RUTHZIL TRATOR COMERCIAL DE PEÇAS LTDA 11 97083-6812 ROLANDO CITRANGULO

79023648A
October, 2005

Challenger®

# Parts Manual

## MT800 SERIES
## TRACK TRACTORS

MT835 (BAM40001-59999)
MT845 (BBP40001-59999)
MT855 (BCC40001-59999)
MT865 (BDS40001-59999)
9YY1 - Up (Transmission)
AZG1 - Up (Axle)
AZH1 - Up (Axle)
AZJ1 - Up (Axle)
AZK1 - Up (Axle)

ALPHABETICAL INDEX

The complete alphabetical index appears at the beginning of this publication. It is used to locate major groups, assemblies and components.

NUMERICAL INDEX

The numerical index of this publication follows the Alphabetical Index at the beginning of the publication and indicates at which grid location and page number a part number appears.

ILLUSTRATIONS

All illustrations are located on the left hand page with the text on the right. Except for some common hardware, all parts are identified with an item number which corresponds to the ìitemî column on the text page. This is followed by the parts number, quantity and description.

HARDWARE

Common hardware not identified such as bolts, nuts, cotter pins and lube fittings, are listed indented in the text beneath the item to which they attach or fit. Common hardware listed indented beneath an item is NOT included unless specified. Example: (Incl. BOLT, LOCKWASHER AND NUT).

ORDERING PARTS

Be sure to refer to both the text and the illustration to assure ordering the correct part.

RECOMMENDED DEALER STOCK

A recommended dealer stock listing appears at the end of this publication.

AGCO

INDEX

## AIR INLET AND EXHAUST SYSTEM

AIR CLEANER AS-BASIC - 192-8980 MT835 & MT845 ..... 155
AIR CLEANER AS-BASIC - 196-4056 (MT855 & MT865) ..... 157
AIR CLEANER GP - 172-5337 (MT855 & MT865) ..... 151
AIR CLEANER GP - 172-5338 MT835 & MT845 ..... 153
LINES GP-AIR - 172-5341 MT855 & MT865 ..... 161
LINES GP-AIR - 172-5342 MT835 & MT845 ..... 159
LINES GP-EJECTOR - 197-4849 MT855 & MT865 ..... 165
LINES GP-EJECTOR - 212-4444 MT835 & MT845 ..... 163
MUFFLER GP - 172-5335 MT855 & MT865 ..... 169
MUFFLER GP - 172-5336 MT835 & MT845 ..... 167
SHIELD GP-EXHAUST - 218-2883 EAME - ITALIAN MARKET ..... 149

## BRAKING SYSTEM

BRAKE AR - 185-8860 AIR TRAILER (WITHOUT HITCH) MT835 & MT845 EAME ONLY ..... 717
BRAKE AR - 186-1620 AIR TRAILER (WITHOUT HITCH) EAME ONLY ..... 719
BRAKE AR - 192-6390 AIR TRAILER (WITH HITCH) MT855 & MT865 ..... 723
BRAKE AR-AIR - 192-6400 WITH HITCH MT835 & MT845 EAME ONLY ..... 721
BRAKE GP-PARKING - 210-7510 ..... 731
CONTROL GP-PARKING BRAKE - 172-6857 EAME ONLY ..... 733
CONTROL GP-PARKING BRAKE - 192-6350 ..... 737
CONTROL GP-PARKING BRAKE - 192-6360 SECONDARY EAME ONLY ..... 735
CONTROL GP-SERVICE BRAKE - 200-4400 ..... 739
CYLINDER GP-MASTER - 184-5338 SERVICE BRAKE ..... 743
KIT HYDR TRAILER BRAKE - 209-3689 WITH 3 POINT HITCH EAME ONLY ..... 729
KIT-HYD BRAKE - 501140D1 WITHOUT 3 POINT HITCH SPECIAL APPLICATIONS ..... 727
KIT-HYD TRAILER BRAKE - 209-3688 WITHOUT 3 POINT HITCH EAME ONLY ..... 725
LINES & CONTROL GP (KIT) - 190-0436 AIR TRAILER BRAKE (WITHOUT HITCH) (EAME ONLY) ..... 751
LINES & CONTROL GP - 190-0436 AIR TRAILER BRAKE (WITHOUT HITCH) (EAME ONLY) ..... 753
LINES GP-BRAKE - 163-0386 ..... 745
LINES GP-BRAKE - 193-1547 COMMON ..... 747
LINES GP-CONTROL (KIT) - 200-4310 AIR TRAILER BRAKE (WITH HITCH) EAME ONLY ..... 755
LINES GP-CONTROL (KIT) - 210-4310 AIR TRAILER BRAKE (WITH HITCH) EAME ONLY ..... 757
LINES GP-SERV BRAKE (B) - 185-8787 EAME ONLY ..... 741
SUPPORT GP-LINES - 200-4320 EAME ONLY ..... 759
TANK & LINES GP-AIR - 190-0435 ..... 761
TANK AR-AIR - 190-0439 MT835 & MT845 EAME ONLY ..... 763
TANK AR-AIR - 190-0440 MT855 & MT865 EAME ONLY ..... 765
TANK AR-AIR - 210-5703 MT835 & MT845 ROW & SPECIAL ONLY ..... 767
TANK AR-AIR - 210-5704 MT855 & MT865 ROW & SPECIAL ONLY ..... 769
VALVE GP-ACCUMULATOR CHARGING - 216-6972 ..... 771
VALVE GP-PARKING BRAKE - 200-4351 ..... 773

## COOLING SYSTEM

COOLER GP & MOUNTING - 190-1482 ..... 127
CORE & MOUNTING GP - 229-8899 ..... 129
FAN GP - 206-6397 ENGINE ..... 131
GUARD GP-FAN - 228-4631 MT835 & MT845 ..... 141
GUARD GP-FAN - 228-4632 MT855 & MT865 ..... 143
GUARD GP-FAN BLAST - 500038D1 ..... 139
LINES GP-COOLANT - 172-5344 ..... 135
LINES GP-COOLANT - 172-5345 MT835 & MT845 ..... 133
LINES GP-TURBOCHARGER - 503583D1 S/N: EFF 3/14/05 ..... 137
TANK GP-EXPANSION & COOLANT - 185-2220 MT855 & MT865 ..... 147
TANK GP-EXPANSION & COOLANT - 194-7966 MT835 & MT845 ..... 145

## DECALS & MARKINGS

DECAL SHEET-COMPLETING AR - 501513D1 ENGLISH ..... 1243
DECAL SHEET-COMPLETING AR - 501514D1 DUTCH ..... 1245
DECAL SHEET-COMPLETING AR - 501515D1 FRENCH ..... 1247
DECAL SHEET-COMPLETING AR - 501516D1 JAPANESE ..... 1249
DECAL SHEET-COMPLETING AR - 501517D1 PORTUGUESE ..... 1251

## DECALS & MARKINGS (CONTINUED)

DECAL SHEET-COMPLETING AR - 501518D1 RUSSIAN ..... 1253
DECAL SHEET-COMPLETING AR - 501519D1 SPANISH ..... 1255
DECAL SHEET-VEHICLE 501505D1 EAME ONLY ..... 1241
DECAL SHEET-VEHICLE - 501503D1 ..... 1237
DECAL SHEET-VEHICLE - 501504D1 ..... 1239
FILM GP - & PLATES - 179-2185 ROW & SPECIAL (PAGE 1 OF 5) ..... 1227
FILM GP - & PLATES - 179-2185 ROW & SPECIAL (PAGE 2 OF 5) ..... 1229
FILM GP - & PLATES - 179-2185 ROW & SPECIAL (PAGE 3 OF 5) ..... 1231
FILM GP - & PLATES - 179-2185 ROW & SPECIAL (PAGE 4 OF 5) ..... 1233
FILM GP - & PLATES - 179-2185 ROW & SPECIAL (PAGE 5 OF 5) ..... 1235
FILM GP-CAT - 500735D1 ..... 1205
FILM GP-CHALLENGER - 500736D1 ..... 1207
FILM GP-MT835 - 500744D1 ..... 1195
FILM GP-MT845 - 500745D1 ..... 1197
FILM GP-MT855 - 500746D1 ..... 1199
FILM GP-MT865 - 500747D1 ..... 1201
FILM GP-PAINT & - 179-2261 EAME ONLY (PAGE 1 OF 9) ..... 1209
FILM GP-PAINT & - 179-2261 EAME ONLY (PAGE 2 OF 9) ..... 1211
FILM GP-PAINT & - 179-2261 EAME ONLY (PAGE 3 OF 9) ..... 1213
FILM GP-PAINT & - 179-2261 EAME ONLY (PAGE 4 OF 9) ..... 1215
FILM GP-PAINT & - 179-2261 EAME ONLY (PAGE 5 OF 9) ..... 1217
FILM GP-PAINT & - 179-2261 EAME ONLY (PAGE 6 OF 9) ..... 1219
FILM GP-PAINT & - 179-2261 EAME ONLY (PAGE 7 OF 9) ..... 1221
FILM GP-PAINT & - 179-2261 EAME ONLY (PAGE 8 OF 9) ..... 1223
FILM GP-PAINT & - 179-2261 EAME ONLY (PAGE 9 OF 9) ..... 1225
WARNING GP-SLOW MOVING VEHICLE 172-8886 ..... 1203

## DIFFERENTIAL STEERING SYSTEM

CONTROL GP-SECONDARY STEERING - 166-4623 EAME ONLY ..... 779
CONTROL GP-STEERING (BASIC) - 217-9780 ..... 777
CONTROL GP-STEERING - 217-9779 ..... 775
HEAD GP-MOTOR - 203-1213 ..... 793
HEAD GP-PUMP - 205-6398 ..... 781
MOTOR & MOUNTING GP - 172-4517 STEERING EAME ONLY ..... 785
MOTOR & MTG GP-STEERING - 158-2404 ROW & SPECIAL ONLY ..... 783
MOTOR GP-PISTON - CH162-9601 STEERING ..... 787
MOTOR GP-PISTON - CH162-9602 STEERING ..... 789
ROTATING GP-MOTOR - 203-0189 STEERING ..... 791

## DRAWBAR, THREE POINT HITCH AND PTO

ADAPTER GP-PLUG - 180-4039 ROW AND SPECIAL APPLICATIONS ..... 947
CONTROL AR-DRAWBAR - 184-5033 POWERED DRAWBAR ..... 949
CONTROL AR-DRAWBAR - 210-7489 WIDE SWING ..... 951
COUPLER GP-QUICK - 179-3318 CATEGORY 3 & 4 NARROW ..... 957
COUPLER GP-QUICK - 180-6640 CATEGORY 4 ..... 959
CYLINDER AS-STEERING - CH189-6001 ..... 967
CYLINDER AS-0102-0408-Y CH189-4911 101.6MM X 408MM (4 X 16.06") ..... 965
CYLINDER GP - CH184-5034 ..... 961
CYLINDER GP-STEERING - 183-4396 ..... 963
DRAWBAR GP-SWINGING 210-7507 ..... 971
DRAWBAR GP-WIDE SWINGING - 180-4036 ..... 969
GUARD GP-CYLINDER - 200-8772 POWERED DRAWBAR ..... 975
GUARD GP-POWER TAKE-OFF - 183-4470 ..... 1013
HITCH AR - 179-0851 WIDE SWINGING DRAWBAR ..... 953
HITCH AR-NON AG - 179-0853 ..... 955
HITCH AR-3 POINT (FIELD) - 169-0028 CATEGORY 4-W/O HYD TRAILER BRAKES ..... 979
HITCH AR-3 POINT (FIELD) - 186-0979 CATAGORY 3&4 NARROW-
W/HYD TRAILER BRAKES EAME ONLY ..... 985
HITCH AR-3 POINT (FIELD) - 189-3300 CATEGORY 4-
W/HYDRAULIC TRAILER BRAKES EAME ONLY ..... 987
HITCH AR-3 POINT - 169-0027 CAT 3 & 4 NARROW-W/O HYD TRAILER BRAKES ..... 977
HITCH AR-3 POINT - 179-0852 CATEGORY 3/4 W/STEERABLE ..... 981
HITCH AR-3 POINT - 180-6639 CATEGORY 4 W/STEERABLE ..... 983
HITCH GP-3 POINT - 179-3317 CATEGORY 3/4 ..... 989

## DRAWBAR, THREE POINT HITCH AND PTO (CONTINUED)

HITCH GP-3 POINT - 184-5065 CATEGORY 4 ..... 991
LINES GP-CYLINDER - 158-2363 3 POINT HITCH ..... 993
LINES GP-CYLINDER - 180-0503 POWERED DRAWBAR ..... 997
LINES GP-POWER TAKE-OFF - 189-2976 ..... 999
LINK GP-LIFT 186-1090 ..... 1001
LINK GP-UPPER 186-1091 ..... 1003
MOUNTING GP-CYLINDER - 184-5035 CONTROLLED DRAWBAR ..... 1005
PLUG GP-3 PT-HITCH - 224-9662 DRAWBAR HITCH APPLICATIONS ..... 1007
POWER TAKE-OFF (KIT) - 163-0400 ROW & SPECIAL APPLICATIONS ..... 1009
POWER TAKE-OFF (KIT) - 224-8603 EAME ..... 1011
ROCKSHAFT GP - 186-1063 ..... 1015
SUPPORT GP-DRAWBAR - 180-4038 SCRAPER HITCH ..... 1017
SUPPORT GP-DRAWBAR - 210-7508 ROW AND SPECIAL APPLICATIONS ..... 1019
SUPPORT GP-FRAME - 210-7509 CONTROLLED DRAWBAR ..... 1021

## ELECTRICAL AND STARTING SYSTEM

ANTENNA GP-DATA RADIO - 501124D1 GPS BASE STATION ..... 337
BATTERY & WIRING GP - 136-5658 3 BATTERIES
WITHOUT DISCONNECT SWITCH MT835 & MT845 ..... 197
BATTERY & WIRING GP - 136-5662 4 BATTERIES WITHOUT DISCONNECT SWITCH ..... 199
BATTERY & WIRING GP - 136-5663 4 BATTERIES WITH DISCONNECT SWITCH ..... 201
BATTERY GP - 136-5659 3 BATTERY W/DISCONNECT SWITCH ..... 205
BLOCK AS-FUSE 501830D1 ..... 291
BLOCK AS-FUSE 501831D1 ..... 293
BLOCK AS-FUSE 501832D1 ..... 295
BLOCK AS-FUSE 501833D1 ..... 297
BLOCK AS-FUSE 501834D1 ..... 299
BLOCK AS-FUSE 501835D1 ..... 301
BLOCK AS-FUSE - 501829D1 ..... 289
CIRCUIT BREAKER GP - 136-5654 ELECTRONIC CONTROL MODULE ..... 207
CONTROL & WIRING GP - 136-5670 ..... 209
CONTROL & WIRING GP-HITCH - 136-5378 LIFT CIRCUIT ..... 211
CONTROL AR - AUTOGUIDE SYSTEM 500628D1 ..... 217
CONTROL AR-COMMUNICATION - 216-0852 ISO ..... 213
CONTROL AR-MACHINE - 216-0874 ISO READY UPGRADE ..... 215
CONTROL GP-ELECTRONIC 501033D1 ..... 279
CONTROL GP-POWER TAKE-OFF - 152-0446 ROW ..... 221
CONTROL GP-POWER TAKE-OFF - 224-5884 EAME ..... 223
CONTROL GP-UNPROGRAMMED 216-0658 ..... 229
ELECTRONICS GP-IMPLEMENT - 229-0891 (SOFTWARE) 3 POINT HITCH ..... 227
ELECTRONICS GP-MACHINE - ISO 216-0614 ..... 231
FUSE GP - 169-6380 ..... 285
FUSE GP-CLAAS - 172-6841 EAME ONLY ..... 287
HEATER GP-JACKET WATER-120V - 215-1802 MT835 & MT845 ROW & SPECIAL ONLY ..... 233
HEATER GP-JACKET WATER-120V - 215-1807 MT855 & MT865 ROW & SPECIAL ONLY ..... 235
HEATER GP-JACKET WATER-240V - 215-1808 MT835 & MT845 EAME ONLY ..... 237
HEATER GP-JACKET WATER-240V - 215-1809 MT855 & MT865 EAME ONLY ..... 239
HEATER GP-TRANSMISSION-120V 163-0402 ROW & SPECIAL ONLY ..... 241
HEATER GP-TRANSMISSION-240V 163-0403 EAME ONLY ..... 243
KIT CONTROL AR-AUTOGUIDE SYSTEM 500630D1 FIELD INSTALLED ..... 219
KIT-GPS BASE STATION - 502609D1 ..... 335
KIT-LIGHTING - 500650D1 CONVERT STD TO DELUXE ROW AND SPECIAL APPLICATIONS ..... 253
KIT-LIGHTING - 500651D1 CONVERT STD TO HID ROW AND SPECIAL APPLICATIONS ..... 255
KIT-LIGHTING - 500652D1 CONVERT DELUXE TO HID ROW AND SPECIAL APPLICATIONS ..... 257
KIT-PTO SWITCH ADAPTOR 502423D1 ..... 225
LAMP GP-HOOD - 12V HALOGEN 500775D1 ..... 259
LAMP GP-HOOD-12V HID 500776D1 ..... 261
LIGHT AS - COURTESY - 12V 501935D1 ..... 245
LIGHTING GP-ROAD (LH TRAFFIC) 168-6580 FIELD INSTALLED EAME ONLY ..... 275
LIGHTING GP-ROAD (RH TRAFFIC) 168-6581 FIELD INSTALLED EAME ONLY ..... 277
LIGHTING GP-SIGNAL - 12V 136-5665 ..... 265
LIGHTING GP-SIGNAL - 136-5429 EAME ONLY ..... 269

## ELECTRICAL AND STARTING SYSTEM (CONTINUED)

LIGHTING GP-SIGNAL - 216-0806 EAME ONLY ..... 267
LIGHTING GP-WARNING - 12V 162-4101 ..... 273
LIGHTING GP-WARNING - 216-9823 ..... 271
LIGHTING GP-12V DELUXE - 500646D1 ..... 249
LIGHTING GP-12V HID - 500647D1 ..... 251
LIGHTING GP-12V STD - 500645D1 ROW AND SPECIAL APPLICATIONS ..... 247
MOUNTING GP-BATTERY - 142-9739 4 BATTERIES ..... 283
MOUNTING GP-BATTERY - 142-9760 3 BATTERIES ..... 281
MOUNTING GP-GPS - 500478D1 AUTOGUIDE SYSTEM ..... 325
MOUNTING GP-KIT - 187-4896 AUX ANTENNA & NON-AUTOGUIDE GPS RECEIVER ..... 327
MOUNTING GP-PDA - 501168D1 AUTOGUIDE SYSTEM ..... 333
RECEIVER GP-TRANSMITTER & GPS - 500607D1 AUTOGUIDE CONTROL ..... 339
RECEIVER KIT-TRANSMITTER - 162-4099 ..... 331
SENSOR & MTG GP-GROUND SPEED 136-5388 ..... 303
SENSOR & MTG GP-GROUND SPEED 136-5404 EAME ..... 305
SENSOR GP-PRESSURE - CH161-9932 ..... 395
SERVICE GP-AUTOGUIDE - 500389D1 ..... 323
STARTING AID GP-ETHER - 187-1740 MT855 & MT865 ..... 309
STARTING MOTOR AS-ELECTRIC - 502284D1 12 VOLT MT835 & MT845 ..... 315
STARTING MOTOR GP-ELECTRIC - 180-2924 MT855 & MT865 ..... 313
STARTING MOTOR GP-ELECTRIC - 208-0090 12 VOLT MT835 & MT845 ..... 311
STARTING MOTOR GP-ELECTRIC - 502282D1 12 VOLT MT855 & MT865 ..... 317
STARTING MOTOR GP-ELECTRIC - 502283D1 12 VOLT MT855 & MT865 ..... 319
STATING AID GP-ETHER - 186-1671 MT835 & MT845 ..... 307
SWITCH GP-GUIDANCE - 500606D1 AUTOGUIDE SYSTEM ..... 321
SWITCH GP-WIPER - CH135-9967 INTERMITTENT 12 VOLT ..... 329
VALVE GP-ETHER - 210-8961 MT835 & MT845 ..... 341
VALVE GP-ETHER - 211-8220 MT855 & MT865 ..... 343
WARNING GP-BACKUP - 195-5968 ..... 345
WIRING GP - 214-3504 AUTOGUIDE ISO COMPATIBLE ..... 349
WIRING GP REMOTE CONTROL - 173-6505 ROW & SPECIAL APPLICATIONS ..... 347
WIRING GP-AUXILIARY - 162-4097 ..... 351
WIRING GP-CAB - 152-0005A EAME ONLY ..... 359
WIRING GP-CAB - 152-0005B EAME ONLY ..... 361
WIRING GP-CAB - 152-0420 1 OF 2 ROW & SPECIAL APPLICATIONS ..... 353
WIRING GP-CAB - 152-0420 2 OF 2 ROW & SPECIAL APPLICATIONS ..... 357
WIRING GP-COMPACT DISC CHANGER 195-9532 ..... 365
WIRING GP-CONSOLE - 136-5477 WITHOUT PTO ..... 369
WIRING GP-CONSOLE - 166-1211 ARMREST W/PTO ..... 367
WIRING GP-CONSOLE - 168-1946 (AUX POWER CLAAS) EAME ONLY ..... 371
WIRING GP-MACHINE - 136-5668 ..... 375
WIRING GP-SHUTOFF - 162-4096 ENGINE ..... 387
WIRING GP-SHUTOFF - 173-6501 TIME DELAY LIGHTING SHUTOFF ..... 389
WIRING GP-TRAILER - 162-4102 CONNECTOR SWITCHES ROW & SPECIAL ..... 391
WIRING GP-TRAILER - 168-1945 CONNECTOR SWITCHES EAME ..... 393
WIRING GP-TRAILER JUMPER - 501940D1 ..... 363
WIRING GP-VEHICLE - 136-5668 ..... 373
WIRING GP-VEHICLE - 136-5669 1 OF 3 EAME ONLY ..... 379
WIRING GP-VEHICLE - 136-5669 2 OF 3 EAME ONLY ..... 381
WIRING GP-VEHICLE - 136-5669 3 OF 3 EAME ONLY ..... 383
WORK LIGHT-HID 500634D1 & 500635D1 ..... 263

## ENGINE INSTALLATION ARRANGEMENT

AIR COMPRESSOR GP - 180-2937 MT835 & MT845 ..... 93
AIR COMPRESSOR GP - 215-8055 ..... 97
COMPRESSOR GP-AIR - 500970D1 MT855 & MT865 ..... 99
DRIVE GP-ACCESSORY - 187-1791 ..... 105
DRIVE GP-FAN - 193-2265 MT855 ..... 109
DRIVE GP-FAN - 193-2266 MT835 & MT845 ..... 107
DRIVE GP-FAN - 197-5675 MT865 ..... 111
INSTALLATION AR-MT835 - 172-5361 ROW & SPECIAL APPLICATIONS ..... 77

## ENGINE INSTALLATION ARRANGEMENT (CONTINUED)

INSTALLATION AR-MT835 - 187-1741 EAME ONLY ..... 79
INSTALLATION AR-MT845 - 172-5362 ROW & SPECIAL APPLICATIONS ..... 81
INSTALLATION AR-MT845 - 187-1742 EAME ONLY ..... 83
INSTALLATION AR-MT855 - 172-5363 ROW & SPECIAL APPLICATIONS ..... 85
INSTALLATION AR-MT855 - 187-1743 EAME ONLY ..... 87
INSTALLATION AR-MT865 - 172-5364 ROW & SPECIAL APPLICATIONS ..... 89
INSTALLATION AR-MT865 - 187-1744 EAME ONLY ..... 91
MOUNTING GP-ALTERNATOR - 206-6987 ..... 113
MOUNTING GP-ENGINE - 172-5333 ..... 117
MOUNTING GP-ENGINE - 172-5334 MT835 & MT845 ..... 115
MOUNTING GP-REFRIGERANT COMPR - 187-1792 ..... 119
PULLEY GP - 185-2237 MT835 & MT845 ..... 121
PULLEY GP - 185-2239 FAN BELT TIGHTENER MT855 ..... 123
PULLEY GP - 185-2240 FAN BELT TIGHTENER MT865 ..... 125

## FRAME AND BODY

BRACE GP-SAFETY - 222-9033 HOOD ROW & SPECIAL ..... 605
CHASSIS AR - 179-1953 ..... 547
COUNTERWEIGHT GP - 185-8688 ROLLER FRAME (1393KG/3071 LB) ROW AND EAME ..... 551
COUNTERWEIGHT GP - 185-8690 ROLLER FRAME (2786KG/6142 LB) ROW AND EAME ..... 553
COUNTERWEIGHT GP-FRONT - 184-5329 20 WEIGHTS (1440KG/3175LB) ROW ONLY ..... 559
COUNTERWEIGHT GP-FRONT - 184-5357 32 WEIGHTS (2000KG/4409LB) ..... 563
COUNTERWEIGHT GP-FRONT - 502116D1 6 WEIGHTS (963KG/2063LB) EAME ONLY ..... 555
COUNTERWEIGHT GP-FRONT - 502117D1 16 WEIGHTS (1403KG/3091LB) EAME ONLY ..... 557
COUNTERWEIGHT GP-FRONT - 502118D1 28 WEIGHTS (1963KG/4328LB) EAME ONLY ..... 561
COUNTERWEIGHT GP-IDLER - 177-4588 (909KG/2000LB) ..... 565
COUNTERWEIGHT GP-IDLER - 178-8047 (1575KG/3500LB) ..... 567
COUNTERWEIGHT GP-IDLER - 185-8720 (2043KG/4500LB) ..... 569
COVER GP-ACCESS - 190-5943 ..... 571
EXTENSION GP-FENDER - 186-2427 EAME ONLY ..... 577
FENDER GP - 161-9174 ROW & SPECIAL ..... 573
FENDER GP - 161-9177 EAME ONLY ..... 575
FRAME GP - 179-1954 (MT835 & MT845) ..... 579
GRILL GP-RADIATOR - 158-5960 ..... 581
GUARD GP - 187-8609 EAME ONLY ..... 583
GUARD GP-BOTTOM - 185-8849 ..... 585
GUARD GP-BOTTOM - 200-8826 FOR USE WITH 197-8558 AUX FUEL TANK AR ..... 587
GUARD GP-BOTTOM - 213-2481 REAR ..... 589
GUARD GP-POWER TRAIN - 189-5805 (MT835 & MT845) ..... 591
HANDHOLD GP - 203-9179 INNER ..... 593
HANDHOLD GP - 221-8534 EAME ONLY ..... 623
HOOD & GUARD GP - 156-1313 ROW & SPECIAL ..... 597
HOOD & GUARD GP - 161-9173 1 OF 2 EAME ONLY ..... 601
HOOD & GUARD GP - 161-9173 2 OF 2 EAME ONLY ..... 603
KIT-MOUNTING - 208-7698 FIRE EXTINGUISHER ROW & SPECIAL ..... 607
MOUNTING GP-BODY - 158-5925 LICENSE PLATE EAME ONLY ..... 613
MOUNTING GP-CAB - 162-4112 ..... 611
MOUNTING GP-COUNTERWEIGHT - 184-5337 (504KG/1112 LB) ROW ONLY ..... 549
MOUNTING GP-MONITOR - 222-7965 ..... 615
MOUNTING GP-WITH FIRE EXTINGUISHER 501785D1 EAME ONLY ..... 609
PANEL GP-ENCLOSURE (CAT) - 210-4350 ..... 617
PLUG GP-COUNTERWEIGHT - 183-5789 COMPLETING ..... 619
REFLECTOR GP - 215-7336 FOR USE WITH DRAWBAR EAME ..... 635
REFLECTOR GP - 215-9580 FOR USE WITH HITCH EAME ..... 637
STEP GP - 156-1327 ..... 621
SUPPORT GP-COMPONENT - 190-5441 ..... 631
SUPPORT GP-FUEL TANK - 186-5431 1 OF 2 ..... 625
SUPPORT GP-FUEL TANK - 186-5431 2 OF 2 ..... 627
TOW CABLE GP - 500039D1 ..... 595
WALKWAY GP - 183-6384 ..... 633

## FUEL SYSTEM

CONTROL GP-DECELERATOR - 152-0447 ..... 171
CONTROL GP-GOVERNOR - 207-2031 ..... 173
FILTER GP-WATER SEP & FUEL - 198-0187 MT855 & MT865 ..... 177
FILTER GP-WATER SEP & FUEL - 198-0188 MT835 & MT845 ..... 175
LINES GP-FUEL - 179-2183 MT855 & MT865 ..... 181
LINES GP-FUEL - 197-1317 ..... 183
LINES GP-FUEL - 213-9315 MT835 & MT845 ..... 179
TANK & MTG GP-FUEL - 179-2182 ..... 185
TANK AR-FUEL - 197-8558 AUXILIARY 94.8 LITERS (25 GALLONS) ..... 187
TANK GP-FUEL - 186-5432 1155 LITERS (305 GALLONS) ..... 189
TANK GP-FUEL - 196-7742 RIGHT HAND ..... 191
TANK GP-FUEL - 206-8891 94.63 LITERS (25 GALLONS) ..... 195
TANK GP-FUEL - 500016D1 LEFT HAND ..... 193

## HYDRAULIC SYSTEM

ACTUATOR GP-PISTON PUMP - CH183-8430 ..... 795
CASE DRAIN GP-FLAT FACE - 502643D1 3 PT HITCH ..... 823
CASE DRAIN GP-PIONEER - 502644D1 3-PT HITCH ..... 825
CONNECTOR GP-VALVE - 180-7174 ABOVE 60 LPM
HYDRAULIC POWER BEYOND ROW AND SPECIAL APPLICATIONS ..... 799
CONVERSION GP-CONTROL VALVE - 185-8699 4 VALVE TO 5 VALVE UPGRADE ..... 801
CONVERSION GP-CONTROL VALVE - 185-8701 ..... 803
CONVERSION GP-CONTROL VALVE - 189-5906 5 VALVE TO 6 VALVE UPGRADE ..... 807
CONVERSION GP-CONTROL VALVE - 189-5910 4 VALVE TO 5 VALVE UPGRADE ..... 805
CYLINDER GP (0125-0345-Y) 125MM X 345MM (4.92 X 13.58") ..... 813
CYLINDER GP-LIFT ..... 811
FILTER & MTG GP-HYDRAULIC - 158-2349 ..... 815
FILTER GP-OIL (BASIC) - 501767D1 (S/N: EFF BAM40601;BBP40472; BCC40702;BDS40823) ..... 829
FILTER GP-OIL - 210-2395 TRANSMISSION/STEERING/IMPLEMENT (S/N: PRIOR
BAM40601;BBP40472; BCC40702;BDS40823) ..... 827
GUARD GP-HDY FILTER - 233-7373 ROW ONLY ..... 817
HYDRAULIC AR - 158-2342 ..... 831
HYDRAULIC KIT-CASE DRAIN 189-3141 EAME ONLY ..... 819
HYDRAULIC KIT-CASE DRAIN 189-3142 ..... 821
HYDRAULIC KIT-POWER BEYOND - 178-7162 STD FLOW
(0-60 LPM) .5" COUPLER ROW AND SPECIAL APPLICATIONS ..... 797
KIT-COUPLING-POWER BEYOND - 189-3143 (CLAAS) EAME ONLY ..... 809
LINES GP-COUPLER 210-0851 ..... 835
LINES GP-COUPLER - 190-0438 ..... 833
LINES GP-ECOLOGY - 502214D1 ..... 855
LINES GP-HYD OIL - 172-4516 ..... 837
LINES GP-HYDRAULIC - 209-8326 (FOR USE W/85CC CAPACITY CHARGE PUMP) ..... 851
LINES GP-HYDRAULIC OIL - 193-1558 ..... 841
LINES GP-HYDRAULIC OIL - 209-8325 ..... 849
LINES GP-HYDRAULIC OIL - 501130D1 HYDRAULIC TRAILER BRAKE ..... 857
LINES GP-IMPL - 172-4519 87CC CAPACITY IMPLEMENT PUMP ..... 853
LINES GP-IMPLEMENT - 158-2356 ..... 843
LINES GP-IMPLEMENT - 172-4518 ..... 847
LINES GP-STEERING - 158-2393 ..... 859
MOUNTING GP-VALVE - 158-2339 ..... 861
MOUNTING GP-VALVE - 162-9805 ..... 865
MOUNTING GP-VALVE - 193-1548 ..... 863
PUMP & MOUNTING GP - 162-9804 (63CC IMPLEMENT PUMP) ..... 867
PUMP & MOUNTING GP - 165-7901 (87CC IMPLEMENT PUMP) ..... 869
PUMP & MTG GP-HYDRAULIC - 158-2397 SCAVENGE PUMP ..... 871
PUMP AR-HYDRAULIC - 180-0184 63CC IMPLEMENT PUMP ..... 873
PUMP AR-HYDRAULIC - 180-0185 87CC IMPLEMENT PUMP ..... 875
PUMP GP-GEAR - CH206-6337 STEERING, IMPLEMENT & TRANS CHARGE ..... 877
PUMP GP-GEAR - CH207-3629 SCAVANGE PUMP STEERING,
IMPLEMENT & TRANS CHARGE ..... 879
PUMP GP-PISTON (SLIPPER) - CH206-9019 63CC IMPLEMENT ..... 885
PUMP GP-PISTON - CH162-9592 SCAVENGE PUMP SLIPPER ..... 881
PUMP GP-PISTON - CH206-9017 87CC IMPLEMENT ..... 883
ROTATING GP-PUMP - 190-3118 87CC IMPLEMENT PUMP ..... 887

## HYDRAULIC SYSTEM (CONTINUED)

ROTATING GP-PUMP - 190-6501 63CC IMPLEMENT PUMP ..... 889
ROTATING GP-PUMP - 205-6400 SCAVENGE PUMP ..... 891
VALVE AR - 180-1438 5 IMPLEMENTS ..... 905
VALVE AR - 193-8197 W/O HITCH & W/O HYDRAULIC TRAILER BRAKE ..... 893
VALVE AR - 193-8198 W/HITCH & W/O HYDRAULIC TRAILER BRAKE ROW & EAME ..... 897
VALVE AR - 193-8199 W/O HITCH & W/HYDRAULIC TRAILER BRAKE EAME ONLY ..... 899
VALVE AR - 193-8200 W/HITCH & W/HYDRAULIC TRAILER BRAKE EAME ONLY ..... 901
VALVE AR - 501070D1 W/O HITCH & W/HYDRAULIC TRAILER BRAKE ..... 895
VALVE AR-BANK 4 - 180-1434 ..... 903
VALVE AR-IMPL - 500795D1 6 IMPLEMENTS ..... 907
VALVE GP-BANK 2 - 192-4816 PRIORITY W/HYDRAULIC TRAILER BRAKE ..... 909
VALVE GP-BANK 3 - 192-4708 PRIORITY WITH HITCH ..... 911
VALVE GP-BANK 4 - 180-0494 IMPLEMENT ..... 913
VALVE GP-BANK 4 - 192-4817 PRIORITY W/HITCH & W/HYD TRAILER BRAKES EAME ONLY ..... 915
VALVE GP-BANK 5 - 180-0495 IMPLEMENT ..... 917
VALVE GP-BANK 6 - 500752D1 5 REMOTES ..... 919
VALVE GP-BRAKE CONTROL - 196-2318 HYDRAULIC TRAILER BRAKES ..... 931
VALVE GP-CONTROL - 162-9816 IMPLEMENT ..... 923
VALVE GP-CONTROL - 162-9817 STEERABLE HITCH ..... 925
VALVE GP-CONTROL - 162-9818 3 POINT HITCH ..... 927
VALVE GP-CONTROL - 192-4707 PRIORITY W/HYDRAULIC TRAILER BRAKES ..... 929
VALVE GP-CONTROL - 209-5019 PRIORITY & ACCUMULATOR CHARGE ..... 933
VALVE GP-CONTROL - 209-5020 PRIORITY ..... 935
VALVE GP-CONTROL - 209-5021 PRIORITY ..... 937
VALVE GP-FLOW CONTROL&RELIEF - 227-8830 IMPLEMENT ..... 921
VALVE GP-PRESS & FLOW CMPNSTR - 214-9379 ..... 939
VALVE GP-PRESSURE COMPENSATOR CH6E-4392 ..... 941
VALVE GP-SERVO - CH183-8417 ..... 943
VALVE GP-SERVO - 205-6412 ..... 945

## MACHINE ARRANGEMENT

BASE COMMON AR (EURO) - 179-2180 EAME ..... 75
BASE COMMON AR - 179-1952 ROW & SPECIAL ONLY ..... 73
BASE UNIT AR-MT835 - 500033D1 SPECIAL APPLICATIONS ..... 65
BASE UNIT AR-MT845 - 500034D1 SPECIAL APPLICATIONS ..... 67
BASE UNIT AR-MT855 - 500035D1 SPECIAL APPLICATIONS ..... 69
BASE UNIT AR-MT865 - 156-5584 ROW ..... 55
BASE UNIT AR-MT865 - 500037D1 SPECIAL APPLICATIONS ..... 71
BASIC UNIT AR-MT835 - 156-5581 ROW ..... 49
BASIC UNIT AR-MT835 - 179-2193 EAME ..... 57
BASIC UNIT AR-MT845 - 156-5582 ROW ..... 51
BASIC UNIT AR-MT845 - 179-2194 EAME ..... 59
BASIC UNIT AR-MT855 - 156-5583 ROW ..... 53
BASIC UNIT AR-MT855 - 179-2195 EAME ..... 61
BASIC UNIT AR-MT865 - 179-2196 EAME ..... 63

## MAINTENANCE PARTS

RECOMMENDED DEALER STOCK ..... 1263

## OPERATOR STATION

AIR CONDITIONER & MOUNTING GP-BASIC 151-9986
(S/N: PRIOR TO BAM50633; BBP50486; BCC50765; BDS50909) ..... 1023
AIR CONDITIONER & MOUNTING GP-BASIC 502502D1
(S/N: EFF BAM50633; BBP50486; BCC50765; BDS50909) ..... 1025
AIR CONDITIONER & MOUNTING GP-DELUXE 166-4592
(S/N: PRIOR TO BAM50619; BBP50482; BCC50756; BDS50902) ..... 1027
AIR CONDITIONER & MOUNTING GP-DELUXE 502501D1
(S/N: EFF BAM50619;BBP50482; BCC50756;BDS50902) ..... 1029
AIR CONDITIONER GP-BASIC - 152-0428
(S/N: PRIOR TO BAM40605; BBP40472; BCC40709; BDS40834) 1 OF 3 ..... 1031
AIR CONDITIONER GP-BASIC - 152-0428
(S/N: PRIOR TO BAM40605; BBP40472; BCC40709; BDS40834) 2 OF 3 ..... 1033
AIR CONDITIONER GP-BASIC - 152-0428
(S/N: PRIOR TO BAM40605; BBP40472; BCC40709; BDS40834) 3 OF 3 ..... 1035
AIR CONDITIONER GP-DELUXE - 152-0427
(S/N: PRIOR TO BAM40575;BBP40461; BCC40683;BDS40763) ..... 1039
AIR CONDITIONER GP-DELUXE - 502499D1
(S/N: EFF BAM40575;BBP40461; BCC40683;BDS40763) ..... 1043
ANTENNA GP-RADIO - 168-1951 ..... 1045
ANTENNA GP-RADIO - 210-1570 BUSINESS BAND ..... 1047
ARMREST GP - 500484D2 4 IMP W/PTO-W/O HTCH ..... 1129
ARMREST GP - 500485D2 4 IMP W/PTO-W/HITCH ..... 1131

## OPERATOR STATION (CONTINUED)

ARMREST GP - 500486D2 4 IMP W/O PTO-W/O HITCH ..... 1133
ARMREST GP - 500487D2 4 IMP W/O PTO-W/HITCH ..... 1135
ARMREST GP - 500488D2 5 IMP W/PTO-W/O HITCH ..... 1137
ARMREST GP - 500489D2 5 IMP W/PTO-W/HTCH ..... 1139
ARMREST GP - 500490D2 5 IMP W/O PTO-W/O HITCH ..... 1141
ARMREST GP - 500491D2 5 IMP W/O PTO-W/HITCH ..... 1143
ARMREST GP - 500791D2 6 IMP W/PTO-W/O HITCH ..... 1145
ARMREST GP - 500792D2 6 IMP W/PTO-W/HITCH ..... 1147
ARMREST GP - 500793D2 6 IMP W/O PTO-W/O HITCH ..... 1149
ARMREST GP - 500794D2 6 IMP W/O PTO-W/HITCH ..... 1151
CAB AR-BASIC - 500842D1 EAME ONLY ..... 1049
CAB AR-BASIC - 500844D1 ROW & SPECIAL APPLICATIONS ..... 1053
CAB AR-DELUXE - 500841D1 EAME ONLY ..... 1051
CAB AR-DELUXE - 500843D1 MT835 & MT845 ROW & SPECIAL APPLICATIONS ..... 1055
CAB AR-DELUXE - 500849D1 MT855 & MT865 ROW & SPECIAL APPLICATIONS ..... 1057
CAB GP - 152-0003 ROW & SPECIAL APPLICATIONS ..... 1059
CAB GP - 152-0004 EAME ONLY ..... 1061
CHANGER GP-COMPACT DISC - 173-6507 ROW AND SPECIAL APPLICATIONS ..... 1117
COMPRESSOR GP-REFRIGERANT - CH178-9570 ..... 1063
CONDITIONER GP-AIR-BASIC - 502500D1
(S/N: PRIOR TO BAM40605; BBP40472; BCC40709; BDS40834) ..... 1037
CONSOLE GP - 500768D1 ..... 1067
CONSOLE GP-MTG - 500839D1 ..... 1127
CONSOLE GP-OPERATOR - 152-0434 WITH PTO ..... 1065
CONTROL GP-AIR & TEMPERATURE 166-4586 ..... 1071
CONTROL GP-BRAKE & CLUTCH 152-0438 ..... 1073
CONTROL GP-HITCH - 152-0445 REAR 3 POINT ..... 1075
CONTROL GP-IMPLEMENT 209-8704 ..... 1085
CONTROL GP-IMPLEMENT - 4 HANDLES 152-0443 ..... 1079
CONTROL GP-IMPLEMENT - 4TH HANDLE 136-5355 ..... 1077
CONTROL GP-IMPLEMENT - 5 HANDLES 166-4590 ..... 1083
CONTROL GP-IMPLEMENT - 6TH HANDLE 152-0448 ..... 1081
CONTROL GP-TRANSMISSION 169-6347 ..... 1089
CONTROL GP-TRANSMISSION - 169-6346 ..... 1087
COVER GP - 500761D1 ..... 1069
DOOR GP-CAB (LH) - 164-7068
(S/N: PRIOR TO BAM40608; BBP40474; BCC60741; BDS40890) ..... 1091
DOOR GP-CAB (LH) - 500927D1 (S/N: EFF BAM40608; BBP40474; BCC60741; BDS40890) ..... 1093
DUCT GP-CAB AIR 166-4556 ..... 1095
GLASS GP-WINDSHIELD - 151-9994 ROW & SPECIAL ..... 1185
GLASS GP-WINDSHIELD - 151-9995 EAME ONLY ..... 1187
HEADLINER GP - 152-0418 OPERATOR COMPARTMENT ..... 1097
INSULATION GP-WEATHER - 217-2214 ..... 1125
KIT-SEAT AS (LUMBAR) - BASIC 220-2329 ..... 1159
KIT-SEAT AS (LUMBAR) - DELUXE 501912D1 ..... 1161
KIT-SEAT SUSPENSION - BASIC 501898D1 ..... 1163
KIT-SEAT SUSPENSION - DELUXE 501909D1 ..... 1165
KIT-SUSPENSION GP - DELUXE SEAT 501916D1 ..... 1169
KIT-SUSPENSION GP-BASIC SEAT 501900D1 ..... 1167
KIT-WIPER (RH) - 162-4103 ..... 1193
LINES GP-A/C - 172-5343 ..... 1099
LINES GP-HEATER - DELUXE 208-2881 ..... 1103
LINES GP-HEATER - 208-2880 ..... 1101
MIRROR GP - 206-0588 SIDE AREA VIEW EAME ONLY ..... 1109
MIRROR GP-REAR VIEW - 209-5607 MANUAL ADJUSTMENT ..... 1105
MIRROR GP-REAR VIEW - 209-5608 POWER ADJUSTMENT & HEATED ..... 1107
RADIO GP-AUTOGUIDE - 232-0869 ..... 1119
RADIO GP-DELUXE - 168-1970 12V HD AM/FM/WB/CAS/REMOTE/GRN
BACKLIGHT ROW AND SPECIAL APPLICATIONS ..... 1113
RADIO GP-DELUXE CD - 170-5739 12V HD AM/FM/WB/CD/REMOTE/GRN
BACKLIGHT ROW AND SPECIAL APPLICATIONS ..... 1115
RADIO GP-STD - 168-1952 12V HD, AM/FM/WB/CASS W/GREEN BACKLIGHT ..... 1111
ROOF GP-CAB - 152-0417 ROW AND SPECIAL APPLICATIONS ..... 1121
ROOF GP-CAB - 152-0444 EAME ONLY ..... 1123

## OPERATOR STATION (CONTINUED)

SEAT GP - DELUXE 500853D1 ..... 1157
SEAT GP-BASIC 500840D1 ..... 1155
SEAT GP-TRAINING - 152-0433 ..... 1153
SPEAKER GP-RADIO 152-0419 ..... 1171
SPEAKER GP-RADIO - SUBWOOFER 173-6506 ..... 1173
STEERING COLUMN GP - CH166-3611 ..... 1175
TRIM GP-CAB - 224-3917 1 OF 2 ..... 1177
TRIM GP-CAB - 224-3917 2 OF 2 ..... 1179
VISOR GP-CAB (SUN VISOR) - FRONT 152-0424 ..... 1181
VISOR GP-CAB (SUN VISOR) - REAR 162-4095 ..... 1183
WIPER GP (DELUXE) - 196-3968 ..... 1191
WIPER GP-WINDOW (BASIC) - 152-0422 ..... 1189

## PAINT

PAINT ..... 1261

## POWER TRAIN

152-5242 TRANSMISSION AR S/N: 9YY1-UP ..... 511
155-9571 CLUTCH GP-INPUT S/N: 9YY1-1465 ..... 427
155-9572 CLUTCH GP-INTERMEDIATE SHAFT S/N: 9YY1-1465 ..... 429
155-9575 CLUTCH GP-REVERSE S/N: 9YY1-UP ..... 433
155-9576 CLUTCH GP-OUTPUT SHAFT S/N: 9YY1-UP ..... 435
155-9579 CASE & PARTS GP-PLANETARY S/N: 9YY1-950 ..... 421
155-9579 CASE & PARTS GP-PLANETARY S/N: 9YY951-UP ..... 423
155-9580 CONTROL GP-TRANSMISSION HYD S/N: 9YY1-UP ..... 453
177-5233 CLUTCH GP-PLANETARY S/N: 9YY1-UP ..... 439
177-5234 DRIVE GP-PUMP S/N: 9YY1-UP ..... 493
179-9479 FINAL DRIVE GP S/N: AZG1-955; AZJ1-1479 ..... 497
179-9479 FINAL DRIVE GP S/N: AZG956-UP; AZJ1480-UP ..... 499
179-9480 FINAL DRIVE GP S/N: AZH1-990; AZK1-987 2286-2600MM (90-102 IN) GAUGE ..... 501
179-9480 FINAL DRIVE GP S/N: AZH991-UP; AZK988-UP ..... 503
180-4376 DIFFERENTIAL GP-STEERING (PAGE 1 OF 2) S/N: AZG1-906; AZH1-972; ..... 457
180-4376 DIFFERENTIAL GP-STEERING (PAGE 2 OF 2) S/N: AZG1-906; AZH1-972; ..... 459
180-4376 DIFFERENTIAL GP-STEERING S/N: AZG1-906; AZH1-972; ..... 455
180-4376 DIFFERENTIAL GP-STEERING S/N: AZG1013-UP; AZH1005-UP; AZJ1897-UP ..... 483
180-4376 DIFFERENTIAL GP-STEERING S/N: AZG907-950; AZH973-983; ..... 463
180-4376 DIFFERENTIAL GP-STEERING S/N: AZG951-1012; AZH984-1004; ..... 473
185-3955 AXLE AR-WITH POWER TAKE-OFF S/N: AZG1-UP 2286-3251 MM (90-128 IN) ..... 515
185-3956 AXLE AR-WITH POWER TAKE-OFF S/N: AZH1-UP 2286-2600 MM (90-102 IN) ..... 517
185-3957 AXLE AR S/N: AZJ1-UP 2286-3251 MM (90-128 IN)
CANNOT BE USED WITH POWER TAKE OFF ..... 519
185-3958 AXLE AR-WITHOUT POWER TAKE-OFF S/N: AZK1-UP 2286-2600 MM (90-102 IN) ..... 521
185-8737 COVER GP-DIFFERENTIAL S/N: AZJ1-UP; AZK1-UP ..... 523
187-4930 POWER TAKE-OFF GP S/N: AZG1-879; AZH1-959 ..... 525
187-4930 POWER TAKE-OFF GP S/N: AZG880-900; AZH960-971 ..... 531
187-4930 POWER TAKE-OFF GP S/N: AZG901-UP; AZH972-UP ..... 537
198-1013 VALVE GP-RELIEF S/N: 9YY1-UP ..... 513
200-5027 POWER TRAIN AR - WITH PTO (2286-3251MM/90-128") GAGE ..... 413
200-5028 POWER TRAIN AR-WITH PTO (2286-2600MM/90-102") GAGE ..... 415
200-5029 POWER TRAIN AR - W/ PTO ..... 417
200-5030 POWER TRAIN AR WITHOUT PTO ..... 419
211-8277 FASTENER GP-FINAL DRIVE ..... 495
216-5343 VALVE GP-MODULATING S/N: AZG1-879; AZH1-959 ..... 543
216-5343 VALVE GP-MODULATING S/N: AZG880-UP; AZH960-UP; 9YY1-UP
12V ELECTRONIC CLUTCH PRESSURE CONTROL ..... 545
217-7314 HOUSING GP-DIFFERENTIAL S/N: AZG1-906; AZH1-972; ..... 505
225-6958 HOUSING GP-DIFFERENTIAL S/N: AZG907-950;AZH973-983; ..... 507
232-1774 CLUTCH GP-TRANSMISSION INPUT SHAFT CLUTCH GROUP
S/N: 9YY1466-UP ..... 443
232-1774 CLUTCH GP-TRANSMISSION INTERMEDIATE SHAFT CLUTCH GROUP (1 OF 2)
S/N: 9YY1466-UP ..... 445
232-1774 CLUTCH GP-TRANSMISSION INTERMEDIATE SHAFT CLUTCH GROUP (2 OF 2)
S/N: 9YY1466-UP ..... 447
232-1774 CLUTCH GP-TRANSMISSION OUTPUT SHAFT CLUTCH GROUP (1 OF 2)
S/N: 9YY1466-UP ..... 449
232-1774 CLUTCH GP-TRANSMISSION OUTPUT SHAFT CLUTCH GROUP (2 OF 2)
S/N: 9YY1466-UP ..... 451
232-1774 CLUTCH GP-TRANSMISSION REVERSE SHAFT CLUTCH GROUP
S/N: 9YY1466-UP ..... 441
242-0962 HOUSING GP-DIFFERENTIAL S/N: AZG951-UP; AZH984-UP; ..... 509

## POWER TRAIN ATTACHING

BREATHER GP-POWERTRAIN - 502496D1
(S/N: EFF BAM40556; BBP40455; BCC40654; BDS40740) ..... 405
DRAIN GP-ECOLOGY - CH163-0397 ..... 399
FILLER GP-POWER TRAIN OIL - 179-4304
(S/N: PRIOR TO BAM40556; BBP40455; BCC40654; BDS40740) ..... 403
FILLER GP-POWER TRAIN OIL - 502498D1 ..... 401
GUARD GP-AXLE - 208-3021 EAME ONLY ..... 397
SHAFT GP-INPUT - 163-0383 ..... 407
SHAFT GP-INPUT - 163-0384 MT855 & MT865 ..... 409
UNIVERSAL JOINT GP - 163-0414 ..... 411

## SERVICE EQUIPMENT AND SUPPLIES

PROTECTION GP-VANDALISM 185-8848 ..... 1257
TOOL GP-AXLE GAUGE CHANGE - 203-9712 FACTORY OPTION ..... 1259

## TRACK BELTS

BELT AR-EXTREME AP - 156-6075 (457MM/18") ..... 645
BELT AR-EXTREME AP - 177-4522 (700MM/27.5") ..... 647
BELT AR-EXTREME AP - 177-4523 (762MM/30") ..... 649
BELT AR-EXTREME AP - 178-8087 (914MM/36") ..... 651
BELT AR-GENERAL AG - 156-6079 (762MM/30") ..... 641
BELT AR-GENERAL AG - 156-6082 (914MM/36") ..... 643
BELT AR-GENERAL AP - 156-6077 (699MM/27.5") ROW & EAME ..... 639
BELT AR-SPECIAL AP - 502027D1 (762MM/30") ..... 653
BELT AR-SPECIAL AP - 502028D1 (914MM/36") ..... 655
KIT-GUIDE BLOCK GENERAL AG & EXTREME APPLICATIONS ..... 657

## UNDERCARRIAGE

BOGIE GP - 130-4818 ..... 671
FRAME AR-LH - 156-4883 ..... 675
FRAME AR-RH 156-4882 ..... 673
FRAME GP-TRACK ROLLER - 163-0678 ..... 677
GAGE AR-TRACK (W/PTO) 2286-3251 MM (90-128 IN) ROW ONLY ..... 661
GAUGE AR-TRACK (W/O PTO) - 177-9947 (2286-2600MM/90-102") EAME ONLY ..... 663
GAUGE AR-TRACK (W/O PTO) - 177-9948 (2286-3251MM/90-128") ROW ONLY ..... 659
GAUGE AR-TRACK (W/PTO) - 183-2197 (2286-2600MM/90-102") EAME ONLY ..... 665
GUARD GP-LINES - 201-9927 TENSIONER WIRE ..... 679
GUARD GP-LINES - 201-9928 ..... 681
IDLER GP - 127-9545 ..... 683
MOUNTING GP-IDLER - 177-4589 ..... 685
MOUNTING GP-TENSIONER - 184-6718 TRACK BELT ..... 687
RESTRAIN GP-ROLLERFRAME - 500040D1 ..... 705
ROLLER AR - 156-4891 MIDDLE 112 MM (4.4 IN) ..... 689
ROLLER AR - 156-4893 MIDDLE 204 MM (8 IN) ..... 691
SUPPORT GP-DRIVE WHEEL - 156-4884 RIGHT HAND ..... 693
SUPPORT GP-DRIVE WHEEL - 156-4885 LEFT HAND ..... 695
SUPPORT GP-UNDERCARRIAGE - 163-1009 WIDE GAUGE ..... 697
SUPPORT GP-UNDERCARRIAGE - 177-9945 (2286-2600MM/90-102") EAME ONLY ..... 699
TENSIONER GP-BELT - LH 500835D1 ..... 667
TENSIONER GP-BELT - RH 500836D1 ..... 669
UNDERCARRIAGE AR - 156-4881 ROW ..... 701
UNDERCARRIAGE AR - 177-9946 EAME ONLY ..... 703
WEDGE GP-WHEEL - 189-8931 EAME ONLY ..... 715
WHEEL AR-DRIVER - 220-2357 112 MM (4.4 IN) ROW & EAME ..... 707
WHEEL AR-DRIVER - 220-2358 WIDE 196 MM (7.7 IN) ..... 709
WHEEL AR-IDLER - 220-2355 105 MM (4.1 IN) ..... 711
WHEEL AR-IDLER - 220-2356 192 MM (7.6 IN) ..... 713

## INDEX


| Part No. | Page | Grid | Part No. | Page | Grid | Part No. | Page | Grid | Part No. | Page | Grid |
|---|---|---|---|---|---|---|---|---|---|---|---|
| AG518357 | 1013 | 1-F 7 | CH1N-5970 | 671 | 1-D 21 | CH108-5985 | 669 | 1-D 20 | CH121-9754 | 275 | 1-C 5 |
| CH0L-1352 | 97 | 1-B 11 | CH1P-4278 | 145 | 1-B 16 | CH108-6075 | 683 | 1-D 22 | CH121-9754 | 277 | 1-C 5 |
| CH0L-1352 | 103 | 1-B 12 | CH1P-4278 | 147 | 1-B 16 | CH108-7251 | 993 | 1-F 5 | CH121-9755 | 275 | 1-C 5 |
| CH0L-2072 | 747 | 1-E 4 | CH1P-4278 | 175 | 1-B 19 | CH109-2356 | 1007 | 1-F 6 | CH121-9755 | 277 | 1-C 5 |
| CH0S-1617 | 97 | 1-B 11 | CH1P-4278 | 177 | 1-B 19 | CH109-9685 | 927 | 1-E 22 | CH121-9870 | 1179 | 1-F 23 |
| CH0S-1617 | 103 | 1-B 12 | CH1P-4278 | 191 | 1-B 21 | CH110-0004 | 99 | 1-B 11 | CH122-1162 | 997 | 1-F 5 |
| CH0T-0200 | 1001 | 1-F 6 | CH1P-4278 | 403 | 1-C 18 | CH110-2028 | 331 | 1-C 11 | CH122-6606 | 891 | 1-E 19 |
| CH0T-0200 | 1003 | 1-F 6 | CH1P-4278 | 405 | 1-C 18 | CH110-2028 | 359 | 1-C 13 | CH122-6607 | 891 | 1-E 19 |
| CH001-5600 | 775 | 1-E 7 | CH1P-4278 | 667 | 1-D 20 | CH110-2028 | 1121 | 1-F 18 | CH122-8352 | 145 | 1-B 16 |
| CH001-5600 | 777 | 1-E 7 | CH1P-4278 | 669 | 1-D 20 | CH110-2028 | 1123 | 1-F 18 | CH122-9250 | 751 | 1-E 5 |
| CH001-5600 | 1073 | 1-F 13 | CH1P-4278 | 845 | 1-E 14 | CH110-2028 | 1171 | 1-F 23 | CH122-9250 | 755 | 1-E 5 |
| CH003-7764 | 145 | 1-B 16 | CH1P-4278 | 855 | 1-E 15 | CH110-6349 | 667 | 1-D 20 | CH123-0707 | 359 | 1-C 13 |
| CH003-7764 | 147 | 1-B 16 | CH1P-4578 | 853 | 1-E 15 | CH110-6349 | 669 | 1-D 20 | CH123-1373 | 197 | 1-B 21 |
| CH003-7764 | 843 | 1-E 14 | CH1P-5767 | 859 | 1-E 15 | CH110-6349 | 859 | 1-E 15 | CH123-1373 | 199 | 1-B 21 |
| CH004-7270 | 147 | 1-B 16 | CH1R-0771 | 175 | 1-B 19 | CH111-4627 | 1177 | 1-F 23 | CH123-2017 | 781 | 1-E 8 |
| CH006-6586 | 403 | 1-C 18 | CH1R-0771 | 177 | 1-B 19 | CH111-8897 | 945 | 1-E 24 | CH123-4950 | 599 | 1-D 13 |
| CH006-6586 | 405 | 1-C 18 | CH1S-0994 | 99 | 1-B 11 | CH112-4631 | 945 | 1-E 24 | CH123-4950 | 601 | 1-D 14 |
| CH006-7801 | 145 | 1-B 16 | CH1S-0994 | 211 | 1-B 23 | CH112-6174 | 1189 | 1-F 24 | CH123-4950 | 1257 | 1-G 7 |
| CH030-4606 | 195 | 1-B 21 | CH1S-0994 | 741 | 1-E 4 | CH113-0899 | 1075 | 1-F 13 | CH123-5748 | 791 | 1-E 9 |
| CH030-9613 | 1193 | 1-G 1 | CH1S-0994 | 759 | 1-E 5 | CH113-4420 | 791 | 1-E 9 | CH123-7556 | 781 | 1-E 8 |
| CH032-3631 | 93 | 1-B 11 | CH1S-0994 | 845 | 1-E 14 | CH113-8490 | 289 | 1-C 6 | CH123-7582 | 881 | 1-E 18 |
| CH033-1097 | 969 | 1-F 2 | CH1S-0994 | 855 | 1-E 15 | CH113-8490 | 291 | 1-C 7 | CH123-7583 | 781 | 1-E 8 |
| CH033-5879 | 921 | 1-E 22 | CH1S-1015 | 859 | 1-E 15 | CH113-8490 | 293 | 1-C 7 | CH124-3548 | 289 | 1-C 6 |
| CH033-6031 | 853 | 1-E 15 | CH1U-8846 | 693 | 1-D 23 | CH113-8490 | 295 | 1-C 7 | CH124-3548 | 291 | 1-C 7 |
| CH033-6032 | 923 | 1-E 22 | CH1U-8846 | 695 | 1-D 23 | CH113-8490 | 297 | 1-C 7 | CH124-3548 | 293 | 1-C 7 |
| CH033-6032 | 925 | 1-E 22 | CH100-4036 | 597 | 1-D 13 | CH113-8490 | 1263 | 1-G 8 | CH124-3548 | 295 | 1-C 7 |
| CH033-6033 | 179 | 1-B 19 | CH100-4036 | 601 | 1-D 14 | CH113-8491 | 289 | 1-C 6 | CH124-3548 | 297 | 1-C 7 |
| CH033-6033 | 181 | 1-B 20 | CH100-4336 | 199 | 1-B 21 | CH113-8491 | 291 | 1-C 7 | CH124-3548 | 1263 | 1-G 8 |
| CH033-6043 | 939 | 1-E 23 | CH100-4336 | 203 | 1-B 22 | CH113-8491 | 295 | 1-C 7 | CH124-4653 | 351 | 1-C 13 |
| CH033-7291 | 581 | 1-D 12 | CH101-2850 | 155 | 1-B 17 | CH113-8491 | 297 | 1-C 7 | CH124-5572 | 97 | 1-B 11 |
| CH034-4202 | 183 | 1-B 20 | CH101-2850 | 157 | 1-B 17 | CH113-8491 | 299 | 1-C 7 | CH124-5572 | 103 | 1-B 12 |
| CH053-2313 | 145 | 1-B 16 | CH101-2867 | 1097 | 1-F 15 | CH113-8491 | 301 | 1-C 8 | CH124-7346 | 1073 | 1-F 13 |
| CH061-9593 | 191 | 1-B 21 | CH101-3129 | 679 | 1-D 21 | CH113-8491 | 1263 | 1-G 8 | CH125-7131 | 93 | 1-B 11 |
| CH077-3241 | 399 | 1-C 17 | CH101-3129 | 681 | 1-D 22 | CH113-8492 | 289 | 1-C 6 | CH126-1645 | 881 | 1-E 18 |
| CH077-5261 | 877 | 1-E 17 | CH102-0409 | 407 | 1-C 18 | CH113-8492 | 291 | 1-C 7 | CH126-1766 | 827 | 1-E 12 |
| CH090-9554 | 1091 | 1-F 15 | CH102-8802 | 341 | 1-C 12 | CH113-8492 | 293 | 1-C 7 | CH126-1773 | 209 | 1-B 22 |
| CH090-9554 | 1093 | 1-F 15 | CH102-8802 | 343 | 1-C 12 | CH113-8492 | 299 | 1-C 7 | CH127-2170 | 171 | 1-B 19 |
| CH090-9555 | 1179 | 1-F 23 | CH102-8802 | 345 | 1-C 12 | CH113-8492 | 301 | 1-C 8 | CH127-2170 | 705 | 1-D 24 |
| CH095-0687 | 885 | 1-E 18 | CH102-8802 | 353 | 1-C 13 | CH113-8492 | 1263 | 1-G 8 | CH127-8609 | 237 | 1-C 1 |
| CH095-0736 | 347 | 1-C 12 | CH102-8802 | 373 | 1-C 15 | CH113-8880 | 597 | 1-D 13 | CH127-8609 | 239 | 1-C 1 |
| CH095-0741 | 1203 | 1-G 2 | CH102-8802 | 379 | 1-C 15 | CH113-8880 | 601 | 1-D 14 | CH127-9548 | 683 | 1-D 22 |
| CH095-0759 | 1153 | 1-F 21 | CH102-8802 | 383 | 1-C 16 | CH114-3469 | 1063 | 1-F 12 | CH127-9553 | 683 | 1-D 22 |
| CH095-0845 | 1001 | 1-F 6 | CH102-8802 | 1063 | 1-F 12 | CH114-4231 | 145 | 1-B 16 | CH127-9554 | 683 | 1-D 22 |
| CH095-0845 | 1003 | 1-F 6 | CH102-8803 | 375 | 1-C 15 | CH114-5333 | 373 | 1-C 15 | CH128-0331 | 93 | 1-B 11 |
| CH095-0915 | 171 | 1-B 19 | CH102-8803 | 395 | 1-C 17 | CH114-5333 | 379 | 1-C 15 | CH128-2162 | 1027 | 1-F 8 |
| CH095-0942 | 943 | 1-E 24 | CH102-8805 | 1107 | 1-F 16 | CH114-5785 | 1099 | 1-F 15 | CH128-2162 | 1029 | 1-F 8 |
| CH095-1316 | 751 | 1-E 5 | CH102-8805 | 1189 | 1-F 24 | CH114-5786 | 733 | 1-E 3 | CH128-4249 | 213 | 1-B 23 |
| CH095-1316 | 755 | 1-E 5 | CH102-8805 | 1191 | 1-G 1 | CH114-5793 | 597 | 1-D 13 | CH128-4249 | 349 | 1-C 12 |
| CH095-1715 | 931 | 1-E 23 | CH102-8805 | 1193 | 1-G 1 | CH114-5793 | 601 | 1-D 14 | CH129-2181 | 93 | 1-B 11 |
| CH095-1750 | 771 | 1-E 7 | CH102-8806 | 329 | 1-C 10 | CH116-5728 | 171 | 1-B 19 | CH129-3178 | 581 | 1-D 12 |
| CH095-9230 | 1001 | 1-F 6 | CH102-8806 | 1189 | 1-F 24 | CH116-7471 | 361 | 1-C 14 | CH129-3178 | 597 | 1-D 13 |
| CH096-2323 | 923 | 1-E 22 | CH103-6216 | 97 | 1-B 11 | CH117-0754 | 969 | 1-F 2 | CH129-3178 | 599 | 1-D 13 |
| CH096-5968 | 945 | 1-E 24 | CH103-6216 | 103 | 1-B 12 | CH117-2311 | 361 | 1-C 14 | CH129-3178 | 601 | 1-D 14 |
| CH096-6095 | 881 | 1-E 18 | CH103-8089 | 621 | 1-D 16 | CH117-8801 | 885 | 1-E 18 | CH129-3178 | 603 | 1-D 14 |
| CH096-6166 | 359 | 1-C 13 | CH104-2091 | 1067 | 1-F 12 | CH117-8929 | 1095 | 1-F 15 | CH129-3178 | 1075 | 1-F 13 |
| CH096-6166 | 361 | 1-C 14 | CH104-2091 | 1095 | 1-F 15 | CH118-0772 | 621 | 1-D 16 | CH129-3178 | 1177 | 1-F 23 |
| CH096-6166 | 1177 | 1-F 23 | CH104-3466 | 957 | 1-F 1 | CH118-4728 | 93 | 1-B 11 | CH129-6457 | 359 | 1-C 13 |
| CH1A-8827 | 957 | 1-F 1 | CH105-1632 | 883 | 1-E 18 | CH119-0942 | 795 | 1-E 9 | CH129-6457 | 361 | 1-C 14 |
| CH1A-8827 | 959 | 1-F 1 | CH105-1638 | 883 | 1-E 18 | CH119-1329 | 1001 | 1-F 6 | CH130-5742 | 1071 | 1-F 13 |
| CH1B-0676 | 1073 | 1-F 13 | CH105-1646 | 887 | 1-E 18 | CH119-5026 | 251 | 1-C 3 | CH131-2171 | 93 | 1-B 11 |
| CH1B-4202 | 743 | 1-E 4 | CH105-1648 | 887 | 1-E 18 | CH119-5026 | 255 | 1-C 3 | CH131-3093 | 1027 | 1-F 8 |
| CH1F-5403 | 1073 | 1-F 13 | CH105-1650 | 887 | 1-E 18 | CH119-5026 | 257 | 1-C 3 | CH131-3093 | 1029 | 1-F 8 |
| CH1G-3174 | 787 | 1-E 8 | CH105-1651 | 887 | 1-E 18 | CH119-5026 | 351 | 1-C 13 | CH131-3540 | 597 | 1-D 13 |
| CH1G-3174 | 793 | 1-E 9 | CH105-1866 | 163 | 1-B 18 | CH119-5026 | 371 | 1-C 15 | CH131-3540 | 599 | 1-D 13 |
| CH1H-8289 | 621 | 1-D 16 | CH105-1866 | 165 | 1-B 18 | CH119-5026 | 1067 | 1-F 12 | CH131-3540 | 601 | 1-D 14 |
| CH1J-2860 | 683 | 1-D 22 | CH105-2145 | 939 | 1-E 23 | CH119-5026 | 1097 | 1-F 15 | CH131-3540 | 1023 | 1-F 8 |
| CH1J-4757 | 683 | 1-D 22 | CH105-3031 | 883 | 1-E 18 | CH119-5026 | 1171 | 1-F 23 | CH131-3540 | 1025 | 1-F 8 |
| CH1J-6474 | 969 | 1-F 2 | CH105-3032 | 883 | 1-E 18 | CH119-6110 | 791 | 1-E 9 | CH131-3540 | 1027 | 1-F 8 |
| CH1J-9671 | 667 | 1-D 20 | CH105-3033 | 883 | 1-E 18 | CH119-7845 | 781 | 1-E 8 | CH131-3540 | 1029 | 1-F 8 |
| CH1J-9671 | 669 | 1-D 20 | CH105-8034 | 361 | 1-C 14 | CH119-9708 | 667 | 1-D 20 | CH131-3540 | 1095 | 1-F 15 |
| CH1J-9671 | 671 | 1-D 21 | CH106-2105 | 843 | 1-E 14 | CH119-9708 | 669 | 1-D 20 | CH131-8627 | 233 | 1-C 1 |
| CH1J-9671 | 683 | 1-D 22 | CH106-2105 | 855 | 1-E 15 | CH120-4897 | 209 | 1-B 22 | CH131-8627 | 235 | 1-C 1 |
| CH1J-9671 | 693 | 1-D 23 | CH107-5591 | 1027 | 1-F 8 | CH120-4897 | 229 | 1-B 24 | CH132-5789 | 197 | 1-B 21 |
| CH1J-9671 | 695 | 1-D 23 | CH107-5591 | 1029 | 1-F 8 | CH121-9753 | 275 | 1-C 5 | CH132-5789 | 199 | 1-B 21 |
| CH1K-6872 | 617 | 1-D 15 | CH108-5985 | 667 | 1-D 20 | CH121-9753 | 277 | 1-C 5 | CH132-5789 | 203 | 1-B 22 |

## INDEX


| Part No. | Page | Grid | Part No. | Page | Grid | Part No. | Page | Grid | Part No. | Page | Grid |
|---|---|---|---|---|---|---|---|---|---|---|---|
| CH132-5789 | 205 | 1-B 22 | CH145-0846 | 361 | 1-C 14 | CH148-8374 | 841 | 1-E 14 | CH161-6149 | 781 | 1-E 8 |
| CH132-5789 | 373 | 1-C 15 | CH145-0847 | 361 | 1-C 14 | CH148-8374 | 857 | 1-E 15 | CH161-6149 | 943 | 1-E 24 |
| CH132-5789 | 383 | 1-C 16 | CH145-9545 | 581 | 1-D 12 | CH148-8378 | 735 | 1-E 3 | CH161-6154 | 771 | 1-E 7 |
| CH133-6517 | 233 | 1-C 1 | CH146-0835 | 97 | 1-B 11 | CH148-8378 | 741 | 1-E 4 | CH161-9932 | 377 | 1-C 15 |
| CH133-6517 | 235 | 1-C 1 | CH146-0835 | 103 | 1-B 12 | CH148-8378 | 845 | 1-E 14 | CH161-9932 | 383 | 1-C 16 |
| CH133-6517 | 237 | 1-C 1 | CH146-4350 | 923 | 1-E 22 | CH148-8383 | 741 | 1-E 4 | CH161-9932 | 395 | 1-C 17 |
| CH133-6517 | 239 | 1-C 1 | CH146-4351 | 923 | 1-E 22 | CH148-8388 | 849 | 1-E 14 | CH162-0177 | 745 | 1-E 4 |
| CH134-1935 | 1191 | 1-G 1 | CH146-7453 | 145 | 1-B 16 | CH148-8388 | 851 | 1-E 15 | CH162-0177 | 921 | 1-E 22 |
| CH134-1935 | 1263 | 1-G 8 | CH146-7453 | 147 | 1-B 16 | CH148-8393 | 995 | 1-F 5 | CH162-6555 | 1085 | 1-F 14 |
| CH134-3987 | 377 | 1-C 15 | CH146-7453 | 179 | 1-B 19 | CH148-8419 | 753 | 1-E 5 | CH162-6660 | 1067 | 1-F 12 |
| CH134-3987 | 383 | 1-C 16 | CH146-7453 | 181 | 1-B 20 | CH148-8419 | 757 | 1-E 5 | CH162-8550 | 1175 | 1-F 23 |
| CH134-3988 | 197 | 1-B 21 | CH146-9439 | 249 | 1-C 2 | CH148-8428 | 995 | 1-F 5 | CH162-9592 | 871 | 1-E 17 |
| CH134-3988 | 199 | 1-B 21 | CH146-9439 | 251 | 1-C 3 | CH148-8428 | 997 | 1-F 5 | CH162-9592 | 881 | 1-E 18 |
| CH134-3988 | 203 | 1-B 22 | CH146-9439 | 253 | 1-C 3 | CH148-8433 | 741 | 1-E 4 | CH162-9601 | 783 | 1-E 8 |
| CH134-3988 | 205 | 1-B 22 | CH146-9439 | 255 | 1-C 3 | CH148-8436 | 747 | 1-E 4 | CH162-9601 | 787 | 1-E 8 |
| CH134-3988 | 375 | 1-C 15 | CH146-9439 | 257 | 1-C 3 | CH148-8439 | 845 | 1-E 14 | CH162-9602 | 785 | 1-E 8 |
| CH134-3988 | 381 | 1-C 16 | CH146-9439 | 273 | 1-C 5 | CH148-8444 | 741 | 1-E 4 | CH162-9602 | 789 | 1-E 8 |
| CH134-3988 | 383 | 1-C 16 | CH146-9439 | 289 | 1-C 6 | CH148-8444 | 747 | 1-E 4 | CH162-9799 | 923 | 1-E 22 |
| CH134-4126 | 209 | 1-B 22 | CH146-9439 | 291 | 1-C 7 | CH148-8444 | 857 | 1-E 15 | CH162-9821 | 923 | 1-E 22 |
| CH134-4126 | 229 | 1-B 24 | CH146-9439 | 293 | 1-C 7 | CH148-8446 | 995 | 1-F 5 | CH163-0397 | 75 | 1-B 9 |
| CH134-7489 | 781 | 1-E 8 | CH146-9439 | 295 | 1-C 7 | CH149-0231 | 845 | 1-E 14 | CH163-0397 | 399 | 1-C 17 |
| CH135-6260 | 159 | 1-B 17 | CH146-9439 | 297 | 1-C 7 | CH149-2758 | 281 | 1-C 6 | CH163-0421 | 241 | 1-C 2 |
| CH135-6261 | 159 | 1-B 17 | CH146-9439 | 299 | 1-C 7 | CH149-2758 | 283 | 1-C 6 | CH163-2657 | 353 | 1-C 13 |
| CH135-6261 | 161 | 1-B 18 | CH146-9439 | 301 | 1-C 8 | CH149-6371 | 373 | 1-C 15 | CH163-2657 | 361 | 1-C 14 |
| CH135-8854 | 781 | 1-E 8 | CH146-9439 | 351 | 1-C 13 | CH149-6371 | 379 | 1-C 15 | CH163-6018 | 735 | 1-E 3 |
| CH135-8854 | 881 | 1-E 18 | CH146-9439 | 371 | 1-C 15 | CH150-3037 | 995 | 1-F 5 | CH164-0909 | 667 | 1-D 20 |
| CH135-9967 | 329 | 1-C 10 | CH146-9439 | 389 | 1-C 16 | CH150-3065 | 797 | 1-E 9 | CH164-0909 | 669 | 1-D 20 |
| CH135-9967 | 1191 | 1-G 1 | CH146-9439 | 1107 | 1-F 16 | CH150-3065 | 799 | 1-E 9 | CH164-5557 | 819 | 1-E 11 |
| CH136-5252 | 247 | 1-C 2 | CH146-9439 | 1191 | 1-G 1 | CH150-3065 | 809 | 1-E 10 | CH164-5557 | 821 | 1-E 12 |
| CH136-5252 | 249 | 1-C 2 | CH147-7143 | 975 | 1-F 3 | CH150-8766 | 971 | 1-F 3 | CH164-5557 | 997 | 1-F 5 |
| CH136-5252 | 251 | 1-C 3 | CH148-7017 | 265 | 1-C 4 | CH151-6030 | 715 | 1-E 1 | CH164-5624 | 821 | 1-E 12 |
| CH136-5254 | 273 | 1-C 5 | CH148-8305 | 667 | 1-D 20 | CH151-9989 | 1185 | 1-F 24 | CH164-7057 | 1091 | 1-F 15 |
| CH136-5268 | 351 | 1-C 13 | CH148-8305 | 669 | 1-D 20 | CH151-9989 | 1187 | 1-F 24 | CH164-7057 | 1093 | 1-F 15 |
| CH136-5268 | 371 | 1-C 15 | CH148-8305 | 837 | 1-E 13 | CH152-4241 | 989 | 1-F 4 | CH164-7070 | 1091 | 1-F 15 |
| CH136-5414 | 1171 | 1-F 23 | CH148-8313 | 843 | 1-E 14 | CH152-4241 | 991 | 1-F 5 | CH164-7070 | 1093 | 1-F 15 |
| CH136-5415 | 1171 | 1-F 23 | CH148-8313 | 855 | 1-E 15 | CH153-4058 | 797 | 1-E 9 | CH164-7491 | 971 | 1-F 3 |
| CH136-5434 | 1173 | 1-F 23 | CH148-8326 | 741 | 1-E 4 | CH153-4061 | 797 | 1-E 9 | CH164-8478 | 1095 | 1-F 15 |
| CH136-5490 | 1111 | 1-F 17 | CH148-8327 | 837 | 1-E 13 | CH153-4061 | 799 | 1-E 9 | CH164-9869 | 741 | 1-E 4 |
| CH136-5490 | 1113 | 1-F 17 | CH148-8327 | 843 | 1-E 14 | CH153-6225 | 797 | 1-E 9 | CH165-5694 | 809 | 1-E 10 |
| CH136-5490 | 1115 | 1-F 17 | CH148-8334 | 837 | 1-E 13 | CH153-6225 | 799 | 1-E 9 | CH165-5975 | 321 | 1-C 10 |
| CH136-5511 | 359 | 1-C 13 | CH148-8334 | 845 | 1-E 14 | CH153-6227 | 799 | 1-E 9 | CH165-5975 | 353 | 1-C 13 |
| CH136-8423 | 883 | 1-E 18 | CH148-8334 | 849 | 1-E 14 | CH153-6228 | 799 | 1-E 9 | CH165-5975 | 357 | 1-C 13 |
| CH136-8423 | 885 | 1-E 18 | CH148-8334 | 851 | 1-E 15 | CH154-2881 | 237 | 1-C 1 | CH165-5975 | 361 | 1-C 14 |
| CH137-3780 | 881 | 1-E 18 | CH148-8335 | 847 | 1-E 14 | CH154-2881 | 239 | 1-C 1 | CH165-5975 | 1065 | 1-F 12 |
| CH137-9775 | 555 | 1-D 9 | CH148-8335 | 849 | 1-E 14 | CH154-5428 | 345 | 1-C 12 | CH165-6969 | 791 | 1-E 9 |
| CH137-9775 | 557 | 1-D 9 | CH148-8335 | 851 | 1-E 15 | CH154-9989 | 1179 | 1-F 23 | CH166-3611 | 1067 | 1-F 12 |
| CH137-9775 | 561 | 1-D 10 | CH148-8340 | 741 | 1-E 4 | CH155-2255 | 1089 | 1-F 14 | CH166-3611 | 1175 | 1-F 23 |
| CH139-6911 | 209 | 1-B 22 | CH148-8340 | 747 | 1-E 4 | CH155-2258 | 1089 | 1-F 14 | CH166-4573 | 1091 | 1-F 15 |
| CH139-6911 | 229 | 1-B 24 | CH148-8340 | 993 | 1-F 5 | CH155-2270 | 827 | 1-E 12 | CH166-4573 | 1093 | 1-F 15 |
| CH140-1739 | 883 | 1-E 18 | CH148-8342 | 993 | 1-F 5 | CH155-3504 | 137 | 1-B 15 | CH166-4574 | 1091 | 1-F 15 |
| CH140-5181 | 1091 | 1-F 15 | CH148-8342 | 999 | 1-F 5 | CH155-3504 | 999 | 1-F 5 | CH166-4574 | 1093 | 1-F 15 |
| CH140-5181 | 1093 | 1-F 15 | CH148-8346 | 993 | 1-F 5 | CH156-0283 | 247 | 1-C 2 | CH166-4596 | 1191 | 1-G 1 |
| CH141-0243 | 891 | 1-E 19 | CH148-8347 | 823 | 1-E 12 | CH156-0283 | 249 | 1-C 2 | CH166-4615 | 1045 | 1-F 10 |
| CH141-1762 | 1189 | 1-F 24 | CH148-8347 | 825 | 1-E 12 | CH156-0283 | 251 | 1-C 3 | CH166-7413 | 793 | 1-E 9 |
| CH141-1762 | 1191 | 1-G 1 | CH148-8347 | 845 | 1-E 14 | CH156-0283 | 253 | 1-C 3 | CH166-7414 | 793 | 1-E 9 |
| CH141-2759 | 297 | 1-C 7 | CH148-8347 | 859 | 1-E 15 | CH156-0283 | 255 | 1-C 3 | CH167-2195 | 965 | 1-F 2 |
| CH141-2759 | 299 | 1-C 7 | CH148-8353 | 845 | 1-E 14 | CH156-0283 | 257 | 1-C 3 | CH167-2201 | 813 | 1-E 11 |
| CH141-2759 | 301 | 1-C 8 | CH148-8355 | 845 | 1-E 14 | CH156-0283 | 731 | 1-E 3 | CH167-2209 | 667 | 1-D 20 |
| CH141-2759 | 1263 | 1-G 8 | CH148-8355 | 847 | 1-E 14 | CH156-0283 | 733 | 1-E 3 | CH167-2209 | 669 | 1-D 20 |
| CH142-2304 | 731 | 1-E 3 | CH148-8355 | 853 | 1-E 15 | CH156-4897 | 683 | 1-D 22 | CH167-2312 | 813 | 1-E 11 |
| CH142-2304 | 733 | 1-E 3 | CH148-8356 | 837 | 1-E 13 | CH156-4900 | 683 | 1-D 22 | CH167-2320 | 667 | 1-D 20 |
| CH142-2304 | 1091 | 1-F 15 | CH148-8360 | 859 | 1-E 15 | CH156-6175 | 345 | 1-C 12 | CH167-2320 | 669 | 1-D 20 |
| CH142-2304 | 1093 | 1-F 15 | CH148-8364 | 741 | 1-E 4 | CH157-0217 | 1071 | 1-F 13 | CH167-2457 | 965 | 1-F 2 |
| CH142-2304 | 1185 | 1-F 24 | CH148-8364 | 747 | 1-E 4 | CH157-0449 | 1065 | 1-F 12 | CH168-2197 | 885 | 1-E 18 |
| CH142-2304 | 1187 | 1-F 24 | CH148-8364 | 847 | 1-E 14 | CH159-5890 | 799 | 1-E 9 | CH168-2198 | 885 | 1-E 18 |
| CH142-9681 | 1111 | 1-F 17 | CH148-8364 | 853 | 1-E 15 | CH159-5893 | 797 | 1-E 9 | CH168-2203 | 885 | 1-E 18 |
| CH142-9681 | 1113 | 1-F 17 | CH148-8364 | 859 | 1-E 15 | CH159-5893 | 799 | 1-E 9 | CH168-2309 | 1185 | 1-F 24 |
| CH142-9681 | 1115 | 1-F 17 | CH148-8364 | 993 | 1-F 5 | CH159-5897 | 797 | 1-E 9 | CH168-2309 | 1187 | 1-F 24 |
| CH144-2179 | 611 | 1-D 15 | CH148-8364 | 997 | 1-F 5 | CH159-5897 | 799 | 1-E 9 | CH168-2333 | 1065 | 1-F 12 |
| CH144-9093 | 943 | 1-E 24 | CH148-8367 | 735 | 1-E 3 | CH159-5898 | 797 | 1-E 9 | CH168-3378 | 889 | 1-E 18 |
| CH144-9094 | 943 | 1-E 24 | CH148-8370 | 747 | 1-E 4 | CH159-5898 | 997 | 1-F 5 | CH168-3379 | 889 | 1-E 18 |
| CH144-9097 | 943 | 1-E 24 | CH148-8372 | 747 | 1-E 4 | CH160-3957 | 683 | 1-D 22 | CH168-3380 | 889 | 1-E 18 |
| CH144-9098 | 943 | 1-E 24 | CH148-8372 | 859 | 1-E 15 | CH160-5223 | 683 | 1-D 22 | CH168-3381 | 889 | 1-E 18 |
| CH144-9101 | 781 | 1-E 8 | CH148-8372 | 997 | 1-F 5 | CH160-8756 | 1185 | 1-F 24 | CH168-3382 | 889 | 1-E 18 |
| CH144-9103 | 781 | 1-E 8 | CH148-8374 | 735 | 1-E 3 | CH160-8756 | 1187 | 1-F 24 | CH168-3384 | 889 | 1-E 18 |

## INDEX


| Part No. | Page | Grid | Part No. | Page | Grid | Part No. | Page | Grid | Part No. | Page | Grid |
|---|---|---|---|---|---|---|---|---|---|---|---|
| CH168-3385 | 889 | 1-E 18 | CH173-3175 | 301 | 1-C 8 | CH183-4584 | 377 | 1-C 15 | CH186-0370 | 923 | 1-E 22 |
| CH168-3504 | 883 | 1-E 18 | CH173-7126 | 175 | 1-B 19 | CH183-4584 | 381 | 1-C 16 | CH186-0371 | 923 | 1-E 22 |
| CH168-3504 | 885 | 1-E 18 | CH173-7126 | 177 | 1-B 19 | CH183-5008 | 957 | 1-F 1 | CH186-0371 | 925 | 1-E 22 |
| CH168-4599 | 797 | 1-E 9 | CH173-7223 | 377 | 1-C 15 | CH183-5008 | 959 | 1-F 1 | CH186-0372 | 925 | 1-E 22 |
| CH168-7317 | 885 | 1-E 18 | CH173-7223 | 383 | 1-C 16 | CH183-8033 | 129 | 1-B 14 | CH186-0375 | 923 | 1-E 22 |
| CH168-7319 | 885 | 1-E 18 | CH173-7639 | 809 | 1-E 10 | CH183-8417 | 795 | 1-E 9 | CH186-0376 | 923 | 1-E 22 |
| CH168-7710 | 677 | 1-D 21 | CH173-9683 | 965 | 1-F 2 | CH183-8417 | 943 | 1-E 24 | CH186-0996 | 969 | 1-F 2 |
| CH168-7863 | 885 | 1-E 18 | CH174-4874 | 693 | 1-D 23 | CH183-8418 | 943 | 1-E 24 | CH186-0996 | 971 | 1-F 3 |
| CH168-8389 | 1211 | 1-G 3 | CH174-4874 | 695 | 1-D 23 | CH183-8419 | 943 | 1-E 24 | CH186-0997 | 969 | 1-F 2 |
| CH168-8389 | 1231 | 1-G 5 | CH174-5747 | 173 | 1-B 19 | CH183-8420 | 943 | 1-E 24 | CH186-0997 | 971 | 1-F 3 |
| CH169-3261 | 1175 | 1-F 23 | CH174-5747 | 1075 | 1-F 13 | CH183-8421 | 943 | 1-E 24 | CH186-0998 | 969 | 1-F 2 |
| CH169-4273 | 749 | 1-E 4 | CH174-5789 | 1177 | 1-F 23 | CH183-8423 | 943 | 1-E 24 | CH186-1000 | 963 | 1-F 2 |
| CH169-6324 | 1111 | 1-F 17 | CH174-5810 | 993 | 1-F 5 | CH183-8424 | 943 | 1-E 24 | CH186-1069 | 1001 | 1-F 6 |
| CH169-6325 | 1113 | 1-F 17 | CH174-6381 | 1121 | 1-F 18 | CH183-8425 | 943 | 1-E 24 | CH186-1069 | 1003 | 1-F 6 |
| CH169-6326 | 1115 | 1-F 17 | CH174-6381 | 1123 | 1-F 18 | CH183-8426 | 943 | 1-E 24 | CH186-1081 | 1001 | 1-F 6 |
| CH169-6352 | 1177 | 1-F 23 | CH174-9061 | 371 | 1-C 15 | CH183-8427 | 943 | 1-E 24 | CH186-1094 | 1001 | 1-F 6 |
| CH169-6377 | 1185 | 1-F 24 | CH174-9215 | 993 | 1-F 5 | CH183-8428 | 943 | 1-E 24 | CH186-1096 | 1001 | 1-F 6 |
| CH169-6377 | 1187 | 1-F 24 | CH174-9994 | 885 | 1-E 18 | CH183-8429 | 943 | 1-E 24 | CH186-1682 | 1067 | 1-F 12 |
| CH169-6392 | 1091 | 1-F 15 | CH175-1323 | 255 | 1-C 3 | CH183-8430 | 795 | 1-E 9 | CH186-3735 | 1189 | 1-F 24 |
| CH169-6392 | 1093 | 1-F 15 | CH175-1323 | 257 | 1-C 3 | CH183-8430 | 881 | 1-E 18 | CH186-3735 | 1191 | 1-G 1 |
| CH169-6397 | 1181 | 1-F 24 | CH175-1323 | 259 | 1-C 3 | CH183-8431 | 795 | 1-E 9 | CH186-4955 | 813 | 1-E 11 |
| CH169-6397 | 1183 | 1-F 24 | CH175-1323 | 261 | 1-C 4 | CH183-8442 | 795 | 1-E 9 | CH186-5137 | 813 | 1-E 11 |
| CH170-0964 | 797 | 1-E 9 | CH175-1323 | 1263 | 1-G 8 | CH183-8443 | 795 | 1-E 9 | CH186-5862 | 191 | 1-B 21 |
| CH170-0964 | 799 | 1-E 9 | CH175-2851 | 667 | 1-D 20 | CH183-8444 | 795 | 1-E 9 | CH187-4902 | 1059 | 1-F 11 |
| CH170-0964 | 809 | 1-E 10 | CH175-2851 | 669 | 1-D 20 | CH183-8446 | 891 | 1-E 19 | CH187-4902 | 1061 | 1-F 12 |
| CH170-1445 | 1185 | 1-F 24 | CH175-3135 | 923 | 1-E 22 | CH183-8447 | 891 | 1-E 19 | CH187-4917 | 1075 | 1-F 13 |
| CH170-1445 | 1187 | 1-F 24 | CH175-3135 | 925 | 1-E 22 | CH183-8449 | 891 | 1-E 19 | CH187-6297 | 751 | 1-E 5 |
| CH170-2237 | 251 | 1-C 3 | CH175-3244 | 375 | 1-C 15 | CH183-8450 | 891 | 1-E 19 | CH187-6297 | 755 | 1-E 5 |
| CH170-2237 | 255 | 1-C 3 | CH175-3244 | 383 | 1-C 16 | CH183-8451 | 891 | 1-E 19 | CH187-6297 | 761 | 1-E 6 |
| CH170-2237 | 257 | 1-C 3 | CH175-4966 | 399 | 1-C 17 | CH183-8452 | 891 | 1-E 19 | CH187-6486 | 751 | 1-E 5 |
| CH170-2237 | 289 | 1-C 6 | CH175-5327 | 761 | 1-E 6 | CH183-8453 | 891 | 1-E 19 | CH187-6486 | 755 | 1-E 5 |
| CH170-2237 | 291 | 1-C 7 | CH175-7057 | 359 | 1-C 13 | CH183-8454 | 881 | 1-E 18 | CH187-6486 | 761 | 1-E 6 |
| CH170-2237 | 293 | 1-C 7 | CH175-7514 | 671 | 1-D 21 | CH184-5034 | 949 | 1-E 24 | CH187-9018 | 833 | 1-E 13 |
| CH170-2237 | 295 | 1-C 7 | CH175-7900 | 965 | 1-F 2 | CH184-5034 | 951 | 1-F 1 | CH187-9018 | 835 | 1-E 13 |
| CH170-2320 | 1015 | 1-F 7 | CH176-4546 | 223 | 1-B 24 | CH184-5034 | 961 | 1-F 2 | CH187-9630 | 923 | 1-E 22 |
| CH170-5282 | 99 | 1-B 11 | CH177-0378 | 171 | 1-B 19 | CH184-5339 | 743 | 1-E 4 | CH188-3640 | 913 | 1-E 21 |
| CH170-5696 | 1189 | 1-F 24 | CH177-1872 | 697 | 1-D 23 | CH184-8029 | 93 | 1-B 11 | CH188-3640 | 917 | 1-E 21 |
| CH170-5696 | 1191 | 1-G 1 | CH177-1872 | 699 | 1-D 23 | CH184-8029 | 99 | 1-B 11 | CH188-3640 | 919 | 1-E 21 |
| CH170-7251 | 1113 | 1-F 17 | CH177-3405 | 969 | 1-F 2 | CH185-0295 | 885 | 1-E 18 | CH188-7789 | 931 | 1-E 23 |
| CH170-7251 | 1115 | 1-F 17 | CH177-3405 | 971 | 1-F 3 | CH185-0296 | 885 | 1-E 18 | CH188-9637 | 887 | 1-E 18 |
| CH170-7251 | 1117 | 1-F 17 | CH177-9778 | 175 | 1-B 19 | CH185-3886 | 1175 | 1-F 23 | CH188-9644 | 265 | 1-C 4 |
| CH171-1105 | 751 | 1-E 5 | CH178-3333 | 911 | 1-E 21 | CH185-3959 | 841 | 1-E 14 | CH188-9644 | 267 | 1-C 4 |
| CH171-1105 | 755 | 1-E 5 | CH178-3888 | 1189 | 1-F 24 | CH185-3959 | 857 | 1-E 15 | CH189-3284 | 1003 | 1-F 6 |
| CH171-1106 | 751 | 1-E 5 | CH178-4164 | 781 | 1-E 8 | CH185-7141 | 331 | 1-C 11 | CH189-4882 | 965 | 1-F 2 |
| CH171-1106 | 755 | 1-E 5 | CH178-4171 | 781 | 1-E 8 | CH185-9753 | 751 | 1-E 5 | CH189-4888 | 965 | 1-F 2 |
| CH171-1107 | 751 | 1-E 5 | CH178-7955 | 1187 | 1-F 24 | CH185-9753 | 755 | 1-E 5 | CH189-4906 | 965 | 1-F 2 |
| CH171-1107 | 755 | 1-E 5 | CH178-7962 | 1065 | 1-F 12 | CH185-9753 | 761 | 1-E 6 | CH189-4907 | 965 | 1-F 2 |
| CH171-3054 | 791 | 1-E 9 | CH178-7963 | 1065 | 1-F 12 | CH185-9753 | 833 | 1-E 13 | CH189-4911 | 961 | 1-F 2 |
| CH171-3055 | 791 | 1-E 9 | CH178-7965 | 1067 | 1-F 12 | CH185-9753 | 835 | 1-E 13 | CH189-4911 | 965 | 1-F 2 |
| CH171-3057 | 791 | 1-E 9 | CH178-9570 | 119 | 1-B 13 | CH185-9759 | 751 | 1-E 5 | CH189-6001 | 963 | 1-F 2 |
| CH171-3058 | 791 | 1-E 9 | CH178-9570 | 1063 | 1-F 12 | CH185-9759 | 755 | 1-E 5 | CH189-6001 | 967 | 1-F 2 |
| CH171-3059 | 791 | 1-E 9 | CH179-2959 | 1179 | 1-F 23 | CH185-9762 | 751 | 1-E 5 | CH189-6397 | 965 | 1-F 2 |
| CH171-3060 | 791 | 1-E 9 | CH179-3160 | 1121 | 1-F 18 | CH185-9762 | 755 | 1-E 5 | CH189-8610 | 1193 | 1-G 1 |
| CH171-3061 | 791 | 1-E 9 | CH179-3160 | 1123 | 1-F 18 | CH185-9762 | 761 | 1-E 6 | CH189-8610 | 1263 | 1-G 8 |
| CH171-4047 | 1095 | 1-F 15 | CH179-4206 | 1081 | 1-F 14 | CH185-9763 | 833 | 1-E 13 | CH190-0430 | 751 | 1-E 5 |
| CH171-5989 | 791 | 1-E 9 | CH179-4209 | 1193 | 1-G 1 | CH185-9768 | 751 | 1-E 5 | CH190-0430 | 755 | 1-E 5 |
| CH171-6723 | 995 | 1-F 5 | CH179-4217 | 1187 | 1-F 24 | CH185-9768 | 755 | 1-E 5 | CH190-0431 | 761 | 1-E 6 |
| CH172-2241 | 121 | 1-B 14 | CH179-4265 | 303 | 1-C 8 | CH185-9768 | 759 | 1-E 5 | CH190-2584 | 957 | 1-F 1 |
| CH172-2241 | 123 | 1-B 14 | CH179-4324 | 173 | 1-B 19 | CH185-9772 | 751 | 1-E 5 | CH190-2584 | 959 | 1-F 1 |
| CH172-2241 | 125 | 1-B 14 | CH179-4324 | 359 | 1-C 13 | CH185-9772 | 755 | 1-E 5 | CH190-2611 | 1005 | 1-F 6 |
| CH172-3403 | 121 | 1-B 14 | CH179-4324 | 1075 | 1-F 13 | CH185-9773 | 751 | 1-E 5 | CH190-2612 | 1005 | 1-F 6 |
| CH172-3403 | 123 | 1-B 14 | CH179-6898 | 733 | 1-E 3 | CH185-9773 | 755 | 1-E 5 | CH190-2615 | 959 | 1-F 1 |
| CH172-3403 | 125 | 1-B 14 | CH179-8665 | 845 | 1-E 14 | CH185-9773 | 761 | 1-E 6 | CH190-2623 | 811 | 1-E 11 |
| CH172-3511 | 223 | 1-B 24 | CH179-8665 | 855 | 1-E 15 | CH185-9773 | 833 | 1-E 13 | CH190-2634 | 989 | 1-F 4 |
| CH172-4620 | 809 | 1-E 10 | CH180-0613 | 291 | 1-C 7 | CH185-9773 | 835 | 1-E 13 | CH190-2634 | 991 | 1-F 5 |
| CH172-4621 | 797 | 1-E 9 | CH180-0613 | 293 | 1-C 7 | CH186-0341 | 923 | 1-E 22 | CH190-3120 | 883 | 1-E 18 |
| CH172-4621 | 809 | 1-E 10 | CH180-0613 | 295 | 1-C 7 | CH186-0347 | 923 | 1-E 22 | CH190-3391 | 693 | 1-D 23 |
| CH172-4622 | 809 | 1-E 10 | CH180-1120 | 739 | 1-E 3 | CH186-0348 | 923 | 1-E 22 | CH190-3391 | 695 | 1-D 23 |
| CH172-4702 | 93 | 1-B 11 | CH180-6213 | 885 | 1-E 18 | CH186-0364 | 923 | 1-E 22 | CH190-3576 | 687 | 1-D 22 |
| CH172-5761 | 747 | 1-E 4 | CH180-7317 | 305 | 1-C 8 | CH186-0365 | 923 | 1-E 22 | CH190-3583 | 687 | 1-D 22 |
| CH172-6847 | 1117 | 1-F 17 | CH180-9339 | 395 | 1-C 17 | CH186-0367 | 923 | 1-E 22 | CH190-6507 | 885 | 1-E 18 |
| CH172-6862 | 1185 | 1-F 24 | CH183-3724 | 799 | 1-E 9 | CH186-0368 | 923 | 1-E 22 | CH190-6508 | 889 | 1-E 18 |
| CH172-6862 | 1187 | 1-F 24 | CH183-3725 | 797 | 1-E 9 | CH186-0368 | 925 | 1-E 22 | CH190-6516 | 883 | 1-E 18 |
| CH172-9287 | 747 | 1-E 4 | CH183-4236 | 751 | 1-E 5 | CH186-0369 | 923 | 1-E 22 | CH190-6518 | 883 | 1-E 18 |
| CH173-0566 | 399 | 1-C 17 | CH183-4236 | 755 | 1-E 5 | CH186-0369 | 925 | 1-E 22 | CH190-6519 | 883 | 1-E 18 |

# INDEX


| Part No. | Page | Grid | Part No. | Page | Grid | Part No. | Page | Grid | Part No. | Page | Grid |
|---|---|---|---|---|---|---|---|---|---|---|---|
| CH190-6520 | 883 | 1-E 18 | CH196-3019 | 989 | 1-F 4 | CH200-8649 | 93 | 1-B 11 | CH208-0765 | 853 | 1-E 15 |
| CH190-6523 | 883 | 1-E 18 | CH196-3019 | 991 | 1-F 5 | CH200-8649 | 197 | 1-B 21 | CH208-1663 | 667 | 1-D 20 |
| CH190-6528 | 887 | 1-E 18 | CH196-3022 | 957 | 1-F 1 | CH200-8649 | 199 | 1-B 21 | CH208-1663 | 669 | 1-D 20 |
| CH191-1780 | 1067 | 1-F 12 | CH196-3024 | 811 | 1-E 11 | CH200-8649 | 201 | 1-B 22 | CH208-2404 | 1091 | 1-F 15 |
| CH191-3701 | 1175 | 1-F 23 | CH196-3025 | 989 | 1-F 4 | CH200-8649 | 205 | 1-B 22 | CH208-2404 | 1093 | 1-F 15 |
| CH191-6944 | 809 | 1-E 10 | CH196-3025 | 991 | 1-F 5 | CH200-8708 | 989 | 1-F 4 | CH208-2404 | 1185 | 1-F 24 |
| CH191-8010 | 1257 | 1-G 7 | CH196-3030 | 989 | 1-F 4 | CH200-8708 | 991 | 1-F 5 | CH208-2404 | 1187 | 1-F 24 |
| CH191-9311 | 833 | 1-E 13 | CH196-3030 | 991 | 1-F 5 | CH200-8747 | 969 | 1-F 2 | CH208-2878 | 1101 | 1-F 16 |
| CH191-9311 | 835 | 1-E 13 | CH196-3034 | 989 | 1-F 4 | CH200-8749 | 969 | 1-F 2 | CH208-4830 | 175 | 1-B 19 |
| CH192-4765 | 1027 | 1-F 8 | CH196-3034 | 991 | 1-F 5 | CH200-8749 | 971 | 1-F 3 | CH208-5384 | 177 | 1-B 19 |
| CH192-4765 | 1029 | 1-F 8 | CH196-3041 | 971 | 1-F 3 | CH200-8751 | 969 | 1-F 2 | CH208-5521 | 1179 | 1-F 23 |
| CH192-4767 | 1073 | 1-F 13 | CH196-3042 | 971 | 1-F 3 | CH200-8751 | 1017 | 1-F 7 | CH208-6662 | 1071 | 1-F 13 |
| CH192-5173 | 611 | 1-D 15 | CH196-3698 | 1175 | 1-F 23 | CH201-0780 | 939 | 1-E 23 | CH208-9482 | 347 | 1-C 12 |
| CH192-6280 | 811 | 1-E 11 | CH196-3699 | 1175 | 1-F 23 | CH201-7614 | 799 | 1-E 9 | CH208-9635 | 1191 | 1-G 1 |
| CH192-6280 | 977 | 1-F 3 | CH196-4250 | 945 | 1-E 24 | CH201-7615 | 797 | 1-E 9 | CH208-9829 | 747 | 1-E 4 |
| CH192-6280 | 979 | 1-F 3 | CH196-4254 | 945 | 1-E 24 | CH201-8106 | 971 | 1-F 3 | CH208-9830 | 747 | 1-E 4 |
| CH192-6280 | 981 | 1-F 4 | CH196-7341 | 273 | 1-C 5 | CH201-8106 | 1005 | 1-F 6 | CH208-9844 | 849 | 1-E 14 |
| CH192-6280 | 983 | 1-F 4 | CH196-9321 | 1257 | 1-G 7 | CH201-9691 | 273 | 1-C 5 | CH208-9844 | 851 | 1-E 15 |
| CH192-6280 | 985 | 1-F 4 | CH196-9444 | 945 | 1-E 24 | CH201-9692 | 273 | 1-C 5 | CH208-9850 | 841 | 1-E 14 |
| CH192-6280 | 987 | 1-F 4 | CH197-4832 | 993 | 1-F 5 | CH202-2373 | 167 | 1-B 18 | CH208-9850 | 857 | 1-E 15 |
| CH192-6389 | 741 | 1-E 4 | CH197-5854 | 1177 | 1-F 23 | CH202-2373 | 169 | 1-B 18 | CH208-9927 | 819 | 1-E 11 |
| CH192-7054 | 1111 | 1-F 17 | CH197-5910 | 741 | 1-E 4 | CH202-2592 | 877 | 1-E 17 | CH208-9927 | 821 | 1-E 12 |
| CH192-7054 | 1113 | 1-F 17 | CH198-1544 | 947 | 1-E 24 | CH202-2593 | 877 | 1-E 17 | CH208-9972 | 843 | 1-E 14 |
| CH192-7054 | 1115 | 1-F 17 | CH198-1963 | 757 | 1-E 5 | CH202-2595 | 877 | 1-E 17 | CH208-9973 | 843 | 1-E 14 |
| CH192-7111 | 921 | 1-E 22 | CH198-8789 | 811 | 1-E 11 | CH202-8633 | 683 | 1-D 22 | CH208-9974 | 843 | 1-E 14 |
| CH192-8841 | 859 | 1-E 15 | CH198-8789 | 813 | 1-E 11 | CH202-9222 | 555 | 1-D 9 | CH209-0620 | 167 | 1-B 18 |
| CH193-1036 | 939 | 1-E 23 | CH199-7718 | 993 | 1-F 5 | CH202-9222 | 557 | 1-D 9 | CH209-3394 | 135 | 1-B 15 |
| CH193-5914 | 621 | 1-D 16 | CH2A-1314 | 859 | 1-E 15 | CH202-9222 | 559 | 1-D 9 | CH209-3395 | 135 | 1-B 15 |
| CH193-5914 | 679 | 1-D 21 | CH2A-1314 | 973 | 1-F 3 | CH202-9222 | 561 | 1-D 10 | CH209-4481 | 1191 | 1-G 1 |
| CH193-5914 | 681 | 1-D 22 | CH2A-3211 | 1065 | 1-F 12 | CH202-9222 | 563 | 1-D 10 | CH209-4482 | 1191 | 1-G 1 |
| CH193-5914 | 735 | 1-E 3 | CH2A-3211 | 1257 | 1-G 7 | CH202-9701 | 683 | 1-D 22 | CH209-6417 | 331 | 1-C 11 |
| CH193-5914 | 861 | 1-E 16 | CH2B-0858 | 179 | 1-B 19 | CH203-0343 | 791 | 1-E 9 | CH209-7451 | 921 | 1-E 22 |
| CH193-5914 | 971 | 1-F 3 | CH2B-0858 | 181 | 1-B 20 | CH203-3169 | 791 | 1-E 9 | CH209-7452 | 921 | 1-E 22 |
| CH193-5914 | 995 | 1-F 5 | CH2B-0858 | 191 | 1-B 21 | CH203-8550 | 777 | 1-E 7 | CH209-7496 | 913 | 1-E 21 |
| CH193-5914 | 1177 | 1-F 23 | CH2B-0941 | 93 | 1-B 11 | CH204-5041 | 131 | 1-B 15 | CH209-7498 | 807 | 1-E 10 |
| CH193-5914 | 1179 | 1-F 23 | CH2B-2404 | 749 | 1-E 4 | CH204-7458 | 377 | 1-C 15 | CH209-8296 | 923 | 1-E 22 |
| CH193-5914 | 1189 | 1-F 24 | CH2D-9454 | 683 | 1-D 22 | CH204-7458 | 383 | 1-C 16 | CH209-9078 | 879 | 1-E 17 |
| CH193-5915 | 579 | 1-D 11 | CH2D-9455 | 683 | 1-D 22 | CH205-3692 | 841 | 1-E 14 | CH209-9079 | 879 | 1-E 17 |
| CH193-5915 | 677 | 1-D 21 | CH2H-3429 | 211 | 1-B 23 | CH205-3692 | 857 | 1-E 15 | CH209-9233 | 1105 | 1-F 16 |
| CH193-5915 | 693 | 1-D 23 | CH2H-3920 | 329 | 1-C 10 | CH205-5366 | 167 | 1-B 18 | CH209-9680 | 923 | 1-E 22 |
| CH193-5915 | 695 | 1-D 23 | CH2H-3920 | 1189 | 1-F 24 | CH205-5366 | 169 | 1-B 18 | CH209-9921 | 931 | 1-E 23 |
| CH193-5916 | 621 | 1-D 16 | CH2H-3934 | 97 | 1-B 11 | CH205-6395 | 881 | 1-E 18 | CH209-9927 | 931 | 1-E 23 |
| CH194-4168 | 121 | 1-B 14 | CH2H-3934 | 103 | 1-B 12 | CH205-6397 | 781 | 1-E 8 | CH209-9947 | 931 | 1-E 23 |
| CH194-4168 | 123 | 1-B 14 | CH2H-3934 | 867 | 1-E 16 | CH206-0325 | 179 | 1-B 19 | CH209-9955 | 931 | 1-E 23 |
| CH194-4168 | 125 | 1-B 14 | CH2H-3934 | 869 | 1-E 16 | CH206-0325 | 181 | 1-B 20 | CH209-9957 | 931 | 1-E 23 |
| CH194-4650 | 939 | 1-E 23 | CH2J-3961 | 813 | 1-E 11 | CH206-2491 | 1085 | 1-F 14 | CH209-9961 | 931 | 1-E 23 |
| CH194-4651 | 939 | 1-E 23 | CH2J-6356 | 171 | 1-B 19 | CH206-4627 | 969 | 1-F 2 | CH209-9962 | 931 | 1-E 23 |
| CH194-6725 | 761 | 1-E 6 | CH2J-6356 | 733 | 1-E 3 | CH206-4627 | 971 | 1-F 3 | CH210-0159 | 849 | 1-E 14 |
| CH194-6848 | 883 | 1-E 18 | CH2J-6356 | 743 | 1-E 4 | CH206-4628 | 969 | 1-F 2 | CH210-0159 | 851 | 1-E 15 |
| CH194-7620 | 377 | 1-C 15 | CH2J-8163 | 813 | 1-E 11 | CH206-4636 | 959 | 1-F 1 | CH210-0179 | 879 | 1-E 17 |
| CH194-8673 | 879 | 1-E 17 | CH2K-4973 | 93 | 1-B 11 | CH206-4640 | 989 | 1-F 4 | CH210-0181 | 837 | 1-E 13 |
| CH195-1104 | 667 | 1-D 20 | CH2K-6830 | 965 | 1-F 2 | CH206-4640 | 991 | 1-F 5 | CH210-0183 | 837 | 1-E 13 |
| CH195-1104 | 669 | 1-D 20 | CH2K-8199 | 399 | 1-C 17 | CH206-4708 | 625 | 1-D 16 | CH210-0780 | 879 | 1-E 17 |
| CH195-2600 | 1121 | 1-F 18 | CH2K-8199 | 799 | 1-E 9 | CH206-5823 | 1193 | 1-G 1 | CH210-1993 | 931 | 1-E 23 |
| CH195-2600 | 1123 | 1-F 18 | CH2L-6726 | 211 | 1-B 23 | CH206-6337 | 867 | 1-E 16 | CH210-2265 | 195 | 1-B 21 |
| CH195-2601 | 1121 | 1-F 18 | CH2M-1908 | 845 | 1-E 14 | CH206-6337 | 869 | 1-E 16 | CH210-2265 | 585 | 1-D 12 |
| CH195-2601 | 1123 | 1-F 18 | CH2M-5795 | 617 | 1-D 15 | CH206-6337 | 877 | 1-E 17 | CH210-4352 | 581 | 1-D 12 |
| CH195-2602 | 1121 | 1-F 18 | CH2N-7456 | 381 | 1-C 16 | CH206-9017 | 869 | 1-E 16 | CH210-4352 | 1095 | 1-F 15 |
| CH195-2602 | 1123 | 1-F 18 | CH2P-2717 | 1257 | 1-G 7 | CH206-9017 | 883 | 1-E 18 | CH210-4570 | 307 | 1-C 8 |
| CH195-2607 | 1121 | 1-F 18 | CH2R-2376 | 1095 | 1-F 15 | CH206-9019 | 867 | 1-E 16 | CH210-4570 | 309 | 1-C 8 |
| CH195-2607 | 1123 | 1-F 18 | CH2R-8613 | 147 | 1-B 16 | CH206-9019 | 885 | 1-E 18 | CH210-7488 | 971 | 1-F 3 |
| CH195-2608 | 1121 | 1-F 18 | CH2S-3440 | 191 | 1-B 21 | CH207-2021 | 1065 | 1-F 12 | CH210-7492 | 971 | 1-F 3 |
| CH195-2608 | 1123 | 1-F 18 | CH200-0010 | 957 | 1-F 1 | CH207-2021 | 1079 | 1-F 13 | CH210-7499 | 971 | 1-F 3 |
| CH195-2609 | 1121 | 1-F 18 | CH200-0010 | 989 | 1-F 4 | CH207-2021 | 1083 | 1-F 14 | CH210-7518 | 971 | 1-F 3 |
| CH195-2609 | 1123 | 1-F 18 | CH200-0010 | 991 | 1-F 5 | CH207-2023 | 1075 | 1-F 13 | CH210-7531 | 1003 | 1-F 6 |
| CH195-2614 | 1121 | 1-F 18 | CH200-4328 | 93 | 1-B 11 | CH207-2024 | 1075 | 1-F 13 | CH210-7532 | 1003 | 1-F 6 |
| CH195-2614 | 1123 | 1-F 18 | CH200-4349 | 751 | 1-E 5 | CH207-2032 | 173 | 1-B 19 | CH211-0912 | 837 | 1-E 13 |
| CH195-2626 | 1079 | 1-F 13 | CH200-4349 | 755 | 1-E 5 | CH207-2039 | 1065 | 1-F 12 | CH211-2722 | 997 | 1-F 5 |
| CH195-2626 | 1083 | 1-F 14 | CH200-4359 | 751 | 1-E 5 | CH207-3629 | 871 | 1-E 17 | CH211-2723 | 997 | 1-F 5 |
| CH195-7925 | 1023 | 1-F 8 | CH200-4359 | 755 | 1-E 5 | CH207-3629 | 879 | 1-E 17 | CH211-2724 | 997 | 1-F 5 |
| CH195-7925 | 1025 | 1-F 8 | CH200-4379 | 751 | 1-E 5 | CH207-5359 | 849 | 1-E 14 | CH211-2725 | 997 | 1-F 5 |
| CH196-2881 | 1121 | 1-F 18 | CH200-4379 | 755 | 1-E 5 | CH207-5359 | 851 | 1-E 15 | CH211-3502 | 847 | 1-E 14 |
| CH196-2881 | 1123 | 1-F 18 | CH200-4384 | 743 | 1-E 4 | CH207-5360 | 849 | 1-E 14 | CH211-3590 | 197 | 1-B 21 |
| CH196-3017 | 957 | 1-F 1 | CH200-6208 | 265 | 1-C 4 | CH207-5360 | 851 | 1-E 15 | CH211-3590 | 199 | 1-B 21 |
| CH196-3019 | 959 | 1-F 1 | CH200-6208 | 269 | 1-C 4 | CH207-6797 | 331 | 1-C 11 | CH211-3590 | 203 | 1-B 22 |

## INDEX


| Part No. | Page | Grid | Part No. | Page | Grid | Part No. | Page | Grid | Part No. | Page | Grid |
|---|---|---|---|---|---|---|---|---|---|---|---|
| CH211-3590 | 205 | 1-B 22 | CH217-5909 | 259 | 1-C 3 | CH3D-9132 | 693 | 1-D 23 | CH3S-8664 | 199 | 1-B 21 |
| CH211-4423 | 573 | 1-D 11 | CH217-5909 | 261 | 1-C 4 | CH3D-9132 | 695 | 1-D 23 | CH3S-8664 | 203 | 1-B 22 |
| CH211-4423 | 575 | 1-D 11 | CH217-5909 | 581 | 1-D 12 | CH3D-9133 | 693 | 1-D 23 | CH3S-8664 | 205 | 1-B 22 |
| CH211-4837 | 1193 | 1-G 1 | CH217-5909 | 599 | 1-D 13 | CH3D-9133 | 695 | 1-D 23 | CH3S-8664 | 759 | 1-E 5 |
| CH211-8202 | 995 | 1-F 5 | CH217-5909 | 601 | 1-D 14 | CH3E-3363 | 279 | 1-C 5 | CH3S-8664 | 1099 | 1-F 15 |
| CH211-8713 | 167 | 1-B 18 | CH217-5909 | 1043 | 1-F 10 | CH3E-3369 | 279 | 1-C 5 | CH3S-8665 | 819 | 1-E 11 |
| CH211-8713 | 169 | 1-B 18 | CH217-5909 | 1121 | 1-F 18 | CH3E-3371 | 395 | 1-C 17 | CH3S-8665 | 821 | 1-E 12 |
| CH211-9968 | 993 | 1-F 5 | CH217-5909 | 1123 | 1-F 18 | CH3E-3389 | 329 | 1-C 10 | CH3S-9233 | 809 | 1-E 10 |
| CH212-0279 | 197 | 1-B 21 | CH218-2891 | 149 | 1-B 16 | CH3E-3389 | 1189 | 1-F 24 | CH3S-9557 | 269 | 1-C 4 |
| CH212-0279 | 199 | 1-B 21 | CH218-2892 | 149 | 1-B 16 | CH3E-4289 | 931 | 1-E 23 | CH3T-0851 | 259 | 1-C 3 |
| CH212-0279 | 203 | 1-B 22 | CH218-2969 | 993 | 1-F 5 | CH3E-4296 | 923 | 1-E 22 | CH3T-0851 | 261 | 1-C 4 |
| CH212-0279 | 205 | 1-B 22 | CH218-3575 | 741 | 1-E 4 | CH3E-4297 | 751 | 1-E 5 | CH3T-8607 | 353 | 1-C 13 |
| CH212-0279 | 993 | 1-F 5 | CH219-0664 | 349 | 1-C 12 | CH3E-4297 | 755 | 1-E 5 | CH3T-8607 | 359 | 1-C 13 |
| CH212-0297 | 741 | 1-E 4 | CH219-4673 | 357 | 1-C 13 | CH3E-4297 | 761 | 1-E 6 | CH3T-8747 | 407 | 1-C 18 |
| CH212-0302 | 741 | 1-E 4 | CH219-4673 | 361 | 1-C 14 | CH3E-4298 | 931 | 1-E 23 | CH3W-6116 | 973 | 1-F 3 |
| CH212-0310 | 741 | 1-E 4 | CH219-5676 | 837 | 1-E 13 | CH3E-4352 | 1091 | 1-F 15 | CH3W-7412 | 617 | 1-D 15 |
| CH212-3416 | 1079 | 1-F 13 | CH219-5677 | 837 | 1-E 13 | CH3E-4352 | 1093 | 1-F 15 | CH4B-2047 | 381 | 1-C 16 |
| CH212-3416 | 1081 | 1-F 14 | CH219-5678 | 837 | 1-E 13 | CH3E-4353 | 1059 | 1-F 11 | CH4B-4274 | 173 | 1-B 19 |
| CH212-3416 | 1083 | 1-F 14 | CH219-5679 | 837 | 1-E 13 | CH3E-4353 | 1061 | 1-F 12 | CH4B-4274 | 211 | 1-B 23 |
| CH212-3585 | 747 | 1-E 4 | CH219-7932 | 843 | 1-E 14 | CH3E-4883 | 115 | 1-B 13 | CH4B-4274 | 251 | 1-C 3 |
| CH212-3812 | 181 | 1-B 20 | CH219-9653 | 747 | 1-E 4 | CH3E-4883 | 117 | 1-B 13 | CH4B-4274 | 255 | 1-C 3 |
| CH212-4443 | 365 | 1-C 14 | CH220-8678 | 175 | 1-B 19 | CH3E-6600 | 1027 | 1-F 8 | CH4B-4274 | 257 | 1-C 3 |
| CH212-4443 | 735 | 1-E 3 | CH220-8678 | 177 | 1-B 19 | CH3E-6600 | 1029 | 1-F 8 | CH4B-4274 | 259 | 1-C 3 |
| CH212-4443 | 1073 | 1-F 13 | CH221-0050 | 741 | 1-E 4 | CH3E-6762 | 753 | 1-E 5 | CH4B-4274 | 261 | 1-C 4 |
| CH212-6998 | 359 | 1-C 13 | CH221-0051 | 741 | 1-E 4 | CH3E-6762 | 757 | 1-E 5 | CH4B-4274 | 381 | 1-C 16 |
| CH213-1783 | 243 | 1-C 2 | CH221-2002 | 183 | 1-B 20 | CH3E-6762 | 761 | 1-E 6 | CH4B-9302 | 93 | 1-B 11 |
| CH213-1827 | 697 | 1-D 23 | CH221-2002 | 191 | 1-B 21 | CH3E-6762 | 833 | 1-E 13 | CH4D-2619 | 779 | 1-E 7 |
| CH213-1827 | 699 | 1-D 23 | CH221-2003 | 191 | 1-B 21 | CH3E-6762 | 835 | 1-E 13 | CH4D-4431 | 667 | 1-D 20 |
| CH213-4497 | 591 | 1-D 13 | CH221-3265 | 191 | 1-B 21 | CH3E-7449 | 93 | 1-B 11 | CH4D-4431 | 669 | 1-D 20 |
| CH213-6199 | 971 | 1-F 3 | CH222-0527 | 845 | 1-E 14 | CH3E-8008 | 781 | 1-E 8 | CH4D-7388 | 1099 | 1-F 15 |
| CH213-6273 | 993 | 1-F 5 | CH222-0527 | 855 | 1-E 15 | CH3E-8020 | 225 | 1-B 24 | CH4D-7388 | 1127 | 1-F 18 |
| CH213-8872 | 993 | 1-F 5 | CH222-4435 | 1121 | 1-F 18 | CH3E-8020 | 1127 | 1-F 18 | CH4D-7733 | 741 | 1-E 4 |
| CH214-1071 | 1007 | 1-F 6 | CH223-9254 | 841 | 1-E 14 | CH3E-8020 | 1177 | 1-F 23 | CH4D-7735 | 741 | 1-E 4 |
| CH214-2184 | 1075 | 1-F 13 | CH223-9254 | 857 | 1-E 15 | CH3E-9860 | 247 | 1-C 2 | CH4D-7735 | 841 | 1-E 14 |
| CH214-4661 | 677 | 1-D 21 | CH223-9804 | 991 | 1-F 5 | CH3E-9860 | 249 | 1-C 2 | CH4D-7735 | 857 | 1-E 15 |
| CH214-9203 | 883 | 1-E 18 | CH225-5203 | 843 | 1-E 14 | CH3E-9860 | 251 | 1-C 3 | CH4D-7794 | 377 | 1-C 15 |
| CH214-9441 | 171 | 1-B 19 | CH225-6215 | 1059 | 1-F 11 | CH3E-9860 | 253 | 1-C 3 | CH4D-7794 | 381 | 1-C 16 |
| CH215-1382 | 267 | 1-C 4 | CH226-0372 | 731 | 1-E 3 | CH3E-9860 | 255 | 1-C 3 | CH4D-7794 | 385 | 1-C 16 |
| CH215-6489 | 179 | 1-B 19 | CH226-0372 | 733 | 1-E 3 | CH3E-9860 | 257 | 1-C 3 | CH4D-9517 | 177 | 1-B 19 |
| CH215-6489 | 181 | 1-B 20 | CH226-2711 | 731 | 1-E 3 | CH3E-9860 | 617 | 1-D 15 | CH4D-9517 | 373 | 1-C 15 |
| CH215-9463 | 671 | 1-D 21 | CH226-2711 | 733 | 1-E 3 | CH3E-9865 | 1257 | 1-G 7 | CH4D-9517 | 379 | 1-C 15 |
| CH215-9464 | 683 | 1-D 22 | CH226-6489 | 819 | 1-E 11 | CH3F-9556 | 1189 | 1-F 24 | CH4E-1251 | 171 | 1-B 19 |
| CH216-2628 | 1023 | 1-F 8 | CH226-6489 | 821 | 1-E 12 | CH3F-9556 | 1191 | 1-G 1 | CH4E-1251 | 733 | 1-E 3 |
| CH216-2628 | 1025 | 1-F 8 | CH227-8229 | 141 | 1-B 16 | CH3G-0785 | 927 | 1-E 22 | CH4E-2229 | 361 | 1-C 14 |
| CH216-2628 | 1027 | 1-F 8 | CH3B-0551 | 191 | 1-B 21 | CH3K-0360 | 667 | 1-D 20 | CH4E-7808 | 1073 | 1-F 13 |
| CH216-2628 | 1029 | 1-F 8 | CH3B-2263 | 883 | 1-E 18 | CH3K-0360 | 669 | 1-D 20 | CH4H-7655 | 1109 | 1-F 16 |
| CH216-2628 | 1189 | 1-F 24 | CH3B-4501 | 359 | 1-C 13 | CH3K-0360 | 735 | 1-E 3 | CH4I-3038 | 273 | 1-C 5 |
| CH216-2628 | 1191 | 1-G 1 | CH3B-4501 | 361 | 1-C 14 | CH3K-0360 | 741 | 1-E 4 | CH4I-5399 | 183 | 1-B 20 |
| CH216-4098 | 927 | 1-E 22 | CH3B-4501 | 377 | 1-C 15 | CH3K-0360 | 745 | 1-E 4 | CH4J-0522 | 853 | 1-E 15 |
| CH216-6428 | 603 | 1-D 14 | CH3B-4501 | 385 | 1-C 16 | CH3K-0360 | 747 | 1-E 4 | CH4J-2036 | 589 | 1-D 12 |
| CH216-6428 | 605 | 1-D 14 | CH3B-4501 | 1089 | 1-F 14 | CH3K-0360 | 825 | 1-E 12 | CH4J-2701 | 743 | 1-E 4 |
| CH216-7114 | 929 | 1-E 22 | CH3B-4503 | 173 | 1-B 19 | CH3K-0360 | 841 | 1-E 14 | CH4J-5050 | 159 | 1-B 17 |
| CH216-7114 | 933 | 1-E 23 | CH3B-4505 | 97 | 1-B 11 | CH3K-0360 | 847 | 1-E 14 | CH4J-5050 | 161 | 1-B 18 |
| CH216-7114 | 935 | 1-E 23 | CH3B-4505 | 103 | 1-B 12 | CH3K-0360 | 853 | 1-E 15 | CH4K-2039 | 93 | 1-B 11 |
| CH216-7114 | 937 | 1-E 23 | CH3B-4605 | 1095 | 1-F 15 | CH3K-0360 | 855 | 1-E 15 | CH4K-7239 | 683 | 1-D 22 |
| CH216-7115 | 935 | 1-E 23 | CH3B-4607 | 617 | 1-D 15 | CH3K-0360 | 857 | 1-E 15 | CH4K-8302 | 95 | 1-B 11 |
| CH216-7115 | 937 | 1-E 23 | CH3B-4610 | 621 | 1-D 16 | CH3K-0360 | 859 | 1-E 15 | CH4K-8302 | 99 | 1-B 11 |
| CH216-7116 | 771 | 1-E 7 | CH3B-4611 | 603 | 1-D 14 | CH3K-0360 | 911 | 1-E 21 | CH4K-8341 | 173 | 1-B 19 |
| CH216-7117 | 771 | 1-E 7 | CH3B-4611 | 605 | 1-D 14 | CH3K-0360 | 915 | 1-E 21 | CH4K-8341 | 1075 | 1-F 13 |
| CH216-7118 | 771 | 1-E 7 | CH3B-4611 | 969 | 1-F 2 | CH3K-0360 | 925 | 1-E 22 | CH4K-8864 | 197 | 1-B 21 |
| CH216-7616 | 1121 | 1-F 18 | CH3B-4611 | 971 | 1-F 3 | CH3K-0360 | 993 | 1-F 5 | CH4K-8864 | 199 | 1-B 21 |
| CH216-7617 | 271 | 1-C 5 | CH3B-4615 | 1073 | 1-F 13 | CH3K-0360 | 995 | 1-F 5 | CH4K-8864 | 203 | 1-B 22 |
| CH216-7617 | 1121 | 1-F 18 | CH3B-4617 | 733 | 1-E 3 | CH3K-0360 | 997 | 1-F 5 | CH4K-8864 | 205 | 1-B 22 |
| CH216-8187 | 931 | 1-E 23 | CH3B-4617 | 735 | 1-E 3 | CH3K-0360 | 999 | 1-F 5 | CH4K-8864 | 377 | 1-C 15 |
| CH216-8189 | 931 | 1-E 23 | CH3B-4617 | 957 | 1-F 1 | CH3K-0715 | 881 | 1-E 18 | CH4K-8864 | 385 | 1-C 16 |
| CH216-8190 | 931 | 1-E 23 | CH3B-4617 | 959 | 1-F 1 | CH3K-9089 | 621 | 1-D 16 | CH4K-8864 | 753 | 1-E 5 |
| CH216-8191 | 931 | 1-E 23 | CH3B-4617 | 969 | 1-F 2 | CH3P-3547 | 1075 | 1-F 13 | CH4K-8864 | 757 | 1-E 5 |
| CH216-8275 | 1203 | 1-G 2 | CH3B-4629 | 589 | 1-D 12 | CH3S-5096 | 1023 | 1-F 8 | CH4K-8864 | 845 | 1-E 14 |
| CH216-9085 | 355 | 1-C 13 | CH3B-8486 | 667 | 1-D 20 | CH3S-5096 | 1025 | 1-F 8 | CH4K-8864 | 855 | 1-E 15 |
| CH216-9085 | 361 | 1-C 14 | CH3B-8486 | 669 | 1-D 20 | CH3S-5096 | 1027 | 1-F 8 | CH4K-9097 | 581 | 1-D 12 |
| CH216-9085 | 1073 | 1-F 13 | CH3C-6969 | 273 | 1-C 5 | CH3S-5096 | 1029 | 1-F 8 | CH4L-3641 | 997 | 1-F 5 |
| CH216-9165 | 1095 | 1-F 15 | CH3C-6969 | 351 | 1-C 13 | CH3S-5096 | 1263 | 1-G 8 | CH4L-8183 | 971 | 1-F 3 |
| CH217-2130 | 1125 | 1-F 18 | CH3C-6969 | 361 | 1-C 14 | CH3S-8664 | 179 | 1-B 19 | CH4M-7668 | 879 | 1-E 17 |
| CH217-2131 | 1125 | 1-F 18 | CH3C-6969 | 371 | 1-C 15 | CH3S-8664 | 181 | 1-B 20 | CH4P-3966 | 97 | 1-B 11 |
| CH217-2132 | 1177 | 1-F 23 | CH3D-6209 | 633 | 1-D 17 | CH3S-8664 | 197 | 1-B 21 | CH4P-3966 | 103 | 1-B 12 |

# INDEX


| Part No. | Page | Grid |
|---|---|---|
| CH4P-3977 | 97 | 1-B 11 |
| CH4P-3977 | 103 | 1-B 12 |
| CH4P-7428 | 377 | 1-C 15 |
| CH4P-7428 | 385 | 1-C 16 |
| CH4P-7428 | 973 | 1-F 3 |
| CH4P-7581 | 203 | 1-B 22 |
| CH4P-7581 | 205 | 1-B 22 |
| CH4P-7581 | 359 | 1-C 13 |
| CH4P-7581 | 373 | 1-C 15 |
| CH4P-7581 | 375 | 1-C 15 |
| CH4P-7581 | 377 | 1-C 15 |
| CH4P-7581 | 379 | 1-C 15 |
| CH4P-7581 | 381 | 1-C 16 |
| CH4P-7581 | 385 | 1-C 16 |
| CH4P-7581 | 759 | 1-E 5 |
| CH4P-7581 | 1007 | 1-F 6 |
| CH4P-8134 | 359 | 1-C 13 |
| CH4S-1962 | 741 | 1-E 4 |
| CH4S-1962 | 839 | 1-E 13 |
| CH4S-1962 | 999 | 1-F 5 |
| CH4S-1962 | 1099 | 1-F 15 |
| CH4V-2264 | 1097 | 1-F 15 |
| CH4V-2445 | 883 | 1-E 18 |
| CH4W-1203 | 107 | 1-B 12 |
| CH4W-1203 | 109 | 1-B 12 |
| CH4W-1203 | 111 | 1-B 13 |
| CH4W-1204 | 107 | 1-B 12 |
| CH4W-1204 | 109 | 1-B 12 |
| CH4W-1204 | 111 | 1-B 13 |
| CH4W-2042 | 107 | 1-B 12 |
| CH4W-2042 | 109 | 1-B 12 |
| CH4W-2042 | 111 | 1-B 13 |
| CH5B-9192 | 753 | 1-E 5 |
| CH5B-9192 | 757 | 1-E 5 |
| CH5C-2874 | 251 | 1-C 3 |
| CH5C-2874 | 255 | 1-C 3 |
| CH5C-2874 | 257 | 1-C 3 |
| CH5C-2874 | 355 | 1-C 13 |
| CH5C-2874 | 359 | 1-C 13 |
| CH5C-8312 | 357 | 1-C 13 |
| CH5C-8312 | 361 | 1-C 14 |
| CH5C-8312 | 377 | 1-C 15 |
| CH5C-8312 | 385 | 1-C 16 |
| CH5C-8312 | 1073 | 1-F 13 |
| CH5D-4204 | 997 | 1-F 5 |
| CH5D-5958 | 791 | 1-E 9 |
| CH5D-6539 | 923 | 1-E 22 |
| CH5D-8159 | 1001 | 1-F 6 |
| CH5D-8159 | 1003 | 1-F 6 |
| CH5E-7045 | 945 | 1-E 24 |
| CH5F-1648 | 133 | 1-B 15 |
| CH5F-3999 | 813 | 1-E 11 |
| CH5F-5434 | 93 | 1-B 11 |
| CH5F-5434 | 99 | 1-B 11 |
| CH5J-3079 | 733 | 1-E 3 |
| CH5J-4715 | 197 | 1-B 21 |
| CH5J-4715 | 199 | 1-B 21 |
| CH5J-4715 | 203 | 1-B 22 |
| CH5J-4715 | 205 | 1-B 22 |
| CH5J-7154 | 965 | 1-F 2 |
| CH5K-1078 | 683 | 1-D 22 |
| CH5K-3294 | 175 | 1-B 19 |
| CH5L-4758 | 797 | 1-E 9 |
| CH5M-2894 | 733 | 1-E 3 |
| CH5P-0537 | 1065 | 1-F 12 |
| CH5P-0767 | 133 | 1-B 15 |
| CH5P-0767 | 135 | 1-B 15 |
| CH5P-0767 | 1101 | 1-F 16 |
| CH5P-1075 | 93 | 1-B 11 |
| CH5P-1075 | 99 | 1-B 11 |
| CH5P-1259 | 163 | 1-B 18 |
| CH5P-1259 | 165 | 1-B 18 |
| CH5P-1420 | 145 | 1-B 16 |
| CH5P-1420 | 147 | 1-B 16 |
| CH5P-1420 | 845 | 1-E 14 |
| CH5P-1420 | 855 | 1-E 15 |
| CH5P-1442 | 145 | 1-B 16 |
| CH5P-1442 | 147 | 1-B 16 |
| CH5P-1442 | 403 | 1-C 18 |
| CH5P-1442 | 405 | 1-C 18 |
| CH5P-1442 | 845 | 1-E 14 |
| CH5P-3602 | 571 | 1-D 11 |
| CH5P-4115 | 211 | 1-B 23 |
| CH5P-4115 | 345 | 1-C 12 |
| CH5P-4115 | 571 | 1-D 11 |
| CH5P-4115 | 581 | 1-D 12 |
| CH5P-4115 | 597 | 1-D 13 |
| CH5P-4115 | 599 | 1-D 13 |
| CH5P-4115 | 601 | 1-D 14 |
| CH5P-4115 | 603 | 1-D 14 |
| CH5P-4115 | 613 | 1-D 15 |
| CH5P-4115 | 973 | 1-F 3 |
| CH5P-4115 | 1023 | 1-F 8 |
| CH5P-4115 | 1025 | 1-F 8 |
| CH5P-4115 | 1027 | 1-F 8 |
| CH5P-4115 | 1029 | 1-F 8 |
| CH5P-4115 | 1121 | 1-F 18 |
| CH5P-4115 | 1123 | 1-F 18 |
| CH5P-4115 | 1191 | 1-G 1 |
| CH5P-4829 | 1023 | 1-F 8 |
| CH5P-4829 | 1025 | 1-F 8 |
| CH5P-4829 | 1027 | 1-F 8 |
| CH5P-4892 | 847 | 1-E 14 |
| CH5P-4924 | 845 | 1-E 14 |
| CH5P-5727 | 579 | 1-D 11 |
| CH5P-5777 | 667 | 1-D 20 |
| CH5P-5777 | 669 | 1-D 20 |
| CH5P-6129 | 1029 | 1-F 8 |
| CH5P-6442 | 175 | 1-B 19 |
| CH5P-6442 | 177 | 1-B 19 |
| CH5P-6442 | 667 | 1-D 20 |
| CH5P-6442 | 669 | 1-D 20 |
| CH5P-7468 | 847 | 1-E 14 |
| CH5P-7468 | 853 | 1-E 15 |
| CH5P-7469 | 847 | 1-E 14 |
| CH5P-7469 | 853 | 1-E 15 |
| CH5P-7684 | 881 | 1-E 18 |
| CH5P-7701 | 183 | 1-B 20 |
| CH5P-7803 | 1189 | 1-F 24 |
| CH5P-7808 | 99 | 1-B 11 |
| CH5P-7958 | 1211 | 1-G 3 |
| CH5P-7958 | 1235 | 1-G 5 |
| CH5P-8087 | 947 | 1-E 24 |
| CH5P-8119 | 737 | 1-E 3 |
| CH5P-8244 | 879 | 1-E 17 |
| CH5P-8247 | 1127 | 1-F 18 |
| CH5P-8440 | 679 | 1-D 21 |
| CH5P-8440 | 681 | 1-D 22 |
| CH5P-8444 | 847 | 1-E 14 |
| CH5P-8444 | 853 | 1-E 15 |
| CH5P-8500 | 353 | 1-C 13 |
| CH5P-8500 | 361 | 1-C 14 |
| CH5P-8500 | 1091 | 1-F 15 |
| CH5P-8500 | 1093 | 1-F 15 |
| CH5P-8500 | 1211 | 1-G 3 |
| CH5P-8500 | 1221 | 1-G 4 |
| CH5P-8500 | 1229 | 1-G 4 |
| CH5P-8500 | 1235 | 1-G 5 |
| CH5P-8500 | 1257 | 1-G 7 |
| CH5P-8500 | 1263 | 1-G 8 |
| CH5P-8502 | 1257 | 1-G 7 |
| CH5P-8837 | 555 | 1-D 9 |
| CH5P-8837 | 557 | 1-D 9 |
| CH5P-8837 | 561 | 1-D 10 |
| CH5P-8905 | 995 | 1-F 5 |
| CH5P-9085 | 679 | 1-D 21 |
| CH5P-9085 | 681 | 1-D 22 |
| CH5P-9186 | 729 | 1-E 2 |
| CH5P-9186 | 805 | 1-E 10 |
| CH5P-9186 | 807 | 1-E 10 |
| CH5P-9186 | 923 | 1-E 22 |
| CH5P-9186 | 925 | 1-E 22 |
| CH5P-9186 | 927 | 1-E 22 |
| CH5P-9205 | 601 | 1-D 14 |
| CH5P-9262 | 939 | 1-E 23 |
| CH5P-9517 | 845 | 1-E 14 |
| CH5P-9517 | 855 | 1-E 15 |
| CH5P-9651 | 671 | 1-D 21 |
| CH5P-9652 | 671 | 1-D 21 |
| CH5R-5676 | 809 | 1-E 10 |
| CH5R-5718 | 809 | 1-E 10 |
| CH5R-5780 | 809 | 1-E 10 |
| CH5R-6304 | 809 | 1-E 10 |
| CH5R-6305 | 799 | 1-E 9 |
| CH5R-6868 | 809 | 1-E 10 |
| CH5S-9062 | 107 | 1-B 12 |
| CH5S-9062 | 109 | 1-B 12 |
| CH5S-9062 | 111 | 1-B 13 |
| CH5V-0354 | 973 | 1-F 3 |
| CH5V-1496 | 1177 | 1-F 23 |
| CH5W-9411 | 771 | 1-E 7 |
| CH6B-1032 | 845 | 1-E 14 |
| CH6C-3679 | 129 | 1-B 14 |
| CH6D-1641 | 749 | 1-E 4 |
| CH6D-1641 | 995 | 1-F 5 |
| CH6D-1641 | 997 | 1-F 5 |
| CH6D-3025 | 211 | 1-B 23 |
| CH6D-4244 | 741 | 1-E 4 |
| CH6D-4246 | 179 | 1-B 19 |
| CH6D-4246 | 181 | 1-B 20 |
| CH6D-4246 | 183 | 1-B 20 |
| CH6D-4246 | 741 | 1-E 4 |
| CH6D-4246 | 995 | 1-F 5 |
| CH6D-7146 | 871 | 1-E 17 |
| CH6E-1571 | 891 | 1-E 19 |
| CH6E-1607 | 941 | 1-E 24 |
| CH6E-3268 | 939 | 1-E 23 |
| CH6E-3269 | 939 | 1-E 23 |
| CH6E-3272 | 939 | 1-E 23 |
| CH6E-3273 | 939 | 1-E 23 |
| CH6E-3274 | 939 | 1-E 23 |
| CH6E-3275 | 939 | 1-E 23 |
| CH6E-3276 | 939 | 1-E 23 |
| CH6E-3343 | 887 | 1-E 18 |
| CH6E-4102 | 791 | 1-E 9 |
| CH6E-4351 | 881 | 1-E 18 |
| CH6E-4358 | 891 | 1-E 19 |
| CH6E-4363 | 891 | 1-E 19 |
| CH6E-4364 | 891 | 1-E 19 |
| CH6E-4365 | 891 | 1-E 19 |
| CH6E-4366 | 891 | 1-E 19 |
| CH6E-4367 | 891 | 1-E 19 |
| CH6E-4370 | 891 | 1-E 19 |
| CH6E-4373 | 891 | 1-E 19 |
| CH6E-4374 | 891 | 1-E 19 |
| CH6E-4382 | 781 | 1-E 8 |
| CH6E-4383 | 781 | 1-E 8 |
| CH6E-4385 | 881 | 1-E 18 |
| CH6E-4392 | 781 | 1-E 8 |
| CH6E-4392 | 941 | 1-E 24 |
| CH6E-4401 | 941 | 1-E 24 |
| CH6E-4614 | 881 | 1-E 18 |
| CH6E-6528 | 939 | 1-E 23 |
| CH6E-6536 | 939 | 1-E 23 |
| CH6E-6537 | 939 | 1-E 23 |
| CH6E-6538 | 939 | 1-E 23 |
| CH6E-6539 | 939 | 1-E 23 |
| CH6E-6540 | 939 | 1-E 23 |
| CH6F-0253 | 223 | 1-B 24 |
| CH6H-3956 | 107 | 1-B 12 |
| CH6H-3956 | 109 | 1-B 12 |
| CH6H-4006 | 1193 | 1-G 1 |
| CH6I-1418 | 209 | 1-B 22 |
| CH6I-1418 | 211 | 1-B 23 |
| CH6I-1418 | 213 | 1-B 23 |
| CH6I-1418 | 215 | 1-B 23 |
| CH6I-1418 | 377 | 1-C 15 |
| CH6I-1418 | 383 | 1-C 16 |
| CH6I-2505 | 155 | 1-B 17 |
| CH6I-2506 | 155 | 1-B 17 |
| CH6I-2509 | 157 | 1-B 17 |
| CH6I-2510 | 157 | 1-B 17 |
| CH6I-4465 | 155 | 1-B 17 |
| CH6J-2245 | 377 | 1-C 15 |
| CH6J-2245 | 381 | 1-C 16 |
| CH6K-3274 | 621 | 1-D 16 |
| CH6K-3632 | 957 | 1-F 1 |
| CH6K-6307 | 667 | 1-D 20 |
| CH6K-6307 | 669 | 1-D 20 |
| CH6K-6307 | 881 | 1-E 18 |
| CH6K-6361 | 1027 | 1-F 8 |
| CH6K-6361 | 1029 | 1-F 8 |
| CH6K-9070 | 1015 | 1-F 7 |
| CH6K-9632 | 1193 | 1-G 1 |
| CH6L-3966 | 733 | 1-E 3 |
| CH6M-5062 | 945 | 1-E 24 |
| CH6N-6984 | 593 | 1-D 13 |
| CH6N-6984 | 621 | 1-D 16 |
| CH6N-6984 | 623 | 1-D 16 |
| CH6R-3185 | 159 | 1-B 17 |
| CH6R-7943 | 883 | 1-E 18 |
| CH6R-7943 | 885 | 1-E 18 |
| CH6S-5993 | 375 | 1-C 15 |
| CH6S-5993 | 385 | 1-C 16 |
| CH6S-6031 | 671 | 1-D 21 |
| CH6S-6032 | 671 | 1-D 21 |
| CH6T-6158 | 159 | 1-B 17 |
| CH6T-6158 | 161 | 1-B 18 |
| CH6T-7298 | 245 | 1-C 2 |
| CH6V-0894 | 211 | 1-B 23 |
| CH6V-1197 | 787 | 1-E 8 |
| CH6V-1197 | 793 | 1-E 9 |
| CH6V-1506 | 1001 | 1-F 6 |
| CH6V-1506 | 1003 | 1-F 6 |
| CH6V-1520 | 845 | 1-E 14 |
| CH6V-1657 | 667 | 1-D 20 |
| CH6V-1657 | 669 | 1-D 20 |
| CH6V-2405 | 1211 | 1-G 3 |
| CH6V-2405 | 1235 | 1-G 5 |
| CH6V-3326 | 791 | 1-E 9 |
| CH6V-3922 | 931 | 1-E 23 |
| CH6V-5049 | 179 | 1-B 19 |
| CH6V-5049 | 181 | 1-B 20 |
| CH6V-5210 | 259 | 1-C 3 |
| CH6V-5210 | 261 | 1-C 4 |
| CH6V-5326 | 781 | 1-E 8 |
| CH6V-5326 | 881 | 1-E 18 |
| CH6V-5586 | 781 | 1-E 8 |
| CH6V-5586 | 941 | 1-E 24 |
| CH6V-5839 | 615 | 1-D 15 |
| CH6V-5839 | 1127 | 1-F 18 |
| CH6V-5839 | 1177 | 1-F 23 |
| CH6V-6228 | 945 | 1-E 24 |
| CH6V-6580 | 929 | 1-E 22 |
| CH6V-6580 | 933 | 1-E 23 |
| CH6V-6580 | 935 | 1-E 23 |
| CH6V-6580 | 937 | 1-E 23 |
| CH6V-6757 | 667 | 1-D 20 |
| CH6V-6757 | 669 | 1-D 20 |
| CH6V-7688 | 957 | 1-F 1 |
| CH6V-7688 | 959 | 1-F 1 |
| CH6V-7723 | 889 | 1-E 18 |
| CH6V-7743 | 571 | 1-D 11 |
| CH6V-7744 | 599 | 1-D 13 |
| CH6V-7744 | 603 | 1-D 14 |
| CH6V-7744 | 623 | 1-D 16 |
| CH6V-8130 | 1003 | 1-F 6 |
| CH6V-8183 | 735 | 1-E 3 |
| CH6V-8183 | 1073 | 1-F 13 |
| CH6V-8225 | 321 | 1-C 10 |

## INDEX


| Part No. | Page | Grid | Part No. | Page | Grid | Part No. | Page | Grid | Part No. | Page | Grid |
|---|---|---|---|---|---|---|---|---|---|---|---|
| CH6V-8225 | 959 | 1-F 1 | CH7G-8839 | 625 | 1-D 16 | CH7X-0579 | 617 | 1-D 15 | CH8C-3206 | 847 | 1-E 14 |
| CH6V-8351 | 941 | 1-E 24 | CH7H-1177 | 209 | 1-B 22 | CH7X-0583 | 555 | 1-D 9 | CH8C-3348 | 1221 | 1-G 4 |
| CH6V-8352 | 939 | 1-E 23 | CH7H-1177 | 229 | 1-B 24 | CH7X-0583 | 557 | 1-D 9 | CH8C-3348 | 1229 | 1-G 4 |
| CH6V-8362 | 1071 | 1-F 13 | CH7J-1309 | 973 | 1-F 3 | CH7X-0583 | 559 | 1-D 9 | CH8C-5053 | 183 | 1-B 20 |
| CH6V-8369 | 329 | 1-C 10 | CH7K-1181 | 145 | 1-B 16 | CH7X-0583 | 561 | 1-D 10 | CH8C-5193 | 881 | 1-E 18 |
| CH6V-8369 | 1189 | 1-F 24 | CH7K-1181 | 147 | 1-B 16 | CH7X-0583 | 563 | 1-D 10 | CH8C-5200 | 751 | 1-E 5 |
| CH6V-8376 | 207 | 1-B 22 | CH7K-1181 | 179 | 1-B 19 | CH7X-0593 | 611 | 1-D 15 | CH8C-5200 | 755 | 1-E 5 |
| CH6V-8376 | 359 | 1-C 13 | CH7K-1181 | 181 | 1-B 20 | CH7X-0594 | 589 | 1-D 12 | CH8C-5237 | 881 | 1-E 18 |
| CH6V-8376 | 361 | 1-C 14 | CH7K-1181 | 197 | 1-B 21 | CH7X-0605 | 973 | 1-F 3 | CH8C-5607 | 211 | 1-B 23 |
| CH6V-8398 | 175 | 1-B 19 | CH7K-1181 | 199 | 1-B 21 | CH7X-0613 | 573 | 1-D 11 | CH8C-5608 | 211 | 1-B 23 |
| CH6V-8398 | 177 | 1-B 19 | CH7K-1181 | 201 | 1-B 22 | CH7X-0613 | 577 | 1-D 11 | CH8C-6354 | 361 | 1-C 14 |
| CH6V-8398 | 741 | 1-E 4 | CH7K-1181 | 205 | 1-B 22 | CH7X-0618 | 139 | 1-B 15 | CH8C-6416 | 745 | 1-E 4 |
| CH6V-8398 | 745 | 1-E 4 | CH7K-1181 | 209 | 1-B 22 | CH7X-0618 | 195 | 1-B 21 | CH8C-6416 | 747 | 1-E 4 |
| CH6V-8398 | 747 | 1-E 4 | CH7K-1181 | 211 | 1-B 23 | CH7X-0618 | 585 | 1-D 12 | CH8C-6416 | 847 | 1-E 14 |
| CH6V-8398 | 749 | 1-E 4 | CH7K-1181 | 213 | 1-B 23 | CH7X-0618 | 587 | 1-D 12 | CH8C-6416 | 853 | 1-E 15 |
| CH6V-8398 | 819 | 1-E 11 | CH7K-1181 | 215 | 1-B 23 | CH7X-0618 | 589 | 1-D 12 | CH8C-6433 | 581 | 1-D 12 |
| CH6V-8398 | 821 | 1-E 12 | CH7K-1181 | 265 | 1-C 4 | CH7X-0618 | 625 | 1-D 16 | CH8C-6802 | 1091 | 1-F 15 |
| CH6V-8398 | 847 | 1-E 14 | CH7K-1181 | 269 | 1-C 4 | CH7X-0618 | 683 | 1-D 22 | CH8C-6802 | 1093 | 1-F 15 |
| CH6V-8398 | 853 | 1-E 15 | CH7K-1181 | 321 | 1-C 10 | CH7X-0795 | 735 | 1-E 3 | CH8C-6870 | 179 | 1-B 19 |
| CH6V-8398 | 857 | 1-E 15 | CH7K-1181 | 345 | 1-C 12 | CH7X-1434 | 1067 | 1-F 12 | CH8C-6870 | 181 | 1-B 20 |
| CH6V-8398 | 859 | 1-E 15 | CH7K-1181 | 355 | 1-C 13 | CH7X-1448 | 403 | 1-C 18 | CH8C-6870 | 183 | 1-B 20 |
| CH6V-8398 | 945 | 1-E 24 | CH7K-1181 | 359 | 1-C 13 | CH7X-1448 | 405 | 1-C 18 | CH8C-6872 | 179 | 1-B 19 |
| CH6V-8398 | 993 | 1-F 5 | CH7K-1181 | 375 | 1-C 15 | CH7X-3374 | 743 | 1-E 4 | CH8C-6872 | 181 | 1-B 20 |
| CH6V-8398 | 995 | 1-F 5 | CH7K-1181 | 377 | 1-C 15 | CH7X-3383 | 819 | 1-E 11 | CH8C-7306 | 95 | 1-B 11 |
| CH6V-8398 | 997 | 1-F 5 | CH7K-1181 | 381 | 1-C 16 | CH7X-6312 | 233 | 1-C 1 | CH8C-7323 | 877 | 1-E 17 |
| CH6V-8399 | 929 | 1-E 22 | CH7K-1181 | 383 | 1-C 16 | CH7X-6312 | 235 | 1-C 1 | CH8C-8514 | 359 | 1-C 13 |
| CH6V-8399 | 933 | 1-E 23 | CH7K-1181 | 403 | 1-C 18 | CH7X-6315 | 209 | 1-B 22 | CH8C-8585 | 1185 | 1-F 24 |
| CH6V-8399 | 935 | 1-E 23 | CH7K-1181 | 405 | 1-C 18 | CH7X-6315 | 229 | 1-B 24 | CH8C-8585 | 1187 | 1-F 24 |
| CH6V-8399 | 937 | 1-E 23 | CH7K-1181 | 679 | 1-D 21 | CH7X-7729 | 95 | 1-B 11 | CH8C-9101 | 667 | 1-D 20 |
| CH6V-8548 | 273 | 1-C 5 | CH7K-1181 | 681 | 1-D 22 | CH7X-7729 | 101 | 1-B 12 | CH8C-9101 | 669 | 1-D 20 |
| CH6V-8554 | 745 | 1-E 4 | CH7K-1181 | 735 | 1-E 3 | CH7X-7729 | 129 | 1-B 14 | CH8C-9160 | 965 | 1-F 2 |
| CH6V-8554 | 747 | 1-E 4 | CH7K-1181 | 739 | 1-E 3 | CH7X-7729 | 131 | 1-B 15 | CH8C-9660 | 171 | 1-B 19 |
| CH6V-8628 | 755 | 1-E 5 | CH7K-1181 | 759 | 1-E 5 | CH7X-7729 | 141 | 1-B 16 | CH8C-9660 | 275 | 1-C 5 |
| CH6V-8639 | 179 | 1-B 19 | CH7K-1181 | 815 | 1-E 11 | CH7X-7729 | 143 | 1-B 16 | CH8C-9660 | 277 | 1-C 5 |
| CH6V-8639 | 181 | 1-B 20 | CH7K-1181 | 1007 | 1-F 6 | CH7X-7729 | 151 | 1-B 17 | CH8C-9660 | 1173 | 1-F 23 |
| CH6V-8723 | 841 | 1-E 14 | CH7K-1181 | 1099 | 1-F 15 | CH7X-7729 | 153 | 1-B 17 | CH8C-9987 | 1259 | 1-G 7 |
| CH6V-8928 | 1177 | 1-F 23 | CH7K-1181 | 1119 | 1-F 17 | CH7X-7729 | 281 | 1-C 6 | CH8D-3886 | 667 | 1-D 20 |
| CH6V-8931 | 213 | 1-B 23 | CH7K-1181 | 1179 | 1-F 23 | CH7X-7729 | 283 | 1-C 6 | CH8D-3886 | 669 | 1-D 20 |
| CH6V-8931 | 215 | 1-B 23 | CH7K-9205 | 973 | 1-F 3 | CH7X-7729 | 327 | 1-C 10 | CH8D-9558 | 1257 | 1-G 7 |
| CH6V-8935 | 753 | 1-E 5 | CH7K-9209 | 973 | 1-F 3 | CH7X-7729 | 591 | 1-D 13 | CH8F-7702 | 743 | 1-E 4 |
| CH6V-8935 | 757 | 1-E 5 | CH7K-9210 | 973 | 1-F 3 | CH7X-7729 | 599 | 1-D 13 | CH8F-8513 | 95 | 1-B 11 |
| CH6V-8978 | 883 | 1-E 18 | CH7K-9211 | 1015 | 1-F 7 | CH7X-7729 | 603 | 1-D 14 | CH8F-8733 | 783 | 1-E 8 |
| CH6V-8996 | 995 | 1-F 5 | CH7S-1912 | 845 | 1-E 14 | CH7X-7729 | 605 | 1-D 14 | CH8F-8733 | 785 | 1-E 8 |
| CH6V-9003 | 137 | 1-B 15 | CH7S-4244 | 1191 | 1-G 1 | CH7X-7729 | 617 | 1-D 15 | CH8F-8733 | 871 | 1-E 17 |
| CH6V-9005 | 853 | 1-E 15 | CH7T-1099 | 153 | 1-B 17 | CH7X-7729 | 625 | 1-D 16 | CH8H-2262 | 671 | 1-D 21 |
| CH6V-9028 | 781 | 1-E 8 | CH7T-1099 | 265 | 1-C 4 | CH7X-7729 | 667 | 1-D 20 | CH8I-4256 | 275 | 1-C 5 |
| CH6V-9028 | 881 | 1-E 18 | CH7T-1099 | 579 | 1-D 11 | CH7X-7729 | 669 | 1-D 20 | CH8I-4256 | 277 | 1-C 5 |
| CH6V-9170 | 995 | 1-F 5 | CH7T-1099 | 625 | 1-D 16 | CH7X-7729 | 679 | 1-D 21 | CH8I-4256 | 1263 | 1-G 8 |
| CH6V-9492 | 1089 | 1-F 14 | CH7T-1099 | 627 | 1-D 16 | CH7X-7729 | 681 | 1-D 22 | CH8K-0589 | 969 | 1-F 2 |
| CH6V-9671 | 361 | 1-C 14 | CH7T-1099 | 697 | 1-D 23 | CH7X-7729 | 693 | 1-D 23 | CH8L-2746 | 95 | 1-B 11 |
| CH6V-9673 | 1081 | 1-F 14 | CH7T-1099 | 699 | 1-D 23 | CH7X-7729 | 695 | 1-D 23 | CH8L-2746 | 101 | 1-B 12 |
| CH6V-9748 | 107 | 1-B 12 | CH7T-1099 | 969 | 1-F 2 | CH7X-7729 | 839 | 1-E 13 | CH8L-2746 | 179 | 1-B 19 |
| CH6V-9748 | 109 | 1-B 12 | CH7T-1099 | 1067 | 1-F 12 | CH7X-7729 | 975 | 1-F 3 | CH8L-2746 | 181 | 1-B 20 |
| CH6V-9748 | 111 | 1-B 13 | CH7T-4532 | 1063 | 1-F 12 | CH7X-7729 | 997 | 1-F 5 | CH8L-2777 | 729 | 1-E 2 |
| CH6V-9828 | 753 | 1-E 5 | CH7T-6799 | 361 | 1-C 14 | CH7X-7729 | 1023 | 1-F 8 | CH8L-2777 | 805 | 1-E 10 |
| CH6V-9828 | 757 | 1-E 5 | CH7T-9793 | 1023 | 1-F 8 | CH7X-7729 | 1025 | 1-F 8 | CH8L-2777 | 807 | 1-E 10 |
| CH6V-9829 | 735 | 1-E 3 | CH7T-9793 | 1025 | 1-F 8 | CH7X-7729 | 1027 | 1-F 8 | CH8L-2777 | 923 | 1-E 22 |
| CH6V-9876 | 183 | 1-B 20 | CH7T-9793 | 1027 | 1-F 8 | CH7X-7729 | 1029 | 1-F 8 | CH8L-2777 | 925 | 1-E 22 |
| CH6W-5698 | 191 | 1-B 21 | CH7T-9793 | 1029 | 1-F 8 | CH7X-7729 | 1099 | 1-F 15 | CH8L-2777 | 927 | 1-E 22 |
| CH6Y-0473 | 671 | 1-D 21 | CH7V-0445 | 621 | 1-D 16 | CH7X-7958 | 179 | 1-B 19 | CH8L-2779 | 179 | 1-B 19 |
| CH6Y-0473 | 683 | 1-D 22 | CH7W-1890 | 145 | 1-B 16 | CH7X-7958 | 181 | 1-B 20 | CH8L-2779 | 181 | 1-B 20 |
| CH6Y-8112 | 957 | 1-F 1 | CH7W-1890 | 147 | 1-B 16 | CH7X-7958 | 183 | 1-B 20 | CH8L-2779 | 183 | 1-B 20 |
| CH6Y-8112 | 959 | 1-F 1 | CH7W-1890 | 191 | 1-B 21 | CH7Y-0725 | 1017 | 1-F 7 | CH8L-2786 | 179 | 1-B 19 |
| CH7B-0863 | 969 | 1-F 2 | CH7W-1890 | 193 | 1-B 21 | CH7Y-3173 | 1173 | 1-F 23 | CH8L-2786 | 181 | 1-B 20 |
| CH7C-6178 | 97 | 1-B 11 | CH7X-0474 | 729 | 1-E 2 | CH7Y-5217 | 667 | 1-D 20 | CH8L-2786 | 183 | 1-B 20 |
| CH7C-6178 | 103 | 1-B 12 | CH7X-0474 | 915 | 1-E 21 | CH7Y-5217 | 669 | 1-D 20 | CH8L-6557 | 95 | 1-B 11 |
| CH7D-0734 | 1005 | 1-F 6 | CH7X-0515 | 551 | 1-D 9 | CH7Y-7256 | 359 | 1-C 13 | CH8L-6557 | 973 | 1-F 3 |
| CH7E-4808 | 107 | 1-B 12 | CH7X-0515 | 553 | 1-D 9 | CH7Y-7388 | 1117 | 1-F 17 | CH8M-2770 | 95 | 1-B 11 |
| CH7E-4808 | 109 | 1-B 12 | CH7X-0515 | 687 | 1-D 22 | CH7Y-8763 | 579 | 1-D 11 | CH8M-2770 | 179 | 1-B 19 |
| CH7E-4808 | 111 | 1-B 13 | CH7X-0515 | 869 | 1-E 16 | CH8B-7614 | 671 | 1-D 21 | CH8M-2770 | 181 | 1-B 20 |
| CH7F-3400 | 1209 | 1-G 2 | CH7X-0515 | 871 | 1-E 17 | CH8C-0572 | 573 | 1-D 11 | CH8M-2770 | 197 | 1-B 21 |
| CH7F-3400 | 1211 | 1-G 3 | CH7X-0517 | 173 | 1-B 19 | CH8C-0572 | 575 | 1-D 11 | CH8M-2770 | 199 | 1-B 21 |
| CH7F-3400 | 1235 | 1-G 5 | CH7X-0533 | 1259 | 1-G 7 | CH8C-0572 | 577 | 1-D 11 | CH8M-2770 | 203 | 1-B 22 |
| CH7G-4332 | 671 | 1-D 21 | CH7X-0561 | 679 | 1-D 21 | CH8C-3051 | 845 | 1-E 14 | CH8M-2770 | 205 | 1-B 22 |
| CH7G-4332 | 683 | 1-D 22 | CH7X-0561 | 681 | 1-D 22 | CH8C-3089 | 795 | 1-E 9 | CH8M-2773 | 209 | 1-B 22 |

| Part No. | Page | Grid | Part No. | Page | Grid | Part No. | Page | Grid | Part No. | Page | Grid |
|---|---|---|---|---|---|---|---|---|---|---|---|
| CH8M-2773 | 741 | 1-E 4 | CH8T-3612 | 601 | 1-D 14 | CH8T-4994 | 743 | 1-E 4 | CH9N-0869 | 377 | 1-C 15 |
| CH8M-4791 | 175 | 1-B 19 | CH8T-3612 | 603 | 1-D 14 | CH8T-4994 | 833 | 1-E 13 | CH9N-0869 | 385 | 1-C 16 |
| CH8N-4617 | 155 | 1-B 17 | CH8T-3612 | 605 | 1-D 14 | CH8T-4994 | 835 | 1-E 13 | CH9N-1941 | 167 | 1-B 18 |
| CH8N-4617 | 157 | 1-B 17 | CH8T-3612 | 625 | 1-D 16 | CH8T-5361 | 957 | 1-F 1 | CH9N-1941 | 169 | 1-B 18 |
| CH8S-0948 | 197 | 1-B 21 | CH8T-3612 | 627 | 1-D 16 | CH8T-5400 | 1191 | 1-G 1 | CH9N-2061 | 1191 | 1-G 1 |
| CH8S-0948 | 199 | 1-B 21 | CH8T-3612 | 629 | 1-D 16 | CH8T-5400 | 1193 | 1-G 1 | CH9P-0356 | 407 | 1-C 18 |
| CH8S-0948 | 203 | 1-B 22 | CH8T-3612 | 815 | 1-E 11 | CH8T-5439 | 589 | 1-D 12 | CH9P-4809 | 411 | 1-C 19 |
| CH8S-0948 | 205 | 1-B 22 | CH8T-3992 | 1185 | 1-F 24 | CH8T-6431 | 735 | 1-E 3 | CH9R-0158 | 1005 | 1-F 6 |
| CH8S-0948 | 1099 | 1-F 15 | CH8T-4001 | 683 | 1-D 22 | CH8T-6693 | 173 | 1-B 19 | CH9R-2613 | 579 | 1-D 11 |
| CH8S-7169 | 403 | 1-C 18 | CH8T-4001 | 973 | 1-F 3 | CH8T-6693 | 1065 | 1-F 12 | CH9R-2640 | 579 | 1-D 11 |
| CH8S-7169 | 405 | 1-C 18 | CH8T-4121 | 911 | 1-E 21 | CH8T-6762 | 97 | 1-B 11 | CH9R-2672 | 201 | 1-B 22 |
| CH8T-0255 | 779 | 1-E 7 | CH8T-4122 | 101 | 1-B 12 | CH8T-6762 | 103 | 1-B 12 | CH9R-2672 | 579 | 1-D 11 |
| CH8T-0269 | 945 | 1-E 24 | CH8T-4122 | 117 | 1-B 13 | CH8T-6764 | 97 | 1-B 11 | CH9R-2821 | 627 | 1-D 16 |
| CH8T-0285 | 571 | 1-D 11 | CH8T-4122 | 321 | 1-C 10 | CH8T-6764 | 103 | 1-B 12 | CH9R-7941 | 371 | 1-C 15 |
| CH8T-0318 | 1091 | 1-F 15 | CH8T-4122 | 621 | 1-D 16 | CH8T-6764 | 107 | 1-B 12 | CH9R-7980 | 371 | 1-C 15 |
| CH8T-0318 | 1093 | 1-F 15 | CH8T-4122 | 631 | 1-D 17 | CH8T-6764 | 109 | 1-B 12 | CH9S-1315 | 969 | 1-F 2 |
| CH8T-0328 | 1073 | 1-F 13 | CH8T-4122 | 667 | 1-D 20 | CH8T-6765 | 775 | 1-E 7 | CH9S-1347 | 1089 | 1-F 14 |
| CH8T-0334 | 571 | 1-D 11 | CH8T-4122 | 669 | 1-D 20 | CH8T-6765 | 777 | 1-E 7 | CH9S-4167 | 175 | 1-B 19 |
| CH8T-0337 | 265 | 1-C 4 | CH8T-4122 | 973 | 1-F 3 | CH8T-7525 | 885 | 1-E 18 | CH9S-4181 | 159 | 1-B 17 |
| CH8T-0337 | 359 | 1-C 13 | CH8T-4122 | 1013 | 1-F 7 | CH8T-7525 | 927 | 1-E 22 | CH9S-4181 | 161 | 1-B 18 |
| CH8T-0389 | 375 | 1-C 15 | CH8T-4127 | 207 | 1-B 22 | CH8T-7525 | 929 | 1-E 22 | CH9S-7583 | 195 | 1-B 21 |
| CH8T-0389 | 381 | 1-C 16 | CH8T-4132 | 551 | 1-D 9 | CH8T-7525 | 931 | 1-E 23 | CH9S-8002 | 781 | 1-E 8 |
| CH8T-0389 | 1067 | 1-F 12 | CH8T-4132 | 553 | 1-D 9 | CH8T-7525 | 933 | 1-E 23 | CH9S-8002 | 881 | 1-E 18 |
| CH8T-0389 | 1109 | 1-F 16 | CH8T-4132 | 667 | 1-D 20 | CH8T-7525 | 935 | 1-E 23 | CH9S-8002 | 883 | 1-E 18 |
| CH8T-0644 | 121 | 1-B 14 | CH8T-4132 | 669 | 1-D 20 | CH8T-7525 | 937 | 1-E 23 | CH9S-8002 | 885 | 1-E 18 |
| CH8T-0644 | 123 | 1-B 14 | CH8T-4205 | 127 | 1-B 14 | CH8T-7876 | 881 | 1-E 18 | CH9S-8002 | 939 | 1-E 23 |
| CH8T-0644 | 125 | 1-B 14 | CH8T-4205 | 197 | 1-B 21 | CH8T-7934 | 1177 | 1-F 23 | CH9S-8003 | 671 | 1-D 21 |
| CH8T-0785 | 813 | 1-E 11 | CH8T-4205 | 199 | 1-B 21 | CH8T-7963 | 1153 | 1-F 21 | CH9S-8003 | 683 | 1-D 22 |
| CH8T-0788 | 179 | 1-B 19 | CH8T-4205 | 203 | 1-B 22 | CH8T-8729 | 1189 | 1-F 24 | CH9S-8003 | 693 | 1-D 23 |
| CH8T-0788 | 181 | 1-B 20 | CH8T-4205 | 205 | 1-B 22 | CH8T-8737 | 329 | 1-C 10 | CH9S-8003 | 695 | 1-D 23 |
| CH8T-1482 | 551 | 1-D 9 | CH8T-4205 | 207 | 1-B 22 | CH8T-8737 | 1189 | 1-F 24 | CH9S-8004 | 175 | 1-B 19 |
| CH8T-1482 | 553 | 1-D 9 | CH8T-4205 | 247 | 1-C 2 | CH8T-8737 | 1191 | 1-G 1 | CH9S-8004 | 177 | 1-B 19 |
| CH8T-1482 | 677 | 1-D 21 | CH8T-4205 | 249 | 1-C 2 | CH8T-8737 | 1193 | 1-G 1 | CH9S-8004 | 881 | 1-E 18 |
| CH8T-1482 | 705 | 1-D 24 | CH8T-4205 | 251 | 1-C 3 | CH8T-8874 | 285 | 1-C 6 | CH9S-8004 | 909 | 1-E 20 |
| CH8T-1807 | 107 | 1-B 12 | CH8T-4205 | 265 | 1-C 4 | CH8T-8874 | 287 | 1-C 6 | CH9S-8004 | 911 | 1-E 21 |
| CH8T-1807 | 111 | 1-B 13 | CH8T-4205 | 269 | 1-C 4 | CH8T-8932 | 743 | 1-E 4 | CH9S-8004 | 915 | 1-E 21 |
| CH8T-2392 | 909 | 1-E 20 | CH8T-4205 | 303 | 1-C 8 | CH8T-9102 | 743 | 1-E 4 | CH9S-8004 | 929 | 1-E 22 |
| CH8T-2392 | 915 | 1-E 21 | CH8T-4205 | 305 | 1-C 8 | CH8T-9501 | 331 | 1-C 11 | CH9S-8004 | 933 | 1-E 23 |
| CH8T-2444 | 1185 | 1-F 24 | CH8T-4205 | 321 | 1-C 10 | CH8T-9501 | 581 | 1-D 12 | CH9S-8004 | 935 | 1-E 23 |
| CH8T-2444 | 1187 | 1-F 24 | CH8T-4205 | 331 | 1-C 11 | CH8T-9501 | 1193 | 1-G 1 | CH9S-8004 | 937 | 1-E 23 |
| CH8T-2658 | 355 | 1-C 13 | CH8T-4205 | 355 | 1-C 13 | CH8T-9655 | 209 | 1-B 22 | CH9S-8004 | 939 | 1-E 23 |
| CH8T-2658 | 361 | 1-C 14 | CH8T-4205 | 357 | 1-C 13 | CH8T-9655 | 211 | 1-B 23 | CH9S-8005 | 911 | 1-E 21 |
| CH8T-2658 | 1073 | 1-F 13 | CH8T-4205 | 359 | 1-C 13 | CH8T-9655 | 213 | 1-B 23 | CH9S-8005 | 915 | 1-E 21 |
| CH8T-2659 | 275 | 1-C 5 | CH8T-4205 | 361 | 1-C 14 | CH8T-9655 | 377 | 1-C 15 | CH9S-8005 | 925 | 1-E 22 |
| CH8T-2659 | 277 | 1-C 5 | CH8T-4205 | 377 | 1-C 15 | CH8T-9655 | 383 | 1-C 16 | CH9S-8008 | 883 | 1-E 18 |
| CH8T-2659 | 1173 | 1-F 23 | CH8T-4205 | 385 | 1-C 16 | CH8U-7381 | 931 | 1-E 23 | CH9S-8010 | 667 | 1-D 20 |
| CH8T-2922 | 945 | 1-E 24 | CH8T-4205 | 613 | 1-D 15 | CH8V-9708 | 197 | 1-B 21 | CH9S-8010 | 669 | 1-D 20 |
| CH8T-3016 | 1085 | 1-F 14 | CH8T-4205 | 1075 | 1-F 13 | CH8V-9708 | 199 | 1-B 21 | CH9T-1576 | 791 | 1-E 9 |
| CH8T-3282 | 95 | 1-B 11 | CH8T-4205 | 1119 | 1-F 17 | CH8V-9708 | 201 | 1-B 22 | CH9T-1579 | 791 | 1-E 9 |
| CH8T-3282 | 101 | 1-B 12 | CH8T-4205 | 1121 | 1-F 18 | CH8V-9708 | 205 | 1-B 22 | CH9T-1582 | 791 | 1-E 9 |
| CH8T-3490 | 153 | 1-B 17 | CH8T-4205 | 1123 | 1-F 18 | CH8V-9708 | 551 | 1-D 9 | CH9T-1637 | 791 | 1-E 9 |
| CH8T-3490 | 579 | 1-D 11 | CH8T-4205 | 1259 | 1-G 7 | CH8V-9708 | 553 | 1-D 9 | CH9T-1642 | 791 | 1-E 9 |
| CH8T-3490 | 591 | 1-D 13 | CH8T-4226 | 325 | 1-C 10 | CH8X-6167 | 735 | 1-E 3 | CH9T-1643 | 791 | 1-E 9 |
| CH8T-3490 | 625 | 1-D 16 | CH8T-4226 | 1121 | 1-F 18 | CH8Y-3795 | 579 | 1-D 11 | CH9T-1687 | 791 | 1-E 9 |
| CH8T-3490 | 627 | 1-D 16 | CH8T-4226 | 1123 | 1-F 18 | CH8Y-3795 | 627 | 1-D 16 | CH9T-2281 | 1095 | 1-F 15 |
| CH8T-3490 | 629 | 1-D 16 | CH8T-4244 | 199 | 1-B 21 | CH8Y-5737 | 1023 | 1-F 8 | CH9T-4057 | 761 | 1-E 6 |
| CH8T-3490 | 693 | 1-D 23 | CH8T-4244 | 201 | 1-B 22 | CH8Y-5737 | 1025 | 1-F 8 | CH9W-3326 | 359 | 1-C 13 |
| CH8T-3490 | 695 | 1-D 23 | CH8T-4244 | 203 | 1-B 22 | CH9B-7233 | 207 | 1-B 22 | CH9W-9625 | 683 | 1-D 22 |
| CH8T-3490 | 743 | 1-E 4 | CH8T-4244 | 205 | 1-B 22 | CH9B-7233 | 359 | 1-C 13 | CH9W-9930 | 115 | 1-B 13 |
| CH8T-3490 | 815 | 1-E 11 | CH8T-4244 | 631 | 1-D 17 | CH9B-7233 | 361 | 1-C 14 | CH9W-9930 | 117 | 1-B 13 |
| CH8T-3490 | 1065 | 1-F 12 | CH8T-4244 | 973 | 1-F 3 | CH9B-7233 | 1071 | 1-F 13 | CH9X-1046 | 171 | 1-B 19 |
| CH8T-3597 | 579 | 1-D 11 | CH8T-4244 | 975 | 1-F 3 | CH9F-2491 | 879 | 1-E 17 | CH9X-1046 | 1027 | 1-F 8 |
| CH8T-3597 | 585 | 1-D 12 | CH8T-4244 | 1091 | 1-F 15 | CH9F-4446 | 107 | 1-B 12 | CH9X-1046 | 1029 | 1-F 8 |
| CH8T-3597 | 587 | 1-D 12 | CH8T-4244 | 1093 | 1-F 15 | CH9F-4446 | 109 | 1-B 12 | CH9X-1046 | 1065 | 1-F 12 |
| CH8T-3597 | 591 | 1-D 13 | CH8T-4778 | 973 | 1-F 3 | CH9F-4446 | 111 | 1-B 13 | CH9X-1046 | 1067 | 1-F 12 |
| CH8T-3597 | 625 | 1-D 16 | CH8T-4896 | 107 | 1-B 12 | CH9G-3695 | 1089 | 1-F 14 | CH9X-1046 | 1177 | 1-F 23 |
| CH8T-3597 | 627 | 1-D 16 | CH8T-4896 | 109 | 1-B 12 | CH9H-1958 | 207 | 1-B 22 | CH9X-1482 | 129 | 1-B 14 |
| CH8T-3597 | 815 | 1-E 11 | CH8T-4896 | 111 | 1-B 13 | CH9H-6673 | 733 | 1-E 3 | CH9X-2038 | 1181 | 1-F 24 |
| CH8T-3612 | 265 | 1-C 4 | CH8T-4896 | 131 | 1-B 15 | CH9M-1974 | 171 | 1-B 19 | CH9X-2038 | 1183 | 1-F 24 |
| CH8T-3612 | 355 | 1-C 13 | CH8T-4896 | 199 | 1-B 21 | CH9M-2904 | 191 | 1-B 21 | CH9X-2039 | 1127 | 1-F 18 |
| CH8T-3612 | 381 | 1-C 16 | CH8T-4896 | 203 | 1-B 22 | CH9M-3835 | 617 | 1-D 15 | CH9X-2040 | 615 | 1-D 15 |
| CH8T-3612 | 575 | 1-D 11 | CH8T-4896 | 877 | 1-E 17 | CH9N-0869 | 209 | 1-B 22 | CH9X-2040 | 1177 | 1-F 23 |
| CH8T-3612 | 579 | 1-D 11 | CH8T-4985 | 179 | 1-B 19 | CH9N-0869 | 211 | 1-B 23 | CH9X-2040 | 1179 | 1-F 23 |
| CH8T-3612 | 581 | 1-D 12 | CH8T-4985 | 181 | 1-B 20 | CH9N-0869 | 213 | 1-B 23 | CH9X-2041 | 615 | 1-D 15 |
| CH8T-3612 | 591 | 1-D 13 | CH8T-4994 | 115 | 1-B 13 | CH9N-0869 | 215 | 1-B 23 | CH9X-2042 | 613 | 1-D 15 |

## INDEX


| Part No. | Page | Grid | Part No. | Page | Grid | Part No. | Page | Grid | Part No. | Page | Grid |
|---|---|---|---|---|---|---|---|---|---|---|---|
| CH9X-2042 | 1059 | 1-F 11 | WR522218 | 179 | 1-B 19 | 096-6166 | 489 | 1-D 2 | 111-7068 | 477 | 1-D 1 |
| CH9X-2042 | 1061 | 1-F 12 | WR522218 | 181 | 1-B 20 | 098-8968 | 355 | 1-C 13 | 111-7068 | 487 | 1-D 2 |
| CH9X-2042 | 1177 | 1-F 23 | WR522218 | 213 | 1-B 23 | 098-8968 | 357 | 1-C 13 | 112-5282 | 453 | 1-C 23 |
| CH9X-2043 | 1185 | 1-F 24 | WR522218 | 267 | 1-C 4 | 1A-0646 | 505 | 1-D 4 | 115-1615 | 1033 | 1-F 9 |
| CH9X-2043 | 1187 | 1-F 24 | WR522218 | 599 | 1-D 13 | 1A-0646 | 507 | 1-D 4 | 115-1615 | 1039 | 1-F 9 |
| CH9X-2044 | 207 | 1-B 22 | WR522218 | 603 | 1-D 14 | 1A-0646 | 509 | 1-D 4 | 115-4550 | 513 | 1-D 5 |
| CH9X-2044 | 359 | 1-C 13 | WR522218 | 605 | 1-D 14 | 1B-6577 | 497 | 1-D 3 | 116-7471 | 357 | 1-C 13 |
| CH9X-2044 | 361 | 1-C 14 | WR522218 | 617 | 1-D 15 | 1B-6577 | 499 | 1-D 3 | 117-0221 | 93 | 1-B 11 |
| CH9X-2044 | 1065 | 1-F 12 | WR522218 | 621 | 1-D 16 | 1B-6577 | 501 | 1-D 4 | 117-1385 | 453 | 1-C 23 |
| CH9X-2044 | 1067 | 1-F 12 | WR522218 | 631 | 1-D 17 | 1B-6577 | 503 | 1-D 4 | 117-2311 | 357 | 1-C 13 |
| CH9X-2044 | 1095 | 1-F 15 | WR522218 | 667 | 1-D 20 | 1C-2251 | 137 | 1-B 15 | 117-8131 | 611 | 1-D 15 |
| CH9X-2044 | 1097 | 1-F 15 | WR522218 | 669 | 1-D 20 | 1F-2771 | 457 | 1-C 23 | 120-8514 | 773 | 1-E 7 |
| CH9X-2044 | 1127 | 1-F 18 | WR522218 | 679 | 1-D 21 | 1F-2771 | 467 | 1-C 24 | 120-9048 | 773 | 1-E 7 |
| CH9X-2044 | 1153 | 1-F 21 | WR522218 | 681 | 1-D 22 | 1F-2771 | 477 | 1-D 1 | 120-9051 | 773 | 1-E 7 |
| CH9X-2044 | 1179 | 1-F 23 | WR522218 | 735 | 1-E 3 | 1F-2771 | 487 | 1-D 2 | 121-3120 | 495 | 1-D 3 |
| CH9X-2045 | 377 | 1-C 15 | WR522218 | 741 | 1-E 4 | 1F-2771 | 493 | 1-D 3 | 123-0380 | 1091 | 1-F 15 |
| CH9X-2045 | 385 | 1-C 16 | WR522218 | 749 | 1-E 4 | 1F-7567 | 455 | 1-C 23 | 123-0380 | 1093 | 1-F 15 |
| CH9X-2045 | 1091 | 1-F 15 | WR522218 | 753 | 1-E 5 | 1F-7567 | 465 | 1-C 24 | 123-0707 | 355 | 1-C 13 |
| CH9X-2045 | 1093 | 1-F 15 | WR522218 | 757 | 1-E 5 | 1F-7567 | 475 | 1-D 1 | 123-1373 | 203 | 1-B 22 |
| CH9X-2045 | 1097 | 1-F 15 | WR522218 | 759 | 1-E 5 | 1F-7567 | 485 | 1-D 2 | 124-0492 | 525 | 1-D 6 |
| CH9X-2045 | 1117 | 1-F 17 | WR522218 | 761 | 1-E 6 | 1L-3162 | 527 | 1-D 6 | 124-0492 | 531 | 1-D 7 |
| CH9X-2045 | 1127 | 1-F 18 | WR522218 | 775 | 1-E 7 | 1L-3162 | 533 | 1-D 7 | 124-0492 | 537 | 1-D 7 |
| CH9X-2045 | 1177 | 1-F 23 | WR522218 | 777 | 1-E 7 | 1L-3162 | 539 | 1-D 7 | 124-1479 | 377 | 1-C 15 |
| CH9X-2045 | 1185 | 1-F 24 | WR522218 | 805 | 1-E 10 | 1P-1669 | 1041 | 1-F 10 | 124-1479 | 759 | 1-E 5 |
| CH9X-2045 | 1187 | 1-F 24 | WR522218 | 807 | 1-E 10 | 1P-3958 | 461 | 1-C 24 | 124-4653 | 353 | 1-C 13 |
| CH9X-2046 | 1095 | 1-F 15 | WR522218 | 819 | 1-E 11 | 1P-3958 | 471 | 1-D 1 | 124-9536 | 455 | 1-C 23 |
| CH9X-2092 | 1179 | 1-F 23 | WR522218 | 821 | 1-E 12 | 1P-3958 | 481 | 1-D 2 | 124-9536 | 463 | 1-C 24 |
| CH9X-2199 | 667 | 1-D 20 | WR522218 | 823 | 1-E 12 | 1P-3958 | 491 | 1-D 3 | 124-9536 | 473 | 1-D 1 |
| CH9X-2199 | 669 | 1-D 20 | WR522218 | 825 | 1-E 12 | 1R-1234 | 707 | 1-D 24 | 124-9536 | 483 | 1-D 2 |
| CH9X-2304 | 995 | 1-F 5 | WR522218 | 833 | 1-E 13 | 1R-1235 | 709 | 1-D 24 | 126-7260 | 457 | 1-C 23 |
| CH9X-2541 | 741 | 1-E 4 | WR522218 | 839 | 1-E 13 | 1R-1238 | 713 | 1-E 1 | 126-7260 | 461 | 1-C 24 |
| CH9X-2606 | 1073 | 1-F 13 | WR522218 | 841 | 1-E 14 | 1R-1249 | 707 | 1-D 24 | 126-7260 | 467 | 1-C 24 |
| CH9X-2616 | 1091 | 1-F 15 | WR522218 | 843 | 1-E 14 | 1R-1250 | 709 | 1-D 24 | 126-7260 | 471 | 1-D 1 |
| CH9X-2616 | 1093 | 1-F 15 | WR522218 | 849 | 1-E 14 | 1R-1265 | 639 | 1-D 17 | 126-7260 | 477 | 1-D 1 |
| CH9X-2858 | 891 | 1-E 19 | WR522218 | 851 | 1-E 15 | 1R-1266 | 641 | 1-D 18 | 126-7260 | 481 | 1-D 2 |
| CH9X-3994 | 1059 | 1-F 11 | WR522218 | 855 | 1-E 15 | 1R-1267 | 643 | 1-D 18 | 126-7260 | 487 | 1-D 2 |
| CH9X-3994 | 1061 | 1-F 12 | WR522218 | 857 | 1-E 15 | 1R-1323 | 647 | 1-D 18 | 126-7260 | 491 | 1-D 3 |
| CH9X-6165 | 1065 | 1-F 12 | WR522218 | 913 | 1-E 21 | 1R-1325 | 649 | 1-D 18 | 127-9545 | 673 | 1-D 21 |
| CH9X-6165 | 1127 | 1-F 18 | WR522218 | 917 | 1-E 21 | 1R-1360 | 651 | 1-D 19 | 127-9545 | 675 | 1-D 21 |
| CH9X-6165 | 1153 | 1-F 21 | WR522218 | 919 | 1-E 21 | 1R-1388 | 645 | 1-D 18 | 127-9545 | 683 | 1-D 22 |
| CH9X-7378 | 1063 | 1-F 12 | WR522218 | 973 | 1-F 3 | 1T-1068 | 421 | 1-C 20 | 127-9561 | 671 | 1-D 21 |
| CH9X-7378 | 1099 | 1-F 15 | WR522218 | 995 | 1-F 5 | 1T-1068 | 423 | 1-C 20 | 127-9562 | 667 | 1-D 20 |
| CH9X-7381 | 1099 | 1-F 15 | WR522218 | 997 | 1-F 5 | 1T-1597 | 529 | 1-D 6 | 127-9562 | 669 | 1-D 20 |
| CH9X-7382 | 1099 | 1-F 15 | WR522218 | 1099 | 1-F 15 | 1T-1597 | 535 | 1-D 7 | 127-9564 | 667 | 1-D 20 |
| CH9X-7680 | 883 | 1-E 18 | WR561071 | 177 | 1-B 19 | 1T-1597 | 541 | 1-D 8 | 127-9564 | 669 | 1-D 20 |
| CH9X-7680 | 885 | 1-E 18 | 005-8593 | 455 | 1-C 23 | 1U-8846 | 403 | 1-C 18 | 128-0420 | 93 | 1-B 11 |
| CH9X-8118 | 273 | 1-C 5 | 005-8593 | 465 | 1-C 24 | 1U-8846 | 421 | 1-C 20 | 129-6457 | 353 | 1-C 13 |
| CH9X-8118 | 1263 | 1-G 8 | 005-8593 | 473 | 1-D 1 | 1U-8846 | 425 | 1-C 20 | 129-6457 | 355 | 1-C 13 |
| CH9X-8250 | 179 | 1-B 19 | 005-8593 | 485 | 1-D 2 | 1U-8846 | 459 | 1-C 23 | 130-4818 | 671 | 1-D 21 |
| CH9X-8250 | 181 | 1-B 20 | 008-3178 | 525 | 1-D 6 | 1U-8846 | 469 | 1-C 24 | 130-4818 | 673 | 1-D 21 |
| CH9X-8250 | 1099 | 1-F 15 | 008-3178 | 531 | 1-D 7 | 1U-8846 | 479 | 1-D 1 | 130-4818 | 675 | 1-D 21 |
| CH9X-8267 | 1023 | 1-F 8 | 008-3178 | 537 | 1-D 7 | 1U-8846 | 489 | 1-D 2 | 130-9811 | 453 | 1-C 23 |
| CH9X-8267 | 1025 | 1-F 8 | 031-1119 | 145 | 1-B 16 | 1U-8846 | 493 | 1-D 3 | 130-9811 | 1039 | 1-F 9 |
| CH9X-8399 | 965 | 1-F 2 | 031-1119 | 147 | 1-B 16 | 1U-8846 | 495 | 1-D 3 | 130-9811 | 1041 | 1-F 10 |
| CH9X-8979 | 883 | 1-E 18 | 036-9823 | 315 | 1-C 9 | 1U-8846 | 497 | 1-D 3 | 131-3718 | 459 | 1-C 23 |
| CH9X-8979 | 885 | 1-E 18 | 036-9823 | 317 | 1-C 9 | 1U-8846 | 499 | 1-D 3 | 131-3718 | 469 | 1-C 24 |
| CH9Y-6102 | 161 | 1-B 18 | 036-9823 | 319 | 1-C 9 | 1U-8846 | 501 | 1-D 4 | 131-3718 | 479 | 1-D 1 |
| WR513654 | 621 | 1-D 16 | 061-7540 | 455 | 1-C 23 | 1U-8846 | 503 | 1-D 4 | 131-3718 | 489 | 1-D 2 |
| WR514360 | 1191 | 1-G 1 | 061-7540 | 463 | 1-C 24 | 101-9640 | 99 | 1-B 11 | 131-3718 | 493 | 1-D 3 |
| WR514360 | 1193 | 1-G 1 | 061-7540 | 473 | 1-D 1 | 102-8802 | 827 | 1-E 12 | 131-3718 | 523 | 1-D 6 |
| WR516365 | 401 | 1-C 18 | 061-7540 | 483 | 1-D 2 | 102-8804 | 211 | 1-B 23 | 131-3718 | 529 | 1-D 6 |
| WR518357 | 815 | 1-E 11 | 090-8865 | 1061 | 1-F 12 | 102-8804 | 265 | 1-C 4 | 131-3718 | 535 | 1-D 7 |
| WR518622 | 1191 | 1-G 1 | 095-0670 | 459 | 1-C 23 | 102-8804 | 353 | 1-C 13 | 131-3718 | 541 | 1-D 8 |
| WR520610 | 667 | 1-D 20 | 095-0670 | 469 | 1-C 24 | 102-8805 | 1107 | 1-F 16 | 131-3718 | 1263 | 1-G 8 |
| WR520610 | 669 | 1-D 20 | 095-0670 | 479 | 1-D 1 | 105-5211 | 753 | 1-E 5 | 132-5789 | 377 | 1-C 15 |
| WR520867 | 1153 | 1-F 21 | 095-0670 | 489 | 1-D 2 | 105-5211 | 757 | 1-E 5 | 132-5789 | 379 | 1-C 15 |
| WR522218 | 95 | 1-B 11 | 095-7930 | 315 | 1-C 9 | 105-8034 | 357 | 1-C 13 | 132-6597 | 457 | 1-C 23 |
| WR522218 | 101 | 1-B 12 | 095-7930 | 317 | 1-C 9 | 109-6497 | 497 | 1-D 3 | 132-6597 | 467 | 1-C 24 |
| WR522218 | 129 | 1-B 14 | 095-7930 | 319 | 1-C 9 | 109-6497 | 499 | 1-D 3 | 132-6597 | 477 | 1-D 1 |
| WR522218 | 131 | 1-B 15 | 096-6166 | 315 | 1-C 9 | 109-6497 | 501 | 1-D 4 | 132-6597 | 487 | 1-D 2 |
| WR522218 | 133 | 1-B 15 | 096-6166 | 317 | 1-C 9 | 109-6497 | 503 | 1-D 4 | 132-6598 | 457 | 1-C 23 |
| WR522218 | 141 | 1-B 16 | 096-6166 | 319 | 1-C 9 | 110-2028 | 355 | 1-C 13 | 132-6598 | 467 | 1-C 24 |
| WR522218 | 143 | 1-B 16 | 096-6166 | 355 | 1-C 13 | 110-6393 | 1231 | 1-G 5 | 132-6598 | 477 | 1-D 1 |
| WR522218 | 163 | 1-B 18 | 096-6166 | 357 | 1-C 13 | 111-7068 | 457 | 1-C 23 | 132-6598 | 487 | 1-D 2 |
| WR522218 | 165 | 1-B 18 | 096-6166 | 479 | 1-D 1 | 111-7068 | 467 | 1-C 24 | 134-3988 | 377 | 1-C 15 |

| Part No. | Page | Grid | Part No. | Page | Grid | Part No. | Page | Grid | Part No. | Page | Grid |
|---|---|---|---|---|---|---|---|---|---|---|---|
| 134-4126 | 377 | 1-C 15 | 136-5477 | 369 | 1-C 14 | 142-9739 | 201 | 1-B 22 | 152-0420 | 1053 | 1-F 11 |
| 134-4126 | 383 | 1-C 16 | 136-5477 | 1049 | 1-F 10 | 142-9739 | 283 | 1-C 6 | 152-0420 | 1055 | 1-F 11 |
| 134-5645 | 505 | 1-D 4 | 136-5477 | 1051 | 1-F 11 | 142-9760 | 197 | 1-B 21 | 152-0420 | 1057 | 1-F 11 |
| 134-5645 | 507 | 1-D 4 | 136-5477 | 1053 | 1-F 11 | 142-9760 | 205 | 1-B 22 | 152-0422 | 1189 | 1-F 24 |
| 134-5645 | 509 | 1-D 4 | 136-5477 | 1055 | 1-F 11 | 142-9760 | 281 | 1-C 6 | 152-0424 | 1049 | 1-F 10 |
| 134-8360 | 427 | 1-C 20 | 136-5477 | 1057 | 1-F 11 | 142-9826 | 113 | 1-B 13 | 152-0424 | 1051 | 1-F 11 |
| 134-8360 | 429 | 1-C 20 | 136-5477 | 1133 | 1-F 19 | 142-9831 | 331 | 1-C 11 | 152-0424 | 1055 | 1-F 11 |
| 134-8360 | 431 | 1-C 21 | 136-5477 | 1135 | 1-F 19 | 142-9839 | 199 | 1-B 21 | 152-0424 | 1057 | 1-F 11 |
| 134-8360 | 433 | 1-C 21 | 136-5477 | 1141 | 1-F 20 | 142-9839 | 201 | 1-B 22 | 152-0424 | 1181 | 1-F 24 |
| 134-8360 | 437 | 1-C 21 | 136-5477 | 1143 | 1-F 20 | 145-0846 | 357 | 1-C 13 | 152-0427 | 1027 | 1-F 8 |
| 134-8360 | 441 | 1-C 22 | 136-5477 | 1149 | 1-F 20 | 145-0847 | 357 | 1-C 13 | 152-0427 | 1039 | 1-F 9 |
| 134-8360 | 443 | 1-C 22 | 136-5477 | 1151 | 1-F 21 | 146-3504 | 315 | 1-C 9 | 152-0427 | 1041 | 1-F 10 |
| 134-8360 | 445 | 1-C 22 | 136-5509 | 251 | 1-C 3 | 146-3504 | 317 | 1-C 9 | 152-0428 | 1023 | 1-F 8 |
| 134-8360 | 447 | 1-C 22 | 136-5509 | 255 | 1-C 3 | 146-3504 | 319 | 1-C 9 | 152-0428 | 1031 | 1-F 9 |
| 134-8360 | 451 | 1-C 23 | 136-5509 | 257 | 1-C 3 | 148-1925 | 453 | 1-C 23 | 152-0428 | 1033 | 1-F 9 |
| 134-8360 | 525 | 1-D 6 | 136-5511 | 353 | 1-C 13 | 148-8316 | 527 | 1-D 6 | 152-0428 | 1035 | 1-F 9 |
| 134-8360 | 531 | 1-D 7 | 136-5530 | 353 | 1-C 13 | 148-8316 | 533 | 1-D 7 | 152-0431 | 1177 | 1-F 23 |
| 134-8360 | 537 | 1-D 7 | 136-5535 | 391 | 1-C 17 | 148-8316 | 539 | 1-D 7 | 152-0433 | 1049 | 1-F 10 |
| 134-8361 | 427 | 1-C 20 | 136-5536 | 209 | 1-B 22 | 148-8385 | 527 | 1-D 6 | 152-0433 | 1051 | 1-F 11 |
| 134-8361 | 429 | 1-C 20 | 136-5566 | 171 | 1-B 19 | 148-8385 | 533 | 1-D 7 | 152-0433 | 1053 | 1-F 11 |
| 134-8361 | 431 | 1-C 21 | 136-5597 | 251 | 1-C 3 | 148-8385 | 539 | 1-D 7 | 152-0433 | 1055 | 1-F 11 |
| 134-8361 | 433 | 1-C 21 | 136-5597 | 255 | 1-C 3 | 148-8395 | 423 | 1-C 20 | 152-0433 | 1057 | 1-F 11 |
| 134-8361 | 437 | 1-C 21 | 136-5597 | 257 | 1-C 3 | 150-5146 | 97 | 1-B 11 | 152-0433 | 1153 | 1-F 21 |
| 134-8361 | 441 | 1-C 22 | 136-5598 | 255 | 1-C 3 | 150-5146 | 103 | 1-B 12 | 152-0434 | 1065 | 1-F 12 |
| 134-8361 | 443 | 1-C 22 | 136-5598 | 257 | 1-C 3 | 151-4059 | 715 | 1-E 1 | 152-0434 | 1127 | 1-F 18 |
| 134-8361 | 445 | 1-C 22 | 136-5598 | 261 | 1-C 4 | 151-8541 | 1185 | 1-F 24 | 152-0434 | 1129 | 1-F 18 |
| 134-8361 | 447 | 1-C 22 | 136-5600 | 113 | 1-B 13 | 151-8541 | 1187 | 1-F 24 | 152-0434 | 1131 | 1-F 19 |
| 134-8361 | 451 | 1-C 23 | 136-5600 | 207 | 1-B 22 | 151-8545 | 1185 | 1-F 24 | 152-0434 | 1133 | 1-F 19 |
| 134-8361 | 525 | 1-D 6 | 136-5600 | 1263 | 1-G 8 | 151-8545 | 1187 | 1-F 24 | 152-0434 | 1135 | 1-F 19 |
| 134-8361 | 531 | 1-D 7 | 136-5612 | 197 | 1-B 21 | 151-8559 | 1059 | 1-F 11 | 152-0434 | 1137 | 1-F 19 |
| 134-8361 | 537 | 1-D 7 | 136-5612 | 205 | 1-B 22 | 151-8559 | 1061 | 1-F 12 | 152-0434 | 1139 | 1-F 19 |
| 135-4483 | 353 | 1-C 13 | 136-5631 | 199 | 1-B 21 | 151-9961 | 1059 | 1-F 11 | 152-0434 | 1141 | 1-F 20 |
| 136-1953 | 1031 | 1-F 9 | 136-5631 | 201 | 1-B 22 | 151-9961 | 1061 | 1-F 12 | 152-0434 | 1143 | 1-F 20 |
| 136-5218 | 171 | 1-B 19 | 136-5654 | 197 | 1-B 21 | 151-9979 | 1185 | 1-F 24 | 152-0434 | 1145 | 1-F 20 |
| 136-5221 | 171 | 1-B 19 | 136-5654 | 199 | 1-B 21 | 151-9979 | 1187 | 1-F 24 | 152-0434 | 1147 | 1-F 20 |
| 136-5224 | 171 | 1-B 19 | 136-5654 | 201 | 1-B 22 | 151-9982 | 1185 | 1-F 24 | 152-0434 | 1149 | 1-F 20 |
| 136-5225 | 197 | 1-B 21 | 136-5654 | 205 | 1-B 22 | 151-9983 | 1091 | 1-F 15 | 152-0434 | 1151 | 1-F 21 |
| 136-5225 | 199 | 1-B 21 | 136-5654 | 207 | 1-B 22 | 151-9984 | 1185 | 1-F 24 | 152-0438 | 1049 | 1-F 10 |
| 136-5225 | 201 | 1-B 22 | 136-5655 | 207 | 1-B 22 | 151-9986 | 1023 | 1-F 8 | 152-0438 | 1051 | 1-F 11 |
| 136-5225 | 205 | 1-B 22 | 136-5657 | 199 | 1-B 21 | 151-9986 | 1049 | 1-F 10 | 152-0438 | 1053 | 1-F 11 |
| 136-5261 | 303 | 1-C 8 | 136-5657 | 201 | 1-B 22 | 151-9986 | 1053 | 1-F 11 | 152-0438 | 1055 | 1-F 11 |
| 136-5261 | 305 | 1-C 8 | 136-5658 | 197 | 1-B 21 | 151-9991 | 1187 | 1-F 24 | 152-0438 | 1057 | 1-F 11 |
| 136-5270 | 197 | 1-B 21 | 136-5659 | 57 | 1-B 7 | 151-9994 | 1059 | 1-F 11 | 152-0438 | 1073 | 1-F 13 |
| 136-5270 | 199 | 1-B 21 | 136-5659 | 59 | 1-B 7 | 151-9994 | 1185 | 1-F 24 | 152-0441 | 1121 | 1-F 18 |
| 136-5270 | 201 | 1-B 22 | 136-5659 | 205 | 1-B 22 | 151-9995 | 1061 | 1-F 12 | 152-0441 | 1123 | 1-F 18 |
| 136-5270 | 205 | 1-B 22 | 136-5659 | 1055 | 1-F 11 | 151-9995 | 1187 | 1-F 24 | 152-0443 | 903 | 1-E 20 |
| 136-5288 | 255 | 1-C 3 | 136-5662 | 199 | 1-B 21 | 152-0003 | 1053 | 1-F 11 | 152-0443 | 1079 | 1-F 13 |
| 136-5288 | 257 | 1-C 3 | 136-5663 | 61 | 1-B 8 | 152-0003 | 1055 | 1-F 11 | 152-0443 | 1129 | 1-F 18 |
| 136-5288 | 261 | 1-C 4 | 136-5663 | 63 | 1-B 8 | 152-0003 | 1057 | 1-F 11 | 152-0443 | 1131 | 1-F 19 |
| 136-5289 | 255 | 1-C 3 | 136-5663 | 201 | 1-B 22 | 152-0003 | 1059 | 1-F 11 | 152-0443 | 1133 | 1-F 19 |
| 136-5289 | 257 | 1-C 3 | 136-5663 | 203 | 1-B 22 | 152-0004 | 1049 | 1-F 10 | 152-0443 | 1135 | 1-F 19 |
| 136-5289 | 261 | 1-C 4 | 136-5663 | 1057 | 1-F 11 | 152-0004 | 1051 | 1-F 11 | 152-0444 | 1049 | 1-F 10 |
| 136-5330 | 1045 | 1-F 10 | 136-5665 | 73 | 1-B 9 | 152-0004 | 1061 | 1-F 12 | 152-0444 | 1051 | 1-F 11 |
| 136-5340 | 197 | 1-B 21 | 136-5665 | 265 | 1-C 4 | 152-0005 | 359 | 1-C 13 | 152-0444 | 1123 | 1-F 18 |
| 136-5340 | 199 | 1-B 21 | 136-5668 | 73 | 1-B 9 | 152-0005 | 361 | 1-C 14 | 152-0445 | 977 | 1-F 3 |
| 136-5340 | 201 | 1-B 22 | 136-5668 | 373 | 1-C 15 | 152-0005 | 1049 | 1-F 10 | 152-0445 | 979 | 1-F 3 |
| 136-5340 | 205 | 1-B 22 | 136-5668 | 375 | 1-C 15 | 152-0005 | 1051 | 1-F 11 | 152-0445 | 981 | 1-F 4 |
| 136-5355 | 801 | 1-E 10 | 136-5668 | 377 | 1-C 15 | 152-0417 | 1053 | 1-F 11 | 152-0445 | 983 | 1-F 4 |
| 136-5355 | 1077 | 1-F 13 | 136-5669 | 75 | 1-B 9 | 152-0417 | 1055 | 1-F 11 | 152-0445 | 985 | 1-F 4 |
| 136-5378 | 211 | 1-B 23 | 136-5669 | 379 | 1-C 15 | 152-0417 | 1057 | 1-F 11 | 152-0445 | 987 | 1-F 4 |
| 136-5378 | 977 | 1-F 3 | 136-5669 | 381 | 1-C 16 | 152-0417 | 1121 | 1-F 18 | 152-0445 | 1075 | 1-F 13 |
| 136-5378 | 979 | 1-F 3 | 136-5669 | 383 | 1-C 16 | 152-0418 | 1049 | 1-F 10 | 152-0445 | 1131 | 1-F 19 |
| 136-5378 | 981 | 1-F 4 | 136-5669 | 385 | 1-C 16 | 152-0418 | 1051 | 1-F 11 | 152-0445 | 1135 | 1-F 19 |
| 136-5378 | 983 | 1-F 4 | 136-5670 | 209 | 1-B 22 | 152-0418 | 1053 | 1-F 11 | 152-0445 | 1139 | 1-F 19 |
| 136-5378 | 985 | 1-F 4 | 136-5670 | 801 | 1-E 10 | 152-0418 | 1055 | 1-F 11 | 152-0445 | 1143 | 1-F 20 |
| 136-5378 | 987 | 1-F 4 | 136-5670 | 905 | 1-E 20 | 152-0418 | 1057 | 1-F 11 | 152-0445 | 1147 | 1-F 20 |
| 136-5380 | 375 | 1-C 15 | 136-5670 | 907 | 1-E 20 | 152-0418 | 1097 | 1-F 15 | 152-0445 | 1151 | 1-F 21 |
| 136-5380 | 381 | 1-C 16 | 141-0888 | 773 | 1-E 7 | 152-0419 | 1049 | 1-F 10 | 152-0446 | 221 | 1-B 24 |
| 136-5381 | 375 | 1-C 15 | 142-9677 | 265 | 1-C 4 | 152-0419 | 1051 | 1-F 11 | 152-0446 | 1009 | 1-F 6 |
| 136-5388 | 303 | 1-C 8 | 142-9717 | 205 | 1-B 22 | 152-0419 | 1055 | 1-F 11 | 152-0447 | 171 | 1-B 19 |
| 136-5404 | 305 | 1-C 8 | 142-9738 | 197 | 1-B 21 | 152-0419 | 1057 | 1-F 11 | 152-0447 | 1049 | 1-F 10 |
| 136-5429 | 75 | 1-B 9 | 142-9738 | 199 | 1-B 21 | 152-0419 | 1171 | 1-F 23 | 152-0447 | 1051 | 1-F 11 |
| 136-5429 | 269 | 1-C 4 | 142-9738 | 201 | 1-B 22 | 152-0420 | 353 | 1-C 13 | 152-0447 | 1053 | 1-F 11 |
| 136-5441 | 265 | 1-C 4 | 142-9738 | 205 | 1-B 22 | 152-0420 | 355 | 1-C 13 | 152-0447 | 1055 | 1-F 11 |
| 136-5476 | 265 | 1-C 4 | 142-9739 | 199 | 1-B 21 | 152-0420 | 357 | 1-C 13 | 152-0447 | 1057 | 1-F 11 |

## INDEX


| Part No. | Page | Grid | Part No. | Page | Grid | Part No. | Page | Grid | Part No. | Page | Grid |
|---|---|---|---|---|---|---|---|---|---|---|---|
| 152-0448 | 803 | 1-E 10 | 156-6075 | 645 | 1-D 18 | 162-4091 | 269 | 1-C 4 | 163-0383 | 407 | 1-C 18 |
| 152-0448 | 1081 | 1-F 14 | 156-6077 | 639 | 1-D 17 | 162-4092 | 265 | 1-C 4 | 163-0384 | 85 | 1-B 10 |
| 152-0448 | 1145 | 1-F 20 | 156-6079 | 641 | 1-D 18 | 162-4092 | 269 | 1-C 4 | 163-0384 | 87 | 1-B 10 |
| 152-0448 | 1147 | 1-F 20 | 156-6082 | 643 | 1-D 18 | 162-4095 | 1183 | 1-F 24 | 163-0384 | 89 | 1-B 10 |
| 152-0448 | 1149 | 1-F 20 | 156-6084 | 671 | 1-D 21 | 162-4096 | 387 | 1-C 16 | 163-0384 | 91 | 1-B 11 |
| 152-0448 | 1151 | 1-F 21 | 156-8343 | 693 | 1-D 23 | 162-4096 | 1055 | 1-F 11 | 163-0384 | 409 | 1-C 18 |
| 152-5242 | 413 | 1-C 19 | 156-8343 | 695 | 1-D 23 | 162-4096 | 1057 | 1-F 11 | 163-0386 | 73 | 1-B 9 |
| 152-5242 | 415 | 1-C 19 | 158-2339 | 831 | 1-E 13 | 162-4097 | 351 | 1-C 13 | 163-0386 | 745 | 1-E 4 |
| 152-5242 | 417 | 1-C 19 | 158-2339 | 861 | 1-E 16 | 162-4097 | 1055 | 1-F 11 | 163-0400 | 1009 | 1-F 6 |
| 152-5242 | 419 | 1-C 19 | 158-2342 | 73 | 1-B 9 | 162-4097 | 1057 | 1-F 11 | 163-0402 | 241 | 1-C 2 |
| 152-5242 | 511 | 1-D 5 | 158-2342 | 75 | 1-B 9 | 162-4099 | 331 | 1-C 11 | 163-0403 | 243 | 1-C 2 |
| 153-9300 | 355 | 1-C 13 | 158-2342 | 831 | 1-E 13 | 162-4101 | 271 | 1-C 5 | 163-0405 | 409 | 1-C 18 |
| 154-8079 | 353 | 1-C 13 | 158-2349 | 815 | 1-E 11 | 162-4101 | 273 | 1-C 5 | 163-0412 | 407 | 1-C 18 |
| 154-8263 | 671 | 1-D 21 | 158-2349 | 831 | 1-E 13 | 162-4101 | 1049 | 1-F 10 | 163-0414 | 409 | 1-C 18 |
| 154-8264 | 671 | 1-D 21 | 158-2356 | 831 | 1-E 13 | 162-4101 | 1051 | 1-F 11 | 163-0414 | 411 | 1-C 19 |
| 154-8264 | 1263 | 1-G 8 | 158-2356 | 843 | 1-E 14 | 162-4102 | 391 | 1-C 17 | 163-0415 | 411 | 1-C 19 |
| 155-0014 | 269 | 1-C 4 | 158-2356 | 845 | 1-E 14 | 162-4103 | 1193 | 1-G 1 | 163-0425 | 407 | 1-C 18 |
| 155-0020 | 267 | 1-C 4 | 158-2363 | 977 | 1-F 3 | 162-4105 | 1065 | 1-F 12 | 163-0425 | 409 | 1-C 18 |
| 155-0027 | 265 | 1-C 4 | 158-2363 | 979 | 1-F 3 | 162-4111 | 1123 | 1-F 18 | 163-0592 | 455 | 1-C 23 |
| 155-0029 | 265 | 1-C 4 | 158-2363 | 981 | 1-F 4 | 162-4112 | 547 | 1-D 8 | 163-0592 | 463 | 1-C 24 |
| 155-0038 | 207 | 1-B 22 | 158-2363 | 983 | 1-F 4 | 162-4112 | 611 | 1-D 15 | 163-0592 | 473 | 1-D 1 |
| 155-0042 | 275 | 1-C 5 | 158-2363 | 985 | 1-F 4 | 162-6654 | 1121 | 1-F 18 | 163-0592 | 483 | 1-D 2 |
| 155-0043 | 277 | 1-C 5 | 158-2363 | 987 | 1-F 4 | 162-6654 | 1123 | 1-F 18 | 163-0678 | 673 | 1-D 21 |
| 155-2939 | 671 | 1-D 21 | 158-2363 | 993 | 1-F 5 | 162-6655 | 1121 | 1-F 18 | 163-0678 | 675 | 1-D 21 |
| 155-4426 | 543 | 1-D 8 | 158-2363 | 995 | 1-F 5 | 162-6687 | 1097 | 1-F 15 | 163-0678 | 677 | 1-D 21 |
| 155-4426 | 545 | 1-D 8 | 158-2393 | 831 | 1-E 13 | 162-6688 | 1097 | 1-F 15 | 163-1009 | 697 | 1-D 23 |
| 155-9571 | 427 | 1-C 20 | 158-2393 | 859 | 1-E 15 | 162-6689 | 1097 | 1-F 15 | 163-1009 | 701 | 1-D 24 |
| 155-9571 | 511 | 1-D 5 | 158-2397 | 831 | 1-E 13 | 162-6690 | 1097 | 1-F 15 | 164-2108 | 543 | 1-D 8 |
| 155-9572 | 429 | 1-C 20 | 158-2397 | 871 | 1-E 17 | 162-6691 | 1095 | 1-F 15 | 164-2108 | 545 | 1-D 8 |
| 155-9572 | 431 | 1-C 21 | 158-2404 | 659 | 1-D 19 | 162-6692 | 1097 | 1-F 15 | 164-3949 | 529 | 1-D 6 |
| 155-9572 | 511 | 1-D 5 | 158-2404 | 661 | 1-D 20 | 162-6693 | 1121 | 1-F 18 | 164-3949 | 535 | 1-D 7 |
| 155-9575 | 433 | 1-C 21 | 158-2404 | 783 | 1-E 8 | 162-6693 | 1123 | 1-F 18 | 164-3949 | 541 | 1-D 8 |
| 155-9575 | 511 | 1-D 5 | 158-5925 | 75 | 1-B 9 | 162-6696 | 265 | 1-C 4 | 164-3951 | 529 | 1-D 6 |
| 155-9576 | 435 | 1-C 21 | 158-5925 | 613 | 1-D 15 | 162-6697 | 265 | 1-C 4 | 164-3951 | 535 | 1-D 7 |
| 155-9576 | 437 | 1-C 21 | 158-5934 | 599 | 1-D 13 | 162-6698 | 265 | 1-C 4 | 164-3951 | 541 | 1-D 8 |
| 155-9576 | 511 | 1-D 5 | 158-5934 | 601 | 1-D 14 | 162-6699 | 265 | 1-C 4 | 164-4180 | 423 | 1-C 20 |
| 155-9579 | 421 | 1-C 20 | 158-5935 | 599 | 1-D 13 | 162-6734 | 1095 | 1-F 15 | 164-5567 | 423 | 1-C 20 |
| 155-9579 | 423 | 1-C 20 | 158-5935 | 601 | 1-D 14 | 162-6737 | 1065 | 1-F 12 | 164-5619 | 423 | 1-C 20 |
| 155-9579 | 425 | 1-C 20 | 158-5950 | 597 | 1-D 13 | 162-6738 | 1065 | 1-F 12 | 164-7013 | 1091 | 1-F 15 |
| 155-9579 | 511 | 1-D 5 | 158-5950 | 601 | 1-D 14 | 162-6738 | 1263 | 1-G 8 | 164-7013 | 1093 | 1-F 15 |
| 155-9580 | 453 | 1-C 23 | 158-5952 | 597 | 1-D 13 | 162-6751 | 1177 | 1-F 23 | 164-7014 | 1091 | 1-F 15 |
| 155-9580 | 511 | 1-D 5 | 158-5952 | 601 | 1-D 14 | 162-6752 | 1179 | 1-F 23 | 164-7014 | 1093 | 1-F 15 |
| 156-1313 | 73 | 1-B 9 | 158-5953 | 599 | 1-D 13 | 162-6757 | 1153 | 1-F 21 | 164-7017 | 1059 | 1-F 11 |
| 156-1313 | 597 | 1-D 13 | 158-5953 | 601 | 1-D 14 | 162-6758 | 1153 | 1-F 21 | 164-7017 | 1061 | 1-F 12 |
| 156-1313 | 599 | 1-D 13 | 158-5960 | 581 | 1-D 12 | 162-6759 | 1153 | 1-F 21 | 164-7023 | 1095 | 1-F 15 |
| 156-1327 | 547 | 1-D 8 | 158-5960 | 597 | 1-D 13 | 162-9766 | 751 | 1-E 5 | 164-7040 | 1075 | 1-F 13 |
| 156-1327 | 621 | 1-D 16 | 158-5961 | 581 | 1-D 12 | 162-9766 | 755 | 1-E 5 | 164-7041 | 1089 | 1-F 14 |
| 156-4881 | 659 | 1-D 19 | 158-5962 | 581 | 1-D 12 | 162-9804 | 867 | 1-E 16 | 164-7042 | 1065 | 1-F 12 |
| 156-4881 | 661 | 1-D 20 | 159-1236 | 401 | 1-C 18 | 162-9804 | 873 | 1-E 17 | 164-7044 | 1067 | 1-F 12 |
| 156-4881 | 701 | 1-D 24 | 159-1236 | 403 | 1-C 18 | 162-9805 | 727 | 1-E 2 | 164-7054 | 1091 | 1-F 15 |
| 156-4882 | 673 | 1-D 21 | 160-6789 | 529 | 1-D 6 | 162-9805 | 729 | 1-E 2 | 164-7062 | 1153 | 1-F 21 |
| 156-4882 | 701 | 1-D 24 | 160-6789 | 535 | 1-D 7 | 162-9805 | 865 | 1-E 16 | 164-7067 | 1091 | 1-F 15 |
| 156-4882 | 703 | 1-D 24 | 160-6789 | 541 | 1-D 8 | 162-9805 | 895 | 1-E 19 | 164-7067 | 1093 | 1-F 15 |
| 156-4883 | 675 | 1-D 21 | 161-1817 | 693 | 1-D 23 | 162-9805 | 899 | 1-E 19 | 164-7068 | 1059 | 1-F 11 |
| 156-4883 | 701 | 1-D 24 | 161-1817 | 695 | 1-D 23 | 162-9805 | 901 | 1-E 20 | 164-7068 | 1061 | 1-F 12 |
| 156-4883 | 703 | 1-D 24 | 161-8222 | 421 | 1-C 20 | 162-9816 | 807 | 1-E 10 | 164-7068 | 1091 | 1-F 15 |
| 156-4884 | 673 | 1-D 21 | 161-8222 | 423 | 1-C 20 | 162-9816 | 913 | 1-E 21 | 164-7069 | 1177 | 1-F 23 |
| 156-4884 | 693 | 1-D 23 | 161-8739 | 525 | 1-D 6 | 162-9816 | 917 | 1-E 21 | 165-0260 | 529 | 1-D 6 |
| 156-4885 | 675 | 1-D 21 | 161-8739 | 531 | 1-D 7 | 162-9816 | 919 | 1-E 21 | 165-0260 | 535 | 1-D 7 |
| 156-4885 | 695 | 1-D 23 | 161-8739 | 537 | 1-D 7 | 162-9816 | 923 | 1-E 22 | 165-0260 | 541 | 1-D 8 |
| 156-4891 | 689 | 1-D 22 | 161-8848 | 525 | 1-D 6 | 162-9817 | 911 | 1-E 21 | 165-0390 | 453 | 1-C 23 |
| 156-4893 | 65 | 1-B 8 | 161-8848 | 531 | 1-D 7 | 162-9817 | 915 | 1-E 21 | 165-0400 | 443 | 1-C 22 |
| 156-4893 | 67 | 1-B 8 | 161-9173 | 75 | 1-B 9 | 162-9817 | 925 | 1-E 22 | 165-0420 | 435 | 1-C 21 |
| 156-4893 | 69 | 1-B 8 | 161-9173 | 601 | 1-D 14 | 162-9818 | 911 | 1-E 21 | 165-0420 | 449 | 1-C 22 |
| 156-4893 | 71 | 1-B 9 | 161-9173 | 603 | 1-D 14 | 162-9818 | 915 | 1-E 21 | 165-5973 | 247 | 1-C 2 |
| 156-4893 | 691 | 1-D 23 | 161-9174 | 73 | 1-B 9 | 162-9818 | 927 | 1-E 22 | 165-5973 | 249 | 1-C 2 |
| 156-5581 | 49 | 1-B 6 | 161-9174 | 573 | 1-D 11 | 162-9822 | 925 | 1-E 22 | 165-5973 | 251 | 1-C 3 |
| 156-5581 | 65 | 1-B 8 | 161-9177 | 75 | 1-B 9 | 163-0267 | 697 | 1-D 23 | 165-7901 | 869 | 1-E 16 |
| 156-5582 | 51 | 1-B 7 | 161-9177 | 575 | 1-D 11 | 163-0267 | 699 | 1-D 23 | 165-7901 | 875 | 1-E 17 |
| 156-5582 | 67 | 1-B 8 | 162-0177 | 423 | 1-C 20 | 163-0268 | 697 | 1-D 23 | 165-8537 | 923 | 1-E 22 |
| 156-5583 | 53 | 1-B 7 | 162-0177 | 529 | 1-D 6 | 163-0268 | 699 | 1-D 23 | 165-8537 | 925 | 1-E 22 |
| 156-5583 | 69 | 1-B 8 | 162-0177 | 535 | 1-D 7 | 163-0383 | 77 | 1-B 9 | 165-8537 | 927 | 1-E 22 |
| 156-5584 | 55 | 1-B 7 | 162-0177 | 541 | 1-D 8 | 163-0383 | 79 | 1-B 9 | 166-1211 | 367 | 1-C 14 |
| 156-5584 | 71 | 1-B 9 | 162-0288 | 697 | 1-D 23 | 163-0383 | 81 | 1-B 10 | 166-1211 | 1129 | 1-F 18 |
| 156-5863 | 1039 | 1-F 9 | 162-4091 | 265 | 1-C 4 | 163-0383 | 83 | 1-B 10 | 166-1211 | 1131 | 1-F 19 |

# INDEX


| Part No. | Page | Grid | Part No. | Page | Grid | Part No. | Page | Grid | Part No. | Page | Grid |
|---|---|---|---|---|---|---|---|---|---|---|---|
| 166-1211 | 1137 | 1-F 19 | 168-2311 | 1039 | 1-F 9 | 171-1229 | 211 | 1-B 23 | 172-5343 | 1099 | 1-F 15 |
| 166-1211 | 1139 | 1-F 19 | 168-2311 | 1041 | 1-F 10 | 171-1229 | 1263 | 1-G 8 | 172-5344 | 85 | 1-B 10 |
| 166-1211 | 1145 | 1-F 20 | 168-2313 | 1033 | 1-F 9 | 171-1576 | 1045 | 1-F 10 | 172-5344 | 87 | 1-B 10 |
| 166-1211 | 1147 | 1-F 20 | 168-2313 | 1039 | 1-F 9 | 171-7234 | 551 | 1-D 9 | 172-5344 | 89 | 1-B 10 |
| 166-3754 | 1067 | 1-F 12 | 168-2313 | 1263 | 1-G 8 | 171-7234 | 553 | 1-D 9 | 172-5344 | 91 | 1-B 11 |
| 166-3755 | 1067 | 1-F 12 | 168-2315 | 1033 | 1-F 9 | 171-9687 | 265 | 1-C 4 | 172-5344 | 135 | 1-B 15 |
| 166-4553 | 1089 | 1-F 14 | 168-2315 | 1039 | 1-F 9 | 171-9687 | 269 | 1-C 4 | 172-5345 | 77 | 1-B 9 |
| 166-4555 | 1067 | 1-F 12 | 168-2316 | 1033 | 1-F 9 | 171-9687 | 1263 | 1-G 8 | 172-5345 | 79 | 1-B 9 |
| 166-4556 | 1023 | 1-F 8 | 168-2316 | 1039 | 1-F 9 | 171-9688 | 265 | 1-C 4 | 172-5345 | 81 | 1-B 10 |
| 166-4556 | 1025 | 1-F 8 | 168-2318 | 1031 | 1-F 9 | 171-9688 | 269 | 1-C 4 | 172-5345 | 83 | 1-B 10 |
| 166-4556 | 1027 | 1-F 8 | 168-2322 | 1041 | 1-F 10 | 171-9688 | 1263 | 1-G 8 | 172-5345 | 133 | 1-B 15 |
| 166-4556 | 1029 | 1-F 8 | 168-2324 | 1031 | 1-F 9 | 171-9773 | 1261 | 1-G 8 | 172-5361 | 49 | 1-B 6 |
| 166-4556 | 1095 | 1-F 15 | 168-2326 | 1031 | 1-F 9 | 171-9774 | 1261 | 1-G 8 | 172-5361 | 77 | 1-B 9 |
| 166-4558 | 1059 | 1-F 11 | 168-2327 | 1035 | 1-F 9 | 172-3441 | 525 | 1-D 6 | 172-5362 | 51 | 1-B 7 |
| 166-4558 | 1061 | 1-F 12 | 168-2334 | 1089 | 1-F 14 | 172-3441 | 531 | 1-D 7 | 172-5362 | 81 | 1-B 10 |
| 166-4568 | 1185 | 1-F 24 | 168-4558 | 525 | 1-D 6 | 172-3441 | 537 | 1-D 7 | 172-5363 | 53 | 1-B 7 |
| 166-4570 | 1185 | 1-F 24 | 168-4558 | 531 | 1-D 7 | 172-4155 | 699 | 1-D 23 | 172-5363 | 85 | 1-B 10 |
| 166-4586 | 1023 | 1-F 8 | 168-4558 | 537 | 1-D 7 | 172-4516 | 831 | 1-E 13 | 172-5364 | 55 | 1-B 7 |
| 166-4586 | 1025 | 1-F 8 | 168-6580 | 275 | 1-C 5 | 172-4516 | 837 | 1-E 13 | 172-5364 | 89 | 1-B 10 |
| 166-4586 | 1071 | 1-F 13 | 168-6581 | 277 | 1-C 5 | 172-4516 | 839 | 1-E 13 | 172-6841 | 287 | 1-C 6 |
| 166-4587 | 1027 | 1-F 8 | 169-0027 | 977 | 1-F 3 | 172-4517 | 663 | 1-D 20 | 172-6841 | 361 | 1-C 14 |
| 166-4590 | 905 | 1-E 20 | 169-0028 | 979 | 1-F 3 | 172-4517 | 665 | 1-D 20 | 172-6842 | 1173 | 1-F 23 |
| 166-4590 | 1083 | 1-F 14 | 169-6323 | 1189 | 1-F 24 | 172-4517 | 785 | 1-E 8 | 172-6844 | 1117 | 1-F 17 |
| 166-4590 | 1137 | 1-F 19 | 169-6323 | 1191 | 1-G 1 | 172-4518 | 847 | 1-E 14 | 172-6845 | 1117 | 1-F 17 |
| 166-4590 | 1139 | 1-F 19 | 169-6328 | 1185 | 1-F 24 | 172-4518 | 873 | 1-E 17 | 172-6851 | 1075 | 1-F 13 |
| 166-4590 | 1141 | 1-F 20 | 169-6328 | 1187 | 1-F 24 | 172-4519 | 853 | 1-E 15 | 172-6852 | 1075 | 1-F 13 |
| 166-4590 | 1143 | 1-F 20 | 169-6337 | 1095 | 1-F 15 | 172-4519 | 875 | 1-E 17 | 172-6853 | 1075 | 1-F 13 |
| 166-4590 | 1145 | 1-F 20 | 169-6342 | 1177 | 1-F 23 | 172-5333 | 85 | 1-B 10 | 172-6857 | 733 | 1-E 3 |
| 166-4590 | 1147 | 1-F 20 | 169-6343 | 1177 | 1-F 23 | 172-5333 | 87 | 1-B 10 | 172-6857 | 1049 | 1-F 10 |
| 166-4590 | 1149 | 1-F 20 | 169-6344 | 1177 | 1-F 23 | 172-5333 | 89 | 1-B 10 | 172-6857 | 1051 | 1-F 11 |
| 166-4590 | 1151 | 1-F 21 | 169-6345 | 1179 | 1-F 23 | 172-5333 | 91 | 1-B 11 | 172-6858 | 1075 | 1-F 13 |
| 166-4592 | 1027 | 1-F 8 | 169-6346 | 367 | 1-C 14 | 172-5333 | 117 | 1-B 13 | 172-6863 | 1075 | 1-F 13 |
| 166-4592 | 1051 | 1-F 11 | 169-6346 | 369 | 1-C 14 | 172-5334 | 77 | 1-B 9 | 172-6864 | 1075 | 1-F 13 |
| 166-4592 | 1055 | 1-F 11 | 169-6346 | 1087 | 1-F 14 | 172-5334 | 79 | 1-B 9 | 172-6865 | 1075 | 1-F 13 |
| 166-4592 | 1057 | 1-F 11 | 169-6347 | 1087 | 1-F 14 | 172-5334 | 81 | 1-B 10 | 172-6869 | 1089 | 1-F 14 |
| 166-4595 | 1095 | 1-F 15 | 169-6347 | 1089 | 1-F 14 | 172-5334 | 83 | 1-B 10 | 172-6945 | 77 | 1-B 9 |
| 166-4603 | 1023 | 1-F 8 | 169-6351 | 1153 | 1-F 21 | 172-5334 | 115 | 1-B 13 | 172-6945 | 79 | 1-B 9 |
| 166-4603 | 1025 | 1-F 8 | 169-6362 | 1079 | 1-F 13 | 172-5335 | 85 | 1-B 10 | 172-6946 | 81 | 1-B 10 |
| 166-4603 | 1027 | 1-F 8 | 169-6362 | 1083 | 1-F 14 | 172-5335 | 87 | 1-B 10 | 172-6946 | 83 | 1-B 10 |
| 166-4603 | 1029 | 1-F 8 | 169-6367 | 353 | 1-C 13 | 172-5335 | 89 | 1-B 10 | 172-7966 | 513 | 1-D 5 |
| 166-4608 | 1065 | 1-F 12 | 169-6370 | 353 | 1-C 13 | 172-5335 | 91 | 1-B 11 | 172-7968 | 513 | 1-D 5 |
| 166-4616 | 247 | 1-C 2 | 169-6373 | 1095 | 1-F 15 | 172-5335 | 169 | 1-B 18 | 172-8035 | 347 | 1-C 12 |
| 166-4616 | 249 | 1-C 2 | 169-6380 | 285 | 1-C 6 | 172-5336 | 77 | 1-B 9 | 172-8886 | 73 | 1-B 9 |
| 166-4616 | 251 | 1-C 3 | 169-6380 | 357 | 1-C 13 | 172-5336 | 79 | 1-B 9 | 172-8886 | 1203 | 1-G 2 |
| 166-4617 | 1095 | 1-F 15 | 169-6383 | 1177 | 1-F 23 | 172-5336 | 81 | 1-B 10 | 173-2743 | 621 | 1-D 16 |
| 166-4623 | 75 | 1-B 9 | 169-6384 | 1081 | 1-F 14 | 172-5336 | 83 | 1-B 10 | 173-2744 | 621 | 1-D 16 |
| 166-4623 | 779 | 1-E 7 | 169-6385 | 1067 | 1-F 12 | 172-5336 | 167 | 1-B 18 | 173-4060 | 1261 | 1-G 8 |
| 166-7774 | 551 | 1-D 9 | 169-6386 | 1067 | 1-F 12 | 172-5337 | 85 | 1-B 10 | 173-5392 | 427 | 1-C 20 |
| 166-7774 | 553 | 1-D 9 | 169-6390 | 1065 | 1-F 12 | 172-5337 | 87 | 1-B 10 | 173-5392 | 429 | 1-C 20 |
| 166-7775 | 551 | 1-D 9 | 169-6391 | 1075 | 1-F 13 | 172-5337 | 89 | 1-B 10 | 173-5392 | 431 | 1-C 21 |
| 166-7775 | 553 | 1-D 9 | 169-6399 | 1185 | 1-F 24 | 172-5337 | 91 | 1-B 11 | 173-5392 | 433 | 1-C 21 |
| 166-7776 | 551 | 1-D 9 | 169-6399 | 1187 | 1-F 24 | 172-5337 | 151 | 1-B 17 | 173-5392 | 435 | 1-C 21 |
| 166-7776 | 553 | 1-D 9 | 169-8222 | 321 | 1-C 10 | 172-5338 | 77 | 1-B 9 | 173-5392 | 437 | 1-C 21 |
| 167-1258 | 1193 | 1-G 1 | 169-8223 | 273 | 1-C 5 | 172-5338 | 79 | 1-B 9 | 173-5392 | 441 | 1-C 22 |
| 167-9524 | 543 | 1-D 8 | 169-8225 | 387 | 1-C 16 | 172-5338 | 81 | 1-B 10 | 173-5392 | 443 | 1-C 22 |
| 167-9524 | 545 | 1-D 8 | 169-8227 | 1075 | 1-F 13 | 172-5338 | 83 | 1-B 10 | 173-5392 | 445 | 1-C 22 |
| 168-1945 | 393 | 1-C 17 | 169-8227 | 1263 | 1-G 8 | 172-5338 | 153 | 1-B 17 | 173-5392 | 447 | 1-C 22 |
| 168-1946 | 371 | 1-C 15 | 169-8228 | 367 | 1-C 14 | 172-5341 | 85 | 1-B 10 | 173-5392 | 449 | 1-C 22 |
| 168-1946 | 1049 | 1-F 10 | 169-8228 | 369 | 1-C 14 | 172-5341 | 87 | 1-B 10 | 173-5392 | 451 | 1-C 23 |
| 168-1946 | 1051 | 1-F 11 | 169-8229 | 351 | 1-C 13 | 172-5341 | 89 | 1-B 10 | 173-5392 | 525 | 1-D 6 |
| 168-1951 | 1045 | 1-F 10 | 169-8229 | 371 | 1-C 15 | 172-5341 | 91 | 1-B 11 | 173-5392 | 531 | 1-D 7 |
| 168-1951 | 1049 | 1-F 10 | 169-8230 | 391 | 1-C 17 | 172-5341 | 161 | 1-B 18 | 173-5392 | 537 | 1-D 7 |
| 168-1951 | 1051 | 1-F 11 | 169-8230 | 393 | 1-C 17 | 172-5342 | 77 | 1-B 9 | 173-6501 | 389 | 1-C 16 |
| 168-1951 | 1053 | 1-F 11 | 169-8231 | 357 | 1-C 13 | 172-5342 | 79 | 1-B 9 | 173-6501 | 1051 | 1-F 11 |
| 168-1951 | 1055 | 1-F 11 | 169-8231 | 361 | 1-C 14 | 172-5342 | 81 | 1-B 10 | 173-6501 | 1055 | 1-F 11 |
| 168-1951 | 1057 | 1-F 11 | 170-1198 | 353 | 1-C 13 | 172-5342 | 83 | 1-B 10 | 173-6501 | 1057 | 1-F 11 |
| 168-1952 | 1111 | 1-F 17 | 170-2204 | 353 | 1-C 13 | 172-5342 | 159 | 1-B 17 | 173-6505 | 347 | 1-C 12 |
| 168-1970 | 1113 | 1-F 17 | 170-2204 | 359 | 1-C 13 | 172-5343 | 77 | 1-B 9 | 173-6506 | 1173 | 1-F 23 |
| 168-2284 | 1121 | 1-F 18 | 170-5739 | 1115 | 1-F 17 | 172-5343 | 79 | 1-B 9 | 173-6507 | 1117 | 1-F 17 |
| 168-2284 | 1123 | 1-F 18 | 170-5765 | 621 | 1-D 16 | 172-5343 | 81 | 1-B 10 | 173-7707 | 357 | 1-C 13 |
| 168-2291 | 327 | 1-C 10 | 170-7252 | 365 | 1-C 14 | 172-5343 | 83 | 1-B 10 | 173-7708 | 359 | 1-C 13 |
| 168-2305 | 1097 | 1-F 15 | 170-7253 | 1117 | 1-F 17 | 172-5343 | 85 | 1-B 10 | 173-7708 | 363 | 1-C 14 |
| 168-2311 | 1031 | 1-F 9 | 170-7255 | 1173 | 1-F 23 | 172-5343 | 87 | 1-B 10 | 173-8307 | 635 | 1-D 17 |
| 168-2311 | 1033 | 1-F 9 | 170-7290 | 493 | 1-D 3 | 172-5343 | 89 | 1-B 10 | 173-8307 | 637 | 1-D 17 |
| 168-2311 | 1035 | 1-F 9 | 170-7290 | 523 | 1-D 6 | 172-5343 | 91 | 1-B 11 | 173-8818 | 1065 | 1-F 12 |

## INDEX


| Part No. | Page | Grid | Part No. | Page | Grid | Part No. | Page | Grid | Part No. | Page | Grid |
|---|---|---|---|---|---|---|---|---|---|---|---|
| 174-3978 | 1031 | 1-F 9 | 177-4522 | 647 | 1-D 18 | 177-5249 | 1263 | 1-G 8 | 177-6761 | 439 | 1-C 21 |
| 174-3979 | 1031 | 1-F 9 | 177-4523 | 649 | 1-D 18 | 177-5250 | 427 | 1-C 20 | 177-6762 | 439 | 1-C 21 |
| 174-3980 | 1033 | 1-F 9 | 177-4588 | 565 | 1-D 10 | 177-5250 | 433 | 1-C 21 | 177-6763 | 439 | 1-C 21 |
| 174-3981 | 1031 | 1-F 9 | 177-4589 | 685 | 1-D 22 | 177-5250 | 441 | 1-C 22 | 177-6764 | 439 | 1-C 21 |
| 174-4874 | 497 | 1-D 3 | 177-5233 | 439 | 1-C 21 | 177-5250 | 443 | 1-C 22 | 177-6765 | 439 | 1-C 21 |
| 174-4874 | 499 | 1-D 3 | 177-5233 | 511 | 1-D 5 | 177-5252 | 427 | 1-C 20 | 177-6766 | 439 | 1-C 21 |
| 174-4874 | 501 | 1-D 4 | 177-5234 | 493 | 1-D 3 | 177-5252 | 443 | 1-C 22 | 177-6767 | 439 | 1-C 21 |
| 174-4874 | 503 | 1-D 4 | 177-5234 | 511 | 1-D 5 | 177-5256 | 427 | 1-C 20 | 177-6768 | 439 | 1-C 21 |
| 174-4875 | 501 | 1-D 4 | 177-5236 | 427 | 1-C 20 | 177-5256 | 429 | 1-C 20 | 177-6769 | 437 | 1-C 21 |
| 174-4875 | 503 | 1-D 4 | 177-5236 | 429 | 1-C 20 | 177-5256 | 443 | 1-C 22 | 177-6769 | 451 | 1-C 23 |
| 174-5770 | 1023 | 1-F 8 | 177-5236 | 431 | 1-C 21 | 177-5256 | 445 | 1-C 22 | 177-6770 | 433 | 1-C 21 |
| 174-5770 | 1025 | 1-F 8 | 177-5236 | 433 | 1-C 21 | 177-5257 | 427 | 1-C 20 | 177-6770 | 441 | 1-C 22 |
| 174-5770 | 1027 | 1-F 8 | 177-5236 | 441 | 1-C 22 | 177-5257 | 429 | 1-C 20 | 177-6771 | 435 | 1-C 21 |
| 174-5770 | 1029 | 1-F 8 | 177-5236 | 443 | 1-C 22 | 177-5257 | 433 | 1-C 21 | 177-6771 | 437 | 1-C 21 |
| 174-5774 | 1177 | 1-F 23 | 177-5236 | 445 | 1-C 22 | 177-5257 | 441 | 1-C 22 | 177-6771 | 449 | 1-C 22 |
| 174-5788 | 1177 | 1-F 23 | 177-5236 | 447 | 1-C 22 | 177-5257 | 443 | 1-C 22 | 177-6771 | 451 | 1-C 23 |
| 174-5790 | 1065 | 1-F 12 | 177-5241 | 427 | 1-C 20 | 177-5257 | 445 | 1-C 22 | 177-6774 | 421 | 1-C 20 |
| 174-7449 | 513 | 1-D 5 | 177-5241 | 429 | 1-C 20 | 177-5258 | 427 | 1-C 20 | 177-6774 | 423 | 1-C 20 |
| 174-7872 | 1193 | 1-G 1 | 177-5241 | 431 | 1-C 21 | 177-5258 | 429 | 1-C 20 | 177-6775 | 421 | 1-C 20 |
| 174-8822 | 761 | 1-E 6 | 177-5241 | 433 | 1-C 21 | 177-5258 | 431 | 1-C 21 | 177-6775 | 423 | 1-C 20 |
| 174-9381 | 457 | 1-C 23 | 177-5241 | 435 | 1-C 21 | 177-5258 | 433 | 1-C 21 | 177-6781 | 493 | 1-D 3 |
| 174-9381 | 467 | 1-C 24 | 177-5241 | 437 | 1-C 21 | 177-5258 | 435 | 1-C 21 | 177-6782 | 493 | 1-D 3 |
| 174-9381 | 477 | 1-D 1 | 177-5241 | 441 | 1-C 22 | 177-5258 | 437 | 1-C 21 | 177-6783 | 493 | 1-D 3 |
| 174-9381 | 487 | 1-D 2 | 177-5241 | 443 | 1-C 22 | 177-5258 | 441 | 1-C 22 | 177-6784 | 493 | 1-D 3 |
| 174-9383 | 461 | 1-C 24 | 177-5241 | 445 | 1-C 22 | 177-5258 | 443 | 1-C 22 | 177-6795 | 435 | 1-C 21 |
| 174-9383 | 471 | 1-D 1 | 177-5241 | 447 | 1-C 22 | 177-5258 | 445 | 1-C 22 | 177-6795 | 449 | 1-C 22 |
| 174-9383 | 481 | 1-D 2 | 177-5241 | 449 | 1-C 22 | 177-5258 | 447 | 1-C 22 | 177-6797 | 427 | 1-C 20 |
| 174-9383 | 491 | 1-D 3 | 177-5241 | 451 | 1-C 23 | 177-5258 | 449 | 1-C 22 | 177-6797 | 429 | 1-C 20 |
| 174-9407 | 457 | 1-C 23 | 177-5241 | 525 | 1-D 6 | 177-5258 | 451 | 1-C 23 | 177-6797 | 431 | 1-C 21 |
| 174-9407 | 467 | 1-C 24 | 177-5241 | 531 | 1-D 7 | 177-5260 | 427 | 1-C 20 | 177-6797 | 433 | 1-C 21 |
| 174-9407 | 477 | 1-D 1 | 177-5241 | 537 | 1-D 7 | 177-5260 | 443 | 1-C 22 | 177-6797 | 437 | 1-C 21 |
| 174-9407 | 487 | 1-D 2 | 177-5243 | 427 | 1-C 20 | 177-5263 | 429 | 1-C 20 | 177-6797 | 441 | 1-C 22 |
| 174-9410 | 457 | 1-C 23 | 177-5243 | 429 | 1-C 20 | 177-5263 | 445 | 1-C 22 | 177-6797 | 443 | 1-C 22 |
| 174-9410 | 467 | 1-C 24 | 177-5243 | 431 | 1-C 21 | 177-5265 | 429 | 1-C 20 | 177-6797 | 445 | 1-C 22 |
| 174-9410 | 477 | 1-D 1 | 177-5243 | 433 | 1-C 21 | 177-5265 | 445 | 1-C 22 | 177-6797 | 447 | 1-C 22 |
| 174-9410 | 487 | 1-D 2 | 177-5243 | 437 | 1-C 21 | 177-5267 | 429 | 1-C 20 | 177-6797 | 451 | 1-C 23 |
| 175-0198 | 1193 | 1-G 1 | 177-5243 | 441 | 1-C 22 | 177-5267 | 435 | 1-C 21 | 177-6797 | 525 | 1-D 6 |
| 175-3097 | 497 | 1-D 3 | 177-5243 | 443 | 1-C 22 | 177-5267 | 445 | 1-C 22 | 177-6797 | 531 | 1-D 7 |
| 175-3097 | 499 | 1-D 3 | 177-5243 | 445 | 1-C 22 | 177-5267 | 449 | 1-C 22 | 177-6797 | 537 | 1-D 7 |
| 175-3097 | 501 | 1-D 4 | 177-5243 | 447 | 1-C 22 | 177-5269 | 433 | 1-C 21 | 177-6800 | 421 | 1-C 20 |
| 175-3097 | 503 | 1-D 4 | 177-5243 | 451 | 1-C 23 | 177-5269 | 441 | 1-C 22 | 177-6800 | 423 | 1-C 20 |
| 175-3097 | 505 | 1-D 4 | 177-5243 | 525 | 1-D 6 | 177-5270 | 433 | 1-C 21 | 177-6801 | 427 | 1-C 20 |
| 175-3097 | 507 | 1-D 4 | 177-5243 | 531 | 1-D 7 | 177-5270 | 441 | 1-C 22 | 177-6801 | 429 | 1-C 20 |
| 175-3097 | 509 | 1-D 4 | 177-5243 | 537 | 1-D 7 | 177-6738 | 435 | 1-C 21 | 177-6801 | 433 | 1-C 21 |
| 175-7513 | 671 | 1-D 21 | 177-5246 | 427 | 1-C 20 | 177-6738 | 437 | 1-C 21 | 177-6801 | 435 | 1-C 21 |
| 176-0373 | 581 | 1-D 12 | 177-5246 | 429 | 1-C 20 | 177-6738 | 449 | 1-C 22 | 177-6801 | 441 | 1-C 22 |
| 176-0374 | 581 | 1-D 12 | 177-5246 | 431 | 1-C 21 | 177-6738 | 451 | 1-C 23 | 177-6801 | 443 | 1-C 22 |
| 176-0379 | 259 | 1-C 3 | 177-5246 | 433 | 1-C 21 | 177-6739 | 435 | 1-C 21 | 177-6801 | 445 | 1-C 22 |
| 176-0380 | 259 | 1-C 3 | 177-5246 | 435 | 1-C 21 | 177-6739 | 449 | 1-C 22 | 177-6801 | 449 | 1-C 22 |
| 176-0997 | 573 | 1-D 11 | 177-5246 | 437 | 1-C 21 | 177-6740 | 435 | 1-C 21 | 177-6801 | 1263 | 1-G 8 |
| 176-0997 | 575 | 1-D 11 | 177-5246 | 441 | 1-C 22 | 177-6740 | 449 | 1-C 22 | 177-6802 | 431 | 1-C 21 |
| 176-0998 | 573 | 1-D 11 | 177-5246 | 443 | 1-C 22 | 177-6741 | 421 | 1-C 20 | 177-6802 | 447 | 1-C 22 |
| 176-0998 | 575 | 1-D 11 | 177-5246 | 445 | 1-C 22 | 177-6741 | 423 | 1-C 20 | 177-6804 | 427 | 1-C 20 |
| 176-0999 | 573 | 1-D 11 | 177-5246 | 447 | 1-C 22 | 177-6743 | 435 | 1-C 21 | 177-6804 | 429 | 1-C 20 |
| 176-0999 | 575 | 1-D 11 | 177-5246 | 449 | 1-C 22 | 177-6743 | 449 | 1-C 22 | 177-6804 | 431 | 1-C 21 |
| 176-1001 | 573 | 1-D 11 | 177-5246 | 451 | 1-C 23 | 177-6747 | 435 | 1-C 21 | 177-6804 | 433 | 1-C 21 |
| 176-1001 | 575 | 1-D 11 | 177-5246 | 525 | 1-D 6 | 177-6747 | 449 | 1-C 22 | 177-6804 | 437 | 1-C 21 |
| 176-1002 | 573 | 1-D 11 | 177-5246 | 531 | 1-D 7 | 177-6752 | 435 | 1-C 21 | 177-6804 | 441 | 1-C 22 |
| 176-1002 | 575 | 1-D 11 | 177-5246 | 537 | 1-D 7 | 177-6752 | 449 | 1-C 22 | 177-6804 | 443 | 1-C 22 |
| 176-1377 | 457 | 1-C 23 | 177-5248 | 427 | 1-C 20 | 177-6754 | 435 | 1-C 21 | 177-6804 | 445 | 1-C 22 |
| 176-1377 | 461 | 1-C 24 | 177-5248 | 433 | 1-C 21 | 177-6754 | 449 | 1-C 22 | 177-6804 | 447 | 1-C 22 |
| 176-1377 | 467 | 1-C 24 | 177-5248 | 441 | 1-C 22 | 177-6755 | 435 | 1-C 21 | 177-6804 | 451 | 1-C 23 |
| 176-1377 | 471 | 1-D 1 | 177-5248 | 443 | 1-C 22 | 177-6755 | 437 | 1-C 21 | 177-6804 | 525 | 1-D 6 |
| 176-1377 | 477 | 1-D 1 | 177-5249 | 427 | 1-C 20 | 177-6755 | 449 | 1-C 22 | 177-6804 | 531 | 1-D 7 |
| 176-1377 | 481 | 1-D 2 | 177-5249 | 429 | 1-C 20 | 177-6755 | 451 | 1-C 23 | 177-6804 | 537 | 1-D 7 |
| 176-1377 | 487 | 1-D 2 | 177-5249 | 431 | 1-C 21 | 177-6757 | 435 | 1-C 21 | 177-7107 | 613 | 1-D 15 |
| 176-1377 | 491 | 1-D 3 | 177-5249 | 433 | 1-C 21 | 177-6757 | 437 | 1-C 21 | 177-9555 | 761 | 1-E 6 |
| 176-2966 | 667 | 1-D 20 | 177-5249 | 435 | 1-C 21 | 177-6757 | 449 | 1-C 22 | 177-9641 | 1039 | 1-F 9 |
| 176-2968 | 669 | 1-D 20 | 177-5249 | 437 | 1-C 21 | 177-6757 | 451 | 1-C 23 | 177-9642 | 1039 | 1-F 9 |
| 177-0381 | 355 | 1-C 13 | 177-5249 | 441 | 1-C 22 | 177-6758 | 435 | 1-C 21 | 177-9645 | 1039 | 1-F 9 |
| 177-0381 | 359 | 1-C 13 | 177-5249 | 443 | 1-C 22 | 177-6758 | 437 | 1-C 21 | 177-9778 | 177 | 1-B 19 |
| 177-0385 | 355 | 1-C 13 | 177-5249 | 445 | 1-C 22 | 177-6758 | 449 | 1-C 22 | 177-9945 | 699 | 1-D 23 |
| 177-0385 | 359 | 1-C 13 | 177-5249 | 447 | 1-C 22 | 177-6758 | 451 | 1-C 23 | 177-9945 | 703 | 1-D 24 |
| 177-0661 | 957 | 1-F 1 | 177-5249 | 449 | 1-C 22 | 177-6760 | 435 | 1-C 21 | 177-9946 | 663 | 1-D 20 |
| 177-0661 | 959 | 1-F 1 | 177-5249 | 451 | 1-C 23 | 177-6760 | 449 | 1-C 22 | 177-9946 | 665 | 1-D 20 |

# INDEX


| Part No. | Page | Grid | Part No. | Page | Grid | Part No. | Page | Grid | Part No. | Page | Grid |
|---|---|---|---|---|---|---|---|---|---|---|---|
| 177-9946 | 703 | 1-D 24 | 179-2261 | 1219 | 1-G 3 | 179-9480 | 501 | 1-D 4 | 180-4376 | 457 | 1-C 23 |
| 177-9947 | 663 | 1-D 20 | 179-2261 | 1221 | 1-G 4 | 179-9480 | 503 | 1-D 4 | 180-4376 | 459 | 1-C 23 |
| 177-9948 | 659 | 1-D 19 | 179-2261 | 1223 | 1-G 4 | 179-9480 | 517 | 1-D 5 | 180-4376 | 461 | 1-C 24 |
| 178-1202 | 667 | 1-D 20 | 179-2261 | 1225 | 1-G 4 | 179-9480 | 521 | 1-D 6 | 180-4376 | 463 | 1-C 24 |
| 178-1202 | 669 | 1-D 20 | 179-2886 | 99 | 1-B 11 | 179-9488 | 497 | 1-D 3 | 180-4376 | 465 | 1-C 24 |
| 178-1203 | 667 | 1-D 20 | 179-2887 | 99 | 1-B 11 | 179-9488 | 499 | 1-D 3 | 180-4376 | 467 | 1-C 24 |
| 178-1203 | 669 | 1-D 20 | 179-2957 | 1177 | 1-F 23 | 179-9488 | 501 | 1-D 4 | 180-4376 | 469 | 1-C 24 |
| 178-6238 | 1179 | 1-F 23 | 179-3317 | 977 | 1-F 3 | 179-9488 | 503 | 1-D 4 | 180-4376 | 471 | 1-D 1 |
| 178-7162 | 797 | 1-E 9 | 179-3317 | 981 | 1-F 4 | 179-9827 | 821 | 1-E 12 | 180-4376 | 473 | 1-D 1 |
| 178-7197 | 761 | 1-E 6 | 179-3317 | 985 | 1-F 4 | 179-9828 | 821 | 1-E 12 | 180-4376 | 475 | 1-D 1 |
| 178-7952 | 1127 | 1-F 18 | 179-3317 | 989 | 1-F 4 | 180-0184 | 873 | 1-E 17 | 180-4376 | 477 | 1-D 1 |
| 178-7953 | 1187 | 1-F 24 | 179-3318 | 957 | 1-F 1 | 180-0185 | 65 | 1-B 8 | 180-4376 | 479 | 1-D 1 |
| 178-7954 | 1187 | 1-F 24 | 179-3318 | 977 | 1-F 3 | 180-0185 | 67 | 1-B 8 | 180-4376 | 481 | 1-D 2 |
| 178-7957 | 355 | 1-C 13 | 179-3318 | 981 | 1-F 4 | 180-0185 | 69 | 1-B 8 | 180-4376 | 483 | 1-D 2 |
| 178-7957 | 359 | 1-C 13 | 179-3318 | 985 | 1-F 4 | 180-0185 | 71 | 1-B 9 | 180-4376 | 485 | 1-D 2 |
| 178-7974 | 1095 | 1-F 15 | 179-4203 | 1121 | 1-F 18 | 180-0185 | 875 | 1-E 17 | 180-4376 | 487 | 1-D 2 |
| 178-8047 | 567 | 1-D 10 | 179-4203 | 1123 | 1-F 18 | 180-0494 | 903 | 1-E 20 | 180-4376 | 489 | 1-D 2 |
| 178-8087 | 651 | 1-D 19 | 179-4204 | 359 | 1-C 13 | 180-0494 | 913 | 1-E 21 | 180-4376 | 491 | 1-D 3 |
| 178-9090 | 377 | 1-C 15 | 179-4206 | 1065 | 1-F 12 | 180-0495 | 905 | 1-E 20 | 180-4376 | 515 | 1-D 5 |
| 178-9090 | 383 | 1-C 16 | 179-4207 | 597 | 1-D 13 | 180-0495 | 917 | 1-E 21 | 180-4376 | 517 | 1-D 5 |
| 178-9244 | 1153 | 1-F 21 | 179-4207 | 599 | 1-D 13 | 180-0498 | 805 | 1-E 10 | 180-4376 | 519 | 1-D 5 |
| 178-9245 | 1153 | 1-F 21 | 179-4207 | 1065 | 1-F 12 | 180-0500 | 911 | 1-E 21 | 180-4376 | 521 | 1-D 6 |
| 179-0851 | 953 | 1-F 1 | 179-4219 | 1091 | 1-F 15 | 180-0500 | 915 | 1-E 21 | 180-4379 | 461 | 1-C 24 |
| 179-0852 | 981 | 1-F 4 | 179-4221 | 1095 | 1-F 15 | 180-0503 | 949 | 1-E 24 | 180-4379 | 471 | 1-D 1 |
| 179-0853 | 65 | 1-B 8 | 179-4223 | 1095 | 1-F 15 | 180-0503 | 951 | 1-F 1 | 180-4379 | 481 | 1-D 2 |
| 179-0853 | 67 | 1-B 8 | 179-4225 | 1095 | 1-F 15 | 180-0503 | 997 | 1-F 5 | 180-4379 | 491 | 1-D 3 |
| 179-0853 | 69 | 1-B 8 | 179-4227 | 1075 | 1-F 13 | 180-1434 | 903 | 1-E 20 | 180-4381 | 461 | 1-C 24 |
| 179-0853 | 71 | 1-B 9 | 179-4304 | 49 | 1-B 6 | 180-1438 | 905 | 1-E 20 | 180-4381 | 471 | 1-D 1 |
| 179-0853 | 955 | 1-F 1 | 179-4304 | 51 | 1-B 7 | 180-1667 | 751 | 1-E 5 | 180-4381 | 481 | 1-D 2 |
| 179-1952 | 49 | 1-B 6 | 179-4304 | 53 | 1-B 7 | 180-1667 | 755 | 1-E 5 | 180-4381 | 491 | 1-D 3 |
| 179-1952 | 51 | 1-B 7 | 179-4304 | 55 | 1-B 7 | 180-2455 | 1039 | 1-F 9 | 180-4382 | 461 | 1-C 24 |
| 179-1952 | 53 | 1-B 7 | 179-4304 | 57 | 1-B 7 | 180-2461 | 1039 | 1-F 9 | 180-4382 | 471 | 1-D 1 |
| 179-1952 | 55 | 1-B 7 | 179-4304 | 59 | 1-B 7 | 180-2463 | 1033 | 1-F 9 | 180-4382 | 481 | 1-D 2 |
| 179-1952 | 73 | 1-B 9 | 179-4304 | 61 | 1-B 8 | 180-2463 | 1039 | 1-F 9 | 180-4382 | 491 | 1-D 3 |
| 179-1953 | 73 | 1-B 9 | 179-4304 | 63 | 1-B 8 | 180-2464 | 1033 | 1-F 9 | 180-4384 | 461 | 1-C 24 |
| 179-1953 | 75 | 1-B 9 | 179-4304 | 403 | 1-C 18 | 180-2464 | 1039 | 1-F 9 | 180-4384 | 471 | 1-D 1 |
| 179-1953 | 547 | 1-D 8 | 179-4324 | 357 | 1-C 13 | 180-2465 | 1035 | 1-F 9 | 180-4384 | 481 | 1-D 2 |
| 179-1954 | 547 | 1-D 8 | 179-6897 | 733 | 1-E 3 | 180-2465 | 1041 | 1-F 10 | 180-4384 | 491 | 1-D 3 |
| 179-1954 | 579 | 1-D 11 | 179-6899 | 733 | 1-E 3 | 180-2466 | 1035 | 1-F 9 | 180-4387 | 461 | 1-C 24 |
| 179-2180 | 57 | 1-B 7 | 179-6901 | 733 | 1-E 3 | 180-2466 | 1041 | 1-F 10 | 180-4387 | 471 | 1-D 1 |
| 179-2180 | 59 | 1-B 7 | 179-8220 | 1067 | 1-F 12 | 180-2467 | 1035 | 1-F 9 | 180-4387 | 481 | 1-D 2 |
| 179-2180 | 61 | 1-B 8 | 179-8664 | 843 | 1-E 14 | 180-2467 | 1041 | 1-F 10 | 180-4387 | 491 | 1-D 3 |
| 179-2180 | 63 | 1-B 8 | 179-8664 | 855 | 1-E 15 | 180-2468 | 1035 | 1-F 9 | 180-4502 | 457 | 1-C 23 |
| 179-2180 | 75 | 1-B 9 | 179-9006 | 457 | 1-C 23 | 180-2468 | 1041 | 1-F 10 | 180-4502 | 461 | 1-C 24 |
| 179-2182 | 185 | 1-B 20 | 179-9006 | 461 | 1-C 24 | 180-2469 | 1035 | 1-F 9 | 180-4502 | 467 | 1-C 24 |
| 179-2182 | 547 | 1-D 8 | 179-9006 | 467 | 1-C 24 | 180-2469 | 1041 | 1-F 10 | 180-4502 | 471 | 1-D 1 |
| 179-2183 | 85 | 1-B 10 | 179-9006 | 471 | 1-D 1 | 180-2470 | 1031 | 1-F 9 | 180-4502 | 477 | 1-D 1 |
| 179-2183 | 87 | 1-B 10 | 179-9006 | 477 | 1-D 1 | 180-2471 | 1035 | 1-F 9 | 180-4502 | 481 | 1-D 2 |
| 179-2183 | 89 | 1-B 10 | 179-9006 | 481 | 1-D 2 | 180-2471 | 1041 | 1-F 10 | 180-4502 | 487 | 1-D 2 |
| 179-2183 | 91 | 1-B 11 | 179-9006 | 487 | 1-D 2 | 180-2519 | 751 | 1-E 5 | 180-4502 | 491 | 1-D 3 |
| 179-2183 | 181 | 1-B 20 | 179-9006 | 491 | 1-D 3 | 180-2519 | 755 | 1-E 5 | 180-4505 | 457 | 1-C 23 |
| 179-2185 | 73 | 1-B 9 | 179-9007 | 497 | 1-D 3 | 180-2825 | 1177 | 1-F 23 | 180-4505 | 461 | 1-C 24 |
| 179-2185 | 1227 | 1-G 4 | 179-9007 | 499 | 1-D 3 | 180-2924 | 85 | 1-B 10 | 180-4505 | 467 | 1-C 24 |
| 179-2185 | 1229 | 1-G 4 | 179-9007 | 501 | 1-D 4 | 180-2924 | 87 | 1-B 10 | 180-4505 | 471 | 1-D 1 |
| 179-2185 | 1231 | 1-G 5 | 179-9007 | 503 | 1-D 4 | 180-2924 | 89 | 1-B 10 | 180-4505 | 477 | 1-D 1 |
| 179-2185 | 1233 | 1-G 5 | 179-9471 | 497 | 1-D 3 | 180-2924 | 91 | 1-B 11 | 180-4505 | 481 | 1-D 2 |
| 179-2185 | 1235 | 1-G 5 | 179-9471 | 499 | 1-D 3 | 180-2924 | 313 | 1-C 9 | 180-4505 | 487 | 1-D 2 |
| 179-2193 | 57 | 1-B 7 | 179-9471 | 501 | 1-D 4 | 180-2937 | 93 | 1-B 11 | 180-4505 | 491 | 1-D 3 |
| 179-2194 | 59 | 1-B 7 | 179-9471 | 503 | 1-D 4 | 180-2937 | 95 | 1-B 11 | 180-5237 | 1065 | 1-F 12 |
| 179-2195 | 61 | 1-B 8 | 179-9476 | 497 | 1-D 3 | 180-2937 | 717 | 1-E 1 | 180-5239 | 1095 | 1-F 15 |
| 179-2196 | 63 | 1-B 8 | 179-9476 | 499 | 1-D 3 | 180-2937 | 721 | 1-E 2 | 180-5244 | 355 | 1-C 13 |
| 179-2248 | 1243 | 1-G 6 | 179-9476 | 501 | 1-D 4 | 180-2937 | 763 | 1-E 6 | 180-5244 | 359 | 1-C 13 |
| 179-2249 | 1247 | 1-G 6 | 179-9476 | 503 | 1-D 4 | 180-2937 | 767 | 1-E 6 | 180-5485 | 761 | 1-E 6 |
| 179-2250 | 1255 | 1-G 7 | 179-9477 | 497 | 1-D 3 | 180-3667 | 669 | 1-D 20 | 180-6240 | 1091 | 1-F 15 |
| 179-2251 | 1251 | 1-G 7 | 179-9477 | 499 | 1-D 3 | 180-3669 | 667 | 1-D 20 | 180-6240 | 1093 | 1-F 15 |
| 179-2252 | 1245 | 1-G 6 | 179-9477 | 501 | 1-D 4 | 180-4036 | 949 | 1-E 24 | 180-6639 | 983 | 1-F 4 |
| 179-2254 | 1249 | 1-G 6 | 179-9477 | 503 | 1-D 4 | 180-4036 | 953 | 1-F 1 | 180-6640 | 959 | 1-F 1 |
| 179-2255 | 1253 | 1-G 7 | 179-9478 | 497 | 1-D 3 | 180-4036 | 969 | 1-F 2 | 180-6640 | 979 | 1-F 3 |
| 179-2257 | 149 | 1-B 16 | 179-9478 | 499 | 1-D 3 | 180-4038 | 955 | 1-F 1 | 180-6640 | 983 | 1-F 4 |
| 179-2261 | 75 | 1-B 9 | 179-9478 | 501 | 1-D 4 | 180-4038 | 1017 | 1-F 7 | 180-6640 | 987 | 1-F 4 |
| 179-2261 | 1209 | 1-G 2 | 179-9478 | 503 | 1-D 4 | 180-4039 | 947 | 1-E 24 | 180-7174 | 799 | 1-E 9 |
| 179-2261 | 1211 | 1-G 3 | 179-9479 | 497 | 1-D 3 | 180-4039 | 949 | 1-E 24 | 180-8369 | 529 | 1-D 6 |
| 179-2261 | 1213 | 1-G 3 | 179-9479 | 499 | 1-D 3 | 180-4039 | 953 | 1-F 1 | 180-8369 | 535 | 1-D 7 |
| 179-2261 | 1215 | 1-G 3 | 179-9479 | 515 | 1-D 5 | 180-4039 | 955 | 1-F 1 | 180-8369 | 541 | 1-D 8 |
| 179-2261 | 1217 | 1-G 3 | 179-9479 | 519 | 1-D 5 | 180-4376 | 455 | 1-C 23 | 180-8378 | 525 | 1-D 6 |

## INDEX


| Part No. | Page | Grid | Part No. | Page | Grid | Part No. | Page | Grid | Part No. | Page | Grid |
|---|---|---|---|---|---|---|---|---|---|---|---|
| 180-8378 | 531 | 1-D 7 | 184-0790 | 669 | 1-D 20 | 184-7171 | 113 | 1-B 13 | 186-0983 | 1001 | 1-F 6 |
| 180-8378 | 537 | 1-D 7 | 184-1693 | 457 | 1-C 23 | 184-7976 | 633 | 1-D 17 | 186-0994 | 969 | 1-F 2 |
| 180-8382 | 525 | 1-D 6 | 184-1693 | 461 | 1-C 24 | 184-7977 | 633 | 1-D 17 | 186-0994 | 971 | 1-F 3 |
| 180-8382 | 531 | 1-D 7 | 184-1693 | 467 | 1-C 24 | 184-7978 | 633 | 1-D 17 | 186-0995 | 969 | 1-F 2 |
| 180-8382 | 537 | 1-D 7 | 184-1693 | 471 | 1-D 1 | 184-7979 | 633 | 1-D 17 | 186-0995 | 971 | 1-F 3 |
| 180-8385 | 525 | 1-D 6 | 184-1693 | 477 | 1-D 1 | 184-7980 | 633 | 1-D 17 | 186-1000 | 961 | 1-F 2 |
| 180-8385 | 531 | 1-D 7 | 184-1693 | 481 | 1-D 2 | 184-7985 | 633 | 1-D 17 | 186-1020 | 1001 | 1-F 6 |
| 180-8385 | 537 | 1-D 7 | 184-1693 | 487 | 1-D 2 | 185-2151 | 1153 | 1-F 21 | 186-1063 | 989 | 1-F 4 |
| 180-8393 | 525 | 1-D 6 | 184-1693 | 491 | 1-D 3 | 185-2151 | 1263 | 1-G 8 | 186-1063 | 991 | 1-F 5 |
| 180-8393 | 531 | 1-D 7 | 184-1694 | 457 | 1-C 23 | 185-2220 | 85 | 1-B 10 | 186-1063 | 1015 | 1-F 7 |
| 180-8393 | 537 | 1-D 7 | 184-1694 | 467 | 1-C 24 | 185-2220 | 87 | 1-B 10 | 186-1064 | 1015 | 1-F 7 |
| 180-8395 | 525 | 1-D 6 | 184-1694 | 477 | 1-D 1 | 185-2220 | 89 | 1-B 10 | 186-1071 | 971 | 1-F 3 |
| 180-8395 | 531 | 1-D 7 | 184-1694 | 487 | 1-D 2 | 185-2220 | 91 | 1-B 11 | 186-1077 | 971 | 1-F 3 |
| 180-8395 | 537 | 1-D 7 | 184-1695 | 457 | 1-C 23 | 185-2220 | 147 | 1-B 16 | 186-1078 | 971 | 1-F 3 |
| 180-8428 | 457 | 1-C 23 | 184-1695 | 461 | 1-C 24 | 185-2225 | 127 | 1-B 14 | 186-1090 | 989 | 1-F 4 |
| 180-8428 | 467 | 1-C 24 | 184-1695 | 467 | 1-C 24 | 185-2226 | 127 | 1-B 14 | 186-1090 | 991 | 1-F 5 |
| 180-8428 | 477 | 1-D 1 | 184-1695 | 471 | 1-D 1 | 185-2227 | 127 | 1-B 14 | 186-1090 | 1001 | 1-F 6 |
| 180-8428 | 487 | 1-D 2 | 184-1695 | 477 | 1-D 1 | 185-2237 | 77 | 1-B 9 | 186-1091 | 989 | 1-F 4 |
| 180-8431 | 505 | 1-D 4 | 184-1695 | 481 | 1-D 2 | 185-2237 | 79 | 1-B 9 | 186-1091 | 991 | 1-F 5 |
| 180-8431 | 507 | 1-D 4 | 184-1695 | 487 | 1-D 2 | 185-2237 | 81 | 1-B 10 | 186-1091 | 1003 | 1-F 6 |
| 180-8431 | 509 | 1-D 4 | 184-1695 | 491 | 1-D 3 | 185-2237 | 83 | 1-B 10 | 186-1093 | 1001 | 1-F 6 |
| 180-9214 | 1041 | 1-F 10 | 184-1695 | 1263 | 1-G 8 | 185-2237 | 121 | 1-B 14 | 186-1095 | 1001 | 1-F 6 |
| 180-9966 | 1059 | 1-F 11 | 184-1696 | 457 | 1-C 23 | 185-2239 | 85 | 1-B 10 | 186-1620 | 719 | 1-E 1 |
| 180-9966 | 1061 | 1-F 12 | 184-1696 | 461 | 1-C 24 | 185-2239 | 87 | 1-B 10 | 186-1671 | 77 | 1-B 9 |
| 183-2197 | 665 | 1-D 20 | 184-1696 | 467 | 1-C 24 | 185-2239 | 123 | 1-B 14 | 186-1671 | 79 | 1-B 9 |
| 183-2198 | 661 | 1-D 20 | 184-1696 | 471 | 1-D 1 | 185-2240 | 89 | 1-B 10 | 186-1671 | 81 | 1-B 10 |
| 183-2317 | 453 | 1-C 23 | 184-1696 | 477 | 1-D 1 | 185-2240 | 91 | 1-B 11 | 186-1671 | 83 | 1-B 10 |
| 183-3411 | 457 | 1-C 23 | 184-1696 | 481 | 1-D 2 | 185-2240 | 125 | 1-B 14 | 186-1671 | 307 | 1-C 8 |
| 183-3411 | 467 | 1-C 24 | 184-1696 | 487 | 1-D 2 | 185-3955 | 413 | 1-C 19 | 186-2427 | 75 | 1-B 9 |
| 183-3411 | 477 | 1-D 1 | 184-1696 | 491 | 1-D 3 | 185-3955 | 515 | 1-D 5 | 186-2427 | 577 | 1-D 11 |
| 183-3411 | 487 | 1-D 2 | 184-1697 | 461 | 1-C 24 | 185-3956 | 415 | 1-C 19 | 186-2867 | 457 | 1-C 23 |
| 183-3413 | 457 | 1-C 23 | 184-1697 | 471 | 1-D 1 | 185-3956 | 517 | 1-D 5 | 186-2867 | 467 | 1-C 24 |
| 183-3413 | 467 | 1-C 24 | 184-1697 | 481 | 1-D 2 | 185-3957 | 417 | 1-C 19 | 186-2867 | 477 | 1-D 1 |
| 183-3413 | 477 | 1-D 1 | 184-1697 | 491 | 1-D 3 | 185-3957 | 519 | 1-D 5 | 186-2867 | 487 | 1-D 2 |
| 183-3413 | 487 | 1-D 2 | 184-1704 | 1177 | 1-F 23 | 185-3958 | 419 | 1-C 19 | 186-2868 | 455 | 1-C 23 |
| 183-3414 | 457 | 1-C 23 | 184-2472 | 377 | 1-C 15 | 185-3958 | 521 | 1-D 6 | 186-2868 | 463 | 1-C 24 |
| 183-3414 | 467 | 1-C 24 | 184-2472 | 383 | 1-C 16 | 185-4015 | 1033 | 1-F 9 | 186-2868 | 473 | 1-D 1 |
| 183-3414 | 477 | 1-D 1 | 184-4356 | 693 | 1-D 23 | 185-4015 | 1039 | 1-F 9 | 186-2868 | 483 | 1-D 2 |
| 183-3414 | 487 | 1-D 2 | 184-4356 | 695 | 1-D 23 | 185-4422 | 461 | 1-C 24 | 186-2869 | 457 | 1-C 23 |
| 183-3415 | 461 | 1-C 24 | 184-5033 | 949 | 1-E 24 | 185-4422 | 471 | 1-D 1 | 186-2869 | 467 | 1-C 24 |
| 183-3415 | 471 | 1-D 1 | 184-5035 | 949 | 1-E 24 | 185-4422 | 481 | 1-D 2 | 186-2869 | 477 | 1-D 1 |
| 183-3415 | 481 | 1-D 2 | 184-5035 | 951 | 1-F 1 | 185-4422 | 491 | 1-D 3 | 186-2869 | 487 | 1-D 2 |
| 183-3415 | 491 | 1-D 3 | 184-5035 | 1005 | 1-F 6 | 185-4423 | 461 | 1-C 24 | 186-2869 | 1263 | 1-G 8 |
| 183-3416 | 461 | 1-C 24 | 184-5042 | 969 | 1-F 2 | 185-4423 | 471 | 1-D 1 | 186-3735 | 265 | 1-C 4 |
| 183-3416 | 471 | 1-D 1 | 184-5049 | 969 | 1-F 2 | 185-4423 | 481 | 1-D 2 | 186-3735 | 353 | 1-C 13 |
| 183-3416 | 481 | 1-D 2 | 184-5051 | 969 | 1-F 2 | 185-4423 | 491 | 1-D 3 | 186-3735 | 373 | 1-C 15 |
| 183-3416 | 491 | 1-D 3 | 184-5053 | 969 | 1-F 2 | 185-8617 | 397 | 1-C 17 | 186-3735 | 827 | 1-E 12 |
| 183-4130 | 579 | 1-D 11 | 184-5055 | 969 | 1-F 2 | 185-8688 | 551 | 1-D 9 | 186-5431 | 185 | 1-B 20 |
| 183-4131 | 579 | 1-D 11 | 184-5060 | 969 | 1-F 2 | 185-8690 | 553 | 1-D 9 | 186-5431 | 625 | 1-D 16 |
| 183-4132 | 579 | 1-D 11 | 184-5062 | 969 | 1-F 2 | 185-8699 | 801 | 1-E 10 | 186-5431 | 627 | 1-D 16 |
| 183-4145 | 579 | 1-D 11 | 184-5062 | 971 | 1-F 3 | 185-8701 | 803 | 1-E 10 | 186-5431 | 629 | 1-D 16 |
| 183-4241 | 753 | 1-E 5 | 184-5063 | 1001 | 1-F 6 | 185-8720 | 569 | 1-D 10 | 186-5432 | 185 | 1-B 20 |
| 183-4241 | 757 | 1-E 5 | 184-5065 | 979 | 1-F 3 | 185-8737 | 519 | 1-D 5 | 186-5432 | 189 | 1-B 20 |
| 183-4396 | 963 | 1-F 2 | 184-5065 | 983 | 1-F 4 | 185-8737 | 521 | 1-D 6 | 187-1062 | 627 | 1-D 16 |
| 183-4396 | 977 | 1-F 3 | 184-5065 | 987 | 1-F 4 | 185-8737 | 523 | 1-D 6 | 187-1069 | 627 | 1-D 16 |
| 183-4396 | 979 | 1-F 3 | 184-5065 | 991 | 1-F 5 | 185-8787 | 75 | 1-B 9 | 187-1376 | 421 | 1-C 20 |
| 183-4396 | 981 | 1-F 4 | 184-5329 | 559 | 1-D 9 | 185-8787 | 741 | 1-E 4 | 187-1376 | 423 | 1-C 20 |
| 183-4396 | 983 | 1-F 4 | 184-5337 | 549 | 1-D 8 | 185-8848 | 1257 | 1-G 7 | 187-1377 | 455 | 1-C 23 |
| 183-4396 | 985 | 1-F 4 | 184-5338 | 739 | 1-E 3 | 185-8849 | 585 | 1-D 12 | 187-1377 | 463 | 1-C 24 |
| 183-4396 | 987 | 1-F 4 | 184-5338 | 743 | 1-E 4 | 185-8860 | 717 | 1-E 1 | 187-1377 | 473 | 1-D 1 |
| 183-4470 | 661 | 1-D 20 | 184-5352 | 743 | 1-E 4 | 185-9754 | 761 | 1-E 6 | 187-1377 | 483 | 1-D 2 |
| 183-4470 | 665 | 1-D 20 | 184-5356 | 549 | 1-D 8 | 185-9756 | 761 | 1-E 6 | 187-1740 | 85 | 1-B 10 |
| 183-4470 | 1009 | 1-F 6 | 184-5356 | 555 | 1-D 9 | 185-9769 | 761 | 1-E 6 | 187-1740 | 87 | 1-B 10 |
| 183-4470 | 1011 | 1-F 7 | 184-5356 | 557 | 1-D 9 | 185-9771 | 761 | 1-E 6 | 187-1740 | 89 | 1-B 10 |
| 183-4470 | 1013 | 1-F 7 | 184-5356 | 559 | 1-D 9 | 185-9774 | 761 | 1-E 6 | 187-1740 | 91 | 1-B 11 |
| 183-5789 | 619 | 1-D 15 | 184-5356 | 561 | 1-D 10 | 186-0342 | 923 | 1-E 22 | 187-1740 | 309 | 1-C 8 |
| 183-6384 | 73 | 1-B 9 | 184-5356 | 563 | 1-D 10 | 186-0346 | 923 | 1-E 22 | 187-1741 | 57 | 1-B 7 |
| 183-6384 | 75 | 1-B 9 | 184-5357 | 65 | 1-B 8 | 186-0346 | 925 | 1-E 22 | 187-1741 | 79 | 1-B 9 |
| 183-6384 | 633 | 1-D 17 | 184-5357 | 67 | 1-B 8 | 186-0370 | 925 | 1-E 22 | 187-1742 | 59 | 1-B 7 |
| 183-7892 | 621 | 1-D 16 | 184-5357 | 69 | 1-B 8 | 186-0372 | 923 | 1-E 22 | 187-1742 | 83 | 1-B 10 |
| 183-7894 | 621 | 1-D 16 | 184-5357 | 71 | 1-B 9 | 186-0373 | 923 | 1-E 22 | 187-1743 | 61 | 1-B 8 |
| 183-8600 | 697 | 1-D 23 | 184-5357 | 563 | 1-D 10 | 186-0373 | 925 | 1-E 22 | 187-1743 | 87 | 1-B 10 |
| 183-8600 | 699 | 1-D 23 | 184-6718 | 673 | 1-D 21 | 186-0377 | 923 | 1-E 22 | 187-1744 | 63 | 1-B 8 |
| 183-9281 | 1205 | 1-G 2 | 184-6718 | 675 | 1-D 21 | 186-0466 | 581 | 1-D 12 | 187-1744 | 91 | 1-B 11 |
| 184-0790 | 667 | 1-D 20 | 184-6718 | 687 | 1-D 22 | 186-0979 | 985 | 1-F 4 | 187-1791 | 77 | 1-B 9 |

# INDEX


| Part No. | Page | Grid | Part No. | Page | Grid | Part No. | Page | Grid | Part No. | Page | Grid |
|---|---|---|---|---|---|---|---|---|---|---|---|
| 187-1791 | 79 | 1-B 9 | 187-8141 | 537 | 1-D 7 | 189-2089 | 481 | 1-D 2 | 190-2608 | 991 | 1-F 5 |
| 187-1791 | 81 | 1-B 10 | 187-8142 | 539 | 1-D 7 | 189-2089 | 487 | 1-D 2 | 190-2609 | 989 | 1-F 4 |
| 187-1791 | 83 | 1-B 10 | 187-8609 | 75 | 1-B 9 | 189-2089 | 491 | 1-D 3 | 190-2609 | 991 | 1-F 5 |
| 187-1791 | 85 | 1-B 10 | 187-8609 | 583 | 1-D 12 | 189-2976 | 661 | 1-D 20 | 190-2613 | 1005 | 1-F 6 |
| 187-1791 | 87 | 1-B 10 | 187-8611 | 583 | 1-D 12 | 189-2976 | 665 | 1-D 20 | 190-2624 | 989 | 1-F 4 |
| 187-1791 | 89 | 1-B 10 | 187-8947 | 435 | 1-C 21 | 189-2976 | 999 | 1-F 5 | 190-2624 | 991 | 1-F 5 |
| 187-1791 | 91 | 1-B 11 | 187-8947 | 437 | 1-C 21 | 189-2976 | 1009 | 1-F 6 | 190-2838 | 211 | 1-B 23 |
| 187-1791 | 105 | 1-B 12 | 187-8947 | 449 | 1-C 22 | 189-2976 | 1011 | 1-F 7 | 190-2839 | 211 | 1-B 23 |
| 187-1792 | 77 | 1-B 9 | 187-8947 | 451 | 1-C 23 | 189-3141 | 819 | 1-E 11 | 190-3118 | 883 | 1-E 18 |
| 187-1792 | 79 | 1-B 9 | 187-8947 | 1263 | 1-G 8 | 189-3142 | 821 | 1-E 12 | 190-3118 | 887 | 1-E 18 |
| 187-1792 | 81 | 1-B 10 | 187-9009 | 93 | 1-B 11 | 189-3142 | 1263 | 1-G 8 | 190-5441 | 547 | 1-D 8 |
| 187-1792 | 83 | 1-B 10 | 187-9009 | 99 | 1-B 11 | 189-3143 | 809 | 1-E 10 | 190-5441 | 631 | 1-D 17 |
| 187-1792 | 85 | 1-B 10 | 187-9012 | 751 | 1-E 5 | 189-3165 | 667 | 1-D 20 | 190-5942 | 571 | 1-D 11 |
| 187-1792 | 87 | 1-B 10 | 187-9012 | 755 | 1-E 5 | 189-3165 | 669 | 1-D 20 | 190-5943 | 571 | 1-D 11 |
| 187-1792 | 89 | 1-B 10 | 187-9020 | 753 | 1-E 5 | 189-3296 | 1001 | 1-F 6 | 190-5943 | 597 | 1-D 13 |
| 187-1792 | 91 | 1-B 11 | 187-9020 | 757 | 1-E 5 | 189-3296 | 1003 | 1-F 6 | 190-5943 | 601 | 1-D 14 |
| 187-1792 | 119 | 1-B 13 | 188-0452 | 599 | 1-D 13 | 189-3300 | 987 | 1-F 4 | 190-6043 | 967 | 1-F 2 |
| 187-3185 | 761 | 1-E 6 | 188-0452 | 603 | 1-D 14 | 189-3302 | 991 | 1-F 5 | 190-6501 | 885 | 1-E 18 |
| 187-3367 | 455 | 1-C 23 | 188-0453 | 599 | 1-D 13 | 189-3307 | 989 | 1-F 4 | 190-6501 | 889 | 1-E 18 |
| 187-3367 | 463 | 1-C 24 | 188-0453 | 603 | 1-D 14 | 189-3307 | 991 | 1-F 5 | 190-6525 | 887 | 1-E 18 |
| 187-3367 | 473 | 1-D 1 | 188-0497 | 627 | 1-D 16 | 189-3308 | 989 | 1-F 4 | 190-6526 | 887 | 1-E 18 |
| 187-3367 | 483 | 1-D 2 | 188-0514 | 597 | 1-D 13 | 189-3308 | 991 | 1-F 5 | 190-8326 | 1177 | 1-F 23 |
| 187-3368 | 455 | 1-C 23 | 188-0514 | 601 | 1-D 14 | 189-3310 | 957 | 1-F 1 | 191-0426 | 427 | 1-C 20 |
| 187-3368 | 463 | 1-C 24 | 188-0564 | 599 | 1-D 13 | 189-3313 | 957 | 1-F 1 | 191-0426 | 431 | 1-C 21 |
| 187-3368 | 473 | 1-D 1 | 188-0564 | 603 | 1-D 14 | 189-3325 | 1017 | 1-F 7 | 191-0426 | 443 | 1-C 22 |
| 187-3368 | 483 | 1-D 2 | 188-0568 | 601 | 1-D 14 | 189-4286 | 591 | 1-D 13 | 191-0426 | 447 | 1-C 22 |
| 187-3369 | 455 | 1-C 23 | 188-0632 | 455 | 1-C 23 | 189-4287 | 591 | 1-D 13 | 191-0427 | 427 | 1-C 20 |
| 187-3369 | 463 | 1-C 24 | 188-0632 | 463 | 1-C 24 | 189-4288 | 591 | 1-D 13 | 191-0427 | 429 | 1-C 20 |
| 187-3369 | 473 | 1-D 1 | 188-0632 | 473 | 1-D 1 | 189-4289 | 591 | 1-D 13 | 191-0427 | 433 | 1-C 21 |
| 187-3369 | 483 | 1-D 2 | 188-0632 | 483 | 1-D 2 | 189-5477 | 283 | 1-C 6 | 191-0427 | 441 | 1-C 22 |
| 187-3370 | 455 | 1-C 23 | 188-0633 | 455 | 1-C 23 | 189-5805 | 547 | 1-D 8 | 191-0427 | 443 | 1-C 22 |
| 187-3370 | 463 | 1-C 24 | 188-0633 | 463 | 1-C 24 | 189-5805 | 591 | 1-D 13 | 191-0427 | 445 | 1-C 22 |
| 187-3370 | 473 | 1-D 1 | 188-0633 | 473 | 1-D 1 | 189-5906 | 803 | 1-E 10 | 191-0428 | 435 | 1-C 21 |
| 187-3370 | 483 | 1-D 2 | 188-0633 | 483 | 1-D 2 | 189-5906 | 807 | 1-E 10 | 191-0428 | 449 | 1-C 22 |
| 187-3371 | 455 | 1-C 23 | 188-0635 | 457 | 1-C 23 | 189-5910 | 801 | 1-E 10 | 191-0429 | 437 | 1-C 21 |
| 187-3371 | 463 | 1-C 24 | 188-0635 | 461 | 1-C 24 | 189-5910 | 805 | 1-E 10 | 191-0429 | 451 | 1-C 23 |
| 187-3371 | 473 | 1-D 1 | 188-0635 | 467 | 1-C 24 | 189-5987 | 967 | 1-F 2 | 191-1907 | 455 | 1-C 23 |
| 187-3371 | 483 | 1-D 2 | 188-0635 | 471 | 1-D 1 | 189-5989 | 967 | 1-F 2 | 191-1907 | 463 | 1-C 24 |
| 187-3372 | 455 | 1-C 23 | 188-0635 | 477 | 1-D 1 | 189-9922 | 1173 | 1-F 23 | 191-1907 | 473 | 1-D 1 |
| 187-3372 | 463 | 1-C 24 | 188-0635 | 481 | 1-D 2 | 190-0429 | 753 | 1-E 5 | 191-1907 | 483 | 1-D 2 |
| 187-3372 | 473 | 1-D 1 | 188-0635 | 487 | 1-D 2 | 190-0429 | 757 | 1-E 5 | 191-1908 | 455 | 1-C 23 |
| 187-3372 | 483 | 1-D 2 | 188-0635 | 491 | 1-D 3 | 190-0435 | 717 | 1-E 1 | 191-1908 | 463 | 1-C 24 |
| 187-3373 | 455 | 1-C 23 | 188-0762 | 627 | 1-D 16 | 190-0435 | 719 | 1-E 1 | 191-1908 | 473 | 1-D 1 |
| 187-3373 | 463 | 1-C 24 | 188-0763 | 627 | 1-D 16 | 190-0435 | 721 | 1-E 2 | 191-1908 | 483 | 1-D 2 |
| 187-3373 | 473 | 1-D 1 | 188-0764 | 627 | 1-D 16 | 190-0435 | 723 | 1-E 2 | 191-1909 | 455 | 1-C 23 |
| 187-3373 | 483 | 1-D 2 | 188-0765 | 627 | 1-D 16 | 190-0435 | 761 | 1-E 6 | 191-1909 | 463 | 1-C 24 |
| 187-3374 | 455 | 1-C 23 | 188-0766 | 627 | 1-D 16 | 190-0435 | 763 | 1-E 6 | 191-1909 | 473 | 1-D 1 |
| 187-3374 | 463 | 1-C 24 | 188-0768 | 627 | 1-D 16 | 190-0435 | 765 | 1-E 6 | 191-1909 | 483 | 1-D 2 |
| 187-3374 | 473 | 1-D 1 | 188-0769 | 627 | 1-D 16 | 190-0435 | 767 | 1-E 6 | 191-1910 | 455 | 1-C 23 |
| 187-3374 | 483 | 1-D 2 | 188-0771 | 191 | 1-B 21 | 190-0435 | 769 | 1-E 6 | 191-1910 | 463 | 1-C 24 |
| 187-4896 | 327 | 1-C 10 | 188-0772 | 625 | 1-D 16 | 190-0436 | 717 | 1-E 1 | 191-1910 | 473 | 1-D 1 |
| 187-4906 | 1095 | 1-F 15 | 188-0773 | 625 | 1-D 16 | 190-0436 | 719 | 1-E 1 | 191-1910 | 483 | 1-D 2 |
| 187-4921 | 1095 | 1-F 15 | 188-0774 | 627 | 1-D 16 | 190-0436 | 751 | 1-E 5 | 191-1911 | 455 | 1-C 23 |
| 187-4930 | 515 | 1-D 5 | 188-0775 | 627 | 1-D 16 | 190-0436 | 753 | 1-E 5 | 191-1911 | 463 | 1-C 24 |
| 187-4930 | 517 | 1-D 5 | 188-0776 | 627 | 1-D 16 | 190-0438 | 717 | 1-E 1 | 191-1911 | 473 | 1-D 1 |
| 187-4930 | 525 | 1-D 6 | 188-0777 | 625 | 1-D 16 | 190-0438 | 719 | 1-E 1 | 191-1911 | 483 | 1-D 2 |
| 187-4930 | 527 | 1-D 6 | 188-0778 | 625 | 1-D 16 | 190-0438 | 721 | 1-E 2 | 191-1912 | 455 | 1-C 23 |
| 187-4930 | 529 | 1-D 6 | 188-0779 | 625 | 1-D 16 | 190-0438 | 723 | 1-E 2 | 191-1912 | 463 | 1-C 24 |
| 187-4930 | 531 | 1-D 7 | 188-1155 | 1257 | 1-G 7 | 190-0438 | 763 | 1-E 6 | 191-1912 | 473 | 1-D 1 |
| 187-4930 | 533 | 1-D 7 | 188-2162 | 421 | 1-C 20 | 190-0438 | 765 | 1-E 6 | 191-1912 | 483 | 1-D 2 |
| 187-4930 | 535 | 1-D 7 | 188-2162 | 423 | 1-C 20 | 190-0438 | 833 | 1-E 13 | 191-2276 | 357 | 1-C 13 |
| 187-4930 | 537 | 1-D 7 | 188-2618 | 1203 | 1-G 2 | 190-0439 | 763 | 1-E 6 | 191-5262 | 527 | 1-D 6 |
| 187-4930 | 539 | 1-D 7 | 188-3642 | 921 | 1-E 22 | 190-0440 | 765 | 1-E 6 | 191-5262 | 533 | 1-D 7 |
| 187-4930 | 541 | 1-D 8 | 188-7731 | 529 | 1-D 6 | 190-0446 | 761 | 1-E 6 | 191-5262 | 539 | 1-D 7 |
| 187-4930 | 1009 | 1-F 6 | 188-7731 | 535 | 1-D 7 | 190-1482 | 77 | 1-B 9 | 191-5988 | 151 | 1-B 17 |
| 187-4930 | 1011 | 1-F 7 | 188-7731 | 541 | 1-D 8 | 190-1482 | 79 | 1-B 9 | 191-5988 | 153 | 1-B 17 |
| 187-5245 | 761 | 1-E 6 | 188-9912 | 421 | 1-C 20 | 190-1482 | 81 | 1-B 10 | 191-8006 | 1257 | 1-G 7 |
| 187-5246 | 761 | 1-E 6 | 188-9912 | 423 | 1-C 20 | 190-1482 | 83 | 1-B 10 | 191-8007 | 1257 | 1-G 7 |
| 187-6226 | 435 | 1-C 21 | 189-1711 | 667 | 1-D 20 | 190-1482 | 85 | 1-B 10 | 191-8303 | 453 | 1-C 23 |
| 187-6226 | 437 | 1-C 21 | 189-1711 | 669 | 1-D 20 | 190-1482 | 87 | 1-B 10 | 191-8304 | 453 | 1-C 23 |
| 187-6226 | 449 | 1-C 22 | 189-2089 | 457 | 1-C 23 | 190-1482 | 89 | 1-B 10 | 192-0938 | 891 | 1-E 19 |
| 187-6226 | 451 | 1-C 23 | 189-2089 | 461 | 1-C 24 | 190-1482 | 91 | 1-B 11 | 192-0976 | 621 | 1-D 16 |
| 187-7430 | 913 | 1-E 21 | 189-2089 | 467 | 1-C 24 | 190-1482 | 127 | 1-B 14 | 192-1463 | 115 | 1-B 13 |
| 187-7430 | 917 | 1-E 21 | 189-2089 | 471 | 1-D 1 | 190-2601 | 957 | 1-F 1 | 192-3042 | 585 | 1-D 12 |
| 187-7430 | 919 | 1-E 21 | 189-2089 | 477 | 1-D 1 | 190-2608 | 989 | 1-F 4 | 192-3042 | 587 | 1-D 12 |

## INDEX


| Part No. | Page | Grid | Part No. | Page | Grid | Part No. | Page | Grid | Part No. | Page | Grid |
|---|---|---|---|---|---|---|---|---|---|---|---|
| 192-4158 | 281 | 1-C 6 | 193-2265 | 123 | 1-B 14 | 196-3968 | 1191 | 1-G 1 | 197-4550 | 1157 | 1-F 21 |
| 192-4707 | 893 | 1-E 19 | 193-2266 | 107 | 1-B 12 | 196-4055 | 151 | 1-B 17 | 197-4849 | 85 | 1-B 10 |
| 192-4707 | 929 | 1-E 22 | 193-2266 | 121 | 1-B 14 | 196-4056 | 151 | 1-B 17 | 197-4849 | 87 | 1-B 10 |
| 192-4708 | 897 | 1-E 19 | 193-2271 | 109 | 1-B 12 | 196-4056 | 157 | 1-B 17 | 197-4849 | 89 | 1-B 10 |
| 192-4708 | 911 | 1-E 21 | 193-2272 | 107 | 1-B 12 | 196-4249 | 945 | 1-E 24 | 197-4849 | 91 | 1-B 11 |
| 192-4708 | 977 | 1-F 3 | 193-4445 | 1033 | 1-F 9 | 196-6944 | 571 | 1-D 11 | 197-4849 | 165 | 1-B 18 |
| 192-4708 | 979 | 1-F 3 | 193-4752 | 381 | 1-C 16 | 196-6946 | 571 | 1-D 11 | 197-4852 | 165 | 1-B 18 |
| 192-4776 | 173 | 1-B 19 | 193-7868 | 195 | 1-B 21 | 196-6954 | 571 | 1-D 11 | 197-5411 | 455 | 1-C 23 |
| 192-4777 | 173 | 1-B 19 | 193-8098 | 859 | 1-E 15 | 196-7742 | 189 | 1-B 20 | 197-5411 | 463 | 1-C 24 |
| 192-4816 | 727 | 1-E 2 | 193-8197 | 893 | 1-E 19 | 196-7742 | 191 | 1-B 21 | 197-5411 | 473 | 1-D 1 |
| 192-4816 | 895 | 1-E 19 | 193-8198 | 897 | 1-E 19 | 196-7824 | 631 | 1-D 17 | 197-5411 | 483 | 1-D 2 |
| 192-4816 | 899 | 1-E 19 | 193-8199 | 725 | 1-E 2 | 196-9864 | 585 | 1-D 12 | 197-5414 | 837 | 1-E 13 |
| 192-4816 | 909 | 1-E 20 | 193-8199 | 899 | 1-E 19 | 196-9866 | 585 | 1-D 12 | 197-5675 | 111 | 1-B 13 |
| 192-4817 | 901 | 1-E 20 | 193-8200 | 901 | 1-E 20 | 196-9866 | 587 | 1-D 12 | 197-5675 | 125 | 1-B 14 |
| 192-4817 | 915 | 1-E 21 | 193-8200 | 985 | 1-F 4 | 197-0749 | 93 | 1-B 11 | 197-5676 | 111 | 1-B 13 |
| 192-4975 | 435 | 1-C 21 | 193-8200 | 987 | 1-F 4 | 197-1317 | 183 | 1-B 20 | 197-5852 | 1177 | 1-F 23 |
| 192-4975 | 449 | 1-C 22 | 194-7019 | 497 | 1-D 3 | 197-1317 | 187 | 1-B 20 | 197-6291 | 123 | 1-B 14 |
| 192-5602 | 477 | 1-D 1 | 194-7620 | 383 | 1-C 16 | 197-1437 | 99 | 1-B 11 | 197-6291 | 1263 | 1-G 8 |
| 192-5602 | 487 | 1-D 2 | 194-7966 | 77 | 1-B 9 | 197-2996 | 779 | 1-E 7 | 197-6292 | 125 | 1-B 14 |
| 192-5642 | 265 | 1-C 4 | 194-7966 | 79 | 1-B 9 | 197-2997 | 779 | 1-E 7 | 197-6292 | 1263 | 1-G 8 |
| 192-5643 | 265 | 1-C 4 | 194-7966 | 81 | 1-B 10 | 197-2998 | 779 | 1-E 7 | 197-7948 | 183 | 1-B 20 |
| 192-5644 | 265 | 1-C 4 | 194-7966 | 83 | 1-B 10 | 197-2999 | 779 | 1-E 7 | 197-8128 | 625 | 1-D 16 |
| 192-6350 | 73 | 1-B 9 | 194-7966 | 145 | 1-B 16 | 197-3000 | 779 | 1-E 7 | 197-8131 | 625 | 1-D 16 |
| 192-6350 | 75 | 1-B 9 | 195-0499 | 625 | 1-D 16 | 197-3083 | 1095 | 1-F 15 | 197-8558 | 55 | 1-B 7 |
| 192-6350 | 737 | 1-E 3 | 195-0500 | 625 | 1-D 16 | 197-3667 | 677 | 1-D 21 | 197-8558 | 63 | 1-B 8 |
| 192-6360 | 75 | 1-B 9 | 195-0501 | 625 | 1-D 16 | 197-4516 | 1159 | 1-F 21 | 197-8558 | 187 | 1-B 20 |
| 192-6360 | 735 | 1-E 3 | 195-0502 | 627 | 1-D 16 | 197-4516 | 1161 | 1-F 22 | 198-0187 | 85 | 1-B 10 |
| 192-6366 | 751 | 1-E 5 | 195-1004 | 591 | 1-D 13 | 197-4517 | 1159 | 1-F 21 | 198-0187 | 87 | 1-B 10 |
| 192-6366 | 755 | 1-E 5 | 195-1016 | 591 | 1-D 13 | 197-4518 | 1159 | 1-F 21 | 198-0187 | 89 | 1-B 10 |
| 192-6371 | 735 | 1-E 3 | 195-2612 | 1171 | 1-F 23 | 197-4519 | 1159 | 1-F 21 | 198-0187 | 91 | 1-B 11 |
| 192-6383 | 731 | 1-E 3 | 195-2615 | 633 | 1-D 17 | 197-4519 | 1161 | 1-F 22 | 198-0187 | 177 | 1-B 19 |
| 192-6386 | 183 | 1-B 20 | 195-2616 | 633 | 1-D 17 | 197-4520 | 1159 | 1-F 21 | 198-0188 | 77 | 1-B 9 |
| 192-6390 | 723 | 1-E 2 | 195-3252 | 455 | 1-C 23 | 197-4520 | 1161 | 1-F 22 | 198-0188 | 79 | 1-B 9 |
| 192-6392 | 751 | 1-E 5 | 195-3252 | 463 | 1-C 24 | 197-4521 | 1159 | 1-F 21 | 198-0188 | 81 | 1-B 10 |
| 192-6392 | 755 | 1-E 5 | 195-3252 | 473 | 1-D 1 | 197-4521 | 1161 | 1-F 22 | 198-0188 | 83 | 1-B 10 |
| 192-6398 | 759 | 1-E 5 | 195-3252 | 483 | 1-D 2 | 197-4522 | 1159 | 1-F 21 | 198-0188 | 175 | 1-B 19 |
| 192-6400 | 721 | 1-E 2 | 195-4507 | 1099 | 1-F 15 | 197-4522 | 1161 | 1-F 22 | 198-0288 | 455 | 1-C 23 |
| 192-6457 | 631 | 1-D 17 | 195-4512 | 1099 | 1-F 15 | 197-4523 | 1155 | 1-F 21 | 198-0288 | 463 | 1-C 24 |
| 192-6460 | 151 | 1-B 17 | 195-4513 | 1099 | 1-F 15 | 197-4524 | 1155 | 1-F 21 | 198-0288 | 473 | 1-D 1 |
| 192-6460 | 153 | 1-B 17 | 195-4519 | 133 | 1-B 15 | 197-4525 | 1159 | 1-F 21 | 198-0288 | 483 | 1-D 2 |
| 192-6516 | 599 | 1-D 13 | 195-4519 | 135 | 1-B 15 | 197-4525 | 1161 | 1-F 22 | 198-1013 | 453 | 1-C 23 |
| 192-6516 | 601 | 1-D 14 | 195-4520 | 1103 | 1-F 16 | 197-4526 | 1159 | 1-F 21 | 198-1013 | 513 | 1-D 5 |
| 192-6518 | 599 | 1-D 13 | 195-5221 | 1205 | 1-G 2 | 197-4526 | 1161 | 1-F 22 | 198-1955 | 99 | 1-B 11 |
| 192-6529 | 581 | 1-D 12 | 195-5227 | 1067 | 1-F 12 | 197-4527 | 1155 | 1-F 21 | 198-1961 | 99 | 1-B 11 |
| 192-7901 | 677 | 1-D 21 | 195-5228 | 1067 | 1-F 12 | 197-4527 | 1157 | 1-F 21 | 198-1962 | 93 | 1-B 11 |
| 192-8979 | 153 | 1-B 17 | 195-5228 | 1069 | 1-F 12 | 197-4529 | 1155 | 1-F 21 | 198-2898 | 129 | 1-B 14 |
| 192-8980 | 153 | 1-B 17 | 195-5229 | 1067 | 1-F 12 | 197-4529 | 1157 | 1-F 21 | 198-2900 | 129 | 1-B 14 |
| 192-8980 | 155 | 1-B 17 | 195-5230 | 1067 | 1-F 12 | 197-4530 | 1167 | 1-F 22 | 198-4070 | 1027 | 1-F 8 |
| 192-9017 | 1067 | 1-F 12 | 195-5968 | 65 | 1-B 8 | 197-4530 | 1169 | 1-F 22 | 198-4070 | 1029 | 1-F 8 |
| 193-0238 | 1031 | 1-F 9 | 195-5968 | 67 | 1-B 8 | 197-4531 | 1167 | 1-F 22 | 198-4265 | 837 | 1-E 13 |
| 193-0362 | 497 | 1-D 3 | 195-5968 | 69 | 1-B 8 | 197-4531 | 1169 | 1-F 22 | 198-4474 | 1259 | 1-G 7 |
| 193-0362 | 499 | 1-D 3 | 195-5968 | 71 | 1-B 9 | 197-4532 | 1167 | 1-F 22 | 198-4475 | 1259 | 1-G 7 |
| 193-0362 | 501 | 1-D 4 | 195-5968 | 345 | 1-C 12 | 197-4532 | 1169 | 1-F 22 | 198-4477 | 1259 | 1-G 7 |
| 193-0362 | 503 | 1-D 4 | 195-9532 | 365 | 1-C 14 | 197-4533 | 1167 | 1-F 22 | 198-6068 | 137 | 1-B 15 |
| 193-0363 | 497 | 1-D 3 | 195-9633 | 565 | 1-D 10 | 197-4533 | 1169 | 1-F 22 | 198-8376 | 211 | 1-B 23 |
| 193-0363 | 499 | 1-D 3 | 195-9633 | 567 | 1-D 10 | 197-4534 | 1167 | 1-F 22 | 198-8377 | 211 | 1-B 23 |
| 193-0363 | 501 | 1-D 4 | 195-9633 | 569 | 1-D 10 | 197-4534 | 1169 | 1-F 22 | 198-8378 | 989 | 1-F 4 |
| 193-0363 | 503 | 1-D 4 | 196-1969 | 761 | 1-E 6 | 197-4537 | 1167 | 1-F 22 | 198-8378 | 991 | 1-F 5 |
| 193-0650 | 505 | 1-D 4 | 196-1970 | 761 | 1-E 6 | 197-4537 | 1169 | 1-F 22 | 199-2086 | 627 | 1-D 16 |
| 193-0650 | 507 | 1-D 4 | 196-1971 | 761 | 1-E 6 | 197-4538 | 1167 | 1-F 22 | 199-3481 | 247 | 1-C 2 |
| 193-0650 | 509 | 1-D 4 | 196-2318 | 729 | 1-E 2 | 197-4538 | 1169 | 1-F 22 | 199-3481 | 249 | 1-C 2 |
| 193-1423 | 151 | 1-B 17 | 196-2318 | 909 | 1-E 20 | 197-4539 | 1167 | 1-F 22 | 199-3481 | 251 | 1-C 3 |
| 193-1423 | 153 | 1-B 17 | 196-2318 | 915 | 1-E 21 | 197-4540 | 1167 | 1-F 22 | 199-4273 | 529 | 1-D 6 |
| 193-1547 | 73 | 1-B 9 | 196-2318 | 931 | 1-E 23 | 197-4540 | 1169 | 1-F 22 | 199-4273 | 535 | 1-D 7 |
| 193-1547 | 75 | 1-B 9 | 196-2993 | 957 | 1-F 1 | 197-4541 | 1167 | 1-F 22 | 199-4273 | 541 | 1-D 8 |
| 193-1547 | 747 | 1-E 4 | 196-2994 | 957 | 1-F 1 | 197-4541 | 1169 | 1-F 22 | 199-6263 | 211 | 1-B 23 |
| 193-1547 | 749 | 1-E 4 | 196-2997 | 957 | 1-F 1 | 197-4544 | 1163 | 1-F 22 | 199-6265 | 971 | 1-F 3 |
| 193-1548 | 863 | 1-E 16 | 196-2997 | 959 | 1-F 1 | 197-4544 | 1165 | 1-F 22 | 199-7107 | 457 | 1-C 23 |
| 193-1548 | 893 | 1-E 19 | 196-3036 | 971 | 1-F 3 | 197-4545 | 1167 | 1-F 22 | 199-7107 | 461 | 1-C 24 |
| 193-1548 | 897 | 1-E 19 | 196-3037 | 971 | 1-F 3 | 197-4546 | 1163 | 1-F 22 | 199-7107 | 467 | 1-C 24 |
| 193-1558 | 729 | 1-E 2 | 196-3052 | 971 | 1-F 3 | 197-4546 | 1165 | 1-F 22 | 199-7107 | 471 | 1-D 1 |
| 193-1558 | 841 | 1-E 14 | 196-3968 | 1049 | 1-F 10 | 197-4547 | 1167 | 1-F 22 | 199-7107 | 477 | 1-D 1 |
| 193-1558 | 899 | 1-E 19 | 196-3968 | 1051 | 1-F 11 | 197-4547 | 1169 | 1-F 22 | 199-7107 | 481 | 1-D 2 |
| 193-1558 | 901 | 1-E 20 | 196-3968 | 1055 | 1-F 11 | 197-4548 | 1169 | 1-F 22 | 199-7107 | 487 | 1-D 2 |
| 193-2265 | 109 | 1-B 12 | 196-3968 | 1057 | 1-F 11 | 197-4550 | 1155 | 1-F 21 | 199-7107 | 491 | 1-D 3 |

## INDEX


| Part No. | Page | Grid | Part No. | Page | Grid | Part No. | Page | Grid | Part No. | Page | Grid |
|---|---|---|---|---|---|---|---|---|---|---|---|
| 199-7855 | 573 | 1-D 11 | 200-2993 | 841 | 1-E 14 | 201-5096 | 1205 | 1-G 2 | 204-0627 | 139 | 1-B 15 |
| 199-7855 | 575 | 1-D 11 | 200-2993 | 857 | 1-E 15 | 201-8342 | 991 | 1-F 5 | 204-5043 | 617 | 1-D 15 |
| 199-7859 | 573 | 1-D 11 | 200-3039 | 427 | 1-C 20 | 201-8344 | 991 | 1-F 5 | 204-9922 | 621 | 1-D 16 |
| 199-7859 | 575 | 1-D 11 | 200-3039 | 429 | 1-C 20 | 201-8438 | 779 | 1-E 7 | 205-1388 | 625 | 1-D 16 |
| 199-9240 | 427 | 1-C 20 | 200-3039 | 431 | 1-C 21 | 201-9041 | 231 | 1-C 1 | 205-1390 | 627 | 1-D 16 |
| 199-9240 | 429 | 1-C 20 | 200-3039 | 433 | 1-C 21 | 201-9789 | 1067 | 1-F 12 | 205-1394 | 625 | 1-D 16 |
| 199-9240 | 431 | 1-C 21 | 200-3039 | 435 | 1-C 21 | 201-9927 | 679 | 1-D 21 | 205-1395 | 625 | 1-D 16 |
| 199-9240 | 433 | 1-C 21 | 200-3039 | 437 | 1-C 21 | 201-9927 | 701 | 1-D 24 | 205-1396 | 625 | 1-D 16 |
| 199-9240 | 435 | 1-C 21 | 200-3039 | 441 | 1-C 22 | 201-9928 | 681 | 1-D 22 | 205-1397 | 625 | 1-D 16 |
| 199-9240 | 437 | 1-C 21 | 200-3039 | 443 | 1-C 22 | 201-9928 | 703 | 1-D 24 | 205-1645 | 135 | 1-B 15 |
| 199-9240 | 441 | 1-C 22 | 200-3039 | 445 | 1-C 22 | 201-9930 | 679 | 1-D 21 | 205-1646 | 135 | 1-B 15 |
| 199-9240 | 443 | 1-C 22 | 200-3039 | 447 | 1-C 22 | 201-9931 | 681 | 1-D 22 | 205-1647 | 133 | 1-B 15 |
| 199-9240 | 445 | 1-C 22 | 200-3039 | 449 | 1-C 22 | 201-9932 | 679 | 1-D 21 | 205-1648 | 133 | 1-B 15 |
| 199-9240 | 447 | 1-C 22 | 200-3039 | 451 | 1-C 23 | 201-9932 | 681 | 1-D 22 | 205-2132 | 161 | 1-B 18 |
| 199-9240 | 449 | 1-C 22 | 200-3039 | 527 | 1-D 6 | 202-0843 | 1061 | 1-F 12 | 205-2133 | 161 | 1-B 18 |
| 199-9240 | 451 | 1-C 23 | 200-3039 | 533 | 1-D 7 | 202-0844 | 367 | 1-C 14 | 205-2134 | 159 | 1-B 17 |
| 199-9240 | 527 | 1-D 6 | 200-3039 | 539 | 1-D 7 | 202-0844 | 369 | 1-C 14 | 205-2135 | 159 | 1-B 17 |
| 199-9240 | 533 | 1-D 7 | 200-4310 | 721 | 1-E 2 | 202-0848 | 1095 | 1-F 15 | 205-5367 | 169 | 1-B 18 |
| 199-9240 | 539 | 1-D 7 | 200-4310 | 723 | 1-E 2 | 202-2356 | 571 | 1-D 11 | 205-6398 | 781 | 1-E 8 |
| 2A-3746 | 457 | 1-C 23 | 200-4310 | 755 | 1-E 5 | 202-2357 | 571 | 1-D 11 | 205-6398 | 881 | 1-E 18 |
| 2A-3746 | 467 | 1-C 24 | 200-4310 | 757 | 1-E 5 | 202-2792 | 791 | 1-E 9 | 205-6399 | 881 | 1-E 18 |
| 2A-3746 | 477 | 1-D 1 | 200-4316 | 743 | 1-E 4 | 202-7320 | 251 | 1-C 3 | 205-6400 | 881 | 1-E 18 |
| 2A-3746 | 487 | 1-D 2 | 200-4317 | 735 | 1-E 3 | 202-7320 | 255 | 1-C 3 | 205-6400 | 891 | 1-E 19 |
| 2D-9190 | 525 | 1-D 6 | 200-4320 | 75 | 1-B 9 | 202-7320 | 257 | 1-C 3 | 205-6410 | 945 | 1-E 24 |
| 2D-9190 | 531 | 1-D 7 | 200-4320 | 759 | 1-E 5 | 202-9220 | 555 | 1-D 9 | 205-6411 | 945 | 1-E 24 |
| 2D-9190 | 537 | 1-D 7 | 200-4321 | 759 | 1-E 5 | 202-9220 | 557 | 1-D 9 | 205-6412 | 881 | 1-E 18 |
| 2H-1190 | 455 | 1-C 23 | 200-4322 | 743 | 1-E 4 | 202-9220 | 559 | 1-D 9 | 205-6412 | 945 | 1-E 24 |
| 2H-1190 | 463 | 1-C 24 | 200-4323 | 735 | 1-E 3 | 202-9220 | 561 | 1-D 10 | 205-6464 | 945 | 1-E 24 |
| 2H-1190 | 473 | 1-D 1 | 200-4325 | 773 | 1-E 7 | 202-9220 | 563 | 1-D 10 | 205-8334 | 397 | 1-C 17 |
| 2H-1190 | 483 | 1-D 2 | 200-4327 | 773 | 1-E 7 | 202-9223 | 555 | 1-D 9 | 205-8771 | 241 | 1-C 2 |
| 2H-5549 | 455 | 1-C 23 | 200-4329 | 773 | 1-E 7 | 202-9223 | 557 | 1-D 9 | 205-8772 | 243 | 1-C 2 |
| 2H-5549 | 465 | 1-C 24 | 200-4335 | 739 | 1-E 3 | 202-9223 | 559 | 1-D 9 | 205-8790 | 1259 | 1-G 7 |
| 2H-5549 | 475 | 1-D 1 | 200-4339 | 759 | 1-E 5 | 202-9223 | 561 | 1-D 10 | 205-9961 | 693 | 1-D 23 |
| 2H-5549 | 485 | 1-D 2 | 200-4341 | 735 | 1-E 3 | 202-9223 | 563 | 1-D 10 | 205-9961 | 695 | 1-D 23 |
| 2J-2152 | 497 | 1-D 3 | 200-4343 | 743 | 1-E 4 | 203-0128 | 201 | 1-B 22 | 205-9962 | 693 | 1-D 23 |
| 2J-2152 | 499 | 1-D 3 | 200-4351 | 737 | 1-E 3 | 203-0128 | 205 | 1-B 22 | 205-9962 | 695 | 1-D 23 |
| 2J-2152 | 501 | 1-D 4 | 200-4351 | 773 | 1-E 7 | 203-0189 | 787 | 1-E 8 | 206-0578 | 1105 | 1-F 16 |
| 2J-2152 | 503 | 1-D 4 | 200-4369 | 833 | 1-E 13 | 203-0189 | 789 | 1-E 8 | 206-0579 | 1107 | 1-F 16 |
| 2K-1381 | 455 | 1-C 23 | 200-4372 | 735 | 1-E 3 | 203-0189 | 791 | 1-E 9 | 206-0580 | 1107 | 1-F 16 |
| 2K-1381 | 465 | 1-C 24 | 200-4374 | 751 | 1-E 5 | 203-0190 | 787 | 1-E 8 | 206-0581 | 1105 | 1-F 16 |
| 2K-1381 | 475 | 1-D 1 | 200-4374 | 755 | 1-E 5 | 203-0341 | 791 | 1-E 9 | 206-0581 | 1107 | 1-F 16 |
| 2K-1381 | 485 | 1-D 2 | 200-4375 | 773 | 1-E 7 | 203-1207 | 793 | 1-E 9 | 206-0584 | 1107 | 1-F 16 |
| 2M-9780 | 421 | 1-C 20 | 200-4392 | 735 | 1-E 3 | 203-1210 | 793 | 1-E 9 | 206-0586 | 1105 | 1-F 16 |
| 2M-9780 | 423 | 1-C 20 | 200-4400 | 73 | 1-B 9 | 203-1213 | 789 | 1-E 8 | 206-0588 | 1049 | 1-F 10 |
| 2M-9780 | 455 | 1-C 23 | 200-4400 | 75 | 1-B 9 | 203-1213 | 793 | 1-E 9 | 206-0588 | 1051 | 1-F 11 |
| 2M-9780 | 475 | 1-D 1 | 200-4400 | 739 | 1-E 3 | 203-2631 | 427 | 1-C 20 | 206-0588 | 1109 | 1-F 16 |
| 2M-9780 | 485 | 1-D 2 | 200-5027 | 413 | 1-C 19 | 203-2631 | 429 | 1-C 20 | 206-0589 | 1109 | 1-F 16 |
| 2M-9780 | 489 | 1-D 2 | 200-5027 | 661 | 1-D 20 | 203-2631 | 431 | 1-C 21 | 206-4604 | 975 | 1-F 3 |
| 2M-9780 | 491 | 1-D 3 | 200-5028 | 415 | 1-C 19 | 203-2631 | 433 | 1-C 21 | 206-4605 | 975 | 1-F 3 |
| 2P-1692 | 453 | 1-C 23 | 200-5028 | 665 | 1-D 20 | 203-2631 | 437 | 1-C 21 | 206-4613 | 959 | 1-F 1 |
| 2P-8421 | 421 | 1-C 20 | 200-5029 | 417 | 1-C 19 | 203-2631 | 441 | 1-C 22 | 206-4619 | 971 | 1-F 3 |
| 2S-4078 | 461 | 1-C 24 | 200-5029 | 659 | 1-D 19 | 203-2631 | 443 | 1-C 22 | 206-4631 | 969 | 1-F 2 |
| 2S-4078 | 471 | 1-D 1 | 200-5030 | 419 | 1-C 19 | 203-2631 | 445 | 1-C 22 | 206-4633 | 959 | 1-F 1 |
| 2S-4078 | 481 | 1-D 2 | 200-5030 | 663 | 1-D 20 | 203-2631 | 447 | 1-C 22 | 206-4635 | 975 | 1-F 3 |
| 2S-4078 | 491 | 1-D 3 | 200-6376 | 321 | 1-C 10 | 203-2631 | 451 | 1-C 23 | 206-4719 | 627 | 1-D 16 |
| 2S-4663 | 513 | 1-D 5 | 200-8750 | 969 | 1-F 2 | 203-2631 | 527 | 1-D 6 | 206-4720 | 629 | 1-D 16 |
| 2S-5835 | 513 | 1-D 5 | 200-8772 | 949 | 1-E 24 | 203-2631 | 533 | 1-D 7 | 206-6397 | 77 | 1-B 9 |
| 2Y-7489 | 455 | 1-C 23 | 200-8772 | 951 | 1-F 1 | 203-2631 | 539 | 1-D 7 | 206-6397 | 79 | 1-B 9 |
| 2Y-7489 | 465 | 1-C 24 | 200-8772 | 975 | 1-F 3 | 203-2632 | 435 | 1-C 21 | 206-6397 | 81 | 1-B 10 |
| 2Y-7489 | 475 | 1-D 1 | 200-8773 | 975 | 1-F 3 | 203-2632 | 449 | 1-C 22 | 206-6397 | 83 | 1-B 10 |
| 2Y-7489 | 485 | 1-D 2 | 200-8775 | 971 | 1-F 3 | 203-3167 | 791 | 1-E 9 | 206-6397 | 85 | 1-B 10 |
| 200-1300 | 183 | 1-B 20 | 200-8826 | 587 | 1-D 12 | 203-3168 | 791 | 1-E 9 | 206-6397 | 87 | 1-B 10 |
| 200-1770 | 1067 | 1-F 12 | 201-0486 | 273 | 1-C 5 | 203-3929 | 505 | 1-D 4 | 206-6397 | 89 | 1-B 10 |
| 200-1771 | 1067 | 1-F 12 | 201-0487 | 273 | 1-C 5 | 203-3929 | 507 | 1-D 4 | 206-6397 | 91 | 1-B 11 |
| 200-2841 | 191 | 1-B 21 | 201-1186 | 1095 | 1-F 15 | 203-3929 | 509 | 1-D 4 | 206-6397 | 131 | 1-B 15 |
| 200-2992 | 819 | 1-E 11 | 201-2440 | 205 | 1-B 22 | 203-6604 | 1259 | 1-G 7 | 206-6987 | 77 | 1-B 9 |
| 200-2992 | 821 | 1-E 12 | 201-2441 | 201 | 1-B 22 | 203-6965 | 1095 | 1-F 15 | 206-6987 | 79 | 1-B 9 |
| 200-2992 | 823 | 1-E 12 | 201-2442 | 201 | 1-B 22 | 203-6966 | 1095 | 1-F 15 | 206-6987 | 81 | 1-B 10 |
| 200-2992 | 825 | 1-E 12 | 201-2442 | 205 | 1-B 22 | 203-7787 | 1259 | 1-G 7 | 206-6987 | 83 | 1-B 10 |
| 200-2992 | 841 | 1-E 14 | 201-2442 | 1263 | 1-G 8 | 203-9179 | 593 | 1-D 13 | 206-6987 | 85 | 1-B 10 |
| 200-2992 | 857 | 1-E 15 | 201-4113 | 1067 | 1-F 12 | 203-9183 | 593 | 1-D 13 | 206-6987 | 87 | 1-B 10 |
| 200-2993 | 819 | 1-E 11 | 201-4114 | 1067 | 1-F 12 | 203-9200 | 593 | 1-D 13 | 206-6987 | 89 | 1-B 10 |
| 200-2993 | 821 | 1-E 12 | 201-4652 | 147 | 1-B 16 | 203-9200 | 621 | 1-D 16 | 206-6987 | 91 | 1-B 11 |
| 200-2993 | 823 | 1-E 12 | 201-4653 | 145 | 1-B 16 | 203-9200 | 623 | 1-D 16 | 206-6987 | 113 | 1-B 13 |
| 200-2993 | 825 | 1-E 12 | 201-4653 | 147 | 1-B 16 | 203-9712 | 1259 | 1-G 7 | 206-7461 | 1031 | 1-F 9 |

## INDEX


| Part No. | Page | Grid | Part No. | Page | Grid | Part No. | Page | Grid | Part No. | Page | Grid |
|---|---|---|---|---|---|---|---|---|---|---|---|
| 206-7462 | 1033 | 1-F 9 | 209-0359 | 599 | 1-D 13 | 209-9919 | 931 | 1-E 23 | 210-7507 | 987 | 1-F 4 |
| 206-7462 | 1039 | 1-F 9 | 209-0359 | 603 | 1-D 14 | 209-9920 | 931 | 1-E 23 | 210-7508 | 953 | 1-F 1 |
| 206-7463 | 1033 | 1-F 9 | 209-0361 | 599 | 1-D 13 | 209-9936 | 931 | 1-E 23 | 210-7508 | 955 | 1-F 1 |
| 206-7463 | 1039 | 1-F 9 | 209-0361 | 603 | 1-D 14 | 209-9949 | 931 | 1-E 23 | 210-7508 | 1019 | 1-F 7 |
| 206-7524 | 267 | 1-C 4 | 209-0364 | 599 | 1-D 13 | 210-0184 | 837 | 1-E 13 | 210-7509 | 949 | 1-E 24 |
| 206-7565 | 127 | 1-B 14 | 209-0364 | 603 | 1-D 14 | 210-0851 | 767 | 1-E 6 | 210-7509 | 951 | 1-F 1 |
| 206-8787 | 317 | 1-C 9 | 209-0373 | 599 | 1-D 13 | 210-0851 | 769 | 1-E 6 | 210-7509 | 1021 | 1-F 8 |
| 206-8787 | 319 | 1-C 9 | 209-0373 | 603 | 1-D 14 | 210-0851 | 835 | 1-E 13 | 210-7510 | 73 | 1-B 9 |
| 206-8789 | 315 | 1-C 9 | 209-0376 | 599 | 1-D 13 | 210-1503 | 997 | 1-F 5 | 210-7510 | 731 | 1-E 3 |
| 206-8891 | 187 | 1-B 20 | 209-0376 | 603 | 1-D 14 | 210-1570 | 1047 | 1-F 10 | 210-7511 | 731 | 1-E 3 |
| 206-8891 | 195 | 1-B 21 | 209-0512 | 167 | 1-B 18 | 210-1570 | 1055 | 1-F 11 | 210-7512 | 971 | 1-F 3 |
| 207-0511 | 1107 | 1-F 16 | 209-0512 | 169 | 1-B 18 | 210-1570 | 1057 | 1-F 11 | 210-7513 | 971 | 1-F 3 |
| 207-0516 | 635 | 1-D 17 | 209-0799 | 625 | 1-D 16 | 210-1975 | 527 | 1-D 6 | 210-7514 | 971 | 1-F 3 |
| 207-0516 | 637 | 1-D 17 | 209-0800 | 625 | 1-D 16 | 210-1975 | 533 | 1-D 7 | 210-7515 | 971 | 1-F 3 |
| 207-0745 | 843 | 1-E 14 | 209-0801 | 167 | 1-B 18 | 210-1996 | 167 | 1-B 18 | 210-7523 | 1003 | 1-F 6 |
| 207-1293 | 1031 | 1-F 9 | 209-0802 | 169 | 1-B 18 | 210-2395 | 815 | 1-E 11 | 210-7526 | 591 | 1-D 13 |
| 207-2021 | 1065 | 1-F 12 | 209-0893 | 377 | 1-C 15 | 210-2395 | 827 | 1-E 12 | 210-7677 | 837 | 1-E 13 |
| 207-2022 | 1065 | 1-F 12 | 209-0893 | 383 | 1-C 16 | 210-2654 | 1047 | 1-F 10 | 210-8405 | 457 | 1-C 23 |
| 207-2031 | 173 | 1-B 19 | 209-1366 | 579 | 1-D 11 | 210-2682 | 625 | 1-D 16 | 210-8405 | 461 | 1-C 24 |
| 207-2031 | 1065 | 1-F 12 | 209-3146 | 599 | 1-D 13 | 210-3258 | 1095 | 1-F 15 | 210-8405 | 467 | 1-C 24 |
| 207-2036 | 1185 | 1-F 24 | 209-3146 | 603 | 1-D 14 | 210-3292 | 1095 | 1-F 15 | 210-8405 | 471 | 1-D 1 |
| 207-2036 | 1187 | 1-F 24 | 209-3147 | 599 | 1-D 13 | 210-3930 | 307 | 1-C 8 | 210-8405 | 477 | 1-D 1 |
| 207-2038 | 1107 | 1-F 16 | 209-3147 | 603 | 1-D 14 | 210-3930 | 309 | 1-C 8 | 210-8405 | 481 | 1-D 2 |
| 207-5993 | 457 | 1-C 23 | 209-3384 | 599 | 1-D 13 | 210-3931 | 341 | 1-C 12 | 210-8405 | 487 | 1-D 2 |
| 207-5993 | 467 | 1-C 24 | 209-3384 | 603 | 1-D 14 | 210-3932 | 309 | 1-C 8 | 210-8405 | 491 | 1-D 3 |
| 207-5993 | 477 | 1-D 1 | 209-3385 | 599 | 1-D 13 | 210-3933 | 341 | 1-C 12 | 210-8406 | 457 | 1-C 23 |
| 207-5993 | 487 | 1-D 2 | 209-3385 | 603 | 1-D 14 | 210-3933 | 343 | 1-C 12 | 210-8406 | 461 | 1-C 24 |
| 207-5993 | 1263 | 1-G 8 | 209-3389 | 135 | 1-B 15 | 210-4348 | 617 | 1-D 15 | 210-8406 | 467 | 1-C 24 |
| 207-5994 | 493 | 1-D 3 | 209-3392 | 135 | 1-B 15 | 210-4349 | 617 | 1-D 15 | 210-8406 | 471 | 1-D 1 |
| 207-7007 | 457 | 1-C 23 | 209-3414 | 865 | 1-E 16 | 210-4350 | 75 | 1-B 9 | 210-8406 | 477 | 1-D 1 |
| 207-7007 | 467 | 1-C 24 | 209-3688 | 725 | 1-E 2 | 210-4350 | 617 | 1-D 15 | 210-8406 | 481 | 1-D 2 |
| 207-7007 | 477 | 1-D 1 | 209-3689 | 729 | 1-E 2 | 210-4351 | 581 | 1-D 12 | 210-8406 | 487 | 1-D 2 |
| 207-7007 | 487 | 1-D 2 | 209-5019 | 911 | 1-E 21 | 210-4354 | 259 | 1-C 3 | 210-8406 | 491 | 1-D 3 |
| 207-7554 | 837 | 1-E 13 | 209-5019 | 933 | 1-E 23 | 210-4354 | 261 | 1-C 4 | 210-8519 | 341 | 1-C 12 |
| 207-8218 | 423 | 1-C 20 | 209-5020 | 909 | 1-E 20 | 210-4357 | 1205 | 1-G 2 | 210-8519 | 343 | 1-C 12 |
| 207-8227 | 1209 | 1-G 2 | 209-5020 | 935 | 1-E 23 | 210-4358 | 1205 | 1-G 2 | 210-8521 | 341 | 1-C 12 |
| 208-0090 | 77 | 1-B 9 | 209-5021 | 729 | 1-E 2 | 210-4406 | 617 | 1-D 15 | 210-8521 | 343 | 1-C 12 |
| 208-0090 | 79 | 1-B 9 | 209-5021 | 915 | 1-E 21 | 210-4407 | 617 | 1-D 15 | 210-8961 | 307 | 1-C 8 |
| 208-0090 | 81 | 1-B 10 | 209-5021 | 937 | 1-E 23 | 210-4408 | 617 | 1-D 15 | 210-8961 | 341 | 1-C 12 |
| 208-0090 | 83 | 1-B 10 | 209-5604 | 1105 | 1-F 16 | 210-4411 | 617 | 1-D 15 | 211-0174 | 573 | 1-D 11 |
| 208-0090 | 311 | 1-C 9 | 209-5604 | 1107 | 1-F 16 | 210-4412 | 617 | 1-D 15 | 211-0174 | 575 | 1-D 11 |
| 208-0563 | 991 | 1-F 5 | 209-5605 | 1105 | 1-F 16 | 210-4413 | 599 | 1-D 13 | 211-0178 | 573 | 1-D 11 |
| 208-0564 | 991 | 1-F 5 | 209-5606 | 1107 | 1-F 16 | 210-4413 | 601 | 1-D 14 | 211-0178 | 575 | 1-D 11 |
| 208-2880 | 1049 | 1-F 10 | 209-5607 | 1105 | 1-F 16 | 210-4414 | 599 | 1-D 13 | 211-0182 | 577 | 1-D 11 |
| 208-2880 | 1053 | 1-F 11 | 209-5608 | 1049 | 1-F 10 | 210-4414 | 601 | 1-D 14 | 211-0183 | 577 | 1-D 11 |
| 208-2880 | 1101 | 1-F 16 | 209-5608 | 1051 | 1-F 11 | 210-4415 | 599 | 1-D 13 | 211-0535 | 839 | 1-E 13 |
| 208-2881 | 1051 | 1-F 11 | 209-5608 | 1055 | 1-F 11 | 210-4415 | 601 | 1-D 14 | 211-1156 | 995 | 1-F 5 |
| 208-2881 | 1055 | 1-F 11 | 209-5608 | 1057 | 1-F 11 | 210-4416 | 571 | 1-D 11 | 211-1170 | 453 | 1-C 23 |
| 208-2881 | 1057 | 1-F 11 | 209-5608 | 1107 | 1-F 16 | 210-4418 | 581 | 1-D 12 | 211-1171 | 377 | 1-C 15 |
| 208-2881 | 1103 | 1-F 16 | 209-6244 | 997 | 1-F 5 | 210-4421 | 617 | 1-D 15 | 211-1171 | 383 | 1-C 16 |
| 208-3021 | 75 | 1-B 9 | 209-6295 | 579 | 1-D 11 | 210-4464 | 997 | 1-F 5 | 211-1677 | 307 | 1-C 8 |
| 208-3021 | 397 | 1-C 17 | 209-6434 | 579 | 1-D 11 | 210-5610 | 747 | 1-E 4 | 211-1677 | 309 | 1-C 8 |
| 208-3022 | 635 | 1-D 17 | 209-6677 | 843 | 1-E 14 | 210-5648 | 747 | 1-E 4 | 211-1850 | 843 | 1-E 14 |
| 208-3022 | 637 | 1-D 17 | 209-7359 | 927 | 1-E 22 | 210-5649 | 747 | 1-E 4 | 211-2731 | 421 | 1-C 20 |
| 208-7525 | 621 | 1-D 16 | 209-7497 | 805 | 1-E 10 | 210-5703 | 767 | 1-E 6 | 211-2731 | 423 | 1-C 20 |
| 208-7698 | 607 | 1-D 14 | 209-7497 | 917 | 1-E 21 | 210-5704 | 769 | 1-E 6 | 211-2885 | 999 | 1-F 5 |
| 208-7843 | 739 | 1-E 3 | 209-7599 | 927 | 1-E 22 | 210-6063 | 997 | 1-F 5 | 211-3547 | 843 | 1-E 14 |
| 208-9495 | 571 | 1-D 11 | 209-7709 | 833 | 1-E 13 | 210-7423 | 175 | 1-B 19 | 211-3715 | 843 | 1-E 14 |
| 208-9496 | 571 | 1-D 11 | 209-8325 | 849 | 1-E 14 | 210-7483 | 731 | 1-E 3 | 211-4410 | 843 | 1-E 14 |
| 208-9814 | 745 | 1-E 4 | 209-8325 | 873 | 1-E 17 | 210-7489 | 951 | 1-F 1 | 211-8220 | 309 | 1-C 8 |
| 208-9815 | 745 | 1-E 4 | 209-8326 | 851 | 1-E 15 | 210-7491 | 1005 | 1-F 6 | 211-8220 | 343 | 1-C 12 |
| 208-9838 | 747 | 1-E 4 | 209-8326 | 875 | 1-E 17 | 210-7495 | 971 | 1-F 3 | 211-8222 | 343 | 1-C 12 |
| 208-9839 | 747 | 1-E 4 | 209-8430 | 1047 | 1-F 10 | 210-7497 | 971 | 1-F 3 | 211-8276 | 527 | 1-D 6 |
| 208-9875 | 841 | 1-E 14 | 209-8704 | 1077 | 1-F 13 | 210-7500 | 971 | 1-F 3 | 211-8276 | 533 | 1-D 7 |
| 208-9875 | 857 | 1-E 15 | 209-8704 | 1079 | 1-F 13 | 210-7501 | 971 | 1-F 3 | 211-8276 | 539 | 1-D 7 |
| 208-9878 | 841 | 1-E 14 | 209-8704 | 1081 | 1-F 14 | 210-7503 | 1021 | 1-F 8 | 211-8277 | 413 | 1-C 19 |
| 208-9928 | 819 | 1-E 11 | 209-8704 | 1083 | 1-F 14 | 210-7504 | 971 | 1-F 3 | 211-8277 | 415 | 1-C 19 |
| 208-9928 | 821 | 1-E 12 | 209-8704 | 1085 | 1-F 14 | 210-7506 | 1019 | 1-F 7 | 211-8277 | 417 | 1-C 19 |
| 208-9928 | 823 | 1-E 12 | 209-9220 | 633 | 1-D 17 | 210-7507 | 971 | 1-F 3 | 211-8277 | 419 | 1-C 19 |
| 208-9928 | 825 | 1-E 12 | 209-9222 | 633 | 1-D 17 | 210-7507 | 973 | 1-F 3 | 211-8277 | 495 | 1-D 3 |
| 209-0094 | 167 | 1-B 18 | 209-9231 | 591 | 1-D 13 | 210-7507 | 977 | 1-F 3 | 211-8280 | 457 | 1-C 23 |
| 209-0095 | 169 | 1-B 18 | 209-9232 | 591 | 1-D 13 | 210-7507 | 979 | 1-F 3 | 211-8280 | 461 | 1-C 24 |
| 209-0141 | 179 | 1-B 19 | 209-9680 | 927 | 1-E 22 | 210-7507 | 981 | 1-F 4 | 211-8280 | 467 | 1-C 24 |
| 209-0141 | 181 | 1-B 20 | 209-9680 | 1263 | 1-G 8 | 210-7507 | 983 | 1-F 4 | 211-8280 | 471 | 1-D 1 |
| 209-0141 | 837 | 1-E 13 | 209-9800 | 997 | 1-F 5 | 210-7507 | 985 | 1-F 4 | 211-8280 | 477 | 1-D 1 |

# INDEX


| Part No. | Page | Grid | Part No. | Page | Grid | Part No. | Page | Grid | Part No. | Page | Grid |
|---|---|---|---|---|---|---|---|---|---|---|---|
| 211-8280 | 481 | 1-D 2 | 214-1118 | 1095 | 1-F 15 | 216-6425 | 603 | 1-D 14 | 216-6988 | 935 | 1-E 23 |
| 211-8280 | 487 | 1-D 2 | 214-3504 | 349 | 1-C 12 | 216-6425 | 605 | 1-D 14 | 216-6988 | 937 | 1-E 23 |
| 211-8280 | 491 | 1-D 3 | 214-4667 | 1095 | 1-F 15 | 216-6426 | 603 | 1-D 14 | 216-6990 | 929 | 1-E 22 |
| 211-8315 | 843 | 1-E 14 | 214-9064 | 631 | 1-D 17 | 216-6426 | 605 | 1-D 14 | 216-6990 | 933 | 1-E 23 |
| 212-3281 | 167 | 1-B 18 | 214-9201 | 883 | 1-E 18 | 216-6429 | 601 | 1-D 14 | 216-6990 | 935 | 1-E 23 |
| 212-3597 | 93 | 1-B 11 | 214-9202 | 883 | 1-E 18 | 216-6429 | 605 | 1-D 14 | 216-6990 | 937 | 1-E 23 |
| 212-3601 | 833 | 1-E 13 | 214-9204 | 885 | 1-E 18 | 216-6430 | 603 | 1-D 14 | 216-6991 | 929 | 1-E 22 |
| 212-3602 | 99 | 1-B 11 | 214-9205 | 885 | 1-E 18 | 216-6430 | 605 | 1-D 14 | 216-6991 | 931 | 1-E 23 |
| 212-3811 | 179 | 1-B 19 | 214-9206 | 885 | 1-E 18 | 216-6971 | 929 | 1-E 22 | 216-6991 | 933 | 1-E 23 |
| 212-3811 | 181 | 1-B 20 | 214-9207 | 885 | 1-E 18 | 216-6971 | 933 | 1-E 23 | 216-6991 | 935 | 1-E 23 |
| 212-3813 | 179 | 1-B 19 | 214-9379 | 883 | 1-E 18 | 216-6971 | 935 | 1-E 23 | 216-6991 | 937 | 1-E 23 |
| 212-3813 | 181 | 1-B 20 | 214-9379 | 885 | 1-E 18 | 216-6971 | 937 | 1-E 23 | 216-6992 | 929 | 1-E 22 |
| 212-3814 | 179 | 1-B 19 | 214-9379 | 939 | 1-E 23 | 216-6972 | 771 | 1-E 7 | 216-6992 | 933 | 1-E 23 |
| 212-3814 | 181 | 1-B 20 | 215-1802 | 233 | 1-C 1 | 216-6972 | 929 | 1-E 22 | 216-6992 | 935 | 1-E 23 |
| 212-3815 | 179 | 1-B 19 | 215-1807 | 235 | 1-C 1 | 216-6972 | 933 | 1-E 23 | 216-6992 | 937 | 1-E 23 |
| 212-3815 | 181 | 1-B 20 | 215-1808 | 237 | 1-C 1 | 216-6972 | 935 | 1-E 23 | 216-7010 | 929 | 1-E 22 |
| 212-3839 | 93 | 1-B 11 | 215-1809 | 239 | 1-C 1 | 216-6972 | 937 | 1-E 23 | 216-7010 | 933 | 1-E 23 |
| 212-4300 | 169 | 1-B 18 | 215-7331 | 635 | 1-D 17 | 216-6973 | 929 | 1-E 22 | 216-7010 | 935 | 1-E 23 |
| 212-4444 | 77 | 1-B 9 | 215-7331 | 637 | 1-D 17 | 216-6973 | 933 | 1-E 23 | 216-7010 | 937 | 1-E 23 |
| 212-4444 | 79 | 1-B 9 | 215-7335 | 635 | 1-D 17 | 216-6973 | 935 | 1-E 23 | 216-7035 | 929 | 1-E 22 |
| 212-4444 | 81 | 1-B 10 | 215-7335 | 637 | 1-D 17 | 216-6973 | 937 | 1-E 23 | 216-7035 | 933 | 1-E 23 |
| 212-4444 | 83 | 1-B 10 | 215-7336 | 635 | 1-D 17 | 216-6974 | 929 | 1-E 22 | 216-7035 | 935 | 1-E 23 |
| 212-4444 | 163 | 1-B 18 | 215-7353 | 637 | 1-D 17 | 216-6974 | 933 | 1-E 23 | 216-7035 | 937 | 1-E 23 |
| 212-4445 | 163 | 1-B 18 | 215-7684 | 259 | 1-C 3 | 216-6974 | 935 | 1-E 23 | 216-7115 | 929 | 1-E 22 |
| 212-6998 | 353 | 1-C 13 | 215-7684 | 261 | 1-C 4 | 216-6974 | 937 | 1-E 23 | 216-7115 | 933 | 1-E 23 |
| 212-7187 | 131 | 1-B 15 | 215-7687 | 259 | 1-C 3 | 216-6975 | 929 | 1-E 22 | 216-7404 | 935 | 1-E 23 |
| 212-9996 | 573 | 1-D 11 | 215-7687 | 261 | 1-C 4 | 216-6975 | 933 | 1-E 23 | 216-7404 | 937 | 1-E 23 |
| 212-9998 | 573 | 1-D 11 | 215-8050 | 93 | 1-B 11 | 216-6975 | 935 | 1-E 23 | 216-7694 | 1087 | 1-F 14 |
| 213-2481 | 589 | 1-D 12 | 215-8051 | 93 | 1-B 11 | 216-6975 | 937 | 1-E 23 | 216-7835 | 339 | 1-C 11 |
| 213-2500 | 589 | 1-D 12 | 215-8051 | 99 | 1-B 11 | 216-6976 | 929 | 1-E 22 | 216-7836 | 339 | 1-C 11 |
| 213-2501 | 589 | 1-D 12 | 215-8051 | 133 | 1-B 15 | 216-6976 | 933 | 1-E 23 | 216-7837 | 339 | 1-C 11 |
| 213-2502 | 589 | 1-D 12 | 215-8051 | 145 | 1-B 16 | 216-6976 | 935 | 1-E 23 | 216-7839 | 339 | 1-C 11 |
| 213-2503 | 589 | 1-D 12 | 215-8052 | 93 | 1-B 11 | 216-6976 | 937 | 1-E 23 | 216-7841 | 339 | 1-C 11 |
| 213-2504 | 589 | 1-D 12 | 215-8054 | 93 | 1-B 11 | 216-6977 | 929 | 1-E 22 | 216-8188 | 931 | 1-E 23 |
| 213-2505 | 589 | 1-D 12 | 215-8055 | 93 | 1-B 11 | 216-6977 | 931 | 1-E 23 | 216-8277 | 353 | 1-C 13 |
| 213-2506 | 589 | 1-D 12 | 215-8055 | 97 | 1-B 11 | 216-6977 | 933 | 1-E 23 | 216-8715 | 497 | 1-D 3 |
| 213-2589 | 93 | 1-B 11 | 215-8055 | 101 | 1-B 12 | 216-6977 | 935 | 1-E 23 | 216-8715 | 499 | 1-D 3 |
| 213-2589 | 175 | 1-B 19 | 215-8055 | 103 | 1-B 12 | 216-6977 | 937 | 1-E 23 | 216-8715 | 501 | 1-D 4 |
| 213-3269 | 457 | 1-C 23 | 215-8364 | 615 | 1-D 15 | 216-6978 | 929 | 1-E 22 | 216-8715 | 503 | 1-D 4 |
| 213-3269 | 461 | 1-C 24 | 215-9109 | 267 | 1-C 4 | 216-6978 | 933 | 1-E 23 | 216-8860 | 321 | 1-C 10 |
| 213-3269 | 467 | 1-C 24 | 215-9580 | 637 | 1-D 17 | 216-6978 | 935 | 1-E 23 | 216-9213 | 527 | 1-D 6 |
| 213-3269 | 471 | 1-D 1 | 215-9809 | 259 | 1-C 3 | 216-6978 | 937 | 1-E 23 | 216-9213 | 533 | 1-D 7 |
| 213-3269 | 477 | 1-D 1 | 215-9809 | 261 | 1-C 4 | 216-6979 | 929 | 1-E 22 | 216-9213 | 539 | 1-D 7 |
| 213-3269 | 481 | 1-D 2 | 216-0614 | 213 | 1-B 23 | 216-6979 | 933 | 1-E 23 | 216-9823 | 65 | 1-B 8 |
| 213-3269 | 487 | 1-D 2 | 216-0614 | 215 | 1-B 23 | 216-6979 | 935 | 1-E 23 | 216-9823 | 67 | 1-B 8 |
| 213-3269 | 491 | 1-D 3 | 216-0614 | 231 | 1-C 1 | 216-6979 | 937 | 1-E 23 | 216-9823 | 69 | 1-B 8 |
| 213-3270 | 459 | 1-C 23 | 216-0658 | 209 | 1-B 22 | 216-6980 | 929 | 1-E 22 | 216-9823 | 71 | 1-B 9 |
| 213-3270 | 461 | 1-C 24 | 216-0658 | 227 | 1-B 24 | 216-6980 | 931 | 1-E 23 | 216-9823 | 271 | 1-C 5 |
| 213-3270 | 469 | 1-C 24 | 216-0658 | 229 | 1-B 24 | 216-6980 | 933 | 1-E 23 | 217-2214 | 1121 | 1-F 18 |
| 213-3270 | 471 | 1-D 1 | 216-0806 | 267 | 1-C 4 | 216-6980 | 935 | 1-E 23 | 217-2214 | 1123 | 1-F 18 |
| 213-3270 | 479 | 1-D 1 | 216-0852 | 213 | 1-B 23 | 216-6980 | 937 | 1-E 23 | 217-2214 | 1125 | 1-F 18 |
| 213-3270 | 481 | 1-D 2 | 216-0874 | 215 | 1-B 23 | 216-6980 | 1263 | 1-G 8 | 217-3441 | 1031 | 1-F 9 |
| 213-3270 | 489 | 1-D 2 | 216-0887 | 267 | 1-C 4 | 216-6981 | 929 | 1-E 22 | 217-3442 | 1031 | 1-F 9 |
| 213-3270 | 491 | 1-D 3 | 216-2883 | 149 | 1-B 16 | 216-6981 | 931 | 1-E 23 | 217-3443 | 1031 | 1-F 9 |
| 213-4902 | 573 | 1-D 11 | 216-3028 | 357 | 1-C 13 | 216-6981 | 933 | 1-E 23 | 217-3444 | 1031 | 1-F 9 |
| 213-4902 | 575 | 1-D 11 | 216-3028 | 361 | 1-C 14 | 216-6981 | 935 | 1-E 23 | 217-3513 | 1095 | 1-F 15 |
| 213-6190 | 459 | 1-C 23 | 216-3458 | 927 | 1-E 22 | 216-6981 | 937 | 1-E 23 | 217-3514 | 1095 | 1-F 15 |
| 213-6190 | 469 | 1-C 24 | 216-3461 | 927 | 1-E 22 | 216-6983 | 929 | 1-E 22 | 217-3555 | 523 | 1-D 6 |
| 213-6190 | 479 | 1-D 1 | 216-3462 | 927 | 1-E 22 | 216-6983 | 933 | 1-E 23 | 217-3556 | 527 | 1-D 6 |
| 213-6190 | 489 | 1-D 2 | 216-3475 | 927 | 1-E 22 | 216-6983 | 935 | 1-E 23 | 217-3556 | 529 | 1-D 6 |
| 213-6191 | 461 | 1-C 24 | 216-3478 | 927 | 1-E 22 | 216-6983 | 937 | 1-E 23 | 217-3556 | 533 | 1-D 7 |
| 213-6191 | 471 | 1-D 1 | 216-3479 | 927 | 1-E 22 | 216-6984 | 929 | 1-E 22 | 217-3556 | 535 | 1-D 7 |
| 213-6191 | 481 | 1-D 2 | 216-3480 | 927 | 1-E 22 | 216-6984 | 933 | 1-E 23 | 217-3556 | 539 | 1-D 7 |
| 213-6191 | 491 | 1-D 3 | 216-3481 | 927 | 1-E 22 | 216-6984 | 935 | 1-E 23 | 217-3557 | 523 | 1-D 6 |
| 213-7061 | 989 | 1-F 4 | 216-3569 | 927 | 1-E 22 | 216-6984 | 937 | 1-E 23 | 217-3557 | 529 | 1-D 6 |
| 213-7061 | 991 | 1-F 5 | 216-3570 | 927 | 1-E 22 | 216-6986 | 929 | 1-E 22 | 217-3557 | 535 | 1-D 7 |
| 213-7062 | 989 | 1-F 4 | 216-4353 | 267 | 1-C 4 | 216-6986 | 933 | 1-E 23 | 217-3557 | 541 | 1-D 8 |
| 213-7062 | 991 | 1-F 5 | 216-5343 | 453 | 1-C 23 | 216-6986 | 935 | 1-E 23 | 217-4156 | 849 | 1-E 14 |
| 213-9315 | 77 | 1-B 9 | 216-5343 | 529 | 1-D 6 | 216-6986 | 937 | 1-E 23 | 217-4157 | 849 | 1-E 14 |
| 213-9315 | 79 | 1-B 9 | 216-5343 | 535 | 1-D 7 | 216-6987 | 929 | 1-E 22 | 217-5924 | 179 | 1-B 19 |
| 213-9315 | 81 | 1-B 10 | 216-5343 | 541 | 1-D 8 | 216-6987 | 933 | 1-E 23 | 217-5924 | 181 | 1-B 20 |
| 213-9315 | 83 | 1-B 10 | 216-5343 | 543 | 1-D 8 | 216-6987 | 935 | 1-E 23 | 217-7314 | 505 | 1-D 4 |
| 213-9315 | 179 | 1-B 19 | 216-5343 | 545 | 1-D 8 | 216-6987 | 937 | 1-E 23 | 217-7365 | 843 | 1-E 14 |
| 214-0041 | 179 | 1-B 19 | 216-5343 | 1263 | 1-G 8 | 216-6988 | 929 | 1-E 22 | 217-8425 | 497 | 1-D 3 |
| 214-0042 | 179 | 1-B 19 | 216-6285 | 617 | 1-D 15 | 216-6988 | 933 | 1-E 23 | 217-8425 | 499 | 1-D 3 |

## INDEX


| Part No. | Page | Grid | Part No. | Page | Grid | Part No. | Page | Grid | Part No. | Page | Grid |
|---|---|---|---|---|---|---|---|---|---|---|---|
| 217-8425 | 501 | 1-D 4 | 221-1230 | 121 | 1-B 14 | 223-6530 | 837 | 1-E 13 | 228-4643 | 143 | 1-B 16 |
| 217-8425 | 503 | 1-D 4 | 221-1230 | 123 | 1-B 14 | 224-1398 | 849 | 1-E 14 | 228-7494 | 741 | 1-E 4 |
| 217-9673 | 147 | 1-B 16 | 221-1230 | 125 | 1-B 14 | 224-1399 | 863 | 1-E 16 | 229-0888 | 209 | 1-B 22 |
| 217-9779 | 353 | 1-C 13 | 221-1233 | 121 | 1-B 14 | 224-2189 | 307 | 1-C 8 | 229-0891 | 211 | 1-B 23 |
| 217-9779 | 775 | 1-E 7 | 221-1233 | 123 | 1-B 14 | 224-3917 | 1049 | 1-F 10 | 229-0891 | 227 | 1-B 24 |
| 217-9780 | 359 | 1-C 13 | 221-1233 | 125 | 1-B 14 | 224-3917 | 1051 | 1-F 11 | 229-8893 | 129 | 1-B 14 |
| 217-9780 | 361 | 1-C 14 | 221-1233 | 1263 | 1-G 8 | 224-3917 | 1053 | 1-F 11 | 229-8895 | 129 | 1-B 14 |
| 217-9780 | 777 | 1-E 7 | 221-1775 | 1099 | 1-F 15 | 224-3917 | 1055 | 1-F 11 | 229-8898 | 129 | 1-B 14 |
| 218-2771 | 203 | 1-B 22 | 221-1776 | 177 | 1-B 19 | 224-3917 | 1057 | 1-F 11 | 229-8899 | 127 | 1-B 14 |
| 218-2771 | 205 | 1-B 22 | 221-2548 | 109 | 1-B 12 | 224-3917 | 1177 | 1-F 23 | 229-8899 | 129 | 1-B 14 |
| 218-2803 | 833 | 1-E 13 | 221-2548 | 111 | 1-B 13 | 224-3917 | 1179 | 1-F 23 | 230-9563 | 843 | 1-E 14 |
| 218-2805 | 835 | 1-E 13 | 221-2549 | 107 | 1-B 12 | 224-3945 | 837 | 1-E 13 | 230-9563 | 1263 | 1-G 8 |
| 218-2806 | 833 | 1-E 13 | 221-2642 | 1119 | 1-F 17 | 224-3946 | 837 | 1-E 13 | 231-5219 | 137 | 1-B 15 |
| 218-2806 | 835 | 1-E 13 | 221-2762 | 127 | 1-B 14 | 224-5868 | 499 | 1-D 3 | 231-6106 | 599 | 1-D 13 |
| 218-2807 | 93 | 1-B 11 | 221-2763 | 127 | 1-B 14 | 224-5869 | 501 | 1-D 4 | 231-6106 | 603 | 1-D 14 |
| 218-2808 | 99 | 1-B 11 | 221-5334 | 457 | 1-C 23 | 224-5869 | 503 | 1-D 4 | 232-0345 | 421 | 1-C 20 |
| 218-2809 | 101 | 1-B 12 | 221-5334 | 461 | 1-C 24 | 224-5870 | 499 | 1-D 3 | 232-0345 | 423 | 1-C 20 |
| 218-2886 | 149 | 1-B 16 | 221-5334 | 467 | 1-C 24 | 224-5870 | 501 | 1-D 4 | 232-0838 | 741 | 1-E 4 |
| 218-2888 | 149 | 1-B 16 | 221-5334 | 471 | 1-D 1 | 224-5870 | 503 | 1-D 4 | 232-0869 | 1119 | 1-F 17 |
| 218-2889 | 149 | 1-B 16 | 221-5334 | 477 | 1-D 1 | 224-5884 | 223 | 1-B 24 | 232-0879 | 335 | 1-C 11 |
| 219-4775 | 321 | 1-C 10 | 221-5334 | 481 | 1-D 2 | 224-5884 | 665 | 1-D 20 | 232-1774 | 441 | 1-C 22 |
| 219-4779 | 1119 | 1-F 17 | 221-5334 | 487 | 1-D 2 | 224-5884 | 1011 | 1-F 7 | 232-1774 | 443 | 1-C 22 |
| 219-4796 | 1119 | 1-F 17 | 221-5334 | 491 | 1-D 3 | 224-6641 | 591 | 1-D 13 | 232-1774 | 445 | 1-C 22 |
| 219-6551 | 837 | 1-E 13 | 221-5389 | 1119 | 1-F 17 | 224-6641 | 817 | 1-E 11 | 232-1774 | 447 | 1-C 22 |
| 219-7208 | 851 | 1-E 15 | 221-5433 | 1065 | 1-F 12 | 224-7075 | 179 | 1-B 19 | 232-1774 | 449 | 1-C 22 |
| 219-7209 | 851 | 1-E 15 | 221-7640 | 613 | 1-D 15 | 224-8603 | 1011 | 1-F 7 | 232-1774 | 451 | 1-C 23 |
| 219-7563 | 629 | 1-D 16 | 221-8534 | 75 | 1-B 9 | 224-9662 | 949 | 1-E 24 | 232-1774 | 511 | 1-D 5 |
| 219-7564 | 625 | 1-D 16 | 221-8534 | 623 | 1-D 16 | 224-9662 | 953 | 1-F 1 | 233-6580 | 1119 | 1-F 17 |
| 219-7565 | 625 | 1-D 16 | 221-8535 | 623 | 1-D 16 | 224-9662 | 955 | 1-F 1 | 233-7373 | 817 | 1-E 11 |
| 219-7565 | 629 | 1-D 16 | 221-8536 | 623 | 1-D 16 | 224-9662 | 1007 | 1-F 6 | 233-8642 | 839 | 1-E 13 |
| 219-7566 | 625 | 1-D 16 | 221-8537 | 623 | 1-D 16 | 225-0175 | 837 | 1-E 13 | 235-4672 | 85 | 1-B 10 |
| 219-7566 | 629 | 1-D 16 | 221-9201 | 267 | 1-C 4 | 225-0176 | 837 | 1-E 13 | 235-4672 | 87 | 1-B 10 |
| 219-8629 | 159 | 1-B 17 | 222-1887 | 613 | 1-D 15 | 225-1406 | 1095 | 1-F 15 | 235-4673 | 89 | 1-B 10 |
| 219-8629 | 161 | 1-B 18 | 222-1903 | 461 | 1-C 24 | 225-6958 | 455 | 1-C 23 | 235-4673 | 91 | 1-B 11 |
| 219-8630 | 159 | 1-B 17 | 222-1903 | 471 | 1-D 1 | 225-6958 | 465 | 1-C 24 | 235-6166 | 457 | 1-C 23 |
| 219-8630 | 161 | 1-B 18 | 222-1903 | 481 | 1-D 2 | 225-6958 | 507 | 1-D 4 | 235-6166 | 467 | 1-C 24 |
| 219-8631 | 159 | 1-B 17 | 222-1903 | 491 | 1-D 3 | 225-8514 | 617 | 1-D 15 | 235-6166 | 477 | 1-D 1 |
| 219-8632 | 161 | 1-B 18 | 222-1904 | 459 | 1-C 23 | 225-8861 | 621 | 1-D 16 | 235-6166 | 487 | 1-D 2 |
| 219-8787 | 837 | 1-E 13 | 222-1904 | 469 | 1-C 24 | 226-0919 | 631 | 1-D 17 | 239-9822 | 461 | 1-C 24 |
| 219-8801 | 999 | 1-F 5 | 222-1904 | 479 | 1-D 1 | 226-0921 | 631 | 1-D 17 | 239-9822 | 471 | 1-D 1 |
| 219-9652 | 747 | 1-E 4 | 222-1904 | 489 | 1-D 2 | 226-1882 | 837 | 1-E 13 | 239-9822 | 481 | 1-D 2 |
| 219-9656 | 1127 | 1-F 18 | 222-2280 | 1211 | 1-G 3 | 226-4324 | 375 | 1-C 15 | 239-9822 | 491 | 1-D 3 |
| 220-2329 | 1155 | 1-F 21 | 222-2281 | 1231 | 1-G 5 | 226-4324 | 381 | 1-C 16 | 240-5529 | 429 | 1-C 20 |
| 220-2329 | 1159 | 1-F 21 | 222-2457 | 367 | 1-C 14 | 226-4325 | 375 | 1-C 15 | 240-5529 | 445 | 1-C 22 |
| 220-2333 | 1159 | 1-F 21 | 222-2457 | 369 | 1-C 14 | 226-4325 | 381 | 1-C 16 | 241-6205 | 513 | 1-D 5 |
| 220-2355 | 711 | 1-E 1 | 222-4774 | 1095 | 1-F 15 | 226-4754 | 373 | 1-C 15 | 242-0962 | 473 | 1-D 1 |
| 220-2356 | 65 | 1-B 8 | 222-7965 | 65 | 1-B 8 | 226-4754 | 379 | 1-C 15 | 242-0962 | 485 | 1-D 2 |
| 220-2356 | 67 | 1-B 8 | 222-7965 | 67 | 1-B 8 | 226-7570 | 145 | 1-B 16 | 242-0962 | 509 | 1-D 4 |
| 220-2356 | 69 | 1-B 8 | 222-7965 | 69 | 1-B 8 | 226-7570 | 147 | 1-B 16 | 242-5086 | 457 | 1-C 23 |
| 220-2356 | 71 | 1-B 9 | 222-7965 | 71 | 1-B 9 | 227-4312 | 1177 | 1-F 23 | 242-5086 | 461 | 1-C 24 |
| 220-2356 | 713 | 1-E 1 | 222-7965 | 615 | 1-D 15 | 227-4313 | 1177 | 1-F 23 | 242-5086 | 467 | 1-C 24 |
| 220-2357 | 707 | 1-D 24 | 222-9033 | 605 | 1-D 14 | 227-5269 | 839 | 1-E 13 | 242-5086 | 471 | 1-D 1 |
| 220-2358 | 65 | 1-B 8 | 222-9156 | 269 | 1-C 4 | 227-5270 | 839 | 1-E 13 | 242-5086 | 477 | 1-D 1 |
| 220-2358 | 67 | 1-B 8 | 222-9854 | 815 | 1-E 11 | 227-6744 | 827 | 1-E 12 | 242-5086 | 481 | 1-D 2 |
| 220-2358 | 69 | 1-B 8 | 222-9855 | 815 | 1-E 11 | 227-6745 | 827 | 1-E 12 | 242-5086 | 487 | 1-D 2 |
| 220-2358 | 71 | 1-B 9 | 223-0623 | 461 | 1-C 24 | 227-8224 | 143 | 1-B 16 | 242-5086 | 491 | 1-D 3 |
| 220-2358 | 709 | 1-D 24 | 223-0623 | 471 | 1-D 1 | 227-8726 | 921 | 1-E 22 | 244-3699 | 479 | 1-D 1 |
| 220-2730 | 621 | 1-D 16 | 223-0623 | 481 | 1-D 2 | 227-8727 | 921 | 1-E 22 | 244-3699 | 489 | 1-D 2 |
| 220-3664 | 747 | 1-E 4 | 223-0623 | 491 | 1-D 3 | 227-8830 | 913 | 1-E 21 | 252-2226 | 459 | 1-C 23 |
| 220-3810 | 403 | 1-C 18 | 223-0687 | 197 | 1-B 21 | 227-8830 | 917 | 1-E 21 | 252-2226 | 469 | 1-C 24 |
| 220-4138 | 383 | 1-C 16 | 223-0687 | 199 | 1-B 21 | 227-8830 | 919 | 1-E 21 | 252-2227 | 479 | 1-D 1 |
| 220-5736 | 207 | 1-B 22 | 223-0687 | 203 | 1-B 22 | 227-8830 | 921 | 1-E 22 | 252-2227 | 489 | 1-D 2 |
| 220-5736 | 1263 | 1-G 8 | 223-0687 | 205 | 1-B 22 | 227-9327 | 455 | 1-C 23 | 256-0176 | 227 | 1-B 24 |
| 220-8642 | 179 | 1-B 19 | 223-0701 | 117 | 1-B 13 | 227-9327 | 463 | 1-C 24 | 256-0176 | 377 | 1-C 15 |
| 220-8642 | 181 | 1-B 20 | 223-1637 | 465 | 1-C 24 | 227-9327 | 473 | 1-D 1 | 256-0184 | 209 | 1-B 22 |
| 221-0331 | 741 | 1-E 4 | 223-1637 | 475 | 1-D 1 | 227-9327 | 483 | 1-D 2 | 256-0187 | 231 | 1-C 1 |
| 221-0691 | 459 | 1-C 23 | 223-1637 | 485 | 1-D 2 | 227-9744 | 1159 | 1-F 21 | 260-9471 | 497 | 1-D 3 |
| 221-0691 | 469 | 1-C 24 | 223-2480 | 697 | 1-D 23 | 228-2777 | 1191 | 1-G 1 | 260-9471 | 499 | 1-D 3 |
| 221-0691 | 479 | 1-D 1 | 223-2480 | 699 | 1-D 23 | 228-4278 | 453 | 1-C 23 | 260-9471 | 501 | 1-D 4 |
| 221-0691 | 489 | 1-D 2 | 223-3273 | 697 | 1-D 23 | 228-4631 | 141 | 1-B 16 | 260-9471 | 503 | 1-D 4 |
| 221-0807 | 129 | 1-B 14 | 223-3273 | 699 | 1-D 23 | 228-4632 | 143 | 1-B 16 | 261-2719 | 497 | 1-D 3 |
| 221-0808 | 107 | 1-B 12 | 223-4304 | 677 | 1-D 21 | 228-4633 | 143 | 1-B 16 | 261-2719 | 499 | 1-D 3 |
| 221-0808 | 109 | 1-B 12 | 223-4941 | 1031 | 1-F 9 | 228-4642 | 141 | 1-B 16 | 261-2719 | 501 | 1-D 4 |
| 221-0808 | 111 | 1-B 13 | 223-5887 | 597 | 1-D 13 | 228-4642 | 143 | 1-B 16 | 261-2719 | 503 | 1-D 4 |
| 221-1229 | 129 | 1-B 14 | 223-5887 | 603 | 1-D 14 | 228-4643 | 141 | 1-B 16 | 266-0216 | 497 | 1-D 3 |

# INDEX


| Part No. | Page | Grid | Part No. | Page | Grid | Part No. | Page | Grid | Part No. | Page | Grid |
|---|---|---|---|---|---|---|---|---|---|---|---|
| 266-0216 | 499 | 1-D 3 | 3T-3434 | 317 | 1-C 9 | 4M-1831 | 315 | 1-C 9 | 400035X1 | 695 | 1-D 23 |
| 266-0216 | 501 | 1-D 4 | 3T-3434 | 319 | 1-C 9 | 4M-1831 | 317 | 1-C 9 | 400035X1 | 1019 | 1-F 7 |
| 266-0216 | 503 | 1-D 4 | 4B-9782 | 455 | 1-C 23 | 4M-1831 | 319 | 1-C 9 | 400036X1 | 969 | 1-F 2 |
| 267-8459 | 383 | 1-C 16 | 4B-9782 | 463 | 1-C 24 | 4M-2381 | 513 | 1-D 5 | 400039X1 | 95 | 1-B 11 |
| 3B-4501 | 355 | 1-C 13 | 4B-9782 | 473 | 1-D 1 | 4M-5905 | 513 | 1-D 5 | 400039X1 | 101 | 1-B 12 |
| 3B-4501 | 357 | 1-C 13 | 4B-9782 | 483 | 1-D 2 | 4N-0952 | 479 | 1-D 1 | 400039X1 | 121 | 1-B 14 |
| 3B-8485 | 973 | 1-F 3 | 4B-9783 | 465 | 1-C 24 | 4P-7428 | 453 | 1-C 23 | 400039X1 | 123 | 1-B 14 |
| 3C-6969 | 355 | 1-C 13 | 4B-9783 | 475 | 1-D 1 | 4P-7581 | 355 | 1-C 13 | 400039X1 | 125 | 1-B 14 |
| 3C-6969 | 357 | 1-C 13 | 4B-9783 | 485 | 1-D 2 | 4P-7581 | 453 | 1-C 23 | 400039X1 | 145 | 1-B 16 |
| 3D-2824 | 421 | 1-C 20 | 4B-9880 | 513 | 1-D 5 | 4P-7581 | 529 | 1-D 6 | 400039X1 | 151 | 1-B 17 |
| 3D-8317 | 513 | 1-D 5 | 4C-4183 | 1261 | 1-G 8 | 4P-7581 | 535 | 1-D 7 | 400039X1 | 153 | 1-B 17 |
| 3E-3377 | 353 | 1-C 13 | 4C-4184 | 1261 | 1-G 8 | 4P-7581 | 541 | 1-D 8 | 400039X1 | 179 | 1-B 19 |
| 3E-4353 | 527 | 1-D 6 | 4C-4190 | 1261 | 1-G 8 | 4P-8134 | 355 | 1-C 13 | 400039X1 | 181 | 1-B 20 |
| 3E-4353 | 533 | 1-D 7 | 4C-4191 | 1261 | 1-G 8 | 4P-8134 | 357 | 1-C 13 | 400039X1 | 183 | 1-B 20 |
| 3E-4353 | 539 | 1-D 7 | 4C-4192 | 1261 | 1-G 8 | 4P-8134 | 453 | 1-C 23 | 400039X1 | 197 | 1-B 21 |
| 3E-5464 | 1031 | 1-F 9 | 4C-4197 | 1261 | 1-G 8 | 4T-2201 | 439 | 1-C 21 | 400039X1 | 199 | 1-B 21 |
| 3E-6284 | 353 | 1-C 13 | 4C-4198 | 1261 | 1-G 8 | 4T-4200 | 525 | 1-D 6 | 400039X1 | 203 | 1-B 22 |
| 3E-7775 | 315 | 1-C 9 | 4C-4199 | 1261 | 1-G 8 | 4T-4200 | 531 | 1-D 7 | 400039X1 | 205 | 1-B 22 |
| 3E-7775 | 319 | 1-C 9 | 4C-4200 | 1261 | 1-G 8 | 4T-4200 | 537 | 1-D 7 | 400039X1 | 209 | 1-B 22 |
| 3F-0379 | 315 | 1-C 9 | 4C-4205 | 1261 | 1-G 8 | 400000X1 | 863 | 1-E 16 | 400039X1 | 211 | 1-B 23 |
| 3F-0379 | 317 | 1-C 9 | 4C-4206 | 1261 | 1-G 8 | 400001X1 | 209 | 1-B 22 | 400039X1 | 213 | 1-B 23 |
| 3F-0379 | 319 | 1-C 9 | 4C-4207 | 1261 | 1-G 8 | 400001X1 | 377 | 1-C 15 | 400039X1 | 215 | 1-B 23 |
| 3F-0957 | 421 | 1-C 20 | 4C-4211 | 1261 | 1-G 8 | 400001X1 | 383 | 1-C 16 | 400039X1 | 267 | 1-C 4 |
| 3H-0703 | 449 | 1-C 22 | 4C-5843 | 1261 | 1-G 8 | 400002X1 | 683 | 1-D 22 | 400039X1 | 357 | 1-C 13 |
| 3J-1907 | 421 | 1-C 20 | 4C-6122 | 1261 | 1-G 8 | 400004X1 | 171 | 1-B 19 | 400039X1 | 361 | 1-C 14 |
| 3J-1907 | 423 | 1-C 20 | 4C-6126 | 1261 | 1-G 8 | 400004X1 | 1073 | 1-F 13 | 400039X1 | 375 | 1-C 15 |
| 3J-1907 | 455 | 1-C 23 | 4C-6127 | 1261 | 1-G 8 | 400005X1 | 281 | 1-C 6 | 400039X1 | 381 | 1-C 16 |
| 3J-1907 | 465 | 1-C 24 | 4C-6129 | 1261 | 1-G 8 | 400005X1 | 283 | 1-C 6 | 400039X1 | 385 | 1-C 16 |
| 3J-1907 | 475 | 1-D 1 | 4C-6133 | 1261 | 1-G 8 | 400006X1 | 351 | 1-C 13 | 400039X1 | 579 | 1-D 11 |
| 3J-1907 | 485 | 1-D 2 | 4C-6134 | 1261 | 1-G 8 | 400006X1 | 371 | 1-C 15 | 400039X1 | 591 | 1-D 13 |
| 3J-1907 | 513 | 1-D 5 | 4D-7889 | 427 | 1-C 20 | 400008X1 | 697 | 1-D 23 | 400039X1 | 621 | 1-D 16 |
| 3J-1907 | 529 | 1-D 6 | 4D-7889 | 429 | 1-C 20 | 400008X1 | 699 | 1-D 23 | 400039X1 | 625 | 1-D 16 |
| 3J-1907 | 535 | 1-D 7 | 4D-7889 | 431 | 1-C 21 | 400009X1 | 683 | 1-D 22 | 400039X1 | 629 | 1-D 16 |
| 3J-1907 | 541 | 1-D 8 | 4D-7889 | 433 | 1-C 21 | 400011X1 | 761 | 1-E 6 | 400039X1 | 735 | 1-E 3 |
| 3J-1907 | 543 | 1-D 8 | 4D-7889 | 437 | 1-C 21 | 400013X1 | 599 | 1-D 13 | 400039X1 | 739 | 1-E 3 |
| 3J-1907 | 545 | 1-D 8 | 4D-7889 | 441 | 1-C 22 | 400013X1 | 603 | 1-D 14 | 400039X1 | 741 | 1-E 4 |
| 3J-7354 | 527 | 1-D 6 | 4D-7889 | 443 | 1-C 22 | 400014X1 | 677 | 1-D 21 | 400039X1 | 743 | 1-E 4 |
| 3J-7354 | 533 | 1-D 7 | 4D-7889 | 445 | 1-C 22 | 400015X1 | 621 | 1-D 16 | 400039X1 | 749 | 1-E 4 |
| 3J-7354 | 539 | 1-D 7 | 4D-7889 | 447 | 1-C 22 | 400017X1 | 359 | 1-C 13 | 400039X1 | 753 | 1-E 5 |
| 3K-0360 | 421 | 1-C 20 | 4D-7889 | 451 | 1-C 23 | 400018X1 | 177 | 1-B 19 | 400039X1 | 757 | 1-E 5 |
| 3K-0360 | 423 | 1-C 20 | 4D-7889 | 525 | 1-D 6 | 400018X1 | 1023 | 1-F 8 | 400039X1 | 759 | 1-E 5 |
| 3K-0360 | 459 | 1-C 23 | 4D-7889 | 531 | 1-D 7 | 400018X1 | 1025 | 1-F 8 | 400039X1 | 819 | 1-E 11 |
| 3K-0360 | 469 | 1-C 24 | 4D-7889 | 537 | 1-D 7 | 400019X1 | 131 | 1-B 15 | 400039X1 | 821 | 1-E 12 |
| 3K-0360 | 479 | 1-D 1 | 4E-2229 | 357 | 1-C 13 | 400019X1 | 135 | 1-B 15 | 400039X1 | 823 | 1-E 12 |
| 3K-0360 | 489 | 1-D 2 | 4E-2250 | 211 | 1-B 23 | 400021X1 | 259 | 1-C 3 | 400039X1 | 825 | 1-E 12 |
| 3K-0360 | 513 | 1-D 5 | 4F-4097 | 421 | 1-C 20 | 400021X1 | 261 | 1-C 4 | 400039X1 | 839 | 1-E 13 |
| 3K-0360 | 735 | 1-E 3 | 4F-4097 | 423 | 1-C 20 | 400022X1 | 1023 | 1-F 8 | 400039X1 | 841 | 1-E 14 |
| 3K-0715 | 421 | 1-C 20 | 4H-0408 | 759 | 1-E 5 | 400022X1 | 1025 | 1-F 8 | 400039X1 | 843 | 1-E 14 |
| 3K-0715 | 423 | 1-C 20 | 4H-6507 | 455 | 1-C 23 | 400022X1 | 1027 | 1-F 8 | 400039X1 | 849 | 1-E 14 |
| 3P-3441 | 459 | 1-C 23 | 4H-6507 | 463 | 1-C 24 | 400022X1 | 1029 | 1-F 8 | 400039X1 | 851 | 1-E 15 |
| 3P-3441 | 461 | 1-C 24 | 4H-6507 | 473 | 1-D 1 | 400022X1 | 1037 | 1-F 9 | 400039X1 | 857 | 1-E 15 |
| 3P-3441 | 469 | 1-C 24 | 4H-6507 | 483 | 1-D 2 | 400022X1 | 1043 | 1-F 10 | 400039X1 | 969 | 1-F 2 |
| 3P-3441 | 471 | 1-D 1 | 4J-5140 | 461 | 1-C 24 | 400022X1 | 1091 | 1-F 15 | 400039X1 | 973 | 1-F 3 |
| 3P-3441 | 479 | 1-D 1 | 4J-5140 | 471 | 1-D 1 | 400022X1 | 1093 | 1-F 15 | 400039X1 | 975 | 1-F 3 |
| 3P-3441 | 481 | 1-D 2 | 4J-5140 | 481 | 1-D 2 | 400023X1 | 679 | 1-D 21 | 400039X1 | 989 | 1-F 4 |
| 3P-3441 | 489 | 1-D 2 | 4J-5140 | 491 | 1-D 3 | 400023X1 | 681 | 1-D 22 | 400039X1 | 997 | 1-F 5 |
| 3P-3441 | 491 | 1-D 3 | 4J-5140 | 529 | 1-D 6 | 400024X1 | 573 | 1-D 11 | 400039X1 | 1017 | 1-F 7 |
| 3S-2093 | 357 | 1-C 13 | 4J-5140 | 535 | 1-D 7 | 400024X1 | 575 | 1-D 11 | 400039X1 | 1073 | 1-F 13 |
| 3S-2093 | 453 | 1-C 23 | 4J-5140 | 541 | 1-D 8 | 400024X1 | 749 | 1-E 4 | 400039X1 | 1099 | 1-F 15 |
| 3S-2708 | 435 | 1-C 21 | 4J-5477 | 527 | 1-D 6 | 400025X1 | 973 | 1-F 3 | 400039X1 | 1109 | 1-F 16 |
| 3S-2708 | 437 | 1-C 21 | 4J-5477 | 533 | 1-D 7 | 400026X1 | 957 | 1-F 1 | 400039X1 | 1177 | 1-F 23 |
| 3S-2708 | 449 | 1-C 22 | 4J-5477 | 539 | 1-D 7 | 400027X1 | 683 | 1-D 22 | 400040X1 | 95 | 1-B 11 |
| 3S-2708 | 451 | 1-C 23 | 4J-8996 | 421 | 1-C 20 | 400028X1 | 119 | 1-B 13 | 400040X1 | 133 | 1-B 15 |
| 3S-2708 | 459 | 1-C 23 | 4J-8996 | 423 | 1-C 20 | 400028X1 | 741 | 1-E 4 | 400040X1 | 135 | 1-B 15 |
| 3S-2708 | 461 | 1-C 24 | 4K-3892 | 457 | 1-C 23 | 400029X1 | 625 | 1-D 16 | 400040X1 | 145 | 1-B 16 |
| 3S-2708 | 469 | 1-C 24 | 4K-3892 | 461 | 1-C 24 | 400031X1 | 565 | 1-D 10 | 400040X1 | 147 | 1-B 16 |
| 3S-2708 | 471 | 1-D 1 | 4K-3892 | 467 | 1-C 24 | 400031X1 | 567 | 1-D 10 | 400040X1 | 179 | 1-B 19 |
| 3S-2708 | 479 | 1-D 1 | 4K-3892 | 471 | 1-D 1 | 400031X1 | 569 | 1-D 10 | 400040X1 | 181 | 1-B 20 |
| 3S-2708 | 481 | 1-D 2 | 4K-3892 | 477 | 1-D 1 | 400031X1 | 589 | 1-D 12 | 400040X1 | 197 | 1-B 21 |
| 3S-2708 | 489 | 1-D 2 | 4K-3892 | 481 | 1-D 2 | 400032X1 | 697 | 1-D 23 | 400040X1 | 199 | 1-B 21 |
| 3S-2708 | 491 | 1-D 3 | 4K-3892 | 487 | 1-D 2 | 400032X1 | 699 | 1-D 23 | 400040X1 | 203 | 1-B 22 |
| 3T-3422 | 315 | 1-C 9 | 4K-3892 | 491 | 1-D 3 | 400033X1 | 989 | 1-F 4 | 400040X1 | 205 | 1-B 22 |
| 3T-3422 | 317 | 1-C 9 | 4K-9429 | 635 | 1-D 17 | 400035X1 | 683 | 1-D 22 | 400040X1 | 307 | 1-C 8 |
| 3T-3422 | 319 | 1-C 9 | 4K-9429 | 637 | 1-D 17 | 400035X1 | 685 | 1-D 22 | 400040X1 | 309 | 1-C 8 |
| 3T-3434 | 315 | 1-C 9 | 4M-0189 | 493 | 1-D 3 | 400035X1 | 693 | 1-D 23 | 400040X1 | 385 | 1-C 16 |

## INDEX


| Part No. | Page | Grid | Part No. | Page | Grid | Part No. | Page | Grid | Part No. | Page | Grid |
|---|---|---|---|---|---|---|---|---|---|---|---|
| 400040X1 | 579 | 1-D 11 | 400050X1 | 853 | 1-E 15 | 400058X1 | 181 | 1-B 20 | 400065X1 | 1093 | 1-F 15 |
| 400040X1 | 629 | 1-D 16 | 400050X1 | 861 | 1-E 16 | 400058X1 | 183 | 1-B 20 | 400066X1 | 179 | 1-B 19 |
| 400040X1 | 749 | 1-E 4 | 400050X1 | 867 | 1-E 16 | 400058X1 | 197 | 1-B 21 | 400066X1 | 181 | 1-B 20 |
| 400040X1 | 759 | 1-E 5 | 400050X1 | 871 | 1-E 17 | 400058X1 | 199 | 1-B 21 | 400066X1 | 629 | 1-D 16 |
| 400040X1 | 837 | 1-E 13 | 400051X1 | 621 | 1-D 16 | 400058X1 | 203 | 1-B 22 | 400066X1 | 839 | 1-E 13 |
| 400040X1 | 843 | 1-E 14 | 400051X1 | 633 | 1-D 17 | 400058X1 | 205 | 1-B 22 | 400066X1 | 1121 | 1-F 18 |
| 400040X1 | 855 | 1-E 15 | 400051X1 | 839 | 1-E 13 | 400058X1 | 357 | 1-C 13 | 400066X1 | 1123 | 1-F 18 |
| 400040X1 | 973 | 1-F 3 | 400051X1 | 863 | 1-E 16 | 400058X1 | 361 | 1-C 14 | 400067X1 | 565 | 1-D 10 |
| 400040X1 | 991 | 1-F 5 | 400051X1 | 865 | 1-E 16 | 400058X1 | 599 | 1-D 13 | 400067X1 | 567 | 1-D 10 |
| 400040X1 | 995 | 1-F 5 | 400052X1 | 197 | 1-B 21 | 400058X1 | 603 | 1-D 14 | 400067X1 | 569 | 1-D 10 |
| 400040X1 | 997 | 1-F 5 | 400052X1 | 199 | 1-B 21 | 400058X1 | 617 | 1-D 15 | 400067X1 | 629 | 1-D 16 |
| 400040X1 | 1007 | 1-F 6 | 400052X1 | 203 | 1-B 22 | 400058X1 | 625 | 1-D 16 | 400067X1 | 693 | 1-D 23 |
| 400040X1 | 1073 | 1-F 13 | 400052X1 | 205 | 1-B 22 | 400058X1 | 629 | 1-D 16 | 400067X1 | 695 | 1-D 23 |
| 400040X1 | 1099 | 1-F 15 | 400052X1 | 593 | 1-D 13 | 400058X1 | 631 | 1-D 17 | 400067X1 | 1019 | 1-F 7 |
| 400040X1 | 1121 | 1-F 18 | 400052X1 | 621 | 1-D 16 | 400058X1 | 633 | 1-D 17 | 400067X1 | 1021 | 1-F 8 |
| 400040X1 | 1123 | 1-F 18 | 400052X1 | 623 | 1-D 16 | 400058X1 | 637 | 1-D 17 | 400068X1 | 779 | 1-E 7 |
| 400040X1 | 1189 | 1-F 24 | 400053X1 | 149 | 1-B 16 | 400058X1 | 667 | 1-D 20 | 400069X1 | 407 | 1-C 18 |
| 400040X1 | 1191 | 1-G 1 | 400053X1 | 573 | 1-D 11 | 400058X1 | 669 | 1-D 20 | 400069X1 | 409 | 1-C 18 |
| 400040X1 | 1193 | 1-G 1 | 400053X1 | 577 | 1-D 11 | 400058X1 | 693 | 1-D 23 | 400070X1 | 1075 | 1-F 13 |
| 400041X1 | 303 | 1-C 8 | 400053X1 | 581 | 1-D 12 | 400058X1 | 695 | 1-D 23 | 400071X1 | 1075 | 1-F 13 |
| 400041X1 | 305 | 1-C 8 | 400053X1 | 591 | 1-D 13 | 400058X1 | 741 | 1-E 4 | 400072X1 | 173 | 1-B 19 |
| 400041X1 | 385 | 1-C 16 | 400053X1 | 607 | 1-D 14 | 400058X1 | 761 | 1-E 6 | 400073X1 | 1089 | 1-F 14 |
| 400041X1 | 407 | 1-C 18 | 400053X1 | 625 | 1-D 16 | 400058X1 | 839 | 1-E 13 | 400074X1 | 173 | 1-B 19 |
| 400041X1 | 409 | 1-C 18 | 400053X1 | 629 | 1-D 16 | 400058X1 | 843 | 1-E 14 | 400074X1 | 1075 | 1-F 13 |
| 400041X1 | 555 | 1-D 9 | 400053X1 | 633 | 1-D 17 | 400058X1 | 1059 | 1-F 11 | 400075X1 | 671 | 1-D 21 |
| 400041X1 | 557 | 1-D 9 | 400053X1 | 705 | 1-D 24 | 400058X1 | 1061 | 1-F 12 | 400076X1 | 359 | 1-C 13 |
| 400041X1 | 559 | 1-D 9 | 400053X1 | 779 | 1-E 7 | 400058X1 | 1099 | 1-F 15 | 400076X1 | 571 | 1-D 11 |
| 400041X1 | 561 | 1-D 10 | 400053X1 | 819 | 1-E 11 | 400058X1 | 1121 | 1-F 18 | 400076X1 | 1097 | 1-F 15 |
| 400041X1 | 563 | 1-D 10 | 400053X1 | 821 | 1-E 12 | 400058X1 | 1123 | 1-F 18 | 400077X1 | 133 | 1-B 15 |
| 400041X1 | 625 | 1-D 16 | 400053X1 | 823 | 1-E 12 | 400059X1 | 175 | 1-B 19 | 400078X1 | 957 | 1-F 1 |
| 400041X1 | 631 | 1-D 17 | 400053X1 | 825 | 1-E 12 | 400059X1 | 177 | 1-B 19 | 400078X1 | 959 | 1-F 1 |
| 400041X1 | 635 | 1-D 17 | 400053X1 | 839 | 1-E 13 | 400059X1 | 203 | 1-B 22 | 400078X1 | 971 | 1-F 3 |
| 400041X1 | 637 | 1-D 17 | 400053X1 | 1023 | 1-F 8 | 400059X1 | 205 | 1-B 22 | 400078X1 | 989 | 1-F 4 |
| 400041X1 | 839 | 1-E 13 | 400053X1 | 1025 | 1-F 8 | 400059X1 | 591 | 1-D 13 | 400078X1 | 991 | 1-F 5 |
| 400041X1 | 973 | 1-F 3 | 400053X1 | 1027 | 1-F 8 | 400059X1 | 599 | 1-D 13 | 400079X1 | 969 | 1-F 2 |
| 400041X1 | 975 | 1-F 3 | 400053X1 | 1029 | 1-F 8 | 400059X1 | 603 | 1-D 14 | 400080X1 | 549 | 1-D 8 |
| 400042X1 | 1121 | 1-F 18 | 400053X1 | 1091 | 1-F 15 | 400059X1 | 605 | 1-D 14 | 400080X1 | 555 | 1-D 9 |
| 400042X1 | 1123 | 1-F 18 | 400053X1 | 1093 | 1-F 15 | 400059X1 | 617 | 1-D 15 | 400080X1 | 557 | 1-D 9 |
| 400044X1 | 141 | 1-B 16 | 400053X1 | 1095 | 1-F 15 | 400059X1 | 629 | 1-D 16 | 400080X1 | 559 | 1-D 9 |
| 400044X1 | 327 | 1-C 10 | 400053X1 | 1179 | 1-F 23 | 400059X1 | 633 | 1-D 17 | 400080X1 | 561 | 1-D 10 |
| 400044X1 | 623 | 1-D 16 | 400055X1 | 197 | 1-B 21 | 400059X1 | 833 | 1-E 13 | 400080X1 | 563 | 1-D 10 |
| 400044X1 | 625 | 1-D 16 | 400055X1 | 199 | 1-B 21 | 400059X1 | 847 | 1-E 14 | 400080X1 | 565 | 1-D 10 |
| 400044X1 | 737 | 1-E 3 | 400055X1 | 203 | 1-B 22 | 400059X1 | 851 | 1-E 15 | 400080X1 | 567 | 1-D 10 |
| 400044X1 | 849 | 1-E 14 | 400055X1 | 205 | 1-B 22 | 400059X1 | 853 | 1-E 15 | 400080X1 | 569 | 1-D 10 |
| 400044X1 | 1099 | 1-F 15 | 400055X1 | 385 | 1-C 16 | 400060X1 | 127 | 1-B 14 | 400080X1 | 579 | 1-D 11 |
| 400046X1 | 197 | 1-B 21 | 400055X1 | 401 | 1-C 18 | 400060X1 | 211 | 1-B 23 | 400080X1 | 671 | 1-D 21 |
| 400046X1 | 199 | 1-B 21 | 400055X1 | 403 | 1-C 18 | 400062X1 | 629 | 1-D 16 | 400080X1 | 683 | 1-D 22 |
| 400046X1 | 203 | 1-B 22 | 400055X1 | 683 | 1-D 22 | 400062X1 | 859 | 1-E 15 | 400080X1 | 693 | 1-D 23 |
| 400046X1 | 205 | 1-B 22 | 400055X1 | 1153 | 1-F 21 | 400063X1 | 407 | 1-C 18 | 400080X1 | 695 | 1-D 23 |
| 400046X1 | 847 | 1-E 14 | 400056X1 | 167 | 1-B 18 | 400063X1 | 409 | 1-C 18 | 400080X1 | 697 | 1-D 23 |
| 400046X1 | 853 | 1-E 15 | 400056X1 | 169 | 1-B 18 | 400063X1 | 551 | 1-D 9 | 400080X1 | 699 | 1-D 23 |
| 400046X1 | 863 | 1-E 16 | 400056X1 | 783 | 1-E 8 | 400063X1 | 553 | 1-D 9 | 400080X1 | 749 | 1-E 4 |
| 400046X1 | 865 | 1-E 16 | 400056X1 | 785 | 1-E 8 | 400063X1 | 819 | 1-E 11 | 400080X1 | 957 | 1-F 1 |
| 400047X1 | 375 | 1-C 15 | 400056X1 | 869 | 1-E 16 | 400063X1 | 821 | 1-E 12 | 400080X1 | 959 | 1-F 1 |
| 400047X1 | 697 | 1-D 23 | 400056X1 | 871 | 1-E 17 | 400063X1 | 823 | 1-E 12 | 400080X1 | 989 | 1-F 4 |
| 400047X1 | 699 | 1-D 23 | 400056X1 | 973 | 1-F 3 | 400063X1 | 825 | 1-E 12 | 400080X1 | 991 | 1-F 5 |
| 400048X1 | 1121 | 1-F 18 | 400056X1 | 989 | 1-F 4 | 400063X1 | 839 | 1-E 13 | 400081X1 | 115 | 1-B 13 |
| 400048X1 | 1123 | 1-F 18 | 400056X1 | 991 | 1-F 5 | 400063X1 | 847 | 1-E 14 | 400081X1 | 117 | 1-B 13 |
| 400049X1 | 95 | 1-B 11 | 400057X1 | 195 | 1-B 21 | 400063X1 | 853 | 1-E 15 | 400081X1 | 565 | 1-D 10 |
| 400049X1 | 621 | 1-D 16 | 400057X1 | 407 | 1-C 18 | 400064X1 | 139 | 1-B 15 | 400081X1 | 567 | 1-D 10 |
| 400049X1 | 1023 | 1-F 8 | 400057X1 | 411 | 1-C 19 | 400064X1 | 583 | 1-D 12 | 400081X1 | 569 | 1-D 10 |
| 400049X1 | 1025 | 1-F 8 | 400057X1 | 585 | 1-D 12 | 400064X1 | 591 | 1-D 13 | 400081X1 | 579 | 1-D 11 |
| 400049X1 | 1027 | 1-F 8 | 400057X1 | 587 | 1-D 12 | 400064X1 | 629 | 1-D 16 | 400081X1 | 629 | 1-D 16 |
| 400049X1 | 1029 | 1-F 8 | 400057X1 | 859 | 1-E 15 | 400064X1 | 697 | 1-D 23 | 400081X1 | 683 | 1-D 22 |
| 400050X1 | 107 | 1-B 12 | 400058X1 | 95 | 1-B 11 | 400064X1 | 699 | 1-D 23 | 400081X1 | 685 | 1-D 22 |
| 400050X1 | 109 | 1-B 12 | 400058X1 | 101 | 1-B 12 | 400064X1 | 761 | 1-E 6 | 400081X1 | 693 | 1-D 23 |
| 400050X1 | 111 | 1-B 13 | 400058X1 | 129 | 1-B 14 | 400064X1 | 815 | 1-E 11 | 400081X1 | 695 | 1-D 23 |
| 400050X1 | 127 | 1-B 14 | 400058X1 | 133 | 1-B 15 | 400064X1 | 839 | 1-E 13 | 400081X1 | 969 | 1-F 2 |
| 400050X1 | 589 | 1-D 12 | 400058X1 | 141 | 1-B 16 | 400064X1 | 847 | 1-E 14 | 400081X1 | 973 | 1-F 3 |
| 400050X1 | 621 | 1-D 16 | 400058X1 | 143 | 1-B 16 | 400064X1 | 849 | 1-E 14 | 400081X1 | 1017 | 1-F 7 |
| 400050X1 | 625 | 1-D 16 | 400058X1 | 145 | 1-B 16 | 400064X1 | 851 | 1-E 15 | 400081X1 | 1019 | 1-F 7 |
| 400050X1 | 629 | 1-D 16 | 400058X1 | 147 | 1-B 16 | 400064X1 | 853 | 1-E 15 | 400081X1 | 1021 | 1-F 8 |
| 400050X1 | 631 | 1-D 17 | 400058X1 | 167 | 1-B 18 | 400064X1 | 867 | 1-E 16 | 400081X1 | 1073 | 1-F 13 |
| 400050X1 | 633 | 1-D 17 | 400058X1 | 169 | 1-B 18 | 400064X1 | 869 | 1-E 16 | 400082X1 | 167 | 1-B 18 |
| 400050X1 | 847 | 1-E 14 | 400058X1 | 179 | 1-B 19 | 400065X1 | 1091 | 1-F 15 | 400082X1 | 169 | 1-B 18 |

| Part No. | Page | Grid | Part No. | Page | Grid | Part No. | Page | Grid | Part No. | Page | Grid |
|---|---|---|---|---|---|---|---|---|---|---|---|
| 400082X1 | 407 | 1-C 18 | 400123X1 | 851 | 1-E 15 | 400191X1 | 671 | 1-D 21 | 400227X1 | 153 | 1-B 17 |
| 400082X1 | 409 | 1-C 18 | 400123X1 | 853 | 1-E 15 | 400191X1 | 693 | 1-D 23 | 400227X1 | 211 | 1-B 23 |
| 400082X1 | 579 | 1-D 11 | 400124X1 | 1073 | 1-F 13 | 400191X1 | 695 | 1-D 23 | 400227X1 | 267 | 1-C 4 |
| 400082X1 | 629 | 1-D 16 | 400125X1 | 1103 | 1-F 16 | 400191X1 | 957 | 1-F 1 | 400227X1 | 357 | 1-C 13 |
| 400082X1 | 671 | 1-D 21 | 400126X1 | 163 | 1-B 18 | 400191X1 | 959 | 1-F 1 | 400227X1 | 359 | 1-C 13 |
| 400082X1 | 693 | 1-D 23 | 400126X1 | 165 | 1-B 18 | 400191X1 | 973 | 1-F 3 | 400227X1 | 375 | 1-C 15 |
| 400082X1 | 695 | 1-D 23 | 400127X1 | 159 | 1-B 17 | 400191X1 | 989 | 1-F 4 | 400227X1 | 377 | 1-C 15 |
| 400082X1 | 783 | 1-E 8 | 400127X1 | 161 | 1-B 18 | 400191X1 | 991 | 1-F 5 | 400227X1 | 381 | 1-C 16 |
| 400082X1 | 785 | 1-E 8 | 400127X1 | 1095 | 1-F 15 | 400194X1 | 549 | 1-D 8 | 400227X1 | 385 | 1-C 16 |
| 400082X1 | 815 | 1-E 11 | 400128X1 | 1045 | 1-F 10 | 400194X1 | 555 | 1-D 9 | 400227X1 | 573 | 1-D 11 |
| 400082X1 | 947 | 1-E 24 | 400129X2 | 1203 | 1-G 2 | 400194X1 | 557 | 1-D 9 | 400227X1 | 575 | 1-D 11 |
| 400083X1 | 1259 | 1-G 7 | 400130X1 | 99 | 1-B 11 | 400194X1 | 559 | 1-D 9 | 400227X1 | 671 | 1-D 21 |
| 400084X1 | 359 | 1-C 13 | 400132X1 | 275 | 1-C 5 | 400194X1 | 561 | 1-D 10 | 400227X1 | 683 | 1-D 22 |
| 400084X1 | 1067 | 1-F 12 | 400132X1 | 277 | 1-C 5 | 400194X1 | 563 | 1-D 10 | 400227X1 | 753 | 1-E 5 |
| 400084X1 | 1095 | 1-F 15 | 400134X1 | 579 | 1-D 11 | 400194X1 | 959 | 1-F 1 | 400227X1 | 757 | 1-E 5 |
| 400085X1 | 1067 | 1-F 12 | 400135X1 | 1257 | 1-G 7 | 400197X1 | 579 | 1-D 11 | 400227X1 | 1059 | 1-F 11 |
| 400085X1 | 1095 | 1-F 15 | 400137X1 | 1073 | 1-F 13 | 400198X1 | 973 | 1-F 3 | 400227X1 | 1061 | 1-F 12 |
| 400085X1 | 1177 | 1-F 23 | 400138X1 | 571 | 1-D 11 | 400199X1 | 611 | 1-D 15 | 400227X1 | 1121 | 1-F 18 |
| 400085X1 | 1179 | 1-F 23 | 400139X1 | 273 | 1-C 5 | 400200X1 | 611 | 1-D 15 | 400227X1 | 1123 | 1-F 18 |
| 400086X1 | 1171 | 1-F 23 | 400140X1 | 603 | 1-D 14 | 400201X1 | 95 | 1-B 11 | 400227X1 | 1259 | 1-G 7 |
| 400087X1 | 259 | 1-C 3 | 400140X1 | 605 | 1-D 14 | 400202X1 | 129 | 1-B 14 | 400228X1 | 667 | 1-D 20 |
| 400087X1 | 261 | 1-C 4 | 400142X1 | 683 | 1-D 22 | 400205X1 | 211 | 1-B 23 | 400228X1 | 669 | 1-D 20 |
| 400088X1 | 629 | 1-D 16 | 400143X1 | 631 | 1-D 17 | 400205X1 | 845 | 1-E 14 | 400229X1 | 115 | 1-B 13 |
| 400088X1 | 947 | 1-E 24 | 400146X1 | 107 | 1-B 12 | 400205X1 | 959 | 1-F 1 | 400229X1 | 117 | 1-B 13 |
| 400088X1 | 1005 | 1-F 6 | 400146X1 | 109 | 1-B 12 | 400208X1 | 213 | 1-B 23 | 400230X1 | 247 | 1-C 2 |
| 400090X1 | 565 | 1-D 10 | 400146X1 | 111 | 1-B 13 | 400208X1 | 215 | 1-B 23 | 400230X1 | 249 | 1-C 2 |
| 400091X1 | 551 | 1-D 9 | 400149X1 | 99 | 1-B 11 | 400208X1 | 285 | 1-C 6 | 400230X1 | 251 | 1-C 3 |
| 400092X1 | 947 | 1-E 24 | 400151X1 | 795 | 1-E 9 | 400208X1 | 287 | 1-C 6 | 400232X1 | 1021 | 1-F 8 |
| 400093X1 | 947 | 1-E 24 | 400152X1 | 197 | 1-B 21 | 400209X1 | 377 | 1-C 15 | 400233X1 | 197 | 1-B 21 |
| 400095X1 | 973 | 1-F 3 | 400152X1 | 199 | 1-B 21 | 400209X1 | 381 | 1-C 16 | 400233X1 | 205 | 1-B 22 |
| 400097X1 | 1015 | 1-F 7 | 400152X1 | 203 | 1-B 22 | 400210X1 | 881 | 1-E 18 | 400234X1 | 579 | 1-D 11 |
| 400098X1 | 693 | 1-D 23 | 400152X1 | 205 | 1-B 22 | 400211X1 | 251 | 1-C 3 | 400234X1 | 749 | 1-E 4 |
| 400100X1 | 847 | 1-E 14 | 400152X1 | 265 | 1-C 4 | 400211X1 | 255 | 1-C 3 | 400236X1 | 549 | 1-D 8 |
| 400101X1 | 867 | 1-E 16 | 400152X1 | 269 | 1-C 4 | 400211X1 | 257 | 1-C 3 | 400236X1 | 555 | 1-D 9 |
| 400101X1 | 869 | 1-E 16 | 400152X1 | 303 | 1-C 8 | 400213X1 | 551 | 1-D 9 | 400236X1 | 557 | 1-D 9 |
| 400103X1 | 849 | 1-E 14 | 400152X1 | 305 | 1-C 8 | 400213X1 | 553 | 1-D 9 | 400236X1 | 559 | 1-D 9 |
| 400103X1 | 851 | 1-E 15 | 400152X1 | 321 | 1-C 10 | 400213X1 | 705 | 1-D 24 | 400236X1 | 561 | 1-D 10 |
| 400104X1 | 599 | 1-D 13 | 400152X1 | 345 | 1-C 12 | 400213X1 | 1017 | 1-F 7 | 400236X1 | 563 | 1-D 10 |
| 400104X1 | 603 | 1-D 14 | 400152X1 | 1023 | 1-F 8 | 400217X1 | 865 | 1-E 16 | 400236X1 | 991 | 1-F 5 |
| 400106X1 | 1179 | 1-F 23 | 400152X1 | 1027 | 1-F 8 | 400220X1 | 787 | 1-E 8 | 400238X1 | 883 | 1-E 18 |
| 400107X1 | 839 | 1-E 13 | 400152X1 | 1119 | 1-F 17 | 400220X1 | 793 | 1-E 9 | 400239X1 | 101 | 1-B 12 |
| 400108X1 | 133 | 1-B 15 | 400152X1 | 1121 | 1-F 18 | 400220X1 | 883 | 1-E 18 | 400239X1 | 141 | 1-B 16 |
| 400108X1 | 135 | 1-B 15 | 400152X1 | 1123 | 1-F 18 | 400220X1 | 885 | 1-E 18 | 400239X1 | 143 | 1-B 16 |
| 400108X1 | 195 | 1-B 21 | 400152X1 | 1259 | 1-G 7 | 400221X1 | 203 | 1-B 22 | 400239X1 | 145 | 1-B 16 |
| 400108X1 | 585 | 1-D 12 | 400153X1 | 199 | 1-B 21 | 400221X1 | 205 | 1-B 22 | 400239X1 | 741 | 1-E 4 |
| 400108X1 | 1101 | 1-F 16 | 400153X1 | 203 | 1-B 22 | 400221X1 | 269 | 1-C 4 | 400240X1 | 179 | 1-B 19 |
| 400109X1 | 145 | 1-B 16 | 400154X1 | 407 | 1-C 18 | 400221X1 | 599 | 1-D 13 | 400240X1 | 325 | 1-C 10 |
| 400109X1 | 147 | 1-B 16 | 400157X1 | 147 | 1-B 16 | 400221X1 | 603 | 1-D 14 | 400240X1 | 757 | 1-E 5 |
| 400109X1 | 845 | 1-E 14 | 400160X1 | 211 | 1-B 23 | 400221X1 | 613 | 1-D 15 | 400241X1 | 175 | 1-B 19 |
| 400109X1 | 1043 | 1-F 10 | 400161X1 | 1127 | 1-F 18 | 400221X1 | 1037 | 1-F 9 | 400241X1 | 625 | 1-D 16 |
| 400110X1 | 1065 | 1-F 12 | 400162X1 | 597 | 1-D 13 | 400221X1 | 1043 | 1-F 10 | 400241X1 | 845 | 1-E 14 |
| 400110X1 | 1077 | 1-F 13 | 400162X1 | 601 | 1-D 14 | 400221X1 | 1095 | 1-F 15 | 400242X1 | 753 | 1-E 5 |
| 400110X1 | 1081 | 1-F 14 | 400171X1 | 133 | 1-B 15 | 400221X1 | 1177 | 1-F 23 | 400242X1 | 757 | 1-E 5 |
| 400110X1 | 1177 | 1-F 23 | 400172X1 | 321 | 1-C 10 | 400221X1 | 1191 | 1-G 1 | 400244X1 | 407 | 1-C 18 |
| 400110X1 | 1179 | 1-F 23 | 400173X1 | 127 | 1-B 14 | 400222X1 | 973 | 1-F 3 | 400244X1 | 409 | 1-C 18 |
| 400111X1 | 1105 | 1-F 16 | 400175X1 | 135 | 1-B 15 | 400225X1 | 95 | 1-B 11 | 400244X1 | 687 | 1-D 22 |
| 400111X1 | 1107 | 1-F 16 | 400176X1 | 199 | 1-B 21 | 400225X1 | 121 | 1-B 14 | 400244X1 | 957 | 1-F 1 |
| 400113X1 | 1179 | 1-F 23 | 400176X1 | 203 | 1-B 22 | 400225X1 | 123 | 1-B 14 | 400244X1 | 973 | 1-F 3 |
| 400114X1 | 731 | 1-E 3 | 400177X1 | 99 | 1-B 11 | 400225X1 | 125 | 1-B 14 | 400244X1 | 989 | 1-F 4 |
| 400114X1 | 1193 | 1-G 1 | 400179X1 | 321 | 1-C 10 | 400225X1 | 151 | 1-B 17 | 400244X1 | 991 | 1-F 5 |
| 400115X1 | 597 | 1-D 13 | 400180X1 | 117 | 1-B 13 | 400225X1 | 153 | 1-B 17 | 400245X1 | 599 | 1-D 13 |
| 400115X1 | 601 | 1-D 14 | 400181X1 | 115 | 1-B 13 | 400225X1 | 197 | 1-B 21 | 400245X1 | 603 | 1-D 14 |
| 400117X1 | 743 | 1-E 4 | 400182X1 | 969 | 1-F 2 | 400225X1 | 199 | 1-B 21 | 400245X1 | 715 | 1-E 1 |
| 400117X1 | 753 | 1-E 5 | 400182X1 | 973 | 1-F 3 | 400225X1 | 203 | 1-B 22 | 400245X1 | 739 | 1-E 3 |
| 400117X1 | 757 | 1-E 5 | 400184X1 | 1021 | 1-F 8 | 400225X1 | 205 | 1-B 22 | 400245X1 | 1105 | 1-F 16 |
| 400119X1 | 1121 | 1-F 18 | 400185X1 | 1043 | 1-F 10 | 400225X1 | 617 | 1-D 15 | 400245X1 | 1107 | 1-F 16 |
| 400119X1 | 1123 | 1-F 18 | 400186X1 | 1075 | 1-F 13 | 400225X1 | 631 | 1-D 17 | 400246X1 | 883 | 1-E 18 |
| 400120X1 | 1073 | 1-F 13 | 400187X1 | 973 | 1-F 3 | 400225X1 | 731 | 1-E 3 | 400246X1 | 885 | 1-E 18 |
| 400121X1 | 1073 | 1-F 13 | 400188X1 | 211 | 1-B 23 | 400225X1 | 737 | 1-E 3 | 400247X1 | 135 | 1-B 15 |
| 400122X1 | 579 | 1-D 11 | 400190X1 | 857 | 1-E 15 | 400225X1 | 909 | 1-E 20 | 400249X1 | 95 | 1-B 11 |
| 400123X1 | 829 | 1-E 12 | 400190X1 | 1059 | 1-F 11 | 400225X1 | 995 | 1-F 5 | 400249X1 | 101 | 1-B 12 |
| 400123X1 | 837 | 1-E 13 | 400190X1 | 1061 | 1-F 12 | 400226X1 | 591 | 1-D 13 | 400250X1 | 95 | 1-B 11 |
| 400123X1 | 839 | 1-E 13 | 400191X1 | 579 | 1-D 11 | 400226X1 | 749 | 1-E 4 | 400251X1 | 359 | 1-C 13 |
| 400123X1 | 847 | 1-E 14 | 400191X1 | 621 | 1-D 16 | 400226X1 | 997 | 1-F 5 | 400251X1 | 361 | 1-C 14 |
| 400123X1 | 849 | 1-E 14 | 400191X1 | 631 | 1-D 17 | 400227X1 | 151 | 1-B 17 | 400251X1 | 377 | 1-C 15 |

## INDEX


| Part No. | Page | Grid | Part No. | Page | Grid | Part No. | Page | Grid | Part No. | Page | Grid |
|---|---|---|---|---|---|---|---|---|---|---|---|
| 400251X1 | 385 | 1-C 16 | 400287X1 | 309 | 1-C 8 | 400289X1 | 991 | 1-F 5 | 400318X1 | 175 | 1-B 19 |
| 400252X1 | 107 | 1-B 12 | 400287X1 | 357 | 1-C 13 | 400290X1 | 989 | 1-F 4 | 400318X1 | 177 | 1-B 19 |
| 400252X1 | 109 | 1-B 12 | 400287X1 | 361 | 1-C 14 | 400290X1 | 991 | 1-F 5 | 400318X1 | 375 | 1-C 15 |
| 400252X1 | 111 | 1-B 13 | 400287X1 | 375 | 1-C 15 | 400290X1 | 1001 | 1-F 6 | 400318X1 | 377 | 1-C 15 |
| 400254X1 | 1079 | 1-F 13 | 400287X1 | 381 | 1-C 16 | 400291X1 | 989 | 1-F 4 | 400318X1 | 383 | 1-C 16 |
| 400254X1 | 1083 | 1-F 14 | 400287X1 | 385 | 1-C 16 | 400291X1 | 991 | 1-F 5 | 400318X1 | 385 | 1-C 16 |
| 400256X1 | 1075 | 1-F 13 | 400287X1 | 579 | 1-D 11 | 400292X1 | 1037 | 1-F 9 | 400318X1 | 403 | 1-C 18 |
| 400256X1 | 1091 | 1-F 15 | 400287X1 | 591 | 1-D 13 | 400292X1 | 1043 | 1-F 10 | 400318X1 | 405 | 1-C 18 |
| 400256X1 | 1093 | 1-F 15 | 400287X1 | 593 | 1-D 13 | 400292X1 | 1193 | 1-G 1 | 400318X1 | 667 | 1-D 20 |
| 400257X1 | 573 | 1-D 11 | 400287X1 | 599 | 1-D 13 | 400293X1 | 1043 | 1-F 10 | 400318X1 | 669 | 1-D 20 |
| 400257X1 | 577 | 1-D 11 | 400287X1 | 617 | 1-D 15 | 400294X1 | 1037 | 1-F 9 | 400318X1 | 735 | 1-E 3 |
| 400260X1 | 671 | 1-D 21 | 400287X1 | 621 | 1-D 16 | 400295X1 | 213 | 1-B 23 | 400318X1 | 741 | 1-E 4 |
| 400261X1 | 683 | 1-D 22 | 400287X1 | 623 | 1-D 16 | 400295X1 | 349 | 1-C 12 | 400318X1 | 745 | 1-E 4 |
| 400263X1 | 969 | 1-F 2 | 400287X1 | 625 | 1-D 16 | 400295X1 | 1043 | 1-F 10 | 400318X1 | 747 | 1-E 4 |
| 400265X1 | 311 | 1-C 9 | 400287X1 | 629 | 1-D 16 | 400296X1 | 1037 | 1-F 9 | 400318X1 | 749 | 1-E 4 |
| 400265X1 | 313 | 1-C 9 | 400287X1 | 631 | 1-D 17 | 400296X1 | 1043 | 1-F 10 | 400318X1 | 797 | 1-E 9 |
| 400267X1 | 557 | 1-D 9 | 400287X1 | 633 | 1-D 17 | 400297X1 | 1043 | 1-F 10 | 400318X1 | 799 | 1-E 9 |
| 400267X1 | 559 | 1-D 9 | 400287X1 | 637 | 1-D 17 | 400298X1 | 1037 | 1-F 9 | 400318X1 | 809 | 1-E 10 |
| 400267X1 | 561 | 1-D 10 | 400287X1 | 729 | 1-E 2 | 400298X1 | 1043 | 1-F 10 | 400318X1 | 821 | 1-E 12 |
| 400267X1 | 563 | 1-D 10 | 400287X1 | 731 | 1-E 3 | 400299X1 | 1037 | 1-F 9 | 400318X1 | 827 | 1-E 12 |
| 400268X1 | 555 | 1-D 9 | 400287X1 | 735 | 1-E 3 | 400300X1 | 203 | 1-B 22 | 400318X1 | 829 | 1-E 12 |
| 400270X1 | 957 | 1-F 1 | 400287X1 | 737 | 1-E 3 | 400300X1 | 205 | 1-B 22 | 400318X1 | 837 | 1-E 13 |
| 400272X1 | 693 | 1-D 23 | 400287X1 | 739 | 1-E 3 | 400300X1 | 247 | 1-C 2 | 400318X1 | 841 | 1-E 14 |
| 400272X1 | 695 | 1-D 23 | 400287X1 | 741 | 1-E 4 | 400300X1 | 249 | 1-C 2 | 400318X1 | 843 | 1-E 14 |
| 400274X1 | 113 | 1-B 13 | 400287X1 | 743 | 1-E 4 | 400300X1 | 251 | 1-C 3 | 400318X1 | 845 | 1-E 14 |
| 400275X1 | 617 | 1-D 15 | 400287X1 | 749 | 1-E 4 | 400300X1 | 265 | 1-C 4 | 400318X1 | 855 | 1-E 15 |
| 400276X1 | 657 | 1-D 19 | 400287X1 | 753 | 1-E 5 | 400300X1 | 321 | 1-C 10 | 400318X1 | 857 | 1-E 15 |
| 400277X1 | 599 | 1-D 13 | 400287X1 | 757 | 1-E 5 | 400300X1 | 571 | 1-D 11 | 400318X1 | 881 | 1-E 18 |
| 400277X1 | 603 | 1-D 14 | 400287X1 | 759 | 1-E 5 | 400300X1 | 613 | 1-D 15 | 400318X1 | 909 | 1-E 20 |
| 400277X1 | 605 | 1-D 14 | 400287X1 | 761 | 1-E 6 | 400300X1 | 973 | 1-F 3 | 400318X1 | 911 | 1-E 21 |
| 400278X1 | 657 | 1-D 19 | 400287X1 | 775 | 1-E 7 | 400300X1 | 1033 | 1-F 9 | 400318X1 | 915 | 1-E 21 |
| 400280X1 | 99 | 1-B 11 | 400287X1 | 777 | 1-E 7 | 400300X1 | 1037 | 1-F 9 | 400318X1 | 921 | 1-E 22 |
| 400281X1 | 99 | 1-B 11 | 400287X1 | 819 | 1-E 11 | 400300X1 | 1039 | 1-F 9 | 400318X1 | 929 | 1-E 22 |
| 400282X1 | 1191 | 1-G 1 | 400287X1 | 821 | 1-E 12 | 400300X1 | 1043 | 1-F 10 | 400318X1 | 939 | 1-E 23 |
| 400282X1 | 1193 | 1-G 1 | 400287X1 | 823 | 1-E 12 | 400300X1 | 1095 | 1-F 15 | 400319X1 | 137 | 1-B 15 |
| 400283X1 | 989 | 1-F 4 | 400287X1 | 825 | 1-E 12 | 400300X1 | 1119 | 1-F 17 | 400319X1 | 741 | 1-E 4 |
| 400283X1 | 991 | 1-F 5 | 400287X1 | 833 | 1-E 13 | 400300X1 | 1127 | 1-F 18 | 400319X1 | 747 | 1-E 4 |
| 400284X1 | 989 | 1-F 4 | 400287X1 | 839 | 1-E 13 | 400300X1 | 1153 | 1-F 21 | 400319X1 | 787 | 1-E 8 |
| 400284X1 | 991 | 1-F 5 | 400287X1 | 841 | 1-E 14 | 400300X1 | 1185 | 1-F 24 | 400319X1 | 789 | 1-E 8 |
| 400285X1 | 989 | 1-F 4 | 400287X1 | 843 | 1-E 14 | 400300X1 | 1187 | 1-F 24 | 400319X1 | 819 | 1-E 11 |
| 400285X1 | 991 | 1-F 5 | 400287X1 | 847 | 1-E 14 | 400300X1 | 1191 | 1-G 1 | 400319X1 | 821 | 1-E 12 |
| 400286X1 | 671 | 1-D 21 | 400287X1 | 849 | 1-E 14 | 400301X1 | 1037 | 1-F 9 | 400319X1 | 823 | 1-E 12 |
| 400286X1 | 989 | 1-F 4 | 400287X1 | 851 | 1-E 15 | 400301X1 | 1043 | 1-F 10 | 400319X1 | 825 | 1-E 12 |
| 400286X1 | 991 | 1-F 5 | 400287X1 | 853 | 1-E 15 | 400302X1 | 1037 | 1-F 9 | 400319X1 | 829 | 1-E 12 |
| 400286X1 | 1259 | 1-G 7 | 400287X1 | 855 | 1-E 15 | 400305X1 | 1037 | 1-F 9 | 400319X1 | 839 | 1-E 13 |
| 400287X1 | 95 | 1-B 11 | 400287X1 | 857 | 1-E 15 | 400305X1 | 1043 | 1-F 10 | 400319X1 | 849 | 1-E 14 |
| 400287X1 | 101 | 1-B 12 | 400287X1 | 909 | 1-E 20 | 400306X1 | 1037 | 1-F 9 | 400319X1 | 851 | 1-E 15 |
| 400287X1 | 121 | 1-B 14 | 400287X1 | 915 | 1-E 21 | 400307X1 | 1037 | 1-F 9 | 400319X1 | 859 | 1-E 15 |
| 400287X1 | 123 | 1-B 14 | 400287X1 | 969 | 1-F 2 | 400307X1 | 1043 | 1-F 10 | 400319X1 | 885 | 1-E 18 |
| 400287X1 | 125 | 1-B 14 | 400287X1 | 973 | 1-F 3 | 400308X1 | 1037 | 1-F 9 | 400319X1 | 909 | 1-E 20 |
| 400287X1 | 133 | 1-B 15 | 400287X1 | 991 | 1-F 5 | 400308X1 | 1043 | 1-F 10 | 400319X1 | 915 | 1-E 21 |
| 400287X1 | 135 | 1-B 15 | 400287X1 | 995 | 1-F 5 | 400309X1 | 1037 | 1-F 9 | 400319X1 | 931 | 1-E 23 |
| 400287X1 | 145 | 1-B 16 | 400287X1 | 997 | 1-F 5 | 400309X1 | 1043 | 1-F 10 | 400319X1 | 997 | 1-F 5 |
| 400287X1 | 147 | 1-B 16 | 400287X1 | 1001 | 1-F 6 | 400310X1 | 173 | 1-B 19 | 400319X1 | 999 | 1-F 5 |
| 400287X1 | 151 | 1-B 17 | 400287X1 | 1003 | 1-F 6 | 400310X1 | 269 | 1-C 4 | 400322X1 | 93 | 1-B 11 |
| 400287X1 | 153 | 1-B 17 | 400287X1 | 1007 | 1-F 6 | 400310X1 | 367 | 1-C 14 | 400322X1 | 99 | 1-B 11 |
| 400287X1 | 163 | 1-B 18 | 400287X1 | 1017 | 1-F 7 | 400310X1 | 369 | 1-C 14 | 400322X1 | 133 | 1-B 15 |
| 400287X1 | 165 | 1-B 18 | 400287X1 | 1059 | 1-F 11 | 400310X1 | 571 | 1-D 11 | 400322X1 | 135 | 1-B 15 |
| 400287X1 | 167 | 1-B 18 | 400287X1 | 1061 | 1-F 12 | 400310X1 | 599 | 1-D 13 | 400322X1 | 137 | 1-B 15 |
| 400287X1 | 169 | 1-B 18 | 400287X1 | 1067 | 1-F 12 | 400310X1 | 601 | 1-D 14 | 400322X1 | 371 | 1-C 15 |
| 400287X1 | 175 | 1-B 19 | 400287X1 | 1073 | 1-F 13 | 400310X1 | 603 | 1-D 14 | 400322X1 | 821 | 1-E 12 |
| 400287X1 | 177 | 1-B 19 | 400287X1 | 1099 | 1-F 15 | 400310X1 | 843 | 1-E 14 | 400322X1 | 925 | 1-E 22 |
| 400287X1 | 179 | 1-B 19 | 400287X1 | 1109 | 1-F 16 | 400310X1 | 959 | 1-F 1 | 400322X1 | 929 | 1-E 22 |
| 400287X1 | 181 | 1-B 20 | 400287X1 | 1121 | 1-F 18 | 400310X1 | 1037 | 1-F 9 | 400322X1 | 933 | 1-E 23 |
| 400287X1 | 183 | 1-B 20 | 400287X1 | 1123 | 1-F 18 | 400310X1 | 1043 | 1-F 10 | 400322X1 | 935 | 1-E 23 |
| 400287X1 | 197 | 1-B 21 | 400287X1 | 1189 | 1-F 24 | 400310X1 | 1121 | 1-F 18 | 400322X1 | 937 | 1-E 23 |
| 400287X1 | 199 | 1-B 21 | 400287X1 | 1191 | 1-G 1 | 400310X1 | 1123 | 1-F 18 | 400322X1 | 993 | 1-F 5 |
| 400287X1 | 203 | 1-B 22 | 400287X1 | 1193 | 1-G 1 | 400310X1 | 1171 | 1-F 23 | 400322X1 | 995 | 1-F 5 |
| 400287X1 | 205 | 1-B 22 | 400288X1 | 989 | 1-F 4 | 400310X1 | 1177 | 1-F 23 | 400322X1 | 999 | 1-F 5 |
| 400287X1 | 209 | 1-B 22 | 400288X1 | 991 | 1-F 5 | 400310X1 | 1203 | 1-G 2 | 400323X1 | 667 | 1-D 20 |
| 400287X1 | 211 | 1-B 23 | 400288X1 | 1017 | 1-F 7 | 400311X1 | 811 | 1-E 11 | 400323X1 | 669 | 1-D 20 |
| 400287X1 | 213 | 1-B 23 | 400289X1 | 579 | 1-D 11 | 400313X1 | 1067 | 1-F 12 | 400323X1 | 735 | 1-E 3 |
| 400287X1 | 215 | 1-B 23 | 400289X1 | 679 | 1-D 21 | 400313X1 | 1123 | 1-F 18 | 400323X1 | 741 | 1-E 4 |
| 400287X1 | 267 | 1-C 4 | 400289X1 | 681 | 1-D 22 | 400313X1 | 1185 | 1-F 24 | 400323X1 | 745 | 1-E 4 |
| 400287X1 | 307 | 1-C 8 | 400289X1 | 989 | 1-F 4 | 400313X1 | 1187 | 1-F 24 | 400323X1 | 747 | 1-E 4 |

| Part No. | Page | Grid | Part No. | Page | Grid | Part No. | Page | Grid | Part No. | Page | Grid |
|---|---|---|---|---|---|---|---|---|---|---|---|
| 400323X1 | 829 | 1-E 12 | 400340X1 | 609 | 1-D 14 | 400357X1 | 621 | 1-D 16 | 400366X1 | 823 | 1-E 12 |
| 400323X1 | 843 | 1-E 14 | 400340X1 | 715 | 1-E 1 | 400357X1 | 625 | 1-D 16 | 400366X1 | 825 | 1-E 12 |
| 400323X1 | 847 | 1-E 14 | 400340X1 | 779 | 1-E 7 | 400357X1 | 629 | 1-D 16 | 400366X1 | 829 | 1-E 12 |
| 400323X1 | 853 | 1-E 15 | 400340X1 | 1023 | 1-F 8 | 400357X1 | 631 | 1-D 17 | 400366X1 | 837 | 1-E 13 |
| 400323X1 | 859 | 1-E 15 | 400340X1 | 1025 | 1-F 8 | 400357X1 | 633 | 1-D 17 | 400366X1 | 839 | 1-E 13 |
| 400324X1 | 735 | 1-E 3 | 400340X1 | 1027 | 1-F 8 | 400357X1 | 635 | 1-D 17 | 400366X1 | 843 | 1-E 14 |
| 400324X1 | 741 | 1-E 4 | 400340X1 | 1029 | 1-F 8 | 400357X1 | 637 | 1-D 17 | 400366X1 | 845 | 1-E 14 |
| 400324X1 | 829 | 1-E 12 | 400340X1 | 1091 | 1-F 15 | 400357X1 | 697 | 1-D 23 | 400366X1 | 849 | 1-E 14 |
| 400324X1 | 843 | 1-E 14 | 400340X1 | 1093 | 1-F 15 | 400357X1 | 699 | 1-D 23 | 400366X1 | 851 | 1-E 15 |
| 400325X1 | 829 | 1-E 12 | 400340X1 | 1095 | 1-F 15 | 400357X1 | 761 | 1-E 6 | 400366X1 | 859 | 1-E 15 |
| 400330X1 | 1091 | 1-F 15 | 400340X1 | 1185 | 1-F 24 | 400357X1 | 815 | 1-E 11 | 400366X1 | 995 | 1-F 5 |
| 400330X1 | 1093 | 1-F 15 | 400340X1 | 1187 | 1-F 24 | 400357X1 | 819 | 1-E 11 | 400367X1 | 741 | 1-E 4 |
| 400330X1 | 1185 | 1-F 24 | 400340X1 | 1189 | 1-F 24 | 400357X1 | 821 | 1-E 12 | 400367X1 | 829 | 1-E 12 |
| 400330X1 | 1187 | 1-F 24 | 400340X1 | 1191 | 1-G 1 | 400357X1 | 823 | 1-E 12 | 400367X1 | 841 | 1-E 14 |
| 400331X1 | 1091 | 1-F 15 | 400341X1 | 211 | 1-B 23 | 400357X1 | 825 | 1-E 12 | 400367X1 | 857 | 1-E 15 |
| 400331X1 | 1093 | 1-F 15 | 400341X1 | 307 | 1-C 8 | 400357X1 | 839 | 1-E 13 | 400368X1 | 747 | 1-E 4 |
| 400332X1 | 819 | 1-E 11 | 400341X1 | 309 | 1-C 8 | 400357X1 | 843 | 1-E 14 | 400368X1 | 829 | 1-E 12 |
| 400332X1 | 1091 | 1-F 15 | 400341X1 | 375 | 1-C 15 | 400357X1 | 847 | 1-E 14 | 400368X1 | 843 | 1-E 14 |
| 400332X1 | 1093 | 1-F 15 | 400341X1 | 377 | 1-C 15 | 400357X1 | 849 | 1-E 14 | 400369X1 | 829 | 1-E 12 |
| 400333X1 | 1091 | 1-F 15 | 400341X1 | 381 | 1-C 16 | 400357X1 | 851 | 1-E 15 | 400370X1 | 829 | 1-E 12 |
| 400333X1 | 1093 | 1-F 15 | 400341X1 | 573 | 1-D 11 | 400357X1 | 853 | 1-E 15 | 400372X1 | 841 | 1-E 14 |
| 400333X1 | 1185 | 1-F 24 | 400341X1 | 575 | 1-D 11 | 400357X1 | 857 | 1-E 15 | 400374X1 | 787 | 1-E 8 |
| 400333X1 | 1187 | 1-F 24 | 400341X1 | 581 | 1-D 12 | 400357X1 | 859 | 1-E 15 | 400374X1 | 789 | 1-E 8 |
| 400334X1 | 173 | 1-B 19 | 400341X1 | 599 | 1-D 13 | 400357X1 | 861 | 1-E 16 | 400374X1 | 829 | 1-E 12 |
| 400334X1 | 1075 | 1-F 13 | 400341X1 | 601 | 1-D 14 | 400357X1 | 863 | 1-E 16 | 400374X1 | 885 | 1-E 18 |
| 400336X1 | 115 | 1-B 13 | 400341X1 | 603 | 1-D 14 | 400357X1 | 865 | 1-E 16 | 400374X1 | 909 | 1-E 20 |
| 400336X1 | 117 | 1-B 13 | 400341X1 | 609 | 1-D 14 | 400357X1 | 871 | 1-E 17 | 400374X1 | 915 | 1-E 21 |
| 400339X1 | 95 | 1-B 11 | 400341X1 | 625 | 1-D 16 | 400357X1 | 881 | 1-E 18 | 400375X1 | 555 | 1-D 9 |
| 400339X1 | 101 | 1-B 12 | 400341X1 | 735 | 1-E 3 | 400357X1 | 883 | 1-E 18 | 400375X1 | 557 | 1-D 9 |
| 400339X1 | 119 | 1-B 13 | 400341X1 | 973 | 1-F 3 | 400357X1 | 885 | 1-E 18 | 400375X1 | 667 | 1-D 20 |
| 400339X1 | 211 | 1-B 23 | 400341X1 | 1023 | 1-F 8 | 400357X1 | 973 | 1-F 3 | 400375X1 | 669 | 1-D 20 |
| 400339X1 | 265 | 1-C 4 | 400341X1 | 1025 | 1-F 8 | 400357X1 | 975 | 1-F 3 | 400375X1 | 921 | 1-E 22 |
| 400339X1 | 267 | 1-C 4 | 400341X1 | 1027 | 1-F 8 | 400357X1 | 1153 | 1-F 21 | 400376X1 | 95 | 1-B 11 |
| 400339X1 | 307 | 1-C 8 | 400341X1 | 1029 | 1-F 8 | 400358X1 | 101 | 1-B 12 | 400376X1 | 99 | 1-B 11 |
| 400339X1 | 309 | 1-C 8 | 400347X1 | 749 | 1-E 4 | 400358X1 | 407 | 1-C 18 | 400376X1 | 101 | 1-B 12 |
| 400339X1 | 375 | 1-C 15 | 400348X1 | 749 | 1-E 4 | 400358X1 | 409 | 1-C 18 | 400376X1 | 159 | 1-B 17 |
| 400339X1 | 377 | 1-C 15 | 400348X1 | 819 | 1-E 11 | 400358X1 | 657 | 1-D 19 | 400376X1 | 161 | 1-B 18 |
| 400339X1 | 381 | 1-C 16 | 400350X1 | 551 | 1-D 9 | 400358X1 | 839 | 1-E 13 | 400376X1 | 399 | 1-C 17 |
| 400339X1 | 385 | 1-C 16 | 400350X1 | 553 | 1-D 9 | 400359X1 | 843 | 1-E 14 | 400376X1 | 667 | 1-D 20 |
| 400339X1 | 581 | 1-D 12 | 400352X1 | 751 | 1-E 5 | 400359X1 | 849 | 1-E 14 | 400376X1 | 669 | 1-D 20 |
| 400339X1 | 607 | 1-D 14 | 400352X1 | 755 | 1-E 5 | 400359X1 | 851 | 1-E 15 | 400376X1 | 797 | 1-E 9 |
| 400339X1 | 609 | 1-D 14 | 400352X1 | 761 | 1-E 6 | 400360X1 | 827 | 1-E 12 | 400376X1 | 809 | 1-E 10 |
| 400339X1 | 621 | 1-D 16 | 400354X1 | 1259 | 1-G 7 | 400360X1 | 829 | 1-E 12 | 400376X1 | 829 | 1-E 12 |
| 400339X1 | 625 | 1-D 16 | 400356X1 | 1065 | 1-F 12 | 400361X1 | 99 | 1-B 11 | 400376X1 | 837 | 1-E 13 |
| 400339X1 | 629 | 1-D 16 | 400357X1 | 95 | 1-B 11 | 400361X1 | 377 | 1-C 15 | 400376X1 | 843 | 1-E 14 |
| 400339X1 | 671 | 1-D 21 | 400357X1 | 107 | 1-B 12 | 400361X1 | 383 | 1-C 16 | 400376X1 | 847 | 1-E 14 |
| 400339X1 | 683 | 1-D 22 | 400357X1 | 109 | 1-B 12 | 400361X1 | 747 | 1-E 4 | 400376X1 | 849 | 1-E 14 |
| 400339X1 | 735 | 1-E 3 | 400357X1 | 111 | 1-B 13 | 400361X1 | 751 | 1-E 5 | 400376X1 | 851 | 1-E 15 |
| 400339X1 | 739 | 1-E 3 | 400357X1 | 113 | 1-B 13 | 400361X1 | 755 | 1-E 5 | 400376X1 | 853 | 1-E 15 |
| 400339X1 | 741 | 1-E 4 | 400357X1 | 127 | 1-B 14 | 400361X1 | 761 | 1-E 6 | 400376X1 | 859 | 1-E 15 |
| 400339X1 | 749 | 1-E 4 | 400357X1 | 129 | 1-B 14 | 400361X1 | 781 | 1-E 8 | 400376X1 | 881 | 1-E 18 |
| 400339X1 | 753 | 1-E 5 | 400357X1 | 173 | 1-B 19 | 400361X1 | 829 | 1-E 12 | 400376X1 | 921 | 1-E 22 |
| 400339X1 | 757 | 1-E 5 | 400357X1 | 197 | 1-B 21 | 400361X1 | 837 | 1-E 13 | 400377X1 | 747 | 1-E 4 |
| 400339X1 | 779 | 1-E 7 | 400357X1 | 199 | 1-B 21 | 400361X1 | 843 | 1-E 14 | 400377X1 | 751 | 1-E 5 |
| 400339X1 | 819 | 1-E 11 | 400357X1 | 201 | 1-B 22 | 400361X1 | 859 | 1-E 15 | 400377X1 | 753 | 1-E 5 |
| 400339X1 | 821 | 1-E 12 | 400357X1 | 203 | 1-B 22 | 400361X1 | 881 | 1-E 18 | 400377X1 | 755 | 1-E 5 |
| 400339X1 | 823 | 1-E 12 | 400357X1 | 205 | 1-B 22 | 400361X1 | 883 | 1-E 18 | 400377X1 | 757 | 1-E 5 |
| 400339X1 | 825 | 1-E 12 | 400357X1 | 303 | 1-C 8 | 400361X1 | 885 | 1-E 18 | 400377X1 | 829 | 1-E 12 |
| 400339X1 | 839 | 1-E 13 | 400357X1 | 305 | 1-C 8 | 400361X1 | 939 | 1-E 23 | 400377X1 | 837 | 1-E 13 |
| 400339X1 | 973 | 1-F 3 | 400357X1 | 375 | 1-C 15 | 400363X1 | 837 | 1-E 13 | 400377X1 | 843 | 1-E 14 |
| 400339X1 | 1091 | 1-F 15 | 400357X1 | 385 | 1-C 16 | 400365X1 | 183 | 1-B 20 | 400378X1 | 735 | 1-E 3 |
| 400339X1 | 1093 | 1-F 15 | 400357X1 | 401 | 1-C 18 | 400365X1 | 829 | 1-E 12 | 400378X1 | 741 | 1-E 4 |
| 400339X1 | 1121 | 1-F 18 | 400357X1 | 403 | 1-C 18 | 400365X1 | 837 | 1-E 13 | 400378X1 | 747 | 1-E 4 |
| 400339X1 | 1123 | 1-F 18 | 400357X1 | 407 | 1-C 18 | 400365X1 | 839 | 1-E 13 | 400378X1 | 749 | 1-E 4 |
| 400339X1 | 1153 | 1-F 21 | 400357X1 | 409 | 1-C 18 | 400365X1 | 843 | 1-E 14 | 400378X1 | 841 | 1-E 14 |
| 400340X1 | 133 | 1-B 15 | 400357X1 | 551 | 1-D 9 | 400365X1 | 845 | 1-E 14 | 400378X1 | 845 | 1-E 14 |
| 400340X1 | 149 | 1-B 16 | 400357X1 | 553 | 1-D 9 | 400365X1 | 849 | 1-E 14 | 400378X1 | 857 | 1-E 15 |
| 400340X1 | 211 | 1-B 23 | 400357X1 | 559 | 1-D 9 | 400365X1 | 851 | 1-E 15 | 400380X1 | 815 | 1-E 11 |
| 400340X1 | 213 | 1-B 23 | 400357X1 | 561 | 1-D 10 | 400365X1 | 945 | 1-E 24 | 400381X1 | 625 | 1-D 16 |
| 400340X1 | 215 | 1-B 23 | 400357X1 | 563 | 1-D 10 | 400366X1 | 93 | 1-B 11 | 400381X1 | 683 | 1-D 22 |
| 400340X1 | 265 | 1-C 4 | 400357X1 | 583 | 1-D 12 | 400366X1 | 99 | 1-B 11 | 400381X1 | 815 | 1-E 11 |
| 400340X1 | 267 | 1-C 4 | 400357X1 | 591 | 1-D 13 | 400366X1 | 133 | 1-B 15 | 400381X1 | 847 | 1-E 14 |
| 400340X1 | 307 | 1-C 8 | 400357X1 | 603 | 1-D 14 | 400366X1 | 135 | 1-B 15 | 400381X1 | 853 | 1-E 15 |
| 400340X1 | 309 | 1-C 8 | 400357X1 | 605 | 1-D 14 | 400366X1 | 741 | 1-E 4 | 400381X1 | 867 | 1-E 16 |
| 400340X1 | 573 | 1-D 11 | 400357X1 | 617 | 1-D 15 | 400366X1 | 761 | 1-E 6 | 400381X1 | 869 | 1-E 16 |

## INDEX


| Part No. | Page | Grid | Part No. | Page | Grid | Part No. | Page | Grid | Part No. | Page | Grid |
|---|---|---|---|---|---|---|---|---|---|---|---|
| 400381X1 | 973 | 1-F 3 | 400588X1 | 839 | 1-E 13 | 400645X1 | 741 | 1-E 4 | 400702X1 | 145 | 1-B 16 |
| 400381X1 | 975 | 1-F 3 | 400588X1 | 859 | 1-E 15 | 400647X1 | 133 | 1-B 15 | 400702X1 | 147 | 1-B 16 |
| 400382X1 | 215 | 1-B 23 | 400589X1 | 839 | 1-E 13 | 400647X1 | 135 | 1-B 15 | 400702X1 | 179 | 1-B 19 |
| 400403X1 | 245 | 1-C 2 | 400590X1 | 839 | 1-E 13 | 400649X1 | 97 | 1-B 11 | 400702X1 | 181 | 1-B 20 |
| 400404X1 | 245 | 1-C 2 | 400591X1 | 839 | 1-E 13 | 400649X1 | 103 | 1-B 12 | 400702X1 | 843 | 1-E 14 |
| 400405X1 | 245 | 1-C 2 | 400593X1 | 241 | 1-C 2 | 400650X1 | 751 | 1-E 5 | 400702X1 | 1099 | 1-F 15 |
| 400406X1 | 245 | 1-C 2 | 400593X1 | 243 | 1-C 2 | 400650X1 | 755 | 1-E 5 | 400703X1 | 95 | 1-B 11 |
| 400407X1 | 245 | 1-C 2 | 400593X1 | 667 | 1-D 20 | 400654X1 | 133 | 1-B 15 | 400703X1 | 101 | 1-B 12 |
| 400408X1 | 361 | 1-C 14 | 400593X1 | 669 | 1-D 20 | 400654X1 | 135 | 1-B 15 | 400704X1 | 93 | 1-B 11 |
| 400410X1 | 819 | 1-E 11 | 400593X1 | 837 | 1-E 13 | 400655X1 | 133 | 1-B 15 | 400704X1 | 99 | 1-B 11 |
| 400410X1 | 821 | 1-E 12 | 400593X1 | 845 | 1-E 14 | 400655X1 | 135 | 1-B 15 | 400706X1 | 395 | 1-C 17 |
| 400412X1 | 995 | 1-F 5 | 400593X1 | 849 | 1-E 14 | 400657X1 | 135 | 1-B 15 | 400708X1 | 361 | 1-C 14 |
| 400414X1 | 819 | 1-E 11 | 400593X1 | 851 | 1-E 15 | 400658X1 | 99 | 1-B 11 | 400715X1 | 1089 | 1-F 14 |
| 400414X1 | 821 | 1-E 12 | 400593X1 | 995 | 1-F 5 | 400659X1 | 99 | 1-B 11 | 400717X1 | 279 | 1-C 5 |
| 400416X1 | 749 | 1-E 4 | 400595X1 | 837 | 1-E 13 | 400665X1 | 99 | 1-B 11 | 400753X1 | 273 | 1-C 5 |
| 400416X1 | 809 | 1-E 10 | 400596X1 | 837 | 1-E 13 | 400665X1 | 1099 | 1-F 15 | 400754X1 | 223 | 1-B 24 |
| 400416X1 | 819 | 1-E 11 | 400597X1 | 145 | 1-B 16 | 400667X1 | 133 | 1-B 15 | 400780X1 | 1043 | 1-F 10 |
| 400416X1 | 821 | 1-E 12 | 400597X1 | 375 | 1-C 15 | 400667X1 | 135 | 1-B 15 | 400781X1 | 361 | 1-C 14 |
| 400416X1 | 823 | 1-E 12 | 400597X1 | 377 | 1-C 15 | 400674X1 | 93 | 1-B 11 | 400782X1 | 225 | 1-B 24 |
| 400416X1 | 825 | 1-E 12 | 400597X1 | 385 | 1-C 16 | 400674X1 | 99 | 1-B 11 | 400782X1 | 367 | 1-C 14 |
| 400416X1 | 837 | 1-E 13 | 400597X1 | 839 | 1-E 13 | 400675X1 | 93 | 1-B 11 | 400825X1 | 749 | 1-E 4 |
| 400416X1 | 843 | 1-E 14 | 400597X1 | 849 | 1-E 14 | 400675X1 | 99 | 1-B 11 | 400826X1 | 113 | 1-B 13 |
| 400416X1 | 845 | 1-E 14 | 400597X1 | 851 | 1-E 15 | 400678X1 | 95 | 1-B 11 | 400831X1 | 403 | 1-C 18 |
| 400416X1 | 859 | 1-E 15 | 400598X1 | 183 | 1-B 20 | 400678X1 | 99 | 1-B 11 | 400831X1 | 405 | 1-C 18 |
| 400416X1 | 883 | 1-E 18 | 400598X1 | 839 | 1-E 13 | 400681X1 | 95 | 1-B 11 | 400834X1 | 367 | 1-C 14 |
| 400417X1 | 745 | 1-E 4 | 400599X1 | 93 | 1-B 11 | 400681X1 | 99 | 1-B 11 | 400834X1 | 369 | 1-C 14 |
| 400418X1 | 175 | 1-B 19 | 400599X1 | 99 | 1-B 11 | 400682X1 | 95 | 1-B 11 | 400834X1 | 1077 | 1-F 13 |
| 400419X1 | 821 | 1-E 12 | 400599X1 | 127 | 1-B 14 | 400682X1 | 99 | 1-B 11 | 400835X1 | 367 | 1-C 14 |
| 400420X1 | 821 | 1-E 12 | 400599X1 | 135 | 1-B 15 | 400682X1 | 581 | 1-D 12 | 400835X1 | 369 | 1-C 14 |
| 400421X1 | 821 | 1-E 12 | 400599X1 | 149 | 1-B 16 | 400682X1 | 617 | 1-D 15 | 400835X1 | 775 | 1-E 7 |
| 400422X1 | 821 | 1-E 12 | 400599X1 | 151 | 1-B 17 | 400684X1 | 95 | 1-B 11 | 400835X1 | 777 | 1-E 7 |
| 400423X1 | 821 | 1-E 12 | 400599X1 | 153 | 1-B 17 | 400684X1 | 99 | 1-B 11 | 400836X1 | 367 | 1-C 14 |
| 400428X1 | 741 | 1-E 4 | 400599X1 | 581 | 1-D 12 | 400686X1 | 179 | 1-B 19 | 400836X1 | 369 | 1-C 14 |
| 400428X1 | 745 | 1-E 4 | 400599X1 | 591 | 1-D 13 | 400686X1 | 181 | 1-B 20 | 400837X1 | 145 | 1-B 16 |
| 400428X1 | 749 | 1-E 4 | 400599X1 | 597 | 1-D 13 | 400687X1 | 99 | 1-B 11 | 400837X1 | 147 | 1-B 16 |
| 400429X1 | 179 | 1-B 19 | 400599X1 | 599 | 1-D 13 | 400688X1 | 147 | 1-B 16 | 400837X1 | 197 | 1-B 21 |
| 400453X1 | 321 | 1-C 10 | 400599X1 | 601 | 1-D 14 | 400688X1 | 759 | 1-E 5 | 400837X1 | 199 | 1-B 21 |
| 400455X1 | 1111 | 1-F 17 | 400599X1 | 603 | 1-D 14 | 400689X1 | 95 | 1-B 11 | 400837X1 | 201 | 1-B 22 |
| 400455X1 | 1113 | 1-F 17 | 400599X1 | 625 | 1-D 16 | 400689X1 | 99 | 1-B 11 | 400837X1 | 205 | 1-B 22 |
| 400455X1 | 1115 | 1-F 17 | 400599X1 | 633 | 1-D 17 | 400689X1 | 179 | 1-B 19 | 400837X1 | 241 | 1-C 2 |
| 400486X1 | 1117 | 1-F 17 | 400599X1 | 705 | 1-D 24 | 400689X1 | 181 | 1-B 20 | 400837X1 | 243 | 1-C 2 |
| 400497X1 | 395 | 1-C 17 | 400599X1 | 715 | 1-E 1 | 400689X1 | 843 | 1-E 14 | 400837X1 | 331 | 1-C 11 |
| 400511X1 | 201 | 1-B 22 | 400599X1 | 1023 | 1-F 8 | 400689X1 | 855 | 1-E 15 | 400837X1 | 351 | 1-C 13 |
| 400511X1 | 279 | 1-C 5 | 400599X1 | 1025 | 1-F 8 | 400691X1 | 179 | 1-B 19 | 400837X1 | 353 | 1-C 13 |
| 400511X1 | 353 | 1-C 13 | 400599X1 | 1027 | 1-F 8 | 400691X1 | 181 | 1-B 20 | 400837X1 | 359 | 1-C 13 |
| 400511X1 | 379 | 1-C 15 | 400599X1 | 1029 | 1-F 8 | 400692X1 | 93 | 1-B 11 | 400837X1 | 361 | 1-C 14 |
| 400553X1 | 1073 | 1-F 13 | 400599X1 | 1095 | 1-F 15 | 400692X1 | 99 | 1-B 11 | 400837X1 | 367 | 1-C 14 |
| 400561X1 | 223 | 1-B 24 | 400599X1 | 1105 | 1-F 16 | 400693X1 | 93 | 1-B 11 | 400837X1 | 369 | 1-C 14 |
| 400561X1 | 1191 | 1-G 1 | 400599X1 | 1107 | 1-F 16 | 400693X1 | 101 | 1-B 12 | 400837X1 | 371 | 1-C 15 |
| 400561X1 | 1193 | 1-G 1 | 400599X1 | 1179 | 1-F 23 | 400693X1 | 133 | 1-B 15 | 400837X1 | 387 | 1-C 16 |
| 400562X1 | 225 | 1-B 24 | 400599X1 | 1185 | 1-F 24 | 400693X1 | 135 | 1-B 15 | 400837X1 | 391 | 1-C 17 |
| 400562X1 | 245 | 1-C 2 | 400599X1 | 1187 | 1-F 24 | 400694X1 | 133 | 1-B 15 | 400837X1 | 393 | 1-C 17 |
| 400562X1 | 279 | 1-C 5 | 400602X1 | 307 | 1-C 8 | 400694X1 | 135 | 1-B 15 | 400837X1 | 843 | 1-E 14 |
| 400562X1 | 329 | 1-C 10 | 400602X1 | 309 | 1-C 8 | 400695X1 | 197 | 1-B 21 | 400837X1 | 855 | 1-E 15 |
| 400562X1 | 361 | 1-C 14 | 400603X1 | 1099 | 1-F 15 | 400695X1 | 199 | 1-B 21 | 400837X1 | 1023 | 1-F 8 |
| 400562X1 | 367 | 1-C 14 | 400604X1 | 1099 | 1-F 15 | 400695X1 | 203 | 1-B 22 | 400837X1 | 1025 | 1-F 8 |
| 400562X1 | 373 | 1-C 15 | 400607X1 | 745 | 1-E 4 | 400695X1 | 205 | 1-B 22 | 400837X1 | 1027 | 1-F 8 |
| 400562X1 | 375 | 1-C 15 | 400607X1 | 747 | 1-E 4 | 400695X1 | 1099 | 1-F 15 | 400837X1 | 1029 | 1-F 8 |
| 400562X1 | 379 | 1-C 15 | 400607X1 | 847 | 1-E 14 | 400696X1 | 101 | 1-B 12 | 400837X1 | 1099 | 1-F 15 |
| 400562X1 | 383 | 1-C 16 | 400607X1 | 853 | 1-E 15 | 400697X1 | 93 | 1-B 11 | 400837X1 | 1191 | 1-G 1 |
| 400564X1 | 819 | 1-E 11 | 400614X1 | 749 | 1-E 4 | 400697X1 | 101 | 1-B 12 | 400861X1 | 329 | 1-C 10 |
| 400564X1 | 825 | 1-E 12 | 400616X1 | 819 | 1-E 11 | 400699X1 | 133 | 1-B 15 | 400862X1 | 247 | 1-C 2 |
| 400565X1 | 819 | 1-E 11 | 400616X1 | 995 | 1-F 5 | 400699X1 | 135 | 1-B 15 | 400862X1 | 249 | 1-C 2 |
| 400568X1 | 825 | 1-E 12 | 400618X1 | 749 | 1-E 4 | 400700X1 | 823 | 1-E 12 | 400862X1 | 251 | 1-C 3 |
| 400569X1 | 825 | 1-E 12 | 400620X1 | 735 | 1-E 3 | 400700X1 | 825 | 1-E 12 | 400862X1 | 253 | 1-C 3 |
| 400570X1 | 113 | 1-B 13 | 400621X1 | 753 | 1-E 5 | 400700X1 | 849 | 1-E 14 | 400862X1 | 255 | 1-C 3 |
| 400576X1 | 1073 | 1-F 13 | 400621X1 | 757 | 1-E 5 | 400700X1 | 851 | 1-E 15 | 400862X1 | 1263 | 1-G 8 |
| 400577X1 | 837 | 1-E 13 | 400621X1 | 759 | 1-E 5 | 400700X1 | 1099 | 1-F 15 | 400864X1 | 269 | 1-C 4 |
| 400578X1 | 837 | 1-E 13 | 400625X1 | 741 | 1-E 4 | 400701X1 | 95 | 1-B 11 | 400865X1 | 383 | 1-C 16 |
| 400580X1 | 837 | 1-E 13 | 400627X1 | 179 | 1-B 19 | 400701X1 | 101 | 1-B 12 | 400899X1 | 215 | 1-B 23 |
| 400582X1 | 837 | 1-E 13 | 400627X1 | 181 | 1-B 20 | 400701X1 | 145 | 1-B 16 | 400932X1 | 1037 | 1-F 9 |
| 400583X1 | 183 | 1-B 20 | 400628X1 | 735 | 1-E 3 | 400701X1 | 147 | 1-B 16 | 400932X1 | 1043 | 1-F 10 |
| 400584X1 | 837 | 1-E 13 | 400636X1 | 749 | 1-E 4 | 400702X1 | 101 | 1-B 12 | 400941X1 | 215 | 1-B 23 |
| 400584X1 | 843 | 1-E 14 | 400638X1 | 741 | 1-E 4 | 400702X1 | 133 | 1-B 15 | 400948X1 | 1023 | 1-F 8 |
| 400586X1 | 837 | 1-E 13 | 400638X1 | 843 | 1-E 14 | 400702X1 | 135 | 1-B 15 | 400948X1 | 1025 | 1-F 8 |

## INDEX


| Part No. | Page | Grid | Part No. | Page | Grid | Part No. | Page | Grid | Part No. | Page | Grid |
|---|---|---|---|---|---|---|---|---|---|---|---|
| 400961X1 | 823 | 1-E 12 | 5S-7349 | 317 | 1-C 9 | 500450D1 | 1073 | 1-F 13 | 500650D1 | 253 | 1-C 3 |
| 400963X1 | 825 | 1-E 12 | 5S-7349 | 319 | 1-C 9 | 500458D1 | 847 | 1-E 14 | 500651D1 | 255 | 1-C 3 |
| 400965X1 | 823 | 1-E 12 | 500014D1 | 377 | 1-C 15 | 500458D1 | 853 | 1-E 15 | 500652D1 | 257 | 1-C 3 |
| 400965X1 | 825 | 1-E 12 | 500014D1 | 385 | 1-C 16 | 500468D1 | 705 | 1-D 24 | 500653D1 | 247 | 1-C 2 |
| 400967X1 | 823 | 1-E 12 | 500016D1 | 189 | 1-B 20 | 500469D1 | 705 | 1-D 24 | 500653D1 | 249 | 1-C 2 |
| 400967X1 | 825 | 1-E 12 | 500016D1 | 193 | 1-B 21 | 500470D1 | 705 | 1-D 24 | 500653D1 | 251 | 1-C 3 |
| 400968X1 | 823 | 1-E 12 | 500017D1 | 193 | 1-B 21 | 500473D1 | 1023 | 1-F 8 | 500653D1 | 253 | 1-C 3 |
| 400968X1 | 825 | 1-E 12 | 500019D1 | 193 | 1-B 21 | 500473D1 | 1025 | 1-F 8 | 500653D1 | 255 | 1-C 3 |
| 5B-5821 | 421 | 1-C 20 | 500033D1 | 65 | 1-B 8 | 500475D1 | 325 | 1-C 10 | 500654D1 | 247 | 1-C 2 |
| 5B-5821 | 423 | 1-C 20 | 500034D1 | 67 | 1-B 8 | 500476D1 | 325 | 1-C 10 | 500654D1 | 249 | 1-C 2 |
| 5B-5821 | 493 | 1-D 3 | 500035D1 | 69 | 1-B 8 | 500477D1 | 325 | 1-C 10 | 500654D1 | 251 | 1-C 3 |
| 5B-5821 | 505 | 1-D 4 | 500037D1 | 71 | 1-B 9 | 500478D1 | 321 | 1-C 10 | 500654D1 | 253 | 1-C 3 |
| 5B-5821 | 507 | 1-D 4 | 500038D1 | 139 | 1-B 15 | 500478D1 | 325 | 1-C 10 | 500654D1 | 255 | 1-C 3 |
| 5B-5821 | 509 | 1-D 4 | 500039D1 | 65 | 1-B 8 | 500483D1 | 1127 | 1-F 18 | 500658D1 | 1091 | 1-F 15 |
| 5F-3144 | 459 | 1-C 23 | 500039D1 | 67 | 1-B 8 | 500484D2 | 1129 | 1-F 18 | 500658D1 | 1093 | 1-F 15 |
| 5F-3144 | 469 | 1-C 24 | 500039D1 | 69 | 1-B 8 | 500485D2 | 1131 | 1-F 19 | 500660D1 | 1093 | 1-F 15 |
| 5F-3144 | 479 | 1-D 1 | 500039D1 | 71 | 1-B 9 | 500486D2 | 1133 | 1-F 19 | 500671D1 | 829 | 1-E 12 |
| 5F-3144 | 489 | 1-D 2 | 500039D1 | 595 | 1-D 13 | 500487D2 | 1135 | 1-F 19 | 500672D1 | 829 | 1-E 12 |
| 5F-3999 | 529 | 1-D 6 | 500040D1 | 65 | 1-B 8 | 500488D2 | 1137 | 1-F 19 | 500674D1 | 263 | 1-C 4 |
| 5F-3999 | 535 | 1-D 7 | 500040D1 | 67 | 1-B 8 | 500489D2 | 1139 | 1-F 19 | 500676D1 | 263 | 1-C 4 |
| 5F-3999 | 541 | 1-D 8 | 500040D1 | 69 | 1-B 8 | 500490D2 | 1141 | 1-F 20 | 500676D2 | 247 | 1-C 2 |
| 5H-3193 | 493 | 1-D 3 | 500040D1 | 71 | 1-B 9 | 500491D2 | 1143 | 1-F 20 | 500676D2 | 249 | 1-C 2 |
| 5H-3252 | 529 | 1-D 6 | 500040D1 | 705 | 1-D 24 | 500493D1 | 1073 | 1-F 13 | 500676D2 | 251 | 1-C 3 |
| 5H-3252 | 535 | 1-D 7 | 500062D1 | 711 | 1-E 1 | 500494D1 | 747 | 1-E 4 | 500676D2 | 253 | 1-C 3 |
| 5H-3252 | 541 | 1-D 8 | 500081D1 | 705 | 1-D 24 | 500505D1 | 607 | 1-D 14 | 500676D2 | 255 | 1-C 3 |
| 5H-6005 | 455 | 1-C 23 | 500120D1 | 595 | 1-D 13 | 500510D1 | 213 | 1-B 23 | 500677D1 | 263 | 1-C 4 |
| 5H-6005 | 465 | 1-C 24 | 500124D1 | 595 | 1-D 13 | 500510D1 | 375 | 1-C 15 | 500677D2 | 249 | 1-C 2 |
| 5H-6005 | 475 | 1-D 1 | 500125D1 | 595 | 1-D 13 | 500510D1 | 381 | 1-C 16 | 500677D2 | 251 | 1-C 3 |
| 5H-6005 | 485 | 1-D 2 | 500126D1 | 595 | 1-D 13 | 500513D1 | 1073 | 1-F 13 | 500678D1 | 265 | 1-C 4 |
| 5H-8038 | 421 | 1-C 20 | 500127D1 | 859 | 1-E 15 | 500515D1 | 101 | 1-B 12 | 500678D1 | 1263 | 1-G 8 |
| 5H-8038 | 423 | 1-C 20 | 500128D1 | 853 | 1-E 15 | 500516D1 | 93 | 1-B 11 | 500679D1 | 331 | 1-C 11 |
| 5H-8985 | 429 | 1-C 20 | 500129D1 | 843 | 1-E 14 | 500517D1 | 133 | 1-B 15 | 500680D1 | 331 | 1-C 11 |
| 5H-8985 | 433 | 1-C 21 | 500142D1 | 179 | 1-B 19 | 500518D1 | 133 | 1-B 15 | 500682D1 | 331 | 1-C 11 |
| 5H-8985 | 435 | 1-C 21 | 500142D1 | 181 | 1-B 20 | 500519D1 | 105 | 1-B 12 | 500685D1 | 105 | 1-B 12 |
| 5H-8985 | 441 | 1-C 22 | 500291D1 | 179 | 1-B 19 | 500523D1 | 839 | 1-E 13 | 500685D1 | 1263 | 1-G 8 |
| 5H-8985 | 445 | 1-C 22 | 500291D1 | 181 | 1-B 20 | 500524D1 | 839 | 1-E 13 | 500686D1 | 813 | 1-E 11 |
| 5H-8985 | 449 | 1-C 22 | 500316D1 | 113 | 1-B 13 | 500529D1 | 267 | 1-C 4 | 500687D1 | 667 | 1-D 20 |
| 5J-3886 | 421 | 1-C 20 | 500317D1 | 171 | 1-B 19 | 500530D1 | 267 | 1-C 4 | 500687D1 | 669 | 1-D 20 |
| 5J-3886 | 423 | 1-C 20 | 500317D1 | 173 | 1-B 19 | 500599D1 | 847 | 1-E 14 | 500717D1 | 1073 | 1-F 13 |
| 5L-4751 | 459 | 1-C 23 | 500317D1 | 355 | 1-C 13 | 500606D1 | 217 | 1-B 23 | 500717D1 | 1263 | 1-G 8 |
| 5L-4751 | 469 | 1-C 24 | 500361D1 | 1119 | 1-F 17 | 500606D1 | 219 | 1-B 23 | 500719D1 | 1207 | 1-G 2 |
| 5L-4751 | 479 | 1-D 1 | 500362D1 | 1119 | 1-F 17 | 500606D1 | 321 | 1-C 10 | 500729D1 | 1207 | 1-G 2 |
| 5L-4751 | 489 | 1-D 2 | 500363D1 | 1119 | 1-F 17 | 500607D1 | 217 | 1-B 23 | 500730D1 | 1195 | 1-G 1 |
| 5M-0578 | 461 | 1-C 24 | 500364D1 | 1119 | 1-F 17 | 500607D1 | 219 | 1-B 23 | 500731D1 | 1197 | 1-G 1 |
| 5M-0578 | 471 | 1-D 1 | 500367D1 | 333 | 1-C 11 | 500607D1 | 339 | 1-C 11 | 500732D1 | 1199 | 1-G 1 |
| 5M-0578 | 481 | 1-D 2 | 500371D1 | 1209 | 1-G 2 | 500610D1 | 321 | 1-C 10 | 500733D1 | 1201 | 1-G 2 |
| 5M-0578 | 491 | 1-D 3 | 500371D1 | 1211 | 1-G 3 | 500612D1 | 1155 | 1-F 21 | 500734D1 | 1207 | 1-G 2 |
| 5M-2051 | 493 | 1-D 3 | 500371D1 | 1215 | 1-G 3 | 500612D1 | 1157 | 1-F 21 | 500735D1 | 1205 | 1-G 2 |
| 5M-2894 | 137 | 1-B 15 | 500371D1 | 1217 | 1-G 3 | 500619D1 | 211 | 1-B 23 | 500736D1 | 1207 | 1-G 2 |
| 5M-6509 | 459 | 1-C 23 | 500371D1 | 1229 | 1-G 4 | 500619D1 | 1073 | 1-F 13 | 500737D1 | 1207 | 1-G 2 |
| 5M-6509 | 469 | 1-C 24 | 500371D1 | 1231 | 1-G 5 | 500624D1 | 1091 | 1-F 15 | 500738D1 | 1207 | 1-G 2 |
| 5M-6509 | 479 | 1-D 1 | 500371D1 | 1233 | 1-G 5 | 500624D1 | 1093 | 1-F 15 | 500744D1 | 49 | 1-B 6 |
| 5M-6509 | 489 | 1-D 2 | 500371D1 | 1235 | 1-G 5 | 500625D1 | 1093 | 1-F 15 | 500744D1 | 57 | 1-B 7 |
| 5M-7937 | 421 | 1-C 20 | 500371D1 | 1237 | 1-G 5 | 500627D1 | 197 | 1-B 21 | 500744D1 | 1195 | 1-G 1 |
| 5M-7937 | 423 | 1-C 20 | 500372D1 | 1209 | 1-G 2 | 500627D1 | 199 | 1-B 21 | 500745D1 | 51 | 1-B 7 |
| 5M-7937 | 505 | 1-D 4 | 500372D1 | 1211 | 1-G 3 | 500627D1 | 201 | 1-B 22 | 500745D1 | 59 | 1-B 7 |
| 5M-7937 | 507 | 1-D 4 | 500372D1 | 1217 | 1-G 3 | 500627D1 | 205 | 1-B 22 | 500745D1 | 1197 | 1-G 1 |
| 5M-7937 | 509 | 1-D 4 | 500372D1 | 1229 | 1-G 4 | 500628D1 | 217 | 1-B 23 | 500746D1 | 53 | 1-B 7 |
| 5M-7937 | 527 | 1-D 6 | 500372D1 | 1231 | 1-G 5 | 500630D1 | 219 | 1-B 23 | 500746D1 | 61 | 1-B 8 |
| 5M-7937 | 533 | 1-D 7 | 500372D1 | 1233 | 1-G 5 | 500634D1 | 251 | 1-C 3 | 500746D1 | 1199 | 1-G 1 |
| 5M-7937 | 539 | 1-D 7 | 500372D1 | 1235 | 1-G 5 | 500634D1 | 255 | 1-C 3 | 500747D1 | 55 | 1-B 7 |
| 5M-8034 | 265 | 1-C 4 | 500372D1 | 1237 | 1-G 5 | 500634D1 | 257 | 1-C 3 | 500747D1 | 63 | 1-B 8 |
| 5P-0765 | 1039 | 1-F 9 | 500378D1 | 1073 | 1-F 13 | 500634D1 | 263 | 1-C 4 | 500747D1 | 1201 | 1-G 2 |
| 5P-1404 | 425 | 1-C 20 | 500382D1 | 1075 | 1-F 13 | 500635D1 | 251 | 1-C 3 | 500748D2 | 1207 | 1-G 2 |
| 5P-3413 | 307 | 1-C 8 | 500389D1 | 323 | 1-C 10 | 500635D1 | 255 | 1-C 3 | 500749D1 | 1205 | 1-G 2 |
| 5P-3413 | 309 | 1-C 8 | 500392D1 | 323 | 1-C 10 | 500635D1 | 257 | 1-C 3 | 500749D1 | 1207 | 1-G 2 |
| 5P-6254 | 457 | 1-C 23 | 500395D2 | 693 | 1-D 23 | 500635D1 | 263 | 1-C 4 | 500752D1 | 907 | 1-E 20 |
| 5P-6254 | 467 | 1-C 24 | 500395D2 | 695 | 1-D 23 | 500637D1 | 263 | 1-C 4 | 500752D1 | 919 | 1-E 21 |
| 5P-6254 | 477 | 1-D 1 | 500396D2 | 693 | 1-D 23 | 500638D1 | 263 | 1-C 4 | 500754D1 | 959 | 1-F 1 |
| 5P-6254 | 487 | 1-D 2 | 500396D2 | 695 | 1-D 23 | 500639D1 | 251 | 1-C 3 | 500758D1 | 1099 | 1-F 15 |
| 5P-7843 | 455 | 1-C 23 | 500419D1 | 1173 | 1-F 23 | 500639D1 | 255 | 1-C 3 | 500761D1 | 1049 | 1-F 10 |
| 5P-7843 | 463 | 1-C 24 | 500441D2 | 621 | 1-D 16 | 500639D1 | 257 | 1-C 3 | 500761D1 | 1051 | 1-F 11 |
| 5P-7843 | 473 | 1-D 1 | 500442D1 | 1073 | 1-F 13 | 500645D1 | 247 | 1-C 2 | 500761D1 | 1069 | 1-F 12 |
| 5P-7843 | 483 | 1-D 2 | 500446D1 | 359 | 1-C 13 | 500646D1 | 249 | 1-C 2 | 500768D1 | 1049 | 1-F 10 |
| 5S-7349 | 315 | 1-C 9 | 500447D1 | 739 | 1-E 3 | 500647D1 | 251 | 1-C 3 | 500768D1 | 1051 | 1-F 11 |

## INDEX


| Part No. | Page | Grid | Part No. | Page | Grid | Part No. | Page | Grid | Part No. | Page | Grid |
|---|---|---|---|---|---|---|---|---|---|---|---|
| 500768D1 | 1053 | 1-F 11 | 501070D1 | 895 | 1-E 19 | 501251D1 | 1213 | 1-G 3 | 501261D1 | 1213 | 1-G 3 |
| 500768D1 | 1055 | 1-F 11 | 501073D1 | 335 | 1-C 11 | 501251D1 | 1227 | 1-G 4 | 501261D1 | 1215 | 1-G 3 |
| 500768D1 | 1057 | 1-F 11 | 501073D1 | 337 | 1-C 11 | 501251D1 | 1237 | 1-G 5 | 501261D1 | 1217 | 1-G 3 |
| 500768D1 | 1067 | 1-F 12 | 501074D1 | 335 | 1-C 11 | 501252D1 | 1213 | 1-G 3 | 501261D1 | 1219 | 1-G 3 |
| 500775D1 | 247 | 1-C 2 | 501074D1 | 337 | 1-C 11 | 501252D1 | 1227 | 1-G 4 | 501261D1 | 1221 | 1-G 4 |
| 500775D1 | 249 | 1-C 2 | 501075D1 | 335 | 1-C 11 | 501252D1 | 1237 | 1-G 5 | 501261D1 | 1223 | 1-G 4 |
| 500775D1 | 259 | 1-C 3 | 501075D1 | 337 | 1-C 11 | 501253D1 | 1209 | 1-G 2 | 501261D1 | 1225 | 1-G 4 |
| 500776D1 | 251 | 1-C 3 | 501103D1 | 1213 | 1-G 3 | 501253D1 | 1211 | 1-G 3 | 501261D1 | 1241 | 1-G 6 |
| 500776D1 | 261 | 1-C 4 | 501103D1 | 1227 | 1-G 4 | 501253D1 | 1213 | 1-G 3 | 501262D1 | 1209 | 1-G 2 |
| 500791D2 | 1145 | 1-F 20 | 501103D1 | 1237 | 1-G 5 | 501253D1 | 1215 | 1-G 3 | 501262D1 | 1211 | 1-G 3 |
| 500792D2 | 1147 | 1-F 20 | 501104D1 | 1209 | 1-G 2 | 501253D1 | 1217 | 1-G 3 | 501262D1 | 1213 | 1-G 3 |
| 500793D2 | 1149 | 1-F 20 | 501104D1 | 1233 | 1-G 5 | 501253D1 | 1219 | 1-G 3 | 501262D1 | 1215 | 1-G 3 |
| 500794D2 | 1151 | 1-F 21 | 501104D1 | 1237 | 1-G 5 | 501253D1 | 1221 | 1-G 4 | 501262D1 | 1217 | 1-G 3 |
| 500795D1 | 907 | 1-E 20 | 501105D1 | 1215 | 1-G 3 | 501253D1 | 1223 | 1-G 4 | 501262D1 | 1219 | 1-G 3 |
| 500834D1 | 667 | 1-D 20 | 501105D1 | 1231 | 1-G 5 | 501253D1 | 1225 | 1-G 4 | 501262D1 | 1221 | 1-G 4 |
| 500834D1 | 669 | 1-D 20 | 501105D1 | 1237 | 1-G 5 | 501253D1 | 1227 | 1-G 4 | 501262D1 | 1223 | 1-G 4 |
| 500835D1 | 667 | 1-D 20 | 501106D1 | 1209 | 1-G 2 | 501253D1 | 1229 | 1-G 4 | 501262D1 | 1225 | 1-G 4 |
| 500835D1 | 675 | 1-D 21 | 501106D1 | 1233 | 1-G 5 | 501253D1 | 1231 | 1-G 5 | 501262D1 | 1241 | 1-G 6 |
| 500836D1 | 669 | 1-D 20 | 501106D1 | 1237 | 1-G 5 | 501253D1 | 1233 | 1-G 5 | 501263D1 | 1209 | 1-G 2 |
| 500836D1 | 673 | 1-D 21 | 501107D1 | 1227 | 1-G 4 | 501253D1 | 1235 | 1-G 5 | 501263D1 | 1211 | 1-G 3 |
| 500839D1 | 1049 | 1-F 10 | 501107D1 | 1237 | 1-G 5 | 501253D1 | 1239 | 1-G 5 | 501263D1 | 1213 | 1-G 3 |
| 500839D1 | 1051 | 1-F 11 | 501108D1 | 1215 | 1-G 3 | 501253D1 | 1241 | 1-G 6 | 501263D1 | 1215 | 1-G 3 |
| 500839D1 | 1053 | 1-F 11 | 501108D1 | 1231 | 1-G 5 | 501254D1 | 1209 | 1-G 2 | 501263D1 | 1217 | 1-G 3 |
| 500839D1 | 1055 | 1-F 11 | 501108D1 | 1237 | 1-G 5 | 501254D1 | 1211 | 1-G 3 | 501263D1 | 1219 | 1-G 3 |
| 500839D1 | 1057 | 1-F 11 | 501109D1 | 201 | 1-B 22 | 501254D1 | 1213 | 1-G 3 | 501263D1 | 1221 | 1-G 4 |
| 500839D1 | 1127 | 1-F 18 | 501110D1 | 199 | 1-B 21 | 501254D1 | 1215 | 1-G 3 | 501263D1 | 1223 | 1-G 4 |
| 500840D1 | 1155 | 1-F 21 | 501111D1 | 201 | 1-B 22 | 501254D1 | 1217 | 1-G 3 | 501263D1 | 1225 | 1-G 4 |
| 500841D1 | 1051 | 1-F 11 | 501112D1 | 199 | 1-B 21 | 501254D1 | 1219 | 1-G 3 | 501263D1 | 1241 | 1-G 6 |
| 500842D1 | 1049 | 1-F 10 | 501113D1 | 205 | 1-B 22 | 501254D1 | 1221 | 1-G 4 | 501264D1 | 1209 | 1-G 2 |
| 500843D1 | 1055 | 1-F 11 | 501114D1 | 197 | 1-B 21 | 501254D1 | 1223 | 1-G 4 | 501264D1 | 1211 | 1-G 3 |
| 500844D1 | 1053 | 1-F 11 | 501118D1 | 211 | 1-B 23 | 501254D1 | 1225 | 1-G 4 | 501264D1 | 1213 | 1-G 3 |
| 500849D1 | 1057 | 1-F 11 | 501120D1 | 1191 | 1-G 1 | 501254D1 | 1241 | 1-G 6 | 501264D1 | 1215 | 1-G 3 |
| 500853D1 | 1157 | 1-F 21 | 501124D1 | 337 | 1-C 11 | 501256D1 | 1189 | 1-F 24 | 501264D1 | 1217 | 1-G 3 |
| 500854D1 | 1127 | 1-F 18 | 501127D1 | 857 | 1-E 15 | 501256D1 | 1227 | 1-G 4 | 501264D1 | 1219 | 1-G 3 |
| 500882D1 | 321 | 1-C 10 | 501128D1 | 857 | 1-E 15 | 501256D1 | 1229 | 1-G 4 | 501264D1 | 1221 | 1-G 4 |
| 500910D1 | 213 | 1-B 23 | 501129D1 | 857 | 1-E 15 | 501256D1 | 1231 | 1-G 5 | 501264D1 | 1223 | 1-G 4 |
| 500910D1 | 349 | 1-C 12 | 501130D1 | 727 | 1-E 2 | 501256D1 | 1233 | 1-G 5 | 501264D1 | 1225 | 1-G 4 |
| 500925D1 | 671 | 1-D 21 | 501130D1 | 857 | 1-E 15 | 501256D1 | 1235 | 1-G 5 | 501264D1 | 1241 | 1-G 6 |
| 500925D1 | 683 | 1-D 22 | 501130D1 | 895 | 1-E 19 | 501257D1 | 1209 | 1-G 2 | 501265D1 | 1209 | 1-G 2 |
| 500927D1 | 1059 | 1-F 11 | 501140D1 | 727 | 1-E 2 | 501257D1 | 1211 | 1-G 3 | 501265D1 | 1211 | 1-G 3 |
| 500927D1 | 1061 | 1-F 12 | 501144D1 | 1023 | 1-F 8 | 501257D1 | 1213 | 1-G 3 | 501265D1 | 1213 | 1-G 3 |
| 500927D1 | 1093 | 1-F 15 | 501144D1 | 1025 | 1-F 8 | 501257D1 | 1215 | 1-G 3 | 501265D1 | 1215 | 1-G 3 |
| 500929D1 | 1091 | 1-F 15 | 501144D1 | 1027 | 1-F 8 | 501257D1 | 1217 | 1-G 3 | 501265D1 | 1217 | 1-G 3 |
| 500929D1 | 1093 | 1-F 15 | 501144D1 | 1029 | 1-F 8 | 501257D1 | 1219 | 1-G 3 | 501265D1 | 1219 | 1-G 3 |
| 500931D1 | 1093 | 1-F 15 | 501145D1 | 1023 | 1-F 8 | 501257D1 | 1221 | 1-G 4 | 501265D1 | 1221 | 1-G 4 |
| 500932D1 | 929 | 1-E 22 | 501145D1 | 1025 | 1-F 8 | 501257D1 | 1223 | 1-G 4 | 501265D1 | 1223 | 1-G 4 |
| 500932D1 | 933 | 1-E 23 | 501145D1 | 1027 | 1-F 8 | 501257D1 | 1225 | 1-G 4 | 501265D1 | 1225 | 1-G 4 |
| 500932D1 | 935 | 1-E 23 | 501145D1 | 1029 | 1-F 8 | 501257D1 | 1241 | 1-G 6 | 501267D1 | 1209 | 1-G 2 |
| 500932D1 | 937 | 1-E 23 | 501146D1 | 1043 | 1-F 10 | 501258D1 | 1211 | 1-G 3 | 501267D1 | 1211 | 1-G 3 |
| 500936D1 | 967 | 1-F 2 | 501147D1 | 1023 | 1-F 8 | 501258D1 | 1215 | 1-G 3 | 501267D1 | 1213 | 1-G 3 |
| 500939D1 | 967 | 1-F 2 | 501147D1 | 1025 | 1-F 8 | 501258D1 | 1231 | 1-G 5 | 501267D1 | 1215 | 1-G 3 |
| 500940D1 | 967 | 1-F 2 | 501147D1 | 1027 | 1-F 8 | 501258D1 | 1235 | 1-G 5 | 501267D1 | 1217 | 1-G 3 |
| 500950D1 | 749 | 1-E 4 | 501147D1 | 1029 | 1-F 8 | 501258D1 | 1237 | 1-G 5 | 501267D1 | 1219 | 1-G 3 |
| 500956D1 | 839 | 1-E 13 | 501148D1 | 597 | 1-D 13 | 501259D1 | 1209 | 1-G 2 | 501267D1 | 1221 | 1-G 4 |
| 500957D1 | 1091 | 1-F 15 | 501148D1 | 601 | 1-D 14 | 501259D1 | 1211 | 1-G 3 | 501267D1 | 1223 | 1-G 4 |
| 500957D1 | 1093 | 1-F 15 | 501153D1 | 1095 | 1-F 15 | 501259D1 | 1213 | 1-G 3 | 501267D1 | 1225 | 1-G 4 |
| 500967D1 | 967 | 1-F 2 | 501153D1 | 1263 | 1-G 8 | 501259D1 | 1215 | 1-G 3 | 501267D1 | 1227 | 1-G 4 |
| 500968D1 | 967 | 1-F 2 | 501168D1 | 333 | 1-C 11 | 501259D1 | 1217 | 1-G 3 | 501267D1 | 1229 | 1-G 4 |
| 500970D1 | 99 | 1-B 11 | 501169D1 | 333 | 1-C 11 | 501259D1 | 1219 | 1-G 3 | 501267D1 | 1231 | 1-G 5 |
| 500970D1 | 101 | 1-B 12 | 501170D1 | 333 | 1-C 11 | 501259D1 | 1221 | 1-G 4 | 501267D1 | 1233 | 1-G 5 |
| 500970D1 | 719 | 1-E 1 | 501171D1 | 333 | 1-C 11 | 501259D1 | 1223 | 1-G 4 | 501267D1 | 1235 | 1-G 5 |
| 500970D1 | 723 | 1-E 2 | 501178D1 | 121 | 1-B 14 | 501259D1 | 1225 | 1-G 4 | 501267D1 | 1239 | 1-G 5 |
| 500970D1 | 765 | 1-E 6 | 501178D1 | 1263 | 1-G 8 | 501259D1 | 1241 | 1-G 6 | 501267D1 | 1241 | 1-G 6 |
| 500970D1 | 769 | 1-E 6 | 501186D1 | 653 | 1-D 19 | 501260D1 | 1209 | 1-G 2 | 501268D1 | 1227 | 1-G 4 |
| 500973D1 | 1099 | 1-F 15 | 501196D1 | 655 | 1-D 19 | 501260D1 | 1211 | 1-G 3 | 501268D1 | 1237 | 1-G 5 |
| 500978D1 | 1099 | 1-F 15 | 501197D1 | 657 | 1-D 19 | 501260D1 | 1213 | 1-G 3 | 501269D1 | 1215 | 1-G 3 |
| 500990D1 | 1099 | 1-F 15 | 501198D1 | 657 | 1-D 19 | 501260D1 | 1215 | 1-G 3 | 501269D1 | 1231 | 1-G 5 |
| 501026D1 | 1179 | 1-F 23 | 501205D1 | 617 | 1-D 15 | 501260D1 | 1217 | 1-G 3 | 501269D1 | 1237 | 1-G 5 |
| 501026D1 | 1263 | 1-G 8 | 501210D1 | 1095 | 1-F 15 | 501260D1 | 1219 | 1-G 3 | 501270D1 | 1227 | 1-G 4 |
| 501028D1 | 1091 | 1-F 15 | 501215D1 | 657 | 1-D 19 | 501260D1 | 1221 | 1-G 4 | 501271D1 | 1213 | 1-G 3 |
| 501033D1 | 279 | 1-C 5 | 501216D1 | 657 | 1-D 19 | 501260D1 | 1223 | 1-G 4 | 501272D1 | 1209 | 1-G 2 |
| 501033D1 | 367 | 1-C 14 | 501250D1 | 1227 | 1-G 4 | 501260D1 | 1225 | 1-G 4 | 501272D1 | 1211 | 1-G 3 |
| 501033D1 | 369 | 1-C 14 | 501250D1 | 1229 | 1-G 4 | 501260D1 | 1241 | 1-G 6 | 501272D1 | 1213 | 1-G 3 |
| 501045D1 | 141 | 1-B 16 | 501250D1 | 1235 | 1-G 5 | 501261D1 | 1209 | 1-G 2 | 501272D1 | 1215 | 1-G 3 |
| 501051D1 | 1185 | 1-F 24 | 501250D1 | 1237 | 1-G 5 | 501261D1 | 1211 | 1-G 3 | 501272D1 | 1217 | 1-G 3 |

| Part No. | Page | Grid | Part No. | Page | Grid | Part No. | Page | Grid | Part No. | Page | Grid |
|---|---|---|---|---|---|---|---|---|---|---|---|
| 501272D1 | 1219 | 1-G 3 | 501282D1 | 1211 | 1-G 3 | 501292D1 | 1215 | 1-G 3 | 501300D1 | 1209 | 1-G 2 |
| 501272D1 | 1221 | 1-G 4 | 501282D1 | 1213 | 1-G 3 | 501292D1 | 1217 | 1-G 3 | 501300D1 | 1211 | 1-G 3 |
| 501272D1 | 1223 | 1-G 4 | 501282D1 | 1215 | 1-G 3 | 501292D1 | 1219 | 1-G 3 | 501300D1 | 1213 | 1-G 3 |
| 501272D1 | 1225 | 1-G 4 | 501282D1 | 1217 | 1-G 3 | 501292D1 | 1221 | 1-G 4 | 501300D1 | 1215 | 1-G 3 |
| 501272D1 | 1227 | 1-G 4 | 501282D1 | 1219 | 1-G 3 | 501292D1 | 1223 | 1-G 4 | 501300D1 | 1217 | 1-G 3 |
| 501272D1 | 1229 | 1-G 4 | 501282D1 | 1221 | 1-G 4 | 501292D1 | 1225 | 1-G 4 | 501300D1 | 1219 | 1-G 3 |
| 501272D1 | 1231 | 1-G 5 | 501282D1 | 1223 | 1-G 4 | 501292D1 | 1241 | 1-G 6 | 501300D1 | 1221 | 1-G 4 |
| 501272D1 | 1233 | 1-G 5 | 501282D1 | 1225 | 1-G 4 | 501293D1 | 1209 | 1-G 2 | 501300D1 | 1223 | 1-G 4 |
| 501272D1 | 1235 | 1-G 5 | 501283D1 | 1229 | 1-G 4 | 501293D1 | 1211 | 1-G 3 | 501300D1 | 1225 | 1-G 4 |
| 501273D1 | 1209 | 1-G 2 | 501283D1 | 1237 | 1-G 5 | 501293D1 | 1213 | 1-G 3 | 501300D1 | 1241 | 1-G 6 |
| 501273D1 | 1211 | 1-G 3 | 501284D1 | 1235 | 1-G 5 | 501293D1 | 1215 | 1-G 3 | 501301D1 | 1209 | 1-G 2 |
| 501273D1 | 1213 | 1-G 3 | 501284D1 | 1237 | 1-G 5 | 501293D1 | 1217 | 1-G 3 | 501301D1 | 1211 | 1-G 3 |
| 501273D1 | 1215 | 1-G 3 | 501285D1 | 1235 | 1-G 5 | 501293D1 | 1219 | 1-G 3 | 501301D1 | 1213 | 1-G 3 |
| 501273D1 | 1217 | 1-G 3 | 501285D1 | 1237 | 1-G 5 | 501293D1 | 1221 | 1-G 4 | 501301D1 | 1215 | 1-G 3 |
| 501273D1 | 1219 | 1-G 3 | 501286D1 | 1209 | 1-G 2 | 501293D1 | 1223 | 1-G 4 | 501301D1 | 1217 | 1-G 3 |
| 501273D1 | 1221 | 1-G 4 | 501286D1 | 1211 | 1-G 3 | 501293D1 | 1225 | 1-G 4 | 501301D1 | 1219 | 1-G 3 |
| 501273D1 | 1223 | 1-G 4 | 501286D1 | 1213 | 1-G 3 | 501293D1 | 1241 | 1-G 6 | 501301D1 | 1221 | 1-G 4 |
| 501273D1 | 1225 | 1-G 4 | 501286D1 | 1215 | 1-G 3 | 501294D1 | 1209 | 1-G 2 | 501301D1 | 1223 | 1-G 4 |
| 501274D1 | 1209 | 1-G 2 | 501286D1 | 1217 | 1-G 3 | 501294D1 | 1211 | 1-G 3 | 501301D1 | 1225 | 1-G 4 |
| 501274D1 | 1211 | 1-G 3 | 501286D1 | 1219 | 1-G 3 | 501294D1 | 1213 | 1-G 3 | 501301D1 | 1241 | 1-G 6 |
| 501274D1 | 1213 | 1-G 3 | 501286D1 | 1221 | 1-G 4 | 501294D1 | 1215 | 1-G 3 | 501302D1 | 1209 | 1-G 2 |
| 501274D1 | 1215 | 1-G 3 | 501286D1 | 1223 | 1-G 4 | 501294D1 | 1217 | 1-G 3 | 501302D1 | 1211 | 1-G 3 |
| 501274D1 | 1217 | 1-G 3 | 501286D1 | 1225 | 1-G 4 | 501294D1 | 1219 | 1-G 3 | 501302D1 | 1213 | 1-G 3 |
| 501274D1 | 1219 | 1-G 3 | 501286D1 | 1227 | 1-G 4 | 501294D1 | 1221 | 1-G 4 | 501302D1 | 1215 | 1-G 3 |
| 501274D1 | 1221 | 1-G 4 | 501286D1 | 1229 | 1-G 4 | 501294D1 | 1223 | 1-G 4 | 501302D1 | 1217 | 1-G 3 |
| 501274D1 | 1223 | 1-G 4 | 501286D1 | 1231 | 1-G 5 | 501294D1 | 1225 | 1-G 4 | 501302D1 | 1219 | 1-G 3 |
| 501274D1 | 1225 | 1-G 4 | 501286D1 | 1233 | 1-G 5 | 501294D1 | 1241 | 1-G 6 | 501302D1 | 1221 | 1-G 4 |
| 501274D1 | 1227 | 1-G 4 | 501286D1 | 1235 | 1-G 5 | 501295D1 | 1209 | 1-G 2 | 501302D1 | 1223 | 1-G 4 |
| 501274D1 | 1229 | 1-G 4 | 501287D1 | 1209 | 1-G 2 | 501295D1 | 1211 | 1-G 3 | 501302D1 | 1225 | 1-G 4 |
| 501274D1 | 1231 | 1-G 5 | 501287D1 | 1211 | 1-G 3 | 501295D1 | 1213 | 1-G 3 | 501303D1 | 1209 | 1-G 2 |
| 501274D1 | 1233 | 1-G 5 | 501287D1 | 1213 | 1-G 3 | 501295D1 | 1215 | 1-G 3 | 501303D1 | 1211 | 1-G 3 |
| 501274D1 | 1235 | 1-G 5 | 501287D1 | 1215 | 1-G 3 | 501295D1 | 1217 | 1-G 3 | 501303D1 | 1213 | 1-G 3 |
| 501275D1 | 1231 | 1-G 5 | 501287D1 | 1217 | 1-G 3 | 501295D1 | 1219 | 1-G 3 | 501303D1 | 1215 | 1-G 3 |
| 501275D1 | 1235 | 1-G 5 | 501287D1 | 1219 | 1-G 3 | 501295D1 | 1221 | 1-G 4 | 501303D1 | 1217 | 1-G 3 |
| 501275D1 | 1237 | 1-G 5 | 501287D1 | 1221 | 1-G 4 | 501295D1 | 1223 | 1-G 4 | 501303D1 | 1219 | 1-G 3 |
| 501276D1 | 1213 | 1-G 3 | 501287D1 | 1223 | 1-G 4 | 501295D1 | 1225 | 1-G 4 | 501303D1 | 1221 | 1-G 4 |
| 501276D1 | 1227 | 1-G 4 | 501287D1 | 1225 | 1-G 4 | 501295D1 | 1241 | 1-G 6 | 501303D1 | 1223 | 1-G 4 |
| 501276D1 | 1237 | 1-G 5 | 501287D1 | 1227 | 1-G 4 | 501296D1 | 1209 | 1-G 2 | 501303D1 | 1225 | 1-G 4 |
| 501277D1 | 1209 | 1-G 2 | 501287D1 | 1229 | 1-G 4 | 501296D1 | 1211 | 1-G 3 | 501303D1 | 1241 | 1-G 6 |
| 501277D1 | 1211 | 1-G 3 | 501287D1 | 1231 | 1-G 5 | 501296D1 | 1213 | 1-G 3 | 501305D1 | 1215 | 1-G 3 |
| 501277D1 | 1213 | 1-G 3 | 501287D1 | 1233 | 1-G 5 | 501296D1 | 1215 | 1-G 3 | 501305D1 | 1231 | 1-G 5 |
| 501277D1 | 1215 | 1-G 3 | 501287D1 | 1235 | 1-G 5 | 501296D1 | 1217 | 1-G 3 | 501305D1 | 1237 | 1-G 5 |
| 501277D1 | 1217 | 1-G 3 | 501287D1 | 1239 | 1-G 5 | 501296D1 | 1219 | 1-G 3 | 501306D1 | 1209 | 1-G 2 |
| 501277D1 | 1219 | 1-G 3 | 501287D1 | 1241 | 1-G 6 | 501296D1 | 1221 | 1-G 4 | 501306D1 | 1211 | 1-G 3 |
| 501277D1 | 1221 | 1-G 4 | 501288D1 | 1211 | 1-G 3 | 501296D1 | 1223 | 1-G 4 | 501306D1 | 1213 | 1-G 3 |
| 501277D1 | 1223 | 1-G 4 | 501288D1 | 1231 | 1-G 5 | 501296D1 | 1225 | 1-G 4 | 501306D1 | 1215 | 1-G 3 |
| 501277D1 | 1225 | 1-G 4 | 501288D1 | 1237 | 1-G 5 | 501296D1 | 1241 | 1-G 6 | 501306D1 | 1217 | 1-G 3 |
| 501277D1 | 1227 | 1-G 4 | 501289D1 | 1227 | 1-G 4 | 501297D1 | 1209 | 1-G 2 | 501306D1 | 1219 | 1-G 3 |
| 501277D1 | 1229 | 1-G 4 | 501289D1 | 1229 | 1-G 4 | 501297D1 | 1211 | 1-G 3 | 501306D1 | 1221 | 1-G 4 |
| 501277D1 | 1231 | 1-G 5 | 501289D1 | 1231 | 1-G 5 | 501297D1 | 1213 | 1-G 3 | 501306D1 | 1223 | 1-G 4 |
| 501277D1 | 1233 | 1-G 5 | 501289D1 | 1233 | 1-G 5 | 501297D1 | 1215 | 1-G 3 | 501306D1 | 1225 | 1-G 4 |
| 501277D1 | 1235 | 1-G 5 | 501289D1 | 1235 | 1-G 5 | 501297D1 | 1217 | 1-G 3 | 501306D1 | 1227 | 1-G 4 |
| 501277D1 | 1239 | 1-G 5 | 501290D1 | 1209 | 1-G 2 | 501297D1 | 1219 | 1-G 3 | 501306D1 | 1229 | 1-G 4 |
| 501277D1 | 1241 | 1-G 6 | 501290D1 | 1211 | 1-G 3 | 501297D1 | 1221 | 1-G 4 | 501306D1 | 1231 | 1-G 5 |
| 501278D1 | 1215 | 1-G 3 | 501290D1 | 1213 | 1-G 3 | 501297D1 | 1223 | 1-G 4 | 501306D1 | 1233 | 1-G 5 |
| 501278D1 | 1231 | 1-G 5 | 501290D1 | 1215 | 1-G 3 | 501297D1 | 1225 | 1-G 4 | 501306D1 | 1235 | 1-G 5 |
| 501278D1 | 1237 | 1-G 5 | 501290D1 | 1217 | 1-G 3 | 501298D1 | 1209 | 1-G 2 | 501306D1 | 1239 | 1-G 5 |
| 501280D1 | 1215 | 1-G 3 | 501290D1 | 1219 | 1-G 3 | 501298D1 | 1211 | 1-G 3 | 501306D1 | 1241 | 1-G 6 |
| 501280D1 | 1231 | 1-G 5 | 501290D1 | 1221 | 1-G 4 | 501298D1 | 1213 | 1-G 3 | 501307D1 | 1209 | 1-G 2 |
| 501280D1 | 1237 | 1-G 5 | 501290D1 | 1223 | 1-G 4 | 501298D1 | 1215 | 1-G 3 | 501307D1 | 1233 | 1-G 5 |
| 501281D1 | 1209 | 1-G 2 | 501290D1 | 1225 | 1-G 4 | 501298D1 | 1217 | 1-G 3 | 501307D1 | 1237 | 1-G 5 |
| 501281D1 | 1211 | 1-G 3 | 501290D1 | 1241 | 1-G 6 | 501298D1 | 1219 | 1-G 3 | 501314D1 | 1243 | 1-G 6 |
| 501281D1 | 1213 | 1-G 3 | 501291D1 | 1209 | 1-G 2 | 501298D1 | 1221 | 1-G 4 | 501315D1 | 1247 | 1-G 6 |
| 501281D1 | 1215 | 1-G 3 | 501291D1 | 1211 | 1-G 3 | 501298D1 | 1223 | 1-G 4 | 501316D1 | 1255 | 1-G 7 |
| 501281D1 | 1217 | 1-G 3 | 501291D1 | 1213 | 1-G 3 | 501298D1 | 1225 | 1-G 4 | 501317D1 | 1251 | 1-G 7 |
| 501281D1 | 1219 | 1-G 3 | 501291D1 | 1215 | 1-G 3 | 501299D1 | 1209 | 1-G 2 | 501318D1 | 1253 | 1-G 7 |
| 501281D1 | 1221 | 1-G 4 | 501291D1 | 1217 | 1-G 3 | 501299D1 | 1211 | 1-G 3 | 501319D1 | 1245 | 1-G 6 |
| 501281D1 | 1223 | 1-G 4 | 501291D1 | 1219 | 1-G 3 | 501299D1 | 1213 | 1-G 3 | 501320D1 | 1249 | 1-G 6 |
| 501281D1 | 1225 | 1-G 4 | 501291D1 | 1221 | 1-G 4 | 501299D1 | 1215 | 1-G 3 | 501321D1 | 1243 | 1-G 6 |
| 501281D1 | 1227 | 1-G 4 | 501291D1 | 1223 | 1-G 4 | 501299D1 | 1217 | 1-G 3 | 501322D1 | 1245 | 1-G 6 |
| 501281D1 | 1229 | 1-G 4 | 501291D1 | 1225 | 1-G 4 | 501299D1 | 1219 | 1-G 3 | 501323D1 | 1247 | 1-G 6 |
| 501281D1 | 1231 | 1-G 5 | 501291D1 | 1241 | 1-G 6 | 501299D1 | 1221 | 1-G 4 | 501324D1 | 1249 | 1-G 6 |
| 501281D1 | 1233 | 1-G 5 | 501292D1 | 1209 | 1-G 2 | 501299D1 | 1223 | 1-G 4 | 501325D1 | 1251 | 1-G 7 |
| 501281D1 | 1235 | 1-G 5 | 501292D1 | 1211 | 1-G 3 | 501299D1 | 1225 | 1-G 4 | 501326D1 | 1253 | 1-G 7 |
| 501282D1 | 1209 | 1-G 2 | 501292D1 | 1213 | 1-G 3 | 501299D1 | 1241 | 1-G 6 | 501327D1 | 1255 | 1-G 7 |

## INDEX


| Part No. | Page | Grid | Part No. | Page | Grid | Part No. | Page | Grid | Part No. | Page | Grid |
|---|---|---|---|---|---|---|---|---|---|---|---|
| 501328D1 | 1243 | 1-G 6 | 501406D1 | 1221 | 1-G 4 | 501525D1 | 1083 | 1-F 14 | 501730D1 | 1043 | 1-F 10 |
| 501329D1 | 1245 | 1-G 6 | 501406D1 | 1223 | 1-G 4 | 501526D1 | 1079 | 1-F 13 | 501731D1 | 1037 | 1-F 9 |
| 501330D1 | 1247 | 1-G 6 | 501406D1 | 1225 | 1-G 4 | 501526D1 | 1083 | 1-F 14 | 501731D1 | 1043 | 1-F 10 |
| 501331D1 | 1249 | 1-G 6 | 501406D1 | 1227 | 1-G 4 | 501527D1 | 1079 | 1-F 13 | 501732D1 | 1037 | 1-F 9 |
| 501332D1 | 1251 | 1-G 7 | 501406D1 | 1229 | 1-G 4 | 501527D1 | 1083 | 1-F 14 | 501733D1 | 1037 | 1-F 9 |
| 501333D1 | 1253 | 1-G 7 | 501406D1 | 1231 | 1-G 5 | 501528D1 | 1079 | 1-F 13 | 501734D1 | 1037 | 1-F 9 |
| 501334D1 | 1255 | 1-G 7 | 501406D1 | 1233 | 1-G 5 | 501528D1 | 1083 | 1-F 14 | 501735D1 | 1037 | 1-F 9 |
| 501335D1 | 1243 | 1-G 6 | 501406D1 | 1235 | 1-G 5 | 501529D1 | 1083 | 1-F 14 | 501737D1 | 1037 | 1-F 9 |
| 501336D1 | 1245 | 1-G 6 | 501480D1 | 1205 | 1-G 2 | 501530D1 | 1065 | 1-F 12 | 501738D1 | 1043 | 1-F 10 |
| 501337D1 | 1247 | 1-G 6 | 501482D1 | 1205 | 1-G 2 | 501530D1 | 1081 | 1-F 14 | 501738D1 | 1103 | 1-F 16 |
| 501338D1 | 1249 | 1-G 6 | 501483D1 | 1205 | 1-G 2 | 501531D1 | 1065 | 1-F 12 | 501739D1 | 639 | 1-D 17 |
| 501339D1 | 1251 | 1-G 7 | 501500D1 | 1227 | 1-G 4 | 501532D1 | 225 | 1-B 24 | 501739D1 | 641 | 1-D 18 |
| 501340D1 | 1253 | 1-G 7 | 501500D1 | 1229 | 1-G 4 | 501532D1 | 1065 | 1-F 12 | 501739D1 | 643 | 1-D 18 |
| 501341D1 | 1255 | 1-G 7 | 501500D1 | 1231 | 1-G 5 | 501564D1 | 1191 | 1-G 1 | 501739D1 | 645 | 1-D 18 |
| 501342D1 | 1243 | 1-G 6 | 501500D1 | 1233 | 1-G 5 | 501565D1 | 1191 | 1-G 1 | 501739D1 | 647 | 1-D 18 |
| 501343D1 | 1245 | 1-G 6 | 501500D1 | 1235 | 1-G 5 | 501566D1 | 1191 | 1-G 1 | 501739D1 | 649 | 1-D 18 |
| 501344D1 | 1247 | 1-G 6 | 501501D1 | 1209 | 1-G 2 | 501603D1 | 1193 | 1-G 1 | 501739D1 | 651 | 1-D 19 |
| 501345D1 | 1251 | 1-G 7 | 501501D1 | 1211 | 1-G 3 | 501604D1 | 1191 | 1-G 1 | 501739D1 | 653 | 1-D 19 |
| 501346D1 | 1253 | 1-G 7 | 501501D1 | 1213 | 1-G 3 | 501688D1 | 1189 | 1-F 24 | 501739D1 | 655 | 1-D 19 |
| 501347D1 | 1255 | 1-G 7 | 501501D1 | 1215 | 1-G 3 | 501688D1 | 1191 | 1-G 1 | 501740D1 | 1027 | 1-F 8 |
| 501348D1 | 1249 | 1-G 6 | 501501D1 | 1217 | 1-G 3 | 501688D1 | 1263 | 1-G 8 | 501740D1 | 1029 | 1-F 8 |
| 501349D1 | 1243 | 1-G 6 | 501501D1 | 1219 | 1-G 3 | 501697D1 | 1027 | 1-F 8 | 501742D1 | 639 | 1-D 17 |
| 501350D1 | 1245 | 1-G 6 | 501501D1 | 1221 | 1-G 4 | 501697D1 | 1029 | 1-F 8 | 501742D1 | 641 | 1-D 18 |
| 501351D1 | 1247 | 1-G 6 | 501501D1 | 1223 | 1-G 4 | 501697D1 | 1043 | 1-F 10 | 501742D1 | 643 | 1-D 18 |
| 501352D1 | 1249 | 1-G 6 | 501501D1 | 1225 | 1-G 4 | 501700D1 | 1043 | 1-F 10 | 501742D1 | 645 | 1-D 18 |
| 501353D1 | 1251 | 1-G 7 | 501503D1 | 979 | 1-F 3 | 501701D2 | 1037 | 1-F 9 | 501742D1 | 647 | 1-D 18 |
| 501354D1 | 1253 | 1-G 7 | 501503D1 | 985 | 1-F 4 | 501701D2 | 1043 | 1-F 10 | 501742D1 | 649 | 1-D 18 |
| 501355D1 | 1255 | 1-G 7 | 501503D1 | 987 | 1-F 4 | 501702D1 | 1037 | 1-F 9 | 501742D1 | 651 | 1-D 19 |
| 501356D1 | 1243 | 1-G 6 | 501503D1 | 1209 | 1-G 2 | 501702D1 | 1043 | 1-F 10 | 501742D1 | 653 | 1-D 19 |
| 501357D1 | 1245 | 1-G 6 | 501503D1 | 1211 | 1-G 3 | 501703D1 | 1037 | 1-F 9 | 501742D1 | 655 | 1-D 19 |
| 501358D1 | 1247 | 1-G 6 | 501503D1 | 1213 | 1-G 3 | 501703D1 | 1043 | 1-F 10 | 501743D1 | 639 | 1-D 17 |
| 501359D1 | 1249 | 1-G 6 | 501503D1 | 1215 | 1-G 3 | 501704D1 | 1037 | 1-F 9 | 501743D1 | 641 | 1-D 18 |
| 501360D1 | 1251 | 1-G 7 | 501503D1 | 1217 | 1-G 3 | 501704D1 | 1043 | 1-F 10 | 501743D1 | 643 | 1-D 18 |
| 501361D1 | 1253 | 1-G 7 | 501503D1 | 1219 | 1-G 3 | 501705D1 | 1037 | 1-F 9 | 501743D1 | 645 | 1-D 18 |
| 501362D1 | 1255 | 1-G 7 | 501503D1 | 1221 | 1-G 4 | 501705D1 | 1043 | 1-F 10 | 501743D1 | 647 | 1-D 18 |
| 501370D1 | 1243 | 1-G 6 | 501503D1 | 1223 | 1-G 4 | 501706D1 | 1035 | 1-F 9 | 501743D1 | 649 | 1-D 18 |
| 501371D1 | 1247 | 1-G 6 | 501503D1 | 1225 | 1-G 4 | 501706D1 | 1037 | 1-F 9 | 501743D1 | 651 | 1-D 19 |
| 501372D1 | 1255 | 1-G 7 | 501503D1 | 1227 | 1-G 4 | 501706D1 | 1041 | 1-F 10 | 501743D1 | 653 | 1-D 19 |
| 501373D1 | 1251 | 1-G 7 | 501503D1 | 1229 | 1-G 4 | 501706D1 | 1043 | 1-F 10 | 501743D1 | 655 | 1-D 19 |
| 501374D1 | 1245 | 1-G 6 | 501503D1 | 1231 | 1-G 5 | 501707D2 | 1043 | 1-F 10 | 501745D1 | 1027 | 1-F 8 |
| 501375D1 | 1249 | 1-G 6 | 501503D1 | 1233 | 1-G 5 | 501708D1 | 1043 | 1-F 10 | 501745D1 | 1029 | 1-F 8 |
| 501376D1 | 1253 | 1-G 7 | 501503D1 | 1235 | 1-G 5 | 501709D1 | 1037 | 1-F 9 | 501766D1 | 827 | 1-E 12 |
| 501377D1 | 1243 | 1-G 6 | 501503D1 | 1237 | 1-G 5 | 501709D1 | 1043 | 1-F 10 | 501766D1 | 829 | 1-E 12 |
| 501378D1 | 1245 | 1-G 6 | 501504D1 | 979 | 1-F 3 | 501710D1 | 1037 | 1-F 9 | 501766D1 | 1263 | 1-G 8 |
| 501379D1 | 1247 | 1-G 6 | 501504D1 | 1227 | 1-G 4 | 501711D2 | 1037 | 1-F 9 | 501767D1 | 815 | 1-E 11 |
| 501380D1 | 1249 | 1-G 6 | 501504D1 | 1229 | 1-G 4 | 501712D1 | 1043 | 1-F 10 | 501767D1 | 829 | 1-E 12 |
| 501381D1 | 1251 | 1-G 7 | 501504D1 | 1231 | 1-G 5 | 501713D1 | 1037 | 1-F 9 | 501771D1 | 819 | 1-E 11 |
| 501382D1 | 1253 | 1-G 7 | 501504D1 | 1233 | 1-G 5 | 501713D1 | 1043 | 1-F 10 | 501771D1 | 821 | 1-E 12 |
| 501383D1 | 1255 | 1-G 7 | 501504D1 | 1235 | 1-G 5 | 501714D1 | 1037 | 1-F 9 | 501771D1 | 823 | 1-E 12 |
| 501384D1 | 1243 | 1-G 6 | 501504D1 | 1239 | 1-G 5 | 501714D1 | 1043 | 1-F 10 | 501771D1 | 825 | 1-E 12 |
| 501385D1 | 1247 | 1-G 6 | 501505D1 | 985 | 1-F 4 | 501716D1 | 1037 | 1-F 9 | 501771D1 | 1263 | 1-G 8 |
| 501386D1 | 1255 | 1-G 7 | 501505D1 | 987 | 1-F 4 | 501716D1 | 1043 | 1-F 10 | 501774D1 | 113 | 1-B 13 |
| 501387D1 | 1251 | 1-G 7 | 501505D1 | 1209 | 1-G 2 | 501717D1 | 1043 | 1-F 10 | 501775D1 | 609 | 1-D 14 |
| 501388D1 | 1245 | 1-G 6 | 501505D1 | 1211 | 1-G 3 | 501718D1 | 1037 | 1-F 9 | 501785D1 | 609 | 1-D 14 |
| 501389D1 | 1249 | 1-G 6 | 501505D1 | 1213 | 1-G 3 | 501718D1 | 1043 | 1-F 10 | 501787D1 | 409 | 1-C 18 |
| 501390D1 | 1253 | 1-G 7 | 501505D1 | 1215 | 1-G 3 | 501719D1 | 1037 | 1-F 9 | 501806D1 | 401 | 1-C 18 |
| 501391D1 | 1247 | 1-G 6 | 501505D1 | 1217 | 1-G 3 | 501719D1 | 1043 | 1-F 10 | 501806D1 | 979 | 1-F 3 |
| 501392D1 | 1255 | 1-G 7 | 501505D1 | 1219 | 1-G 3 | 501720D2 | 1037 | 1-F 9 | 501806D1 | 985 | 1-F 4 |
| 501393D1 | 1251 | 1-G 7 | 501505D1 | 1221 | 1-G 4 | 501720D2 | 1043 | 1-F 10 | 501806D1 | 987 | 1-F 4 |
| 501394D1 | 1245 | 1-G 6 | 501505D1 | 1223 | 1-G 4 | 501721D2 | 1037 | 1-F 9 | 501820D1 | 967 | 1-F 2 |
| 501395D1 | 1249 | 1-G 6 | 501505D1 | 1225 | 1-G 4 | 501721D2 | 1043 | 1-F 10 | 501826D1 | 1095 | 1-F 15 |
| 501396D1 | 1253 | 1-G 7 | 501505D1 | 1241 | 1-G 6 | 501722D2 | 1037 | 1-F 9 | 501829D1 | 213 | 1-B 23 |
| 501397D1 | 1243 | 1-G 6 | 501513D1 | 979 | 1-F 3 | 501722D2 | 1043 | 1-F 10 | 501829D1 | 215 | 1-B 23 |
| 501405D1 | 1227 | 1-G 4 | 501513D1 | 1243 | 1-G 6 | 501723D2 | 1037 | 1-F 9 | 501829D1 | 289 | 1-C 6 |
| 501405D1 | 1229 | 1-G 4 | 501514D1 | 1245 | 1-G 6 | 501723D2 | 1043 | 1-F 10 | 501830D1 | 285 | 1-C 6 |
| 501405D1 | 1231 | 1-G 5 | 501515D1 | 1247 | 1-G 6 | 501724D2 | 1037 | 1-F 9 | 501830D1 | 291 | 1-C 7 |
| 501405D1 | 1233 | 1-G 5 | 501516D1 | 1249 | 1-G 6 | 501724D2 | 1043 | 1-F 10 | 501831D1 | 287 | 1-C 6 |
| 501405D1 | 1235 | 1-G 5 | 501517D1 | 1251 | 1-G 7 | 501725D1 | 1037 | 1-F 9 | 501831D1 | 293 | 1-C 7 |
| 501406D1 | 1191 | 1-G 1 | 501518D1 | 1253 | 1-G 7 | 501725D1 | 1043 | 1-F 10 | 501832D1 | 285 | 1-C 6 |
| 501406D1 | 1209 | 1-G 2 | 501519D1 | 1255 | 1-G 7 | 501726D1 | 1037 | 1-F 9 | 501832D1 | 287 | 1-C 6 |
| 501406D1 | 1211 | 1-G 3 | 501521D1 | 1065 | 1-F 12 | 501726D1 | 1043 | 1-F 10 | 501832D1 | 295 | 1-C 7 |
| 501406D1 | 1213 | 1-G 3 | 501522D1 | 1065 | 1-F 12 | 501727D1 | 1037 | 1-F 9 | 501833D1 | 285 | 1-C 6 |
| 501406D1 | 1215 | 1-G 3 | 501523D1 | 1075 | 1-F 13 | 501728D1 | 1037 | 1-F 9 | 501833D1 | 287 | 1-C 6 |
| 501406D1 | 1217 | 1-G 3 | 501524D1 | 1065 | 1-F 12 | 501729D1 | 1037 | 1-F 9 | 501833D1 | 297 | 1-C 7 |
| 501406D1 | 1219 | 1-G 3 | 501525D1 | 1079 | 1-F 13 | 501730D1 | 1037 | 1-F 9 | 501834D1 | 285 | 1-C 6 |

| Part No. | Page | Grid | Part No. | Page | Grid | Part No. | Page | Grid | Part No. | Page | Grid |
|---|---|---|---|---|---|---|---|---|---|---|---|
| 501834D1 | 287 | 1-C 6 | 501949D1 | 359 | 1-C 13 | 502179D1 | 273 | 1-C 5 | 502496D1 | 63 | 1-B 8 |
| 501834D1 | 299 | 1-C 7 | 501952D1 | 375 | 1-C 15 | 502180D1 | 351 | 1-C 13 | 502496D1 | 405 | 1-C 18 |
| 501835D1 | 285 | 1-C 6 | 501952D1 | 381 | 1-C 16 | 502183D1 | 197 | 1-B 21 | 502498D1 | 401 | 1-C 18 |
| 501835D1 | 287 | 1-C 6 | 501962D1 | 245 | 1-C 2 | 502183D1 | 199 | 1-B 21 | 502498D1 | 949 | 1-E 24 |
| 501835D1 | 301 | 1-C 8 | 501962D1 | 383 | 1-C 16 | 502183D1 | 201 | 1-B 22 | 502498D1 | 953 | 1-F 1 |
| 501836D1 | 289 | 1-C 6 | 501963D1 | 967 | 1-F 2 | 502183D1 | 205 | 1-B 22 | 502498D1 | 955 | 1-F 1 |
| 501836D1 | 291 | 1-C 7 | 501973D1 | 177 | 1-B 19 | 502183D1 | 1263 | 1-G 8 | 502499D1 | 1027 | 1-F 8 |
| 501836D1 | 293 | 1-C 7 | 501996D1 | 633 | 1-D 17 | 502185D1 | 639 | 1-D 17 | 502499D1 | 1029 | 1-F 8 |
| 501836D1 | 295 | 1-C 7 | 501997D1 | 633 | 1-D 17 | 502185D1 | 641 | 1-D 18 | 502499D1 | 1043 | 1-F 10 |
| 501836D1 | 297 | 1-C 7 | 501998D1 | 377 | 1-C 15 | 502185D1 | 643 | 1-D 18 | 502500D1 | 1023 | 1-F 8 |
| 501836D1 | 299 | 1-C 7 | 501998D1 | 381 | 1-C 16 | 502185D1 | 645 | 1-D 18 | 502500D1 | 1025 | 1-F 8 |
| 501836D1 | 301 | 1-C 8 | 502003D1 | 211 | 1-B 23 | 502185D1 | 647 | 1-D 18 | 502500D1 | 1037 | 1-F 9 |
| 501837D1 | 291 | 1-C 7 | 502005D1 | 367 | 1-C 14 | 502185D1 | 649 | 1-D 18 | 502501D1 | 1029 | 1-F 8 |
| 501838D1 | 297 | 1-C 7 | 502005D1 | 369 | 1-C 14 | 502185D1 | 651 | 1-D 19 | 502501D1 | 1051 | 1-F 11 |
| 501839D1 | 299 | 1-C 7 | 502006D1 | 367 | 1-C 14 | 502185D1 | 653 | 1-D 19 | 502501D1 | 1055 | 1-F 11 |
| 501840D1 | 293 | 1-C 7 | 502006D1 | 369 | 1-C 14 | 502185D1 | 655 | 1-D 19 | 502501D1 | 1057 | 1-F 11 |
| 501841D1 | 289 | 1-C 6 | 502009D1 | 225 | 1-B 24 | 502188D1 | 355 | 1-C 13 | 502502D1 | 1025 | 1-F 8 |
| 501842D1 | 301 | 1-C 8 | 502009D1 | 367 | 1-C 14 | 502188D1 | 359 | 1-C 13 | 502502D1 | 1049 | 1-F 10 |
| 501877D1 | 295 | 1-C 7 | 502010D1 | 1093 | 1-F 15 | 502190D1 | 273 | 1-C 5 | 502502D1 | 1053 | 1-F 11 |
| 501881D1 | 1095 | 1-F 15 | 502011D1 | 1091 | 1-F 15 | 502191D1 | 1173 | 1-F 23 | 502517D1 | 1023 | 1-F 8 |
| 501883D1 | 113 | 1-B 13 | 502011D1 | 1093 | 1-F 15 | 502197D1 | 375 | 1-C 15 | 502517D1 | 1025 | 1-F 8 |
| 501884D1 | 113 | 1-B 13 | 502013D1 | 323 | 1-C 10 | 502198D1 | 393 | 1-C 17 | 502517D1 | 1027 | 1-F 8 |
| 501887D1 | 285 | 1-C 6 | 502014D1 | 323 | 1-C 10 | 502207D1 | 201 | 1-B 22 | 502517D1 | 1029 | 1-F 8 |
| 501887D1 | 287 | 1-C 6 | 502027D1 | 653 | 1-D 19 | 502214D1 | 855 | 1-E 15 | 502523D1 | 673 | 1-D 21 |
| 501896D1 | 1185 | 1-F 24 | 502028D1 | 655 | 1-D 19 | 502214D1 | 903 | 1-E 20 | 502523D1 | 675 | 1-D 21 |
| 501896D1 | 1187 | 1-F 24 | 502033D1 | 1043 | 1-F 10 | 502214D1 | 905 | 1-E 20 | 502528D1 | 1037 | 1-F 9 |
| 501898D1 | 1155 | 1-F 21 | 502035D1 | 367 | 1-C 14 | 502214D1 | 907 | 1-E 20 | 502528D1 | 1043 | 1-F 10 |
| 501898D1 | 1163 | 1-F 22 | 502035D1 | 369 | 1-C 14 | 502242D1 | 215 | 1-B 23 | 502535D1 | 881 | 1-E 18 |
| 501899D1 | 1161 | 1-F 22 | 502036D1 | 1043 | 1-F 10 | 502244D1 | 347 | 1-C 12 | 502536D1 | 881 | 1-E 18 |
| 501900D1 | 1163 | 1-F 22 | 502041D1 | 1099 | 1-F 15 | 502245D1 | 269 | 1-C 4 | 502537D1 | 881 | 1-E 18 |
| 501900D1 | 1167 | 1-F 22 | 502042D1 | 1099 | 1-F 15 | 502267D1 | 1037 | 1-F 9 | 502556D1 | 135 | 1-B 15 |
| 501902D1 | 1167 | 1-F 22 | 502043D1 | 1099 | 1-F 15 | 502276D1 | 381 | 1-C 16 | 502609D1 | 335 | 1-C 11 |
| 501902D1 | 1169 | 1-F 22 | 502044D1 | 1099 | 1-F 15 | 502279D1 | 1215 | 1-G 3 | 502610D1 | 335 | 1-C 11 |
| 501903D1 | 1167 | 1-F 22 | 502045D1 | 1099 | 1-F 15 | 502282D1 | 313 | 1-C 9 | 502611D1 | 335 | 1-C 11 |
| 501903D1 | 1169 | 1-F 22 | 502050D1 | 1013 | 1-F 7 | 502282D1 | 317 | 1-C 9 | 502612D1 | 335 | 1-C 11 |
| 501906D1 | 1167 | 1-F 22 | 502064D1 | 1065 | 1-F 12 | 502283D1 | 313 | 1-C 9 | 502619D1 | 1229 | 1-G 4 |
| 501906D1 | 1169 | 1-F 22 | 502072D1 | 269 | 1-C 4 | 502283D1 | 319 | 1-C 9 | 502620D1 | 1221 | 1-G 4 |
| 501907D2 | 1167 | 1-F 22 | 502088D1 | 965 | 1-F 2 | 502284D1 | 311 | 1-C 9 | 502640D1 | 1089 | 1-F 14 |
| 501907D2 | 1169 | 1-F 22 | 502088D1 | 967 | 1-F 2 | 502284D1 | 315 | 1-C 9 | 502643D1 | 823 | 1-E 12 |
| 501908D1 | 1157 | 1-F 21 | 502094D1 | 247 | 1-C 2 | 502321D1 | 1121 | 1-F 18 | 502644D1 | 825 | 1-E 12 |
| 501909D1 | 1157 | 1-F 21 | 502095D1 | 967 | 1-F 2 | 502321D1 | 1123 | 1-F 18 | 502655D1 | 631 | 1-D 17 |
| 501909D1 | 1165 | 1-F 22 | 502096D1 | 967 | 1-F 2 | 502322D1 | 1121 | 1-F 18 | 502679D1 | 819 | 1-E 11 |
| 501910D1 | 1157 | 1-F 21 | 502097D1 | 967 | 1-F 2 | 502322D1 | 1123 | 1-F 18 | 502679D1 | 821 | 1-E 12 |
| 501911D1 | 1157 | 1-F 21 | 502099D1 | 225 | 1-B 24 | 502327D1 | 675 | 1-D 21 | 502679D1 | 823 | 1-E 12 |
| 501912D1 | 1157 | 1-F 21 | 502105D1 | 739 | 1-E 3 | 502328D1 | 673 | 1-D 21 | 502679D1 | 825 | 1-E 12 |
| 501912D1 | 1161 | 1-F 22 | 502113D1 | 555 | 1-D 9 | 502338D1 | 1099 | 1-F 15 | 502682D1 | 823 | 1-E 12 |
| 501913D1 | 1161 | 1-F 22 | 502113D1 | 557 | 1-D 9 | 502423D1 | 221 | 1-B 24 | 502683D1 | 825 | 1-E 12 |
| 501914D1 | 1161 | 1-F 22 | 502116D1 | 555 | 1-D 9 | 502423D1 | 223 | 1-B 24 | 502757D1 | 303 | 1-C 8 |
| 501915D1 | 1161 | 1-F 22 | 502117D1 | 557 | 1-D 9 | 502423D1 | 225 | 1-B 24 | 502758D1 | 585 | 1-D 12 |
| 501916D1 | 1165 | 1-F 22 | 502118D1 | 561 | 1-D 10 | 502434D1 | 213 | 1-B 23 | 502759D1 | 345 | 1-C 12 |
| 501916D1 | 1169 | 1-F 22 | 502120D1 | 1089 | 1-F 14 | 502434D1 | 215 | 1-B 23 | 502760D1 | 187 | 1-B 20 |
| 501917D1 | 1169 | 1-F 22 | 502121D1 | 1089 | 1-F 14 | 502446D1 | 197 | 1-B 21 | 502761D1 | 587 | 1-D 12 |
| 501918D1 | 1169 | 1-F 22 | 502122D1 | 1089 | 1-F 14 | 502446D1 | 199 | 1-B 21 | 502762D1 | 593 | 1-D 13 |
| 501919D1 | 1169 | 1-F 22 | 502130D1 | 561 | 1-D 10 | 502446D1 | 203 | 1-B 22 | 502763D1 | 1259 | 1-G 7 |
| 501920D1 | 1169 | 1-F 22 | 502141D1 | 645 | 1-D 18 | 502446D1 | 205 | 1-B 22 | 502764D1 | 589 | 1-D 12 |
| 501921D1 | 1161 | 1-F 22 | 502142D1 | 639 | 1-D 17 | 502468D1 | 823 | 1-E 12 | 502765D1 | 271 | 1-C 5 |
| 501921D1 | 1169 | 1-F 22 | 502143D1 | 647 | 1-D 18 | 502468D1 | 825 | 1-E 12 | 502768D1 | 705 | 1-D 24 |
| 501922D1 | 1169 | 1-F 22 | 502144D1 | 641 | 1-D 18 | 502469D1 | 823 | 1-E 12 | 502769D1 | 705 | 1-D 24 |
| 501926D1 | 839 | 1-E 13 | 502145D1 | 649 | 1-D 18 | 502469D1 | 825 | 1-E 12 | 502770D1 | 345 | 1-C 12 |
| 501927D1 | 839 | 1-E 13 | 502146D1 | 643 | 1-D 18 | 502471D1 | 825 | 1-E 12 | 502771D1 | 187 | 1-B 20 |
| 501929D1 | 407 | 1-C 18 | 502147D1 | 651 | 1-D 19 | 502472D1 | 823 | 1-E 12 | 502772D1 | 593 | 1-D 13 |
| 501931D1 | 409 | 1-C 18 | 502148D1 | 653 | 1-D 19 | 502473D1 | 823 | 1-E 12 | 502773D1 | 271 | 1-C 5 |
| 501934D1 | 245 | 1-C 2 | 502149D1 | 655 | 1-D 19 | 502474D1 | 215 | 1-B 23 | 502774D1 | 305 | 1-C 8 |
| 501934D1 | 683 | 1-D 22 | 502158D1 | 707 | 1-D 24 | 502475D1 | 823 | 1-E 12 | 502776D1 | 1105 | 1-F 16 |
| 501935D1 | 245 | 1-C 2 | 502159D1 | 689 | 1-D 22 | 502486D1 | 213 | 1-B 23 | 502778D1 | 615 | 1-D 15 |
| 501935D1 | 359 | 1-C 13 | 502160D1 | 711 | 1-E 1 | 502486D1 | 215 | 1-B 23 | 502779D1 | 647 | 1-D 18 |
| 501936D1 | 245 | 1-C 2 | 502161D1 | 709 | 1-D 24 | 502487D1 | 215 | 1-B 23 | 502780D1 | 649 | 1-D 18 |
| 501940D1 | 355 | 1-C 13 | 502162D1 | 691 | 1-D 23 | 502488D1 | 141 | 1-B 16 | 502781D1 | 651 | 1-D 19 |
| 501940D1 | 363 | 1-C 14 | 502163D1 | 713 | 1-E 1 | 502496D1 | 49 | 1-B 6 | 502782D1 | 653 | 1-D 19 |
| 501941D1 | 361 | 1-C 14 | 502173D1 | 361 | 1-C 14 | 502496D1 | 51 | 1-B 7 | 502783D1 | 655 | 1-D 19 |
| 501942D1 | 99 | 1-B 11 | 502175D1 | 371 | 1-C 15 | 502496D1 | 53 | 1-B 7 | 502784D1 | 563 | 1-D 10 |
| 501944D1 | 1073 | 1-F 13 | 502176D1 | 331 | 1-C 11 | 502496D1 | 55 | 1-B 7 | 502785D1 | 875 | 1-E 17 |
| 501948D1 | 969 | 1-F 2 | 502177D1 | 251 | 1-C 3 | 502496D1 | 57 | 1-B 7 | 502786D1 | 691 | 1-D 23 |
| 501948D1 | 1017 | 1-F 7 | 502177D1 | 255 | 1-C 3 | 502496D1 | 59 | 1-B 7 | 502787D1 | 713 | 1-E 1 |
| 501949D1 | 353 | 1-C 13 | 502177D1 | 257 | 1-C 3 | 502496D1 | 61 | 1-B 8 | 502788D1 | 709 | 1-D 24 |

## INDEX


| Part No. | Page | Grid | Part No. | Page | Grid | Part No. | Page | Grid | Part No. | Page | Grid |
|---|---|---|---|---|---|---|---|---|---|---|---|
| 502793D1 | 1181 | 1-F 24 | 6V-3668 | 489 | 1-D 2 | 6V-8724 | 485 | 1-D 2 | 7T-3275 | 319 | 1-C 9 |
| 502794D1 | 1171 | 1-F 23 | 6V-3940 | 513 | 1-D 5 | 6V-9000 | 527 | 1-D 6 | 7T-3279 | 315 | 1-C 9 |
| 502795D1 | 351 | 1-C 13 | 6V-3965 | 421 | 1-C 20 | 6V-9000 | 533 | 1-D 7 | 7T-3279 | 317 | 1-C 9 |
| 502796D1 | 1069 | 1-F 12 | 6V-3965 | 423 | 1-C 20 | 6V-9000 | 539 | 1-D 7 | 7T-3279 | 319 | 1-C 9 |
| 502798D1 | 615 | 1-D 15 | 6V-3965 | 529 | 1-D 6 | 6V-9028 | 753 | 1-E 5 | 7T-3451 | 315 | 1-C 9 |
| 502901D1 | 399 | 1-C 17 | 6V-3965 | 535 | 1-D 7 | 6V-9028 | 757 | 1-E 5 | 7T-3451 | 317 | 1-C 9 |
| 502905D1 | 1191 | 1-G 1 | 6V-3965 | 541 | 1-D 8 | 6V-9189 | 497 | 1-D 3 | 7T-3451 | 319 | 1-C 9 |
| 502906D1 | 201 | 1-B 22 | 6V-3965 | 543 | 1-D 8 | 6V-9189 | 499 | 1-D 3 | 7T-3454 | 315 | 1-C 9 |
| 502907D1 | 875 | 1-E 17 | 6V-3965 | 545 | 1-D 8 | 6V-9189 | 501 | 1-D 4 | 7T-3454 | 317 | 1-C 9 |
| 502913D1 | 709 | 1-D 24 | 6V-3965 | 735 | 1-E 3 | 6V-9189 | 503 | 1-D 4 | 7T-3454 | 319 | 1-C 9 |
| 502914D1 | 691 | 1-D 23 | 6V-4249 | 539 | 1-D 7 | 6V-9671 | 357 | 1-C 13 | 7T-3973 | 317 | 1-C 9 |
| 502915D1 | 713 | 1-E 1 | 6V-4442 | 461 | 1-C 24 | 6Y-1223 | 493 | 1-D 3 | 7T-3974 | 315 | 1-C 9 |
| 502916D1 | 563 | 1-D 10 | 6V-4442 | 471 | 1-D 1 | 6Y-5631 | 525 | 1-D 6 | 7T-3974 | 317 | 1-C 9 |
| 502918D1 | 955 | 1-F 1 | 6V-4442 | 481 | 1-D 2 | 6Y-5631 | 531 | 1-D 7 | 7T-3974 | 319 | 1-C 9 |
| 502919D1 | 595 | 1-D 13 | 6V-4442 | 491 | 1-D 3 | 6Y-5631 | 537 | 1-D 7 | 7T-5594 | 427 | 1-C 20 |
| 502931D1 | 689 | 1-D 22 | 6V-5215 | 527 | 1-D 6 | 6Y-7968 | 525 | 1-D 6 | 7T-5594 | 429 | 1-C 20 |
| 502932D1 | 691 | 1-D 23 | 6V-5215 | 533 | 1-D 7 | 6Y-7968 | 531 | 1-D 7 | 7T-5594 | 431 | 1-C 21 |
| 503583D1 | 135 | 1-B 15 | 6V-5215 | 539 | 1-D 7 | 6Y-7968 | 537 | 1-D 7 | 7T-5594 | 433 | 1-C 21 |
| 503583D1 | 137 | 1-B 15 | 6V-5218 | 513 | 1-D 5 | 7C-6467 | 497 | 1-D 3 | 7T-5594 | 435 | 1-C 21 |
| 503754D1 | 323 | 1-C 10 | 6V-5224 | 499 | 1-D 3 | 7C-6467 | 499 | 1-D 3 | 7T-5594 | 437 | 1-C 21 |
| 504445D1 | 1095 | 1-F 15 | 6V-5224 | 501 | 1-D 4 | 7C-6467 | 501 | 1-D 4 | 7T-5594 | 441 | 1-C 22 |
| 505003D1 | 359 | 1-C 13 | 6V-5224 | 503 | 1-D 4 | 7C-6467 | 503 | 1-D 4 | 7T-5594 | 443 | 1-C 22 |
| 6A-5591 | 421 | 1-C 20 | 6V-5684 | 439 | 1-C 21 | 7C-6467 | 529 | 1-D 6 | 7T-5594 | 445 | 1-C 22 |
| 6A-5591 | 423 | 1-C 20 | 6V-5815 | 433 | 1-C 21 | 7C-6467 | 535 | 1-D 7 | 7T-5594 | 447 | 1-C 22 |
| 6F-2956 | 421 | 1-C 20 | 6V-5815 | 441 | 1-C 22 | 7C-6467 | 541 | 1-D 8 | 7T-5594 | 449 | 1-C 22 |
| 6F-2956 | 423 | 1-C 20 | 6V-5839 | 453 | 1-C 23 | 7E-8923 | 97 | 1-B 11 | 7T-5594 | 451 | 1-C 23 |
| 6F-2956 | 455 | 1-C 23 | 6V-5842 | 527 | 1-D 6 | 7E-8923 | 103 | 1-B 12 | 7T-5594 | 527 | 1-D 6 |
| 6F-2956 | 463 | 1-C 24 | 6V-5842 | 533 | 1-D 7 | 7E-8925 | 97 | 1-B 11 | 7T-5594 | 533 | 1-D 7 |
| 6F-2956 | 473 | 1-D 1 | 6V-6640 | 407 | 1-C 18 | 7E-8925 | 103 | 1-B 12 | 7T-5594 | 539 | 1-D 7 |
| 6F-2956 | 483 | 1-D 2 | 6V-6654 | 461 | 1-C 24 | 7E-8926 | 97 | 1-B 11 | 7T-6799 | 353 | 1-C 13 |
| 6F-7044 | 353 | 1-C 13 | 6V-6654 | 471 | 1-D 1 | 7E-8926 | 103 | 1-B 12 | 7T-9356 | 525 | 1-D 6 |
| 6F-7044 | 359 | 1-C 13 | 6V-6654 | 481 | 1-D 2 | 7E-8928 | 97 | 1-B 11 | 7T-9356 | 531 | 1-D 7 |
| 6H-3956 | 111 | 1-B 13 | 6V-6654 | 491 | 1-D 3 | 7E-8928 | 103 | 1-B 12 | 7T-9356 | 537 | 1-D 7 |
| 6H-7611 | 525 | 1-D 6 | 6V-7357 | 1033 | 1-F 9 | 7G-2510 | 435 | 1-C 21 | 7X-0562 | 315 | 1-C 9 |
| 6H-7611 | 531 | 1-D 7 | 6V-7357 | 1039 | 1-F 9 | 7G-2510 | 437 | 1-C 21 | 7X-0562 | 317 | 1-C 9 |
| 6H-7611 | 537 | 1-D 7 | 6V-8084 | 497 | 1-D 3 | 7G-2510 | 449 | 1-C 22 | 7X-0562 | 319 | 1-C 9 |
| 6I-3907 | 101 | 1-B 12 | 6V-8084 | 499 | 1-D 3 | 7G-2510 | 451 | 1-C 23 | 7X-2049 | 1031 | 1-F 9 |
| 6I-4467 | 157 | 1-B 17 | 6V-8084 | 501 | 1-D 4 | 7G-6945 | 439 | 1-C 21 | 7X-2532 | 495 | 1-D 3 |
| 6N-3826 | 315 | 1-C 9 | 6V-8084 | 503 | 1-D 4 | 7H-0832 | 455 | 1-C 23 | 7X-2553 | 495 | 1-D 3 |
| 6N-3826 | 317 | 1-C 9 | 6V-8188 | 315 | 1-C 9 | 7H-0832 | 463 | 1-C 24 | 7X-2566 | 421 | 1-C 20 |
| 6N-3826 | 319 | 1-C 9 | 6V-8188 | 317 | 1-C 9 | 7H-0832 | 473 | 1-D 1 | 7X-2566 | 425 | 1-C 20 |
| 6S-3002 | 421 | 1-C 20 | 6V-8188 | 319 | 1-C 9 | 7H-0832 | 483 | 1-D 2 | 7X-2569 | 495 | 1-D 3 |
| 6S-3002 | 425 | 1-C 20 | 6V-8376 | 353 | 1-C 13 | 7H-3937 | 1033 | 1-F 9 | 7X-2578 | 497 | 1-D 3 |
| 6T-7298 | 353 | 1-C 13 | 6V-8376 | 355 | 1-C 13 | 7H-3937 | 1039 | 1-F 9 | 7X-2578 | 499 | 1-D 3 |
| 6V-0347 | 427 | 1-C 20 | 6V-8376 | 357 | 1-C 13 | 7I-2272 | 1033 | 1-F 9 | 7X-2578 | 501 | 1-D 4 |
| 6V-0347 | 429 | 1-C 20 | 6V-8378 | 315 | 1-C 9 | 7J-0204 | 421 | 1-C 20 | 7X-2578 | 503 | 1-D 4 |
| 6V-0347 | 431 | 1-C 21 | 6V-8378 | 317 | 1-C 9 | 7J-0204 | 423 | 1-C 20 | 7X-3373 | 315 | 1-C 9 |
| 6V-0347 | 433 | 1-C 21 | 6V-8378 | 319 | 1-C 9 | 7L-2894 | 315 | 1-C 9 | 7X-3373 | 317 | 1-C 9 |
| 6V-0347 | 435 | 1-C 21 | 6V-8397 | 455 | 1-C 23 | 7L-2894 | 317 | 1-C 9 | 7X-3373 | 319 | 1-C 9 |
| 6V-0347 | 437 | 1-C 21 | 6V-8397 | 465 | 1-C 24 | 7L-2894 | 319 | 1-C 9 | 7X-3396 | 505 | 1-D 4 |
| 6V-0347 | 441 | 1-C 22 | 6V-8397 | 475 | 1-D 1 | 7M-8485 | 421 | 1-C 20 | 7X-3396 | 507 | 1-D 4 |
| 6V-0347 | 443 | 1-C 22 | 6V-8397 | 485 | 1-D 2 | 7M-8485 | 423 | 1-C 20 | 7X-3396 | 509 | 1-D 4 |
| 6V-0347 | 445 | 1-C 22 | 6V-8490 | 435 | 1-C 21 | 7M-8485 | 461 | 1-C 24 | 7X-6315 | 377 | 1-C 15 |
| 6V-0347 | 447 | 1-C 22 | 6V-8490 | 449 | 1-C 22 | 7M-8485 | 471 | 1-D 1 | 7X-6315 | 383 | 1-C 16 |
| 6V-0347 | 449 | 1-C 22 | 6V-8554 | 753 | 1-E 5 | 7M-8485 | 481 | 1-D 2 | 7X-7816 | 457 | 1-C 23 |
| 6V-0347 | 451 | 1-C 23 | 6V-8554 | 757 | 1-E 5 | 7M-8485 | 491 | 1-D 3 | 7X-7816 | 467 | 1-C 24 |
| 6V-0347 | 455 | 1-C 23 | 6V-8634 | 735 | 1-E 3 | 7M-8485 | 1263 | 1-G 8 | 7X-7816 | 477 | 1-D 1 |
| 6V-0347 | 463 | 1-C 24 | 6V-8636 | 455 | 1-C 23 | 7N-0296 | 307 | 1-C 8 | 7X-7816 | 487 | 1-D 2 |
| 6V-0347 | 473 | 1-D 1 | 6V-8636 | 465 | 1-C 24 | 7N-0296 | 309 | 1-C 8 | 7Y-7256 | 355 | 1-C 13 |
| 6V-0347 | 483 | 1-D 2 | 6V-8636 | 475 | 1-D 1 | 7T-0093 | 1033 | 1-F 9 | 700719352 | 819 | 1-E 11 |
| 6V-0484 | 421 | 1-C 20 | 6V-8636 | 485 | 1-D 2 | 7T-0093 | 1039 | 1-F 9 | 72571005 | 323 | 1-C 10 |
| 6V-0484 | 423 | 1-C 20 | 6V-8647 | 527 | 1-D 6 | 7T-1099 | 453 | 1-C 23 | 72571006 | 335 | 1-C 11 |
| 6V-0852 | 421 | 1-C 20 | 6V-8647 | 533 | 1-D 7 | 7T-1099 | 583 | 1-D 12 | 72571008 | 339 | 1-C 11 |
| 6V-0852 | 423 | 1-C 20 | 6V-8647 | 539 | 1-D 7 | 7T-1099 | 971 | 1-F 3 | 72571022 | 339 | 1-C 11 |
| 6V-0852 | 453 | 1-C 23 | 6V-8675 | 459 | 1-C 23 | 7T-3267 | 315 | 1-C 9 | 72571023 | 323 | 1-C 10 |
| 6V-0852 | 529 | 1-D 6 | 6V-8675 | 461 | 1-C 24 | 7T-3267 | 317 | 1-C 9 | 79019518B | 217 | 1-B 23 |
| 6V-0852 | 535 | 1-D 7 | 6V-8675 | 469 | 1-C 24 | 7T-3267 | 319 | 1-C 9 | 79019518B | 219 | 1-B 23 |
| 6V-0852 | 541 | 1-D 8 | 6V-8675 | 471 | 1-D 1 | 7T-3268 | 315 | 1-C 9 | 8C-3075 | 421 | 1-C 20 |
| 6V-3532 | 459 | 1-C 23 | 6V-8675 | 479 | 1-D 1 | 7T-3268 | 317 | 1-C 9 | 8C-3075 | 425 | 1-C 20 |
| 6V-3532 | 469 | 1-C 24 | 6V-8675 | 481 | 1-D 2 | 7T-3268 | 319 | 1-C 9 | 8C-3428 | 453 | 1-C 23 |
| 6V-3532 | 479 | 1-D 1 | 6V-8675 | 489 | 1-D 2 | 7T-3271 | 315 | 1-C 9 | 8C-5224 | 457 | 1-C 23 |
| 6V-3532 | 489 | 1-D 2 | 6V-8675 | 491 | 1-D 3 | 7T-3271 | 317 | 1-C 9 | 8C-5224 | 467 | 1-C 24 |
| 6V-3668 | 459 | 1-C 23 | 6V-8724 | 455 | 1-C 23 | 7T-3271 | 319 | 1-C 9 | 8C-5224 | 477 | 1-D 1 |
| 6V-3668 | 469 | 1-C 24 | 6V-8724 | 465 | 1-C 24 | 7T-3275 | 315 | 1-C 9 | 8C-5224 | 487 | 1-D 2 |
| 6V-3668 | 479 | 1-D 1 | 6V-8724 | 475 | 1-D 1 | 7T-3275 | 317 | 1-C 9 | 8C-5224 | 495 | 1-D 3 |

# INDEX


| Part No. | Page | Grid | Part No. | Page | Grid | Part No. | Page | Grid | Part No. | Page | Grid |
|---|---|---|---|---|---|---|---|---|---|---|---|
| 8C-5224 | 497 | 1-D 3 | 8T-0070 | 471 | 1-D 1 | 8T-4139 | 533 | 1-D 7 | 8T-8568 | 315 | 1-C 9 |
| 8C-5224 | 499 | 1-D 3 | 8T-0070 | 481 | 1-D 2 | 8T-4139 | 535 | 1-D 7 | 8T-8568 | 317 | 1-C 9 |
| 8C-5224 | 501 | 1-D 4 | 8T-0070 | 491 | 1-D 3 | 8T-4139 | 539 | 1-D 7 | 8T-8568 | 319 | 1-C 9 |
| 8C-5224 | 503 | 1-D 4 | 8T-0100 | 497 | 1-D 3 | 8T-4139 | 541 | 1-D 8 | 8T-8569 | 315 | 1-C 9 |
| 8C-6354 | 357 | 1-C 13 | 8T-0100 | 499 | 1-D 3 | 8T-4139 | 817 | 1-E 11 | 8T-8569 | 317 | 1-C 9 |
| 8C-8514 | 355 | 1-C 13 | 8T-0100 | 501 | 1-D 4 | 8T-4141 | 421 | 1-C 20 | 8T-8569 | 319 | 1-C 9 |
| 8D-2256 | 457 | 1-C 23 | 8T-0100 | 503 | 1-D 4 | 8T-4141 | 425 | 1-C 20 | 8T-8570 | 315 | 1-C 9 |
| 8D-2256 | 467 | 1-C 24 | 8T-0285 | 479 | 1-D 1 | 8T-4141 | 495 | 1-D 3 | 8T-8570 | 317 | 1-C 9 |
| 8D-2256 | 477 | 1-D 1 | 8T-0285 | 489 | 1-D 2 | 8T-4167 | 497 | 1-D 3 | 8T-8570 | 319 | 1-C 9 |
| 8D-2256 | 487 | 1-D 2 | 8T-0328 | 315 | 1-C 9 | 8T-4167 | 499 | 1-D 3 | 8T-9405 | 355 | 1-C 13 |
| 8E-1143 | 513 | 1-D 5 | 8T-0328 | 317 | 1-C 9 | 8T-4167 | 501 | 1-D 4 | 8T-9405 | 357 | 1-C 13 |
| 8E-8276 | 525 | 1-D 6 | 8T-0328 | 319 | 1-C 9 | 8T-4167 | 503 | 1-D 4 | 8T-9884 | 315 | 1-C 9 |
| 8E-8276 | 531 | 1-D 7 | 8T-0337 | 355 | 1-C 13 | 8T-4179 | 453 | 1-C 23 | 8T-9884 | 317 | 1-C 9 |
| 8E-8276 | 537 | 1-D 7 | 8T-0646 | 439 | 1-C 21 | 8T-4183 | 493 | 1-D 3 | 8T-9884 | 319 | 1-C 9 |
| 8E-8277 | 525 | 1-D 6 | 8T-0657 | 459 | 1-C 23 | 8T-4189 | 421 | 1-C 20 | 8T-9885 | 315 | 1-C 9 |
| 8E-8277 | 531 | 1-D 7 | 8T-0657 | 469 | 1-C 24 | 8T-4189 | 425 | 1-C 20 | 8T-9885 | 317 | 1-C 9 |
| 8E-8277 | 537 | 1-D 7 | 8T-0657 | 479 | 1-D 1 | 8T-4195 | 421 | 1-C 20 | 8T-9885 | 319 | 1-C 9 |
| 8E-8310 | 457 | 1-C 23 | 8T-0657 | 489 | 1-D 2 | 8T-4195 | 425 | 1-C 20 | 9B-0453 | 353 | 1-C 13 |
| 8E-8310 | 461 | 1-C 24 | 8T-1159 | 455 | 1-C 23 | 8T-4195 | 455 | 1-C 23 | 9B-0453 | 359 | 1-C 13 |
| 8E-8310 | 467 | 1-C 24 | 8T-1159 | 465 | 1-C 24 | 8T-4195 | 459 | 1-C 23 | 9B-7233 | 315 | 1-C 9 |
| 8E-8310 | 471 | 1-D 1 | 8T-1159 | 475 | 1-D 1 | 8T-4195 | 465 | 1-C 24 | 9B-7233 | 317 | 1-C 9 |
| 8E-8310 | 477 | 1-D 1 | 8T-1159 | 485 | 1-D 2 | 8T-4195 | 469 | 1-C 24 | 9B-7233 | 319 | 1-C 9 |
| 8E-8310 | 481 | 1-D 2 | 8T-2572 | 427 | 1-C 20 | 8T-4195 | 475 | 1-D 1 | 9B-7233 | 353 | 1-C 13 |
| 8E-8310 | 487 | 1-D 2 | 8T-2572 | 429 | 1-C 20 | 8T-4195 | 479 | 1-D 1 | 9B-7233 | 355 | 1-C 13 |
| 8E-8310 | 491 | 1-D 3 | 8T-2572 | 431 | 1-C 21 | 8T-4195 | 485 | 1-D 2 | 9B-7233 | 357 | 1-C 13 |
| 8E-8316 | 461 | 1-C 24 | 8T-2572 | 433 | 1-C 21 | 8T-4195 | 489 | 1-D 2 | 9G-3695 | 201 | 1-B 22 |
| 8E-8316 | 471 | 1-D 1 | 8T-2572 | 435 | 1-C 21 | 8T-4195 | 493 | 1-D 3 | 9H-5545 | 439 | 1-C 21 |
| 8E-8316 | 481 | 1-D 2 | 8T-2572 | 437 | 1-C 21 | 8T-4195 | 523 | 1-D 6 | 9K-1171 | 457 | 1-C 23 |
| 8E-8316 | 491 | 1-D 3 | 8T-2572 | 441 | 1-C 22 | 8T-4195 | 529 | 1-D 6 | 9K-1171 | 467 | 1-C 24 |
| 8E-8652 | 457 | 1-C 23 | 8T-2572 | 443 | 1-C 22 | 8T-4195 | 535 | 1-D 7 | 9K-1171 | 477 | 1-D 1 |
| 8E-8652 | 461 | 1-C 24 | 8T-2572 | 445 | 1-C 22 | 8T-4195 | 541 | 1-D 8 | 9K-1171 | 487 | 1-D 2 |
| 8E-8652 | 467 | 1-C 24 | 8T-2572 | 447 | 1-C 22 | 8T-4196 | 817 | 1-E 11 | 9M-1974 | 513 | 1-D 5 |
| 8E-8652 | 471 | 1-D 1 | 8T-2572 | 449 | 1-C 22 | 8T-4200 | 453 | 1-C 23 | 9M-2110 | 513 | 1-D 5 |
| 8E-8652 | 477 | 1-D 1 | 8T-2572 | 451 | 1-C 23 | 8T-4205 | 315 | 1-C 9 | 9P-2343 | 435 | 1-C 21 |
| 8E-8652 | 481 | 1-D 2 | 8T-2572 | 527 | 1-D 6 | 8T-4205 | 317 | 1-C 9 | 9P-2343 | 449 | 1-C 22 |
| 8E-8652 | 487 | 1-D 2 | 8T-2572 | 533 | 1-D 7 | 8T-4205 | 319 | 1-C 9 | 9R-2613 | 971 | 1-F 3 |
| 8E-8652 | 491 | 1-D 3 | 8T-2572 | 539 | 1-D 7 | 8T-4219 | 971 | 1-F 3 | 9S-3902 | 453 | 1-C 23 |
| 8E-8653 | 525 | 1-D 6 | 8T-2659 | 355 | 1-C 13 | 8T-4223 | 453 | 1-C 23 | 9S-4167 | 177 | 1-B 19 |
| 8E-8653 | 531 | 1-D 7 | 8T-4121 | 455 | 1-C 23 | 8T-4223 | 527 | 1-D 6 | 9S-4181 | 421 | 1-C 20 |
| 8E-8653 | 537 | 1-D 7 | 8T-4121 | 459 | 1-C 23 | 8T-4223 | 529 | 1-D 6 | 9S-4181 | 423 | 1-C 20 |
| 8F-1434 | 315 | 1-C 9 | 8T-4121 | 465 | 1-C 24 | 8T-4223 | 533 | 1-D 7 | 9S-4181 | 461 | 1-C 24 |
| 8F-1434 | 317 | 1-C 9 | 8T-4121 | 469 | 1-C 24 | 8T-4223 | 535 | 1-D 7 | 9S-4181 | 471 | 1-D 1 |
| 8F-1434 | 319 | 1-C 9 | 8T-4121 | 475 | 1-D 1 | 8T-4223 | 539 | 1-D 7 | 9S-4181 | 481 | 1-D 2 |
| 8F-3469 | 439 | 1-C 21 | 8T-4121 | 479 | 1-D 1 | 8T-4223 | 541 | 1-D 8 | 9S-4181 | 491 | 1-D 3 |
| 8F-3469 | 1263 | 1-G 8 | 8T-4121 | 485 | 1-D 2 | 8T-4223 | 817 | 1-E 11 | 9S-4190 | 455 | 1-C 23 |
| 8H-1141 | 315 | 1-C 9 | 8T-4121 | 489 | 1-D 2 | 8T-4224 | 453 | 1-C 23 | 9S-4190 | 465 | 1-C 24 |
| 8H-1141 | 317 | 1-C 9 | 8T-4121 | 505 | 1-D 4 | 8T-4224 | 529 | 1-D 6 | 9S-4190 | 475 | 1-D 1 |
| 8H-1141 | 319 | 1-C 9 | 8T-4121 | 507 | 1-D 4 | 8T-4224 | 535 | 1-D 7 | 9S-4190 | 485 | 1-D 2 |
| 8J-8879 | 493 | 1-D 3 | 8T-4121 | 509 | 1-D 4 | 8T-4224 | 541 | 1-D 8 | 9S-6130 | 461 | 1-C 24 |
| 8K-0589 | 971 | 1-F 3 | 8T-4121 | 529 | 1-D 6 | 8T-4910 | 455 | 1-C 23 | 9S-6130 | 471 | 1-D 1 |
| 8L-2777 | 459 | 1-C 23 | 8T-4121 | 535 | 1-D 7 | 8T-4910 | 465 | 1-C 24 | 9S-6130 | 481 | 1-D 2 |
| 8L-2777 | 469 | 1-C 24 | 8T-4121 | 541 | 1-D 8 | 8T-4910 | 475 | 1-D 1 | 9S-6130 | 491 | 1-D 3 |
| 8L-2777 | 479 | 1-D 1 | 8T-4121 | 817 | 1-E 11 | 8T-4910 | 485 | 1-D 2 | 9S-8004 | 421 | 1-C 20 |
| 8L-2777 | 489 | 1-D 2 | 8T-4122 | 459 | 1-C 23 | 8T-5041 | 493 | 1-D 3 | 9S-8004 | 423 | 1-C 20 |
| 8L-9381 | 1031 | 1-F 9 | 8T-4122 | 469 | 1-C 24 | 8T-5436 | 429 | 1-C 20 | 9S-8004 | 513 | 1-D 5 |
| 8L-9381 | 1033 | 1-F 9 | 8T-4122 | 479 | 1-D 1 | 8T-5436 | 435 | 1-C 21 | 9S-8004 | 529 | 1-D 6 |
| 8L-9381 | 1035 | 1-F 9 | 8T-4122 | 489 | 1-D 2 | 8T-5436 | 445 | 1-C 22 | 9S-8004 | 535 | 1-D 7 |
| 8L-9381 | 1039 | 1-F 9 | 8T-4123 | 421 | 1-C 20 | 8T-5436 | 449 | 1-C 22 | 9S-8004 | 541 | 1-D 8 |
| 8L-9381 | 1041 | 1-F 10 | 8T-4123 | 425 | 1-C 20 | 8T-6466 | 459 | 1-C 23 | 9S-8005 | 421 | 1-C 20 |
| 8M-5253 | 513 | 1-D 5 | 8T-4123 | 495 | 1-D 3 | 8T-6466 | 469 | 1-C 24 | 9S-8005 | 423 | 1-C 20 |
| 8M-7160 | 421 | 1-C 20 | 8T-4136 | 505 | 1-D 4 | 8T-6466 | 479 | 1-D 1 | 9S-8005 | 459 | 1-C 23 |
| 8M-7160 | 423 | 1-C 20 | 8T-4136 | 507 | 1-D 4 | 8T-6466 | 489 | 1-D 2 | 9S-8005 | 469 | 1-C 24 |
| 8M-7160 | 461 | 1-C 24 | 8T-4136 | 509 | 1-D 4 | 8T-6764 | 111 | 1-B 13 | 9S-8005 | 479 | 1-D 1 |
| 8M-7160 | 471 | 1-D 1 | 8T-4137 | 453 | 1-C 23 | 8T-6869 | 453 | 1-C 23 | 9S-8005 | 489 | 1-D 2 |
| 8M-7160 | 481 | 1-D 2 | 8T-4137 | 455 | 1-C 23 | 8T-6869 | 529 | 1-D 6 | 9S-8006 | 421 | 1-C 20 |
| 8M-7160 | 491 | 1-D 3 | 8T-4137 | 465 | 1-C 24 | 8T-6869 | 535 | 1-D 7 | 9S-8006 | 423 | 1-C 20 |
| 8N-1536 | 1035 | 1-F 9 | 8T-4137 | 475 | 1-D 1 | 8T-6869 | 541 | 1-D 8 | 9S-8007 | 421 | 1-C 20 |
| 8P-7898 | 493 | 1-D 3 | 8T-4137 | 485 | 1-D 2 | 8T-6870 | 453 | 1-C 23 | 9S-8007 | 423 | 1-C 20 |
| 8S-0527 | 449 | 1-C 22 | 8T-4137 | 505 | 1-D 4 | 8T-7338 | 459 | 1-C 23 | 9S-8010 | 453 | 1-C 23 |
| 8S-0527 | 451 | 1-C 23 | 8T-4137 | 507 | 1-D 4 | 8T-7338 | 469 | 1-C 24 | 9U-0512 | 611 | 1-D 15 |
| 8S-0768 | 453 | 1-C 23 | 8T-4137 | 509 | 1-D 4 | 8T-7338 | 479 | 1-D 1 | 9U-7725 | 1261 | 1-G 8 |
| 8S-0768 | 529 | 1-D 6 | 8T-4137 | 817 | 1-E 11 | 8T-7338 | 489 | 1-D 2 | 9U-7948 | 1261 | 1-G 8 |
| 8S-0768 | 535 | 1-D 7 | 8T-4138 | 1031 | 1-F 9 | 8T-8566 | 315 | 1-C 9 | 9U-8669 | 513 | 1-D 5 |
| 8S-0768 | 541 | 1-D 8 | 8T-4139 | 527 | 1-D 6 | 8T-8566 | 317 | 1-C 9 | 9U-8875 | 527 | 1-D 6 |
| 8T-0070 | 461 | 1-C 24 | 8T-4139 | 529 | 1-D 6 | 8T-8566 | 319 | 1-C 9 | 9U-8875 | 533 | 1-D 7 |

## INDEX


| Part No. | Page | Grid |
|---|---|---|
| 9U-8875 | 539 | 1-D 7 |
| 9W-0719 | 525 | 1-D 6 |
| 9W-0719 | 531 | 1-D 7 |
| 9W-0719 | 537 | 1-D 7 |
| 9W-3326 | 353 | 1-C 13 |
| 9X-1046 | 355 | 1-C 13 |
| 9X-1813 | 827 | 1-E 12 |
| 9X-1813 | 1263 | 1-G 8 |
| 9X-1813 | 1263 | 1-G 8 |
| 9X-2044 | 355 | 1-C 13 |
| 9X-2044 | 357 | 1-C 13 |
| 9X-2480 | 1033 | 1-F 9 |
| 9X-2480 | 1039 | 1-F 9 |
| 9X-2488 | 1031 | 1-F 9 |
| 9X-2488 | 1039 | 1-F 9 |
| 9X-4609 | 453 | 1-C 23 |
| 9X-4824 | 315 | 1-C 9 |
| 9X-4824 | 317 | 1-C 9 |
| 9X-4824 | 319 | 1-C 9 |
| 9X-4994 | 1031 | 1-F 9 |
| 9X-7719 | 421 | 1-C 20 |
| 9X-7719 | 425 | 1-C 20 |
| 9X-8256 | 1031 | 1-F 9 |
| 9X-8256 | 1033 | 1-F 9 |
| 9X-8256 | 1039 | 1-F 9 |
| 9X-8268 | 499 | 1-D 3 |
| 9X-8268 | 501 | 1-D 4 |
| 9X-8268 | 503 | 1-D 4 |
| 9Y-1116 | 93 | 1-B 11 |

| Part No. | Page | Grid | Part No. | Page | Grid | Part No. | Page | Grid | Part No. | Page | Grid |
|---|---|---|---|---|---|---|---|---|---|---|---|

## INDEX


| Part No. | Page | Grid | Part No. | Page | Grid | Part No. | Page | Grid | Part No. | Page | Grid |
|---|---|---|---|---|---|---|---|---|---|---|---|

**BASIC UNIT AR-MT835 - 156-5581**
**ROW**

NO ILLUSTRATION

NOTIF

## BASIC UNIT AR-MT835 - 156-5581
ROW

| ITEM | NUMBER | QTY | DESCRIPTION |
|---|---|---|---|
| - | 156-5581 | -- | BASIC UNIT AR-MT835 [A] (NOT SERVICED) |
| 1 | 500744D1 | 1 | FILM GP (MT835) (NOT SERVICED)<br>(SEE BREAKDOWN FOR COMPONENTS) |
| 2 | 172-5361 | 1 | INSTALLATION AR-ENGINE (NOT SERVICED)<br>(SEE BREAKDOWN FOR COMPONENTS) |
| 3 | 179-1952 | -- | BASE AR-COMMON (NOT SERVICED)<br>(SEE BREAKDOWN FOR COMPONENTS) |
| 4 | 179-4304 | -- | FILLER GP-POWERTRAIN OIL (NOT SERVICED)<br>(S/N PRIOR TO BAM40556)<br>(SEE BREAKDOWN FOR COMPONENTS) |
| 4 | 502496D1 | -- | BREATHER GP-POWERTRAIN (NOT SERVICED)<br>(S/N EFF BAM40556)<br>(SEE BREAKDOWN FOR COMPONENTS) |

[A] PART OF 500033D1 BASE UNIT AR

NOTIF
PR: t05i29k58b0001

**BASIC UNIT AR-MT845 - 156-5582**
**ROW**

NO ILLUSTRATION

NOTIF

## BASIC UNIT AR-MT845 - 156-5582
ROW

| ITEM | NUMBER | QTY | DESCRIPTION |
|---|---|---|---|
| - | 156-5582 | -- | BASIC UNIT AR-MT845 [A] (NOT SERVICED) |
| 1 | 500745D1 | 1 | FILM GP (MT845) (NOT SERVICED)<br>(SEE BREAKDOWN FOR COMPONENTS) |
| 2 | 172-5362 | 1 | INSTALLATION AR-ENGINE (NOT SERVICED)<br>(SEE BREAKDOWN FOR COMPONENTS) |
| 3 | 179-1952 | -- | BASE AR-COMMON (NOT SERVICED)<br>(SEE BREAKDOWN FOR COMPONENTS) |
| 4 | 179-4304 | -- | FILLER GP-POWERTRAIN OIL (NOT SERVICED)<br>(S/N PRIOR TO BBP40455)<br>(SEE BREAKDOWN FOR COMPONENTS) |
| 4 | 502496D1 | -- | BREATHER GP-POWERTRAIN (NOT SERVICED)<br>(S/N EFF BBP40455)<br>(SEE BREAKDOWN FOR COMPONENTS) |

[A] PART OF 500034D1 BASE UNIT AR

NOTIF
PR: t05i29k58b0002

**BASIC UNIT AR-MT855 - 156-5583**
**ROW**

NO ILLUSTRATION

NOTIF

## BASIC UNIT AR-MT855 - 156-5583
ROW

| ITEM | NUMBER | QTY | DESCRIPTION |
|---|---|---|---|
| - | 156-5583 | -- | BASIC UNIT AR-MT855 [A] (NOT SERVICED) |
| 1 | 500746D1 | 1 | FILM GP (MT855) (NOT SERVICED)<br>(SEE BREAKDOWN FOR COMPONENTS) |
| 2 | 172-5363 | 1 | INSTALLATION AR-ENGINE (NOT SERVICED)<br>(SEE BREAKDOWN FOR COMPONENTS) |
| 3 | 179-1952 | -- | BASE AR-COMMON (NOT SERVICED)<br>(SEE BREAKDOWN FOR COMPONENTS) |
| 4 | 179-4304 | -- | FILLER GP-POWERTRAIN OIL (NOT SERVICED)<br>(S/N PRIOR TO BCC40654)<br>(SEE BREAKDOWN FOR COMPONENTS) |
| 4 | 502496D1 | -- | BREATHER GP-POWERTRAIN (NOT SERVICED)<br>(S/N EFF BCC40654)<br>(SEE BREAKDOWN FOR COMPONENTS) |

[A] PART OF 500035D1 BASE UNIT AR

NOTIF
PR: t05i29k58b0003

**BASE UNIT AR-MT865 - 156-5584**
**ROW**

NO ILLUSTRATION

NOTIF

## BASE UNIT AR-MT865 - 156-5584
ROW

| ITEM | NUMBER | QTY | DESCRIPTION |
|---|---|---|---|
| - | 156-5584 | -- | BASE UNIT AR-MT865 [A] (NOT SERVICED) |
| 1 | 179-4304 | 1 | FILLER GP-POWER TRAIN OIL (NOT SERVICED)<br>(S/N: PRIOR TO BDS40740)<br>(SEE BREAKDOWN FOR COMPONENTS) |
| 1 | 502496D1 | 1 | BREATHER GP-POWERTRAIN (NOT SERVICED)<br>(S/N: EFF BDS40740)<br>(SEE BREAKDOWN FOR COMPONENTS) |
| 2 | 197-8558 | 1 | TANK AR-FUEL<br>(SEE BREAKDOWN FOR COMPONENTS) |
| 3 | 179-1952 | -- | BASE AR-COMMON (NOT SERVICED)<br>(SEE BREAKDOWN FOR COMPONENTS) |
| 4 | 172-5364 | 1 | INSTALLATION AR-ENGINE (NOT SERVICED)<br>(SEE BREAKDOWN FOR COMPONENTS) |
| 5 | 500747D1 | 1 | FILM GP (MT865) (NOT SERVICED)<br>(SEE BREAKDOWN FOR COMPONENTS) |

[A] PART OF 500037D1 BASE UNIT AR

NOTIF
PR: t05i29k58b0004

**BASIC UNIT AR-MT835 - 179-2193**
**EAME**

NO ILLUSTRATION

NOTIF

## BASIC UNIT AR-MT835 - 179-2193
EAME

| ITEM | NUMBER | QTY | DESCRIPTION |
|---|---|---|---|
| - | 179-2193 | -- | BASIC UNIT AR-MT835 (NOT SERVICED) |
| 1 | 136-5659 | 1 | BATTERY GP (NOT SERVICED)<br>(SEE BREAKDOWN FOR COMPONENTS) |
| 2 | 179-2180 | 1 | BASE COMMON AR (EURO) (NOT SERVICED)<br>(SEE BREAKDOWN FOR COMPONENTS) |
| 3 | 187-1741 | 1 | INSTALLATION AR (NOT SERVICED)<br>(SEE BREAKDOWN FOR COMPONENTS) |
| 4 | 500744D1 | 1 | FILM GP (MT835) (NOT SERVICED)<br>(SEE BREAKDOWN FOR COMPONENTS) |
| 5 | 179-4304 | 1 | FILLER GP-POWERTRAIN OIL (NOT SERVICED)<br>(S/N PRIOR TO BAM40556)<br>(SEE BREAKDOWN FOR COMPONENTS) |
| 5 | 502496D1 | 1 | BREATHER GP-POWERTRAIN (NOT SERVICED)<br>(S/N EFF BAM40556)<br>(SEE BREAKDOWN FOR COMPONENTS) |

NOTIF
PR: t05i29k58b0005

**BASIC UNIT AR-MT845 - 179-2194**
**EAME**

NO ILLUSTRATION

NOTIF

## BASIC UNIT AR-MT845 - 179-2194
EAME

| ITEM | NUMBER | QTY | DESCRIPTION |
|---|---|---|---|
| - | 179-2194 | -- | BASIC UNIT AR-MT845 (NOT SERVICED) |
| 1 | 136-5659 | 1 | BATTERY GP (NOT SERVICED)<br>(SEE BREAKDOWN FOR COMPONENTS) |
| 2 | 179-2180 | 1 | BASE COMMON AR (EURO) (NOT SERVICED)<br>(SEE BREAKDOWN FOR COMPONENTS) |
| 3 | 187-1742 | 1 | INSTALLATION AR (NOT SERVICED)<br>(SEE BREAKDOWN FOR COMPONENTS) |
| 4 | 500745D1 | 1 | FILM GP (MT845) (NOT SERVICED)<br>(SEE BREAKDOWN FOR COMPONENTS) |
| 5 | 179-4304 | 1 | FILLER GP-POWERTRAIN OIL (NOT SERVICED)<br>(S/N PRIOR TO BBP40455)<br>(SEE BREAKDOWN FOR COMPONENTS) |
| 5 | 502496D1 | 1 | BREATHER GP-POWERTRAIN (NOT SERVICED)<br>(S/N EFF BBP40455)<br>(SEE BREAKDOWN FOR COMPONENTS) |

NOTIF
PR: t05i29k58b0006

**BASIC UNIT AR-MT855 - 179-2195**
**EAME**

NO ILLUSTRATION

NOTIF

## BASIC UNIT AR-MT855 - 179-2195
EAME

| ITEM | NUMBER | QTY | DESCRIPTION |
|---|---|---|---|
| - | 179-2195 | -- | BASIC UNIT AR-MT855 (NOT SERVICED) |
| 1 | 136-5663 | 1 | BATTERY GP (NOT SERVICED)<br>(SEE BREAKDOWN FOR COMPONENTS) |
| 2 | 179-2180 | 1 | BASE COMMON AR (EURO) (NOT SERVICED)<br>(SEE BREAKDOWN FOR COMPONENTS) |
| 3 | 187-1743 | 1 | INSTALLATION AR (NOT SERVICED)<br>(SEE BREAKDOWN FOR COMPONENTS) |
| 4 | 500746D1 | 1 | FILM GP (MT855) (NOT SERVICED)<br>(SEE BREAKDOWN FOR COMPONENTS) |
| 5 | 179-4304 | 1 | FILLER GP-POWERTRAIN OIL (NOT SERVICED)<br>(S/N PRIOR TO BCC40654)<br>(SEE BREAKDOWN FOR COMPONENTS) |
| 5 | 502496D1 | 1 | BREATHER GP-POWERTRAIN (NOT SERVICED)<br>(S/N EFF BCC40654)<br>(SEE BREAKDOWN FOR COMPONENTS) |

NOTIF
PR: t05i29k58b0007

**BASIC UNIT AR-MT865 - 179-2196**
**EAME**

NO ILLUSTRATION

NOTIF

## BASIC UNIT AR-MT865 - 179-2196
EAME

| ITEM | NUMBER | QTY | DESCRIPTION |
|---|---|---|---|
| - | 179-2196 | -- | BASIC UNIT AR-MT865 (NOT SERVICED) |
| 1 | 136-5663 | 1 | BATTERY GP (NOT SERVICED)<br>(SEE BREAKDOWN FOR COMPONENTS) |
| 2 | 179-2180 | 1 | BASE COMMON AR (EURO) (NOT SERVICED)<br>(SEE BREAKDOWN FOR COMPONENTS) |
| 3 | 187-1744 | 1 | INSTALLATION AR (NOT SERVICED)<br>(SEE BREAKDOWN FOR COMPONENTS) |
| 4 | 197-8558 | 1 | TANK AR-FUEL (NOT SERVICED)<br>(SEE BREAKDOWN FOR COMPONENTS) |
| 5 | 500747D1 | 1 | FILM GP (MT865) (NOT SERVICED)<br>(SEE BREAKDOWN FOR COMPONENTS) |
| 6 | 179-4304 | 1 | FILLER GP-POWERTRAIN OIL (NOT SERVICED)<br>(S/N: PRIOR TO BDS40740)<br>(SEE BREAKDOWN FOR COMPONENTS) |
| 6 | 502496D1 | 1 | BREATHER GP-POWERTRAIN (NOT SERVICED)<br>(SEE BREAKDOWN FOR COMPONENTS)<br>(S/N: EFF BDS40740) |

NOTIF
PR: t05i29k58b0008

## BASE UNIT AR-MT835 - 500033D1
SPECIAL APPLICATIONS

NO ILLUSTRATION

NOTIF

## BASE UNIT AR-MT835 - 500033D1
SPECIAL APPLICATIONS

| ITEM | NUMBER | QTY | DESCRIPTION |
|---|---|---|---|
| - | 500033D1 | -- | BASE UNIT AR-MT835 (NOT SERVICED) |
| 1 | 156-4893 | 1 | MIDROLLER WHL AR, WIDE (NOT SERVICED) (SEE BREAKDOWN FOR COMPONENTS) |
| 2 | 156-5581 | 1 | BASIC UNIT AR (NOT SERVICED) (SEE BREAKDOWN FOR COMPONENTS) |
| 3 | 179-0853 | 1 | HITCH AR-NON AG (NOT SERVICED) (SEE BREAKDOWN FOR COMPONENTS) |
| 4 | 180-0185 | 1 | PUMP AR-HYD (NOT SERVICED) (SEE BREAKDOWN FOR COMPONENTS) |
| 5 | 184-5357 | 1 | COUNTERWEIGHT GP-FRONT (NOT SERVICED) (SEE BREAKDOWN FOR COMPONENTS) |
| 6 | 195-5968 | 1 | WARNING GP-BACKUP (NOT SERVICED) (SEE BREAKDOWN FOR COMPONENTS) |
| 7 | ----- | 1 | PLUG GP-SHIPPING (NOT SERVICED) |
| 8 | 216-9823 | 1 | LIGHTING GP-WARNING (NOT SERVICED) (SEE BREAKDOWN FOR COMPONENTS) |
| 9 | 220-2356 | 1 | WHEEL AR-IDLER (NOT SERVICED) (SEE BREAKDOWN FOR COMPONENTS) |
| 10 | 220-2358 | 1 | WHEEL AR-DRIVER (NOT SERVICED) (SEE BREAKDOWN FOR COMPONENTS) |
| 11 | 222-7965 | 1 | MOUNTING GP (MONITOR) (NOT SERVICED) (SEE BREAKDOWN FOR COMPONENTS) |
| 12 | 500039D1 | 1 | CABLE GP.-TOW (NOT SERVICED) (SEE BREAKDOWN FOR COMPONENTS) |
| 13 | 500040D1 | 1 | RESTRAIN GP-ROLLERFRAME (NOT SERVICED) (SEE BREAKDOWN FOR COMPONENTS) |

NOTIF
PR: t05i29k58b0009

## BASE UNIT AR-MT845 - 500034D1
SPECIAL APPLICATIONS

NO ILLUSTRATION

NOTIF

## BASE UNIT AR-MT845 - 500034D1
SPECIAL APPLICATIONS

| ITEM | NUMBER | QTY | DESCRIPTION |
|---|---|---|---|
| - | 500034D1 | -- | BASE UNIT AR-MT845 (NOT SERVICED) |
| 1 | 156-4893 | 1 | MIDROLLER WHL AR, WIDE (NOT SERVICED) (SEE BREAKDOWN FOR COMPONENTS) |
| 2 | 156-5582 | 1 | BASIC UNIT AR (NOT SERVICED) (SEE BREAKDOWN FOR COMPONENTS) |
| 3 | 179-0853 | 1 | HITCH AR-NON AG (NOT SERVICED) (SEE BREAKDOWN FOR COMPONENTS) |
| 4 | 180-0185 | 1 | PUMP AR-HYD (NOT SERVICED) (SEE BREAKDOWN FOR COMPONENTS) |
| 5 | 184-5357 | 1 | COUNTERWEIGHT GP-FRONT (NOT SERVICED) (SEE BREAKDOWN FOR COMPONENTS) |
| 6 | 195-5968 | 1 | WARNING GP-BACKUP (NOT SERVICED) (SEE BREAKDOWN FOR COMPONENTS) |
| 7 | ----- | 1 | PLUG GP (NOT SERVICED) |
| 8 | 216-9823 | 1 | LIGHTING GP-WARNING (NOT SERVICED) (SEE BREAKDOWN FOR COMPONENTS) |
| 9 | 220-2356 | 1 | WHEEL AR-IDLER (NOT SERVICED) (SEE BREAKDOWN FOR COMPONENTS) |
| 10 | 220-2358 | 1 | WHEEL AR-DRIVER (NOT SERVICED) (SEE BREAKDOWN FOR COMPONENTS) |
| 11 | 222-7965 | 1 | MOUNTING GP (MONITOR) (NOT SERVICED) (SEE BREAKDOWN FOR COMPONENTS) |
| 12 | 500039D1 | 1 | CABLE GP.-TOW (NOT SERVICED) (SEE BREAKDOWN FOR COMPONENTS) |
| 13 | 500040D1 | 1 | RESTRAIN GP-ROLLERFRAME (NOT SERVICED) (SEE BREAKDOWN FOR COMPONENTS) |

NOTIF
PR: t05i29k58b0010

## BASE UNIT AR-MT855 - 500035D1
SPECIAL APPLICATIONS

NO ILLUSTRATION

NOTIF

## BASE UNIT AR-MT855 - 500035D1
SPECIAL APPLICATIONS

| ITEM | NUMBER | QTY | DESCRIPTION |
|---|---|---|---|
| - | 500035D1 | -- | BASE UNIT AR-MT855 (NOT SERVICED) |
| 1 | 156-4893 | 1 | MIDROLLER WHL AR, WIDE (NOT SERVICED) (SEE BREAKDOWN FOR COMPONENTS) |
| 2 | 156-5583 | 1 | BASIC UNIT AR (NOT SERVICED) (SEE BREAKDOWN FOR COMPONENTS) |
| 3 | 179-0853 | 1 | HITCH AR-NON AG (NOT SERVICED) (SEE BREAKDOWN FOR COMPONENTS) |
| 4 | 180-0185 | 1 | PUMP AR-HYD (NOT SERVICED) (SEE BREAKDOWN FOR COMPONENTS) |
| 5 | 184-5357 | 1 | COUNTERWEIGHT GP-FRONT (NOT SERVICED) (SEE BREAKDOWN FOR COMPONENTS) |
| 6 | 195-5968 | 1 | WARNING GP-BACKUP (NOT SERVICED) (SEE BREAKDOWN FOR COMPONENTS) |
| 7 | ----- | 1 | PLUG GP (NOT SERVICED) |
| 8 | 216-9823 | 1 | LIGHTING GP-WARNING (NOT SERVICED) (SEE BREAKDOWN FOR COMPONENTS) |
| 9 | 220-2356 | 1 | WHEEL AR-IDLER (NOT SERVICED) (SEE BREAKDOWN FOR COMPONENTS) |
| 10 | 220-2358 | 1 | WHEEL AR-DRIVER (NOT SERVICED) (SEE BREAKDOWN FOR COMPONENTS) |
| 11 | 222-7965 | 1 | MOUNTING GP (MONITOR) (NOT SERVICED) (SEE BREAKDOWN FOR COMPONENTS) |
| 12 | 500039D1 | 1 | CABLE GP.-TOW (NOT SERVICED) (SEE BREAKDOWN FOR COMPONENTS) |
| 13 | 500040D1 | 1 | RESTRAIN GP-ROLLERFRAME (NOT SERVICED) (SEE BREAKDOWN FOR COMPONENTS) |

NOTIF
PR: t05i29k58b0011

## BASE UNIT AR-MT865 - 500037D1
SPECIAL APPLICATIONS

NO ILLUSTRATION

NOTIF

## BASE UNIT AR-MT865 - 500037D1
SPECIAL APPLICATIONS

| ITEM | NUMBER | QTY | DESCRIPTION |
|---|---|---|---|
| - | 500037D1 | -- | BASE UNIT AR-MT865 (NOT SERVICED) |
| 1 | 156-4893 | 1 | MIDROLLER WHL AR, WIDE (NOT SERVICED) (SEE BREAKDOWN FOR COMPONENTS) |
| 2 | 156-5584 | 1 | BASIC UNIT AR (NOT SERVICED) (SEE BREAKDOWN FOR COMPONENTS) |
| 3 | 179-0853 | 1 | HITCH AR-NON AG (NOT SERVICED) (SEE BREAKDOWN FOR COMPONENTS) |
| 4 | 180-0185 | 1 | PUMP AR-HYD (NOT SERVICED) (SEE BREAKDOWN FOR COMPONENTS) |
| 5 | 184-5357 | 1 | COUNTERWEIGHT GP-FRONT (NOT SERVICED) (SEE BREAKDOWN FOR COMPONENTS) |
| 6 | 195-5968 | 1 | WARNING GP-BACKUP (NOT SERVICED) (SEE BREAKDOWN FOR COMPONENTS) |
| 7 | ----- | 1 | PLUG GP (NOT SERVICED) |
| 8 | 216-9823 | 1 | LIGHTING GP-WARNING (NOT SERVICED) (SEE BREAKDOWN FOR COMPONENTS) |
| 9 | 220-2356 | 1 | WHEEL AR-IDLER (NOT SERVICED) (SEE BREAKDOWN FOR COMPONENTS) |
| 10 | 220-2358 | 1 | WHEEL AR-DRIVER (NOT SERVICED) (SEE BREAKDOWN FOR COMPONENTS) |
| 11 | 222-7965 | 1 | MOUNTING GP (MONITOR) (NOT SERVICED) (SEE BREAKDOWN FOR COMPONENTS) |
| 12 | 500039D1 | 1 | CABLE GP.-TOW (NOT SERVICED) (SEE BREAKDOWN FOR COMPONENTS) |
| 13 | 500040D1 | 1 | RESTRAIN GP-ROLLERFRAME (NOT SERVICED) (SEE BREAKDOWN FOR COMPONENTS) |

NOTIF
PR: t05i29k58b0012

**BASE COMMON AR - 179-1952**
**ROW & SPECIAL ONLY**

NO ILLUSTRATION

NOTIF

## BASE COMMON AR - 179-1952
ROW & SPECIAL ONLY

| ITEM | NUMBER | QTY | DESCRIPTION |
|---|---|---|---|
| - | 179-1952 | -- | BASE COMMON AR (NOT SERVICED) [A] |
| 1 | 136-5665 | 1 | LIGHTING GP-SIGNAL (NOT SERVICED)<br>(SEE BREAKDOWN FOR COMPONENTS) |
| 2 | 136-5668 | 1 | WIRING GP-MACHINE (NOT SERVICED)<br>(SEE BREAKDOWN FOR COMPONENTS) |
| 3 | 156-1313 | 1 | HOOD & GUARD GP (NOT SERVICED)<br>(SEE BREAKDOWN FOR COMPONENTS) |
| 4 | 158-2342 | 1 | HYDRAULIC AR (NOT SERVICED)<br>(SEE BREAKDOWN FOR COMPONENTS) |
| 5 | 161-9174 | 1 | FENDER GP (NOT SERVICED)<br>(SEE BREAKDOWN FOR COMPONENTS) |
| 6 | 163-0386 | 1 | LINES GP-BRAKE (NOT SERVICED)<br>(SEE BREAKDOWN FOR COMPONENTS) |
| 7 | 172-8886 | 1 | WARNING GP-SLOW MOVING VEHICLE<br>(NOT SERVICED)<br>(SEE BREAKDOWN FOR COMPONENTS) |
| 8 | 179-1953 | 1 | CHASSIS AR (NOT SERVICED)<br>(SEE BREAKDOWN FOR COMPONENTS) |
| 9 | 179-2185 | 1 | PLATE & FILM GP (NOT SERVICED)<br>(SEE BREAKDOWN FOR COMPONENTS) |
| 10 | 183-6384 | 1 | WALKWAY GP (NOT SERVICED)<br>(SEE BREAKDOWN FOR COMPONENTS) |
| 11 | 192-6350 | 1 | CONTROL GP-PARKING BRAKE (NOT SERVICED)<br>(SEE BREAKDOWN FOR COMPONENTS) |
| 12 | 193-1547 | 1 | LINES GP-BRAKE (COMMON) (NOT SERVICED)<br>(SEE BREAKDOWN FOR COMPONENTS) |
| 13 | 200-4400 | 1 | CONTROL GP-SERVICE BRAKE (NOT SERVICED)<br>(SEE BREAKDOWN FOR COMPONENTS) |
| 14 | 210-7510 | 1 | BRAKE GP-PARKING (NOT SERVICED)<br>(SEE BREAKDOWN FOR COMPONENTS) |

[A] PART OF 156-5581;156-5582;156-5583;
156-5584 BASE UNIT AR

NOTIF
PR: t05i29k58b0013

**BASE COMMON AR (EURO) - 179-2180**
**EAME**

NO ILLUSTRATION

NOTIF

## BASE COMMON AR (EURO) - 179-2180
EAME

| ITEM | NUMBER | QTY | DESCRIPTION |
|---|---|---|---|
| - | 179-2180 | -- | BASE COMMON AR [A] (NOT SERVICED) |
| 1 | 136-5429 | 1 | LIGHTING GP-SIGNAL (NOT SERVICED) (SEE BREAKDOWN FOR COMPONENTS) |
| 2 | 136-5669 | 1 | WIRING GP-VEHICLE (NOT SERVICED) (SEE BREAKDOWN FOR COMPONENTS) |
| 3 | 158-2342 | 1 | HYD AR- COMMON (NOT SERVICED) (SEE BREAKDOWN FOR COMPONENTS) |
| 4 | 158-5925 | 1 | MOUNTING GP-BODY (NOT SERVICED) (SEE BREAKDOWN FOR COMPONENTS) |
| 5 | 161-9173 | 1 | HOOD GP-GUARD (NOT SERVICED) (SEE BREAKDOWN FOR COMPONENTS) |
| 6 | 161-9177 | 1 | FENDER GP (EAME) (NOT SERVICED) (SEE BREAKDOWN FOR COMPONENTS) |
| 7 | CH163-0397 | 1 | DRAIN GP (ECOLOGY) (NOT SERVICED) (SEE BREAKDOWN FOR COMPONENTS) |
| 8 | 166-4623 | 1 | CONTROL GP MOUNTING & (NOT SERVICED) (SEE BREAKDOWN FOR COMPONENTS) |
| 9 | 179-1953 | 1 | CHASSIS AR-COM (NOT SERVICED) (SEE BREAKDOWN FOR COMPONENTS) |
| 10 | 179-2261 | 1 | FILM GP-PAINT & (NOT SERVICED) (SEE BREAKDOWN FOR COMPONENTS) |
| 11 | 183-6384 | 1 | WALKWAY GP (NOT SERVICED) (SEE BREAKDOWN FOR COMPONENTS) |
| 12 | 185-8787 | 1 | LINES GP-SERV BRAKE(B) (NOT SERVICED) (SEE BREAKDOWN FOR COMPONENTS) |
| 13 | 186-2427 | 1 | EXTENSION GP-FENDER (NOT SERVICED) (SEE BREAKDOWN FOR COMPONENTS) |
| 14 | 187-8609 | 1 | GUARD GP (NOT SERVICED) (SEE BREAKDOWN FOR COMPONENTS) |
| 15 | 192-6350 | 1 | CONTROL GP-PARK BRAKE (NOT SERVICED) (SEE BREAKDOWN FOR COMPONENTS) |
| 16 | 192-6360 | 1 | CONTROL GP-BRAKE (Q) (NOT SERVICED) (SEE BREAKDOWN FOR COMPONENTS) |
| 17 | 193-1547 | 1 | LINES GP-SERV BRAKE (A) (NOT SERVICED) (SEE BREAKDOWN FOR COMPONENTS) |
| 18 | 200-4320 | 1 | SUPPORT GP-LINES (NOT SERVICED) (SEE BREAKDOWN FOR COMPONENTS) |
| 19 | 200-4400 | 1 | CONTROL GP-BRAKE(A) (NOT SERVICED) (SEE BREAKDOWN FOR COMPONENTS) |
| 20 | 210-4350 | 1 | ENCLOSURE GP (CAT) (NOT SERVICED) (SEE BREAKDOWN FOR COMPONENTS) |
| 21 | 221-8534 | 1 | HANDRAIL GP (NOT SERVICED) (SEE BREAKDOWN FOR COMPONENTS) |
| 22 | 208-3021 | 1 | GUARD GP-AXLE (SEE BREAKDOWN FOR COMPONENTS) |

[A] PART OF 179-2193; 179-2194; 179-2195; 179-2196 BASE UNIT AR

NOTIF
PR: t05i29k58b0014

## INSTALLATION AR-MT835 - 172-5361
ROW & SPECIAL APPLICATIONS

NO ILLUSTRATION

NOTIF

## INSTALLATION AR-MT835 - 172-5361
ROW & SPECIAL APPLICATIONS

| ITEM | NUMBER | QTY | DESCRIPTION |
|---|---|---|---|
| - | 172-5361 | -- | INSTALLATION AR-MT835 [A] (NOT SERVICED) |
| 1 | 163-0383 | 1 | SHAFT GP-INPUT (NOT SERVICED)<br>(SEE BREAKDOWN FOR COMPONENTS) |
| 2 | 172-5334 | 1 | MOUNTING GP-ENGINE (NOT SERVICED)<br>(SEE BREAKDOWN FOR COMPONENTS) |
| 3 | 172-5336 | 1 | MUFFLER GP (NOT SERVICED)<br>(SEE BREAKDOWN FOR COMPONENTS) |
| 4 | 172-5338 | 1 | CLEANER GP-AIR (A) (NOT SERVICED)<br>(SEE BREAKDOWN FOR COMPONENTS) |
| 5 | 172-5342 | 1 | LINES GP-AIR (NOT SERVICED)<br>(SEE BREAKDOWN FOR COMPONENTS) |
| 6 | 172-5343 | 1 | LINES GP-A/C (NOT SERVICED)<br>(SEE BREAKDOWN FOR COMPONENTS) |
| 7 | 172-5345 | 1 | LINES GP-COOLANT (NOT SERVICED)<br>(SEE BREAKDOWN FOR COMPONENTS) |
| 8 | 172-6945 | 1 | ENGINE AR-COMPL (340HP)<br>(ORDER COMPONENTS THRU CAT ENG DIV.) |
| 9 | 185-2237 | 1 | PULLEY GP (NOT SERVICED)<br>(SEE BREAKDOWN FOR COMPONENTS) |
| 10 | 186-1671 | 1 | AID GP-ETHER STARTING (NOT SERVICED)<br>(SEE BREAKDOWN FOR COMPONENTS) |
| 11 | 187-1791 | 1 | DRIVE GP-ACCESSORY (NOT SERVICED)<br>(SEE BREAKDOWN FOR COMPONENTS) |
| 12 | 187-1792 | 1 | MOUNTING GP-COMPRESSOR (NOT SERVICED)<br>(SEE BREAKDOWN FOR COMPONENTS) |
| 13 | 190-1482 | 1 | COOLER GP-MTG & (NOT SERVICED)<br>(SEE BREAKDOWN FOR COMPONENTS) |
| 14 | 194-7966 | 1 | TANK GP-EXP & COOLANT (NOT SERVICED)<br>(SEE BREAKDOWN FOR COMPONENTS) |
| 15 | 198-0188 | 1 | FILTER GP-WATER (NOT SERVICED)<br>(SEE BREAKDOWN FOR COMPONENTS) |
| 16 | 206-6397 | 1 | FAN GP-ENGINE (NOT SERVICED)<br>(SEE BREAKDOWN FOR COMPONENTS) |
| 17 | 206-6987 | 1 | MOUNTING GP-ALTERNATOR<br>(SEE BREAKDOWN FOR COMPONENTS) |
| 18 | 208-0090 | 1 | MOTOR GP-ELECTRIC<br>(SEE BREAKDOWN FOR COMPONENTS) |
| 19 | 212-4444 | 1 | LINES GP.- DUST EJECTOR (NOT SERVICED)<br>(SEE BREAKDOWN FOR COMPONENTS) |
| 20 | 213-9315 | 1 | LINES GP-FUEL (NOT SERVICED)<br>(SEE BREAKDOWN FOR COMPONENTS) |

[A] PART OF 156-5581 BASIC UNIT AR

NOTIF
PR: t05i29k58b0015

## INSTALLATION AR-MT835 - 187-1741
EAME ONLY

NO ILLUSTRATION

NOTIF

## INSTALLATION AR-MT835 - 187-1741
EAME ONLY

| ITEM | NUMBER | QTY | DESCRIPTION |
|---|---|---|---|
| - | 187-1741 | -- | INSTALLATION AR-MT835 [A] (NOT SERVICED) |
| 1 | 163-0383 | 1 | SHAFT GP-INPUT (NOT SERVICED)<br>(SEE BREAKDOWN FOR COMPONENTS) |
| 2 | 172-5334 | 1 | MOUNTING GP-ENGINE (NOT SERVICED)<br>(SEE BREAKDOWN FOR COMPONENTS) |
| 3 | 172-5336 | 1 | MUFFLER GP (NOT SERVICED)<br>(SEE BREAKDOWN FOR COMPONENTS) |
| 4 | 172-5338 | 1 | CLEANER GP-AIR (A) (NOT SERVICED)<br>(SEE BREAKDOWN FOR COMPONENTS) |
| 5 | 172-5342 | 1 | LINES GP-AIR (NOT SERVICED)<br>(SEE BREAKDOWN FOR COMPONENTS) |
| 6 | 172-5343 | 1 | LINES GP-A/C (NOT SERVICED)<br>(SEE BREAKDOWN FOR COMPONENTS) |
| 7 | 172-5345 | 1 | LINES GP-COOLANT (NOT SERVICED)<br>(SEE BREAKDOWN FOR COMPONENTS) |
| 8 | 172-6945 | 1 | ENGINE AR-COMPL (340HP)<br>(ORDER COMPONENTS THRU CAT ENG DIV.) |
| 9 | 185-2237 | 1 | PULLEY GP (NOT SERVICED)<br>(SEE BREAKDOWN FOR COMPONENTS) |
| 10 | 186-1671 | 1 | AID GP-ETHER STARTING (NOT SERVICED)<br>(SEE BREAKDOWN FOR COMPONENTS) |
| 11 | 187-1791 | 1 | DRIVE GP-ACCESSORY (NOT SERVICED)<br>(SEE BREAKDOWN FOR COMPONENTS) |
| 12 | 187-1792 | 1 | MOUNTING GP-COMPRESSOR (NOT SERVICED)<br>(SEE BREAKDOWN FOR COMPONENTS) |
| 13 | 190-1482 | 1 | COOLER GP-MTG & (NOT SERVICED)<br>(SEE BREAKDOWN FOR COMPONENTS) |
| 14 | 194-7966 | 1 | TANK GP-EXP & COOLANT (NOT SERVICED)<br>(SEE BREAKDOWN FOR COMPONENTS) |
| 15 | 198-0188 | 1 | FILTER GP-WATER (NOT SERVICED)<br>(SEE BREAKDOWN FOR COMPONENTS) |
| 16 | 206-6397 | 1 | FAN GP-ENGINE (NOT SERVICED)<br>(SEE BREAKDOWN FOR COMPONENTS) |
| 17 | 206-6987 | 1 | MOUNTING GP-ALTERNATOR<br>(SEE BREAKDOWN FOR COMPONENTS) |
| 18 | 208-0090 | 1 | MOTOR GP-ELECTRIC<br>(SEE BREAKDOWN FOR COMPONENTS) |
| 19 | 212-4444 | 1 | LINES GP.- DUST EJECTOR (NOT SERVICED)<br>(SEE BREAKDOWN FOR COMPONENTS) |
| 20 | 213-9315 | 1 | LINES GP-FUEL (NOT SERVICED)<br>(SEE BREAKDOWN FOR COMPONENTS) |

[A] PART OF 179-2193 BASIC UNIT AR

NOTIF
PR: t05i29k58b0016

## INSTALLATION AR-MT845 - 172-5362
ROW & SPECIAL APPLICATIONS

NO ILLUSTRATION

NOTIF

## INSTALLATION AR-MT845 - 172-5362
ROW & SPECIAL APPLICATIONS

| ITEM | NUMBER | QTY | DESCRIPTION |
|---|---|---|---|
| - | 172-5362 | -- | INSTALLATION AR-MT845 [A] (NOT SERVICED) |
| 1 | 163-0383 | 1 | SHAFT GP-INPUT (NOT SERVICED)<br>(SEE BREAKDOWN FOR COMPONENTS) |
| 2 | 172-5334 | 1 | MOUNTING GP-ENGINE (NOT SERVICED)<br>(SEE BREAKDOWN FOR COMPONENTS) |
| 3 | 172-5336 | 1 | MUFFLER GP (NOT SERVICED)<br>(SEE BREAKDOWN FOR COMPONENTS) |
| 4 | 172-5338 | 1 | CLEANER GP-AIR (A) (NOT SERVICED)<br>(SEE BREAKDOWN FOR COMPONENTS) |
| 5 | 172-5342 | 1 | LINES GP-AIR (NOT SERVICED)<br>(SEE BREAKDOWN FOR COMPONENTS) |
| 6 | 172-5343 | 1 | LINES GP-A/C (NOT SERVICED)<br>(SEE BREAKDOWN FOR COMPONENTS) |
| 7 | 172-5345 | 1 | LINES GP-COOLANT (NOT SERVICED)<br>(SEE BREAKDOWN FOR COMPONENTS) |
| 8 | 172-6946 | 1 | ENGINE AR-COMPL (380HP)<br>(ORDER COMPONENTS THRU CAT ENG DIV.) |
| 9 | 185-2237 | 1 | PULLEY GP (NOT SERVICED)<br>(SEE BREAKDOWN FOR COMPONENTS) |
| 10 | 186-1671 | 1 | AID GP-ETHER STARTING (NOT SERVICED)<br>(SEE BREAKDOWN FOR COMPONENTS) |
| 11 | 187-1791 | 1 | DRIVE GP-ACCESSORY (NOT SERVICED)<br>(SEE BREAKDOWN FOR COMPONENTS) |
| 12 | 187-1792 | 1 | MOUNTING GP-COMPRESSOR (NOT SERVICED)<br>(SEE BREAKDOWN FOR COMPONENTS) |
| 13 | 190-1482 | 1 | COOLER GP-MTG & (NOT SERVICED)<br>(SEE BREAKDOWN FOR COMPONENTS) |
| 14 | 194-7966 | 1 | TANK GP-EXP & COOLANT (NOT SERVICED)<br>(SEE BREAKDOWN FOR COMPONENTS) |
| 15 | 198-0188 | 1 | FILTER GP-WATER (NOT SERVICED)<br>(SEE BREAKDOWN FOR COMPONENTS) |
| 16 | 206-6397 | 1 | FAN GP-ENGINE (NOT SERVICED)<br>(SEE BREAKDOWN FOR COMPONENTS) |
| 17 | 206-6987 | 1 | MOUNTING GP-ALTERNATOR<br>(SEE BREAKDOWN FOR COMPONENTS) |
| 18 | 208-0090 | 1 | MOTOR GP-ELECTRIC<br>(SEE BREAKDOWN FOR COMPONENTS) |
| 19 | 212-4444 | 1 | LINES GP.- DUST EJECTOR (NOT SERVICED)<br>(SEE BREAKDOWN FOR COMPONENTS) |
| 20 | 213-9315 | 1 | LINES GP-FUEL (NOT SERVICED)<br>(SEE BREAKDOWN FOR COMPONENTS) |

[A] PART OF 156-5582 BASIC UNIT AR

NOTIF
PR: t05i29k58b0017

**INSTALLATION AR-MT845 - 187-1742**
**EAME ONLY**

NO ILLUSTRATION

NOTIF

## INSTALLATION AR-MT845 - 187-1742
EAME ONLY

| ITEM | NUMBER | QTY | DESCRIPTION |
|---|---|---|---|
| - | 187-1742 | -- | INSTALLATION AR-MT845 [A] (NOT SERVICED) |
| 1 | 163-0383 | 1 | SHAFT GP-INPUT (NOT SERVICED)<br>(SEE BREAKDOWN FOR COMPONENTS) |
| 2 | 172-5334 | 1 | MOUNTING GP-ENGINE (NOT SERVICED)<br>(SEE BREAKDOWN FOR COMPONENTS) |
| 3 | 172-5336 | 1 | MUFFLER GP (NOT SERVICED)<br>(SEE BREAKDOWN FOR COMPONENTS) |
| 4 | 172-5338 | 1 | CLEANER GP-AIR (A) (NOT SERVICED)<br>(SEE BREAKDOWN FOR COMPONENTS) |
| 5 | 172-5342 | 1 | LINES GP-AIR (NOT SERVICED)<br>(SEE BREAKDOWN FOR COMPONENTS) |
| 6 | 172-5343 | 1 | LINES GP-A/C (NOT SERVICED)<br>(SEE BREAKDOWN FOR COMPONENTS) |
| 7 | 172-5345 | 1 | LINES GP-COOLANT (NOT SERVICED)<br>(SEE BREAKDOWN FOR COMPONENTS) |
| 8 | 172-6946 | 1 | ENGINE AR-COMPL (380HP)<br>(ORDER COMPONENTS THRU CAT ENG DIV.) |
| 9 | 185-2237 | 1 | PULLEY GP (NOT SERVICED)<br>(SEE BREAKDOWN FOR COMPONENTS) |
| 10 | 186-1671 | 1 | AID GP-ETHER STARTING (NOT SERVICED)<br>(SEE BREAKDOWN FOR COMPONENTS) |
| 11 | 187-1791 | 1 | DRIVE GP-ACCESSORY (NOT SERVICED)<br>(SEE BREAKDOWN FOR COMPONENTS) |
| 12 | 187-1792 | 1 | MOUNTING GP-COMPRESSOR (NOT SERVICED)<br>(SEE BREAKDOWN FOR COMPONENTS) |
| 13 | 190-1482 | 1 | COOLER GP-MTG & (NOT SERVICED)<br>(SEE BREAKDOWN FOR COMPONENTS) |
| 14 | 194-7966 | 1 | TANK GP-EXP & COOLANT (NOT SERVICED)<br>(SEE BREAKDOWN FOR COMPONENTS) |
| 15 | 198-0188 | 1 | FILTER GP-WATER (NOT SERVICED)<br>(SEE BREAKDOWN FOR COMPONENTS) |
| 16 | 206-6397 | 1 | FAN GP-ENGINE (NOT SERVICED)<br>(SEE BREAKDOWN FOR COMPONENTS) |
| 17 | 206-6987 | 1 | MOUNTING GP-ALTERNATOR<br>(SEE BREAKDOWN FOR COMPONENTS) |
| 18 | 208-0090 | 1 | MOTOR GP-ELECTRIC<br>(SEE BREAKDOWN FOR COMPONENTS) |
| 19 | 212-4444 | 1 | LINES GP-DUST EJECTOR (NOT SERVICED)<br>(SEE BREAKDOWN FOR COMPONENTS) |
| 20 | 213-9315 | 1 | LINES GP-FUEL (NOT SERVICED)<br>(SEE BREAKDOWN FOR COMPONENTS) |

[A] PART OF 179-2194 BASIC UNIT AR

NOTIF
PR: t05i29k58b0018

## INSTALLATION AR-MT855 - 172-5363
ROW & SPECIAL APPLICATIONS

NO ILLUSTRATION

NOTIF

| ITEM | NUMBER | QTY | DESCRIPTION |
|---|---|---|---|
| - | 172-5363 | -- | INSTALLATION AR-MT855 [A] (NOT SERVICED) |
| 1 | 163-0384 | 1 | SHAFT GP-INPUT (NOT SERVICED)<br>(SEE BREAKDOWN FOR COMPONENTS) |
| 2 | 172-5333 | 1 | MOUNTING GP-ENGINE (NOT SERVICED)<br>(SEE BREAKDOWN FOR COMPONENTS) |
| 3 | 172-5335 | 1 | MUFFLER GP (NOT SERVICED)<br>(SEE BREAKDOWN FOR COMPONENTS) |
| 4 | 172-5337 | 1 | CLEANER GP-AIR (A) (NOT SERVICED)<br>(SEE BREAKDOWN FOR COMPONENTS) |
| 5 | 172-5341 | 1 | LINES GP-AIR (NOT SERVICED)<br>(SEE BREAKDOWN FOR COMPONENTS) |
| 6 | 172-5343 | 1 | LINES GP-A/C (NOT SERVICED)<br>(SEE BREAKDOWN FOR COMPONENTS) |
| 7 | 172-5344 | 1 | LINES GP-COOLANT (NOT SERVICED)<br>(SEE BREAKDOWN FOR COMPONENTS) |
| 8 | 235-4672 | 1 | ENGINE AR-COMPL (450 HP)<br>(ORDER COMPONENTS THRU CAT ENG DIV.) |
| 9 | 185-2239 | 1 | PULLEY GP (NOT SERVICED)<br>(SEE BREAKDOWN FOR COMPONENTS) |
| 10 | 187-1740 | 1 | AID GP-ETHER STARTING (NOT SERVICED)<br>(SEE BREAKDOWN FOR COMPONENTS) |
| 11 | 187-1791 | 1 | DRIVE GP-ACCESSORY (NOT SERVICED)<br>(SEE BREAKDOWN FOR COMPONENTS) |
| 12 | 187-1792 | 1 | MOUNTING GP-COMPRESSOR (NOT SERVICED)<br>(SEE BREAKDOWN FOR COMPONENTS) |
| 13 | 190-1482 | 1 | COOLER GP-MTG & (NOT SERVICED)<br>(SEE BREAKDOWN FOR COMPONENTS) |
| 14 | 185-2220 | 1 | TANK GP-EXP & COOLANT (NOT SERVICED)<br>(SEE BREAKDOWN FOR COMPONENTS) |
| 15 | 198-0187 | 1 | FILTER GP-WATER (NOT SERVICED)<br>(SEE BREAKDOWN FOR COMPONENTS) |
| 16 | 206-6397 | 1 | FAN GP-ENGINE (NOT SERVICED)<br>(SEE BREAKDOWN FOR COMPONENTS) |
| 17 | 206-6987 | 1 | MOUNTING GP-ALTERNATOR<br>(SEE BREAKDOWN FOR COMPONENTS) |
| 18 | 180-2924 | 1 | MOTOR GP-ELECTRIC<br>(SEE BREAKDOWN FOR COMPONENTS) |
| 19 | 197-4849 | 1 | LINES GP-DUST EJECTOR (NOT SERVICED)<br>(SEE BREAKDOWN FOR COMPONENTS) |
| 20 | 179-2183 | 1 | LINES GP-FUEL (NOT SERVICED)<br>(SEE BREAKDOWN FOR COMPONENTS) |

[A] PART OF 156-5583 BASIC UNIT AR

NOTIF
PR: t05i29k58b0019

## INSTALLATION AR-MT855 - 187-1743
EAME ONLY

NO ILLUSTRATION

NOTIF

## INSTALLATION AR-MT855 - 187-1743

EAME ONLY

| ITEM | NUMBER | QTY | DESCRIPTION |
|---|---|---|---|
| - | 187-1743 | -- | INSTALLATION AR-MT855 [A] (NOT SERVICED) |
| 1 | 163-0384 | 1 | SHAFT GP-INPUT (NOT SERVICED)<br>(SEE BREAKDOWN FOR COMPONENTS) |
| 2 | 172-5333 | 1 | MOUNTING GP-ENGINE (NOT SERVICED)<br>(SEE BREAKDOWN FOR COMPONENTS) |
| 3 | 172-5335 | 1 | MUFFLER GP (NOT SERVICED)<br>(SEE BREAKDOWN FOR COMPONENTS) |
| 4 | 172-5337 | 1 | CLEANER GP-AIR (A) (NOT SERVICED)<br>(SEE BREAKDOWN FOR COMPONENTS) |
| 5 | 172-5341 | 1 | LINES GP-AIR (NOT SERVICED)<br>(SEE BREAKDOWN FOR COMPONENTS) |
| 6 | 172-5343 | 1 | LINES GP-A/C (NOT SERVICED)<br>(SEE BREAKDOWN FOR COMPONENTS) |
| 7 | 172-5344 | 1 | LINES GP-COOLANT (NOT SERVICED)<br>(SEE BREAKDOWN FOR COMPONENTS) |
| 8 | 235-4672 | 1 | ENGINE AR-COMPL (435HP)<br>(ORDER COMPONENTS THRU CAT ENG DIV.) |
| 9 | 179-2183 | 1 | LINES GP-FUEL (NOT SERVICED)<br>(SEE BREAKDOWN FOR COMPONENTS) |
| 10 | 180-2924 | 1 | MOTOR GP-ELECTRIC<br>(SEE BREAKDOWN FOR COMPONENTS) |
| 11 | 185-2220 | 1 | TANK GP-EXP & COOLANT (NOT SERVICED)<br>(SEE BREAKDOWN FOR COMPONENTS) |
| 12 | 185-2239 | 1 | PULLEY GP (NOT SERVICED)<br>(SEE BREAKDOWN FOR COMPONENTS) |
| 13 | 187-1740 | 1 | AID GP-ETHER STARTING (NOT SERVICED)<br>(SEE BREAKDOWN FOR COMPONENTS) |
| 14 | 187-1791 | 1 | DRIVE GP-ACCESSORY (NOT SERVICED)<br>(SEE BREAKDOWN FOR COMPONENTS) |
| 15 | 187-1792 | 1 | MOUNTING GP-COMPRESSOR (NOT SERVICED)<br>(SEE BREAKDOWN FOR COMPONENTS) |
| 16 | 190-1482 | 1 | COOLER GP-MTG & (NOT SERVICED)<br>(SEE BREAKDOWN FOR COMPONENTS) |
| 17 | 197-4849 | 1 | LINES GP.- DUST EJECTOR (NOT SERVICED)<br>(SEE BREAKDOWN FOR COMPONENTS) |
| 18 | 198-0187 | 1 | FILTER GP-WATER (NOT SERVICED)<br>(SEE BREAKDOWN FOR COMPONENTS) |
| 19 | 206-6397 | 1 | FAN GP-ENGINE (NOT SERVICED)<br>(SEE BREAKDOWN FOR COMPONENTS) |
| 20 | 206-6987 | 1 | MOUNTING GP-ALTERNATOR<br>(SEE BREAKDOWN FOR COMPONENTS) |

[A] PART OF 179-2195 BASIC UNIT AR

NOTIF
PR: t05i29k58b0020

## INSTALLATION AR-MT865 - 172-5364
ROW & SPECIAL APPLICATIONS

NO ILLUSTRATION

NOTIF

| ITEM | NUMBER | QTY | DESCRIPTION |
|---|---|---|---|
| - | 172-5364 | -- | INSTALLATION AR-MT865 [A] (NOT SERVICED) |
| 1 | 163-0384 | 1 | SHAFT GP-INPUT (NOT SERVICED)<br>(SEE BREAKDOWN FOR COMPONENTS) |
| 2 | 172-5333 | 1 | MOUNTING GP-ENGINE (NOT SERVICED)<br>(SEE BREAKDOWN FOR COMPONENTS) |
| 3 | 172-5335 | 1 | MUFFLER GP (NOT SERVICED)<br>(SEE BREAKDOWN FOR COMPONENTS) |
| 4 | 172-5337 | 1 | CLEANER GP-AIR (A) (NOT SERVICED)<br>(SEE BREAKDOWN FOR COMPONENTS) |
| 5 | 172-5341 | 1 | LINES GP-AIR (NOT SERVICED)<br>(SEE BREAKDOWN FOR COMPONENTS) |
| 6 | 172-5343 | 1 | LINES GP-A/C (NOT SERVICED)<br>(SEE BREAKDOWN FOR COMPONENTS) |
| 7 | 172-5344 | 1 | LINES GP-COOLANT (NOT SERVICED)<br>(SEE BREAKDOWN FOR COMPONENTS) |
| 8 | 235-4673 | 1 | ENGINE AR-COMPL (500 HP)<br>(ORDER COMPONENTS THRU CAT ENG DIV.) |
| 9 | 185-2240 | 1 | PULLEY GP (NOT SERVICED)<br>(SEE BREAKDOWN FOR COMPONENTS) |
| 10 | 187-1740 | 1 | AID GP-ETHER STARTING (NOT SERVICED)<br>(SEE BREAKDOWN FOR COMPONENTS) |
| 11 | 187-1791 | 1 | DRIVE GP-ACCESSORY (NOT SERVICED)<br>(SEE BREAKDOWN FOR COMPONENTS) |
| 12 | 187-1792 | 1 | MOUNTING GP-COMPRESSOR (NOT SERVICED)<br>(SEE BREAKDOWN FOR COMPONENTS) |
| 13 | 190-1482 | 1 | COOLER GP-MTG & (NOT SERVICED)<br>(SEE BREAKDOWN FOR COMPONENTS) |
| 14 | 185-2220 | 1 | TANK GP-EXP & COOLANT (NOT SERVICED)<br>(SEE BREAKDOWN FOR COMPONENTS) |
| 15 | 198-0187 | 1 | FILTER GP-WATER (NOT SERVICED)<br>(SEE BREAKDOWN FOR COMPONENTS) |
| 16 | 206-6397 | 1 | FAN GP-ENGINE (NOT SERVICED)<br>(SEE BREAKDOWN FOR COMPONENTS) |
| 17 | 206-6987 | 1 | MOUNTING GP-ALTERNATOR<br>(SEE BREAKDOWN FOR COMPONENTS) |
| 18 | 180-2924 | 1 | MOTOR GP-ELECTRIC<br>(SEE BREAKDOWN FOR COMPONENTS) |
| 19 | 197-4849 | 1 | LINES GP.- DUST EJECTOR (NOT SERVICED)<br>(SEE BREAKDOWN FOR COMPONENTS) |
| 20 | 179-2183 | 1 | LINES GP-FUEL (NOT SERVICED)<br>(SEE BREAKDOWN FOR COMPONENTS) |

[A] PART OF 156-5583 BASIC UNIT AR

NOTIF
PR: t05i29k58b0021

## INSTALLATION AR-MT865 - 187-1744
EAME ONLY

NO ILLUSTRATION

NOTIF

## INSTALLATION AR-MT865 - 187-1744
EAME ONLY

| ITEM | NUMBER | QTY | DESCRIPTION |
|---|---|---|---|
| - | 187-1744 | -- | INSTALLATION AR-MT865 [A] (NOT SERVICED) |
| 1 | 163-0384 | 1 | SHAFT GP-INPUT (NOT SERVICED)<br>(SEE BREAKDOWN FOR COMPONENTS) |
| 2 | 172-5333 | 1 | MOUNTING GP-ENGINE (NOT SERVICED)<br>(SEE BREAKDOWN FOR COMPONENTS) |
| 3 | 172-5335 | 1 | MUFFLER GP (NOT SERVICED)<br>(SEE BREAKDOWN FOR COMPONENTS) |
| 4 | 172-5337 | 1 | CLEANER GP-AIR (A) (NOT SERVICED)<br>(SEE BREAKDOWN FOR COMPONENTS) |
| 5 | 172-5341 | 1 | LINES GP-AIR (NOT SERVICED)<br>(SEE BREAKDOWN FOR COMPONENTS) |
| 6 | 172-5343 | 1 | LINES GP-A/C (NOT SERVICED)<br>(SEE BREAKDOWN FOR COMPONENTS) |
| 7 | 172-5344 | 1 | LINES GP-COOLANT (NOT SERVICED)<br>(SEE BREAKDOWN FOR COMPONENTS) |
| 8 | 235-4673 | 1 | ENGINE AR-COMPL (500HP)<br>(ORDER COMPONENTS THRU CAT ENG DIV.) |
| 9 | 179-2183 | 1 | LINES GP-FUEL (NOT SERVICED)<br>(SEE BREAKDOWN FOR COMPONENTS) |
| 10 | 180-2924 | 1 | MOTOR GP-ELECTRIC<br>(SEE BREAKDOWN FOR COMPONENTS) |
| 11 | 185-2220 | 1 | TANK GP-EXP & COOLANT (NOT SERVICED)<br>(SEE BREAKDOWN FOR COMPONENTS) |
| 12 | 185-2240 | 1 | PULLEY GP (NOT SERVICED)<br>(SEE BREAKDOWN FOR COMPONENTS) |
| 13 | 187-1740 | 1 | AID GP-ETHER STARTING (NOT SERVICED)<br>(SEE BREAKDOWN FOR COMPONENTS) |
| 14 | 187-1791 | 1 | DRIVE GP-ACCESSORY (NOT SERVICED)<br>(SEE BREAKDOWN FOR COMPONENTS) |
| 15 | 187-1792 | 1 | MOUNTING GP-COMPRESSOR (NOT SERVICED)<br>(SEE BREAKDOWN FOR COMPONENTS) |
| 16 | 190-1482 | 1 | COOLER GP-MTG & (NOT SERVICED)<br>(SEE BREAKDOWN FOR COMPONENTS) |
| 17 | 197-4849 | 1 | LINES GP-DUST EJECTOR (NOT SERVICED)<br>(SEE BREAKDOWN FOR COMPONENTS) |
| 18 | 198-0187 | 1 | FILTER GP-WATER (NOT SERVICED)<br>(SEE BREAKDOWN FOR COMPONENTS) |
| 19 | 206-6397 | 1 | FAN GP-ENGINE (NOT SERVICED)<br>(SEE BREAKDOWN FOR COMPONENTS) |
| 20 | 206-6987 | 1 | MOUNTING GP-ALTERNATOR<br>(SEE BREAKDOWN FOR COMPONENTS) |

[A] PART OF 179-2196 BASIC UNIT AR

NOTIF
PR: t05i29k58b0022

## AIR COMPRESSOR GP - 180-2937

**MT835 & MT845**

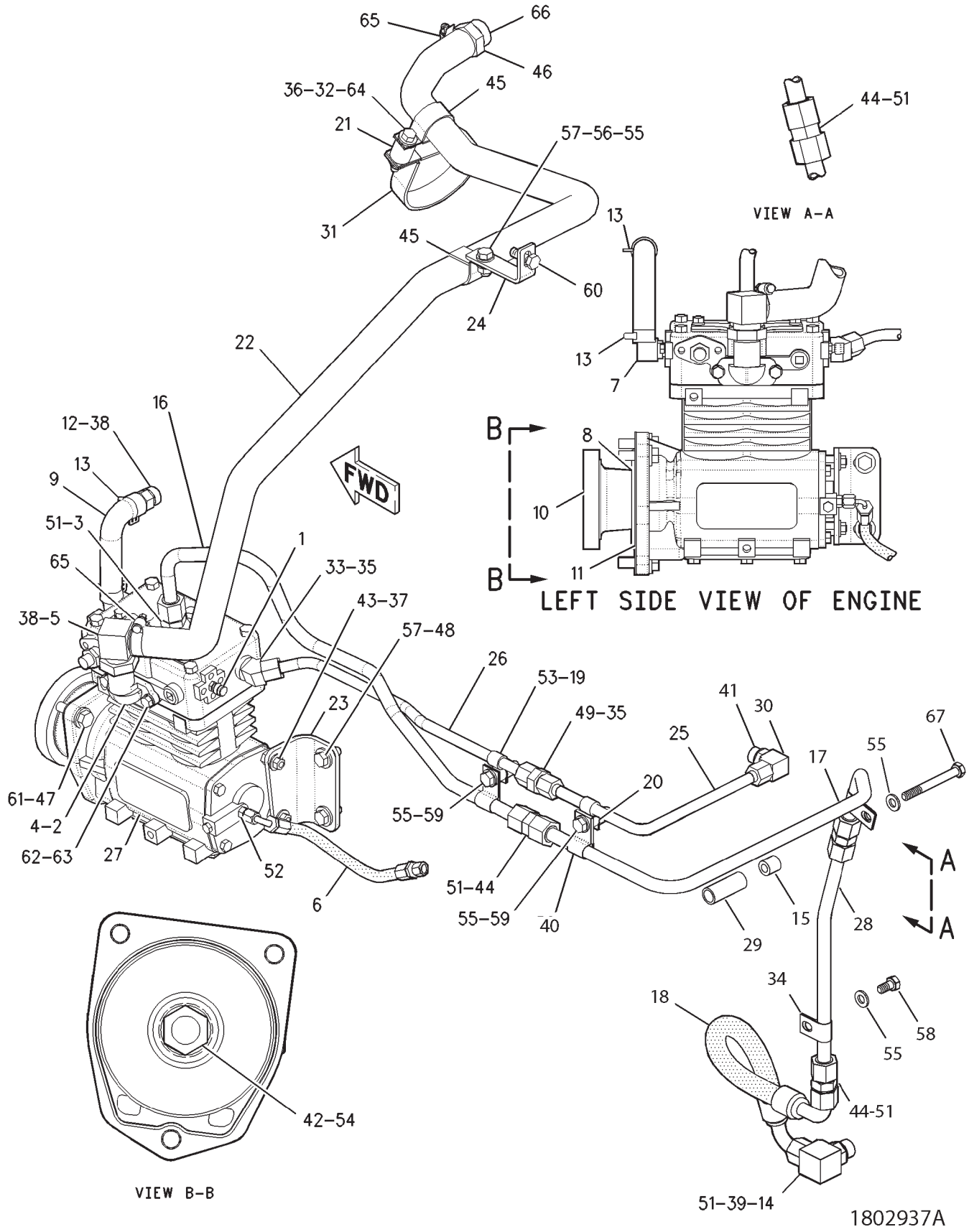

## AIR COMPRESSOR GP - 180-2937
**MT835 & MT845**

| ITEM | NUMBER | QTY | DESCRIPTION |
|---|---|---|---|
| - | 180-2937 | -- | AIR COMPRESSOR GP [A] (NOT SERVICED) |
| 1 | CH5F-5434 | 1 | VALVE-RELIEF |
| 2 | 400692X1 | 1 | ELBOW |
| 3 | 400693X1 | 1 | ADAPTER-STR,0.50MNPTFX-10MORFS |
| 4 | 400697X1 | 1 | GASKET-AIR INLET |
| 5 | 400704X1 | 1 | CONNECTOR-90DEG 10 STORX25.4 OD BARB |
| 6 | 9Y-1116 | 1 | HOSE-END |
| 7 | CH032-3631 | 1 | ELBOW |
| 8 | 117-0221 | 1 | RING-PILOT |
| 9 | CH128-0331 | 1 | HOSE |
| 10 | 128-0420 | 1 | GEAR (42 TEETH) |
| 11 | CH129-2181 | 1 | SEAL-INTEGRAL |
| 12 | CH131-2171 | 1 | CONNECTOR (10STORX15.9BARB) |
| 13 | CH172-4702 | 2 | CLAMP |
| 14 | CH184-8029 | 1 | ELBOW AS.-90DEG 10 ORFS X M22 |
| | 400322X1 | 1 | SEAL-O-RING (19.28IDX1.78DIA) |
| | 400366X1 | 1 | SEAL-O-RING (22.5ODX1.78DIA) |
| | 187-9009 | 1 | RING-RETAINING |
| 15 | CH2B-0941 | 1 | SPACER (19ODX10.5IDX19) |
| 16 | 197-0749 | 1 | TUBE |
| 17 | 500516D1 | 1 | TUBE |
| 18 | 198-1962 | 1 | HOSE |
| 19 | CH200-4328 | 2 | SPACER (11X19.05X10.5) |
| 20 | CH200-8649 | 2 | SPACER (.5X.75X.56 IN THK) |
| 21 | 212-3597 | 1 | SPACER |
| 22 | 212-3839 | 1 | HOSE-AIR INLET |
| 23 | 215-8050 | 1 | BRACKET |
| 24 | 215-8051 | 1 | BRACKET |
| 25 | 215-8052 | 1 | TUBE |
| 26 | 215-8054 | 1 | TUBE |
| 27 | 215-8055 | 1 | AIR COMPRESSOR GP |
| | | | (SEE BREAKDOWN FOR COMPONENTS) |
| 28 | 218-2807 | 1 | TUBE |
| 29 | 213-2589 | 1 | SPACER |
| 30 | CH118-4728 | 1 | ELBOW-90DEG (8FLAR37X8STOR) |
| 31 | CH125-7131 | 1 | CLIP |
| 32 | CH2K-4973 | 1 | LOCKNUT (3/8-16) |
| 33 | CH3E-7449 | 1 | ELBOW |
| 34 | CH4B-9302 | 1 | CLIP |
| 35 | CH4K-2039 | 2 | SEAL-O-RING |
| 36 | CH5P-1075 | 2 | WASHER-HARD (10.2X22.5X3) |
| 37 | 400599X1 | 2 | WASHER-HARD (M8X20.5X2) |
| 38 | 400674X1 | 2 | SEAL-O-RING |
| 39 | 400675X1 | 1 | SEAL-O-RING |

CONTINUED

[A] PART OF:
185-8860;192-6400 BRAKE AR-AIR
190-0439;210-5703 TANK AR-AIR

1802937A
PR: t05i29k58b0023

## AIR COMPRESSOR GP - 180-2937

**MT835 & MT845**

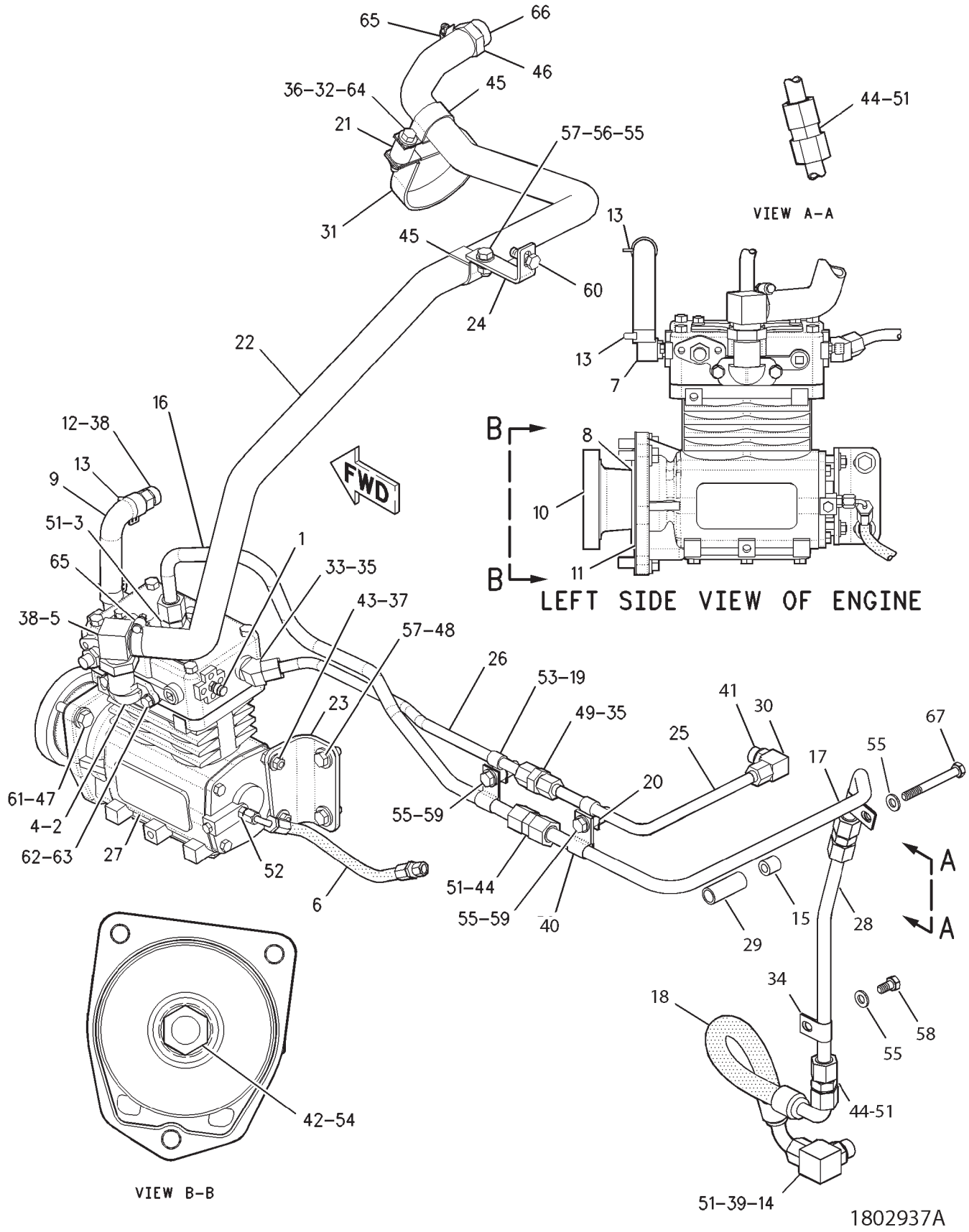

## AIR COMPRESSOR GP - 180-2937
**MT835 & MT845**

| ITEM | NUMBER | QTY | DESCRIPTION |
|---|---|---|---|
| - | 180-2937 | -- | AIR COMPRESSOR GP [A] (NOT SERVICED) |
| 40 | CH4K-8302 | 2 | CLAMP-LOOP (15.88ID W/COAT) |
| 41 | 400678X1 | 1 | SEAL-O-RING (16.36IDX2.21DIA) |
| 42 | 400681X1 | 1 | NUT-FULL (M20X2.50) |
| 43 | 400682X1 | 2 | NUT (5/16-18) |
| 44 | 400684X1 | 3 | UNION-FACE SEAL |
| 45 | 400689X1 | 2 | CLIP-LOOP (38.1 ID) |
| 46 | 400376X1 | 1 | SEAL-O-RING (29.74IDX2.95DIA) |
| 47 | 400201X1 | 3 | BOLT (M12X1.75) |
| 48 | CH7X-7729 | 2 | WASHER (11X25X3) |
| 49 | CH8C-7306 | 1 | ADAPTER |
| 50 | CH8F-8513 | 1 | CLIP |
| 51 | CH8L-2746 | 8 | SEAL-O-RING |
| 52 | CH8L-6557 | 1 | CONNECTOR |
| 53 | CH8M-2770 | 2 | CLIP |
| 54 | CH8T-3282 | 1 | WASHER-HARD (22X35X3.5) |
| 55 | 400287X1 | 7 | WASHER-HARD (11X21X2.5) |
| 56 | WR522218 | 1 | NUT (M10X1.5) |
| 57 | 400039X1 | 3 | BOLT (M10X1.5X25MM) |
| 58 | 400040X1 | 1 | BOLT (M10X1.5X20MM) |
| 59 | 400049X1 | 2 | BOLT (M10X1.5X45MM) |
| 60 | 400058X1 | 1 | BOLT (M10X1.5X30MM) |
| 61 | 400357X1 | 3 | WASHER-HARD (M12X25.5X3) |
| 62 | 400339X1 | 2 | WASHER-HARD (8.8X16X2) |
| 63 | 400249X1 | 2 | BOLT (5/16-18X.875 IN) |
| 64 | 400250X1 | 1 | BOLT (3/8-16X2.25 IN) |
| 65 | 400701X1 | 2 | CLAMP-HOSE |
| 66 | 400703X1 | 1 | CONNECTOR AS (16STORX25.4BARB) |
| | 400376X1 | 1 | SEAL-O-RING (29.74IDX2.95DIA) |
| 67 | 400225X1 | 2 | BOLT (M10X1.5X90MM) |

[A] PART OF:
185-8860;192-6400 BRAKE AR-AIR
190-0439;210-5703 TANK AR-AIR

1802937A
PR: t05i29k58b0023

## AIR COMPRESSOR GP - 215-8055

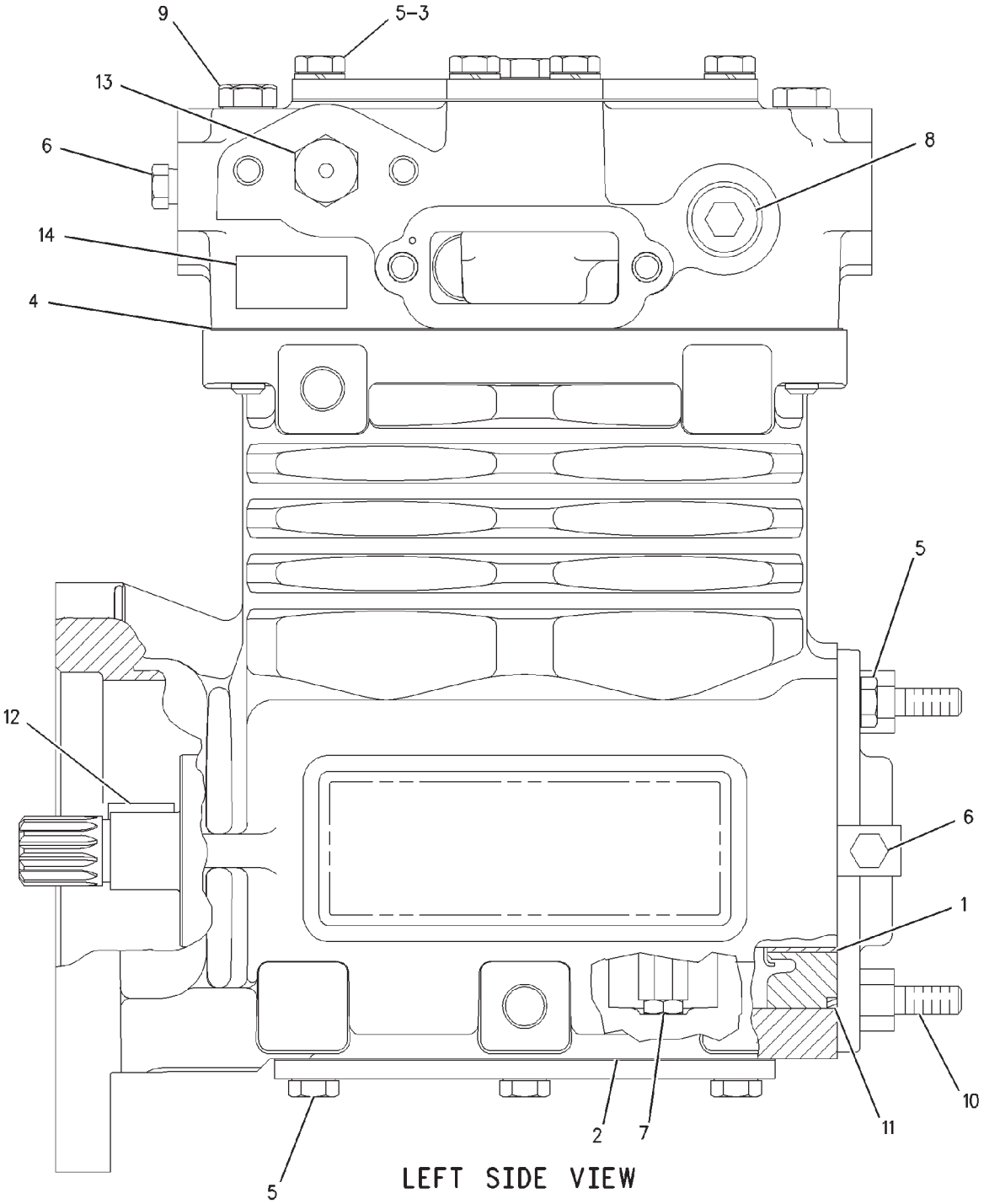


00783724

## AIR COMPRESSOR GP - 215-8055

| ITEM | NUMBER | QTY | DESCRIPTION |
|---|---|---|---|
| - | 215-8055 | -- | AIR COMPRESSOR GP [A] |
| 1 | CH7C-6178 | 2 | BEARING-REAR |
| 2 | 7E-8928 | 1 | GASKET-BASE |
| 3 | CH3B-4505 | 4 | LOCKWASHER (.097IN THK) |
| 4 | CH4P-3977 | 1 | GASKET-CYLINDER HEAD |
| 5 | CH0S-1617 | 12 | BOLT (5/16-18X0.75 IN) |
| 6 | CH8T-6764 | 2 | PLUG-PIPE |
| 7 | CH4P-3966 | 2 | PISTON & ROD AS |
| 8 | CH8T-6762 | 1 | PLUG-PIPE |
| 9 | CH0L-1352 | 6 | BOLT (3/8-16X3.25 IN) |
| 10 | CH146-0835 | 2 | STUD-END COVER |
| 11 | CH2H-3934 | 1 | SEAL-O-RING |
| 12 | CH103-6216 | 1 | KEY |
| 13 | CH124-5572 | 1 | VALVE |
| 14 | 400649X1 | 1 | PLATE-INFORMATION |
| - | 7E-8923 | 1 | KIT-CRANKSHAFT BEARING |
| - | 7E-8925 | 1 | KIT-STANDARD RING |
| - | 7E-8926 | 1 | KIT-CYLINDER HEAD |
| - | 150-5146 | 1 | KIT-UNLOADER |

[A] PART OF 180-2937; 500970D1
AIR COMPRESSOR GP

00783724
PR: t05i29k58b0024

## COMPRESSOR GP-AIR - 500970D1

**MT855 & MT865**

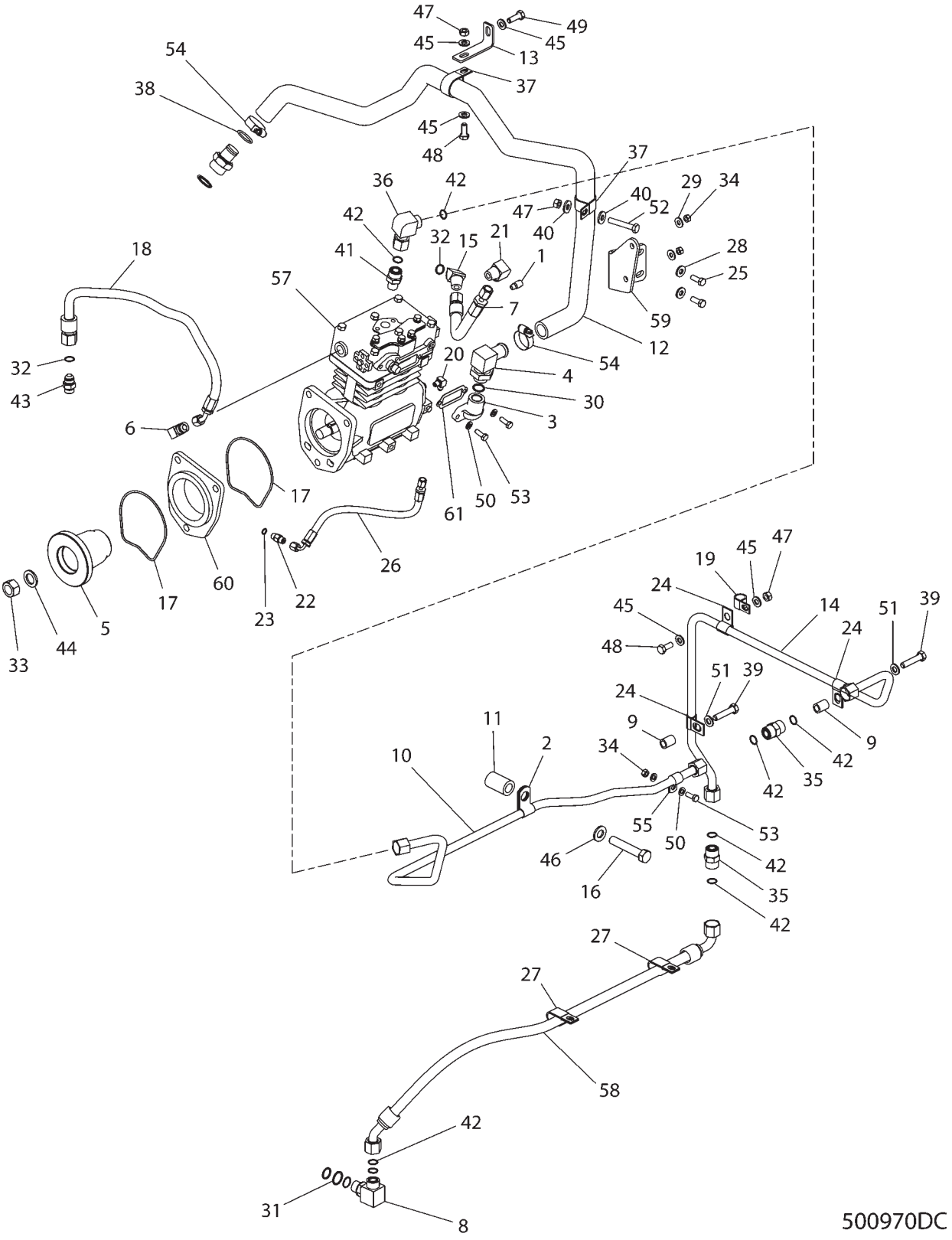

## COMPRESSOR GP-AIR - 500970D1
**MT855 & MT865**

| ITEM | NUMBER | QTY | DESCRIPTION |
|---|---|---|---|
| - | 500970D1 | -- | AIR COMPRESSOR GP [A] (NOT SERVICED) |
| 1 | CH5F-5434 | 1 | VENT AS-1/8NPTF |
| 2 | CH5P-7808 | 1 | CLIP-LOOP 16.0 ID |
| 3 | 400692X1 | 1 | ELBOW |
| 4 | 400704X1 | 1 | CONNECTOR-90DEG 10 STORX25.4 OD BARB |
| 5 | 101-9640 | 1 | GEAR-AIR COMPRESSOR |
| 6 | CH170-5282 | 1 | ELBOW-90DEG 8FLAR37X8NPTF |
| 7 | 179-2886 | 1 | HOSE AS-12.7 ID CMS 5883 |
| 8 | CH184-8029 | 1 | ELBOW AS.-90DEG 10 ORFS X M22 |
| | 400366X1 | 1 | SEAL-O-RING (22.5ODX1.78DIA) |
| | 400322X1 | 1 | SEAL-O-RING (19.28IDX1.78DIA) |
| | 187-9009 | 1 | RING-RETAINING |
| 9 | 197-1437 | 2 | SPACER |
| 10 | 198-1955 | 1 | TUBE AS. |
| 11 | 198-1961 | 1 | SPACER |
| 12 | 212-3602 | 1 | HOSE-AIR INLET |
| 13 | 215-8051 | 1 | BRACKET |
| 14 | 218-2808 | 1 | TUBE AS. |
| 15 | 400280X1 | 1 | ELBOW-45DEG 8STOR 8 37DEG FLARED |
| 16 | 400130X1 | 1 | BOLT-5/8-18X88.9 PH&O HHD 10.9 |
| 17 | CH110-0004 | 2 | SEAL (AIR COMP MTG) |
| 18 | 179-2887 | 1 | HOSE AS-12.7 ID CMS 5883 |
| 19 | CH1S-0994 | 1 | CLIP-LOOP 20.64 ID |
| 20 | 400658X1 | 1 | ELBOW-90DEG 4 FLAR 37 X 2 NPTF |
| 21 | 400659X1 | 1 | ELBOW-90 DEG 8 FLAR37 X 8 NPTF |
| 22 | 400281X1 | 1 | CONNECTOR-4 STOR 4 37DEG FLARED |
| 23 | 400361X1 | 1 | SEAL-O-RING (8.92ID X 1.83DIA) |
| 24 | CH4K-8302 | 3 | CLIP-LOOP 15.88 ID W/COAT |
| 25 | 400149X1 | 2 | BOLT-3/8-16X25.4 ZNDI HHD 10.9 |
| 26 | 501942D1 | 1 | HOSE ASM-7/16-20 THD,FJS/FJS90 |
| 27 | 400665X1 | 2 | CLIP-LOOP 19ID X 2 |
| 28 | CH5P-1075 | 2 | WASHER-HARD 10.2IDX22.5ODX3ORG |
| 29 | 400599X1 | 2 | WASHER-HARD,M8X20.5ODX2THK |
| 30 | 400674X1 | 1 | SEAL-O-RING 19.18IDX2.46DIA |
| 31 | 400675X1 | 1 | SEAL-O-RING 19.18IDX2.46DIA |
| 32 | 400678X1 | 2 | SEAL-O-RING 16.36IDX2.21DIA |
| 33 | 400681X1 | 1 | NUT M20 X 2.5 THD X 18 |
| 34 | 400682X1 | 3 | NUT 5/16-18 THD 6.75 |
| 35 | 400684X1 | 2 | UNION- 10 ORFS |
| 36 | 400687X1 | 1 | ELBOW-90DEG 10 ORFS SWVL |
| 37 | 400689X1 | 2 | CLIP LOOP 38.1ID |
| 38 | 400376X1 | 1 | SEAL-O-RING 29.74 IDX2.95 DIA |
| 39 | 400177X1 | 2 | BOLT-7/16-14X50 ZNDI HHD 10.9 |

CONTINUED

[A] PART OF:
186-1620; 192-6390 BRAKE AR-AIR TRA
190-0440; 210-5704 TANK AR-AIR

500970DC
PR: t05i29k58b0025

## COMPRESSOR GP-AIR - 500970D1

**MT855 & MT865**

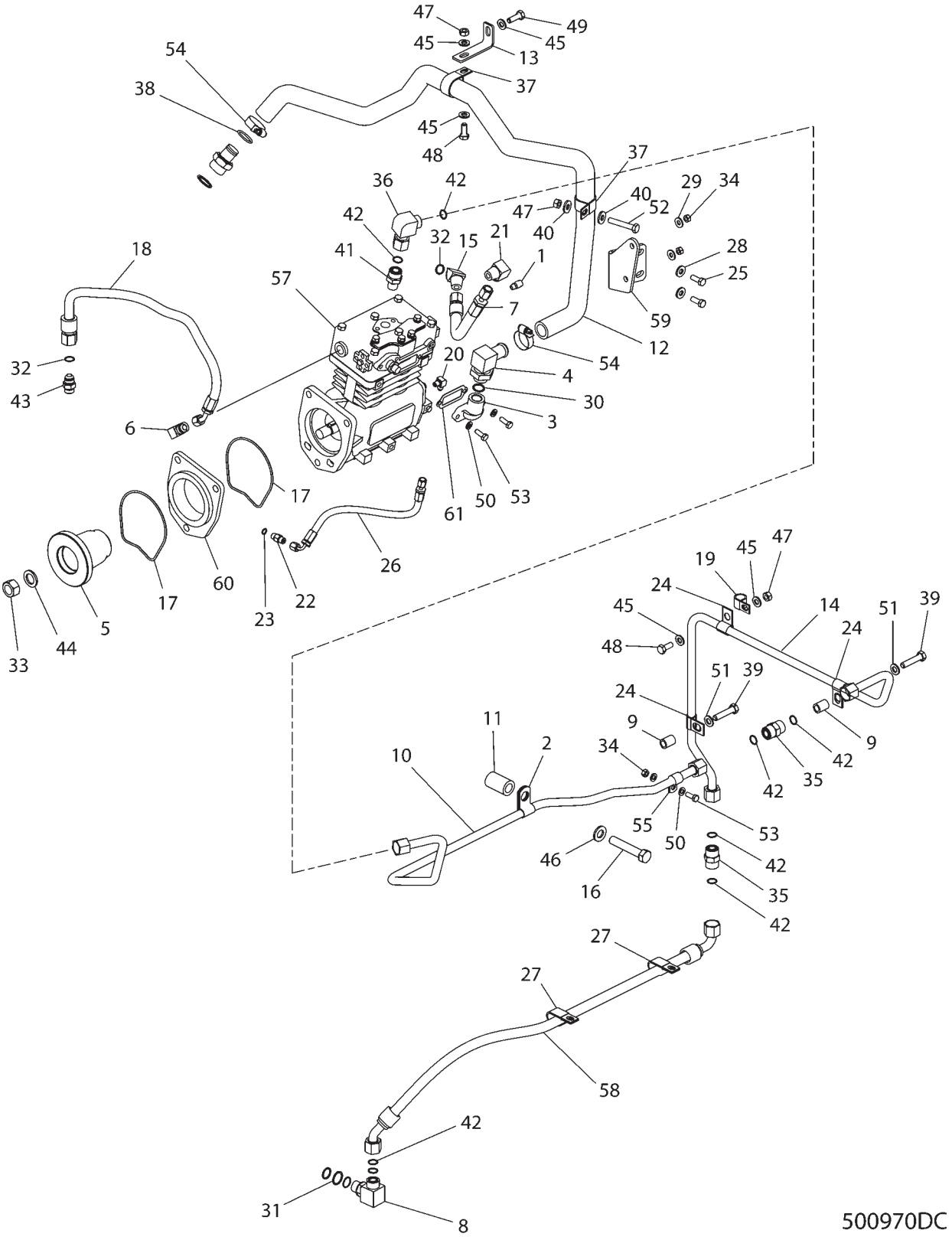

## COMPRESSOR GP-AIR - 500970D1
**MT855 & MT865**

| ITEM | NUMBER | QTY | DESCRIPTION |
|---|---|---|---|
| - | 500970D1 | -- | AIR COMPRESSOR GP [A] (NOT SERVICED) |
| 40 | CH7X-7729 | 2 | WASHER-11IDX5ODX3MM |
| 41 | 400693X1 | 1 | ADAPTER-STR,0.50MNPTFX-10MORFS |
| 42 | CH8L-2746 | 7 | SEAL-O-RING 15.61IDX1.78DIA |
| 43 | 400696X1 | 1 | CONNECTOR-8FLAR 37 X 8STOR |
| 44 | CH8T-3282 | 1 | WASHER HARD-22IDX35ODX3.5MM |
| 45 | 400287X1 | 5 | WASHER-HARD 11IDX21ODX2.5 ZND1 |
| 46 | CH8T-4122 | 1 | WASHER HARD-17IDX32ODX3.5MM |
| 47 | WR522218 | 3 | NUT-M10-1.5,CL10.9,ZN,H,REG |
| 48 | 400039X1 | 2 | BOLT-M10X1.5X25 ZNDI HHD 10.9 |
| 49 | 400058X1 | 1 | BOLT-M10X1.5X30 ZNDI HHD 10.9 |
| 50 | 400339X1 | 4 | WASHER-HARD |
| 51 | 400358X1 | 2 | WASHER-HARD-7/16X22.50DX2.5THK |
| 52 | 400239X1 | 1 | BOLT-M10X1.5X60 ZNDI HHD 10.9 |
| 53 | 400249X1 | 3 | BOLT-5/16-18X22.2 ZNDI HHD10.9 |
| 54 | 400701X1 | 2 | CLAMP-HOSE SST22.2-44.5IDX13.5 |
| 55 | 400702X1 | 1 | CLIP-ONE TUBE COATED |
| 56 | 400703X1 | 1 | CONNECTOR AS-16STORX25.4 BARB |
| | 400376X1 | 1 | SEAL-O-RING |
| 57 | 215-8055 | 1 | COMPRESSOR AS-AIR |
| | | | (SEE BREAKDOWN FOR COMPONENTS) |
| 58 | 218-2809 | 1 | HOSE AS-15.9 ID CMS 5758A |
| 59 | 500515D1 | 1 | BRACKET |
| 60 | 6I-3907 | 1 | ADAPTER-PILOT |
| 61 | 400697X1 | 1 | GASKET-AIR COMPRESSOR |

[A] PART OF:
186-1620; 192-6390 BRAKE AR-AIR TRA
190-0440; 210-5704 TANK AR-AIR

500970DC
PR: t05i29k58b0025

## AIR COMPRESSOR GP - 215-8055

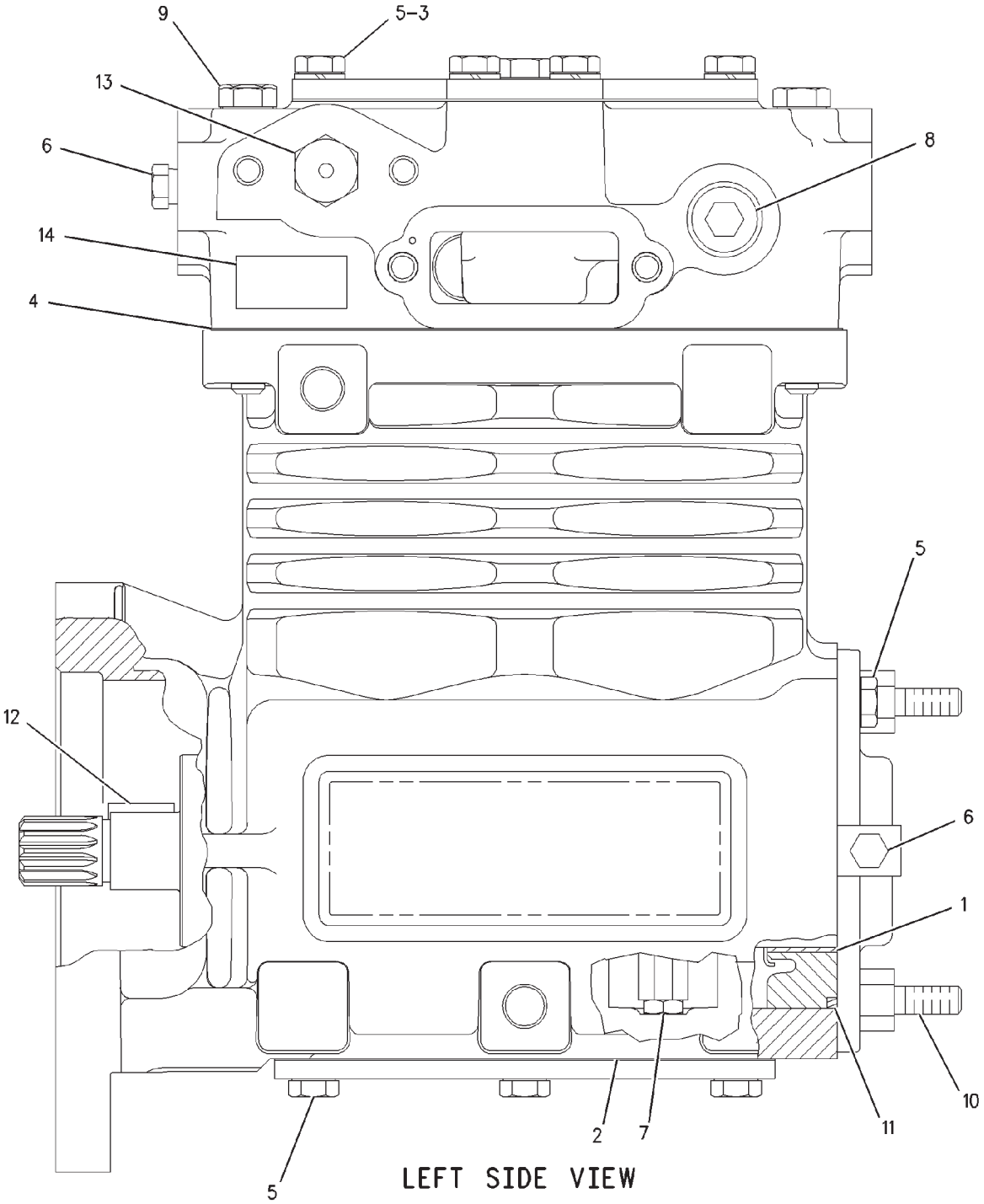


00783724

## AIR COMPRESSOR GP - 215-8055

| ITEM | NUMBER | QTY | DESCRIPTION |
|---|---|---|---|
| - | 215-8055 | -- | AIR COMPRESSOR GP [A] |
| 1 | CH7C-6178 | 2 | BEARING-REAR |
| 2 | 7E-8928 | 1 | GASKET-BASE |
| 3 | CH3B-4505 | 4 | LOCKWASHER (.097IN THK) |
| 4 | CH4P-3977 | 1 | GASKET-CYLINDER HEAD |
| 5 | CH0S-1617 | 12 | BOLT (5/16-18X0.75 IN) |
| 6 | CH8T-6764 | 2 | PLUG-PIPE |
| 7 | CH4P-3966 | 2 | PISTON & ROD AS |
| 8 | CH8T-6762 | 1 | PLUG-PIPE |
| 9 | CH0L-1352 | 6 | BOLT (3/8-16X3.25 IN) |
| 10 | CH146-0835 | 2 | STUD-END COVER |
| 11 | CH2H-3934 | 1 | SEAL-O-RING |
| 12 | CH103-6216 | 1 | KEY |
| 13 | CH124-5572 | 1 | VALVE |
| 14 | 400649X1 | 1 | PLATE-INFORMATION |
| - | 7E-8923 | 1 | KIT-CRANKSHAFT BEARING |
| - | 7E-8925 | 1 | KIT-STANDARD RING |
| - | 7E-8926 | 1 | KIT-CYLINDER HEAD |
| - | 150-5146 | 1 | KIT-UNLOADER |

[A] PART OF 180-2937; 180-2398;
500970D1 AIR COMPRESSOR GP

00783724
PR: t05i29k58b0026

## DRIVE GP-ACCESSORY - 187-1791

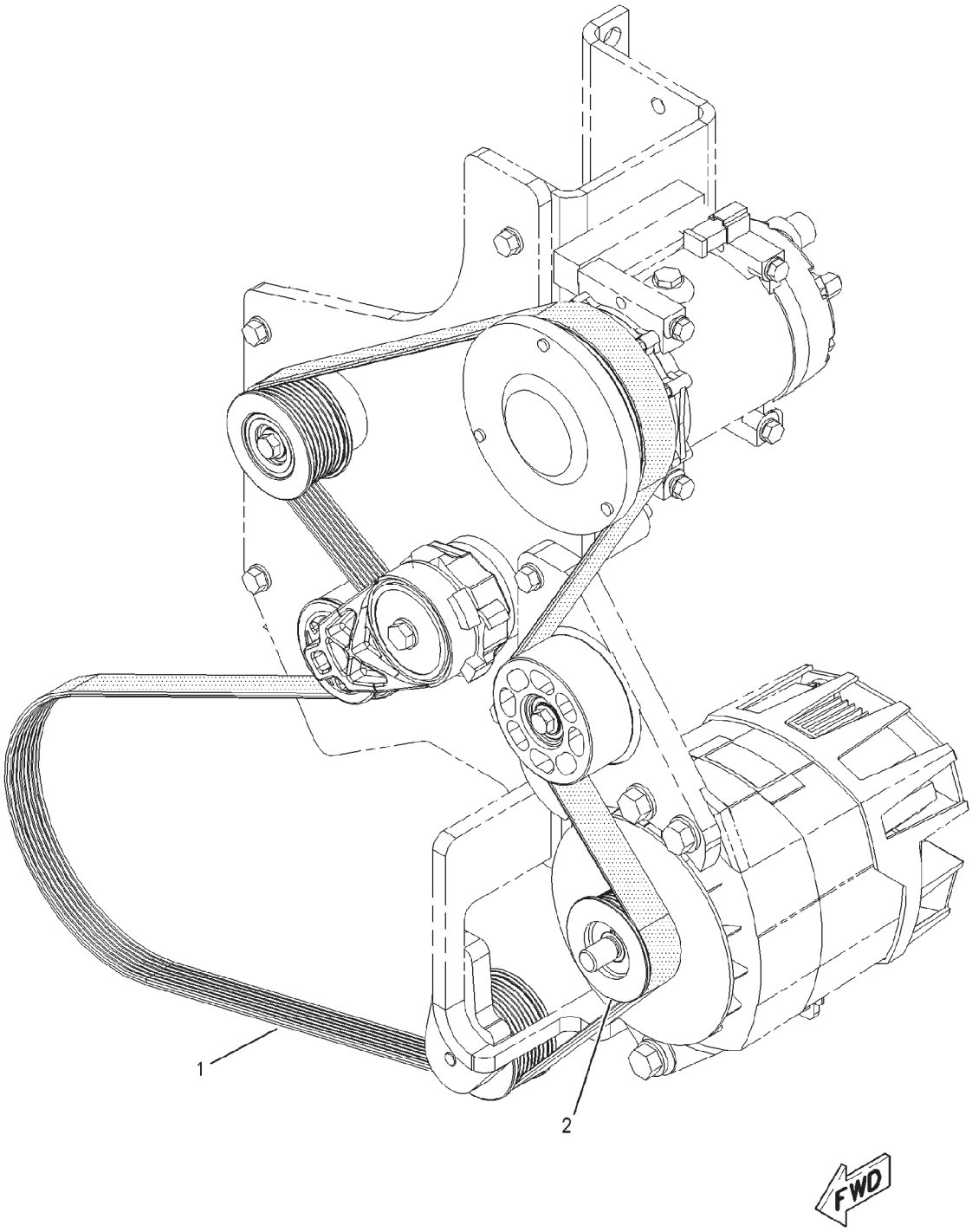


00869546

## DRIVE GP-ACCESSORY - 187-1791

| ITEM | NUMBER | QTY | DESCRIPTION |
|---|---|---|---|
| - | 187-1791 | -- | DRIVE GP-ACCESSORY [A] (NOT SERVICED) |
| 1 | 500685D1 | 1 | BELT (ALTERNATOR) |
| 2 | 500519D1 | 1 | PULLEY-ALTERNATOR (8 GROOVE) |

[A] PART OF 172-5361;172-5362;172-5363;
172-5364;187-1741;187-1742;187-1743;
187-1744 INSTALLATION AR-ENGINE

00869546
PR: t05i29k58b0027

## DRIVE GP-FAN - 193-2266
**MT835 & MT845**

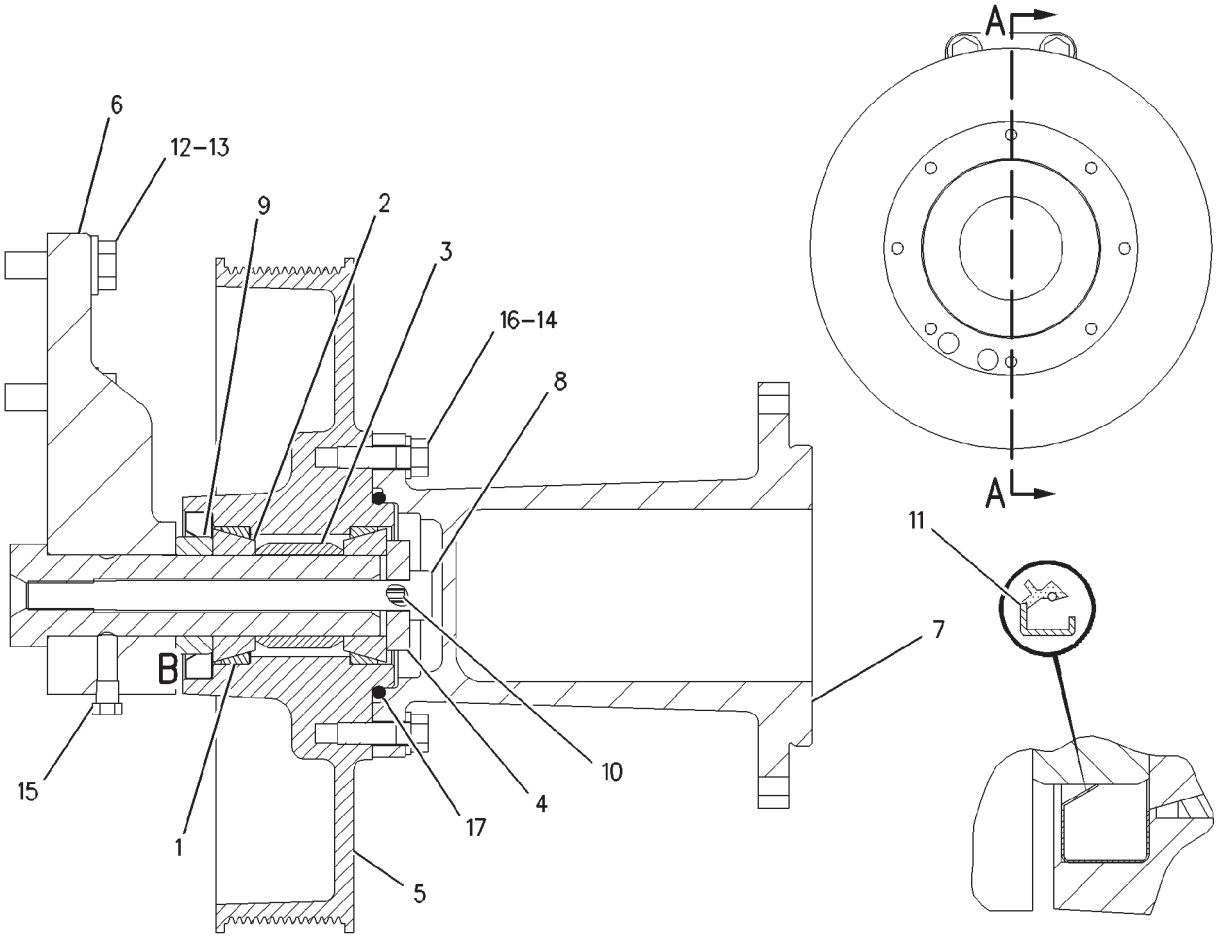


00901705

## DRIVE GP-FAN - 193-2266
**MT835 & MT845**

| ITEM | NUMBER | QTY | DESCRIPTION |
|---|---|---|---|
| - | 193-2266 | -- | DRIVE GP-FAN [A] (NOT SERVICED) |
| 1 | CH4W-1203 | 2 | CUP-BEARING |
| 2 | CH4W-1204 | 2 | CONE-BEARING |
| 3 | CH4W-2042 | 1 | SPACER (35.3X45.5X38.331) |
| 4 | CH7E-4808 | 1 | PLATE |
| 5 | 193-2272 | 1 | PULLEY-FAN |
| 6 | 221-0808 | 1 | BRACKET |
| 7 | 221-2549 | 1 | ADAPTER-FAN |
| 8 | 400146X1 | 1 | BOLT (1/2-13X6.5 IN) |
| 9 | CH5S-9062 | 1 | SPACER (35.032X50.8X15.88) |
| 10 | CH6H-3956 | 1 | PIN |
| 11 | CH6V-9748 | 1 | SEAL-LIP |
| 12 | 400050X1 | 4 | BOLT (M12X1.75X40MM) |
| 13 | 400357X1 | 4 | WASHER-HARD (M12X25.5X3) |
| 14 | CH8T-4896 | 6 | WASHER-HARD (10.2X18.5X2.5) |
| 15 | CH8T-6764 | 1 | PLUG-PIPE |
| 16 | 400252X1 | 6 | BOLT (3/8-16X1.25 IN) |
| 17 | CH9F-4446 | 1 | SEAL-O-RING (78.74MM ID) |
| 18 | CH8T-1807 | | LUBRICANT [B] |

[A] PART OF 185-2237 PULLEY GP
[B] LUBRICATE DRIVE GP WITH 40 GRAMS OF BEARING LUB. LIGHTLY LUB. THE SEALING LIPS WITH BEARING LUB.

00901705
PR: t05i29k58b0028

## DRIVE GP-FAN - 193-2265
**MT855**

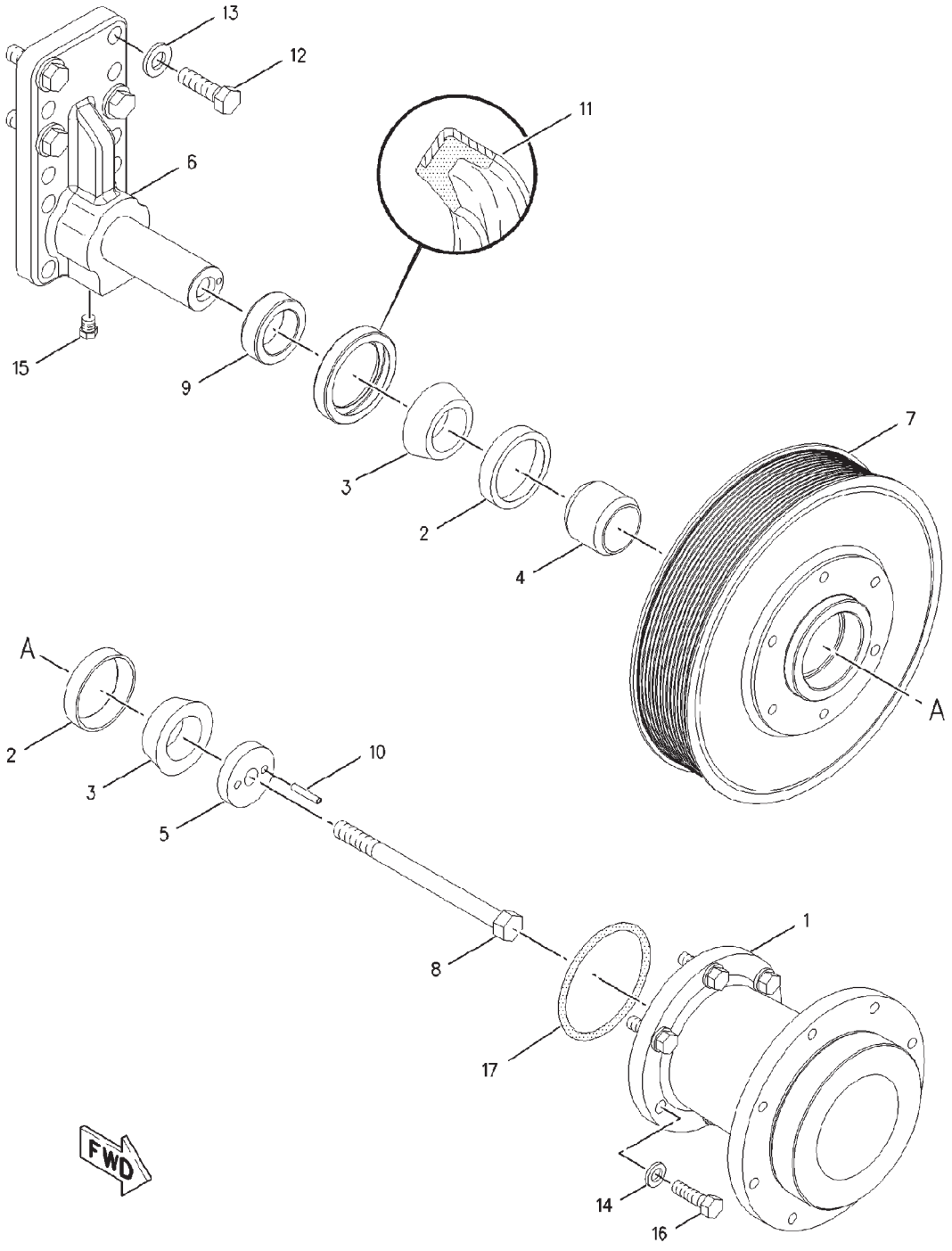


00886751

## DRIVE GP-FAN - 193-2265
**MT855**

| ITEM | NUMBER | QTY | DESCRIPTION |
|---|---|---|---|
| - | 193-2265 | -- | DRIVE GP-FAN [A] |
| 1 | 221-2548 | 1 | ADAPTER-FAN |
| 2 | CH4W-1203 | 2 | CUP-BEARING |
| 3 | CH4W-1204 | 2 | CONE-BEARING |
| 4 | CH4W-2042 | 1 | SPACER (35.3X45.5X38.331) |
| 5 | CH7E-4808 | 1 | PLATE |
| 6 | 221-0808 | 1 | BRACKET |
| 7 | 193-2271 | 1 | PULLEY-FAN |
| 8 | 400146X1 | 1 | BOLT (1/2-13X6.5 IN) |
| 9 | CH5S-9062 | 1 | SPACER (35.032X50.8X15.88) |
| 10 | CH6H-3956 | 1 | PIN |
| 11 | CH6V-9748 | 1 | SEAL-LIP |
| 12 | 400050X1 | 4 | BOLT (M12X1.75X40MM) |
| 13 | 400357X1 | 4 | WASHER-HARD (M12X25.5X3) |
| 14 | CH8T-4896 | 6 | WASHER-HARD (10.2X18.5X2.5) |
| 15 | CH8T-6764 | 1 | PLUG-PIPE |
| 16 | 400252X1 | 6 | BOLT (3/8-16X1.25 IN) |
| 17 | CH9F-4446 | 1 | SEAL-O-RING |

[A] PART OF 185-2239 PULLEY GP

00886751
PR: t05i29k58b0029

## DRIVE GP-FAN - 197-5675
**MT865**

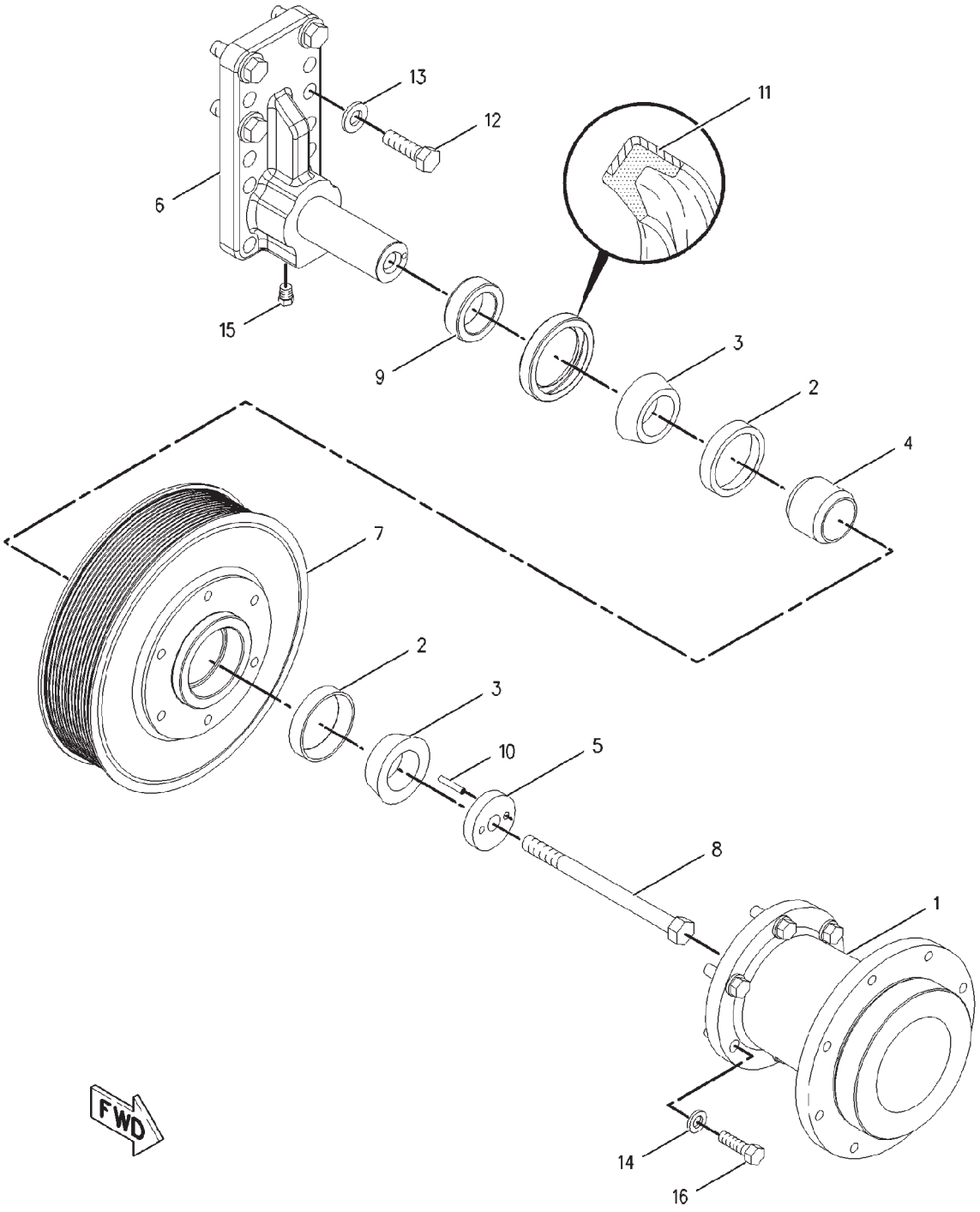


00878552

## DRIVE GP-FAN - 197-5675
**MT865**

| ITEM | NUMBER | QTY | DESCRIPTION |
|---|---|---|---|
| - | 197-5675 | -- | DRIVE GP-FAN [A] (NOT SERVICED) |
| 1 | 221-2548 | 1 | ADAPTER-FAN |
| 2 | CH4W-1203 | 2 | CUP-BEARING |
| 3 | CH4W-1204 | 2 | CONE-BEARING |
| 4 | CH4W-2042 | 1 | SPACER (35.3X45.5X38.331) |
| 5 | CH7E-4808 | 1 | PLATE |
| 6 | 221-0808 | 1 | BRACKET |
| 7 | 197-5676 | 1 | PULLEY-FAN |
| 8 | 400146X1 | 1 | BOLT (1/2-13X165) |
| 9 | CH5S-9062 | 1 | SPACER (35.032X50.8X15.88) |
| 10 | 6H-3956 | 1 | PIN |
| 11 | CH6V-9748 | 1 | SEAL-LIP |
| 12 | 400050X1 | 4 | BOLT (M12X1.75X40MM) |
| 13 | 400357X1 | 4 | WASHER-HARD (M12X25.5X3) |
| 14 | CH8T-4896 | 6 | WASHER-HARD (10.2X18.5X2.5) |
| 15 | 8T-6764 | 1 | PLUG-PIPE |
| 16 | 400252X1 | 6 | BOLT (3/8-16X1.25 IN) |
| 17 | CH9F-4446 | 1 | SEAL-O-RING (NOT SHOWN) |
| 18 | CH8T-1807 | AR | LUBRICANT (NOT SHOWN) [B] |

[A] PART OF 185-2240 PULLEY GP

[B] LUBRICATE DRIVE GP WITH 40 GRAMS OF BEARING LUBRICANT. LIGHTLY LUB. THE SEALING LIPS WITH BEARING LUB. ADD 10 GRAMS IN CAVITY BETWEEN BEARINGS AN PUT 30 GRAMS IN THE FAN ADAPTER CAVITY.

00878552
PR: t05i29k58b0030

## MOUNTING GP-ALTERNATOR - 206-6987

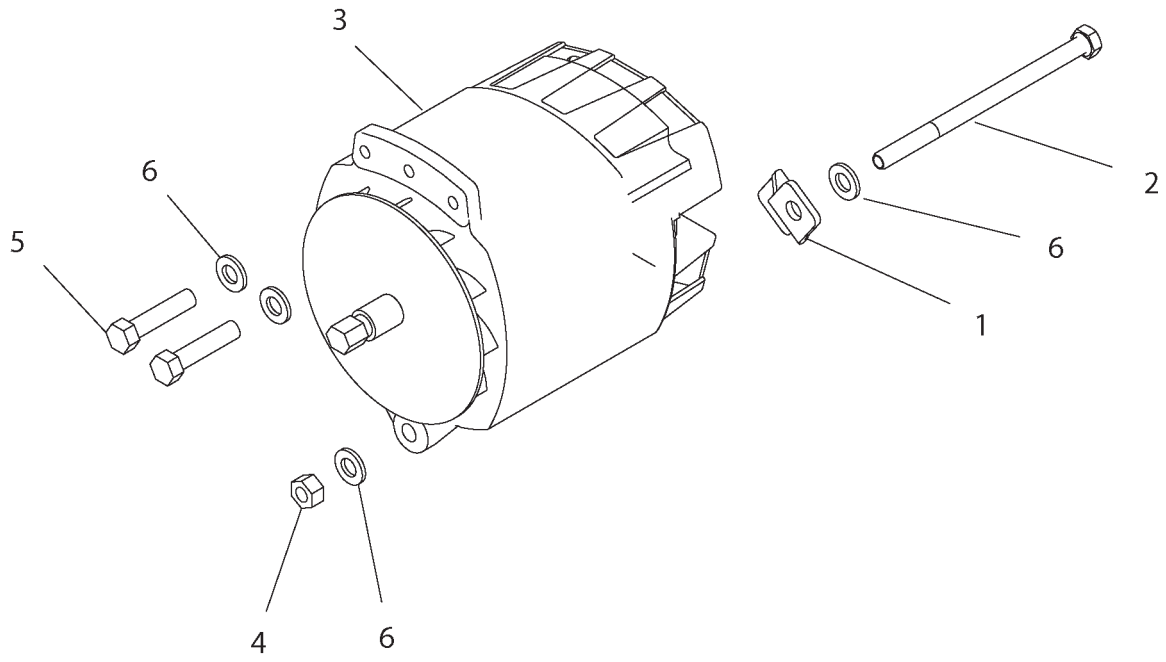


2066987A

## MOUNTING GP-ALTERNATOR - 206-6987

| ITEM | NUMBER | QTY | DESCRIPTION |
|---|---|---|---|
| - | 206-6987 | -- | MOUNTING GP-ALT [A] (NOT SERVICED) |
| 1 | 142-9826 | 1 | BRACKET ASM |
| 2 | 400826X1 | 1 | BOLT (1/2-13X7.5") |
| 3 | 184-7171 | 1 | ALTERNATOR-12V 160A (S/N: PRIOR TO BAM40569;BBP40459;BCC40674;BDS40753) |
| | 136-5600 | | FUSE |
| 3 | 501774D1 | 1 | ALTERNATOR-12V 160A (S/N: EFF BAM40569;BBP40459;BCC40674;BDS40753) |
| | 501883D1 | 1 | GUARD |
| | 501884D1 | 1 | REGULATOR |
| 4 | 400570X1 | 1 | NUT (1/2-13) |
| 5 | 500316D1 | 2 | BOLT (1/2-13X2") (EARLY VERSION) |
| 5 | 400274X1 | 2 | BOLT (1/2-13X2.25") (LATER VERSION) |
| 6 | 400357X1 | 4 | WASHER-HARD (M12X25.5X3) |

[A] PART OF 172-5361;172-5362;172-5363; 172-5364;187-1741;187-1742;187-1743; 187-1744 INSTALLATION AR-ENGINE

2066987A
PR: t05i29k58b0031

## MOUNTING GP-ENGINE - 172-5334
**MT835 & MT845**

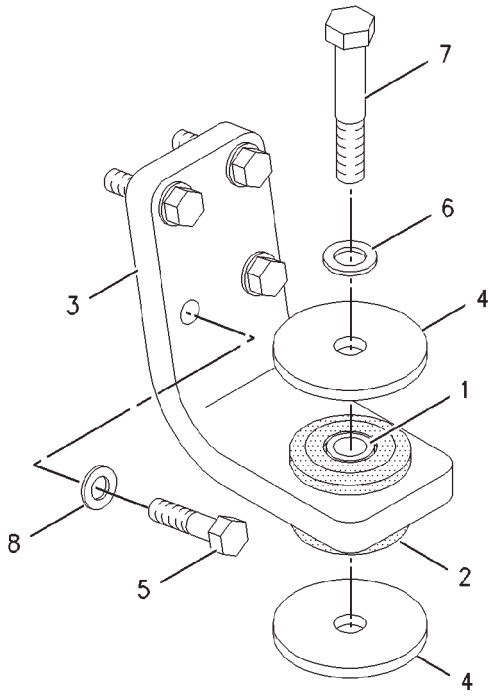


VIEW OF AREA A

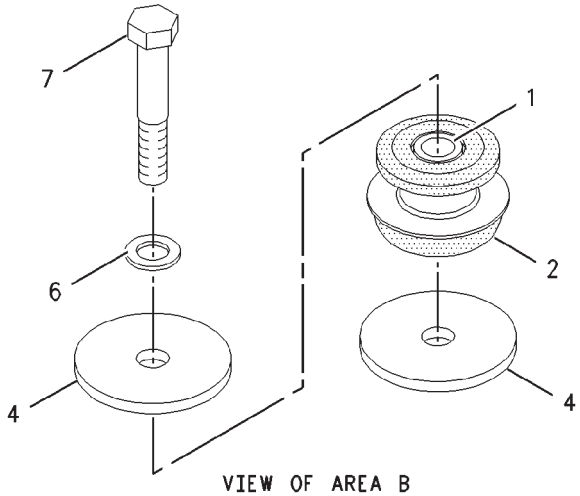


VIEW OF AREA B

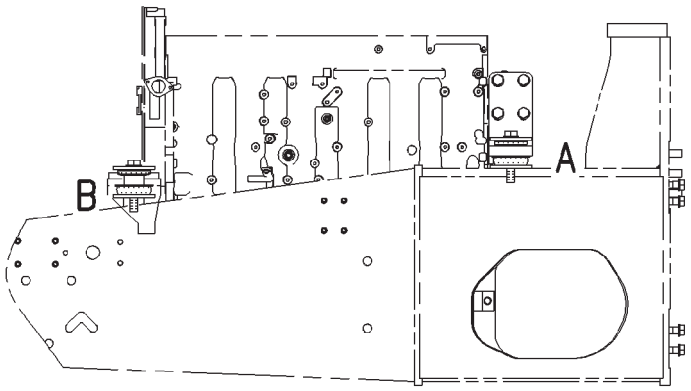


LEFT SIDE VIEW

00898127

## MOUNTING GP-ENGINE - 172-5334
**MT835 & MT845**

| ITEM | NUMBER | QTY | DESCRIPTION |
|---|---|---|---|
| - | 172-5334 | -- | MOUNTING GP-ENGINE [A] (NOT SERVICED) |
| 1 | CH3E-4883 | 4 | SLEEVE |
| 2 | CH9W-9930 | 4 | MOUNT ASM (INCLUDES PAD & MOUNT) |
| 3 | 192-1463 | 2 | SUPPORT (REAR) |
| 4 | 400336X1 | 8 | WASHER (26IDX126ODX10 |
| 5 | 400181X1 | 8 | BOLT (3/4-10X3 IN) |
| 6 | 400081X1 | 4 | WASHER-HARD (26X44X4) |
| 7 | 400229X1 | 4 | BOLT (M24X3X140MM) |
| 8 | CH8T-4994 | 8 | WASHER-HARD (20X36.5X3.5) |

[A] PART OF 172-5361; 172-5362
INSTALLATION AR-ENGINE
NOTE: QUANTITIES SHOWN ARE THOSE
REQUIRED FOR BOTH RH AND LH SIDES.

00898127
PR: t05i29k58b0032

## MOUNTING GP-ENGINE - 172-5333

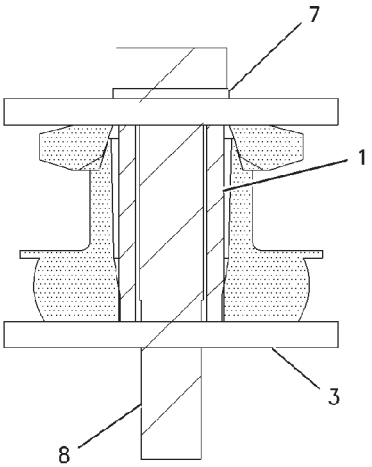


SECTION A-A

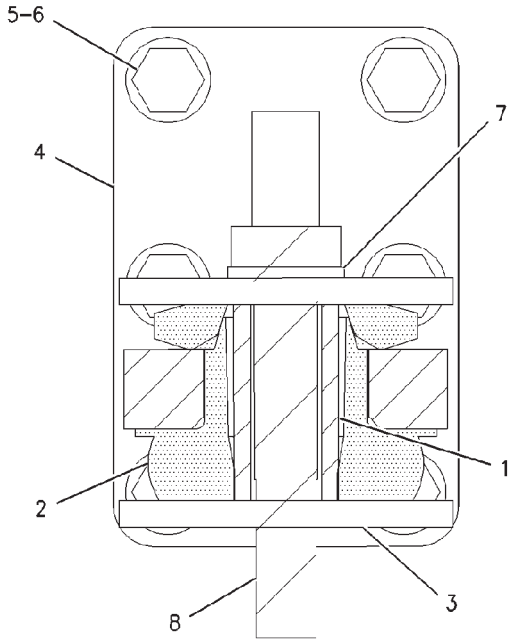


SECTION B-B

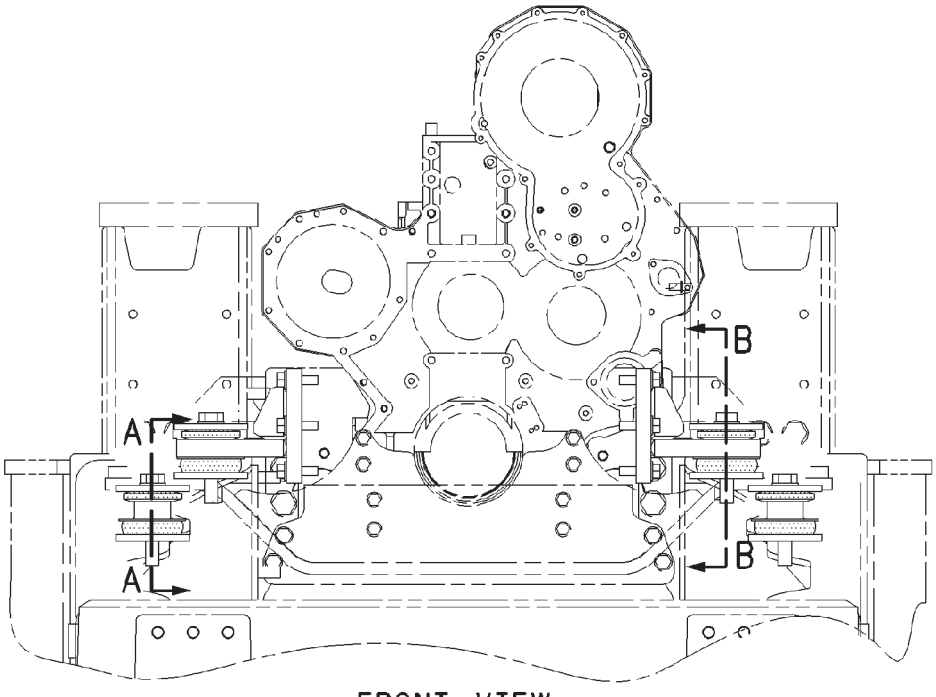


FRONT VIEW

00867786

## MOUNTING GP-ENGINE - 172-5333

| ITEM | NUMBER | QTY | DESCRIPTION |
|---|---|---|---|
| - | 172-5333 | -- | MOUNTING GP-ENGINE [A] (NOT SERVICED) |
| 1 | CH3E-4883 | 4 | SLEEVE |
| 2 | CH9W-9930 | 4 | MOUNT ASM (INCLUDES PAD & MOUNT) |
| 3 | 400336X1 | 8 | WASHER |
| 4 | 223-0701 | 2 | BRACKET-SUPPORT ENGINE |
| 5 | 400180X1 | 12 | BOLT (5/8-11X50.8) |
| 6 | CH8T-4122 | 12 | WASHER-HARD (17X32X3.5) |
| 7 | 400081X1 | 4 | WASHER-HARD (26X44X4) |
| 8 | 400229X1 | 4 | BOLT (M24X3X140MM) |

[A] PART OF 172-5363;172-5364;187-1743;
187-1744 INSTALLATION AR-ENGINE

00867786
PR: t05i29k58b0033

## MOUNTING GP-REFRIGERANT COMPR - 187-1792

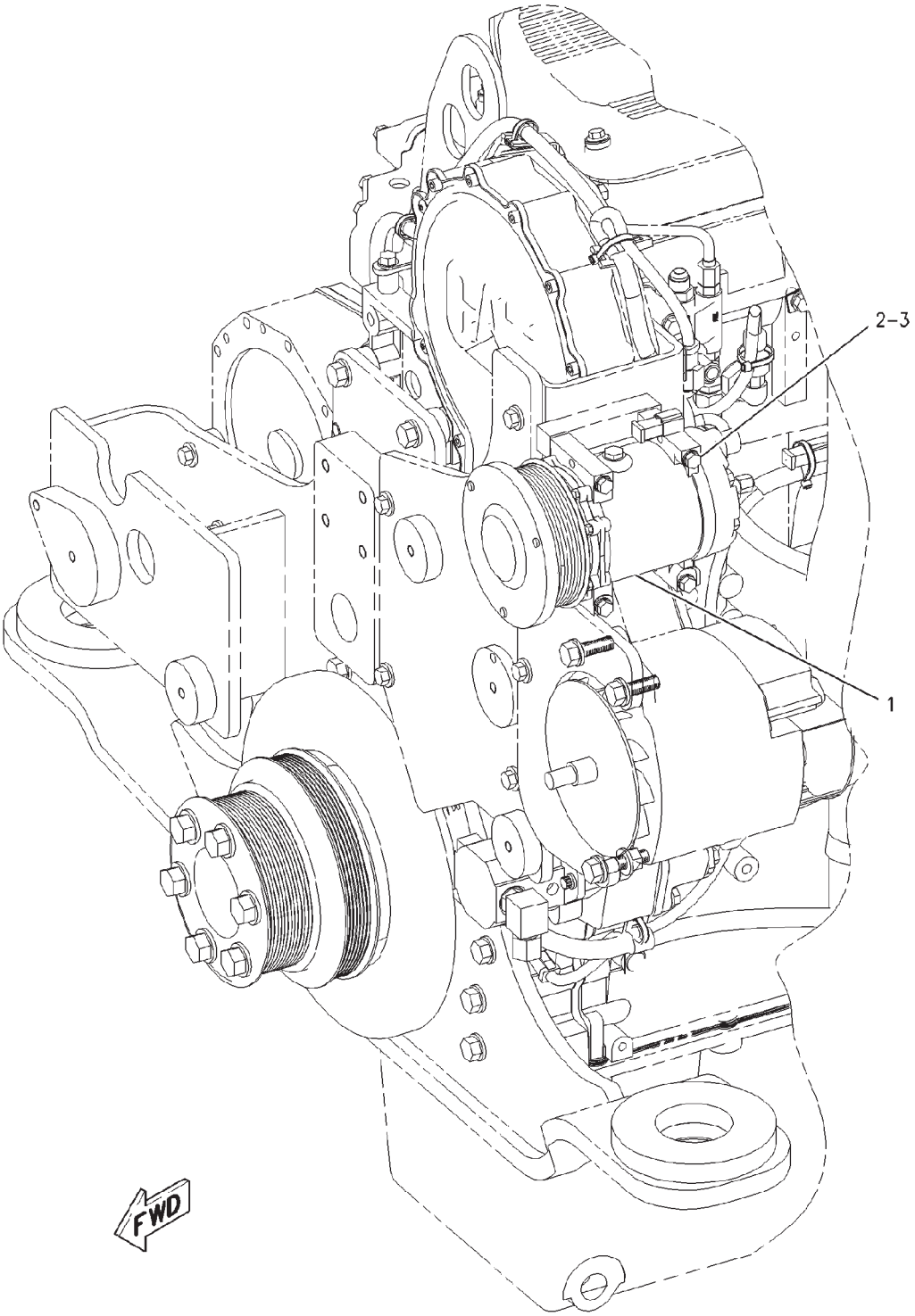


00867656

## MOUNTING GP-REFRIGERANT COMPR - 187-1792

| ITEM | NUMBER | QTY | DESCRIPTION |
|---|---|---|---|
| - | 187-1792 | -- | MOUNTING GP-REFRIGERANT COMPR [A] (NOT SERVICED) |
| 1 | CH178-9570 | 1 | COMPRESSOR GP-REFRIGERANT (SEE BREAKDOWN FOR COMPONENTS) |
| 2 | 400028X1 | 4 | BOLT (M8X1.25X100MM) |
| 3 | 400339X1 | 4 | WASHER-HARD (8.8X16X2) |

[A] PART OF 172-5361;172-5362;172-5363;
172-5364;187-1741;187-1742;187-1743;
187-1744 INSTALLATION AR-ENGINE

00867656
PR: t05i29k58b0034

## PULLEY GP - 185-2237
**MT835 & MT845**

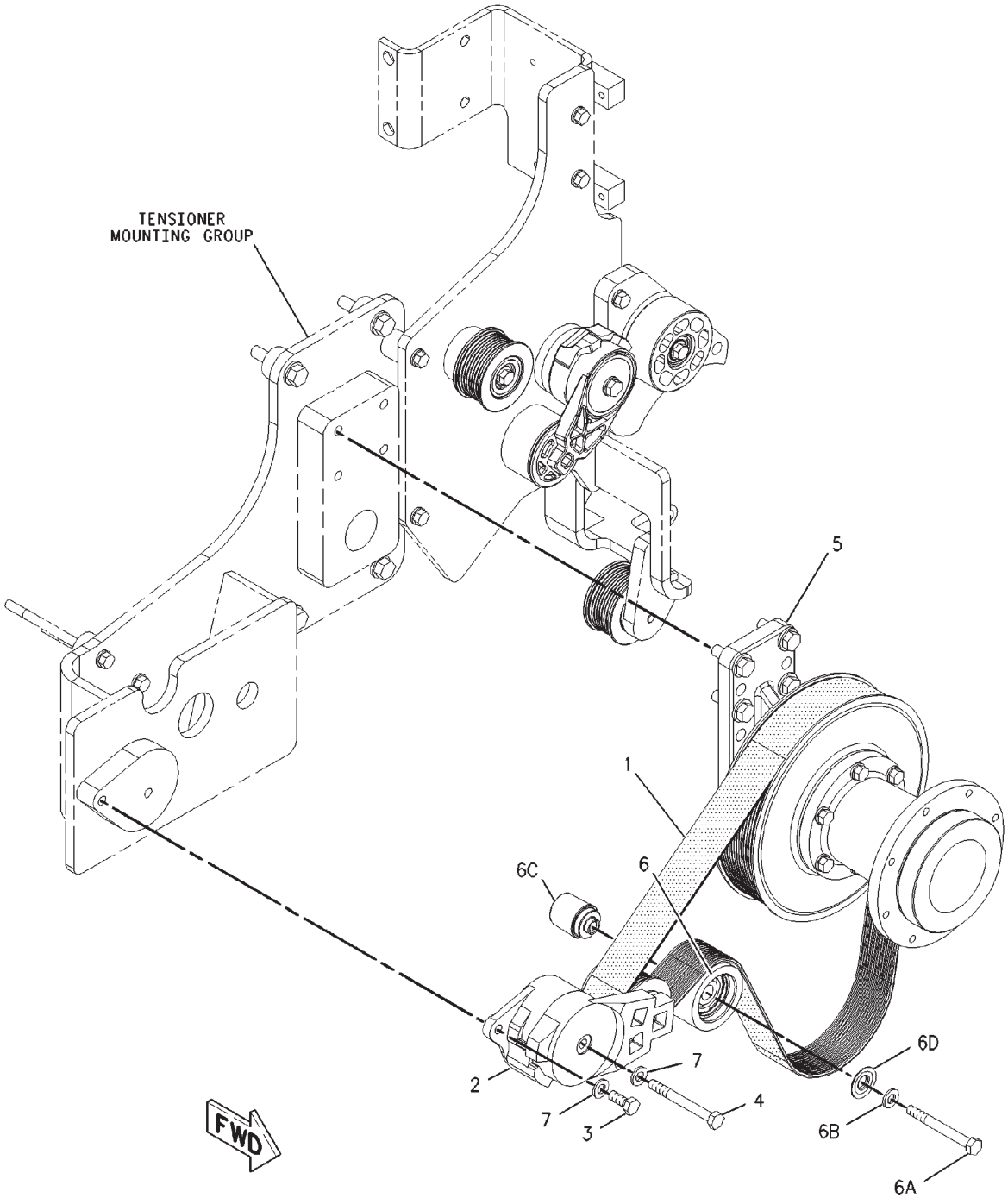


00868139

## PULLEY GP - 185-2237
**MT835 & MT845**

| ITEM | NUMBER | QTY | DESCRIPTION |
|---|---|---|---|
| - | 185-2237 | -- | PULLEY GP [A] (NOT SERVICED) |
| 1 | 501178D1 | 1 | BELT (FAN DRIVE) |
| 2 | 221-1230 | 1 | BELT TIGHTENER |
| 3 | 400039X1 | 1 | BOLT (M10X1.5X25MM) |
| 4 | 400225X1 | 1 | BOLT (M10X1.5X90MM) |
| 5 | 193-2266 | 1 | DRIVE GP-FAN (NOT SERVICED) (SEE BREAKDOWN FOR COMPONENTS) |
| 6 | 221-1233 | 1 | PULLEY ASM-IDLER (INCLUDES PULLEY ASM) |
| | CH172-2241 | 1 | PULLEY ASM (INCLUDES 6A THRU 6D) |
| 6A | CH8T-0644 | 1 | BOLT (M10X1.50X90MM) |
| 6B | 400287X1 | 1 | WASHER-HARD (11X21X2.5) |
| 6C | CH172-3403 | 1 | SPACER |
| 6D | CH194-4168 | 1 | COVER-DUST |
| 7 | 400287X1 | 2 | WASHER-HARD (11X21X2.5) |

[A] PART OF 172-5361; 172-5362
INSTALLATION AR-ENGINE

00868139
PR: t05i29k58b0035

**PULLEY GP - 185-2239**
**FAN BELT TIGHTENER**
**MT855**

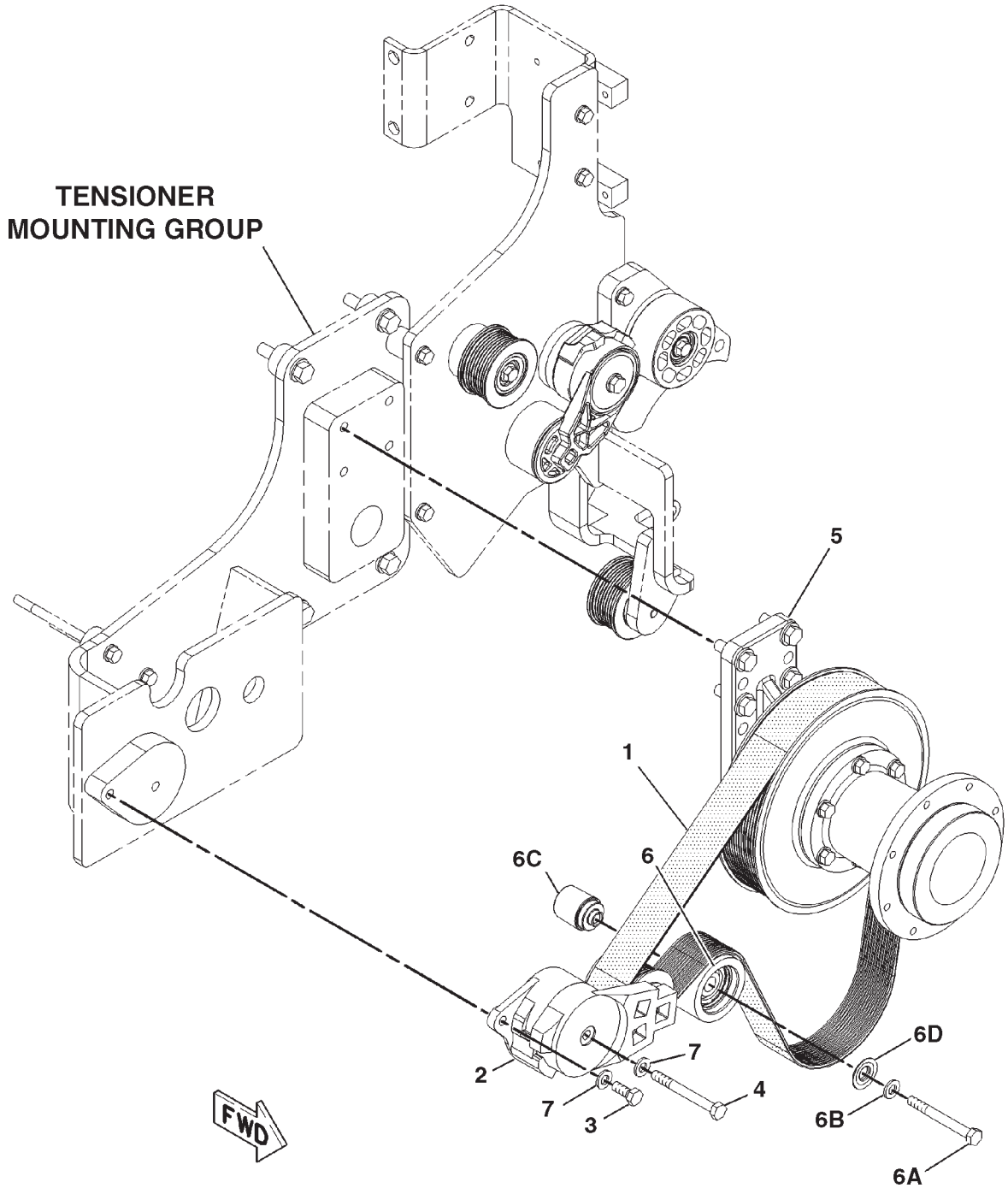


0868139A

## PULLEY GP - 185-2239
**FAN BELT TIGHTENER**
**MT855**

| ITEM | NUMBER | QTY | DESCRIPTION |
|---|---|---|---|
| - | 185-2239 | -- | PULLEY GP [A] (NOT SERVICED) |
| 1 | 197-6291 | 1 | BELT (FAN DRIVE) |
| 2 | 221-1230 | 1 | TIGHTENER-BELT |
| 3 | 400039X1 | 1 | BOLT (M10X1.5X25MM) |
| 4 | 400225X1 | 1 | BOLT (M10X1.5X90MM) |
| 5 | 193-2265 | 1 | DRIVE GP-FAN<br>(SEE BREAKDOWN FOR COMPONENTS) |
| 6 | 221-1233 | 1 | PULLEY ASM-IDLER |
| | CH172-2241 | 1 | PULLEY ASM-IDLER (INCLS 6A THRU 6D) |
| 6A | CH8T-0644 | 1 | BOLT (M10X1.50X90MM) |
| 6B | 400287X1 | 1 | WASHER-HARD (11X21X2.5) |
| 6C | CH172-3403 | 1 | SPACER |
| 6D | CH194-4168 | 1 | COVER-DUST |
| 7 | 400287X1 | 2 | WASHER-HARD (11X21X2.5) |

[A] PART OF 172-5363; 187-1743
INSTALLATION AR-ENGINE

0868139A
PR: t05i29k58b0036

## PULLEY GP - 185-2240
**FAN BELT TIGHTENER**
**MT865**

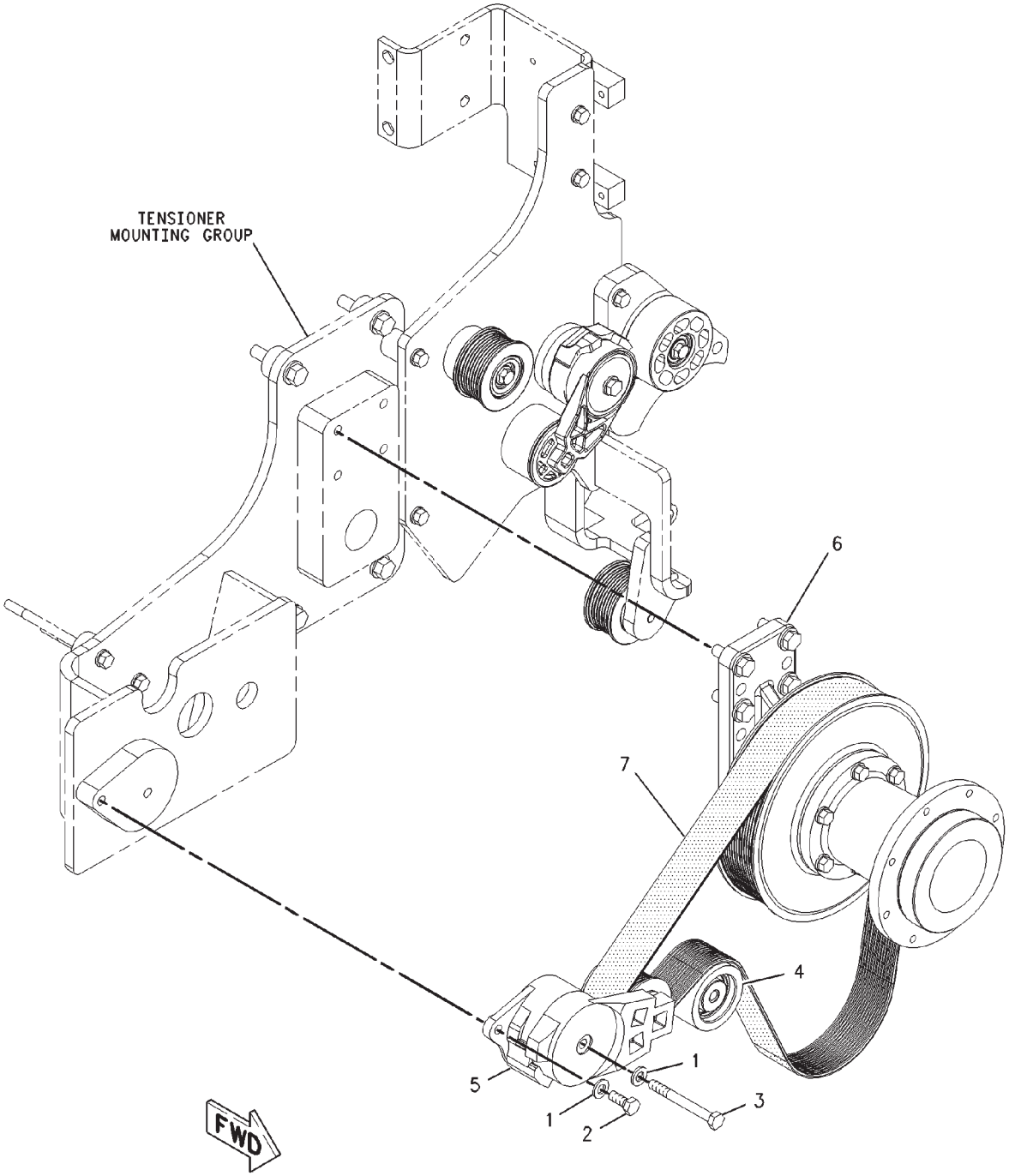


00899835

## PULLEY GP - 185-2240
**FAN BELT TIGHTENER**
**MT865**

| ITEM | NUMBER | QTY | DESCRIPTION |
|---|---|---|---|
| - | 185-2240 | -- | PULLEY GP [A] (NOT SERVICED) |
| 1 | 400287X1 | 2 | WASHER-HARD (11X21X2.5) |
| 2 | 400039X1 | 1 | BOLT (M10X1.5X25MM) |
| 3 | 400225X1 | 1 | BOLT (M10X1.5X90MM) |
| 4 | 221-1233 | 1 | PULLEY ASM-IDLER |
| | CH172-2241 | | PULLEY (INCLUDES 4A THRU 4D) |
| 4A | CH8T-0644 | 1 | BOLT (M10X1.50X90MM) |
| 4B | 400287X1 | 1 | WASHER-HARD (11X21X2.5) |
| 4C | CH172-3403 | 1 | SPACER |
| 4D | CH194-4168 | 1 | COVER-DUST |
| 5 | 221-1230 | 1 | BELT TIGHTENER |
| 6 | 197-5675 | 1 | DRIVE GP-FAN (NOT SERVICED) |
| | | | (SEE BREAKDOWN FOR COMPONENTS) |
| 7 | 197-6292 | 1 | BELT |

[A] PART OF 172-5364; 187-1744
INSTALLATION AR-ENGINE

00899835
PR: t05i29k58b0037

## COOLER GP & MOUNTING - 190-1482

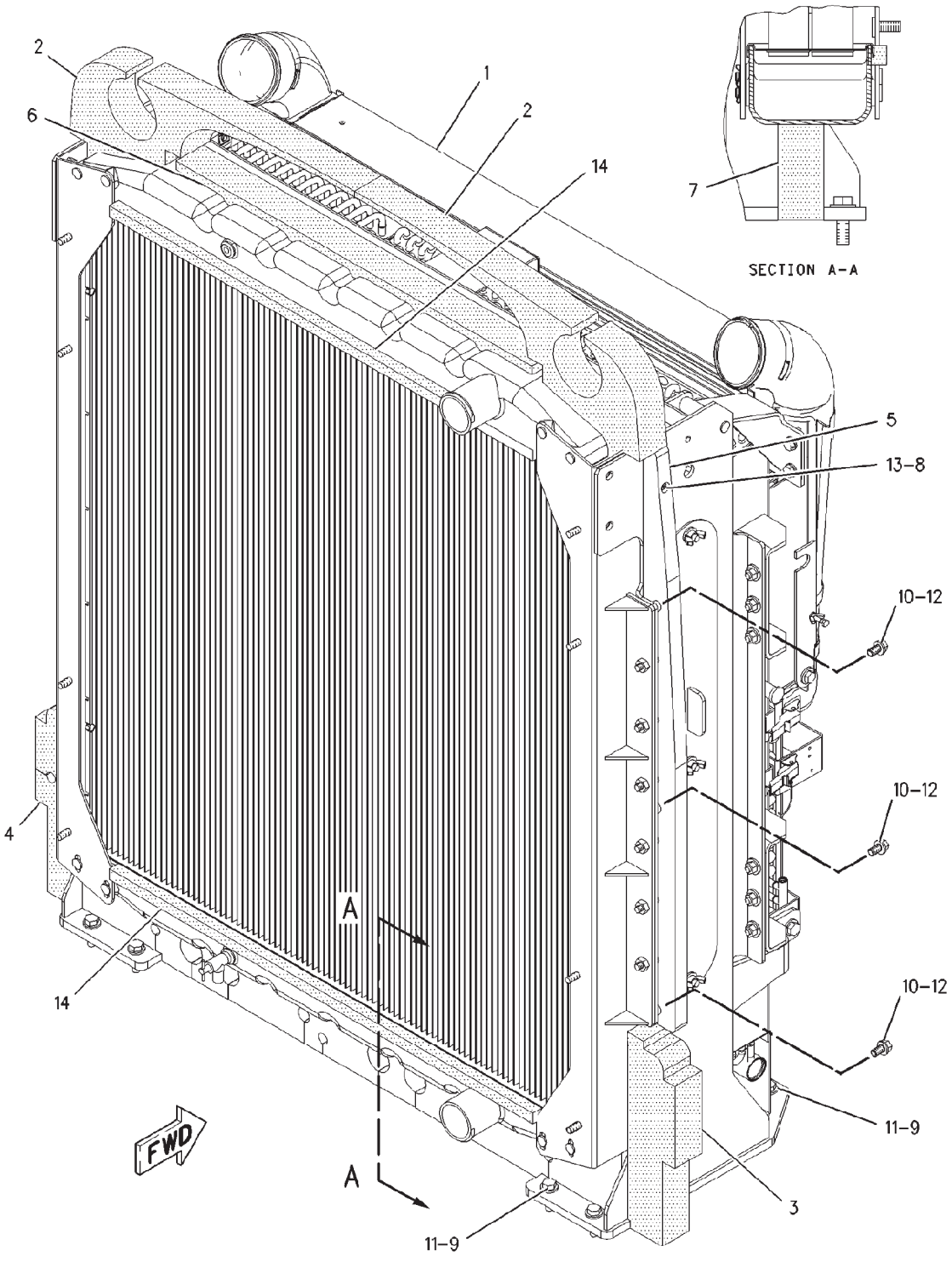


00887515

## COOLER GP & MOUNTING - 190-1482

| ITEM | NUMBER | QTY | DESCRIPTION |
|---|---|---|---|
| - | 190-1482 | -- | COOL GP-ENGINE OIL [A] (NOT SERVICED) |
| 1 | 229-8899 | 1 | CORE GP & MOUNTING (NOT SERVICED) (SEE BREAKDOWN FOR COMPONENTS) |
| 2 | 185-2225 | 2 | BAFFLE |
| 3 | 185-2226 | 1 | BAFFLE (RH) |
| 4 | 185-2227 | 1 | BAFFLE (LH) |
| 5 | 206-7565 | 2 | GUIDE |
| 6 | 221-2762 | 1 | BAFFLE |
| 7 | 221-2763 | 1 | BAFFLE |
| 8 | 400173X1 | 2 | BOLT-SOCKET HEAD (M6X1X40MM) |
| 9 | 400050X1 | 8 | BOLT (M12X1.75X40MM) |
| 10 | 400060X1 | 6 | BOLT (M8X1.25X40MM) |
| 11 | 400357X1 | 8 | WASHER-HARD (M12X25.5X3) |
| 12 | 400599X1 | 6 | WASHER-HARD (M8X20.5X2) |
| 13 | CH8T-4205 | 2 | WASHER (7.2IDX14.5X2) |
| 14 | ----- | | NOT USED |

[A] PART OF 172-5361;172-5362;172-5363;
172-5364;187-1741;187-1742;187-1743;
187-1744 INSTALLATION AR-ENGINE

00887515
PR: t05i29k58b0038

## CORE & MOUNTING GP - 229-8899

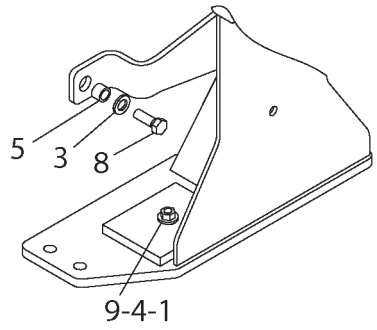


DETAIL A

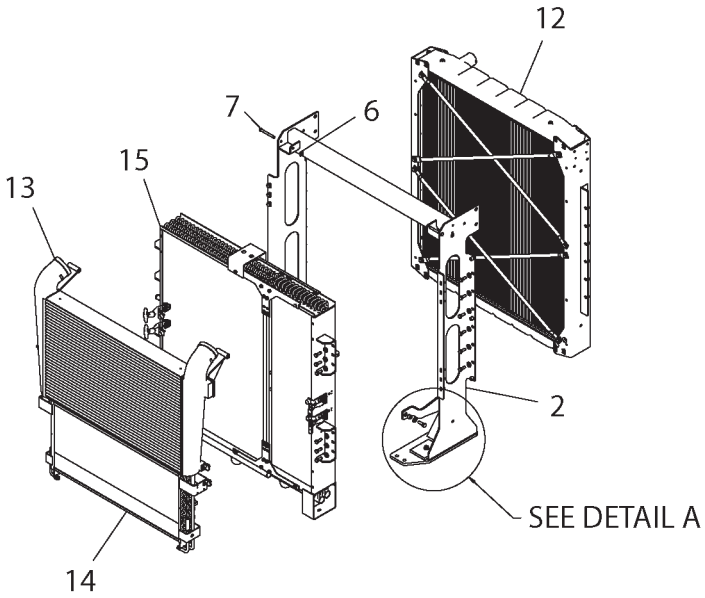


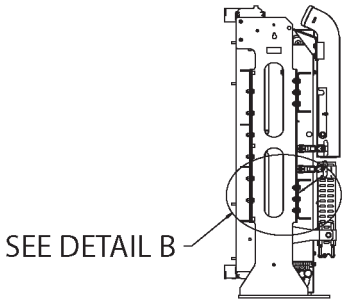


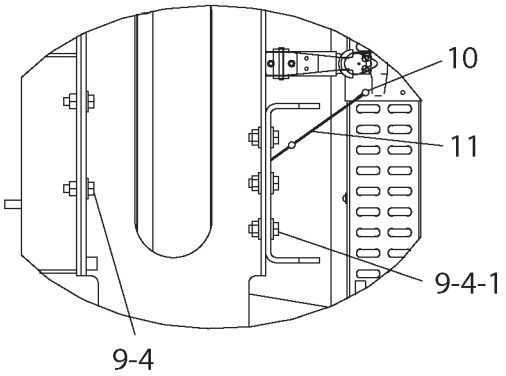


DETAIL B

2298899A

## CORE & MOUNTING GP - 229-8899

| ITEM | NUMBER | QTY | DESCRIPTION |
|---|---|---|---|
| - | 229-8899 | -- | CORE & MOUNTING GP [A] |
| 1 | WR522218 | 14 | NUT-M10-1.5,CL10.9,ZN,H,REG |
| 2 | 198-2898 | 1 | SUPPORT AS-CORE |
| 3 | 400357X1 | 2 | WASHER-HARD-M12X25.50DX3THK |
| 4 | CH7X-7729 | 40 | WASHER-11IDX5ODX3MM |
| 5 | CH9X-1482 | 2 | SPACER-19ODX13.51IDX13.51 ZN |
| 6 | CH183-8033 | 2 | CLIP-8DIA |
| 7 | 198-2900 | 2 | PIN |
| 8 | 400202X1 | 2 | BOLT-M12X1.75X35 PH&O LK 10.9 |
| 9 | 400058X1 | 26 | BOLT-M10X1.5X30 ZNDI HHD 10.9 |
| 10 | CH6C-3679 | 2 | RIVET-BLIND2-6.5 GRIPX4.75 SST |
| 11 | 221-0807 | 1 | CABLE AS |
| 12 | 221-1229 | 1 | RADIATOR GP-(BASIC) (D) |
| 13 | 229-8895 | 1 | AFTERCOOLER GP-AIR |
| 14 | 229-8893 | 1 | CORE AS-CONDENSER |
| 15 | 229-8898 | 1 | COOLER GP-OIL |

[A] PART OF 190-1482 COOLER & MTG GP

2298899A
PR: t05i29k58b0039

## FAN GP - 206-6397
**ENGINE**

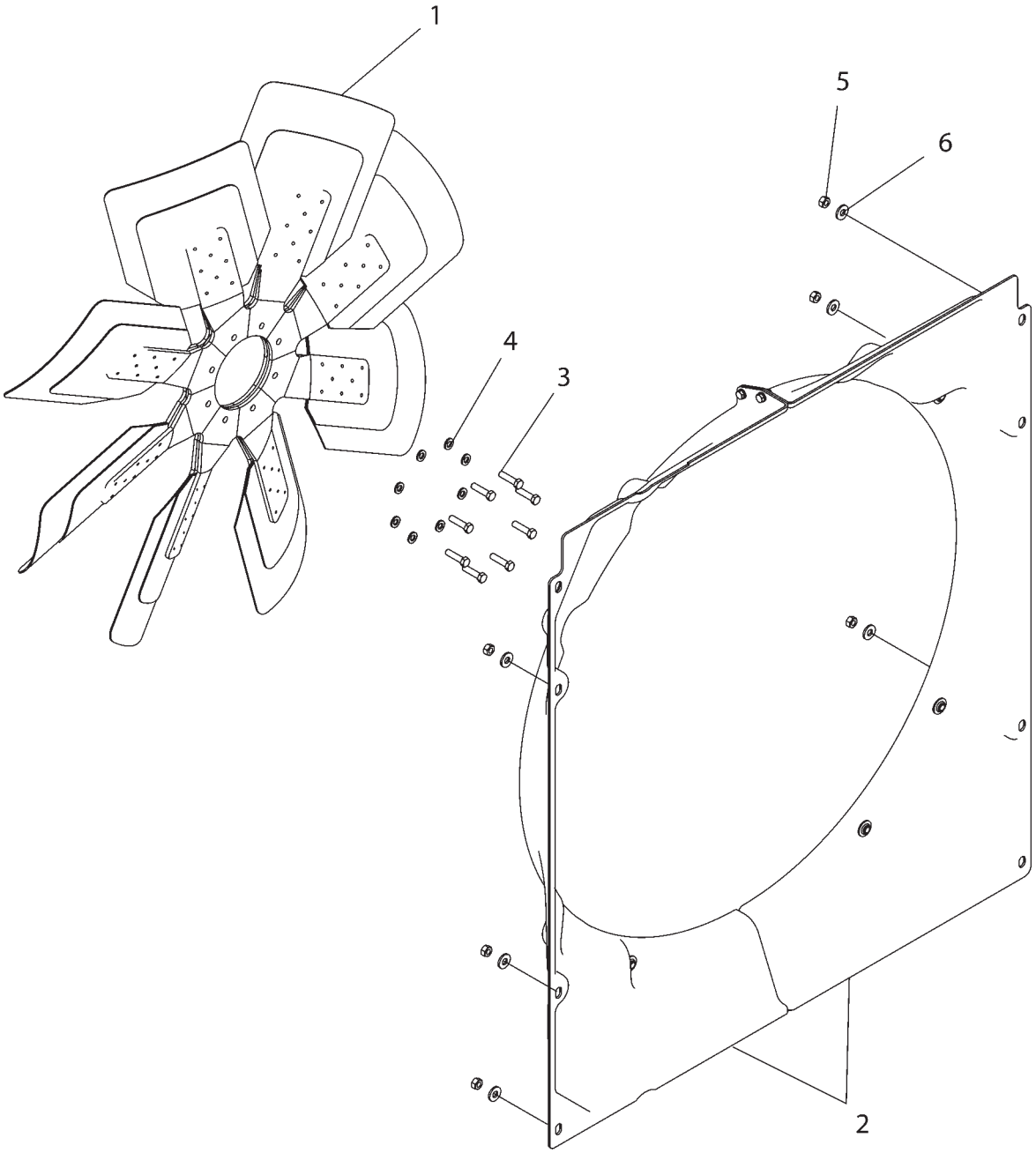


2066397A

## FAN GP - 206-6397
ENGINE

| ITEM | NUMBER | QTY | DESCRIPTION |
|---|---|---|---|
| - | 206-6397 | -- | FAN GP [A] (NOT SERVICED) |
| 1 | CH204-5041 | 1 | SPIDER-FAN |
| 2 | 212-7187 | 1 | SHROUD GP-RADIATOR (COMPONENTS NOT SERVICED SEPARATELY) |
| 3 | 400019X1 | 8 | BOLT (3/8-16X1.5 IN) |
| 4 | CH7X-7729 | 8 | WASHER (11X25X3) |
| 5 | WR522218 | 8 | NUT (M10X1.5) |
| 6 | CH8T-4896 | 8 | WASHER-HARD (10X18.5X2.5) |

[A] PART OF 172-5361;172-5362;172-5363;
172-5364;187-1741;187-1742;187-1743;
187-1744 INSTALLATION AR-ENGINE

2066397A
PR: t05i29k58b0040

## LINES GP-COOLANT - 172-5345
**MT835 & MT845**

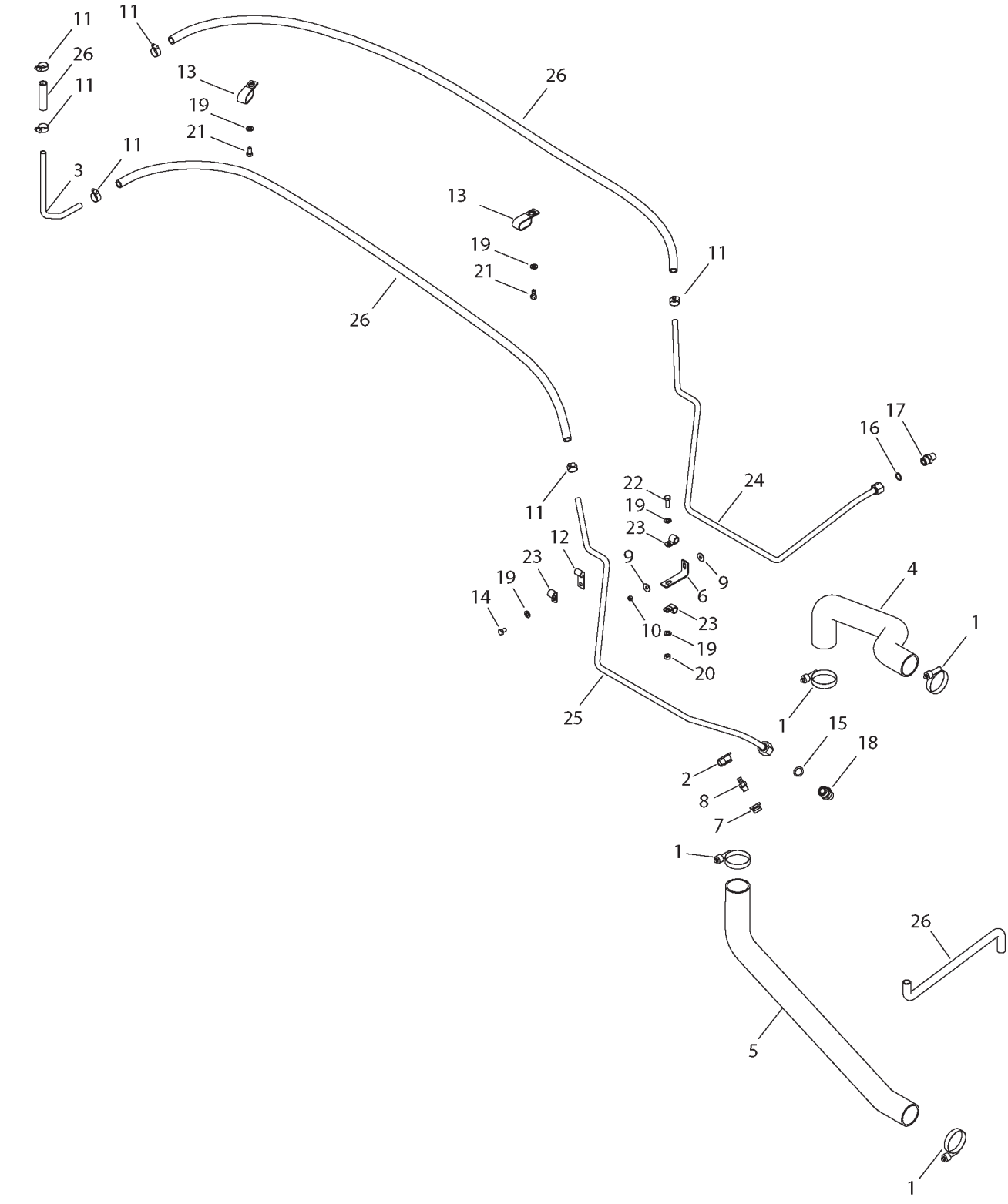

## LINES GP-COOLANT - 172-5345
**MT835 & MT845**

| ITEM | NUMBER | QTY | DESCRIPTION |
|---|---|---|---|
| - | 172-5345 | -- | LINES GP-COOLANT [A] (NOT SERVICED) |
| 1 | 400699X1 | 4 | CLAMP-HOSE (UNIFORM LOAD) |
| 2 | 400655X1 | 1 | CAP-DUST (ENGINE COOLANT) |
| 3 | 195-4519 | 1 | TUBE |
| 4 | 205-1647 | 1 | HOSE-RADIATOR (INLET) |
| 5 | 205-1648 | 1 | HOSE-RADIATOR (OUTLET) |
| 6 | 215-8051 | 1 | BRACKET |
| 7 | 400647X1 | 1 | BSHG-RDCR,HEX,0.75X0.37NPTF,BR |
| 8 | 400654X1 | 1 | VALVE-FLUID SAMPLING 6 NPTF |
| 9 | 400077X1 | 2 | WASHER-HARD 8.8IDX25.5ODX2 ORG |
| 10 | 400340X1 | 1 | NUT-M8X1.25X13 HEX ZND1 |
| 11 | 400108X1 | 7 | CLAMP-HOSE SST 15.9-26.9X13.5 |
| 12 | CH5F-1648 | 1 | CLIP-LOOP 15.88 ID |
| 13 | 400667X1 | 2 | CLIP-TWO TUBE COATED |
| 14 | 400171X1 | 1 | BOLT-M10X1.5X16 PH&O HHD 10.9 |
| 15 | 400366X1 | 1 | SEAL-O-RING 22.5 ODX1.78 DIA |
| 16 | 400322X1 | 1 | SEAL-O-RING 19.28 ODX1.78 DIA |
| 17 | 400693X1 | 1 | ADAPTER-STR,0.50MNPTFX-10MORFS |
| 18 | 400694X1 | 1 | ADAPTER-STR,0.75MNPTFX-12MORFS |
| 19 | 400287X1 | 5 | WASHER-HARD 11IDX21ODX2.5 ZND1 |
| 20 | WR522218 | 1 | NUT-M10-1.5,CL10.9,ZN,H,REG |
| 21 | 400040X1 | 2 | BOLT-M10X1.5X20 ZNDI HHD 10.9 |
| 22 | 400058X1 | 1 | BOLT-M10X1.5X30 ZNDI HHD 10.9 |
| 23 | 400702X1 | 3 | CLIP-ONE TUBE COATED |
| 24 | 500517D1 | 1 | TUBE AS. |
| 25 | 500518D1 | 1 | TUBE AS. |
| 26 | CH5P-0767 | AR | HOSE-BULK 15.88 ID (438 CM) |

[A] PART OF 172-5361;172-5362;187-1741;
187-1742 INSTALLATION AR

1725345A
PR: t05i29k58b0041

## LINES GP-COOLANT - 172-5344

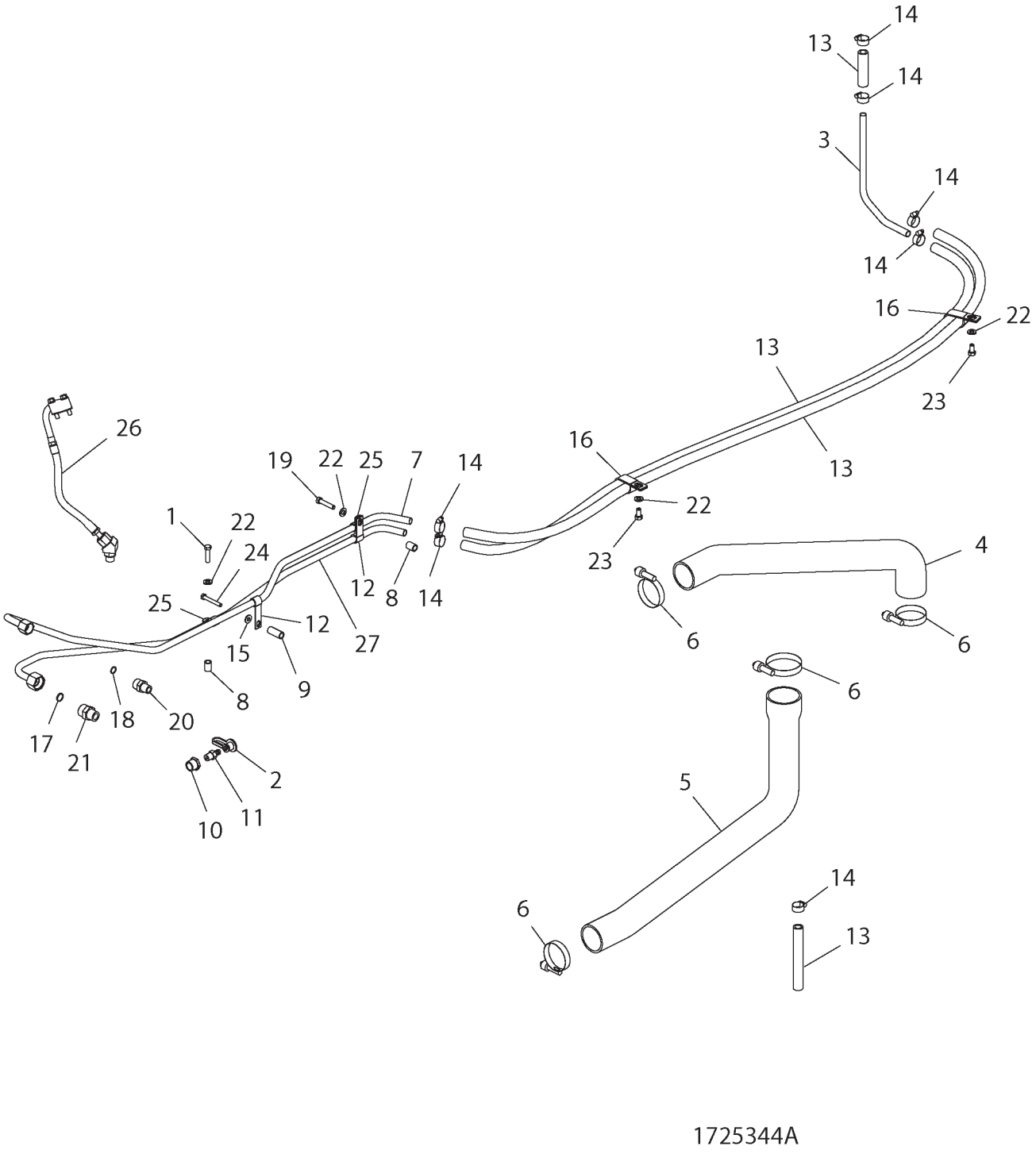

## LINES GP-COOLANT - 172-5344

| ITEM | NUMBER | QTY | DESCRIPTION |
|---|---|---|---|
| - | 172-5344 | -- | LINES GP-COOLANT [A] (NOT SERVICED) |
| 1 | 400019X1 | 1 | BOLT-3/8-16X38.1 ZNDI HHD 10.9 |
| 2 | 400655X1 | 1 | CAP-DUST (ENGINE COOLANT) |
| 3 | 195-4519 | 1 | TUBE |
| 4 | 205-1645 | 1 | HOSE-RADIATOR (INLET) |
| 5 | 205-1646 | 1 | HOSE-RADIATOR (OUTLET) |
| 6 | 400699X1 | 4 | CLAMP-HOSE (UNIFORM LOAD) |
| 7 | 209-3392 | 1 | TUBE AS |
| 8 | CH209-3394 | 2 | SPACER-17.14ODX12.52IDX22.4 ZN |
| 9 | CH209-3395 | 1 | SPACER-17.14ODX12.52IDX40 ZN |
| 10 | 400647X1 | 1 | BSHG-RDCR,HEX,0.75X0.37NPTF,BR |
| 11 | 400654X1 | 1 | VALVE-FLUID SAMPLING 6 NPTF |
| 12 | 400657X1 | 2 | CLIP-ONE TUBE-COATED |
| 13 | CH5P-0767 | AR | HOSE-BULK 15.88 ID (448CM) |
| 14 | 400108X1 | 7 | CLAMP-HOSE SST 15.9-26.9X13.5 |
| 15 | 400599X1 | 1 | WASHER-HARD,M8X20.5ODX2THK |
| 16 | 400667X1 | 2 | CLIP-TWO TUBE COATED |
| 17 | 400366X1 | 1 | SEAL-O-RING 22.5ODX1.78 DIA |
| 18 | 400322X1 | 1 | SEAL-O-RING 19.28IDX1.78 DIA |
| 19 | 400175X1 | 1 | BOLT-3/8-16X47.6 ZNDI HHD 10.9 |
| 20 | 400693X1 | 1 | ADAPTER-STR,0.50MNPTFX-10MORFS |
| 21 | 400694X1 | 1 | ADAPTER-STR,0.75MNPTFX-12MORFS |
| 22 | 400287X1 | 4 | WASHER-HARD 11IDX21ODX2.5 ZND1 |
| 23 | 400040X1 | 2 | BOLT-M10X1.5X20 ZNDI HHD 10.9 |
| 24 | 400247X1 | 1 | BOLT-5/16-18X57.1 ZNDI HHD10.9 |
| 25 | 400702X1 | 2 | CLIP-ONE TUBE COATED |
| 26 | 503583D1 | 1 | LINES GP-TURBOCHARGER (S/N: EFF BAM50670;BBP50501;BCC50790;BDS50965) (SEE BREAKDOWN FOR COMPONENTS) |
| 27 | 209-3389 | 1 | TUBE AS. (S/N: PRIOR BAM50670;BBP50501; BCC50790;BDS50965) |
| 27 | 502556D1 | 1 | TUBE AS. (S/N: EFF BAM50670;BBP50501; BCC50790;BDS50965) |

[A] PART OF 172-5363;172-5364;187-1743; 187-1744 INSTALLATION AR

1725344A
PR: t05i29k58b0042

## LINES GP-TURBOCHARGER - 503583D1

**S/N: EFF 3/14/05**

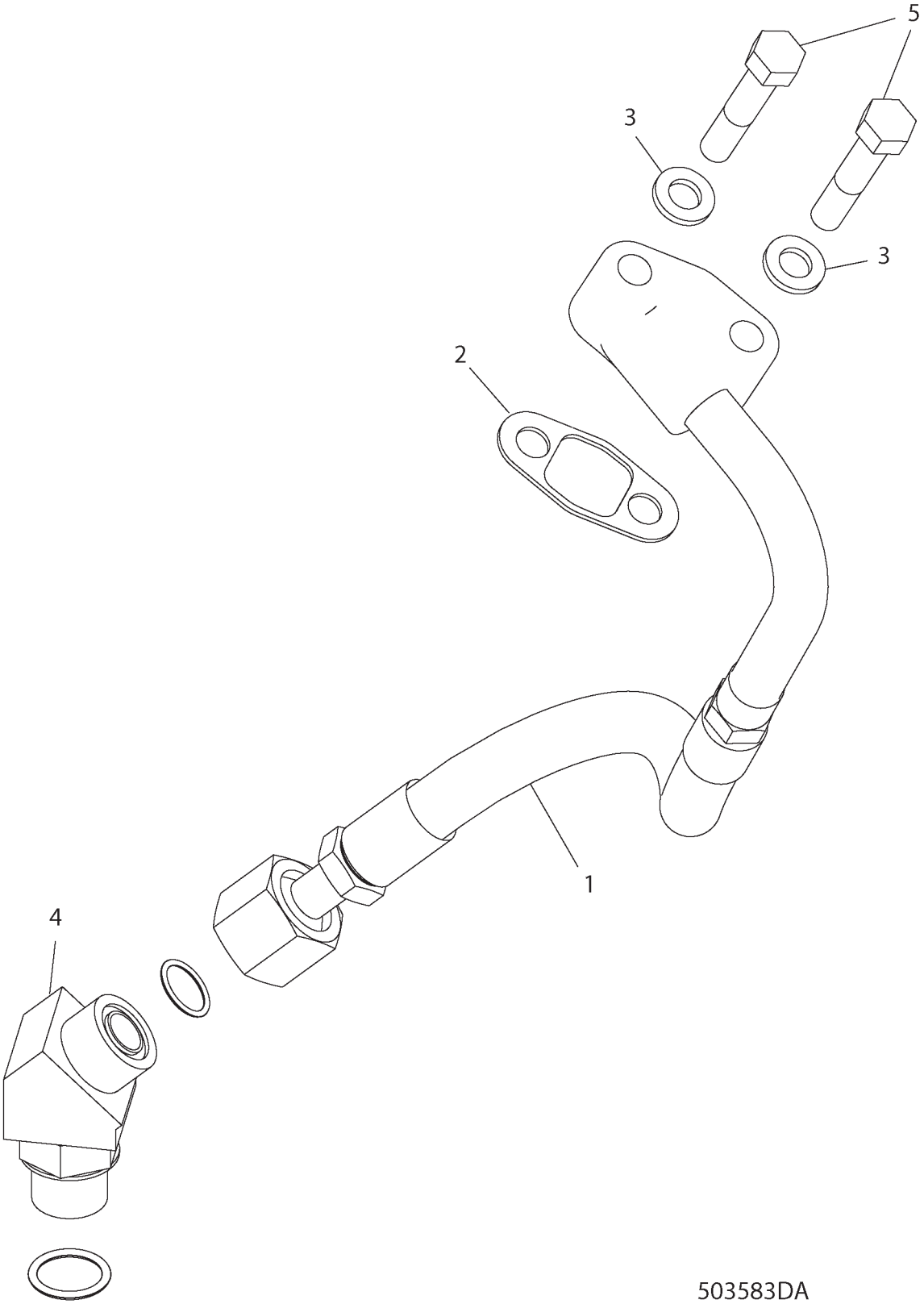

## LINES GP-TURBOCHARGER - 503583D1

**S/N: EFF 3/14/05**

| ITEM | NUMBER | QTY | DESCRIPTION |
|---|---|---|---|
| - | 503583D1 | -- | LINES GP-TURBOCHARGER [A] (NOT SERVICED) |
| 1 | 231-5219 | 1 | HOSE AS |
| 2 | 198-6068 | 1 | SEAL-INTEGRAL |
| 3 | 5M-2894 | 2 | WASHER-HARD M10(3/8) 18.5OD |
| 4 | CH155-3504 | 1 | ELBOW AS-45DEG 10ORFS X 10STOR |
| | 400319X1 | 1 | SEAL-O-RING (19.18IDX2.46DIA) |
| | CH6V-9003 | 1 | ELBOW-SEAL |
| | 400322X1 | 1 | SEAL-O-RING (19.28ODX1.78DIA) |
| 5 | 1C-2251 | 2 | BOLT |

[A] PART OF 172-5344 LINES GP-COOLANT

503583DA
PR: t05i29k58b0043

## GUARD GP-FAN BLAST - 500038D1

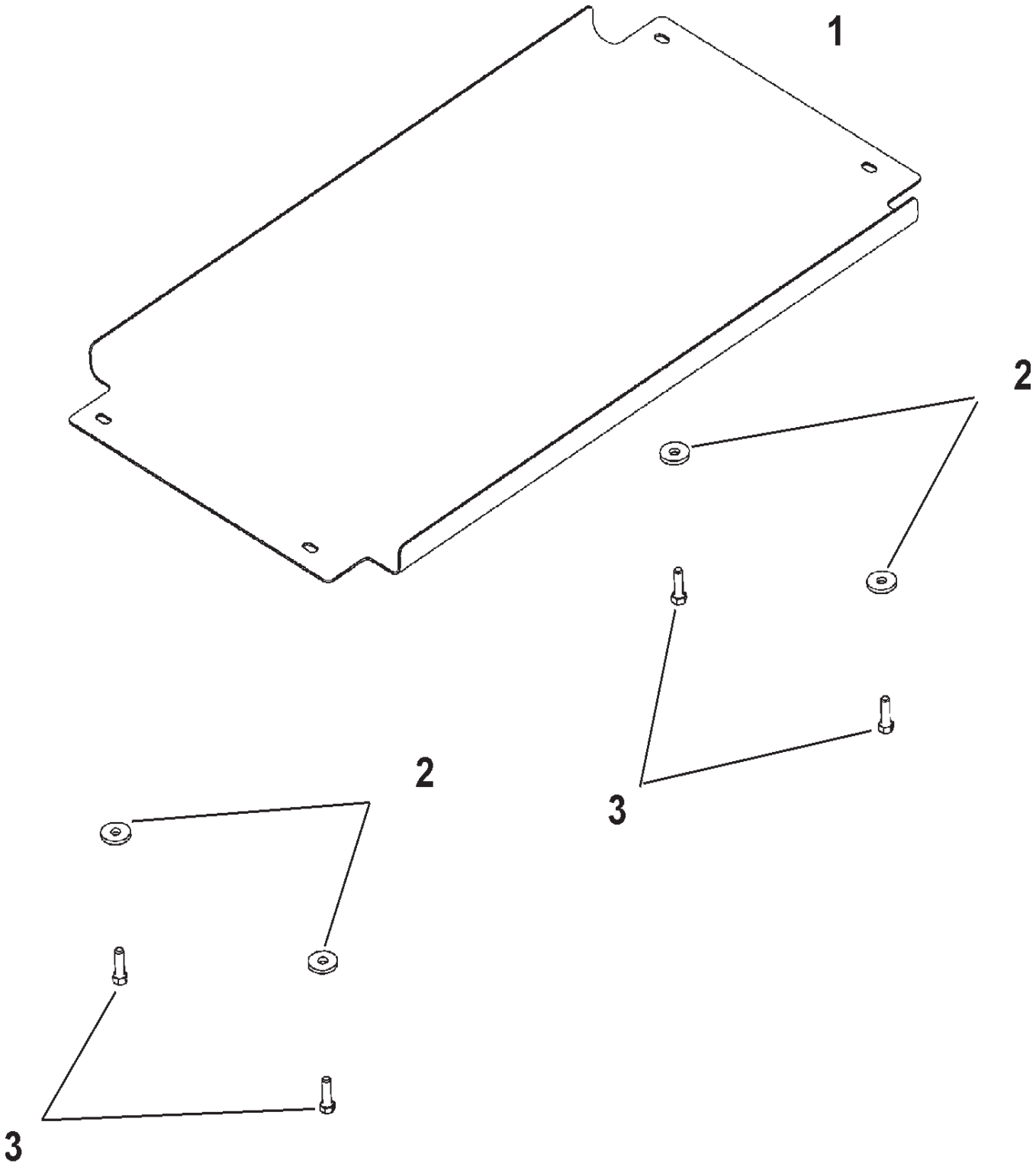


500038D1

## GUARD GP-FAN BLAST - 500038D1

| ITEM | NUMBER | QTY | DESCRIPTION |
|---|---|---|---|
| - | 500038D1 | -- | GUARD GP-FAN BLAST (SERVICED BY COMPONENTS) |
| 1 | 204-0627 | 1 | SHIELD-FAN BLAST |
| 2 | CH7X-0618 | 4 | WASHER-HARD (13.5X40X5) |
| 3 | 400064X1 | 4 | BOLT (M12X1.75X35) |

500038D1
PR: t05i29k58b0044

## GUARD GP-FAN - 228-4631
**MT835 & MT845**

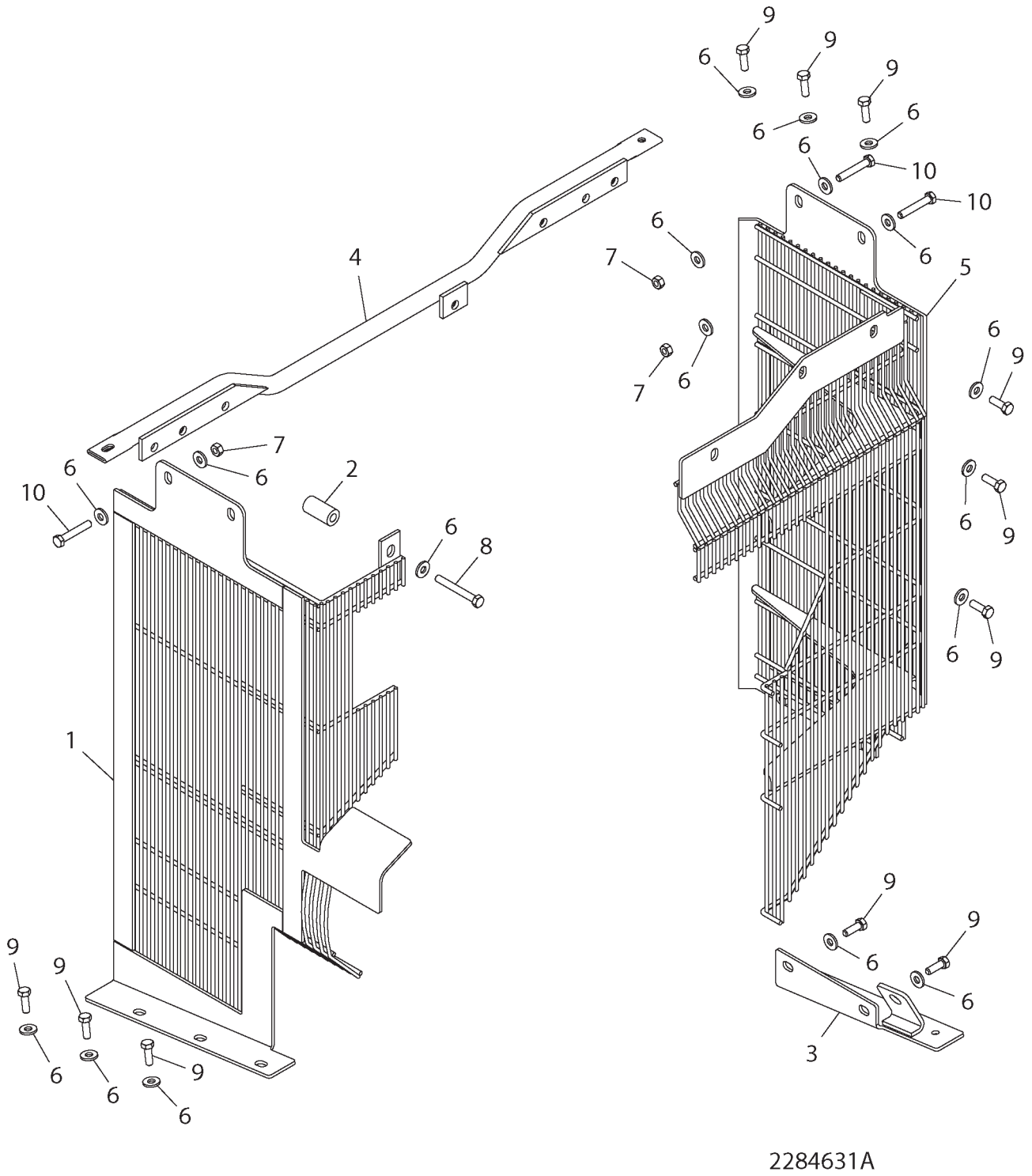

## GUARD GP-FAN - 228-4631
**MT835 & MT845**

| ITEM | NUMBER | QTY | DESCRIPTION |
|---|---|---|---|
| - | 228-4631 | -- | GUARD GP-FAN |
| 1 | 502488D1 | 1 | GUARD ASSEMBLY (LH) |
| 2 | CH227-8229 | 1 | SPACER-25.4ODX19.05IDX49.1 STL |
| 3 | 228-4642 | 1 | BRACKET AS. |
| 4 | 228-4643 | 1 | SUPPORT AS. |
| 5 | 501045D1 | 1 | GUARD AS. (RH) |
| 6 | CH7X-7729 | 18 | WASHER-11IDX5ODX3MM |
| 7 | WR522218 | 3 | NUT-M10-1.5,CL10.9,ZN,H,REG |
| 8 | 400044X1 | 1 | BOLT-M10X1.5X80 ZNDI HHD 10.9 |
| 9 | 400058X1 | 11 | BOLT-M10X1.5X30 ZNDI HHD 10.9 |
| 10 | 400239X1 | 3 | BOLT-M10X1.5X60 ZNDI HHD 10.9 |

2284631A
PR: t05i29k58b0045

## GUARD GP-FAN - 228-4632
**MT855 & MT865**

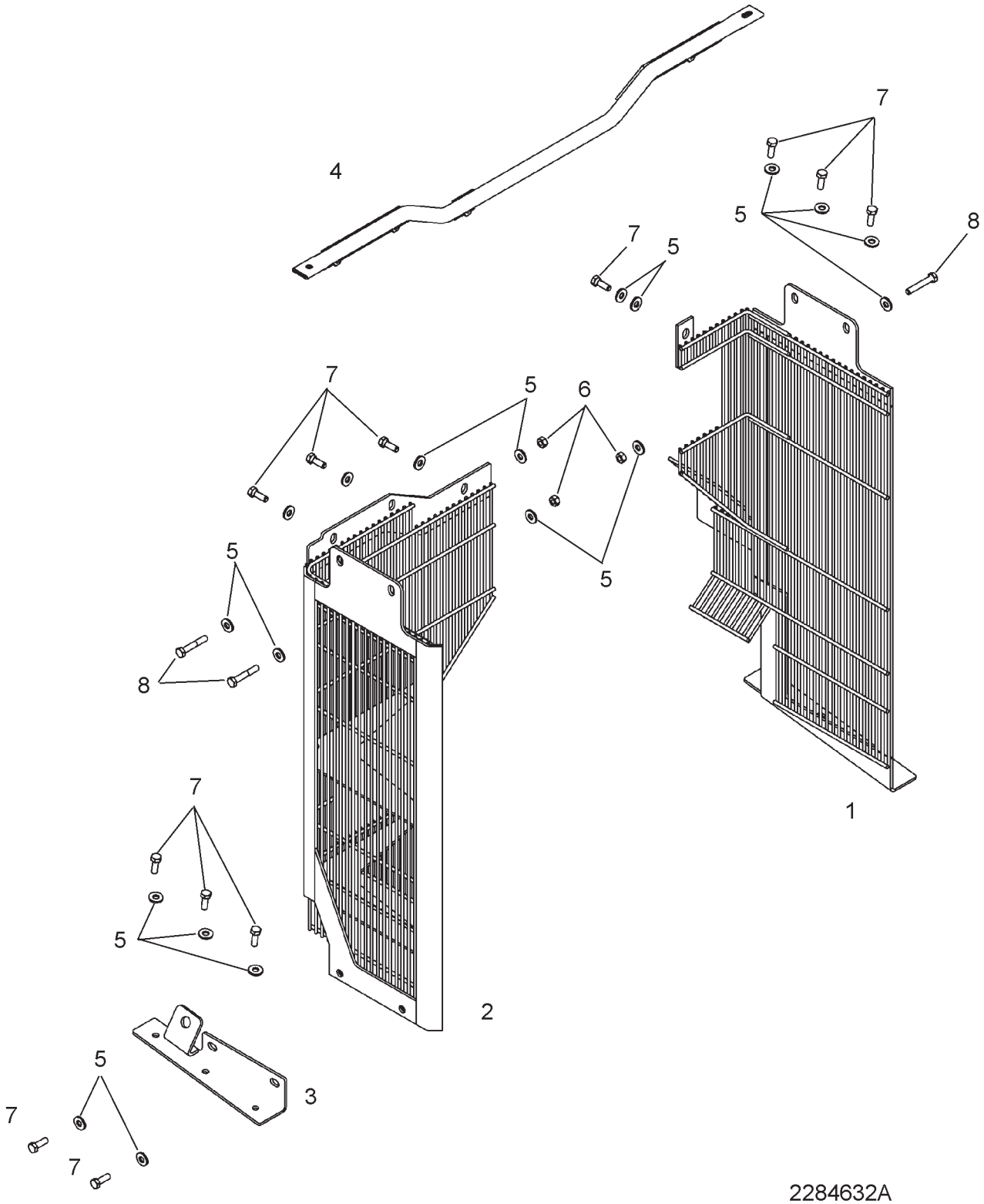

## GUARD GP-FAN - 228-4632
**MT855 & MT865**

| ITEM | NUMBER | QTY | DESCRIPTION |
|---|---|---|---|
| - | 228-4632 | -- | GUARD GP-FAN |
| 1 | 227-8224 | 1 | GUARD AS. (LH) |
| 2 | 228-4633 | 1 | GUARD AS. (RH) |
| 3 | 228-4642 | 1 | BRACKET AS. |
| 4 | 228-4643 | 1 | SUPPORT AS. |
| 5 | CH7X-7729 | 19 | WASHER-11IDX5ODX3MM |
| 6 | WR522218 | 3 | NUT |
| 7 | 400058X1 | 12 | BOLT-M10X1.5X30 ZNDI HHD |
| 8 | 400239X1 | 3 | BOLT-M10X1.5X60 ZNDI HHD 10.9 |

2284632A
PR: t05i29k58b0046

## TANK GP-EXPANSION & COOLANT - 194-7966

**MT835 & MT845**

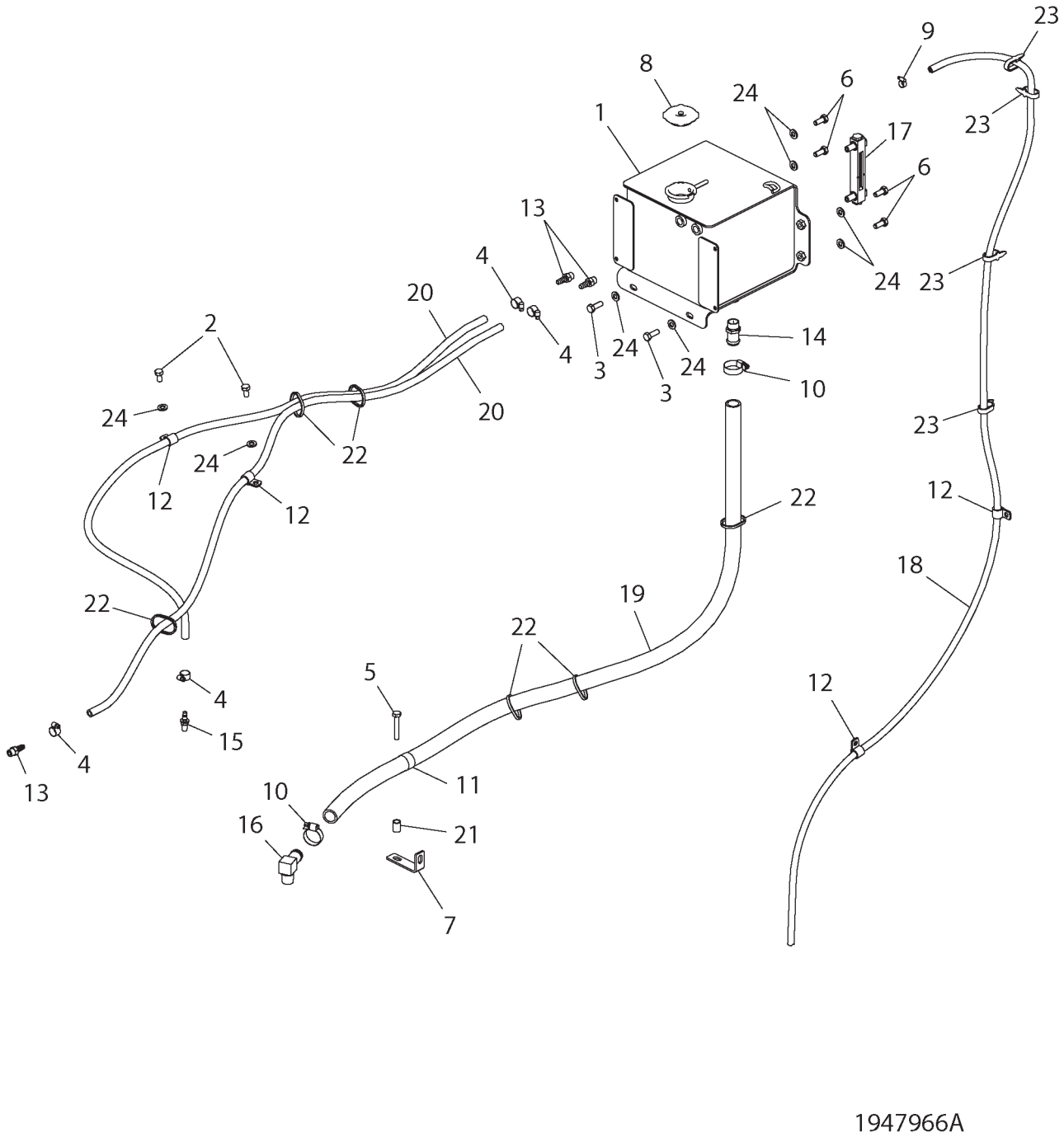

## TANK GP-EXPANSION & COOLANT - 194-7966

MT835 & MT845

| ITEM | NUMBER | QTY | DESCRIPTION |
|---|---|---|---|
| - | 194-7966 | -- | TANK GP-EXPANSION & COOLANT [A] (NOT SERVICED) |
| 1 | 226-7570 | 1 | TANK AS |
| 2 | 400040X1 | 2 | BOLT-M10X1.5X20 ZNDI HHD 10.9 |
| 3 | 400058X1 | 2 | BOLT-M10X1.5X30 ZNDI HHD 10.9 |
| 4 | 400109X1 | 4 | CLAMP-HOSE SST 11.1-19.8X13.5 |
| 5 | 400239X1 | 1 | BOLT-M10X1.5X60 ZNDI HHD 10.9 |
| 6 | 400039X1 | 4 | BOLT-M10X1.5X25 ZNDI HHD 10.9 |
| 7 | 215-8051 | 1 | BRACKET |
| 8 | 031-1119 | 1 | CAP AS-RADIATOR |
| 9 | CH1P-4278 | 1 | CLAMP-HOSE 5.5-15.88 ID X 8 |
| 10 | 400701X1 | 2 | CLAMP-HOSE SST22.2-44.5IDX13.5 |
| 11 | 400597X1 | 1 | CLIP-31.75 ID M10 OR 3/8 |
| 12 | 400702X1 | 4 | CLIP-ONE TUBE COATED |
| 13 | CH003-7764 | 3 | CONNECTOR-6 NPTFX9.52 OD BARB |
| 14 | CH053-2313 | 1 | CONNECTOR-12NPTF X 25 BARB BRS |
| 15 | CH006-7801 | 1 | CONNECTOR-6NPTFX9.52 BARB |
| 16 | CH7W-1890 | 1 | ELBOW-90DEG.12NPTFX25.4OD BARB |
| 17 | 201-4653 | 1 | GAGE-SIGHT |
| | CH114-4231 | 2 | BOLT-MTG (1/2-20X2AX45.30MM) |
| | CH122-8352 | 4 | SEAL-O-RING (15.54IDX2.62DIA) |
| 18 | CH5P-1420 | -- | HOSE (BULK) 7.92 DIA (253CM) |
| 19 | CH146-7453 | -- | HOSE-BULK 25.4 ID HTEMP L PRES (170CM) |
| 20 | CH5P-1442 | -- | HOSE-BULK 9.52ID HI TEMP (320CM) |
| 21 | CH209-3394 | 1 | SPACER-17.14ODX12.52IDX22.4 ZN |
| 22 | CH7K-1181 | 6 | STRAP-CABLE 0.19-4.00 |
| 23 | 400837X1 | 4 | STRAP-CABLE (PLASTIC) |
| 24 | 400287X1 | 8 | WASHER-HARD 11IDX21ODX2.5 ZND1 |

[A] PART OF 172-5361;172-5362;187-1741
187-1742 INSTALLATION AR

1947966A
PR: t05i29k58b0047

## TANK GP-EXPANSION & COOLANT - 185-2220

**MT855 & MT865**

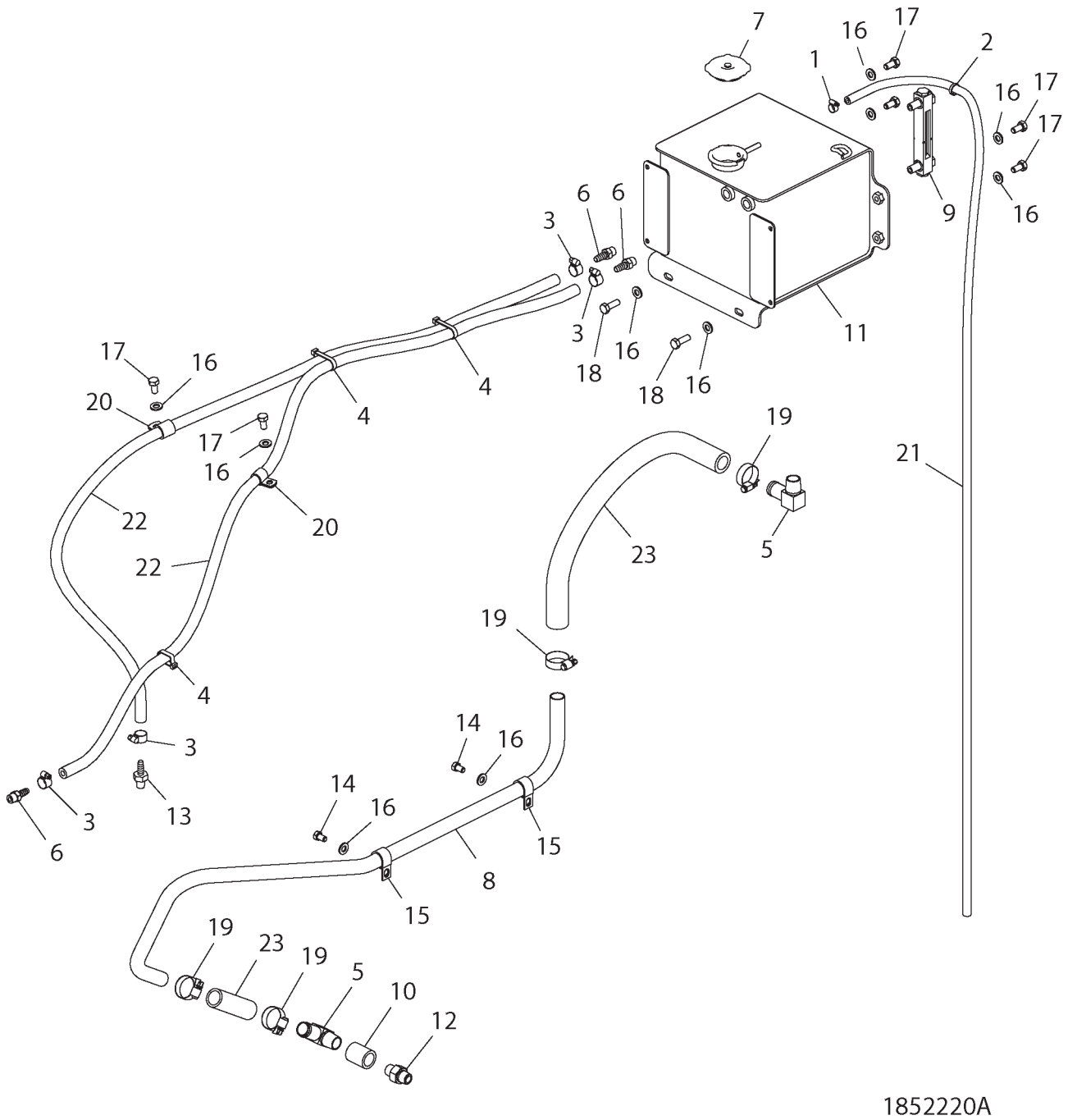

## TANK GP-EXPANSION & COOLANT - 185-2220

**MT855 & MT865**

| ITEM | NUMBER | QTY | DESCRIPTION |
|---|---|---|---|
| - | 185-2220 | -- | TANK GP-EXP & COOLANT [A] (NOT SERVICED) |
| 1 | CH1P-4278 | 1 | CLAMP-HOSE 5.5-15.88 ID X 8 |
| 2 | 400837X1 | 1 | STRAP-CABLE 44.45X4.93MM (SOME UNITS) |
| 3 | 400109X1 | 4 | CLAMP-HOSE SST 11.1-19.8X13.5 |
| 4 | CH7K-1181 | 3 | STRAP-CABLE 0.19-4.00 |
| 5 | CH7W-1890 | 2 | ELBOW-90DEG.12NPTFX25.4OD BARB |
| 6 | CH003-7764 | 3 | CONNECTOR-6 NPTFX9.52 OD BARB |
| 7 | 031-1119 | 1 | CAP AS-RADIATOR |
| 8 | 201-4652 | 1 | TUBE |
| 9 | 201-4653 | 1 | GAGE-SIGHT |
| 10 | 217-9673 | 1 | COUPLING-12 NPTF |
| 11 | 226-7570 | 1 | TANK AS |
| 12 | CH004-7270 | 1 | NIPPLE-12 NPTF |
| 13 | CH2R-8613 | 1 | ADAPTER-8 NPTF X 9.52 OD BARB |
| 14 | 400157X1 | 2 | BOLT-3/8-16X15.8 ZNDI HHD 10.9 |
| 15 | 400688X1 | 2 | CLIP LOOP 25.4ID |
| 16 | 400287X1 | 10 | WASHER-HARD 11IDX21ODX2.5 ZND1 |
| 17 | 400040X1 | 6 | BOLT-M10X1.5X20 ZNDI HHD 10.9 |
| 18 | 400058X1 | 2 | BOLT-M10X1.5X30 ZNDI HHD 10.9 |
| 19 | 400701X1 | 4 | CLAMP-HOSE SST22.2-44.5IDX13.5 |
| 20 | 400702X1 | 2 | CLIP-ONE TUBE COATED |
| 21 | CH5P-1420 | AR | HOSE (BULK) 7.92 DIA (190CM) |
| 22 | CH5P-1442 | AR | HOSE-BULK 9.52ID HI TEMP (317CM) |
| 23 | CH146-7453 | AR | HOSE-BULK 25.4 ID HTEMP L PRES (65CM) |

[A] PART OF 172-5363;172-5364;187-1743
187-1744 INSTALLATION AR

1852220A
PR: t05i29k58b0048

## SHIELD GP-EXHAUST - 218-2883

**EAME - ITALIAN MARKET**

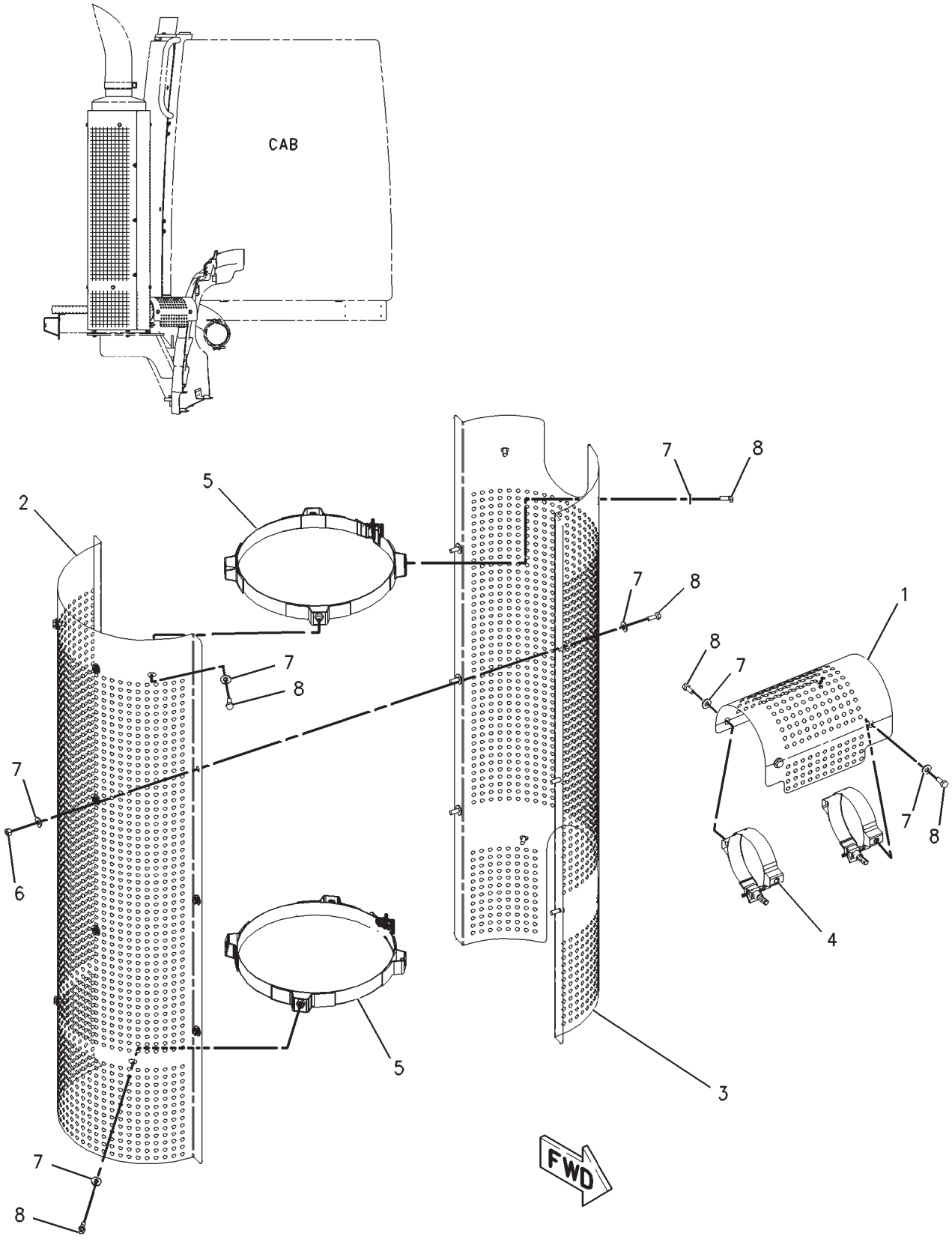

## SHIELD GP-EXHAUST - 218-2883
**EAME - ITALIAN MARKET**

| ITEM | NUMBER | QTY | DESCRIPTION |
|---|---|---|---|
| - | 179-2257 | -- | COMPLETING AR-ITALIAN (REF ONLY-NOT SERVICED) |
| - | 216-2883 | -- | SHIELD GP-EXHAUST [A] (NOT SERVICED) (INCLUDES ITEMS 1-8) |
| 1 | 218-2886 | 1 | SHIELD |
| 2 | 218-2888 | 1 | SHIELD |
| 3 | 218-2889 | 1 | SHIELD |
| 4 | CH218-2891 | 2 | CLAMP |
| 5 | CH218-2892 | 2 | CLAMP |
| 6 | 400340X1 | 6 | NUT (M8X1.25) |
| 7 | 400599X1 | 24 | WASHER-HARD (8.8X20.5X2) |
| 8 | 400053X1 | 18 | BOLT (M8X1.25X20MM) |

[A] PART OF 179-2257 COMPLETING AR -ITALIAN

00894235
PR: t05i29k58b0049

## AIR CLEANER GP - 172-5337
**(MT855 & MT865)**

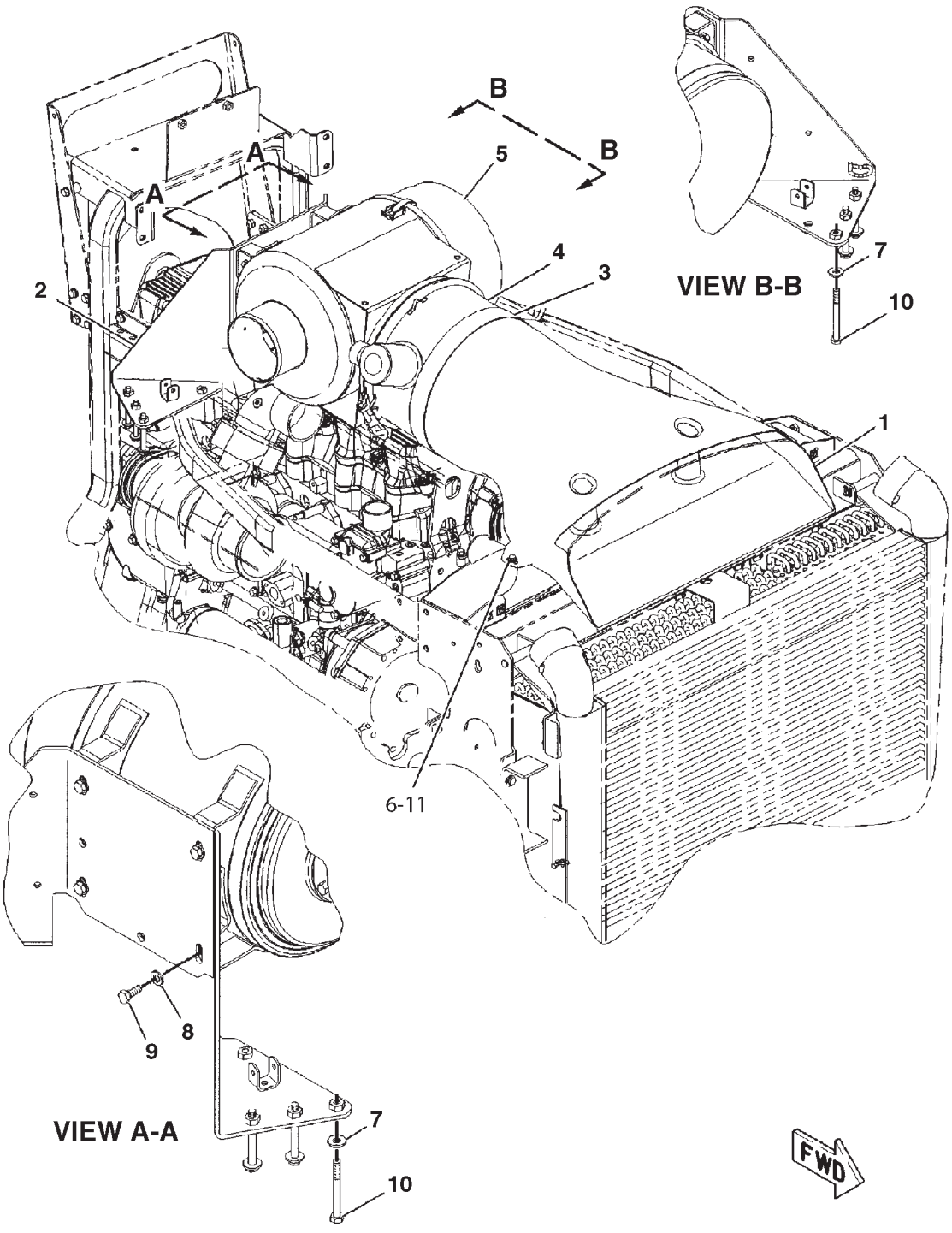


0869409A

## AIR CLEANER GP - 172-5337
**(MT855 & MT865)**

| ITEM | NUMBER | QTY | DESCRIPTION |
|---|---|---|---|
| - | 172-5337 | -- | AIR CLEANER GP [A] (NOT SERVICED) |
| 1 | 191-5988 | 1 | DUCT-INLET |
| 2 | 192-6460 | 1 | BRACKET ASM |
| 3 | 193-1423 | 1 | SEAL |
| 4 | 196-4055 | 1 | BODY-PRECLEANER |
| 5 | 196-4056 | 1 | AIR CLEANER GP<br>(SEE BREAKDOWN FOR COMPONENTS) |
| 6 | 400599X1 | 2 | WASHER-HARD (8.8X20.5X2) |
| 7 | CH7X-7729 | 6 | WASHER (11X25X3) |
| 8 | 400287X1 | 4 | WASHER-HARD (11X21X2.5) |
| 9 | 400039X1 | 4 | BOLT (M10X1.5X25MM) |
| 10 | 400225X1 | 6 | BOLT (M10X1.5X90MM) |
| 11 | 400227X1 | 2 | BOLT (M8X1.25X16MM) |

[A] PART OF 172-5363;172-5364;187-1743;
187-1744 INSTALLATION AR-ENGINE

0869409A
PR: t05i29k58b0050

## AIR CLEANER GP - 172-5338
**MT835 & MT845**

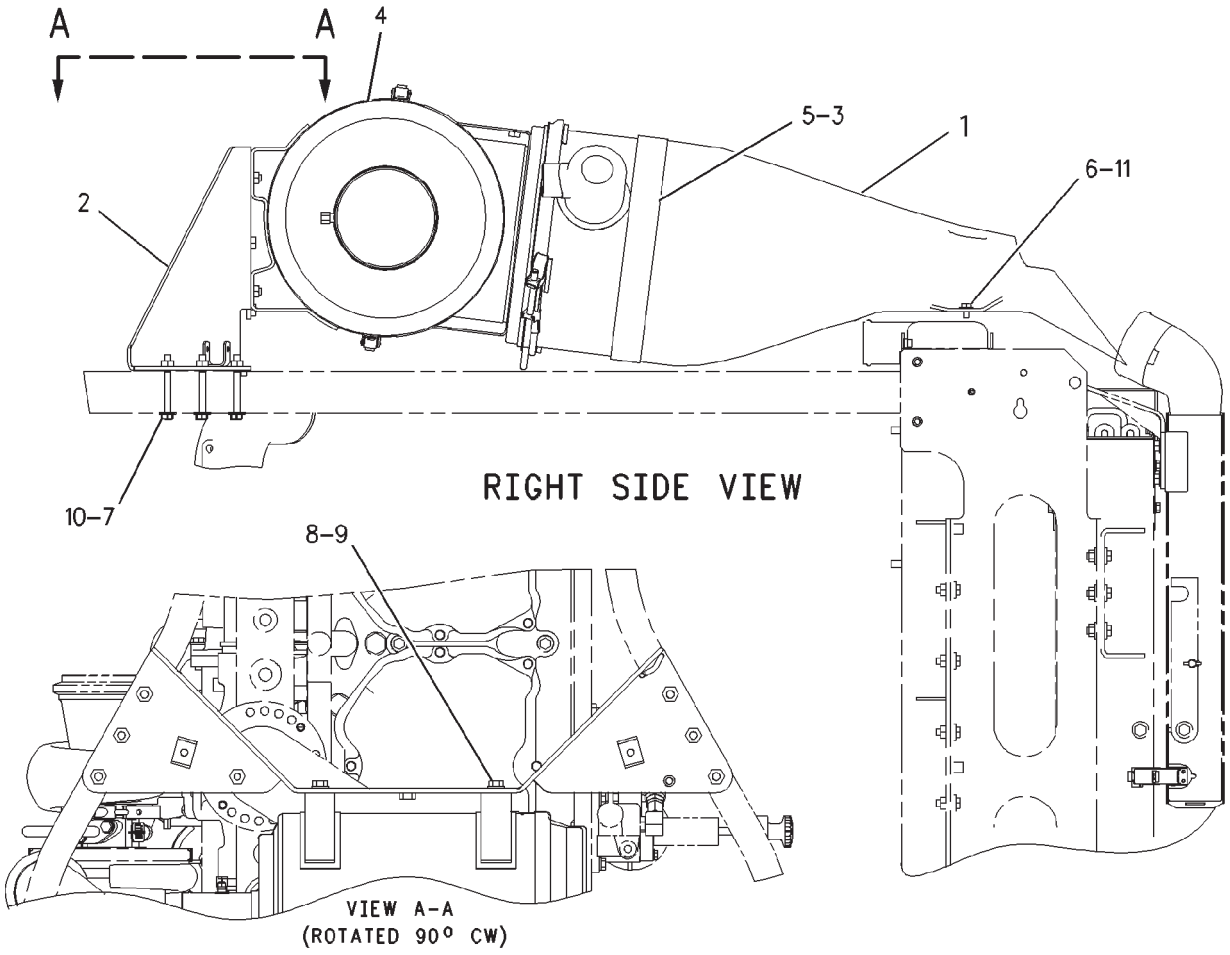


00888102

## AIR CLEANER GP - 172-5338
**MT835 & MT845**

| ITEM | NUMBER | QTY | DESCRIPTION |
|---|---|---|---|
| - | 172-5338 | -- | AIR CLEANER GP [A] (NOT SERVICED) |
| 1 | 191-5988 | 1 | DUCT-INLET |
| 2 | 192-6460 | 1 | BRACKET ASM |
| | CH7T-1099 | 1 | LINK |
| | CH8T-3490 | 10 | NUT-WELD |
| 3 | 192-8979 | 1 | BODY-PRECLEANER |
| 4 | 192-8980 | 1 | AIR CLEANER GP (SEE BREAKDOWN FOR COMPONENTS) |
| 5 | 193-1423 | 1 | SEAL |
| 6 | 400599X1 | 2 | WASHER-HARD (8.8X20.5X2) |
| 7 | CH7X-7729 | 6 | WASHER (11X25X3) |
| 8 | 400287X1 | 4 | WASHER-HARD (11X21X2.5) |
| 9 | 400039X1 | 4 | BOLT (M10X1.5X25MM) |
| 10 | 400225X1 | 6 | BOLT (M10X1.5X90MM) |
| 11 | 400227X1 | 2 | BOLT (M8X1.25X16MM) |

[A] PART OF 172-5361;172-5362;187-1741;
187-1742 INSTALLATION AR-ENGINE

00888102
PR: t05i29k58b0051

## AIR CLEANER AS-BASIC - 192-8980
**MT835 & MT845**

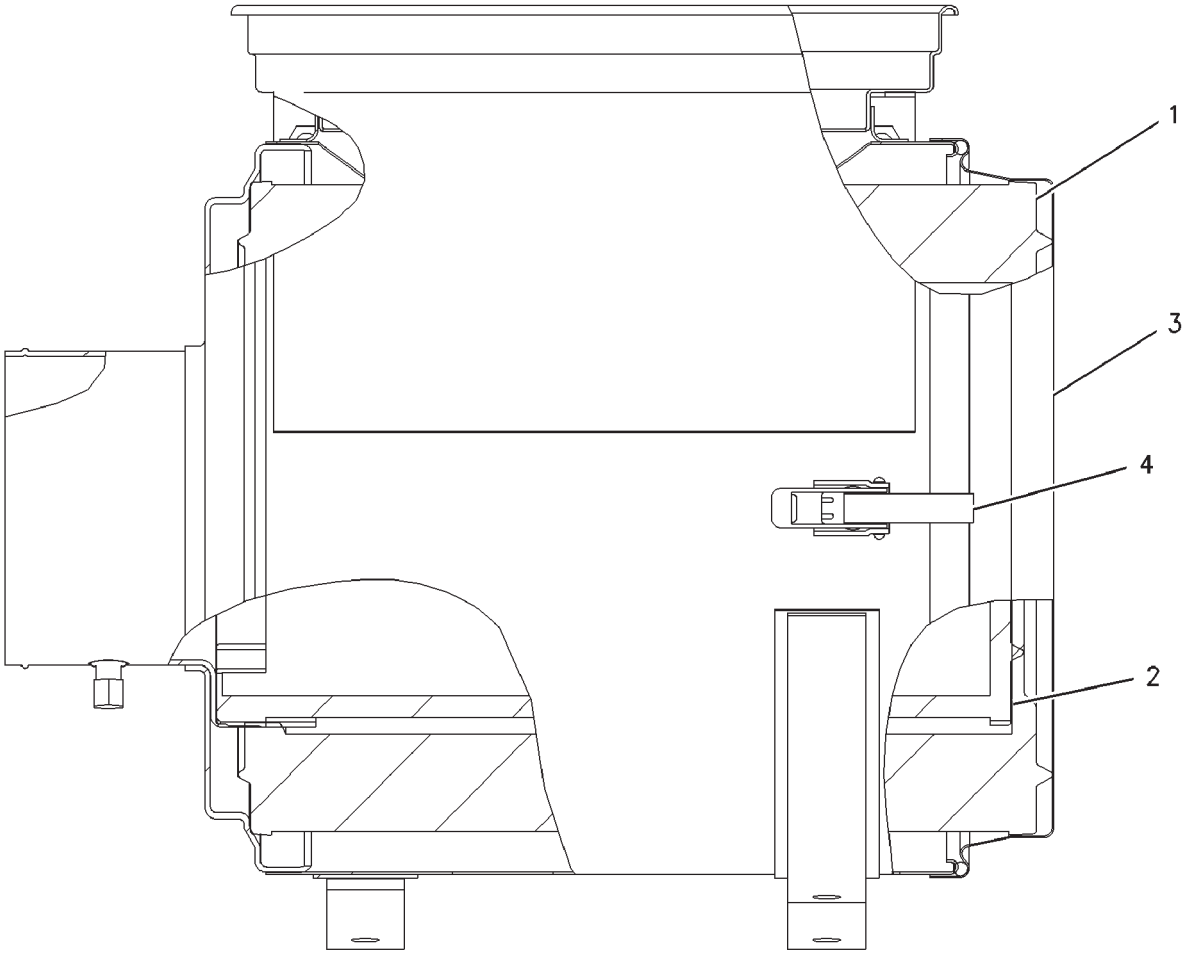


00887696

## AIR CLEANER AS-BASIC - 192-8980
**MT835 & MT845**

| ITEM | NUMBER | QTY | DESCRIPTION |
|---|---|---|---|
| - | 192-8980 | -- | AIR CLEANER AS [A] |
| 1 | CH6I-2505 | 1 | FILTER ELEMENT-AIR (PRIMARY) |
| 2 | CH6I-2506 | 1 | FILTER ELEMENT-AIR (SECONDARY) |
| 3 | CH6I-4465 | 1 | COVER ASM-AIR CLEANER |
| | CH101-2850 | 1 | FILM-AIR CLEANER (RADIAL SEAL) |
| 4 | CH8N-4617 | 2 | KIT-CLAMP (INCLS CLAMP & RIVET) |

[A] PART OF 172-5338 AIR CLEANER GP

00887696
PR: t05i29k58b0052

## AIR CLEANER AS-BASIC - 196-4056
**(MT855 & MT865)**

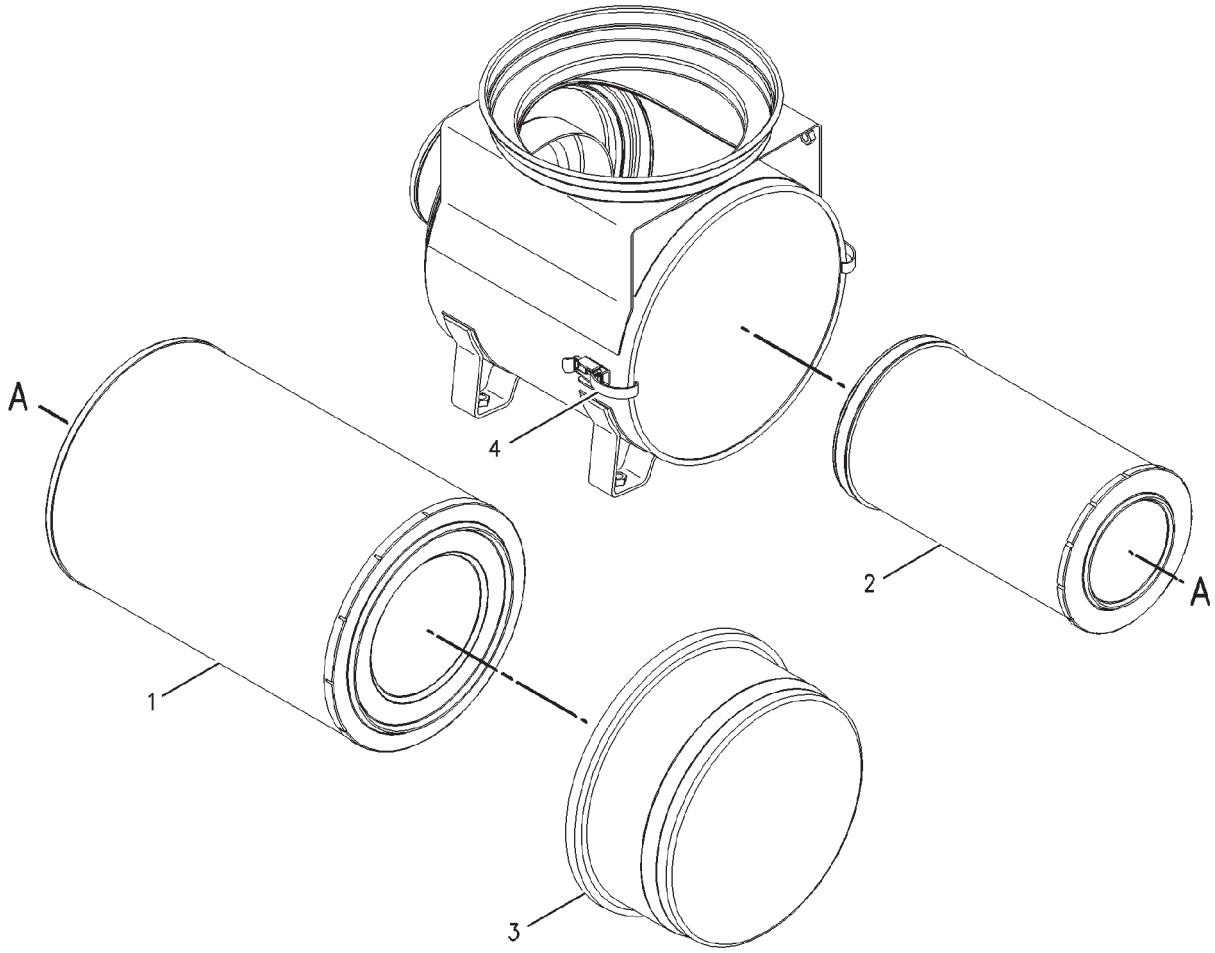


00874425

## AIR CLEANER AS-BASIC - 196-4056
**(MT855 & MT865)**

| ITEM | NUMBER | QTY | DESCRIPTION |
|---|---|---|---|
| - | 196-4056 | -- | AIR CLEANER GP [A] |
| 1 | CH6I-2509 | 1 | FILTER ELEMENT-AIR (PRIMARY) |
| 2 | CH6I-2510 | 1 | FILTER ELEMENT-AIR (SECONDARY) |
| 3 | 6I-4467 | 1 | COVER-AIR CLEANER |
| | CH101-2850 | 1 | FILM-AIR CLEANER (RADIAL SEAL) |
| 4 | CH8N-4617 | 2 | KIT-AIR CLEANER CLAMP<br>(SERVICED AS COMPLETE KIT ONLY)<br>(INCLUDES CLIP ASM AND RIVET) |

[A] PART OF 172-5337 AIR CLEANER GP

00874425
PR: t05i29k58b0053

## LINES GP-AIR - 172-5342
**MT835 & MT845**

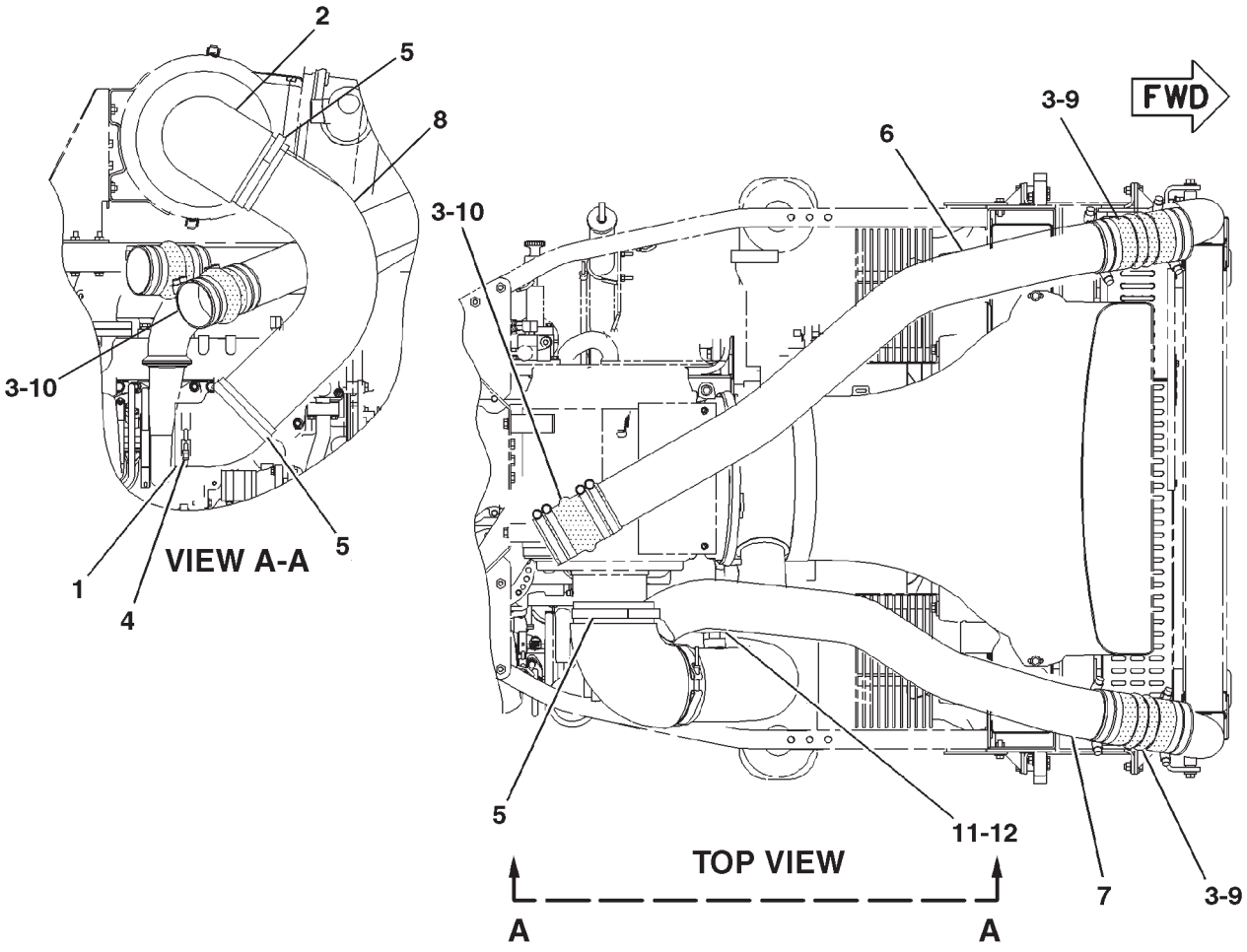


0887727A

## LINES GP-AIR - 172-5342
**MT835 & MT845**

| ITEM | NUMBER | QTY | DESCRIPTION |
|---|---|---|---|
| - | 172-5342 | -- | LINES GP-AIR [A] (NOT SERVICED) |
| 1 | CH6R-3185 | 1 | REDUCER |
| 2 | CH6T-6158 | 1 | ELBOW |
| 3 | 400127X1 | 16 | CLAMP |
| 4 | CH135-6260 | 1 | CLAMP |
| 5 | CH135-6261 | 3 | CLAMP |
| 6 | 205-2134 | 1 | TUBE-INLET |
| 7 | 205-2135 | 1 | TUBE-OUTLET |
| 8 | 219-8631 | 1 | TUBE ASM-INLET |
| | CH4J-5050 | 1 | BOSS |
| 9 | 219-8629 | 2 | HOSE-HUMP |
| 10 | 219-8630 | 2 | HOSE-HUMP |
| 11 | 400376X1 | 1 | SEAL-O-RING |
| 12 | CH9S-4181 | 1 | PLUG |

[A] PART OF 172-5361;172-5362;187-1741;
187-1742 INSTALLATION AR-ENGINE

0887727A
PR: t05i29k58b0054

## LINES GP-AIR - 172-5341
**MT855 & MT865**

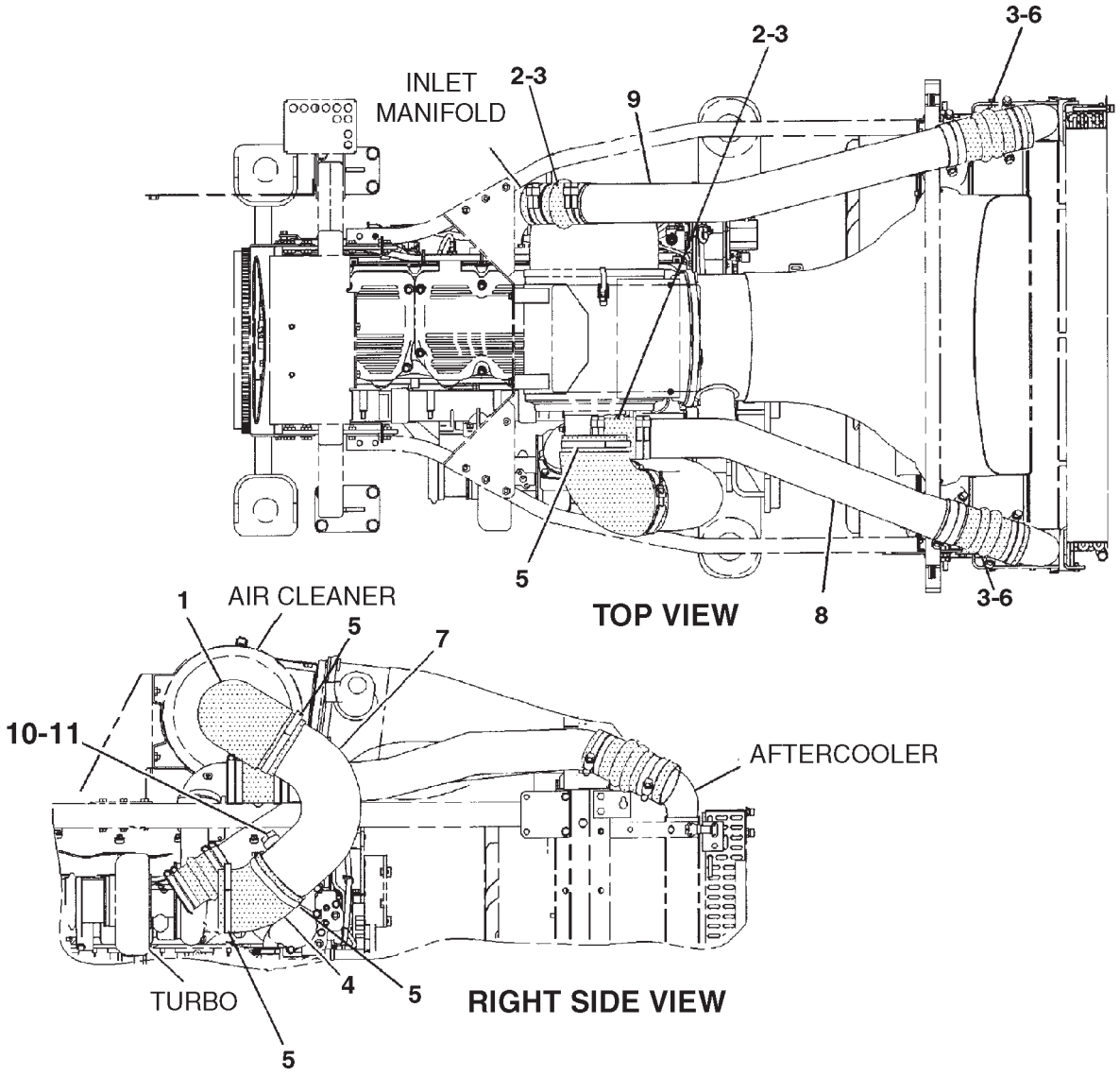


0882882A

## LINES GP-AIR - 172-5341
**MT855 & MT865**

| ITEM | NUMBER | QTY | DESCRIPTION |
|---|---|---|---|
| - | 172-5341 | -- | LINES GP-AIR [A] (NOT SERVICED) |
| 1 | CH6T-6158 | 1 | ELBOW |
| 2 | 219-8630 | 2 | HOSE-HUMP |
| 3 | 400127X1 | 16 | CLAMP-HOSE |
| 4 | CH9Y-6102 | 1 | ELBOW |
| 5 | CH135-6261 | 4 | CLAMP |
| 6 | 219-8629 | 2 | HOSE |
| 7 | 219-8632 | 1 | TUBE ASM-INLET(INCLUDES BOSS & TUBE) |
| | CH4J-5050 | | BOSS |
| 8 | 205-2132 | 1 | TUBE-OUTLET |
| 9 | 205-2133 | 1 | TUBE-INLET |
| 10 | 400376X1 | 1 | SEAL-O-RING |
| 11 | CH9S-4181 | 1 | PLUG |

[A] PART OF 172-5363;172-5364;187-1743;
187-1744 INSTALLATION AR-ENGINE

0882882A
PR: t05i29k58b0055

## LINES GP-EJECTOR - 212-4444
**MT835 & MT845**

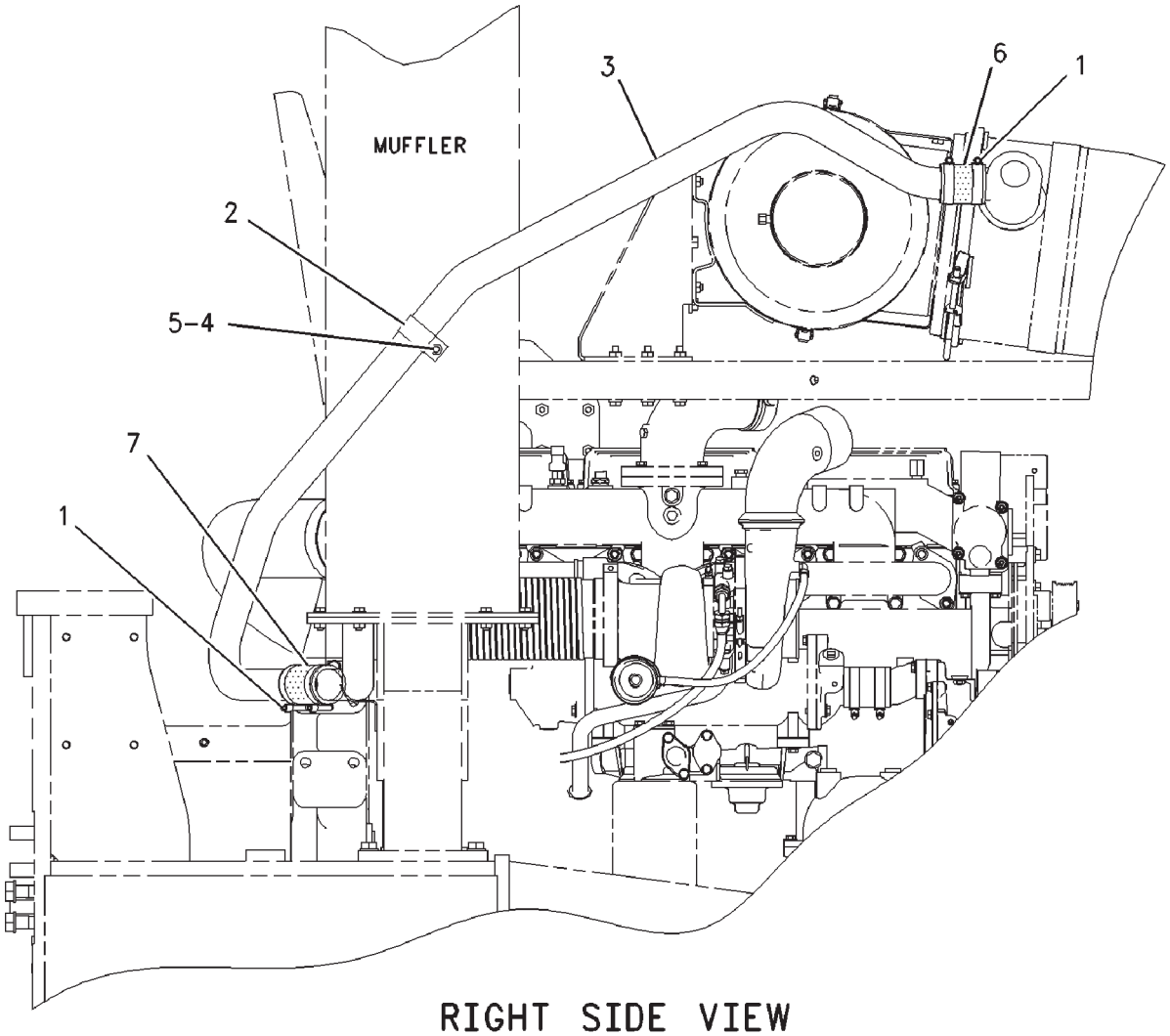


RIGHT SIDE VIEW

00888277

## LINES GP-EJECTOR - 212-4444
**MT835 & MT845**

| ITEM | NUMBER | QTY | DESCRIPTION |
|---|---|---|---|
| - | 212-4444 | -- | LINES GP-EJECTOR [A] (NOT SERVICED) |
| 1 | 400126X1 | 4 | CLAMP-HOSE |
| 2 | CH105-1866 | 1 | CLIP |
| 3 | 212-4445 | 1 | TUBE |
| 4 | 400287X1 | 1 | WASHER-HARD (11X21X2.5) |
| 5 | WR522218 | 2 | NUT (M10X1.5) |
| 6 | CH5P-1259 | -- | HOSE (7.25CM) |
| 7 | CH5P-1259 | -- | HOSE (10.75CM) |

[A] PART OF 172-5361; 172-5362
INSTALLATION AR-ENGINE

00888277
PR: t05i29k58b0056

## LINES GP-EJECTOR - 197-4849
**MT855 & MT865**

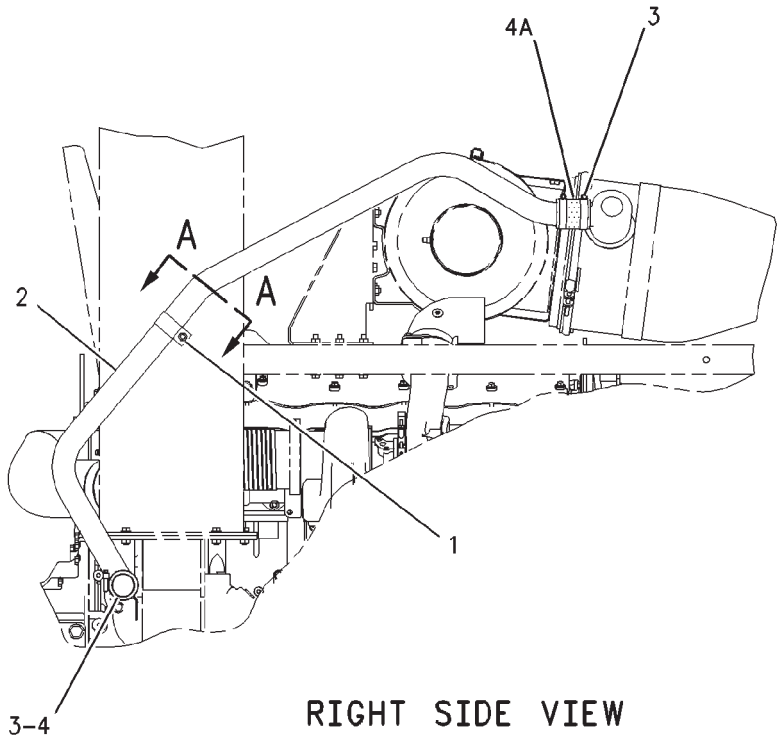


RIGHT SIDE VIEW

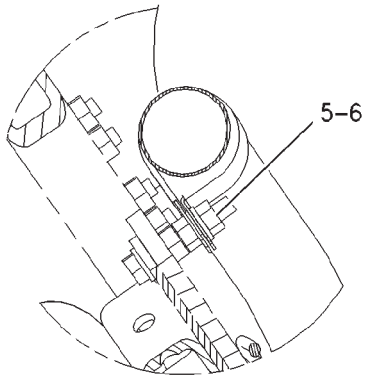


SECTION A-A

## LINES GP-EJECTOR - 197-4849

**MT855 & MT865**

| ITEM | NUMBER | QTY | DESCRIPTION |
|---|---|---|---|
| - | 197-4849 | -- | LINES GP-EJECTOR [A] (NOT SERVICED) |
| 1 | CH105-1866 | 1 | CLIP |
| 2 | 197-4852 | 1 | TUBE |
| 3 | 400126X1 | 4 | CLAMP-HOSE |
| 4 | CH5P-1259 | -- | HOSE (50.80ID X 10.7CM) |
| 4A | CH5P-1259 | -- | HOSE (50.80ID X 7.2CM) |
| 5 | WR522218 | 2 | NUT (M10X1.5) |
| 6 | 400287X1 | 1 | WASHER-HARD (11X21X2.5) |

[A] PART OF: 172-5363;172-5364;187-1743;
187-1744 INSTALLATION AR-ENGINE

00868057
PR: t05i29k58b0057

## MUFFLER GP - 172-5336
**MT835 & MT845**

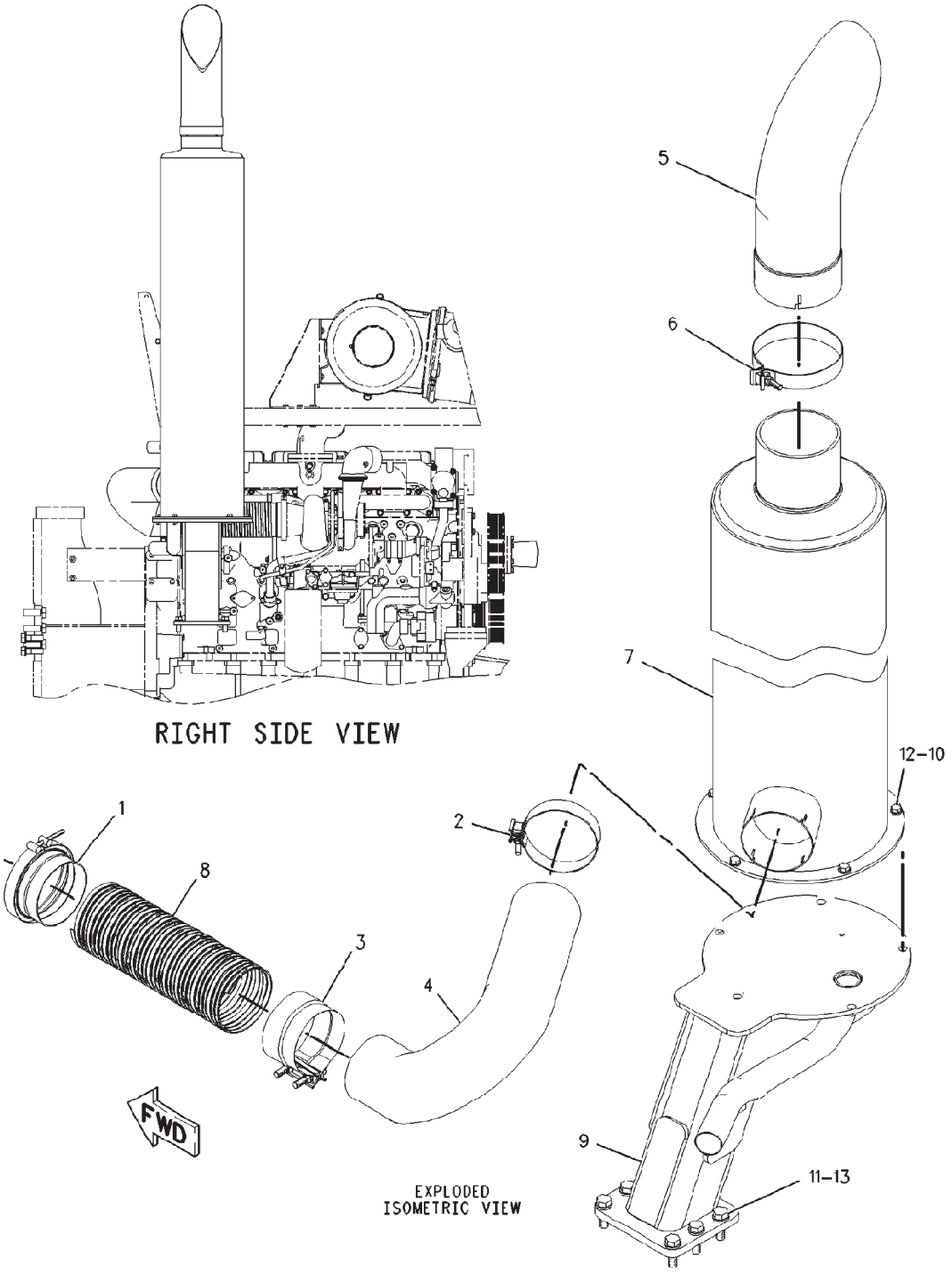


00899722

## MUFFLER GP - 172-5336
**MT835 & MT845**

| ITEM | NUMBER | QTY | DESCRIPTION |
|---|---|---|---|
| - | 172-5336 | -- | MUFFLER GP [A] (NOT SERVICED) |
| 1 | CH9N-1941 | 1 | CLAMP-V-BAND |
| 2 | CH202-2373 | 1 | CLAMP |
| 3 | CH205-5366 | 1 | CLAMP |
| 4 | 209-0094 | 1 | TUBE ASM |
| 5 | 209-0512 | 1 | EXTENSION |
| 6 | CH209-0620 | 1 | CLAMP |
| 7 | 209-0801 | 1 | MUFFLER |
| 8 | 210-1996 | 1 | TUBE-FLEXIBLE |
| 9 | 212-3281 | 1 | SUPPORT ASM-EXHAUST (MT835 & MT845) |
| 10 | 400287X1 | 5 | WASHER-HARD (11X21X2.5) |
| 11 | 400056X1 | 6 | BOLT (M16X2X50MM) |
| 12 | 400058X1 | 5 | BOLT (M10X1.5X30MM) |
| 13 | 400082X1 | 6 | WASHER (17.5X30X3.5) |
| 14 | CH211-8713 | | SEALANT (NOT SHOWN) |

[A] PART OF 172-5361;172-5362;187-1741;
187-1742 INSTALLATION AR-ENGINE

00899722
PR: t05i29k58b0058

## MUFFLER GP - 172-5335
**MT855 & MT865**

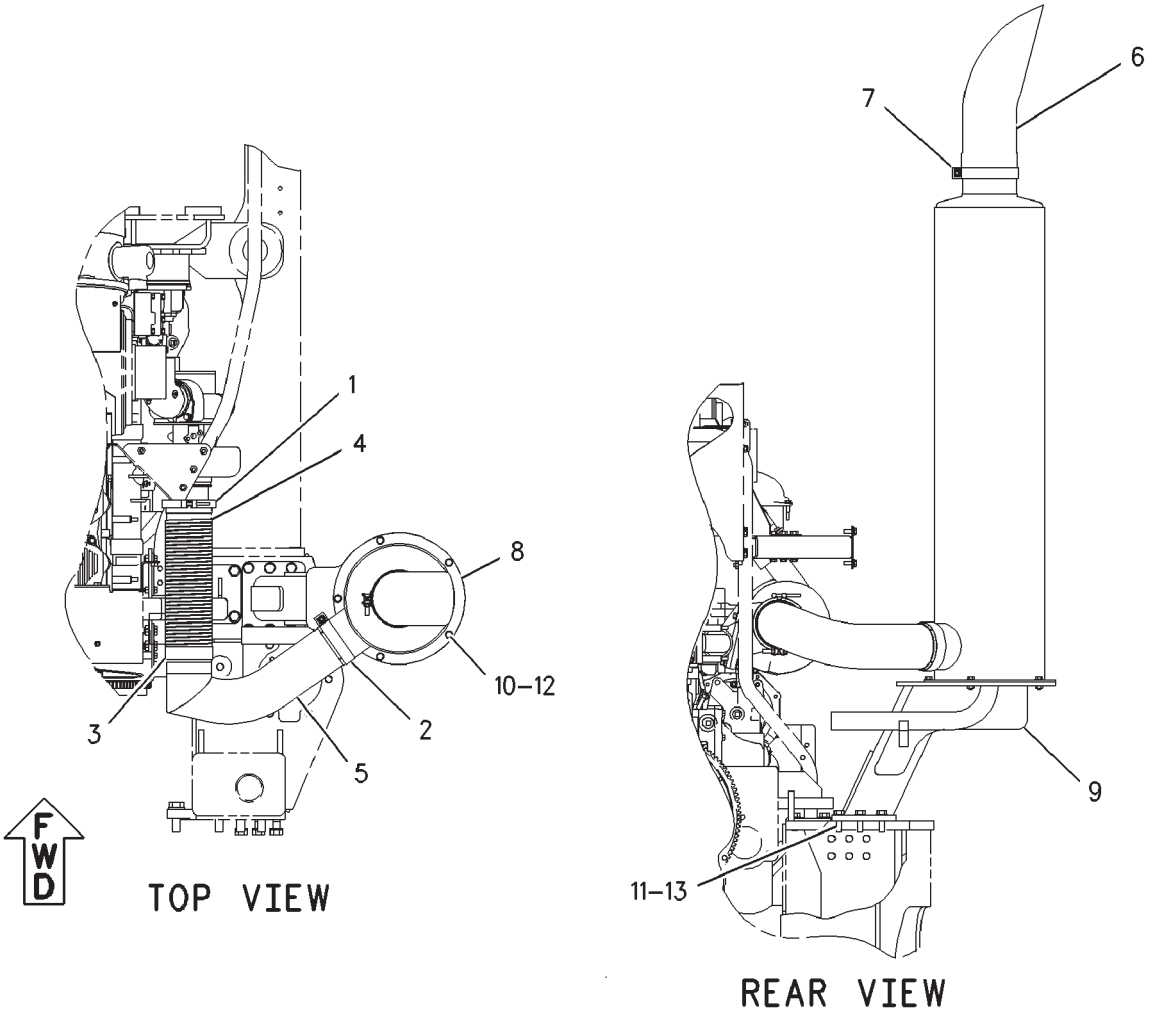


00868168

## MUFFLER GP - 172-5335
**MT855 & MT865**

| ITEM | NUMBER | QTY | DESCRIPTION |
|---|---|---|---|
| - | 172-5335 | -- | MUFFLER GP [A] (NOT SERVICED) |
| 1 | CH9N-1941 | 1 | CLAMP-V-BAND |
| 2 | CH202-2373 | 1 | CLAMP |
| 3 | CH205-5366 | 1 | CLAMP |
| 4 | 205-5367 | 1 | TUBE-FLEXIBLE |
| 5 | 209-0095 | 1 | TUBE-EXHAUST |
| 6 | 209-0512 | 1 | EXTENSION |
| 7 | CH209-0620 | 1 | CLAMP |
| 8 | 209-0802 | 1 | MUFFLER |
| 9 | 212-4300 | 1 | SUPPORT ASM (INCLUDES SUPPORT & TUBE) (FOR MT855 AND MT865) |
| 10 | 400287X1 | 5 | WASHER-HARD (11X21X2.5) |
| 11 | 400056X1 | 6 | BOLT (M16X2X50MM) |
| 12 | 400058X1 | 5 | BOLT (M10X1.5X30MM) |
| 13 | 400082X1 | 6 | WASHER (17.5X30X3.5) |
| 14 | CH211-8713 | | SEALANT (NOT SHOWN) |

[A] PART OF 172-5363;172-5364;187-1743
187-1744 INSTALLATION AR-ENGINE

00868168
PR: t05i29k58b0059

## CONTROL GP-DECELERATOR - 152-0447

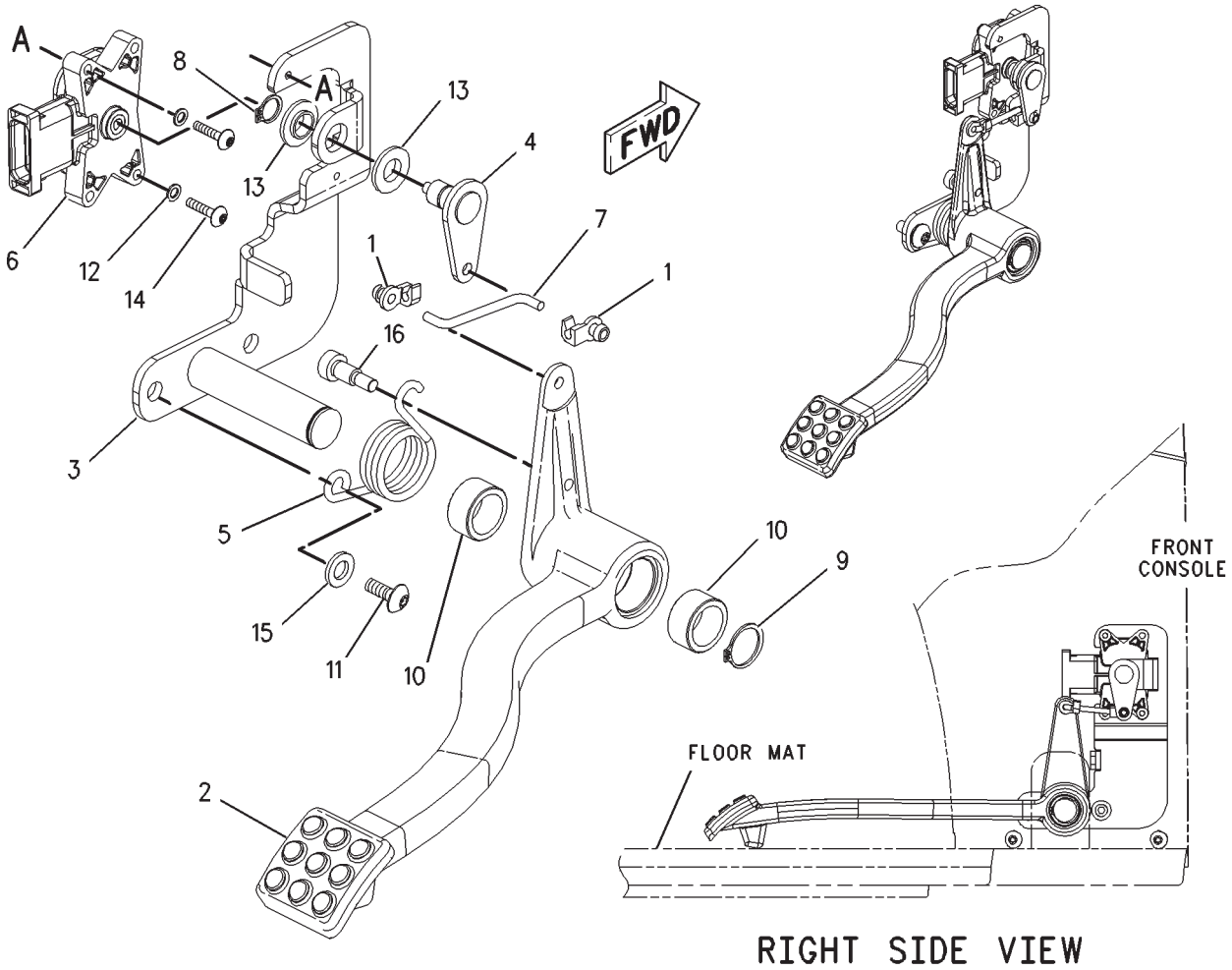


00850574

## CONTROL GP-DECELERATOR - 152-0447

| ITEM | NUMBER | QTY | DESCRIPTION |
|---|---|---|---|
| - | 152-0447 | -- | CONTROL GP-DECELERATOR [A] (NOT SERVICED) |
| 1 | CH116-5728 | 2 | CLIP-ROD END |
| 2 | 136-5218 | 1 | PEDAL-DECELERATOR |
| 3 | 136-5221 | 1 | BRACKET ASM (INCLUDES BRACKET & SHAFT) |
| 4 | 136-5224 | 1 | ARM ASM (INCLUDES SHAFT & PLATE) |
| 5 | CH214-9441 | 1 | SPRING |
| 6 | 500317D1 | 1 | SENSOR POSITION |
| 7 | 136-5566 | 1 | LINK |
| 8 | CH095-0915 | 1 | RING-RETAINING |
| 9 | CH2J-6356 | 1 | RING-RETAINING |
| 10 | CH4E-1251 | 2 | BEARING-SLEEVE |
| 11 | CH127-2170 | 2 | SCREW-TRUSS HEAD (M8X1.25X20MM) |
| 12 | CH8C-9660 | 2 | WASHER (4.6X7.9X0.8) |
| 13 | CH177-0378 | 2 | BUSHING |
| 14 | CH9X-1046 | 2 | SCREW (M4X0.7X18MM) |
| 15 | CH9M-1974 | 2 | WASHER-HARD (8.8X16X2) |
| 16 | 400004X1 | 1 | BOLT-SHOULDER (M6X1X23.25MM) |

[A] PART OF 500841D1;500842D1;500844D1; 500849D1 CAB AR

00850574
PR: t05i29k58b0060

## CONTROL GP-GOVERNOR - 207-2031

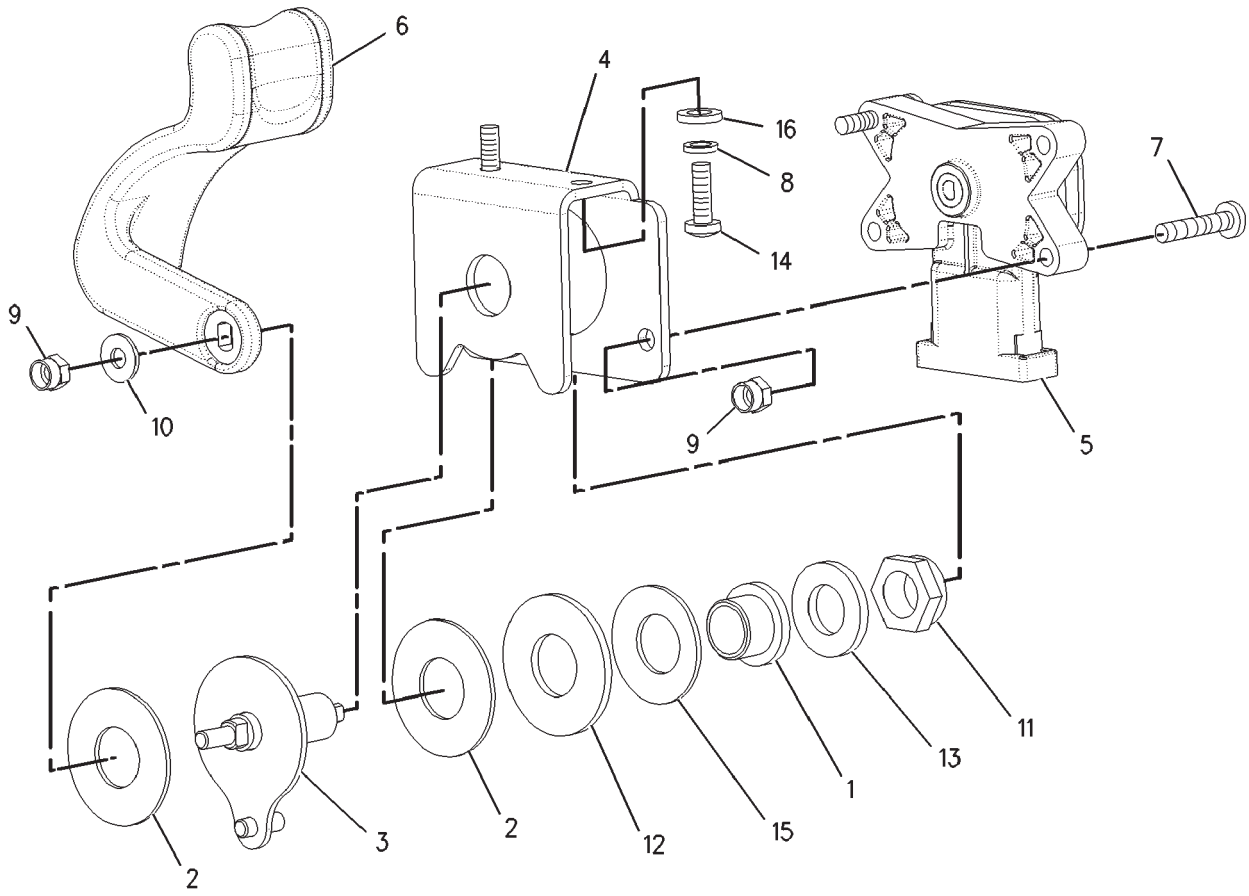


00867630

## CONTROL GP-GOVERNOR - 207-2031

| ITEM | NUMBER | QTY | DESCRIPTION |
|---|---|---|---|
| - | 207-2031 | -- | CONTROL GP-GOVERNOR [A] (NOT SERVICED) |
| 1 | CH174-5747 | 1 | BUSHING |
| 2 | 400334X1 | 2 | WASHER (16.5X37X1.5) |
| 3 | 192-4776 | 1 | SHAFT ASM(INCLUDES PIN, PLATE & SHAFT) |
| 4 | 192-4777 | 1 | BRACKET |
| 5 | 500317D1 | 1 | SENSOR-POSITION (SENSOR A) |
| 6 | CH207-2032 | 1 | HANDLE |
| 7 | 400072X1 | 2 | BOLT-HX SCKT HD (M5X0.8X25MM) |
| 8 | CH3B-4503 | 2 | LOCKWASHER |
| 9 | CH179-4324 | 3 | LOCKNUT-NYLON INSRT (M5X.8) |
| 10 | CH4B-4274 | 1 | WASHER (5.5X13X1.2) |
| 11 | CH4K-8341 | 1 | LOCKNUT (1/2-20) |
| 12 | CH7X-0517 | 1 | WASHER-HARD (17X38X2.5) |
| 13 | 400357X1 | 1 | WASHER-HARD (M12X25.5X3) |
| 14 | CH8T-6693 | 2 | SCREW-MACHINE (M5X0.8X16MM) |
| 15 | 400074X1 | 1 | WASHER-BELLVILLE |
| 16 | 400310X1 | 2 | WASHER (6.6X12X2) |

[A] PART OF 152-0434 CONSOLE
GP-OPERATOR

00867630
PR: t05i29k58b0061

## FILTER GP-WATER SEP & FUEL - 198-0188
**MT835 & MT845**

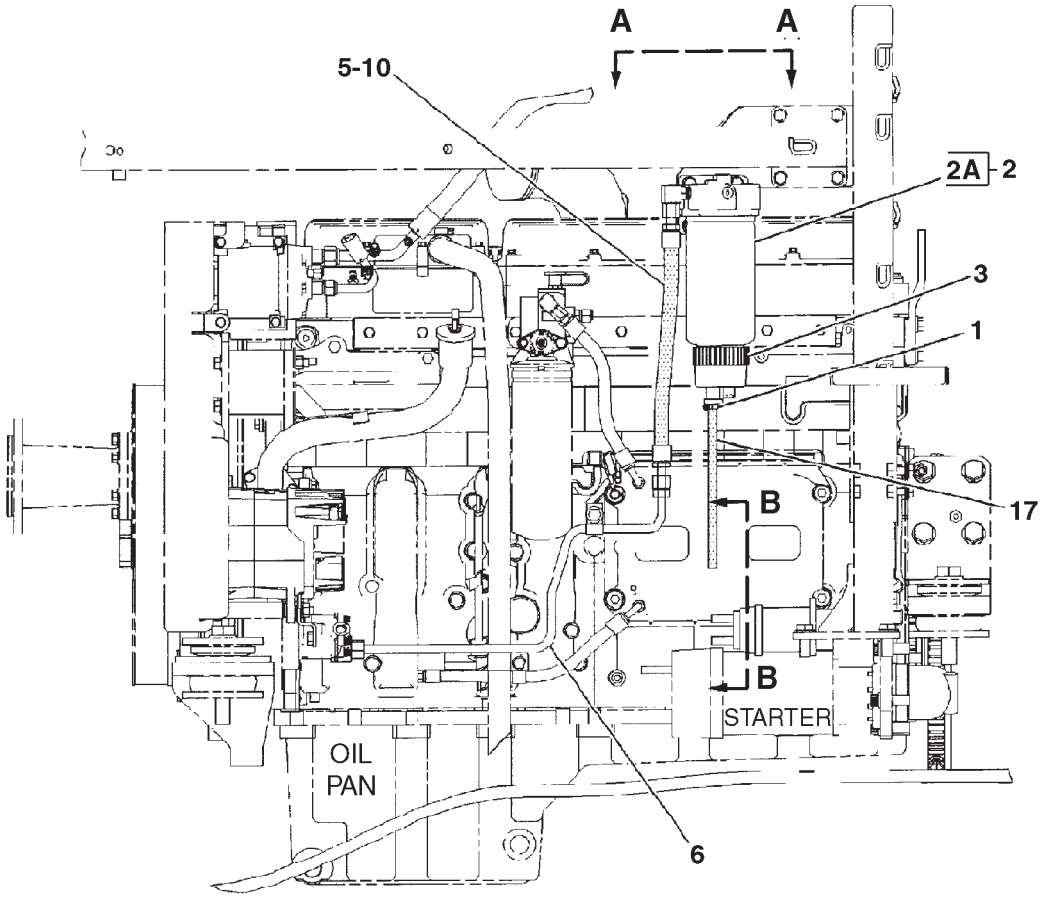


LEFT SIDE VIEW

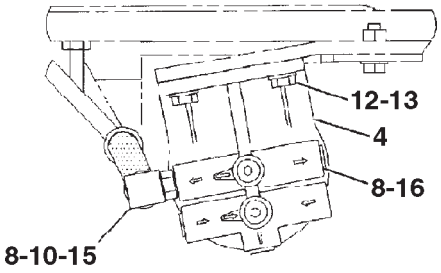


VIEW A-A

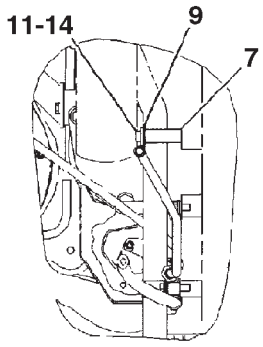


VIEW B-B

0888323A

## FILTER GP-WATER SEP & FUEL - 198-0188

**MT835 & MT845**

| ITEM | NUMBER | QTY | DESCRIPTION |
|---|---|---|---|
| - | 198-0188 | -- | FILTER GP-WATER SEP & FUEL [A] (NOT SERVICED) |
| 1 | CH1P-4278 | 1 | CLAMP-HOSE |
| 2 | CH1R-0771 | 1 | FILTER ASM-FUEL (INCLS 2A) |
| 2A | CH220-8678 | 1 | SEAL |
| 3 | CH173-7126 | 1 | BOWL |
| 4 | CH177-9778 | 1 | BASE ASM (INCLUDES STUD) |
| | CH9S-4167 | 1 | STUD-HOLLOW |
| 5 | CH208-4830 | 1 | HOSE ASM |
| 6 | 210-7423 | 1 | TUBE ASM |
| 7 | 213-2589 | 1 | SPACER |
| 8 | 400318X1 | 6 | SEAL-O-RING (11.89IDX1.98DIA) |
| 9 | CH5K-3294 | 1 | CLIP |
| 10 | CH6V-8398 | 2 | SEAL-O-RING (16.03ODX1.78DIA) |
| 11 | CH8M-4791 | 1 | WASHER-HARD |
| 12 | 400287X1 | 3 | WASHER-HARD (11X21X2.5) |
| 13 | 400059X1 | 3 | BOLT (M10X1.5X35MM) |
| 14 | 400241X1 | 1 | BOLT (M12X1.75X80MM) |
| 15 | 400418X1 | 1 | ELBOW-90DEG -6STOR -8ORFS |
| 16 | CH9S-8004 | 5 | PLUG |
| 17 | CH5P-6442 | AR | HOSE (26CM) |

[A] PART OF 172-5361; 172-5362
INSTALLATION AR-ENGINE

0888323A
PR: t05i29k58b0062

## FILTER GP-WATER SEP & FUEL - 198-0187

**MT855 & MT865**

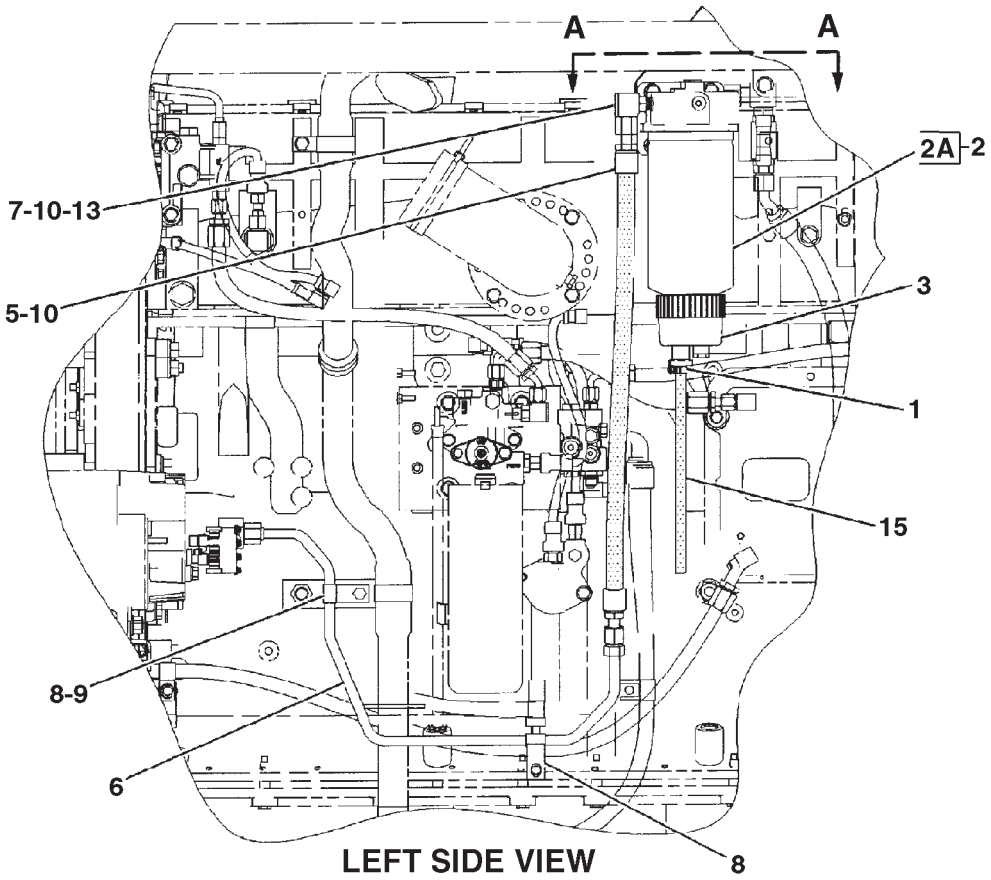


LEFT SIDE VIEW

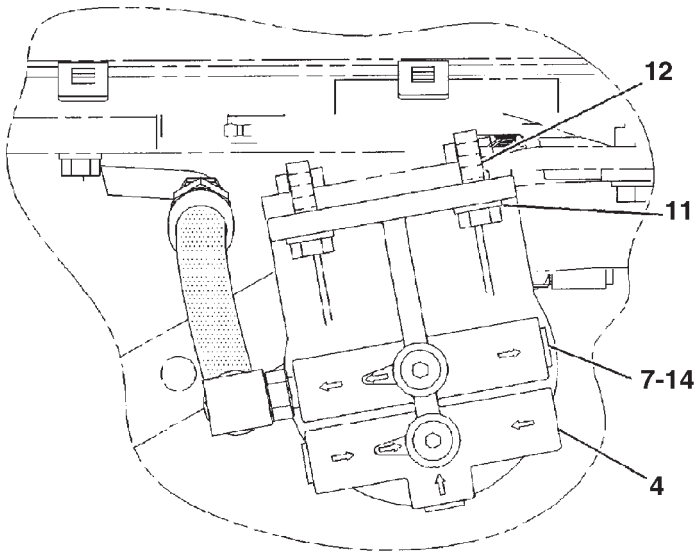


VIEW A-A

0898139A

## FILTER GP-WATER SEP & FUEL - 198-0187

MT855 & MT865

| ITEM | NUMBER | QTY | DESCRIPTION |
|---|---|---|---|
| - | 198-0187 | -- | FILTER GP-WATER SEP & FUEL [A] (NOT SERVICED) |
| 1 | CH1P-4278 | 1 | CLAMP-HOSE |
| 2 | CH1R-0771 | 1 | FILTER ASM-FUEL FOR SEAL REPLACEMENT ORDER 2A) |
| 2A | CH220-8678 | 1 | SEAL |
| 3 | CH173-7126 | 1 | BOWL |
| 4 | 177-9778 | 1 | BASE ASM (INCLUDES STUD) |
| | 9S-4167 | 1 | STUD |
| 5 | CH208-5384 | 1 | HOSE ASM |
| 6 | 221-1776 | 1 | TUBE ASM |
| 7 | 400318X1 | 6 | SEAL-O-RING |
| 8 | CH4D-9517 | 1 | CLIP |
| 9 | WR561071 | 1 | BOLT (3/8-16X3) |
| 10 | CH6V-8398 | 2 | SEAL-O-RING |
| 11 | 400287X1 | 4 | WASHER-HARD (11X21X2.5) |
| 12 | 400059X1 | 3 | BOLT (M10X1.5X35MM) |
| 13 | 400018X1 | 1 | ELBOW |
| 14 | CH9S-8004 | 5 | PLUG |
| 15 | CH5P-6442 | 1 | HOSE (26CM) |

[A] PART OF 172-5363;172-5364;187-1743;
187-1744 INSTALLATION AR-ENGINE

0898139A
PR: t05i29k58b0063

## LINES GP-FUEL - 213-9315
**MT835 & MT845**

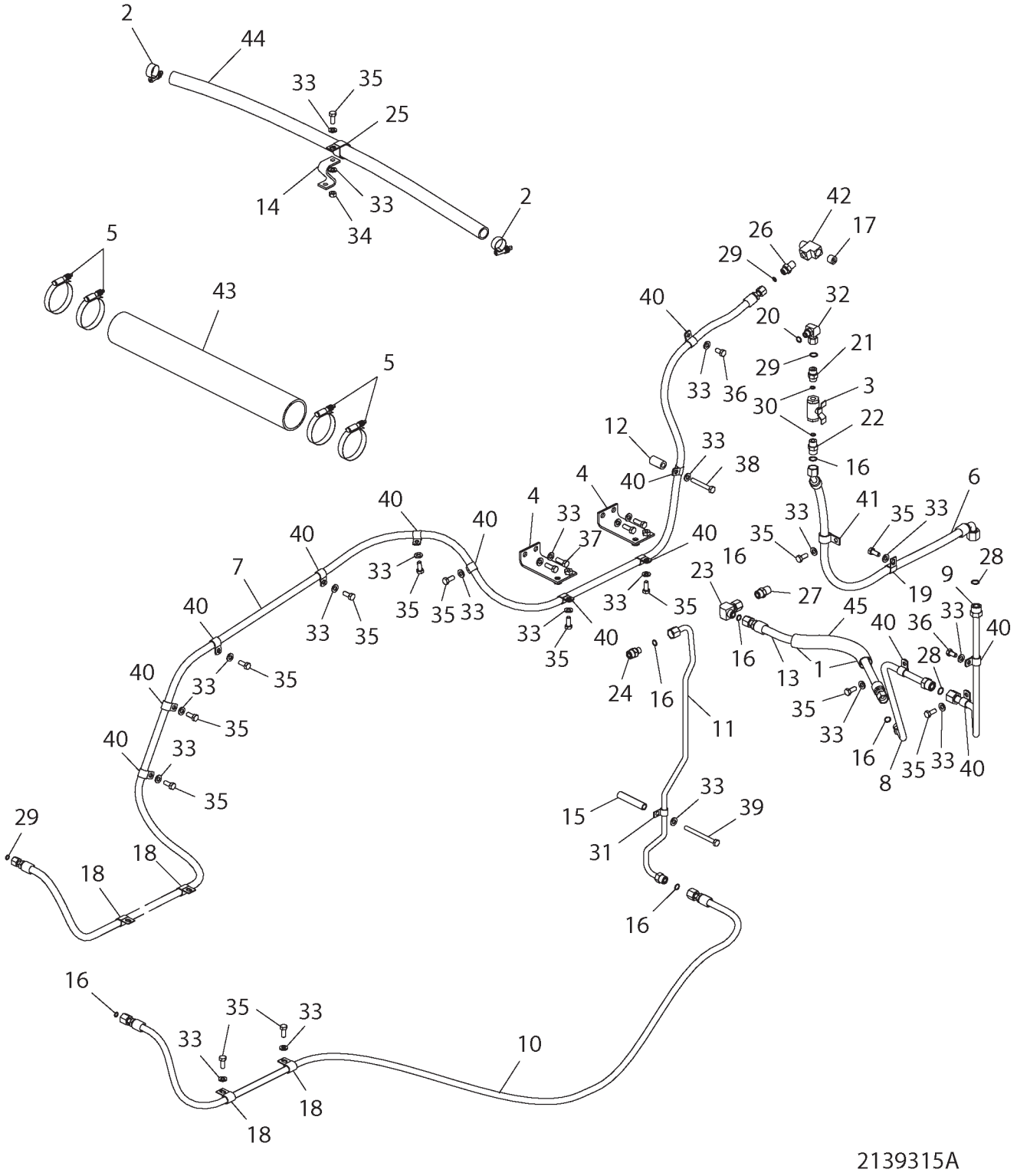

## LINES GP-FUEL - 213-9315
**MT835 & MT845**

| ITEM | NUMBER | QTY | DESCRIPTION |
|---|---|---|---|
| | 213-9315 | | LINES GP-FUEL [A] (NOT SERVICED) |
| 1 | CH7K-1181 | 2 | STRAP-CABLE 0.19-4.00 |
| 2 | CH7X-7958 | 2 | CLAMP-25-44IDX16 CONST TENSION |
| 3 | CH206-0325 | 1 | VALVE-3/4-16 THD |
| 4 | 209-0141 | 2 | BRACKET AS |
| 5 | CH8T-4985 | 4 | CLAMP-HOSE 83-105ID CONST LOAD |
| 6 | 212-3811 | 1 | HOSE AS-12.7 ID CMS 5774 |
| 7 | 212-3813 | 1 | HOSE AS-9.5 ID CMS 5774 |
| 8 | 212-3814 | 1 | TUBE AS. |
| 9 | 212-3815 | 1 | TUBE AS. |
| 10 | 214-0041 | 1 | HOSE AS-9.52 ID CMS 5774 |
| 11 | 214-0042 | 1 | TUBE AS. |
| 12 | CH215-6489 | 1 | SPACER-12 IDX22 ODX40 ZN |
| 13 | 217-5924 | 1 | HOSE AS-12.7 ID CMS 5574 |
| 14 | 220-8642 | 1 | BRACKET |
| 15 | 224-7075 | 1 | SPACER |
| 16 | CH033-6033 | 7 | SEAL-O-RING 12.4IDX1.78DIA |
| 17 | CH2B-0858 | 1 | PLUG-8 NPTF 9.52SQR.CNTRSK |
| 18 | CH3S-8664 | 4 | CLIP-LOOP 19.05 ID |
| 19 | CH6D-4246 | 1 | CLIP-LOOP 19.05ID |
| 20 | CH6V-5049 | 2 | SEAL-O RING 11.89IDX1.98 DIA |
| 21 | 400627X1 | 1 | CONNECTOR-STR-8STOR-6ORFS |
| 22 | CH6V-8639 | 1 | CONNECTOR-STR-12.7 STR -8 ORFS |
| 23 | 400686X1 | 1 | ELBOW-90DEG 8 ORFS SWVL |
| 24 | 400429X1 | 1 | CONNECTOR-STR -6 STOR-8 ORFS |
| 25 | 400689X1 | 1 | CLIP LOOP 38.1ID |
| 26 | CH8C-6870 | 1 | CONNECTOR-8 NPTF X 6 ORFS |
| 27 | CH8C-6872 | 1 | CONNECTOR-8 NPTF X 8 ORFS |
| 28 | CH8L-2746 | 2 | SEAL-O-RING 15.61IDX1.78DIA |
| 29 | CH8L-2779 | 3 | SEAL-O-RING 9.25ID X 1.78DIA |
| 30 | CH8L-2786 | 2 | SEAL-O RING 16.36IDX2.21 DIA |
| 31 | CH8M-2770 | 1 | CLIP-LOOP 12.7 ID |
| 32 | CH8T-0788 | 1 | ELBOW-90DEG 6STORX6 ORFS SWVL |
| 33 | 400287X1 | 24 | WASHER-HARD 11IDX21ODX2.5 ZND1 |
| 34 | WR522218 | 1 | NUT-M10-1.5,CL10.9,ZN,H,REG |
| 35 | 400039X1 | 15 | BOLT-M10X1.5X25 ZNDI HHD 10.9 |
| 36 | 400040X1 | 2 | BOLT-M10X1.5X20 ZNDI HHD 10.9 |
| 37 | 400058X1 | 4 | BOLT-M10X1.5X30 ZNDI HHD 10.9 |
| 38 | 400066X1 | 1 | BOLT-M10X1.5X70 ZNDI HHD 10.9 |
| 39 | 400240X1 | 1 | BOLT-M10X1.5X110 ZNDI HHD 10.9 |
| 40 | 400702X1 | 13 | CLIP-ONE TUBE COATED |
| 41 | CH9X-8250 | 1 | CLIP-LOOP 23.8 ID |
| 42 | 500142D1 | 1 | FITTING-TEE |
| 43 | 500291D1 | 1 | HOSE-TRANSFER |
| 44 | CH146-7453 | AR | HOSE-BULK 25.4 ID HTEMP L PRES (116CM) |
| 45 | 400691X1 | AR | SLEEVE-ABRASION BULK 31.75ID (25CM) |

[A] PART OF 172-5361;172-5362;187-1741;
187-1742 INSTALLATION AR

2139315A
PR: t05i29k58b0064

## LINES GP-FUEL - 179-2183
**MT855 & MT865**

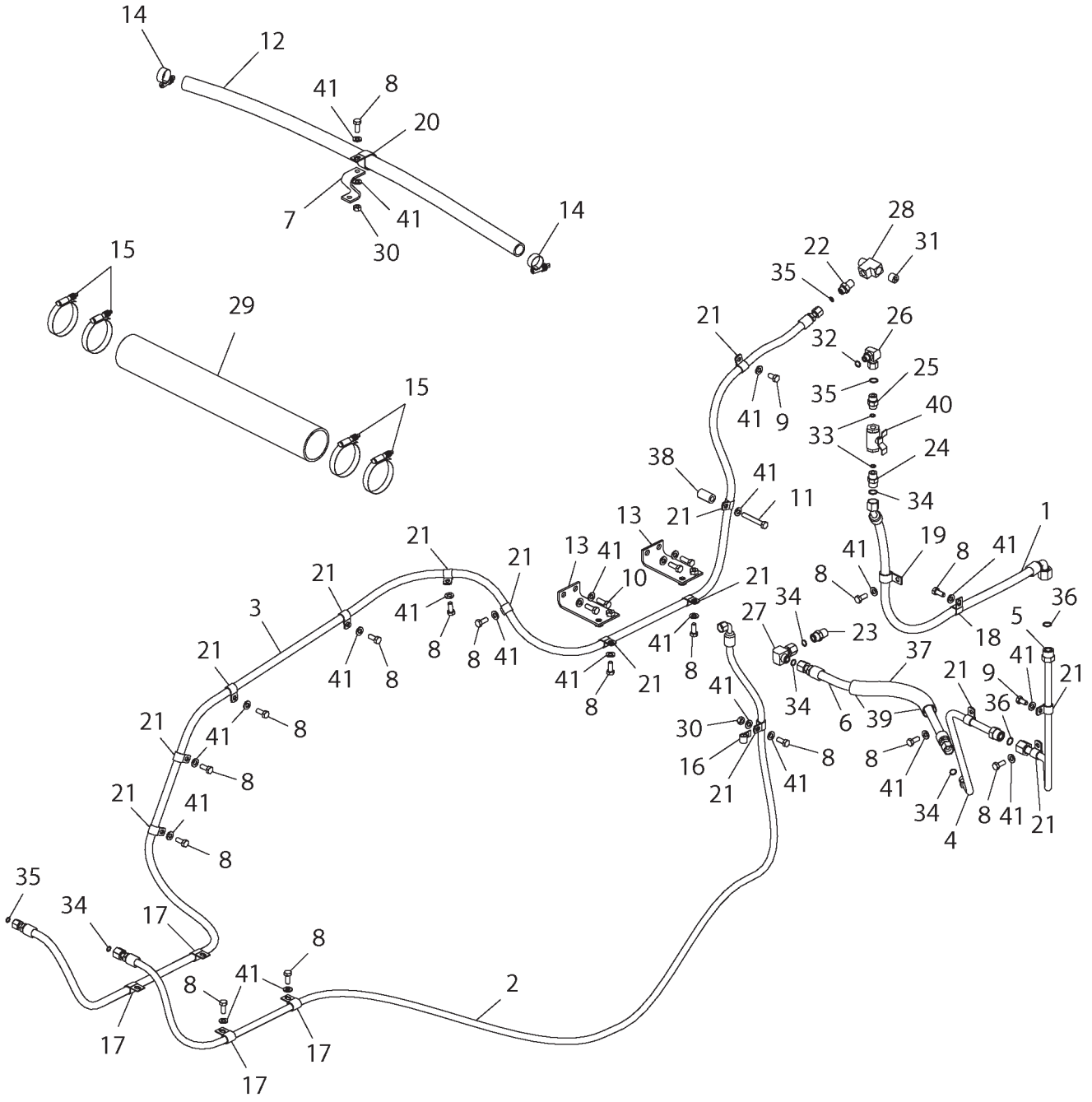

## LINES GP-FUEL - 179-2183
**MT855 & MT865**

| ITEM | NUMBER | QTY | DESCRIPTION |
|---|---|---|---|
| - | 179-2183 | -- | LINES GP-FUEL [A] (NOT SERVICED) |
| 1 | 212-3811 | 1 | HOSE AS-12.7 ID CMS 5774 |
| 2 | CH212-3812 | 1 | HOSE AS 9.5 ID CMS 5774 |
| 3 | 212-3813 | 1 | HOSE AS-9.5 ID CMS 5774 |
| 4 | 212-3814 | 1 | TUBE AS. |
| 5 | 212-3815 | 1 | TUBE AS. |
| 6 | 217-5924 | 1 | HOSE AS-12.7 ID CMS 5574 |
| 7 | 220-8642 | 1 | BRACKET |
| 8 | 400039X1 | 16 | BOLT-M10X1.5X25 ZNDI HHD 10.9 |
| 9 | 400040X1 | 16 | BOLT-M10X1.5X20 ZNDI HHD 10.9 |
| 10 | 400058X1 | 16 | BOLT-M10X1.5X30 ZNDI HHD 10.9 |
| 11 | 400066X1 | 16 | BOLT-M10X1.5X70 ZNDI HHD 10.9 |
| 12 | CH146-7453 | 116 | HOSE-BULK 25.4 ID HTEMP L PRES (116CM) |
| 13 | 209-0141 | 2 | BRACKET AS |
| 14 | CH7X-7958 | 2 | CLAMP-25-44IDX16 CONST TENSION |
| 15 | CH8T-4985 | 4 | CLAMP-HOSE 83-105ID CONST LOAD |
| 16 | CH8M-2770 | 1 | CLIP-LOOP 12.7 ID |
| 17 | CH3S-8664 | 4 | CLIP-LOOP 19.05 ID |
| 18 | CH6D-4246 | 1 | CLIP-LOOP 19.05ID |
| 19 | CH9X-8250 | 1 | CLIP-LOOP 23.8 ID |
| 20 | 400689X1 | 1 | CLIP LOOP 38.1ID |
| 21 | 400702X1 | 14 | CLIP-ONE TUBE COATED |
| 22 | CH8C-6870 | 1 | CONNECTOR-8 NPTF X 6 ORFS |
| 23 | CH8C-6872 | 1 | CONNECTOR-8 NPTF X 8 ORFS |
| 24 | CH6V-8639 | 1 | CONNECTOR-STR-12.7 STR -8 ORFS |
| 25 | 400627X1 | 1 | CONNECTOR-STR-8STOR-6ORFS |
| 26 | CH8T-0788 | 1 | ELBOW-90DEG 6STORX6 ORFS SWVL |
| 27 | 400686X1 | 1 | ELBOW-90DEG 8 ORFS SWVL |
| 28 | 500142D1 | 1 | FITTING-TEE |
| 29 | 500291D1 | 1 | HOSE-TRANSFER |
| 30 | WR522218 | 2 | NUT-M10-1.5,CL10.9,ZN,H,REG |
| 31 | CH2B-0858 | 1 | PLUG-8 NPTF 9.52SQR.CNTRSK |
| 32 | CH6V-5049 | 1 | SEAL-O RING 11.89IDX1.98 DIA |
| 33 | CH8L-2786 | 2 | SEAL-O RING 16.36IDX2.21 DIA |
| 34 | CH033-6033 | 5 | SEAL-O-RING 12.4IDX1.78DIA |
| 35 | CH8L-2779 | 3 | SEAL-O-RING 9.25ID X 1.78DIA |
| 36 | CH8L-2746 | 2 | SEAL-O-RING 15.61IDX1.78DIA |
| 37 | 400691X1 | 25 | SLEEVE-ABRASION BULK 31.75ID (25CM) |
| 38 | CH215-6489 | 1 | SPACER-12 IDX22 ODX40 ZN |
| 39 | CH7K-1181 | 2 | STRAP-CABLE 0.19-4.00 |
| 40 | CH206-0325 | 1 | VALVE-3/4-16 THD |
| 41 | 400287X1 | 25 | WASHER-HARD 11IDX21ODX2.5 ZND1 |

[A] PART OF 172-5363;172-5364;187-1743;
187-1744 INSTALLATION AR-ENGINE

1792183A
PR: t05i29k58b0065

## LINES GP-FUEL - 197-1317

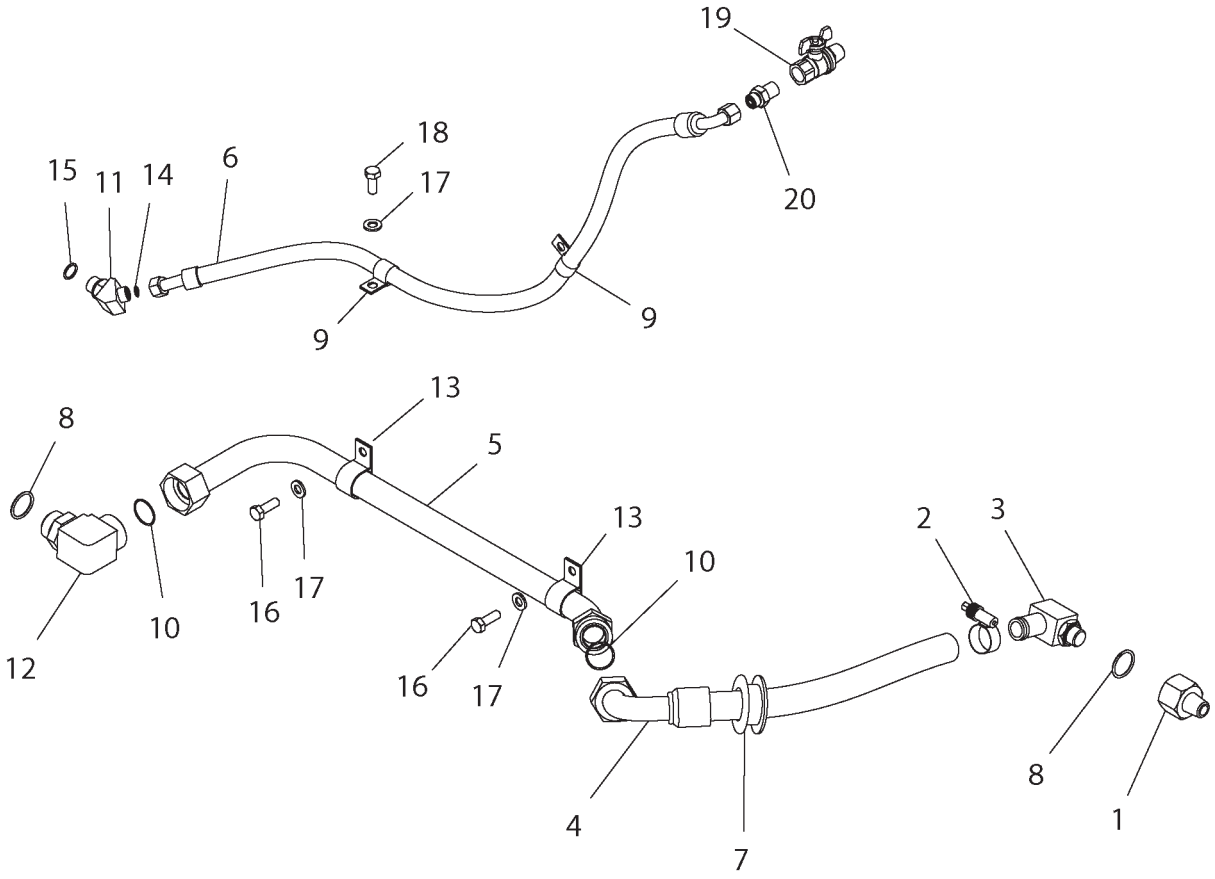


1971317A

## LINES GP-FUEL - 197-1317

| ITEM | NUMBER | QTY | DESCRIPTION |
|---|---|---|---|
| - | 197-1317 | -- | LINES GP-FUEL [A] |
| 1 | CH8C-5053 | 1 | ADAPTER |
| 2 | CH7X-7958 | 1 | CLAMP-HOSE |
| 3 | CH034-4202 | 1 | ELBOW |
| 4 | 197-7948 | 1 | HOSE |
| 5 | 200-1300 | 1 | TUBE ASM |
| 6 | 192-6386 | 1 | HOSE |
| 7 | CH4I-5399 | 1 | GROMMET |
| 8 | CH5P-7701 | 2 | SEAL-O-RING |
| 9 | CH6D-4246 | 2 | CLIP |
| 10 | 400365X1 | 2 | SEAL-O-RING |
| 11 | CH6V-9876 | 1 | ELBOW |
| 12 | 400583X1 | 1 | ELBOW |
| 13 | 400598X1 | 2 | CLIP |
| 14 | CH8L-2779 | 2 | SEAL-O-RING |
| 15 | CH8L-2786 | 1 | SEAL-O-RING |
| 16 | 400058X1 | 2 | BOLT (M10X1.5X30MM) |
| 17 | 400287X1 | 3 | WASHER-HARD (11X21X2.5) |
| 18 | 400039X1 | 1 | BOLT (M10X1.5X25MM) |
| 19 | CH221-2002 | 1 | VALVE-BALL (8NPTF) |
| 20 | CH8C-6870 | 1 | CONNECTOR (6ORFSX8NPT) |

[A] PART OF 197-8558 TANK AR-FUEL

1971317A
PR: t05i29k58b0066

## TANK & MTG GP-FUEL - 179-2182

NO ILLUSTRATION

NOTIF1

## TANK & MTG GP-FUEL - 179-2182

| ITEM | NUMBER | QTY | DESCRIPTION |
|---|---|---|---|
| - | 179-2182 | -- | TANK & MTG GP-FUEL [A] (NOT SERVICED) |
| 1 | 186-5431 | 1 | SUPPORT GP-FUEL TANK (NOT SERVICED)<br>(SEE BREAKDOWN FOR COMPONENTS) |
| 2 | 186-5432 | 1 | TANK GP-FUEL (NOT SERVICED)<br>(SEE BREAKDOWN FOR COMPONENTS) |

[A] PART OF 179-1953 CHASSIS AR

NOTIF1
PR: t05i29k58b0067

## TANK AR-FUEL - 197-8558
**AUXILIARY 94.8 LITERS (25 GALLONS)**

NO ILLUSTRATION

## TANK AR-FUEL - 197-8558
**AUXILIARY 94.8 LITERS (25 GALLONS)**

| ITEM | NUMBER | QTY | DESCRIPTION |
|---|---|---|---|
| - | 502771D1 | -- | TANK AR-3RD FUEL TANK (FACT OPT)<br>(MT835,MT845,MT855) (NOT SERVICED) |
| - | 502760D1 | -- | TANK AR-3RD FUEL TANK (FIELD INSTALLED)<br>(INCLUDES 197-8558 & INSTRUCTIONS)<br>(MT835,MT845,MT855) |
| - | 197-8558 | -- | TANK AR-FUEL [A] (INCLS ITEMS 1 & 2) |
| 1 | 197-1317 | 1 | LINES GP-FUEL (NOT SERVICED)<br>(SEE BREAKDOWN FOR COMPONENTS) |
| 2 | 206-8891 | 1 | TANK GP-FUEL (NOT SERVICED)<br>(SEE BREAKDOWN FOR COMPONENTS) |

[A] PART OF:
156-5584; 179-2196 BASE UNIT AR;
502760D1; 502771D1 TANK AR-FUEL

NOTIF2
PR: t05i29k58b0068

## TANK GP-FUEL - 186-5432
**1155 LITERS (305 GALLONS)**

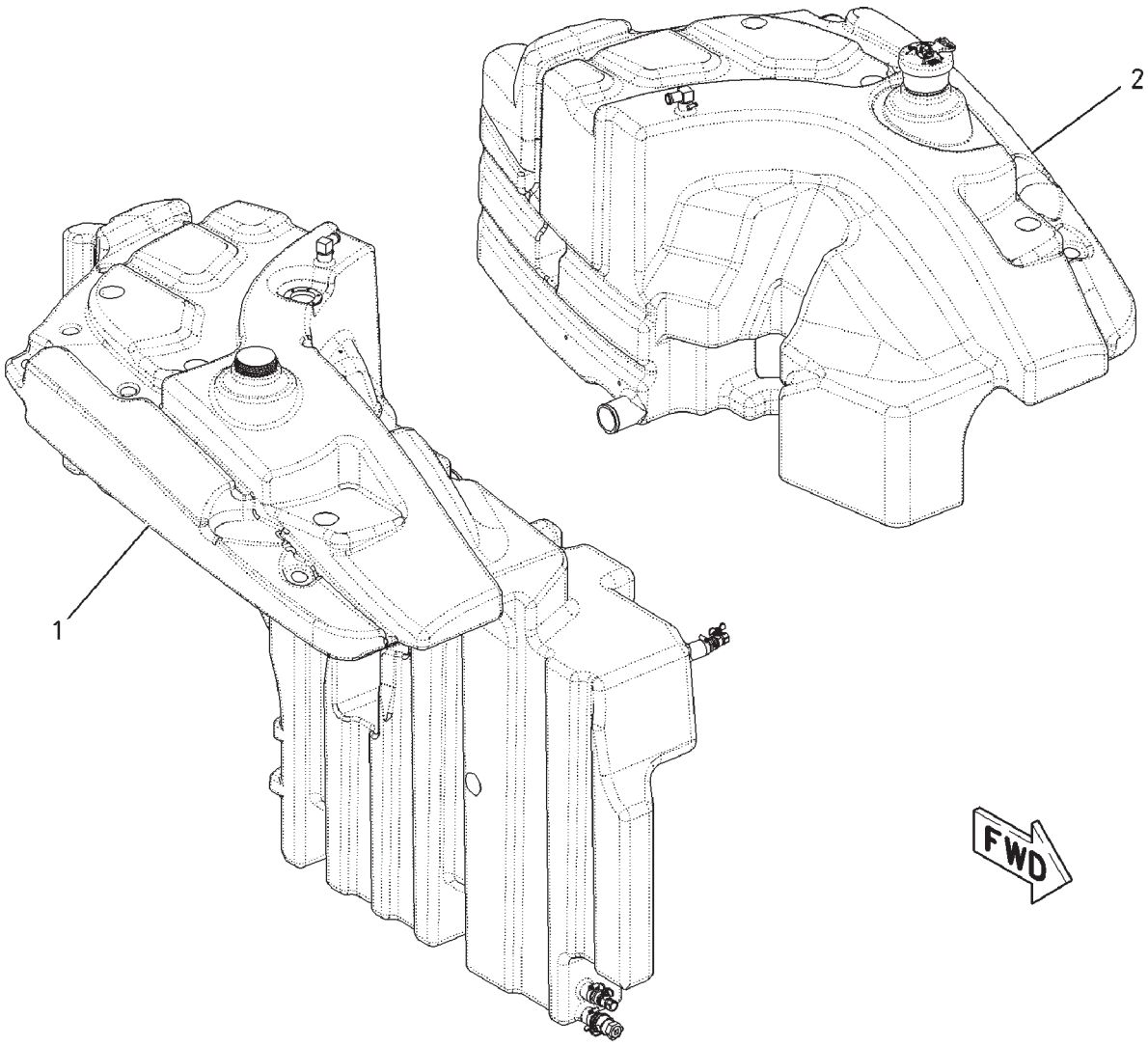


00886907

## TANK GP-FUEL - 186-5432
**1155 LITERS (305 GALLONS)**

| ITEM | NUMBER | QTY | DESCRIPTION |
|---|---|---|---|
| - | 186-5432 | -- | TANK GP-FUEL [A] (NOT SERVICED) |
| 1 | 196-7742 | 1 | TANK GP-FUEL (RH) (NOT SERVICED)<br>(SEE BREAKDOWN FOR COMPONENTS) |
| 2 | 500016D1 | 1 | TANK GP-FUEL (LH) (NOT SERVICED)<br>(SEE BREAKDOWN FOR COMPONENTS) |

[A] PART OF 179-2182 TANK & MTG GP-FUEL

00886907
PR: t05i29k58b0069

## TANK GP-FUEL - 196-7742
**RIGHT HAND**

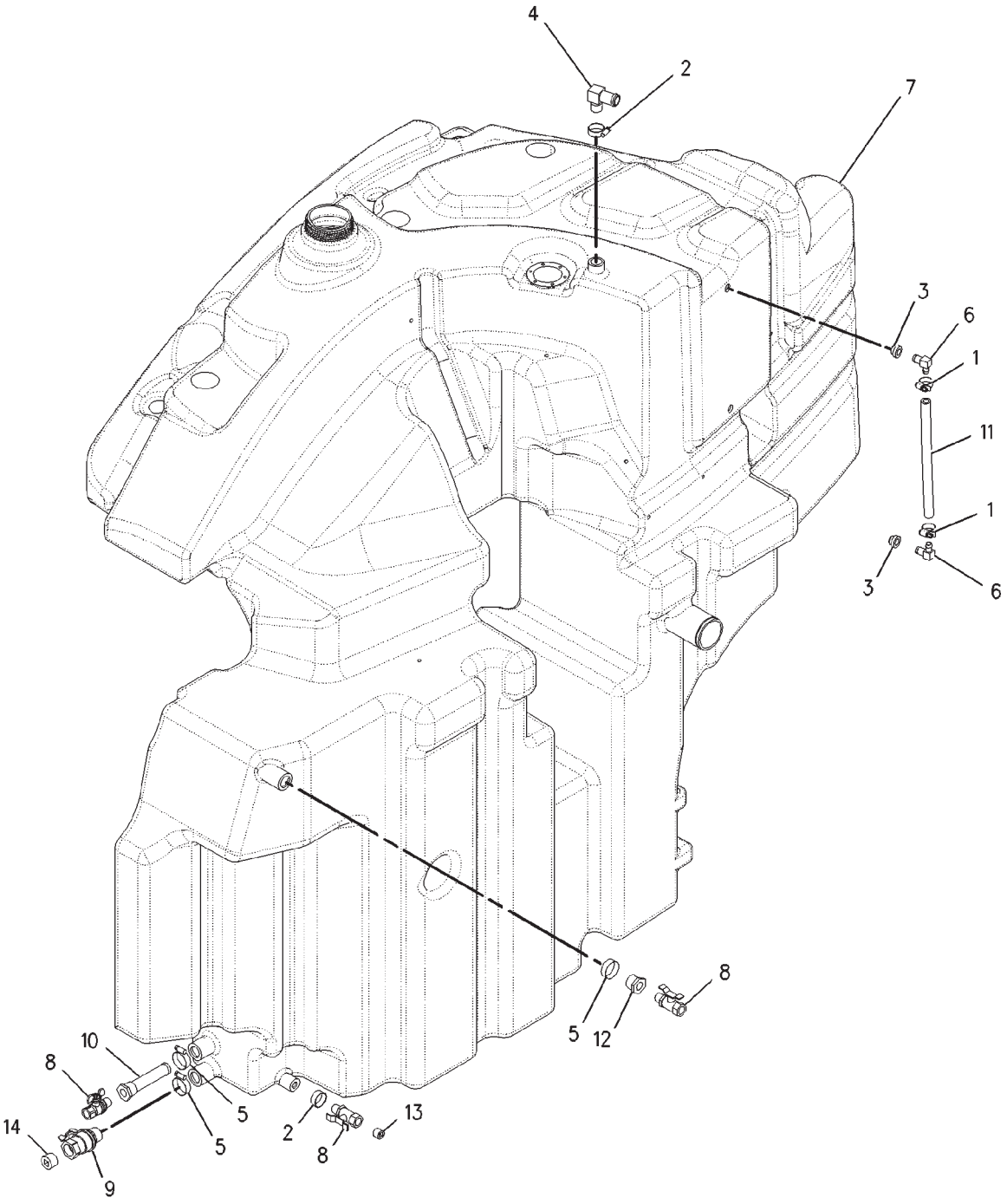


00888761

## TANK GP-FUEL - 196-7742
RIGHT HAND

| ITEM | NUMBER | QTY | DESCRIPTION |
|---|---|---|---|
| - | 196-7742 | -- | TANK GP-FUEL [A] (NOT SERVICED) |
| 1 | CH1P-4278 | 2 | CLAMP-HOSE |
| 2 | CH2S-3440 | 2 | CLAMP-HOSE |
| 3 | CH6W-5698 | 2 | GROMMET |
| 4 | CH7W-1890 | 1 | ELBOW |
| 5 | CH9M-2904 | 3 | CLAMP-HOSE |
| 6 | CH186-5862 | 2 | ELBOW |
| 7 | 188-0771 | 1 | TANK-FUEL (RH) |
| 8 | CH221-2002 | 3 | VALVE-BALL (FUEL SHUT-OFF) |
| 9 | CH221-2003 | 1 | VALVE-BALL (FUEL SHUT-OFF) |
| 10 | CH221-3265 | 1 | STRAINER (SUCTION) |
| 11 | 200-2841 | AR | HOSE-BULK-90CM (31CM REQ'D) |
| 12 | CH061-9593 | 1 | BUSHING-REDUCER |
| 13 | CH2B-0858 | 1 | PLUG-PIPE |
| 14 | CH3B-0551 | 1 | PLUG-PIPE |

[A] PART OF 186-5432 TANK GP-FUEL

00888761
PR: t05i29k58b0070

## TANK GP-FUEL - 500016D1
**LEFT HAND**

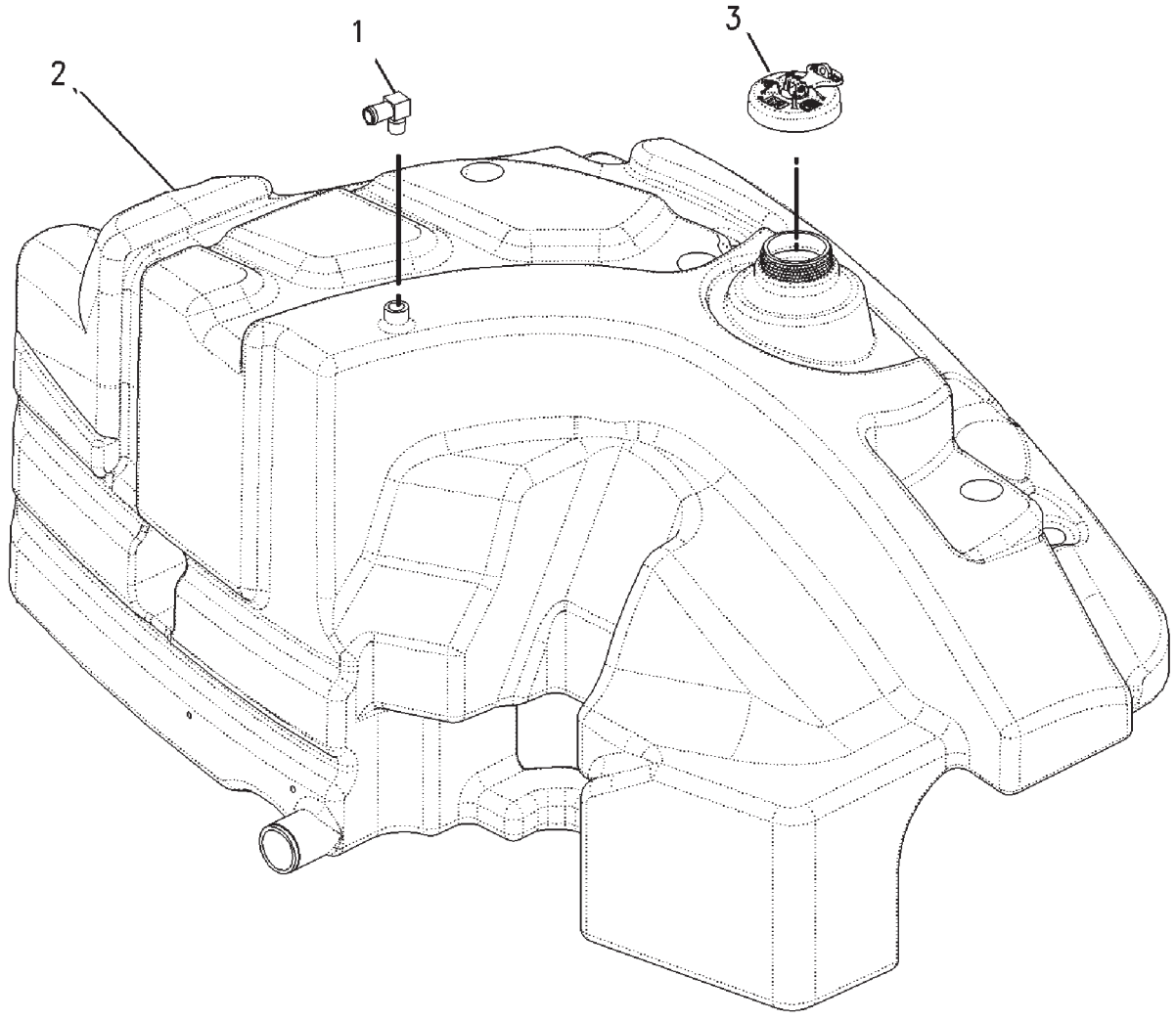


500016DB

## TANK GP-FUEL - 500016D1
**LEFT HAND**

| ITEM | NUMBER | QTY | DESCRIPTION |
|---|---|---|---|
| - | 500016D1 | -- | TANK GP-FUEL [A] (NOT SERVICED) |
| 1 | CH7W-1890 | 1 | ELBOW-90DEG (12NPTFX25.4ODBARB) |
| 2 | 500017D1 | 1 | TANK-FUEL (LH) |
| 3 | 500019D1 | 1 | FUEL CAP AS-2 WAY VENTING |

[A] PART OF 186-5432 TANK GP-FUEL

500016DB
PR: t05i29k58b0071

## TANK GP-FUEL - 206-8891
**94.63 LITERS (25 GALLONS)**

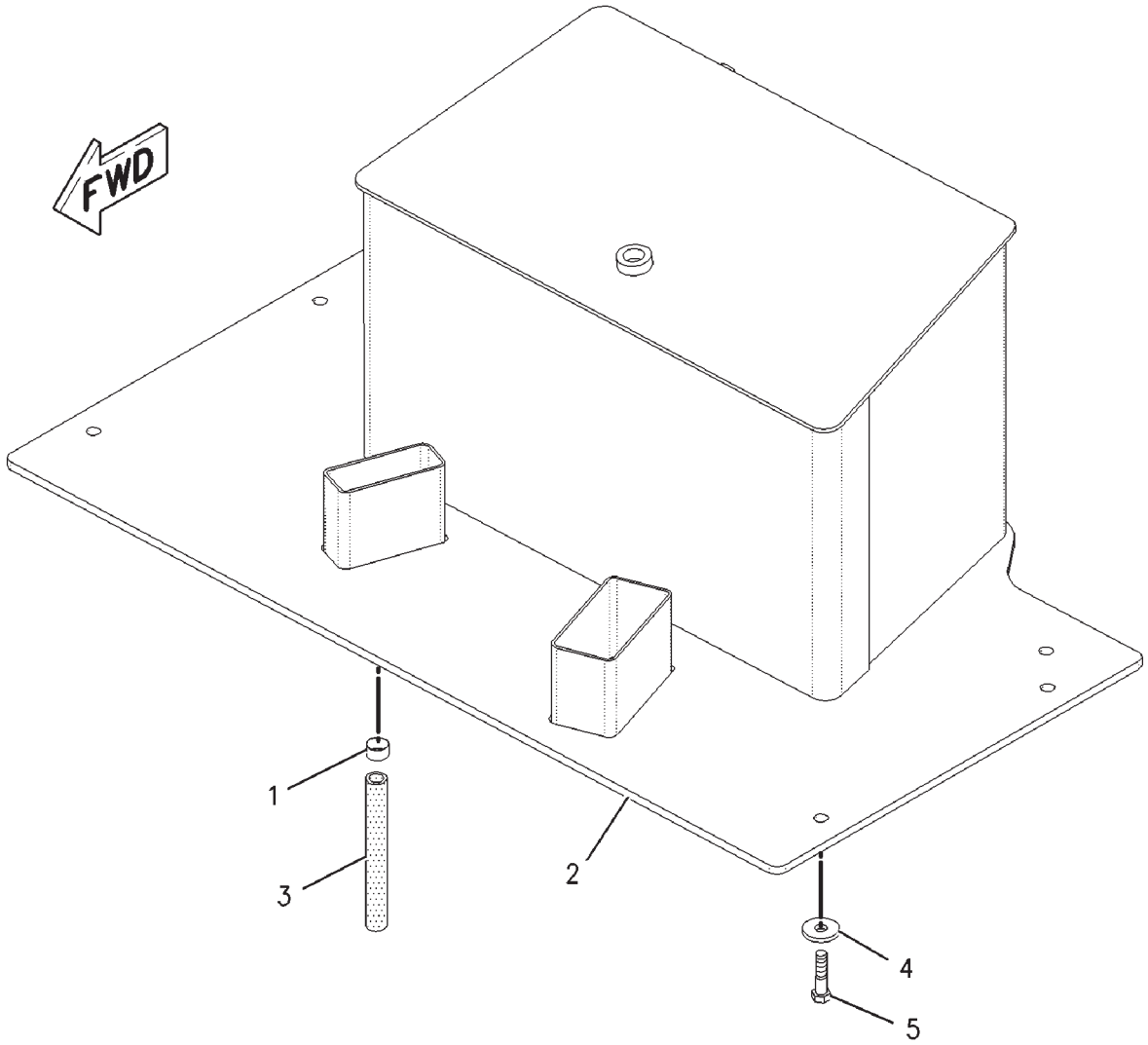


00891934

## TANK GP-FUEL - 206-8891
**94.63 LITERS (25 GALLONS)**

| ITEM | NUMBER | QTY | DESCRIPTION |
|---|---|---|---|
| - | 206-8891 | -- | TANK GP-FUEL [A] (NOT SERVICED) |
| 1 | 400108X1 | 1 | CLAMP-HOSE |
| 2 | 193-7868 | 1 | TANK GP-FUEL |
| | CH9S-7583 | 1 | PLUG (2 1/2-12) |
| | CH030-4606 | 1 | SEAL-O-RING |
| 3 | CH210-2265 | | HOSE (19 CM) |
| 4 | CH7X-0618 | 6 | WASHER-HARD (13.5X40X5) |
| 5 | 400057X1 | 6 | BOLT (M12X1.75X50MM) |

[A] PART OF 197-8558 TANK AR-FUEL

00891934
PR: t05i29k58b0072

## BATTERY & WIRING GP - 136-5658

**3 BATTERIES WITHOUT DISCONNECT SWITCH**
**MT835 & MT845**

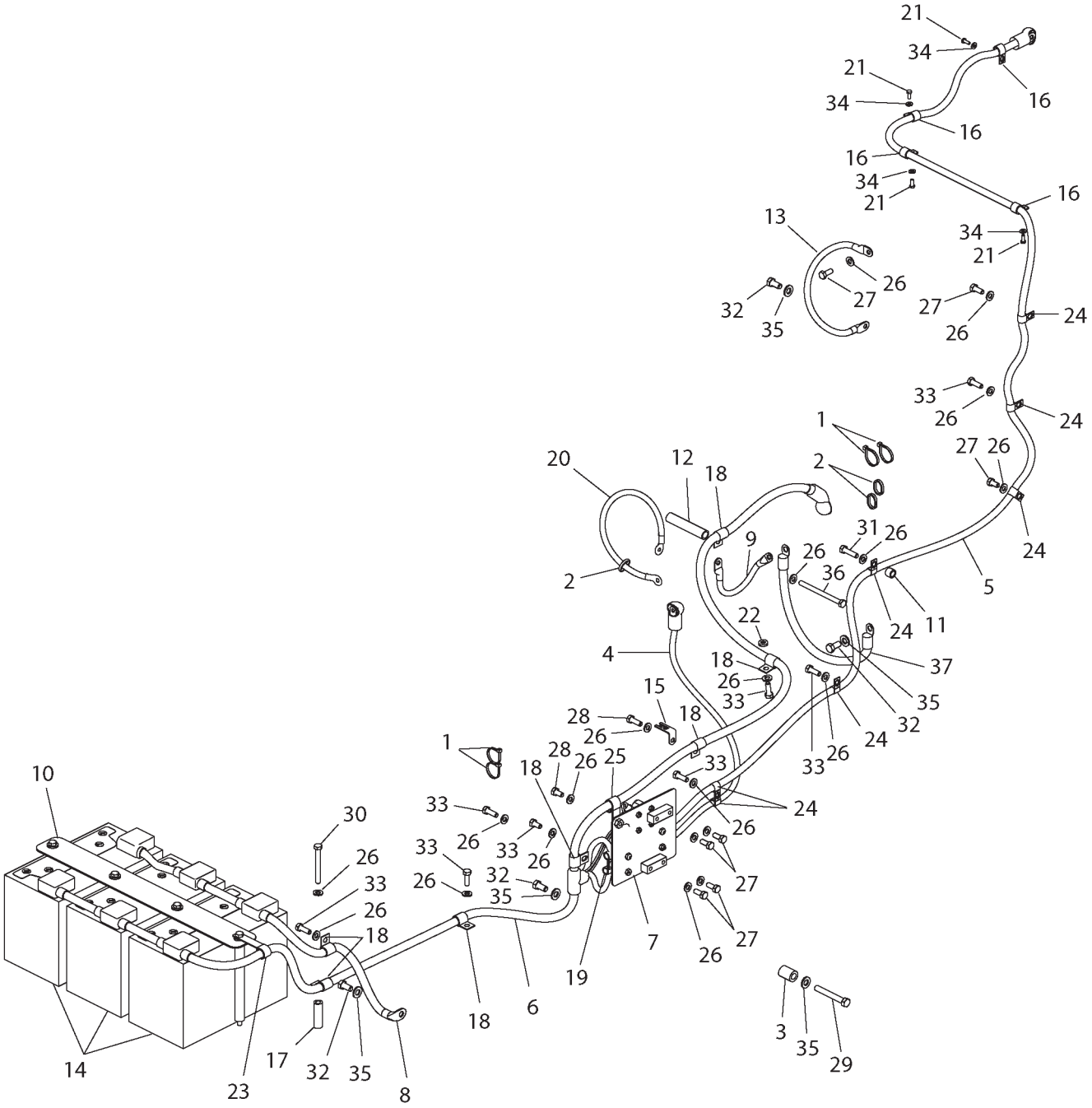

## BATTERY & WIRING GP - 136-5658

**3 BATTERIES WITHOUT DISCONNECT SWITCH**
**MT835 & MT845**

| ITEM | NUMBER | QTY | DESCRIPTION |
|---|---|---|---|
| - | 136-5658 | -- | BATTERY & WIRING GP (NOT SERVICED) |
| 1 | 400837X1 | 6 | STRAP-CABLE (44.45X4.93MM) |
| 2 | CH7K-1181 | 3 | STRAP-CABLE (0.19-4.00) |
| 3 | CH8V-9708 | 1 | SPACER (4.31IDX25.4ODX35MM |
| 4 | 136-5225 | 1 | CABLE ASM-BATTERY (POSITIVE) |
| 5 | 136-5270 | 1 | CABLE ASM-BATTERY (POSITIVE) |
| 6 | 136-5612 | 1 | CABLE ASM (POSITIVE) |
| 7 | 136-5654 | 1 | CIRCUIT BREAKER GP (NOT SERVICED) (SEE BREAKDOWN FOR COMPONENTS) |
| 8 | 501114D1 | 1 | CABLE ASM-4AWG (NEGATIVE) |
| 9 | 142-9738 | 1 | CABLE ASM (NEGATIVE) |
| 10 | 142-9760 | 1 | MOUNTING GP-BATTERY (NOT SERVICED) (SEE BREAKDOWN FOR COMPONENTS) |
| 11 | CH200-8649 | 1 | SPACER |
| 12 | CH211-3590 | 1 | SPACER |
| 13 | 223-0687 | 1 | CABLE-GROUND |
| 14 | 502446D1 | 3 | BATTERY-MAINT FREE (DRY) |
| | CH123-1373 | 6 | PLUG ASM-FILLER |
| 15 | CH132-5789 | 1 | CLIP-LADDER 90DEGX47.5MM V COAT |
| 16 | CH134-3988 | 4 | CLIP |
| 17 | CH212-0279 | 1 | SPACER |
| 18 | CH3S-8664 | 7 | CLIP-LOOP (19.05ID) |
| 19 | CH4K-8864 | 4 | CLIP-LOOP (14.29ID) |
| 20 | 500627D1 | 1 | CABLE ASM-NEG (ALT GND) (1060MM LG) (EARLY VERSION) |
| 20 | 502183D1 | 1 | CABLE ASM-NEG (ALT GND) (472.5MM LG) (LATER VERSION) |
| 21 | 400152X1 | 4 | BOLT (M6X1X16MM) |
| 22 | CH5J-4715 | 1 | WASHER |
| 23 | 400695X1 | 1 | CLIP-LOOP (20.64ID) |
| 24 | CH8M-2770 | 8 | CLIP |
| 25 | CH8S-0948 | 1 | CLIP |
| 26 | 400287X1 | 22 | WASHER-HARD (11X21X2.5) |
| 27 | 400039X1 | 6 | BOLT (M10X1.5X25MM) |
| 28 | 400040X1 | 5 | BOLT (M10X1.5X20MM) |
| 29 | 400046X1 | 1 | BOLT (M12X1.75X90) |
| 30 | 400225X1 | 1 | BOLT (M10X1.5X90MM) |
| 31 | 400052X1 | 1 | BOLT (M10X1.5X40) |
| 32 | 400055X1 | 4 | BOLT (M12X1.75X25) |
| 33 | 400058X1 | 8 | BOLT (M10X1.5X30MM) |
| 34 | CH8T-4205 | 4 | WASHER-HARD (7.2X14.5X2MM) |
| 35 | 400357X1 | 5 | WASHER-HARD (M12X25.5X3) |
| 36 | 400233X1 | 1 | BOLT (M10X1.5X130) |
| 37 | 136-5340 | 1 | CABLE ASM (NEGATIVE) |

1365658A
PR: t05i29k58b0073

## BATTERY & WIRING GP - 136-5662

### 4 BATTERIES WITHOUT DISCONNECT SWITCH

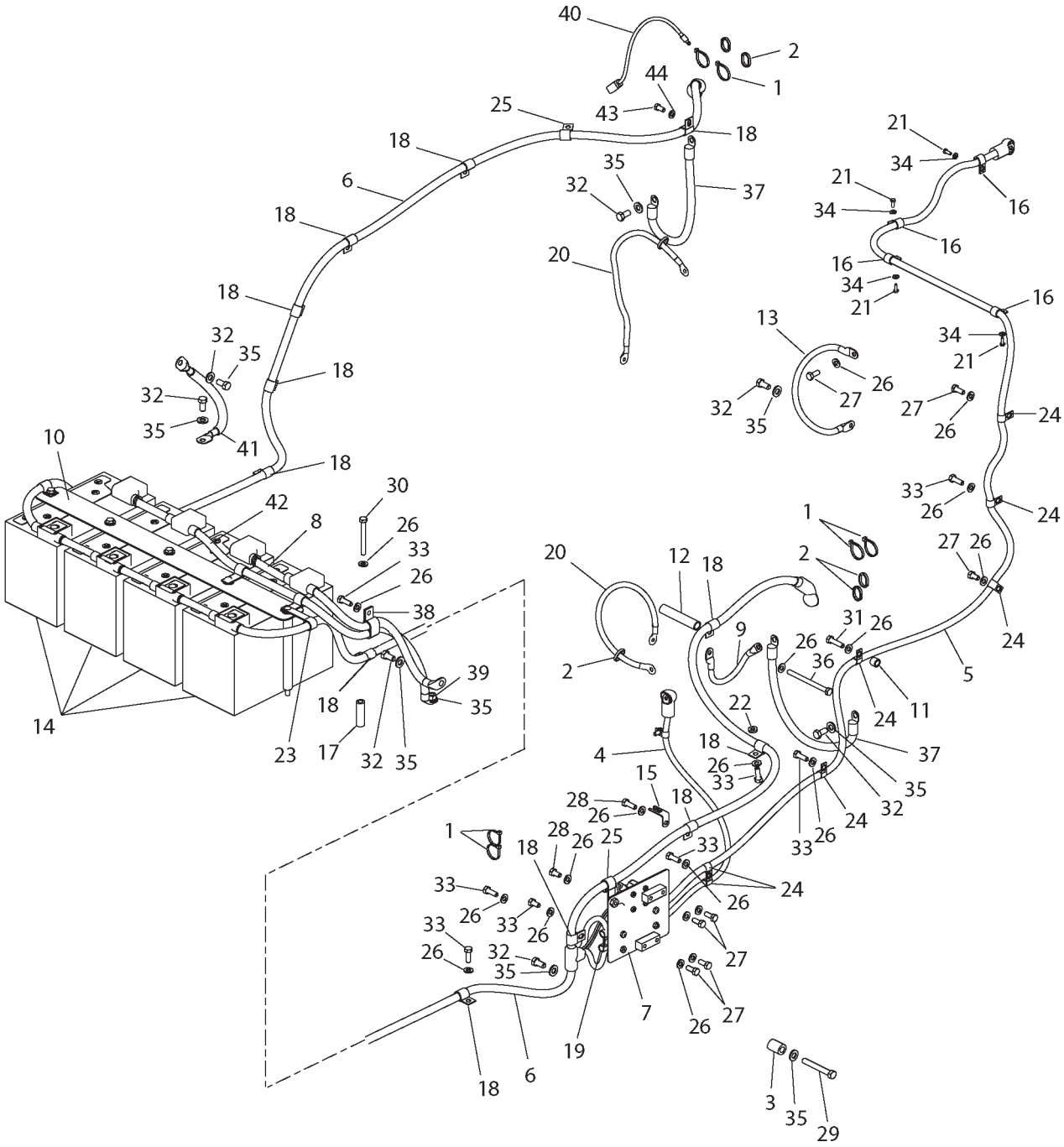

## BATTERY & WIRING GP - 136-5662
### 4 BATTERIES WITHOUT DISCONNECT SWITCH

| ITEM | NUMBER | QTY | DESCRIPTION |
|---|---|---|---|
| - | 136-5662 | -- | BATTERY & WIRING GP (NOT SERVICED) |
| 1 | 400837X1 | 9 | STRAP-CABLE (44.45X4.93MM) |
| 2 | CH7K-1181 | 5 | STRAP-CABLE (0.19-4.00) |
| 3 | CH8V-9708 | 1 | SPACER (4.31IDX25.4ODX35MM |
| 4 | 136-5225 | 1 | CABLE ASM-BATTERY (POSITIVE) |
| 5 | 136-5270 | 1 | CABLE ASM-BATTERY (POSITIVE) |
| 6 | 136-5631 | 1 | CABLE ASM (POSITIVE) |
| 7 | 136-5654 | 1 | CIRCUIT BREAKER GP (NOT SERVICED) (SEE BREAKDOWN FOR COMPONENTS) |
| 8 | 501112D1 | 1 | CABLE ASM-4AWG (NEGATIVE) |
| 9 | 142-9738 | 1 | CABLE ASM (NEGATIVE) |
| 10 | 142-9739 | 1 | MOUNTING GP-BATTERY (NOT SERVICED) (SEE BREAKDOWN FOR COMPONENTS) |
| 11 | CH200-8649 | 1 | SPACER |
| 12 | CH211-3590 | 1 | SPACER |
| 13 | 223-0687 | 1 | CABLE-GROUND |
| 14 | 502446D1 | 4 | BATTERY-MAINT FREE (DRY) |
| | CH123-1373 | 6 | PLUG ASM-FILLER |
| 15 | CH132-5789 | 1 | CLIP-LADDER 90DEGX47.5MM V COAT |
| 16 | CH134-3988 | 4 | CLIP |
| 17 | CH212-0279 | 2 | SPACER |
| 18 | CH3S-8664 | 14 | CLIP-LOOP (19.05ID) |
| 19 | CH4K-8864 | 4 | CLIP-LOOP (14.29ID) |
| 20 | 500627D1 | 1 | CABLE ASM-NEG (ALT GND) (1060MM LG) (EARLY VERSION) |
| 20 | 502183D1 | 1 | CABLE ASM-NEG (ALT GND) (472.5MM LG) (LATER VERSION) |
| 21 | 400152X1 | 4 | BOLT (M6X1X16MM) |
| 22 | CH5J-4715 | 1 | WASHER |
| 23 | 400695X1 | 1 | CLIP-LOOP (20.64ID) |
| 24 | CH8M-2770 | 8 | CLIP |
| 25 | CH8S-0948 | 4 | CLIP |
| 26 | 400287X1 | 25 | WASHER-HARD (11X21X2.5) |
| 27 | 400039X1 | 6 | BOLT (M10X1.5X25MM) |
| 28 | 400040X1 | 6 | BOLT (M10X1.5X20MM) |
| 29 | 400046X1 | 1 | BOLT (M12X1.75X90) |
| 30 | 400225X1 | 2 | BOLT (M10X1.5X90MM) |
| 31 | 400052X1 | 1 | BOLT (M10X1.5X40) |
| 32 | 400055X1 | 7 | BOLT (M12X1.75X25) |
| 33 | 400058X1 | 9 | BOLT (M10X1.5X30MM) |
| 34 | CH8T-4205 | 4 | WASHER-HARD (7.2X14.5X2MM) |
| 35 | 400357X1 | 9 | WASHER-HARD (M12X25.5X3) |
| 36 | 400176X1 | 1 | BOLT (M10X1.5X130) |
| 37 | 136-5340 | 2 | CABLE ASM (NEGATIVE) |
| 38 | CH100-4336 | 1 | CLIP-LOOP (10.3 DBL) |
| 39 | CH8T-4244 | 1 | NUT (M12X1.75) |
| 40 | 136-5657 | 1 | HARNESS ASM |
| 41 | 142-9839 | 2 | CABLE ASM (NEGATIVE) |
| 42 | 501110D1 | 1 | CABLE ASM (NEGATIVE) |
| 43 | 400153X1 | 1 | BOLT (3/8-16X19MM) |
| 44 | CH8T-4896 | 1 | WASHER-HARD (10IDX18.5ODX2.5) |

1365662A
PR: t05i29k58b0074

## BATTERY & WIRING GP - 136-5663
4 BATTERIES WITH DISCONNECT SWITCH

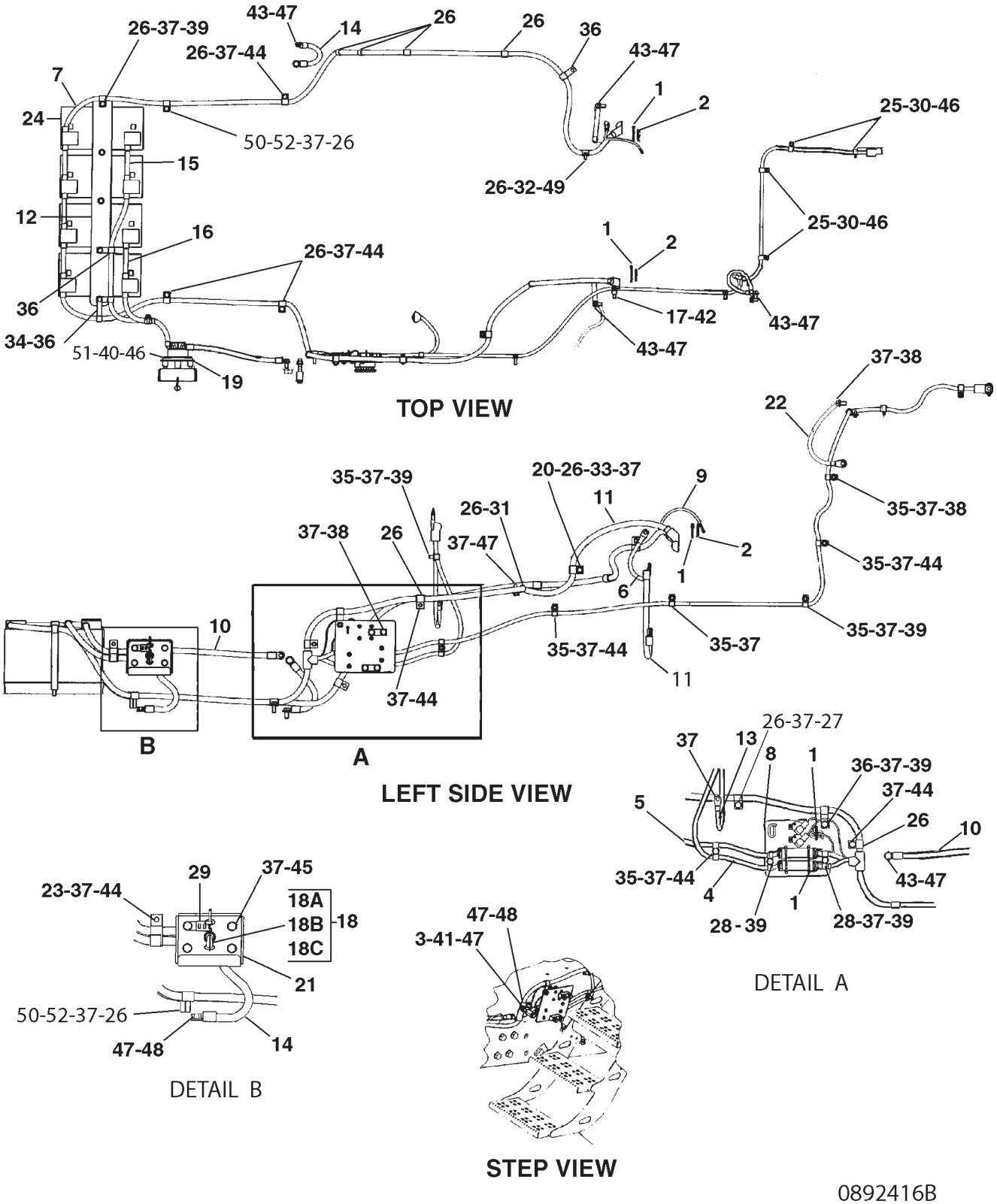


0892416B

## BATTERY & WIRING GP - 136-5663
### 4 BATTERIES WITH DISCONNECT SWITCH

| ITEM | NUMBER | QTY | DESCRIPTION |
|---|---|---|---|
| - | 502906D1 | -- | BATTERY & WIRING GP (NOT SERVICED) |
| - | 136-5663 | -- | BATTERY & WIRING GP [A] (NOT SERVICED) |
| 1 | 400837X1 | 9 | STRAP-CABLE |
| 2 | CH7K-1181 | 5 | STRAP-CABLE |
| 3 | CH8V-9708 | 1 | SPACER |
| 4 | 136-5225 | 1 | CABLE ASM-BATTERY (POSITIVE) |
| 5 | 136-5270 | 1 | CABLE ASM-BATTERY (POSITIVE) |
| 6 | 136-5340 | 2 | CABLE ASM (NEGATIVE) |
| 7 | 136-5631 | 1 | CABLE ASM-POSITIVE |
| 8 | 136-5654 | 1 | CIRCUIT BREAKER GP (NOT SERVICED) (SEE BREAKDOWN FOR COMPONENTS) |
| 9 | 136-5657 | 1 | HARNESS ASM (STARTER CONNECTOR) |
| | 400511X1 | 1 | WEDGE |
| | 9G-3695 | 1 | PLUG |
| 10 | 502207D1 | 1 | CABLE ASM (NEGATIVE) |
| 11 | 142-9738 | 1 | CABLE ASM (NEGATIVE) |
| 12 | 142-9739 | 1 | MOUNTING GP-BATTERY (NOT SERVICED) (SEE BREAKDOWN FOR COMPONENTS) |
| 13 | 500627D1 | 1 | STRAP (NEGATIVE) (S/N: PRIOR BAM40456;BBP40455;BCC40639;BDS40721) |
| 13 | 500627D1 | 1 | CABLE ASM (NEGATIVE) (S/N: EFF BAM40456-40600;BBP40455-40471;BCC40639-40696; BDS40721-40815) |
| 13 | 502183D1 | 1 | CABLE ASM (NEGATIVE) (S/N: EFF BAM40601; BBP40472;BCC40697;BDS40816) |
| 14 | 142-9839 | 2 | CABLE ASM (NEGATIVE) |
| 15 | 501109D1 | 1 | CABLE (NEGATIVE) |
| 16 | 501111D1 | 1 | CABLE (NEGATIVE) |
| 17 | CH200-8649 | 1 | SPACER |
| 18 | 201-2441 | 1 | SWITCH ASM-DISCONNECT (INCLS ITEMS 18A THRU 18C) |
| 18A | 400357X1 | 4 | WASHER-HARD (M12X25.5X3) |
| 18B | CH8T-4244 | 4 | NUT (M12X1.75) |
| 18C | 201-2442 | 1 | KEY |
| 19 | 203-0128 | 1 | PLATE ASM |
| | CH9R-2672 | 4 | BOSS (M10X20MM) |

CONTINUED

[A] PART OF: 179-2195; 179-2196;
BASE UNIT AR;
502906D1 BATTERY GP;
500849D1 CAB AR-DELUXE

## BATTERY & WIRING GP - 136-5663
4 BATTERIES WITH DISCONNECT SWITCH

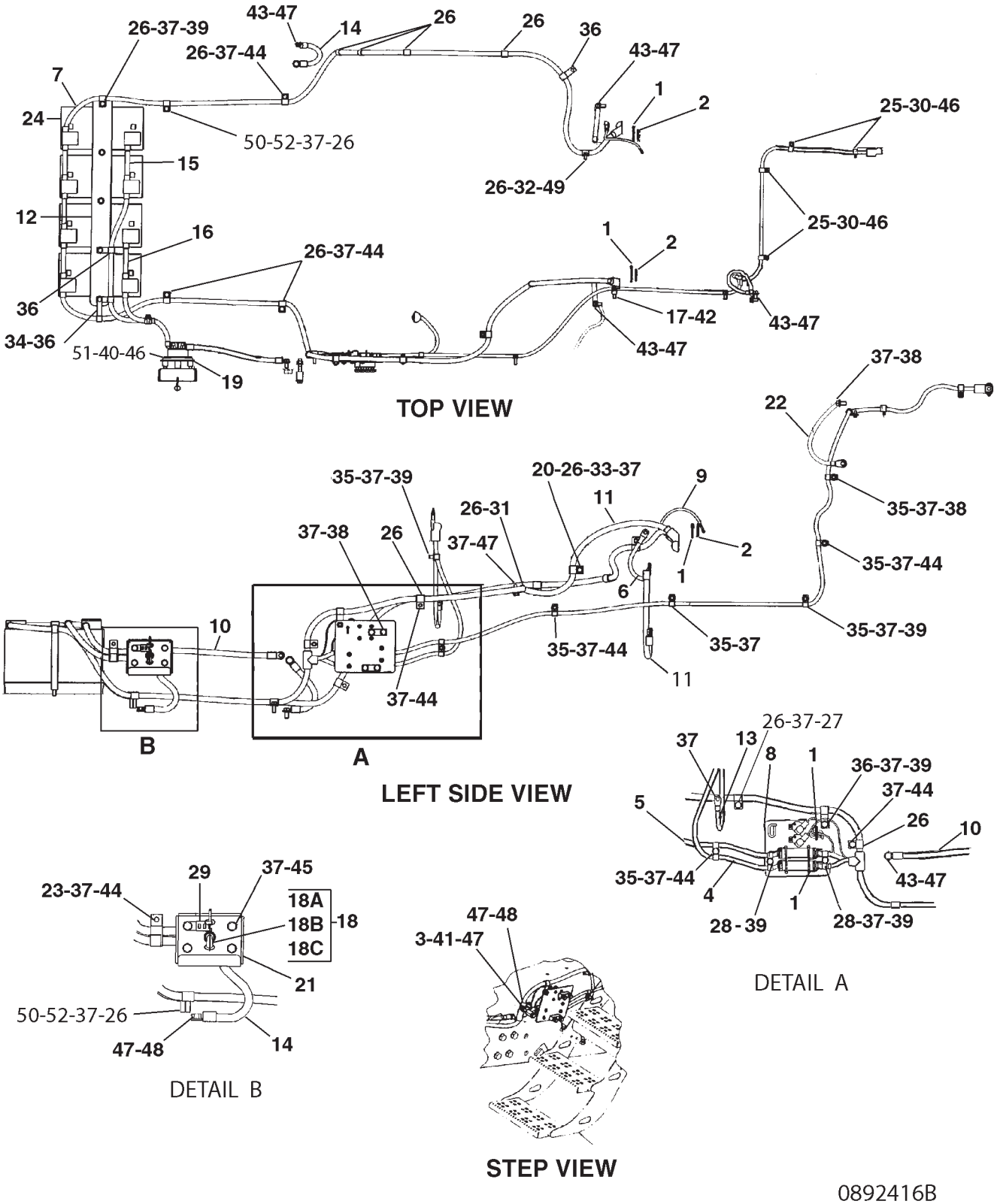


0892416B

## BATTERY & WIRING GP - 136-5663
### 4 BATTERIES WITH DISCONNECT SWITCH

| ITEM | NUMBER | QTY | DESCRIPTION |
|---|---|---|---|
| - | 136-5663 | -- | BATTERY & WIRING GP [A] (NOT SERVICED) |
| 20 | CH211-3590 | 1 | SPACER |
| 21 | 218-2771 | 1 | GUARD |
| 22 | 223-0687 | 1 | CABLE ASM-GROUND |
| 23 | CH100-4336 | 1 | CLIP |
| 24 | 502446D1 | 4 | BATTERY (MAINT-FREE 12V-DRY) |
| | 123-1373 | 6 | PLUG ASM-FILLER |
| 25 | CH134-3988 | 4 | CLIP-LOOP (15.88 ID COATED) |
| 26 | CH3S-8664 | 14 | CLIP-LOOP (19.05 ID) |
| 27 | CH132-5789 | 1 | CLIP-LADDER (90DEGX47.5MM VCOAT) |
| 28 | CH4K-8864 | 4 | CLIP-LOOP (14.29 ID) |
| 29 | CH4P-7581 | 1 | CLIP-LADDER (15DEGX12.5MM VCOAT) |
| 30 | 400152X1 | 4 | BOLT (M6X1X16MM) |
| 31 | CH5J-4715 | 1 | WASHER (10.3X20.6X4.2) |
| 32 | 400153X1 | 1 | BOLT (3/8-16X0.75 IN) |
| 33 | 400176X1 | 1 | BOLT (3/8-16X133) |
| 34 | 400695X1 | 1 | CLIP-LOOP (20.64 ID) |
| 35 | CH8M-2770 | 8 | CLIP-LOOP (12.7 ID) |
| 36 | CH8S-0948 | 4 | CLIP-LOOP (20.64 ID) |
| 37 | 400287X1 | 29 | WASHER-HARD (11X21X2.5) |
| 38 | 400039X1 | 6 | BOLT (M10X1.5X25MM) |
| 39 | 400040X1 | 6 | BOLT (M10X1.5X20MM) |
| 40 | 400221X1 | 2 | BOLT (M6X1X20MM) |
| 41 | 400046X1 | 1 | BOLT (M12X1.75X90) |
| 42 | 400052X1 | 1 | BOLT (M10X1.5X40) |
| 43 | 400055X1 | 6 | BOLT (M12X1.75X25) |
| 44 | 400058X1 | 9 | BOLT (M10X1.5X30MM) |
| 45 | 400059X1 | 4 | BOLT (M10X1.5X35MM) |
| 46 | CH8T-4205 | 8 | WASHER-HARD (7.2X14.5X2MM) |
| 47 | 400357X1 | 9 | WASHER-HARD (M12X25.5X3) |
| 48 | CH8T-4244 | 2 | NUT (M12X1.75) |
| 49 | CH8T-4896 | 1 | WASHER-HARD (10.2X18.5X2.5) |
| 50 | CH212-0279 | 2 | SPACER (19.1ODX11.1X62) |
| 51 | 400300X1 | 2 | NUT (M6X1) |
| 52 | 400225X1 | 1 | BOLT (M10X1.5X90) |

[A] PART OF: 179-2195; 179-2196;
BASE UNIT AR;
502906D1 BATTERY GP;
500849D1 CAB AR-DELUXE

0892416B
PR: t05i29k58b0075

## BATTERY GP - 136-5659

### 3 BATTERY W/DISCONNECT SWITCH

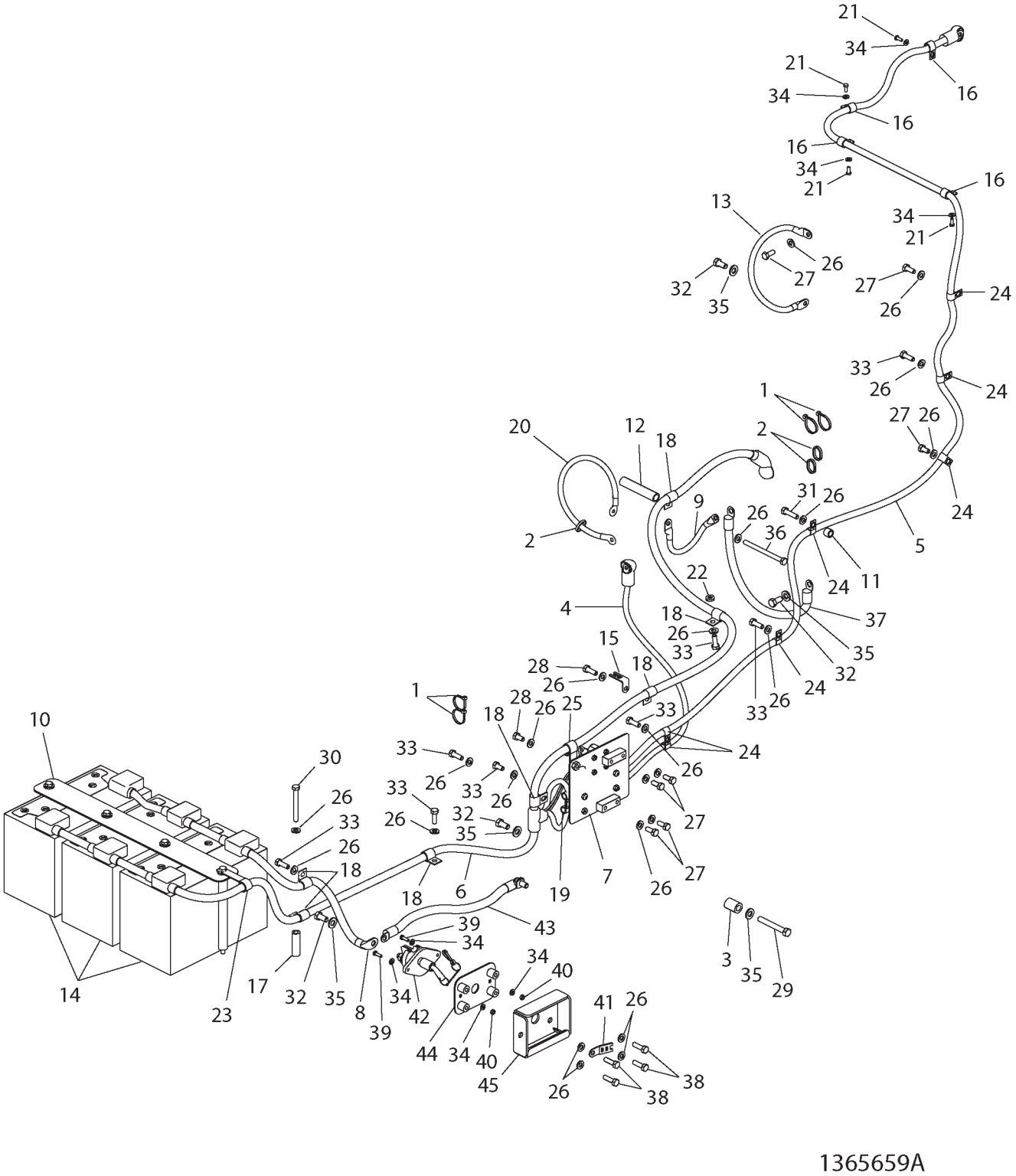

## BATTERY GP - 136-5659
### 3 BATTERY W/DISCONNECT SWITCH

| ITEM | NUMBER | QTY | DESCRIPTION |
|---|---|---|---|
| - | 136-5659 | -- | BATTERY GP |
| 1 | 400837X1 | 7 | STRAP-CABLE (PLASTIC) |
| 2 | CH7K-1181 | 3 | STRAP-CABLE 0.19-4.00 |
| 3 | CH8V-9708 | 1 | SPACER |
| 4 | 136-5225 | 1 | CABLE AS-POS |
| 5 | 136-5270 | 1 | CABLE AS-POS |
| 6 | 136-5612 | 1 | CABLE AS-POS |
| 7 | 136-5654 | 1 | BREAKER GP-CIRCUIT (NOT SERVICED) (SEE BREAKDOWN FOR COMPONENTS) |
| 8 | 501113D1 | 1 | CABLE AS-NEG |
| 9 | 142-9738 | 1 | CABLE AS-NEG |
| 10 | 142-9760 | 1 | MOUNTING GP-BATTERY (NOT SERVICED) (SEE BREAKDOWN FOR COMPONENTS) |
| 11 | CH200-8649 | 1 | SPACER-19ODX12.7IDX14.3MM |
| 12 | CH211-3590 | | SPACER-21.34ODX15.8IDX14.3MM |
| 13 | 223-0687 | 1 | CABLE AS-GND |
| 14 | 502446D1 | 3 | BATTERY (MAINT FREE-DRY) |
| 15 | CH132-5789 | 1 | CLIP-LADDER 90DEGX47.5MM V COAT |
| 16 | CH134-3988 | 4 | CLIP-LOOP 15.88 ID W/COAT |
| 17 | CH212-0279 | 1 | SPACER 19.1ODX11.1IDX62 |
| 18 | CH3S-8664 | 7 | CLIP-LOOP 19.05 ID |
| 19 | CH4K-8864 | 4 | CLIP-LOOP 14.29ID |
| 20 | 500627D1 | 1 | CABLE ASM (NEGATIVE) (S/N: PRIOR BAM40601;BBP40472;BCC40697;BDS40816) |
| 20 | 502183D1 | 1 | CABLE ASM (NEGATIVE) (S/N: EFF BAM40601; BBP40472;BCC40697;BDS40816) |
| 21 | 400152X1 | 4 | BOLT-M6X1X16MM ZNDI HHD 10.9 |
| 22 | CH5J-4715 | 1 | WASHER-HARD 10.3IDX20.6ODX4.2 |
| 23 | 400695X1 | 1 | CLIP-LOOP 20.64ID |
| 24 | CH8M-2770 | 8 | CLIP-LOOP 12.7 ID |
| 25 | CH8S-0948 | 1 | CLIP-LOOP-20.64 ID |
| 26 | 400287X1 | 25 | WASHER-HARD 11IDX21ODX2.5 ZND1 |
| 27 | 400039X1 | 8 | BOLT-M10X1.5X25 ZNDI HHD 10.9 |
| 28 | 400040X1 | 4 | BOLT-M10X1.5X20 ZNDI HHD 10.9 |
| 29 | 400046X1 | 1 | BOLT-M12X1.75X90 ZNDI HHD 10.9 |
| 30 | 400225X1 | 1 | BOLT-M10X1.5X90 ZNDI HHD 10.9 |
| 31 | 400052X1 | 1 | BOLT-M10X1.5X40 ZNDI HHD 10.9 |
| 32 | 400055X1 | 3 | BOLT-M12X1.75X25 ZNDI HHD 10.9 |
| 33 | 400058X1 | 8 | BOLT-M10X1.5X30 ZNDI HHD 10.9 |
| 34 | CH8T-4205 | 8 | WASHER-HARD 7.2IDX14.5ODX2MM |
| 35 | 400357X1 | 4 | WASHER-HARD-M12X25.50DX3THK |
| 36 | 400233X1 | 1 | BOLT-M10X1.5X130 ZNDI HHD 10.9 |
| 37 | 136-5340 | 1 | CABLE AS-NEG |
| 38 | 400059X1 | 4 | BOLT-M10X1.5X35 ZNDI HHD 10.9 |
| 39 | 400221X1 | 2 | BOLT-M6X1X20MM ZNDI HHD 10.9 |
| 40 | 400300X1 | 2 | NUT M6X1 |
| 41 | CH4P-7581 | 1 | CLIP-LADDER 15DEGX12.5MM V COAT |
| 42 | 201-2440 | 1 | SWITCH AS-MASTER |
| | 201-2442 | 1 | KEY |
| | 400357X1 | 2 | WASHER-HARD |
| | CH8T-4244 | 2 | NUT |
| 43 | 142-9717 | 1 | CABLE AS-NEG |
| 44 | 203-0128 | 1 | PLATE AS |
| 45 | 218-2771 | 1 | GUARD |

PART OF 179-2193; 179-2194
BASIC UNIT AR

1365659A
PR: t05i29k58b0076

## CIRCUIT BREAKER GP - 136-5654
**ELECTRONIC CONTROL MODULE**

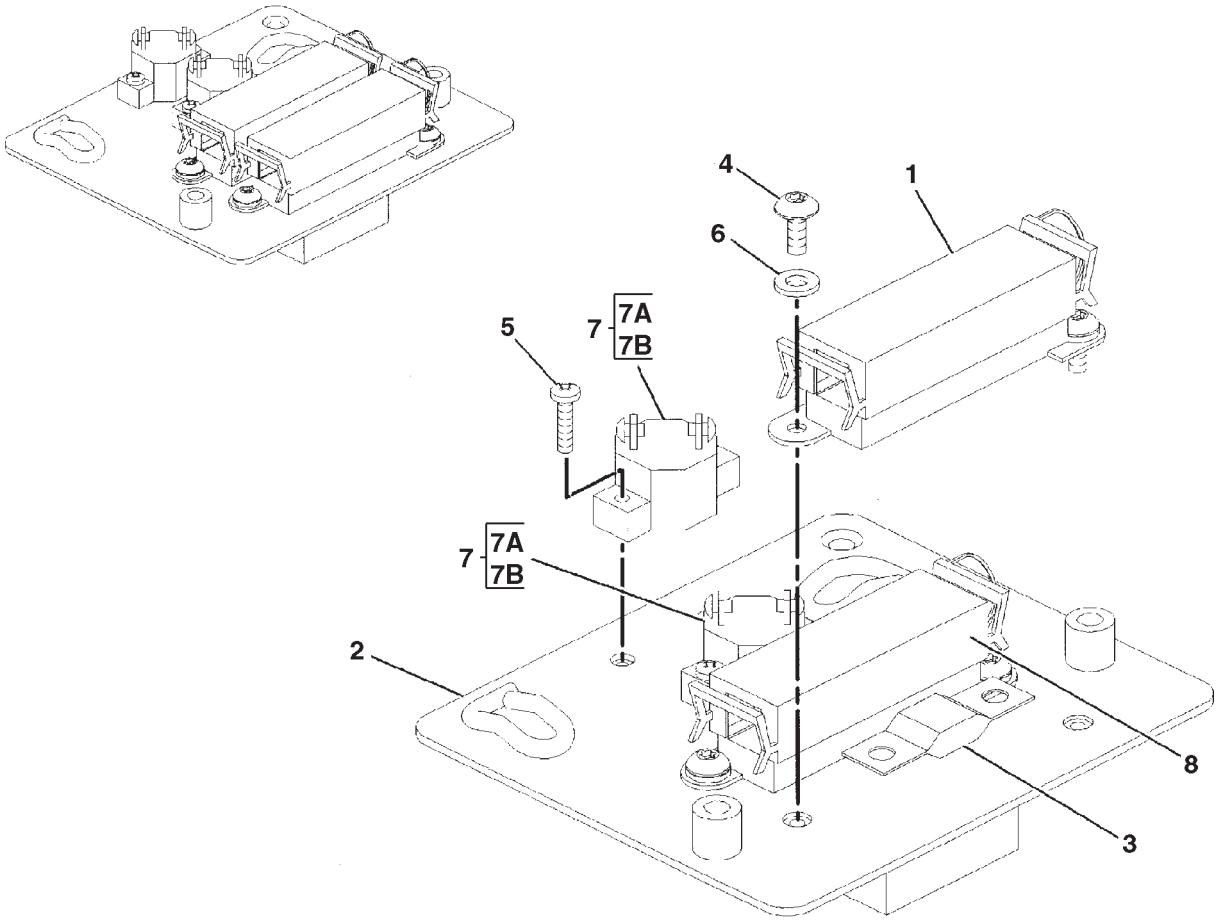


0899311A

## CIRCUIT BREAKER GP - 136-5654
ELECTRONIC CONTROL MODULE

| ITEM | NUMBER | QTY | DESCRIPTION |
|---|---|---|---|
| - | 136-5654 | -- | CIRCUIT BREAKER GP [A] (NOT SERVICED) |
| 1 | 136-5600 | 1 | FUSE (BATTERY)(175 AMP) |
| 2 | 136-5655 | 1 | BRACKET ASM |
| 3 | 155-0038 | 2 | HOLDER-FUSE |
| 4 | CH9X-2044 | 4 | SCREW-TRUSS HEAD (M6X1X16MM) |
| 5 | CH8T-4127 | 4 | SCREW-MACHINE (M5X0.8X20MM) |
| 6 | CH8T-4205 | 4 | WASHER-HARD (7.2X14.5X2MM) |
| 7 | CH9H-1958 | 1 | CIRCUIT BREAKER GP (20 AMP)(ENGINE ECM) |
| 7A | CH6V-8376 | 2 | SCREW-MACHINE (8-32X0.25 IN) |
| 7B | CH9B-7233 | 2 | LOCKWASHER |
| 8 | 220-5736 | 1 | FUSE (ALTERNATOR)(200 AMP) |

[A] PART OF 136-5658;136-5659;136-5662;
136-5663 BATTERY & WIRING GP

0899311A
PR: t05i29k58b0077

## CONTROL & WIRING GP - 136-5670

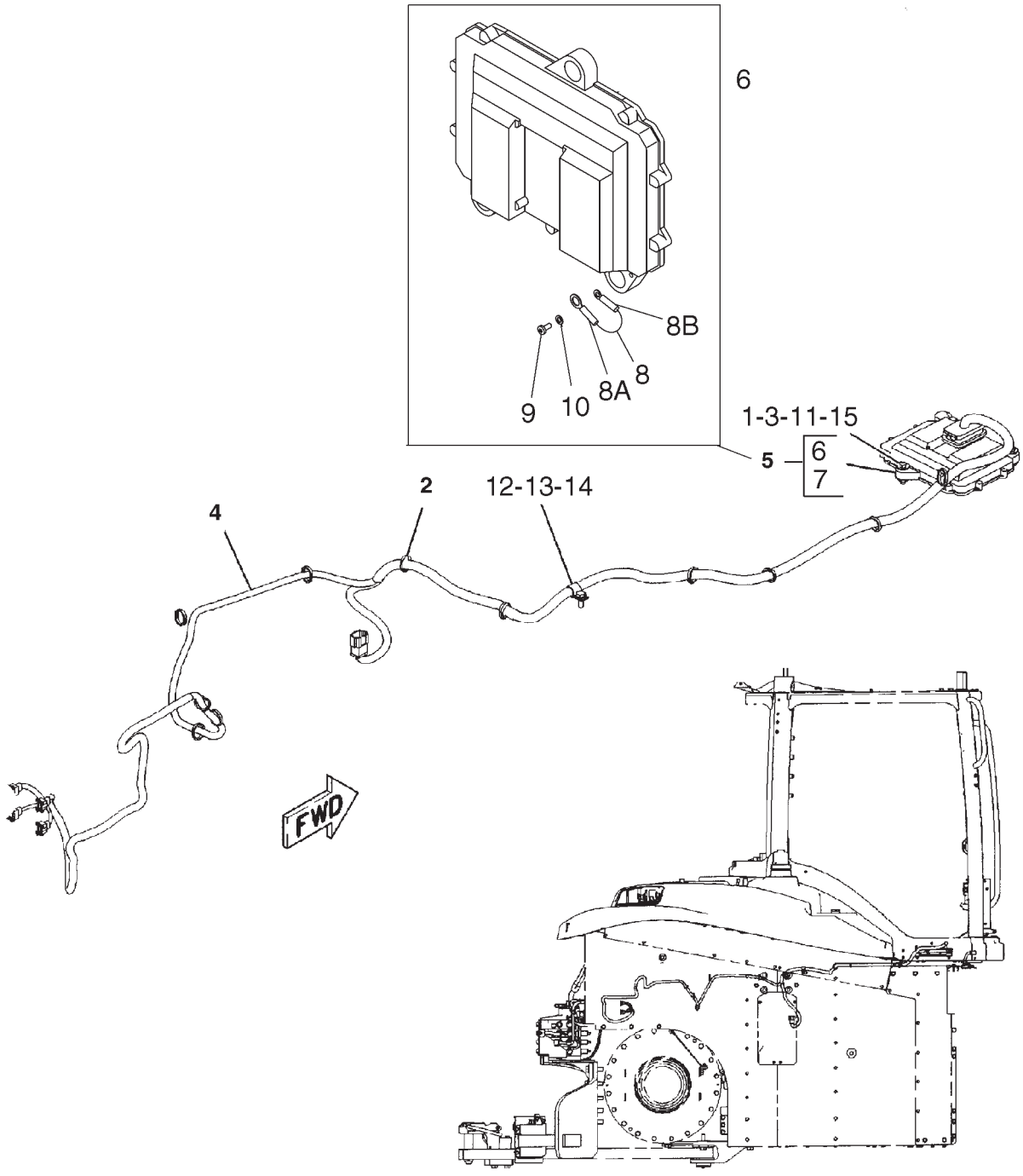


RIGHT SIDE VIEW

1365670E

## CONTROL & WIRING GP - 136-5670

| ITEM | NUMBER | QTY | DESCRIPTION |
|---|---|---|---|
| - | 136-5670 | -- | CONTROL & WIRING GP [A][B] |
| 1 | CH6I-1418 | 3 | SPACER (8.2X12.7X28.7) |
| 2 | CH7K-1181 | 11 | STRAP-CABLE |
| 3 | CH8T-9655 | 6 | MOUNT (ISOLATION) |
| 4 | 136-5536 | 1 | HARNESS ASM |
| 5 | 229-0888 | 1 | ELECTRONICS GP (INCLS ITEMS 6 & 7) (NOT SERVICED) |
| 6 | 216-0658 | 1 | CONTROL GP (INCLS ITEMS 8 THRU 10) |
| | CH126-1773 | 1 | CAP-CONNECTOR (SEALED) |
| 7 | 256-0184 | 1 | SOFTWARE (LOCATED ON "ONEAGCO" OR CALL 507-847-7222) |
| 8 | CH7X-6315 | 1 | STRAP ASM (INCLS 8A & 8B) |
| 8A | CH139-6911 | 1 | TERMINAL-RING |
| 8B | CH7H-1177 | 1 | TERMINAL-RING |
| 9 | CH120-4897 | 1 | SCREW-PAN HEAD (M4X0.7X9.5) |
| 10 | CH134-4126 | 1 | WASHER (4.52X8.28X.76) |
| 11 | 400001X1 | 3 | BOLT (M8X1.25X40MM) |
| 12 | CH8M-2773 | 1 | CLIP |
| 13 | 400287X1 | 1 | WASHER-HARD (11X21X2.5) |
| 14 | 400039X1 | 1 | BOLT (M10X1.5X25MM) |
| 15 | CH9N-0869 | 3 | WASHER-HARD (8.8X25.5X2) |

[A] PART OF:
180-1438 VALVE AR-IMPL
500795D1 VALVE AR-IMPL
502052D1 VALVE AR-IMPL
502218D1 CONVERSION GP-CONTROL VALVE
185-8699 CONVERSION GP-CONTROL VALVE

1365670E
PR: t05i29k58b0078

## CONTROL & WIRING GP-HITCH - 136-5378

### LIFT CIRCUIT

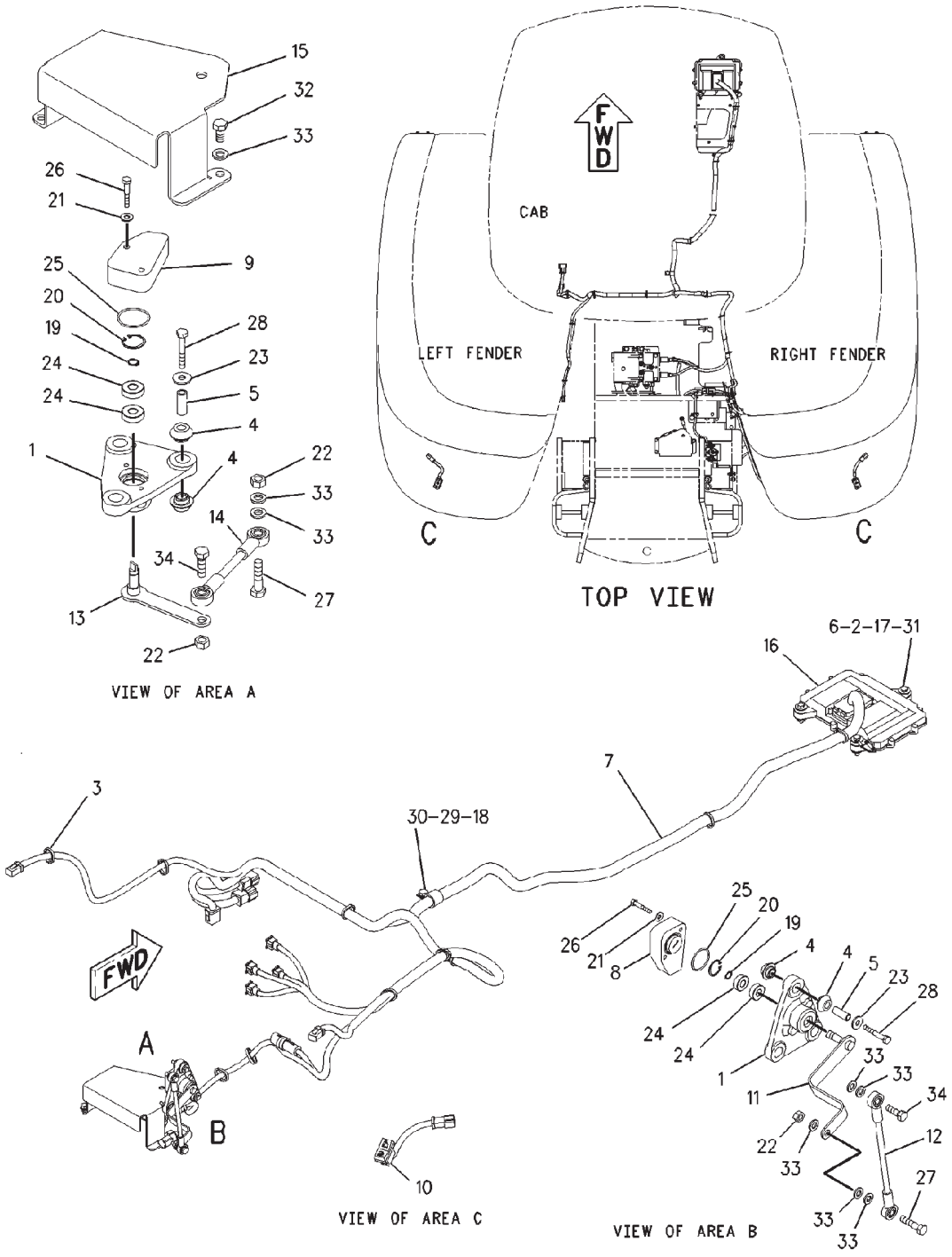


00884276

| ITEM | NUMBER | QTY | DESCRIPTION |
|---|---|---|---|
| - | 136-5378 | -- | CONTROL & WIRING GP-HITCH [A] (NOT SERVICED) |
| 1 | 4E-2250 | 2 | HOUSING |
| 2 | CH6I-1418 | 3 | SPACER (8.2X12.7X28.7) |
| 3 | CH7K-1181 | 17 | STRAP-CABLE |
| 4 | CH8C-5607 | 12 | MOUNT (ISOLATION) |
| 5 | CH8C-5608 | 6 | SPACER (6.5X9.5X25.4) |
| 6 | CH8T-9655 | 6 | MOUNT (ISOLATION) |
| 7 | 501118D1 | 1 | HARNESS ASM-3PT HITCH |
| 8 | 500619D1 | 1 | SENSOR GP-POSITION (REAR HITCH HEIGHT-OUTER) |
| 9 | 502003D1 | 1 | SENSOR GP-POSITION (REAR HITCH HEIGHT-INNER) |
| 10 | 171-1229 | 2 | SWITCH ASM (REAR HITCH RAISE/LOWER) (INCLS RECEPTACLE) |
| | 102-8804 | 1 | KIT-RECEPTACLE (4 PIN)(W/WEDGE) |
| 11 | 190-2838 | 1 | ARM ASM |
| 12 | 190-2839 | 1 | ROD ASM |
| 13 | 198-8376 | 1 | ARM ASM |
| 14 | 198-8377 | 1 | ROD ASM |
| 15 | 199-6263 | 1 | SHIELD |
| 16 | 229-0891 | 1 | ELECTRONICS GP-A2004 (HITCH SDM) (NOT SERVICED) (SEE BREAKDOWN FOR COMPONENTS) |
| 17 | CH9N-0869 | 3 | WASHER-HARD (8.8X25.5X2) |
| 18 | CH1S-0994 | 1 | CLIP (20.64ID) |
| 19 | CH2H-3429 | 2 | RING-RETAINING |
| 20 | CH2L-6726 | 2 | RING-RETAINING |
| 21 | CH4B-4274 | 4 | WASHER (5.5X13X1.2) |
| 22 | 400340X1 | 3 | NUT (M8X1.25) |
| 23 | CH5P-4115 | 6 | WASHER-HARD (7.2X19X2) |
| 24 | CH6D-3025 | 4 | BALL BEARING |
| 25 | CH6V-0894 | 2 | SEAL-O-RING |
| 26 | 400160X1 | 4 | BOLT (M5X0.8X30MM) |
| 27 | 400188X1 | 2 | BOLT (M8X1.25X35MM) |
| 28 | 400205X1 | 6 | BOLT (M6X1X40MM) |
| 29 | 400287X1 | 1 | WASHER-HARD (11X21X2.5) |
| 30 | 400039X1 | 1 | BOLT (M10X1.5X25MM) |
| 31 | 400060X1 | 3 | BOLT (M8X1.25X40MM) |
| 32 | 400227X1 | 3 | BOLT (M8X1.25X16MM) |
| 33 | 400339X1 | 10 | WASHER-HARD (8.8X16X2) |
| 34 | 400341X1 | 2 | BOLT (M8X1.25X25MM) |

[A] PART OF 169-0027;169-0028;179-0852;
180-6639 HITCH AR-3 POINT

00884276
PR: t05i29k58b0079

## CONTROL AR-COMMUNICATION - 216-0852
**ISO**

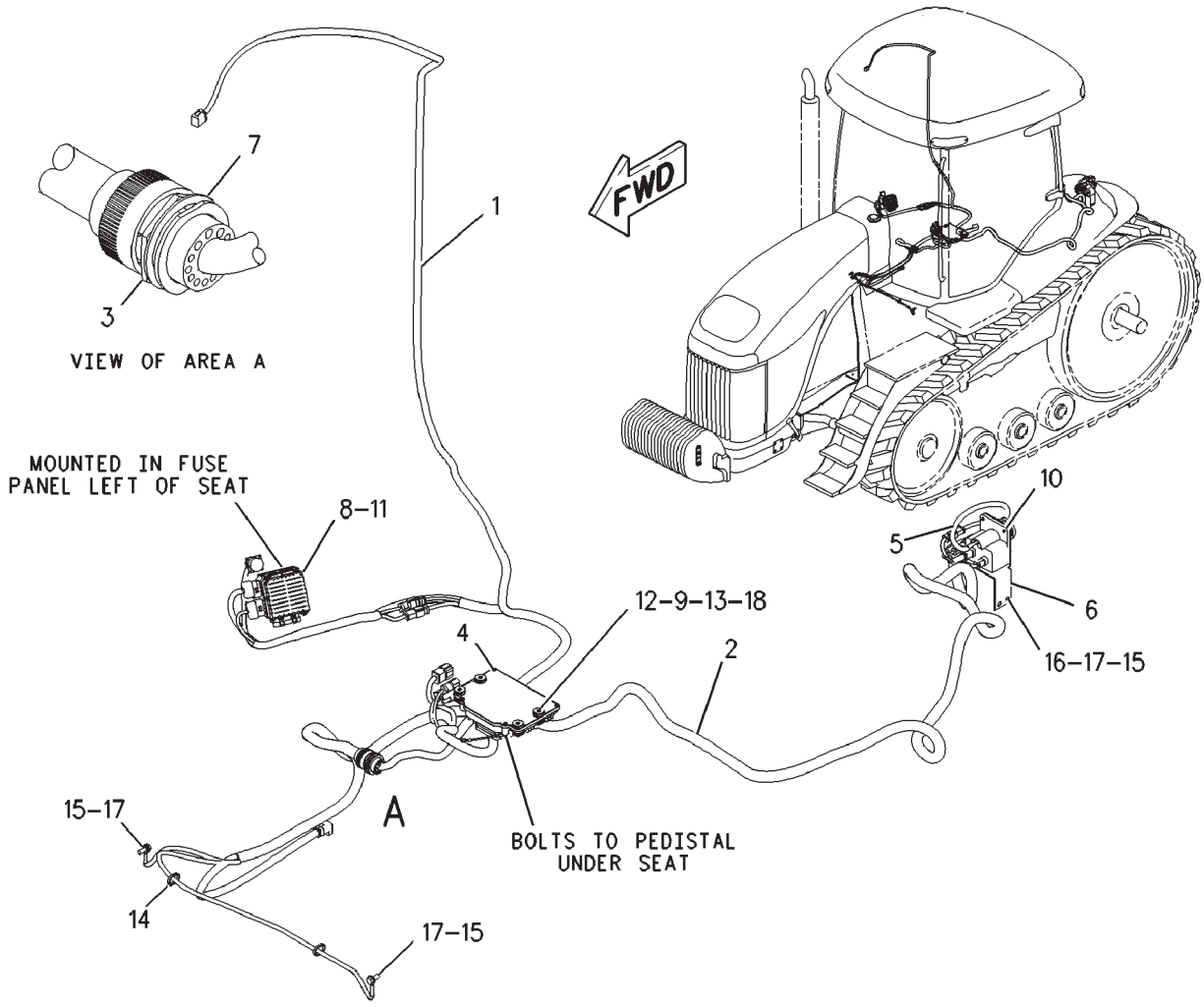


00892916

| ITEM | NUMBER | QTY | DESCRIPTION |
|---|---|---|---|
| - | 216-0852 | -- | CONTROL AR-COMMUNICATIONS (NOT SERVICED) |
| 1 | 500910D1 | 1 | HARNESS ASM (MAIN CAB) |
| 2 | 502434D1 | 1 | HARNESS ASM (ISO) |
| 3 | 400295X1 | 1 | NUT (1 11/16-18) |
| 4 | 216-0614 | 1 | ELECTRONICS GP-MACHINE (COMMUNICATION) (NOT SERVICED) (SEE BREAKDOWN FOR COMPONENTS) |
| 5 | 502486D1 | 1 | HARNESS ASM |
| 6 | 500510D1 | 1 | BRACKET |
| 7 | CH128-4249 | 1 | LOCKWASHER |
| 8 | 501829D1 | 1 | BLOCK ASY-FUSE (SEE BREAKDOWN FOR COMPONENTS) |
| 9 | 400340X1 | 4 | NUT (M8X1.25) |
| 10 | CH6V-8931 | 4 | SCREW-WASHER HEAD (M6X1X16) |
| 11 | 400208X1 | 4 | BOLT-SOCKET HEAD (M5X0.8X40MM) |
| 12 | CH9N-0869 | 8 | WASHER-HARD (8.8X25.5X2) |
| 13 | CH6I-1418 | 4 | SPACER (8.2X12.7X28.7) |
| 14 | CH7K-1181 | 22 | STRAP-CABLE |
| 15 | 400287X1 | 2 | WASHER-HARD (11X21X2.5) |
| 16 | WR522218 | 2 | NUT (M10X1.5) |
| 17 | 400039X1 | 4 | BOLT (M10X1.5X25MM) |
| 18 | CH8T-9655 | 8 | MOUNT-ISOLATION |

00892916
PR: t05i29k58b0080

## CONTROL AR-MACHINE - 216-0874
**ISO READY UPGRADE**

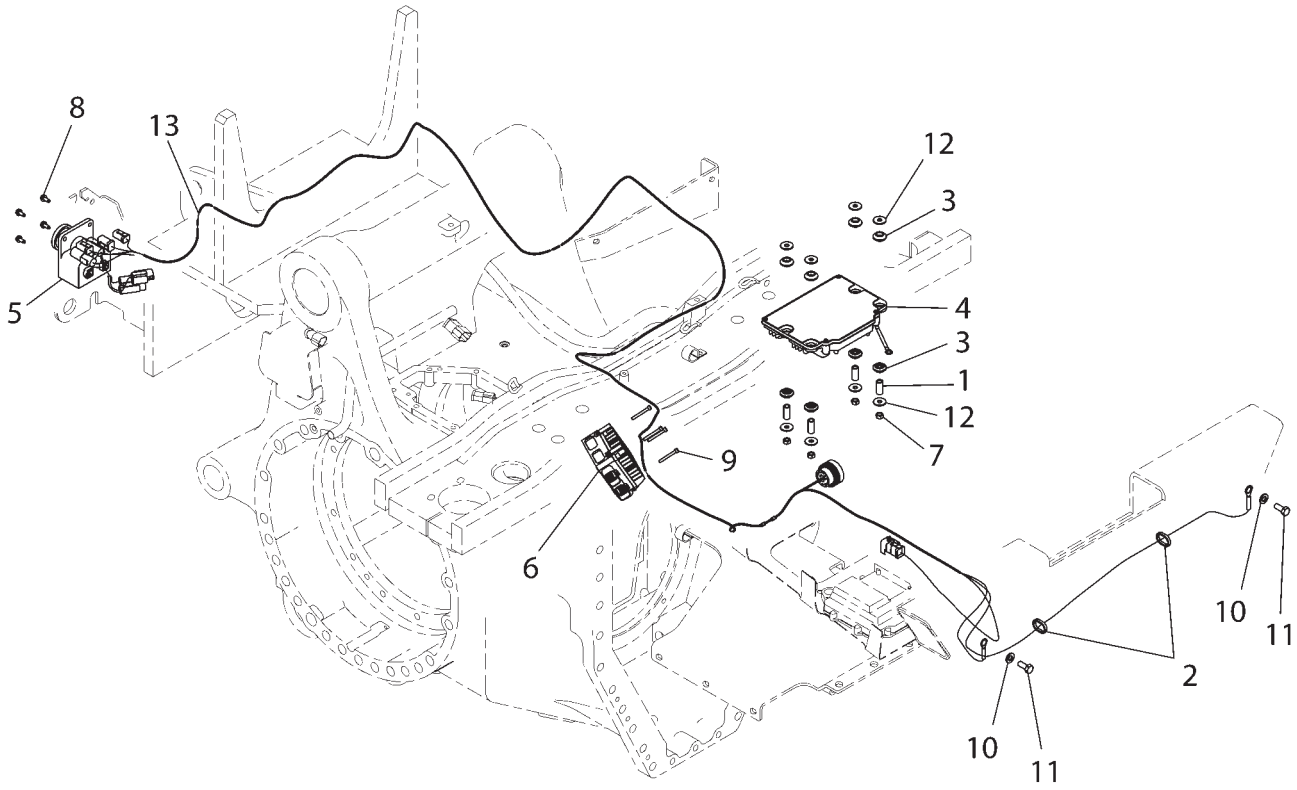


2160874F

## CONTROL AR-MACHINE - 216-0874
ISO READY UPGRADE

| ITEM | NUMBER | QTY | DESCRIPTION |
|---|---|---|---|
| - | 216-0874 | -- | CONTROL AR-MACHINE |
| 1 | CH6I-1418 | 4 | SPACER |
| 2 | CH7K-1181 | 22 | STRAP-CABLE |
| 3 | 400941X1 | 8 | MOUNT-ISO |
| 4 | 216-0614 | 1 | ELECTRONICS GP-MACHINE (COMMUNICATION) (NOT SERVICED) (SEE BREAKDOWN FOR COMPONENTS) |
| 5 | 502486D1 | 1 | HARNESS ASM-ISO |
| | 502242D1 | 1 | HARNESS ASM |
| | 502487D1 | 1 | CONNECTOR ASM (REPLACEMENT PINS LISTED BELOW) |
| | 400382X1 | 2 | PIN-CONNECTOR (12-14AWG) |
| | 400899X1 | 2 | PIN-CONNECTOR (8-10AWG) |
| 6 | 501829D1 | 1 | PANEL GP-FUSE (SEE BREAKDOWN FOR COMPONENTS) |
| 7 | 400340X1 | 4 | NUT (M8X1.25) |
| 8 | CH6V-8931 | 4 | SCREW-WASHER HEAD (M6X1X16) |
| 9 | 400208X1 | 4 | BOLT-SOCKET HEAD (M5X0.8X40MM) |
| 10 | 400287X1 | 2 | WASHER-HARD |
| 11 | 400039X1 | 2 | BOLT (M10X1.5X25) |
| 12 | CH9N-0869 | 8 | WASHER-HARD (8.8X25.5X2) |
| 13 | 502434D1 | 1 | HARNESS ASM (W/TERMINATOR) |
| | 502474D1 | 1 | TERMINATOR-ACTIVE |

2160874F
PR: t05i29k58b0081

## CONTROL AR - AUTOGUIDE SYSTEM
**500628D1**

NO ILLUSTRATION

NOTIF

| ITEM | NUMBER | QTY | DESCRIPTION |
|---|---|---|---|
| - | 500628D1 | -- | CONTROL AR (NOT SERVICED) |
| | 79019518B | | MANUAL, OPERATOR'S-AUTOGUIDE |
| | 500606D1 | 1 | SWITCH GP-GUIDANCE (NOT SERVICED, (SEE BREAKDOWN FOR COMPONENTS) |
| | 500607D1 | 1 | TRANSMITTER & RECEIVER GP (GLOBAL POSITIONING SYSTEM) (SEE BREAKDOWN FOR COMPONENTS) |

NOTIF
PR: t05i29k58b0082

## KIT CONTROL AR-AUTOGUIDE SYSTEM
**500630D1**
**FIELD INSTALLED**

NO ILLUSTRATION

NOTIF

## KIT CONTROL AR-AUTOGUIDE SYSTEM

**500630D1**
**FIELD INSTALLED**

| ITEM | NUMBER | QTY | DESCRIPTION |
|---|---|---|---|
| - | 500630D1 | -- | KIT CONTROL AR |
| 1 | 79019518B | 1 | MANUAL, OPERATOR'S-AUTOGUIDE |
| 2 | 500606D1 | 1 | SWITCH GP-GUIDANCE (GPS) (NOT SERVICED)<br>(SEE BREAKDOWN FOR COMPONENTS) |
| 3 | 500607D1 | 1 | RECEIVER GP-TRANSMITTER (GPS)<br>(SEE BREAKDOWN FOR COMPONENTS) |
| 4 | ----- | 1 | (NOT USED ON THIS MODEL) |

NOTIF
PR: t05i29k58b0083

## CONTROL GP-POWER TAKE-OFF - 152-0446
**ROW**

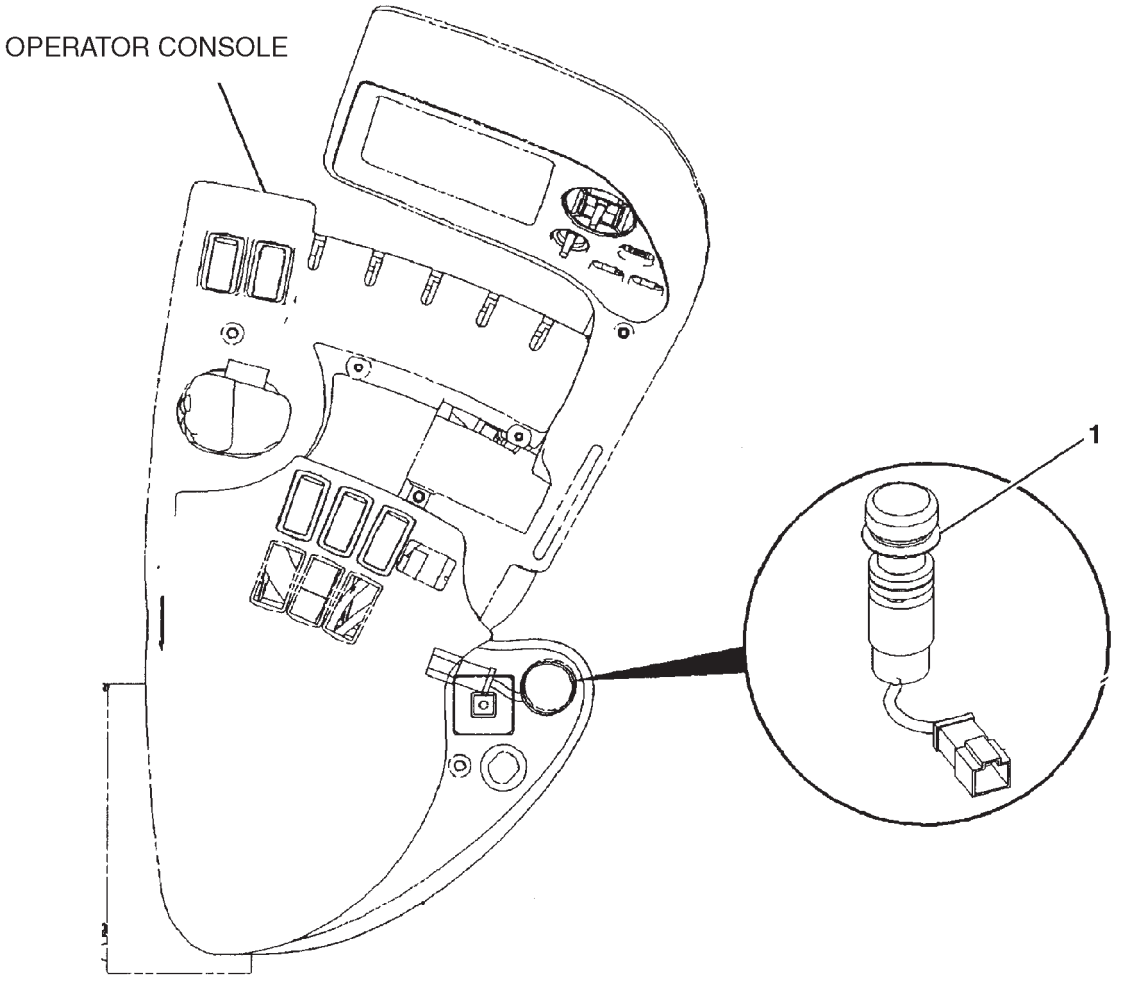


**TOP VIEW**

1520446A

| ITEM | NUMBER | QTY | DESCRIPTION |
|---|---|---|---|
| - | 152-0446 | -- | CONTROL GP-PTO [A] (NOT SERVICED) |
| 1 | 502423D1 | 1 | KIT-PTO SWITCH ADAPT<br>(SEE BREAKDOWN FOR COMPONENTS) |

[A] PART OF 163-0400 KIT-PTO

1520446A
PR: t05i29k58b0084

**CONTROL GP-POWER TAKE-OFF - 224-5884**
**EAME**

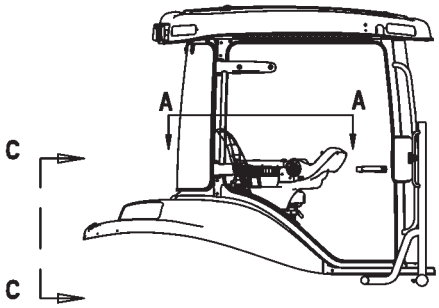


RIGHT SIDE VIEW OF CAB

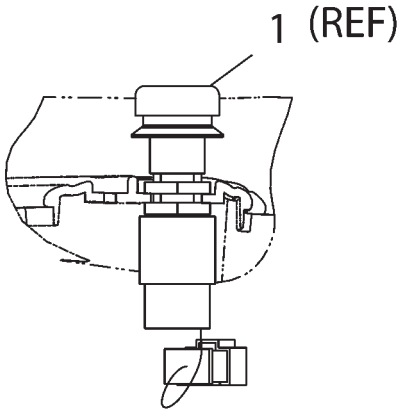


VIEW B-B
ROTATED CW 90o

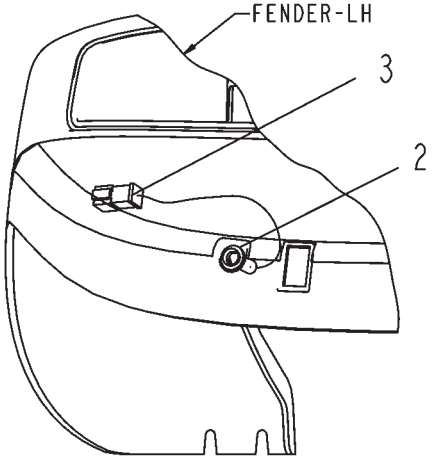


VIEW C-C

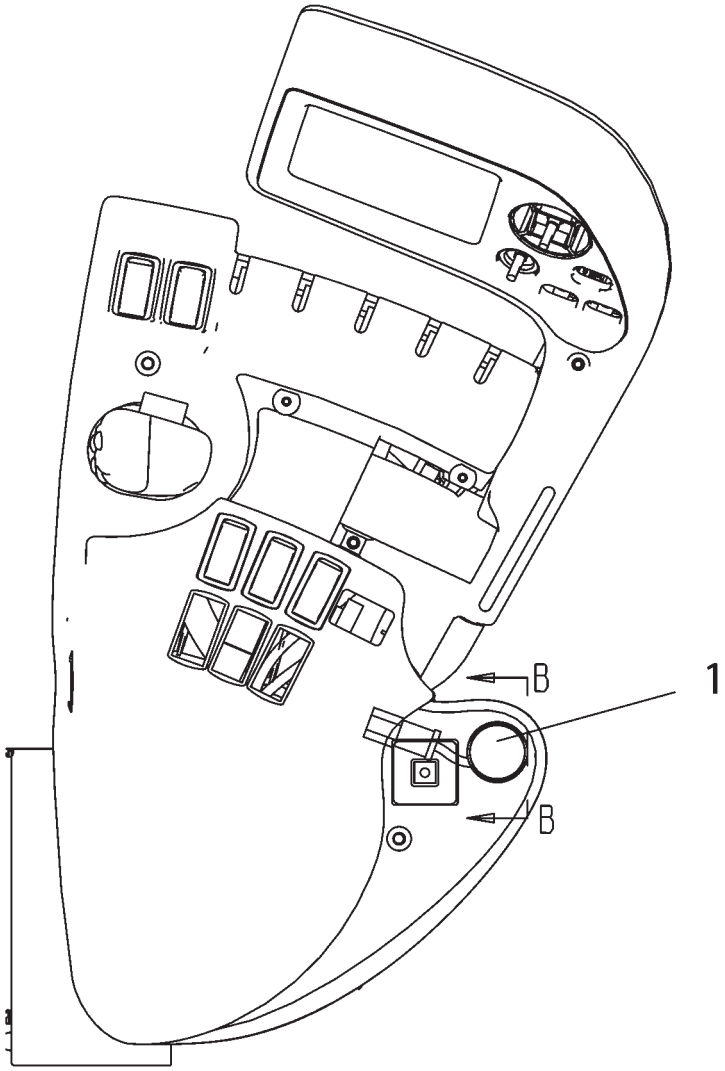


VIEW A-A

| ITEM | NUMBER | QTY | DESCRIPTION |
|---|---|---|---|
| - | 224-5884 | -- | CONTROL GP-PTO [A] (NOT SERVICED) |
| 1 | 502423D1 | 1 | KIT-PTO SWITCH ADAPT |
| | | | (SEE BREAKDOWN FOR COMPONENTS) |
| 2 | CH176-4546 | 1 | SWITCH ASM (PUSHBUTTON) |
| | CH172-3511 | 1 | NUT-SWITCH MTG (5/8-24) |
| | CH6F-0253 | 1 | WASHER-LOCK |
| | 400561X1 | 5 | PIN-CONNECTOR |
| 3 | 400754X1 | 1 | RECEPTICLE KIT, CONNECTOR |

[A] PART OF 183-2197 GAUGE AR-TRACK;
224-8603 KIT-PTO

2245884C
PR: t05i29k58b0085

## KIT-PTO SWITCH ADAPTOR
**502423D1**

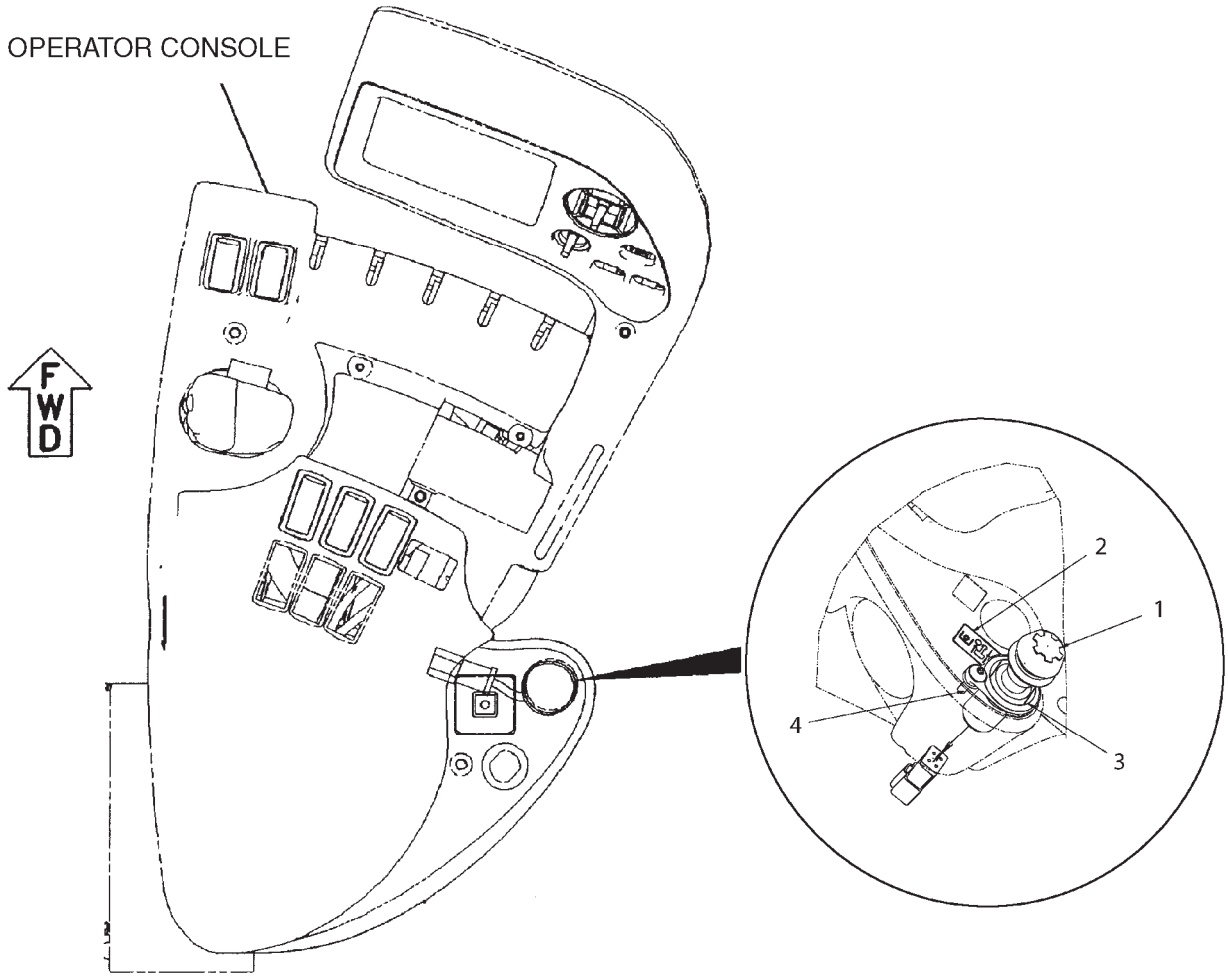


**TOP VIEW**

502423D1

## KIT-PTO SWITCH ADAPTOR
**502423D1**

| ITEM | NUMBER | QTY | DESCRIPTION |
|---|---|---|---|
| - | 502423D1 | -- | KIT-PTO SWITCH ADAPTOR [A] |
| 1 | 502009D1 | 1 | SWITCH ASM-PTO |
| | 400562X1 | 4 | PIN |
| | 400782X1 | 1 | CONNECTOR-RECEPT |
| 2 | 501532D1 | 1 | FILM-PTO |
| 3 | 502099D1 | 1 | ADAPTOR |
| 4 | CH3E-8020 | 1 | SCREW-TRUSS HD (M6X1X25MM) |

[A] PART OF 502428D1;502428D1
REWORK AR;
152-0446;224-5884 CONTROL GP-PTO

502423DA
PR: t05i29k58b0086

**ELECTRONICS GP-IMPLEMENT - 229-0891**
**(SOFTWARE)**
**3 POINT HITCH**

NO ILLUSTRATION

NOTIF

## ELECTRONICS GP-IMPLEMENT - 229-0891
**(SOFTWARE)**
**3 POINT HITCH**

| ITEM | NUMBER | QTY | DESCRIPTION |
|---|---|---|---|
| - | 229-0891 | -- | ELECTRONICS GP-IMPLEMENT [A]<br>(NOT SERVICED) |
| 1 | 256-0176 | 1 | SOFTWARE GP-IMPLEMENT (REAR HITCH)<br>(SOFTWARE ONLY)<br>(LOCATED ON "ONEAGCO" OR CALL 507-847-7222) |
| 2 | 216-0658 | 1 | CONTROL GP-UNPROGRAMMED (HITCH)<br>(SEE BREAKDOWN FOR COMPONENTS) |

[A] PART OF 136-5378 CONTROL & WIRING GP-HITCH

NOTIF
PR: t05i29k58b0087

## CONTROL GP-UNPROGRAMMED
**216-0658**

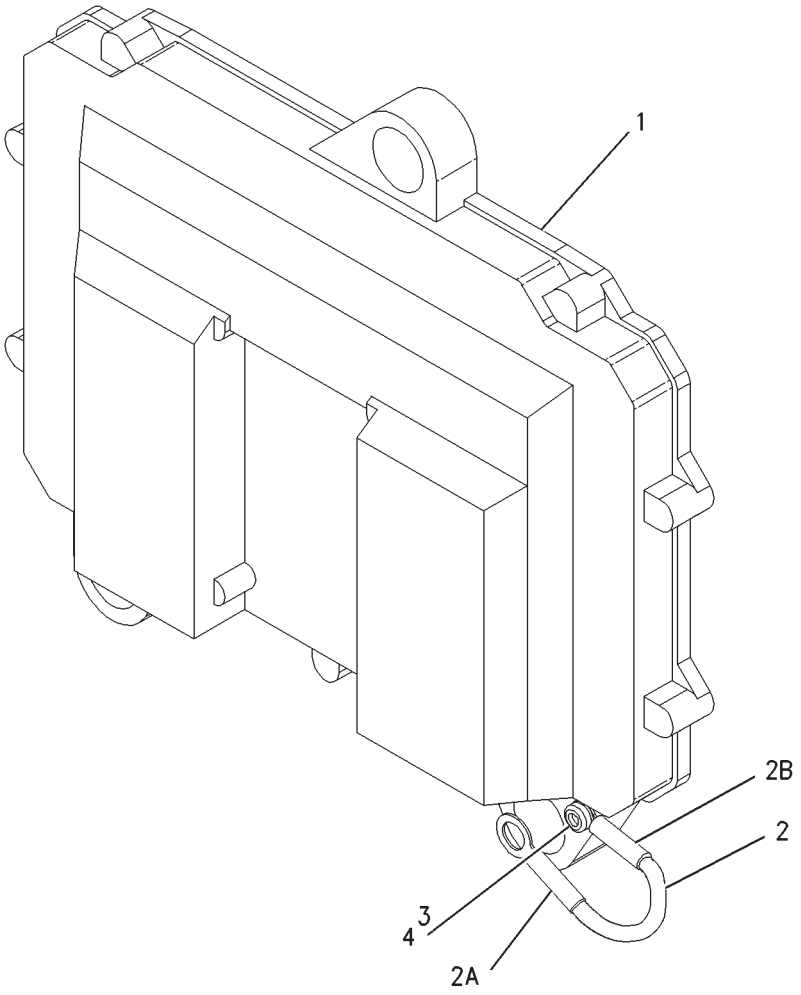


00818553

## CONTROL GP-UNPROGRAMMED
**216-0658**

| ITEM | NUMBER | QTY | DESCRIPTION |
|---|---|---|---|
| - | 216-0658 | -- | CONTROL GP-UNPROGRAMMED [A] |
| 1 | ----- | 1 | CONTROL ASM (NOT SERVICED SEPARATELY) |
| 2 | CH7X-6315 | 1 | STRAP ASM |
| 2A | CH139-6911 | 1 | TERMINAL-RING |
| 2B | CH7H-1177 | 1 | TERMINAL-RING |
| 3 | CH120-4897 | 1 | SCREW-PAN HEAD (M4X0.7X9.5) |
| 4 | CH134-4126 | 1 | WASHER (4.52X8.28X.76) |

[A] PART OF 229-0891 ELECTRONICS GP-IMPLEMENT

00818553
PR: t05i29k58b0088

**ELECTRONICS GP-MACHINE - ISO**
**216-0614**

NO ILLUSTRATION

NOTIF

| ITEM | NUMBER | QTY | DESCRIPTION |
|---|---|---|---|
| - | 216-0614 | -- | ELECTRONICS GP-MACHINE [A] (NOT SERVICED) |
| | 201-9041 | 1 | CONTROL GP-ENGINE ELECTRONIC |
| | 256-0187 | 1 | SOFTWARE GP-COMMUNICATION (LOCATED ON "ONEAGCO" OR CALL 507-847-7222) |

[A] PART OF 216-0852;216-0874
CONTROL AR-COMMUNICATION

NOTIF
PR: t05i29k58b0089

## HEATER GP-JACKET WATER-120V - 215-1802

**MT835 & MT845**
**ROW & SPECIAL ONLY**

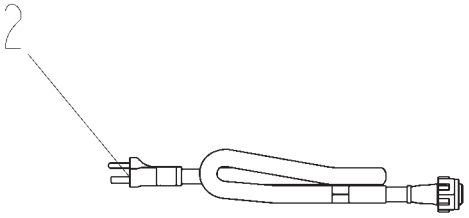


CORD ASY. STORED UNDER TRAINER SEAT

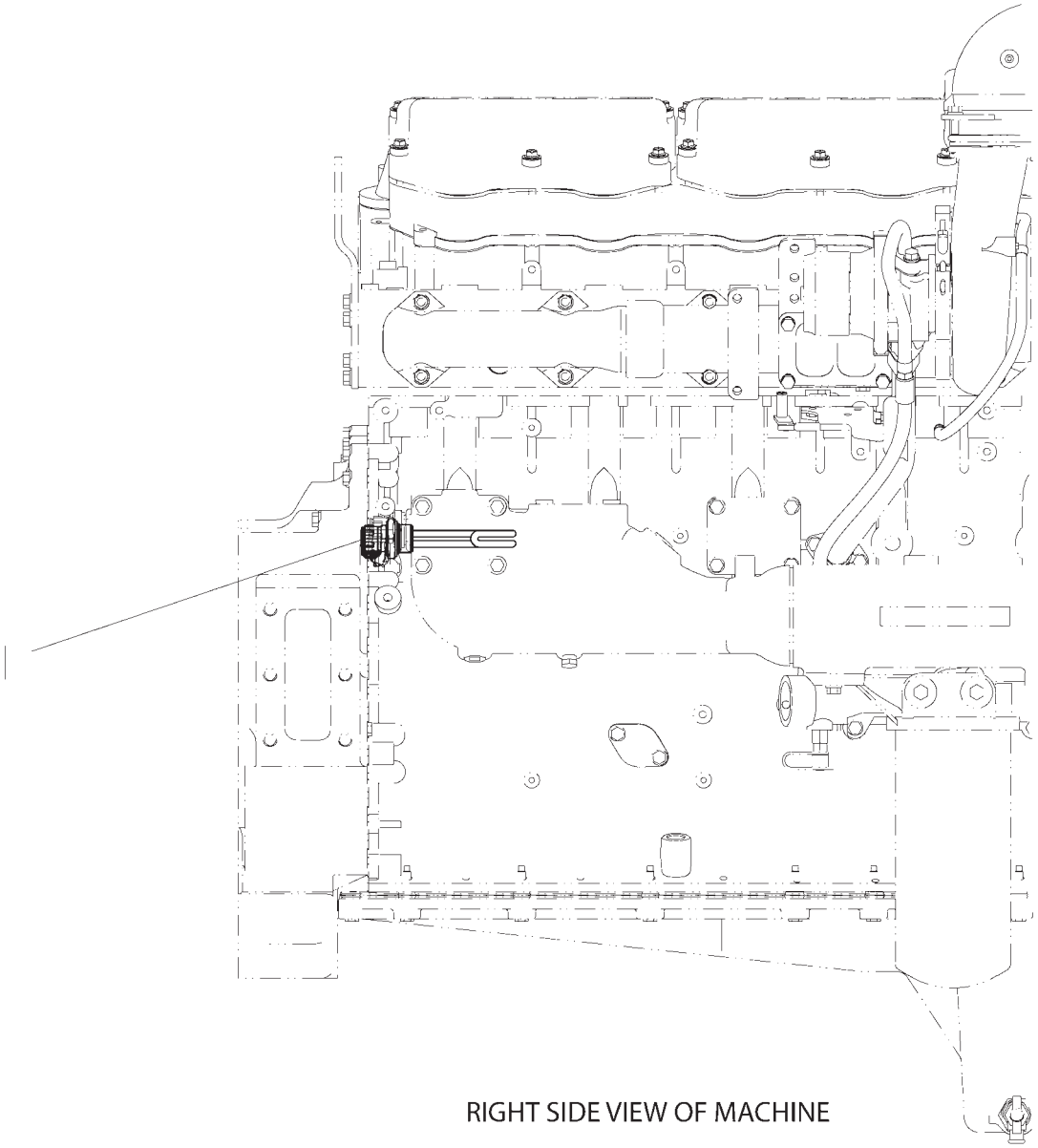


RIGHT SIDE VIEW OF MACHINE

2151807B

## HEATER GP-JACKET WATER-120V - 215-1802

**MT835 & MT845**
**ROW & SPECIAL ONLY**

| ITEM | NUMBER | QTY | DESCRIPTION |
|---|---|---|---|
| - | 215-1802 | -- | HEATER GP-JACKET WATER (NOT SERVICED) |
| 1 | CH131-8627 | 1 | ELEMENT ASM-HEATER (120V/1250W) (INCLS 1A) |
| 1A | CH133-6517 | 1 | CAP ASM-DUST |
| 2 | CH7X-6312 | 1 | CORD ASM (120 VOLT/15 AMPERE) |

2151807B
PR: t05i29k58b0090

## HEATER GP-JACKET WATER-120V - 215-1807

**MT855 & MT865**
**ROW & SPECIAL ONLY**

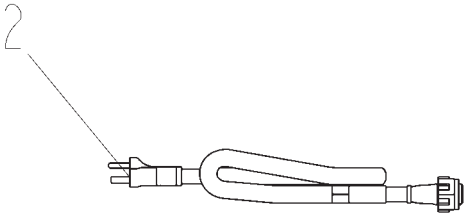


CORD ASY. STORED UNDER TRAINER SEAT

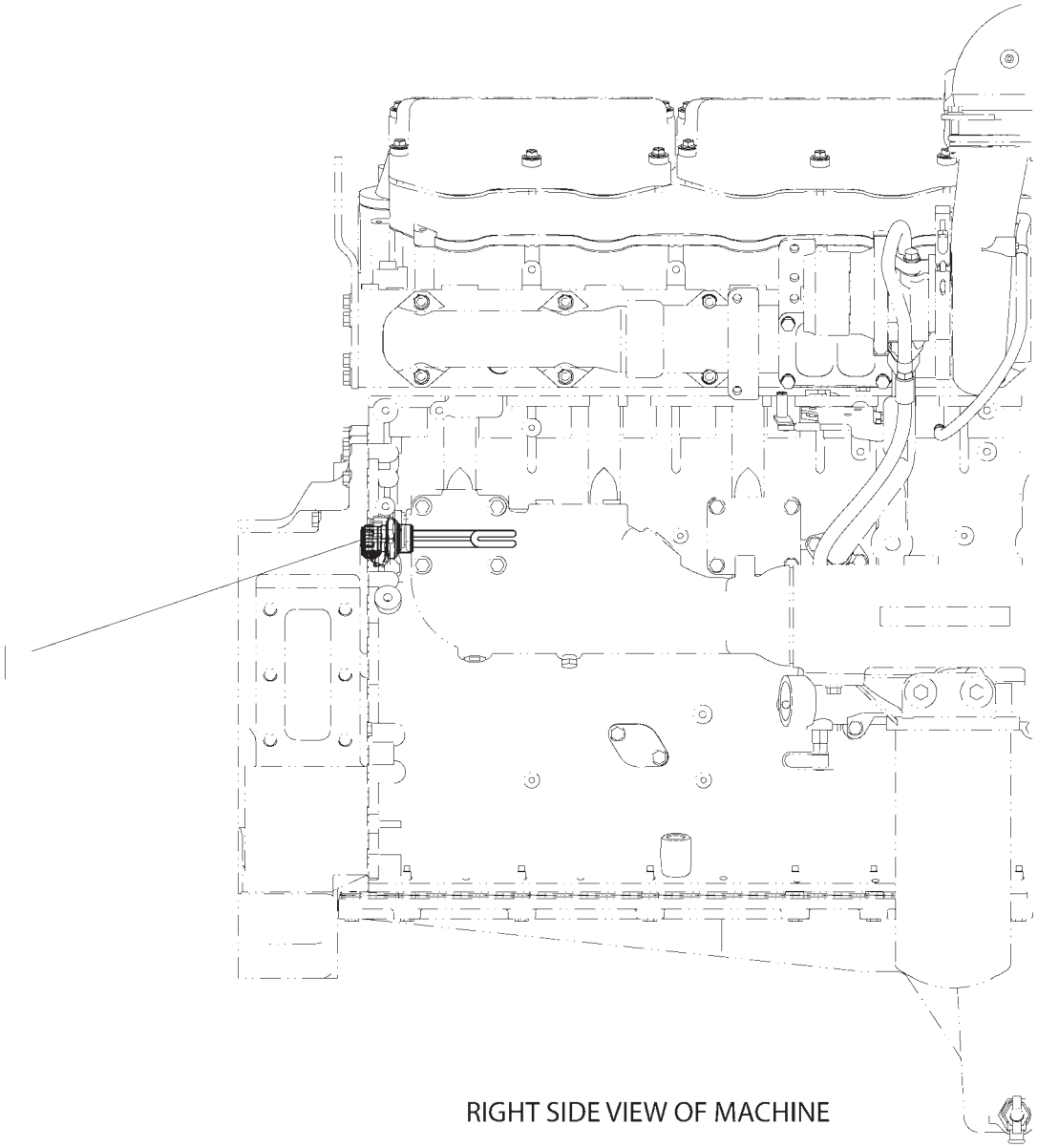


RIGHT SIDE VIEW OF MACHINE

2151807B

# HEATER GP-JACKET WATER-120V - 215-1807

**MT855 & MT865**
**ROW & SPECIAL ONLY**

| ITEM | NUMBER | QTY | DESCRIPTION |
|---|---|---|---|
| - | 215-1807 | -- | HEATER GP-JACKET WATER (NOT SERVICED) |
| 1 | CH131-8627 | 1 | ELEMENT ASM-HEATER (120V/1250W) (INCLS 1A) |
| 1A | CH133-6517 | 1 | CAP ASM-DUST |
| 2 | CH7X-6312 | 1 | CORD ASM (120 VOLT/15 AMPERE) |

2151807B
PR: t05i29k58b0091

## HEATER GP-JACKET WATER-240V - 215-1808

**MT835 & MT845**
**EAME ONLY**

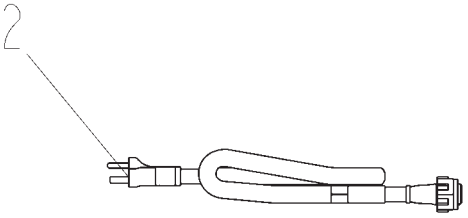


CORD ASY. STORED UNDER TRAINER SEAT

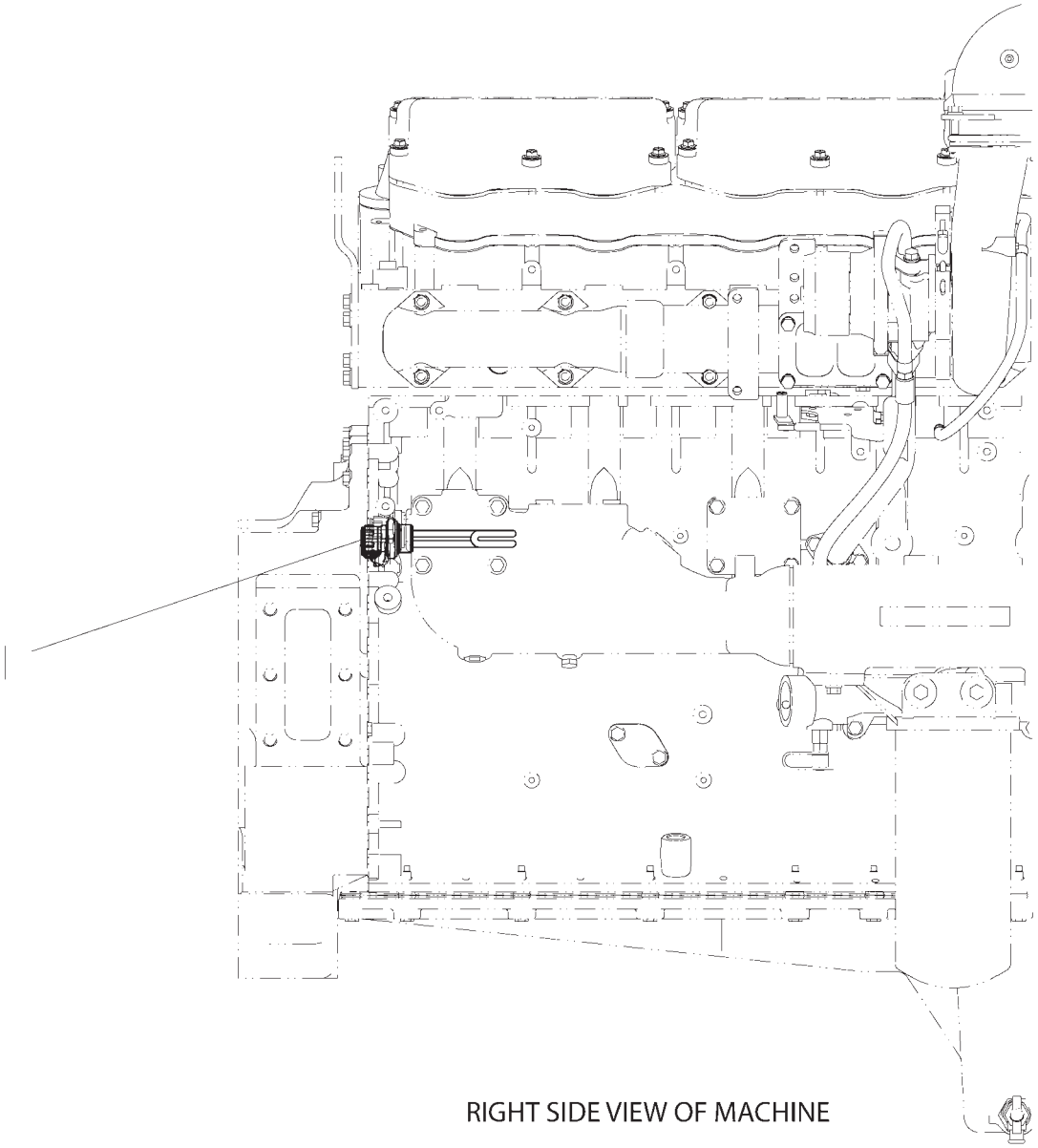


RIGHT SIDE VIEW OF MACHINE

2151807B

## HEATER GP-JACKET WATER-240V - 215-1808

**MT835 & MT845**
**EAME ONLY**

| ITEM | NUMBER | QTY | DESCRIPTION |
|---|---|---|---|
| - | 215-1808 | -- | HEATER GP-JACKET WATER (NOT SERVICED) |
| 1 | CH154-2881 | 1 | ELEMENT ASM-HEATER (240V/1250W) (INCLS 1A) |
| 1A | CH133-6517 | 1 | CAP ASM-DUST |
| 2 | CH127-8609 | 1 | CORD ASM (240 VAC/15 AMP) |

2151807B
PR: t05i29k58b0092

## HEATER GP-JACKET WATER-240V - 215-1809

**MT855 & MT865**
**EAME ONLY**

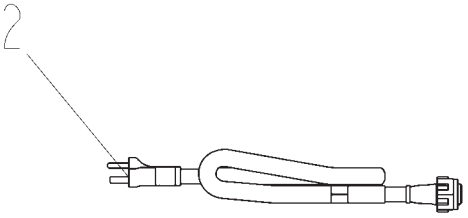


CORD ASY. STORED UNDER TRAINER SEAT

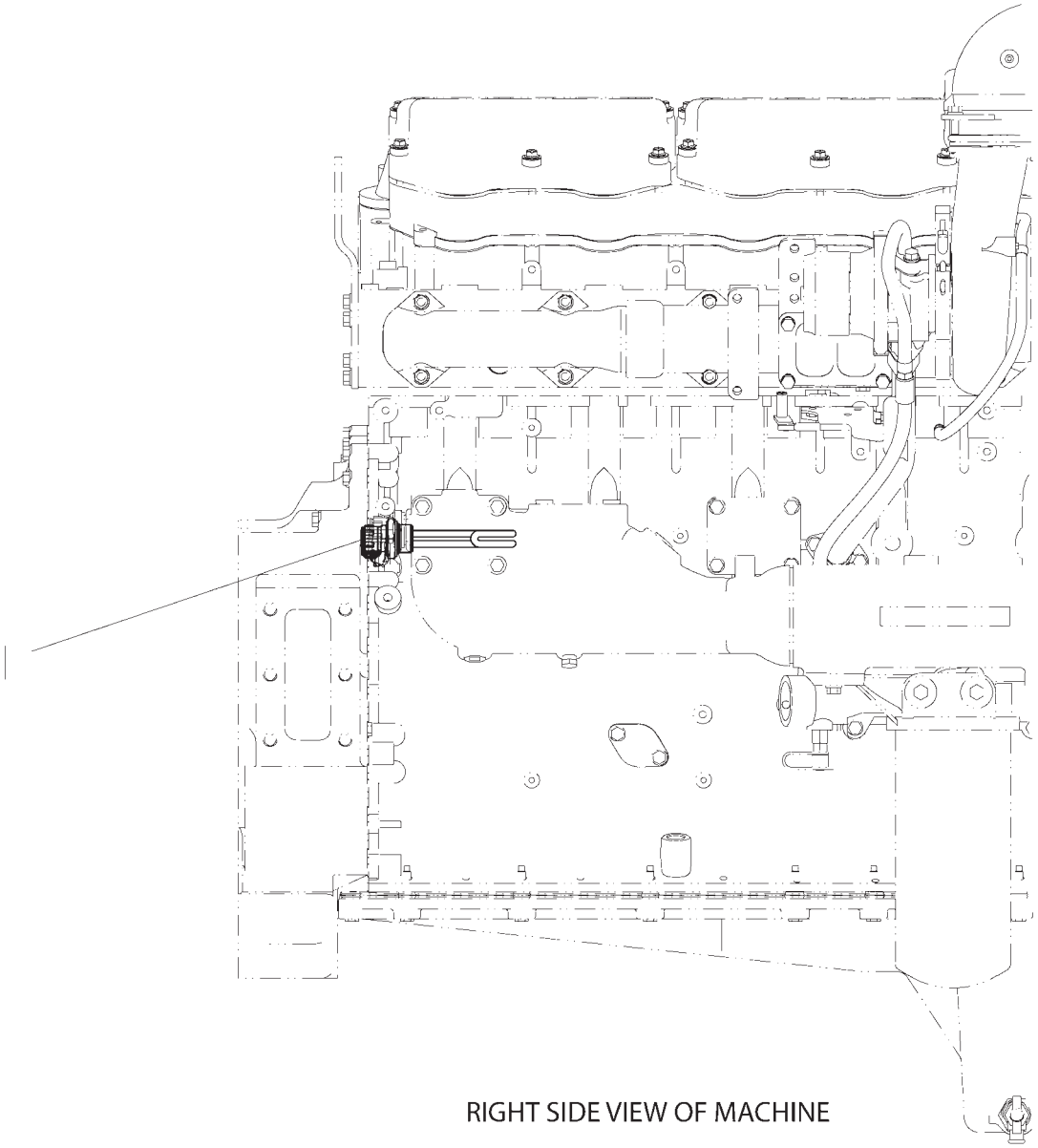


RIGHT SIDE VIEW OF MACHINE

2151807B

## HEATER GP-JACKET WATER-240V - 215-1809

**MT855 & MT865**
**EAME ONLY**

| ITEM | NUMBER | QTY | DESCRIPTION |
|---|---|---|---|
| - | 215-1809 | -- | HEATER GP-JACKET WATER (NOT SERVICED) |
| 1 | CH154-2881 | 1 | ELEMENT ASM-HEATER (240V/1250W) (INCLS 1A) |
| 1A | CH133-6517 | 1 | CAP ASM-DUST |
| 2 | CH127-8609 | 1 | CORD ASM (240 VAC/15 AMP) |

2151807B
PR: t05i29k58b0093

## HEATER GP-TRANSMISSION-120V

**163-0402**
**ROW & SPECIAL ONLY**

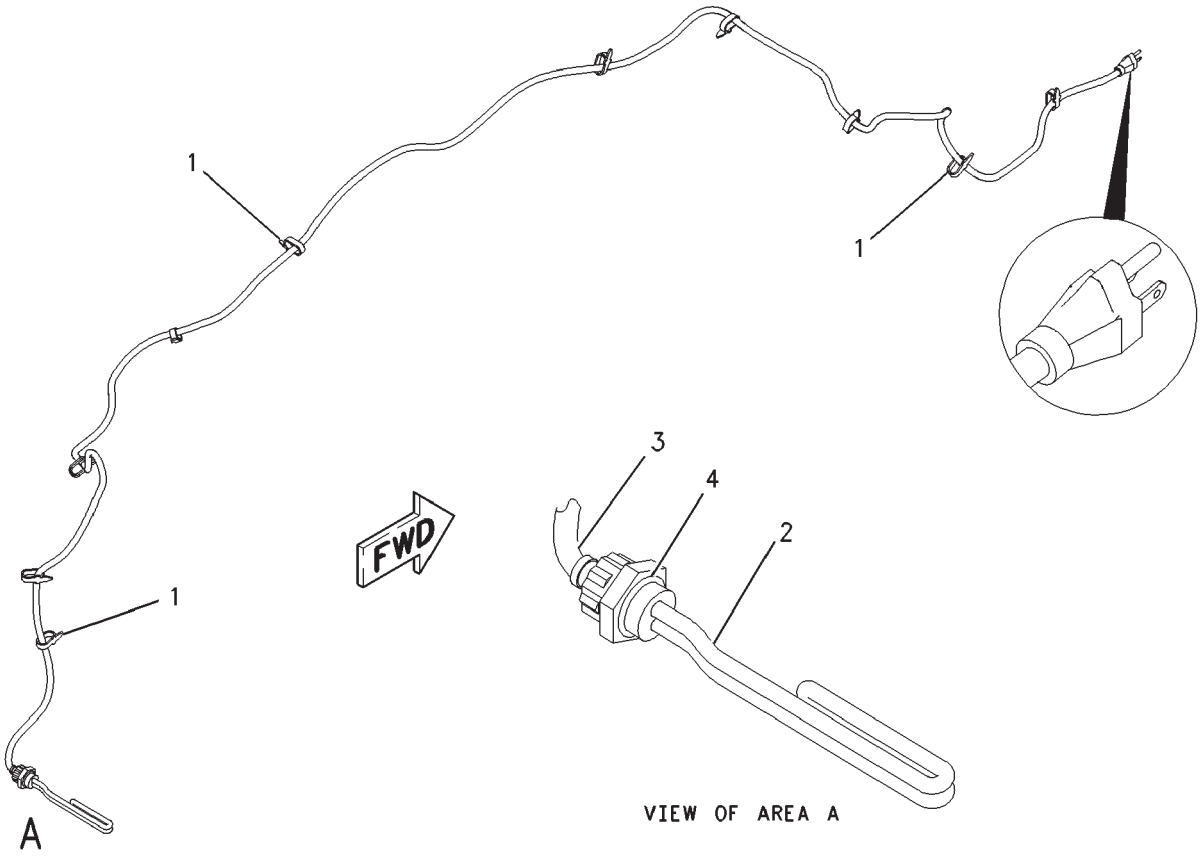

## HEATER GP-TRANSMISSION-120V

**163-0402**
**ROW & SPECIAL ONLY**

| ITEM | NUMBER | QTY | DESCRIPTION |
|---|---|---|---|
| - | 163-0402 | -- | HEATER GP-TRANSMISSION (NOT SERVICED) |
| 1 | 400837X1 | 10 | STRAP-CABLE |
| 2 | 205-8771 | 1 | ELEMENT ASM (120 VOLT) (TRANSMISSION) |
| 3 | CH163-0421 | 1 | CORD ASM |
| 4 | 400593X1 | 1 | SEAL-O-RING |

00851879
PR: t05i29k58b0094

## HEATER GP-TRANSMISSION-240V

**163-0403**
**EAME ONLY**

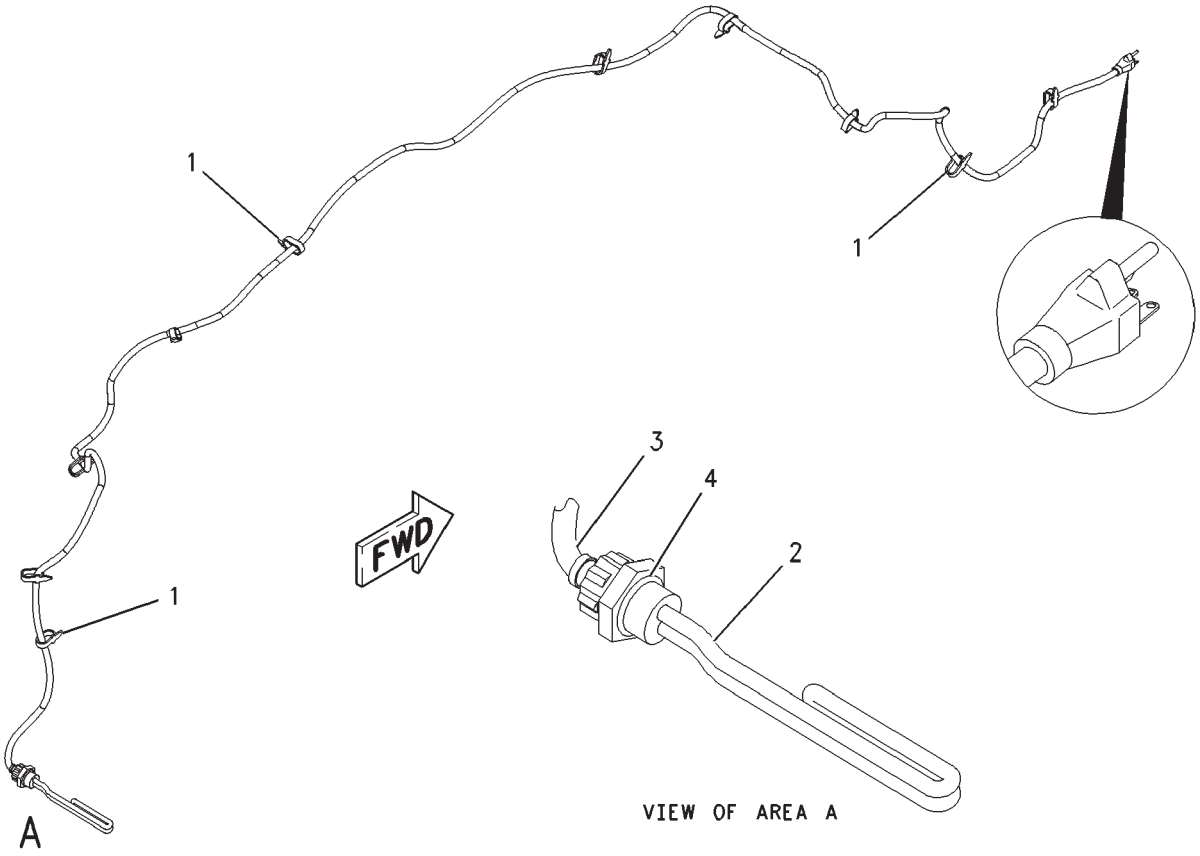

## HEATER GP-TRANSMISSION-240V

**163-0403**
**EAME ONLY**

| ITEM | NUMBER | QTY | DESCRIPTION |
|---|---|---|---|
| - | 163-0403 | -- | HEATER GP-TRANSMISSION (NOT SERVICED) |
| 1 | 400837X1 | 10 | STRAP-CABLE |
| 2 | 205-8772 | 1 | ELEMENT ASM (240 VOLT) (TRANSMISSION HEATER) |
| 3 | CH213-1783 | 1 | CORD ASM |
| 4 | 400593X1 | 1 | SEAL-O-RING |

00856912
PR: t05i29k58b0095

## LIGHT AS - COURTESY - 12V
**501935D1**

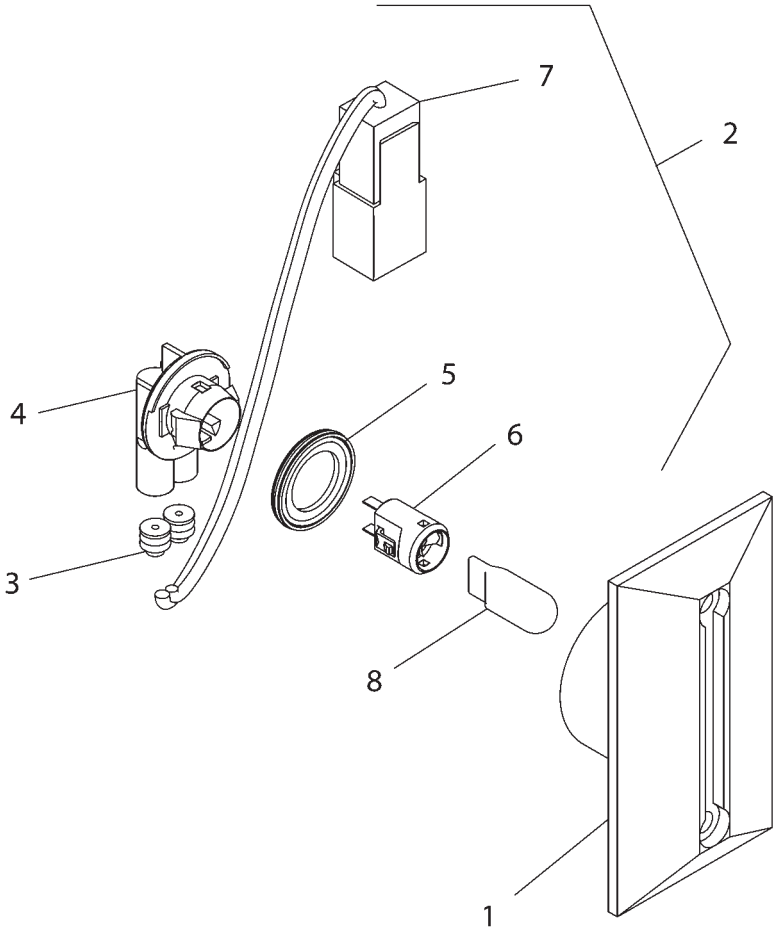


501935DB

## LIGHT AS - COURTESY - 12V
**501935D1**

| ITEM | NUMBER | QTY | DESCRIPTION |
|---|---|---|---|
| - | 501935D1 | -- | LIGHT AS-COURTESY [A] |
| 1 | 501936D1 | 1 | HOUSING |
| 2 | 501934D1 | 1 | LAMP AS (INCLS 3-10) |
| 3 | 400403X1 | 2 | SEAL |
| 4 | 400405X1 | 1 | CONNECTOR |
| 5 | 400406X1 | 1 | SEAL |
| 6 | 400407X1 | 1 | LAMP SOCKET INSERT |
| 7 | 501962D1 | 1 | RECEPTACLE-CONN DEUTSCH 2 PIN |
| 8 | CH6T-7298 | 1 | LAMP-12V BASE W-2 CLEAR |
| 9 | 400404X1 | 2 | SOCKET (NOT SHOWN) |
| 10 | 400562X1 | 2 | PIN-CONNECTOR 16-18 AWG (NOT SHOWN) |

[A] PART OF 152-0005 WIRING GP

501935DB
PR: t05i29k58b0096

## LIGHTING GP-12V STD - 500645D1
ROW AND SPECIAL APPLICATIONS

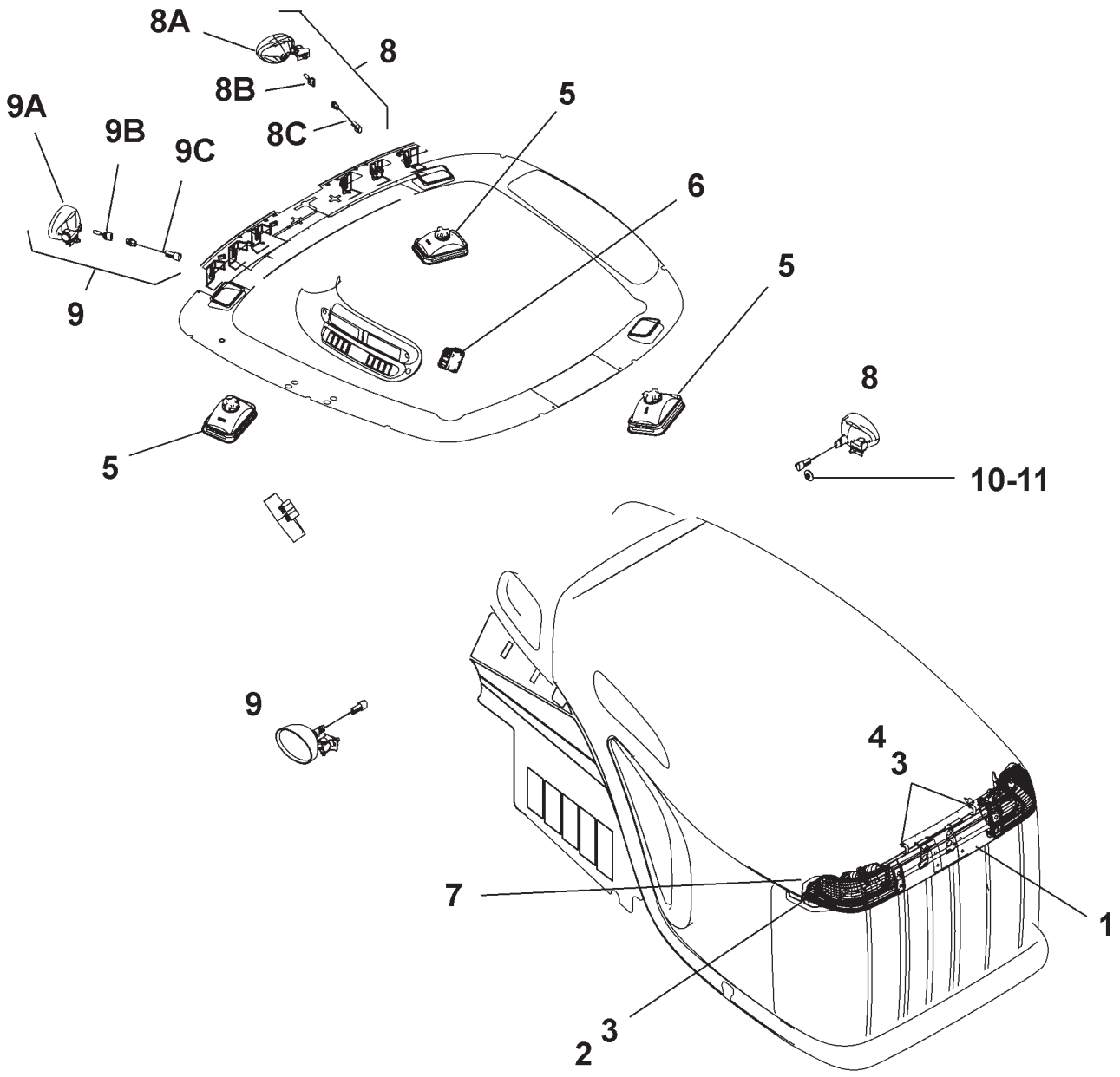


500645DD

## LIGHTING GP-12V STD - 500645D1
ROW AND SPECIAL APPLICATIONS

| ITEM | NUMBER | QTY | DESCRIPTION |
|---|---|---|---|
| - | 500645D1 | -- | LIGHTING GP |
| 1 | 500775D1 | 1 | LAMP GP (HOOD) (NOT SERVICED) (SEE BREAKDOWN FOR COMPONENTS) |
| 2 | 400230X1 | 2 | BOLT-M6X1X14MM ZNDI HHD 10.9 |
| 3 | CH8T-4205 | 4 | WASHER-HARD 7.2IDX14.5ODX2MM |
| 4 | 400300X1 | 2 | NUT M6X1 |
| 5 | 166-4616 | 3 | LAMP GP-PORCH (INCL BULB) |
| | CH136-5252 | -- | LAMP-MINIATURE |
| 6 | 165-5973 | 1 | SWITCH AS.-ROCKER |
| 7 | 199-3481 | 1 | SEAL-HOOD |
| 8 | 500654D1 | 2 | WORK LIGHT (LH) (OVAL) |
| 8A | 500676D2 | 1 | LIGHT |
| 8B | 400862X1 | 1 | BULB |
| 8C | 502094D1 | 1 | HARNESS AS-JUMPER |
| 9 | 500653D1 | 2 | WORK LIGHT (RH) (OVAL) |
| 9A | 500676D2 | 1 | LIGHT |
| 9B | 400862X1 | 1 | BULB |
| 9C | 502094D1 | 1 | HARNESS AS-JUMPER |
| 10 | CH156-0283 | 4 | WASHER-HARD 8.4IDX35ODX2.5 MM |
| 11 | CH3E-9860 | 4 | LOCKNUT-5/16-18 ZNDI |

500645DD
PR: t05i29k58b0097

## LIGHTING GP-12V DELUXE - 500646D1

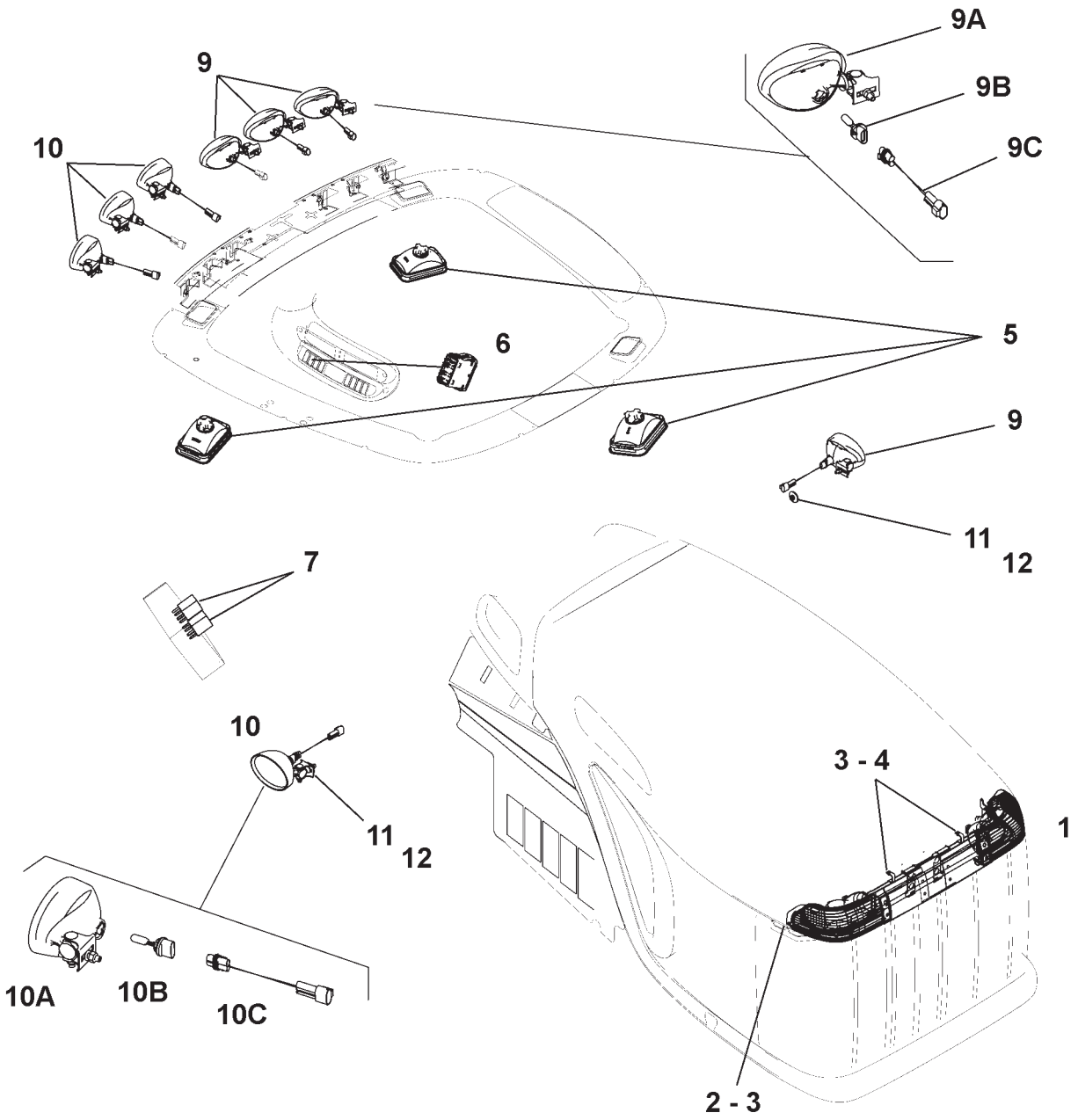


500646DD

## LIGHTING GP-12V DELUXE - 500646D1

| ITEM | NUMBER | QTY | DESCRIPTION |
|---|---|---|---|
| - | 500646D1 | -- | LIGHTING GP (NOT SERVICED) |
| 1 | 500775D1 | 1 | LAMP GP (HOOD) (NOT SERVICED) (SEE BREAKDOWN FOR COMPONENTS) |
| 2 | 400230X1 | 2 | BOLT-M6X1X14MM ZNDI HHD 10.9 |
| 3 | CH8T-4205 | 4 | WASHER-HARD 7.2IDX14.5ODX2MM |
| 4 | 400300X1 | 2 | NUT M6X1 |
| 5 | 166-4616 | 3 | LAMP GP-PORCH (INCL BULB) |
| | CH136-5252 | -- | LAMP-MINIATURE |
| 6 | 165-5973 | 1 | SWITCH AS.-ROCKER |
| 7 | CH146-9439 | 2 | RELAY AS |
| 8 | 199-3481 | 1 | SEAL-HOOD (NOT SHOWN) |
| 9 | 500654D1 | 4 | WORK LIGHT (LH) (INCLS 9A-9C) |
| 9A | 500677D2 | 1 | LIGHT |
| 9B | 400862X1 | 1 | BULB |
| 9C | 502094D1 | 1 | HARNESS AS-JUMPER |
| 10 | 500653D1 | 4 | WORK LIGHT (RH) (INCLS 10A-10C) |
| 10A | 500676D2 | 1 | LIGHT |
| 10B | 400862X1 | 1 | BULB |
| 10C | 502094D1 | 1 | HARNESS AS-JUMPER |
| 11 | CH156-0283 | 8 | WASHER-HARD 8.4IDX35ODX2.5 MM |
| 12 | CH3E-9860 | 8 | LOCKNUT-5/16-18 ZNDI |

500646DD
PR: t05i29k58b0098

## LIGHTING GP-12V HID - 500647D1

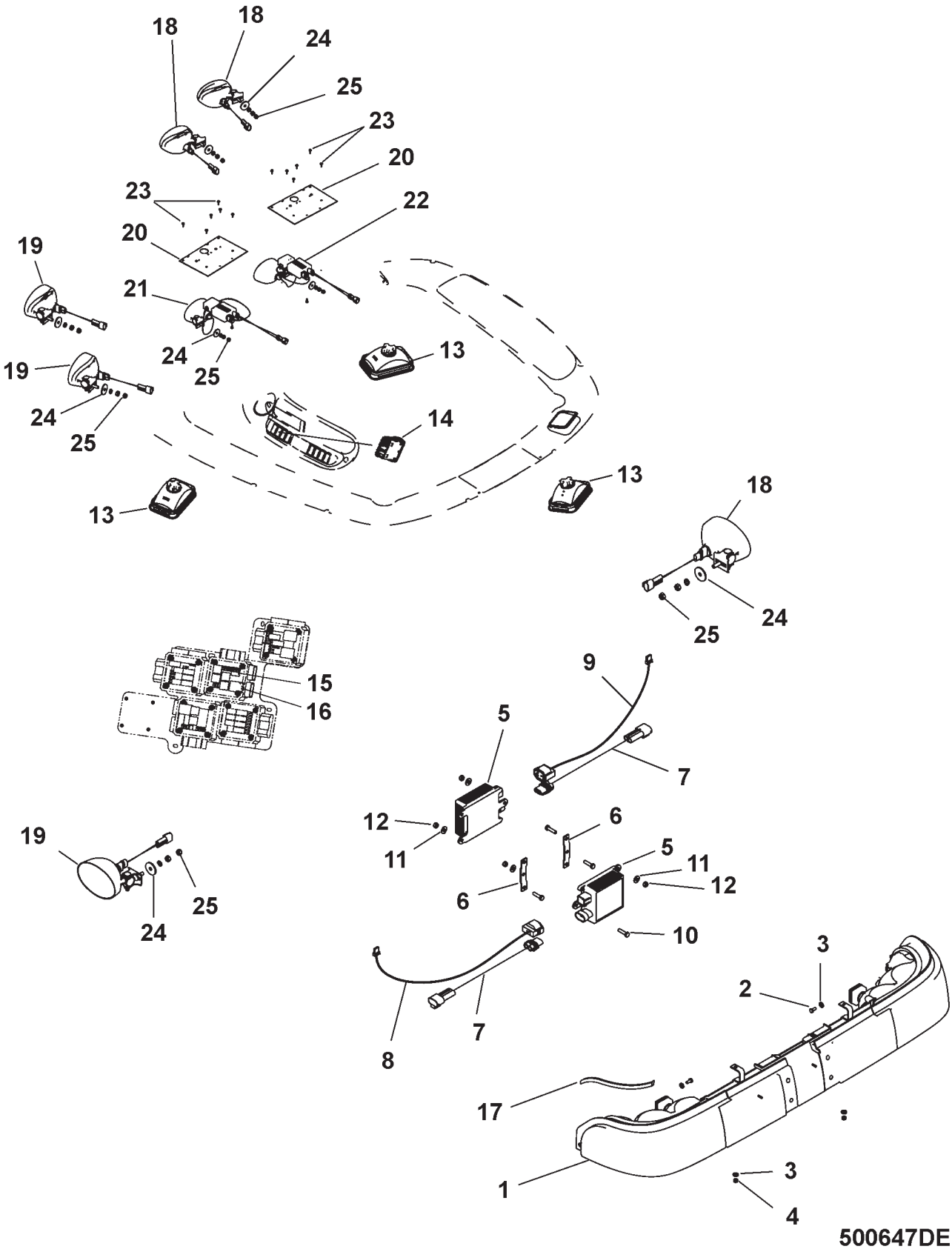

## LIGHTING GP-12V HID - 500647D1

| ITEM | NUMBER | QTY | DESCRIPTION |
|---|---|---|---|
| - | 500647D1 | -- | LIGHTING GP (HID) |
| 1 | 500776D1 | 1 | LAMP GP (HOOD) (SEE BREAKDOWN FOR COMPONENTS) |
| 2 | 400230X1 | 2 | BOLT-M6X1X14MM ZNDI HHD 10.9 |
| 3 | CH8T-4205 | 4 | WASHER-HARD 7.2IDX14.5ODX2MM |
| 4 | 400300X1 | 2 | NUT M6X1 |
| 5 | 136-5597 | 2 | BALLAST AS.-HID |
| 6 | 136-5509 | 2 | BRACKET-BALLAST |
| 7 | 502177D1 | 2 | HARNESS AS.-BALLAST |
| 8 | 202-7320 | 1 | HARNESS AS.-HID |
| 9 | 202-7320 | 1 | HARNESS AS.-HID |
| 10 | 400211X1 | 6 | BOLT-M5X0.8-6GX20 ZN HHD 8.8 |
| 11 | CH4B-4274 | 6 | WASHER-5.5IDX13ODX1.2MM |
| 12 | CH5C-2874 | 6 | NUT-M5X0.8THD HEX ZNDI |
| 13 | 166-4616 | 3 | LAMP GP-PORCH |
| | CH136-5252 | -- | LAMP-MINIATURE |
| 14 | 165-5973 | 1 | SWITCH AS.-ROCKER |
| 15 | CH146-9439 | 1 | RELAY AS. |
| 16 | CH170-2237 | 1 | RELAY AS.-12 VDC |
| 17 | 199-3481 | 1 | SEAL-HOOD |
| 18 | 500654D1 | 3 | WORK LIGHT (LH) |
| | 500676D2 | 1 | LIGHT |
| | 400862X1 | 1 | BULB |
| | 502094D1 | 1 | HARNESS AS-JUMPER |
| 19 | 500653D1 | 3 | WORK LIGHT (RH) |
| | 500677D2 | 1 | LIGHT |
| | 400862X1 | 1 | BULB |
| | 502094D1 | 1 | HARNESS AS-JUMPER |
| 20 | 500639D1 | 2 | BRACKET, HID BALLAST |
| 21 | 500634D1 | 1 | WORK LIGHT-HID (RH) (SEE BREAKDOWN FOR COMPONENTS) |
| 22 | 500635D1 | 1 | WORK LIGHT-HID (LH) (SEE BREAKDOWN FOR COMPONENTS) |
| 23 | CH119-5026 | 14 | SCREW-#10-16X16MM PAN THD CTG |
| 24 | CH156-0283 | 8 | WASHER-HARD 8.4IDX35ODX2.5MM |
| 25 | CH3E-9860 | 8 | LOCKNUT-5/16-18 ZNDI |

500647DE
PR: t05i29k58b0099

## KIT-LIGHTING - 500650D1

**CONVERT STD TO DELUXE**
**ROW AND SPECIAL APPLICATIONS**

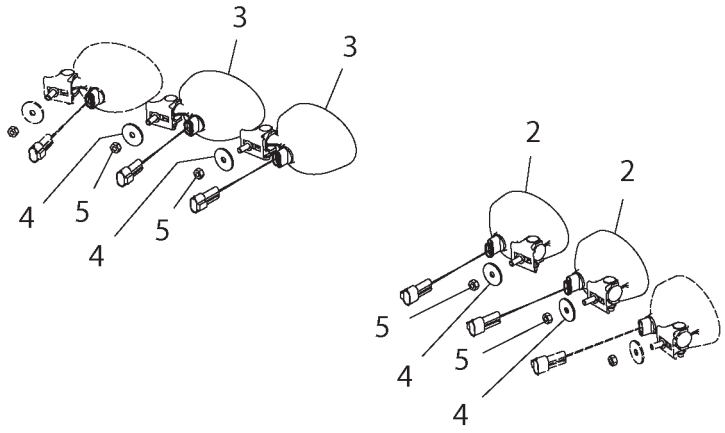





500650DA

## KIT-LIGHTING - 500650D1
**CONVERT STD TO DELUXE ROW AND SPECIAL APPLICATIONS**

| ITEM | NUMBER | QTY | DESCRIPTION |
|---|---|---|---|
| - | 500650D1 | -- | LIGHTING GP |
| 1 | CH146-9439 | 2 | RELAY AS. |
| 2 | 500654D1 | 2 | WORK LIGHT (LH) (OVAL) |
| | 500676D2 | 1 | LIGHT |
| | 400862X1 | 1 | BULB |
| | 502094D1 | 1 | HARNESS AS-JUMPER |
| 3 | 500653D1 | 2 | WORK LIGHT (RH) (OVAL) |
| | 500676D2 | 1 | LIGHT |
| | 400862X1 | 1 | BULB |
| | 502094D1 | 1 | HARNESS AS-JUMPER |
| 4 | CH156-0283 | 4 | WASHER-HARD 8.4IDX35ODX2.5 MM |
| 5 | CH3E-9860 | 4 | LOCKNUT-5/16-18 ZNDI |

500650DA
PR: t05i29k58b0100

## KIT-LIGHTING - 500651D1

CONVERT STD TO HID
ROW AND SPECIAL APPLICATIONS

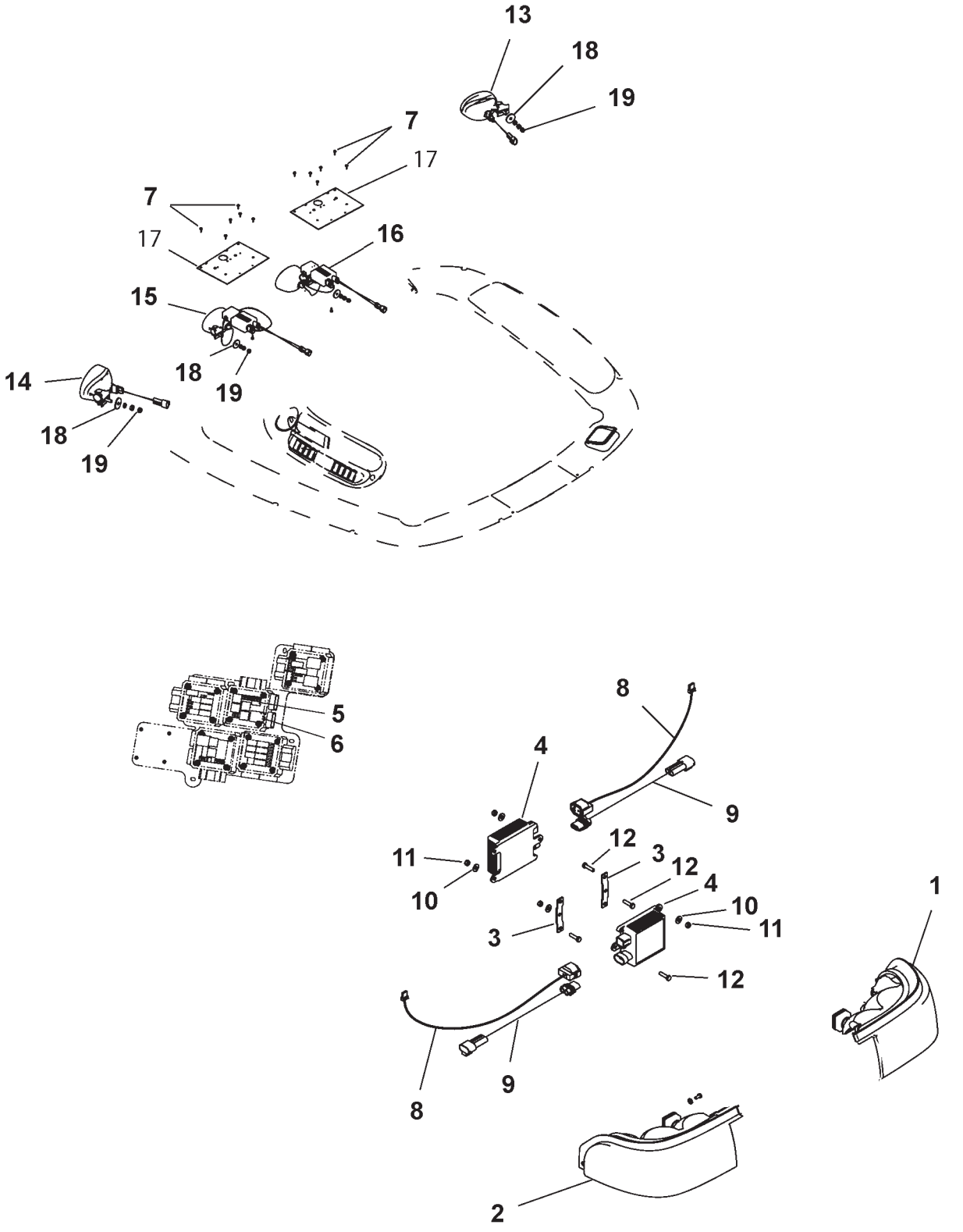

## KIT-LIGHTING - 500651D1
**CONVERT STD TO HID ROW AND SPECIAL APPLICATIONS**

| ITEM | NUMBER | QTY | DESCRIPTION |
|---|---|---|---|
| - | 500651D1 | -- | KIT-LIGHTING (STD TO HID) |
| 1 | 136-5288 | 1 | HEADLAMP AS-HID (LH) |
| | 136-5598 | 1 | LAMP (12V)(35 WATT) |
| | CH175-1323 | 2 | LAMP (12V)(55 WATT) |
| 2 | 136-5289 | 1 | HEADLAMP AS-HID (RH) |
| | 136-5598 | 1 | LAMP (12V)(35 WATT) |
| | CH175-1323 | 2 | LAMP (12V)(55 WATT) |
| 3 | 136-5509 | 2 | BRACKET-BALLAST |
| 4 | 136-5597 | 2 | BALLAST AS-HID |
| 5 | CH146-9439 | 1 | RELAY AS. |
| 6 | CH170-2237 | 1 | RELAY AS.-12 VDC |
| 7 | CH119-5026 | 12 | SCREW-#10-16X16MM PAN THD CTG |
| 8 | 202-7320 | 2 | HARNESS AS-HID |
| 9 | 502177D1 | 2 | HARNESS AS-BALLAST |
| 10 | CH4B-4274 | 6 | WASHER-5.5IDX13ODX1.2MM |
| 11 | CH5C-2874 | 6 | NUT-M5X0.8THD HEX ZNDI |
| 12 | 400211X1 | 6 | BOLT-M5X0.8-6GX20 ZN HHD 8.8 |
| 13 | 500654D1 | 1 | WORK LIGHT (LH) |
| | 500676D2 | 1 | LIGHT |
| | 400862X1 | 1 | BULB |
| | 502094D1 | 1 | HARNESS AS-JUMPER |
| 14 | 500653D1 | 1 | WORK LIGHT (RH) |
| | 500676D2 | 1 | LIGHT |
| | 400862X1 | 1 | BULB |
| | 502094D1 | 1 | HARNESS AS-JUMPER |
| 15 | 500634D1 | 1 | WORK LIGHT-HID (RH) (SEE BREAKDOWN FOR COMPONENTS) |
| 16 | 500635D1 | 1 | WORK LIGHT-HID (LH) (SEE BREAKDOWN FOR COMPONENTS) |
| 17 | 500639D1 | 2 | BRACKET, HID BALLAST |
| 18 | CH156-0283 | 4 | WASHER-HARD 8.4IDX35ODX2.5 MM |
| 19 | CH3E-9860 | 4 | LOCKNUT-5/16-18 ZNDI |

500651DA
PR: t05i29k58b0101

## KIT-LIGHTING - 500652D1
CONVERT DELUXE TO HID
ROW AND SPECIAL APPLICATIONS

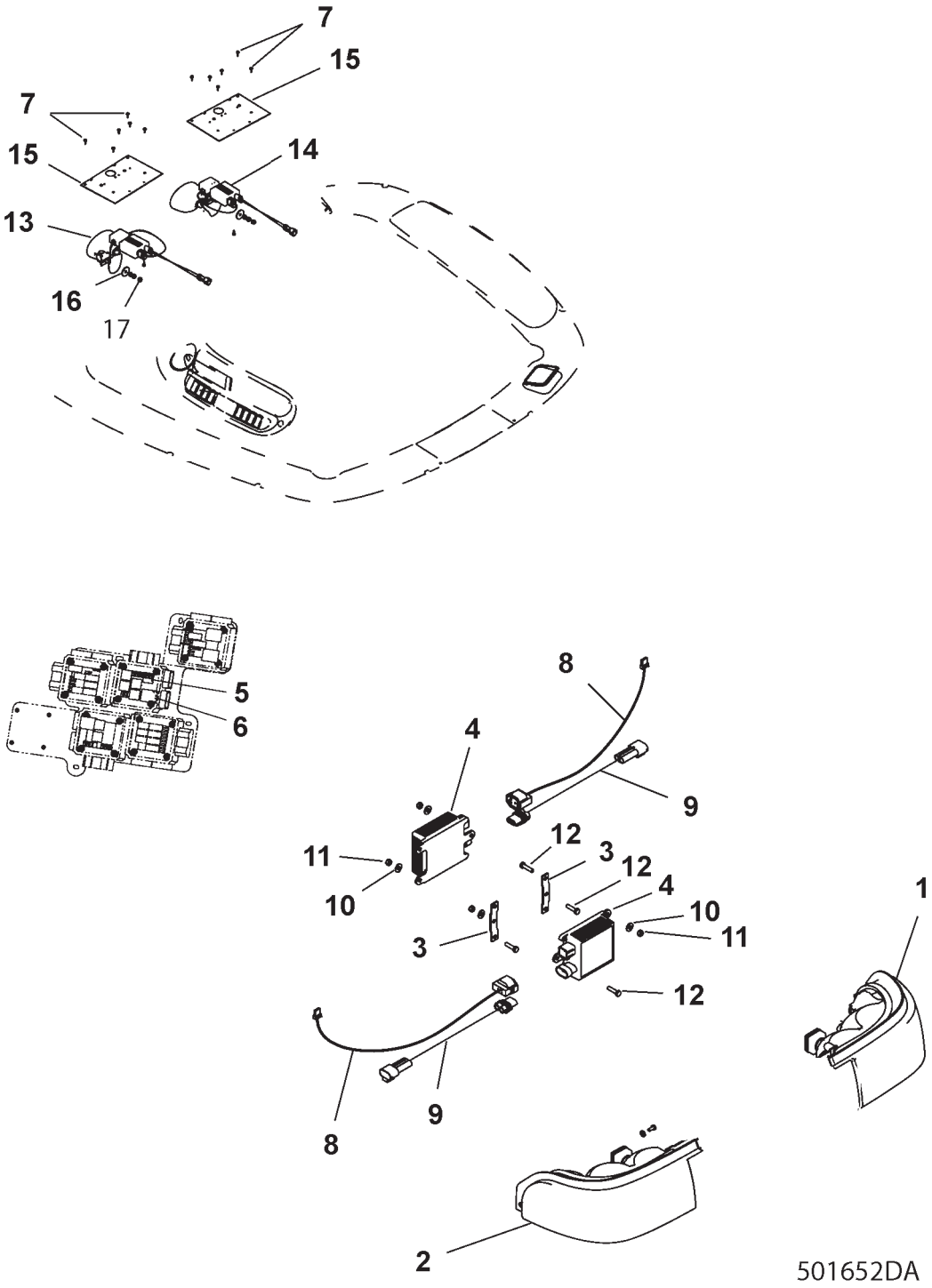

## KIT-LIGHTING - 500652D1
**CONVERT DELUXE TO HID ROW AND SPECIAL APPLICATIONS**

| ITEM | NUMBER | QTY | DESCRIPTION |
|---|---|---|---|
| - | 500652D1 | -- | KIT-LIGHTING (DLX TO HID) |
| 1 | 136-5288 | 1 | HEADLAMP AS-HID (LH) |
| | 136-5598 | 1 | LAMP (12V)(35 WATT) |
| | CH175-1323 | 2 | LAMP (12V)(55 WATT) |
| 2 | 136-5289 | 1 | HEADLAMP AS-HID (RH) |
| | 136-5598 | 1 | LAMP (12V)(35 WATT) |
| | CH175-1323 | 2 | LAMP (12V)(55 WATT) |
| 3 | 136-5509 | 2 | BRACKET-BALLAST |
| 4 | 136-5597 | 2 | BALLAST AS-HID |
| 5 | CH146-9439 | 1 | RELAY AS. |
| 6 | CH170-2237 | 1 | RELAY AS.-12 VDC |
| 7 | CH119-5026 | 12 | SCREW-#10-16X16MM PAN THD CTG |
| 8 | 202-7320 | 2 | HARNESS AS-HID |
| 9 | 502177D1 | 2 | HARNESS AS-BALLAST |
| 10 | CH4B-4274 | 6 | WASHER-5.5IDX13ODX1.2MM |
| 11 | CH5C-2874 | 6 | NUT-M5X0.8THD HEX ZNDI |
| 12 | 400211X1 | 6 | BOLT-M5X0.8-6GX20 ZN HHD 8.8 |
| 13 | 500634D1 | 1 | WORK LIGHT-HID (RH) (SEE BREAKDOWN FOR COMPONENTS) |
| 14 | 500635D1 | 1 | WORK LIGHT-HID (LH) (SEE BREAKDOWN FOR COMPONENTS) |
| 15 | 500639D1 | 2 | BRACKET, HID BALLAST |
| 16 | CH156-0283 | 2 | WASHER-HARD 8.4IDX35ODX2.5 MM |
| 17 | CH3E-9860 | 2 | LOCKNUT-5/16-18 ZNDI |

500652DA
PR: t05i29k58b0102

## LAMP GP-HOOD - 12V HALOGEN
**500775D1**

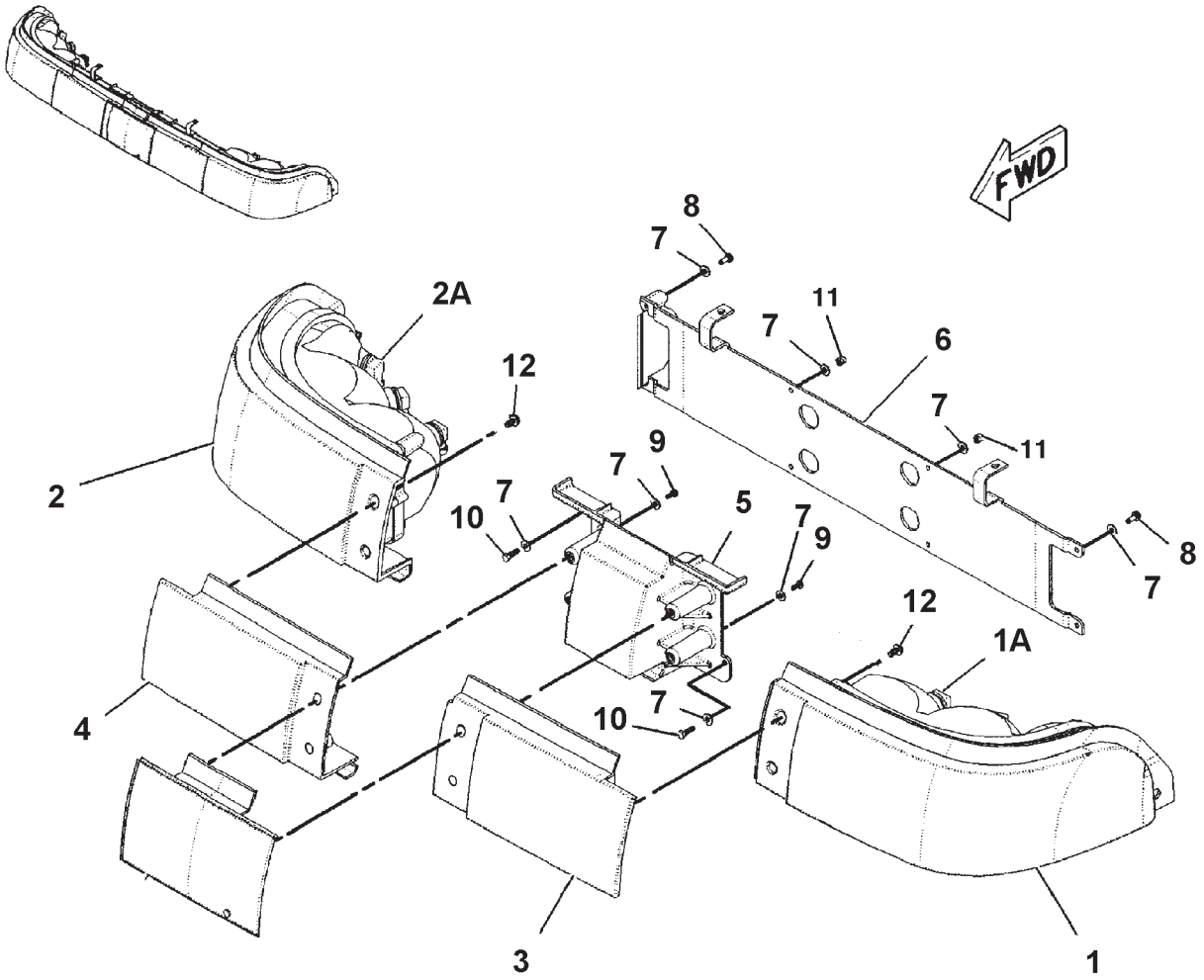


500775DB

## LAMP GP-HOOD - 12V HALOGEN
**500775D1**

| ITEM | NUMBER | QTY | DESCRIPTION |
|---|---|---|---|
| - | 500775D1 | -- | LAMP GP-HOOD [A] (NOT SERVICED) (SERVICED BY COMPONENTS) |
| 1 | 176-0379 | 1 | HEADLAMP AS.-LH |
| 1A | CH175-1323 | 3 | LAMP (12 VOLT)(55 WATT) |
| 2 | 176-0380 | 1 | HEADLAMP AS.-RH |
| 2A | CH175-1323 | 3 | LAMP (12 VOLT)(55 WATT) |
| 3 | 215-7684 | 1 | PANEL-LH (HEADLIGHT) |
| 4 | 215-7687 | 1 | PANEL-RH (HEADLIGHT) |
| 5 | 210-4354 | 1 | BRACKET-HEADLIGHT |
| 6 | 215-9809 | 1 | BRACKET-HEADLIGHT |
| 7 | CH4B-4274 | 16 | WASHER-5.5IDX13ODX1.2MM |
| 8 | 400087X1 | 4 | SCREW-#10-16X12.7 PAN,THD CTG |
| 9 | CH6V-5210 | 4 | SCREW-PAN M4X0.7X10 CROSS |
| 10 | 400021X1 | 4 | BOLT-M5X0.8-6GX16MM ZN HHD |
| 11 | CH3T-0851 | 4 | NUT-LOCK M5X0.8 |
| 12 | CH217-5909 | 4 | SCREW-NO10-15X12.7 PAN THD CTG |

[A] PART OF 500645D1 & 500646D1
LIGHTING GROUPS

500775DB
PR: t05i29k58b0103

## LAMP GP-HOOD-12V HID
**500776D1**

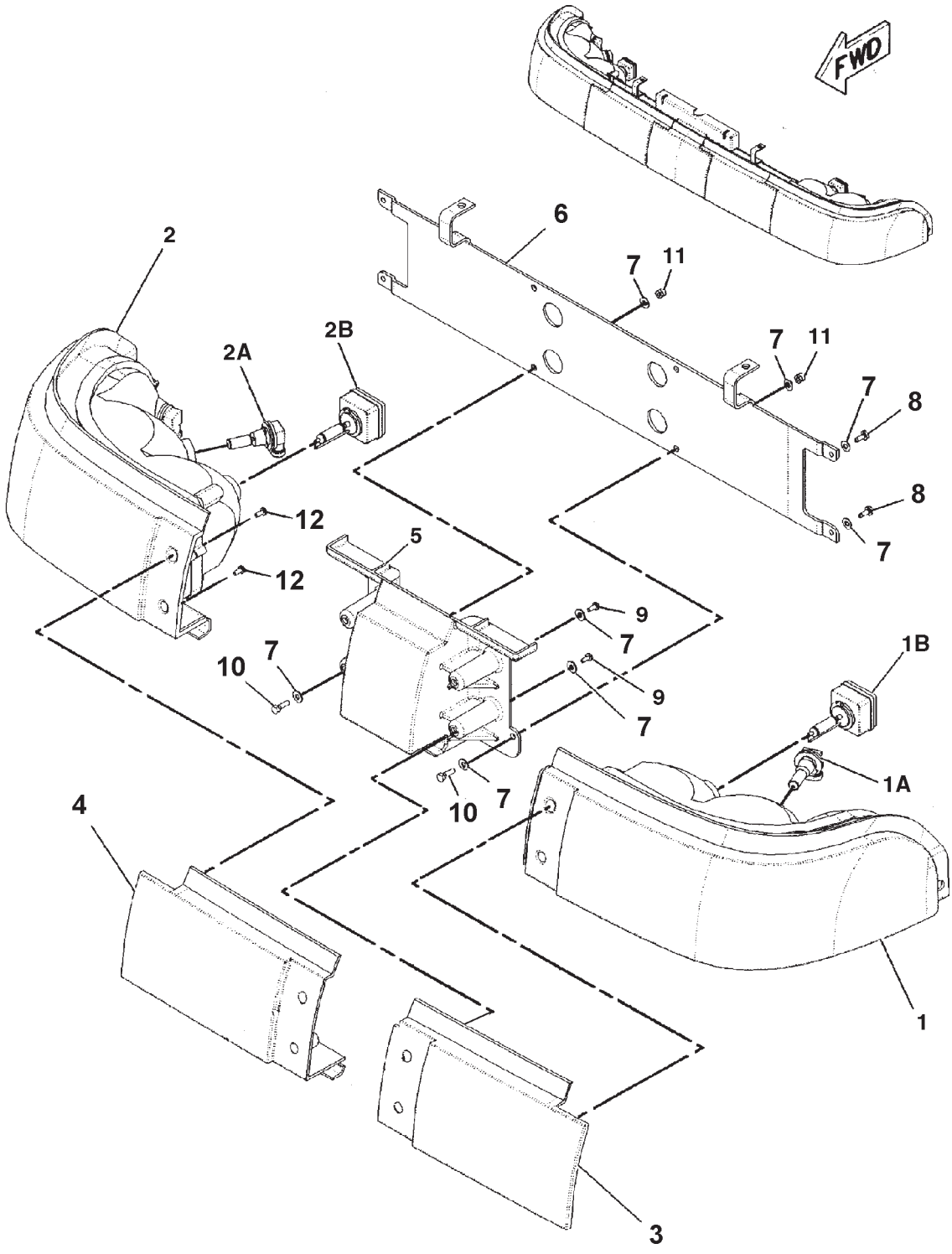


500776DB

## LAMP GP-HOOD-12V HID
**500776D1**

| ITEM | NUMBER | QTY | DESCRIPTION |
|---|---|---|---|
| - | 500776D1 | -- | LAMP GP-HOOD [A] (SERVICE BY COMPONENTS) |
| 1 | 136-5288 | 1 | LAMP GP-HEAD (LH) (INCLS 1A & 1B) |
| 1A | 136-5598 | 1 | LAMP (12V)(35 WATT) |
| 1B | CH175-1323 | 2 | LAMP (12V)(55 WATT) |
| 2 | 136-5289 | 1 | LAMP GP-HEAD (RH) (INCLS 2A & 2B) |
| 2A | 136-5598 | 1 | LAMP (12V)(35 WATT) |
| 2B | CH175-1323 | 2 | LAMP (12V)(55 WATT) |
| 3 | 215-7684 | 1 | PANEL-LH (HEADLIGHT) |
| 4 | 215-7687 | 1 | PANEL-RH (HEADLIGHT) |
| 5 | 210-4354 | 1 | BRACKET-HEADLIGHT |
| 6 | 215-9809 | 1 | BRACKET-HEADLIGHT |
| 7 | CH4B-4274 | 16 | WASHER-5.5IDX13ODX1.2MM |
| 8 | 400087X1 | 4 | SCREW-#10-16X12.7 PAN,THD CTG |
| 9 | CH6V-5210 | 4 | SCREW-PAN M4X0.7X10 CROSS |
| 10 | 400021X1 | 4 | BOLT-M5X0.8-6GX16MM ZN HHD |
| 11 | CH3T-0851 | 4 | NUT-LOCK M5X0.8 |
| 12 | CH217-5909 | 4 | SCREW-NO10-15X12.7 PAN THD CTG |

[A] PART OF 500647D1 LIGHTING GROUP-HID

500776DB
PR: t05i29k58b0104

## WORK LIGHT-HID
**500634D1 & 500635D1**

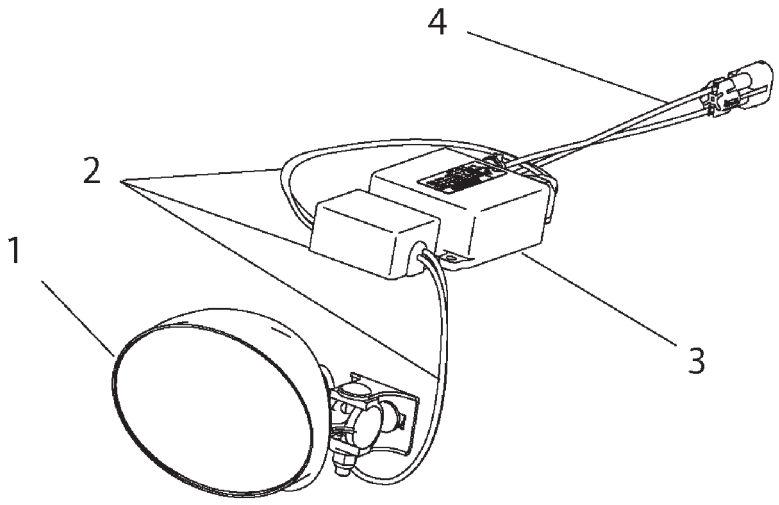


501634DA

## WORK LIGHT-HID
**500634D1 & 500635D1**

| ITEM | NUMBER | QTY | DESCRIPTION |
|---|---|---|---|
| - | 500634D1 | -- | WORK LIGHT-RH [A] (SHOWN) |
| - | 500635D1 | -- | WORK LIGHT-LH [A] (NOT SHOWN) |
| 1 | 500676D1 | 1 | WORK LIGHT (RH) (SHOWN) |
| | 500677D1 | 1 | WORK LIGHT (LH) (NOT SHOWN) |
| 2 | 500638D1 | 1 | HARNESS AS |
| 3 | 500637D1 | 1 | BALLAST AS.-HID |
| 4 | 500674D1 | 1 | HARNESS AS |

[A] PART OF 500647D1 LIGHTING GROUP-HID

500634DA
PR: t05i29k58b0105

## LIGHTING GP-SIGNAL - 12V
136-5665

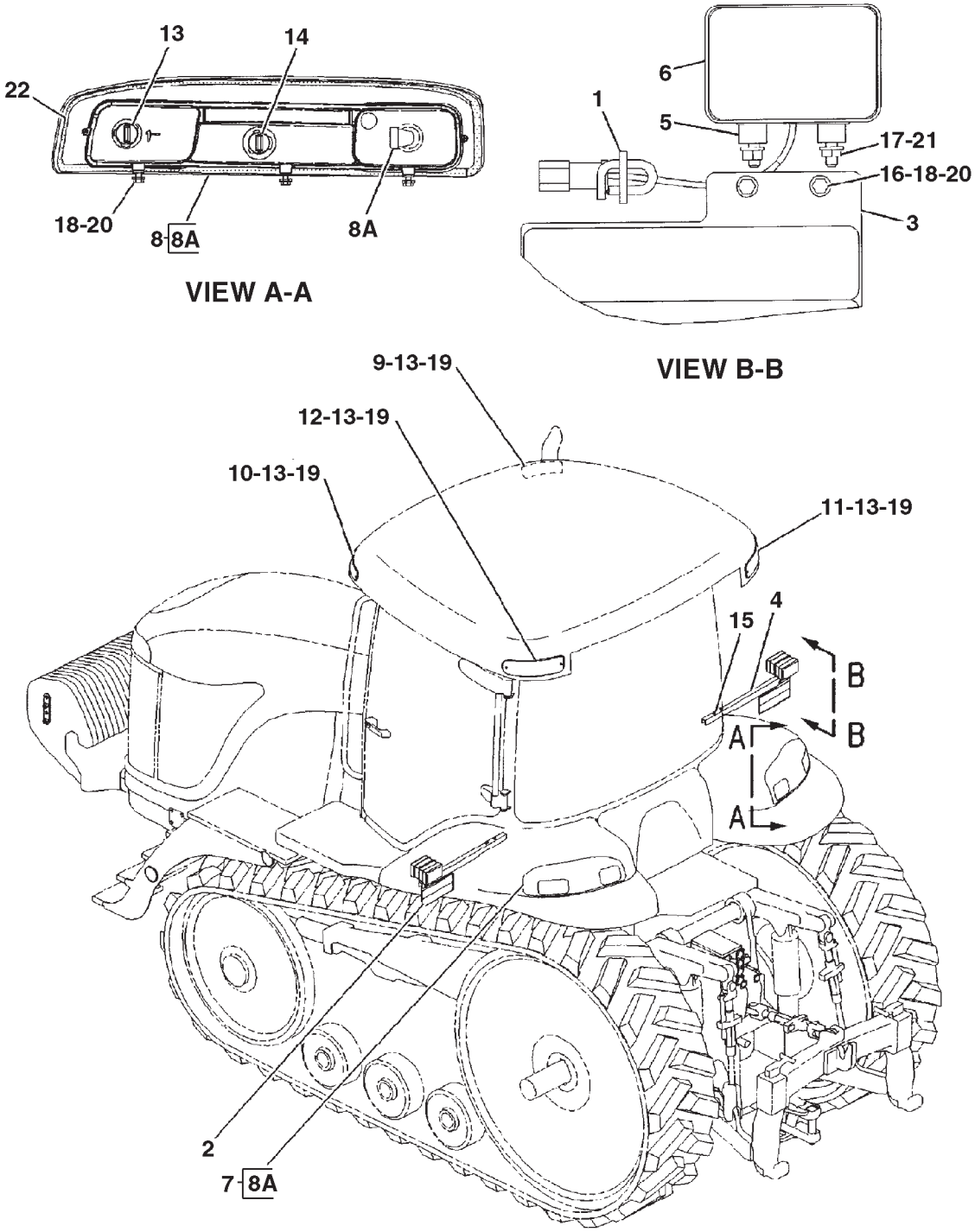


0886924A

## LIGHTING GP-SIGNAL - 12V
136-5665

| ITEM | NUMBER | QTY | DESCRIPTION |
|---|---|---|---|
| - | 136-5665 | -- | LIGHTING GP-SIGNAL [A] (NOT SERVICED) |
| 1 | CH7K-1181 | 2 | STRAP-CABLE |
| 2 | 136-5441 | 1 | PLATE ASM-LH (INCLUDES PLATE AND FILM) |
| | 192-5642 | 1 | FILM-RED |
| | 192-5643 | 1 | FILM-YELLOW |
| | 192-5644 | 1 | FILM-ORANGE |
| 3 | 136-5476 | 1 | PLATE ASM-RH (INCLUDES PLATE AND FILM) |
| | 192-5642 | 1 | FILM-RED |
| | 192-5643 | 1 | FILM-YELLOW |
| | 192-5644 | 1 | FILM-ORANGE |
| 4 | 142-9677 | 2 | EXTENSION ASM |
| | | | (INCLUDED LINK, NUT AND BRACKET) |
| | CH7T-1099 | 2 | LINK |
| | CH8T-3612 | 2 | NUT-WELD (M8X1.25) |
| 5 | CH148-7017 | 4 | SPACER (10.2X19.05X13) |
| 6 | 155-0027 | 2 | LAMP GP (TURN SIGNAL) |
| | | | (INCLUDES BODY-LAMP) |
| | | | (SERVICE REPAIR ORDER THE FOLLOWING 6A, 6B, 6C AND 6D) |
| 6A | 5M-8034 | 2 | LAMP (12 VOLT) (TURN SIGNAL) |
| 6B | 186-3735 | 2 | PIN-CONNECTOR |
| 6C | 102-8804 | 1 | KIT-RECEPTACLE (4 PIN) |
| | | | (INCLUDES RECEPTACLE ASM AND WEDGE) |
| | | | (SERVICED AS COMPLETE KIT ONLY) |
| 6D | 155-0029 | 2 | LENS (AMBER) (TURN SIGNAL) |
| 7 | 162-4091 | 1 | LAMP GP-SIGNAL (FENDER)(LH) |
| | | | (SERVICE REPAIR BULB ORDER 8A) |
| 8 | 162-4092 | 1 | LAMP GP-SIGNAL (FENDER)(RH) |
| | | | (SERVICE REPAIR BULB ORDER 8A) |
| 8A | 500678D1 | 1 | LAMP (12 VOLT)(50 WATT) (FENDER) |
| 9 | 162-6696 | 1 | LAMP (ROOF-FRONT RH) |
| 10 | 162-6697 | 1 | LAMP (ROOF-FRONT LH) |
| 11 | 162-6698 | 1 | LAMP (ROOF-REAR RH) |
| 12 | 162-6699 | 1 | LAMP (ROOF-REAR LH) |
| 13 | 171-9687 | 6 | LAMP (12 VOLT)(SINGLE FILAMENT) |
| 14 | 171-9688 | 2 | LAMP (12 VOLT)(DOUBLE FILAMENT) |
| 15 | 400300X1 | 4 | NUT (M6X1) |
| 16 | 400340X1 | 4 | NUT (M8X1.25) |
| 17 | CH188-9644 | 4 | SCREW-FLAT HEAD |
| 18 | 400152X1 | 10 | BOLT (M6X1X16MM) |
| 19 | CH8T-0337 | 8 | SCREW-MACHINE (M4X0.7X12MM) |
| 20 | CH8T-4205 | 14 | WASHER-HARD (7.2X14.5X2MM) |
| 21 | 400339X1 | 4 | WASHER-HARD (8.8X16X2) |
| 22 | CH200-6208 | AR | SEAL (9.5X4.7 ADH BACK) (274CM) |

[A] PART OF 179-1952 BASE COMMON AR

## LIGHTING GP-SIGNAL - 216-0806
EAME ONLY

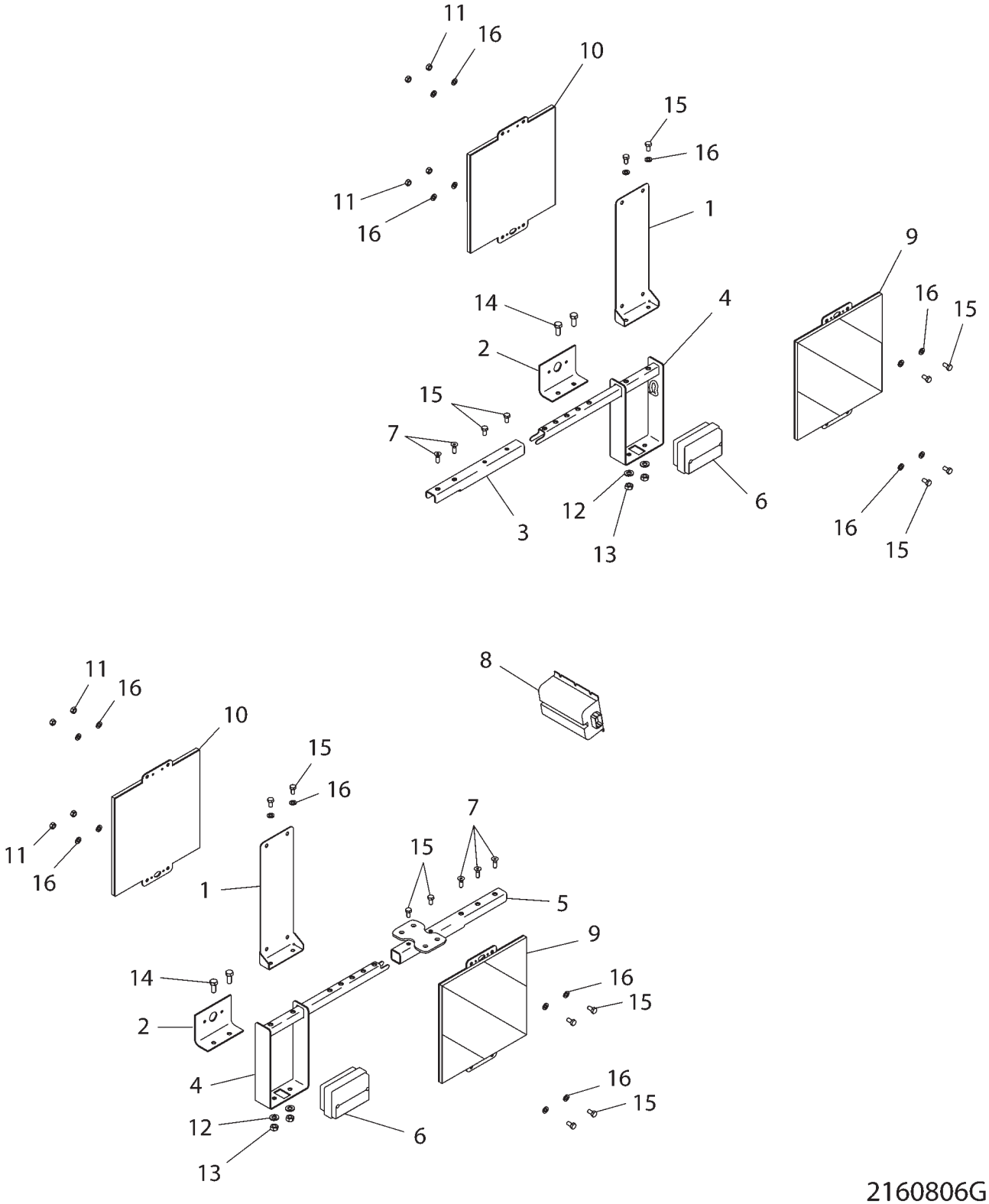

## LIGHTING GP-SIGNAL - 216-0806
**EAME ONLY**

| ITEM | NUMBER | QTY | DESCRIPTION |
|---|---|---|---|
| - | 216-0806 | -- | LIGHTING GP-SIGNAL |
| 1 | 206-7524 | 2 | BRACKET |
| 2 | 215-9109 | 2 | BRACKET |
| 3 | 216-0887 | 1 | TUBE-EXTENSION |
| 4 | 216-4353 | 2 | BRACKET AS. |
| 5 | 221-9201 | 1 | TUBE AS-EXTENSION |
| 6 | 155-0020 | 2 | LIGHT AS.-EXTREMITY |
| 7 | CH188-9644 | 4 | SCREW-M8X1.25X25MM FLAT HSHD |
| 8 | CH215-1382 | 1 | FLASHER-SOLID STATE-12 VDC |
| 9 | 500529D1 | 2 | PLATE-WARNING (EAME) |
| 10 | 500530D1 | 2 | PLATE-WARNING (EAME) |
| 11 | 400340X1 | 8 | NUT-M8X1.25X13 HEX ZND1 |
| 12 | 400287X1 | 4 | WASHER-HARD 11IDX21ODX2.5 ZND1 |
| 13 | WR522218 | 4 | NUT-M10-1.5,CL10.9,ZN,H,REG |
| 14 | 400039X1 | 4 | BOLT-M10X1.5X25 ZNDI HHD 10.9 |
| 15 | 400227X1 | 16 | BOLT-M8X1.25X16 ZNDI HHD 10.9 |
| 16 | 400339X1 | 20 | WASHER-HARD |

2160806G
PR: t05i29k58b0107

## LIGHTING GP-SIGNAL - 136-5429

**EAME ONLY**

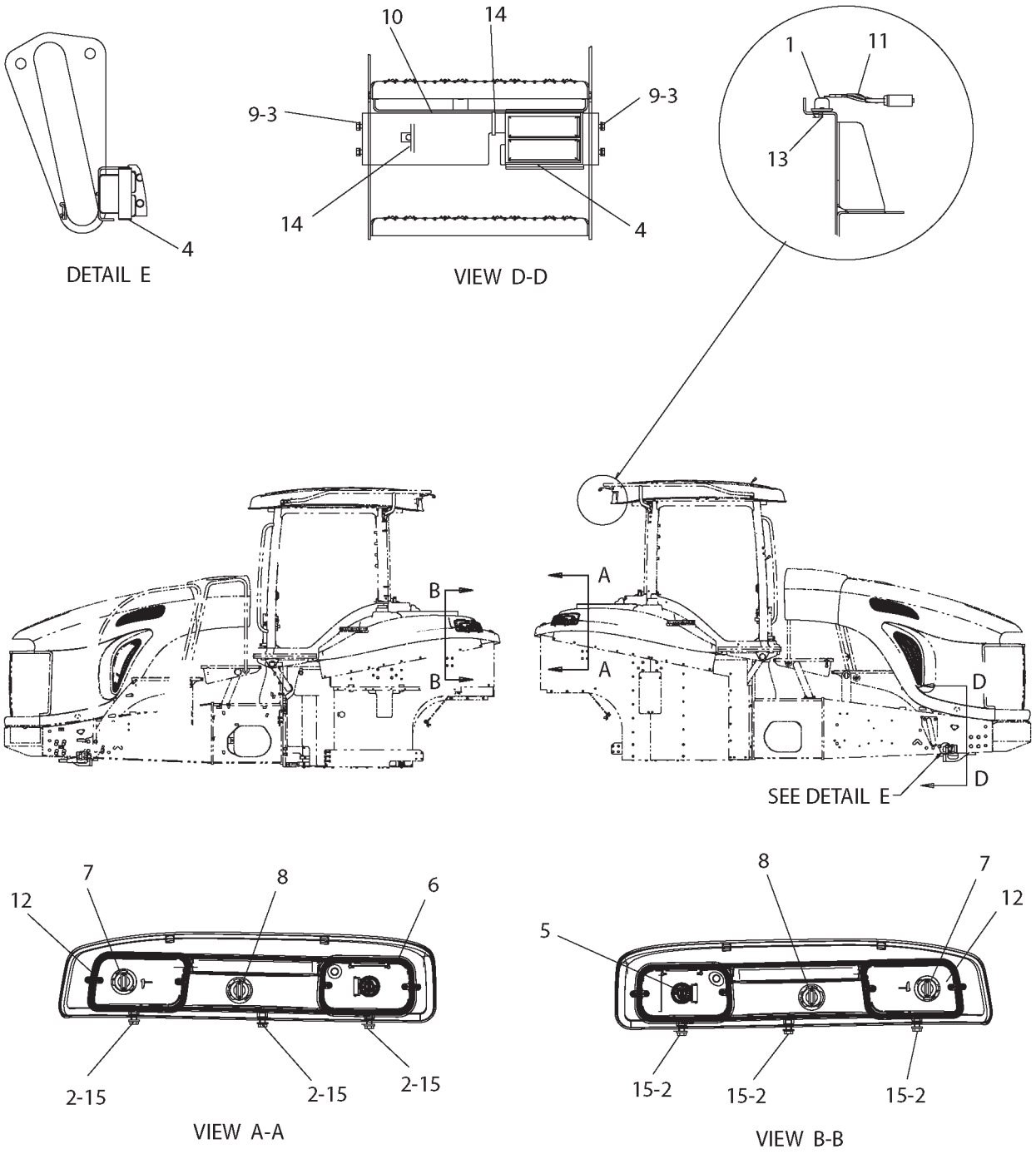


1365429A

## LIGHTING GP-SIGNAL - 136-5429
EAME ONLY

| ITEM | NUMBER | QTY | DESCRIPTION |
|---|---|---|---|
| - | 136-5429 | -- | LIGHTING GP-SIGNAL [A] (NOT SERVICED) |
| 1 | 222-9156 | 2 | LAMP AS |
| 2 | 400152X1 | 6 | BOLT-M6X1X16MM ZNDI HHD 10.9 |
| 3 | 400221X1 | 4 | BOLT-M6X1X20MM ZNDI HHD 10.9 |
| 4 | 155-0014 | 2 | LIGHT AS-EXTREMITY |
| 5 | 162-4091 | 1 | LAMP AS-FENDER (LH) |
| | 400864X1 | 1 | BULB (12V-50W) |
| 6 | 162-4092 | 1 | LAMP AS-FENDER (RH) |
| | 400864X1 | 1 | BULB (12V-50W) |
| 7 | 171-9687 | 2 | BULB-12V (S8) |
| 8 | 171-9688 | 2 | BULB-12V (S8) |
| 9 | 400310X1 | 4 | WASHER |
| 10 | 502072D1 | 1 | BRACKET AS |
| 11 | 502245D1 | 1 | HARNESS AS. |
| 12 | CH200-6208 | -- | SEAL BULK 9.5X4.7 ADH BACKING (274CM) |
| 13 | CH3S-9557 | 4 | SCREW-PAN 4-40 THD X12.7 CROSS |
| 14 | CH7K-1181 | 2 | STRAP-CABLE 0.19-4.00 |
| 15 | CH8T-4205 | 6 | WASHER-HARD 7.2IDX14.5ODX2MM |

[A] PART OF 179-2180 BASE COMMON AR

1365429A
PR: t05i29k58b0108

## LIGHTING GP-WARNING - 216-9823

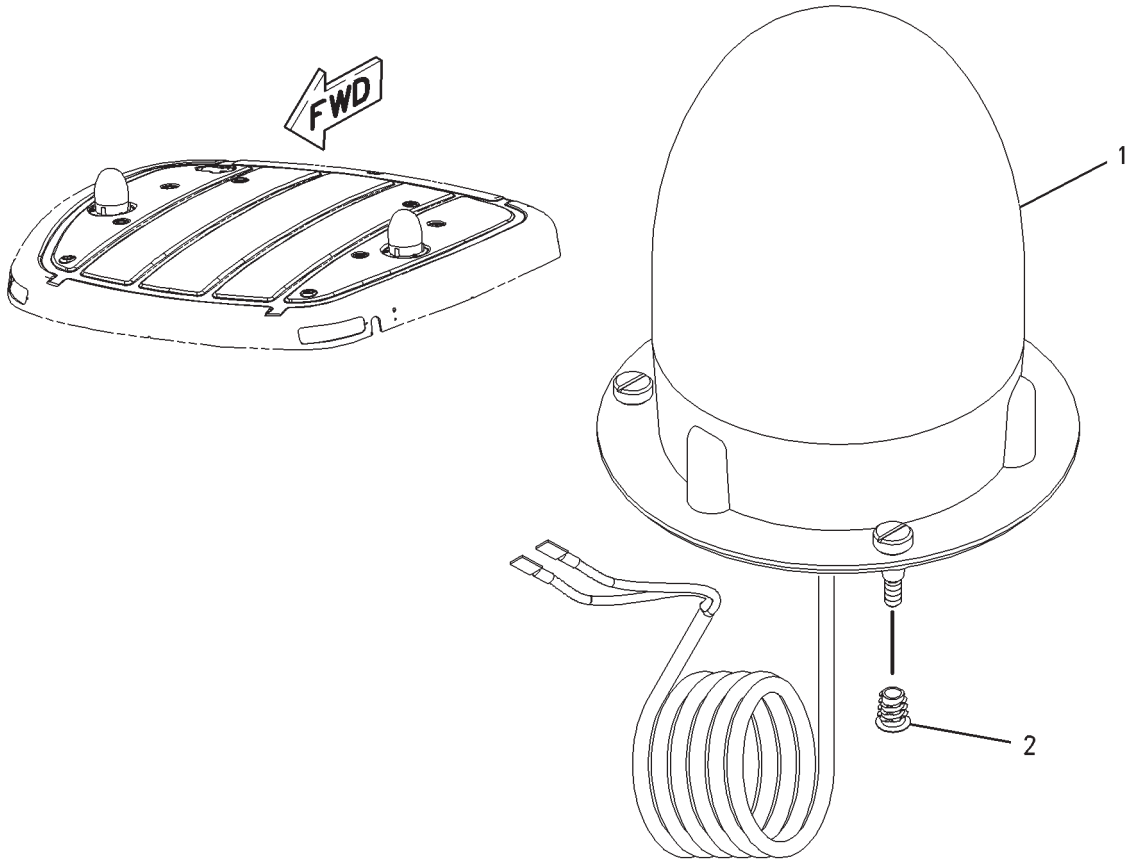


00891621

## LIGHTING GP-WARNING - 216-9823

| ITEM | NUMBER | QTY | DESCRIPTION |
|---|---|---|---|
| - | 502765D1 | -- | LIGHTING GP-WARNING (FIELD KIT) |
| - | 502773D1 | -- | LIGHTING GP-WARNING (FACTORY OPT)<br>(NOT SERVICED, ORDER FIELD INSTAL'D) |
| - | 216-9823 | -- | LIGHTING GP-WARN'G [A] (ORDER FIELD KIT) |
| 1 | 162-4101 | 1 | LIGHTING GP-WARNING<br>(SEE BREAKDOWN FOR COMPONENTS) |
| 2 | CH216-7617 | 6 | INSERT |

[A] PART OF 502765D1 LIGHTING GP-WARN.

00891621
PR: t05i29k58b0109

## LIGHTING GP-WARNING - 12V
**162-4101**

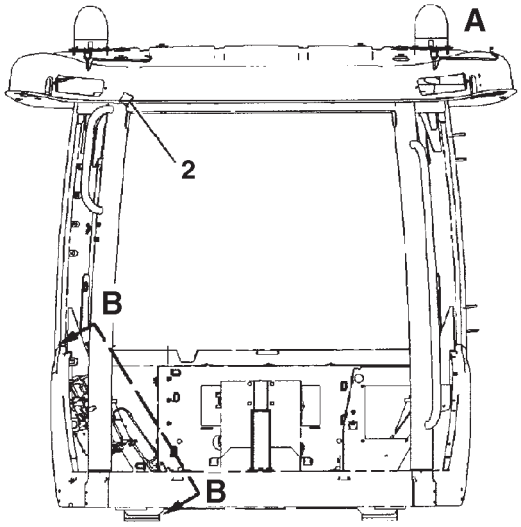


FRONT VIEW

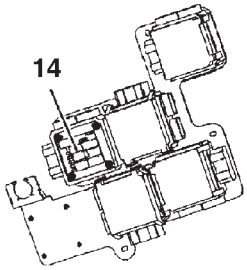


VIEW B-B

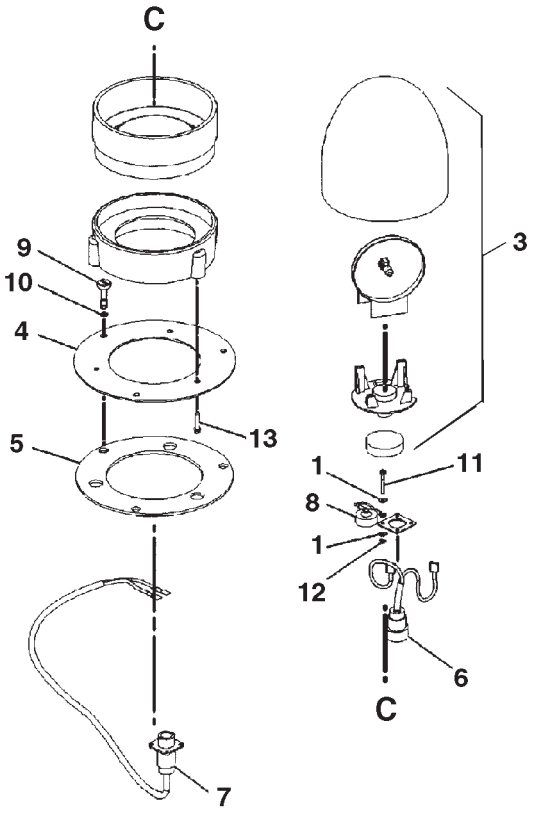


VIEW OF AREA A

0842107A

## LIGHTING GP-WARNING - 12V
**162-4101**

| ITEM | NUMBER | QTY | DESCRIPTION |
|---|---|---|---|
| - | 162-4101 | -- | LIGHTING GP-WARNING [A] (NOT SERVICED) |
| 1 | CH4I-3038 | 16 | WASHER (3.3X8X0.5) |
| 2 | 169-8223 | 1 | SWITCH-ROCKER (BEACON) |
| 3 | CH196-7341 | 2 | LAMP GP-WARNING BEACON |
| | CH136-5254 | 1 | LENS (ROTATING BEACON) (AMBER) |
| | CH9X-8118 | 1 | LAMP (12 VOLT) |
| 4 | 201-0486 | 2 | PLATE |
| 5 | 201-0487 | 2 | GASKET |
| 6 | 502190D1 | 2 | HARNESS ASM (BEACON) |
| 7 | 502179D1 | 2 | HARNESS ASM |
| 8 | 400753X1 | 2 | CAP-SEALING |
| 9 | CH201-9691 | 6 | SCREW (M6X1X26MM) |
| 10 | CH201-9692 | 6 | RETAINER |
| 11 | 400139X1 | 8 | BOLT-SOCKET HEAD (M3X0.5X25MM) |
| 12 | CH3C-6969 | 8 | NUT (M3X0.5) |
| 13 | CH6V-8548 | 6 | SCREW-WASHER HEAD (8-32X.85 IN) |
| 14 | CH146-9439 | 1 | RELAY (12 VOLT) |

[A] PART OF 216-9823 LIGHTING GP-WARNING

0842107A
PR: t05i29k58b0110

## LIGHTING GP-ROAD (LH TRAFFIC)

**168-6580**
**FIELD INSTALLED**
**EAME ONLY**

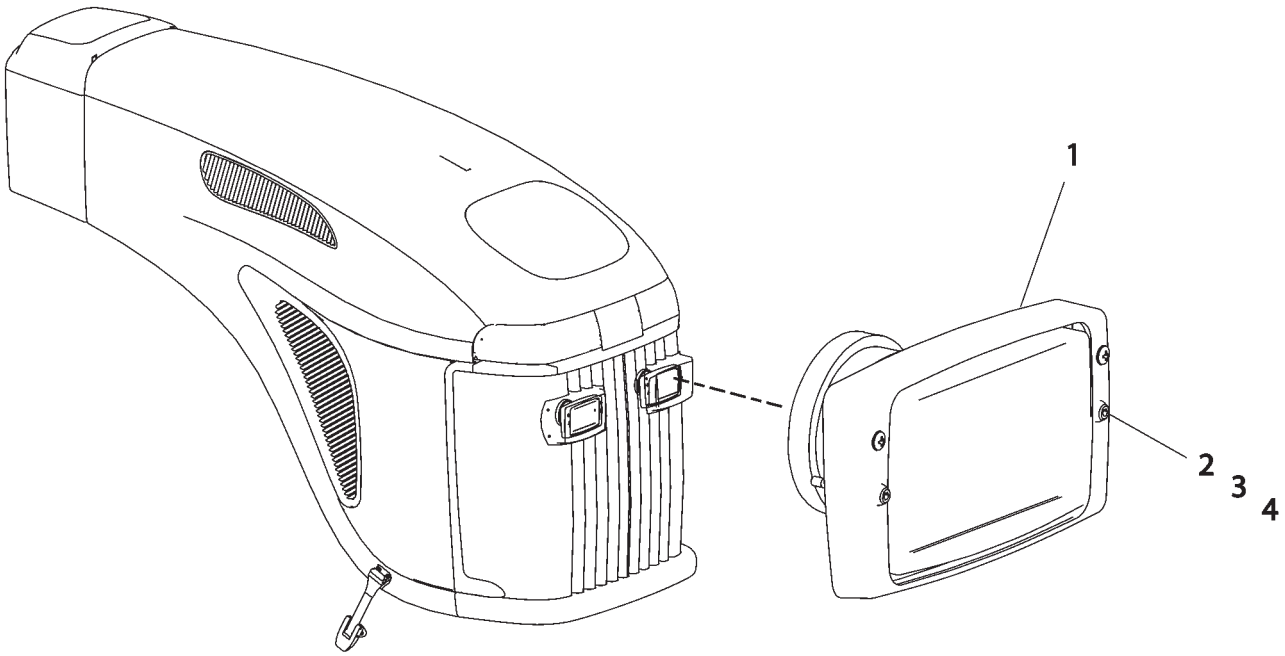


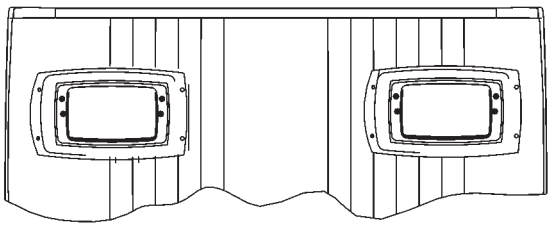

**ALTERNATE CONFIGURATION**
**(T955, T956, T957, T958)**

1686580F

## LIGHTING GP-ROAD (LH TRAFFIC)
**168-6580**
**FIELD INSTALLED**
**EAME ONLY**

| ITEM | NUMBER | QTY | DESCRIPTION |
|---|---|---|---|
| - | 168-6580 | -- | LIGHTING GP-ROADING (LH TRAFFIC) [A] |
| 1 | 155-0042 | 2 | LAMP GP-HEAD |
| | CH8I-4256 | 1 | BULB-HEADLAMP (12V-60W) |
| | CH121-9755 | 2 | WASHER-SOFT (4.3IDX8ODX0.5) |
| | CH121-9754 | 1 | CAP |
| | CH121-9753 | 2 | WASHER-SOFT (4.3IDX9ODX0.5) |
| 2 | 400132X1 | 4 | BOLT (M4X0.7X30MM) |
| 3 | CH8C-9660 | 4 | WASHER (4.6IDX7.9ODX0.8) |
| 4 | CH8T-2659 | 4 | NUT (M4X0.7-6H THD SELF LOCK) |

[A] KIT INSTALLED IN EUROPE ONLY

1686580F
PR: t05i29k58b0111

## LIGHTING GP-ROAD (RH TRAFFIC)

**168-6581**
**FIELD INSTALLED**
**EAME ONLY**

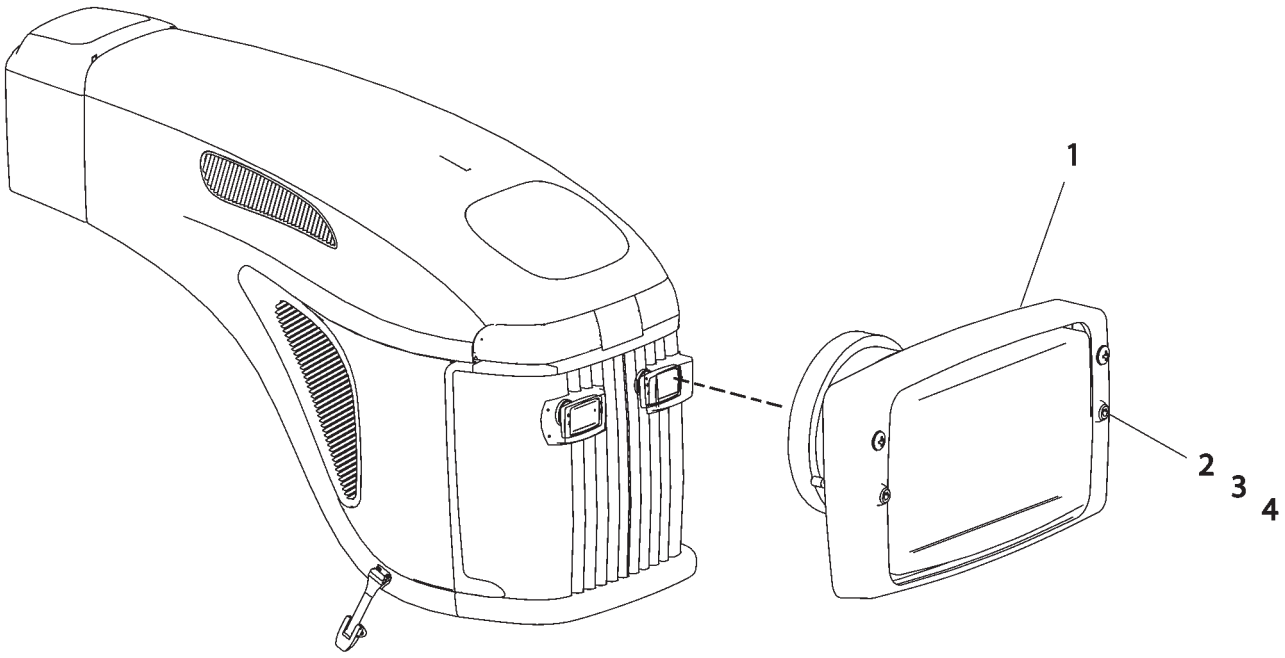


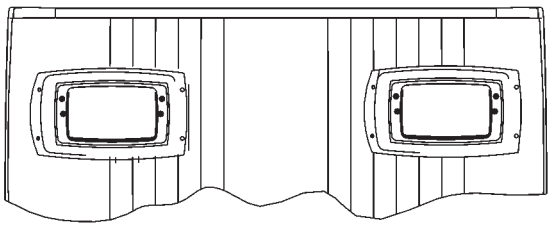

**ALTERNATE CONFIGURATION**
**(T955, T956, T957, T958)**

1686580F

## LIGHTING GP-ROAD (RH TRAFFIC)
**168-6581**
**FIELD INSTALLED**
**EAME ONLY**

| ITEM | NUMBER | QTY | DESCRIPTION |
|---|---|---|---|
| - | 168-6581 | -- | LIGHTING GP-ROADING (LH TRAFFIC) [A] |
| 1 | 155-0043 | 2 | LAMP GP-HEAD |
| | CH8I-4256 | 1 | BULB-HEADLAMP (12V-60W) |
| | CH121-9755 | 2 | WASHER-SOFT (4.3IDX8ODX0.5) |
| | CH121-9754 | 1 | CAP |
| | CH121-9753 | 2 | WASHER-SOFT (4.3IDX9ODX0.5) |
| 2 | 400132X1 | 4 | BOLT (M4X0.7X30MM) |
| 3 | CH8C-9660 | 4 | WASHER (4.6IDX7.9ODX0.8) |
| 4 | CH8T-2659 | 4 | NUT (M4X0.7-6H THD SELF LOCK) |

[A] KIT INSTALLED IN EUROPE ONLY

1686580F
PR: t05i29k58b0112

## CONTROL GP-ELECTRONIC
**501033D1**

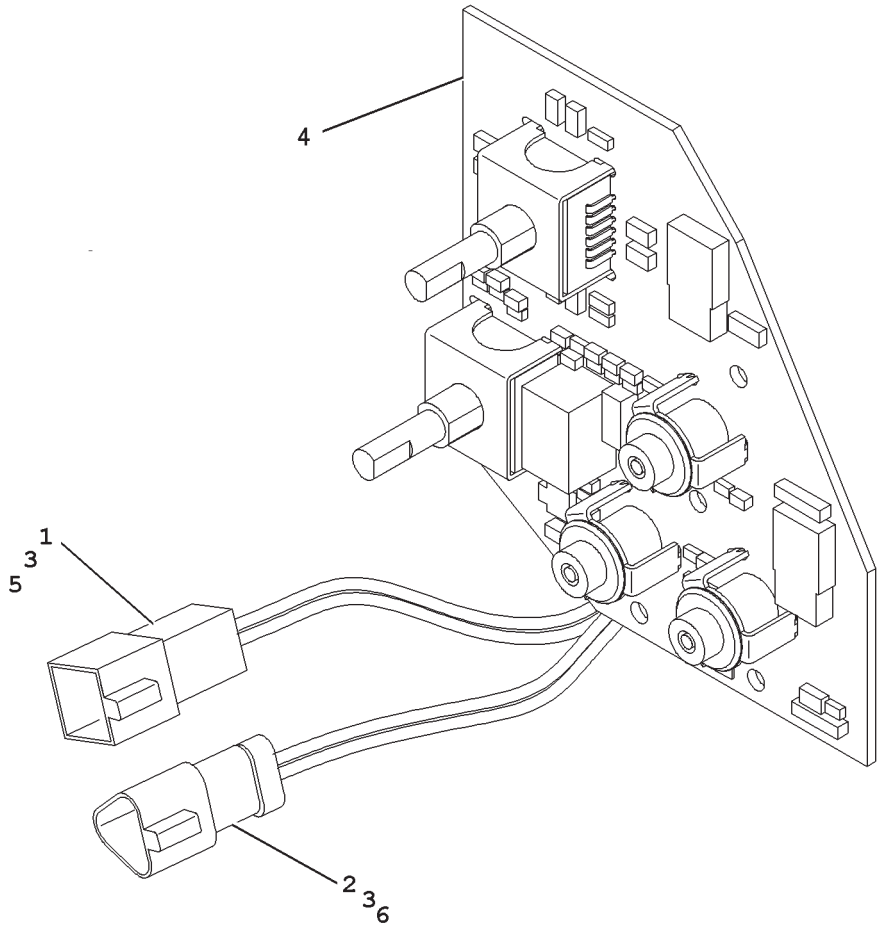


00759685

## CONTROL GP-ELECTRONIC
**501033D1**

| ITEM | NUMBER | QTY | DESCRIPTION |
|---|---|---|---|
| - | 501033D1 | -- | CONTROL GP-ELECTRONIC [A] |
| 1 | 400511X1 | 1 | WEDGE-RECEPTACLE LOCK (2 PIN) |
| 2 | 400717X1 | 1 | WEDGE-RECEPTACLE LOCK (3 PIN) |
| 3 | 400562X1 | 5 | PIN-CONNECTOR |
| 4 | ----- | 1 | CONTROL ASM-ELECTRONIC [B] |
| 5 | CH3E-3363 | 1 | RECEPTACLE (2 PIN) |
| 6 | CH3E-3369 | 1 | RECEPTACLE (3 PIN) |

[A] PART OF 136-5477;166-1211
WIRING GP-CONSOLE
[B] NOT SERVICED SEPARATELY

00759685
PR: t05i29k58b0113

## MOUNTING GP-BATTERY - 142-9760
**3 BATTERIES**

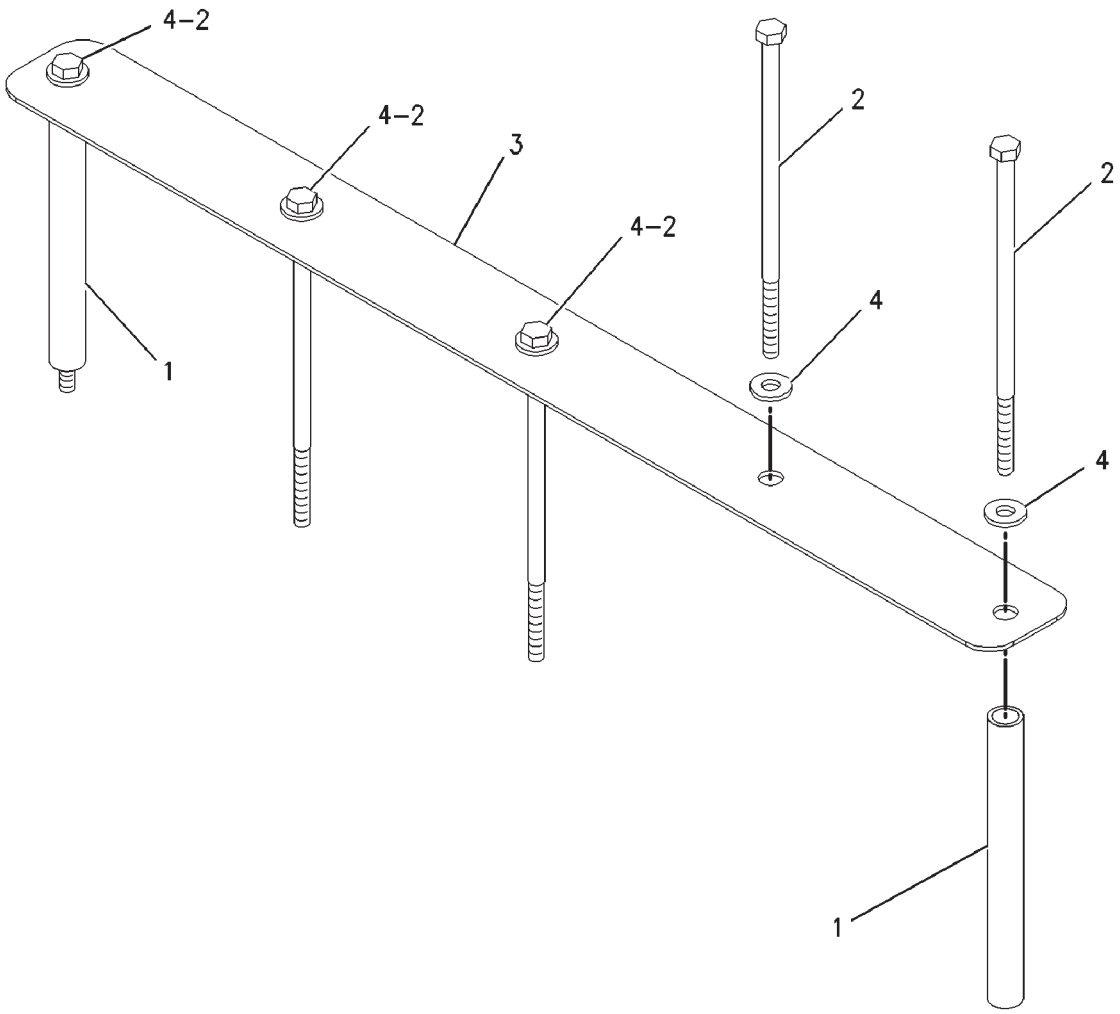


00837389

## MOUNTING GP-BATTERY - 142-9760
### 3 BATTERIES

| ITEM | NUMBER | QTY | DESCRIPTION |
|---|---|---|---|
| - | 142-9760 | -- | MOUNTING GP-BATTERY [A] (NOT SERVICED) |
| 1 | CH149-2758 | 2 | SPACER (15.9X21.4X204.22) |
| 2 | 400005X1 | 4 | BOLT-HEX HEAD (M10X1.5X230MM) |
| 3 | 192-4158 | 1 | PLATE |
| 4 | CH7X-7729 | 4 | WASHER (11X25X3) |

[A] PART OF 136-5658; 136-5659
BATTERY & WIRING GP

00837389
PR: t05i29k58b0114

## MOUNTING GP-BATTERY - 142-9739
**4 BATTERIES**

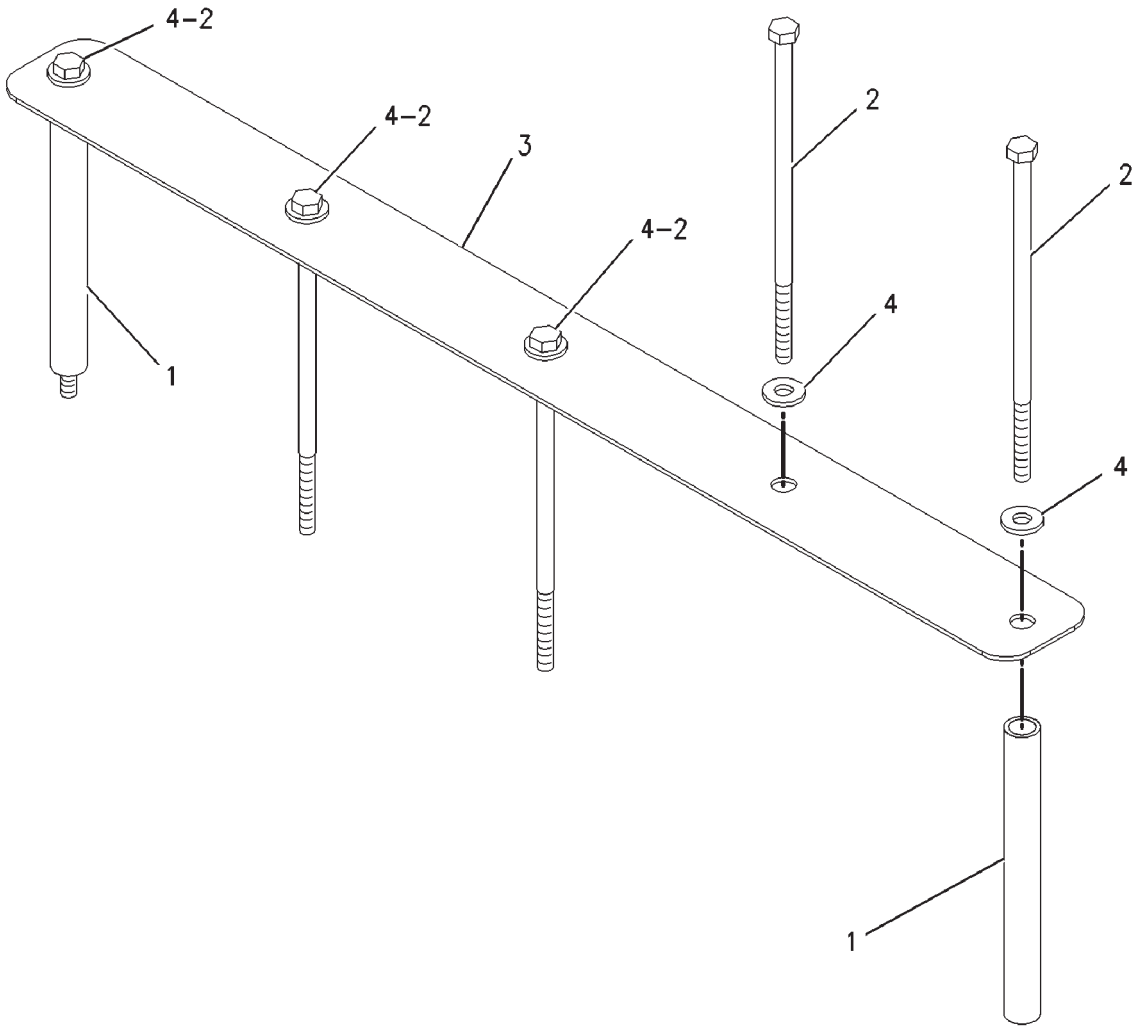


00837360

## MOUNTING GP-BATTERY - 142-9739
### 4 BATTERIES

| ITEM | NUMBER | QTY | DESCRIPTION |
|---|---|---|---|
| - | 142-9739 | -- | MOUNTING GP-BATTERY [A] (NOT SERVICED) |
| 1 | CH149-2758 | 2 | SPACER (15.9X21.4X204.22) |
| 2 | 400005X1 | 5 | BOLT-HEX HEAD (M10X1.5X230MM) |
| 3 | 189-5477 | 1 | PLATE |
| 4 | CH7X-7729 | 5 | WASHER (11X25X3) |

[A] PART OF 136-5662; 136-5663 BATTERY & WIRING GP

00837360
PR: t05i29k58b0115

**FUSE GP - 169-6380**

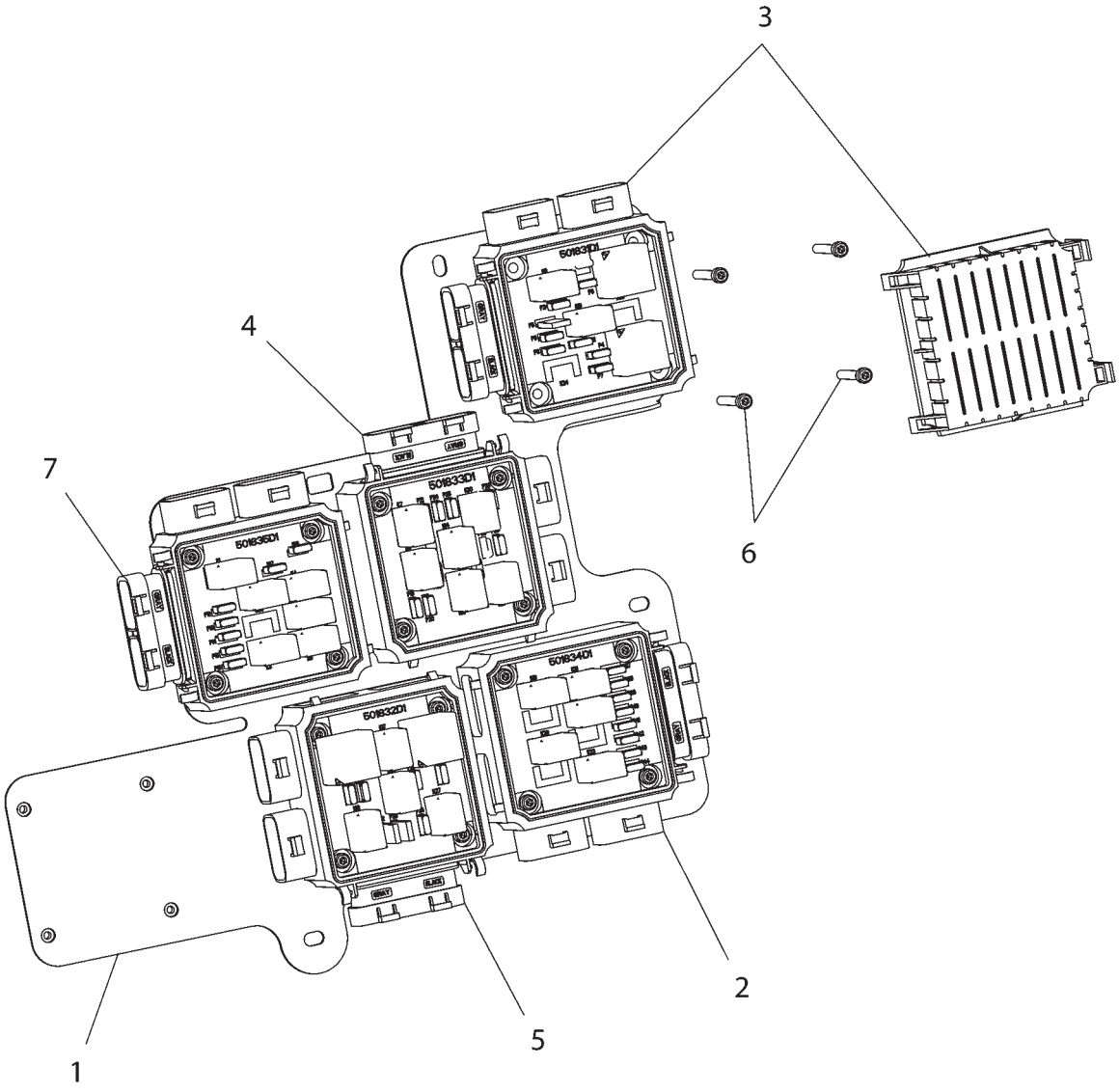


1726841J

## FUSE GP - 169-6380

| ITEM | NUMBER | QTY | DESCRIPTION |
|---|---|---|---|
| - | 169-6380 | -- | PANEL GP-FUSE (NOT SERVICED) [A] |
| 1 | 501887D1 | 1 | PLATE AS |
| | CH8T-8874 | 20 | NUT-WELD (M5X0.8 THD) |
| 2 | 501834D1 | 1 | BLOCK AS-FUSE (SEE BREAKDOWN FOR COMPONENTS) |
| 3 | 501830D1 | 1 | BLOCK AS-FUSE (SEE BREAKDOWN FOR COMPONENTS) |
| 4 | 501833D1 | 1 | BLOCK AS-FUSE (SEE BREAKDOWN FOR COMPONENTS) |
| 5 | 501832D1 | 1 | BLOCK AS-FUSE (SEE BREAKDOWN FOR COMPONENTS) |
| 6 | 400208X1 | 20 | BOLT-SOCKET HEAD (M5X0.8X40MM) |
| 7 | 501835D1 | 1 | BLOCK AS-FUSE (SEE BREAKDOWN FOR COMPONENTS) |

[A] PART OF 152-0420 WIRING GP-CAB

## FUSE GP-CLAAS - 172-6841

**EAME ONLY**

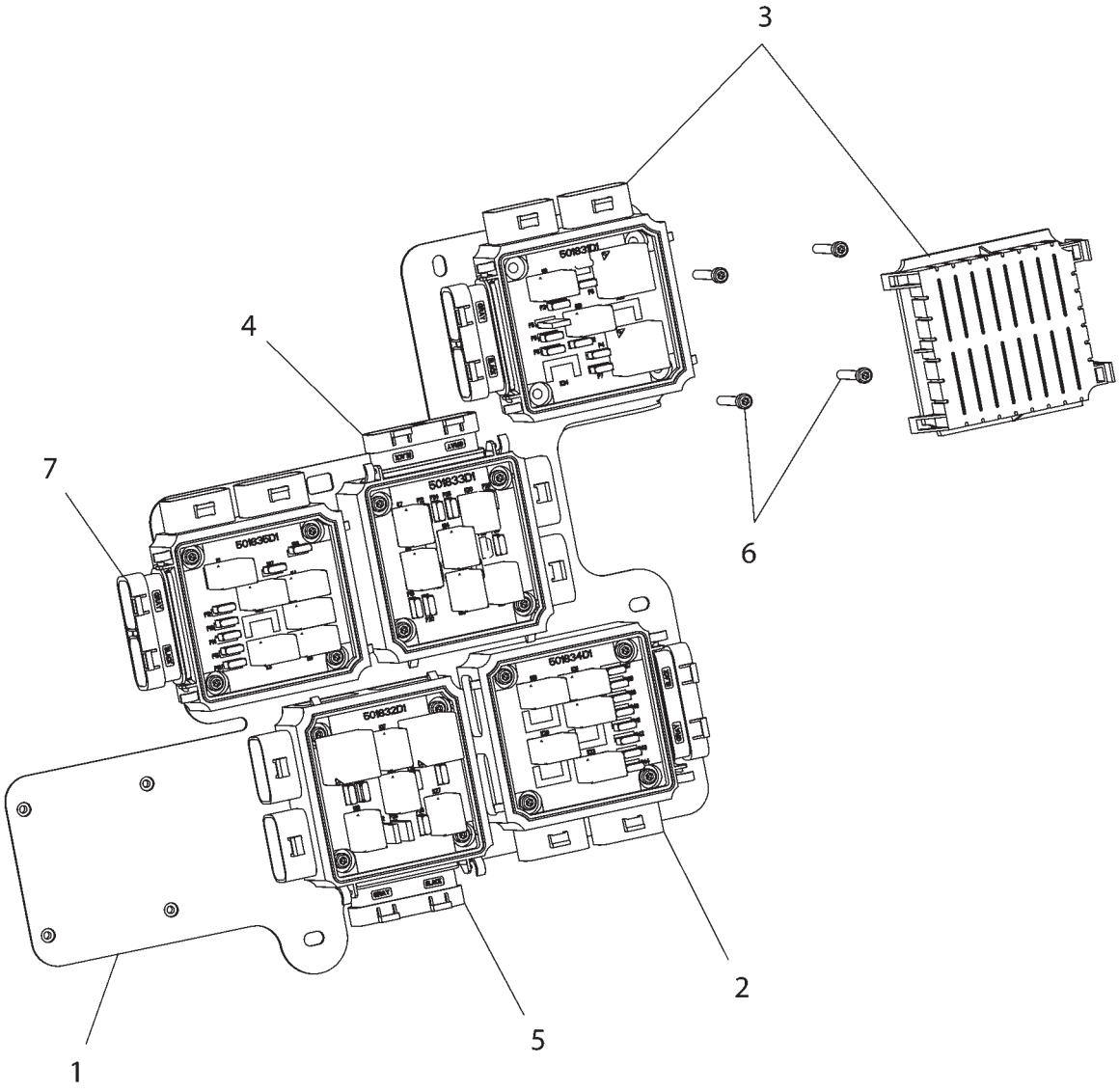


1726841J

## FUSE GP-CLAAS - 172-6841
EAME ONLY

| ITEM | NUMBER | QTY | DESCRIPTION |
|---|---|---|---|
| - | 172-6841 | -- | PANEL GP-FUSE [A] |
| 1 | 501887D1 | 1 | PLATE AS |
| | CH8T-8874 | 20 | NUT-WELD (M5X0.8 THD) |
| 2 | 501834D1 | 1 | BLOCK AS-FUSE (SEE BREAKDOWN FOR COMPONENTS) |
| 3 | 501831D1 | 1 | BLOCK AS-FUSE (SEE BREAKDOWN (SEE BREAKDOWN FOR COMPONENTS) |
| 4 | 501833D1 | 1 | BLOCK AS-FUSE (SEE BREAKDOWN FOR COMPONENTS) |
| 5 | 501832D1 | 1 | BLOCK AS-FUSE (SEE BREAKDOWN FOR COMPONENTS) |
| 6 | 400208X1 | 20 | BOLT-SOCKET HEAD (M5X0.8X40MM) |
| 7 | 501835D1 | 1 | BLOCK AS-FUSE (SEE BREAKDOWN FOR COMPONENTS) |

[A] PART OF 152-0005 WIRING GP-CAB

1726841J
PR: t05i29k58b0117

**BLOCK AS-FUSE - 501829D1**

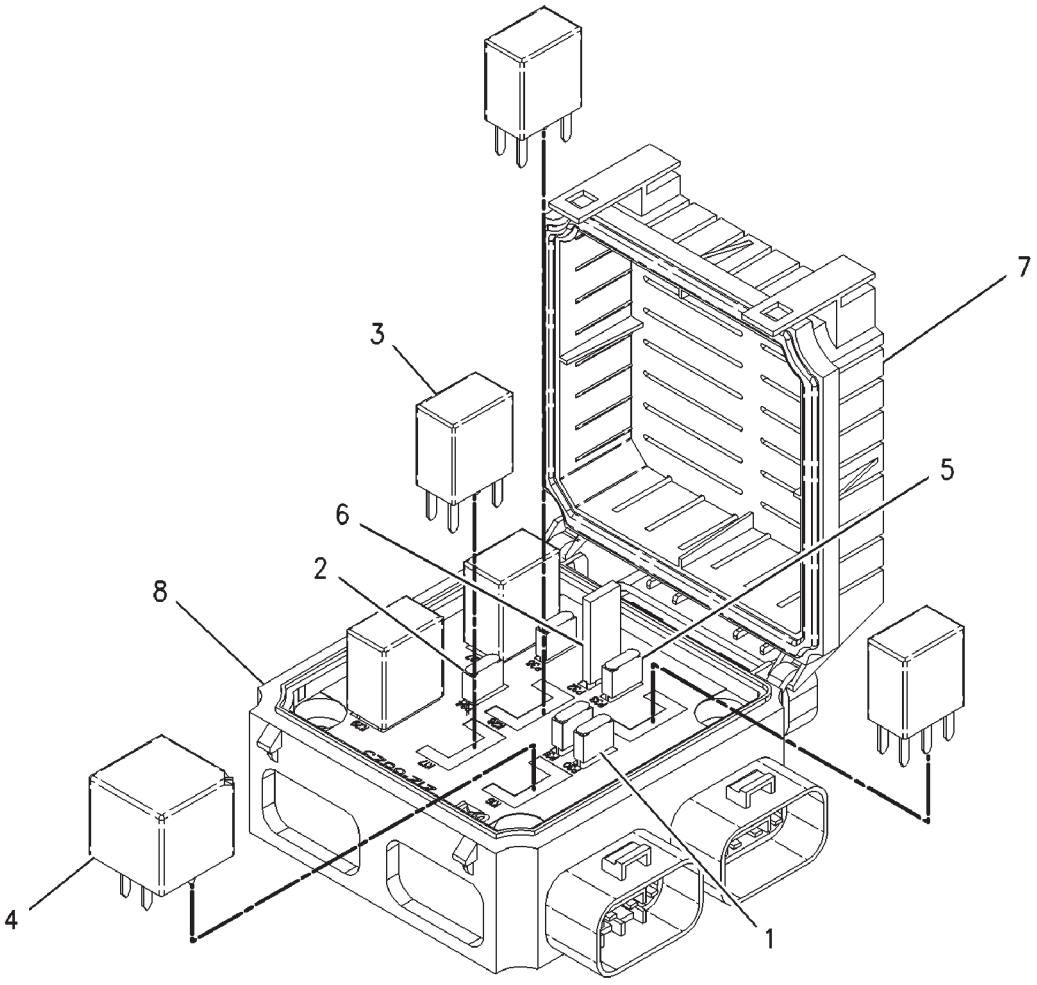


**00878049**

## BLOCK AS-FUSE - 501829D1

| ITEM | NUMBER | QTY | DESCRIPTION |
|---|---|---|---|
| - | 501829D1 | -- | BLOCK ASY-FUSE (COMPLETE) [A] |
| 1 | CH113-8490 | 2 | FUSE (10 AMP) |
| 2 | CH113-8491 | 2 | FUSE (15 AMP) |
| 3 | CH146-9439 | 5 | RELAY (12 VOLT) |
| 4 | CH170-2237 | 1 | RELAY (12 VOLT) |
| 5 | CH113-8492 | 1 | FUSE (20 AMP) |
| 6 | CH124-3548 | 1 | FUSE (30 AMP) |
| 7 | 501836D1 | 1 | COVER |
| 8 | 501841D1 | 1 | BLOCK-FUSE |

[A] PART OF 216-0852 CONTROL AR-
COMMUNICATION

00878049
PR: t05i29k58b0118

## BLOCK AS-FUSE
**501830D1**

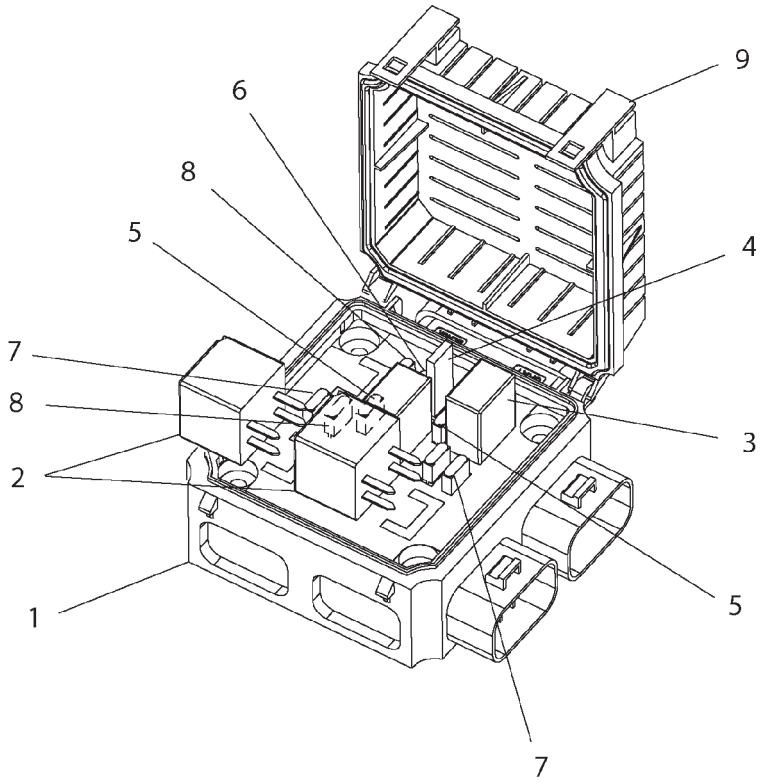


501830DA

## BLOCK AS-FUSE
**501830D1**

| ITEM | NUMBER | QTY | DESCRIPTION |
|---|---|---|---|
| - | 501830D1 | -- | BLOCK AS-FUSE [A] |
| 1 | 501837D1 | 1 | BLOCK-FUSE |
| 2 | CH170-2237 | 2 | RELAY AS (12V) |
| 3 | CH146-9439 | 2 | RELAY AS (12V) |
| 4 | CH180-0613 | 1 | BREAKER AS-CIRCUIT (30A) |
| 5 | CH113-8490 | 3 | FUSE (10A) |
| 6 | CH113-8491 | 1 | FUSE (15A) |
| 7 | CH124-3548 | 2 | FUSE (30A) |
| 8 | CH113-8492 | 2 | FUSE (20A) |
| 9 | 501836D1 | 1 | COVER-FUSE BLOCK |

[A] PART OF 169-6380 FUSE GP

501830DA
PR: t05i29k58b0119

## BLOCK AS-FUSE
**501831D1**

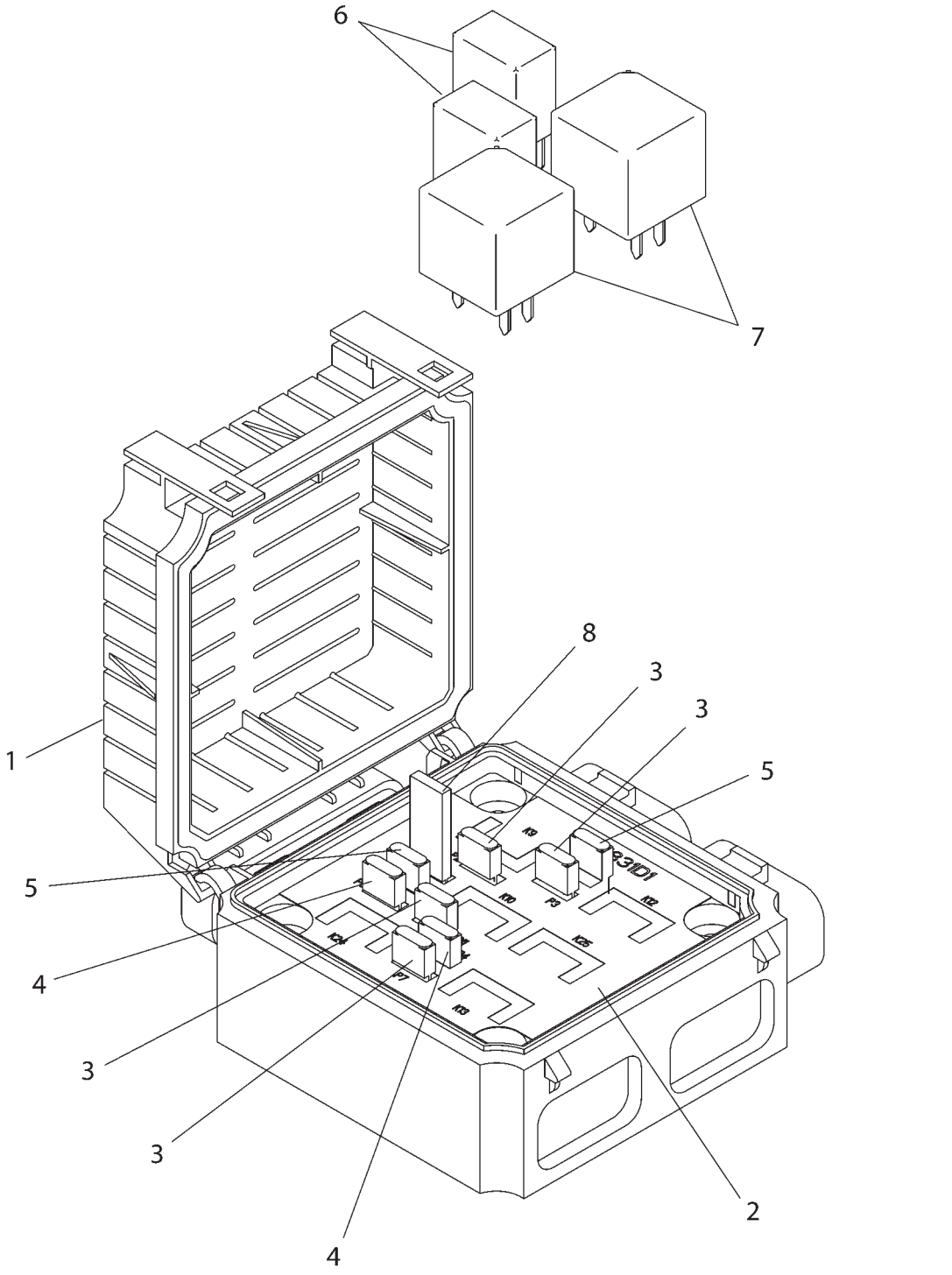

## BLOCK AS-FUSE
501831D1

| ITEM | NUMBER | QTY | DESCRIPTION |
|---|---|---|---|
| - | 501831D1 | -- | BLOCK AS-FUSE [A] |
| 1 | 501836D1 | 1 | COVER |
| 2 | 501840D1 | 1 | BLOCK-FUSE |
| 3 | CH113-8490 | 4 | FUSE (10A) |
| 4 | CH113-8492 | 2 | FUSE (20A) |
| 5 | CH124-3548 | 2 | FUSE (30A) |
| 6 | CH146-9439 | 2 | RELAY AS (12V) |
| 7 | CH170-2237 | 2 | RELAY AS (12V) |
| 8 | CH180-0613 | 1 | BREAKER AS-CIRCUIT (30A) |

[A] PART OF 172-6841 FUSE GP

501831DC
PR: t05i29k58b0120

## BLOCK AS-FUSE
**501832D1**

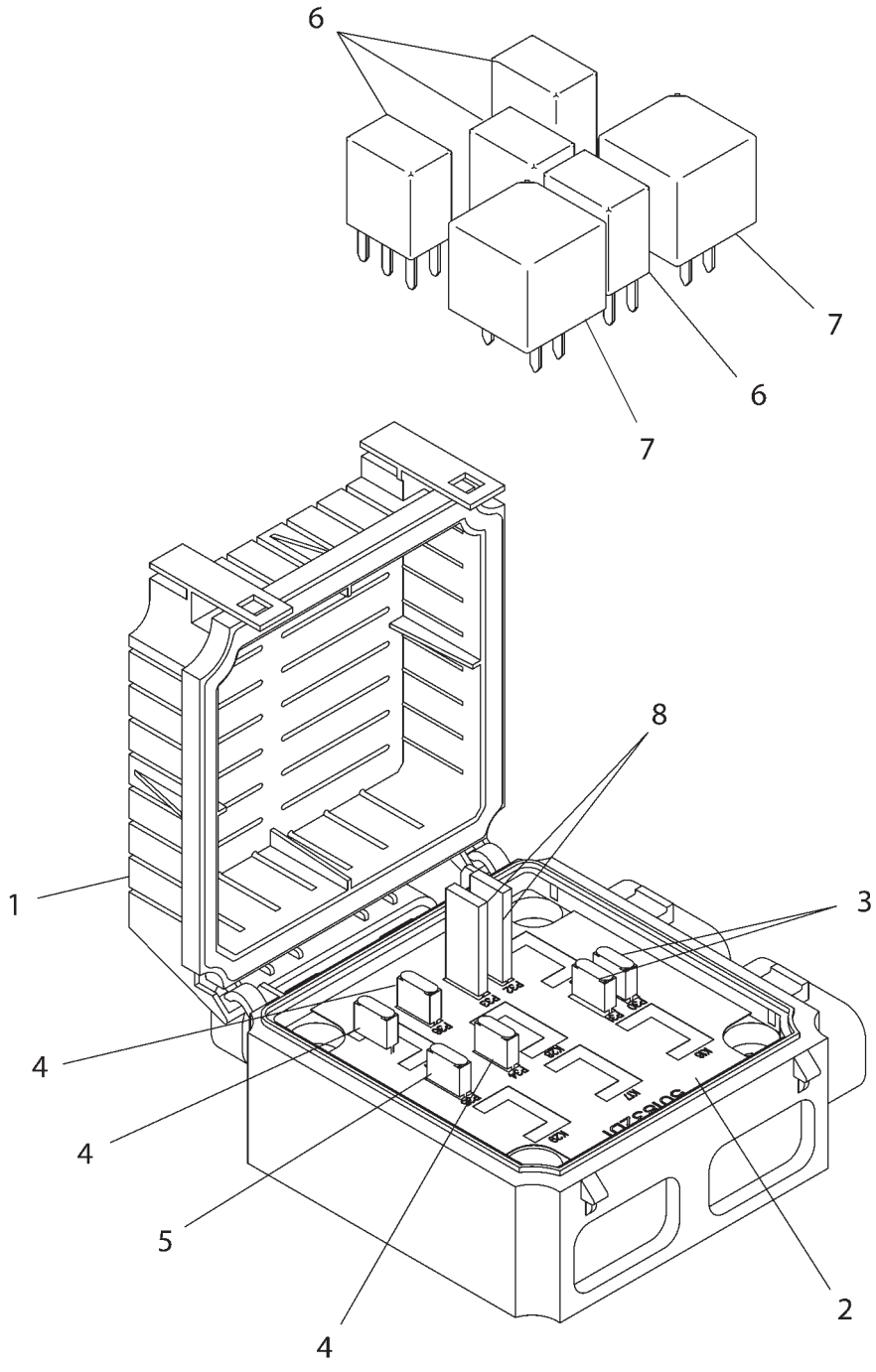

## BLOCK AS-FUSE
**501832D1**

| ITEM | NUMBER | QTY | DESCRIPTION |
|---|---|---|---|
| - | 501832D1 | -- | BLOCK AS-FUSE [A] |
| 1 | 501836D1 | 1 | COVER |
| 2 | 501877D1 | 1 | BLOCK-FUSE |
| 3 | CH113-8490 | 2 | FUSE (10A) |
| 4 | CH113-8491 | 3 | FUSE (15A) |
| 5 | CH124-3548 | 1 | FUSE (30A) |
| 6 | CH146-9439 | 4 | RELAY AS (12V) |
| 7 | CH170-2237 | 2 | RELAY AS (12V) |
| 8 | CH180-0613 | 2 | BREAKER AS-CIRCUIT (30A) |

[A] PART OF 172-6841 FUSE GP

501832DC
PR: t05i29k58b0121

## BLOCK AS-FUSE
**501833D1**

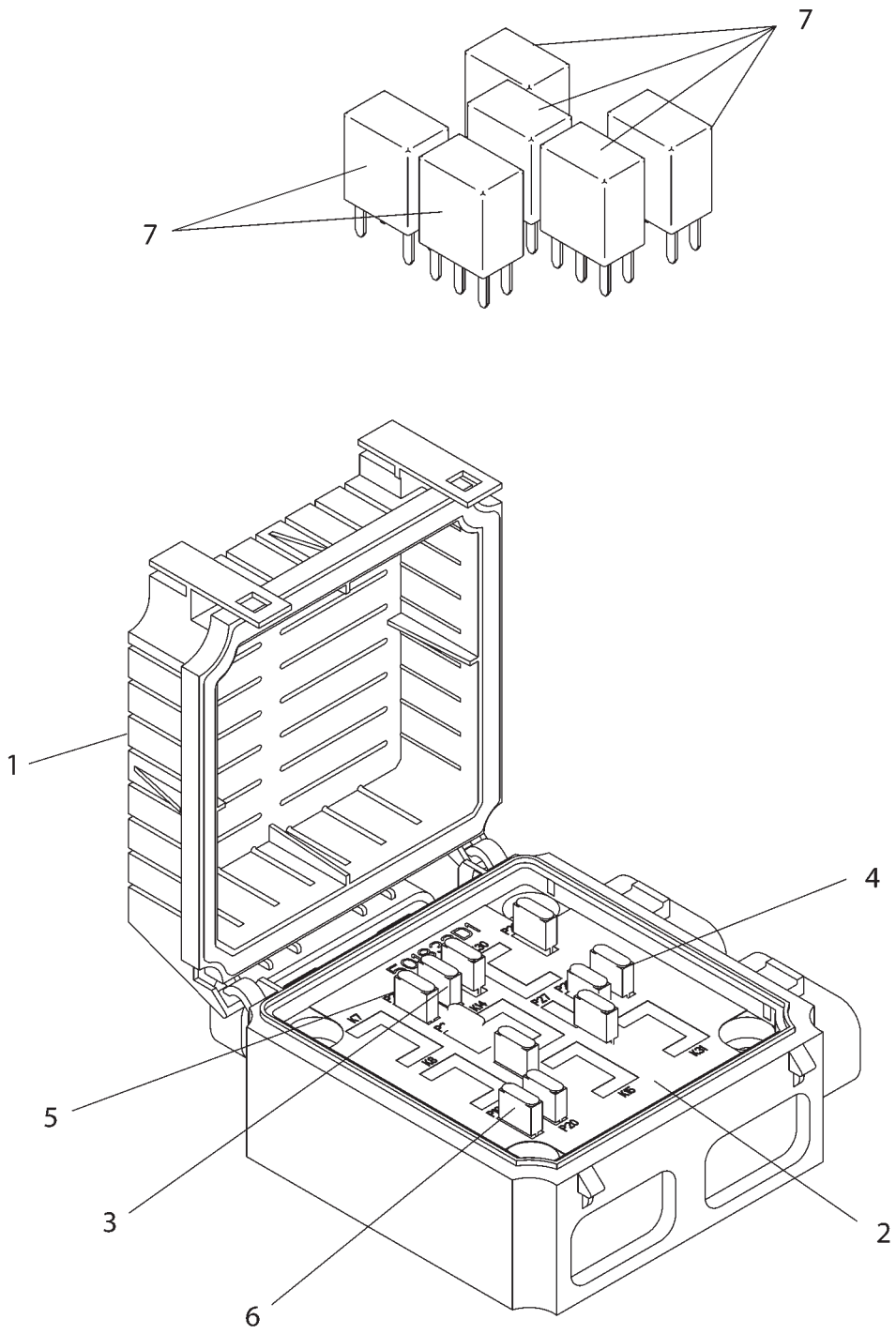

## BLOCK AS-FUSE
**501833D1**

| ITEM | NUMBER | QTY | DESCRIPTION |
|---|---|---|---|
| - | 501833D1 | -- | BLOCK AS-FUSE [A] |
| 1 | 501836D1 | 1 | COVER |
| 2 | 501838D1 | 1 | BLOCK-FUSE |
| 3 | CH113-8490 | 3 | FUSE (10V) |
| 4 | CH113-8491 | 4 | FUSE (15A) |
| 5 | CH124-3548 | 2 | FUSE (30A) |
| 6 | CH141-2759 | 2 | FUSE (5A) |
| 7 | CH146-9439 | 6 | RELAY AS (12V) |

[A] PART OF 172-6841 FUSE GP

501833DC
PR: t05i29k58b0122

## BLOCK AS-FUSE
**501834D1**

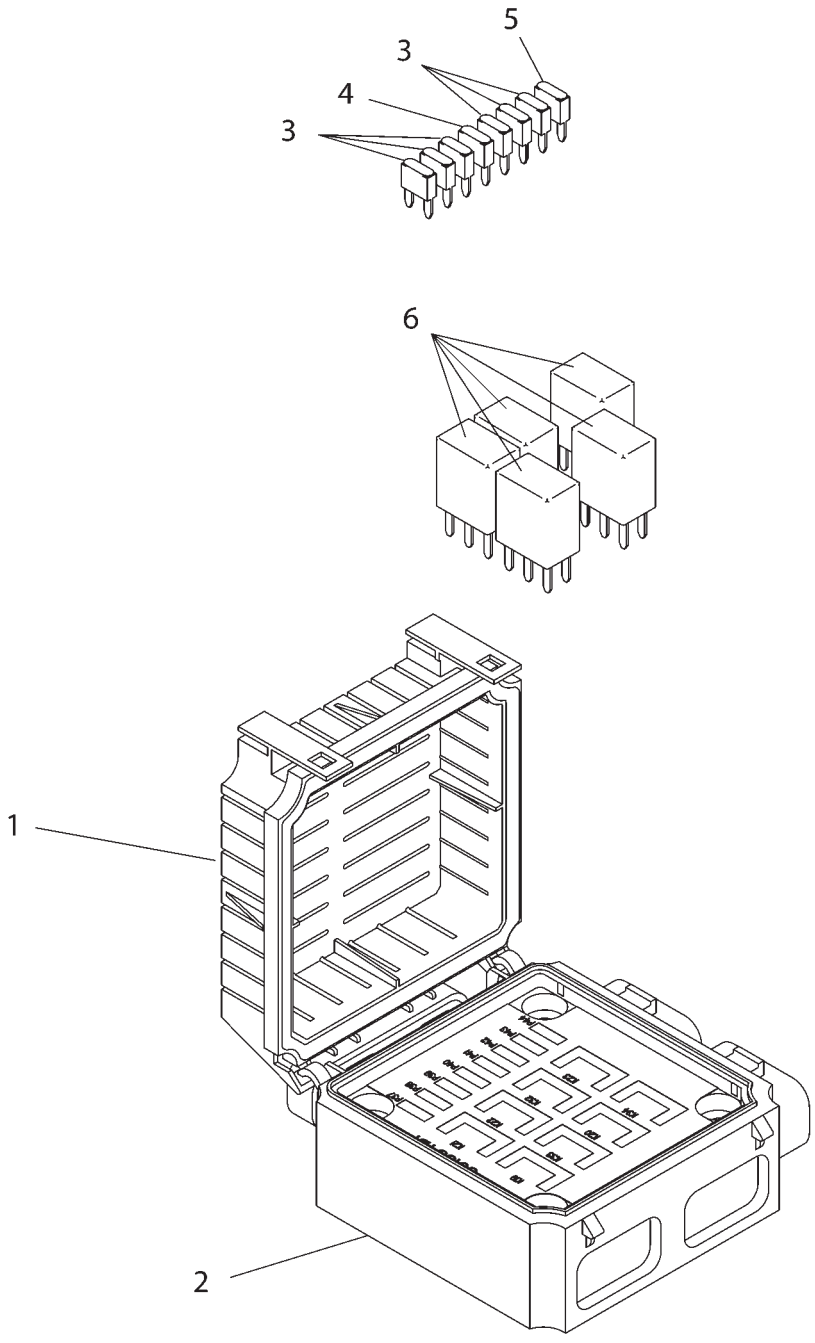

## BLOCK AS-FUSE
**501834D1**

| ITEM | NUMBER | QTY | DESCRIPTION |
|---|---|---|---|
| - | 501834D1 | -- | BLOCK AS-FUSE [A] |
| 1 | 501836D1 | 1 | COVER |
| 2 | 501839D1 | 1 | BLOCK-FUSE |
| 3 | CH113-8491 | 6 | FUSE (15A) |
| 4 | CH113-8492 | 1 | FUSE (20V) |
| 5 | CH141-2759 | 1 | FUSE (5A) |
| 6 | CH146-9439 | 5 | RELAY AS (12V) |

[A] PART OF 172-6841 FUSE GP

501834DC
PR: t05i29k58b0123

## BLOCK AS-FUSE
**501835D1**

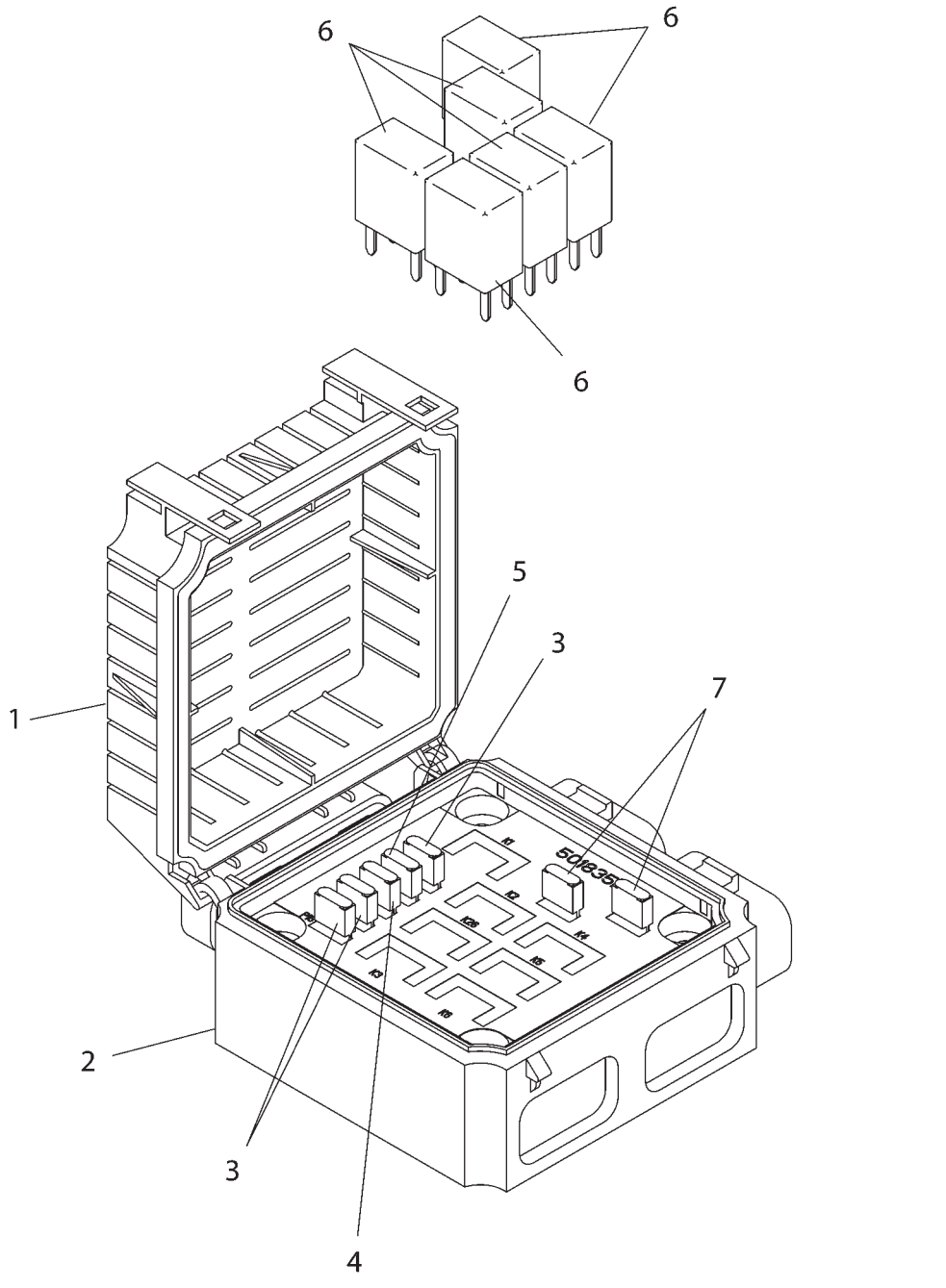

## BLOCK AS-FUSE
**501835D1**

| ITEM | NUMBER | QTY | DESCRIPTION |
|---|---|---|---|
| - | 501835D1 | -- | BLOCK AS-FUSE [A] |
| 1 | 501836D1 | 1 | COVER |
| 2 | 501842D1 | 1 | BLOCK-FUSE |
| 3 | CH113-8491 | 3 | FUSE (15A) |
| 4 | CH113-8492 | 1 | FUSE (20V) |
| 5 | CH141-2759 | 1 | FUSE (5A) |
| 6 | CH146-9439 | 6 | RELAY AS (12V) |
| 7 | CH173-3175 | 2 | BREAKER AS-CIRCUIT (20A) |

[A] PART OF 172-6841 FUSE GP

501835DC
PR: t05i29k58b0124

## SENSOR & MTG GP-GROUND SPEED
**136-5388**

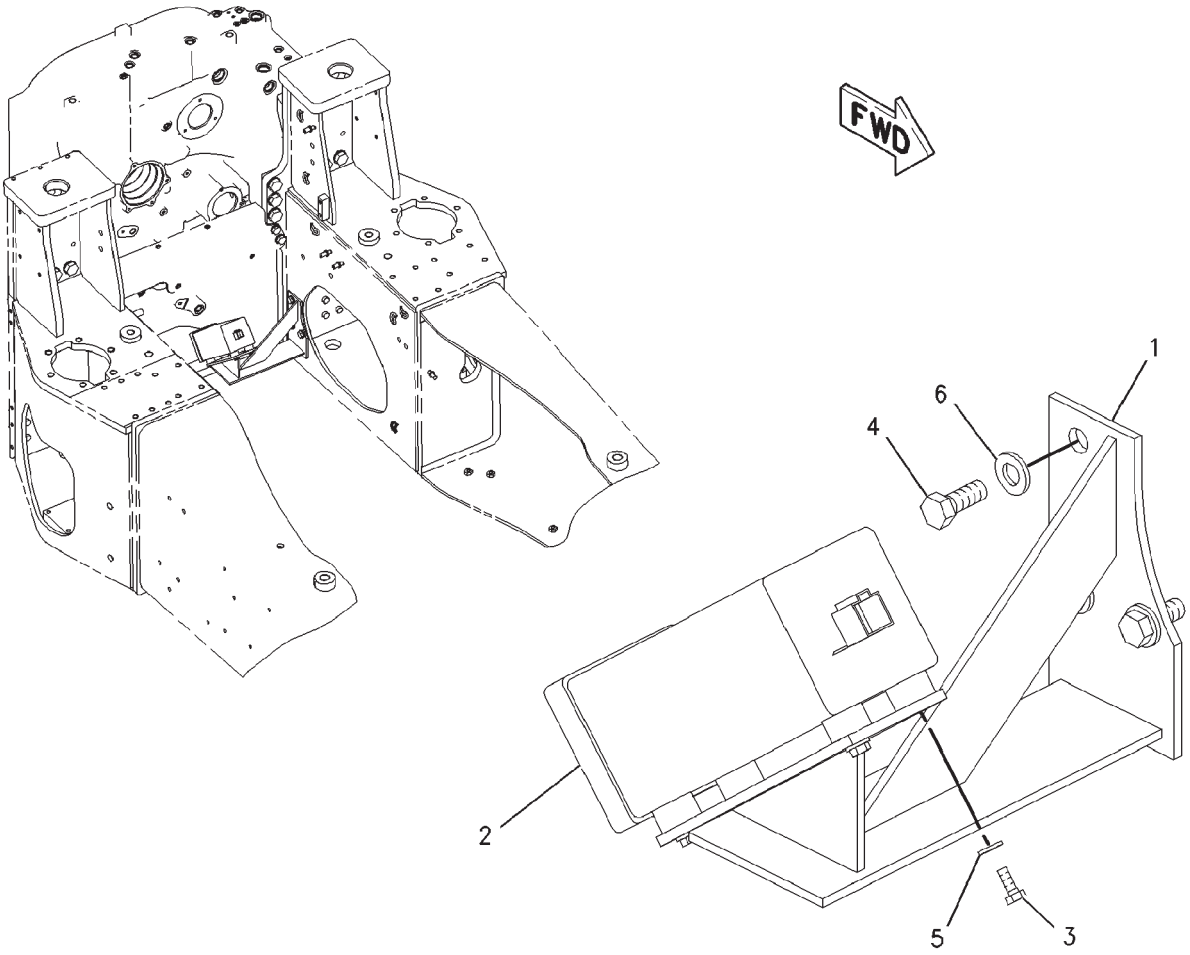


00850277

## SENSOR & MTG GP-GROUND SPEED
136-5388

| ITEM | NUMBER | QTY | DESCRIPTION |
|---|---|---|---|
| - | 502757D1 | -- | SENSOR & MTG GP-GROUND SPEED (FIELD INSTALLED) |
| - | 136-5388 | -- | SENSOR & MTG GP-GND SPD [A] (FACTORY) (NOT SERVICED-ORDER FIELD INSTALLED) |
| 1 | 136-5261 | 1 | BRACKET ASM |
| 2 | CH179-4265 | 1 | SENSOR GP-GROUND SPEED |
| 3 | 400152X1 | 4 | BOLT (M6X1X16MM) |
| 4 | 400041X1 | 3 | BOLT (M12X1.75X30MM) |
| 5 | CH8T-4205 | 4 | WASHER-HARD (7.2X14.5X2MM) |
| 6 | 400357X1 | 3 | WASHER-HARD (M12X25.5X3) |

[A] PART OF 502757D1 SENSOR GP

00850277
PR: t05i29k58b0125

## SENSOR & MTG GP-GROUND SPEED

**136-5404**
**EAME**

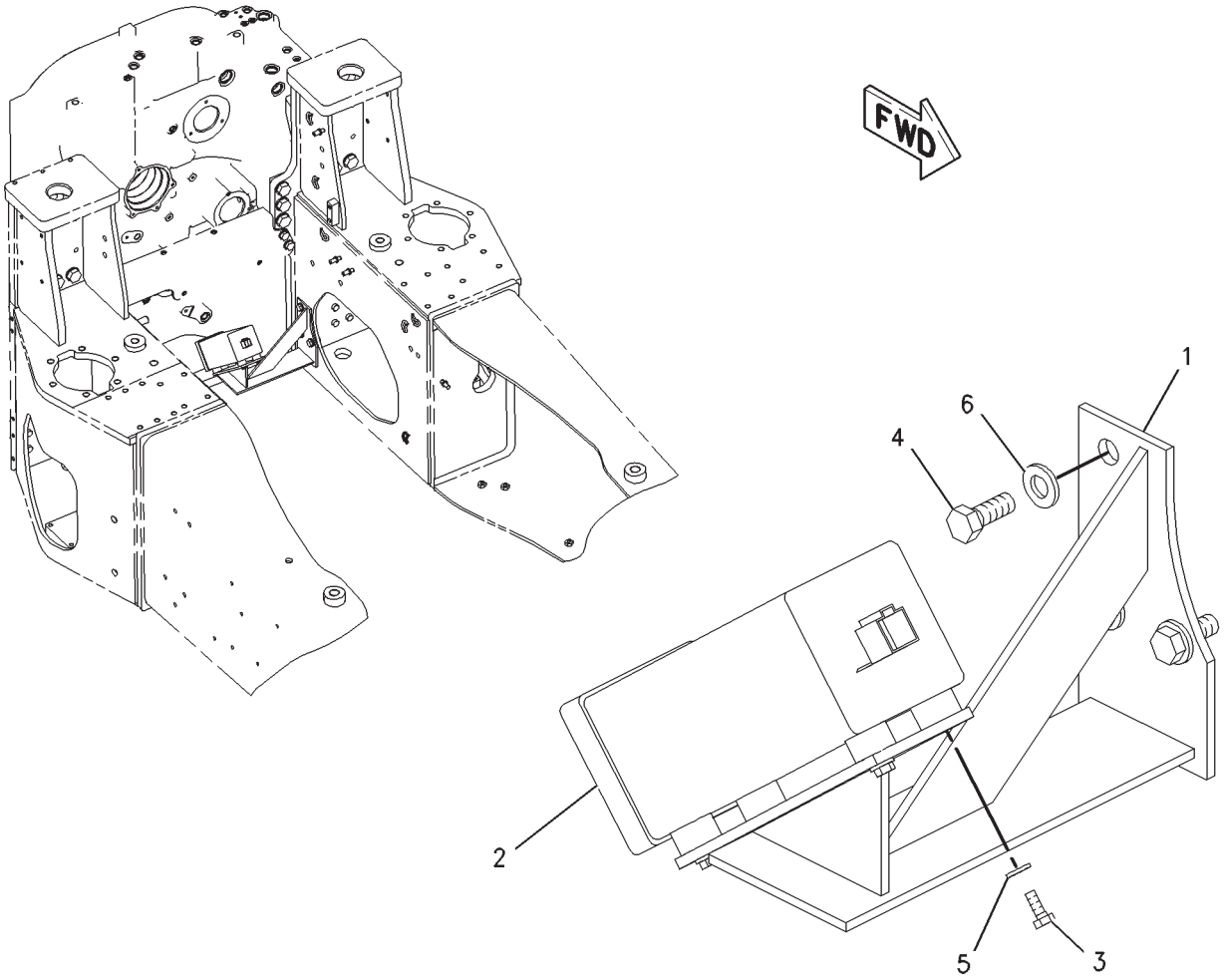


00784295

## SENSOR & MTG GP-GROUND SPEED
**136-5404**
**EAME**

| ITEM | NUMBER | QTY | DESCRIPTION |
|---|---|---|---|
| - | 502774D1 | -- | SENSOR & MTG GP-GROUND SPEED (FIELD INSTALLED) |
| - | 136-5404 | -- | SENSOR & MTG GP-GND SPD [A] (FACTORY) (NOT SERVICED-ORDER FIELD INSTALLED) |
| 1 | 136-5261 | 1 | BRACKET AS |
| 2 | CH180-7317 | 1 | SENSOR GP-GROUND SPEED |
| 3 | 400152X1 | 4 | BOLT (M6X1X16MM) |
| 4 | 400041X1 | 3 | BOLT (M12X1.75X30MM) |
| 5 | CH8T-4205 | 4 | WASHER-HARD (7.2X14.5X2MM) |
| 6 | 400357X1 | 3 | WASHER-HARD (M12X25.5X3) |

[A] PART OF 502774D1 SENSOR GP

00784295
PR: t05i29k58b0126

## STATING AID GP-ETHER - 186-1671

**MT835 & MT845**

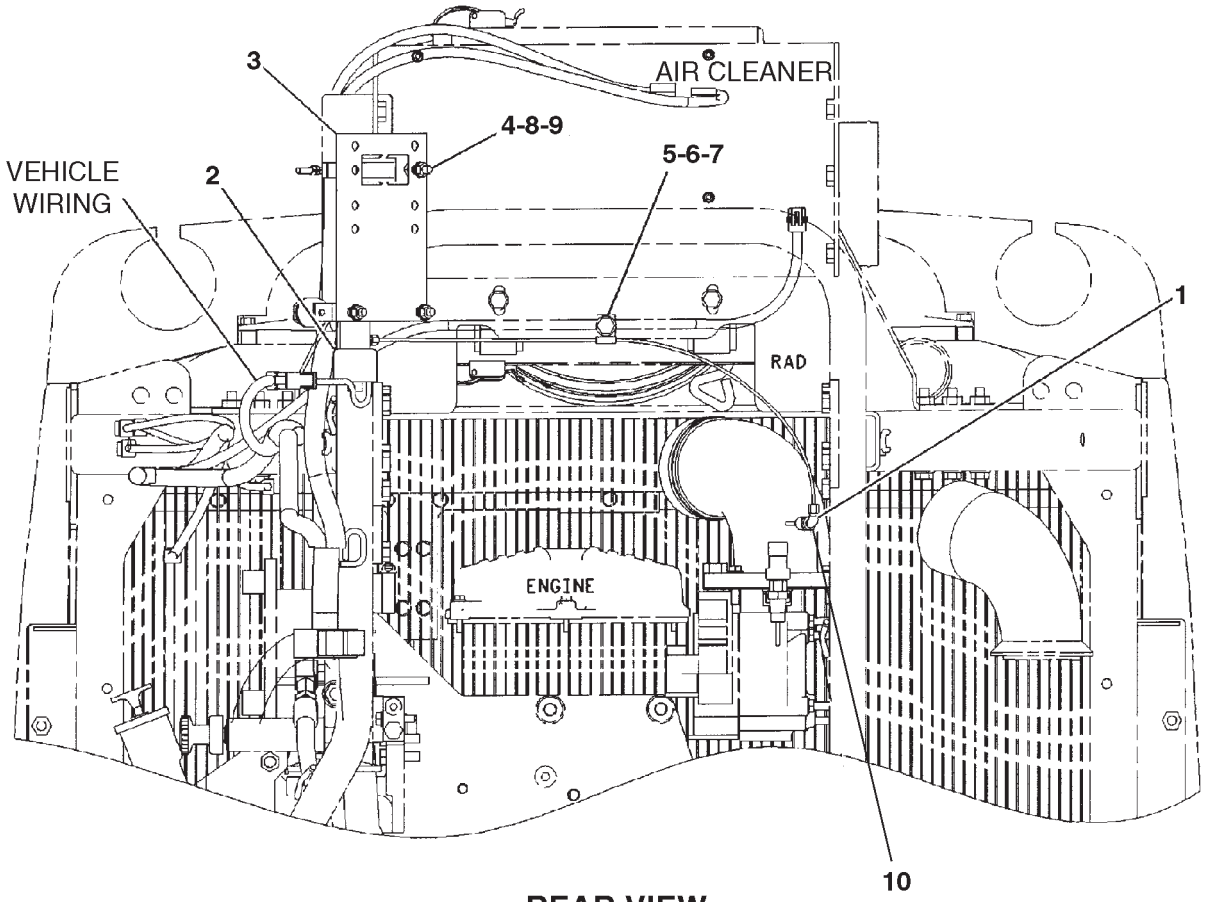


**REAR VIEW**

0888158A

## STATING AID GP-ETHER - 186-1671
**MT835 & MT845**

| ITEM | NUMBER | QTY | DESCRIPTION |
|---|---|---|---|
| - | 186-1671 | -- | STARTING AID GP-ETHER [A] (NOT SERVICED) (INCL. ITEM 1 THRU 9) |
| 1 | 224-2189 | 1 | ATOMIZER |
| 2 | 210-8961 | 1 | VALVE GP-ETHER (SEE BREAKDOWN FOR COMPONENTS) |
| 3 | 211-1677 | 1 | MOUNTING GP-ETHER CANISTER |
| | CH210-4570 | 1 | CLAMP-HOSE T-BOLT |
| | 210-3930 | 1 | BRACKET-ETHER VALVE |
| 4 | 400340X1 | 3 | NUT (M8X1.25) |
| 5 | 400602X1 | 1 | CLIP |
| 6 | 400287X1 | 1 | WASHER-HARD (11X21X2.5) |
| 7 | 400040X1 | 1 | BOLT (M10X1.5X20MM) |
| 8 | 400339X1 | 6 | WASHER-HARD (8.8X16X2) |
| 9 | 400341X1 | 3 | BOLT (M8X1.25X25MM) |
| 10 | 5P-3413 | | SEALANT-PIPE (50 ML TUBE) |
| | 7N-0296 | 1 | CYLINDER-ETHER (NOT SHOWN) |

[A] PART OF 172-5361; 172-5362
INSTALLATION AR-ENGINE

0888158A
PR: t05i29k58b0127

## STARTING AID GP-ETHER - 187-1740
**MT855 & MT865**

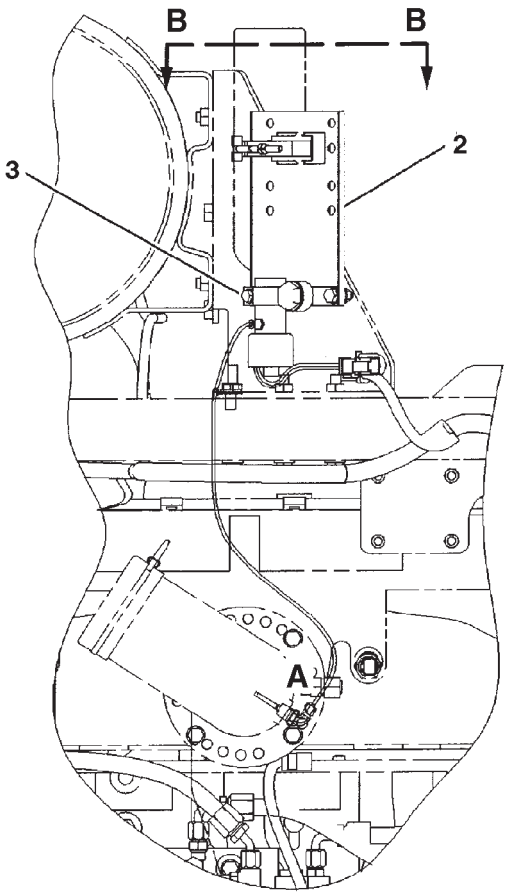


LEFT SIDE VIEW

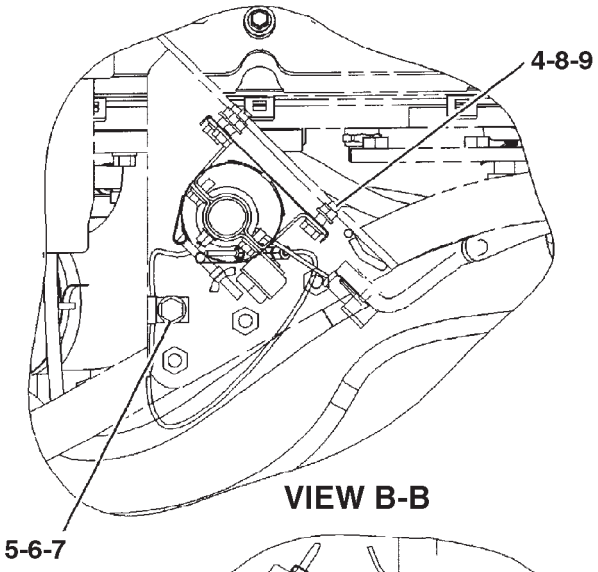


VIEW B-B

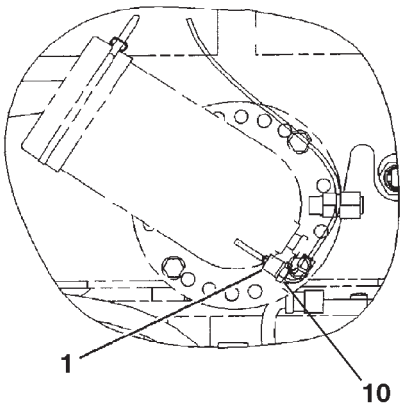


VIEW OF AREA A

0902125A

## STARTING AID GP-ETHER - 187-1740
**MT855 & MT865**

| ITEM | NUMBER | QTY | DESCRIPTION |
|---|---|---|---|
| - | 187-1740 | -- | STARTING AID GP-ETHER [A] (NOT SERVICED) (INCL. ITEM 1 THRU 9) |
| 1 | 210-3932 | 1 | ATOMIZER |
| 2 | 211-1677 | 1 | MOUNTING GP-ETHER CANISTER |
| | CH210-4570 | 1 | CLAMP-HOSE T-BOLT |
| | 210-3930 | 1 | BRACKET-ETHER VALVE |
| 3 | 211-8220 | 1 | VALVE GP-ETHER (SEE BREAKDOWN FOR COMPONENTS) |
| 4 | 400340X1 | 3 | NUT (M8X1.25) |
| 5 | 400602X1 | 1 | CLIP |
| 6 | 400287X1 | 1 | WASHER-HARD (11X21X2.5) |
| 7 | 400040X1 | 1 | BOLT (M10X1.5X20MM) |
| 8 | 400339X1 | 6 | WASHER-HARD (8.8X16X2) |
| 9 | 400341X1 | 3 | BOLT (M8X1.25X25MM) |
| 10 | 5P-3413 | | SEALANT-PIPE (50 ML TUBE) |
| | 7N-0296 | 1 | CYLINDER-ETHER (NOT SHOWN) |

[A] PART OF 172-5363; 172-5364
INSTALLATION AR-ENGINE

0902125A
PR: t05i29k58b0128

## STARTING MOTOR GP-ELECTRIC - 208-0090

**12 VOLT**
**MT835 & MT845**

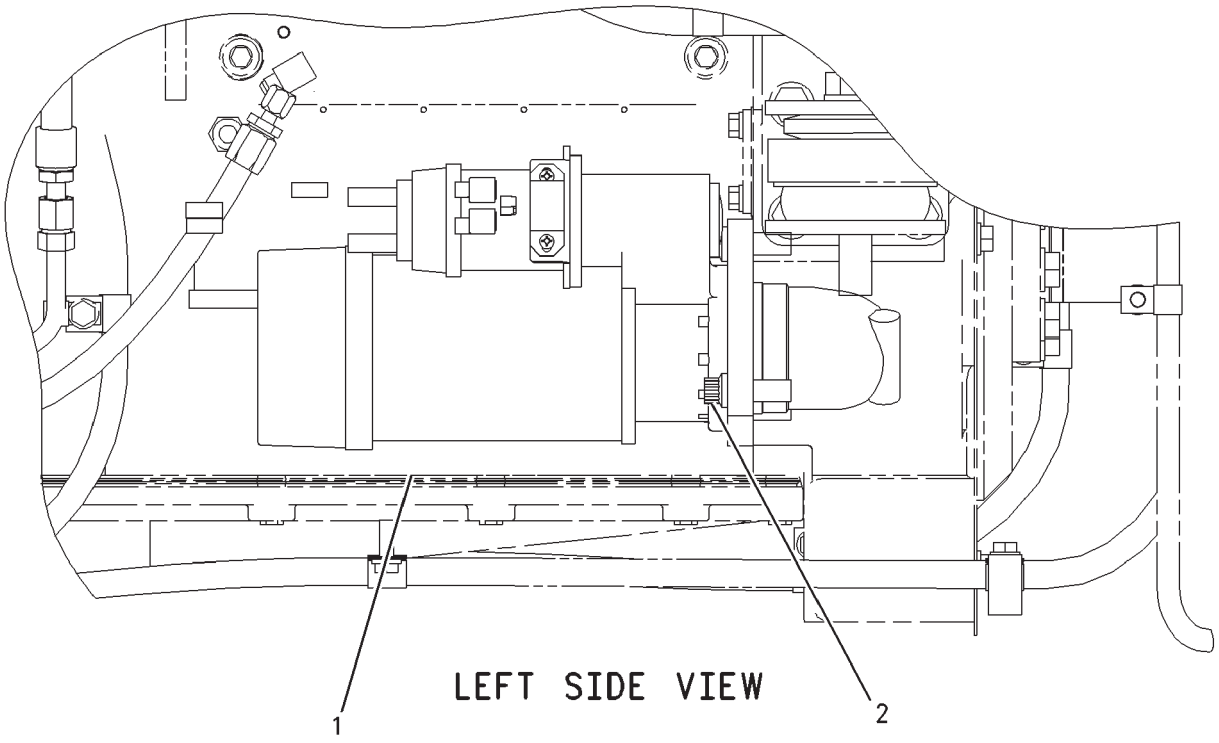


00887867

## STARTING MOTOR GP-ELECTRIC - 208-0090

**12 VOLT**
**MT835 & MT845**

| ITEM | NUMBER | QTY | DESCRIPTION |
|---|---|---|---|
| - | 208-0090 | -- | STARTING MOTOR GP-ELECTRIC [A] (NOT SERVICED) |
| 1 | 502284D1 | 1 | STARTING MOTOR AS-ELECTRIC (SEE BREAKDOWN FOR COMPONENTS) |
| 2 | 400265X1 | 3 | BOLT-12PT (5/8-11X44.4MM) |

[A] PART OF 172-5361; 172-5362
INSTALLATION AR-ENGINE

00887867
PR: t05i29k58b0129

## STARTING MOTOR GP-ELECTRIC - 180-2924

**MT855 & MT865**

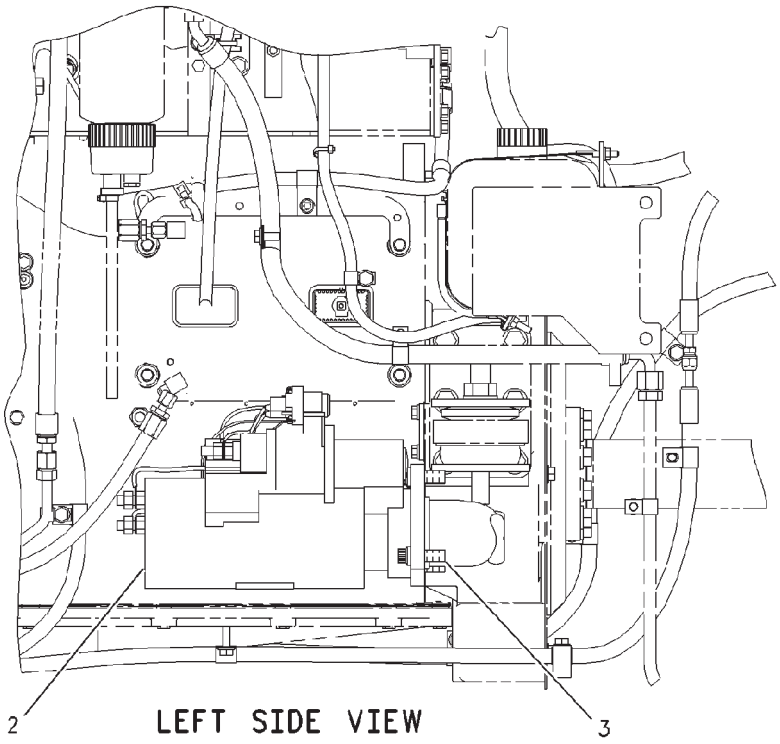


LEFT SIDE VIEW

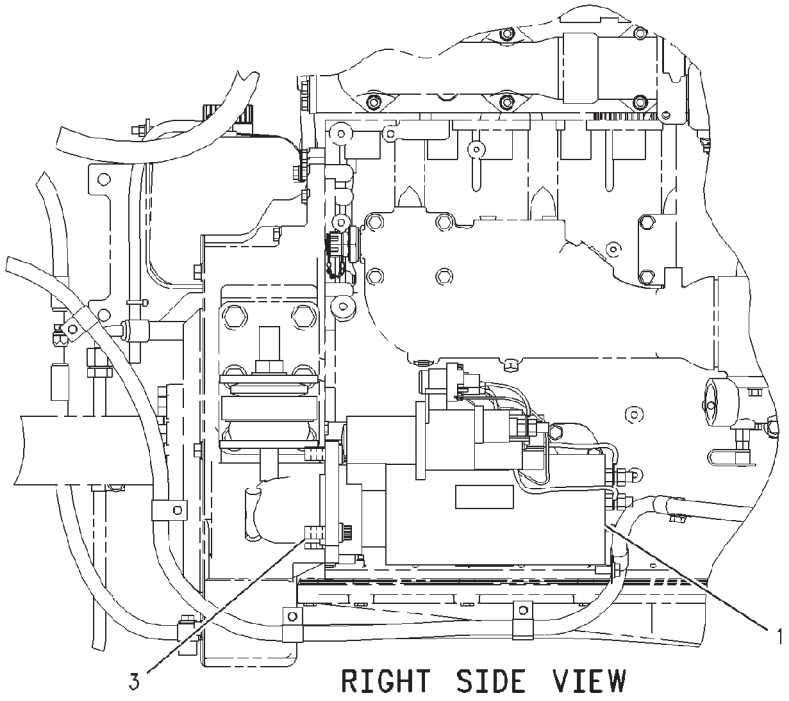


RIGHT SIDE VIEW

| ITEM | NUMBER | QTY | DESCRIPTION |
|---|---|---|---|
| - | 180-2924 | -- | STARTING MOTOR GP-ELECTRIC [A] (NOT SERVICED) |
| 1 | 502282D1 | 1 | STARTING MOTOR GP-ELECTRIC (RH) (SEE BREAKDOWN FOR COMPONENTS) |
| 2 | 502283D1 | 1 | STARTING MOTOR GP-ELECTRIC (LH) (SEE BREAKDOWN FOR COMPONENTS) |
| 3 | 400265X1 | 6 | BOLT-12 POINT HEAD (5/8-11X44.4DAC) |

[A] PART OF 172-5363;172-5364;187-1743;
187-1744 INSTALLATION AR-ENGINE

00868926
PR: t05i29k58b0130

## STARTING MOTOR AS-ELECTRIC - 502284D1

**12 VOLT**
**MT835 & MT845**

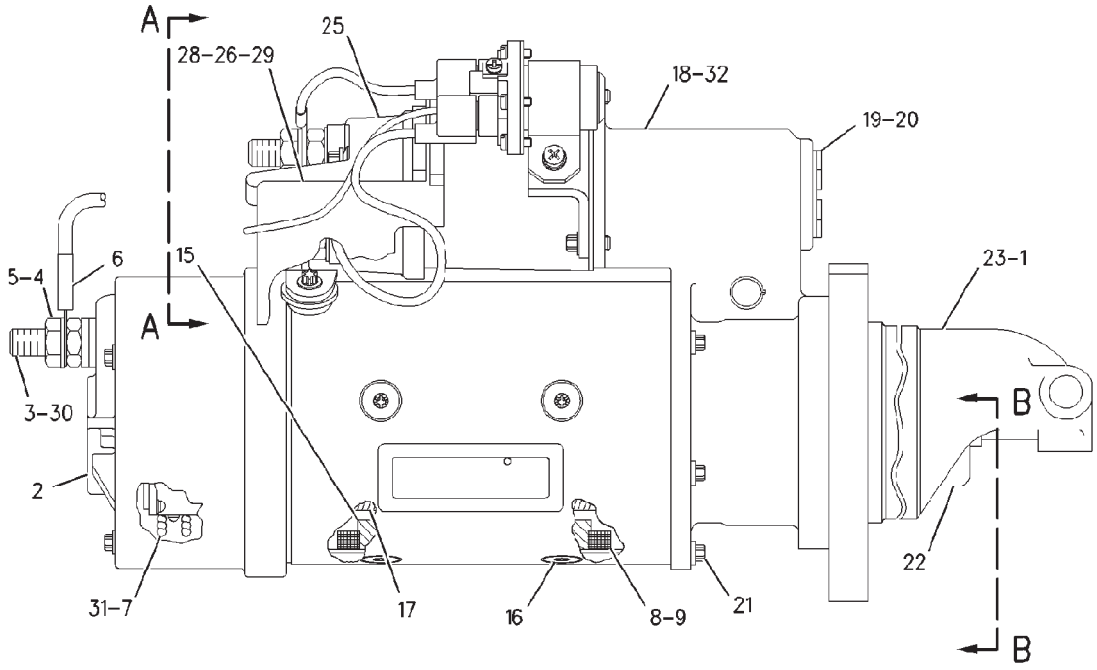


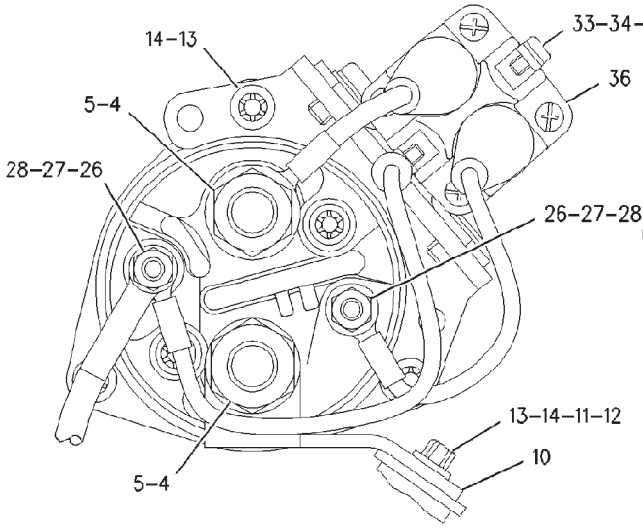


VIEW A-A

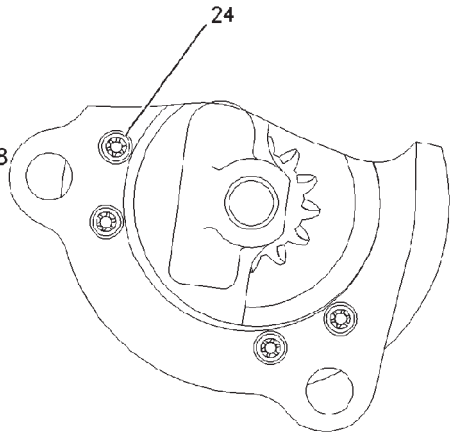


VIEW B-B

00888492

## STARTING MOTOR AS-ELECTRIC - 502284D1

**12 VOLT**
**MT835 & MT845**

| ITEM | NUMBER | QTY | DESCRIPTION |
|---|---|---|---|
| - | 502284D1 | -- | STARTING MOTOR AS-ELECTRIC [A] |
| 1 | 3T-3434 | 6 | PLUG |
| 2 | 7T-3279 | 1 | HOUSING |
| 3 | 8T-8566 | 1 | TERMINAL |
| 4 | 6V-8188 | 4 | NUT (1/2-13) |
| 5 | 7X-0562 | 4 | WASHER-HARD (13.5X19X0.8) |
| 6 | 3T-3422 | 1 | WIRE |
| 7 | 8T-8570 | 1 | HOLDER-BRUSH |
| 8 | 8T-8568 | 1 | COIL-FIELD |
| 9 | 7T-3454 | 1 | INSULATOR |
| 10 | 7T-3271 | 1 | CONNECTOR |
| 11 | 7T-3451 | 1 | INSULATOR-TERMINAL |
| 12 | 8T-8569 | 1 | INSULATOR-TERMINAL |
| 13 | 5S-7349 | 4 | BOLT (1/4-20X0.5 IN) |
| 14 | 8T-4205 | 4 | WASHER-HARD (7.2X14.5X2MM) |
| 15 | 8H-1141 | 4 | SHOE-POLE |
| 16 | 3F-0379 | 8 | SCREW-POLE SHOE (3/8-24) |
| 17 | 7T-3275 | 1 | ARMATURE |
| 18 | 3E-7775 | 1 | HOUSING |
| 19 | 4M-1831 | 1 | PLUG-LEVER HOUSING |
| 20 | 7L-2894 | 1 | GASKET |
| 21 | 036-9823 | 5 | BOLT |
| 22 | 6N-3826 | 1 | DRIVE-MOTOR |
| 23 | 7T-3974 | 1 | HOUSING-DRIVE |
| 24 | 7X-3373 | 6 | BOLT (5/16-18X0.88 IN) |
| 25 | 206-8789 | 1 | KIT-SOLENOID (12V) (STARTING MOTOR)<br>(INCLUDES SOLENOID AS, BOLT & NUTS) |
| 26 | 6V-8378 | 3 | NUT (10-32) |
| 27 | 8F-1434 | 2 | LOCKWASHER |
| 28 | 8T-0328 | 3 | WASHER-HARD (5.5X10X1) |
| 29 | 9X-4824 | 1 | COVER-STARTING MOTOR |
| 30 | 8T-9884 | 1 | KIT-INSULATOR (STARTING MOTOR)<br>(SERVICED AS COMPLETE KIT ONLY)<br>(INCLUDES INSULATORS AND BUSHING) |
| 31 | 8T-9885 | 1 | KIT-BRUSH (STARTING MOTOR) (12 VOLT)<br>(SERVICED AS COMPLETE KIT ONLY)<br>(INCLUDES BRUSHES, SPRINGS, SCREWS,<br>SEAL AND SCREW ASM) |
| 32 | 7T-3268 | 1 | KIT-LEVER (STARTING MOTOR)<br>(SERVICED AS COMPLETE KIT ONLY)<br>(INCLUDES 2 LEVER ASM, 2 SEALS,<br>NUT, GASKET AND RETAINER) |
| 33 | 095-7930 | 1 | SCREW-MACHINE |
| 34 | 096-6166 | 1 | WASHER-HARD (4.5X9X1) |
| 35 | 9B-7233 | 1 | LOCKWASHER |
| 36 | 146-3504 | 1 | SWITCH-RELAY (12V) (STARTING MOTOR) |
| - | 7T-3267 | 1 | KIT-BUSHING (STARTING MOTOR) |

[A] PART OF 208-0090 STARTING MOTOR GP-ELECTRIC

## STARTING MOTOR GP-ELECTRIC - 502282D1

**12 VOLT**
**MT855 & MT865**

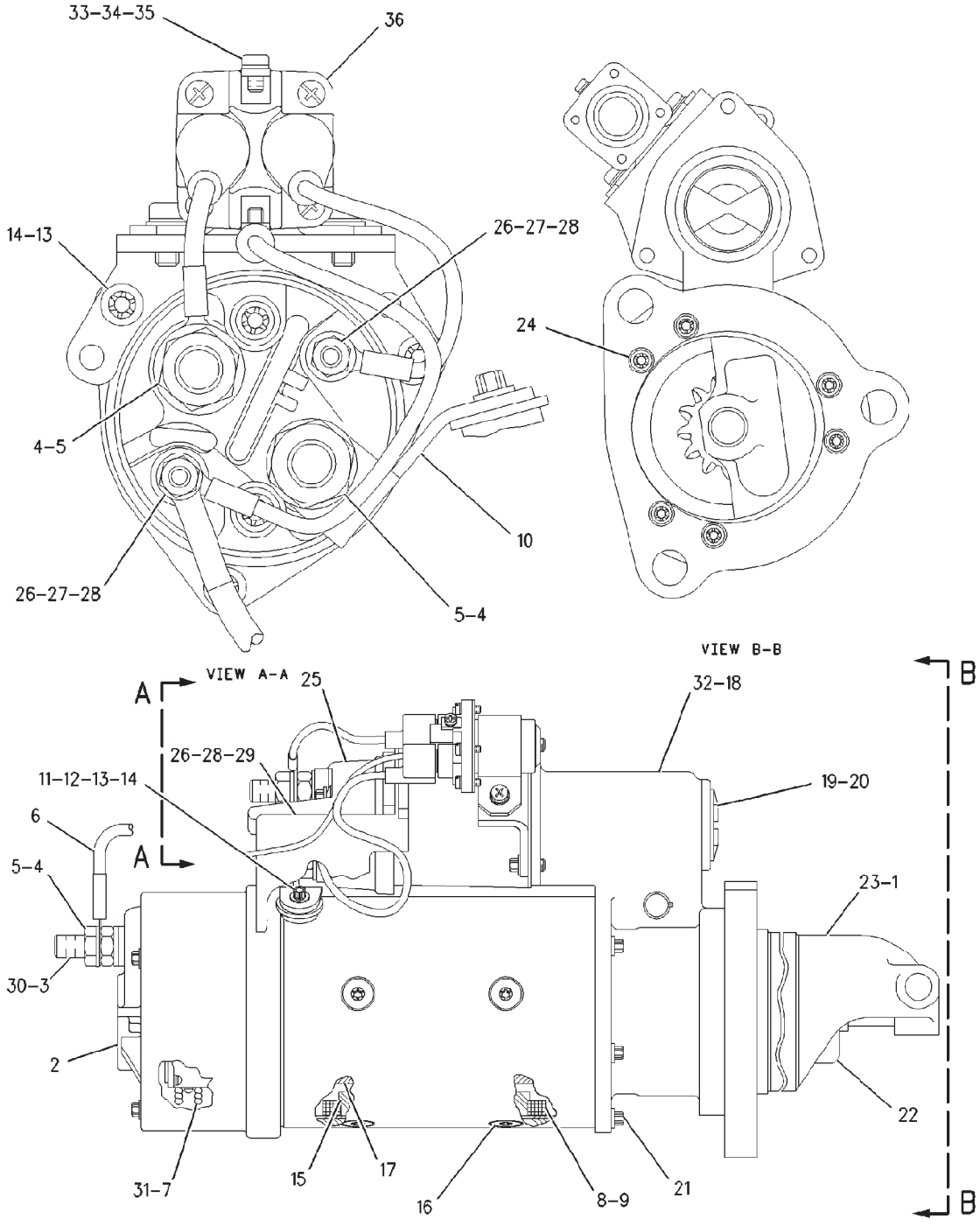


00867504

## STARTING MOTOR GP-ELECTRIC - 502282D1

**12 VOLT**
**MT855 & MT865**

| ITEM | NUMBER | QTY | DESCRIPTION |
|---|---|---|---|
| - | 502282D1 | -- | STARTING MOTOR GP-ELECTRIC [A] |
| 1 | 3T-3434 | 6 | PLUG |
| 2 | 7T-3279 | 1 | HOUSING |
| 3 | 8T-8566 | 1 | TERMINAL |
| 4 | 6V-8188 | 4 | NUT (1/2-13) |
| 5 | 7X-0562 | 4 | WASHER-HARD (13.5X19X0.8) |
| 6 | 3T-3422 | 1 | WIRE |
| 7 | 8T-8570 | 1 | HOLDER-BRUSH |
| 8 | 8T-8568 | 1 | COIL-FIELD |
| 9 | 7T-3454 | 1 | INSULATOR |
| 10 | 7T-3271 | 1 | CONNECTOR |
| 11 | 7T-3451 | 1 | INSULATOR-TERMINAL |
| 12 | 8T-8569 | 1 | INSULATOR-TERMINAL |
| 13 | 5S-7349 | 4 | BOLT (1/4-20X0.5 IN) |
| 14 | 8T-4205 | 4 | WASHER-HARD (7.2X14.5X2MM) |
| 15 | 8H-1141 | 4 | SHOE-POLE |
| 16 | 3F-0379 | 8 | SCREW-POLE SHOE (3/8-24) |
| 17 | 7T-3275 | 1 | ARMATURE |
| 18 | 7T-3973 | 1 | HOUSING-LEVER |
| 19 | 4M-1831 | 1 | PLUG-LEVER HOUSING |
| 20 | 7L-2894 | 1 | GASKET |
| 21 | 036-9823 | 5 | BOLT |
| 22 | 6N-3826 | 1 | DRIVE-MOTOR |
| 23 | 7T-3974 | 1 | HOUSING-DRIVE |
| 24 | 7X-3373 | 6 | BOLT (5/16-18X0.88 IN) |
| 25 | 206-8787 | 1 | KIT-SOLENOID (SERVICED AS COMPLETE KIT ONLY) |
| 26 | 6V-8378 | 3 | NUT (10-32) |
| 27 | 8F-1434 | 2 | LOCKWASHER |
| 28 | 8T-0328 | 3 | WASHER-HARD (5.5X10X1) |
| 29 | 9X-4824 | 1 | COVER-STARTING MOTOR |
| 30 | 8T-9884 | 1 | KIT-INSULATOR (STARTING MOTOR) (SERVICED-COMPLETE KIT ONLY) (INCLUDES: INSULATORS AND BUSHING) |
| 31 | 8T-9885 | 1 | KIT-BRUSH (SERVICED-COMPLETE KIT ONLY) (INCLUDES BRUSHES, SPRINGS, SCREW, SEAL, AND SCREW ASM) |
| 32 | 7T-3268 | 1 | KIT-LEVER (STARTING MOTOR) (SERVICED-COMPLETE KIT ONLY) (INCLUDES: 2 LEVER ASM, 2 SEALS, NUT, GASKET, AND RETAINER) |
| 33 | 095-7930 | 1 | SCREW-MACHINE |
| 34 | 096-6166 | 1 | WASHER-HARD (4.5X9X1) |
| 35 | 9B-7233 | 1 | LOCKWASHER |
| 36 | 146-3504 | 1 | SWITCH-RELAY (STARTING MOTOR) |
| - | 7T-3267 | 1 | KIT-BUSHING (STARTING MOTOR) (NOT SHOWN) |

[A] PART OF 180-2924 STARTING MOTOR GP-ELECTRIC

00867504
PR: t05i29k58b0132

## STARTING MOTOR GP-ELECTRIC - 502283D1

**12 VOLT**
**MT855 & MT865**

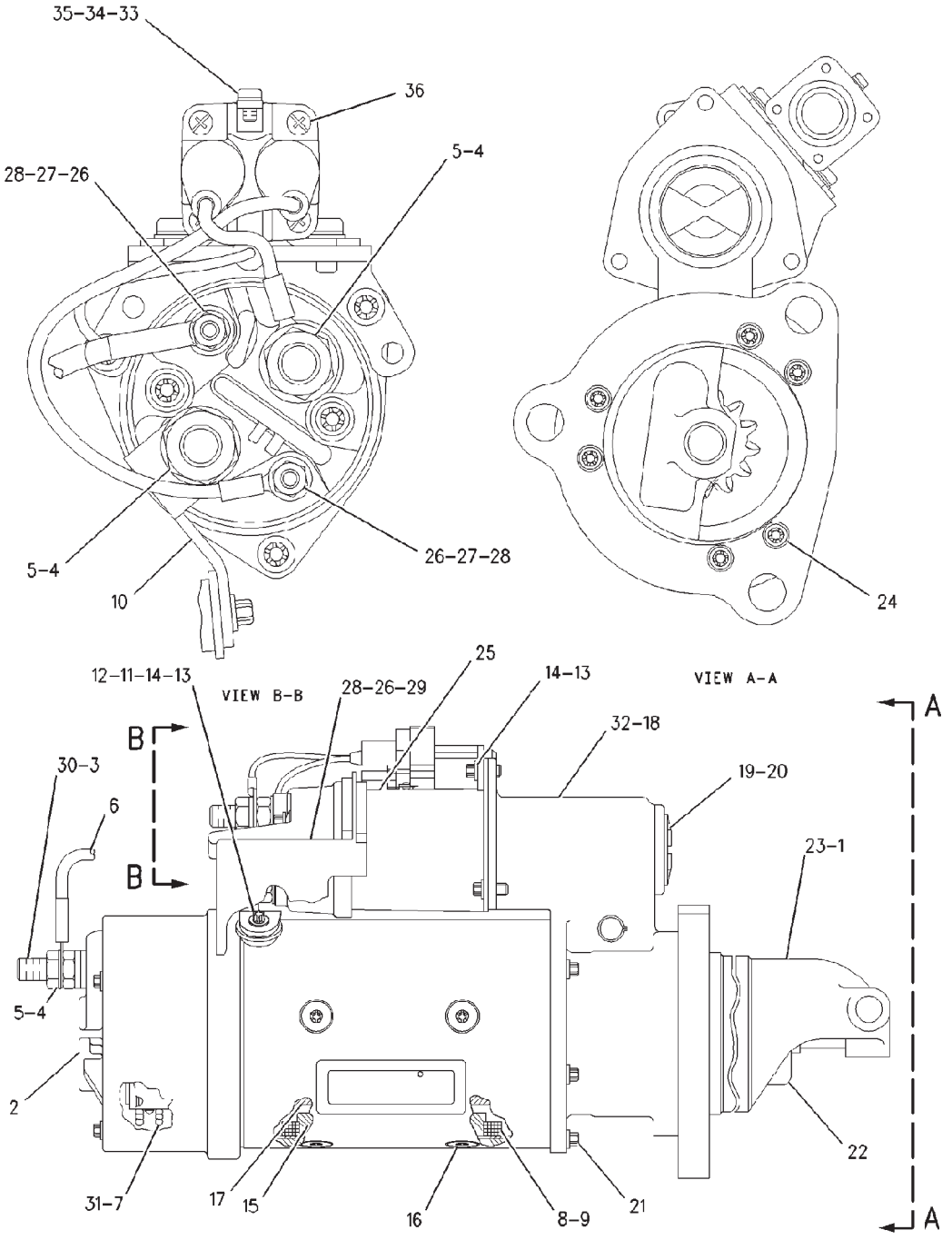


00867507

## STARTING MOTOR GP-ELECTRIC - 502283D1

**12 VOLT**
**MT855 & MT865**

| ITEM | NUMBER | QTY | DESCRIPTION |
|---|---|---|---|
| - | 502283D1 | -- | STARTING MOTOR GP-ELECTRIC [A] |
| 1 | 3T-3434 | 6 | PLUG |
| 2 | 7T-3279 | 1 | HOUSING |
| 3 | 8T-8566 | 1 | TERMINAL |
| 4 | 6V-8188 | 4 | NUT (1/2-13) |
| 5 | 7X-0562 | 4 | WASHER-HARD (13.5X19X0.8) |
| 6 | 3T-3422 | 1 | WIRE |
| 7 | 8T-8570 | 1 | HOLDER-BRUSH |
| 8 | 8T-8568 | 1 | COIL-FIELD |
| 9 | 7T-3454 | 1 | INSULATOR |
| 10 | 7T-3271 | 1 | CONNECTOR |
| 11 | 7T-3451 | 1 | INSULATOR-TERMINAL |
| 12 | 8T-8569 | 1 | INSULATOR-TERMINAL |
| 13 | 5S-7349 | 4 | BOLT (1/4-20X0.5 IN) |
| 14 | 8T-4205 | 4 | WASHER-HARD (7.2X14.5X2MM) |
| 15 | 8H-1141 | 4 | SHOE-POLE |
| 16 | 3F-0379 | 8 | SCREW-POLE SHOE (3/8-24) |
| 17 | 7T-3275 | 1 | ARMATURE |
| 18 | 3E-7775 | 1 | HOUSING |
| 19 | 4M-1831 | 1 | PLUG-LEVER HOUSING |
| 20 | 7L-2894 | 1 | GASKET |
| 21 | 036-9823 | 5 | BOLT |
| 22 | 6N-3826 | 1 | DRIVE-MOTOR |
| 23 | 7T-3974 | 1 | HOUSING-DRIVE |
| 24 | 7X-3373 | 6 | BOLT (5/16-18X0.88 IN) |
| 25 | 206-8787 | 1 | KIT-SOLENOID<br>(SERVICED AS COMPLETE KIT ONLY) |
| 26 | 6V-8378 | 3 | NUT (10-32) |
| 27 | 8F-1434 | 2 | LOCKWASHER |
| 28 | 8T-0328 | 3 | WASHER-HARD (5.5X10X1) |
| 29 | 9X-4824 | 1 | COVER-STARTING MOTOR |
| 30 | 8T-9884 | 1 | KIT-INSULATOR (STARTING MOTOR)<br>(SERVICED AS COMPLETE KIT ONLY)<br>(INCLUDES: INSULATORS AND BUSHING) |
| 31 | 8T-9885 | 1 | KIT-BRUSH (SERVICED-COMPLETE KIT ONLY)<br>(INCLUDES BRUSHES, SPRINGS, SCREW,<br>SEAL, AND SCREW ASM) |
| 32 | 7T-3268 | 1 | KIT-LEVER (STARTING MOTOR)<br>(SERVICED-COMPLETE KIT ONLY)<br>(INCLUDES: 2 LEVER ASM, 2 SEALS,<br>NUT, GASKET, AND RETAINER) |
| 33 | 095-7930 | 1 | SCREW-MACHINE |
| 34 | 096-6166 | 1 | WASHER-HARD (4.5X9X1) |
| 35 | 9B-7233 | 1 | LOCKWASHER |
| 36 | 146-3504 | 1 | SWITCH-RELAY (STARTING MOTOR) |
| | 7T-3267 | 1 | KIT-BUSHING (STARTING MOTOR) |

[A] PART OF 180-2924 STARTING MOTOR GP-ELECTRIC

00867507
PR: t05i29k58b0133

## SWITCH GP-GUIDANCE - 500606D1
AUTOGUIDE SYSTEM

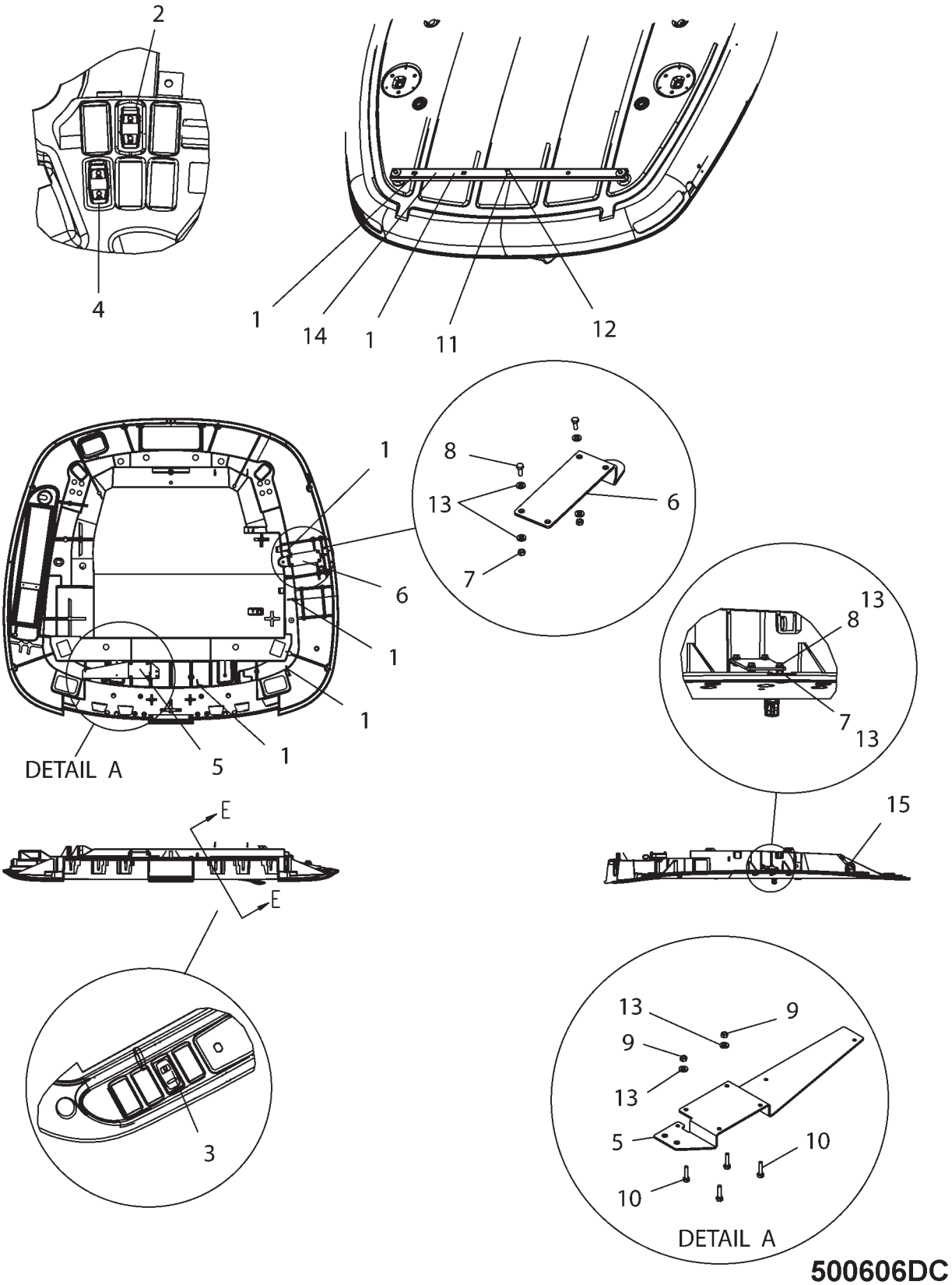

| ITEM | NUMBER | QTY | DESCRIPTION |
|---|---|---|---|
| - | 500606D1 | -- | SWITCH GP-RECEIVER [A] (NOT SERVICED) |
| 1 | CH7K-1181 | 6 | STRAP-CABLE |
| 2 | 169-8222 | 1 | SWITCH ASM-ROCKER (AUTO GUIDE CONTROL) |
| | 400453X1 | | PLUG-CONNECTOR |
| | CH165-5975 | | PLUG-PANEL (FOR COVERING MTG HOLE) |
| 3 | 500882D1 | 1 | SWITCH ASM-ROCKER (AUTO GUIDE POWER) |
| | 400453X1 | | PLUG-CONNECTOR |
| | CH165-5975 | | PLUG-PANEL (FOR COVERING MTG HOLE) |
| 4 | 200-6376 | 1 | SWITCH ASM-ROCKER (AUTO GUIDE MARKING) |
| | 400453X1 | | PLUG-CONNECTOR |
| | CH165-5975 | | PLUG-PANEL (FOR COVERING MTG HOLE) |
| 5 | 216-8860 | 1 | BRACKET ASM |
| 6 | 219-4775 | 1 | BRACKET ASM |
| 7 | 400300X1 | 4 | NUT (M6X1) |
| 8 | 400152X1 | 4 | BOLT (M6X1X16MM) |
| 9 | CH6V-8225 | 4 | NUT (M6X1) |
| 10 | 400172X1 | 4 | BOLT (M6X1X25MM) |
| 11 | 400179X1 | 1 | BOLT (5/8-11) |
| 12 | CH8T-4122 | 1 | WASHER-HARD |
| 13 | CH8T-4205 | 12 | WASHER-HARD (7.2X14.5X2MM) |
| 14 | 500478D1 | 1 | MOUNTING GP-GPS |
| | | | (SEE BREAKDOWN FOR COMPONENTS) |
| 15 | 500610D1 | 1 | GROMMET-RH (HANDRAIL) (REPLACES |
| | | | PART PROVIDED IN ROOF GP-CAB) |

[A] PART OF 500628D1 CONTROL GP-COMMUNICATION

500606DC
PR: t05i29k58b0134

**SERVICE GP-AUTOGUIDE - 500389D1**

NO ILLUSTRATION

NOTIF

## SERVICE GP-AUTOGUIDE - 500389D1

| ITEM | NUMBER | QTY | DESCRIPTION |
|---|---|---|---|
| - | 500389D1 | -- | SERVICE GP-AUTOGUIDE |
| 1 | 500392D1 | 1 | HARNESS AS-SERIAL |
| 2 | 72571023 | 1 | SERVICE TOOL-AUTOGUIDE (ORDER ON AGCO DEALER INFO NET) |
| 3 | 503754D1 | 1 | HARNESS-COM 3 SERIAL CABLE |
| | 502013D1 | 1 | HARNESS-COM, CAB |
| | 502014D1 | 1 | HARNESS-COM, RECEIVER |
| 4 | 72571005 | 1 | MANUAL-SERVICE TOOL-AUTO GUIDE (ORDER ON AGCO DEALER INFO NET) |

NOTIF
PR: t05i29k58b0135

## MOUNTING GP-GPS - 500478D1
AUTOGUIDE SYSTEM

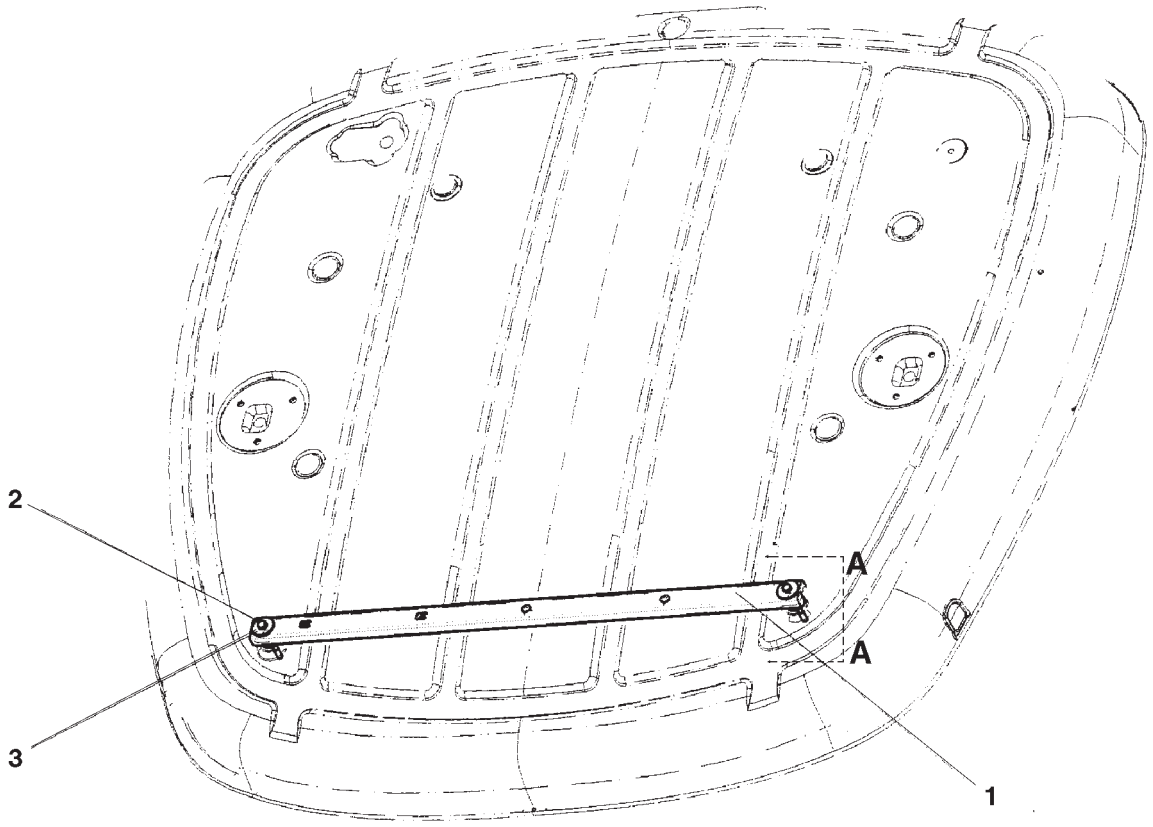


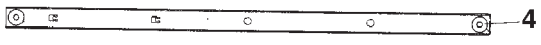





SEE A-A

0890702M

| ITEM | NUMBER | QTY | DESCRIPTION |
|---|---|---|---|
| - | 500478D1 | -- | MOUNTING GP [A] (NOT SERVICED) |
| 1 | 500477D1 | | BRACKET ASM (INCLUDES ITEMS 4 AND 5) |
| 2 | 400240X1 | 2 | BOLT (M10X1.5X110) |
| 3 | CH8T-4226 | 2 | WASHER-PLATED |
| 4 | 500475D1 | 2 | SPACER |
| 5 | 500476D1 | 1 | BRACKET |

[A] PART OF 500606D1 SWITCH GP

0890702M
PR: t05i29k58b0136

## MOUNTING GP-KIT - 187-4896

**AUX ANTENNA & NON-AUTOGUIDE GPS RECEIVER**

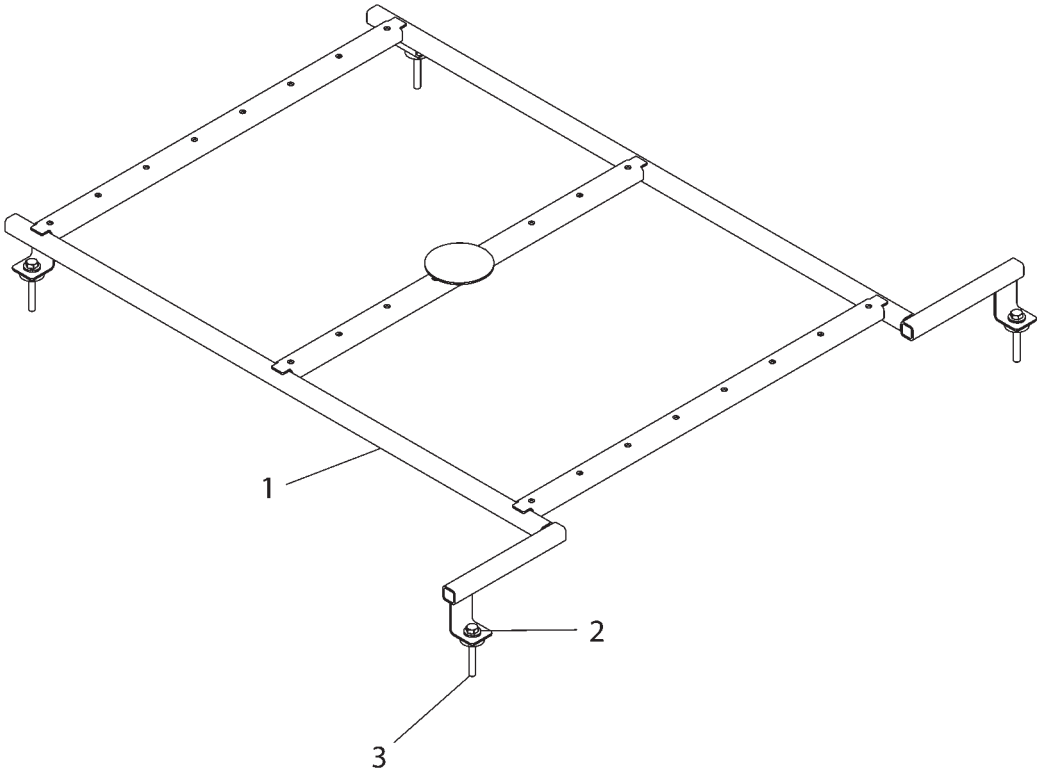

## MOUNTING GP-KIT - 187-4896
AUX ANTENNA & NON-AUTOGUIDE GPS RECEIVER

| ITEM | NUMBER | QTY | DESCRIPTION |
|---|---|---|---|
| - | 187-4896 | -- | MOUNTING GP (KIT) |
| 1 | 168-2291 | 1 | RACK ASM |
| 2 | CH7X-7729 | 4 | WASHER (11X25X3) |
| 3 | 400044X1 | 4 | BOLT (M10X1.5X80) |

1874896D
PR: t05i29k58b0137

## SWITCH GP-WIPER - CH135-9967
**INTERMITTENT 12 VOLT**

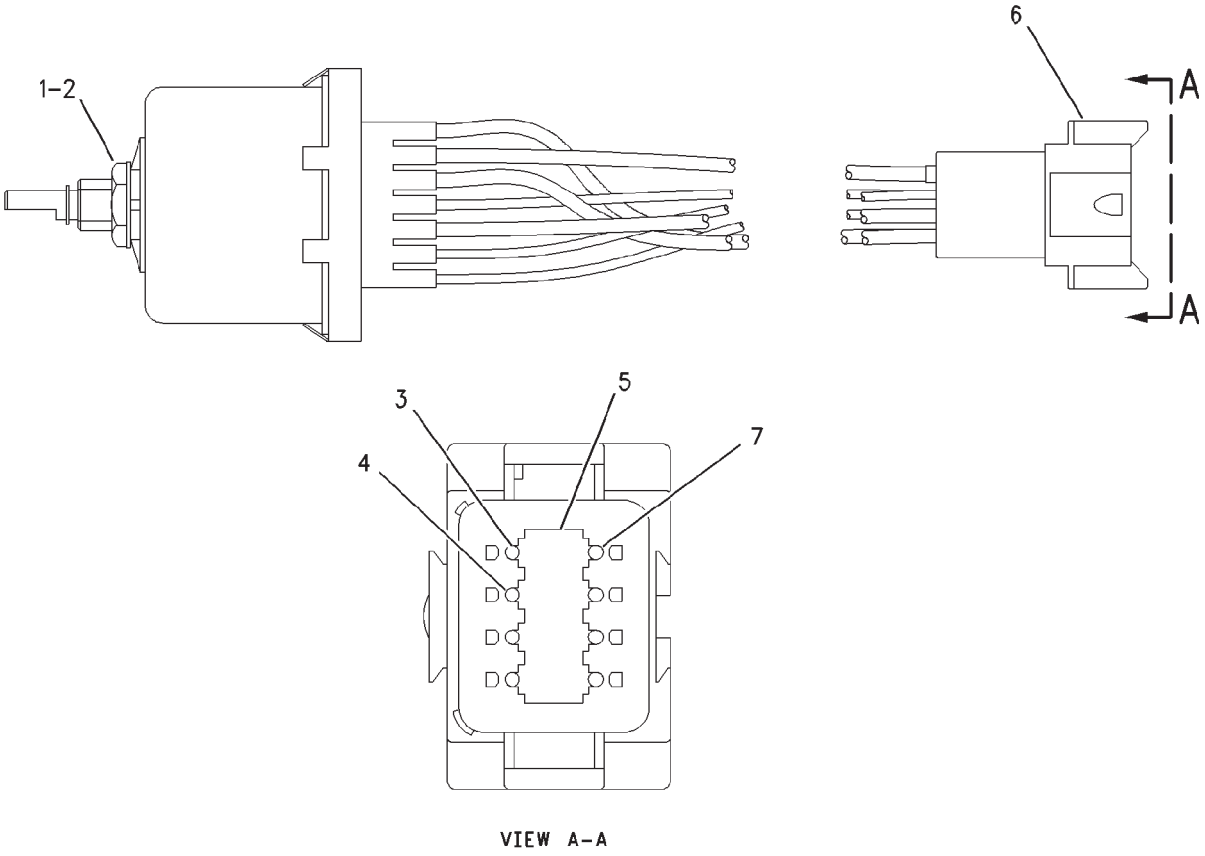


VIEW A–A

## SWITCH GP-WIPER - CH135-9967
### INTERMITTENT 12 VOLT

| ITEM | NUMBER | QTY | DESCRIPTION |
|---|---|---|---|
| - | CH135-9967 | -- | SWITCH AS-WIPER [A] |
| 1 | CH6V-8369 | 1 | NUT (7/16-28) |
| 2 | CH2H-3920 | 1 | LOCKWASHER (11.38MM ID) |
| 3 | CH8T-8737 | 1 | PLUG-SEAL |
| 4 | 400562X1 | 3 | PIN-CONNECTOR |
| 5 | CH3E-3389 | 1 | WEDGE-RECEPTACLE LOCK |
| 6 | CH102-8806 | 1 | KIT-RECEPTACLE (8 PIN)<br>(INCLUDES RECEPTACLE ASM AND WEDGE)<br>(SERVICED AS COMPLETE KIT ONLY) |
| 7 | 400861X1 | 4 | PIN-CONNECTOR |

[A] PART OF 196-3968 WIPER GP-WINDOW

00673034
PR: t05i29k58b0138

## RECEIVER KIT-TRANSMITTER - 162-4099

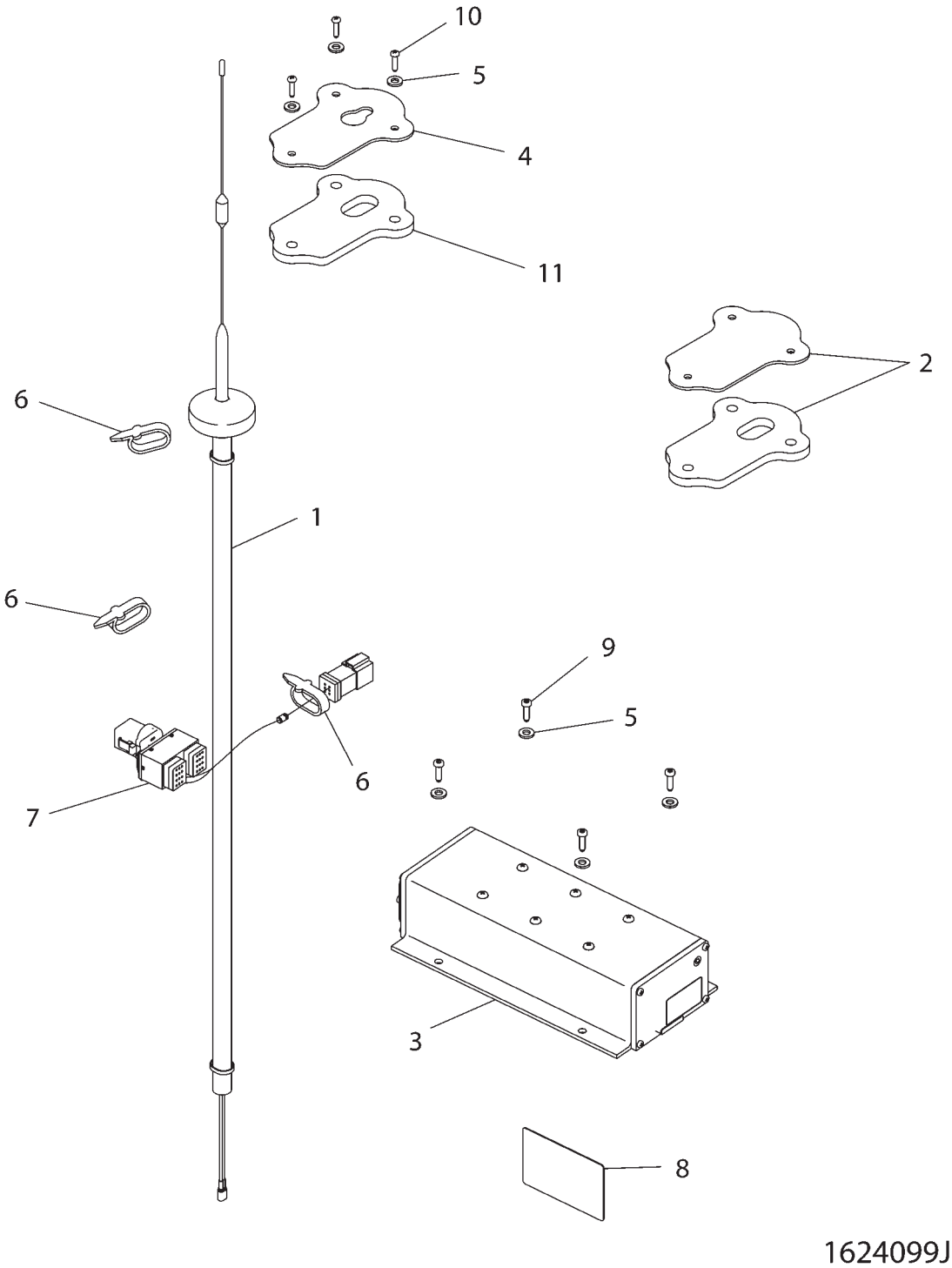

## RECEIVER KIT-TRANSMITTER - 162-4099

| ITEM | NUMBER | QTY | DESCRIPTION |
|---|---|---|---|
| | 162-4099 | -- | RECEIVER KIT-TRANSMITTER |
| 1 | CH207-6797 | 1 | ANTENNA AS.-ROOF(GPS/VHF |
| 2 | 142-9831 | 1 | COVER KIT-CAB |
| | 500679D1 | 1 | PLATE |
| | 500682D1 | 1 | GASKET-COVER (PL201 ANTENNA) |
| 3 | CH209-6417 | 1 | CONTROL GP-ELECTRONIC |
| 4 | 500680D1 | 1 | BRACKET |
| 5 | CH8T-4205 | 7 | WASHER-HARD 7.2IDX14.5ODX2MM |
| 6 | 400837X1 | 4 | STRAP-CABLE (PLASTIC) |
| 7 | 502176D1 | 1 | HARNESS AS. |
| 8 | CH185-7141 | 1 | FILM-WARN (LINK RADIO) |
| 9 | CH110-2028 | 4 | SCREW-NO10-14X19MM PAN,THD CTG |
| 10 | CH8T-9501 | 3 | SCREW-10-16X19.05 PAN,THD FMG |
| 11 | 500682D1 | 1 | GASKET-COVER (PL201 ANTENNA) |

1624099J
PR: t05i29k58b0139

## MOUNTING GP-PDA - 501168D1
AUTOGUIDE SYSTEM

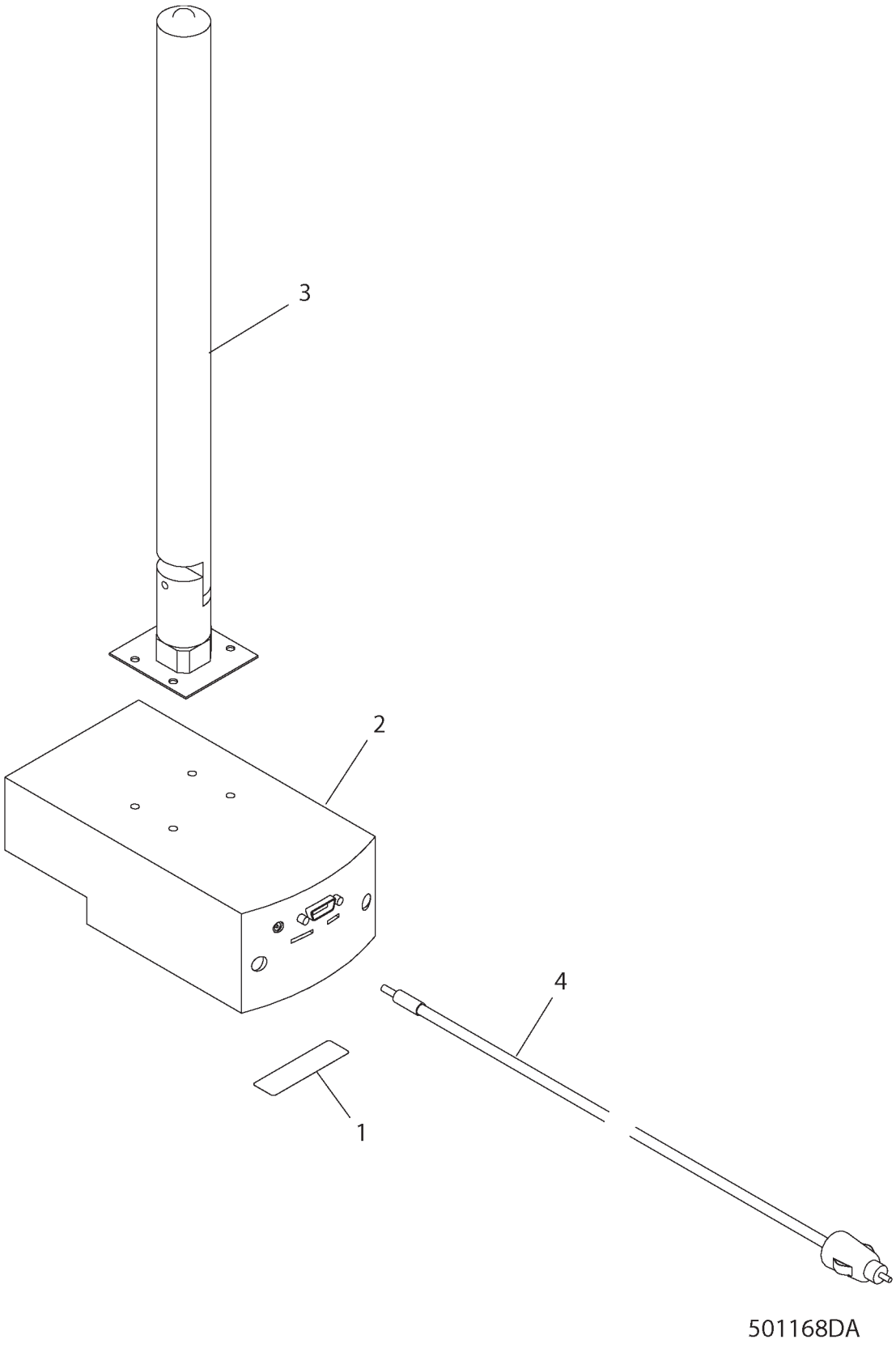

| ITEM | NUMBER | QTY | DESCRIPTION |
|---|---|---|---|
| - | 501168D1 | -- | MOUNTING GP-PDA |
| 1 | 500367D1 | 1 | FILM-AUTOGUIDE |
| 2 | 501169D1 | 1 | CRADLE GP |
| 3 | 501170D1 | 1 | ARM |
| 4 | 501171D1 | 1 | CABLE-ADAPTOR PLUG |

501168DA
PR: t05i29k58b0140

## KIT-GPS BASE STATION - 502609D1

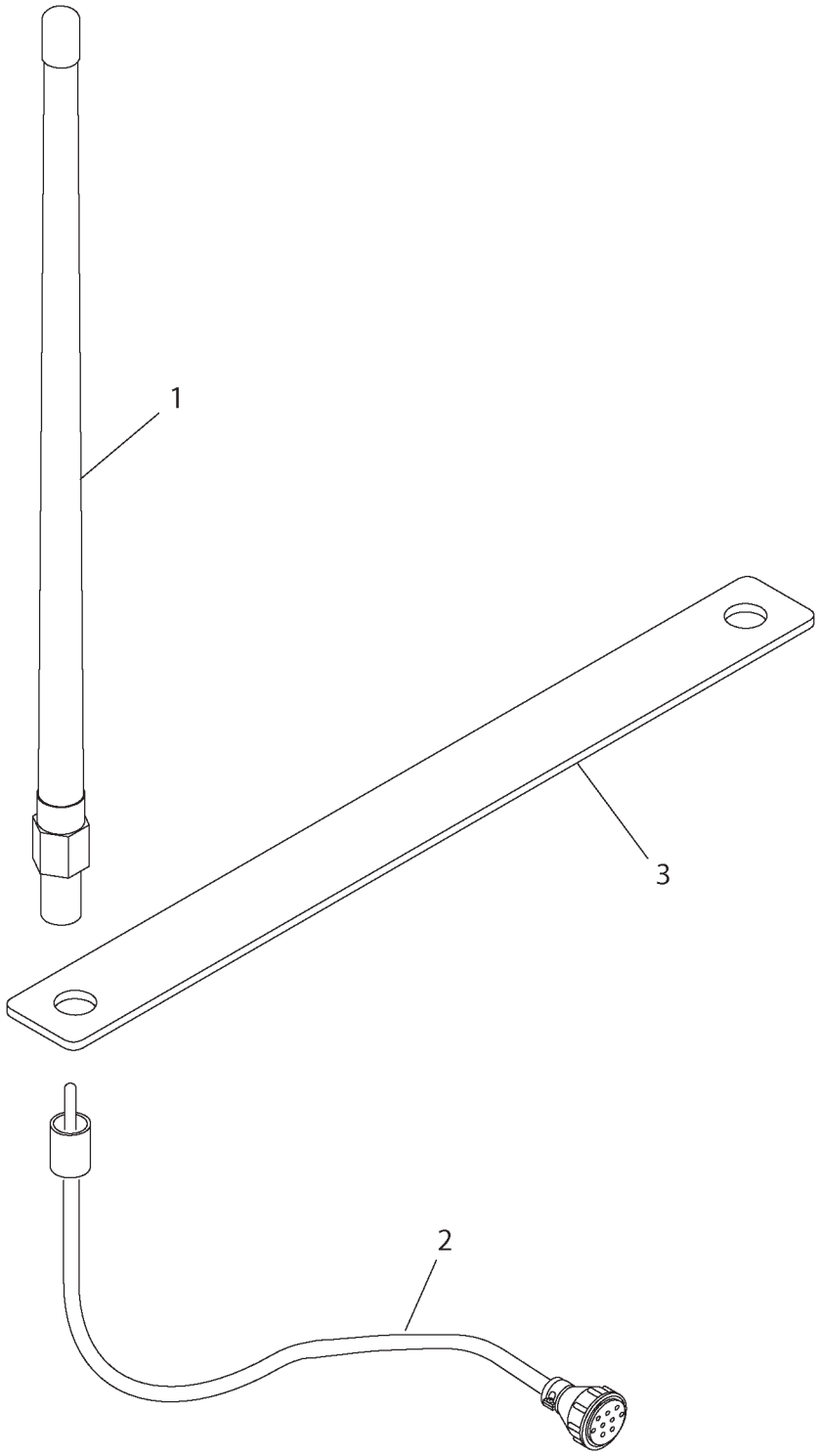

## KIT-GPS BASE STATION - 502609D1

| ITEM | NUMBER | QTY | DESCRIPTION |
|---|---|---|---|
| - | 502609D1 | -- | KIT-GPS BASE STATION |
| 1 | 501073D1 | 1 | ANTENNA AS-DATA RADIO |
| 2 | 501074D1 | 1 | CABLE AS |
| 3 | 501075D1 | 1 | BRACKET |
| 4 | 72571006 | 1 | SOFTWARE (NOT SHOWN) (ORDER FROM AGCO DEALER INFO NET) |
| 5 | 502610D1 | 1 | RECEIVER GP-GPS BASE STATION (NOT SHOWN) |
| 6 | 502611D1 | 1 | HARNESS AS-GPS BASE PWR (NOT SHOWN) |
| 7 | 502612D1 | 1 | CASE AS-GPS BASE (NOT SHOWN) |
| - | 232-0879 | 1 | TRIPOD AS (NOT PART OF KIT) (SERVICED AS COMPLETE AS) |

501124DA
PR: t05i29k58b0141

## ANTENNA GP-DATA RADIO - 501124D1

GPS BASE STATION

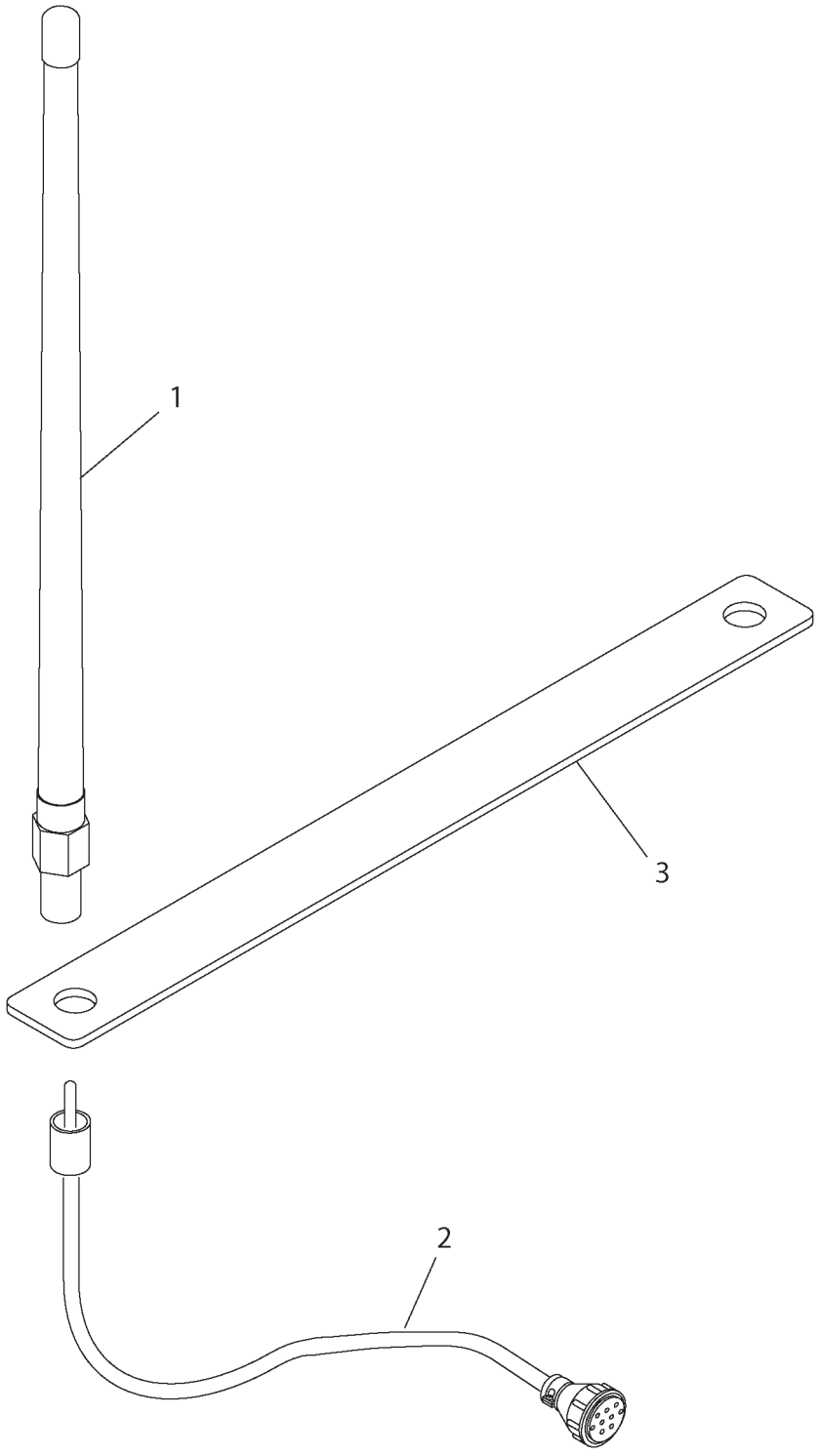

## ANTENNA GP-DATA RADIO - 501124D1

GPS BASE STATION

| ITEM | NUMBER | QTY | DESCRIPTION |
|---|---|---|---|
| - | 501124D1 | -- | ANTENNA GP-DATA RADIO |
| 1 | 501073D1 | 1 | ANTENNA AS-DATA RADIO |
| 2 | 501074D1 | 1 | CABLE AS |
| 3 | 501075D1 | 1 | BRACKET |

501124DA
PR: t05i29k58b0142

## RECEIVER GP-TRANSMITTER & GPS - 500607D1
AUTOGUIDE CONTROL

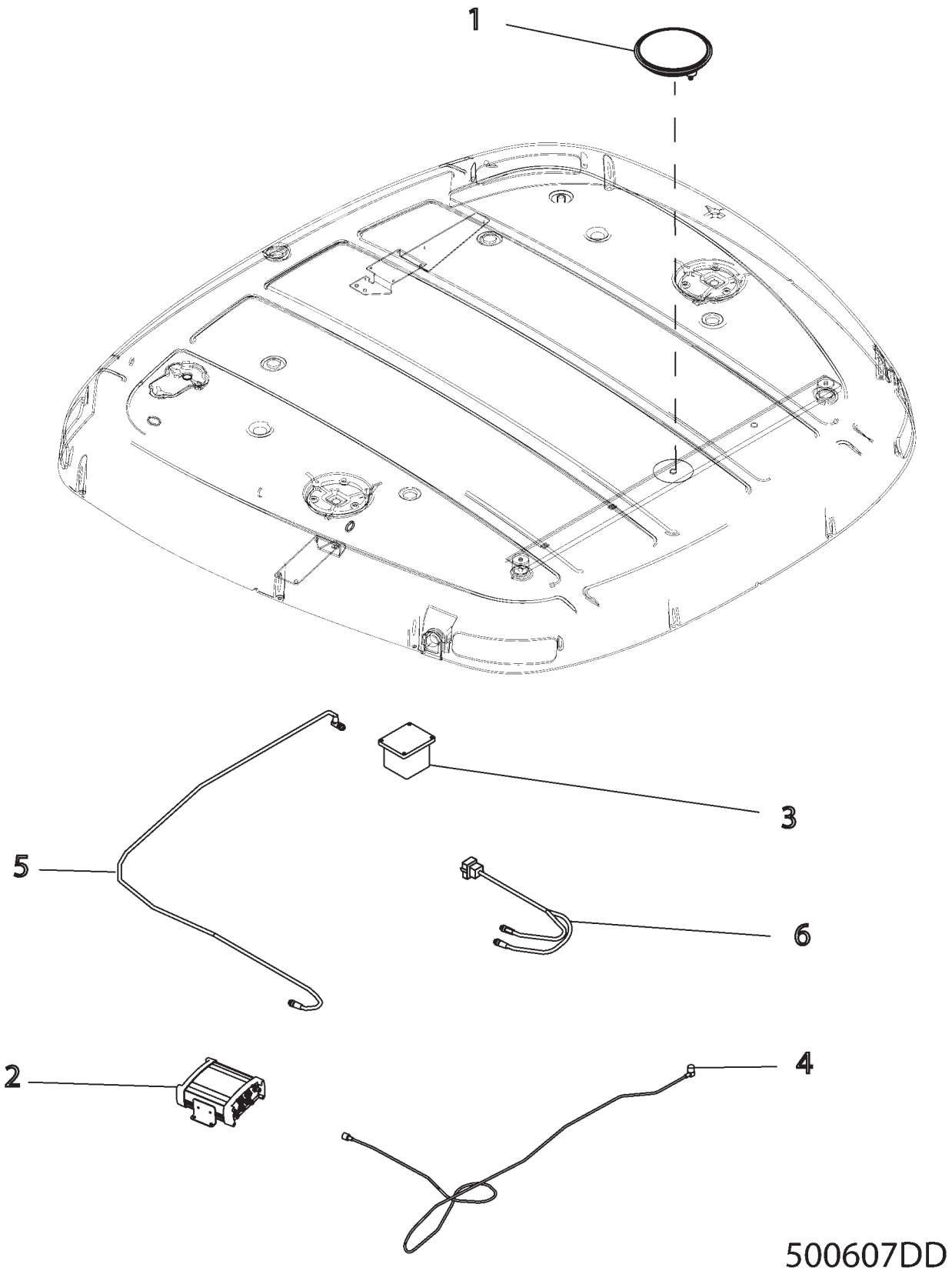

| ITEM | NUMBER | QTY | DESCRIPTION |
|---|---|---|---|
| - | 500607D1 | -- | RECEIVER GP-TRANSMITTER GPS [A] |
| 1 | 216-7835 | 1 | MOUNT (ANTENNA) |
| 2 | 216-7837 | 1 | RECEIVER MODULE |
| 3 | 72571008 | 1 | SENSOR GP-DMU (3AXIS) |
| 4 | 216-7836 | 1 | CABLE (ANTENNA) |
| 5 | 216-7839 | 1 | HARNESS (SENSOR GP-POSITION) |
| 6 | 216-7841 | 1 | HARNESS (RECEIVER-GPS) |
| 7 | 72571022 | 1 | SOFTWARE (NOT SHOWN) (ORDER FROM DEALER INFO NET) |

[A] PART OF 500628D1 & 500630D1
CONTROL AR-AUTOGUIDE

500607DD
PR: t05i29k58b0143

## VALVE GP-ETHER - 210-8961

**MT835 & MT845**

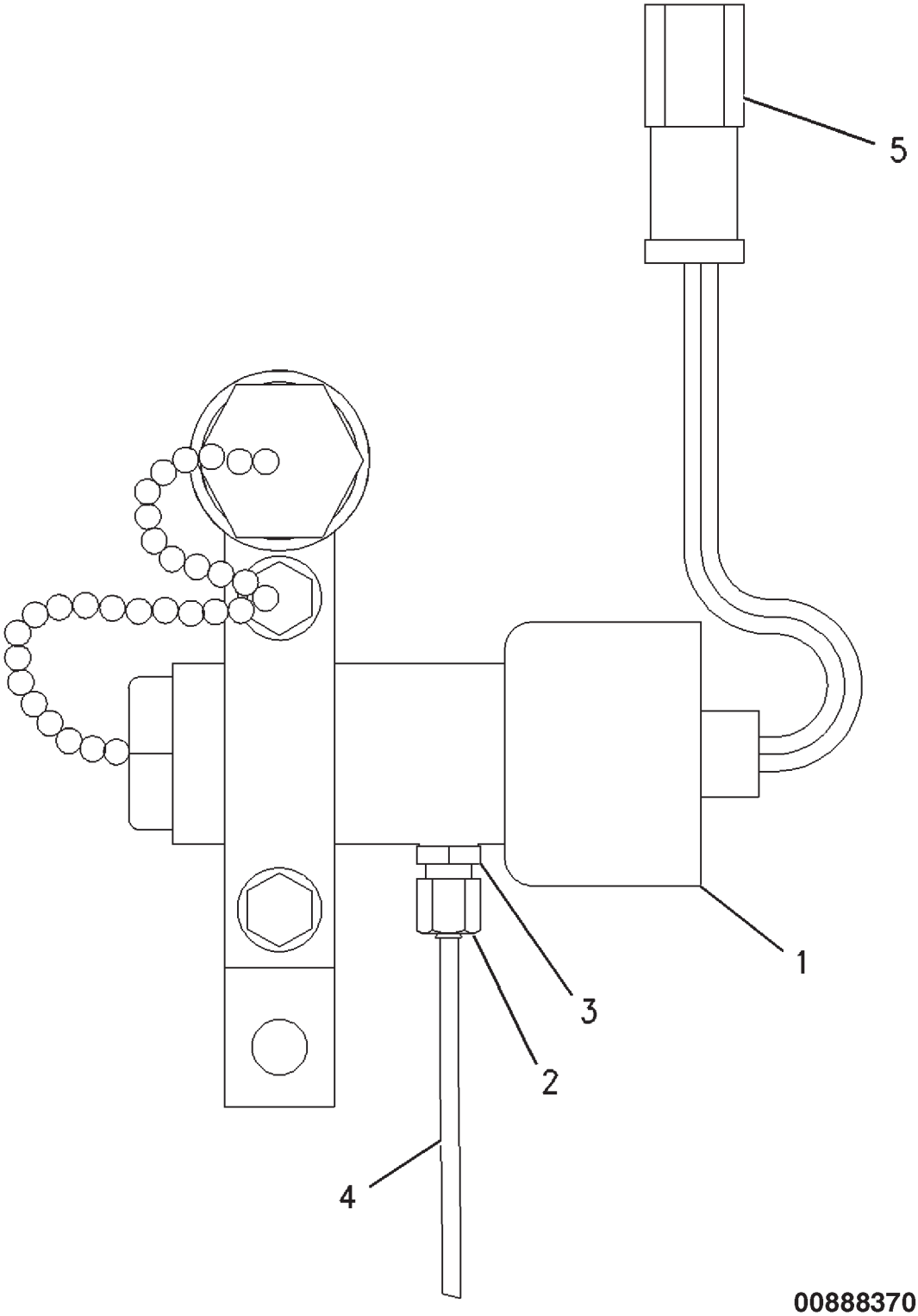

## VALVE GP-ETHER - 210-8961
**MT835 & MT845**

| ITEM | NUMBER | QTY | DESCRIPTION |
|---|---|---|---|
| - | 210-8961 | -- | VALVE GP-ETHER [A] |
| 1 | 210-3931 | 1 | VALVE-ETHER |
| 2 | 210-8519 | 1 | NUT |
| 3 | 210-8521 | 1 | FITTING |
| 4 | 210-3933 | AR | TUBE (64 cm) |
| 5 | CH102-8802 | 1 | KIT-RECEPTACLE (2 PIN)<br>(INCLUDES WEDGE AND RECEPTACLE ASM)<br>(SERVICED AS COMPLETE KIT ONLY) |

[A] PART OF 186-1671 STARTING AIDR GP-ETHER

00888370
PR: t05i29k58b0144

## VALVE GP-ETHER - 211-8220

**MT855 & MT865**

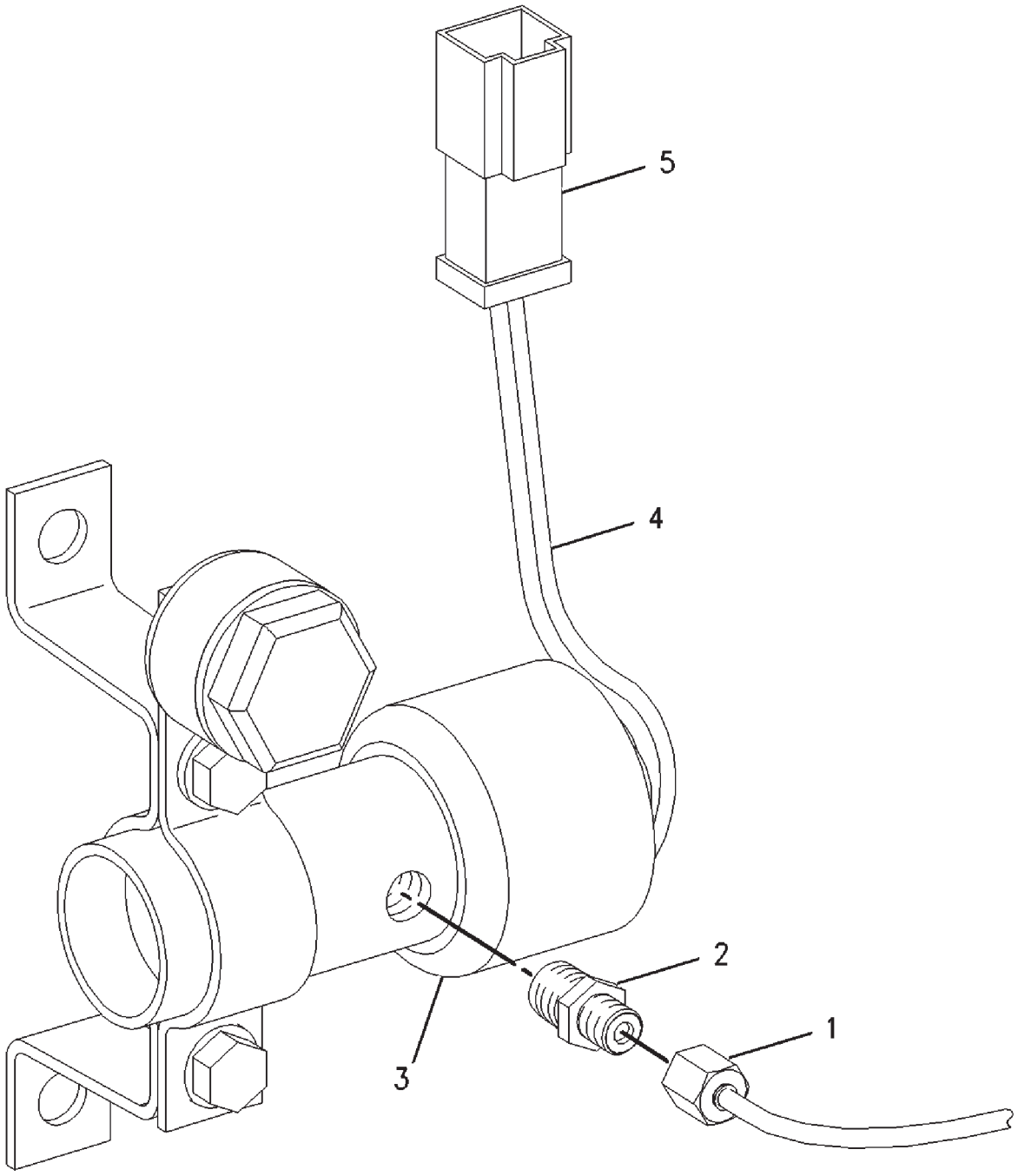


00878638

## VALVE GP-ETHER - 211-8220
**MT855 & MT865**

| ITEM | NUMBER | QTY | DESCRIPTION |
|---|---|---|---|
| - | 211-8220 | -- | VALVE GP-ETHER [A] |
| 1 | 210-8519 | 1 | NUT |
| 2 | 210-8521 | 1 | FITTING |
| 3 | 211-8222 | 1 | VALVE-ETHER |
| 4 | 210-3933 | | TUBE (64CM) |
| 5 | CH102-8802 | 1 | KIT-RECEPTACLE (2 PIN)<br>(INCLUDES RECEPTACLE ASM AND WEDGE)<br>(SERVICED AS COMPLETE KIT ONLY) |

[A] PART OF 187-1740 AID GP-ETHER START

00878638
PR: t05i29k58b0145

**WARNING GP-BACKUP - 195-5968**

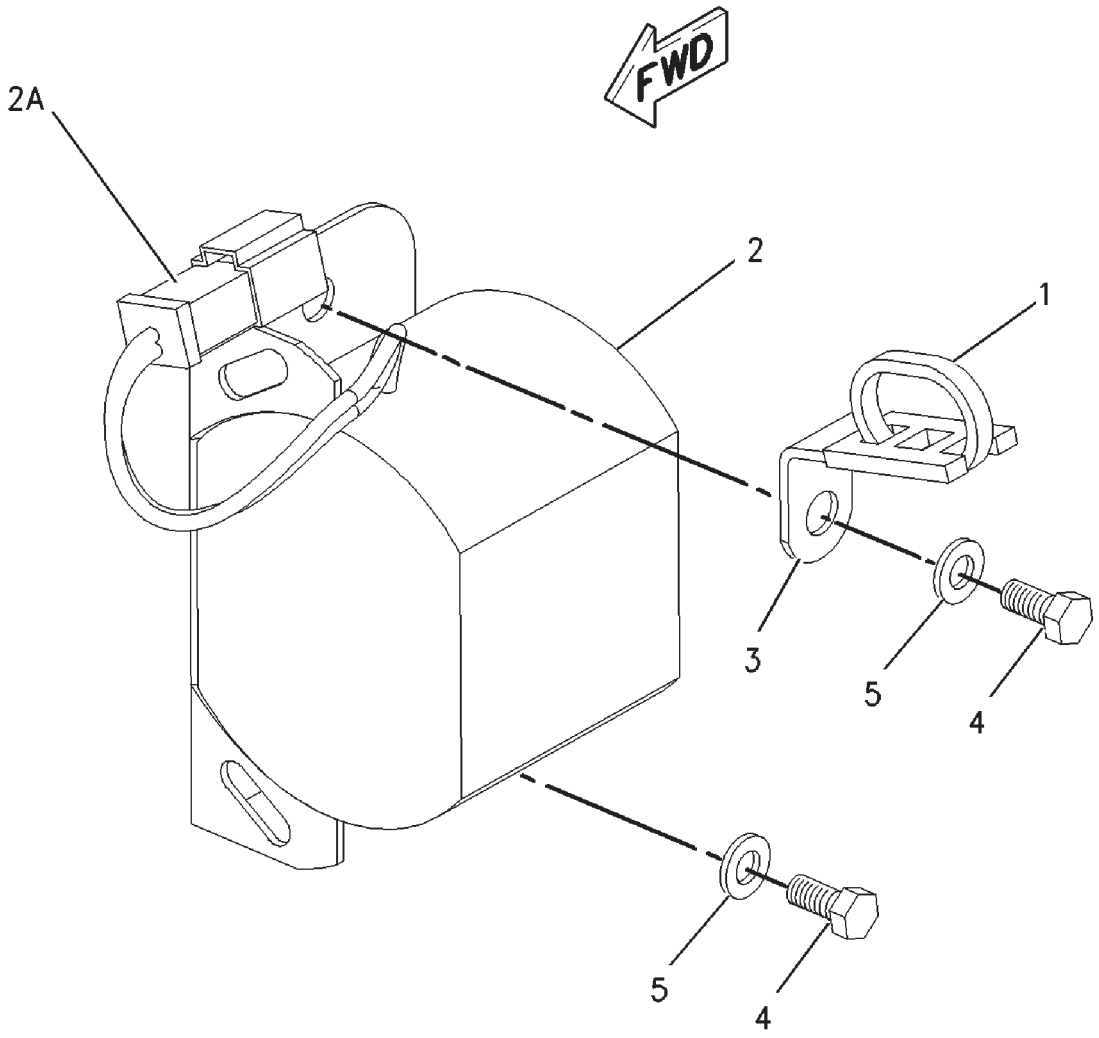


**00743485**

## WARNING GP-BACKUP - 195-5968

| ITEM | NUMBER | QTY | DESCRIPTION |
|---|---|---|---|
| - | 502759D1 | -- | WARNING GP-BACKUP (FIELD INSTALLED) |
| - | 502770D1 | -- | WARNING GP-BACKUP (FACT) (NOT SERVICED, ORDER FIELD INSTALLED) |
| - | 195-5968 | -- | WARNING GP-BACKUP [A] |
| 1 | CH7K-1181 | 1 | STRAP-CABLE |
| 2 | CH154-5428 | 1 | ALARM-BACK UP |
| 2A | CH102-8802 | 1 | KIT-RECEPTACLE (2 PIN) (INCLUDES RECEPTACLE ASM AND WEDGE) (SERVICED AS COMPLETE KIT ONLY) |
| 3 | CH156-6175 | 1 | CLIP |
| 4 | 400152X1 | 2 | BOLT (M6X1X16MM) |
| 5 | CH5P-4115 | 2 | WASHER-HARD (7.2X19X2) |

[A] PART OF 502759D1;502770D1 WARNING GP

00743485
PR: t05i29k58b0146

## WIRING GP REMOTE CONTROL - 173-6505

**ROW & SPECIAL APPLICATIONS**

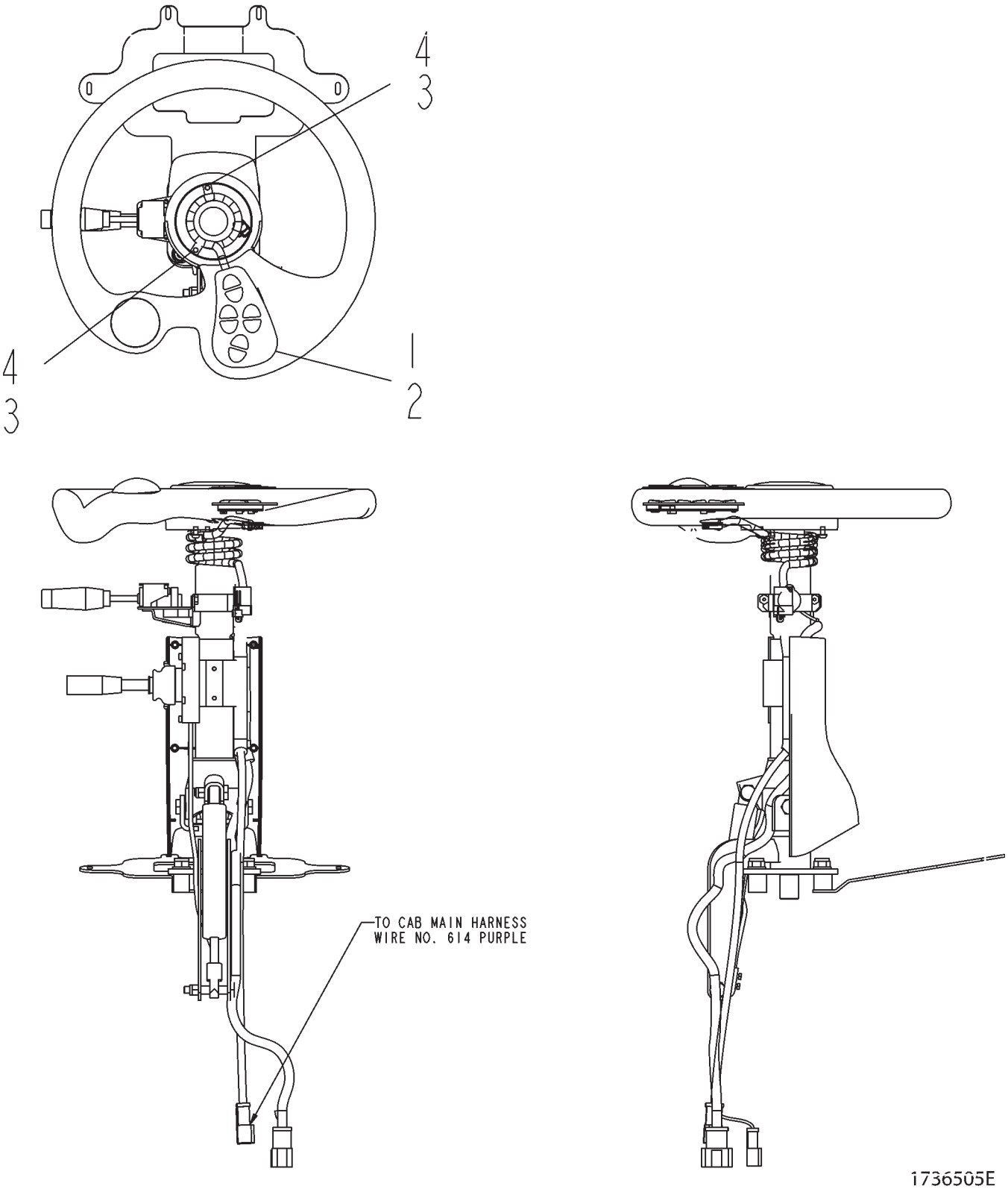

| ITEM | NUMBER | QTY | DESCRIPTION |
|---|---|---|---|
| - | 173-6505 | -- | WIRING GP [A] (NOT SERVICED) |
| 1 | 502244D1 | 1 | HARNESS-RADIO (REMOTE CONTROL) |
| 2 | 172-8035 | 1 | SWITCH (STEERING WHEEL RADIO CONTROLS) |
| 3 | CH208-9482 | 2 | CLIP |
| 4 | CH095-0736 | 2 | SCREW-MACHINE (M5X0.8X10MM) |

[A] STEERING WHEEL MOUNTED RADIO CONTROLS

1736505E
PR: t05i29k58b0147

## WIRING GP - 214-3504
**AUTOGUIDE ISO COMPATIBLE**

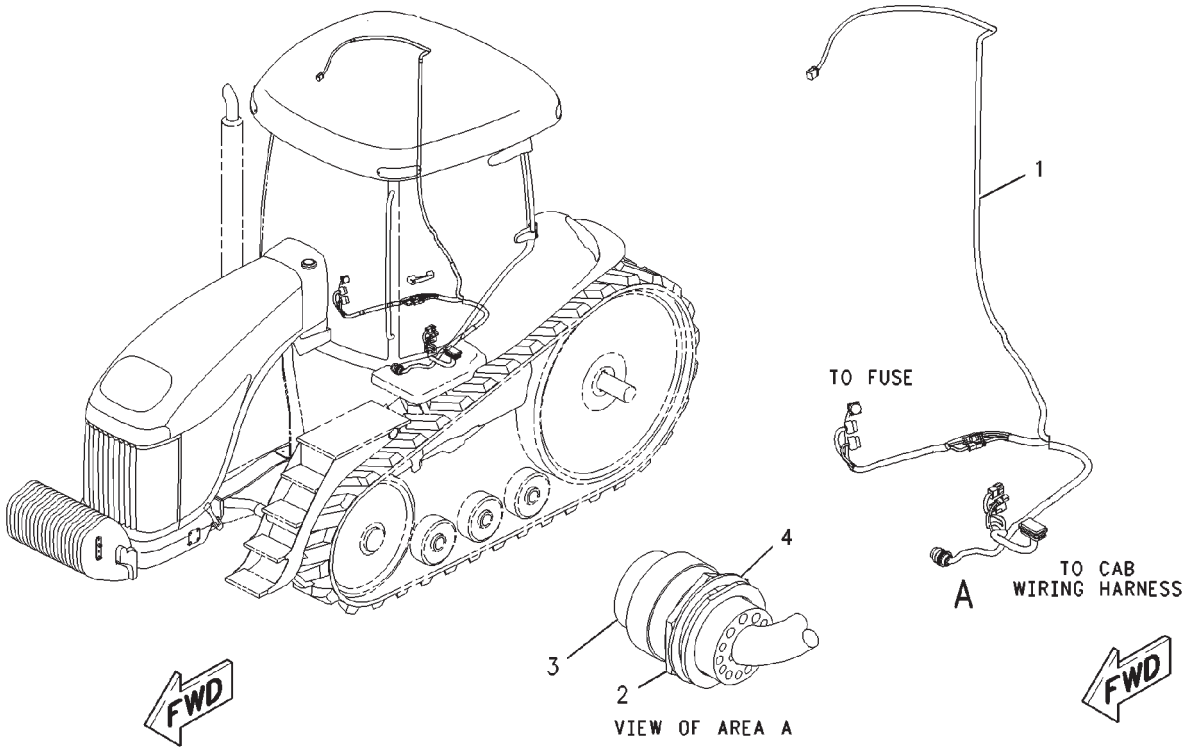


00895779

## WIRING GP - 214-3504
**AUTOGUIDE ISO COMPATIBLE**

| ITEM | NUMBER | QTY | DESCRIPTION |
|---|---|---|---|
| - | 214-3504 | -- | WIRING GP (NOT SERVICED) |
| 1 | 500910D1 | 1 | HARNESS ASM (ISO) |
| 2 | 400295X1 | 1 | NUT (1 11/16-18 UNEF-2B) |
| 3 | CH219-0664 | 1 | CAP |
| 4 | CH128-4249 | 1 | LOCKWASHER |

00895779
PR: t05i29k58b0148

## WIRING GP-AUXILIARY - 162-4097

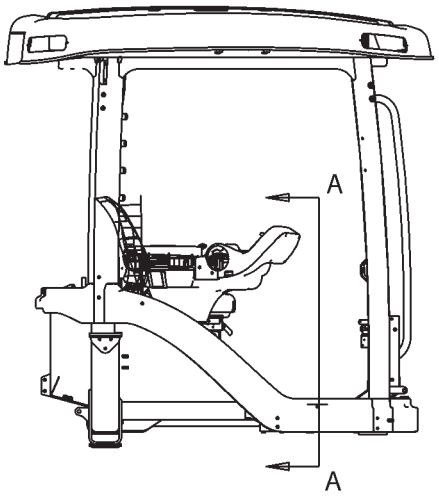


RIGHT SIDE VIEW OF CAB

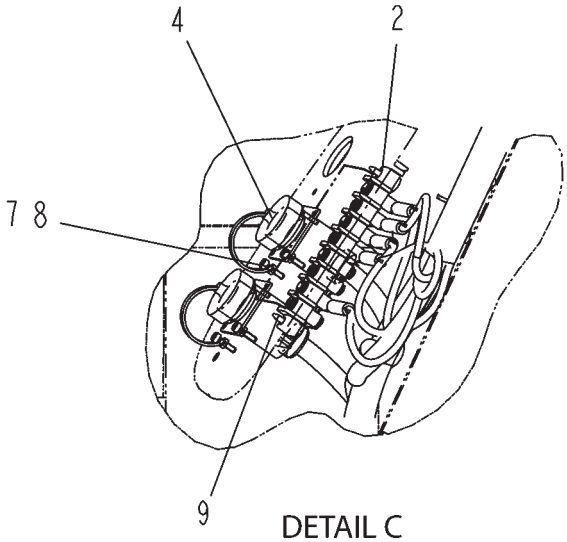


DETAIL C

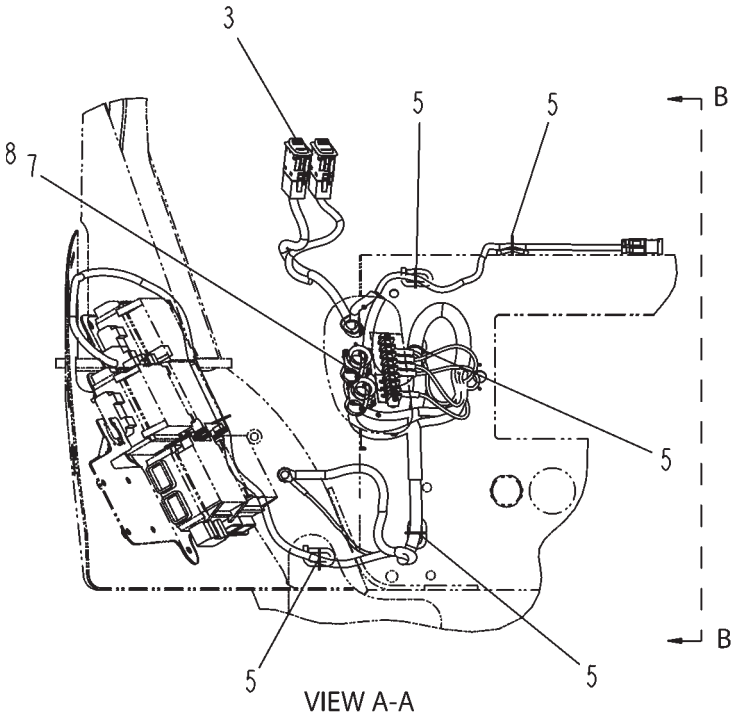


VIEW A-A

(SEAT NOT SHOWN)

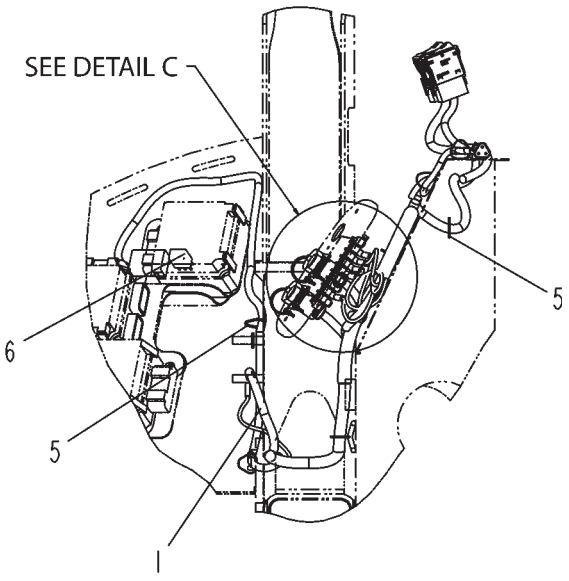


VIEW B-B

1624097F

## WIRING GP-AUXILIARY - 162-4097

| ITEM | NUMBER | QTY | DESCRIPTION |
|---|---|---|---|
| - | 502795D1 | -- | WIRING GP-AUXILIARY (NOT SERVICED) |
| - | 162-4097 | -- | WIRING GP-AUXILIARY [A] (REF ONLY) (NOT SERVICED) |
| 1 | 502180D1 | 1 | HARNESS ASM (AUXILIARY POWER) |
| 2 | CH136-5268 | 1 | STRIP |
| 3 | 169-8229 | 2 | SWITCH-ROCKER (AUXILIARY POWER) |
| 4 | CH124-4653 | 2 | CAP |
| 5 | 400837X1 | 7 | STRAP-CABLE |
| 6 | CH146-9439 | 1 | RELAY(12V)(AUXILIARY POWER SWITCHES) |
| 7 | 400006X1 | 6 | BOLT-SOCKET HEAD (M3X0.5X12MM) |
| 8 | CH3C-6969 | 6 | NUT (M3X0.5) |
| 9 | CH119-5026 | 2 | SCREW-PAN HEAD (10-16X0.63 IN) |

[A] PART OF 500843D1;500849D1 CAB AR;
502795D1 WIRING GP-CONSOLE

1624097F
PR: t05i29k58b0149

## WIRING GP-CAB - 152-0420

1 OF 2
ROW & SPECIAL APPLICATIONS

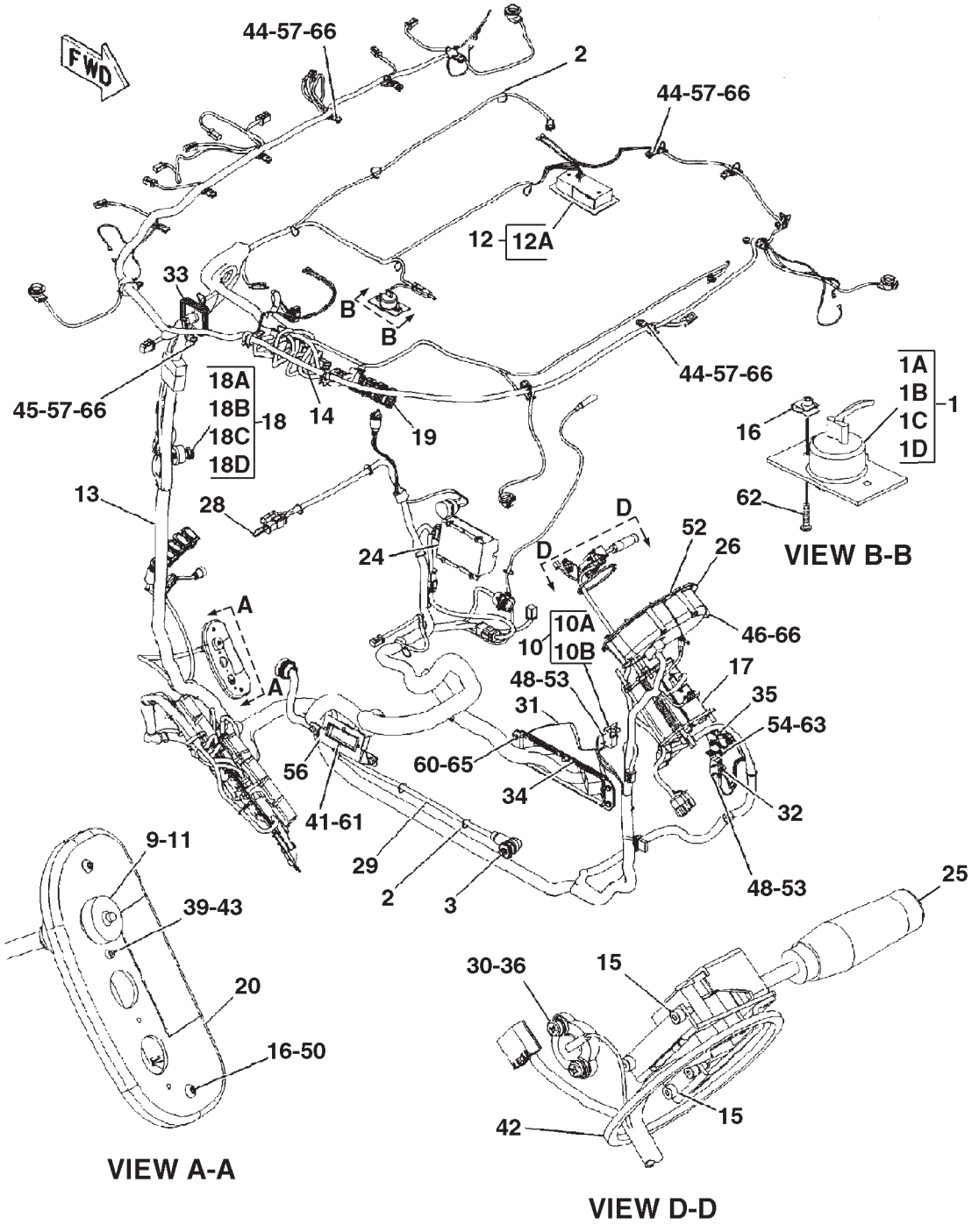


0898288A

## WIRING GP-CAB - 152-0420

1 OF 2
ROW & SPECIAL APPLICATIONS

| ITEM | NUMBER | QTY | DESCRIPTION |
|---|---|---|---|
| - | 152-0420 | -- | WIRING GP-CAB [A] (NOT SERVICED) |
| 1 | 3E-6284 | 1 | LAMP ASM-IMPLEMENT CONTROL (12 VOLT) (SERVICE REPAIR ORDER 1A THRU 1D) |
| 1A | CH102-8802 | 1 | KIT-RECEPTACLE (2 PIN) (INCLUDES RECEPTACLE ASM AND WEDGE) (SERVICED AS COMPLETE KIT ONLY) |
| 1B | 6T-7298 | 1 | LAMP (12 VOLT) (IMPLEMENT CONTROL) |
| 1C | 186-3735 | 2 | PIN-CONNECTOR |
| 1D | 400511X1 | 1 | WEDGE |
| 2 | 400837X1 | 62 | STRAP-CABLE |
| 3 | CH3T-8607 | 1 | TERMINAL ASM |
| | 6F-7044 | 2 | NUT-FULL (1/2-20) |
| | 9B-0453 | 2 | LOCKWASHER |
| 9 | 124-4653 | 1 | CAP |
| 10 | 129-6457 | 1 | SWITCH ASM-LIMIT (BRAKE LIGHT) (FOR SERVICE REPAIR ORDER 10A & 10B) |
| 10A | 6V-8376 | 3 | SCREW-MACHINE (8-32X0.25 IN) |
| 10B | 9B-7233 | 3 | LOCKWASHER |
| 11 | 135-4483 | 4 | RETAINER |
| 12 | 136-5511 | 1 | LAMP ASM-DOME (FOR SERVICE REPAIR ORDER 12A) |
| 12A | 9W-3326 | 1 | LAMP (12 VOLT) (DOME LIGHT) |
| 13 | 136-5530 | 1 | HARNESS ASM (CAB MAIN) |
| 14 | 501949D1 | 1 | HARNESS ASM (ROOF) |
| 15 | 216-8277 | 4 | BOLT-SOCKET HEAD |
| 16 | 154-8079 | 4 | NUT (U-TYPE RETAINER) |
| 17 | 217-9779 | 1 | CONTROL GP-STEERING (SEE BREAKDOWN FOR COMPONENTS) |
| 18 | CH163-2657 | 1 | SWITCH GP-START [B] (FOR SERVICE REPAIR ORDER 18A THRU 18D) |
| 18A | 3E-3377 | 1 | WEDGE-RECEPTACLE LOCK |
| 18B | 7T-6799 | 1 | NUT-MOUNTING (1-32) |
| 18C | 186-3735 | 2 | PIN-CONNECTOR |
| 18D | 102-8804 | 1 | KIT-RECEPTACLE (4 PIN) (INCLUDES RECEPTACLE ASM AND WEDGE) (SERVICED AS COMPLETE KIT ONLY) |
| - | CH5P-8500 | 1 | KEY IGNITION |
| 19 | CH165-5975 | 10 | PLUG-PANEL |
| 20 | 169-6367 | 1 | PANEL ASM (SERVICE) |
| | | 1 | DOOR (ORDER ITEM 20) |
| | 169-6370 | 1 | PANEL |
| | | 1 | SPRING-TORSION (ORDER ITEM 20) |
| 24 | 170-1198 | 1 | MODULE-FLASHER |
| 25 | 170-2204 | 1 | SWITCH ASM (HIGH/LOW BEAM,ROADING,TURN) |
| 26 | 212-6998 | 1 | MODULE GP-DISPLAY (DASH) |

CONTINUED

[A] PART OF 500843D1;500844D1;500849D1 CAB AR
[B] REQUIRES CH5P-8500 KEY

## WIRING GP-CAB - 152-0420

1 OF 2
ROW & SPECIAL APPLICATIONS

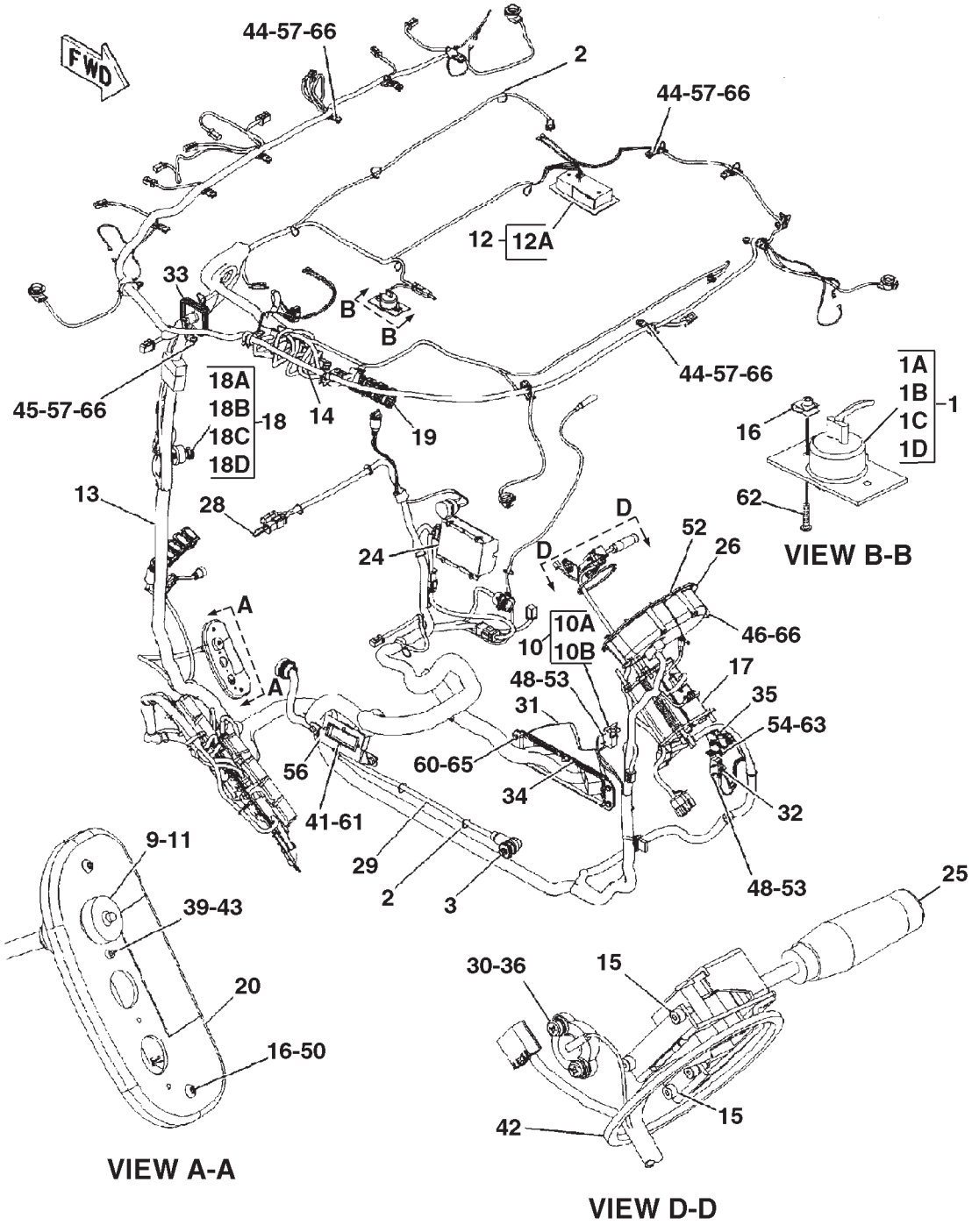


0898288A

## WIRING GP-CAB - 152-0420

1 OF 2
ROW & SPECIAL APPLICATIONS

| ITEM | NUMBER | QTY | DESCRIPTION |
|---|---|---|---|
| - | 152-0420 | -- | WIRING GP-CAB [A] (NOT SERVICED) |
| 28 | 501940D1 | 1 | WIRING GP-TRAILER JUMPER (SEE BREAKDOWN) |
| 29 | 502188D1 | 1 | CABLE (CAB POWER) |
| 30 | 8C-8514 | 2 | SCREW-MACHINE (8-32X.375 IN) |
| 31 | 177-0381 | 1 | HOUSING |
| 32 | 129-6457 | 1 | SWITCH ASM-LIMIT (INCHING PEDAL) (FOR SERVICE REPAIR ORDER 32A & 32B) |
| 32A | 6V-8376 | 3 | SCREW-MACHINE (8-32X0.25 IN) |
| 32B | 9B-7233 | 3 | LOCKWASHER |
| 33 | 178-7957 | 1 | GROMMET |
| 34 | 180-5244 | 1 | SEAL-CONNECTOR |
| 35 | 500317D1 | 1 | SENSOR GP-POSITION (INCHING PEDAL) |
| 36 | 096-6166 | 10 | WASHER-HARD (4.5X9X1) |
| 39 | 153-9300 | 1 | BOLT-SOCKET HEAD (M3X0.5X12MM) |
| 41 | 3B-4501 | 12 | LOCKWASHER |
| 42 | CH7K-1181 | 1 | STRAP-CABLE |
| 43 | 3C-6969 | 5 | NUT (M3X0.5) |
| 44 | 4P-7581 | 15 | CLIP |
| 45 | 4P-8134 | 2 | CLIP |
| 46 | CH5C-2874 | 4 | NUT (M5X.8) |
| 48 | CH216-9085 | 4 | SCREW-PAN HEAD |
| 50 | 7Y-7256 | 2 | SCREW-TRUSS HEAD (M4X0.7X35MM) |
| 52 | 8T-0337 | 6 | SCREW-MACHINE (M4X0.7X12MM) |
| 53 | CH8T-2658 | 4 | LOCKNUT (M3X0.5) |
| 54 | 8T-2659 | 2 | LOCKNUT (M4X0.7) |
| 56 | 177-0385 | 1 | PLATE ASM |
| | CH8T-3612 | 2 | NUT-WELD (M8X1.25) |
| 57 | 110-2028 | 17 | SCREW-PAN HEAD (10-14X.75 IN) (10-14X.75IN) |
| 60 | CH8T-4205 | 7 | WASHER-HARD (7.2X14.5X2MM) |
| 61 | 8T-9405 | 12 | BOLT-SOCKET HEAD (M4X0.7X16MM) |
| 62 | 123-0707 | 2 | SCREW-HEX SOCKET (M4X0.7X20MM) |
| 63 | 9X-1046 | 2 | SCREW (M4X0.7X18MM) |
| 65 | 9X-2044 | 7 | SCREW-TRUSS HEAD (M6X1X16MM) |
| 66 | 098-8968 | 25 | WASHER (5X16X1.2) |

[A] PART OF 500843D1;500844D1;500849D1 CAB AR
[B] REQUIRES CH5P-8500 KEY

0898288A
PR: t05i29k58b0150

## WIRING GP-CAB - 152-0420

2 OF 2
ROW & SPECIAL APPLICATIONS

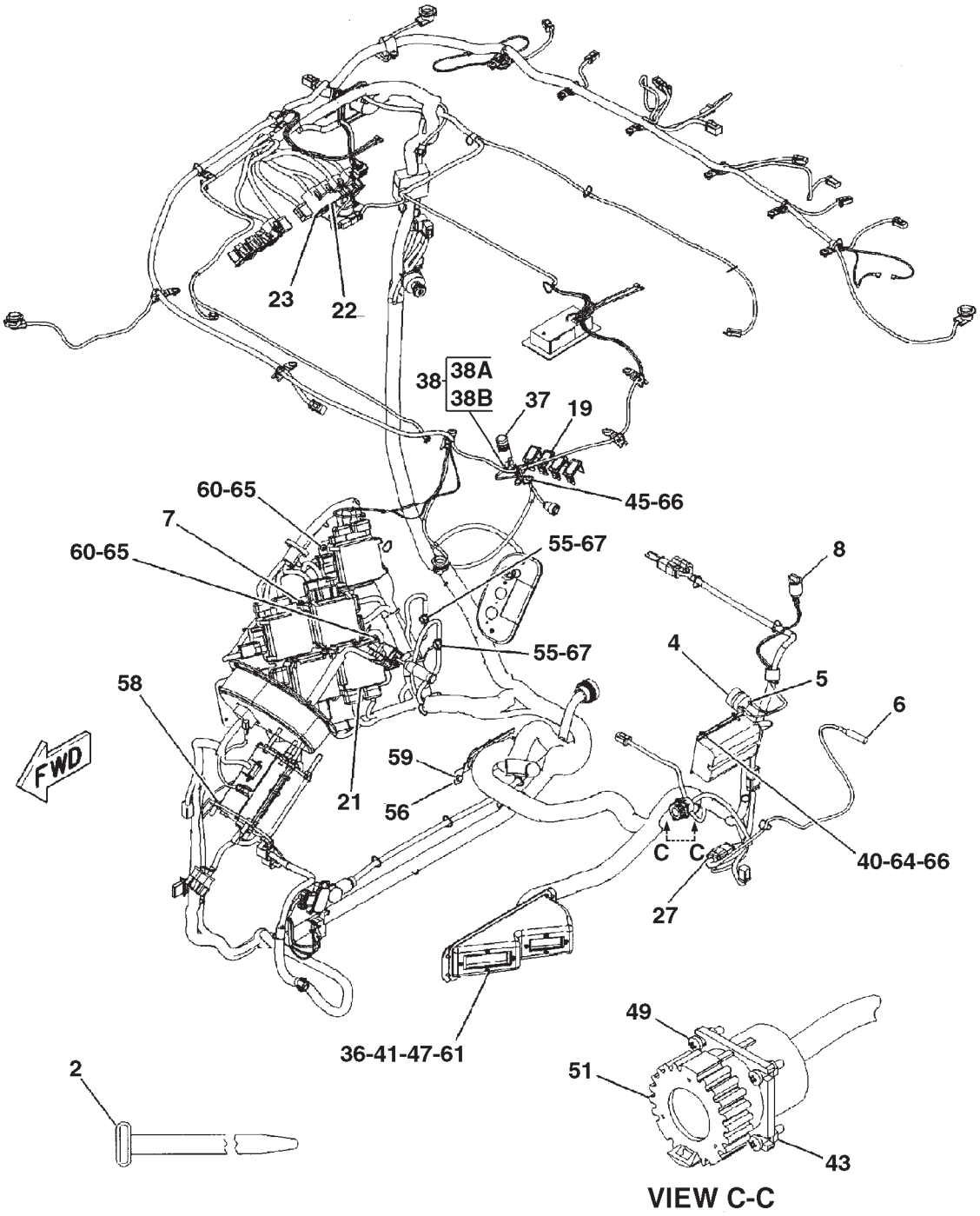


0898293A

## WIRING GP-CAB - 152-0420
2 OF 2
ROW & SPECIAL APPLICATIONS

| ITEM | NUMBER | QTY | DESCRIPTION |
|---|---|---|---|
| - | 152-0420 | -- | WIRING GP-CAB [A] (NOT SERVICED) |
| 2 | 3S-2093 | 62 | STRAP-CABLE |
| 4 | 4E-2229 | 1 | DAMPER-ALARM (VOLUME CONTROL) |
| 5 | CH219-4673 | 1 | HORN (OPERATOR AUDIBLE ALARM) |
| 6 | 105-8034 | 1 | SWITCH-LIMIT (CAB DOOR) |
| 7 | 116-7471 | 1 | PULLER-MINIFUSE |
| 8 | 117-2311 | 1 | RECEPTACLE-POWER (12 VOLT) |
| 19 | CH165-5975 | 10 | PLUG |
| 21 | 169-6380 | 1 | PANEL GP-FUSE (NOT SERVICED) (SEE BREAKDOWN FOR COMPONENTS) |
| 22 | 216-3028 | 1 | SWITCH-ROCKER (HAZARD) |
| 23 | 169-8231 | 1 | SWITCH-ROCKER (FLOOD LIGHTS) |
| 27 | 173-7707 | 1 | HARNESS (FLASHER) |
| 36 | 096-6166 | 10 | WASHER-HARD (4.5X9X1) |
| 37 | 145-0846 | 1 | KNOB-LIGHTER |
| 38 | 145-0847 | 1 | HOUSING ASM (LIGHTER) (FOR SERVICE REPAIR ORDER 38A & 38B) |
| 38A | 6V-8376 | 1 | SCREW-MACHINE (8-32X0.25 IN) |
| 38B | 9B-7233 | 1 | LOCKWASHER |
| 40 | 191-2276 | 4 | SCREW-TRUSS HEAD (M5X0.8) |
| 41 | 3B-4501 | 12 | LOCKWASHER |
| 43 | 3C-6969 | 5 | NUT (M3X0.5) |
| 45 | 4P-8134 | 2 | CLIP |
| 47 | CH5C-8312 | 8 | NUT (M4X0.7) |
| 49 | 6V-9671 | 4 | SCREW-MACHINE (M3X0.5X12MM) |
| 51 | 8C-6354 | 1 | CAP-RECEPTACLE |
| 55 | 400287X1 | 2 | WASHER-HARD (11X21X2.5) |
| 56 | 177-0385 | 1 | PLATE ASM |
|  | CH8T-3612 | 2 | NUT-WELD (M8X1.25) |
| 58 | 400058X1 | 4 | BOLT (M10X1.5X30MM) |
| 59 | 400227X1 | 2 | BOLT (M8X1.25X16MM) |
| 60 | CH8T-4205 | 7 | WASHER-HARD (7.2X14.5X2MM) |
| 61 | 8T-9405 | 12 | BOLT-SOCKET HEAD (M4X0.7X16MM) |
| 64 | 179-4324 | 4 | LOCKNUT (M5X0.8) |
| 65 | 9X-2044 | 7 | SCREW-TRUSS HEAD (M6X1X16MM) |
| 66 | 098-8968 | 25 | WASHER (5X16X1.2) |
| 67 | 400039X1 | 2 | BOLT (M10X1.5X25MM) |

[A] PART OF 500843D1;500844D1;500849D1
CAB AR

## WIRING GP-CAB - 152-0005A

EAME ONLY

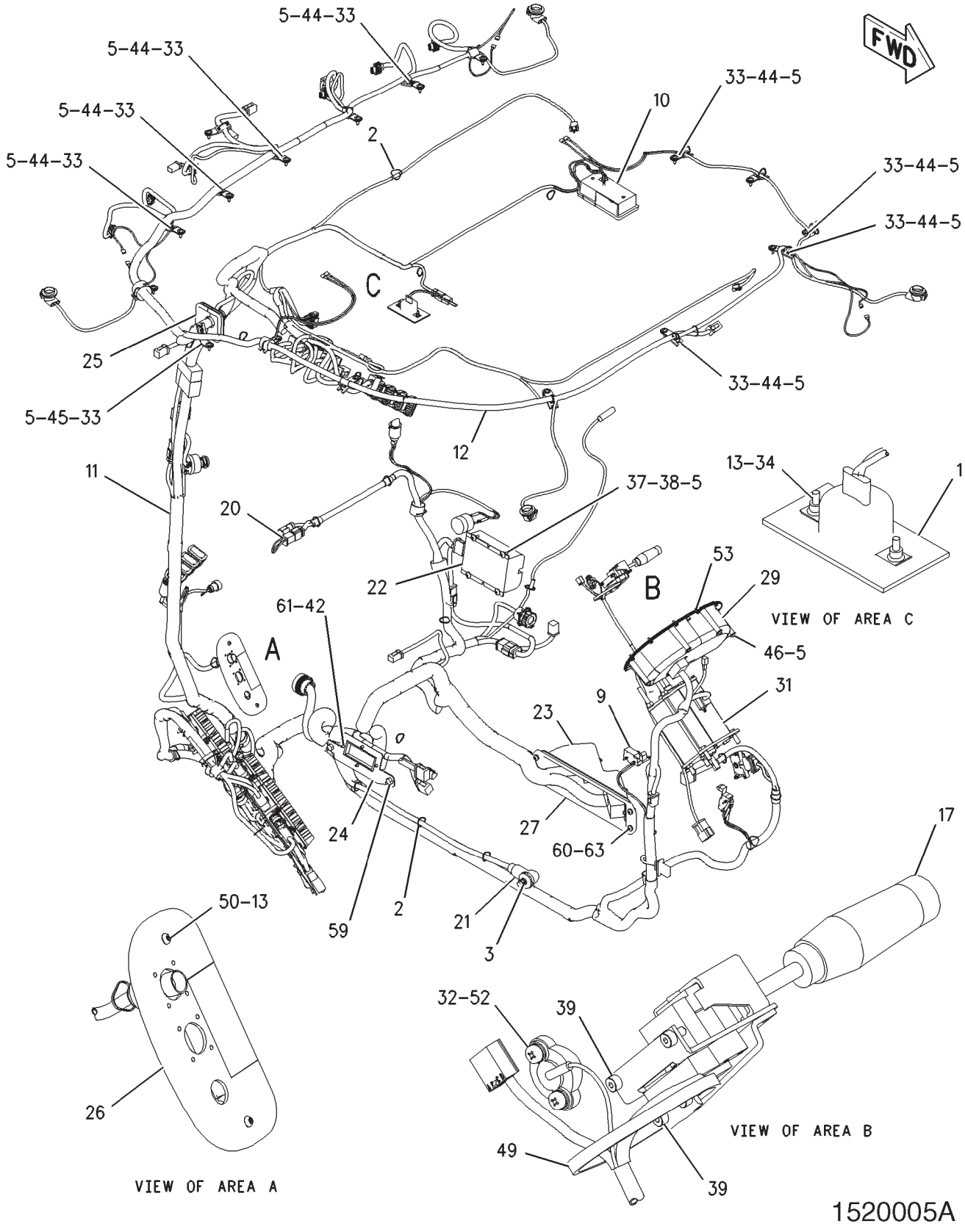

## WIRING GP-CAB - 152-0005A
EAME ONLY

| ITEM | NUMBER | QTY | DESCRIPTION |
|---|---|---|---|
| - | 152-0005 | -- | WIRING GP-CAB [A] (NOT SERVICED) |
| 1 | 501935D1 | 1 | COURTESY LIGHT AS (12 VOLT) |
| | | | (SEE BREAKDOWN FOR COMPONENTS) |
| 2 | 400837X1 | 63 | STRAP-CABLE [B] |
| 3 | CH3T-8607 | 1 | STUD ASY-POWER TERMINAL |
| | 6F-7044 | 2 | NUT-FULL (1/2-20) |
| | 9B-0453 | 2 | LOCKWASHER |
| 5 | 400076X1 | 25 | WASHER (5X16X1.2) |
| 9 | CH129-6457 | 1 | SWITCH AS-LIMIT (BRAKE LIGHT) |
| | CH6V-8376 | 3 | SCREW-MACHINE (8-32X0.25 IN) |
| | CH9B-7233 | 3 | LOCKWASHER |
| 10 | CH136-5511 | 1 | LAMP AS-DOME |
| | CH9W-3326 | 1 | LAMP (12 VOLT) |
| 11 | 500446D1 | 1 | HARNESS AS (CAB MAIN) |
| 12 | 501949D1 | 1 | HARNESS AS (ROOF) |
| 13 | 400084X1 | 4 | NUT-RETAINER (M4X0.07X0.6-3.8PANEL) |
| 17 | 170-2204 | 1 | SWITCH AS (HIGH/LOW BEAM, ROADING, TURN) |
| 20 | 173-7708 | 1 | HARNESS AS (TRAILER CONNECTOR) |
| 21 | 502188D1 | 1 | CABLE AS (CAB POWER) |
| 22 | CH175-7057 | 1 | MODULE-FLASHER |
| 23 | 177-0381 | 1 | HOUSING-CAB INTERFACE |
| 24 | 177-0385 | 1 | PLATE AS |
| 25 | 178-7957 | 1 | GROMMET-INNER ROOF |
| 26 | 179-4204 | 1 | PANEL AS (SERVICE) |
| 27 | 180-5244 | 1 | SEAL-CONNECTOR |
| 29 | CH212-6998 | 1 | MODULE GP-DISPLAY |
| 31 | 217-9780 | 1 | CONTROL GP-STEERING |
| | | | (SEE BREAKDOWN FOR COMPONENTS) |
| 32 | CH096-6166 | 10 | WASHER-HARD (4.5X9X1) |
| 33 | CH110-2028 | 17 | SCREW-PAN HEAD (10-14X.75 IN) |
| 34 | CH123-0707 | 2 | SCREW-HEX SOCKET (M4X0.7X20MM) |
| 37 | CH179-4324 | 4 | LOCKNUT |
| 38 | 505003D1 | 4 | SCREW (M5X0.8X20MM) |
| 39 | 400017X1 | 4 | BOLT-SCKT HD (M4X0.7X8) |
| 42 | CH3B-4501 | 12 | LOCKWASHER |
| 44 | CH4P-7581 | 15 | CLIP |
| 45 | CH4P-8134 | 2 | CLIP |
| 46 | CH5C-2874 | 4 | NUT (M5X.8) |
| 49 | CH7K-1181 | 1 | STRAP-CABLE |
| 50 | CH7Y-7256 | 2 | SCREW-TRUSS HEAD (M4X0.7X35MM) |
| 52 | CH8C-8514 | 2 | SCREW-MACHINE (8-32X.375 IN) |
| 53 | CH8T-0337 | 6 | SCREW-MACHINE (M4X0.7X12MM) |
| 59 | 400227X1 | 2 | BOLT (M8X1.25X16MM) |
| 60 | CH8T-4205 | 7 | WASHER-HARD (7.2X14.5X2) |
| 61 | 400251X1 | 12 | BOLT-SOCKET HEAD (M4X0.7X16MM) |
| 63 | CH9X-2044 | 7 | SCREW-TRUSS HEAD (M6X1X16MM) |

[A] PART OF 152-0008; 152-0009 CAB AR
[B] USE AS REQUIRED

1520005A
PR: t05i29k58b0152

## WIRING GP-CAB - 152-0005B

EAME ONLY

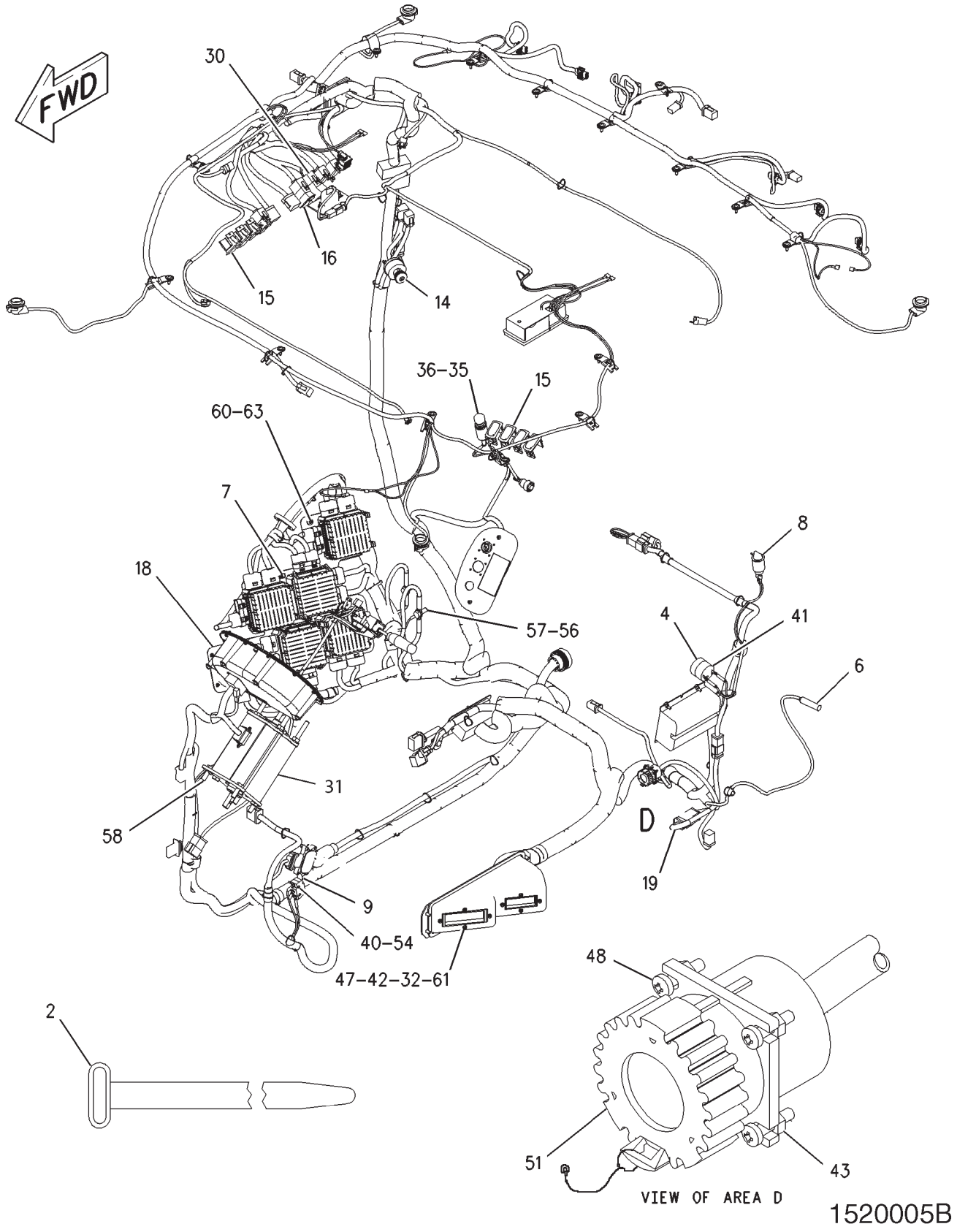

## WIRING GP-CAB - 152-0005B
EAME ONLY

| ITEM | NUMBER | QTY | DESCRIPTION |
|---|---|---|---|
| - | 152-0005 | -- | WIRING GP-CAB [A] (NOT SERVICED) |
| 2 | 400837X1 | 63 | STRAP-CABLE [B] |
| 4 | CH4E-2229 | 1 | DAMPER AS-ALARM |
| 6 | CH105-8034 | 1 | SWITCH AS-LIMIT (CAB DOOR) |
| 7 | CH116-7471 | 1 | PULLER-MINIFUSE |
| 8 | CH117-2311 | 2 | RECEPTACLE AS-POWER (12 VOLT) |
| 9 | CH129-6457 | 1 | SWITCH AS-LIMIT |
| | CH6V-8376 | 3 | SCREW-MACHINE (8-32X0.25 IN) |
| | CH9B-7233 | 3 | LOCKWASHER |
| 14 | CH163-2657 | 1 | SWITCH GP-START |
| | 400781X1 | 1 | WEDGE-RECEPTACLE LOCK |
| | CH7T-6799 | 1 | NUT-MOUNTING (1-32) |
| | 400562X1 | 2 | PIN-CONNECTOR |
| | 400708X1 | 1 | KIT-RECEPTACLE (4 PIN) (INCLUDES RECEPTACLE AS WEDGE) |
| | CH5P-8500 | 1 | KEY-IGNITION |
| 15 | CH165-5975 | 8 | PLUG |
| 16 | 169-8231 | 1 | SWITCH AS-ROCKER (FLOOD) |
| 18 | 172-6841 | 1 | PANEL GP-FUSE (CLAAS) (SEE BREAKDOWN FOR COMPONENTS) |
| 19 | 502173D1 | 1 | HARNESS AS (FLASHER) |
| 30 | 216-3028 | 1 | SWITCH AS-ROCKER (HAZARD) |
| 31 | 217-9780 | 1 | CONTROL GP-STEERING (SEE BREAKDOWN FOR COMPONENTS) |
| 32 | CH096-6166 | 10 | WASHER-HARD (4.5X9X1) |
| 35 | CH145-0846 | 1 | KNOB AS-LIGHTER |
| 36 | CH145-0847 | 1 | HOUSING AS-LIGHTER |
| | CH6V-8376 | 1 | SCREW-MACHINE (8-32X0.25 IN) |
| | CH9B-7233 | 1 | LOCKWASHER |
| 40 | CH216-9085 | 4 | SCREW-PAN HEAD |
| 41 | CH219-4673 | 1 | HORN (12 VOLT) |
| 42 | CH3B-4501 | 12 | LOCKWASHER |
| 43 | CH3C-6969 | 4 | NUT (M3X0.5) |
| 47 | CH5C-8312 | 8 | NUT (M4X0.7) |
| 48 | CH6V-9671 | 4 | SCREW-MACHINE (M3X0.5X12MM) |
| 51 | 501941D1 | 1 | CAP AS-W/LANYARD |
| | CH8C-6354 | 1 | CAP-RECEPTACLE |
| | 400408X1 | 1 | LANYARD |
| 54 | CH8T-2658 | 4 | LOCKNUT (M3X0.5) |
| 56 | 400287X1 | 2 | WASHER-HARD (11X21X2.5) |
| 57 | 400039X1 | 2 | BOLT (M10X1.5X25MM) |
| 58 | 400058X1 | 4 | BOLT (M10X1.5X30MM) |
| 60 | CH8T-4205 | 7 | WASHER-HARD (7.2X14.5X2) |
| 61 | 400251X1 | 12 | BOLT-SOCKET HEAD (M4X0.7X16MM) |
| 63 | CH9X-2044 | 7 | SCREW-TRUSS HEAD (M6X1X16MM) |

[A] PART OF 152-0008; 152-0009 CAB AR
[B] USE AS REQUIRED

1520005B
PR: t05i29k58b0153

**WIRING GP-TRAILER JUMPER - 501940D1**

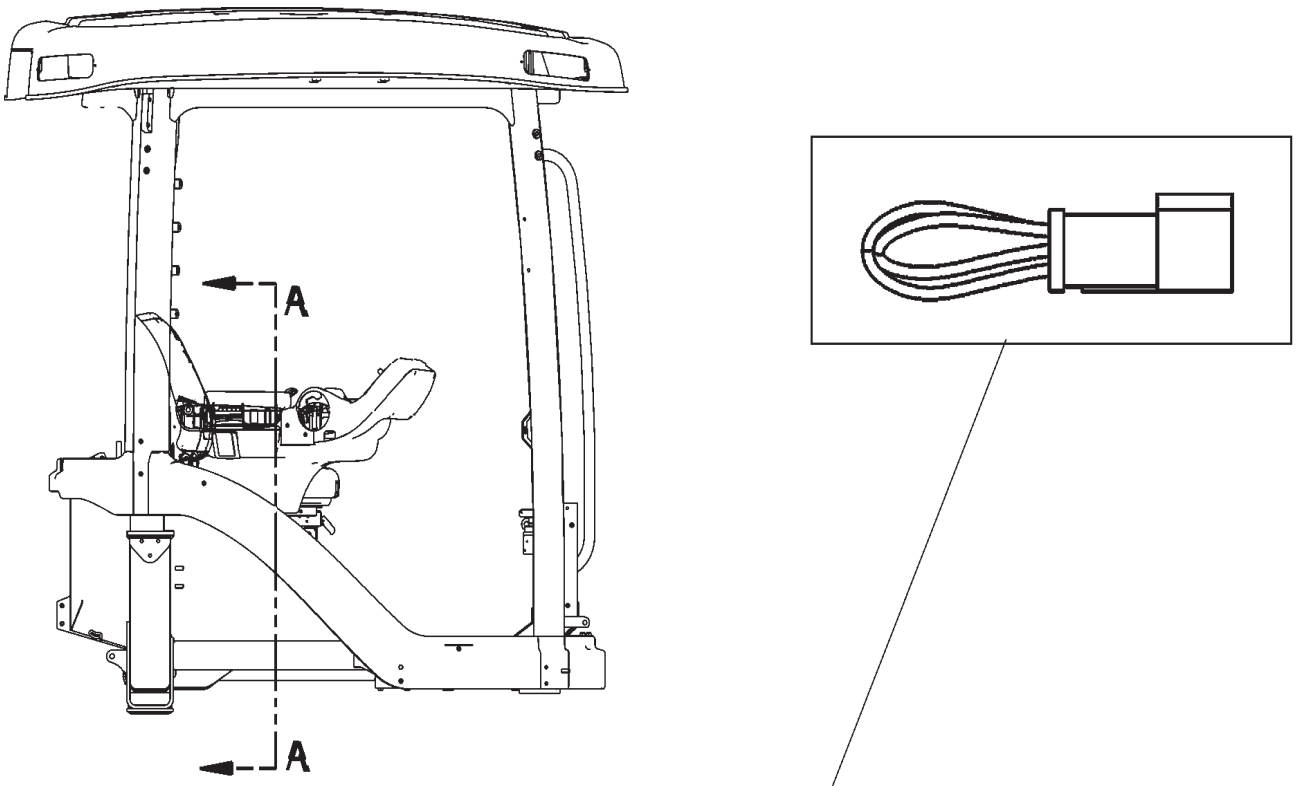


RIGHT SIDE VIEW OF CAB

SECTION A-A
(SEAT AND REAR WRAP REMOVED)

501940DC

| ITEM | NUMBER | QTY | DESCRIPTION |
|---|---|---|---|
| - | 501940D1 | -- | WIRING GP-TRAILER JUMPER |
| 1 | 173-7708 | 1 | HARNESS AS-TRAILER |

501940DC
PR: t05i29k58b0154

## WIRING GP-COMPACT DISC CHANGER
**195-9532**

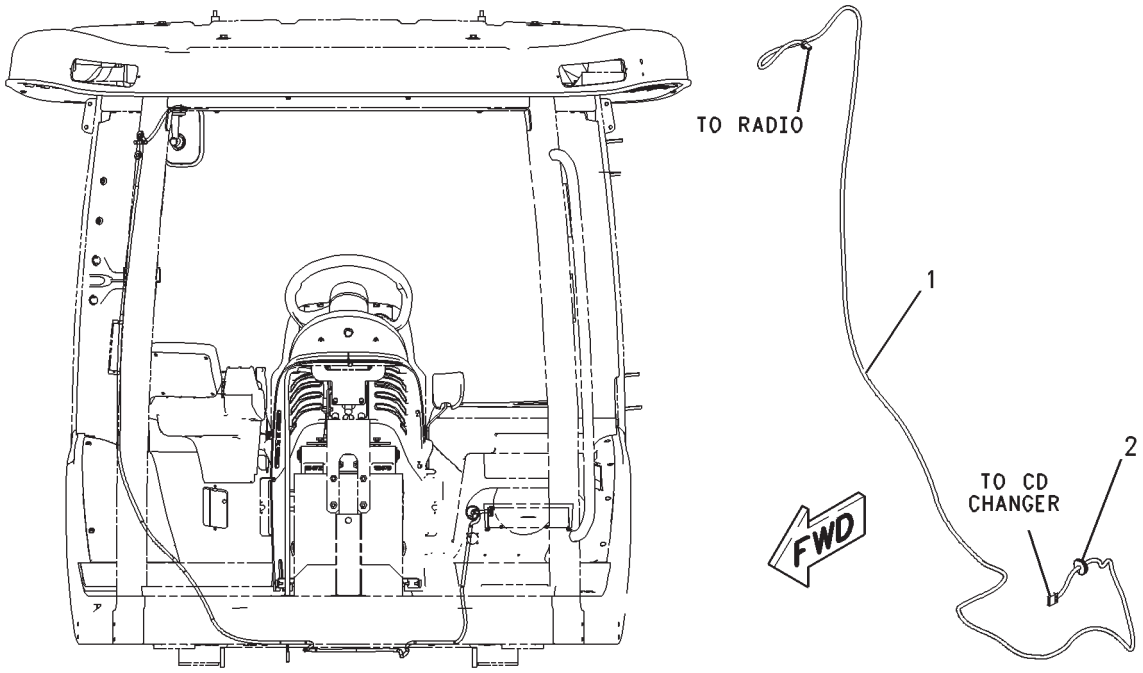


FRONT VIEW

00825421

## WIRING GP-COMPACT DISC CHANGER
195-9532

| ITEM | NUMBER | QTY | DESCRIPTION |
|---|---|---|---|
| - | 195-9532 | -- | WIRING GP-COMPACT DISC CHANGER (NOT SERVICED) |
| 1 | 170-7252 | 1 | HARNESS (COMPACT DISC CHANGER) |
| 2 | CH212-4443 | 1 | GROMMET |

00825421
PR: t05i29k58b0155

## WIRING GP-CONSOLE - 166-1211
**ARMREST W/PTO**

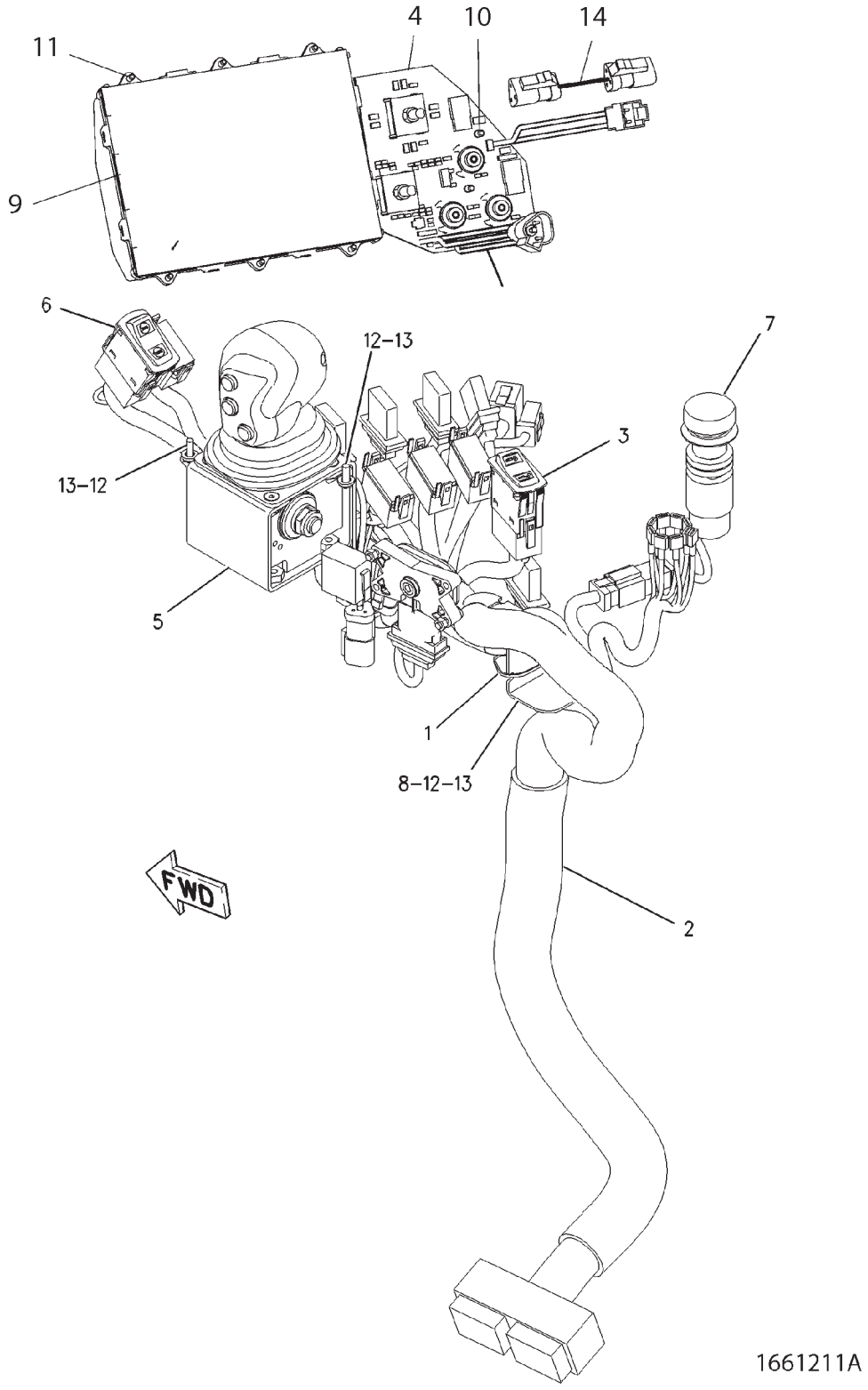

## WIRING GP-CONSOLE - 166-1211
### ARMREST W/PTO

| ITEM | NUMBER | QTY | DESCRIPTION |
|---|---|---|---|
| - | 166-1211 | -- | WIRING GP-CONSOLE [A] (NOT SERVICED) |
| 1 | 400837X1 | 4 | STRAP-CABLE |
| 2 | 502035D1 | 1 | HARNESS AS. (ARMREST) |
| 3 | 222-2457 | 1 | SWITCH-ROCKER (ROADING LOCKOUT) |
| 4 | 501033D1 | 1 | MODULE GP-MONITOR KEYPAD (TR MGMT CNTR) (SEE BREAKDOWN FOR COMPONENTS) |
| 5 | 169-6346 | 1 | CONTROL GP-TRANSMISSION (NOT SERVICED) (SEE BREAKDOWN FOR COMPONENTS) |
| 6 | 169-8228 | 1 | SWITCH-ROCKER (ONE TOUCH MULTI-FUNCTION) |
| 7 | 502009D1 | 1 | SWITCH AS. (POWER TAKE-OFF) |
| | 400782X1 | 1 | CONNECTOR-RECP. |
| | 400562X1 | 4 | PIN-CONNECTOR |
| 8 | 202-0844 | 1 | BRACKET |
| 9 | 502006D1 | 1 | DISPLAY (TRACTOR MGMT CENTER) |
| 10 | 400834X1 | 4 | SCREW-TRUSS HD (8-16X0.5IN) |
| 11 | 400835X1 | 6 | SCREW-PAN HEAD (6-19X0.5IN) |
| 12 | 400836X1 | 3 | SCREW-MACHINE (M5X0.8 THD) |
| 13 | 400310X1 | 3 | WASHER (6.6X12X2MM THK) |
| 14 | 502005D1 | 1 | JUMPER HARNESS-SWITCH MODULE |

[A] PART OF 500484D2; 500485D2;
500488D2; 500489D2; 500791D2;
500792D2 ARMREST GP

1661211A
PR: t05i29k58b0156

## WIRING GP-CONSOLE - 136-5477
**WITHOUT PTO**

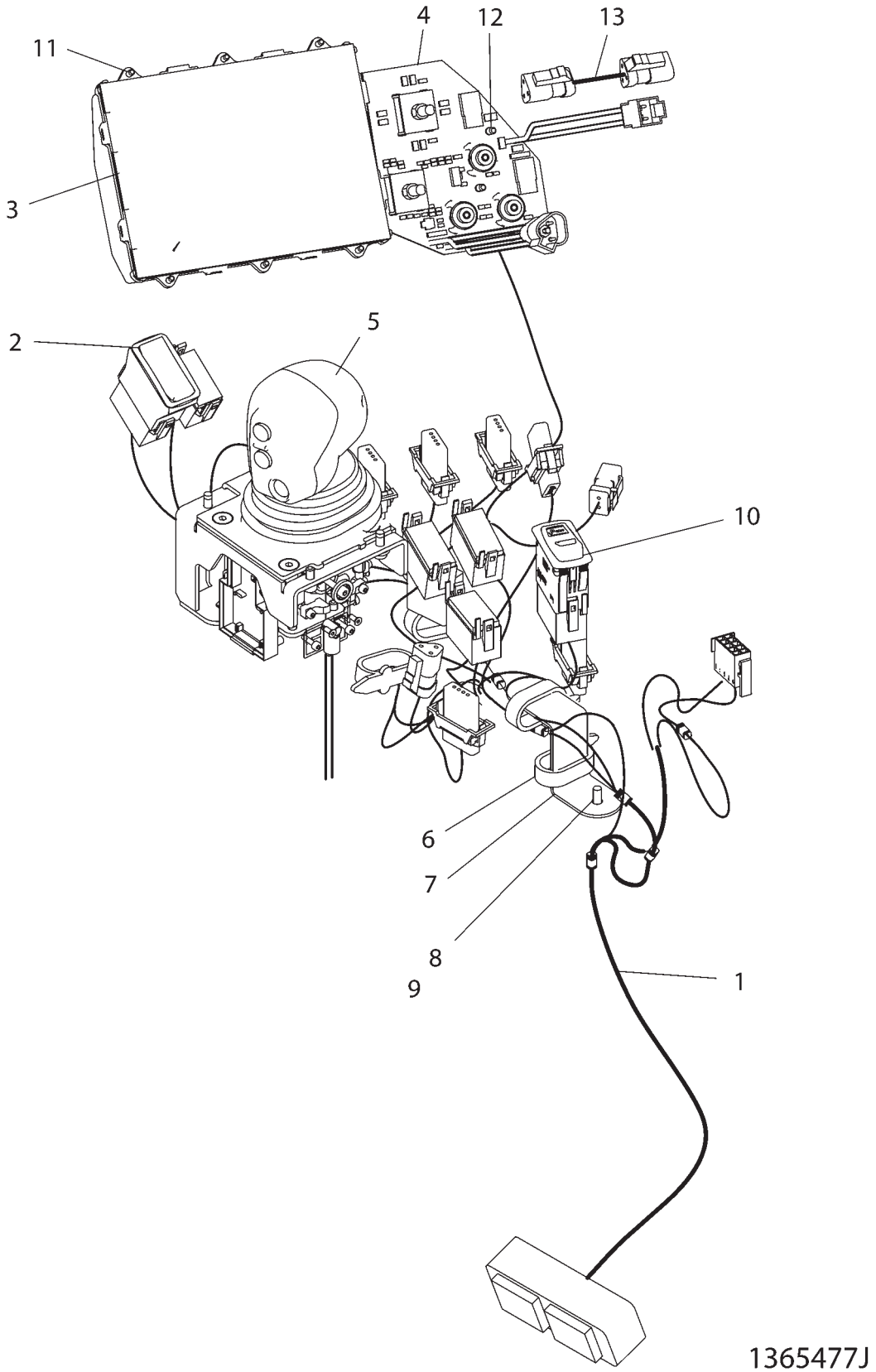

## WIRING GP-CONSOLE - 136-5477
### WITHOUT PTO

| ITEM | NUMBER | QTY | DESCRIPTION |
|---|---|---|---|
| - | 136-5477 | -- | WIRING GP-CONSOLE [A] (NOT SERVICED) |
| 1 | 502035D1 | 1 | HARNESS ASM (ARMREST) |
| 2 | 169-8228 | 1 | SWITCH ASM-ROCKER (ONE TOUCH MULTI-FUNCTION) |
| 3 | 502006D1 | 1 | DISPLAY |
| 4 | 501033D1 | 1 | CONTROL GP-ELECTRONIC (SEE BREAKDOWN FOR COMPONENTS) |
| 5 | 169-6346 | 1 | CONTROL GP-TRANSMISSION (NOT SERVICED) (SEE BREAKDOWN FOR COMPONENTS) |
| 6 | 400837X1 | 4 | STRAP-CABLE |
| 7 | 202-0844 | 1 | BRACKET |
| 8 | 400310X1 | 3 | WASHER (6.6X12X2) |
| 9 | 400836X1 | 3 | SCREW-PAN HD (M5X0.8X14) |
| 10 | 222-2457 | 1 | SWITCH-ROCKER (IMPLEMENT LOCKOUT) |
| 11 | 400835X1 | 6 | SCREW-PAN HD (6-19X12.7) |
| 12 | 400834X1 | 4 | SCREW-TRUSS HD (8-16X12.7MM) |
| 13 | 502005D1 | 1 | JUMPER HARNESS-SWITCH MODULE |

[A] PART OF:
500486D2; 500487D2; 500490D2;
500491D2; 500793D2;
500794D2 ARMREST GP
500841D1; 500842D1; 500843D1;
500844D1; 500849D1 CAB AR

1365477J
PR: t05i29k58b0157

## WIRING GP-CONSOLE - 168-1946

**(AUX POWER CLAAS)**
**EAME ONLY**

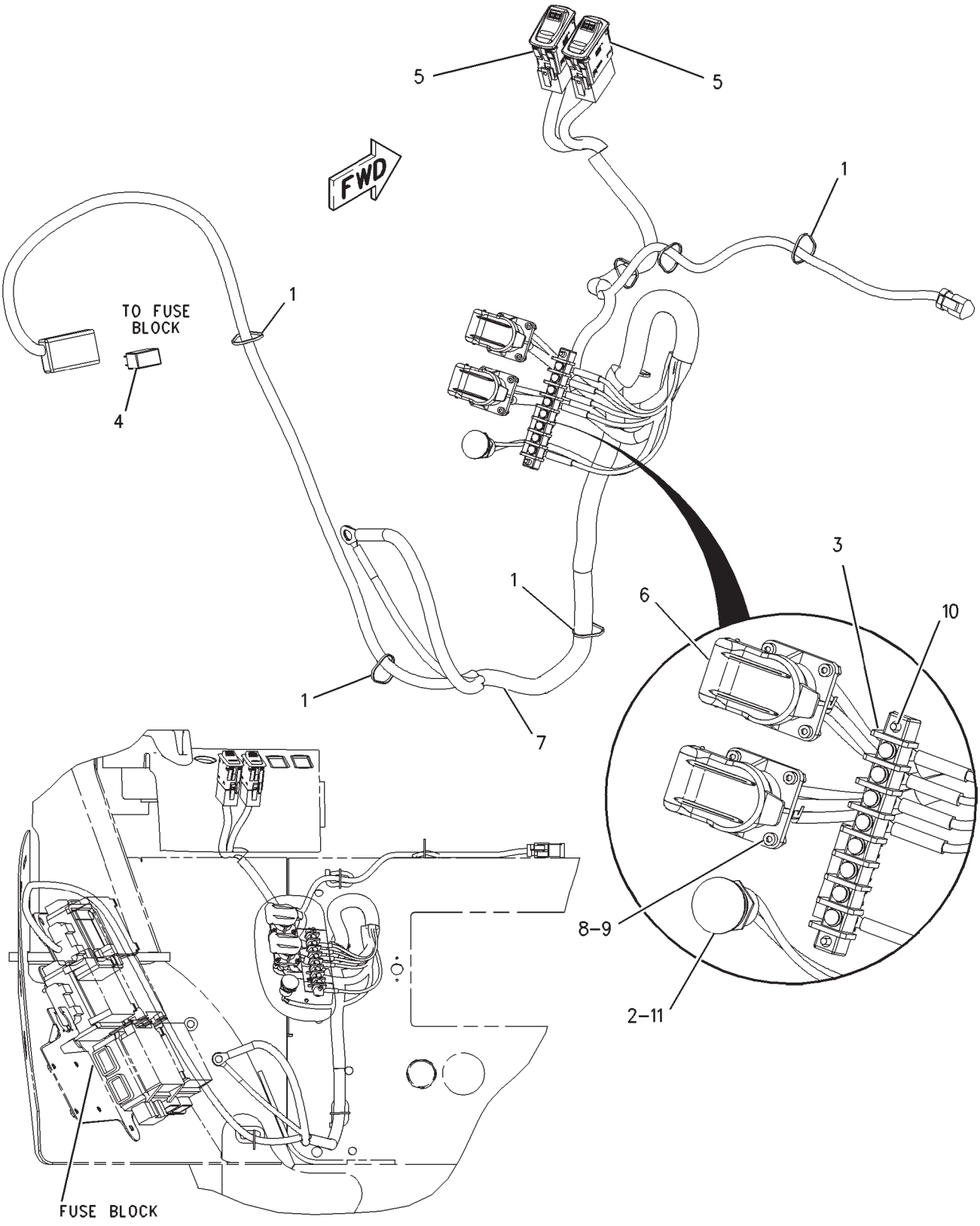


FRONT VIEW

00883528

## WIRING GP-CONSOLE - 168-1946
**(AUX POWER CLAAS)**
**EAME ONLY**

| ITEM | NUMBER | QTY | DESCRIPTION |
|---|---|---|---|
| - | 168-1946 | -- | WIRING GP-CONSOLE [A] |
| 1 | 400837X1 | 7 | STRAP-CABLE |
| 2 | CH9R-7941 | 1 | RECEPTACLE AS-POWER (24 VOLTS) |
| | CH9R-7980 | 1 | COVER |
| 3 | CH136-5268 | 1 | STRIP AS |
| 4 | CH146-9439 | 1 | RELAY AS (12 VOLT) (AUXILIARY POWER SWITCHES) |
| 5 | 169-8229 | 2 | SWITCH AS-ROCKER (AUXILIARY POWER) |
| 6 | CH174-9061 | 2 | CONNECTOR |
| 7 | 502175D1 | 1 | HARNESS AS (AUXILIARY POWER) |
| 8 | 400006X1 | 8 | BOLT-SOCKET HEAD (M3X0.5X12MM) |
| 9 | CH3C-6969 | 8 | NUT (M3X0.5 THD) |
| 10 | CH119-5026 | 2 | SCREW-PAN HEAD (10-16X0.63 IN) |
| 11 | 400322X1 | 1 | SEAL-O-RING (19.28ODX1.78DIA) |

[A] PART OF 500841D1; 500842D1
CAB AR

00883528
PR: t05i29k58b0158

**WIRING GP-VEHICLE - 136-5668**

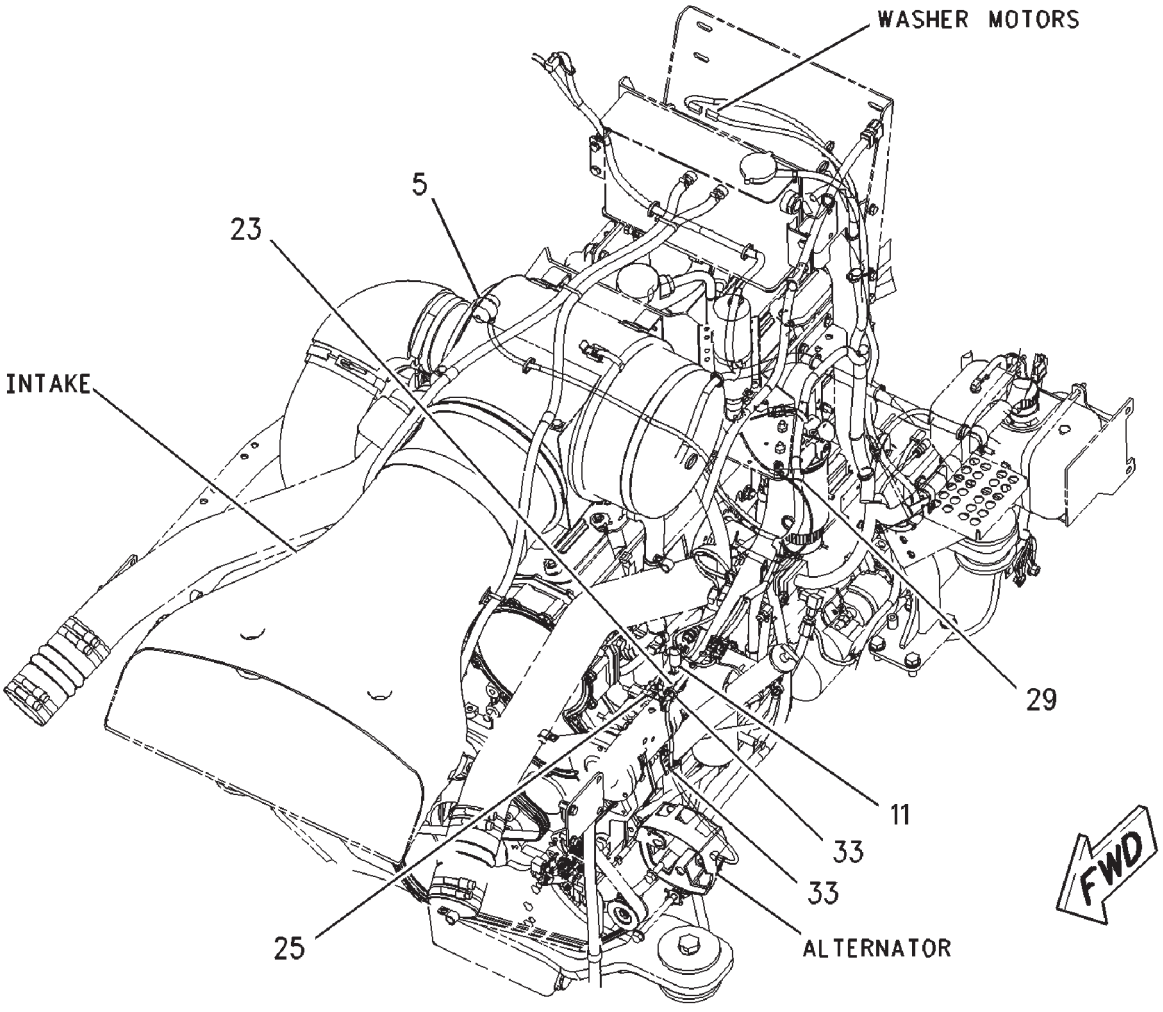


VIEW OF HARNESS
AROUND ENGINE

00897024

## WIRING GP-VEHICLE - 136-5668

| ITEM | NUMBER | QTY | DESCRIPTION |
|---|---|---|---|
| - | 136-5668 | -- | WIRING GP-MACHINE [A] (NOT SERVICED) |
| 5 | 226-4754 | 1 | SWITCH ASM |
| 11 | CH149-6371 | 1 | SWITCH ASM-PRESSURE |
| | CH102-8802 | 1 | KIT-RECEPTACLE (2 PIN)<br>(INCLUDES WEDGE AND RECEPTACLE ASM)<br>(SERVICED AS COMPLETE KIT ONLY) |
| | 400562X1 | 2 | PIN-CONNECTOR |
| 23 | CH114-5333 | 1 | SWITCH ASM-PRESSURE (HI-LOW) |
| | CH102-8802 | 1 | KIT-RECEPTACLE (2 PIN)<br>(INCLUDES WEDGE AND RECEPTACLE ASM)<br>(SERVICED AS COMPLETE KIT ONLY) |
| | 186-3735 | 2 | PIN-CONNECTOR |
| 25 | CH132-5789 | 2 | CLIP-LADDER (90DEGX47.5MM) |
| 29 | CH4D-9517 | 1 | CLIP-LOOP (12.7ID) |
| 33 | CH4P-7581 | 11 | CLIP-LADDER (15DEGX12.5MM) |

[A] PART OF:
179-1952; 501810D1 BASE COMMON AR

00897024
PR: t05i29k58b0159

## WIRING GP-MACHINE - 136-5668

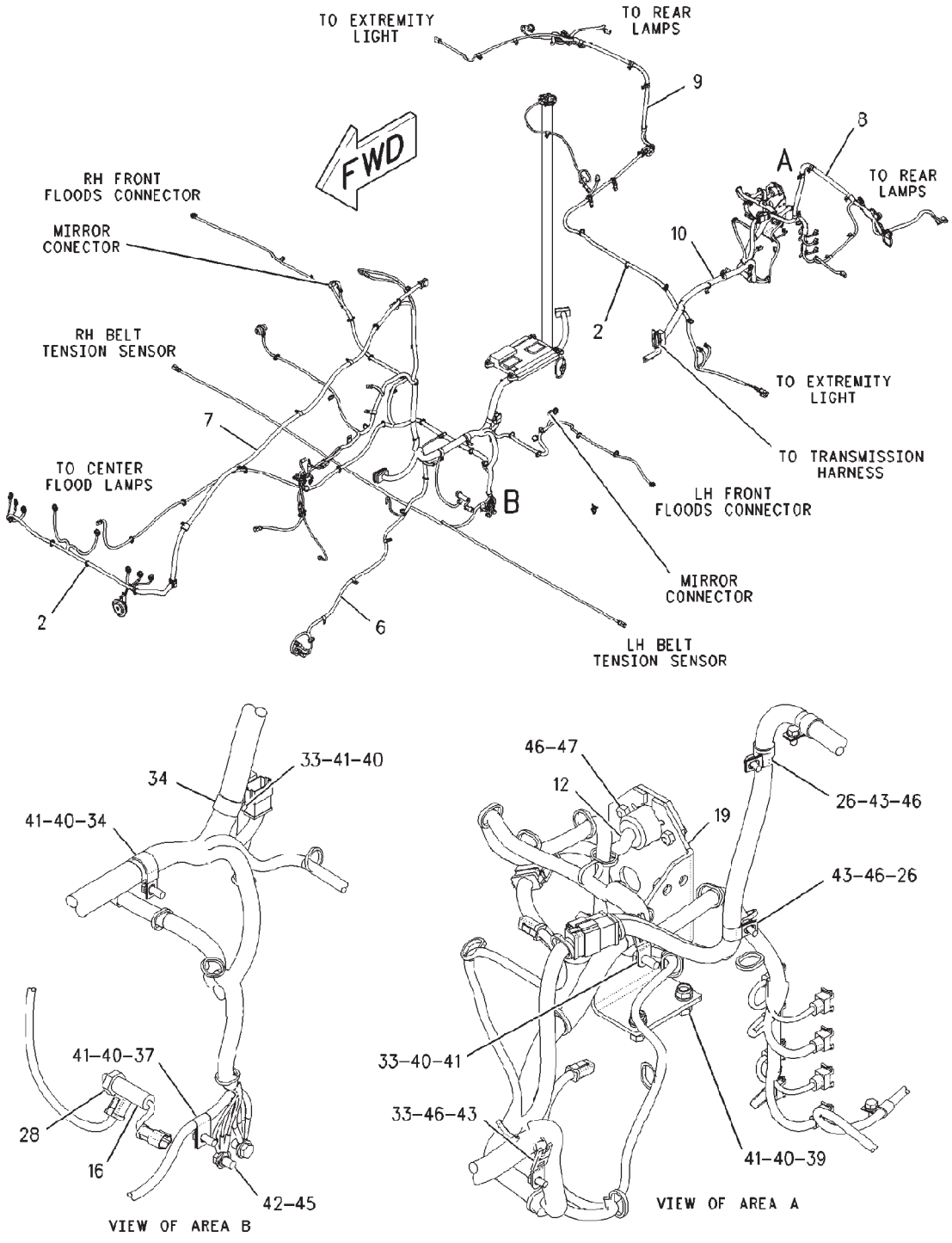


00896821

## WIRING GP-MACHINE - 136-5668

| ITEM | NUMBER | QTY | DESCRIPTION |
|---|---|---|---|
| - | 136-5668 | -- | WIRING GP-MACHINE [A] (NOT SERVICED) |
| 2 | CH7K-1181 | 87 | STRAP-CABLE |
| 6 | 136-5380 | 1 | HARNESS ASM-CHASSIS |
| 7 | 136-5381 | 1 | HARNESS ASM (HOOD) |
| 8 | 226-4324 | 1 | HARNESS ASM (LH) |
| 9 | 226-4325 | 1 | HARNESS ASM (RH) |
| 10 | 501952D1 | 1 | HARNESS ASM (REAR) |
| 12 | 502197D1 | 1 | HARNESS ASM-TRAILER |
| 16 | CH175-3244 | 1 | SWITCH ASM-PRESSURE |
| | CH102-8803 | 1 | KIT-RECEPTACLE (3 PIN)<br>(INCLUDES WEDGE AND RECEPTACLE ASM)<br>(SERVICED AS COMPLETE KIT ONLY) |
| | 400562X1 | 1 | PIN-CONNECTOR |
| 19 | 500510D1 | 1 | BRACKET ASM (INCLUDES BRACKET & NUT) |
| 26 | CH134-3988 | 11 | CLIP-LOOP (15.88ID) |
| 28 | 400318X1 | 2 | SEAL-O-RING (11.89ID X 1.98 DIA) |
| 33 | CH4P-7581 | 11 | CLIP-LADDER (15DEGX12.5MM) |
| 34 | 400597X1 | 3 | CLIP (31.75ID 3/8) |
| 37 | CH6S-5993 | 1 | CLIP-LOOP (11.9ID) |
| 39 | CH8T-0389 | 2 | LOCKNUT (M10X1.5) |
| 40 | 400287X1 | 6 | WASHER-HARD (11X21X2.5) |
| 41 | 400039X1 | 6 | BOLT (M10X1.5X25MM) |
| 42 | 400047X1 | 2 | BOLT (M12X1.75X20MM) |
| 43 | 400227X1 | 18 | BOLT (M8X1.25X16MM) |
| 45 | 400357X1 | 2 | WASHER-HARD (M12X25.5X3) |
| 46 | 400339X1 | 23 | WASHER-HARD (8.8X16X2) |
| 47 | 400341X1 | 3 | BOLT (M8X1.25X25MM) |

[A] PART OF:
179-1952; 501810D1 BASE COMMON AR

00896821
PR: t05i29k58b0160

## WIRING GP-MACHINE - 136-5668

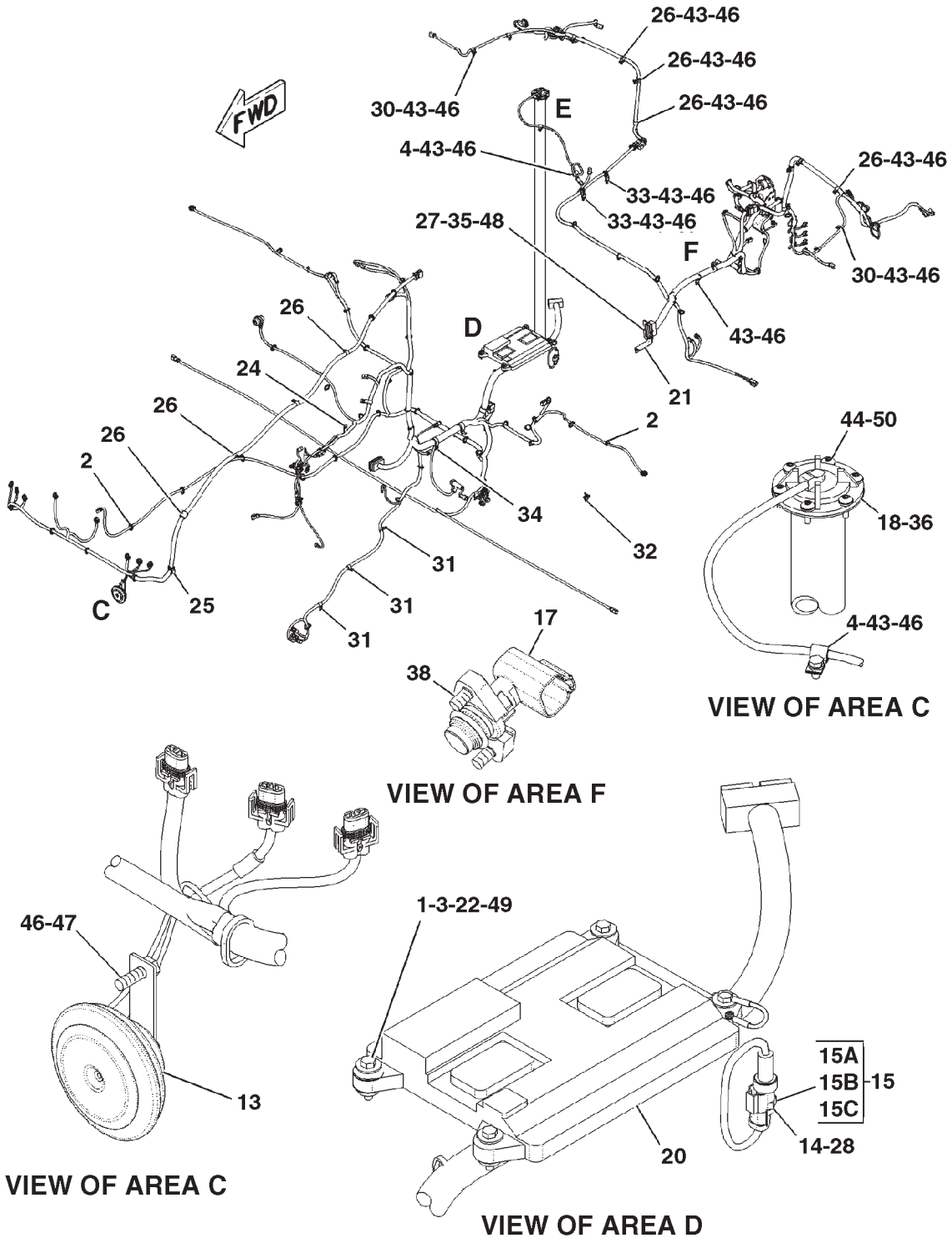


0896824A

## WIRING GP-MACHINE - 136-5668

| ITEM | NUMBER | QTY | DESCRIPTION |
|---|---|---|---|
| - | 136-5668 | -- | WIRING GP-MACHINE [A] (NOT SERVICED) |
| 1 | CH6I-1418 | 4 | SPACER (8.2X12.7X28.7) |
| 2 | CH7K-1181 | 87 | STRAP-CABLE |
| 3 | CH8T-9655 | 8 | MOUNT (ISOLATION) |
| 4 | CH134-3987 | 2 | CLIP |
| 13 | 501998D1 | 1 | HORN (12 VOLT) |
| 14 | CH161-9932 | 1 | SENSOR GP-PRESSURE |
| | | | (SEE BREAKDOWN FOR COMPONENTS) |
| 15 | CH173-7223 | 1 | ADAPTER AS (INCLS 15A-15C) |
| 15A | ----- | 1 | ADAPTER (ORDER ITEM 15) |
| 15B | 400361X1 | 1 | SEAL-O-RING (8.92ID X 1.83DIA) |
| 15C | 400318X1 | 1 | SEAL-O-RING (11.89IDX1.98DIA) |
| 17 | CH183-4584 | 1 | SENSOR GP-SPEED |
| | CH6J-2245 | | SEAL-O-RING (17.12IDX2.62DIA) |
| 18 | CH194-7620 | 1 | SENDER AS-FUEL LEVEL |
| | CH204-7458 | 1 | SENSOR KIT |
| 20 | 209-0893 | 1 | ELECTRONICS GP-MACHINE |
| | | | (TRANSMISSION/MACHINE)(NOT SERVICED) |
| | 256-0176 | 1 | SOFTWARE GP-POWER TRAIN |
| | | | (TRANSMISSION/MACHINE) |
| | | | (SOFTWARE ONLY) |
| | | | (LOCATED ON "ONEAGCO" OR CALL |
| | | | 507-847-7222) |
| | 178-9090 | 1 | CONTROL GP-UNPROGRAMMED |
| | | 1 | CONTROL ASM |
| | 7X-6315 | 1 | STRAP ASM-GROUND |
| | 134-4126 | 1 | WASHER (4.52X8.28X.76) |
| | 184-2472 | 1 | SCREW-PAN HEAD (LUBRICATED) |
| 21 | 211-1171 | 1 | BRACKET ASM |
| 22 | 400001X1 | 4 | BOLT (M8X1.25X40MM) |
| 24 | 124-1479 | 1 | CLIP |
| 25 | 132-5789 | 2 | CLIP |
| 26 | 134-3988 | 12 | CLIP |
| 27 | CH3B-4501 | 4 | LOCKWASHER |
| 28 | 400318X1 | 2 | SEAL-O-RING (11.89IDX1.98DIA) |
| 30 | CH4D-7794 | 4 | CLIP |
| 31 | CH4K-8864 | 3 | CLIP |
| 32 | CH4P-7428 | 1 | CLIP |
| 33 | CH4P-7581 | 11 | CLIP |
| 34 | 400597X1 | 3 | CLIP |
| 35 | CH5C-8312 | 4 | NUT (M4X0.7) |
| 36 | 500014D1 | 1 | GASKET |
| 38 | 400209X1 | 2 | BOLT-SOCKET HEAD (M6X1X12MM) |
| 43 | 400227X1 | 18 | BOLT (M8X1.25X16MM) |
| 44 | CH8T-4205 | 6 | WASHER-HARD (7.2X14.5X2MM) |
| 46 | 400339X1 | 23 | WASHER-HARD (8.8X16X2) |
| 47 | 400341X1 | 5 | BOLT (M8X1.25X25MM) |
| 48 | 400251X1 | 4 | BOLT-SOCKET HEAD (M4X0.7X16MM) |
| 49 | CH9N-0869 | 4 | WASHER-HARD (8.8X25.5X2) |
| 50 | CH9X-2045 | 6 | SCREW-TRUSS HEAD (M6X1X20MM) |

[A] PART OF:
179-1952; 501810D1 BASE COMMON AR

0896824A
PR: t05i29k58b0161

## WIRING GP-VEHICLE - 136-5669

1 OF 3
EAME ONLY

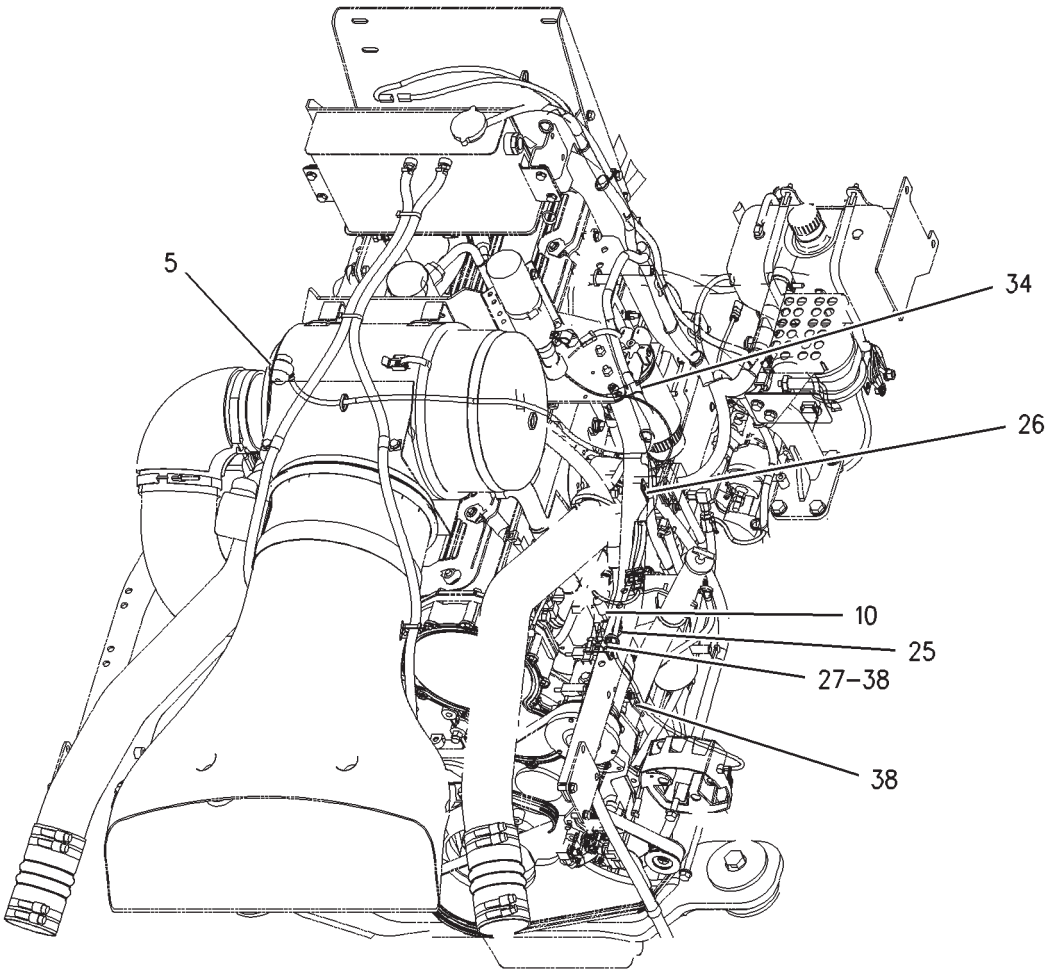


VIEW OF ENGINE

## WIRING GP-VEHICLE - 136-5669

1 OF 3
EAME ONLY

| ITEM | NUMBER | QTY | DESCRIPTION |
|---|---|---|---|
| - | 136-5669 | -- | WIRING GP-VEHICLE [A] (NOT SERVICED) |
| 5 | 226-4754 | 1 | SWITCH AS |
| 10 | CH149-6371 | 1 | SWITCH AS-PRESSURE (AIR CONDITIONER LOW) |
| | CH102-8802 | 1 | KIT-RECEPTACLE (2 PIN) (RECEPTACLE AS WEDGE) |
| | 400562X1 | 2 | PIN-CONNECTOR (16-18AWG) |
| 25 | CH114-5333 | 1 | SWITCH AS-PRESSURE (HI-LOW) |
| | CH102-8802 | 1 | KIT-RECEPTACLE (2 PIN) (INCLUDES RECEPTACLE AS WEDGE) |
| | 400511X1 | 1 | WEDGE-RECEPTACLE LOCK (2 PIN) |
| | 400562X1 | 2 | PIN-CONNECTOR |
| 26 | CH4D-9517 | 1 | CLIP |
| 27 | 132-5789 | 2 | CLIP |
| 34 | CH4P-7581 | 1 | CLIP |
| 38 | CH4P-7581 | 8 | CLIP |

[A] PART OF 179-2180 BASE COMMON AR
[B] USE AS REQUIRED
[E] ORDER BY THE CENTIMETER

00897317
PR: t05i29k58b0162

## WIRING GP-VEHICLE - 136-5669

2 OF 3
EAME ONLY

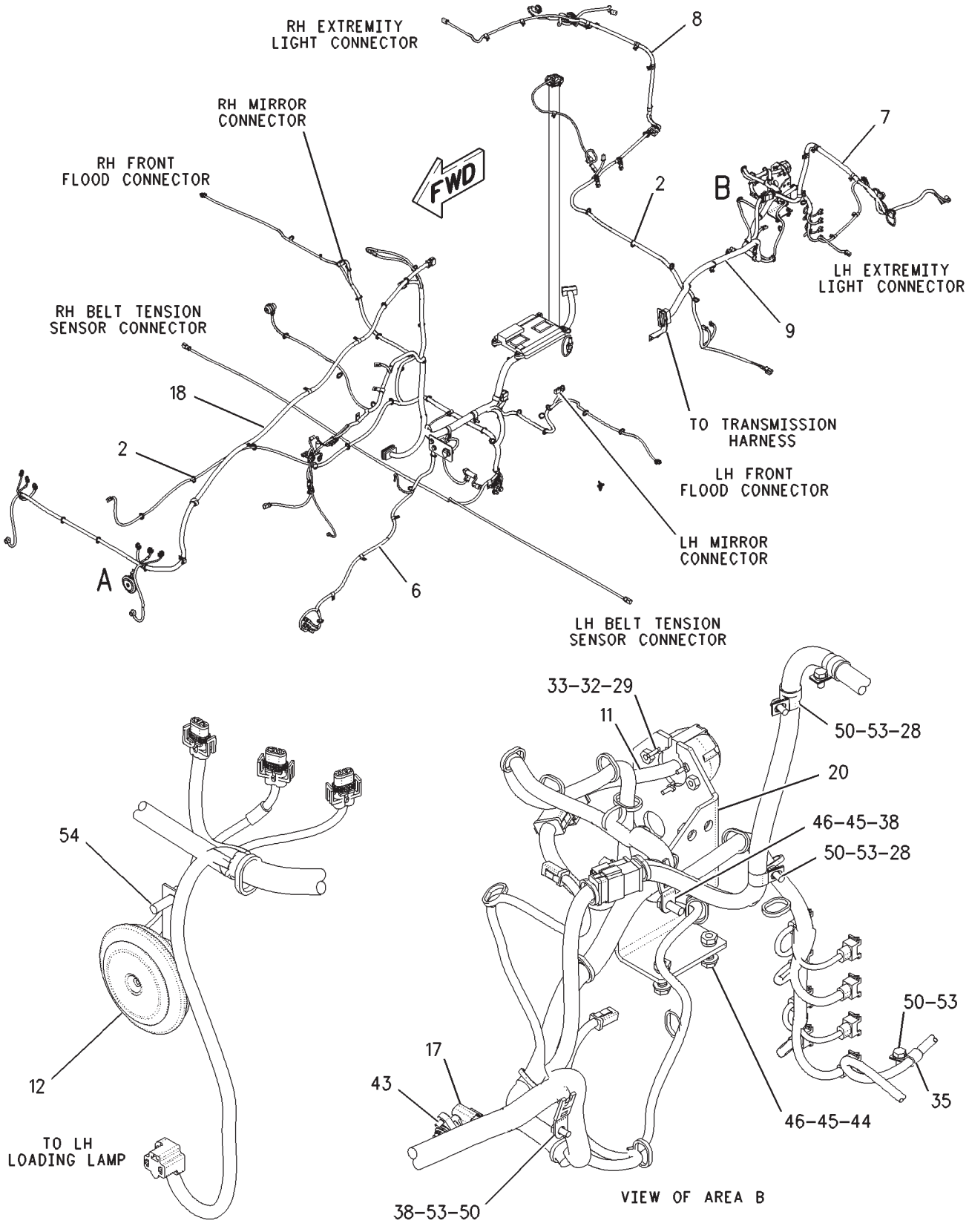

## WIRING GP-VEHICLE - 136-5669

2 OF 3
EAME ONLY

| ITEM | NUMBER | QTY | DESCRIPTION |
|---|---|---|---|
| - | 136-5669 | -- | WIRING GP-VEHICLE [A] (NOT SERVICED) |
| 2 | CH7K-1181 | 90 | STRAP-CABLE |
| 6 | 136-5380 | 1 | HARNESS AS-CHASSIS |
| 7 | 226-4324 | 1 | HARNESS AS (LH) |
| 8 | 226-4325 | 1 | HARNESS AS (RH) |
| 9 | 501952D1 | 1 | HARNESS AS (REAR) |
| 11 | 502276D1 | 1 | HARNESS AS-TRAILER |
| 12 | 501998D1 | 1 | HORN (12 VOLT) |
| 17 | CH183-4584 | 1 | SENSOR GP-SPEED |
| | CH6J-2245 | 1 | SEAL-O-RING (17.12IDX2.62DIA) |
| 18 | 193-4752 | 1 | HARNESS AS (HOOD) |
| 20 | 500510D1 | 1 | BRACKET AS |
| | CH8T-3612 | 2 | NUT-WELD (M8X1.25 THD) |
| 28 | CH134-3988 | 11 | CLIP |
| 29 | CH2N-7456 | 3 | SCREW-MACHINE (10-24X1.5IN) |
| 32 | CH4B-2047 | 3 | NUT (10-24 THD) |
| 33 | CH4B-4274 | 3 | WASHER (5.5X13X1.2MM THK) |
| 35 | CH4D-7794 | 4 | CLIP |
| 38 | CH4P-7581 | 8 | CLIP-LADDER (15DEGX12.5MM-VCOAT) |
| 43 | 400209X1 | 2 | BOLT-SOCKET HEAD (M6X1X12MM) |
| 44 | CH8T-0389 | 2 | LOCKNUT (M10X1.5 THD) |
| 45 | 400287X1 | 6 | WASHER-HARD (11X21X2.5MM THK) |
| 46 | 400039X1 | 5 | BOLT (M10X1.5X25MM) |
| 50 | 400227X1 | 18 | BOLT (M8X1.25X16MM) |
| 53 | 400339X1 | 21 | WASHER-HARD (8.8X16X2MM THK) |
| 54 | 400341X1 | 3 | BOLT (M8X1.25X25MM) |

[A] PART OF 179-2180 BASE COMMON AR
[B] USE AS REQUIRED
[E] ORDER BY THE CENTIMETER

00897318
PR: t05i29k58b0163

## WIRING GP-VEHICLE - 136-5669

3 OF 3
EAME ONLY

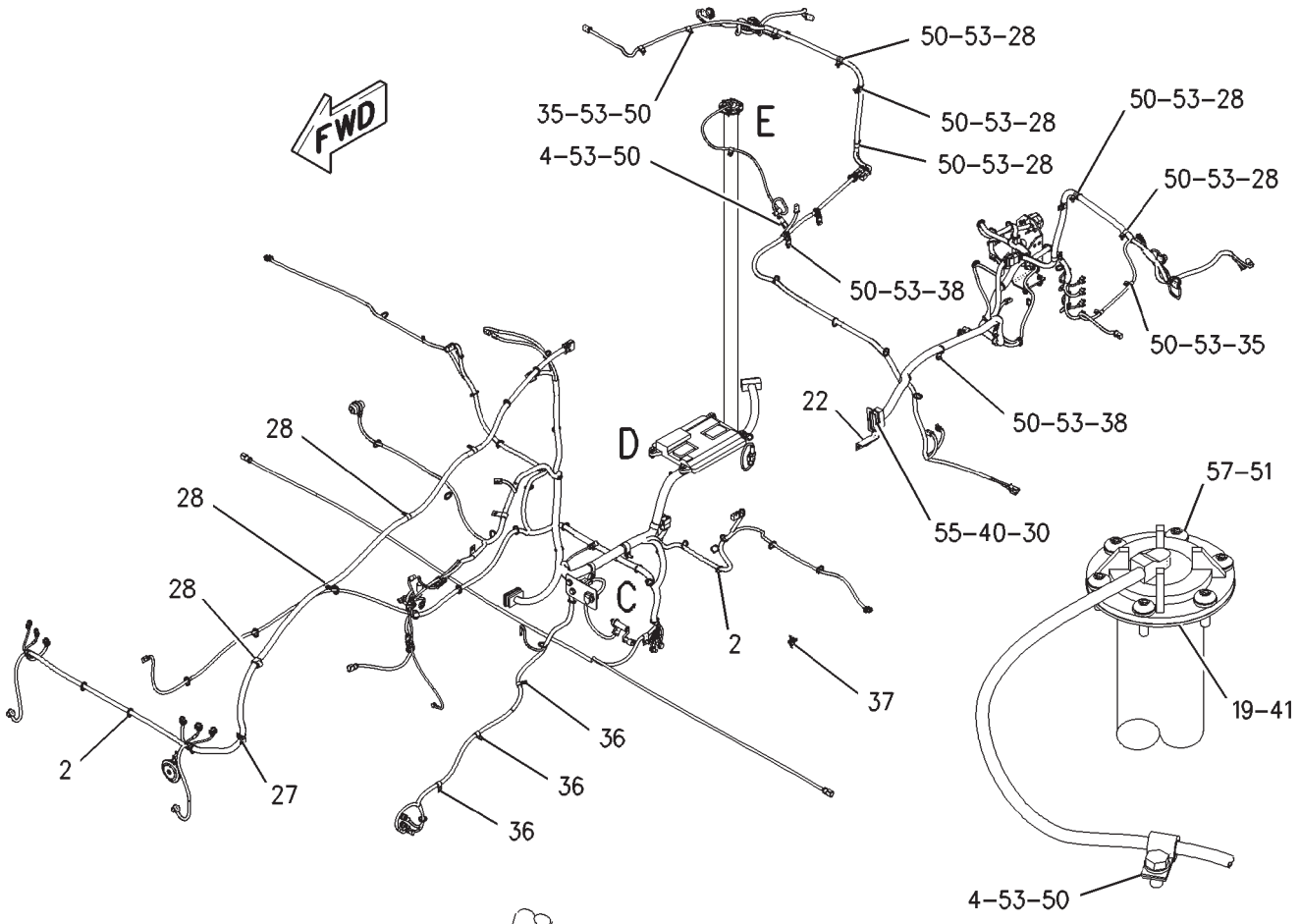


VIEW OF AREA E

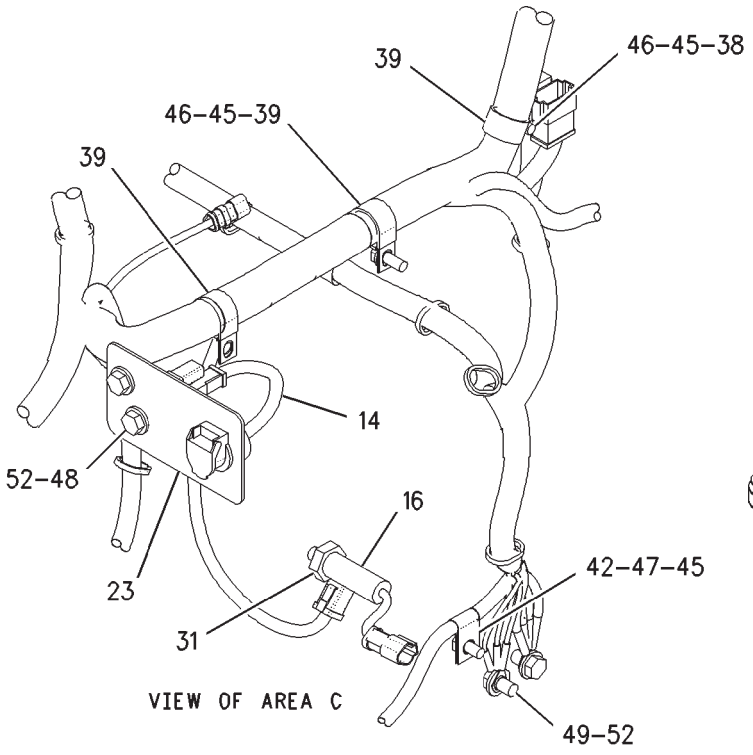


VIEW OF AREA C

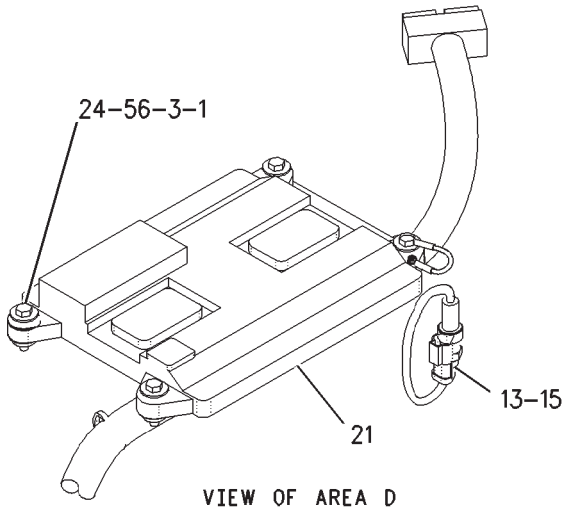


VIEW OF AREA D

00897319

| ITEM | NUMBER | QTY | DESCRIPTION |
|---|---|---|---|
| - | 136-5669 | -- | WIRING GP-VEHICLE [A] (NOT SERVICED) |
| 1 | CH6I-1418 | 4 | SPACER (8.2X12.7X28.7MM THK) |
| 2 | CH7K-1181 | 90 | STRAP-CABLE |
| 3 | CH8T-9655 | 8 | MOUNT (ISOLATION) |
| 4 | CH134-3987 | 2 | CLIP |
| 13 | CH161-9932 | 1 | SENSOR GP-PRESSURE |
| | | | (SEE BREAKDOWN FOR COMPONENTS) |
| 14 | 501962D1 | 1 | RECEPTACLE AS (12V EXTERNAL PWR OUTLET) |
| | 400865X1 | 1 | RECEPTACLE AS (HSG & COVER ONLY) |
| | CH102-8802 | 1 | KIT-RECEPTACLE CONNECTOR (2 PIN) |
| | | | (RECEPTACLE AND WEDGE) |
| | 400562X1 | 2 | PIN-CONNECTOR (16-18AWG) |
| 15 | CH173-7223 | 1 | ADAPTER AS (4STORX6STOR) |
| | 400318X1 | 1 | SEAL-O-RING (11.89IDX1.98DIA) |
| | 400361X1 | 1 | SEAL-O-RING (8.92ID X 1.83DIA) |
| 16 | CH175-3244 | 1 | SWITCH AS-PRESSURE |
| | CH102-8802 | 1 | KIT-RECEPTACLE-3 PIN (INCL WEDGE) |
| | 400562X1 | 3 | PIN-CONNECTOR |
| 19 | 194-7620 | 1 | SENDER AS-FUEL LEVEL |
| | CH204-7458 | 1 | KIT-SENSOR (FUEL LEVEL) |
| | CH102-8802 | 1 | KIT-RECEPTACLE-2 PIN (INCL WEDGE) |
| 21 | 209-0893 | 1 | ELECTRONICS GP-MACHINE |
| | | | (TRANSMISSION/MACHINE)(NOT SERVICED) |
| | 267-8459 | 1 | SOFTWARE GP-POWER TRAIN |
| | | | (TRANSMISSION/MACHINE) |
| | | | (SOFTWARE ONLY) |
| | | | (LOCATED ON "ONEAGCO" OR CALL |
| | | | 507-847-7222) |
| | 178-9090 | 1 | CONTROL GP-UNPROGRAMMED |
| | | 1 | CONTROL ASM |
| | 7X-6315 | 1 | STRAP ASM-GROUND |
| | 134-4126 | 1 | WASHER (4.52X8.28X.76) |
| | 184-2472 | 1 | SCREW-PAN HEAD (LUBRICATED) |
| 22 | 211-1171 | 1 | BRACKET AS |
| 23 | 220-4138 | 1 | BRACKET |
| 24 | 400001X1 | 4 | BOLT (M8X1.25X40MM) |
| 27 | CH132-5789 | 2 | CLIP |
| 28 | CH134-3988 | 12 | CLIP |

CONTINUED

[A] PART OF 179-2180 BASE COMMON AR

## WIRING GP-VEHICLE - 136-5669

3 OF 3
EAME ONLY

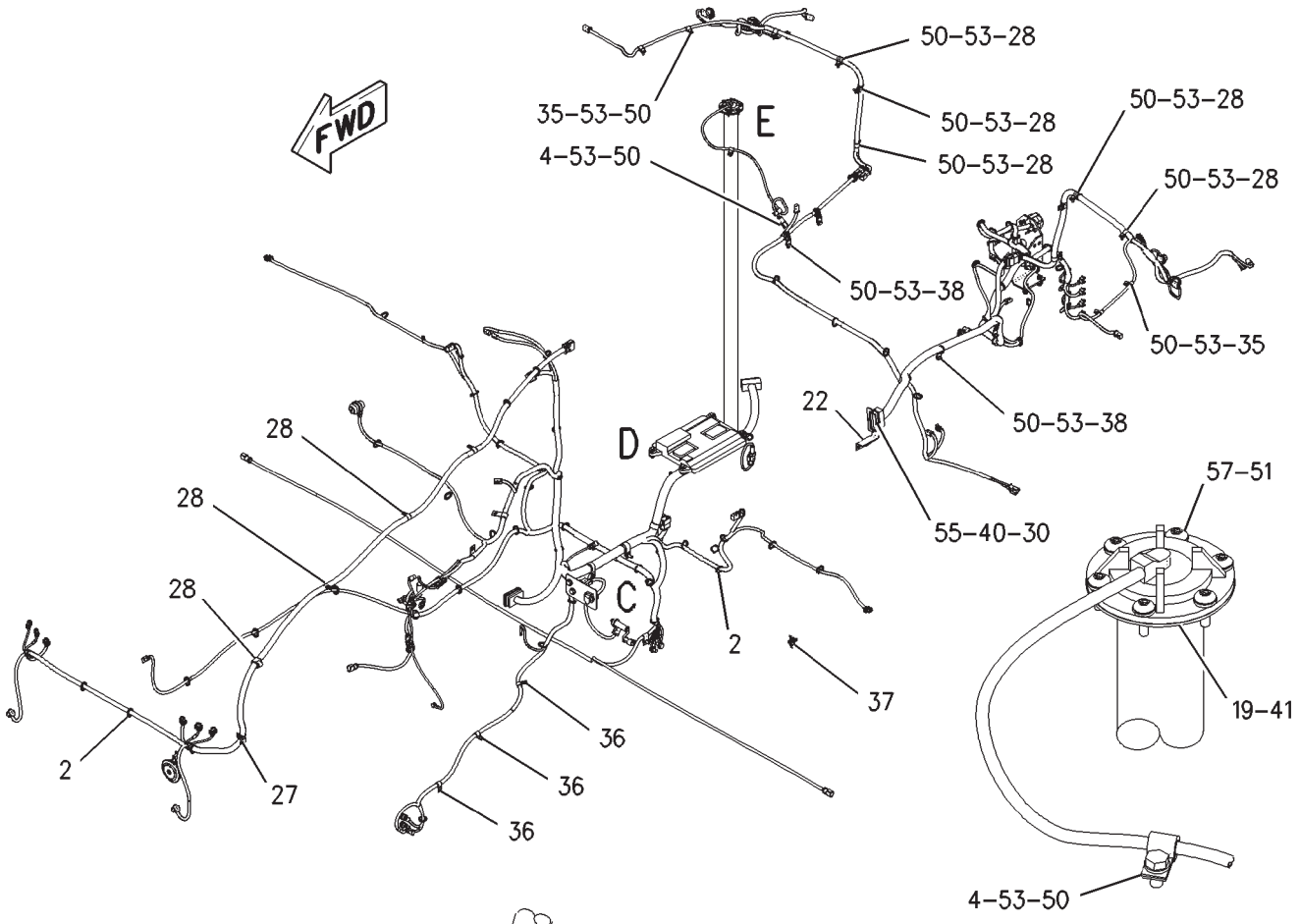


VIEW OF AREA E

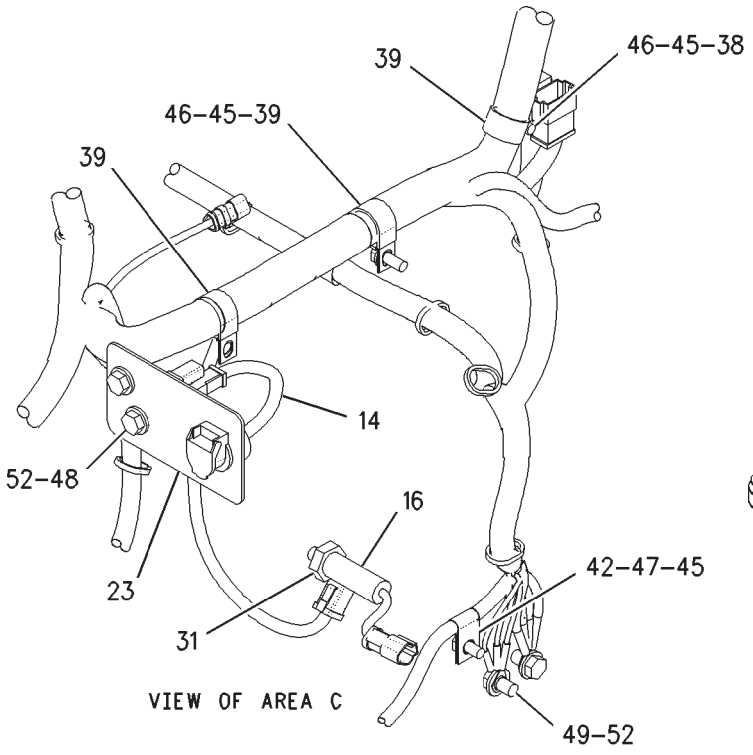


VIEW OF AREA C

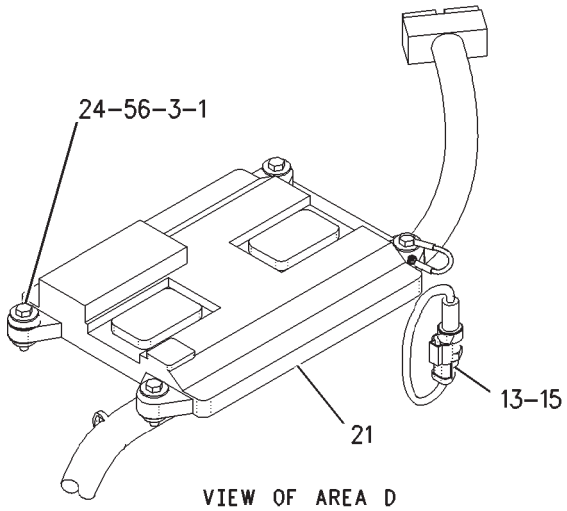


VIEW OF AREA D

00897319

## WIRING GP-VEHICLE - 136-5669

3 OF 3
EAME ONLY

| ITEM | NUMBER | QTY | DESCRIPTION |
|---|---|---|---|
| - | 136-5669 | -- | WIRING GP-VEHICLE [A] (NOT SERVICED) |
| 30 | CH3B-4501 | 4 | LOCKWASHER |
| 31 | 400318X1 | 1 | SEAL-O-RING (11.89ID X 1.98 DIA) |
| 35 | CH4D-7794 | 4 | CLIP-LOOP (10.00ID W/COAT) |
| 36 | CH4K-8864 | 3 | CLIP-LOOP (14.29ID) |
| 37 | CH4P-7428 | 1 | CLIP-LADDER (15DEGX35.5MM) |
| 38 | CH4P-7581 | 11 | CLIP-LADDER (15DEGX12.5MM-VCOAT) |
| 39 | 400597X1 | 3 | CLIP (31.75ID 3/8) |
| 40 | CH5C-8312 | 4 | NUT (M4X0.7 THD) |
| 41 | 500014D1 | 1 | GASKET |
| 42 | CH6S-5993 | 1 | CLIP |
| 45 | 400287X1 | 6 | WASHER-HARD (11X21X2.5MM THK) |
| 46 | 400039X1 | 5 | BOLT (M10X1.5X25MM) |
| 47 | 400040X1 | 1 | BOLT (M10X1.5X20MM) |
| 48 | 400041X1 | 2 | BOLT (M12X1.75X30MM) |
| 49 | 400055X1 | 2 | BOLT (M12X1.75X25MM) |
| 50 | 400227X1 | 18 | BOLT (M8X1.25X16MM) |
| 51 | CH8T-4205 | 6 | WASHER-HARD (7.2X14.5X2MM THK) |
| 52 | 400357X1 | 4 | WASHER-HARD (M12X25.5X3MM THK) |
| 53 | 400339X1 | 21 | WASHER-HARD (8.8X16X2MM THK) |
| 55 | 400251X1 | 4 | BOLT-SOCKET HEAD (M4X0.7X16MM) |
| 56 | CH9N-0869 | 4 | WASHER-HARD (8.8X25.5X2MM THK) |
| 57 | CH9X-2045 | 6 | SCREW-TRUSS HEAD (M6X1X20MM) |

[A] PART OF 179-2180 BASE COMMON AR

00897319
PR: t05i29k58b0164

## WIRING GP-SHUTOFF - 162-4096
**ENGINE**

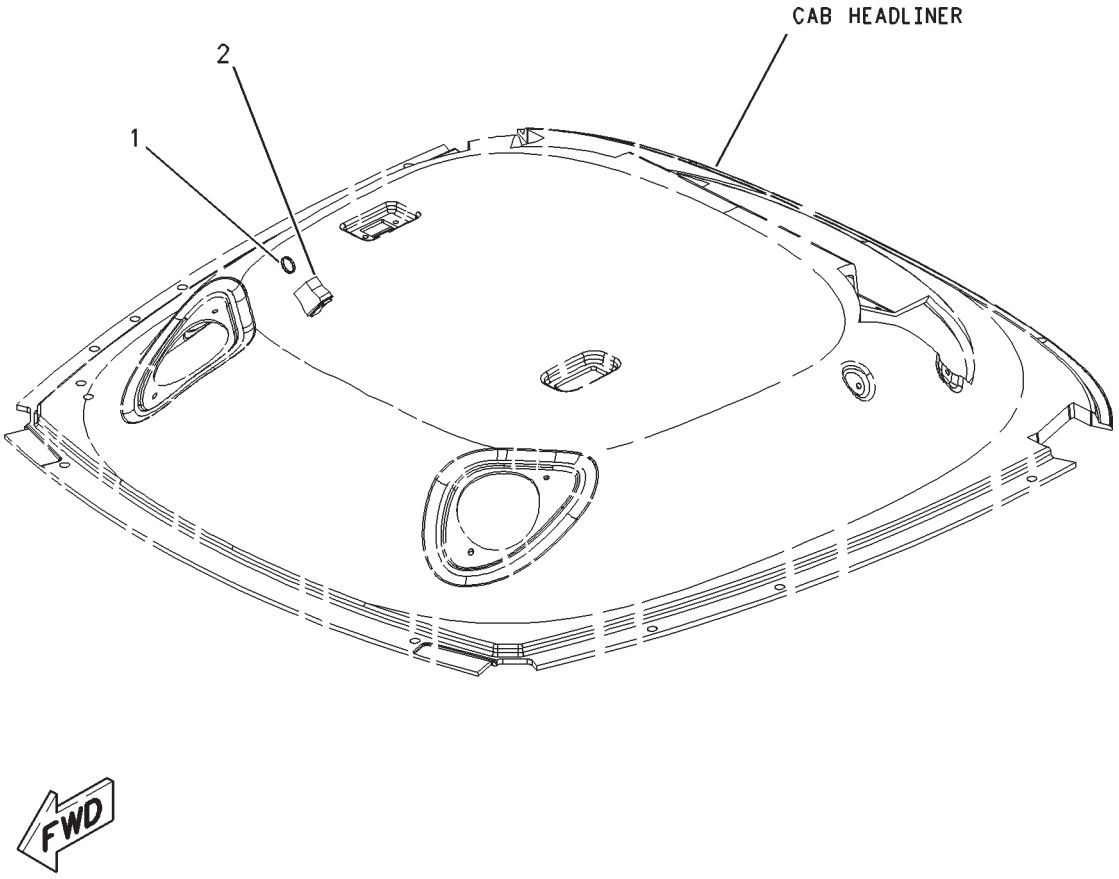


00664360

| ITEM | NUMBER | QTY | DESCRIPTION |
|---|---|---|---|
| - | 162-4096 | -- | WIRING GP-SHUTOFF [A] (NOT SERVICED) |
| 1 | 400837X1 | 1 | STRAP-CABLE |
| 2 | 169-8225 | 1 | SWITCH ASM-ROCKER (ENGINE IDLE TIMER) |

[A] PART OF 500843D1;500849D1 CAB AR

00664360
PR: t05i29k58b0165

## WIRING GP-SHUTOFF - 173-6501
TIME DELAY LIGHTING SHUTOFF

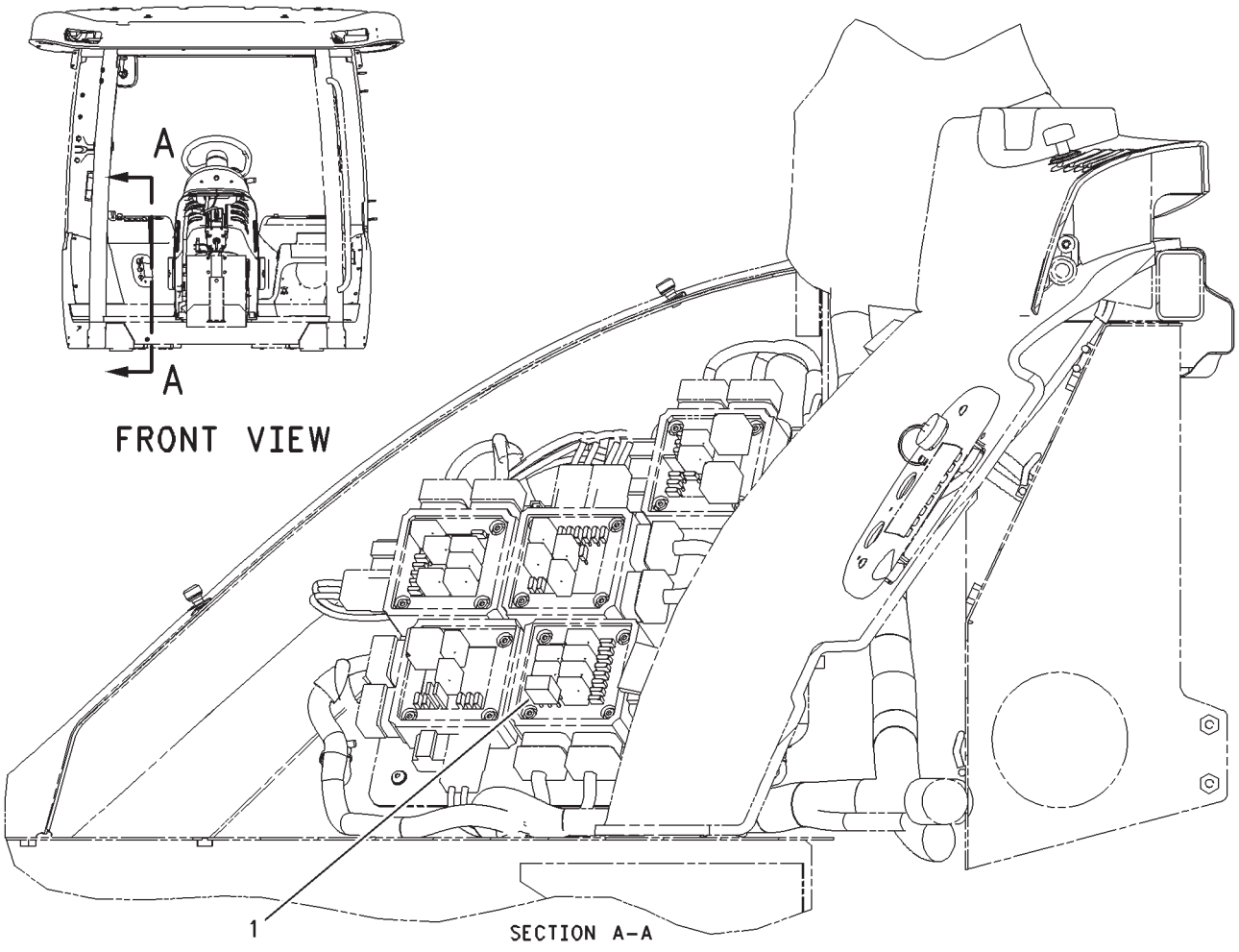


00676197

## WIRING GP-SHUTOFF - 173-6501
### TIME DELAY LIGHTING SHUTOFF

| ITEM | NUMBER | QTY | DESCRIPTION |
|---|---|---|---|
| - | 173-6501 | -- | WIRING GP-SHUTOFF [A] (NOT SERVICED) |
| 1 | CH146-9439 | 1 | RELAY (12 VOLT) (WORK LIGHTS TIMER) |

[A] 500841D1; 500843D1; 500849D1;
CAB AR

00676197
PR: t05i29k58b0166

## WIRING GP-TRAILER - 162-4102

**CONNECTOR SWITCHES**
**ROW & SPECIAL**

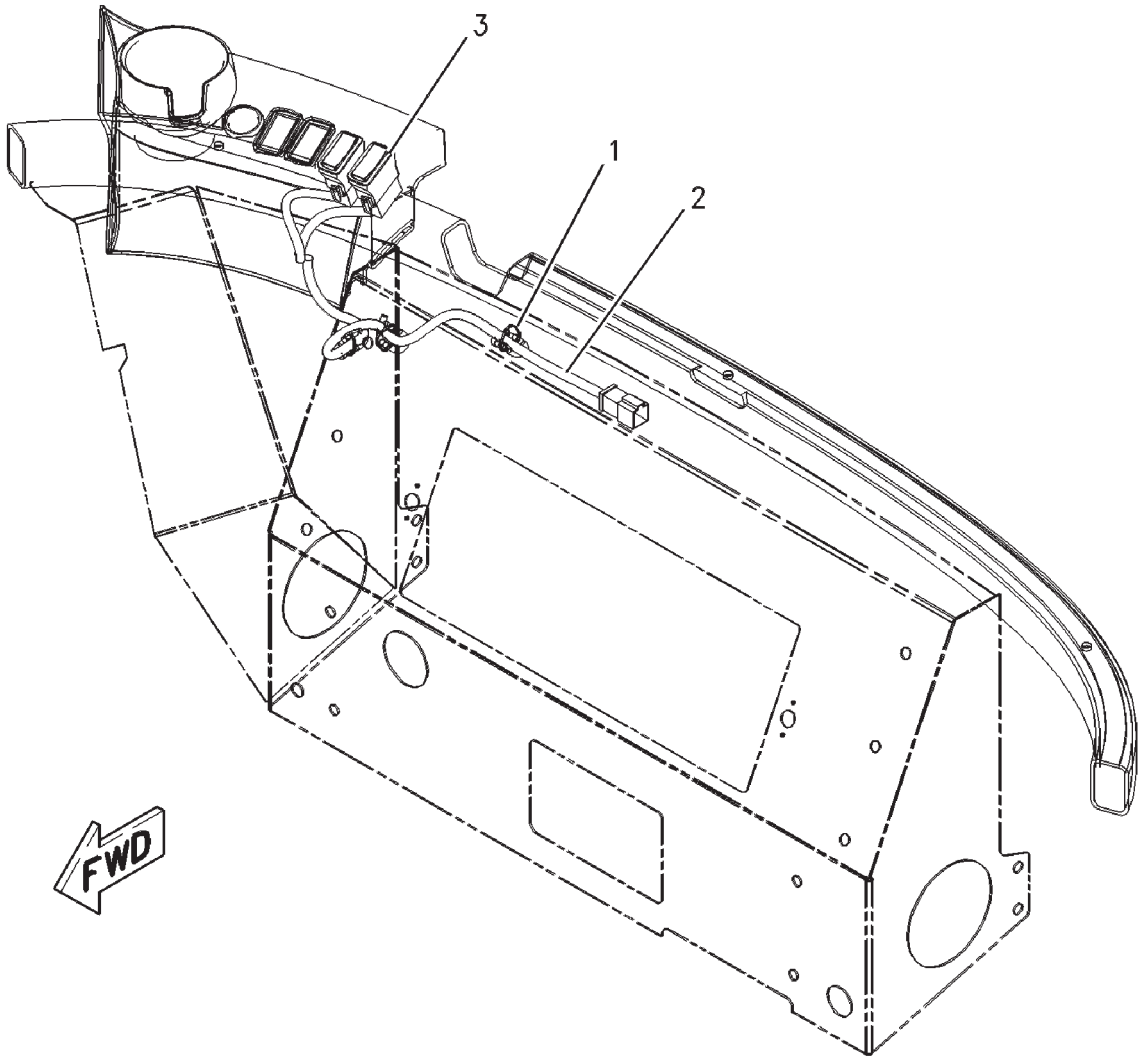


00664369

## WIRING GP-TRAILER - 162-4102
**CONNECTOR SWITCHES**
**ROW & SPECIAL**

| ITEM | NUMBER | QTY | DESCRIPTION |
|---|---|---|---|
| - | 162-4102 | -- | WIRING GP-TRAILER (NOT SERVICED) |
| 1 | 400837X1 | 3 | STRAP-CABLE |
| 2 | 136-5535 | 1 | HARNESS ASM (TRAILER SWITCHES) |
| 3 | 169-8230 | 2 | SWITCH ASM-ROCKER (TRAILER) |

00664369
PR: t05i29k58b0167

## WIRING GP-TRAILER - 168-1945

**CONNECTOR SWITCHES**
**EAME**

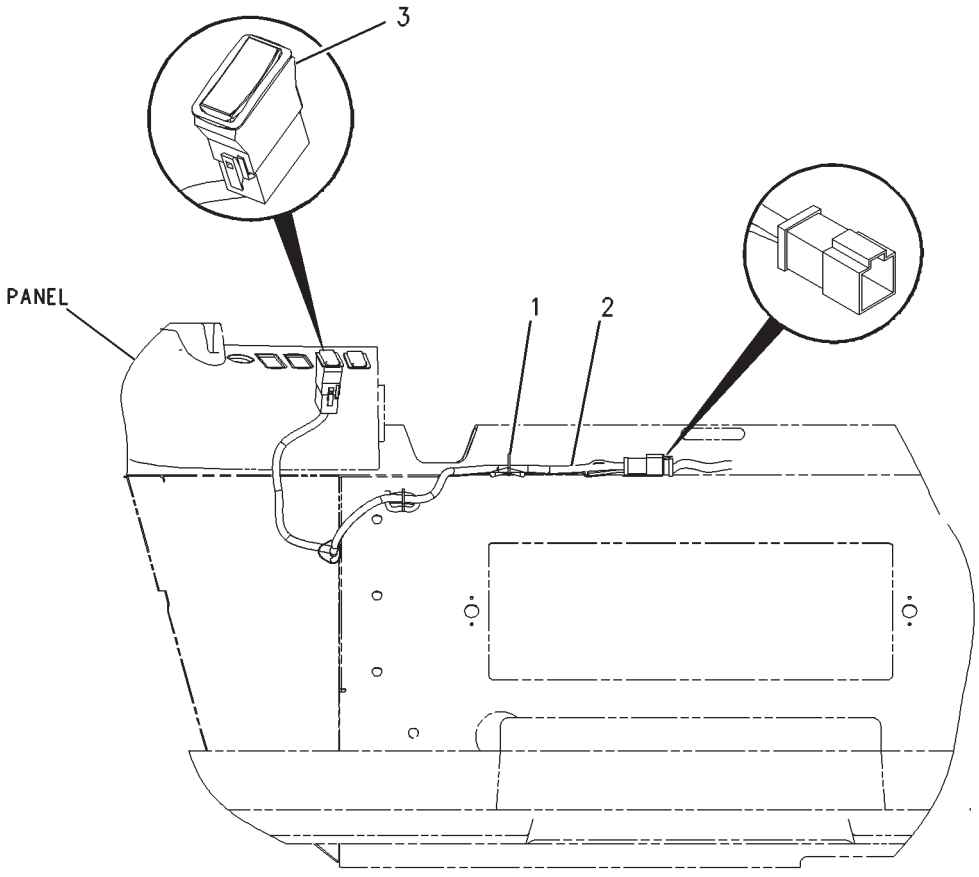


FRONT VIEW

## WIRING GP-TRAILER - 168-1945
### CONNECTOR SWITCHES
### EAME

| ITEM | NUMBER | QTY | DESCRIPTION |
|---|---|---|---|
| - | 168-1945 | -- | WIRING GP-TRAILER (NOT SERVICED) |
| 1 | 400837X1 | 3 | STRAP-CABLE |
| 2 | 502198D1 | 1 | HARNESS AS (TRAILER CONNECTOR SWITCH) |
| 3 | 169-8230 | 1 | SWITCH AS-ROCKER (TRAILER) |

00723129
PR: t05i29k58b0168

## SENSOR GP-PRESSURE - CH161-9932

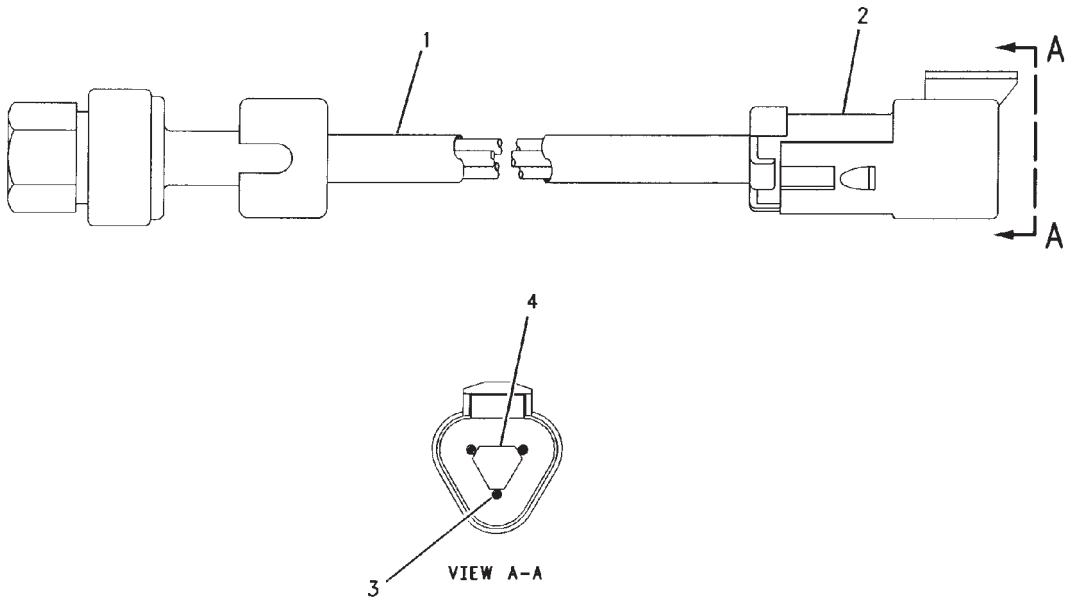


00612982

## SENSOR GP-PRESSURE - CH161-9932

| ITEM | NUMBER | QTY | DESCRIPTION |
|---|---|---|---|
| - | CH161-9932 | -- | SENSOR GP-PRESSURE [A] |
| 1 | ----- | | SLEEVE (15CM) |
| 2 | CH102-8803 | 1 | KIT-RECEPTACLE AS (3 PIN) (INCLS ITEM 4) |
| 3 | CH180-9339 | 3 | PIN-CONNECTOR (14-18 AWG GOLD) |
| | 400497X1 | 1 | PIN-CONNECTOR (14AWG) |
| | 400706X1 | 1 | PIN-CONNECTOR (16-18AWG) |
| 4 | CH3E-3371 | 1 | WEDGE-RECEPT LOCK |

[A] PART OF 136-5668;136-5669
WIRING GP-VEHICLE

00612982
PR: t05i29k58b0169

## GUARD GP-AXLE - 208-3021
EAME ONLY

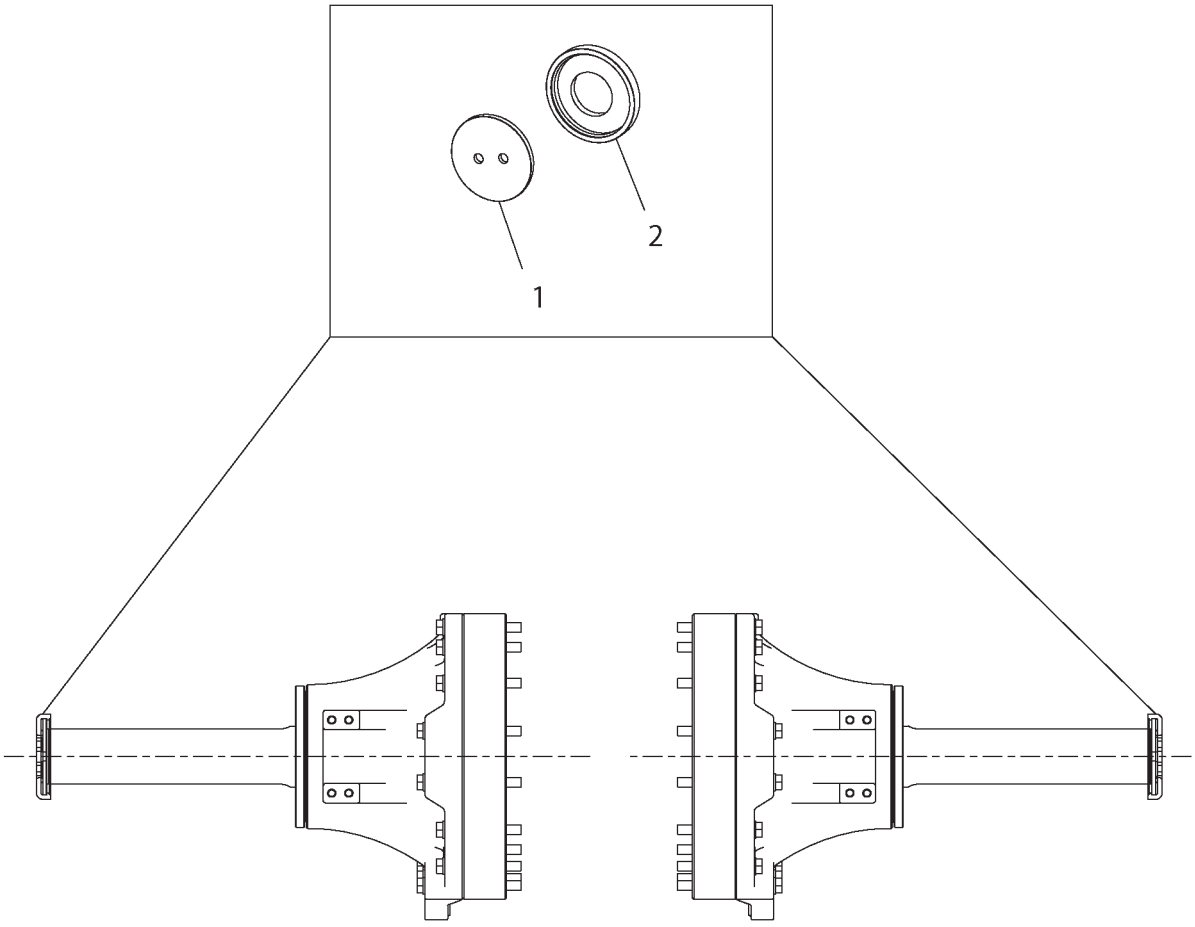


2083021A

## GUARD GP-AXLE - 208-3021
EAME ONLY

| ITEM | NUMBER | QTY | DESCRIPTION |
|---|---|---|---|
| - | 208-3021 | -- | GUARD GP-AXLE [A] |
| 1 | 185-8617 | 2 | PLATE-END |
| 2 | 205-8334 | 2 | CAP |

[A] PART OF BASE COMMON AR

2083021A
PR: t05i29k58b0170

DRAIN GP-ECOLOGY - CH163-0397

**TO REAR TRANSMISSION CASE ON MT800 TRACTORS**

**TO FRONT TRANSMISSION CASE ON MT700 TRACTORS**

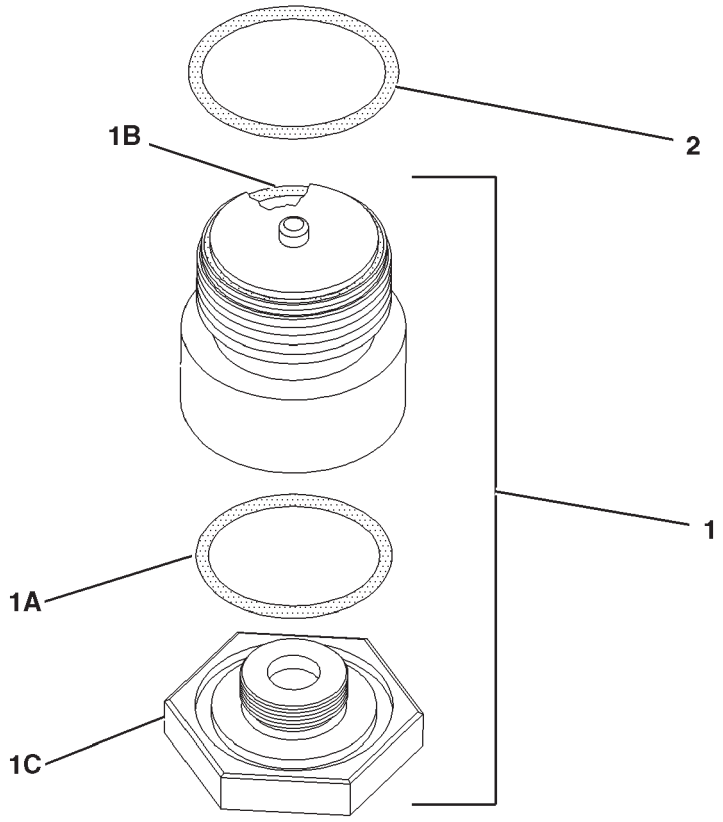


0883187A

## DRAIN GP-ECOLOGY - CH163-0397

| ITEM | NUMBER | QTY | DESCRIPTION |
|---|---|---|---|
| - | 502901D1 | -- | DRAIN GP-ECOLOGY (FACT OPTION-REF ONLY) (NOT SERVICED) |
| - | CH163-0397 | -- | DRAIN GP-ECOLOGY [A] (NOT SERVICED) |
| 1 | CH173-0566 | 1 | DRAIN GP-ECOLOGY (INCLS 1A-1C) |
| 1A | CH2K-8199 | 1 | SEAL-O-RING |
| 1B | CH077-3241 | 1 | SEAL-O-RING |
| 1C | CH175-4966 | 1 | PLUG (TRANSMISSION DRAIN) |
| 2 | 400376X1 | 1 | SEAL-O-RING |

[A] PART OF:
179-2180 BASE COMMON AR
502901D1 DRAIN GP

0883187A
PR: t05i29k58b0171

## FILLER GP-POWER TRAIN OIL - 502498D1

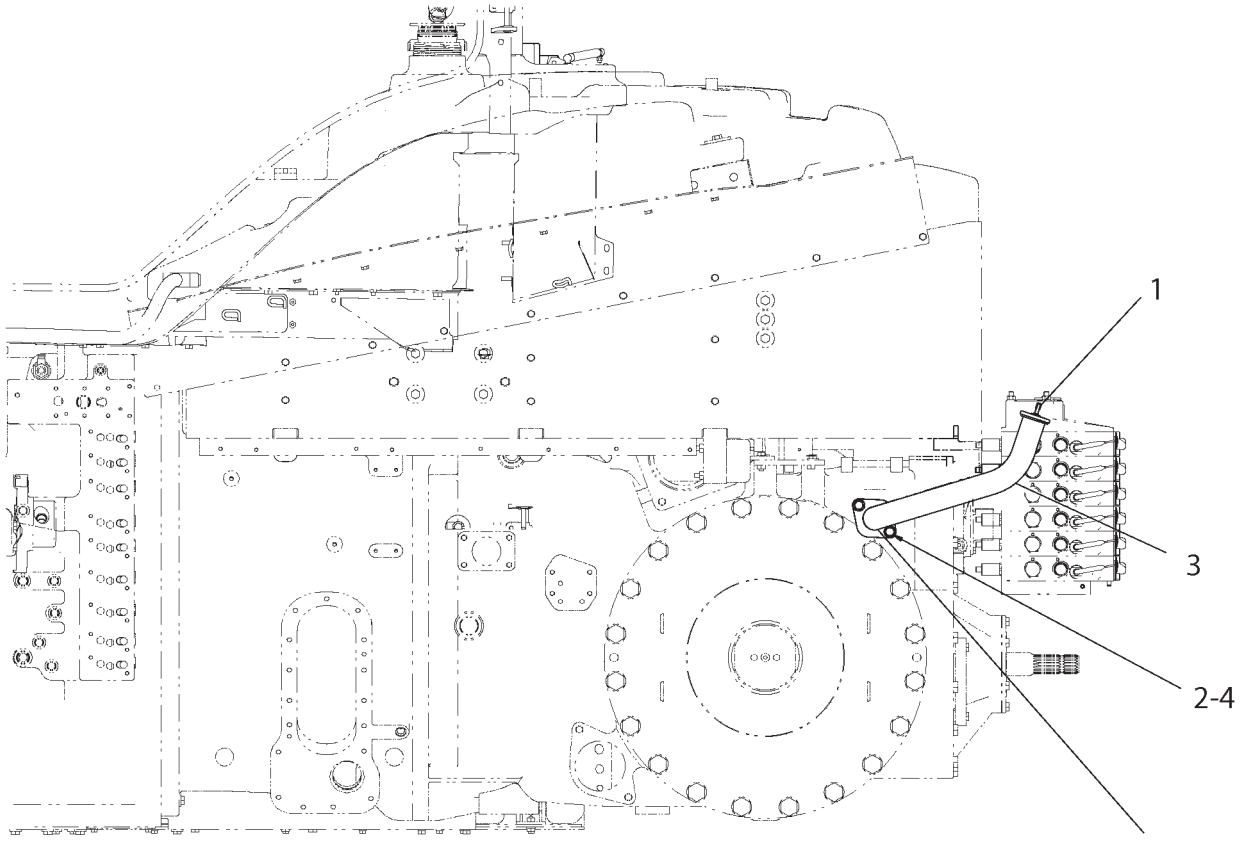


502498DA

## FILLER GP-POWER TRAIN OIL - 502498D1

| ITEM | NUMBER | QTY | DESCRIPTION |
|---|---|---|---|
| - | 502498D1 | -- | FILLER GP-POWER TRAIN OIL [A] (NOT SERVICED) |
| 1 | 159-1236 | 1 | CAP-BREATHER (POWER TRAIN) |
| 2 | 400055X1 | 2 | BOLT (M12X1.75X25MM) |
| 3 | 501806D1 | 1 | TUBE ASM |
| 4 | 400357X1 | 2 | WASHER-HARD (M12X25.5X3) |
| 5 | WR516365 | AR | SEALANT-GASKET 515 (50ML BOTTLE) |

[A] PART OF: 179-0851; 179-0853 HITCH AR
184-5033 CONT AR-DRAWBAR

502498DA
PR: t05i29k58b0172

## FILLER GP-POWER TRAIN OIL - 179-4304

**(S/N: PRIOR TO BAM40556; BBP40455; BCC40654; BDS40740)**

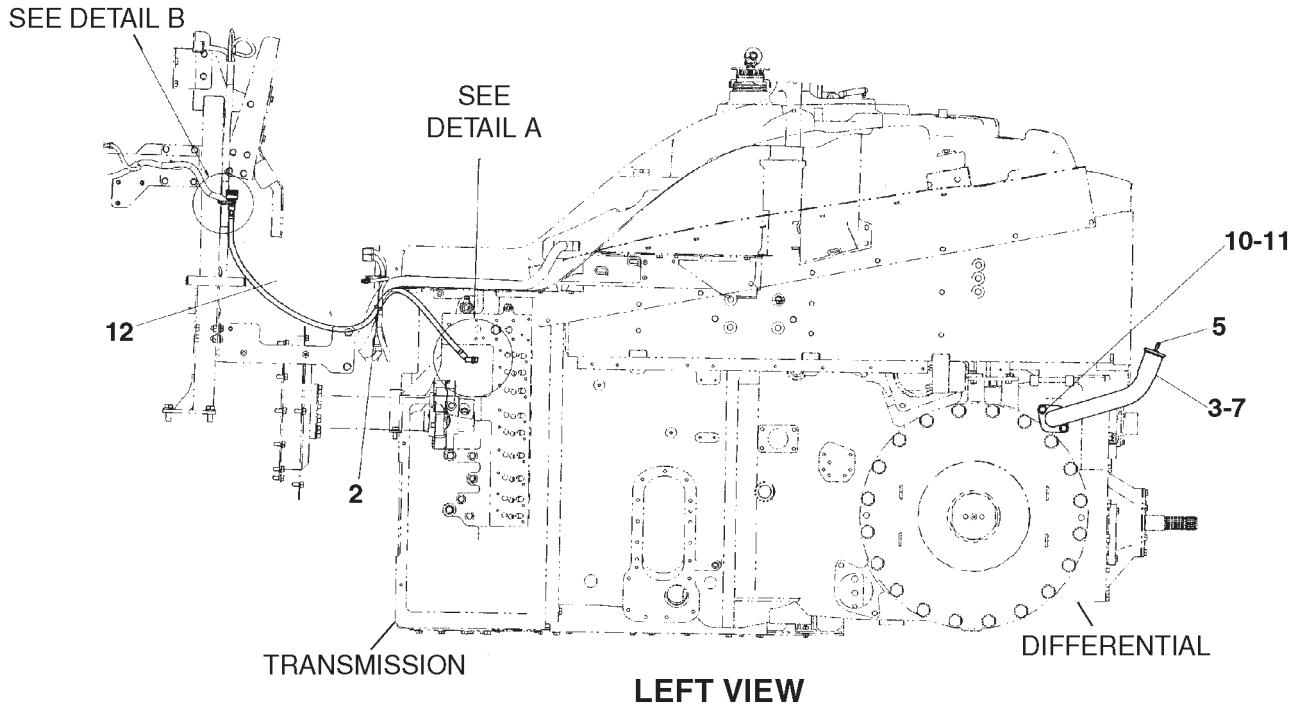


**LEFT VIEW**

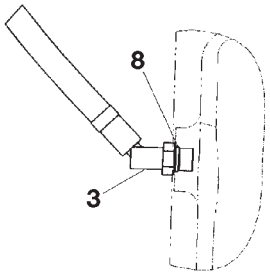


**DETAIL A**

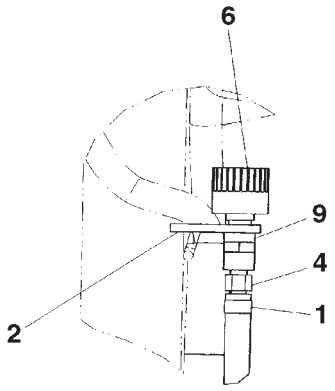


**DETAIL B**

## FILLER GP-POWER TRAIN OIL - 179-4304

**(S/N: PRIOR TO BAM40556; BBP40455; BCC40654; BDS40740)**

| ITEM | NUMBER | QTY | DESCRIPTION |
|---|---|---|---|
| - | 179-4304 | -- | FILLER GP-POWER TRAIN OIL [A] (NOT SERVICED) |
| 1 | CH1P-4278 | 2 | CLAMP-HOSE |
| 2 | CH7K-1181 | 2 | STRAP-CABLE |
| 3 | CH7X-1448 | 1 | ELBOW |
| 4 | CH006-6586 | 1 | CONNECTOR-HOSE |
| 5 | 159-1236 | 1 | CAP-BREATHER (POWER TRAIN) |
| 6 | 400831X1 | 1 | BREATHER (POWER TRAIN) |
| 7 | 220-3810 | 1 | TUBE ASM |
| 8 | 400318X1 | 1 | SEAL-O-RING (11.89ID X 1.98 DIA) |
| 9 | CH8S-7169 | 1 | COUPLING |
| 10 | 400055X1 | 2 | BOLT (M12X1.75X25MM) |
| 11 | 400357X1 | 2 | WASHER-HARD (M12X25.5X3) |
| 12 | CH5P-1442 | 110 | HOSE (ORDER cm) |
| | 1U-8846 | | SEALANT-GASKET (USE AS REQUIRED) |

[A] PART OF 156-5581;156-5582;156-5583; 156-5584;179-2193;179-2194;179-2195; 179-2196 BASE UNIT AR

0886011A
PR: t05i29k58b0173

## BREATHER GP-POWERTRAIN - 502496D1

**(S/N: EFF BAM40556; BBP40455; BCC40654; BDS40740)**

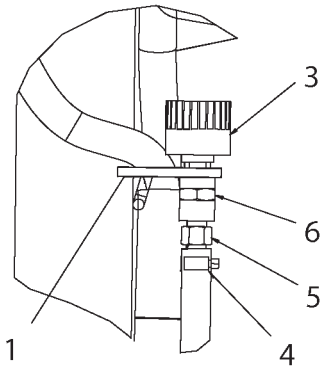


DETAIL B

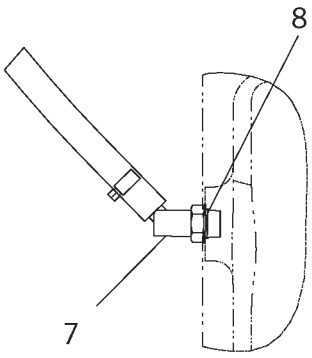


DETAIL A

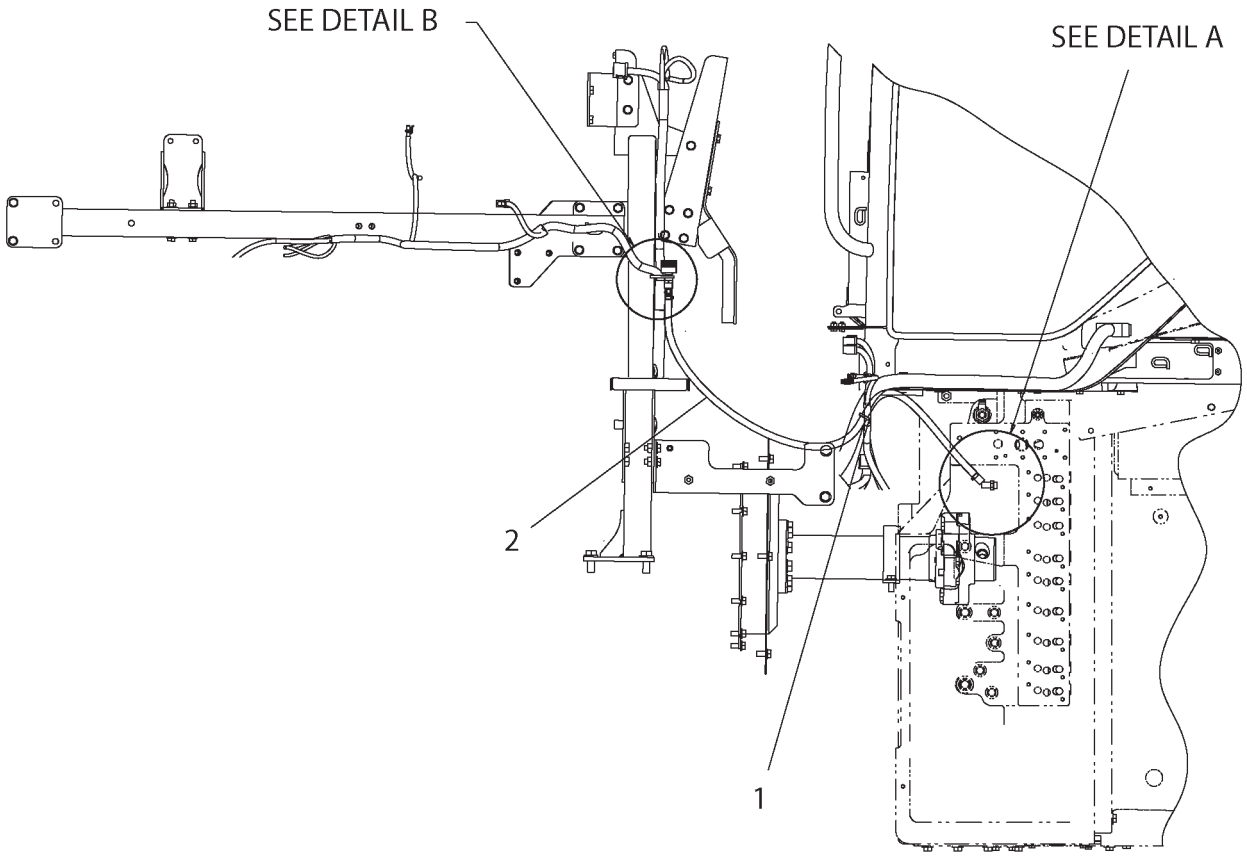


502496DA

## BREATHER GP-POWERTRAIN - 502496D1

**(S/N: EFF BAM40556; BBP40455; BCC40654; BDS40740)**

| ITEM | NUMBER | QTY | DESCRIPTION |
|---|---|---|---|
| - | 502496D1 | -- | BREATHER GP-POWERTRAIN [A] (NOT SERVICED) |
| 1 | CH7K-1181 | 2 | STRAP-CABLE 0.19-4.00 |
| 2 | CH5P-1442 | -- | HOSE-BULK 9.52ID HI TEMP (110CM) |
| 3 | 400831X1 | 1 | BREATHER-1/4-18 NPTF |
| 4 | CH1P-4278 | 2 | CLAMP-HOSE 5.5-15.88 ID X 8 |
| 5 | CH006-6586 | 1 | CONNECTOR-4NPTFX9.52 OD BARB |
| 6 | CH8S-7169 | 1 | COUPLING-4NPTF HEX |
| 7 | CH7X-1448 | 1 | ELBOW-45DEG 6STOR X 9.52 BARB |
| 8 | 400318X1 | 1 | SEAL-O-RING (11.89ID X 1.98 DIA) |

[A] PART OF: 156-5581;156-5582;156-5583; 156-5584;179-2193;179-2194;179-2195; 179-2196 BASE UNIT AR

502496DA
PR: t05i29k58b0174

## SHAFT GP-INPUT - 163-0383

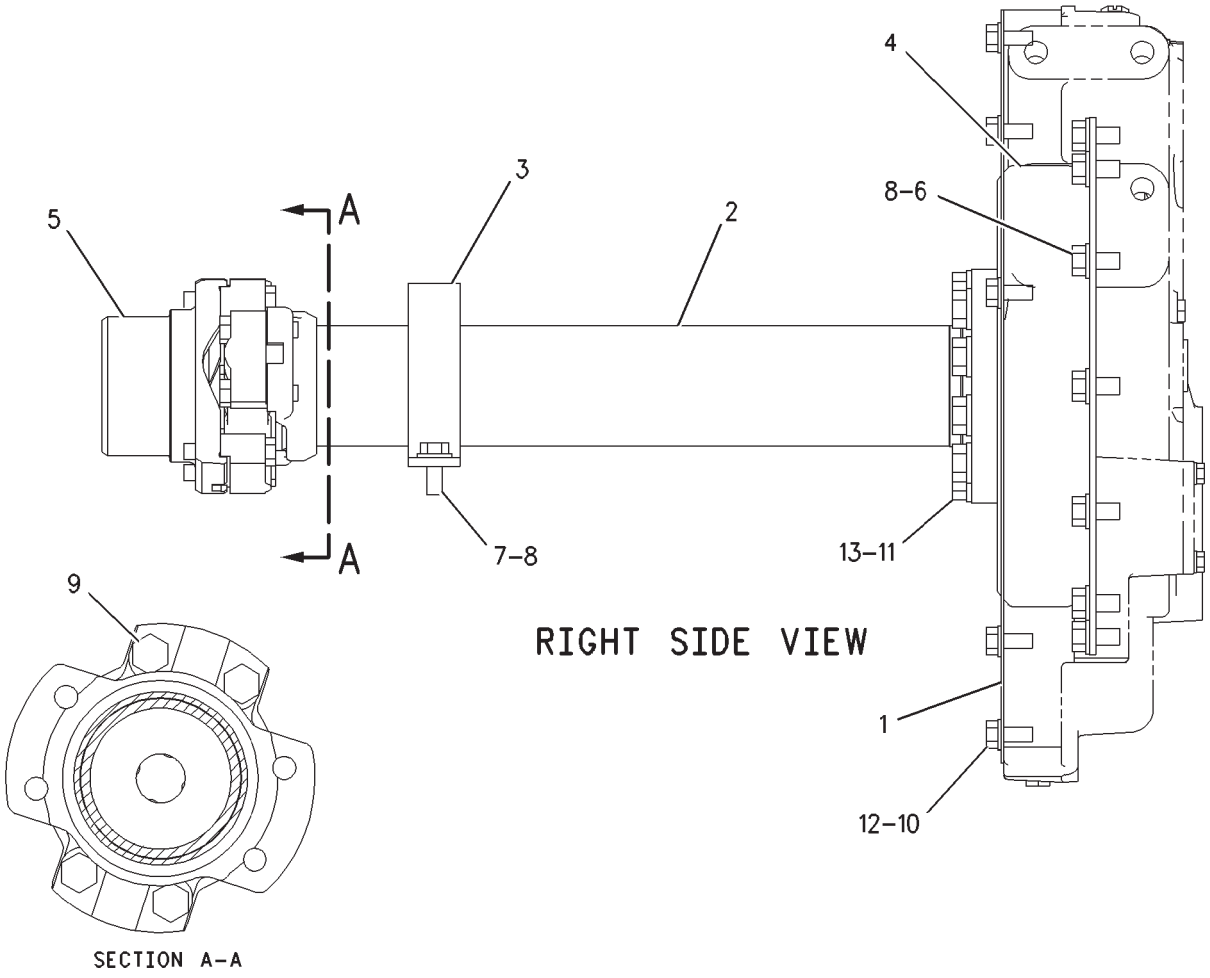


00887891

## SHAFT GP-INPUT - 163-0383

| ITEM | NUMBER | QTY | DESCRIPTION |
|---|---|---|---|
| - | 163-0383 | -- | SHAFT GP-INPUT [A] (NOT SERVICED) |
| 1 | CH102-0409 | 1 | COVER |
| 2 | 163-0412 | 1 | UNIVERSAL JOINT GP [A] |
| | 400057X1 | 4 | BOLT (M12X1.75X50MM) |
| | CH9P-0356 | 1 | SPIDER & BEARING |
| 3 | 163-0425 | 1 | BRACKET |
| 4 | 501929D1 | 1 | COUPLING |
| 5 | 501929D1 | 1 | YOKE ASM (INCLUDES PLUG) |
| | CH3T-8747 | 1 | PLUG-CORE |
| | 6V-6640 | | SEALANT (USE AS REQUIRED) |
| 6 | 400154X1 | 12 | BOLT (1/2-13X25MM) |
| 7 | 400041X1 | 2 | BOLT (M12X1.75X30MM) |
| 8 | 400357X1 | 14 | WASHER-HARD (M12X25.5X3) |
| 9 | 400063X1 | 4 | BOLT (M12X1.75X60MM) |
| 10 | 400358X1 | 6 | WASHER (7/16X22.5X2.5) |
| 11 | 400244X1 | 10 | BOLT (M16X2.0X45MM) |
| 12 | 400069X1 | 6 | BOLT (7/16-14X1 IN) |
| 13 | 400082X1 | 10 | WASHER (17.5X30X3.5) |

[A] PART OF 172-5361;172-5362;187-1741;
187-1742 INSTALLATION AR-ENGINE

00887891
PR: t05i29k58b0175

## SHAFT GP-INPUT - 163-0384
**MT855 & MT865**

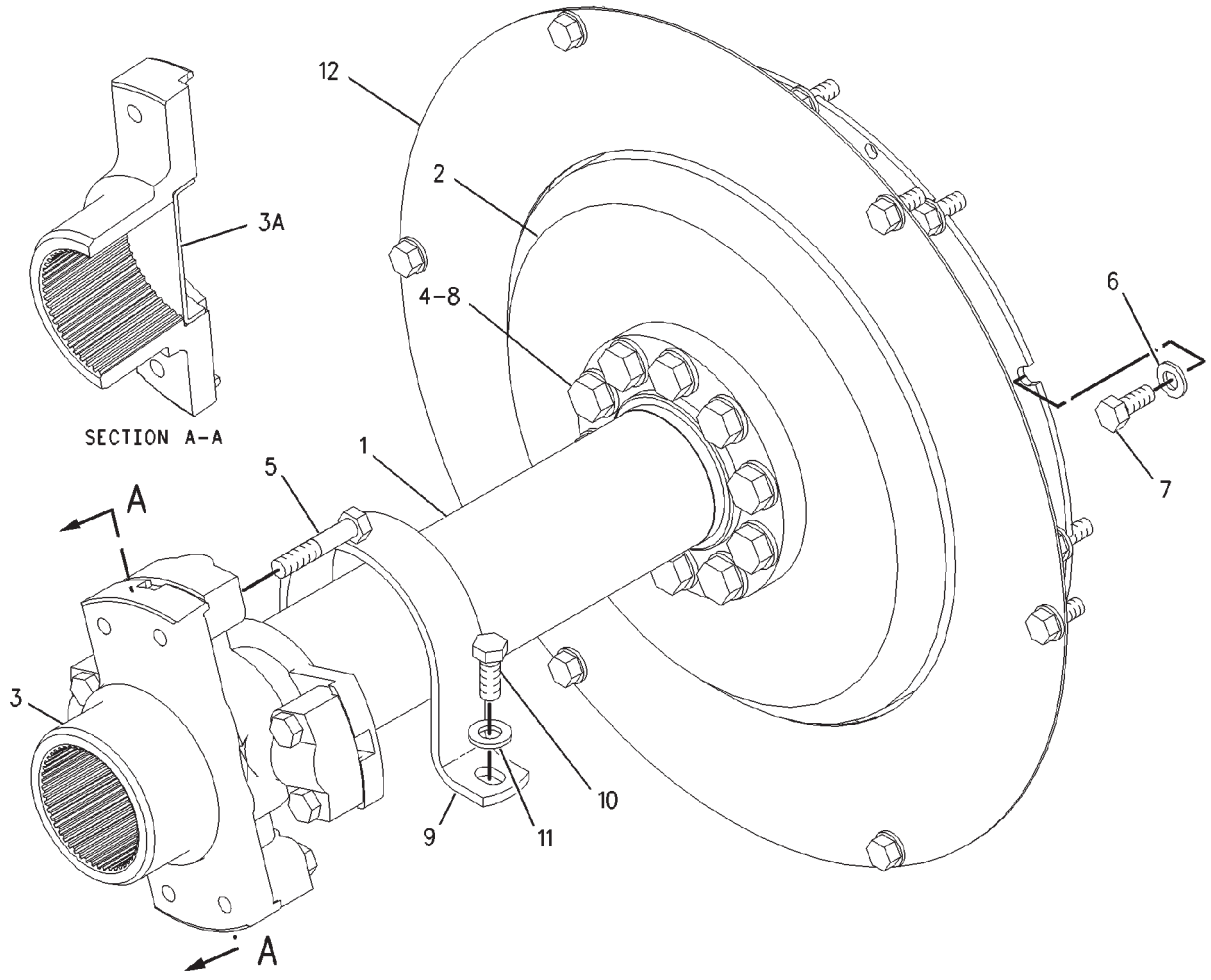


00867568

## SHAFT GP-INPUT - 163-0384
**MT855 & MT865**

| ITEM | NUMBER | QTY | DESCRIPTION |
|---|---|---|---|
| - | 163-0384 | -- | SHAFT GP-INPUT [A] (NOT SERVICED) |
| 1 | 163-0414 | 1 | UNIVERSAL JOINT GP (SEE BREAKDOWN FOR COMPONENTS) |
| 2 | 501931D1 | 1 | COUPLING AS-FLYWHEEL |
| 3 | 501787D1 | 1 | YOKE ASM |
| 4 | 400244X1 | 10 | BOLT (M16X2.0X45MM) |
| 5 | 400063X1 | 4 | BOLT (M12X1.75X60MM) |
| 6 | 400358X1 | 18 | WASHER (7/16X22.5X2.5) |
| 7 | 400069X1 | 18 | BOLT (7/16-14X1 IN) |
| 8 | 400082X1 | 10 | WASHER (17.5X30X3.5) |
| 9 | 163-0425 | 1 | BRACKET |
| 10 | 400041X1 | 2 | BOLT (M12X1.75X30MM) |
| 11 | 400357X1 | 2 | WASHER-HARD (M12X25.5X3) |
| 12 | 163-0405 | 1 | COVER |

[A] PART OF 172-5363;172-5364;187-1743;
187-1744 INSTALLATION AR-ENGINE

00867568
PR: t05i29k58b0176

## UNIVERSAL JOINT GP - 163-0414

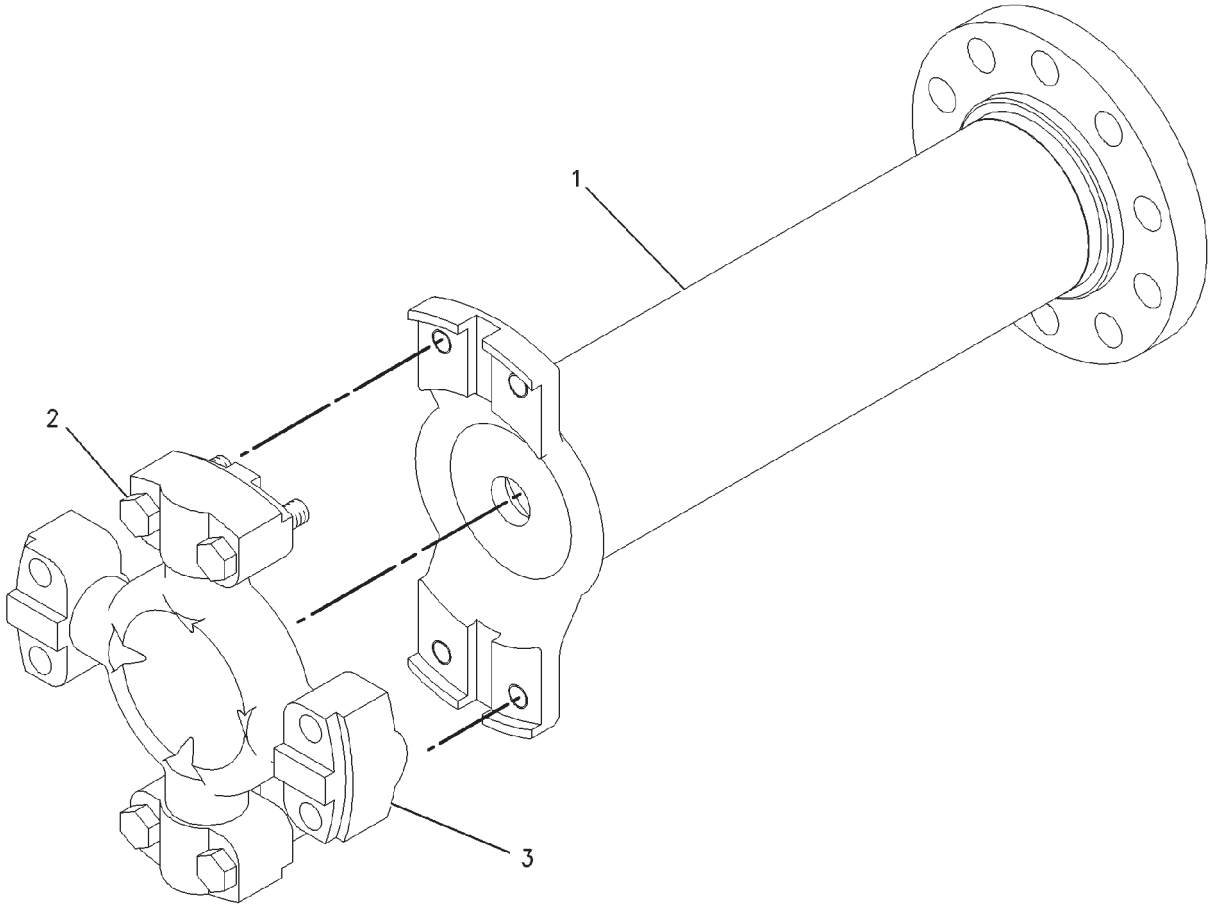


00750174

## UNIVERSAL JOINT GP - 163-0414

| ITEM | NUMBER | QTY | DESCRIPTION |
|---|---|---|---|
| - | 163-0414 | -- | UNIVERSAL JOINT GP [A] |
| 1 | 163-0415 | 1 | TUBE |
| 2 | 400057X1 | 4 | BOLT (M12X1.75X50MM) |
| 3 | CH9P-4809 | 1 | SPIDER & BEARING AS |

[A] PART OF 163-0384 SHAFT GP-INPUT

00750174
PR: t05i29k58b0177

## 200-5027 POWER TRAIN AR - WITH PTO
**(2286-3251MM/90-128") GAGE**

NO ILLUSTRATION

NOTIF

## 200-5027 POWER TRAIN AR - WITH PTO
**(2286-3251MM/90-128") GAGE**

| ITEM | NUMBER | QTY | DESCRIPTION |
|---|---|---|---|
| - | 200-5027 | -- | POWER TRAIN AR<br>(NOT SERVICED) |
| | 185-3955 | 1 | AXLE AR (NOT SERVICED)<br>(SEE BREAKDOWN FOR COMPONENTS) |
| | 211-8277 | 1 | FASTENER GP-FINAL DRIVE<br>(NOT SERVICED)<br>(SEE BREAKDOWN FOR COMPONENTS) |
| | 152-5242 | 1 | TRANSMISSION AR<br>(SEE BREAKDOWN FOR COMPONENTS) |

NOTIF
PR: t05i29k58b0178

## 200-5028 POWER TRAIN AR-WITH PTO
**(2286-2600MM/90-102") GAGE**

NO ILLUSTRATION

NOTIF

## 200-5028 POWER TRAIN AR-WITH PTO
**(2286-2600MM/90-102") GAGE**

| ITEM | NUMBER | QTY | DESCRIPTION |
|---|---|---|---|
| - | 200-5028 | -- | POWER TRAIN AR<br>(NOT SERVICED) |
| | 185-3956 | 1 | AXLE AR (NOT SERVICED)<br>(SEE BREAKDOWN FOR COMPONENTS) |
| | 211-8277 | 1 | FASTENER GP-FINAL DRIVE<br>(NOT SERVICED)<br>(SEE BREAKDOWN FOR COMPONENTS) |
| | 152-5242 | 1 | TRANSMISSION AR<br>(SEE BREAKDOWN FOR COMPONENTS) |

NOTIF
PR: t05i29k58b0179

## 200-5029 POWER TRAIN AR - W/ PTO

NO ILLUSTRATION

NOTIF

## 200-5029 POWER TRAIN AR - W/ PTO

| ITEM | NUMBER | QTY | DESCRIPTION |
|---|---|---|---|
| - | 200-5029 | -- | POWER TRAIN AR<br>(NOT SERVICED) |
| 1 | 152-5242 | 1 | TRANSMISSION AR<br>(SEE BREAKDOWN FOR COMPONENTS) |
| 2 | 185-3957 | 1 | AXLE AR (NOT SERVICED)<br>(SEE BREAKDOWN FOR COMPONENTS) |
| 3 | 211-8277 | 1 | FASTENER GP-FINAL DRIVE (NOT SERVICED)<br>(SEE BREAKDOWN FOR COMPONENTS) |

NOTIF
PR: t05i29k58b0180

## 200-5030 POWER TRAIN AR WITHOUT PTO

NO ILLUSTRATION

NOTIF

## 200-5030 POWER TRAIN AR WITHOUT PTO

| ITEM | NUMBER | QTY | DESCRIPTION |
|---|---|---|---|
| - | 200-5030 | -- | POWER TRAIN AR (NOT SERVICED) |
| 1 | 152-5242 | 1 | TRANSMISSION AR<br>(SEE BREAKDOWN FOR COMPONENTS) |
| 2 | 185-3958 | 1 | AXLE AR (NOT SERVICED)<br>(SEE BREAKDOWN FOR COMPONENTS) |
| 3 | 211-8277 | 1 | FASTENER GP-FINAL DRIVE (NOT SERVICED)<br>(SEE BREAKDOWN FOR COMPONENTS) |

[N] NEW PART

NOTIF
PR: t05i29k58b0181

## 155-9579 CASE & PARTS GP-PLANETARY

**S/N: 9YY1-950**

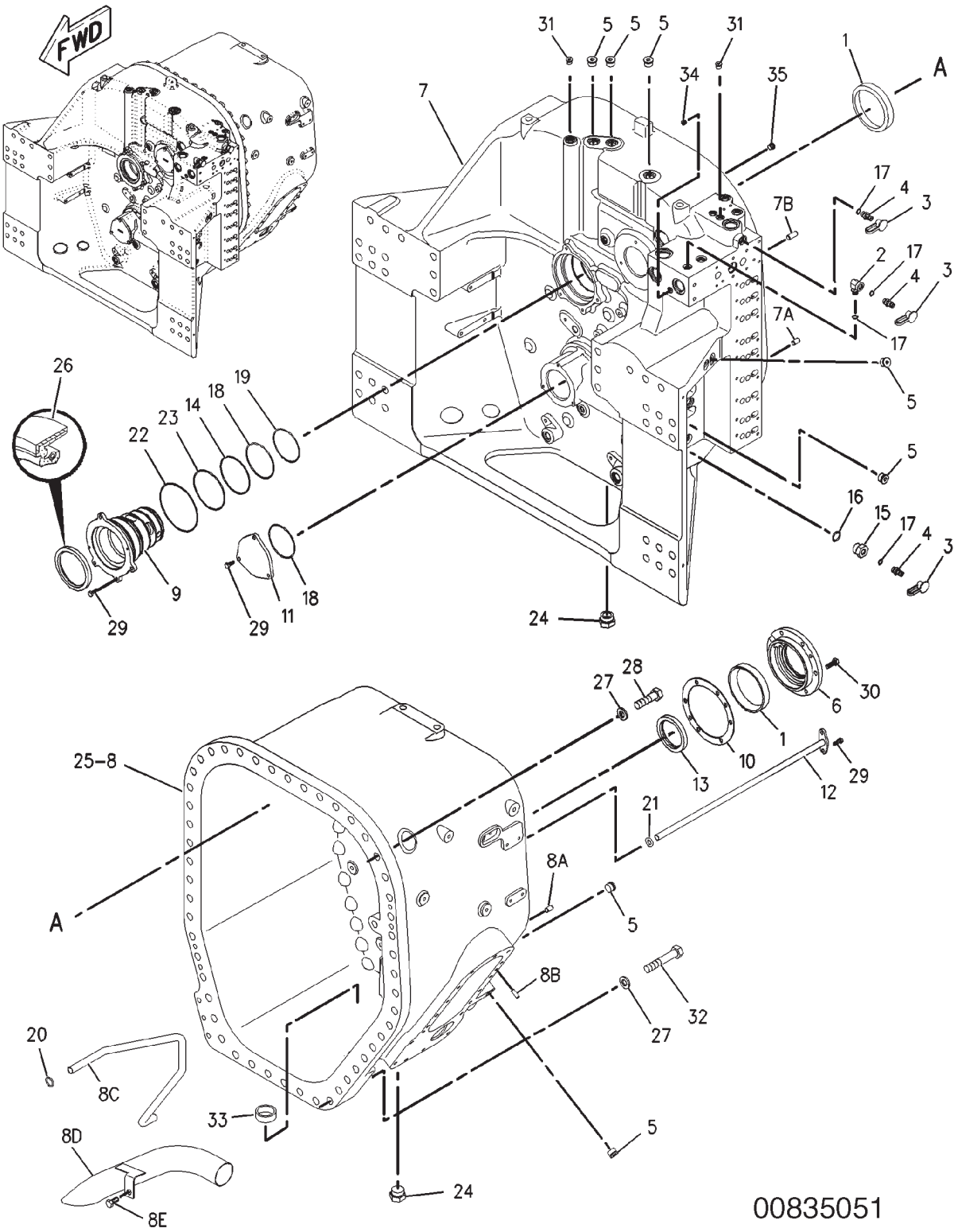

## 155-9579 CASE & PARTS GP-PLANETARY
**S/N: 9YY1-950**

| ITEM | NUMBER | QTY | DESCRIPTION |
|---|---|---|---|
| - | 155-9579 | -- | CASE & PARTS GP-PLANETARY [A] |
| | | | (NOT SERVICED) |
| 1 | 6F-2956 | 8 | CUP-BEARING |
| 2 | 6V-0484 | 1 | ADAPTER-O-RING |
| 3 | 6V-0852 | 3 | CAP-DUST |
| 4 | 6V-3965 | 3 | FITTING AS |
| 5 | 9S-8006 | 7 | PLUG |
| | 2M-9780 | 1 | SEAL-O-RING |
| 6 | 177-6741 | 4 | CAGE-BEARING |
| 7 | 177-6774 | 1 | CASE AS (FRONT) |
| | 211-2731 | 1 | TUBE |
| 7A | 3F-0957 | 2 | DOWEL |
| 7B | 5M-7937 | 2 | DOWEL |
| 8 | 177-6775 | 1 | CASE AS (REAR) |
| 8A | 3F-0957 | 2 | DOWEL |
| 8B | 5B-5821 | 2 | DOWEL |
| 8C | 177-6800 | 1 | TUBE |
| 8D | 161-8222 | 1 | TUBE AS |
| 8E | 6A-5591 | 1 | BOLT (M12X1.75X25-MM) |
| 9 | 232-0345 | 1 | HOUSING |
| 10 | 187-1376 | 4 | SHIM PACK (INCLUDES 13-SHIMS) |
| 11 | 188-2162 | 3 | COVER |
| 12 | 188-9912 | 1 | TUBE AS |
| 13 | 9X-7719 | 1 | SEAL-LIP TYPE |
| 14 | 1T-1068 | 1 | SEAL-O-RING |
| 15 | 2P-8421 | 1 | ADAPTER-O-RING |
| 16 | 3D-2824 | 1 | SEAL-O-RING |
| 17 | 3J-1907 | 4 | SEAL-O-RING |
| 18 | 3K-0715 | 4 | SEAL-O-RING |
| 19 | 4F-4097 | 1 | SEAL-O-RING |
| 20 | 4J-8996 | 1 | SEAL-O-RING |
| 21 | 5H-8038 | 1 | SEAL-O-RING |
| 22 | 5J-3886 | 1 | SEAL-O-RING |
| 23 | 6S-3002 | 1 | SEAL-O-RING |
| 24 | 9S-4181 | 2 | PLUG |
| | 7M-8485 | 2 | SEAL-O-RING |
| 25 | 1U-8846 | AR | SEALANT-GASKET |
| 26 | 8C-3075 | 1 | SEAL-LIP TYPE |
| 27 | 8T-4123 | 50 | WASHER-PLATED (22X35X3.5-MM THK) |
| 28 | 8T-4141 | 38 | BOLT (M20X2.5X70-MM) |
| 29 | 8T-4189 | 15 | BOLT (M8X1.25X20-MM) |
| 30 | 8T-4195 | 24 | BOLT (M10X1.5X30-MM) |
| 31 | 9S-8004 | 2 | PLUG |
| | 3J-1907 | 2 | SEAL-O-RING |
| 32 | 7X-2566 | 12 | BOLT (M20X2.5X110-MM) |
| 33 | 8M-7160 | 1 | MAGNET |
| 34 | 7J-0204 | 1 | SEAL-O-RING |
| | 9S-8007 | 1 | PLUG |
| 35 | 3K-0360 | 16 | SEAL-O-RING |
| | 9S-8005 | 16 | PLUG |

[A] PART OF 152-5242 TRANSMISSION AR

00835051
PR: t05i29k58b0182

## 155-9579 CASE & PARTS GP-PLANETARY

**S/N: 9YY951-UP**

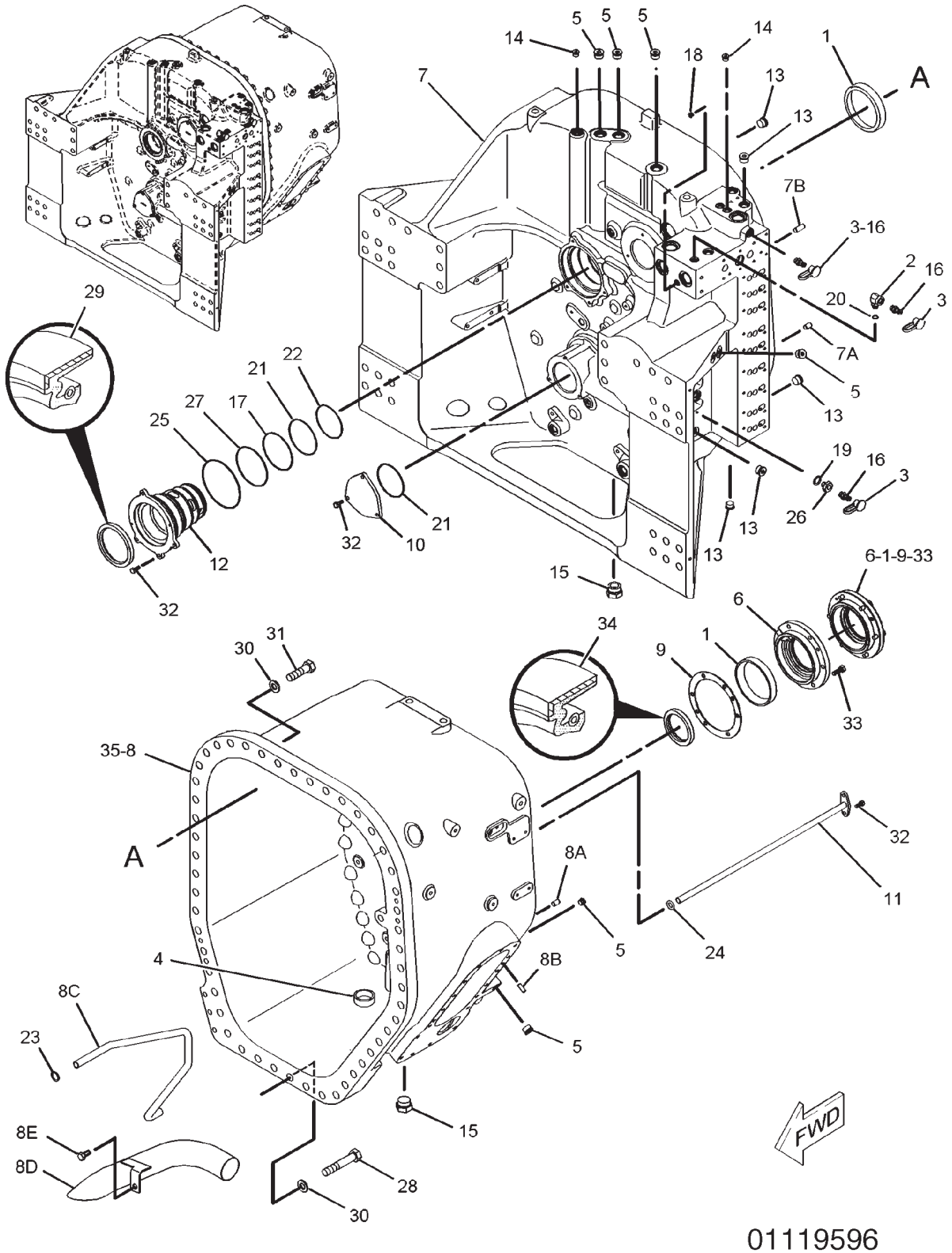

## 155-9579 CASE & PARTS GP-PLANETARY
**S/N: 9YY951-UP**

| ITEM | NUMBER | QTY | DESCRIPTION |
|---|---|---|---|
| - | 155-9579 | -- | CASE & PARTS GP-PLANETARY [A] (NOT SERVICED) |
| 1 | 6F-2956 | 8 | CUP-BEARING |
| 2 | 6V-0484 | 1 | ADAPTER-O-RING |
| 3 | 6V-0852 | 3 | CAP-DUST |
| 4 | 8M-7160 | 1 | MAGNET |
| 5 | 164-5619 | 6 | PLUG AS |
| | 9S-8006 | 1 | PLUG |
| | 2M-9780 | 1 | SEAL-O-RING |
| 6 | 177-6741 | 4 | CAGE-BEARING |
| 7 | 177-6774 | 1 | CASE AS (FRONT) |
| | 211-2731 | 1 | TUBE |
| 7A | 3F-0957 | 2 | DOWEL |
| 7B | 5M-7937 | 2 | DOWEL |
| 8 | 177-6775 | 1 | CASE AS (REAR) |
| 8A | 3F-0957 | 2 | DOWEL |
| 8B | 5B-5821 | 2 | DOWEL |
| 8C | 177-6800 | 1 | TUBE |
| 8D | 161-8222 | 1 | TUBE AS |
| 8E | 6A-5591 | 1 | BOLT (M12X1.75X25-MM) |
| 9 | 187-1376 | 4 | SHIM PACK (INCLUDES 13-SHIMS) |
| 10 | 188-2162 | 3 | COVER |
| 11 | 188-9912 | 1 | TUBE AS |
| 12 | 232-0345 | 1 | HOUSING-SEAL |
| 13 | 148-8395 | 16 | PLUG AS |
| | 3K-0360 | 1 | SEAL-O-RING |
| | 9S-8005 | 1 | PLUG |
| 14 | 162-0177 | 2 | PLUG AS |
| | 9S-8004 | 1 | PLUG |
| | 3J-1907 | 1 | SEAL-O-RING |
| 15 | 164-4180 | 2 | PLUG AS |
| | 9S-4181 | 1 | PLUG |
| | 7M-8485 | 1 | SEAL-O-RING |
| 16 | 164-5567 | 3 | FITTING GP-COUPLING |
| | 3J-1907 | 1 | SEAL-O-RING |
| | 6V-3965 | 1 | FITTING AS |
| 17 | 1T-1068 | 1 | SEAL-O-RING |
| 18 | 207-8218 | 1 | PLUG AS |
| | 7J-0204 | 1 | SEAL-O-RING |
| | 9S-8007 | 1 | PLUG |
| 19 | 2M-9780 | 1 | SEAL-O-RING |
| 20 | 3J-1907 | 1 | SEAL-O-RING |
| 21 | 3K-0715 | 4 | SEAL-O-RING |
| 22 | 4F-4097 | 1 | SEAL-O-RING |
| 23 | 4J-8996 | 1 | SEAL-O-RING |
| 24 | 5H-8038 | 1 | SEAL-O-RING |
| 25 | 5J-3886 | 1 | SEAL-O-RING |

CONTINUED

[A] PART OF 152-5242 TRANSMISSION AR

## 155-9579 CASE & PARTS GP-PLANETARY

**S/N: 9YY951-UP**

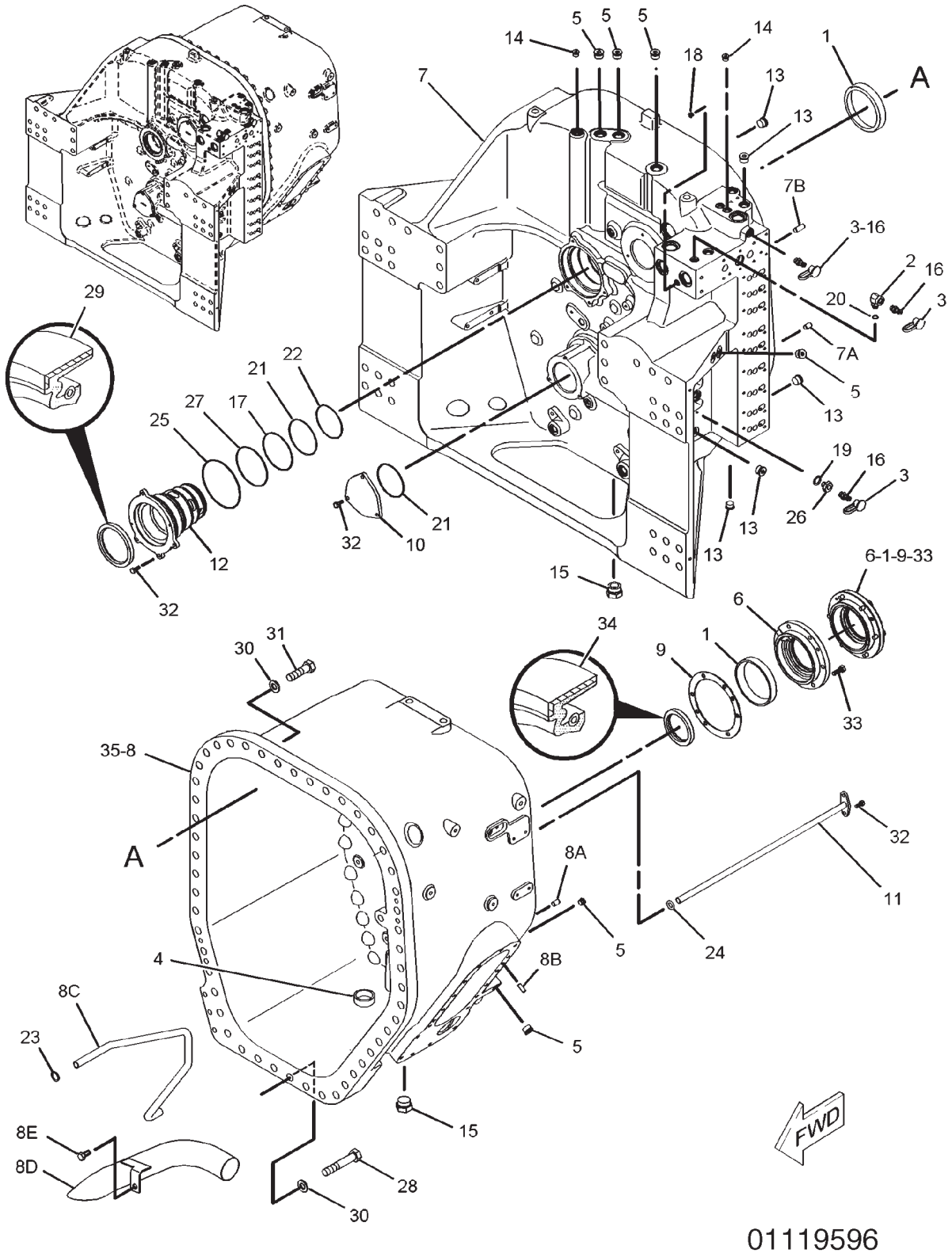

## 155-9579 CASE & PARTS GP-PLANETARY
**S/N: 9YY951-UP**

| ITEM | NUMBER | QTY | DESCRIPTION |
|---|---|---|---|
| - | 155-9579 | -- | CASE & PARTS GP-PLANETARY[A] (NOT SERVICED) |
| 26 | 5P-1404 | 1 | ADAPTER-O-RING |
| 27 | 6S-3002 | 1 | SEAL-O-RING |
| 28 | 7X-2566 | 12 | BOLT (M20X2.5X110-MM) |
| 29 | 8C-3075 | 1 | SEAL-LIP TYPE |
| 30 | 8T-4123 | 50 | WASHER-PLATED (22X35X3.5-MM THK) |
| 31 | 8T-4141 | 38 | BOLT (M20X2.5X70-MM) |
| 32 | 8T-4189 | 14 | BOLT (M8X1.25X20-MM) |
| 33 | 8T-4195 | 24 | BOLT (M10X1.5X30-MM) |
| 34 | 9X-7719 | 1 | SEAL-LIP TYPE |
| 35 | 1U-8846 | AR | SEALANT-GASKET |

[A] PART OF 152-5242 TRANSMISSION AR

01119596
PR: t05i29k58b0183

## 155-9571 CLUTCH GP-INPUT
**S/N: 9YY1-1465**

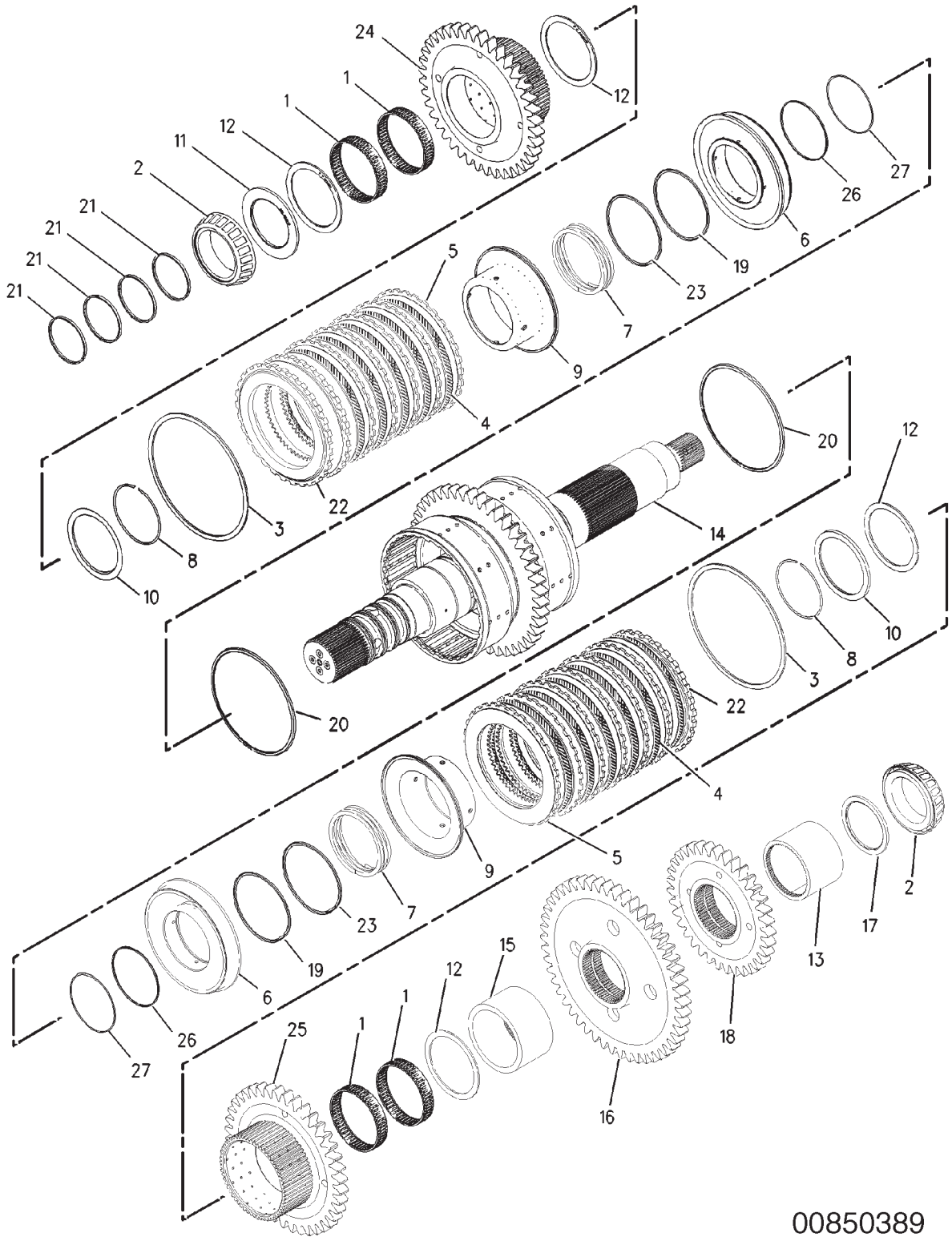

## 155-9571 CLUTCH GP-INPUT
**S/N: 9YY1-1465**

| ITEM | NUMBER | QTY | DESCRIPTION |
|---|---|---|---|
| - | 155-9571 | -- | CLUTCH GP-INPUT [A] (NOT SERVICED) |
| 1 | 177-5236 | 4 | BEARING |
| 2 | 6V-0347 | 2 | CONE-BEARING |
| 3 | 4D-7889 | 2 | RING |
| 4 | 134-8360 | 12 | DISC-FRICTION |
| 5 | 134-8361 | 12 | PLATE-CLUTCH |
| 6 | 203-2631 | 2 | PISTON |
| 7 | 173-5392 | 2 | SPRING |
| 8 | 177-5241 | 2 | RING-RETAINING |
| 9 | 177-5243 | 2 | SEAL AS |
| 10 | 177-5246 | 2 | RING-SPACER |
| 11 | 177-5248 | 1 | SPACER (86.25X126X5MM THK) |
| 12 | 177-5249 | 4 | DISC-THRUST |
| 13 | 177-5250 | 1 | SPACER |
| 14 | 177-5252 | 1 | SHAFT AS (45 TEETH) |
| 15 | 177-5256 | 1 | SPACER |
| 16 | 177-5257 | 1 | GEAR (50 TEETH) |
| 17 | 177-5258 | 1 | SPACER (86.3X106X5MM THK) |
| 18 | 177-5260 | 1 | GEAR (35 TEETH) |
| 19 | 200-3039 | 2 | RING-SEAL (EXTERNAL) |
| 20 | 177-6797 | 2 | RING-SEAL (EXTERNAL) |
| 21 | 177-6801 | 4 | RING-SEAL |
| 22 | 177-6804 | 2 | PLATE-END |
| 23 | 199-9240 | 2 | SEAL-O-RING |
| 24 | 191-0426 | 1 | GEAR (35 TEETH) |
| 25 | 191-0427 | 1 | GEAR (40 TEETH) |
| 26 | 7T-5594 | 2 | RING-SEAL |
| 27 | 8T-2572 | 2 | SEAL-O-RING |

[A] PART OF 152-5242 TRANSMISSION AR

00850389
PR: t05i29k58b0184

## 155-9572 CLUTCH GP-INTERMEDIATE SHAFT

**S/N: 9YY1-1465**

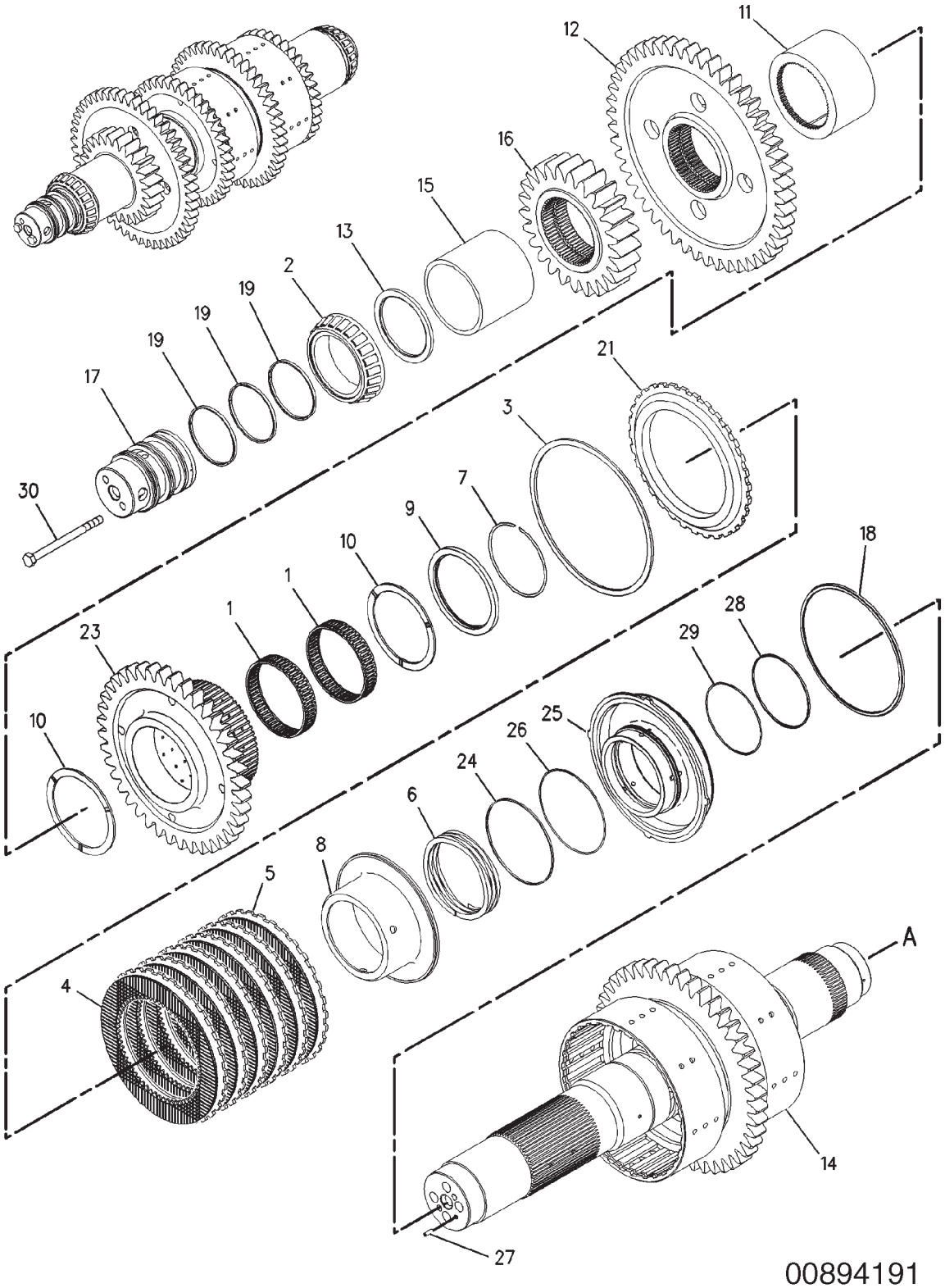

## 155-9572 CLUTCH GP-INTERMEDIATE SHAFT

**S/N: 9YY1-1465**

| ITEM | NUMBER | QTY | DESCRIPTION |
|---|---|---|---|
| - | 155-9572 | -- | CLUTCH GP-INTERMEDIATE SHAFT [A] (NOT SERVICED) |
| 1 | 177-5236 | 2 | BEARING |
| 2 | 6V-0347 | 1 | CONE-BEARING |
| 3 | 4D-7889 | 1 | RING |
| 4 | 134-8360 | 6 | DISC-FRICTION |
| 5 | 134-8361 | 6 | PLATE-CLUTCH |
| 6 | 173-5392 | 1 | SPRING |
| 7 | 177-5241 | 1 | RING-RETAINING |
| 8 | 177-5243 | 1 | SEAL AS |
| 9 | 177-5246 | 1 | RING-SPACER |
| 10 | 177-5249 | 2 | DISC-THRUST |
| 11 | 177-5256 | 1 | SPACER |
| 12 | 177-5257 | 1 | GEAR (50-TEETH) |
| 13 | 177-5258 | 1 | SPACER (86.3X106X5-MM THK) |
| 14 | 240-5529 | 1 | SHAFT AS |
| 15 | 177-5263 | 1 | SPACER |
| 16 | 177-5265 | 1 | GEAR (25-TEETH) |
| 17 | 177-5267 | 1 | CARRIER-SEAL |
| 18 | 177-6797 | 1 | RING-SEAL |
| 19 | 177-6801 | 3 | RING-SEAL |
| 21 | 177-6804 | 1 | PLATE-END |
| 23 | 191-0427 | 1 | GEAR (40-TEETH) |
| 24 | 200-3039 | 1 | RING-SEAL |
| 25 | 203-2631 | 1 | PISTON |
| 26 | 199-9240 | 1 | SEAL-O-RING |
| 27 | 5H-8985 | 1 | PIN-SPRING |
| 28 | 7T-5594 | 1 | RING-SEAL |
| 29 | 8T-2572 | 1 | SEAL-O-RING |
| 30 | 8T-5436 | 2 | BOLT (M10X1.5X130-MM) |

[A] PART OF 152-5242 TRANSMISSION AR

00894191
PR: t05i29k58b0185

## 155-9572 CLUTCH GP-INTERMEDIATE SHAFT

**S/N: 9YY1-1465**

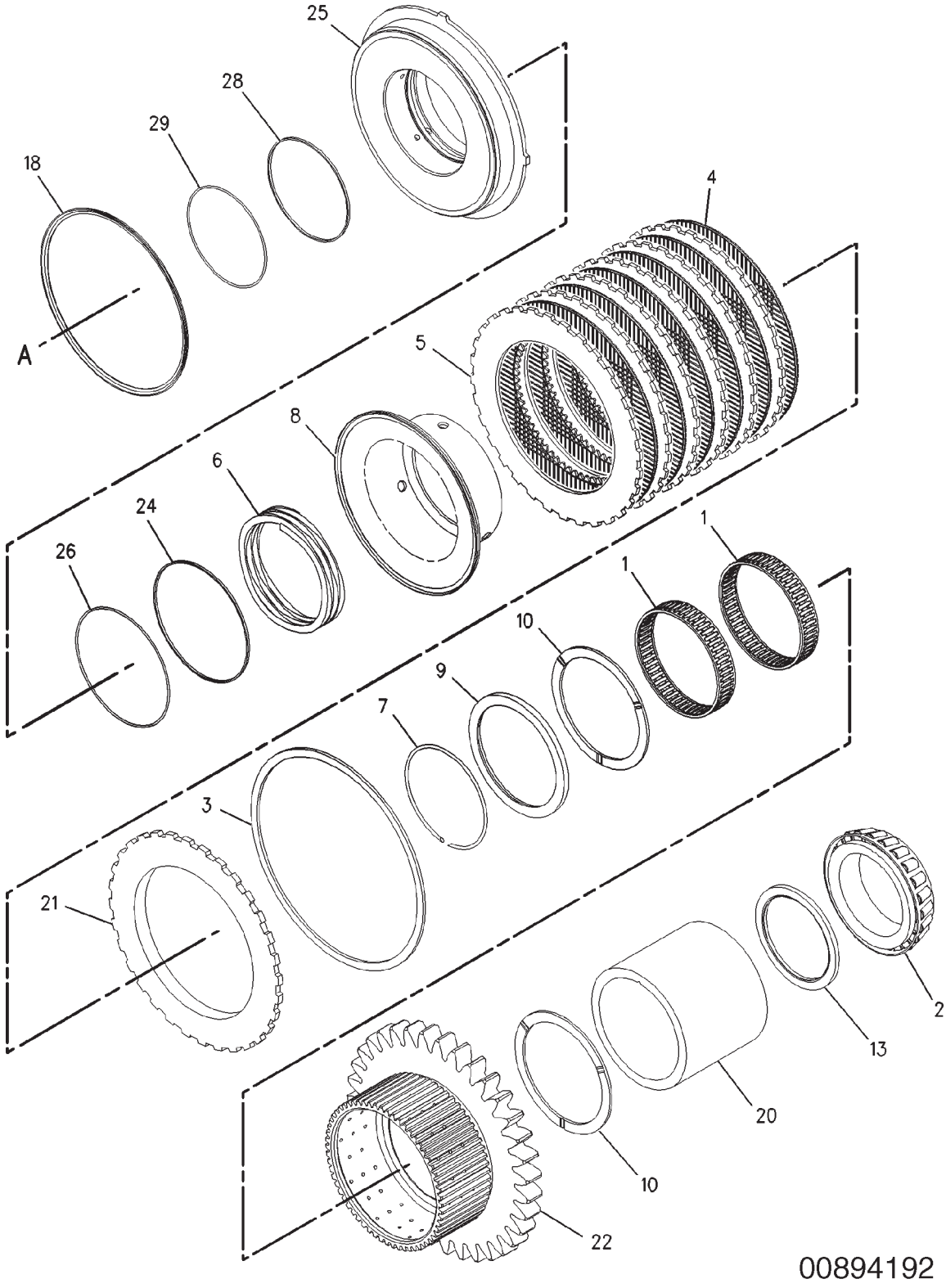

## 155-9572 CLUTCH GP-INTERMEDIATE SHAFT

**S/N: 9YY1-1465**

| ITEM | NUMBER | QTY | DESCRIPTION |
|---|---|---|---|
| - | 155-9572 | -- | CLUTCH GP-INTERMEDIATE SHAFT [A] (NOT SERVICED) |
| 1 | 177-5236 | 2 | BEARING |
| 2 | 6V-0347 | 1 | CONE-BEARING |
| 3 | 4D-7889 | 1 | RING |
| 4 | 134-8360 | 6 | DISC-FRICTION |
| 5 | 134-8361 | 6 | PLATE-CLUTCH |
| 6 | 173-5392 | 1 | SPRING |
| 7 | 177-5241 | 1 | RING-RETAINING |
| 8 | 177-5243 | 1 | SEAL AS |
| 9 | 177-5246 | 1 | RING-SPACER |
| 10 | 177-5249 | 2 | DISC-THRUST |
| 13 | 177-5258 | 1 | SPACER (86.3X106X5-MM THK) |
| 18 | 177-6797 | 1 | RING-SEAL |
| 20 | 177-6802 | 1 | SPACER |
| 21 | 177-6804 | 1 | PLATE-END |
| 22 | 191-0426 | 1 | GEAR (35-TEETH) |
| 24 | 200-3039 | 1 | RING-SEAL |
| 25 | 203-2631 | 1 | PISTON |
| 26 | 199-9240 | 1 | SEAL-O-RING |
| 28 | 7T-5594 | 1 | RING-SEAL |
| 29 | 8T-2572 | 1 | SEAL-O-RING |

[A] PART OF 152-5242 TRANSMISSION AR

00894192
PR: t05i29k58b0186

## 155-9575 CLUTCH GP-REVERSE
**S/N: 9YY1-UP**

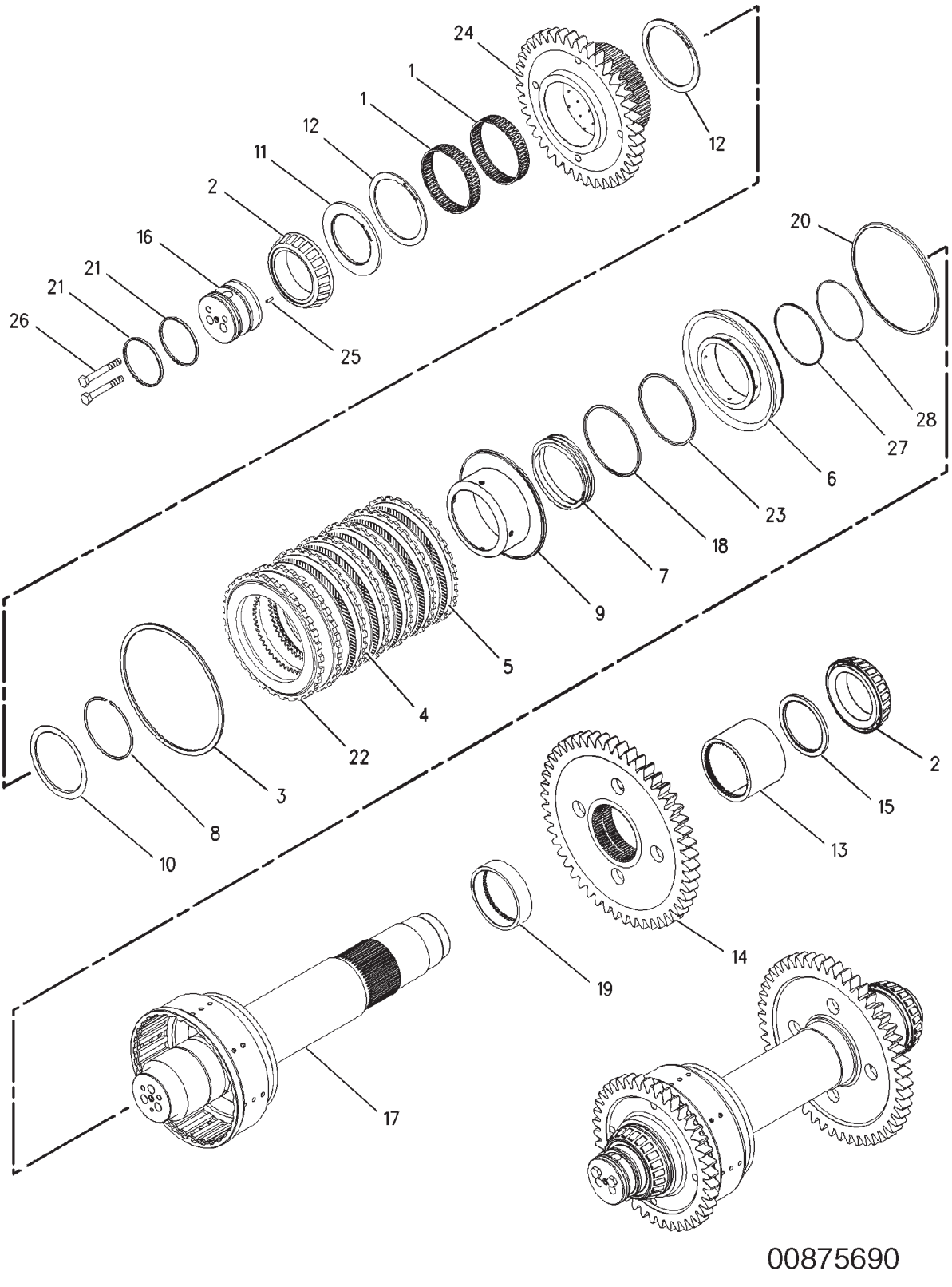

## 155-9575 CLUTCH GP-REVERSE
**S/N: 9YY1-UP**

| ITEM | NUMBER | QTY | DESCRIPTION |
|---|---|---|---|
| - | 155-9575 | -- | CLUTCH GP-REVERSE [A] (NOT SERVICED) |
| 1 | 177-5236 | 2 | BEARING |
| 2 | 6V-0347 | 2 | CONE-BEARING |
| 3 | 4D-7889 | 1 | RING |
| 4 | 134-8360 | 6 | DISC-FRICTION |
| 5 | 134-8361 | 6 | PLATE-CLUTCH |
| 6 | 203-2631 | 1 | PISTON |
| 7 | 173-5392 | 1 | SPRING |
| 8 | 177-5241 | 1 | RING-RETAINING |
| 9 | 177-5243 | 1 | SEAL AS |
| 10 | 177-5246 | 1 | RING-SPACER |
| 11 | 177-5248 | 1 | SPACER |
| 12 | 177-5249 | 2 | DISC-THRUST |
| 13 | 177-5250 | 1 | SPACER |
| 14 | 177-5257 | 1 | GEAR (50 TEETH) |
| 15 | 177-5258 | 1 | SPACER (86.3X106X5MM THK) |
| 16 | 177-5269 | 1 | CARRIER-SEAL |
| 17 | 177-5270 | 1 | SHAFT AS |
| 18 | 200-3039 | 1 | RING-SEAL |
| 19 | 177-6770 | 1 | SPACER |
| 20 | 177-6797 | 1 | RING-SEAL (EXTERNAL) |
| 21 | 177-6801 | 2 | RING-SEAL |
| 22 | 177-6804 | 1 | PLATE-END |
| 23 | 199-9240 | 1 | SEAL-O-RING |
| 24 | 191-0427 | 1 | GEAR (40 TEETH) |
| 25 | 5H-8985 | 1 | PIN-SPRING |
| 26 | 6V-5815 | 2 | BOLT (M10X1.5X75MM) |
| 27 | 7T-5594 | 1 | RING-SEAL |
| 28 | 8T-2572 | 1 | SEAL-O-RING |

[A] PART OF 152-5242 TRANSMISSION AR

00875690
PR: t05i29k58b0187

## 155-9576 CLUTCH GP-OUTPUT SHAFT

**S/N: 9YY1-UP**

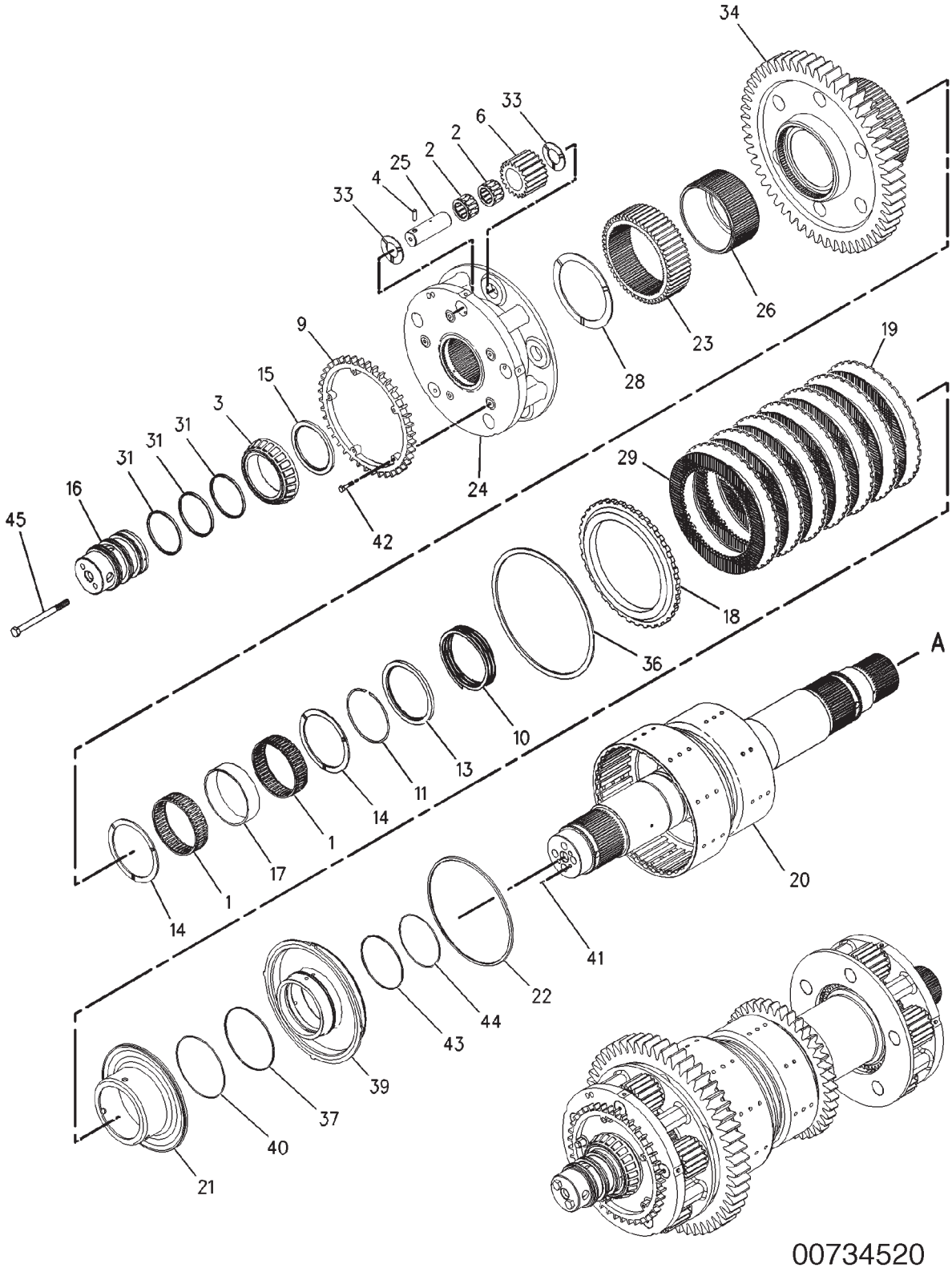

## 155-9576 CLUTCH GP-OUTPUT SHAFT
**S/N: 9YY1-UP**

| ITEM | NUMBER | QTY | DESCRIPTION |
|---|---|---|---|
| - | 155-9576 | -- | CLUTCH GP-OUTPUT SHAFT [A] (NOT SERVICED) |
| 1 | 177-6738 | 2 | BEARING |
| 2 | 187-6226 | 10 | BEARING-SPECIAL |
| 3 | 6V-0347 | 1 | CONE-BEARING |
| 4 | 3S-2708 | 5 | PIN-SPRING |
| 6 | 7G-2510 | 5 | GEAR-PLANETARY (20 TEETH) |
| 9 | 165-0420 | 1 | ROTOR AS |
| 10 | 173-5392 | 1 | SPRING |
| 11 | 177-5241 | 1 | RING-RETAINING |
| 13 | 177-5246 | 1 | RING-SPACER |
| 14 | 177-5249 | 2 | DISC-THRUST |
| 15 | 177-5258 | 1 | SPACER (86.3X106X5MM THK) |
| 16 | 177-5267 | 1 | CARRIER-SEAL |
| 17 | 177-6739 | 1 | SPACER |
| 18 | 177-6740 | 1 | PLATE-END |
| 19 | 177-6743 | 7 | PLATE-CLUTCH |
| 20 | 177-6747 | 1 | SHAFT AS |
| | 9P-2343 | 1 | PLUG-ORIFICE |
| 21 | 177-6752 | 1 | SEAL AS |
| 22 | 177-6754 | 1 | RING-SEAL |
| 23 | 177-6755 | 1 | GEAR-SUN (53 TEETH) |
| 24 | 177-6757 | 1 | CARRIER-PLANETARY |
| 25 | 177-6758 | 5 | SHAFT AS |
| 26 | 177-6760 | 1 | SHAFT-DRIVE (LH) |
| 28 | 177-6771 | 1 | DISC-THRUST |
| 29 | 177-6795 | 7 | DISC-FRICTION |
| 31 | 177-6801 | 3 | RING-SEAL |
| 33 | 187-8947 | 10 | DISC-THRUST |
| 34 | 191-0428 | 1 | GEAR (54 TEETH) |
| 36 | 192-4975 | 1 | RING-RETAINING |
| 37 | 200-3039 | 1 | RING-SEAL |
| 39 | 203-2632 | 1 | PISTON |
| 40 | 199-9240 | 1 | SEAL-O-RING |
| 41 | 5H-8985 | 1 | PIN-SPRING |
| 42 | 6V-8490 | 3 | BOLT (M6X1X25MM) |
| 43 | 7T-5594 | 1 | RING-SEAL |
| 44 | 8T-2572 | 1 | SEAL-O-RING |
| 45 | 8T-5436 | 2 | BOLT (M10X1.50X130MM) |

[A] PART OF 152-5242 TRANSMISSION AR

## 155-9576 CLUTCH GP-OUTPUT SHAFT

**S/N: 9YY1-UP**

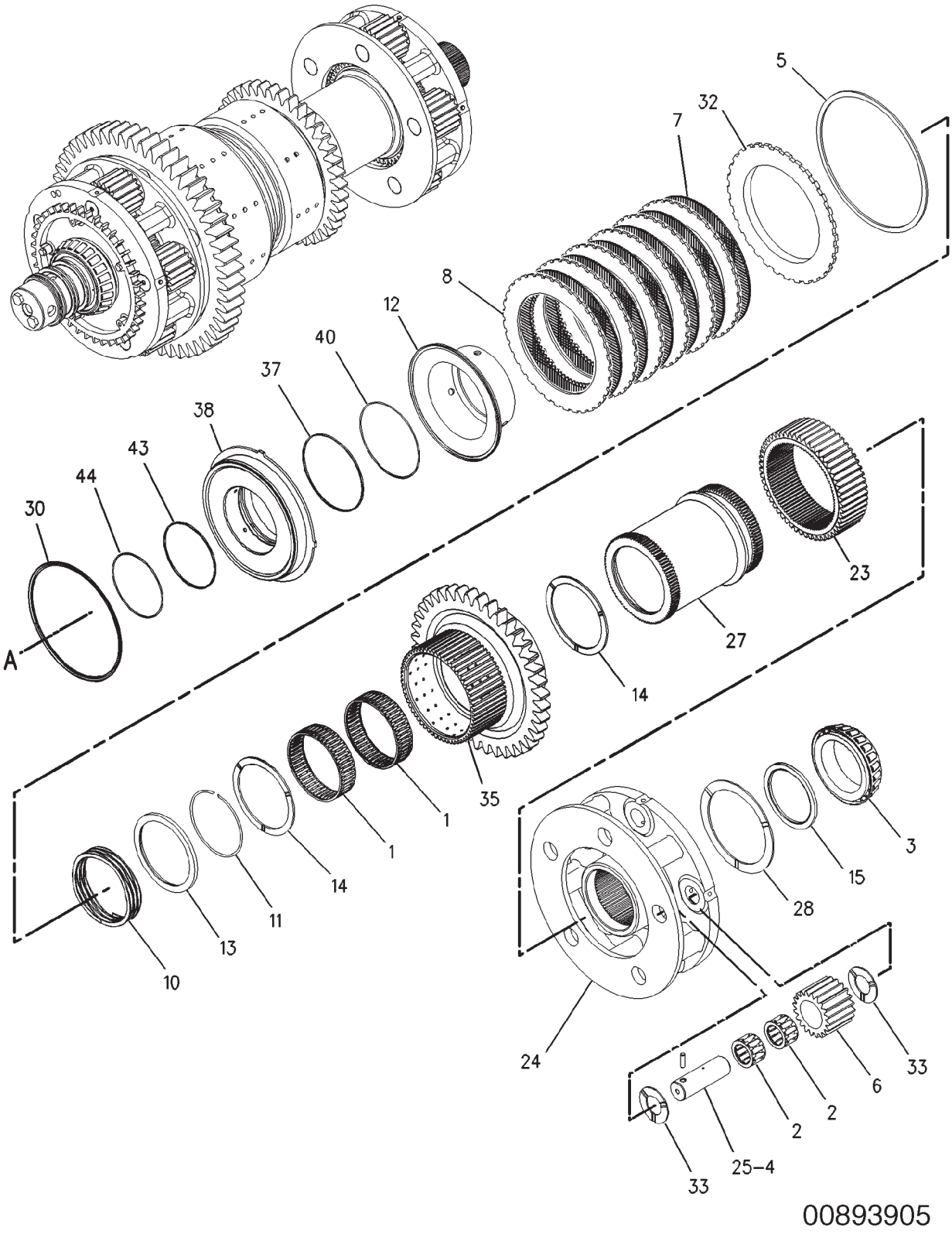

## 155-9576 CLUTCH GP-OUTPUT SHAFT
**S/N: 9YY1-UP**

| ITEM | NUMBER | QTY | DESCRIPTION |
|---|---|---|---|
| - | 155-9576 | -- | CLUTCH GP-OUTPUT SHAFT [A] (NOT SERVICED) |
| 1 | 177-6738 | 2 | BEARING |
| 2 | 187-6226 | 10 | BEARING-SPECIAL |
| 3 | 6V-0347 | 1 | CONE-BEARING |
| 4 | 3S-2708 | 5 | PIN-SPRING |
| 5 | 4D-7889 | 1 | RING |
| 6 | 7G-2510 | 5 | GEAR-PLANETARY (20 TEETH) |
| 7 | 134-8360 | 6 | DISC-FRICTION |
| 8 | 134-8361 | 6 | PLATE-CLUTCH |
| 10 | 173-5392 | 1 | SPRING |
| 11 | 177-5241 | 1 | RING-RETAINING |
| 12 | 177-5243 | 1 | SEAL AS |
| 13 | 177-5246 | 1 | RING-SPACER |
| 14 | 177-5249 | 2 | DISC-THRUST |
| 15 | 177-5258 | 1 | SPACER (86.3X106X5MM THK) |
| 23 | 177-6755 | 1 | GEAR-SUN (53 TEETH) |
| 24 | 177-6757 | 1 | CARRIER-PLANETARY |
| 25 | 177-6758 | 5 | SHAFT AS |
| 27 | 177-6769 | 1 | SHAFT-DRIVE (RH) |
| 28 | 177-6771 | 1 | DISC-THRUST |
| 30 | 177-6797 | 1 | RING-SEAL |
| 32 | 177-6804 | 1 | PLATE-END |
| 33 | 187-8947 | 10 | DISC-THRUST |
| 35 | 191-0429 | 1 | GEAR (40 TEETH) |
| 37 | 200-3039 | 1 | RING-SEAL |
| 38 | 203-2631 | 1 | PISTON |
| 40 | 199-9240 | 1 | SEAL-O-RING |
| 43 | 7T-5594 | 1 | RING-SEAL |
| 44 | 8T-2572 | 1 | SEAL-O-RING |

[A] PART OF 152-5242 TRANSMISSION AR

00893905
PR: t05i29k58b0189

## 177-5233 CLUTCH GP-PLANETARY

**S/N: 9YY1-UP**

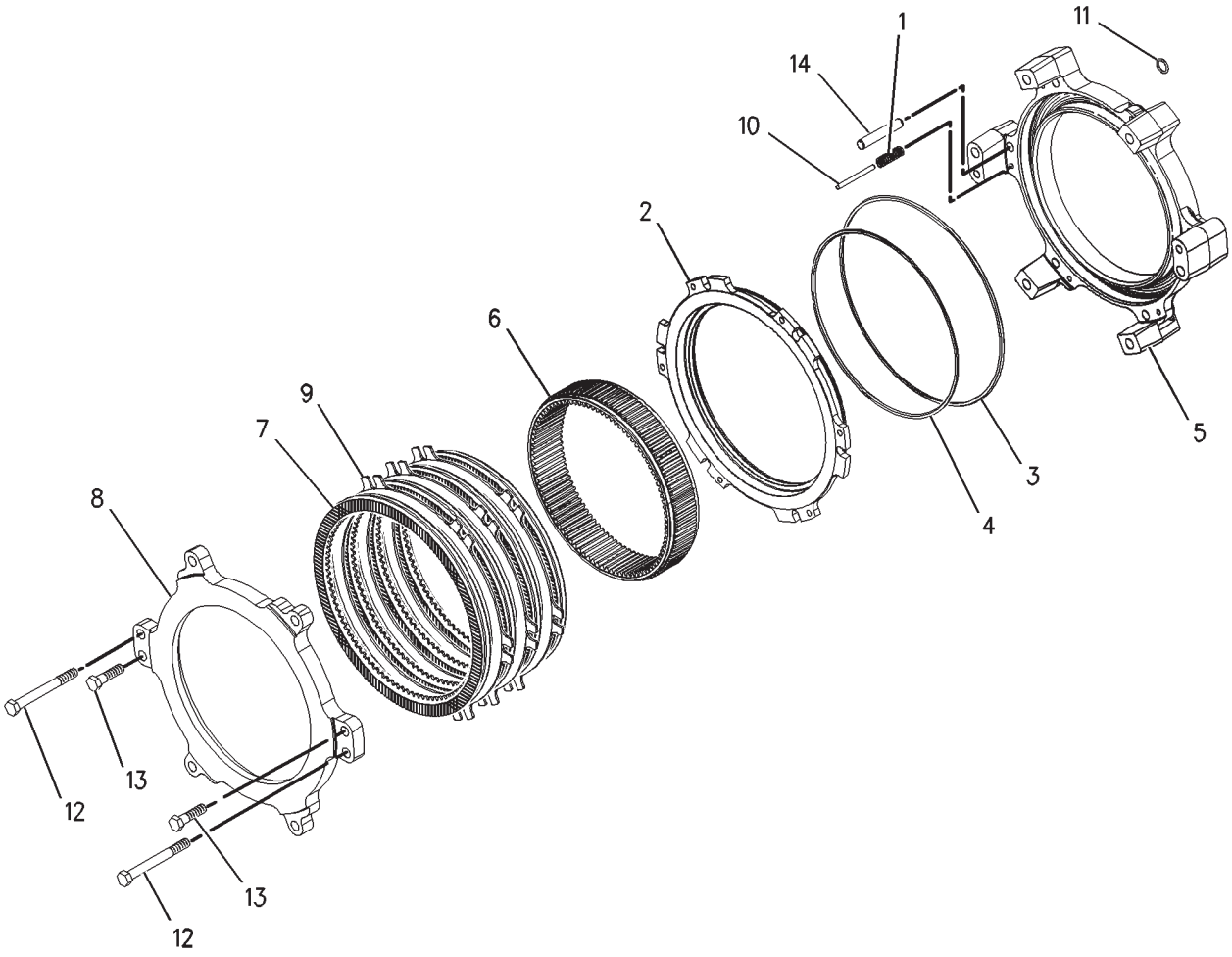


00734552

## 177-5233 CLUTCH GP-PLANETARY
**S/N: 9YY1-UP**

| ITEM | NUMBER | QTY | DESCRIPTION |
|---|---|---|---|
| - | 177-5233 | -- | CLUTCH GP-PLANETARY [A] (NOT SERVICED) |
| 1 | 7G-6945 | 6 | SPRING |
| 2 | 177-6761 | 1 | PISTON |
| 3 | 177-6762 | 1 | RING-SEAL (EXTERNAL) |
| 4 | 177-6763 | 1 | RING-SEAL (INTERNAL) |
| 5 | 177-6764 | 1 | HOUSING-CLUTCH |
| 6 | 177-6765 | 1 | GEAR-RING (92 TEETH) |
| 7 | 177-6766 | 4 | DISC-FRICTION |
| 8 | 177-6767 | 1 | PLATE-END |
| 9 | 177-6768 | 3 | PLATE-CLUTCH |
| 10 | 4T-2201 | 6 | ROD |
| 11 | 8F-3469 | 2 | SEAL-O-RING |
| 12 | 8T-0646 | 6 | BOLT (M12X1.75X110MM) |
| 13 | 6V-5684 | 2 | BOLT (M12X1.75X45MM) |
| 14 | 9H-5545 | 6 | DOWEL-REACTION |

[A] PART OF 152-5242 TRANSMISSION AR

00734552
PR: t05i29k58b0190

## 232-1774 CLUTCH GP-TRANSMISSION

**REVERSE SHAFT CLUTCH GROUP**
**S/N: 9YY1466-UP**

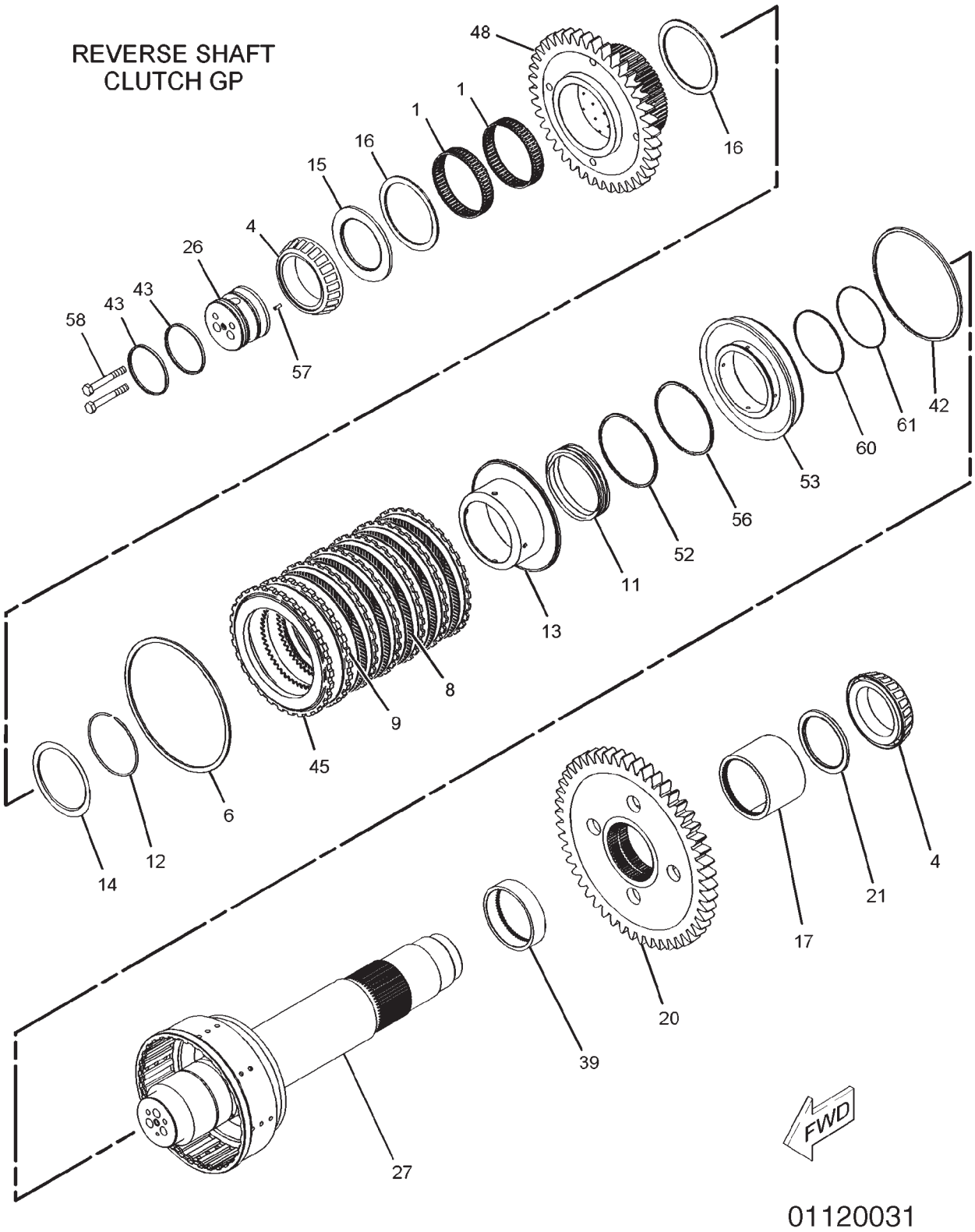

## 232-1774 CLUTCH GP-TRANSMISSION
**REVERSE SHAFT CLUTCH GROUP**
**S/N: 9YY1466-UP**

| ITEM | NUMBER | QTY | DESCRIPTION |
|---|---|---|---|
| - | 232-1774 | -- | CLUTCH GP-TRANSMISSION [A] (NOT SERVICED) |
| 1 | 177-5236 | 2 | BEARING |
| 4 | 6V-0347 | 2 | CONE-BEARING |
| 6 | 4D-7889 | 1 | RING |
| 8 | 134-8360 | 6 | DISC-FRICTION |
| 9 | 134-8361 | 6 | PLATE-CLUTCH |
| 11 | 173-5392 | 1 | SPRING |
| 12 | 177-5241 | 1 | RING-RETAINING |
| 13 | 177-5243 | 1 | SEAL AS |
| 14 | 177-5246 | 1 | RING-SPACER |
| 15 | 177-5248 | 1 | SPACER |
| 16 | 177-5249 | 2 | DISC-THRUST |
| 17 | 177-5250 | 1 | SPACER |
| 20 | 177-5257 | 1 | GEAR (50-TEETH) |
| 21 | 177-5258 | 1 | SPACER (86.3X106X5-MM THK) |
| 26 | 177-5269 | 1 | CARRIER-SEAL |
| 27 | 177-5270 | 1 | SHAFT AS |
| 39 | 177-6770 | 1 | SPACER |
| 42 | 177-6797 | 1 | RING-SEAL |
| 43 | 177-6801 | 2 | RING-SEAL |
| 45 | 177-6804 | 1 | PLATE-END |
| 48 | 191-0427 | 1 | GEAR (40-TEETH) |
| 52 | 200-3039 | 1 | RING-SEAL |
| 53 | 203-2631 | 1 | PISTON |
| 56 | 199-9240 | 1 | SEAL-O-RING |
| 57 | 5H-8985 | 1 | PIN-SPRING |
| 58 | 6V-5815 | 2 | BOLT (M10X1.5X75-MM) |
| 60 | 7T-5594 | 1 | RING-SEAL |
| 61 | 8T-2572 | 1 | SEAL-O-RING |

[A] PART OF 152-5242 TRANSMISSION AR

01120031
PR: t05i29k58b0191

## 232-1774 CLUTCH GP-TRANSMISSION

**INPUT SHAFT CLUTCH GROUP**
**S/N: 9YY1466-UP**

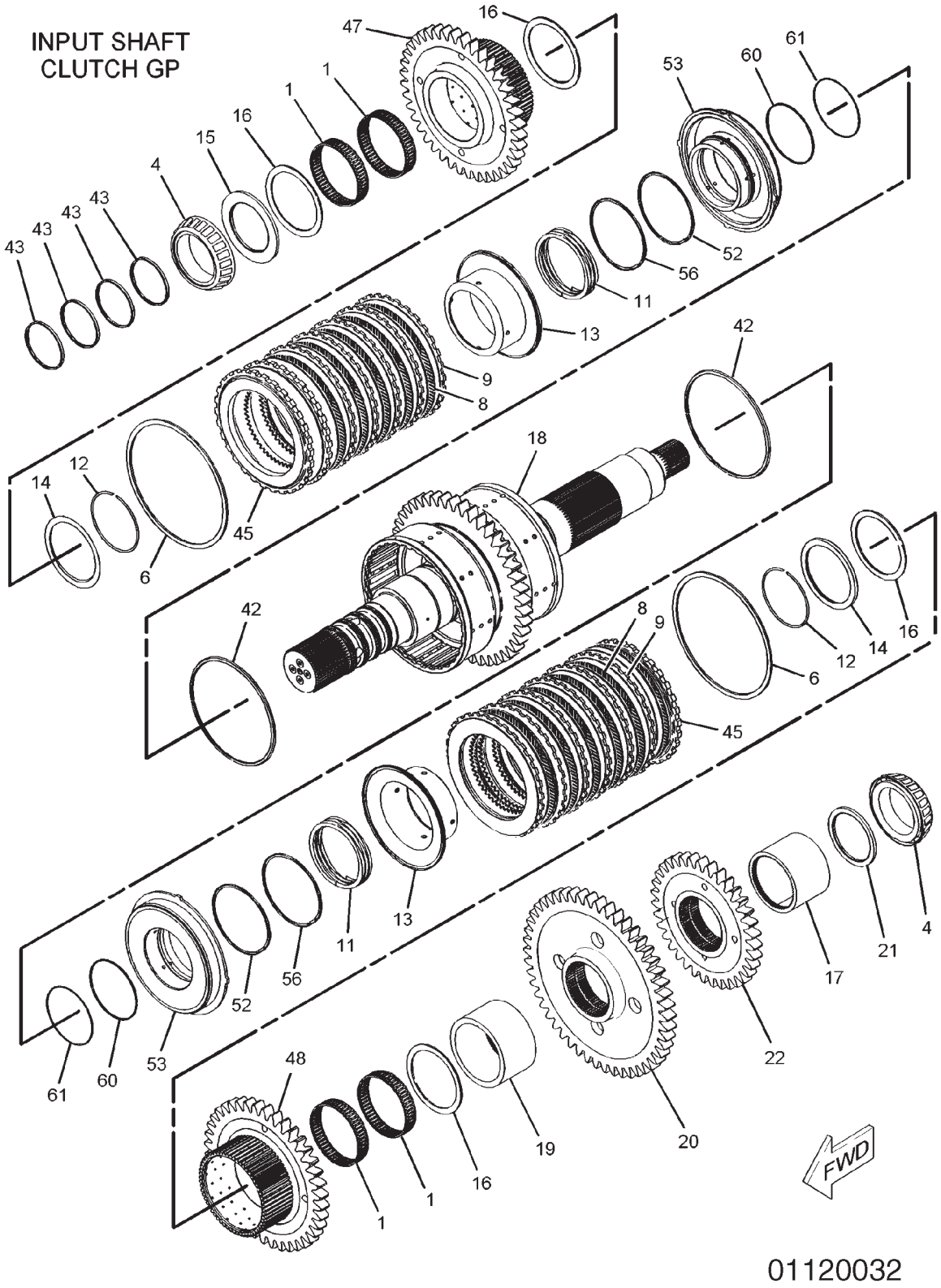

## 232-1774 CLUTCH GP-TRANSMISSION
**INPUT SHAFT CLUTCH GROUP**
**S/N: 9YY1466-UP**

| ITEM | NUMBER | QTY | DESCRIPTION |
|---|---|---|---|
| - | 232-1774 | -- | CLUTCH GP-TRANSMISSION [A] (NOT SERVICED) |
| 1 | 177-5236 | 4 | BEARING |
| 4 | 6V-0347 | 2 | CONE-BEARING |
| 6 | 4D-7889 | 2 | RING |
| 8 | 134-8360 | 12 | DISC-FRICTION |
| 9 | 134-8361 | 12 | PLATE-CLUTCH |
| 11 | 173-5392 | 2 | SPRING |
| 12 | 177-5241 | 2 | RING-RETAINING |
| 13 | 177-5243 | 2 | SEAL AS |
| 14 | 177-5246 | 2 | RING-SPACER |
| 15 | 177-5248 | 1 | SPACER |
| 16 | 177-5249 | 4 | DISC-THRUST |
| 17 | 177-5250 | 1 | SPACER |
| 18 | 177-5252 | 1 | SHAFT AS |
| | 165-0400 | 4 | PLUG |
| 19 | 177-5256 | 1 | SPACER |
| 20 | 177-5257 | 1 | GEAR (50-TEETH) |
| 21 | 177-5258 | 1 | SPACER (86.3X106X5-MM THK) |
| 22 | 177-5260 | 1 | GEAR (35-TEETH) |
| 42 | 177-6797 | 2 | RING-SEAL |
| 43 | 177-6801 | 4 | RING-SEAL |
| 45 | 177-6804 | 2 | PLATE-END |
| 47 | 191-0426 | 1 | GEAR (35-TEETH) |
| 48 | 191-0427 | 1 | GEAR (40-TEETH) |
| 52 | 200-3039 | 2 | RING-SEAL |
| 53 | 203-2631 | 2 | PISTON |
| 56 | 199-9240 | 1 | SEAL-O-RING |
| 60 | 7T-5594 | 2 | RING-SEAL |
| 61 | 8T-2572 | 2 | SEAL-O-RING |

[A] PART OF 152-5242 TRANSMISSION AR

## 232-1774 CLUTCH GP-TRANSMISSION

**INTERMEDIATE SHAFT CLUTCH GROUP (1 OF 2)**
**S/N: 9YY1466-UP**

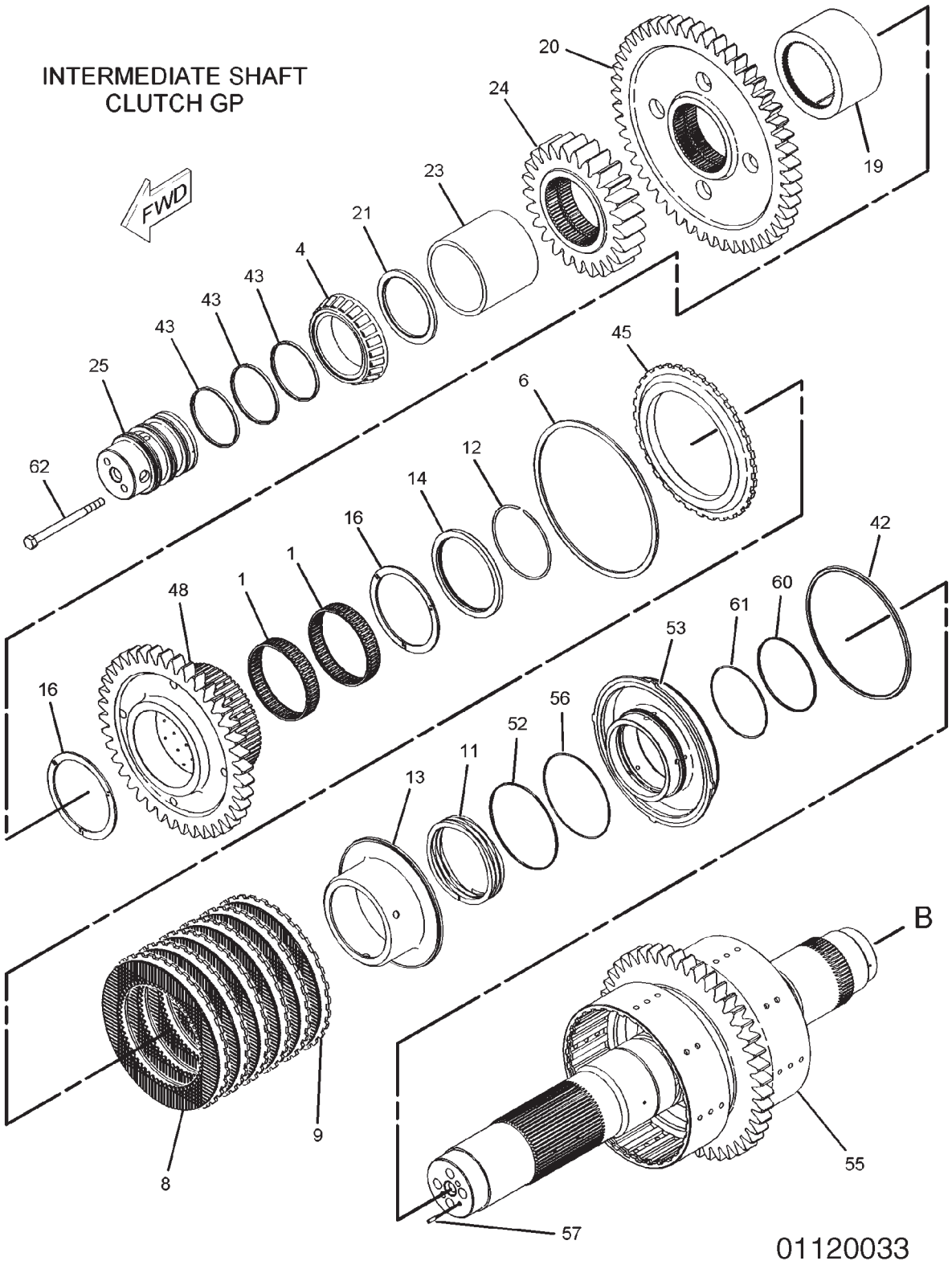

## 232-1774 CLUTCH GP-TRANSMISSION

**INTERMEDIATE SHAFT CLUTCH GROUP (1 OF 2)**
**S/N: 9YY1466-UP**

| ITEM | NUMBER | QTY | DESCRIPTION |
|---|---|---|---|
| - | 232-1774 | -- | CLUTCH GP-TRANSMISSION [A] (NOT SERVICED) |
| 1 | 177-5236 | 2 | BEARING |
| 4 | 6V-0347 | 1 | CONE-BEARING |
| 6 | 4D-7889 | 1 | RING |
| 8 | 134-8360 | 6 | DISC-FRICTION |
| 9 | 134-8361 | 6 | PLATE-CLUTCH |
| 11 | 173-5392 | 1 | SPRING |
| 12 | 177-5241 | 1 | RING-RETAINING |
| 13 | 177-5243 | 1 | SEAL AS |
| 14 | 177-5246 | 1 | RING-SPACER |
| 16 | 177-5249 | 2 | DISC-THRUST |
| 19 | 177-5256 | 1 | SPACER |
| 20 | 177-5257 | 1 | GEAR (50-TEETH) |
| 21 | 177-5258 | 1 | SPACER (86.3X106X5-MM THK) |
| 23 | 177-5263 | 1 | SPACER |
| 24 | 177-5265 | 1 | GEAR (25-TEETH) |
| 25 | 177-5267 | 1 | CARRIER-SEAL |
| 42 | 177-6797 | 1 | RING-SEAL |
| 43 | 177-6801 | 3 | RING-SEAL |
| 45 | 177-6804 | 1 | PLATE-END |
| 48 | 191-0427 | 1 | GEAR (40-TEETH) |
| 52 | 200-3039 | 1 | RING-SEAL |
| 53 | 203-2631 | 1 | PISTON |
| 55 | 240-5529 | 1 | SHAFT AS |
| 56 | 199-9240 | 1 | SEAL-O-RING |
| 57 | 5H-8985 | 1 | PIN-SPRING |
| 60 | 7T-5594 | 1 | RING-SEAL |
| 61 | 8T-2572 | 1 | SEAL-O-RING |
| 62 | 8T-5436 | 1 | BOLT (M10X1.5X130-MM) |

[A] PART OF 152-5242 TRANSMISSION AR

01120033
PR: t05i29k58b0193

## 232-1774 CLUTCH GP-TRANSMISSION

**INTERMEDIATE SHAFT CLUTCH GROUP (2 OF 2)**
**S/N: 9YY1466-UP**

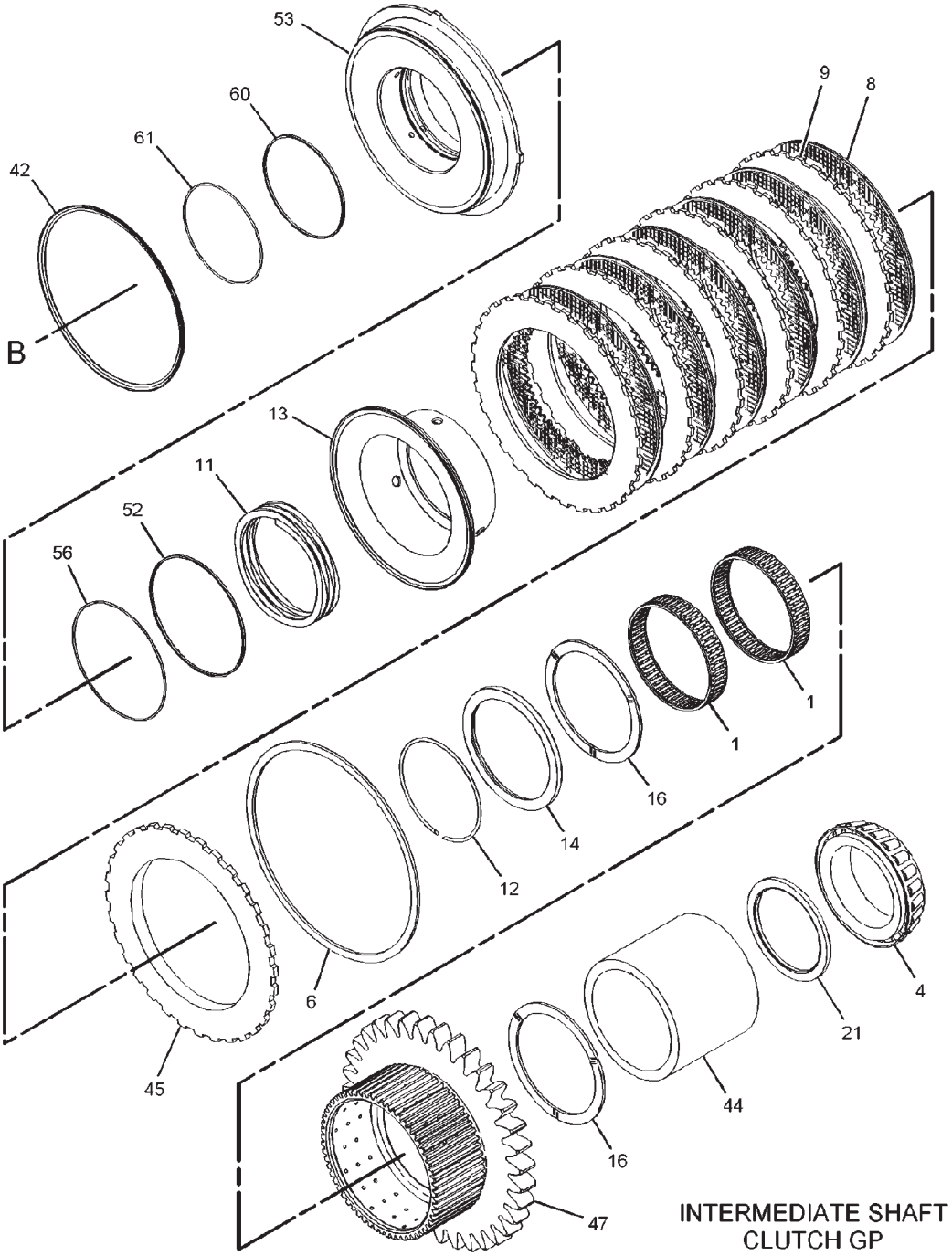

## 232-1774 CLUTCH GP-TRANSMISSION
**INTERMEDIATE SHAFT CLUTCH GROUP (2 OF 2)**
**S/N: 9YY1466-UP**

| ITEM | NUMBER | QTY | DESCRIPTION |
|---|---|---|---|
| - | 232-1774 | -- | CLUTCH GP-TRANSMISSION [A] (NOT SERVICED) |
| 1 | 177-5236 | 2 | BEARING |
| 4 | 6V-0347 | 1 | CONE-BEARING |
| 6 | 4D-7889 | 1 | RING |
| 8 | 134-8360 | 6 | DISC-FRICTION |
| 9 | 134-8361 | 6 | PLATE-CLUTCH |
| 11 | 173-5392 | 1 | SPRING |
| 12 | 177-5241 | 1 | RING-RETAINING |
| 13 | 177-5243 | 1 | SEAL AS |
| 14 | 177-5246 | 1 | RING-SPACER |
| 16 | 177-5249 | 2 | DISC-THRUST |
| 21 | 177-5258 | 1 | SPACER (86.3X106X5-MM THK) |
| 42 | 177-6797 | 1 | RING-SEAL |
| 44 | 177-6802 | 1 | SPACER |
| 45 | 177-6804 | 1 | PLATE-END |
| 47 | 191-0426 | 1 | GEAR (35-TEETH) |
| 52 | 200-3039 | 1 | RING-SEAL |
| 53 | 203-2631 | 1 | PISTON |
| 56 | 199-9240 | 1 | SEAL-O-RING |
| 60 | 7T-5594 | 1 | RING-SEAL |
| 61 | 8T-2572 | 1 | SEAL-O-RING |

[A] PART OF 152-5242 TRANSMISSION AR

01120035
PR: t05i29k58b0194

## 232-1774 CLUTCH GP-TRANSMISSION

**OUTPUT SHAFT CLUTCH GROUP (1 OF 2)**
**S/N: 9YY1466-UP**

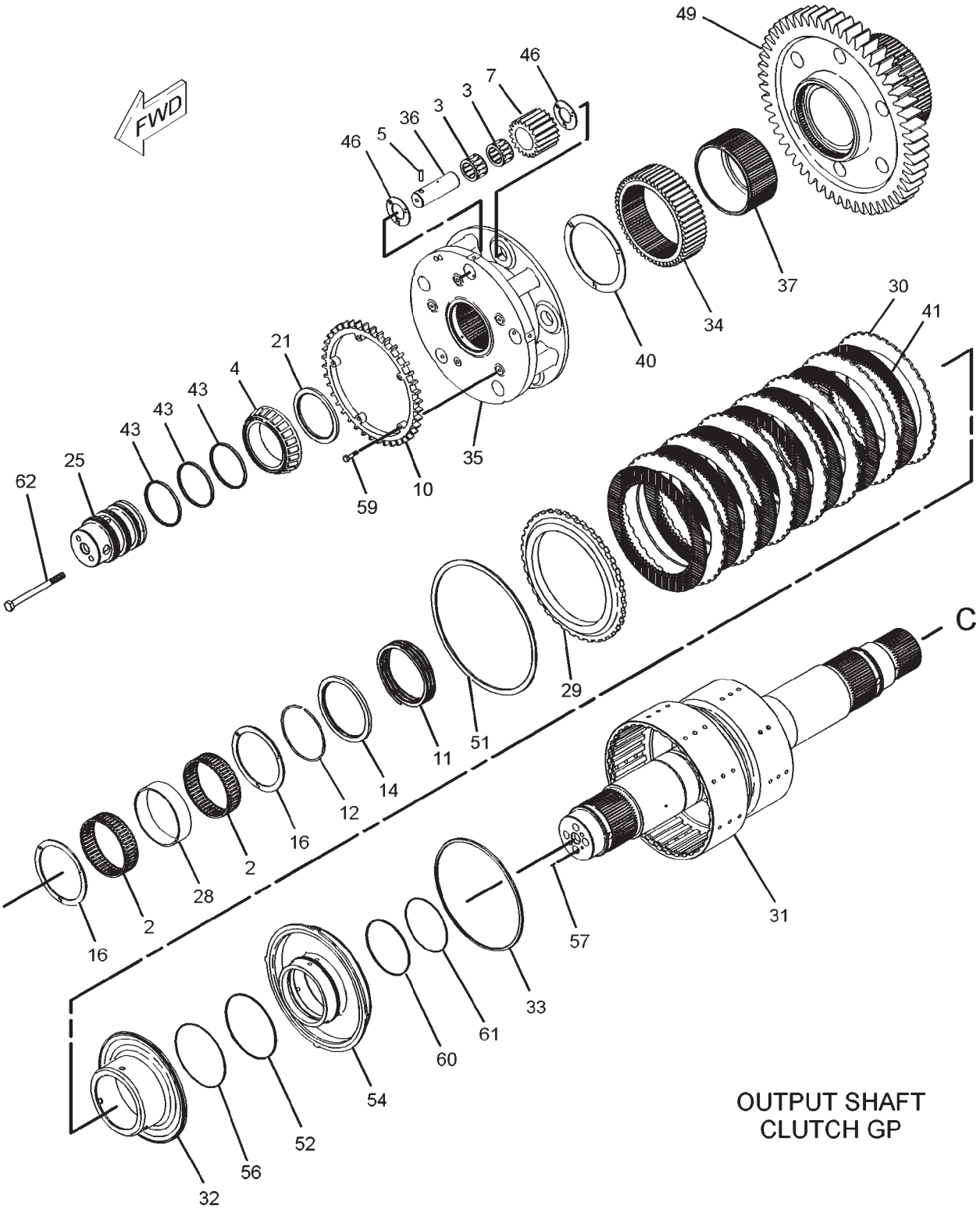

## 232-1774 CLUTCH GP-TRANSMISSION
**OUTPUT SHAFT CLUTCH GROUP (1 OF 2)**
**S/N: 9YY1466-UP**

| ITEM | NUMBER | QTY | DESCRIPTION |
|---|---|---|---|
| - | 232-1774 | -- | CLUTCH GP-TRANSMISSION [A] (NOT SERVICED) |
| 2 | 177-6738 | 2 | BEARING |
| 3 | 187-6226 | 2 | BEARING-SPECIAL |
| 4 | 6V-0347 | 1 | CONE-BEARING |
| 5 | 3S-2708 | 1 | PIN-SPRING |
| 7 | 7G-2510 | 1 | GEAR-PLANETARY (20-TEETH) |
| 10 | 165-0420 | 1 | ROTOR AS |
| | 3H-0703 | 2 | DOWEL |
| 11 | 173-5392 | 1 | SPRING |
| 12 | 177-5241 | 1 | RING-RETAINING |
| 14 | 177-5246 | 1 | RING-SPACER |
| 16 | 177-5249 | 2 | DISC-THRUST |
| 21 | 177-5258 | 1 | SPACER (86.3X106X5-MM THK) |
| 25 | 177-5267 | 1 | CARRIER-SEAL |
| 28 | 177-6739 | 1 | SPACER |
| 29 | 177-6740 | 1 | PLATE-END |
| 30 | 177-6743 | 1 | PLATE-CLUTCH |
| 31 | 177-6747 | 1 | SHAFT AS |
| | 9P-2343 | 1 | PLUG-ORIFICE |
| 32 | 177-6752 | 1 | SEAL AS |
| 33 | 177-6754 | 1 | RING-SEAL |
| 34 | 177-6755 | 1 | GEAR-SUN (53-TEETH) |
| 35 | 177-6757 | 1 | CARRIER-PLANETARY |
| 36 | 177-6758 | 1 | SHAFT AS |
| | 8S-0527 | 1 | PLUG-CUP |
| 37 | 177-6760 | 1 | SHAFT-DRIVE (LH) |
| 40 | 177-6771 | 1 | DISC-THRUST |
| 41 | 177-6795 | 1 | DISC-FRICTION |
| 43 | 177-6801 | 3 | RING-SEAL |
| 46 | 187-8947 | 2 | DISC-THRUST |
| 49 | 191-0428 | 1 | GEAR (54-TEETH) |
| 51 | 192-4975 | 1 | RING-RETAINING |
| 52 | 200-3039 | 1 | RING-SEAL |
| 54 | 203-2632 | 1 | PISTON |
| 56 | 199-9240 | 1 | SEAL-O-RING |
| 57 | 5H-8985 | 1 | PIN-SPRING |
| 59 | 6V-8490 | 1 | BOLT (M6X1X25-MM) |
| 60 | 7T-5594 | 1 | RING-SEAL |
| 61 | 8T-2572 | 1 | SEAL-O-RING |
| 62 | 8T-5436 | 1 | BOLT (M10X1.5X130-MM) |

[A] PART OF 152-5242 TRANSMISSION AR

01120036
PR: t05i29k58b0195

## 232-1774 CLUTCH GP-TRANSMISSION

**OUTPUT SHAFT CLUTCH GROUP (2 OF 2)**
**S/N: 9YY1466-UP**

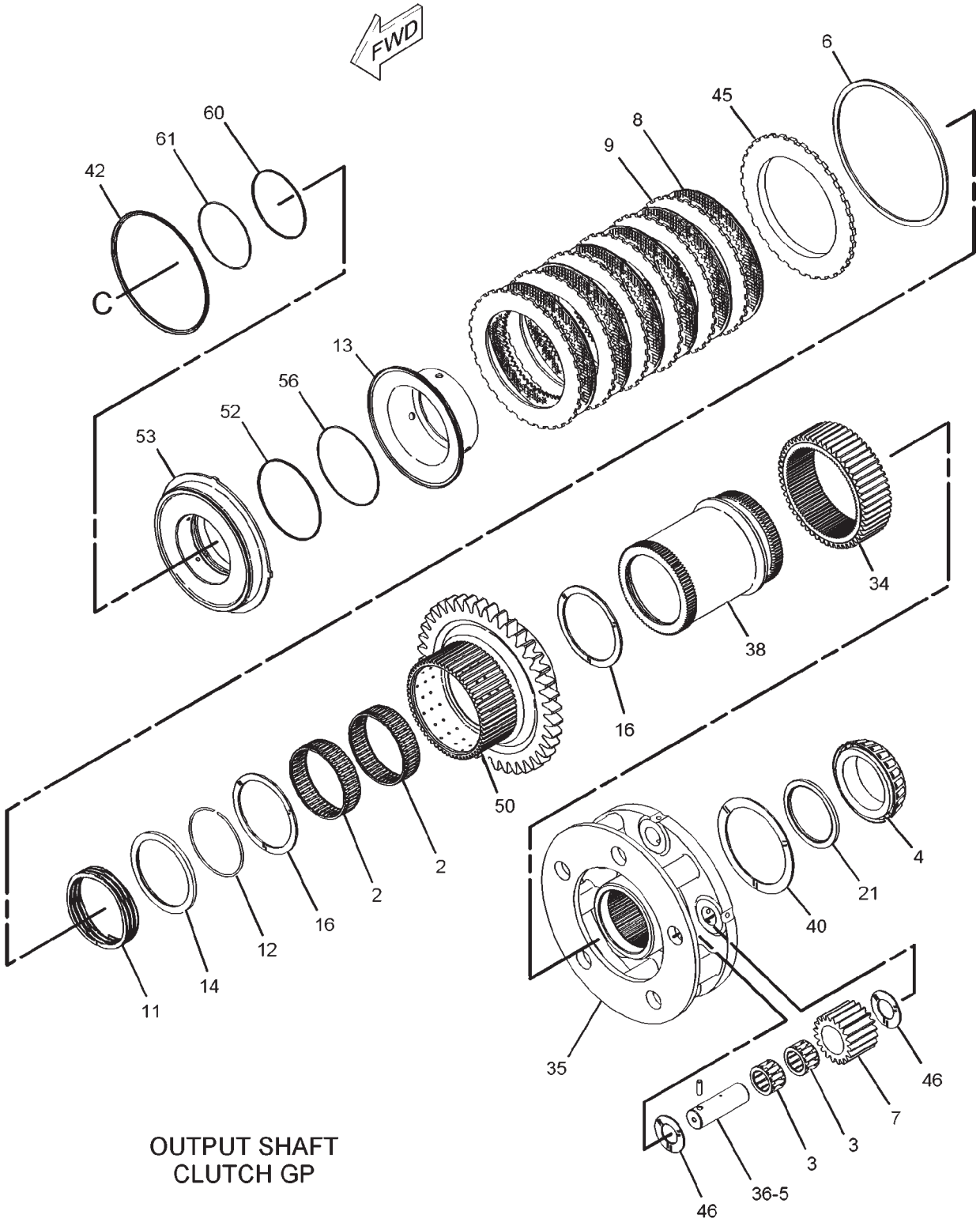


01120038

## 232-1774 CLUTCH GP-TRANSMISSION
**OUTPUT SHAFT CLUTCH GROUP (2 OF 2)**
**S/N: 9YY1466-UP**

| ITEM | NUMBER | QTY | DESCRIPTION |
|---|---|---|---|
| - | 232-1774 | -- | CLUTCH GP-TRANSMISSION [A] (NOT SERVICED) |
| 2 | 177-6738 | 2 | BEARING |
| 3 | 187-6226 | 2 | BEARING-SPECIAL |
| 4 | 6V-0347 | 1 | CONE-BEARING |
| 5 | 3S-2708 | 1 | PIN-SPRING |
| 6 | 4D-7889 | 1 | RING |
| 7 | 7G-2510 | 1 | GEAR-PLANETARY (20-TEETH) |
| 8 | 134-8360 | 6 | DISC-FRICTION |
| 9 | 134-8361 | 6 | PLATE-CLUTCH |
| 11 | 173-5392 | 1 | SPRING |
| 12 | 177-5241 | 1 | RING-RETAINING |
| 13 | 177-5243 | 1 | SEAL AS |
| 14 | 177-5246 | 1 | RING-SPACER |
| 16 | 177-5249 | 2 | DISC-THRUST |
| 21 | 177-5258 | 1 | SPACER (86.3X106X5-MM THK) |
| 34 | 177-6755 | 1 | GEAR-SUN (53-TEETH) |
| 35 | 177-6757 | 1 | CARRIER-PLANETARY |
| 36 | 177-6758 | 1 | SHAFT AS |
|  | 8S-0527 | 1 | PLUG-CUP |
| 38 | 177-6769 | 1 | SHAFT-DRIVE (RH) |
| 40 | 177-6771 | 1 | DISC-THRUST |
| 42 | 177-6797 | 1 | RING-SEAL |
| 45 | 177-6804 | 1 | PLATE-END |
| 46 | 187-8947 | 2 | DISC-THRUST |
| 50 | 191-0429 | 1 | GEAR (40-TEETH) |
| 52 | 200-3039 | 1 | RING-SEAL |
| 53 | 203-2631 | 1 | PISTON |
| 56 | 199-9240 | 1 | SEAL-O-RING |
| 60 | 7T-5594 | 1 | RING-SEAL |
| 61 | 8T-2572 | 1 | SEAL-O-RING |

[A] PART OF 152-5242 TRANSMISSION AR

01120038
PR: t05i29k58b0196

## 155-9580 CONTROL GP-TRANSMISSION HYD

**S/N: 9YY1-UP**

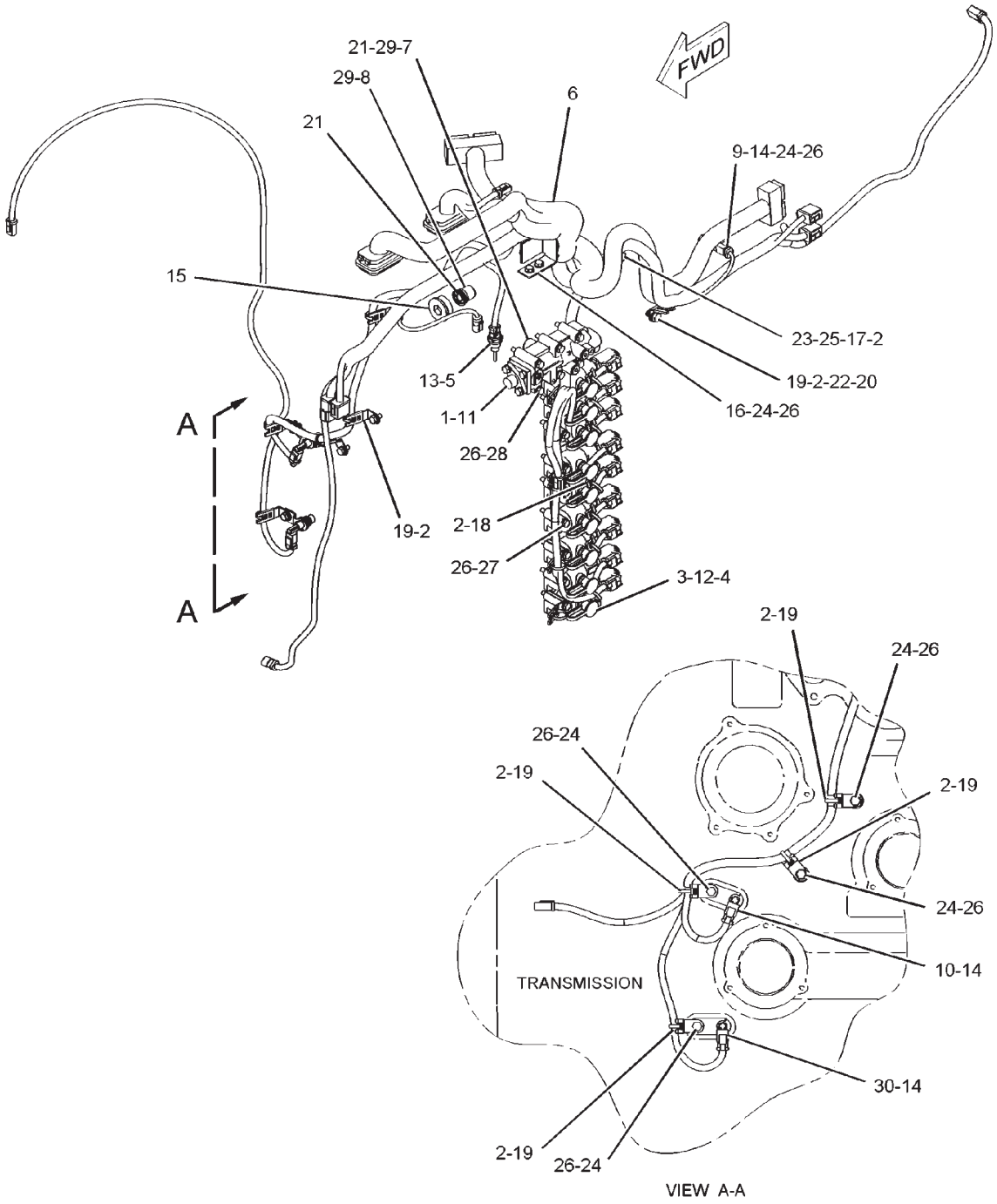


01120531

## 155-9580 CONTROL GP-TRANSMISSION HYD
**S/N: 9YY1-UP**

| ITEM | NUMBER | QTY | DESCRIPTION |
|---|---|---|---|
| - | 155-9580 | -- | CONTROL GP-TRANSMISSION HYD [A] (NOT SERVICED) |
| 1 | 2P-1692 | 1 | SEAL-O-RING |
| 2 | 3S-2093 | 18 | STRAP-CABLE |
| 3 | 6V-0852 | 9 | CAP-DUST |
| 4 | 8S-0768 | 9 | SEAL-O-RING |
| 5 | 130-9811 | 1 | SENSOR GP-TEMPERATURE (HYDRAULIC OIL) |
| 6 | 228-4278 | 1 | HARNESS AS-TRANSMISSION |
| 7 | 148-1925 | 1 | VALVE-RELIEF (COOLER BYPASS) |
| 8 | 165-0390 | 1 | VALVE-RELIEF (TRANSMISSION-LUBE) |
| 9 | 191-8303 | 1 | SENSOR GP-SPEED (TRANSMISSION-INPUT) |
| 10 | 191-8304 | 1 | SENSOR GP-SPEED (TRANSMISSION-OUTPUT #1) |
| 11 | 198-1013 | 1 | VALVE GP-RELIEF (HYDRAULIC CONTROL SYSTEM) (SEE BREAKDOWN FOR COMPONENTS) |
| 12 | 216-5343 | 9 | VALVE GP-MODULATING (ELEK CLUTCH PRESS CONT) (SEE BREAKDOWN FOR COMPONENTS) |
| 13 | 112-5282 | 1 | SEAL-O-RING |
| 14 | 117-1385 | 3 | SEAL-O-RING |
| 15 | 9S-3902 | 1 | PLUG AS |
| | 9S-8010 | 1 | PLUG |
| | 183-2317 | 1 | SEAL-O-RING |
| 16 | 211-1170 | 1 | BRACKET AS |
| | 7T-1099 | 2 | LINK |
| 17 | 4P-7428 | 1 | CLIP |
| 18 | 4P-7581 | 11 | CLIP |
| 19 | 4P-8134 | 6 | CLIP |
| 20 | 6V-5839 | 1 | WASHER (11X21X2.5-MM THK) |
| 21 | 8C-3428 | 2 | RING-RETAINING |
| 22 | 8T-4137 | 1 | BOLT (M10X1.5X20-MM) |
| 23 | 8T-4179 | 1 | BOLT (M12X1.75X20-MM) |
| 24 | 8T-4200 | 7 | BOLT (M8X1.25X16-MM) |
| 25 | 8T-4223 | 1 | WASHER-HARD (13.5X25.5X3-MM THK) |
| 26 | 8T-4224 | 31 | WASHER-HARD (8.8X16X2-MM THK) |
| 27 | 8T-6869 | 22 | BOLT (M8X1.25X60-MM) |
| 28 | 8T-6870 | 2 | BOLT (M8X1.25X70-MM) |
| 29 | 9X-4609 | 2 | SEAL-O-RING |
| 30 | 191-8304 | 1 | SENSOR GP-SPEED TRANSMISSION-OUTPUT #2 |

[A] PART OF 152-5242 TRANSMISSION AR

01120531
PR: t05i29k58b0197

## 180-4376 DIFFERENTIAL GP-STEERING

**S/N: AZG1-906; AZH1-972;
AZJ1-1112; AZK1-968**

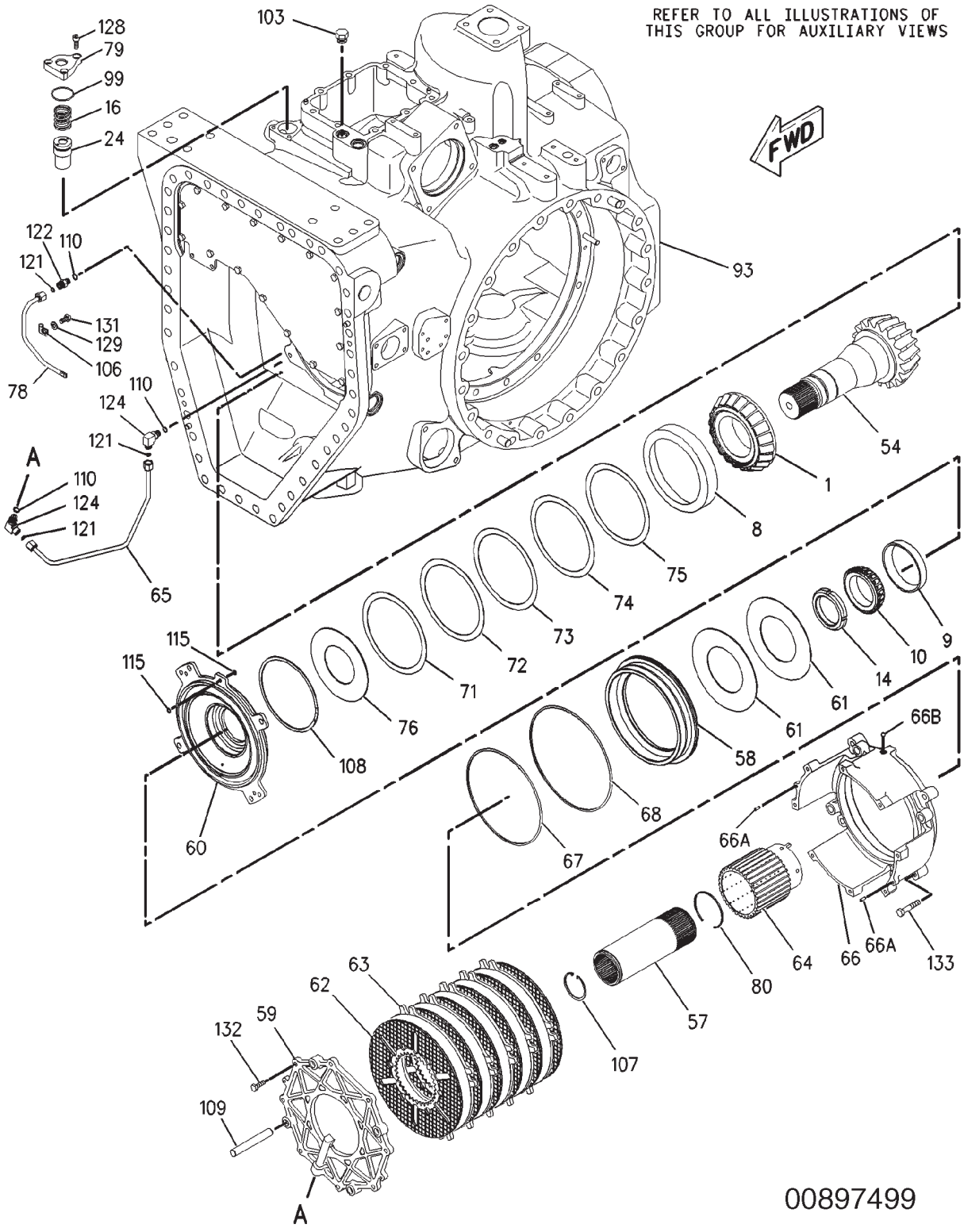

## 180-4376 DIFFERENTIAL GP-STEERING

**S/N: AZG1-906; AZH1-972; AZJ1-1112; AZK1-968**

| ITEM | NUMBER | QTY | DESCRIPTION |
|---|---|---|---|
| - | 180-4376 | -- | DIFFERENTIAL GP-STEERING [A] (NOT SERVICED) |
| 1 | 124-9536 | 1 | CONE-BEARING |
| 8 | 5P-7843 | 1 | CUP-BEARING |
| 9 | 6F-2956 | 1 | CUP-BEARING |
| 10 | 6V-0347 | 1 | CONE-BEARING |
| 14 | 4H-6507 | 1 | LOCKNUT |
| 16 | 7H-0832 | 1 | SPRING |
| 24 | 163-0592 | 1 | VALVE GP-CHECK (HYDRAULIC) |
| | 061-7540 | 1 | SEAL-O-RING |
| 54 | 186-2868 | 1 | PINION-BEVEL (17-TEETH) |
| 57 | 187-1377 | 1 | COUPLING |
| 58 | 227-9327 | 1 | PISTON |
| 59 | 187-3367 | 1 | PLATE-END |
| 60 | 187-3368 | 1 | PLATE-SPRING |
| 61 | 187-3369 | 2 | SPRING |
| 62 | 187-3370 | 1 | DISC-FRICTION |
| 63 | 187-3371 | 6 | PLATE-CLUTCH |
| 64 | 187-3372 | 1 | HUB-CLUTCH |
| 65 | 187-3373 | 1 | TUBE AS |
| 66 | 187-3374 | 1 | HOUSING AS |
| 66A | 2H-1190 | 2 | DOWEL |
| 66B | 4B-9782 | 1 | BALL |
| 67 | 188-0632 | 1 | SEAL-BRAKE |
| 68 | 188-0633 | 1 | SEAL-BRAKE |
| 71 | 191-1907 | AR | SHIM (0.9MM THK) |
| 72 | 191-1908 | AR | SHIM (0.8MM THK) |
| 73 | 191-1909 | AR | SHIM (0.7MM THK) |
| 74 | 191-1910 | AR | SHIM (0.6MM THK) |
| 75 | 191-1911 | AR | SHIM (0.5MM THK) |
| 76 | 191-1912 | 1 | PLATE-RETAINER |
| 78 | 195-3252 | 1 | TUBE AS |
| 79 | 197-5411 | 1 | FLANGE |
| 80 | 198-0288 | 1 | RING-RETAINING |
| 93 | 225-6958 | 1 | HOUSING GP-DIFFERENTIAL (NOT SERVICED) (SEE BREAKDOWN FOR COMPONENTS) |
| 99 | 005-8593 | 1 | SEAL-O-RING |
| 103 | 9S-4190 | 1 | PLUG |
| | 2M-9780 | 1 | SEAL-O-RING |
| 106 | 1F-7567 | 1 | CLIP |
| 107 | 2H-5549 | 1 | RING-RETAINING |
| 108 | 2K-1381 | 1 | RING-RETAINING |
| 109 | 2Y-7489 | 4 | DOWEL |
| 110 | 3J-1907 | 3 | SEAL-O-RING |
| 115 | 5H-6005 | 2 | SEAL-O-RING |
| 121 | 6V-8397 | 3 | SEAL-O-RING |
| 122 | 6V-8636 | 1 | CONNECTOR |
| 124 | 6V-8724 | 2 | ELBOW |
| 128 | 8T-1159 | 3 | BOLT-SOCKET HEAD (M10X1.5X25-MM) |
| 129 | 8T-4121 | 1 | WASHER-HARD (11X21X2.5-MM THK) |
| 131 | 8T-4137 | 1 | BOLT (M10X1.5X20-MM) |
| 132 | 8T-4195 | 10 | BOLT (M10X1.5X30-MM) |
| 133 | 8T-4910 | 4 | BOLT (M12X1.75X60-MM) |

[A] 185-3955, 185-3956, 185-3957, 185-3958 AXLE AR

## 180-4376 DIFFERENTIAL GP-STEERING

**(PAGE 1 OF 2)**
**S/N: AZG1-906; AZH1-972;**
**AZJ1-1112; AZK1-968**

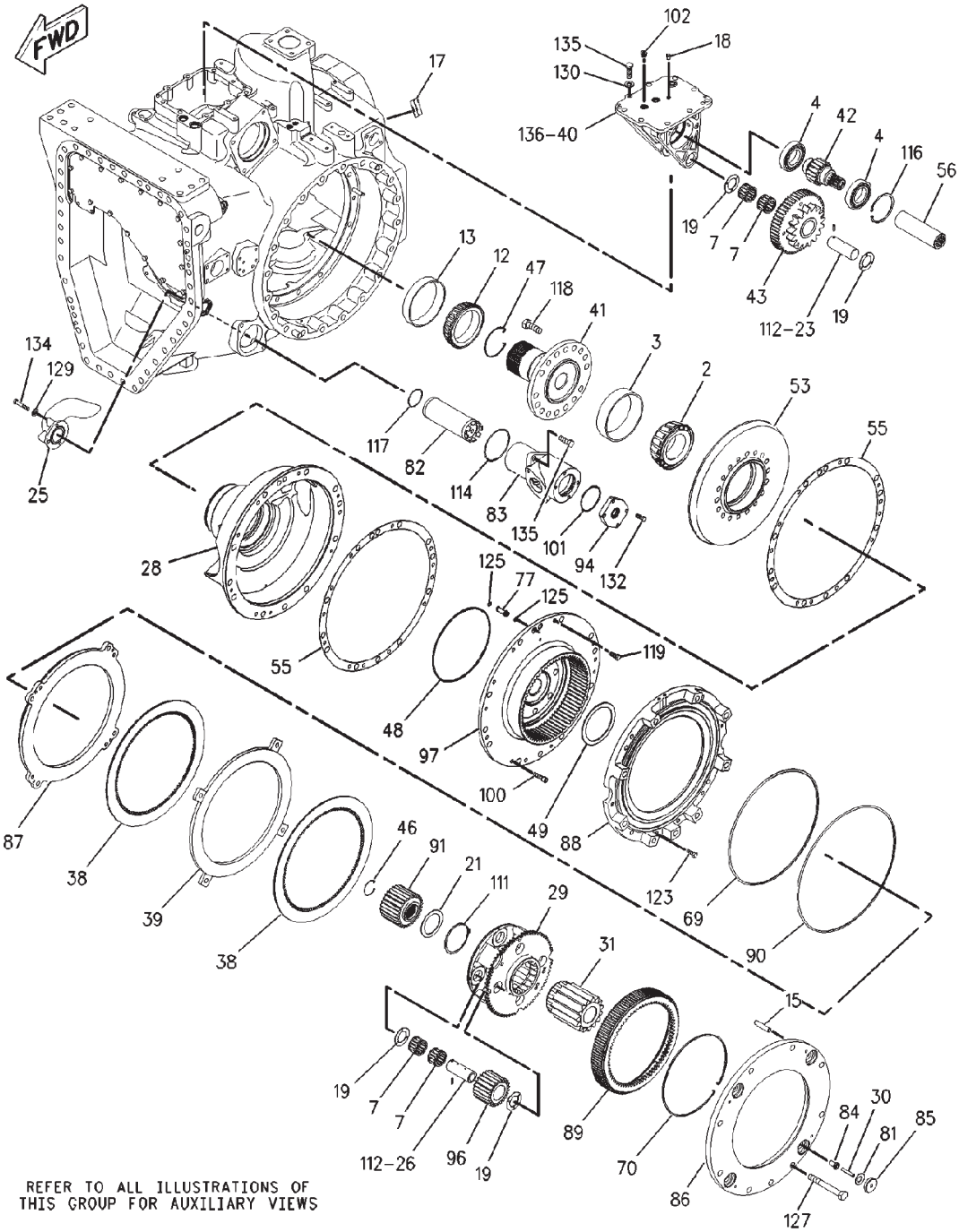


REFER TO ALL ILLUSTRATIONS OF THIS GROUP FOR AUXILIARY VIEWS

00897500

## 180-4376 DIFFERENTIAL GP-STEERING

**(PAGE 1 OF 2)**
**S/N: AZG1-906; AZH1-972; AZJ1-1112; AZK1-968**

| ITEM | NUMBER | QTY | DESCRIPTION |
|---|---|---|---|
| - | 180-4376 | -- | DIFFERENTIAL GP-STEERING [A] (NOT SERVICED) |
| 2 | 132-6597 | 1 | CONE-BEARING |
| 3 | 132-6598 | 1 | CUP-BEARING |
| 4 | 1F-2771 | 2 | BALL BEARING |
| 7 | 5P-6254 | 10 | BEARING |
| 12 | 8D-2256 | 1 | CONE-BEARING |
| 13 | 9K-1171 | 1 | CUP-BEARING |
| 15 | 4K-3892 | 4 | DOWEL |
| 17 | 7X-7816 | 1 | PLATE-SERIAL NUMBER (TRANSMISSION) |
| | ----- | 2 | TACK |
| 18 | 8C-5224 | 3 | PLUG-SEAL |
| 19 | 8E-8310 | 9 | DISC-THRUST |
| 21 | 8E-8652 | 1 | DISC-THRUST |
| 23 | 111-7068 | 1 | SHAFT AS |
| | 2A-3746 | 1 | PLUG-CUP |
| 25 | ----- | 1 | TUBE |
| 26 | 174-9381 | 4 | SHAFT-PLANETARY |
| 28 | 174-9407 | 1 | SUPPORT |
| 29 | 174-9410 | 1 | CARRIER-PLANETARY |
| 30 | 176-1377 | 4 | PIN-SPRING |
| 31 | 179-9006 | 1 | GEAR-SUN (15-TEETH) |
| 38 | 180-4502 | 2 | DISC-FRICTION |
| 39 | 180-4505 | 1 | PLATE |
| 40 | 180-8428 | 1 | SUPPORT AS |
| | 2A-3746 | 4 | PLUG-CUP |
| 41 | 183-3411 | 1 | SHAFT-BEVEL GEAR |
| 42 | 183-3413 | 1 | GEAR (18-TEETH) |
| 43 | 183-3414 | 1 | GEAR (54-TEETH) |
| 46 | 184-1693 | 1 | RING-RETAINING |
| 47 | 184-1694 | 1 | RING-RETAINING |
| 48 | 184-1695 | 1 | SEAL-RING |
| 49 | 184-1696 | 1 | DISC-THRUST |
| 53 | 186-2867 | 1 | GEAR-BEVEL (48-TEETH) |
| 55 | 186-2869 | 2 | SHIM PACK (INCLUDES 14-SHIMS) |
| 56 | 235-6166 | 1 | COUPLING |
| 69 | 188-0635 | 1 | SEAL-BRAKE |
| 70 | 189-2089 | 1 | RING-LOCK |
| 77 | 192-5602 | 2 | SLEEVE |
| 81 | 199-7107 | 4 | SPRING |
| 82 | 207-5993 | 1 | SCREEN |
| 83 | 207-7007 | 1 | HOUSING |
| 84 | 210-8405 | 4 | BUSHING |
| 85 | 210-8406 | 4 | PLATE-SPRING |
| 86 | 221-5334 | 1 | PLATE-REACTION |
| 87 | 211-8280 | 1 | PISTON-BRAKE |
| 88 | 242-5086 | 1 | HOUSING AS |
| | 126-7260 | 1 | PLUG |
| 89 | 213-3269 | 1 | HUB-BRAKE |

CONTINUED

[A] 185-3955, 185-3956, 185-3957, 185-3958 AXLE AR

## 180-4376 DIFFERENTIAL GP-STEERING

**(PAGE 2 OF 2)**
**S/N: AZG1-906; AZH1-972;**
**AZJ1-1112; AZK1-968**

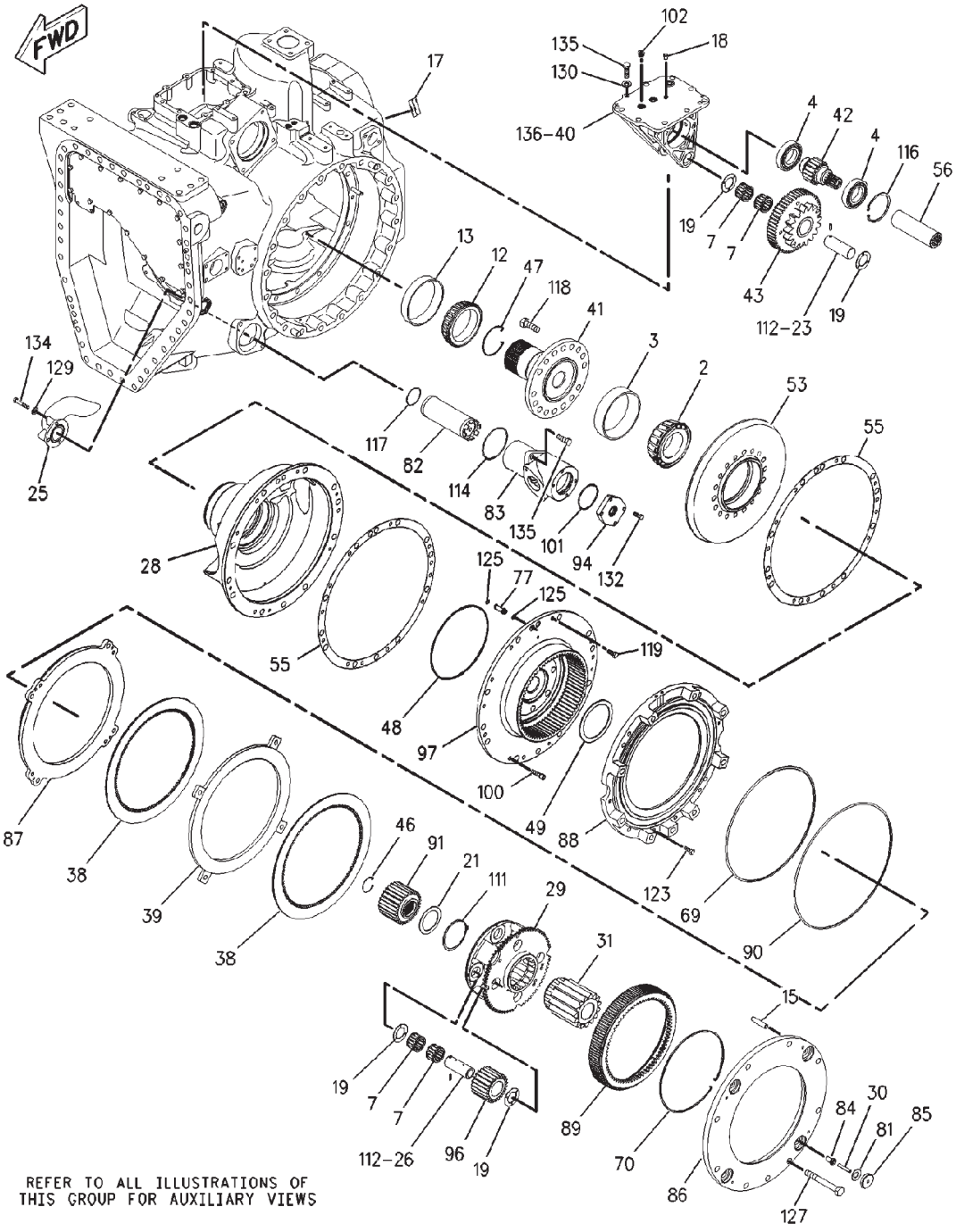


REFER TO ALL ILLUSTRATIONS OF THIS GROUP FOR AUXILIARY VIEWS

00897500

## 180-4376 DIFFERENTIAL GP-STEERING

**(PAGE 2 OF 2)**
**S/N: AZG1-906; AZH1-972; AZJ1-1112; AZK1-968**

| ITEM | NUMBER | QTY | DESCRIPTION |
|---|---|---|---|
| - | 180-4376 | -- | DIFFERENTIAL GP [A] (NOT SERVICED) |
| 90 | 213-3270 | 1 | SEAL-D-RING |
| 91 | 213-6190 | 1 | GEAR-SUN (28-TEETH) |
| 94 | 221-0691 | 1 | COVER |
| 96 | 222-1904 | 4 | GEAR-PLANETARY (23-TEETH) |
| 97 | 252-2226 | 1 | GEAR-RING |
| 100 | 095-0670 | 3 | BOLT (M12X1.75X45-MM) |
| 101 | 131-3718 | 1 | SEAL-O-RING |
| 102 | 9S-8005 | 1 | PLUG |
| | 3K-0360 | 1 | SEAL-O-RING |
| 111 | 3P-3441 | 1 | RING-RETAINING |
| 112 | 3S-2708 | 5 | PIN-SPRING |
| 114 | 5F-3144 | 1 | SEAL-O-RING |
| 116 | 5L-4751 | 1 | RING-RETAINING |
| 117 | 5M-6509 | 1 | SEAL-O-RING |
| 118 | 6V-3532 | 16 | BOLT (M20X2.5X60-MM) |
| 119 | 6V-3668 | 6 | BOLT (M12X1.75X30-MM) |
| 123 | 6V-8675 | 1 | BOLT (M12X1.75X35-MM) |
| 125 | 8L-2777 | 4 | SEAL-O-RING |
| 127 | 8T-0657 | 9 | BOLT (M20X2.5X160-MM) |
| 129 | 8T-4121 | 3 | WASHER-HARD (11X21X2.5-MM THK) |
| 130 | 8T-4122 | 9 | WASHER-HARD (17X32X3.5-MM THK) |
| 132 | 8T-4195 | 4 | BOLT (M10X1.5X30-MM) |
| 134 | 8T-6466 | 3 | BOLT (M10X1.5X60-MM) |
| 135 | 8T-7338 | 11 | BOLT (M16X2X45-MM) |
| 136 | 1U-8846 | AR | SEALANT-GASKET |

[A] 185-3955, 185-3956, 185-3957, 185-3958 AXLE AR

00897500
PR: t05i29k58b0199

## 180-4376 DIFFERENTIAL GP-STEERING

**S/N: AZG1-906; AZH1-972;
AZJ1-1112; AZK1-968**

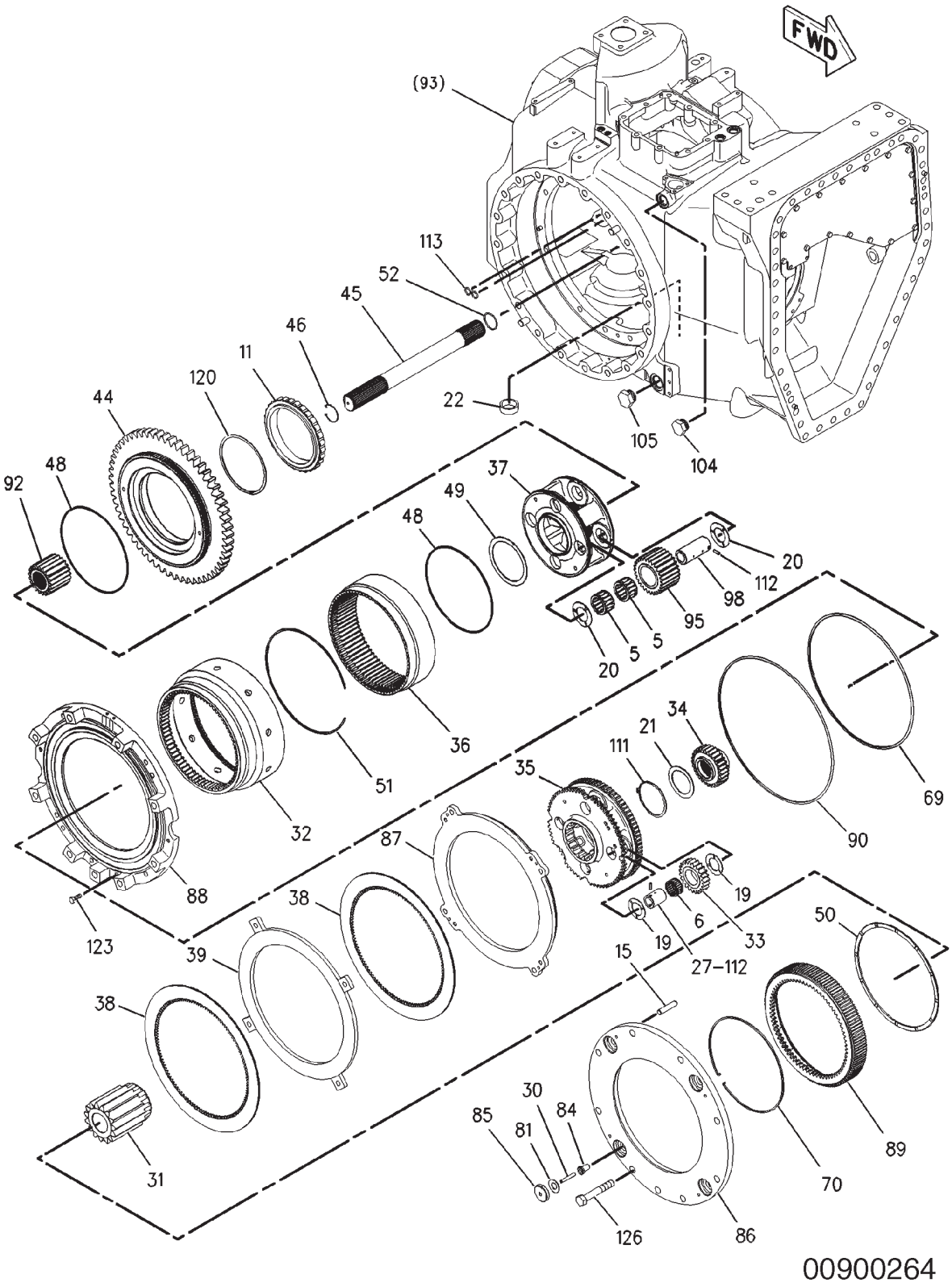

## 180-4376 DIFFERENTIAL GP-STEERING

**S/N: AZG1-906; AZH1-972; AZJ1-1112; AZK1-968**

| ITEM | NUMBER | QTY | DESCRIPTION |
|---|---|---|---|
| - | 180-4376 | -- | DIFFERENTIAL GP-STEERING [A] (NOT SERVICED) |
| 5 | 1P-3958 | 8 | ROLLER AS-SPECIAL |
| 6 | 5M-0578 | 4 | BEARING AS-ROLLER |
| 11 | 6V-6654 | 1 | BEARING AS-ROLLER |
| 15 | 4K-3892 | 4 | DOWEL |
| 19 | 8E-8310 | 9 | DISC-THRUST |
| 20 | 8E-8316 | 8 | DISC-THRUST |
| 21 | 8E-8652 | 1 | DISC-THRUST |
| 22 | 8M-7160 | 1 | MAGNET |
| 27 | 174-9383 | 4 | SHAFT-PLANETARY |
| 30 | 176-1377 | 4 | PIN-SPRING |
| 31 | 179-9006 | 1 | GEAR-SUN (15-TEETH) |
| 32 | 239-9822 | 1 | GEAR-RING (72-TEETH) |
| 33 | 180-4379 | 4 | GEAR-PLANETARY (23-TEETH) |
| 34 | 180-4381 | 1 | GEAR-SUN (28-TEETH) |
| 35 | 180-4382 | 1 | CARRIER-PLANETARY |
| 36 | 180-4384 | 1 | GEAR-RING (75-TEETH) |
| 37 | 180-4387 | 1 | CARRIER-PLANETARY |
| 38 | 180-4502 | 2 | DISC-FRICTION |
| 39 | 180-4505 | 1 | PLATE |
| 44 | 183-3415 | 1 | GEAR (58-TEETH) |
| 45 | 183-3416 | 1 | SHAFT |
| 46 | 184-1693 | 1 | RING-RETAINING |
| 48 | 184-1695 | 2 | SEAL-RING |
| 49 | 184-1696 | 1 | DISC-THRUST |
| 50 | 184-1697 | 1 | DISC-THRUST |
| 51 | 185-4422 | 1 | RING-LOCK |
| 52 | 185-4423 | 1 | RING-RETAINING |
| 69 | 188-0635 | 1 | SEAL-BRAKE |
| 70 | 189-2089 | 1 | RING-LOCK |
| 81 | 199-7107 | 4 | SPRING |
| 84 | 210-8405 | 4 | BUSHING |
| 85 | 210-8406 | 4 | PLATE-SPRING |
| 86 | 221-5334 | 1 | PLATE-REACTION |
| 87 | 211-8280 | 1 | PISTON-BRAKE |
| 88 | 242-5086 | 1 | HOUSING AS |
| | 126-7260 | 1 | PLUG |
| 89 | 213-3269 | 1 | HUB-BRAKE |
| 90 | 213-3270 | 1 | SEAL-D-RING |
| 92 | 213-6191 | 1 | GEAR-SUN (34-TEETH) |
| 95 | 222-1903 | 4 | GEAR-PLANETARY (27-TEETH) |
| 98 | 223-0623 | 4 | SHAFT-PLANETARY |
| 104 | 9S-4181 | 1 | PLUG |
| | 7M-8485 | 1 | SEAL-O-RING |
| 105 | 9S-6130 | 1 | PLUG |
| | 2S-4078 | 1 | SEAL-O-RING |
| 111 | 3P-3441 | 1 | RING-RETAINING |
| 112 | 3S-2708 | 8 | PIN-SPRING |
| 113 | 4J-5140 | 2 | SEAL-O-RING |
| 120 | 6V-4442 | 1 | RING-RETAINING |
| 123 | 6V-8675 | 1 | BOLT (M12X1.75X35-MM) |
| 126 | 8T-0070 | 9 | BOLT (M20X2.5X120-MM) |

[A] 185-3955, 185-3956, 185-3957, 185-3958 AXLE AR

00900264
PR: t05i29k58b0200

## 180-4376 DIFFERENTIAL GP-STEERING

**S/N: AZG907-950; AZH973-983;
AZJ1113-1434; AZK969-979**

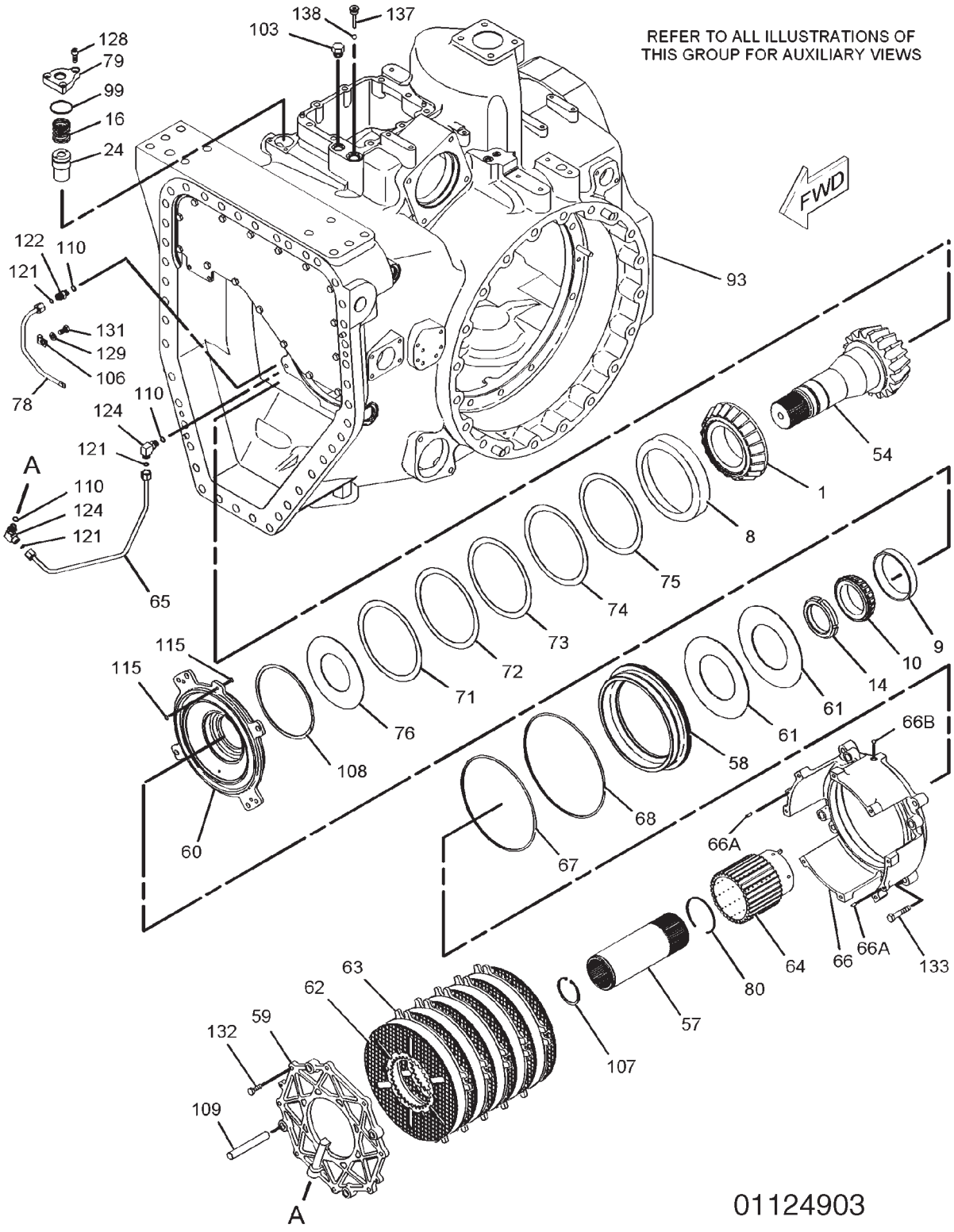

## 180-4376 DIFFERENTIAL GP-STEERING

**S/N: AZG907-950; AZH973-983; AZJ1113-1434; AZK969-979**

| ITEM | NUMBER | QTY | DESCRIPTION |
|---|---|---|---|
| - | 180-4376 | -- | DIFFERENTIAL GP-STEERING [A] (NOT SERVICED) |
| 1 | 124-9536 | 1 | CONE-BEARING |
| 8 | 5P-7843 | 1 | CUP-BEARING |
| 9 | 6F-2956 | 1 | CUP-BEARING |
| 10 | 6V-0347 | 1 | CONE-BEARING |
| 14 | 4H-6507 | 1 | LOCKNUT |
| 16 | 7H-0832 | 1 | SPRING |
| 24 | 163-0592 | 1 | VALVE GP-CHECK (HYDRAULIC) |
| | 061-7540 | 1 | SEAL-O-RING |
| 54 | 186-2868 | 1 | PINION-BEVEL (17-TEETH) |
| 57 | 187-1377 | 1 | COUPLING |
| 58 | 227-9327 | 1 | PISTON |
| 59 | 187-3367 | 1 | PLATE-END |
| 60 | 187-3368 | 1 | PLATE-SPRING |
| 61 | 187-3369 | 2 | SPRING |
| 62 | 187-3370 | 6 | DISC-FRICTION |
| 63 | 187-3371 | 6 | PLATE-CLUTCH |
| 64 | 187-3372 | 1 | HUB-CLUTCH |
| 65 | 187-3373 | 1 | TUBE AS |
| 66 | 187-3374 | 1 | HOUSING AS |
| 66A | 2H-1190 | 2 | DOWEL |
| 66B | 4B-9782 | 1 | BALL |
| 67 | 188-0632 | 1 | SEAL-BRAKE |
| 68 | 188-0633 | 1 | SEAL-BRAKE |
| 71 | 191-1907 | AR | SHIM (0.9MM THK) |
| 72 | 191-1908 | AR | SHIM (0.8MM THK) |
| 73 | 191-1909 | AR | SHIM (0.7MM THK) |
| 74 | 191-1910 | AR | SHIM (0.6MM THK) |
| 75 | 191-1911 | AR | SHIM (0.5MM THK) |
| 76 | 191-1912 | 1 | PLATE-RETAINER |
| 78 | 195-3252 | 1 | TUBE AS |
| 79 | 197-5411 | 1 | FLANGE |
| 80 | 198-0288 | 1 | RING-RETAINING |

CONTINUED

[A] 185-3955, 185-3956, 185-3957, 185-3958 AXLE AR
[C] CHANGE FROM PREVIOUS TYPE

## 180-4376 DIFFERENTIAL GP-STEERING

**S/N: AZG907-950; AZH973-983;
AZJ1113-1434; AZK969-979**

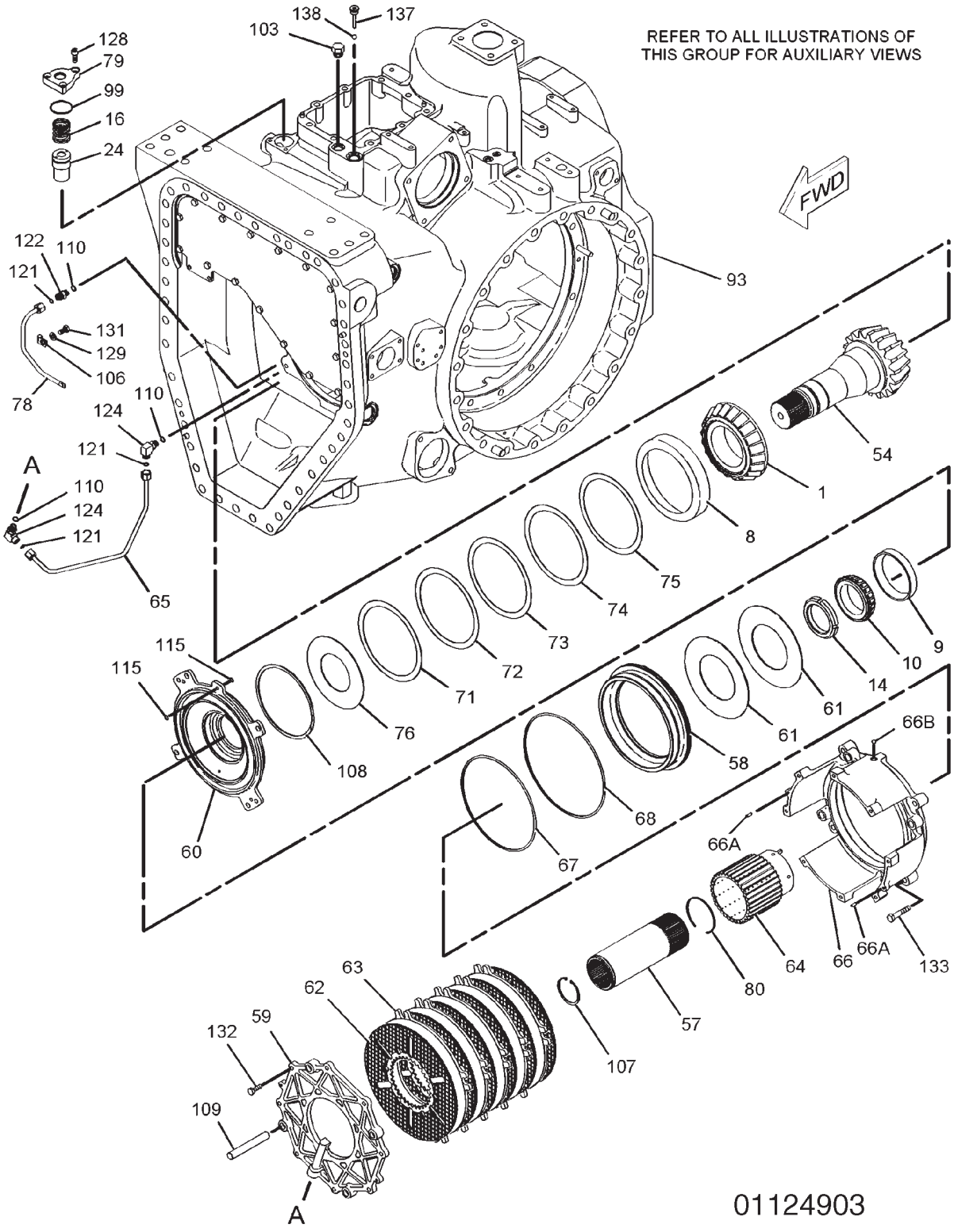

## 180-4376 DIFFERENTIAL GP-STEERING

**S/N: AZG907-950; AZH973-983; AZJ1113-1434; AZK969-979**

| ITEM | NUMBER | QTY | DESCRIPTION |
|---|---|---|---|
| - | 180-4376 | -- | DIFFERENTIAL GP-STEERING [A]<br>(NOT SERVICED) |
| 93 | 225-6958 | 1 | HOUSING GP-DIFFERENTIAL [C]<br>(NOT SERVICED)<br>(SEE BREAKDOWN FOR COMPONENTS) |
| 99 | 005-8593 | 1 | SEAL-O-RING |
| 103 | 9S-4190 | 1 | PLUG |
| 106 | 1F-7567 | 1 | CLIP |
| 107 | 2H-5549 | 1 | RING-RETAINING |
| 108 | 2K-1381 | 1 | RING-RETAINING |
| 109 | 2Y-7489 | 4 | DOWEL |
| 110 | 3J-1907 | 3 | SEAL-O-RING |
| 115 | 5H-6005 | 2 | SEAL-O-RING |
| 121 | 6V-8397 | 3 | SEAL-O-RING |
| 122 | 6V-8636 | 1 | CONNECTOR |
| 124 | 6V-8724 | 2 | ELBOW |
| 128 | 8T-1159 | 3 | BOLT-SOCKET HEAD (M10X1.5X25-MM) |
| 129 | 8T-4121 | 1 | WASHER-HARD (11X21X2.5-MM THK) |
| 131 | 8T-4137 | 1 | BOLT (M10X1.5X20-MM) |
| 132 | 8T-4195 | 10 | BOLT (M10X1.5X30-MM) |
| 133 | 8T-4910 | 4 | BOLT (M12X1.75X60-MM) |
| 137 | 223-1637 | 1 | PLUG AS |
| 138 | 4B-9783 | 1 | BALL |

[A] 185-3955, 185-3956,
185-3957, 185-3958 AXLE AR
[C] CHANGE FROM PREVIOUS TYPE

01124903
PR: t05i29k58b0201

## 180-4376 DIFFERENTIAL GP-STEERING

**S/N: AZG907-950; AZH973-983;
AZJ1113-1434; AZK969-979**

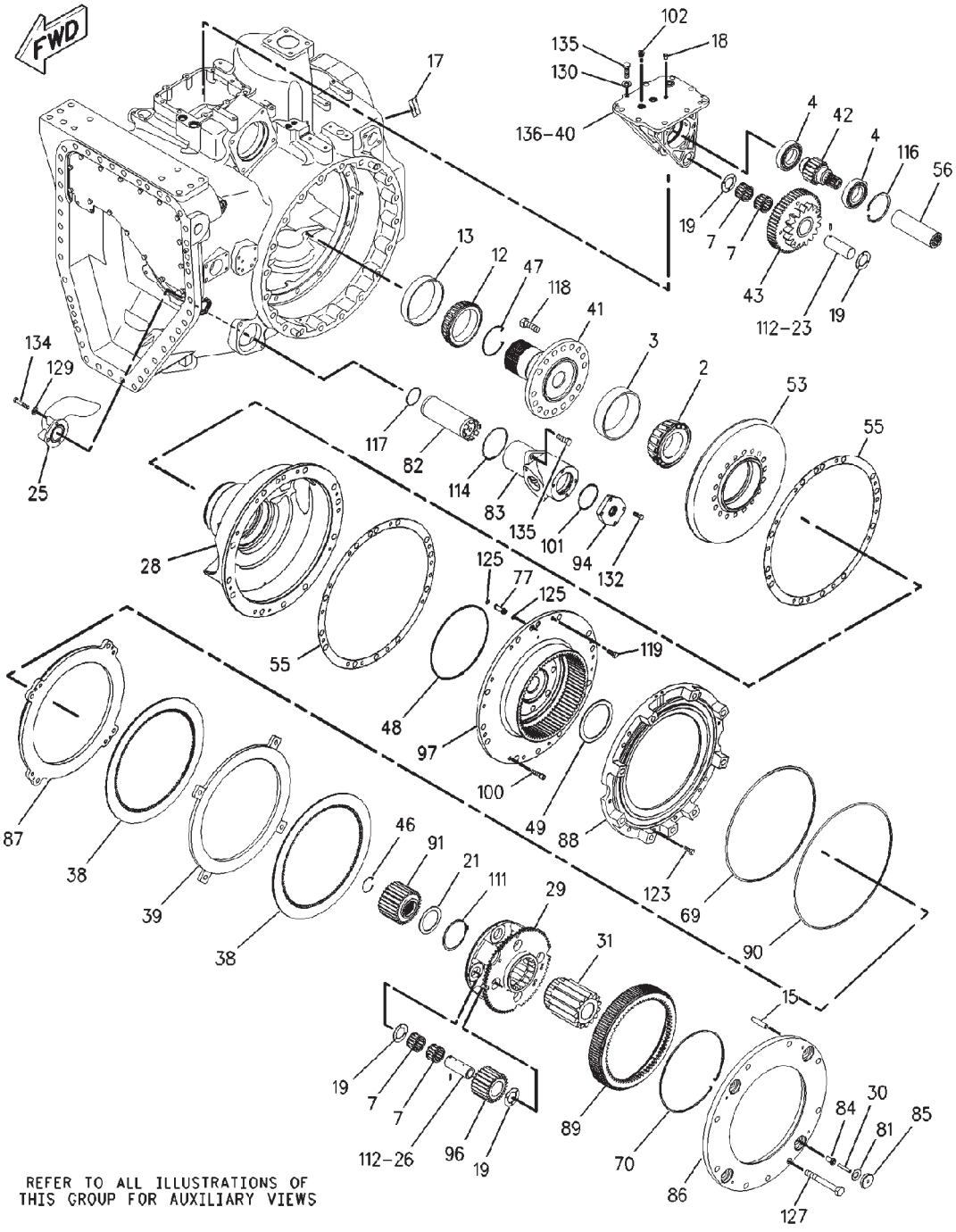


REFER TO ALL ILLUSTRATIONS OF THIS GROUP FOR AUXILIARY VIEWS

00897500

## 180-4376 DIFFERENTIAL GP-STEERING

**S/N: AZG907-950; AZH973-983; AZJ1113-1434; AZK969-979**

| ITEM | NUMBER | QTY | DESCRIPTION |
|---|---|---|---|
| - | 180-4376 | -- | DIFFERENTIAL GP-STEERING [A] (NOT SERVICED) |
| 2 | 132-6597 | 1 | CONE-BEARING |
| 3 | 132-6598 | 1 | CUP-BEARING |
| 4 | 1F-2771 | 2 | BALL BEARING |
| 7 | 5P-6254 | 10 | BEARING |
| 12 | 8D-2256 | 1 | CONE-BEARING |
| 13 | 9K-1171 | 1 | CUP-BEARING |
| 15 | 4K-3892 | 4 | DOWEL |
| 17 | 7X-7816 | 1 | PLATE-SERIAL NUMBER (TRANSMISSION) |
| | ----- | 2 | TACK |
| 18 | 8C-5224 | 3 | PLUG-SEAL |
| 19 | 8E-8310 | 9 | DISC-THRUST |
| 21 | 8E-8652 | 1 | DISC-THRUST |
| 23 | 111-7068 | 1 | SHAFT AS |
| | 2A-3746 | 1 | PLUG-CUP |
| 25 | ----- | 1 | TUBE |
| 26 | 174-9381 | 4 | SHAFT-PLANETARY |
| 28 | 174-9407 | 1 | SUPPORT |
| 29 | 174-9410 | 1 | CARRIER-PLANETARY |
| 30 | 176-1377 | 4 | PIN-SPRING |
| 31 | 179-9006 | 1 | GEAR-SUN (15-TEETH) |
| 38 | 180-4502 | 2 | DISC-FRICTION |
| 39 | 180-4505 | 1 | PLATE |
| 40 | 180-8428 | 1 | SUPPORT AS |
| | 2A-3746 | 4 | PLUG-CUP |
| 41 | 183-3411 | 1 | SHAFT-BEVEL GEAR |
| 42 | 183-3413 | 1 | GEAR (18-TEETH) |
| 43 | 183-3414 | 1 | GEAR (54-TEETH) |
| 46 | 184-1693 | 1 | RING-RETAINING |
| 47 | 184-1694 | 1 | RING-RETAINING |
| 48 | 184-1695 | 1 | SEAL-RING |
| 49 | 184-1696 | 1 | DISC-THRUST |
| 53 | 186-2867 | 1 | GEAR-BEVEL (48-TEETH) |
| 55 | 186-2869 | 2 | SHIM PACK (INCLUDES 14-SHIMS) |
| 56 | 235-6166 | 1 | COUPLING |
| 69 | 188-0635 | 1 | SEAL-BRAKE |
| 70 | 189-2089 | 1 | RING-LOCK |
| 77 | 192-5602 | 2 | SLEEVE |
| 81 | 199-7107 | 4 | SPRING |
| 82 | 207-5993 | 1 | SCREEN |
| 83 | 207-7007 | 1 | HOUSING |
| 84 | 210-8405 | 4 | BUSHING |
| 85 | 210-8406 | 4 | PLATE-SPRING |
| 86 | 221-5334 | 1 | PLATE-REACTION |
| 87 | 211-8280 | 1 | PISTON-BRAKE |
| 88 | 242-5086 | 1 | HOUSING AS |
| | 126-7260 | 1 | PLUG |
| 89 | 213-3269 | 1 | HUB-BRAKE |

CONTINUED

[A] 185-3955, 185-3956, 185-3957, 185-3958 AXLE AR

## 180-4376 DIFFERENTIAL GP-STEERING

**S/N: AZG907-950; AZH973-983;
AZJ1113-1434; AZK969-979**

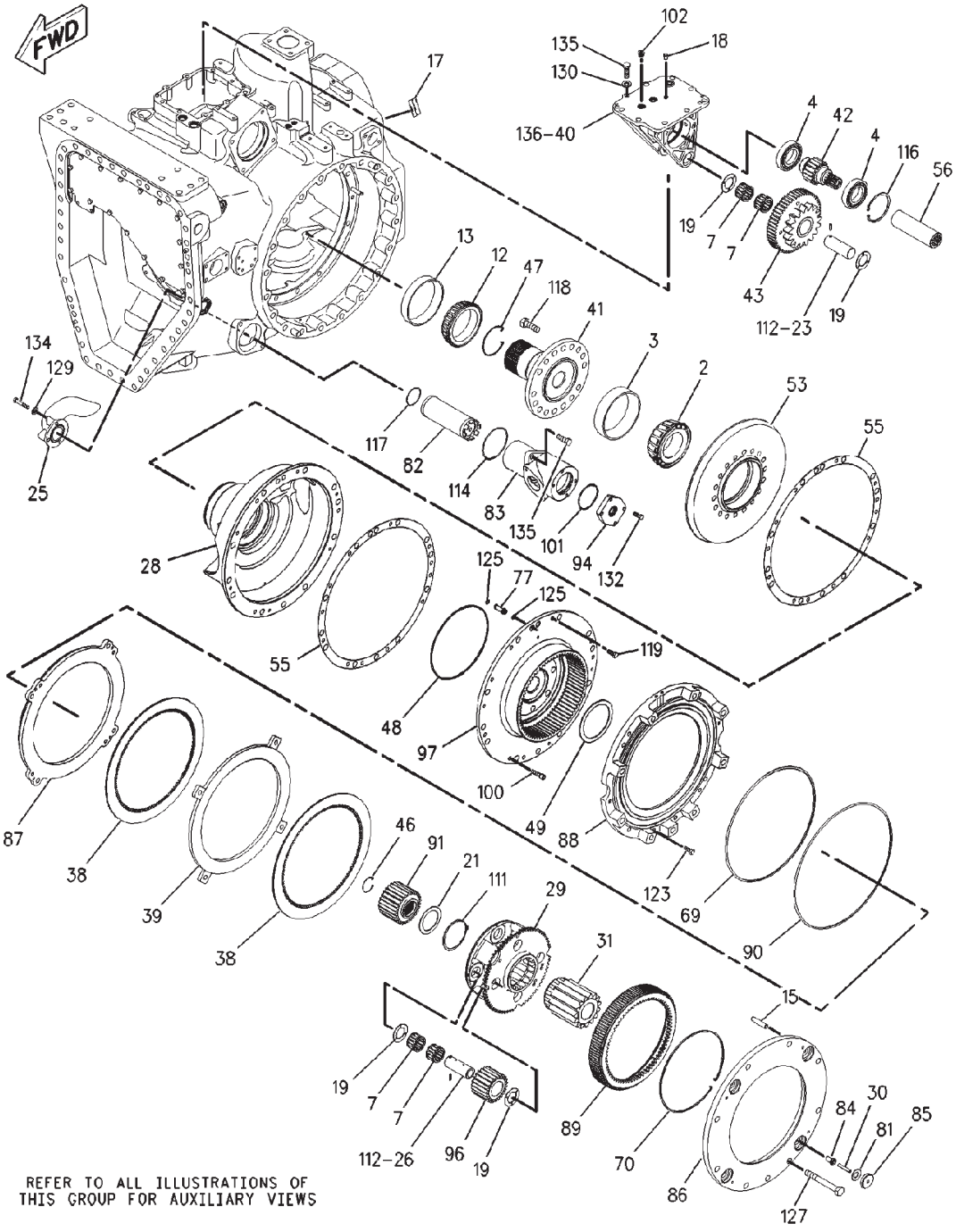


REFER TO ALL ILLUSTRATIONS OF THIS GROUP FOR AUXILIARY VIEWS

00897500

## 180-4376 DIFFERENTIAL GP-STEERING

**S/N: AZG907-950; AZH973-983; AZJ1113-1434; AZK969-979**

| ITEM | NUMBER | QTY | DESCRIPTION |
|---|---|---|---|
| - | 180-4376 | -- | DIFFERENTIAL GP [A] (NOT SERVICED) |
| 90 | 213-3270 | 1 | SEAL-D-RING |
| 91 | 213-6190 | 1 | GEAR-SUN (28-TEETH) |
| 94 | 221-0691 | 1 | COVER |
| 96 | 222-1904 | 4 | GEAR-PLANETARY (23-TEETH) |
| 97 | 252-2226 | 1 | GEAR-RING |
| 100 | 095-0670 | 3 | BOLT (M12X1.75X45-MM) |
| 101 | 131-3718 | 1 | SEAL-O-RING |
| 102 | 9S-8005 | 1 | PLUG |
| | 3K-0360 | 1 | SEAL-O-RING |
| 111 | 3P-3441 | 1 | RING-RETAINING |
| 112 | 3S-2708 | 5 | PIN-SPRING |
| 114 | 5F-3144 | 1 | SEAL-O-RING |
| 116 | 5L-4751 | 1 | RING-RETAINING |
| 117 | 5M-6509 | 1 | SEAL-O-RING |
| 118 | 6V-3532 | 16 | BOLT (M20X2.5X60-MM) |
| 119 | 6V-3668 | 6 | BOLT (M12X1.75X30-MM) |
| 123 | 6V-8675 | 1 | BOLT (M12X1.75X35-MM) |
| 125 | 8L-2777 | 4 | SEAL-O-RING |
| 127 | 8T-0657 | 9 | BOLT (M20X2.5X160-MM) |
| 129 | 8T-4121 | 3 | WASHER-HARD (11X21X2.5-MM THK) |
| 130 | 8T-4122 | 9 | WASHER-HARD (17X32X3.5-MM THK) |
| 132 | 8T-4195 | 4 | BOLT (M10X1.5X30-MM) |
| 134 | 8T-6466 | 3 | BOLT (M10X1.5X60-MM) |
| 135 | 8T-7338 | 11 | BOLT (M16X2X45-MM) |
| 136 | 1U-8846 | AR | SEALANT-GASKET |

[A] 185-3955, 185-3956, 185-3957, 185-3958 AXLE AR

00897500
PR: t05i29k58b0202

## 180-4376 DIFFERENTIAL GP-STEERING

**S/N: AZG907-950; AZH973-983;
AZJ1113-1434; AZK969-979**

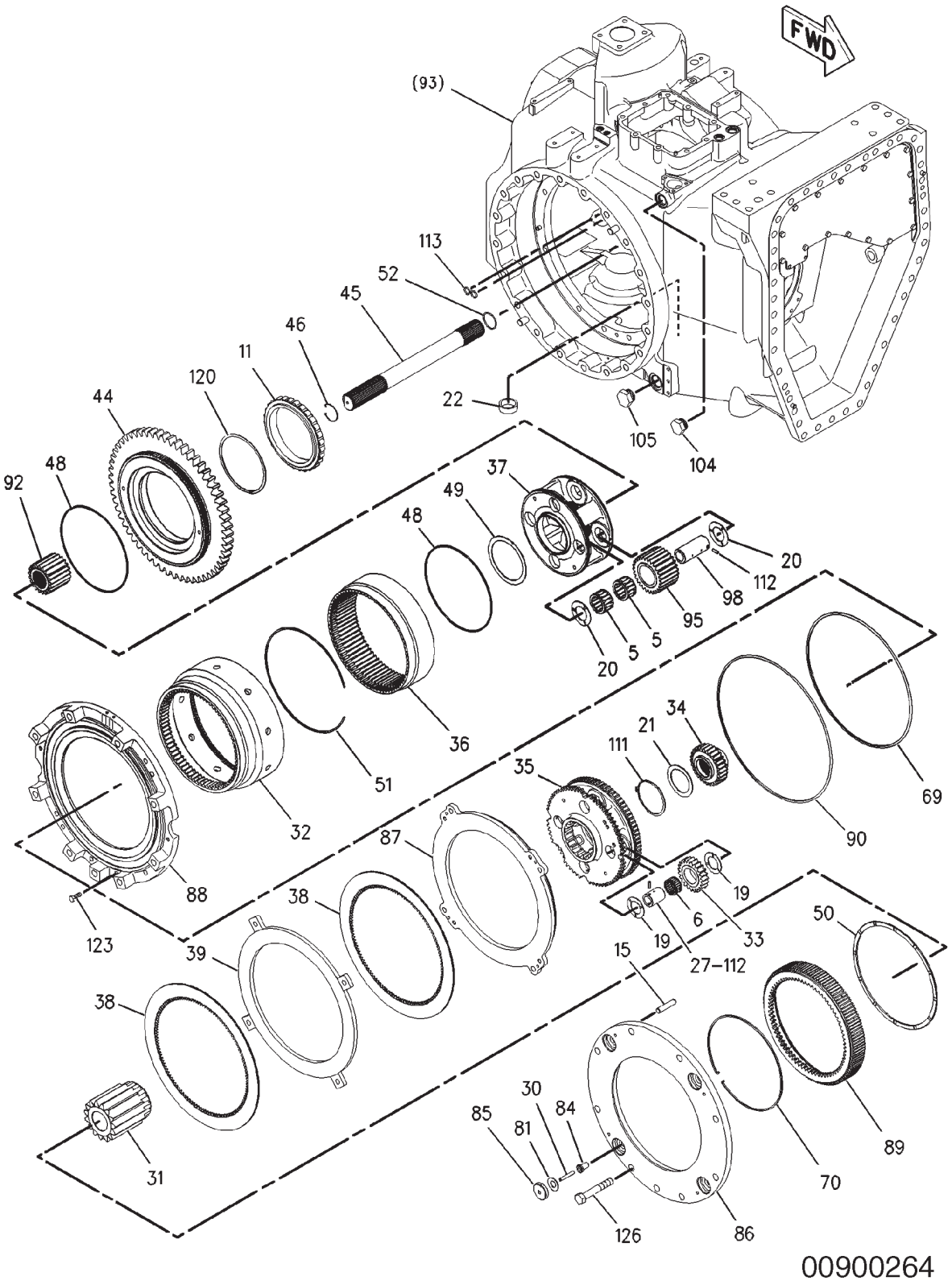

## 180-4376 DIFFERENTIAL GP-STEERING

**S/N: AZG907-950; AZH973-983; AZJ1113-1434; AZK969-979**

| ITEM | NUMBER | QTY | DESCRIPTION |
|---|---|---|---|
| - | 180-4376 | -- | DIFFERENTIAL GP-STEERING [A] (NOT SERVICED) |
| 5 | 1P-3958 | 8 | ROLLER AS-SPECIAL |
| 6 | 5M-0578 | 4 | BEARING AS-ROLLER |
| 11 | 6V-6654 | 1 | BEARING AS-ROLLER |
| 15 | 4K-3892 | 4 | DOWEL |
| 19 | 8E-8310 | 8 | DISC-THRUST |
| 20 | 8E-8316 | 8 | DISC-THRUST |
| 21 | 8E-8652 | 1 | DISC-THRUST |
| 22 | 8M-7160 | 1 | MAGNET |
| 27 | 174-9383 | 4 | SHAFT-PLANETARY |
| 30 | 176-1377 | 4 | PIN-SPRING |
| 31 | 179-9006 | 1 | GEAR-SUN (15-TEETH) |
| 32 | 239-9822 | 1 | GEAR-RING (72-TEETH) |
| 33 | 180-4379 | 4 | GEAR-PLANETARY (23-TEETH) |
| 34 | 180-4381 | 1 | GEAR-SUN (28-TEETH) |
| 35 | 180-4382 | 1 | CARRIER-PLANETARY |
| 36 | 180-4384 | 1 | GEAR-RING (75-TEETH) |
| 37 | 180-4387 | 1 | CARRIER-PLANETARY |
| 38 | 180-4502 | 2 | DISC-FRICTION |
| 39 | 180-4505 | 1 | PLATE |
| 44 | 183-3415 | 1 | GEAR (58-TEETH) |
| 45 | 183-3416 | 1 | SHAFT |
| 46 | 184-1693 | 1 | RING-RETAINING |
| 48 | 184-1695 | 2 | SEAL-RING |
| 49 | 184-1696 | 1 | DISC-THRUST |
| 50 | 184-1697 | 1 | DISC-THRUST |
| 51 | 185-4422 | 1 | RING-LOCK |
| 52 | 185-4423 | 1 | RING-RETAINING |
| 69 | 188-0635 | 1 | SEAL-BRAKE |
| 70 | 189-2089 | 1 | RING-LOCK |
| 81 | 199-7107 | 4 | SPRING |
| 84 | 210-8405 | 4 | BUSHING |
| 85 | 210-8406 | 4 | PLATE-SPRING |
| 86 | 221-5334 | 1 | PLATE-REACTION |
| 87 | 211-8280 | 1 | PISTON-BRAKE |
| 88 | 242-5086 | 1 | HOUSING AS |
| | 126-7260 | 1 | PLUG |
| 89 | 213-3269 | 1 | HUB-BRAKE |
| 90 | 213-3270 | 1 | SEAL-D-RING |
| 92 | 213-6191 | 1 | GEAR-SUN (34-TEETH) |
| 95 | 222-1903 | 4 | GEAR-PLANETARY (27-TEETH) |
| 98 | 223-0623 | 4 | SHAFT-PLANETARY |
| 104 | 9S-4181 | 1 | PLUG |
| | 7M-8485 | 1 | SEAL-O-RING |
| 105 | 9S-6130 | 1 | PLUG |
| | 2S-4078 | 1 | SEAL-O-RING |
| 111 | 3P-3441 | 1 | RING-RETAINING |
| 112 | 3S-2708 | 8 | PIN-SPRING |
| 113 | 4J-5140 | 2 | SEAL-O-RING |
| 120 | 6V-4442 | 1 | RING-RETAINING |
| 123 | 6V-8675 | 1 | BOLT (M12X1.75X35-MM) |
| 126 | 8T-0070 | 9 | BOLT (M20X2.5X120-MM) |

[A] 185-3955, 185-3956, 185-3957, 185-3958 AXLE AR

## 180-4376 DIFFERENTIAL GP-STEERING

**S/N: AZG951-1012; AZH984-1004;
AZJ1435-1896; AZK980-1002**

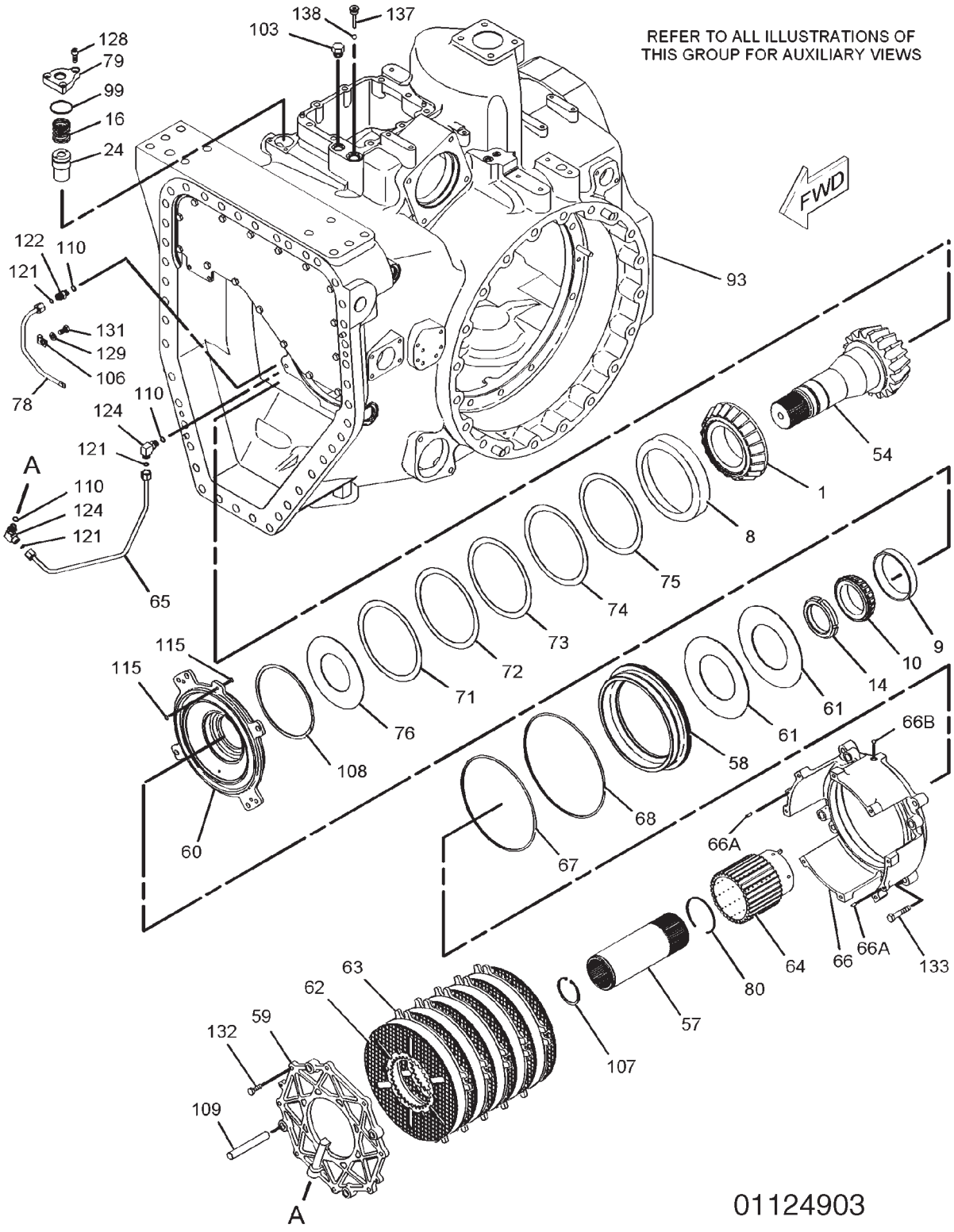

## 180-4376 DIFFERENTIAL GP-STEERING

**S/N: AZG951-1012; AZH984-1004; AZJ1435-1896; AZK980-1002**

| ITEM | NUMBER | QTY | DESCRIPTION |
|---|---|---|---|
| - | 180-4376 | -- | DIFFERENTIAL GP-STEERING [A] (NOT SERVICED) |
| 1 | 124-9536 | 1 | CONE-BEARING |
| 8 | 5P-7843 | 1 | CUP-BEARING |
| 9 | 6F-2956 | 1 | CUP-BEARING |
| 10 | 6V-0347 | 1 | CONE-BEARING |
| 14 | 4H-6507 | 1 | LOCKNUT |
| 16 | 7H-0832 | 1 | SPRING |
| 24 | 163-0592 | 1 | VALVE GP-CHECK (HYDRAULIC) |
| | 061-7540 | 1 | SEAL-O-RING |
| 54 | 186-2868 | 1 | PINION-BEVEL (17-TEETH) |
| 57 | 187-1377 | 1 | COUPLING |
| 58 | 227-9327 | 1 | PISTON |
| 59 | 187-3367 | 1 | PLATE-END |
| 60 | 187-3368 | 1 | PLATE-SPRING |
| 61 | 187-3369 | 2 | SPRING |
| 62 | 187-3370 | 6 | DISC-FRICTION |
| 63 | 187-3371 | 6 | PLATE-CLUTCH |
| 64 | 187-3372 | 1 | HUB-CLUTCH |
| 65 | 187-3373 | 1 | TUBE AS |
| 66 | 187-3374 | 1 | HOUSING AS |
| 66A | 2H-1190 | 2 | DOWEL |
| 66B | 4B-9782 | 1 | BALL |
| 67 | 188-0632 | 1 | SEAL-BRAKE |
| 68 | 188-0633 | 1 | SEAL-BRAKE |
| 71 | 191-1907 | AR | SHIM (0.9MM THK) |
| 72 | 191-1908 | AR | SHIM (0.8MM THK) |
| 73 | 191-1909 | AR | SHIM (0.7MM THK) |
| 74 | 191-1910 | AR | SHIM (0.6MM THK) |
| 75 | 191-1911 | AR | SHIM (0.5MM THK) |
| 76 | 191-1912 | 1 | PLATE-RETAINER |
| 78 | 195-3252 | 1 | TUBE AS |
| 79 | 197-5411 | 1 | FLANGE |
| 80 | 198-0288 | 1 | RING-RETAINING |
| 93 | 242-0962 | 1 | HOUSING GP-DIFFERENTIAL [C] (SEE BREAKDOWN FOR COMPONENTS) |
| 99 | 005-8593 | 1 | SEAL-O-RING |

CONTINUED

[A] 185-3955, 185-3956, 185-3957, 185-3958 AXLE AR
[C] CHANGE FROM PREVIOUS TYPE

## 180-4376 DIFFERENTIAL GP-STEERING

**S/N: AZG951-1012; AZH984-1004;
AZJ1435-1896; AZK980-1002**

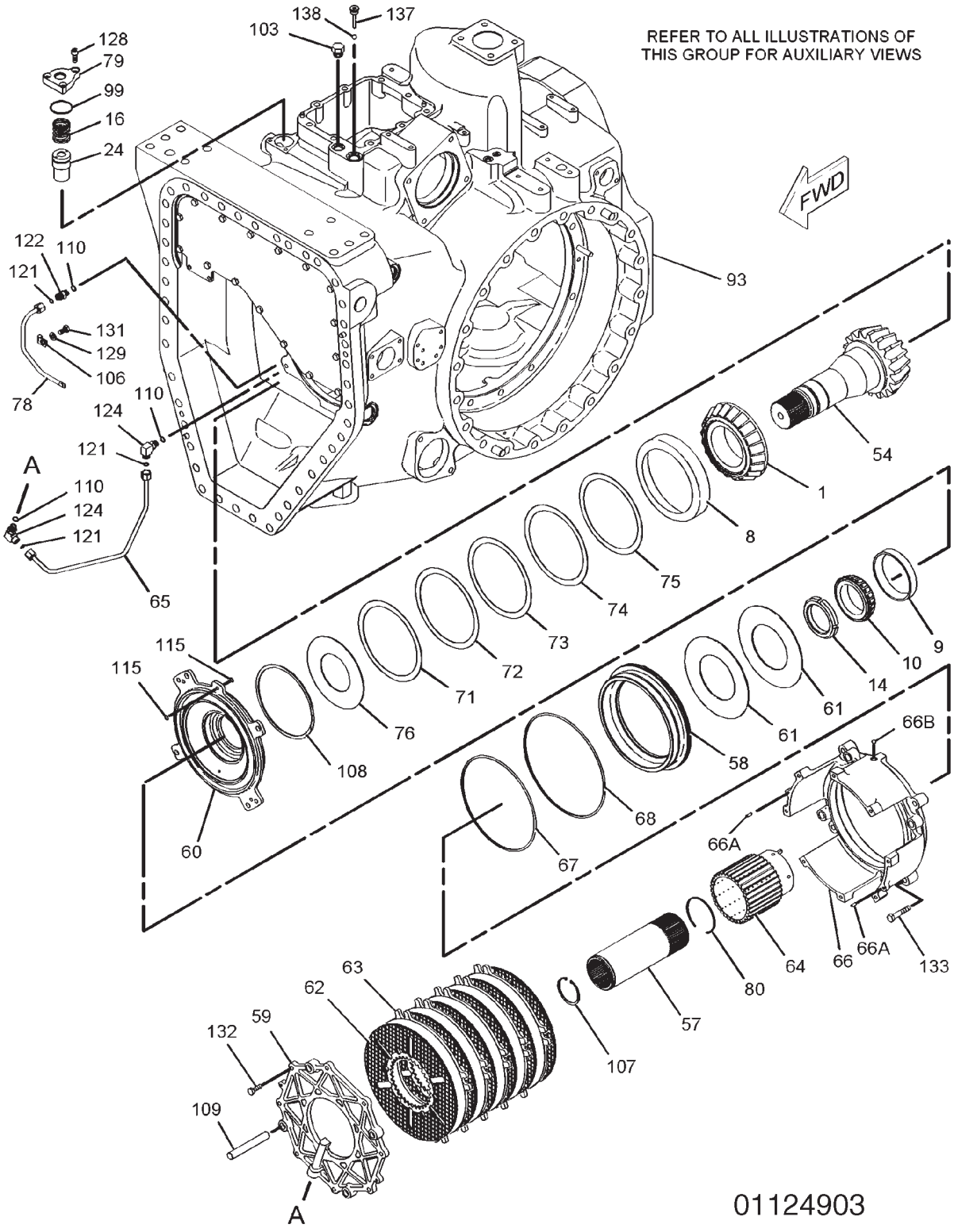

## 180-4376 DIFFERENTIAL GP-STEERING

**S/N: AZG951-1012; AZH984-1004; AZJ1435-1896; AZK980-1002**

| ITEM | NUMBER | QTY | DESCRIPTION |
|---|---|---|---|
| - | 180-4376 | -- | DIFFERENTIAL GP-STEERING [A] (NOT SERVICED) |
| 103 | 9S-4190 | 1 | PLUG |
| | 2M-9780 | 1 | SEAL-O-RING |
| 106 | 1F-7567 | 1 | CLIP |
| 107 | 2H-5549 | 1 | RING-RETAINING |
| 108 | 2K-1381 | 1 | RING-RETAINING |
| 109 | 2Y-7489 | 4 | DOWEL |
| 110 | 3J-1907 | 3 | SEAL-O-RING |
| 115 | 5H-6005 | 2 | SEAL-O-RING |
| 121 | 6V-8397 | 3 | SEAL-O-RING |
| 122 | 6V-8636 | 1 | CONNECTOR |
| 124 | 6V-8724 | 2 | ELBOW |
| 128 | 8T-1159 | 3 | BOLT-SOCKET HEAD (M10X1.5X25-MM) |
| 129 | 8T-4121 | 1 | WASHER-HARD (11X21X2.5-MM THK) |
| 131 | 8T-4137 | 1 | BOLT (M10X1.5X20-MM) |
| 132 | 8T-4195 | 10 | BOLT (M10X1.5X30-MM) |
| 133 | 8T-4910 | 4 | BOLT (M12X1.75X60-MM) |
| 137 | 223-1637 | 1 | PLUG AS |
| 138 | 4B-9783 | 1 | BALL |

[A] 185-3955, 185-3956, 185-3957, 185-3958 AXLE AR

01124903
PR: t05i29k58b0204

## 180-4376 DIFFERENTIAL GP-STEERING

**S/N: AZG951-1012; AZH984-1004;
AZJ1435-1896; AZK980-1002**

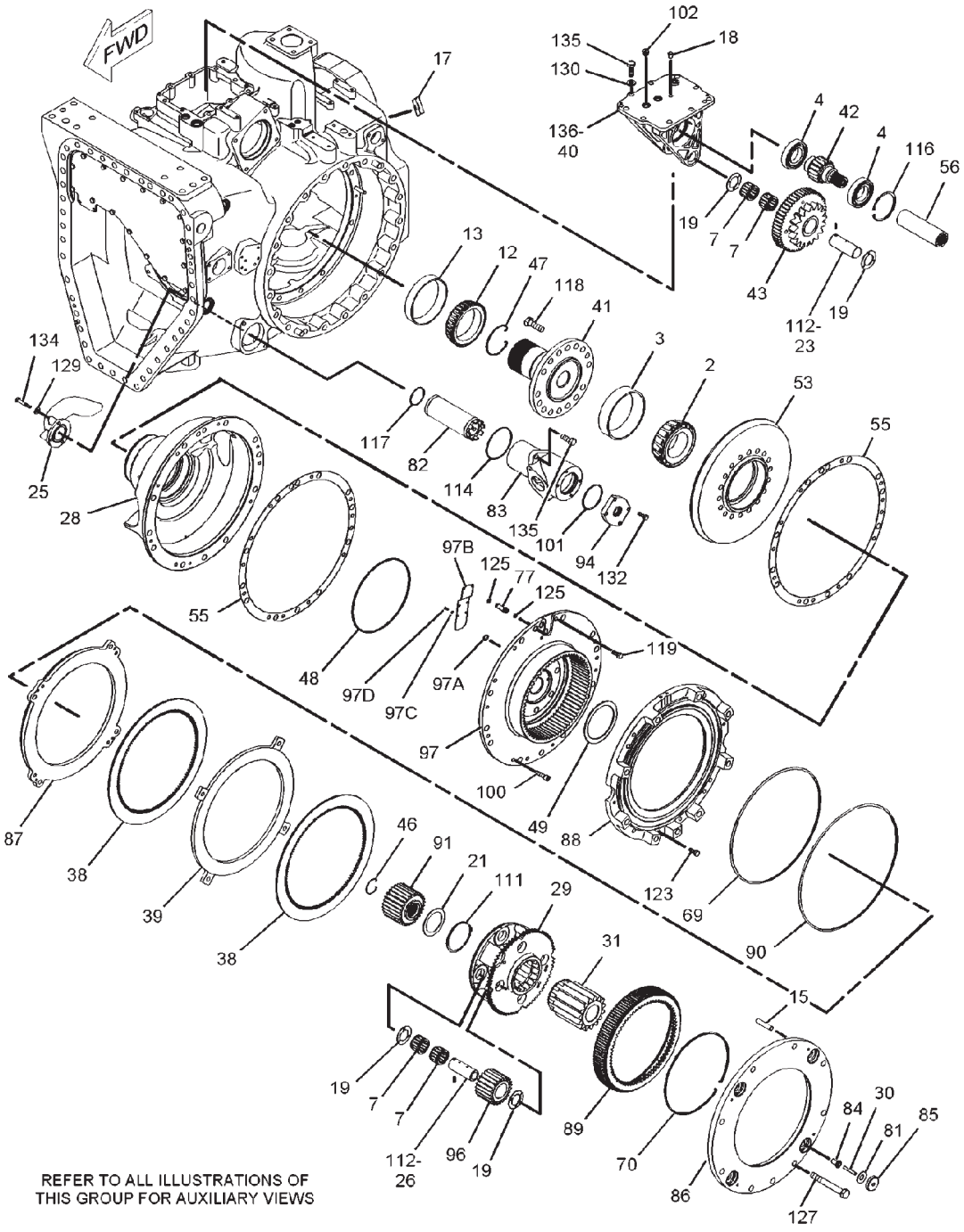


01125249

## 180-4376 DIFFERENTIAL GP-STEERING

**S/N: AZG951-1012; AZH984-1004; AZJ1435-1896; AZK980-1002**

| ITEM | NUMBER | QTY | DESCRIPTION |
|---|---|---|---|
| - | 180-4376 | -- | DIFFERENTIAL GP-STEERING [A] (NOT SERVICED) |
| 2 | 132-6597 | 1 | CONE-BEARING |
| 3 | 132-6598 | 1 | CUP-BEARING |
| 4 | 1F-2771 | 2 | BALL BEARING |
| 7 | 5P-6254 | 10 | BEARING |
| 12 | 8D-2256 | 1 | CONE-BEARING |
| 13 | 9K-1171 | 1 | CUP-BEARING |
| 15 | 4K-3892 | 4 | DOWEL |
| 17 | 7X-7816 | 1 | PLATE-SERIAL NUMBER (TRANSMISSION) |
| | ----- | 2 | TACK |
| 18 | 8C-5224 | 3 | PLUG-SEAL |
| 19 | 8E-8310 | 10 | DISC-THRUST |
| 21 | 8E-8652 | 1 | DISC-THRUST |
| 23 | 111-7068 | 1 | SHAFT AS |
| | 2A-3746 | 1 | PLUG-CUP |
| 25 | ----- | 1 | TUBE |
| 26 | 174-9381 | 4 | SHAFT-PLANETARY |
| 28 | 174-9407 | 1 | SUPPORT |
| 29 | 174-9410 | 1 | CARRIER-PLANETARY |
| 30 | 176-1377 | 4 | PIN-SPRING |
| 31 | 179-9006 | 1 | GEAR-SUN (15-TEETH) |
| 38 | 180-4502 | 2 | DISC-FRICTION |
| 39 | 180-4505 | 1 | PLATE |
| 40 | 180-8428 | 1 | SUPPORT AS |
| | 2A-3746 | 4 | PLUG-CUP |
| 41 | 183-3411 | 1 | SHAFT-BEVEL GEAR |
| 42 | 183-3413 | 1 | GEAR (18-TEETH) |
| 43 | 183-3414 | 1 | GEAR (54-TEETH) |
| 46 | 184-1693 | 1 | RING-RETAINING |
| 47 | 184-1694 | 1 | RING-RETAINING |
| 48 | 184-1695 | 1 | SEAL-RING |
| 49 | 184-1696 | 1 | DISC-THRUST |
| 53 | 186-2867 | 1 | GEAR-BEVEL (48-TEETH) |
| 55 | 186-2869 | 2 | SHIM PACK (INCLUDES 14-SHIMS) |
| 56 | 235-6166 | 1 | COUPLING |
| 69 | 188-0635 | 1 | SEAL-BRAKE |
| 70 | 189-2089 | 1 | RING-LOCK |
| 77 | 192-5602 | 2 | SLEEVE |
| 81 | 199-7107 | 4 | SPRING |
| 82 | 207-5993 | 1 | SCREEN |
| 83 | 207-7007 | 1 | HOUSING |
| 84 | 210-8405 | 4 | BUSHING |
| 85 | 210-8406 | 4 | PLATE-SPRING |
| 86 | 221-5334 | 1 | PLATE-REACTION |
| 87 | 211-8280 | 1 | PISTON-BRAKE |
| 88 | 242-5086 | 2 | HOUSING AS |
| | 126-7260 | 2 | PLUG |
| 89 | 213-3269 | 2 | HUB-BRAKE |

CONTINUED

[A] 185-3955, 185-3956, 185-3957, 185-3958 AXLE AR

## 180-4376 DIFFERENTIAL GP-STEERING

**S/N: AZG951-1012; AZH984-1004;
AZJ1435-1896; AZK980-1002**

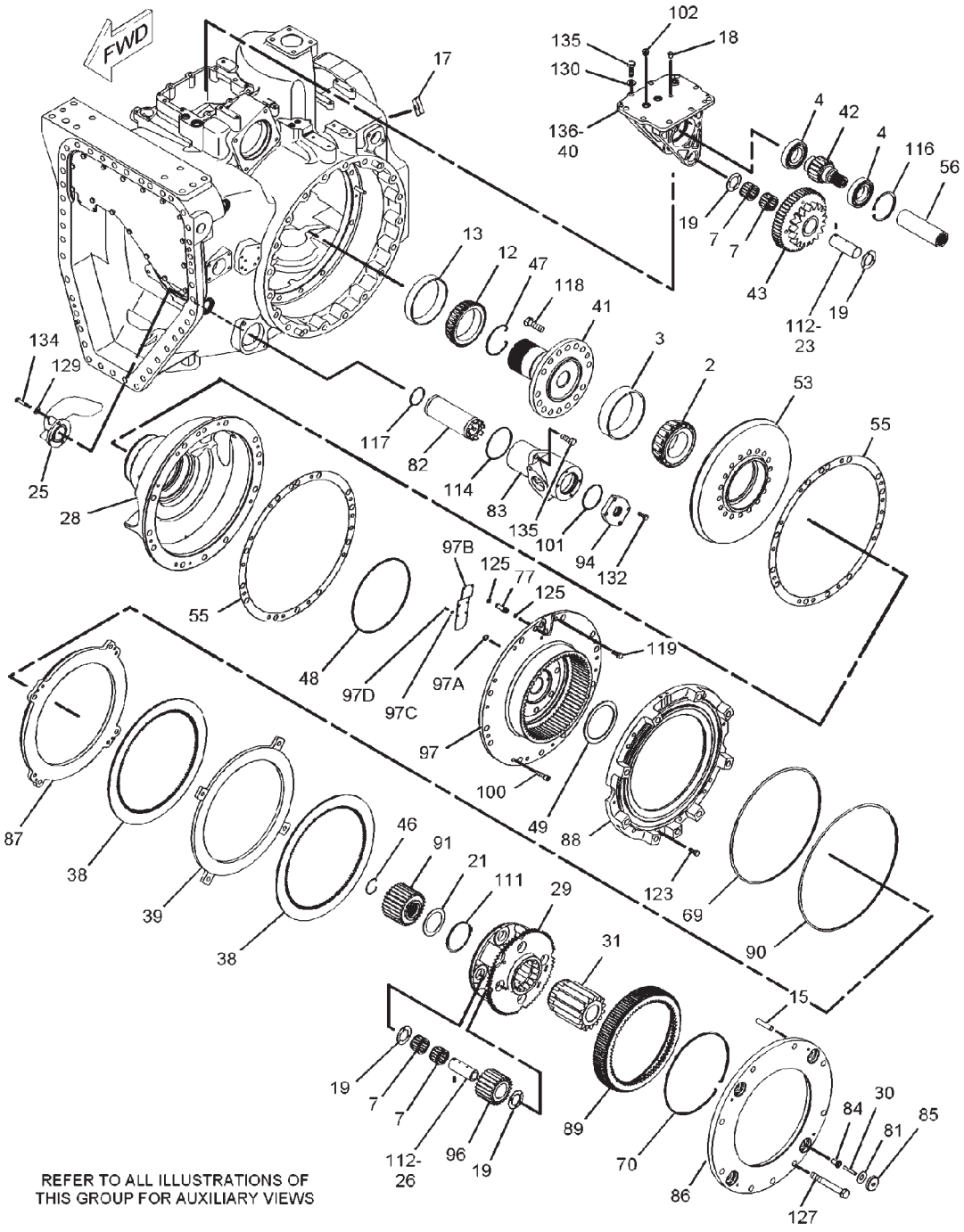


01125249

## 180-4376 DIFFERENTIAL GP-STEERING

**S/N: AZG951-1012; AZH984-1004; AZJ1435-1896; AZK980-1002**

| ITEM | NUMBER | QTY | DESCRIPTION |
|---|---|---|---|
| - | 180-4376 | -- | DIFFERENTIAL GP [A] (NOT SERVICED) |
| 90 | 213-3270 | 1 | SEAL-D-RING |
| 91 | 213-6190 | 1 | GEAR-SUN (28-TEETH) |
| 94 | 221-0691 | 1 | COVER |
| 96 | 222-1904 | 4 | GEAR-PLANETARY (23-TEETH) |
| 97 | 252-2227 | 1 | GEAR AS-RING |
| 97A | 4N-0952 | 1 | PLUG-CUP |
| 97B | 244-3699 | 1 | PLATE |
| 97C | 096-6166 | 6 | WASHER-HARD (4.5X9X1-MM THK) |
| 97D | 8T-0285 | 6 | SCREW-MACHINE (M4X0.7X12-MM) |
| 100 | 095-0670 | 3 | BOLT (M12X1.75X45-MM) |
| 101 | 131-3718 | 1 | SEAL-O-RING |
| 102 | 9S-8005 | 1 | PLUG |
| | 3K-0360 | 1 | SEAL-O-RING |
| 111 | 3P-3441 | 1 | RING-RETAINING |
| 112 | 3S-2708 | 5 | PIN-SPRING |
| 114 | 5F-3144 | 1 | SEAL-O-RING |
| 116 | 5L-4751 | 1 | RING-RETAINING |
| 117 | 5M-6509 | 1 | SEAL-O-RING |
| 118 | 6V-3532 | 16 | BOLT (M20X2.5X60-MM) |
| 119 | 6V-3668 | 6 | BOLT (M12X1.75X30-MM) |
| 123 | 6V-8675 | 1 | BOLT (M12X1.75X35-MM) |
| 125 | 8L-2777 | 4 | SEAL-O-RING |
| 127 | 8T-0657 | 9 | BOLT (M20X2.5X160-MM) |
| 129 | 8T-4121 | 3 | WASHER-HARD (11X21X2.5-MM THK) |
| 130 | 8T-4122 | 9 | WASHER-HARD (17X32X3.5-MM THK) |
| 132 | 8T-4195 | 4 | BOLT (M10X1.5X30-MM) |
| 134 | 8T-6466 | 3 | BOLT (M10X1.5X60-MM) |
| 135 | 8T-7338 | 11 | BOLT (M16X2X45-MM) |
| 136 | 1U-8846 | AR | SEALANT-GASKET |

[A] 185-3955, 185-3956, 185-3957, 185-3958 AXLE AR

## 180-4376 DIFFERENTIAL GP-STEERING

**S/N: AZG951-1012; AZH984-1004;
AZJ1435-1896; AZK980-1002**

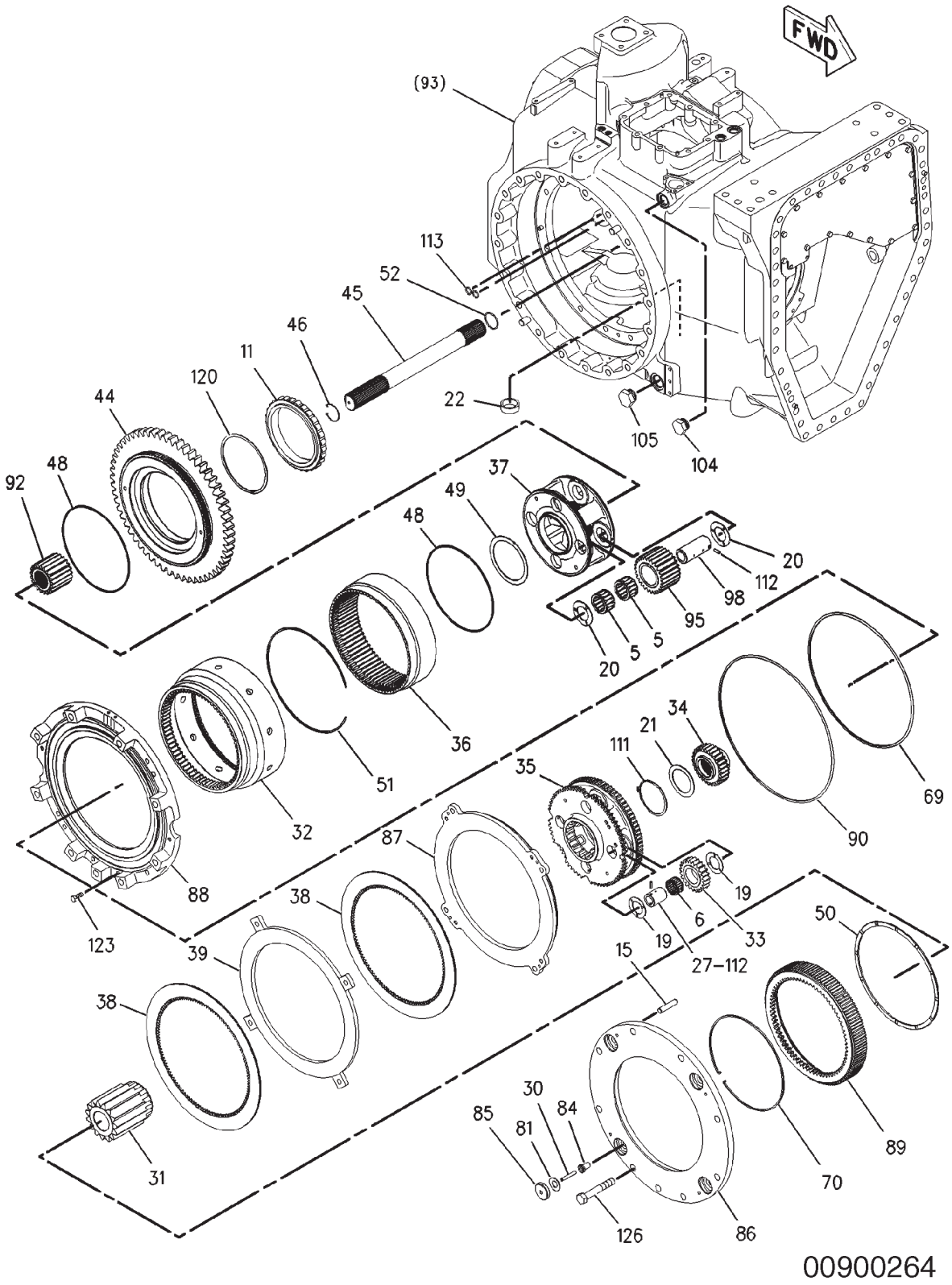

## 180-4376 DIFFERENTIAL GP-STEERING

**S/N: AZG951-1012; AZH984-1004; AZJ1435-1896; AZK980-1002**

| ITEM | NUMBER | QTY | DESCRIPTION |
|---|---|---|---|
| - | 180-4376 | -- | DIFFERENTIAL GP-STEERING [A] (NOT SERVICED) |
| 5 | 1P-3958 | 8 | ROLLER AS-SPECIAL |
| 6 | 5M-0578 | 4 | BEARING AS-ROLLER |
| 11 | 6V-6654 | 1 | BEARING AS-ROLLER |
| 15 | 4K-3892 | 4 | DOWEL |
| 19 | 8E-8310 | 8 | DISC-THRUST |
| 20 | 8E-8316 | 8 | DISC-THRUST |
| 21 | 8E-8652 | 1 | DISC-THRUST |
| 22 | 8M-7160 | 1 | MAGNET |
| 27 | 174-9383 | 4 | SHAFT-PLANETARY |
| 30 | 176-1377 | 4 | PIN-SPRING |
| 31 | 179-9006 | 1 | GEAR-SUN (15-TEETH) |
| 32 | 239-9822 | 1 | GEAR-RING (72-TEETH) |
| 33 | 180-4379 | 4 | GEAR-PLANETARY (23-TEETH) |
| 34 | 180-4381 | 1 | GEAR-SUN (28-TEETH) |
| 35 | 180-4382 | 1 | CARRIER-PLANETARY |
| 36 | 180-4384 | 1 | GEAR-RING (75-TEETH) |
| 37 | 180-4387 | 1 | CARRIER-PLANETARY |
| 38 | 180-4502 | 2 | DISC-FRICTION |
| 39 | 180-4505 | 1 | PLATE |
| 44 | 183-3415 | 1 | GEAR (58-TEETH) |
| 45 | 183-3416 | 1 | SHAFT |
| 46 | 184-1693 | 1 | RING-RETAINING |
| 48 | 184-1695 | 2 | SEAL-RING |
| 49 | 184-1696 | 1 | DISC-THRUST |
| 50 | 184-1697 | 1 | DISC-THRUST |
| 51 | 185-4422 | 1 | RING-LOCK |
| 52 | 185-4423 | 1 | RING-RETAINING |
| 69 | 188-0635 | 1 | SEAL-BRAKE |
| 70 | 189-2089 | 1 | RING-LOCK |
| 81 | 199-7107 | 4 | SPRING |
| 84 | 210-8405 | 4 | BUSHING |
| 85 | 210-8406 | 4 | PLATE-SPRING |
| 86 | 221-5334 | 1 | PLATE-REACTION |
| 87 | 211-8280 | 1 | PISTON-BRAKE |
| 88 | 242-5086 | 1 | HOUSING AS |
| | 126-7260 | 1 | PLUG |
| 89 | 213-3269 | 1 | HUB-BRAKE |
| 90 | 213-3270 | 1 | SEAL-D-RING |
| 92 | 213-6191 | 1 | GEAR-SUN (34-TEETH) |
| 95 | 222-1903 | 4 | GEAR-PLANETARY (27-TEETH) |
| 98 | 223-0623 | 4 | SHAFT-PLANETARY |
| 104 | 9S-4181 | 1 | PLUG |
| | 7M-8485 | 1 | SEAL-O-RING |
| 105 | 9S-6130 | 1 | PLUG |
| | 2S-4078 | 1 | SEAL-O-RING |
| 111 | 3P-3441 | 1 | RING-RETAINING |
| 112 | 3S-2708 | 8 | PIN-SPRING |
| 113 | 4J-5140 | 2 | SEAL-O-RING |
| 120 | 6V-4442 | 1 | RING-RETAINING |
| 123 | 6V-8675 | 1 | BOLT (M12X1.75X35-MM) |
| 126 | 8T-0070 | 9 | BOLT (M20X2.5X120-MM) |

[A] 185-3955, 185-3956, 185-3957, 185-3958 AXLE AR

## 180-4376 DIFFERENTIAL GP-STEERING

**S/N: AZG1013-UP; AZH1005-UP; AZJ1897-UP**

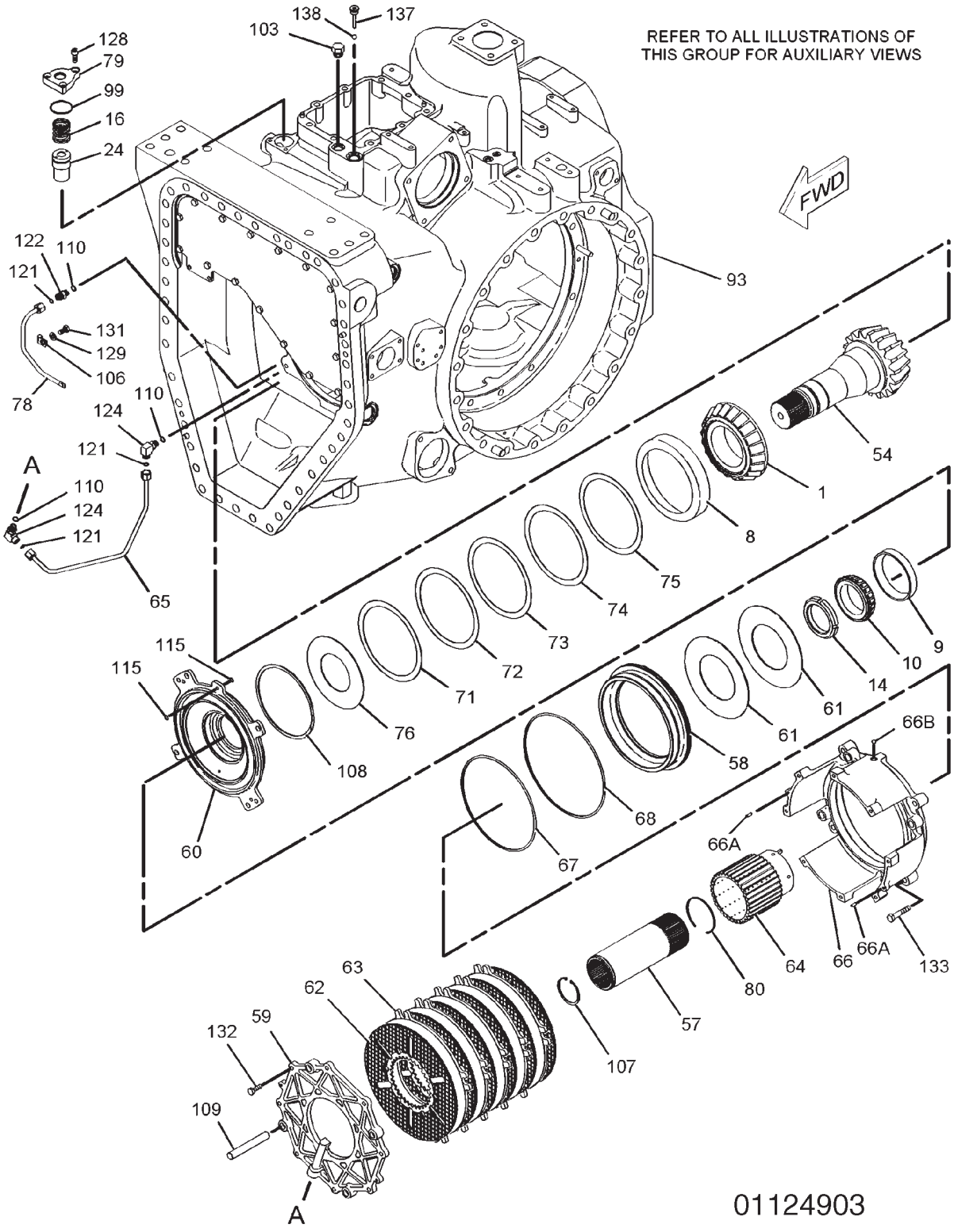

## 180-4376 DIFFERENTIAL GP-STEERING
**S/N: AZG1013-UP; AZH1005-UP; AZJ1897-UP**

| ITEM | NUMBER | QTY | DESCRIPTION |
|---|---|---|---|
| - | 180-4376 | -- | DIFFERENTIAL GP-STEERING [A] (NOT SERVICED) |
| 1 | 124-9536 | 1 | CONE-BEARING |
| 8 | 5P-7843 | 1 | CUP-BEARING |
| 9 | 6F-2956 | 1 | CUP-BEARING |
| 10 | 6V-0347 | 1 | CONE-BEARING |
| 14 | 4H-6507 | 1 | LOCKNUT |
| 16 | 7H-0832 | 1 | SPRING |
| 24 | 163-0592 | 1 | VALVE GP-CHECK (HYDRAULIC) |
| | 061-7540 | 1 | SEAL-O-RING |
| 54 | 186-2868 | 1 | PINION-BEVEL (17-TEETH) |
| 57 | 187-1377 | 1 | COUPLING |
| 58 | 227-9327 | 1 | PISTON |
| 59 | 187-3367 | 1 | PLATE-END |
| 60 | 187-3368 | 1 | PLATE-SPRING |
| 61 | 187-3369 | 2 | SPRING |
| 62 | 187-3370 | 6 | DISC-FRICTION |
| 63 | 187-3371 | 6 | PLATE-CLUTCH |
| 64 | 187-3372 | 1 | HUB-CLUTCH |
| 65 | 187-3373 | 1 | TUBE AS |
| 66 | 187-3374 | 1 | HOUSING AS |
| 66A | 2H-1190 | 2 | DOWEL |
| 66B | 4B-9782 | 1 | BALL |
| 67 | 188-0632 | 1 | SEAL-BRAKE |
| 68 | 188-0633 | 1 | SEAL-BRAKE |
| 71 | 191-1907 | AR | SHIM (0.9MM THK) |
| 72 | 191-1908 | AR | SHIM (0.8MM THK) |
| 73 | 191-1909 | AR | SHIM (0.7MM THK) |
| 74 | 191-1910 | AR | SHIM (0.6MM THK) |
| 75 | 191-1911 | AR | SHIM (0.5MM THK) |
| 76 | 191-1912 | 1 | PLATE-RETAINER |
| 78 | 195-3252 | 1 | TUBE AS |
| 79 | 197-5411 | 1 | FLANGE |
| 80 | 198-0288 | 1 | RING-RETAINING |

CONTINUED

[A] 185-3955, 185-3956, 185-3957 AXLE AR

## 180-4376 DIFFERENTIAL GP-STEERING

**S/N: AZG1013-UP; AZH1005-UP; AZJ1897-UP**

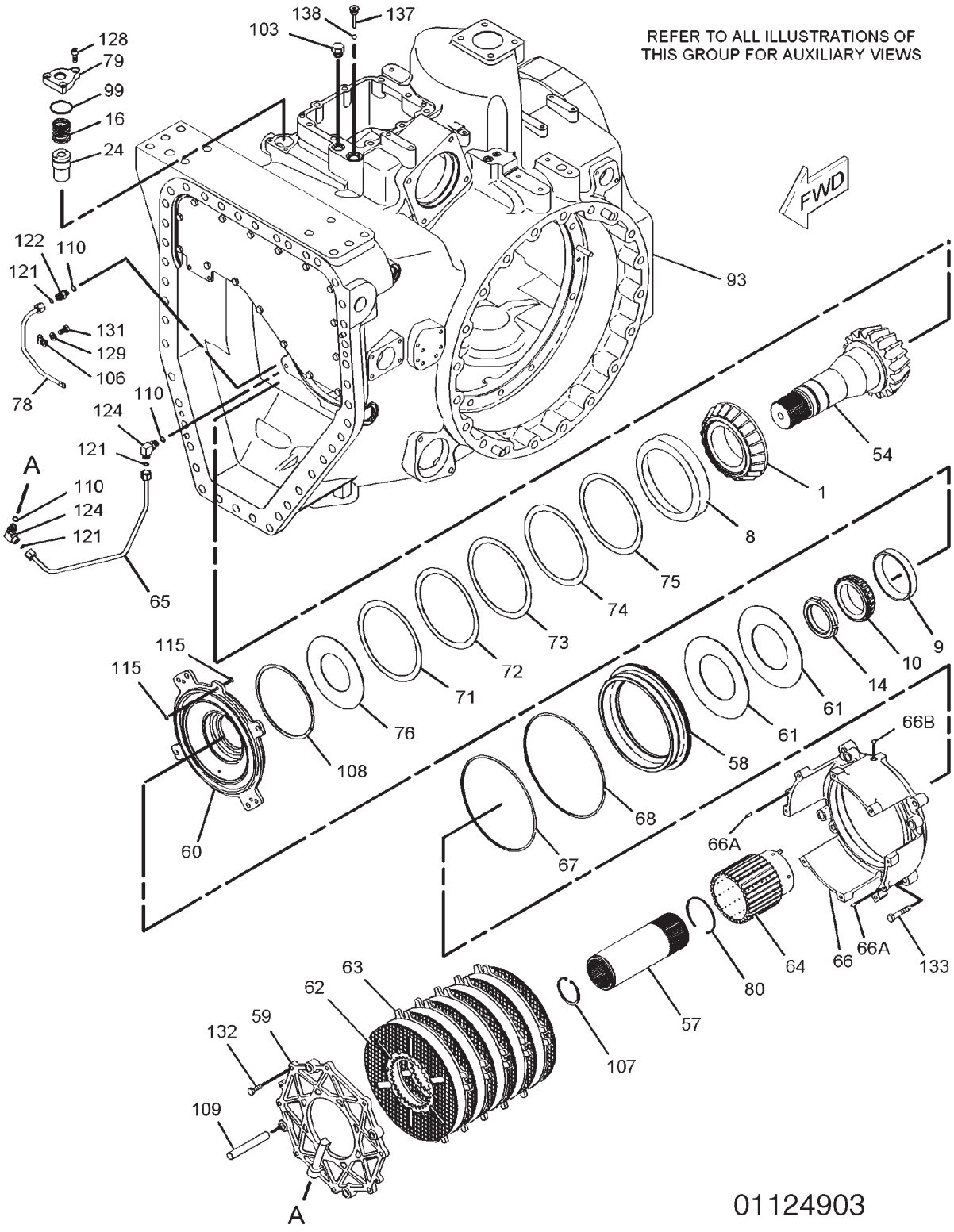

## 180-4376 DIFFERENTIAL GP-STEERING
**S/N: AZG1013-UP; AZH1005-UP; AZJ1897-UP**

| ITEM | NUMBER | QTY | DESCRIPTION |
|---|---|---|---|
| - | 180-4376 | -- | DIFFERENTIAL GP-STEERING [A] (NOT SERVICED) |
| 93 | 242-0962 | 1 | HOUSING GP-DIFFERENTIAL (SEE BREAKDOWN FOR COMPONENTS) |
| 99 | 005-8593 | 1 | SEAL-O-RING |
| 103 | 9S-4190 | 1 | PLUG |
| | 2M-9780 | 1 | SEAL-O-RING |
| 106 | 1F-7567 | 1 | CLIP |
| 107 | 2H-5549 | 1 | RING-RETAINING |
| 108 | 2K-1381 | 1 | RING-RETAINING |
| 109 | 2Y-7489 | 4 | DOWEL |
| 110 | 3J-1907 | 3 | SEAL-O-RING |
| 115 | 5H-6005 | 2 | SEAL-O-RING |
| 121 | 6V-8397 | 3 | SEAL-O-RING |
| 122 | 6V-8636 | 1 | CONNECTOR |
| 124 | 6V-8724 | 2 | ELBOW |
| 128 | 8T-1159 | 3 | BOLT-SOCKET HEAD (M10X1.5X25-MM) |
| 129 | 8T-4121 | 1 | WASHER-HARD (11X21X2.5-MM THK) |
| 131 | 8T-4137 | 1 | BOLT (M10X1.5X20-MM) |
| 132 | 8T-4195 | 10 | BOLT (M10X1.5X30-MM) |
| 133 | 8T-4910 | 4 | BOLT (M12X1.75X60-MM) |
| 137 | 223-1637 | 1 | PLUG AS |
| 138 | 4B-9783 | 1 | BALL |

[A] 185-3955, 185-3956, 185-3957 AXLE AR

01124903
PR: t05i29k58b0207

## 180-4376 DIFFERENTIAL GP-STEERING

**S/N: AZG1013-UP; AZH1005-UP; AZJ1897-UP**

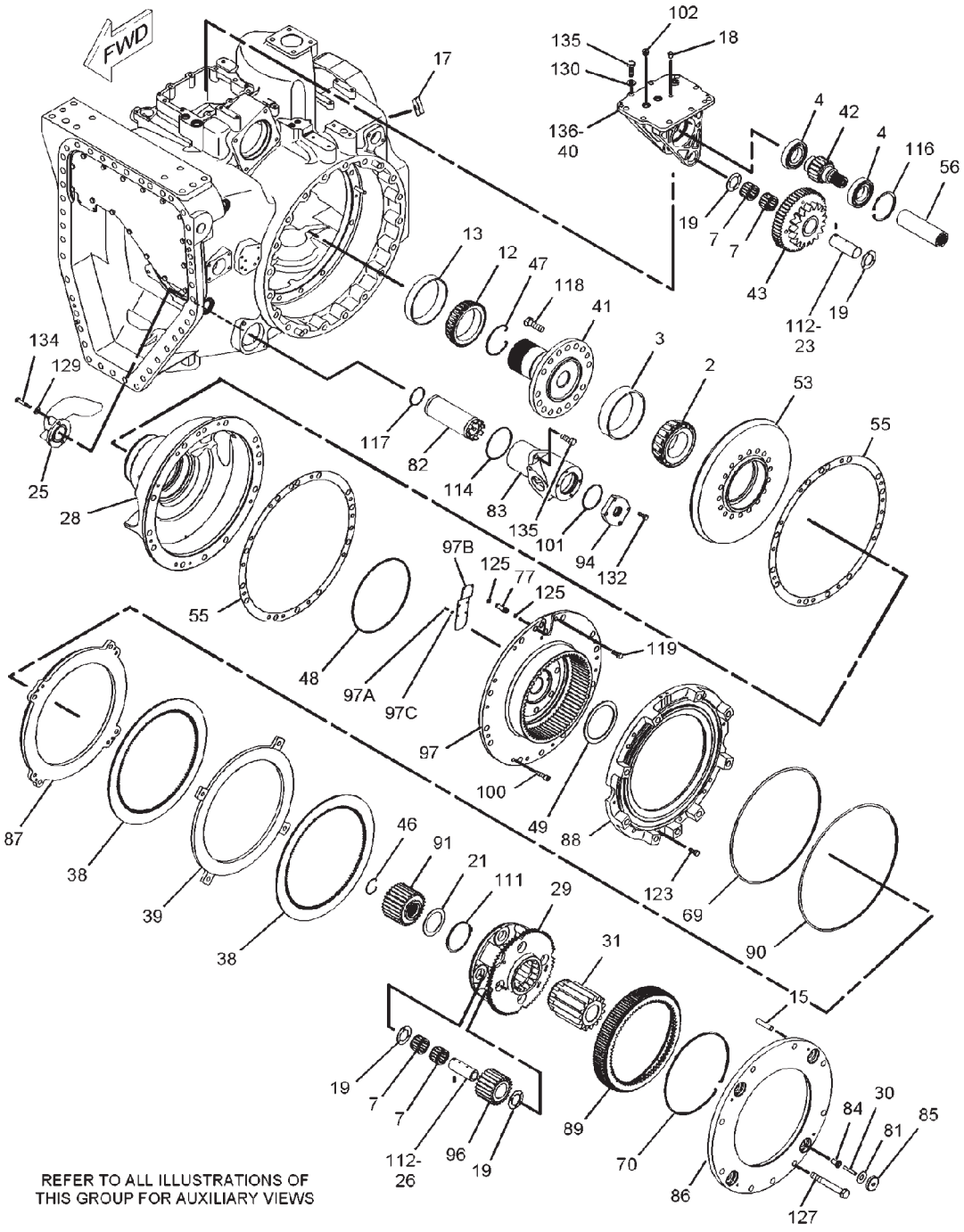


01125322

## 180-4376 DIFFERENTIAL GP-STEERING
**S/N: AZG1013-UP; AZH1005-UP; AZJ1897-UP**

| ITEM | NUMBER | QTY | DESCRIPTION |
|---|---|---|---|
| - | 180-4376 | -- | DIFFERENTIAL GP-STEERING [A] (NOT SERVICED) |
| 2 | 132-6597 | 1 | CONE-BEARING |
| 3 | 132-6598 | 1 | CUP-BEARING |
| 4 | 1F-2771 | 2 | BALL BEARING |
| 7 | 5P-6254 | 10 | BEARING |
| 12 | 8D-2256 | 1 | CONE-BEARING |
| 13 | 9K-1171 | 1 | CUP-BEARING |
| 15 | 4K-3892 | 4 | DOWEL |
| 17 | 7X-7816 | 1 | PLATE-SERIAL NUMBER (TRANSMISSION) |
| | ----- | 2 | TACK |
| 18 | 8C-5224 | 3 | PLUG-SEAL |
| 19 | 8E-8310 | 10 | DISC-THRUST |
| 21 | 8E-8652 | 1 | DISC-THRUST |
| 23 | 111-7068 | 1 | SHAFT AS |
| | 2A-3746 | 1 | PLUG-CUP |
| 25 | ----- | 1 | TUBE |
| 26 | 174-9381 | 4 | SHAFT-PLANETARY |
| 28 | 174-9407 | 1 | SUPPORT |
| 29 | 174-9410 | 1 | CARRIER-PLANETARY |
| 30 | 176-1377 | 4 | PIN-SPRING |
| 31 | 179-9006 | 1 | GEAR-SUN (15-TEETH) |
| 38 | 180-4502 | 2 | DISC-FRICTION |
| 39 | 180-4505 | 1 | PLATE |
| 40 | 180-8428 | 1 | SUPPORT AS |
| | 2A-3746 | 4 | PLUG-CUP |
| 41 | 183-3411 | 1 | SHAFT-BEVEL GEAR |
| 42 | 183-3413 | 1 | GEAR (18-TEETH) |
| 43 | 183-3414 | 1 | GEAR (54-TEETH) |
| 46 | 184-1693 | 1 | RING-RETAINING |
| 47 | 184-1694 | 1 | RING-RETAINING |
| 48 | 184-1695 | 1 | SEAL-RING |
| 49 | 184-1696 | 1 | DISC-THRUST |
| 53 | 186-2867 | 1 | GEAR-BEVEL (48-TEETH) |
| 55 | 186-2869 | 2 | SHIM PACK (INCLUDES 14-SHIMS) |
| 56 | 235-6166 | 1 | COUPLING |
| 69 | 188-0635 | 1 | SEAL-BRAKE |
| 70 | 189-2089 | 1 | RING-LOCK |
| 77 | 192-5602 | 2 | SLEEVE |
| 81 | 199-7107 | 4 | SPRING |
| 82 | 207-5993 | 1 | SCREEN |
| 83 | 207-7007 | 1 | HOUSING |
| 84 | 210-8405 | 4 | BUSHING |
| 85 | 210-8406 | 4 | PLATE-SPRING |
| 86 | 221-5334 | 1 | PLATE-REACTION |
| 87 | 211-8280 | 1 | PISTON-BRAKE |
| 88 | 242-5086 | 1 | HOUSING AS |
| | 126-7260 | 1 | PLUG |
| 89 | 213-3269 | 1 | HUB-BRAKE |

CONTINUED

[A] 185-3955, 185-3956, 185-3957 AXLE AR

## 180-4376 DIFFERENTIAL GP-STEERING

**S/N: AZG1013-UP; AZH1005-UP; AZJ1897-UP**

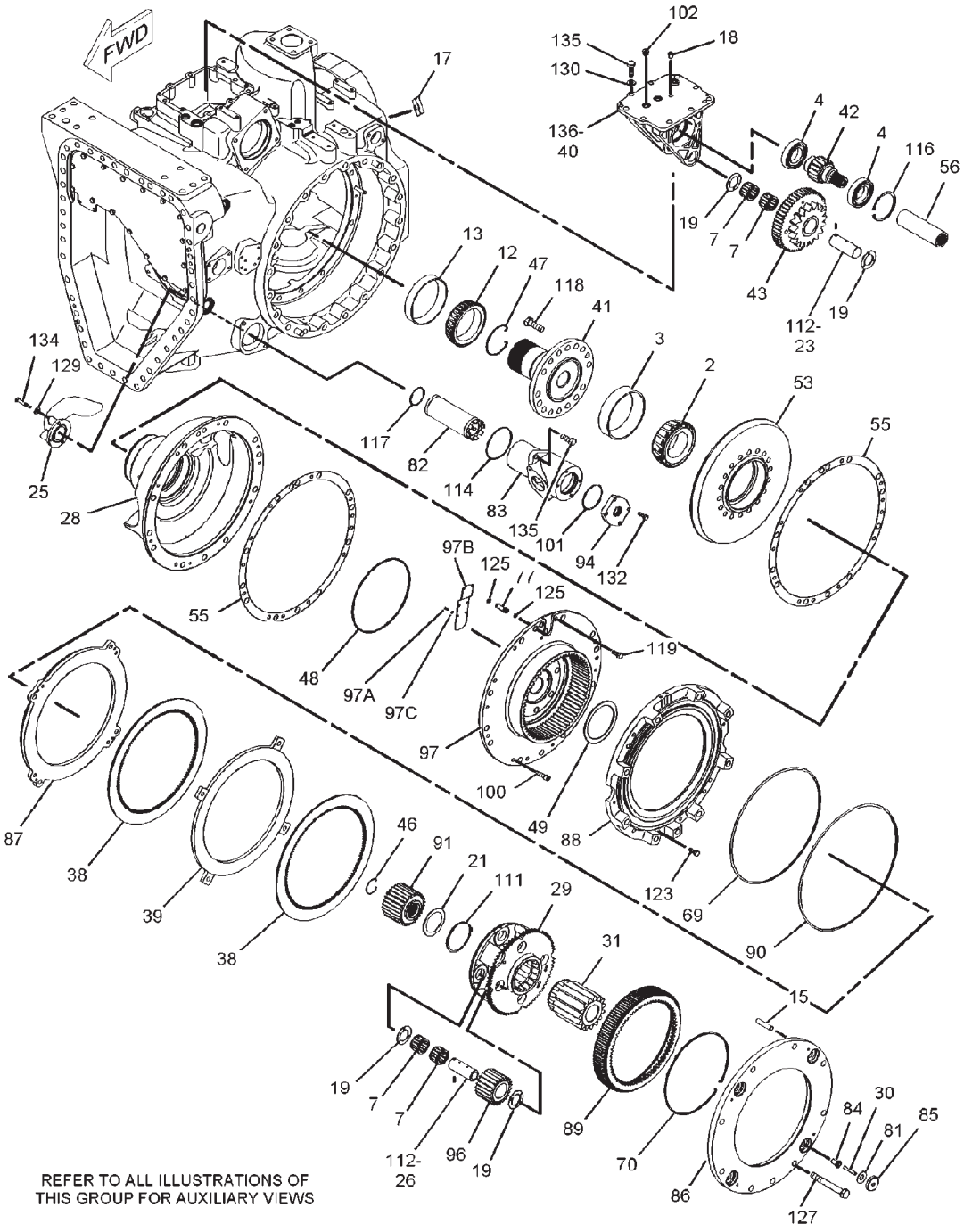


01125322

## 180-4376 DIFFERENTIAL GP-STEERING
**S/N: AZG1013-UP; AZH1005-UP; AZJ1897-UP**

| ITEM | NUMBER | QTY | DESCRIPTION |
|---|---|---|---|
| - | 180-4376 | -- | DIFFERENTIAL GP-STEERING [A] (NOT SERVICED) |
| 90 | 213-3270 | 1 | SEAL-D-RING |
| 91 | 213-6190 | 1 | GEAR-SUN (28-TEETH) |
| 94 | 221-0691 | 1 | COVER |
| 96 | 222-1904 | 4 | GEAR-PLANETARY (23-TEETH) |
| 97 | 252-2227 | 1 | GEAR AS-RING |
| 97A | 8T-0285 | 6 | SCREW-MACHINE (M4X0.7X12-MM) |
| 97B | 244-3699 | 1 | PLATE |
| 97C | 096-6166 | 6 | WASHER-HARD (4.5X9X1-MM THK) |
| 100 | 095-0670 | 3 | BOLT (M12X1.75X45-MM) |
| 101 | 131-3718 | 1 | SEAL-O-RING |
| 102 | 9S-8005 | 1 | PLUG |
| | 3K-0360 | 1 | SEAL-O-RING |
| | 2M-9780 | 1 | SEAL-O-RING |
| 111 | 3P-3441 | 1 | RING-RETAINING |
| 112 | 3S-2708 | 5 | PIN-SPRING |
| 114 | 5F-3144 | 1 | SEAL-O-RING |
| 116 | 5L-4751 | 1 | RING-RETAINING |
| 117 | 5M-6509 | 1 | SEAL-O-RING |
| 118 | 6V-3532 | 16 | BOLT (M20X2.5X60-MM) |
| 119 | 6V-3668 | 6 | BOLT (M12X1.75X30-MM) |
| 123 | 6V-8675 | 1 | BOLT (M12X1.75X35-MM) |
| 125 | 8L-2777 | 4 | SEAL-O-RING |
| 127 | 8T-0657 | 9 | BOLT (M20X2.5X160-MM) |
| 129 | 8T-4121 | 3 | WASHER-HARD (11X21X2.5-MM THK) |
| 130 | 8T-4122 | 9 | WASHER-HARD (17X32X3.5-MM THK) |
| 132 | 8T-4195 | 4 | BOLT (M10X1.5X30-MM) |
| 134 | 8T-6466 | 3 | BOLT (M10X1.5X60-MM) |
| 135 | 8T-7338 | 11 | BOLT (M16X2X45-MM) |
| 136 | 1U-8846 | AR | SEALANT-GASKET |

[A] 185-3955, 185-3956, 185-3957 AXLE AR

01125322
PR: t05i29k58b0208

## 180-4376 DIFFERENTIAL GP-STEERING

**S/N: AZG1013-UP; AZH1005-UP; AZJ1897-UP**

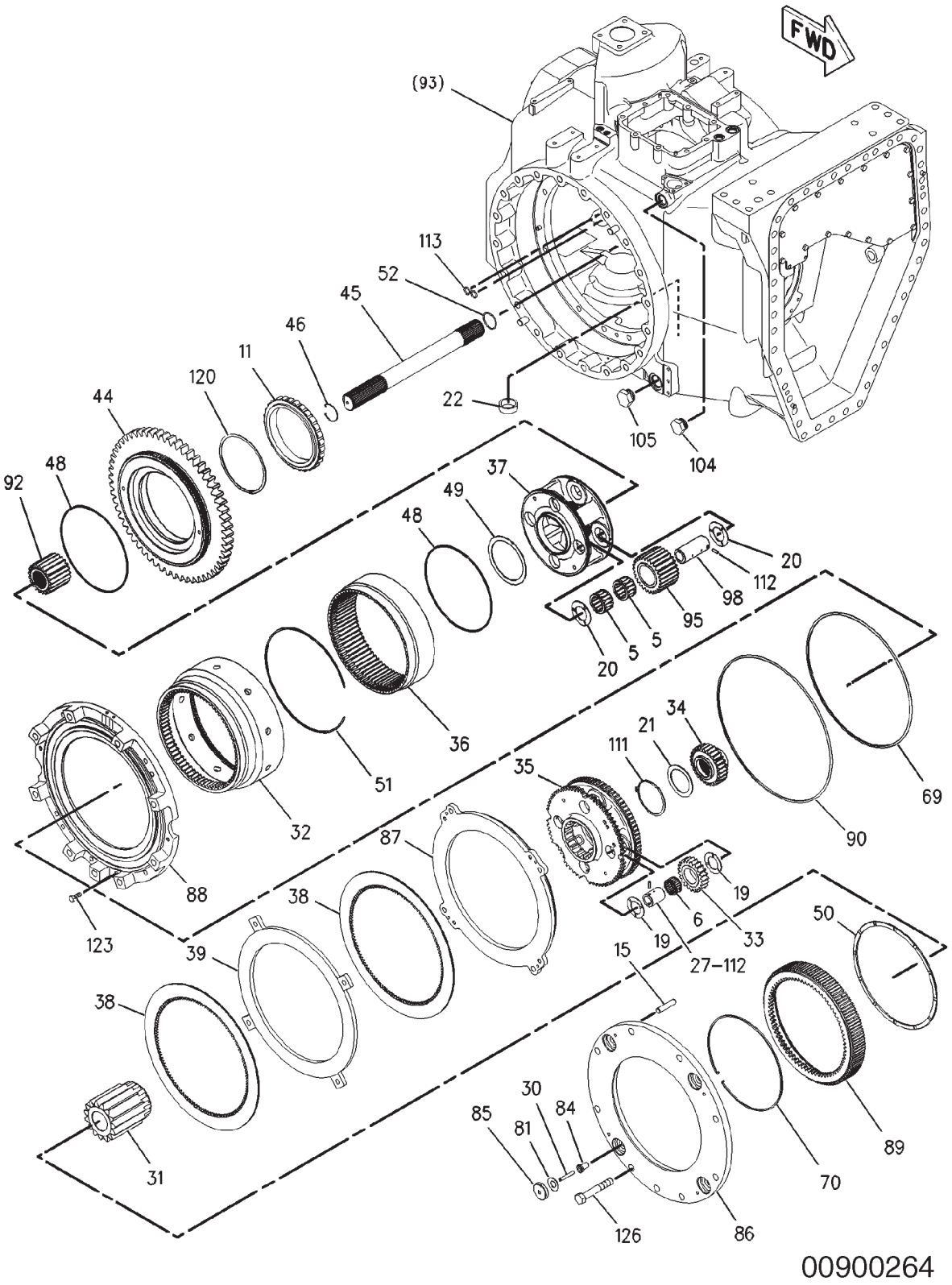

## 180-4376 DIFFERENTIAL GP-STEERING
**S/N: AZG1013-UP; AZH1005-UP; AZJ1897-UP**

| ITEM | NUMBER | QTY | DESCRIPTION |
|---|---|---|---|
| - | 180-4376 | -- | DIFFERENTIAL GP-STEERING [A] |
| | | | (NOT SERVICED) |
| 5 | 1P-3958 | 8 | ROLLER AS-SPECIAL |
| 6 | 5M-0578 | 4 | BEARING AS-ROLLER |
| 11 | 6V-6654 | 1 | BEARING AS-ROLLER |
| 15 | 4K-3892 | 4 | DOWEL |
| 19 | 8E-8310 | 8 | DISC-THRUST |
| 20 | 8E-8316 | 8 | DISC-THRUST |
| 21 | 8E-8652 | 1 | DISC-THRUST |
| 22 | 8M-7160 | 1 | MAGNET |
| 27 | 174-9383 | 4 | SHAFT-PLANETARY |
| 30 | 176-1377 | 4 | PIN-SPRING |
| 31 | 179-9006 | 1 | GEAR-SUN (15-TEETH) |
| 32 | 239-9822 | 1 | GEAR-RING (72-TEETH) |
| 33 | 180-4379 | 4 | GEAR-PLANETARY (23-TEETH) |
| 34 | 180-4381 | 1 | GEAR-SUN (28-TEETH) |
| 35 | 180-4382 | 1 | CARRIER-PLANETARY |
| 36 | 180-4384 | 1 | GEAR-RING (75-TEETH) |
| 37 | 180-4387 | 1 | CARRIER-PLANETARY |
| 38 | 180-4502 | 2 | DISC-FRICTION |
| 39 | 180-4505 | 1 | PLATE |
| 44 | 183-3415 | 1 | GEAR (58-TEETH) |
| 45 | 183-3416 | 1 | SHAFT |
| 46 | 184-1693 | 1 | RING-RETAINING |
| 48 | 184-1695 | 2 | SEAL-RING |
| 49 | 184-1696 | 1 | DISC-THRUST |
| 50 | 184-1697 | 1 | DISC-THRUST |
| 51 | 185-4422 | 1 | RING-LOCK |
| 52 | 185-4423 | 1 | RING-RETAINING |
| 69 | 188-0635 | 1 | SEAL-BRAKE |
| 70 | 189-2089 | 1 | RING-LOCK |
| 81 | 199-7107 | 4 | SPRING |
| 84 | 210-8405 | 4 | BUSHING |
| 85 | 210-8406 | 4 | PLATE-SPRING |
| 86 | 221-5334 | 1 | PLATE-REACTION |
| 87 | 211-8280 | 1 | PISTON-BRAKE |
| 88 | 242-5086 | 1 | HOUSING AS |
| | 126-7260 | 1 | PLUG |
| 89 | 213-3269 | 1 | HUB-BRAKE |
| 90 | 213-3270 | 1 | SEAL-D-RING |
| 92 | 213-6191 | 1 | GEAR-SUN (34-TEETH) |
| 95 | 222-1903 | 4 | GEAR-PLANETARY (27-TEETH) |
| 98 | 223-0623 | 4 | SHAFT-PLANETARY |
| | 2M-9780 | 1 | SEAL-O-RING |
| 104 | 9S-4181 | 1 | PLUG |
| | 7M-8485 | 1 | SEAL-O-RING |
| 105 | 9S-6130 | 1 | PLUG |
| | 2S-4078 | 1 | SEAL-O-RING |
| 111 | 3P-3441 | 1 | RING-RETAINING |
| 112 | 3S-2708 | 8 | PIN-SPRING |
| 113 | 4J-5140 | 2 | SEAL-O-RING |
| 120 | 6V-4442 | 1 | RING-RETAINING |
| 123 | 6V-8675 | 1 | BOLT (M12X1.75X35-MM) |
| 126 | 8T-0070 | 9 | BOLT (M20X2.5X120-MM) |

[A] 185-3955, 185-3956, 185-3957 AXLE AR

## 177-5234 DRIVE GP-PUMP
**S/N: 9YY1-UP**

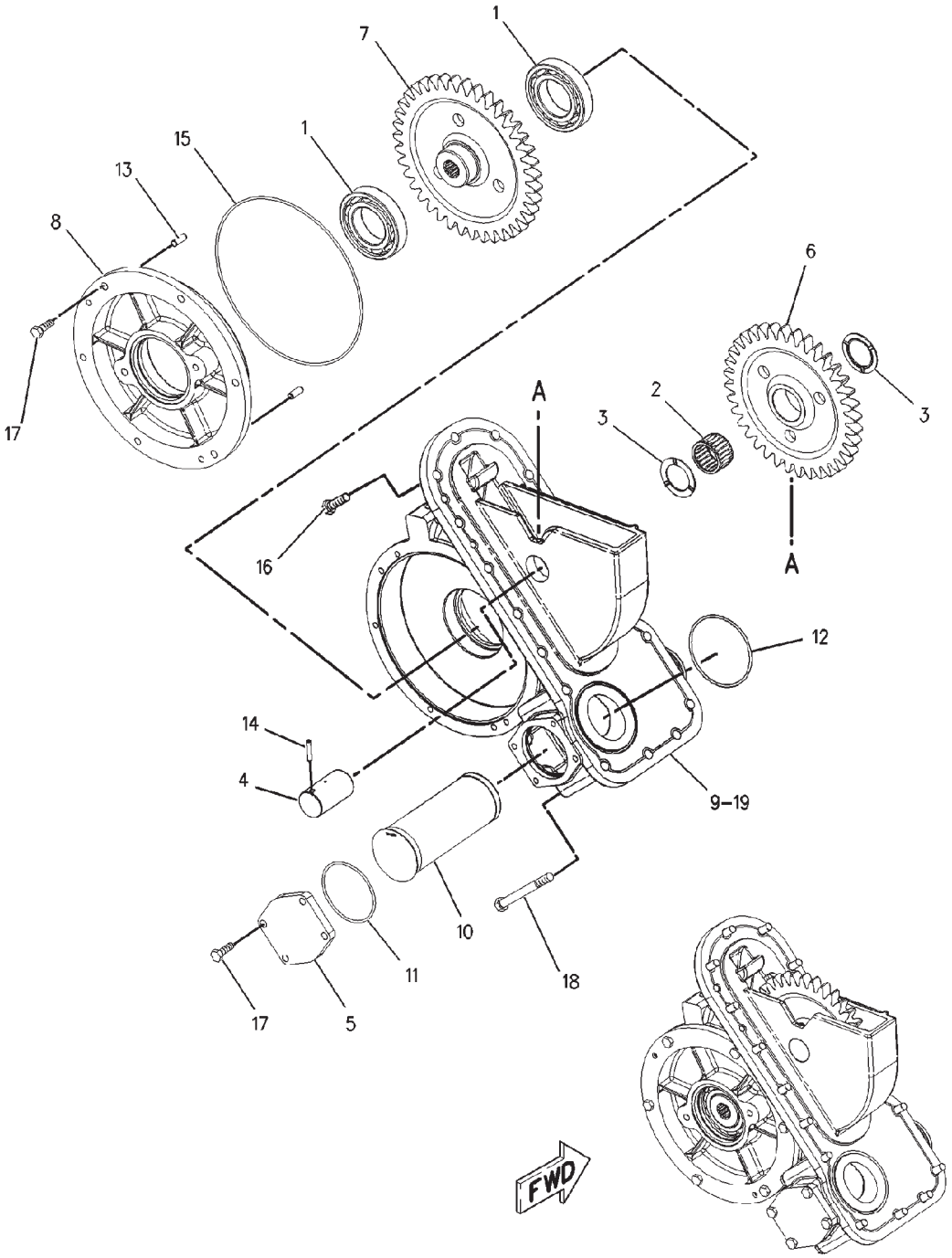


00872185

## 177-5234 DRIVE GP-PUMP
**S/N: 9YY1-UP**

| ITEM | NUMBER | QTY | DESCRIPTION |
|---|---|---|---|
| - | 177-5234 | -- | DRIVE GP-PUMP [A] (NOT SERVICED) |
| 1 | 1F-2771 | 2 | BALL BEARING |
| 2 | 5M-2051 | 1 | BEARING-CAGED |
| 3 | 6Y-1223 | 2 | DISC-THRUST |
| 4 | 8P-7898 | 1 | SHAFT-PLANETARY |
| 5 | 170-7290 | 1 | COVER |
| 6 | 177-6781 | 1 | GEAR (36-TEETH) |
| 7 | 177-6782 | 1 | GEAR (39-TEETH) |
| 8 | 177-6783 | 1 | COVER |
| 9 | 177-6784 | 1 | HOUSING |
| 10 | 207-5994 | 1 | SCREEN (PUMP DRIVE INLET) |
| 11 | 131-3718 | 1 | SEAL-O-RING |
| 12 | 4M-0189 | 1 | SEAL-O-RING |
| 13 | 5B-5821 | 2 | DOWEL |
| 14 | 5H-3193 | 1 | PIN-SPRING |
| 15 | 8J-8879 | 1 | SEAL-O-RING |
| 16 | 8T-4183 | 15 | BOLT (M12X1.75X40-MM) |
| 17 | 8T-4195 | 10 | BOLT (M10X1.5X30-MM) |
| 18 | 8T-5041 | 2 | BOLT (M12X1.75X120-MM) |
| 19 | 1U-8846 | AR | SEALANT-GASKET |

[A] PART OF 152-5242 TRANSMISSION AR

00872185
PR: t05i29k58b0210

## 211-8277 FASTENER GP-FINAL DRIVE

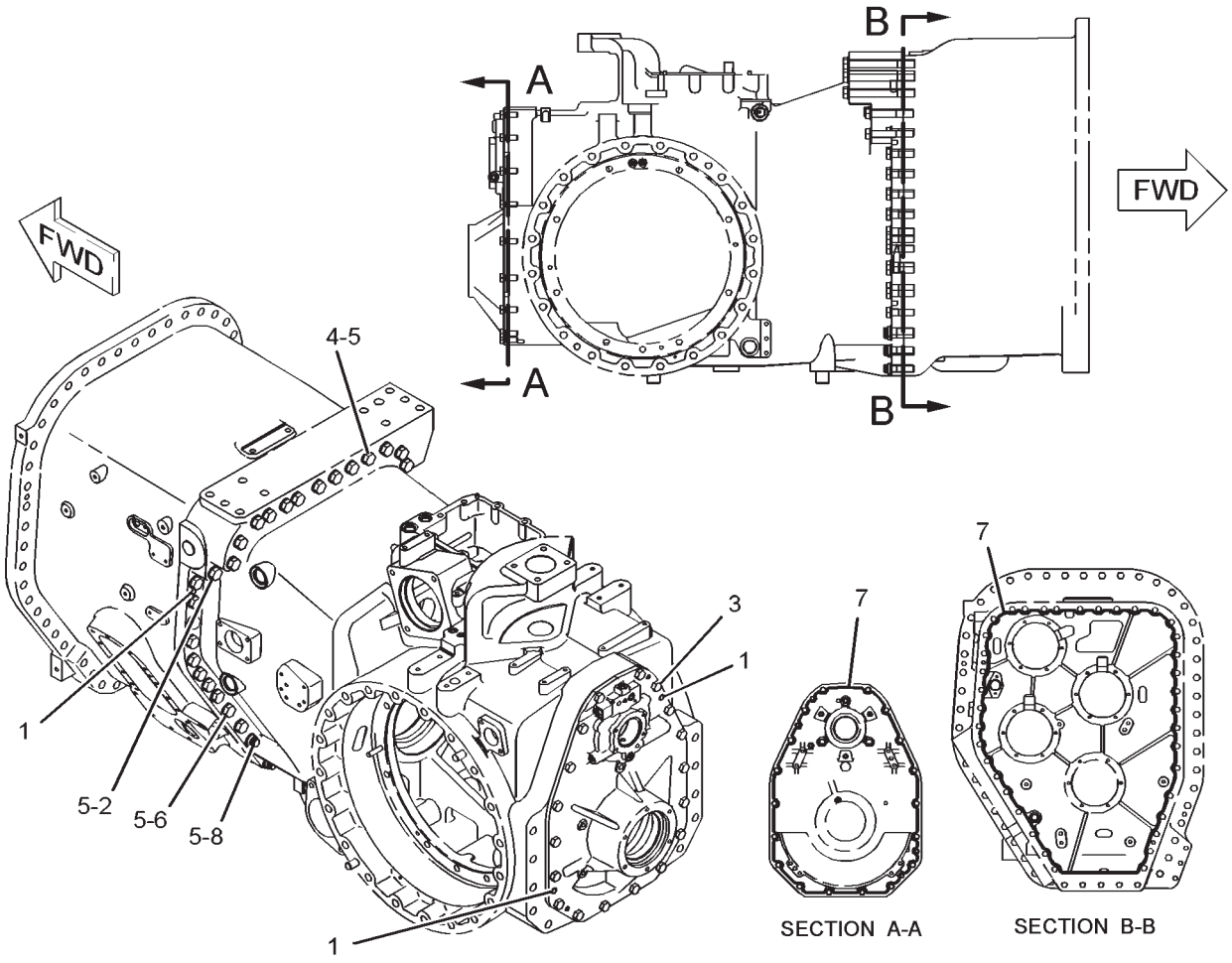


01118299

## 211-8277 FASTENER GP-FINAL DRIVE

| ITEM | NUMBER | QTY | DESCRIPTION |
|---|---|---|---|
| - | 211-8277 | -- | FASTENER GP-FINAL DRIVE [A] (NOT SERVICED) |
| 1 | 8C-5224 | 4 | PLUG-SEAL |
| 2 | 7X-2532 | 3 | BOLT (M20X2.5X130-MM) |
| 3 | 7X-2553 | 18 | BOLT (M16X2X40-MM) |
| 4 | 7X-2569 | 13 | BOLT (M20X2.5X200-MM) |
| 5 | 8T-4123 | 43 | WASHER-PLATED (22X35X3.5-MM THK) |
| 6 | 8T-4141 | 18 | BOLT (M20X2.5X70-MM) |
| 7 | 1U-8846 | AR | SEALANT-GASKET |
| 8 | 121-3120 | 9 | BOLT-12 POINT HEAD (M20X2.5X70-MM) |

[A] PART OF 200-5027, 200-5028, 200-5029, 200-5030 POWER TRAIN AR

01118299
PR: t05i29k58b0211

## 179-9479 FINAL DRIVE GP

**S/N: AZG1-955; AZJ1-1479**

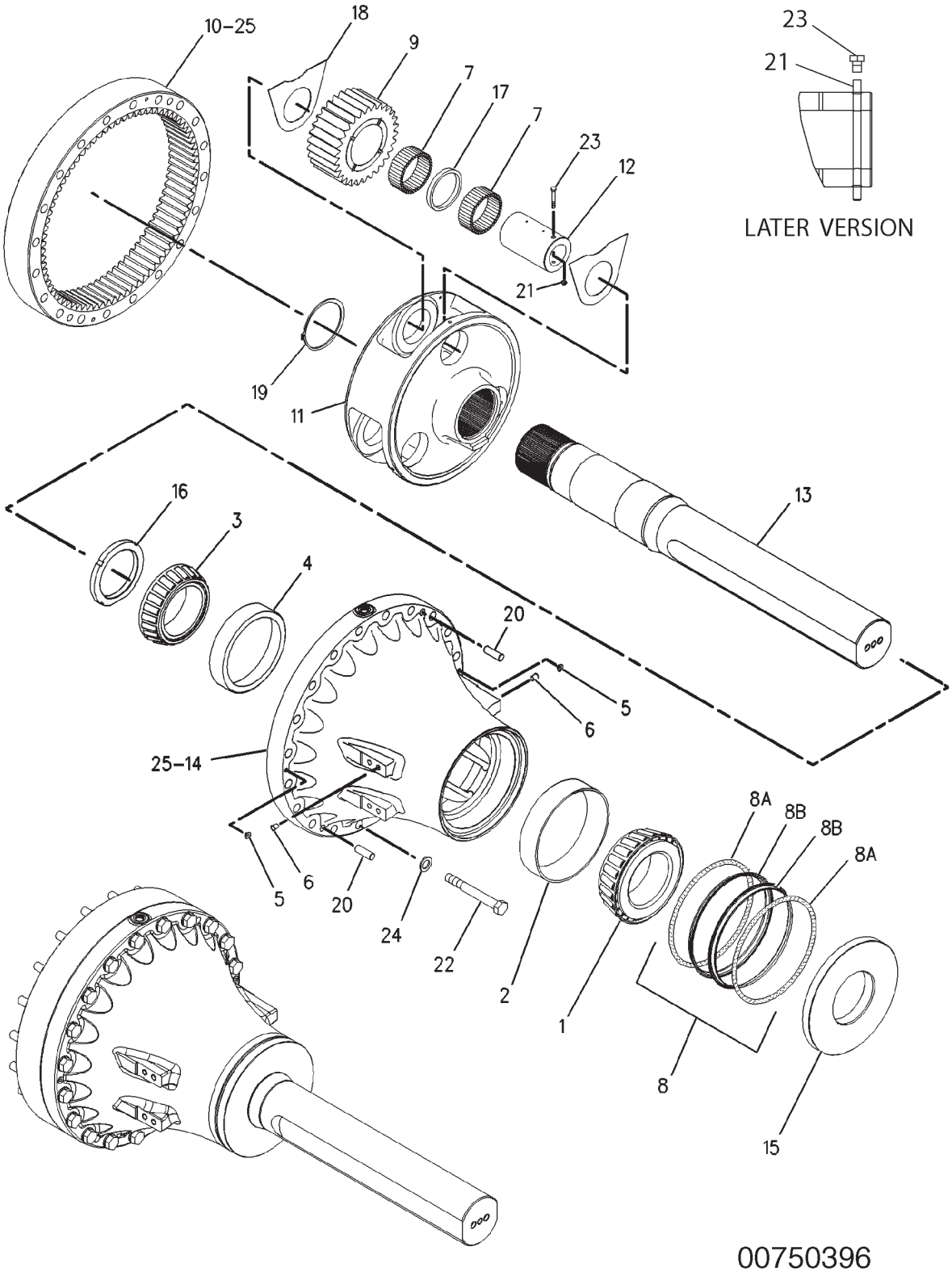

## 179-9479 FINAL DRIVE GP
**S/N: AZG1-955; AZJ1-1479**

| ITEM | NUMBER | QTY | DESCRIPTION |
|---|---|---|---|
| - | 179-9479 | -- | FINAL DRIVE GP [A] (NOT SERVICED) |
| 1 | 193-0362 | 1 | CONE-BEARING |
| 2 | 193-0363 | 1 | CUP-BEARING |
| 3 | 1B-6577 | 1 | CONE-BEARING |
| 4 | 2J-2152 | 1 | CUP-BEARING |
| 5 | 7C-6467 | 2 | PLUG |
| 6 | 8C-5224 | 8 | PLUG-SEAL |
| 7 | 261-2719 | 228 | BEARING-NEEDLE |
| 8 | 174-4874 | 1 | SEAL GP-DUO-CONE |
| 8A | ----- | 2 | RING-TORIC [Z] |
| 8B | ----- | 2 | SEAL-RING [Z] |
| 9 | 179-9007 | 3 | GEAR-PLANETARY (30-TEETH) |
| 10 | 217-8425 | 1 | GEAR-RING (78-TEETH) |
| 11 | 260-9471 | 1 | CARRIER-PLANETARY |
| 12 | 179-9471 | 3 | SHAFT-PLANETARY |
| 13 | 194-7019 | 1 | SHAFT-AXLE |
| 14 | 179-9476 | 1 | HOUSING-AXLE |
| 15 | 179-9477 | 1 | SPACER (160X350X36-MM THK) |
| 16 | 179-9478 | 1 | NUT-BEARING |
| 17 | 179-9488 | 3 | RACE-THRUST |
| 18 | 216-8715 | 6 | WASHER-THRUST |
| 19 | 109-6497 | 1 | RING-RETAINING |
| 20 | 175-3097 | 2 | DOWEL |
| 21 | 6V-9189 | 3 | LOCKNUT (M8X1.25) (EARLY VERSION) |
| 21 | 266-0216 | 3 | PIN (M8.5X135) (LATER VERSION) |
| 22 | 7X-2578 | 20 | BOLT (M24X3X200-MM) |
| 23 | 8T-0100 | 3 | BOLT (M8X1.25X60-MM) (EARLY VERSION) |
| 23 | 6V-8084 | 3 | BOLT (M10X1.5X12) (LATER VERSION) |
| 24 | 8T-4167 | 20 | WASHER-HARD (26X44X4-MM THK) |
| 25 | 1U-8846 | AR | SEALANT-GASKET |

[A] PART OF 185-3955, 185-3957 AXLE AR
[Z] NOT SERVICED SEPARATELY

00750396
PR: t05i29k58b0212

## 179-9479 FINAL DRIVE GP

**S/N: AZG956-UP; AZJ1480-UP**

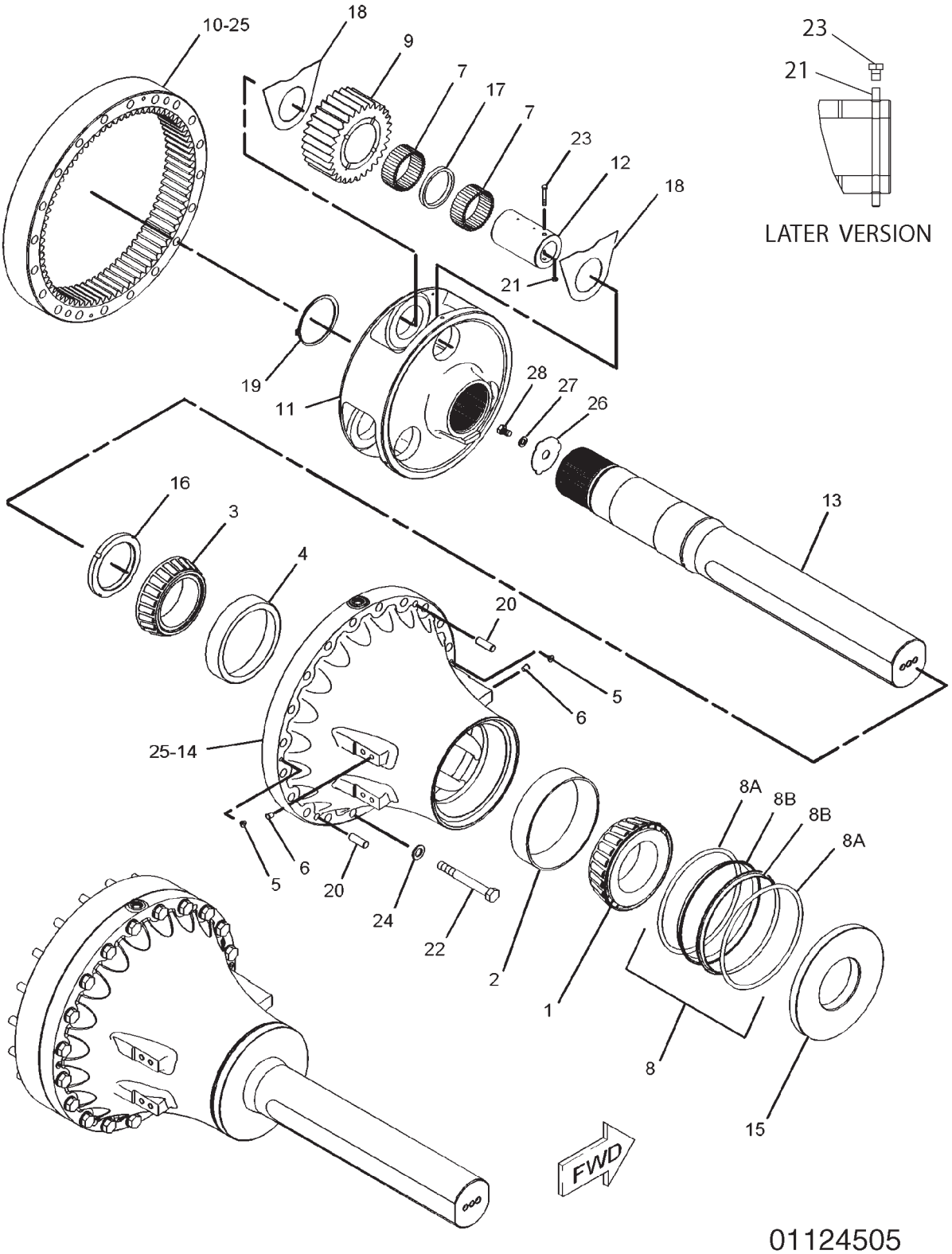

## 179-9479 FINAL DRIVE GP
**S/N: AZG956-UP; AZJ1480-UP**

| ITEM | NUMBER | QTY | DESCRIPTION |
|---|---|---|---|
| - | 179-9479 | -- | FINAL DRIVE GP [A] (NOT SERVICED) |
| 1 | 193-0362 | 1 | CONE-BEARING |
| 2 | 193-0363 | 1 | CUP-BEARING |
| 3 | 1B-6577 | 1 | CONE-BEARING |
| 4 | 2J-2152 | 1 | CUP-BEARING |
| 5 | 7C-6467 | 2 | PLUG |
| 6 | 8C-5224 | 8 | PLUG-SEAL |
| 7 | 261-2719 | 228 | BEARING-NEEDLE |
| 8 | 174-4874 | 1 | SEAL GP-DUO-CONE |
| 8A | ----- | 2 | RING-TORIC [Z] |
| 8B | ----- | 2 | SEAL-RING [Z] |
| 9 | 179-9007 | 3 | GEAR-PLANETARY (30-TEETH) |
| 10 | 217-8425 | 1 | GEAR-RING (78-TEETH) |
| 11 | 260-9471 | 1 | CARRIER-PLANETARY |
| 12 | 179-9471 | 3 | SHAFT-PLANETARY |
| 13 | 224-5868 | 1 | SHAFT-AXLE |
| 14 | 179-9476 | 1 | HOUSING-AXLE |
| 15 | 179-9477 | 1 | SPACER (160X350X36-MM THK) |
| 16 | 179-9478 | 1 | NUT-BEARING |
| 17 | 179-9488 | 3 | RACE-THRUST |
| 18 | 216-8715 | 6 | WASHER-THRUST |
| 19 | 109-6497 | 1 | RING-RETAINING |
| 20 | 175-3097 | 2 | DOWEL |
| 21 | 6V-9189 | 3 | LOCKNUT (M8X1.25) (EARLY VERSION) |
| 21 | 266-0216 | 3 | PIN (M8.5X135) (LATER VERSION) |
| 22 | 7X-2578 | 20 | BOLT (M24X3X200-MM) |
| 23 | 8T-0100 | 3 | BOLT (M8X1.25X60-MM) (EARLY VERSION) |
| 23 | 6V-8084 | 3 | BOLT (M10X1.5X12) (LATER VERSION) |
| 24 | 8T-4167 | 20 | WASHER-HARD (26X44X4-MM THK) |
| 25 | 1U-8846 | AR | SEALANT-GASKET |
| 26 | 224-5870 | 1 | WASHER-THRUST |
| 27 | 9X-8268 | 1 | WASHER (17.5X30X3.5-MM THK) |
| 28 | 6V-5224 | 1 | BOLT (M16X2X25-MM) |

[A] PART OF 185-3955, 185-3957 AXLE AR
[Z] NOT SERVICED SEPARATELY

01124505
PR: t05i29k58b0213

## 179-9480 FINAL DRIVE GP

**S/N: AZH1-990; AZK1-987**
**2286-2600MM (90-102 IN) GAUGE**

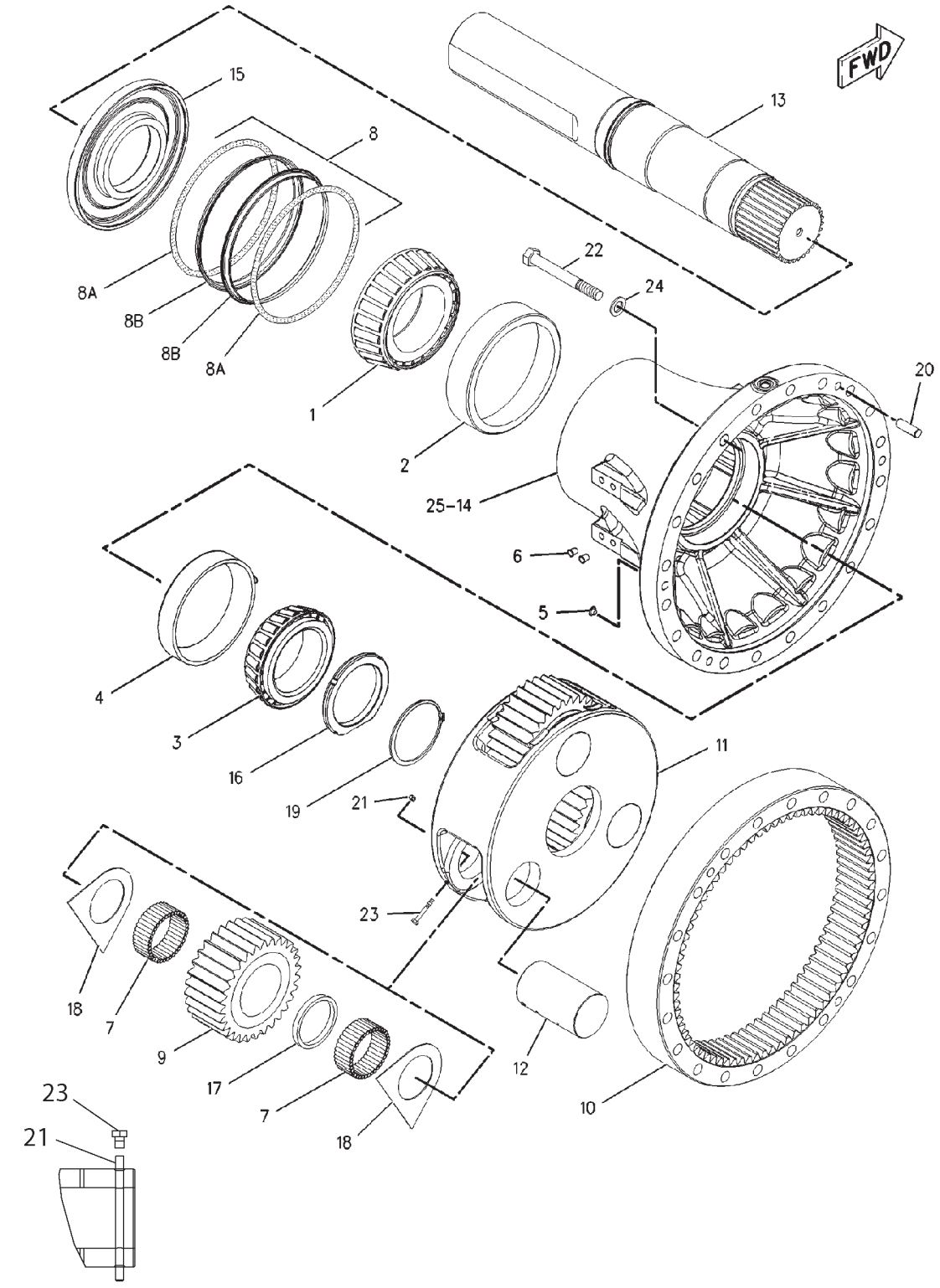

## 179-9480 FINAL DRIVE GP

**S/N: AZH1-990; AZK1-987**
**2286-2600MM (90-102 IN) GAUGE**

| ITEM | NUMBER | QTY | DESCRIPTION |
|---|---|---|---|
| - | 179-9480 | -- | FINAL DRIVE GP (NOT SERVICED) |
| 1 | 193-0362 | 1 | CONE-BEARING |
| 2 | 193-0363 | 1 | CUP-BEARING |
| 3 | 1B-6577 | 1 | CONE-BEARING |
| 4 | 2J-2152 | 1 | CUP-BEARING |
| 5 | 7C-6467 | 2 | PLUG |
| 6 | 8C-5224 | 8 | PLUG-SEAL |
| 7 | 261-2719 | 228 | BEARING-NEEDLE |
| 8 | 174-4874 | 1 | SEAL GP-DUO-CONE |
| 8A | 174-4875 | 2 | RING-TORIC |
| 8B | ----- | 2 | SEAL-RING [Z] |
| 9 | 179-9007 | 3 | GEAR-PLANETARY (30-TEETH) |
| 10 | 217-8425 | 1 | GEAR-RING (78-TEETH) |
| 11 | 260-9471 | 1 | CARRIER-PLANETARY |
| 12 | 179-9471 | 3 | SHAFT-PLANETARY |
| 13 | 224-5869 | 1 | SHAFT-AXLE |
| | 224-5870 | 1 | WASHER |
| | 6V-5224 | 1 | BOLT |
| | 9X-8268 | 1 | WASHER |
| 14 | 179-9476 | 1 | HOUSING-AXLE |
| 15 | 179-9477 | 1 | SPACER (160X350X36-MM THK) |
| 16 | 179-9478 | 1 | NUT-BEARING |
| 17 | 179-9488 | 3 | RACE-THRUST |
| 18 | 216-8715 | 6 | WASHER-THRUST |
| 19 | 109-6497 | 1 | RING-RETAINING |
| 20 | 175-3097 | 2 | DOWEL |
| 21 | 6V-9189 | 3 | LOCKNUT (M8X1.25) (EARLY VERSION) |
| 21 | 266-0216 | 3 | PIN (M8.5X135) (LATER VERSION) |
| 22 | 7X-2578 | 20 | BOLT (M24X3X200-MM) |
| 23 | 8T-0100 | 3 | BOLT (M8X1.25X60-MM) (EARLY VERSION) |
| 23 | 6V-8084 | 3 | BOLT (M10X1.5X12) (LATER VERSION) |
| 24 | 8T-4167 | 20 | WASHER-HARD (26X44X4-MM THK) |
| 25 | 1U-8846 | AR | SEALANT-GASKET |

[A] PART OF 185-3956, 185-3958 AXLE AR
[Z] NOT SERVICED SEPARATELY

00886393
PR: t05i29k58b0214

## 179-9480 FINAL DRIVE GP

**S/N: AZH991-UP; AZK988-UP**

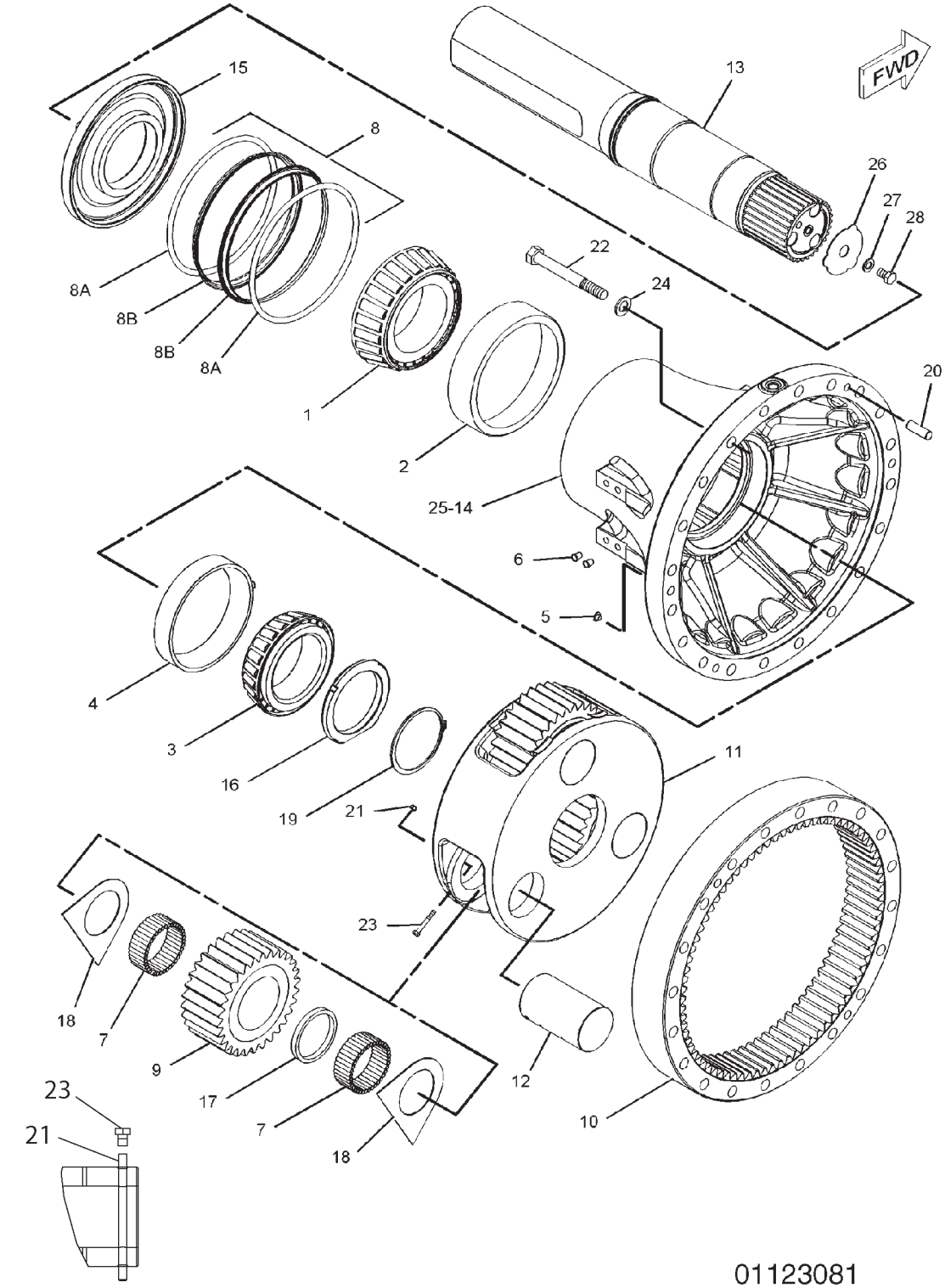

## 179-9480 FINAL DRIVE GP
**S/N: AZH991-UP; AZK988-UP**

| ITEM | NUMBER | QTY | DESCRIPTION |
|---|---|---|---|
| - | 179-9480 | -- | FINAL DRIVE GP [A] (NOT SERVICED) |
| 1 | 193-0362 | 1 | CONE-BEARING |
| 2 | 193-0363 | 1 | CUP-BEARING |
| 3 | 1B-6577 | 1 | CONE-BEARING |
| 4 | 2J-2152 | 1 | CUP-BEARING |
| 5 | 7C-6467 | 2 | PLUG |
| 6 | 8C-5224 | 8 | PLUG-SEAL |
| 7 | 261-2719 | 228 | BEARING-NEEDLE |
| 8 | 174-4874 | 1 | SEAL GP-DUO-CONE |
| 8A | 174-4875 | 2 | RING-TORIC |
| 8B | ----- | 2 | SEAL-RING [Z] |
| 9 | 179-9007 | 3 | GEAR-PLANETARY (30-TEETH) |
| 10 | 217-8425 | 1 | GEAR-RING (78-TEETH) |
| 11 | 260-9471 | 1 | CARRIER-PLANETARY |
| 12 | 179-9471 | 3 | SHAFT-PLANETARY |
| 13 | 224-5869 | 1 | SHAFT-AXLE |
| 14 | 179-9476 | 1 | HOUSING-AXLE |
| 15 | 179-9477 | 1 | SPACER (160X350X36-MM THK) |
| 16 | 179-9478 | 1 | NUT-BEARING |
| 17 | 179-9488 | 3 | RACE-THRUST |
| 18 | 216-8715 | 6 | WASHER-THRUST |
| 19 | 109-6497 | 1 | RING-RETAINING |
| 20 | 175-3097 | 2 | DOWEL |
| 21 | 6V-9189 | 3 | LOCKNUT (M8X1.25) (EARLY VERSION) |
| 21 | 266-0216 | 3 | PIN (M8.5X135) (LATER VERSION) |
| 22 | 7X-2578 | 20 | BOLT (M24X3X200-MM) |
| 23 | 8T-0100 | 3 | BOLT (M8X1.25X60-MM) (EARLY VERSION) |
| 23 | 6V-8084 | 3 | BOLT (M10X1.5X12) (LATER VERSION) |
| 24 | 8T-4167 | 20 | WASHER-HARD (26X44X4-MM THK) |
| 25 | 1U-8846 | AR | SEALANT-GASKET |
| 26 | 224-5870 | 1 | WASHER-THRUST |
| 27 | 9X-8268 | 1 | WASHER (17.5X30X3.5-MM THK) |
| 28 | 6V-5224 | 1 | BOLT (M16X2X25-MM) |

[A] PART OF 185-3956, 185-3958 AXLE AR
[Z] NOT SERVICED SEPARATELY

01123081
PR: t05i29k58b0215

## 217-7314 HOUSING GP-DIFFERENTIAL

**S/N: AZG1-906; AZH1-972;
AZJ1-1112; AZK1-968**

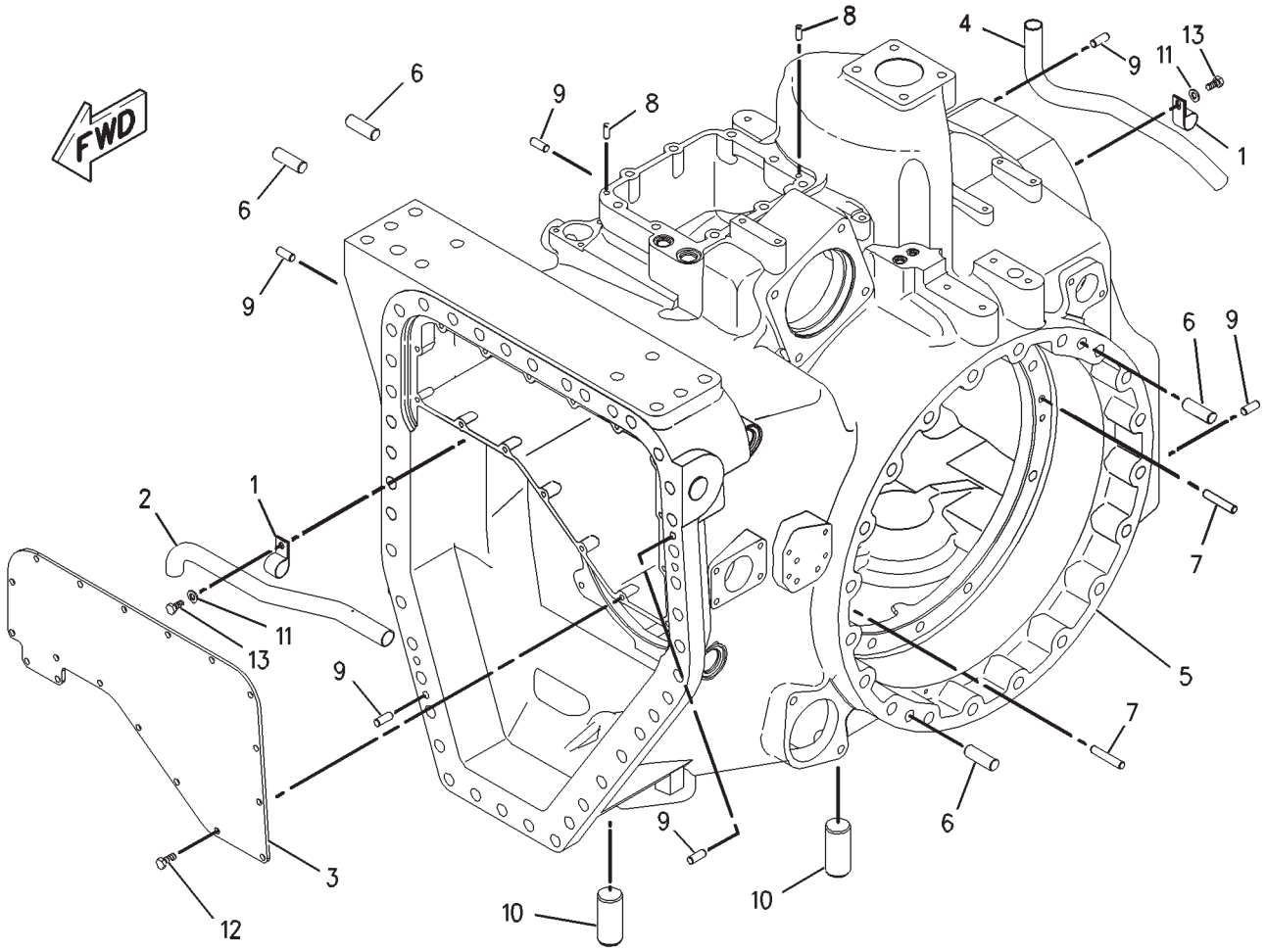


00898342

## 217-7314 HOUSING GP-DIFFERENTIAL

**S/N: AZG1-906; AZH1-972; AZJ1-1112; AZK1-968**

| ITEM | NUMBER | QTY | DESCRIPTION |
|---|---|---|---|
| - | 217-7314 | -- | HOUSING GP-DIFFERENTIAL [A] (NLA-ORDER 225-6958) |
| 1 | 134-5645 | 2 | CLIP |
| 2 | 180-8431 | 1 | TUBE |
| 3 | 193-0650 | 1 | COVER |
| 4 | 203-3929 | 1 | TUBE |
| 5 | ----- | 1 | HOUSING |
| 6 | 175-3097 | 4 | DOWEL |
| 7 | 1A-0646 | 2 | DOWEL |
| 8 | 5B-5821 | 2 | DOWEL |
| 9 | 5M-7937 | 6 | DOWEL |
| 10 | 7X-3396 | 2 | DOWEL |
| 11 | 8T-4121 | 2 | WASHER-HARD (11X21X2.5-MM THK) |
| 12 | 8T-4136 | 16 | BOLT (M10X1.5X25-MM) |
| 13 | 8T-4137 | 2 | BOLT (M10X1.5X20-MM) |

00898342

[A] PART OF 180-4376 DIFFERENTIAL GP

## 225-6958 HOUSING GP-DIFFERENTIAL

**S/N: AZG907-950; AZH973-983;
AZJ1113-1434; AZK968-979**

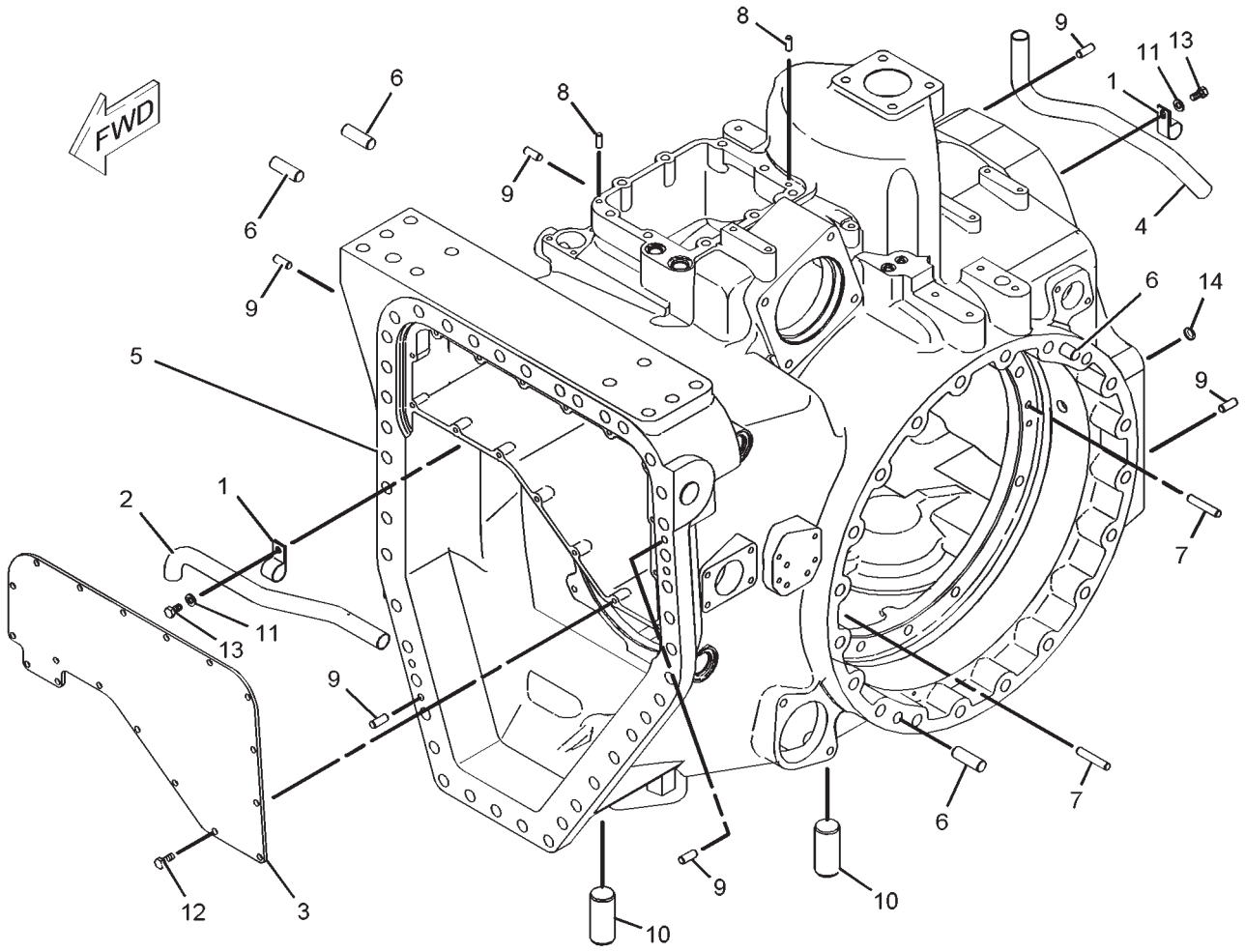


01122771

## 225-6958 HOUSING GP-DIFFERENTIAL

**S/N: AZG907-950;AZH973-983;
AZJ1113-1434; AZK968-979**

| ITEM | NUMBER | QTY | DESCRIPTION |
|---|---|---|---|
| - | 225-6958 | -- | HOUSING GP-DIFFERENTIAL [A] (NOT SERVICED) |
| 1 | 134-5645 | 2 | CLIP |
| 2 | 180-8431 | 1 | TUBE |
| 3 | 193-0650 | 1 | COVER |
| 4 | 203-3929 | 1 | TUBE |
| 5 | ----- | 1 | HOUSING [Z] |
| 6 | 175-3097 | 4 | DOWEL |
| 7 | 1A-0646 | 2 | DOWEL |
| 8 | 5B-5821 | 2 | DOWEL |
| 9 | 5M-7937 | 6 | DOWEL |
| 10 | 7X-3396 | 2 | DOWEL |
| 11 | 8T-4121 | 2 | WASHER-HARD (11X21X2.5-MM THK) |
| 12 | 8T-4136 | 16 | BOLT (M10X1.5X25-MM) |
| 13 | 8T-4137 | 2 | BOLT (M10X1.5X20-MM) |
| 14 | 4N-0952 | 1 | PLUG-CUP |

[A] PART OF 180-4376 DIFFERENTIAL GP
[Z] NOT SERVICED SEPARATELY

01122771
PR: t05i29k58b0217

## 242-0962 HOUSING GP-DIFFERENTIAL

**S/N: AZG951-UP; AZH984-UP;
AZJ1435-UP; AZK980-UP**

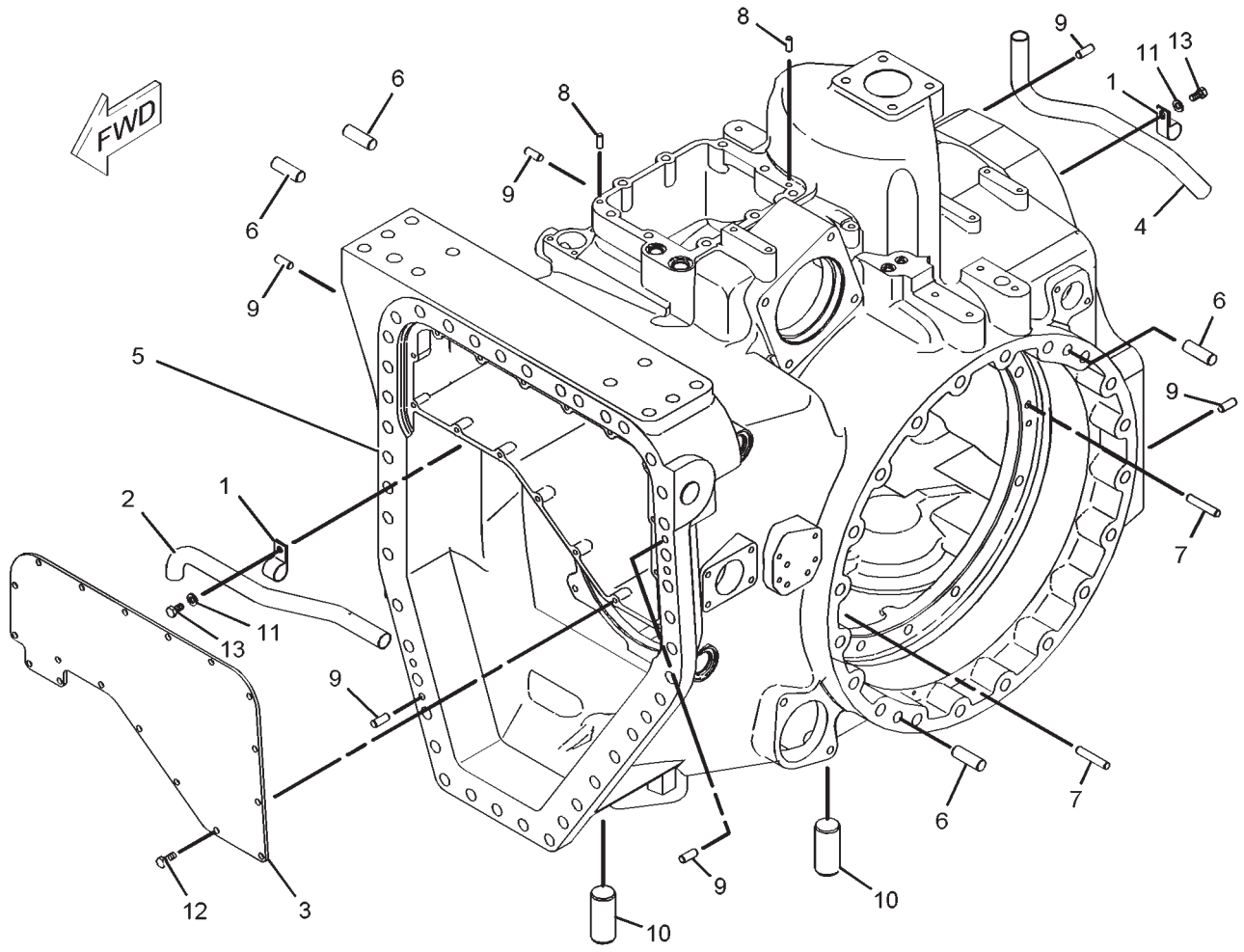


01122772

## 242-0962 HOUSING GP-DIFFERENTIAL

**S/N: AZG951-UP; AZH984-UP; AZJ1435-UP; AZK980-UP**

| ITEM | NUMBER | QTY | DESCRIPTION |
|---|---|---|---|
| - | 242-0962 | -- | HOUSING GP-DIFFERENTIAL [A] |
| 1 | 134-5645 | 2 | CLIP |
| 2 | 180-8431 | 1 | TUBE |
| 3 | 193-0650 | 1 | COVER |
| 4 | 203-3929 | 1 | TUBE |
| 5 | ----- | 1 | HOUSING [Z] |
| 6 | 175-3097 | 4 | DOWEL |
| 7 | 1A-0646 | 2 | DOWEL |
| 8 | 5B-5821 | 2 | DOWEL |
| 9 | 5M-7937 | 6 | DOWEL |
| 10 | 7X-3396 | 2 | DOWEL |
| 11 | 8T-4121 | 2 | WASHER-HARD (11X21X2.5-MM THK) |
| 12 | 8T-4136 | 16 | BOLT (M10X1.5X25-MM) |
| 13 | 8T-4137 | 2 | BOLT (M10X1.5X20-MM) |

[A] PART OF 180-4376 DIFFERENTIAL GP
[Z] NOT SERVICED SEPARATELY

01122772
PR: t05i29k58b0218

## 152-5242 TRANSMISSION AR
S/N: 9YY1-UP

NO ILLUSTRATION

NOTIF

## 152-5242 TRANSMISSION AR
**S/N: 9YY1-UP**

| ITEM | NUMBER | QTY | DESCRIPTION |
|---|---|---|---|
| - | 152-5242 | -- | TRANSMISSION AR |
| | 155-9579 | 1 | CASE & PARTS GP-PLANETARY 1<br>(NOT SERVICED)<br>(SEE BREAKDOWN FOR COMPONENTS) |
| | 155-9571 | 1 | CLUTCH GP (INPUT) S/N: 9YY1-1465<br>(NOT SERVICED)<br>(SEE BREAKDOWN FOR COMPONENTS) |
| | 155-9572 | 1 | CLUTCH GP (INTERMEDIATE) S/N: 9YY1-1465<br>(NOT SERVICED)<br>(SEE BREAKDOWN FOR COMPONENTS) |
| | 155-9575 | 1 | CLUTCH GP (REVERSE) S/N: 9YY1-1465<br>(NOT SERVICED)<br>(SEE BREAKDOWN FOR COMPONENTS) |
| | 155-9576 | 1 | CLUTCH GP (OUTPUT) (S/N: 9YY1-1465)<br>(NOT SERVICED)<br>(SEE BREAKDOWN FOR COMPONENTS) |
| | 232-1774 | 1 | CLUTCH GP-TRANSMISSION (S/N: 9YY1466-UP)<br>(NOT SERVICED)<br>(SEE BREAKDOWN FOR COMPONENTS) |
| | 177-5233 | 2 | CLUTCH GP (PLANETARY)<br>(NOT SERVICED)<br>(SEE BREAKDOWN FOR COMPONENTS) |
| | 155-9580 | 1 | CONTROL GP-TRANSMISSION HYD<br>(NOT SERVICED)<br>(SEE BREAKDOWN FOR COMPONENTS) |
| | 177-5234 | 1 | DRIVE GP-PUMP (NOT SERVICED)<br>(SEE BREAKDOWN FOR COMPONENTS) |

[A] PART OF 200-5027, 200-5028,
200-5029, 200-5030 POWER TRAIN AR

NOTIF
PR: t05i29k58b0219

## 198-1013 VALVE GP-RELIEF
**S/N: 9YY1-UP**

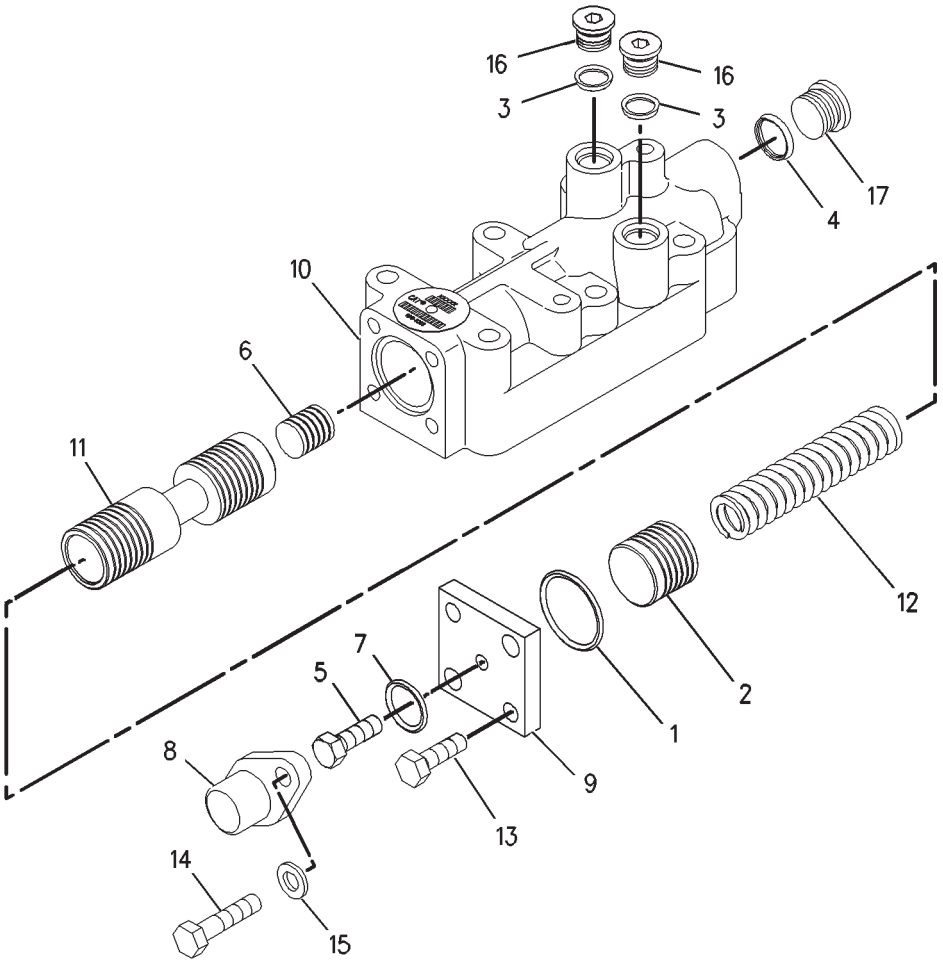


00894902

## 198-1013 VALVE GP-RELIEF
**S/N: 9YY1-UP**

| ITEM | NUMBER | QTY | DESCRIPTION |
|---|---|---|---|
| - | 198-1013 | -- | VALVE GP-RELIEF [A] |
| 1 | 2S-4663 | 1 | SEAL-O-RING |
| 2 | 2S-5835 | 1 | PISTON-LOAD |
| 3 | 3J-1907 | 2 | SEAL-O-RING |
| 4 | 3K-0360 | 1 | SEAL-O-RING |
| 5 | 4M-5905 | 1 | SCREW-ADJUSTMENT (5/16-18X1-IN) |
| 6 | 8E-1143 | 1 | SLUG |
| 7 | 8M-5253 | 1 | SEAL-O-RING |
| 8 | 9M-2110 | 1 | COVER-ADJUSTMENT |
| 9 | 115-4550 | 1 | COVER |
| 10 | 172-7966 | 1 | BODY |
| 11 | 172-7968 | 1 | SPOOL AS |
| | 3D-8317 | 1 | RING-RETAINING |
| | 4B-9880 | 1 | BALL |
| | 4M-2381 | 1 | SPRING |
| | 9U-8669 | 1 | RETAINER |
| 12 | 174-7449 | 1 | SPRING |
| 13 | 6V-3940 | 2 | BOLT (M8X1.25X25-MM) |
| 14 | 6V-5218 | 2 | BOLT (M8X1.25X35-MM) |
| 15 | 9M-1974 | 2 | WASHER-HARD (8.8X16X2-MM THK) |
| 16 | 9S-8004 | 2 | PLUG |
| 17 | 241-6205 | 1 | PLUG |

[A] PART OF 155-9580 CONTROL GP
-TRANSMISSION HYD

00894902
PR: t05i29k58b0220

## 185-3955 AXLE AR-WITH POWER TAKE-OFF

**S/N: AZG1-UP**
**2286-3251 MM (90-128 IN)**

NO ILLUSTRATION

NOTIF

## 185-3955 AXLE AR-WITH POWER TAKE-OFF

**S/N: AZG1-UP**
**2286-3251 MM (90-128 IN)**

| ITEM | NUMBER | QTY | DESCRIPTION |
|---|---|---|---|
| - | 185-3955 | -- | AXLE AR-WITH POWER TAKE-OFF [A] (NOT SERVICED) |
| 1 | 179-9479 | 2 | FINAL DRIVE GP (NOT SERVICED) (SEE BREAKDOWN FOR COMPONENTS) |
| 2 | 180-4376 | 1 | DIFFERENTIAL GP (NOT SERVICED) (SEE BREAKDOWN FOR COMPONENTS) |
| 3 | 187-4930 | 1 | POWER TAKE-OFF GP (NOT SERVICED) (SEE BREAKDOWN FOR COMPONENTS) |

[A] PART OF 200-5027 POWER TRAIN AR

NOTIF
PR: t05i29k58b0221

## 185-3956 AXLE AR-WITH POWER TAKE-OFF

**S/N: AZH1-UP**
**2286-2600 MM (90-102 IN)**

NO ILLUSTRATION

NOTIF

## 185-3956 AXLE AR-WITH POWER TAKE-OFF

**S/N: AZH1-UP**
**2286-2600 MM (90-102 IN)**

| ITEM | NUMBER | QTY | DESCRIPTION |
|---|---|---|---|
| - | 185-3956 | -- | AXLE AR-WITH POWER TAKE-OFF [A] (NOT SERVICED) |
| | 180-4376 | 1 | DIFFERENTIAL GP (NOT SERVICED) (SEE BREAKDOWN FOR COMPONENTS) |
| | 179-9480 | 2 | FINAL DRIVE GP (NOT SERVICED) (SEE BREAKDOWN FOR COMPONENTS) |
| | 187-4930 | 1 | POWER TAKE-OFF GP (NOT SERVICED) (SEE BREAKDOWN FOR COMPONENTS) |

[A] PART OF 200-5028 POWER TRAIN AR

NOTIF
PR: t05i29k58b0222

## 185-3957 AXLE AR

**S/N: AZJ1-UP**
**2286-3251 MM (90-128 IN)**
**CANNOT BE USED WITH POWER TAKE OFF**

NO ILLUSTRATION

NOTIF

## 185-3957 AXLE AR

**S/N: AZJ1-UP**
**2286-3251 MM (90-128 IN)**
**CANNOT BE USED WITH POWER TAKE OFF**

| ITEM | NUMBER | QTY | DESCRIPTION |
|---|---|---|---|
| - | 185-3957 | -- | AXLE AR [A] (NOT SERVICED) |
| | 185-8737 | 1 | COVER GP-DIFFERENTIAL (NOT SERVICED) (SEE BREAKDOWN FOR COMPONENTS) |
| | 180-4376 | 1 | DIFFERENTIAL GP (NOT SERVICED) (SEE BREAKDOWN FOR COMPONENTS) |
| | 179-9479 | 2 | FINAL DRIVE GP (NOT SERVICED) (SEE BREAKDOWN FOR COMPONENTS) |

[A] PART OF 200-5029 POWER TRAIN AR

NOTIF
PR: t05i29k58b0223

## 185-3958 AXLE AR-WITHOUT POWER TAKE-OFF

**S/N: AZK1-UP**
**2286-2600 MM (90-102 IN)**

NO ILLUSTRATION

NOTIF

## 185-3958 AXLE AR-WITHOUT POWER TAKE-OFF

**S/N: AZK1-UP**
**2286-2600 MM (90-102 IN)**

| ITEM | NUMBER | QTY | DESCRIPTION |
|---|---|---|---|
| - | 185-3958 | -- | AXLE AR-WITHOUT POWER TAKE-OFF [A] (NOT SERVICED) |
| | 185-8737 | 1 | COVER GP-DIFFERENTIAL (NOT SERVICED) (SEE BREAKDOWN FOR COMPONENTS) |
| | 180-4376 | 1 | DIFFERENTIAL GP (NOT SERVICED) (SEE BREAKDOWN FOR COMPONENTS) |
| | 179-9480 | 2 | FINAL DRIVE GP (NOT SERVICED) (SEE BREAKDOWN FOR COMPONENTS) |

[A] PART OF 200-5030 POWER TRAIN AR

NOTIF
PR: t05i29k58b0224

## 185-8737 COVER GP-DIFFERENTIAL

**S/N: AZJ1-UP; AZK1-UP**

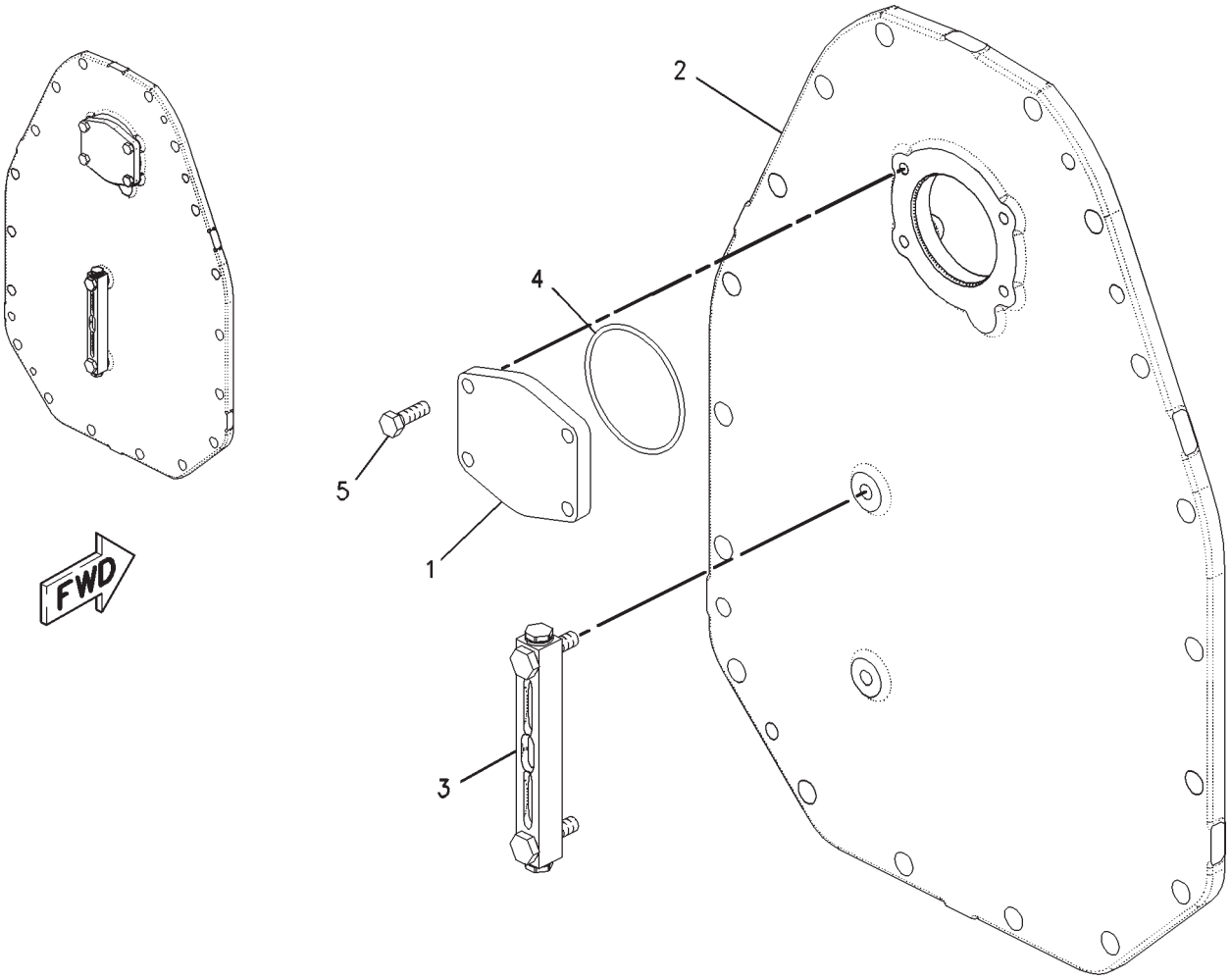


00893383

## 185-8737 COVER GP-DIFFERENTIAL
**S/N: AZJ1-UP; AZK1-UP**

| ITEM | NUMBER | QTY | DESCRIPTION |
|---|---|---|---|
| - | 185-8737 | -- | COVER GP-DIFFERENTIAL [A] (NOT SERVICED) |
| 1 | 170-7290 | 1 | COVER |
| 2 | 217-3555 | 1 | COVER |
| 3 | 217-3557 | 1 | GAUGE-SIGHT |
| 4 | 131-3718 | 1 | SEAL-O-RING |
| 5 | 8T-4195 | 4 | BOLT (M10X1.5X30MM) |

[A] PART OF 185-3957, 185-3958 AXLE AR

00893383
PR: t05i29k58b0225

## 187-4930 POWER TAKE-OFF GP

**S/N: AZG1-879; AZH1-959**

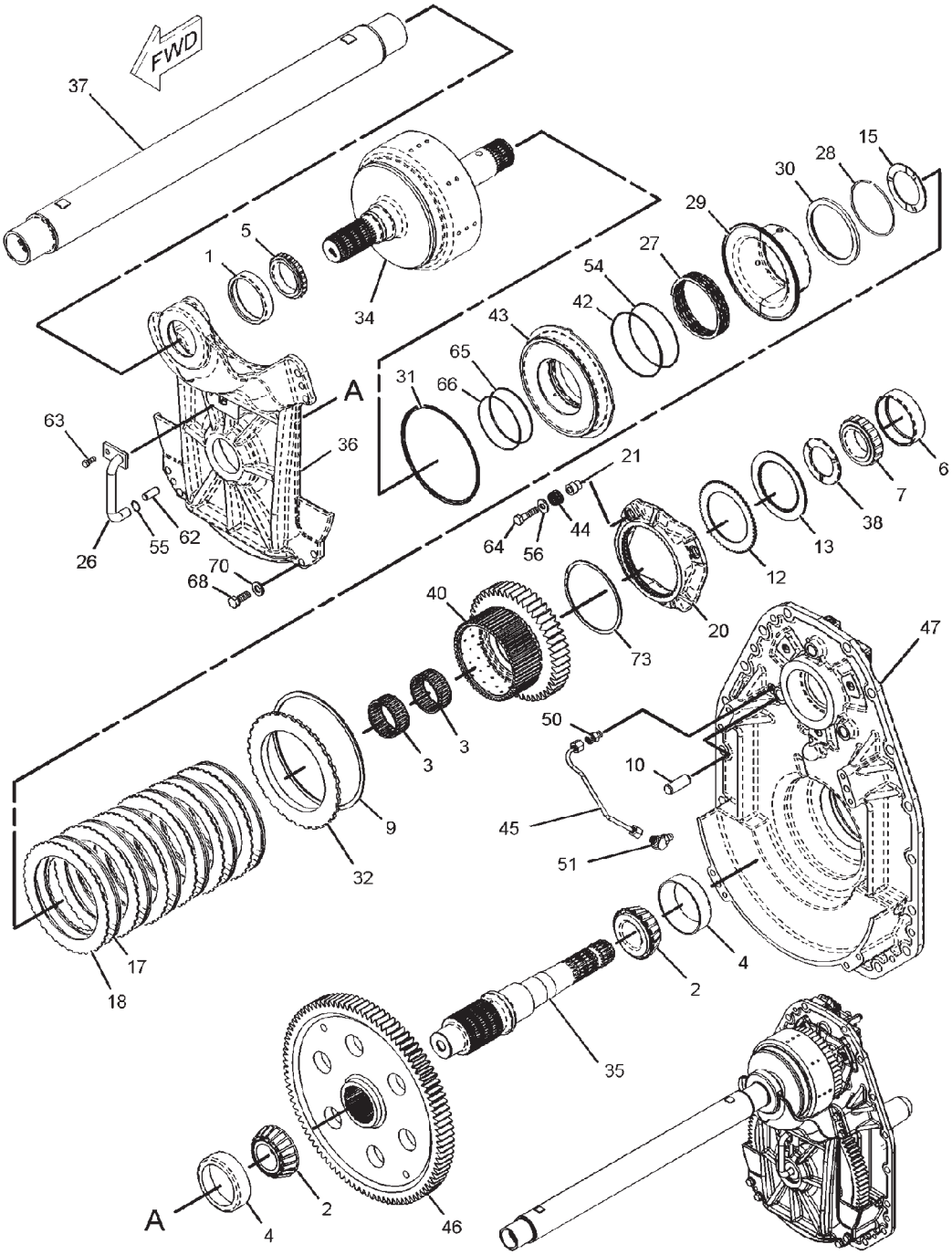


01122766

## 187-4930 POWER TAKE-OFF GP
**S/N: AZG1-879; AZH1-959**

| ITEM | NUMBER | QTY | DESCRIPTION |
|---|---|---|---|
| - | 187-4930 | -- | POWER TAKE-OFF GP (NOT SERVICED) |
| 1 | 172-3441 | 1 | RACE-ROLLER BEARING |
| 2 | 008-3178 | 2 | CONE-BEARING |
| 3 | 124-0492 | 2 | BEARING-CAGED |
| 4 | 2D-9190 | 2 | CUP-BEARING |
| 5 | 6H-7611 | 1 | BEARING-INNER |
| 6 | 8E-8276 | 1 | RACE-BEARING OUTER |
| 7 | 8E-8277 | 1 | BEARING-INNER |
| 9 | 4D-7889 | 1 | RING |
| 10 | 4T-4200 | 3 | SLUG |
| 12 | 6Y-5631 | 1 | PLATE-CLUTCH |
| 13 | 6Y-7968 | 1 | DISC-FRICTION |
| 15 | 8E-8653 | 1 | DISC-THRUST |
| 17 | 134-8360 | 6 | DISC-FRICTION |
| 18 | 134-8361 | 6 | PLATE-CLUTCH |
| 20 | 161-8739 | 1 | PLATE-BRAKE |
| 21 | 161-8848 | 3 | BUSHING |
| 26 | 168-4558 | 1 | TUBE AS |
| 27 | 173-5392 | 1 | SPRING |
| 28 | 177-5241 | 1 | RING-RETAINING |
| 29 | 177-5243 | 1 | SEAL AS |
| 30 | 177-5246 | 1 | RING-SPACER |
| 31 | 177-6797 | 1 | RING-SEAL |
| 32 | 177-6804 | 1 | PLATE-END |
| 34 | 180-8378 | 1 | SHAFT AS |
| | 7T-9356 | 1 | PLUG-CUP |
| | 9W-0719 | 1 | PLUG |
| 35 | 180-8382 | 1 | SHAFT |
| 36 | 180-8385 | 1 | CARRIER-BEARING |
| 37 | 180-8393 | 1 | SHAFT AS |
| 38 | 180-8395 | 1 | DISC-THRUST |

CONTINUED

[A] PART OF 185-3955, 185-3956 AXLE AR

## 187-4930 POWER TAKE-OFF GP

**S/N: AZG1-879; AZH1-959**

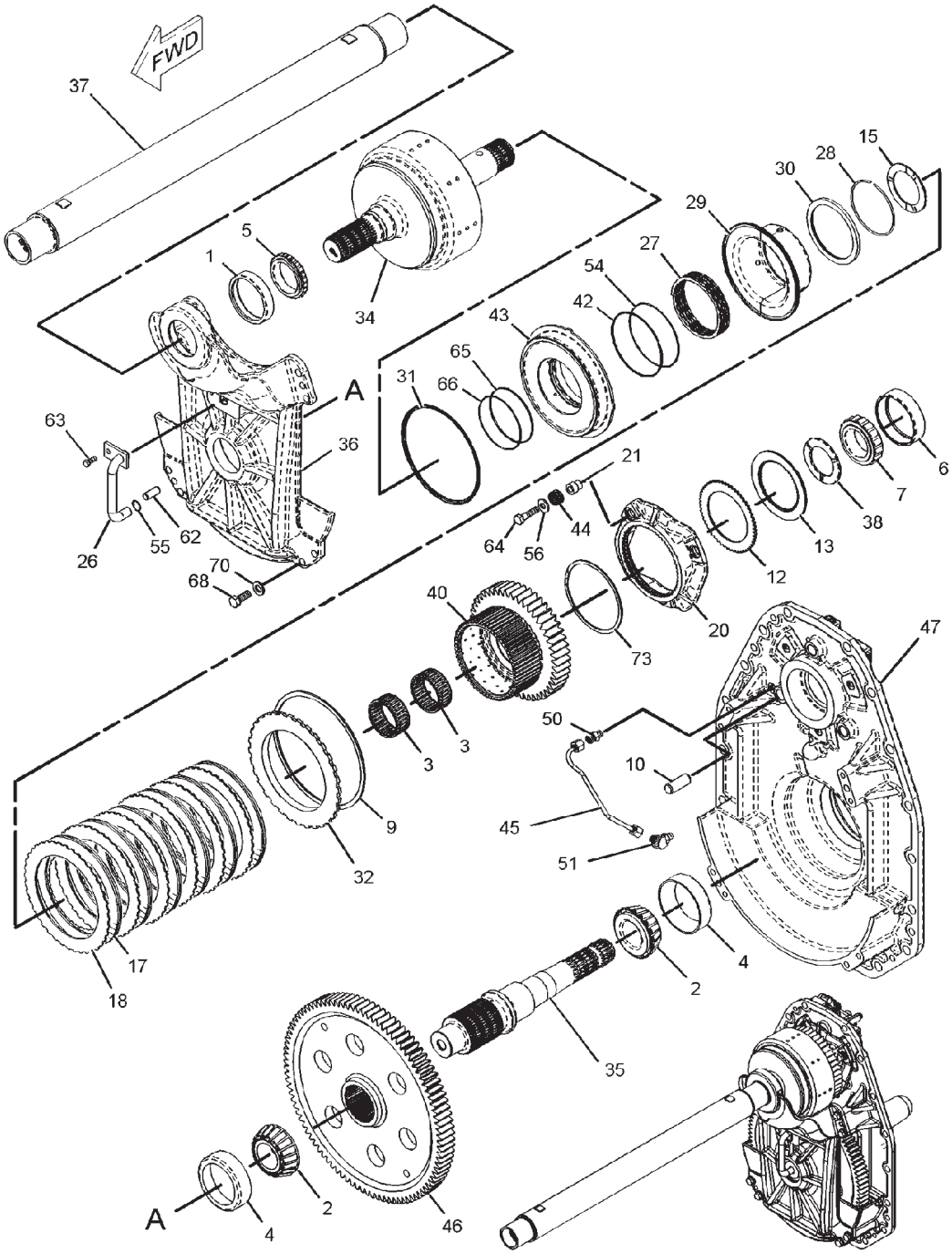


01122766

## 187-4930 POWER TAKE-OFF GP
**S/N: AZG1-879; AZH1-959**

| ITEM | NUMBER | QTY | DESCRIPTION |
|---|---|---|---|
| - | 187-4930 | -- | POWER TAKE-OFF GP (NOT SERVICED) |
| 40 | 191-5262 | 1 | GEAR (48-TEETH) |
| 42 | 200-3039 | 1 | RING-SEAL |
| 43 | 203-2631 | 1 | PISTON |
| 44 | 210-1975 | 3 | SPRING |
| 45 | 211-8276 | 1 | TUBE AS |
| 46 | 216-9213 | 1 | GEAR (95-TEETH) |
| 47 | 217-3556 | 1 | COVER |
| 50 | 148-8316 | 1 | CONNECTOR AS |
| | 3J-7354 | 1 | SEAL-O-RING |
| | 4J-5477 | 1 | SEAL-O-RING |
| | 6V-8647 | 1 | CONNECTOR |
| 51 | 148-8385 | 1 | ELBOW AS |
| | 3J-7354 | 1 | SEAL-O-RING |
| | 4J-5477 | 1 | SEAL-O-RING |
| | 6V-9000 | 1 | ELBOW |
| 54 | 199-9240 | 1 | SEAL-O-RING |
| 55 | 1L-3162 | 1 | RING-RETAINING |
| 56 | 3E-4353 | 3 | WASHER-HARD (11X25X3-MM THK) |
| 62 | 5M-7937 | 2 | DOWEL |
| 63 | 6V-5215 | 1 | BOLT (M8X1.25X16-MM) |
| 64 | 6V-5842 | 3 | BOLT (M10X1.5X40-MM) |
| 65 | 7T-5594 | 1 | RING-SEAL |
| 66 | 8T-2572 | 1 | SEAL-O-RING |
| 68 | 8T-4139 | 8 | BOLT (M12X1.75X30-MM) |
| 70 | 8T-4223 | 8 | WASHER-HARD (13.5X25.5X3-MM THK) |
| 73 | 9U-8875 | 1 | RING-RETAINING |

[A] PART OF 185-3955, 185-3956 AXLE AR

01122766
PR: t05i29k58b0226

## 187-4930 POWER TAKE-OFF GP

**S/N: AZG1-879; AZH1-959**

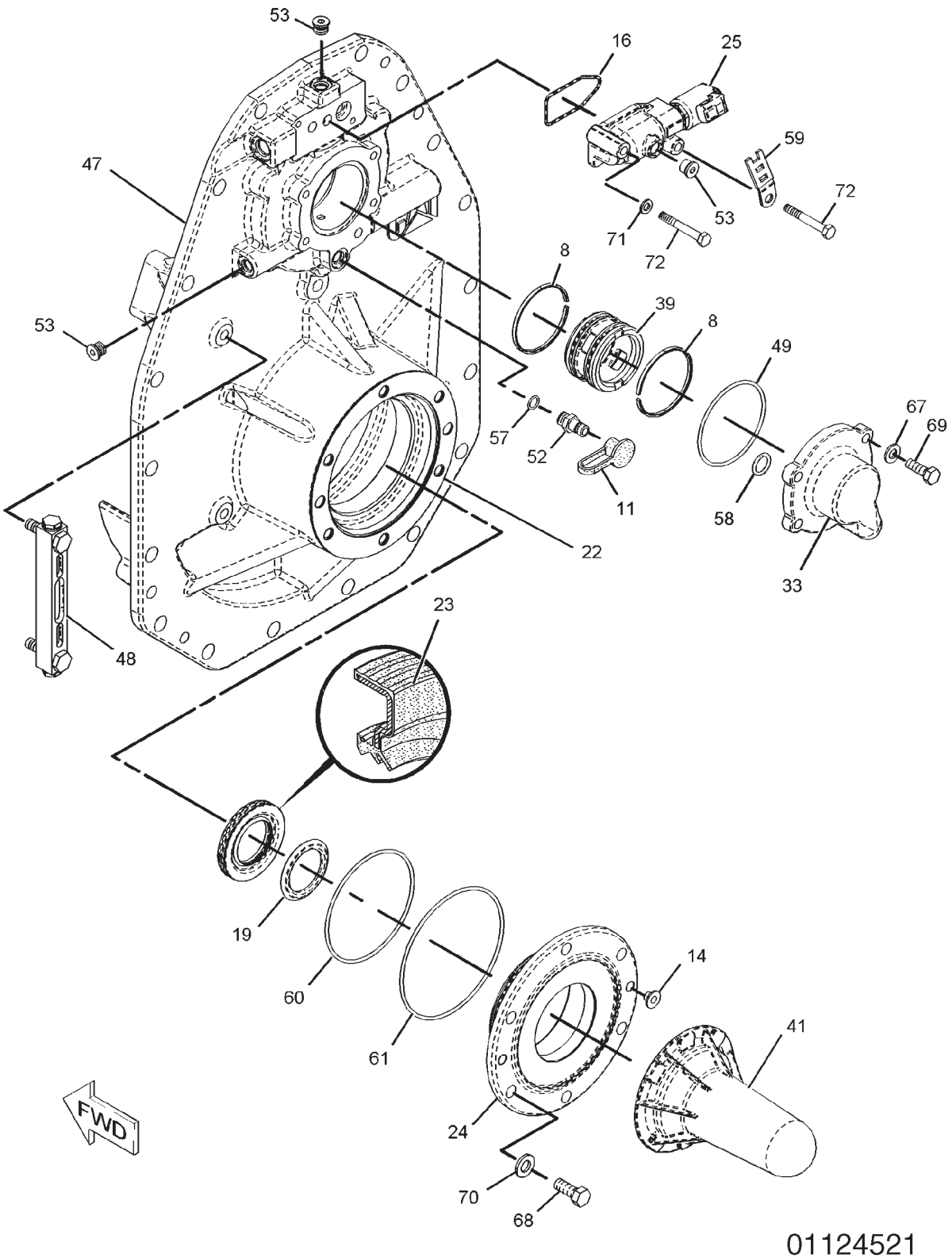

## 187-4930 POWER TAKE-OFF GP
**S/N: AZG1-879; AZH1-959**

| ITEM | NUMBER | QTY | DESCRIPTION |
|---|---|---|---|
| - | 187-4930 | -- | POWER TAKE-OFF GP (NOT SERVICED) |
| 8 | 1T-1597 | 2 | RING-SEAL |
| 11 | 6V-0852 | 1 | CAP-DUST |
| 14 | 7C-6467 | 2 | PLUG |
| 16 | 8S-0768 | 1 | SEAL-O-RING |
| 19 | 160-6789 | 1 | GUARD |
| 22 | 164-3949 | 1 | SHIM PACK (INCLUDES 13-SHIMS) |
| 23 | 164-3951 | 1 | SEAL-LIP TYPE |
| 24 | 165-0260 | 1 | CAGE-BEARING |
| 25 | 216-5343 | 1 | VALVE GP-MODULATING |
| | | | (CLUTCH PACK HYDRAULIC OIL) |
| | | | (SEE BREAKDOWN FOR COMPONENTS) |
| 33 | 180-8369 | 1 | COVER |
| 39 | 188-7731 | 1 | CARRIER-RING |
| 41 | 199-4273 | 1 | COVER AS |
| 47 | 217-3556 | 1 | COVER |
| 48 | 217-3557 | 1 | GAUGE-SIGHT |
| 49 | 131-3718 | 1 | SEAL-O-RING |
| 52 | 6V-3965 | 1 | FITTING AS [B] |
| 53 | 162-0177 | 3 | PLUG AS |
| | 3J-1907 | 1 | SEAL-O-RING |
| | 9S-8004 | 1 | PLUG |
| 57 | 3J-1907 | 1 | SEAL-O-RING |
| 58 | 4J-5140 | 1 | SEAL-O-RING |
| 59 | 4P-7581 | 1 | CLIP |
| 60 | 5F-3999 | 1 | SEAL-O-RING |
| 61 | 5H-3252 | 1 | SEAL-O-RING |
| 67 | 8T-4121 | 4 | WASHER-HARD (11X21X2.5-MM THK) |
| 68 | 8T-4139 | 6 | BOLT (M12X1.75X30-MM) |
| 69 | 8T-4195 | 4 | BOLT (M10X1.5X30-MM) |
| 70 | 8T-4223 | 6 | WASHER-HARD (13.5X25.5X3-MM THK) |
| 71 | 8T-4224 | 1 | WASHER-HARD (8.8X16X2-MM THK) |
| 72 | 8T-6869 | 2 | BOLT (M8X1.25X60-MM) |

[A] PART OF 185-3955, 185-3956 AXLE AR
[B] NOT PART OF THIS GROUP

01124521
PR: t05i29k58b0227

## 187-4930 POWER TAKE-OFF GP

**S/N: AZG880-900; AZH960-971**

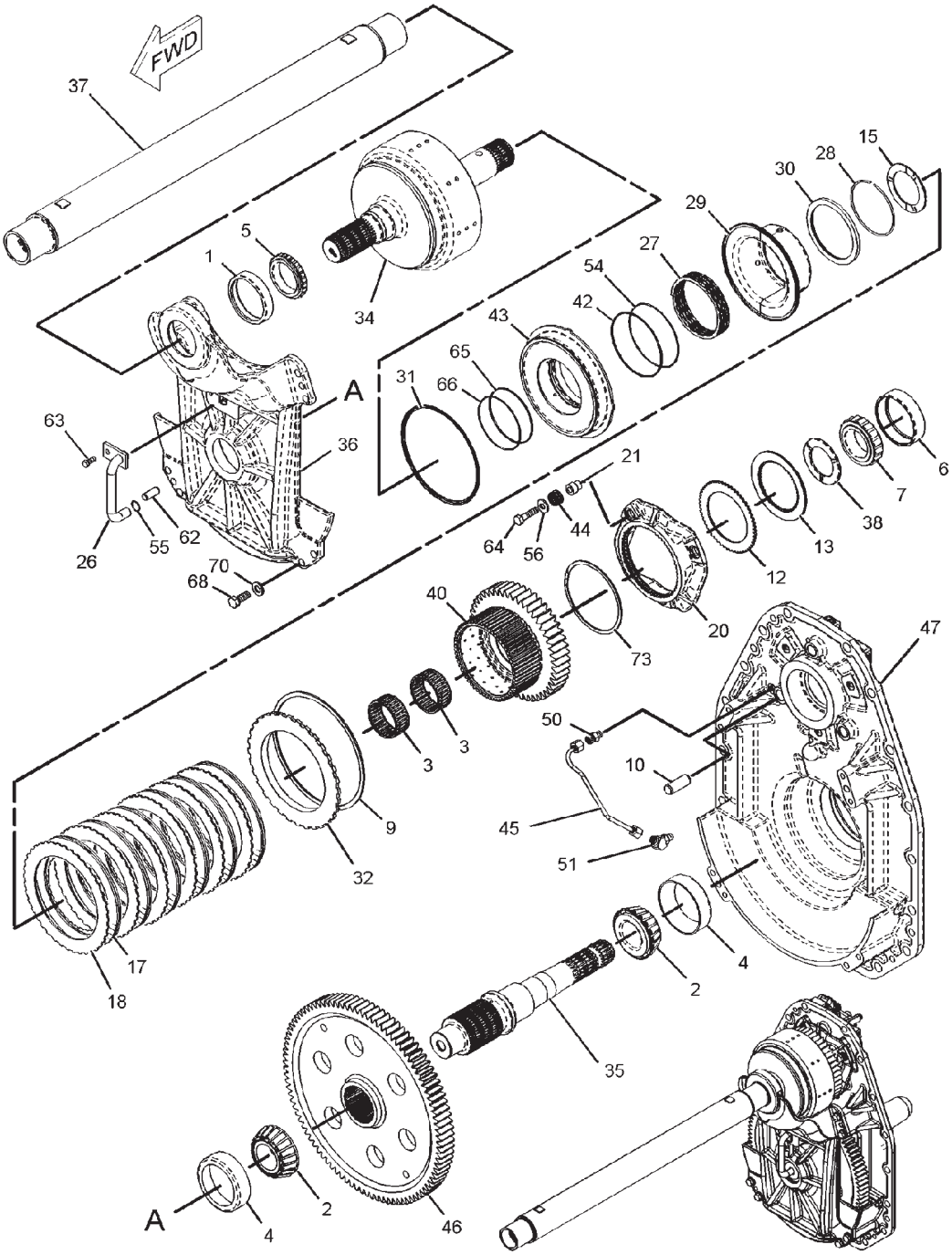


01122766

## 187-4930 POWER TAKE-OFF GP
**S/N: AZG880-900; AZH960-971**

| ITEM | NUMBER | QTY | DESCRIPTION |
|---|---|---|---|
| - | 187-4930 | -- | POWER TAKE-OFF GP [A] (NOT SERVICED) |
| 1 | 172-3441 | 1 | RACE-ROLLER BEARING |
| 2 | 008-3178 | 2 | CONE-BEARING |
| 3 | 124-0492 | 2 | BEARING-CAGED |
| 4 | 2D-9190 | 2 | CUP-BEARING |
| 5 | 6H-7611 | 1 | BEARING-INNER |
| 6 | 8E-8276 | 1 | RACE-BEARING OUTER |
| 7 | 8E-8277 | 1 | BEARING-INNER |
| 9 | 4D-7889 | 1 | RING |
| 10 | 4T-4200 | 3 | SLUG |
| 12 | 6Y-5631 | 1 | PLATE-CLUTCH |
| 13 | 6Y-7968 | 1 | DISC-FRICTION |
| 15 | 8E-8653 | 1 | DISC-THRUST |
| 17 | 134-8360 | 6 | DISC-FRICTION |
| 18 | 134-8361 | 6 | PLATE-CLUTCH |
| 20 | 161-8739 | 1 | PLATE-BRAKE |
| 21 | 161-8848 | 3 | BUSHING |
| 26 | 168-4558 | 1 | TUBE AS |
| 27 | 173-5392 | 1 | SPRING |
| 28 | 177-5241 | 1 | RING-RETAINING |
| 29 | 177-5243 | 1 | SEAL AS |
| 30 | 177-5246 | 1 | RING-SPACER |
| 31 | 177-6797 | 1 | RING-SEAL |
| 32 | 177-6804 | 1 | PLATE-END |
| 34 | 180-8378 | 1 | SHAFT AS |
| | 7T-9356 | 1 | PLUG-CUP |
| | 9W-0719 | 1 | PLUG |
| 35 | 180-8382 | 1 | SHAFT |
| 36 | 180-8385 | 1 | CARRIER-BEARING |
| 37 | 180-8393 | 1 | SHAFT AS |
| 38 | 180-8395 | 1 | DISC-THRUST |

CONTINUED

[A] PART OF 185-3955, 185-3956 AXLE AR

## 187-4930 POWER TAKE-OFF GP

**S/N: AZG880-900; AZH960-971**

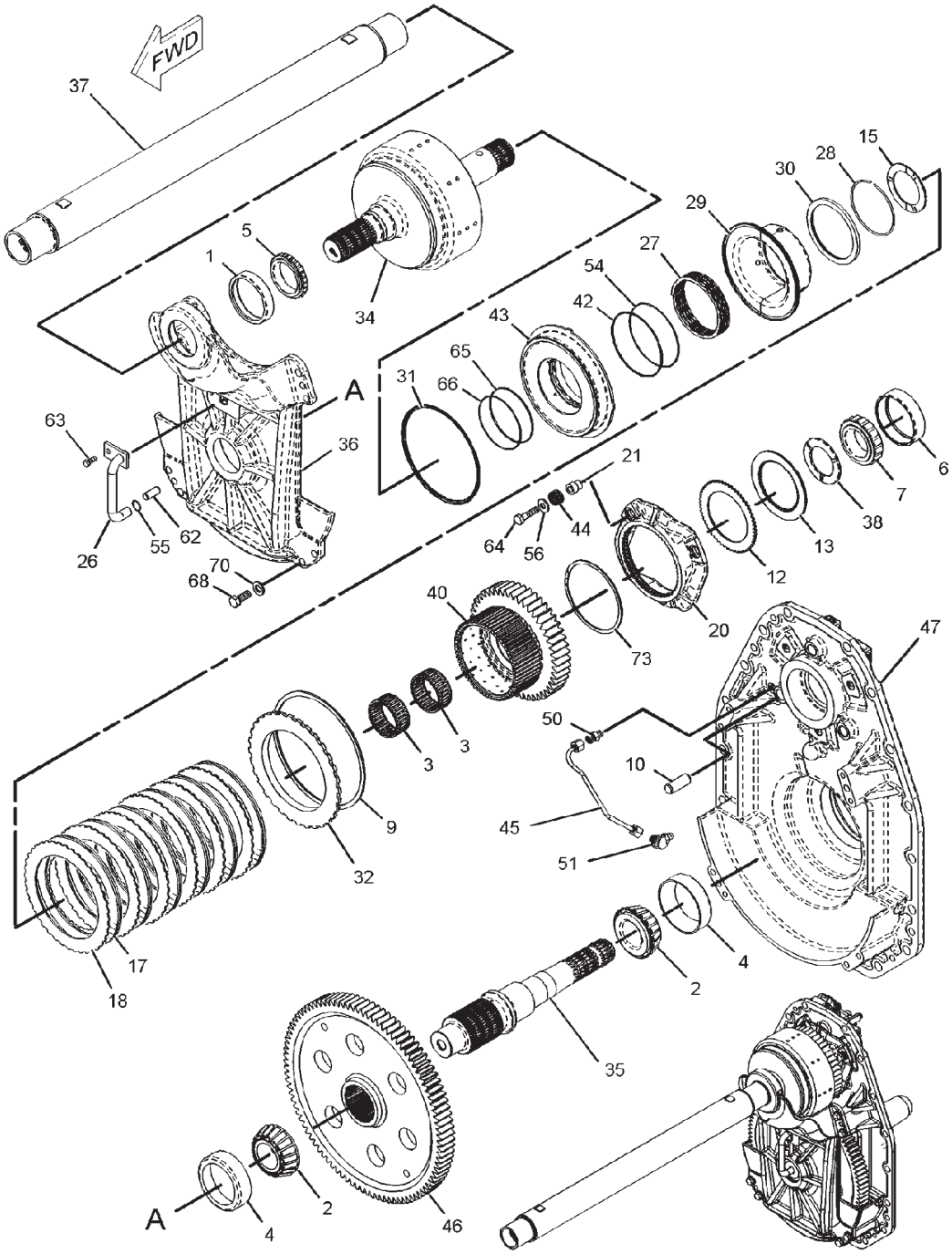


01122766

## 187-4930 POWER TAKE-OFF GP
**S/N: AZG880-900; AZH960-971**

| ITEM | NUMBER | QTY | DESCRIPTION |
|---|---|---|---|
| - | 187-4930 | -- | POWER TAKE-OFF GP [A] (NOT SERVICED) |
| 40 | 191-5262 | 1 | GEAR (48-TEETH) |
| 42 | 200-3039 | 1 | RING-SEAL |
| 43 | 203-2631 | 1 | PISTON |
| 44 | 210-1975 | 3 | SPRING |
| 45 | 211-8276 | 1 | TUBE AS |
| 46 | 216-9213 | 1 | GEAR (95-TEETH) |
| 47 | 217-3556 | 1 | COVER |
| 50 | 148-8316 | 1 | CONNECTOR AS |
| | 3J-7354 | 1 | SEAL-O-RING |
| | 4J-5477 | 1 | SEAL-O-RING |
| | 6V-8647 | 1 | CONNECTOR |
| 51 | 148-8385 | 1 | ELBOW AS |
| | 3J-7354 | 1 | SEAL-O-RING |
| | 4J-5477 | 1 | SEAL-O-RING |
| | 6V-9000 | 1 | ELBOW |
| 54 | 199-9240 | 1 | SEAL-O-RING |
| 55 | 1L-3162 | 1 | RING-RETAINING |
| 56 | 3E-4353 | 3 | WASHER-HARD (11X25X3-MM THK) |
| 62 | 5M-7937 | 2 | DOWEL |
| 63 | 6V-5215 | 1 | BOLT (M8X1.25X16-MM) |
| 64 | 6V-5842 | 3 | BOLT (M10X1.5X40-MM) |
| 65 | 7T-5594 | 1 | RING-SEAL |
| 66 | 8T-2572 | 1 | SEAL-O-RING |
| 68 | 8T-4139 | 8 | BOLT (M12X1.75X30-MM) |
| 70 | 8T-4223 | 8 | WASHER-HARD (13.5X25.5X3-MM THK) |
| 73 | 9U-8875 | 1 | RING-RETAINING |

[A] PART OF 185-3955, 185-3956 AXLE AR

01122766
PR: t05i29k58b0228

## 187-4930 POWER TAKE-OFF GP

**S/N: AZG880-900; AZH960-971**

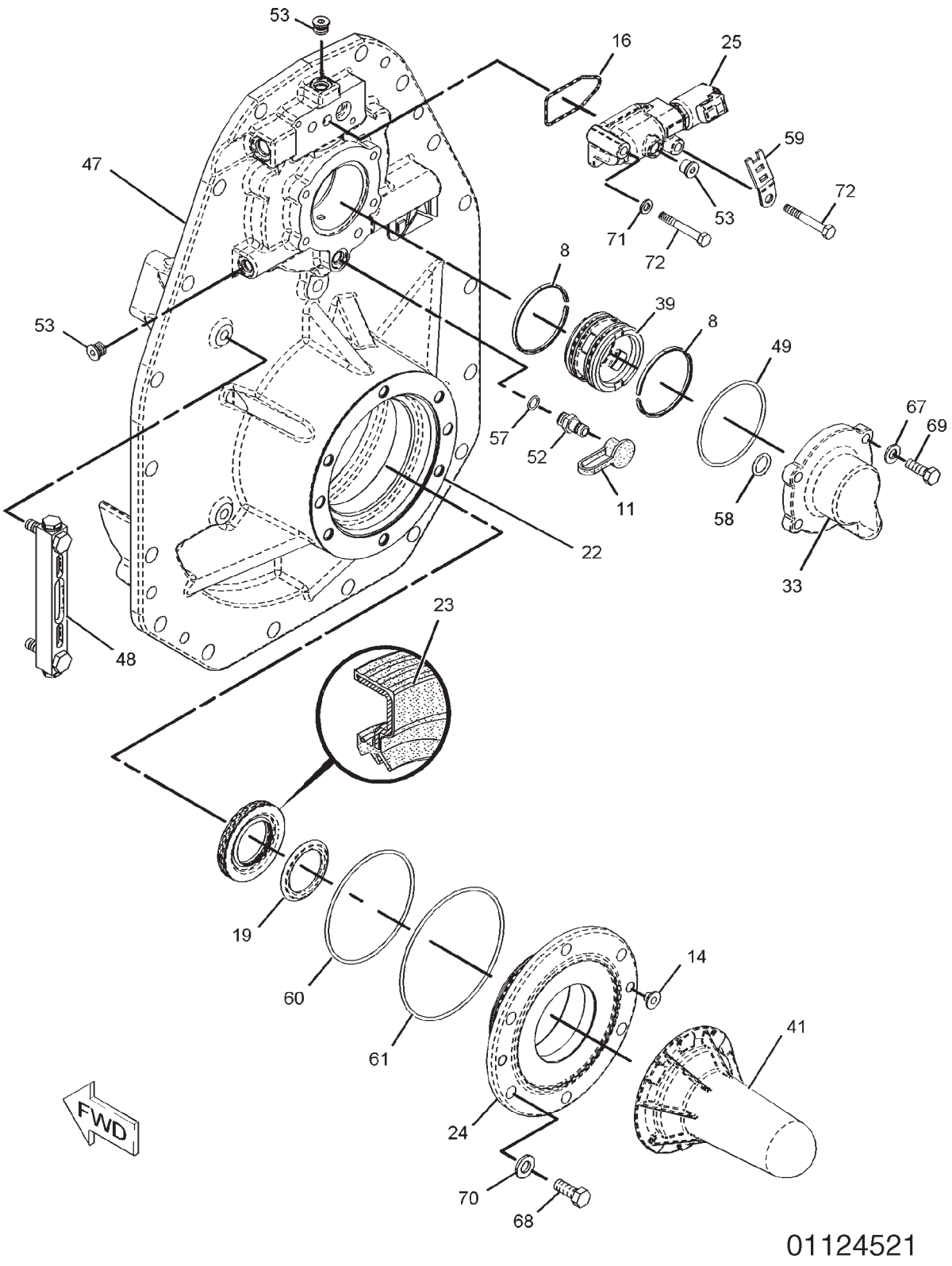

## 187-4930 POWER TAKE-OFF GP
**S/N: AZG880-900; AZH960-971**

| ITEM | NUMBER | QTY | DESCRIPTION |
|---|---|---|---|
| - | 187-4930 | -- | POWER TAKE-OFF GP [A] (NOT SERVICED) |
| 8 | 1T-1597 | 2 | RING-SEAL |
| 11 | 6V-0852 | 1 | CAP-DUST |
| 14 | 7C-6467 | 2 | PLUG |
| 16 | 8S-0768 | 1 | SEAL-O-RING |
| 19 | 160-6789 | 1 | GUARD |
| 22 | 164-3949 | AR | SHIM PACK (INCLUDES 13-SHIMS) |
| 23 | 164-3951 | 1 | SEAL-LIP TYPE |
| 24 | 165-0260 | 1 | CAGE-BEARING |
| 25 | 216-5343 | 1 | VALVE GP-MODULATING [C] |
| | | | (CLUTCH PACK HYDRAULIC OIL) |
| | | | (SEE BREAKDOWN FOR COMPONENTS) |
| 33 | 180-8369 | 1 | COVER |
| 39 | 188-7731 | 1 | CARRIER-RING |
| 41 | 199-4273 | 1 | COVER AS |
| 47 | 217-3556 | 1 | COVER |
| 48 | 217-3557 | 1 | GAUGE-SIGHT |
| 49 | 131-3718 | 1 | SEAL-O-RING |
| 52 | 6V-3965 | 1 | FITTING AS [B] |
| 53 | 162-0177 | 3 | PLUG AS |
| | 3J-1907 | 1 | SEAL-O-RING |
| | 9S-8004 | 1 | PLUG |
| 57 | 3J-1907 | 1 | SEAL-O-RING |
| 58 | 4J-5140 | 1 | SEAL-O-RING |
| 59 | 4P-7581 | 1 | CLIP |
| 60 | 5F-3999 | 1 | SEAL-O-RING |
| 61 | 5H-3252 | 1 | SEAL-O-RING |
| 67 | 8T-4121 | 4 | WASHER-HARD (11X21X2.5-MM THK) |
| 68 | 8T-4139 | 6 | BOLT (M12X1.75X30-MM) |
| 69 | 8T-4195 | 4 | BOLT (M10X1.5X30-MM) |
| 70 | 8T-4223 | 6 | WASHER-HARD (13.5X25.5X3-MM THK) |
| 71 | 8T-4224 | 1 | WASHER-HARD (8.8X16X2-MM THK) |
| 72 | 8T-6869 | 2 | BOLT (M8X1.25X60-MM) |

[A] PART OF 185-3955, 185-3956 AXLE AR
[B] NOT PART OF THIS GROUP
[C] CHANGE FROM PREVIOUS TYPE

01124521
PR: t05i29k58b0229

## 187-4930 POWER TAKE-OFF GP

**S/N: AZG901-UP; AZH972-UP**

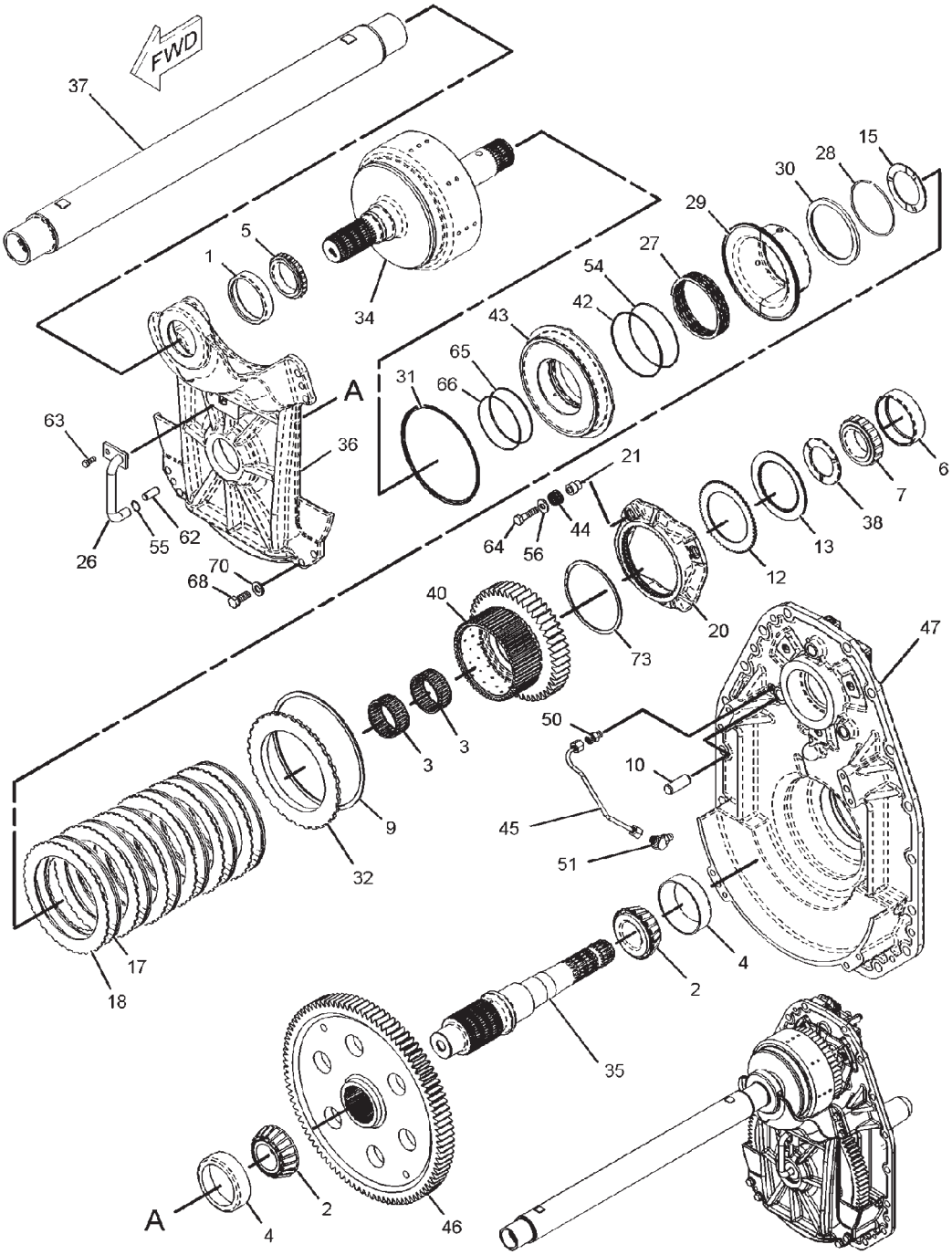


01122766

## 187-4930 POWER TAKE-OFF GP
**S/N: AZG901-UP; AZH972-UP**

| ITEM | NUMBER | QTY | DESCRIPTION |
|---|---|---|---|
| - | 187-4930 | -- | POWER TAKE-OFF GP [A] (NOT SERVICED) |
| 1 | 172-3441 | 1 | RACE-ROLLER BEARING |
| 2 | 008-3178 | 2 | CONE-BEARING |
| 3 | 124-0492 | 2 | BEARING-CAGED |
| 4 | 2D-9190 | 2 | CUP-BEARING |
| 5 | 6H-7611 | 1 | BEARING-INNER |
| 6 | 8E-8276 | 1 | RACE-BEARING OUTER |
| 7 | 8E-8277 | 1 | BEARING-INNER |
| 9 | 4D-7889 | 1 | RING |
| 10 | 4T-4200 | 3 | SLUG |
| 12 | 6Y-5631 | 1 | PLATE-CLUTCH |
| 13 | 6Y-7968 | 1 | DISC-FRICTION |
| 15 | 8E-8653 | 1 | DISC-THRUST |
| 17 | 134-8360 | 6 | DISC-FRICTION |
| 18 | 134-8361 | 6 | PLATE-CLUTCH |
| 20 | 161-8739 | 1 | PLATE-BRAKE |
| 21 | 187-8141 | 3 | BUSHING |
| 26 | 168-4558 | 1 | TUBE AS |
| 27 | 173-5392 | 1 | SPRING |
| 28 | 177-5241 | 1 | RING-RETAINING |
| 29 | 177-5243 | 1 | SEAL AS |
| 30 | 177-5246 | 1 | RING-SPACER |
| 31 | 177-6797 | 1 | RING-SEAL |
| 32 | 177-6804 | 1 | PLATE-END |
| 34 | 180-8378 | 1 | SHAFT AS |
| | 7T-9356 | 1 | PLUG-CUP |
| | 9W-0719 | 1 | PLUG |
| 35 | 180-8382 | 1 | SHAFT |
| 36 | 180-8385 | 1 | CARRIER-BEARING |
| 37 | 180-8393 | 1 | SHAFT AS |
| 38 | 180-8395 | 1 | DISC-THRUST |

CONTINUED

[A] PART OF 185-3955, 185-3956 AXLE AR

## 187-4930 POWER TAKE-OFF GP

**S/N: AZG901-UP; AZH972-UP**

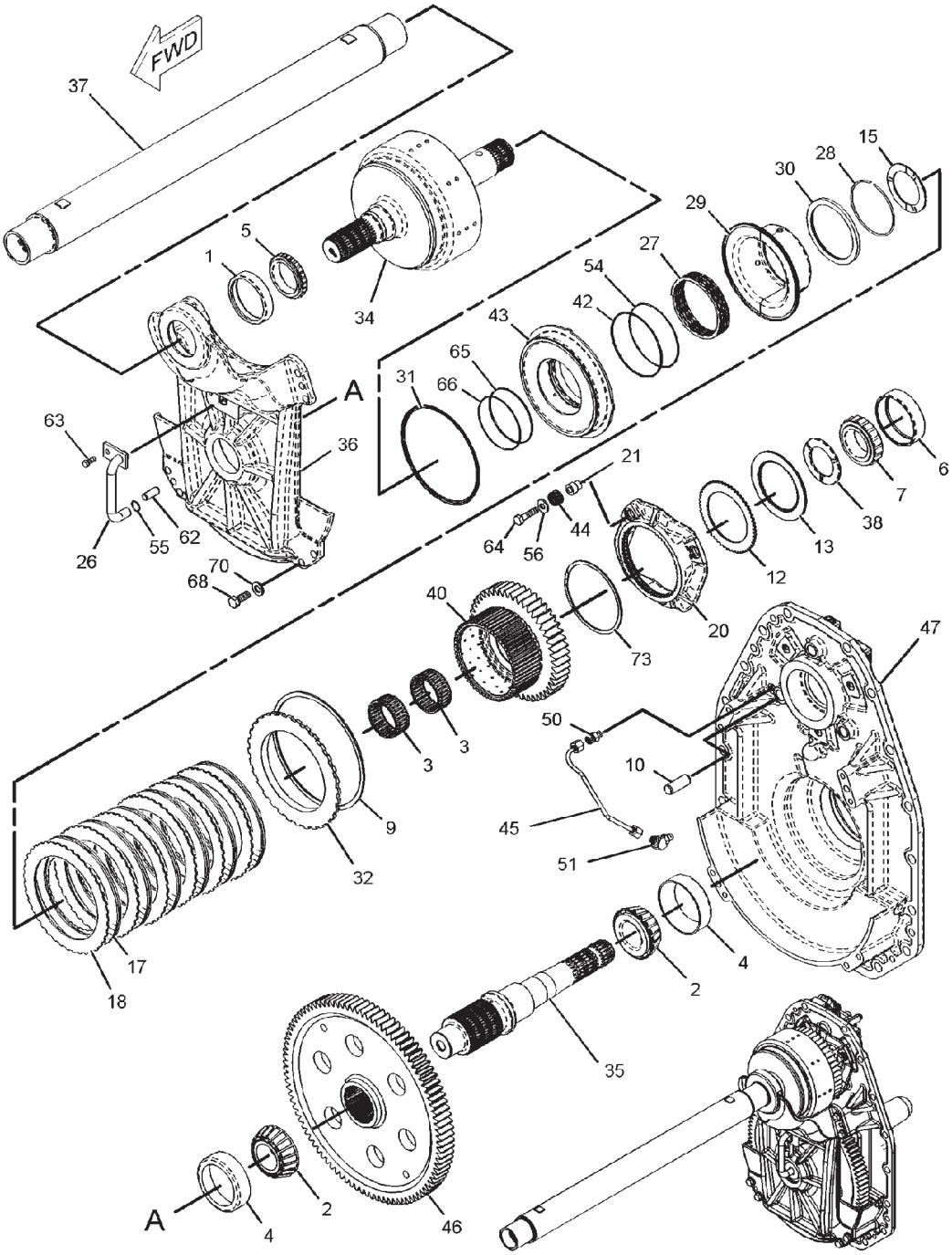

## 187-4930 POWER TAKE-OFF GP
**S/N: AZG901-UP; AZH972-UP**

| ITEM | NUMBER | QTY | DESCRIPTION |
|---|---|---|---|
| - | 187-4930 | -- | POWER TAKE-OFF GP [A] (NOT SERVICED) |
| 40 | 191-5262 | 1 | GEAR (48-TEETH) |
| 42 | 200-3039 | 1 | RING-SEAL |
| 43 | 203-2631 | 1 | PISTON |
| 44 | 187-8142 | 3 | SPRING |
| 45 | 211-8276 | 1 | TUBE AS |
| 46 | 216-9213 | 1 | GEAR (95-TEETH) |
| 47 | 217-3556 | 1 | COVER |
| 50 | 148-8316 | 1 | CONNECTOR AS |
| | 3J-7354 | 1 | SEAL-O-RING |
| | 4J-5477 | 1 | SEAL-O-RING |
| | 6V-8647 | 1 | CONNECTOR |
| 51 | 148-8385 | 1 | ELBOW AS |
| | 3J-7354 | 1 | SEAL-O-RING |
| | 4J-5477 | 1 | SEAL-O-RING |
| | 6V-9000 | 1 | ELBOW |
| 54 | 199-9240 | 1 | SEAL-O-RING |
| 55 | 1L-3162 | 1 | RING-RETAINING |
| 56 | 3E-4353 | 3 | WASHER-HARD (11X25X3-MM THK) |
| 62 | 5M-7937 | 2 | DOWEL |
| 63 | 6V-5215 | 1 | BOLT (M8X1.25X16-MM) |
| 64 | 6V-4249 | 3 | BOLT (M10X1.5X50-MM) |
| 65 | 7T-5594 | 1 | RING-SEAL |
| 66 | 8T-2572 | 1 | SEAL-O-RING |
| 68 | 8T-4139 | 8 | BOLT (M12X1.75X30-MM) |
| 70 | 8T-4223 | 8 | WASHER-HARD (13.5X25.5X3-MM THK) |
| 73 | 9U-8875 | 1 | RING-RETAINING |

[A] PART OF 185-3955, 185-3956 AXLE AR

01122766
PR: t05i29k58b0230

## 187-4930 POWER TAKE-OFF GP

**S/N: AZG901-UP; AZH972-UP**

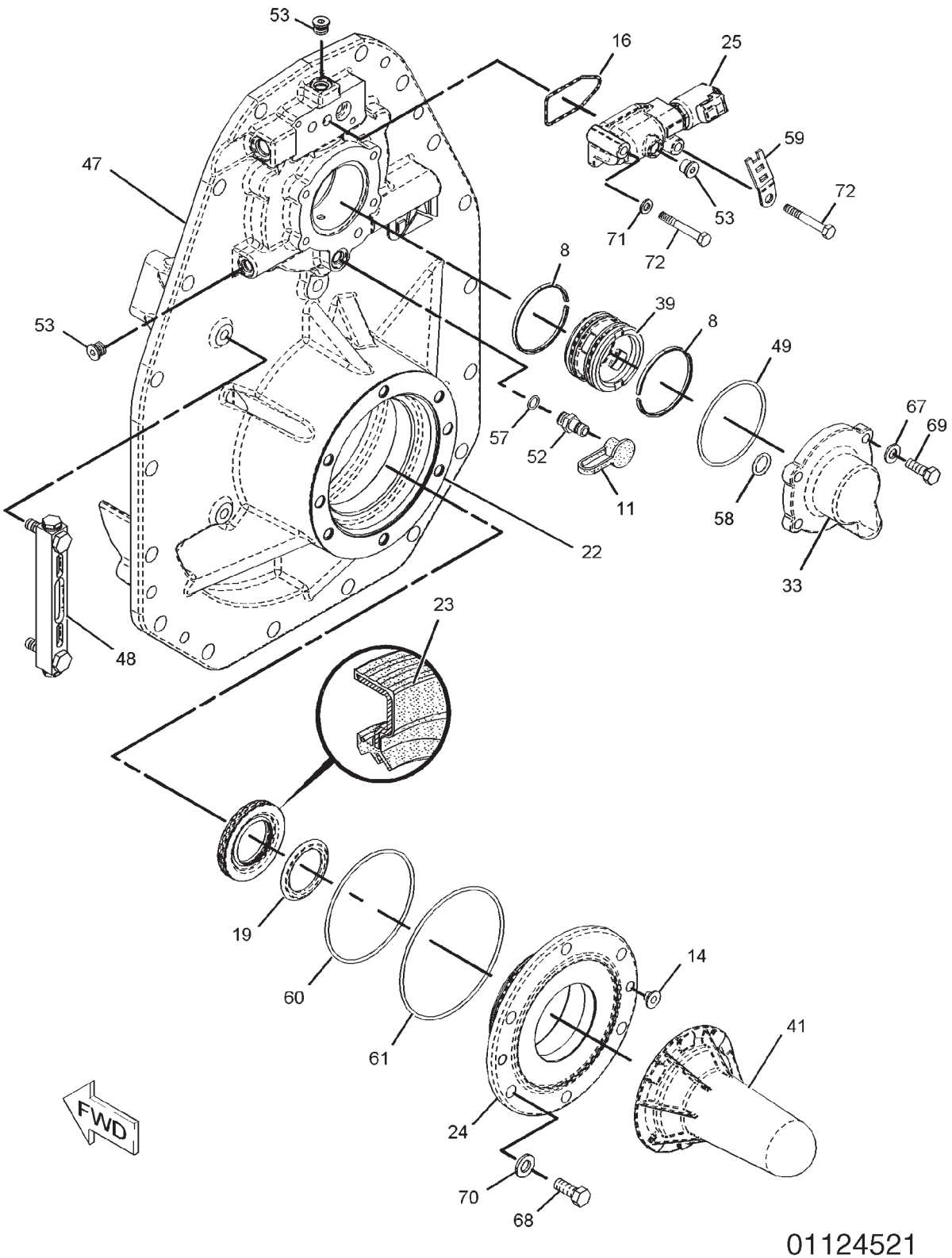

## 187-4930 POWER TAKE-OFF GP
**S/N: AZG901-UP; AZH972-UP**

| ITEM | NUMBER | QTY | DESCRIPTION |
|---|---|---|---|
| - | 187-4930 | -- | POWER TAKE-OFF GP [A] (NOT SERVICED) |
| 8 | 1T-1597 | 2 | RING-SEAL |
| 11 | 6V-0852 | 1 | CAP-DUST |
| 14 | 7C-6467 | 2 | PLUG |
| 16 | 8S-0768 | 1 | SEAL-O-RING |
| 19 | 160-6789 | 1 | GUARD |
| 22 | 164-3949 | AR | SHIM PACK (INCLUDES 13-SHIMS) |
| 23 | 164-3951 | 1 | SEAL-LIP TYPE |
| 24 | 165-0260 | 1 | CAGE-BEARING |
| 25 | 216-5343 | 1 | VALVE GP-MODULATING |
| | | | (CLUTCH PACK HYDRAULIC OIL) |
| | | | (SEE BREAKDOWN FOR COMPONENTS) |
| 33 | 180-8369 | 1 | COVER |
| 39 | 188-7731 | 1 | CARRIER-RING |
| 41 | 199-4273 | 1 | COVER AS |
| 47 | 217-3556 | 1 | COVER |
| 48 | 217-3557 | 1 | GAUGE-SIGHT |
| 49 | 131-3718 | 1 | SEAL-O-RING |
| 52 | 6V-3965 | 1 | FITTING AS [B] |
| 53 | 162-0177 | 3 | PLUG AS |
| | 3J-1907 | 1 | SEAL-O-RING |
| | 9S-8004 | 1 | PLUG |
| 57 | 3J-1907 | 1 | SEAL-O-RING |
| 58 | 4J-5140 | 1 | SEAL-O-RING |
| 59 | 4P-7581 | 1 | CLIP |
| 60 | 5F-3999 | 1 | SEAL-O-RING |
| 61 | 5H-3252 | 1 | SEAL-O-RING |
| 67 | 8T-4121 | 4 | WASHER-HARD (11X21X2.5-MM THK) |
| 68 | 8T-4139 | 6 | BOLT (M12X1.75X30-MM) |
| 69 | 8T-4195 | 4 | BOLT (M10X1.5X30-MM) |
| 70 | 8T-4223 | 6 | WASHER-HARD (13.5X25.5X3-MM THK) |
| 71 | 8T-4224 | 1 | WASHER-HARD (8.8X16X2-MM THK) |
| 72 | 8T-6869 | 2 | BOLT (M8X1.25X60-MM) |

[A] PART OF 185-3955, 185-3956 AXLE AR
[B] NOT PART OF THIS GROUP

01124521
PR: t05i29k58b0231

## 216-5343 VALVE GP-MODULATING

**S/N: AZG1-879; AZH1-959**

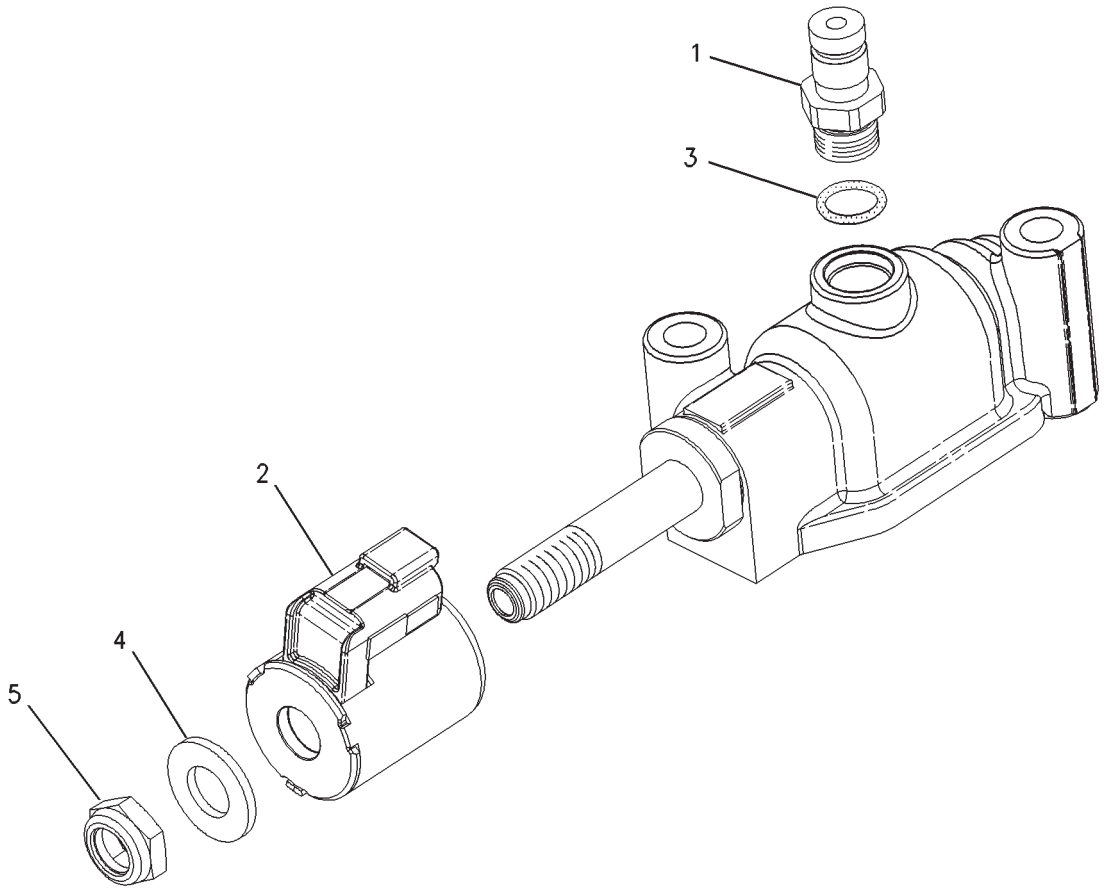


00672893

## 216-5343 VALVE GP-MODULATING
**S/N: AZG1-879; AZH1-959**

| ITEM | NUMBER | QTY | DESCRIPTION |
|---|---|---|---|
| - | 216-5343 | -- | VALVE GP-MODULATING [A] |
| 1 | 6V-3965 | 1 | FITTING AS |
| 2 | 155-4426 | 1 | COIL AS |
| 3 | 3J-1907 | 1 | SEAL-O-RING |
| 4 | 164-2108 | 1 | WASHER (13.03X25.4X2.38-MM THK) |
| 5 | 167-9524 | 1 | NUT-SELF-LOCKING (1/2-28-THD) |

[A] PART OF 187-4930 POWER TAKE-OFF GP

00672893
PR: t05i29k58b0232

## 216-5343 VALVE GP-MODULATING

**S/N: AZG880-UP; AZH960-UP; 9YY1-UP**
**12V ELECTRONIC CLUTCH PRESSURE CONTROL**

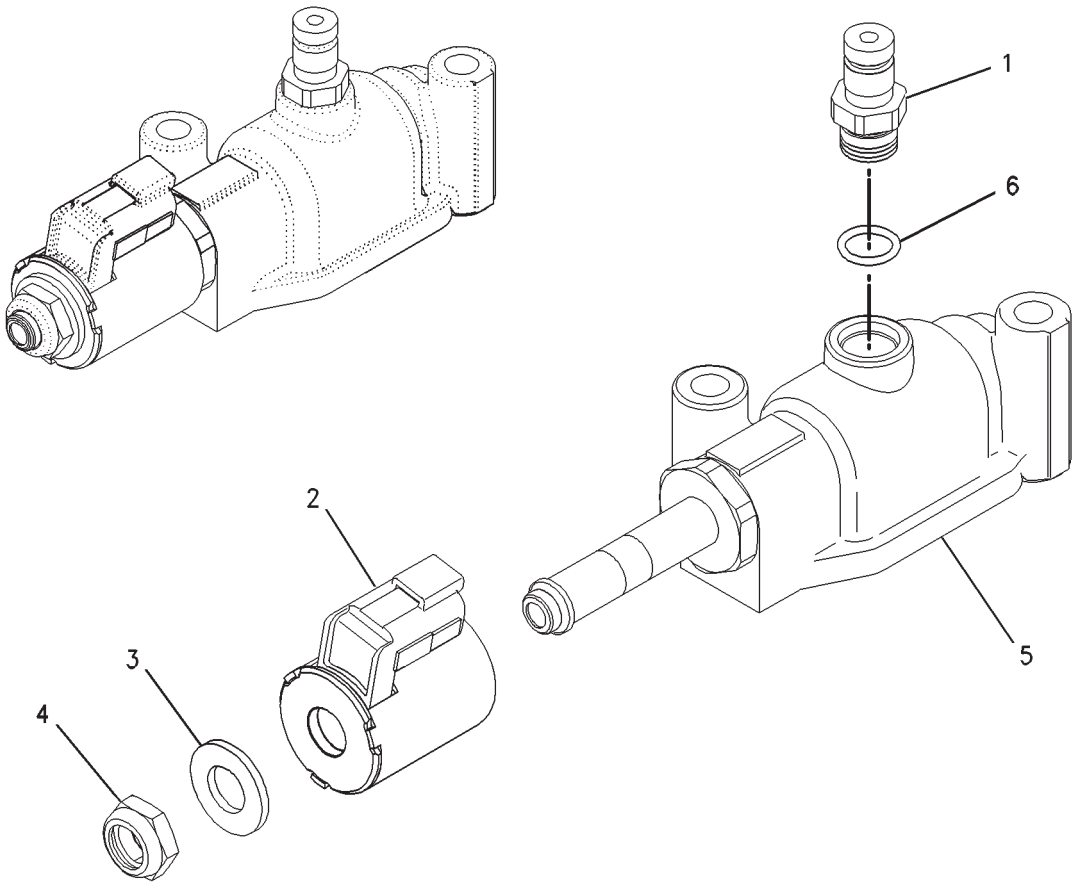


00890963

## 216-5343 VALVE GP-MODULATING
**S/N: AZG880-UP; AZH960-UP; 9YY1-UP**
**12V ELECTRONIC CLUTCH PRESSURE CONTROL**

| ITEM | NUMBER | QTY | DESCRIPTION |
|---|---|---|---|
| - | 216-5343 | -- | VALVE GP-MODULATING [A] |
| 1 | 6V-3965 | 1 | FITTING AS |
| 2 | 155-4426 | 1 | COIL AS |
| 3 | 164-2108 | 1 | WASHER (13.03X25.4X2.38-MM THK) |
| 4 | 167-9524 | 1 | NUT-SELF-LOCKING (1/2-28-THD) |
| 5 | ----- | 1 | VALVE AS [Z] |
| 6 | 3J-1907 | 1 | SEAL-O-RING |

[A] PART OF:
155-9580 CONTROL GP-TRANSMISSION HYD
187-4930 POWER TAKE-OFF GP
[Z] NOT SERVICED SEPARATELY

00890963
PR: t05i29k58b0233

**CHASSIS AR - 179-1953**

NO ILLUSTRATION

## CHASSIS AR - 179-1953

| ITEM | NUMBER | QTY | DESCRIPTION |
|---|---|---|---|
| - | 179-1953 | -- | CHASSIS AR [A] (NOT SERVICED) |
| 1 | 179-1954 | 1 | FRAME GP (NOT SERVICED)<br>(SEE BREAKDOWN FOR COMPONENTS) |
| 2 | 189-5805 | 1 | GUARD GP-POWER TRAIN (NOT SERVICED)<br>(SEE BREAKDOWN FOR COMPONENTS) |
| 3 | 162-4112 | 1 | MOUNTING GP-CAB (NOT SERVICED)<br>(SEE BREAKDOWN FOR COMPONENTS) |
| 4 | 156-1327 | 1 | STEP GP (NOT SERVICED)<br>(SEE BREAKDOWN FOR COMPONENTS) |
| 5 | 190-5441 | 1 | SUPPORT GP-HOOD (NOT SERVICED)<br>(SEE BREAKDOWN FOR COMPONENTS) |
| 6 | 179-2182 | 1 | TANK & MTG GP-FUEL (NOT SERVICED)<br>(SEE BREAKDOWN FOR COMPONENTS) |

[A] PART OF:
179-1952; 179-2180 BASE COMMON AR

NOTIF8
PR: t05i29k58b0234

## MOUNTING GP-COUNTERWEIGHT - 184-5337

**(504KG/1112 LB)**
**ROW ONLY**

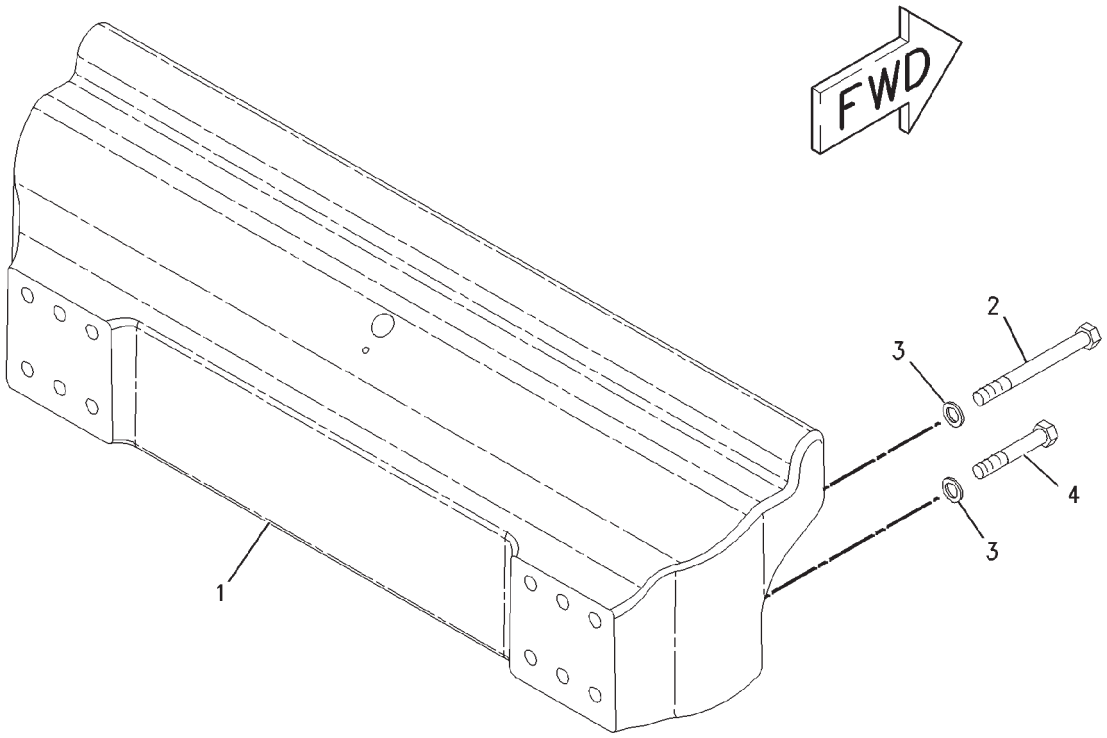


00835473

## MOUNTING GP-COUNTERWEIGHT - 184-5337
**(504KG/1112 LB)**
**ROW ONLY**

| ITEM | NUMBER | QTY | DESCRIPTION |
|---|---|---|---|
| - | 184-5337 | -- | MOUNTING GP-COUNTERWGHT (NOT SERVICED) |
| 1 | 184-5356 | 1 | BRACKET |
| 2 | 400194X1 | 6 | BOLT (M20X2.5X180MM) |
| 3 | 400080X1 | 12 | WASHER-PLATED (22X35X3.5) |
| 4 | 400236X1 | 6 | BOLT (M20X2.5X120MM) |

00835473
PR: t05i29k58b0235

## COUNTERWEIGHT GP - 185-8688

**ROLLER FRAME (1393KG/3071 LB)**
**ROW AND EAME**

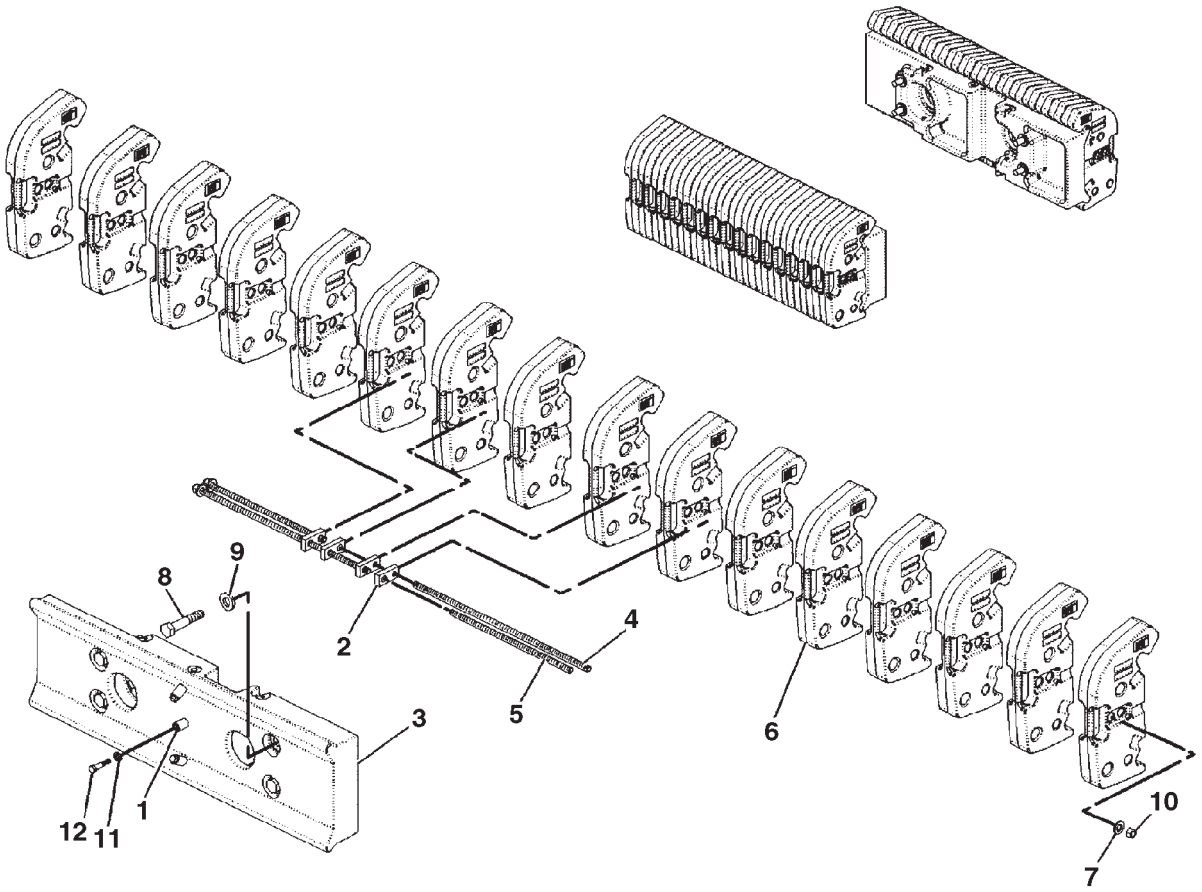


0886635A

## COUNTERWEIGHT GP - 185-8688

**ROLLER FRAME (1393KG/3071 LB)**
**ROW AND EAME**

| ITEM | NUMBER | QTY | DESCRIPTION |
|---|---|---|---|
| - | 185-8688 | -- | COUNTERWEIGHT GP (NOT SERVICED) |
| 1 | CH8V-9708 | 6 | SPACER (14.3X25.4X35) |
| 2 | 400350X1 | 8 | NUT-RETAINER |
| 3 | 166-7774 | 2 | SUPPORT |
| 4 | 166-7775 | 4 | ROD (COUNTERWEIGHT) |
| 5 | 166-7776 | 4 | ROD (COUNTERWEIGHT) |
| 6 | 171-7234 | 32 | WEIGHT |
| 7 | CH7X-0515 | 8 | WASHER-HARD (17X35X5) |
| 8 | 400213X1 | 8 | BOLT (M24X3X120MM) |
| 9 | CH8T-1482 | 8 | WASHER-HARD (26X50X8) |
| 10 | CH8T-4132 | 8 | NUT (M16X2) |
| 11 | 400357X1 | 6 | WASHER-HARD (M12X25.5X3) |
| 12 | 400063X1 | 6 | BOLT (M12X1.75X60MM) |
| 13 | 400091X1 | 6 | PLUG PROTECTIVE (NOT SHOWN) |

0886635A
PR: t05i29k58b0236

## COUNTERWEIGHT GP - 185-8690

**ROLLER FRAME (2786KG/6142 LB)**
**ROW AND EAME**

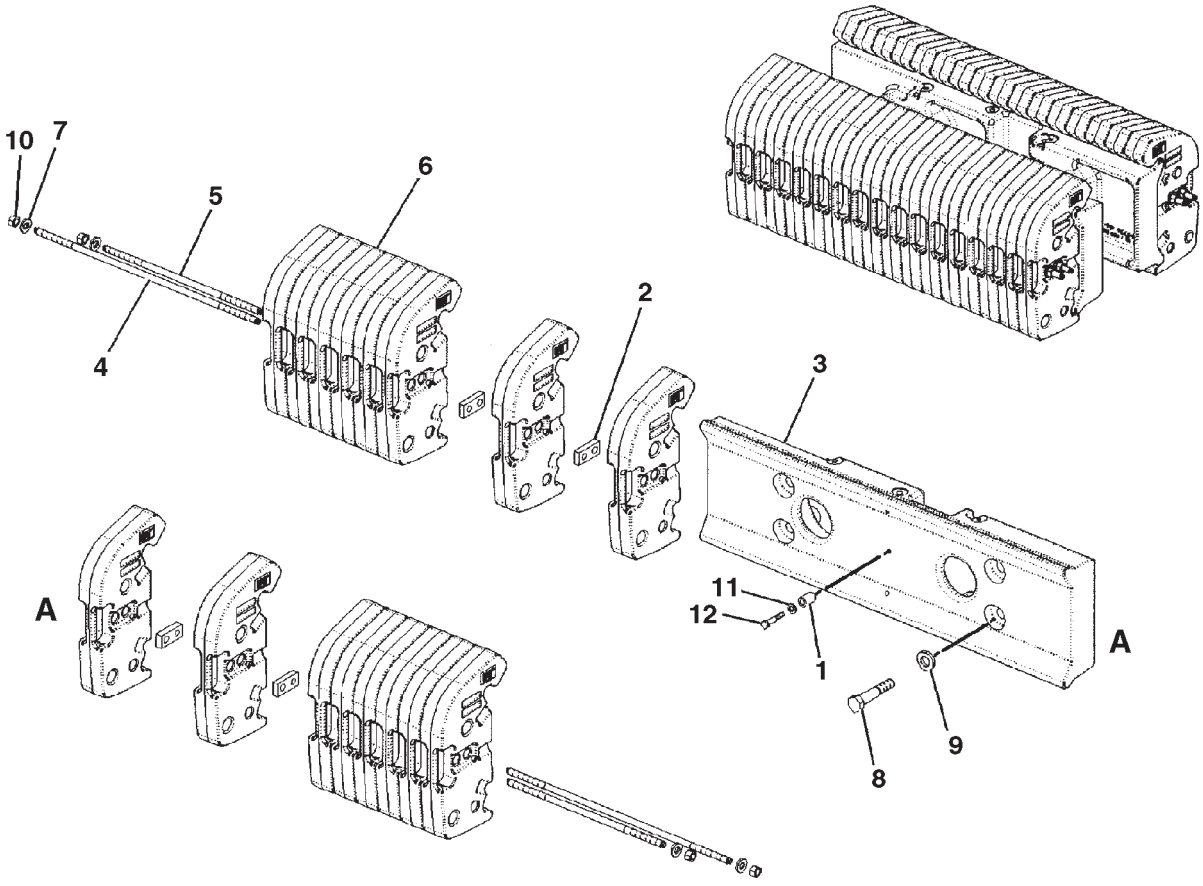


0887109A

## COUNTERWEIGHT GP - 185-8690
**ROLLER FRAME (2786KG/6142 LB)**
**ROW AND EAME**

| ITEM | NUMBER | QTY | DESCRIPTION |
|---|---|---|---|
| - | 185-8690 | -- | COUNTERWEIGHT GP (NOT SERVICED) |
| 1 | CH8V-9708 | 12 | SPACER (14.3X25.4X35) |
| 2 | 400350X1 | 16 | NUT-RETAINER |
| 3 | 166-7774 | 4 | SUPPORT |
| 4 | 166-7775 | 8 | ROD |
| 5 | 166-7776 | 8 | ROD |
| 6 | 171-7234 | 64 | WEIGHT |
| 7 | CH7X-0515 | 16 | WASHER-HARD (17X35X5) |
| 8 | 400213X1 | 16 | BOLT (M24X3X) |
| 9 | CH8T-1482 | 16 | WASHER-HARD (26X50X8) |
| 10 | CH8T-4132 | 16 | NUT (M16X2) |
| 11 | 400357X1 | 12 | WASHER-HARD (M12X25.5X3) |
| 12 | 400063X1 | 12 | BOLT (M12X1.75X60MM) |

0887109A
PR: t05i29k58b0237

## COUNTERWEIGHT GP-FRONT - 502116D1

**6 WEIGHTS (963KG/2063LB)**
**EAME ONLY**

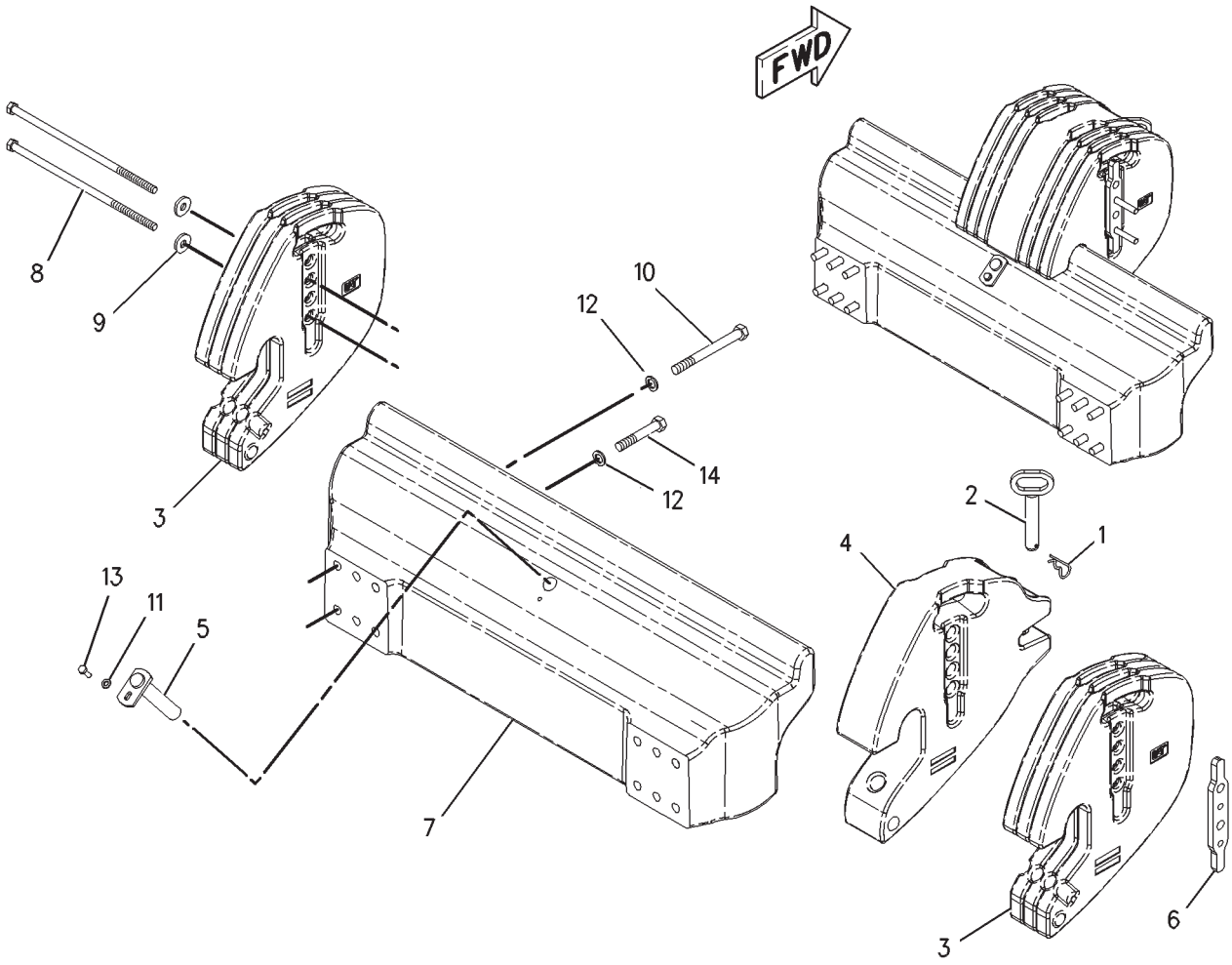

## COUNTERWEIGHT GP-FRONT - 502116D1

**6 WEIGHTS (963KG/2063LB)**
**EAME ONLY**

| ITEM | NUMBER | QTY | DESCRIPTION |
|---|---|---|---|
| - | 502116D1 | -- | COUNTERWEIGHT GP-FRONT |
| 1 | CH5P-8837 | 1 | LOCK PIN |
| 2 | CH137-9775 | 1 | PIN AS |
| 3 | 202-9220 | 6 | WEIGHT |
| 4 | 502113D1 | 1 | WEIGHT (CENTER) |
| 5 | CH202-9222 | 1 | PIN AS |
| 6 | 202-9223 | 1 | PLATE |
| 7 | 184-5356 | 1 | BRACKET |
| 8 | 400268X1 | 2 | BOLT (M16X2X440MM) |
| 9 | CH7X-0583 | 2 | WASHER-HARD (17X45X6) |
| 10 | 400194X1 | 6 | BOLT (M20X2.5X180MM) |
| 11 | 400375X1 | 1 | WASHER-HARD (M12X25.5X3) |
| 12 | 400080X1 | 12 | WASHER-PLATED (22X35X3.5) |
| 13 | 400041X1 | 1 | BOLT (M12X1.75X30MM) |
| 14 | 400236X1 | 6 | BOLT (M20X2.5X120MM) |

00776682
PR: t05i29k58b0238

## COUNTERWEIGHT GP-FRONT - 502117D1

**16 WEIGHTS (1403KG/3091LB)**
**EAME ONLY**

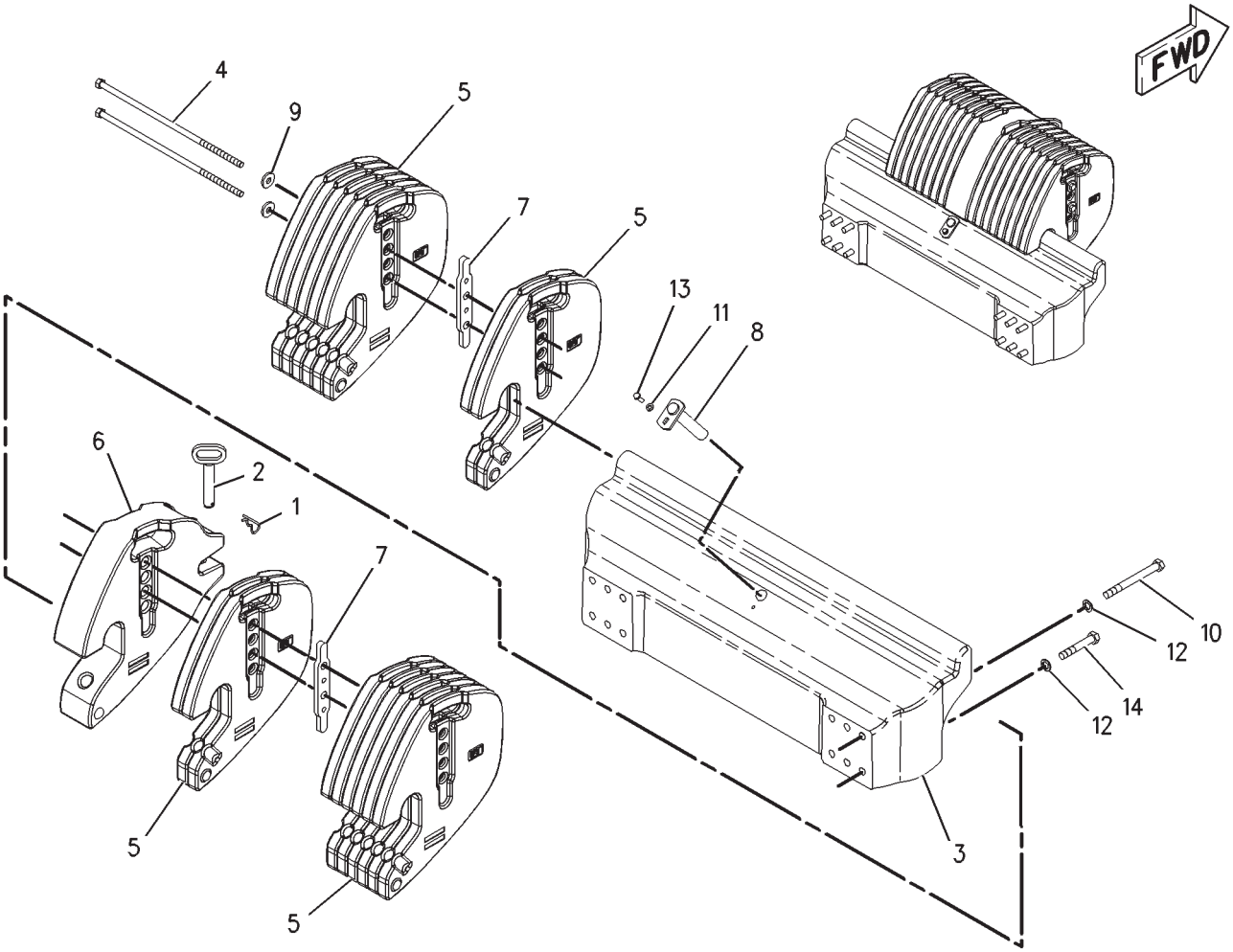


00875121

## COUNTERWEIGHT GP-FRONT - 502117D1

**16 WEIGHTS (1403KG/3091LB)**
**EAME ONLY**

| ITEM | NUMBER | QTY | DESCRIPTION |
|---|---|---|---|
| - | 502117D1 | -- | COUNTERWEIGHT GP-FRONT |
| 1 | CH5P-8837 | 1 | LOCK PIN |
| 2 | CH137-9775 | 1 | PIN AS |
| 3 | 184-5356 | 1 | BRACKET |
| 4 | 400267X1 | 2 | BOLT (M16X2X550MM) |
| 5 | 202-9220 | 16 | WEIGHT |
| 6 | 502113D1 | 1 | WEIGHT (CENTER) |
| 7 | 202-9223 | 2 | PLATE |
| 8 | CH202-9222 | 1 | PIN AS |
| 9 | CH7X-0583 | 2 | WASHER-HARD (17X45X6) |
| 10 | 400194X1 | 6 | BOLT (M20X2.5X180MM) |
| 11 | 400375X1 | 1 | WASHER-HARD (M12X25.5X3) |
| 12 | 400080X1 | 12 | WASHER-PLATED (22X35X3.5) |
| 13 | 400041X1 | 1 | BOLT (M12X1.75X30MM) |
| 14 | 400236X1 | 6 | BOLT (M20X2.5X120MM) |

00875121
PR: t05i29k58b0239

## COUNTERWEIGHT GP-FRONT - 184-5329

**20 WEIGHTS (1440KG/3175LB)**
**ROW ONLY**

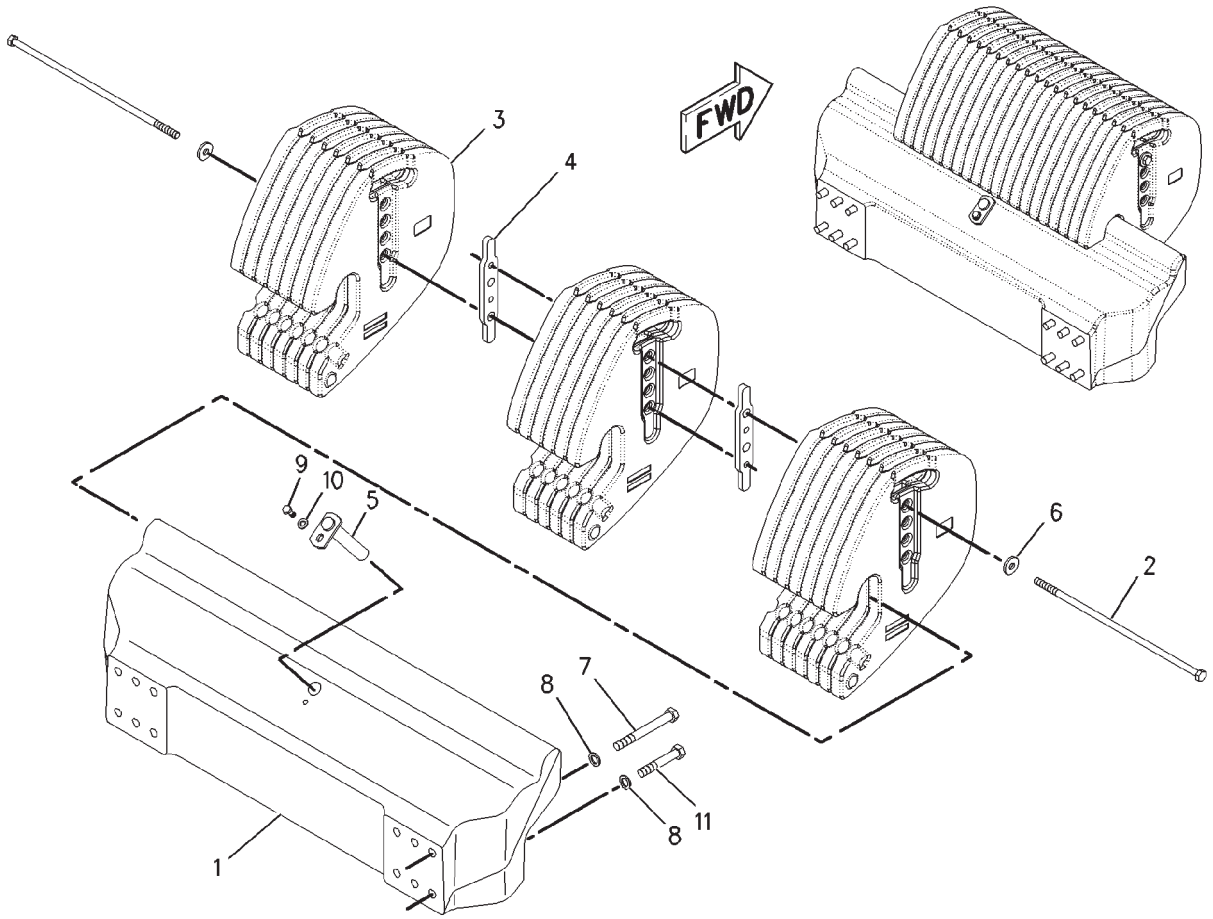


00887128

## COUNTERWEIGHT GP-FRONT - 184-5329

**20 WEIGHTS (1440KG/3175LB)**
**ROW ONLY**

| ITEM | NUMBER | QTY | DESCRIPTION |
|---|---|---|---|
| - | 184-5329 | -- | COUNTERWEIGHT GP-FRONT |
| 1 | 184-5356 | 1 | BRACKET |
| 2 | 400267X1 | 2 | BOLT (M16X2X550MM) |
| 3 | 202-9220 | 20 | WEIGHT |
| 4 | 202-9223 | 2 | PLATE |
| 5 | CH202-9222 | 1 | PIN ASM |
| 6 | CH7X-0583 | 2 | WASHER-HARD (17X45X6) |
| 7 | 400194X1 | 6 | BOLT (M20X2.5X180MM) |
| 8 | 400080X1 | 12 | WASHER-PLATED (22X35X3.5) |
| 9 | 400041X1 | 1 | BOLT (M12X1.75X30MM) |
| 10 | 400357X1 | 1 | WASHER-HARD (M12X25.5X3) |
| 11 | 400236X1 | 6 | BOLT (M20X2.5X120MM) |

00887128
PR: t05i29k58b0240

## COUNTERWEIGHT GP-FRONT - 502118D1

**28 WEIGHTS (1963KG/4328LB)**
**EAME ONLY**

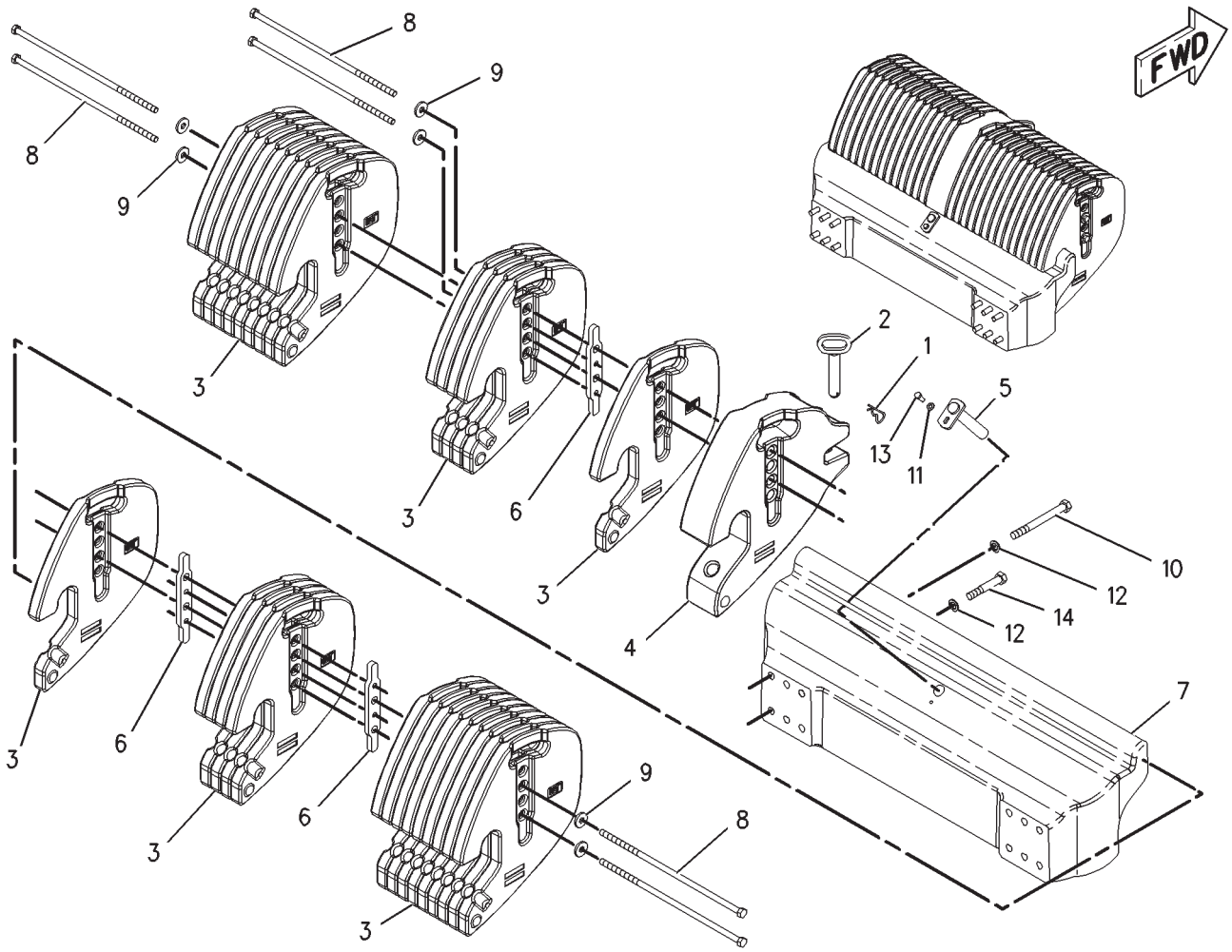


00779332

## COUNTERWEIGHT GP-FRONT - 502118D1

**28 WEIGHTS (1963KG/4328LB)**
**EAME ONLY**

| ITEM | NUMBER | QTY | DESCRIPTION |
|---|---|---|---|
| - | 502118D1 | -- | COUNTERWEIGHT GP-FRONT |
| 1 | CH5P-8837 | 1 | LOCK PIN |
| 2 | CH137-9775 | 1 | PIN AS |
| 3 | 202-9220 | 28 | WEIGHT |
| 4 | 502130D1 | 1 | WEIGHT (CENTER) |
| 5 | CH202-9222 | 1 | PIN AS |
| 6 | 202-9223 | 3 | PLATE |
| 7 | 184-5356 | 1 | BRACKET |
| 8 | 400267X1 | 6 | BOLT (M16X2X550MM) |
| 9 | CH7X-0583 | 6 | WASHER-HARD (17X45X6) |
| 10 | 400194X1 | 6 | BOLT (M20X2.5X180MM) |
| 11 | 400357X1 | 1 | WASHER-HARD (M12X25.5X3) |
| 12 | 400080X1 | 12 | WASHER-PLATED (22X35X3.5) |
| 13 | 400041X1 | 1 | BOLT (M12X1.75X30MM) |
| 14 | 400236X1 | 6 | BOLT (M20X2.5X120MM) |

00779332
PR: t05i29k58b0241

## COUNTERWEIGHT GP-FRONT - 184-5357

**32 WEIGHTS (2000KG/4409LB)**

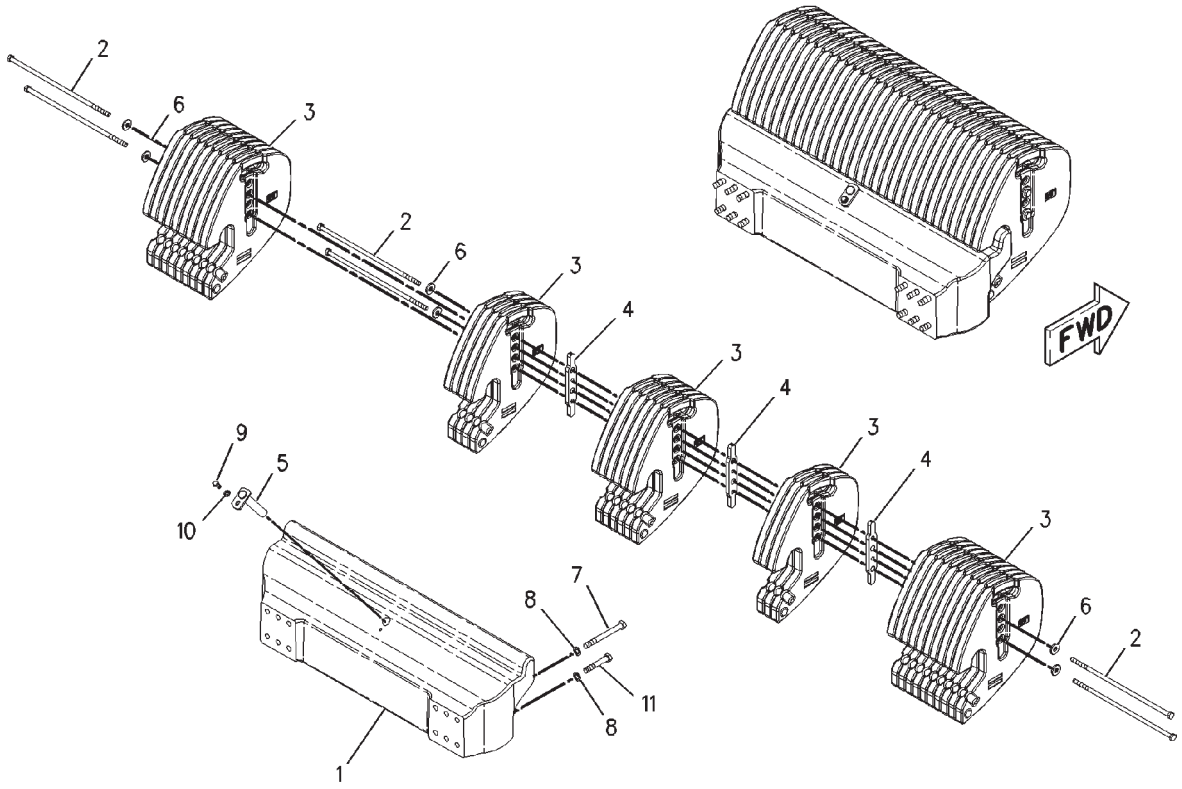


00835430

## COUNTERWEIGHT GP-FRONT - 184-5357

**32 WEIGHTS (2000KG/4409LB)**

| ITEM | NUMBER | QTY | DESCRIPTION |
|---|---|---|---|
| - | 502784D1 | -- | COUNTERWEIGHT GP-FRNT [A] (FIELD INST) |
| - | 502916D1 | -- | COUNTERWEIGHT GP-FRNT [A] (FACT OPTION) (NOT SERVICED) |
| - | 184-5357 | -- | COUNTERWEIGHT GP-FRNT [A] (NOT SERVICED, ORDER FIELD INSTALLED) |
| 1 | 184-5356 | 1 | BRACKET |
| 2 | 400267X1 | 6 | BOLT (M16X2X550MM) |
| 3 | 202-9220 | 32 | WEIGHT |
| 4 | 202-9223 | 3 | PLATE |
| 5 | CH202-9222 | 1 | PIN ASM |
| 6 | CH7X-0583 | 6 | WASHER-HARD (17X45X6) |
| 7 | 400194X1 | 6 | BOLT (M20X2.5X180MM) |
| 8 | 400080X1 | 12 | WASHER-PLATED (22X35X3.5) |
| 9 | 400041X1 | 1 | BOLT (M12X1.75X30MM) |
| 10 | 400357X1 | 1 | WASHER-HARD (M12X25.5X3) |
| 11 | 400236X1 | 6 | BOLT (M20X2.5X120MM) |

[A] PART OF 502784D1;502916D1
CNTRWGHT GP-FRONT

00835430
PR: t05i29k58b0242

## COUNTERWEIGHT GP-IDLER - 177-4588
**(909KG/2000LB)**

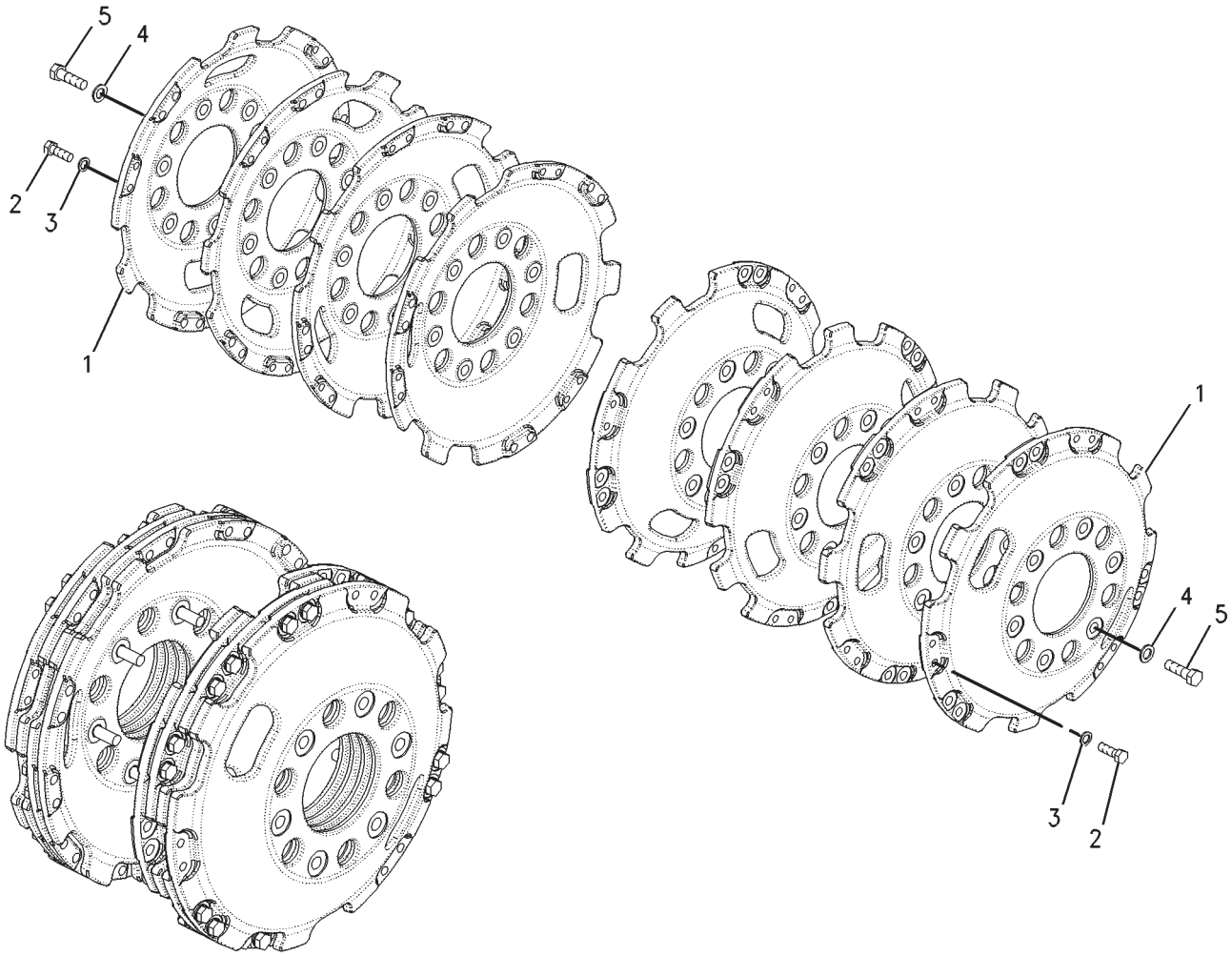


00814137

## COUNTERWEIGHT GP-IDLER - 177-4588
**(909KG/2000LB)**

| ITEM | NUMBER | QTY | DESCRIPTION |
|---|---|---|---|
| - | 177-4588 | -- | COUNTERWEIGHT GP-IDLER (NOT SERVICED) |
| 1 | 195-9633 | 16 | COUNTERWEIGHT |
| 2 | 400031X1 | 72 | BOLT (M20X2.5X60MM) |
| 3 | 400080X1 | 72 | WASHER-PLATED (22X35X3.5) |
| 4 | 400081X1 | 24 | WASHER-HARD (26X44X4) |
| 5 | 400067X1 | 24 | BOLT (M24X3X80MM) |
| 6 | 400090X1 | 24 | PLUG, PLASTIC (M20) (NOT SHOWN) |

00814137
PR: t05i29k58b0243

## COUNTERWEIGHT GP-IDLER - 178-8047
**(1575KG/3500LB)**

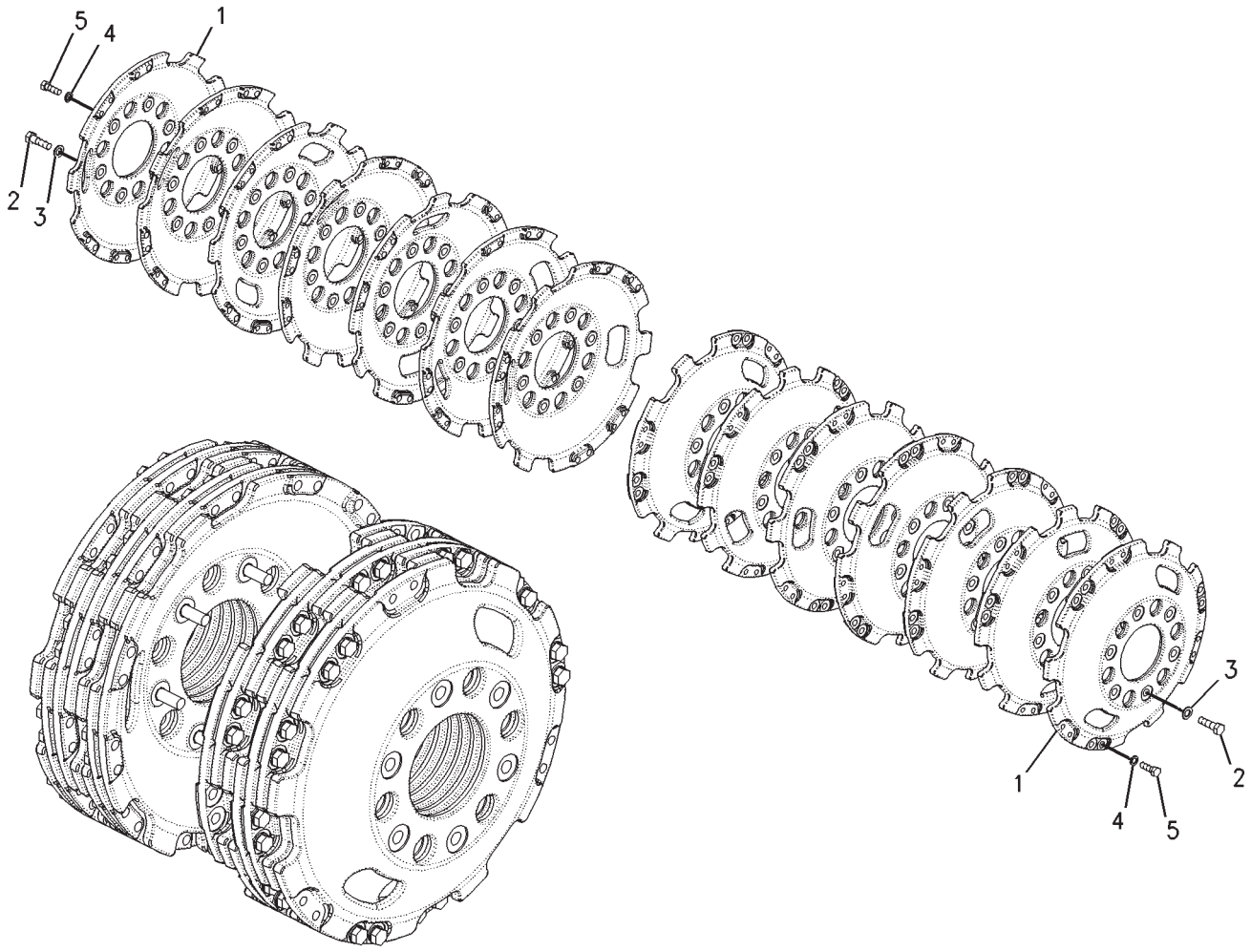


00814444

## COUNTERWEIGHT GP-IDLER - 178-8047
**(1575KG/3500LB)**

| ITEM | NUMBER | QTY | DESCRIPTION |
|---|---|---|---|
| - | 178-8047 | -- | COUNTERWEIGHT GP-IDLER (NOT SERVICED) |
| 1 | 195-9633 | 28 | COUNTERWEIGHT |
| 2 | 400031X1 | 144 | BOLT (M20X2.5X60MM) |
| 3 | 400080X1 | 144 | WASHER-PLATED (22X35X3.5) |
| 4 | 400081X1 | 24 | WASHER-HARD (26X44X4) |
| 5 | 400067X1 | 24 | BOLT (M24X3X80MM) |
| 6 | 400090X1 | 24 | PLUG, PLASTIC (M20) (NOT SHOWN) |

00814444
PR: t05i29k58b0244

## COUNTERWEIGHT GP-IDLER - 185-8720
**(2043KG/4500LB)**

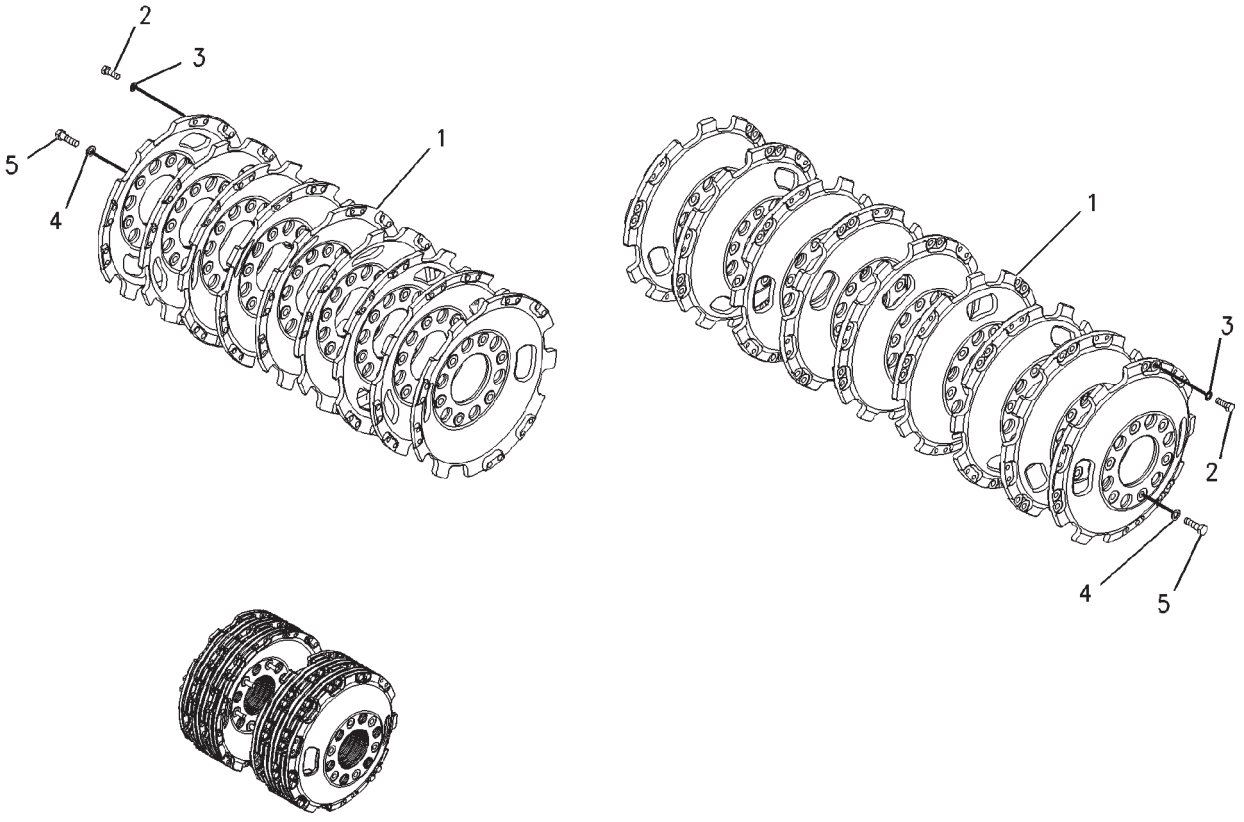


00835573

## COUNTERWEIGHT GP-IDLER - 185-8720
**(2043KG/4500LB)**

| ITEM | NUMBER | QTY | DESCRIPTION |
|---|---|---|---|
| - | 185-8720 | -- | COUNTERWEIGHT GP-IDLER (NOT SERVICED) |
| 1 | 195-9633 | 36 | COUNTERWEIGHT |
| 2 | 400031X1 | 192 | BOLT (M20X2.5X60MM) |
| 3 | 400080X1 | 192 | WASHER-PLATED (22X35X3.5) |
| 4 | 400081X1 | 24 | WASHER-HARD (26X44X4) |
| 5 | 400067X1 | 24 | BOLT (M24X3X80MM) |
| 6 | 400090X1 | -- | PLUG, PLASTIC (M20) (NOT SHOWN) |

00835573
PR: t05i29k58b0245

## COVER GP-ACCESS - 190-5943

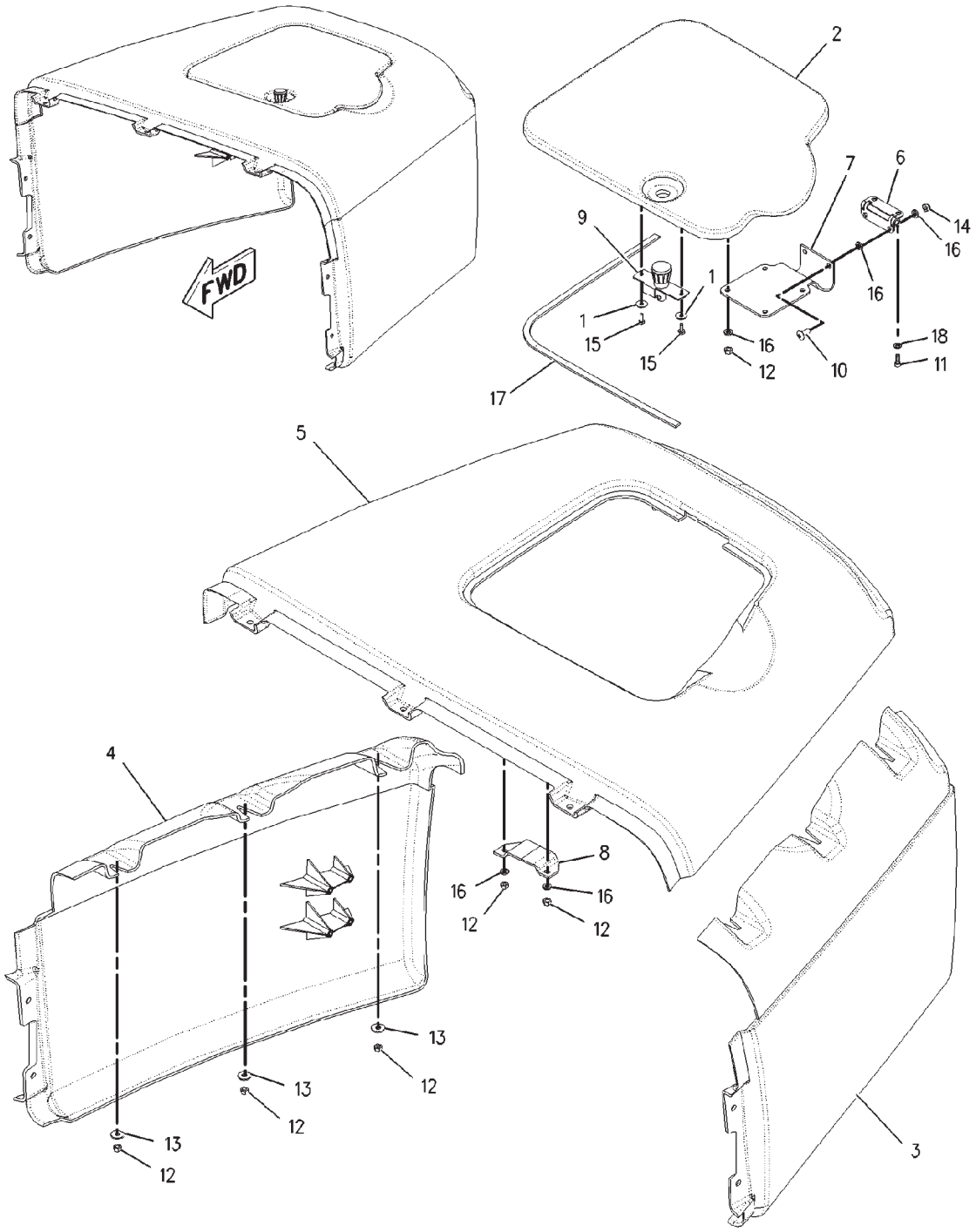


00891537

## COVER GP-ACCESS - 190-5943

| ITEM | NUMBER | QTY | DESCRIPTION |
|---|---|---|---|
| - | 190-5943 | -- | COVER GP-ACCESS [A] |
| 1 | 400076X1 | 2 | WASHER (5X16X1.2) |
| 2 | 190-5942 | 1 | LID ASM |
| 3 | 196-6944 | 1 | PANEL ASM (LH) |
| 4 | 196-6946 | 1 | PANEL ASM (RH) |
| 5 | 196-6954 | 1 | PANEL ASM (TOP) |
| 6 | 202-2356 | 1 | HINGE |
| 7 | 202-2357 | 1 | BRACKET |
| 8 | 208-9495 | 1 | BRACKET |
| 9 | 208-9496 | 1 | LATCH ASM |
| 10 | 210-4416 | 2 | SCREW (M6) |
| 11 | 400138X1 | 2 | BOLT-SOCKET HEAD (M6X1X10.0MM) |
| 12 | 400300X1 | 12 | NUT (M6X1) |
| 13 | CH5P-4115 | 6 | WASHER-HARD (7.2X19X2) |
| 14 | CH6V-7743 | 2 | LOCKNUT (M6X1) |
| 15 | CH8T-0285 | 2 | SCREW-MACHINE (M4X0.7X12MM) |
| 16 | 400310X1 | 10 | WASHER (6.6X12X2) |
| 17 | CH5P-3602 | | SEAL (6 DM) |
| 18 | CH8T-0334 | 2 | WASHER-HARD (6.6X12.5X1.6) |

[A] PART OF 156-1313; 161-9173
HOOD & GUARD GP

00891537
PR: t05i29k58b0246

## FENDER GP - 161-9174
**ROW & SPECIAL**

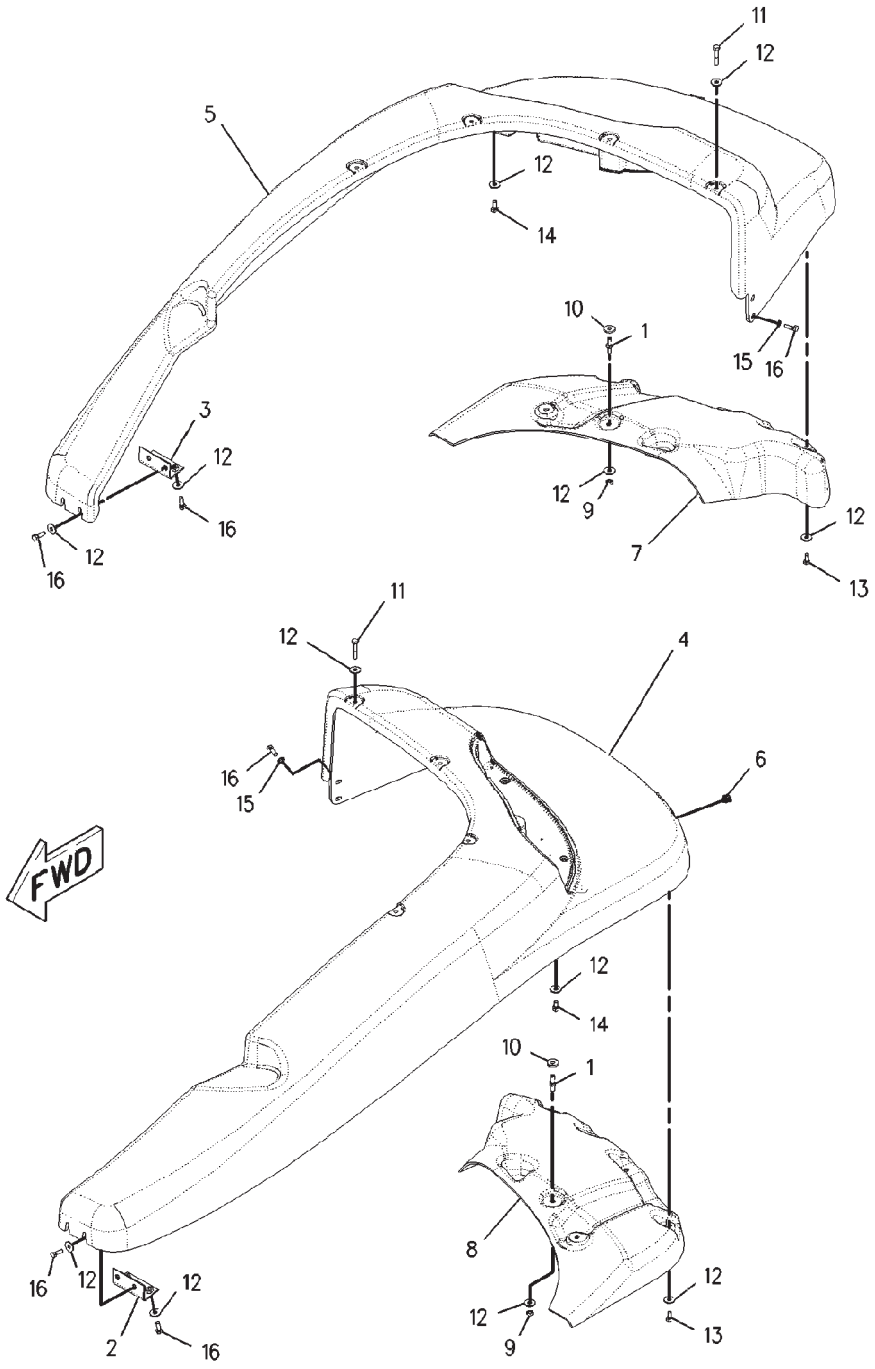


00857778

## FENDER GP - 161-9174
ROW & SPECIAL

| ITEM | NUMBER | QTY | DESCRIPTION |
|---|---|---|---|
| - | 161-9174 | -- | FENDER GP [A] (NOT SERVICED) |
| 1 | 400257X1 | 4 | STUDBOLT (M8X1.25X20) |
| 2 | 199-7855 | 1 | BRACKET ASM |
| 3 | 199-7859 | 1 | BRACKET ASM |
| 4 | 211-0174 | 1 | FENDER ASM (LH) |
| | 213-4902 | 1 | GUARD (SWITCH) |
| | 176-0997 | 1 | COVER-LH |
| | 176-0998 | 1 | GASKET-LH |
| | 176-0999 | 3 | RIVET |
| 5 | 211-0178 | 1 | FENDER ASM (RH) |
| | 213-4902 | 1 | GUARD (SWITCH) |
| | 176-0999 | 3 | RIVET |
| | 176-1001 | 1 | COVER-RH |
| | 176-1002 | 1 | GASKET-RH |
| 6 | CH211-4423 | 1 | PLUG |
| 7 | 212-9998 | 1 | GUARD |
| 8 | 212-9996 | 1 | GUARD |
| 9 | 400340X1 | 4 | NUT (M8X1.25) |
| 10 | CH7X-0613 | 4 | WASHER-HARD (8.8X25.5X5) |
| 11 | 400024X1 | 8 | BOLT (M8X1.25X45MM) |
| 12 | CH8C-0572 | 32 | WASHER (8.8X25.5X2) |
| 13 | 400053X1 | 8 | BOLT (M8X1.25X20MM) |
| 14 | 400227X1 | 4 | BOLT (M8X1.25X16MM) |
| 15 | CH8C-0572 | 4 | WASHER (8.8X25.5X2) |
| 16 | 400341X1 | 12 | BOLT (M8X1.25X25MM) |

[A] PART OF 179-1952 BASE COMMON AR

00857778
PR: t05i29k58b0247

## FENDER GP - 161-9177
EAME ONLY

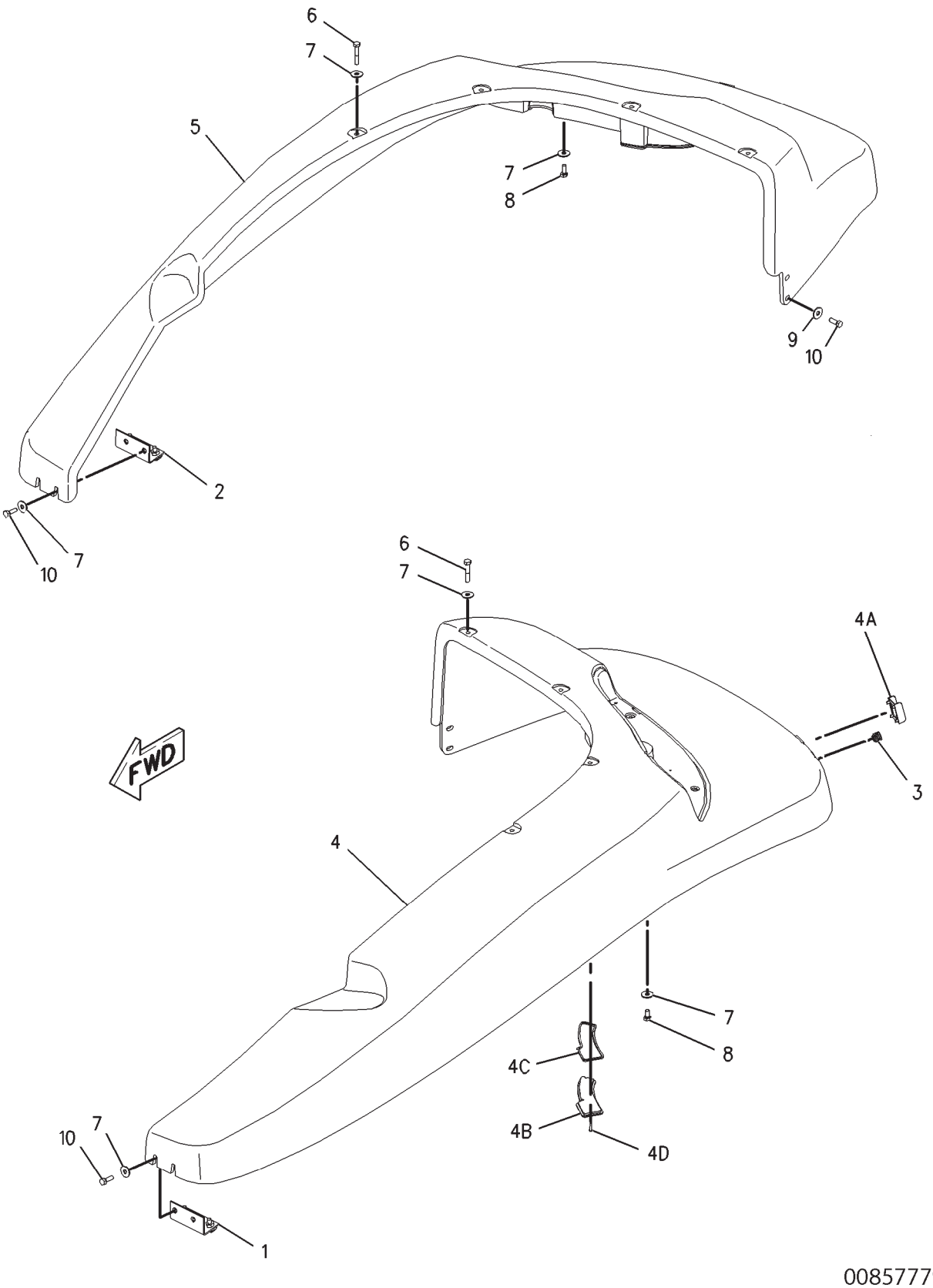


00857779

## FENDER GP - 161-9177
EAME ONLY

| ITEM | NUMBER | QTY | DESCRIPTION |
|---|---|---|---|
| - | 161-9177 | -- | FENDER GP [A] (NOT SERVICED) |
| 1 | 199-7855 | 1 | BRACKET AS |
| 2 | 199-7859 | 1 | BRACKET AS |
| | CH8T-3612 | 4 | NUT-WELD (M8X1.25 THD) |
| 3 | CH211-4423 | 1 | PLUG |
| 4 | 211-0174 | 1 | FENDER AS (LH) |
| 4A | 213-4902 | 1 | GUARD |
| 4B | 176-0997 | 1 | COVER-LH |
| 4C | 176-0998 | 1 | GASKET-LH |
| 4D | 176-0999 | 3 | RIVET |
| 5 | 211-0178 | 1 | FENDER AS (RH) |
| | 213-4902 | 1 | GUARD |
| | 176-0999 | 3 | RIVET |
| | 176-1001 | 1 | COVER-RH |
| | 176-1002 | 1 | ASKET-RH |
| 6 | 400024X1 | 8 | BOLT (M8X1.25X45MM) |
| 7 | CH8C-0572 | 24 | WASHER (8.8X25.5X2MM THK) |
| 8 | 400227X1 | 4 | BOLT (M8X1.25X16MM) |
| 9 | CH8C-0572 | 4 | WASHER (8.8X25.5X2MM THK) |
| 10 | 400341X1 | 12 | BOLT (M8X1.25X25MM) |

[A] PART OF 179-2180; 501811D1;
502936D1 BASE COMMON AR

00857779
PR: t05i29k58b0248

## EXTENSION GP-FENDER - 186-2427
EAME ONLY

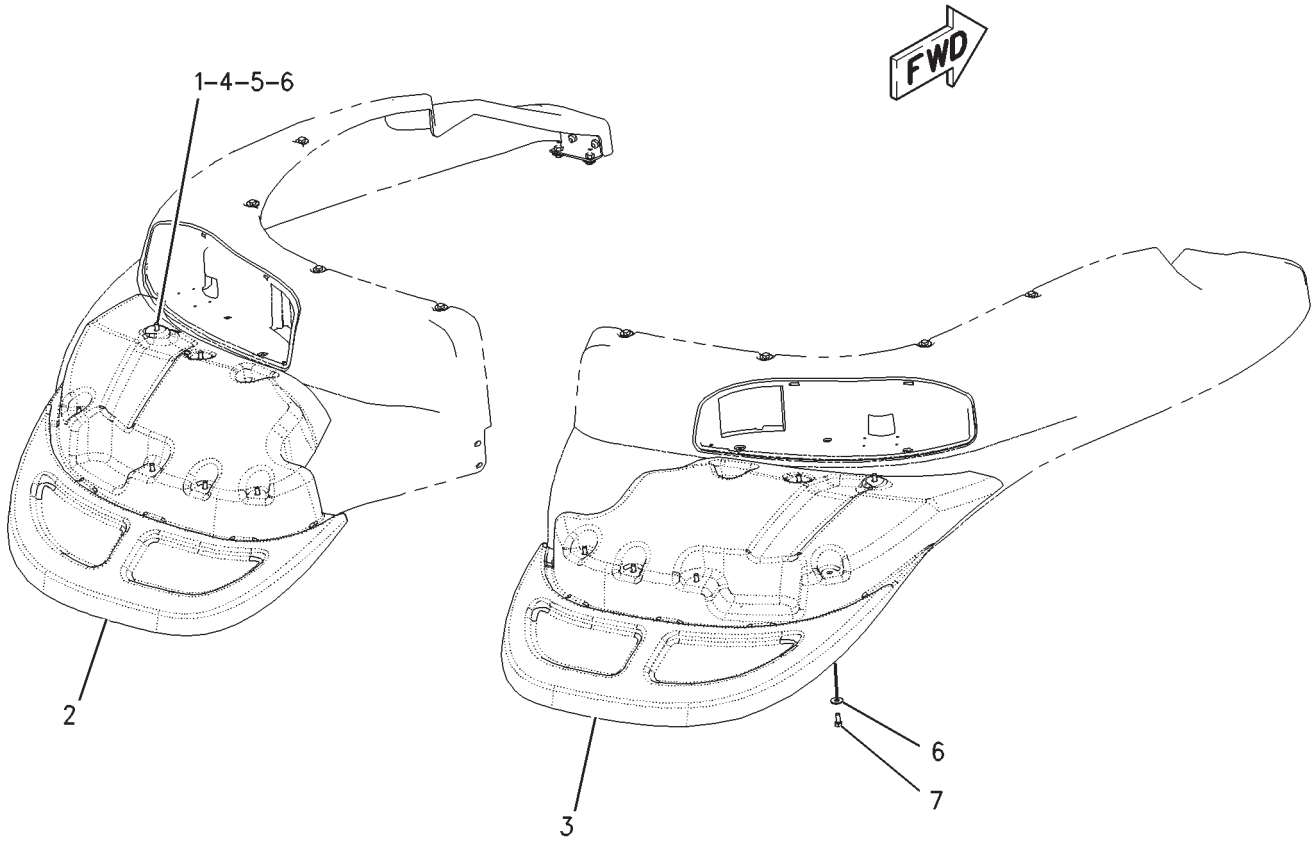


00887875

## EXTENSION GP-FENDER - 186-2427
EAME ONLY

| ITEM | NUMBER | QTY | DESCRIPTION |
|---|---|---|---|
| - | 186-2427 | -- | EXTENSION GP-FENER [A] (NOT SERVICED) |
| 1 | 400257X1 | 4 | STUDBOLT (M8X1.25 THD) |
| 2 | 211-0182 | 1 | EXTENSION (LH) |
| 3 | 211-0183 | 1 | EXTENSION (RH) |
| 4 | 400053X1 | 4 | NUT (M8X1.25 THD) |
| 5 | CH7X-0613 | 4 | WASHER-HARD (8.8X25.5X5MM THK) |
| 6 | CH8C-0572 | 12 | WASHER (8.8X25.5X2MM THK) |
| 7 | 400053X1 | 8 | BOLT (M8X1.25X20MM) |

[A] PART OF 179-2180 BASE COMMON AR

00887875
PR: t05i29k58b0249

## FRAME GP - 179-1954
**(MT835 & MT845)**

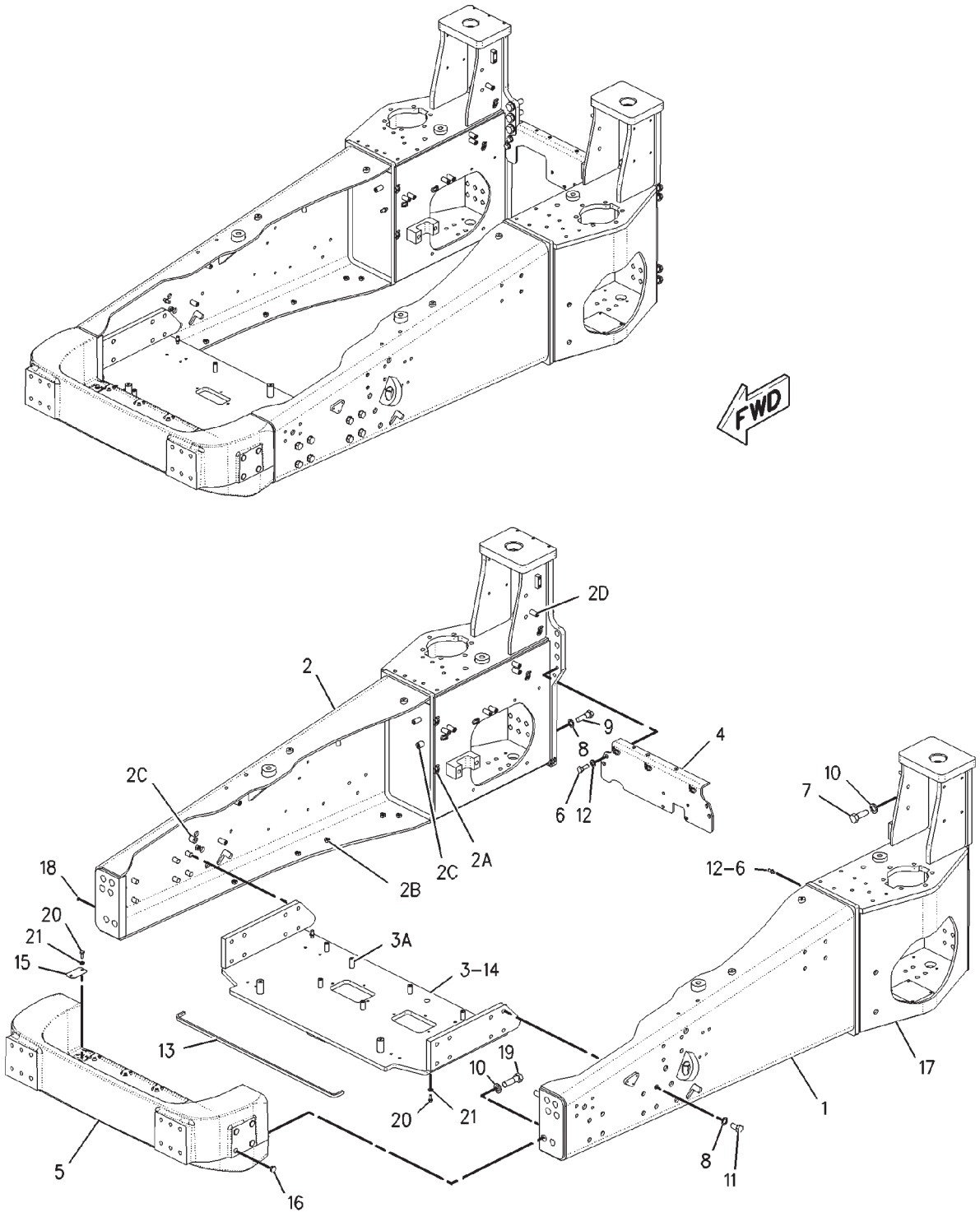


00897283

## FRAME GP - 179-1954
**(MT835 & MT845)**

| ITEM | NUMBER | QTY | DESCRIPTION |
|---|---|---|---|
| - | 179-1954 | -- | FRAME GP [A] (NOT SERVICED) |
| 1 | 183-4130 | 1 | FRAME ASM-LH |
| | CH7T-1099 | 7 | LINK |
| | CH7Y-8763 | 1 | BOSS (M10X1.5-6HX30MM) |
| | CH8T-3490 | 5 | NUT-WELD (M10X1.5) |
| | CH8T-3597 | 19 | NUT-WELD (M12X1.75) |
| | CH8Y-3795 | 7 | BOSS (M10X1.5X39MM) |
| | CH9R-2613 | 1 | BOSS (M10X1.5) |
| | CH9R-2640 | 6 | BOSS (M12X1.75) |
| | CH9R-2672 | 1 | BOSS (M10X1.5) |
| 2 | 183-4131 | 1 | FRAME ASM-RH |
| | CH8T-3490 | 10 | NUT-WELD (M10X1.5) |
| 2A | CH7T-1099 | 8 | LINK |
| 2B | CH8T-3597 | 11 | NUT-WELD (M12X1.75) |
| 2C | CH9R-2640 | 2 | BOSS |
| 2D | CH8Y-3795 | 11 | BOSS (M10X1.5X39MM) |
| 3 | 183-4132 | 1 | HOOK ASM-TOW |
| 3A | CH8Y-3795 | 3 | BOSS (M10X1.5X39MM) |
| | CH9R-2613 | 3 | BOSS (M10X1.5X25MM) |
| | CH9R-2640 | 2 | BOSS |
| 4 | 183-4145 | 1 | PLATE ASM |
| | CH7T-1099 | 3 | LINK |
| | CH8T-3490 | 3 | NUT-WELD (M10X1.5) |
| | CH8T-3597 | 2 | NUT-WELD (M12X1.75) |
| | CH8T-3612 | 2 | NUT-WELD (M8X1.25) |
| 5 | 209-1366 | 1 | SUPPORT |
| 6 | 400191X1 | 4 | BOLT (M16X2X40MM) |
| 7 | 400197X1 | 12 | BOLT (M24X3X70MM) |
| 8 | 400080X1 | 40 | WASHER-PLATED (22X35X3.5) |
| 9 | 400122X1 | 24 | BOLT (M20X2.5X70MM) |
| 10 | 400081X1 | 24 | WASHER-HARD (26X44X4) |
| 11 | 400234X1 | 16 | BOLT (M20X2.5X40MM) |
| 12 | 400082X1 | 4 | WASHER (17.5X30X3.5) |
| 13 | CH5P-5727 | 116 | SEAL (CM) |
| 14 | 209-6434 | 2 | PLATE |
| 15 | 209-6295 | 2 | SCREEN |
| 16 | 400091X1 | 10 | PLUG (M24) |
| 17 | CH193-5915 | 28 | PLUG (M12) |
| 18 | 400289X1 | 6 | PLUG (M7) |
| 19 | 400134X1 | 12 | BOLT (M24X3X80MM) |
| 20 | 400039X1 | 4 | BOLT (M10X1.5X25MM) |
| | 400040X1 | 6 | BOLT (M10X1.5X20MM) |
| 21 | 400287X1 | 10 | WASHER-HARD (11X21X2.5) |

[A] PART OF 179-1953 CHASSIS AR-COM

00897283
PR: t05i29k58b0250

## GRILL GP-RADIATOR - 158-5960

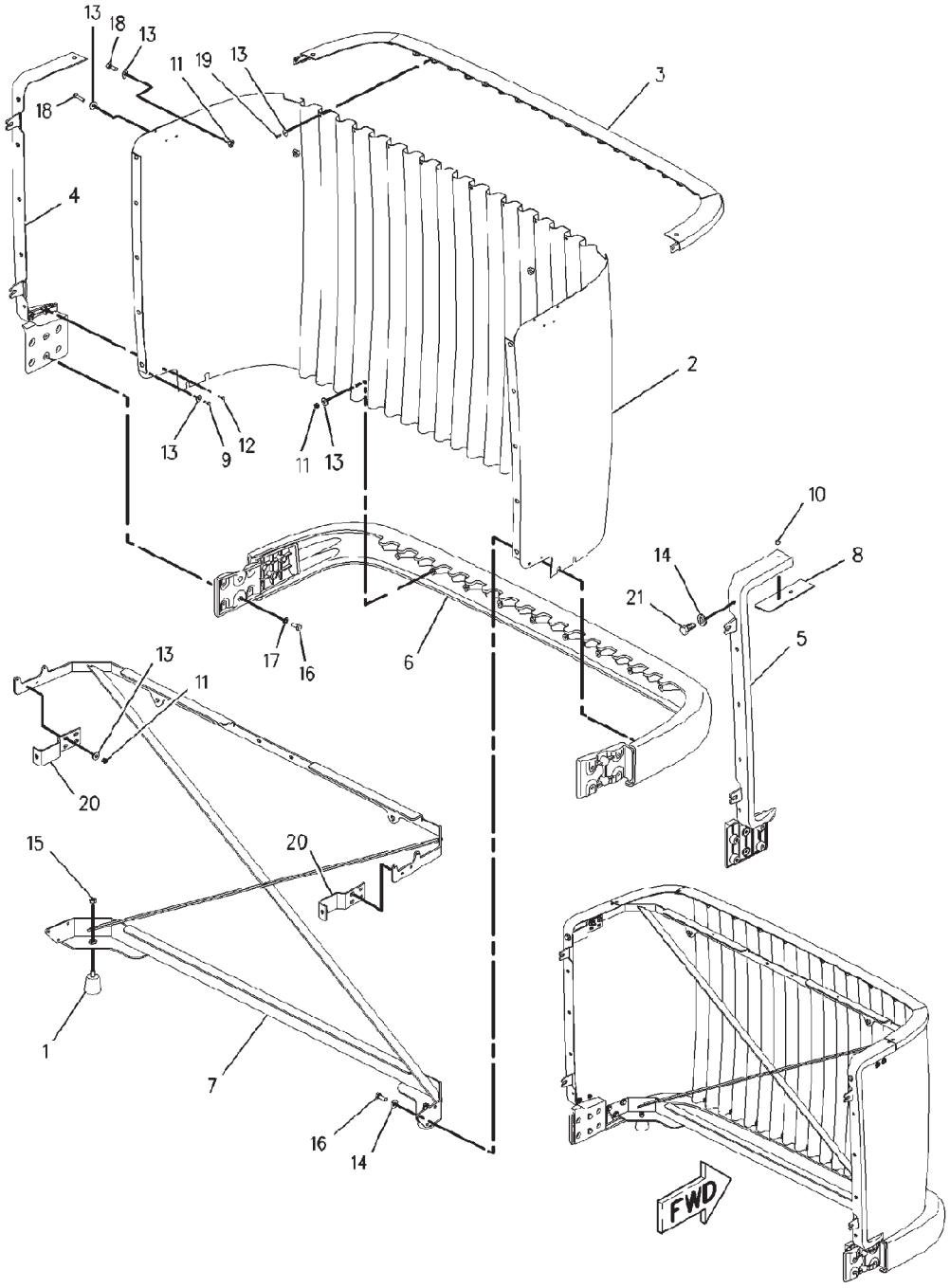


00857765

## GRILL GP-RADIATOR - 158-5960

| ITEM | NUMBER | QTY | DESCRIPTION |
|---|---|---|---|
| - | 158-5960 | -- | GRILL GP-RADIATOR [A] |
| 1 | CH145-9545 | 2 | BUMPER |
| 2 | 158-5961 | 1 | GRILL |
| 3 | 158-5962 | 1 | RETAINER ASM (UPPER) |
| 4 | 176-0373 | 1 | RETAINER ASM (LH) |
| 5 | 176-0374 | 1 | RETAINER ASM (RH) |
| 6 | 186-0466 | 1 | RETAINER ASM (LOWER) |
| 7 | 192-6529 | 1 | BAR ASM |
| | CH4K-9097 | 2 | NUT-WELD (5/16-18) |
| | CH8T-3612 | 2 | NUT-WELD (M8X1.25) |
| 8 | 210-4351 | 2 | PLATE |
| 9 | CH210-4352 | 2 | SCREW-PAN HEAD |
| 10 | CH033-7291 | 4 | RIVET-POP |
| 11 | CH129-3178 | 13 | LOCKNUT (M6X1) |
| 12 | CH217-5909 | 2 | SCREW-PAN HEAD (1/4-15X0.50 IN) |
| 13 | CH5P-4115 | 27 | WASHER-HARD (7.2X19X2) |
| 14 | 400599X1 | 8 | WASHER-HARD (8.8X20.5X2) |
| 15 | 400682X1 | 2 | NUT (5/16-18) |
| 16 | 400053X1 | 10 | BOLT (M8X1.25X20MM) |
| 17 | 400339X1 | 4 | WASHER-HARD (8.8X16X2) |
| 18 | CH8C-6433 | 4 | BOLT (M6X1X30MM) |
| 19 | CH8T-9501 | 8 | SCREW (10-16X.75 IN) |
| 20 | 210-4418 | 2 | BRACKET AS |
| 21 | 400341X1 | 2 | BOLT (M8X1.25X25MM) |

[A] PART OF 156-1313 HOOD & GUARD GP

00857765
PR: t05i29k58b0251

## GUARD GP - 187-8609
EAME ONLY

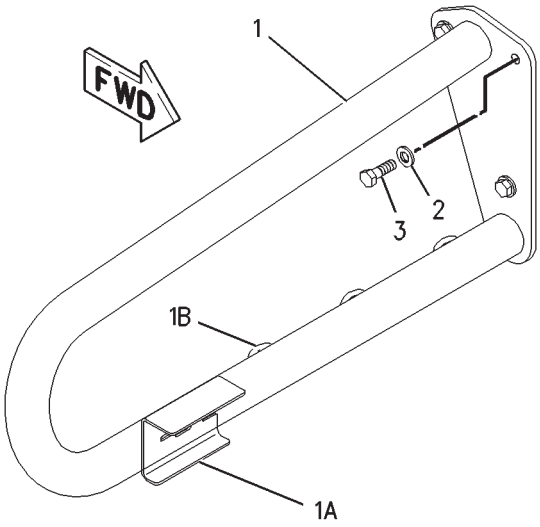


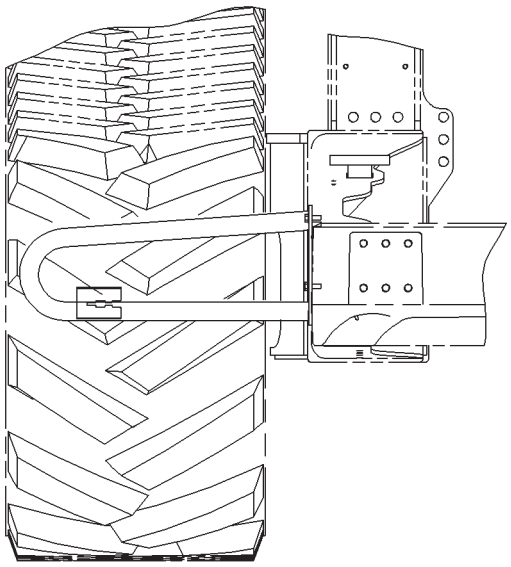

FRONT VIEW

## GUARD GP - 187-8609
EAME ONLY

| ITEM | NUMBER | QTY | DESCRIPTION |
|---|---|---|---|
| - | 187-8609 | -- | GUARD GP [A] (NOT SERVICED) |
| 1 | 187-8611 | 1 | GUARD AS (INCLS 1A-1B) |
| 1A | | 1 | BRACKET [Z] |
| 1B | 7T-1099 | 3 | LINK |
| 2 | 400357X1 | 3 | WASHER-HARD (M12X25.5X3MM THK) |
| 3 | 400064X1 | 3 | BOLT (M12X1.75X35MM) |

[A] PART OF 179-2180 BASE COMMON AR
[Z] NOT SERVICED SEPARATELY

00857946
PR: t05i29k58b0252

## GUARD GP-BOTTOM - 185-8849

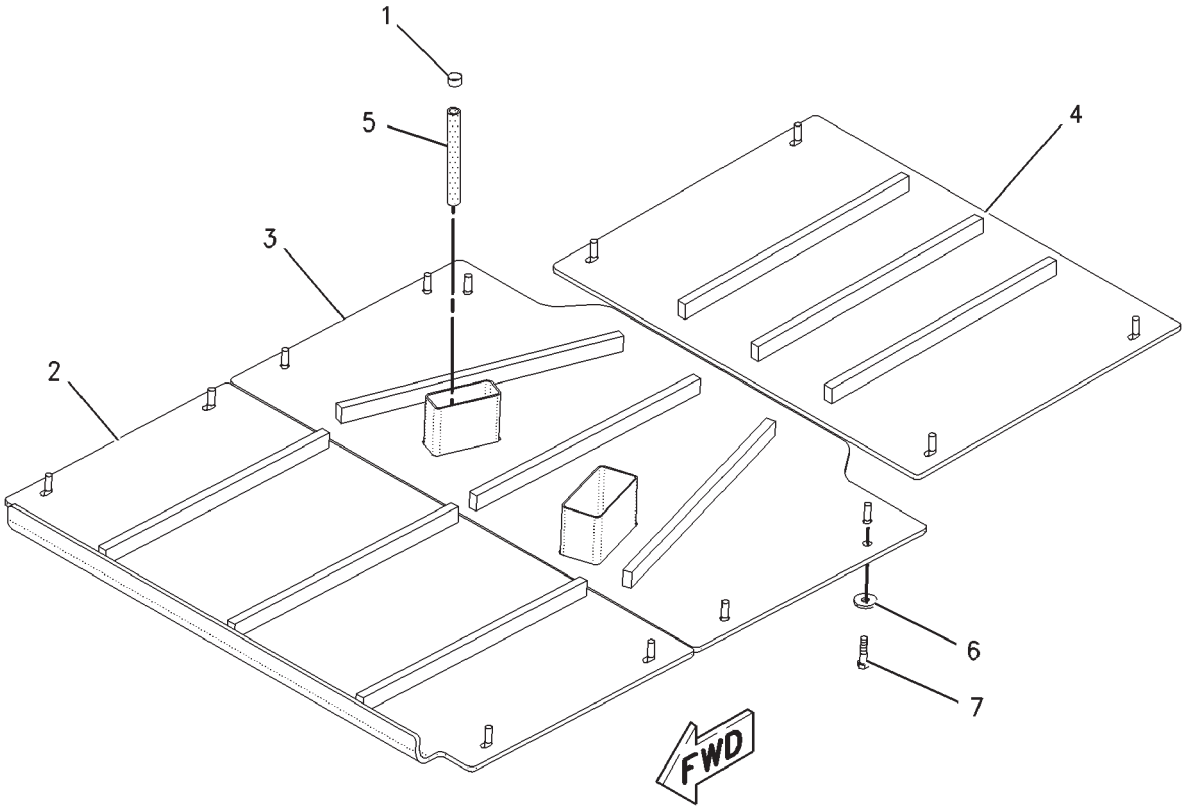


00890678

## GUARD GP-BOTTOM - 185-8849

| ITEM | NUMBER | QTY | DESCRIPTION |
|---|---|---|---|
| - | 502758D1 | -- | GUARD GP-BOTTOM (FIELD INSTALLED) |
| - | 185-8849 | -- | GUARD GP-BOTTOM [A][B] (NOT SERVICED, ORDER FIELD INSTALLED) |
| 1 | 400108X1 | 1 | CLAMP-HOSE |
| 2 | 192-3042 | 1 | GUARD ASM (FRONT) |
| 3 | 196-9864 | 1 | GUARD ASM (MIDDLE) |
| 4 | 196-9866 | 1 | GUARD AS (REAR) |
| | CH8T-3597 | 3 | NUT-WELD (M12X1.75) |
| 5 | CH210-2265 | 1 | HOSE (19CM) |
| 6 | CH7X-0618 | 14 | WASHER-HARD (13.5X40X5) |
| 7 | 400057X1 | 14 | BOLT (M12X1.75X50MM) |

[A] PART OF 502758D1 GUARD GP
[B] THIS GROUP CANNOT BE USED WITH 197-9558 AUX FUEL TANK AR.

00890678
PR: t05i29k58b0253

## GUARD GP-BOTTOM - 200-8826
**FOR USE WITH 197-8558 AUX FUEL TANK AR**

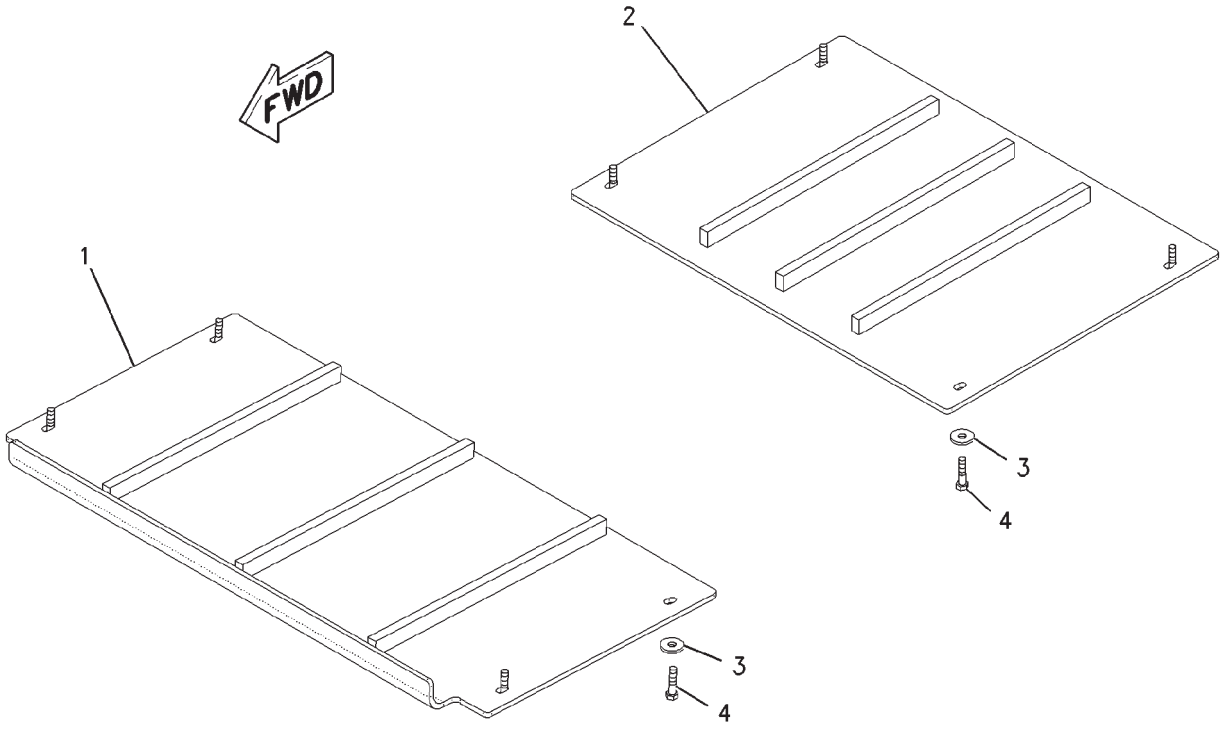


00891867

## GUARD GP-BOTTOM - 200-8826
**FOR USE WITH 197-8558 AUX FUEL TANK AR**

| ITEM | NUMBER | QTY | DESCRIPTION |
|---|---|---|---|
| - | 502761D1 | -- | KIT/GUARD GP-BOTTOM (FIELD INSTALLED) |
| - | 200-8826 | -- | GUARD GP-BOTTOM [A] (NOT SERVICED, ORDER FIELD INSTALLED) |
| 1 | 192-3042 | 1 | GUARD ASM (FRONT) |
| 2 | 196-9866 | 1 | GUARD ASM (REAR) |
| | CH8T-3597 | 3 | NUT-WELD (M12X1.75) |
| 3 | CH7X-0618 | 8 | WASHER-HARD (13.5X40X5) |
| 4 | 400057X1 | 8 | BOLT (M12X1.75X50MM) |

[A] PART OF 502761D1 GUARD GP

00891867
PR: t05i29k58b0254

## GUARD GP-BOTTOM - 213-2481
REAR

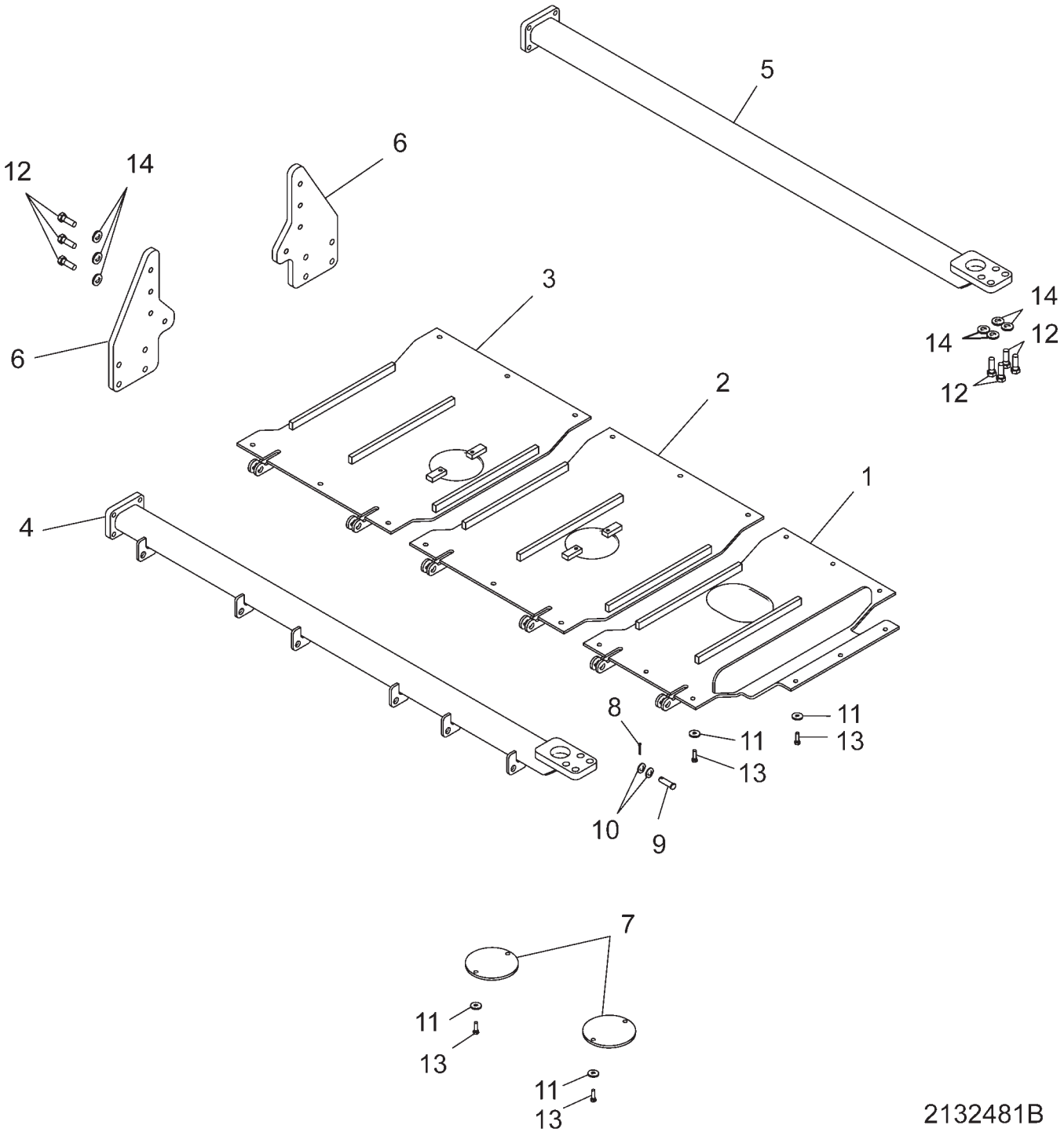

## GUARD GP-BOTTOM - 213-2481
REAR

| ITEM | NUMBER | QTY | DESCRIPTION |
|---|---|---|---|
| - | 502764D1 | -- | KIT/GUARD-BOTTOM-REAR (FIELD INSTALLED) |
| - | 213-2481 | -- | GUARD GP-BOTTOM-REAR [A] (NOT SERVICED, ORDER FIELD INSTALLED) |
| 1 | 213-2500 | 1 | GUARD AS-BOTTOM |
| 2 | 213-2501 | 1 | GUARD AS-BOTTOM |
| 3 | 213-2502 | 1 | GUARD AS-BOTTOM |
| 4 | 213-2503 | 1 | SUPPORT AS-RH |
| 5 | 213-2504 | 1 | SUPPORT AS-LH |
| 6 | 213-2505 | 2 | SUPPORT |
| 7 | 213-2506 | 2 | PLATE |
| 8 | CH3B-4629 | 6 | COTTER PIN 4.76 DIAX 38.1 |
| 9 | CH4J-2036 | 6 | PIN |
| 10 | CH7X-0594 | 12 | WASHER HARD |
| 11 | CH7X-0618 | 25 | WASHER HARD 13.5IDX40ODX5 ZNDI |
| 12 | 400031X1 | 24 | BOLT-M20X2.5X60 ZNDI HHD 10.9 |
| 13 | 400050X1 | 25 | BOLT-M12X1.75X40 ZNDI HHD 10.9 |
| 14 | CH8T-5439 | 24 | WASHER- HARD |

[A] PART OF 502764D1 GUARD GP

2132481B
PR: t05i29k58b0255

## GUARD GP-POWER TRAIN - 189-5805
**(MT835 & MT845)**

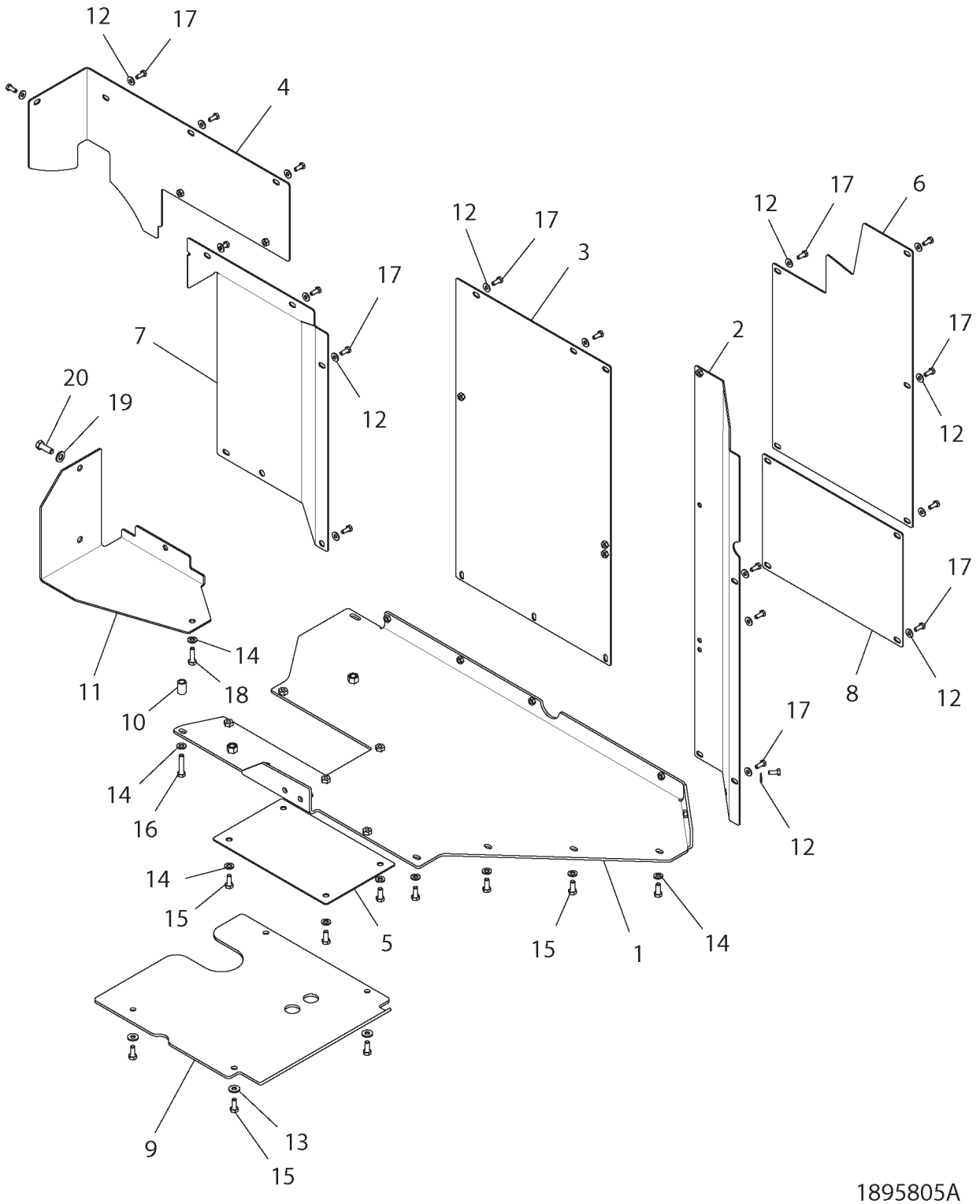

## GUARD GP-POWER TRAIN - 189-5805
**(MT835 & MT845)**

| ITEM | NUMBER | QTY | DESCRIPTION |
|---|---|---|---|
| - | 189-5805 | -- | GUARD GP-POWER TRAIN [A] (NOT SERVICED) |
| 1 | 189-4286 | 1 | GUARD ASM |
| | CH8T-3597 | 2 | NUT-WELD (M12X1.75) |
| | CH8T-3490 | 8 | NUT-WELD (M10X1.5) |
| | CH8T-3612 | 5 | NUT-WELD (M8X1.25) |
| 2 | 189-4287 | 1 | GUARD ASM |
| | CH8T-3612 | 4 | NUT-WELD (M8X1.25) |
| 3 | 189-4288 | 1 | GUARD AS |
| | CH8T-3612 | 3 | NUT-WELD (M8X1.25) |
| 4 | 189-4289 | 1 | GUARD ASM |
| | CH8T-3612 | 2 | NUT-WELD (M8X1.25) |
| 5 | 195-1004 | 1 | COVER |
| 6 | 195-1016 | 1 | COVER |
| 7 | 209-9231 | 1 | GUARD |
| 8 | 209-9232 | 1 | COVER |
| 9 | 210-7526 | 1 | PLATE |
| 10 | CH213-4497 | 1 | SPACER (12.75X19.1X29) |
| 11 | 224-6641 | 1 | PLATE AS |
| 12 | 400599X1 | 24 | WASHER-HARD (8.8X20.5X2) |
| 13 | CH7X-7729 | 4 | WASHER (11X25X3) |
| 14 | 400287X1 | 10 | WASHER-HARD (11X21X2.5) |
| 15 | 400039X1 | 12 | BOLT (M10X1.5X25MM) |
| 16 | 400226X1 | 1 | BOLT (M10X1.5X50MM) |
| 17 | 400053X1 | 24 | BOLT (M8X1.25X20MM) |
| 18 | 400059X1 | 1 | BOLT (M10X1.5X35MM) |
| 19 | 400357X1 | 2 | WASHER (M12X25.5X3) |
| 20 | 400064X1 | 2 | BOLT (M12X1.75X35MM) |

[A] PART OF 179-1953 CHASSIS AR

1895805A
PR: t05i29k58b0256

## HANDHOLD GP - 203-9179
**INNER**

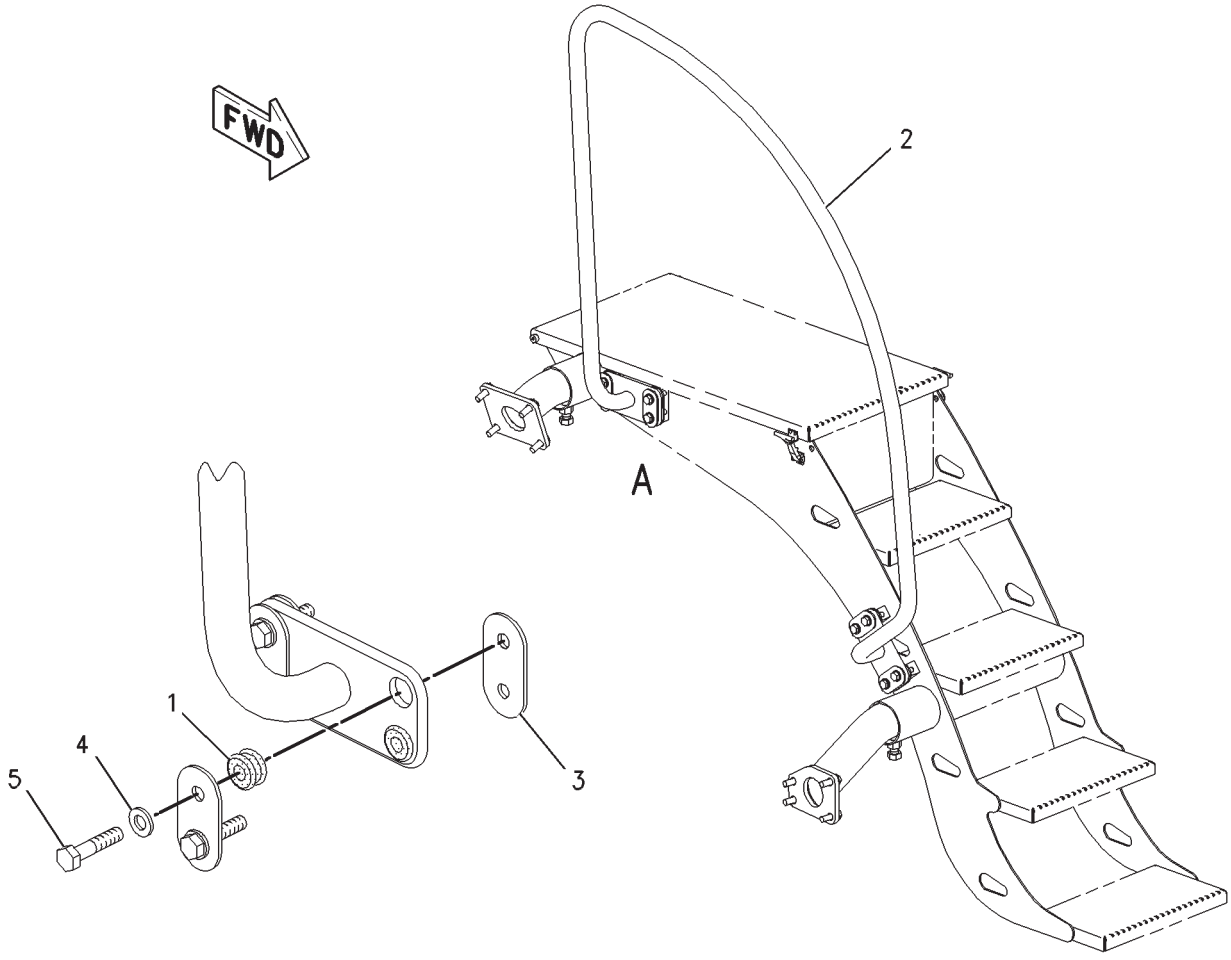


00810595

## HANDHOLD GP - 203-9179
INNER

| ITEM | NUMBER | QTY | DESCRIPTION |
|---|---|---|---|
| - | 502762D1 | -- | HANDHOLD GP (FIELD INSTALLED) |
| - | 502772D1 | -- | HANDHOLD GP (FACTORY) (NOT SERVICED, ORDER FIELD INSTALLED) |
| - | 203-9179 | -- | HANDHOLD GP [A] (REF ONLY) (NOT SERVICED, ORDER FIELD INSTALLED) |
| 1 | CH6N-6984 | 8 | MOUNT |
| 2 | 203-9183 | 1 | HANDHOLD ASM |
| 3 | 203-9200 | 8 | PLATE |
| 4 | 400287X1 | 8 | WASHER-HARD (11X21X2.5) |
| 5 | 400052X1 | 8 | BOLT (M10X1.5X45MM) |

[A] PART OF 502762D1 & 502772D1
HANDHOLD GP

00810595
PR: t05i29k58b0257

## TOW CABLE GP - 500039D1

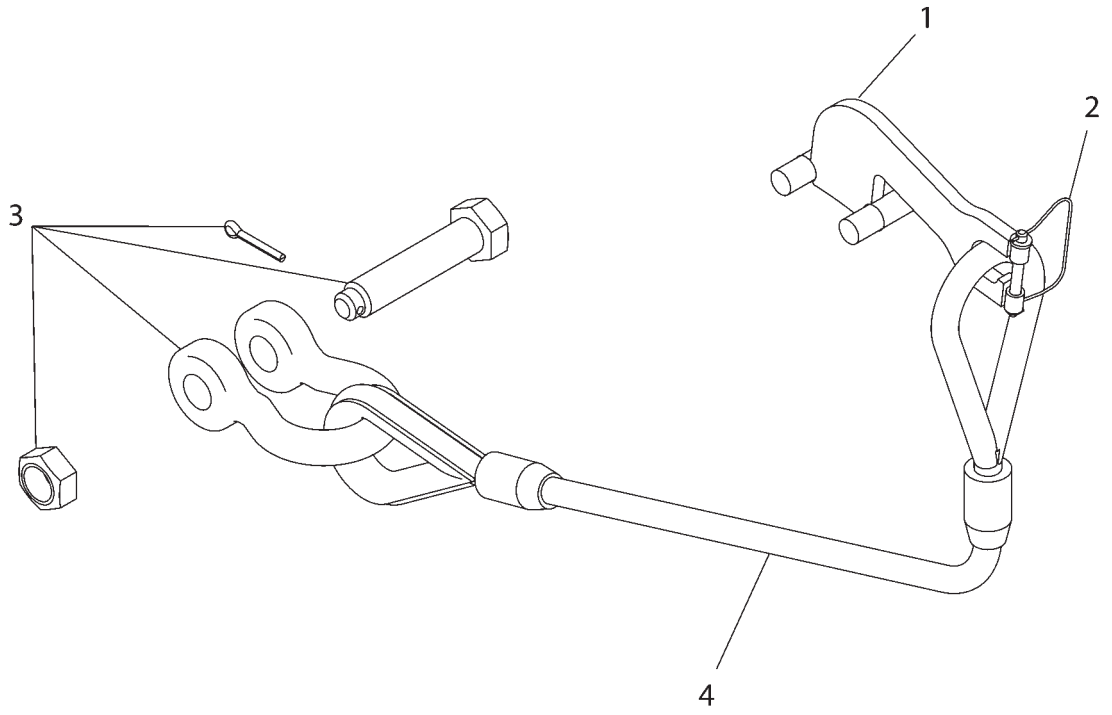


500039DA

## TOW CABLE GP - 500039D1

| ITEM | NUMBER | QTY | DESCRIPTION |
|---|---|---|---|
| - | 502919D1 | -- | KIT-CABLE GP-TOW (FIELD INSTALLED) |
| - | 500039D1 | -- | CABLE GP-TOW [A] |
| 1 | 500120D1 | 1 | BRACKET AS |
| 2 | 500124D1 | 1 | HITCH PIN AS |
| 3 | 500125D1 | 1 | SHACKLE AS |
| 4 | 500126D1 | 1 | CABLE AS |

[A] PART OF 502919D1 KIT-TOW CABLE GP;
500033D1; 500034D1; 500035D1;
500037D1 BASE UNIT AR

500039DA
PR: t05i29k58b0258

## HOOD & GUARD GP - 156-1313
ROW & SPECIAL

REFER TO ALL ILLUSTRATIONS OF
THIS GROUP FOR AUXILIARY VIEWS

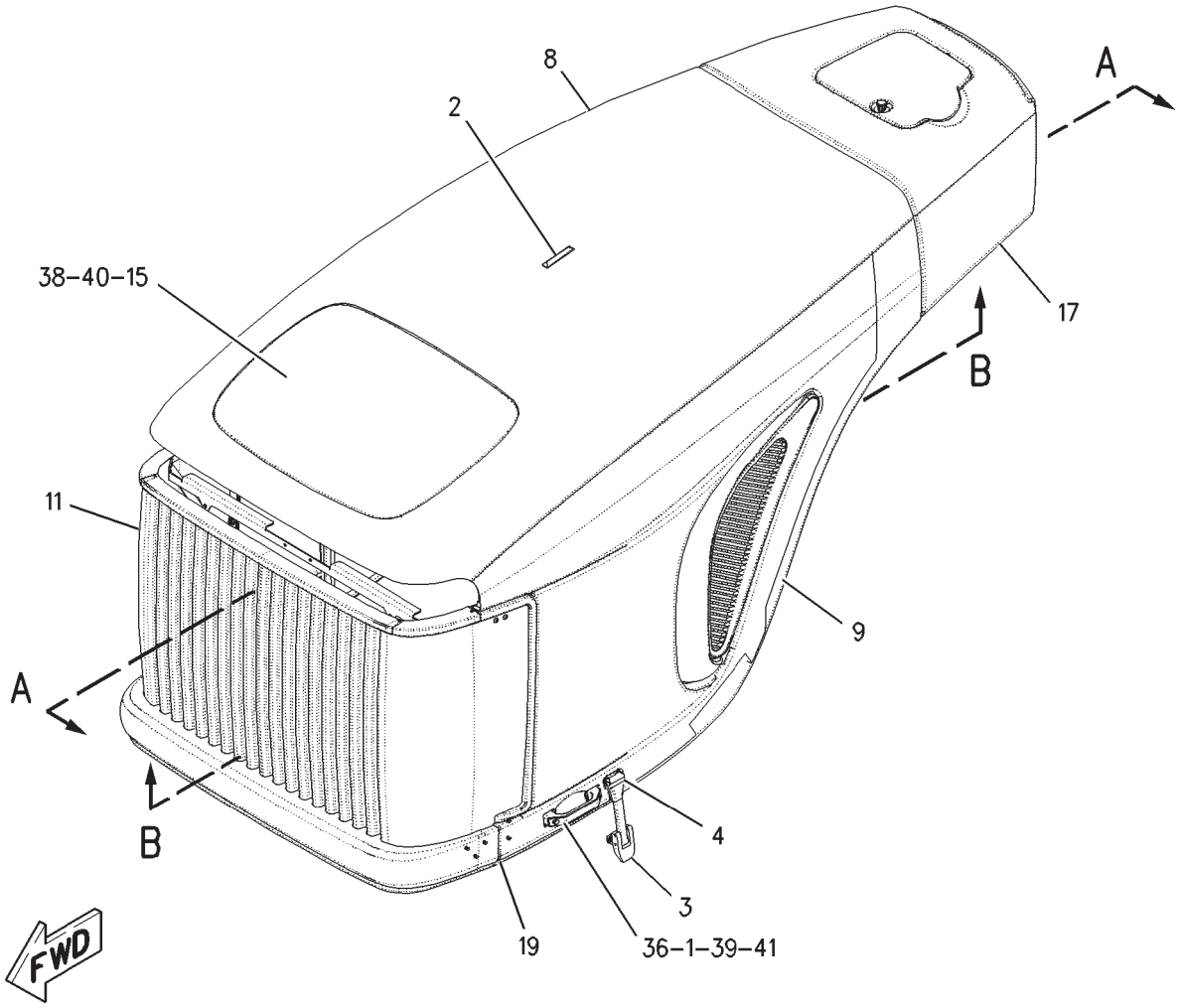

## HOOD & GUARD GP - 156-1313
ROW & SPECIAL

| ITEM | NUMBER | QTY | DESCRIPTION |
|---|---|---|---|
| - | 156-1313 | -- | HOOD & GUARD GP [A] (NOT SERVICED) |
| 1 | 400162X1 | 2 | BOLT-SOCKET HEAD (M8X1.25X50 MM) |
| 2 | CH100-4036 | 1 | MARKER-HOOD |
| 3 | CH113-8880 | 2 | LATCH ASM |
| 4 | CH114-5793 | 2 | KEEPER |
| 8 | 158-5950 | 1 | HOOD AS |
| 9 | 158-5952 | 1 | PANEL AS (LH) |
| | 179-4207 | 1 | INSERT |
| 11 | 158-5960 | 1 | GRILL GP-RADIATOR |
| | | | (SEE BREAKDOWN FOR COMPONENTS) |
| 15 | 188-0514 | 1 | GRILL (TOP) |
| 17 | 190-5943 | 1 | COVER GP-ACCESS |
| | | | (SEE BREAKDOWN FOR COMPONENTS) |
| 19 | 501148D1 | | SEAL (GRILL) (3015MM) |
| 36 | 400115X1 | 1 | HANDLE |
| 38 | CH129-3178 | 60 | LOCKNUT (M6X1 THD) |
| 39 | CH131-3540 | 12 | LOCKNUT |
| 40 | CH5P-4115 | 51 | WASHER-HARD (7.2X19X2MM THK) |
| 41 | 400599X1 | 50 | WASHER-HARD (8.8X20.5X2MM THK) |

[A] PART OF 179-1952 BASE AR-COMMON

00887940
PR: t05i29k58b0259

## HOOD & GUARD GP - 156-1313
ROW & SPECIAL

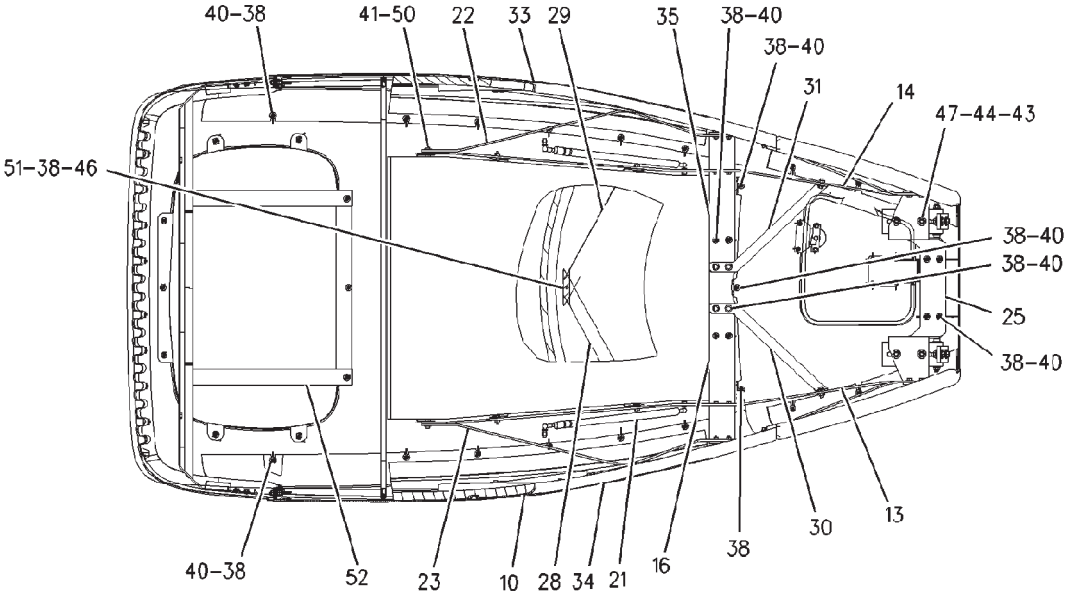


SECTION B-B

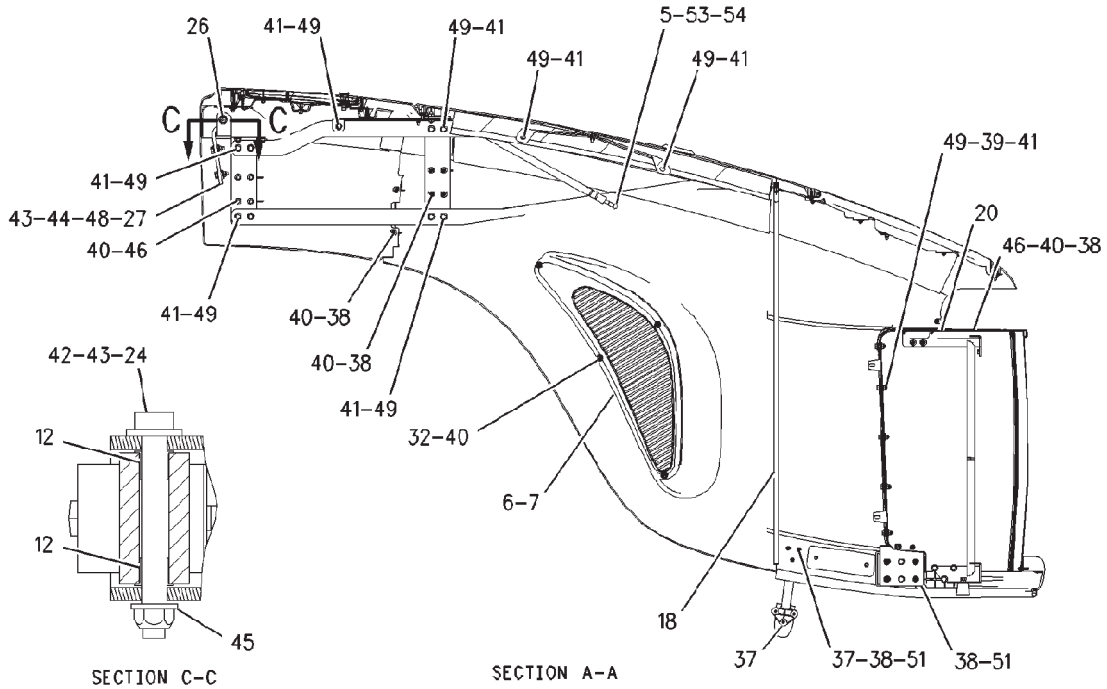


SECTION C-C

SECTION A-A

## HOOD & GUARD GP - 156-1313
ROW & SPECIAL

| ITEM | NUMBER | QTY | DESCRIPTION |
|---|---|---|---|
| - | 156-1313 | -- | HOOD & GUARD GP [A] (NOT SERVICED) |
| 5 | ----- | -- | NOT USED |
| 6 | 158-5934 | 1 | GRILL LOWER (LH) |
| 7 | 158-5935 | 1 | GRILL LOWER (RH) |
| 10 | 158-5953 | 1 | PANEL ASM (RH) |
| | 179-4207 | 1 | INSERT (M6) |
| 12 | 400104X1 | 4 | BEARING |
| 13 | 188-0452 | 1 | PLATE (RH) |
| 14 | 188-0453 | 1 | PLATE (LH) |
| 16 | 188-0564 | 1 | BRACKET |
| 18 | 192-6516 | 1 | SEAL (HOOD) (LH) |
| 20 | 192-6518 | | SEAL (HOOD) (LH) |
| 21 | 231-6106 | 2 | STRUT-GAS |
| 22 | 209-0359 | 1 | BRACKET |
| 23 | 209-0361 | 1 | BRACKET |
| 24 | 400013X1 | 2 | BOLT-SHOULDER (M10X1.5X96) |
| 25 | 209-0364 | 1 | BRACKET |
| 26 | 209-0373 | 2 | BRACKET |
| 27 | 209-0376 | 2 | ANGLE ASM |
| 28 | 209-3146 | 1 | BRACKET |
| 29 | 209-3147 | 1 | BRACKET |
| 30 | 209-3384 | 1 | BRACKET |
| 31 | 209-3385 | 1 | BRACKET |
| 32 | CH217-5909 | 8 | SCREW-PAN HEAD |
| 33 | 210-4413 | 1 | INSULATION (LH) |
| 34 | 210-4414 | 1 | INSULATION (RH) |
| 35 | 210-4415 | 1 | INSULATION (TOP) |
| 37 | CH123-4950 | 12 | SCREW-PAN HEAD (M6X1X16MM) |
| 38 | CH129-3178 | 60 | LOCKNUT (M6X1 THD) |
| 39 | CH131-3540 | 12 | LOCKNUT |
| 40 | CH5P-4115 | 51 | WASHER-HARD (7.2X19X2MM THK) |
| 41 | 400599X1 | 50 | WASHER-HARD (8.8X20.5X2MM THK) |
| 42 | 400277X1 | 2 | WASHER-HARD (13.5X25.5X3MM THK) |
| 43 | CH6V-7744 | 10 | LOCKNUT (M10X1.5 THD) |
| 44 | CH7X-7729 | 16 | WASHER (11X25X3MM THK) |
| 45 | 400287X1 | 6 | WASHER-HARD (11X21X2.5MM THK) |
| 46 | 400221X1 | 11 | BOLT (M6X1X20MM) |
| 47 | 400058X1 | 4 | BOLT (M10X1.5X30MM) |
| 48 | 400059X1 | 4 | BOLT (M10X1.5X35MM) |
| 49 | 400341X1 | 36 | BOLT (M8X1.25X25MM) |
| 50 | 400245X1 | 2 | BOLT (M8X1.25X30MM) |
| 51 | 400310X1 | 16 | WASHER (6.6X12X2MM THK) |
| 52 | 223-5887 | 2 | BRACKET |
| 53 | 400287X1 | 4 | WASHER-HARD (11X21X2.5) |
| 54 | WR522218 | 4 | NUT (M8X1.25) |

[A] PART OF 179-1952 BASE AR-COMMON

00887941
PR: t05i29k58b0260

## HOOD & GUARD GP - 161-9173

1 OF 2
EAME ONLY

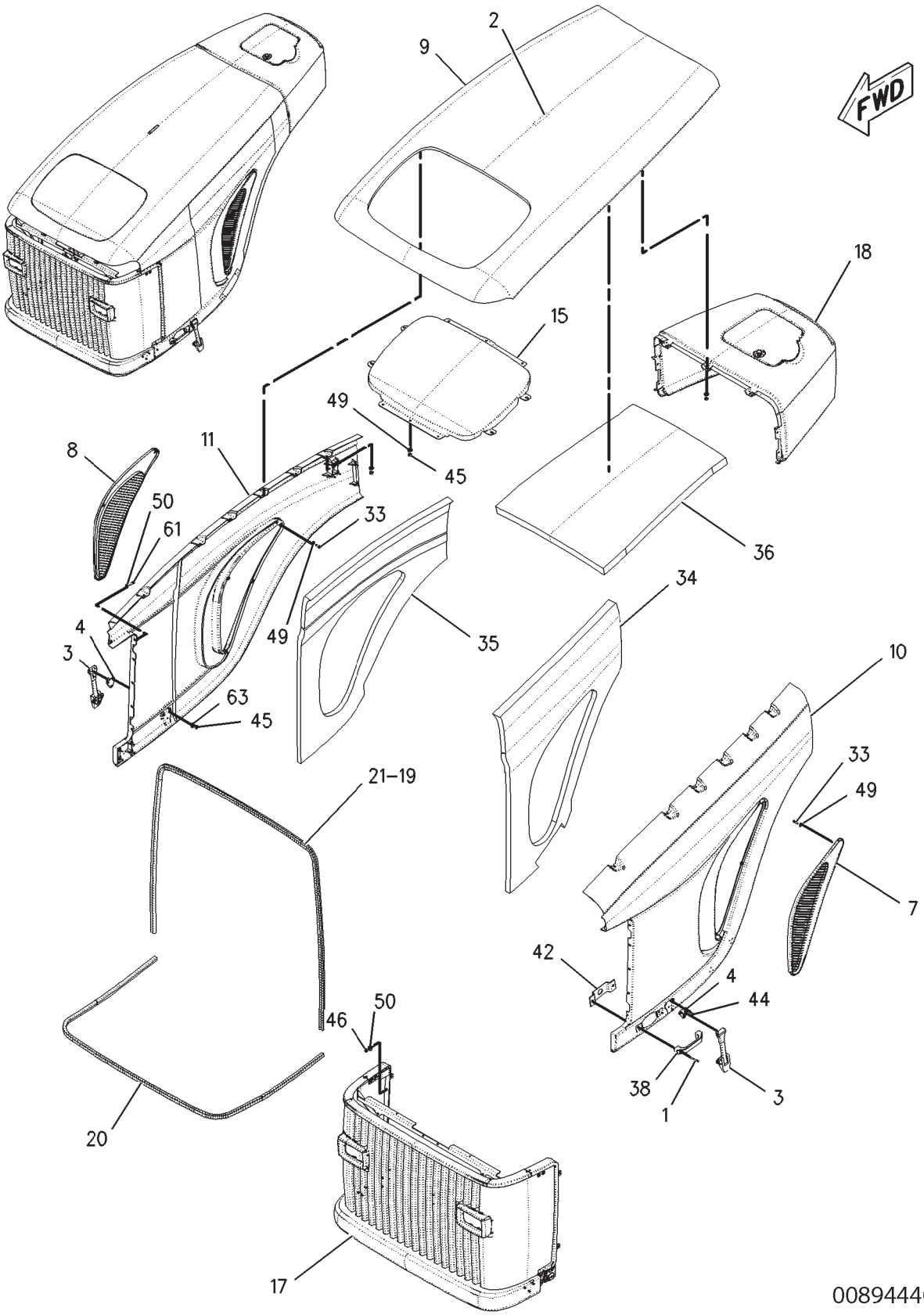

## HOOD & GUARD GP - 161-9173

1 OF 2
EAME ONLY

| ITEM | NUMBER | QTY | DESCRIPTION |
|---|---|---|---|
| - | 161-9173 | -- | HOOD & GUARD GP [A] (NOT SERVICED) |
| 1 | 400162X1 | 2 | BOLT-SOCKET HEAD (M8X1.25X50 MM) |
| 2 | CH100-4036 | 1 | MARKER-HOOD |
| 3 | CH113-8880 | 2 | LATCH AS |
| 4 | CH114-5793 | 2 | KEEPER |
| 7 | 158-5934 | 1 | GRILL AS-LWR (LH) |
| 8 | 158-5935 | 1 | GRILL AS-LWR (RH) |
| 9 | 158-5950 | 1 | HOOD AS |
| 10 | 158-5952 | 1 | PANEL AS (LH) |
| 11 | 158-5953 | 1 | PANEL AS (RH) |
| 15 | 188-0514 | 1 | GRILL (TOP) |
| 17 | 188-0568 | 1 | GRILL AS |
| 18 | 190-5943 | 1 | COVER GP-ACCESS |
| | | | (SEE BREAKDOWN FOR COMPONENTS) |
| 19 | 192-6516 | 1 | SEAL (HOOD-LH) (3430MM) |
| 20 | 501148D1 | 1 | SEAL (GRILL) |
| 21 | CH5P-9205 | 1 | SEAL (HOOD-UPPER) (1469MM) |
| | | | (ORDER BY THE METER) |
| 33 | CH217-5909 | 8 | SCREW-PAN HEAD |
| 34 | 210-4413 | 1 | INSULATION (LH) |
| 35 | 210-4414 | 1 | INSULATION (RH) |
| 36 | 210-4415 | 1 | INSULATION (TOP) |
| 38 | 400115X1 | 1 | HANDLE |
| 42 | 216-6429 | 1 | BRACKET AS |
| | CH8T-3612 | 2 | NUT-WELD (M8X1.25 THD) |
| 44 | CH123-4950 | 12 | SCREW-PAN HEAD (M6X1X16MM) |
| 45 | CH129-3178 | 60 | LOCKNUT (M6X1 THD) |
| 46 | CH131-3540 | 10 | LOCKNUT |
| 49 | CH5P-4115 | 51 | WASHER-HARD (7.2X19X2MM THK) |
| 50 | 400599X1 | 48 | WASHER-HARD (8.8X20.5X2MM THK) |
| 61 | 400341X1 | 36 | BOLT (M8X1.25X25MM) |
| 63 | 400310X1 | 16 | WASHER (6.6X12X2MM THK) |

[A] PART OF 179-2180 BASE COMMON AR

00894440
PR: t05i29k58b0261

## HOOD & GUARD GP - 161-9173

2 OF 2
EAME ONLY

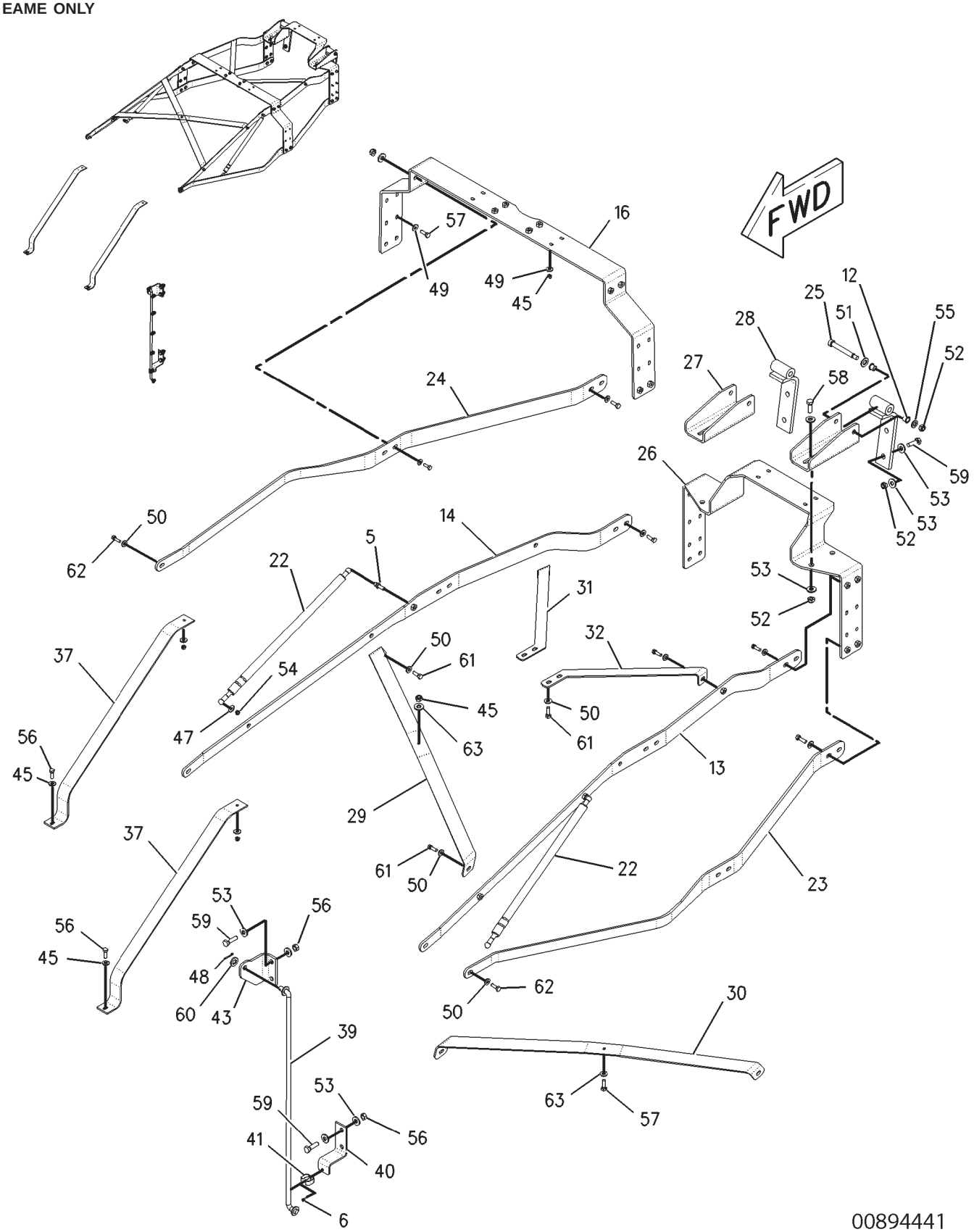


00894441

## HOOD & GUARD GP - 161-9173

2 OF 2
EAME ONLY

| ITEM | NUMBER | QTY | DESCRIPTION |
|---|---|---|---|
| - | 161-9173 | -- | HOOD & GUARD GP [A] (NOT SERVICED) |
| 5 | | | NOT USED |
| 6 | 400140X1 | 1 | BOLT-SOCKET HEAD (M4X0.7X10MM) |
| 12 | 400104X1 | 4 | BEARING |
| 13 | 188-0452 | 1 | PLATE AS (RH) |
| 14 | 188-0453 | 1 | PLATE AS (LH) |
| | CH8T-3612 | 4 | NUT-WELD (M8X1.25 THD) |
| 16 | 188-0564 | 1 | BRACKET AS |
| | CH8T-3612 | 12 | NUT-WELD (M8X1.25 THD) |
| 22 | 231-6106 | 2 | SPRING-GAS |
| 23 | 209-0359 | 1 | BRACKET |
| 24 | 209-0361 | 1 | BRACKET |
| 25 | 400013X1 | 2 | BOLT (M10X1.5X96) |
| 26 | 209-0364 | 1 | BRACKET AS |
| | CH8T-3612 | 8 | NUT-WELD (M8X1.25 THD) |
| 27 | 209-0373 | 2 | BRACKET |
| 28 | 209-0376 | 2 | ANGLE AS |
| 29 | 209-3146 | 1 | BRACKET |
| 30 | 209-3147 | 1 | BRACKET |
| 31 | 209-3384 | 1 | BRACKET |
| 32 | 209-3385 | 1 | BRACKET |
| 37 | 223-5887 | 2 | BRACKET |
| 39 | 216-6425 | 1 | ROD AS |
| 40 | 216-6426 | 1 | BRACKET AS |
| 41 | CH216-6428 | 1 | CLIP |
| 43 | 216-6430 | 1 | SUPPORT |
| 45 | CH129-3178 | 60 | LOCKNUT (M6X1 THD) |
| 47 | | | NOT USED |
| 48 | CH3B-4611 | 1 | PIN-COTTER |
| 49 | CH5P-4115 | 61 | WASHER-HARD (7.2X19X2MM THK) |
| 50 | 400599X1 | 48 | WASHER-HARD (8.8X20.5X2MM THK) |
| 51 | 400277X1 | 2 | WASHER-HARD (M12X25.5X3MM THK) |
| 52 | CH6V-7744 | 10 | LOCKNUT (M10X1.5 THD) |
| 53 | CH7X-7729 | 24 | WASHER (11X25X3MM THK) |
| 54 | WR522218 | 2 | NUT (M10X1.5 THD) |
| 55 | | | NOT USED |
| 56 | WR522218 | 4 | NUT (M10X1.5 THD) |
| 57 | 400221X1 | 11 | BOLT (M6X1X20MM) |
| 58 | 400058X1 | 4 | BOLT (M10X1.5X30MM) |
| 59 | 400059X1 | 8 | BOLT (M10X1.5X35MM) |
| 60 | 400357X1 | 1 | WASHER-HARD (M12X25.5X3MM THK) |
| 61 | 400341X1 | 36 | BOLT (M8X1.25X25MM) |
| 62 | 400245X1 | 2 | BOLT (M8X1.25X30MM) |
| 63 | 400310X1 | 16 | WASHER (6.6X12X2MM THK) |

[A] PART OF 179-2180 BASE COMMON AR

## BRACE GP-SAFETY - 222-9033
HOOD
ROW & SPECIAL

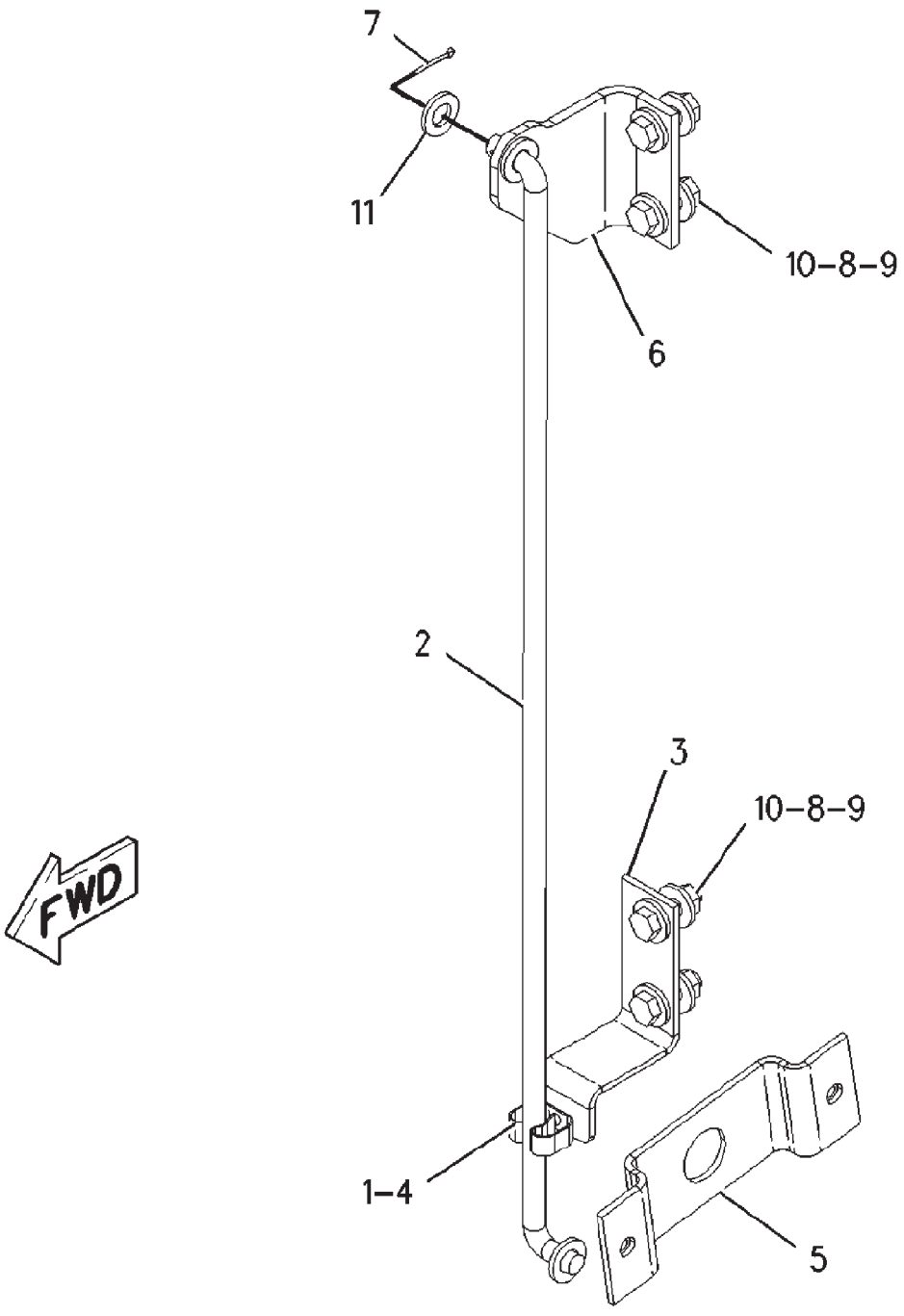


00899424

## BRACE GP-SAFETY - 222-9033

HOOD
ROW & SPECIAL

| ITEM | NUMBER | QTY | DESCRIPTION |
|---|---|---|---|
| - | 222-9033 | -- | BRACE GP-SAFETY |
| 1 | 400140X1 | 1 | BOLT-SOCKET HEAD (M4X0.7X10MM) |
| 2 | 216-6425 | 1 | ROD ASM |
| | 400277X1 | 2 | WASHER-HARD |
| 3 | 216-6426 | 1 | BRACKET ASM |
| 4 | CH216-6428 | 1 | CLIP |
| 5 | 216-6429 | 1 | BRACKET ASM |
| | CH8T-3612 | 2 | NUT-WELD (M8X1.25) |
| 6 | 216-6430 | 1 | SUPPORT |
| 7 | CH3B-4611 | 1 | PIN-COTTER |
| 8 | CH7X-7729 | 8 | WASHER (11X25X3) |
| 9 | WR522218 | 4 | NUT (M10X1.5) |
| 10 | 400059X1 | 4 | BOLT (M10X1.5X35MM) |
| 11 | 400357X1 | 1 | WASHER-HARD (M12X25.5X3) |

00899424
PR: t05i29k58b0263

## KIT-MOUNTING - 208-7698
**FIRE EXTINGUISHER**
**ROW & SPECIAL**

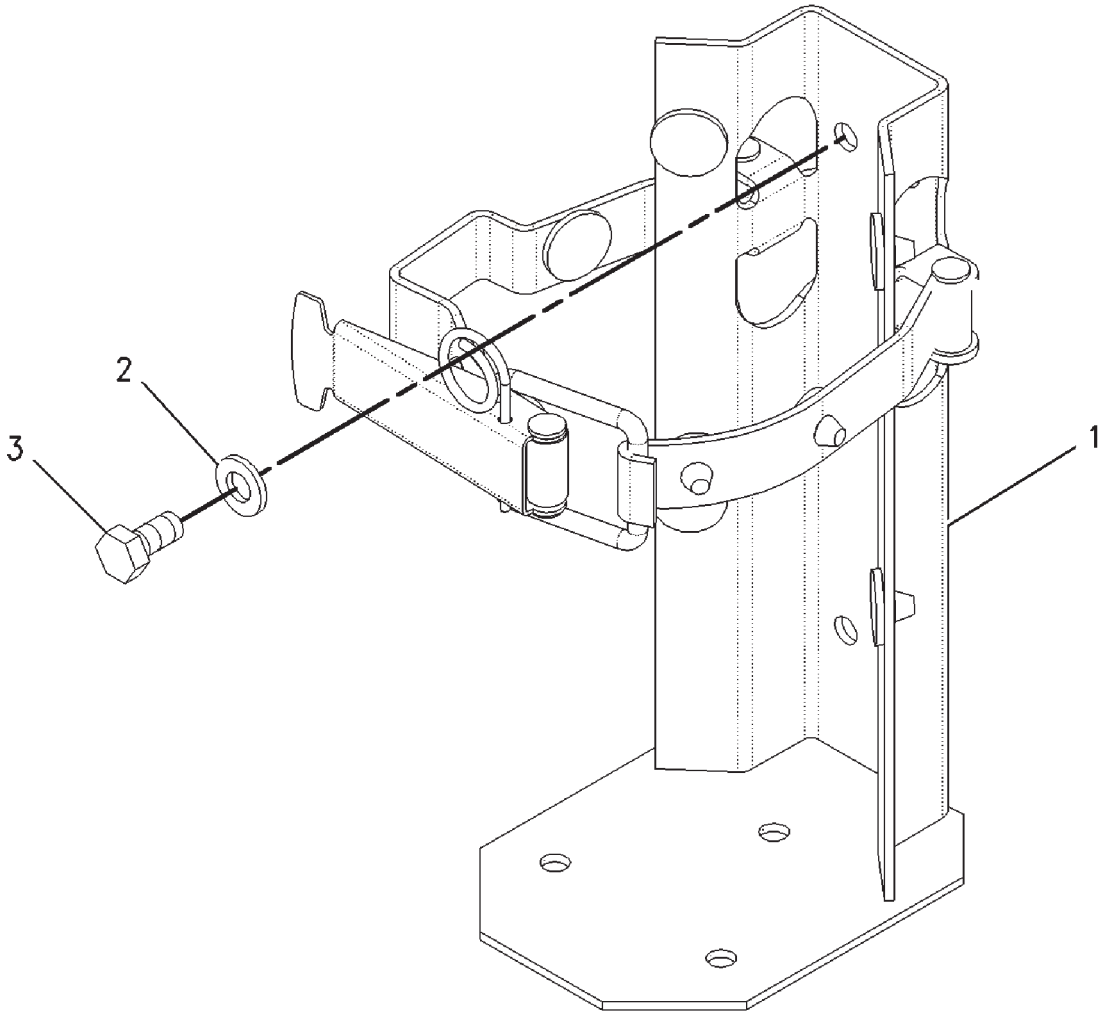


00888925

## KIT-MOUNTING - 208-7698
**FIRE EXTINGUISHER**
**ROW & SPECIAL**

| ITEM | NUMBER | QTY | DESCRIPTION |
|---|---|---|---|
| - | 208-7698 | -- | KIT MOUNTING |
| 1 | 500505D1 | 1 | BRACKET |
| 2 | 400339X1 | 4 | WASHER-HARD (8.8X16X2) |
| 3 | 400053X1 | 4 | BOLT (M8X1.25X20MM) |

00888925
PR: t05i29k58b0264

## MOUNTING GP-WITH FIRE EXTINGUISHER

**501785D1**
**EAME ONLY**

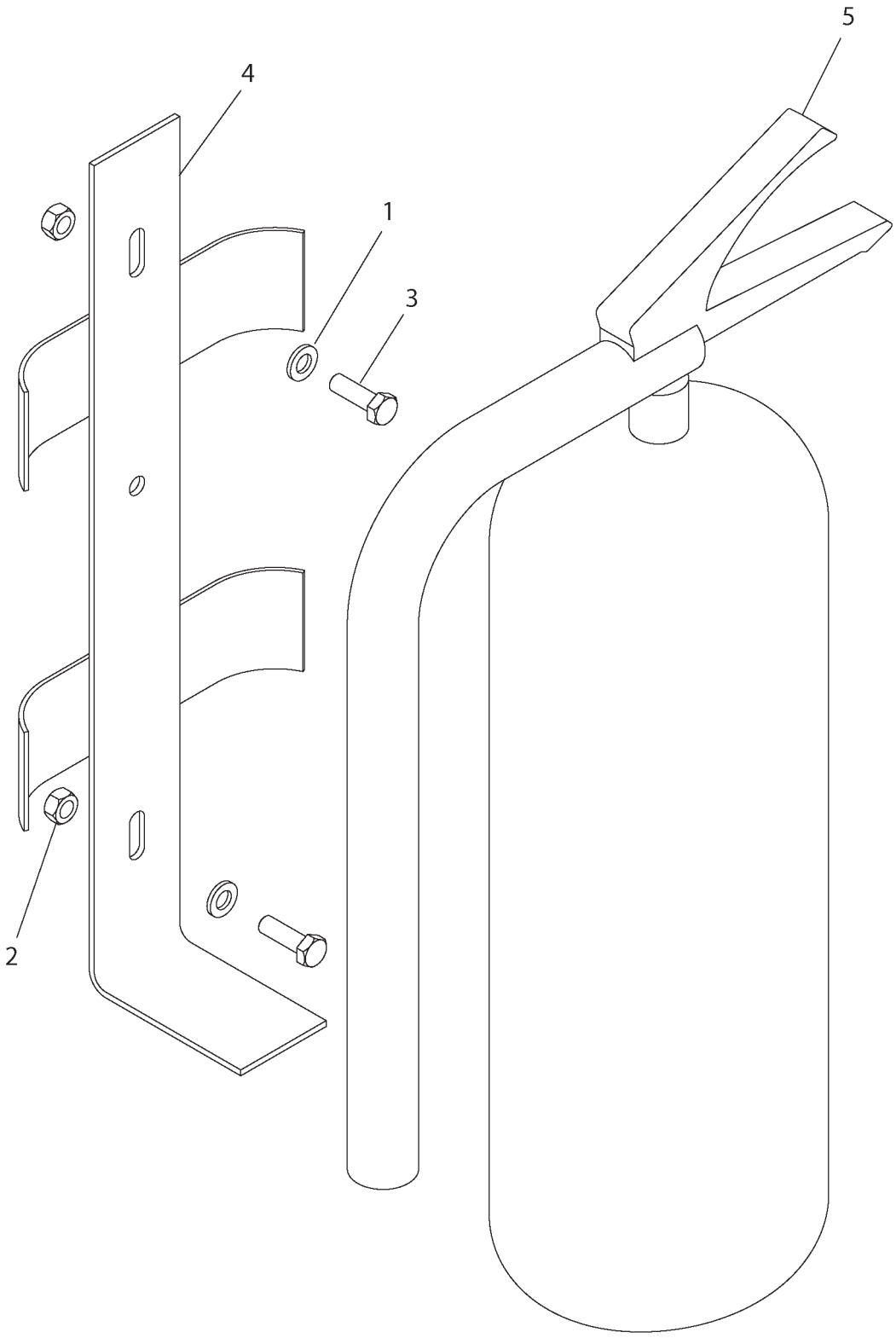

## MOUNTING GP-WITH FIRE EXTINGUISHER

**501785D1**
**EAME ONLY**

| ITEM | NUMBER | QTY | DESCRIPTION |
|---|---|---|---|
| - | 501785D1 | -- | MOUNTING GP-FIRE EXTINGUISHER |
| 1 | 400339X1 | 2 | WASHER-HARD |
| 2 | 400340X1 | 2 | NUT |
| 3 | 400341X1 | 2 | BOLT-HEX HD |
| 4 | 501775D1 | 1 | BRACKET-FIRE EXTG |
| 5 | 501785D1 | 1 | EXTENGUISHER-FIRE |

501785DA
PR: t05i29k58b0265

## MOUNTING GP-CAB - 162-4112

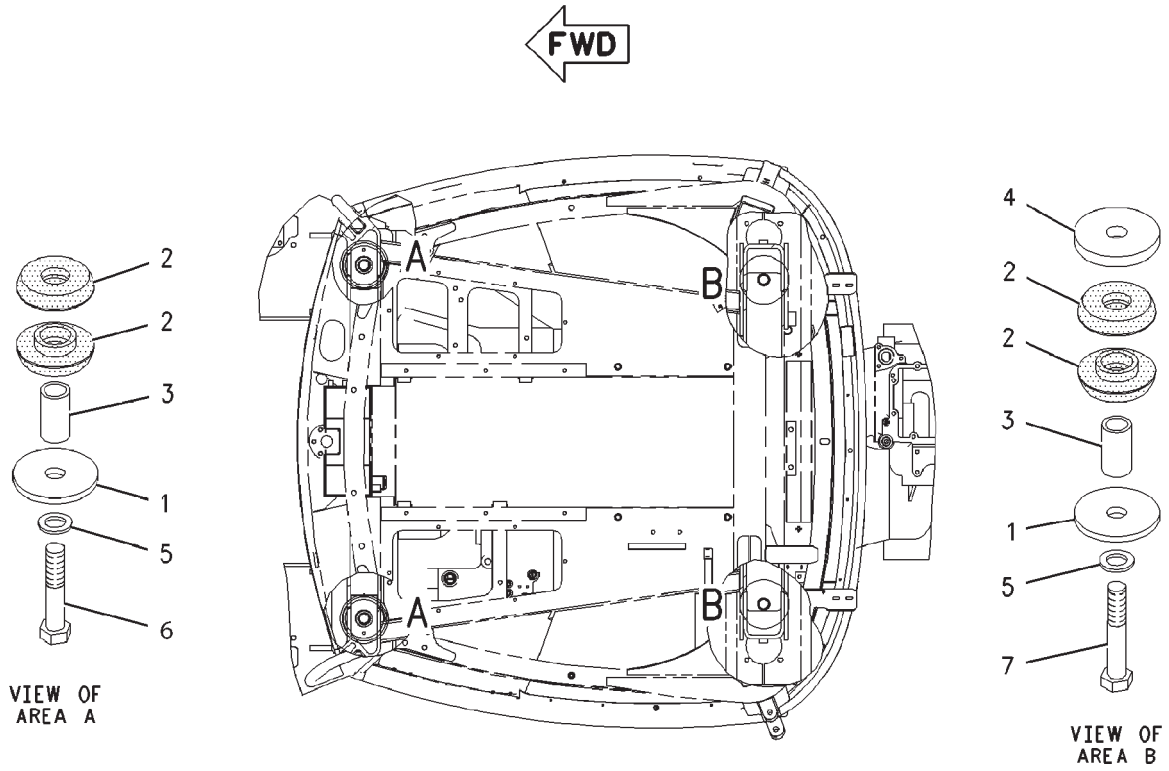


TOP VIEW

00850697

## MOUNTING GP-CAB - 162-4112

| ITEM | NUMBER | QTY | DESCRIPTION |
|---|---|---|---|
| - | 162-4112 | -- | MOUNTING GP-CAB [A] (NOT SERVICED) |
| 1 | 9U-0512 | 4 | WASHER (12.0) |
| 2 | 117-8131 | 8 | MOUNT |
| 3 | CH144-2179 | 4 | SLEEVE |
| 4 | CH192-5173 | 2 | PLATE |
| 5 | CH7X-0593 | 4 | WASHER-HARD (34X57X6) |
| 6 | 400199X1 | 2 | BOLT (M30X3.5X160) |
| 7 | 400200X1 | 2 | BOLT (M30X3.5X180) |

[A] PART OF 179-1953 CHASSIS AR

00850697
PR: t05i29k58b0266

## MOUNTING GP-BODY - 158-5925

**LICENSE PLATE**
**EAME ONLY**

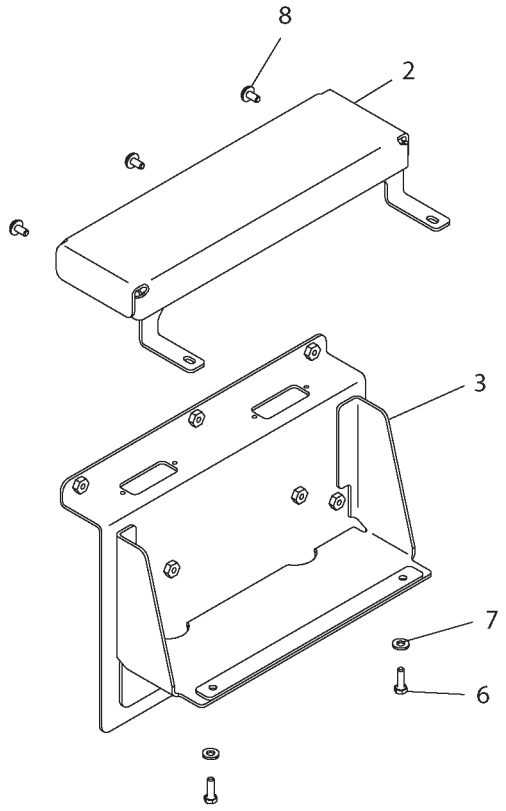


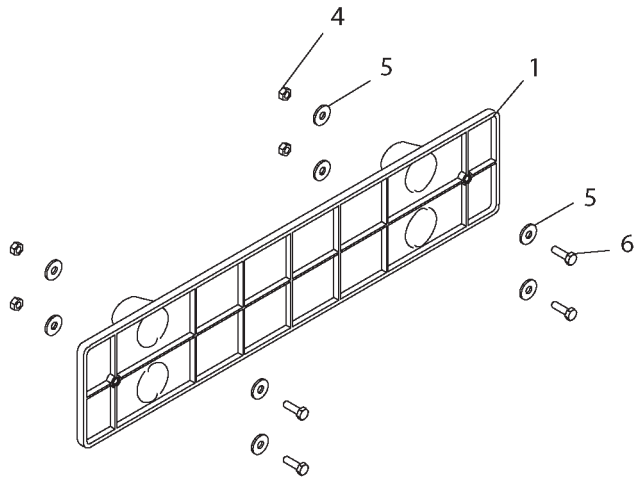


1585925A

## MOUNTING GP-BODY - 158-5925
LICENSE PLATE
EAME ONLY

| ITEM | NUMBER | QTY | DESCRIPTION |
|---|---|---|---|
| - | 158-5925 | -- | MOUNTING GP-LICENSE PLATE [A] (NOT SERVICED) |
| 1 | 177-7107 | 1 | PLATE AS.-LICENSE |
| 2 | 221-7640 | 1 | BRACKET AS. |
| 3 | 222-1887 | 1 | BRACKET AS |
| 4 | 400300X1 | 4 | NUT M6X1 |
| 5 | CH5P-4115 | 8 | WASHER-7.2IDX19ODX2MM |
| 6 | 400221X1 | 6 | BOLT-M6X1X20MM ZNDI HHD 10.9 |
| 7 | CH8T-4205 | 2 | WASHER-HARD 7.2IDX14.5ODX2MM |
| 8 | CH9X-2042 | 3 | SCREW-M6X1X12 ORG TORX |

[A] PART OF 179-2180 BASE COMMON AR

1585925A
PR: t05i29k58b0267

## MOUNTING GP-MONITOR - 222-7965

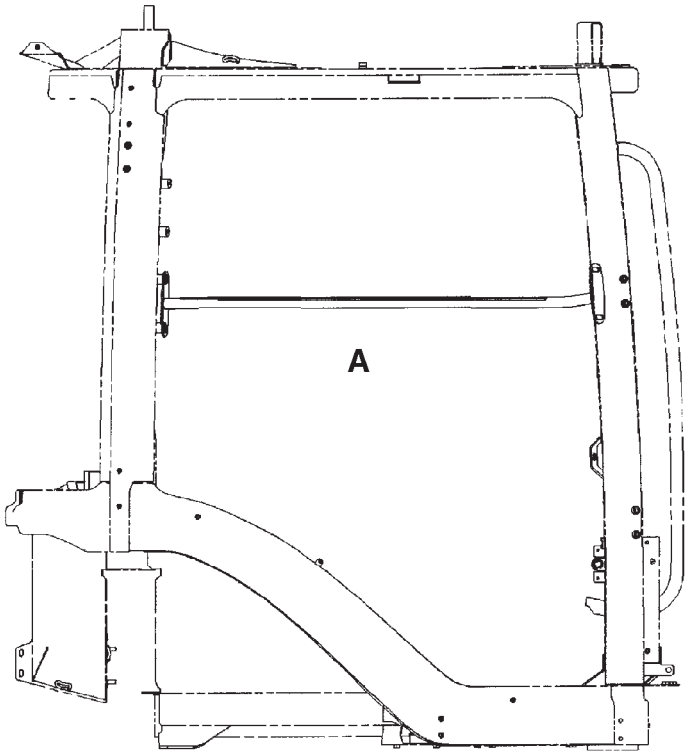


RIGHT SIDE VIEW

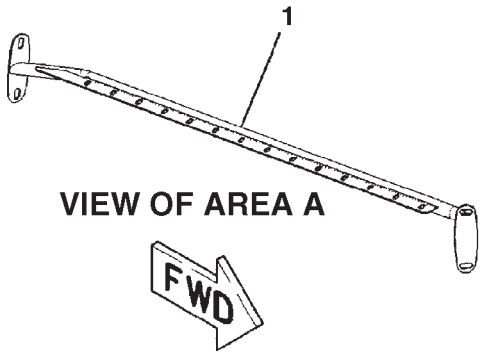


VIEW OF AREA A

0894860A

## MOUNTING GP-MONITOR - 222-7965

| ITEM | NUMBER | QTY | DESCRIPTION |
|---|---|---|---|
| - | 502778D1 | -- | MOUNTING GP-MONITOR (FIELD INSTALLED) |
| - | 502798D1 | -- | MOUNTING GP-MONITOR (FACTORY) (NOT SERVICED, ORDER FIELD INSTALLED) |
| - | 222-7965 | -- | MOUNTING GP-MONITOR [A] (NOT SERVICED, ORDER FIELD INSTALLED) |
| 1 | 215-8364 | 1 | TUBE ASM |
| | CH6V-5839 | 2 | WASHER (11IDX21X2.5MM) (NOT SHOWN) |
| | CH9X-2040 | 2 | SCREW-TRS HD (M10X1.5X20) (NOT SHOWN) |
| | CH9X-2041 | 2 | SCREW-TRS HD (M10X1.5X25) (NOT SHOWN) |

[A] PART OF 500033D1;500034D1;500035D1;
500037D1 BASE UNIT AR;
BASE UNIT AR;
502778D1; 502798D1 MTG GP-MONITOR

0894860A
PR: t05i29k58b0268

## PANEL GP-ENCLOSURE (CAT) - 210-4350

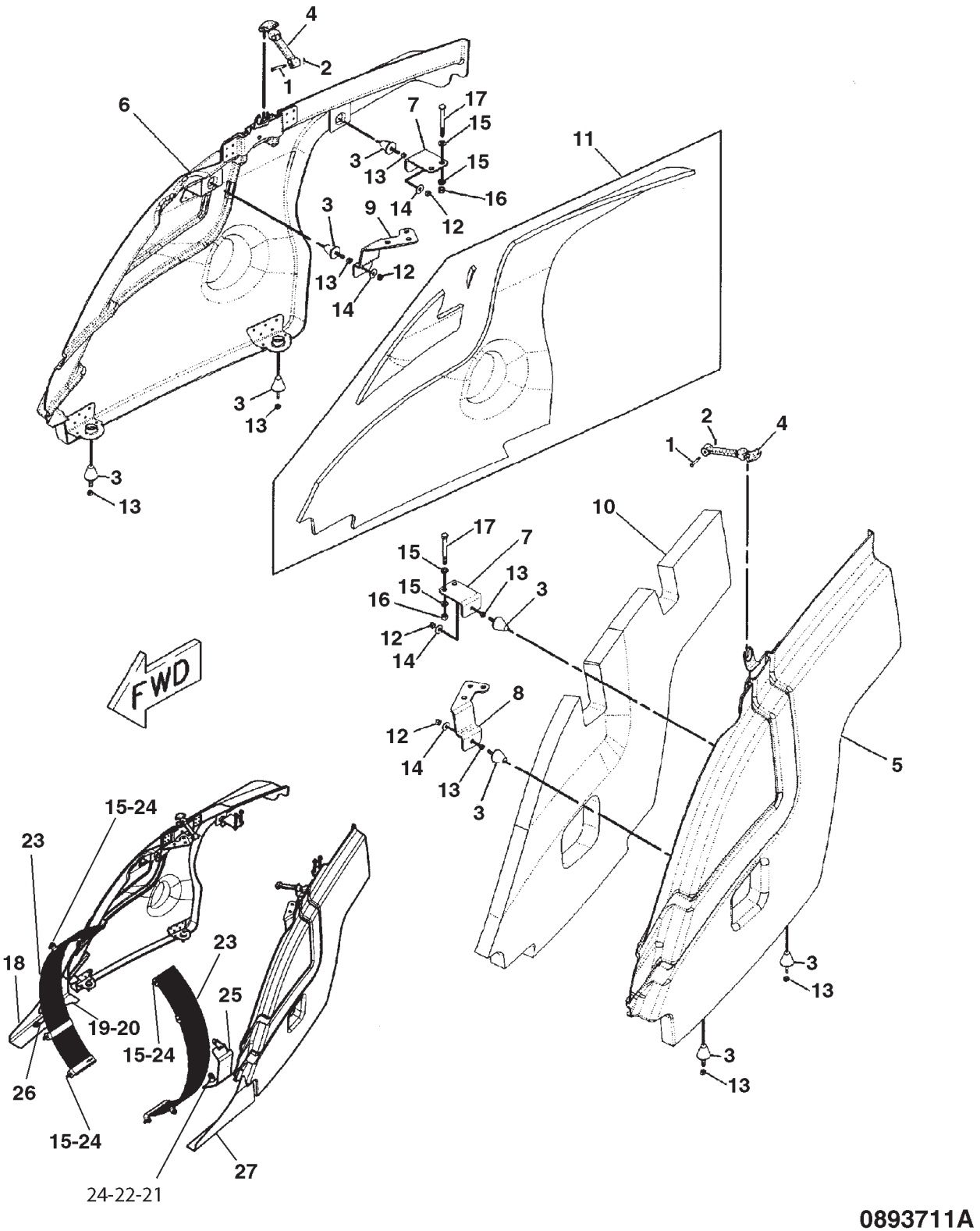

## PANEL GP-ENCLOSURE (CAT) - 210-4350

| ITEM | NUMBER | QTY | DESCRIPTION |
|---|---|---|---|
| - | 210-4350 | -- | PANEL GP-ENCLOSURE [A] (NOT SERVICED) |
| 1 | CH2M-5795 | 2 | PIN-CLEVIS |
| 2 | CH3B-4607 | 2 | PIN-COTTER |
| 3 | CH3W-7412 | 8 | BUMPER-CONICAL |
| 4 | CH9M-3835 | 2 | LATCH-RUBBER |
| 5 | 210-4348 | 1 | PANEL ASM (LH) |
| 6 | 210-4349 | 1 | PANEL ASM (RH) |
| 7 | 210-4406 | 2 | BRACKET |
| 8 | 210-4407 | 1 | BRACKET (LH) |
| 9 | 210-4408 | 1 | BRACKET (RH) |
| 10 | 210-4411 | 1 | INSULATION (LH) |
| 11 | 210-4412 | 1 | INSULATION (RH) |
| 12 | CH3E-9860 | 4 | LOCKNUT (5/16-18) |
| 13 | 400682X1 | 8 | NUT (5/16-18) |
| 14 | CH7X-0579 | 8 | WASHER-HARD (8.8X25.5X2) |
| 15 | 400287X1 | 14 | WASHER-HARD (11X21X2.5) |
| 16 | WR522218 | 4 | NUT (M10X1.5) |
| 17 | 400225X1 | 4 | BOLT (M10X1.5X90MM) |
| 18 | 210-4421 | 1 | BRACKET |
| 19 | CH7X-7729 | 4 | WASHER |
| 20 | 400059X1 | 4 | BOLT (M10X1.5) |
| 21 | ----- | 2 | NUT-HEX 1/2-13 (USE LOCKNUT) |
| 21 | CH1K-6872 | 2 | NUT-LOCK 1/2-13 |
| 22 | 400357X1 | 2 | WASHER-HARD |
| 23 | 204-5043 | 2 | GUARD ASM-FAN |
| 24 | 400058X1 | 6 | BOLT (M10X1.5X30) |
| 25 | 501205D1 | 1 | GUARD-ALTERNATOR |
| 26 | 225-8514 | 1 | PLATE |
| 27 | 216-6285 | 1 | BRACKET |
| 28 | 400275X1 | 2 | GROMMET (USED W/ITEM 25) (NOT SHOWN) |

[A] PART OF 179-2180 BASE COMMON AR

0893711A
PR: t05i29k58b0269

## PLUG GP-COUNTERWEIGHT - 183-5789
**COMPLETING**

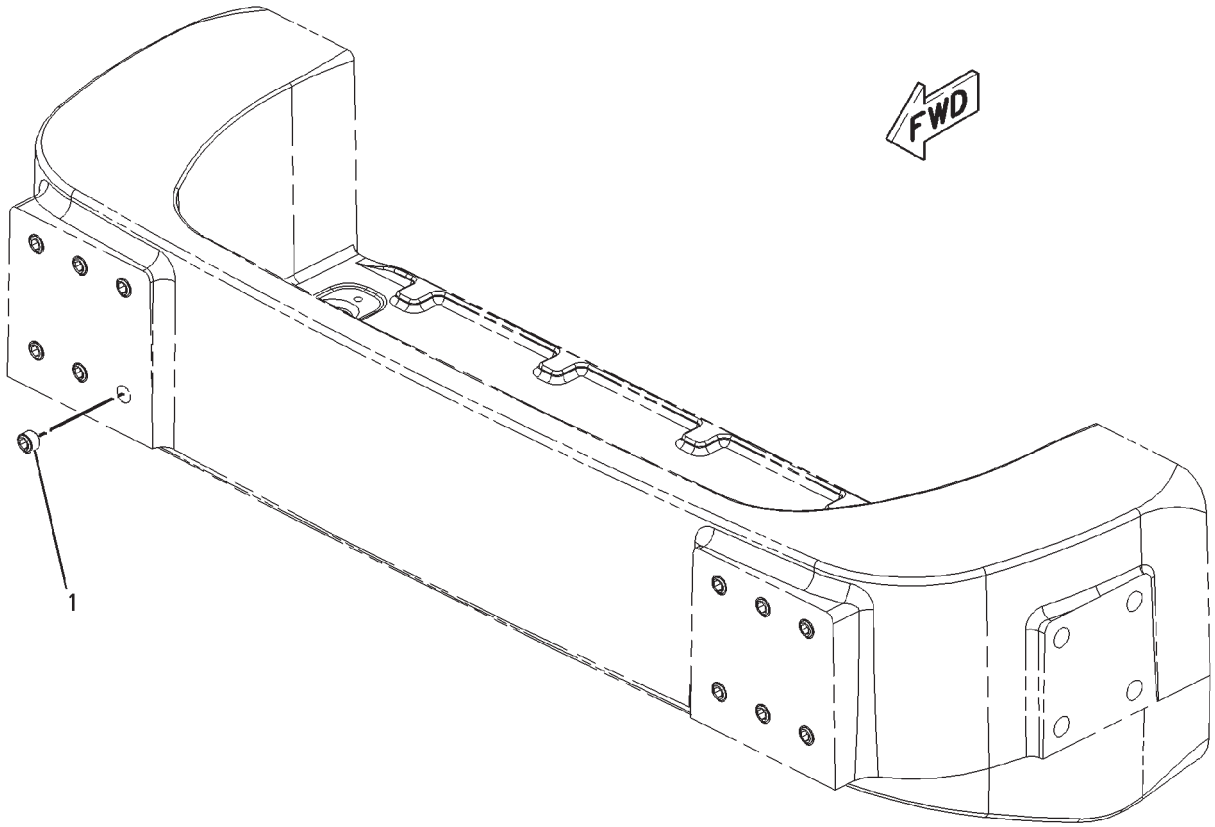


00851420

| ITEM | NUMBER | QTY | DESCRIPTION |
|---|---|---|---|
| - | 183-5789 | -- | PLUG GP-COUNTERWEIGHT (NOT SERVICED) |
| 1 | 400090X1 | 12 | PLUG |

00851420
PR: t05i29k58b0270

**STEP GP - 156-1327**

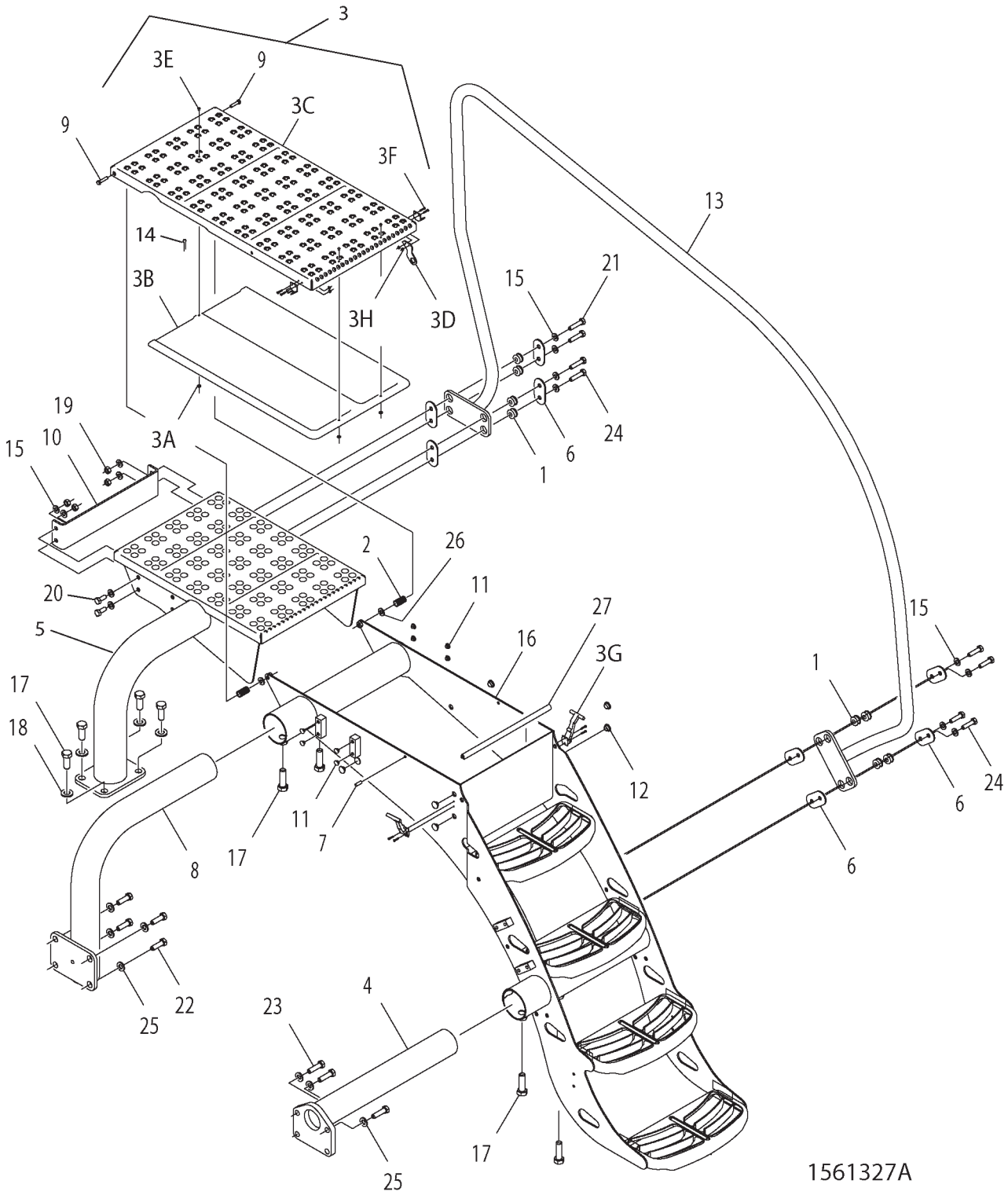

## STEP GP - 156-1327

| ITEM | NUMBER | QTY | DESCRIPTION |
|---|---|---|---|
| - | 156-1327 | -- | STEP GP [A] (NOT SERVICED) |
| 1 | CH6N-6984 | 8 | MOUNTING |
| 2 | CH7V-0445 | 2 | SPRING-COMP 15.24 OD X 19.05 |
| 3 | 173-2743 | 1 | STEP AS-TOP DECK (NOT SERVICED) (ORDER 3A-3H) |
| 3A | CH6K-3274 | 3 | PLATE-RIVET 3.3 X 9.5 X 1.5 |
| 3B | 170-5765 | 1 | SHIELD |
| 3C | 173-2744 | 1 | STEP-TOP |
| 3D | 192-0976 | 1 | PLATE-LOCK TAB |
| 3E | CH103-8089 | 3 | RIVET-BL 3.18 X 6.38-7.92 GRIP |
| 3F | CH1H-8289 | 8 | SCREW-PAN 5-40 THD SLOTTED |
| 3G | CH118-0772 | 2 | LATCH AS-T BALL |
| 3H | CH3K-9089 | 8 | NUT-SELF LOCKING 5-40-3B THD |
| 4 | 183-7892 | 1 | PIPE AS-FRONT |
| 5 | 183-7894 | 1 | STEP AS |
| 6 | 203-9200 | 6 | PLATE |
| 7 | 204-9922 | 1 | ROD |
| 8 | 208-7525 | 1 | PIPE AS. -REAR |
| 9 | 400015X1 | 2 | BOLT-M8X1.25X33 ZNDI HSHD 12.9 |
| 10 | 225-8861 | 1 | BRACKET |
| 11 | CH193-5914 | 12 | PLUG-PROTECTIVE PLASTIC,M10 |
| 12 | CH193-5916 | 6 | PLUG-PROTECTIVE PLASTIC M16 |
| 13 | 220-2730 | 1 | TUBE AS-HANDRAIL |
| 14 | CH3B-4610 | 1 | PIN-COTTER 2.38 DIAX22.2MM STL |
| 15 | 400287X1 | 16 | WASHER-HARD 11IDX21ODX2.5 ZND1 |
| 16 | 500441D2 | 1 | STEP AS |
| 17 | 400191X1 | 8 | BOLT-M16X2X40MM ZNDI HHD 10.9 |
| 18 | CH8T-4122 | 4 | WASHER HARD-17IDX32ODX3.5MM |
| 19 | WR522218 | 6 | NUT-M10-1.5,CL10.9,ZN,H,REG |
| 20 | 400039X1 | 2 | BOLT-M10X1.5X25 ZNDI HHD 10.9 |
| 21 | 400049X1 | 2 | BOLT-M10X1.5X45 ZNDI HHD 10.9 |
| 22 | 400050X1 | 4 | BOLT-M12X1.75X40 ZNDI HHD 10.9 |
| 23 | 400051X1 | 3 | BOLT-M12X1.75X45 ZNDI HHD 10.9 |
| 24 | 400052X1 | 6 | BOLT-M10X1.5X40 ZNDI HHD 10.9 |
| 25 | 400357X1 | 7 | WASHER-HARD-M12X25.50DX3THK |
| 26 | 400339X1 | 2 | WASHER-HARD |
| 27 | WR513654 | 1 | EDGE LINER .19" TK MAT PVC (33CM) |

PART OF 179-1953 CHASSIS AR

1561327A
PR: t05i29k58b0271

## HANDHOLD GP - 221-8534
EAME ONLY

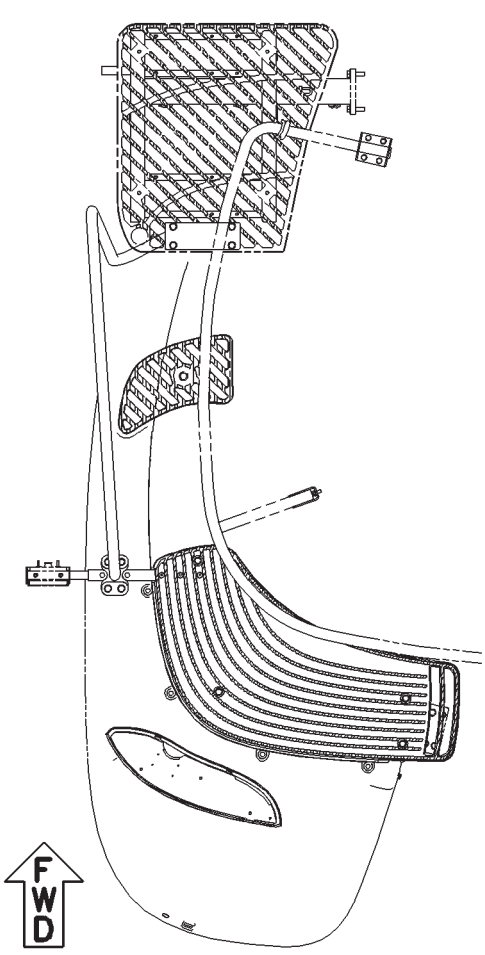


TOP VIEW

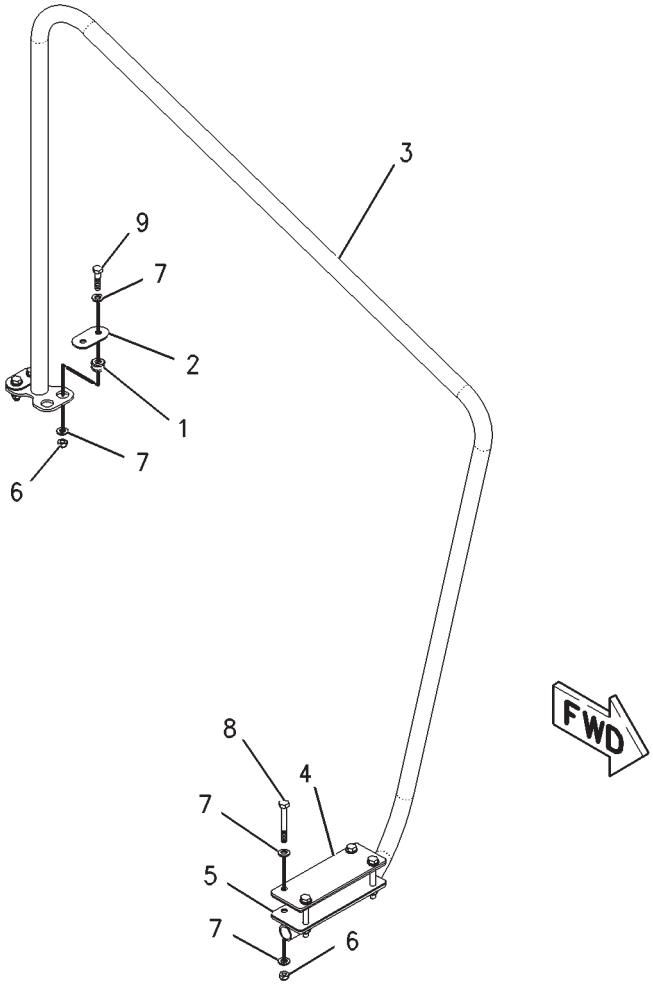


00895637

## HANDHOLD GP - 221-8534
EAME ONLY

| ITEM | NUMBER | QTY | DESCRIPTION |
|---|---|---|---|
| - | 221-8534 | -- | HANDHOLD GP [A] (NOT SERVICED) |
| 1 | CH6N-6984 | 4 | MOUNT |
| 2 | 203-9200 | 2 | PLATE |
| 3 | 221-8535 | 1 | HANDHOLD AS |
| 4 | 221-8536 | 1 | PLATE |
| 5 | 221-8537 | 2 | INSULATION |
| 6 | CH6V-7744 | 8 | LOCKNUT (M10X1.5 THD) |
| 7 | 400287X1 | 16 | WASHER-HARD (11X21X2.5MM THK) |
| 8 | 400044X1 | 4 | BOLT (M10X1.50X80MM) |
| 9 | 400052X1 | 4 | BOLT (M10X1.5X40MM) |

[A] PART OF 179-2180 BASE COMMON AR

00895637
PR: t05i29k58b0272

## SUPPORT GP-FUEL TANK - 186-5431
1 OF 2

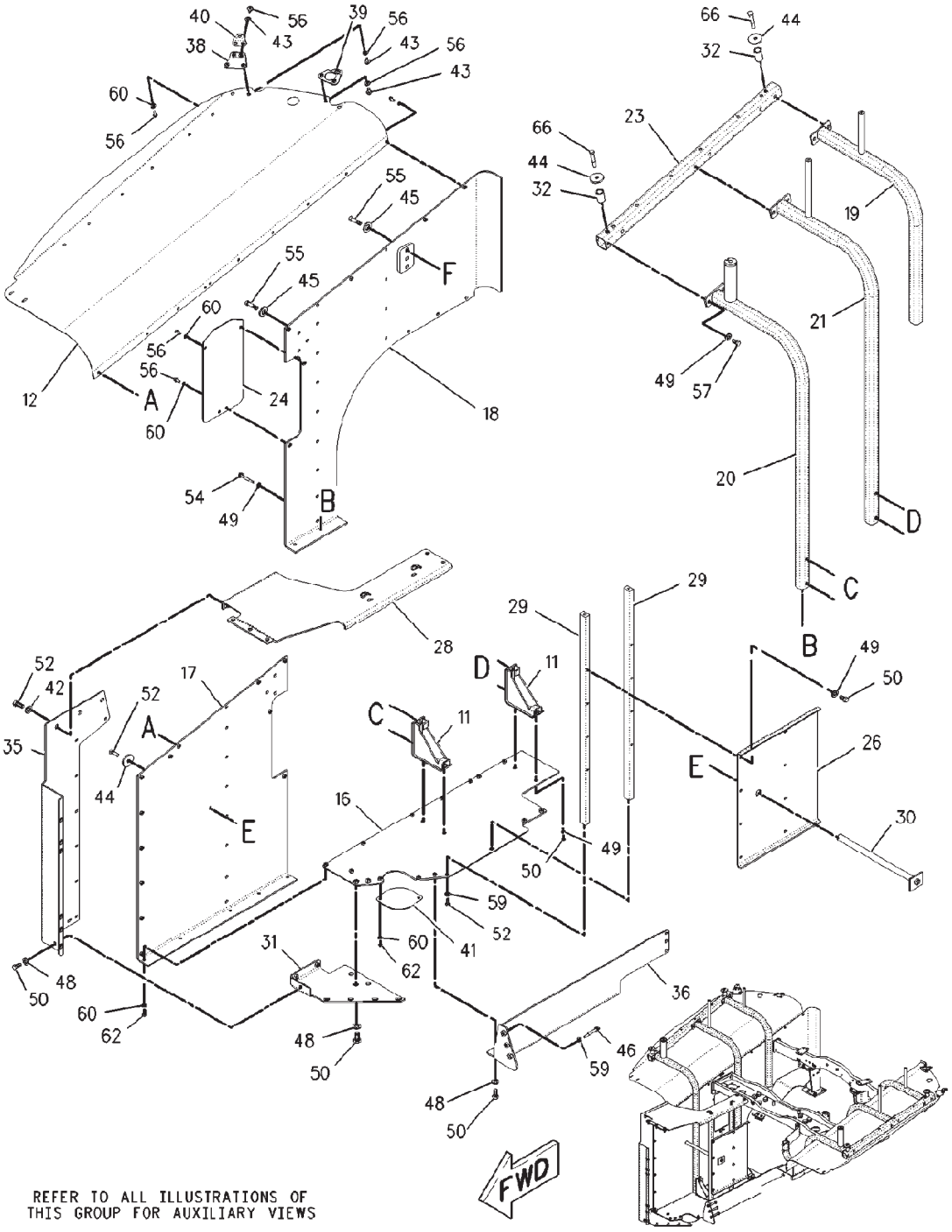


00890185

## SUPPORT GP-FUEL TANK - 186-5431
1 OF 2

| ITEM | NUMBER | QTY | DESCRIPTION |
|---|---|---|---|
| - | 186-5431 | -- | SUPPORT GP-FUEL TANK [A] (NOT SERVICED) |
| 11 | 188-0772 | 2 | PLATE ASM (INCL.NUT-WELD, AND PLATES) |
| | CH8T-3490 | 4 | NUT-WELD (M10X1.5) |
| 12 | 188-0773 | 1 | SHIELD |
| 16 | 188-0777 | 1 | PLATE ASM (RH) (TANK SUPPORT) |
| | CH8T-3490 | 5 | NUT-WELD (M10X1.5) |
| | CH8T-3612 | 10 | NUT-WELD (M8X1.25) |
| 17 | 188-0778 | 1 | SHIELD AS |
| | CH8T-3612 | 12 | NUT-WELD (M8X1.25) |
| 18 | 188-0779 | 1 | SHIELD AS |
| | CH8T-3612 | 6 | NUT-WELD (M8X1.25) |
| 19 | 195-0499 | 1 | TUBE AS |
| 20 | 195-0500 | 1 | TUBE AS |
| | CH8T-3597 | 1 | NUT-WELD (M12X1.75) |
| 21 | 195-0501 | 1 | TUBE AS (INCLUDES PLATE, ROD & TUBE) |
| 23 | 197-8128 | 1 | SUPPORT |
| 24 | 197-8131 | 1 | SHIELD (RH) |
| 26 | 205-1388 | 1 | PLATE |
| 28 | 205-1394 | 1 | PLATE ASM(INCL. PLATE, LINK & NUT-WELD) |
| | CH7T-1099 | 2 | LINK |
| | CH8T-3597 | 3 | NUT-WELD (M12X1.75) |
| 29 | 205-1395 | 2 | BAR |
| 30 | 205-1396 | 1 | PIN ASM (INCLUDES SPACE-BAR & PLATE) |
| 31 | 205-1397 | 1 | SHIELD AS (INCLUDES PLATE & NUT-WELD) |
| | CH8T-3490 | 3 | NUT-WELD (M10X1.5) |
| 32 | CH206-4708 | 4 | SPACER (22.2X31.8X50) |
| 35 | 209-0799 | 1 | SHIELD (RH) (FRONT) |
| 36 | 209-0800 | 1 | BRACKET ASM (INCL. BRACKET & NUT-WELD) |
| | CH8T-3490 | 2 | NUT-WELD (M10X1.50) |
| | CH8T-3597 | 4 | NUT-WELD (M12X1.75) |
| 38 | 219-7564 | 1 | BRACKET ASM(INCLUDES PLATE & NUT-WELD) |
| | CH8T-3612 | 4 | NUT-WELD (M8X1.25) |
| 39 | 219-7565 | 2 | BRACKET ASM(INCLUDES PLATE & NUT-WELD) |
| | CH8T-3612 | 2 | NUT-WELD (M8X1.25) |
| 40 | 219-7566 | 2 | BRACKET |
| 41 | 210-2682 | 1 | COVER |
| 42 | 400381X1 | 3 | WASHER-HARD (13.5X30X4) |
| 43 | 400599X1 | 12 | WASHER-HARD (8.8X20.5X2) |
| 44 | CH7G-8839 | 5 | SPACER (13.5X57X6) |
| 45 | CH7X-0618 | 14 | WASHER-HARD (13.5X40X5) |
| 46 | 400029X1 | 3 | BOLT (M12X1.75X100MM) |
| 48 | CH7X-7729 | 9 | WASHER (11X25X3) |
| 49 | 400287X1 | 59 | WASHER-HARD (11X21X2.5) |
| 50 | 400039X1 | 31 | BOLT (M10X1.5X25MM) |
| 52 | 400041X1 | 33 | BOLT (M12X1.75X30MM) |
| 54 | 400044X1 | 6 | BOLT (M10X1.50X80MM) |
| 55 | 400050X1 | 14 | BOLT (M12X1.75X40MM) |
| 56 | 400053X1 | 72 | BOLT (M8X1.25X20MM) |
| 57 | 400058X1 | 12 | BOLT (M10X1.5X30MM) |
| 59 | 400357X1 | 35 | WASHER-HARD (M12X25.5X3) |
| 60 | 400339X1 | 69 | WASHER-HARD (8.8X16X2) |
| 62 | 400341X1 | 9 | BOLT (M8X1.25X25MM) |
| 66 | 400241X1 | 4 | BOLT (M12X1.75X80MM) |

[A] PART OF 179-2182 TANK & MTG GP-FUEL

## SUPPORT GP-FUEL TANK - 186-5431
2 OF 2

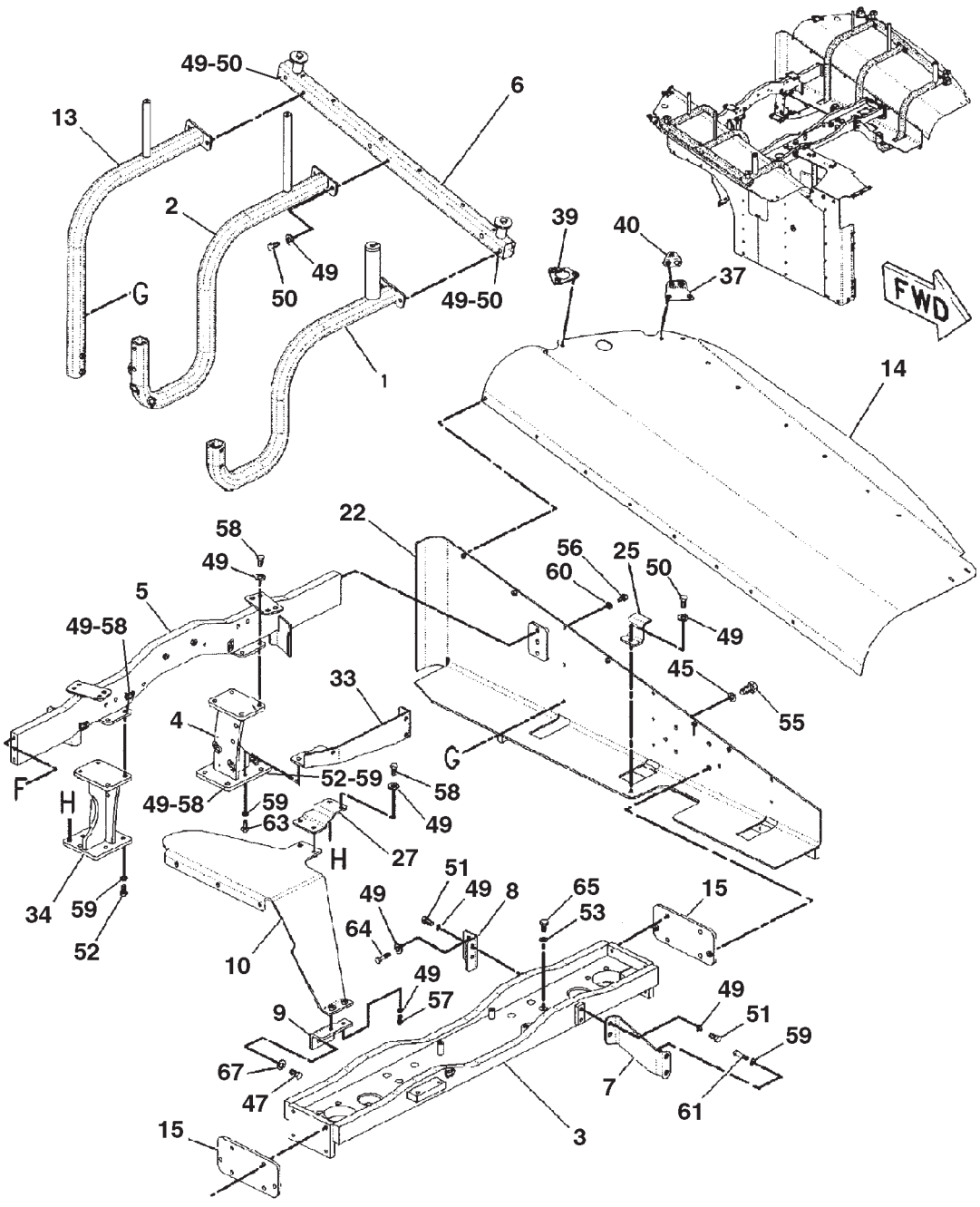


REFER TO ALL ILLUSTRATIONS OF
THIS GROUP FOR AUXILIARY VIEWS

## SUPPORT GP-FUEL TANK - 186-5431



| ITEM | NUMBER | QTY | DESCRIPTION |
|---|---|---|---|
| - | 186-5431 | -- | SUPPORT GP-FUEL TANK [A] (NOT SERVICED) |
| 1 | 187-1062 | 1 | TUBE ASM |
| | CH7T-1099 | 1 | LINK |
| | CH8T-3597 | 1 | NUT-WELD (M12X1.75) |
| 2 | 187-1069 | 1 | TUBE ASM |
| | CH7T-1099 | 3 | LINK |
| | CH8T-3490 | 2 | NUT-WELD (M10X1.5) |
| 3 | 188-0497 | 1 | BRACKET ASM |
| | CH7T-1099 | 4 | LINK |
| | CH8Y-3795 | 1 | BOSS (M10X1.5X39MM) |
| 4 | 188-0762 | 1 | BRACKET ASM |
| | CH7T-1099 | 3 | LINK |
| | CH8T-3490 | 8 | NUT-WELD (M10X1.5) |
| | CH9R-2821 | 1 | BOSS |
| 5 | 188-0763 | 1 | SUPPORT ASM |
| | CH7T-1099 | 3 | LINK |
| 6 | 188-0764 | 1 | SUPPORT AS |
| 7 | 188-0765 | 1 | ARM ASM |
| | CH8T-3597 | 2 | NUT-WELD (M12X1.75) |
| 8 | 188-0766 | 1 | ANGLE |
| 9 | 188-0768 | 1 | BRACKET |
| 10 | 188-0769 | 1 | BRACKET ASM |
| | CH8T-3490 | 7 | NUT-WELD (M10X1.5) |
| 13 | 188-0774 | 1 | TUBE ASM |
| | CH8T-3490 | 2 | NUT-WELD (M10X1.5) |
| 14 | 188-0775 | 1 | SHIELD |
| 15 | 188-0776 | 2 | PLATE ASM |
| | CH8T-3490 | 2 | NUT-WELD (M10X1.5) |
| 22 | 195-0502 | 1 | SUPPORT ASM |
| | CH8T-3490 | 1 | NUT-WELD (M10X1.5) |
| | CH8T-3612 | 5 | NUT-WELD (M8X1.25) |
| 25 | 199-2086 | 1 | BRACKET (LH) |
| 27 | 205-1390 | 1 | BRACKET |
| 33 | 206-4719 | 1 | SUPPORT ASM (ARM) |
| | CH7T-1099 | 1 | LINK |
| | CH8T-3490 | 2 | NUT-WELD (M10X1.5) |
| | CH8T-3612 | 1 | NUT-WELD (M8X1.25) |

CONTINUED

[A] PART OF 179-2182 TANK & MTG GP-FUEL

## SUPPORT GP-FUEL TANK - 186-5431
2 OF 2

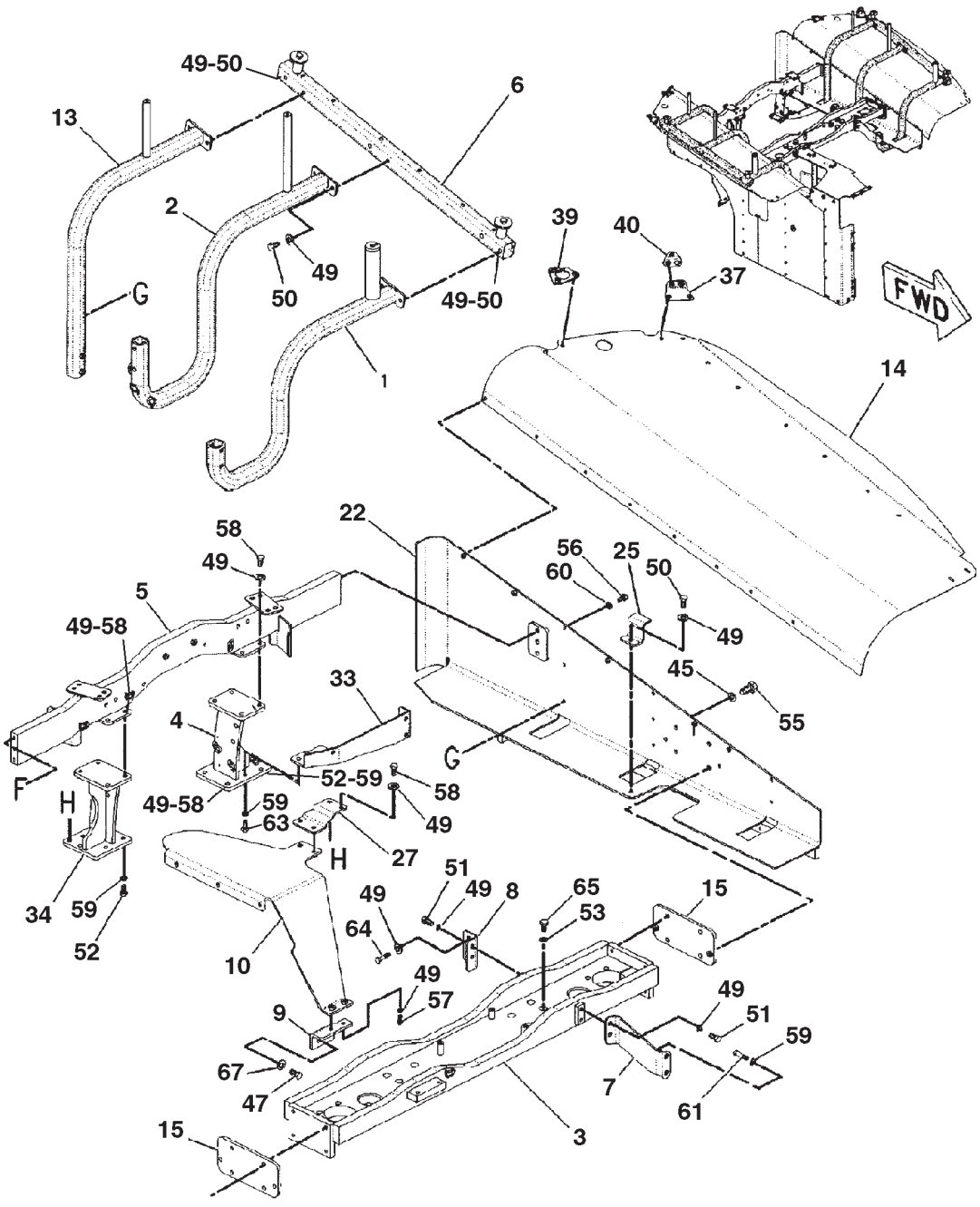


REFER TO ALL ILLUSTRATIONS OF
THIS GROUP FOR AUXILIARY VIEWS

0890186A

## SUPPORT GP-FUEL TANK - 186-5431
2 OF 2

| ITEM | NUMBER | QTY | DESCRIPTION |
|---|---|---|---|
| - | 186-5431 | -- | SUPPORT GP-FUEL TANK [A] (NOT SERVICED) |
| 34 | 206-4720 | 1 | BRACKET ASM |
| | CH8T-3490 | 6 | NUT-WELD (M10X1.5) |
| 37 | 219-7563 | 1 | BRACKET ASM |
| | CH8T-3612 | 4 | NUT-WELD (M8X1.25) |
| 39 | 219-7565 | 2 | BRACKET ASM |
| | CH8T-3612 | 2 | NUT-WELD (M8X1.25) |
| 40 | 219-7566 | 2 | BRACKET |
| 45 | CH7X-0618 | 14 | WASHER-HARD (13.5X40X5) |
| 47 | 400088X1 | 2 | BOLT (M16X2X30MM) |
| 49 | 400287X1 | 59 | WASHER-HARD (11X21X2.5) |
| 50 | 400039X1 | 31 | BOLT (M10X1.5X25MM) |
| 51 | 400040X1 | 4 | BOLT (M10X1.5X20MM) |
| 52 | 400041X1 | 33 | BOLT (M12X1.75X30MM) |
| 53 | 400081X1 | 10 | WASHER-HARD (26X44X4) |
| 55 | 400050X1 | 14 | BOLT (M12X1.75X40MM) |
| 56 | 400053X1 | 72 | BOLT (M8X1.25X20MM) |
| 57 | 400058X1 | 12 | BOLT (M10X1.5X30MM) |
| 58 | 400059X1 | 13 | BOLT (M10X1.5X35MM) |
| 59 | 400357X1 | 35 | WASHER-HARD (M12X25.5X3) |
| 60 | 400339X1 | 69 | WASHER-HARD (8.8X16X2) |
| 61 | 400062X1 | 2 | BOLT (M12X1.75X70MM) |
| 63 | 400064X1 | 1 | BOLT (M12X1.75X35MM) |
| 64 | 400066X1 | 2 | BOLT (M10X1.50X70MM) |
| 65 | 400067X1 | 10 | BOLT (M24X3X80MM) |
| 67 | 400082X1 | 2 | WASHER (17.5X30X3.5) |

[A] PART OF 179-2182 TANK & MTG GP-FUEL

0890186A
PR: t05i29k58b0274

## SUPPORT GP-COMPONENT - 190-5441

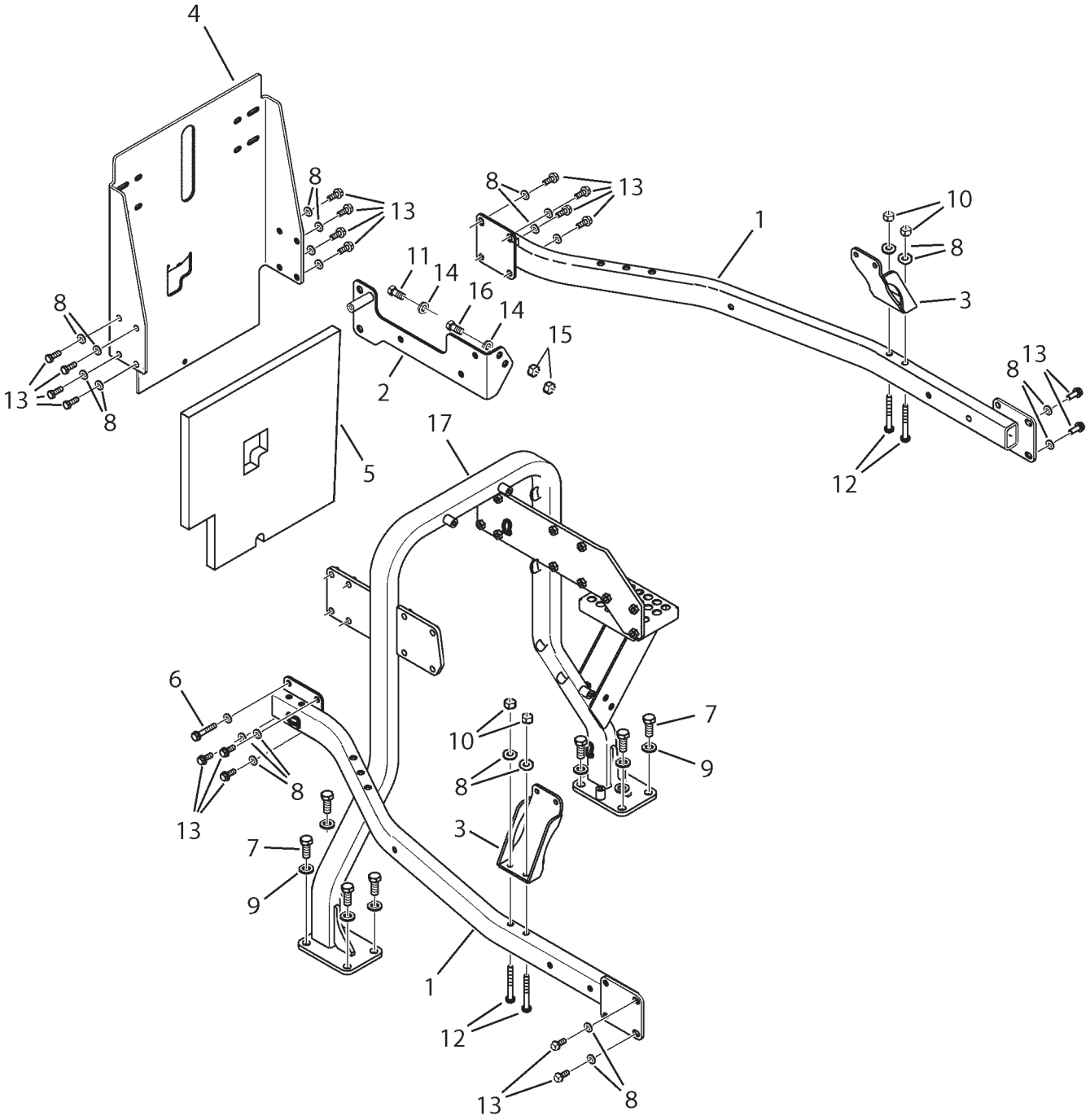


1905441A

## SUPPORT GP-COMPONENT - 190-5441

| ITEM | NUMBER | QTY | DESCRIPTION |
|---|---|---|---|
| - | 190-5441 | -- | SUPPORT GP-COMPONENT [A] (NOT SERVICED) |
| 1 | 192-6457 | 2 | TUBE AS (SIDE) |
| 2 | 196-7824 | 1 | PLATE AS. |
| 3 | 214-9064 | 2 | BRACKET AS |
| 4 | 226-0921 | 1 | SUPPORT |
| 5 | 502655D1 | 1 | INSULATION-REAR ENGINE |
| 6 | 400143X1 | 1 | BOLT-M10X1.5X60 ZNDI HHD 10.9 |
| 7 | 400191X1 | 8 | BOLT-M16X2X40MM ZNDI HHD 10.9 |
| 8 | 400287X1 | 28 | WASHER-HARD 11IDX21ODX2.5 ZND1 |
| 9 | CH8T-4122 | 8 | WASHER HARD-17IDX32ODX3.5MM |
| 10 | WR522218 | 4 | NUT-M10-1.5,CL10.9,ZN,H,REG |
| 11 | 400041X1 | 3 | BOLT-M12X1.75X30 ZNDI HHD 10.9 |
| 12 | 400225X1 | 4 | BOLT-M10X1.5X90 ZNDI HHD 10.9 |
| 13 | 400058X1 | 19 | BOLT-M10X1.5X30 ZNDI HHD 10.9 |
| 14 | 400357X1 | 4 | WASHER-HARD-M12X25.50DX3THK |
| 15 | CH8T-4244 | 2 | NUT-M12X1.75 HEX ZN |
| 16 | 400050X1 | 1 | BOLT-M12X1.75X40 ZNDI HHD 10.9 |
| 17 | 226-0919 | 1 | TUBE AS.-CMPNT |

PART OF 179-1953 CHASSIS AR

1905441A
PR: t05i29k58b0275

## WALKWAY GP - 183-6384

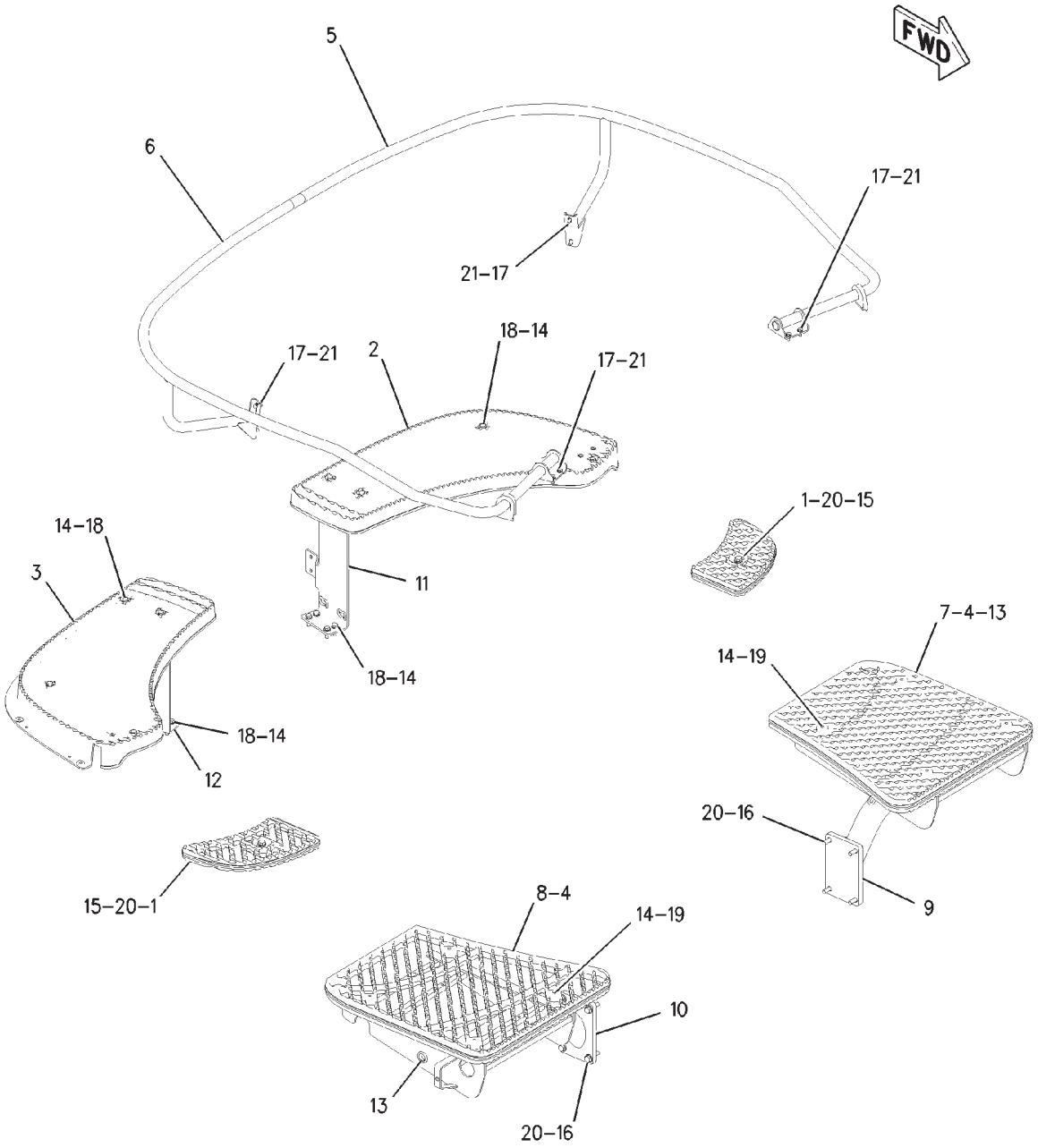


00823178

## WALKWAY GP - 183-6384

| ITEM | NUMBER | QTY | DESCRIPTION |
|---|---|---|---|
| - | 183-6384 | -- | WALKWAY GP [A] (NOT SERVICED) |
| 1 | 184-7976 | 2 | STEP |
| 2 | 184-7977 | 1 | PLATFORM (LH) |
| 3 | 184-7978 | 1 | PLATFORM (RH) |
| 4 | 184-7979 | 2 | STEP |
| 5 | 184-7980 | 1 | HANDHOLD LH |
| 6 | 184-7985 | 1 | HANDHOLD RH |
| 7 | 195-2615 | 1 | GROMMET (LH) |
| 8 | 195-2616 | 1 | GROMMET (RH) |
| 9 | 209-9220 | 1 | SUPPORT ASM |
| 10 | 209-9222 | 1 | SUPPORT ASM |
| 11 | 501997D1 | 1 | BRACKET ASM (LH) |
| 12 | 501996D1 | 1 | BRACKET ASM (RH) |
| 13 | CH3D-6209 | 6 | GROMMET |
| 14 | 400287X1 | 24 | WASHER-HARD (11X21X2.5) |
| 15 | 400050X1 | 2 | BOLT (M12X1.75X40MM) |
| 16 | 400051X1 | 8 | BOLT (M12X1.75X45MM) |
| 17 | 400053X1 | 12 | BOLT (M8X1.25X20MM) |
| 18 | 400058X1 | 16 | BOLT (M10X1.5X30MM) |
| 19 | 400059X1 | 8 | BOLT (M10X1.5X35MM) |
| 20 | 400357X1 | 10 | WASHER-HARD (M12X25.5X3) |
| 21 | 400599X1 | 12 | WASHER-HARD (M8X20.5X2) |

[A] PART OF:
179-1952; 179-2180 BASE COMMON AR

00823178
PR: t05i29k58b0276

## REFLECTOR GP - 215-7336
FOR USE WITH DRAWBAR
EAME

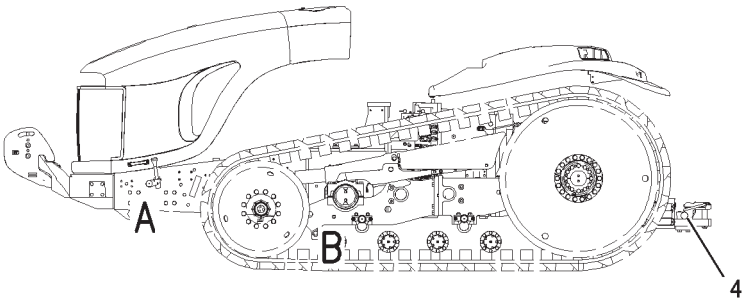


LEFT SIDE VIEW

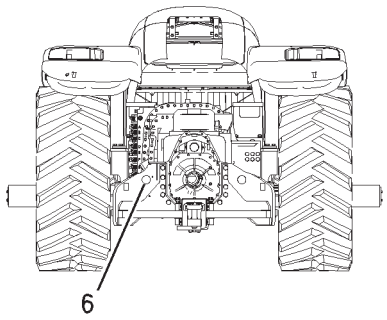


REAR VIEW

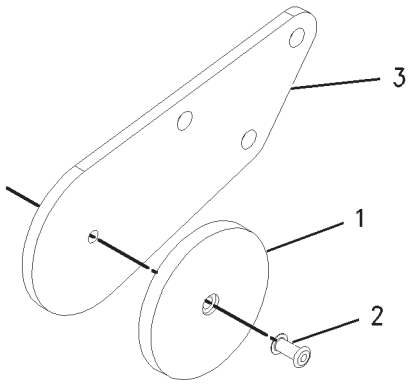


VIEW OF AREA A

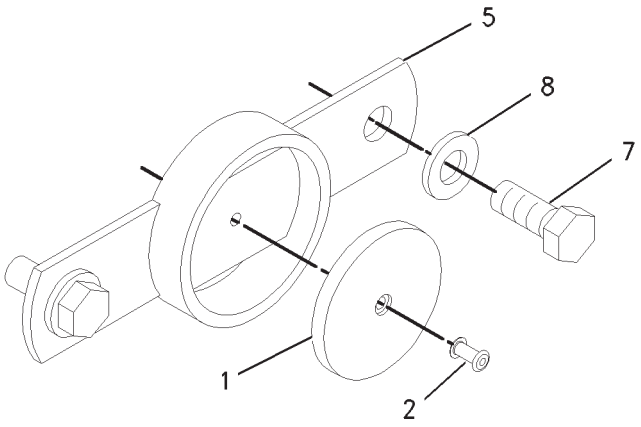


VIEW OF AREA B

## REFLECTOR GP - 215-7336
FOR USE WITH DRAWBAR
EAME

| ITEM | NUMBER | QTY | DESCRIPTION |
|---|---|---|---|
| - | 215-7336 | -- | KIT, REFLECTOR |
| 1 | 207-0516 | 6 | REFLECTOR |
| 2 | 4K-9429 | 6 | RIVET |
| 3 | 173-8307 | 2 | BRACKET (FRONT) |
| 4 | 208-3022 | 2 | FILM (YELLOW REFLECTIVE) |
| 5 | 215-7331 | 4 | BRACKET AS (CENTER) |
| 6 | 215-7335 | 2 | FILM (RED REFLECTIVE) |
| 7 | 400041X1 | 8 | BOLT (M12X1.75X30MM) |
| 8 | 400357X1 | 8 | WASHER-HARD (M12X25.5X3) |

00894260
PR: t05i29k58b0277

## REFLECTOR GP - 215-9580
**FOR USE WITH HITCH**
**EAME**

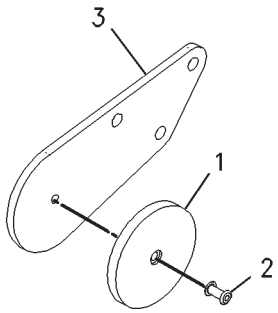


VIEW OF AREA A

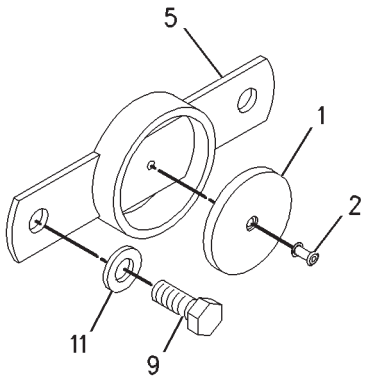


VIEW OF AREA B

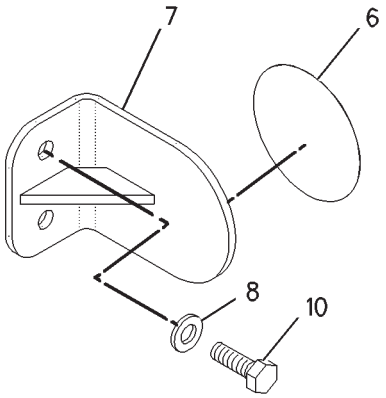


VIEW OF AREA C

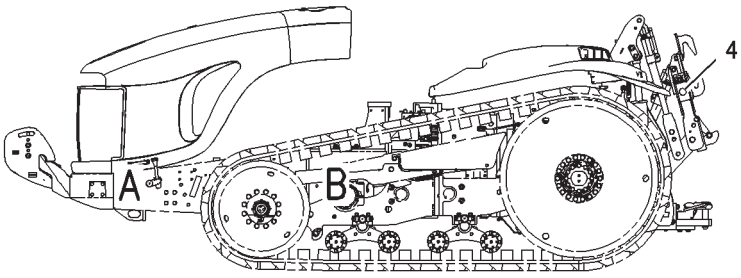


LEFT SIDE VIEW

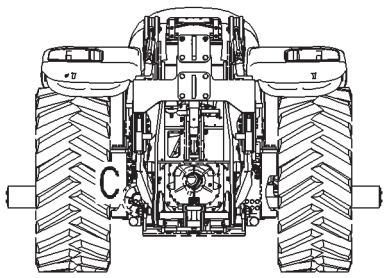


REAR VIEW

## REFLECTOR GP - 215-9580
FOR USE WITH HITCH
EAME

| ITEM | NUMBER | QTY | DESCRIPTION |
|---|---|---|---|
| - | 215-9580 | -- | KIT, REFLECTOR |
| 1 | 207-0516 | 6 | REFLECTOR |
| 2 | 4K-9429 | 6 | RIVET |
| 3 | 173-8307 | 2 | BRACKET (FRONT) |
| 4 | 208-3022 | 2 | FILM (YELLOW REFLECTIVE) |
| 5 | 215-7331 | 4 | BRACKET AS (CENTER) |
| 6 | 215-7335 | 2 | FILM (RED REFLECTIVE) |
| 7 | 215-7353 | 2 | BRACKET AS |
| 8 | 400287X1 | 4 | WASHER-HARD (11X21X2.5) |
| 9 | 400041X1 | 8 | BOLT (M12X1.75X30MM) |
| 10 | 400058X1 | 4 | BOLT (M10X1.5X30MM) |
| 11 | 400357X1 | 8 | WASHER-HARD (M12X25.5X3) |

00893300
PR: t05i29k58b0278

## BELT AR-GENERAL AP - 156-6077

**(699MM/27.5")**
**ROW & EAME**

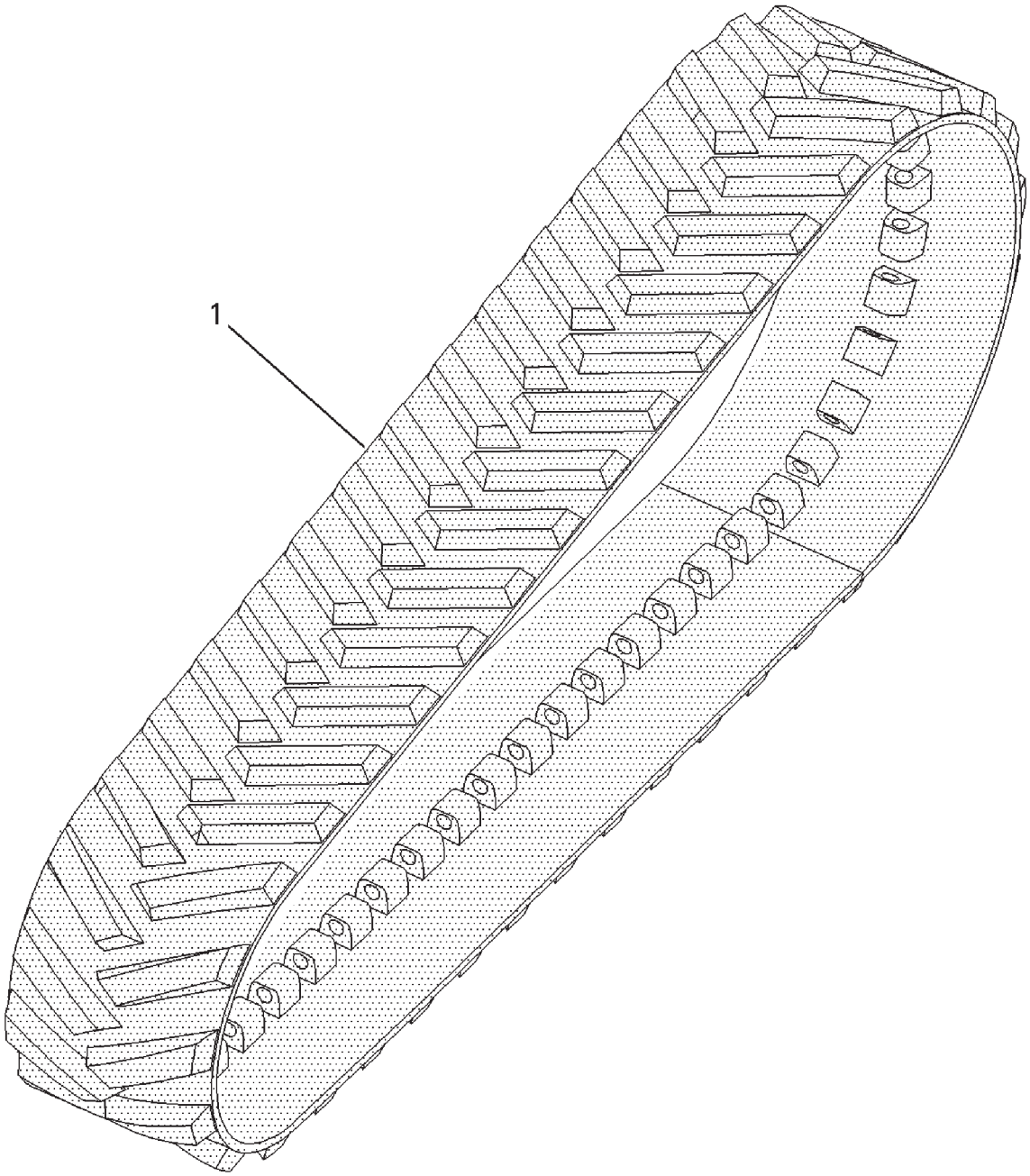


00750372

## BELT AR-GENERAL AP - 156-6077
**(699MM/27.5")**
**ROW & EAME**

| ITEM | NUMBER | QTY | DESCRIPTION |
|---|---|---|---|
| - | 156-6077 | -- | BELT AR (ORDER ON WHOLEGOODS) |
| - | 502142D1 | -- | BELT AR-FIELD (INCLS 1 OF ITEM 1) |
| 1 | 1R-1265 | 2 | BELT |
| - | 502185D1 | -- | KIT, BELT REPAIR |
| | 501739D1 | | ELASTOMER |
| | 501742D1 | | SOLIDIFIER |
| - | 501743D1 | -- | BELT CONDITIONER |

00750372
PR: t05i29k58b0279

## BELT AR-GENERAL AG - 156-6079
**(762MM/30")**

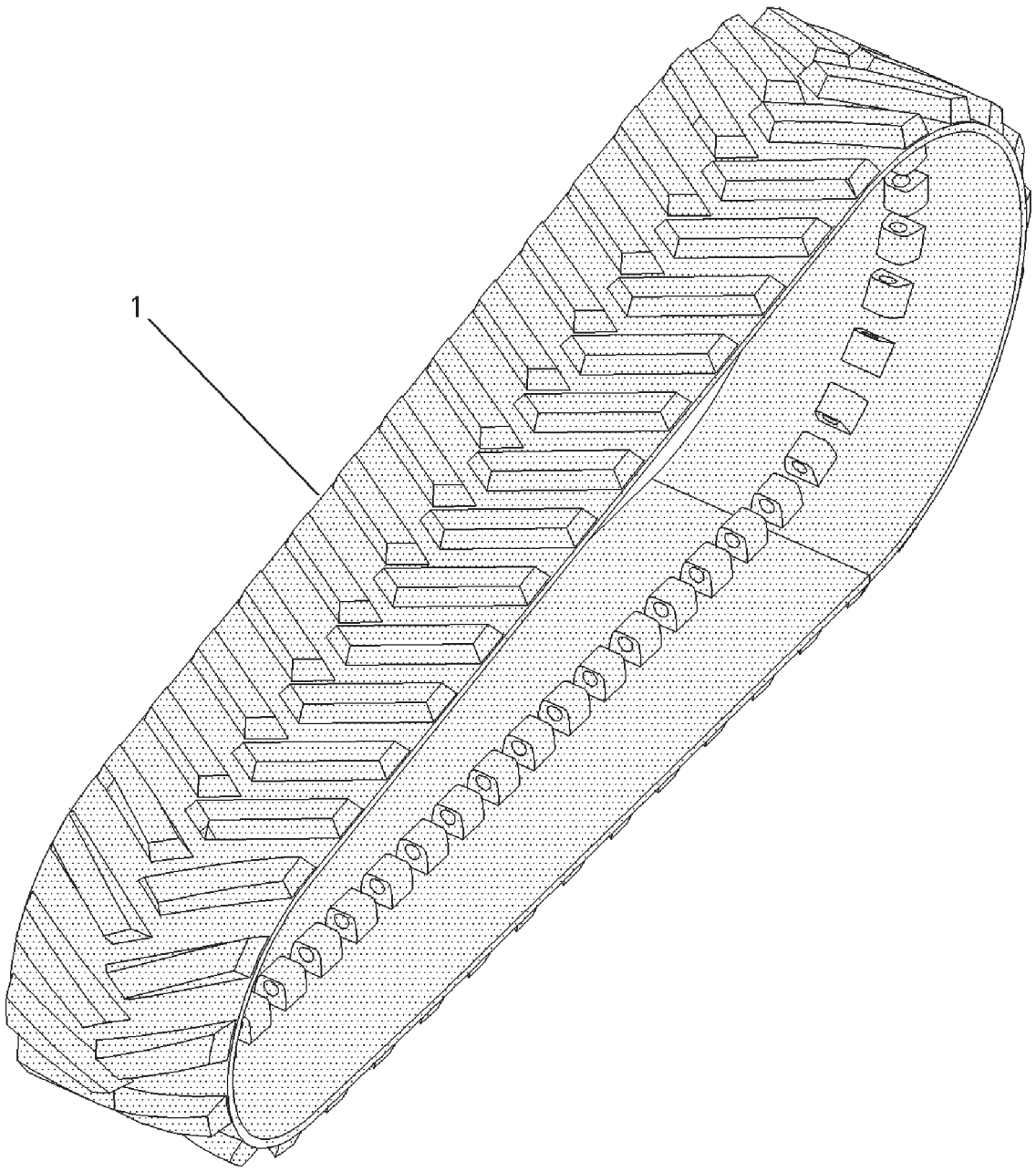


00750377

## BELT AR-GENERAL AG - 156-6079
**(762MM/30")**

| ITEM | NUMBER | QTY | DESCRIPTION |
|---|---|---|---|
| - | 156-6079 | -- | BELT AR (ORDER ON WHOLEGOODS) |
| 1 | 1R-1266 | 2 | BELT |
| - | 502144D1 | -- | BELT AR-30"-FIELD (INCLS 1 OF ITEM 1) |
| - | 502185D1 | -- | KIT, BELT REPAIR |
| | 501739D1 | | ELASTOMER |
| | 501742D1 | | SOLIDIFIER |
| - | 501743D1 | -- | BELT CONDITIONER |

00750377
PR: t05i29k58b0280

## BELT AR-GENERAL AG - 156-6082
**(914MM/36")**

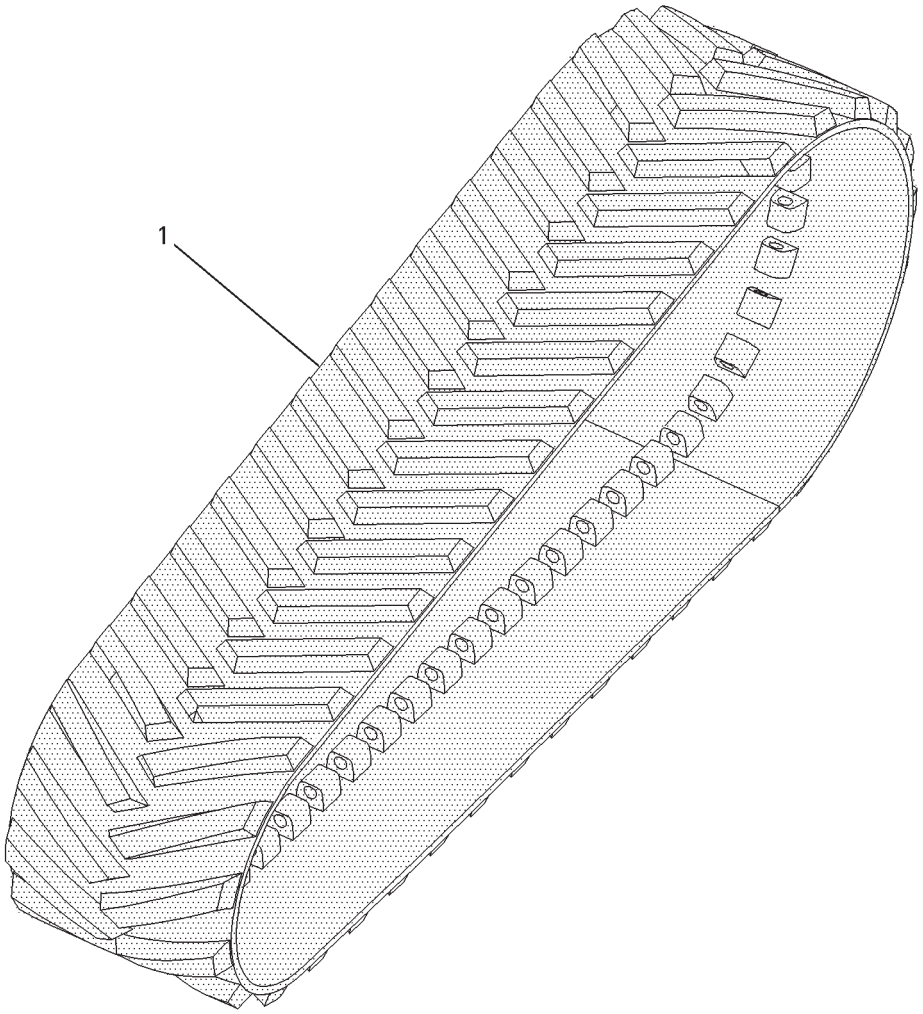

## BELT AR-GENERAL AG - 156-6082
**(914MM/36")**

| ITEM | NUMBER | QTY | DESCRIPTION |
|---|---|---|---|
| - | 156-6082 | -- | BELT AR-36" (ORDER ON WHOLEGOODS) |
| 1 | 1R-1267 | 2 | BELT |
| - | 502146D1 | -- | BELT AR-36"-FIELD (INCLS 1 OF ITEM 1) |
| - | 502185D1 | -- | KIT, BELT REPAIR |
| | 501739D1 | | ELASTOMER |
| | 501742D1 | | SOLIDIFIER |
| - | 501743D1 | -- | BELT CONDITIONER |

00750562
PR: t05i29k58b0281

## BELT AR-EXTREME AP - 156-6075
**(457MM/18")**

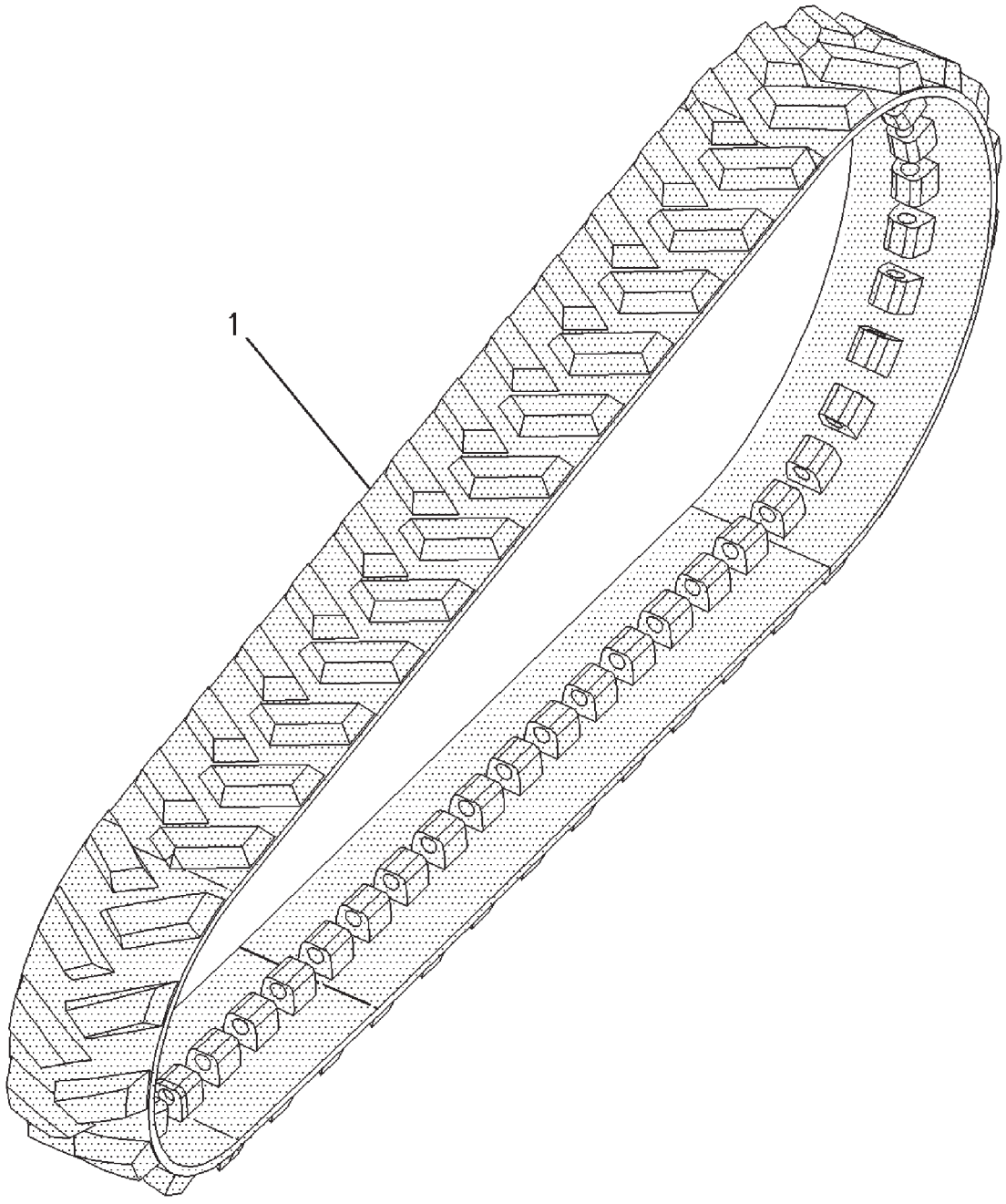


00750379

## BELT AR-EXTREME AP - 156-6075
**(457MM/18")**

| ITEM | NUMBER | QTY | DESCRIPTION |
|---|---|---|---|
| - | 156-6075 | -- | BELT AR (ORDER ON WHOLEGOODS) |
| 1 | 1R-1388 | 2 | BELT |
| - | 502141D1 | -- | BELT AR (INCLS 1 OF ITEM 1) |
| - | 502185D1 | -- | KIT, BELT REPAIR |
| | 501739D1 | | ELASTOMER |
| | 501742D1 | | SOLIDIFIER |
| - | 501743D1 | -- | BELT CONDITIONER |

00750319
PR: t05i29k58b0282

## BELT AR-EXTREME AP - 177-4522
**(700MM/27.5")**

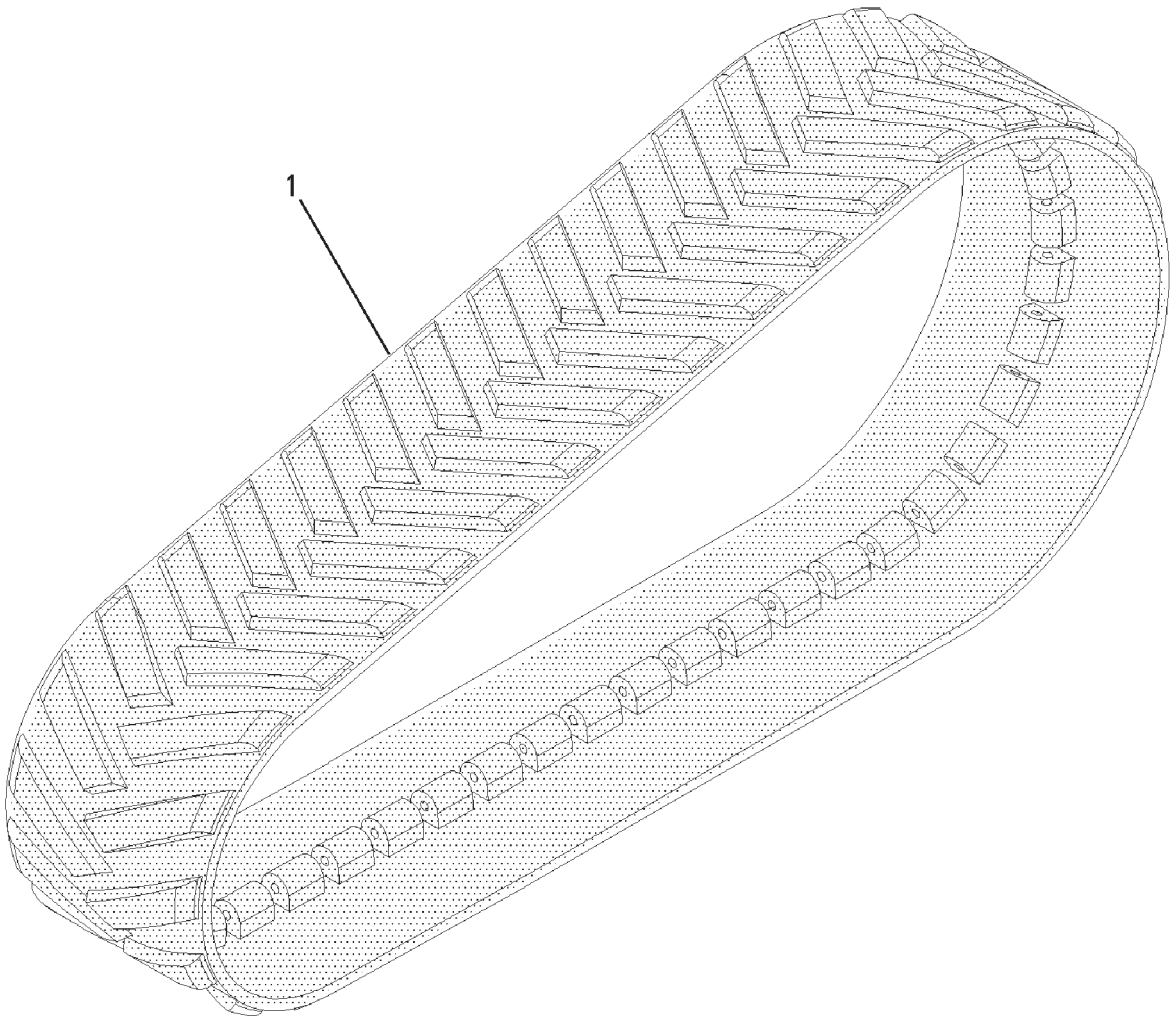


00851106

## BELT AR-EXTREME AP - 177-4522
**(700MM/27.5")**

| ITEM | NUMBER | QTY | DESCRIPTION |
|---|---|---|---|
| - | 502779D1 | -- | BELT AR-27.5" [R] (FIELD INSTALLED) (INCLS 2 OF ITEM 1) |
| - | 502143D1 | -- | BELT AR-27.5"-FIELD (INCLS 1 OF ITEM 1) |
| - | 177-4522 | -- | BELT AR-27.5" [A] (ORDER ON WHOLEGOODS) |
| 1 | 1R-1323 | 2 | BELT |
| - | 502143D1 | -- | BELT AR-30"-FIELD (INCLS 1 OF ITEM 1) |
| - | 502185D1 | -- | KIT, BELT REPAIR |
| | 501739D1 | | ELASTOMER |
| | 501742D1 | | SOLIDIFIER |
| - | 501743D1 | -- | BELT CONDITIONER |

[A] PART OF 502779D1 BELT AR
[R] ROW ONLY

00851106
PR: t05i29k58b0283

## BELT AR-EXTREME AP - 177-4523
**(762MM/30")**

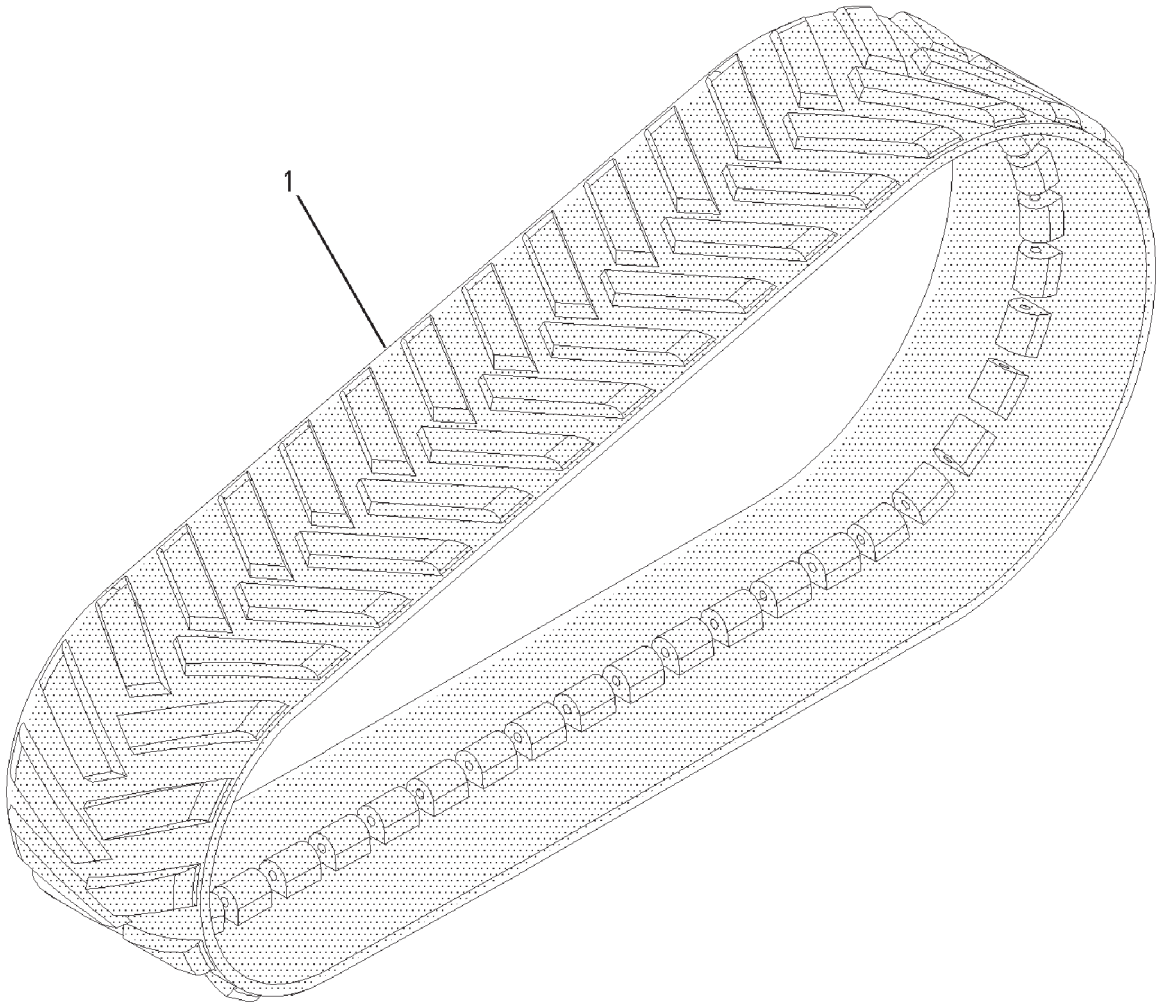


00851108

## BELT AR-EXTREME AP - 177-4523
**(762MM/30")**

| ITEM | NUMBER | QTY | DESCRIPTION |
|---|---|---|---|
| - | 502780D1 | -- | BELT AR-30" [R] (FIELD INSTALLED)<br>(INCLS 2 OF ITEM 1) |
| - | 502145D1 | -- | BELT AR-30"-FIELD (INCLS 1 OF ITEM 1) |
| - | 177-4523 | -- | BELT AR-30"-FACT [A]<br>(INCLS 2 OF ITEM 1)<br>(ORDER ON WHOLEGOODS) |
| 1 | 1R-1325 | 2 | BELT |
| - | 502185D1 | -- | KIT, BELT REPAIR |
| | 501739D1 | | ELASTOMER |
| | 501742D1 | | SOLIDIFIER |
| - | 501743D1 | -- | BELT CONDITIONER |

[A] PART OF 502780D1 BELT AR
[R] ROW ONLY

00851108
PR: t05i29k58b0284

## BELT AR-EXTREME AP - 178-8087
**(914MM/36")**

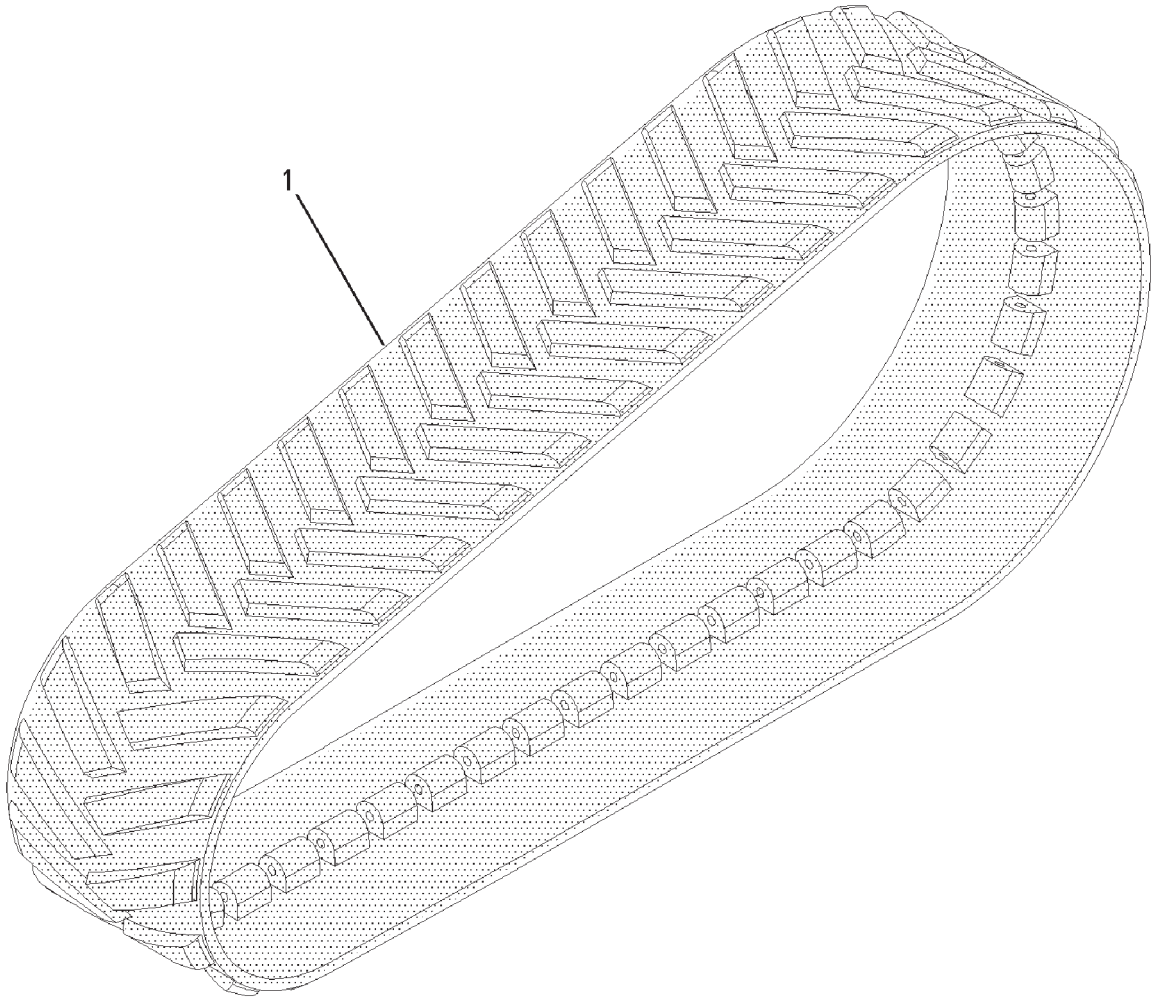


00851176

## BELT AR-EXTREME AP - 178-8087
**(914MM/36")**

| ITEM | NUMBER | QTY | DESCRIPTION |
|---|---|---|---|
| - | 502781D1 | -- | BELT AR-36" [R] (FIELD INSTALLED) (INCLS 2 OF ITEM 1) |
| - | 502147D1 | -- | BELT AR-36"-FIELD (INCLS 1 OF ITEM 1) |
| - | 178-8087 | -- | BELT AR-36" [A] (INCLS 2 OF ITEM 1) (ORDER ON WHOLEGOODS) |
| 1 | 1R-1360 | 2 | BELT |
| - | 502185D1 | -- | KIT, BELT REPAIR |
| | 501739D1 | | ELASTOMER |
| | 501742D1 | | SOLIDIFIER |
| - | 501743D1 | -- | BELT CONDITIONER |

[A] PART OF 502781D1 BELT AR
[R] ROW ONLY

00851176
PR: t05i29k58b0285

## BELT AR-SPECIAL AP - 502027D1
**(762MM/30")**

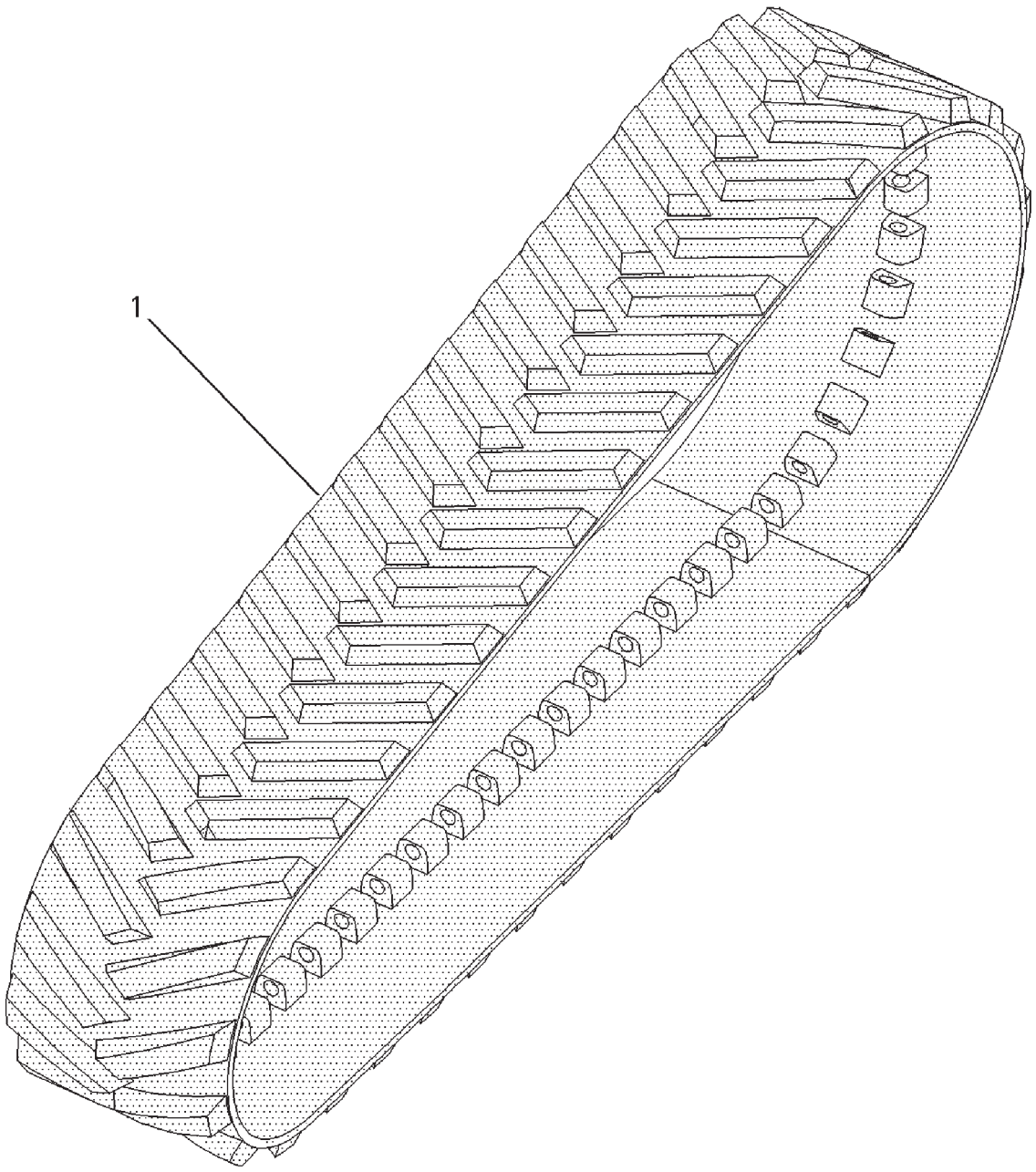


00750377

## BELT AR-SPECIAL AP - 502027D1
**(762MM/30")**

| ITEM | NUMBER | QTY | DESCRIPTION |
|---|---|---|---|
| - | 502782D1 | -- | BELT AR-30" [R] (FIELD INSTALLED) (INCLS 2 OF ITEM 1) |
| - | 502027D1 | -- | BELT AR [A] (ORDER ON WHOLEGOODS) (INCLS 2 OF ITEM 1) |
| - | 502148D1 | -- | BELT AR-FIELD (INCLS 1 OF ITEM 1) |
| 1 | 501186D1 | 2 | BELT |
| - | 502185D1 | -- | KIT, BELT REPAIR |
| | 501739D1 | | ELASTOMER |
| | 501742D1 | | SOLIDIFIER |
| - | 501743D1 | -- | BELT CONDITIONER |

[A] PART OF 502782D1
[R] ROW ONLY

00750377
PR: t05i29k58b0286

## BELT AR-SPECIAL AP - 502028D1
**(914MM/36")**

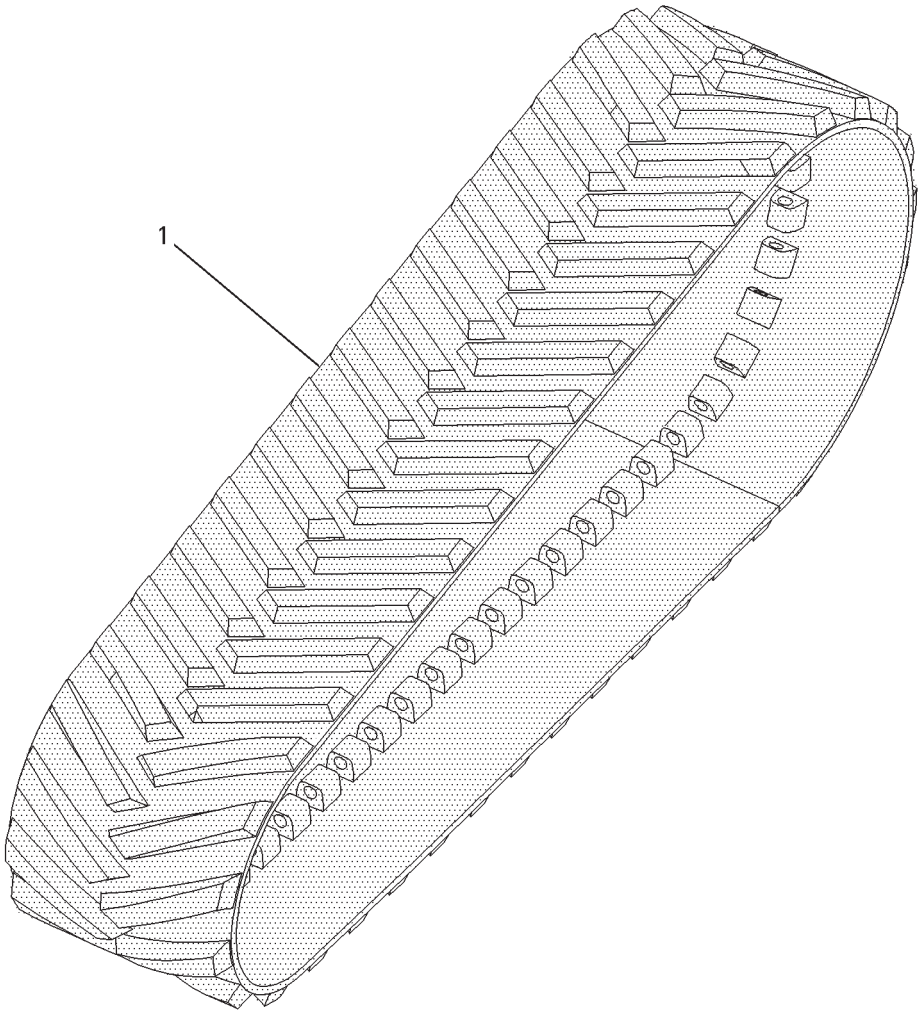

## BELT AR-SPECIAL AP - 502028D1
**(914MM/36")**

| ITEM | NUMBER | QTY | DESCRIPTION |
|---|---|---|---|
| - | 502783D1 | -- | BELT AR-36" [R] (FIELD INSTALLED) (INCLS 2 OF ITEM 1) |
| - | 502028D1 | -- | BELT AR-36" [A] (ORDER ON WHOLEGOODS) (INCLS 2 OF ITEM 1) |
| - | 502149D1 | -- | BELT AR-36"-FIELD (INCLS 1 OF ITEM 1) |
| 1 | 501196D1 | 2 | BELT |
| - | 502185D1 | -- | KIT, BELT REPAIR |
| | 501739D1 | | ELASTOMER |
| | 501742D1 | | SOLIDIFIER |
| - | 501743D1 | -- | BELT CONDITIONER |

[A] PART OF 502783D1
[R] ROW ONLY

00750562
PR: t05i29k58b0287

## KIT-GUIDE BLOCK
GENERAL AG & EXTREME APPLICATIONS

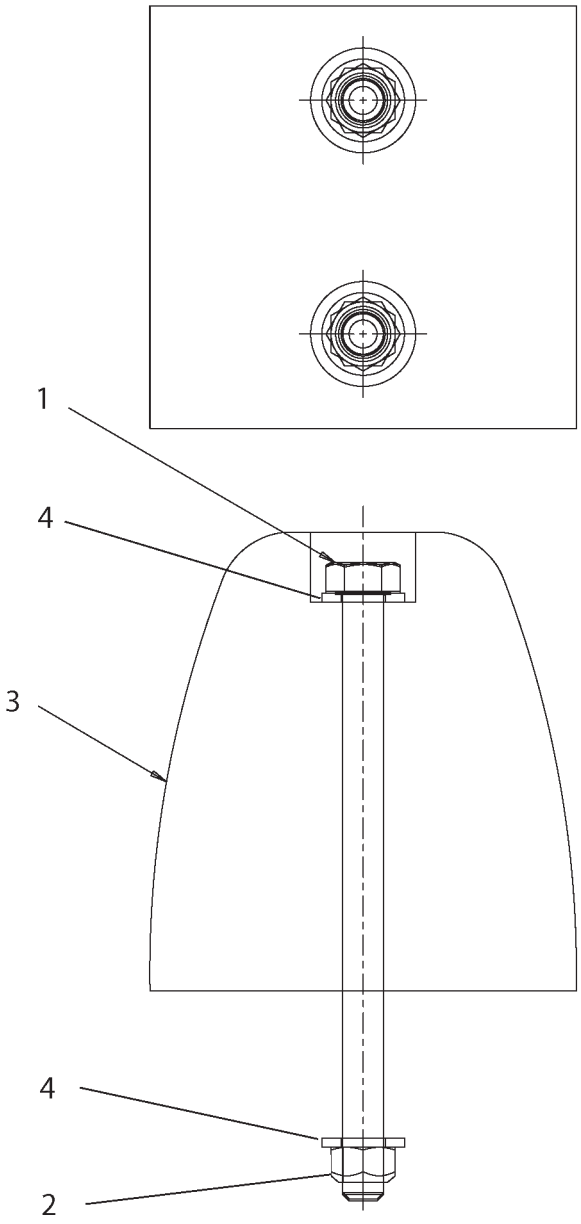


501213DA

## KIT-GUIDE BLOCK
### GENERAL AG & EXTREME APPLICATIONS

| ITEM | NUMBER | QTY | DESCRIPTION |
|---|---|---|---|
| - | 501215D1 | -- | KIT-GUIDE BLOCK (GEN AG) |
| - | 501216D1 | -- | KIT-GUIDE BLOCK (EXTREME AP) |
| 1 | 400276X1 | 2 | BOLT-7/16-14X165 ZNDI HHD 10.9 |
| 2 | 400278X1 | 2 | NUT-LOCK 7/16-14 ZNDI&WAX HEX |
| 3 | 501197D1 | 1 | BLOCK-GUIDE (GEN AG) |
| | 501198D1 | 1 | BLOCK-GUIDE (EXTREME AP) |
| 4 | 400358X1 | 4 | WASHER-HARD-7/16X22.50DX2.5THK |

501213DA
PR: t05i29k58b0288

**GAUGE AR-TRACK (W/O PTO) - 177-9948**
**(2286-3251MM/90-128")**
**ROW ONLY**

NO ILLUSTRATION

NOTIF

## GAUGE AR-TRACK (W/O PTO) - 177-9948

**(2286-3251MM/90-128")**
**ROW ONLY**

| ITEM | NUMBER | QTY | DESCRIPTION |
|---|---|---|---|
| - | 177-9948 | -- | GAUGE AR-TRACK (NOT SERVICED) |
| 1 | 156-4881 | 1 | UNDERCARRIAGE AR (NOT SERVICED)<br>(SEE BREAKDOWN FOR COMPONENTS) |
| 2 | 158-2404 | 1 | MOTOR & MTG GP-STEERING (NOT SERVICED)<br>(SEE BREAKDOWN FOR COMPONENTS) |
| 3 | 200-5029 | 1 | POWER TRAIN AR (NOT SERVICED)<br>(SEE BREAKDOWN FOR COMPONENTS) |

NOTIF
PR: t05i29k58b0289

## GAGE AR-TRACK (W/PTO)

**2286-3251 MM (90-128 IN)**
**ROW ONLY**

NO ILLUSTRATION

NOTIF

## GAGE AR-TRACK (W/PTO)
**2286-3251 MM (90-128 IN)**
**ROW ONLY**

| ITEM | NUMBER | QTY | DESCRIPTION |
|---|---|---|---|
| - | 183-2198 | -- | GAUGE AR-TRACK (NOT SERVICED) |
| - | 183-4470 | 1 | GUARD GP-POWER TAKE-OFF<br>(SEE BREAKDOWN FOR COMPONENTS) |
| - | 189-2976 | 1 | LINES GP-POWER TAKE-OFF (NOT SERVICED)<br>(SEE BREAKDOWN FOR COMPONENTS) |
| - | 158-2404 | 1 | MOTOR & MTG GP-STEERING (NOT SERVICED)<br>(SEE BREAKDOWN FOR COMPONENTS) |
| - | 200-5027 | 1 | POWER TRAIN AR (NOT SERVICED)<br>(SEE BREAKDOWN FOR COMPONENTS) |
| - | 156-4881 | 1 | UNDERCARRIAGE AR (NOT SERVICED)<br>(SEE BREAKDOWN FOR COMPONENTS) |

NOTIF
PR: t05i29k58b0290

**GAUGE AR-TRACK (W/O PTO) - 177-9947**
**(2286-2600MM/90-102")**
**EAME ONLY**

NO ILLUSTRATION

NOTIF

## GAUGE AR-TRACK (W/O PTO) - 177-9947

**(2286-2600MM/90-102")**
**EAME ONLY**

| ITEM | NUMBER | QTY | DESCRIPTION |
|---|---|---|---|
| - | 177-9947 | -- | GAUGE AR-TRACK (NOT SERVICED) |
| 1 | 172-4517 | 1 | MOTOR & MOUNTING GP (STEERING) (NOT SERVICED) (SEE BREAKDOWN FOR COMPONENTS) |
| 2 | 177-9946 | 1 | UNDERCARRIAGE AR (NOT SERVICED) (SEE BREAKDOWN FOR COMPONENTS) |
| 3 | 200-5030 | 1 | POWER TRAIN AR (NOT SERVICED) (SEE BREAKDOWN FOR COMPONENTS) |

NOTIF
PR: t05i29k58b0291

**GAUGE AR-TRACK (W/PTO) - 183-2197**
**(2286-2600MM/90-102")**
**EAME ONLY**

NO ILLUSTRATION

NOTIF

## GAUGE AR-TRACK (W/PTO) - 183-2197

**(2286-2600MM/90-102")**
**EAME ONLY**

| ITEM | NUMBER | QTY | DESCRIPTION |
|---|---|---|---|
| - | 183-2197 | -- | GAUGE AR-TRACK (NOT SERVICED) |
| - | 224-5884 | 1 | CONTROL GP-POWER TAKE-OFF (NOT SERVICED)<br>(SEE BREAKDOWN FOR COMPONENTS) |
| - | 183-4470 | 1 | GUARD GP-POWER TAKE-OFF (NOT SERVICED)<br>(SEE BREAKDOWN FOR COMPONENTS) |
| - | 189-2976 | 1 | LINES GP-POWER TAKE-OFF (NOT SERVICED)<br>(SEE BREAKDOWN FOR COMPONENTS) |
| - | 172-4517 | 1 | MOTOR & MOUNTING GP (NOT SERVICED)<br>(SEE BREAKDOWN FOR COMPONENTS) |
| - | 200-5028 | 1 | POWER TRAIN AR (NOT SERVICED)<br>(SEE BREAKDOWN FOR COMPONENTS) |
| - | 177-9946 | 1 | UNDERCARRIAGE AR (NOT SERVICED)<br>(SEE BREAKDOWN FOR COMPONENTS) |

NOTIF
PR: t05i29k58b0292

## TENSIONER GP-BELT - LH

**500835D1**

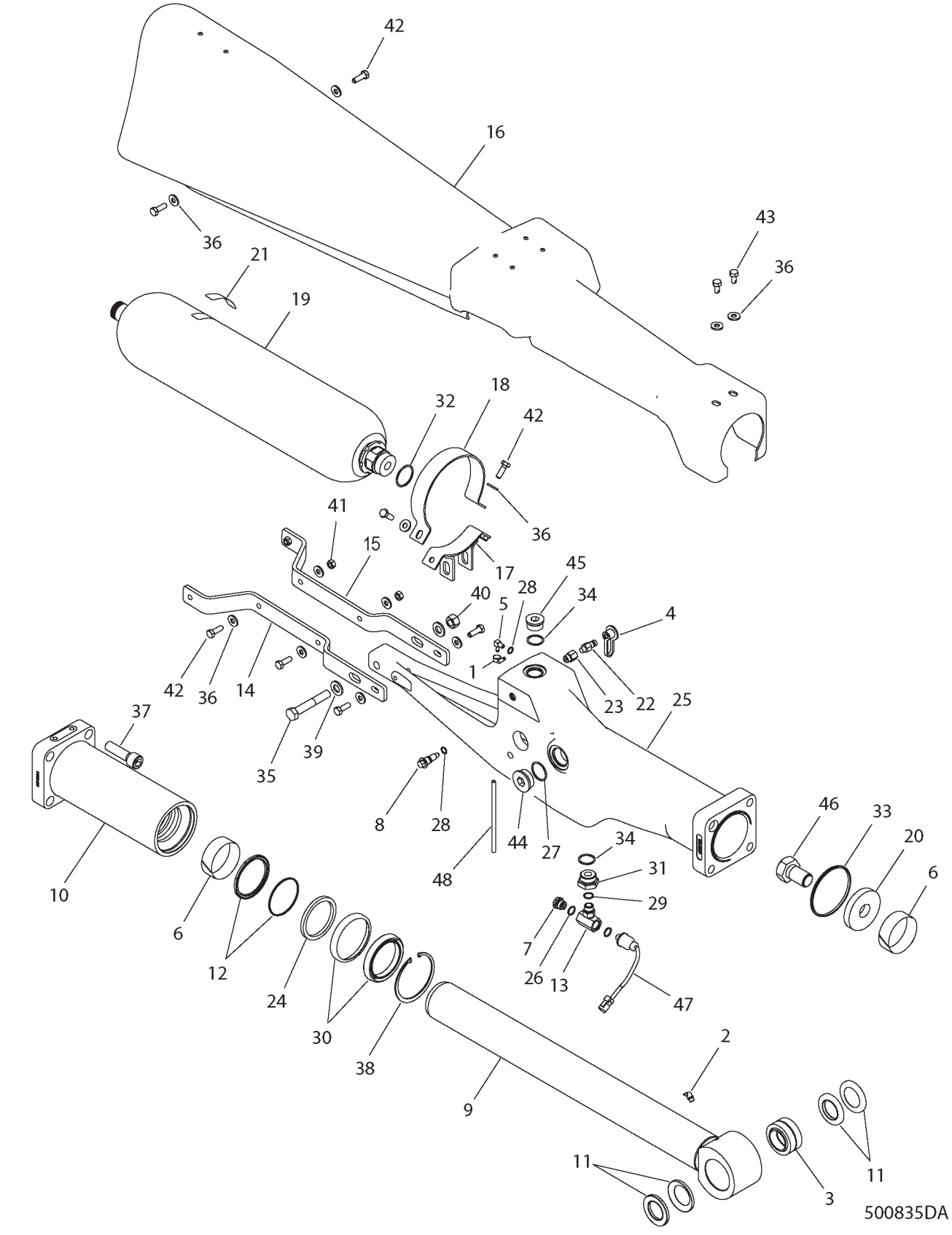

## TENSIONER GP-BELT - LH
**500835D1**

| ITEM | NUMBER | QTY | DESCRIPTION |
|---|---|---|---|
| - | 500835D1 | -- | TENSIONER GP-BELT [A] (NOT SERVICED) |
| 1 | CH1P-4278 | 1 | CLAMP-HOSE 5.5-15.88 ID X 8 |
| 2 | CH3B-8486 | 1 | FITTING-ZERK 45 DEG 2 NPTF ZN |
| 3 | CH4D-4431 | 1 | BEARING-SLF ALNG44.45 X 71.438 |
| 4 | 400323X1 | 1 | CAP-DUST 12.6 DIA -RUBBER |
| 5 | CH6V-6757 | 1 | ELBOW-90DEG 4NPTFX6.35 OD BARB |
| 6 | CH8C-9101 | 2 | RING-WEAR 82.5 IDX1.5X28.25 |
| 7 | CH108-5985 | 1 | VALVE-DISC RELIEF 8STOR |
| 8 | CH119-9708 | 2 | VALVE-NEEDLE M12X1.75-6G HEX |
| 9 | 127-9562 | 1 | ROD AS |
| 10 | 127-9564 | 1 | GUIDE |
| 11 | CH164-0909 | 2 | SEAL-PIN 11.29 PINX71.4ODX6.35 |
| 12 | CH167-2209 | 1 | SEAL AS-98.83 BORE X 82.5 ROD |
| 13 | CH175-2851 | 1 | TEE-8STOR X 8STOR X 5STOR |
| 14 | 178-1202 | 1 | BRACKET AS.-RH |
| 15 | 178-1203 | 1 | BRACKET AS.-LH |
| 16 | 180-3669 | 1 | GUARD AS-LH |
| 17 | 184-0790 | 1 | SUPPORT AS.-ACCUMULATOR |
| 18 | 189-1711 | 1 | CLAMP-SUPPORT |
| 19 | 189-3165 | 1 | ACCUMULATOR AS. |
| 20 | CH195-1104 | 1 | SPACER 30.5 IDX92 ODX15MM |
| 21 | CH208-1663 | 1 | FILM-WARNING ACCUMULATOR |
| 22 | CH110-6349 | 1 | NIPPLE-QUICK CONNECT 4STOR |
| 23 | CH148-8305 | 1 | ADAPTER AS-6 STOR X 4 STOR |
| 24 | CH167-2320 | 1 | SEAL-UCUP 95.3 BORE X 82.5 ROD |
| 25 | 176-2966 | 1 | CYLINDER-LH (TENSIONER) |
| 26 | CH1J-9671 | 1 | SEAL-O-RING 10.52IDX1.83DIA |
| 27 | 400593X1 | 1 | SEAL-O-RING 37.46 IDX3 DIA |
| 28 | 400318X1 | 2 | SEAL-O-RING (11.89ID X 1.98 DIA) |
| 29 | CH3K-0360 | 2 | SEAL-O-RING 16.36IDX2.21DIA |
| 30 | 500687D1 | 1 | SEAL-WIPER(DOUBLE LIP) |
| 31 | CH5P-5777 | 1 | ADAPTER-16 STOR X 8 STOR |
| 32 | CH6K-6307 | 1 | SEAL-O RING 43.69 IDX3DIA |
| 33 | CH6V-1657 | 1 | SEAL-RECT 116.4ODX3.4WX4.95THK |
| 34 | 400376X1 | 2 | SEAL-O-RING 29.74 IDX2.95 DIA |
| 35 | WR520610 | 1 | BOLT-M16-2.0X100,CL10.9,ZN,HHD |
| 36 | CH7X-7729 | 12 | WASHER-11IDX5ODX3MM |
| 37 | CH7Y-5217 | 4 | BOLT-SOCKET M20X2.5X70 |
| 38 | CH8D-3886 | 1 | RING RETAIN INT 114.05 ODX2.8 |
| 39 | CH8T-4122 | 2 | WASHER HARD-17IDX32ODX3.5MM |
| 40 | CH8T-4132 | 1 | NUT-M16X2X14.8 |
| 41 | WR522218 | 2 | NUT-M10-1.5,CL10.9,ZN,H,REG |
| 42 | 400058X1 | 8 | BOLT-M10X1.5X30 ZNDI HHD 10.9 |
| 43 | 400228X1 | 2 | BOLT-M10X1.5X20 ZNDI LK 10.9 |
| 44 | CH9S-8010 | 1 | PLUG-20 STOR HEX SOCKET |
| 45 | 400375X1 | 1 | PLUG-16 STOR ZN HSHD |
| 46 | CH9X-2199 | 1 | BOLT-M30X3.5X50 HHD 10.9 |
| 47 | 500834D1 | 1 | SENSOR GP-PRESSURE |
| 48 | CH5P-6442 | AR | HOSE-BULK RUBBER 6.35ID (18CM) |

[A] PART OF
156-4883 FRAME AR TRACK-LH

500835DA
PR: t05i29k58b0293

## TENSIONER GP-BELT - RH

**500836D1**

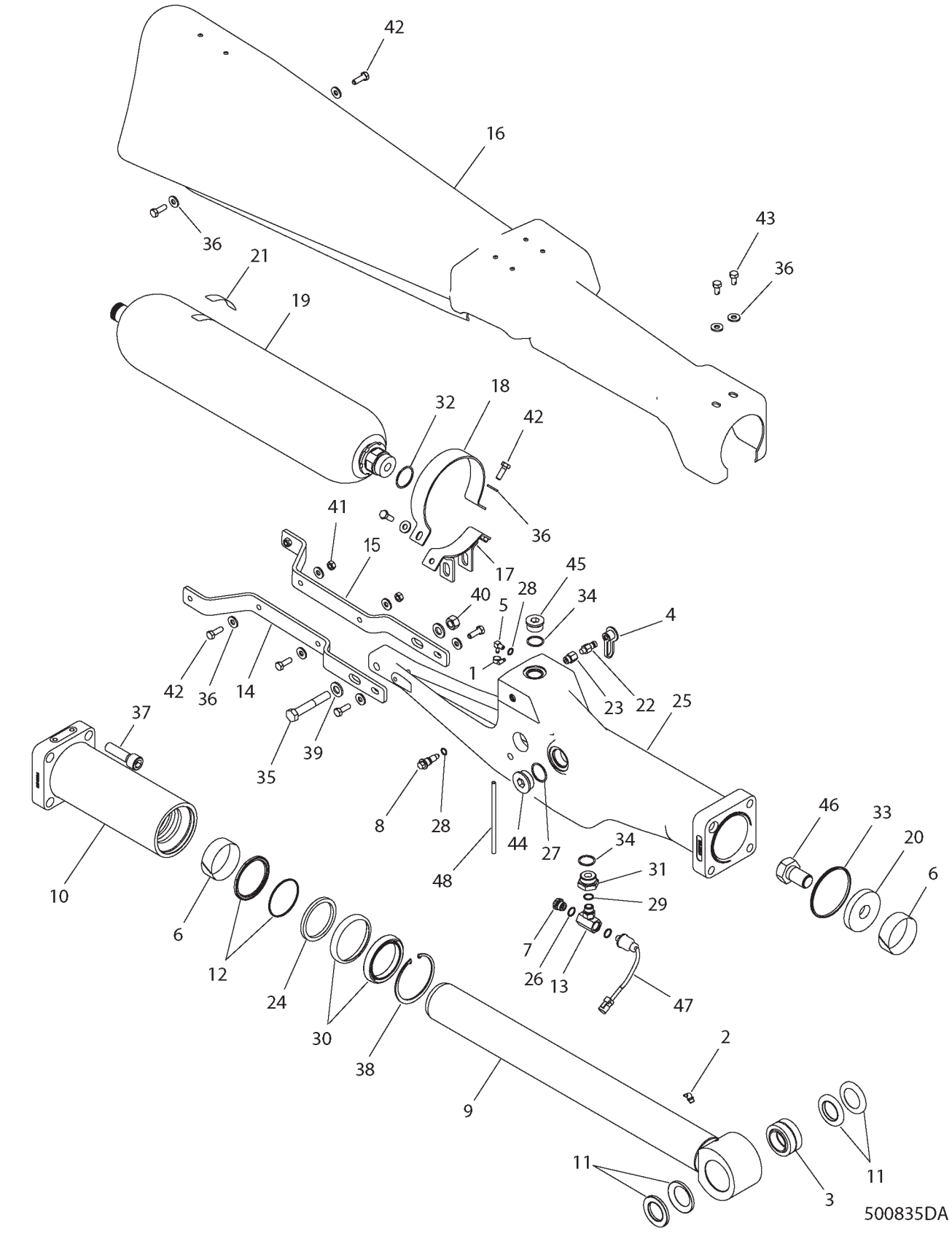

## TENSIONER GP-BELT - RH
500836D1

| ITEM | NUMBER | QTY | DESCRIPTION |
|---|---|---|---|
| - | 500836D1 | -- | TENSIONER GP-BELT [A] (NOT SERVICED) |
| 1 | CH1P-4278 | 1 | CLAMP-HOSE 5.5-15.88 ID X 8 |
| 2 | CH3B-8486 | 1 | FITTING-ZERK 45 DEG 2 NPTF ZN |
| 3 | CH4D-4431 | 1 | BEARING-SLF ALNG44.45 X 71.438 |
| 4 | 400323X1 | 1 | CAP-DUST 12.6 DIA -RUBBER |
| 5 | CH6V-6757 | 1 | ELBOW-90DEG 4NPTFX6.35 OD BARB |
| 6 | CH8C-9101 | 2 | RING-WEAR 82.5 IDX1.5X28.25 |
| 7 | CH108-5985 | 1 | VALVE-DISC RELIEF 8STOR |
| 8 | CH119-9708 | 2 | VALVE-NEEDLE M12X1.75-6G HEX |
| 9 | 127-9562 | 1 | ROD AS |
| 10 | 127-9564 | 1 | GUIDE |
| 11 | CH164-0909 | 2 | SEAL-PIN 11.29 PINX71.4ODX6.35 |
| 12 | CH167-2209 | 1 | SEAL AS-98.83 BORE X 82.5 ROD |
| 13 | CH175-2851 | 1 | TEE-8STOR X 8STOR X 5STOR |
| 14 | 178-1202 | 1 | BRACKET AS.-RH |
| 15 | 178-1203 | 1 | BRACKET AS.-LH |
| 16 | 180-3667 | 1 | GUARD AS.-RH |
| 17 | 184-0790 | 1 | SUPPORT AS.-ACCUMULATOR |
| 18 | 189-1711 | 1 | CLAMP-SUPPORT |
| 19 | 189-3165 | 1 | ACCUMULATOR AS. |
| 20 | CH195-1104 | 1 | SPACER 30.5 IDX92 ODX15MM |
| 21 | CH208-1663 | 1 | FILM-WARNING ACCUMULATOR |
| 22 | CH110-6349 | 1 | NIPPLE-QUICK CONNECT 4STOR |
| 23 | CH148-8305 | 1 | ADAPTER AS-6 STOR X 4 STOR |
| 24 | CH167-2320 | 1 | SEAL-UCUP 95.3 BORE X 82.5 ROD |
| 25 | 176-2968 | 1 | CYLINDER-RH (TENSIONER) |
| 26 | CH1J-9671 | 1 | SEAL-O-RING 10.52IDX1.83DIA |
| 27 | 400593X1 | 1 | SEAL-O-RING 37.46 IDX3 DIA |
| 28 | 400318X1 | 2 | SEAL-O-RING (11.89ID X 1.98 DIA) |
| 29 | CH3K-0360 | 2 | SEAL-O-RING 16.36IDX2.21DIA |
| 30 | 500687D1 | 1 | SEAL-WIPER(DOUBLE LIP) |
| 31 | CH5P-5777 | 1 | ADAPTER-16 STOR X 8 STOR |
| 32 | CH6K-6307 | 1 | SEAL-O RING 43.69 IDX3DIA |
| 33 | CH6V-1657 | 1 | SEAL-RECT 116.4ODX3.4WX4.95THK |
| 34 | 400376X1 | 2 | SEAL-O-RING 29.74 IDX2.95 DIA |
| 35 | WR520610 | 1 | BOLT-M16-2.0X100,CL10.9,ZN,HHD |
| 36 | CH7X-7729 | 12 | WASHER-11IDX5ODX3MM |
| 37 | CH7Y-5217 | 4 | BOLT-SOCKET M20X2.5X70 |
| 38 | CH8D-3886 | 1 | RING RETAIN INT 114.05 ODX2.8 |
| 39 | CH8T-4122 | 2 | WASHER HARD-17IDX32ODX3.5MM |
| 40 | CH8T-4132 | 1 | NUT-M16X2X14.8 |
| 41 | WR522218 | 2 | NUT-M10-1.5,CL10.9,ZN,H,REG |
| 42 | 400058X1 | 8 | BOLT-M10X1.5X30 ZNDI HHD 10.9 |
| 43 | 400228X1 | 2 | BOLT-M10X1.5X20 ZNDI LK 10.9 |
| 44 | CH9S-8010 | 1 | PLUG-20 STOR HEX SOCKET |
| 45 | 400375X1 | 1 | PLUG-16 STOR ZN HSHD |
| 46 | CH9X-2199 | 1 | BOLT-M30X3.5X50 HHD 10.9 |
| 47 | 500834D1 | 1 | SENSOR GP-PRESSURE |
| 48 | CH5P-6442 | AR | HOSE-BULK RUBBER 6.35ID (18CM) |

[A] PART OF
156-4882 FRAME AR TRACK-RH

500835DA
PR: t05i29k58b0294

**BOGIE GP - 130-4818**

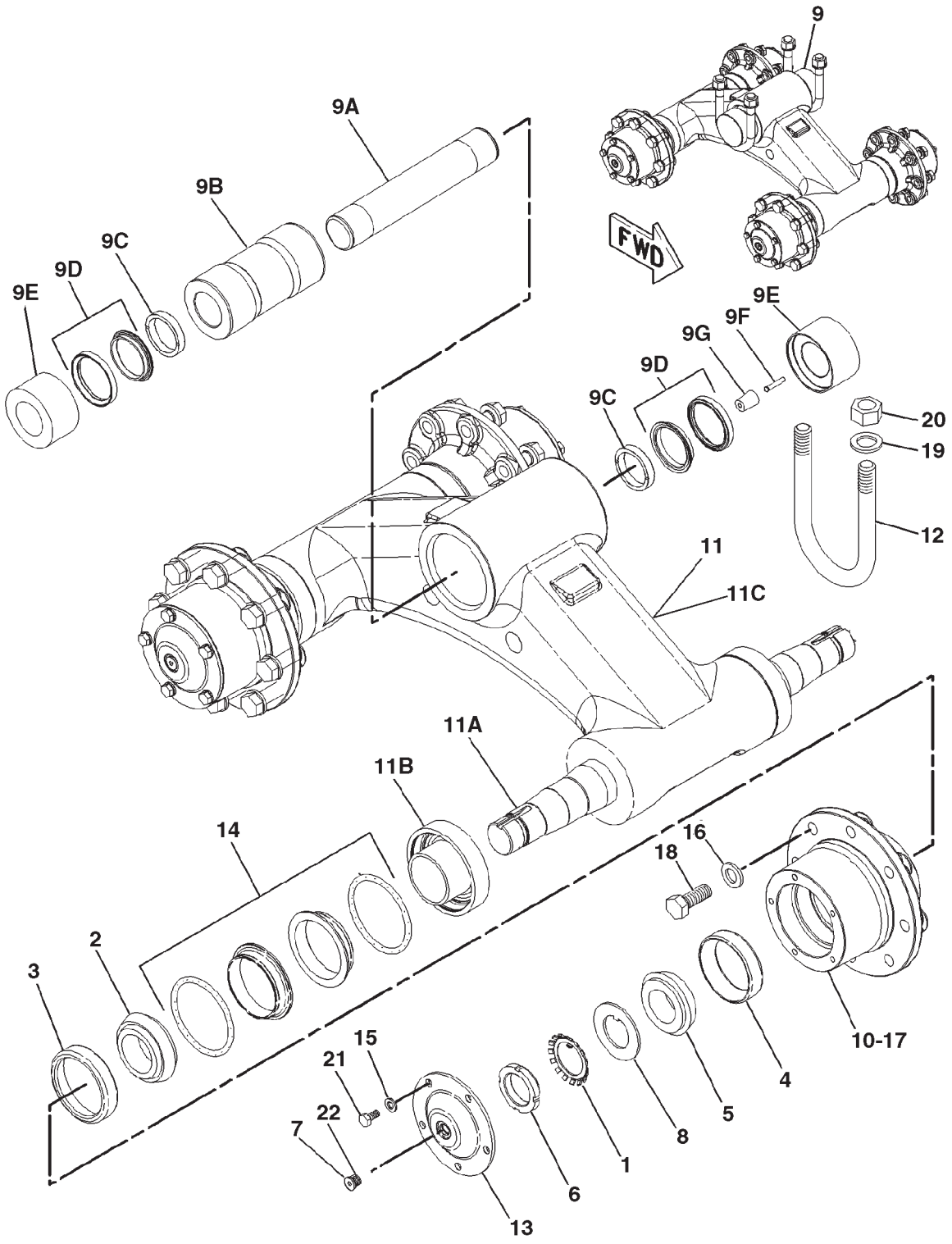


0862331A

## BOGIE GP - 130-4818

| ITEM | NUMBER | QTY | DESCRIPTION |
|---|---|---|---|
| - | 130-4818 | -- | BOGIE GP [A] (NOT SERVICED) |
| 1 | CH1N-5970 | 4 | LOCKWASHER |
| 2 | CH5P-9651 | 4 | CONE-BEARING |
| 3 | CH5P-9652 | 4 | CUP-BEARING |
| 4 | CH6S-6031 | 4 | CUP-BEARING |
| 5 | CH6S-6032 | 4 | CONE-BEARING |
| 6 | CH8B-7614 | 4 | NUT-BEARING |
| 7 | CH9S-8003 | 4 | PLUG |
| 8 | 400075X1 | 4 | WASHER-BRG (40.46X69.85X3) |
| 9 | 500925D1 | 1 | PIN GP (INCLUDES 9A THRU 9G) |
| 9A | ----- | 1 | PIN-TRACK |
| 9B | ----- | 1 | BEARING-SLEEVE |
| 9C | ----- | 2 | RING-THRUST |
| 9D | ----- | 2 | SEAL ASM |
| 9E | ----- | 2 | COLLAR |
| 9F | CH6Y-0473 | 1 | PLUG-CLEAR |
| 9G | CH7G-4332 | 1 | STOPPER |
| 10 | 127-9561 | 4 | HUB |
| 11 | 155-2939 | 1 | BOGIE ASM (INCLUDES 11A THRU 11C) |
| 11A | 154-8263 | 2 | AXLE |
| 11B | 154-8264 | 4 | RETAINER |
| 11C | ----- | 1 | BOGIE MINOR (ORDER COMPLETE AS) |
| 12 | 400260X1 | 2 | U-BOLT |
| 13 | 156-6084 | 4 | COVER |
| 14 | 175-7513 | 4 | SEAL GP-DUO-CONE |
| 14A | CH8H-2262 | 2 | SEAL-O-RING |
| 14B | CH175-7514 | 2 | SEAL-RING |
| 15 | 400339X1 | 20 | WASHER-HARD (8.8X16X2) |
| 16 | 400082X1 | 32 | WASHER (17.5X30X3.5) |
| 17 | CH215-9463 | 4 | GASKET |
| 18 | 400191X1 | 32 | BOLT (M16X2X40MM) |
| 19 | 400080X1 | 4 | WASHER-PLATED (22X35X3.5) |
| 20 | 400286X1 | 4 | NUT (M20X2.5) |
| 21 | 400227X1 | 20 | BOLT (M8X1.25X16MM) |
| 22 | CH1J-9671 | 4 | SEAL-O-RING |

[A] PART OF 156-4882; 156-4883 FRAME AR

0862331A
PR: t05i29k58b0295

## FRAME AR-RH
**156-4882**

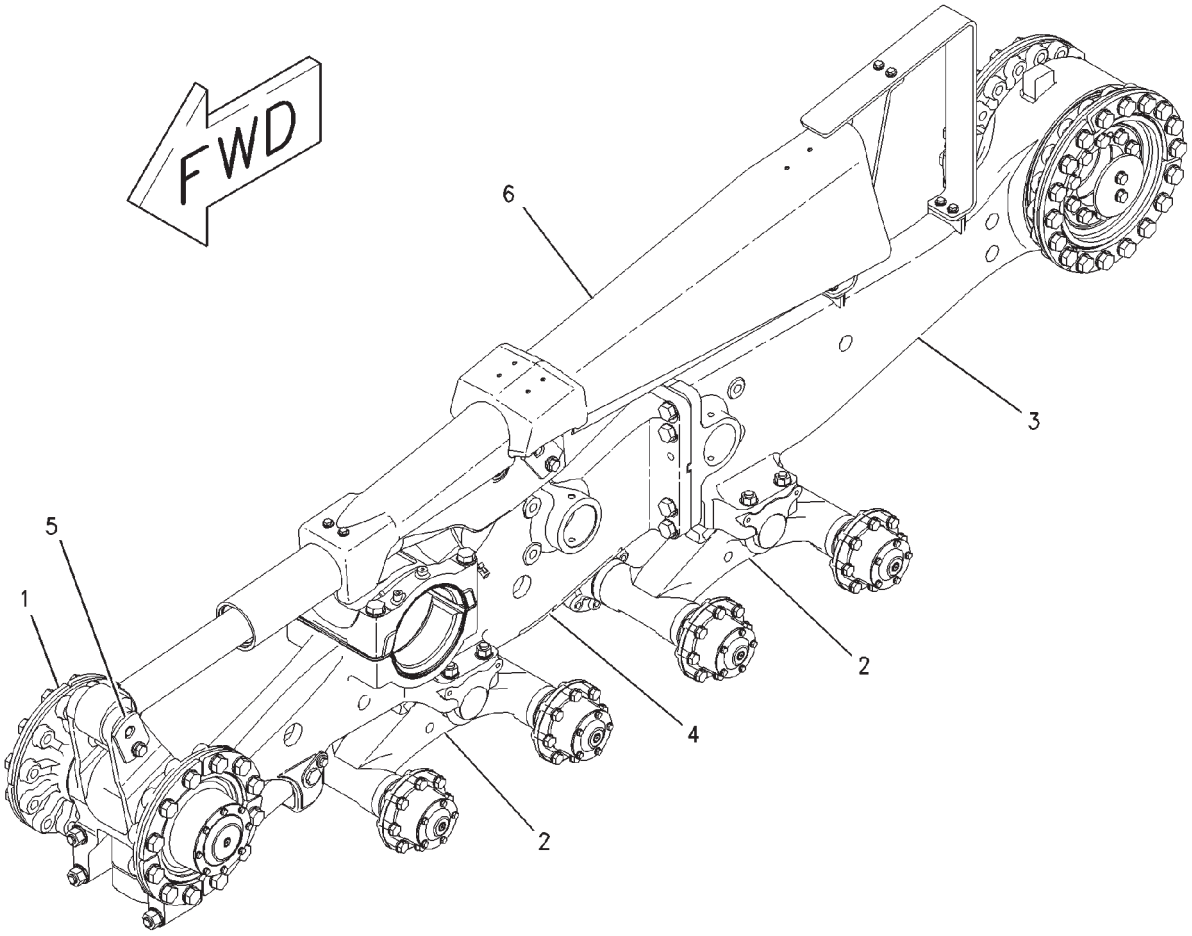


00838123

## FRAME AR-RH
156-4882

| ITEM | NUMBER | QTY | DESCRIPTION |
|---|---|---|---|
| - | 502328D1 | -- | FRAME AS-TRACK-RH (OPTION) |
| - | 156-4882 | -- | FRAME AR [A] (NOT SERVICED) |
| 1 | 127-9545 | 1 | IDLER GP (NOT SERVICED)<br>(SEE BREAKDOWN FOR COMPONENTS) |
| 2 | 130-4818 | 2 | BOGIE GP (NOT SERVICED)<br>(SEE BREAKDOWN FOR COMPONENTS) |
| 3 | 156-4884 | 1 | SUPPORT GP-DRIVE WHEEL (RH)<br>(SEE BREAKDOWN FOR COMPONENTS) |
| 4 | 163-0678 | 1 | FRAME GP-TRACK ROLLER (NOT SERVICED)<br>(SEE BREAKDOWN FOR COMPONENTS) |
| 5 | 184-6718 | 1 | MOUNTING GP-TENSIONER (NOT SERVICED)<br>(SEE BREAKDOWN FOR COMPONENTS) |
| 6 | 500836D1 | 1 | BELT TENSIONER GP (NOT SERVICED)<br>(SEE BREAKDOWN FOR COMPONENTS) |
| 7 | 502523D1 | 4 | CAP-PLUG (NOT SHOWN) |

[A] PART OF 156-4881; 177-9947
UNDERCARRIAGE AR;
502328D1 FRAME AS

00838123
PR: t05i29k58b0296

**FRAME AR-LH - 156-4883**

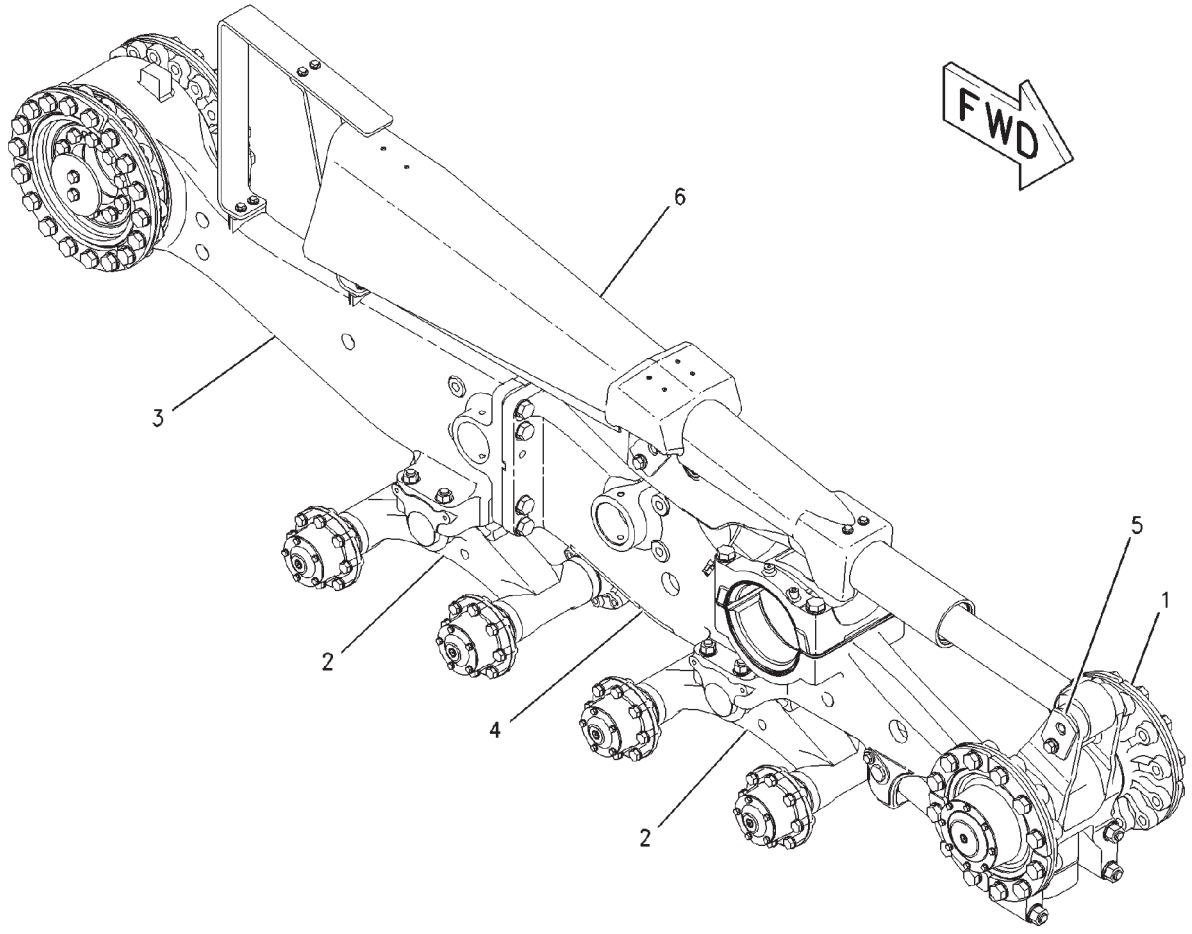


00837737

## FRAME AR-LH - 156-4883

| ITEM | NUMBER | QTY | DESCRIPTION |
|---|---|---|---|
| - | 502327D1 | -- | FRAME AS-TRACK-LH (OPTION) |
| - | 156-4883 | -- | FRAME AR [A] (NOT SERVICED) |
| 1 | 127-9545 | 1 | IDLER GP (NOT SERVICED)<br>(SEE BREAKDOWN FOR COMPONENTS) |
| 2 | 130-4818 | 2 | BOGIE GP (NOT SERVICED)<br>(SEE BREAKDOWN FOR COMPONENTS) |
| 3 | 156-4885 | 1 | SUPPORT GP-DRIVE WHEEL(LH)(NOT SERVICED)<br>(SEE BREAKDOWN FOR COMPONENTS) |
| 4 | 163-0678 | 1 | FRAME GP-TRACK ROLLER (NOT SERVICED)<br>(SEE BREAKDOWN FOR COMPONENTS) |
| 5 | 184-6718 | 1 | MOUNTING GP-TENSIONER (NOT SERVICED)<br>(SEE BREAKDOWN FOR COMPONENTS) |
| 6 | 500835D1 | 1 | BELT TENSIONER GP (NOT SERVICED)<br>(SEE BREAKDOWN FOR COMPONENTS) |
| 7 | 502523D1 | 4 | CAP-PLUG (NOT SHOWN) |

[A] PART OF 156-4881; 177-9946
UNDERCARRIAGE AR;
502327D1 FRAME AS-TRACK-LH

00837737
PR: t05i29k58b0297

## FRAME GP-TRACK ROLLER - 163-0678

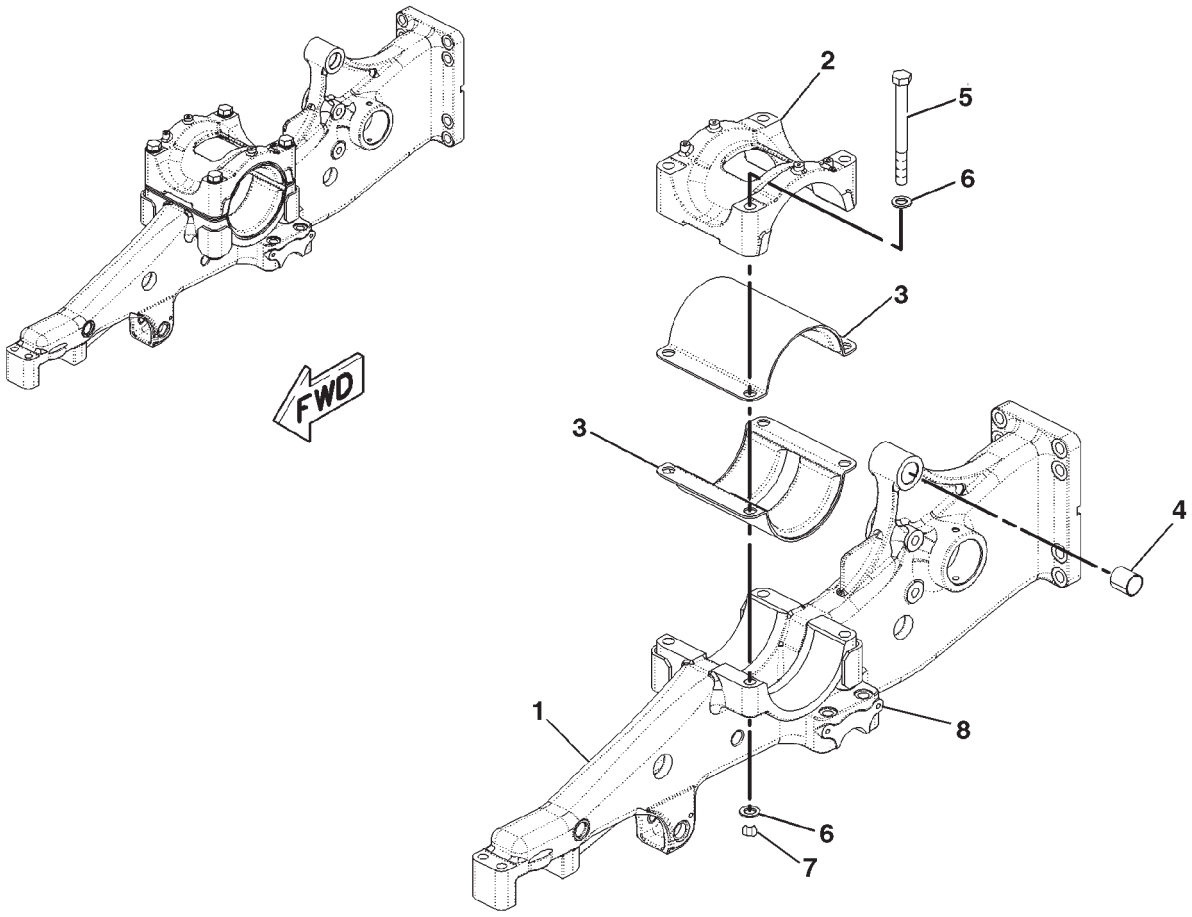


0850720A

## FRAME GP-TRACK ROLLER - 163-0678

| ITEM | NUMBER | QTY | DESCRIPTION |
|---|---|---|---|
| - | 163-0678 | -- | FRAME GP-TRACK ROLLER [A] (NOT SERVICED) |
| 1 | 197-3667 | 1 | FRAME |
| 2 | 192-7901 | 1 | CAP |
| 3 | CH214-4661 | 2 | BEARING ASM |
| 4 | CH168-7710 | 1 | BEARING |
| 5 | 400014X1 | 4 | BOLT (M24X3X255MM) |
| 6 | CH8T-1482 | 4 | WASHER-HARD (26X50X8) |
| 7 | 223-4304 | 4 | NUT-RETAINER |
| 8 | CH193-5915 | 4 | PLUG |

[A] PART OF 156-4882; 156-4883 FRAME AR

0850720A
PR: t05i29k58b0298

## GUARD GP-LINES - 201-9927
**TENSIONER WIRE**

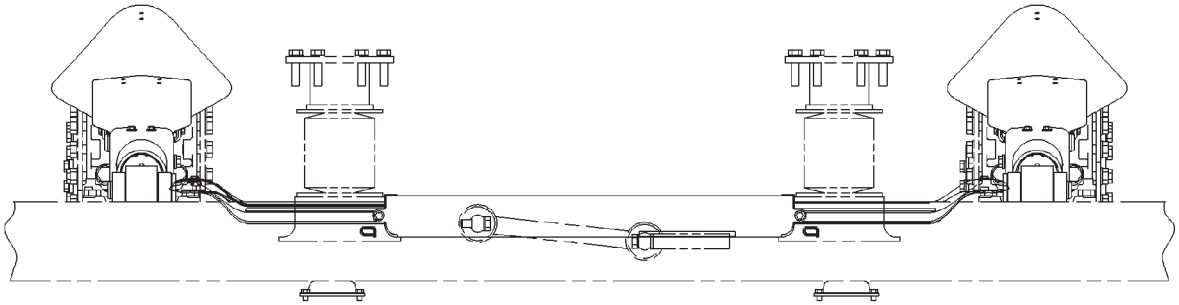

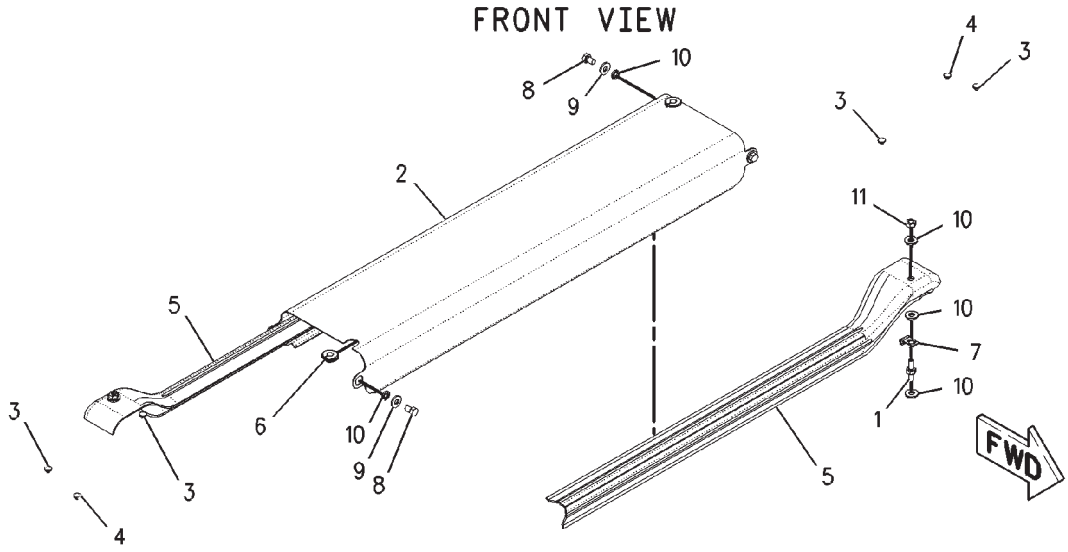


00853301

## GUARD GP-LINES - 201-9927
TENSIONER WIRE

| ITEM | NUMBER | QTY | DESCRIPTION |
|---|---|---|---|
| - | 201-9927 | -- | GUARD GP-LINES [A] (NOT SERVICED) |
| 1 | CH101-3129 | 2 | STUD (M10X1.5) |
| 2 | 201-9932 | 1 | COVER |
| 3 | 400289X1 | 4 | PLUG-PROTECTIVE (M7) |
| 4 | CH193-5914 | 2 | PLUG-PROTECTIVE (M10) |
| 5 | 201-9930 | 2 | GUARD-WIRE |
| 6 | CH5P-8440 | 2 | GROMMET |
| 7 | CH5P-9085 | 2 | CLIP |
| 8 | 400023X1 | 4 | BOLT (M10X1.5X16MM) |
| 9 | CH7X-0561 | 4 | WASHER-HARD (12X18.5X3) |
| 10 | CH7X-7729 | 10 | WASHER (11X25X3) |
| 11 | WR522218 | 2 | NUT (M10X1.5) |
| 12 | CH7K-1181 | 4 | STRAP-CABLE (0.19X4) (NOT SHOWN) |

[A] PART OF 156-4881 UNDERCARRIAGE AR

00853301
PR: t05i29k58b0299

## GUARD GP-LINES - 201-9928

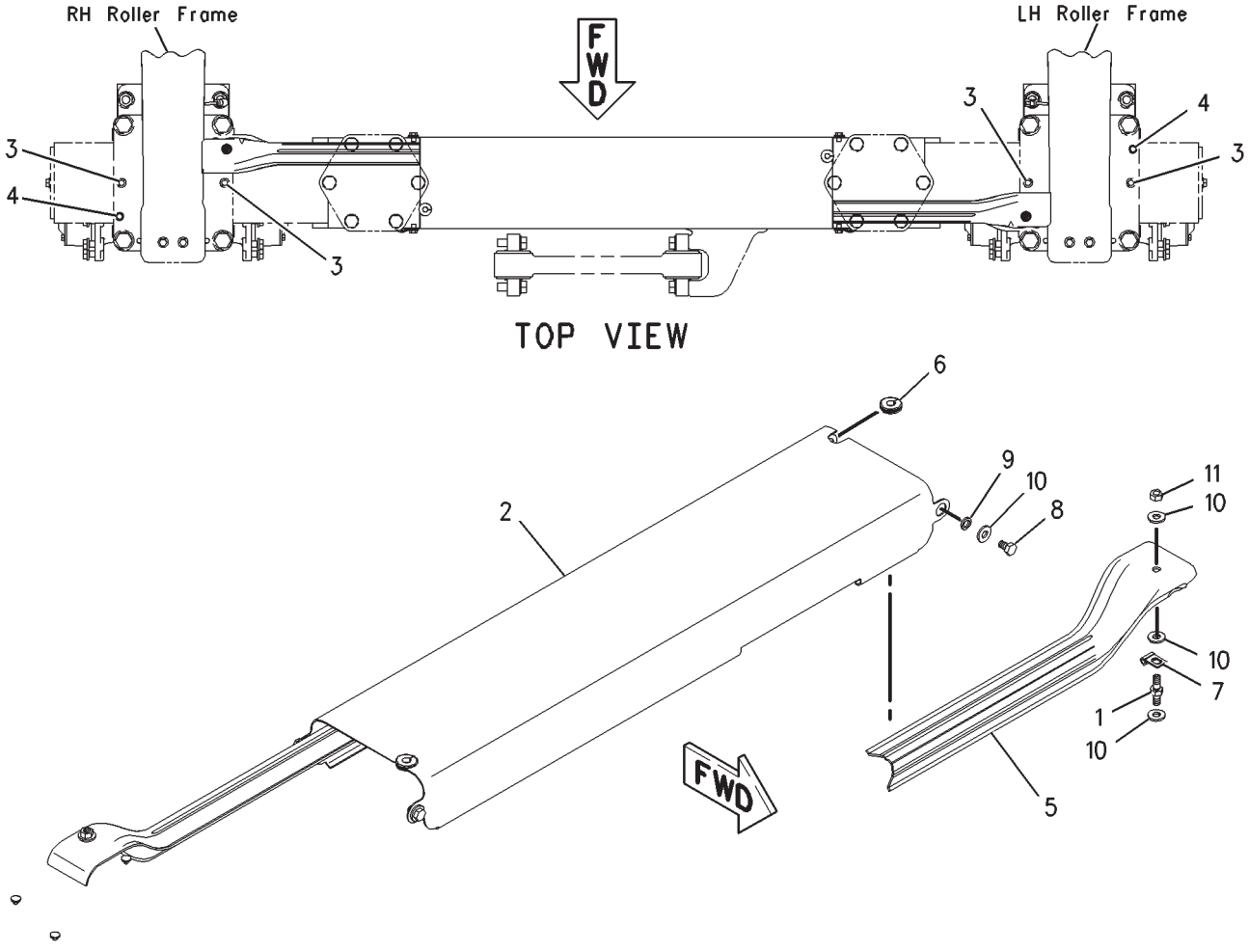

## GUARD GP-LINES - 201-9928

| ITEM | NUMBER | QTY | DESCRIPTION |
|---|---|---|---|
| | | | (TENSIONER WIRE) |
| - | 201-9928 | -- | GUARD GP-LINES |
| 1 | CH101-3129 | 2 | STUD (M10X1.5 THD) |
| 2 | 201-9932 | 1 | COVER |
| 3 | 400289X1 | 4 | PLUG-PROTECTIVE (M7) |
| 4 | CH193-5914 | 2 | PLUG-PROTECTIVE (M10) |
| 5 | 201-9931 | 2 | GUARD-WIRE |
| 6 | CH5P-8440 | 2 | GROMMET |
| 7 | CH5P-9085 | 2 | CLIP |
| 8 | 400023X1 | 4 | BOLT (M10X1.5X16MM) |
| 9 | CH7X-0561 | 4 | WASHER-HARD |
| 10 | CH7X-7729 | 10 | WASHER (11X25X3MM THK) |
| 11 | WR522218 | 2 | NUT (M10X1.5 THD) |
| 12 | CH7K-1181 | 4 | STRAP-CABLE (0.19X4) (NOT SHOWN) |

[A] PART OF 177-9946 UNDERCARRIAGE AR

00853303
PR: t05i29k58b0300

IDLER GP - 127-9545

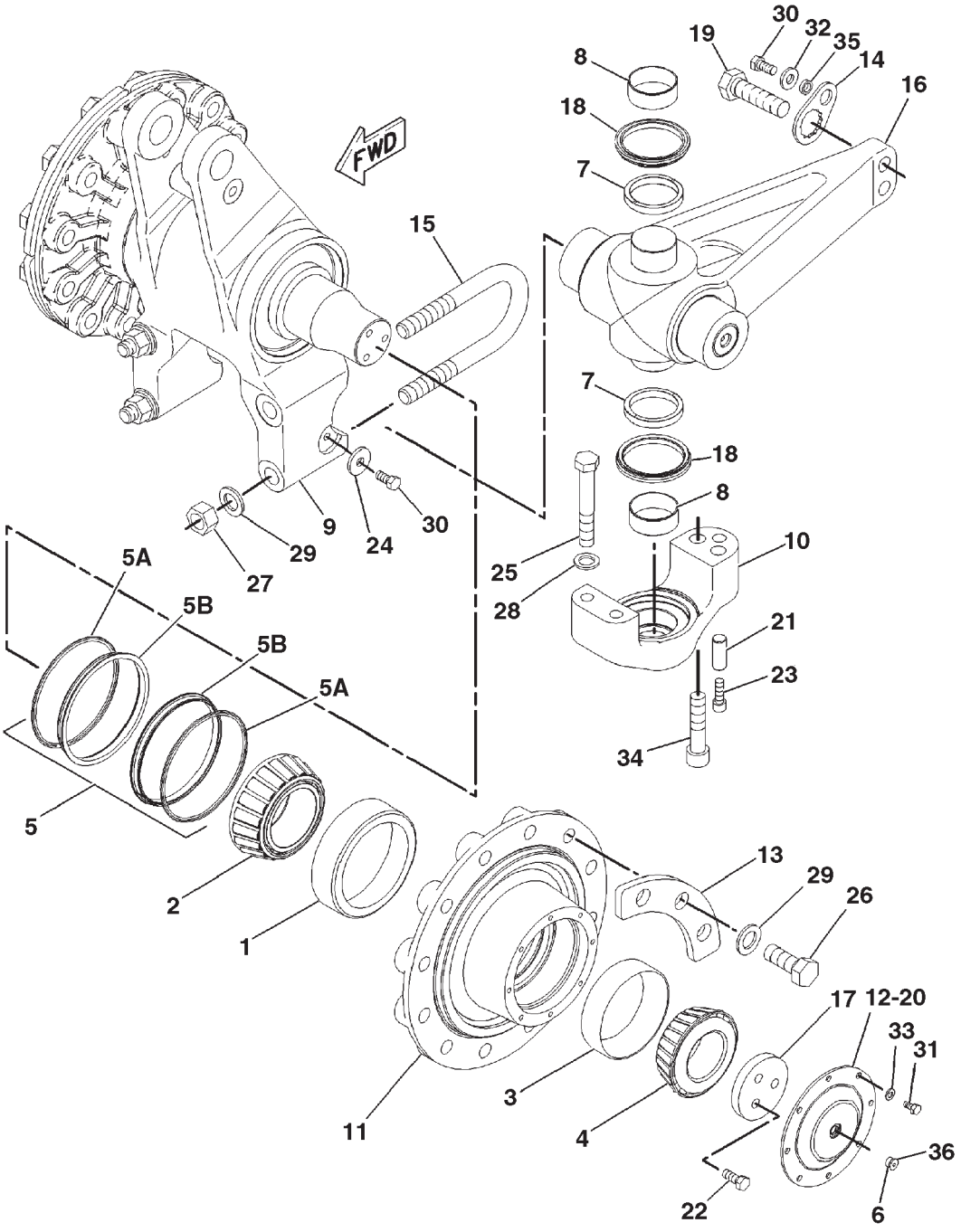


0862342A

## IDLER GP - 127-9545

| ITEM | NUMBER | QTY | DESCRIPTION |
|---|---|---|---|
| - | 127-9545 | -- | IDLER GP [A] (NOT SERVICED) |
| 1 | CH1J-2860 | 2 | CUP-BEARING |
| 2 | CH1J-4757 | 2 | CONE-BEARING |
| 3 | CH2D-9454 | 2 | CUP-BEARING |
| 4 | CH2D-9455 | 2 | CONE-BEARING |
| 5 | CH5K-1078 | 2 | SEAL GP-DUO-CONE |
| 6 | CH9S-8003 | 2 | PLUG |
| 7 | CH9W-9625 | 2 | RING-THRUST |
| 8 | CH108-6075 | 2 | BUSHING |
| 9 | CH127-9548 | 1 | LINK-SWING |
| 10 | CH127-9553 | 1 | CAP |
| 11 | CH127-9554 | 2 | HUB |
| 12 | CH156-4897 | 2 | COVER |
| 13 | CH156-4900 | 8 | PLATE |
| 14 | CH202-8633 | 2 | PLATE-LOCK |
| 15 | 400261X1 | 2 | U-BOLT |
| 16 | CH160-3957 | 1 | LEVER GP-IDLER |
| | 500925D1 | 1 | PIN AS (SERVICED BY ** ITEMS) |
| | CH6Y-0473 | 1 | **PLUG-CLEAR |
| | CH7G-4332 | 1 | **STOPPER |
| 17 | CH160-5223 | 2 | PLATE |
| 18 | 501934D1 | 2 | SEAL ASM |
| 19 | 400009X1 | 2 | BOLT (M24X3X88MM) |
| 20 | CH215-9464 | 2 | GASKET |
| 21 | CH4K-7239 | 1 | DOWEL |
| 22 | 400227X1 | 6 | BOLT (M12X1.75X30MM) |
| 23 | 400002X1 | 1 | BOLT-SOCKET HEAD (M12X1.75X35MM) |
| 24 | CH7X-0618 | 2 | WASHER-HARD (13.5X40X5) |
| 25 | 400027X1 | 2 | BOLT (M20X2.5X130MM) |
| 26 | 400035X1 | 12 | BOLT (M24X3X60MM) |
| 27 | CH8T-4001 | 4 | NUT (M24X3) |
| 28 | 400080X1 | 2 | WASHER-PLATED (22X35X3.5) |
| 29 | 400081X1 | 16 | WASHER-HARD (26X44X4) |
| 30 | 400055X1 | 4 | BOLT (M12X1.75X25MM) |
| 31 | 400227X1 | 16 | BOLT (M8X1.25X16MM) |
| 32 | 400381X1 | 2 | WASHER-HARD (13.5X30X4) |
| 33 | 400339X1 | 16 | WASHER-HARD (8.8X16X2) |
| 34 | 400142X1 | 2 | BOLT-SOCKET HEAD (M20X2.5X90) |
| 35 | CH202-9701 | 2 | SPACER (12.95X19.05X5) |
| 36 | CH1J-9671 | 2 | SEAL-O-RING |

[A] PART OF 156-4882; 156-4883 FRAME AR

## MOUNTING GP-IDLER - 177-4589

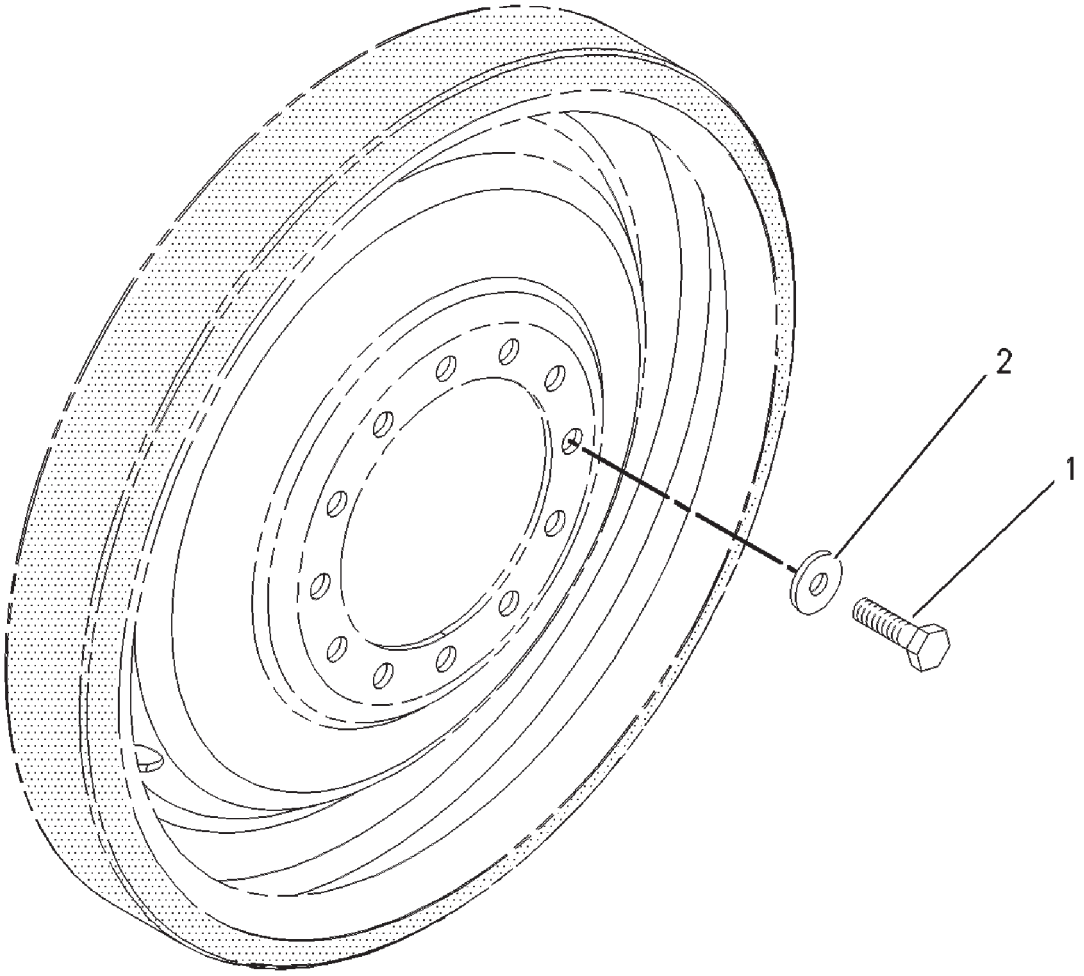


00640046

## MOUNTING GP-IDLER - 177-4589

| ITEM | NUMBER | QTY | DESCRIPTION |
|---|---|---|---|
| - | 177-4589 | -- | MOUNTING GP-IDLER (NOT SERVICED) |
| 1 | 400035X1 | 24 | BOLT (M24X3X60MM) |
| 2 | 400081X1 | 24 | WASHER-HARD (26X44X4) |

00640046
PR: t05i29k58b0302

## MOUNTING GP-TENSIONER - 184-6718
TRACK BELT

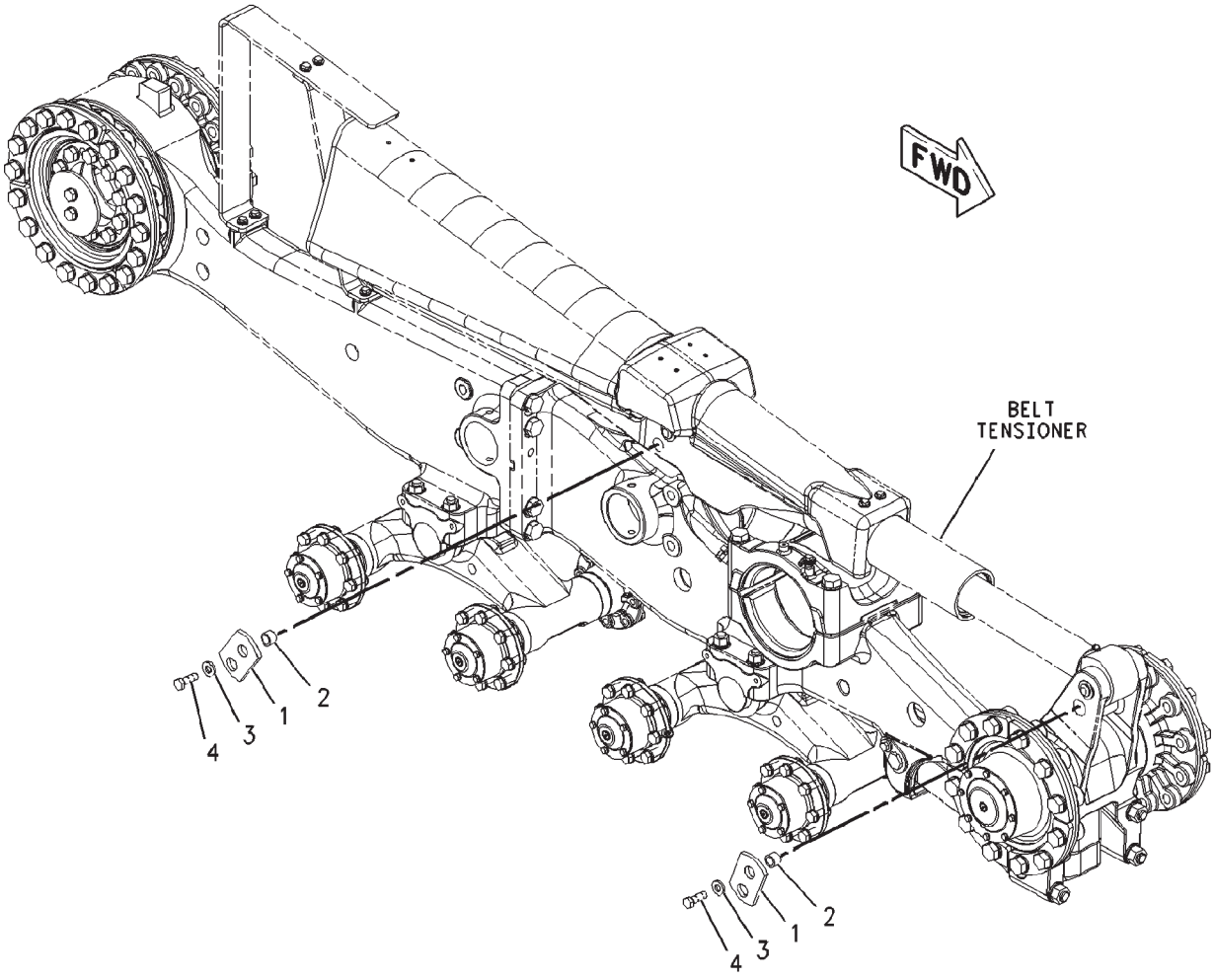


00851415

| ITEM | NUMBER | QTY | DESCRIPTION |
|---|---|---|---|
| - | 184-6718 | -- | MOUNTING GP-TENSIONER [A] (NOT SERVICED) |
| 1 | CH190-3576 | 2 | PIN ASM |
| 2 | CH190-3583 | 2 | SPACER (20X28.6X19) |
| 3 | CH7X-0515 | 2 | WASHER-HARD (17X35X5) |
| 4 | 400244X1 | 2 | BOLT (M16X2.0X45MM) |

[A] PART OF 156-4882; 156-4883 FRAME AR

00851415
PR: t05i29k58b0303

## ROLLER AR - 156-4891
**MIDDLE 112 MM (4.4 IN)**

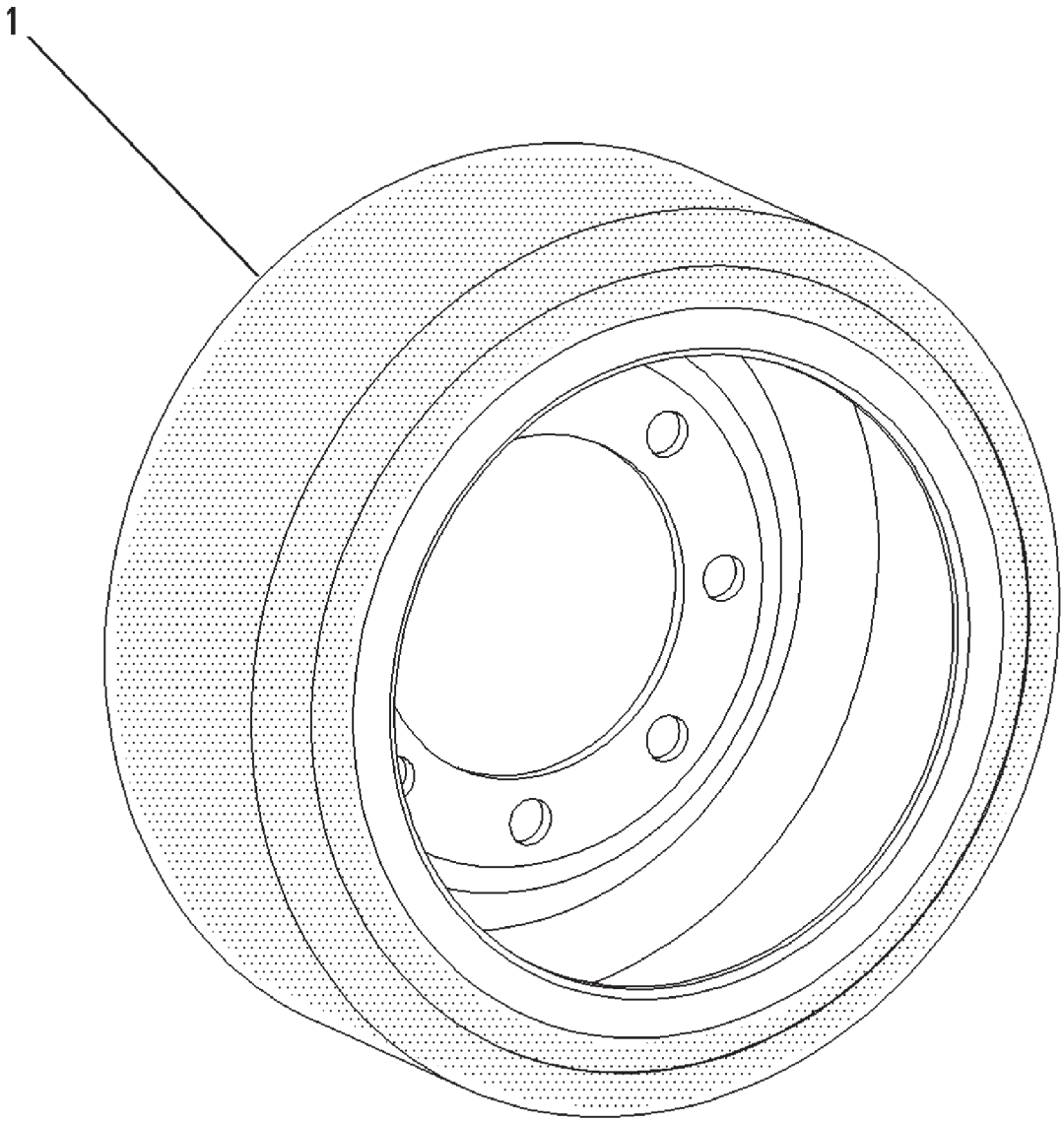


00648929

## ROLLER AR - 156-4891
**MIDDLE 112 MM (4.4 IN)**

| ITEM | NUMBER | QTY | DESCRIPTION |
|---|---|---|---|
| - | 156-4891 | -- | ROLLER AR (NOT SERVICED) |
| 1 | 502931D1 | 16 | ROLLER ASM |
| - | 502159D1 | -- | ROLLER AR (INCLUDES 8 OF ITEM 1) |

00648929
PR: t05i29k58b0304

## ROLLER AR - 156-4893
**MIDDLE 204 MM (8 IN)**

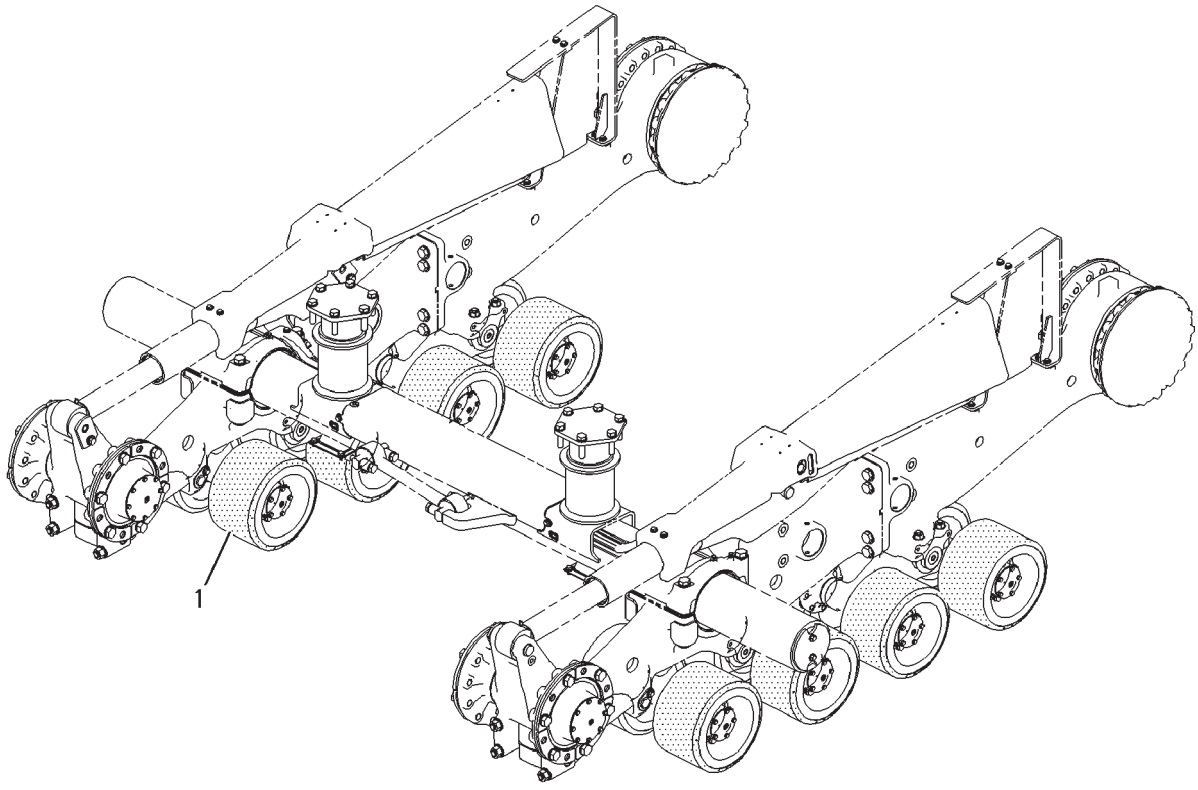


00885773

## ROLLER AR - 156-4893
**MIDDLE 204 MM (8 IN)**

| ITEM | NUMBER | QTY | DESCRIPTION |
|---|---|---|---|
| - | 502786D1 | -- | ROLLER AR (FIELD INSTALLED) |
| - | 502914D1 | -- | ROLLER AR (FACTORY) (NOT SERVICED, ORDER FIELD INSTALLED) |
| - | 156-4893 | -- | MIDROLLER WHEEL AR [A] (REF) (NOT SERVICED, ORDER FIELD INSTALLED) |
| 1 | 502932D1 | 16 | ROLLER ASM |
| - | 502162D1 | -- | ROLLER AR (INCLUDES 8 OF ITEM 1) |

[A] PART OF 502768D1;502914D1 ROLLER AS

00885773
PR: t05i29k58b0305

## SUPPORT GP-DRIVE WHEEL - 156-4884
RIGHT HAND

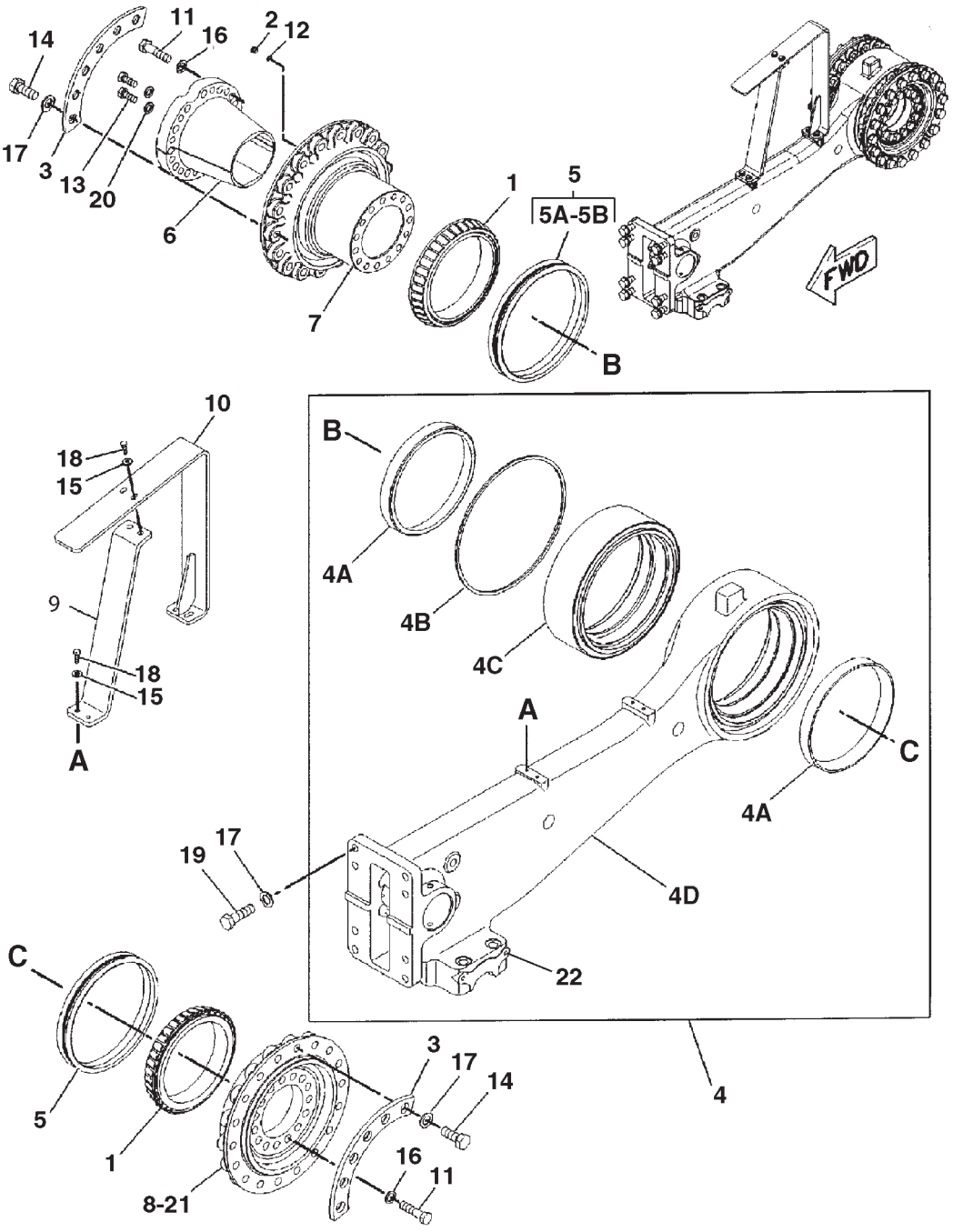


0829713A

## SUPPORT GP-DRIVE WHEEL - 156-4884
RIGHT HAND

| ITEM | NUMBER | QTY | DESCRIPTION |
|---|---|---|---|
| - | 156-4884 | -- | SUPPORT GP-DRIVE WHEEL [A] (NOT SERVICED) |
| 1 | CH3D-9132 | 2 | CONE-BEARING |
| 2 | CH9S-8003 | 1 | PLUG |
| 3 | 156-8343 | 6 | PLATE-BACKUP |
| 4 | 161-1817 | 1 | ARM ASM |
| 4A | CH3D-9133 | 2 | CUP-BEARING |
| 4B | 400098X1 | 1 | RING-RETAINING (400 OD X 2.82) |
| 4C | CH190-3391 | 1 | HOUSING ASM |
| 4D | ----- | 1 | ARM-REACTION (ORDER ITEM 4) |
| 5 | CH174-4874 | 2 | SEAL GP-DUO-CONE |
| 6 | 184-4356 | 1 | COLLET |
| 7 | 500396D2 | 1 | HUB-OUTER |
| 8 | 500395D2 | 1 | HUB-INNER |
| 9 | 205-9961 | 1 | BRACKET ASM |
|  | CH8T-3490 | 2 | NUT-WELD (M10X1.5) |
| 10 | 205-9962 | 1 | BRACKET |
| 11 | 400272X1 | 27 | BOLT (M20X2.5X80MM) |
| 12 | CH1J-9671 | 1 | SEAL-O-RING |
| 13 | 400191X1 | 2 | BOLT (M16X2X40MM) |
| 14 | 400035X1 | 36 | BOLT (M24X3X60MM) |
| 15 | CH7X-7729 | 6 | WASHER (11X25X3) |
| 16 | 400080X1 | 27 | WASHER-PLATED (22X35X3.5) |
| 17 | 400081X1 | 44 | WASHER-HARD (26X44X4) |
| 18 | 400058X1 | 6 | BOLT (M10X1.5X30MM) |
| 19 | 400067X1 | 8 | BOLT (M24X3X80MM) |
| 20 | 400082X1 | 2 | WASHER (17.5X30X3.5) |
| 21 | CH1U-8846 |  | SEALANT-GASKET |
| 22 | CH193-5915 | 4 | PLUG |

[A] PART OF 156-4882 FRAME AR

0829713A
PR: t05i29k58b0306

## SUPPORT GP-DRIVE WHEEL - 156-4885
**LEFT HAND**

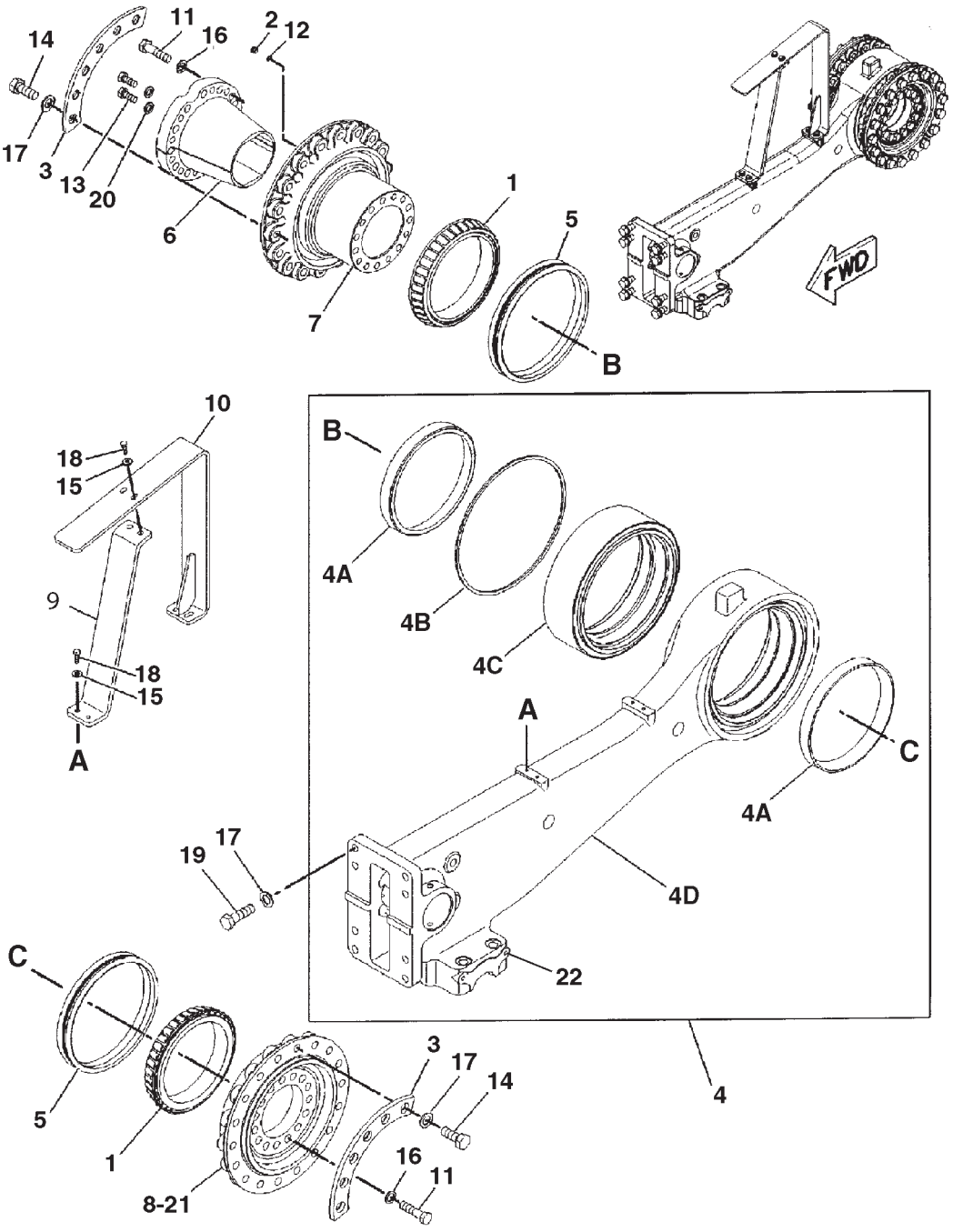


0829713B

## SUPPORT GP-DRIVE WHEEL - 156-4885
LEFT HAND

| ITEM | NUMBER | QTY | DESCRIPTION |
|---|---|---|---|
| - | 156-4885 | -- | SUPPORT GP-DRIVE WHEEL [A] (NOT SERVICED) |
| 1 | CH3D-9132 | 2 | CONE-BEARING |
| 2 | CH9S-8003 | 1 | PLUG |
| 3 | 156-8343 | 6 | PLATE-BACKUP |
| 4 | 161-1817 | 1 | ARM ASM (ORDER COMPLETE OR 4A THRU 4C) |
| 4A | CH3D-9133 | 2 | CUP-BEARING |
| 4B | 400098X1 | 1 | RING-RETAINING (400 OD X 2.82) |
| 4C | CH190-3391 | 1 | HOUSING ASM |
| 4D | ----- | 1 | ARM-REACTION (NOT SERVICED SEPARATELY) |
| 5 | CH174-4874 | 2 | SEAL GP-DUO-CONE (ORDER COMPLETE OR |
| 6 | 184-4356 | 1 | COLLET |
| 7 | 500396D2 | 1 | HUB-OUTER |
| 8 | 500395D2 | 1 | HUB-INNER |
| 9 | 205-9961 | 1 | BRACKET ASM |
| | CH8T-3490 | 2 | NUT-WELD (M10X1.5) |
| 10 | 205-9962 | 1 | BRACKET |
| 11 | 400272X1 | 27 | BOLT (M20X2.5X80MM) |
| 12 | CH1J-9671 | 1 | SEAL-O-RING |
| 13 | 400191X1 | 2 | BOLT (M16X2X40MM) |
| 14 | 400035X1 | 36 | BOLT (M24X3X60MM) |
| 15 | CH7X-7729 | 6 | WASHER (11X25X3) |
| 16 | 400080X1 | 27 | WASHER-PLATED (22X35X3.5) |
| 17 | 400081X1 | 44 | WASHER-HARD (26X44X4) |
| 18 | 400058X1 | 6 | BOLT (M10X1.5X30MM) |
| 19 | 400067X1 | 8 | BOLT (M24X3X80MM) |
| 20 | 400082X1 | 2 | WASHER (17.5X30X3.5) |
| 21 | CH1U-8846 | | SEALANT-GASKET |
| 22 | CH193-5915 | 4 | PLUG |

[A] PART OF 156-4883 FRAME AR

0829713B
PR: t05i29k58b0307

## SUPPORT GP-UNDERCARRIAGE - 163-1009
**WIDE GAUGE**

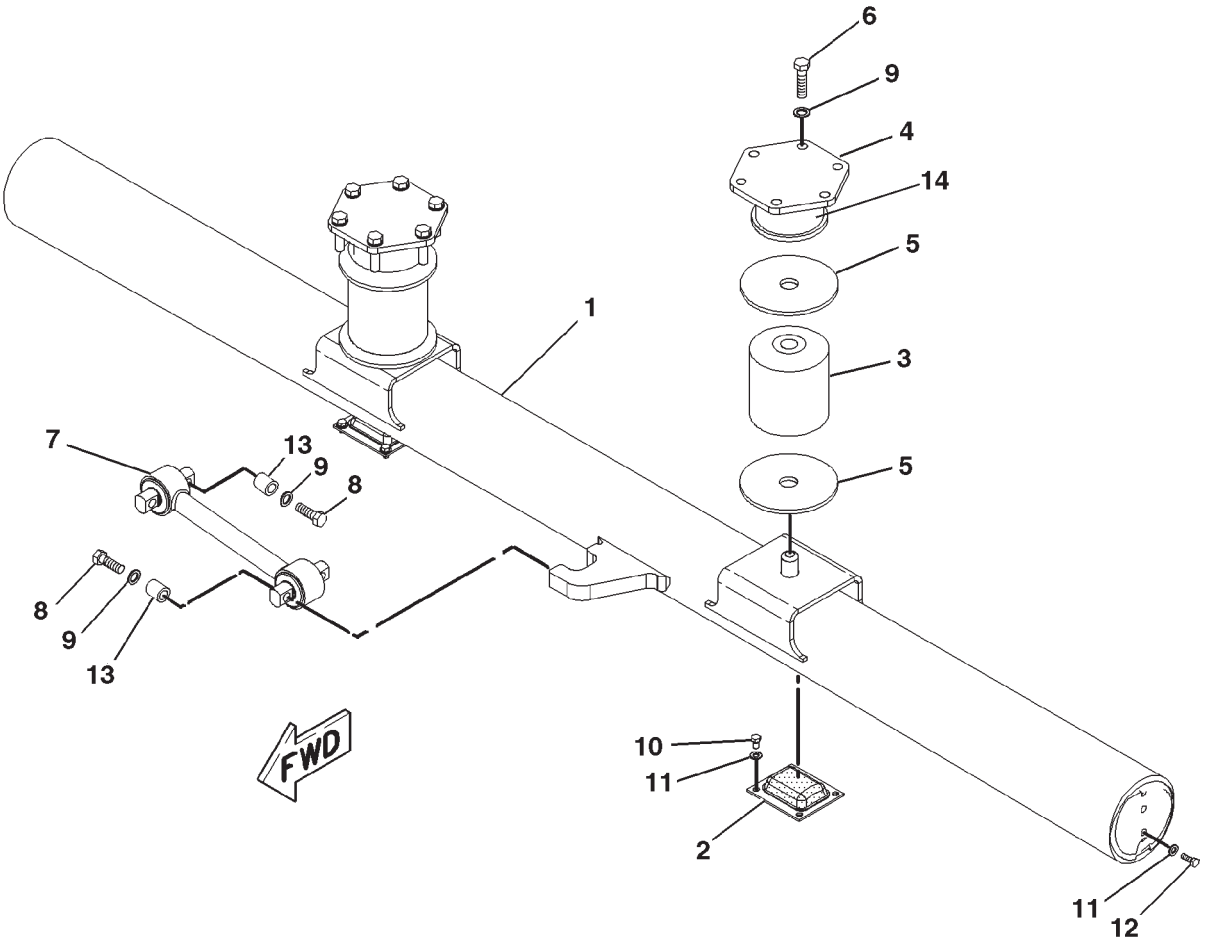


0850229A

## SUPPORT GP-UNDERCARRIAGE - 163-1009
WIDE GAUGE

| ITEM | NUMBER | QTY | DESCRIPTION |
|---|---|---|---|
| - | 163-1009 | -- | SUPPORT GP-UNDERCARRIAGE [A] (NOT SERVICED) |
| 1 | 162-0288 | 1 | SUPPORT ASM |
| | CH7T-1099 | 2 | LINK |
| 2 | 163-0267 | 2 | PAD ASM |
| 3 | 163-0268 | 2 | SPRING (RUBBER) |
| 4 | 223-3273 | 2 | PLATE |
| 5 | CH177-1872 | 4 | PLATE |
| 6 | 400008X1 | 12 | BOLT-HEX HEAD (M20X2.5X80MM) |
| 7 | 183-8600 | 1 | ROD |
| 8 | 400032X1 | 4 | BOLT (M20X2.5X100MM) |
| 9 | 400080X1 | 16 | WASHER-PLATED (22X35X3.5) |
| 10 | 400047X1 | 8 | BOLT (M12X1.75X20MM) |
| 11 | 400357X1 | 12 | WASHER-HARD (M12X25.5X3) |
| 12 | 400064X1 | 4 | BOLT (M12X1.75X35MM) |
| 13 | CH213-1827 | 4 | SPACER (22X35X40) |
| 14 | 223-2480 | 2 | SUPPORT |

[A] PART OF
156-4881; 502325D1 UNDERCARRIAGE AR

0850229A
PR: t05i29k58b0308

## SUPPORT GP-UNDERCARRIAGE - 177-9945

**(2286-2600MM/90-102")**
**EAME ONLY**

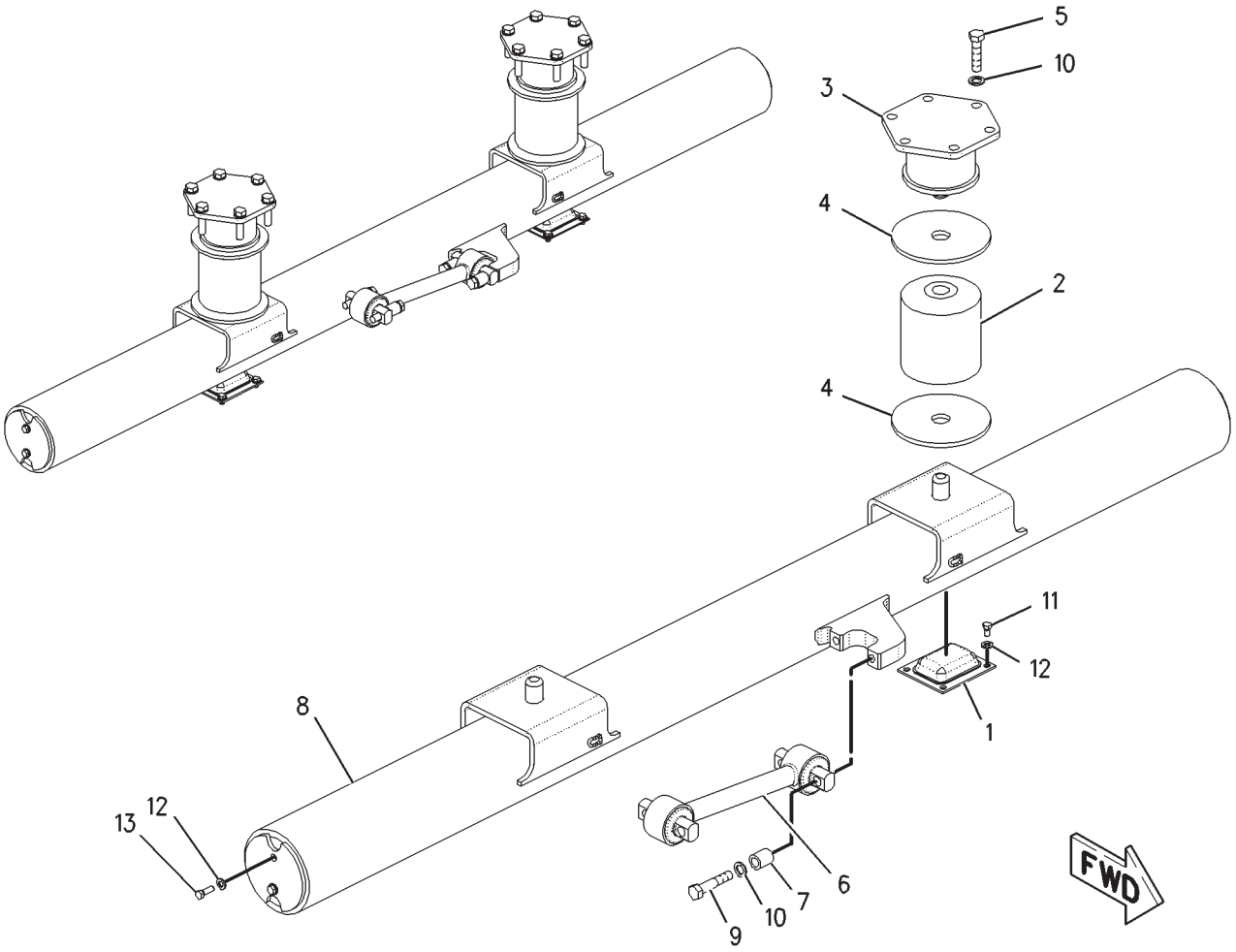


00853117

## SUPPORT GP-UNDERCARRIAGE - 177-9945

**(2286-2600MM/90-102")**
**EAME ONLY**

| ITEM | NUMBER | QTY | DESCRIPTION |
|---|---|---|---|
| - | 177-9945 | -- | SUPPORT GP-UNDERCARRIAGE [A] (NOT SERVICED) |
| 1 | 163-0267 | 2 | PAD AS (SUPPORT) |
| 2 | 163-0268 | 2 | SPRING (RUBBER) |
| 3 | 223-3273 | 2 | PLATE |
| | 223-2480 | 2 | SUPPORT |
| 4 | CH177-1872 | 4 | PLATE |
| 5 | 400008X1 | 12 | BOLT-HEX HEAD (M20X2.5X80MM) |
| 6 | 183-8600 | 1 | ROD |
| 7 | CH213-1827 | 4 | SPACER (22X35X40MM THK) |
| 8 | 172-4155 | 1 | SUPPORT AS |
| | CH7T-1099 | 2 | LINK |
| 9 | 400032X1 | 4 | BOLT (M20X2.5X100MM) |
| 10 | 400080X1 | 16 | WASHER-PLATED (22X35X3.5MM THK) |
| 11 | 400047X1 | 8 | BOLT (M12X1.75X20MM) |
| 12 | 400357X1 | 12 | WASHER-HARD (M12X25.5X3MM THK) |
| 13 | 400064X1 | 4 | BOLT (M12X1.75X35MM) |

[A] PART OF 177-9946 UNDERCARRIAGE AR

00853117
PR: t05i29k58b0309

## UNDERCARRIAGE AR - 156-4881
**ROW**

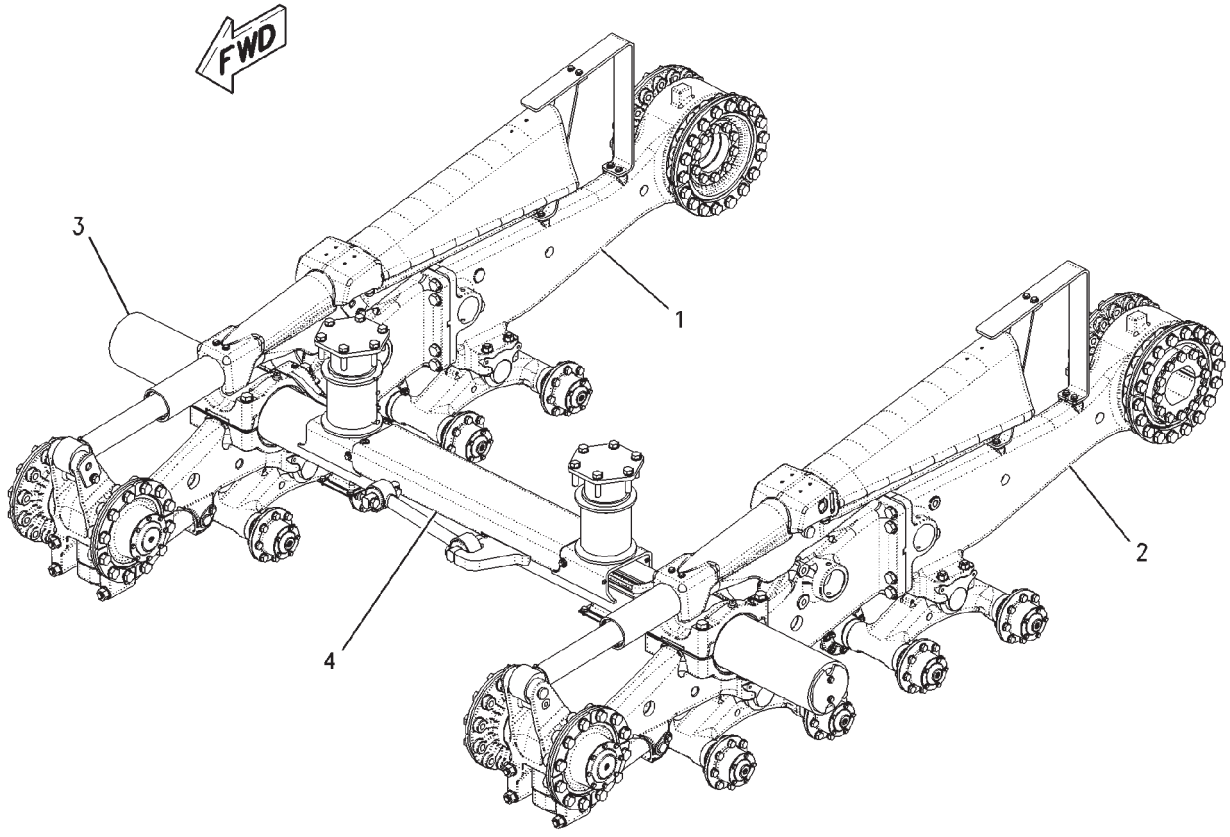


00850503

## UNDERCARRIAGE AR - 156-4881
ROW

| ITEM | NUMBER | QTY | DESCRIPTION |
|---|---|---|---|
| - | 156-4881 | -- | UNDERCARRIAGE AR [A] (NOT SERVICED) |
| 1 | 156-4882 | 1 | FRAME AR (RH) (NOT SERVICED) (SEE BREAKDOWN FOR COMPONENTS) |
| 2 | 156-4883 | 1 | FRAME AR (LH) (NOT SERVICED) (SEE BREAKDOWN FOR COMPONENTS) |
| 3 | 163-1009 | 1 | SUPPORT GP-UNDERCARRIAGE (NOT SERVICED) (SEE BREAKDOWN FOR COMPONENTS) |
| 4 | 201-9927 | 1 | GUARD GP-LINES (NOT SERVICED) (SEE BREAKDOWN FOR COMPONENTS) |

[A] PART OF 177-9948; 183-2198 GAUGE AR-TRACK

00850503
PR: t05i29k58b0310

## UNDERCARRIAGE AR - 177-9946
**EAME ONLY**

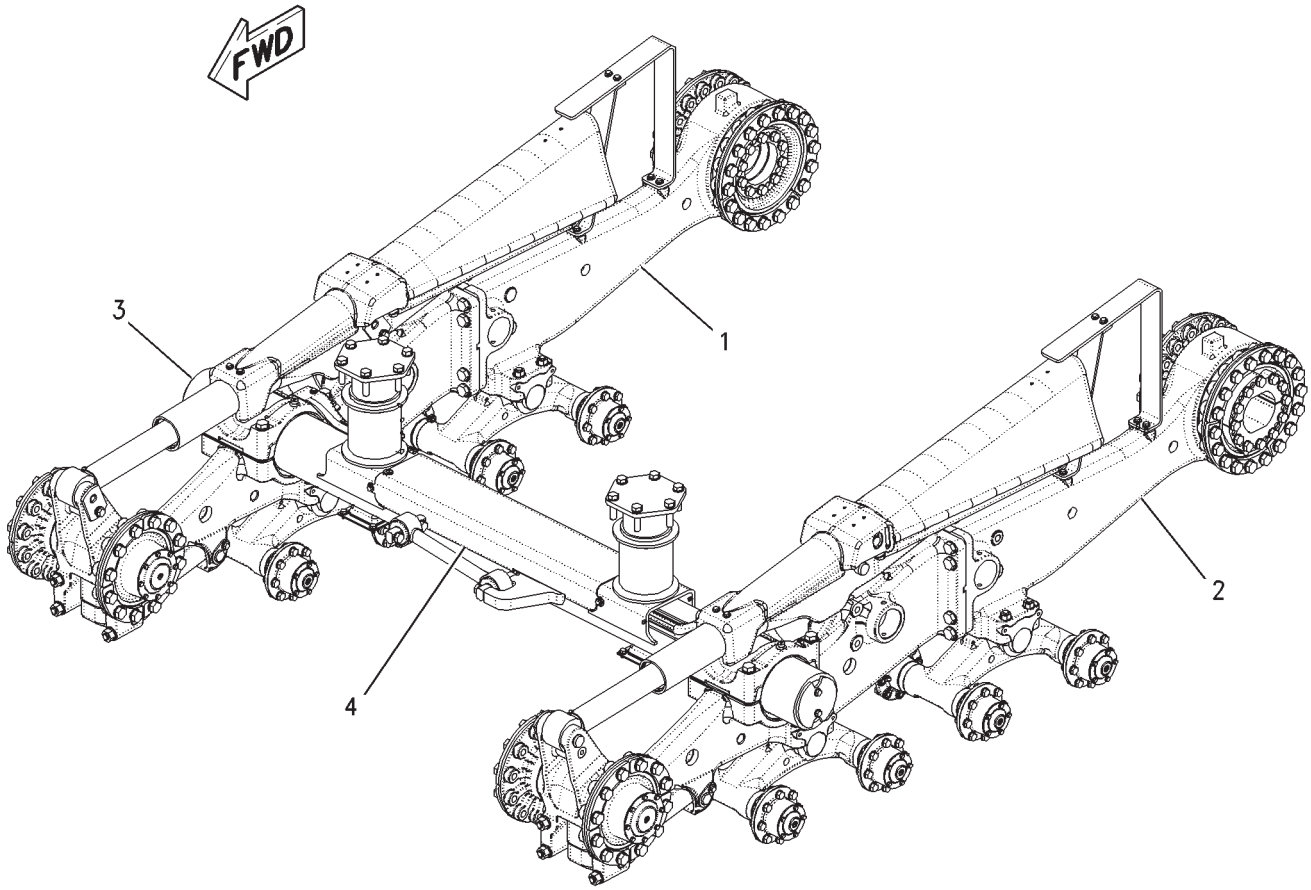


00851114

## UNDERCARRIAGE AR - 177-9946
**EAME ONLY**

| ITEM | NUMBER | QTY | DESCRIPTION |
|---|---|---|---|
| - | 177-9946 | -- | UNDERCARRIAGE AR |
| 1 | 156-4882 | 1 | FRAME AR (RH) (NOT SERVICED)<br>(SEE BREAKDOWN FOR COMPONENTS) |
| 2 | 156-4883 | 1 | FRAME AR (LH) (NOT SERVICED)<br>(SEE BREAKDOWN FOR COMPONENTS) |
| 3 | 177-9945 | 1 | SUPPORT GP-UNDERCARRIAGE (NOT SERVICED)<br>(SEE BREAKDOWN FOR COMPONENTS) |
| 4 | 201-9928 | 1 | GUARD GP-LINES (NOT SERVICED)<br>(SEE BREAKDOWN FOR COMPONENTS) |

[A] PART OF:
177-9947; 183-2197 GAUGE AR-TRACK

00851114
PR: t05i29k58b0311

## RESTRAIN GP-ROLLERFRAME - 500040D1

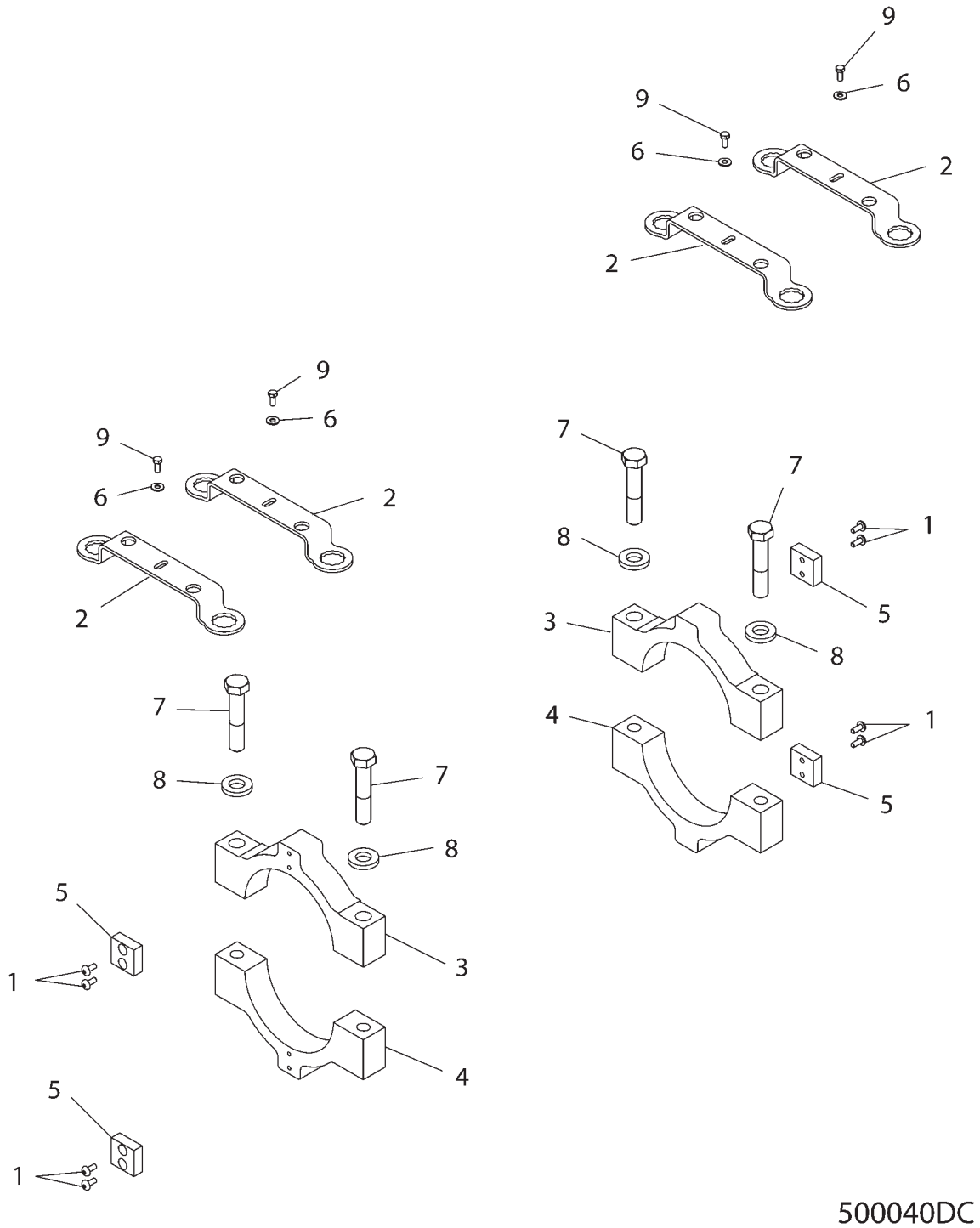

## RESTRAIN GP-ROLLERFRAME - 500040D1

| ITEM | NUMBER | QTY | DESCRIPTION |
|---|---|---|---|
| - | 502769D1 | -- | RESTRAIN GP-ROLLERFRAME (FIELD INSTALL) |
| - | 502768D1 | -- | RESTRAIN GP-ROLLERFRAME (FACTORY) (NOT SERVICED, ORDER FIELD INSTALLED) |
| - | 500040D1 | -- | RESTRAIN GP-ROLLERFRAME [A] (NOT SERVICED, ORDER FIELD INSTALLED) |
| 1 | CH127-2170 | 8 | SCREW-M8X1.25X20MM TRUSS HD |
| 2 | 500081D1 | 4 | BRACKET-LOCK |
| 3 | 500468D1 | 2 | CLAMP-TOP |
| 4 | 500469D1 | 2 | CLAMP-BOTTOM |
| 5 | 500470D1 | 4 | PAD-WEAR |
| 6 | 400599X1 | 4 | WASHER-HARD,M8X20.5ODX2THK |
| 7 | 400213X1 | 4 | BOLT-M24X3X120MM |
| 8 | CH8T-1482 | 4 | WASHER-HARD (26IDX50ODX8MM) |
| 9 | 400053X1 | 4 | BOLT-M8X1.25X20 |

[A] PART OF 502768D1;502769D1 RESTAIN GP

500040DC
PR: t05i29k58b0312

## WHEEL AR-DRIVER - 220-2357

**112 MM (4.4 IN)**
**ROW & EAME**

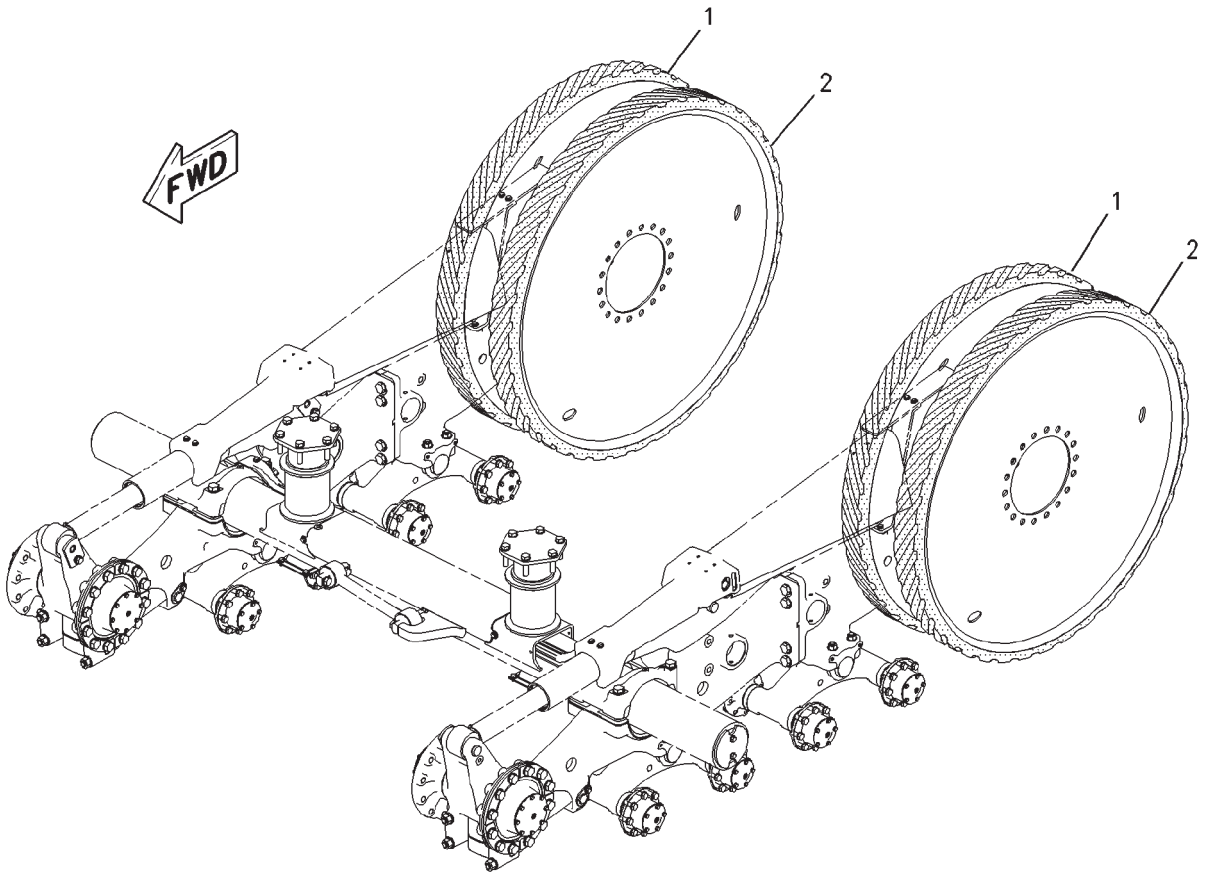


00889595

## WHEEL AR-DRIVER - 220-2357

**112 MM (4.4 IN)**
**ROW & EAME**

| ITEM | NUMBER | QTY | DESCRIPTION |
|---|---|---|---|
| - | 220-2357 | -- | WHEEL AR-DRIVER (NOT SERVICED) |
| 1 | 1R-1234 | 2 | WHEEL ASM |
| 2 | 1R-1249 | 2 | WHEEL ASM |
| - | 502158D1 | -- | KIT-WHEEL AR-DRIVER (FIELD INSTALLED) (INCLUDES 1 EA OF ITEM 1 & 2) |

00889595
PR: t05i29k58b0313

## WHEEL AR-DRIVER - 220-2358

**WIDE**
**196 MM (7.7 IN)**

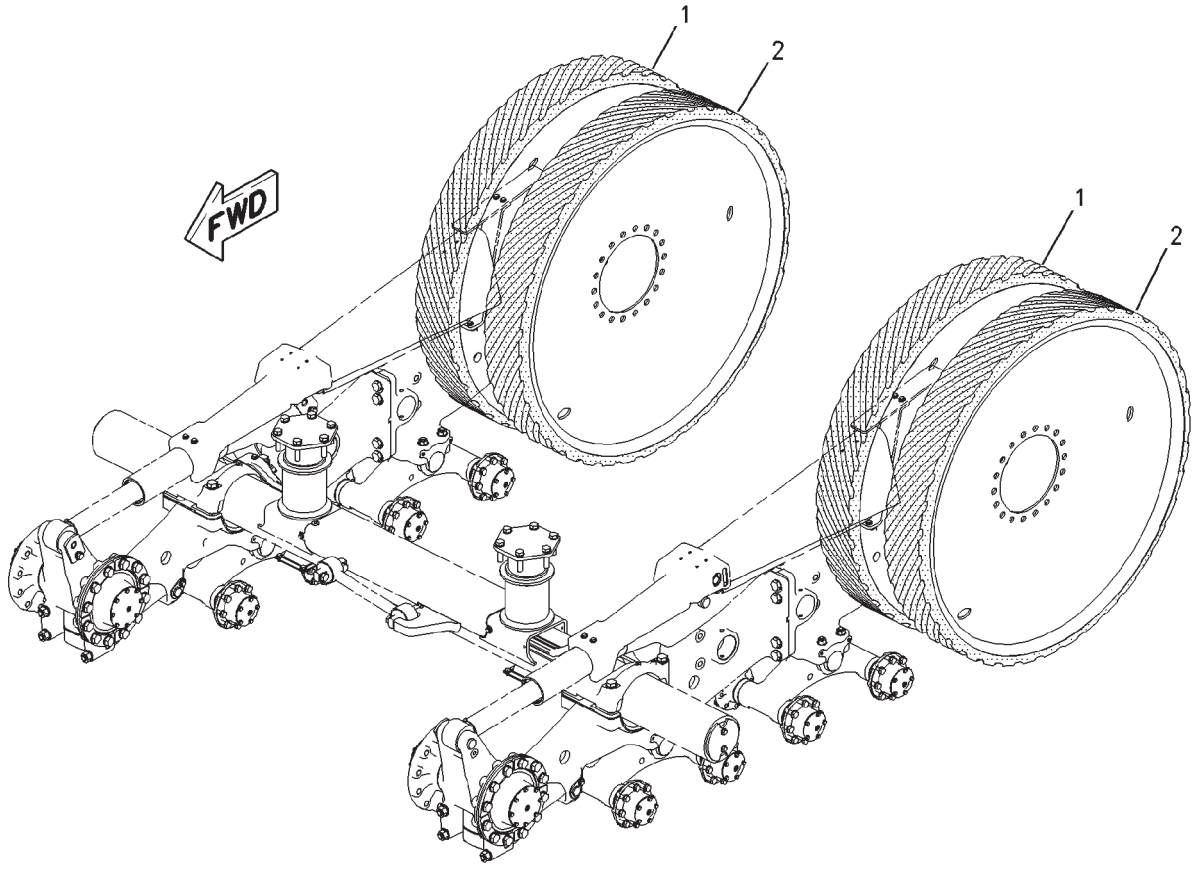


00889641

## WHEEL AR-DRIVER - 220-2358

**WIDE**
**196 MM (7.7 IN)**

| ITEM | NUMBER | QTY | DESCRIPTION |
|---|---|---|---|
| - | 220-2358 | -- | WHEEL AR-DRIVER [A] (NOT SERVICED) |
| - | 502788D1 | -- | KIT-WHEEL AR-DRIVER (FIELD INSTALLED) |
| - | 502913D1 | -- | WHEEL AR-DRIVER (EAME/ROW)(NOT SERVICED) |
| 1 | 1R-1235 | 2 | WHEEL ASM |
| 2 | 1R-1250 | 2 | WHEEL ASM |
| - | 502161D1 | -- | KIT-WHEEL AR-DRIVER (FIELD INSTALLED) (INCLUDES 1 EA OF ITEM 1 & 2) |

[A] PART OF 500033D1;500034D1;500035D1;
500037D1 BASE UNIT AR;
502788D1 WHEEL AR-DRIVER;
502913D1 WHEEL AR-DRIVER

00889641
PR: t05i29k58b0314

## WHEEL AR-IDLER - 220-2355
**105 MM (4.1 IN)**

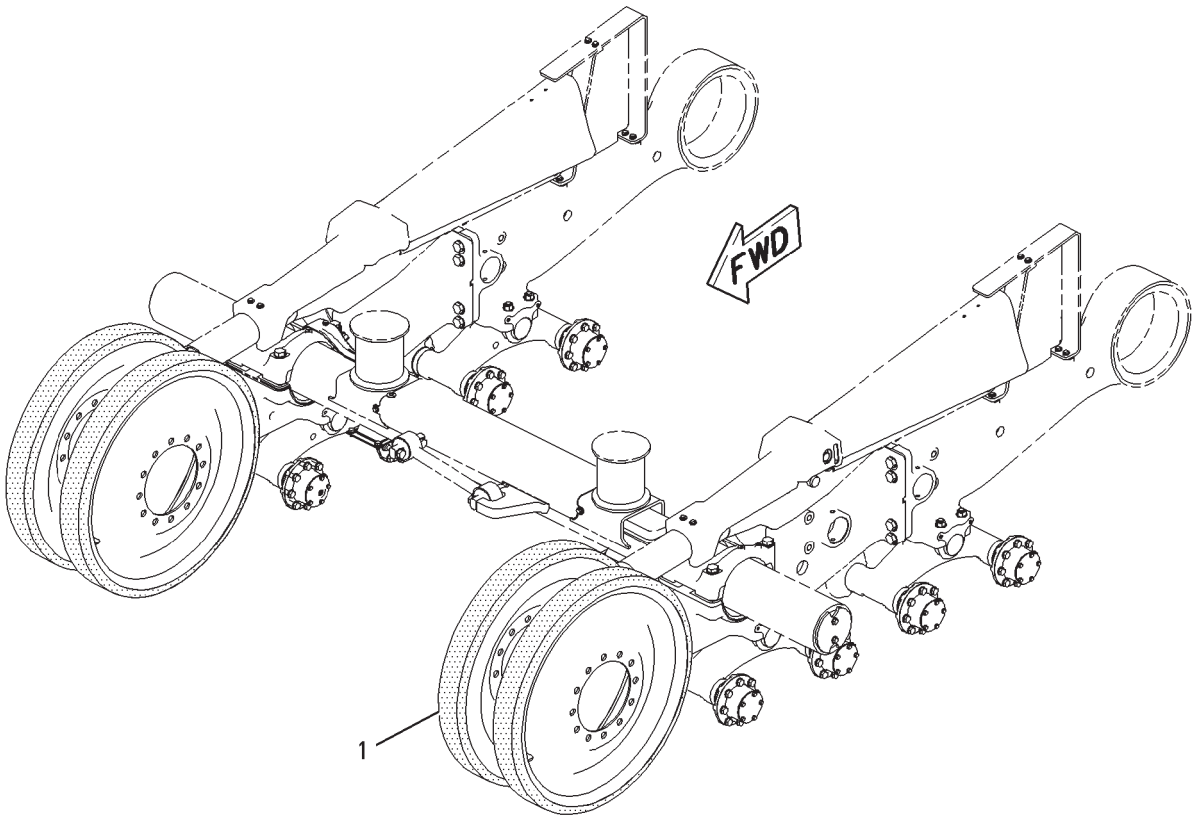


00889409

## WHEEL AR-IDLER - 220-2355
**105 MM (4.1 IN)**

| ITEM | NUMBER | QTY | DESCRIPTION |
|---|---|---|---|
| - | 220-2355 | -- | WHEEL AR-IDLER (NOT SERVICED) |
| 1 | 500062D1 | 4 | WHEEL ASM-IDLER |
| - | 502160D1 | -- | WHEEL AR-IDLER (KIT) (INCLS 2 OF ITEM 1) |

00889409
PR: t05i29k58b0315

## WHEEL AR-IDLER - 220-2356
**192 MM (7.6 IN)**

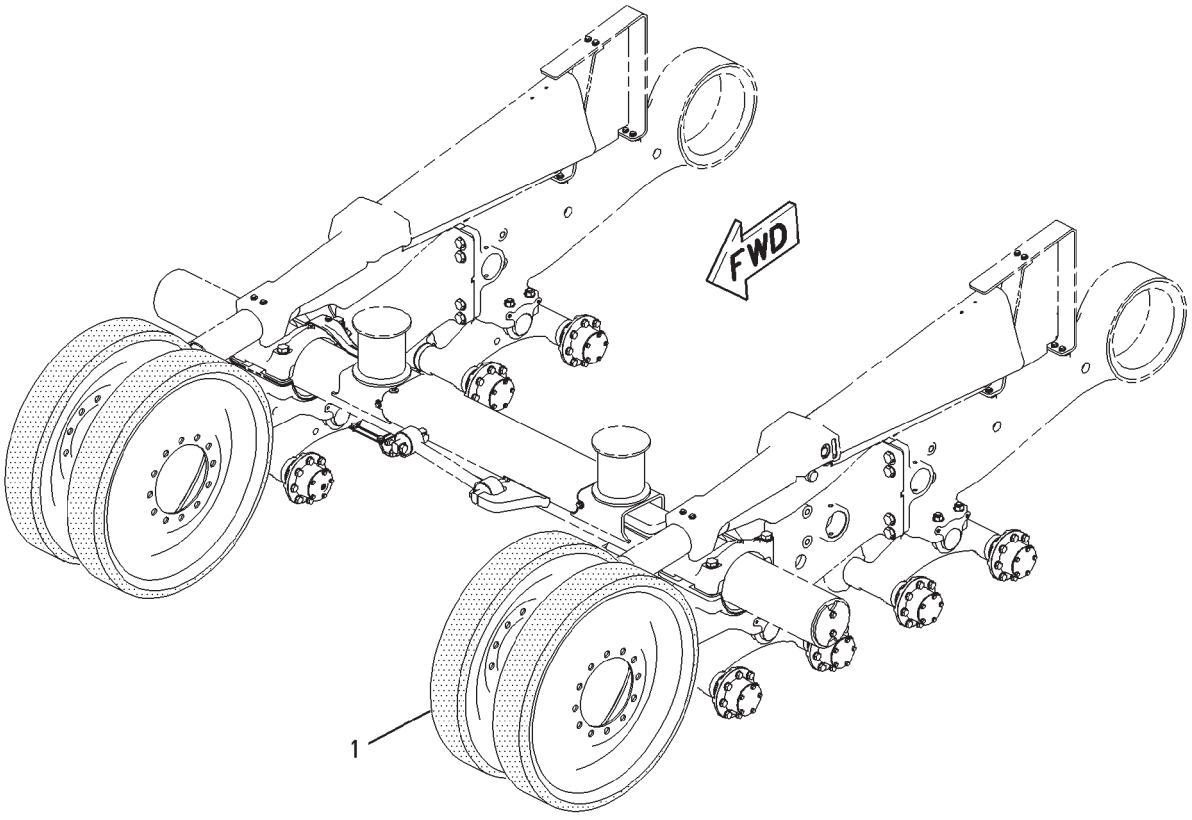


00889550

## WHEEL AR-IDLER - 220-2356
**192 MM (7.6 IN)**

| ITEM | NUMBER | QTY | DESCRIPTION |
|---|---|---|---|
| - | 502787D1 | -- | WHEEL AR-IDLER (FIELD INSTALLED) |
| - | 502915D1 | -- | WHEEL AR-IDLER (FACT) (NOT SERVICED, ORDER FIELD INSTALLED) |
| - | 220-2356 | -- | WHEEL AR-IDLER (REF ONLY-NOT SERVICED, ORDER FIELD INSTALLED) |
| 1 | 1R-1238 | 4 | WHEEL ASM-IDLER |
| - | 502163D1 | -- | WHEEL AR-IDLER (KIT) (INCLS 2 OF ITEM 1) |

00889550
PR: t05i29k58b0316

## WEDGE GP-WHEEL - 189-8931
**EAME ONLY**

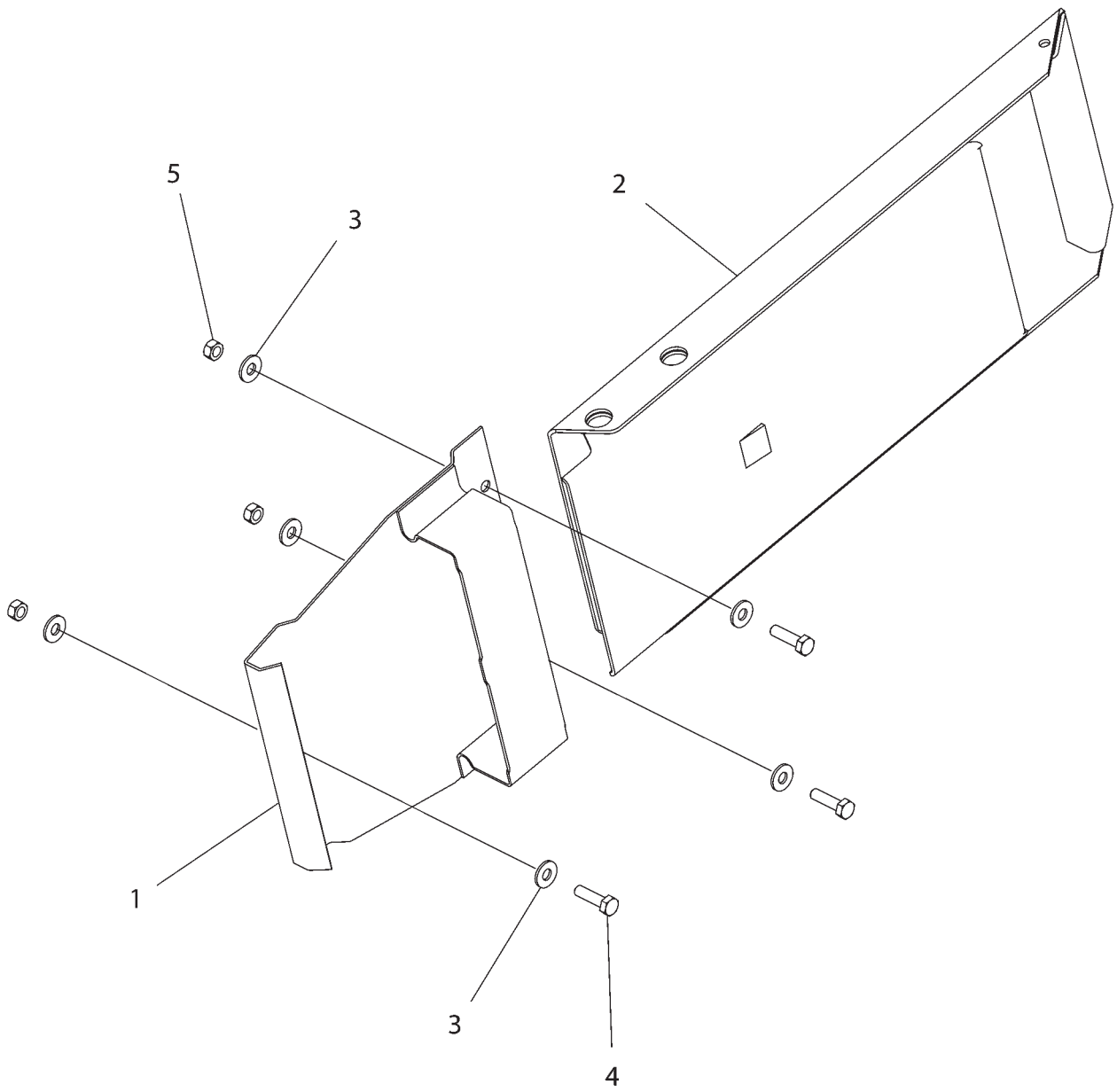

## WEDGE GP-WHEEL - 189-8931
**EAME ONLY**

| ITEM | NUMBER | QTY | DESCRIPTION |
|---|---|---|---|
| 1 | CH151-6030 | 1 | BRACKET AS. |
| 2 | 151-4059 | 1 | WHEEL BLOCK |
| 3 | 400599X1 | 6 | WASHER-HARD,M8X20.5ODX2THK |
| 4 | 400245X1 | 3 | BOLT-M8X1.25X30 ZNDI HHD 10.9 |
| 5 | 400340X1 | 3 | NUT-M8X1.25X13 HEX ZND1 |

1898931C
PR: t05i29k58b0317

**BRAKE AR - 185-8860**
**AIR TRAILER (WITHOUT HITCH)**
**MT835 & MT845**
**EAME ONLY**

NO ILLUSTRATION

NOTIF

## BRAKE AR - 185-8860
**AIR TRAILER (WITHOUT HITCH)**
**MT835 & MT845**
**EAME ONLY**

| ITEM | NUMBER | QTY | DESCRIPTION |
|---|---|---|---|
| - | 185-8860 | -- | BRAKE AR-W/O HITCH (SERVICED BY GROUPS) |
| 1 | 180-2937 | 1 | AIR COMPRESSOR GP (NOT SERVICED) (SEE BREAKDOWN FOR COMPONENTS) |
| 2 | 190-0435 | 1 | TANK & LINES GP-AIR (NOT SERVICED) (SEE BREAKDOWN FOR COMPONENTS) |
| 3 | 190-0436 | 1 | LINES GP-CONTROL (KIT) (SEE BREAKDOWN FOR COMPONENTS) |
| 4 | 190-0438 | 1 | LINES GP-COUPLER (NOT SERVICED) (SEE BREAKDOWN FOR COMPONENTS) |

NOTIF
PR: t05i29k58b0318

**BRAKE AR - 186-1620**
**AIR TRAILER (WITHOUT HITCH)**
**EAME ONLY**

NO ILLUSTRATION

NOTIF

## BRAKE AR - 186-1620
**AIR TRAILER (WITHOUT HITCH)**
**EAME ONLY**

| ITEM | NUMBER | QTY | DESCRIPTION |
|---|---|---|---|
| - | 186-1620 | -- | BRAKE AR-W/O HITCH |
| 1 | 500970D1 | 1 | AIR COMPRESSOR GP (NOT SERVICED)<br>(SEE BREAKDOWN FOR COMPONENTS) |
| 2 | 190-0435 | 1 | TANK & LINES GP-AIR (NOT SERVICED)<br>(SEE BREAKDOWN FOR COMPONENTS) |
| 3 | 190-0436 | 1 | LINES GP-CONTROL (KIT)<br>(SEE BREAKDOWN FOR COMPONENTS) |
| 4 | 190-0438 | 1 | LINES GP-COUPLER (NOT SERVICED)<br>(SEE BREAKDOWN FOR COMPONENTS) |

NOTIF
PR: t05i29k58b0319

**BRAKE AR-AIR - 192-6400**
**WITH HITCH**
**MT835 & MT845**
**EAME ONLY**

NO ILLUSTRATION

NOTIF

## BRAKE AR-AIR - 192-6400

**WITH HITCH**
**MT835 & MT845**
**EAME ONLY**

| ITEM | NUMBER | QTY | DESCRIPTION |
|---|---|---|---|
| - | 192-6400 | -- | BRAKE AR-AIR (NOT SERVICED) |
| 1 | 180-2937 | 1 | AIR COMPRESSOR GP (NOT SERVICED)<br>(SEE BREAKDOWN FOR COMPONENTS) |
| 2 | 200-4310 | -- | LINES & CONTROL GP (KIT)<br>(SEE BREAKDOWN FOR COMPONENTS) |
| 3 | 190-0438 | 1 | LINES GP-COUPLER (NOT SERVICED)<br>(SEE BREAKDOWN FOR COMPONENTS) |
| 4 | 190-0435 | 1 | TANK & LINES GP-AIR (NOT SERVICED)<br>(SEE BREAKDOWN FOR COMPONENTS) |

NOTIF
PR: t05i29k58b0320

## BRAKE AR - 192-6390
**AIR TRAILER (WITH HITCH)**
**MT855 & MT865**

NO ILLUSTRATION

NOTIF

## BRAKE AR - 192-6390
**AIR TRAILER (WITH HITCH)**
**MT855 & MT865**

| ITEM | NUMBER | QTY | DESCRIPTION |
|---|---|---|---|
| - | 192-6390 | -- | BRAKE AR-AIR TRAILER |
| 1 | 500970D1 | 1 | AIR COMPRESSOR GP (NOT SERVICED)<br>(SEE BREAKDOWN FOR COMPONENTS) |
| 2 | 200-4310 | -- | LINES & CONTROL GP (KIT)<br>(SEE BREAKDOWN FOR COMPONENTS) |
| 3 | 190-0435 | 1 | TANK & LINES GP-AIR (NOT SERVICED)<br>(SEE BREAKDOWN FOR COMPONENTS) |
| 4 | 190-0438 | 1 | LINES GP-COUPLER (NOT SERVICED)<br>(SEE BREAKDOWN FOR COMPONENTS) |

NOTIF
PR: t05i29k58b0321

## KIT-HYD TRAILER BRAKE - 209-3688

**WITHOUT 3 POINT HITCH**
**EAME ONLY**

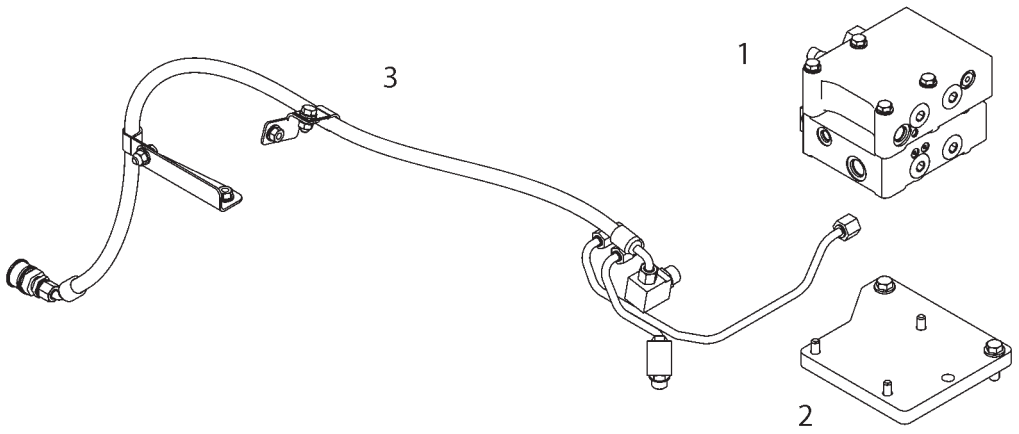


2093688C

## KIT-HYD TRAILER BRAKE - 209-3688
**WITHOUT 3 POINT HITCH**
**EAME ONLY**

| ITEM | NUMBER | QTY | DESCRIPTION |
|---|---|---|---|
| - | 209-3688 | -- | KIT-HYD TRAILER BRAKE |
| | 193-8199 | 1 | VALVE AR (NOT SERVICED)<br>(INCLUDES ITEMS 1-3)<br>(SEE BREAKDOWN FOR COMPONENTS) |

2093688C
PR: t05i29k58b0322

## KIT-HYD BRAKE - 501140D1
**WITHOUT 3 POINT HITCH**
**SPECIAL APPLICATIONS**

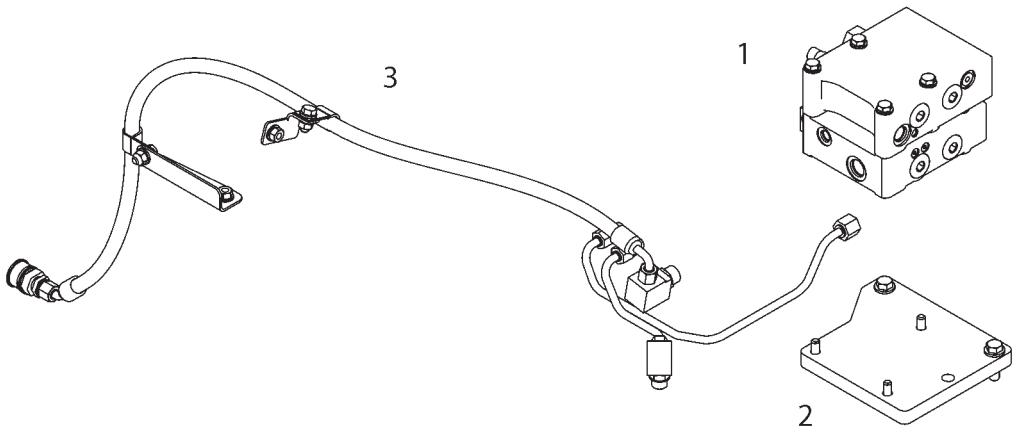


2093688C

## KIT-HYD BRAKE - 501140D1
**WITHOUT 3 POINT HITCH**
**SPECIAL APPLICATIONS**

| ITEM | NUMBER | QTY | DESCRIPTION |
|---|---|---|---|
| - | 501140D1 | -- | KIT-HYD BRAKE (FIELD INSTALLED) |
| 1 | 192-4816 | 1 | VALVE GP-BANK 2<br>(SEE BREAKDOWN FOR COMPONENTS) |
| 2 | 162-9805 | 1 | MOUNTING GP-VALVE (NOT SERVICED)<br>(SEE BREAKDOWN FOR COMPONENTS) |
| 3 | 501130D1 | 1 | LINES GP-HYDRAULIC OIL (NOT SERVICED)<br>(SEE BREAKDOWN FOR COMPONENTS) |

2093688C
PR: t05i29k58b0323

## KIT HYDR TRAILER BRAKE - 209-3689

WITH 3 POINT HITCH
EAME ONLY

NO ILLUSTRATION

NOTIF

## KIT HYDR TRAILER BRAKE - 209-3689

**WITH 3 POINT HITCH**
**EAME ONLY**

| ITEM | NUMBER | QTY | DESCRIPTION |
|---|---|---|---|
| - | 209-3689 | -- | BRAKE AR-TRAILER (SERVICED BY GROUPS) |
| 1 | CH7X-0474 | 4 | BOLT (M10X1.5X220MM) |
| 2 | 400287X1 | 4 | WASHER-HARD (11X21X2.5) |
| 3 | 162-9805 | 1 | MOUNTING GP-VALVE (NOT SERVICED) (SEE BREAKDOWN FOR COMPONENTS) |
| 4 | 193-1558 | 1 | LINES GP-HYDRAULIC (NOT SERVICED) (SEE BREAKDOWN FOR COMPONENTS) |
| 5 | 196-2318 | 1 | VALVE GP-BRAKE CONTROL (SEE BREAKDOWN FOR COMPONENTS) |
| 6 | 209-5021 | 1 | VALVE GP-CONTROL (PRIORITY) (SEE BREAKDOWN FOR COMPONENTS) |
| 7 | CH5P-9186 | 8 | SEAL-O-RING [J] |
| 8 | CH8L-2777 | 7 | SEAL-O-RING [J] |

[J] QUANTITIES SHOWN REFLECT REPLACEMENT SEALS FOR THE VALVE SECTION IMMEDIATELY BELOW THE TOP PLATE AND DUPLICATE SEALS FOR THOSE PRESENT IN THE ADDITIONAL VALVE GP

NOTIF
PR: t05i29k58b0324

## BRAKE GP-PARKING - 210-7510

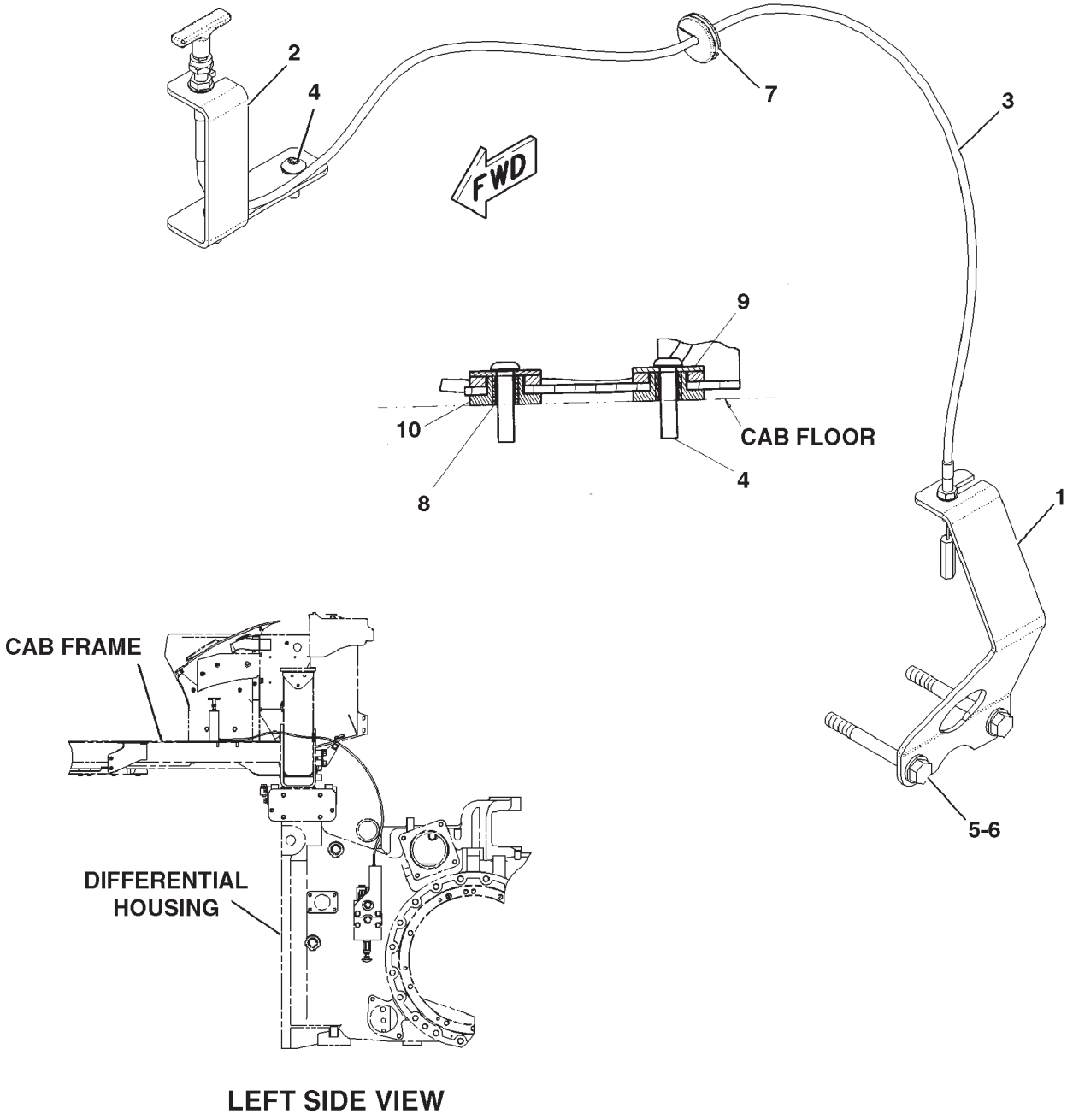


LEFT SIDE VIEW

0893359B

## BRAKE GP-PARKING - 210-7510

| ITEM | NUMBER | QTY | DESCRIPTION |
|---|---|---|---|
| - | 210-7510 | -- | BRAKE GP-PARKING [A] (NOT SERVICED) |
| 1 | 192-6383 | 1 | BRACKET |
| 2 | 210-7483 | 1 | BRACKET |
| 3 | 210-7511 | 1 | CABLE (PARKING BRAKE) |
| 4 | CH142-2304 | 2 | SCREW (M8 X 1.25) |
| 5 | 400287X1 | 2 | WASHER-HARD (11X21X2.5) |
| 6 | 400225X1 | 2 | BOLT (M10X1.5X90MM) |
| 7 | 400114X1 | 1 | GROMMET (30ODX7IDX3LG) |
| 8 | CH226-2711 | 2 | SPACER |
| 9 | CH156-0283 | 2 | WASHER-HARD |
| 10 | CH226-0372 | 2 | MOUNT |

[A] PART OF 179-1952 BASE AR-COMMON

0893359B
PR: t05i29k58b0325

## CONTROL GP-PARKING BRAKE - 172-6857
EAME ONLY

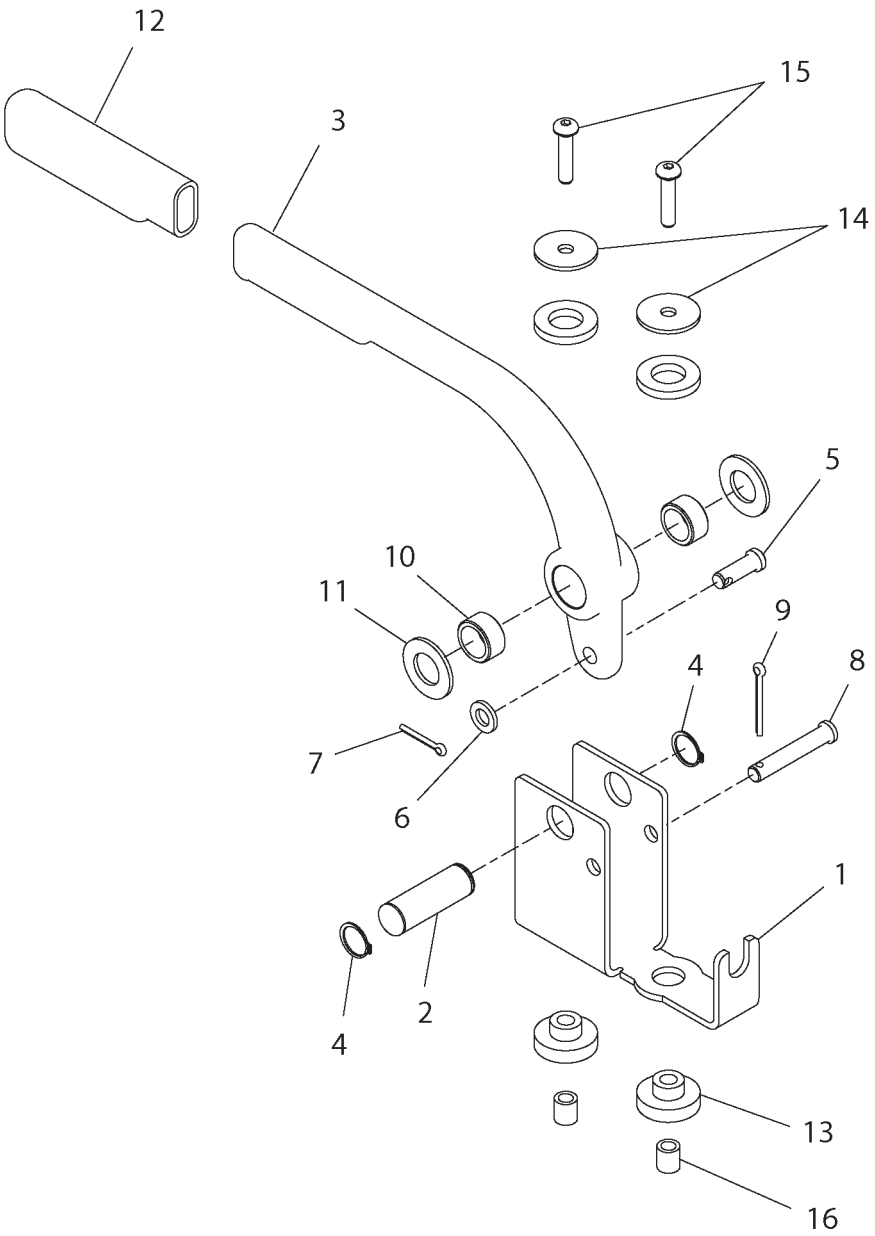


1726857F

## CONTROL GP-PARKING BRAKE - 172-6857

EAME ONLY

| ITEM | NUMBER | QTY | DESCRIPTION |
|---|---|---|---|
| - | 172-6857 | -- | CONTROL GP-PARK BRAKE [A] (NOT SERVICED) |
| 1 | 179-6897 | 1 | BRACKET |
| 2 | CH179-6898 | 1 | PIN |
| 3 | 179-6901 | 1 | HANDLE |
| 4 | CH2J-6356 | 2 | RING-RETAINING |
| 5 | CH9H-6673 | 1 | PIN |
| 6 | CH5M-2894 | 1 | WASHER-HARD (10.2X18.5X2.5MM THK) |
| 7 | CH3B-4617 | 1 | PIN-COTTER |
| 8 | CH6L-3966 | 1 | PIN |
| 9 | CH5J-3079 | 1 | PIN-COTTER |
| 10 | CH4E-1251 | 2 | BEARING-SLEEVE |
| 11 | CH114-5786 | 2 | WASHER-NYLON (19.5X36.2X2.5MM THK) |
| 12 | 179-6899 | 1 | COVER |
| 13 | CH226-0372 | 2 | BUSHING MOUNT (34.9ODX9.5ID |
| 14 | CH156-0283 | 2 | WASHER-HARD (8.4X35X2.5MM THK) |
| 15 | CH142-2304 | 2 | BOLT-BTN HD (M8X1.25X35MM) |
| 16 | CH226-2711 | 2 | SPACER (12.7IDX8.2ODX14) |

[A] PART OF 500841D1; 500842D1 CAB AR

1726857F
PR: t05i29k58b0326

## CONTROL GP-PARKING BRAKE - 192-6360

**SECONDARY**
**EAME ONLY**

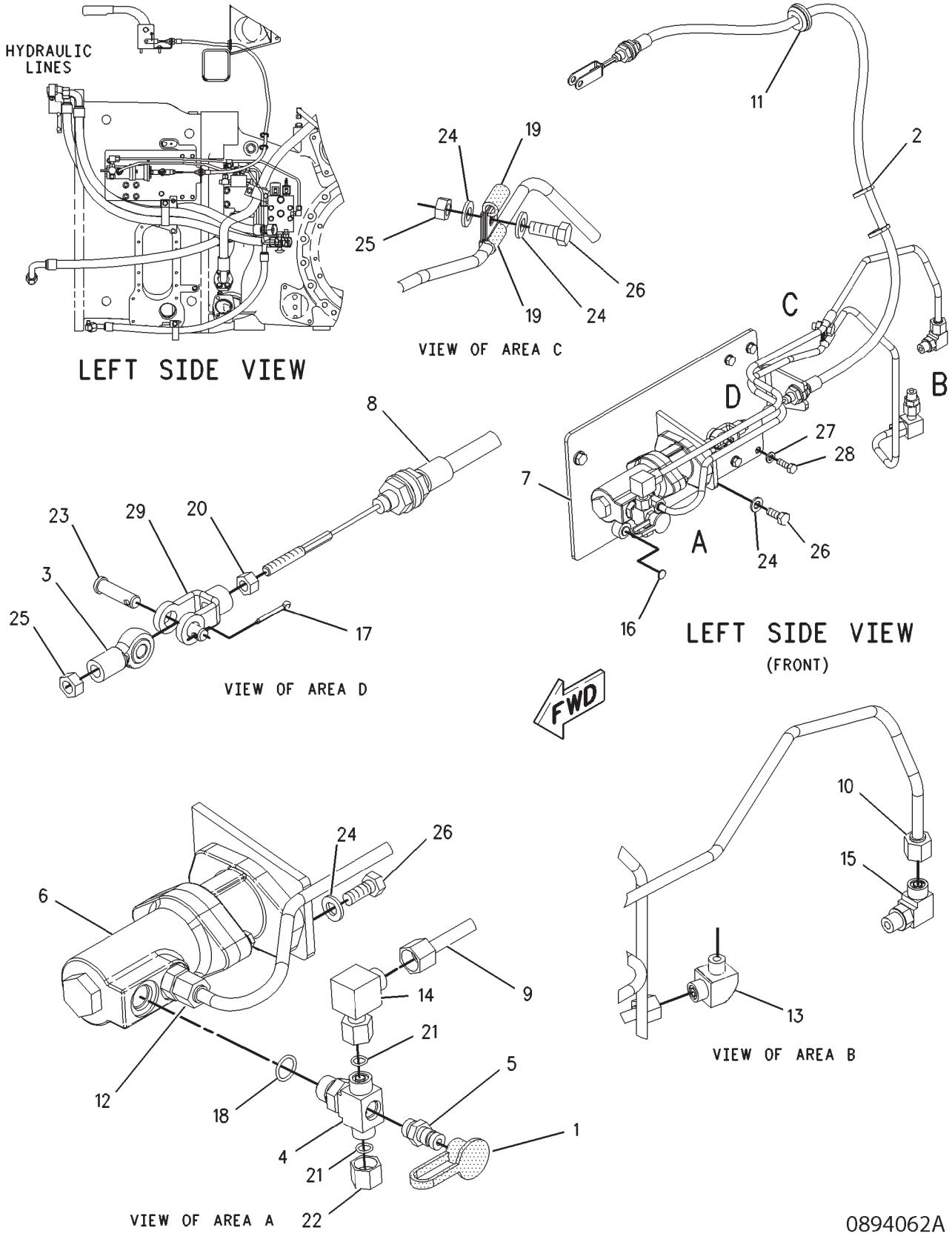

## CONTROL GP-PARKING BRAKE - 192-6360

SECONDARY
EAME ONLY

| ITEM | NUMBER | QTY | DESCRIPTION |
|---|---|---|---|
| - | 192-6360 | -- | CONTROL GP-PARKING BRAKE |
| 1 | 400323X1 | 1 | CAP-DUST |
| 2 | CH7K-1181 | 2 | STRAP-CABLE |
| 3 | CH8T-6431 | 1 | ROD END |
| 4 | CH163-6018 | 1 | TEE |
| 5 | 400324X1 | 1 | FITTING AS |
| | 400318X1 | 1 | SEAL-O-RING (11.89IDX1.98DIA) |
| | 6V-3965 | 1 | FITTING AS |
| 6 | 192-6371 | 1 | VALVE AS-BRAKE [J] |
| 7 | 200-4317 | 1 | BRACKET AS |
| 8 | 200-4323 | 1 | CABLE AS |
| 9 | 200-4392 | 1 | TUBE AS |
| 10 | 200-4372 | 1 | TUBE AS |
| 11 | CH212-4443 | 1 | GROMMET |
| 12 | 400628X1 | 1 | CONNECTOR AS |
| | 3K-0360 | 1 | SEAL-O-RING |
| | 400378X1 | 1 | SEAL-O-RING (12.83ODX1.78DIA) |
| | 6V-8634 | 1 | CONNECTOR |
| 13 | CH148-8374 | 1 | ELBOW AS-90DEG 6ORFS X 8STOR |
| | CH3K-0360 | 1 | SEAL-O-RING (16.36IDX2.21DIA) |
| | 400378X1 | 1 | SEAL-O-RING (12.83ODX1.78DIA) |
| 14 | CH148-8367 | 1 | ELBOW AS-90DEG 6ORFS X 6ORFS SWVL |
| | 400378X1 | 1 | SEAL-O-RING (12.83ODX1.78DIA) |
| 15 | CH148-8378 | 1 | ELBOW AS-90 DEG 4 STOR X6 ORFS |
| | 400318X1 | 1 | SEAL-O-RING (11.89IDX1.98DIA) |
| | 400378X1 | 1 | SEAL-O-RING (12.83ODX1.78DIA) |
| 16 | CH193-5914 | 4 | PLUG |
| 17 | CH3B-4617 | 1 | PIN-COTTER |
| 18 | CH3K-0360 | 1 | SEAL-O-RING |
| 19 | 400620X1 | 2 | CLIP |
| 20 | CH6V-8183 | 1 | NUT-FULL (3/8-24 THD) |
| 21 | 400378X1 | 2 | SEAL-O-RING (12.83ODX1.78DIA) |
| 22 | CH6V-9829 | 1 | CAP AS |
| 23 | CH7X-0795 | 1 | PIN |
| 24 | 400287X1 | 6 | WASHER-HARD (11X21X2.5MM THK) |
| 25 | WR522218 | 2 | NUT (M10X1.5 THD) |
| 26 | 400039X1 | 5 | BOLT (M10X1.5X25MM) |
| 27 | 400339X1 | 4 | WASHER-HARD (8.8X16X2MM THK) |
| 28 | 400341X1 | 4 | BOLT (M8X1.25X25MM) |
| 29 | CH8X-6167 | 1 | ROD END |
| | 200-4341 | 1 | KIT-REPAIR (VALVE AS-BRAKE) [J] |

[A] PART OF 179-2180 BASE COMMON AR
[J] REPAIR KIT(S) MARKED J AVAILABLE
FOR PART(S) MARKED J

0894062A
PR: t05i29k58b0327

## CONTROL GP-PARKING BRAKE - 192-6350

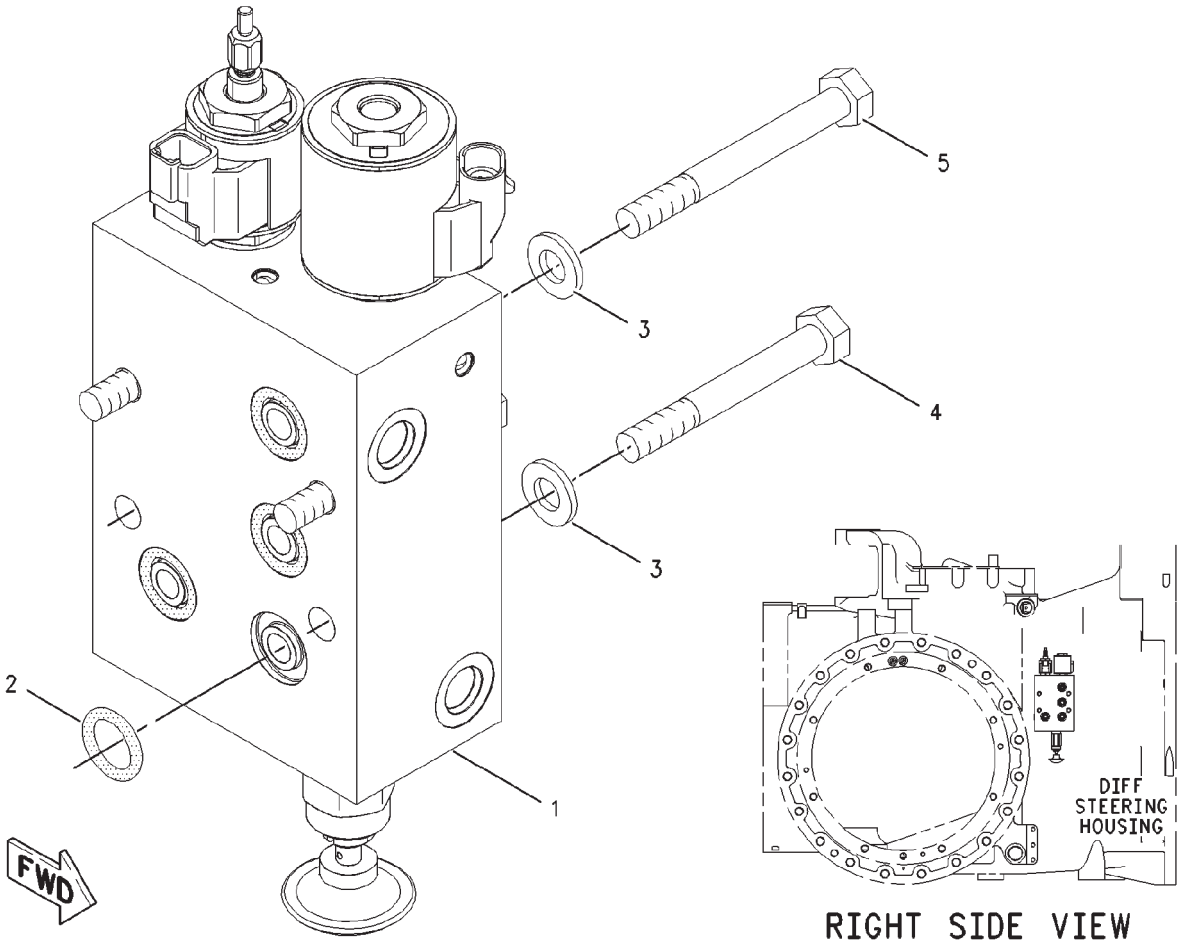


00856740

## CONTROL GP-PARKING BRAKE - 192-6350

| ITEM | NUMBER | QTY | DESCRIPTION |
|---|---|---|---|
| - | 192-6350 | -- | CONTROL GP-PARKING BRAKE [A] (NOT SERVICED) |
| 1 | 200-4351 | 1 | VALVE GP-PARKING BRAKE (SEE BREAKDOWN FOR COMPONENTS) |
| 2 | CH5P-8119 | 4 | SEAL-O-RING |
| 3 | 400287X1 | 4 | WASHER-HARD (11X21X2.5) |
| 4 | 400044X1 | 3 | BOLT (M10X1.50X80MM) |
| 5 | 400225X1 | 1 | BOLT (M10X1.5X90MM) |

[A] PART OF:
179-1952; 179-2180 BASE COMMON AR

00856740
PR: t05i29k58b0328

## CONTROL GP-SERVICE BRAKE - 200-4400

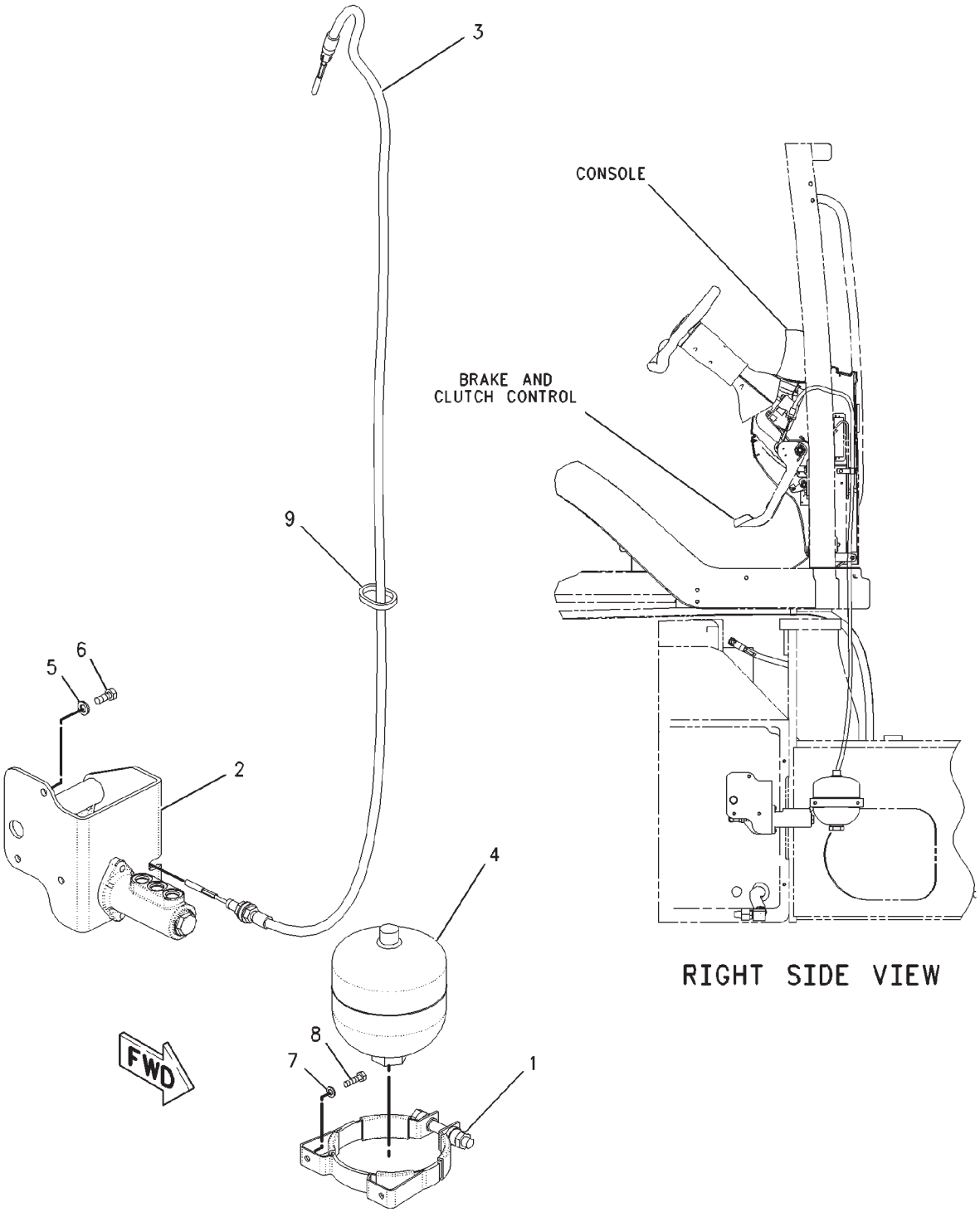


00888809

## CONTROL GP-SERVICE BRAKE - 200-4400

| ITEM | NUMBER | QTY | DESCRIPTION |
|---|---|---|---|
| - | 200-4400 | -- | CONTROL GP-SERVICE BRAKE [A] (NOT SERVICED) |
| 1 | CH180-1120 | 1 | CLAMP |
| 2 | 184-5338 | 1 | CYLINDER GP-MASTER (SEE BREAKDOWN FOR COMPONENTS) |
| 3 | 500447D1 | 1 | CABLE (SERVICE BRAKE) |
| 4 | 200-4335 | 1 | ACCUMULATOR ASM-BRAKE |
| | 502105D1 | 1 | TAG-CYLINDER |
| | 208-7843 | 1 | FILM-ACCUMULATOR |
| 5 | 400287X1 | 3 | WASHER-HARD (11X21X2.5) |
| 6 | 400039X1 | 3 | BOLT (M10X1.5X25MM) |
| 7 | 400339X1 | 2 | WASHER-HARD (8.8X16X2) |
| 8 | 400245X1 | 2 | BOLT (M8X1.25X30MM) |
| 9 | CH7K-1181 | 1 | STRAP-CABLE |

[A] PART OF:
179-1952; 179-2180 BASE AR-COMMON

00888809
PR: t05i29k58b0329

## LINES GP-SERV BRAKE (B) - 185-8787

EAME ONLY

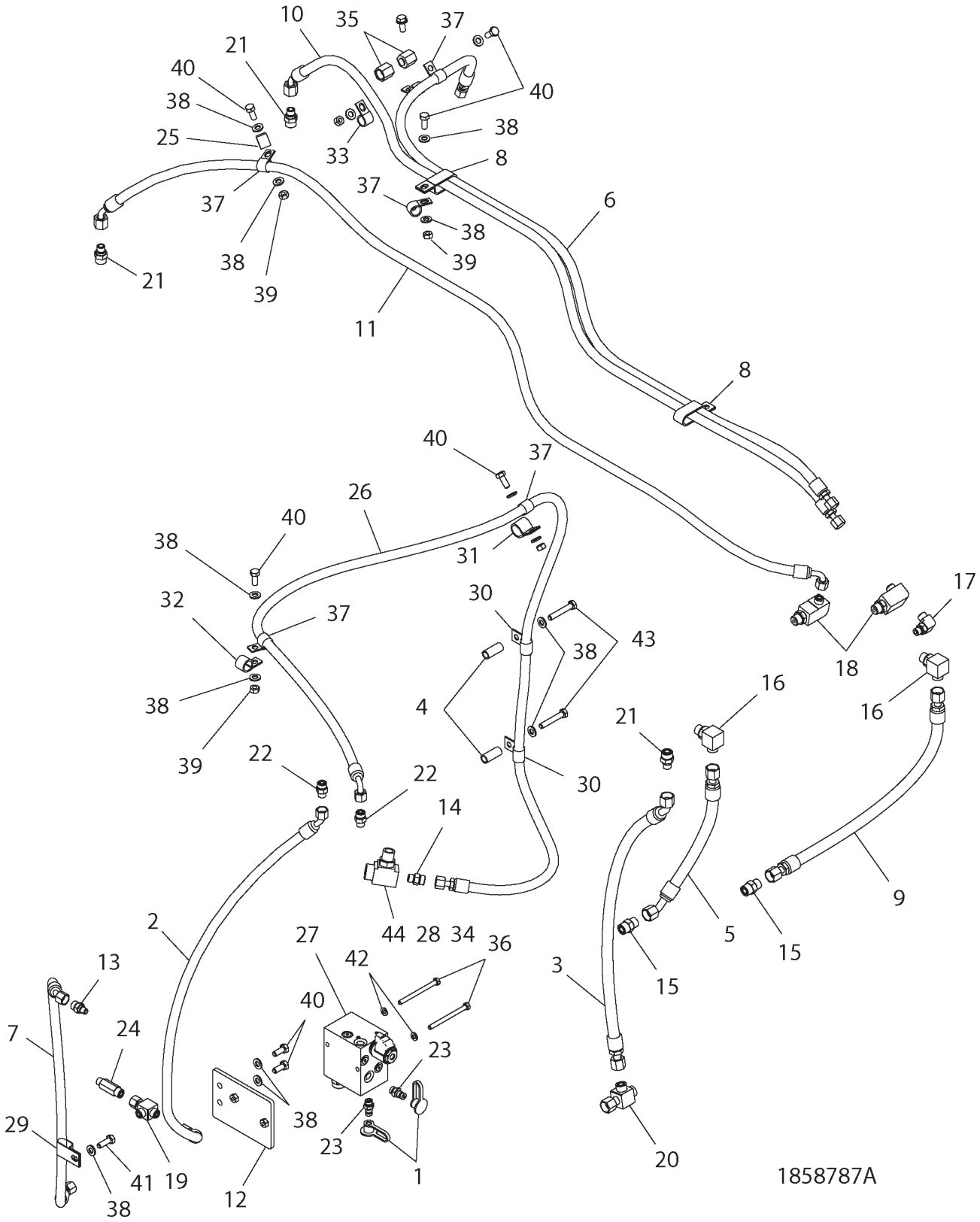

## LINES GP-SERV BRAKE (B) - 185-8787

EAME ONLY

| ITEM | NUMBER | QTY | DESCRIPTION |
|---|---|---|---|
| - | 185-8787 | -- | LINES GP-SERV BRAKE (B) [A] (NOT SERVICED) |
| 1 | 400323X1 | 2 | CAP-DUST 12.6 DIA -RUBBER |
| 2 | CH192-6389 | 1 | HOSE AS.-9.5 ID SAE 100R1 |
| 3 | CH197-5910 | 1 | HOSE AS.-12.7 ID SAE 100R1 |
| 4 | CH209-3395 | 2 | SPACER-17.14ODX12.52IDX40 ZN |
| 5 | CH212-0297 | 1 | HOSE AS.-12.7 ID SAE 100R1 |
| 6 | CH212-0302 | 2 | HOSE AS.-9.5 ID SAE 100R1 |
| 7 | CH212-0310 | 1 | HOSE AS.-9.5 ID SAE 100R1 |
| 8 | 400625X1 | 2 | CLIP-19.05 ID DBL,M10 OR 3/8 |
| 9 | CH218-3575 | 1 | HOSE AS.-12.7 ID SAE 100R1 |
| 10 | CH221-0050 | 1 | HOSE AS.-9.5 ID SAE 100R1 |
| 11 | CH221-0051 | 1 | HOSE AS.-9.5 ID SAE 100R1 |
| 12 | 221-0331 | 1 | BRACKET AS |
| 13 | CH148-8326 | 1 | CONNECTOR AS-6 ORFS X 4 STOR |
| 14 | 400367X1 | 1 | CONNECTOR AS-6 STOR -6 ORFS |
| 15 | CH148-8340 | 2 | CONNECTOR AS. ELEC |
| | CH3K-0360 | 1 | SEAL-O-RING (16.36IDX2.21DIA) |
| | CH6V-8398 | 1 | SEAL-O-RING (16.03ODX1.78DIA) |
| 16 | CH148-8364 | 2 | ELBOW AS-90DEG (8STOR-8ORFS) |
| | CH3K-0360 | 1 | SEAL-O-RING (16.36IDX2.21DIA) |
| | CH6V-8398 | 1 | SEAL-O-RING (16.03ODX1.78DIA) |
| 17 | CH148-8378 | 1 | ELBOW AS-90 DEG 4 STOR X6 ORFS |
| | 400318X1 | 1 | SEAL-O-RING (11.89IDX1.98DIA) |
| | 400378X1 | 1 | SEAL-O-RING (12.83ODX1.78DIA) |
| 18 | CH148-8383 | 2 | ELBOW AS-90DEG 8STOR X 6ORFS |
| | CH3K-0360 | 1 | SEAL-O-RING (16.36IDX2.21DIA) |
| | 400378X1 | 1 | SEAL-O-RING (12.83ODX1.78DIA) |
| 19 | CH148-8433 | 1 | TEE AS-6 ORFS X 3 |
| | 400378X1 | 2 | SEAL-O-RING (12.83ODX1.78DIA) |
| 20 | CH148-8444 | 1 | TEE-SWIVEL 3X -8 ORFS |
| | CH6V-8398 | 2 | SEAL-O-RING (16.03IDX1.78DIA) |
| 21 | 400428X1 | 3 | CONNECTOR AS-STR-6STOR-8ORFS |
| 22 | 400638X1 | 2 | CONNECTOR AS-STR-6STOR-6ORFS |
| 23 | 400324X1 | 2 | NIPPLE AS-QUICK DISC-4&ORING |
| 24 | CH164-9869 | 1 | CONNECTOR AS-6STOR X 6ORFS |
| 25 | CH1S-0994 | 1 | CLIP-LOOP 20.64 ID |
| 26 | 228-7494 | 1 | HOSE AS. |
| 27 | 232-0838 | 1 | VALVE AS. |
| 28 | 400319X1 | 1 | SEAL-O-RING 19.18 IDX2.46 DIA |
| 29 | CH4D-7733 | 1 | CLIP-LOOP 17.46ID |
| 30 | CH4D-7735 | 2 | CLIP-LOOP 18.29ID |
| 31 | CH4S-1962 | 1 | CLIP-LOOP 25.4 ID |
| 32 | CH6D-4244 | 1 | CLIP-LOOP 22.22 ID W/COAT |
| 33 | CH6D-4246 | 4 | CLIP-LOOP 19.05ID |
| 34 | 400366X1 | 1 | SEAL-O-RING 22.5 ODX1.78 DIA |
| 35 | 400645X1 | 2 | CAP AS-12.7 OD-8 ORFS |
| 36 | 400028X1 | 2 | BOLT-M8X1.25X100 ZNDI HHD 10.9 |
| 37 | CH8M-2773 | 5 | CLIP-LOOP 47.6 ID |
| 38 | 400287X1 | 16 | WASHER-HARD 11IDX21ODX2.5 ZND1 |
| 39 | WR522218 | 5 | NUT-M10-1.5,CL10.9,ZN,H,REG |
| 40 | 400039X1 | 8 | BOLT-M10X1.5X25 ZNDI HHD 10.9 |
| 41 | 400058X1 | 1 | BOLT-M10X1.5X30 ZNDI HHD 10.9 |
| 42 | 400339X1 | 2 | WASHER-HARD |
| 43 | 400239X1 | 2 | BOLT-M10X1.5X60 ZNDI HHD 10.9 |
| 44 | CH9X-2541 | 1 | TEE-6STOR X 10STOR X 12ORFS |

[A] PART OF 179-2180 BASE COMMON AR

1858787A
PR: t05i29k58b0330

## CYLINDER GP-MASTER - 184-5338
SERVICE BRAKE

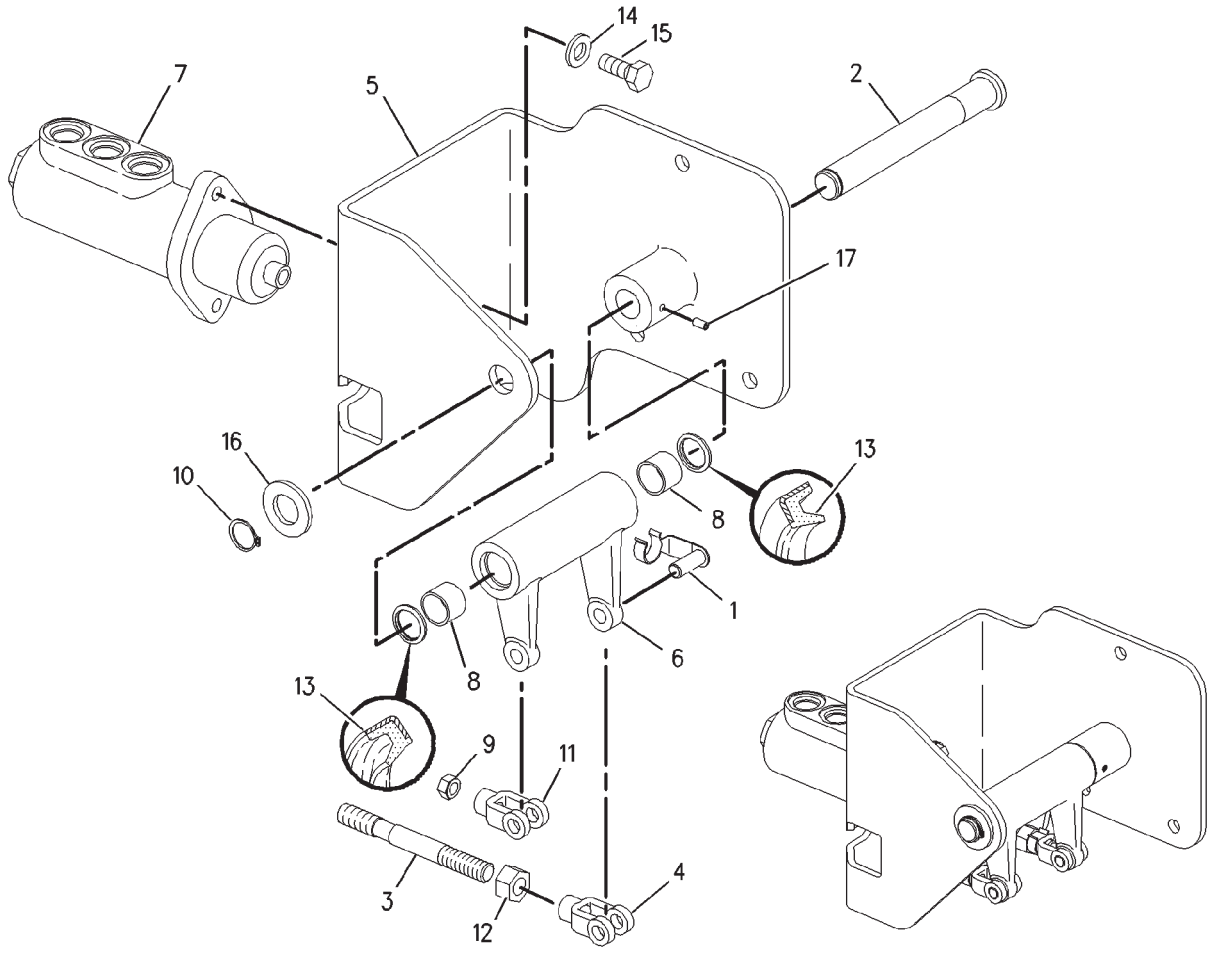


00886571

## CYLINDER GP-MASTER - 184-5338
SERVICE BRAKE

| ITEM | NUMBER | QTY | DESCRIPTION |
|---|---|---|---|
| - | 184-5338 | -- | CYLINDER GP-MASTER [A] |
| 1 | CH8T-8932 | 2 | PIN-SPRING |
| 2 | CH184-5339 | 1 | ROD |
| 3 | 184-5352 | 1 | STEM |
| 4 | 400117X1 | 1 | ROD END |
| 5 | 200-4316 | 1 | BRACKET ASM |
| | CH8T-3490 | 1 | NUT |
| 6 | 200-4322 | 1 | LEVER |
| 7 | 200-4343 | 1 | VALVE (BRAKE) |
| 8 | CH200-4384 | 2 | BEARING |
| 9 | CH1B-4202 | 1 | NUT (5/16-24) |
| 10 | CH2J-6356 | 1 | RING-RETAINING |
| 11 | CH4J-2701 | 1 | ROD END |
| 12 | CH7X-3374 | 1 | NUT-FULL (1/2-20) |
| 13 | CH8F-7702 | 2 | SEAL-LIP |
| 14 | 400287X1 | 2 | WASHER-HARD (11X21X2.5) |
| 15 | 400039X1 | 2 | BOLT (M10X1.5X25MM) |
| 16 | CH8T-4994 | 1 | WASHER-HARD (20X36.5X3.5) |
| 17 | CH8T-9102 | 1 | SETSCREW-SOCKET (M5X0.8X10MM) |

[A] PART OF 200-4400 CONTROL GP-SRVC BRAKE

00886571
PR: t05i29k58b0331

## LINES GP-BRAKE - 163-0386

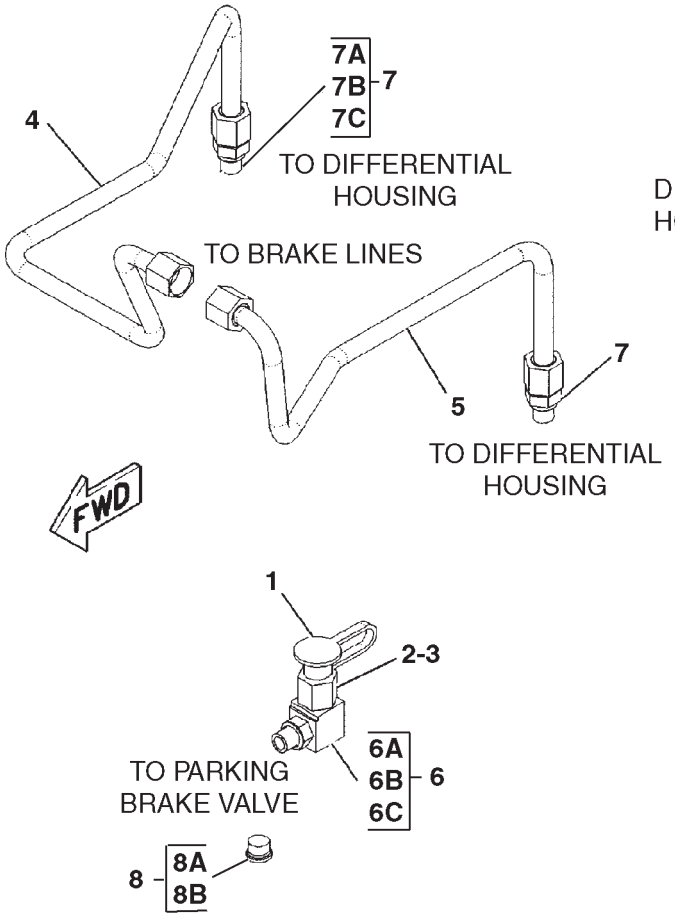


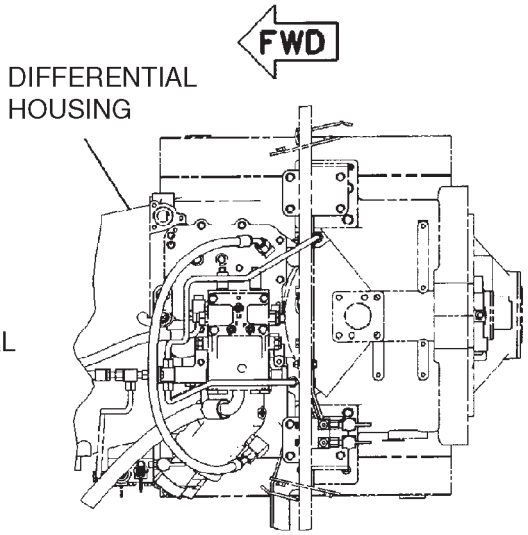


TOP VIEW

0823177A

## LINES GP-BRAKE - 163-0386

| ITEM | NUMBER | QTY | DESCRIPTION |
|---|---|---|---|
| - | 163-0386 | -- | LINES GP-BRAKE [A] (NOT SERVICED) |
| 1 | 400323X1 | 1 | CAP-DUST |
| 2 | CH8C-6416 | 1 | FITTING (INCLUDES NUT) |
| | CH6V-8554 | 1 | NUT |
| 3 | 400607X1 | 1 | NUT (13/16-16) |
| 4 | 208-9814 | 1 | TUBE ASM(INCLUDES NUT, SLEEVE, TUBE) |
| 5 | 208-9815 | 1 | TUBE ASM |
| 6 | 400417X1 | 1 | ELBOW AS (90DEG-6STOR-8ORFS) |
| 6A | 400318X1 | 1 | SEAL-O-RING (11.89IDX1.98DIA) |
| 6B | CH6V-8398 | 1 | SEAL-O-RING (16.03ODX1.78DIA) |
| 7 | 400428X1 | 2 | CONNECTOR AS-STR (6STOR-8ORFS) |
| 7A | 400318X1 | 1 | SEAL-O-RING (11.89IDX1.98DIA) |
| 7B | CH6V-8398 | 1 | SEAL-O-RING (16.03ODX1.78DIA) |
| 7C | ----- | 1 | CONNECTOR-SEAL (ORDER ITEM 7) |
| 8 | CH162-0177 | 1 | PLUG AS-HSHD (9/16-18) |
| 8A | CH3K-0360 | 1 | SEAL-O-RING |
| 8B | ----- | 1 | PLUG (ORDER ITEM 8) |

[A] PART OF 179-1952 BASE AR-COMMON

0823177A
PR: t05i29k58b0332

## LINES GP-BRAKE - 193-1547
COMMON

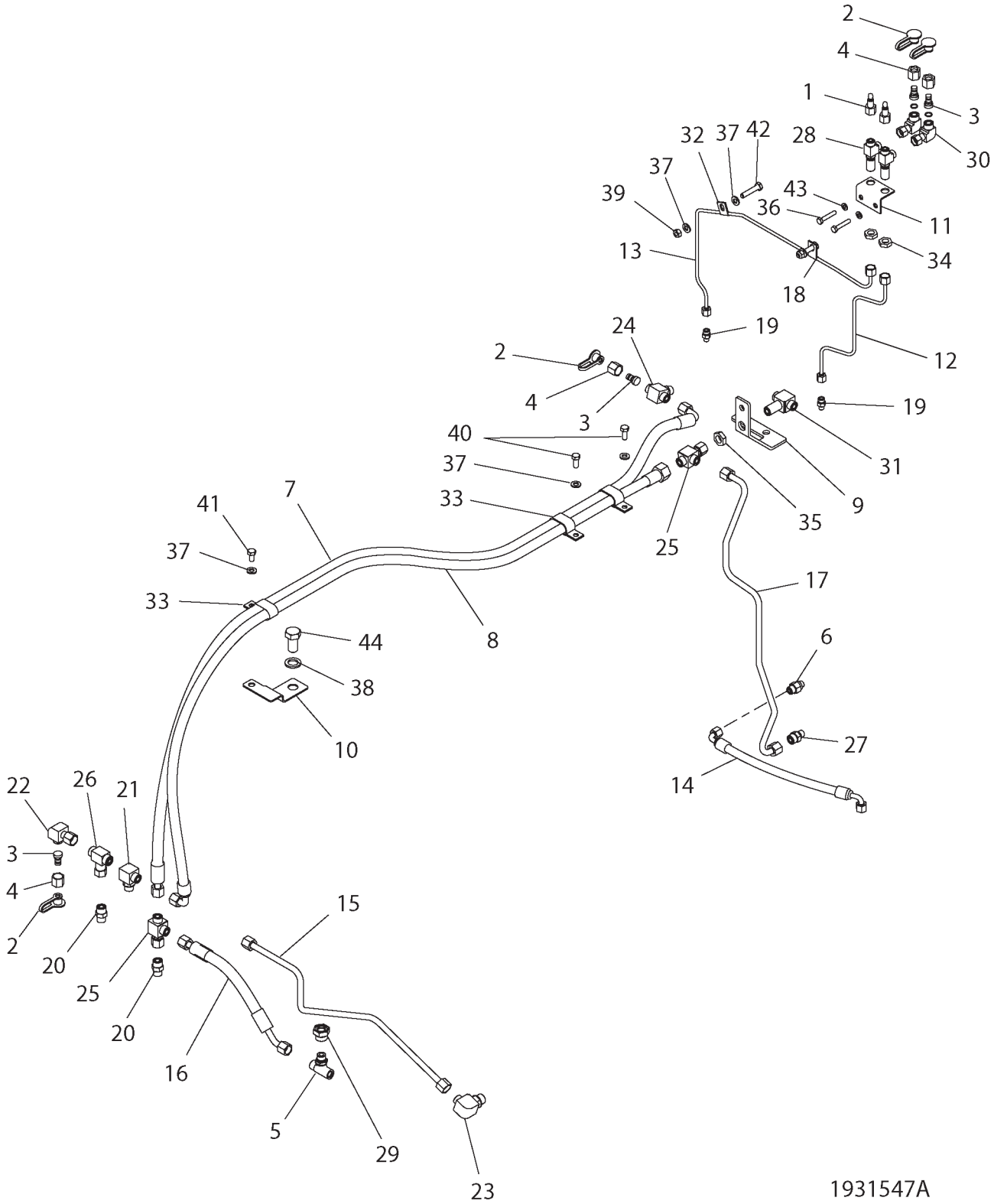

## LINES GP-BRAKE - 193-1547
COMMON

| ITEM | NUMBER | QTY | DESCRIPTION |
|---|---|---|---|
| - | 193-1547 | -- | LINES GP-BRAKE (COMMON) [A] |
| 1 | 500494D1 | 2 | VALVE GP-PURGE (BLEEDER) |
| 2 | 400323X1 | 4 | CAP-DUST |
| 3 | CH8C-6416 | 4 | NIPPLE AS |
| | CH6V-8554 | 1 | NUT |
| 4 | 400607X1 | 4 | NUT (13/16-16) |
| 5 | CH172-5761 | 1 | TEE AS (6STORX8STORX8ORFS) |
| | CH3K-0360 | 1 | SEAL-O-RING (16.36IDX2.21DIA) |
| | CH6V-8398 | 1 | SEAL-O-RING (16.03ODX1.78DIA) |
| 6 | CH172-9287 | 1 | CONNECTOR AS (6 STOR -6 ORFS) |
| | 400318X1 | 1 | SEAL-O-RING (11.89IDX1.98DIA) |
| | 400378X1 | 1 | SEAL-O-RING (12.83ODX1.78DIA) |
| 7 | CH208-9829 | 1 | HOSE ASM |
| 8 | CH208-9830 | 1 | HOSE ASM |
| 9 | 208-9838 | 1 | BRACKET ASM |
| 10 | 208-9839 | 1 | BRACKET ASM |
| 11 | 210-5610 | 1 | BRACKET ASM |
| 12 | 210-5648 | 1 | TUBE ASM |
| 13 | 210-5649 | 1 | TUBE ASM |
| 14 | CH212-3585 | 1 | HOSE ASM |
| 15 | 219-9652 | 1 | TUBE ASM |
| 16 | CH219-9653 | 1 | HOSE ASM |
| 17 | 220-3664 | 1 | TUBE ASM |
| 18 | CH0L-2072 | 2 | CLIP |
| 19 | 400368X1 | 2 | CONNECTOR AS (4STOR -4ORFS) |
| | 400361X1 | 1 | SEAL-O-RING (8.92ID X 1.83DIA) |
| | 400377X1 | 1 | SEAL-O-RING (11.23OD X 1.78DIA) |
| 20 | CH148-8340 | 2 | CONNECTOR AS (8ORFS 8STOR) |
| | CH3K-0360 | 1 | SEAL-O-RING (16.36IDX2.21DIA) |
| | CH6V-8398 | 1 | SEAL-O-RING (16.03ODX1.78DIA) |
| 21 | CH148-8364 | 1 | ELBOW AS-90DEG (8STOR-8ORFS) |
| | CH3K-0360 | 1 | SEAL-O-RING (16.36IDX2.21DIA) |
| | CH6V-8398 | 1 | SEAL-O-RING (16.03ODX1.78DIA) |
| 22 | CH148-8370 | 1 | ELBOW AS-90DEG (8 ORFS SWVL) |
| | CH6V-8398 | 1 | SEAL-O-RING (16.03ODX1.78DIA) |
| 23 | CH148-8372 | 1 | ELBOW AS (10STOR 8ORFS) |
| | 400319X1 | 1 | SEAL-O-RING (19.18IDX2.46DIA) |
| | CH6V-8398 | 1 | SEAL-O-RING (16.03ODX1.78DIA) |
| 24 | CH148-8436 | 1 | TEE ASM (6 ORFS) |
| | CH3K-0360 | 1 | SEAL-O-RING (16.36IDX2.21DIA) |
| | CH6V-8398 | 2 | SEAL-O-RING (16.03ODX1.78DIA) |
| 25 | CH148-8444 | 3 | TEE-SWIVEL 3X -8 ORFS |
| | CH6V-8398 | 2 | SEAL-O-RING (16.03IDX1.78DIA) |

CONTINUED

[A] PART OF:
179-1952; 179-2180 BASE COMMON AR

## LINES GP-BRAKE - 193-1547
COMMON

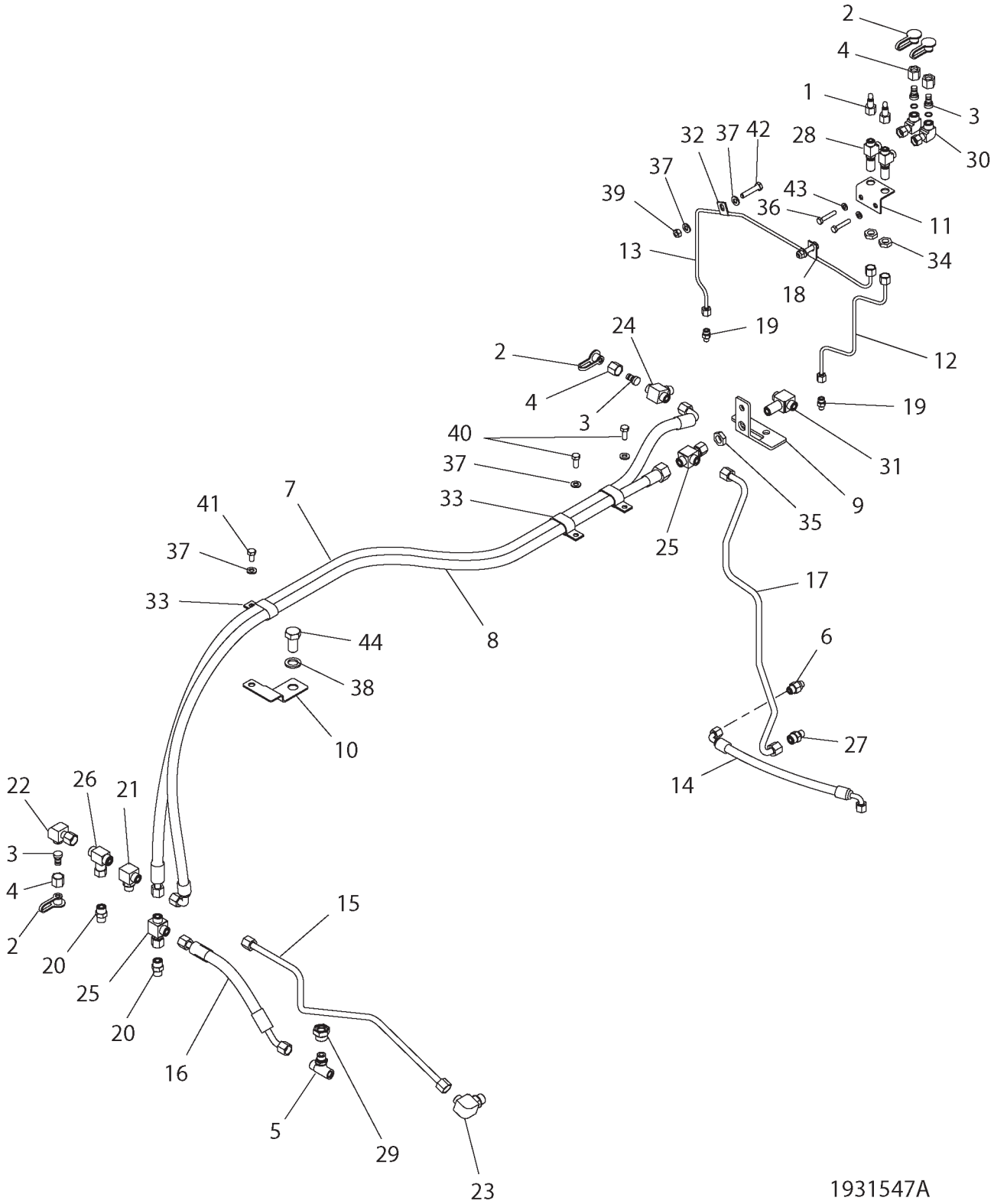

## LINES GP-BRAKE - 193-1547
COMMON

| ITEM | NUMBER | QTY | DESCRIPTION |
|---|---|---|---|
| - | 193-1547 | -- | LINES GP-BRAKE (COMMON) [A] (NOT SERVICED) |
| 26 | 400614X1 | 1 | TEE AS (8 ORFS) |
| | CH6V-8398 | 2 | SEAL-O-RING (16.03ODX1.78DIA) |
| 27 | 400428X1 | 1 | CONNECTOR AS -6STOR-8ORFS |
| | 400318X1 | 1 | SEAL-O-RING (11.89IDX1.98DIA) |
| | CH6V-8398 | 1 | SEAL-O-RING (16.03ODX1.78DIA) |
| 28 | 400618X1 | 2 | TEE AS-BLKHD (6 ORFS) |
| | 400378X1 | 3 | SEAL-O-RING (12.83ODX1.78DIA) |
| 29 | 400636X1 | 1 | ADAPTER AS (STR-12 STOR-8 PORT) |
| | 400416X1 | 1 | SEAL-O-RING (23.47IDX2.95DIA) |
| 30 | 400825X1 | 2 | ELBOW AS-90DEG (8ORFS) |
| | CH6V-8398 | 2 | SEAL-O-RING (16.03ODX1.78DIA) |
| 31 | CH169-4273 | 1 | TEE AS-BLKHD UNION (8ORFS) |
| | CH6V-8398 | 3 | SEAL-O-RING (16.03ODX1.78DIA) |
| 32 | CH2B-2404 | 1 | CLIP |
| 33 | CH6D-1641 | 3 | CLIP |
| 34 | 400347X1 | 2 | NUT-BULKHEAD (11/16-16) |
| 35 | 400348X1 | 1 | NUT-BULKHEAD (13/16-16) |
| 36 | 400024X1 | 2 | BOLT (M8X1.25X45MM) |
| 37 | 400287X1 | 7 | WASHER-HARD (11X21X2.5) |
| 38 | 400080X1 | 1 | WASHER-PLATED (22X35X3.5) |
| 39 | WR522218 | 2 | NUT (M10X1.5) |
| 40 | 400039X1 | 2 | BOLT (M10X1.5X25MM) |
| 41 | 400040X1 | 1 | BOLT (M10X1.5X20MM) |
| 42 | 400226X1 | 2 | BOLT (M10X1.5X50MM) |
| 43 | 400339X1 | 2 | WASHER-HARD (8.8X16X2) |
| 44 | 400234X1 | 1 | BOLT (M20X2.5X40MM) |
| 45 | 500950D1 | 2 | NUT-TUBE (NOT SHOWN) |

[A] PART OF:
179-1952; 179-2180 BASE COMMON AR

1931547A
PR: t05i29k58b0333

## LINES & CONTROL GP (KIT) - 190-0436

**AIR TRAILER BRAKE (WITHOUT HITCH)**
**(EAME ONLY)**

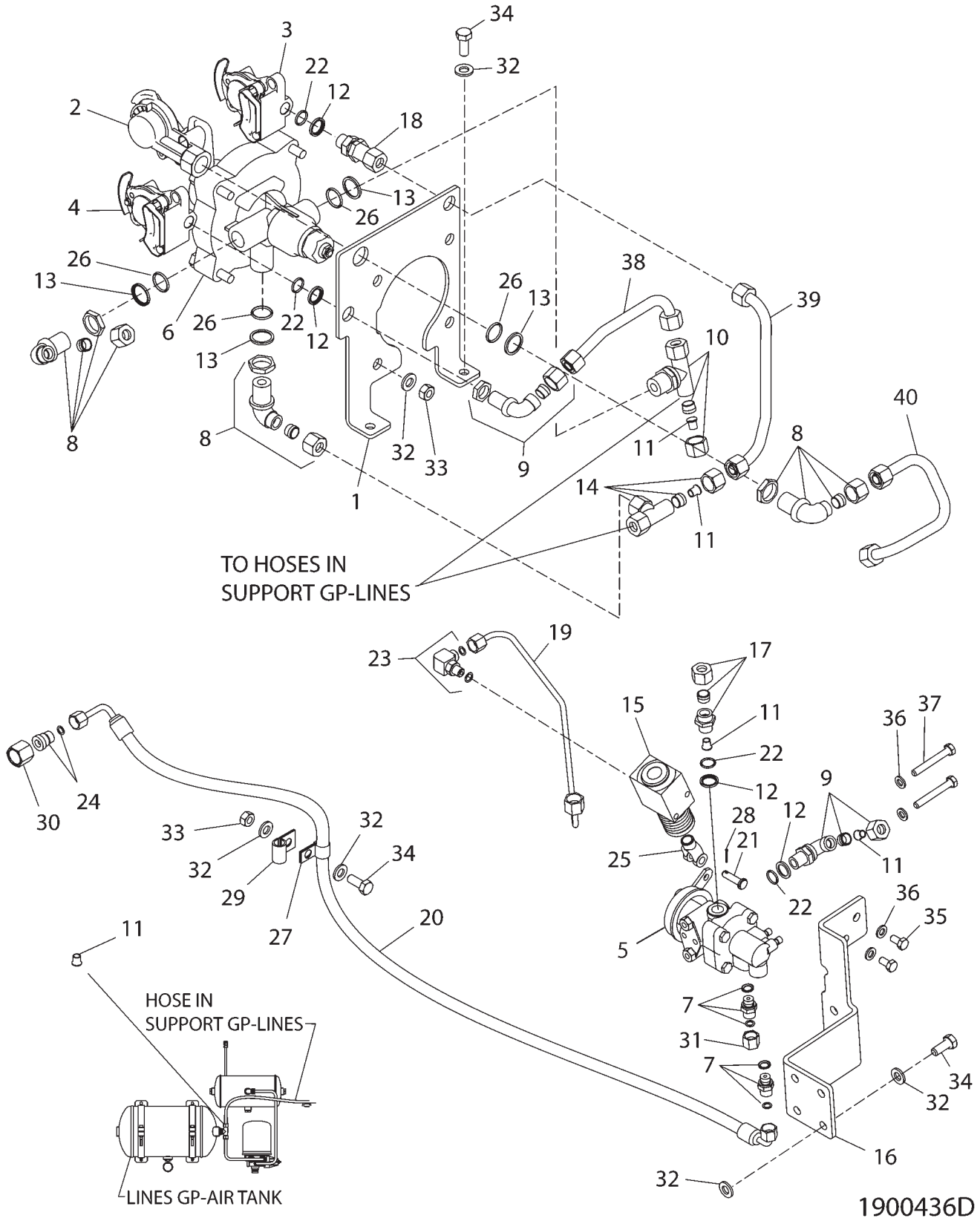

## LINES & CONTROL GP (KIT) - 190-0436
**AIR TRAILER BRAKE (WITHOUT HITCH)**
**(EAME ONLY)**

| ITEM | NUMBER | QTY | DESCRIPTION |
|---|---|---|---|
| - | 190-0436 | -- | LINES & CONTROL GP |
| 1 | 162-9766 | 1 | BRACKET |
| 2 | CH171-1105 | 1 | CONNECTOR AS (QUICK) |
| 3 | CH171-1106 | 1 | CONNECTOR AS (QUICK) |
| 4 | CH171-1107 | 1 | CONNECTOR AS (QUICK) |
| 5 | 180-1667 | 1 | VALVE-CONTROL |
| 6 | 180-2519 | 1 | VALVE-CONTROL |
| 7 | CH183-4236 | 2 | ADAPTER GP |
| | 400377X1 | 1 | SEAL-O-RING (11.23OD X 1.78DIA) |
| | CH8C-5200 | 1 | SEAL |
| 8 | CH185-9753 | 3 | ELBOW AS-90DEG (M16XM18) |
| 9 | CH185-9759 | 2 | ELBOW AS-90DEG (M16XM18) |
| | CH187-6297 | 1 | FERRULE |
| | 400352X1 | 1 | NUT-TUBE (M18X1.5) |
| | 187-9012 | 1 | LOCKNUT |
| 10 | CH185-9762 | 1 | TEE AS (M18XM22XM18) |
| | CH187-6297 | 2 | FERRULE |
| | 400352X1 | 2 | NUT-TUBE (M18X1.5) |
| | CH187-6486 | 1 | LOCKNUT |
| 11 | CH185-9768 | 5 | INSERT |
| 12 | CH185-9772 | 4 | RING-BACKUP |
| 13 | CH185-9773 | 4 | RING-BACKUP |
| 14 | CH190-0430 | 1 | TEE AS (M18X3) |
| | CH3E-4297 | 1 | SEAL-O-RING (10IDX1.5DIA) |
| | CH187-6297 | 2 | FERRULE (12OD TUBE) |
| | 400352X1 | 2 | NUT-TUBE (M18X1.5) |
| 15 | 192-6366 | 1 | ACTUATOR AS |
| 16 | 192-6392 | 1 | BRACKET AS |
| 17 | CH200-4349 | 1 | ADAPTER (M18XM16) |
| | CH187-6297 | 1 | FERRULE (12OD TUBE) |
| | 400352X1 | 1 | NUT-TUBE (M18X1.5) |
| 18 | CH200-4359 | 1 | COUPLING |
| 19 | 200-4374 | 1 | TUBE AS |
| 20 | CH200-4379 | 1 | HOSE AS |
| 21 | CH095-1316 | 1 | PIN-CLEVIS |
| 22 | CH122-9250 | 4 | SEAL-O-RING |
| 23 | 400650X1 | 1 | ELBOW AS-90DEG-4STORX4ORFS |
| | 400361X1 | 1 | SEAL-O-RING (8.92ID X 1.83DIA) |
| | 400377X1 | 1 | SEAL-O-RING (11.23OD X 1.78DIA) |
| | ----- | 1 | ELBOW (ORDER ITEM 23) |

[A] PART OF:
185-8860 BRAKE AR-AIR
186-1620 BRAKE AR-AIR

CONTINUED

## LINES & CONTROL GP - 190-0436
**AIR TRAILER BRAKE (WITHOUT HITCH)**
**(EAME ONLY)**

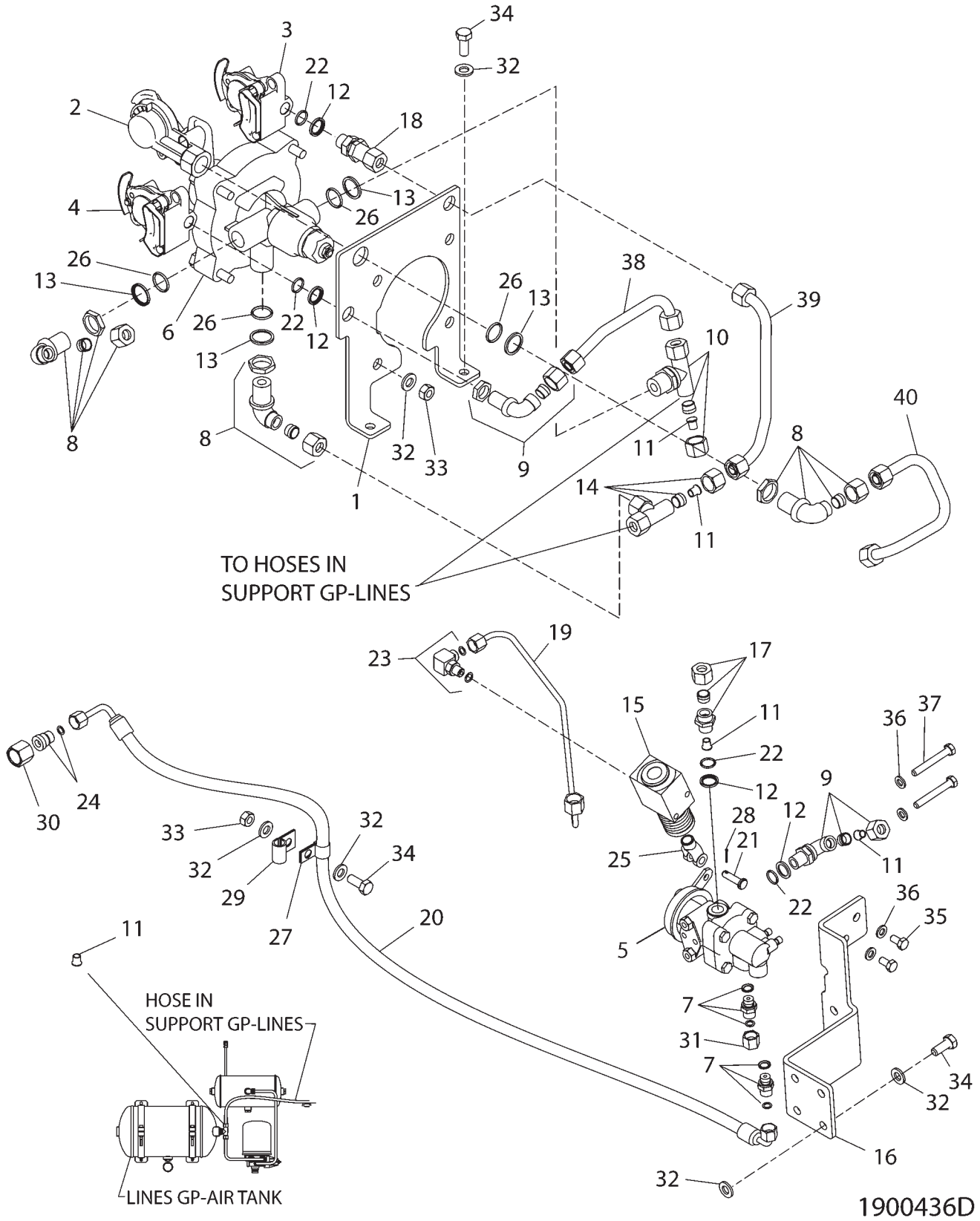

## LINES & CONTROL GP - 190-0436
**AIR TRAILER BRAKE (WITHOUT HITCH)**
**(EAME ONLY)**

| ITEM | NUMBER | QTY | DESCRIPTION |
|---|---|---|---|
| - | 190-0436 | -- | LINES GP-CONTRL (SERVICED BY COMPONENTS) |
| 24 | CH148-8419 | 1 | REDUCER AS (40RFSX80RFS) |
| | 400377X1 | 1 | SEAL-O-RING (11.23OD X 1.78DIA) |
| | CH6V-8935 | 1 | REDUCER-O-RING |
| 25 | 400117X1 | 1 | END-YOKE ROD |
| 26 | CH3E-6762 | 4 | SEAL-O-RING (20.3IDX2.4DIA) |
| 27 | CH4K-8864 | 1 | CLIP-LOOP (14.29ID) |
| 28 | CH5B-9192 | 1 | PIN-COTTER (1.59DIAX15.88 BRS) |
| 29 | 400621X1 | 1 | CLIP (12.7IDX3/8) |
| 30 | 6V-8554 | 1 | NUT (12.7 ORFS) |
| 31 | CH6V-9828 | 1 | CAP AS |
| 31 | 105-5211 | 1 | PLUG (OLDER MODELS) (INCLS SEAL) |
| | 6V-9028 | 1 | SEAL-O-RING |
| 32 | 400287X1 | 12 | WASHER-HARD (11X21X2.5) |
| 33 | WR522218 | 5 | NUT (M10X1.5) |
| 34 | 400039X1 | 7 | BOLT (M10X1.5X25MM) |
| 35 | 400227X1 | 2 | BOLT (M8X1.25X16MM) |
| 36 | 400339X1 | 4 | WASHER-HARD (8.8X16X2) |
| 37 | 400242X1 | 2 | BOLT (M8X1.25X60MM) |
| 38 | 183-4241 | 1 | TUBE AS |
| 39 | 187-9020 | 1 | TUBE AS |
| 40 | 190-0429 | 1 | TUBE AS |

[A] PART OF:
185-8860 BRAKE AR-AIR
186-1620 BRAKE AR-AIR

1900436D
PR: t05i29k58b0334

## LINES GP-CONTROL (KIT) - 200-4310

AIR TRAILER BRAKE (WITH HITCH)
EAME ONLY

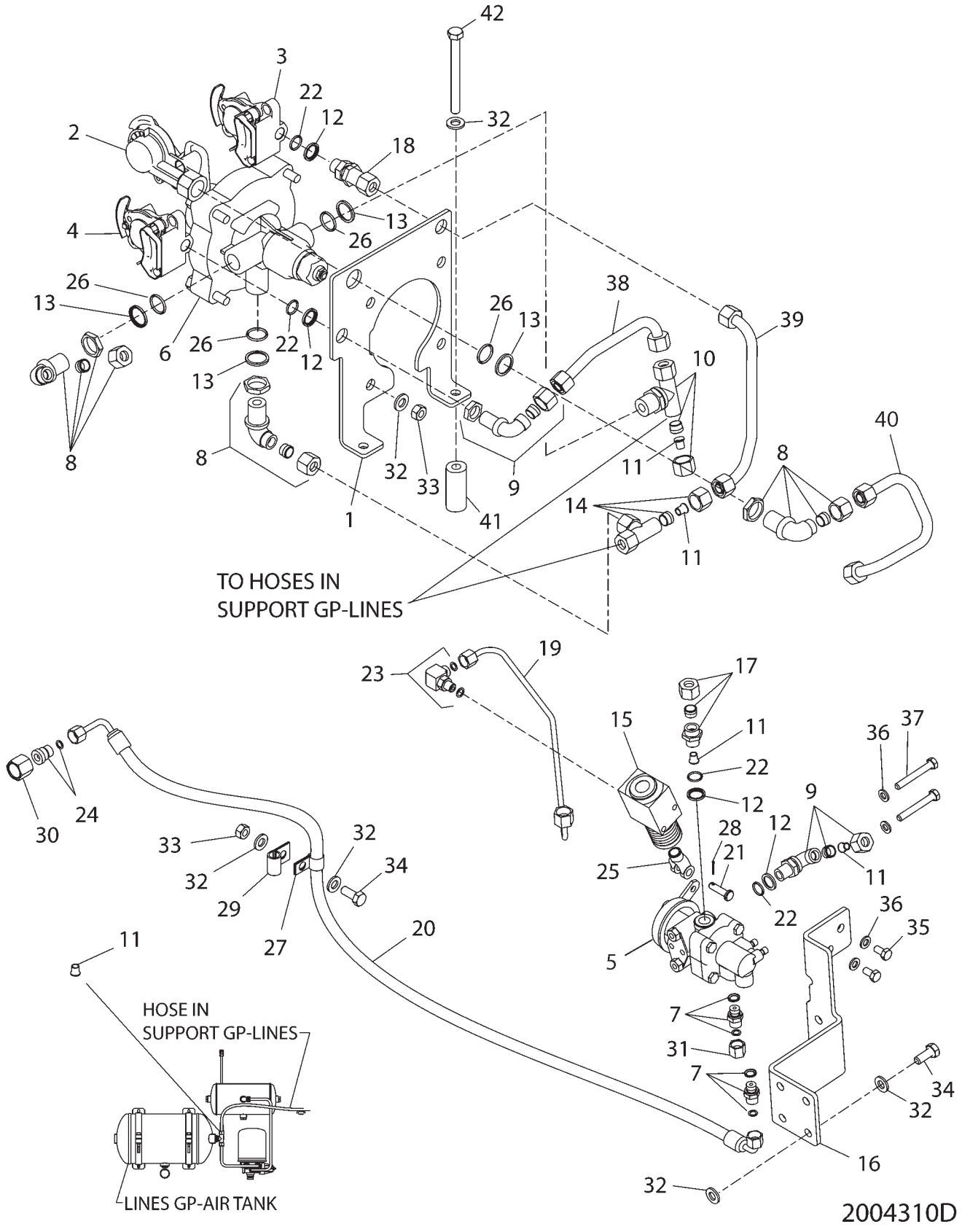

## LINES GP-CONTROL (KIT) - 200-4310
**AIR TRAILER BRAKE (WITH HITCH)**
**EAME ONLY**

| ITEM | NUMBER | QTY | DESCRIPTION |
|---|---|---|---|
| - | 200-4310 | -- | LINES GP-AIR TR BRAKE [A] |
| 1 | 162-9766 | 1 | BRACKET |
| 2 | CH171-1105 | 1 | CONNECTOR AS (QUICK) |
| 3 | CH171-1106 | 1 | CONNECTOR AS (QUICK) |
| 4 | CH171-1107 | 1 | CONNECTOR AS (QUICK) |
| 5 | 180-1667 | 1 | VALVE-CONTROL |
| 6 | 180-2519 | 1 | VALVE-CONTROL |
| 7 | CH183-4236 | 2 | ADAPTER GP |
| | 400377X1 | 1 | SEAL-O-RING (11.23OD X 1.78DIA) |
| | CH8C-5200 | 1 | SEAL |
| 8 | CH185-9753 | 3 | ELBOW AS-90DEG (M16XM18) |
| 9 | CH185-9759 | 2 | ELBOW AS-90DEG (M16XM18) |
| | CH187-6297 | 1 | FERRULE |
| | 400352X1 | 1 | NUT-TUBE (M18X1.5) |
| | 187-9012 | 1 | LOCKNUT |
| 10 | CH185-9762 | 1 | TEE AS (M18XM22XM18) |
| | CH187-6297 | 2 | FERRULE |
| | 400352X1 | 2 | NUT-TUBE (M18X1.5) |
| | CH187-6486 | 1 | LOCKNUT |
| 11 | CH185-9768 | 5 | INSERT |
| 12 | CH185-9772 | 4 | RING-BACKUP |
| 13 | CH185-9773 | 4 | RING-BACKUP |
| 14 | CH190-0430 | 1 | TEE AS (M18X3) |
| | CH3E-4297 | 1 | SEAL-O-RING (10IDX1.5DIA) |
| | CH187-6297 | 2 | FERRULE (12OD TUBE) |
| | 400352X1 | 2 | NUT-TUBE (M18X1.5) |
| 15 | 192-6366 | 1 | ACTUATOR AS |
| 16 | 192-6392 | 1 | BRACKET AS |
| 17 | CH200-4349 | 1 | ADAPTER (M18XM16) |
| | CH187-6297 | 1 | FERRULE (12OD TUBE) |
| | 400352X1 | 1 | NUT-TUBE (M18X1.5) |
| 18 | CH200-4359 | 1 | COUPLING |
| 19 | 200-4374 | 1 | TUBE AS |
| 20 | CH200-4379 | 1 | HOSE AS |
| 21 | CH095-1316 | 1 | PIN-CLEVIS |
| 22 | CH122-9250 | 4 | SEAL-O-RING |
| 23 | 400650X1 | 1 | ELBOW AS-90DEG-4STORX4ORFS |
| | 400361X1 | 1 | SEAL-O-RING (8.92ID X 1.83DIA) |
| | 400377X1 | 1 | SEAL-O-RING (11.23OD X 1.78DIA) |
| | CH6V-8628 | 1 | ELBOW |

[A] PART OF 192-6390; 192-6400;
502358D1 BRAKE AR-AIR

CONTINUED

## LINES GP-CONTROL (KIT) - 210-4310

AIR TRAILER BRAKE (WITH HITCH)
EAME ONLY

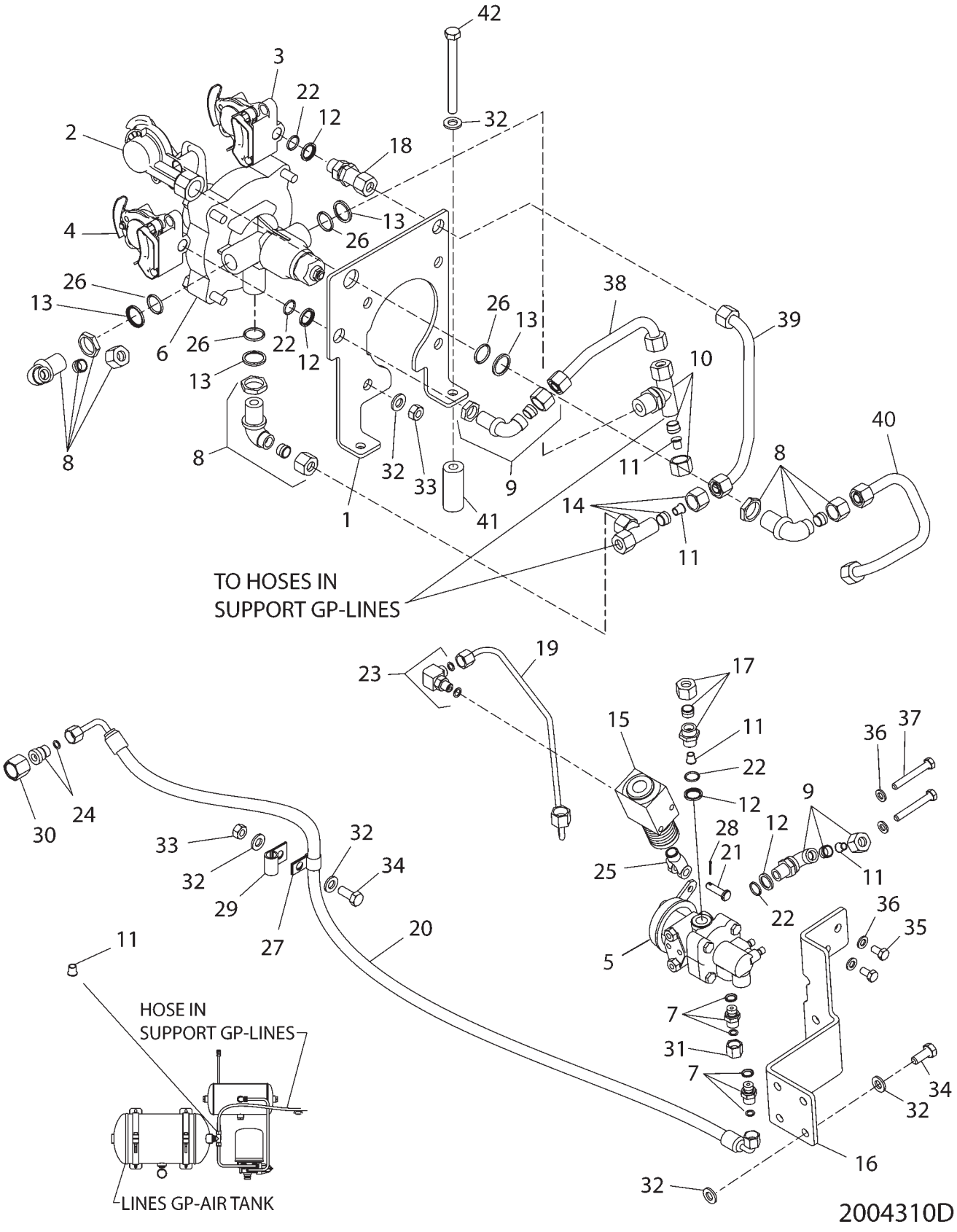

## LINES GP-CONTROL (KIT) - 210-4310
**AIR TRAILER BRAKE (WITH HITCH)**
**EAME ONLY**

| ITEM | NUMBER | QTY | DESCRIPTION |
|---|---|---|---|
| - | 200-4310 | -- | LINES GP-AIR TR BRAKE [A] |
| 24 | CH148-8419 | 1 | REDUCER AS (40RFSX80RFS) |
| | 400377X1 | 1 | SEAL-O-RING (11.23OD X 1.78DIA) |
| | CH6V-8935 | 1 | REDUCER-O-RING |
| 25 | 400117X1 | 1 | END-YOKE ROD |
| 26 | CH3E-6762 | 4 | SEAL-O-RING (20.3IDX2.4DIA) |
| 27 | CH4K-8864 | 1 | CLIP-LOOP (14.29ID) |
| 28 | CH5B-9192 | 1 | PIN-COTTER (1.59DIAX15.88 BRS) |
| 29 | 400621X1 | 3 | CLIP (12.7IDX3/8) |
| 30 | 6V-8554 | 1 | NUT (12.7 ORFS) |
| 31 | CH6V-9828 | 1 | CAP AS |
| 31 | 105-5211 | 1 | PLUG (OLDER MODELS) (INCLS SEAL) |
| | 6V-9028 | 1 | SEAL-O-RING |
| 32 | 400287X1 | 14 | WASHER-HARD (11X21X2.5) |
| 33 | WR522218 | 6 | NUT (M10X1.5) |
| 34 | 400039X1 | 6 | BOLT (M10X1.5X25MM) |
| 35 | 400227X1 | 2 | BOLT (M8X1.25X16MM) |
| 36 | 400339X1 | 4 | WASHER-HARD (8.8X16X2) |
| 37 | 400242X1 | 2 | BOLT (M8X1.25X60MM) |
| 38 | 183-4241 | 1 | TUBE AS |
| 39 | 187-9020 | 1 | TUBE AS |
| 40 | 190-0429 | 1 | TUBE AS |
| 41 | CH198-1963 | 2 | SPACER |
| 42 | 400240X1 | 2 | BOLT (M10X1.5X110) |

[A] PART OF 192-6390; 192-6400;
502358D1 BRAKE AR-AIR

2004310D
PR: t05i29k58b0335

## SUPPORT GP-LINES - 200-4320
EAME ONLY

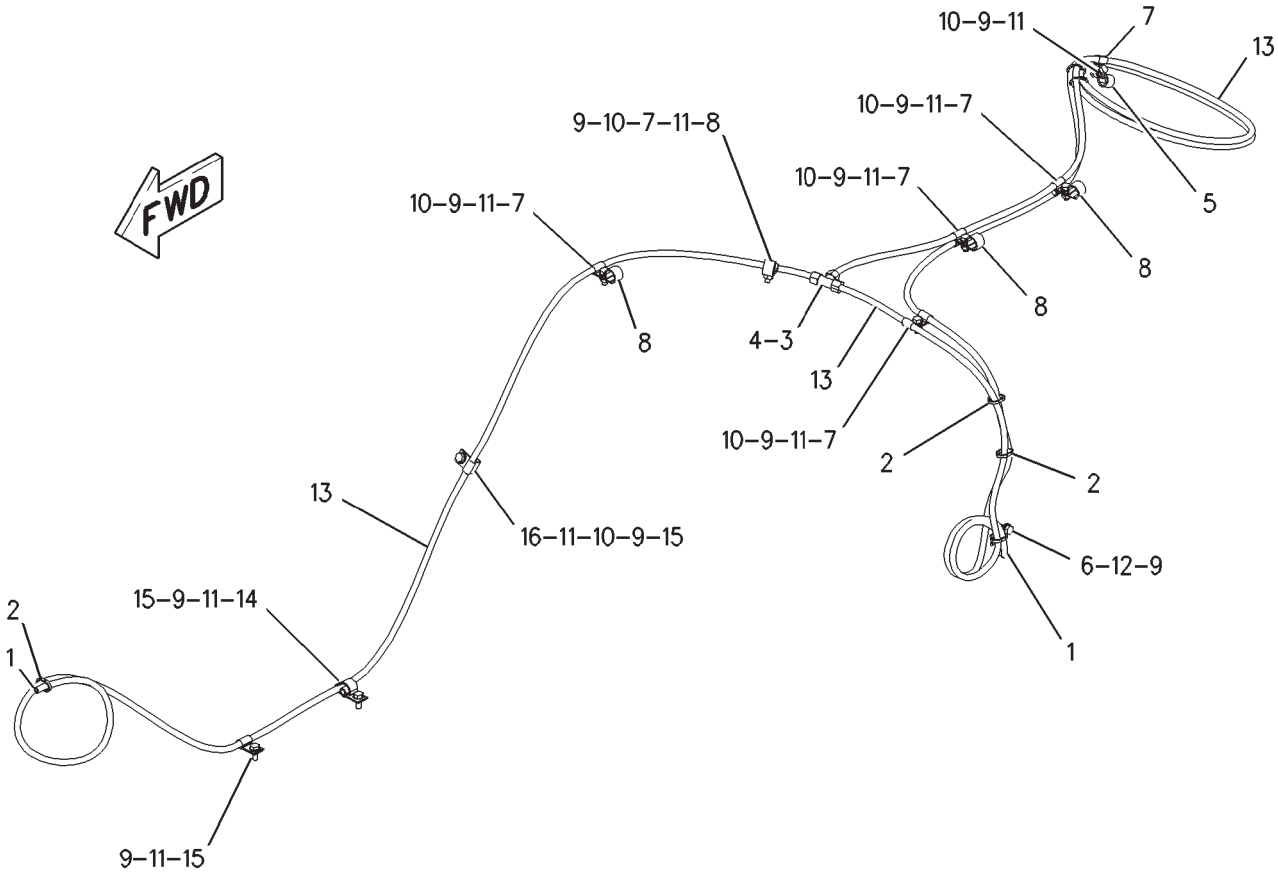


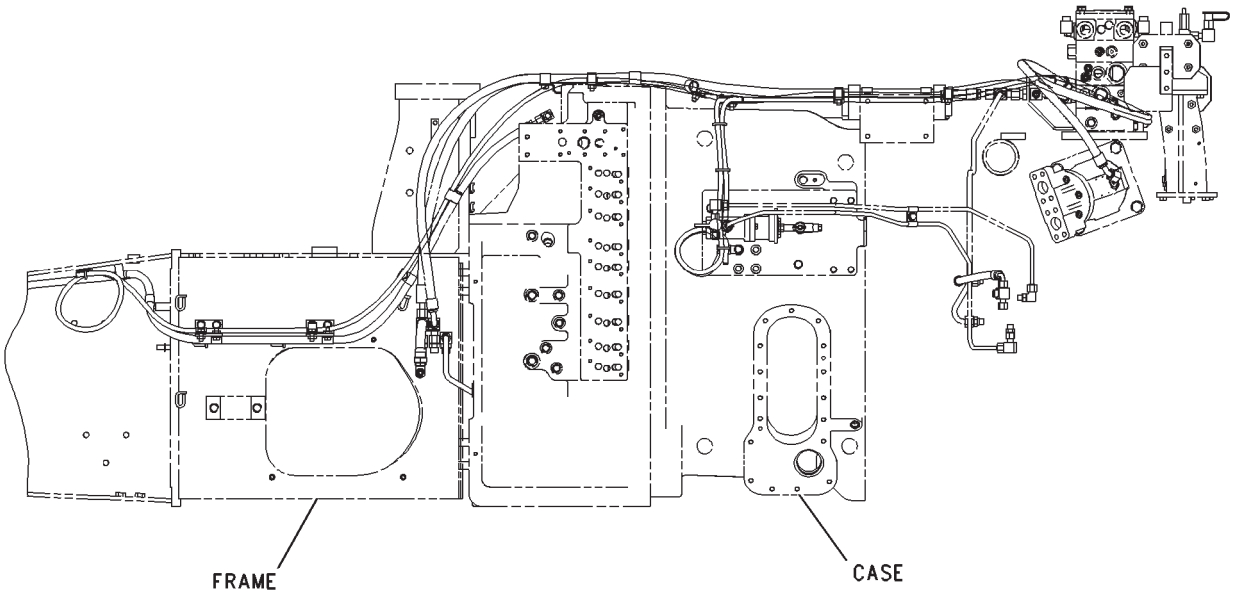


LEFT SIDE VIEW

## SUPPORT GP-LINES - 200-4320
**EAME ONLY**

| ITEM | NUMBER | QTY | DESCRIPTION |
|---|---|---|---|
| - | 200-4320 | -- | SUPPORT GP-LINES [A] (NOT SERVICED) |
| 1 | 4H-0408 | 5 | PLUG-PROTECTION (10MM) |
| 2 | CH7K-1181 | 6 | STRAP-CABLE |
| 3 | 192-6398 | 1 | FITTING AS |
| 4 | CH185-9768 | 3 | INSERT |
| 5 | CH1S-0994 | 1 | CLIP |
| 6 | CH4P-7581 | 1 | CLIP |
| 7 | 400621X1 | 10 | CLIP |
| 8 | 400688X1 | 4 | CLIP |
| 9 | 400287X1 | 17 | WASHER-HARD (11X21X2.5MM THK) |
| 10 | WR522218 | 7 | NUT (M10X1.5 THD) |
| 11 | 400039X1 | 9 | BOLT (M10X1.5X25MM) |
| 12 | 400040X1 | 1 | BOLT (M10X1.5X20MM) |
| 13 | 200-4321 | AR | TUBE-PLASTIC (938CM) |
| 14 | 200-4339 | 1 | CLIP |
| 15 | 124-1479 | 3 | CLIP |
| 16 | CH3S-8664 | 1 | CLIP |

[A] PART OF 179-2180 BASE COMMON AR

00887780
PR: t05i29k58b0336

## TANK & LINES GP-AIR - 190-0435

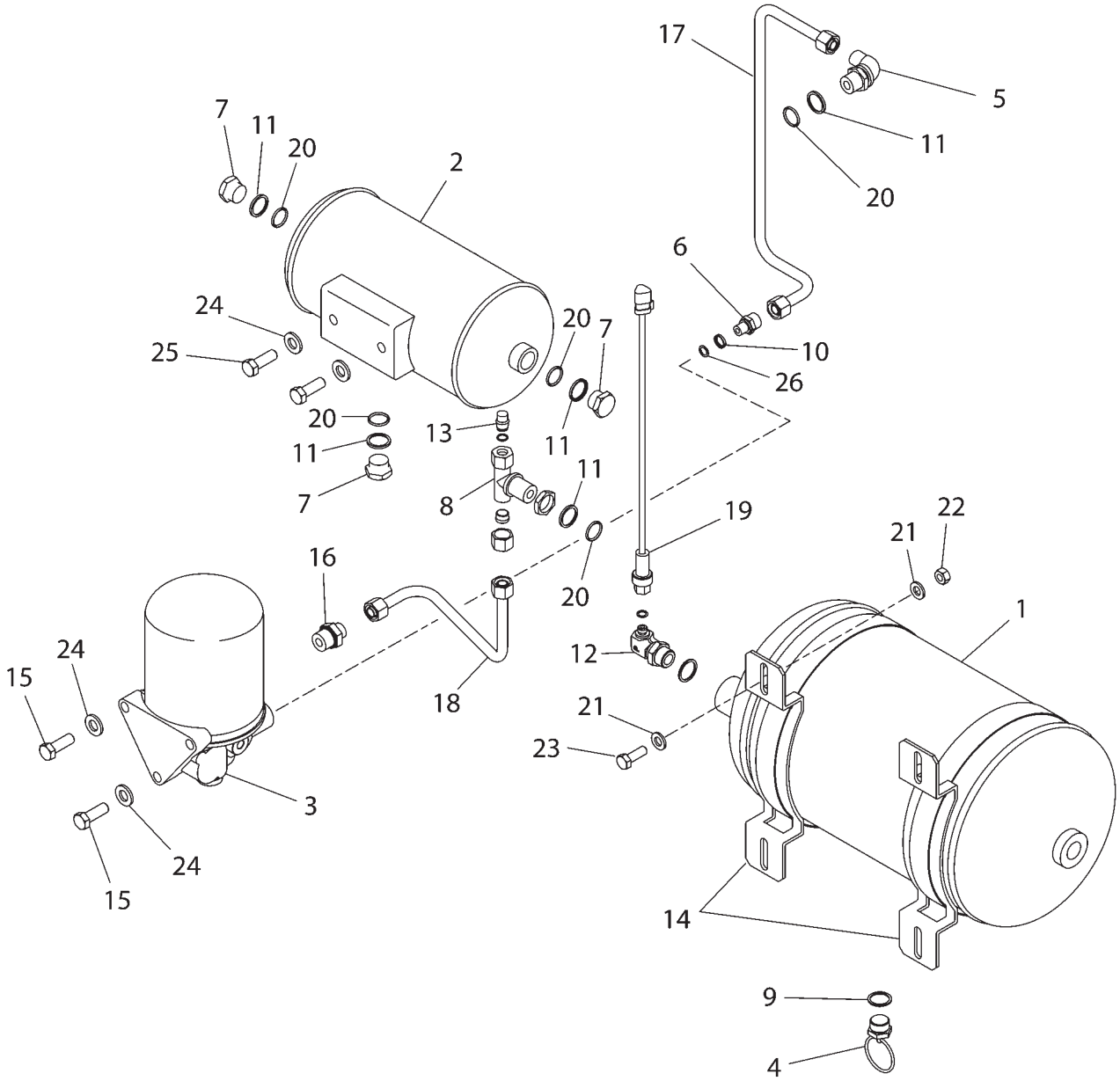

## TANK & LINES GP-AIR - 190-0435

| ITEM | NUMBER | QTY | DESCRIPTION |
|---|---|---|---|
| - | 190-0435 | -- | TANK & LINES GP-AIR [A] |
| | | | (NOT SERVICED) |
| 1 | 174-8822 | 1 | TANK-AIR |
| 2 | 177-9555 | 1 | TANK-AIR |
| 3 | 178-7197 | 1 | AIR DRYER GP |
| | 187-3185 | 1 | KIT-CARTRIDGE (DESICCANT) |
| | 187-5245 | 1 | KIT-VALVE (PURGE) |
| | 187-5246 | 1 | KIT-GOVERNOR |
| 4 | 180-5485 | 1 | VALVE-DRAIN |
| 5 | CH185-9753 | 1 | ELBOW AS-90DEG (M16XM18) |
| 6 | 185-9754 | 1 | ADAPTER |
| 7 | 185-9756 | 3 | PLUG |
| 8 | CH185-9762 | 1 | TEE GP (M18XM22XM18)(INCLS ITEMS BELOW) |
| | CH187-6297 | 2 | FERRULE |
| | 400352X1 | 2 | NUT-TUBE (M18X1.5) |
| | CH187-6486 | 1 | LOCKNUT (M22X1.5) |
| 9 | 185-9769 | 1 | WASHER-SEAL (22.2X26.9X1.5) |
| 10 | 185-9771 | 1 | RING-BACKUP |
| 11 | CH185-9773 | 5 | RING-BACKUP |
| 12 | 185-9774 | 1 | ELBOW (INCLS SEALS) |
| | 400361X1 | 1 | SEAL-O-RING (8.92ID X 1.83DIA) |
| | 400366X1 | 1 | SEAL-O-RING (22.5OD X 1.78DIA) |
| 13 | CH190-0431 | 1 | CAP (INCLS SEAL) |
| | CH3E-4297 | 1 | SEAL-O-RING |
| 14 | 190-0446 | 2 | BRACKET |
| 15 | 400011X1 | 3 | BOLT (M12X1.5X35MM) |
| 16 | 196-1969 | 1 | ADAPTER ASM (INCLS SEAL) |
| | CH175-5327 | 1 | SEAL |
| 17 | 196-1970 | 1 | TUBE ASM(INCL. FERRUEL, NUT & TUBE) |
| 18 | 196-1971 | 1 | TUBE ASM (INCL. FERRULE, NUT & TUBE) |
| 19 | CH194-6725 | 1 | SENSOR GP-PRESSURE [B] |
| 20 | CH3E-6762 | 5 | SEAL-O-RING |
| 21 | 400287X1 | 8 | WASHER-HARD (11X21X2.5) |
| 22 | WR522218 | 4 | NUT (M10X1.5) |
| 23 | 400058X1 | 4 | BOLT (M10X1.5X30MM) |
| 24 | 400357X1 | 5 | WASHER-HARD (M12X25.5X3) |
| 25 | 400064X1 | 2 | BOLT (M12X1.75X35MM) |
| 26 | CH9T-4057 | 1 | SEAL-O-RING |

[A] PART OF:
185-8660; 186-1620 BRAKE AR-AIR TR
190-0439; 190-0440 TANK AR-AIR
192-6390; 192-6400 BRAKE AR-AIR
210-5703; 210-5704 TANK AR-AIR
502357D1; 502358D1 BRAKE AR-AIR
502359D1; 502360D1 TANK AR-AIR

[B] SENSOR ITEM 19:
THIS SENSOR IS USED IN MULTIPLE APPLICATIONS DO NOT USE SPN MODIFIER YOU MUST USE APPLICATION SPECIFIC MODIFIERS IN DBAM I.E.

1900435D
PR: t05i29k58b0337

**TANK AR-AIR - 190-0439**
**MT835 & MT845**
**EAME ONLY**

NO ILLUSTRATION

NOTIF

## TANK AR-AIR - 190-0439

**MT835 & MT845**
**EAME ONLY**

| ITEM | NUMBER | QTY | DESCRIPTION |
|---|---|---|---|
| - | 190-0439 | -- | TANK AR-AIR |
| 1 | 180-2937 | 1 | AIR COMPRESSOR GP (NOT SERVICED)<br>(SEE BREAKDOWN FOR COMPONENTS) |
| 2 | 190-0435 | 1 | TANK & LINES GP-AIR (NOT SERVICED)<br>(SEE BREAKDOWN FOR COMPONENTS) |
| 3 | 190-0438 | 1 | LINES GP-COUPLER (NOT SERVICED)<br>(SEE BREAKDOWN FOR COMPONENTS) |

NOTIF
PR: t05i29k58b0338

**TANK AR-AIR - 190-0440**
**MT855 & MT865**
**EAME ONLY**

NO ILLUSTRATION

NOTIF

## TANK AR-AIR - 190-0440

**MT855 & MT865**
**EAME ONLY**

| ITEM | NUMBER | QTY | DESCRIPTION |
|---|---|---|---|
| - | 190-0440 | -- | TANK AR-AIR |
| 1 | 500970D1 | 1 | AIR COMPRESSOR GP (NOT SERVICED)<br>(SEE BREAKDOWN FOR COMPONENTS) |
| 2 | 190-0435 | 1 | TANK & LINES GP-AIR (NOT SERVICED)<br>(SEE BREAKDOWN FOR COMPONENTS) |
| 3 | 190-0438 | 1 | LINES GP-COUPLER (NOT SERVICED)<br>(SEE BREAKDOWN FOR COMPONENTS) |

NOTIF
PR: t05i29k58b0339

**TANK AR-AIR - 210-5703**
**MT835 & MT845**
**ROW & SPECIAL ONLY**

NO ILLUSTRATION

NOTIF

## TANK AR-AIR - 210-5703

**MT835 & MT845**
**ROW & SPECIAL ONLY**

| ITEM | NUMBER | QTY | DESCRIPTION |
|---|---|---|---|
| - | 210-5703 | -- | TANK AR-AIR |
| 1 | 180-2937 | 1 | AIR COMPRESSOR GP (NOT SERVICED)<br>(SEE BREAKDOWN FOR COMPONENTS) |
| 2 | 190-0435 | 1 | TANK & LINES GP-AIR (NOT SERVICED)<br>(SEE BREAKDOWN FOR COMPONENTS) |
| 3 | 210-0851 | 1 | LINES GP-COUPLER (NOT SERVICED)<br>(SEE BREAKDOWN FOR COMPONENTS) |

NOTIF
PR: t05i29k58b0340

**TANK AR-AIR - 210-5704**
**MT855 & MT865**
**ROW & SPECIAL ONLY**

NO ILLUSTRATION

NOTIF

## TANK AR-AIR - 210-5704

**MT855 & MT865**
**ROW & SPECIAL ONLY**

| ITEM | NUMBER | QTY | DESCRIPTION |
|---|---|---|---|
| - | 210-5704 | -- | TANK AR-AIR |
| 1 | 500970D1 | 1 | AIR COMPRESSOR GP (NOT SERVICED)<br>(SEE BREAKDOWN FOR COMPONENTS) |
| 2 | 190-0435 | 1 | TANK & LINES GP-AIR (NOT SERVICED)<br>(SEE BREAKDOWN FOR COMPONENTS) |
| 3 | 210-0851 | 1 | LINES GP-COUPLER (NOT SERVICED)<br>(SEE BREAKDOWN FOR COMPONENTS) |

NOTIF
PR: t05i29k58b0341

## VALVE GP-ACCUMULATOR CHARGING - 216-6972

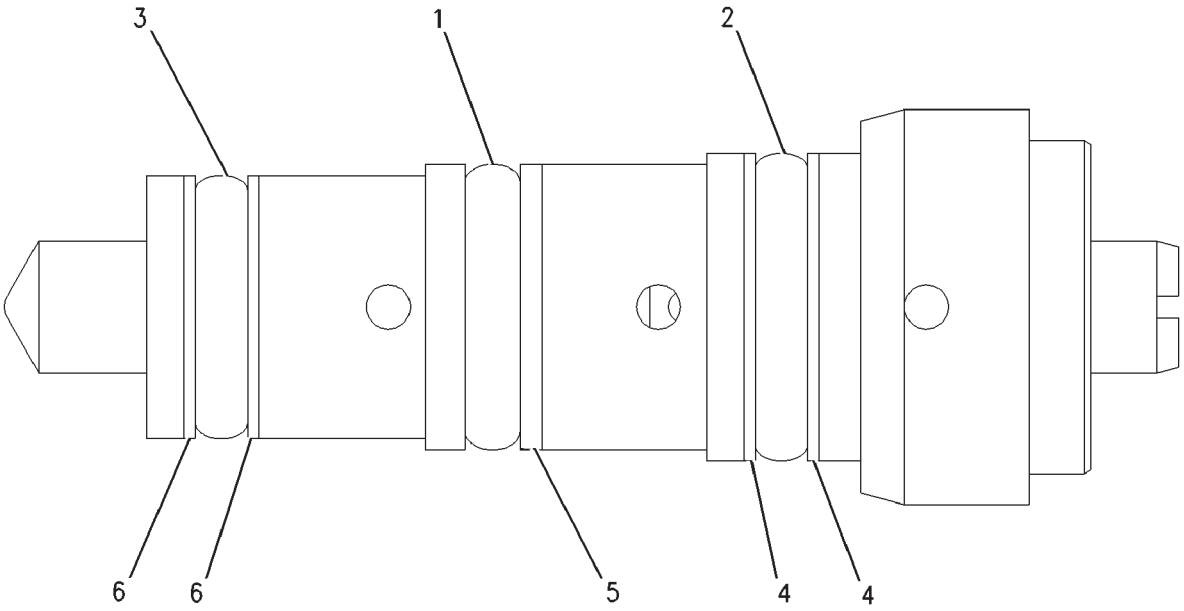


00894814

# VALVE GP-ACCUMULATOR CHARGING - 216-6972

| ITEM | NUMBER | QTY | DESCRIPTION |
|---|---|---|---|
| - | 216-6972 | -- | VALVE GP-ACCUMULATOR CHARGING [A] |
| 1 | CH5W-9411 | 1 | SEAL-O-RING |
| 2 | CH095-1750 | 1 | SEAL-O-RING |
| 3 | CH161-6154 | 1 | SEAL-O-RING |
| 4 | CH216-7116 | 2 | RING-BACKUP |
| 5 | CH216-7117 | 1 | RING-BACKUP |
| 6 | CH216-7118 | 2 | RING-BACKUP |

[A] PART OF:
192-4707 VALVE GP-CONTROL
209-5019 VALVE GP-CONTROL
209-5021 VALVE GP-CONTROL

00894814
PR: t05i29k58b0342

## VALVE GP-PARKING BRAKE - 200-4351

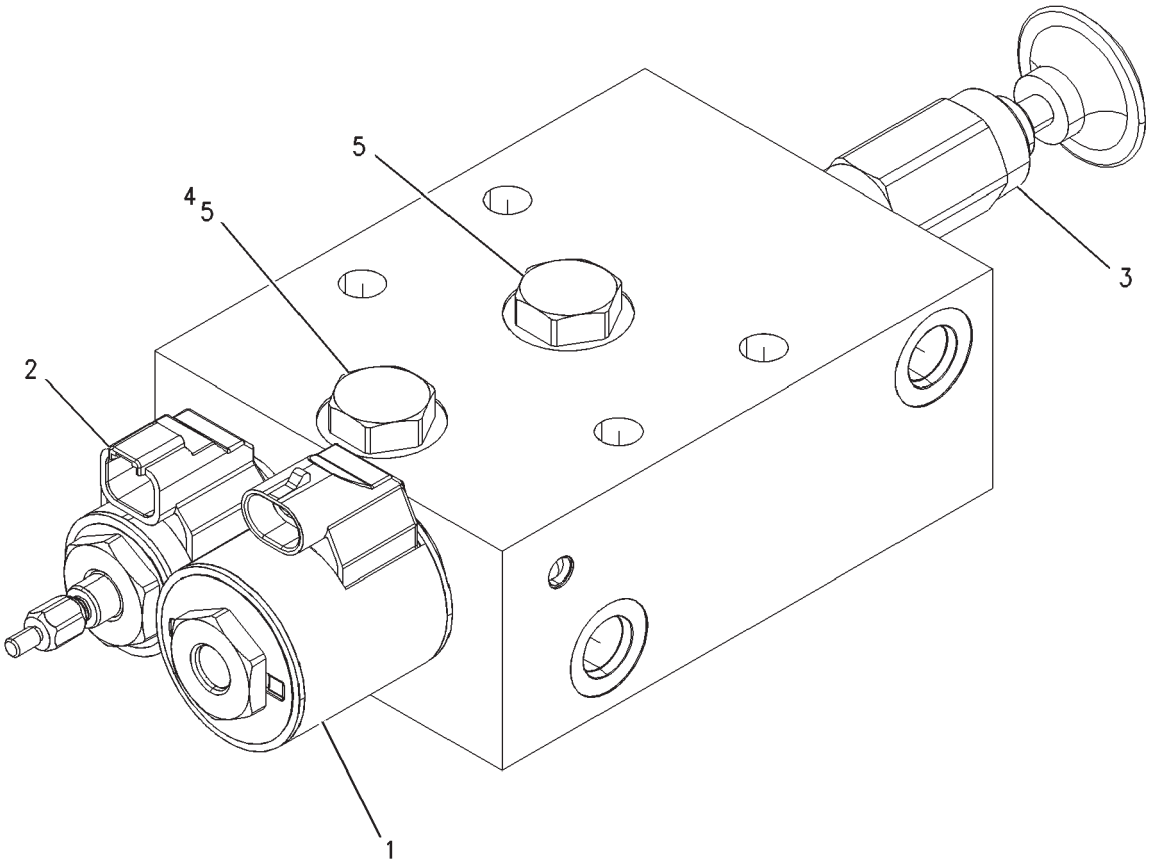


00871963

## VALVE GP-PARKING BRAKE - 200-4351

| ITEM | NUMBER | QTY | DESCRIPTION |
|---|---|---|---|
| - | 200-4351 | -- | VALVE GP-PARKING BRAKE [A] |
| 1 | 200-4325 | 1 | VALVE ASM-SOLENOID |
| | 120-8514 | 1 | KIT-SEAL |
| 2 | 200-4327 | 1 | VALVE ASM-SOLENOID |
| | 120-9051 | 1 | KIT-SEAL |
| 3 | 200-4329 | 1 | VALVE ASM |
| | 141-0888 | 1 | KIT-SEAL |
| 4 | 200-4375 | 1 | ORIFICE |
| 5 | 120-9048 | 2 | VALVE-CHECK |

[A] PART OF:
192-6350 CONTROL GP-PARKING BRAKE

00871963
PR: t05i29k58b0343

## CONTROL GP-STEERING - 217-9779

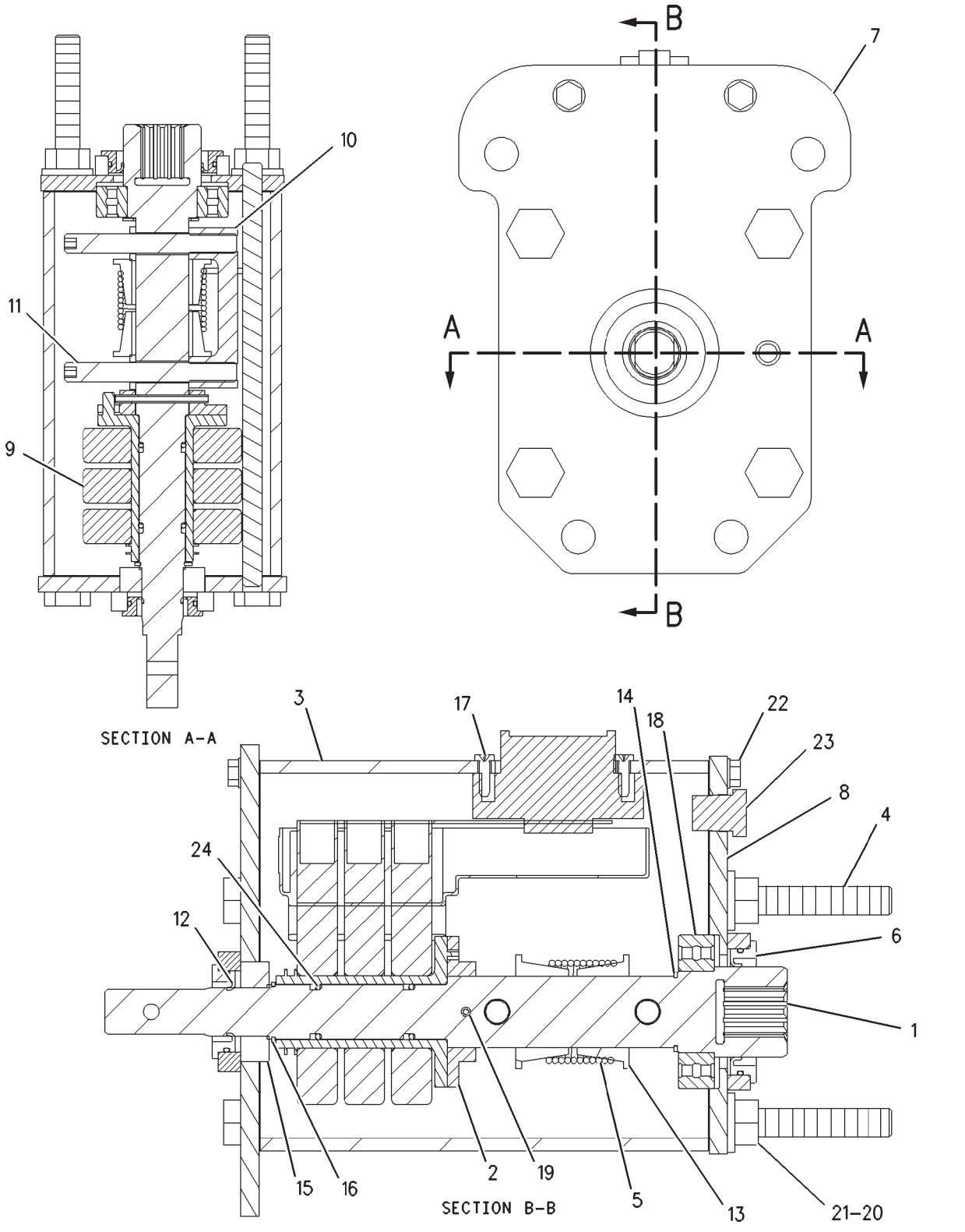

## CONTROL GP-STEERING - 217-9779

| ITEM | NUMBER | QTY | DESCRIPTION |
|---|---|---|---|
| - | 217-9779 | -- | CONTROL GP-STEERING [A] |
| 1 | ----- | 1 | SHAFT-STEERING |
| 2 | ----- | 1 | COLLAR (ORDER COMPLETE AS) |
| 3 | ----- | 1 | HOUSING (ORDER COMPLETE AS) |
| 4 | ----- | 4 | STUD (ORDER COMPLETE AS) |
| 5 | ----- | 1 | SPRING |
| 6 | ----- | 1 | SEAL-LIP TYPE (ORDER COMPLETE AS) |
| 7 | ----- | 1 | PLATE ASM (ORDER COMPLETE AS) |
| 8 | ----- | 1 | PLATE ASM (ORDER COMPLETE AS) |
| 9 | ----- | 1 | SENSOR GP-POSITION (ORDER COMPLETE AS) |
| 10 | ----- | 1 | STOP |
| 11 | ----- | 2 | STUD |
| 12 | ----- | 1 | SEAL-LIP TYPE |
| 13 | ----- | 2 | BUSHING |
| 14 | CH001-5600 | 1 | RING-SNAP |
| 15 | ----- | 1 | BALL BEARING (ORDER COMPLETE AS) |
| 16 | ----- | 1 | RING-RETAINING |
| 17 | 400835X1 | 2 | SCREW-PAN HEAD (6-19X0.5 IN) |
| 18 | ----- | 1 | BEARING (ORDER ITEM 15) |
| 19 | ----- | 1 | PIN-SPRING |
| 20 | 400287X1 | 4 | WASHER-HARD (11X21X2.5) |
| 21 | WR522218 | 4 | NUT (M10X1.5) |
| 22 | | 4 | SCREW-MACHINE (M5X0.8X20MM) |
| 23 | CH8T-6765 | 1 | PLUG-PIPE |
| 24 | ----- | 2 | SEAL-O-RING |

[A] PART OF 152-0420 WIRING GP-CAB

00882993
PR: t05i29k58b0344

## CONTROL GP-STEERING (BASIC) - 217-9780

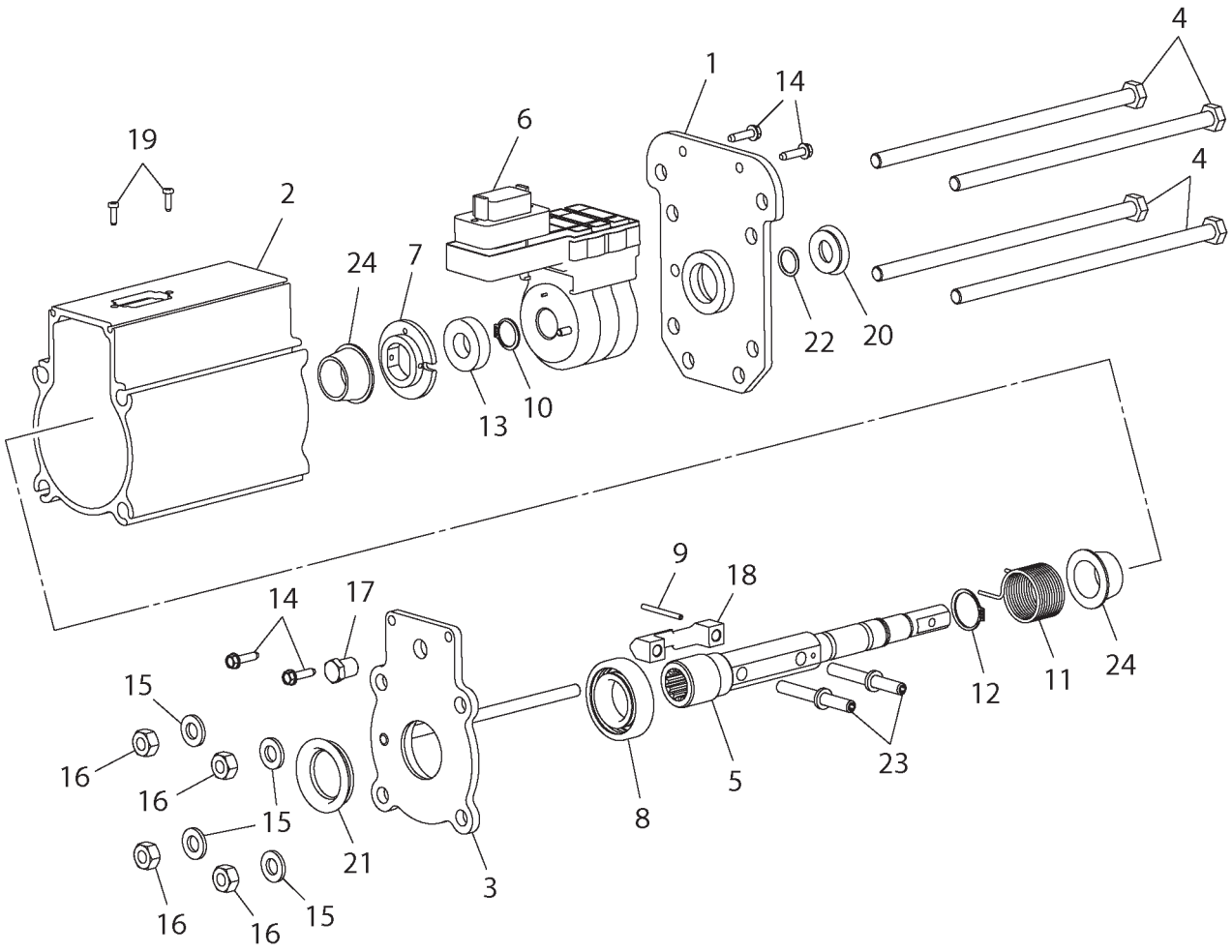


2179780A

## CONTROL GP-STEERING (BASIC) - 217-9780

| ITEM | NUMBER | QTY | DESCRIPTION |
|---|---|---|---|
| - | 217-9780 | -- | CONTROL GP-STEERING (BASIC) [A] |
| 1 | 217-9780 | 1 | PLATE AS. (NOT SERVICED) |
| 2 | ----- | 1 | HOUSING (NOT SERVICED) |
| 3 | ----- | 1 | PLATE AS (NOT SERVICED) |
| 4 | ----- | 4 | BOLT-STUD M10X1.5X229 ZN 10.9 |
| 5 | ----- | 1 | SHAFT-STEERING (NOT SERVICED) |
| 6 | ----- | 1 | SENSOR-STEERING |
| 7 | ----- | 1 | PIN-DRIVE (NOT SERVICED) |
| 8 | ----- | 1 | BEARING-BALL 28.58 IDX53.98 OD |
| 9 | ----- | 1 | PIN-SPG 3.2DIAX38.1 |
| 10 | ----- | 1 | RING-RETAINING EXT 17.5 IDX1.2 |
| 11 | CH203-8550 | 1 | SPRING-TORSION RH 3.66NM/TURN |
| 12 | CH001-5600 | 1 | RING-RETAINING EXT 23.5 IDX1.1 |
| 13 | ----- | 1 | BEARING-BALL 17 IDX35 OD |
| 14 | ----- | 4 | SCREW (NOT SERVICED) |
| 15 | 400287X1 | 4 | WASHER-HARD 11IDX21ODX2.5 ZND1 |
| 16 | WR522218 | 4 | NUT-M10-1.5,CL10.9,ZN,H,REG |
| 17 | CH8T-6765 | 1 | PLUG-PIPE 1/4-18 ZN HHD |
| 18 | ----- | 1 | STOP (NOT SERVICED) |
| 19 | 400835X1 | 2 | SCREW #6-19X12.7 R/B 400835X1 |
| 20 | ----- | 1 | SEAL-LIP 17SFT X 25.58 BORE |
| 21 | ----- | 1 | SEAL-LIP 31.75 SHFTX44.45 BORE |
| 22 | ----- | 2 | SEAL-O-RING (NOT SERVICED) |
| 23 | ----- | 2 | BOLT-STUD M8X1.25X41.5 10.9 |
| 24 | ----- | 2 | BUSHING-TAPERED 35DIAX25.5ID |

[A] PART OF 152-0005 WIRING GP

2179780A
PR: t05i29k58b0345

## CONTROL GP-SECONDARY STEERING - 166-4623

**EAME ONLY**

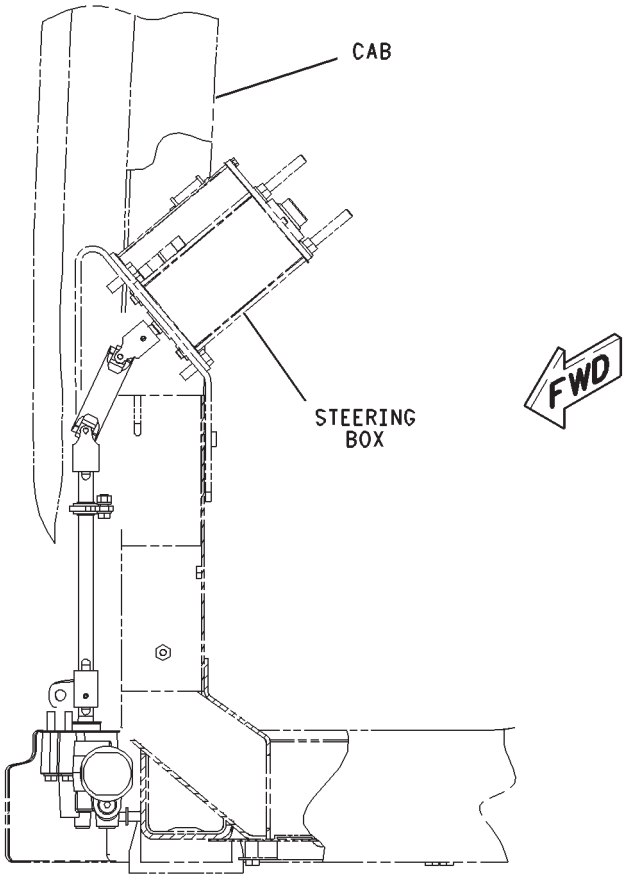


LEFT SIDE VIEW

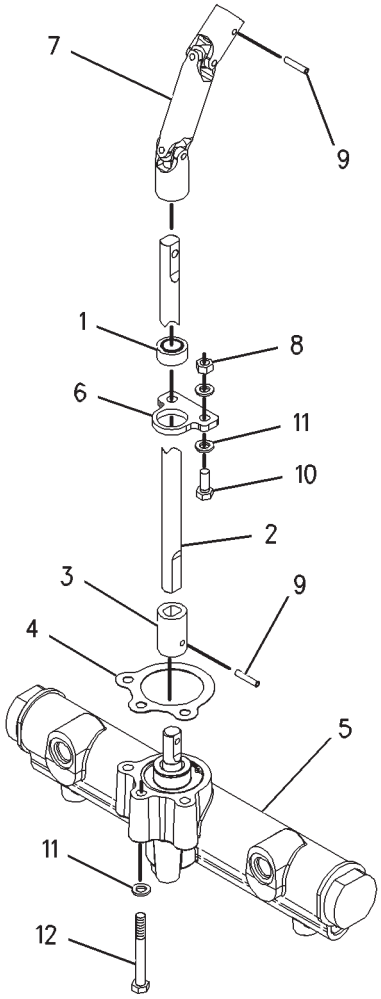

## CONTROL GP-SECONDARY STEERING - 166-4623

EAME ONLY

| ITEM | NUMBER | QTY | DESCRIPTION |
|---|---|---|---|
| - | 166-4623 | -- | CONTROL GP-SECONDARY STEERING [A] (NOT SERVICED) |
| 1 | CH4D-2619 | 1 | BEARING |
| 2 | 197-2997 | 1 | SHAFT |
| 3 | 197-2998 | 1 | COLLAR |
| 4 | 197-2999 | 1 | GASKET |
| 5 | 197-3000 | 1 | CONTROL GP-SECONDARY STEERING |
| 6 | 201-8438 | 1 | MOUNT |
| 7 | 197-2996 | 1 | JOINT AS |
| 8 | 400340X1 | 2 | NUT (M8X1.25 THD) |
| 9 | CH8T-0255 | 2 | PIN-SPRING |
| 10 | 400053X1 | 2 | BOLT (M8X1.25X20MM) |
| 11 | 400339X1 | 7 | WASHER-HARD (8.8X16X2MM THK) |
| 12 | 400068X1 | 3 | BOLT (M8X1.25X70MM) |

[A] PART OF 179-2180 BASE COMMON AR

00811388
PR: t05i29k58b0346

HEAD GP-PUMP - 205-6398

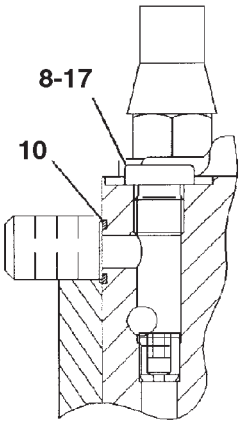


SECTION B-B

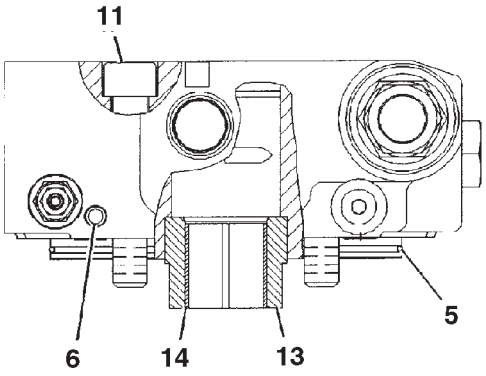


VIEW A-A

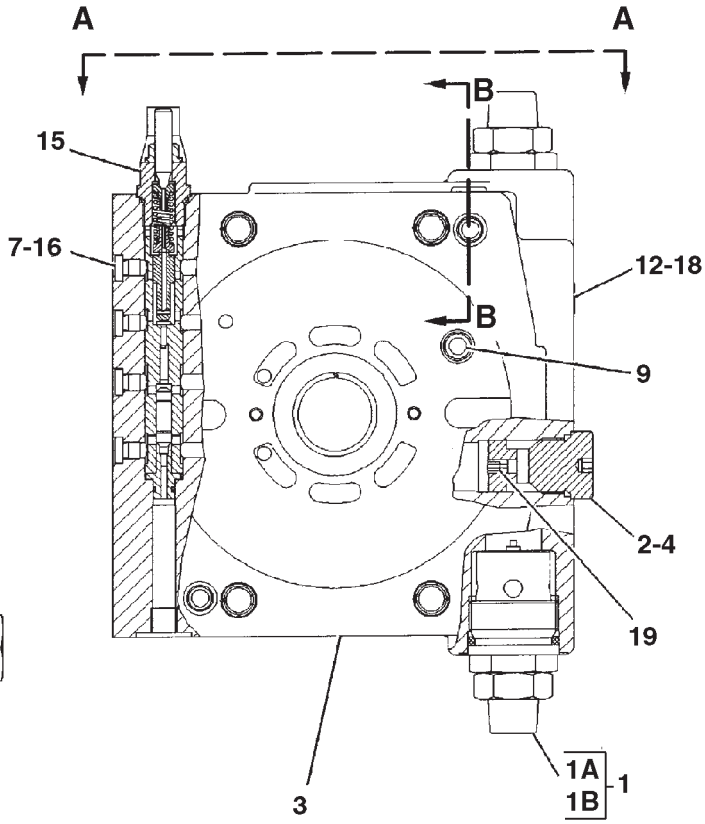


0853334A

## HEAD GP-PUMP - 205-6398

| ITEM | NUMBER | QTY | DESCRIPTION |
|---|---|---|---|
| - | 205-6398 | -- | HEAD GP-PUMP [A] |
| 1 | CH178-4164 | 2 | VALVE GP-RELIEF |
| | | | (SERVICE REPAIR ORDER 1A AND 1B) |
| 1A | CH178-4171 | 1 | SEAL KIT |
| 1B | CH123-7556 | 1 | CAP |
| 2 | CH144-9103 | 1 | PLUG |
| 3 | CH205-6397 | 1 | HEAD |
| 4 | CH6V-5326 | 1 | SEAL-O-RING |
| 5 | CH119-7845 | 1 | SEAL-O-RING |
| 6 | CH123-2017 | 1 | PLUG |
| 7 | CH134-7489 | 4 | PLUG (M8X1) |
| 8 | CH135-8854 | 1 | PLUG |
| 9 | CH144-9101 | 1 | PLUG-BREAK OFF |
| 10 | CH161-6149 | 2 | SEAL-O-RING |
| 11 | CH3E-8008 | 4 | BOLT-SOCKET HEAD (M16X2X90MM) |
| 12 | 400361X1 | 2 | SEAL-O-RING (8.92ID X 1.83DIA) |
| 13 | CH6E-4382 | 1 | BUSHING |
| 14 | CH6E-4383 | 1 | BUSHING |
| 15 | CH6E-4392 | 1 | VALVE GP-PRESSURE COMPENSATOR |
| | | | (SEE BREAKDOWN FOR COMPONENTS) |
| 16 | CH6V-5586 | 4 | SEAL-O-RING |
| 17 | CH6V-9028 | 1 | SEAL-O-RING |
| 18 | CH9S-8002 | 2 | PLUG |
| 19 | CH123-7583 | 1 | ORIFICE (1.8MM) |

[A] PART OF CH162-9592 PUMP GP-PISTON

0853334A
PR: t05i29k58b0347

## MOTOR & MTG GP-STEERING - 158-2404
**ROW & SPECIAL ONLY**

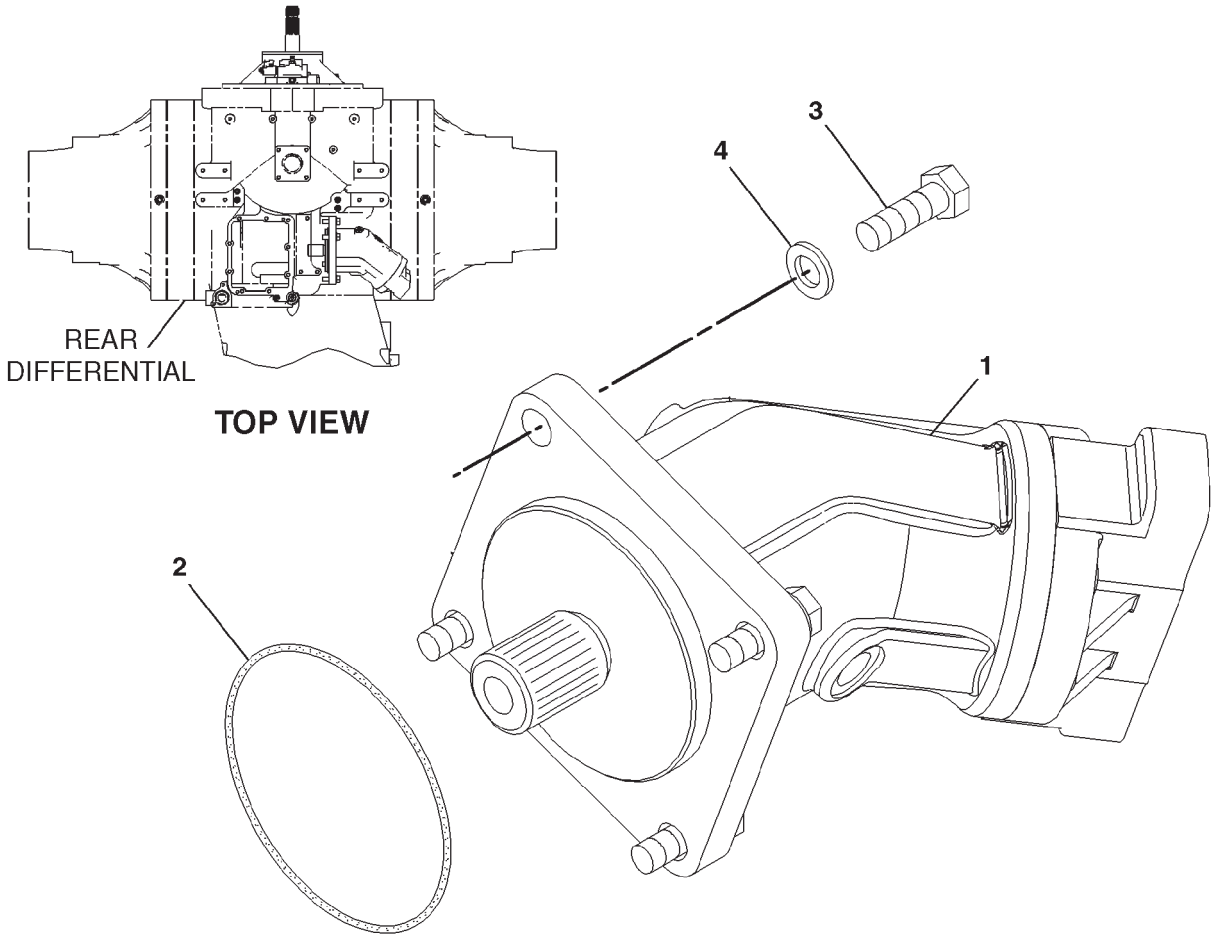


0901627A

| ITEM | NUMBER | QTY | DESCRIPTION |
|---|---|---|---|
| - | 158-2404 | -- | MOTOR & MTG GP STEERING [A] (NOT SERVICED) |
| 1 | CH162-9601 | 1 | MOTOR GP-PISTON (STEERING) (SEE BREAKDOWN FOR COMPONENTS) |
| 2 | CH8F-8733 | 1 | SEAL-O-RING |
| 3 | 400056X1 | 4 | BOLT (M16X2X50MM) |
| 4 | 400082X1 | 4 | WASHER (17.5X30X3.5) |

[A] PART OF 177-9948; 183-2198
GAUGE AR-TRACK

0901627A
PR: t05i29k58b0348

## MOTOR & MOUNTING GP - 172-4517

**STEERING**
**EAME ONLY**

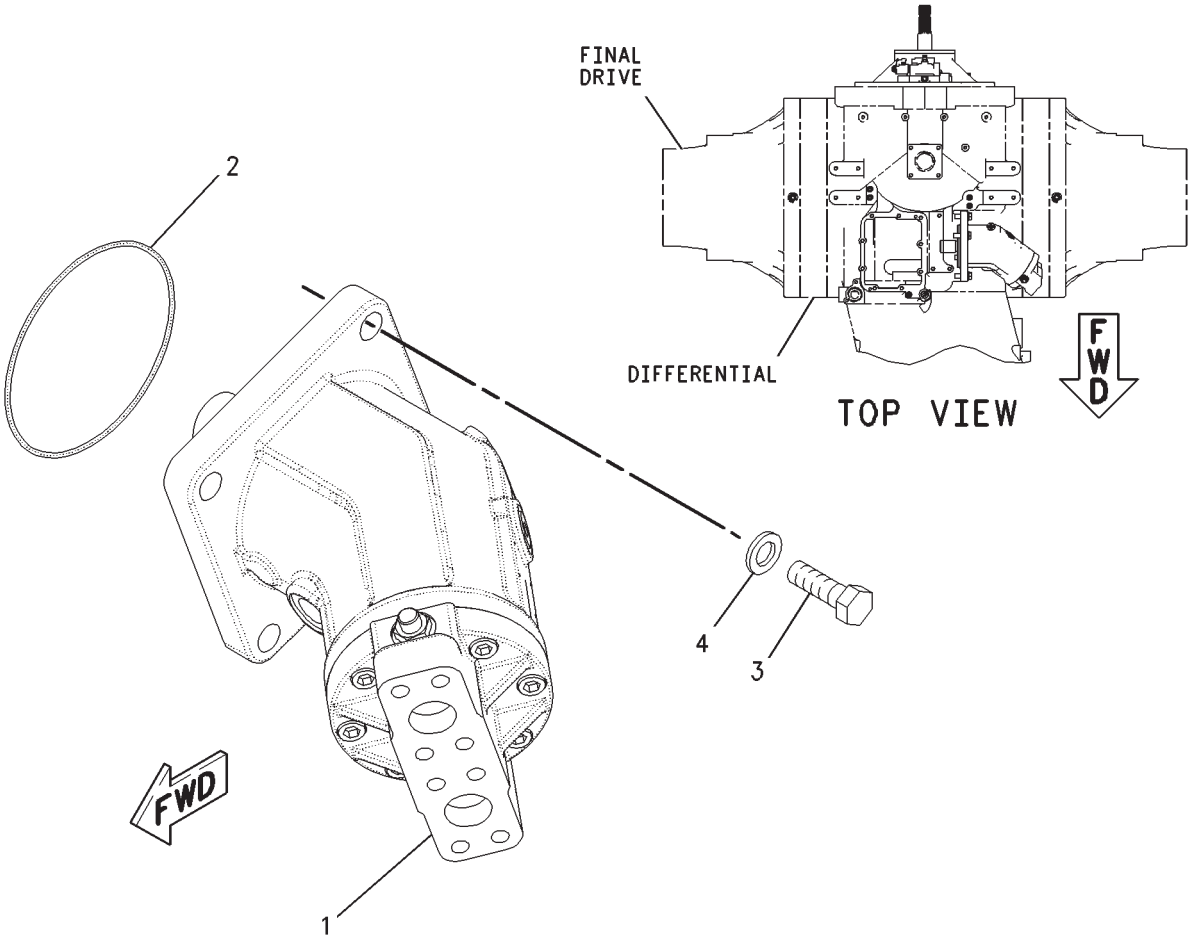


00779015

## MOTOR & MOUNTING GP - 172-4517

STEERING
EAME ONLY

| ITEM | NUMBER | QTY | DESCRIPTION |
|---|---|---|---|
| - | 172-4517 | -- | MOTOR & MTG GP STEERING [A] |
| 1 | CH162-9602 | 1 | MOTOR GP-PISTON (STEERING)<br>(SEE BREAKDOWN FOR COMPONENTS) |
| 2 | CH8F-8733 | 1 | SEAL-O-RING |
| 3 | 400056X1 | 4 | BOLT (M16X2X50MM) |
| 4 | 400082X1 | 4 | WASHER (17.5X30X3.5MM THK) |

[A] PART OF:
177-9947; 183-2197 GAUGE AR-TRACK

00779015
PR: t05i29k58b0349

## MOTOR GP-PISTON - CH162-9601
STEERING

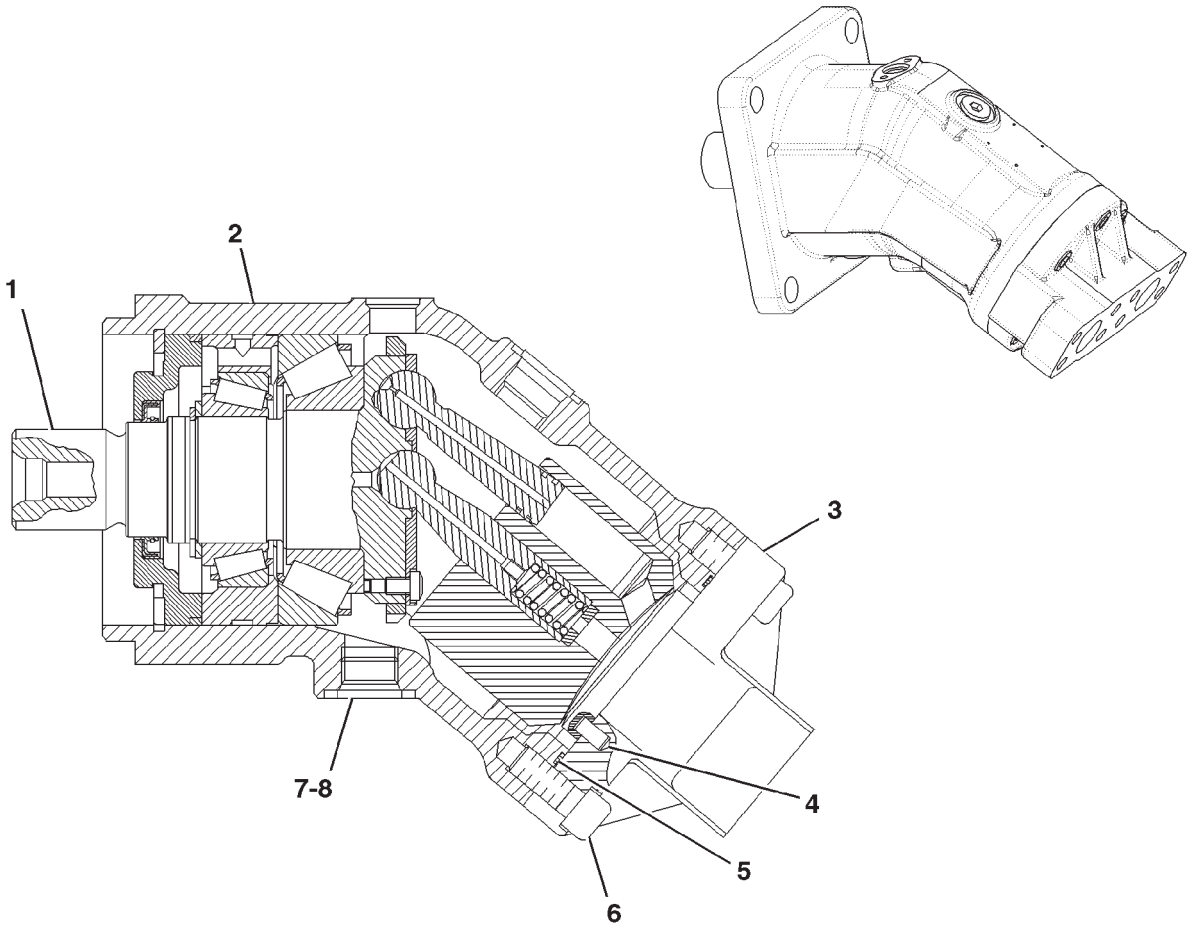


0829718A

| ITEM | NUMBER | QTY | DESCRIPTION |
|---|---|---|---|
| - | CH162-9601 | -- | MOTOR GP-PISTON [A] |
| 1 | 203-0189 | 1 | ROTATING GP-MOTOR (SEE BREAKDOWN FOR COMPONENTS) |
| 2 | ----- | 1 | HOUSING (ORDER MOTOR GP-PISTON) |
| 3 | 203-0190 | 1 | HEAD |
| 4 | CH1G-3174 | 1 | PIN |
| 5 | CH6V-1197 | 1 | SEAL-O-RING |
| 6 | 400220X1 | 6 | BOLT-HEX SOCKET (M12X1.75X30MM) |
| 7 | 400374X1 | 1 | PLUG |
| 8 | 400319X1 | 1 | SEAL-O-RING (19.18IDX2.46DIA) |

[A] PART OF 158-2404 MOTOR & MTG GP-STEERING

0829718A
PR: t05i29k58b0350

## MOTOR GP-PISTON - CH162-9602
**STEERING**

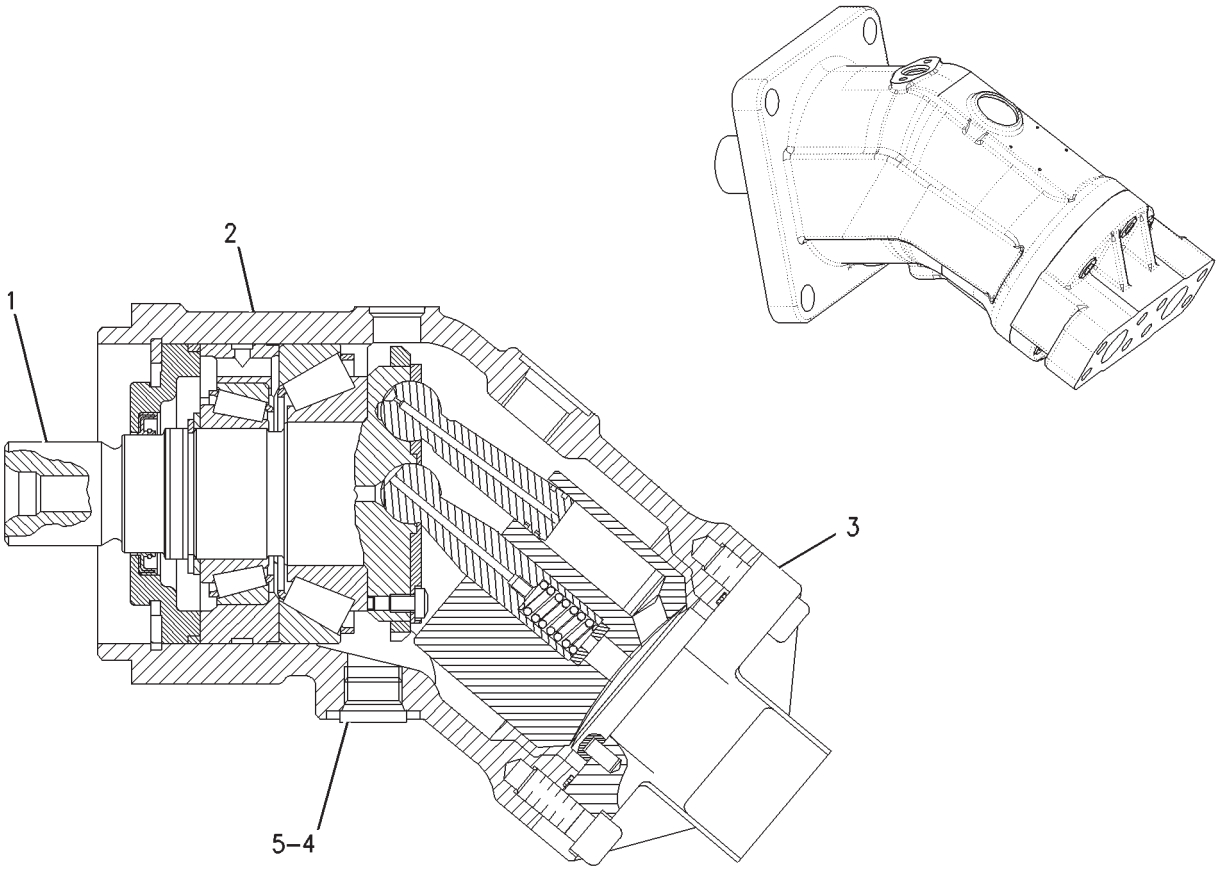


00850707

| ITEM | NUMBER | QTY | DESCRIPTION |
|---|---|---|---|
| - | CH162-9602 | -- | MOTOR GP-PISTON [A] |
| 1 | 203-0189 | 1 | ROTATING GP-MOTOR (SEE BREAKDOWN FOR COMPONENTS) |
| 2 | ----- | 1 | HOUSING (ORDER MOTOR GP-PISTON) |
| 3 | 203-1213 | 1 | HEAD (SEE BREAKDOWN FOR COMPONENTS) |
| 4 | 400374X1 | 1 | PLUG (10STOR) |
| 5 | 400319X1 | 1 | SEAL-O-RING (19.18IDX2.46DIA) |

[A] PART OF 172-4517 MOTOR & MTG GP

00850707
PR: t05i29k58b0351

## ROTATING GP-MOTOR - 203-0189
STEERING

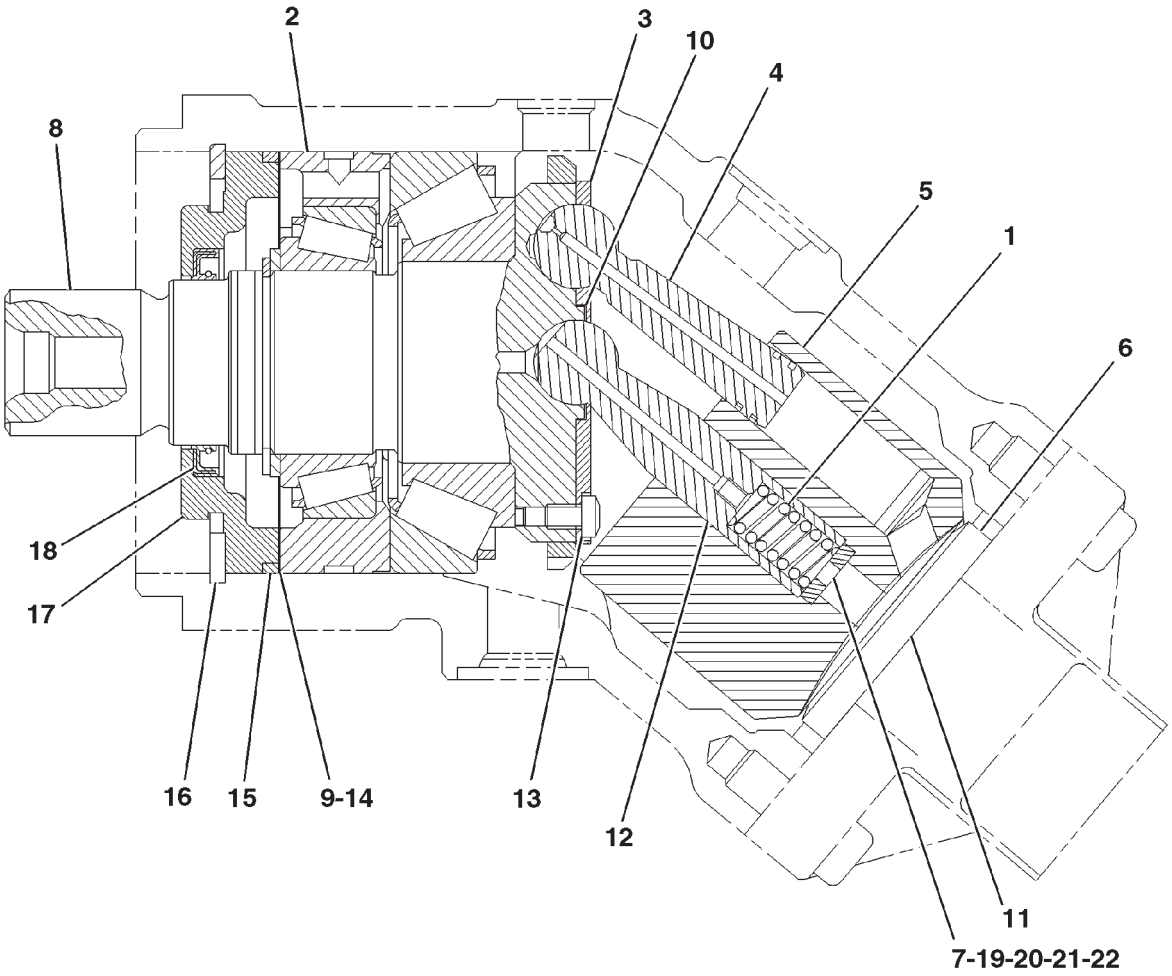


0829761A

## ROTATING GP-MOTOR - 203-0189
STEERING

| ITEM | NUMBER | QTY | DESCRIPTION |
|---|---|---|---|
| - | 203-0189 | -- | ROTATING GP-MOTOR [A] |
| 1 | CH171-3061 | 1 | SPRING |
| 2 | CH171-5989 | 1 | KIT-BEARING [R] |
| 3 | CH9T-1642 | 1 | PLATE-RETAINING |
| 4 | CH165-6969 | 7 | PISTON ASM |
| | CH9T-1582 | 2 | RING |
| 5 | CH9T-1687 | 1 | BARREL-CYLINDER |
| 6 | 203-0341 | 1 | VALVE GP-FLUSHING (HYD STEERING) A |
| 6A | 203-3167 | 1 | PLATE |
| 6B | 203-3168 | 1 | PIN |
| 6C | CH119-6110 | 2 | RETAINER |
| 6D | CH6E-4102 | 2 | SPRING |
| 6E | CH203-3169 | 2 | PIN |
| 7 | CH171-3060 | 1 | SHIM (3.6mm) |
| 8 | 202-2792 | 1 | SHAFT ASM-MOTOR |
| 9 | CH9T-1579 | 1 | SHIM (0.3) |
| 10 | CH9T-1643 | 1 | DISC-RETAINING |
| 11 | CH203-0343 | 1 | WASHER |
| 12 | CH171-3054 | 1 | PIN-CENTER |
| 13 | CH113-4420 | 7 | SCREW (M6X20MM) |
| 14 | CH9T-1576 | 2 | SHIM (0.1) |
| 15 | CH5D-5958 | 1 | SEAL-O-RING |
| 16 | CH6V-3326 | 1 | RING-RETAINING |
| 17 | CH9T-1637 | 1 | COVER-FRONT |
| 18 | CH123-5748 | 1 | SEAL-SHAFT |
| 19 | CH171-3059 | 1 | SHIM (3.7mm) |
| 20 | CH171-3058 | | SHIM (3.8mm) |
| 21 | CH171-3057 | 1 | SHIM (3.9mm) |
| 22 | CH171-3055 | 1 | SHIM (4.0mm) |

[A] PART OF CH162-9601 & CH162-9602
MOTOR GP-PISTON
[R] REPLACE COMPLETE

0829761A
PR: t05i29k58b0352

## HEAD GP-MOTOR - 203-1213

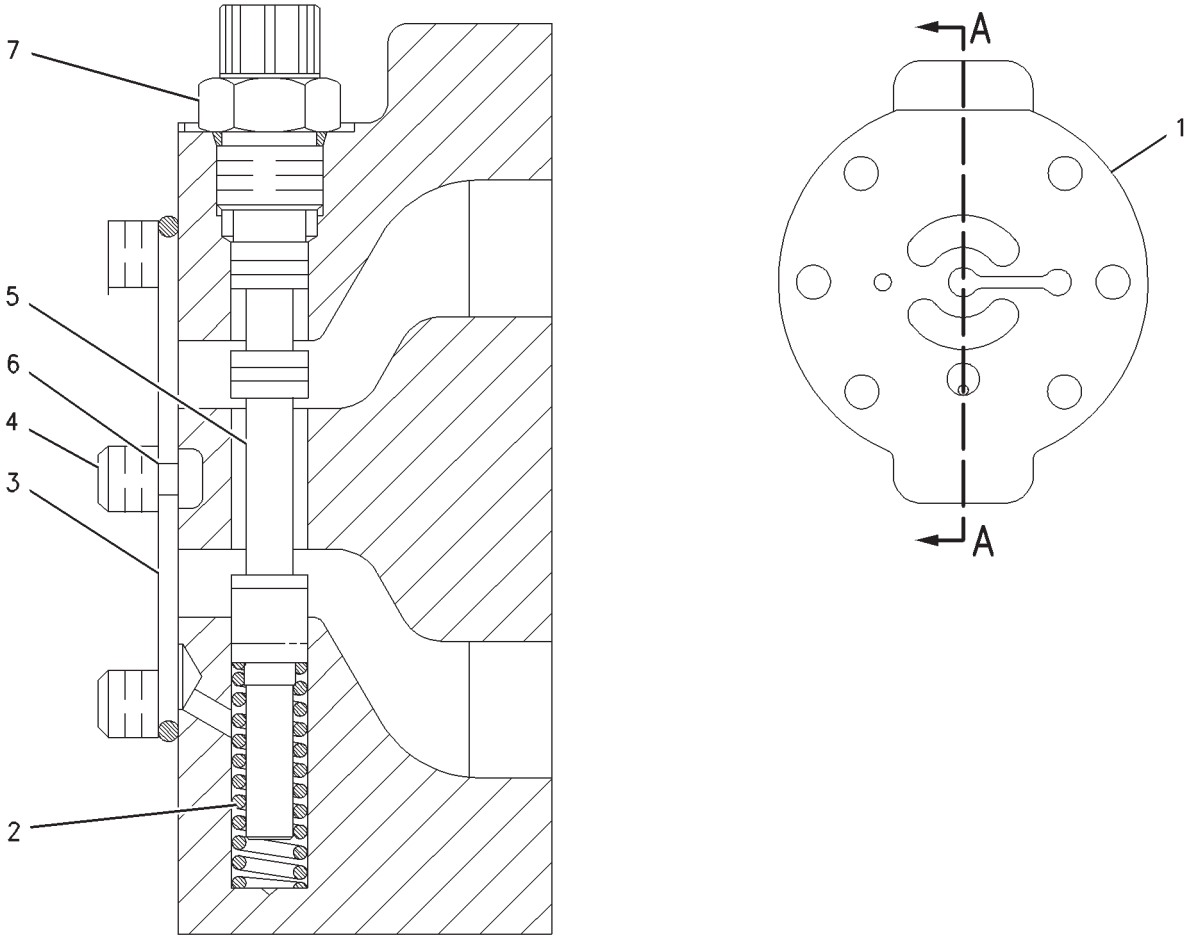


SECTION A-A

00852712

## HEAD GP-MOTOR - 203-1213

| ITEM | NUMBER | QTY | DESCRIPTION |
|---|---|---|---|
| - | 203-1213 | -- | HEAD GP-MOTOR |
| 1 | 203-1207 | 1 | HEAD |
| 2 | CH166-7413 | 1 | SPRING |
| 3 | CH6V-1197 | 1 | SEAL-O-RING |
| 4 | 400220X1 | 6 | BOLT-HEX SOCKET (M12X1.75X30MM) |
| 5 | 203-1210 | 1 | SPOOL |
| 6 | CH1G-3174 | 1 | PIN |
| 7 | CH166-7414 | 1 | FITTING |

[A] PART OF 162-9602 MOTOR GP-PISTON

00852712
PR: t05i29k58b0353

## ACTUATOR GP-PISTON PUMP - CH183-8430

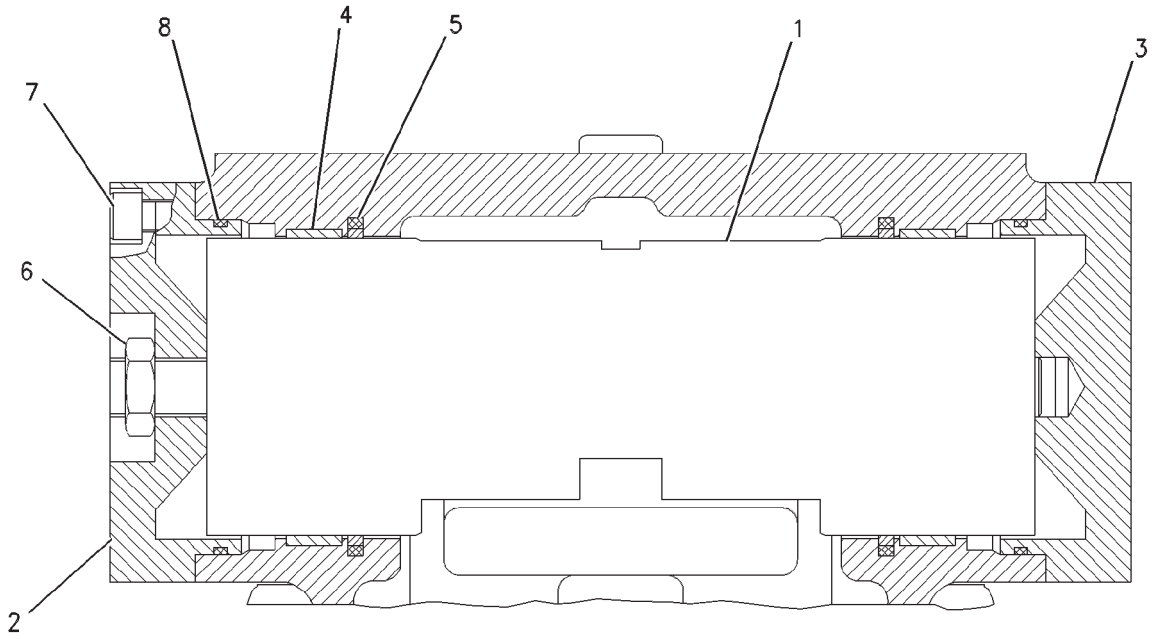


00664406

## ACTUATOR GP-PISTON PUMP - CH183-8430

| ITEM | NUMBER | QTY | DESCRIPTION |
|---|---|---|---|
| - | CH183-8430 | -- | ACTUATOR GP-PISTON PUMP [A] |
| 1 | CH183-8417 | 1 | VALVE GP-SERVO<br>(SEE BREAKDOWN FOR COMPONENTS) |
| 2 | CH183-8431 | 1 | COVER |
| 3 | CH183-8442 | 1 | COVER |
| 4 | CH183-8443 | 2 | RING-WEAR |
| 5 | CH183-8444 | 2 | RING-SEAL |
| 6 | CH119-0942 | 1 | NUT |
| 7 | 400151X1 | 8 | BOLT-SOCKET HEAD (M8X1.25X25MM) |
| 8 | CH8C-3089 | 2 | SEAL-O-RING (82.22MM ID) |

[A] PART OF CH162-9592 PUMP GP-PISTON

00664406
PR: t05i29k58b0354

## HYDRAULIC KIT-POWER BEYOND - 178-7162

**STD FLOW (0-60 LPM) .5" COUPLER**
**ROW AND SPECIAL APPLICATIONS**

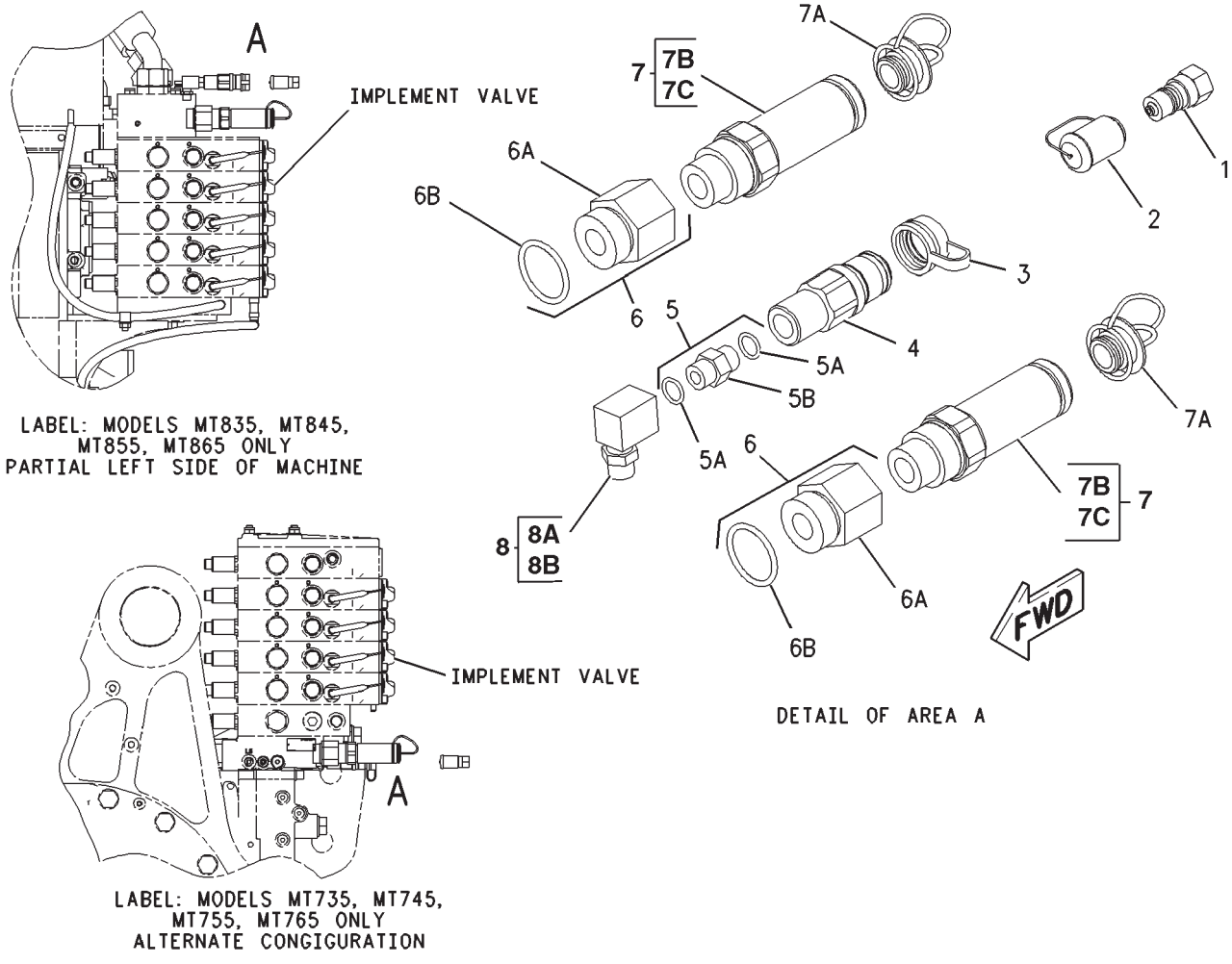

## HYDRAULIC KIT-POWER BEYOND - 178-7162

**STD FLOW (0-60 LPM) .5" COUPLER**
**ROW AND SPECIAL APPLICATIONS**

| ITEM | NUMBER | QTY | DESCRIPTION |
|---|---|---|---|
| - | 178-7162 | -- | CONNECTOR GP-VALVE |
| 1 | CH153-4061 | 1 | FITTING |
| - | CH153-4058 | 1 | COUPLING (NOT SHOWN) [A] |
| 2 | CH153-6225 | 1 | CAP-DUST |
| 3 | CH159-5893 | 1 | CAP-DUST |
| 4 | CH159-5897 | 1 | COUPLER AS |
| 5 | CH170-0964 | 1 | CONNECTOR AS (6STOR X 6STOR) |
| 5A | 400318X1 | 2 | SEAL-O-RING (11.89DIA X 1.98) |
| 5B | ----- | 1 | CONNECTOR (ORDER ITEM 5) |
| 6 | CH172-4621 | 2 | ADAPTER AS (16STOR X 12STOR) |
| 6A | ----- | 1 | ADAPTER-STR (ORDER ITEM 6) |
| 6B | 400376X1 | 1 | SEAL-O-RING (29.74ID X 2.95DIA) |
| 7 | CH183-3725 | 2 | COUPLER ASM |
| 7A | CH168-4599 | 1 | CAP-DUST |
| 7B | CH5L-4758 | 1 | SEAL-O-RING |
| 7C | CH201-7615 | 1 | RING-BACKUP |
| - | CH159-5898 | 1 | NIPPLE ASM (NOT SHOWN) [B] |
| 8 | CH150-3065 | 1 | ADAPTER AS-90DEG (6STORX6STOR) [C] |
| 8A | 400318X1 | 1 | SEAL-O-RING (11.89ID X 1.98) |
| 8B | ----- | 1 | ADAPTER (ORDER ITEM 8) |

[A] MATING PART FOR ITEM 1
[B] MATING PART FOR ITEM 7
[C] PART REQ'D FOR MODELS
MT835, MT845, MT855, MT865 ONLY

00885028
PR: t05i29k58b0355

## CONNECTOR GP-VALVE - 180-7174

**ABOVE 60 LPM HYDRAULIC POWER BEYOND ROW AND SPECIAL APPLICATIONS**

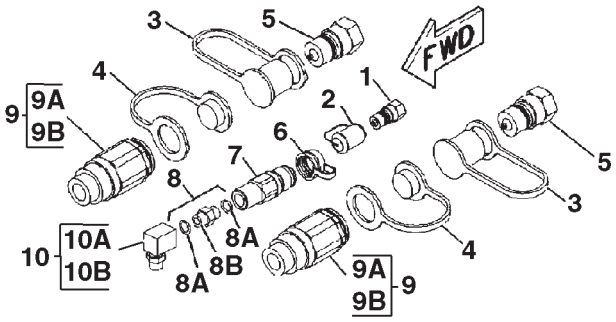


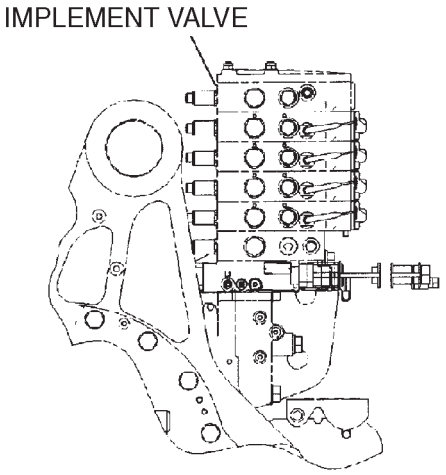


RIGHT SIDE VIEW

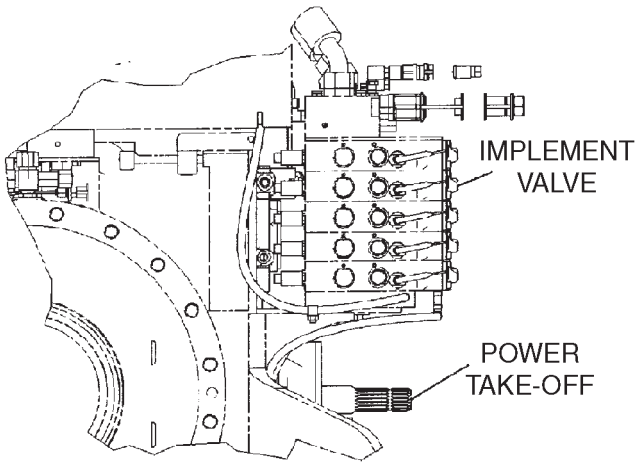


LEFT SIDE VIEW

0824172A

## CONNECTOR GP-VALVE - 180-7174

**ABOVE 60 LPM HYDRAULIC POWER BEYOND ROW AND SPECIAL APPLICATIONS**

| ITEM | NUMBER | QTY | DESCRIPTION |
|---|---|---|---|
| - | 180-7174 | -- | CONNECTOR GP-VALVE |
| 1 | CH153-4061 | 1 | FITTING |
| 2 | CH153-6225 | 1 | CAP-DUST |
| 3 | CH153-6227 | 2 | CAP-DUST |
| 4 | CH153-6228 | 2 | PLUG-DUST [A] |
| 5 | CH159-5890 | 2 | FITTING ASM (INCLUDES COUPLING & CAP) |
| | CH153-6227 | 1 | CAP-DUST |
| 6 | CH159-5893 | 1 | CAP-DUST |
| 7 | CH159-5897 | 1 | COUPLER |
| 8 | CH170-0964 | 1 | CONNECTOR AS (6STORX6STOR) |
| 8A | 400318X1 | 2 | SEAL-O-RING (11.89IDX1.98DIA) |
| 8B | ----- | 1 | CONNECTOR (ORDER ITEM 8) |
| 9 | CH183-3724 | 2 | COUPLER AS |
| 9A | CH2K-8199 | 1 | SEAL-O-RING |
| 9B | CH201-7614 | 1 | RING-BACKUP |
| - | CH5R-6305 | 1 | NIPPLE ASM (NOT SHOWN) [B] |
| 10 | CH150-3065 | 1 | ADAPTER AS (90DEG-6STOR X 6STOR) [C] |
| 10A | 400318X1 | 1 | SEAL-O-RING (11.89IDX1.98DIA) |
| 10B | ----- | 1 | ADAPTER (ORDER ITEM 10) |

[A] DUST PROTECTION
[B] MATING PART
[C] PARTS FOR MT800 SERIES ONLY

0824172A
PR: t05i29k58b0356

## CONVERSION GP-CONTROL VALVE - 185-8699
### 4 VALVE TO 5 VALVE UPGRADE

NO ILLUSTRATION

NOTIF

## CONVERSION GP-CONTROL VALVE - 185-8699

### 4 VALVE TO 5 VALVE UPGRADE

| ITEM | NUMBER | QTY | DESCRIPTION |
|---|---|---|---|
| - | 185-8699 | -- | CONVERSION GP-CONTROL VALVE |
| | 136-5670 | 1 | CONTROL & WIRING GP (NOT SERVICED)<br>(SEE BREAKDOWN FOR COMPONENTS) |
| | 136-5355 | 1 | CONTROL GP-IMPLEMENT (NOT SERVICED)<br>(SEE BREAKDOWN FOR COMPONENTS) |
| | 189-5910 | 1 | CONVERSION GP-CONTROL VALVE (FOUR TO FIVE BANK VALVE)<br>(SEE BREAKDOWN FOR COMPONENTS) |

NOTIF
PR: t05i29k58b0357

## CONVERSION GP-CONTROL VALVE - 185-8701

NO ILLUSTRATION

NOTIF

## CONVERSION GP-CONTROL VALVE - 185-8701

| ITEM | NUMBER | QTY | DESCRIPTION |
|---|---|---|---|
| - | 185-8701 | -- | CONVERSION GP-CONTROL VALVE [A] |
| | 152-0448 | 1 | CONTROL GP-IMPLEMENT (NOT SERVICED)<br>(SEE BREAKDOWN FOR COMPONENTS) |
| | 189-5906 | 1 | CONVERSION GP-CONTROL VALVE<br>(FIVE TO SIX BANK VALVE)<br>(SEE BREAKDOWN FOR COMPONENTS) |

[A] 5 VALVE TO 6 VALVE UPGRADE

NOTIF
PR: t05i29k58b0358

## CONVERSION GP-CONTROL VALVE - 189-5910
### 4 VALVE TO 5 VALVE UPGRADE

NO ILLUSTRATION

NOTIF

## CONVERSION GP-CONTROL VALVE - 189-5910

### 4 VALVE TO 5 VALVE UPGRADE

| ITEM | NUMBER | QTY | DESCRIPTION |
|---|---|---|---|
| - | 189-5910 | -- | CONVERSION GP-CONTROL VALVE [A] |
| | 180-0498 | 1 | VALVE GP-CONTROL<br>(SEE BREAKDOWN FOR COMPONENTS) |
| | WR522218 | 4 | NUT (M10X1.5) |
| | CH5P-9186 | 14 | SEAL-O-RING |
| | CH8L-2777 | 4 | SEAL-O-RING |
| | 209-7497 | 4 | STUD |

[A] PART OF 185-8699 CONV GP-CONTROL VALVE

NOTE:
QUANTITIES SHOWN ON SEAL-O-RING REFLECT REPLACEMENT SEALS FOR THE VALVE SECTION IMMEDIATELY BELOW THE TOP PLATE AMD DUPLICATE SEALS FOR THOSE PRESENT IN THE ADDITIONAL VALVE GP

THIS KIT CONVERTS A FOUR (4) REMOTE VALVE NONSTEERABE HITCH VALVE STACK TO FIVE (5) REMOTE VALVE NONSTEETABEL HITCH VALVE STOCK.

NOTIF
PR: t05i29k58b0359

## CONVERSION GP-CONTROL VALVE - 189-5906
### 5 VALVE TO 6 VALVE UPGRADE

NO ILLUSTRATION

NOTIF

## CONVERSION GP-CONTROL VALVE - 189-5906

### 5 VALVE TO 6 VALVE UPGRADE

| ITEM | NUMBER | QTY | DESCRIPTION |
|---|---|---|---|
| - | 189-5906 | -- | CONVERSION GP-CONTROL VALVE [A] |
| 1 | 162-9816 | 1 | VALVE GP-CONTROL<br>(SEE BREAKDOWN FOR COMPONENTS) |
| 2 | WR522218 | 4 | NUT (M10X1.5) |
| 3 | CH5P-9186 | 14 | SEAL-O-RING [J] |
| 4 | CH8L-2777 | 4 | SEAL-O-RING [J] |
| 5 | CH209-7498 | 4 | STUD |

[A] PART OF 185-8701 CONVERSION GP-CONTROL VALVE
[J] QUANTITIES SHOWN REFLECT REPLACEMENT SEALS FOR THE VALVE SECTION IMMEDIATELY BELOW THE TOP PLATE AND DUPLICATE SEALS FOR THOSE PRESENT IN THE ADDITIONAL VALVE GP.

NOTIF
PR: t05i29k58b0360

## KIT-COUPLING-POWER BEYOND - 189-3143

**(CLAAS)**
**EAME ONLY**

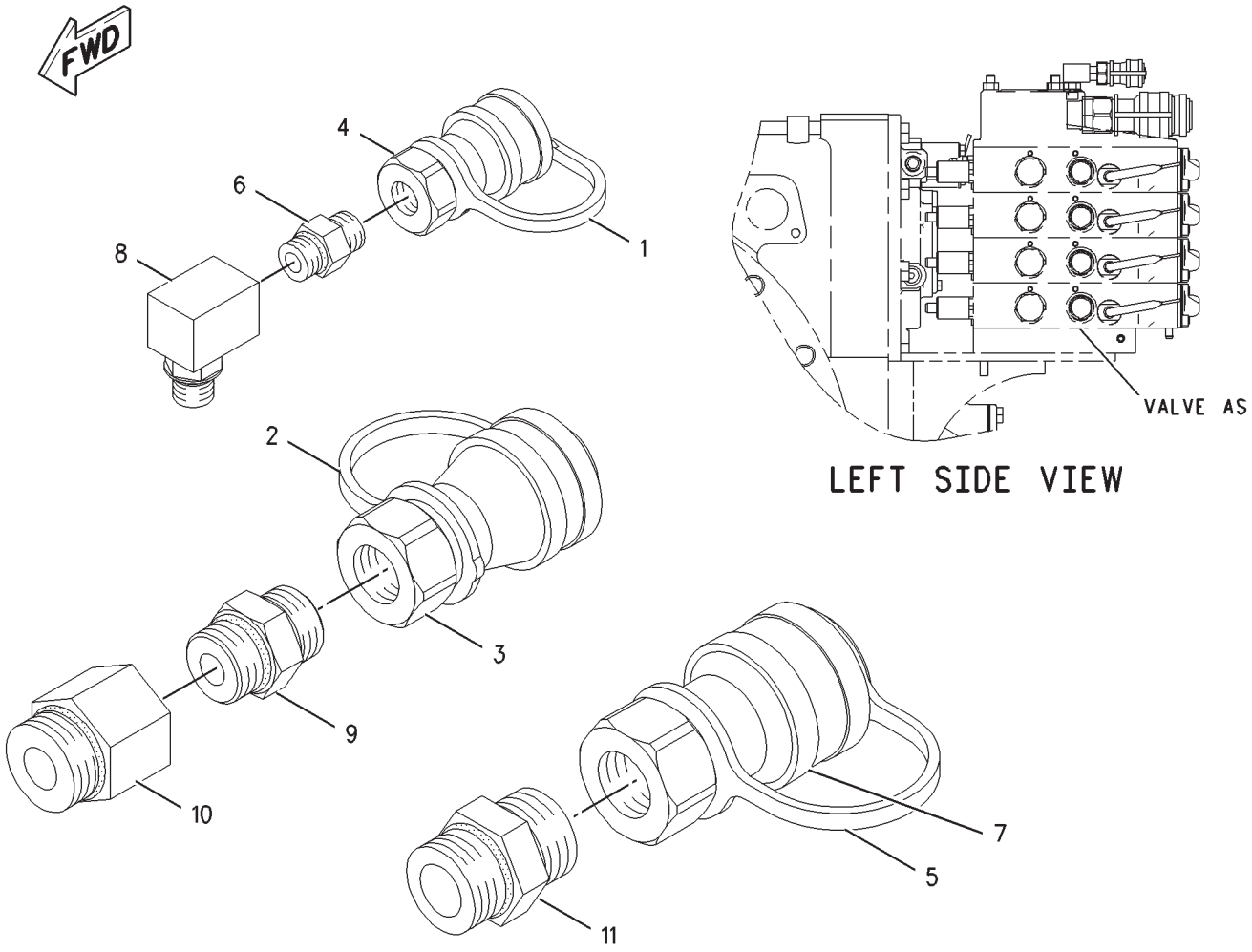


00893843

## KIT-COUPLING-POWER BEYOND - 189-3143

**(CLAAS)**
**EAME ONLY**

| ITEM | NUMBER | QTY | DESCRIPTION |
|---|---|---|---|
| - | 189-3143 | -- | KIT-COUPLING-POWER BEYOND |
| 1 | CH5R-5676 | 1 | PLUG-DUST |
| 2 | CH5R-5718 | 1 | PLUG-DUST |
| 3 | CH5R-6304 | 1 | COUPLER-QUICK CONNECT (12STOR-FEM) |
| | CH3S-9233 | 1 | SEAL-O-RING |
| | CH5R-5780 | 1 | RETAINER |
| 4 | CH5R-6868 | 1 | COUPLER-QUICK CONNECT (6STOR-FEM) |
| 5 | CH165-5694 | 1 | PLUG-DUST |
| 6 | CH170-0964 | 1 | CONNECTOR AS (6STOR X 6STOR) |
| | 400318X1 | 2 | SEAL-O-RING (11.89ID X 1.98 DIA) |
| 7 | CH173-7639 | 1 | COUPLER-QUICK CONNECT (16STOR-FEM) |
| | CH191-6944 | 1 | KIT-SEAL (COUPLING AS) |
| 8 | CH150-3065 | 1 | ADAPTER AS (90DEG-6STOR X 6STOR) |
| | 400318X1 | 1 | SEAL-O-RING (11.89ID X 1.98 DIA) |
| 9 | CH172-4620 | 1 | CONNECTOR AS (12STOR HEX) |
| | 400416X1 | 2 | SEAL-O-RING (23.47IDX2.95DIA) |
| 10 | CH172-4621 | 1 | ADAPTER AS (16STOR X 12STOR) |
| | 400376X1 | 2 | SEAL-O-RING (29.74ID X 2.95DIA) |
| 11 | CH172-4622 | 1 | UNION AS (16STOR HEX) |
| | 400376X1 | 2 | SEAL-O-RING (29.74ID X 2.95DIA) |

00893843
PR: t05i29k58b0361

## CYLINDER GP-LIFT

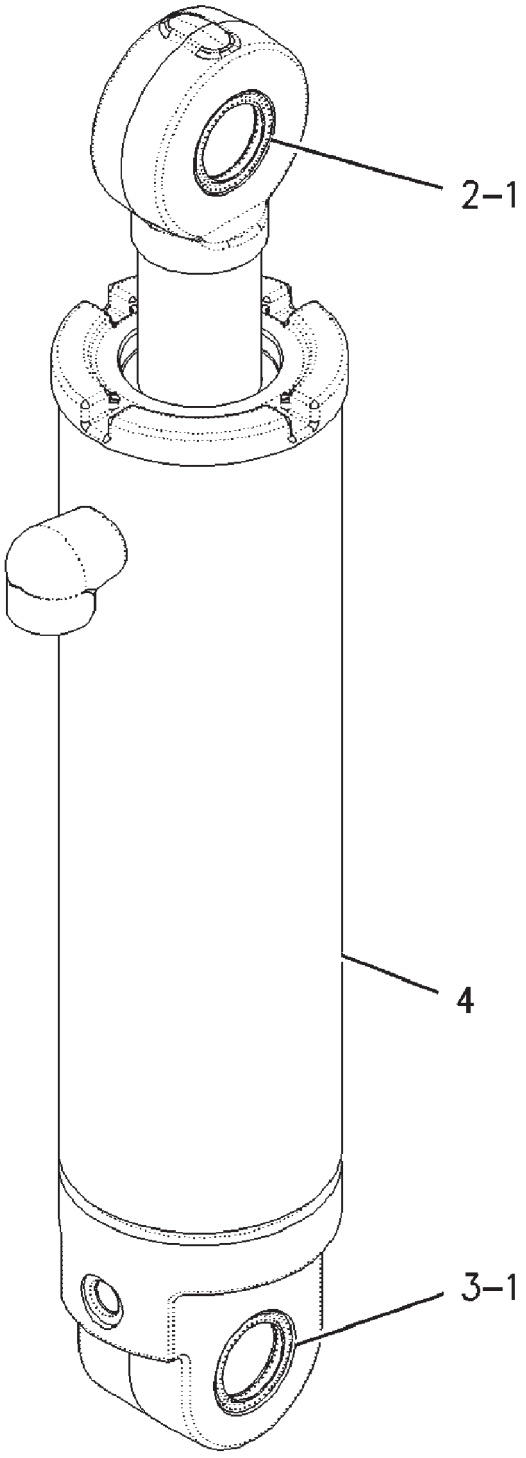


00852391

| ITEM | NUMBER | QTY | DESCRIPTION |
|---|---|---|---|
| - | CH192-6280 | -- | CYLINDER GP-LIFT (W/BRGS & SEALS) [A] |
| 1 | 400311X1 | 4 | SEAL-LIP |
| 2 | CH190-2623 | 1 | BEARING |
| 3 | CH196-3024 | 1 | BEARING |
| 4 | CH198-8789 | 1 | CYLINDER GP (0125-0345-Y) (NOT SERVICED, ORDER CYLINDER GP-W/BRGS & SEALS) (SEE BREAKDOWN FOR COMPONENTS) |

[A] PART OF: 169-0027;169-0028;
179-0852;180-6639;186-0979 &
189-3300 HITCH AR-3 POINT

00852391
PR: t05i29k58b0362

## CYLINDER GP (0125-0345-Y)

**125MM X 345MM (4.92 X 13.58")**

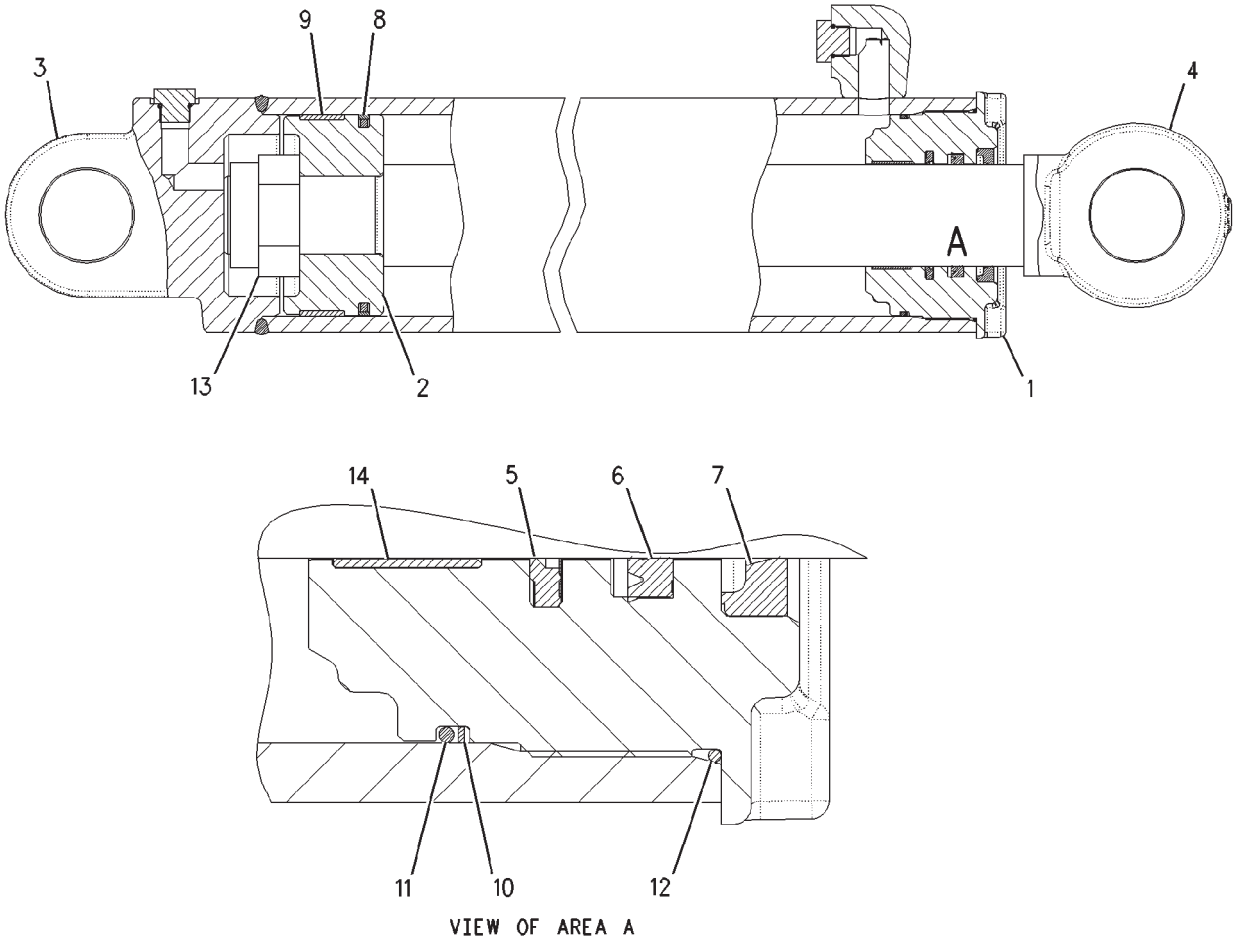

## CYLINDER GP (0125-0345-Y)
**125MM X 345MM (4.92 X 13.58")**

| ITEM | NUMBER | QTY | DESCRIPTION |
|---|---|---|---|
| - | CH198-8789 | -- | CYLINDER GP [A] (NOT SERVICED)<br>(ORDER CYLINDER GP-LIFT CH192-6280) |
| 1 | ----- | 1 | HEAD |
| 2 | ----- | 1 | PISTON |
| 3 | ----- | 1 | BODY |
| 4 | ----- | 1 | ROD ASM |
| 5 | CH167-2201 | 1 | SEAL ASM-BUFFER |
| 6 | CH167-2312 | 1 | SEAL-U-CUP |
| 7 | 500686D1 | 1 | SEAL-WIPER (DOUBLE LIP) |
| 8 | CH186-4955 | 1 | SEAL-PISTON |
| 9 | CH186-5137 | 1 | RING-WEAR |
| 10 | CH2J-3961 | 1 | RING-BACKUP |
| 11 | CH2J-8163 | 1 | SEAL-O-RING (117.07X3.53) |
| 12 | CH5F-3999 | 1 | SEAL-O-RING (123.42X3.53) |
| 13 | ----- | 1 | NUT-SELF LOCKING |
| 14 | CH8T-0785 | 1 | RING-WEAR |

[A] PART OF CH192-6280 CYLINDER GP-LIFT

00852903
PR: t05i29k58b0363

## FILTER & MTG GP-HYDRAULIC - 158-2349

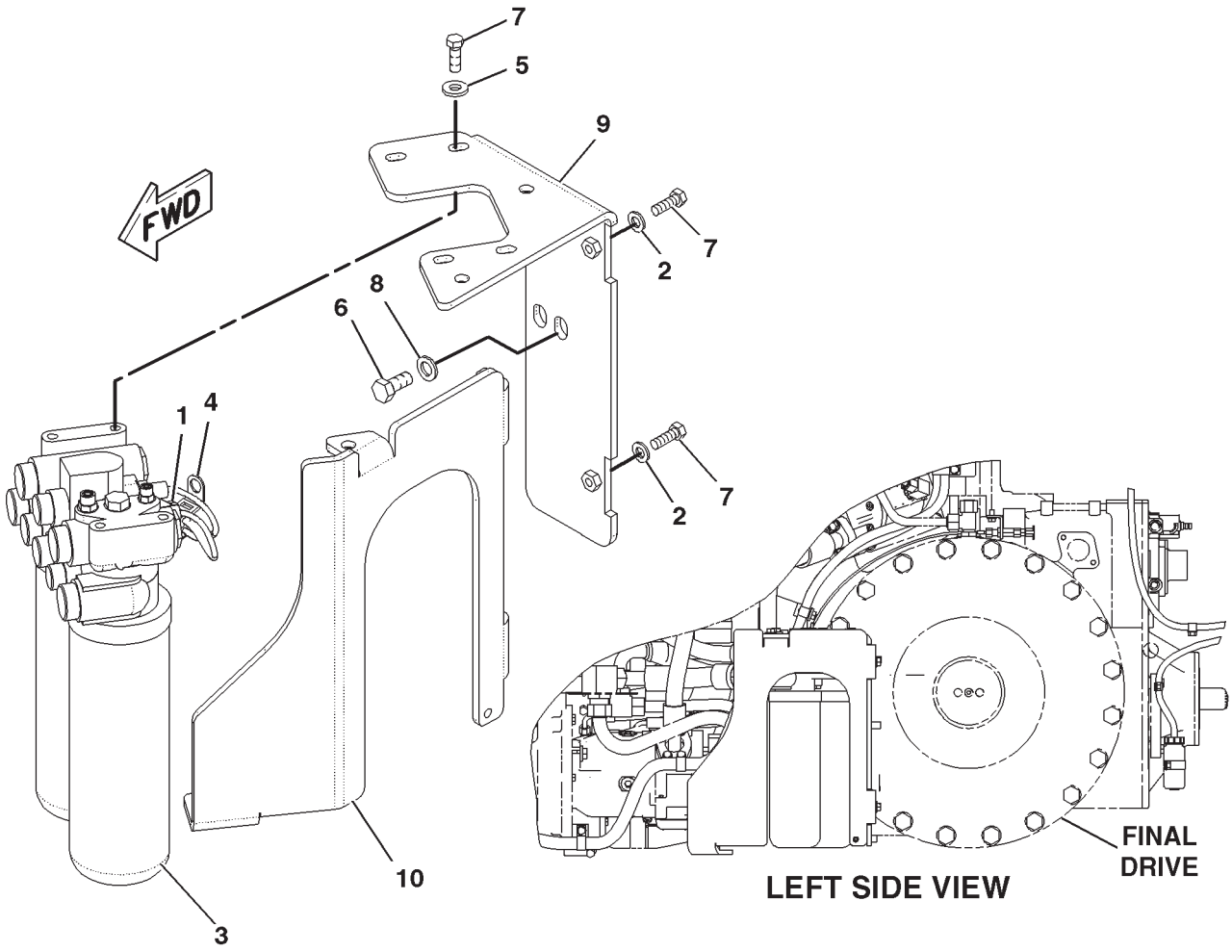


0895667A

## FILTER & MTG GP-HYDRAULIC - 158-2349

| ITEM | NUMBER | QTY | DESCRIPTION |
|---|---|---|---|
| - | 158-2349 | -- | FILTER & MTG GP-HYD [A] (NOT SERVICED) |
| 1 | CH7K-1181 | 1 | STRAP-CABLE |
| 2 | 400357X1 | 2 | WASHER-HARD (M12X25.5X3) |
| 3 | 210-2395 | -- | FILTER GP-OIL (HYDRAULIC) (S/N: PRIOR BAM40601;BBP40472;BCC40702;BDS40823) (NLA ORDER EFF. FILTER GP-OIL) |
| 3 | 501767D1 | 1 | FILTER GP-OIL (HYDRAULIC) (S/N: EFF BAM40601;BBP40472;BCC40702;BDS40823) (TRANS/STEERING/IMPLEMENT) (SEE BREAKDOWN FOR COMPONENTS) |
| 4 | 400380X1 | 1 | CLIP |
| 5 | 400381X1 | 4 | WASHER-HARD (13.5X30X4) |
| 6 | WR518357 | 4 | BOLT (M16X2X35MM) |
| 7 | 400064X1 | 6 | BOLT (M12X1.75X35MM) |
| 8 | 400082X1 | 4 | WASHER (17.5X30X3.5) |
| 9 | 222-9854 | 1 | PLATE ASM |
| | CH8T-3597 | 5 | NUT-WELD (M12X1.75) |
| 10 | 222-9855 | 1 | PLATE ASM |
| | CH8T-3612 | 1 | NUT-WELD (M8X1.25) |
| | CH8T-3490 | 1 | NUT-WELD (M10X1.5) |
| | CH8T-3597 | 1 | NUT-WELD (M12X1.75) |

[A] PART OF 158-2342 HYD AR-COMMON

0895667A
PR: t05i29k58b0364

## GUARD GP-HDY FILTER - 233-7373
**ROW ONLY**

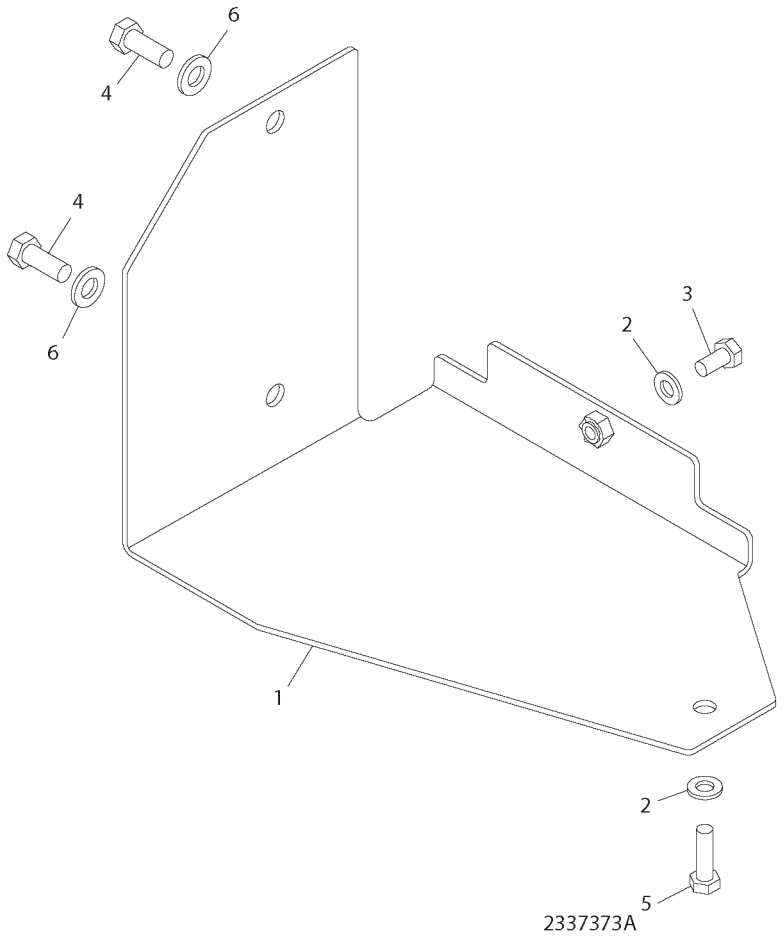

## GUARD GP-HDY FILTER - 233-7373
**ROW ONLY**

| ITEM | NUMBER | QTY | DESCRIPTION |
|---|---|---|---|
| - | 233-7373 | -- | GUARD GP-HDY FILTER |
| 1 | 224-6641 | 1 | PLATE AS. |
| 2 | 8T-4121 | 2 | WASHER-HARD M10 |
| 3 | 8T-4137 | 1 | BOLT- M10X1.5 X20ZNDI HHD 10.9 |
| 4 | 8T-4139 | 2 | BOLT- M12X1.75X30 ZNDI HHD10.9 |
| 5 | 8T-4196 | 1 | BOLT |
| 6 | 8T-4223 | 2 | WASHER-HARD M12(1/2) 26OD |

2337373A
PR: t05i29k58b0365

## HYDRAULIC KIT-CASE DRAIN

**189-3141**
**EAME ONLY**

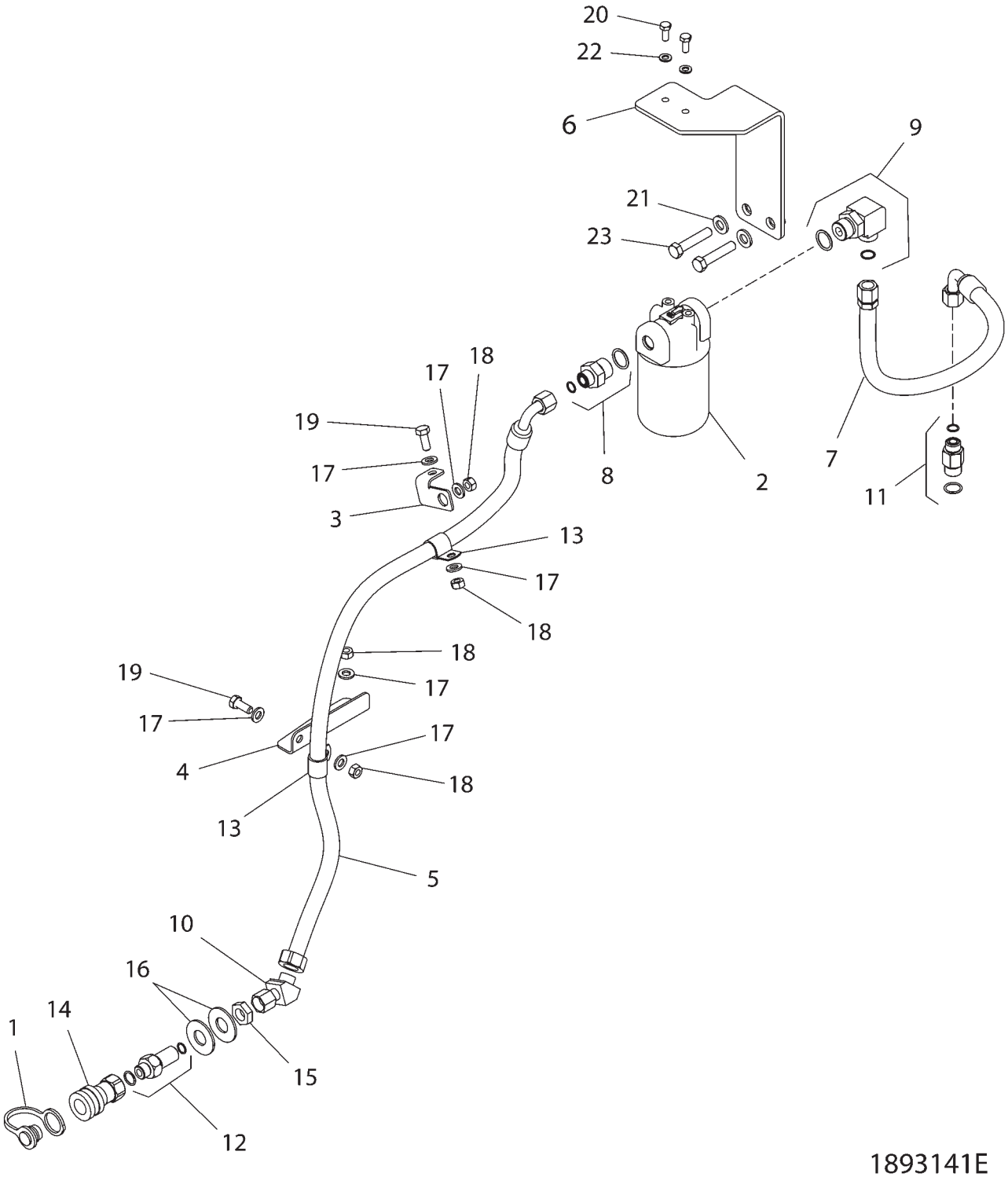

## HYDRAULIC KIT-CASE DRAIN
**189-3141**
**EAME ONLY**

| ITEM | NUMBER | QTY | DESCRIPTION |
|---|---|---|---|
| - | 189-3141 | -- | HYDRAULIC KIT-CASE DRAIN<br>FOR COMPLETE REPLACEMENT,<br>RDER 502682D1-FLAT FACE OR<br>02683D1-PIONEER) |
| 1 | 400564X1 | 1 | PLUG-DUST-23.4 DIA |
| 2 | 502679D1 | 1 | FILTER GP-HYD (INCLS ELEMENT) |
| | 501771D1 | 1 | ELEMENT-OIL FILTER |
| 3 | 200-2992 | 1 | BRACKET |
| 4 | 200-2993 | 1 | BRACKET |
| 5 | CH208-9927 | 1 | HOSE AS-12.7 ID SAE 100R1 |
| 6 | 208-9928 | 1 | BRACKET AS |
| 7 | CH226-6489 | 1 | HOSE AS 12.7 ID SAE 100R1 AT |
| 8 | 400414X1 | 1 | CONNECTOR AS-STR-12STOR-8ORFS |
| | CH6V-8398 | 1 | SEAL-O-RING (16.03OD X 1.78) |
| | 400319X1 | 1 | SEAL-O-RING (19.18ID X 2.46) |
| 9 | 400410X1 | 1 | ELBOW AS-90DEG-12STOR-10ORFS |
| | 400332X1 | 1 | SEAL-O-RING (19.28ID X 1.78) |
| | 400416X1 | 1 | SEAL-O-RING (23.47ID X 2.95 DIA) |
| 10 | 400616X1 | 1 | ELBOW AS-8 ORFS 45DEG |
| | CH6V-8398 | 1 | SEAL-O-RING (16.03ODX1.78) |
| 11 | CH164-5557 | 1 | CONNECTOR AS-8ORFS X 10STOR |
| | 400319X1 | 1 | SEAL-O-RING (19.18IDX2.46) |
| | CH6V-8398 | 1 | SEAL-O-RING (16.03ODX1.78DIA) |
| 12 | 400565X1 | 1 | CONNECTOR AS-BLKHD-8STOR-8ORFS |
| 13 | CH3S-8665 | 2 | CLIP-LOOP 22.2 ID W/COAT |
| 14 | 700719352 | 1 | COUPLER/HALF-QUICK DISC-FEMALE |
| 15 | 400348X1 | 1 | NUT-BULKHEAD 13/16-16 |
| 16 | CH7X-3383 | 2 | WASHER-22 ID X 50 OD X 3 ZN |
| 17 | 400287X1 | 6 | WASHER-HARD 11IDX21ODX2.5 ZND1 |
| 18 | WR522218 | 4 | NUT-M10-1.5,CL10.9,ZN,H,REG |
| 19 | 400039X1 | 2 | BOLT-M10X1.5X25 ZNDI HHD 10.9 |
| 20 | 400053X1 | 2 | BOLT-M8X1.25X20 ZNDI HHD 10.9 |
| 21 | 400357X1 | 2 | WASHER-HARD-M12X25.50DX3THK |
| 22 | 400339X1 | 2 | WASHER-HARD |
| 23 | 400063X1 | 2 | BOLT-M12X1.75X60 ZNDI HHD 10.9 |

## HYDRAULIC KIT-CASE DRAIN
**189-3142**

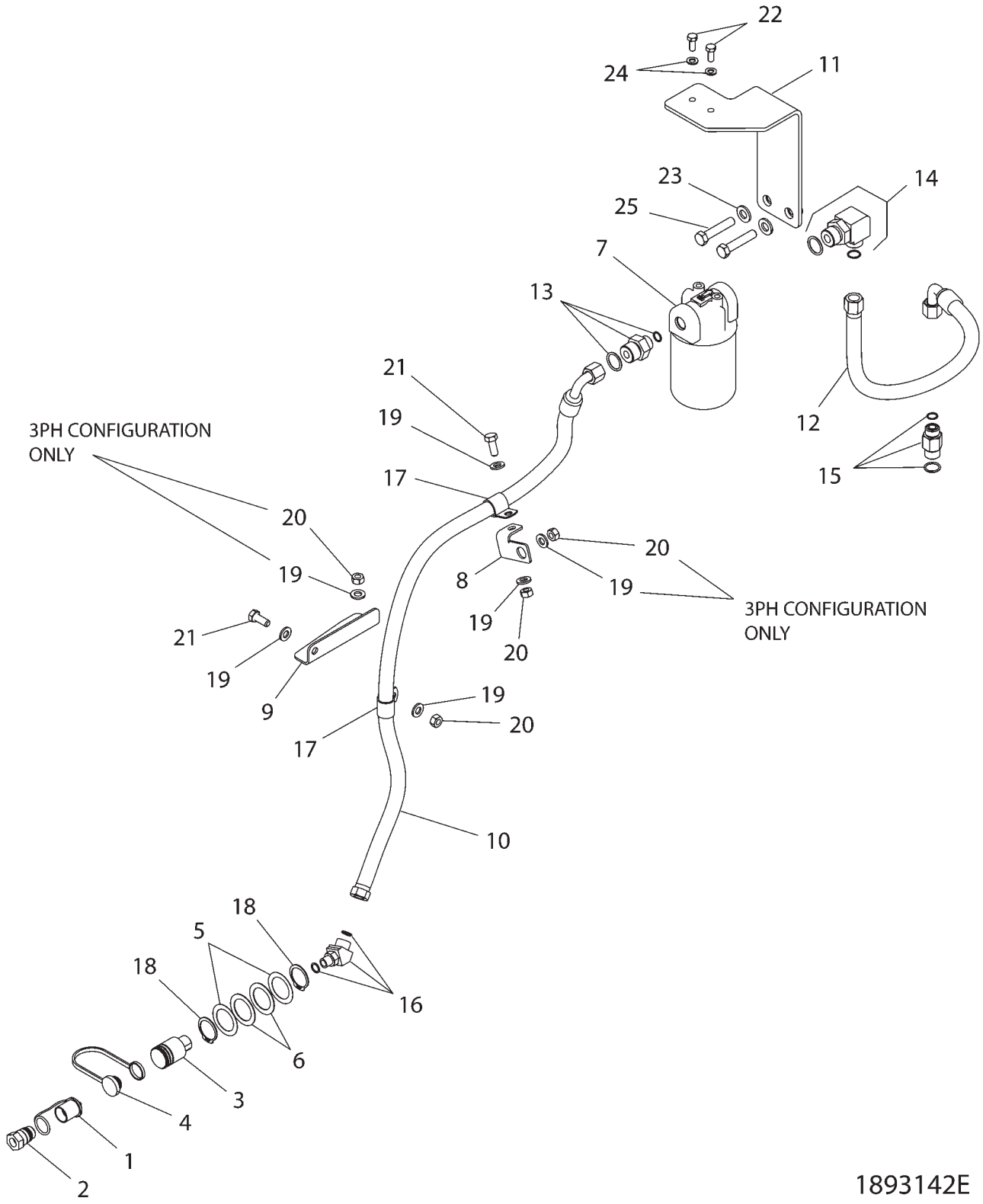

## HYDRAULIC KIT-CASE DRAIN
**189-3142**

| ITEM | NUMBER | QTY | DESCRIPTION |
|---|---|---|---|
| - | 189-3142 | -- | HYDRAULIC KIT-CASE DRAIN<br>FOR COMPLETE REPLACEMENT,<br>RDER 502682D1-FLAT FACE OR<br>02683D1-PIONEER) |
| 1 | 400423X1 | 1 | CAP-PROTECTIVE (22 DIA) |
| 2 | 400419X1 | 1 | NIPPLE AS-QUICK DISC |
| 3 | 400420X1 | 1 | COUPLING AS-QUICK DISC |
| 4 | 400422X1 | 1 | PLUG-DUST |
| 5 | 179-9827 | 2 | SHIM |
| 6 | 179-9828 | 2 | SHIM |
| 7 | 502679D1 | 1 | FILTER GP-OIL |
| | 501771D1 | 1 | ELEMENT-OIL FILTER |
| 8 | 200-2992 | 1 | BRACKET |
| 9 | 200-2993 | 1 | BRACKET |
| 10 | CH208-9927 | 1 | HOSE ASM |
| 11 | 208-9928 | 1 | BRACKET ASM |
| 12 | CH226-6489 | 1 | HOSE ASM |
| 13 | 400414X1 | 1 | CONNECTOR AS-STR-12STOR-8ORFS |
| | 400416X1 | 1 | SEAL-O-RING (23.47IDX2.95DIA) |
| | CH6V-8398 | 1 | SEAL-O-RING (16.03ODX1.78DIA) |
| 14 | 400410X1 | 1 | ELBOW AS (90DEG-12STOR-10ORFS) |
| | 400416X1 | 1 | SEAL-O-RING (23.47IDX2.95DIA) |
| | 400322X1 | 1 | SEAL-O-RING (19.28ID X 1.78) |
| 15 | CH164-5557 | 1 | CONNECTOR AS-8ORFS X 10STOR |
| | 400319X1 | 1 | SEAL-O-RING (19.18ID X 2.46) |
| | CH6V-8398 | 1 | SEAL-O-RING (16.03ODX1.78DIA) |
| 16 | CH164-5624 | 1 | ELBOW AS (45DEG-6STOR-8ORFS) |
| | CH6V-8398 | 1 | SEAL-O-RING (16.03ODX1.78DIA) |
| | 400318X1 | 1 | SEAL-O-RING (11.89ID X 1.98) |
| 17 | CH3S-8665 | 2 | CLIP-LOOP 22.2 ID W/COAT |
| 18 | 400421X1 | 2 | RING-RETAINING,EXT (31IDX1.27) |
| 19 | 400287X1 | 6 | WASHER-HARD (11X21X2.5) |
| 20 | WR522218 | 4 | NUT (M10X1.5) |
| 21 | 400039X1 | 2 | BOLT (M10X1.5X25MM) |
| 22 | 400053X1 | 2 | BOLT (M8X1.25X20MM) |
| 23 | 400357X1 | 2 | WASHER-HARD (M12X25.5X3) |
| 24 | 400339X1 | 2 | WASHER-HARD (8.8X16X2) |
| 25 | 400063X1 | 2 | BOLT (M12X1.75X60) |

## CASE DRAIN GP-FLAT FACE - 502643D1

3 PT HITCH

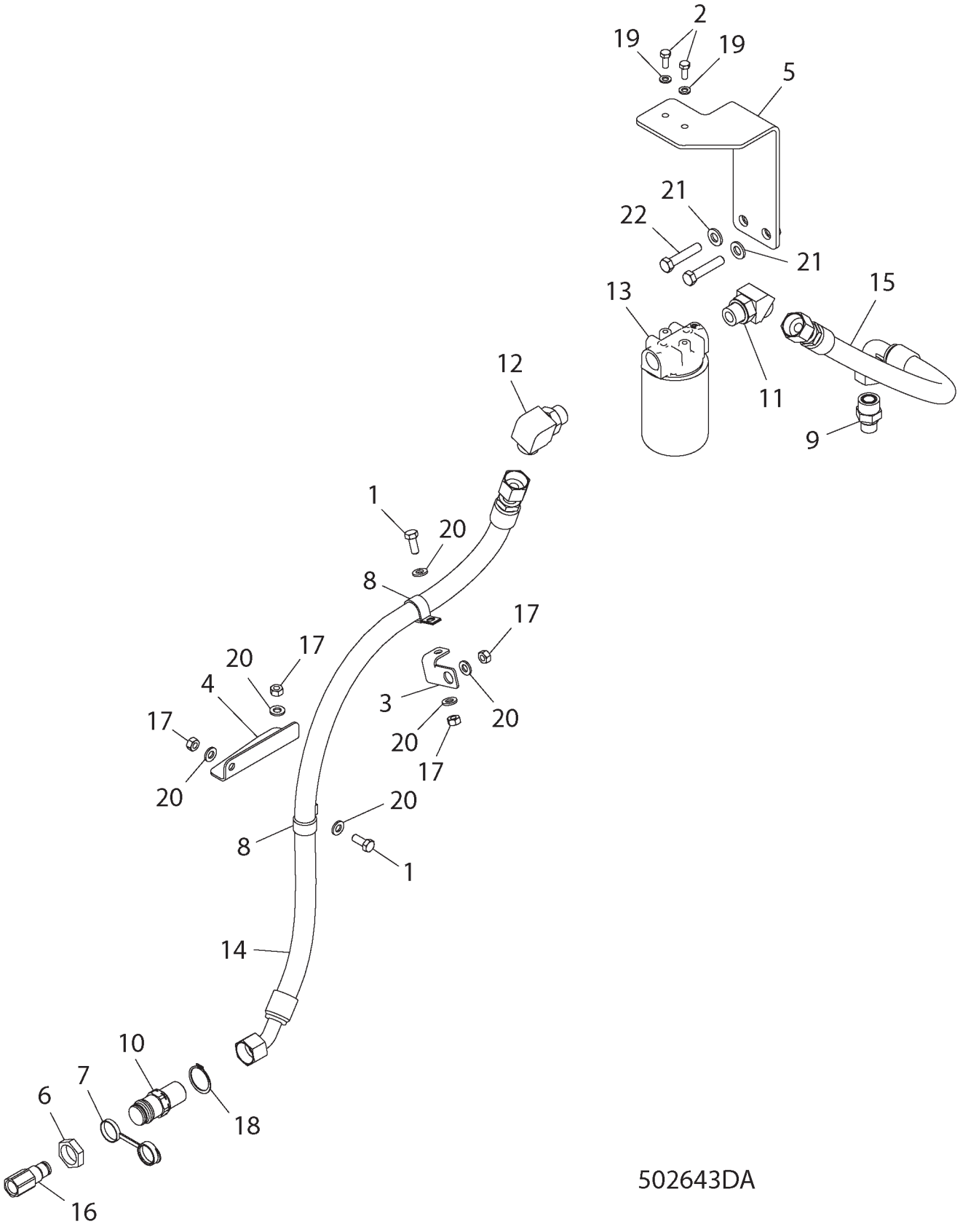

## CASE DRAIN GP-FLAT FACE - 502643D1
3 PT HITCH

| ITEM | NUMBER | QTY | DESCRIPTION |
|---|---|---|---|
| - | 502643D1 | -- | CASE DRAIN GP-FLAT FACE (NOT SERVICED, ORDER FIELD INSTALLED) |
| - | 502682D1 | -- | HYDRAULIC KIT-CASE DRAIN (FIELD INSTALLED) |
| 1 | 400039X1 | 2 | BOLT-M10X1.5X25 ZNDI HHD 10.9 |
| 2 | 400053X1 | 2 | BOLT-M8X1.25X20 ZNDI HHD 10.9 |
| 3 | 200-2992 | 1 | BRACKET |
| 4 | 200-2993 | 1 | BRACKET |
| 5 | 208-9928 | 1 | BRACKET AS |
| 6 | 400961X1 | 1 | BULKHEAD NUT-12ORFS |
| 7 | 502473D1 | 1 | CAP-DUST |
| 8 | 400700X1 | 2 | CLIP LOOP 28.58ID |
| 9 | 400965X1 | 1 | CONNECTOR AS-STR 10STOR-12ORFS |
| | 400319X1 | 1 | SEAL-O-RING (19.18ID X 2.46DIA) |
| | 400366X1 | 1 | SEAL-O-RING (22.5OD X 1.78DIA) |
| 10 | 502475D1 | 1 | COUPLER AS |
| | 400366X1 | 1 | SEAL-O-RING (22.5IDX1.78DIA) |
| 11 | 400967X1 | 1 | ELBOW AS-45 -12STOR-12ORFS |
| | 400366X1 | 1 | SEAL-O-RING (22.5OD X 1.78DIA) |
| | 400416X1 | 1 | SEAL-O-RING (23.47ID X 2.95DIA) |
| 12 | CH148-8347 | 1 | ELBOW AS-90DEG 12STOR X 12ORFS |
| | 400366X1 | 1 | SEAL-O-RING (22.5IDX1.78DIA) |
| | 400416X1 | 1 | SEAL-O-RING (23.47IDX2.95DIA) |
| 13 | 502679D1 | 1 | FILTER GP-HYD |
| | 501771D1 | 1 | FILTER AS-HYD |
| 14 | 502468D1 | 1 | HOSE AS (FOR 19.1 ID SAE |
| 15 | 502469D1 | 1 | HOSE AS |
| 16 | 502472D1 | 1 | NIPPLE AS-FLAT FACE-SIZE 6 |
| 17 | WR522218 | 4 | NUT-M10-1.5,CL10.9,ZN,H,REG |
| 18 | 400968X1 | 1 | SNAP RING EXT |
| 19 | 400339X1 | 2 | WASHER-HARD |
| 20 | 400287X1 | 6 | WASHER-HARD 11IDX21ODX2.5 ZND1 |
| 21 | 400357X1 | 2 | WASHER-HARD-M12X25.50DX3THK |
| 22 | 400063X1 | 2 | BOLT-M12X1.75X60 ZNDI HHD 10.9 |

502643DA
PR: t05i29k58b0368

## CASE DRAIN GP-PIONEER - 502644D1
**3-PT HITCH**

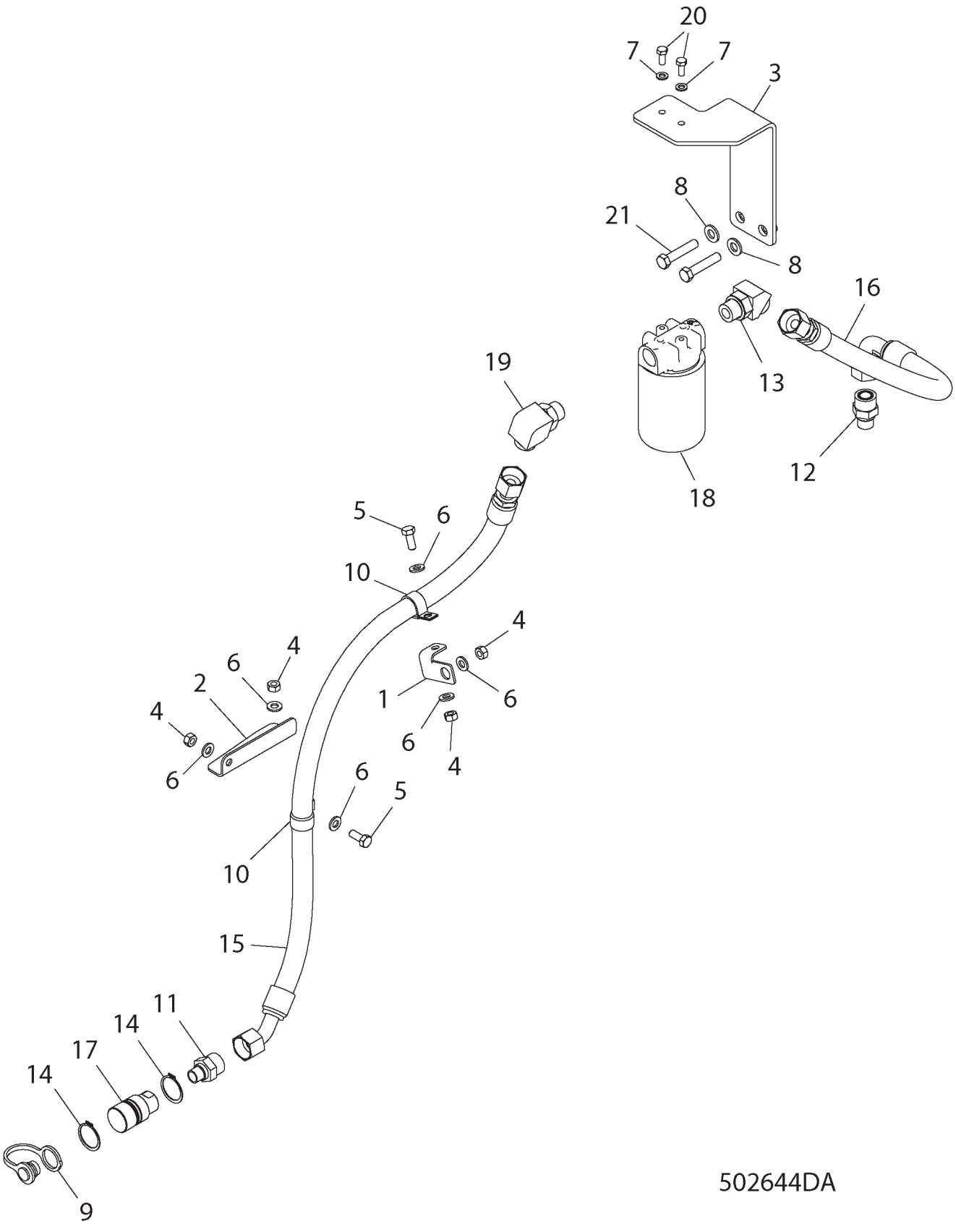

## CASE DRAIN GP-PIONEER - 502644D1
3-PT HITCH

| ITEM | NUMBER | QTY | DESCRIPTION |
|---|---|---|---|
| - | 502644D1 | -- | CASE DRAIN GP-PIONEER (NOT SERVICED, ORDER FIELD INSTALLED) |
| - | 502683D1 | -- | CASE DRAIN GP-PIONEER (FIELD INSTALLED) |
| 1 | 200-2992 | 1 | BRACKET |
| 2 | 200-2993 | 1 | BRACKET |
| 3 | 208-9928 | 1 | BRACKET AS |
| 4 | WR522218 | 4 | NUT-M10-1.5,CL10.9,ZN,H,REG |
| 5 | 400039X1 | 2 | BOLT-M10X1.5X25 ZNDI HHD 10.9 |
| 6 | 400287X1 | 6 | WASHER-HARD 11IDX21ODX2.5 ZND1 |
| 7 | 400339X1 | 2 | WASHER-HARD |
| 8 | 400357X1 | 2 | WASHER-HARD-M12X25.50DX3THK |
| 9 | 400564X1 | 1 | PLUG-DUST-23.4 DIA |
| 10 | 400700X1 | 2 | CLIP LOOP 28.58ID |
| 11 | 400963X1 | 1 | CONNECTOR AS-STR -8STOR-12ORFS |
| | CH3K-0360 | 1 | SEAL-O-RING |
| | 400366X1 | 1 | SEAL-O-RING (23.47ODX2.95DIA) |
| 12 | 400965X1 | 1 | CONNECTOR AS-STR 10STOR-12ORFS |
| | 400319X1 | 1 | SEAL-O-RING (19.18ID X 2.46DIA) |
| | 400366X1 | 1 | SEAL-O-RING (22.5OD X 1.78DIA) |
| 13 | 400967X1 | 1 | ELBOW AS-45 -12STOR-12ORFS |
| | 400366X1 | 1 | SEAL-O-RING (22.5OD X 1.78DIA) |
| | 400416X1 | 1 | SEAL-O-RING (23.47ID X 2.95DIA) |
| 14 | 400968X1 | 2 | SNAP RING EXT |
| 15 | 502468D1 | 1 | HOSE AS (FOR 19.1 ID SAE |
| 16 | 502469D1 | 1 | HOSE AS |
| 17 | 502471D1 | 1 | COUPLER AS-PIONEER-SIZE 8 |
| | 400569X1 | 1 | SEAL-O-RING (20.22X3.53) |
| | 400568X1 | 1 | RETAINER (20.81IDX26.6ODX0.81THK) |
| 18 | 502679D1 | 1 | FILTER GP-HYD |
| | 501771D1 | 1 | FILTER AS-HYD |
| 19 | CH148-8347 | 1 | ELBOW AS-90DEG 12STOR X 12ORFS |
| 20 | 400053X1 | 2 | BOLT-M8X1.25X20 ZNDI HHD 10.9 |
| 21 | 400063X1 | 2 | BOLT-M12X1.75X60 ZNDI HHD 10.9 |

502644DA
PR: t05i29k58b0369

## FILTER GP-OIL - 210-2395

**TRANSMISSION/STEERING/IMPLEMENT**
**(S/N: PRIOR BAM40601;BBP40472; BCC40702;BDS40823)**

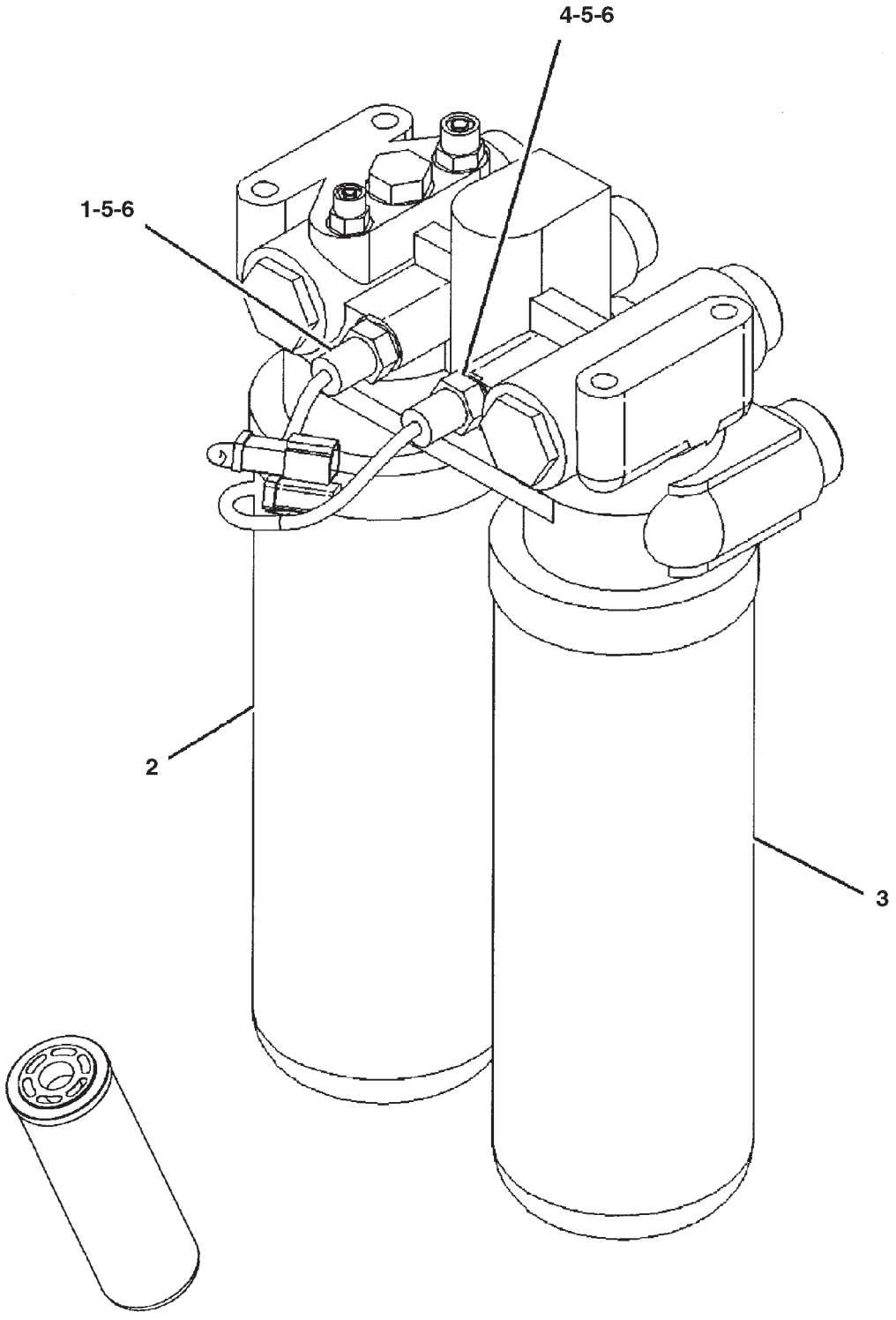


PICTORIAL VIEW

0889254A

## FILTER GP-OIL - 210-2395

**TRANSMISSION/STEERING/IMPLEMENT (S/N: PRIOR BAM40601;BBP40472; BCC40702;BDS40823)**

| ITEM | NUMBER | QTY | DESCRIPTION |
|---|---|---|---|
| - | 210-2395 | -- | FILTER GP-OIL [A] (NO LONGER AVAILABLE, ORDER EFF. FILTER GP-OIL) |
| 1 | 227-6744 | 1 | SWITCH ASM-PRESSURE (TRANSMISSION & STEERING) |
| | 102-8802 | 1 | KIT-RECEPTACLE (2 PIN) (INCLUDES RECEPTACLE ASM AND WEDGE) (SERVICED AS COMPLETE KIT ONLY) |
| | 186-3735 | 1 | PIN-CONNECTOR |
| | 9X-1813 | | SLEEVE |
| 2 | 501766D1 | 1 | FILTER ELEMENT ASM-OIL (HYDRAULIC) (IMPLEMENT) |
| 3 | 501766D1 | 1 | FILTER ELEMENT ASM-OIL (HYDRAULIC) (TRANSMISSION & STEERING) |
| 4 | 227-6745 | 1 | SWITCH ASM-PRESSURE (IMPLEMENT) |
| | CH155-2270 | 1 | KIT-CONNECTING PLUG (2 PIN) (INCLS PLUG AS WEDGE-PLUG LOCK) (SERVICED AS COMPLETE KIT ONLY) |
| | CH126-1766 | 2 | SOCKET-CONNECTOR |
| | 9X-1813 | | SLEEVE |
| 5 | 400318X1 | 2 | SEAL-O-RING |
| 6 | 400360X1 | 2 | SEAL-O-RING |

[A] PART OF 158-2349 FILTER & MTG GP

0889254A
PR: t05i29k58b0370

## FILTER GP-OIL (BASIC) - 501767D1

**(S/N: EFF BAM40601;BBP40472; BCC40702;BDS40823)**

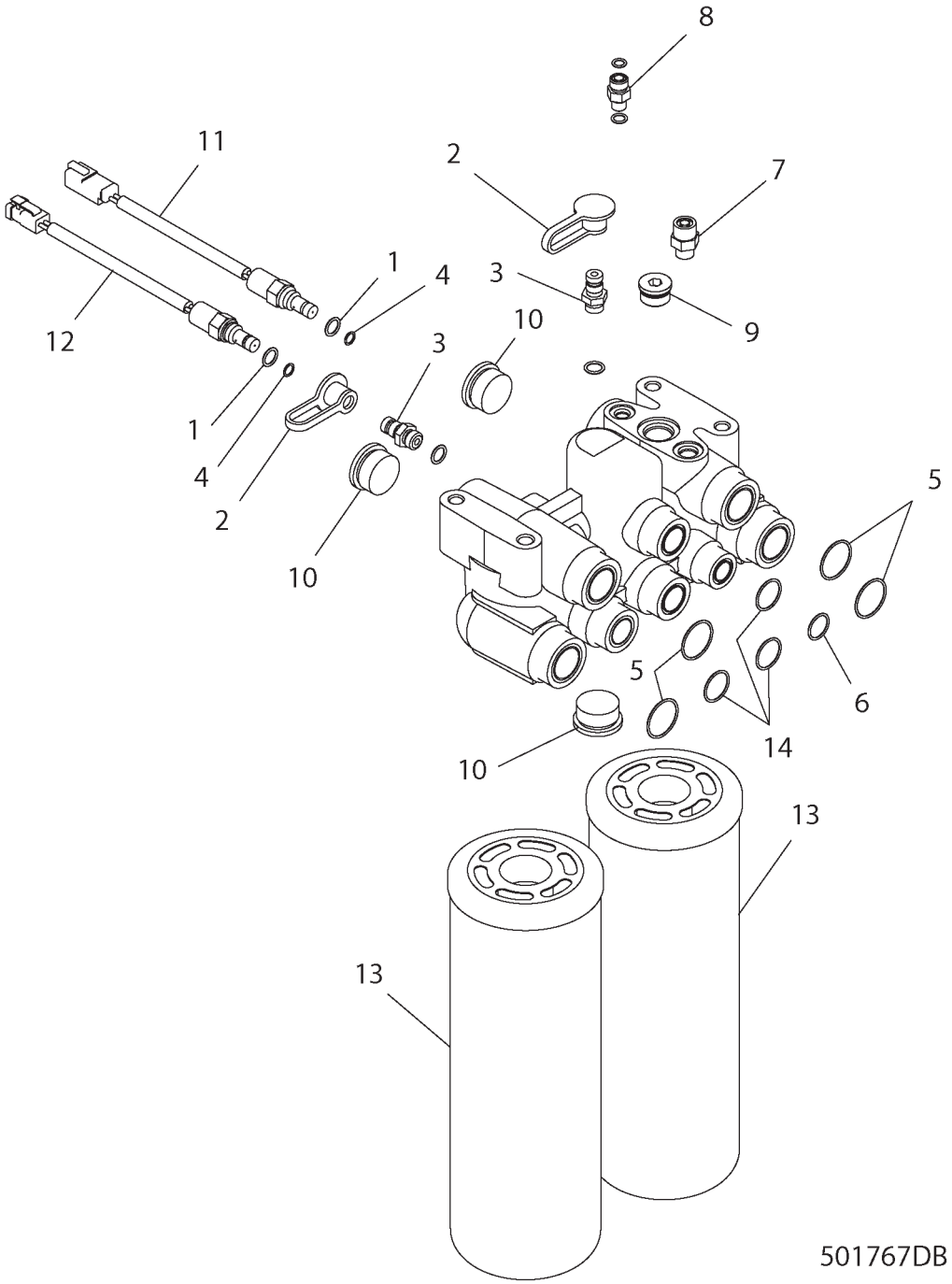

## FILTER GP-OIL (BASIC) - 501767D1

**(S/N: EFF BAM40601;BBP40472; BCC40702;BDS40823)**

| ITEM | NUMBER | QTY | DESCRIPTION |
|---|---|---|---|
| - | 501767D1 | -- | FILTER GP-OIL (BASIC) [A] |
| 1 | 400318X1 | 2 | SEAL-O-RING (11.89ID X 1.98 DIA) |
| 2 | 400323X1 | 2 | CAP-DUST 12.6 DIA -RUBBER |
| 3 | 400324X1 | 2 | NIPPLE AS-QUICK DISC-4&ORING |
| | 400318X1 | 1 | SEAL-O-RING (11.89ID X 1.98) |
| | 400325X1 | 1 | NIPPLE AS-QUICK DISC |
| 4 | 400360X1 | 2 | SEAL-O-RING 7.65 IDX1.78 DIA |
| 5 | 400365X1 | 4 | SEAL-O-RING 33.75 ODX1.78 DIA |
| 6 | 400366X1 | 1 | SEAL-O-RING 22.5 ODX1.78 DIA |
| 7 | 400367X1 | 1 | CONNECTOR AS-6 STOR -6 ORFS |
| 8 | 400368X1 | 1 | CONNECTOR AS-STR -4STOR -4ORFS |
| | 400361X1 | 1 | SEAL-O-RING (8.92ID X 1.83DIA) |
| | 400377X1 | 1 | SEAL-O-RING (11.23OD X 1.78DIA) |
| 9 | 400369X1 | 1 | PLUG AS-10 STOR ZN HSHD&ORING |
| | 400319X1 | 1 | SEAL-O-RING (19.18ID X 2.46) |
| | 400374X1 | 1 | PLUG (10STOR) |
| 10 | 400370X1 | 3 | PLUG AS-16 STOR ZN HSHD&ORING |
| | 400376X1 | 1 | SEAL-O-RING (29.74ID X 2.95) |
| | 400374X1 | 1 | PLUG (16STOR) |
| 11 | 500671D1 | 1 | SWITCH AS-PRESSURE |
| 12 | 500672D1 | 1 | SWITCH AS-PRESSURE |
| 13 | 501766D1 | 2 | FILTER AS-HYD |
| 14 | 400123X1 | 3 | SEAL-O RING-27.22ODX1.78 DIA |

[A] PART OF 158-2349 FILTER & MTG GP

501767DB
PR: t05i29k58b0371

**HYDRAULIC AR - 158-2342**

NO ILLUSTRATION

## HYDRAULIC AR - 158-2342

| ITEM | NUMBER | QTY | DESCRIPTION |
|---|---|---|---|
| - | 158-2342 | 1 | HYDRAULIC AR [A] (NOT SERVICED) |
| 1 | 158-2339 | 1 | MOUNTING GP-VALVE (NOT SERVICED)<br>(SEE BREAKDOWN FOR COMPONENTS) |
| 2 | 158-2349 | 1 | FILTER & MTG GP-HYDRAULIC<br>(NOT SERVICED)<br>(SEE BREAKDOWN FOR COMPONENTS) |
| 3 | 158-2356 | 1 | LINES GP-IMPLEMENT (NOT SERVICED)<br>(SEE BREAKDOWN FOR COMPONENTS) |
| 4 | 158-2393 | 1 | LINES GP-STEERING (NOT SERVICED)<br>(SEE BREAKDOWN FOR COMPONENTS) |
| 5 | 158-2397 | 1 | PUMP & MTG GP-HYDRAULIC (NOT SERVICED)<br>(SEE BREAKDOWN FOR COMPONENTS) |
| 6 | 172-4516 | 1 | LINES GP-HYDRAULI OIL (NOT SERVICED)<br>(SEE BREAKDOWN FOR COMPONENTS) |

[A] PART OF 179-1952; 179-2180
BASE COMMON AR

NOTIF13
PR: t05i29k58b0372

## LINES GP-COUPLER - 190-0438

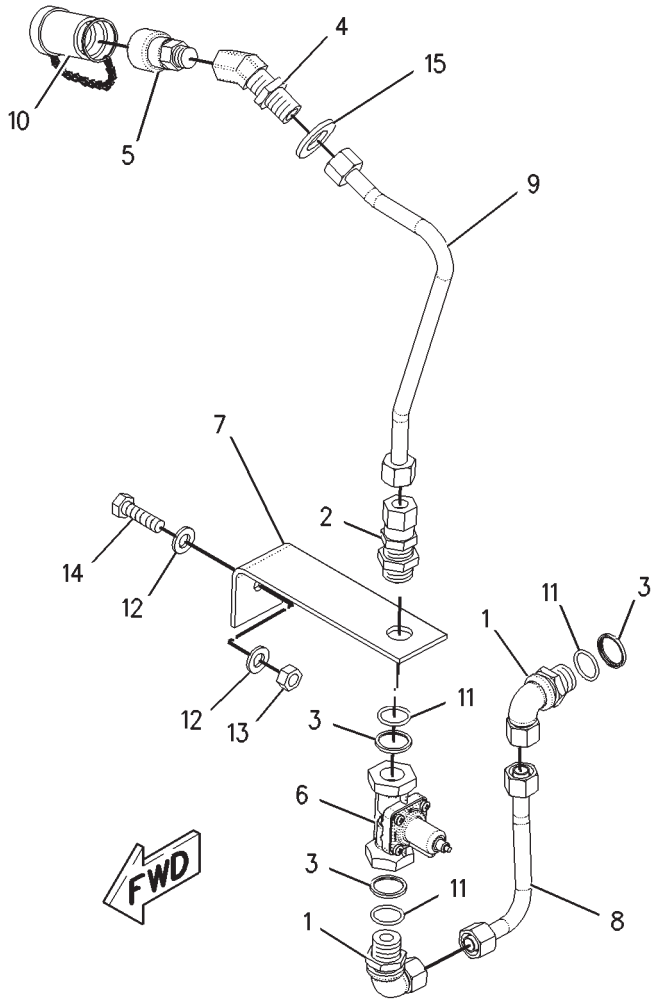


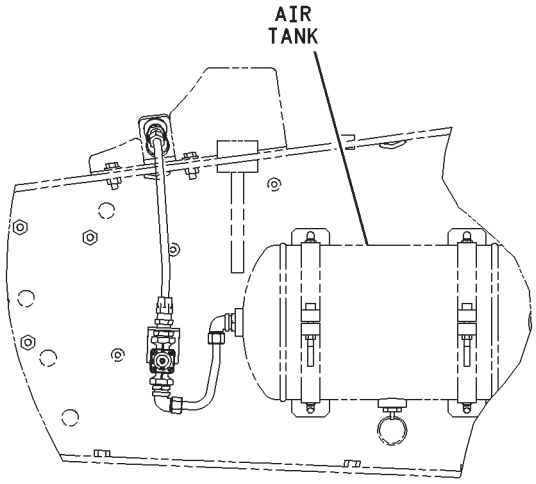


LEFT SIDE VIEW

1900438H

## LINES GP-COUPLER - 190-0438

| ITEM | NUMBER | QTY | DESCRIPTION |
|---|---|---|---|
| - | 190-0438 | -- | LINES GP-COUPLER [A] |
| 1 | CH185-9753 | 2 | ELBOW AS-90DEG (M16XM18) |
| 2 | CH185-9763 | 1 | CONNECTOR |
| 3 | CH185-9773 | 3 | RING-BACKUP |
| 4 | CH187-9018 | 1 | ADAPTER-BULKHEAD (3/8-18XM18) |
| 5 | CH191-9311 | 1 | COUPLING |
| 6 | 200-4369 | 1 | VALVE-CHARGING |
| 7 | 209-7709 | 1 | BRACKET |
| 8 | 212-3601 | 1 | TUBE AS |
| 9 | 218-2803 | 1 | TUBE AS |
| 10 | 218-2806 | 1 | CAP-DUST |
| 11 | CH3E-6762 | 3 | SEAL-O-RING |
| 12 | 400287X1 | 2 | WASHER-HARD (11X21X2.5) |
| 13 | WR522218 | 1 | NUT (M10X1.5) |
| 14 | 400059X1 | 1 | BOLT (M10X1.5X35MM) |
| 15 | CH8T-4994 | 1 | WASHER-HARD (20X36.5X3.5) |

[A] PART OF:
185-8860;186-1620;192-6390 BRAKE AR
192-6400;502357D1;502358D1 BRAKE AR
190-0439;190-0440;502359D1 TANK AR

1900438H
PR: t05i29k58b0373

## LINES GP-COUPLER
**210-0851**

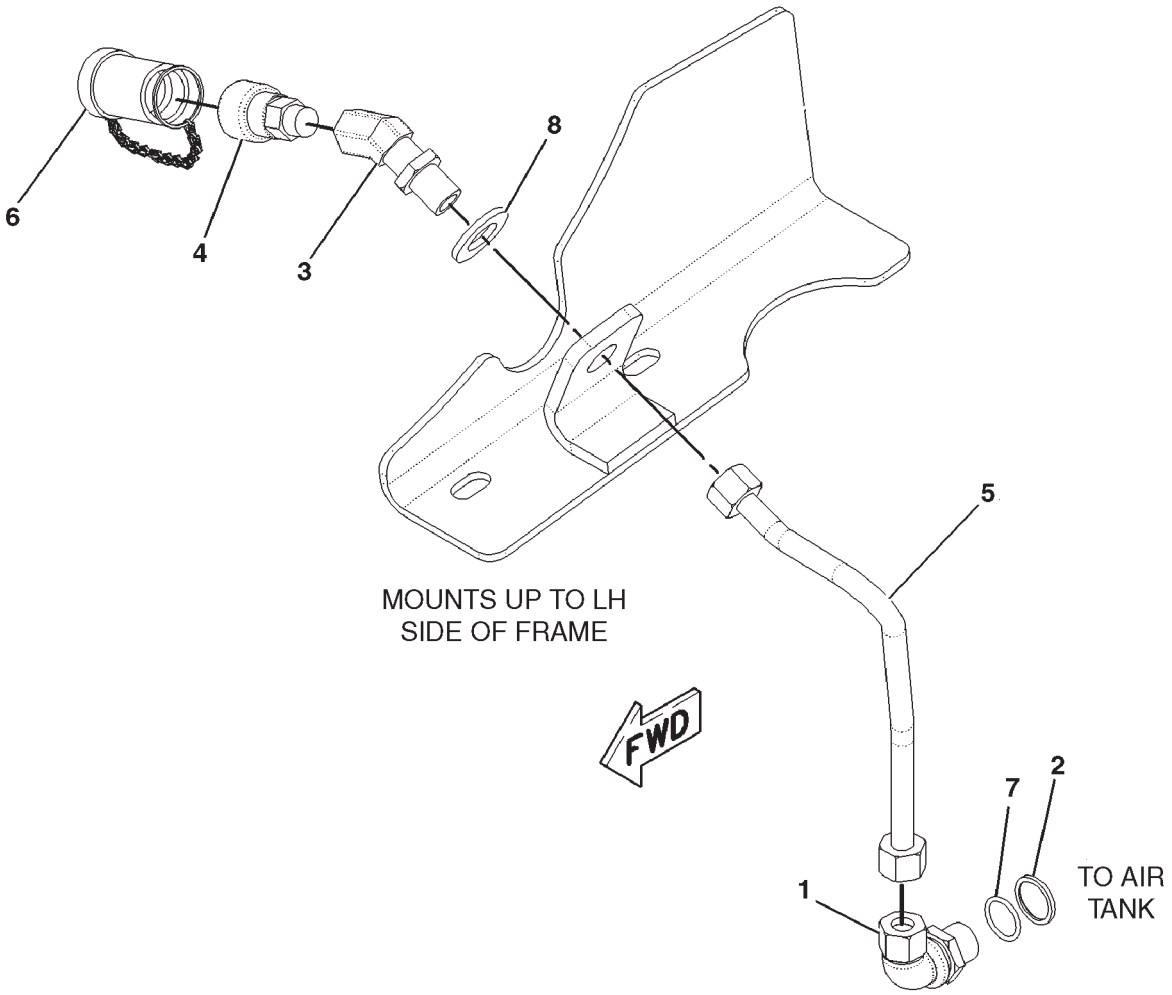


**0889197A**

## LINES GP-COUPLER
**210-0851**

| ITEM | NUMBER | QTY | DESCRIPTION |
|---|---|---|---|
| - | 210-0851 | -- | LINES GP-COUPLER [A] (NOT SERVICED) |
| 1 | CH185-9753 | 1 | ELBOW AS-90DEG (M16XM18) |
| 2 | CH185-9773 | 1 | RING-BACKUP |
| 3 | CH187-9018 | 1 | ADAPTER |
| 4 | CH191-9311 | 1 | COUPLING |
| 5 | 218-2805 | 1 | TUBE ASM |
| 6 | 218-2806 | 1 | CAP-DUST |
| 7 | CH3E-6762 | 1 | SEAL-O-RING |
| 8 | CH8T-4994 | 1 | WASHER-HARD (20X36.5X3.5) |

[A] PART OF 210-5703;210-5704;502360D1
TANK AR-AIR

0889197A
PR: t05i29k58b0374

## LINES GP-HYD OIL - 172-4516

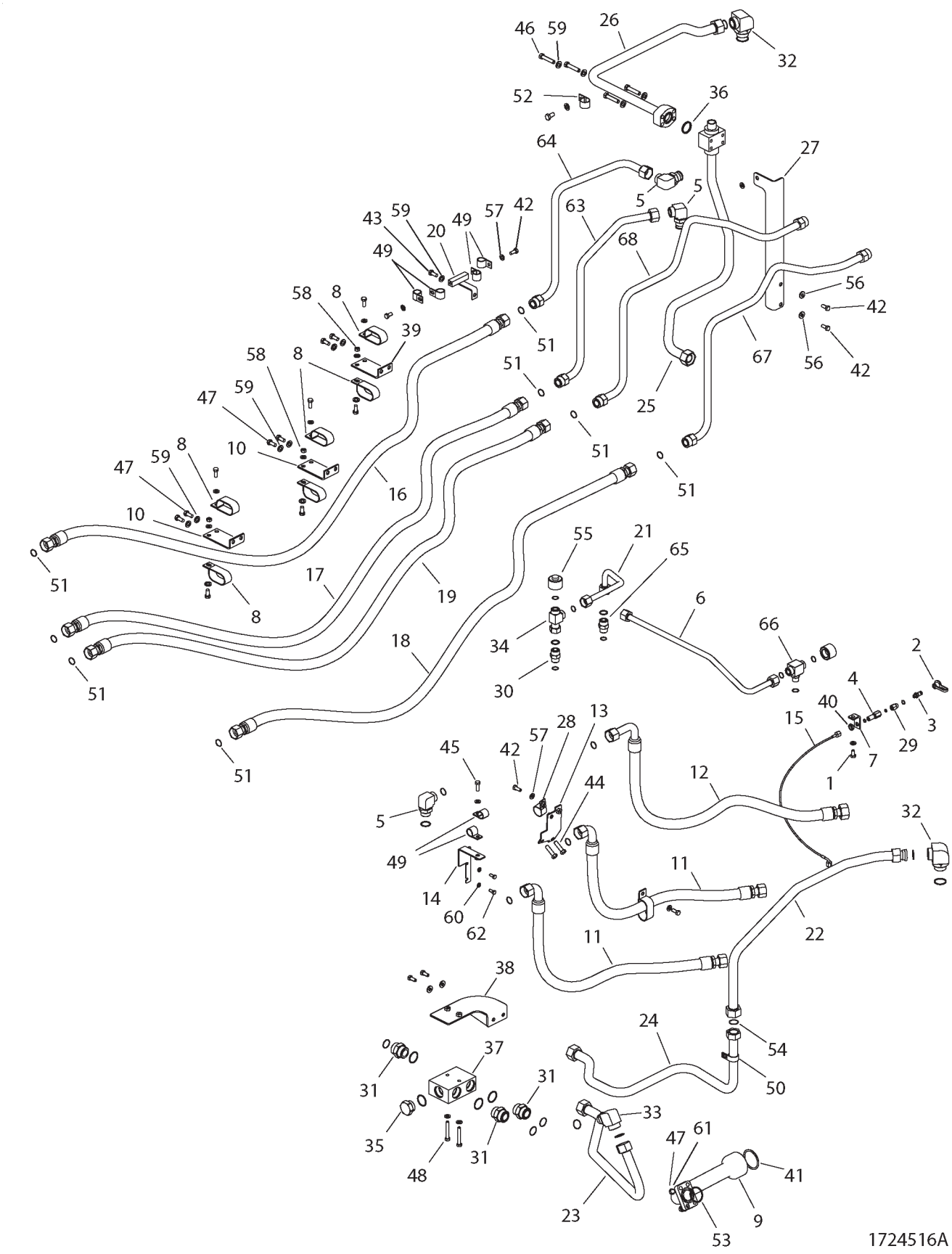

## LINES GP-HYD OIL - 172-4516

| ITEM | NUMBER | QTY | DESCRIPTION |
|---|---|---|---|
| - | 172-4516 | -- | LINES GP-HYD OIL [A] (NOT SERVICED) |
| 1 | 400040X1 | 5 | BOLT-M10X1.5X20 ZNDI HHD 10.9 |
| 2 | 400363X1 | 1 | CAP-DUST-12.6 DIA -RUBBER |
| 3 | 400577X1 | 1 | VALVE AS-4 3500 KPA |
| | 400361X1 | 1 | SEAL-O-RING (8.92IDX1.83DIA) |
| 4 | 400578X1 | 1 | ADAPTER AS-BLKDH-4ORFS-6PORT |
| | 400377X1 | 1 | SEAL-O-RING (11.23IDX1.78DIA) |
| 5 | 400580X1 | 3 | ELBOW AS-90DEG 16STOR 16ORFS |
| | 400376X1 | 1 | SEAL-O-RING (29.74IDX2.95DIA) |
| | 400123X1 | 1 | SEAL-O-RING (27.22ODX1.78DIA) |
| 6 | 197-5414 | 1 | TUBE AS. |
| 7 | 198-4265 | 1 | BRACKET |
| 8 | 400595X1 | 7 | CLIP-38.1 ID DBL M12 OR 7/16 |
| 9 | 207-7554 | 1 | TUBE |
| 10 | 209-0141 | 2 | BRACKET AS |
| 11 | CH210-0181 | 2 | HOSE AS-25.4ID SAE 100R1AT |
| 12 | CH210-0183 | 1 | HOSE AS-25.4ID SAE 100R1AT |
| 13 | 210-0184 | 1 | BRACKET AS |
| 14 | 210-7677 | 1 | PLATE AS |
| 15 | CH211-0912 | 1 | HOSE AS-6.3ID SAE 100R1AT |
| 16 | CH219-5676 | 1 | HOSE AS-25.4ID SAE 100R1AT |
| 17 | CH219-5677 | 1 | HOSE AS-25.4ID SAE 100R1AT |
| 18 | CH219-5678 | 1 | HOSE AS-25.4ID SAE 100R1AT |
| 19 | CH219-5679 | 1 | HOSE AS-25.4ID SAE 100R1AT |
| 20 | 219-6551 | 1 | BRACKET AS. |
| 21 | 219-8787 | 1 | TUBE AS. |
| 22 | 223-6530 | 1 | TUBE AS |
| 23 | 224-3945 | 1 | TUBE AS. |
| 24 | 224-3946 | 1 | TUBE AS. |
| 25 | 225-0175 | 1 | TUBE AS. |
| 26 | 225-0176 | 1 | TUBE AS. |
| 27 | 226-1882 | 1 | PLATE AS |
| 28 | 400596X1 | 1 | CLIP-38.1 ID M14 OR 1/2 |
| 29 | CH148-8305 | 1 | ADAPTER AS-6 STOR X 4 STOR |
| | 400318X1 | 1 | SEAL-O-RING (11.89IDX1.98DIA) |
| 30 | CH148-8327 | 1 | CONNECTOR AS-12 ORFSX 12STOR |
| | 400416X1 | 1 | SEAL-O-RING 23.47IDX2.95DIA |
| | 400366X1 | 1 | SEAL-O-RING 22.5 ODX1.78 DIA |
| 31 | CH148-8334 | 3 | CONNECTOR AS-20 ORFS X 20 STOR |
| | 400365X1 | 1 | SEAL-O-RING (29.74IDX2.95DIA) |
| | 400593X1 | 1 | SEAL-O-RING (33.57ODX1.78DIA) |
| 32 | CH148-8356 | 2 | ELBOW AS-90-20ORFS X 20STOR |
| | 400593X1 | 1 | SEAL-O-RING (37.46IDX3DIA) |
| | 400365X1 | 1 | SEAL-O-RING (33.57ODX1.78DIA) |
| 33 | 400582X1 | 1 | ELBOW AS-90DEG 16STOR 20ORFS |
| | 400365X1 | 1 | SEAL-O-RING (33.57ODX1.78DIA) |
| | 400376X1 | 1 | SEAL-O-RING (29.74IDX2.95DIA) |
| 34 | 400584X1 | 1 | TEE AS-SWIVEL 12 ORFS |
| | 400366X1 | 1 | SEAL-O-RING 22.5 ODX1.78 DIA |
| 35 | 400586X1 | 1 | PLUG AS-STR 20 STOR |
| | 400593X1 | 1 | SEAL-O-RING (33.57ODX1.78DIA) |

CONTINUED

[A] PART OF 158-2342 HYD AR-COMMON

## LINES GP-HYD OIL - 172-4516

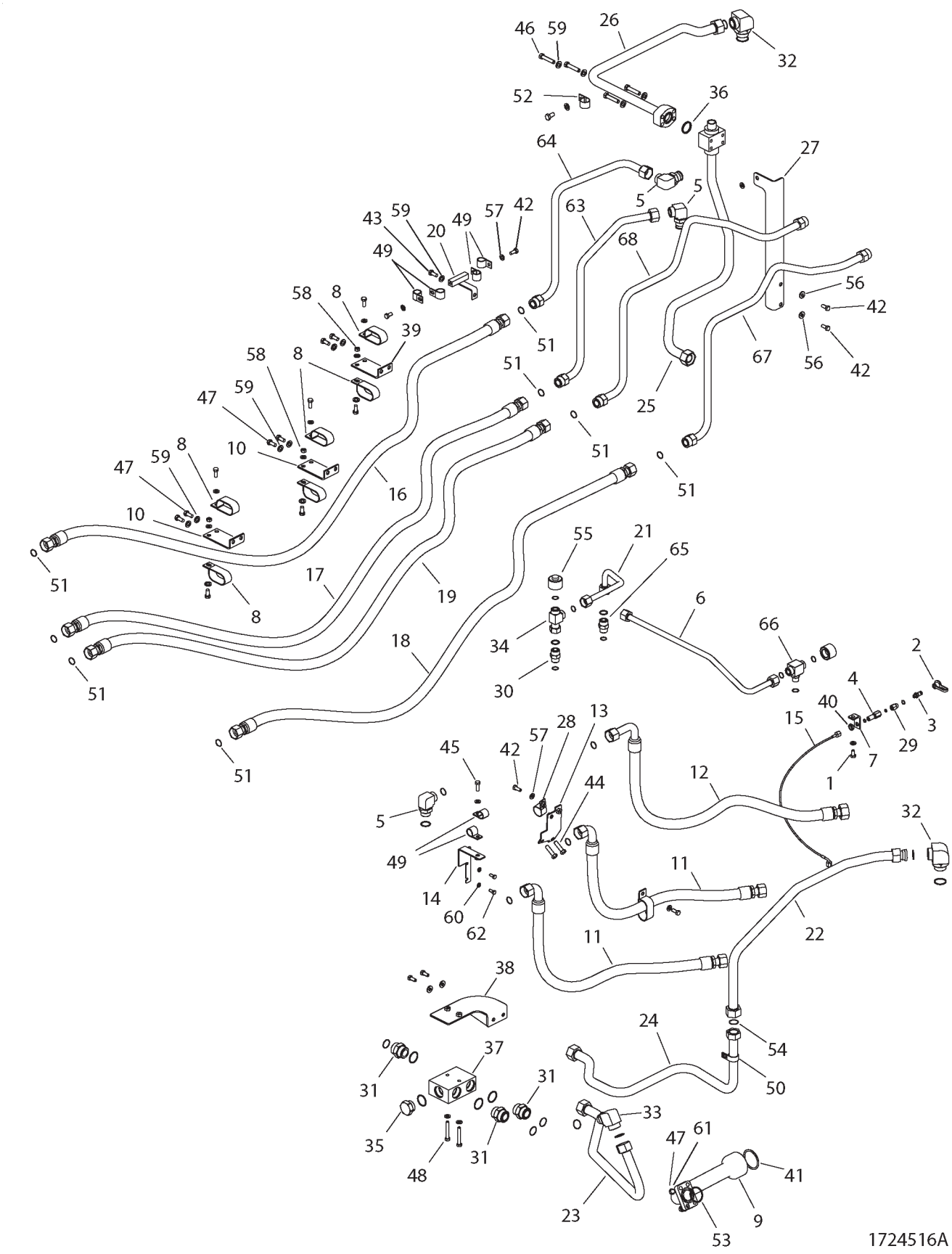

## LINES GP-HYD OIL - 172-4516

| ITEM | NUMBER | QTY | DESCRIPTION |
|---|---|---|---|
| - | 172-4516 | -- | LINES GP-HYD OIL [A] (NOT SERVICED) |
| 36 | 400588X1 | 1 | SEAL-RECT 45 OD 4.95 THK |
| 37 | 227-5269 | 1 | MANIFOLD |
| 38 | 227-5270 | 1 | BRACKET AS. |
| 39 | 233-8642 | 1 | BRACKET |
| 40 | 400589X1 | 1 | NUT-LOCK 9/16-18 ZNDI BLKHD |
| 41 | 400590X1 | 1 | SEAL-O-RING 66.04 IDX5.33 DIA |
| 42 | 400039X1 | 15 | BOLT-M10X1.5X25 ZNDI HHD 10.9 |
| 43 | 400041X1 | 1 | BOLT-M12X1.75X30 ZNDI HHD 10.9 |
| 44 | 400051X1 | 2 | BOLT-M12X1.75X45 ZNDI HHD 10.9 |
| 45 | 400058X1 | 1 | BOLT-M10X1.5X30 ZNDI HHD 10.9 |
| 46 | 400063X1 | 4 | BOLT-M12X1.75X60 ZNDI HHD 10.9 |
| 47 | 400064X1 | 6 | BOLT-M12X1.75X35 ZNDI HHD 10.9 |
| 48 | 400066X1 | 2 | BOLT-M10X1.5X70 ZNDI HHD 10.9 |
| 49 | CH4S-1962 | 6 | CLIP-LOOP 25.4 ID |
| 50 | 400597X1 | 1 | CLIP-31.75 ID M10 OR 3/8 |
| 51 | 400123X1 | 10 | SEAL-O RING-27.22ODX1.78 DIA |
| 52 | 400598X1 | 1 | CLIP-31.8 ID M10 OR 3/8 |
| 53 | 400591X1 | 1 | SEAL-O-RING 50.39 IDX3.53 DIA |
| 54 | 400365X1 | 1 | SEAL-O-RING 33.75 ODX1.78 DIA |
| 55 | 400107X1 | 1 | CAP AS 19.05 OD TUBE |
| 56 | CH7X-7729 | 2 | WASHER-11IDX5ODX3MM |
| 57 | 400287X1 | 23 | WASHER-HARD 11IDX21ODX2.5 ZND1 |
| 58 | WR522218 | 2 | NUT-M10-1.5,CL10.9,ZN,H,REG |
| 59 | 400357X1 | 7 | WASHER-HARD-M12X25.50DX3THK |
| 60 | 400339X1 | 2 | WASHER-HARD |
| 61 | 400358X1 | 4 | WASHER-HARD-7/16X22.50DX2.5THK |
| 62 | 400053X1 | 2 | BOLT-M8X1.25X20 ZNDI HHD 10.9 |
| 63 | 500523D1 | 1 | TUBE AS. |
| 64 | 500524D1 | 1 | TUBE AS. |
| 65 | 500956D1 | 1 | CONNECTOR AS-ORFS |
| | 400319X1 | 1 | SEAL-O-RING 19.18IDX2.46DIA |
| | 400366X1 | 1 | SEAL-O-RING 22.5ODX1.78DIA |
| 66 | 211-0535 | 1 | TEE AS-10 STOR-12 ORFS |
| | 400319X1 | 1 | SEAL-O-RING 19.18IDX2.46DIA |
| | 400366X1 | 2 | SEAL-O-RING 22.5ODX1.78DIA |
| 67 | 501926D1 | 1 | TUBE AS |
| 68 | 501927D1 | 1 | TUBE AS |

[A] PART OF 158-2342 HYD AR-COMMON

1724516A
PR: t05i29k58b0375

## LINES GP-HYDRAULIC OIL - 193-1558

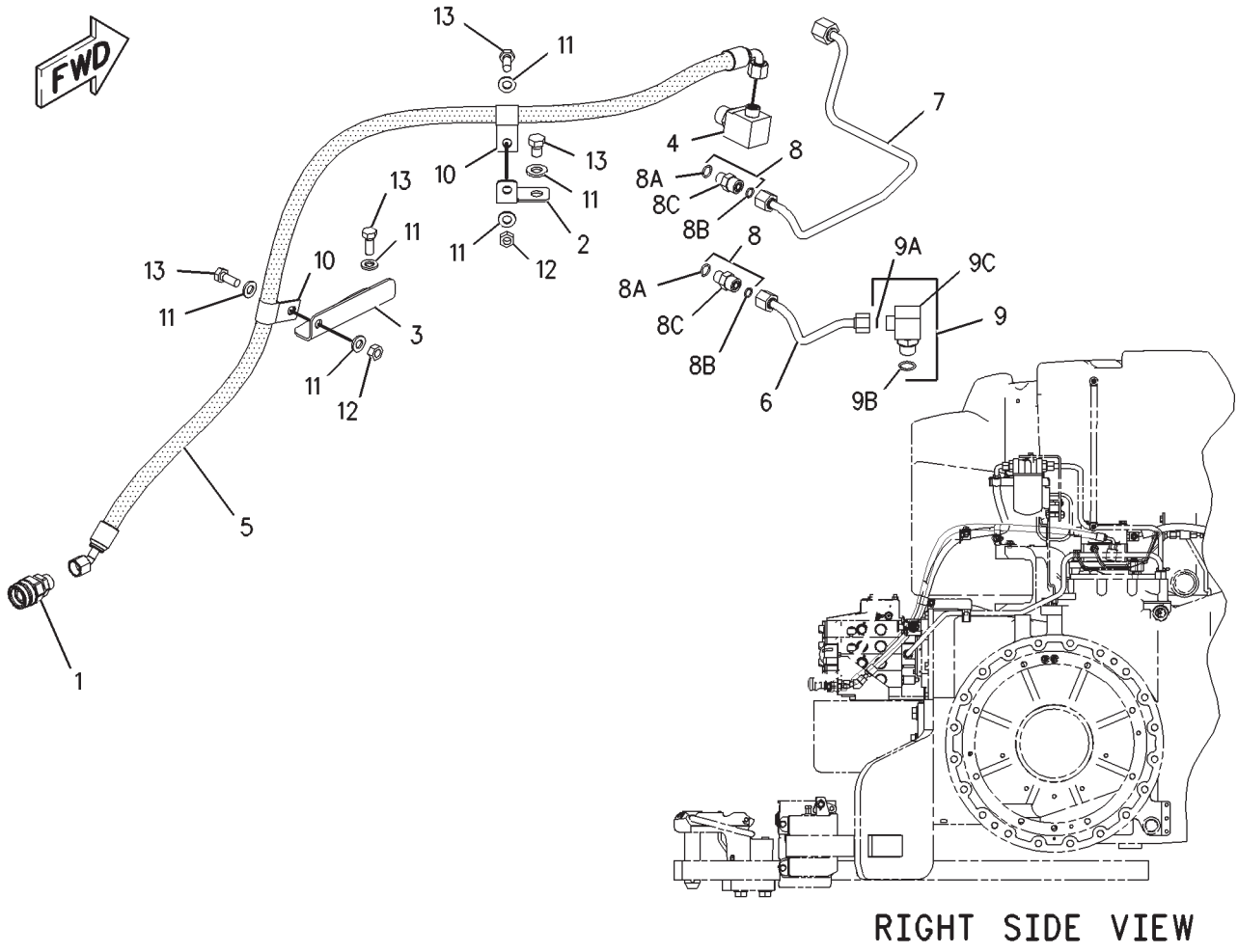

## LINES GP-HYDRAULIC OIL - 193-1558

| ITEM | NUMBER | QTY | DESCRIPTION |
|---|---|---|---|
| - | 193-1558 | -- | LINES GP-HYDRAULIC [A] (NOT SERVICED) |
| 1 | CH185-3959 | 1 | COUPLER GP-QUICK (INCLS SEAL) |
| | 400378X1 | 1 | SEAL-O-RING (12.83ODX1.78DIA) |
| - | CH223-9254 | 1 | CAP-DUST (USE W/ITEM 1) (NOT SHOWN) |
| 2 | 200-2992 | 1 | BRACKET |
| 3 | 200-2993 | 1 | BRACKET |
| 4 | CH205-3692 | 1 | ELBOW AS |
| 5 | CH208-9850 | 1 | HOSE AS |
| 6 | 208-9875 | 1 | TUBE AS |
| 7 | 208-9878 | 1 | TUBE AS |
| 8 | 400367X1 | 2 | CONNECTOR AS 6 STOR-6 (INCLS 8A-8C) |
| 8A | 400318X1 | 1 | SEAL-O-RING (11.89ID X 1.98 DIA) |
| 8B | 400378X1 | 1 | SEAL-O-RING (12.83OD X 1.78 DIA) |
| 8C | 400372X1 | 1 | CONNECTOR-STR -6 STOR -6 ORFS |
| 9 | CH148-8374 | 1 | ELBOW AS-90DEG 6ORFS X 8STOR |
| 9A | 400378X1 | 1 | SEAL-O-RING (12.83OD X 1.78 DIA) |
| 9B | CH3K-0360 | 1 | SEAL-O-RING (16.36ID X 2.21 DIA) |
| 9C | CH6V-8723 | 1 | ELBOW |
| 10 | CH4D-7735 | 2 | CLIP |
| 11 | 400287X1 | 6 | WASHER-HARD (11X21X2.5) |
| 12 | WR522218 | 4 | NUT (M10X1.5) |
| 13 | 400039X1 | 2 | BOLT (M10X1.5X25MM) |

[A] PART OF:
193-8199; 193-8200 VALVE AR
209-3689 KIT-HYD TRAILER BRAKE

00857381
PR: t05i29k58b0376

## LINES GP-IMPLEMENT - 158-2356

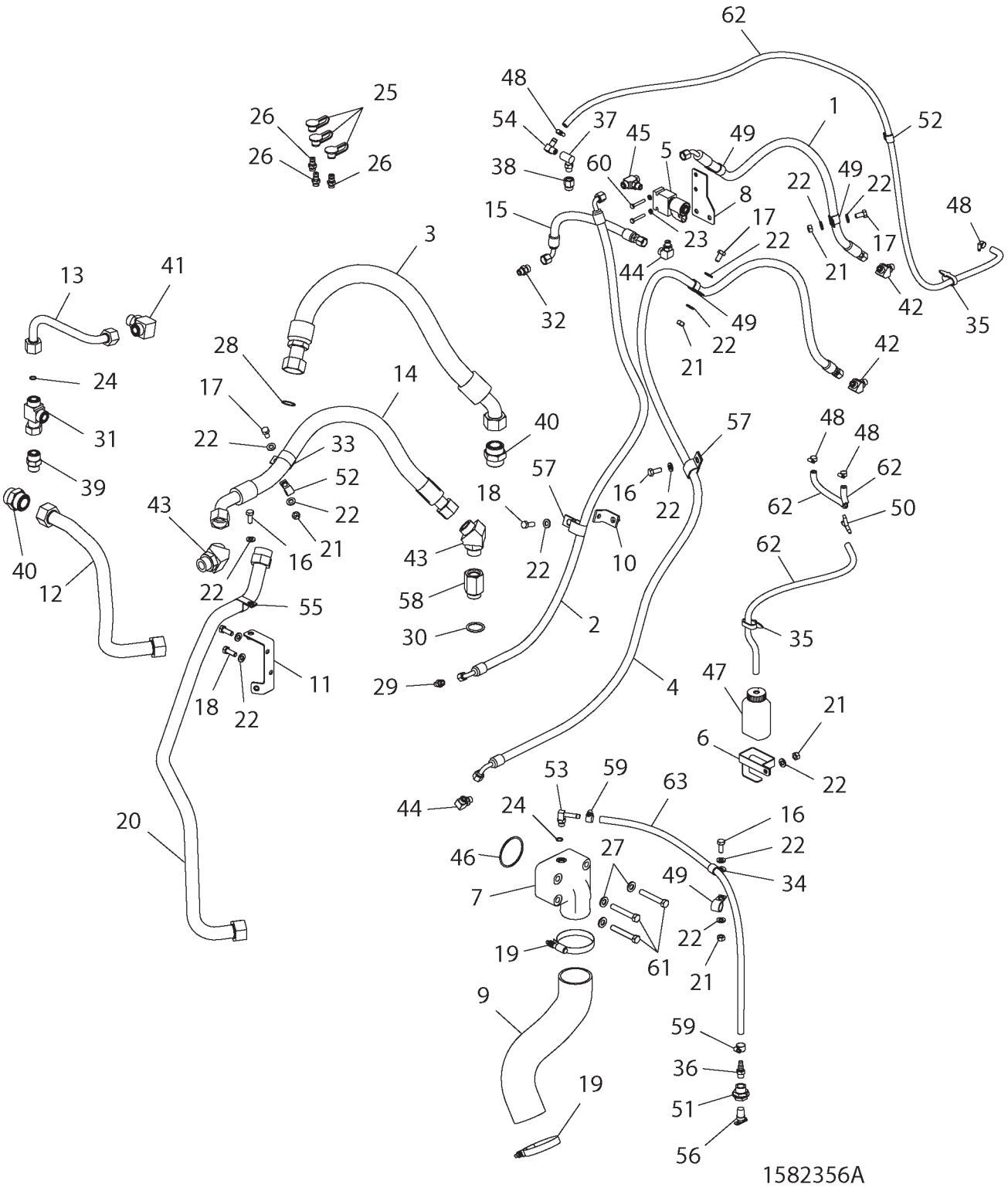

## LINES GP-IMPLEMENT - 158-2356

| ITEM | NUMBER | QTY | DESCRIPTION |
|---|---|---|---|
| - | 158-2356 | -- | LINES GP-IMPLEMENT [A] (NOT SERVICED) |
| 1 | CH208-9972 | 1 | HOSE AS-9.5 ID SAE 100R12 |
| 2 | CH208-9973 | 1 | HOSE AS-9.5 ID SAE 100R2AT |
| 3 | CH225-5203 | 1 | HOSE AS-31.81ID SAE 100R1AT |
| 4 | CH208-9974 | 1 | HOSE AS-9.5 ID SAE 100R2AT |
| 5 | 207-0745 | 1 | VALVE GP- SOL |
| 6 | 179-8664 | 1 | BRACKET |
| 7 | 209-6677 | 1 | ELBOW |
| 8 | 211-1850 | 1 | BRACKET AS. |
| 9 | 211-3547 | 1 | HOSE |
| 10 | 211-3715 | 1 | BRACKET AS. |
| 11 | 211-4410 | 1 | BRACKET AS. |
| 12 | 211-8315 | 1 | TUBE AS. |
| 13 | 217-7365 | 1 | TUBE AS. |
| 14 | CH219-7932 | 1 | HOSE AS-25.4ID SAE 100R12 |
| 15 | 230-9563 | 1 | HOSE AS. |
| 16 | 400039X1 | 3 | BOLT-M10X1.5X25 ZNDI HHD 10.9 |
| 17 | 400040X1 | 3 | BOLT-M10X1.5X20 ZNDI HHD 10.9 |
| 18 | 400058X1 | 3 | BOLT-M10X1.5X30 ZNDI HHD 10.9 |
| 19 | 400359X1 | 2 | CLAMP-HOSE,SST 70-92X16 |
| 20 | 500129D1 | 1 | TUBE AS. |
| 21 | WR522218 | 5 | NUT-M10-1.5,CL10.9,ZN,H,REG |
| 22 | 400287X1 | 14 | WASHER-HARD 11IDX21ODX2.5 ZND1 |
| 23 | 400310X1 | 2 | WASHER |
| 24 | 400318X1 | 2 | SEAL-O-RING 11.89IDXDIA1.98 |
| 25 | 400323X1 | 3 | CAP-DUST 12.6 DIA -RUBBER |
| 26 | 400324X1 | 3 | NIPPLE AS-QUICK DISC-4&ORING |
| 27 | 400357X1 | 3 | WASHER-HARD-M12X25.50DX3THK |
| 28 | 400365X1 | 1 | SEAL-O-RING 33.75 ODX1.78 DIA |
| 29 | 400368X1 | 1 | CONNECTOR AS-STR -4STOR -4ORFS |
| | 400361X1 | 1 | SEAL-O-RING (8.92ID X 1.83DIA) |
| | 400377X1 | 1 | SEAL-O-RING (11.23OD X 1.78DIA) |
| 30 | 400376X1 | 1 | SEAL-O-RING 29.74 IDX2.95 DIA |
| 31 | 400584X1 | 1 | TEE AS-SWIVEL 12 ORFS |
| | 400366X1 | 1 | SEAL-O-RING 22.5 ODX1.78 DIA |
| 32 | 400638X1 | 1 | CONNECTOR AS-STR-6STOR-6ORFS |
| 33 | 400689X1 | 1 | CLIP LOOP 38.1ID |
| 34 | 400702X1 | 1 | CLIP-ONE TUBE COATED |
| 35 | 400837X1 | 4 | STRAP-CABLE (PLASTIC) |
| 36 | CH003-7764 | 1 | CONNECTOR-6 NPTFX9.52 OD BARB |
| 37 | CH106-2105 | 1 | ELBOW-90DEG-STRAIGHT THD |
| 38 | CH148-8313 | 1 | ADAPTER AS-8STOR X 6STOR |
| 39 | CH148-8327 | 1 | CONNECTOR AS-12 ORFSX 12STOR |
| | 400416X1 | 1 | SEAL-O-RING 23.47IDX2.95DIA |
| | 400366X1 | 1 | SEAL-O-RING 22.5 ODX1.78 DIA |

CONTINUED

[A] PART OF 158-2342 HYD AR-COMMON

## LINES GP-IMPLEMENT - 158-2356

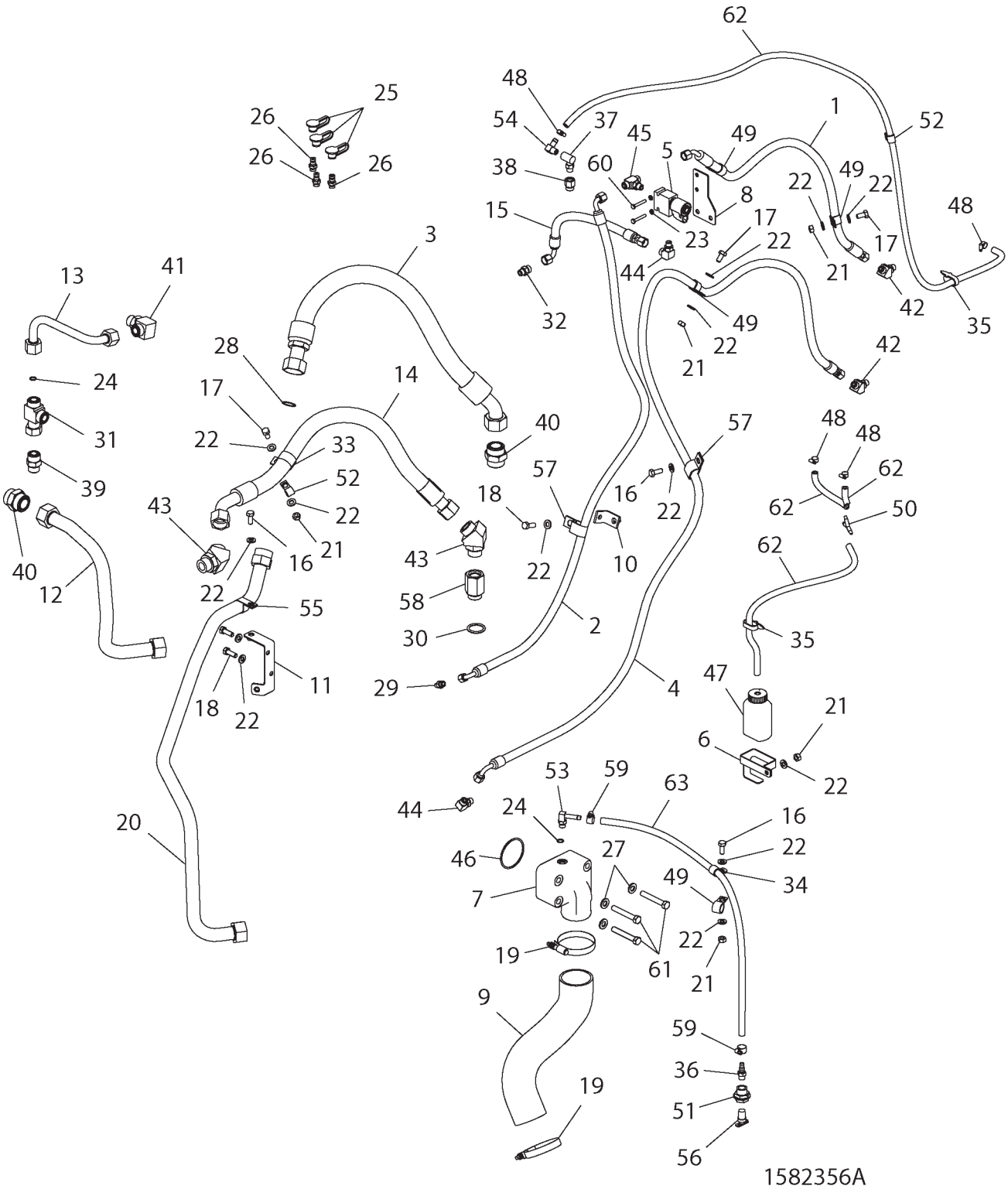

## LINES GP-IMPLEMENT - 158-2356

| ITEM | NUMBER | QTY | DESCRIPTION |
|---|---|---|---|
| - | 158-2356 | -- | LINES GP-IMPLEMENT [A] (NOT SERVICED) |
| 40 | CH148-8334 | 2 | CONNECTOR AS-20 ORFS X 20 STOR |
| | 400365X1 | 1 | SEAL-O-RING (29.74IDX2.95DIA) |
| | 400593X1 | 1 | SEAL-O-RING (33.57ODX1.78DIA) |
| 41 | CH148-8347 | 1 | ELBOW AS-90DEG 12STOR X 12ORFS |
| | 400366X1 | 1 | SEAL-O-RING (22.5IDX1.78DIA) |
| | 400416X1 | 1 | SEAL-O-RING (23.47IDX2.95DIA) |
| 42 | CH148-8353 | 2 | ELBOW AS-45DEG 6STOR X 6ORFS |
| 43 | CH148-8355 | 2 | ELBOW AS-45DEG 16STORX16ORFS |
| 44 | CH148-8378 | 2 | ELBOW AS-90 DEG 4 STOR X6 ORFS |
| | 400318X1 | 1 | SEAL-O-RING (11.89IDX1.98DIA) |
| | 400378X1 | 1 | SEAL-O-RING (12.83ODX1.78DIA) |
| 45 | CH148-8439 | 1 | TEE AS-6ORFS X 6ORFS X 6STOR |
| 46 | CH149-0231 | 1 | SEAL-O-RING 72.62ID X 3.53DIA |
| 47 | CH179-8665 | 1 | BOTTLE AS |
| 48 | CH1P-4278 | 4 | CLAMP-HOSE 5.5-15.88 ID X 8 |
| 49 | CH1S-0994 | 4 | CLIP-LOOP 20.64 ID |
| 50 | CH222-0527 | 1 | COUPLING-Y 3 X 7.9 OD BARB |
| 51 | CH2M-1908 | 1 | UNION-BLKHD 3/8-18 NPTF |
| 52 | CH4K-8864 | 2 | CLIP-LOOP 14.29ID |
| 53 | CH5P-4924 | 1 | ELBOW-90DEG 6STOR X 9.52 BARB |
| 54 | CH5P-9517 | 1 | ELBOW-90DEG4NPTF X 7.92 OD BARB |
| 55 | CH6B-1032 | 1 | CLIP-LOOP 31.8 ID |
| 56 | CH6V-1520 | 1 | VALVE-SHUT OFF -6 NPTF -10HOSE |
| 57 | CH7S-1912 | 2 | CLIP-LOOP 2X20.62 ID |
| 58 | CH8C-3051 | 1 | ADAPTER-16STOR X 16STOR |
| 59 | 400109X1 | 2 | CLAMP-HOSE SST 11.1-19.8X13.5 |
| 60 | 400205X1 | 2 | BOLT-M6X1X40MM ZNDI HHD 10.9 |
| 61 | 400241X1 | 3 | BOLT-M12X1.75X80 ZNDI HHD 10.9 |
| 62 | CH5P-1420 | AR | HOSE (BULK) 7.92 DIA (245CM) |
| 63 | CH5P-1442 | AR | HOSE-BULK 9.52ID HI TEMP (78CM) |

[A] PART OF 158-2342 HYD AR-COMMON

1582356A
PR: t05i29k58b0377

## LINES GP-IMPLEMENT - 172-4518

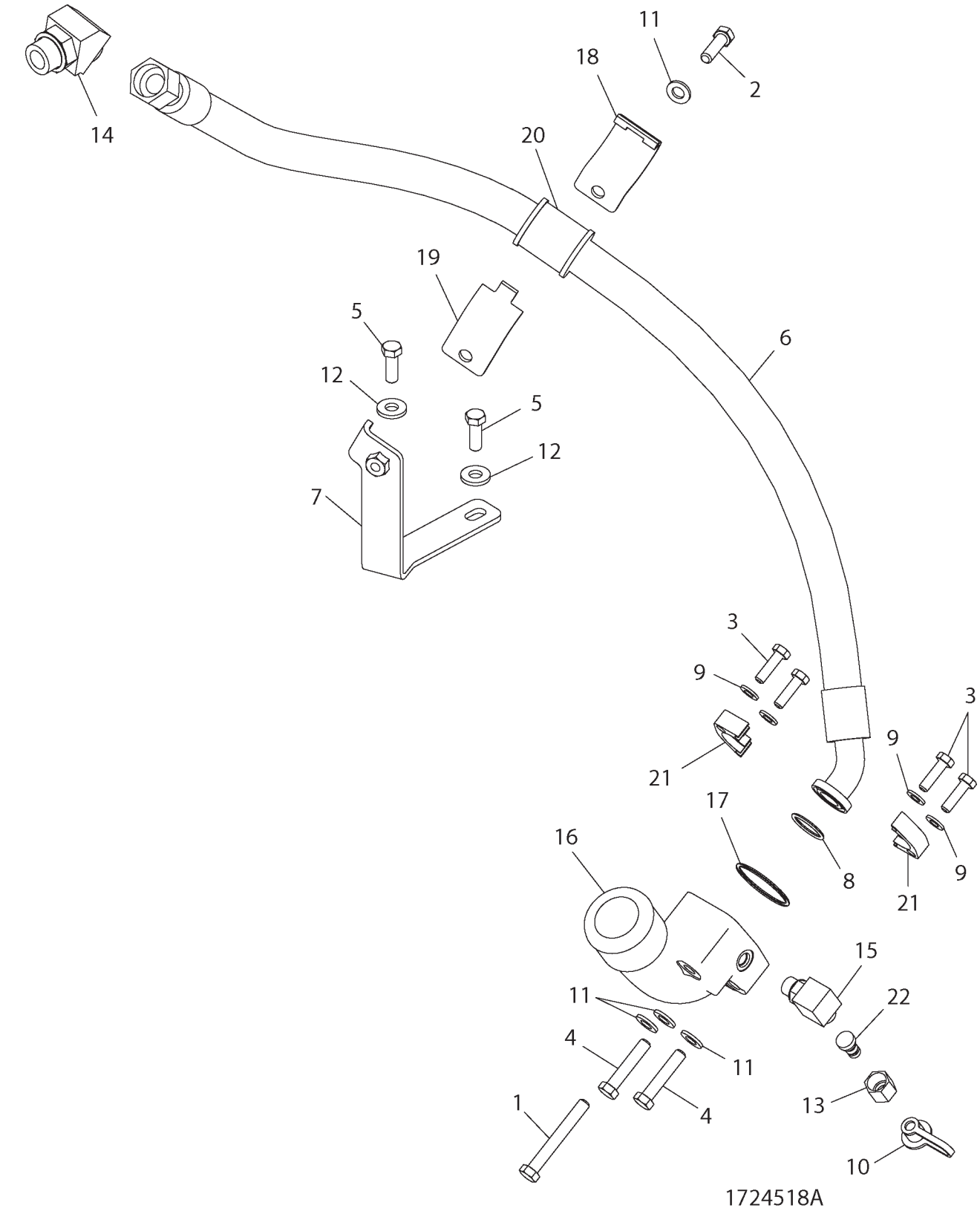

## LINES GP-IMPLEMENT - 172-4518

| ITEM | NUMBER | QTY | DESCRIPTION |
|---|---|---|---|
| - | 172-4518 | -- | LINES GP-IMPLEMENT [A] (NOT SERVICED) |
| 1 | 400046X1 | 1 | BOLT-M12X1.75X90 ZNDI HHD 10.9 |
| 2 | 400050X1 | 1 | BOLT-M12X1.75X40 ZNDI HHD 10.9 |
| 3 | 400059X1 | 4 | BOLT-M10X1.5X35 ZNDI HHD 10.9 |
| 4 | 400063X1 | 2 | BOLT-M12X1.75X60 ZNDI HHD 10.9 |
| 5 | 400064X1 | 2 | BOLT-M12X1.75X35 ZNDI HHD 10.9 |
| 6 | 500599D1 | 1 | HOSE AS (FOR 25.4 ID SAE |
| 7 | 500458D1 | 1 | BRACKET AS |
| 8 | 400100X1 | 1 | SEAL-O RING-32.92IDX3.53DIA |
| 9 | 400287X1 | 4 | WASHER-HARD 11IDX21ODX2.5 ZND1 |
| 10 | 400323X1 | 1 | CAP-DUST 12.6 DIA -RUBBER |
| 11 | 400357X1 | 4 | WASHER-HARD-M12X25.50DX3THK |
| 12 | 400381X1 | 2 | WASHER-HARD-13.5IDX30 ODX4THK |
| 13 | 400607X1 | 1 | NUT-ORFS 13/16-16 PLATED |
| 14 | CH148-8355 | 1 | ELBOW AS-45DEG 16STORX16ORFS |
| | 400376X1 | 1 | SEAL-O-RING |
| | 400123X1 | 1 | SEAL-O RING-27.22ODX1.78 DIA |
| 15 | CH148-8364 | 1 | ELBOW AS-90DEG (8STOR-8ORFS) |
| | CH3K-0360 | 1 | SEAL-O-RING (16.36IDX2.21DIA) |
| | CH6V-8398 | 1 | SEAL-O-RING (16.03ODX1.78DIA) |
| 16 | CH211-3502 | 1 | ELBOW |
| 17 | CH5P-4892 | 1 | SEAL-O-RING 59.92IDX3.53DIA |
| 18 | CH5P-7468 | 1 | CLIP-HOSE TOP 52 ID |
| 19 | CH5P-7469 | 1 | CLIP-HOSE BOTTOM 52 ID |
| 20 | CH5P-8444 | 1 | GROMMET-RUBBER52ODX37IDX52LG |
| 21 | CH8C-3206 | 2 | FLANGE-HALF (-16) |
| 22 | CH8C-6416 | 1 | NIPPLE AS-QUICK DISC -4 & ORNG |

[A] PART OF 180-0184 PUMP AR-HYD

1724518A
PR: t05i29k58b0378

## LINES GP-HYDRAULIC OIL - 209-8325

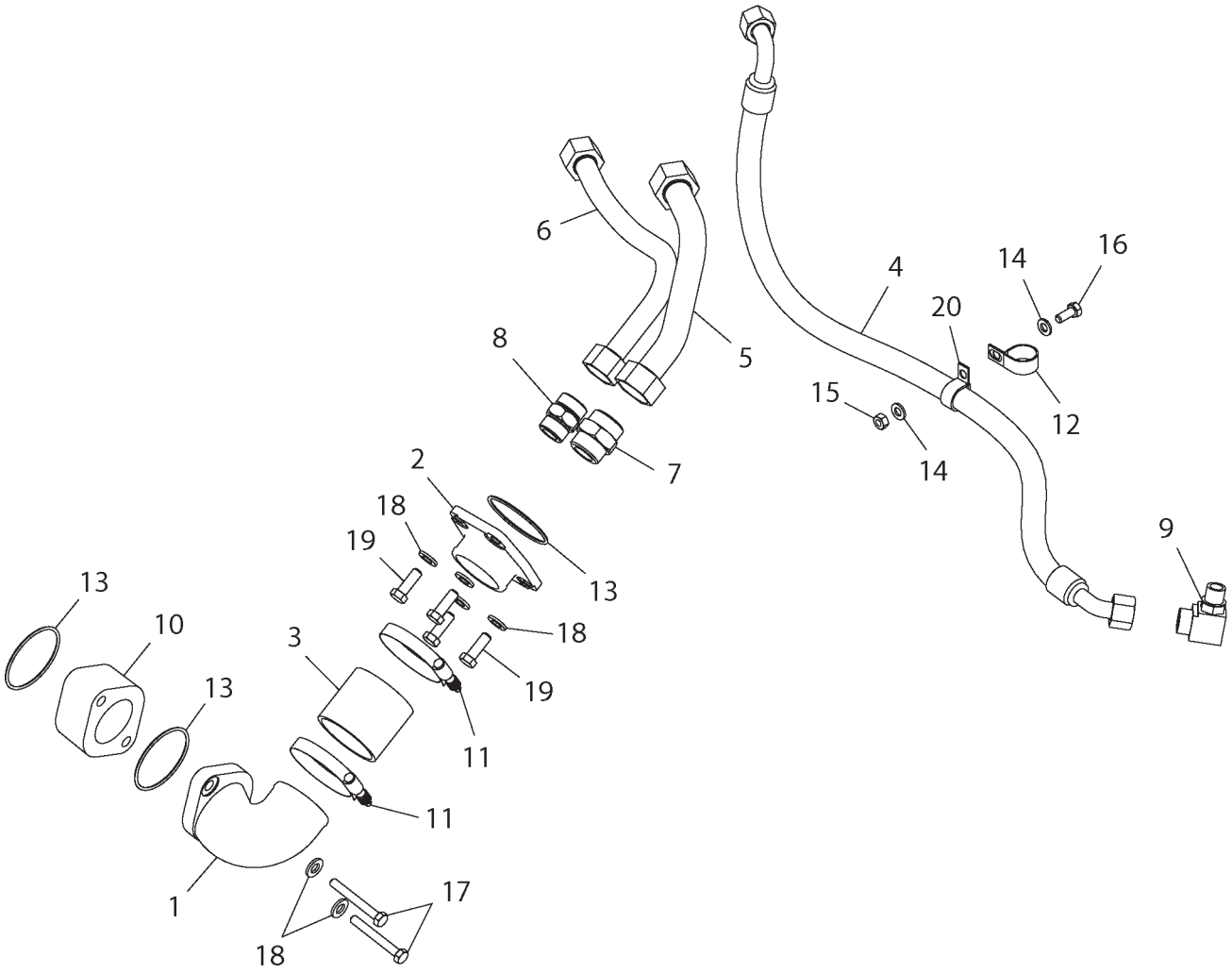


2098325A

## LINES GP-HYDRAULIC OIL - 209-8325

| ITEM | NUMBER | QTY | DESCRIPTION |
|---|---|---|---|
| - | 209-8325 | -- | LINES GP-HYD OIL [A] (NOT SERVICED) |
| 1 | CH207-5359 | 1 | TUBE |
| 2 | CH207-5360 | 1 | TUBE |
| 3 | CH208-9844 | 1 | HOSE |
| 4 | CH210-0159 | 1 | HOSE AS-19.0 ID SAE 100R1 |
| 5 | 217-4156 | 1 | TUBE AS. |
| 6 | 217-4157 | 1 | TUBE AS. |
| 7 | CH148-8334 | 1 | CONNECTOR AS-20 ORFS X 20 STOR |
| | 400365X1 | 1 | SEAL-O-RING (29.74IDX2.95DIA) |
| | 400593X1 | 1 | SEAL-O-RING (33.57ODX1.78DIA) |
| 8 | CH148-8335 | 1 | CONNECTOR AS.-16 STORX16 ORFS |
| | 400376X1 | 1 | SEAL-O-RING |
| | 400123X1 | 1 | SEAL-O RING-27.22ODX1.78 DIA |
| 9 | CH148-8388 | 1 | ELBOW-90 DEG 10 STORX12 ORFS |
| | 400319X1 | 1 | SEAL-O-RING (11.89X1.98) |
| | 400366X1 | 1 | SEAL-O-RING |
| 10 | 224-1398 | 1 | SPACER |
| 11 | 400359X1 | 2 | CLAMP-HOSE,SST 70-92X16 |
| 12 | 400597X1 | 1 | CLIP-31.75 ID M10 OR 3/8 |
| 13 | 400103X1 | 3 | SEAL-O RING-82.14IDX3.53 DIA |
| 14 | 400287X1 | 2 | WASHER-HARD 11IDX21ODX2.5 ZND1 |
| 15 | WR522218 | 1 | NUT-M10-1.5,CL10.9,ZN,H,REG |
| 16 | 400039X1 | 1 | BOLT-M10X1.5X25 ZNDI HHD 10.9 |
| 17 | 400044X1 | 2 | BOLT-M10X1.5X80 ZNDI HHD 10.9 |
| 18 | 400357X1 | 6 | WASHER-HARD-M12X25.50DX3THK |
| 19 | 400064X1 | 4 | BOLT-M12X1.75X35 ZNDI HHD 10.9 |
| 20 | 400700X1 | 1 | CLIP LOOP 28.58ID |

[A] PART OF 180-0184 PUMP AR

2098325A
PR: t05i29k58b0379

## LINES GP-HYDRAULIC - 209-8326
**(FOR USE W/85CC CAPACITY CHARGE PUMP)**

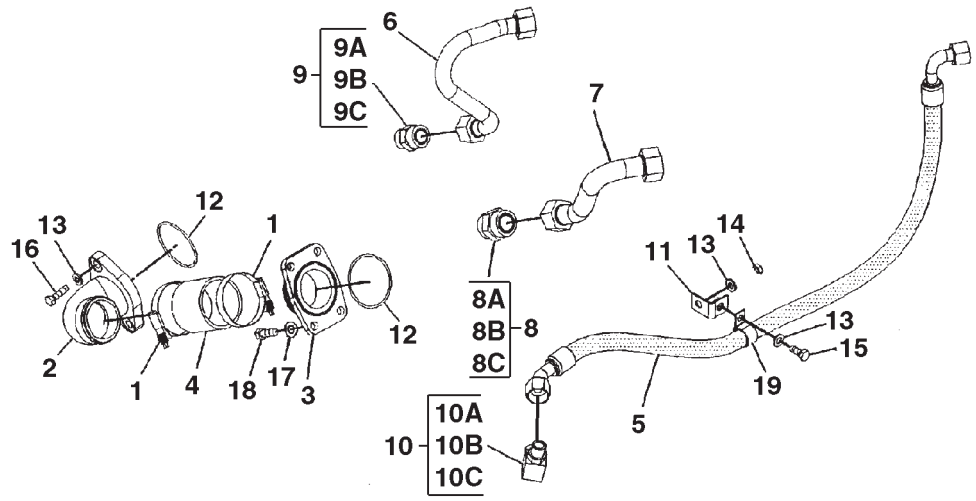


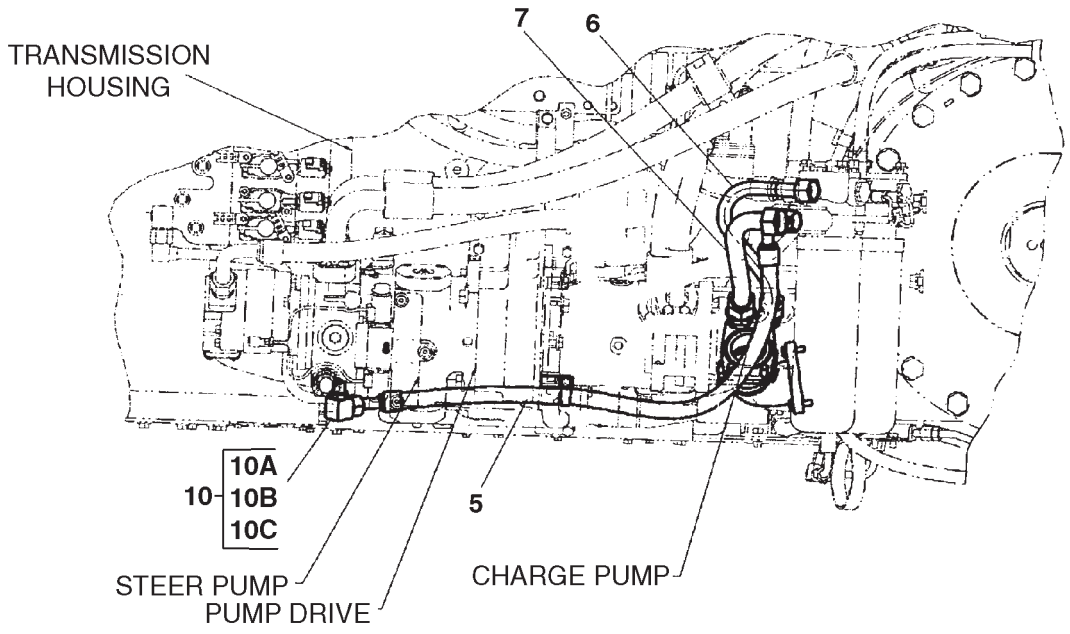


0889153A

## LINES GP-HYDRAULIC - 209-8326
**(FOR USE W/85CC CAPACITY CHARGE PUMP)**

| ITEM | NUMBER | QTY | DESCRIPTION |
|---|---|---|---|
| - | 209-8326 | -- | LINES GP-HYDRAULIC [A] (NOT SERVICED) |
| 1 | 400359X1 | 2 | CLAMP-HOSE |
| 2 | CH207-5359 | 1 | TUBE |
| 3 | CH207-5360 | 1 | TUBE |
| 4 | CH208-9844 | 1 | HOSE (7.5CM) |
| 5 | CH210-0159 | 1 | HOSE ASM |
| 6 | 219-7208 | 1 | TUBE ASM |
| 7 | 219-7209 | 1 | TUBE ASM |
| 8 | CH148-8334 | 1 | CONNECTOR AS-20 ORFS X 20 STOR |
| 8A | 400593X1 | 1 | SEAL-O-RING |
| 8B | 400365X1 | 1 | SEAL-O-RING |
| 8C | ----- | 1 | CONNECTOR (ORDER ITEM 8) |
| 9 | CH148-8335 | 1 | CONNECTOR AS.-16 STORX16 ORFS |
| 9A | 400376X1 | 1 | SEAL-O-RING |
| 9B | 400123X1 | 1 | SEAL-O RING-27.22ODX1.78 DIA |
| 9C | ----- | 1 | CONNECTOR (ORDER ITEM 9) |
| 10 | CH148-8388 | 1 | ELBOW-90 DEG 10 STORX12 ORFS |
| 10A | 400319X1 | 1 | SEAL-O-RING (11.89X1.98) |
| 10B | ----- | 1 | ELBOW (ORDER ITEM 10) |
| 10C | 400366X1 | 1 | SEAL-O-RING |
| 11 | 400597X1 | 1 | CLIP-LOOP (31.75ID) |
| 12 | 400103X1 | 2 | SEAL-O-RING |
| 13 | 400287X1 | 4 | WASHER-HARD (11X21X2.5) |
| 14 | WR522218 | 1 | NUT-WELD (M10X1.5) |
| 15 | 400039X1 | 1 | BOLT (M10X1.5X25MM) |
| 16 | 400059X1 | 3 | BOLT (M10X1.5X35MM) |
| 17 | 400357X1 | 4 | WASHER-HARD (M12X25.5X3) |
| 18 | 400064X1 | 4 | BOLT (M12X1.75X35MM) |
| 19 | 400700X1 | 1 | CLIP (28.58ID) |

[A] PART OF 180-0185 PUMP AR-HYDRAULIC

0889153A
PR: t05i29k58b0380

## LINES GP-IMPL - 172-4519
**87CC CAPACITY IMPLEMENT PUMP**

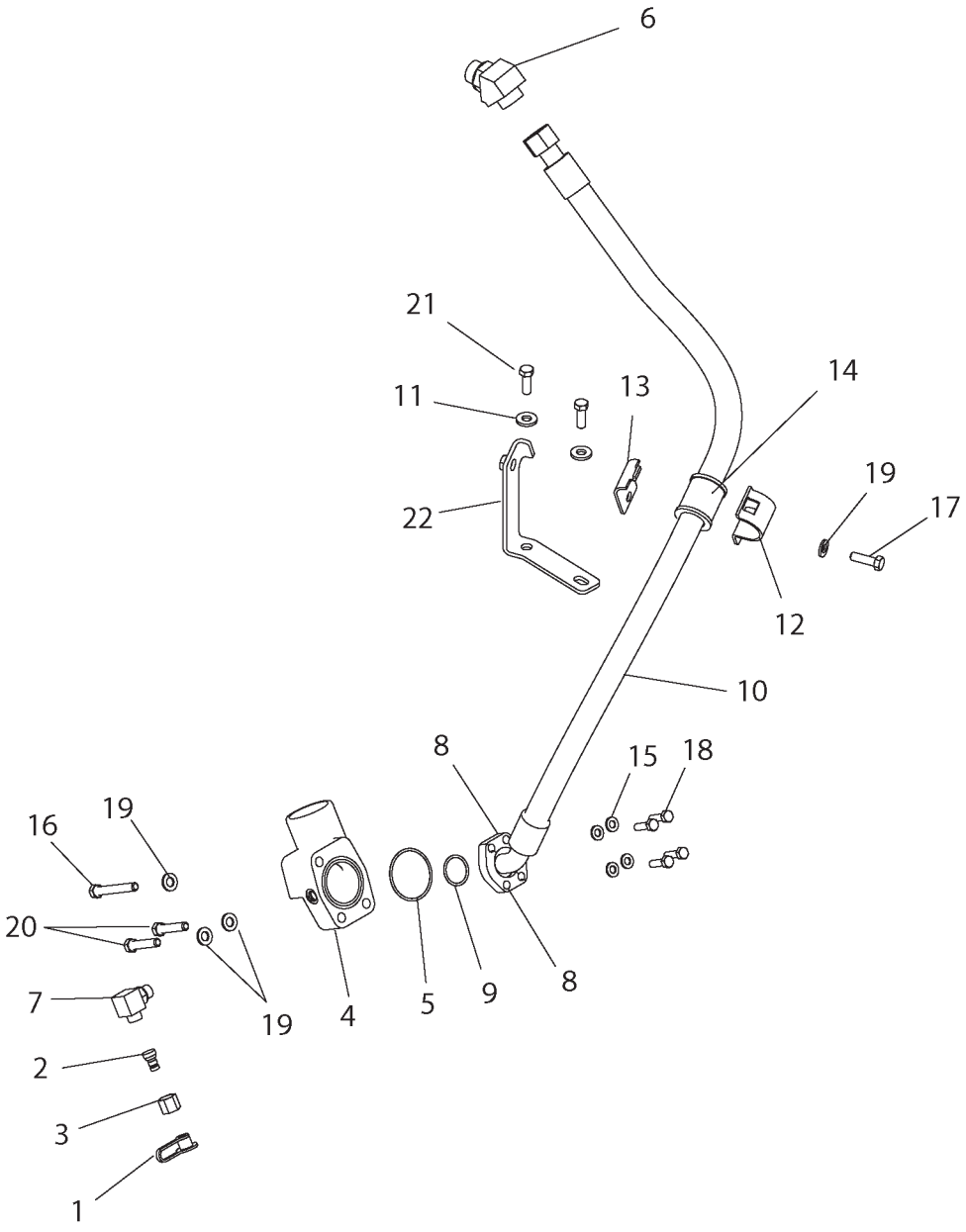


1724519A

## LINES GP-IMPL - 172-4519
**87CC CAPACITY IMPLEMENT PUMP**

| ITEM | NUMBER | QTY | DESCRIPTION |
|---|---|---|---|
| - | 172-4519 | -- | LINES GP-IMPL [A] (NOT SERVICED) |
| 1 | 400323X1 | 1 | CAP-DUST 12.6 DIA -RUBBER |
| 2 | CH8C-6416 | 1 | NIPPLE AS-QUICK DISC -4 & ORNG |
| 3 | 400607X1 | 1 | NUT-ORFS 13/16-16 PLATED |
| 4 | CH208-0765 | 1 | ELBOW |
| 5 | CH033-6031 | 1 | SEAL-O-RING 69.44IDX3.53DIA |
| 6 | CH148-8355 | 1 | ELBOW AS-45DEG 16STORX16ORFS |
| | CH6V-9005 | 1 | ELBOW-45DEG |
| | 400123X1 | 1 | SEAL-O RING-27.22ODX1.78 DIA |
| | 400376X1 | 1 | SEAL-O-RING (29.74ID) |
| 7 | CH148-8364 | 1 | ELBOW AS-90DEG (8STOR-8ORFS) |
| | CH3K-0360 | 1 | SEAL-O-RING (16.36IDX2.21DIA) |
| | CH6V-8398 | 1 | SEAL-O-RING (16.03ODX1.78DIA) |
| 8 | CH1P-4578 | 2 | FLANGE-HALF (-20) |
| 9 | CH4J-0522 | 1 | SEAL-O-RING 37.69IDX3.53DIA |
| 10 | 500128D1 | 1 | HOSE AS. |
| 11 | 400381X1 | 2 | WASHER-HARD-13.5IDX30 ODX4THK |
| 12 | CH5P-7468 | 1 | CLIP-HOSE TOP 52 ID |
| 13 | CH5P-7469 | 1 | CLIP-HOSE BOTTOM 52 ID |
| 14 | CH5P-8444 | 1 | GROMMET-RUBBER52ODX37IDX52LG |
| 15 | 400287X1 | 4 | WASHER-HARD 11IDX21ODX2.5 ZND1 |
| 16 | 400046X1 | 1 | BOLT-M12X1.75X90 ZNDI HHD 10.9 |
| 17 | 400050X1 | 1 | BOLT-M12X1.75X40 ZNDI HHD 10.9 |
| 18 | 400059X1 | 4 | BOLT-M10X1.5X35 ZNDI HHD 10.9 |
| 19 | 400357X1 | 4 | WASHER-HARD-M12X25.50DX3THK |
| 20 | 400063X1 | 2 | BOLT-M12X1.75X60 ZNDI HHD 10.9 |
| 21 | 400064X1 | 2 | BOLT-M12X1.75X35 ZNDI HHD 10.9 |
| 22 | 500458D1 | 1 | BRACKET AS |

[A] PART OF 180-0185 PUMP AR

1724519A
PR: t05i29k58b0381

## LINES GP-ECOLOGY - 502214D1

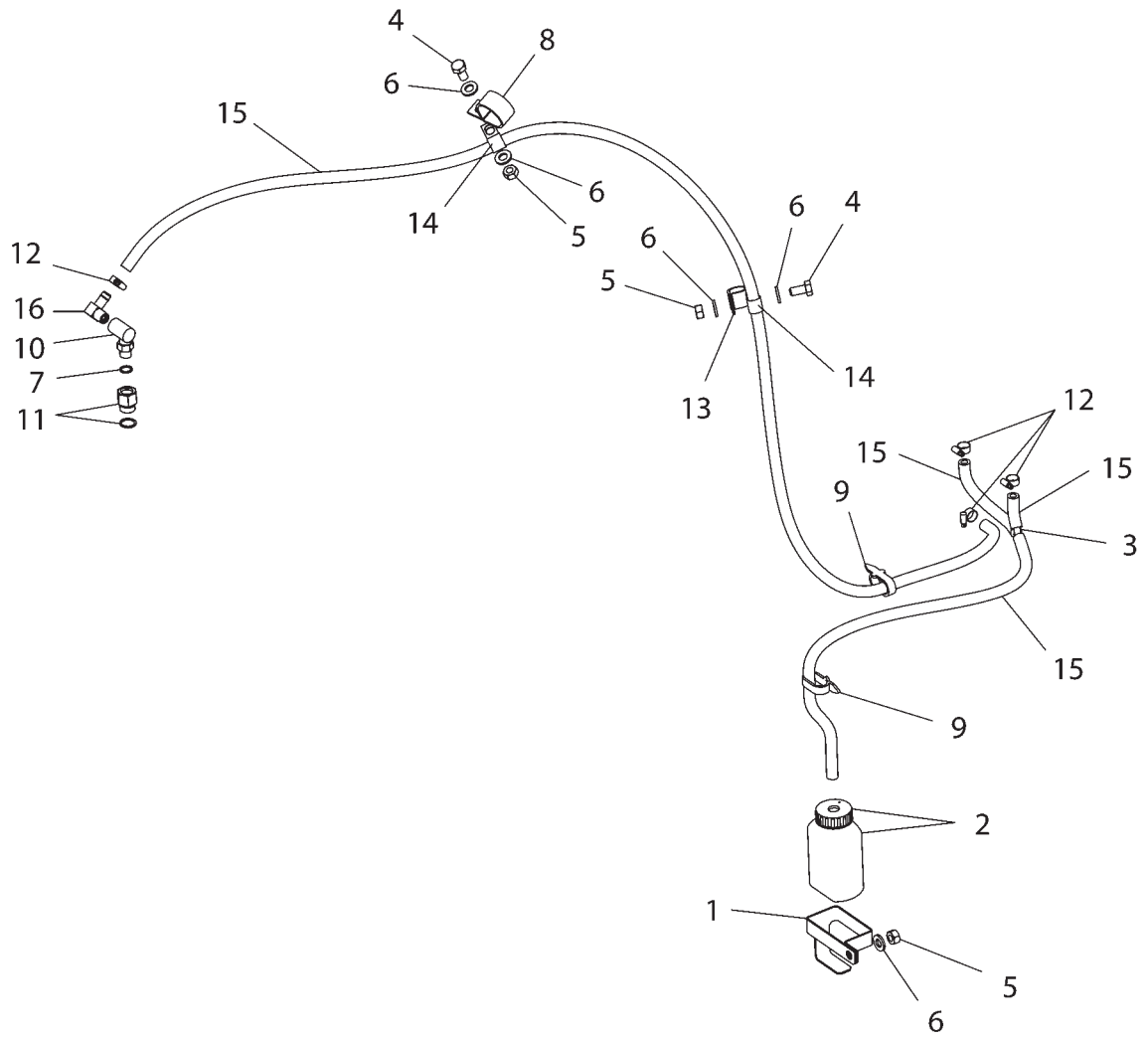

## LINES GP-ECOLOGY - 502214D1

| ITEM | NUMBER | QTY | DESCRIPTION |
|---|---|---|---|
| - | 502214D1 | -- | LINES GP-ECOLOGY [A] (NOT SERVICED) |
| 1 | 179-8664 | 1 | BRACKET |
| 2 | CH179-8665 | 1 | BOTTLE AS |
| 3 | CH222-0527 | 1 | COUPLING-Y 3 X 7.9 OD BARB |
| 4 | 400040X1 | 2 | BOLT-M10X1.5X20 ZNDI HHD 10.9 |
| 5 | WR522218 | 3 | NUT-M10-1.5,CL10.9,ZN,H,REG |
| 6 | 400287X1 | 5 | WASHER-HARD 11IDX21ODX2.5 ZND1 |
| 7 | 400318X1 | 1 | SEAL-O-RING (11.89ID X 1.98 DIA) |
| 8 | 400689X1 | 1 | CLIP LOOP 38.1ID |
| 9 | 400837X1 | 2 | STRAP-CABLE (PLASTIC) |
| 10 | CH106-2105 | 1 | ELBOW-900-STRAIGHT THD |
| 11 | CH148-8313 | 1 | ADAPTER AS-8STOR X 6STOR (INCL O-RING) |
| | CH3K-0360 | 1 | SEAL-O-RING (16.36 ID X 2.21 DIA) |
| 12 | CH1P-4278 | 4 | CLAMP-HOSE 5.5-15.88 ID X 8 |
| 13 | CH1S-0994 | 1 | CLIP-LOOP 20.64 ID |
| 14 | CH4K-8864 | 2 | CLIP-LOOP 14.29ID |
| 15 | CH5P-1420 | -- | HOSE (BULK) 7.92 DIA (245CM) |
| 16 | CH5P-9517 | 1 | ELBOW-90 DEG. X 4NPTF X 7.92 OD BARB |

[A] PART OF: 180-1434;500795D1
VALVE AR-IMPL

502214DC
PR: t05i29k58b0382

## LINES GP-HYDRAULIC OIL - 501130D1
HYDRAULIC TRAILER BRAKE

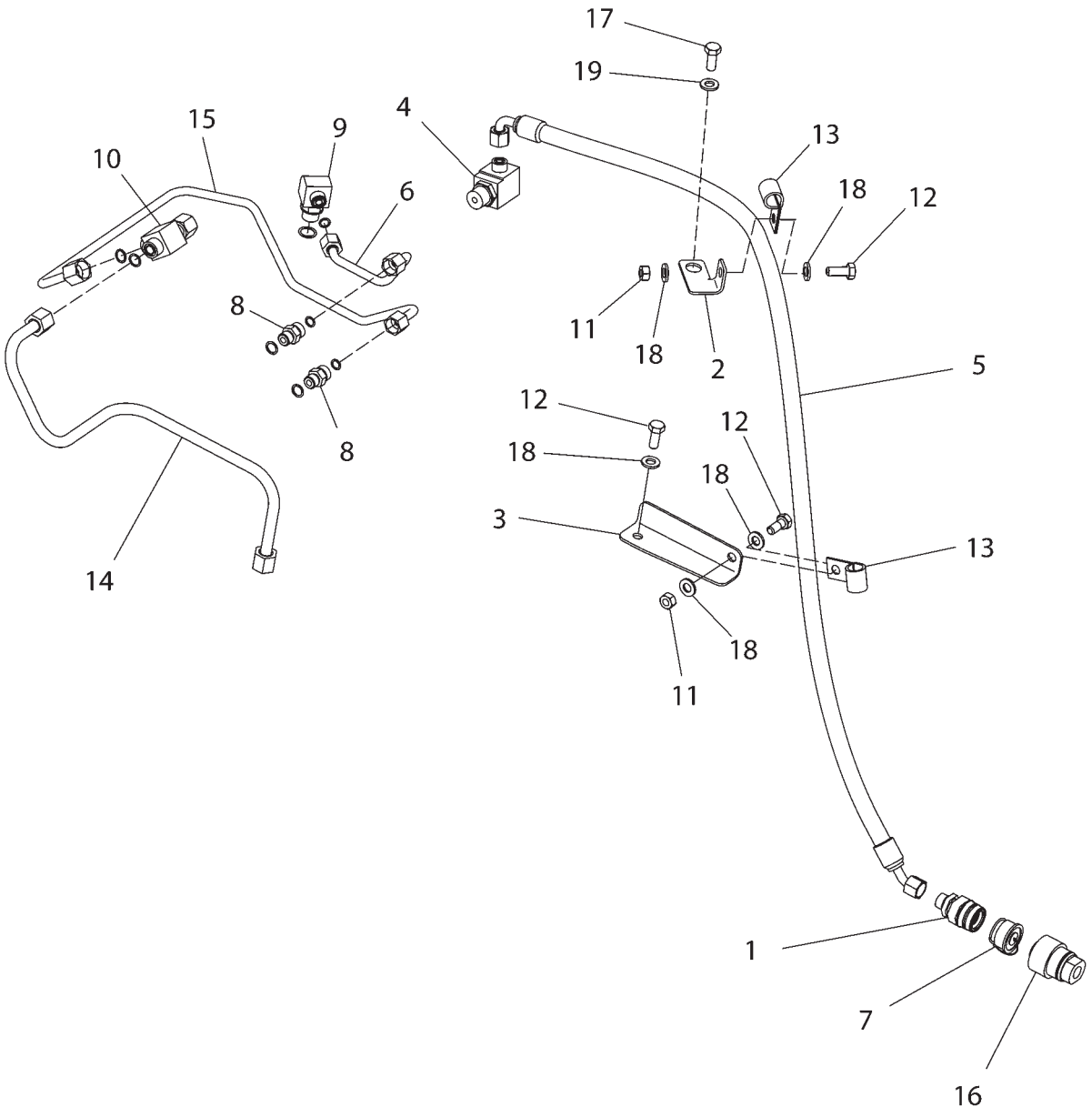

## LINES GP-HYDRAULIC OIL - 501130D1
HYDRAULIC TRAILER BRAKE

| ITEM | NUMBER | QTY | DESCRIPTION |
|---|---|---|---|
| - | 501130D1 | -- | LINES GP-HYD OIL (NOT SERVICED) |
| 1 | CH185-3959 | 1 | COUPLER-QK CONNECT 12STOR ML |
| 2 | 200-2992 | 1 | BRACKET |
| 3 | 200-2993 | 1 | BRACKET |
| 4 | CH205-3692 | 1 | ELBOW AS-900 8STOR X 8ORFS |
| 5 | CH208-9850 | 1 | HOSE AS-9.5 ID SAE 100R2 |
| 6 | 208-9875 | 1 | TUBE AS. |
| 7 | CH223-9254 | 1 | CAP-DUST |
| 8 | 400367X1 | 2 | CONNECTOR AS-6 STOR -6 ORFS |
| | 400378X1 | 1 | SEAL-O-RING (12.83ODX1.78DIA) |
| | 400318X1 | 1 | SEAL-O-RING (11.89ID X 1.98 DIA) |
| 9 | CH148-8374 | 1 | ELBOW AS-90DEG 6ORFS X 8STOR |
| | CH3K-0360 | 1 | SEAL-O-RING (16.36 ID X 2.21 DIA) |
| | 400378X1 | 1 | SEAL-O-RING (12.83ODX1.78DIA) |
| 10 | CH148-8444 | 1 | TEE-SWIVEL 3X -8 ORFS |
| | CH6V-8398 | 2 | SEAL-O-RING (16.03IDX1.78DIA) |
| 11 | WR522218 | 4 | NUT-M10-1.5,CL10.9,ZN,H,REG |
| 12 | 400039X1 | 3 | BOLT-M10X1.5X25 ZNDI HHD 10.9 |
| 13 | CH4D-7735 | 2 | CLIP-LOOP 18.29ID |
| 14 | 501127D1 | 1 | TUBE AS |
| 15 | 501128D1 | 1 | TUBE AS |
| 16 | 501129D1 | 1 | COUPLING-TRAILER |
| 17 | 400190X1 | 1 | BOLT-M12X1.75X16 ZNDI HHD 10.9 |
| 18 | 400287X1 | 6 | WASHER-HARD 11IDX21ODX2.5 ZND1 |
| 19 | 400357X1 | 1 | WASHER-HARD-M12X25.50DX3THK |

[A] PART OF:
501170D1 VALVE AR
501140D1 BRAKE KIT-HYD

501130DB
PR: t05i29k58b0383

## LINES GP-STEERING - 158-2393

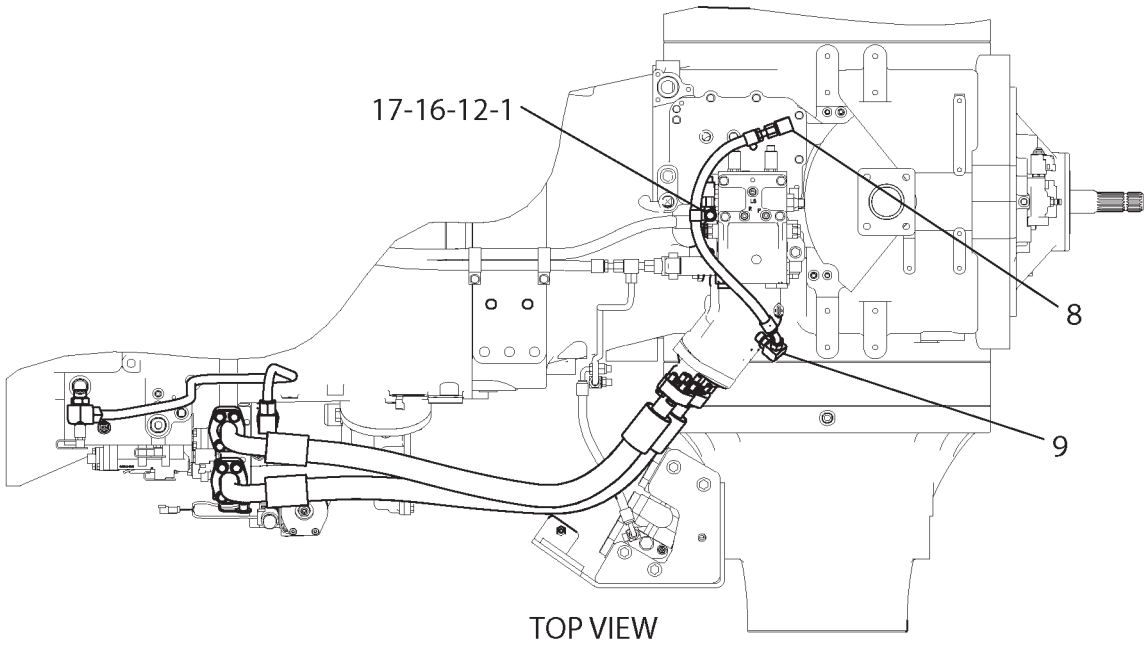


TOP VIEW

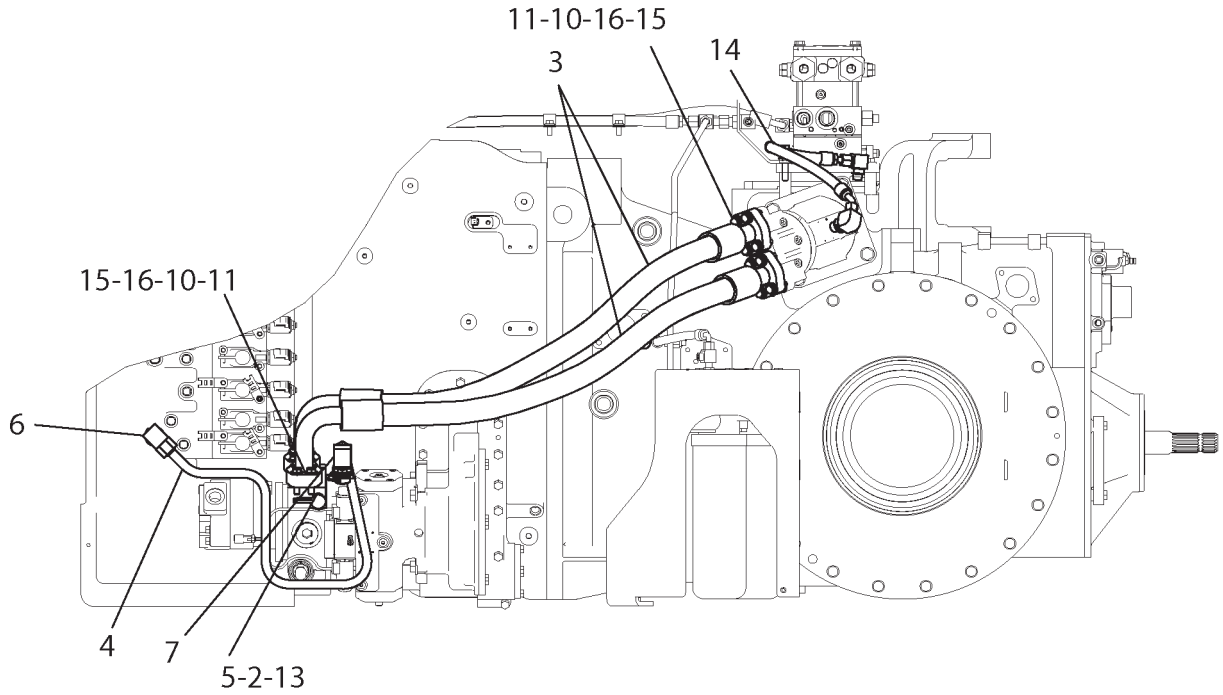


LEFT SIDE VIEW

1582393F

## LINES GP-STEERING - 158-2393

| ITEM | NUMBER | QTY | DESCRIPTION |
|---|---|---|---|
| - | 158-2393 | -- | LINES GP-STEERING [A] (NOT SERVICED) |
| 1 | CH2A-1314 | 1 | SPACER |
| 2 | 400323X1 | 1 | CAP-DUST |
| 3 | CH192-8841 | 2 | HOSE ASM |
| 4 | 193-8098 | 1 | TUBE ASM |
| 5 | CH110-6349 | 1 | FITTING AS |
| 6 | CH148-8347 | 1 | ELBOW AS (12STORX12ORFS) |
| | 400366X1 | 1 | SEAL-O-RING (22.5IDX1.78DIA) |
| | 400416X1 | 1 | SEAL-O-RING (23.47IDX2.95DIA) |
| 7 | CH148-8360 | 1 | ELBOW AS (16STORX12ORFS) |
| | 400366X1 | 1 | SEAL-O-RING (22.5IDX1.78DIA) |
| | 400376X1 | 1 | SEAL-O-RING (29.74IDX2.95DIA) |
| 8 | CH148-8364 | 1 | ELBOW AS-90DEG (8STOR-8ORFS) |
| | CH3K-0360 | 1 | SEAL-O-RING (16.36IDX2.21DIA) |
| | CH6V-8398 | 1 | SEAL-O-RING (16.03ODX1.78DIA) |
| 9 | CH148-8372 | 1 | ELBOW AS-90DEG (10STOR-8ORFS) |
| | CH6V-8398 | 1 | SEAL-O-RING (16.03 OD X 1.78 DIA) |
| | 400319X1 | 1 | SEAL-O-RING (19.81IDX2.46DIA) |
| 10 | 400588X1 | 4 | SEAL-RECTANGULAR |
| 11 | CH1P-5767 | 8 | FLANGE-half |
| 12 | CH1S-1015 | 1 | CLIP-LOOP |
| 13 | 400361X1 | 1 | SEAL-O-RING (8.92IDX1.83DIA) |
| 14 | 500127D1 | 1 | HOSE ASM |
| 15 | 400057X1 | 16 | BOLT (M12X1.75X50MM) |
| 16 | 400357X1 | 17 | WASHER-HARD (M12X25.5X3) |
| 17 | 400062X1 | 1 | BOLT (M12X1.75X70MM) |

[A] PART OF:
158-2342; 501809D1 HYD AR-COMMON

1582393F
PR: t05i29k58b0384

## MOUNTING GP-VALVE - 158-2339

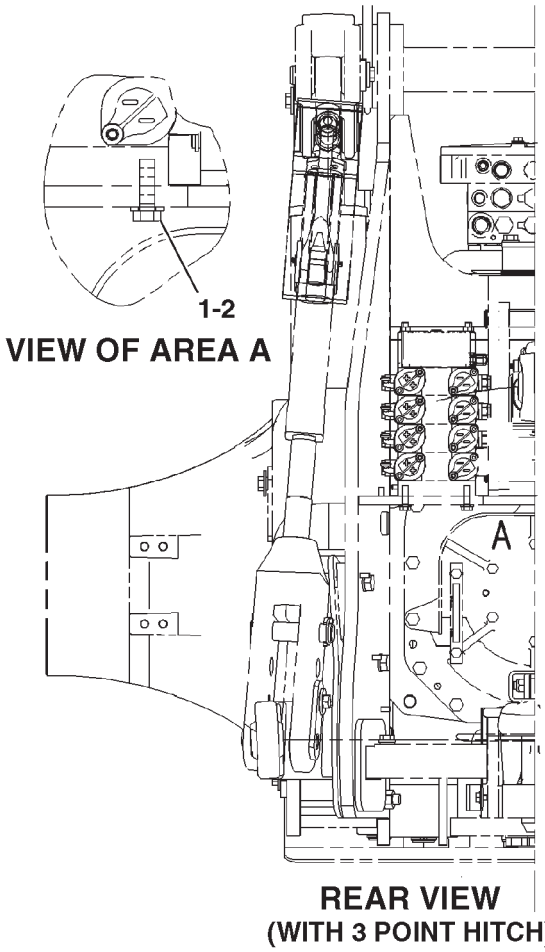


VIEW OF AREA A

REAR VIEW
(WITH 3 POINT HITCH)

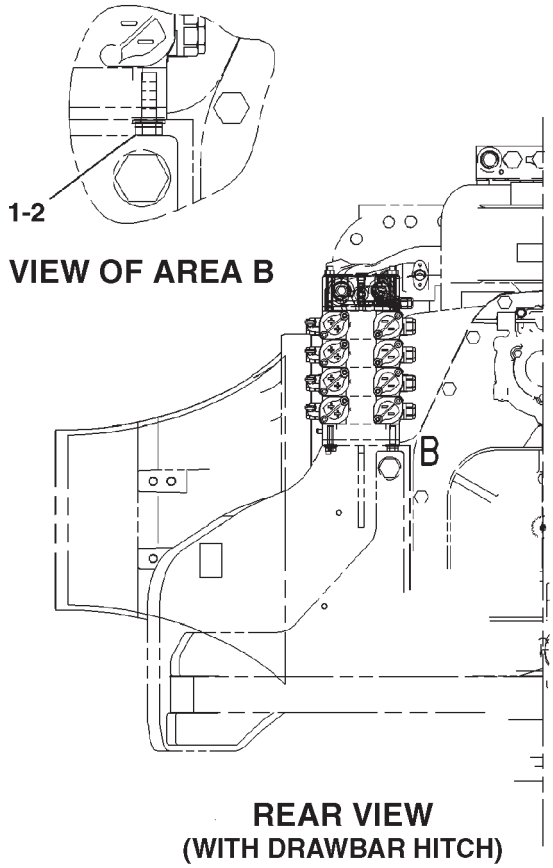


VIEW OF AREA B

REAR VIEW
(WITH DRAWBAR HITCH)
(ALTERNATE CONFIGURATION)

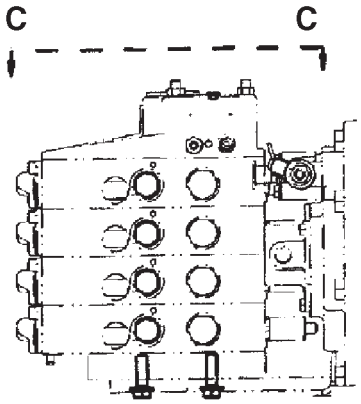


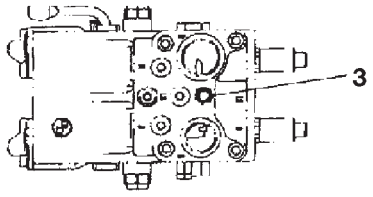


VIEW C-C

0855208A

## MOUNTING GP-VALVE - 158-2339

| ITEM | NUMBER | QTY | DESCRIPTION |
|---|---|---|---|
| - | 158-2339 | -- | MOUNTING GP-VALVE [A] |
| 1 | 400050X1 | 4 | BOLT (M12X1.75X40MM) |
| 2 | 400357X1 | 4 | WASHER-HARD (M12X25.5X3) |
| 3 | CH193-5914 | 1 | PLUG |

[A] PART OF 158-2342 HYDRAULIC AR

0855208A
PR: t05i29k58b0385

## MOUNTING GP-VALVE - 193-1548

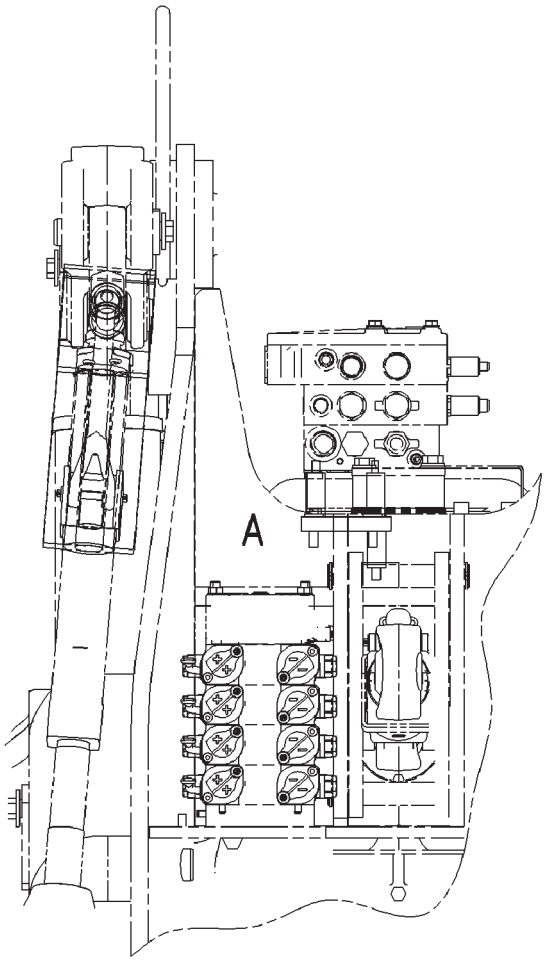


REAR VIEW

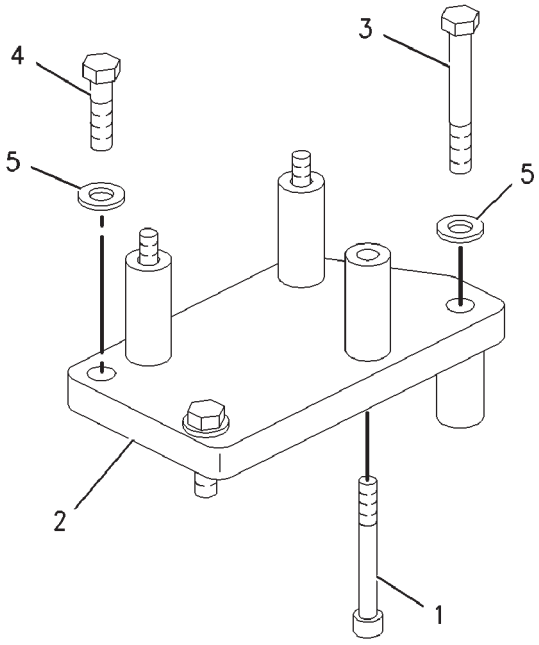


VIEW OF AREA A

## MOUNTING GP-VALVE - 193-1548

| ITEM | NUMBER | QTY | DESCRIPTION |
|---|---|---|---|
| - | 193-1548 | -- | MOUNTING GP-VALVE [A] (NOT SERVICED) |
| 1 | 400000X1 | 3 | BOLT-SOCKET HEAD (M10X1.5X85) |
| 2 | 224-1399 | 1 | BRACKET AS |
| 3 | 400046X1 | 1 | BOLT (M12X1.75X90MM) |
| 4 | 400051X1 | 2 | BOLT (M12X1.75X45MM) |
| 5 | 400357X1 | 2 | WASHER-HARD (M12X25.5X3) |

[A] PART OF 193-8197; 193-8198 VALVE AR

00854860
PR: t05i29k58b0386

## MOUNTING GP-VALVE - 162-9805

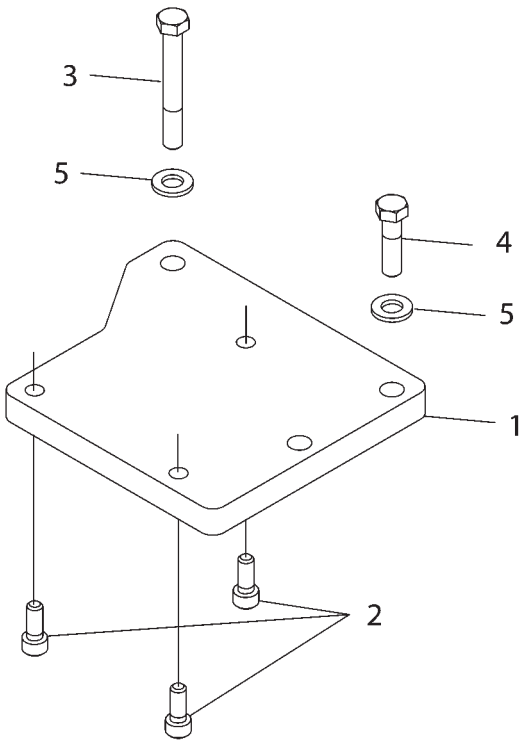


1629805D

## MOUNTING GP-VALVE - 162-9805

| ITEM | NUMBER | QTY | DESCRIPTION |
|---|---|---|---|
| - | 162-9805 | -- | MOUNTING GP-VALVE [A] (NOT SERVICED) |
| 1 | 209-3414 | 1 | BRACKET AS |
| 2 | 400217X1 | 3 | BOLT (M10X1.5X25MM) |
| 3 | 400046X1 | 1 | BOLT (M12X1.75X90MM) |
| 4 | 400051X1 | 1 | BOLT (M12X1.75X45MM) |
| 5 | 400357X1 | 2 | WASHER-HARD (M12X25.5X3 THK) |

[A] PART OF:
193-8199;193-8200;501070D1 VALVE AR
209-3689;501140D1 KIT-HYD BRAKE

1629805D
PR: t05i29k58b0387

## PUMP & MOUNTING GP - 162-9804
**(63CC IMPLEMENT PUMP)**

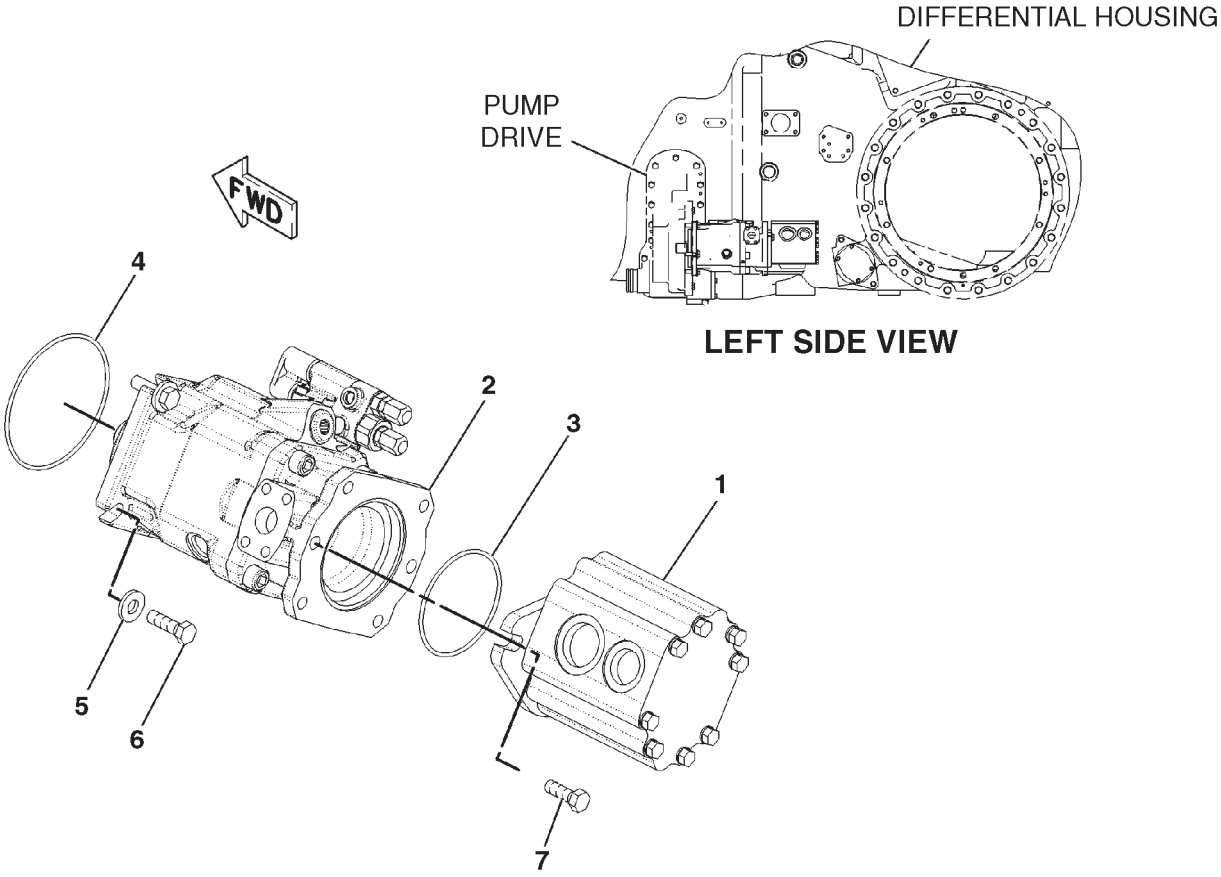


**LEFT SIDE VIEW**

0850708A

## PUMP & MOUNTING GP - 162-9804
**(63CC IMPLEMENT PUMP)**

| ITEM | NUMBER | QTY | DESCRIPTION |
|---|---|---|---|
| - | 162-9804 | -- | PUMP & MOUNTING GP [A] (NOT SERVICED) |
| 1 | CH206-6337 | 1 | PUMP GP-GEAR (CHARGE)<br>(SEE BREAKDOWN FOR COMPONENTS) |
| 2 | CH206-9019 | 1 | PUMP GP-PISTON (IMPLEMENT)<br>(SEE BREAKDOWN FOR COMPONENTS) |
| 3 | CH2H-3934 | 1 | SEAL-O-RING (98.02IDX3.53DIA) |
| 4 | 400101X1 | 1 | SEAL-O-RING (126.61IDX3.53DIA) |
| 5 | 400381X1 | 4 | WASHER-HARD (13.5X30X4) |
| 6 | 400050X1 | 4 | BOLT (M12X1.75X40MM) |
| 7 | 400064X1 | 2 | BOLT (M12X1.75X35MM) |

[A] PART OF 180-0184 PUMP AR-HYDRAULIC

0850708A
PR: t05i29k58b0388

## PUMP & MOUNTING GP - 165-7901
**(87CC IMPLEMENT PUMP)**

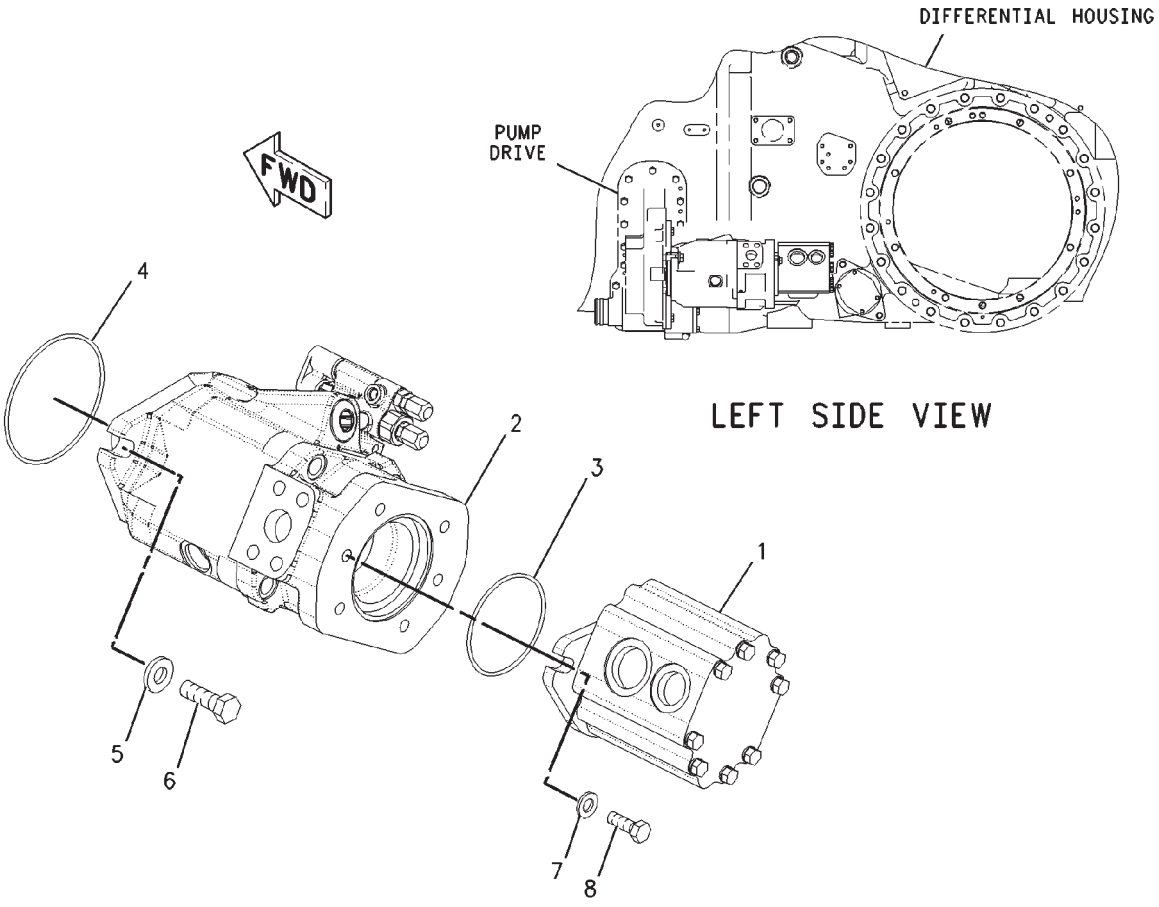


00850772

## PUMP & MOUNTING GP - 165-7901
**(87CC IMPLEMENT PUMP)**

| ITEM | NUMBER | QTY | DESCRIPTION |
|---|---|---|---|
| | 165-7901 | | PUMP & MOUNTING GP [A] (NOT SERVICED) |
| 1 | CH206-6337 | 1 | PUMP GP-GEAR (CHARGE)<br>(SEE BREAKDOWN FOR COMPONENTS) |
| 2 | CH206-9017 | 1 | PUMP GP-PISTON (IMPLEMENT)<br>(SEE BREAKDOWN FOR COMPONENTS) |
| 3 | CH2H-3934 | 1 | SEAL-O-RING |
| 4 | 400101X1 | 1 | SEAL-O-RING |
| 5 | CH7X-0515 | 2 | WASHER-HARD (17X35X5) |
| 6 | 400056X1 | 2 | BOLT (M16X2X50MM) |
| 7 | 400381X1 | 2 | WASHER-HARD |
| 8 | 400064X1 | 2 | BOLT (M12X1.75X35MM) |

[A] PART OF 180-0185 PUMP AR-HYDRAULIC

00850772
PR: t05i29k58b0389

## PUMP & MTG GP-HYDRAULIC - 158-2397
SCAVENGE PUMP

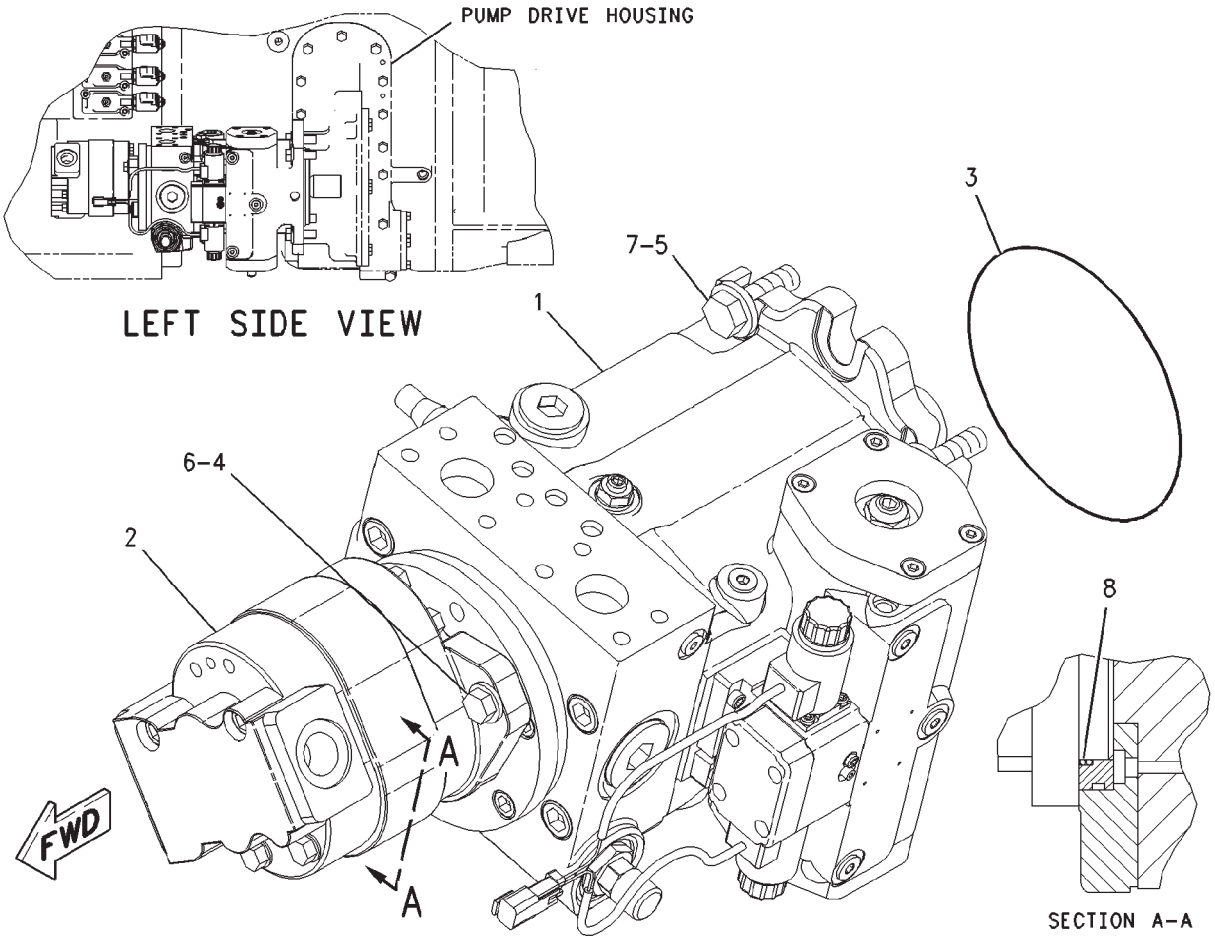


00830561

## PUMP & MTG GP-HYDRAULIC - 158-2397
SCAVENGE PUMP

| ITEM | NUMBER | QTY | DESCRIPTION |
|---|---|---|---|
| - | 158-2397 | -- | PUMP & MTG GP-HYDRAULIC [A] (NOT SERVICED) |
| 1 | CH162-9592 | 1 | PUMP GP-PISTON (SLIPPER) SEE BREAKDOWN FOR COMPONENTS) |
| 2 | CH207-3629 | 1 | PUMP GP-GEAR (STER, IMPL & TMSN CHARGE) SEE BREAKDOWN FOR COMPONENTS) |
| 3 | CH8F-8733 | 1 | SEAL-O-RING |
| 4 | 400050X1 | 2 | BOLT (M12X1.75X40MM) |
| 5 | 400056X1 | 4 | BOLT (M16X2X50MM) |
| 6 | 400357X1 | 2 | WASHER-HARD (M12X25.5X3) |
| 7 | CH7X-0515 | 4 | WASHER-HARD (17X35X5) |
| 8 | CH6D-7146 | 1 | SEAL-O-RING (101.27IDX2.62DIA) [B] |

[A] PART OF 158-2342 HYDRAULIC AR

[B] THIS SEAL IS DELIVERED AS PART OF THE PUMP GP-PISTON. THE SEAL IS LISTED AS A SERVICE REPAIR PART IN CASE OF CUTTING THE SEAL AT INITIAL ASSEMBLY OR IN FIELD SERVICE.

00830561
PR: t05i29k58b0390

## PUMP AR-HYDRAULIC - 180-0184
**63CC IMPLEMENT PUMP HITCH**

NO ILLUSTRATION

NOTIF

## PUMP AR-HYDRAULIC - 180-0184
**63CC IMPLEMENT PUMP HITCH**

| ITEM | NUMBER | QTY | DESCRIPTION |
|---|---|---|---|
| - | 180-0184 | -- | PUMP AR-HYDRAULIC (NOT SERVICED) |
| 1 | 162-9804 | 1 | PUMP & MOUNTING GP (NOT SERVICED)<br>SEE BREAKDOWN FOR COMPONENTS) |
| 2 | 172-4518 | 1 | LINES GP-IMPLEMENT (NOT SERVICED)<br>SEE BREAKDOWN FOR COMPONENTS) |
| 3 | 209-8325 | 1 | LINES GP-HYDRAULIC (NOT SERVICED)<br>SEE BREAKDOWN FOR COMPONENTS) |

NOTIF
PR: t05i29k58b0391

## PUMP AR-HYDRAULIC - 180-0185
**87CC IMPLEMENT PUMP**

NO ILLUSTRATION

NOTIF

## PUMP AR-HYDRAULIC - 180-0185
87CC IMPLEMENT PUMP

| ITEM | NUMBER | QTY | DESCRIPTION |
|---|---|---|---|
| - | 502785D1 | -- | PUMP AR-HYDRAULIC (FIELD INSTALLED) |
| - | 502907D1 | -- | PUMP AR-HYDRAULIC (FACT) (NOT SERVICED, ORDER FIELD INSTALLED) |
| - | 180-0185 | -- | PUMP AR-HYDRAULIC [A] (NOT SERVICED, ORDER FIELD INSTALLED) |
| 1 | 165-7901 | 1 | PUMP & MOUNTING GP (NOT SERVICED) (SEE BREAKDOWN FOR COMPONENTS) |
| 2 | 172-4519 | 1 | LINES GP-IMPLEMENT (NOT SERVICED) (SEE BREAKDOWN FOR COMPONENTS) |
| 3 | 209-8326 | 1 | LINES GP-HYDRAULIC (NOT SERVICED) (SEE BREAKDOWN FOR COMPONENTS) |

[A] PART OF: 500033D1; 500034D1; 500035D1; 500037D1 BASE UNIT AR; 502785D1; 502907D1 PUMP AR-HYD

NOTIF
PR: t05i29k58b0392

## PUMP GP-GEAR - CH206-6337
**STEERING, IMPLEMENT & TRANS CHARGE**

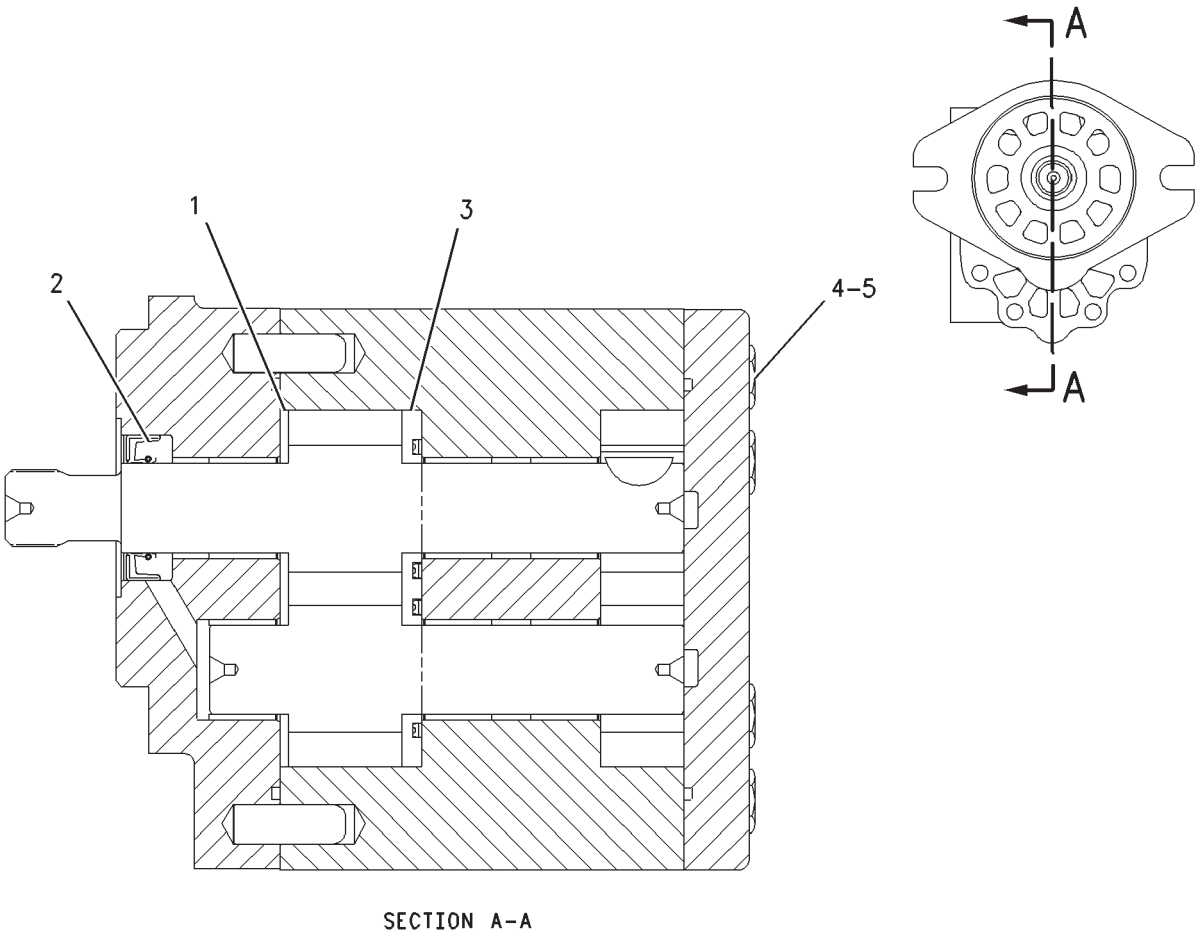


SECTION A-A

00896358

## PUMP GP-GEAR - CH206-6337
**STEERING, IMPLEMENT & TRANS CHARGE**

| ITEM | NUMBER | QTY | DESCRIPTION |
|---|---|---|---|
| - | CH206-6337 | -- | PUMP GP-GEAR [A] |
| 1 | CH077-5261 | 1 | PLATE-THRUST |
| 2 | CH202-2593 | 1 | SEAL-SHAFT |
| | CH202-2595 | 1 | KIT-SEAL (CHARGE PUMP) |
| 3 | CH202-2592 | 1 | PLATE-WEAR |
| 4 | CH8C-7323 | 8 | BOLT (3/8-16X6 IN) |
| 5 | CH8T-4896 | 8 | WASHER-HARD (10.2X18.5X2.5) |

[A] PART OF 162-9804; 165-7901 PUMP & MOUNTING GP

00896358
PR: t05i29k58b0393

## PUMP GP-GEAR - CH207-3629

**SCAVANGE PUMP**
**STEERING, IMPLEMENT & TRANS CHARGE**

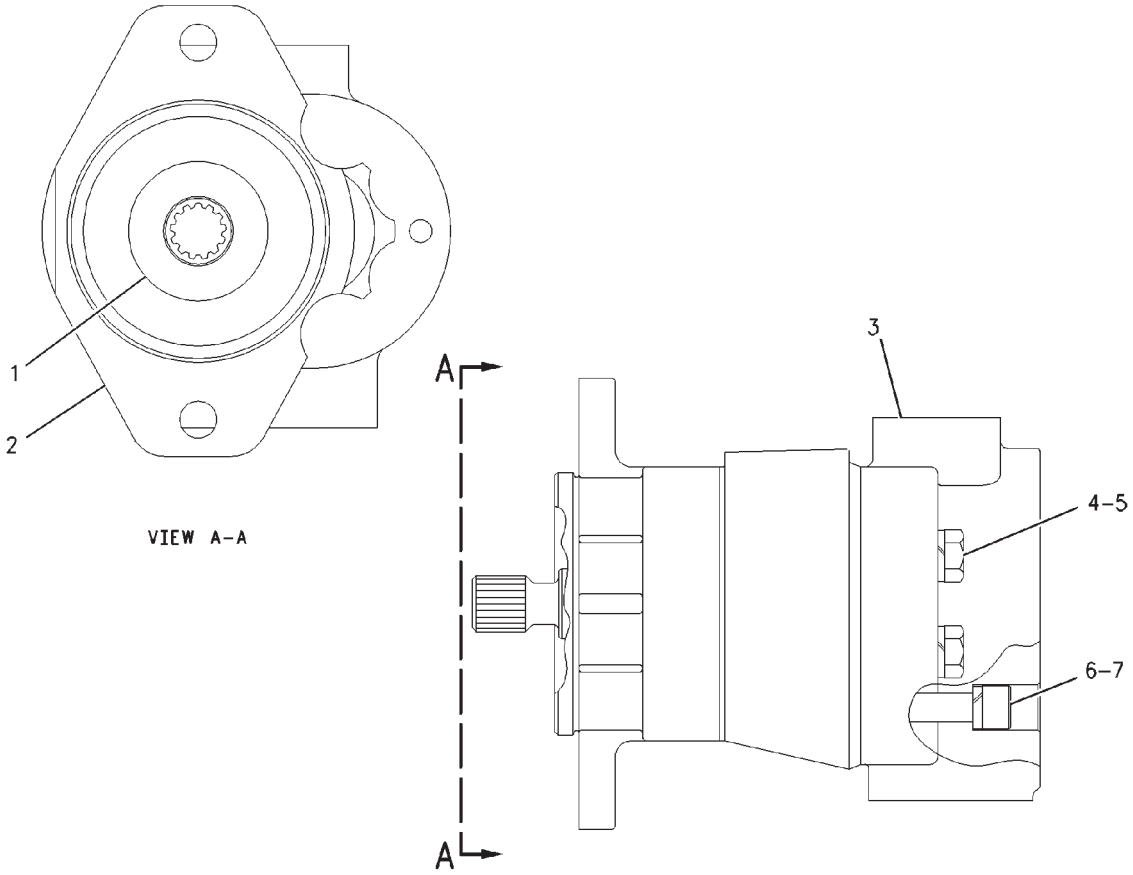


00852392

## PUMP GP-GEAR - CH207-3629

**SCAVANGE PUMP**
**STEERING, IMPLEMENT & TRANS CHARGE**

| ITEM | NUMBER | QTY | DESCRIPTION |
|---|---|---|---|
| - | CH207-3629 | -- | PUMP GP-GEAR [A] |
| 1 | CH4M-7668 | 1 | SEAL-LIP [B] |
| 2 | CH209-9079 | 1 | FLANGE |
| 3 | CH209-9078 | 1 | COVER |
| 4 | CH5P-8244 | 4 | WASHER (12X22.5X2.5) |
| 5 | CH9F-2491 | 4 | BOLT (7/16-14X3.75 IN) |
| 6 | CH210-0780 | 4 | WASHER |
| 7 | CH194-8673 | 4 | BOLT-SOCKET HEAD |
| - | CH210-0179 | 1 | KIT-SEAL |

[A] PART OF 158-2397 PUMP & MTG GP-HYD
[B] INCLUDED IN SEAL KIT

00852392
PR: t05i29k58b0394

## PUMP GP-PISTON - CH162-9592
SCAVENGE PUMP SLIPPER

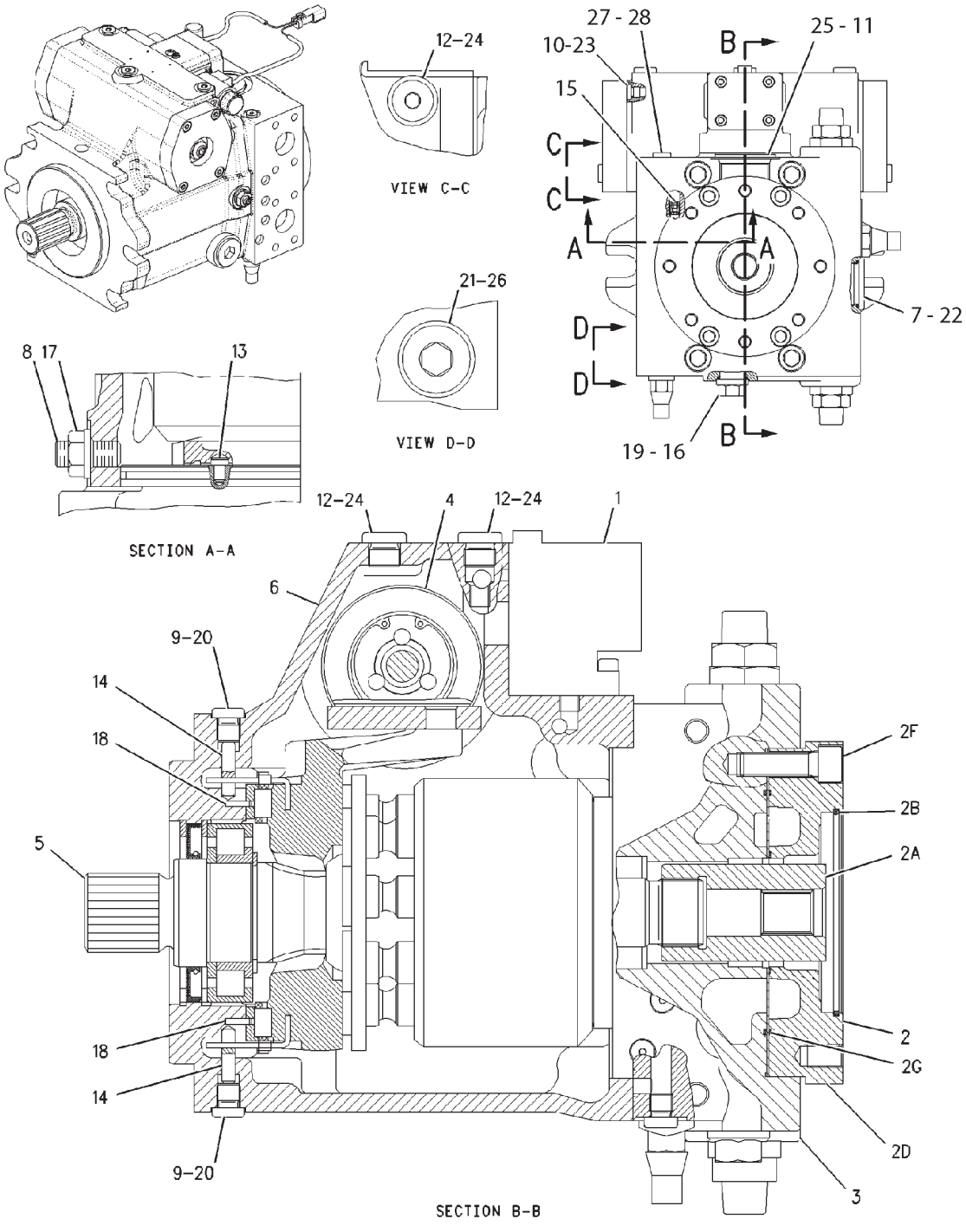


1629592A

## PUMP GP-PISTON - CH162-9592
### SCAVENGE PUMP SLIPPER

| ITEM | NUMBER | QTY | DESCRIPTION |
|---|---|---|---|
| - | CH162-9592 | -- | PUMP GP-PISTON [A] |
| 1 | 205-6412 | 1 | VALVE GP-SERVO<br>(SEE BREAKDOWN FOR COMPONENTS) |
| 2 | 502536D1 | 1 | DRIVE ASM (INCLUDES ITEMS 2A THRU 2G) |
| 2A | CH205-6395 | 1 | COUPLING |
| 2B | CH3K-0715 | 1 | SEAL-O-RING |
| 2D | 502537D1 | 1 | FLANGE |
| 2F | 400210X1 | 4 | BOLT-SOCKET HEAD (M12X1.75X40MM) |
| 2G | CH8C-5237 | 2 | SEAL-O-RING |
| 3 | 205-6398 | 1 | HEAD GP-PUMP<br>(SEE BREAKDOWN FOR COMPONENTS) |
| 4 | CH183-8430 | 1 | ACTUATOR GP-PISTON PUMP<br>(SEE BREAKDOWN FOR COMPONENTS) |
| 5 | 205-6400 | 1 | ROTATING GP-PUMP<br>(SEE BREAKDOWN FOR COMPONENTS) |
| 6 | CH183-8454 | 1 | HOUSING |
| 7 | CH096-6095 | 1 | PLUG |
| 8 | CH123-7582 | 1 | PIN-THREADED |
| 9 | CH135-8854 | 3 | PLUG |
| 10 | CH137-3780 | 2 | PLUG (M10) |
| 11 | CH6K-6307 | 1 | SEAL-O-RING |
| 12 | 400318X1 | 4 | SEAL-O-RING (11.89ID X 1.98 DIA) |
| 13 | 205-6399 | 1 | PIN-ECCENTRIC |
| 14 | CH6E-4351 | 2 | PIN |
| 15 | CH126-1645 | 1 | ORIFICE |
| 16 | 502535D1 | 1 | PLUG |
| 17 | CH6E-4385 | 1 | LOCKNUT |
| 18 | CH6E-4614 | 2 | PIN |
| 19 | CH6V-5326 | 1 | SEAL-O-RING |
| 20 | CH6V-9028 | 2 | SEAL-O-RING |
| 21 | 400376X1 | 1 | SEAL-O-RING |
| 22 | CH8C-5193 | 1 | SEAL-O-RING |
| 23 | CH8T-7876 | 2 | SEAL-O-RING |
| 24 | CH9S-8004 | 4 | PLUG |
| 25 | CH5P-7684 | 1 | PLUG |
| 26 | 400357X1 | 1 | PLUG |
| 27 | CH9S-8002 | 1 | PLUG |
| 28 | 400361X1 | 1 | SEAL-O-RING (8.92ID X 1.83DIA) |

[A] PART OF 158-2397 PUMP & MTG
GP-HYDRAULIC

1629592A
PR: t05i29k58b0395

## PUMP GP-PISTON - CH206-9017
**87CC IMPLEMENT**

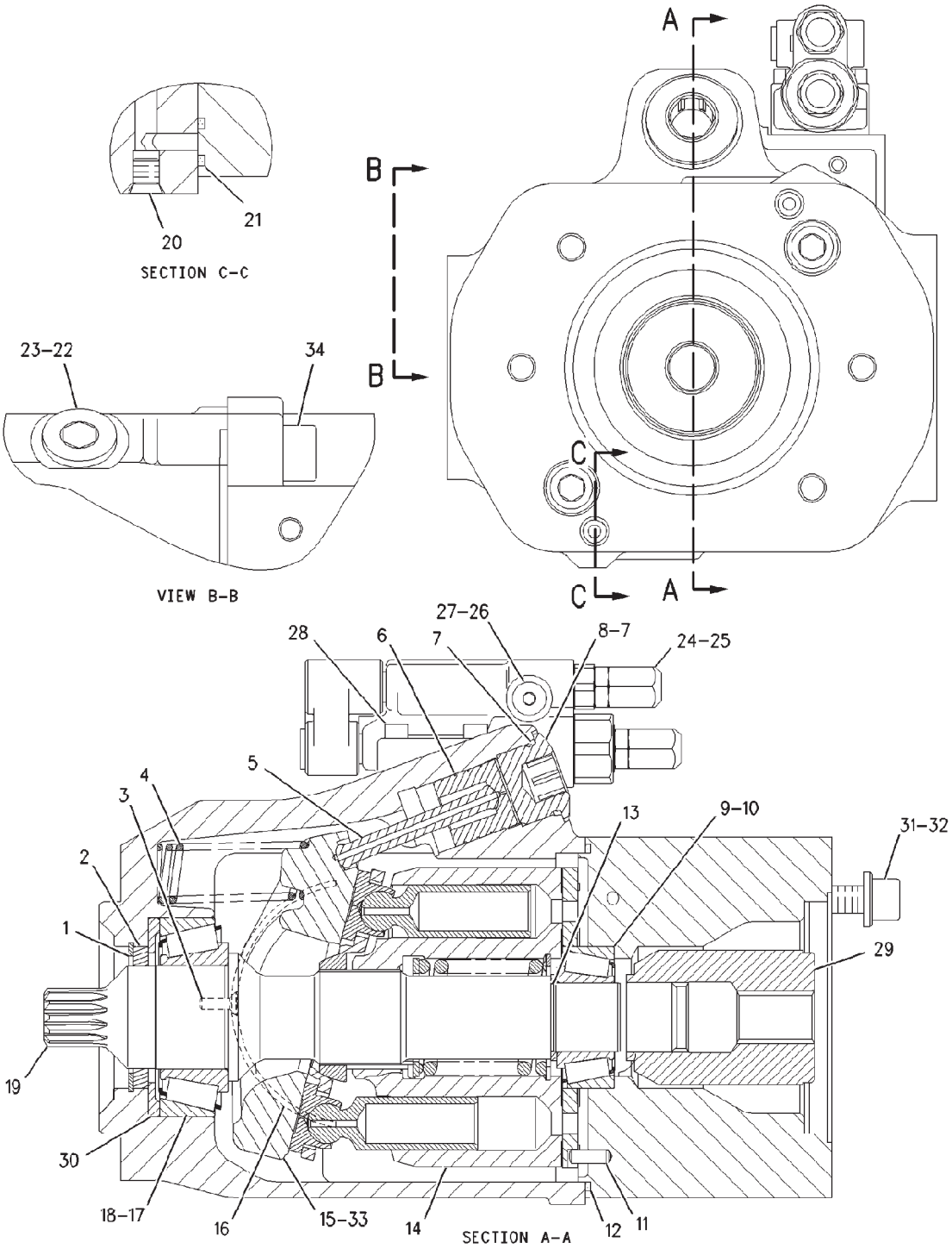


00893848

## PUMP GP-PISTON - CH206-9017
87CC IMPLEMENT

| ITEM | NUMBER | QTY | DESCRIPTION |
|---|---|---|---|
| - | CH206-9017 | -- | PUMP GP-PISTON [A] |
| 1 | CH140-1739 | 1 | RING-RETAINING |
| 2 | CH105-1632 | 1 | SEAL |
| 3 | CH6R-7943 | 2 | SCREW (M5X15.5MM) |
| 4 | CH190-6519 | 1 | SPRING |
| 5 | CH190-3120 | 1 | LINK |
| 6 | 214-9201 | 1 | PISTON |
| 7 | CH6V-8978 | 1 | SEAL-O-RING |
| 8 | CH190-6518 | 1 | PLUG |
| 9 | CH105-3033 | 1 | CUP-BEARING |
| 10 | CH105-3032 | 1 | CONE-BEARING |
| 11 | CH9X-8979 | 1 | DOWEL |
| 12 | CH4V-2445 | 1 | SEAL-O-RING |
| 13 | CH105-1638 | 1 | SPACER |
| 14 | 190-3118 | 1 | ROTATING GP-PUMP (SEE BREAKDOWN FOR COMPONENTS) |
| 15 | CH190-6516 | 1 | SWASHPLATE |
| 16 | CH190-6523 | 2 | BEARING |
| 17 | CH3B-2263 | 1 | CUP-BEARING |
| 18 | CH105-3031 | 1 | CONE-BEARING |
| 19 | 214-9202 | 1 | SHAFT |
| 20 | CH136-8423 | 3 | PLUG-BREAK OFF |
| 21 | CH168-3504 | 2 | SEAL |
| 22 | CH9S-8008 | 1 | PLUG |
| 23 | 400416X1 | 1 | SEAL-O-RING |
| 24 | 214-9379 | 1 | VALVE GP-PRESS & FLOW CMPNSTR (SEE BREAKDOWN FOR COMPONENTS) |
| 25 | CH9X-7680 | 3 | SEAL-O-RING |
| 26 | CH9S-8002 | 1 | PLUG |
| 27 | 400361X1 | 1 | SEAL-O-RING (8.92ID X 1.83DIA) |
| 28 | 400246X1 | 1 | BOLT-SOCKET HEAD (M6X1X30MM) |
| 29 | CH194-6848 | 1 | COUPLER |
| 30 | CH190-6520 | 1 | STOP |
| 31 | 400220X1 | 2 | BOLT-HEX SOCKET (M12X1.75X30MM) |
| 32 | 400357X1 | 2 | WASHER-HARD (M12X25.5X3) |
| 33 | CH214-9203 | 1 | PLUG-ORIFICE |
| 34 | 400238X1 | 4 | BOLT-SOCKET HEAD (M16X2X55MM) |

[A] PART OF 165-7901 PUMP & MOUNTING GP

00893848
PR: t05i29k58b0396

## PUMP GP-PISTON (SLIPPER) - CH206-9019
63CC IMPLEMENT

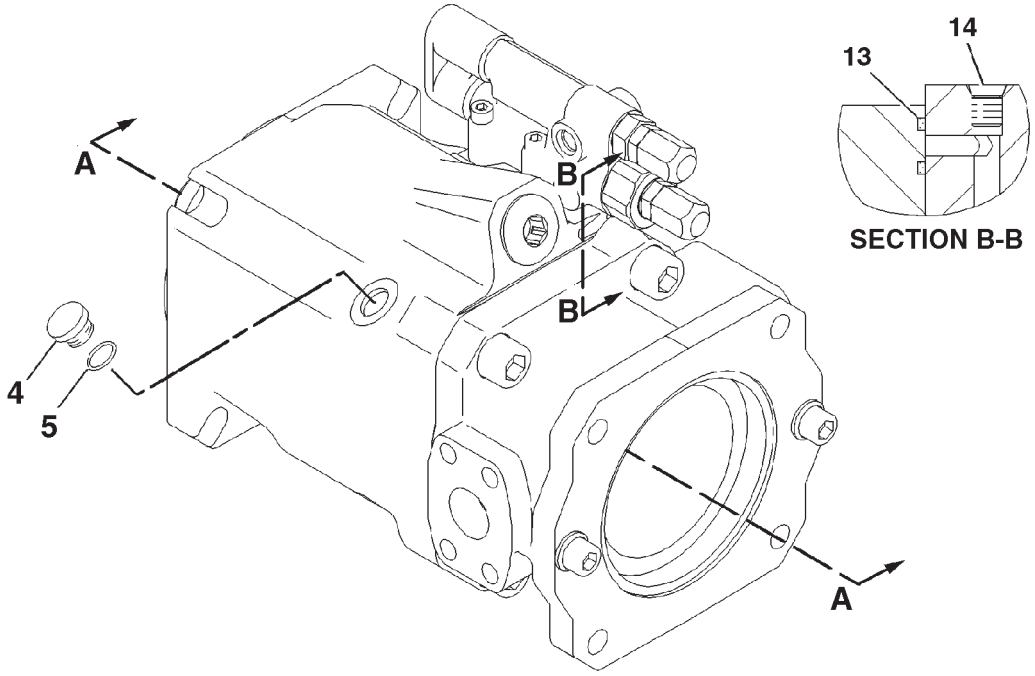


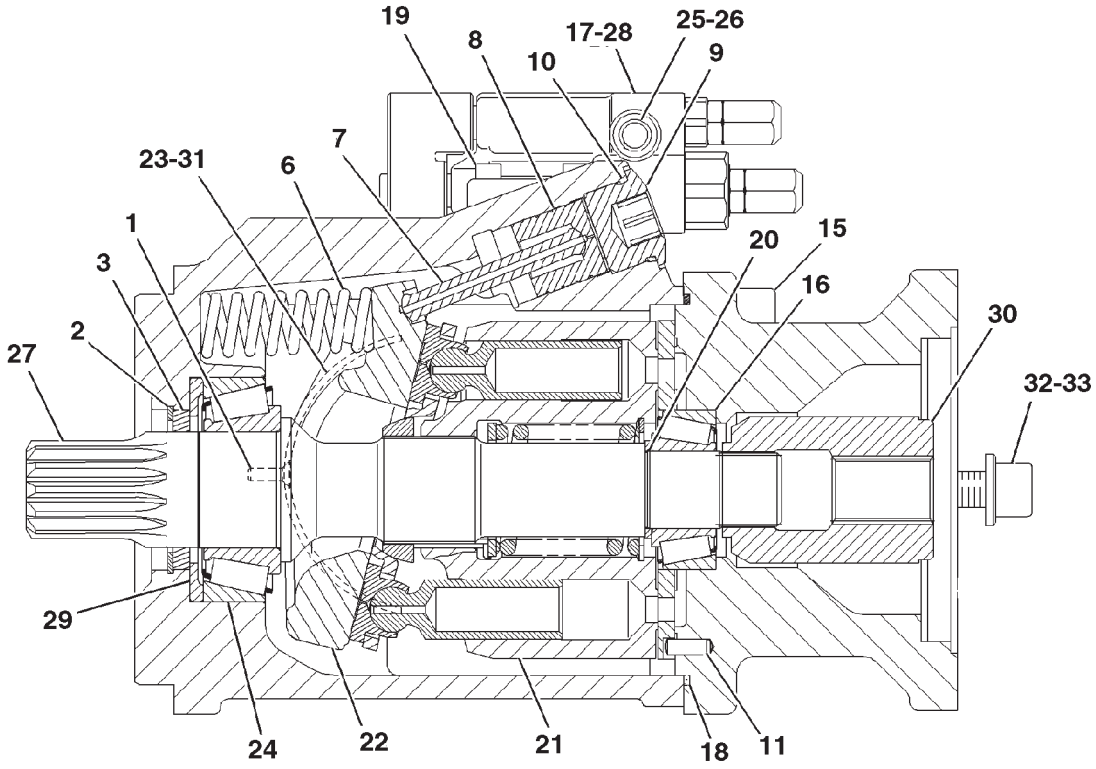


SECTION A-A

0893755A

## PUMP GP-PISTON (SLIPPER) - CH206-9019

63CC IMPLEMENT

| ITEM | NUMBER | QTY | DESCRIPTION |
|---|---|---|---|
| - | CH206-9019 | -- | PUMP GP- PISTON [A] |
| 1 | CH6R-7943 | 2 | SCREW (M5X15.5MM) |
| 2 | CH180-6213 | 1 | RING-RETAINING |
| 3 | CH168-7319 | 1 | SEAL-SHAFT |
| 4 | 400374X1 | 1 | PLUG |
| 5 | 400319X1 | 1 | SEAL-O-RING |
| 6 | CH168-2197 | 1 | SPRING |
| 7 | CH168-2198 | 1 | LINK-CONTROL |
| 8 | CH174-9994 | 1 | PISTON-CONTROL |
| 9 | CH168-7863 | 1 | PLUG-CONTROL |
| 10 | CH8T-7525 | 1 | SEAL-O-RING |
| 11 | CH9X-8979 | 1 | DOWEL |
| 13 | CH168-3504 | 2 | SEAL |
| 14 | CH136-8423 | 2 | PLUG-BREAK OFF |
| 15 | CH095-0687 | 4 | BOLT-SOCKET HEAD |
| 16 | CH185-0296 | 1 | BEARING |
| 17 | CH9X-7680 | 3 | SEAL-O-RING |
| 18 | CH117-8801 | 1 | SEAL-O-RING |
| 19 | 400246X1 | 4 | BOLT-SOCKET HEAD (M6X1X30MM) |
| 20 | CH168-2203 | 1 | SHIM-SHAFT |
| 21 | 190-6501 | 1 | ROTATING GP-PUMP (SEE BREAKDOWN FOR COMPONENTS) |
| 22 | CH168-7317 | 1 | SWASHPLATE-PUMP |
| 23 | 214-9207 | 1 | BEARING (RIGHT HAND) |
| 24 | CH185-0295 | 1 | BEARING |
| 25 | CH9S-8002 | 1 | PLUG |
| 26 | 400361X1 | 1 | SEAL-O-RING |
| 27 | 214-9204 | 1 | SHAFT |
| 28 | 214-9379 | 1 | VALVE GP-PRESS & FLOW CMPNSTR (SEE BREAKDOWN FOR COMPONENTS) |
| 29 | CH190-6507 | 1 | STOP |
| 30 | 214-9205 | 1 | COUPLING-SHAFT |
| 31 | 214-9206 | 1 | BEARING (LEFT HAND) |
| 32 | 400220X1 | 2 | BOLT-HEX SOCKET (M12X1.75X30MM) |
| 33 | 400357X1 | 2 | WASHER-HARD (M12X25.5X3) |

[A] PART OF 162-9804 PUMP & MOUNTING GP

0893755A
PR: t05i29k58b0397

## ROTATING GP-PUMP - 190-3118
**87CC IMPLEMENT PUMP**

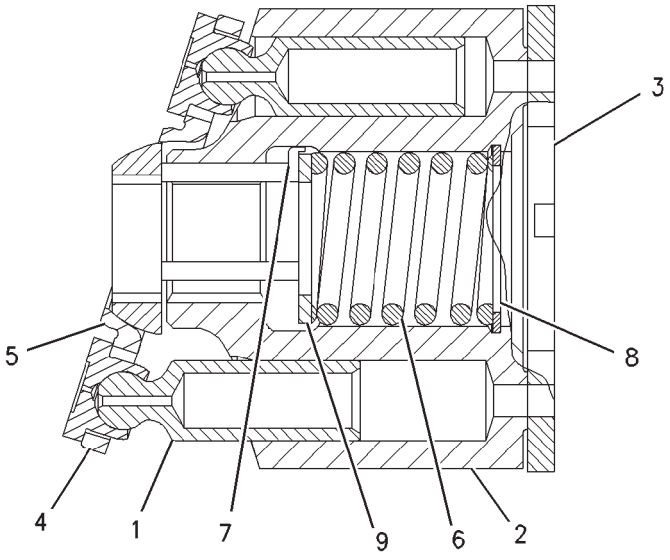


VIEW A-A

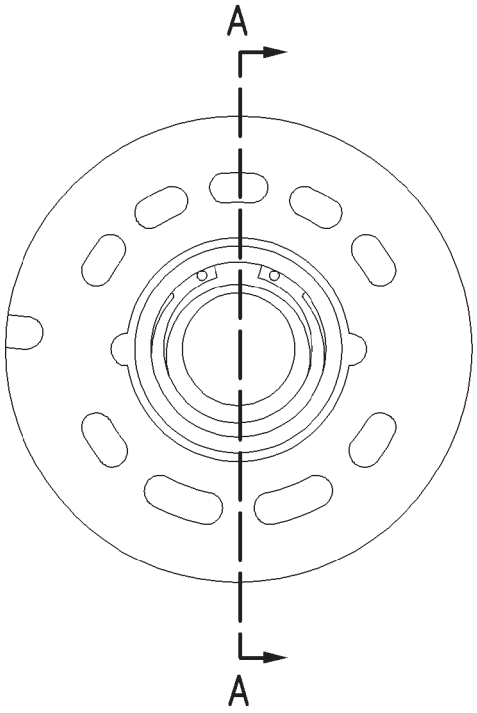


ROTATION = LEFT

## ROTATING GP-PUMP - 190-3118
87CC IMPLEMENT PUMP

| ITEM | NUMBER | QTY | DESCRIPTION |
|---|---|---|---|
| - | 190-3118 | -- | ROTATING GP-PUMP [A] |
| 1 | CH105-1646 | 9 | PISTON-PUMP |
| 2 | 190-6526 | 1 | BARREL |
| 3 | 190-6525 | 1 | PLATE |
| 4 | CH188-9637 | 1 | PLATE-RETRACTION |
| 5 | CH105-1648 | 1 | BEARING |
| 6 | CH105-1651 | 1 | SPRING |
| 7 | CH190-6528 | 3 | PIN |
| 8 | CH6E-3343 | 1 | RING |
| 9 | CH105-1650 | 1 | SPACER-BARREL |

[A] PART OF CH206-9017 PUMP GP-PISTON

00750133
PR: t05i29k58b0398

## ROTATING GP-PUMP - 190-6501
**63CC IMPLEMENT PUMP**

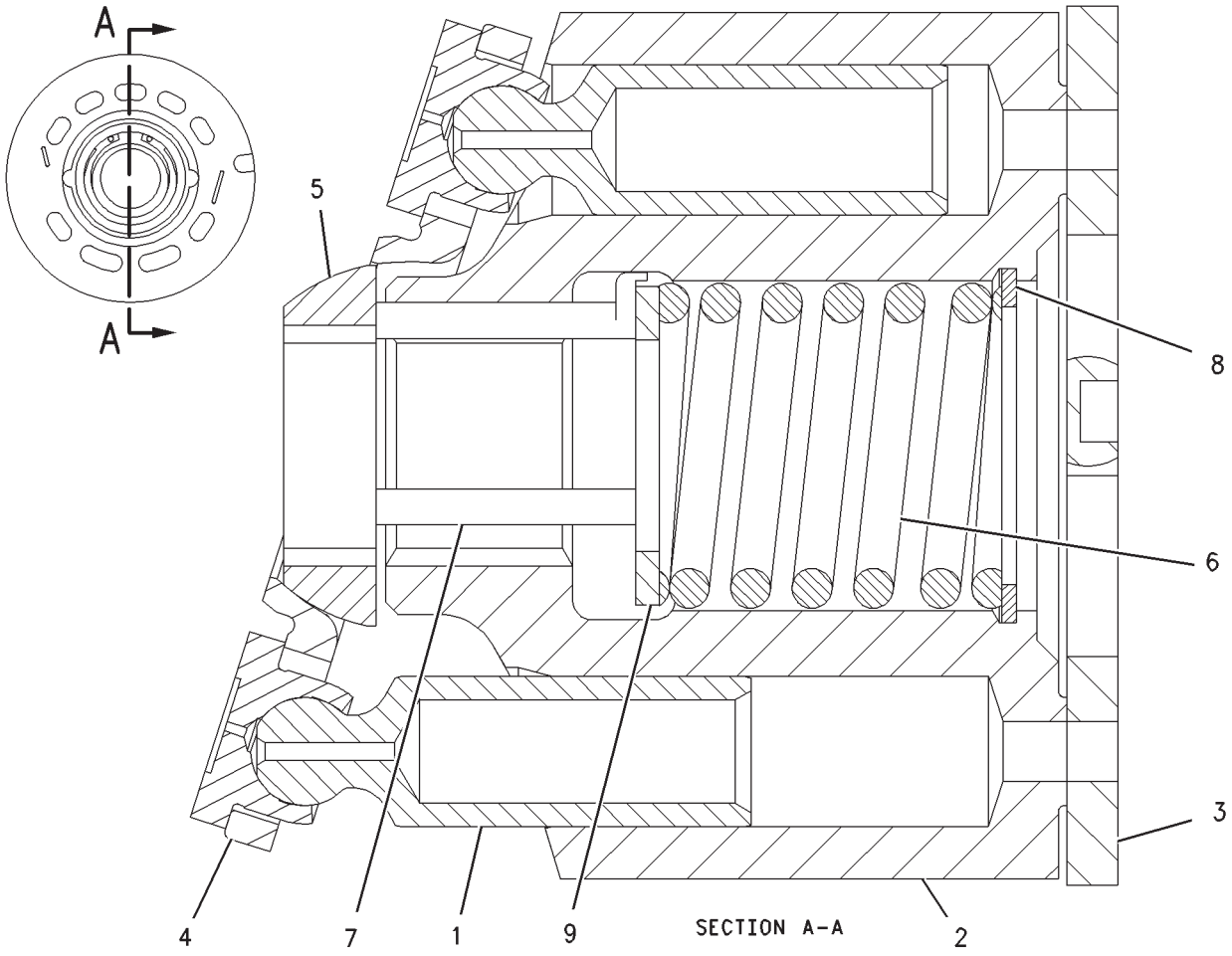


00750145

## ROTATING GP-PUMP - 190-6501
63CC IMPLEMENT PUMP

| ITEM | NUMBER | QTY | DESCRIPTION |
|---|---|---|---|
| - | 190-6501 | -- | ROTATING GP-PUMP [A] |
| 1 | CH168-3384 | 9 | PISTON-PUMP |
| 2 | CH168-3380 | 1 | BARREL-CYLINDER |
| 3 | CH190-6508 | 1 | PLATE |
| 4 | CH168-3385 | 1 | PLATE-RETRACTION |
| 5 | CH168-3378 | 1 | BEARING-SPHERICAL |
| 6 | CH168-3381 | 1 | SPRING |
| 7 | CH168-3379 | 3 | PIN |
| 8 | CH6V-7723 | 1 | RING-RETAINING |
| 9 | CH168-3382 | 1 | WASHER |

[A] PART OF 206-9019 PUMP GP-PISTON

00750145
PR: t05i29k58b0399

## ROTATING GP-PUMP - 205-6400
SCAVENGE PUMP

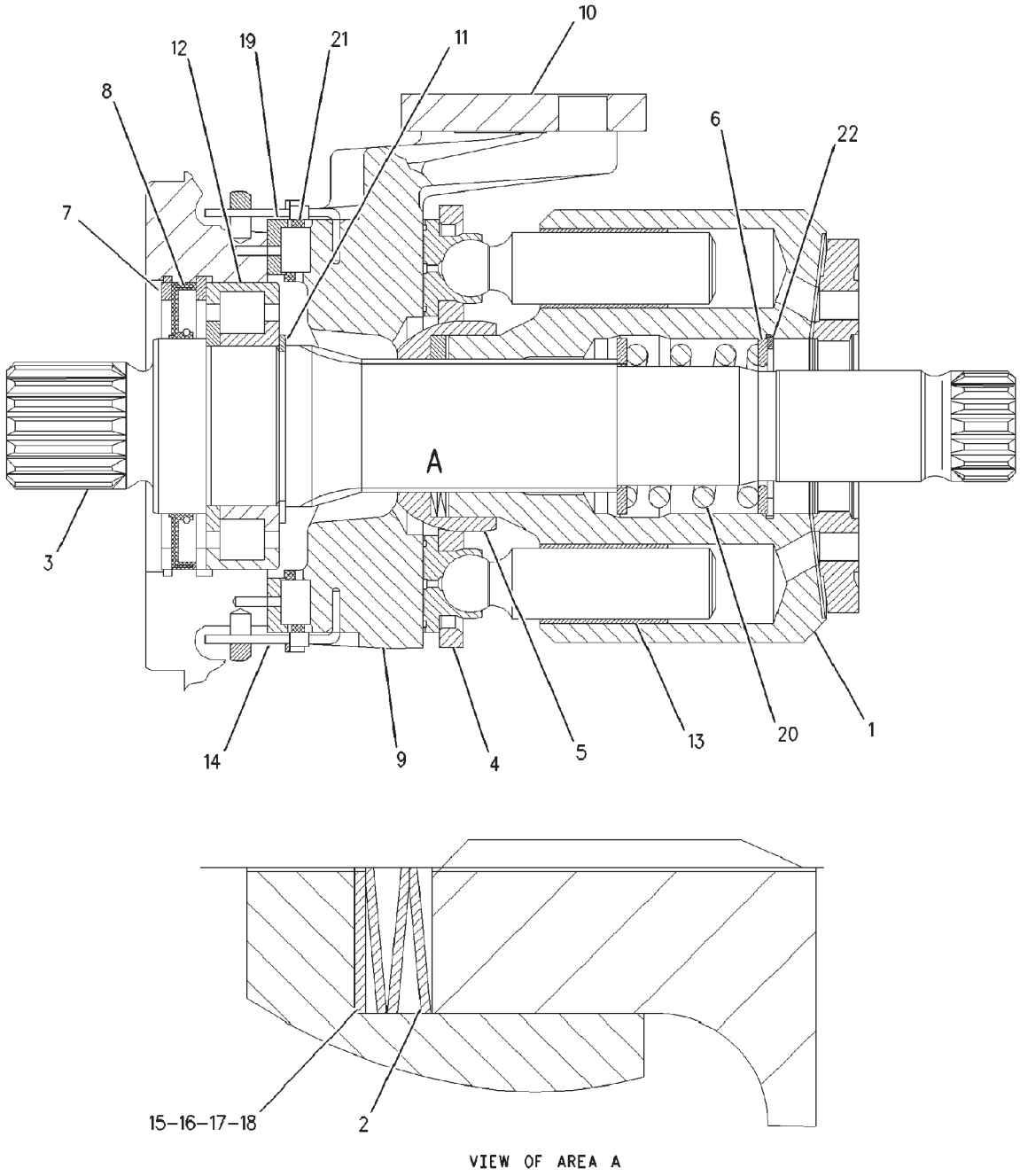

## ROTATING GP-PUMP - 205-6400
SCAVENGE PUMP

| ITEM | NUMBER | QTY | DESCRIPTION |
|---|---|---|---|
| - | 205-6400 | -- | ROTATING GP-PUMP [A] |
| 1 | CH183-8446 | 1 | BARREL |
| 2 | CH183-8447 | 1 | SPRING |
| 3 | 192-0938 | 1 | SHAFT |
| 4 | CH183-8449 | 1 | PLATE |
| 5 | CH183-8450 | 1 | BALL |
| 6 | CH183-8451 | 2 | WASHER |
| 7 | CH183-8452 | 2 | RING-RETAINING |
| 8 | CH183-8453 | 1 | RING-SEAL |
| 9 | CH122-6606 | 1 | SWASHPLATE |
| 10 | CH122-6607 | 1 | LEVER |
| 11 | CH141-0243 | 1 | RING-SNAP |
| 12 | CH6E-1571 | 1 | BEARING |
| 13 | CH6E-4358 | 9 | PISTON |
| 14 | CH6E-4363 | 2 | ROD |
| 15 | CH6E-4364 | | SHIM (1.2) |
| 16 | CH6E-4365 | | SHIM (1 ) |
| 17 | CH6E-4366 | | SHIM (.8) |
| 18 | CH6E-4367 | | SHIM (.6) |
| 19 | CH6E-4370 | 1 | GUIDE |
| 20 | CH6E-4373 | 1 | SPRING |
| 21 | CH6E-4374 | 1 | BEARING |
| 22 | CH9X-2858 | 1 | RING-RETAINING |

[A] PART OF CH162-9592 PUMP GP-PISTON

00853757
PR: t05i29k58b0400

## VALVE AR - 193-8197
**W/O HITCH & W/O HYDRAULIC TRAILER BRAKE**

NO ILLUSTRATION

NOTIF

## VALVE AR - 193-8197
**W/O HITCH & W/O HYDRAULIC TRAILER BRAKE**

| ITEM | NUMBER | QTY | DESCRIPTION |
|---|---|---|---|
| - | 193-8197 | -- | VALVE AR [A] (NOT SERVICED) |
| 1 | 192-4707 | 1 | VALVE GP-CONTROL<br>(SEE BREAKDOWN FOR COMPONENTS) |
| 2 | 193-1548 | 1 | MOUNTING GP-VALVE (NOT SERVICED)<br>(SEE BREAKDOWN FOR COMPONENTS) |

NOTIF
PR: t05i29k58b0401

## VALVE AR - 501070D1
**W/O HITCH & W/HYDRAULIC TRAILER BRAKE**

NO ILLUSTRATION

NOTIF

## VALVE AR - 501070D1
**W/O HITCH & W/HYDRAULIC TRAILER BRAKE**

| ITEM | NUMBER | QTY | DESCRIPTION |
|---|---|---|---|
| - | 501070D1 | -- | VALVE AR [A] (NOT SERVICED) |
| | 162-9805 | 1 | MOUNTING GP-VALVE (NOT SERVICED)<br>(SEE BREAKDOWN FOR COMPONENTS) |
| | 192-4816 | 1 | VALVE GP-BANK 2<br>(SEE BREAKDOWN FOR COMPONENTS) |
| - | 501130D1 | -- | LINES GP-HYDRAULIC OIL (NOT SERVICED)<br>(SEE BREAKDOWN FOR COMPONENTS) |

NOTIF
PR: t05i29k58b0402

## VALVE AR - 193-8198

**W/HITCH & W/O HYDRAULIC TRAILER BRAKE**
**ROW & EAME**

NO ILLUSTRATION

## VALVE AR - 193-8198

**W/HITCH & W/O HYDRAULIC TRAILER BRAKE**
**ROW & EAME**

| ITEM | NUMBER | QTY | DESCRIPTION |
|---|---|---|---|
| - | 193-8198 | -- | VALVE AR [A] (NOT SERVICED) |
| 1 | 192-4708 | 1 | VALVE GP-BANK 3 (PRIORITY W/HITCH) (SEE BREAKDOWN FOR COMPONENTS) |
| 2 | 193-1548 | 1 | MOUNTING GP-VALVE (NOT SERVICED) (SEE BREAKDOWN FOR COMPONENTS) |

NOTIF15
PR: t05i29k58b0403

## VALVE AR - 193-8199

**W/O HITCH & W/HYDRAULIC TRAILER BRAKE**
**EAME ONLY**

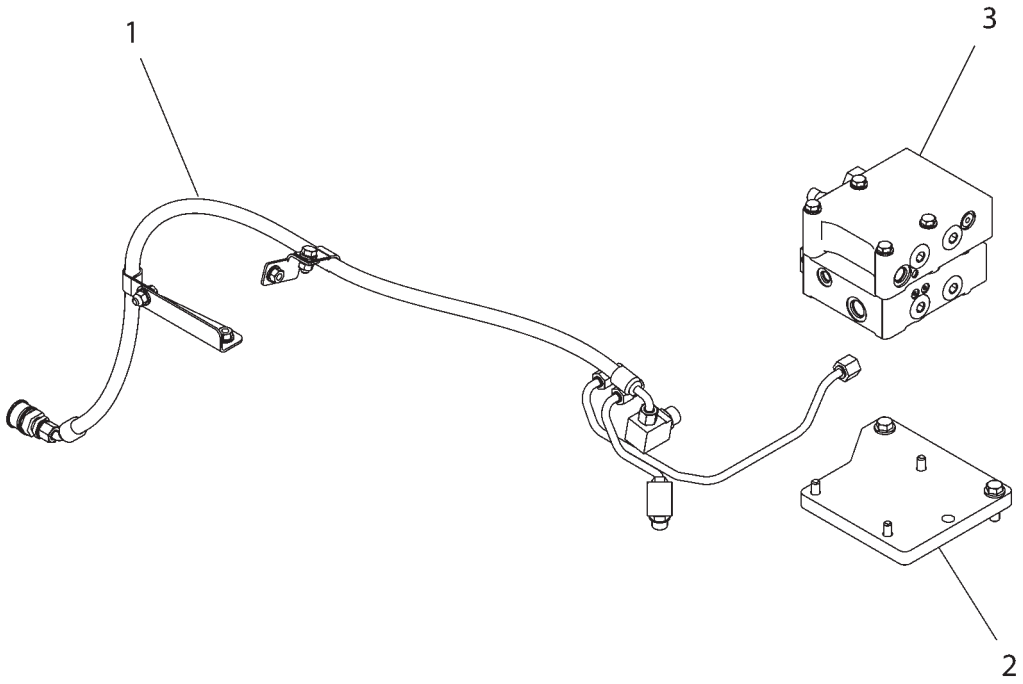


1938199C

## VALVE AR - 193-8199

**W/O HITCH & W/HYDRAULIC TRAILER BRAKE**
**EAME ONLY**

| ITEM | NUMBER | QTY | DESCRIPTION |
|---|---|---|---|
| - | 193-8199 | -- | VALVE AR [A] (NOT SERVICED) |
| 1 | 192-4816 | 1 | VALVE GP-CONTROL<br>(SEE BREAKDOWN FOR COMPONENTS) |
| 2 | 162-9805 | 1 | MOUNTING GP-VALVE (NOT SERVICED)<br>(SEE BREAKDOWN FOR COMPONENTS) |
| 3 | 193-1558 | 1 | LINES GP-HYDRAULIC (NOT SERVICED)<br>(SEE BREAKDOWN FOR COMPONENTS) |

[A] PART OF 209-3688 KIT-HYD TR BRAKE

1938199C
PR: t05i29k58b0404

## VALVE AR - 193-8200

**W/HITCH & W/HYDRAULIC TRAILER BRAKE**
**EAME ONLY**

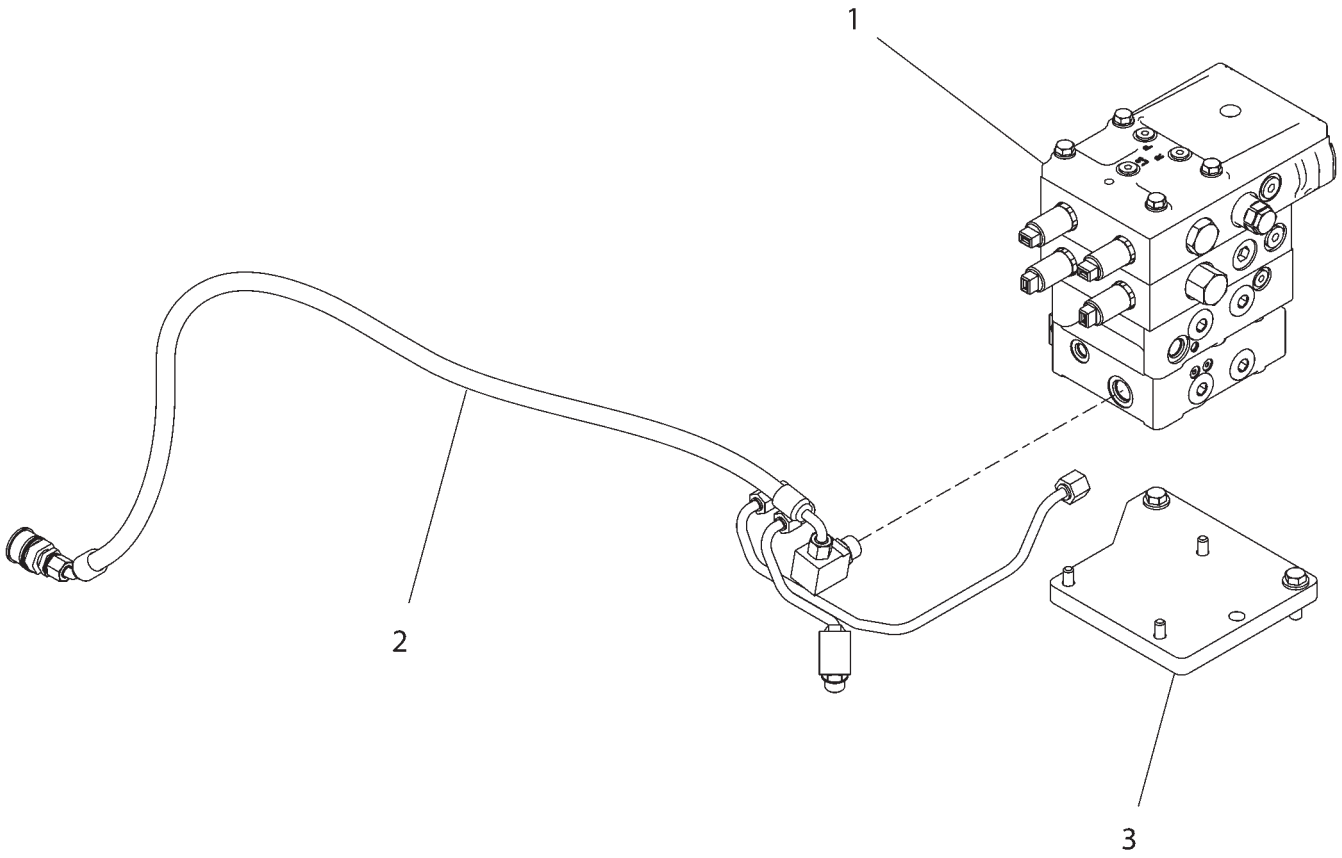

## VALVE AR - 193-8200
**W/HITCH & W/HYDRAULIC TRAILER BRAKE**
**EAME ONLY**

| ITEM | NUMBER | QTY | DESCRIPTION |
|---|---|---|---|
| - | 193-8200 | -- | VALVE AR [A] (NOT SERVICED) |
| 1 | 192-4817 | 1 | VALVE GP-BANK 4<br>(SEE BREAKDOWN FOR COMPONENTS) |
| 2 | 193-1558 | 1 | LINES GP-HYDRAULIC OIL (NOT SERVICED)<br>(SEE BREAKDOWN FOR COMPONENTS) |
| 3 | 162-9805 | 1 | MOUNTING GP-VALVE (NOT SERVICED)<br>(SEE BREAKDOWN FOR COMPONENTS) |

[A] PART OF 186-0979; 189-3300
HITCH AR-3 POINT

1938200B
PR: t05i29k58b0405

## VALVE AR-BANK 4 - 180-1434

NO ILLUSTRATION

NOTIF

## VALVE AR-BANK 4 - 180-1434

| ITEM | NUMBER | QTY | DESCRIPTION |
|---|---|---|---|
| - | 180-1434 | -- | VALVE AR-BANK 4 (NOT SERVICED) |
| 1 | 152-0443 | 1 | CONTROL GP-IMPLEMENT (NOT SERVICED)<br>(SEE BREAKDOWN FOR COMPONENTS) |
| 2 | 180-0494 | 1 | VALVE GP-BANK 4 (NOT SERVICED)<br>(SEE BREAKDOWN FOR COMPONENTS) |
| 3 | 502214D1 | 1 | LINES GP-ECOLOGY (NOT SERVICED)<br>(SEE BREAKDOWN FOR COMPONENTS) |

NOTIF
PR: t05i29k58b0406

## VALVE AR - 180-1438
5 IMPLEMENTS

NO ILLUSTRATION

NOTIF

## VALVE AR - 180-1438
5 IMPLEMENTS

| ITEM | NUMBER | QTY | DESCRIPTION |
|---|---|---|---|
| - | 180-1438 | -- | VALVE AR-IMPL-5 (NOT SERVICED) |
| 1 | 180-0495 | 1 | VALVE GP-BANK 5<br>(SEE BREAKDOWN FOR COMPONENTS) |
| 2 | 166-4590 | 1 | CONTROL GP-IMPLEMENT (NOT SERVICED)<br>(SEE BREAKDOWN FOR COMPONENTS) |
| 3 | 136-5670 | 1 | CONTROL & WIRING GP (NOT SERVICED)<br>(SEE BREAKDOWN FOR COMPONENTS) |
| 4 | 502214D1 | 1 | LINES GP-ECOLOGY (NOT SERVICED)<br>(SEE BREAKDOWN FOR COMPONENTS) |

NOTIF
PR: t05i29k58b0407

## VALVE AR-IMPL - 500795D1
6 IMPLEMENTS

NO ILLUSTRATION

NOTIF

## VALVE AR-IMPL - 500795D1
6 IMPLEMENTS

| ITEM | NUMBER | QTY | DESCRIPTION |
|---|---|---|---|
| - | 500795D1 | -- | VALVE AR-BANK 6 (NOT SERVICED) |
| 1 | 136-5670 | 1 | CONTROL & WIRING GP (NOT SERVICED)<br>(SEE BREAKDOWN FOR COMPONENTS) |
| 2 | 500752D1 | 1 | VALVE GP-BANK 6 (NOT SERVICED)<br>(SEE BREAKDOWN FOR COMPONENTS) |
| 3 | 502214D1 | 1 | LINES GP-ECOLOGY (NOT SERVICED)<br>(SEE BREAKDOWN FOR COMPONENTS) |

NOTIF
PR: t05i29k58b0408

## VALVE GP-BANK 2 - 192-4816
**PRIORITY W/HYDRAULIC TRAILER BRAKE**

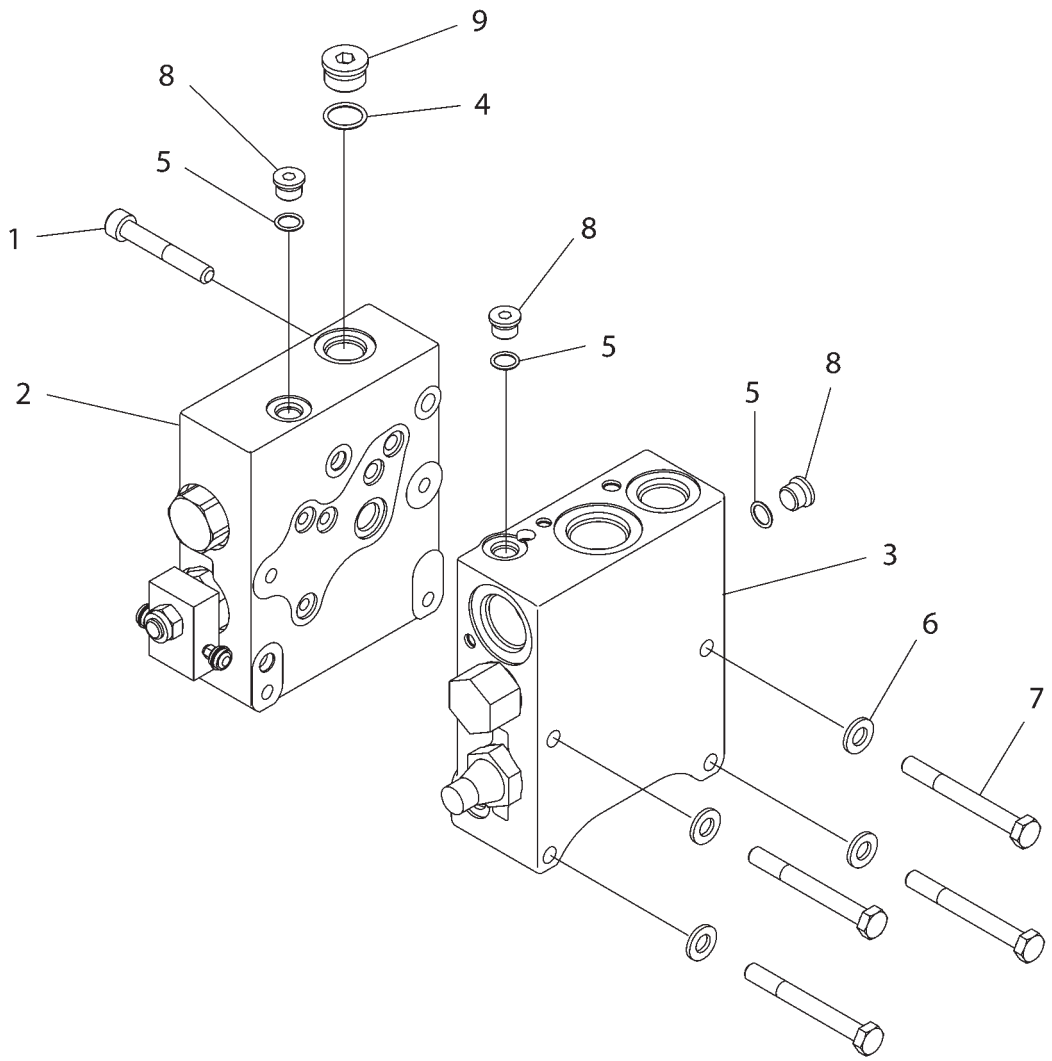


1924816F

## VALVE GP-BANK 2 - 192-4816
**PRIORITY W/HYDRAULIC TRAILER BRAKE**

| ITEM | NUMBER | QTY | DESCRIPTION |
|---|---|---|---|
| - | 192-4816 | -- | VALVE GP-BANK 2 [A] |
| 1 | CH8T-2392 | 1 | BOLT-HSHD (M10X1.5X65MM) |
| 2 | 196-2318 | 1 | VALVE GP-BRAKE CONTROL (HYD TRAILER BR)<br>(SEE BREAKDOWN FOR COMPONENTS) |
| 3 | 209-5020 | 1 | VALVE GP-CONTROL (PRIORITY)<br>(SEE BREAKDOWN FOR COMPONENTS) |
| 4 | 400319X1 | 1 | SEAL-O-RING (19.18 X 2.46 DIA) |
| 5 | 400318X1 | 3 | SEAL-O-RING (11.89 X 1.98 DIA) |
| 6 | 400287X1 | 4 | WASHER-HARD (11X21X2.5) |
| 7 | 400225X1 | 4 | BOLT-HEX HEAD (M10X1.5X90MM) |
| 8 | CH9S-8004 | 3 | PLUG |
| 9 | 400374X1 | 1 | PLUG |

[A] PART OF:
193-8199 VALVE AR
501070D1 VALVE AR
501140D1 VALVE AR

1924816F
PR: t05i29k58b0409

## VALVE GP-BANK 3 - 192-4708
**PRIORITY WITH HITCH**

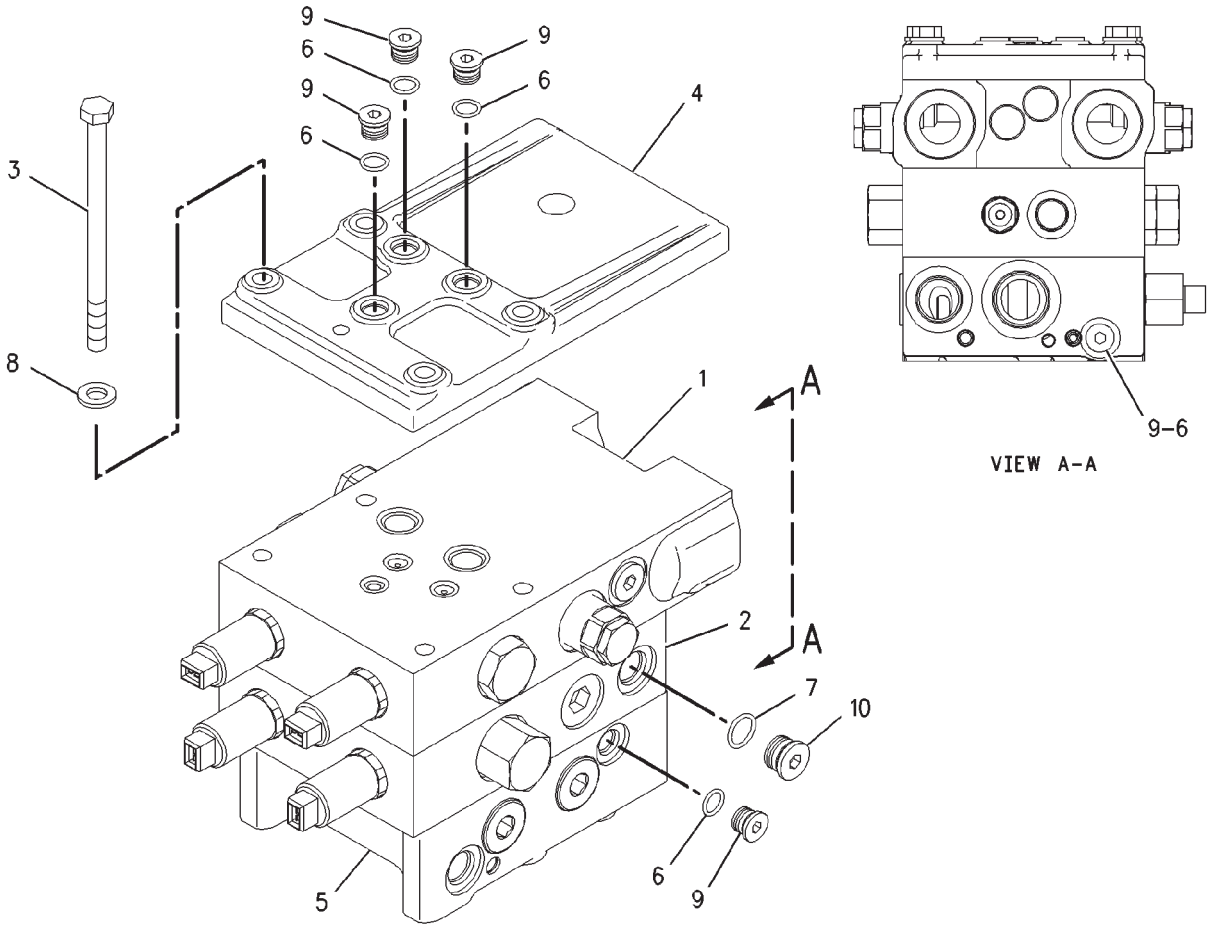


00880872

## VALVE GP-BANK 3 - 192-4708
**PRIORITY WITH HITCH**

| ITEM | NUMBER | QTY | DESCRIPTION |
|---|---|---|---|
| - | 192-4708 | -- | VALVE GP-BANK 3 [A] |
| 1 | 162-9817 | 1 | VALVE GP-CONTROL (STEERABLE HITCH) (SEE BREAKDOWN FOR COMPONENTS) |
| 2 | 162-9818 | 1 | VALVE GP-CONTROL (3 POINT HITCH) (SEE BREAKDOWN FOR COMPONENTS) |
| 3 | CH178-3333 | 4 | BOLT-HEX HEAD (M10X1.5X155MM) |
| 4 | 180-0500 | 1 | COVER-END |
| 5 | 209-5019 | 1 | VALVE GP-CONTROL (PRIORITY & ACCUMULATOR CHARGE) (SEE BREAKDOWN FOR COMPONENTS) |
| 6 | 400318X1 | 5 | SEAL-O-RING (11.89ID X 1.98 DIA) |
| 7 | CH3K-0360 | 1 | SEAL-O-RING |
| 8 | CH8T-4121 | 4 | WASHER-HARD (11X21X2.5) |
| 9 | CH9S-8004 | 5 | PLUG |
| 10 | CH9S-8005 | 1 | PLUG |

[A] PART OF 169-0027; 169-0028 HITCH AR-3 POINT; 193-8198 VALVE AR

00880872
PR: t05i29k58b0410

## VALVE GP-BANK 4 - 180-0494
**IMPLEMENT**

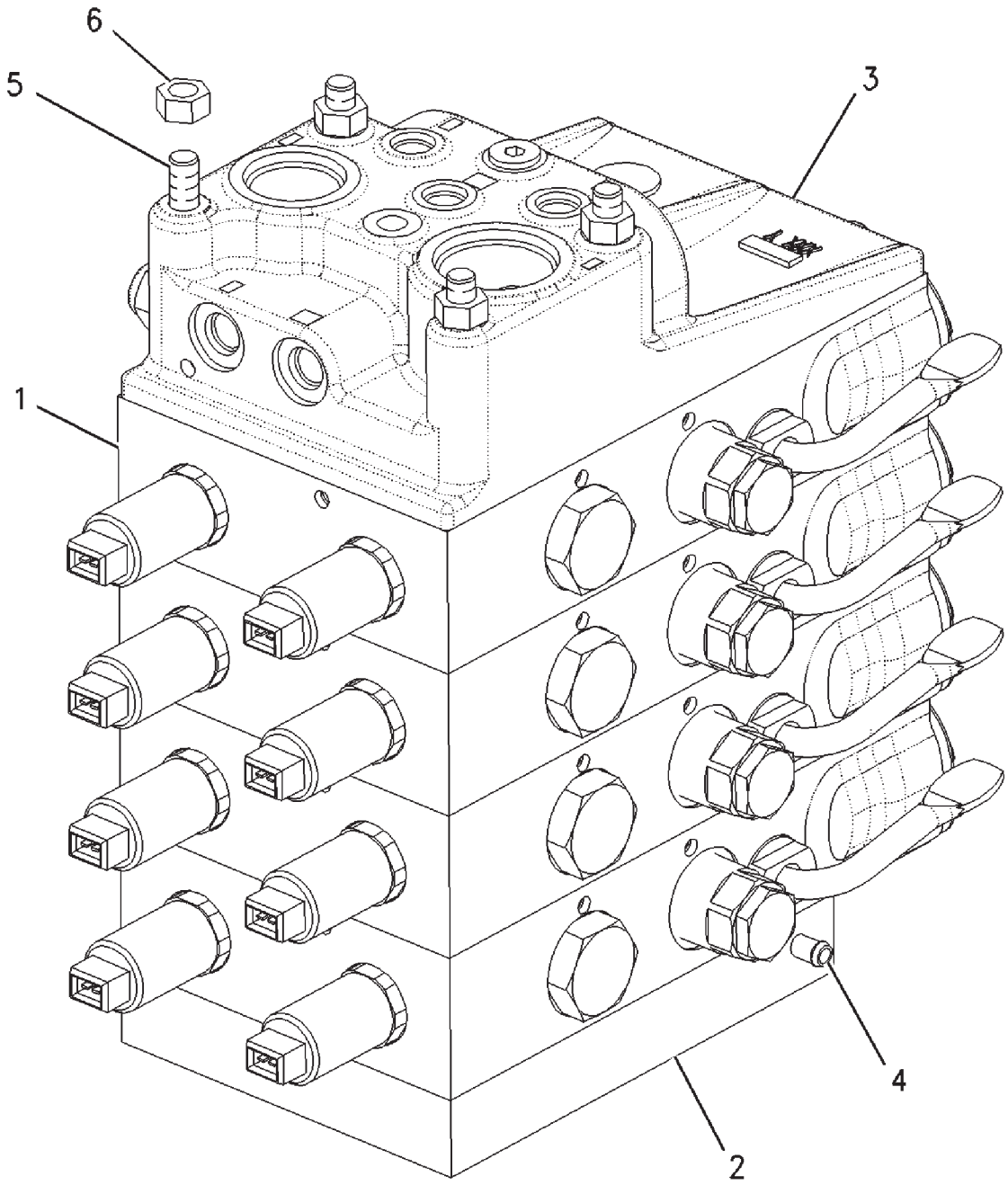


00887124

## VALVE GP-BANK 4 - 180-0494
IMPLEMENT

| ITEM | NUMBER | QTY | DESCRIPTION |
|---|---|---|---|
| - | 180-0494 | -- | VALVE GP-BANK 4 [A] (NOT SERVICED) |
| 1 | 162-9816 | 4 | VALVE GP-CONTROL (IMPLEMENTS) (SEE BREAKDOWN FOR COMPONENTS) |
| 2 | 187-7430 | 1 | MOUNT |
| 3 | 227-8830 | 1 | VALVE GP-FLOW CONTROL & RELIEF (SEE BREAKDOWN FOR COMPONENTS) |
| 4 | CH188-3640 | 3 | FITTING |
| 5 | CH209-7496 | 4 | STUD |
| 6 | WR522218 | 4 | NUT (M10X1.5) |

[A] PART OF 180-1434 VALVE AR-BANK 4

00887124
PR: t05i29k58b0411

## VALVE GP-BANK 4 - 192-4817

**PRIORITY W/HITCH & W/HYD TRAILER BRAKES**
**EAME ONLY**

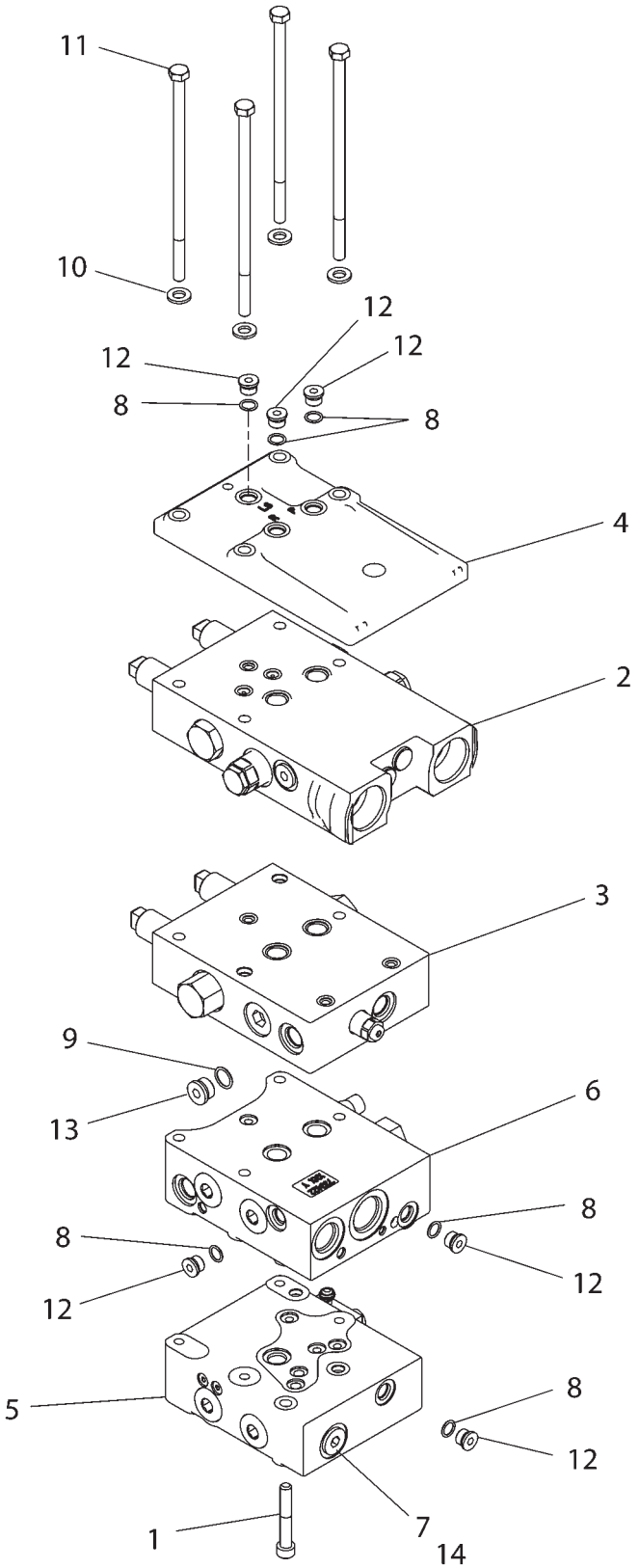


1924817G

## VALVE GP-BANK 4 - 192-4817

**PRIORITY W/HITCH & W/HYD TRAILER BRAKES**
**EAME ONLY**

| ITEM | NUMBER | QTY | DESCRIPTION |
|---|---|---|---|
| - | 192-4817 | -- | VALVE GP-BANK 4 [A] |
| 1 | CH8T-2392 | 1 | BOLT-SOCKET HEAD (M10X1.5X65MM) |
| 2 | 162-9817 | 1 | VALVE GP-CONTROL (STEERABLE 3PT HITCH) (SEE BREAKDOWN FOR COMPONENTS) |
| 3 | 162-9818 | 1 | VALVE GP-CONTROL (3 POINT HITCH) (SEE BREAKDOWN FOR COMPONENTS) |
| 4 | 180-0500 | 1 | COVER-END |
| 5 | 196-2318 | 1 | VALVE GP-BRAKE CONTROL (HYD TRAILER) (SEE BREAKDOWN FOR COMPONENTS) |
| 6 | 209-5021 | 1 | VALVE GP-CONTROL (PRIORITY) (SEE BREAKDOWN FOR COMPONENTS) |
| 7 | 400319X1 | 1 | SEAL-O-RING (19.18IDX2.46DIA) |
| 8 | 400318X1 | 6 | SEAL-O-RING (11.89IDX1.98DIA) |
| 9 | CH3K-0360 | 1 | SEAL-O-RING (16.36IDX2.21DIA) |
| 10 | 400287X1 | 4 | WASHER-HARD (11X21X2.5) |
| 11 | CH7X-0474 | 4 | BOLT (M10X1.5X220MM) |
| 12 | CH9S-8004 | 6 | PLUG |
| 13 | CH9S-8005 | 1 | PLUG |
| 14 | 400374X1 | 1 | PLUG |

[A] PART OF 193-8200 VALVE AR

1924817G
PR: t05i29k58b0412

## VALVE GP-BANK 5 - 180-0495
**IMPLEMENT**

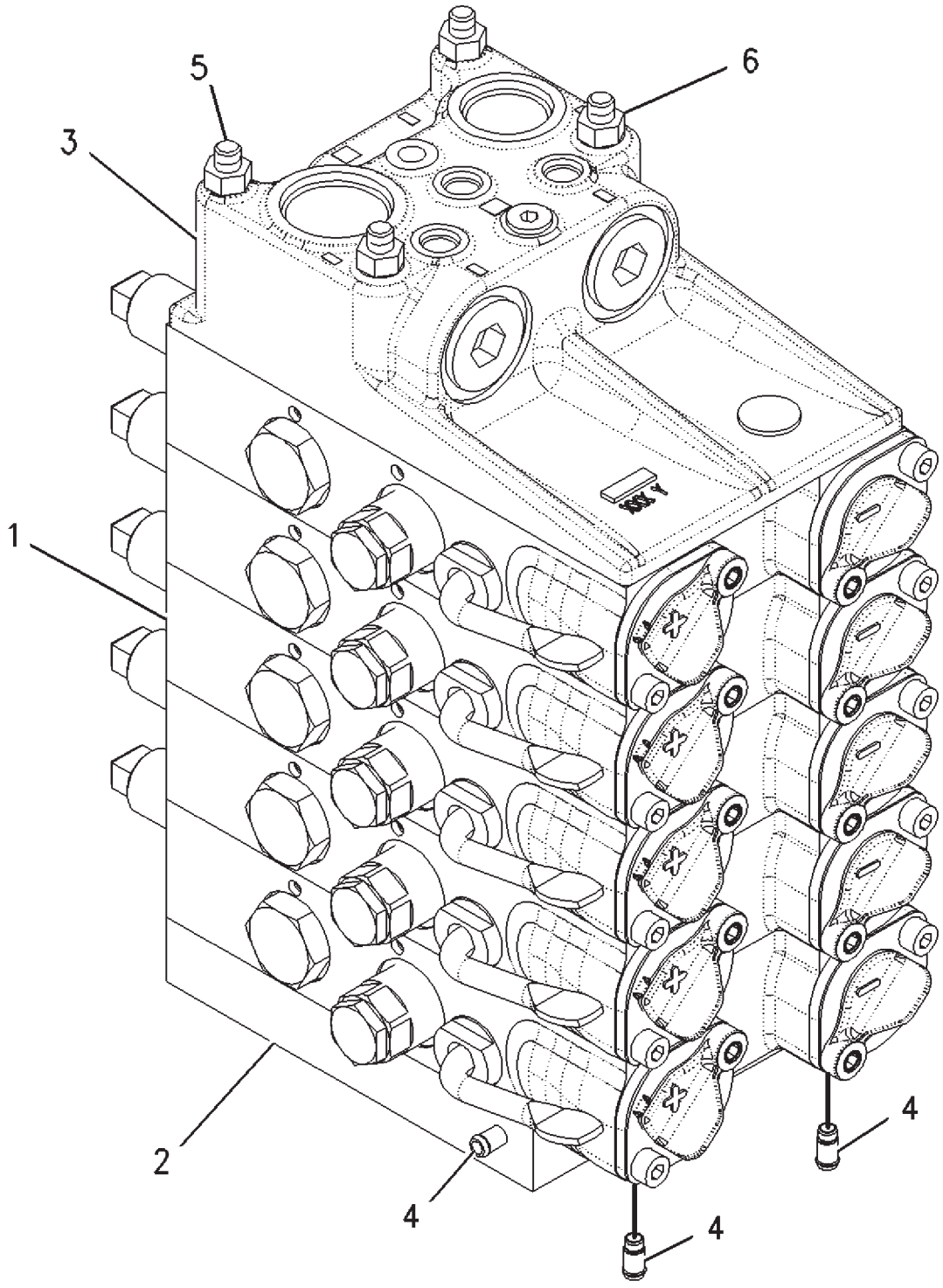


00886217

## VALVE GP-BANK 5 - 180-0495
IMPLEMENT

| ITEM | NUMBER | QTY | DESCRIPTION |
|---|---|---|---|
| - | 180-0495 | -- | VALVE GP-BANK 5 [A] |
| 1 | 162-9816 | 5 | VALVE GP-CONTROL<br>(SEE BREAKDOWN FOR COMPONENTS) |
| 2 | 187-7430 | 1 | MOUNT |
| 3 | 227-8830 | 1 | VALVE GP-FLOW CONTROL & RELIEF<br>(SEE BREAKDOWN FOR COMPONENTS) |
| 4 | CH188-3640 | 3 | FITTING |
| 5 | 209-7497 | 4 | STUD |
| 6 | WR522218 | 4 | NUT (M10X1.5) |

[A] PART OF 180-1438 VALVE AR-BANK 5

00886217
PR: t05i29k58b0413

## VALVE GP-BANK 6 - 500752D1
**5 REMOTES**

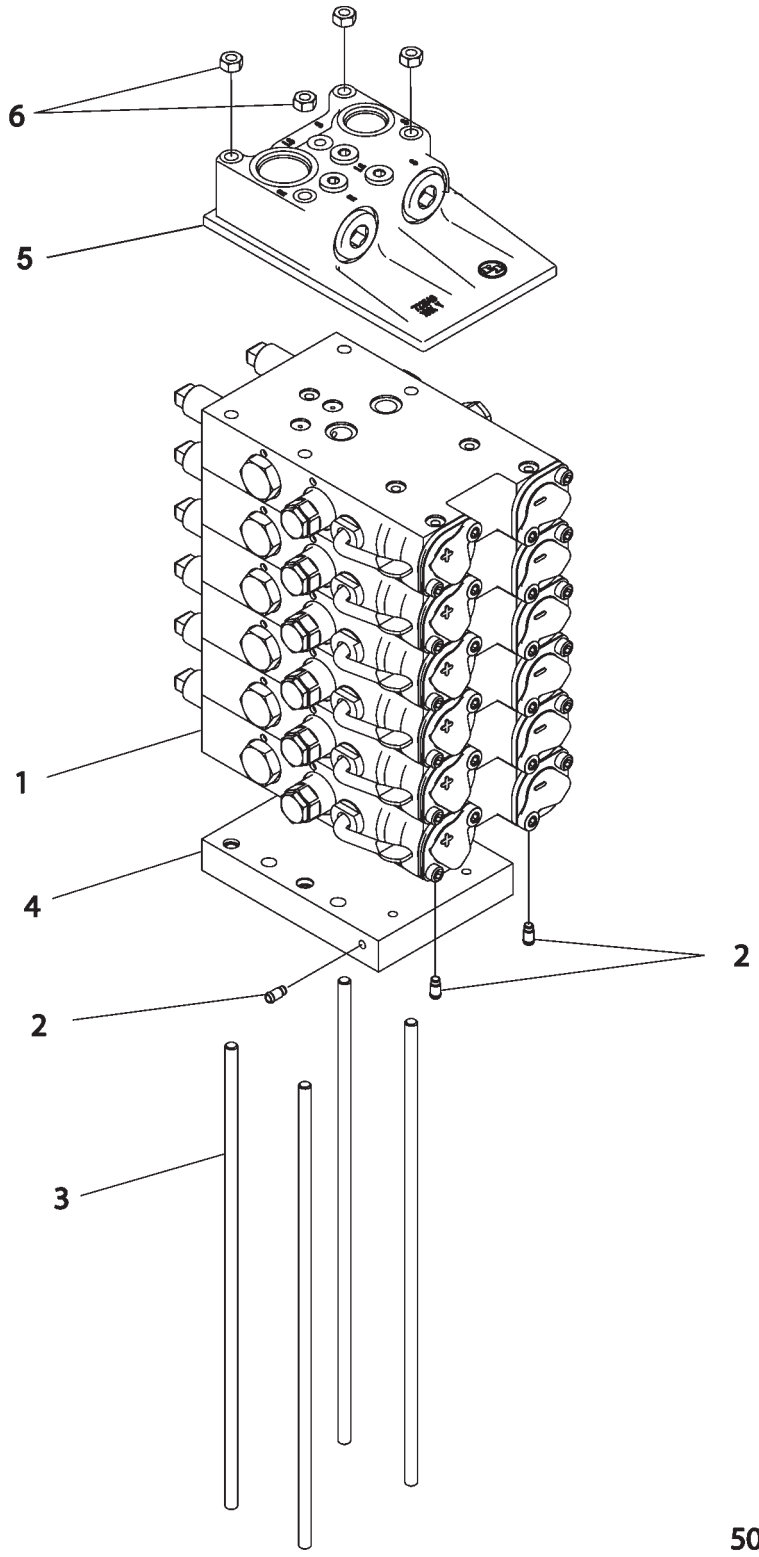

## VALVE GP-BANK 6 - 500752D1
**5 REMOTES**

| ITEM | NUMBER | QTY | DESCRIPTION |
|---|---|---|---|
| - | 500752D1 | -- | VALVE GP-BANK 6 [A] (NOT SERVICED) |
| 1 | 162-9816 | 6 | VALVE GP-CONTROL (SEE BREAKDOWN FOR COMPONENTS) |
| 2 | CH188-3640 | 3 | FITTING |
| 3 | CH209-7498 | 4 | STUD |
| 4 | 187-7430 | 1 | MOUNT |
| 5 | 227-8830 | 1 | VALVE GP-FLOW CONTROL & RELIEF (SEE BREAKDOWN FOR COMPONENTS) |
| 6 | WR522218 | 4 | NUT (M10X1.5) |

[A] PART OF 500795D1 VALVE AR-IMPL

500752DB
PR: t05i29k58b0414

## VALVE GP-FLOW CONTROL&RELIEF - 227-8830
**IMPLEMENT**

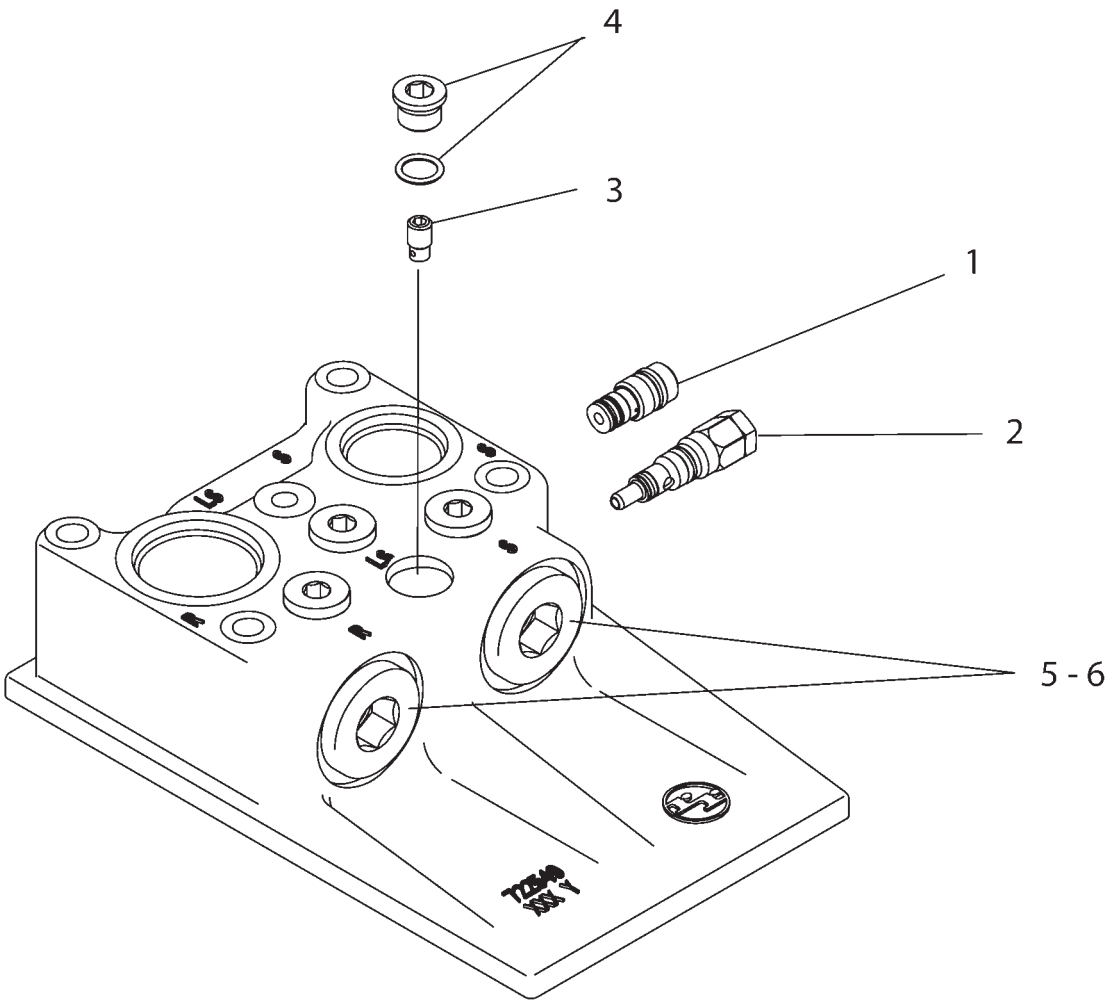

| ITEM | NUMBER | QTY | DESCRIPTION |
|---|---|---|---|
| - | 227-8830 | -- | VALVE GP-INLET FLOW CONTROL & RELIEF [A] |
| 1 | 227-8726 | 1 | VALVE GP-FLOW CNTRL (INCL SEALS & RINGS) |
| | CH209-7451 | 1 | RING-BACKUP |
| | CH209-7452 | 1 | RING-BACKUP |
| | CH033-5879 | 1 | SEAL-O-RING |
| | CH192-7111 | | SEAL-O-RING |
| 2 | 227-8727 | 1 | VALVE GP-RELIEF (INCLS SEALS & RINGS) |
| | CH033-5879 | 1 | SEAL-O-RING |
| | CH192-7111 | 1 | SEAL-O-RING |
| | CH209-7451 | 2 | RING-BACKUP |
| | CH209-7452 | 1 | RING-BACKUP |
| 3 | 188-3642 | 1 | VALVE GP-CHECK (HYD POWER BEYOND LOAD SENSOR) |
| 4 | CH162-0177 | 1 | PLUG AS-HSHD (9/16-18) |
| | 400318X1 | 1 | SEAL-O-RING (11.89ID X 1.98 DIA) |
| 5 | 400376X1 | 2 | SEAL-O-RING |
| 6 | 400375X1 | 2 | PLUG |

[A] PART OF: 180-0494 VALVE GP-BANK 4,
180-0495 VALVE GP-BANK 5 &
500752D1 VALVE GP-BANK 6

2278830B
PR: t05i29k58b0415

## VALVE GP-CONTROL - 162-9816
**IMPLEMENT**

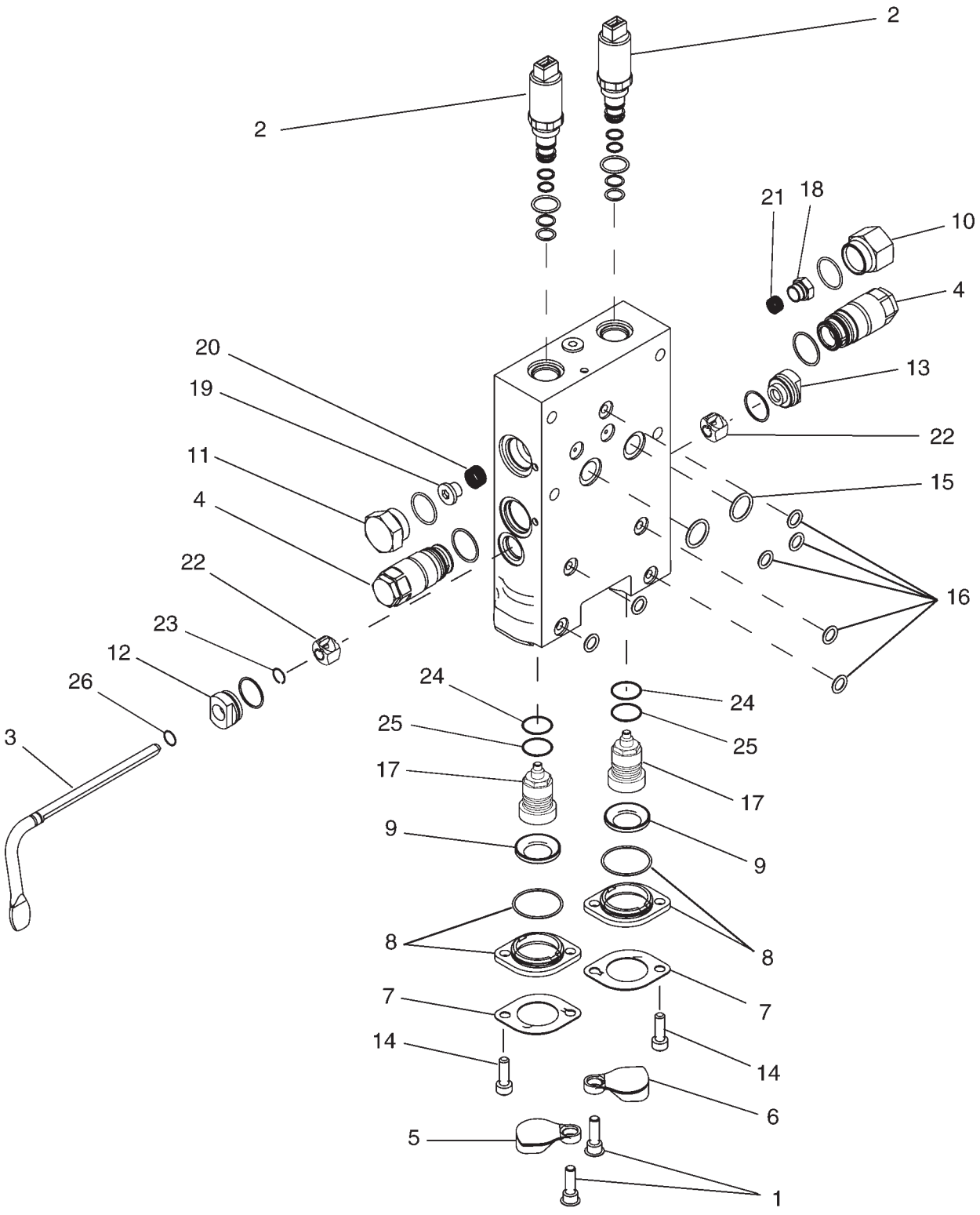

## VALVE GP-CONTROL - 162-9816
IMPLEMENT

| ITEM | NUMBER | QTY | DESCRIPTION |
|---|---|---|---|
| - | 162-9816 | -- | VALVE GP-CONTROL [A] |
| 1 | CH162-9821 | 2 | BOLT (M8X1X25MM)) |
| 2 | 165-8537 | 2 | VALVE GP-SOLENOID & PRESS REDC |
| | CH209-9680 | 1 | KIT-SEAL (VALVE GP-CHECK) |
| 3 | CH186-0341 | 1 | LEVER |
| 4 | 186-0346 | 2 | VALVE GP-CHECK (INCLUDES SEAL-O-RING) |
| | CH033-6032 | 1 | SEAL-O-RING |
| 5 | CH186-0347 | 1 | COVER-DUST |
| 6 | CH186-0348 | 1 | COVER-DUST |
| 7 | CH186-0364 | 2 | PLATE |
| 8 | CH186-0365 | 2 | PLATE ASM |
| | CH187-9630 | 1 | SEAL-O-RING |
| 9 | CH186-0367 | 2 | SEAL |
| 10 | CH186-0368 | 1 | PLUG ASM (INCLUDES SEAL-O-RING) |
| | CH175-3135 | 1 | SEAL-O-RING |
| 11 | CH186-0369 | 1 | PLUG ASM (INCLUDES SEAL-O-RING) |
| | CH175-3135 | 1 | SEAL-O-RING |
| 12 | CH186-0375 | 1 | CAP ASM (INCLUDES SEAL-O-RING) |
| | CH162-9799 | 1 | SEAL-O-RING |
| 13 | CH186-0376 | 1 | CAP ASM |
| | CH162-9799 | 1 | SEAL-O-RING |
| 14 | CH209-8296 | 2 | BOLT-SOCKET HEAD (M8X1.25X25MM) |
| 15 | CH5P-9186 | 2 | SEAL-O-RING |
| 16 | CH8L-2777 | 7 | SEAL-O-RING |
| 17 | 186-0342 | 2 | COUPLING GP (INCL SEAL) |
| | CH146-4350 | 1 | SEAL |
| 18 | CH186-0370 | 1 | PLUG |
| 19 | CH186-0371 | 1 | PLUG |
| 20 | 186-0372 | 1 | SPRING |
| 21 | 186-0373 | 1 | SPRING |
| 22 | 186-0377 | 2 | CAM |
| 23 | CH096-2323 | 1 | RING-RETAINING |
| 24 | CH146-4351 | 2 | SEAL |
| 25 | CH5D-6539 | 2 | SEAL-O-RING |
| 26 | CH3E-4296 | 1 | SEAL-O-RING |

[A] PART OF 180-0494;180-0495
500752D1 VALVE GP;
189-5906 KIT-HYDRAULIC

1629816D
PR: t05i29k58b0416

## VALVE GP-CONTROL - 162-9817
STEERABLE HITCH

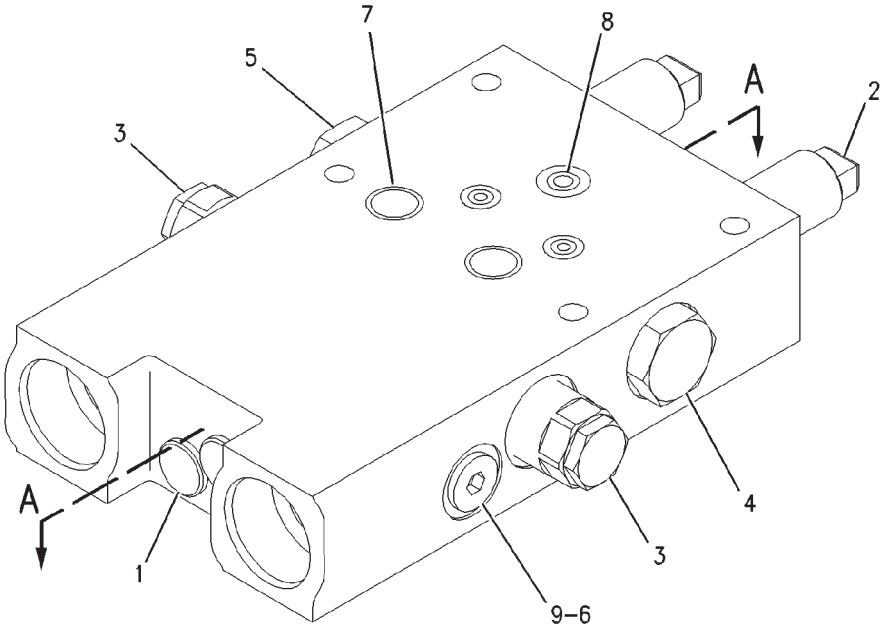


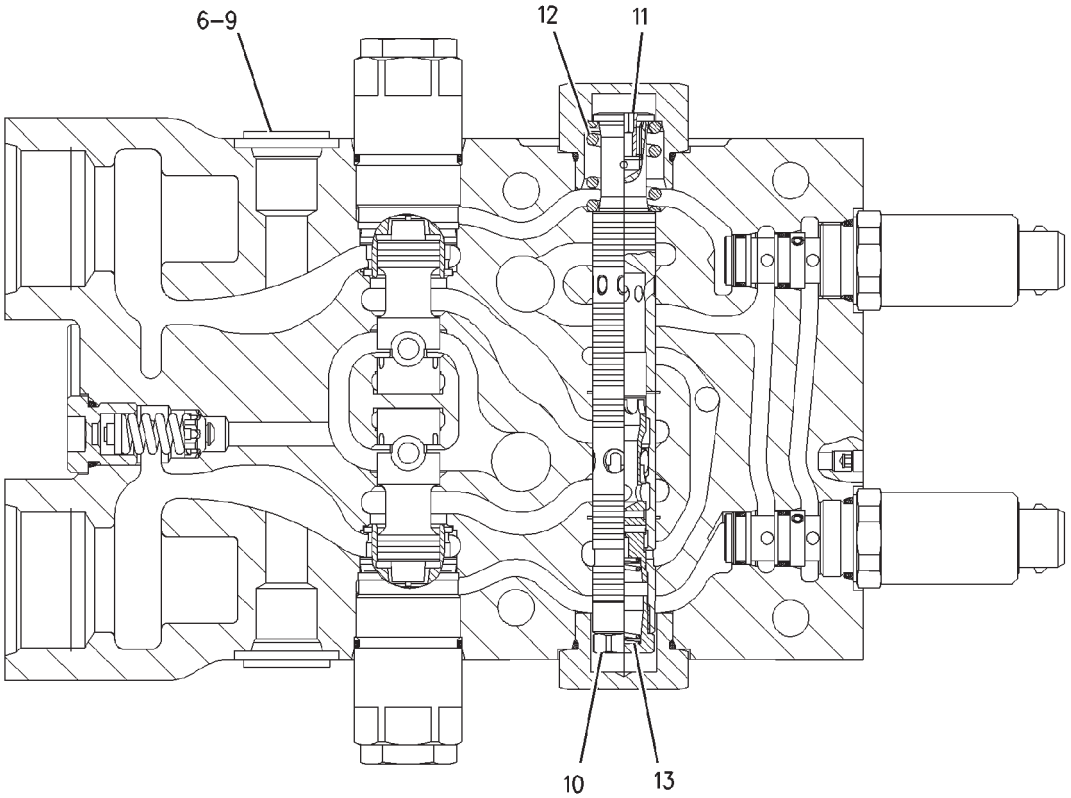


SECTION A–A

00886104

## VALVE GP-CONTROL - 162-9817
STEERABLE HITCH

| ITEM | NUMBER | QTY | DESCRIPTION |
|---|---|---|---|
| - | 162-9817 | -- | VALVE GP-CONTROL [A] |
| 1 | 162-9822 | 2 | VALVE GP-RELIEF (INCLS O-RING SEAL) |
| | 400322X1 | 1 | SEAL-O-RING (19.28 ID X 1.78 DIA) |
| 2 | 165-8537 | 2 | VALVE GP-SOLENOID & PRESS REDC |
| | CH209-9680 | | KIT-SEAL (SOLENOID VALVE) |
| 3 | 186-0346 | 2 | VALVE GP-CHECK |
| | CH033-6032 | 1 | SEAL-O-RING |
| 4 | CH186-0368 | 1 | PLUG ASM |
| | CH175-3135 | 1 | SEAL-O-RING |
| 5 | CH186-0369 | 1 | PLUG ASM |
| | CH175-3135 | 1 | SEAL-O-RING |
| 6 | CH3K-0360 | 2 | SEAL-O-RING |
| 7 | CH5P-9186 | 2 | SEAL-O-RING |
| 8 | CH8L-2777 | 3 | SEAL-O-RING |
| 9 | CH9S-8005 | 2 | PLUG |
| 10 | 186-0370 | 1 | PLUG |
| 11 | CH186-0371 | 1 | PLUG |
| 12 | CH186-0372 | 1 | SPRING |
| 13 | 186-0373 | 1 | SPRING |

[A] PART OF:
192-4708 VALVE GP-BANK 3
192-4817 VALVE GP-BANK 4

00886104
PR: t05i29k58b0417

## VALVE GP-CONTROL - 162-9818
**3 POINT HITCH**

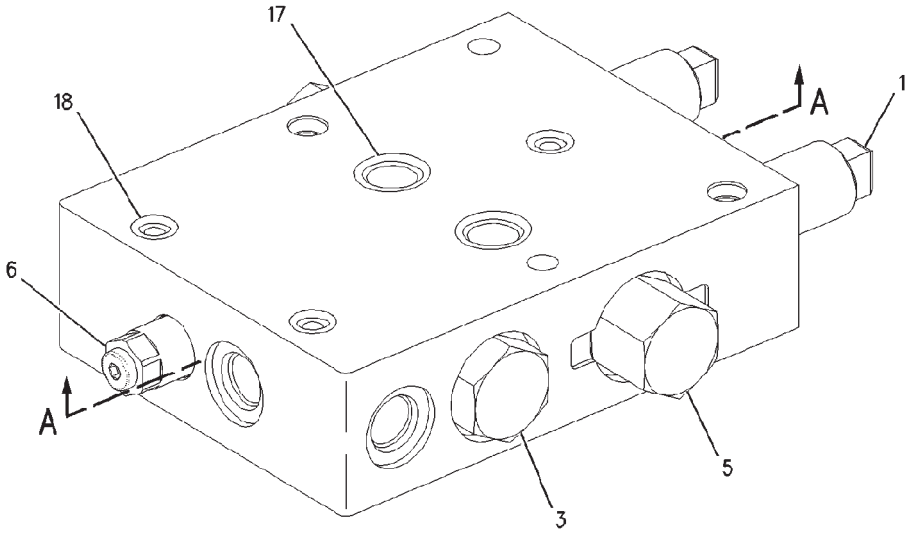


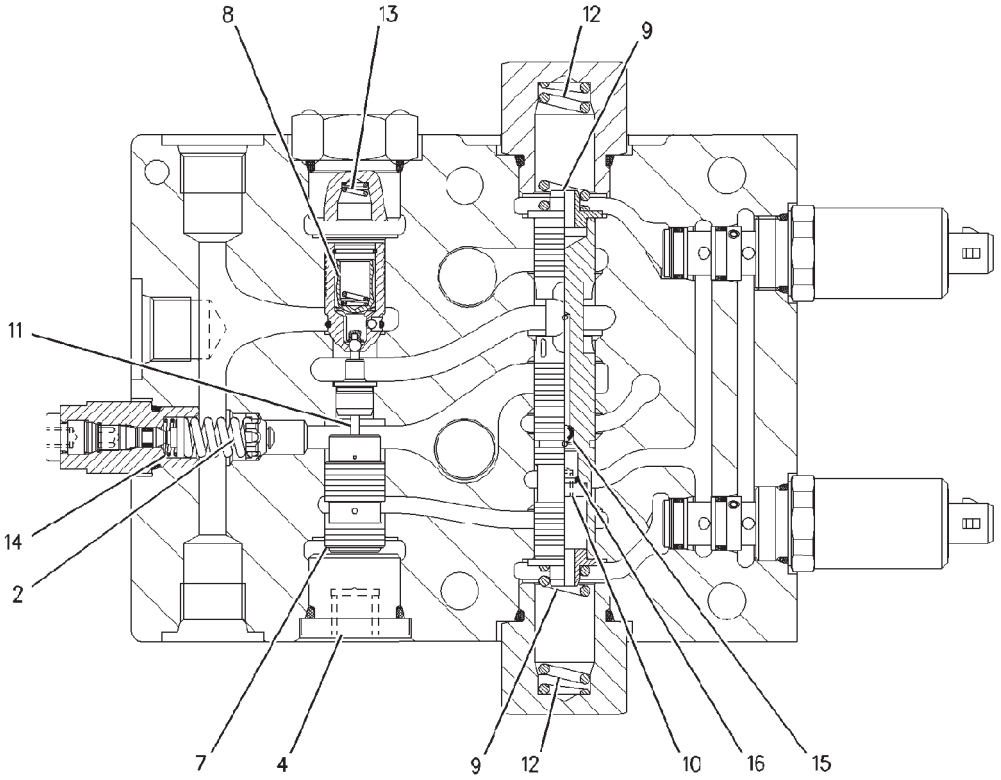


SECTION A-A

00902036

## VALVE GP-CONTROL - 162-9818
3 POINT HITCH

| ITEM | NUMBER | QTY | DESCRIPTION |
|---|---|---|---|
| - | 162-9818 | -- | VALVE GP-CONTROL [A] |
| 1 | 165-8537 | 2 | VALVE GP-SOLENOID & PRESS REDC (3PT HITCH RAISE/LOWER) |
| | 209-9680 | 1 | SEAL-KIT |
| 2 | 209-7359 | 1 | VALVE-RELIEF (3PT HITCH CNTRL CIRCUIT) |
| 3 | 216-3569 | 1 | PLUG ASM |
| | CH8T-7525 | 1 | SEAL-O-RING |
| 4 | 216-3458 | 1 | PLUG ASM |
| | CH8T-7525 | 1 | SEAL-O-RING |
| 5 | 216-3570 | 2 | PLUG ASM |
| | CH8T-7525 | 1 | SEAL-O-RING |
| 6 | 209-7599 | 1 | SCREW-LOWERING (3PT HITCH MANUAL LOWER) |
| 7 | 216-3461 | 1 | SPOOL-VALVE |
| 8 | 216-3462 | 1 | VALVE-CHECK (3PT HITCH POSITION HOLD) |
| 9 | 216-3475 | 2 | RETAINER |
| 10 | CH216-4098 | 1 | PLUG |
| 11 | 216-3478 | 1 | PIN |
| 12 | 216-3479 | 2 | SPRING |
| 13 | 216-3480 | 1 | SPRING |
| 14 | 216-3481 | 1 | SPRING |
| 15 | CH3G-0785 | 1 | BALL |
| 16 | CH109-9685 | 1 | SEAL-O-RING (6.07IDX1.63DIA) |
| 17 | CH5P-9186 | 2 | SEAL-O-RING (20.31IDX2.62DIA) |
| 18 | CH8L-2777 | 3 | SEAL-O-RING (10.77IDX2.62DIA) |

[A] PART OF:
192-4708 VALVE GP-BANK 3
192-4817 VALVE GP-BANK 4

00902036
PR: t05i29k58b0418

## VALVE GP-CONTROL - 192-4707
**PRIORITY W/HYDRAULIC TRAILER BRAKES**

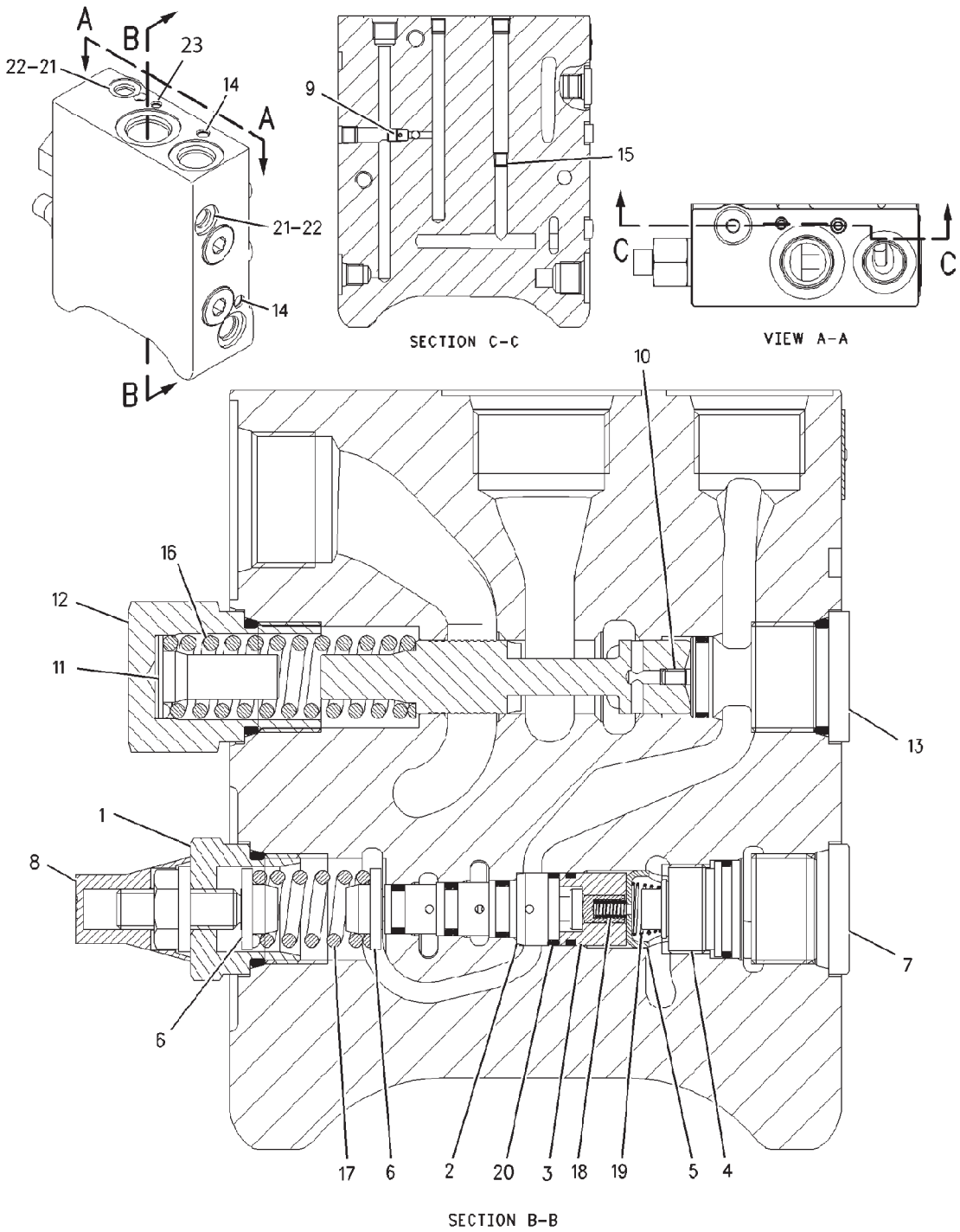


1924707A

## VALVE GP-CONTROL - 192-4707
**PRIORITY W/HYDRAULIC TRAILER BRAKES**

| ITEM | NUMBER | QTY | DESCRIPTION |
|---|---|---|---|
| - | 192-4707 | -- | VALVE GP-CONTROL [A] |
| 1 | 216-6971 | 1 | ADJUSTER ASM |
| | CH8T-7525 | 1 | SEAL-O-RING |
| | 216-6988 | 1 | SCREW |
| | 216-6990 | 1 | SEAL |
| 2 | 216-6972 | 1 | VALVE GP-ACCUMULATOR CHARGING (SEE BREAKDOWN FOR COMPONENTS) |
| 3 | 216-6973 | 1 | SLEEVE ASM |
| | 400322X1 | 1 | SEAL-O-RING |
| 4 | 216-6974 | 1 | VALVE ASM-CHECK |
| | CH6V-6580 | 1 | SEAL-O-RING |
| 5 | 216-6975 | 1 | RETAINER-SPRING |
| 6 | 216-6976 | 2 | RETAINER-SPRING |
| 7 | 216-6977 | 1 | PLUG ASM |
| | CH8T-7525 | 1 | SEAL-O-RING |
| 8 | 216-6978 | 1 | CAP |
| 9 | 216-6979 | 1 | VALVE-CHECK |
| 10 | 216-6980 | 1 | ORIFICE |
| 11 | 216-6981 | 1 | RETAINER |
| 12 | 216-6983 | 1 | PLUG ASM |
| | CH8T-7525 | 1 | SEAL-O-RING |
| 13 | 216-6984 | 1 | PLUG ASM |
| | CH8T-7525 | 1 | SEAL-O-RING |
| | CH6V-8399 | 1 | SEAL-O-RING |
| | CH216-7114 | 1 | RING-BACKUP |
| 14 | 216-6986 | 3 | PLUG-SPL |
| 15 | 216-6987 | 1 | ORIFICE |
| 16 | 216-6991 | 1 | SPRING |
| 17 | 216-6992 | 1 | SPRING |
| 18 | 216-7010 | 1 | SPRING |
| 19 | 216-7035 | 1 | SPRING |
| 20 | 216-7115 | 1 | RING-BACKUP |
| 21 | CH9S-8004 | 2 | PLUG |
| 22 | 400318X1 | 2 | SEAL-O-RING (11.89ID X 1.98 DIA) |
| 23 | 500932D1 | 1 | PLUG-SPL |

[A] PART OF 193-8197 VALVE AR

1924707A
PR: t05i29k58b0419

## VALVE GP-BRAKE CONTROL - 196-2318
HYDRAULIC TRAILER BRAKES

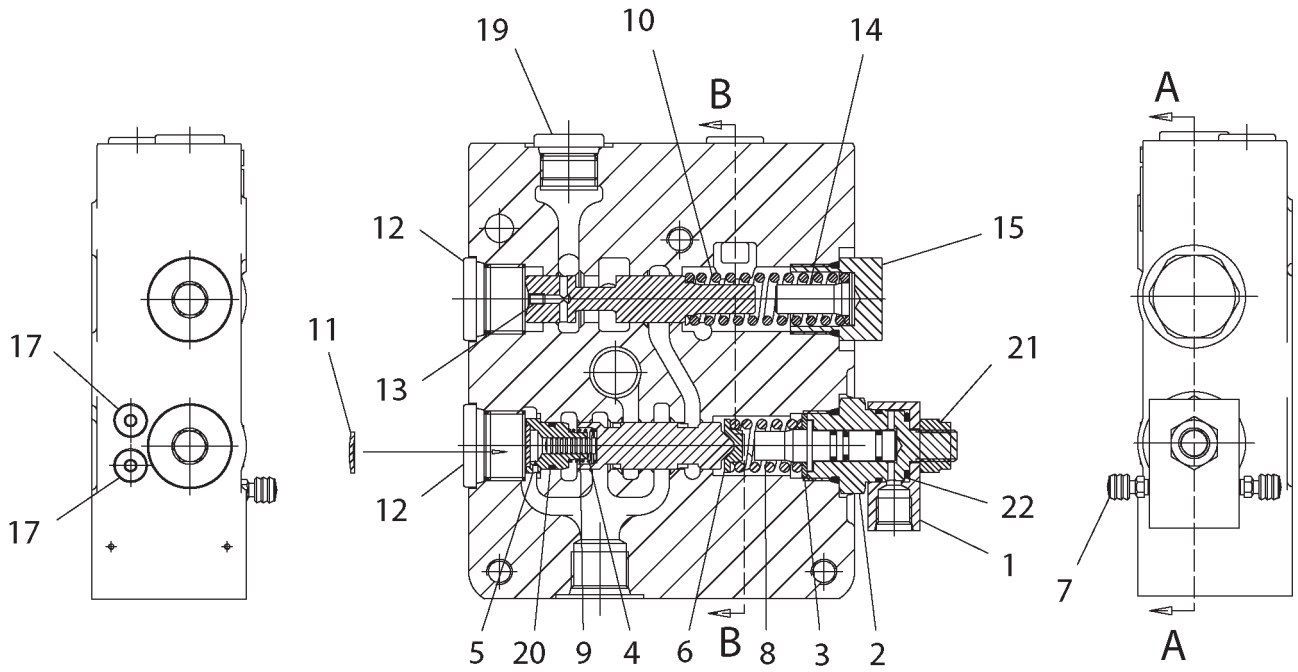


SECTION A-A

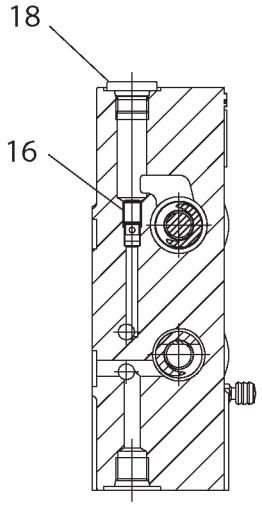


SECTION B-B

1962318C

## VALVE GP-BRAKE CONTROL - 196-2318

HYDRAULIC TRAILER BRAKES

| ITEM | NUMBER | QTY | DESCRIPTION |
|---|---|---|---|
| - | 196-2318 | -- | VALVE GP-BRAKE CNTRL (COMPLETE) |
| 1 | 209-9919 | 1 | MANIFOLD |
| 2 | 209-9920 | 1 | PLUG AS |
| | CH8T-7525 | 1 | SEAL-O-RING |
| | CH8U-7381 | 1 | SEAL-O-RING |
| | CH209-9961 | 2 | RING-GUIDE |
| | CH209-9962 | 1 | RING-GUIDE |
| 3 | CH209-9921 | 1 | WASHER |
| 4 | CH209-9927 | 1 | SLUG |
| 5 | 209-9936 | 1 | SLEEVE |
| 6 | CH209-9947 | 1 | SEAT-SPRING |
| 7 | 209-9949 | 2 | SCREW-PURGE |
| 8 | CH209-9955 | 1 | SPRING |
| 9 | CH209-9957 | 1 | SPRING |
| 10 | 216-6991 | 1 | SPRING |
| 11 | CH210-1993 | 1 | WASHER |
| 12 | 216-6977 | 2 | PLUG AS |
| | CH8T-7525 | 1 | SEAL-O-RING |
| 13 | 216-6980 | 1 | ORIFICE |
| 14 | 216-6981 | 1 | RETAINER |
| 15 | CH216-8187 | 1 | PLUG AS |
| | CH8T-7525 | 1 | SEAL-O-RING |
| 16 | 216-8188 | 1 | VALVE AS-SHUTTLE |
| 17 | CH216-8189 | 2 | PLUG AS |
| | CH3E-4289 | 1 | SEAL-O-RING |
| 18 | CH216-8190 | 1 | PLUG AS |
| | CH3E-4298 | 1 | SEAL-O-RING |
| 19 | CH216-8191 | 1 | PLUG AS |
| | 400319X1 | 1 | SEAL-O-RING |
| 20 | CH095-1715 | 1 | SEAL-O-RING |
| 21 | CH188-7789 | 1 | NUT (M12X1.50) |
| 22 | CH6V-3922 | 1 | SEAL-O-RING |

[A] PART OF:
192-4816 VALVE GP-BANK 2
192-4817 VALVE GP-BANK 4
209-3689 KIT-HYD TRAILER BRAKE

1962318C
PR: t05i29k58b0420

## VALVE GP-CONTROL - 209-5019
PRIORITY & ACCUMULATOR CHARGE

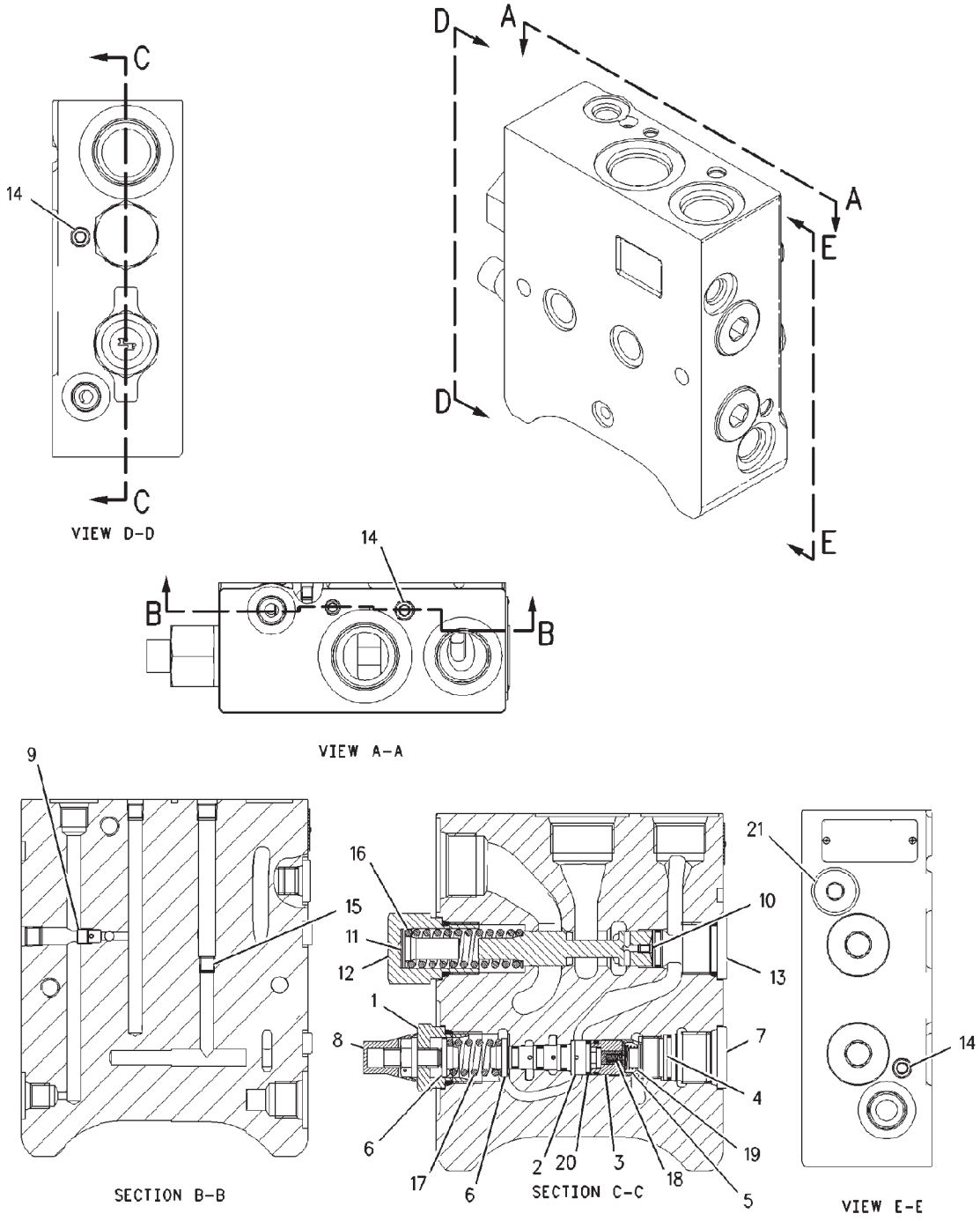


00889029

## VALVE GP-CONTROL - 209-5019
### PRIORITY & ACCUMULATOR CHARGE

| ITEM | NUMBER | QTY | DESCRIPTION |
|---|---|---|---|
| - | 209-5019 | -- | VALVE GP-CONTROL [A] |
| 1 | 216-6971 | 1 | ADJUSTER ASM |
| | CH8T-7525 | 1 | SEAL-O-RING |
| | 216-6988 | 1 | SCREW |
| | 216-6990 | 1 | SEAL |
| 2 | 216-6972 | 1 | VALVE GP-ACCUMULATOR CHARGING (SEE BREAKDOWN FOR COMPONENTS) |
| 3 | 216-6973 | 1 | SLEEVE ASM |
| | 400322X1 | 1 | SEAL-O-RING |
| 4 | 216-6974 | 1 | VALVE ASM-CHECK |
| | CH6V-6580 | 1 | SEAL-O-RING |
| 5 | 216-6975 | 1 | RETAINER-SPRING |
| 6 | 216-6976 | 2 | RETAINER-SPRING |
| 7 | 216-6977 | 1 | PLUG ASM |
| | CH8T-7525 | 1 | SEAL-O-RING |
| 8 | 216-6978 | 1 | CAP |
| 9 | 216-6979 | 1 | VALVE-CHECK |
| 10 | 216-6980 | 1 | ORIFICE |
| 11 | 216-6981 | 1 | RETAINER |
| 12 | 216-6983 | 1 | PLUG ASM |
| | CH8T-7525 | 1 | SEAL-O-RING |
| 13 | 216-6984 | 1 | PLUG ASM |
| | CH8T-7525 | 1 | SEAL-O-RING |
| | CH6V-8399 | 1 | SEAL-O-RING |
| | CH216-7114 | 1 | RING-BACKUP |
| 14 | 216-6986 | 3 | PLUG |
| 15 | 216-6987 | 1 | ORIFICE |
| 16 | 216-6991 | 1 | SPRING |
| 17 | 216-6992 | 1 | SPRING |
| 18 | 216-7010 | 1 | SPRING |
| 19 | 216-7035 | 1 | SPRING |
| 20 | 216-7115 | 1 | RING-BACKUP |
| 21 | CH9S-8004 | 1 | PLUG |
| 22 | 500932D1 | 1 | PLUG-SPCL (NOT SHOWN) |

[A] PART OF 192-4708 VALVE GP-BANK 3

00889029
PR: t05i29k58b0421

## VALVE GP-CONTROL - 209-5020
PRIORITY

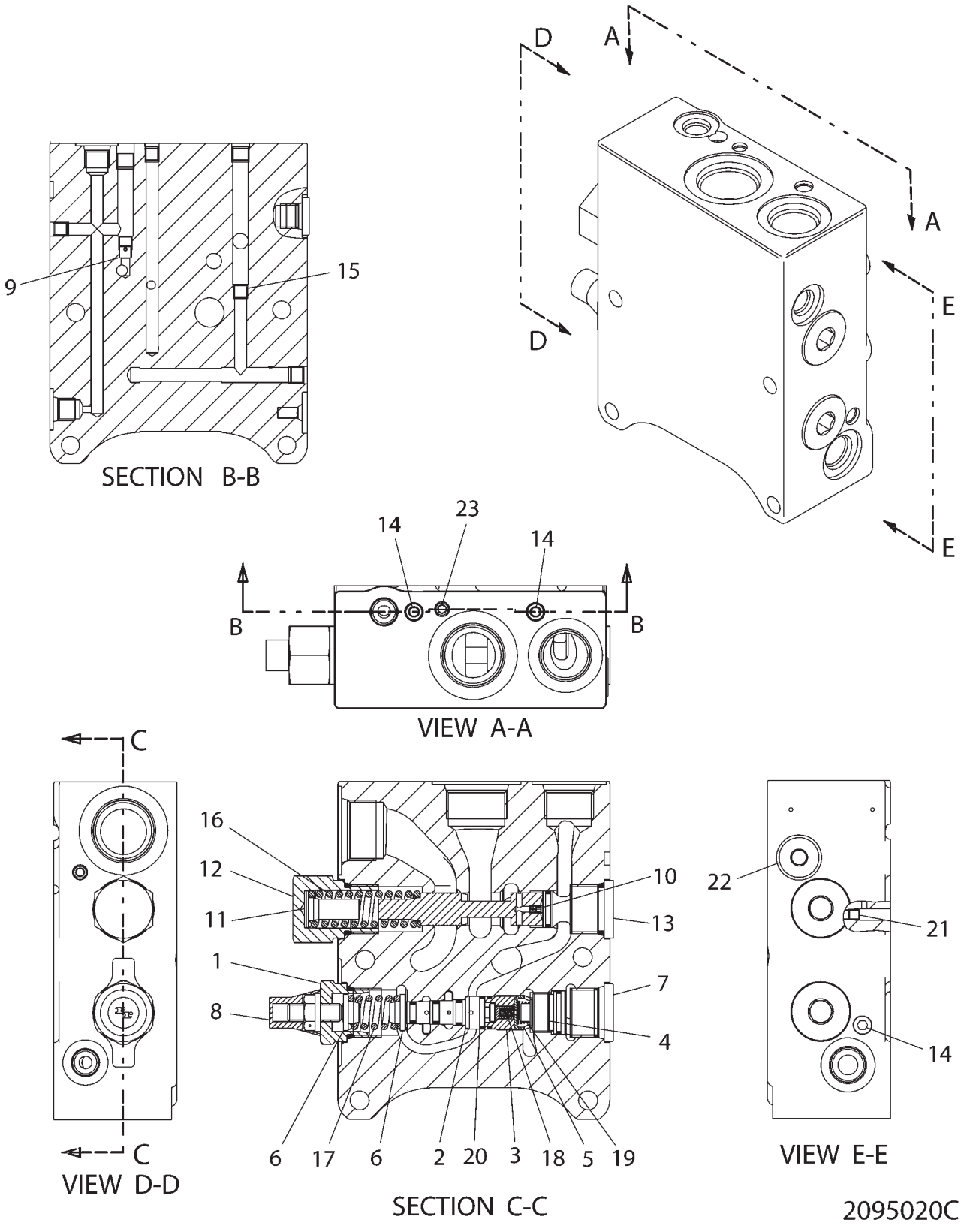

## VALVE GP-CONTROL - 209-5020
PRIORITY

| ITEM | NUMBER | QTY | DESCRIPTION |
|---|---|---|---|
| - | 209-5020 | -- | VALVE GP-CONTROL [A] |
| 1 | 216-6971 | 1 | ADJUSTMENT AS |
| | CH8T-7525 | 1 | SEAL-O-RING |
| | 216-6988 | 1 | SCREW |
| | 216-6990 | 1 | SEAL-LOCK NUT |
| 2 | 216-6972 | 1 | VALVE GP-ACCUMULATOR CHARGING (SEE BREAKDOWN FOR COMPONENTS) |
| 3 | 216-6973 | 1 | SLEEVE ASM |
| | 400322X1 | 1 | SEAL-O-RING |
| 4 | 216-6974 | 1 | VALVE ASM-CHECK |
| | CH6V-6580 | 1 | SEAL-O-RING |
| 5 | 216-6975 | 1 | RETAINER-SPRING |
| 6 | 216-6976 | 2 | RETAINER-SPRING |
| 7 | 216-6977 | 1 | PLUG ASM |
| | CH8T-7525 | 1 | SEAL-O-RING |
| 8 | 216-6978 | 1 | CAP |
| 9 | 216-6979 | 1 | VALVE-CHECK |
| 10 | 216-6980 | 1 | ORIFICE |
| 11 | 216-6981 | 1 | RETAINER |
| 12 | 216-6983 | 1 | PLUG ASM |
| | CH8T-7525 | 1 | SEAL-O-RING |
| 13 | 216-6984 | 1 | PLUG ASM |
| | CH8T-7525 | 1 | SEAL-O-RING |
| | CH6V-8399 | 1 | SEAL-O-RING |
| | CH216-7114 | 1 | RING-BACKUP |
| 14 | 216-6986 | 3 | PLUG |
| 15 | 216-6987 | 1 | ORIFICE |
| 16 | 216-6991 | 1 | SPRING |
| 17 | 216-6992 | 1 | SPRING |
| 18 | 216-7010 | 1 | SPRING |
| 19 | 216-7035 | 1 | SPRING |
| 20 | CH216-7115 | 1 | RING-BACKUP |
| 21 | 216-7404 | 1 | ORIFICE-SPCL |
| 22 | CH9S-8004 | 1 | PLUG AS |
| 23 | 500932D1 | 1 | PLUG-SPCL (NOT SHOWN) |

[A] PART OF 192-4816 VALVE GP-BANK 2

2095020C
PR: t05i29k58b0422

## VALVE GP-CONTROL - 209-5021
**PRIORITY**

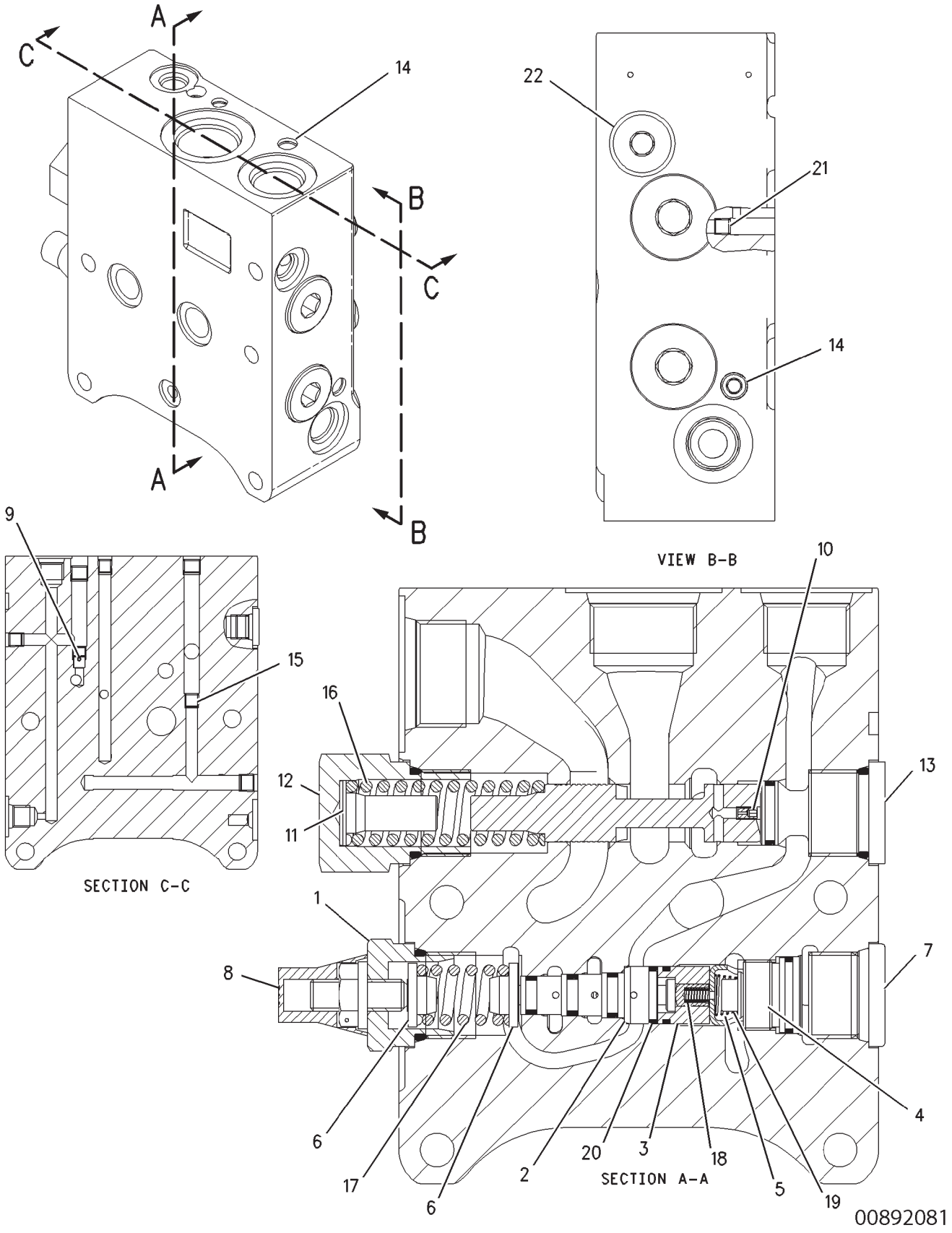

## VALVE GP-CONTROL - 209-5021
PRIORITY

| ITEM | NUMBER | QTY | DESCRIPTION |
|---|---|---|---|
| - | 209-5021 | -- | VALVE GP-CONTROL [A] |
| 1 | 216-6971 | 1 | ADJUSTER AS |
| | CH8T-7525 | 1 | SEAL-O-RING |
| | 216-6988 | 1 | SCREW |
| | 216-6990 | 1 | SEAL |
| 2 | 216-6972 | 1 | VALVE GP-ACCUMULATOR CHARGING (SEE BREAKDOWN FOR COMPONENTS) |
| 3 | 216-6973 | 1 | SLEEVE AS |
| | 400322X1 | 1 | SEAL-O-RING |
| 4 | 216-6974 | 1 | VALVE AS-CHECK |
| | CH6V-6580 | 1 | SEAL-O-RING |
| 5 | 216-6975 | 1 | RETAINER-SPRING |
| 6 | 216-6976 | 2 | RETAINER-SPRING |
| 7 | 216-6977 | 1 | PLUG AS |
| | CH8T-7525 | 1 | SEAL-O-RING |
| 8 | 216-6978 | 1 | CAP |
| 9 | 216-6979 | 1 | VALVE AS-CHECK |
| 10 | 216-6980 | 1 | ORIFICE |
| 11 | 216-6981 | 1 | RETAINER |
| 12 | 216-6983 | 1 | PLUG AS-SPECIAL (PRIORITY) |
| | CH8T-7525 | 1 | SEAL-O-RING |
| 13 | 216-6984 | 1 | PLUG AS |
| | CH6V-8399 | 1 | SEAL-O-RING |
| | CH8T-7525 | 1 | SEAL-O-RING |
| | CH216-7114 | 1 | RING-BACKUP |
| 14 | 216-6986 | 3 | PLUG |
| 15 | 216-6987 | 1 | ORIFICE |
| 16 | 216-6991 | 1 | SPRING |
| 17 | 216-6992 | 1 | SPRING |
| 18 | 216-7010 | 1 | SPRING |
| 19 | 216-7035 | 1 | SPRING |
| 20 | CH216-7115 | 1 | RING-BACKUP |
| 21 | 216-7404 | 1 | ORIFICE |
| 22 | CH9S-8004 | 1 | PLUG AS |
| 23 | 500932D1 | 1 | PLUG-SPCL (NOT SHOWN) |

[A] PART OF:
209-3689 KIT-HYD TRAILER BRAKE
192-4817 VALVE GP-BANK 4

00892081
PR: t05i29k58b0423

## VALVE GP-PRESS & FLOW CMPNSTR - 214-9379

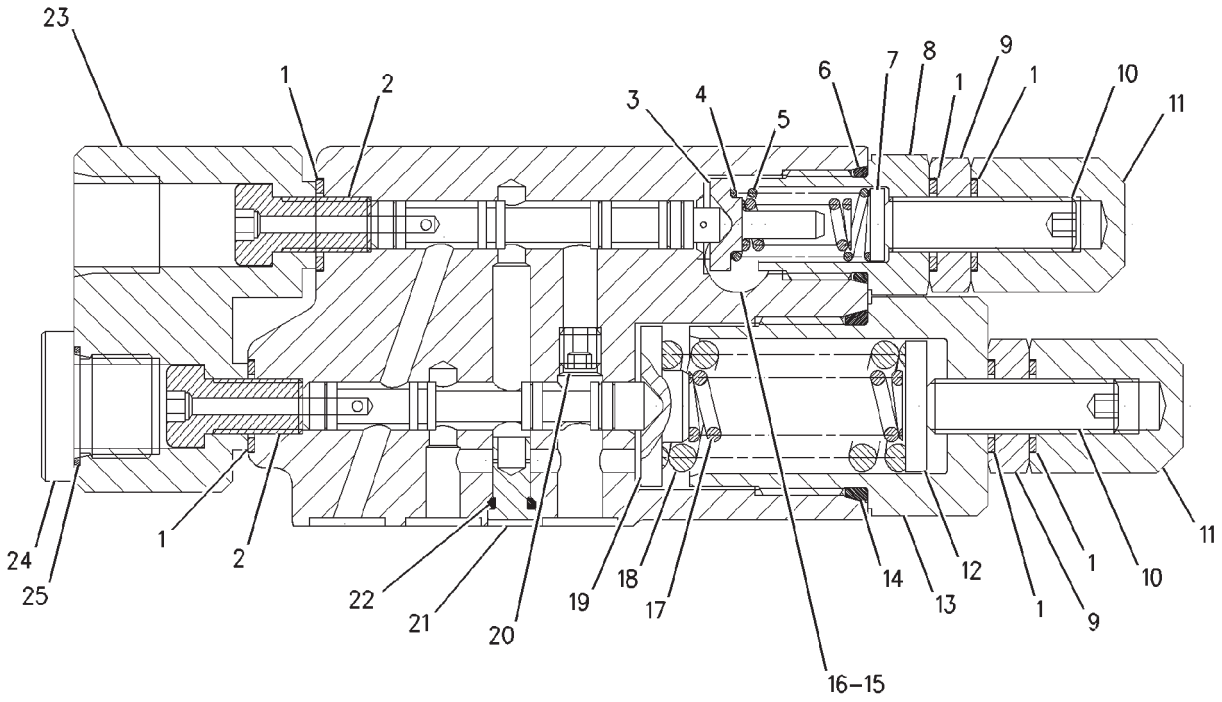


00893866

## VALVE GP-PRESS & FLOW CMPNSTR - 214-9379

| ITEM | NUMBER | QTY | DESCRIPTION |
|---|---|---|---|
| - | 214-9379 | -- | VALVE GP-PRESS & FLOW CMPNSTR [A] |
| 1 | CH6E-6528 | 6 | SEAL |
| 2 | CH194-4650 | 2 | ADAPTER |
| 3 | CH6E-3268 | 1 | RETAINER-SPRING |
| 4 | CH6E-3275 | 1 | SPRING |
| 5 | CH6E-3274 | 1 | SPRING |
| 6 | CH033-6043 | 1 | SEAL-O-RING |
| 7 | CH6E-3272 | 1 | SEAT |
| 8 | CH6E-6540 | 1 | PLUG |
| 9 | CH6E-6538 | 2 | NUT-ADJUSTMENT (M8X1) |
| 10 | CH6E-6537 | 2 | SCREW-ADJUSTMENT (M8X1X28MM) |
| 11 | CH6E-6539 | 2 | NUT-CAP (M8X1) |
| 12 | CH6E-3273 | 1 | SEAT |
| 13 | CH6E-6536 | 1 | PLUG |
| 14 | CH6V-8352 | 1 | SEAL-O-RING |
| 15 | CH9S-8002 | 1 | PLUG |
| 16 | 400361X1 | 1 | SEAL-O-RING (8.92ID X 1.83DIA) |
| 17 | CH193-1036 | 1 | SPRING |
| 18 | CH6E-3276 | 1 | SPRING |
| 19 | CH6E-3269 | 1 | RETAINER-SPRING |
| 20 | CH201-0780 | 1 | ORIFICE |
| 21 | CH105-2145 | 1 | VALVE-ORIFICE |
| 22 | CH5P-9262 | 1 | SEAL-O-RING |
| 23 | CH194-4651 | 1 | ADAPTER (HOUSING) |
| 24 | CH9S-8004 | 1 | PLUG |
| 25 | 400318X1 | 1 | SEAL-O-RING (11.89ID X 1.98 DIA) |

[A] PART OF CH206-9017; CH206-9019
PUMP GP-PISTON

00893866
PR: t05i29k58b0424

## VALVE GP-PRESSURE COMPENSATOR
**CH6E-4392**

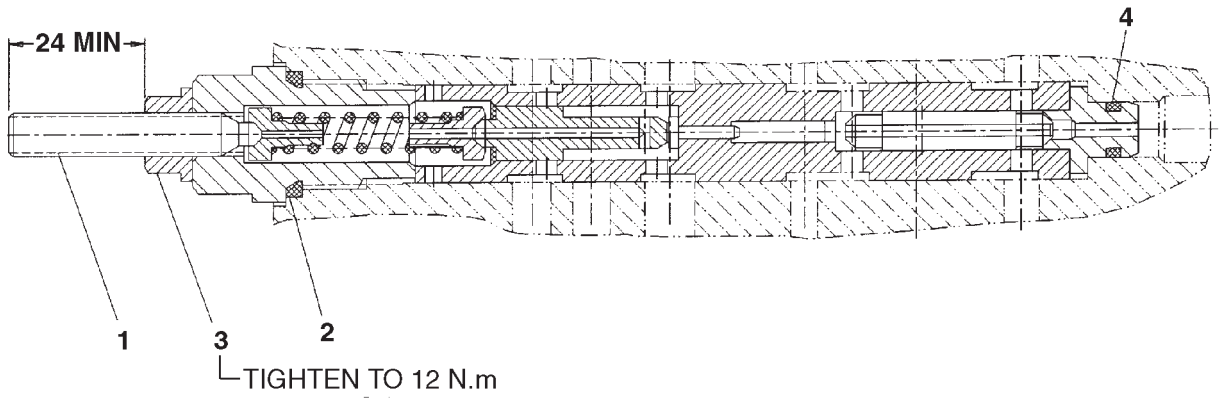

## VALVE GP-PRESSURE COMPENSATOR
CH6E-4392

| ITEM | NUMBER | QTY | DESCRIPTION |
|---|---|---|---|
| - | CH6E-4392 | -- | VALVE GP-PRESSURE COMPENSATOR [A] |
| 1 | CH6E-4401 | 1 | SETSCREW-ADJUSTMENT |
| 2 | CH6V-8351 | 1 | SEAL-O-RING |
| 3 | CH6E-1607 | 1 | LOCKNUT-SEALING |
| 4 | CH6V-5586 | 1 | SEAL-O-RING (6.07MM ID) |

[A] PART OF 205-6398 HEAD GP-PUMP

0228708A
PR: t05i29k58b0425

**VALVE GP-SERVO - CH183-8417**

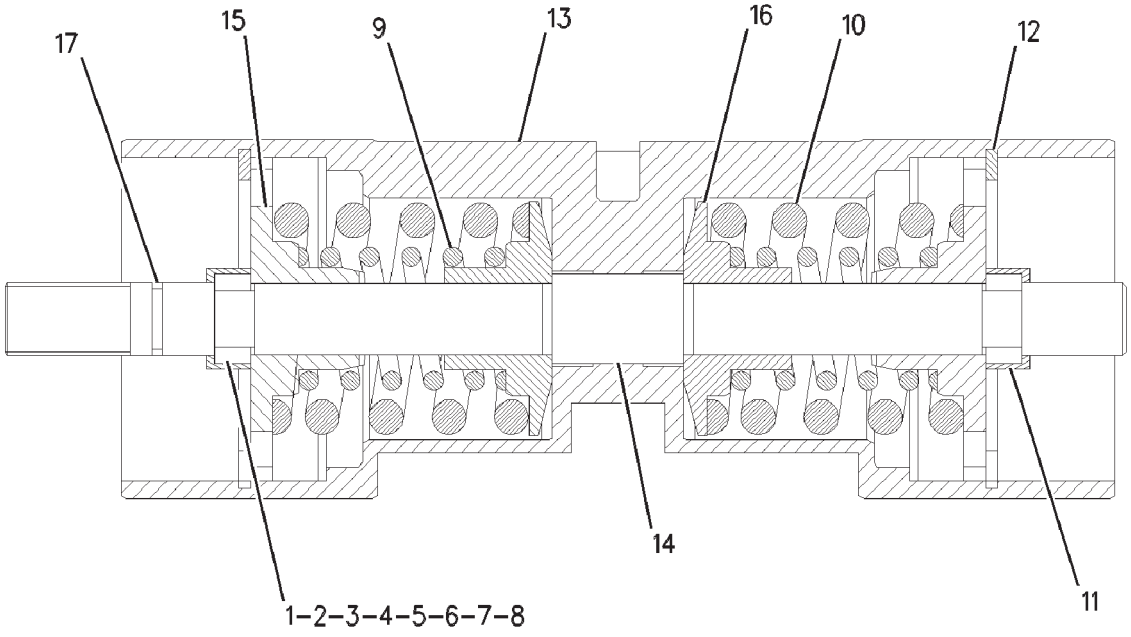


00664661

## VALVE GP-SERVO - CH183-8417

| ITEM | NUMBER | QTY | DESCRIPTION |
|---|---|---|---|
| - | CH183-8417 | -- | VALVE GP-SERVO [A] |
| 1 | CH183-8418 | 2 | SPACER (8.00 MM) |
| 2 | CH183-8419 | 1 | SPACER (7.85 MM) |
| 3 | CH183-8420 | 1 | SPACER (7.90 MM) |
| 4 | CH183-8421 | 1 | SPACER (7.95 MM) |
| 5 | CH183-8423 | 1 | SPACER (8.05 MM) |
| 6 | CH183-8424 | 1 | SPACER (8.10 MM) |
| 7 | CH183-8425 | 11 | SPACER (7.75 MM) |
| 8 | CH183-8426 | 1 | SPACER (7.80 MM) |
| 9 | CH183-8427 | 2 | SPRING |
| 10 | CH183-8428 | 2 | SPRING |
| 11 | CH183-8429 | 2 | RING |
| 12 | CH095-0942 | 2 | RING-RETAINING (63.3MM ID) |
| 13 | CH144-9093 | 1 | PISTON-STROKING |
| 14 | CH144-9094 | 1 | ROD |
| 15 | CH144-9097 | 2 | RETAINER |
| 16 | CH144-9098 | 2 | RETAINER |
| 17 | CH161-6149 | 1 | SEAL-O-RING |

[A] PART OF CH183-8430 ACTUATOR
GP-PISTON PUMP

00664661
PR: t05i29k58b0426

## VALVE GP-SERVO - 205-6412

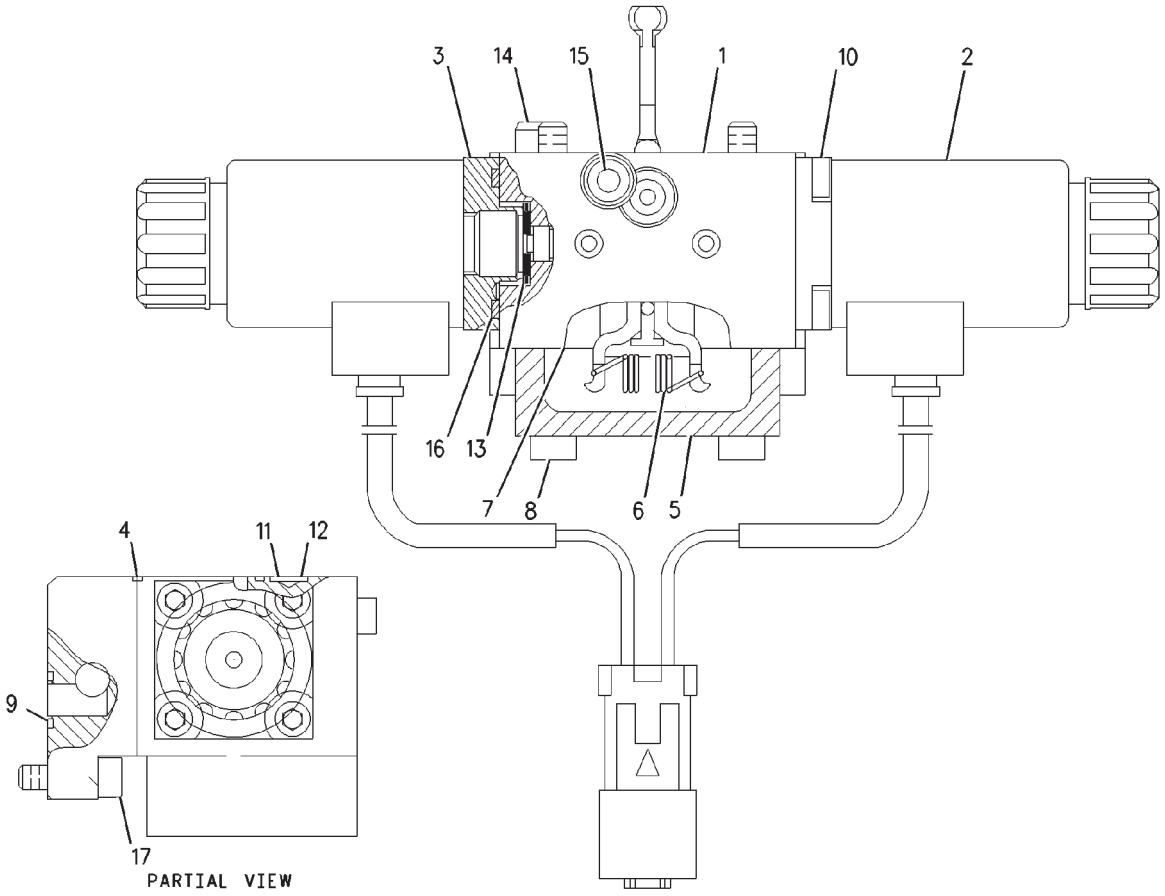

## VALVE GP-SERVO - 205-6412

| ITEM | NUMBER | QTY | DESCRIPTION |
|---|---|---|---|
| - | 205-6412 | -- | VALVE GP-SERVO [A] |
| 1 | 205-6464 | 1 | HOUSING |
| 2 | 196-4249 | 1 | SOLENOID |
| 3 | CH196-4250 | 2 | SPACER (37X37X13) |
| 4 | 400365X1 | 1 | SEAL-O-RING |
| 5 | CH111-8897 | 1 | COVER |
| 6 | 205-6411 | 1 | SPRING |
| 7 | 205-6410 | 1 | GASKET |
| 8 | CH8T-2922 | 4 | BOLT-SOCKET HEAD (M6X1X65MM) |
| 9 | CH6M-5062 | 1 | SEAL-O-RING |
| 10 | CH196-9444 | 8 | BOLT-SOCKET HEAD (M5X0.8X10MM) |
| 11 | CH6V-8398 | 1 | SEAL-O-RING (16.03ODX1.78DIA) |
| 12 | CH112-4631 | 2 | SEAL-O-RING |
| 13 | CH196-4254 | 2 | SPRING |
| 14 | CH5E-7045 | 1 | PIN-CYLINDER |
| 15 | CH096-5968 | 1 | BOLT-SOCKET HEAD (M5X0.8X8MM) |
| 16 | CH6V-6228 | 2 | SEAL-O-RING |
| 17 | CH8T-0269 | 2 | BOLT-SOCKET HEAD (M6X1X20MM) |

[A] PART OF CH162-9592 PUMP GP-PISTON

00853751
PR: t05i29k58b0427

## ADAPTER GP-PLUG - 180-4039
ROW AND SPECIAL APPLICATIONS

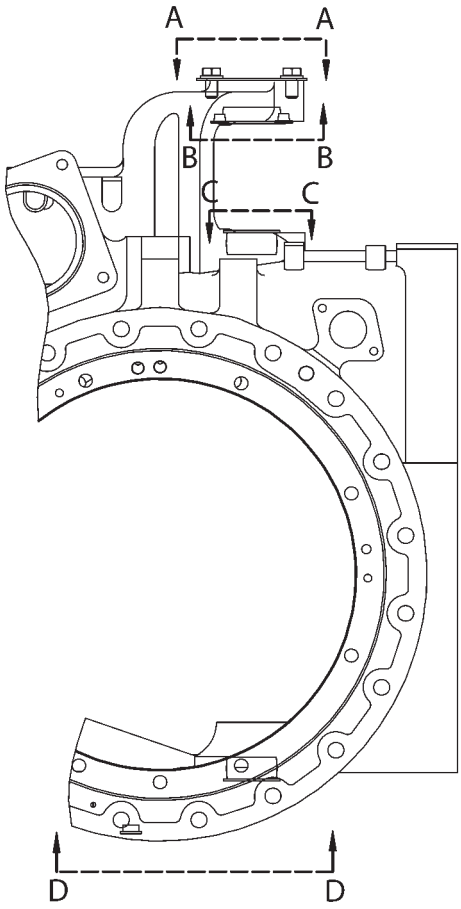


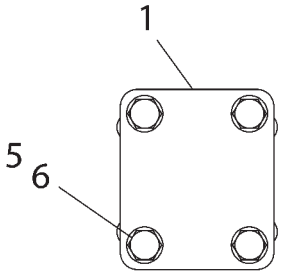


VIEW A-A

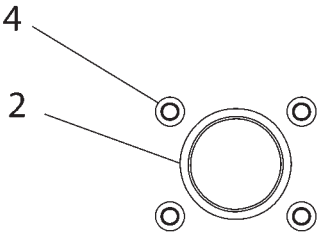


VIEW B-B

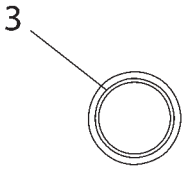


VIEW C-C

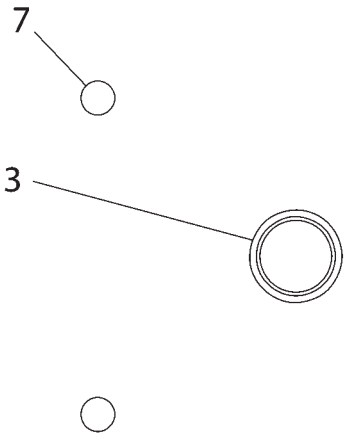


VIEW D-D

1804039F

## ADAPTER GP-PLUG - 180-4039
ROW AND SPECIAL APPLICATIONS

| ITEM | NUMBER | QTY | DESCRIPTION |
|---|---|---|---|
| - | 180-4039 | -- | DRAWBAR, THREE POINT HITCH AND PTO [A] |
| 1 | CH5P-8087 | 2 | PLUG-PROTECTIVE (M66) |
| 2 | CH198-1544 | 1 | PLATE |
| 3 | 400092X1 | 1 | PLUG-PROTECTIVE (M80) |
| 4 | 400093X1 | 4 | PLUG-PROTECTIVE (M14) |
| 5 | 400088X1 | 4 | BOLT (M16X2X30MM) |
| 6 | 400082X1 | 4 | WASHER (17.5X30X3.5) |
| 7 | 400091X1 | 2 | PLUG-PROTECTIVE (M24) |

[A] PART OF:
179-0851 HITCH AR
179-0853 HITCH AR-NON AG
184-5033 CONTROL AR-DRAWBAR

1804039F
PR: t05i29k58b0428

## CONTROL AR-DRAWBAR - 184-5033
POWERED DRAWBAR

NO ILLUSTRATION

NOTIF

## CONTROL AR-DRAWBAR - 184-5033

POWERED DRAWBAR

| ITEM | NUMBER | QTY | DESCRIPTION |
|---|---|---|---|
| - | 184-5033 | -- | CONTROL AR-DRAWBAR (NOT SERVICED) |
| | 180-4039 | 1 | ADAPTER GP-PLUG<br>(SEE BREAKDOWN FOR COMPONENTS) |
| | CH184-5034 | 2 | CYLINDER GP<br>(SEE BREAKDOWN FOR COMPONENTS) |
| | 180-4036 | 1 | DRAWBAR GP-SWINGING (WIDE)<br>(NOT SERVICED)<br>(SEE BREAKDOWN FOR COMPONENTS) |
| | 200-8772 | 1 | GUARD GP-CYLINDER (NOT SERVICED)<br>(SEE BREAKDOWN FOR COMPONENTS) |
| | 180-0503 | 1 | LINES GP-CYLINDER (POWERED DRAWBAR)<br>(NOT SERVICED)<br>(SEE BREAKDOWN FOR COMPONENTS) |
| | 184-5035 | 1 | MOUNTING GP-CYLINDER(CONTROLLED DRAWBAR)<br>(NOT SERVICED)<br>(SEE BREAKDOWN FOR COMPONENTS) |
| | 224-9662 | 1 | PLUG GP-3 PT HITCH<br>(SEE BREAKDOWN FOR COMPONENTS) |
| | 210-7509 | 1 | SUPPORT GP-DRAWBAR (NOT SERVICED)<br>(SEE BREAKDOWN FOR COMPONENTS) |
| | 502498D1 | 1 | FILLER GP-PT OIL-DRAWBAR (NOT SERVICED)<br>(SEE BREAKDOWN FOR COMPONENTS) |

NOTIF
PR: t05i29k58b0429

## CONTROL AR-DRAWBAR - 210-7489
WIDE SWING

NO ILLUSTRATION

NOTIF

## CONTROL AR-DRAWBAR - 210-7489
WIDE SWING

| ITEM | NUMBER | QTY | DESCRIPTION |
|---|---|---|---|
| - | 210-7489 | -- | CONTROL AR-DRAWBAR |
| 1 | CH184-5034 | 2 | CYLINDER GP<br>(SEE BREAKDOWN FOR COMPONENTS) |
| 2 | 180-0503 | 1 | LINES GP-CONTROL (NOT SERVICED)<br>(SEE BREAKDOWN FOR COMPONENTS) |
| 3 | 184-5035 | 1 | MOUNTING GP-CYLINDER (NOT SERVICED)<br>(SEE BREAKDOWN FOR COMPONENTS) |
| 4 | 200-8772 | 1 | GUARD GP-CYLINDER (NOT SERVICED)<br>(SEE BREAKDOWN FOR COMPONENTS) |
| 5 | 210-7509 | 1 | SUPPORT GP-FRAME (NOT SERVICED)<br>(SEE BREAKDOWN FOR COMPONENTS) |

NOTIF
PR: t05i29k58b0430

**HITCH AR - 179-0851**
**WIDE SWINGING DRAWBAR**

NO ILLUSTRATION

NOTIF

## HITCH AR - 179-0851
### WIDE SWINGING DRAWBAR

| ITEM | NUMBER | QTY | DESCRIPTION |
|---|---|---|---|
| - | 179-0851 | -- | HITCH AR (NOT SERVICED) |
| | 180-4039 | 1 | ADAPTER GP-PLUG<br>(SEE BREAKDOWN FOR COMPONENTS) |
| | 180-4036 | 1 | DRAWBAR GP-SWINGING (NOT SERVICED)<br>(SEE BREAKDOWN FOR COMPONENTS) |
| | 224-9662 | 1 | PLUG GP-3 PT HITCH<br>(SEE BREAKDOWN FOR COMPONENTS) |
| | 210-7508 | 1 | SUPPORT GP-DRAWBAR (DRAWBAR)<br>(SEE BREAKDOWN FOR COMPONENTS) |
| | 502498D1 | 1 | FILLER GP-PT OIL-DRAWBAR (NOT SERVICED)<br>(SEE BREAKDOWN FOR COMPONENTS) |

NOTIF
PR: t05i29k58b0431

## HITCH AR-NON AG - 179-0853

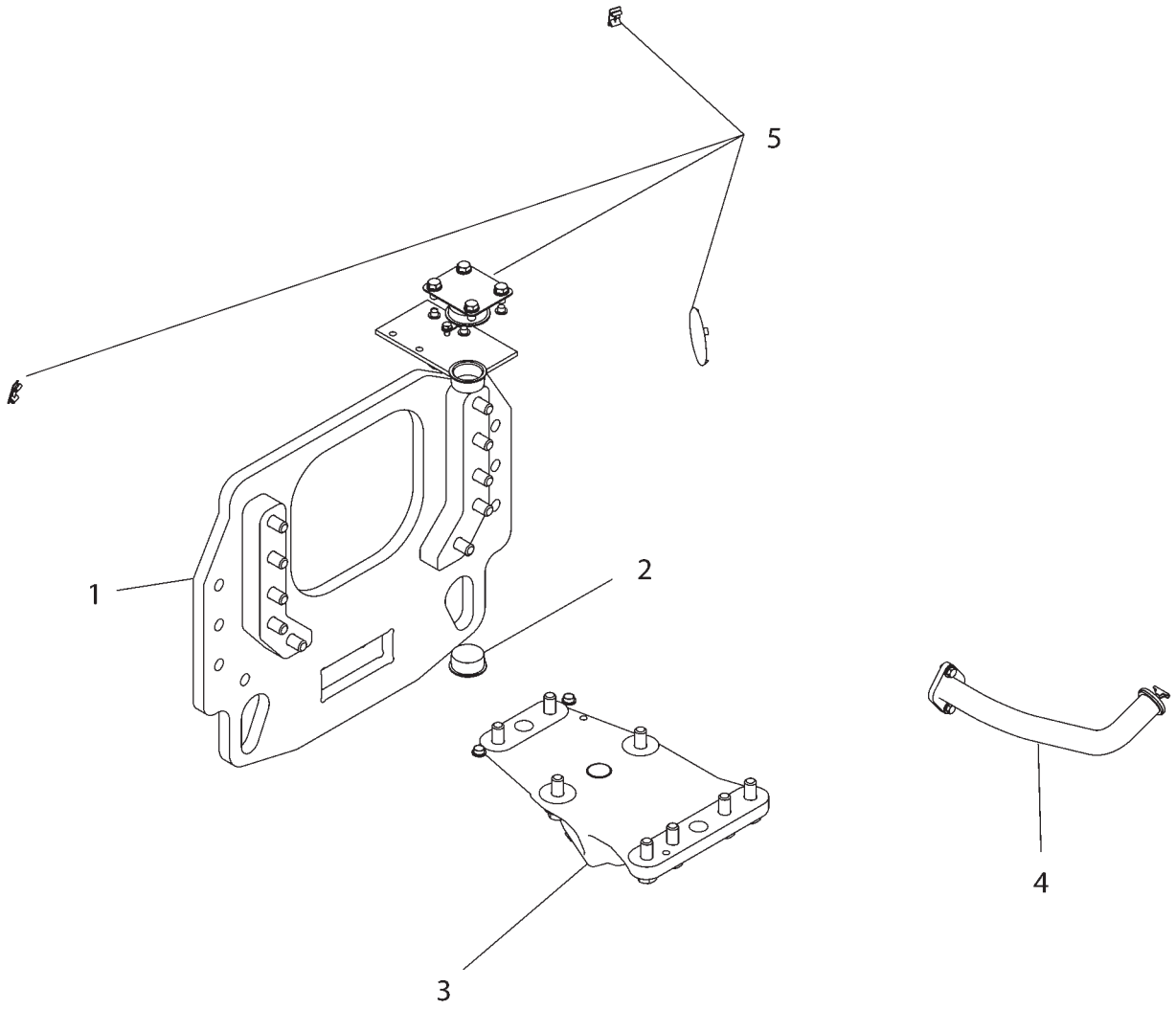


1790853F

| ITEM | NUMBER | QTY | DESCRIPTION |
|---|---|---|---|
| - | 502918D1 | -- | HITCH AR-NON AG (FIELD INSTALLED) |
| - | 179-0853 | -- | HITCH AR-NON AG [A] (NOT SERVICED, ORDER FIELD INSTALLED) |
| 1 | 180-4038 | 1 | SUPPORT GP-DRAWBAR (REAR TIE DOWN) (SEE BREAKDOWN FOR COMPONENTS) |
| 2 | 180-4039 | 1 | ADAPTER GP-PLUG (SEE BREAKDOWN FOR COMPONENTS) |
| 3 | 210-7508 | 1 | SUPPORT GP-DRAWBAR (SEE BREAKDOWN FOR COMPONENTS) |
| 4 | 502498D1 | 1 | FILLER GP-PT OIL-DRAWBAR (NOT SERVICED) (SEE BREAKDOWN FOR COMPONENTS) |
| 5 | 224-9662 | 1 | PLUG GP-3 PT HITCH (SEE BREAKDOWN FOR COMPONENTS) |

[A] PART OF 502918D1 HITCH AR-NON AG

1790853F
PR: t05i29k58b0432

## COUPLER GP-QUICK - 179-3318
CATEGORY 3 & 4 NARROW

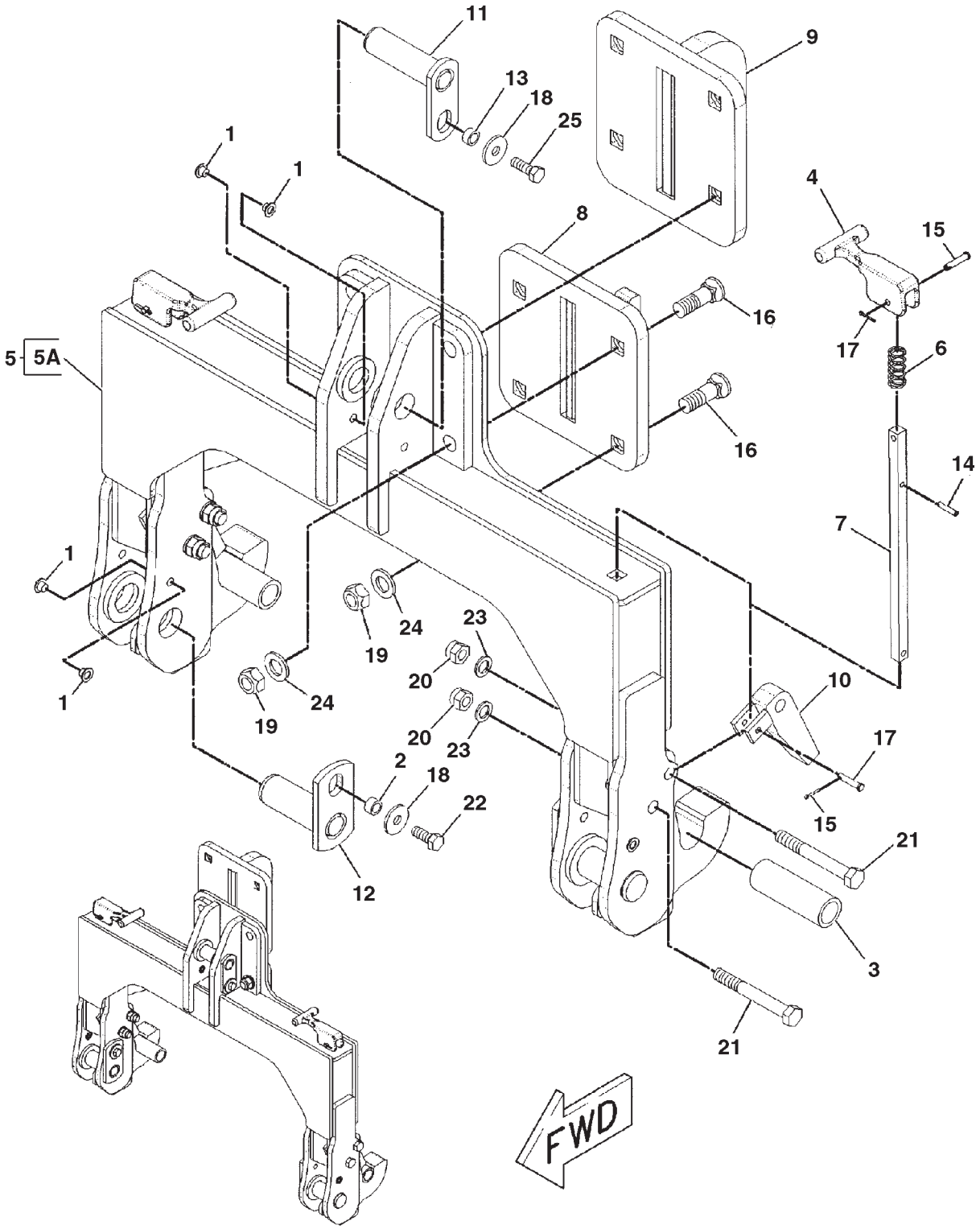


0889557A

## COUPLER GP-QUICK - 179-3318
CATEGORY 3 & 4 NARROW

| ITEM | NUMBER | QTY | DESCRIPTION |
|---|---|---|---|
| - | 179-3318 | -- | COUPLER GP-QUICK [A] |
| 1 | 400093X1 | 6 | PLUG-SEALING |
| 2 | CH6Y-8112 | 2 | SPACER (17X25X14) |
| 3 | CH104-3466 | 2 | BUSHING |
| 4 | 177-0661 | 2 | HANDLE |
| 5 | 189-3310 | 1 | FRAME ASM |
| 5A | 189-3313 | 2 | ARM ASM (COMPLETE ASM ONLY) |
| 6 | CH190-2584 | 2 | SPRING |
| 7 | 190-2601 | 2 | ROD (LIFT) |
| 8 | 196-2993 | 1 | HOOK ASM (CAT 3) |
| 9 | 196-2994 | 1 | HOOK ASM (CAT 4) |
| 10 | 196-2997 | 2 | PLATE ASM |
| 11 | CH196-3017 | 1 | PIN ASM |
| 12 | CH196-3022 | 2 | PIN ASM |
| 13 | CH200-0010 | 1 | SPACER (17.5X25.4X12.5) |
| 14 | CH183-5008 | 2 | PIN-SPRING |
| 15 | CH1A-8827 | 4 | PIN |
| 16 | 400270X1 | 4 | BOLT-PLOW (1-8) |
| 17 | CH3B-4617 | 4 | PIN-COTTER |
| 18 | 400078X1 | 3 | WASHER (16.5X50X5) |
| 19 | CH6K-3632 | 4 | LOCKNUT (1-8) |
| 20 | CH6V-7688 | 4 | LOCKNUT (M20X2.5) |
| 21 | 400026X1 | 4 | BOLT (M20X2.5X160MM) |
| 22 | 400191X1 | 2 | BOLT (M16X2X40MM) |
| 23 | 400080X1 | 4 | WASHER-PLATED (22X35X3.5) |
| 24 | CH8T-5361 | 4 | WASHER-HARD (28X49X5) |
| 25 | 400244X1 | 1 | BOLT (M16X2.0X45MM) |

[A] PART OF:
169-0027; 179-0852; 186-0979
HITCH AR-3 POINT

0889557A
PR: t05i29k58b0433

## COUPLER GP-QUICK - 180-6640
CATEGORY 4

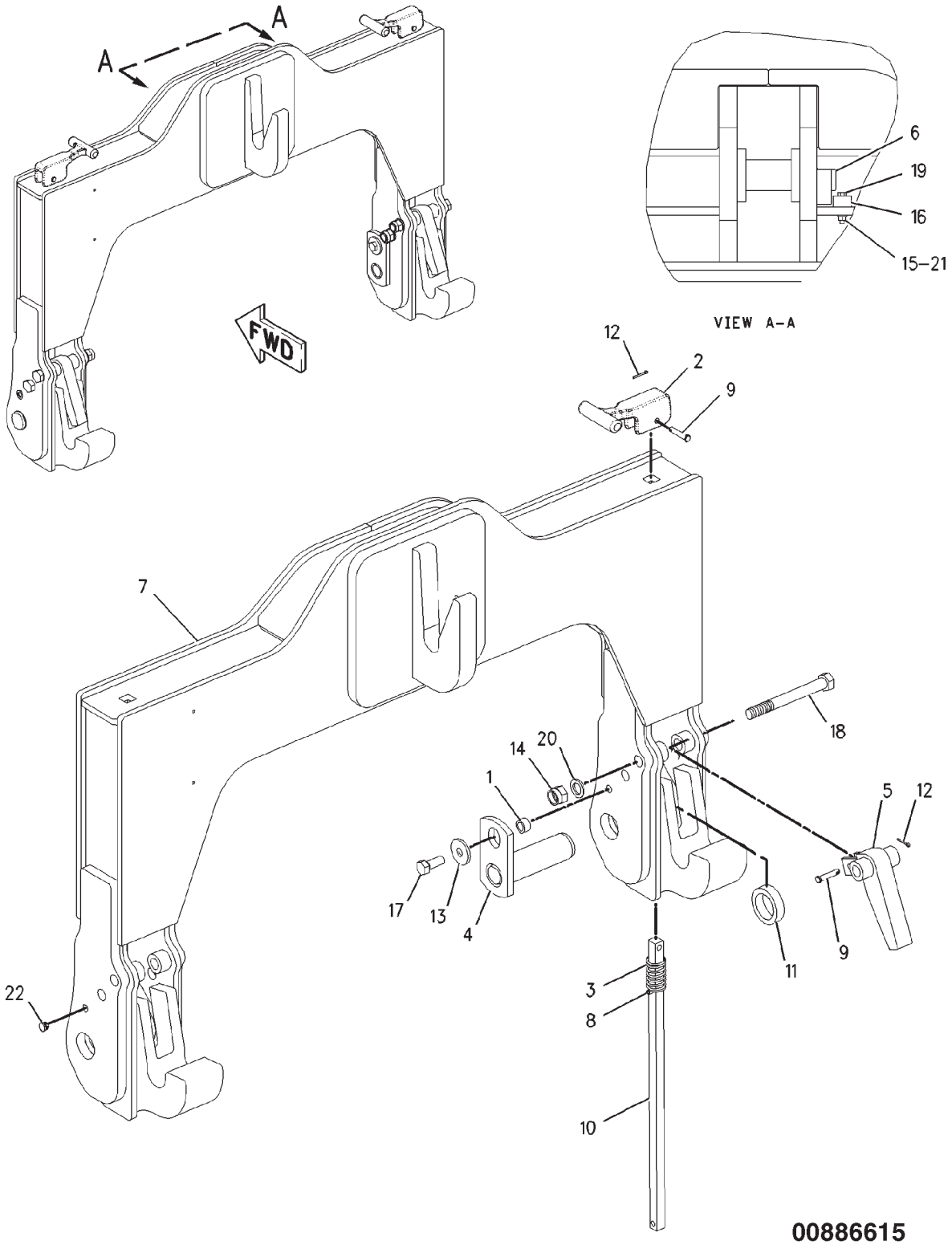

## COUPLER GP-QUICK - 180-6640
CATEGORY 4

| ITEM | NUMBER | QTY | DESCRIPTION |
|---|---|---|---|
| - | 180-6640 | -- | COUPLER GP-QUICK [A] (NOT SERVICED) |
| 1 | CH6Y-8112 | 2 | SPACER (17X25X14) |
| 2 | 177-0661 | 2 | HANDLE |
| 3 | CH190-2584 | 2 | SPRING |
| 4 | CH190-2615 | 2 | PIN ASM |
| 5 | 196-2997 | 2 | PLATE ASM |
| 6 | CH196-3019 | 1 | PIN ASM |
| 7 | 206-4613 | 1 | FRAME ASM |
| 8 | CH183-5008 | 2 | PIN-SPRING |
| 9 | CH1A-8827 | 4 | PIN |
| 10 | 206-4633 | 2 | ROD (LIFT) |
| 11 | CH206-4636 | 2 | SPACER (51.3X63.5X25) |
| 12 | CH3B-4617 | 4 | PIN-COTTER |
| 13 | 400078X1 | 2 | WASHER (16.5X50X5) |
| 14 | CH6V-7688 | 4 | LOCKNUT (M20X2.5) |
| 15 | CH6V-8225 | 1 | NUT (M6X1) |
| 16 | 500754D1 | 1 | SPACER (.31X1.0X.62IN THK) |
| 17 | 400191X1 | 2 | BOLT (M16X2X40MM) |
| 18 | 400194X1 | 4 | BOLT (M20X2.5X180MM) |
| 19 | 400205X1 | 1 | BOLT (M6X1X40MM) |
| 20 | 400080X1 | 4 | WASHER-PLATED (22X35X3.5) |
| 21 | 400310X1 | 1 | WASHER (6.6X12X2) |
| 22 | 400093X1 | 4 | PLUG-SEAL |

[A] PART OF 169-0028;180-6639;189-3300
HITCH AR-3 POINT

00886615
PR: t05i29k58b0434

**CYLINDER GP - CH184-5034**

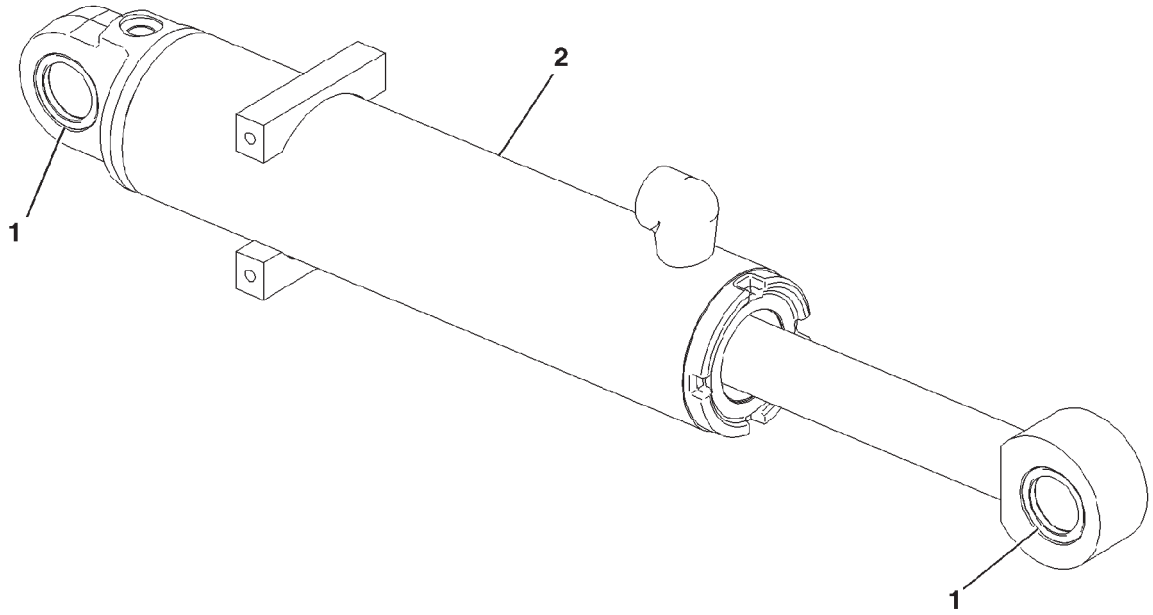


0836754A

| ITEM | NUMBER | QTY | DESCRIPTION |
|---|---|---|---|
| - | CH184-5034 | -- | CYLINDER GP (W/BRG) [A] |
| 1 | CH189-4911 | 1 | CYLINDER AS-STRG (NOT SERVICED, ORDER CYL GROUP W/BRG, OR COMPONENTS) (SEE BREAKDOWN FOR COMPONENTS) |
| 2 | 186-1000 | 2 | BEARING |

[A] PART OF: 184-5033 & 214-7489
CONTROL AR-DRAWBAR

0836754A
PR: t05i29k58b0435

## CYLINDER GP-STEERING - 183-4396

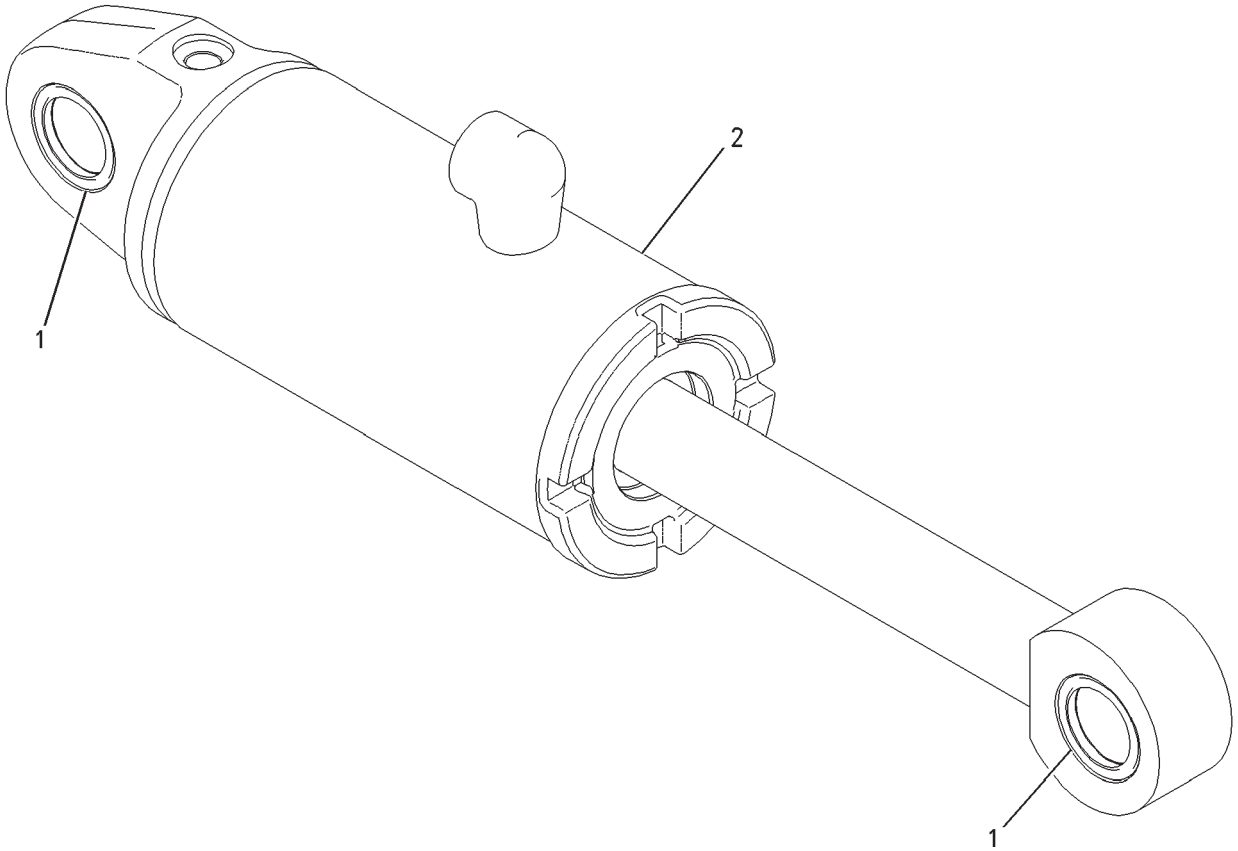


00897881

| ITEM | NUMBER | QTY | DESCRIPTION |
|---|---|---|---|
| - | 183-4396 | -- | CYLINDER GP-STEERING (W/BEARINGS) [A] |
| 1 | CH186-1000 | 2 | BEARING-SLEEVE |
| 2 | CH189-6001 | 1 | CYLINDER AS-STEERING (NOT SERVICED, ORDER CYLINDER GP W/BRGS) (SEE BREAKDOWN FOR COMPONENTS) |

[A] PART OF 169-0027;169-0028;179-0852;
180-6639;186-0979 HITCH AR-3 POINT

00897881
PR: t05i29k58b0436

## CYLINDER AS-0102-0408-Y

**CH189-4911**
**101.6MM X 408MM (4 X 16.06")**

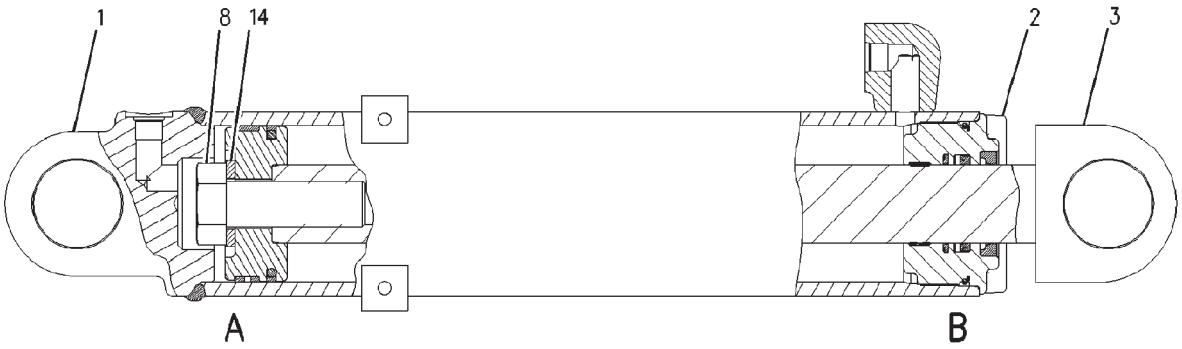


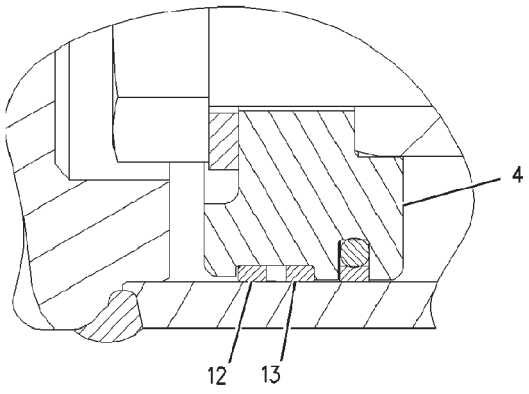


VIEW OF AREA A

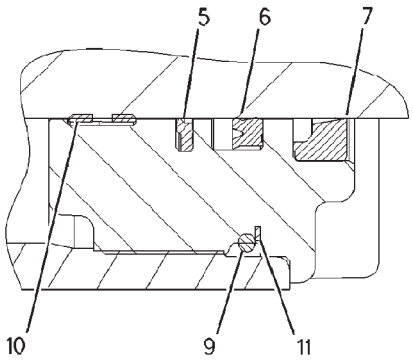


VIEW OF AREA B

## CYLINDER AS-0102-0408-Y

**CH189-4911**
**101.6MM X 408MM (4 X 16.06")**

| ITEM | NUMBER | QTY | DESCRIPTION |
|---|---|---|---|
| - | CH189-4911 | -- | CYLINDER AS-STEERING [A] (NOT SERVICED)<br>(ORDER COMPLETE GP CH184-5034) |
| 1 | CH189-4882 | 1 | CYLINDER ASM (DRAWBAR) |
| 2 | CH189-4888 | 1 | HEAD |
| 3 | CH189-4906 | 1 | ROD ASM |
| 4 | CH189-4907 | 1 | PISTON |
| 5 | CH167-2195 | 1 | SEAL ASM-BUFFER |
| 6 | 502088D1 | 1 | SEAL-U-CUP |
| 7 | CH167-2457 | 1 | SEAL-WIPER |
| 8 | CH173-9683 | 1 | BOLT-HEX HEAD (M30X3.5X90MM) |
| 9 | CH175-7900 | 1 | SEAL-O-RING |
| 10 | CH189-6397 | 1 | RING-WEAR |
| 11 | CH2K-6830 | 1 | RING-BACKUP |
| 12 | CH5J-7154 | 1 | RING-WEAR |
| 13 | CH8C-9160 | 1 | SEAL ASM |
| 14 | CH9X-8399 | 1 | WASHER (33X56X6) |

[A] PART OF CH184-5034 CYLINDER GP

00852369
PR: t05i29k58b0437

## CYLINDER AS-STEERING - CH189-6001

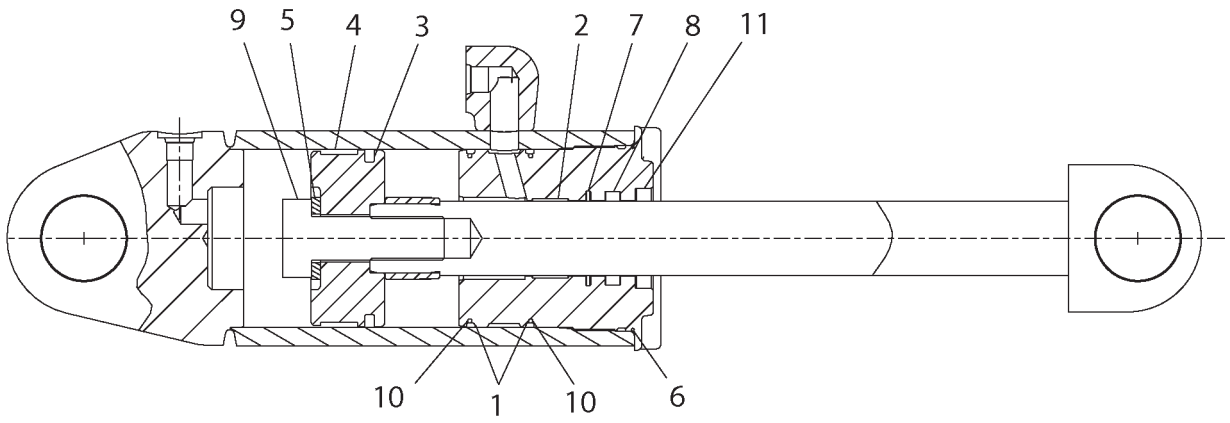


1896001A

## CYLINDER AS-STEERING - CH189-6001

| ITEM | NUMBER | QTY | DESCRIPTION |
|---|---|---|---|
| - | CH189-6001 | -- | CYLINDER AS-STEERING [A] (NOT SERVICED)<br>(SERVICE W/COMPLETE GP 183-4396) |
| 1 | 500967D1 | 2 | RING-BACKUP |
| 2 | 500968D1 | 1 | RING-WEAR |
| 3 | 500936D1 | 1 | SEAL ASM |
| 4 | 500939D1 | 1 | RING-WEAR |
| 5 | 500940D1 | 1 | WASHER (33X56X6) |
| 6 | 501820D1 | 1 | SEAL-O-RING |
| 7 | 501963D1 | 1 | SEAL ASM-BUFFER |
| 8 | 502088D1 | 1 | SEAL-U-CUP |
| 9 | 502095D1 | 1 | BOLT-HEX HEAD (M30X3.5X90MM) |
| 10 | 502096D1 | 2 | SEAL-O-RING |
| 11 | 502097D1 | 1 | SEAL-WIPER |

[A] PART OF 183-4396 CYLINDER GP-STEERING

1896001A
PR: t05i29k58b0438

## DRAWBAR GP-WIDE SWINGING - 180-4036

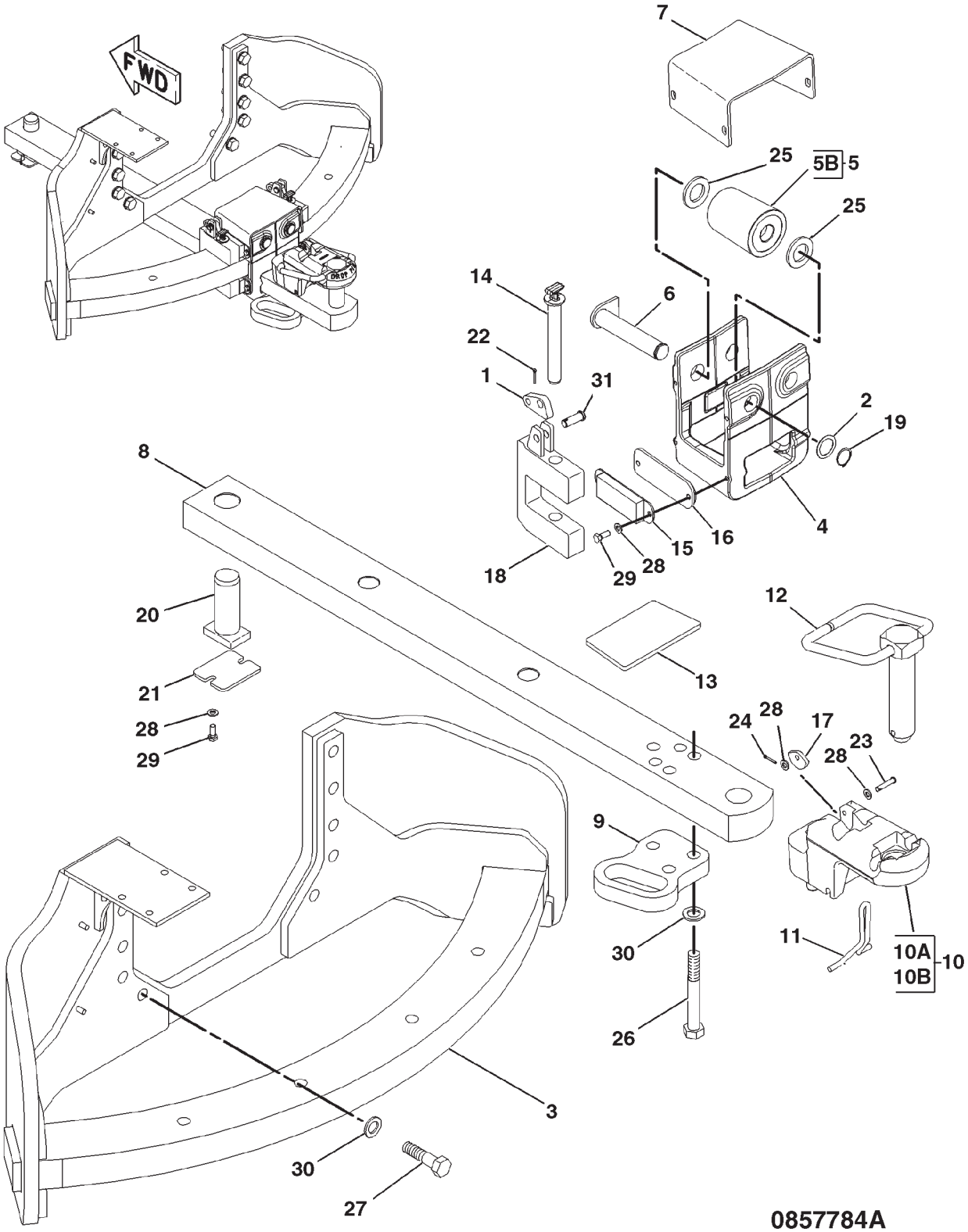

## DRAWBAR GP-WIDE SWINGING - 180-4036

| ITEM | NUMBER | QTY | DESCRIPTION |
|---|---|---|---|
| - | 180-4036 | -- | DRAWBAR GP-SWINGING [A] (NOT SERVICED) |
| 1 | CH7B-0863 | 2 | LATCH-PIN |
| 2 | CH117-0754 | 2 | SHIM (1) |
| 3 | 184-5042 | 1 | PLATE ASM |
| | CH7T-1099 | 2 | LINK |
| | 400263X1 | 1 | STUD |
| 4 | 184-5049 | 1 | BRACKET |
| 5 | 184-5051 | 2 | ROLLER ASM |
| 5B | CH033-1097 | 2 | BALL BEARING |
| 6 | 184-5053 | 2 | PIN ASM |
| 7 | 184-5055 | 1 | PLATE |
| 8 | 184-5060 | 1 | DRAWBAR |
| 9 | 184-5062 | 1 | PLATE |
| 10 | 186-0994 | 1 | CLEAVIS ASM (NOT SERVICED) |
| 10A | 186-0995 | 1 | CLEVIS |
| 10B | CH8K-0589 | 2 | DOWEL |
| 11 | CH186-0996 | 1 | PIN |
| 12 | CH186-0997 | 1 | PIN (50MM DIA) |
| 13 | CH186-0998 | 1 | PLATE |
| 14 | CH200-8747 | 2 | PIN |
| 15 | CH200-8749 | 4 | STOP |
| 16 | 200-8750 | 2 | PLATE |
| 17 | CH206-4627 | 1 | LOCK |
| 18 | 206-4631 | 2 | PLATE ASM |
| 19 | CH1J-6474 | 2 | RING-RETAINING |
| 20 | CH200-8751 | 1 | PIN-DRAWBAR |
| 21 | CH206-4628 | 1 | PLATE-RETAINING (SHOWN) (EARLY TYPE) |
| | 501948D1 | 1 | RETAINER-PIN (DUCTILE IRON) (LATER TYPE) |
| 22 | CH3B-4617 | 2 | PIN-COTTER |
| 23 | CH177-3405 | 1 | PIN |
| 24 | CH3B-4611 | 1 | PIN-COTTER |
| 25 | 400079X1 | 4 | WASHER-HARD (37X60X3) |
| 26 | 400182X1 | 3 | BOLT (M24X3.0X180MM) |
| 27 | 400036X1 | 10 | BOLT (M24X3X90MM) |
| 28 | 400287X1 | 12 | WASHER-HARD (11X21X2.5) |
| 29 | 400039X1 | 10 | BOLT (M10X1.5X25MM) |
| 30 | 400081X1 | 13 | WASHER-HARD (26X44X4) |
| 31 | CH9S-1315 | 2 | PIN-CLEVIS |

[A] PART OF 184-5033 CONTROL AR-DRAWBAR

0857784A
PR: t05i29k58b0439

## DRAWBAR GP-SWINGING
210-7507

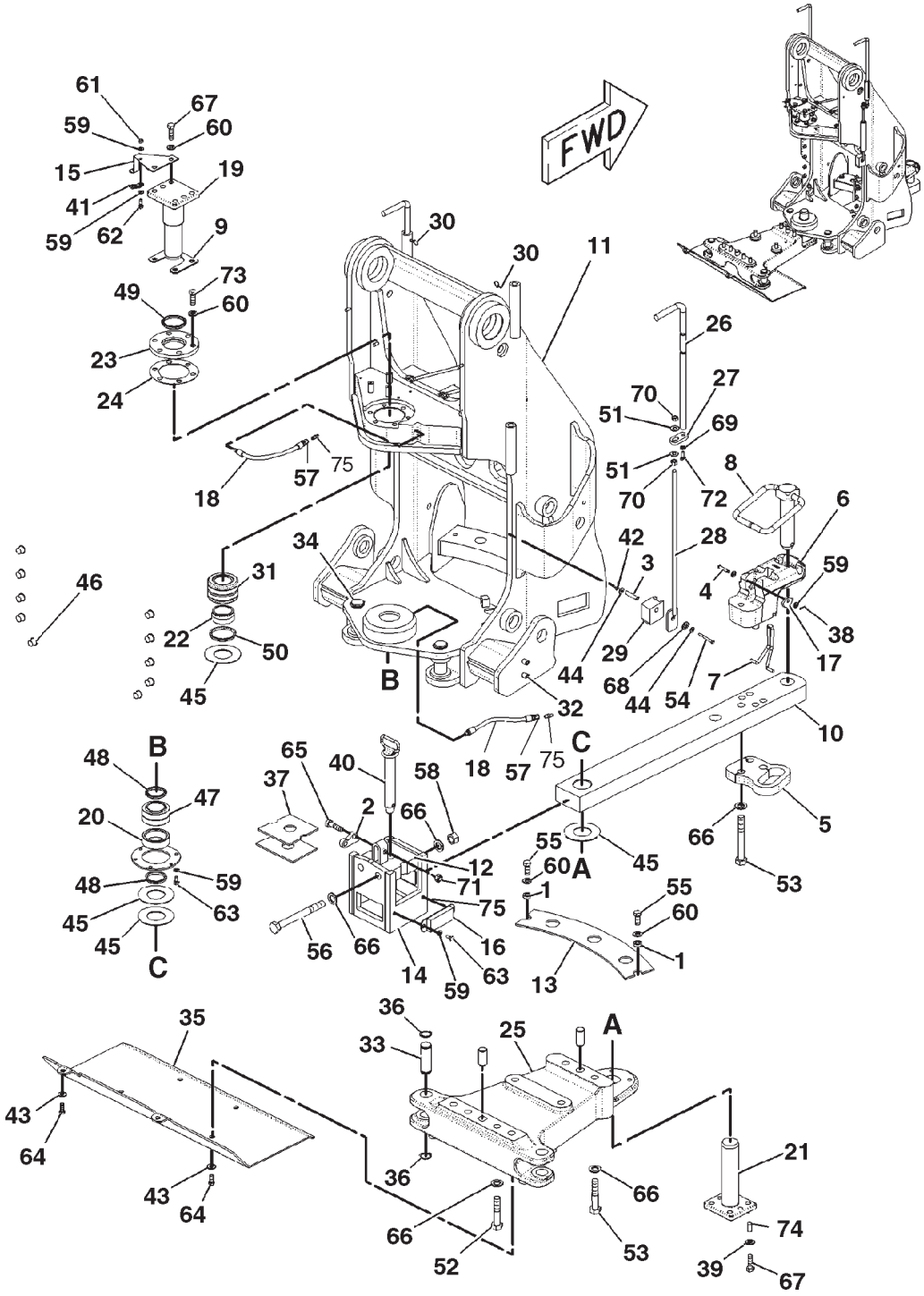


0898157A

## DRAWBAR GP-SWINGING
**210-7507**

| ITEM | NUMBER | QTY | DESCRIPTION |
|---|---|---|---|
| - | 210-7507 | -- | DRAWBAR GP-SWINGING [A] (NOT SERVICED) |
| 1 | CH4L-8183 | 2 | SPACER (16.66X29.15X9.53) |
| 2 | CH150-8766 | 1 | LATCH |
| 3 | CH164-7491 | 2 | TUBE (50 MM)(SEE NOTE J) |
| 4 | CH177-3405 | 1 | PIN |
| 5 | 184-5062 | 1 | PLATE |
| 6 | 186-0994 | 1 | CLEVIS ASM (NOT SERVICED) |
| | 186-0995 | 1 | CLEVIS |
| | 8K-0589 | 2 | DOWEL |
| 7 | CH186-0996 | 1 | PIN |
| 8 | CH186-0997 | 1 | PIN (50MM DIA) |
| 9 | 186-1071 | 1 | SHIM PACK |
| 10 | 186-1077 | 1 | DRAWBAR |
| 11 | 186-1078 | 1 | FRAME ASM-HITCH |
| | 7T-1099 | 12 | LINK |
| | 8T-4219 | 5 | STUD-WELD (M10X1.5X17.5MM) |
| | 9R-2613 | 5 | BOSS (M10X1.5X25MM) |
| 12 | 196-3036 | 1 | PLATE ASM |
| 13 | 196-3037 | 1 | PLATE |
| 14 | 196-3052 | 1 | BRACKET ASM |
| 15 | 199-6265 | 1 | BRACKET |
| 16 | CH200-8749 | 2 | STOP ASM |
| 17 | CH206-4627 | 1 | LOCK |
| 18 | CH210-7488 | 2 | HOSE ASM |
| 19 | CH210-7492 | 1 | PIN ASM (SERVICED COMPLETE) |
| 20 | 210-7495 | 1 | PLATE ASM |
| 21 | 210-7497 | 1 | PIN |
| 22 | CH210-7499 | 1 | SPACER |
| 23 | 210-7500 | 1 | PLATE |
| 24 | 210-7501 | 1 | SHIM PACK |
| 25 | 210-7504 | 1 | PIVOT |
| 26 | 210-7512 | 2 | ROD |
| 27 | 210-7513 | 2 | PLATE |
| 28 | 210-7514 | 2 | ROD ASM |
| 29 | 210-7515 | 2 | BLOCK |
| 30 | CH210-7518 | 2 | PIN |
| 31 | CH213-6199 | 1 | BEARING-SELF-ALIGNING |
| 32 | CH193-5914 | 4 | PLUG |
| 33 | CH196-3041 | 2 | PIN |
| 34 | CH196-3042 | 2 | PIN |
| 35 | 200-8775 | 1 | PLATE |
| 36 | CH201-8106 | 8 | RING-RETAINING |
| 37 | 206-4619 | 1 | PLATE |
| 38 | CH3B-4611 | 1 | PIN-COTTER |
| 39 | 400078X1 | 4 | WASHER-HARD (16.5X50X5) |

CONTINUED

[A] PART OF: 169-0027; 169-0028;
179-0852; 180-6639; 186-0979 &
189-3300 HITCH AR-3 POINT

## DRAWBAR GP-SWINGING
210-7507

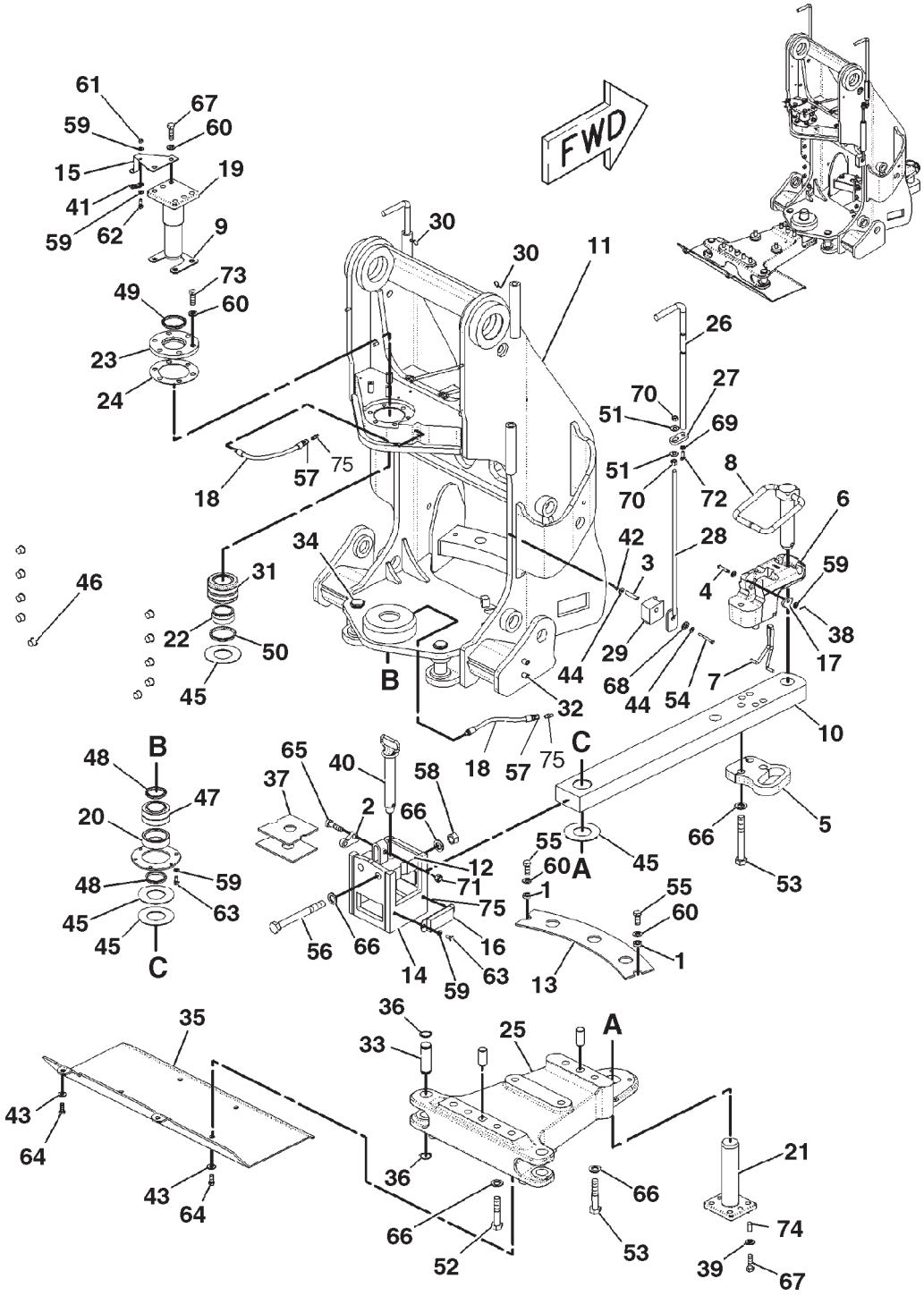


0898157A

## DRAWBAR GP-SWINGING
**210-7507**

| ITEM | NUMBER | QTY | DESCRIPTION |
|---|---|---|---|
| - | 210-7507 | -- | DRAWBAR GP-SWINGING [A] (NOT SERVICED) |
| 40 | CH3W-6116 | 1 | PIN |
| 41 | CH4P-7428 | 1 | CLIP |
| 42 | 400300X1 | 2 | NUT (M6X1) |
| 43 | 400381X1 | 6 | WASHER-HARD (13.5X30X4) |
| 44 | CH5P-4115 | 4 | WASHER-HARD (7.2X19X2) |
| 45 | CH5V-0354 | 4 | WASHER (66X133X3.0) |
| 46 | 400095X1 | 10 | PLUG-PROTECTION |
| 47 | CH7J-1309 | 1 | BEARING |
| 48 | CH7K-9205 | 2 | SEAL-LIP |
| 49 | CH7K-9209 | 1 | SEAL-LIP |
| 50 | CH7K-9210 | 1 | SEAL-LIP |
| 51 | CH7X-0605 | 4 | WASHER-HARD (13X28X1.6) |
| 52 | 400025X1 | 6 | BOLT (M24X3X110MM) |
| 53 | 400182X1 | 9 | BOLT (M24X3.0X180MM) |
| 54 | 400187X1 | 2 | BOLT (M6X1X60MM) |
| 55 | 400191X1 | 2 | BOLT (M16X2X40MM) |
| 56 | 400198X1 | 2 | BOLT (M24X3X240MM) |
| 57 | CH8L-6557 | 2 | CONNECTOR |
| 58 | CH8T-4001 | 2 | NUT (M24X3) |
| 59 | 400287X1 | 14 | WASHER-HARD (11X21X2.5) |
| 60 | CH8T-4122 | 12 | WASHER-HARD (17X32X3.5) |
| 61 | WR522218 | 1 | NUT (M10X1.5) |
| 62 | 400039X1 | 1 | BOLT (M10X1.5X25MM) |
| 63 | 400040X1 | 10 | BOLT (M10X1.5X20MM) |
| 64 | 400041X1 | 6 | BOLT (M12X1.75X30MM) |
| 65 | 400222X1 | 1 | BOLT (M16X2X60MM) |
| 66 | 400081X1 | 19 | WASHER-HARD (26X44X4) |
| 67 | 400056X1 | 8 | BOLT (M16X2X50MM) |
| 68 | 400357X1 | 2 | WASHER-HARD (M12X25.5X3) |
| 69 | 400339X1 | 2 | WASHER-HARD (8.8X16X2) |
| 70 | CH8T-4244 | 4 | NUT (M12X1.75) |
| 71 | CH8T-4778 | 1 | LOCKNUT (M16X2) |
| 72 | 400341X1 | 2 | BOLT (M8X1.25X25) |
| 73 | 400244X1 | 6 | BOLT (M16X2.0X45) |
| 74 | CH2A-1314 | 4 | SPACER (16.7IDX25.4ODX23.8) |
| 75 | 3B-8485 | 2 | FITTING-GREASE (45 DEG X 2NPTF) |

[A] PART OF: 169-0027; 169-0028;
179-0852; 180-6639; 186-0979 &
189-3300 HITCH AR-3 POINT

0898157A
PR: t05i29k58b0440

## GUARD GP-CYLINDER - 200-8772
POWERED DRAWBAR

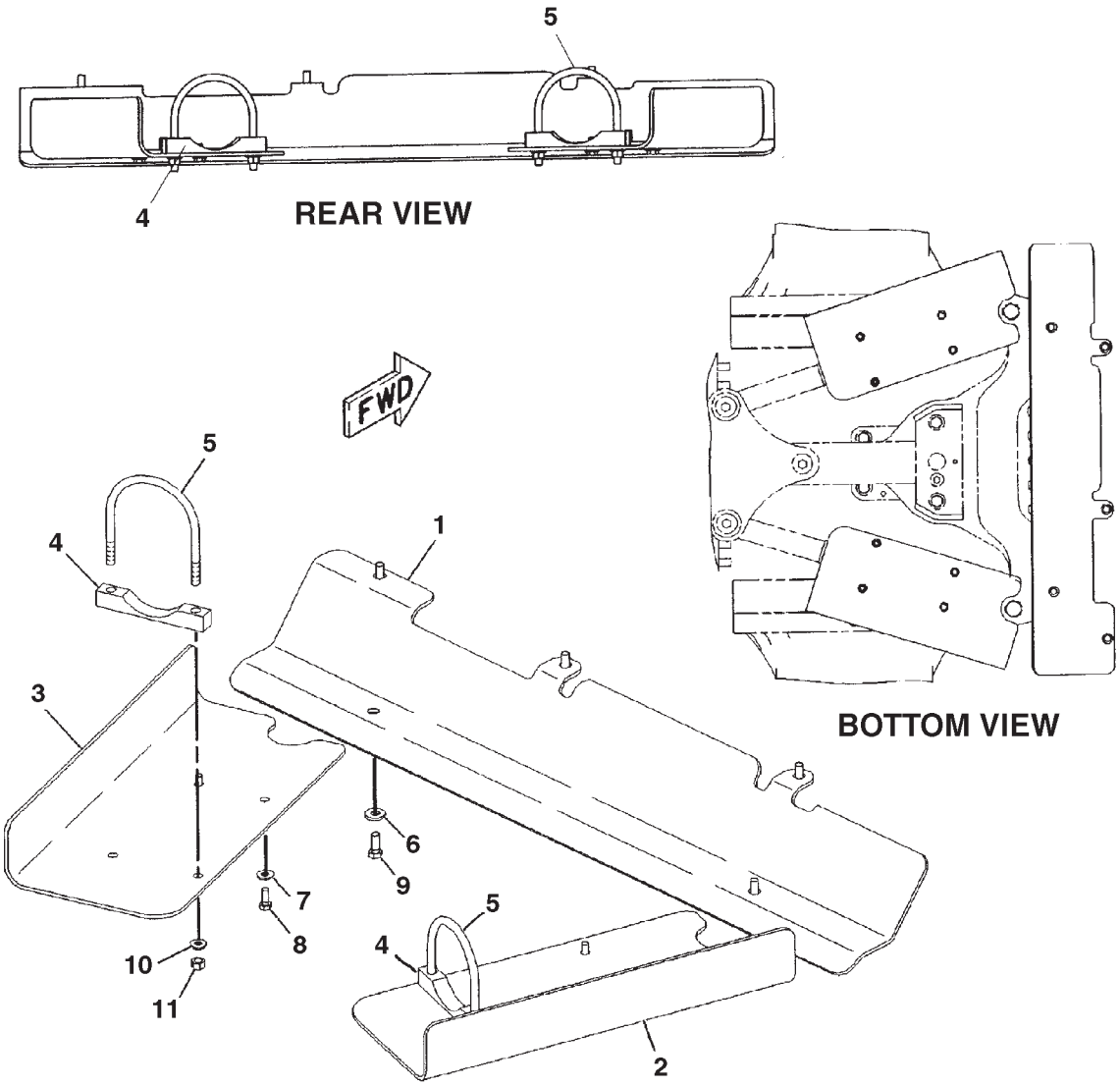


0852809A

## GUARD GP-CYLINDER - 200-8772
**POWERED DRAWBAR**

| ITEM | NUMBER | QTY | DESCRIPTION |
|---|---|---|---|
| - | 200-8772 | -- | GUARD GP-CYLINDER [A] (NOT SERVICED) |
| 1 | 200-8773 | 1 | PLATE |
| 2 | 206-4604 | 1 | PLATE (LH) |
| 3 | 206-4605 | 1 | PLATE (RH) |
| 4 | 206-4635 | 2 | PLATE |
| 5 | CH147-7143 | 2 | U-BOLT (M12X1.75) |
| 6 | 400381X1 | 5 | WASHER-HARD (13.5X30X4) |
| 7 | CH7X-7729 | 4 | WASHER (11X25X3) |
| 8 | 400039X1 | 4 | BOLT (M10X1.5X25MM) |
| 9 | 400041X1 | 5 | BOLT (M12X1.75X30MM) |
| 10 | 400357X1 | 4 | WASHER-HARD (M12X25.5X3) |
| 11 | CH8T-4244 | 4 | NUT (M12X1.75) |

[A] PART OF 184-5033 & 210-7489
CONTROL AR-DRAWBAR

0852809A
PR: t05i29k58b0441

## HITCH AR-3 POINT - 169-0027
**CAT 3 & 4 NARROW-W/O HYD TRAILER BRAKES**

NO ILLUSTRATION

NOTIF

## HITCH AR-3 POINT - 169-0027

**CAT 3 & 4 NARROW-W/O HYD TRAILER BRAKES**

| ITEM | NUMBER | QTY | DESCRIPTION |
|---|---|---|---|
| - | 169-0027 | -- | HITCH AR-3 PT (ORDER ON DEALER CENTRAL) |
| 1 | 136-5378 | 1 | CONTROL & WIRING GP-HITCH (LIFT CIRCUIT)<br>(NOT SERVICED)<br>(SEE BREAKDOWN FOR COMPONENTS) |
| 2 | 152-0445 | 1 | CONTROL GP-HITCH (REAR)(3 POINT)<br>(SEE BREAKDOWN FOR COMPONENTS) |
| 3 | 179-3318 | 1 | COUPLER GP-QUICK<br>(SEE BREAKDOWN FOR COMPONENTS) |
| 4 | CH192-6280 | 2 | CYLINDER GP-LIFT<br>(SEE BREAKDOWN FOR COMPONENTS) |
| 5 | 183-4396 | 2 | CYLINDER GP-STEERING (HITCH LIFT)<br>(SEE BREAKDOWN FOR COMPONENTS) |
| 6 | 210-7507 | 1 | DRAWBAR GP-SWINGING (NOT SERVICED)<br>(SEE BREAKDOWN FOR COMPONENTS) |
| 7 | 179-3317 | 1 | HITCH GP-3 POINT (NOT SERVICED)<br>(SEE BREAKDOWN FOR COMPONENTS) |
| 8 | 158-2363 | 1 | LINES GP-CYLINDER (3 POINT HITCH)<br>(NOT SERVICED)<br>(SEE BREAKDOWN FOR COMPONENTS) |
| 9 | 192-4708 | 1 | VALVE GP-BANK 3 (PRIORITY WITH HITCH)<br>(SEE BREAKDOWN FOR COMPONENTS) |

NOTIF
PR: t05i29k58b0442

## HITCH AR-3 POINT (FIELD) - 169-0028
CATEGORY 4-W/O HYD TRAILER BRAKES

NO ILLUSTRATION

NOTIF

## HITCH AR-3 POINT (FIELD) - 169-0028

CATEGORY 4-W/O HYD TRAILER BRAKES

| ITEM | NUMBER | QTY | DESCRIPTION |
|---|---|---|---|
| - | 169-0028 | -- | HITCH AR-3 POINT (ORDER ON WHOLEGOODS) |
| 1 | 136-5378 | 1 | CONTROL & WIRING GP-HITCH(LIFT CIRCUIT)<br>(NOT SERVICED)<br>(SEE BREAKDOWN FOR COMPONENTS) |
| 2 | 152-0445 | 1 | CONTROL GP-HITCH (REAR)(3 POINT)<br>(SEE BREAKDOWN FOR COMPONENTS) |
| 3 | 158-2363 | 1 | LINES GP-CYLINDER (3 POINT HITCH)<br>(NOT SERVICED)<br>(SEE BREAKDOWN FOR COMPONENTS) |
| 4 | 180-6640 | 1 | COUPLER GP-QUICK (NOT SERVICED)<br>(SEE BREAKDOWN FOR COMPONENTS) |
| 5 | 192-4708 | 1 | VALVE GP-BANK 3 (PRIORITY WITH HITCH)<br>(SEE BREAKDOWN FOR COMPONENTS) |
| 6 | 210-7507 | 1 | DRAWBAR GP-SWINGING (NOT SERVICED)<br>(SEE BREAKDOWN FOR COMPONENTS) |
| 7 | CH192-6280 | 2 | CYLINDER GP-LIFT<br>(SEE BREAKDOWN FOR COMPONENTS) |
| 8 | 501503D1 | 1 | DECAL SHEET-VEHICLE<br>(SEE BREAKDOWN FOR COMPONENTS) |
| 9 | 501504D1 | -- | DECAL SHEET-VEHICLE [A]<br>(SEE BREAKDOWN FOR COMPONENTS) |
| 10 | 501513D1 | -- | DECAL SHEET-TRANSLATIONS-ENGLISH<br>(SEE BREAKDOWN FOR COMPONENTS) |
| 11 | 183-4396 | 2 | CYLINDER GP-STEERING (HITCH LIFT)<br>(SEE BREAKDOWN FOR COMPONENTS) |
| 12 | 184-5065 | 1 | HITCH GP-3 POINT (NOT SERVICED)<br>(SEE BREAKDOWN FOR COMPONENTS) |
| 12 | 501806D1 | 1 | TUBE AS |

NOTIF
PR: t05i29k58b0443

## HITCH AR-3 POINT - 179-0852
CATEGORY 3/4 W/STEERABLE

NO ILLUSTRATION

NOTIF

## HITCH AR-3 POINT - 179-0852
**CATEGORY 3/4 W/STEERABLE**

| ITEM | NUMBER | QTY | DESCRIPTION |
|---|---|---|---|
| - | 179-0852 | -- | HITCH AR-3 POINT (NOT SERVICED) |
| | 136-5378 | 1 | CONTROL & WIRING GP-HITCH (NOT SERVICED) (SEE BREAKDOWN FOR COMPONENTS) |
| | 152-0445 | 1 | CONTROL GP-HITCH (SEE BREAKDOWN FOR COMPONENTS) |
| | 179-3318 | 1 | COUPLER GP-QUICK (SEE BREAKDOWN FOR COMPONENTS) |
| | CH192-6280 | 2 | CYLINDER GP-LIFT (SEE BREAKDOWN FOR COMPONENTS) |
| | 183-4396 | 2 | CYLINDER GP-STEERING (SEE BREAKDOWN FOR COMPONENTS) |
| | 210-7507 | 1 | DRAWBAR GP-SWINGING (NOT SERVICED) (SEE BREAKDOWN FOR COMPONENTS) |
| | 179-3317 | 1 | HITCH GP-3 POINT (NOT SERVICED) (SEE BREAKDOWN FOR COMPONENTS) |
| | 158-2363 | 1 | LINES GP-CYLINDER (NOT SERVICED) (SEE BREAKDOWN FOR COMPONENTS) |

NOTIF
PR: t05i29k58b0444

## HITCH AR-3 POINT - 180-6639
CATEGORY 4 W/STEERABLE

NO ILLUSTRATION

NOTIF

## HITCH AR-3 POINT - 180-6639
**CATEGORY 4 W/STEERABLE**

| ITEM | NUMBER | QTY | DESCRIPTION |
|---|---|---|---|
| - | 180-6639 | -- | HITCH AR-3 POINT |
| | 136-5378 | 1 | CONTROL & WIRING GP-HITCH<br>(NOT SERVICED)<br>(SEE BREAKDOWN FOR COMPONENTS) |
| | 152-0445 | 1 | CONTROL GP-HITCH<br>(SEE BREAKDOWN FOR COMPONENTS) |
| | 180-6640 | 1 | COUPLER GP-QUICK (NOT SERVICED)<br>(SEE BREAKDOWN FOR COMPONENTS) |
| | CH192-6280 | 2 | CYLINDER GP-LIFT<br>(SEE BREAKDOWN FOR COMPONENTS) |
| | 183-4396 | 2 | CYLINDER GP-STEERING<br>(SEE BREAKDOWN FOR COMPONENTS) |
| | 210-7507 | 1 | DRAWBAR GP-SWINGING (NOT SERVICED)<br>(SEE BREAKDOWN FOR COMPONENTS) |
| | 184-5065 | 1 | HITCH GP-3 POINT (NOT SERVICED)<br>(SEE BREAKDOWN FOR COMPONENTS) |
| | 158-2363 | 1 | LINES GP-CYLINDER (NOT SERVICED)<br>(SEE BREAKDOWN FOR COMPONENTS) |

NOTIF
PR: t05i29k58b0445

## HITCH AR-3 POINT (FIELD) - 186-0979

CATAGORY 3&4 NARROW-W/HYD TRAILER BRAKES
EAME ONLY

NO ILLUSTRATION

NOTIF

## HITCH AR-3 POINT (FIELD) - 186-0979

CATAGORY 3&4 NARROW-W/HYD TRAILER BRAKES
EAME ONLY

| ITEM | NUMBER | QTY | DESCRIPTION |
|---|---|---|---|
| - | 186-0979 | -- | HITCH AR-3 POINT |
| 1 | 136-5378 | 1 | CONTROL & WIRING GP-HITCH (LIFT CIRCUIT)<br>(NOT SERVICED)<br>(SEE BREAKDOWN FOR COMPONENTS) |
| 2 | 152-0445 | 1 | CONTROL GP-HITCH (REAR)(3 POINT)<br>(SEE BREAKDOWN FOR COMPONENTS) |
| 3 | 158-2363 | 1 | LINES GP-CYLINDER (3 POINT HITCH)<br>(NOT SERVICED)<br>(SEE BREAKDOWN FOR COMPONENTS) |
| 4 | 179-3317 | 1 | HITCH GP-3 POINT (NOT SERVICED)<br>(SEE BREAKDOWN FOR COMPONENTS) |
| 5 | 179-3318 | 1 | COUPLER GP-QUICK<br>(SEE BREAKDOWN FOR COMPONENTS) |
| 6 | 193-8200 | 1 | VALVE AR (PRIORITY WITH HITCH)<br>(NOT SERVICED)<br>(SEE BREAKDOWN FOR COMPONENTS) |
| 7 | 210-7507 | 1 | DRAWBAR GP-SWINGING (NOT SERVICED)<br>(SEE BREAKDOWN FOR COMPONENTS) |
| 8 | CH192-6280 | 2 | CYLINDER GP-LIFT<br>(SEE BREAKDOWN FOR COMPONENTS) |
| 9 | 501503D1 | 1 | DECAL SHEET-VEHICLE<br>(SEE BREAKDOWN FOR COMPONENTS) |
| 10 | 501505D1 | 1 | DECAL SHEET-VEHICLE<br>(SEE BREAKDOWN FOR COMPONENTS) |
| 11 | 183-4396 | 2 | CYLINDER GP-STEERING (HITCH LIFT)<br>(SEE BREAKDOWN FOR COMPONENTS) |
| 12 | 501806D1 | 1 | TUBE AS |

NOTIF
PR: t05i29k58b0446

## HITCH AR-3 POINT (FIELD) - 189-3300

**CATEGORY 4-W/HYDRAULIC TRAILER BRAKES**
**EAME ONLY**

NO ILLUSTRATION

NOTIF

## HITCH AR-3 POINT (FIELD) - 189-3300

**CATEGORY 4-W/HYDRAULIC TRAILER BRAKES**
**EAME ONLY**

| ITEM | NUMBER | QTY | DESCRIPTION |
|---|---|---|---|
| - | 189-3300 | -- | HITCH AR-3 POINT |
| 1 | 136-5378 | 1 | CONTROL & WIRING GP-HITCH (LIFT CIRCUIT)<br>(NOT SERVICED)<br>(SEE BREAKDOWN FOR COMPONENTS) |
| 2 | 152-0445 | 1 | CONTROL GP-HITCH (REAR)(3 POINT)<br>(SEE BREAKDOWN FOR COMPONENTS) |
| 3 | 158-2363 | 1 | LINES GP-CYLINDER (3 POINT HITCH)<br>(NOT SERVICED)<br>(SEE BREAKDOWN FOR COMPONENTS) |
| 4 | 180-6640 | 1 | COUPLER GP-QUICK (NOT SERVICED)<br>(SEE BREAKDOWN FOR COMPONENTS) |
| 5 | 193-8200 | 1 | VALVE AR (W/HITCH & HYD TRAILER BRAKE)<br>(NOT SERVICED)<br>(SEE BREAKDOWN FOR COMPONENTS) |
| 6 | 210-7507 | 1 | DRAWBAR GP-SWINGING (NOT SERVICED)<br>(SEE BREAKDOWN FOR COMPONENTS) |
| 7 | CH192-6280 | 2 | CYLINDER GP-LIFT<br>(SEE BREAKDOWN FOR COMPONENTS) |
| 8 | 501503D1 | 1 | DECAL SHEET-VEHICLE<br>(SEE BREAKDOWN FOR COMPONENTS) |
| 9 | 501505D1 | 1 | DECAL SHEET-VEHICLE<br>(SEE BREAKDOWN FOR COMPONENTS) |
| 10 | 183-4396 | 2 | CYLINDER GP-STEERING (HITCH LIFT)<br>(SEE BREAKDOWN FOR COMPONENTS) |
| 11 | 184-5065 | 1 | HITCH GP-3 POINT (NOT SERVICED)<br>(SEE BREAKDOWN FOR COMPONENTS) |
| 12 | 501806D1 | 1 | TUBE AS |

NOTIF
PR: t05i29k58b0447

## HITCH GP-3 POINT - 179-3317
CATEGORY 3/4

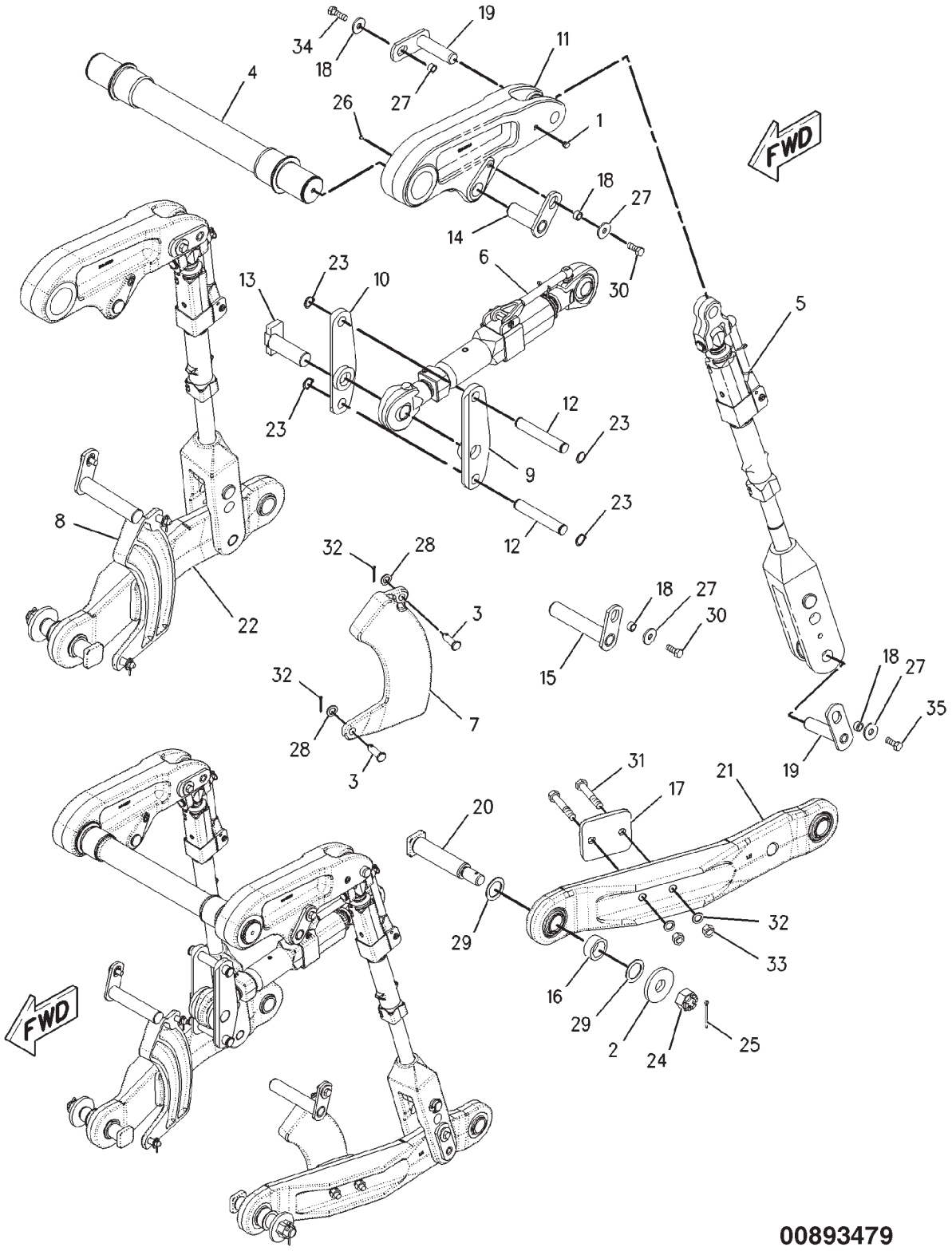

## HITCH GP-3 POINT - 179-3317
CATEGORY 3/4

| ITEM | NUMBER | QTY | DESCRIPTION |
|---|---|---|---|
| - | 179-3317 | -- | HITCH GP-3 POINT [A] (NOT SERVICED) |
| 1 | 400039X1 | 6 | PLUG-SEAL |
| 2 | 400291X1 | 2 | SPACER (39X110X12) |
| 3 | CH152-4241 | 4 | PIN |
| 4 | 186-1063 | 1 | ROCKSHAFT GP (NOT SERVICED)<br>(SEE BREAKDOWN FOR COMPONENTS) |
| 5 | 186-1090 | 2 | LINK GP-LIFT<br>(SEE BREAKDOWN FOR COMPONENTS) |
| 6 | 186-1091 | 1 | LINK GP-UPPER<br>(SEE BREAKDOWN FOR COMPONENTS) |
| 7 | 189-3307 | 1 | LIMITER (LH) |
| 8 | 189-3308 | 1 | LIMITER (RH) |
| 9 | 190-2608 | 1 | SUPPORT ASM |
| 10 | 190-2609 | 1 | SUPPORT ASM |
| 11 | 190-2624 | 2 | ARM-LIFT |
| 12 | CH190-2634 | 2 | PIN |
| 13 | CH196-3019 | 1 | PIN ASM |
| 14 | CH196-3025 | 2 | PIN ASM |
| 15 | CH196-3030 | 2 | PIN ASM |
| 16 | CH196-3034 | 2 | SPACER (51X70X28) |
| 17 | 198-8378 | 2 | BLOCK |
| 18 | CH200-0010 | 8 | SPACER (17.5X25.4X12.5) |
| 19 | CH200-8708 | 4 | PIN ASM |
| 20 | CH206-4640 | 2 | PIN |
| 21 | 213-7061 | 1 | LINK ASM (LH)<br>(INCLUDES LINK, BALL AND RACE) |
| 22 | 213-7062 | 1 | LINK ASM (RH)<br>(INCLUDES LINK, BALL AND RACE) |
| 23 | 400290X1 | 4 | RING-RETAINING |
| 24 | 400285X1 | 2 | NUT-CASTLE (M36X4-6H) |
| 25 | 400283X1 | 2 | PIN-COTTER |
| 26 | 400289X1 | 1 | PLUG |
| 27 | 400078X1 | 8 | WASHER (16.5X50X5) |
| 28 | 400284X1 | 4 | PIN-COTTER |
| 29 | 400288X1 | 4 | WASHER-HARD (51X74X3) |
| 30 | 400191X1 | 4 | BOLT (M16X2X40MM) |
| 31 | 400033X1 | 4 | BOLT (M20X2.5X110MM) |
| 32 | 400080X1 | 8 | WASHER-HARD (22X35X3.5) |
| 33 | 400286X1 | 4 | NUT (M20X2.5) |
| 34 | 400056X1 | 2 | BOLT (M16X2X50MM) |
| 35 | 400244X1 | 2 | BOLT (M16X2.0X45MM) |

[A] PART OF:
169-0027; 179-0852; 186-0979
HITCH AR-3 POINT

00893479
PR: t05i29k58b0448

## HITCH GP-3 POINT - 184-5065
CATEGORY 4

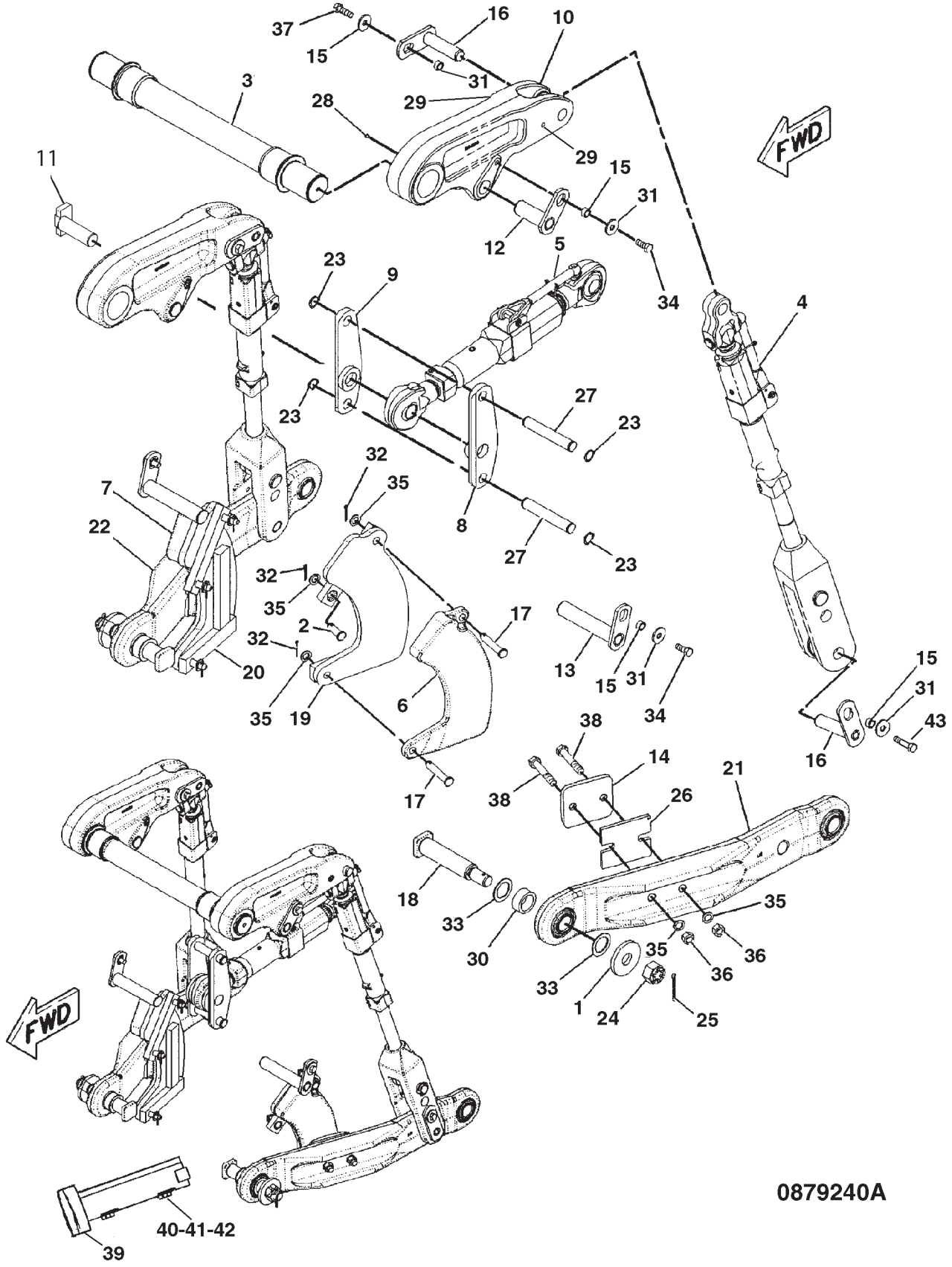

## HITCH GP-3 POINT - 184-5065
CATEGORY 4

| ITEM | NUMBER | QTY | DESCRIPTION |
|---|---|---|---|
| - | 184-5065 | -- | HITCH GP-3POINT [A] (NOT SERVICED) |
| 1 | 400291X1 | 2 | SPACER (39X110X12) |
| 2 | CH152-4241 | 2 | PIN |
| 3 | 186-1063 | 1 | ROCKSHAFT GP (NOT SERVICED)<br>(SEE BREAKDOWN FOR COMPONENTS) |
| 4 | 186-1090 | 2 | LINK GP-LIFT<br>(SEE BREAKDOWN FOR COMPONENTS) |
| 5 | 186-1091 | 1 | LINK GP-UPPER<br>(SEE BREAKDOWN FOR COMPONENTS) |
| 6 | 189-3307 | 1 | LIMITER (LH) |
| 7 | 189-3308 | 1 | LIMITER (RH) |
| 8 | 190-2608 | 1 | SUPPORT ASM (TOP LINK LH) |
| 9 | 190-2609 | 1 | SUPPORT ASM (TOP LINK RH) |
| 10 | 190-2624 | 2 | ARM-LIFT (3 POINT HITCH) |
| 11 | CH196-3019 | 1 | PIN |
| 12 | CH196-3025 | 2 | PIN ASM (LH) |
| 13 | CH196-3030 | 2 | PIN ASM (LH) |
| 14 | 198-8378 | 2 | BLOCK |
| 15 | CH200-0010 | 8 | SPACER (17.5X25.4X12.5) |
| 16 | CH200-8708 | 4 | PIN ASM (QUICK COUPLER) |
| 17 | CH223-9804 | 4 | PIN |
| 18 | CH206-4640 | 2 | PIN (DRAFTARM) |
| 19 | 208-0563 | 1 | SPACER ASM (LH) |
| 20 | 208-0564 | 1 | SPACER ASM (RH) |
| 21 | 213-7061 | 1 | LINK ASM (LH) (INCL. LINK, BALL & RACE) |
| 22 | 213-7062 | 1 | LINK ASM (RH) (INCL. LINK, BALL & RACE) |
| 23 | 400290X1 | 4 | RING-RETAINING,EXT (29IDX2.36) |
| 24 | 400285X1 | 2 | NUT-CASTLE (M36X4-6H) |
| 25 | 400283X1 | 2 | PIN-COTTER (6.3DIAX80) |
| 26 | 189-3302 | 2 | SPACER (SWAY BLOCK) |
| 27 | CH190-2634 | 2 | PIN-TOP LINK SUPT (31.7DIAX194) |
| 28 | 400289X1 | 1 | PLUG-PROTECTIVE, PLASTIC (M7) |
| 29 | 400093X1 | 6 | PLUG-PROTECTIVE, PLASTIC (M14) |
| 30 | CH196-3034 | 2 | SPACER (51X70X28) |
| 31 | 400078X1 | 8 | WASHER (16.5X50X5) |
| 32 | 400284X1 | 6 | PIN-COTTER |
| 33 | 400288X1 | 4 | WASHER-HARD (51X74X3) |
| 34 | 400191X1 | 4 | BOLT (M16X2X40MM) |
| 35 | 400080X1 | 18 | WASHER-PLATED (22X35X3.5) |
| 36 | 400286X1 | 4 | NUT (M20X2.5) |
| 37 | 400056X1 | 2 | BOLT (M16X2X50MM) |
| 38 | 400236X1 | 4 | BOLT (M20X2.5X120MM) |
| 39 | 201-8342 | 2 | LIMITER ASM-LG |
| 40 | 400040X1 | 8 | BOLT (M10X1.5X20) |
| 41 | 400287X1 | 8 | WASHER-HARD |
| 42 | 201-8344 | 4 | PLATE |
| 43 | 400244X1 | 2 | BOLT (M16X2X45) |

[A] PART OF 169-0028;180-6639;189-3300
HITCH AR-3 POINT

## LINES GP-CYLINDER - 158-2363
3 POINT HITCH

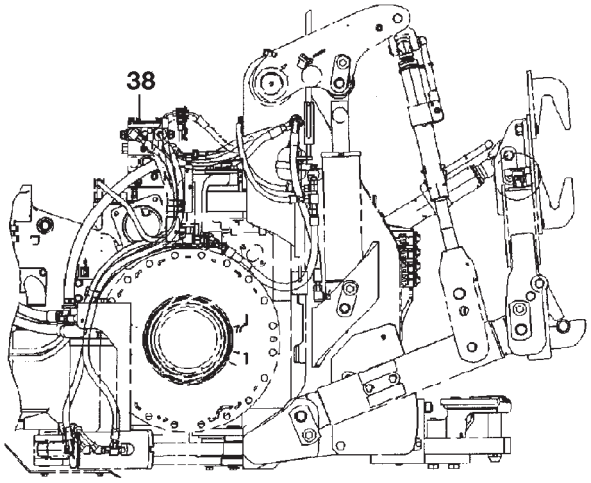


LEFT SIDE VIEW

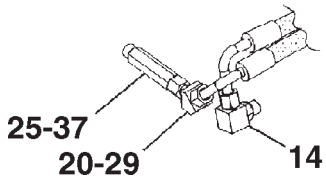


VIEW B-B

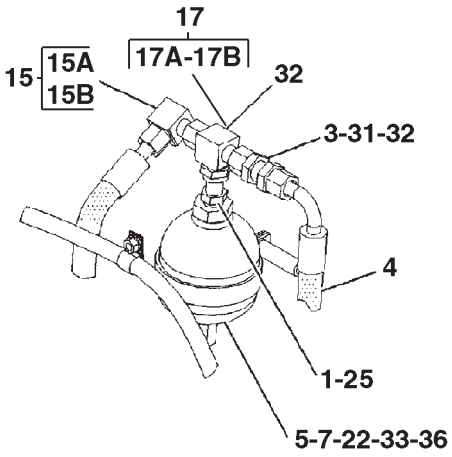


VIEW OF AREA C

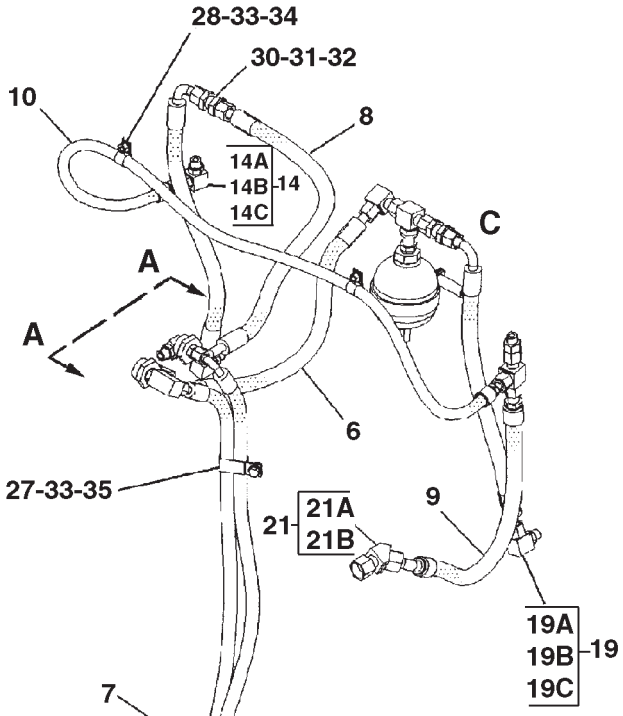


LEFT SIDE VIEW
(FRONT)

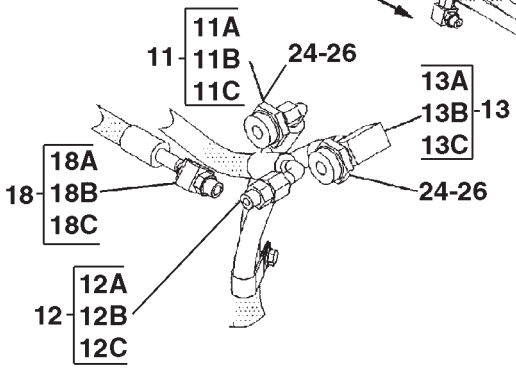


VIEW A-A

0894174A

## LINES GP-CYLINDER - 158-2363
3 POINT HITCH

| ITEM | NUMBER | QTY | DESCRIPTION |
|---|---|---|---|
| - | 158-2363 | -- | LINES GP-CYLINDER [A] (NOT SERVICED) |
| 1 | CH108-7251 | 1 | COUPLING |
| 2 | CH174-5810 | 1 | HOSE ASM |
| 3 | CH174-9215 | 1 | HOSE ASM |
| 4 | CH197-4832 | 2 | HOSE ASM |
| 5 | CH199-7718 | 1 | CLAMP |
| 6 | CH211-9968 | 1 | HOSE ASM |
| 7 | CH212-0279 | 1 | SPACER |
| 8 | CH213-6273 | 1 | HOSE ASM |
| 9 | CH213-8872 | 1 | HOSE ASM |
| 10 | CH218-2969 | 1 | HOSE ASM |
| 11 | CH148-8340 | 1 | CONNECTOR AS -8ORFS-8STOR |
| 11A | CH3K-0360 | 1 | SEAL-O-RING (16.36IDX2.21DIA) |
| 11B | CH6V-8398 | 1 | SEAL-O-RING (16.03ODX1.78DIA) |
| 11C | ----- | 1 | CONNECTOR (ORDER ITEM 11) |
| 12 | CH148-8342 | 2 | CONNECTOR AS (20ORFSX20STOR) |
| 12A | CH3K-0360 | 1 | SEAL-O-RING |
| 12B | ----- | 1 | CONNECTOR (ORDER ITEM 12) |
| 12C | 400322X1 | 1 | SEAL-O-RING |
| 13 | CH148-8346 | 1 | ELBOW AS-90DEG (8STOR-8ORFS) |
| 13A | CH3K-0360 | 1 | SEAL-O-RING (16.36IDX2.21DIA) |
| 13B | CH6V-8398 | 1 | SEAL-O-RING (16.03ODX1.78DIA) |
| 13C | ----- | 1 | ELBOW (ORDER ITEM 13) |
| 14 | CH148-8364 | 2 | ELBOW AS-90DEG (10 PORT ORFS) |
| 14A | CH3K-0360 | 1 | SEAL-O-RING (16.36IDX2.21DIA) |
| 14B | CH6V-8398 | 1 | SEAL-O-RING (16.03ODX1.78DIA) |
| 14C | ----- | 1 | ELBOW (ORDER ITEM 14) |

CONTINUED

[A] PART OF 169-0027;169-0028;179-0852;
180-6639 HITCH AR-3 POINT
[B] PART REQUIRED WHEN HOSE ASM IS
SERVICED WITH REUSABLE COUPLINGS

0894174A
PR: t05i29k58b0450

## LINES GP-CYLINDER - 158-2363
3 POINT HITCH

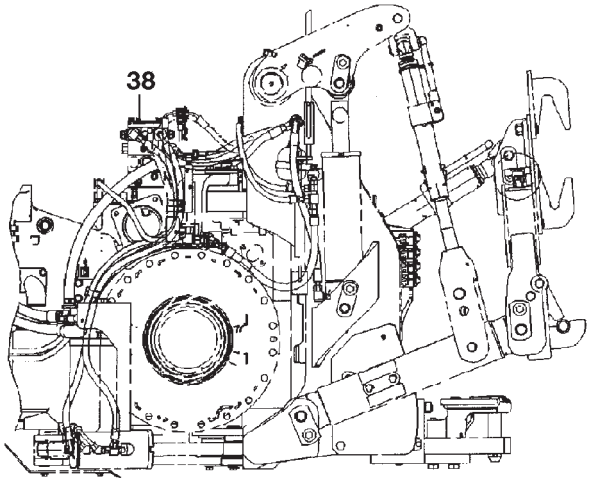


LEFT SIDE VIEW

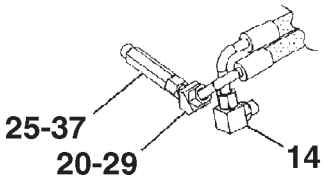


VIEW B-B

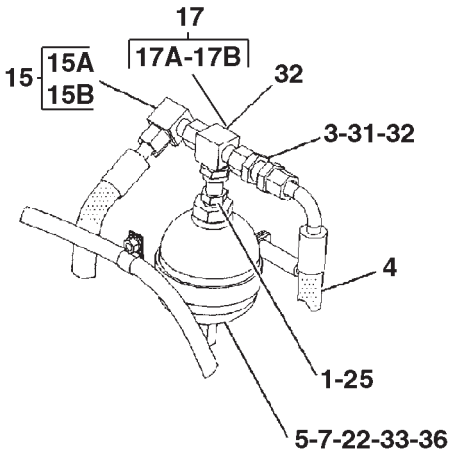


VIEW OF AREA C

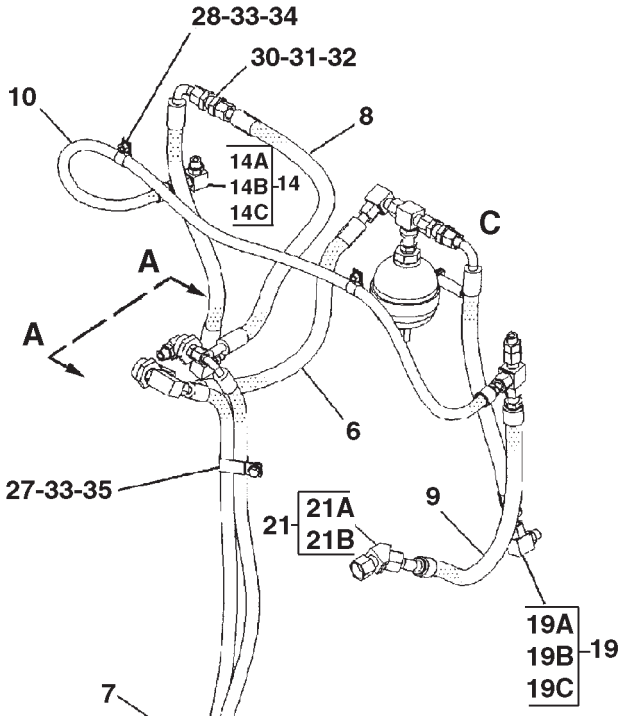


LEFT SIDE VIEW
(FRONT)

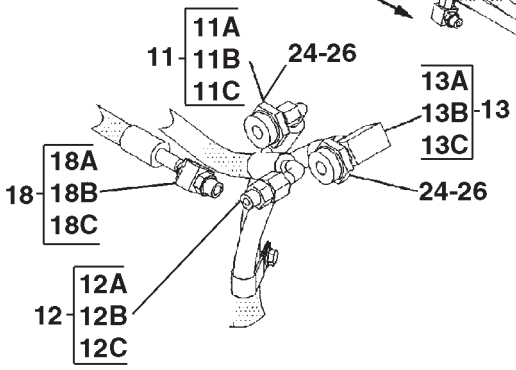


VIEW A-A

0894174A

## LINES GP-CYLINDER - 158-2363
### 3 POINT HITCH

| ITEM | NUMBER | QTY | DESCRIPTION |
|---|---|---|---|
| - | 158-2363 | -- | LINES GP-CYLINDER [A] (NOT SERVICED) |
| 15 | CH148-8393 | 1 | ELBOW AS-90DEG (10ORFS SWIVEL) |
| 15A | ----- | 1 | ELBOW (ORDER ITEM 15) |
| 15B | 400322X1 | 1 | SEAL-O-RING (19.28IDX1.78DIA) |
| 16 | CH148-8428 | 2 | TEE AS (8ORFSX8ORFSX8STOR) |
| 16A | CH3K-0360 | 1 | SEAL-O-RING |
| 16B | CH6V-8398 | 2 | SEAL-O-RING (16.03ODX1.78DIA) |
| 16C | ----- | 1 | TEE-FACE SEAL (ORDER ITEM 16) |
| 17 | CH148-8446 | 2 | TEE AS-SWIVEL (10ORFSX3) |
| 17A | ----- | 1 | TEE-SWIVEL (ORDER ITEM 17) |
| 17B | 400322X1 | 2 | SEAL-O-RING (19.28IDX1.78DIA) |
| 18 | CH150-3037 | 1 | ELBOW AS-45DEG (10ORFSX8STOR) |
| 18A | CH3K-0360 | 1 | SEAL-O-RING |
| 18B | 400322X1 | 1 | SEAL-O-RING (19.28IDX1.78DIA) |
| 18C | ----- | 1 | ELBOW (ORDER ITEM 18) |
| 19 | 400412X1 | 2 | ELBOW AS-90DEG (8STORX10ORFS) |
| 19A | CH3K-0360 | 1 | SEAL-O-RING (16.36IDX2.21DIA) |
| 19B | ----- | 1 | ELBOW (ORDER ITEM 18) |
| 19C | 400322X1 | 1 | SEAL-O-RING (19.28IDX1.78DIA) |
| 20 | 400616X1 | 2 | ELBOW AS-8 ORFS 45DEG |
| 20A | CH6V-8398 | 1 | SEAL-O-RING (16.03ODX1.78DIA) |
| 20B | ----- | 1 | ELBOW (ORDER ITEM 20) |
| 21 | CH171-6723 | 1 | ELBOW ASM-45DEG (12ORFSX12ORFS) |
| 21A | 400366X1 | 1 | SEAL-O-RING (22.5ODX1.78DIA) |
| 21B | ----- | 1 | ELBOW (ORDER ITEM 21) |
| 22 | 211-1156 | 1 | ACCUMULATOR ASM-HYDRAULIC |
| 23 | CH211-8202 | 2 | HOSE ASM |
| 24 | 400593X1 | 2 | SEAL-O-RING (37.46IDX3DIA) |
| 25 | CH3K-0360 | 2 | SEAL-O-RING (16.36IDX2.21DIA) |
| 26 | CH5P-8905 | 2 | ADAPTER-O-RING |
| 27 | CH6D-1641 | 2 | CLIP |
| 28 | CH6D-4246 | 2 | CLIP |
| 29 | CH6V-8398 | 1 | SEAL-O-RING (16.03ODX1.78DIA) |
| 30 | CH6V-8996 | 2 | UNION-BULKHEAD |
| 31 | CH6V-9170 | 2 | NUT-BULKHEAD (1-14) |
| 32 | 400322X1 | 4 | SEAL-O-RING |
| 33 | 400287X1 | 4 | WASHER-HARD (11X21X2.5) |
| 34 | WR522218 | 2 | NUT (M10X1.5) |
| 35 | 400040X1 | 1 | BOLT (M10X1.5X20MM) |
| 36 | 400225X1 | 1 | BOLT (M10X1.5X90MM) |
| 37 | CH9X-2304 | 1 | CONNECTOR |
| 38 | CH193-5914 | 1 | PLUG |

[A] PART OF 169-0027;169-0028;179-0852;
180-6639 HITCH AR-3 POINT
[B] PART REQUIRED WHEN HOSE ASM IS
SERVICED WITH REUSABLE COUPLINGS

## LINES GP-CYLINDER - 180-0503
**POWERED DRAWBAR**

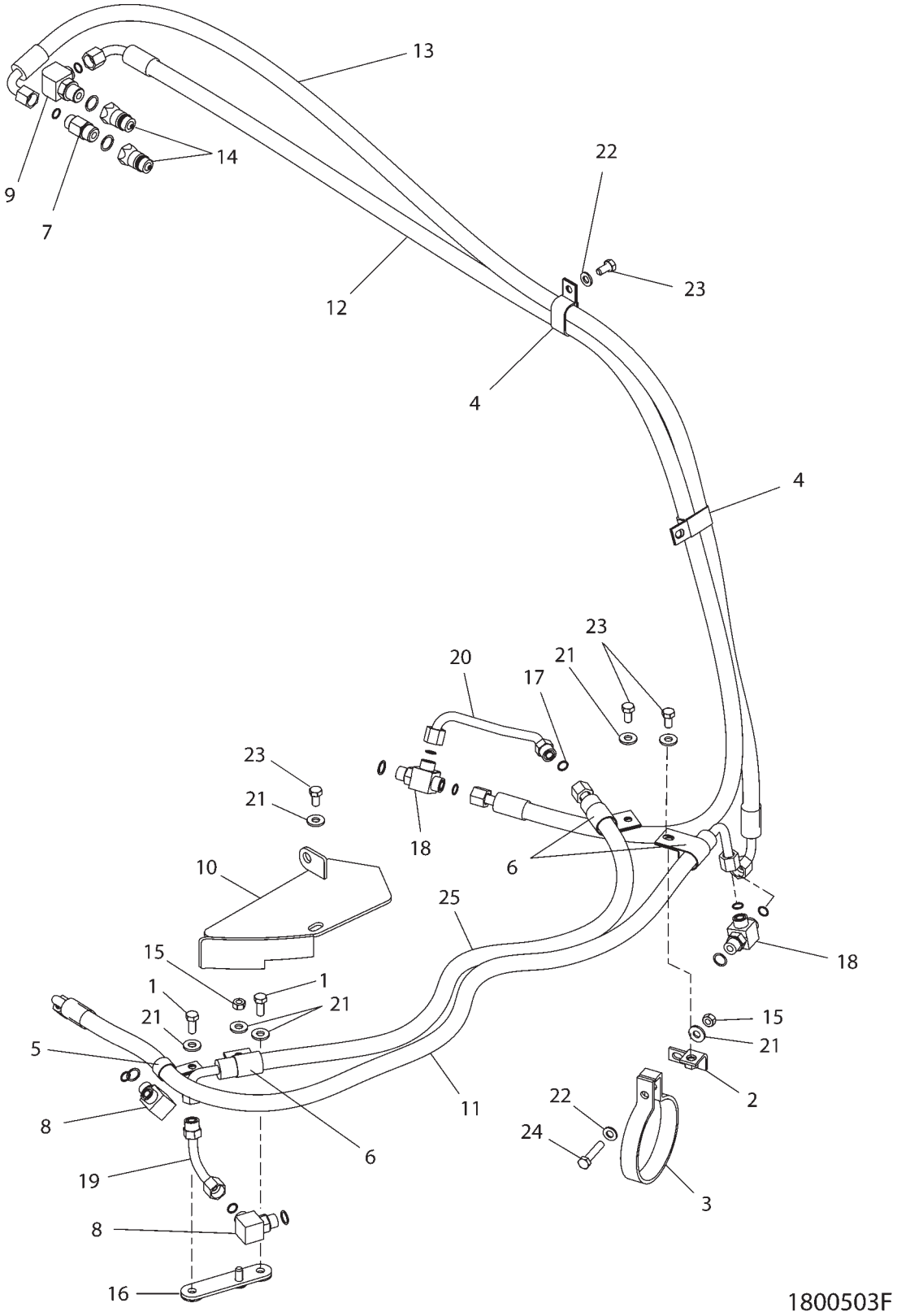

## LINES GP-CYLINDER - 180-0503
POWERED DRAWBAR

| ITEM | NUMBER | QTY | DESCRIPTION |
|---|---|---|---|
| - | 180-0503 | -- | LINES GP-CYLINDER [A] (NOT SERVICED) |
| 1 | 400039X1 | 2 | BOLT (M10X1.5X25MM) |
| 2 | 209-6244 | 1 | BRACKET ASM |
| 3 | CH122-1162 | 1 | CLAMP |
| 4 | CH6D-1641 | 2 | CLIP-LOOP (24IDX2) |
| 5 | CH4L-3641 | 1 | CLIP (25.4ID) |
| 6 | CH5D-4204 | 3 | CLIP (28.58ID) |
| 7 | CH164-5557 | 1 | CONNECTOR ASM (8ORFSX10STOR) |
| | 400319X1 | 1 | SEAL-O-RING (19.18IDX2.46DIA) |
| | CH6V-8398 | 1 | SEAL-O-RING (16.03ODX1.78DIA) |
| 8 | CH148-8364 | 2 | ELBOW AS-90DEG (8STOR-8ORFS) |
| | CH3K-0360 | 1 | SEAL-O-RING (16.36IDX2.21DIA) |
| | CH6V-8398 | 1 | SEAL-O-RING (16.03ODX1.78DIA) |
| 9 | CH148-8372 | 1 | ELBOW AS (10STOR-8ORFS) |
| | 400319X1 | 1 | SEAL-O-RING (19.18IDX2.46DIA) |
| | CH6V-8398 | 1 | SEAL-O-RING (16.03ODX1.78DIA) |
| 10 | 210-6063 | 1 | GUARD ASM |
| 11 | CH211-2723 | 1 | HOSE ASM |
| 12 | CH211-2724 | 1 | HOSE ASM |
| 13 | CH211-2725 | 1 | HOSE ASM |
| 14 | CH159-5898 | 2 | FITTING ASM |
| 15 | WR522218 | 2 | NUT (M10X1.5) |
| 16 | 209-9800 | 1 | PLATE ASM |
| 17 | CH6V-8398 | 2 | SEAL-O-RING (16.03ODX1.78DIA) |
| 18 | CH148-8428 | 2 | TEE AS (8ORFSX8ORFSX8STOR) |
| | CH3K-0360 | 1 | SEAL-O-RING (16.36IDX2.21DIA) |
| | CH6V-8398 | 2 | SEAL-O-RING (16.03ODX1.78DIA) |
| 19 | 210-1503 | 1 | TUBE ASM |
| 20 | 210-4464 | 1 | TUBE ASM |
| 21 | CH7X-7729 | 7 | WASHER (11X25X3) |
| 22 | 400287X1 | 2 | WASHER-HARD (11X21X2.5) |
| 23 | 400040X1 | 4 | BOLT (M10X1.5X20MM) |
| 24 | 400226X1 | 1 | BOLT (M10X1.5X50MM) |
| 25 | CH211-2722 | 1 | HOSE ASM |

[A] PART OF 184-5033 & 210-7489
CONTROL AR-DRAWBAR

1800503F
PR: t05i29k58b0451

## LINES GP-POWER TAKE-OFF - 189-2976

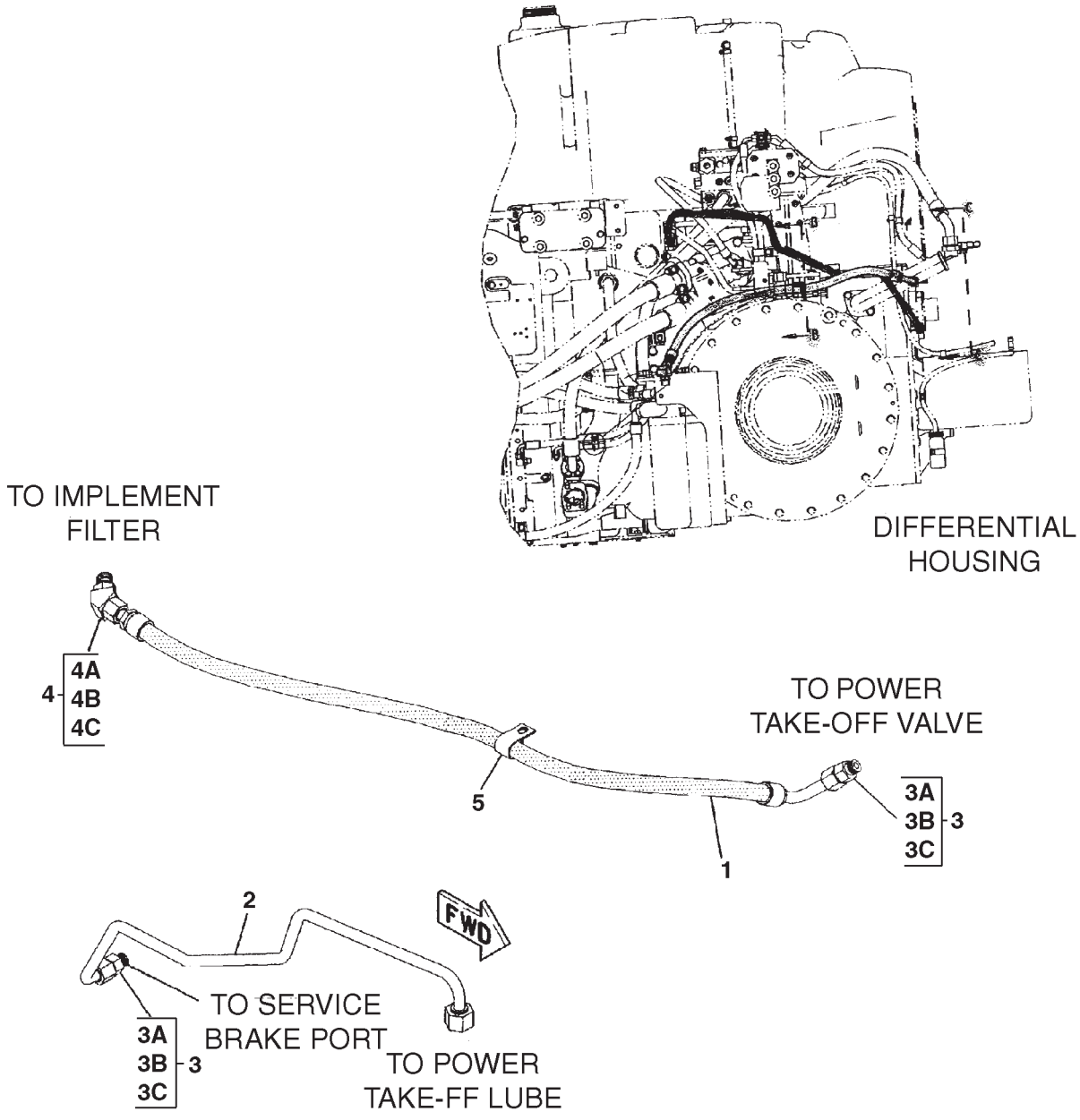


0888048A

| ITEM | NUMBER | QTY | DESCRIPTION |
|---|---|---|---|
| - | 189-2976 | -- | LINES GP-PTO [A] (NOT SERVICED) |
| 1 | 211-2885 | 1 | HOSE ASM (15.9ID SAE 100R1) |
| 2 | 219-8801 | 1 | TUBE ASM |
| 3 | CH148-8342 | 2 | CONNECTOR AS (20ORFSX20STOR) |
| 3A | CH3K-0360 | 1 | SEAL-O-RING (16.36IDX2.21DIA) |
| 3B | ----- | 1 | CONNECTOR (ORDER ITEM 12) |
| 3C | 400322X1 | 1 | SEAL-O-RING (19.28IDX1.78DIA) |
| 4 | CH155-3504 | 1 | ELBOW AS-45DEG (10ORFSX10STOR) |
| 4A | 400319X1 | 1 | SEAL-O-RING (19.18IDX2.46DIA) |
| 4B | ----- | 1 | ELBOW (ORDER ITEM 4) |
| 4C | 400322X1 | 1 | SEAL-O-RING (19.28IDX1.78DIA) |
| 5 | CH4S-1962 | 1 | CLIP-LOOP (25.4ID) |

[A] PART OF 163-0400; 224-8603 KIT-PTO;
183-2197; 183-2198 GAUGE AR-TRACK

0888048A
PR: t05i29k58b0452

## LINK GP-LIFT
**186-1090**

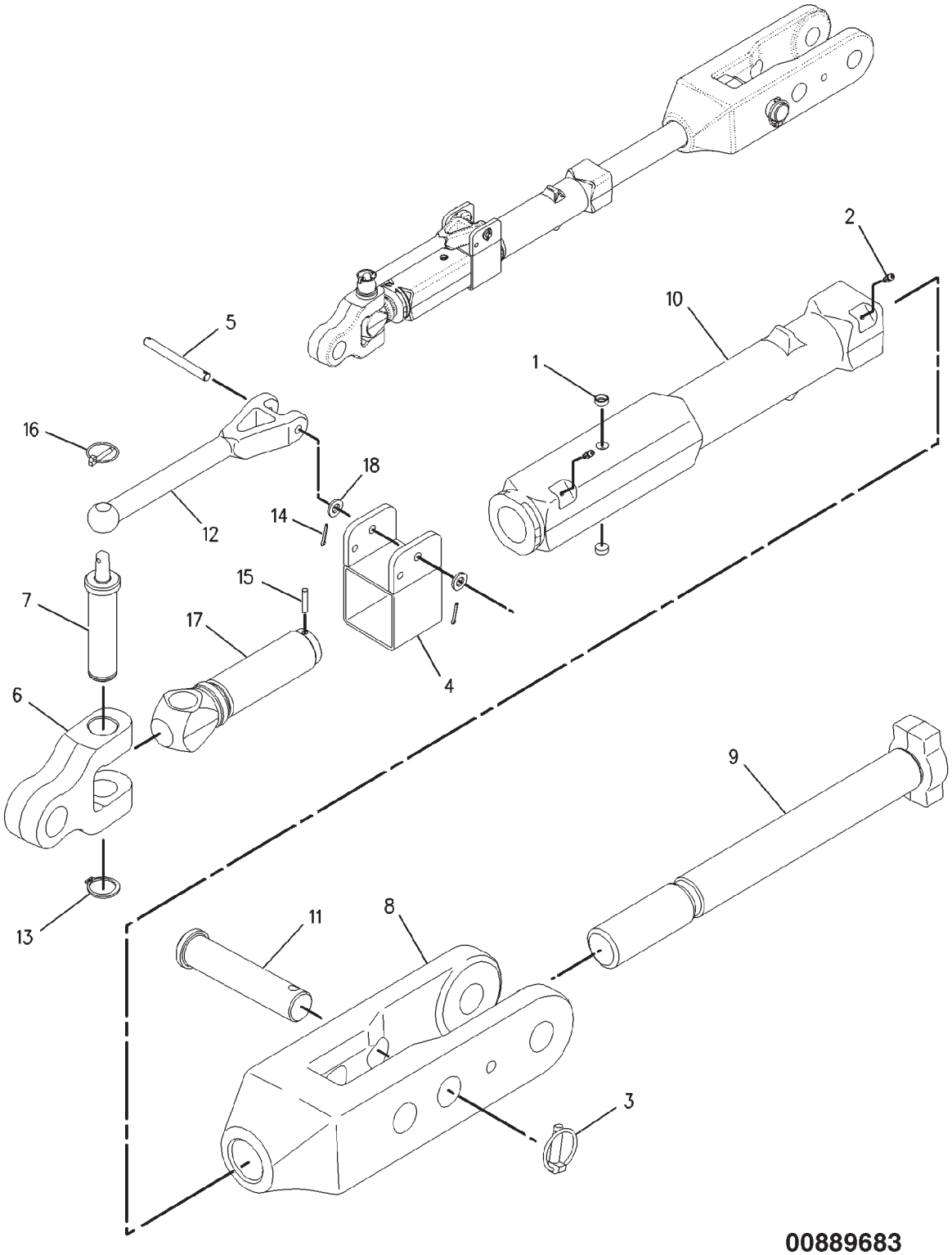

## LINK GP-LIFT
**186-1090**

| ITEM | NUMBER | QTY | DESCRIPTION |
|---|---|---|---|
| - | 186-1090 | -- | LINK GP-LIFT [A] |
| 1 | CH0T-0200 | 2 | PLUG-CUP |
| 2 | CH6V-1506 | 2 | FITTING-GREASE |
| 3 | CH119-1329 | 1 | PIN-LINCH |
| 4 | 184-5063 | 1 | FRAME ASM |
| 5 | CH186-1069 | 1 | PIN |
| 6 | 186-0983 | 1 | PIVOT |
| 7 | CH186-1081 | 1 | PIN |
| 8 | 186-1093 | 1 | CLEVIS |
| 9 | CH186-1094 | 1 | ROD-LIFT LINK |
| 10 | 186-1095 | 1 | TUBE |
| 11 | CH186-1096 | 1 | PIN |
| 12 | 189-3296 | 1 | HANDLE |
| 13 | 400290X1 | 1 | RING-RETAINING |
| 14 | CH095-0845 | 2 | PIN-COTTER |
| 15 | CH095-9230 | 1 | PIN-SPRING |
| 16 | CH5D-8159 | 1 | PIN ASM |
| 17 | 186-1020 | 1 | ROD END-LOWER |
| 18 | 400287X1 | 2 | WASHER-HARD (11X21X2.5) |

[A] PART OF 179-3317; 184-5065
HITCH GP-3 POINT

00889683
PR: t05i29k58b0453

## LINK GP-UPPER
**186-1091**

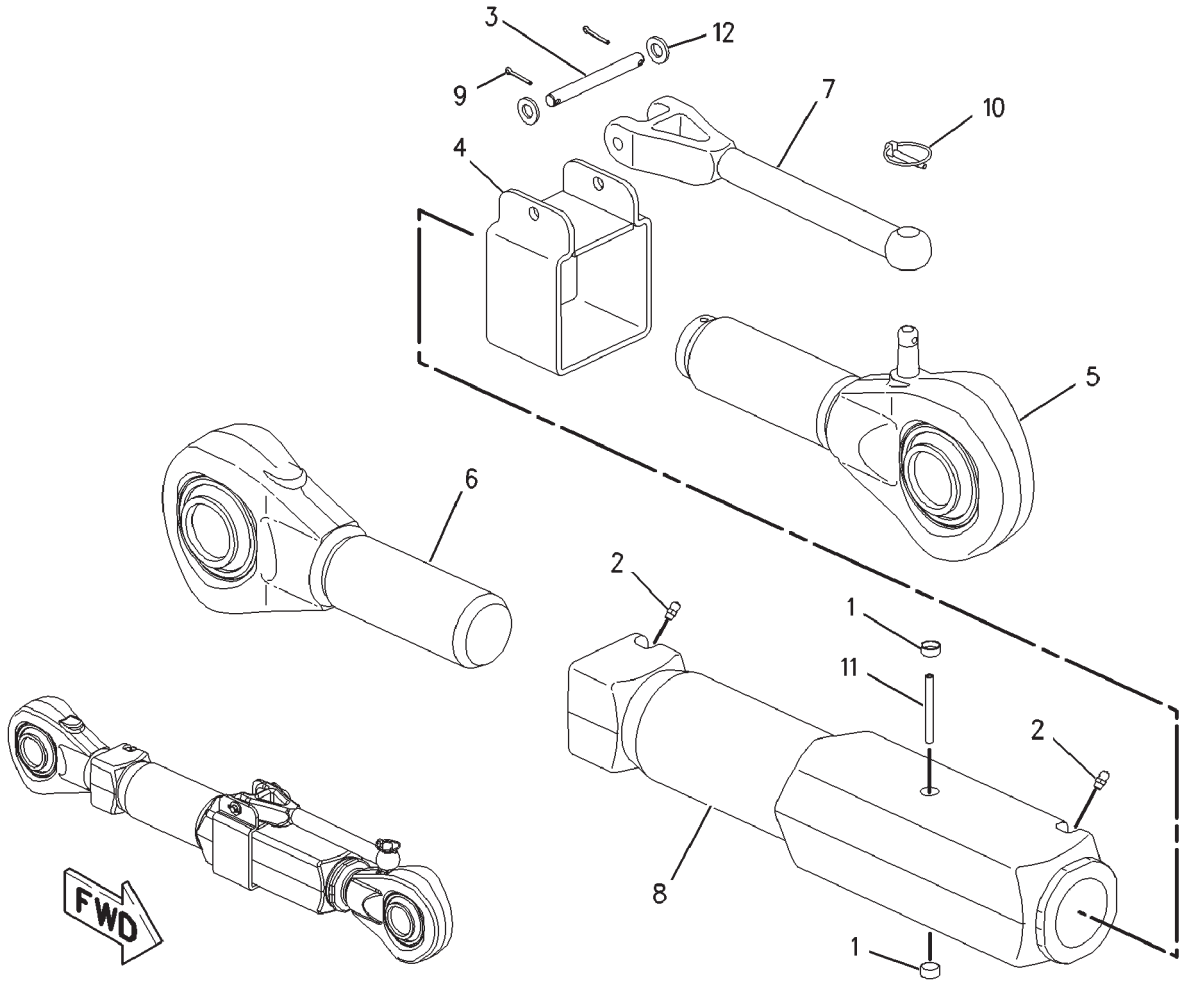


00898208

## LINK GP-UPPER
**186-1091**

| ITEM | NUMBER | QTY | DESCRIPTION |
|---|---|---|---|
| - | 186-1091 | -- | LINK GP-UPPER [A] |
| 1 | CH0T-0200 | 2 | PLUG-CUP |
| 2 | CH6V-1506 | 2 | FITTING-GREASE |
| 3 | CH186-1069 | 1 | PIN |
| 4 | CH189-3284 | 1 | FRAME ASM |
| 5 | CH210-7531 | 1 | ROD END ASM (LH) |
| 6 | CH210-7532 | 1 | ROD END ASM (RH) |
| 7 | 189-3296 | 1 | HANDLE |
| 8 | 210-7523 | 1 | TUBE |
| 9 | CH095-0845 | 2 | PIN-COTTER |
| 10 | CH5D-8159 | 1 | PIN ASM |
| 11 | CH6V-8130 | 1 | PIN-SPRING |
| 12 | 400287X1 | 2 | WASHER-HARD (11X21X2.5) |

[A] PART OF 179-3317; 184-5065
HITCH GP-3 POINT

00898208
PR: t05i29k58b0454

## MOUNTING GP-CYLINDER - 184-5035
CONTROLLED DRAWBAR

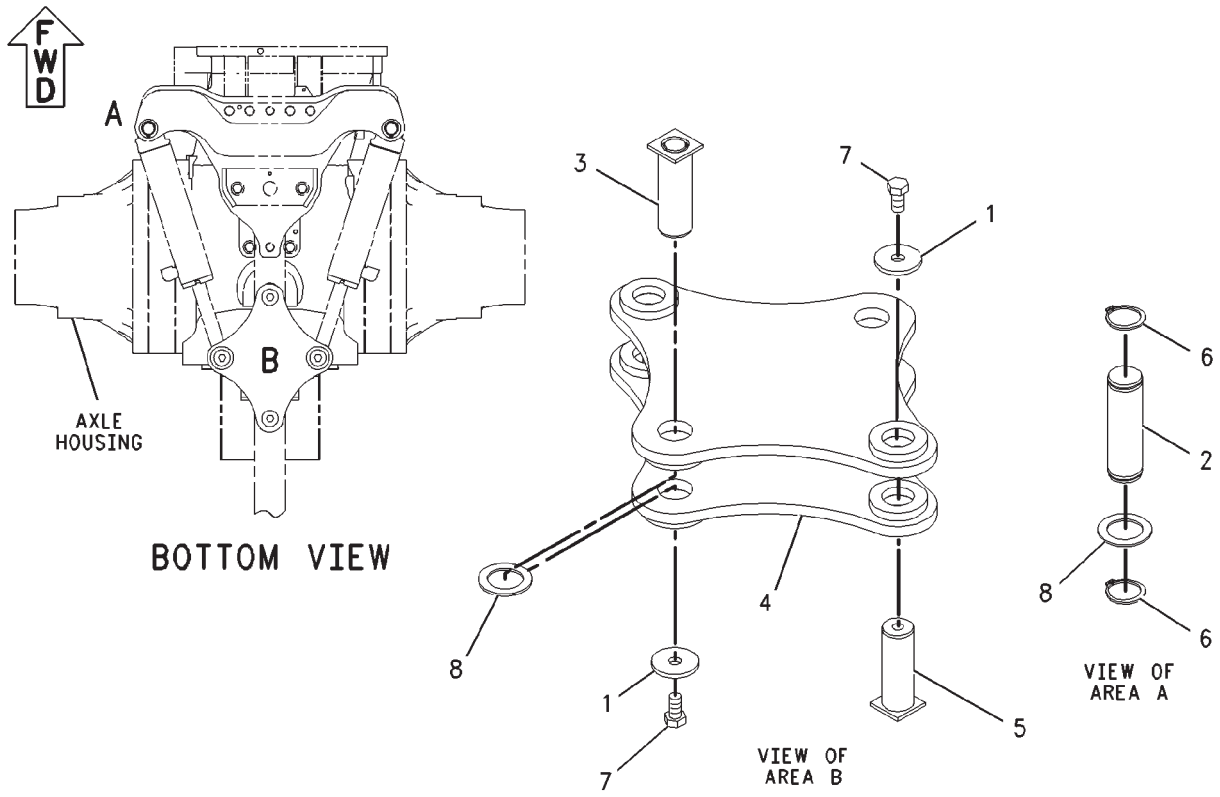


00888167

## MOUNTING GP-CYLINDER - 184-5035
CONTROLLED DRAWBAR

| ITEM | NUMBER | QTY | DESCRIPTION |
|---|---|---|---|
| - | 184-5035 | -- | MOUNTING GP-CYLINDER [A] (NOT SERVICED) |
| 1 | CH7D-0734 | 4 | WASHER (.656X2.38X.250 IN THK) |
| 2 | CH190-2611 | 2 | PIN |
| 3 | CH190-2612 | 2 | PIN ASM |
| 4 | 190-2613 | 2 | PLATE ASM |
| 5 | 210-7491 | 2 | PIN ASM |
| 6 | CH201-8106 | 4 | RING-RETAINING |
| 7 | 400088X1 | 4 | BOLT (M16X2X30MM) |
| 8 | CH9R-0158 | 4 | WASHER (46X69X3) |

[A] PART OF 184-5033 & 210-7489
CONTROL AR-DRAWBAR

00888167
PR: t05i29k58b0455

## PLUG GP-3 PT-HITCH - 224-9662

**DRAWBAR HITCH APPLICATIONS**

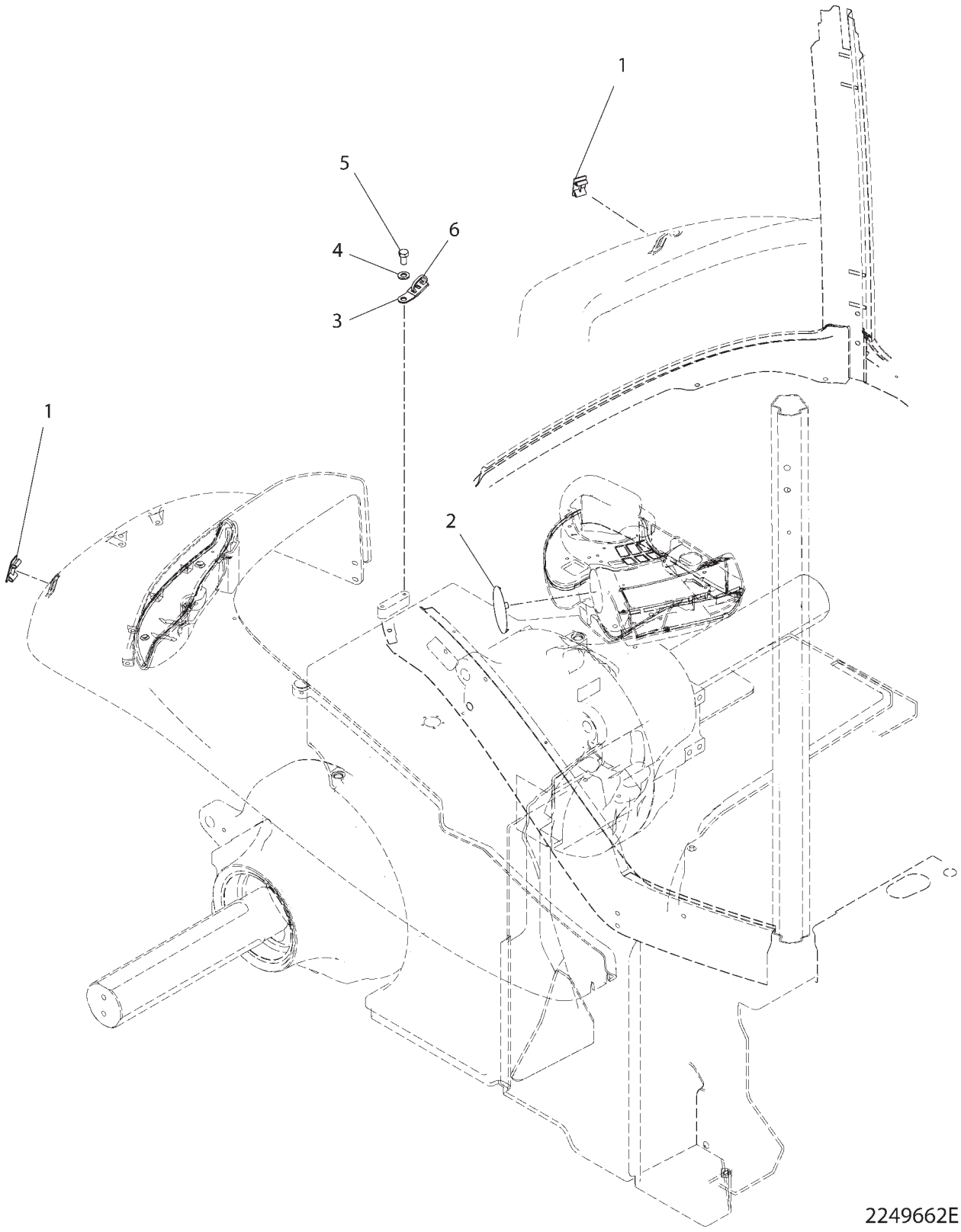

## PLUG GP-3 PT-HITCH - 224-9662
**DRAWBAR HITCH APPLICATIONS**

| ITEM | NUMBER | QTY | DESCRIPTION |
|---|---|---|---|
| - | 224-9662 | -- | PLUG GP-3 PT HITCH [A] |
| 1 | CH109-2356 | 2 | PLUG |
| 2 | CH214-1071 | 1 | PLUG |
| 3 | CH4P-7581 | 1 | CLIP |
| 4 | 400287X1 | 1 | WASHER-HARD (11IDX21ODX2.5) |
| 5 | 400040X1 | 1 | BOLT (M10X1.5X20) |
| 6 | CH7K-1181 | 1 | STRAP-CABLE |

[A] PART OF:
179-0851 HITCH AR
179-0853 HITCH AR-NON AG
184-5033 CONTROL AR-DRAWBAR

2249662E
PR: t05i29k58b0456

## POWER TAKE-OFF (KIT) - 163-0400
ROW & SPECIAL APPLICATIONS

NO ILLUSTRATION

NOTIF

## POWER TAKE-OFF (KIT) - 163-0400
ROW & SPECIAL APPLICATIONS

| ITEM | NUMBER | QTY | DESCRIPTION |
|---|---|---|---|
| - | 163-0400 | -- | KIT-PTO |
| 1 | 152-0446 | 1 | CONTROL GP-PTO (NOT SERVICED)<br>(SEE BREAKDOWN FOR COMPONENTS) |
| 2 | 183-4470 | 1 | GUARD GP-PTO (NOT SERVICED)<br>(SEE BREAKDOWN FOR COMPONENTS) |
| 3 | 187-4930 | 1 | POWER TAKE-OFF GP (NOT SERVICED)<br>(SEE BREAKDOWN FOR COMPONENTS) |
| 4 | 189-2976 | 1 | LINES GP-PTO (NOT SERVICED)<br>(SEE BREAKDOWN FOR COMPONENTS) |

NOTIF
PR: t05i29k58b0457

## POWER TAKE-OFF (KIT) - 224-8603
EAME

NO ILLUSTRATION

NOTIF

## POWER TAKE-OFF (KIT) - 224-8603

EAME

| ITEM | NUMBER | QTY | DESCRIPTION |
|---|---|---|---|
| - | 224-8603 | -- | KIT-PTO |
| 1 | 224-5884 | 1 | CONTROL GP-PTO (NOT SERVICED)<br>(SEE BREAKDOWN FOR COMPONENTS) |
| 2 | 183-4470 | 1 | GUARD GP-PTO (NOT SERVICED)<br>(SEE BREAKDOWN FOR COMPONENTS) |
| 3 | 187-4930 | 1 | POWER TAKE-OFF GP (NOT SERVICED)<br>(SEE BREAKDOWN FOR COMPONENTS) |
| 4 | 189-2976 | 1 | LINES GP-PTO (NOT SERVICED)<br>(SEE BREAKDOWN FOR COMPONENTS) |

NOTIF
PR: t05i29k58b0458

## GUARD GP-POWER TAKE-OFF - 183-4470

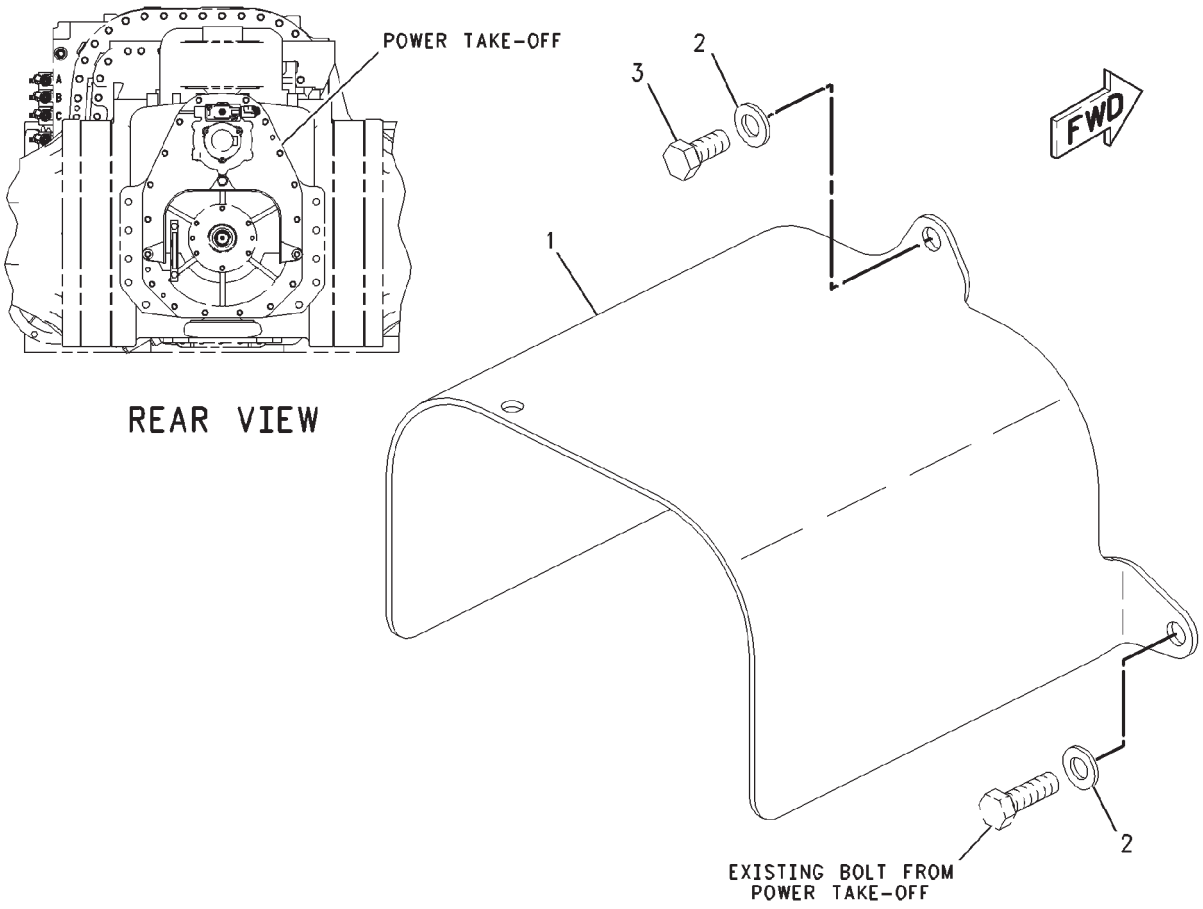


00828240

## GUARD GP-POWER TAKE-OFF - 183-4470

| ITEM | NUMBER | QTY | DESCRIPTION |
|---|---|---|---|
| - | 183-4470 | -- | GUARD GP-POWER TAKE-OFF [A] (NOT SERVICED) |
| 1 | 502050D1 | 1 | PLATE |
| 2 | CH8T-4122 | 3 | WASHER-HARD (17X32X3.5MM THK) |
| 3 | AG518357 | 1 | BOLT (M16X2X35MM) |

[A] PART OF 163-0400; 224-8603 KIT-PTO; 183-2197; 183-2198 GAUGE AR-TRACK

00828240
PR: t05i29k58b0459

**ROCKSHAFT GP - 186-1063**

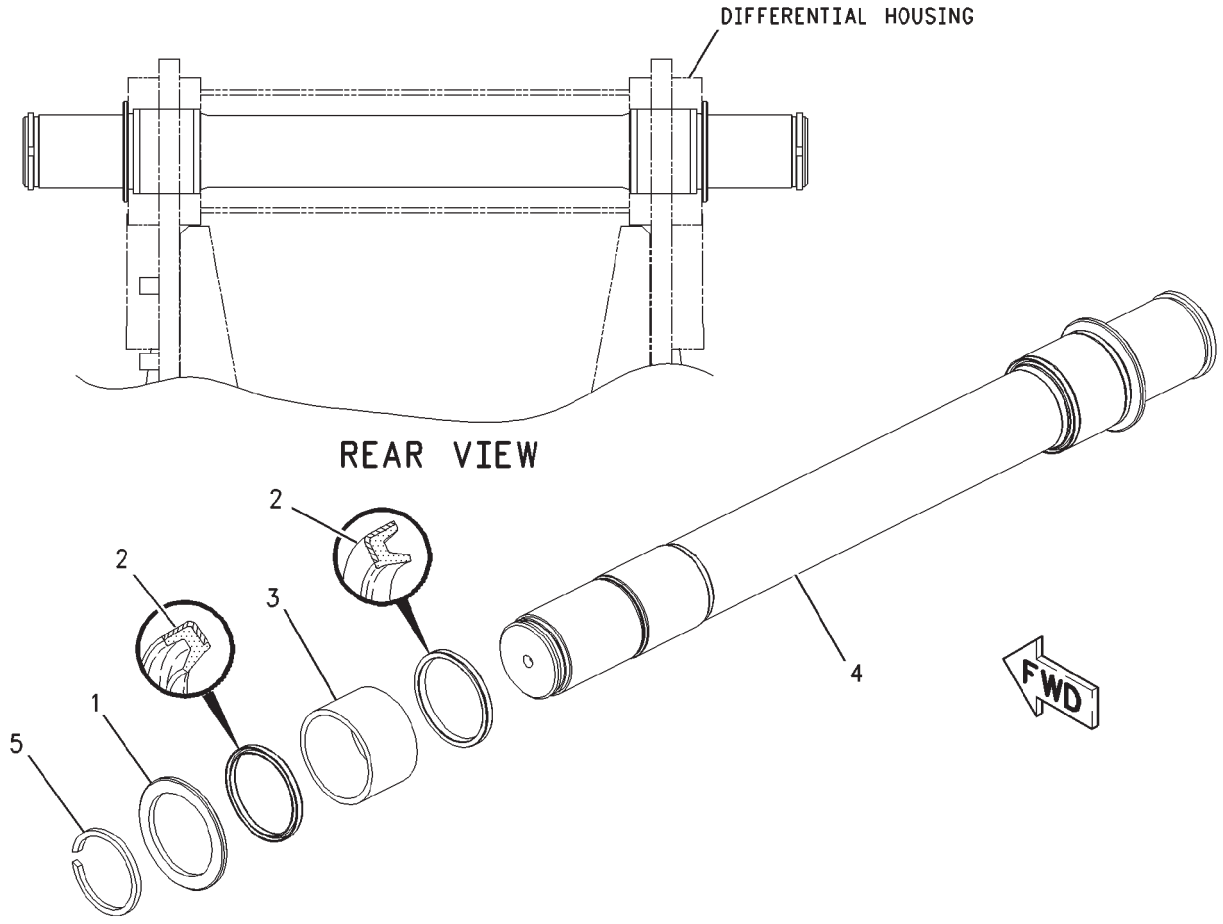


00851422

| ITEM | NUMBER | QTY | DESCRIPTION |
|---|---|---|---|
| - | 186-1063 | -- | ROCKSHAFT GP [A] (NOT SERVICED) |
| 1 | CH6K-9070 | 2 | WASHER-THRUST |
| 2 | CH7K-9211 | 4 | SEAL-LIP |
| 3 | CH170-2320 | 2 | BEARING |
| 4 | 186-1064 | 1 | SHAFT-SPLINED |
| 5 | 400097X1 | 2 | RING-RETAINING |

[A] PART OF 179-3317; 184-5065
HITCH GP-3 POINT

00851422
PR: t05i29k58b0460

## SUPPORT GP-DRAWBAR - 180-4038
**SCRAPER HITCH**

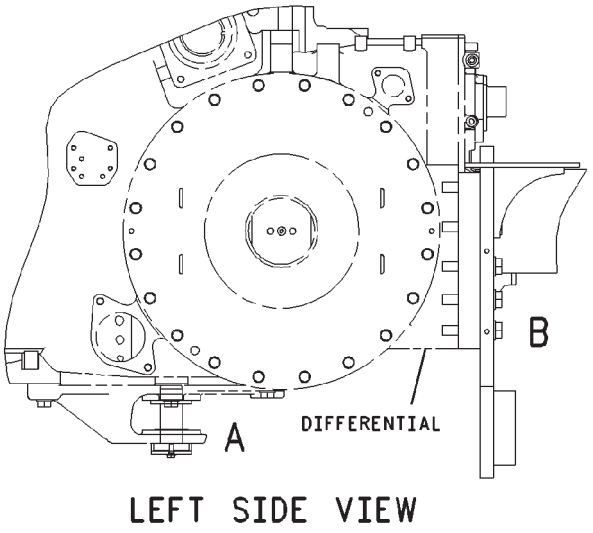


LEFT SIDE VIEW

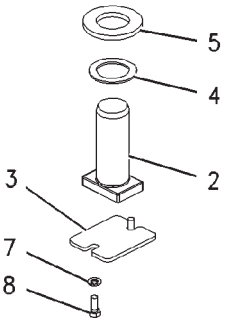


VIEW OF AREA A

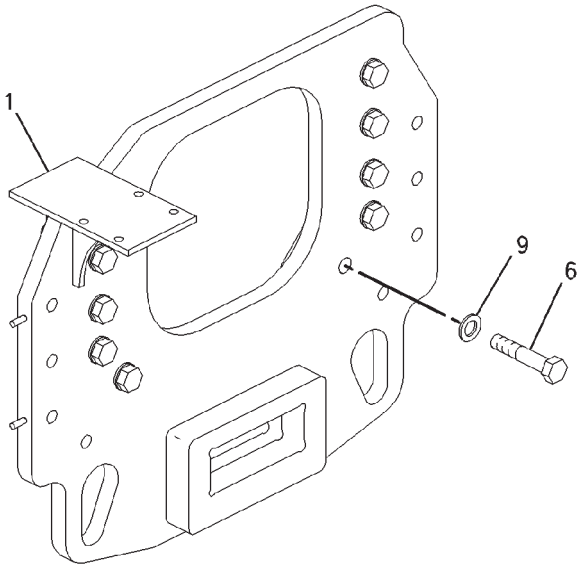


VIEW OF AREA B

## SUPPORT GP-DRAWBAR - 180-4038

SCRAPER HITCH

| ITEM | NUMBER | QTY | DESCRIPTION |
|---|---|---|---|
| - | 180-4038 | -- | SUPPORT GP-DRAWBAR [A] |
| 1 | 189-3325 | 1 | PLATE ASM |
| 2 | CH200-8751 | 1 | PIN-DRAWBAR |
| 3 | 501948D1 | 1 | RETAINER |
| 4 | 400288X1 | 1 | WASHER-HARD (51X74X3) |
| 5 | CH7Y-0725 | 1 | WASHER-HARD (52X92X8) |
| 6 | 400213X1 | 10 | BOLT (M24X3X120MM) |
| 7 | 400287X1 | 2 | WASHER-HARD (11X21X2.5) |
| 8 | 400039X1 | 2 | BOLT (M10X1.5X25MM) |
| 9 | 400081X1 | 10 | WASHER-HARD (26X44X4) |

[A] PART OF 179-0853 HITCH AR-NON AG

00851221
PR: t05i29k58b0461

## SUPPORT GP-DRAWBAR - 210-7508
ROW AND SPECIAL APPLICATIONS

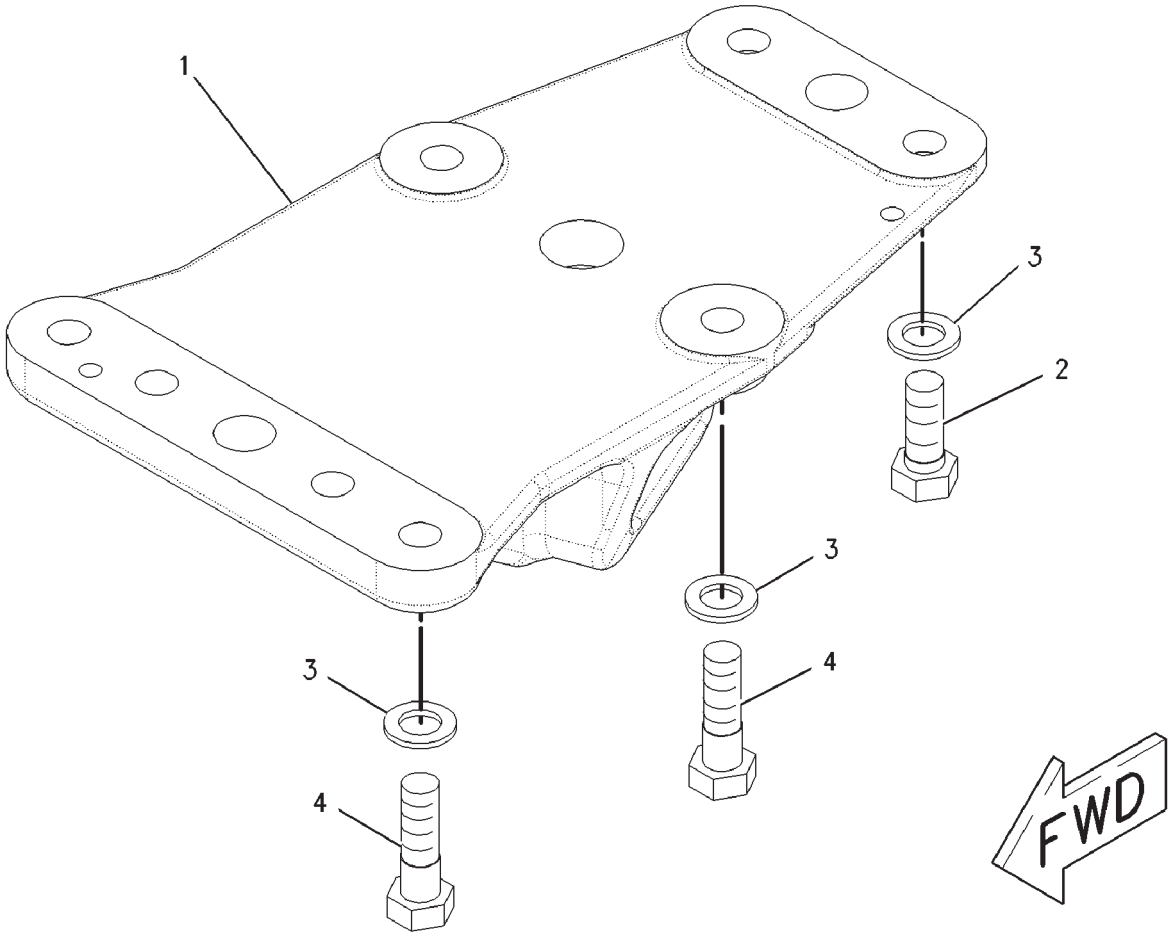


00897590

## SUPPORT GP-DRAWBAR - 210-7508

ROW AND SPECIAL APPLICATIONS

| ITEM | NUMBER | QTY | DESCRIPTION |
|---|---|---|---|
| - | 210-7508 | -- | SUPPORT GP-DRAWBAR [A] |
| 1 | 210-7506 | 1 | SUPPORT |
| 2 | 400035X1 | 2 | BOLT (M24X3X60MM) |
| 3 | 400081X1 | 8 | WASHER-HARD (26X44X4) |
| 4 | 400067X1 | 6 | BOLT (M24X3X80MM) |

[A] PART OF 179-0853 HITCH AR-NON AG

00897590
PR: t05i29k58b0462

## SUPPORT GP-FRAME - 210-7509
**CONTROLLED DRAWBAR**

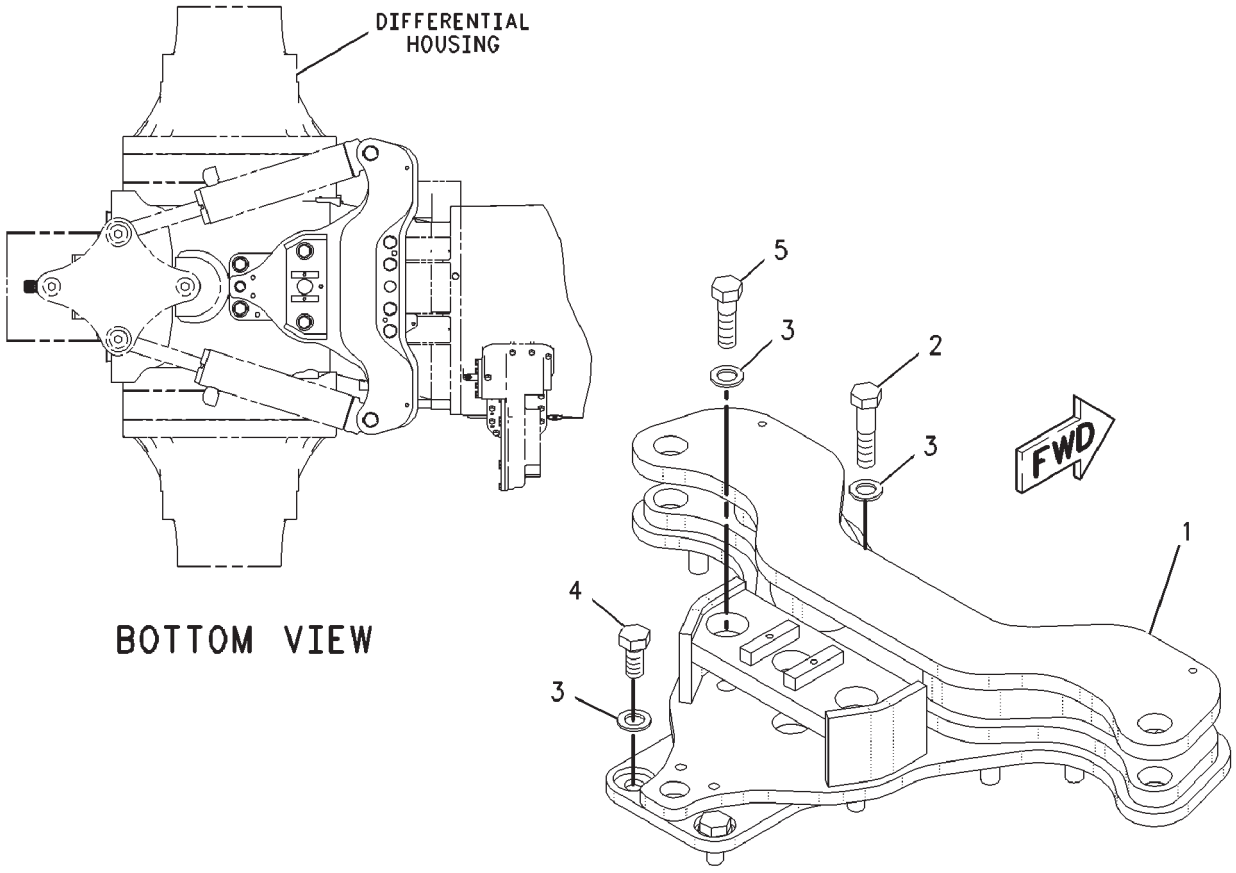

## SUPPORT GP-FRAME - 210-7509
**CONTROLLED DRAWBAR**

| ITEM | NUMBER | QTY | DESCRIPTION |
|---|---|---|---|
| - | 210-7509 | -- | SUPPORT GP-DRAWBAR [A] (NOT SERVICED) |
| 1 | 210-7503 | 1 | PLATE ASM |
| 2 | 400184X1 | 4 | BOLT (M24X3X100MM) |
| 3 | 400081X1 | 8 | WASHER-HARD (26X44X4) |
| 4 | 400232X1 | 2 | BOLT (M24X3X50MM) |
| 5 | 400067X1 | 2 | BOLT (M24X3X80MM) |

[A] PART OF 184-5033 & 210-7489
CONTROL AR-DRAWBAR

00893786
PR: t05i29k58b0463

## AIR CONDITIONER & MOUNTING GP-BASIC

**151-9986**
**(S/N: PRIOR TO BAM50633; BBP50486; BCC50765; BDS50909)**

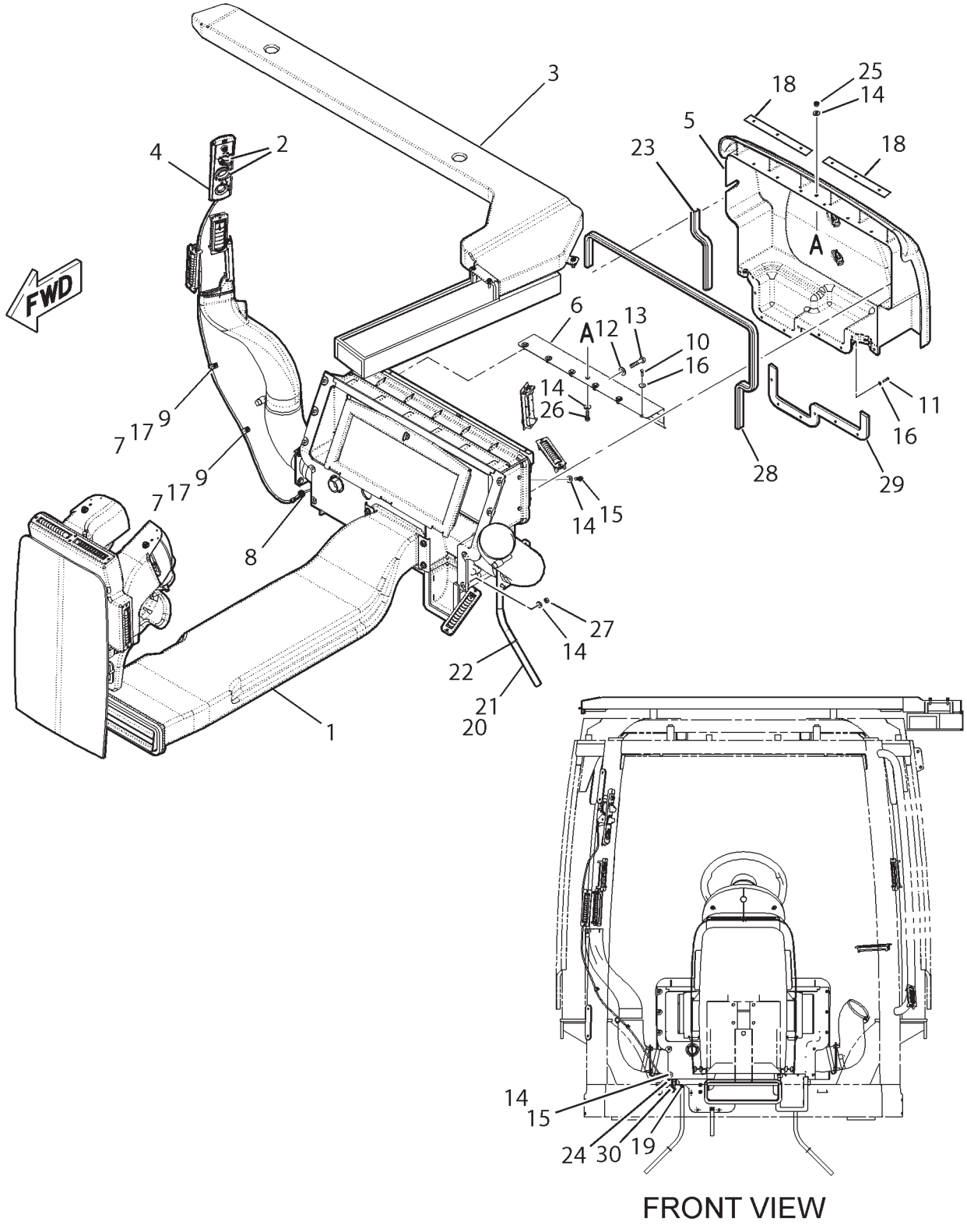

## AIR CONDITIONER & MOUNTING GP-BASIC

**151-9986**
**(S/N: PRIOR TO BAM50633; BBP50486; BCC50765; BDS50909)**

| ITEM | NUMBER | QTY | DESCRIPTION |
|---|---|---|---|
| - | 151-9986 | -- | AIR CONDITIONER & MOUNTING GP [A] (NOT SERVICED) |
| 1 | 152-0428 | 1 | AIR CONDITIONER GP (S/N: PRIOR TO BAM40605;BBP40472;BCC40709;BDS40834) (NOT SERVICED) (SEE BREAKDOWN FOR COMPONENTS) |
| 1 | 502500D1 | 1 | AIR CONDITIONER GP (S/N: EFF BAM40605;BBP40472;BCC40709;BDS40834) (NOT SERVICED) (SEE BREAKDOWN FOR COMPONENTS) |
| 2 | CH216-2628 | 2 | KNOB AS |
| 3 | 166-4556 | 1 | FILTER GP-CAB AIR (NOT SERVICED) (SEE BREAKDOWN FOR COMPONENTS) |
| 4 | 166-4586 | 1 | CONTROL GP-AIR & TEMP (NOT SERVICED) (SEE BREAKDOWN FOR COMPONENTS) |
| 5 | 166-4603 | 1 | COVER |
| 6 | 174-5770 | 1 | BRACKET ASY. |
| 7 | CH195-7925 | 3 | CLIP |
| 8 | 400948X1 | 1 | GROMMET |
| 9 | 400018X1 | 3 | BOLT (M6X1.0X10MM) |
| 10 | 400152X1 | 6 | BOLT (M6X1X16MM) |
| 11 | 400022X1 | 9 | BOLT (M6X1.0X25MM) |
| 12 | CH7X-7729 | 1 | WASHER (11X25X3MM THK) |
| 13 | 400049X1 | 1 | BOLT (M10X1.5X45MM) |
| 14 | 400599X1 | 12 | WASHER-HARD (M8X20.5X2MM THK) |
| 15 | 400053X1 | 6 | BOLT (M8X1.25X20MM) |
| 16 | CH5P-4115 | 9 | WASHER-HARD (7.2X19X2MM THK) |
| 17 | CH9X-8267 | 3 | WASHER (6.6X12X2MM THK) |
| 18 | 501147D1 | 2 | STRIP |
| 19 | CH3S-5096 | 3 | CLAMP |
| 20 | CH7T-9793 | 3 | VALVE (CHECK) |
| 21 | CH5P-4829 | AR | TUBE (42DM) |
| 22 | 400837X1 | 3 | STRAP-CABLE |
| 23 | 501144D1 | 1 | SEAL |
| 24 | 500473D1 | 1 | CLIP |
| 25 | CH131-3540 | 1 | LOCKNUT |
| 26 | 400341X1 | 1 | BOLT (M8X1.25X25MM) |
| 27 | 400340X1 | 4 | NUT (M8X1.25 THD) |
| 28 | 501145D1 | 1 | SEAL |
| 29 | 502517D1 | 1 | PLATE |
| 30 | CH8Y-5737 | 1 | CLIP-COMP (4.3IDX5.1ODX4.8) |

[A] PART OF 500842D1; 500844D1 CAB AR

1519986A
PR: t05i29k58b0464

## AIR CONDITIONER & MOUNTING GP-BASIC

**502502D1**
**(S/N: EFF BAM50633; BBP50486; BCC50765; BDS50909)**

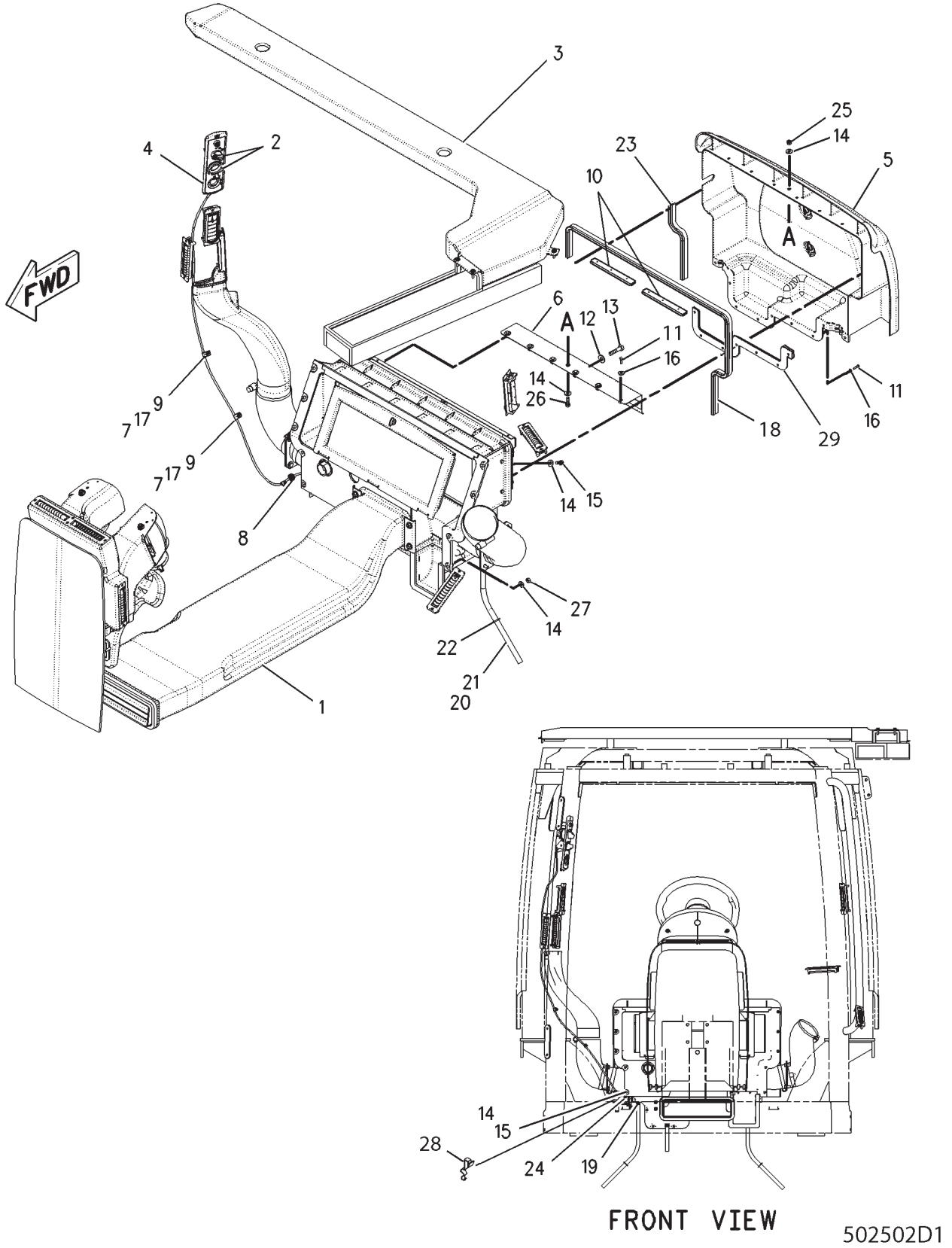

## AIR CONDITIONER & MOUNTING GP-BASIC

**502502D1**
**(S/N: EFF BAM50633; BBP50486; BCC50765; BDS50909)**

| ITEM | NUMBER | QTY | DESCRIPTION |
|---|---|---|---|
| - | 502502D1 | -- | AIR CONDITIONER & MTG GP [A] (NOT SERVICED) |
| 1 | 502500D1 | 1 | AIR CONDITIONER GP (NOT SERVICED) (SEE BREAKDOWN FOR COMPONENTS) |
| 2 | CH216-2628 | 2 | KNOB AS (CONTROL) |
| 3 | 166-4556 | 1 | DUCT GP-CAB AIR (NOT SERVICED) (SEE BREAKDOWN FOR COMPONENTS) |
| 4 | 166-4586 | 1 | CONTROL GP-AIR & TEMPERATURE (SEE BREAKDOWN FOR COMPONENTS) |
| 5 | 166-4603 | 1 | COVER |
| 6 | 174-5770 | 1 | BRACKET AS |
| 7 | CH195-7925 | 3 | CLIP |
| 8 | 400948X1 | 1 | GROMMET |
| 9 | 400018X1 | 3 | BOLT (M6X1.0X10MM) |
| 10 | 501147D1 | 2 | STRIP |
| 11 | 400022X1 | 15 | BOLT (M6X1.0X25MM) |
| 12 | CH7X-7729 | 1 | WASHER (11X25X3MM THK) |
| 13 | 400049X1 | 1 | BOLT (M10X1.5X45MM) |
| 14 | 400599X1 | 12 | WASHER-HARD (8.8X20.5X2MM THK) |
| 15 | 400053X1 | 6 | BOLT (M8X1.25X20MM) |
| 16 | CH5P-4115 | 8 | WASHER-HARD (7.2X19X2MM THK) |
| 17 | CH9X-8267 | 3 | WASHER (6.6X12X2MM THK) |
| 18 | 501145D1 | 1 | SEAL-FOAM |
| 19 | CH3S-5096 | 3 | CLAMP |
| 20 | CH7T-9793 | 3 | VALVE (CHECK) |
| 21 | CH5P-4829 | AR | TUBE (44.1 DM) |
| 22 | 400837X1 | 2 | STRAP-CABLE |
| 23 | 501144D1 | 1 | SEAL-FOAM |
| 24 | CH8Y-5737 | 1 | CLIP |
| 25 | CH131-3540 | 1 | LOCKNUT |
| 26 | 400341X1 | 1 | BOLT (M8X1.25X25MM) |
| 27 | 400340X1 | 4 | NUT (M8X1.25 THD) |
| 28 | 500473D1 | 1 | CLIP |
| 29 | 502517D1 | 1 | PLATE |

[A] PART OF 500842D1; 500844D1 CAB AR

502502DE
PR: t05i29k58b0465

## AIR CONDITIONER & MOUNTING GP-DELUXE

**166-4592**
**(S/N: PRIOR TO BAM50619; BBP50482; BCC50756; BDS50902)**

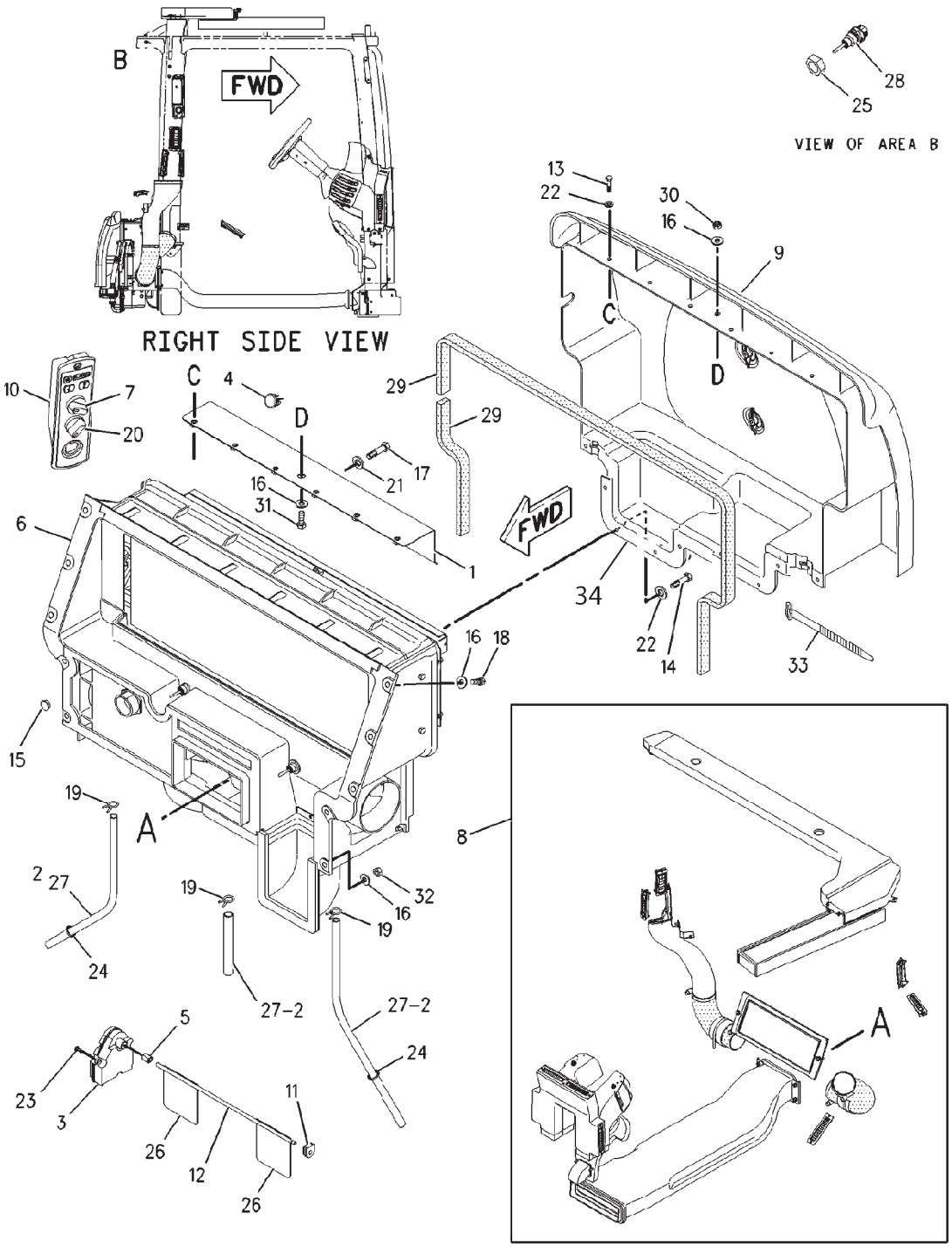


00891734

## AIR CONDITIONER & MOUNTING GP-DELUXE

**166-4592**
**(S/N: PRIOR TO BAM50619; BBP50482; BCC50756; BDS50902)**

| ITEM | NUMBER | QTY | DESCRIPTION |
|---|---|---|---|
| - | 166-4592 | -- | AIR CONDITIONER & MOUNTING GP [A] (NOT SERVICED) |
| 1 | 174-5770 | 1 | BRACKET AS |
| 2 | CH7T-9793 | 3 | VALVE (CHECK) (A/C DRAIN) |
| 3 | 501745D1 | 1 | ACTUATOR |
| 4 | CH128-2162 | 1 | SENSOR GP-LIGHT (SUN LOAD) |
| 5 | CH131-3093 | 1 | BUSHING |
| 6 | 152-0427 | 1 | AIR CONDITIONER GP (S/N: PRIOR TO BAM40575;BBP40461;BCC40683;BDS40763) (NOT SERVICED) (SEE BREAKDOWN FOR COMPONENTS) |
| 6 | 502499D1 | 1 | AIR CONDITIONER GP (S/N: EFF BAM40575; BBP40461;BCC40683;BDS40763) (NOT SERVICED) (SEE BREAKDOWN FOR COMPONENTS) |
| 7 | CH216-2628 | 2 | KNOB AS |
| 8 | 166-4556 | 1 | FILTER GP-CAB AIR (NOT SERVICED) (SEE BREAKDOWN FOR COMPONENTS) |
| 9 | 166-4603 | 1 | COVER |
| 10 | 166-4587 | 1 | CONTROL GP-AIR & TEMP (S/N: PRIOR TO BAM40608;BBP40474;BCC40730;BDS40873) |
| 10 | 501740D1 | 1 | CONTROL GP-AIR & TEMP (S/N: EFF BAM40608;BBP40474;BCC40730;BDS40873) |
| 11 | CH192-4765 | 1 | BUSHING |
| 12 | 198-4070 | 1 | DOOR ASY. |
| 13 | 400152X1 | 6 | BOLT (M6X1X16MM) |
| 14 | 400022X1 | 9 | BOLT (M6X1.0X25MM) |
| 15 | CH6K-6361 | 1 | BUTTON-PLUG |
| 16 | 400599X1 | 12 | WASHER-HARD (8.8X20.5X2MM THK) |
| 17 | 400049X1 | 1 | BOLT (M10X1.5X45MM) |
| 18 | 400053X1 | 6 | BOLT (M8X1.25X20MM) |
| 19 | CH3S-5096 | 3 | CLAMP |
| 20 | 501144D1 | 1 | SEAL-FOAM |
| 21 | CH7X-7729 | 1 | WASHER (11X25X3MM THK) |
| 22 | CH5P-4115 | 8 | WASHER-HARD (7.2X19X2MM THK) |
| 23 | CH9X-1046 | 3 | SCREW (M4X0.7X18MM) |
| 24 | 400837X1 | 3 | STRAP-CABLE |
| 25 | CH107-5591 | 1 | NUT-JAM (3/4-16 THD) |
| 26 | CH3E-6600 | AR | SEAL (BULK) (16CM) |
| 27 | CH5P-4829 | AR | TUBE (42DM) |
| 28 | 501697D1 | 1 | SENDER GP-TEMPERATURE (OUTSIDE AIR) |
| 29 | 501145D1 | 1 | SEAL-FOAM |
| 30 | CH131-3540 | 1 | LOCKNUT |
| 31 | 400341X1 | 1 | BOLT (M8X1.25X25MM) |
| 32 | 400340X1 | 4 | NUT (M8X1.25 THD) |
| 33 | 501147D1 | 2 | STRIP |
| 34 | 502517D1 | 1 | PLATE |

[A] PART OF 500841D1;500843D1;500849D1
CAB AR

00891734
PR: t05i29k58b0466

## AIR CONDITIONER & MOUNTING GP-DELUXE

**502501D1**
**(S/N: EFF BAM50619;BBP50482; BCC50756;BDS50902)**

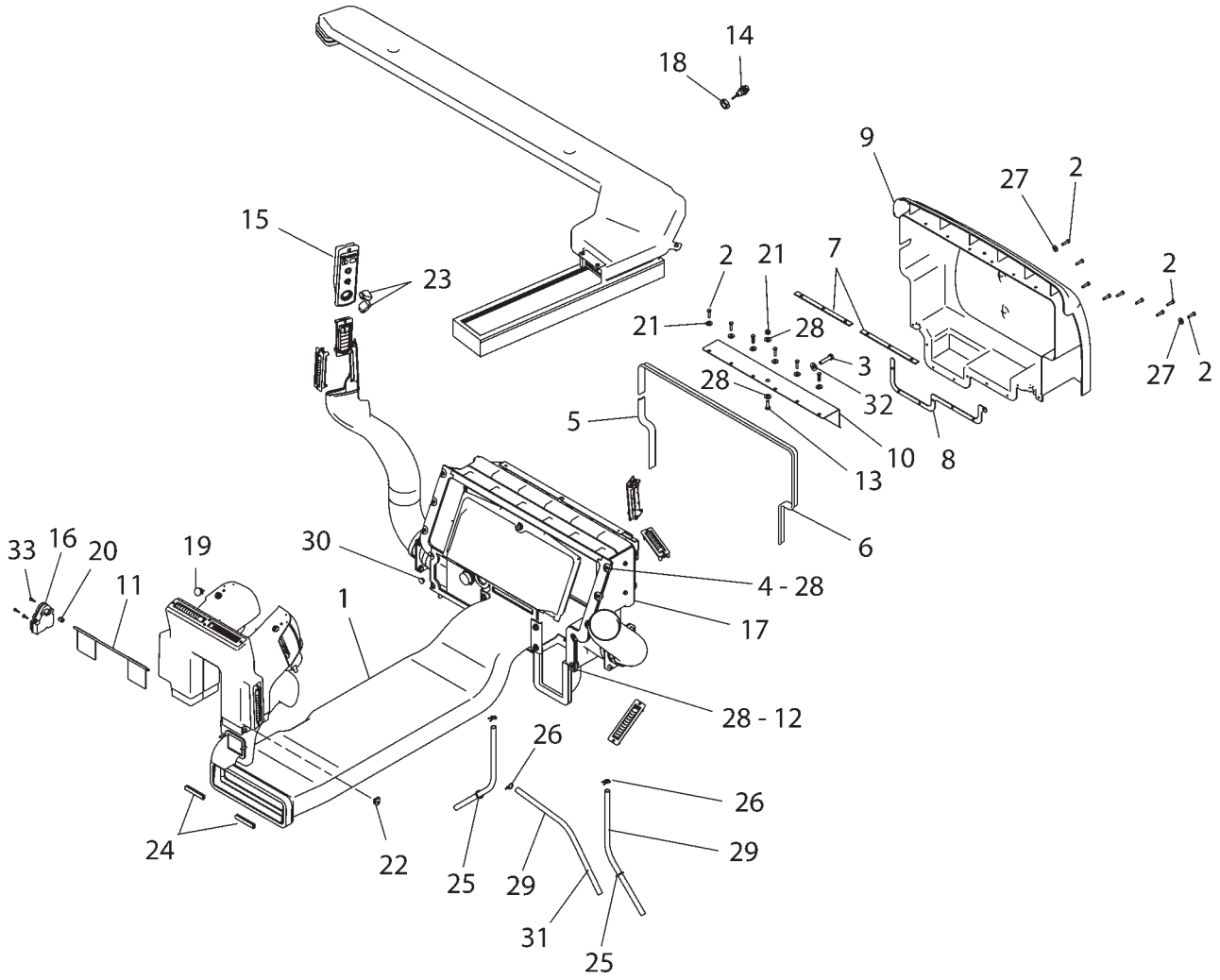


502501DD

## AIR CONDITIONER & MOUNTING GP-DELUXE

**502501D1**
**(S/N: EFF BAM50619;BBP50482; BCC50756;BDS50902)**

| ITEM | NUMBER | QTY | DESCRIPTION |
|---|---|---|---|
| - | 502501D1 | -- | AIR CONDITIONER & MOUNTING GP [A] (NOT SERVICED) |
| 1 | 166-4556 | 1 | DUCT GP-CAB AIR (NOT SERVICED) (SEE BREAKDOWN FOR COMPONENTS) |
| 2 | 400022X1 | 15 | BOLT (M6X1.0X25MM) |
| 3 | 400049X1 | 1 | BOLT (M10X1.5X45MM) |
| 4 | 400053X1 | 6 | BOLT (M8X1.25X20MM) |
| 5 | 501144D1 | 1 | SEAL-FOAM |
| 6 | 501145D1 | 1 | SEAL-FOAM |
| 7 | 501147D1 | 2 | STRIP |
| 8 | 502517D1 | 1 | PLATE |
| 9 | 166-4603 | 1 | COVER |
| 10 | 174-5770 | 1 | BRACKET AS |
| 11 | 198-4070 | 1 | DOOR AS |
| 12 | 400340X1 | 4 | NUT (M8X1.25) |
| 13 | 400341X1 | 1 | BOLT (M8X1.25X25MM) |
| 14 | 501697D1 | 1 | SENSOR |
| 15 | 501740D1 | 1 | CONTROL GP-AIR & TEMPERATURE |
| 16 | 501745D1 | 1 | ACTUATOR |
| 17 | 502499D1 | 1 | AIR CONDITIONER GP (NOT SERVICED) (SEE BREAKDOWN FOR COMPONENTS) |
| 18 | CH107-5591 | 1 | LOCKNUT (3/4-16) |
| 19 | CH128-2162 | 1 | SENSOR GP-LIGHT (SUN LOAD) |
| 20 | CH131-3093 | 1 | BUSHING |
| 21 | CH131-3540 | 1 | LOCKNUT (M8X1.25) |
| 22 | CH192-4765 | 1 | BUSHING |
| 23 | CH216-2628 | 2 | KNOB AS-CONTROL |
| 24 | CH3E-6600 | AR | SEAL (BULK) (16CM) |
| 25 | 400837X1 | 2 | STRAP-CABLE |
| 26 | CH3S-5096 | 3 | CLAMP |
| 27 | CH5P-4115 | 8 | WASHER-HARD (7.2X19X2) |
| 28 | 400599X1 | 12 | WASHER-HARD (8.8X20.5X2) |
| 29 | CH5P-6129 | AR | TUBE (BULK) (44.1DM) |
| 30 | CH6K-6361 | 1 | BUTTON-PLUG |
| 31 | CH7T-9793 | 3 | VALVE (CHECK) |
| 32 | CH7X-7729 | 1 | WASHER (11X25X3) |
| 33 | CH9X-1046 | 3 | SCREW (M4X0.7X18MM) |

[A] PART OF 500841D1;500843D1;500849D1 CAB AR

## AIR CONDITIONER GP-BASIC - 152-0428

**(S/N: PRIOR TO BAM40605; BBP40472; BCC40709; BDS40834)**
**1 OF 3**

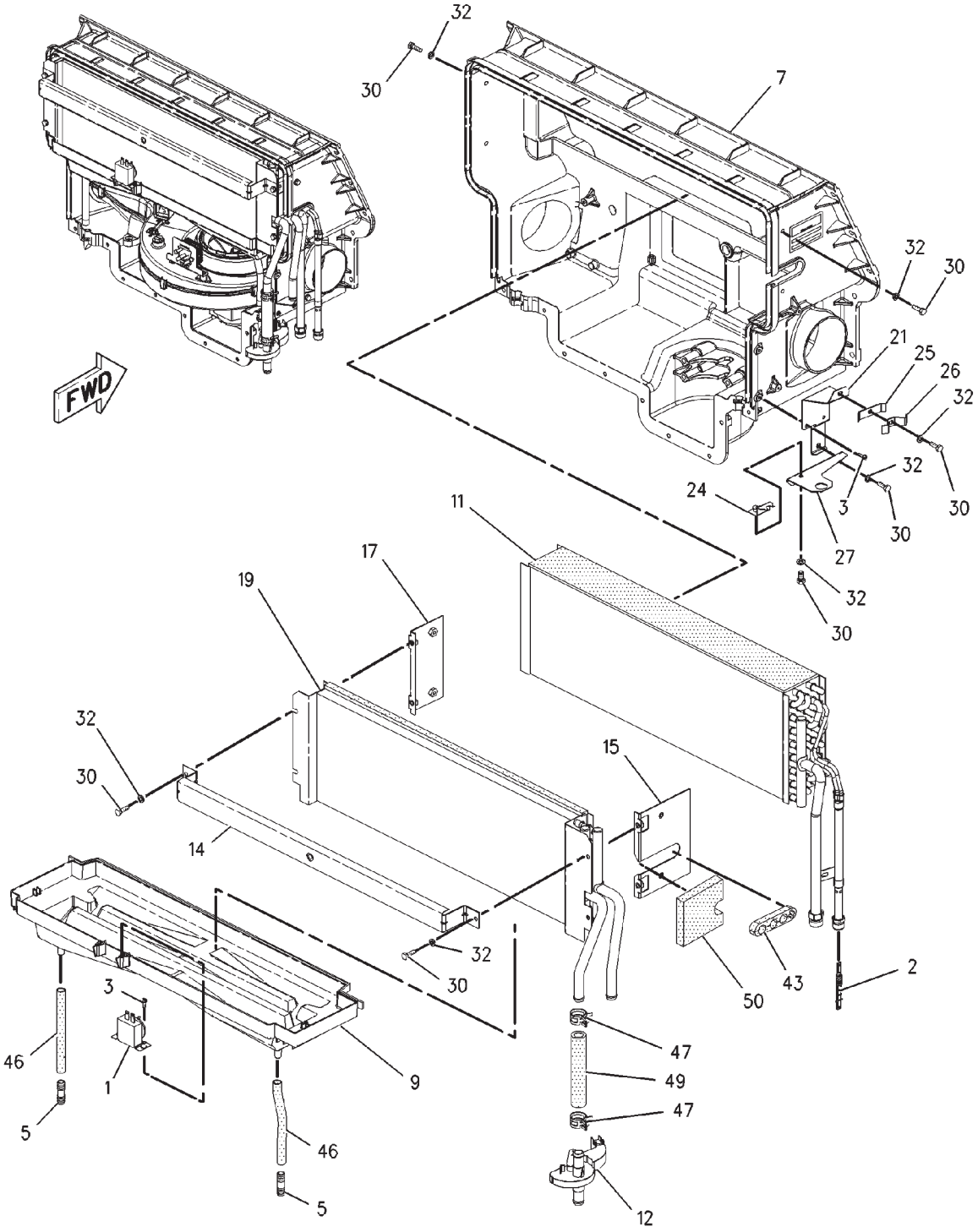


00898876

## AIR CONDITIONER GP-BASIC - 152-0428

**(S/N: PRIOR TO BAM40605; BBP40472; BCC40709; BDS40834)**

**1 OF 3**

| ITEM | NUMBER | QTY | DESCRIPTION |
|---|---|---|---|
| - | 152-0428 | -- | AIR CONDITIONER GP [A] (NOT SERVICED) |
| 1 | 3E-5464 | 1 | SWITCH ASY-THERMOSTAT (AIR CONDITIONER) |
| 2 | 7X-2049 | 1 | TUBE ASY-REFRIGERANT ORIFICE |
| 3 | 8L-9381 | 12 | SCREW-TAPPING (8-32X0.50 IN) |
| 5 | 9X-4994 | 2 | CONNECTOR |
| 7 | 168-2311 | 1 | CASE ASY. |
| 9 | 168-2318 | 1 | PAN-DRAIN |
| 11 | 168-2324 | 1 | COIL ASY-EVAPORATOR |
| 12 | 168-2326 | 1 | VALVE ASY-WATER (CAB HEATER) |
| 14 | 174-3978 | 1 | BRACKET |
| 15 | 174-3979 | 1 | RETAINER |
| 17 | 174-3981 | 1 | RETAINER |
| 19 | 193-0238 | 1 | COIL ASY-HEATER |
| 21 | 206-7461 | 1 | BRACKET ASY. |
| 24 | 217-3441 | 1 | BRACKET ASY. |
| 25 | 217-3442 | 1 | BRACKET |
| 26 | 217-3443 | 1 | BRACKET |
| 27 | 217-3444 | 1 | ANGLE |
| 30 | 8T-4138 | 14 | BOLT (M6X1X20MM) |
| 32 | 9X-8256 | 23 | WASHER (6.6X12X2MM THK) |
| 43 | 180-2470 | 1 | GASKET |
| 46 | 207-1293 | AR | TUBE (4DM) |
| 47 | 9X-2488 | 2 | CLAMP-HOSE |
| 49 | 136-1953 | AR | HOSE (13 CM) |
| 50 | 223-4941 | 1 | GASKET |

[A] PART OF 151-9986 AIR CONDITIONER AND MOUNTING GP

00898876
PR: t05i29k58b0468

## AIR CONDITIONER GP-BASIC - 152-0428

**(S/N: PRIOR TO BAM40605; BBP40472; BCC40709; BDS40834)**
**2 OF 3**

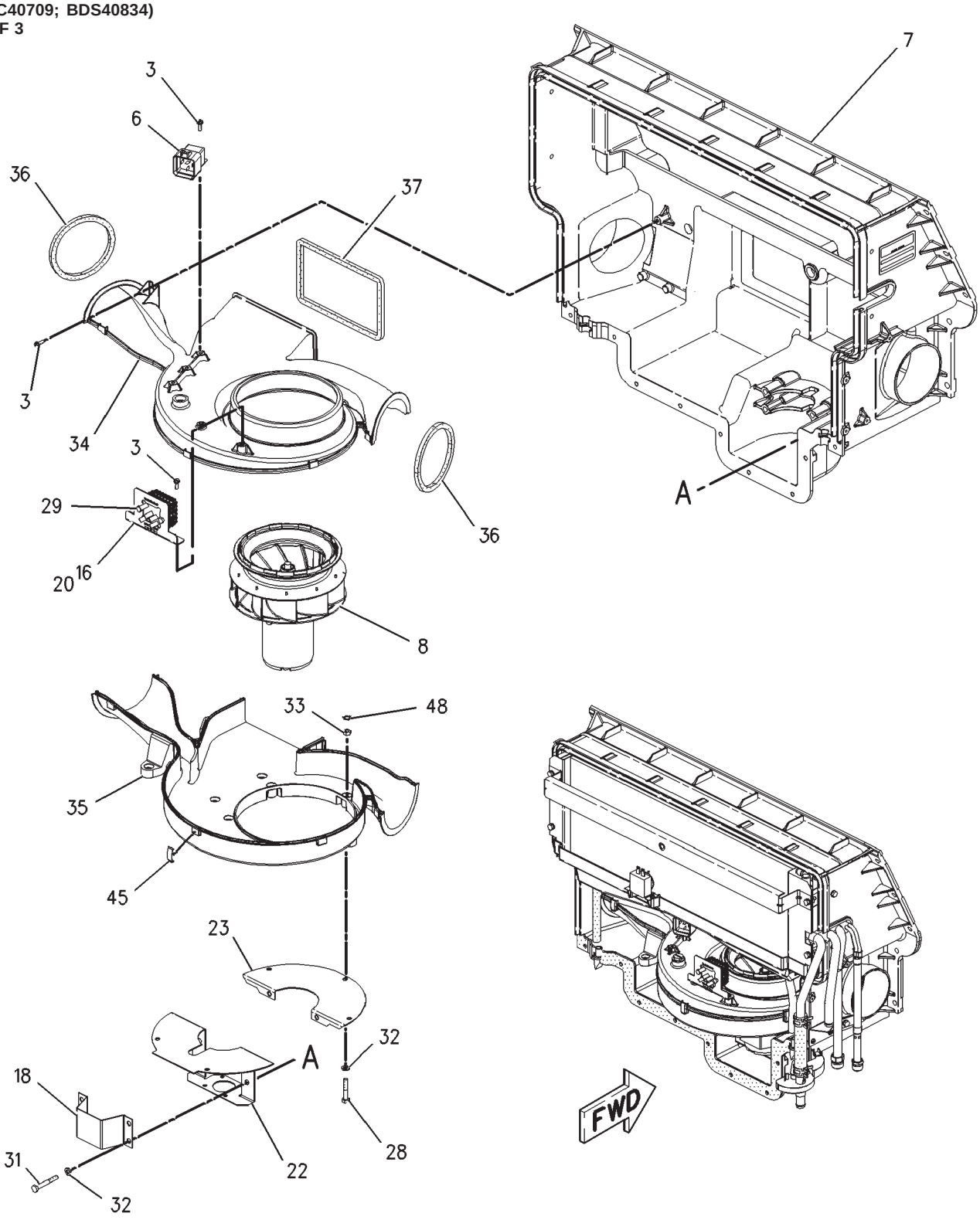


00874740

## AIR CONDITIONER GP-BASIC - 152-0428

**(S/N: PRIOR TO BAM40605; BBP40472; BCC40709; BDS40834)**



| ITEM | NUMBER | QTY | DESCRIPTION |
|---|---|---|---|
| - | 152-0428 | -- | AIR CONDITIONER GP [A] (NOT SERVICED) |
| 3 | 8L-9381 | 12 | SCREW-TAPPING (8-32X0.50 IN) |
| 6 | 115-1615 | 1 | RELAY ASY. (12 VOLT) (CAB BLOWER FAN) |
| 7 | 168-2311 | 1 | CASE ASY. |
| 8 | 168-2313 | 1 | FAN ASY. (CAB BLOWER) |
| | 7T-0093 | 2 | PIN-CONNECTOR |
| 16 | 174-3980 | 1 | BRACKET ASY. |
| 18 | | | NOT USED |
| 20 | 193-4445 | 1 | RESISTOR |
| 22 | 206-7462 | 1 | BRACKET |
| 23 | 206-7463 | 1 | BRACKET ASY. |
| 28 | 6V-7357 | 5 | BOLT (M6X1.0X25MM) |
| 29 | 7I-2272 | 2 | BOLT (M5X0.8X12MM) |
| 31 | 9X-2480 | 4 | BOLT (M6X1.0X45MM) |
| 32 | 9X-8256 | 23 | WASHER (6.6X12X2MM THK) |
| 33 | 400300X1 | 9 | NUT (M6X1 THD) |
| 34 | 168-2315 | 1 | HOUSING-BLOWER |
| 35 | 168-2316 | 1 | HOUSING-BLOWER |
| 36 | 180-2463 | 2 | GASKET |
| 37 | 180-2464 | 1 | GASKET |
| 45 | 185-4015 | 10 | CLIP |
| 48 | 7H-3937 | 9 | LOCKWASHER |

[A] PART OF 151-9986 AIR CONDITIONER AND MOUNTING GP

00874740
PR: t05i29k58b0469

## AIR CONDITIONER GP-BASIC - 152-0428

**(S/N: PRIOR TO BAM40605; BBP40472; BCC40709; BDS40834)**
**3 OF 3**

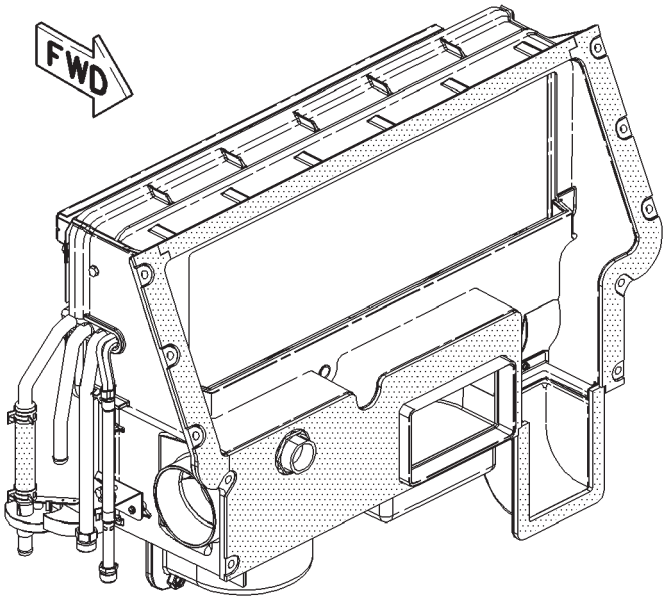


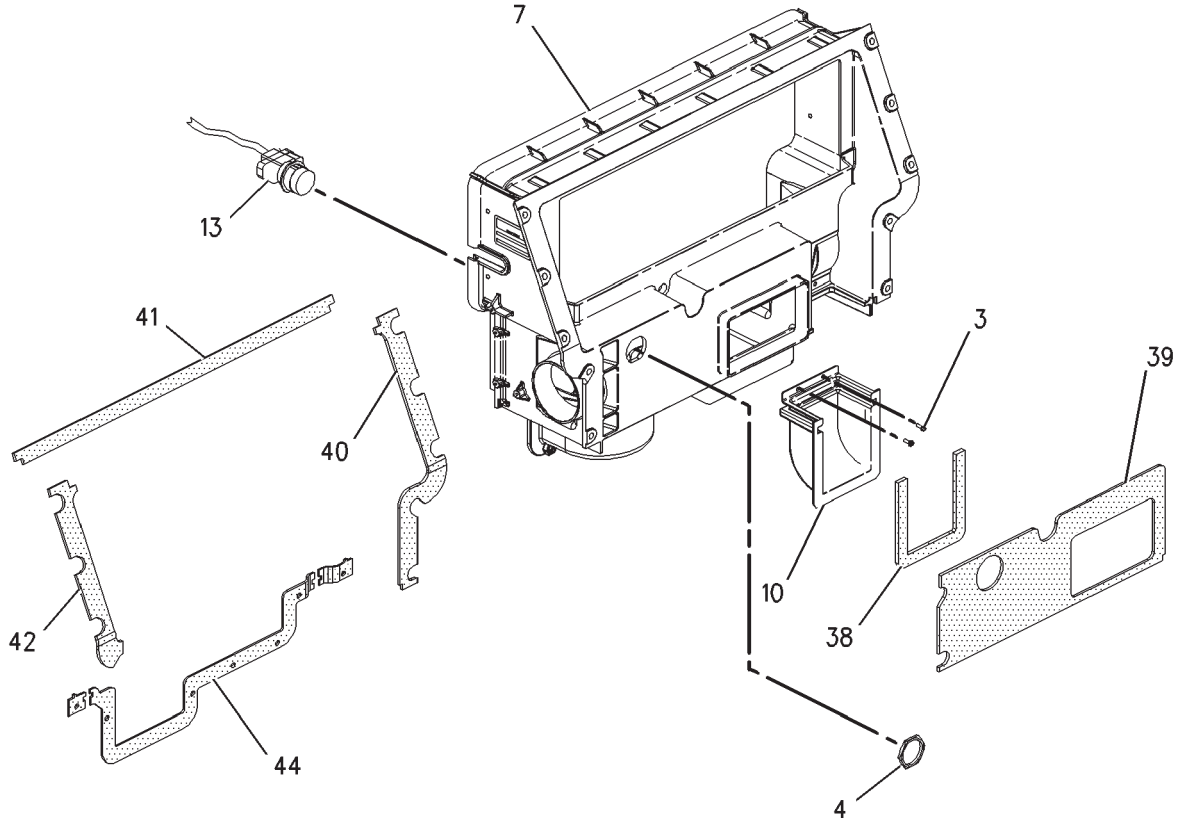


00874741

## AIR CONDITIONER GP-BASIC - 152-0428

**(S/N: PRIOR TO BAM40605; BBP40472; BCC40709; BDS40834)**



| ITEM | NUMBER | QTY | DESCRIPTION |
|---|---|---|---|
| - | 152-0428 | -- | AIR CONDITIONER GP [A] (NOT SERVICED) |
| 3 | 8L-9381 | 12 | SCREW-TAPPING (8-32X0.50 IN) |
| 4 | 8N-1536 | 1 | NUT (1 5/8-18 THD) |
| 7 | 168-2311 | 1 | CASE ASY. |
| 10 | 501706D1 | 1 | DUCT - FRESH AIR |
| 13 | 168-2327 | 1 | HARNESS ASY. (HEATER/AC) |
| 38 | 180-2465 | 1 | GASKET |
| 39 | 180-2466 | 1 | GASKET |
| 40 | 180-2467 | 1 | GASKET |
| 41 | 180-2468 | 1 | GASKET |
| 42 | 180-2469 | 1 | GASKET |
| 44 | 180-2471 | 1 | GASKET |

[A] PART OF 151-9986 AIR CONDITIONER AND MOUNTING GP

00874741
PR: t05i29k58b0470

## CONDITIONER GP-AIR-BASIC - 502500D1

**(S/N: PRIOR TO BAM40605; BBP40472; BCC40709; BDS40834)**

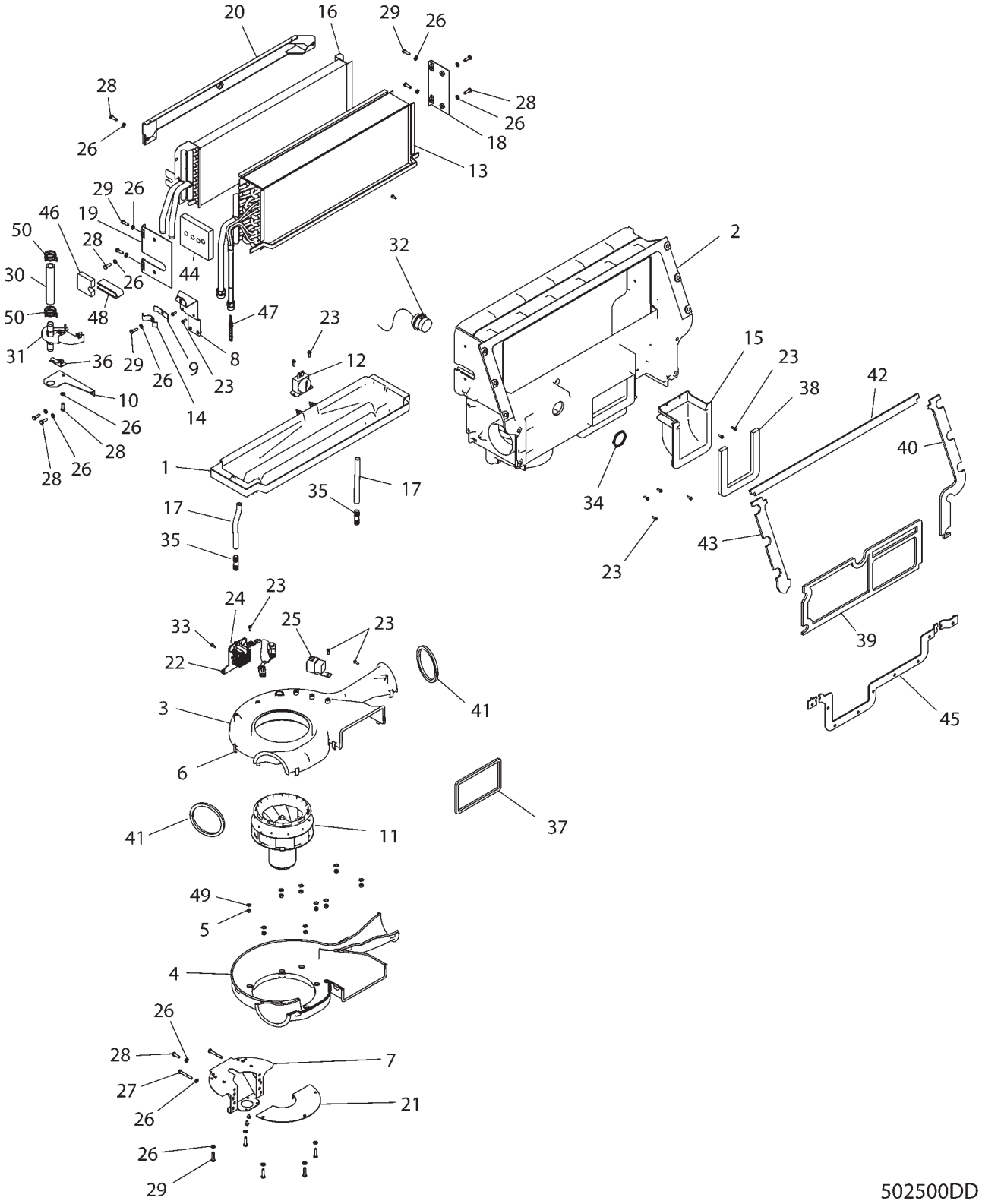

## CONDITIONER GP-AIR-BASIC - 502500D1

**(S/N: PRIOR TO BAM40605; BBP40472; BCC40709; BDS40834)**

| ITEM | NUMBER | QTY | DESCRIPTION |
|---|---|---|---|
| - | 502500D1 | -- | CONDITIONER GP-AIR [A] (NOT SERVICED) |
| 1 | 501705D1 | 1 | PAN-DRAIN |
| 2 | 501701D2 | 1 | CASE AS |
| 3 | 501703D1 | 1 | HOUSING-BLOWER |
| 4 | 501704D1 | 1 | HOUSING-BLOWER |
| 5 | 400300X1 | 9 | NUT M6X1 |
| 6 | 400296X1 | 10 | CLIP |
| 7 | 501730D1 | 1 | BRACKET AS. |
| 8 | 501729D1 | 1 | BRACKET AS. |
| 9 | 501733D1 | 1 | BRACKET |
| 10 | 501735D1 | 1 | ANGLE |
| 11 | 501702D1 | 1 | FAN AS. |
| 12 | 400299X1 | 1 | SWITCH AS.-THERMOSTAT |
| 13 | 501709D1 | 1 | COIL AS.-EVAP |
| 14 | 501734D1 | 1 | BRACKET |
| 15 | 501706D1 | 1 | DUCT-FRESH AIR |
| 16 | 501727D1 | 1 | COIL AS.-HEATER |
| 17 | 400298X1 | AR | TUBE-BULK (4 DM) |
| 18 | 501716D1 | 1 | RETAINER |
| 19 | 501714D1 | 1 | RETAINER |
| 20 | 501713D1 | 1 | BRACKET AS. |
| 21 | 501731D1 | 1 | BRACKET AS. |
| 22 | 502267D1 | 1 | THERMISTOR KIT |
| 23 | 400305X1 | 22 | SCREW-SELF TAPPING |
| 24 | 501728D1 | 1 | RESISTOR |
| 25 | 400292X1 | 1 | RELAY AS. |
| 26 | 400310X1 | 23 | WASHER |
| 27 | 400307X1 | 4 | BOLT M6X1X45 |
| 28 | 400221X1 | 14 | BOLT-M6X1X20MM ZNDI HHD 10.9 |
| 29 | 400022X1 | 5 | BOLT-M6X1X25MM ZNDI HHD 10.9 |
| 30 | 400294X1 | AR | HOSE-BULK (13 CM) |
| 31 | 501710D1 | 1 | VALVE AS.-WATER |
| 32 | 501711D2 | 1 | HARNESS AS |
| 33 | 400302X1 | 2 | BOLT-HEX HEAD |
| 34 | 400306X1 | 1 | NUT-PANEL |
| 35 | 400309X1 | 2 | CONNECTOR |
| 36 | 501732D1 | 1 | BRACKET AS. |
| 37 | 501719D1 | 1 | GASKET |
| 38 | 501720D2 | 1 | GASKET |
| 39 | 501721D2 | 1 | GASKET |
| 40 | 501722D2 | 1 | GASKET |
| 41 | 501718D1 | 2 | GASKET |
| 42 | 501723D2 | 1 | GASKET |
| 43 | 501724D2 | 1 | GASKET |
| 44 | 501725D1 | 1 | GASKET |
| 45 | 501726D1 | 1 | GASKET |
| 46 | 501737D1 | 1 | GASKET |
| 47 | 400932X1 | 1 | ORIFICE AS.-A/C |
| 48 | 502528D1 | 1 | TAPE-REFRIGERANT |
| 49 | 400301X1 | 9 | WASHER-TOOTH |
| 50 | 400308X1 | 2 | CLAMP-HOSE |

[A] PART OF: 502502D1 A/C & MTG GP

## AIR CONDITIONER GP-DELUXE - 152-0427

**(S/N: PRIOR TO BAM40575;BBP40461; BCC40683;BDS40763)**

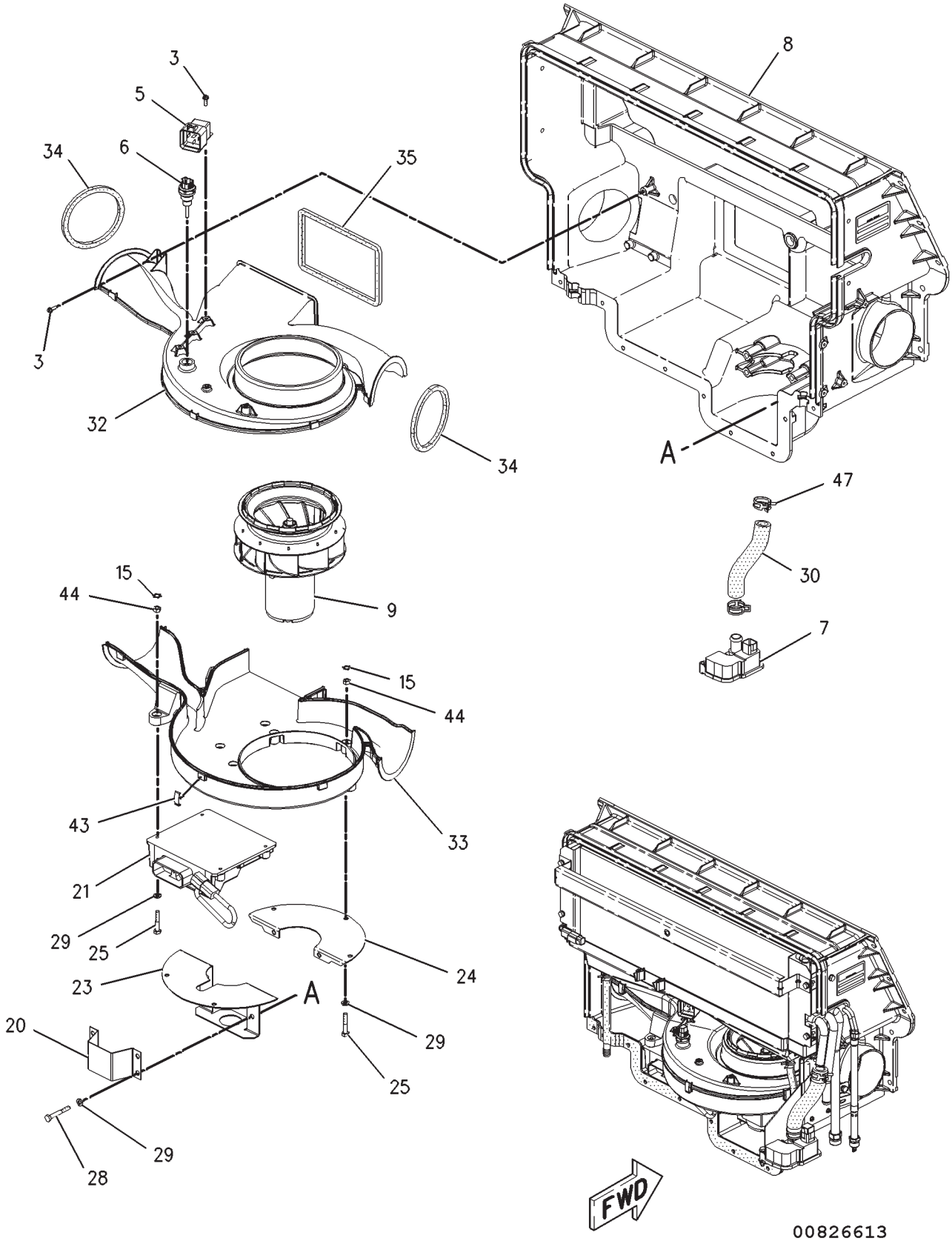

## AIR CONDITIONER GP-DELUXE - 152-0427

**(S/N: PRIOR TO BAM40575;BBP40461; BCC40683;BDS40763)**

| ITEM | NUMBER | QTY | DESCRIPTION |
|---|---|---|---|
| - | 152-0427 | -- | AIR CONDITIONER GP [A] (NOT SERVICED) |
| 3 | 8L-9381 | 7 | SCREW-TAPPING (8-32X0.50 IN) |
| 5 | 115-1615 | 1 | RELAY ASY. (12 VOLT) |
| 6 | 130-9811 | 2 | SENSOR GP-TEMPERATURE |
| 7 | 156-5863 | 1 | VALVE AS-WATER |
| 8 | 168-2311 | 1 | CASE ASY. |
| 9 | 168-2313 | 1 | FAN ASY. |
| | 7T-0093 | 2 | PIN-CONNECTOR (ONE MALE PIN) |
| | 177-9645 | 1 | KIT-RECEPTACLE (2 PIN)(INCL. FOLLOWING) |
| | 177-9641 | 1 | RECEPTACLE ASY. |
| | 177-9642 | 1 | WEDGE |
| 15 | 7H-3937 | 9 | LOCKWASHER |
| 20 | 180-2455 | 1 | BRACKET |
| 21 | 180-2461 | 1 | CONTROL ASY. |
| 23 | 206-7462 | | BRACKET |
| 24 | 206-7463 | 1 | BRACKET ASY. |
| 25 | 6V-7357 | 5 | BOLT (M6X1.0X25MM) |
| 28 | 9X-2480 | 4 | BOLT (M6X1.0X45MM) |
| 29 | 9X-8256 | 28 | WASHER (6.6X12X2MM THK) |
| 30 | 5P-0765 | AR | HOSE (20CM) |
| 32 | 168-2315 | 1 | HOUSING-BLOWER |
| 33 | 168-2316 | 1 | HOUSING-BLOWER |
| 34 | 180-2463 | 2 | GASKET |
| 35 | 180-2464 | 1 | GASKET |
| 43 | 185-4015 | 10 | CLIP |
| 44 | 400300X1 | 11 | NUT (M6X1 THD) |
| 47 | 9X-2488 | 4 | CLAMP-HOSE |

[A] PART OF 166-4592 AIR CONDITIONER AND MOUNTING GP

00826613
PR: t05i29k58b0472

## AIR CONDITIONER GP-DELUXE - 152-0427

**(S/N: PRIOR TO BAM40575;BBP40461; BCC40683;BDS40763)**

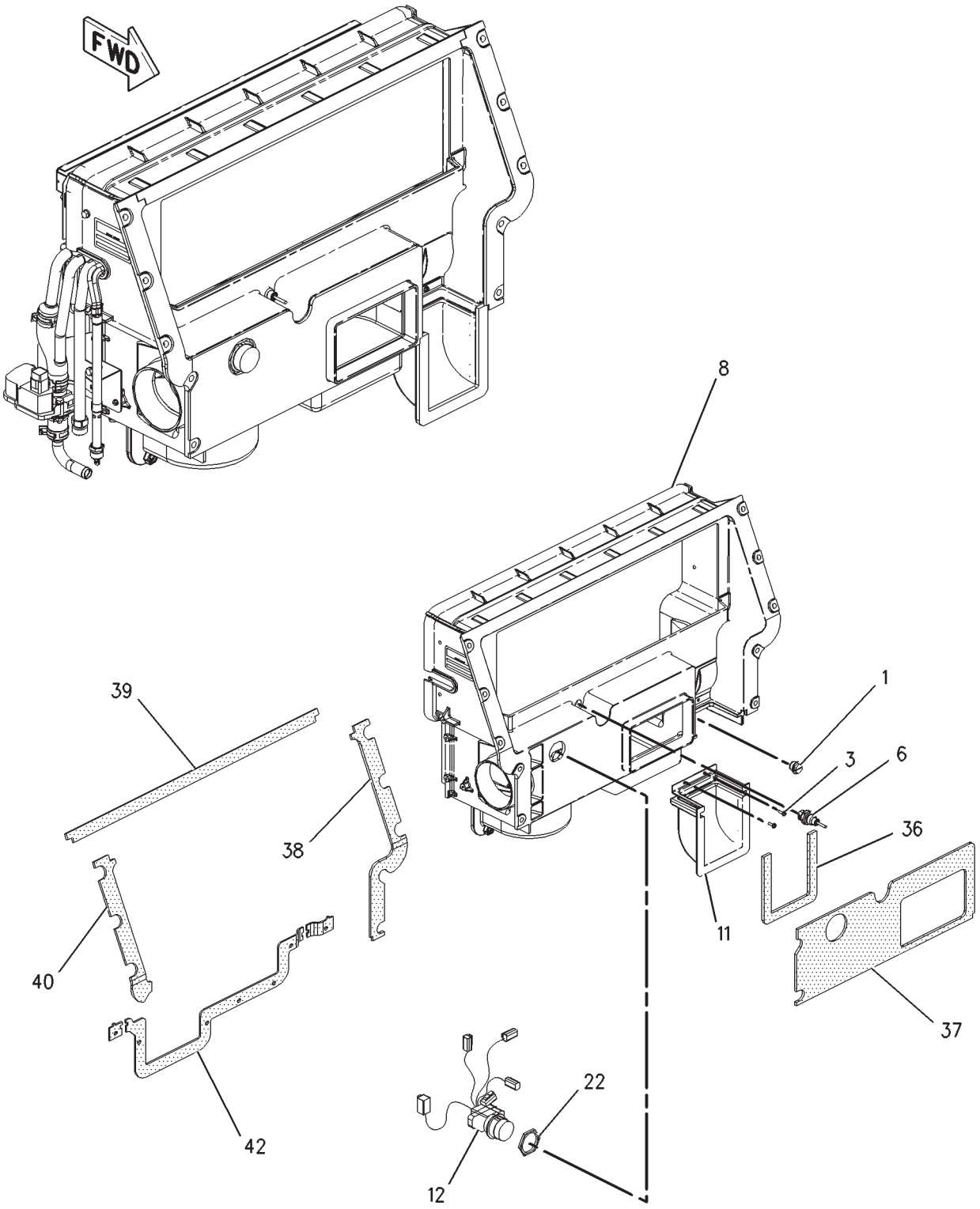


00826614

## AIR CONDITIONER GP-DELUXE - 152-0427

**(S/N: PRIOR TO BAM40575;BBP40461; BCC40683;BDS40763)**

| ITEM | NUMBER | QTY | DESCRIPTION |
|---|---|---|---|
| - | 152-0427 | -- | AIR CONDITIONER GP [A] (NOT SERVICED) |
| 1 | 1P-1669 | 1 | PLUG-SEAL |
| 3 | 8L-9381 | 7 | SCREW-TAPPING (8-32X0.50 IN) |
| 6 | 130-9811 | 2 | SENSOR GP-TEMPERATURE |
| 8 | 168-2311 | 1 | CASE ASY. |
| 11 | 501706D1 | 1 | DUCT - FRESH AIR |
| 12 | 168-2322 | 1 | HARNESS ASY. (AIR CONDITIONER) |
| 22 | 180-9214 | 1 | NUT (11/16-18 THD) |
| 36 | 180-2465 | 1 | GASKET |
| 37 | 180-2466 | 1 | GASKET |
| 38 | 180-2467 | 1 | GASKET |
| 39 | 180-2468 | 1 | GASKET |
| 40 | 180-2469 | 1 | GASKET |
| 42 | 180-2471 | 1 | GASKET |

[A] PART OF 166-4592 AIR CONDITIONER AND MOUNTING GP

00826614
PR: t05i29k58b0473

## AIR CONDITIONER GP-DELUXE - 502499D1

**(S/N: EFF BAM40575;BBP40461; BCC40683;BDS40763)**

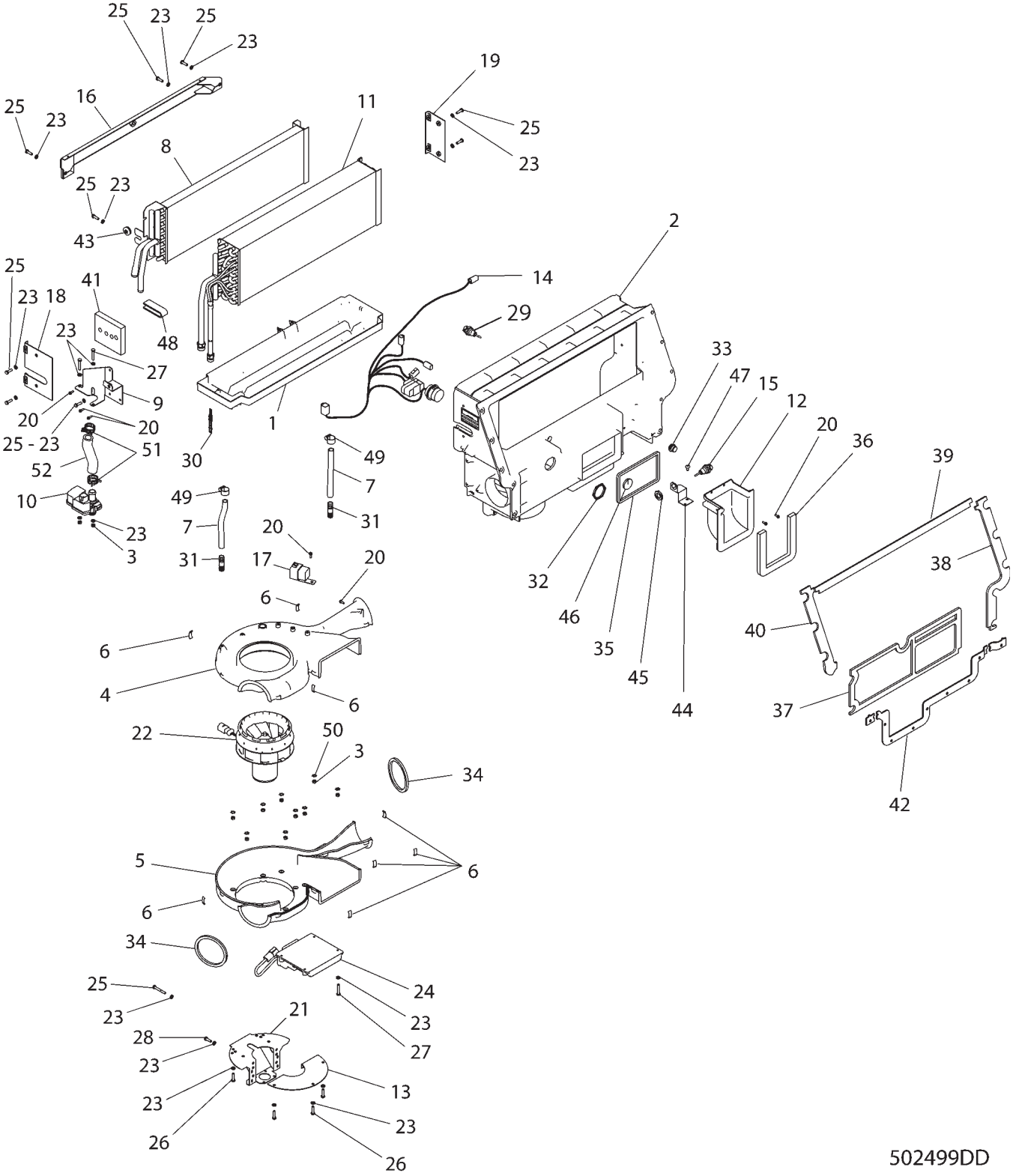

## AIR CONDITIONER GP-DELUXE - 502499D1

**(S/N: EFF BAM40575;BBP40461; BCC40683;BDS40763)**

| ITEM | NUMBER | QTY | DESCRIPTION |
|---|---|---|---|
| - | 502499D1 | -- | CONDITIONER GP-AIR [A] (NOT SERVICED) |
| 1 | 501705D1 | 1 | PAN-DRAIN |
| 2 | 501701D2 | 1 | CASE AS |
| 3 | 400300X1 | 11 | NUT M6X1 |
| 4 | 501703D1 | 1 | HOUSING-BLOWER |
| 5 | 501704D1 | 1 | HOUSING-BLOWER |
| 6 | 400296X1 | 10 | CLIP |
| 7 | 400298X1 | 4 | TUBE-BULK |
| 8 | 501708D1 | 1 | COIL AS.-HEATER |
| 9 | 501712D1 | 1 | BRACKET AS. |
| 10 | 501700D1 | 1 | VALVE AS.-WATER |
| 11 | 501709D1 | 1 | COIL AS.-EVAP |
| 12 | 501706D1 | 1 | DUCT-FRESH AIR |
| 13 | 501731D1 | 1 | BRACKET AS. |
| 14 | 501707D2 | 1 | HARNESS AS |
| 15 | 501697D1 | 2 | SENSOR GP. |
| 16 | 501713D1 | 1 | BRACKET AS. |
| 17 | 400292X1 | 1 | RELAY AS. |
| 18 | 501714D1 | 1 | RETAINER |
| 19 | 501716D1 | 1 | RETAINER |
| 20 | 400305X1 | 7 | SCREW-SELF TAPPING |
| 21 | 501730D1 | 1 | BRACKET AS. |
| 22 | 501702D1 | 1 | FAN AS. |
| 23 | 400310X1 | 28 | WASHER |
| 24 | 501717D1 | 1 | CONTROL AS. |
| 25 | 400221X1 | 11 | BOLT-M6X1X20MM ZNDI HHD 10.9 |
| 26 | 400022X1 | 5 | BOLT-M6X1X25MM ZNDI HHD 10.9 |
| 27 | 400185X1 | 6 | BOLT-M6X1X35MM ZNDI HHD 10.9 |
| 28 | 400307X1 | 4 | BOLT M6X1 |
| 29 | 400293X1 | 1 | SENSOR AS. |
| 30 | 400932X1 | 1 | ORIFICE AS.-A/C |
| 31 | 400309X1 | 2 | CONNECTOR |
| 32 | 400295X1 | 1 | NUT-HEX |
| 33 | 400297X1 | 1 | PLUG |
| 34 | 501718D1 | 2 | GASKET |
| 35 | 501719D1 | 1 | GASKET |
| 36 | 501720D2 | 1 | GASKET |
| 37 | 501721D2 | 1 | GASKET |
| 38 | 501722D2 | 1 | GASKET |
| 39 | 501723D2 | 1 | GASKET |
| 40 | 501724D2 | 1 | GASKET |
| 41 | 501725D1 | 1 | GASKET |
| 42 | 501726D1 | 1 | GASKET |
| 43 | 501146D1 | 1 | GROMMET-WIRE |
| 44 | 502033D1 | 1 | BRACKET |
| 45 | 400780X1 | 1 | NUT-JAM #8 3/4-16 UNF 2B |
| 46 | 502036D1 | 1 | GASKET HVAC SENSOR PROBE |
| 47 | CH217-5909 | 2 | SCREW-1/4-15X12.7 PAN THD CTG |
| 48 | 502528D1 | 1 | TAPE-REFRIGERANT |
| 49 | 400109X1 | 2 | CLAMP-HOSE |
| 50 | 400301X1 | 9 | LOCKWASHER-TOOTH |
| 51 | 400308X1 | 2 | CLAMP-HOSE |
| 52 | 501738D1 | AR | HOSE-HEATER (3/4ID) (20CM) |

[A] PART OF 502501D1
AIR CONDITIONER & MTG GP

## ANTENNA GP-RADIO - 168-1951

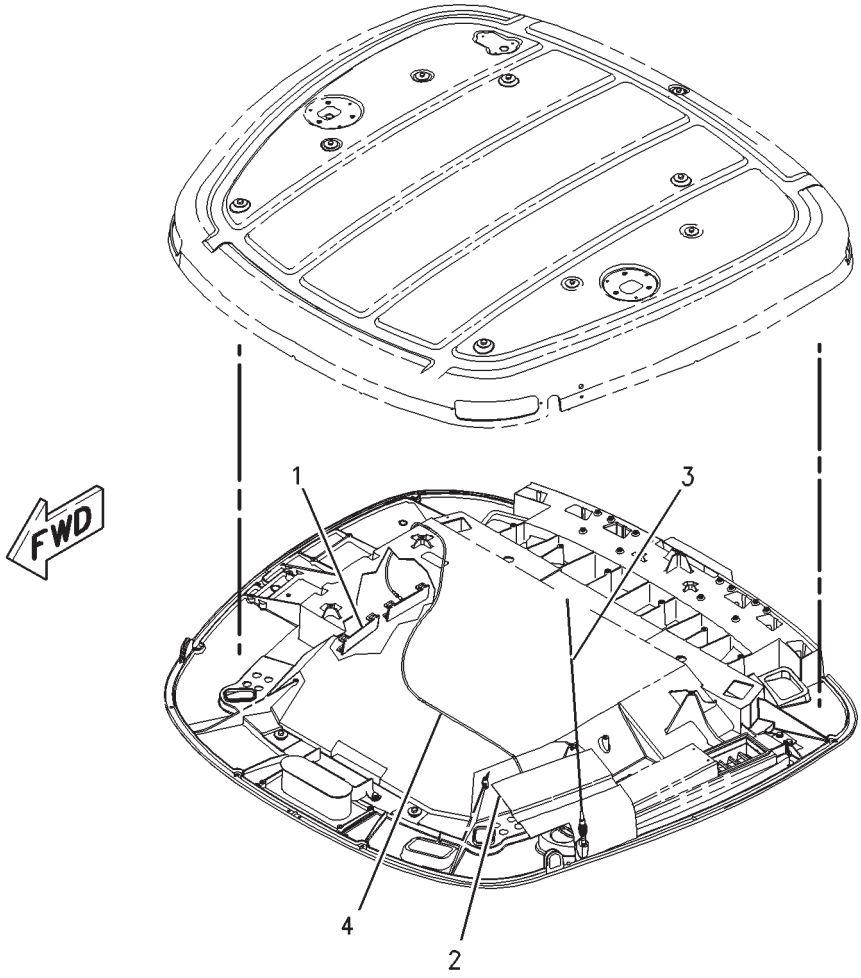


00786383

## ANTENNA GP-RADIO - 168-1951

| ITEM | NUMBER | QTY | DESCRIPTION |
|---|---|---|---|
| - | 168-1951 | -- | ANTENNA GP-RADIO [A] (NOT SERVICED) |
| 1 | 400128X1 | 2 | COVER |
| 2 | 136-5330 | 1 | PLATE-GROUNDING |
| 3 | CH166-4615 | 1 | ANTENNA |
| 4 | 171-1576 | 1 | CABLE-ANTENNA |

[A] PART OF 500841D1; 500842D1;
500844D1; 500849D1 CAB AR

00786383
PR: t05i29k58b0475

## ANTENNA GP-RADIO - 210-1570
**BUSINESS BAND**

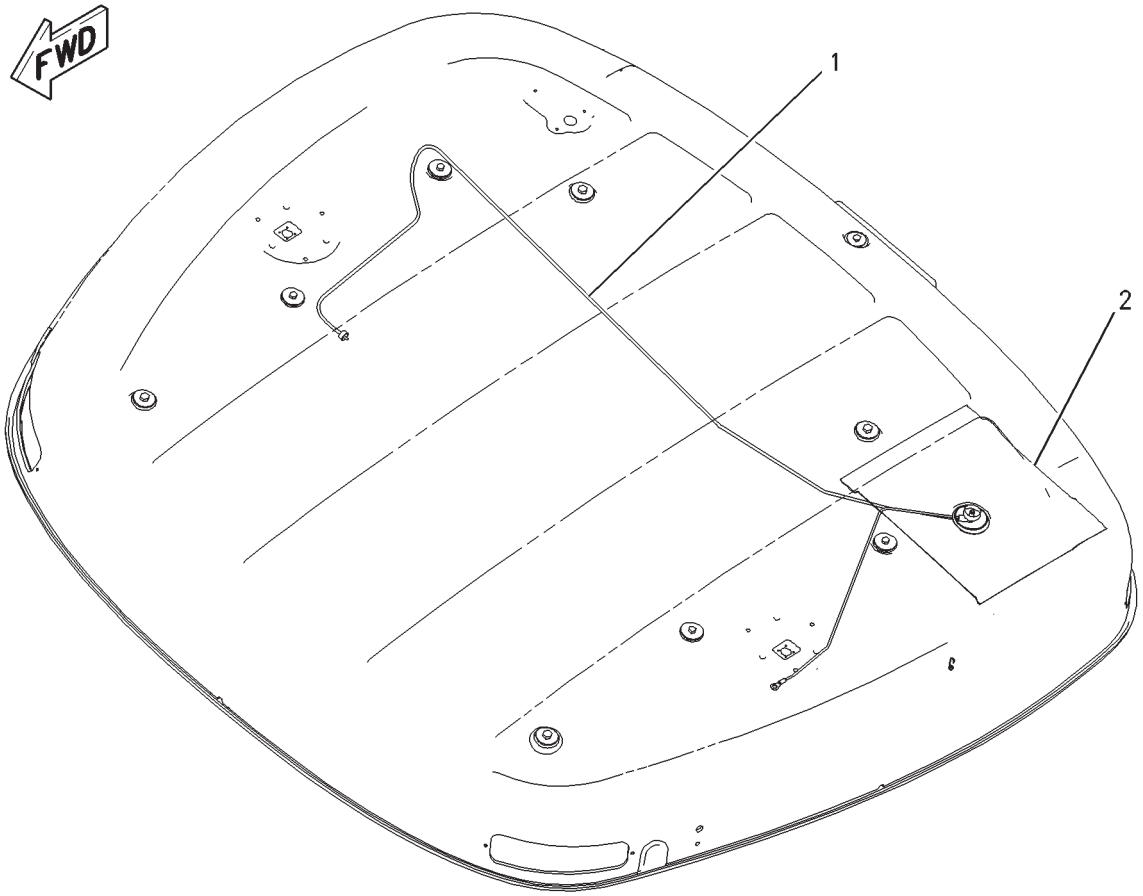


00835371

## ANTENNA GP-RADIO - 210-1570
**BUSINESS BAND**

| ITEM | NUMBER | QTY | DESCRIPTION |
|---|---|---|---|
| - | 210-1570 | -- | ANTENNA GP-RADIO [A] (NOT SERVICED) |
| 1 | 209-8430 | 1 | CABLE |
| 2 | 210-2654 | 1 | PLATE-GROUND |

[A] PART OF 500843D1; 500849D1 CAB AR

00835371
PR: t05i29k58b0476

**CAB AR-BASIC - 500842D1**
**EAME ONLY**

NO ILLUSTRATION

NOTIF

## CAB AR-BASIC - 500842D1
EAME ONLY

| ITEM | NUMBER | QTY | DESCRIPTION |
|---|---|---|---|
| - | 500842D1 | -- | CAB AR-BASIC (SERVICED BY COMPONENTS) |
| 1 | 136-5477 | 1 | WIRING GP-ARMREST (NOT SERVICED)<br>(SEE BREAKDOWN FOR COMPONENTS) |
| 2 | 152-0004 | 1 | CAB GP-BASIC<br>(SEE BREAKDOWN FOR COMPONENTS) |
| 3 | 152-0005 | 1 | WIRING GP-CAB (NOT SERVICED)<br>(SEE BREAKDOWN FOR COMPONENTS) |
| 4 | 152-0418 | 1 | LINER GP-OPERATOR (NOT SERVICED)<br>(SEE BREAKDOWN FOR COMPONENTS) |
| 5 | 152-0419 | 1 | SPEAKER GP-RADIO (NOT SERVICED)<br>(SEE BREAKDOWN FOR COMPONENTS) |
| 6 | 152-0424 | 1 | VISOR GP-CAB (FRONT) (NOT SERVICED)<br>(SEE BREAKDOWN FOR COMPONENTS) |
| 7 | 500768D1 | 1 | CONSOLE GP (NOT SERVICED)<br>(SEE BREAKDOWN FOR COMPONENTS) |
| 8 | 152-0433 | 1 | SEAT GP-TRAINING (NOT SERVICED)<br>(SEE BREAKDOWN FOR COMPONENTS) |
| 9 | 500839D1 | 1 | CONSOLE GP-MTG & (NOT SERVICED)<br>(SEE BREAKDOWN FOR COMPONENTS) |
| 10 | 152-0438 | 1 | CONTROL GP-BRAKE & CLUTCH (NOT SERVICED)<br>(SEE BREAKDOWN FOR COMPONENTS) |
| 11 | 152-0444 | 1 | ROOF GP-CAB (NOT SERVICED)<br>(SEE BREAKDOWN FOR COMPONENTS) |
| 12 | 152-0447 | 1 | CONTROL GP-DECELERATOR (NOT SERVICED)<br>(SEE BREAKDOWN FOR COMPONENTS) |
| 13 | 162-4101 | 1 | LIGHTING GP-WARNING (NOT SERVICED)<br>(SEE BREAKDOWN FOR COMPONENTS) |
| 14 | 151-9986 | 1 | AIR CONDITIONER & MTG GP (S/N: PRIOR TO BAM50633;BBP50486;BCC50765;BDS50909)<br>(NOT SERVICED)<br>(SEE BREAKDOWN FOR COMPONENTS) |
| 14 | 502502D1 | 1 | AIR CONDITIONER & MTG GP (S/N: EFF BAM50633;BBP50486;BCC50765;BDS50909)<br>(NOT SERVICED)<br>(SEE BREAKDOWN FOR COMPONENTS) |
| 15 | 168-1946 | 1 | WIRING GP-CONSOLE (NOT SERVICED)<br>(SEE BREAKDOWN FOR COMPONENTS) |
| 16 | 168-1951 | 1 | ANTENNA GP-RADIO (NOT SERVICED)<br>(SEE BREAKDOWN FOR COMPONENTS) |
| 17 | 172-6857 | 1 | CONTROL GP-PARKING BRAKE (NOT SERVICED)<br>(SEE BREAKDOWN FOR COMPONENTS) |
| 18 | 196-3968 | 1 | WIPER GP (DELUXE) (NOT SERVICED)<br>(SEE BREAKDOWN FOR COMPONENTS) |
| 19 | 206-0588 | 1 | MIRROR GP (NOT SERVICED)<br>(SEE BREAKDOWN FOR COMPONENTS) |
| 20 | 208-2880 | 1 | LINES GP-HEATER (NOT SERVICED)<br>(SEE BREAKDOWN FOR COMPONENTS) |
| 21 | 209-5608 | 1 | MIRROR GP-REAR VIEW (NOT SERVICED)<br>(SEE BREAKDOWN FOR COMPONENTS) |
| 22 | 224-3917 | 1 | TRIM GP-CAB (NOT SERVICED)<br>(SEE BREAKDOWN FOR COMPONENTS) |
| 23 | 500761D1 | 1 | COVER GP (NOT SERVICED)<br>(SEE BREAKDOWN FOR COMPONENTS) |

NOTIF
PR: t05i29k58b0477

**CAB AR-DELUXE - 500841D1**
**EAME ONLY**

NO ILLUSTRATION

NOTIF

## CAB AR-DELUXE - 500841D1
EAME ONLY

| ITEM | NUMBER | QTY | DESCRIPTION |
|---|---|---|---|
| - | 500841D1 | -- | CAB AR-DELUXE (SERVICED BY COMPONENTS) |
| 1 | 136-5477 | 1 | WIRING GP-ARMREST (NOT SERVICED)<br>(SEE BREAKDOWN FOR COMPONENTS) |
| 2 | 152-0004 | 1 | CAB GP-BASIC<br>(SEE BREAKDOWN FOR COMPONENTS) |
| 3 | 152-0005 | 1 | WIRING GP-CAB (NOT SERVICED)<br>(SEE BREAKDOWN FOR COMPONENTS) |
| 4 | 152-0418 | 1 | LINER GP-OPERATOR (NOT SERVICED)<br>(SEE BREAKDOWN FOR COMPONENTS) |
| 5 | 152-0419 | 1 | SPEAKER GP-RADIO (NOT SERVICED)<br>(SEE BREAKDOWN FOR COMPONENTS) |
| 6 | 152-0424 | 1 | VISOR GP-CAB (FRONT) (NOT SERVICED)<br>(SEE BREAKDOWN FOR COMPONENTS) |
| 7 | 500768D1 | 1 | CONSOLE GP (NOT SERVICED)<br>(SEE BREAKDOWN FOR COMPONENTS) |
| 8 | 152-0433 | 1 | SEAT GP-TRAINING (NOT SERVICED)<br>(SEE BREAKDOWN FOR COMPONENTS) |
| 9 | 500839D1 | 1 | CONSOLE GP-MTG & (NOT SERVICED)<br>(SEE BREAKDOWN FOR COMPONENTS) |
| 10 | 152-0438 | 1 | CONTROL GP-BRAKE & CLUTCH (NOT SERVICED)<br>(SEE BREAKDOWN FOR COMPONENTS) |
| 11 | 152-0444 | 1 | ROOF GP-CAB (NOT SERVICED)<br>(SEE BREAKDOWN FOR COMPONENTS) |
| 12 | 152-0447 | 1 | CONTROL GP-DECELERATOR (NOT SERVICED)<br>(SEE BREAKDOWN FOR COMPONENTS) |
| 13 | 162-4101 | 1 | LIGHTING GP-WARNING (NOT SERVICED)<br>(SEE BREAKDOWN FOR COMPONENTS) |
| 14 | 166-4592 | 1 | CONDITIONER GP-MOUNTING & (NOT SERVICED)<br>(S/N: PRIOR TO BAM50619;BBP50482;<br>BCC50756;BDS50902)<br>(SEE BREAKDOWN FOR COMPONENTS) |
| 14 | 502501D1 | 1 | CONDITIONER GP-MOUNTING & (NOT SERVICED)<br>(S/N: EFF BAM50619;BBP50482;<br>BCC50756;BDS50902)<br>(SEE BREAKDOWN FOR COMPONENTS) |
| 15 | 168-1946 | 1 | WIRING GP-CONSOLE (NOT SERVICED)<br>(SEE BREAKDOWN FOR COMPONENTS) |
| 16 | 168-1951 | 1 | ANTENNA GP-RADIO (NOT SERVICED)<br>(SEE BREAKDOWN FOR COMPONENTS) |
| 17 | 172-6857 | 1 | CONTROL GP-PARKING BRAKE (NOT SERVICED)<br>(SEE BREAKDOWN FOR COMPONENTS) |
| 18 | 196-3968 | 1 | WIPER GP (DELUXE) (NOT SERVICED)<br>(SEE BREAKDOWN FOR COMPONENTS) |
| 19 | 206-0588 | 1 | MIRROR GP (NOT SERVICED)<br>(SEE BREAKDOWN FOR COMPONENTS) |
| 20 | 208-2881 | 1 | LINES GP-HEATER (NOT SERVICED)<br>(SEE BREAKDOWN FOR COMPONENTS) |
| 21 | 209-5608 | 1 | MIRROR GP-REAR VIEW (NOT SERVICED)<br>(SEE BREAKDOWN FOR COMPONENTS) |
| 22 | 224-3917 | 1 | TRIM GP-CAB (NOT SERVICED)<br>(SEE BREAKDOWN FOR COMPONENTS) |
| 23 | 173-6501 | 1 | WIRING GP-SHUTOFF (TIME DELAY LIGHTING)<br>(NOT SERVICED)<br>(SEE BREAKDOWN FOR COMPONENTS) |
| 24 | 500761D1 | 1 | COVER GP (NOT SERVICED)<br>(SEE BREAKDOWN FOR COMPONENTS) |

NOTIF
PR: t05i29k58b0478

**CAB AR-BASIC - 500844D1**
**ROW & SPECIAL APPLICATIONS**

NO ILLUSTRATION

NOTIF

## CAB AR-BASIC - 500844D1
**ROW & SPECIAL APPLICATIONS**

| ITEM | NUMBER | QTY | DESCRIPTION |
|---|---|---|---|
| - | 500844D1 | -- | CAB AR (NOT SERVICED) |
| 1 | 136-5477 | 1 | WIRING GP-CONSOLE (NOT SERVICED)<br>(SEE BREAKDOWN FOR COMPONENTS) |
| 2 | 151-9986 | 1 | AIR CONDITIONER & MTG GP (S/N: PRIOR TO BAM50633;BBP50486;BCC50765;BDS50909)<br>(NOT SERVICED)<br>(SEE BREAKDOWN FOR COMPONENTS) |
| 2 | 502502D1 | 1 | AIR CONDITIONER & MTG GP (S/N: EFF BAM50633;BBP50486;BCC50765;BDS50909)<br>(NOT SERVICED)<br>(SEE BREAKDOWN FOR COMPONENTS) |
| 3 | 152-0003 | 1 | CAB GP (SEE BREAKDOWN FOR COMPONENTS) |
| 4 | 152-0417 | 1 | ROOF GP-CAB (NOT SERVICED)<br>(SEE BREAKDOWN FOR COMPONENTS) |
| 5 | 152-0418 | 1 | HEADLINER GP (NOT SERVICED)<br>(SEE BREAKDOWN FOR COMPONENTS) |
| 6 | 152-0420 | 1 | WIRING GP-CAB (NOT SERVICED)<br>(SEE BREAKDOWN FOR COMPONENTS) |
| 7 | 500768D1 | 1 | CONSOLE GP (NOT SERVICED)<br>(SEE BREAKDOWN FOR COMPONENTS) |
| 8 | 152-0433 | 1 | SEAT GP-COMPANION (NOT SERVICED)<br>(SEE BREAKDOWN FOR COMPONENTS) |
| 9 | 500839D1 | 1 | CONSOLE GP & MTG (NOT SERVICED)<br>(SEE BREAKDOWN FOR COMPONENTS) |
| 10 | 152-0438 | 1 | CONTROL GP-CLUTCH & BRAKE<br>(NOT SERVICED)<br>(SEE BREAKDOWN FOR COMPONENTS) |
| 11 | 152-0447 | 1 | CONTROL GP-DECELERATOR (NOT SERVICED)<br>(SEE BREAKDOWN FOR COMPONENTS) |
| 12 | 168-1951 | 1 | ANTENNA GP-RADIO (NOT SERVICED)<br>(SEE BREAKDOWN FOR COMPONENTS) |
| 13 | 208-2880 | 1 | LINES GP-HEATER (NOT SERVICED)<br>(SEE BREAKDOWN FOR COMPONENTS) |
| 14 | 224-3917 | 1 | TRIM GP-CAB (NOT SERVICED)<br>(SEE BREAKDOWN FOR COMPONENTS) |

NOTIF
PR: t05i29k58b0479

**CAB AR-DELUXE - 500843D1**
**MT835 & MT845**
**ROW & SPECIAL APPLICATIONS**

NO ILLUSTRATION

NOTIF

## CAB AR-DELUXE - 500843D1

**MT835 & MT845**
**ROW & SPECIAL APPLICATIONS**

| ITEM | NUMBER | QTY | DESCRIPTION |
|---|---|---|---|
| - | 500843D1 | -- | CAB AR (NOT SERVICED) |
| 1 | 136-5477 | 1 | WIRING GP-ARMREST (NOT SERVICED)<br>(SEE BREAKDOWN FOR COMPONENTS) |
| 2 | 136-5659 | 1 | BATTERY & WIRING GP (NOT SERVICED<br>(SEE BREAKDOWN FOR COMPONENTS) |
| 3 | 152-0003 | 1 | CAB GP<br>(SEE BREAKDOWN FOR COMPONENTS) |
| 4 | 152-0417 | 1 | ROOF GP-CAB (NOT SERVICED)<br>(SEE BREAKDOWN FOR COMPONENTS) |
| 5 | 152-0418 | 1 | HEADLINER GP (NOT SERVICED)<br>(SEE BREAKDOWN FOR COMPONENTS) |
| 6 | 152-0419 | 1 | SPEAKER GP-RADIO (NOT SERVICED)<br>(SEE BREAKDOWN FOR COMPONENTS) |
| 7 | 152-0420 | 1 | WIRING GP-CAB (NOT SERVICED)<br>(SEE BREAKDOWN FOR COMPONENTS) |
| 8 | 152-0424 | 1 | VISOR GP-CAB (FRONT)(NOT SERVICED)<br>(SEE BREAKDOWN FOR COMPONENTS) |
| 9 | 500768D1 | 1 | CONSOLE GP (NOT SERVICED)<br>(SEE BREAKDOWN FOR COMPONENTS) |
| 10 | 152-0433 | 1 | SEAT GP-COMPANION (NOT SERVICED)<br>(SEE BREAKDOWN FOR COMPONENTS) |
| 11 | 500839D1 | 1 | CONSOLE GP-MOUNTING (NOT SERVICED)<br>(SEE BREAKDOWN FOR COMPONENTS) |
| 12 | 152-0438 | 1 | CONTROL GP-CLUTCH & BRAKE (NOT SERVICED)<br>(SEE BREAKDOWN FOR COMPONENTS) |
| 13 | 152-0447 | 1 | CONTROL GP-DECELERATOR (NOT SERVICED)<br>(SEE BREAKDOWN FOR COMPONENTS) |
| 14 | 162-4096 | 1 | WIRING GP-SHUTOFF (ENGINE)<br>(NOT SERVICED)<br>(SEE BREAKDOWN FOR COMPONENTS) |
| 15 | 162-4097 | 1 | WIRING GP-CONSOLE (NOT SERVICED)<br>(SEE BREAKDOWN FOR COMPONENTS) |
| 16 | 166-4592 | 1 | CONDITIONER GP-MOUNTING & (NOT SERVICED)<br>(S/N: PRIOR TO BAM50619;BBP50482;<br>BCC50756;BDS50902)<br>(SEE BREAKDOWN FOR COMPONENTS) |
| 16 | 502501D1 | 1 | CONDITIONER GP-MOUNTING & (NOT SERVICED)<br>(S/N: EFF BAM50619;BBP50482;<br>BCC50756;BDS50902)<br>(SEE BREAKDOWN FOR COMPONENTS) |
| 17 | 168-1951 | 1 | ANTENNA GP-RADIO (AM/FM) (NOT SERVICED)<br>(SEE BREAKDOWN FOR COMPONENTS) |
| 18 | 173-6501 | 1 | WIRING GP-SHUTOFF (TIME DELAY LIGHTING)<br>(NOT SERVICED)<br>(SEE BREAKDOWN FOR COMPONENTS) |
| 19 | 196-3968 | 1 | WIPER GP-WINDOW (NOT SERVICED)<br>(SEE BREAKDOWN FOR COMPONENTS) |
| 20 | 208-2881 | 1 | LINES GP-HEATER (NOT SERVICED)<br>(SEE BREAKDOWN FOR COMPONENTS) |
| 21 | 209-5608 | 1 | MIRROR GP-REAR VIEW (NOT SERVICED)<br>(SEE BREAKDOWN FOR COMPONENTS) |
| 22 | 210-1570 | 1 | ANTENNA GP-RADIO (BUSINESS BAND)<br>(NOT SERVICED)<br>(SEE BREAKDOWN FOR COMPONENTS) |
| 23 | 224-3917 | 1 | TRIM GP-CAB (NOT SERVICED)<br>(SEE BREAKDOWN FOR COMPONENTS) |

NOTIF
PR: t05i29k58b0480

## CAB AR-DELUXE - 500849D1

**MT855 & MT865**
**ROW & SPECIAL APPLICATIONS**

NO ILLUSTRATION

NOTIF

## CAB AR-DELUXE - 500849D1

**MT855 & MT865**
**ROW & SPECIAL APPLICATIONS**

| ITEM | NUMBER | QTY | DESCRIPTION |
|---|---|---|---|
| - | 500849D1 | -- | CAB AR (NOT SERVICED) |
| 1 | 136-5477 | 1 | WIRING GP-ARMREST (NOT SERVICED)<br>(SEE BREAKDOWN FOR COMPONENTS) |
| 2 | 136-5663 | 1 | BATTERY & WIRING GP (NOT SERVICED<br>(SEE BREAKDOWN FOR COMPONENTS) |
| 3 | 152-0003 | 1 | CAB GP<br>(SEE BREAKDOWN FOR COMPONENTS) |
| 4 | 152-0417 | 1 | ROOF GP-CAB (NOT SERVICED)<br>(SEE BREAKDOWN FOR COMPONENTS) |
| 5 | 152-0418 | 1 | HEADLINER GP (NOT SERVICED)<br>(SEE BREAKDOWN FOR COMPONENTS) |
| 6 | 152-0419 | 1 | SPEAKER GP-RADIO (NOT SERVICED)<br>(SEE BREAKDOWN FOR COMPONENTS) |
| 7 | 152-0420 | 1 | WIRING GP-CAB (NOT SERVICED)<br>(SEE BREAKDOWN FOR COMPONENTS) |
| 8 | 152-0424 | 1 | VISOR GP-CAB (FRONT)(NOT SERVICED)<br>(SEE BREAKDOWN FOR COMPONENTS) |
| 9 | 500768D1 | 1 | CONSOLE GP (NOT SERVICED)<br>(SEE BREAKDOWN FOR COMPONENTS) |
| 10 | 152-0433 | 1 | SEAT GP-COMPANION (NOT SERVICED)<br>(SEE BREAKDOWN FOR COMPONENTS) |
| 11 | 500839D1 | 1 | CONSOLE GP-MOUNTING (NOT SERVICED)<br>(SEE BREAKDOWN FOR COMPONENTS) |
| 12 | 152-0438 | 1 | CONTROL GP-CLUTCH & BRAKE (NOT SERVICED)<br>(SEE BREAKDOWN FOR COMPONENTS) |
| 13 | 152-0447 | 1 | CONTROL GP-DECELERATOR (NOT SERVICED)<br>(SEE BREAKDOWN FOR COMPONENTS) |
| 14 | 162-4096 | 1 | WIRING GP-SHUTOFF (ENGINE)<br>(NOT SERVICED)<br>(SEE BREAKDOWN FOR COMPONENTS) |
| 15 | 162-4097 | 1 | WIRING GP-CONSOLE (NOT SERVICED)<br>(SEE BREAKDOWN FOR COMPONENTS) |
| 16 | 166-4592 | 1 | CONDITIONER GP-MOUNTING & (NOT SERVICED)<br>(S/N: PRIOR TO BAM50619;BBP50482;<br>BCC50756;BDS50902)<br>(SEE BREAKDOWN FOR COMPONENTS) |
| 16 | 502501D1 | 1 | CONDITIONER GP-MOUNTING & (NOT SERVICED)<br>(S/N: EFF BAM50619;BBP50482;<br>BCC50756;BDS50902)<br>(SEE BREAKDOWN FOR COMPONENTS) |
| 17 | 168-1951 | 1 | ANTENNA GP-RADIO (AM/FM) (NOT SERVICED)<br>(SEE BREAKDOWN FOR COMPONENTS) |
| 18 | 173-6501 | 1 | WIRING GP-SHUTOFF (TIME DELAY LIGHTING)<br>(NOT SERVICED)<br>(SEE BREAKDOWN FOR COMPONENTS) |
| 19 | 196-3968 | 1 | WIPER GP-WINDOW (NOT SERVICED)<br>(SEE BREAKDOWN FOR COMPONENTS) |
| 20 | 208-2881 | 1 | LINES GP-HEATER (NOT SERVICED)<br>(SEE BREAKDOWN FOR COMPONENTS) |
| 21 | 209-5608 | 1 | MIRROR GP-REAR VIEW (NOT SERVICED)<br>(SEE BREAKDOWN FOR COMPONENTS) |
| 22 | 210-1570 | 1 | ANTENNA GP-RADIO (BUSINESS BAND)<br>(NOT SERVICED)<br>(SEE BREAKDOWN FOR COMPONENTS) |
| 23 | 224-3917 | 1 | TRIM GP-CAB (NOT SERVICED)<br>(SEE BREAKDOWN FOR COMPONENTS) |

NOTIF
PR: t05i29k58b0481

## CAB GP - 152-0003
ROW & SPECIAL APPLICATIONS

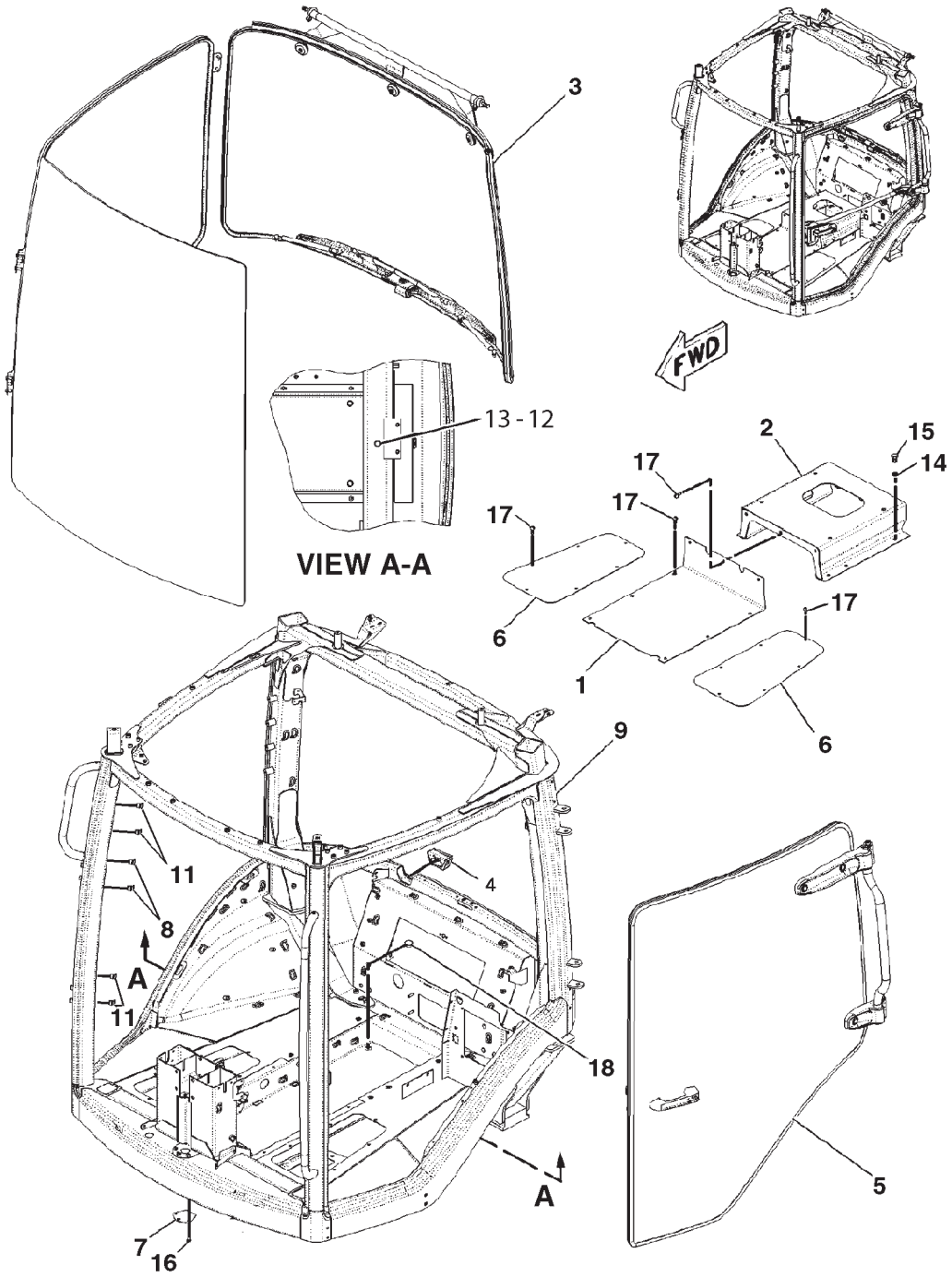


0888610B

## CAB GP - 152-0003
ROW & SPECIAL APPLICATIONS

| ITEM | NUMBER | QTY | DESCRIPTION |
|---|---|---|---|
| - | 152-0003 | -- | CAB GP [A] |
| 1 | 151-8559 | 1 | PLATE-COVER |
| 2 | 151-9961 | 1 | PLATE ASM-SEAT PEDISTAL |
| 3 | 151-9994 | 1 | WINDOW GP-CAB (NOT SERVICED)<br>(SEE BREAKDOWN FOR COMPONENTS) |
| 4 | 164-7017 | 1 | SEAL-WIRING (REAR) |
| 5 | 164-7068 | 1 | DOOR GP-LH (NOT SERVICED)<br>(S/N: PRIOR TO BAM40608; BBP40474; BCC40741; BDS40890)<br>(FOR COMPLETE REPLACEMENT, ORD EFF)<br>(SEE BREAKDOWN FOR COMPONENTS) |
| 5 | 500927D1 | 1 | DOOR GP-LH (NOT SERVICED)<br>(S/N: EFF BAM40608; BBP40474; BCC40741; BDS40890)<br>(SEE BREAKDOWN FOR COMPONENTS) |
| 6 | 166-4558 | 2 | COVER-FLOOR MODULE |
| 7 | 180-9966 | 1 | COVER |
| 8 | CH187-4902 | 8 | INSERT |
| 9 | ----- | 1 | FRAME AS (ORDER CAB GP) |
| 10 | ----- | | NOT USED |
| 11 | CH225-6215 | 4 | BUTTON-PLUG |
| 12 | CH3E-4353 | 1 | WASHER-HARD (11X25X3) |
| 13 | 400190X1 | 1 | BOLT (M12X1.75X16MM) |
| 14 | 400287X1 | 6 | WASHER-HARD (11X21X2.5) |
| 15 | 400058X1 | 6 | BOLT (M10X1.5X30MM) |
| 16 | 400227X1 | 5 | BOLT (M8X1.25X16MM) |
| 17 | CH9X-2042 | 21 | SCREW-TRUSS HEAD (M6X1X12MM) |
| 18 | CH9X-3994 | 2 | PLUG |

[A] PART OF 500843D1; 500844D1; 500849D1
CAB AR

## CAB GP - 152-0004
EAME ONLY

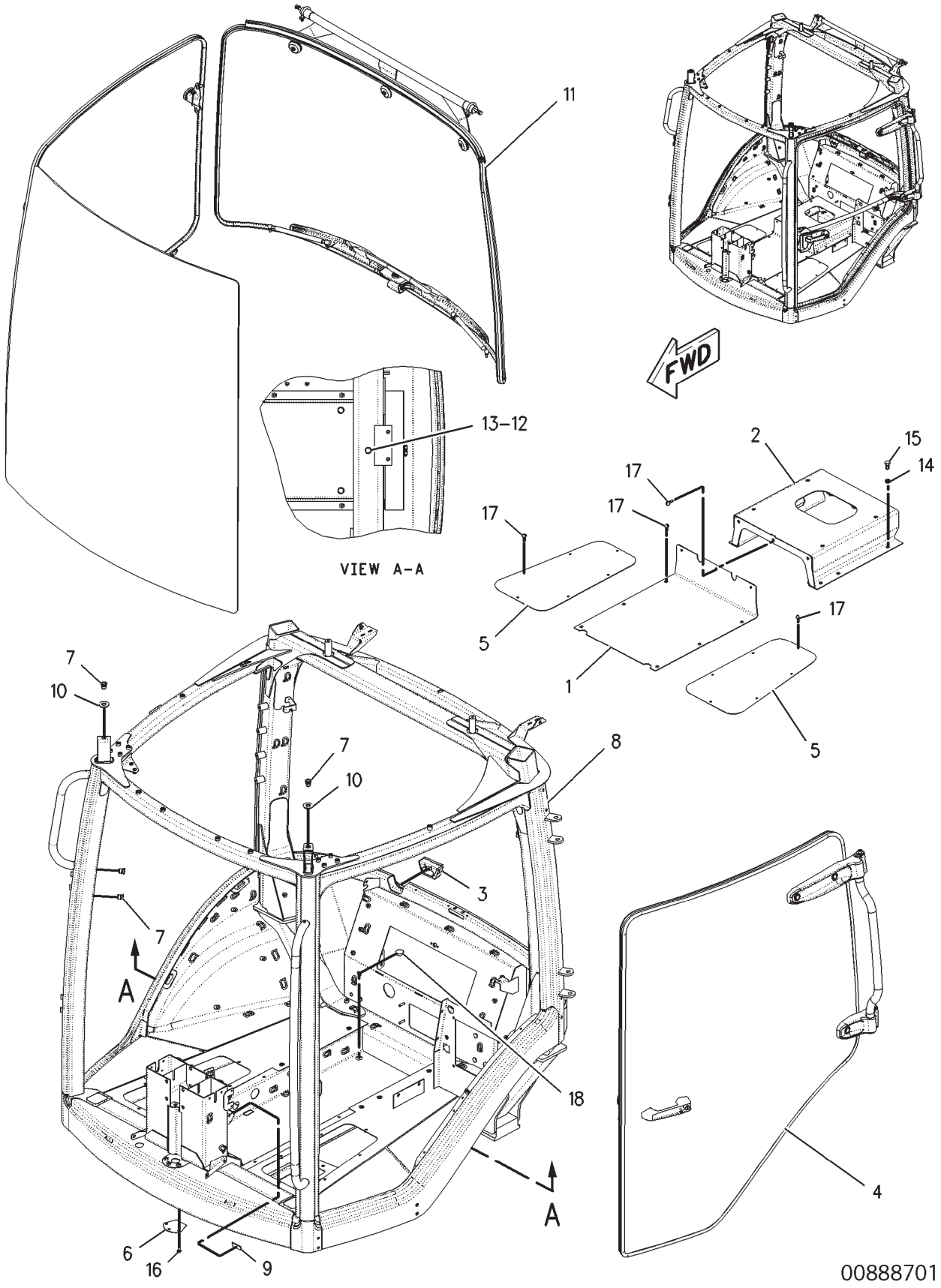

## CAB GP - 152-0004
EAME ONLY

| ITEM | NUMBER | QTY | DESCRIPTION |
|---|---|---|---|
| - | 152-0004 | -- | CAB GP [A] |
| 1 | 151-8559 | 1 | PLATE-COVER |
| 2 | 151-9961 | 1 | PLATE AS-SEAT PEDISTAL |
| 3 | 164-7017 | 1 | SEAL |
| 4 | 164-7068 | 1 | DOOR GP-LH (NOT SERVICED)<br>(S/N: PRIOR TO BAM40608; BBP40474; BCC60741; BDS40890)<br>(FOR COMPLETE REPLACEMENT, ORD EFF)<br>(SEE BREAKDOWN FOR COMPONENTS) |
| 4 | 500927D1 | 1 | DOOR GP-LH (NOT SERVICED)<br>(S/N: EFF BAM40608; BBP40474; BCC60741; BDS40890)<br>(SEE BREAKDOWN FOR COMPONENTS) |
| 5 | 166-4558 | 2 | COVER |
| 6 | 180-9966 | 1 | COVER |
| 7 | CH187-4902 | 6 | INSERT |
| 8 | ----- | 1 | FRAME AS (ORDER CAB GP) |
| 9 | 202-0843 | 1 | PAD |
| 10 | 090-8865 | 2 | SPACER (17X40X3MM THK) |
| 11 | 151-9995 | 1 | GLASS GP-WINDSHIELD (NOT SERVICED)<br>(SEE BREAKDOWN FOR COMPONENTS) |
| 12 | CH3E-4353 | 1 | WASHER-HARD (11X25X3MM THK) |
| 13 | 400190X1 | 1 | BOLT (M12X1.75X16MM) |
| 14 | 400287X1 | 6 | WASHER-HARD (11X21X2.5MM THK) |
| 15 | 400058X1 | 6 | BOLT (M10X1.5X30MM) |
| 16 | 400227X1 | 5 | BOLT (M8X1.25X16MM) |
| 17 | CH9X-2042 | 21 | SCREW-TRUSS HEAD (M6X1X12MM) |
| 18 | CH9X-3994 | 2 | PLUG |

[A] PART OF 500841D1;500842D1 CAB AR

00888701
PR: t05i29k58b0483

## COMPRESSOR GP-REFRIGERANT - CH178-9570

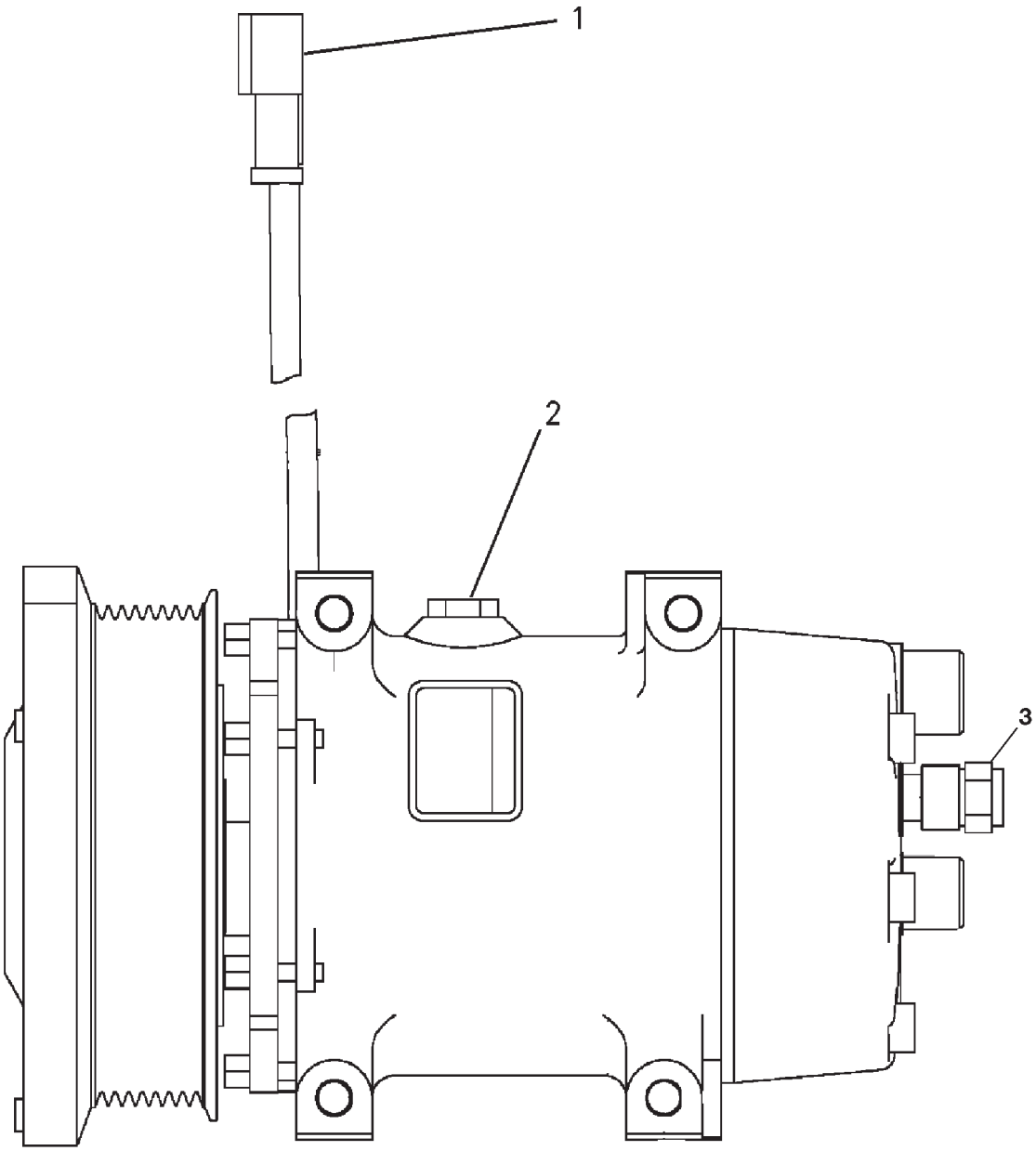


0777332A

## COMPRESSOR GP-REFRIGERANT - CH178-9570

| ITEM | NUMBER | QTY | DESCRIPTION |
|---|---|---|---|
| - | CH178-9570 | -- | COMPRESSOR GP-REFRIGERANT [A] |
| 1 | CH102-8802 | 1 | KIT-RECEPTACLE (2 PIN)<br>(INCLUDES WEDGE AND RECEPTACLE ASM)<br>(SERVICED AS COMPLETE KIT ONLY) |
| 2 | CH7T-4532 | 1 | PLUG ASM (W/SEAL) |
| 3 | CH114-3469 | 1 | VALVE ASM (INCL SEAL) |
| | CH9X-7378 | 1 | SEAL |

[A] PART OF 187-1792 MOUNTING GP-REFRIGERANT COMPR

0777332A
PR: t05i29k58b0484

## CONSOLE GP-OPERATOR - 152-0434
**WITH PTO**

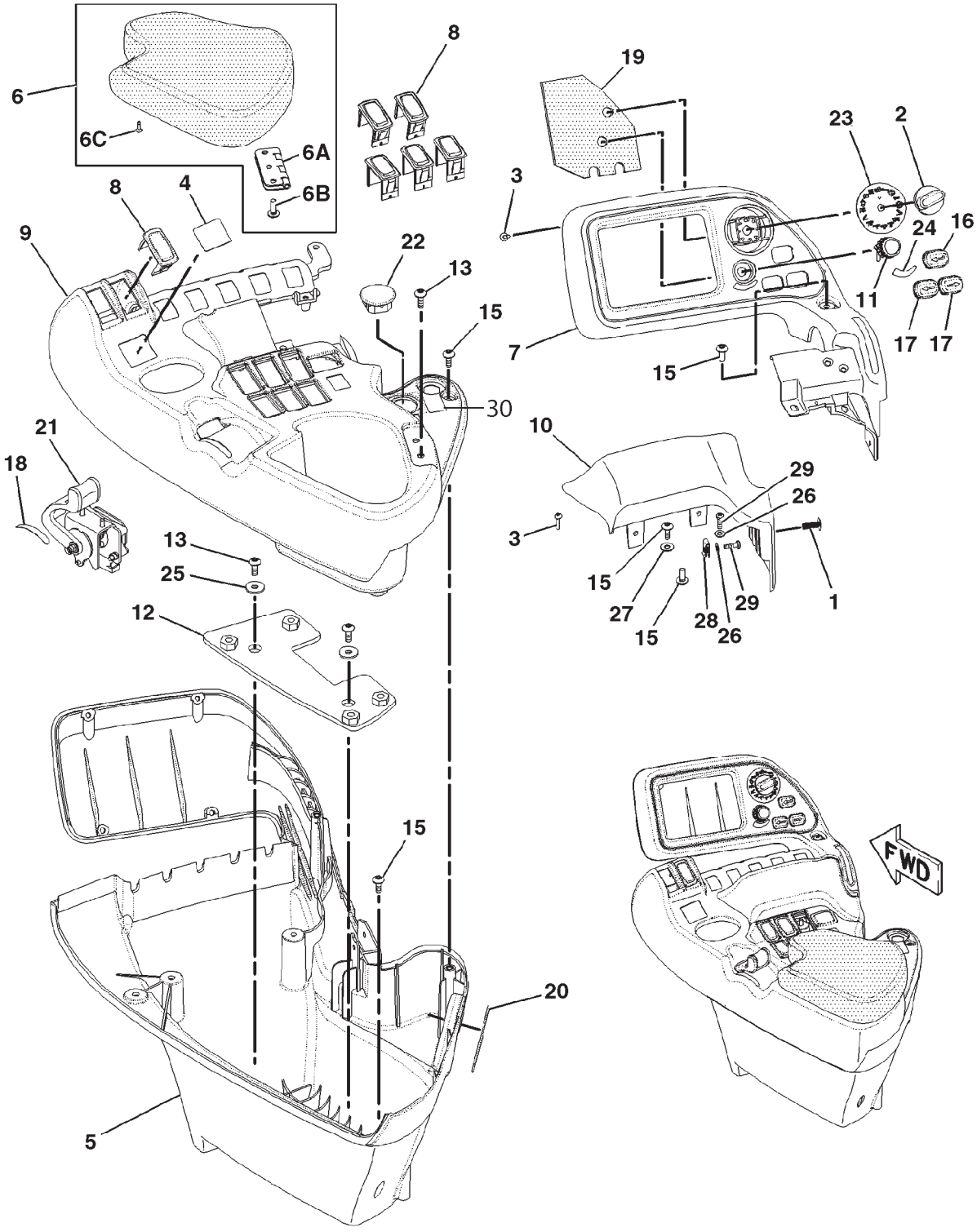


1520434A

## CONSOLE GP-OPERATOR - 152-0434
WITH PTO

| ITEM | NUMBER | QTY | DESCRIPTION |
|---|---|---|---|
| - | 152-0434 | -- | CONSOLE GP-OPERATOR [A] (NOT SERVICED) |
| 1 | 400110X1 | 2 | CLIP-TREE |
| 2 | CH157-0449 | 1 | KNOB-CONTROL (TRACTOR MGMT CENTER SELECTOR) |
| 3 | CH9X-1046 | 6 | SCREW (M4X0.7X18MM) |
| 4 | 501524D1 | 1 | FILM (TRANSMISSION SHIFT) |
| 5 | 162-6737 | 1 | CONSOLE ASY. (BOTTOM) |
| | 179-4207 | 3 | INSERT (M6X1 THD) |
| 6 | 162-6738 | 1 | PAD ASY. (ARM) |
| 6A | 162-4105 | 1 | HINGE ASY. |
| 6B | 207-2021 | 3 | SCREW |
| 6C | 207-2022 | 5 | SCREW |
| 7 | 164-7042 | 1 | HOUSING ASY. |
| | 173-8818 | 4 | INSERT (M4X0.7 THD) |
| 8 | CH165-5975 | 6 | PLUG |
| 9 | 502064D1 | 1 | CONSOLE ASY. (TOP) |
| | 173-8818 | 2 | INSERT (M4X0.7 THD) |
| | 179-4206 | 13 | INSERT (M5X0.8 THD) |
| 10 | 166-4608 | 1 | PAD (PALM) |
| 11 | CH168-2333 | 1 | KNOB (TRACTOR MGMT CENTER ADJUSTMENT) |
| 12 | 169-6390 | 1 | PLATE AS |
| | CH8T-3490 | 4 | NUT-WELD (M10X1.5 THD) |
| 13 | CH207-2021 | 4 | SCREW |
| 15 | CH9X-2044 | 7 | SCREW-TRUSS HEAD (M6X1X16MM) |
| 16 | CH178-7962 | 1 | BUTTON (TRACTOR MGMT CENTER ENTER KEY) |
| 17 | CH178-7963 | 2 | BUTTON (TRACTOR MGMT CENTER TAB KEYS) |
| 18 | 501531D1 | 1 | FILM (THROTTLE INSTRUCTION) |
| 19 | 180-5237 | 1 | SEAL |
| 20 | 221-5433 | 1 | COVER |
| 21 | 207-2031 | 1 | CONTROL GP-GOVERNOR (NOT SERVICED) (SEE BREAKDOWN FOR COMPONENTS) |
| 22 | CH207-2039 | 1 | PLUG |
| 23 | 501521D1 | 1 | FILM-IDENTIFICATION (TRACTOR MGMT CENTER SELECTOR) |
| 24 | 501522D1 | 1 | FILM-IDENTIFICATION (TRACTOR MGMT CENTER ADJUSTMENT) |
| 25 | CH9X-6165 | 2 | WASHER (6.5X22X2.5MM THK) |
| 26 | CH2A-3211 | 2 | WASHER (5.5X12.3X.8MM THK) |
| 27 | CH5P-0537 | 1 | WASHER-HARD (7.2X14.5X2MM THK) |
| 28 | 400356X1 | 1 | CLIP-SPRING (M5X.8-6H) |
| 29 | CH8T-6693 | 2 | SCREW-MACHINE (M5X0.8X16MM) |
| 30 | 501532D1 | 1 | FILM-PTO |
| - | 501530D1 | 1 | DECAL SHEET-CONSOLE (NOT SHOWN) (INCLS ALL DECALS) |

[A] PART OF 152-0436 SEAT GP; 500484D2; 500485D2;500486D2;500487D2;500488D2; 500489D2;500491D2;500791D2;500792D2; 500793D2;500794D2 ARMREST GP

1520434A
PR: t05i29k58b0485

## CONSOLE GP - 500768D1

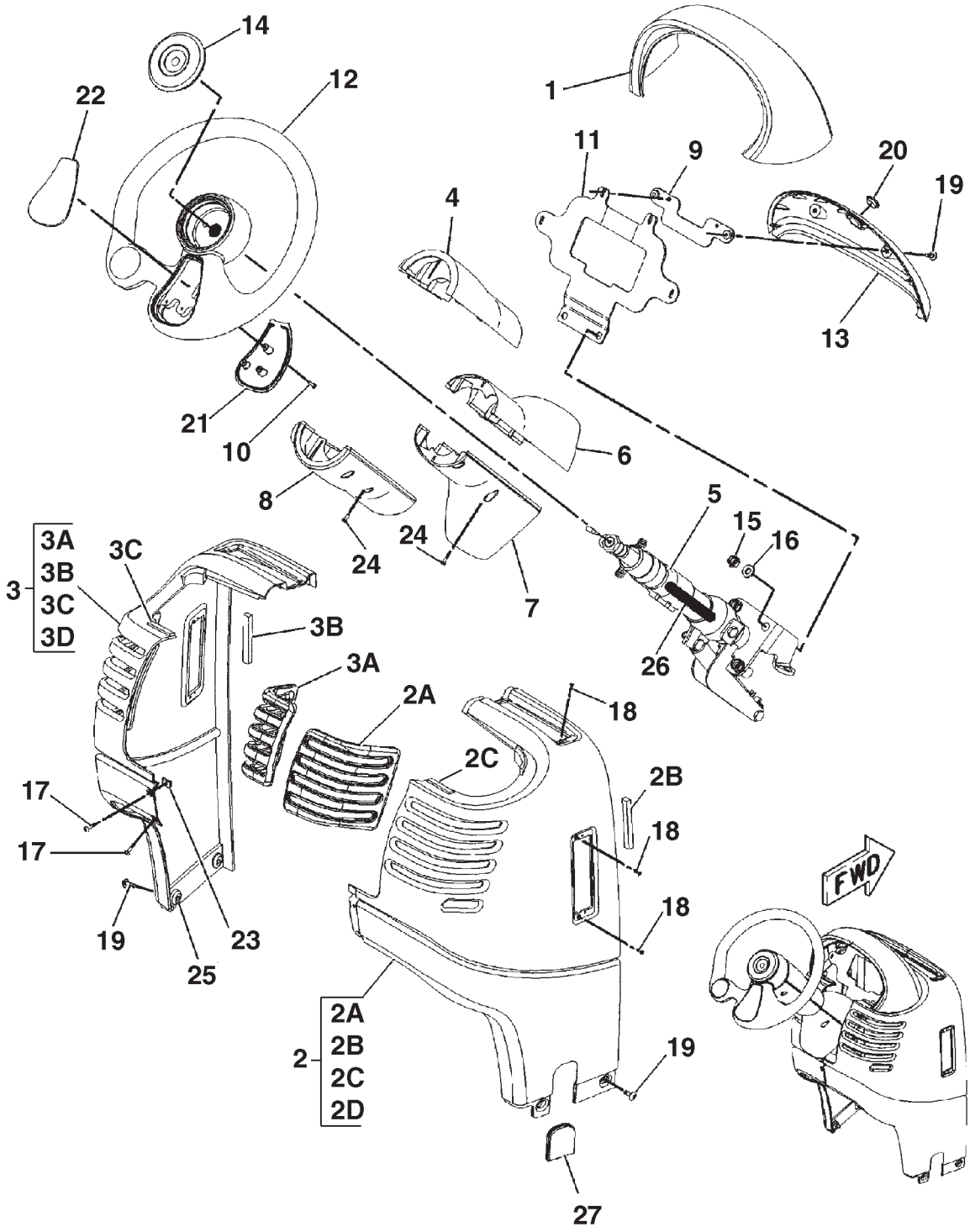


0789409A

## CONSOLE GP - 500768D1

| ITEM | NUMBER | QTY | DESCRIPTION |
|---|---|---|---|
| - | 500768D1 | -- | CONSOLE GP [A] (NOT SERVICED) |
| 1 | CH162-6660 | 1 | COVER AS |
| 2 | 200-1770 | 1 | CONSOLE ASM-RH (INCLS 2A-2E) |
| 2A | | 1 | CONSOLE-RIGHT (ORDER IT 2) |
| 2B | 169-6386 | 1 | SEAL |
| 2C | 201-4113 | 1 | BUMPER |
| 2D | 201-9789 | | SEAL |
| 3 | 200-1771 | 1 | CONSOLE ASM-LH (INCLS 3A-3D) |
| 3A | | 1 | CONSOLE-LEFT (ORDER IT 3) |
| 3B | 169-6385 | 1 | SEAL |
| 3C | 201-4113 | 1 | BUMPER |
| 3D | 201-9789 | | SEAL |
| 4 | 164-7044 | 1 | COVER-TOP (UPPER COLUMN) |
| 5 | CH166-3611 | 1 | COLUMN AS-STEERING (SEE BREAKDOWN FOR COMPONENTS) |
| 6 | 166-3754 | 1 | COVER-TOP (LOWER COLUMN) |
| 7 | 166-3755 | 1 | COVER (LOWER COLUMN) |
| 8 | 166-4555 | 1 | COVER (UPPER COLUMN) |
| 9 | 192-9017 | 1 | BRACKET ASM(INCLUDES BRACKET AND NUT) |
| | 400313X1 | 2 | NUT-WELD (M6X1) |
| 10 | CH186-1682 | 3 | SCREW-PAN HEAD (6-32X0.75 IN) |
| 11 | 179-8220 | 1 | BRACKET ASM |
| | CH7T-1099 | 1 | LINK |
| 12 | 195-5230 | 1 | STEERING WHEEL |
| 13 | CH178-7965 | 1 | COVER |
| 14 | 195-5229 | 1 | BUTTON-HORN |
| 15 | CH8T-0389 | 4 | LOCKNUT (M10X1.5) |
| 16 | 400287X1 | 4 | WASHER-HARD (11X21X2.5) |
| 17 | CH9X-1046 | 2 | SCREW (M4X0.7X18MM) |
| 18 | CH104-2091 | 6 | SCREW-FLAT HEAD (6-20X0.5 IN) |
| 19 | CH9X-2044 | 6 | SCREW-TRUSS HEAD (M6X1X16MM) |
| 20 | CH7X-1434 | 1 | PLUG |
| 21 | 195-5227 | 1 | COVER (REMOTE RADIO CONTROL) |
| 22 | 195-5228 | 1 | COVER |
| 23 | 400084X1 | 1 | NUT-RETAINER (M4X0.07X0.6-3.8 PANEL) |
| 24 | CH119-5026 | 8 | SCREW-PAN HEAD (10-16X0.63 IN) |
| 25 | 400085X1 | 4 | NUT-RETAINER (M6X1X1.63-3.8 PANEL) |
| 26 | CH191-1780 | AR | CONDUIT-FLEXIBLE (14CM) (REQUIRED ONLY ON TRACTORS NOT EQUIPPED W/REMOTE RADIO CONTROLS) |
| 27 | 201-4114 | 1 | GROMMET |

[A] PART OF 152-0012; 152-0013;
222-4146; 500841D1; 500842D1
CAB AR

0789409A
PR: t05i29k58b0486

COVER GP - 500761D1

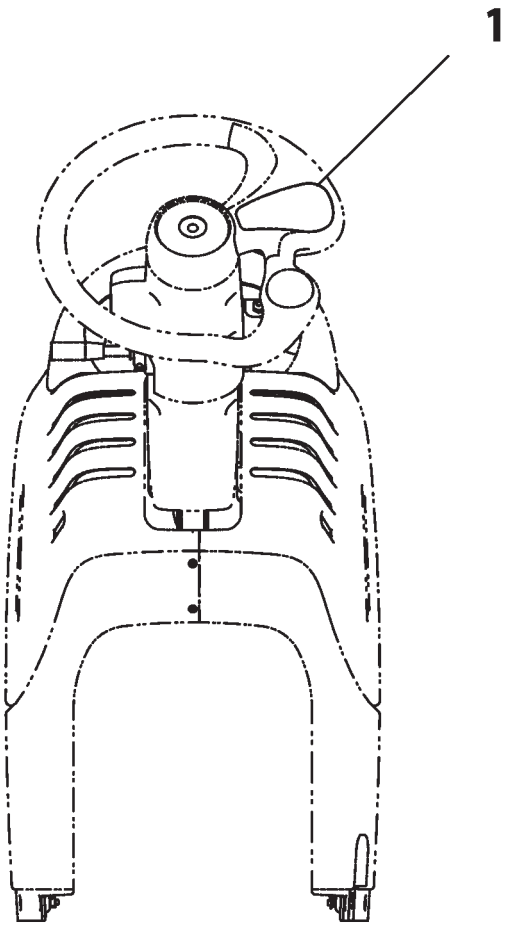

## COVER GP - 500761D1

| ITEM | NUMBER | QTY | DESCRIPTION |
|---|---|---|---|
| - | 502796D1 | -- | COVER GP (NOT SERVICED) |
| - | 500761D1 | -- | COVER GP [A] (NOT SERVICED) |
| 1 | 195-5228 | 1 | COVER |

[A] PART OF 500841D1; 500842D1 CAB AR;
502796D1 COVER GP

500761DB
PR: t05i29k58b0487

## CONTROL GP-AIR & TEMPERATURE
**166-4586**

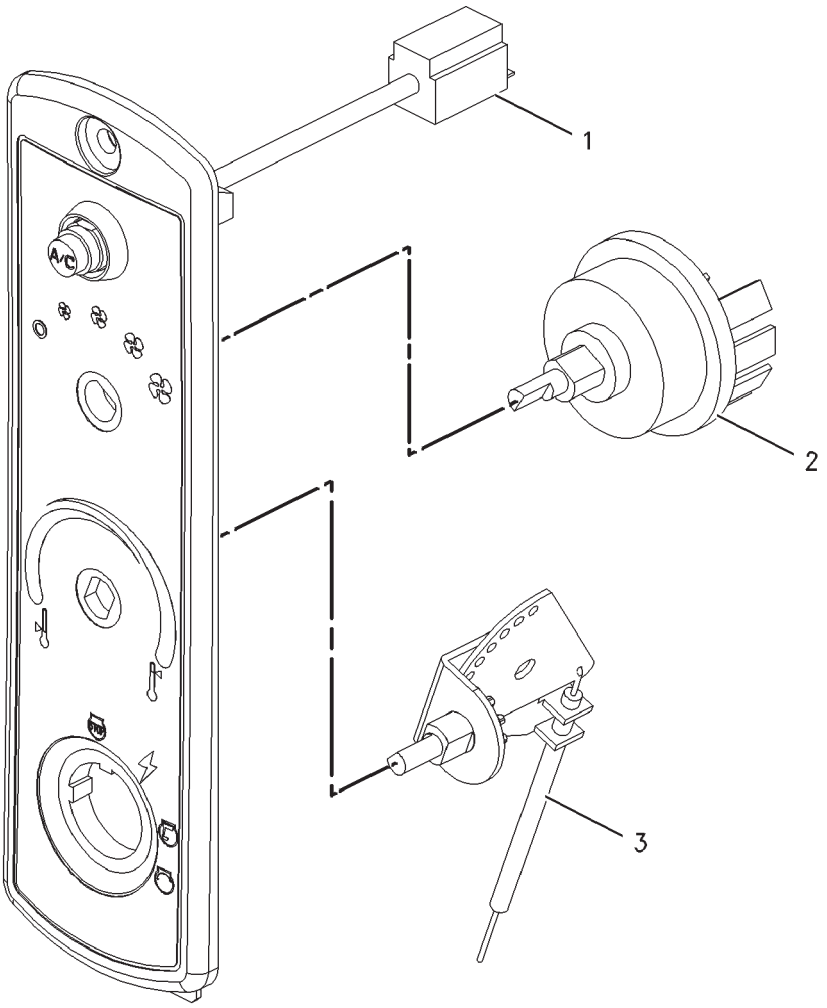

## CONTROL GP-AIR & TEMPERATURE
166-4586

| ITEM | NUMBER | QTY | DESCRIPTION |
|---|---|---|---|
| - | 166-4586 | -- | CONTROL GP-AIR & TEMPERATURE [A] |
| 1 | CH130-5742 | 1 | SWITCH-AIR CONDITIONER |
| 2 | CH157-0217 | 1 | SWITCH ASM-ROTARY (BLOWER FAN SPEED) |
| | CH6V-8362 | 6 | SCREW-MACHINE (8-32X0.31 IN) |
| | CH9B-7233 | 6 | LOCKWASHER |
| 3 | CH208-6662 | 1 | CABLE (CAB TEMPERATURE CONTROL) |

[A] PART OF 151-9986;502502D1
AIR CONDITIONER & MOUNTING GP

00876899
PR: t05i29k58b0488

## CONTROL GP-BRAKE & CLUTCH
**152-0438**

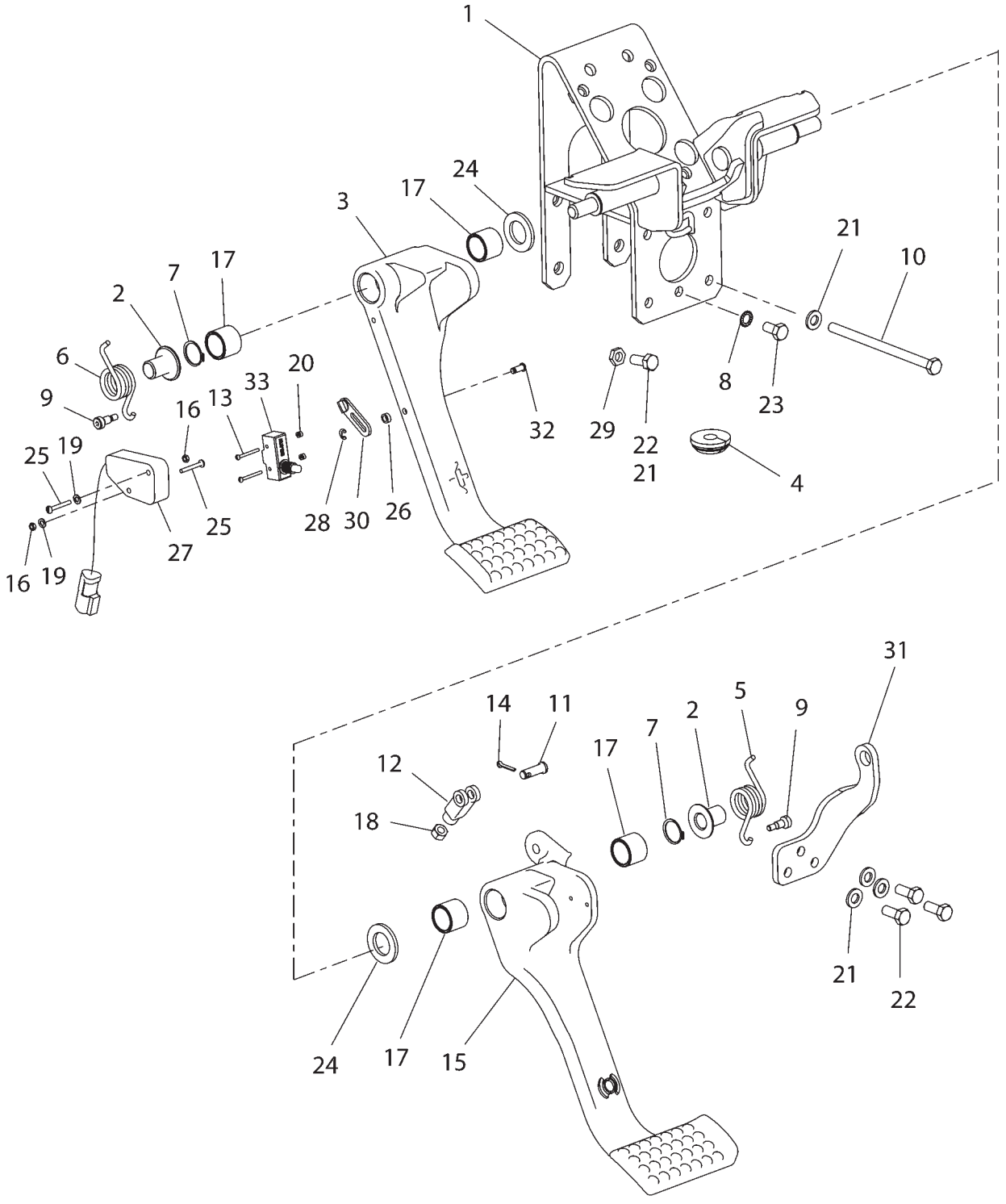

## CONTROL GP-BRAKE & CLUTCH
**152-0438**

| ITEM | NUMBER | QTY | DESCRIPTION |
|---|---|---|---|
| - | 152-0438 | -- | CONTROL GP - BRAKE & CLUTCH [A] (NOT SERVICED) |
| 1 | 500442D1 | 1 | BRACKET AS. |
| 2 | CH192-4767 | 2 | BUSHING-PLASTIC 16.3 ID W/LIP |
| 3 | 501944D1 | 1 | PEDAL-CLUTCH |
| 4 | CH212-4443 | 1 | GROMMET-RUB 12.5 IDX32 ODX2.5 |
| 5 | 400120X1 | 1 | SPRING-TORSION LH 81.3NM/TURN |
| 6 | 400121X1 | 1 | SPRING-TORSION RH 81.3NM/TURN |
| 7 | CH001-5600 | 2 | RING-RETAINING EXT 23.5 IDX1.1 |
| 8 | CH124-7346 | 1 | WASHER-LOCK, EXT T 10.2ID |
| 9 | 400004X1 | 2 | BOLT-M6X1X23.25MM PL SHDR HSHD |
| 10 | 400137X1 | 4 | BOLT-M10X1.5X160 ZNDI HHD 10.9 |
| 11 | CH1B-0676 | 1 | PIN 9.4DIAX29 STL |
| 12 | CH1F-5403 | 1 | ROD END-ADJUSTABLE |
| 13 | CH216-9085 | 2 | SCREW-M3X0.5X35MM PAN, CROSS |
| 14 | CH3B-4615 | 1 | PIN-COTTER 3.18 DIAX19MM STL |
| 15 | 500378D1 | 1 | PEDAL-BRAKE |
| 16 | CH5C-8312 | 2 | NUT-M4X0.7 THD HEX |
| 17 | 400124X1 | 4 | BRG-SLEEVE BRZ 25.44 IDX25.4LG |
| 18 | CH6V-8183 | 1 | NUT-3/8-24 THD FULL |
| 19 | CH8T-0328 | 2 | WASHER-HARD 5.5IDX10ODX1MM |
| 20 | CH8T-2658 | 2 | NUT-M3X0.5-6H HHD SLF LOCK |
| 21 | 400287X1 | 7 | WASHER-HARD 11IDX21ODX2.5 ZND1 |
| 22 | 400039X1 | 4 | BOLT-M10X1.5X25 ZNDI HHD 10.9 |
| 23 | 400040X1 | 1 | BOLT-M10X1.5X20 ZNDI HHD 10.9 |
| 24 | 400081X1 | 2 | WASHER-HARD 26IDX44ODX4MM ZNDI |
| 25 | CH9X-2606 | 2 | SCREW-PAN M4X0.7X30 |
| 26 | CH4E-7808 | 1 | SPACER 10 ODX6.6 IDX4 |
| 27 | 500619D1 | 1 | SENSOR-POSITION |
| 28 | 400553X1 | 1 | E-CLIP 5MM SHAFT |
| 29 | 400576X1 | 1 | NUT-HEX JAM M10X1.5 THD |
| 30 | 500450D1 | 1 | BRACKET AS |
| 31 | 500493D1 | 1 | PLATE |
| 32 | 500513D1 | 1 | PIN |
| 33 | 500717D1 | 1 | SWITCH-PUSH BUTTON |

[A] PART OF 500841D1;500842D1;500844D1;
500849D1 CAB AR

1520438B
PR: t05i29k58b0489

## CONTROL GP-HITCH - 152-0445
REAR 3 POINT

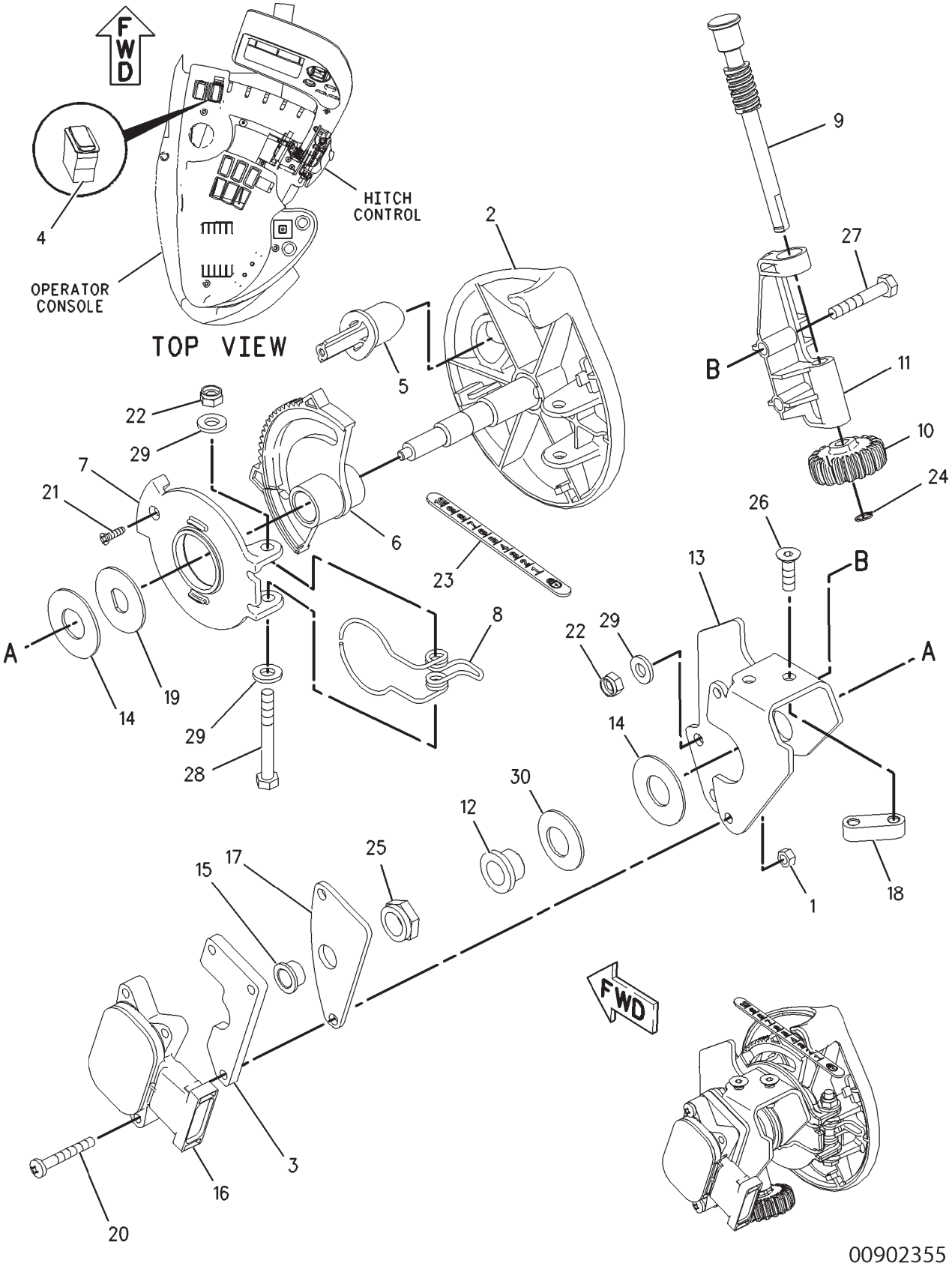

## CONTROL GP-HITCH - 152-0445
REAR 3 POINT

| ITEM | NUMBER | QTY | DESCRIPTION |
|---|---|---|---|
| - | 152-0445 | -- | CONTROL GP-HITCH [A] |
| 1 | CH179-4324 | 2 | LOCKNUT (M5X.8) |
| 2 | 164-7040 | 1 | HANDLE |
| 3 | 169-6391 | 1 | SPACER-RUBBER |
| 4 | 169-8227 | 1 | SWITCH-ROCKER (3 POINT HITCH CONTROL) |
| 5 | 172-6851 | 1 | BUTTON |
| 6 | 172-6852 | 1 | GEAR |
| 7 | 172-6853 | 1 | STOP |
| 8 | 172-6858 | 1 | SPRING |
| 9 | 172-6863 | 1 | GEAR |
| 10 | 172-6864 | 1 | KNOB (HEIGHT ADJ-3 POINT HITCH CONT) |
| 11 | 172-6865 | 1 | BRACKET |
| 12 | CH174-5747 | 1 | BUSHING |
| 13 | 179-4227 | 1 | BRACKET |
| 14 | 400334X1 | 2 | WASHER (16.5X37X1.5) |
| 15 | CH187-4917 | 1 | BUSHING |
| 16 | 500382D1 | 1 | SENSOR GP-POSITION |
| 17 | CH207-2023 | 1 | PLATE |
| 18 | CH207-2024 | 1 | PLATE |
| 19 | CH214-2184 | 1 | WASHER |
| 20 | 400071X1 | 2 | SCREW-MACHINE (M5X0.8X35MM) |
| 21 | CH113-0899 | 1 | SCREW-FLAT HEAD (6-20X0.5 IN) |
| 22 | CH129-3178 | 3 | LOCKNUT (M6X1) |
| 23 | 501523D1 | 1 | FILM-INSTRUCTION (3 POINT HITCH) |
| 24 | CH3P-3547 | 1 | RING-RETAINING |
| 25 | CH4K-8341 | 1 | LOCKNUT (1/2-20) |
| 26 | 400256X1 | 2 | BOLT-HEX SOCKET (M6X1X20MM) |
| 27 | 400070X1 | 2 | BOLT (M6X1X35MM) |
| 28 | 400186X1 | 1 | BOLT (M6X1X50MM) |
| 29 | CH8T-4205 | 4 | WASHER-HARD (7.2X14.5X2MM) |
| 30 | 400074X1 | 1 | WASHER-SPRING |

[A] PART OF 169-0027;169-0028;186-0979;
189-3300 HITCH AR-3 POINT

00902355
PR: t05i29k58b0490

## CONTROL GP-IMPLEMENT - 4TH HANDLE
**136-5355**

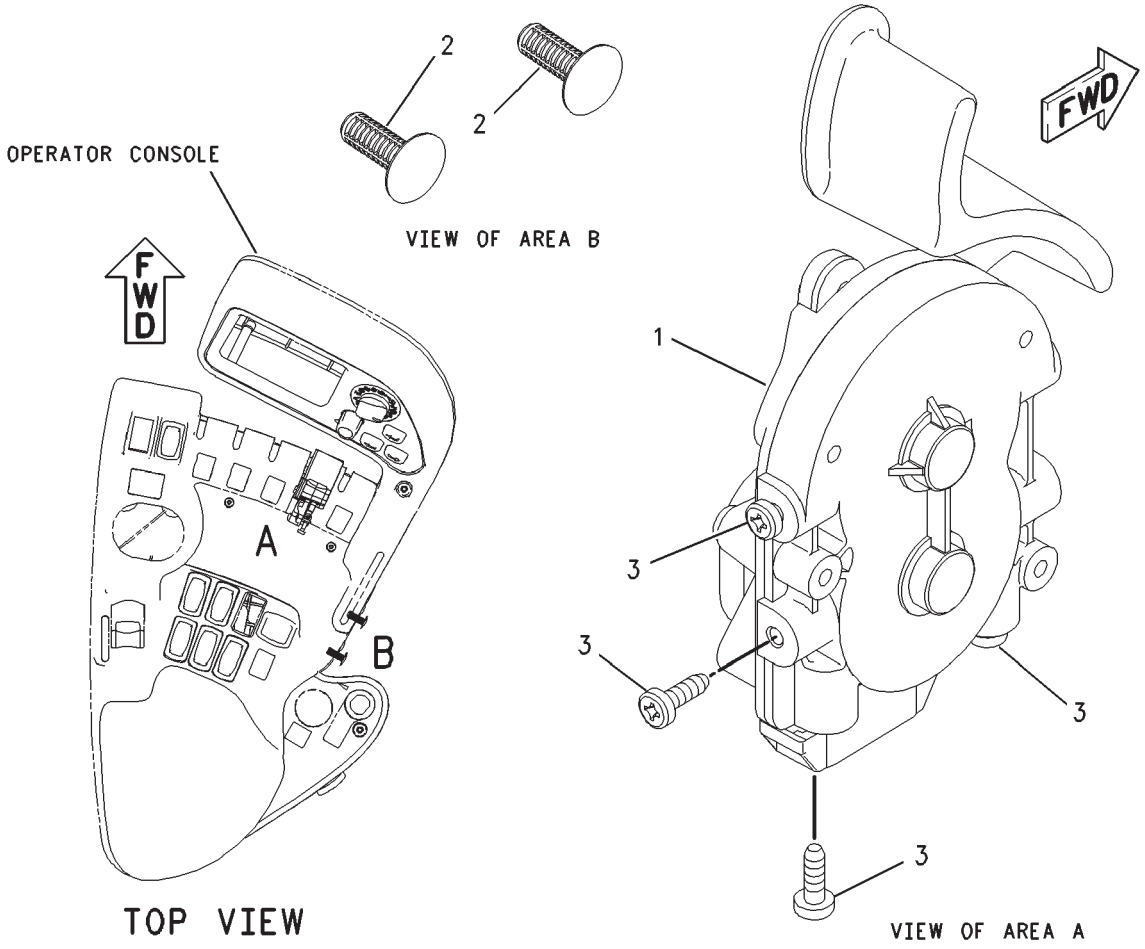


00880990

## CONTROL GP-IMPLEMENT - 4TH HANDLE
136-5355

| ITEM | NUMBER | QTY | DESCRIPTION |
|---|---|---|---|
| - | 136-5355 | -- | CONTROL GP-IMPLEMENT [A] (NOT SERVICED) |
| 1 | 209-8704 | 1 | CONTROL GP-IMPLEMENT (SEE BREAKDOWN FOR COMPONENTS) |
| 2 | 400110X1 | 2 | CLIP |
| 3 | 400834X1 | 4 | SCREW-TRUSS HEAD (8-16X0.5 IN) |

[A] PART OF 185-8699 CONVERSION GP-CONTROL VALVE

00880990
PR: t05i29k58b0491

## CONTROL GP-IMPLEMENT - 4 HANDLES
**152-0443**

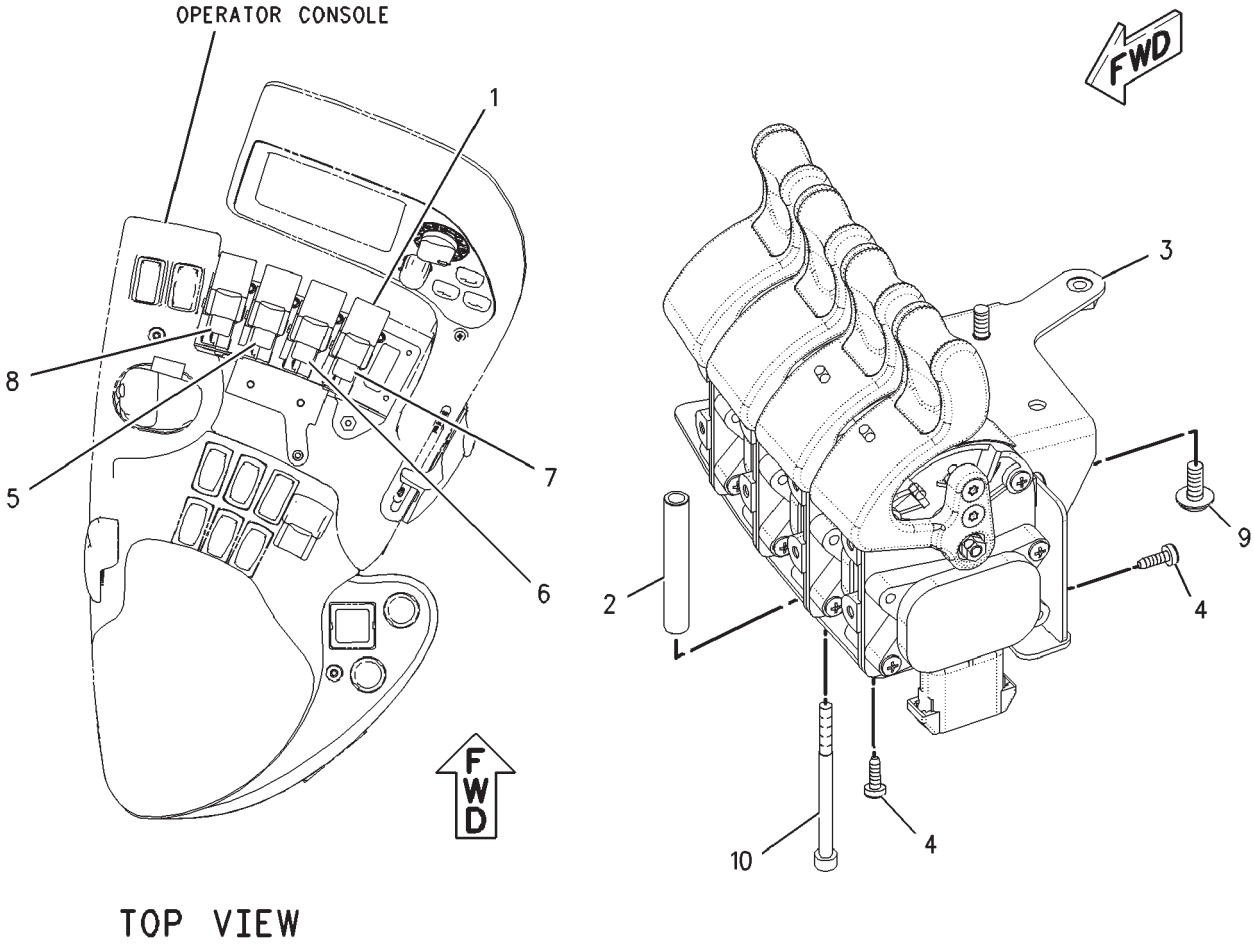


00876314

## CONTROL GP-IMPLEMENT - 4 HANDLES
**152-0443**

| ITEM | NUMBER | QTY | DESCRIPTION |
|---|---|---|---|
| - | 152-0443 | -- | CONTROL GP-IMPLEMENT [A] (NOT SERVICED) |
| 1 | 209-8704 | 4 | CONTROL GP-IMPLEMENT<br>(SEE BREAKDOWN FOR COMPONENTS) |
| 2 | CH195-2626 | 4 | SPACER (6.4X9.6X61) |
| 3 | 169-6362 | 1 | PLATE ASM |
| 4 | CH212-3416 | 16 | SCREW-PAN HEAD (8-16X0.5 IN) |
| 5 | 501526D1 | 1 | FILM (ELECTRO HYDRAULIC LEVER #2) |
| 6 | 501527D1 | 1 | FILM (ELECTRO HYDRAULIC LEVER #3) |
| 7 | 501528D1 | 1 | FILM (ELECTRO HYDRAULIC LEVER #4) |
| 8 | 501525D1 | 1 | FILM (ELECTRO HYDRAULIC LEVER #1) |
| 9 | CH207-2021 | 2 | SCREW |
| 10 | 400254X1 | 4 | BOLT-SOCKET HEAD (M5X.08X70MM) |

[A] PART OF:
180-1434 VALVE AR-BANK 4
502051D1 VALVE AR-4 IMPL

00876314
PR: t05i29k58b0492

## CONTROL GP-IMPLEMENT - 6TH HANDLE
**152-0448**

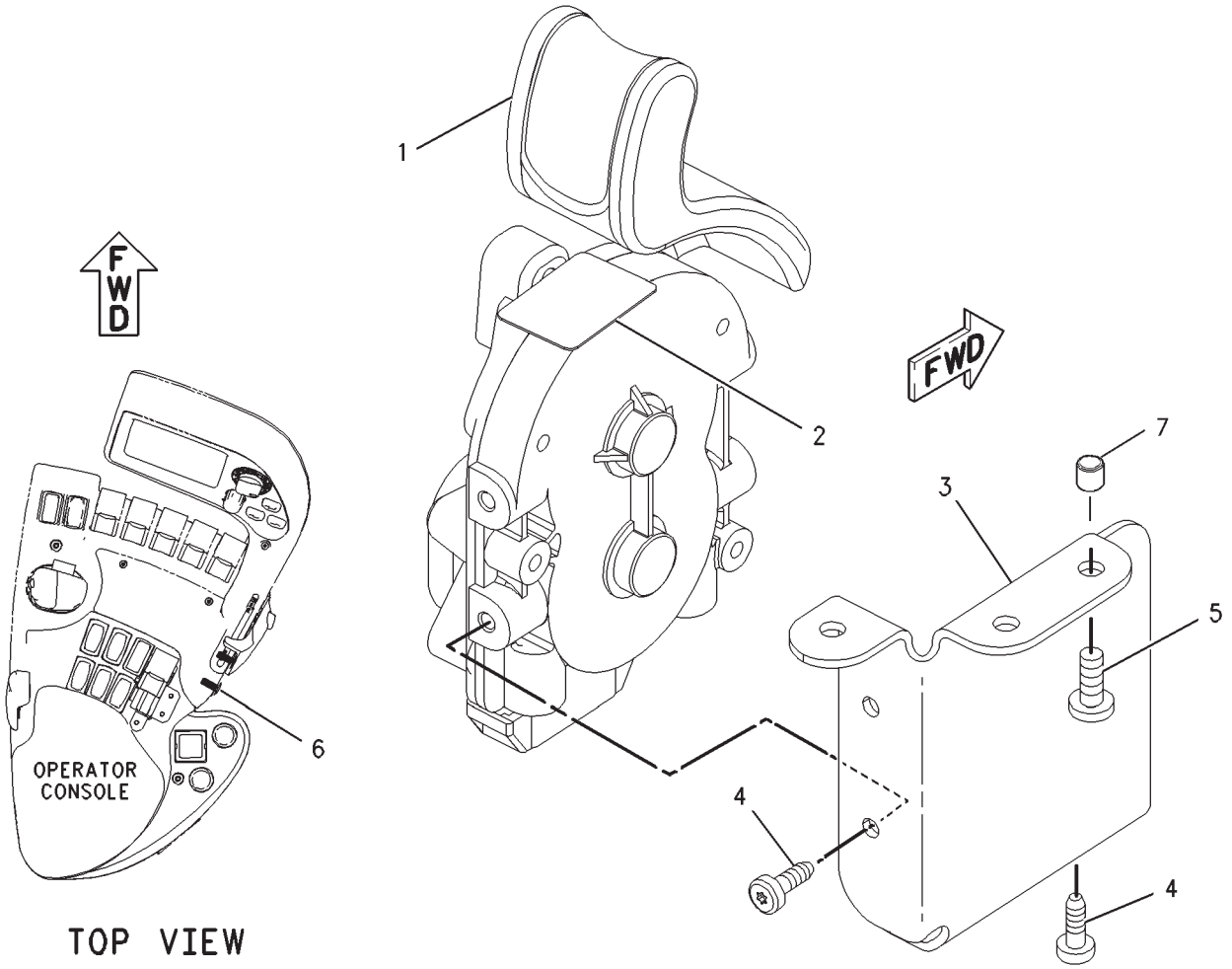


00879185

## CONTROL GP-IMPLEMENT - 6TH HANDLE
**152-0448**

| ITEM | NUMBER | QTY | DESCRIPTION |
|---|---|---|---|
| - | 152-0448 | -- | CONTROL GP-IMPLEMENT [A] (NOT SERVICED) |
| 1 | 209-8704 | 1 | CONTROL GP-IMPLEMENT<br>(SEE BREAKDOWN FOR COMPONENTS) |
| 2 | 501530D1 | 1 | FILM (ELECTRO HYDRAULIC LEVER) |
| 3 | 169-6384 | 1 | BRACKET |
| 4 | CH212-3416 | 4 | SCREW-PAN HEAD (8-16X0.5 IN) |
| 5 | CH6V-9673 | 3 | SCREW-MACHINE (M5X0.8X12MM) |
| 6 | 400110X1 | 2 | FASTENER |
| 7 | CH179-4206 | 3 | INSERT (19/64-24 X M5 X 0.8 ID)<br>(NOT ILLUSTRATED) |

[A] PART OF:
185-8701 CONVERSION GP-CONTROL VALVE
500791D2;500792D2;500793D2;500794D2
ARMREST GP

00879185
PR: t05i29k58b0493

## CONTROL GP-IMPLEMENT - 5 HANDLES
166-4590

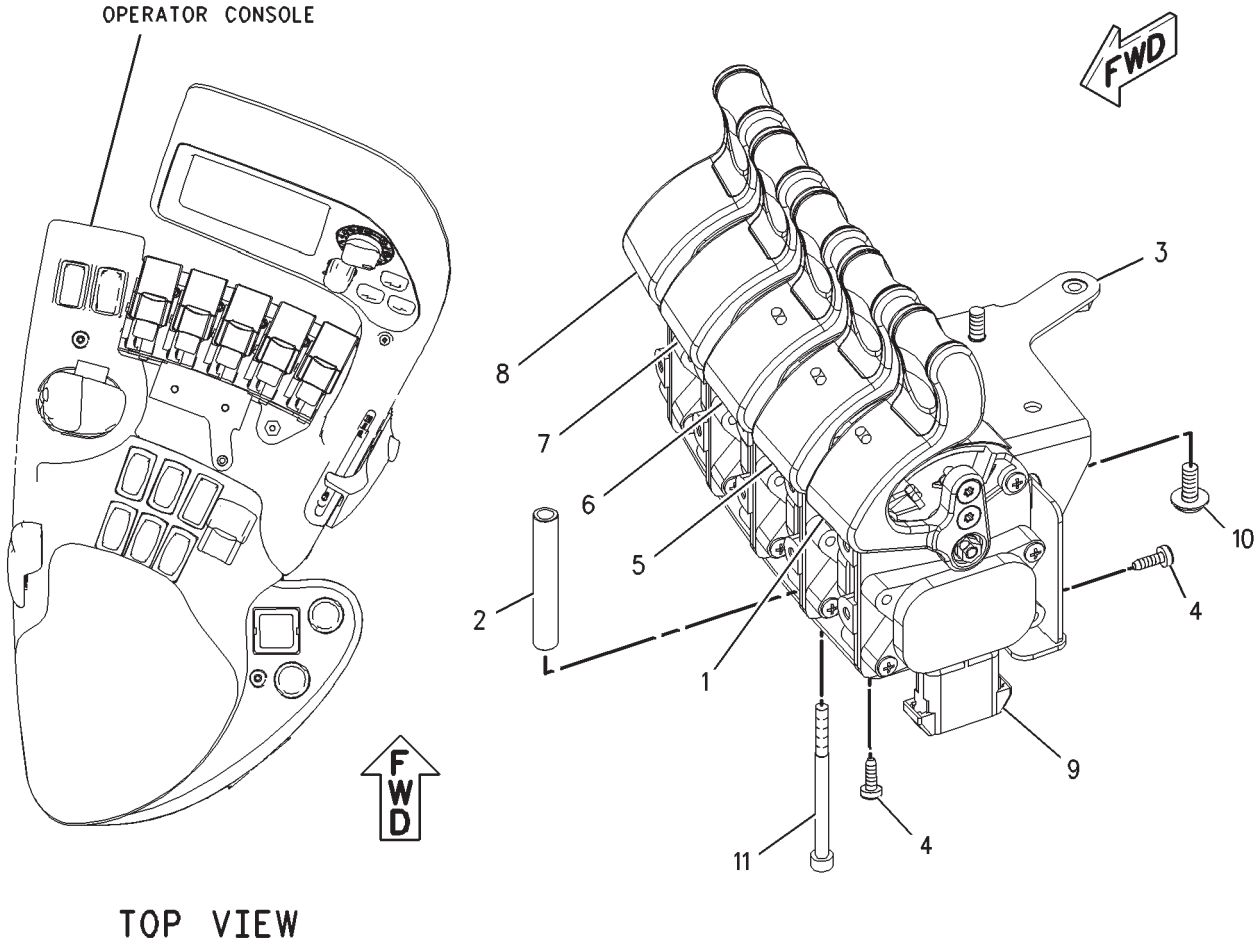


TOP VIEW

00884953

## CONTROL GP-IMPLEMENT - 5 HANDLES
166-4590

| ITEM | NUMBER | QTY | DESCRIPTION |
|---|---|---|---|
| - | 166-4590 | -- | CONTROL GP-IMPLEMENT [A] (NOT SERVICED) |
| 1 | 501529D1 | 1 | FILM (ELECTRO HYDRAULIC LEVER) |
| 2 | CH195-2626 | 4 | SPACER (6.4X9.6X61) |
| 3 | 169-6362 | 1 | PLATE ASM |
| 4 | CH212-3416 | 20 | SCREW-PAN HEAD (8-16X0.5 IN) |
| 5 | 501525D1 | 1 | FILM (ELECTRO HYDRAULIC LEVER) |
| 6 | 501526D1 | 1 | FILM (ELECTRO HYDRAULIC LEVER) |
| 7 | 501527D1 | 1 | FILM (ELECTRO HYDRAULIC LEVER) |
| 8 | 501528D1 | 1 | FILM (ELECTRO HYDRAULIC LEVER) |
| 9 | 209-8704 | 5 | CONTROL GP-IMPLEMENT (SEE BREAKDOWN FOR COMPONENTS) |
| 10 | CH207-2021 | 2 | SCREW |
| 11 | 400254X1 | 4 | BOLT-SOCKET HEAD (M5X.08X70MM) |

[A] PART OF:
180-1438 VALVE AR-BANK 5
502052D1 VALVE AR-IMPL
500488D2;500489D2;500490D2;500491D2;
500791D2;500792D2;500793D2;500794D2
ARMREST GP

00884953
PR: t05i29k58b0494

## CONTROL GP-IMPLEMENT
209-8704

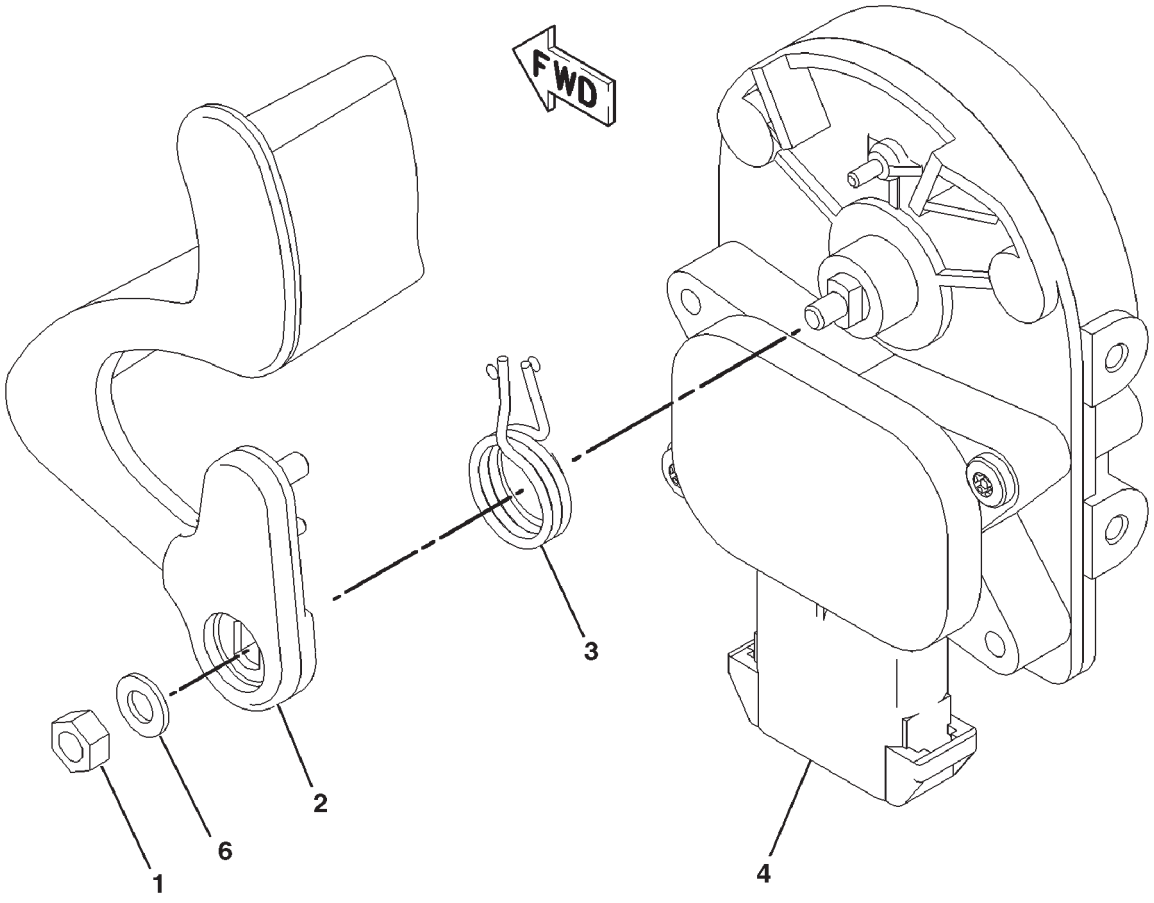


0894755A

## CONTROL GP-IMPLEMENT
209-8704

| ITEM | NUMBER | QTY | DESCRIPTION |
|---|---|---|---|
| - | 209-8704 | -- | CONTROL GP-IMPLEMENT [A] |
| 1 | CH162-6555 | 1 | LOCKNUT (M5X.8) |
| 2 | | 1 | HANDLE ASM (NOT SERVICED SEPARATELY) |
| 3 | CH206-2491 | 1 | SPRING-TORSION RH |
| 4 | | 1 | CONTROL ASM (NOT SERVICED SEPARATELY) |
| 5 | | -- | (NOT USED) |
| 6 | CH8T-3016 | 1 | WASHER (5.3X10X1) |

[A] PART OF 136-5355;152-0443;152-0448;
166-4590 CONTROL GP-IMPLEMENT

0894755A
PR: t05i29k58b0495

## CONTROL GP-TRANSMISSION - 169-6346

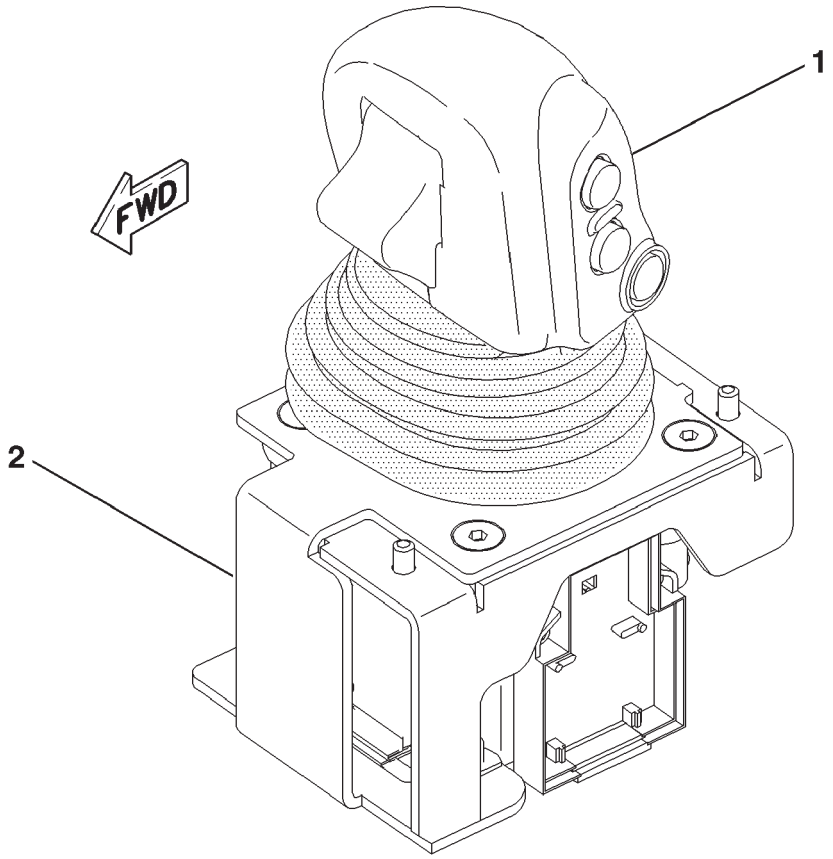


01696346

## CONTROL GP-TRANSMISSION - 169-6346

| ITEM | NUMBER | QTY | DESCRIPTION |
|---|---|---|---|
| - | 169-6346 | -- | CONTROL GP-TRANSMISSION [A] (NOT SERVICED) |
| 1 | 169-6347 | 1 | CONTROL GP-TRANSMISSION (NOT SERVICED) (SEE BREAKDOWN FOR COMPONENTS) |
| 2 | 216-7694 | 1 | CONTROL GP-TRANSMISSION (NO SERVICED COMPONENTS) |

[A] PART OF 136-5477; 166-1211
WIRING GP-ARMREST

01696346
PR: t05i29k58b0496

## CONTROL GP-TRANSMISSION
169-6347

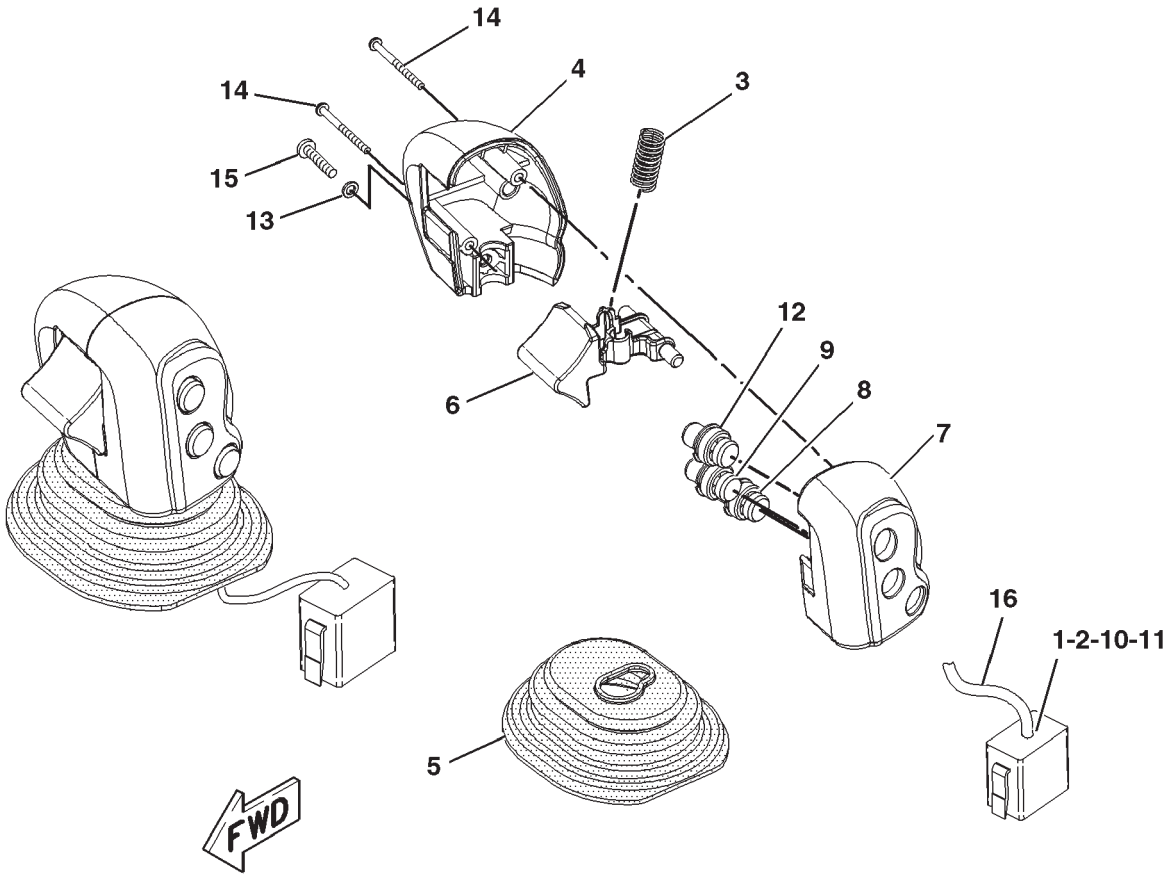


1696347B

## CONTROL GP-TRANSMISSION
169-6347

| ITEM | NUMBER | QTY | DESCRIPTION |
|---|---|---|---|
| - | 169-6347 | -- | CONTROL GP-TRANSMISSION [A] (NOT SERVICED) |
| 1 | 400715X1 | 9 | SOCKET-CONNECTOR (16-18AWG) |
| 2 | CH9G-3695 | 3 | PLUG (GROMMET SEALING) |
| 3 | CH9S-1347 | 1 | SPRING |
| 4 | 164-7041 | 1 | HANDLE |
| 5 | 166-4553 | 1 | BOOT |
| 6 | 168-2334 | 1 | TRIGGER |
| 7 | 172-6869 | 1 | HANDLE ASM |
| 8 | 502640D1 | 1 | SWITCH ASM (AUTO SHIFT) |
| | 502122D1 | 1 | CAP-PUSHBUTTON |
| 9 | 502120D1 | 1 | SWITCH ASM (DOWN SHIFT) |
| | 502122D1 | 1 | CAP-PUSHBUTTON |
| 10 | CH155-2258 | 1 | WEDGE-PLUG LOCK (12 PIN) |
| 11 | CH155-2255 | 1 | KIT-CONNECTING PLUG (12 PIN) (SERVICED ONLY AS COMPLETE KIT) (INCLUDES WEDGE AND PLUG ASM) |
| 12 | 502121D1 | 1 | SWITCH ASM (UP SHIFT) |
| | 502122D1 | 1 | CAP-PUSHBUTTON |
| 13 | CH3B-4501 | 1 | LOCKWASHER (4.42X7.22X1.02M THK) |
| 14 | 400073X1 | 2 | BOLT-HEX SCKT |
| 15 | CH6V-9492 | 1 | SCREW-MACHINE (M4X0.7X25MM) |
| 16 | ----- | AR | LOOM (BLACK) (19CM) (NOT SERVICED) |

[A] PART OF 169-6346 CONTROL GP-TRANSMISSION

1696347B
PR: t05i29k58b0497

## DOOR GP-CAB (LH) - 164-7068

**(S/N: PRIOR TO BAM40608; BBP40474; BCC60741; BDS40890)**

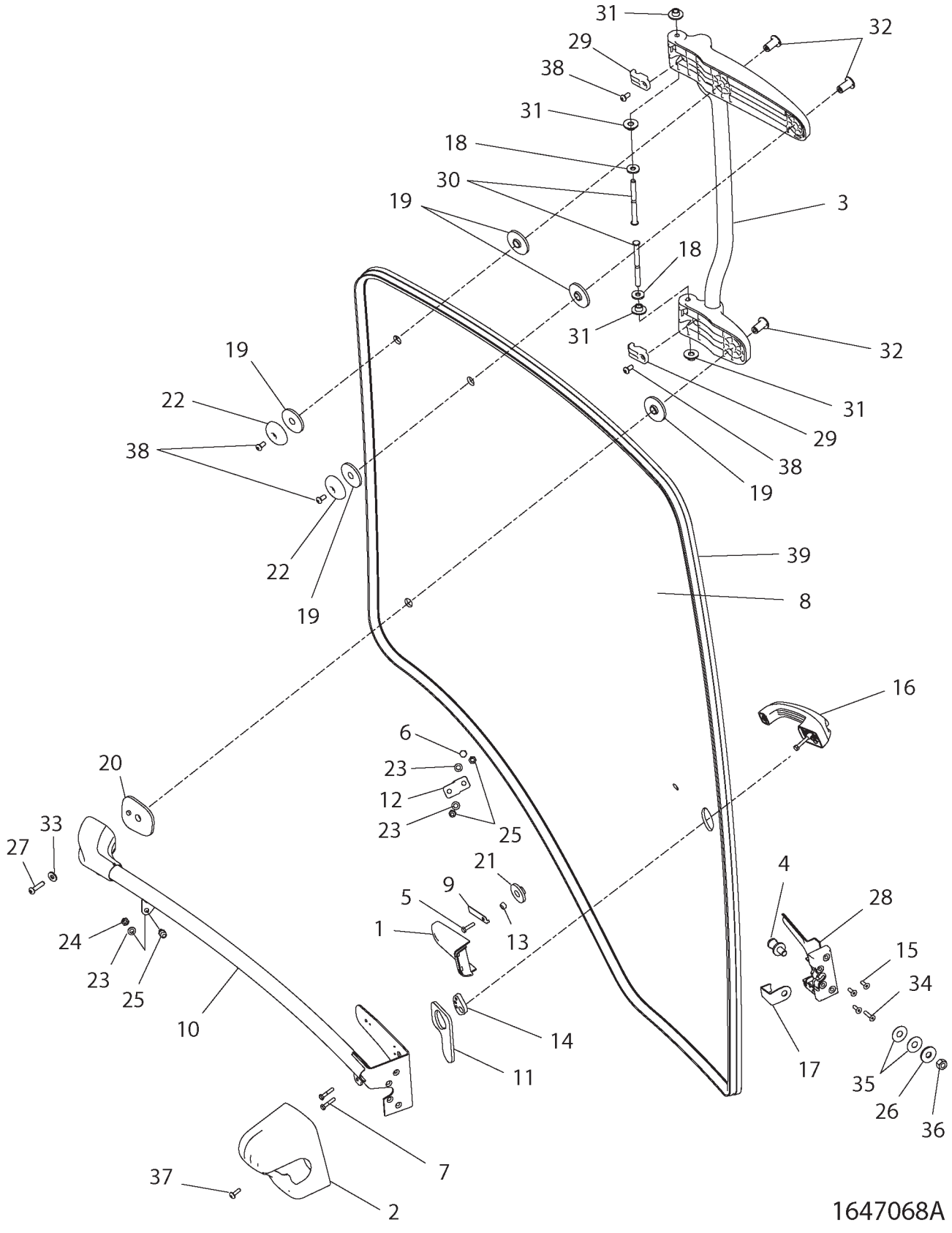

## DOOR GP-CAB (LH) - 164-7068

**(S/N: PRIOR TO BAM40608; BBP40474; BCC60741; BDS40890)**

| ITEM | NUMBER | QTY | DESCRIPTION |
|---|---|---|---|
| - | 164-7068 | -- | DOOR GP-CAB [A] (FOR COMPLETE REPLACEMENT, ORDER EFF DOOR GP-CAB) |
| 1 | 164-7013 | 1 | COVER |
| 2 | 164-7014 | 1 | COVER-DOOR LATCH (LH) |
| 3 | 164-7067 | 1 | HINGE AS-DOOR |
| 4 | 180-6240 | 1 | STRIKER AS.-LONG BODY |
| 5 | 400022X1 | 1 | BOLT-M6X1X25MM ZNDI HHD 10.9 |
| 6 | 400053X1 | 1 | BOLT-M8X1.25X20 ZNDI HHD 10.9 |
| 7 | 400065X1 | 2 | BOLT-M6X1X30MM ZNDI HHD 10.9 |
| 8 | 151-9983 | 1 | GLASS |
| 9 | 179-4219 | 1 | CLIP-COVER |
| 10 | 501028D1 | 1 | TUBE AS |
| 11 | 164-7054 | 1 | WASHER (DOOR LATCH) |
| 12 | 500957D1 | 1 | BRACKET |
| 13 | 500929D1 | 1 | GASKET |
| 14 | 502011D1 | 1 | BUSHING-DOOR |
| 15 | 400256X1 | 3 | BOLT-M6X1X20MM PL FLSHD 12.9 |
| 16 | 500658D1 | 1 | HANDLE AS |
| | CH5P-8500 | 1 | KEY |
| 17 | 123-0380 | 1 | GUARD - STRIKER |
| 18 | 500624D1 | 2 | WASHER-M10 NYLON |
| 19 | 400330X1 | 5 | WASHER 15 ID W/LID |
| 20 | 400331X1 | 1 | WASHER - DOOR |
| 21 | 400332X1 | 1 | WASHER (DOOR HANDLE) |
| 22 | 400333X1 | 2 | WASHER - HINGE |
| 23 | 400339X1 | 3 | WASHER - HARD |
| 24 | 400340X1 | 2 | NUT-M8X1.25X13 HEX ZND1 |
| 25 | CH090-9554 | 2 | STUD-BALL |
| 26 | CH140-5181 | 1 | WASHER-13IDX35ODX3.2MM |
| 27 | CH142-2304 | 1 | SCREW-BTN HD M8X1.25X35 ZNDI |
| 28 | CH164-7057 | 1 | LATCH AS.-LH |
| 29 | CH164-7070 | 2 | CLAMP |
| 30 | CH166-4573 | 2 | PIN-HINGE (DOOR) |
| 31 | CH166-4574 | 4 | BUSHING-HINGE (DOOR) |
| 32 | CH169-6392 | 3 | BOSS |
| 33 | CH3E-4352 | 1 | WASHER-HARD 8.8IDX20.5ODX2.5MM |
| 34 | CH8C-6802 | 1 | SCREW-FLHD M6X1X30 HHD 12.9 |
| 35 | CH8T-0318 | 2 | SHIM-35 ODX13.5 IDX0.8 ZN |
| 36 | CH8T-4244 | 1 | NUT-M12X1.75 HEX ZN |
| 37 | CH9X-2045 | 1 | SCREW-M6X1X20MM ORG TORX T30 |
| 38 | CH9X-2616 | 4 | SCREW-BTNHD M8X1.25X16 ORG12.9 |
| 39 | CH208-2404 | AR | SEAL - BULK (520 CM) |

[A] PART OF: 152-0001;152-0002 CAB GP

1647068A
PR: t05i29k58b0498

## DOOR GP-CAB (LH) - 500927D1

**(S/N: EFF BAM40608; BBP40474; BCC60741; BDS40890)**

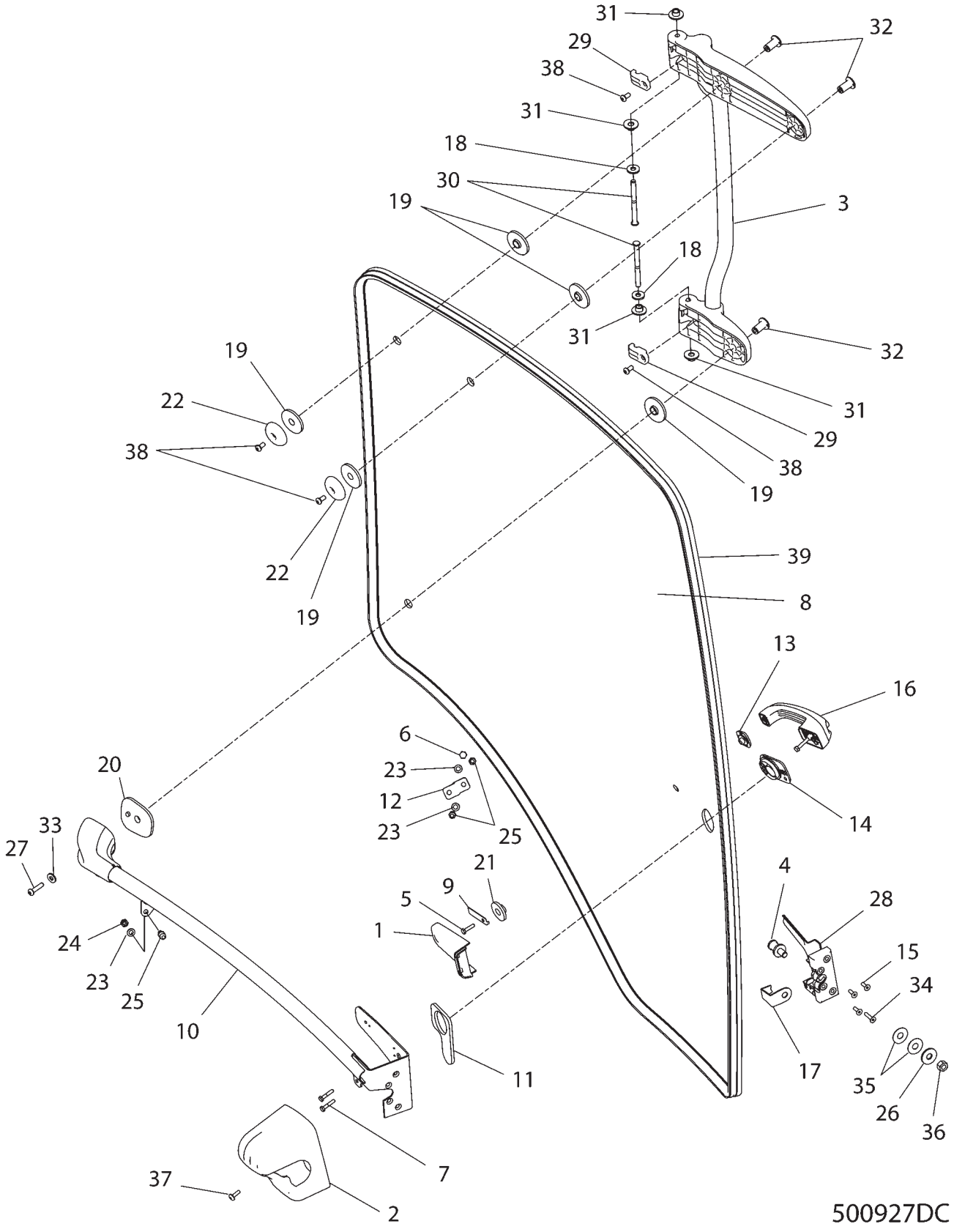

## DOOR GP-CAB (LH) - 500927D1

**(S/N: EFF BAM40608; BBP40474; BCC60741; BDS40890)**

| ITEM | NUMBER | QTY | DESCRIPTION |
|---|---|---|---|
| - | 500927D1 | -- | DOOR GP-CAB [A] (NOT SERVICED) |
| 1 | 164-7013 | 1 | COVER |
| 2 | 164-7014 | 1 | COVER-DOOR LATCH (LH) |
| 3 | 164-7067 | 1 | HINGE AS-DOOR |
| 4 | 180-6240 | 1 | STRIKER AS.-LONG BODY |
| 5 | 400022X1 | 1 | BOLT-M6X1X25MM ZNDI HHD 10.9 |
| 6 | 400053X1 | 1 | BOLT-M8X1.25X20 ZNDI HHD 10.9 |
| 7 | 400065X1 | 2 | BOLT-M6X1X30MM ZNDI HHD 10.9 |
| 8 | 500625D1 | 1 | GLASS |
| 9 | 500660D1 | 1 | CLIP |
| 10 | 500931D1 | 1 | TUBE AS |
| 11 | 502010D1 | 1 | WASHER |
| 12 | 500957D1 | 1 | BRACKET |
| 13 | 500929D1 | 1 | GASKET |
| 14 | 502011D1 | 1 | GASKET |
| 15 | 400256X1 | 3 | BOLT-M6X1X20MM PL FLSHD 12.9 |
| 16 | 500658D1 | 1 | HANDLE AS |
| | CH5P-8500 | 1 | KEY |
| 17 | 123-0380 | 1 | GUARD-STRIKER |
| 18 | 500624D1 | 2 | WASHER-M10 NYLON |
| 19 | 400330X1 | 5 | WASHER 15 ID W/LID |
| 20 | 400331X1 | 1 | WASHER-DOOR |
| 21 | 400332X1 | 1 | WASHER (DOOR HANDLE) |
| 22 | 400333X1 | 2 | WASHER-HINGE |
| 23 | 400339X1 | 3 | WASHER-HARD |
| 24 | 400340X1 | 2 | NUT-M8X1.25X13 HEX ZND1 |
| 25 | CH090-9554 | 2 | STUD-BALL |
| 26 | CH140-5181 | 1 | WASHER-13IDX35ODX3.2MM |
| 27 | CH142-2304 | 1 | SCREW-BTN HD M8X1.25X35 ZNDI |
| 28 | CH164-7057 | 1 | LATCH AS.-LH |
| 29 | CH164-7070 | 2 | CLAMP |
| 30 | CH166-4573 | 2 | PIN-HINGE (DOOR) |
| 31 | CH166-4574 | 4 | BUSHING-HINGE (DOOR) |
| 32 | CH169-6392 | 3 | BOSS |
| 33 | CH3E-4352 | 1 | WASHER-HARD 8.8IDX20.5ODX2.5MM |
| 34 | CH8C-6802 | 1 | SCREW-FLHD M6X1X30 HHD 12.9 |
| 35 | CH8T-0318 | 2 | SHIM-35 ODX13.5 IDX0.8 ZN |
| 36 | CH8T-4244 | 1 | NUT-M12X1.75 HEX ZN |
| 37 | CH9X-2045 | 1 | SCREW-M6X1X20 MM ORG TORX T30 |
| 38 | CH9X-2616 | 4 | SCREW-BTNHD M8X1.25X16 ORG12.9 |
| 39 | CH208-2404 | AR | SEAL-BULK (520 CM) |

[A] PART OF: 152-0001;152-0002
152-0003;152-0004 CAB GP

500927DC
PR: t05i29k58b0499

## DUCT GP-CAB AIR
166-4556

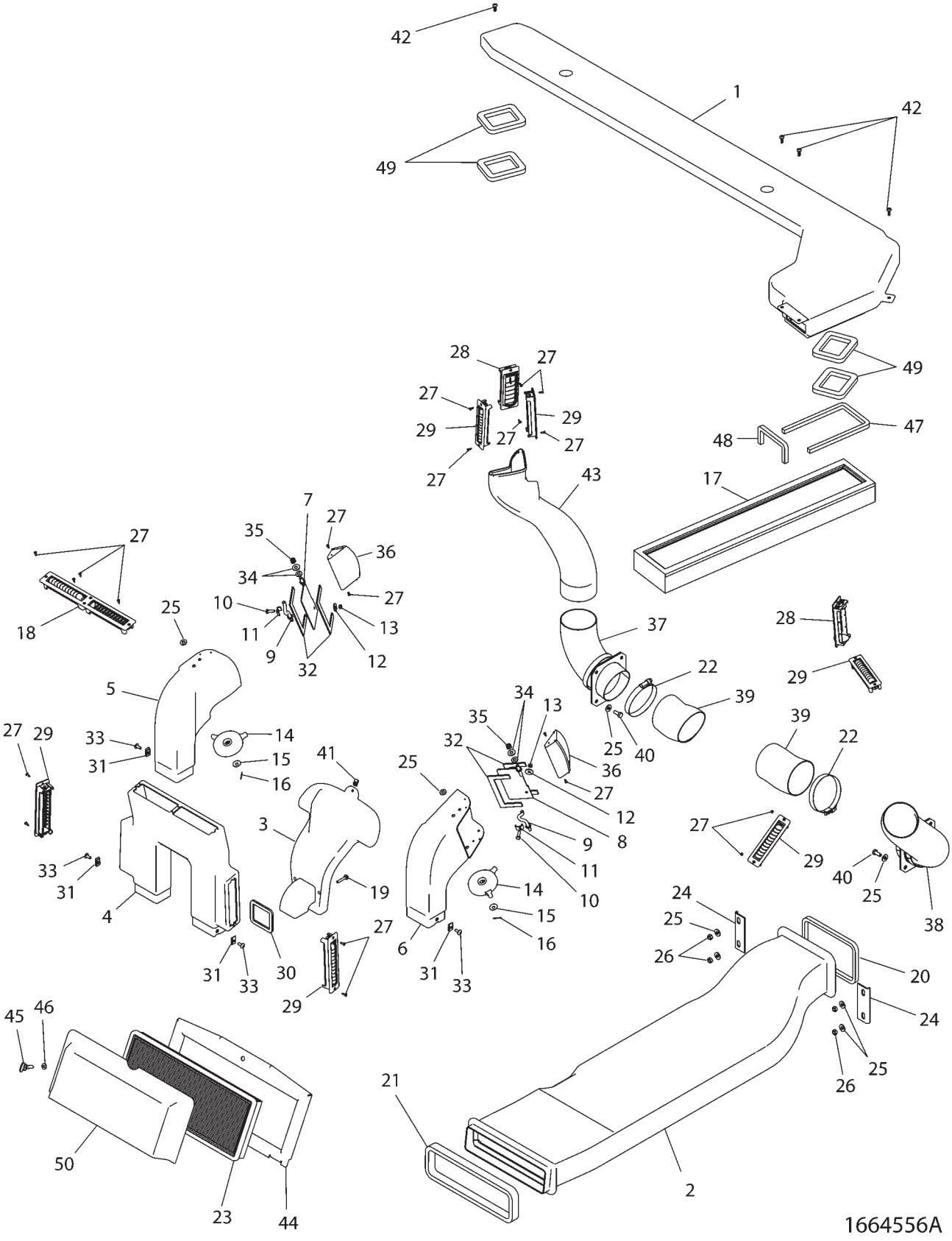

## DUCT GP-CAB AIR
166-4556

| ITEM | NUMBER | QTY | DESCRIPTION |
|---|---|---|---|
| - | 166-4556 | -- | FILTER GP-CAB AIR [A] (NOT SERVICED) |
| 1 | 162-6691 | 1 | DUCT-ROOF |
| 2 | 166-4617 | 1 | DUCT-CENTER |
| 3 | 169-6337 | 1 | DUCT-FRONT (LOWER) |
| 4 | 504445D1 | 1 | DUCT-FRONT (DEFROST) |
| 5 | 164-7023 | 1 | DUCT-RH |
| 6 | 166-4595 | 1 | DUCT-LH |
| 7 | 179-4221 | 1 | BRACKET ASM-LH |
| 8 | 179-4223 | 1 | BRACKET ASM-RH |
| 9 | 179-4225 | 2 | ROD ASM |
| 10 | 400221X1 | 2 | BOLT (M6X1X20MM) |
| 11 | 214-4667 | 2 | PLATE |
| 12 | CH117-8929 | 2 | WASHER-HARD (6.6IDX22ODX2) |
| 13 | 400300X1 | 2 | NUT (M6X1) |
| 14 | 162-6734 | 2 | WHEEL |
| 15 | CH9T-2281 | 2 | SPRING |
| 16 | CH3B-4605 | 2 | PIN-COTTER |
| 17 | 501881D1 | 1 | FILTER-AIR (CAB-OUTSIDE) |
| 18 | CH164-8478 | 1 | LOUVER ASM |
| 19 | CH9X-2046 | 2 | SCREW-TRUSS HEAD (M6X1X35MM) |
| 20 | 178-7974 | 1 | GASKET |
| 21 | 501210D1 | 1 | GASKET |
| 22 | 400127X1 | 6 | CLAMP-HOSE |
| 23 | 501153D1 | 1 | FILTER-AIR (CAB-RECIRCULATION) |
| 24 | 169-6373 | 2 | CLAMP-CENTER DUCT |
| 25 | 400599X1 | 14 | WASHER-HARD (8.8X20.5X2) |
| 26 | 400340X1 | 4 | NUT (M8X1.25) |
| 27 | CH104-2091 | 26 | SCREW-FLAT HEAD (6-20X0.5 IN) |
| 28 | 501826D1 | 3 | LOUVER ASM |
| 29 | CH171-4047 | 6 | LOUVER ASM |
| 30 | 187-4906 | 1 | GASKET |
| 31 | 400085X1 | 4 | NUT (U-TYPE RETAINER) |
| 32 | 187-4921 | 4 | SEAL |
| 33 | CH9X-2044 | 4 | SCREW-TRUSS HEAD (M6X1X16MM) |
| 34 | 214-1118 | 4 | SPACER (8.4X18X2) |
| 35 | CH131-3540 | 2 | LOCKNUT |
| 36 | 197-3083 | 2 | PLATE |
| 37 | 201-1186 | 1 | ADAPTER ASM-RH |
| | 210-3258 | 1 | ADAPTER-CONDITIONER |
| | 210-3292 | 1 | GASKET |
| 38 | 203-6965 | 1 | ADAPTER ASM-LH |
| | 210-3258 | 1 | ADAPTER-CONDITIONER |
| | 210-3292 | 1 | GASKET |
| 39 | 203-6966 | 2 | HOSE |
| 40 | 400053X1 | 8 | BOLT (M8X1.25X20MM) |
| 41 | 400084X1 | 1 | NUT (U-TYPE RETAINER) |
| 42 | CH210-4352 | 4 | SCREW-PAN HEAD |
| 43 | 180-5239 | 1 | DUCT-RH |
| 44 | 202-0848 | 1 | COVER |
| 45 | CH216-9165 | 1 | THUMBSCREW |
| 46 | CH2R-2376 | 1 | WASHER (7X16X.8) |
| 47 | 217-3513 | 1 | SEAL |
| 48 | 217-3514 | 1 | SEAL |
| 49 | 222-4774 | 4 | GASKET |
| 50 | 225-1406 | 1 | COVER-FILTER |

[A] PART OF 151-9986; 166-4592; 502501D1
AIR CONDITIONER & MOUNTING GP

1664556A
PR: t05i29k58b0500

## HEADLINER GP - 152-0418
OPERATOR COMPARTMENT

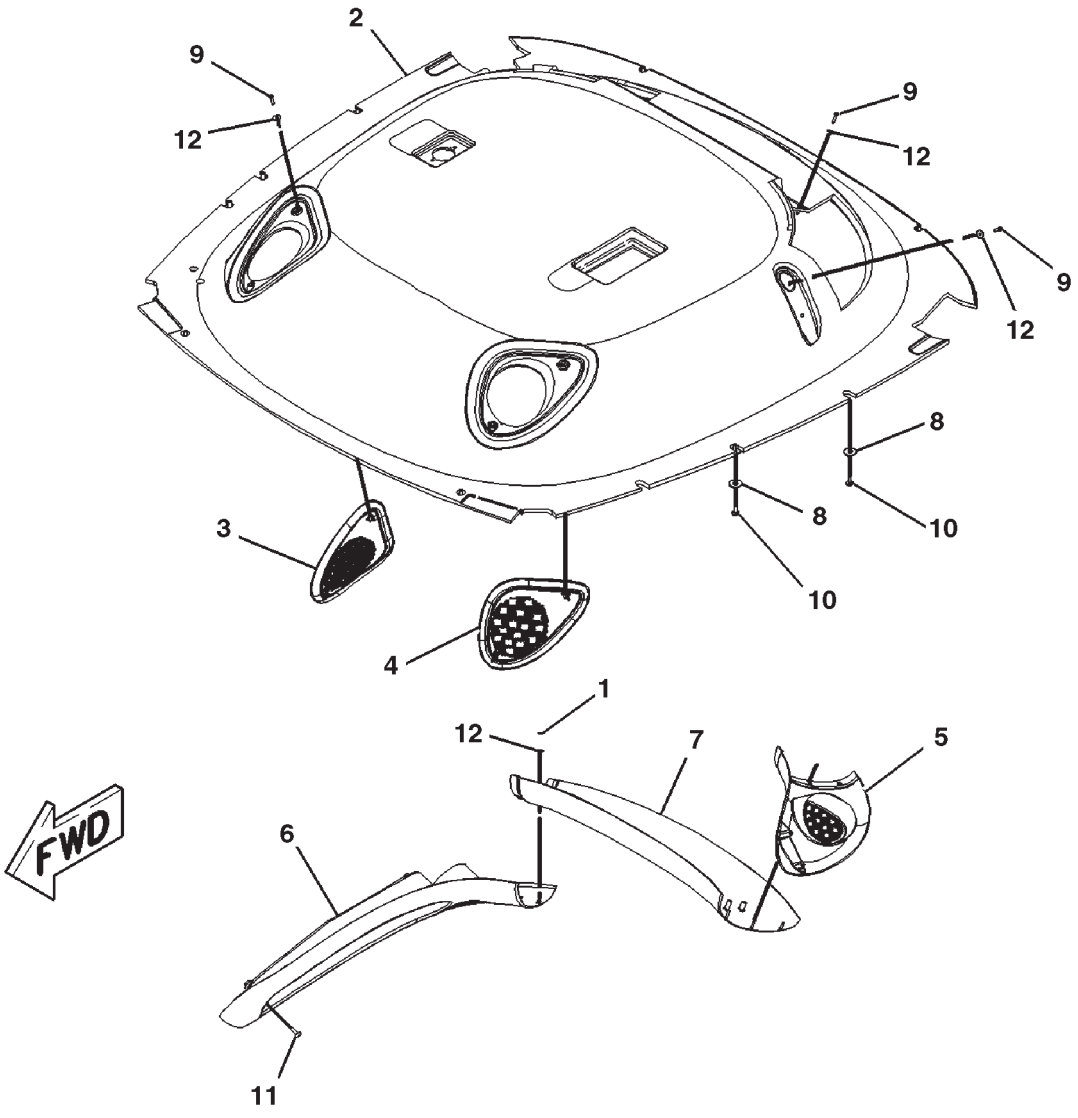


0842870A

## HEADLINER GP - 152-0418
**OPERATOR COMPARTMENT**

| ITEM | NUMBER | QTY | DESCRIPTION |
|---|---|---|---|
| - | 152-0418 | -- | HEADLINER GP [A] (NOT SERVICED) |
| 1 | CH4V-2264 | 5 | NUT-PUSH |
| 2 | 162-6687 | 1 | HEADLINER |
| 3 | 162-6688 | 1 | COVER-FRONT SPEAKER (RH) |
| 4 | 162-6689 | 1 | COVER-FRONT SPEAKER (LH) |
| 5 | 162-6690 | 1 | COVER-REAR SPEAKER (LH) |
| 6 | 162-6692 | 1 | BEZEL |
| 7 | 168-2305 | 1 | COVER-REAR |
| 8 | CH101-2867 | 10 | WASHER-HARD (8.8X25.5X2M THK) |
| 9 | CH119-5026 | 10 | SCREW-PAN HEAD (10-16X0.63 IN) |
| 10 | CH9X-2044 | 10 | SCREW-TRUSS HEAD (M6X1X16MM) |
| 11 | CH9X-2045 | 4 | SCREW-TRUSS HEAD (M6X1X20MM) |
| 12 | 400076X1 | 15 | WASHER (5X16X1.2) |

[A] PART OF 152-0012; 152-0013;
222-4146; 500841D1 CAB AR

0842870A
PR: t05i29k58b0501

**LINES GP-A/C - 172-5343**

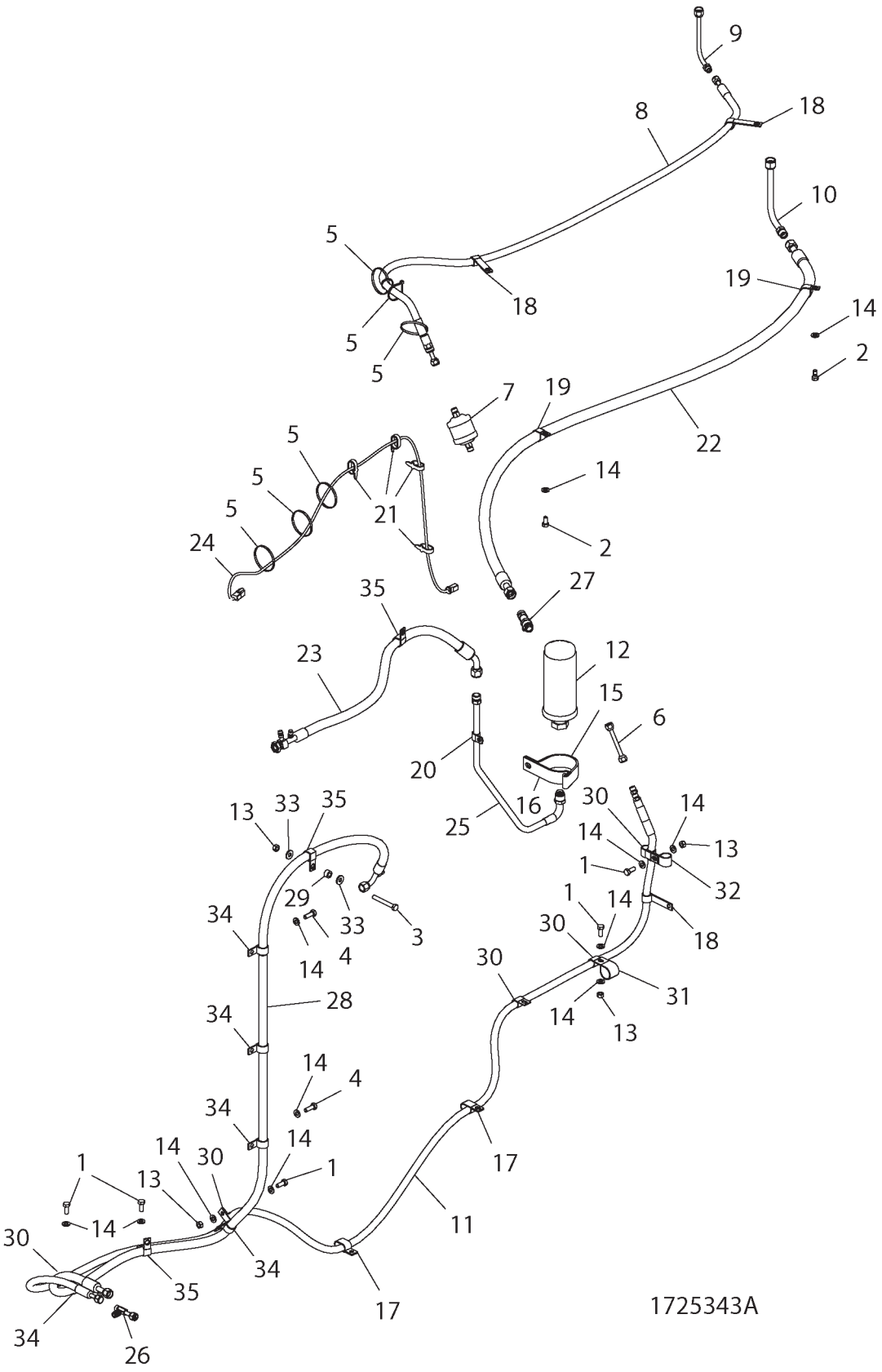

## LINES GP-A/C - 172-5343

| ITEM | NUMBER | QTY | DESCRIPTION |
|---|---|---|---|
| - | 172-5343 | -- | LINES GP-A/C [A] (NOT SERVICED) |
| 1 | 400039X1 | 5 | BOLT-M10X1.5X25 ZNDI HHD 10.9 |
| 2 | 400040X1 | 2 | BOLT-M10X1.5X20 ZNDI HHD 10.9 |
| 3 | 400044X1 | 1 | BOLT-M10X1.5X80 ZNDI HHD 10.9 |
| 4 | 400058X1 | 2 | BOLT-M10X1.5X30 ZNDI HHD 10.9 |
| 5 | CH7K-1181 | 6 | STRAP-CABLE 0.19-4.00 |
| 6 | 500973D1 | 1 | ADAPTER-A/C |
| 7 | 500978D1 | 1 | FILTER-A/C |
| 8 | 195-4507 | 1 | HOSE AS |
| 9 | 195-4512 | 1 | TUBE AS |
| | CH9X-7381 | 1 | SEAL-O-RING |
| 10 | 195-4513 | 1 | TUBE AS |
| | CH9X-7382 | 1 | SEAL-O-RING |
| 11 | 221-1775 | 1 | HOSE AS |
| 12 | 500758D1 | 1 | ACCUMULATOR DRYER-A/C |
| 13 | WR522218 | 4 | NUT-M10-1.5,CL10.9,ZN,H,REG |
| 14 | 400287X1 | 12 | WASHER-HARD 11IDX21ODX2.5 ZND1 |
| 15 | 400603X1 | 1 | CLIP-2 PIECE BOTTOM 88.9 OD |
| 16 | 400604X1 | 1 | CLIP-2 PIECE TOP 88.9 OD |
| 17 | 400665X1 | 2 | CLIP-LOOP 19ID X 2 |
| 18 | 400695X1 | 3 | CLIP-LOOP 20.64ID |
| 19 | 400700X1 | 2 | CLIP-LOOP 28.58ID |
| 20 | 400702X1 | 1 | CLIP-ONE TUBE COATED |
| 21 | 400837X1 | 5 | STRAP-CABLE (PLASTIC) |
| 22 | 500990D1 | 1 | HOSE AS. (FOR 15.9 ID SAE) |
| 23 | 502041D1 | 1 | HOSE AS. (FOR 12.7 ID SAE) |
| 24 | 502042D1 | 1 | HARNESS AS.-JUMPER |
| 25 | 502043D1 | 1 | TUBE AS.-A/C |
| 26 | 502044D1 | 1 | FITTING-A/C |
| 27 | 502045D1 | 1 | ADAPTER-A/C |
| 28 | 502338D1 | 1 | HOSE AS. |
| | CH9X-7381 | 2 | SEAL-O-RING |
| | CH9X-7378 | 1 | SEAL-O-RING (8.92IDX1.83DIA) |
| 29 | CH114-5785 | 1 | SPACER 10.5IDX19ODX11.5 ZN |
| 30 | CH3S-8664 | 6 | CLIP-LOOP 19.05 ID |
| 31 | CH4D-7388 | 1 | CLIP-LOOP 34.9 ID |
| 32 | CH4S-1962 | 1 | CLIP-LOOP 25.4 ID |
| 33 | CH7X-7729 | 2 | WASHER-11IDX5ODX3MM |
| 34 | CH8S-0948 | 3 | CLIP-LOOP-20.64 ID |
| 35 | CH9X-8250 | 4 | CLIP-LOOP 23.8 ID |

[A] PART OF 172-5361;172-5362;172-5363;
172-5364;187-1741;187-1742;187-1743;
187-1744 INSTALLATION AR-ENGINE

1725343A
PR: t05i29k58b0502

## LINES GP-HEATER - 208-2880

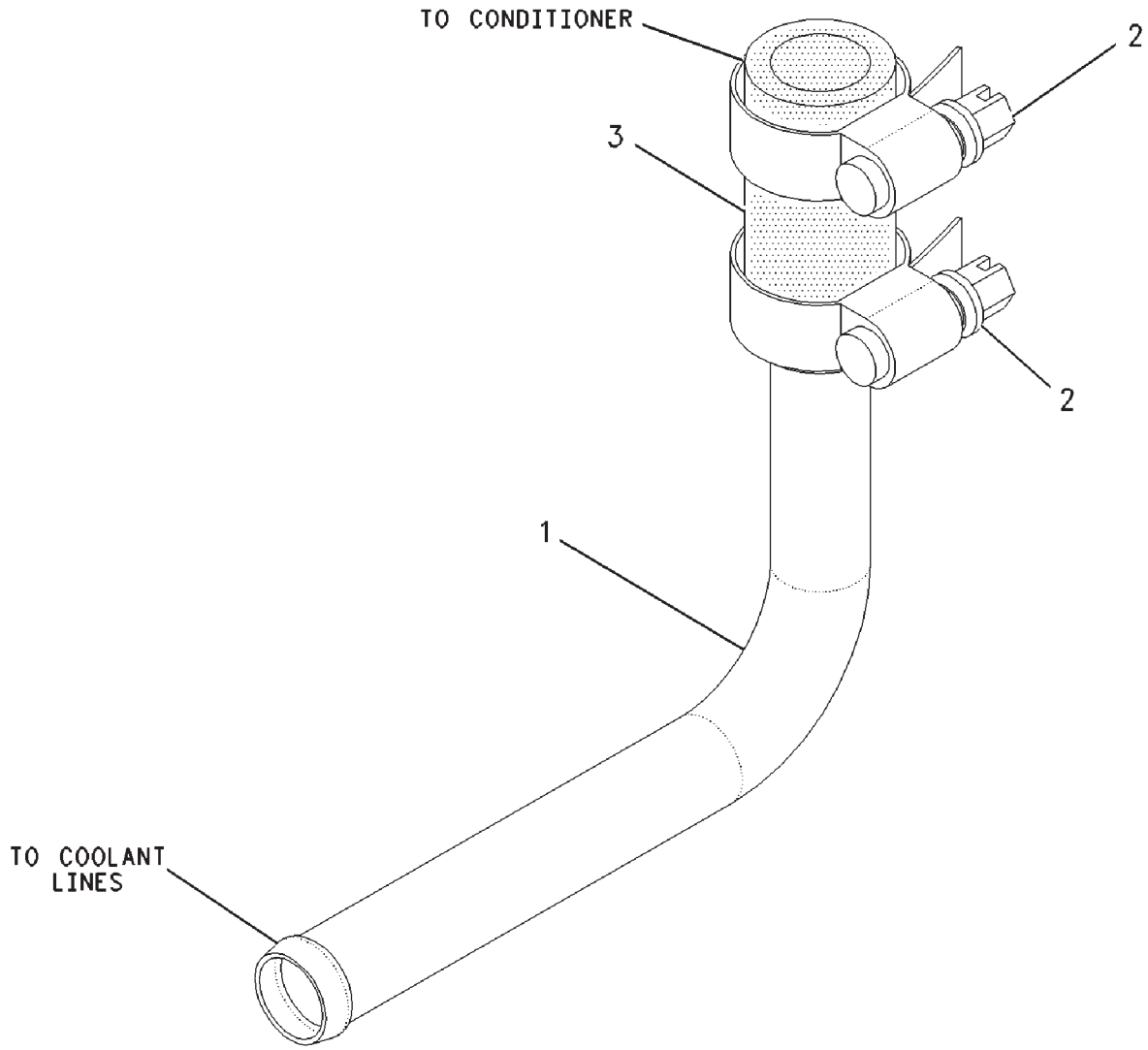


00893577

## LINES GP-HEATER - 208-2880

| ITEM | NUMBER | QTY | DESCRIPTION |
|---|---|---|---|
| - | 208-2880 | -- | LINES GP-HEATER [A] (NOT SERVICED) |
| 1 | CH208-2878 | 1 | ELBOW |
| 2 | 400108X1 | 2 | CLAMP-HOSE |
| 3 | CH5P-0767 | AR | HOSE (5 CM) |

[A] PART OF 152-0009; 152-0013;
500764D1; 500842D1; 500844D1
CAB AR

00893577
PR: t05i29k58b0503

## LINES GP-HEATER - DELUXE
208-2881

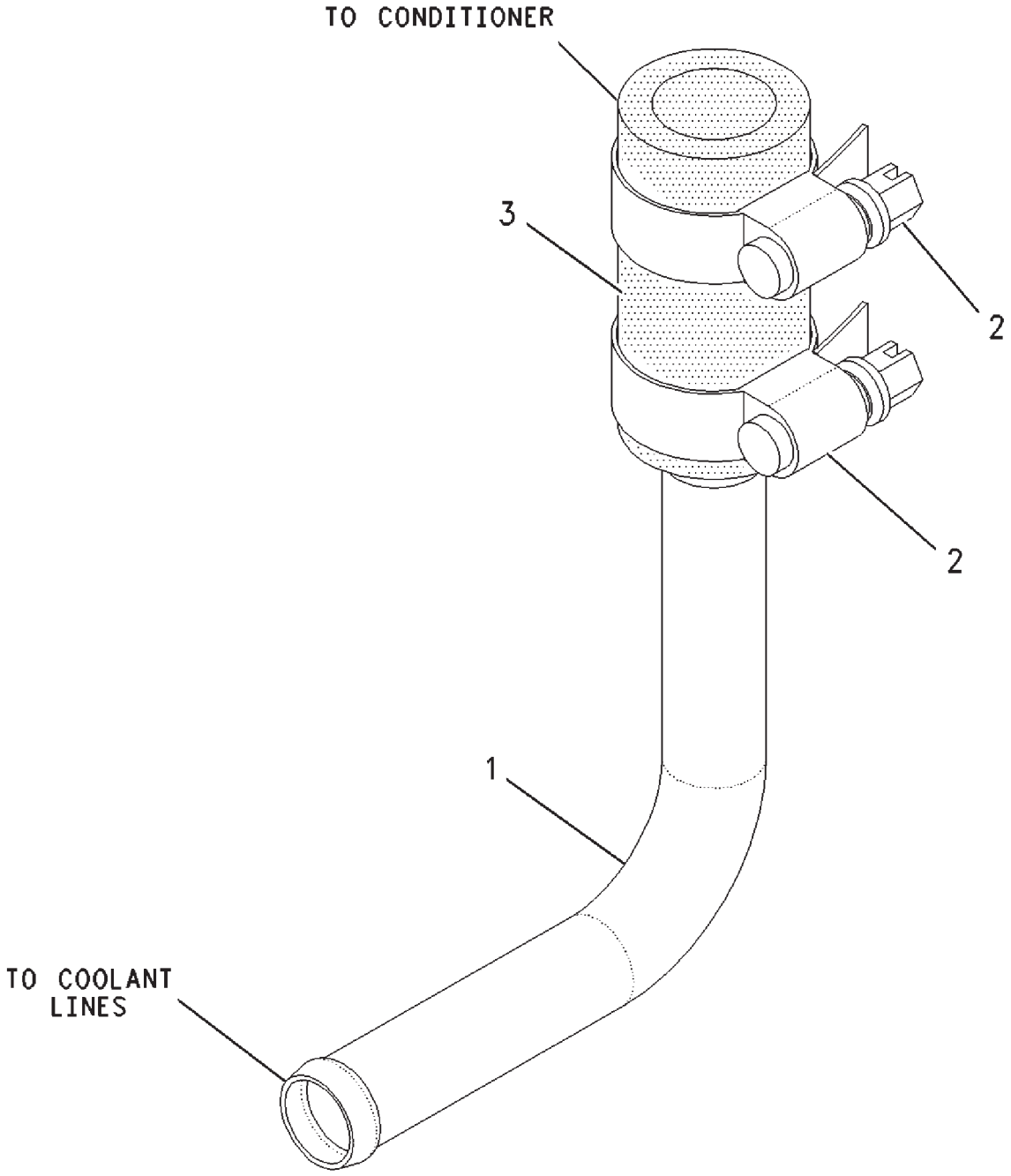


00893020

## LINES GP-HEATER - DELUXE
**208-2881**

| ITEM | NUMBER | QTY | DESCRIPTION |
|---|---|---|---|
| - | 208-2881 | -- | LINE GP-HEATER [A] (NOT SERVICED) |
| 1 | 195-4520 | 1 | TUBE |
| 2 | 400125X1 | 2 | CLAMP-HOSE |
| 3 | 501738D1 | AR | HOSE (6CM) |

[A] PART OF 500841D1;500843D1;500849D1
CAB AR

00893020
PR: t05i29k58b0504

## MIRROR GP-REAR VIEW - 209-5607
MANUAL ADJUSTMENT

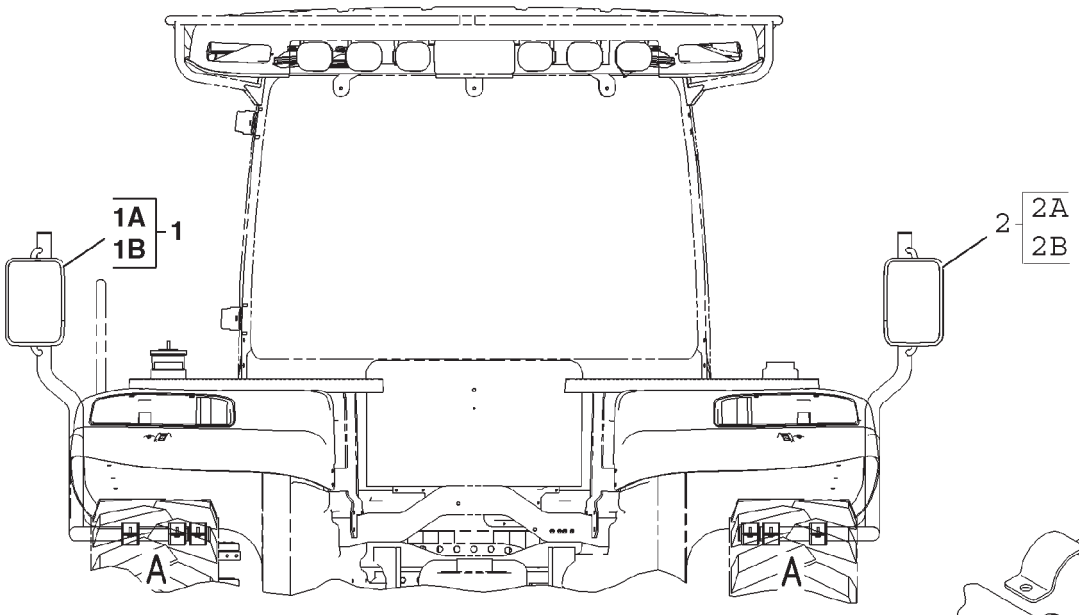


REAR VIEW

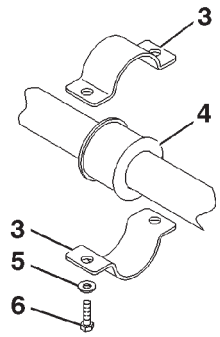


VIEW OF AREA A

0852423B

## MIRROR GP-REAR VIEW - 209-5607
MANUAL ADJUSTMENT

| ITEM | NUMBER | QTY | DESCRIPTION |
|---|---|---|---|
| - | 502776D1 | -- | MIRROR GP-REAR VIEW (FIELD INSTALLED) |
| - | 209-5607 | -- | MIRROR GP-REAR VIEW (NOT SERVICED, ORDER FIELD INSTALLED) |
| 1 | 206-0586 | 1 | MIRROR ASM-REAR VIEW (LH) (INCLUDES 1A & 1B) |
| 1A | 206-0581 | 1 | SUPPORT ASM |
| 1B | 206-0578 | 1 | MIRROR ASM |
| 2 | 209-5605 | 1 | MIRROR GP-REAR VIEW (RH) (INCLUDES 2A & 2B) |
| 2A | 209-5604 | 1 | SUPPORT ASM |
| 2B | 206-0578 | 1 | MIRROR ASM |
| 3 | CH209-9233 | 16 | CLAMP |
| 4 | 400111X1 | 8 | GROMMET |
| 5 | 400599X1 | 16 | WASHER-HARD (8.8X20.5X2) |
| 6 | 400245X1 | 16 | BOLT (M8X1.25X30MM) |

0852423B
PR: t05i29k58b0505

## MIRROR GP-REAR VIEW - 209-5608
POWER ADJUSTMENT & HEATED

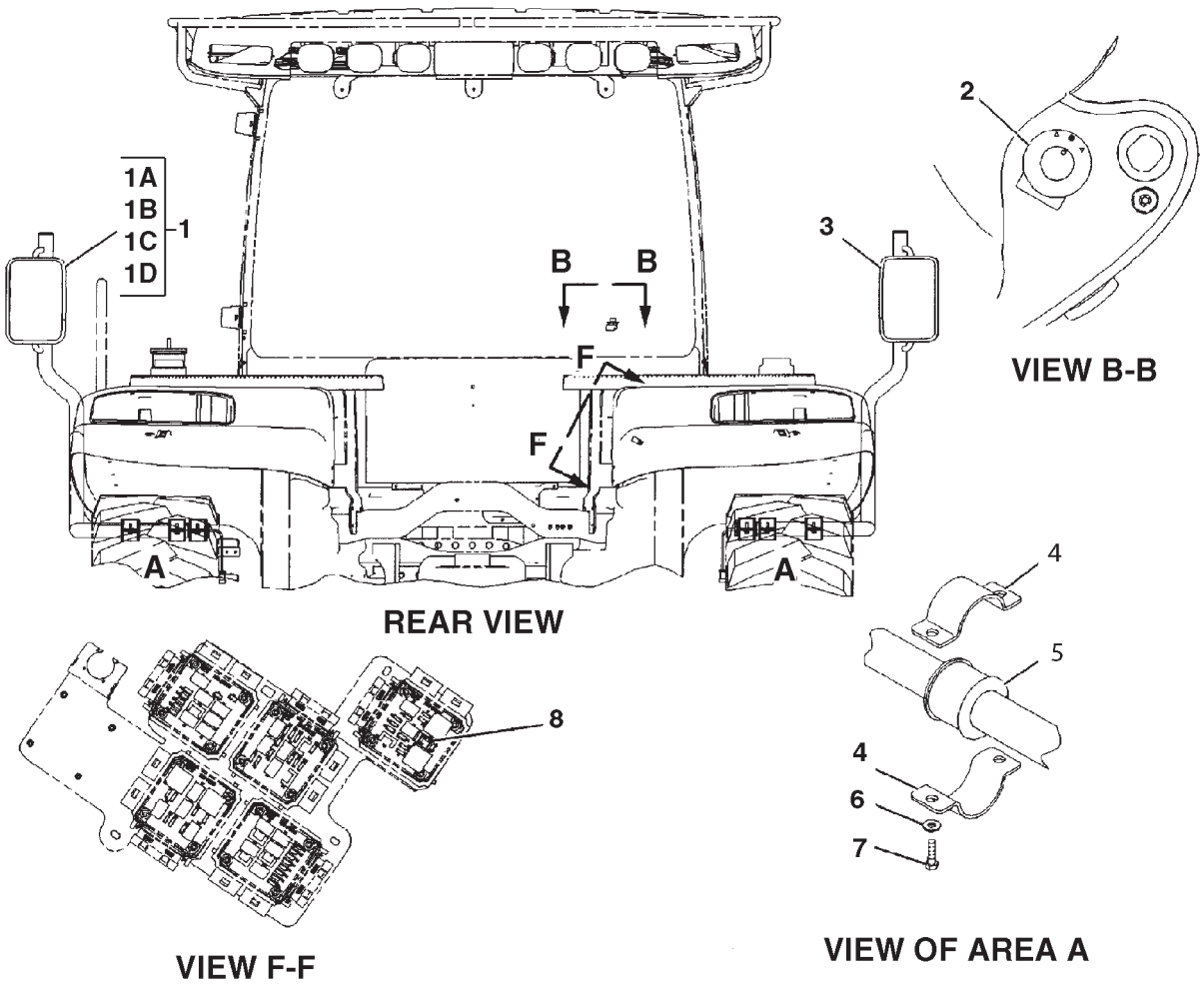


REAR VIEW

VIEW B-B

VIEW F-F

VIEW OF AREA A

0892108A

## MIRROR GP-REAR VIEW - 209-5608
**POWER ADJUSTMENT & HEATED**

| ITEM | NUMBER | QTY | DESCRIPTION |
|---|---|---|---|
| - | 209-5608 | -- | MIRROR GP-REAR VIEW [A] (NOT SERVICED) |
| 1 | 206-0584 | 1 | MIRROR ASM-REAR VIEW (LH) (INCLS 1A-1D) |
| 1A | CH102-8805 | 1 | KIT-RECEPTACLE (6 PIN) |
| 1B | 206-0580 | 1 | HARNESS ASM (REAR VIEW MIRROR) |
| 1C | 206-0581 | 1 | SUPPORT ASM (LH) |
| 1D | 206-0579 | 1 | MIRROR |
| | 207-0511 | | GLASS-MIRROR |
| 2 | 207-2038 | 1 | SWITCH |
| 3 | 209-5606 | 1 | MIRROR GP-REAR VIEW (RH) |
| | 102-8805 | 1 | KIT-RECEPTACLE (6 PIN) |
| | 206-0580 | 1 | HARNESS (REAR VIEW MIRROR) |
| | 209-5604 | 1 | SUPPORT (RH) |
| | 206-0579 | 1 | MIRROR HEAD |
| | 207-0511 | 1 | GLASS-MIRROR |
| 4 | CH209-9233 | 16 | CLAMP |
| 5 | 400111X1 | 8 | GROMMET |
| 6 | 400599X1 | 16 | WASHER-HARD (8.8X20.5X2) |
| 7 | 400245X1 | 16 | BOLT (M8X1.25X30MM) |
| 8 | CH146-9439 | 1 | RELAY (12 VOLT) |

[A] PART OF 500841D1; 500842D1;
500843D1; 500849D1 CAB AR

0892108A
PR: t05i29k58b0506

## MIRROR GP - 206-0588

**SIDE AREA VIEW**
**EAME ONLY**

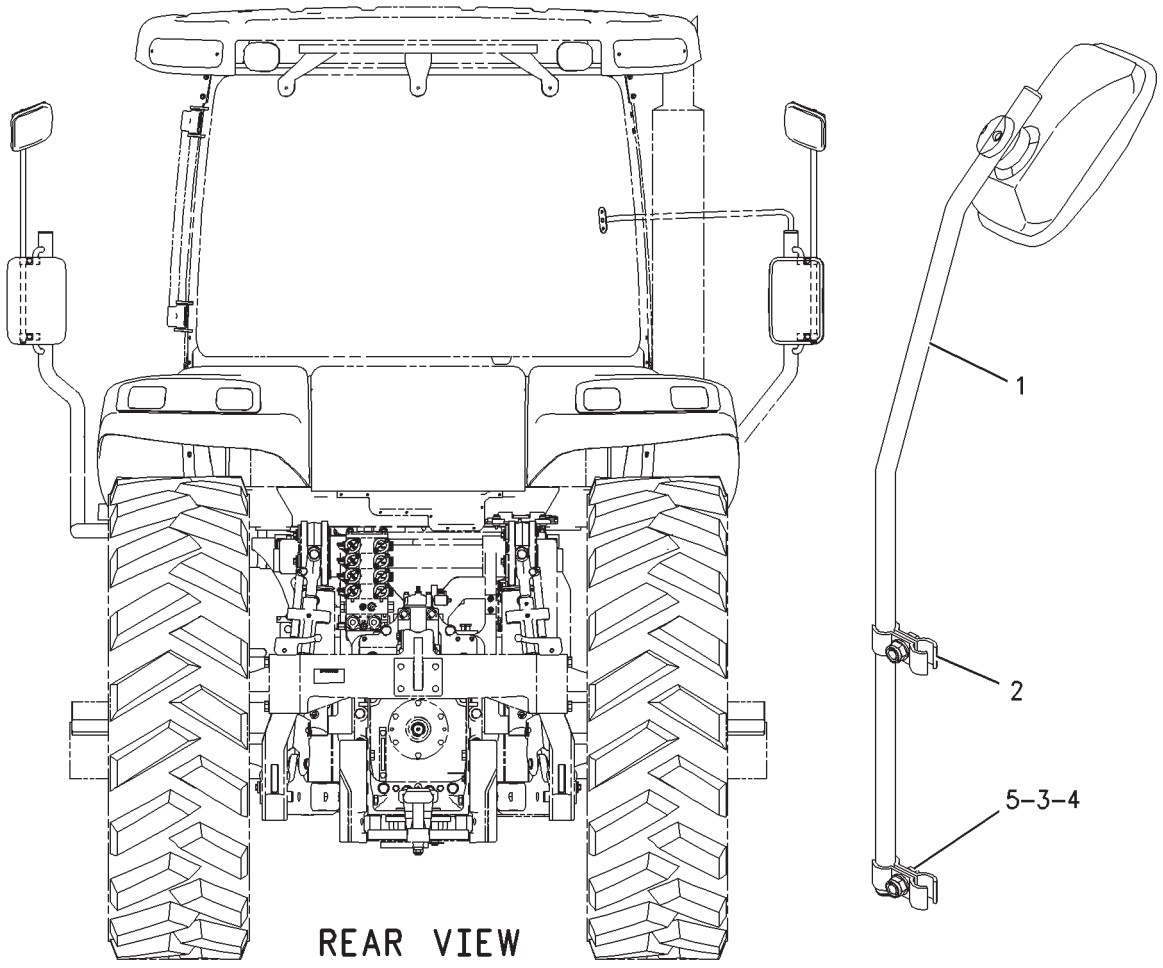


00821303

## MIRROR GP - 206-0588
**SIDE AREA VIEW**
**EAME ONLY**

| ITEM | NUMBER | QTY | DESCRIPTION |
|---|---|---|---|
| - | 206-0588 | -- | MIRROR GP-SIDE AREA VIEW [A] (NOT SERVICED) |
| 1 | 206-0589 | 2 | MIRROR AS |
| 2 | CH4H-7655 | 8 | CLAMP-TUBE |
| 3 | CH8T-0389 | 4 | LOCKNUT (M10X1.5 THD) |
| 4 | 400287X1 | 8 | WASHER-HARD (11X21X2.5MM THK) |
| 5 | 400039X1 | 4 | BOLT (M10X1.5X25MM) |

[A] PART OF 500841D1; 500842D1 CAB AR

00821303
PR: t05i29k58b0507

## RADIO GP-STD - 168-1952

**12V HD, AM/FM/WB/CASS W/GREEN BACKLIGHT**

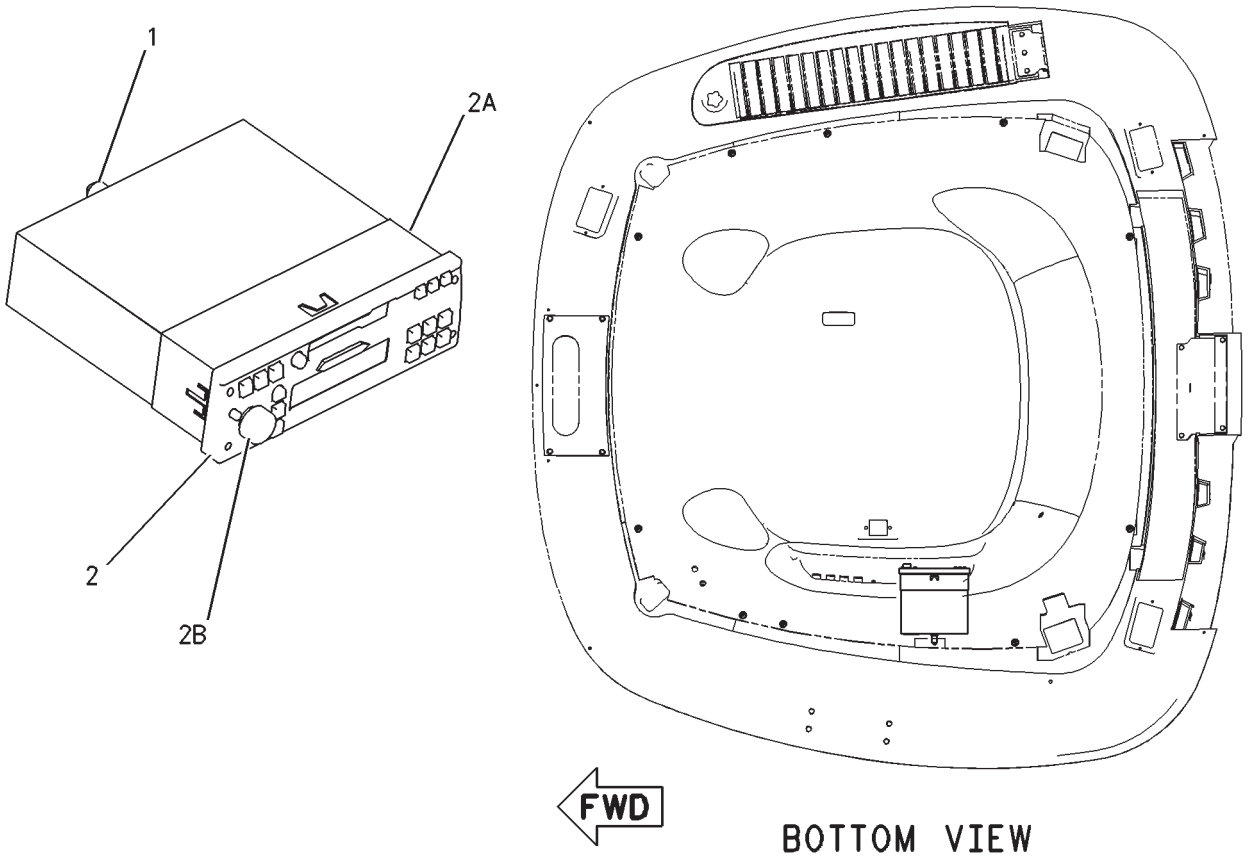

## RADIO GP-STD - 168-1952
**12V HD, AM/FM/WB/CASS W/GREEN BACKLIGHT**

| ITEM | NUMBER | QTY | DESCRIPTION |
|---|---|---|---|
| - | 168-1952 | -- | RADIO GP |
| 1 | CH136-5490 | 1 | BUSHING |
| 2 | CH169-6324 | 1 | RADIO GP |
| 2A | CH192-7054 | 1 | SLEEVE |
| 2B | CH142-9681 | 1 | KNOB (RADIO VOLUME) |
| - | 400455X1 | 1 | CONNECTOR [A] |

[A] MATING CONNECTOR REQUIRED TO CONNECT RADIO

00732187
PR: t05i29k58b0508

## RADIO GP-DELUXE - 168-1970

**12V HD AM/FM/WB/CAS/REMOTE/GRN BACKLIGHT ROW AND SPECIAL APPLICATIONS**

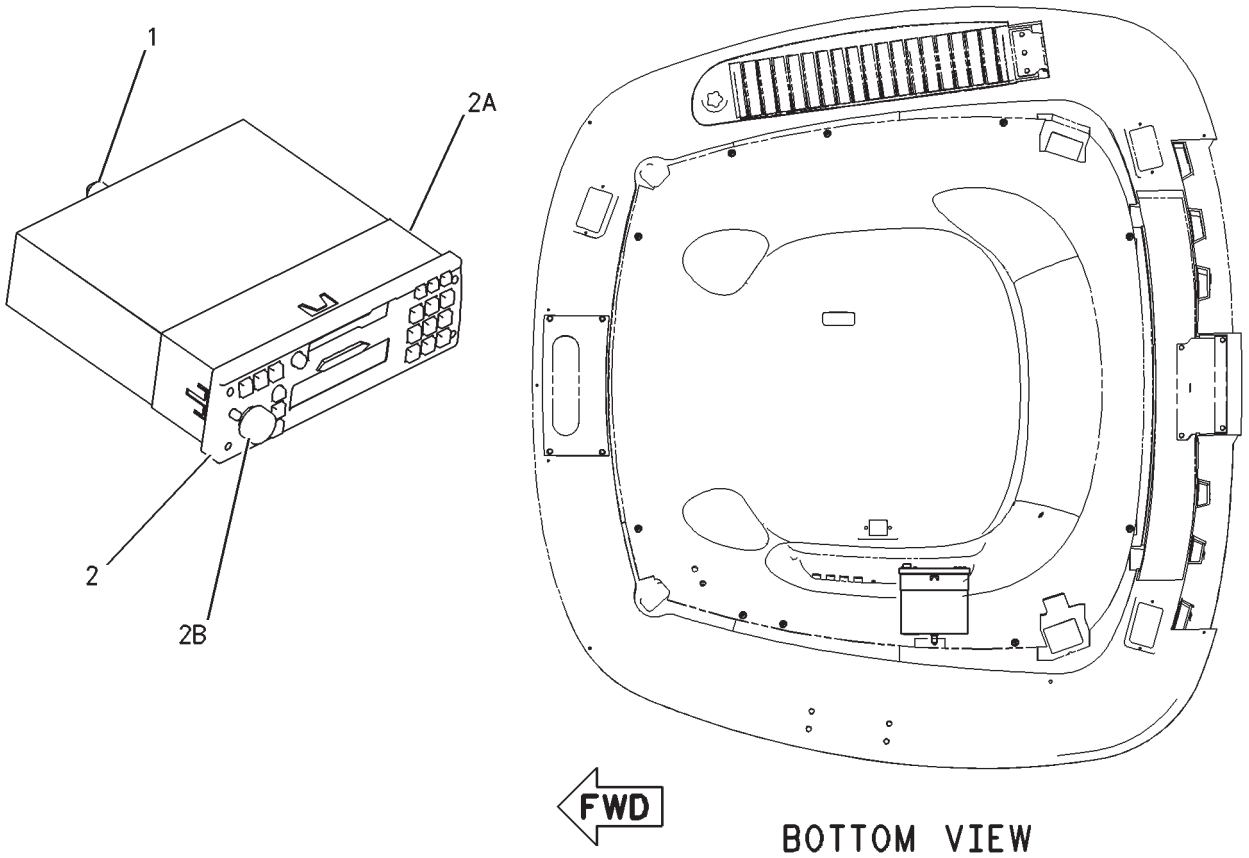

## RADIO GP-DELUXE - 168-1970

**12V HD AM/FM/WB/CAS/REMOTE/GRN BACKLIGHT ROW AND SPECIAL APPLICATIONS**

| ITEM | NUMBER | QTY | DESCRIPTION |
|---|---|---|---|
| - | 168-1970 | -- | RADIO GP |
| 1 | CH136-5490 | 1 | BUSHING |
| 2 | CH169-6325 | 1 | RADIO GP |
| 2A | CH192-7054 | 1 | SLEEVE [A] |
| 2B | CH142-9681 | 1 | KNOB (RADIO VOLUME) |
| - | CH170-7251 | 1 | CHANGER-CD [B] |
| - | 400455X1 | 1 | CONNECTOR [C] |

[A] FOR FRONT RADIO MOUNTING
[B] CD CHANGER WITH RADIO COMPATIBLE
[C] MATING CONNECTOR REQUIRED TO CONNECT RADIO

00732192
PR: t05i29k58b0509

## RADIO GP-DELUXE CD - 170-5739

**12V HD AM/FM/WB/CD/REMOTE/GRN BACKLIGHT ROW AND SPECIAL APPLICATIONS**

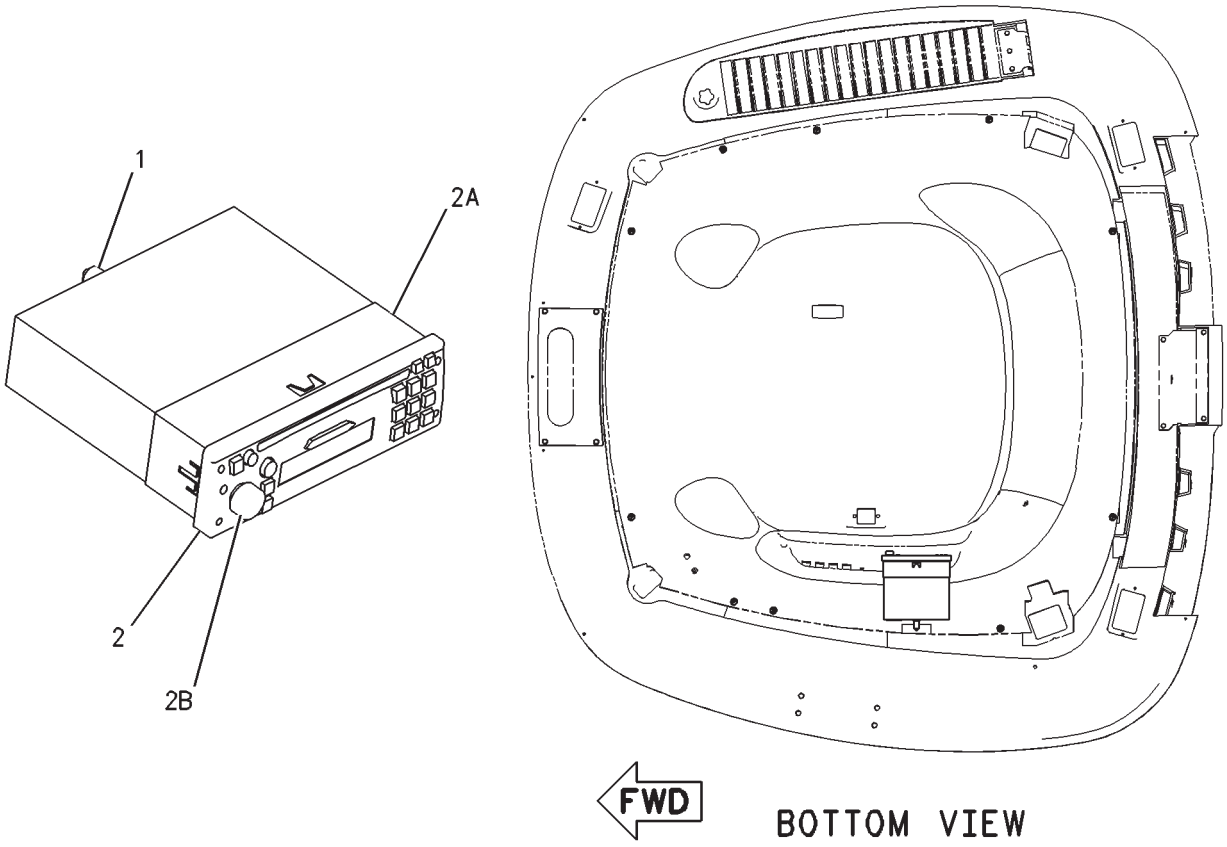

## RADIO GP-DELUXE CD - 170-5739

**12V HD AM/FM/WB/CD/REMOTE/GRN BACKLIGHT ROW AND SPECIAL APPLICATIONS**

| ITEM | NUMBER | QTY | DESCRIPTION |
|---|---|---|---|
| - | 170-5739 | -- | RADIO GP |
| 1 | CH136-5490 | 1 | BUSHING |
| 2 | CH169-6326 | 1 | RADIO GP |
| 2A | CH192-7054 | 1 | SLEEVE [A] |
| 2B | CH142-9681 | 1 | KNOB (RADIO VOLUME) |
| - | 400455X1 | 1 | CONNECTOR RADIO [B] |
| - | CH170-7251 | 1 | CHANGER-CD [C] |

[A] FOR FRONT RADIO MOUNTING
[B] MATING CONNECTOR REQUIRED TO CONNECT RADIO
[C] CD CHANGER COMPATIBLE WITH RADIO

00732194
PR: t05i29k58b0510

## CHANGER GP-COMPACT DISC - 173-6507
**ROW AND SPECIAL APPLICATIONS**

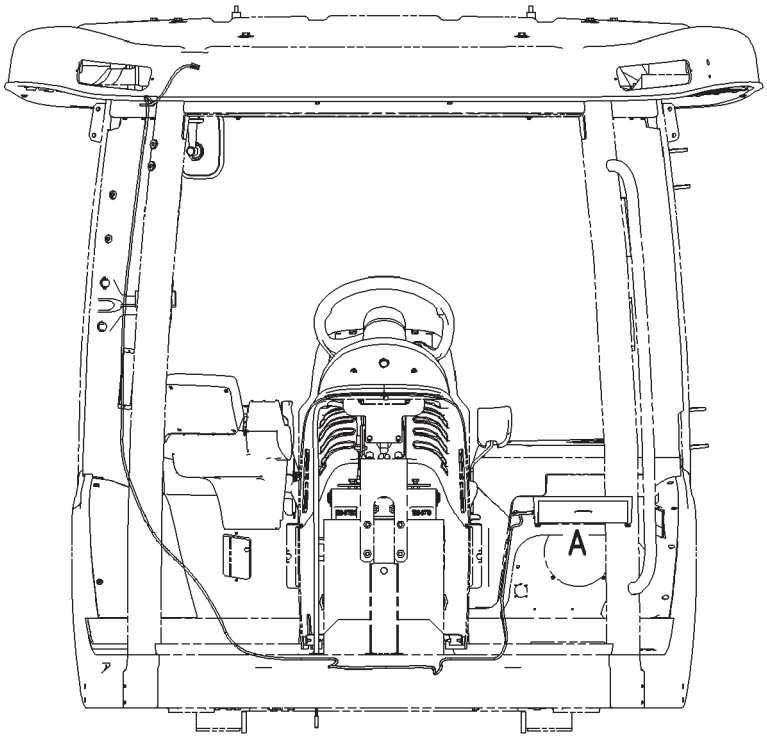


FRONT VIEW

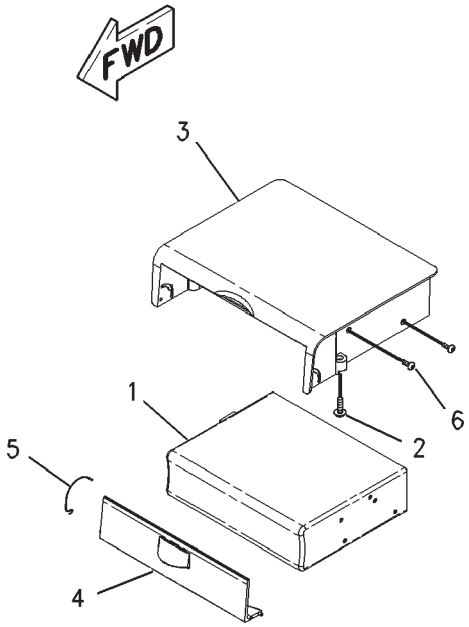


VIEW OF AREA A

## CHANGER GP-COMPACT DISC - 173-6507
ROW AND SPECIAL APPLICATIONS

| ITEM | NUMBER | QTY | DESCRIPTION |
|---|---|---|---|
| - | 173-6507 | -- | CHANGER GP-COMPACT DISC |
| 1 | CH170-7251 | 1 | CHANGER-COMPACT DISC [A] |
| | 170-7253 | 1 | MAGAZINE ASM-COMPACT DISC (6 DISC) [A] (NOT SHOWN, NOT PART OF THIS GROUP) |
| 2 | CH9X-2045 | 2 | SCREW-TRUSS HEAD (M6X1X20MM) |
| 3 | 172-6844 | 1 | FRAME |
| 4 | 172-6845 | 1 | DOOR |
| 5 | CH172-6847 | 1 | SPRING |
| 6 | CH7Y-7388 | 4 | SCREW-BUTTON HEAD (M5X0.8X12MM) |
| - | 400486X1 | 1 | CONNECTOR CD CHANGER [B] |

[A] CD MAGAZINE TO BE USED WITH CD CHANGER
[B] MATING CONNECTOR REQUIRED TO CONNECT TO CD CHANGER

00885053
PR: t05i29k58b0511

## RADIO GP-AUTOGUIDE - 232-0869

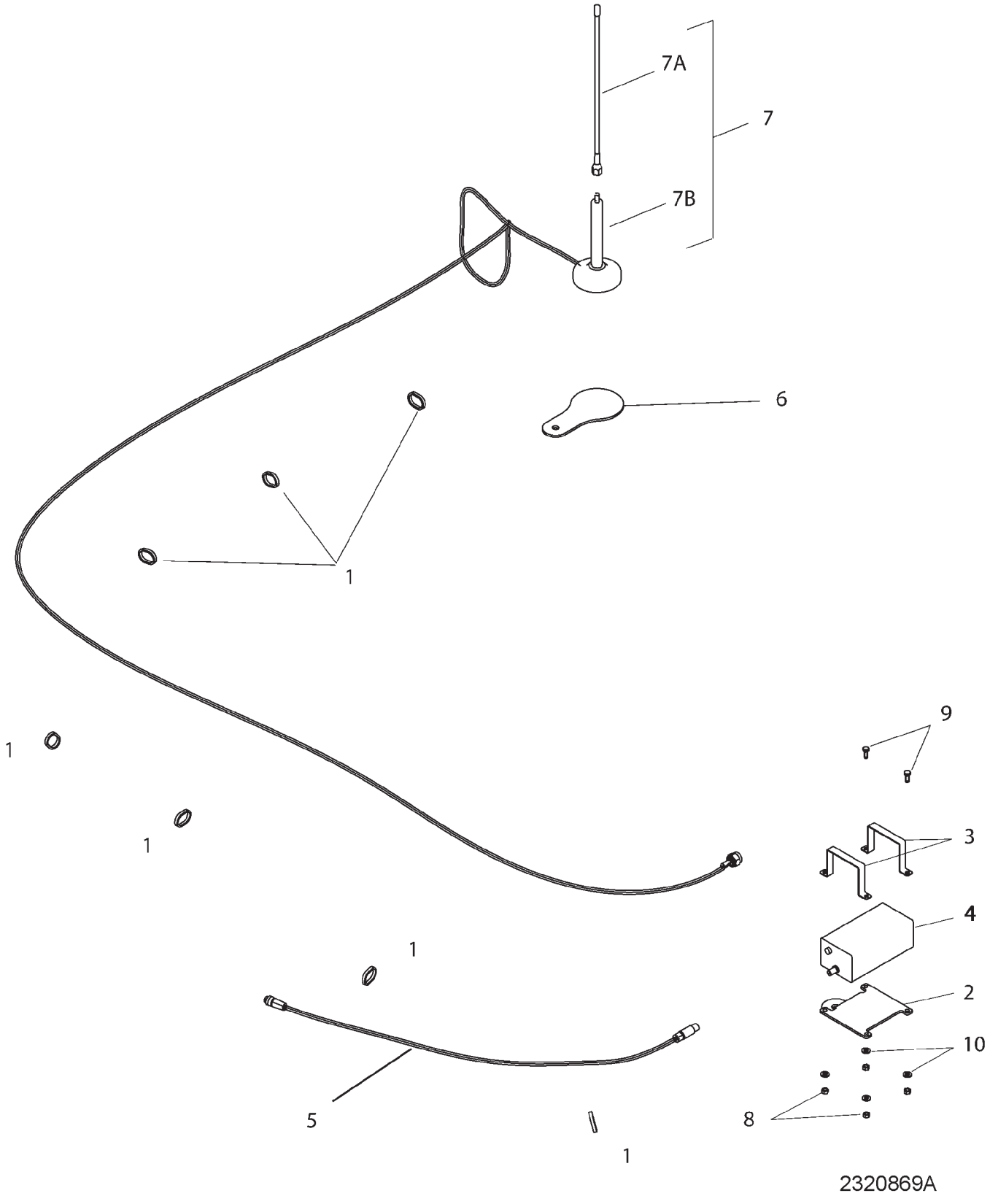

## RADIO GP-AUTOGUIDE - 232-0869

| ITEM | NUMBER | QTY | DESCRIPTION |
|---|---|---|---|
| - | 233-6580 | -- | RADIO GP-AUTOGUIDE (FIELD) |
| - | 232-0869 | -- | RADIO GP-AUTOGUIDE (FACT) (NOT SERVICED, ORDER FIELD INSTALLED) |
| 1 | CH7K-1181 | 7 | STRAP-CABLE 0.19-4.00 |
| 2 | 219-4779 | 1 | BRACKET |
| 3 | 219-4796 | 2 | BRACKET |
| 4 | 221-2642 | 1 | MOUNT AS.-RADIO |
| 5 | 221-5389 | 1 | HARNESS AS |
| 6 | 500361D1 | 1 | PLATE |
| 7 | 500362D1 | 1 | ANTENNA AS-FREEWAVE (INCL 7A & 7B) |
| 7A | 500364D1 | 1 | WHIP |
| 7B | 500363D1 | 1 | BASE |
| 8 | 400300X1 | 4 | NUT M6X1 |
| 9 | 400152X1 | 4 | BOLT-M6X1X16MM ZNDI HHD 10.9 |
| 10 | CH8T-4205 | 4 | WASHER-HARD 7.2IDX14.5ODX2MM |

2320869A
PR: t05i29k58b0512

## ROOF GP-CAB - 152-0417
ROW AND SPECIAL APPLICATIONS

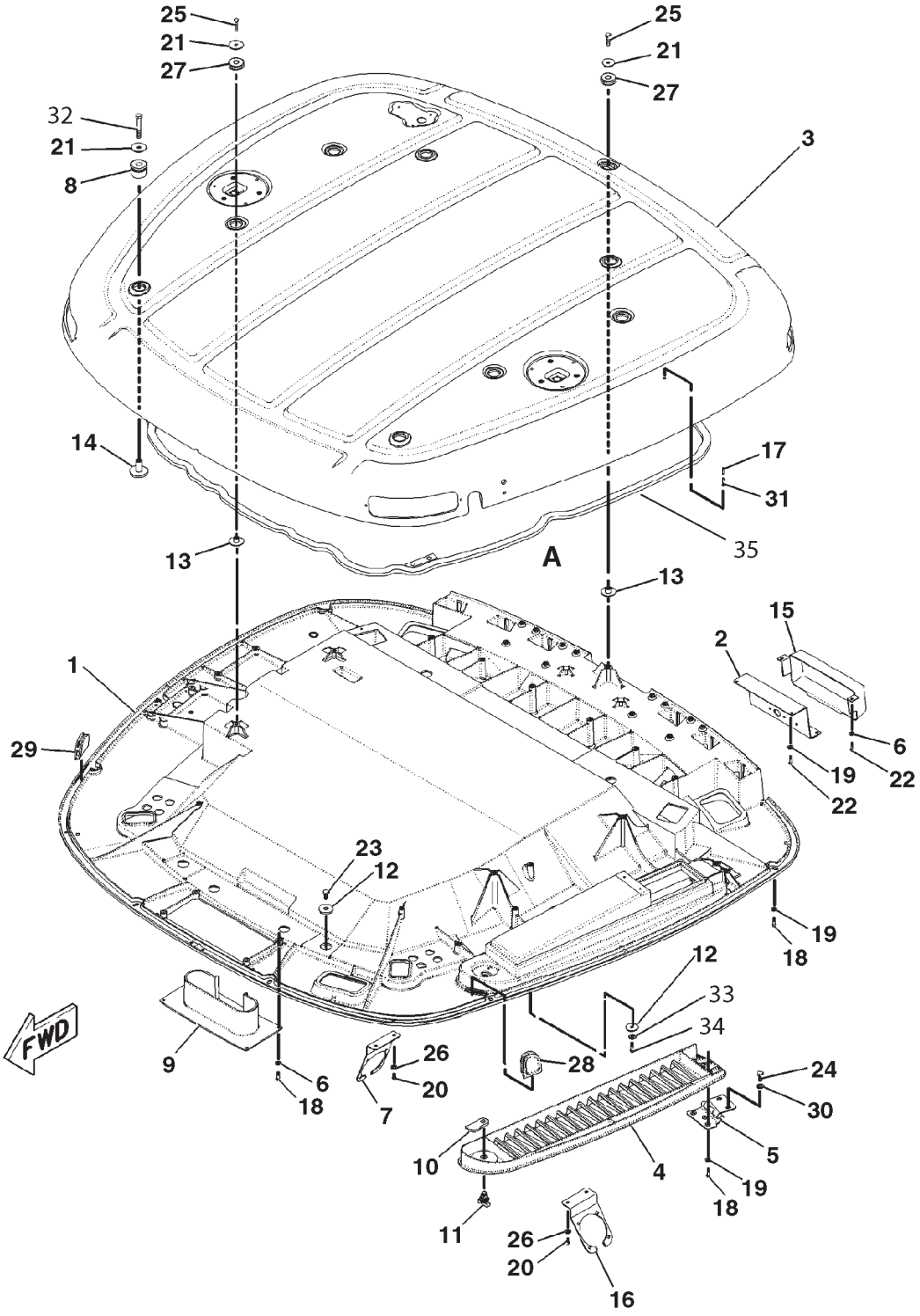


0892132B

## ROOF GP-CAB - 152-0417
ROW AND SPECIAL APPLICATIONS

| ITEM | NUMBER | QTY | DESCRIPTION |
|---|---|---|---|
| - | 152-0417 | -- | ROOF GP-CAB [A](NOT SERVICED) |
| 1 | 152-0441 | 1 | ROOF ASM (INNER) |
| | CH216-7617 | 14 | INSERT (M6) |
| | CH222-4435 | 7 | INSERT (M8X1.25) |
| 2 | 162-6654 | 1 | PLATE |
| 3 | 162-6655 | 1 | ROOF ASM (OUTER) |
| | CH216-7616 | 8 | INSERT (M4) |
| | CH216-7617 | 7 | INSERT (M6) |
| 4 | 162-6693 | 1 | DOOR-FILTER |
| 5 | CH195-2614 | 1 | HINGE ASM |
| 6 | CH8T-4205 | 6 | WASHER-HARD (7.2X14.5X2MM) |
| 7 | 502322D1 | 1 | BRACKET (REAR SPEAKER-RH) |
| 8 | CH195-2609 | 4 | GROMMET |
| 9 | 168-2284 | 1 | COVER |
| 10 | CH179-3160 | 1 | CAM-LATCH |
| 11 | CH174-6381 | 1 | LATCH |
| 12 | 400119X1 | 4 | SPACER (13X44X5MM THK) |
| 13 | CH195-2607 | 5 | SPACER |
| 14 | CH195-2608 | 4 | SPACER |
| 15 | 179-4203 | 1 | COVER |
| 16 | 502321D1 | 1 | BRACKET (REAR SPEAKER-LH) |
| 17 | CH217-5909 | 1 | SCREW-PAN HEAD (M6X1X16MM) |
| 18 | 400048X1 | 14 | BOLT (M6X1X20MM) |
| 19 | CH5P-4115 | 14 | WASHER-HARD (7.2X19X2) |
| 20 | CH110-2028 | 4 | SCREW-PAN HEAD (10-14X.75 IN) |
| 21 | CH8T-4226 | 9 | WASHER-PLATED (10.5X45X3) |
| 22 | 400152X1 | 6 | BOLT (M6X1X16MM) |
| 23 | 400040X1 | 2 | BOLT (M10X1.5X20MM) |
| 24 | 400227X1 | 2 | BOLT (M8X1.25X16MM) |
| 25 | 400042X1 | 5 | BOLT (M8X1.25X35MM) |
| 26 | 400310X1 | 4 | WASHER (6.6X12X2) |
| 27 | CH195-2600 | 5 | GROMMET |
| 28 | CH195-2601 | 1 | GROMMET-LH |
| 29 | CH195-2602 | 1 | GROMMET-RH |
| 30 | 400339X1 | 2 | WASHER-HARD (8.8X16X2) |
| 31 | CH196-2881 | 1 | CLIP |
| 32 | 400066X1 | 4 | BOLT (M10X1.50X70MM) |
| 33 | 400287X1 | 2 | WASHER-HARD (11X21X2.5) |
| 34 | 400058X1 | 2 | BOLT (M10X1.5X30MM) |
| 35 | 217-2214 | 1 | INSULATION GP-WEATHER (NOT SERVICED) (SEE BREAKDOWN FOR COMPONENTS) |

[A] PART OF 500843D1; 500844D1; 500849D1 CAB AR

0892132B
PR: t05i29k58b0513

## ROOF GP-CAB - 152-0444
EAME ONLY

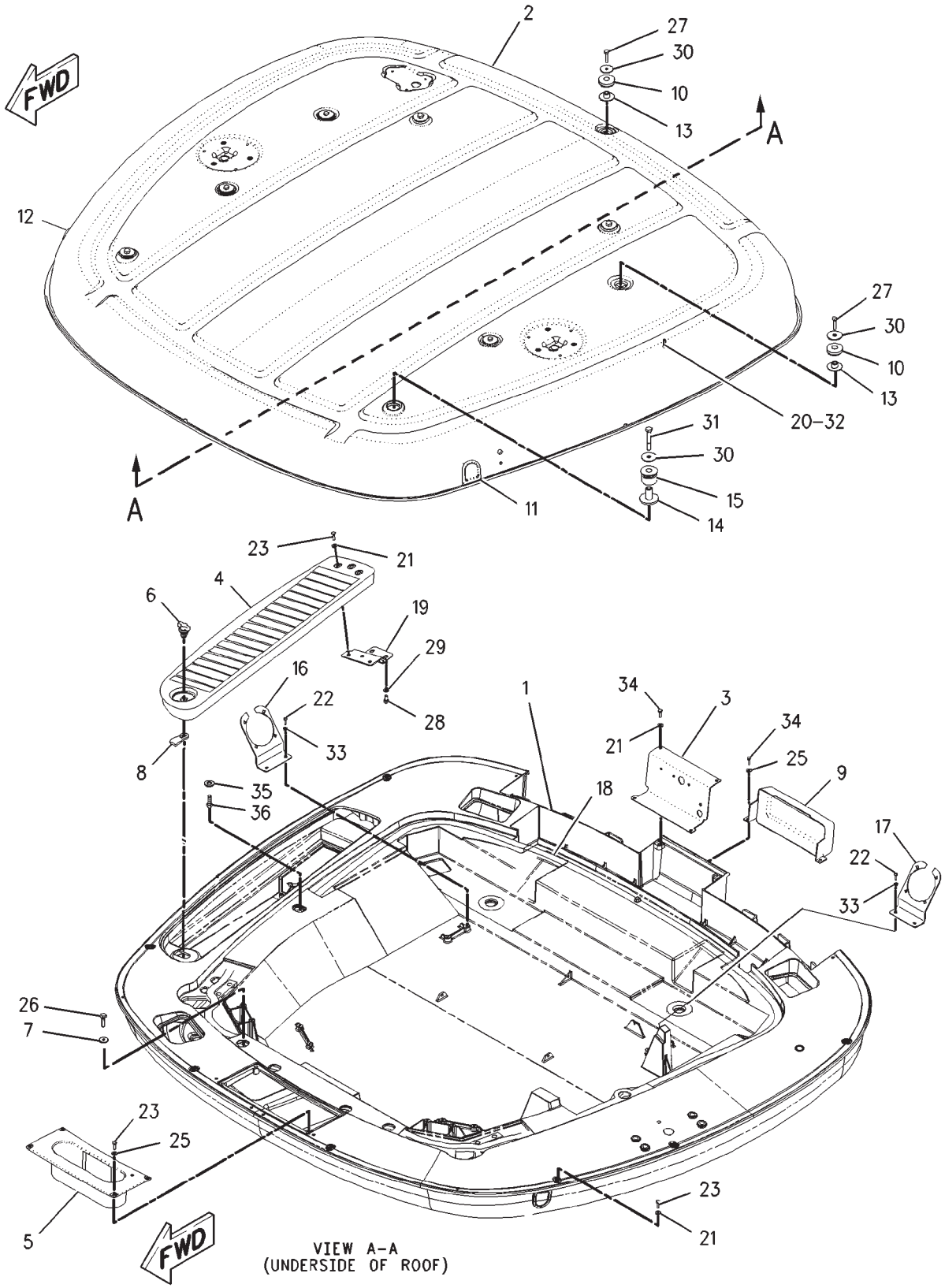


1520444B

## ROOF GP-CAB - 152-0444
EAME ONLY

| ITEM | NUMBER | QTY | DESCRIPTION |
|---|---|---|---|
| - | 152-0444 | -- | ROOF GP-CAB [A] (NOT SERVICED) |
| 1 | 152-0441 | 1 | ROOF AS (INNER) |
| 2 | 162-4111 | 1 | ROOF AS (OUTER) |
| 3 | 162-6654 | 1 | PLATE |
| 4 | 162-6693 | 1 | DOOR AS (FILTER) |
| 5 | 168-2284 | 1 | COVER |
| 6 | CH174-6381 | 1 | LATCH AS |
| 7 | 400119X1 | 4 | SPACER (13X44X5MM THK) |
| 8 | CH179-3160 | 1 | CAM-LATCH |
| 9 | 179-4203 | 1 | COVER-REAR WIPER |
| 10 | CH195-2600 | 5 | GROMMET |
| 11 | CH195-2601 | 1 | GROMMET-LH |
| 12 | CH195-2602 | 1 | GROMMET-RH |
| 13 | CH195-2607 | 5 | SPACER |
| 14 | CH195-2608 | 4 | SPACER |
| 15 | CH195-2609 | 4 | GROMMET |
| 16 | 502321D1 | 1 | BRACKET (REAR SPEAKER)(RH) |
| 17 | 502322D1 | 1 | BRACKET (REAR SPEAKER)(LH) |
| 18 | 217-2214 | 1 | INSULATION GP-COLD WEATHER (SEE BREAKDOWN FOR COMPONENTS) |
| 19 | CH195-2614 | 1 | HINGE AS-FILTER DOOR |
| | 400313X1 | 3 | NUT-WELD (M6) |
| 20 | CH196-2881 | 1 | CLIP |
| 21 | CH5P-4115 | 14 | WASHER-HARD (7.2X19X2MM THK) |
| 22 | CH110-2028 | 4 | SCREW-PAN HEAD (10-14X.75 IN) |
| 23 | 400048X1 | 14 | BOLT (M6X1.0X20MM) |
| 24 | | | NOT USED |
| 25 | CH8T-4205 | 6 | WASHER-HARD (7.2X14.5X2MM THK) |
| 26 | 400040X1 | 2 | BOLT (M10X1.5X20MM) |
| 27 | 400042X1 | 5 | BOLT (M8X1.25X35MM) |
| 28 | 400227X1 | 2 | BOLT (M8X1.25X16MM) |
| 29 | 400339X1 | 2 | WASHER-HARD (8.8X16X2MM THK) |
| 30 | CH8T-4226 | 9 | WASHER-PLATED (10.5X45X3MM THK) |
| 31 | 400066X1 | 4 | BOLT (M10X1.50X70MM) |
| 32 | CH217-5909 | 1 | SCREW-PAN HEAD (1/4-15X12.7) |
| 33 | 400310X1 | 4 | WASHER (6.6X12X2MM THK) |
| 34 | 400152X1 | 6 | BOLT (M6X1X16MM) |
| 35 | 400287X1 | 2 | WASHER-HARD (11X21X2.5MM THK) |
| 36 | 400058X1 | 2 | BOLT (M10X1.5X30MM) |

[A] PART OF 152-0008; 152-0009;
500841D1; 500842D1 CAB AR

1520444B
PR: t05i29k58b0514

## INSULATION GP-WEATHER - 217-2214

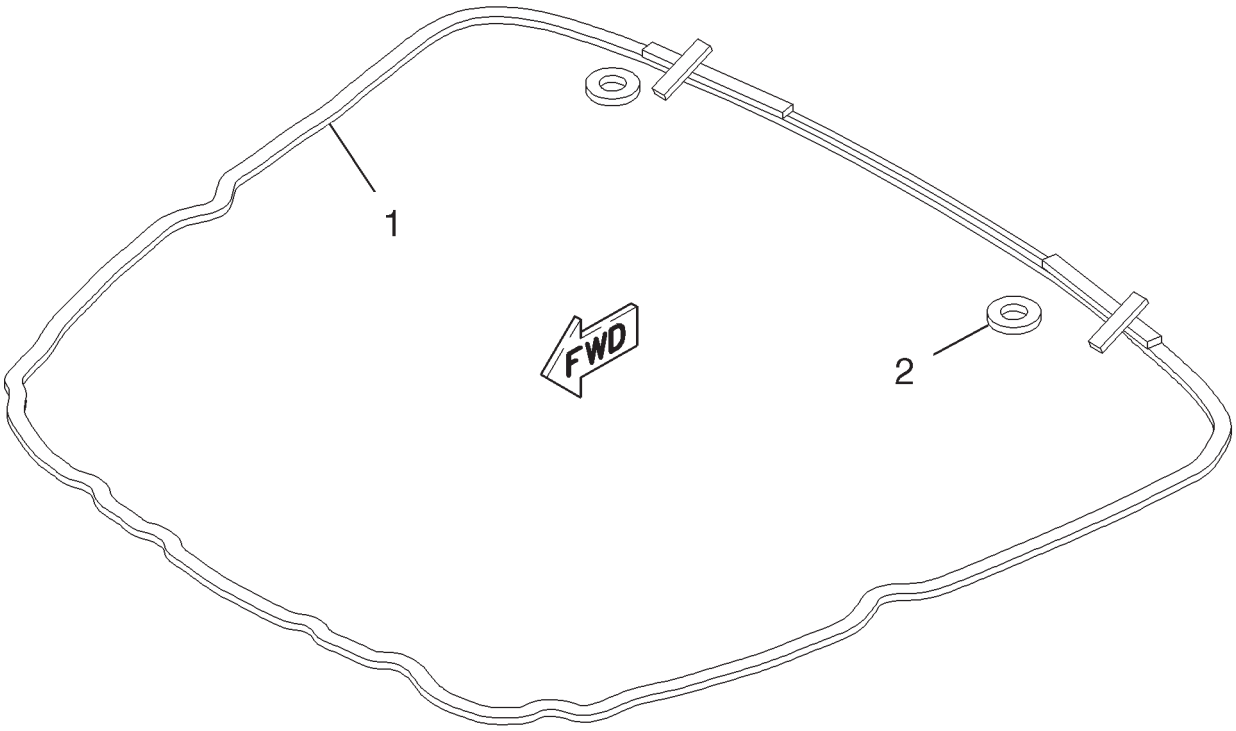


2172214C

## INSULATION GP-WEATHER - 217-2214

| ITEM | NUMBER | QTY | DESCRIPTION |
|---|---|---|---|
| - | 217-2214 | -- | INSULATION GP-WEATHER [A] |
| 1 | CH217-2130 | 1 | SEAL (7620LX24WX12THK ADH BACK) |
| 2 | CH217-2131 | 2 | SEAL (38IDX76ODX12THK ADH BACK) |

[A] PART OF 152-0417; 152-0444 CAB AR

2172214C
PR: t05i29k58b0515

## CONSOLE GP-MTG - 500839D1

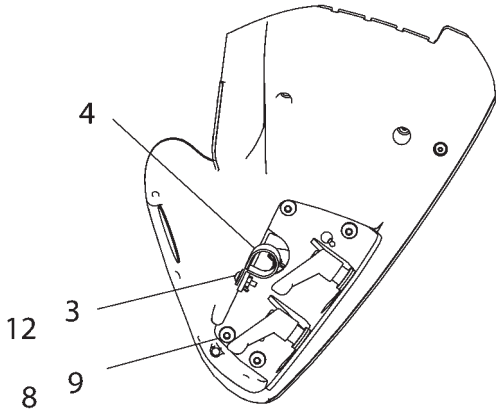


VIEW OF UNDERSIDE OF ARMREST

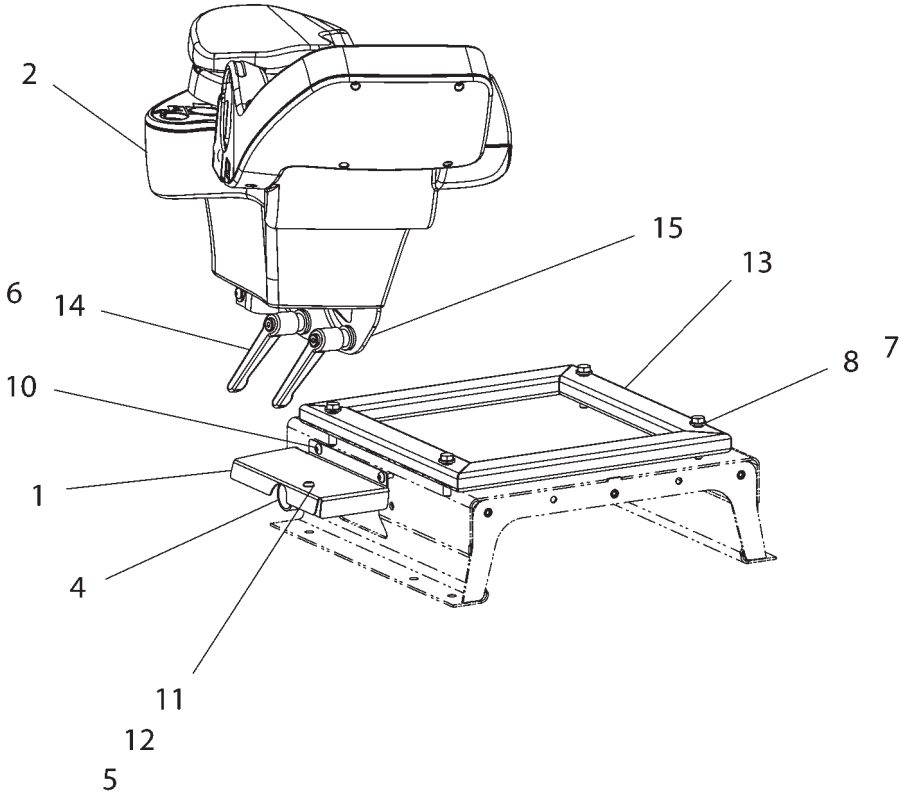


500839DC

## CONSOLE GP-MTG - 500839D1

| ITEM | NUMBER | QTY | DESCRIPTION |
|---|---|---|---|
| - | 500839D1 | -- | CONSOLE GP-MOUNTING [A] (NOT SERVICED) |
| 1 | 178-7952 | 1 | BRACKET-ARMREST |
| 2 | 152-0434 | 1 | CONSOLE GP-OPERATOR |
| 3 | CH3E-8020 | 1 | SCREW-M6X1X25 ORG TORX |
| 4 | CH4D-7388 | 2 | CLIP-LOOP 34.9 ID |
| 5 | 400300X1 | 1 | NUT M6X1 |
| 6 | CH5P-8247 | 4 | WASHER-HARD 17IDX32ODX3.5MM |
| 7 | 400161X1 | 4 | BOLT-M10X1.5X50 PH&O HHD 10.9 |
| 8 | CH6V-5839 | 8 | WASHER-HARD 11IDX21ODX2.5MM |
| 9 | CH9X-2039 | 4 | SCREW-M10X1.5X35 ORG TORX |
| 10 | CH9X-2044 | 2 | SCREW-M6X1X16MM TRUSS HEAD |
| 11 | CH9X-2045 | 1 | SCREW-M6X1X20 MM ORG TORX T30 |
| 12 | CH9X-6165 | 2 | WASHER-6.5IDX22ODX2.5MM |
| 13 | 500483D1 | 1 | SUPPORT AS |
| 14 | 500854D1 | 2 | LEVER |
| 15 | 219-9656 | 1 | BRACKET AS.-ARMREST |

PART OF 500841D1; 500842D1; 500844D1;
500849D1 CAB AR

500839DC
PR: t05i29k58b0516

## ARMREST GP - 500484D2
**4 IMP W/PTO-W/O HTCH**

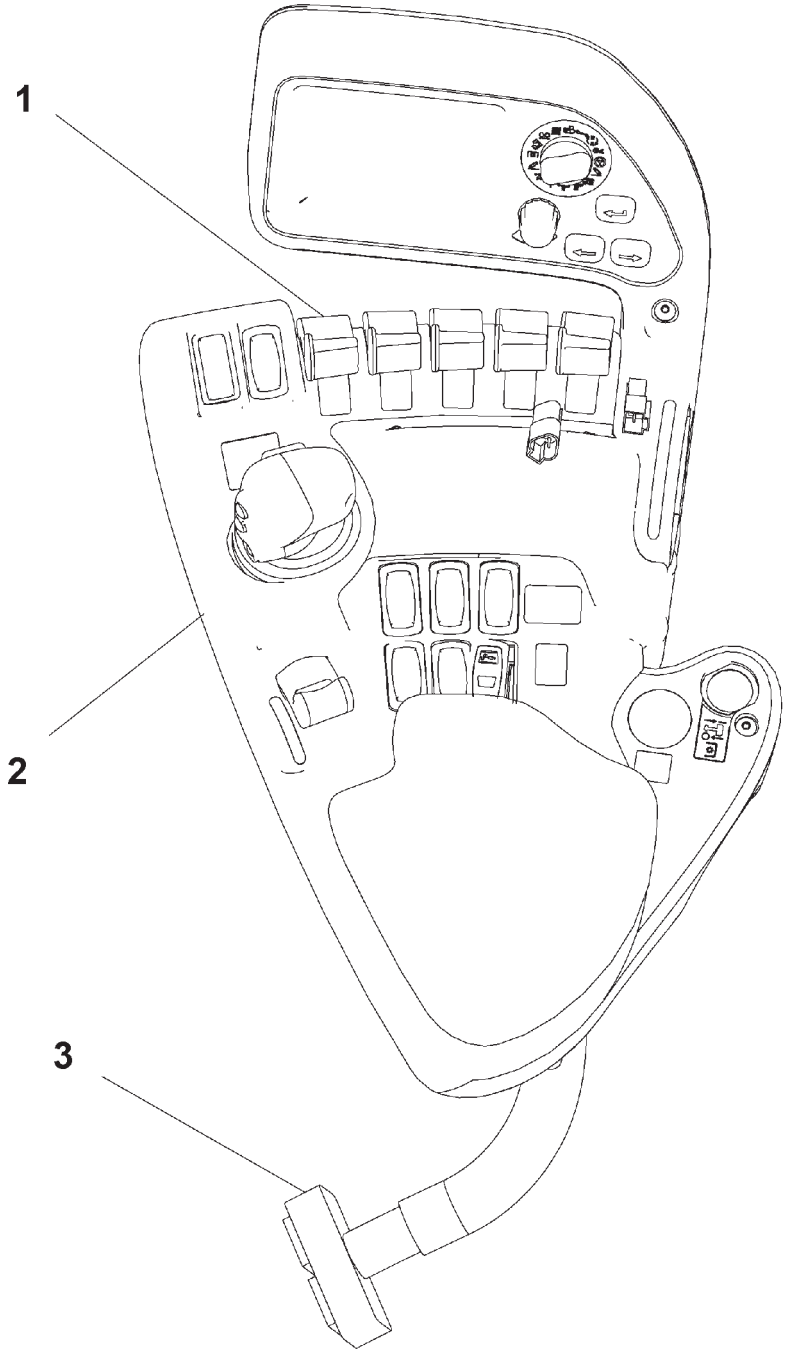


500484D2

## ARMREST GP - 500484D2
**4 IMP W/PTO-W/O HTCH**

| ITEM | NUMBER | QTY | DESCRIPTION |
|---|---|---|---|
| - | 500484D2 | -- | ARMREST GP (NOT SERVICED) |
| 1 | 152-0434 | 1 | CONSOLE GP-OPERATOR (A) (NOT SERIVCED)<br>(SEE BREAKDOWN FOR COMPONENTS) |
| 2 | 152-0443 | 1 | CONTROL GP (NOT SERIVCED)<br>(SEE BREAKDOWN FOR COMPONENTS) |
| 3 | 166-1211 | 1 | WIRING GP-ARMREST (NOT SERIVCED)<br>(SEE BREAKDOWN FOR COMPONENTS) |

500484D2
PR: t05i29k58b0517

## ARMREST GP - 500485D2
**4 IMP W/PTO-W/HITCH**

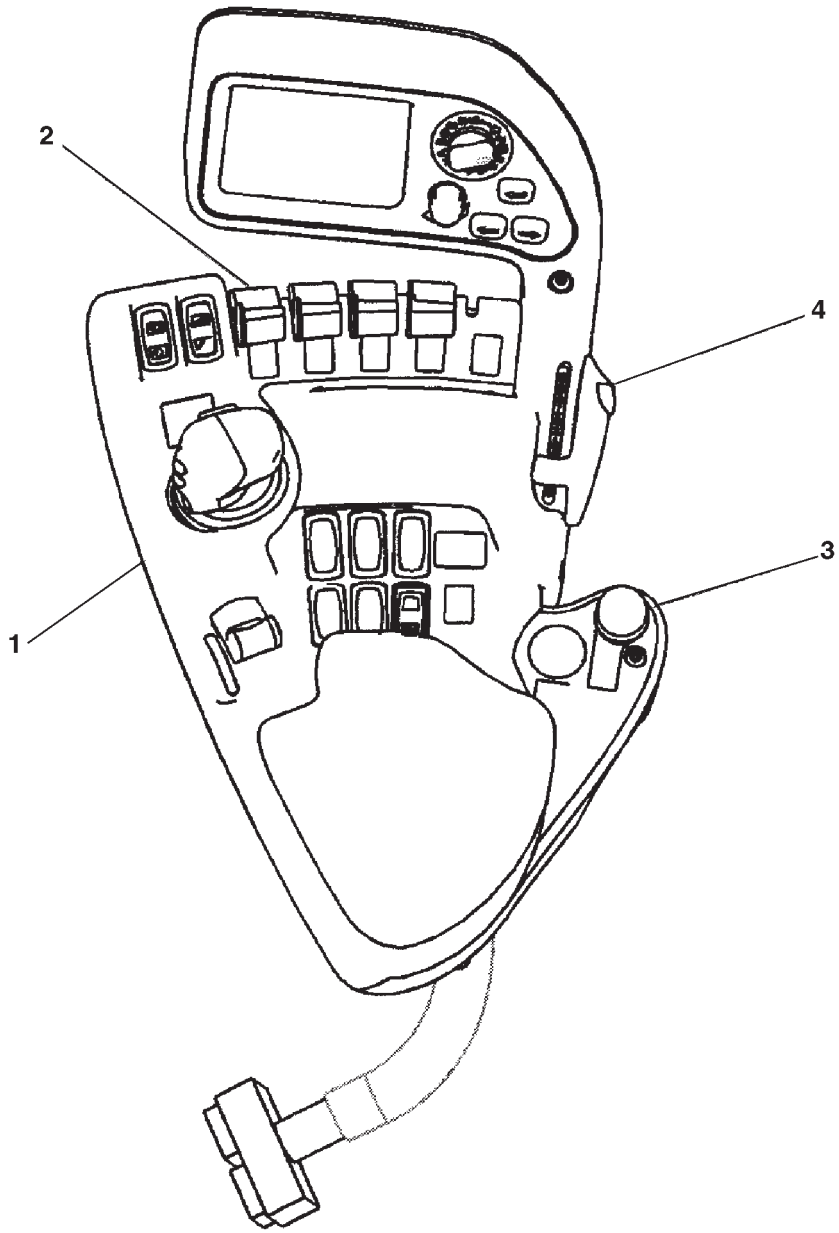


500485DA

## ARMREST GP - 500485D2
**4 IMP W/PTO-W/HITCH**

| ITEM | NUMBER | QTY | DESCRIPTION |
|---|---|---|---|
| - | 500485D2 | -- | ARMREST GP (NOT SERVICED) |
| 1 | 152-0434 | 1 | CONSOLE GP-OPERATOR (A) (NOT SERIVCED)<br>(SEE BREAKDOWN FOR COMPONENTS) |
| 2 | 152-0443 | 1 | CONTROL GP (NOT SERIVCED)<br>(SEE BREAKDOWN FOR COMPONENTS) |
| 3 | 166-1211 | 1 | WIRING GP-B (NOT SERIVCED)<br>(SEE BREAKDOWN FOR COMPONENTS) |
| 4 | 152-0445 | 1 | CONTROL GP-HITCH (NOT SERIVCED)<br>(SEE BREAKDOWN FOR COMPONENTS) |

500485DA
PR: t05i29k58b0518

## ARMREST GP - 500486D2
**4 IMP W/O PTO-W/O HITCH**

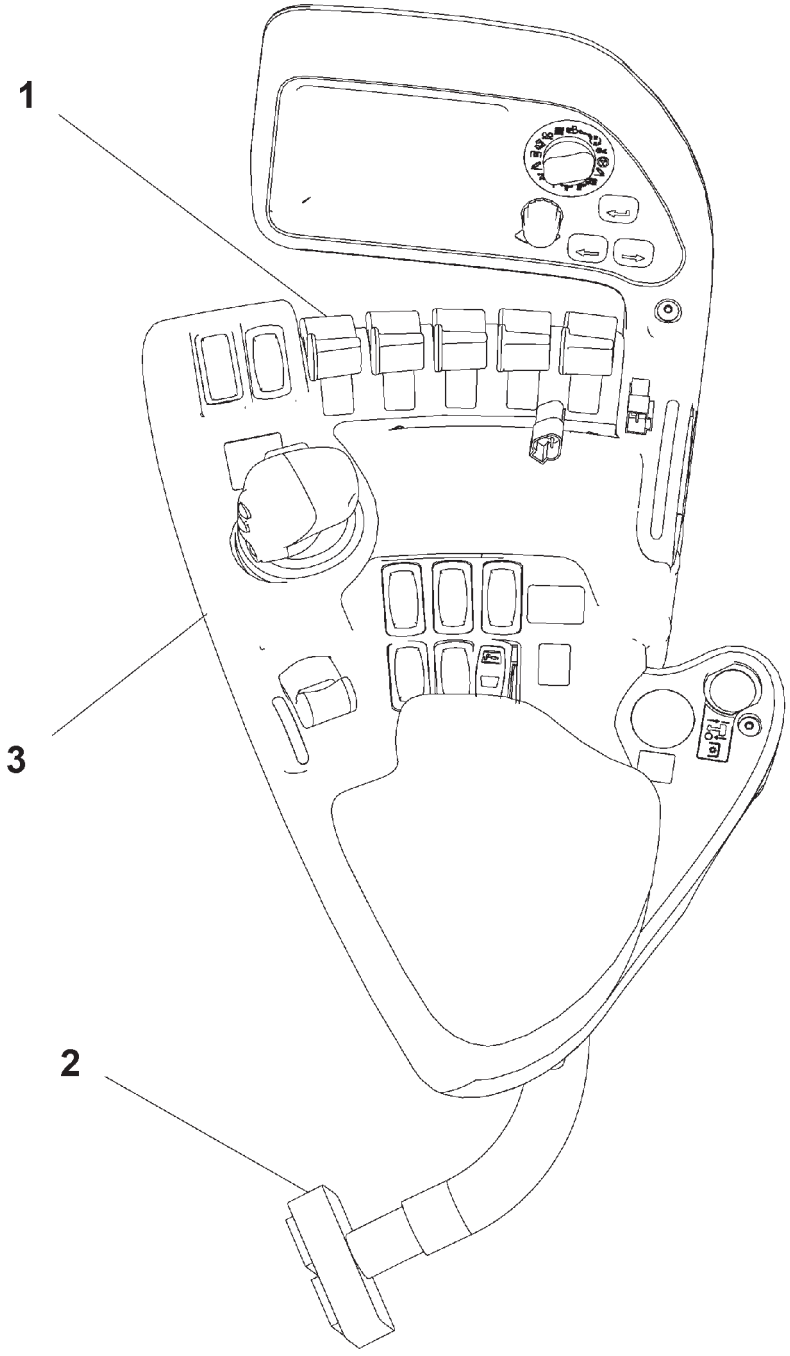


500486D2

## ARMREST GP - 500486D2
**4 IMP W/O PTO-W/O HITCH**

| ITEM | NUMBER | QTY | DESCRIPTION |
|---|---|---|---|
| - | 500486D2 | -- | ARMREST GP (NOT SERVICED) |
| 1 | 152-0443 | 1 | CONTROL GP (NOT SERIVCED)<br>(SEE BREAKDOWN FOR COMPONENTS) |
| 2 | 136-5477 | 1 | WIRING GP-ARMREST (NOT SERIVCED)<br>(SEE BREAKDOWN FOR COMPONENTS) |
| 3 | 152-0434 | 1 | CONSOLE GP-OPERATOR (A) (NOT SERIVCED)<br>(SEE BREAKDOWN FOR COMPONENTS) |

500486D2
PR: t05i29k58b0519

## ARMREST GP - 500487D2
**4 IMP W/O PTO-W/HITCH**

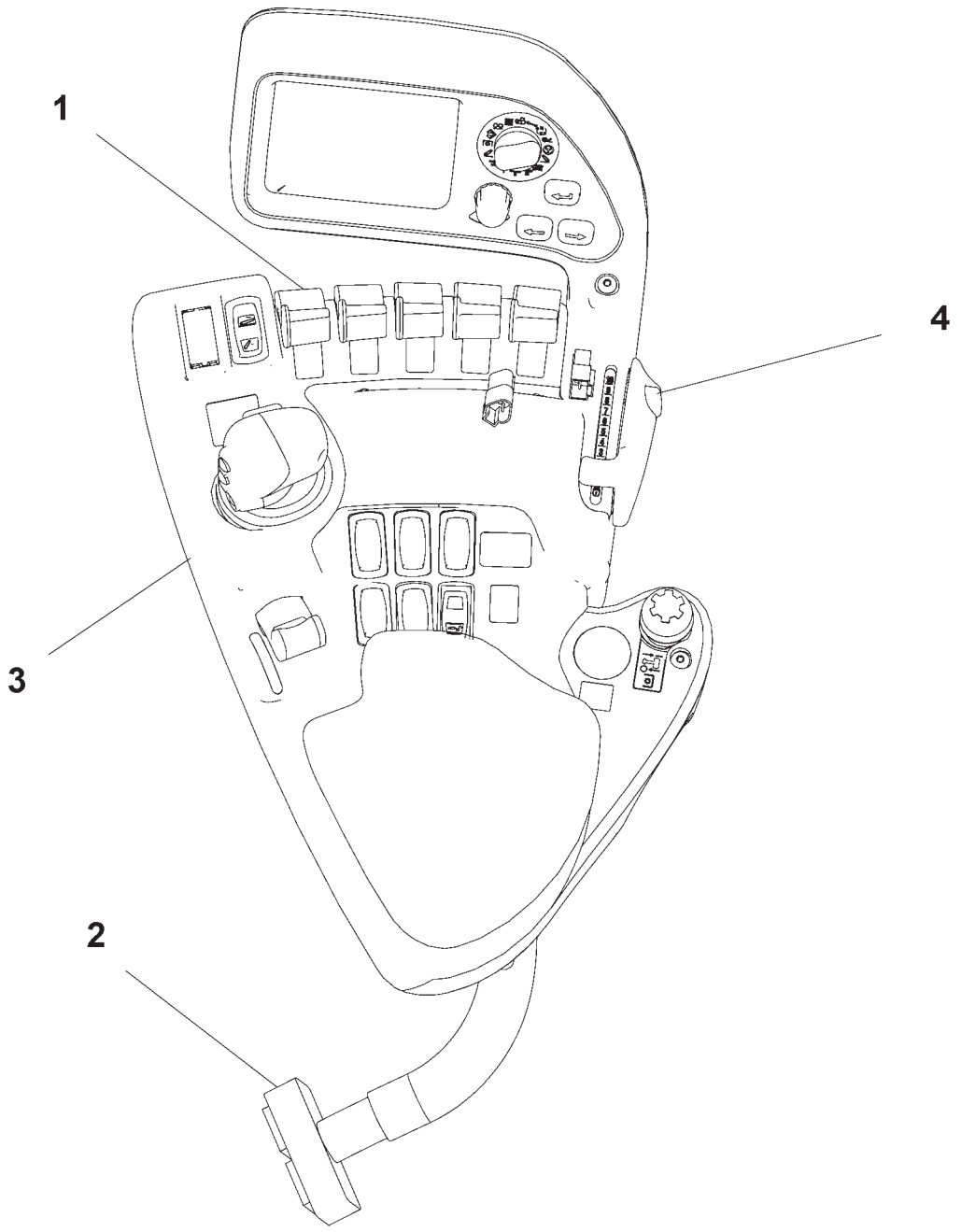


500487D2

## ARMREST GP - 500487D2
**4 IMP W/O PTO-W/HITCH**

| ITEM | NUMBER | QTY | DESCRIPTION |
|---|---|---|---|
| - | 500487D2 | -- | ARMREST GP (NOT SERVICED) |
| 1 | 152-0443 | 1 | CONTROL GP (NOT SERIVCED)<br>(SEE BREAKDOWN FOR COMPONENTS) |
| 2 | 136-5477 | 1 | WIRING GP-ARMREST (NOT SERIVCED)<br>(SEE BREAKDOWN FOR COMPONENTS) |
| 3 | 152-0434 | 1 | CONSOLE GP-OPERATOR (A) (NOT SERIVCED)<br>(SEE BREAKDOWN FOR COMPONENTS) |
| 4 | 152-0445 | 1 | CONTROL GP-HITCH (NOT SERIVCED)<br>(SEE BREAKDOWN FOR COMPONENTS) |

500487D2
PR: t05i29k58b0520

## ARMREST GP - 500488D2
**5 IMP W/PTO-W/O HITCH**

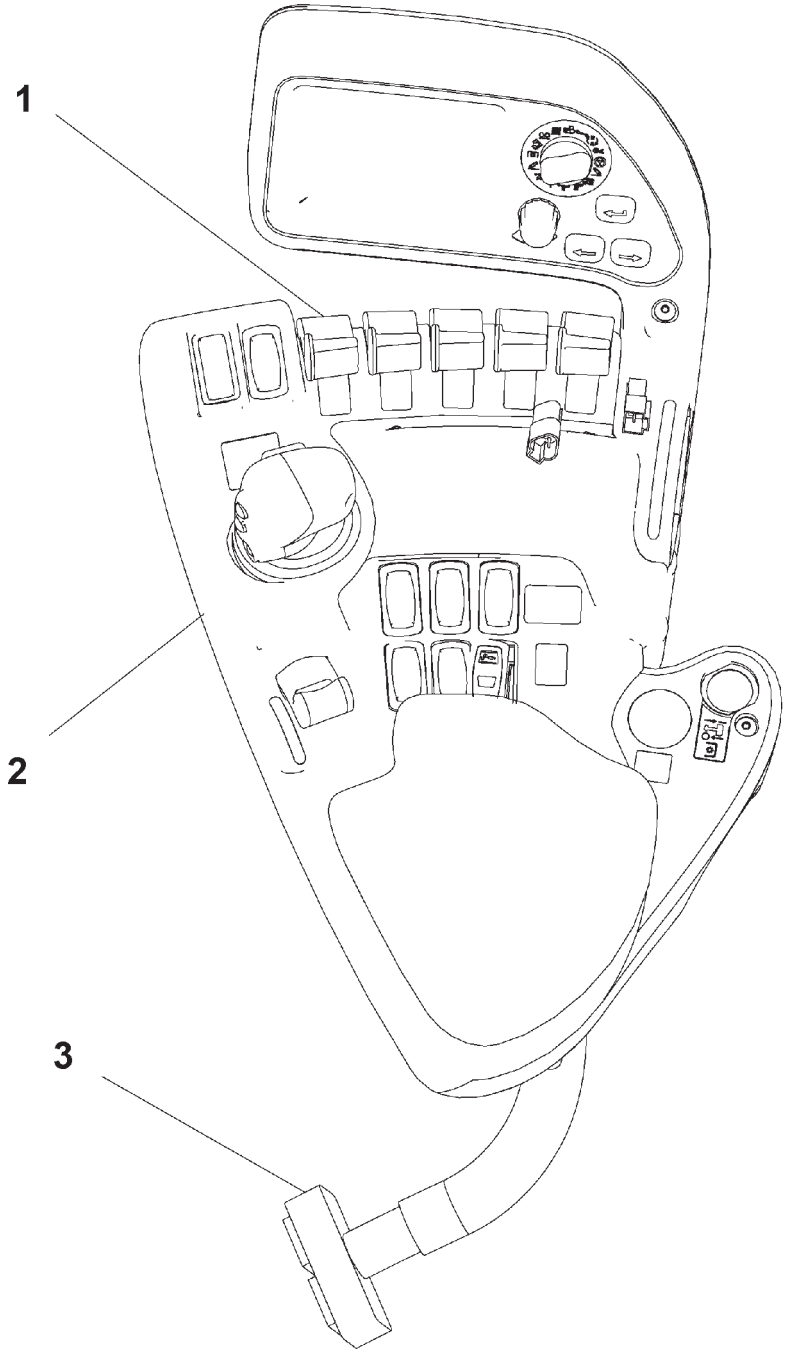


500488D2

## ARMREST GP - 500488D2
**5 IMP W/PTO-W/O HITCH**

| ITEM | NUMBER | QTY | DESCRIPTION |
|---|---|---|---|
| - | 500488D2 | -- | ARMREST GP (NOT SERVICED) |
| 1 | 166-4590 | 1 | CONTROL GP (NOT SERIVCED)<br>(SEE BREAKDOWN FOR COMPONENTS) |
| 2 | 152-0434 | 1 | CONSOLE GP-OPERATOR (A) (NOT SERIVCED)<br>(SEE BREAKDOWN FOR COMPONENTS) |
| 3 | 166-1211 | 1 | WIRING GP-ARMREST (NOT SERIVCED)<br>(SEE BREAKDOWN FOR COMPONENTS) |

500488D2
PR: t05i29k58b0521

## ARMREST GP - 500489D2
**5 IMP W/PTO-W/HTCH**

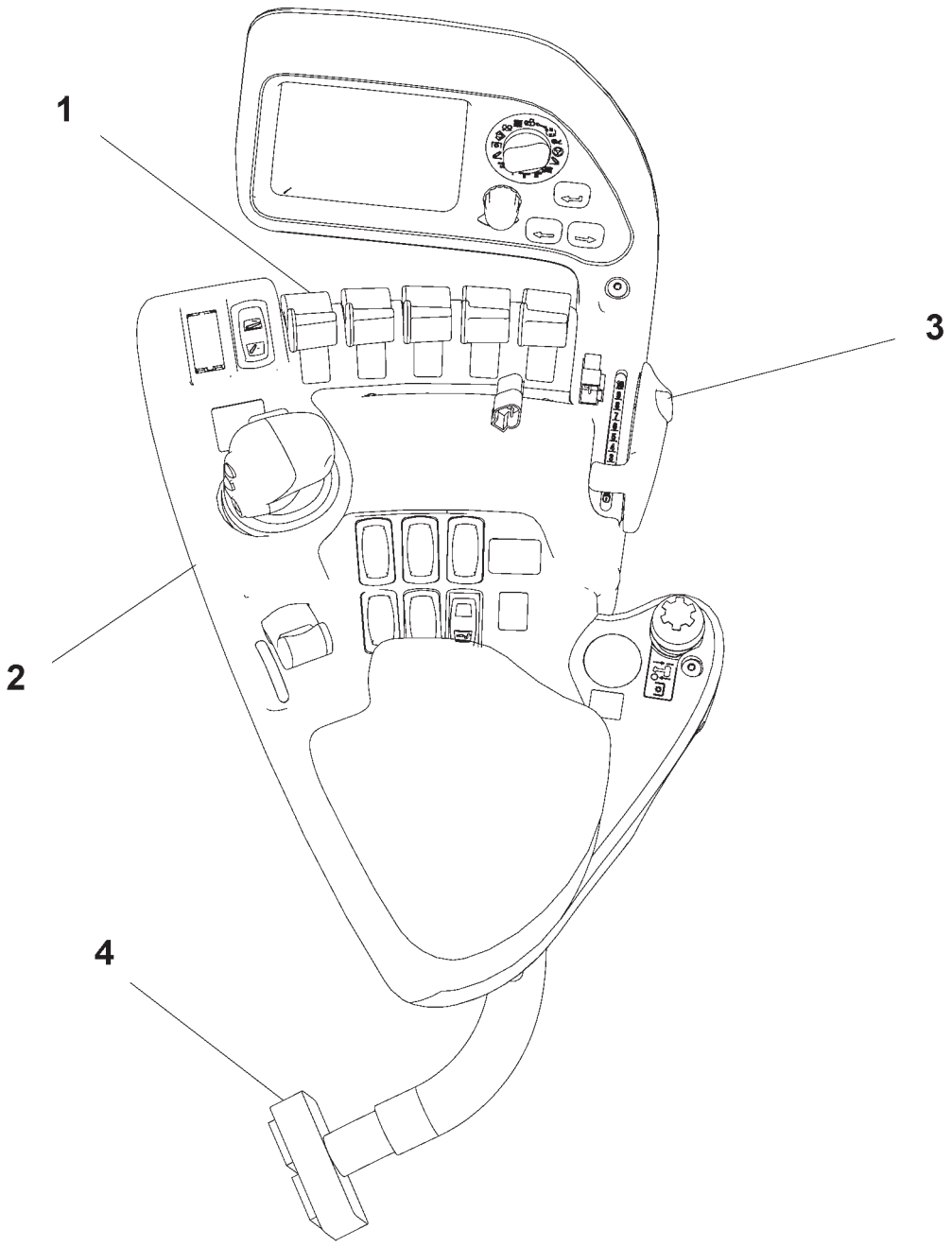


500489D2

## ARMREST GP - 500489D2
**5 IMP W/PTO-W/HTCH**

| ITEM | NUMBER | QTY | DESCRIPTION |
|---|---|---|---|
| - | 500489D2 | -- | ARMREST GP (NOT SERVICED) |
| 1 | 166-4590 | 1 | CONTROL GP (NOT SERIVCED)<br>(SEE BREAKDOWN FOR COMPONENTS) |
| 2 | 152-0434 | 1 | CONSOLE GP-OPERATOR (A) (NOT SERIVCED)<br>(SEE BREAKDOWN FOR COMPONENTS) |
| 3 | 152-0445 | 1 | CONTROL GP-HITCH (NOT SERIVCED)<br>(SEE BREAKDOWN FOR COMPONENTS) |
| 4 | 166-1211 | 1 | WIRING GP-ARMREST (NOT SERIVCED)<br>(SEE BREAKDOWN FOR COMPONENTS) |

500489D2
PR: t05i29k58b0522

## ARMREST GP - 500490D2
**5 IMP W/O PTO-W/O HITCH**

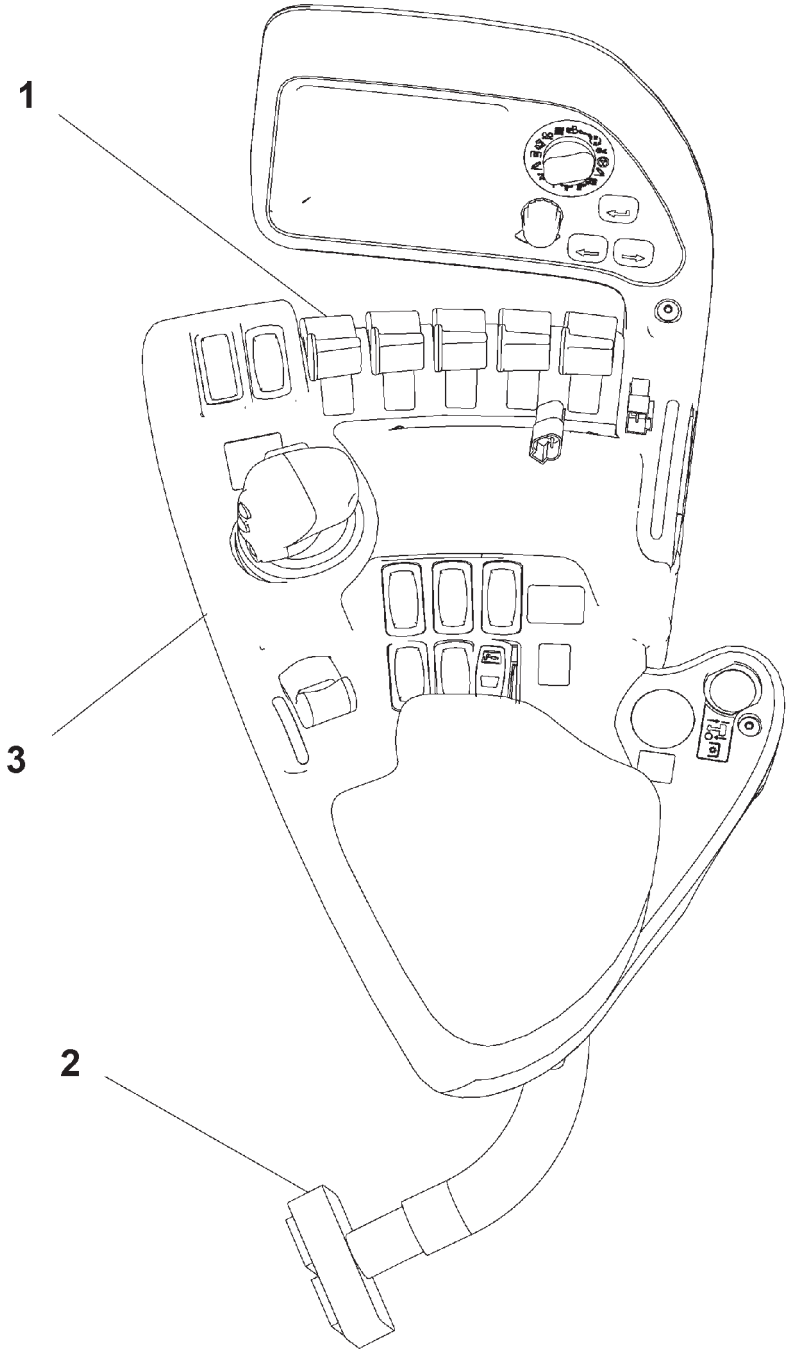


500490D2

## ARMREST GP - 500490D2
**5 IMP W/O PTO-W/O HITCH**

| ITEM | NUMBER | QTY | DESCRIPTION |
|---|---|---|---|
| - | 500490D2 | -- | ARMREST GP (NOT SERVICED) |
| 1 | 166-4590 | 1 | CONTROL GP (NOT SERVICED, (SEE BREAKDOWN FOR COMPONENTS) |
| 2 | 136-5477 | 1 | WIRING GP-ARMREST (NOT SERIVCED) (SEE BREAKDOWN FOR COMPONENTS) |
| 3 | 152-0434 | 1 | CONSOLE GP-OPERATOR (A) (NOT SERIVCED) (SEE BREAKDOWN FOR COMPONENTS) |

500490D2
PR: t05i29k58b0523

## ARMREST GP - 500491D2
**5 IMP W/O PTO-W/HITCH**

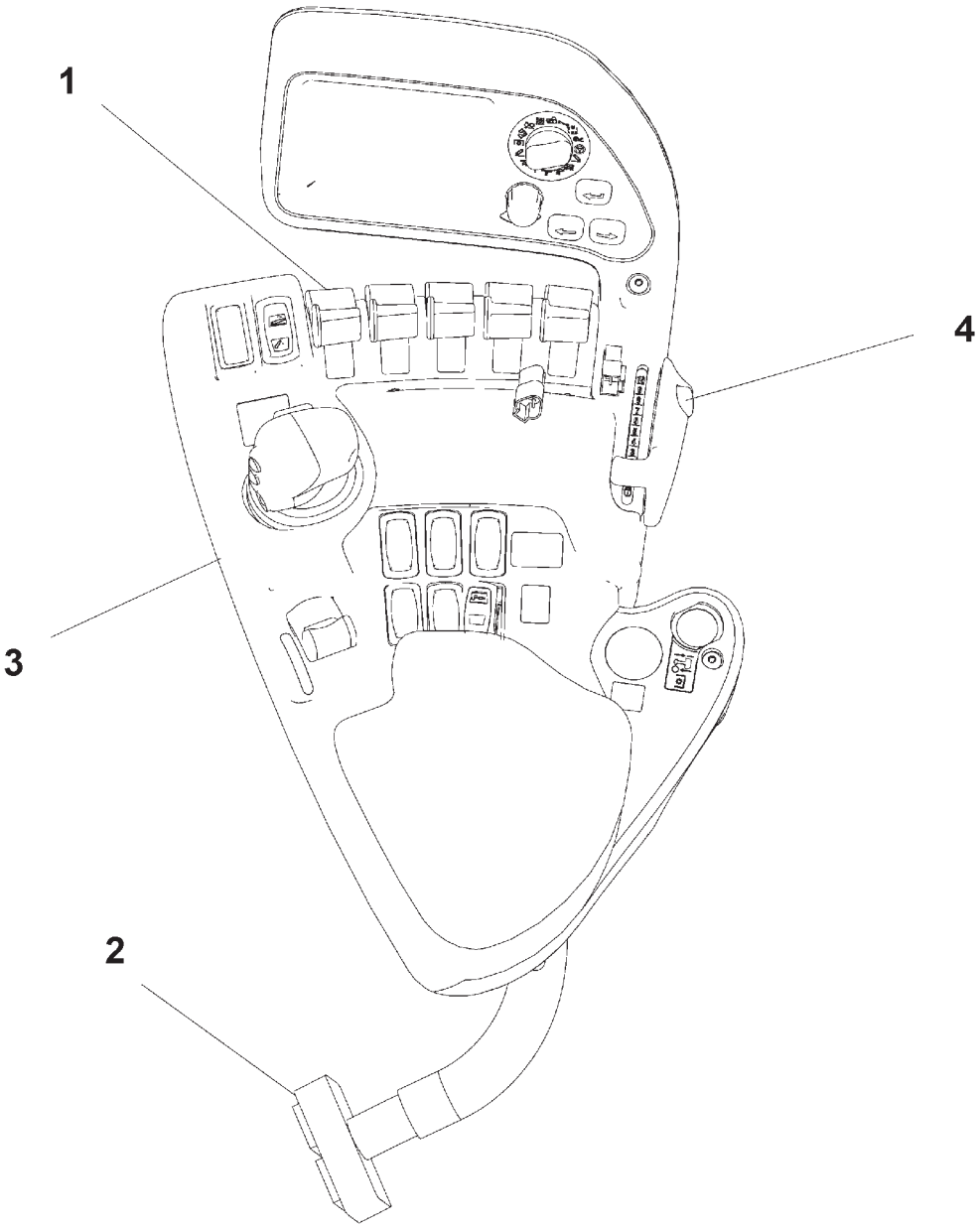


500491D2

## ARMREST GP - 500491D2
**5 IMP W/O PTO-W/HITCH**

| ITEM | NUMBER | QTY | DESCRIPTION |
|---|---|---|---|
| - | 500491D2 | -- | ARMREST GP (NOT SERVICED) |
| 1 | 166-4590 | 1 | CONTROL GP (NOT SERIVCED)<br>(SEE BREAKDOWN FOR COMPONENTS) |
| 2 | 136-5477 | 1 | WIRING GP-ARMREST (NOT SERIVCED)<br>(SEE BREAKDOWN FOR COMPONENTS) |
| 3 | 152-0434 | 1 | CONSOLE GP-OPERATOR (A) (NOT SERIVCED)<br>(SEE BREAKDOWN FOR COMPONENTS) |
| 4 | 152-0445 | 1 | CONTROL GP-HITCH (NOT SERIVCED)<br>(SEE BREAKDOWN FOR COMPONENTS) |

500491D2
PR: t05i29k58b0524

## ARMREST GP - 500791D2
**6 IMP W/PTO-W/O HITCH**

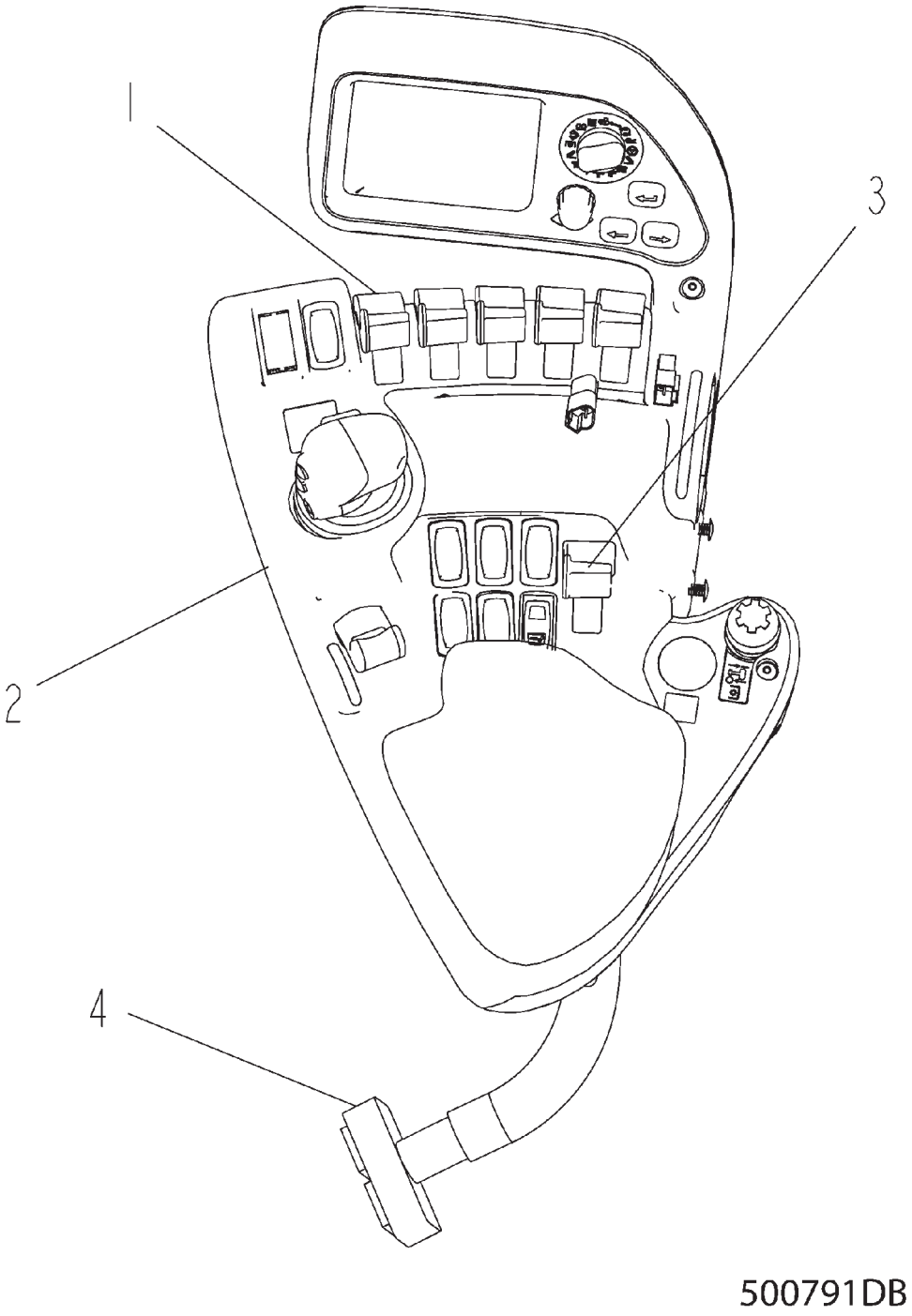

## ARMREST GP - 500791D2
**6 IMP W/PTO-W/O HITCH**

| ITEM | NUMBER | QTY | DESCRIPTION |
|---|---|---|---|
| - | 500791D2 | -- | ARMREST GP (NOT SERVICED) |
| 1 | 166-4590 | 1 | CONTROL GP (NOT SERIVCED)<br>(SEE BREAKDOWN FOR COMPONENTS) |
| 2 | 152-0434 | 1 | CONSOLE GP-OPERATOR (A) (NOT SERIVCED)<br>(SEE BREAKDOWN FOR COMPONENTS) |
| 3 | 152-0448 | 1 | CONTROL GP (NOT SERIVCED)<br>(SEE BREAKDOWN FOR COMPONENTS) |
| 4 | 166-1211 | 1 | WIRING GP-ARMREST (NOT SERIVCED)<br>(SEE BREAKDOWN FOR COMPONENTS) |

500791DB
PR: t05i29k58b0525

## ARMREST GP - 500792D2
**6 IMP W/PTO-W/HITCH**

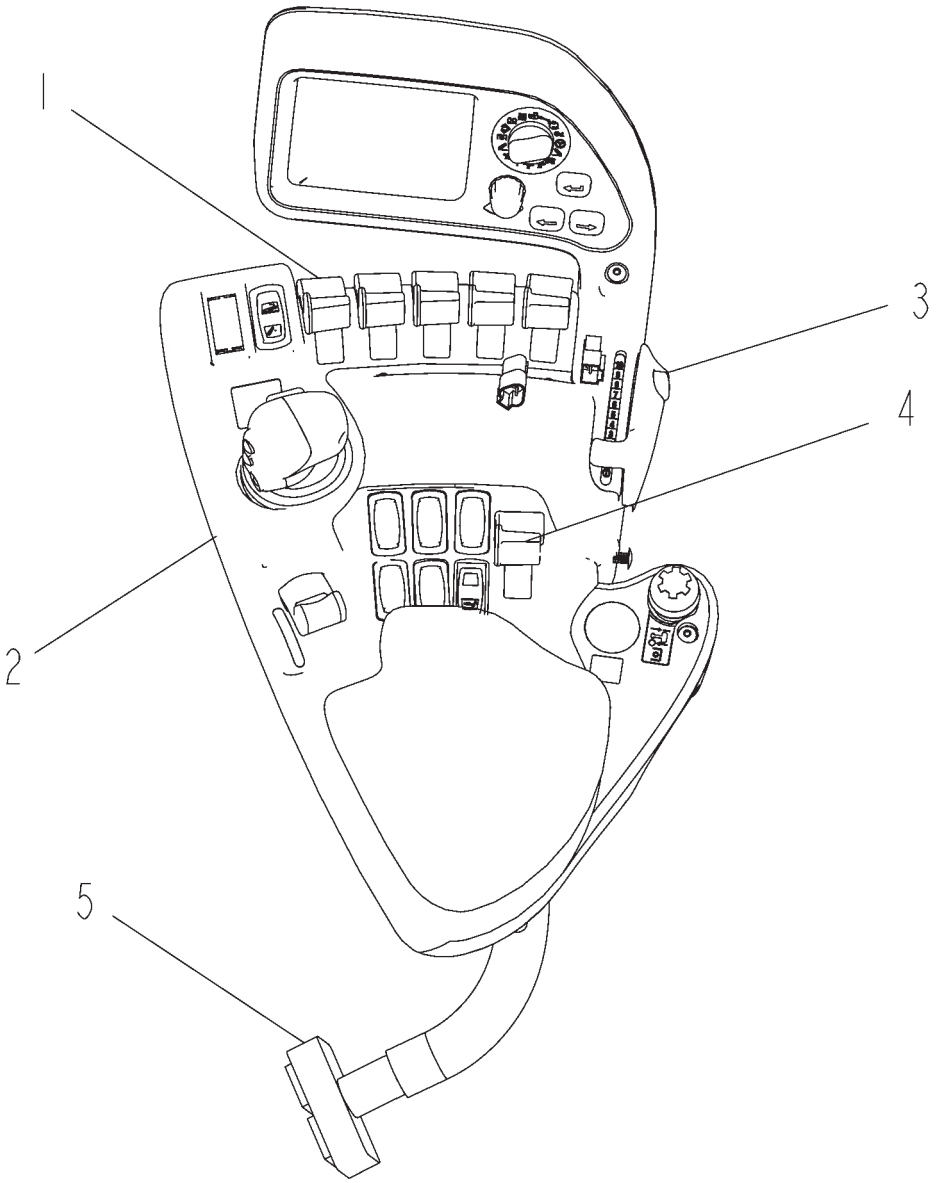


500792DB

## ARMREST GP - 500792D2
**6 IMP W/PTO-W/HITCH**

| ITEM | NUMBER | QTY | DESCRIPTION |
|---|---|---|---|
| - | 500792D2 | -- | ARMREST GP (NOT SERVICED) |
| 1 | 166-4590 | 1 | CONTROL GP (NOT SERIVCED)<br>(SEE BREAKDOWN FOR COMPONENTS) |
| 2 | 152-0434 | 1 | CONSOLE GP-OPERATOR (A) (NOT SERIVCED)<br>(SEE BREAKDOWN FOR COMPONENTS) |
| 3 | 152-0445 | 1 | CONTROL GP-HITCH (NOT SERIVCED)<br>(SEE BREAKDOWN FOR COMPONENTS) |
| 4 | 152-0448 | 1 | CONTROL GP (NOT SERIVCED)<br>(SEE BREAKDOWN FOR COMPONENTS) |
| 5 | 166-1211 | 1 | WIRING GP-ARMREST (NOT SERIVCED)<br>(SEE BREAKDOWN FOR COMPONENTS) |

500792DB
PR: t05i29k58b0526

## ARMREST GP - 500793D2
**6 IMP W/O PTO-W/O HITCH**

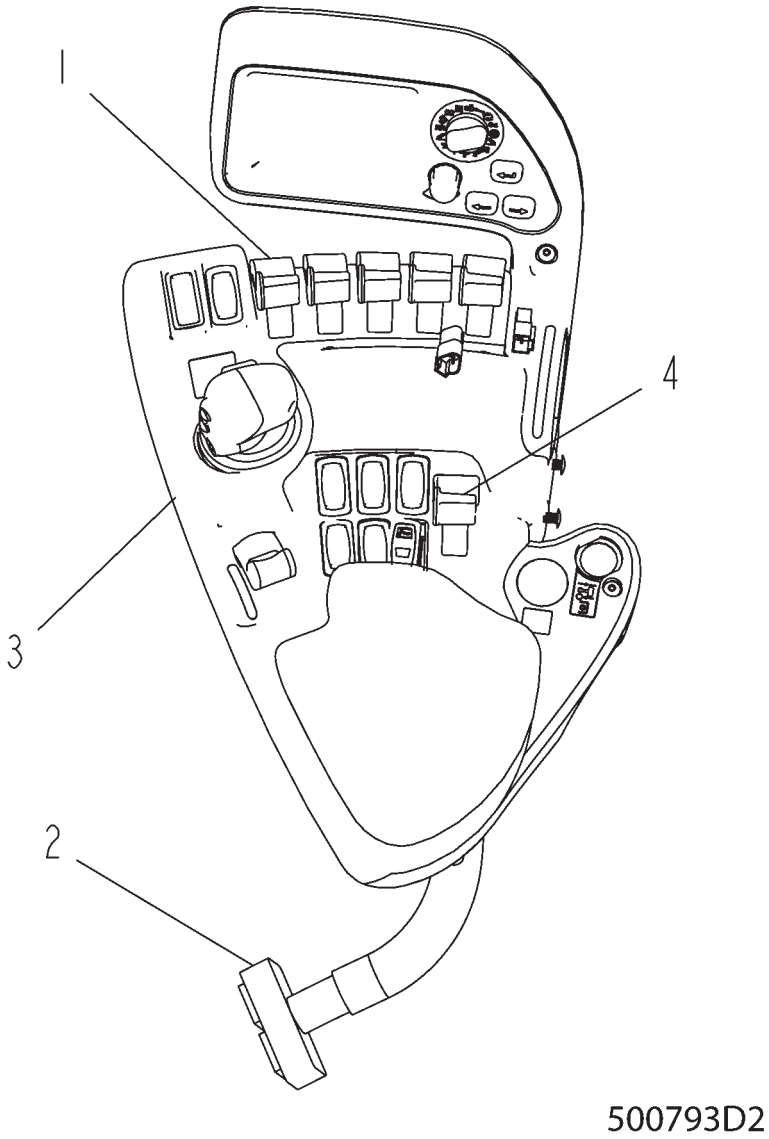

## ARMREST GP - 500793D2
**6 IMP W/O PTO-W/O HITCH**

| ITEM | NUMBER | QTY | DESCRIPTION |
|---|---|---|---|
| - | 500793D2 | -- | ARMREST GP (NOT SERVICED) |
| 1 | 166-4590 | 1 | CONTROL GP (NOT SERIVCED)<br>(SEE BREAKDOWN FOR COMPONENTS) |
| 2 | 136-5477 | 1 | WIRING GP-ARMREST (NOT SERIVCED)<br>(SEE BREAKDOWN FOR COMPONENTS) |
| 3 | 152-0434 | 1 | CONSOLE GP-OPERATOR (A) (NOT SERIVCED)<br>(SEE BREAKDOWN FOR COMPONENTS) |
| 4 | 152-0448 | 1 | CONTROL GP (NOT SERIVCED)<br>(SEE BREAKDOWN FOR COMPONENTS) |

500793DB
PR: t05i29k58b0527

## ARMREST GP - 500794D2
**6 IMP W/O PTO-W/HITCH**

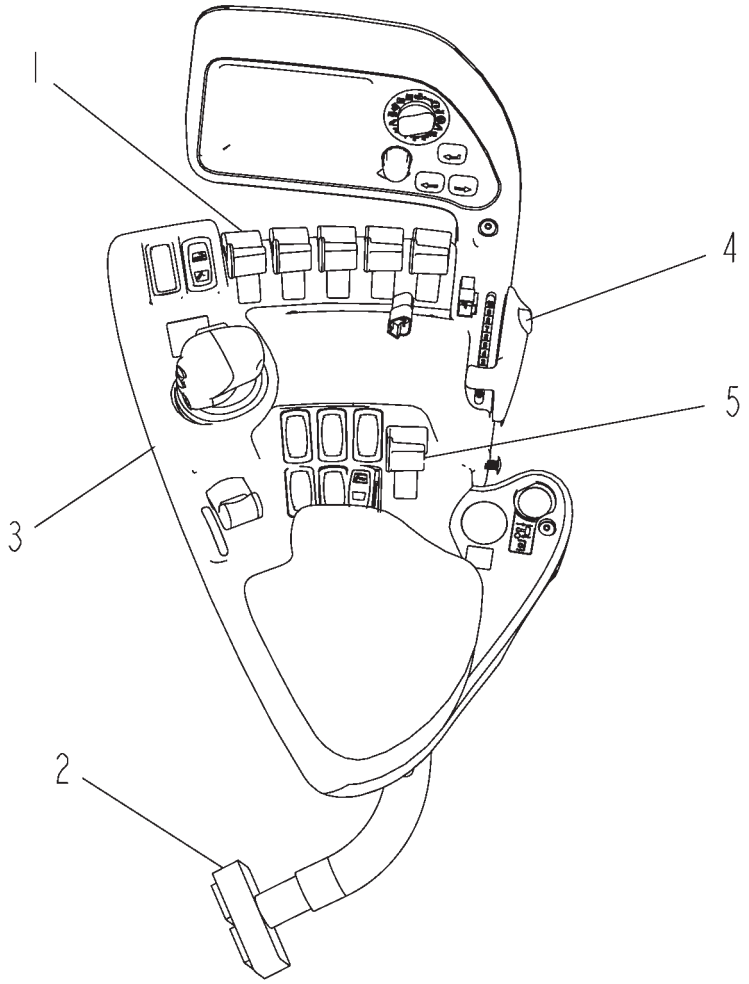


500794DB

## ARMREST GP - 500794D2
**6 IMP W/O PTO-W/HITCH**

| ITEM | NUMBER | QTY | DESCRIPTION |
|---|---|---|---|
| - | 500794D2 | -- | ARMREST GP (NOT SERVICED) |
| 1 | 166-4590 | 1 | CONTROL GP (NOT SERIVCED)<br>(SEE BREAKDOWN FOR COMPONENTS) |
| 2 | 136-5477 | 1 | WIRING GP-ARMREST (NOT SERIVCED)<br>(SEE BREAKDOWN FOR COMPONENTS) |
| 3 | 152-0434 | 1 | CONSOLE GP-OPERATOR (A) (NOT SERIVCED)<br>(SEE BREAKDOWN FOR COMPONENTS) |
| 4 | 152-0445 | 1 | CONTROL GP-HITCH (NOT SERIVCED)<br>(SEE BREAKDOWN FOR COMPONENTS) |
| 5 | 152-0448 | 1 | CONTROL GP (NOT SERIVCED)<br>(SEE BREAKDOWN FOR COMPONENTS) |

500794DB
PR: t05i29k58b0528

## SEAT GP-TRAINING - 152-0433

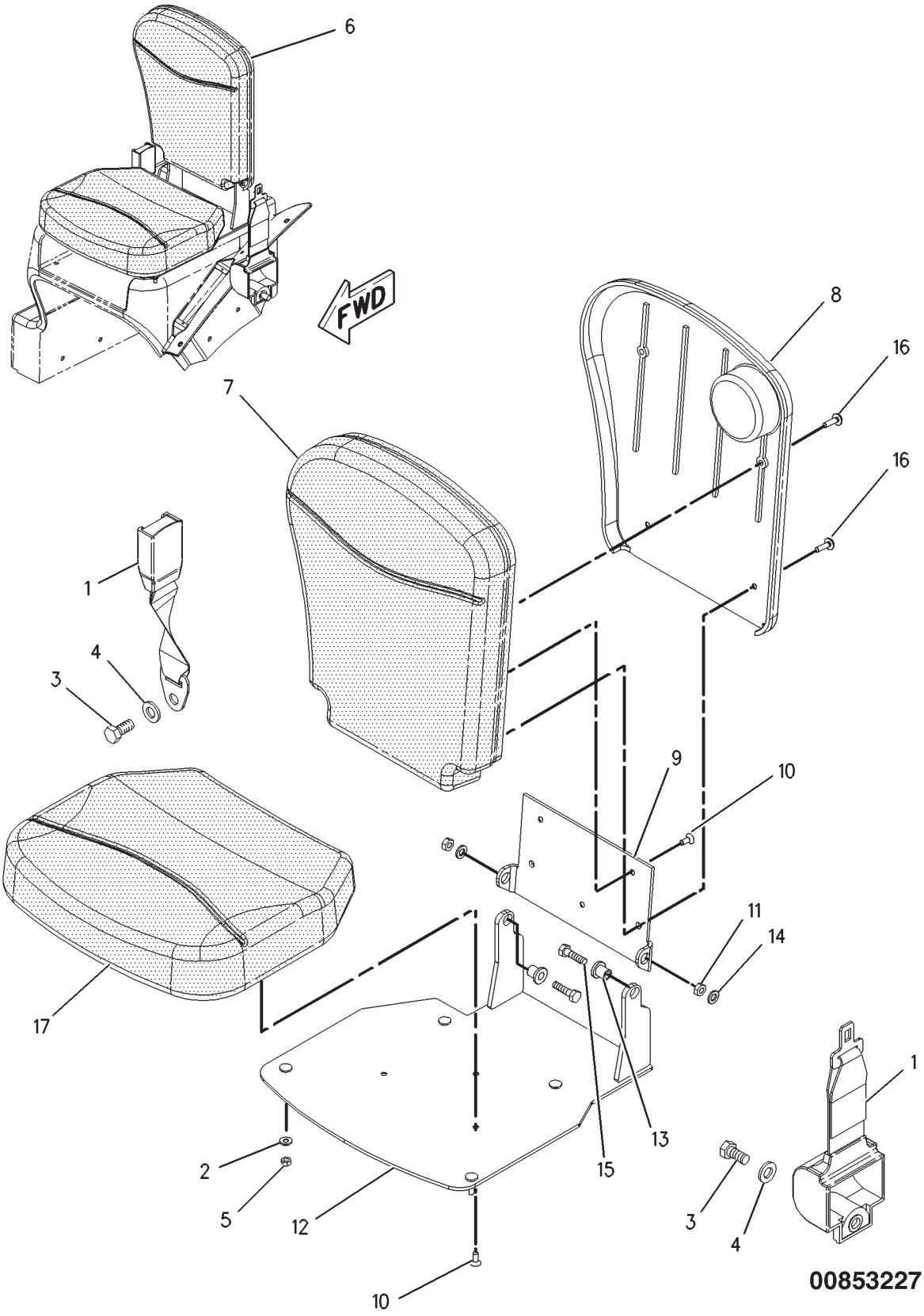

## SEAT GP-TRAINING - 152-0433

| ITEM | NUMBER | QTY | DESCRIPTION |
|---|---|---|---|
| - | 152-0433 | -- | SEAT GP-TRAINING [A] (NOT SERVICED) |
| 1 | 185-2151 | 1 | BELT SET |
| 2 | CH9X-6165 | 4 | WASHER (6.5X22X2.5) |
| 3 | 400055X1 | 2 | BOLT (M12X1.75X25MM) |
| 4 | 400357X1 | 2 | WASHER-HARD (M12X25.5X3) |
| 5 | 400300X1 | 4 | NUT (M6X1) |
| 6 | 164-7062 | 1 | SEAT ASM (INCLUDES ITEMS 7-17) |
| 7 | 162-6758 | 1 | CUSHION-BACK |
| 8 | 162-6759 | 1 | COVER-BACK |
| 9 | 178-9244 | 1 | BRACKET-HINGE |
| 10 | CH095-0759 | 6 | SCREW-MACHINE (M6X1X16.6) |
| 11 | CH8T-7963 | 2 | LOCKNUT (M8X1.25) |
| 12 | 169-6351 | 1 | BRACKET ASM-HINGE |
| 13 | 178-9245 | 2 | BUSHING |
| 14 | 400339X1 | 2 | WASHER-HARD (8.8X16X2) |
| 15 | WR520867 | 2 | BOLT (M8X1.25X25MM) |
| 16 | CH9X-2044 | 4 | SCREW-TRUSS HEAD (M6X1X16MM) |
| 17 | 162-6757 | 1 | CUSHION-BASE |

[A] PART OF 152-0012; 152-0013;
222-4146; 500841D1 CAB AR

00853227
PR: t05i29k58b0529

## SEAT GP-BASIC
**500840D1**

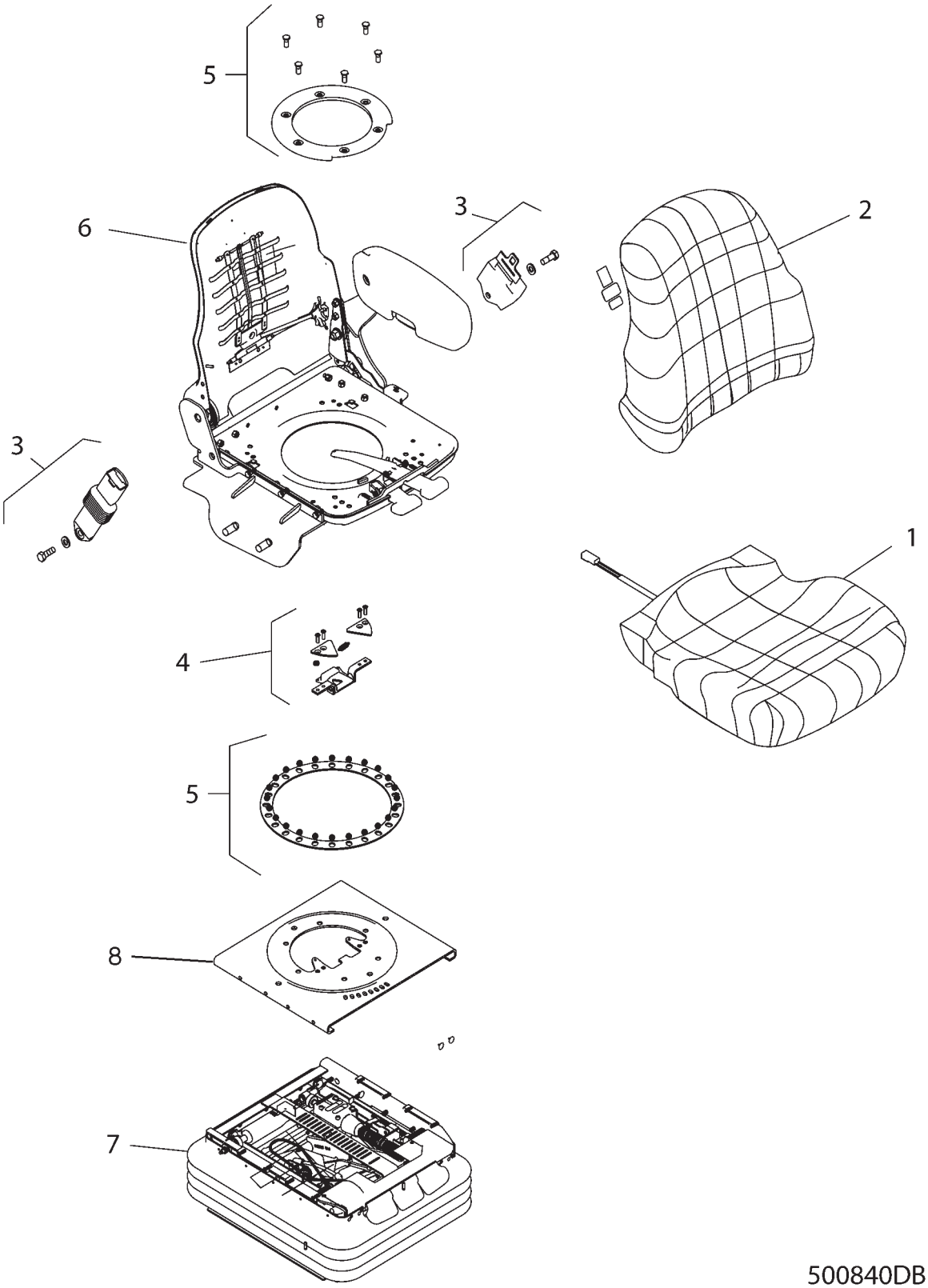

## SEAT GP-BASIC
**500840D1**

| ITEM | NUMBER | QTY | DESCRIPTION |
|---|---|---|---|
| - | 500840D1 | -- | SEAT GP-BASIC |
| 1 | 197-4523 | 1 | KIT-SEAT CUSHION AS. (INCLS SWITCH)<br>(SERVICED AS COMPLETE KIT ONLY) |
| 2 | 197-4524 | 1 | KIT-BACK CUSHION AS. (INCLS 2 SCREWS)<br>(SERVICED AS COMPLETE KIT ONLY) |
| 3 | 197-4527 | 1 | KIT-SEAT BELT<br>(SERVICED AS COMPLETE KIT ONLY) |
| 4 | 197-4529 | 1 | KIT-SLIDE LATCH AS.<br>(SERVICED AS COMPLETE KIT ONLY) |
| 5 | 197-4550 | 1 | KIT-SWIVEL AS. (UPPER)<br>(SERVICED AS COMPLETE KIT ONLY) |
| 6 | 220-2329 | 1 | KIT-SEAT AS. (LUMBAR)<br>(SEE BREAKDOWN FOR COMPONENTS) |
| 7 | 501898D1 | 1 | KIT-SEAT SUSP AS.<br>(SEE BREAKDOWN FOR COMPONENTS) |
| 8 | 500612D1 | 1 | PLATE WLMT, SWIVEL (LWR) |

500840DB
PR: t05i29k58b0530

## SEAT GP - DELUXE
**500853D1**

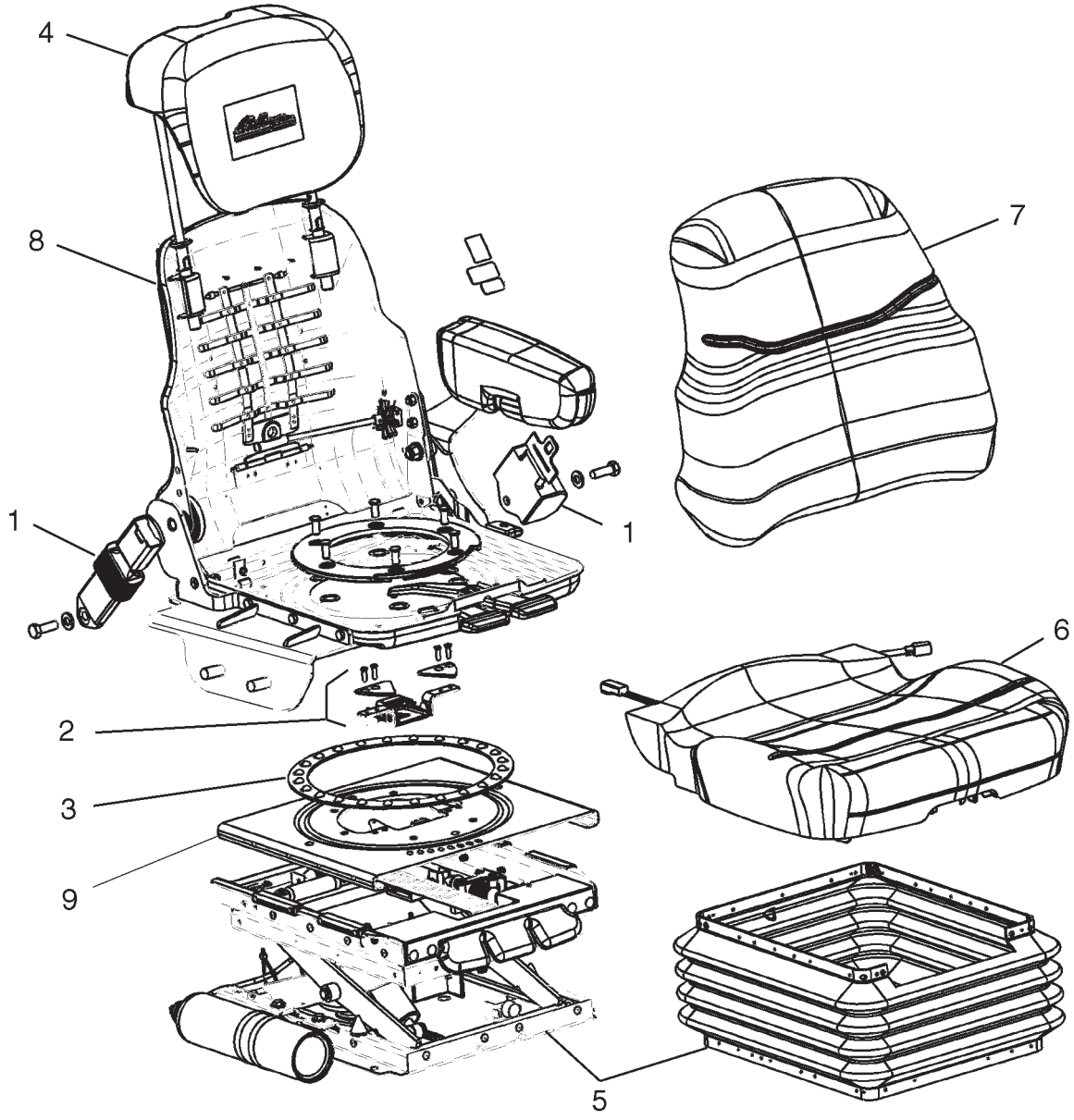

## SEAT GP - DELUXE
**500853D1**

| ITEM | NUMBER | QTY | DESCRIPTION |
|---|---|---|---|
| - | 500853D1 | -- | SEAT GP-DELUXE |
| 1 | 197-4527 | 1 | KIT-SEAT BELT<br>(SERVICED AS COMPLETE KIT ONLY) |
| 2 | 197-4529 | 1 | KIT-SLIDE LATCH AS.<br>(SERVICED AS COMPLETE KIT ONLY) |
| 3 | 197-4550 | 1 | KIT-SWIVEL AS. (UPPER)<br>(SERVICED AS COMPLETE KIT ONLY) |
| 4 | 501908D1 | 1 | KIT-HEAD REST AS.<br>(SERVICED AS COMPLETE KIT ONLY) |
| 5 | 501909D1 | 1 | KIT-SEAT SUSP AS.<br>(SEE BREAKDOWN FOR COMPONENTS) |
| 6 | 501910D1 | 1 | KIT-SEAT CUSHION AS.<br>(SERVICED AS COMPLETE KIT ONLY) |
| 7 | 501911D1 | 1 | KIT-BACK CUSHION AS.<br>(SERVICED AS COMPLETE KIT ONLY) |
| 8 | 501912D1 | 1 | KIT-SEAT AS. (LUMBAR)<br>(SEE BREAKDOWN FOR COMPONENTS) |
| 9 | 500612D1 | 1 | PLATE WLMT-SWIVEL (LOWER) |

500853DB
PR: t05i29k58b0531

## KIT-SEAT AS (LUMBAR) - BASIC
**220-2329**

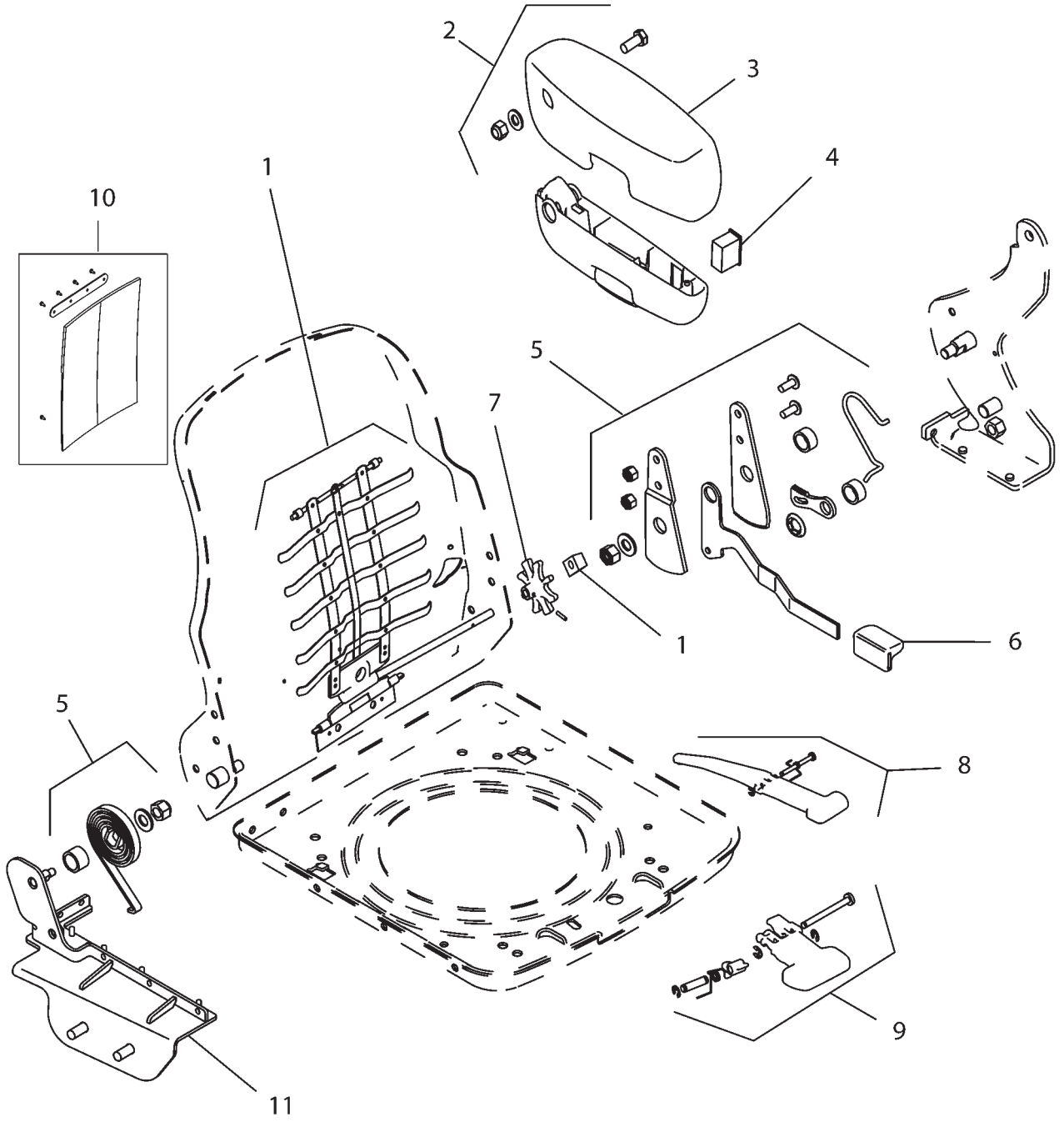

## KIT-SEAT AS (LUMBAR) - BASIC
220-2329

| ITEM | NUMBER | QTY | DESCRIPTION |
|---|---|---|---|
| - | 220-2329 | -- | KIT-SEAT ASM [A] (INCLS 1-11) |
| 1 | 197-4516 | 1 | KIT-LUMBAR AS.<br>(SERVICED AS COMPLETE KIT ONLY) |
| 2 | 197-4517 | 1 | KIT-ARMREST AS., LH (INCLS IT 3)<br>(SERVICED AS COMPLETE KIT ONLY) |
| 3 | 197-4518 | 1 | KIT-ARMREST<br>(SERVICED AS COMPLETE KIT ONLY) |
| 4 | 197-4519 | 1 | KIT-SWITCH (HEIGHT ADJUSTMENT)<br>(SERVICED AS COMPLETE KIT ONLY) |
| 5 | 197-4520 | 1 | KIT-RECLINER AS. (INCLS IT 6)<br>(SERVICED AS COMPLETE KIT ONLY) |
| 6 | 197-4521 | 1 | KIT-KNOB (BACKREST ANGLE ADJUSTMENT)<br>(SERVICED AS COMPLETE KIT ONLY) |
| 7 | 197-4522 | 1 | KIT-KNOB-LUMBAR ADJ. (INCLS ROLL PIN)<br>(SERVICED AS COMPLETE KIT ONLY) |
| 8 | 197-4525 | 1 | KIT-LEVER (FORE/AFT ADJUSTMENT)<br>(SERVICED AS COMPLETE KIT ONLY) |
| 9 | 197-4526 | 1 | KIT-LEVER (SWIVEL)<br>(SERVICED AS COMPLETE KIT ONLY) |
| 10 | 227-9744 | 1 | KIT-MANUAL HOLDER<br>(SERVICED AS COMPLETE KIT ONLY) |
| 11 | 220-2333 | 1 | KIT-BRACKET AS (SEE RH CONSOLE FOR SUPT)<br>(SERVICED AS COMPLETE KIT ONLY) |

[A] PART OF 161-9200 SEAT GP-SUSPENSION
PART OF 500840D1 SEAT GP-BASIC

2202329D
PR: t05i29k58b0532

## KIT-SEAT AS (LUMBAR) - DELUXE
**501912D1**

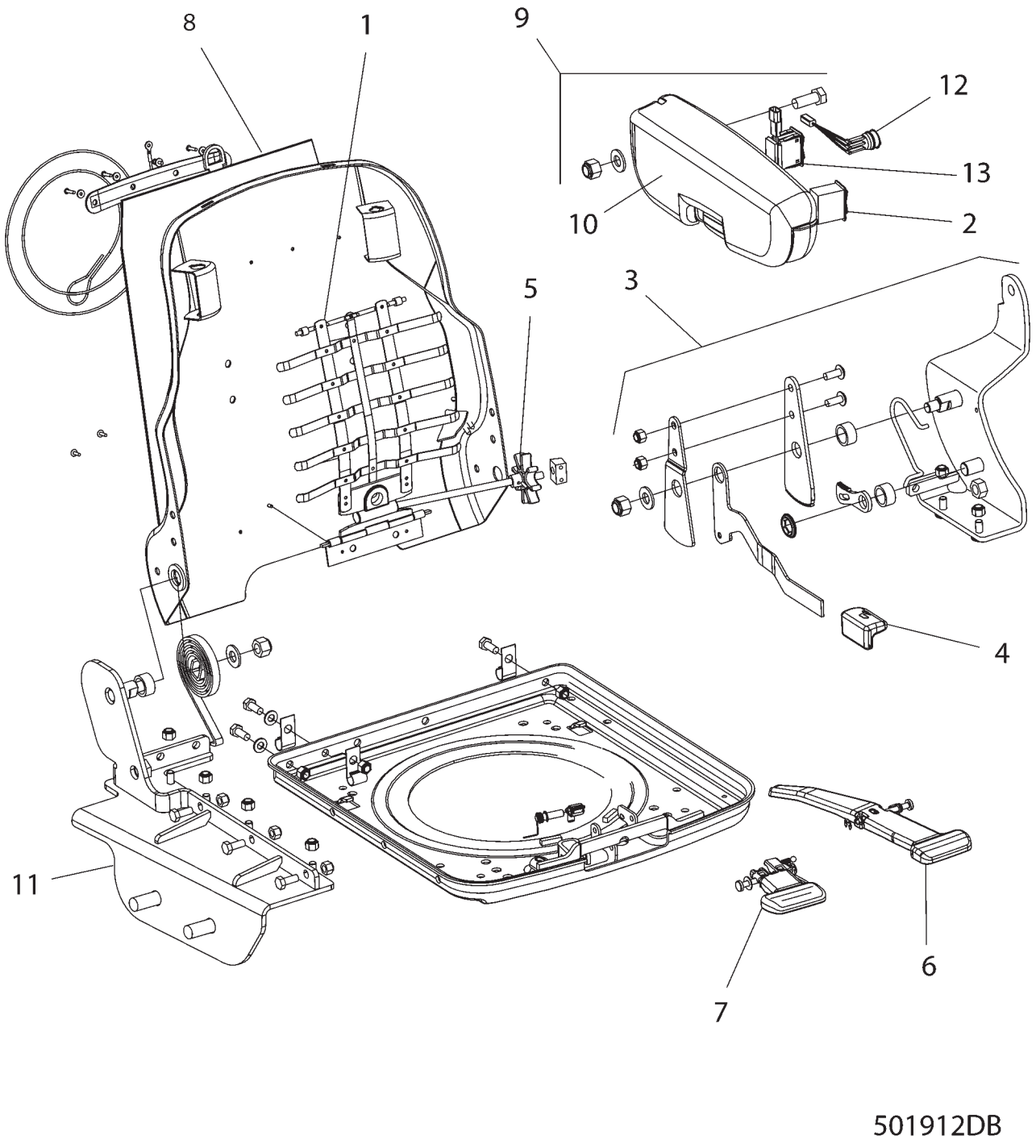

## KIT-SEAT AS (LUMBAR) - DELUXE
501912D1

| ITEM | NUMBER | QTY | DESCRIPTION |
|---|---|---|---|
| - | 501912D1 | -- | KIT-SEAT AS.-LUMBAR (COMPLETE) [A] |
| 1 | 197-4516 | 1 | KIT-LUMBAR AS.<br>(SERVICED AS COMPLETE KIT ONLY) |
| 2 | 197-4519 | 1 | KIT-SWITCH (HEIGHT ADJUSTMENT)<br>(SERVICED AS COMPLETE KIT ONLY) |
| 3 | 197-4520 | 1 | KIT-RECLINER AS. (INCLS IT 4)<br>(SERVICED AS COMPLETE KIT ONLY) |
| 4 | 197-4521 | 1 | KIT-RECLINER KNOB<br>(SERVICED AS COMPLETE KIT ONLY) |
| 5 | 197-4522 | 1 | KIT-LUMBAR KNOB<br>(SERVICED AS COMPLETE KIT ONLY) |
| 6 | 197-4525 | 1 | KIT-LEVER AS.<br>(SERVICED AS COMPLETE KIT ONLY) |
| 7 | 197-4526 | 1 | KIT-LEVER AS.<br>(SERVICED AS COMPLETE KIT ONLY) |
| 8 | 501899D1 | 1 | KIT-MANUAL HOLDER<br>(SERVICED AS COMPLETE KIT ONLY) |
| 9 | 501913D1 | 1 | KIT-ARMREST AS. (LH) (INCLS IT 10)<br>(SERVICED AS COMPLETE KIT ONLY) |
| 10 | 501914D1 | 1 | KIT-ARMREST (LH) (FORMED CUSHION ONLY)<br>(SERVICED AS COMPLETE KIT ONLY) |
| 11 | 501915D1 | 1 | KIT-BRACKET WLMT. |
| 12 | | 1 | NOT USED |
| 13 | 501921D1 | 1 | KIT-RIDE CONTROL SWITCH (INCLS HARNESS)<br>[B] (SERVICED AS COMPLETE KIT ONLY) |

[A] PART OF 500853D1 SEAT GP.-DELUXE
[B] KIT NOT IN GP. SEE 501916D1 SUSP GP.

501912DB
PR: t05i29k58b0533

## KIT-SEAT SUSPENSION - BASIC
**501898D1**

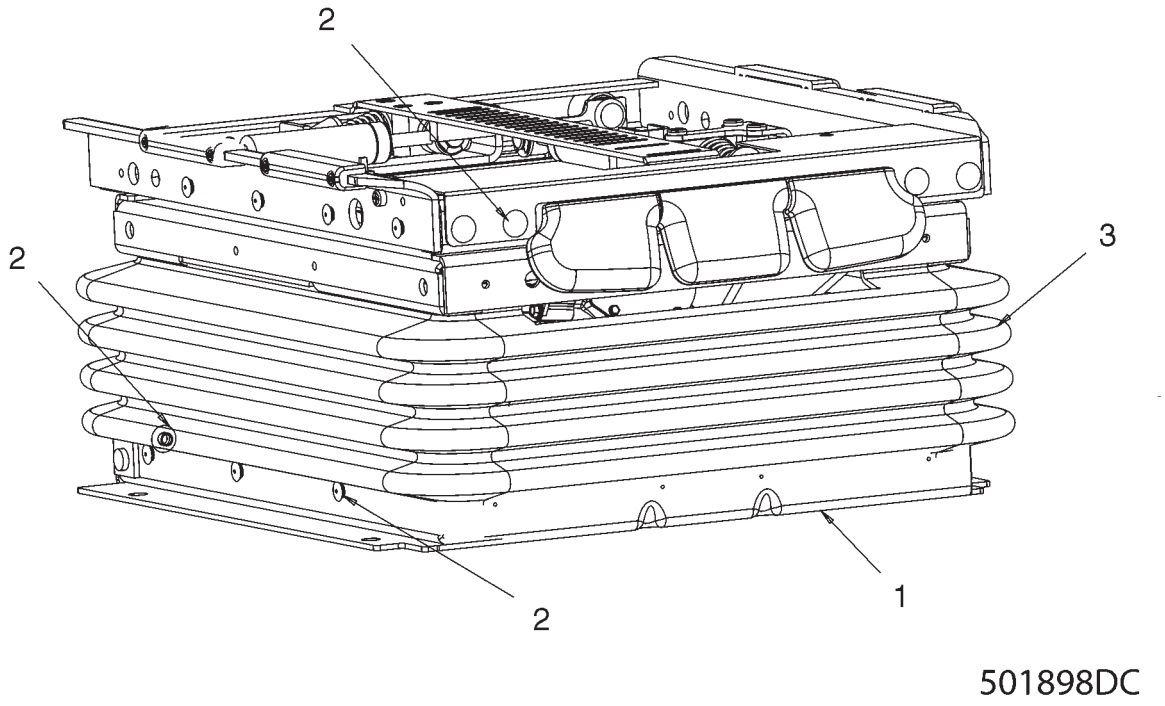

## KIT-SEAT SUSPENSION - BASIC
501898D1

| ITEM | NUMBER | QTY | DESCRIPTION |
|---|---|---|---|
| - | 501898D1 | -- | KIT-SEAT SUSPENSION [A] |
| 1 | 501900D1 | 1 | SUSPENSION GP-SEAT<br>(SEE BREAKDOWN FOR COMPONENTS) |
| 2 | 197-4544 | 1 | KIT-FASTENER<br>(SERVICED AS COMPLETE KIT ONLY) |
| 3 | 197-4546 | 1 | KIT-BOOT<br>(SERVICED AS COMPLETE KIT ONLY) |

[A] PART OF 500840D1 SEAT GP-BASIC

501898DC
PR: t05i29k58b0534

## KIT-SEAT SUSPENSION - DELUXE
**501909D1**

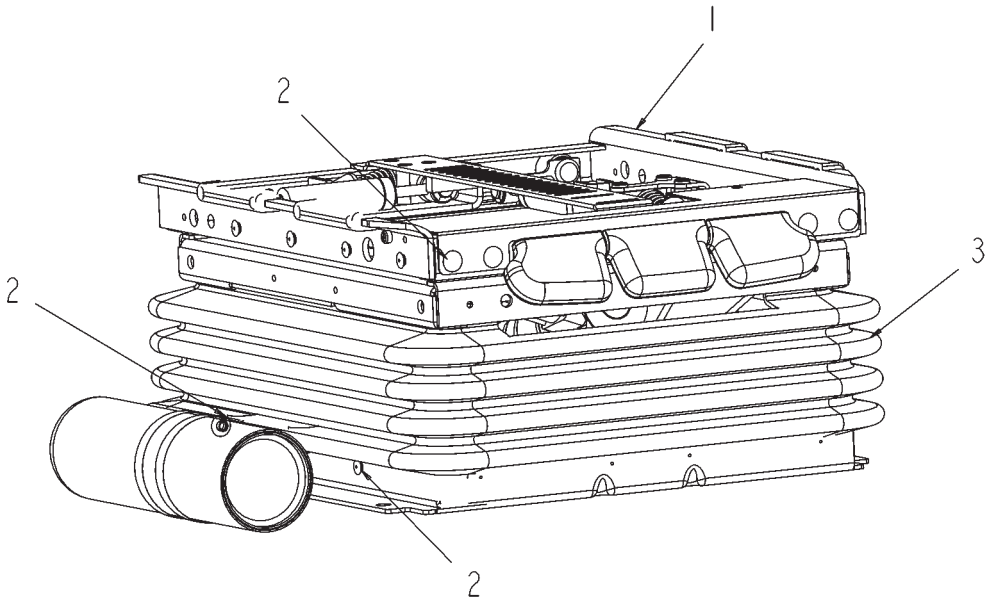


501909DB

## KIT-SEAT SUSPENSION - DELUXE
**501909D1**

| ITEM | NUMBER | QTY | DESCRIPTION |
|---|---|---|---|
| - | 501909D1 | -- | KIT-SEAT SUSPENSION [A] |
| 1 | 501916D1 | 1 | SUSPENSION GP-SEAT<br>(SEE BREAKDOWN FOR COMPONENTS) |
| 2 | 197-4544 | 1 | KIT-FASTENER<br>(SERVICED AS COMPLETE KIT ONLY) |
| 3 | 197-4546 | 1 | KIT-BOOT<br>(SERVICED AS COMPLETE KIT ONLY) |

[A] PART OF 500853D1 SEAT GP-DELUXE

501909DB
PR: t05i29k58b0535

## KIT-SUSPENSION GP-BASIC SEAT
**501900D1**

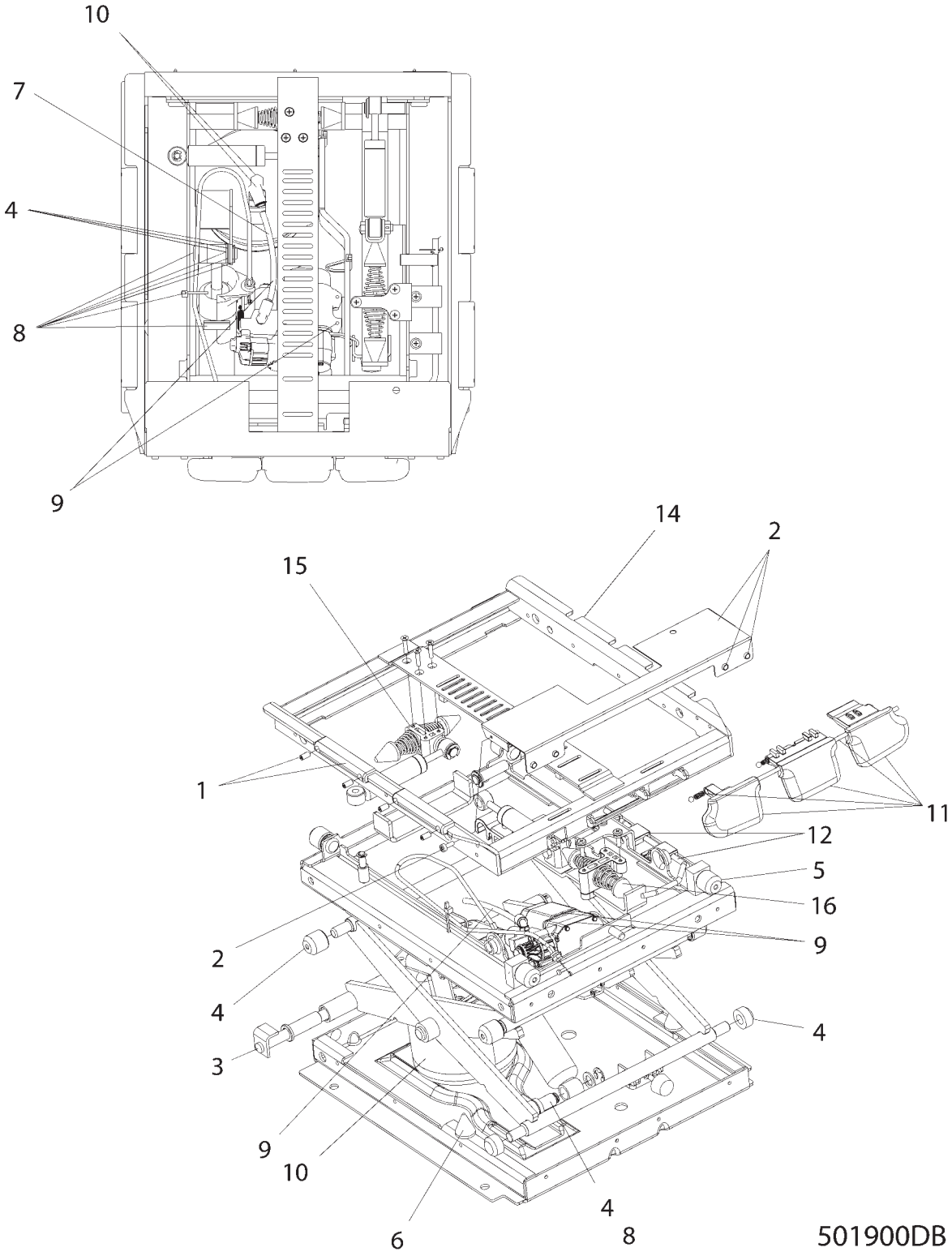

## KIT-SUSPENSION GP-BASIC SEAT
501900D1

| ITEM | NUMBER | QTY | DESCRIPTION |
|---|---|---|---|
| - | 501900D1 | -- | KIT-SUSPENSION GP-SEAT [A] |
| 1 | 197-4530 | 1 | KIT-PUCK AS. (SLIDE)<br>(SERVICED AS COMPLETE KIT ONLY) |
| 2 | 197-4531 | 1 | KIT-COVER PLATE AS.<br>(SERVICED AS COMPLETE KIT ONLY) |
| 3 | 197-4532 | 1 | KIT-BEARING SHAFT<br>(SERVICED AS COMPLETE KIT ONLY) |
| 4 | 197-4533 | 1 | KIT-ROLLER BEARINGS<br>(SERVICED AS COMPLETE KIT ONLY) |
| 5 | 197-4534 | 1 | KIT-ISOLATOR ROLLER<br>(SERVICED AS COMPLETE KIT ONLY) |
| 6 | 197-4537 | 1 | KIT-BUMPER AS. (SUSP)<br>(SERVICED AS COMPLETE KIT ONLY) |
| 7 | 197-4538 | 1 | KIT-AIRLINE AS. (INCLS TUBE & FITTINGS)<br>(SERVICED AS COMPLETE KIT ONLY) |
| 8 | 197-4539 | 1 | KIT-SHOCK AS. (SUSP)<br>(SERVICED AS COMPLETE KIT ONLY) |
| 9 | 197-4540 | 1 | KIT-COMPRESSOR AS<br>(SERVICED AS COMPLETE KIT ONLY) |
| 10 | 197-4541 | 1 | KIT-AIR SPRING AS.<br>(SERVICED AS COMPLETE KIT ONLY) |
| 11 | 197-4545 | 1 | KIT-KNOBS AS.<br>(SERVICED AS COMPLETE KIT ONLY) |
| 12 | 197-4547 | 1 | KIT-FORE/AFT<br>(SERVICED AS COMPLETE KIT ONLY) |
| 13 | 501902D1 | 1 | KIT-HARNESS (SUSPENSION) (NOT SHOWN)<br>(SERVICED AS COMPLETE KIT ONLY) |
| 14 | 501903D1 | 1 | FRAME WLMT, ISOLATOR-LATERAL |
| 15 | 501906D1 | 1 | KIT-SPRING & SHOCK AS. (INCLS SCREWS &<br>RETAINING RING) (SERVICED COMPLETE) |
| 16 | 501907D2 | 1 | KIT-SPRING & SHOCK AS.<br>(SERVICED AS COMPLETE KIT ONLY) |

[A] PART OF 501898D1 KIT-SEAT SUSPENSION

501900DB
PR: t05i29k58b0536

## KIT-SUSPENSION GP - DELUXE SEAT
**501916D1**

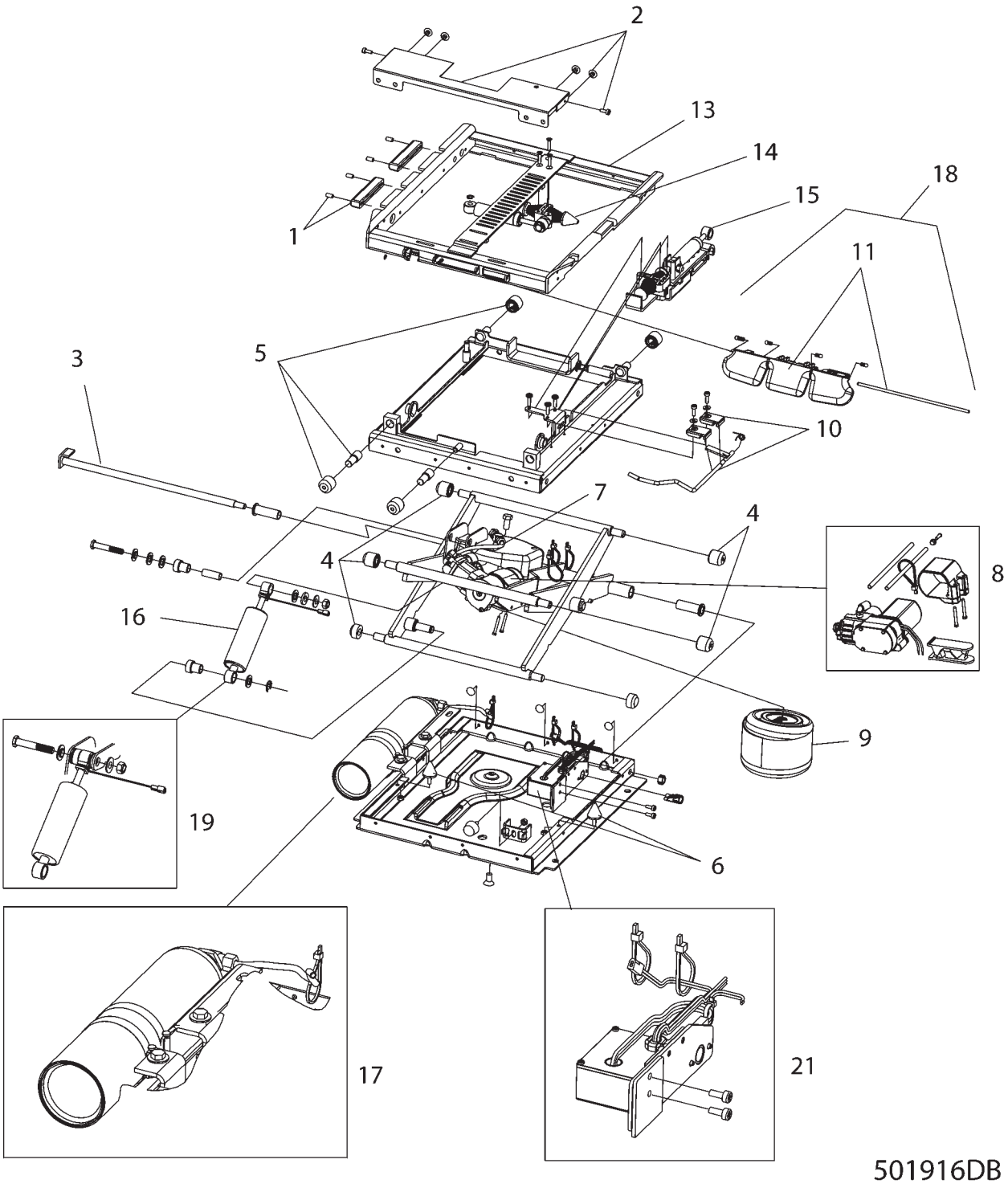

## KIT-SUSPENSION GP - DELUXE SEAT
501916D1

| ITEM | NUMBER | QTY | DESCRIPTION |
|---|---|---|---|
| - | 501916D1 | -- | KIT-SUSPENSION GP (SEAT) [A] |
| 1 | 197-4530 | 1 | KIT-PUCK AS. (SLIDE)<br>(SERVICED AS COMPLETE KIT ONLY) |
| 2 | 197-4531 | 1 | KIT-COVER PLATE AS.<br>(SERVICED AS COMPLETE KIT ONLY) |
| 3 | 197-4532 | 1 | KIT-BEARING SHAFT<br>(SERVICED AS COMPLETE KIT ONLY) |
| 4 | 197-4533 | 1 | KIT-ROLLER BEARINGS<br>(SERVICED AS COMPLETE KIT ONLY) |
| 5 | 197-4534 | 1 | KIT-ISOLATOR ROLLER<br>(SERVICED AS COMPLETE KIT ONLY) |
| 6 | 197-4537 | 1 | KIT-BUMPER AS. (SUSP)<br>(SERVICED AS COMPLETE KIT ONLY) |
| 7 | 197-4538 | 1 | KIT-AIRLINE AS. (INCLS TUBE & FITTINGS)<br>(SERVICED AS COMPLETE KIT ONLY) |
| 8 | 197-4540 | 1 | KIT-COMPRESSOR AS<br>(SERVICED AS COMPLETE KIT ONLY) |
| 9 | 197-4541 | 1 | KIT-AIR SPRING AS.<br>(SERVICED AS COMPLETE KIT ONLY) |
| 10 | 197-4547 | 1 | KIT-FORE/AFT<br>(SERVICED AS COMPLETE KIT ONLY) |
| 11 | 197-4548 | 1 | KIT-CONTROL(LATERAL<br>(SERVICED AS COMPLETE KIT ONLY) |
| 12 | 501902D1 | 1 | KIT-HARNESS (SUSPENSION) (NOT SHOWN)<br>(SERVICED AS COMPLETE KIT ONLY) |
| 13 | 501903D1 | 1 | FRAME WLMT, ISOLATOR-LATERAL |
| 14 | 501906D1 | 1 | KIT-SPRING & SHOCK AS. (INCLS SCREWS &<br>RETAINING RING) (SERVICED COMPLETE) |
| 15 | 501907D2 | 1 | KIT-SPRING & SHOCK AS.<br>(SERVICED AS COMPLETE KIT ONLY) |
| 16 | 501917D1 | 1 | SHOCK (SUSP) (SHOCK ONLY) |
| 17 | 501918D1 | 1 | KIT-AIR TANK (W/FITTINGS, LINES, CLAMPS<br>AND BRACKET)<br>(SERVICED AS COMPLETE KIT ONLY) |
| 18 | 501919D1 | 1 | KIT-KNOB AS. (SUSP) (INCLS ITEM 11)<br>(SERVICED AS COMPLETE KIT ONLY) |
| 19 | 501920D1 | 1 | KIT-CONTROL AS. (SHOCK) (INCLS ITEM 16)<br>(SERVICED AS COMPLETE KIT ONLY) |
| 20 | 501921D1 | 1 | KIT-RIDE CNTRL SWITCH (INCL HARNESS) [B]<br>(NOT SHOWN) (SERVICED AS KIT ONLY) |
| 21 | 501922D1 | 1 | KIT-CONTROL DAMPER<br>(SERVICED AS COMPLETE KIT ONLY) |

[A] PART OF 501909D1 KIT-SEAT SUSPENSION
[B] SWITCH ON LH ARMREST. REFER TO 501912D1 KIT SEAT-LUMBAR-DELUXE

501916DB
PR: t05i29k58b0537

## SPEAKER GP-RADIO
**152-0419**

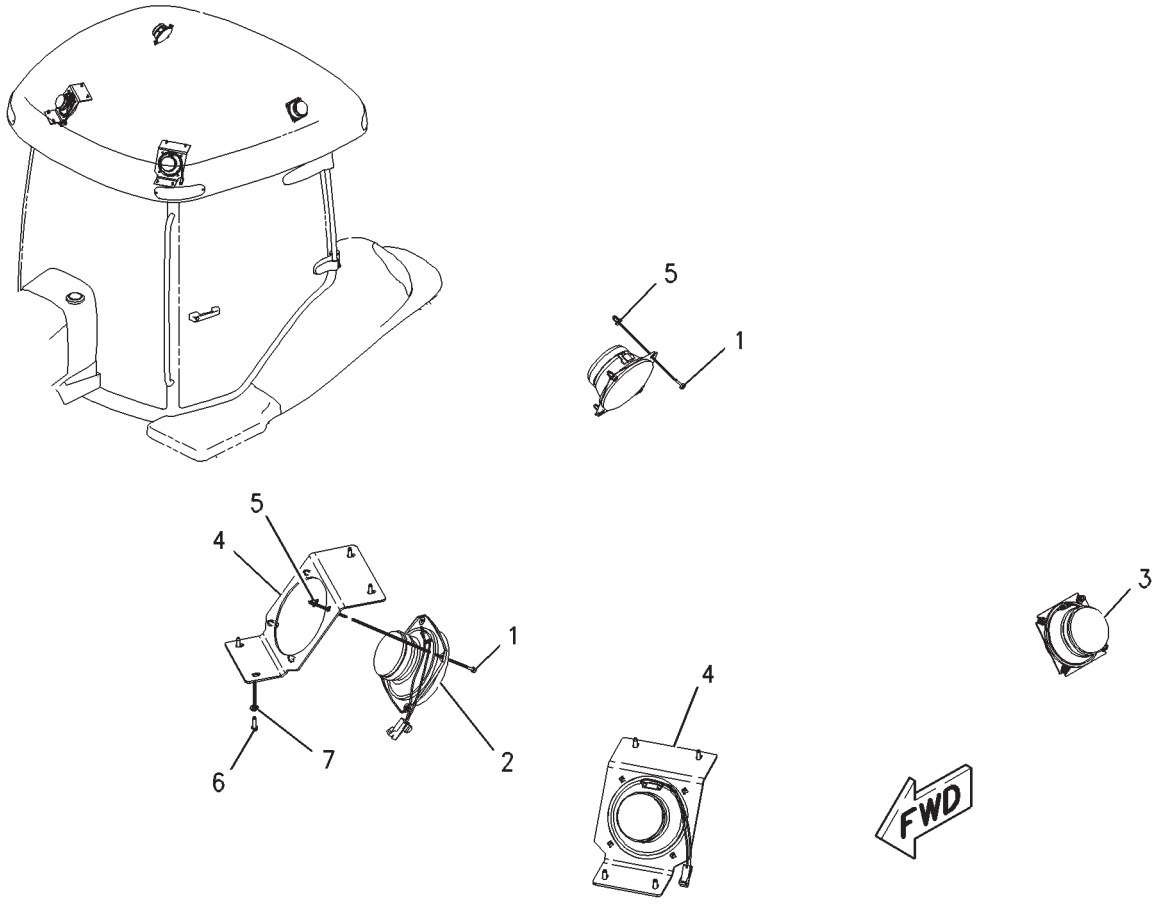


00870222

## SPEAKER GP-RADIO
**152-0419**

| ITEM | NUMBER | QTY | DESCRIPTION |
|---|---|---|---|
| - | 502794D1 | -- | SPEAKER GP-RADIO (NOT SERVICED) (ROW & SPECIAL ONLY) |
| - | 152-0419 | -- | SPEAKER GP-RADIO [A] (REF ONLY) (NOT SERVICED) |
| 1 | CH119-5026 | 16 | SCREW-PAN HEAD (10-16X0.63 IN) |
| 2 | CH136-5414 | 2 | SPEAKER (FRONT) |
| 3 | CH136-5415 | 2 | SPEAKER (REAR) |
| 4 | 195-2612 | 2 | BRACKET |
| 5 | 400086X1 | 16 | NUT, EXPANSION (7MM)(PLASTIC) |
| 6 | CH110-2028 | 8 | SCREW-PAN HEAD (10-14X.75 IN) |
| 7 | 400310X1 | 8 | WASHER (6.6X12X2) |

[A] PART OF 152-0012; 222-4146
500841D1 CAB AR;
502794D1 SPEAKER GP

00870222
PR: t05i29k58b0538

## SPEAKER GP-RADIO - SUBWOOFER
**173-6506**

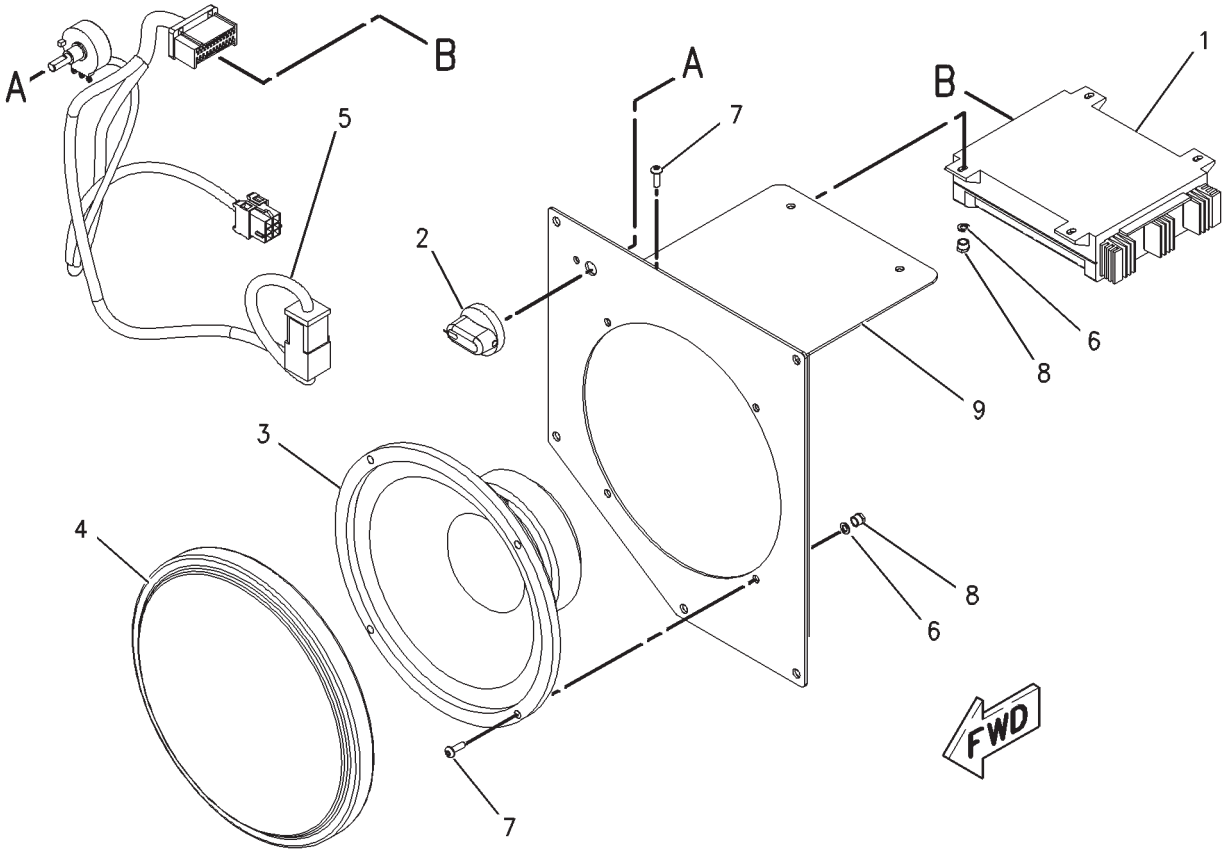


00786642

## SPEAKER GP-RADIO - SUBWOOFER
**173-6506**

| ITEM | NUMBER | QTY | DESCRIPTION |
|---|---|---|---|
| - | 173-6506 | -- | SPEAKER GP-RADIO (NOT SERVICED) |
| 1 | CH136-5434 | 1 | AMPLIFIER ASM |
| 2 | 500419D1 | 1 | KNOB-CONTROL (BASS VOLUME) |
| 3 | 170-7255 | 1 | SPEAKER |
| 4 | 172-6842 | 1 | GRILL |
| 5 | 502191D1 | 1 | HARNESS (SUBWOOFER) |
| 6 | CH8C-9660 | 8 | WASHER (4.6X7.9X0.8) |
| 7 | CH7Y-3173 | 8 | SCREW-BUTTON HEAD (M4X0.7X12MM) |
| 8 | CH8T-2659 | 8 | LOCKNUT (M4X0.7) |
| 9 | 189-9922 | 1 | PLATE ASM |

00786642
PR: t05i29k58b0539

## STEERING COLUMN GP - CH166-3611

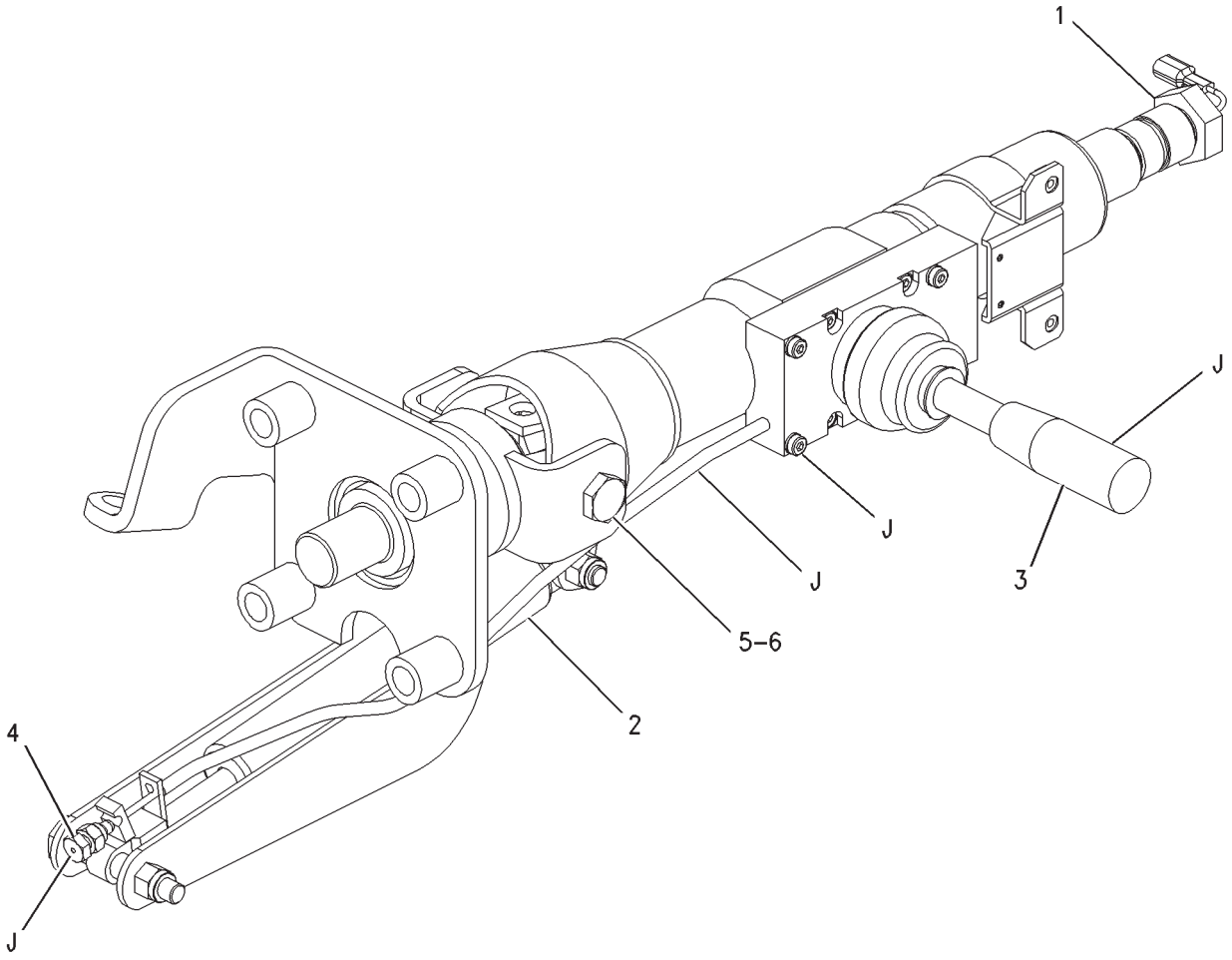


00830593

## STEERING COLUMN GP - CH166-3611

| ITEM | NUMBER | QTY | DESCRIPTION |
|---|---|---|---|
| - | CH166-3611 | -- | STEERING COLUMN GP [A] |
| 1 | CH169-3261 | 1 | NUT (M18X1.5) |
| 2 | CH162-8550 | 1 | KIT-GAS STRUT (STEERING COLUMN) |
| 3 | CH191-3701 | 1 | KIT-STEERING COLUMN TILT/TELESCOPE (INCLS. ITEMS MARKED "J") |
| 4 | CH185-3886 | 1 | CLAMP ASM-CABLE |
| 5 | CH196-3699 | 2 | PIN-PIVOT |
| 6 | CH196-3698 | 2 | BUSHING-PIVOT |

[A] PART OF 500768D1 CONSOLE GP

00830593
PR: t05i29k58b0540

**TRIM GP-CAB - 224-3917**
**1 OF 2**

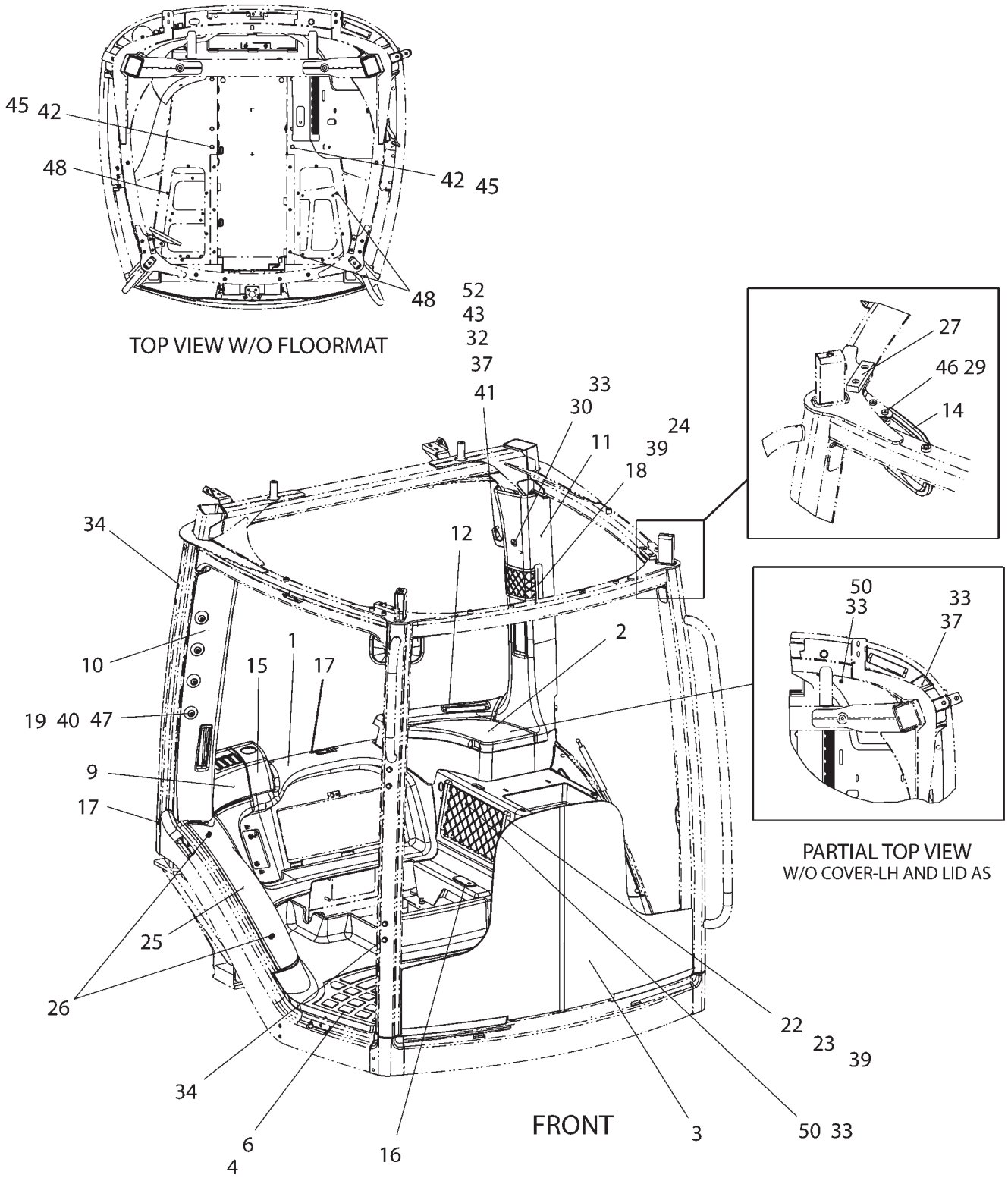


2243917A

## TRIM GP-CAB - 224-3917



| ITEM | NUMBER | QTY | DESCRIPTION |
|---|---|---|---|
| - | 224-3917 | -- | TRIM GP [A] |
| 1 | 162-6751 | 1 | CONSOLE AS-CENTER |
| 2 | 179-2957 | 1 | LID AS |
| 3 | 227-4312 | 1 | MAT-FRONT GLASS |
| 4 | 227-4313 | 1 | MAT-FLOOR |
| 6 | 152-0431 | 1 | FLOOR MAT |
| 9 | 164-7069 | 1 | COVER |
| 10 | 169-6342 | 1 | COVER AS (RH) |
| 11 | 169-6343 | 1 | COVER AS (LH) |
| 12 | 169-6344 | 1 | COMPARTMENT AS |
| 14 | CH169-6352 | 1 | MIRROR (INTERIOR CAB) |
| 15 | 169-6383 | 1 | COVER-WIRE |
| 16 | 174-5774 | 1 | GROMMET-BRAKE |
| 17 | 400110X1 | 16 | FASTENER |
| 18 | 174-5788 | 2 | RETAINER |
| 19 | CH174-5789 | 4 | PLUG-MONITOR |
| 22 | 180-2825 | 1 | RETAINER |
| 23 | 184-1704 | 1 | HOLDER-STORAGE |
| 24 | 190-8326 | 1 | HOLDER-STORAGE |
| 25 | 197-5852 | 1 | COVER AS |
| 26 | CH197-5854 | 2 | LATCH |
| 27 | CH217-2132 | 2 | SEAL |
| 29 | CH096-6166 | 2 | WASHER-HARD (4.5X9X1MM THK) |
| 30 | CH111-4627 | 1 | SCREW-MACHINE (M6X1.0X30MM) |
| 32 | CH129-3178 | 2 | LOCKNUT (M6X1 THD) |
| 33 | 400085X1 | 8 | NUT-RETAINER (M6X1X1.63-3.8 PANEL) |
| 34 | CH193-5914 | 6 | PLUG |
| 37 | CH3E-8020 | 2 | SCREW-TRUSS HEAD (M6X1X25MM) |
| 39 | CH5V-1496 | 9 | RETAINER |
| 40 | CH6V-5839 | 4 | WASHER (11X21X2.5MM THK) |
| 41 | CH6V-8928 | 1 | HOOK-COAT |
| 42 | 400039X1 | 6 | BOLT (M10X1.5X25MM) |
| 43 | 400221X1 | 1 | BOLT (M6X1X20MM) |
| 45 | CH8T-7934 | 6 | WASHER (11X21X5MM THK) |
| 46 | CH9X-1046 | 2 | SCREW (M4X0.7X18MM) |
| 47 | CH9X-2040 | 6 | SCREW-TRUSS HEAD (M10X1.5X25MM) |
| 48 | CH9X-2042 | 21 | SCREW-TRUSS HEAD (M6X1X12MM) |
| 50 | CH9X-2045 | 5 | SCREW-TRUSS HEAD (M6X1X20MM) |
| 52 | 400310X1 | 2 | WASHER |

[A] PART OF 500841D1;500842D1;500843D1;
500844D1; 500849D1 CAB AR

2243917A
PR: t05i29k58b0541

**TRIM GP-CAB - 224-3917**
**2 OF 2**

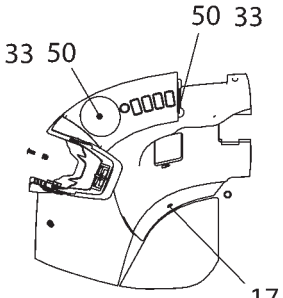


PARTIAL TOP VIEW
W/O ACCESS COVER-WIRE

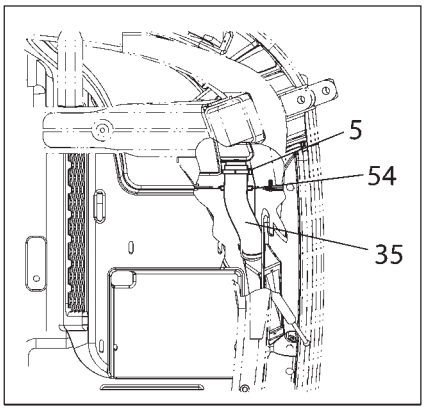


PARTIAL TOP VIEW

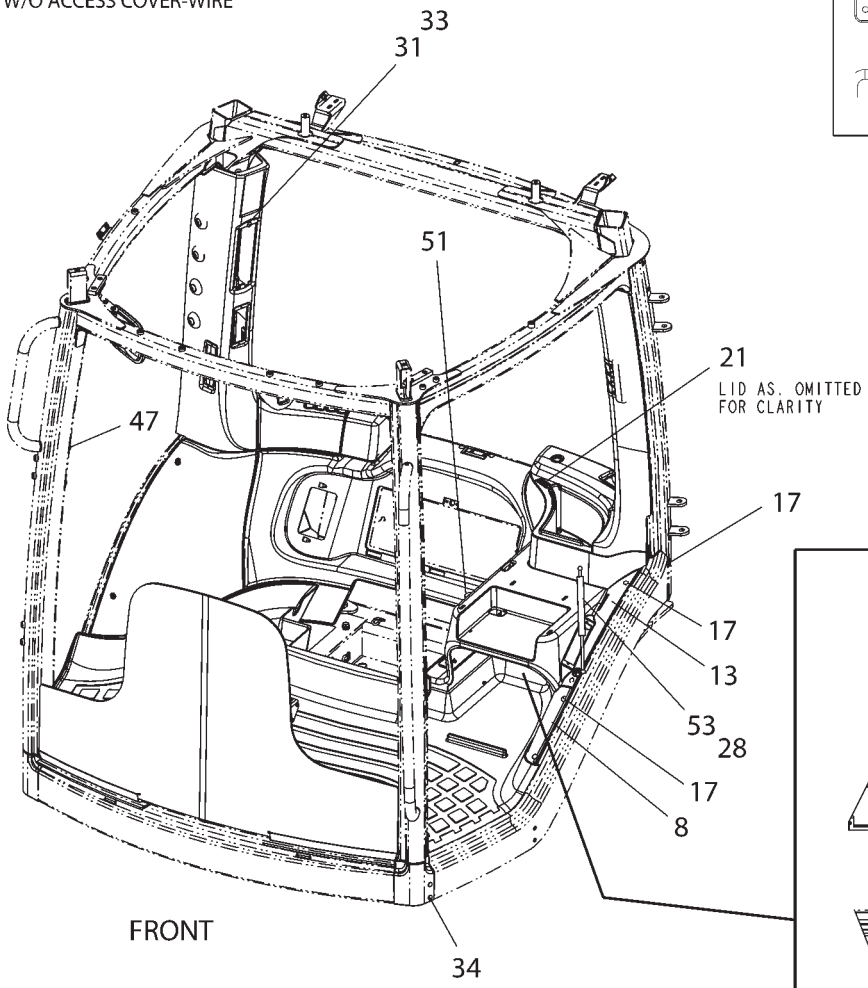


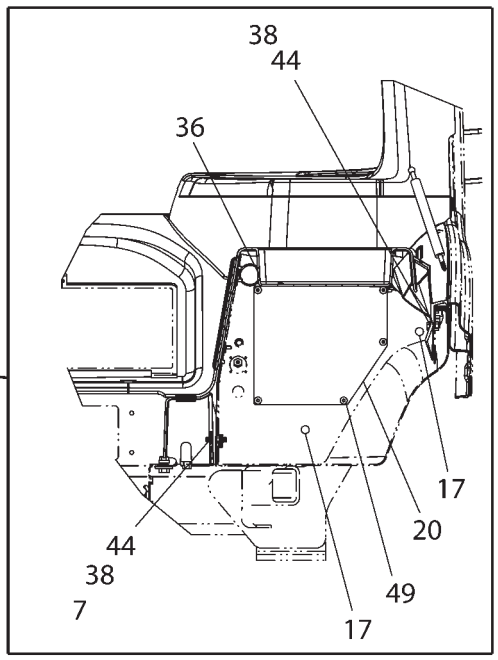


2243917B

## TRIM GP-CAB - 224-3917
2 OF 2

| ITEM | NUMBER | QTY | DESCRIPTION |
|---|---|---|---|
| - | 224-3917 | -- | TRIM GP [A] |
| 5 | CH7K-1181 | 2 | STRAP-CABLE |
| 7 | CH154-9989 | 2 | SPRING CLIP |
| 8 | 162-6752 | 1 | CONSOLE-LH |
| 13 | 169-6345 | 1 | SUPPORT AS |
| 17 | 400110X1 | 16 | FASTENER |
| 20 | 178-6238 | 1 | COVER-SUBWOOFER |
| 21 | CH179-2959 | 1 | MAGNET |
| 28 | CH090-9555 | 2 | CLIP |
| 31 | CH121-9870 | 1 | SCREW-MACHINE (M6X1X40MM) |
| 33 | 400085X1 | 8 | NUT-RETAINER (M6X1X1.63-3.8 PANEL) |
| 34 | CH193-5914 | 6 | PLUG |
| 35 | CH208-5521 | 1 | HOSE (192MM) |
| 36 | 400106X1 | 1 | PLUG-RUBBER (35MM) |
| 38 | 400599X1 | 4 | WASHER-HARD (8.8X20.5X2MM THK) |
| 44 | 400053X1 | 4 | BOLT (M8X1.25X20MM) |
| 47 | CH9X-2040 | 6 | SCREW-TRUSS HEAD (M10X1.5X25MM) |
| 49 | CH9X-2044 | 5 | SCREW-TRUSS HEAD (M6X1X16MM) |
| 50 | CH9X-2045 | 5 | SCREW-TRUSS HEAD (M6X1X20MM) |
| 51 | 400113X1 | 1 | GROMMET |
| 53 | 501026D1 | 1 | SPRING AS-GAS |
| 54 | CH9X-2092 | AR | STRIP-EDGE (8 CM) |

[A] PART OF 500841D1;500842D1;500843D1;
500844D1; 500849D1 CAB AR

2243917B
PR: t05i29k58b0542

## VISOR GP-CAB (SUN VISOR) - FRONT
**152-0424**

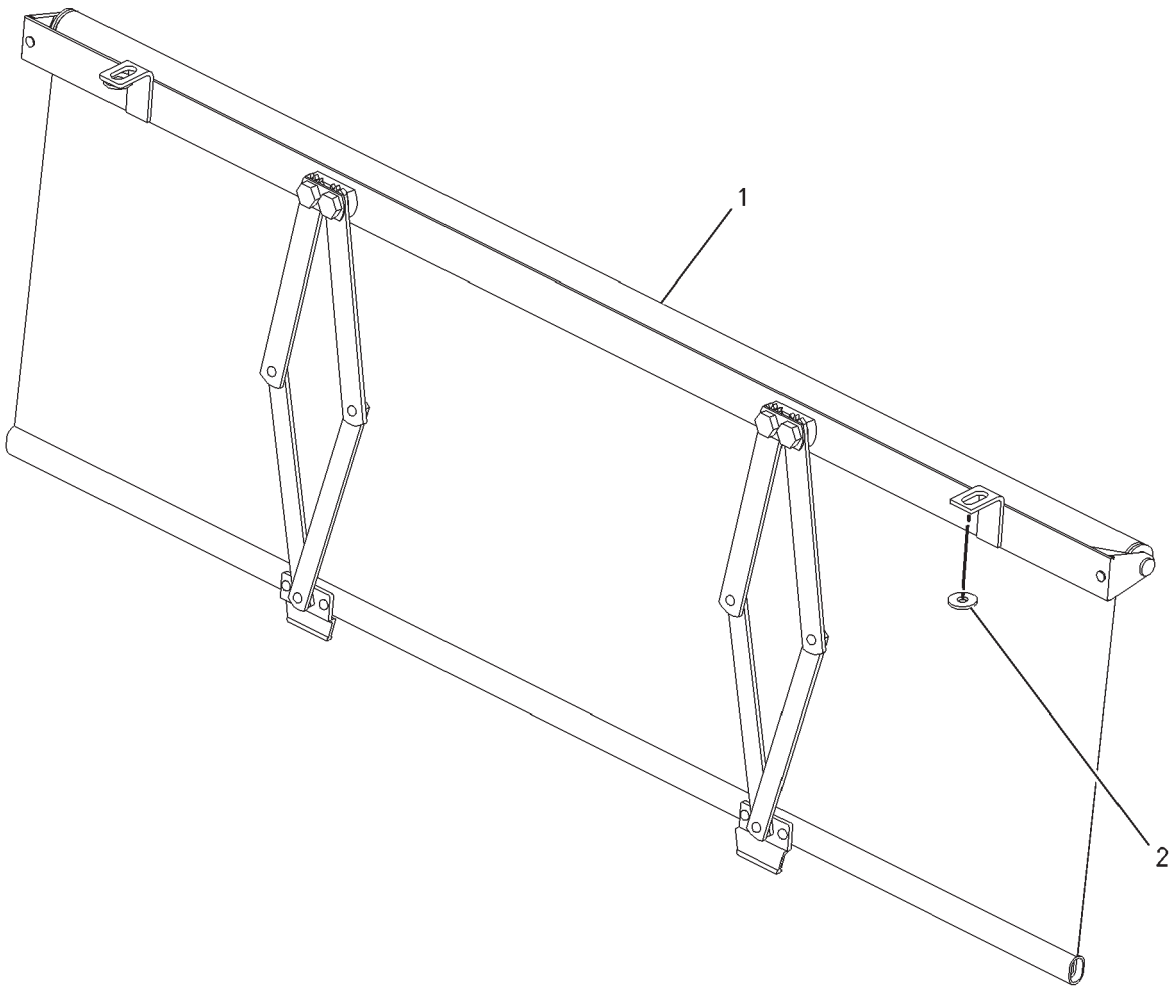


00867693

## VISOR GP-CAB (SUN VISOR) - FRONT
152-0424

| ITEM | NUMBER | QTY | DESCRIPTION |
|---|---|---|---|
| - | 502793D1 | -- | VISOR GP-CAB (SUN VISOR) (FACTORY) (NOT SERVICED) |
| - | 152-0424 | -- | VISOR GP-CAB (SUN VISOR) [A] (REF ONLY) (NOT SERVICED) |
| 1 | CH169-6397 | 1 | SCREEN-SUN |
| 2 | CH9X-2038 | 2 | WASHER (7X19X2) |

[A] PART OF 152-0012; 222-4146;
500841D1;500849D1 CAB AR;
502793D1 VISOR GP-CAB

00867693
PR: t05i29k58b0543

## VISOR GP-CAB (SUN VISOR) - REAR
**162-4095**

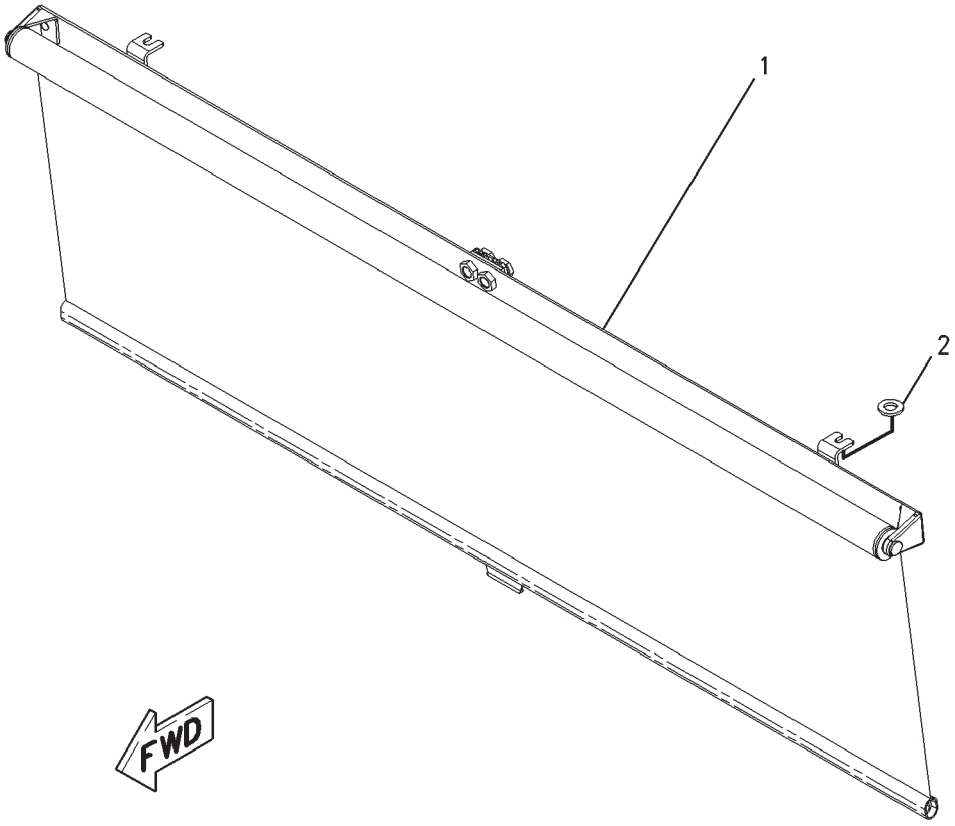


00867436

## VISOR GP-CAB (SUN VISOR) - REAR
**162-4095**

| ITEM | NUMBER | QTY | DESCRIPTION |
|---|---|---|---|
| - | 162-4095 | -- | VISOR GP-CAB (SUN VISOR) (NOT SERVICED) |
| 1 | CH169-6397 | 1 | SCREEN GP-SUN |
| 2 | CH9X-2038 | 2 | WASHER (7X19X2) |

00867436
PR: t05i29k58b0544

## GLASS GP-WINDSHIELD - 151-9994
ROW & SPECIAL

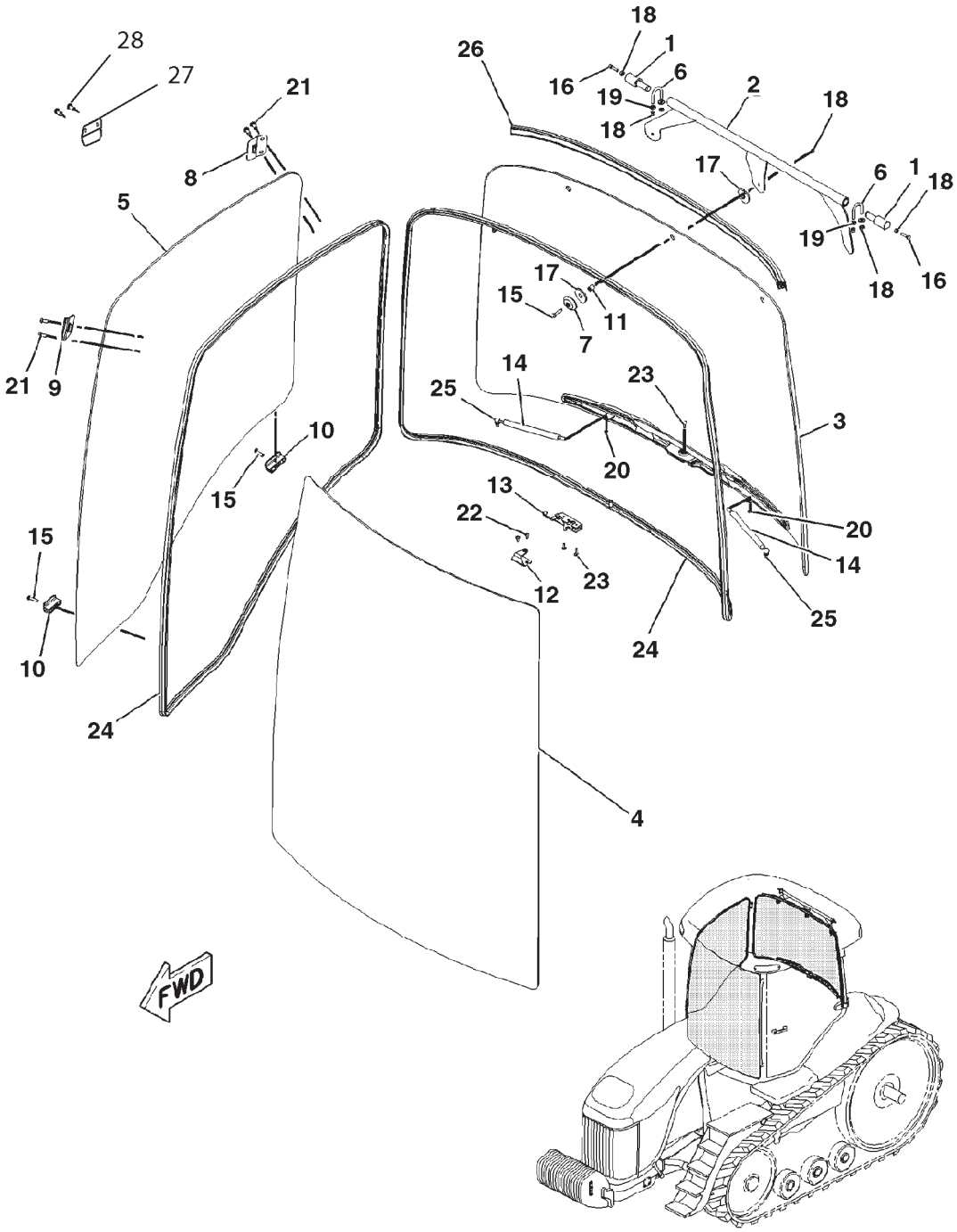

## GLASS GP-WINDSHIELD - 151-9994
ROW & SPECIAL

| ITEM | NUMBER | QTY | DESCRIPTION |
|---|---|---|---|
| - | 151-9994 | -- | GLASS GP [A] (NOT SERVICED) |
| 1 | 151-8541 | 2 | PIN-HINGE |
| 2 | 151-8545 | 1 | PLATE |
| 3 | 151-9979 | 1 | WINDOW ASM-REAR |
| | 169-6328 | 1 | SUPPORT |
| | 151-9982 | 1 | GLASS-REAR |
| 4 | 501896D1 | 1 | WINDOW-FRONT |
| 5 | 151-9984 | 1 | GLASS-RH |
| 6 | CH151-9989 | 2 | CLAMP |
| 7 | 400333X1 | 3 | WASHER (HINGE) |
| 8 | 166-4568 | 1 | CLAMP |
| 9 | 166-4570 | 2 | CLAMP |
| 10 | CH168-2309 | 2 | CLAMP |
| 11 | CH169-6377 | 3 | BUSHING (WINDOW HINGE) |
| 12 | 169-6399 | 1 | PLATE ASM |
| | 400313X1 | 2 | NUT-WELD (M6X1) |
| 13 | CH170-1445 | 1 | LATCH |
| 14 | CH172-6862 | 2 | SPRING ASM-GAS |
| 15 | CH142-2304 | 5 | SCREW-BUTTON HEAD (M8X1.25X35MM) |
| 16 | CH160-8756 | 2 | BOLT-HEX HEAD (M8X1.25X30MM) |
| 17 | 400330X1 | 6 | WASHER (REAR HINGE) |
| 18 | 400340X1 | 9 | NUT (M8X1.25) |
| 19 | 400599X1 | 4 | WASHER-HARD (8.8X20.5X2) |
| 20 | 400300X1 | 2 | NUT (M6X1) |
| 21 | CH8C-8585 | 6 | BOLT-BUTTON HEAD (M10X1.5X20MM) |
| 22 | CH9X-2043 | 2 | SCREW-TRUSS HEAD (M6X1X14MM) |
| 23 | CH9X-2045 | 3 | SCREW-TRUSS HEAD (M6X1X20MM) |
| 24 | CH208-2404 | AR | SEAL (1010CM) |
| 25 | CH8T-2444 | 4 | STUD-BALL |
| 26 | 207-2036 | 1 | SEAL |
| 27 | 501051D1 | 1 | BRACKET |
| 28 | CH8T-3992 | 2 | SCREW-BTN HD (M6X1X12MM) |

[A] PART OF 152-0001;152-0003 CAB GP

## GLASS GP-WINDSHIELD - 151-9995

**EAME ONLY**

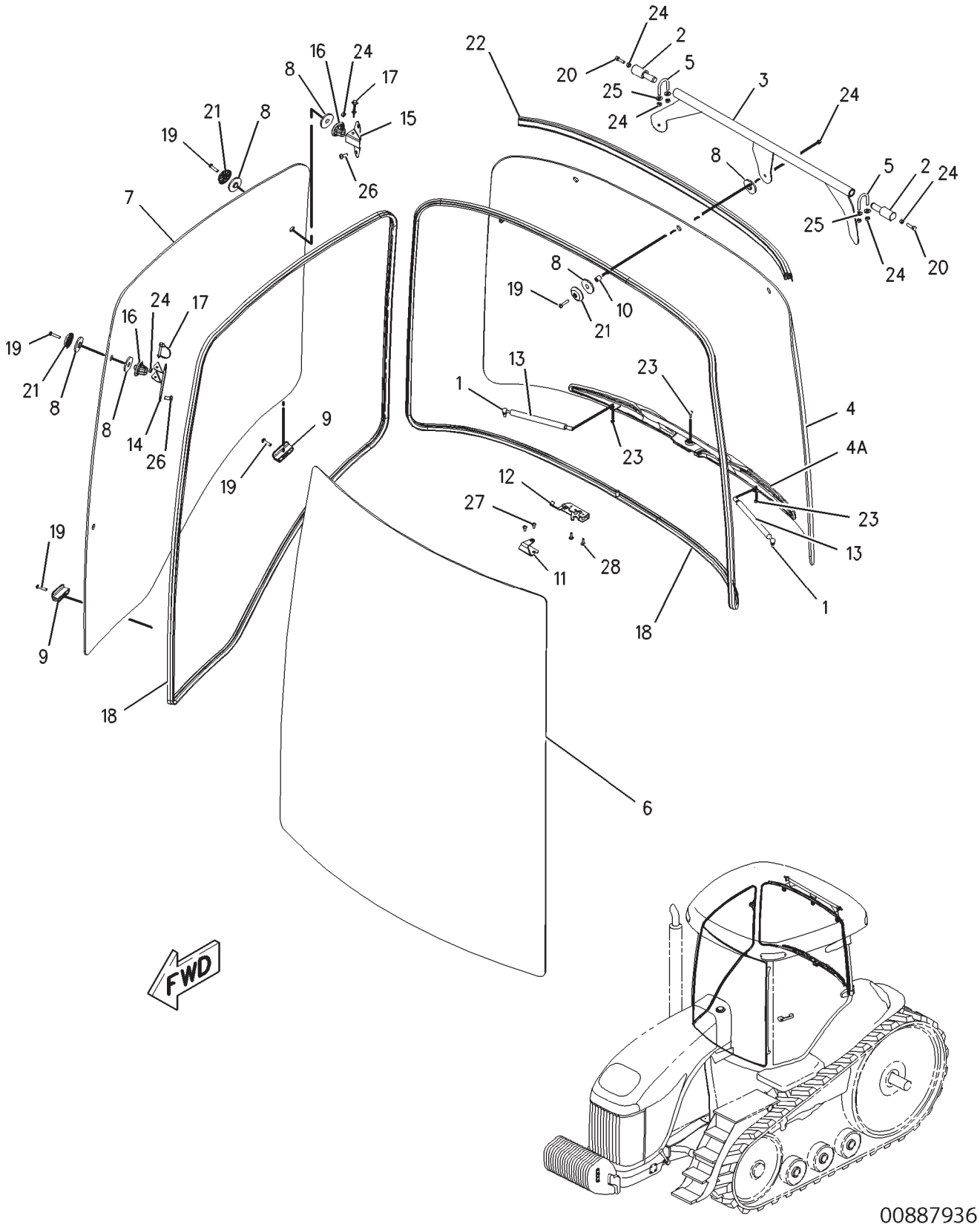

## GLASS GP-WINDSHIELD - 151-9995
EAME ONLY

| ITEM | NUMBER | QTY | DESCRIPTION |
|---|---|---|---|
| - | 151-9995 | -- | GLASS GP-WINDSHIELD [A] |
| 1 | CH8T-2444 | 4 | STUD-BALL |
| 2 | 151-8541 | 2 | PIN-HINGE |
| 3 | 151-8545 | 1 | PLATE AS-REAR HINGE |
| 4 | 151-9979 | 1 | GLASS AS-REAR |
| 4A | 169-6328 | 1 | SUPPORT AS |
| 5 | CH151-9989 | 2 | CLAMP |
| 6 | 501896D1 | 1 | GLASS-FRONT |
| 7 | 151-9991 | 1 | GLASS-RH |
| 8 | 400333X1 | 6 | WASHER (HINGE) |
| 9 | CH168-2309 | 2 | CLAMP-WINDOW (LWR) |
| 10 | CH169-6377 | 3 | BUSHING-WINDOW (HINGE) |
| 11 | 169-6399 | 1 | PLATE AS |
| | 400313X1 | 2 | NUT-WELD (M6X1 THD) |
| 12 | CH170-1445 | 1 | LATCH-REAR WINDOW |
| 13 | CH172-6862 | 2 | SPRING AS-GAS |
| 14 | 178-7953 | 2 | BRACKET |
| 15 | 178-7954 | 1 | BRACKET |
| 16 | CH178-7955 | 3 | BOSS |
| 17 | CH179-4217 | 3 | PIN |
| 18 | CH208-2404 | AR | SEAL-BULK (1010 CM) [B, E] |
| 19 | CH142-2304 | 8 | SCREW-BUTTON HEAD (M8X1.25X35MM) |
| 20 | CH160-8756 | 2 | BOLT-HEX HEAD (M8X1.25X30MM) |
| 21 | 400330X1 | 14 | WASHER (REAR HINGE) |
| 22 | 207-2036 | 1 | SEAL |
| 23 | 400300X1 | 2 | NUT (M6X1 THD) |
| 24 | 400340X1 | 12 | NUT (M8X1.25 THD) |
| 25 | 400599X1 | 4 | WASHER-HARD (8.8X20.5X2MM THK) |
| 26 | CH8C-8585 | 6 | BOLT-BUTTON HEAD (M10X1.5X20MM) |
| 27 | CH9X-2043 | 2 | SCREW-TRUSS HEAD (M6X1X14MM) |
| 28 | CH9X-2045 | 3 | SCREW-TRUSS HEAD (M6X1X20MM) |

[E] ORDER BY THE CENTIMETER
[B] USE AS REQUIRED

[A] PART OF 152-0002;152-0004 CAB GP

00887936
PR: t05i29k58b0546

## WIPER GP-WINDOW (BASIC) - 152-0422

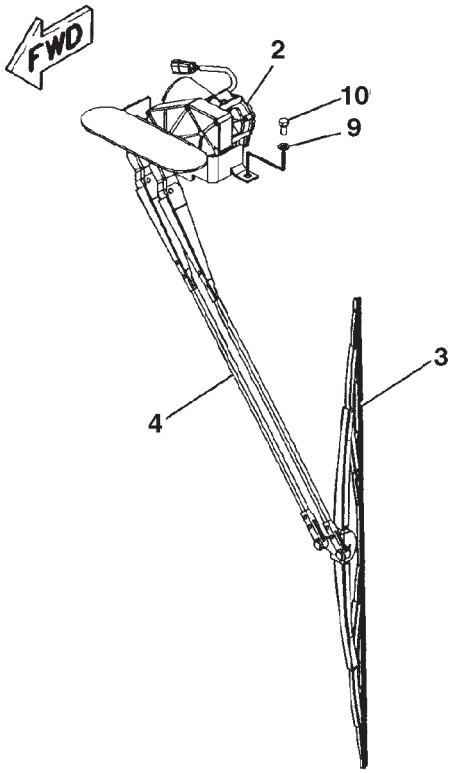


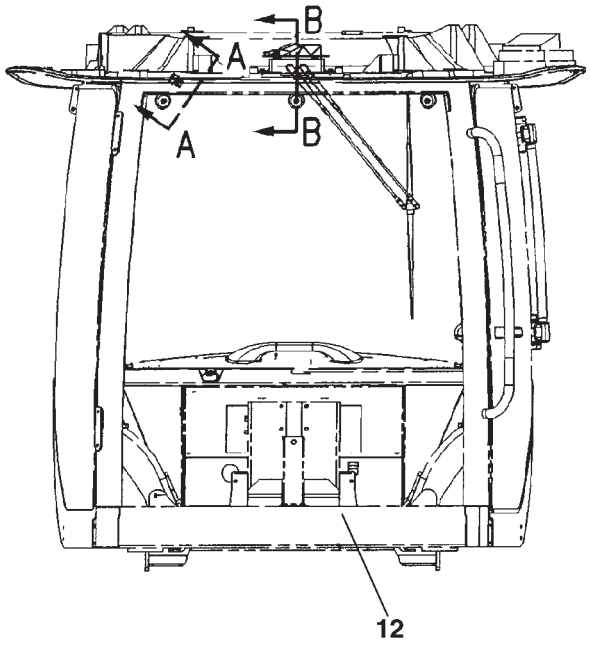


FRONT VIEW

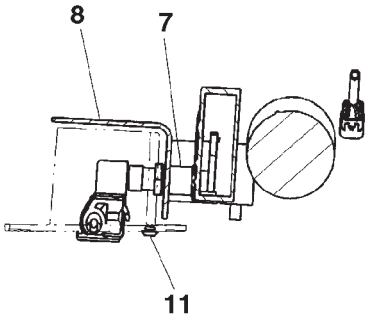


SECTION B-B

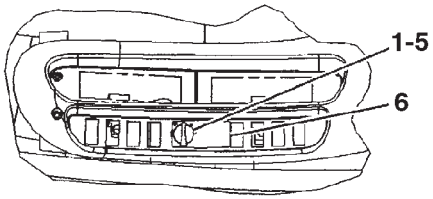


VIEW A-A

## WIPER GP-WINDOW (BASIC) - 152-0422

| ITEM | NUMBER | QTY | DESCRIPTION |
|---|---|---|---|
| - | 152-0422 | | WIPER GP-WINDOW (NOT SERVICED) |
| 1 | CH216-2628 | 1 | KNOB AS (FRONT WIPER & WASHER) |
| 2 | CH170-5696 | 1 | MOTOR GP-WINDOW WIPER (12 VOLT) |
| | 400340X1 | 2 | NUT |
| | CH3F-9556 | 2 | LOCKWASHER |
| | CH8T-8737 | 1 | PLUG |
| | CH186-3735 | 5 | PIN-CONNECTOR |
| | CH102-8805 | 1 | KIT, RECEPTACLE (INCLUDES RECEPTACLE ASM AND WEDGE) |
| 3 | 501688D1 | 1 | BLADE-WIPER |
| 4 | CH178-3888 | 1 | ARM ASM-WIPER |
| 5 | CH112-6174 | 1 | SWITCH ASM-ROTARY(24 VOLT)(FRONT WIPER) |
| | CH2H-3920 | 1 | LOCKWASHER |
| | CH6V-8369 | 1 | NUT (7/16-28) |
| | CH8T-8729 | 6 | PIN-CONNECTOR |
| | CH8T-8737 | 2 | PLUG-SEAL |
| | CH3E-3389 | 1 | WEDGE |
| | CH102-8806 | 1 | KIT-RECEPTACLE (8 PIN) (INCLUDES RECEPTACLE ASM AND WEDGE) |
| 6 | 501256D1 | 1 | FILM-INSTRUCTION (WIPER) |
| 7 | CH141-1762 | 2 | SPACER (20) |
| 8 | 169-6323 | 1 | BRACKET |
| 9 | 400287X1 | 2 | WASHER-HARD (11X21X2.5) |
| 10 | 400040X1 | 2 | BOLT (M10X1.5X20MM) |
| 11 | CH5P-7803 | 1 | BUTTON-PLUG |
| 12 | CH193-5914 | 2 | PLUG |

0874347A
PR: t05i29k58b0547

## WIPER GP (DELUXE) - 196-3968

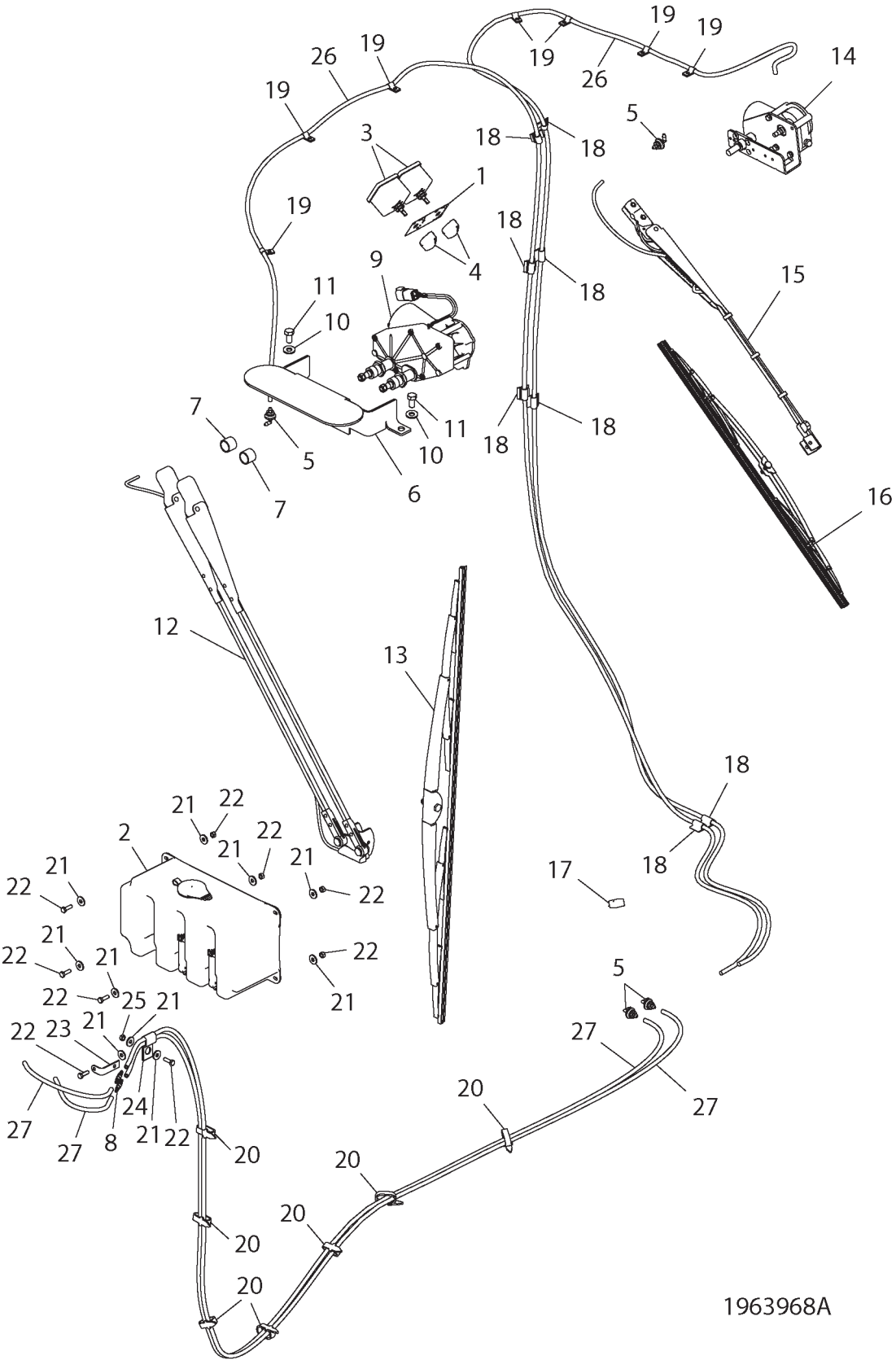

## WIPER GP (DELUXE) - 196-3968

| ITEM | NUMBER | QTY | DESCRIPTION |
|---|---|---|---|
| - | 502905D1 | -- | WIPER GP (DELUXE) (NOT SERVICED) |
| - | 196-3968 | -- | WIPER GP (DELUXE) [A] (NOT SERVICED) |
| 1 | 501406D1 | 1 | FILM-INST |
| 2 | CH208-9635 | 1 | BOTTLE GP-WINDSHIELD |
| | CH209-4481 | 2 | PUMP (WIPER & WASHER) |
| | CH209-4482 | 1 | CAP (WINDOW WASHER TANK) |
| 3 | CH135-9967 | 2 | SWITCH AS-WIPER INTMT 12V |
| | | | (SEE BREAKDOWN FOR COMPONENTS) |
| 4 | CH216-2628 | 2 | KNOB AS.-CONTROL |
| 5 | CH8T-5400 | 4 | CONNECTOR AS.-90 DEG |
| 6 | 169-6323 | 1 | BRACKET-WIPER MOUNT |
| 7 | CH141-1762 | 2 | SPACER-25.4ODX21.2IDX20 STL |
| 8 | 501120D1 | 2 | VALVE AS. |
| 9 | CH170-5696 | 1 | MOTOR GP-COMPACT DRIVE |
| | 400340X1 | 2 | NUT |
| | CH3F-9556 | 2 | LOCKWASHER |
| | CH8T-8737 | 1 | PLUG |
| | CH186-3735 | 5 | PIN-CONNECTOR |
| | CH102-8805 | 1 | KIT, RECEPTACLE |
| | | | (INCLUDES RECEPTACLE ASM AND WEDGE) |
| 10 | 400287X1 | 2 | WASHER-HARD 11IDX21ODX2.5 ZND1 |
| 11 | 400040X1 | 2 | BOLT-M10X1.5X20 ZNDI HHD 10.9 |
| 12 | 501565D1 | 1 | ARM AS-WIPER (WET) |
| | 501564D1 | 1 | NOZZLE AS-WASHER |
| | 501566D1 | 1 | HOSE |
| 13 | 501688D1 | 1 | BLADE AS. -WIPER |
| 14 | CH166-4596 | 1 | MOTOR GP-COMPACT DRIVE 12V |
| | CH102-8805 | 1 | KIT-RECEPTACLE (6 PIN) |
| | CH8T-8737 | 1 | PLUG-SEAL |
| | 400561X1 | 5 | PIN-CONNECTOR |
| 15 | 501604D1 | 1 | ARM AS. -WIPER |
| 16 | CH134-1935 | 1 | BLADE-WIPER |
| 17 | CH146-9439 | 1 | RELAY AS. |
| 18 | 400282X1 | 8 | CLIP |
| 19 | CH9N-2061 | 7 | CLIP-LOOP 60.3 ID |
| 20 | 400837X1 | 7 | STRAP-CABLE (PLASTIC) |
| 21 | CH5P-4115 | 10 | WASHER-7.2IDX19ODX2MM |
| 22 | 400221X1 | 5 | BOLT-M6X1X20MM ZNDI HHD 10.9 |
| 23 | 228-2777 | 1 | BRACKET |
| 24 | CH7S-4244 | 1 | CLIP 20DEGX9.52DIAX25.4 |
| 25 | 400300X1 | 5 | NUT M6X1 |
| 26 | WR518622 | AR | TUBING AIRLINE 0.25OD POLTHN (27FT) |
| 27 | WR514360 | AR | HOSE WINDSHIELD WASHER 0.18ID (1.64FT) |
| 27 | WR514360 | AR | HOSE WINDSHIELD WASHER 0.18ID (19.36FT) |

[A] PART OF 502905D1 WIPER GP-DLX;
152-0012; 222-4146 CAB AR

1963968A
PR: t05i29k58b0548

## KIT-WIPER (RH) - 162-4103

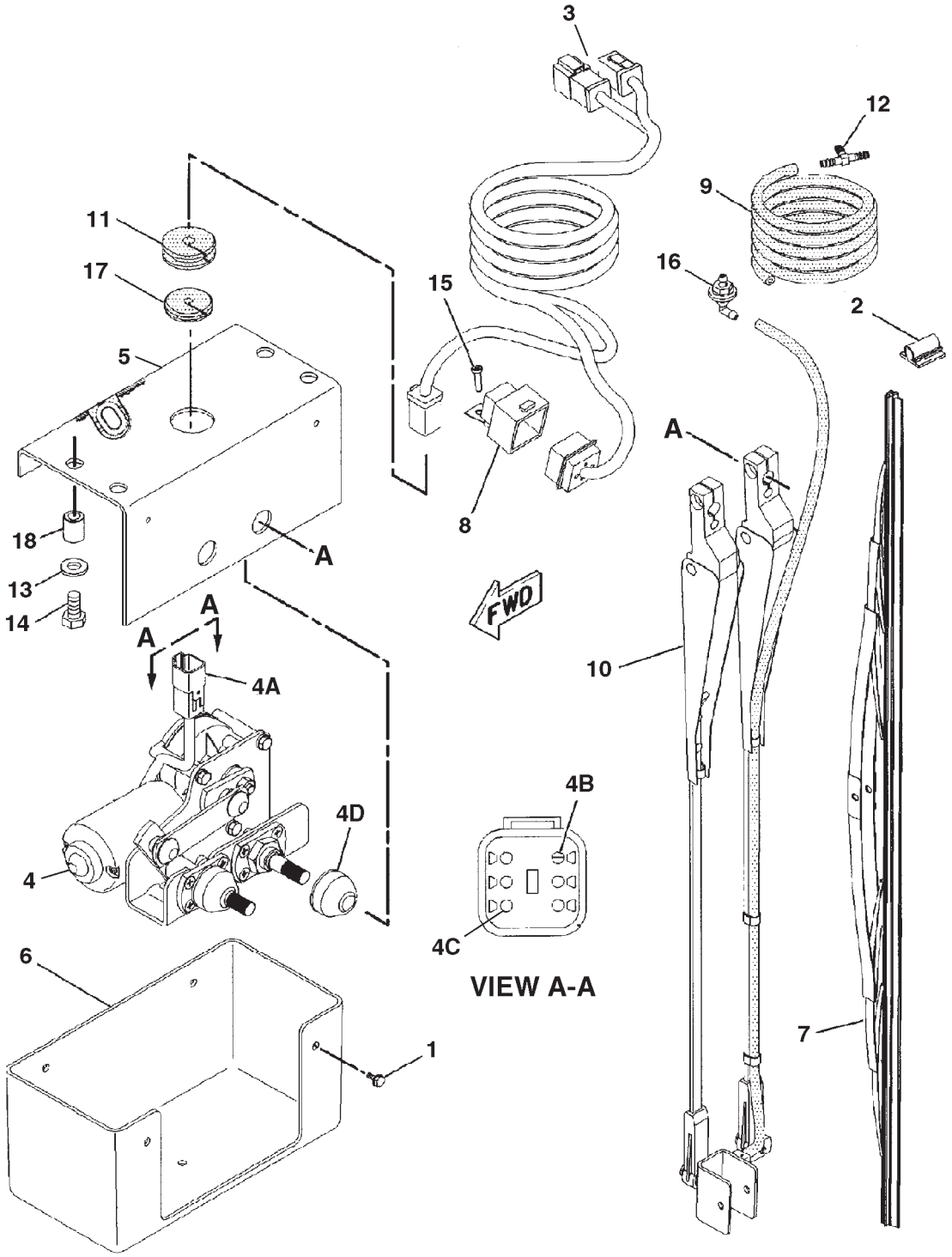

## KIT-WIPER (RH) - 162-4103

| ITEM | NUMBER | QTY | DESCRIPTION |
|---|---|---|---|
| - | 162-4103 | -- | WIPER GP-WINDOW |
| 1 | CH030-9613 | 4 | SCREW-FORMING (10-24X0.37 IN) |
| 2 | 400282X1 | 2 | CLIP |
| 3 | 167-1258 | 1 | HARNESS (SIDE WIPER) |
| 4 | CH211-4837 | 1 | MOTOR GP-COMPACT DRIVE (RH WIPER) (INCLS 4A-4D) |
| 4A | CH102-8805 | 1 | KIT-RECEPTACLE (6 PIN) (INCLS RECEPTACLE AS & WEDGE) |
| 4B | CH8T-8737 | 1 | PLUG-SEAL |
| 4C | 400561X1 | 5 | PIN-CONNECTOR |
| 4D | CH206-5823 | 2 | CAP |
| 5 | 174-7872 | 1 | BRACKET |
| 6 | 175-0198 | 1 | COVER |
| 7 | CH189-8610 | 1 | BLADE-WIPER (RH WINDOW) |
| 8 | 400292X1 | 1 | RELAY ASM (12 VOLT) (RH WINDOW WIPER) |
| 9 | WR514360 | -- | HOSE (78 CM) |
| 10 | 501603D1 | 1 | ARM |
| 11 | CH6H-4006 | 1 | GROMMET |
| 12 | CH6K-9632 | 1 | TEE-HOSE (50OD BARB) |
| 13 | 400287X1 | 4 | WASHER-HARD (11X21X2.5) |
| 14 | 400040X1 | 4 | BOLT (M10X1.5X20MM) |
| 15 | CH8T-9501 | 1 | SCREW (10-16X.75 IN) |
| 16 | CH8T-5400 | 1 | CONNECTOR |
| 17 | 400114X1 | 1 | GROMMET |
| 18 | CH179-4209 | 4 | INSERT |

0878092A
PR: t05i29k58b0549

**FILM GP-MT835 - 500744D1**

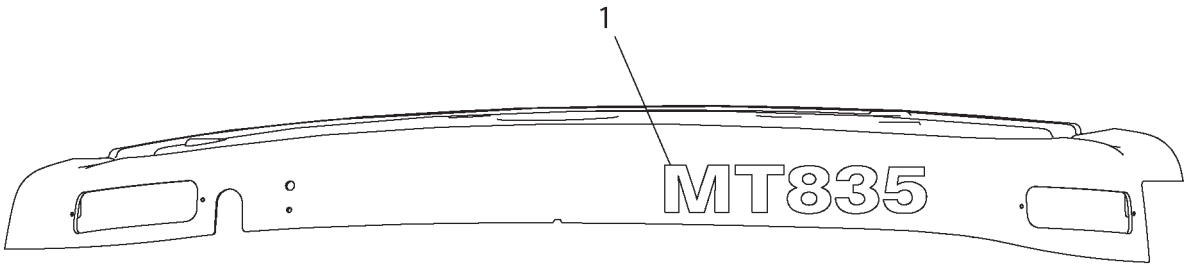


LEFT SIDE VIEW

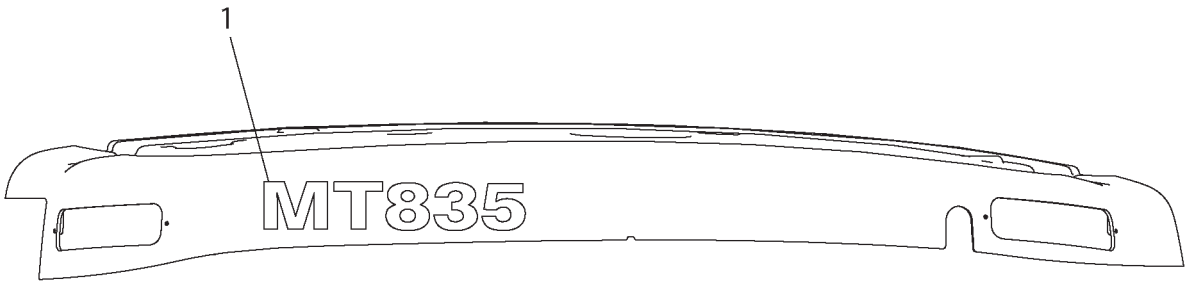


RIGHT SIDE VIEW

500744DA

| ITEM | NUMBER | QTY | DESCRIPTION |
|---|---|---|---|
| - | 500744D1 | -- | FILM GP (MT835) [A] |
| 1 | 500730D1 | 2 | FILM (MT835) |

[A] PART OF 156-5581; 179-2193
BASIC UNIT AR

500744DA
PR: t05i29k58b0550

**FILM GP-MT845 - 500745D1**

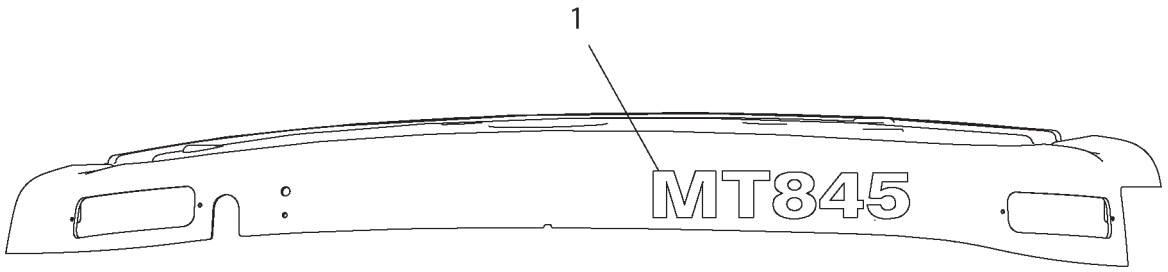


LEFT SIDE VIEW

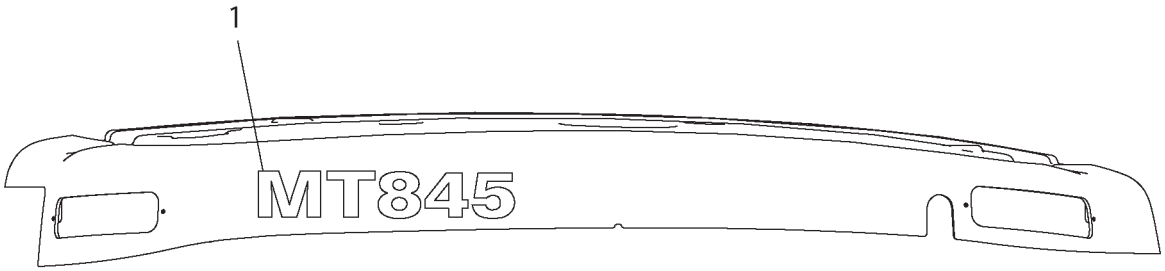


RIGHT SIDE VIEW

500745DA

| ITEM | NUMBER | QTY | DESCRIPTION |
|---|---|---|---|
| - | 500745D1 | -- | FILM GP (MT845) [A] |
| 1 | 500731D1 | 2 | FILM (MT845) |

[A] PART OF 156-5582; 179-2194
BASIC UNIT AR

500745DA
PR: t05i29k58b0551

**FILM GP-MT855 - 500746D1**

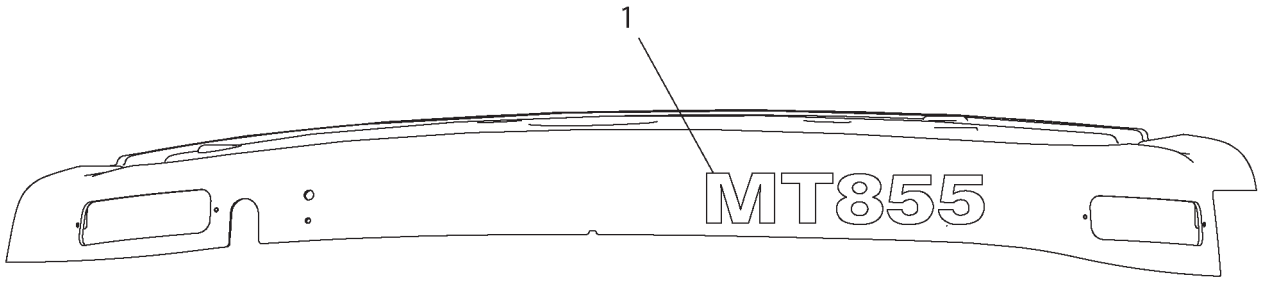


LEFT SIDE VIEW

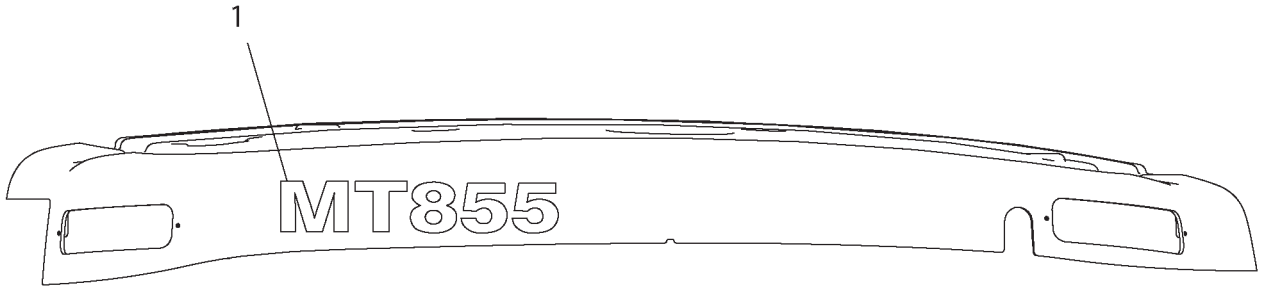


RIGHT SIDE VIEW

500746DA

| ITEM | NUMBER | QTY | DESCRIPTION |
|---|---|---|---|
| - | 500746D1 | -- | FILM GP (MT855) [A] |
| 1 | 500732D1 | 2 | FILM (MT855) |

[A] PART OF 156-5583; 179-2195
BASIC UNIT AR

500746DA
PR: t05i29k58b0552

**FILM GP-MT865 - 500747D1**

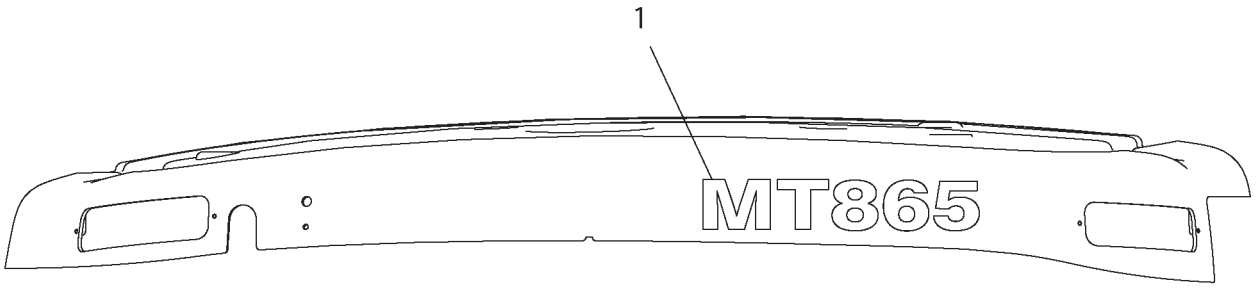


LEFT SIDE VIEW

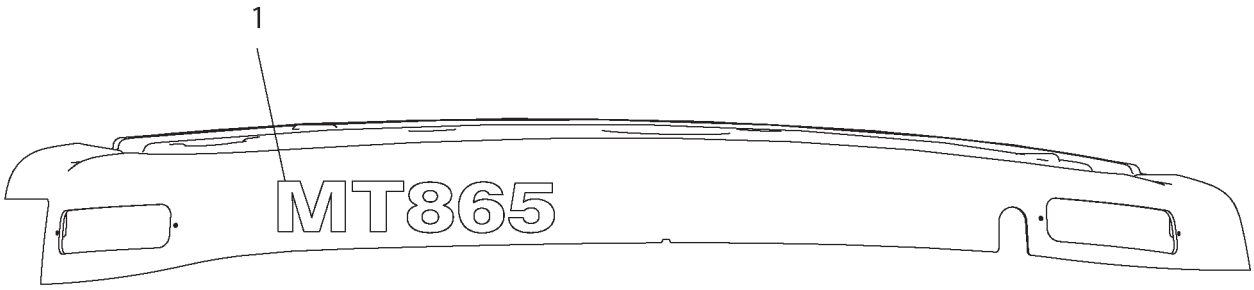


RIGHT SIDE VIEW

500747DA

| ITEM | NUMBER | QTY | DESCRIPTION |
|---|---|---|---|
| - | 500747D1 | -- | FILM GP (MT865) [A] |
| 1 | 500733D1 | 2 | FILM (MT865) |

[A] PART OF 156-5584; 179-2196
BASIC UNIT AR

500747DA
PR: t05i29k58b0553

## WARNING GP-SLOW MOVING VEHICLE
**172-8886**

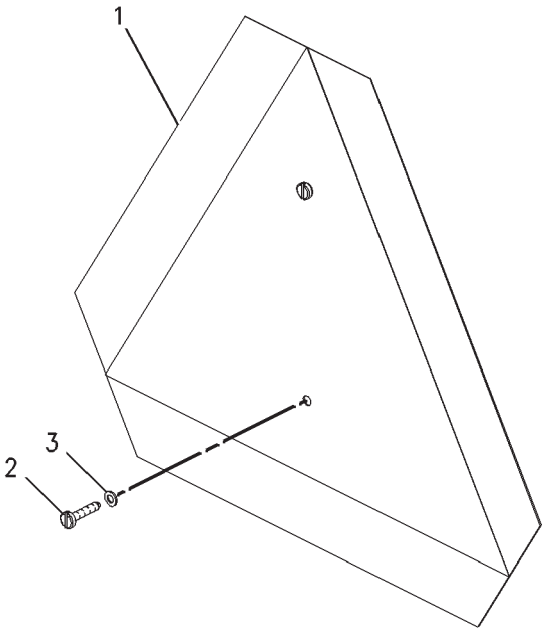


DETAILS OF AREA A

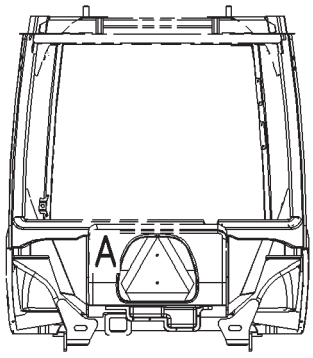


REAR VIEW

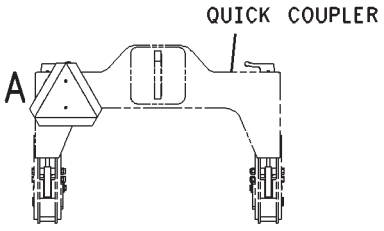


REAR VIEW
(ALTERNATE PLACEMENT)

## WARNING GP-SLOW MOVING VEHICLE
172-8886

| ITEM | NUMBER | QTY | DESCRIPTION |
|---|---|---|---|
| - | 188-2618 | -- | COMPLETING AR-ENGLISH (EAME) (NOT SERVICED) |
| - | 172-8886 | -- | WARNING GP-SLOW MOVING VEHICLE [A] (NOT SERVICED) |
| 1 | 400129X2 | 1 | PLATE ASM-WARNING (SLOW MOVING VEHICLE) |
| 2 | CH095-0741 | 2 | SCREW-MACHINE (M6X1THD) (W/Q-COUPLER) |
| | CH216-8275 | 2 | SCREW-PAN HD (12-14X1 IN)(W/O Q-COUPLER) |
| 3 | 400310X1 | 2 | WASHER (6.6X12X2) |

[A] PART OF 188-2618 COMPLETING AR

00877873
PR: t05i29k58b0554

**FILM GP-CAT - 500735D1**

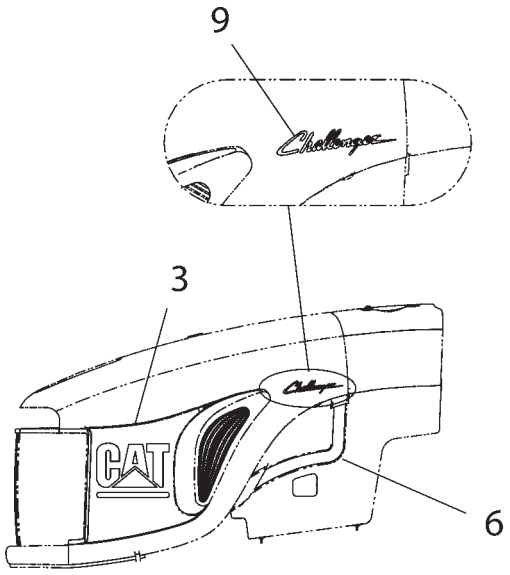


LEFT SIDE OF HOOD

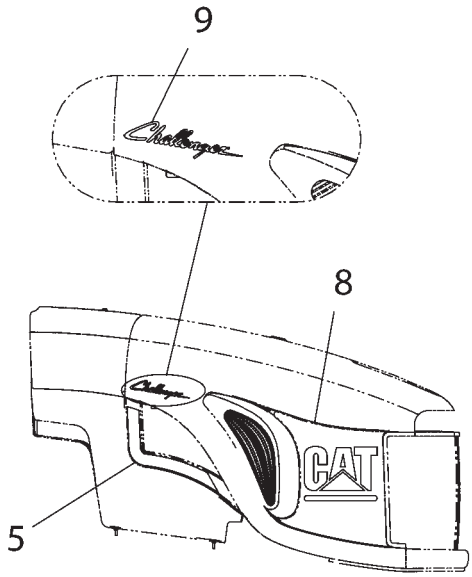


RIGHT SIDE OF HOOD

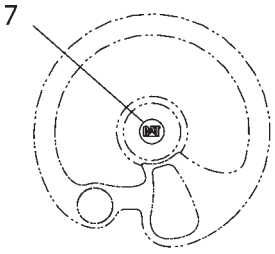


STEERING WHEEL

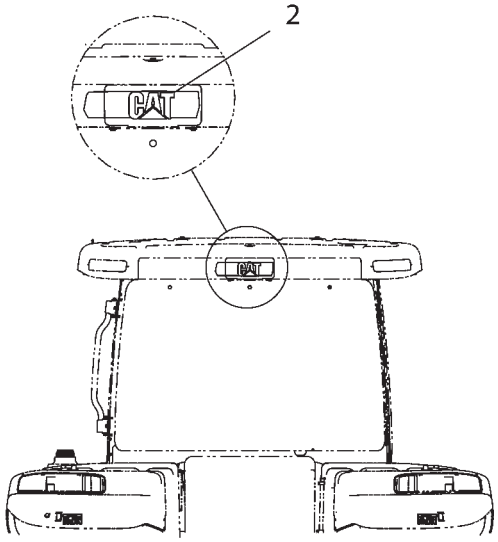


REAR VIEW OF CAB

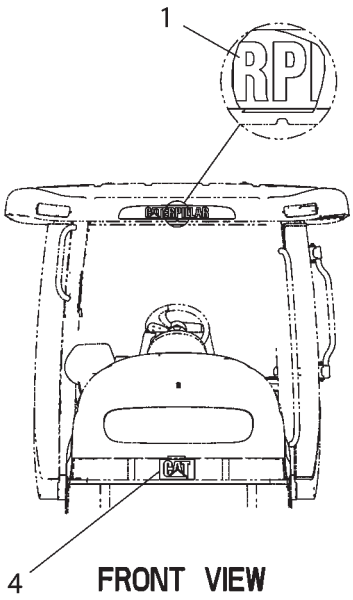


FRONT VIEW

500735DB

| ITEM | NUMBER | QTY | DESCRIPTION |
|---|---|---|---|
| - | 500735D1 | -- | FILM GP-CAT |
| 1 | 501480D1 | 1 | FILM-CATERPILLAR |
| 2 | 183-9281 | 1 | FILM-CAT |
| 3 | 501482D1 | 1 | FILM-HOOD (LEFT) |
| 4 | 201-5096 | 1 | EMBLEM AS-CAT |
| 5 | 210-4357 | 1 | FILM-SIDE PANEL |
| 6 | 210-4358 | 1 | FILM-SIDE PANEL |
| 7 | 195-5221 | 1 | FILM-CAT WHEEL LOGO |
| 8 | 501483D1 | 1 | FILM-HOOD (RIGHT) |
| 9 | 500749D1 | 2 | FILM-CHALLENGER |

500735DB
PR: t05i29k58b0555

**FILM GP-CHALLENGER - 500736D1**

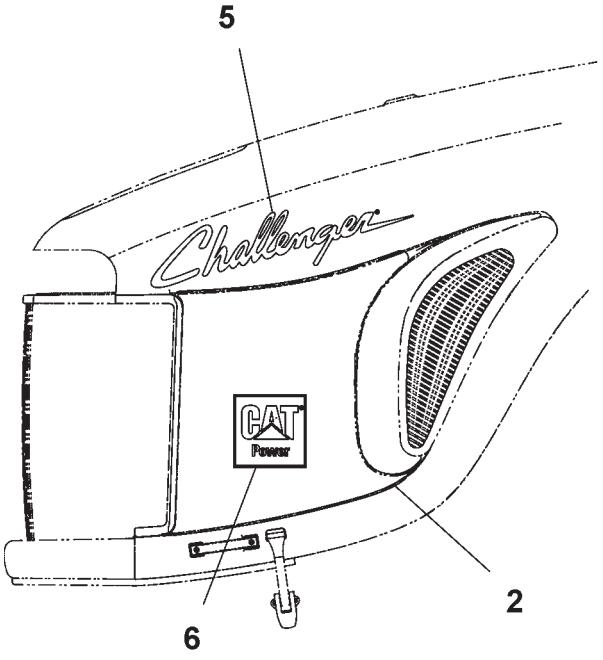


LEFT SIDE VIEW

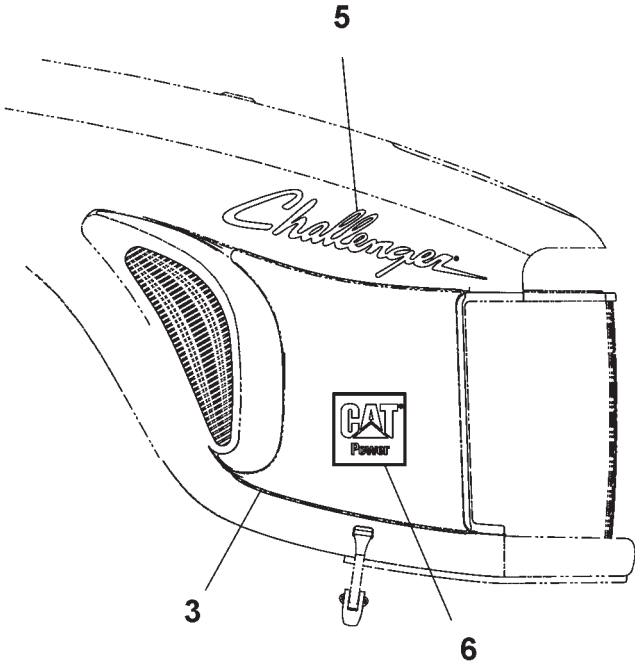


RIGHT SIDE VIEW

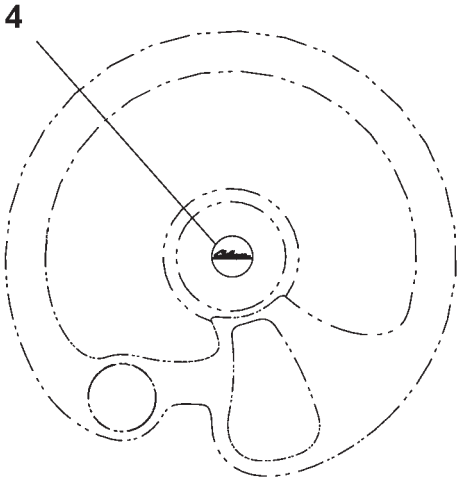


STEERING WHEEL

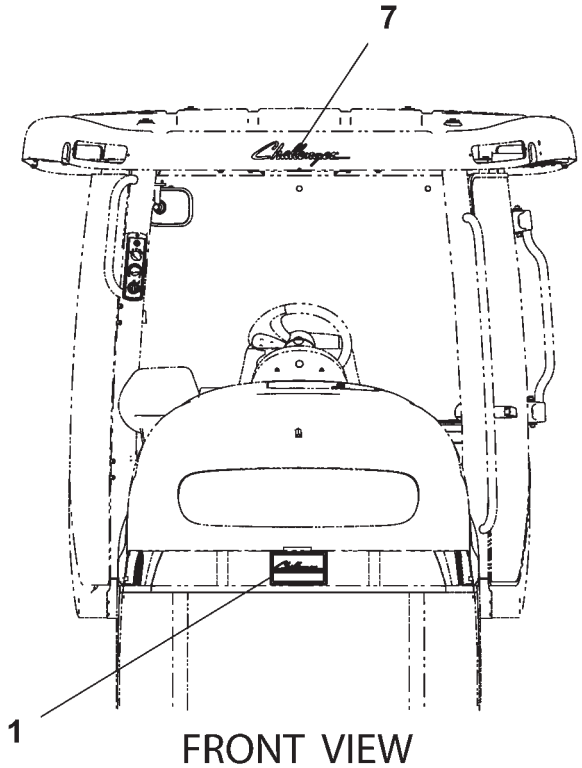


FRONT VIEW

500736DB

## FILM GP-CHALLENGER - 500736D1

| ITEM | NUMBER | QTY | DESCRIPTION |
|---|---|---|---|
| - | 500736D1 | -- | FILM GP-CAT |
| 1 | 500729D1 | 1 | EMBLEM AS-CHALLENGER |
| 2 | 500737D1 | 1 | FILM-HOOD (LH) |
| 3 | 500738D1 | 1 | FILM-HOOD (RH) |
| 4 | 500719D1 | 1 | FILM-CHALLENGER |
| 5 | 500734D1 | 2 | FILM-CHALLENGER |
| 6 | 500748D2 | 2 | FILM-CAT POWER |
| 7 | 500749D1 | 1 | FILM-CHALLENGER |

500736DB
PR: t05i29k58b0556

## FILM GP-PAINT & - 179-2261

**EAME ONLY**
**(PAGE 1 OF 9)**

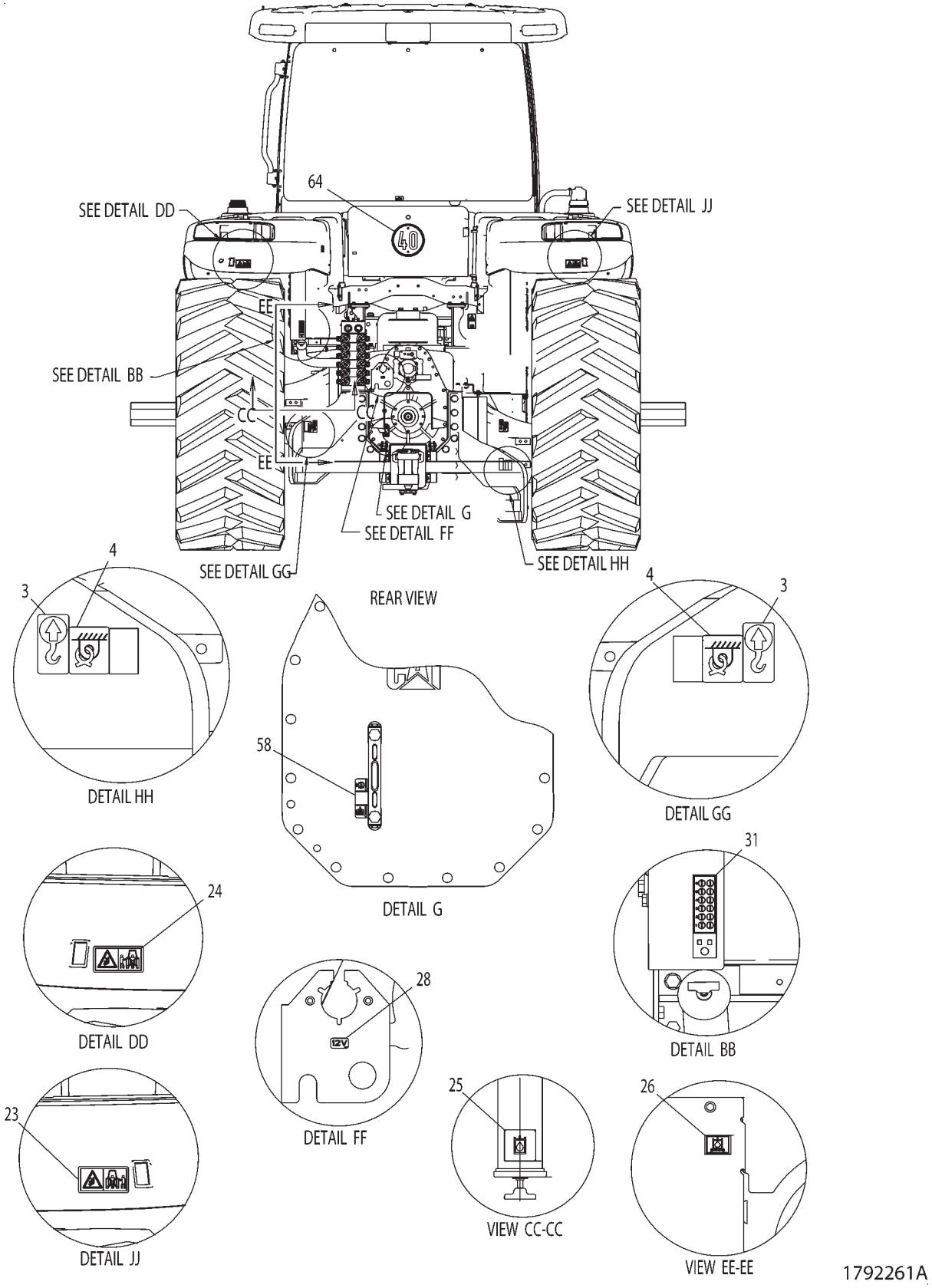

## FILM GP-PAINT & - 179-2261

**EAME ONLY**
**(PAGE 1 OF 9)**

| ITEM | NUMBER | QTY | DESCRIPTION |
|---|---|---|---|
| - | 179-2261 | -- | FILM GP-PLATE & FILM |
| 3 | 500371D1 | 4 | FILM-LIFT |
| 4 | 500372D1 | 4 | FILM-TIE-DOWN |
| - | 501501D1 | 1 | DECAL SHEET-CAB (INCLUDES * ITEMS) |
| - | 501259D1 | 1 | FILM-NOTICE * ** |
| - | 501281D1 | 1 | FILM-MIRRORS * |
| - | 501297D1 | 1 | FILM-WIRE ACCESS * |
| - | 501298D1 | 1 | FILM-WARNING * |
| - | 501265D1 | 1 | FILM-NOTICE * |
| - | 501282D1 | 1 | FILM-ROAD SPEED * |
| - | 501302D1 | 1 | FILM-BRAKE * |
| - | 501274D1 | 2 | FILM-NOTICE * |
| - | 501273D1 | 1 | FILM-NOTICE * |
| - | 501406D1 | 1 | FILM-WIPER DELUXE * |
| - | 501272D1 | 2 | FILM-ATERNATE EXIT * |
| - | 501286D1 | 2 | FILM-INSTALLATION DATE * |
| - | 501503D1 | 1 | DECAL SHEET-VEHICLE (SEE BREAKDOWN) |
| - | 501505D1 | 1 | DECAL SHEET-VEHICLE (INCLUDES ** ITEMS |
| - | 501257D1 | 2 | FILM-NOTICE ** |
| - | 501260D1 | 2 | FILM-NOTICE ** |
| - | 501263D1 | 2 | FILM-NOTICE ** |
| - | 501254D1 | 2 | FILM-WARNING ** |
| - | 501262D1 | 4 | FILM-NOTICE ** |
| - | 501303D1 | 1 | FILM-COOLANT (COLD FILL) ** |
| - | 501277D1 | 1 | FILM-BATTERY (INST) ** |
| - | 501291D1 | 1 | FILM-BATTERY ** |
| - | 501294D1 | 2 | FILM-WARNING (HITCH) ** |
| - | 501264D1 | 2 | FILM-NOTICE ** |
| - | 501290D1 | 2 | FILM-CRUSH/SEVER ** |
| - | 501292D1 | 1 | FILM-WARNING (OVERFLOW) ** |
| - | 501259D1 | 1 | FILM-NOTICE * ** |
| - | 501293D1 | 2 | FILM-WARNING ** |
| - | 501306D1 | 1 | FILM-AIR CLEANER ** |
| - | 501287D1 | 1 | FILM-WARNING ** |
| - | 501261D1 | 1 | FILM-NOTICE ** |
| - | 501301D1 | 2 | FILM-TIGHTENING (BOLT) ** |
| - | 501300D1 | 2 | FILM-TIGHTENING (BOLT) ** |
| - | 501299D1 | 4 | FILM-TIGHTENING (BOLT) ** |
| 23 | 501295D1 | 1 | FILM-HITCH (RIGHT) ** |
| 24 | 501296D1 | 1 | FILM-HITCH (LEFT) ** |
| 25 | 501104D1 | 1 | FILM-HYDRAULIC OIL |
| 26 | 501106D1 | 1 | FILM-IDENT (HYD OIL FILTER) |
| 28 | 501253D1 | 3 | FILM-IDENT (12V) * ** |
| 31 | 501267D1 | 1 | FILM-HYD COUPLERS (INST) ** |
| 58 | 501307D1 | 1 | FILM-XMSN OIL FILL |
| 64 | 207-8227 | 1 | WARNING GP-SPEED |

PART OF 501811D1 BASE COMMON AR

## FILM GP-PAINT & - 179-2261

**EAME ONLY**
**(PAGE 2 OF 9)**

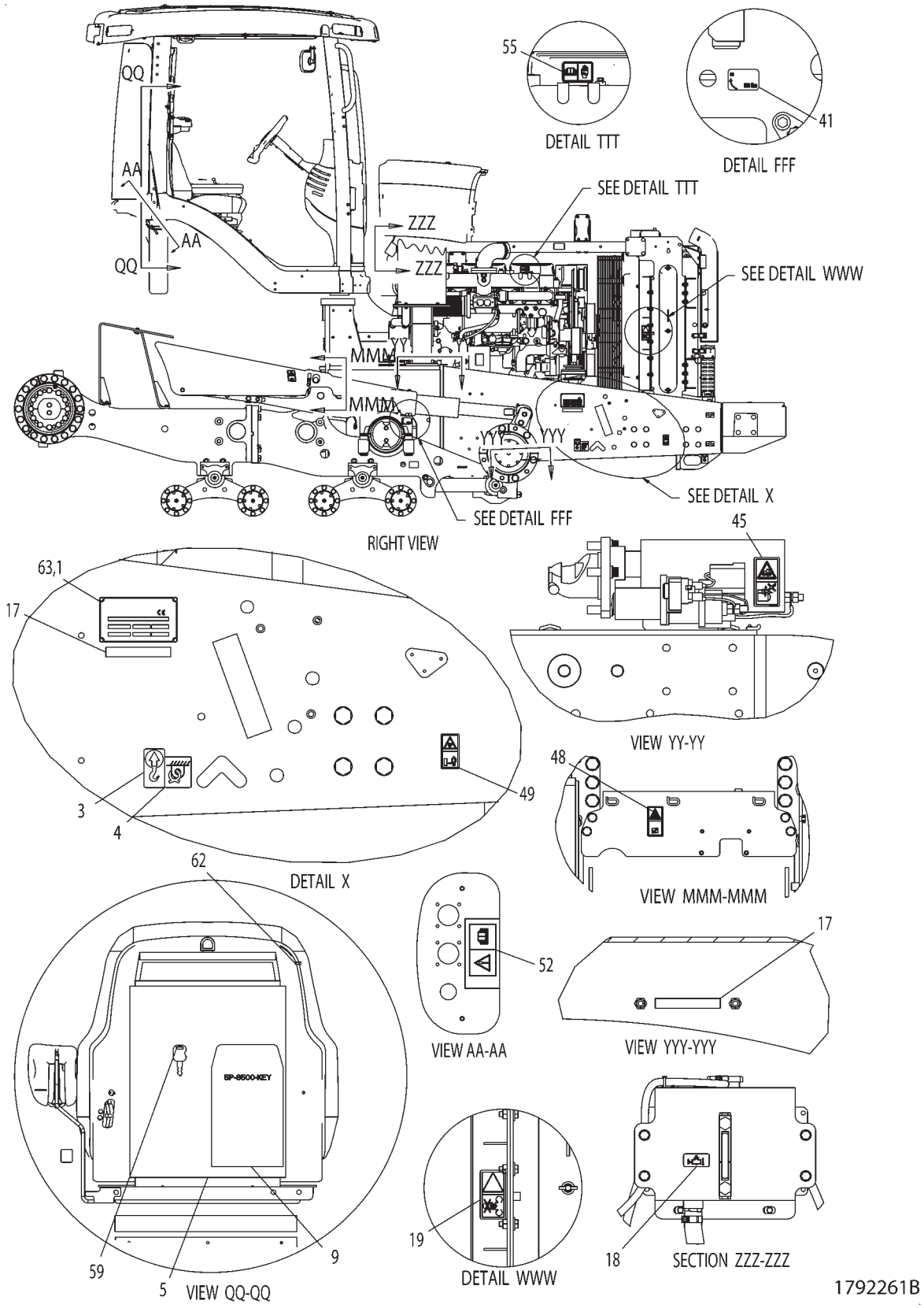

## FILM GP-PAINT & - 179-2261

**EAME ONLY**
**(PAGE 2 OF 9)**

| ITEM | NUMBER | QTY | DESCRIPTION |
|---|---|---|---|
| - | 179-2261 | -- | FILM GP-PLATE & FILM |
| 1 | 222-2280 | 1 | PLATE-PIN NO. |
| 3 | 500371D1 | 4 | FILM-LIFT |
| 4 | 500372D1 | 4 | FILM-TIE-DOWN |
| 5 | CH7F-3400 | 1 | BAG-POLYETHYLENE 305 X 380 |
| - | 501501D1 | 1 | DECAL SHEET-CAB (INCLUDES * ITEMS) |
| - | 501259D1 | 1 | FILM-NOTICE * ** |
| - | 501281D1 | 1 | FILM-MIRRORS * |
| - | 501297D1 | 1 | FILM-WIRE ACCESS * |
| - | 501298D1 | 1 | FILM-WARNING * |
| - | 501265D1 | 1 | FILM-NOTICE * |
| - | 501282D1 | 1 | FILM-ROAD SPEED * |
| - | 501253D1 | 3 | FILM-IDENT (12V) * ** |
| - | 501302D1 | 1 | FILM-BRAKE * |
| - | 501273D1 | 1 | FILM-NOTICE * |
| - | 501406D1 | 1 | FILM-WIPER DELUXE * |
| - | 501272D1 | 2 | FILM-ATERNATE EXIT * |
| - | 501286D1 | 2 | FILM-INSTALLATION DATE * |
| - | 501503D1 | 1 | DECAL SHEET-VEHICLE (SEE BREAKDOWN) |
| - | 501505D1 | 1 | DECAL SHEET-VEHICLE (INCLUDES ** ITEMS |
| - | 501257D1 | 2 | FILM-NOTICE ** |
| - | 501260D1 | 2 | FILM-NOTICE ** |
| - | 501254D1 | 2 | FILM-WARNING ** |
| - | 501296D1 | 1 | FILM-HITCH (LEFT) ** |
| - | 501253D1 | 3 | FILM-IDENT (12V) * ** |
| - | 501277D1 | 1 | FILM-BATTERY (INST) ** |
| - | 501291D1 | 1 | FILM-BATTERY ** |
| - | 501295D1 | 1 | FILM-HITCH (RIGHT) ** |
| - | 501294D1 | 2 | FILM-WARNING (HITCH) ** |
| - | 501264D1 | 2 | FILM-NOTICE ** |
| - | 501292D1 | 1 | FILM-WARNING (OVERFLOW) ** |
| - | 501259D1 | 1 | FILM-NOTICE * ** |
| - | 501306D1 | 1 | FILM-AIR CLEANER ** |
| - | 501287D1 | 1 | FILM-WARNING ** |
| - | 501261D1 | 1 | FILM-NOTICE ** |
| - | 501267D1 | 1 | FILM-HYD COUPLERS (INST) ** |
| - | 501301D1 | 2 | FILM-TIGHTENING (BOLT) ** |
| - | 501299D1 | 4 | FILM-TIGHTENING (BOLT) ** |
| 9 | CH6V-2405 | 1 | ENVELOPE-KEY |
| 17 | 501288D1 | 2 | FILM-CLEAR COVER |
| 18 | 501303D1 | 1 | FILM-COOLANT (COLD FILL) ** |
| 19 | 501290D1 | 2 | FILM-CRUSH/SEVER ** |
| 41 | 501300D1 | 2 | FILM-TIGHTENING (BOLT) ** |
| 45 | 501258D1 | 2 | FILM-NOTICE |
| 48 | 501262D1 | 4 | FILM-NOTICE ** |
| 49 | 501263D1 | 2 | FILM-NOTICE ** |
| 52 | 501274D1 | 2 | FILM-NOTICE * |
| 55 | 501293D1 | 2 | FILM-WARNING ** |
| 59 | CH5P-8500 | 2 | KEY |
| 62 | CH5P-7958 | 1 | SLEEVE-CABLE SPLICE 2.38 OD |
| 63 | CH168-8389 | 4 | TACK-FASTENER (METAL) |

PART OF 501811D1 BASE COMMON AR

## FILM GP-PAINT & - 179-2261

**EAME ONLY**
**(PAGE 3 OF 9)**

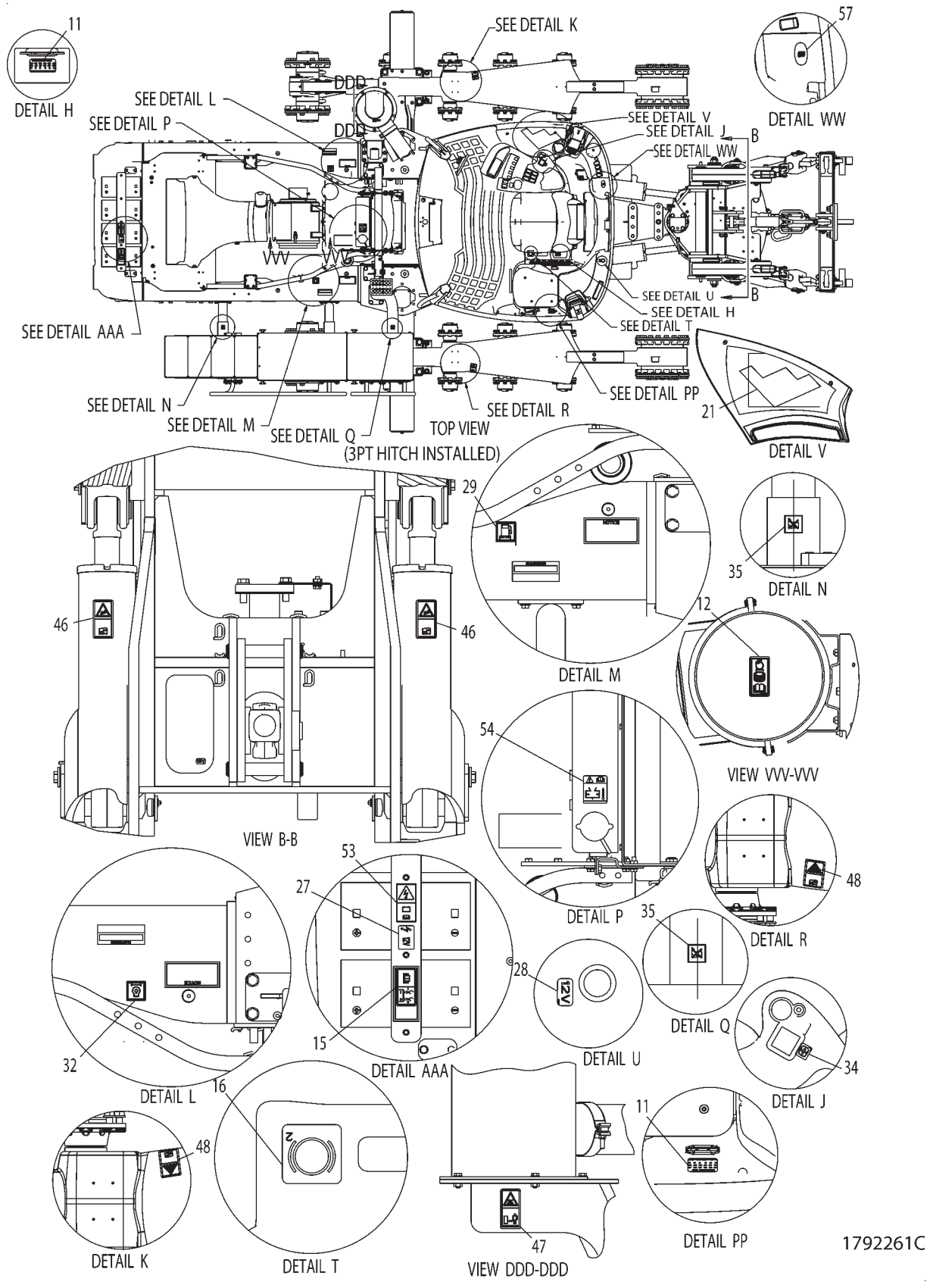

## FILM GP-PAINT & - 179-2261

**EAME ONLY**
**(PAGE 3 OF 9)**

| ITEM | NUMBER | QTY | DESCRIPTION |
|---|---|---|---|
| - | 179-2261 | -- | FILM GP-PLATE & FILM |
| - | 501501D1 | 1 | DECAL SHEET-CAB (INCLUDES * ITEMS) |
| - | 501259D1 | 1 | FILM-NOTICE * ** |
| - | 501298D1 | 1 | FILM-WARNING * |
| - | 501265D1 | 1 | FILM-NOTICE * |
| - | 501282D1 | 1 | FILM-ROAD SPEED * |
| - | 501253D1 | 3 | FILM-IDENT (12V) * ** |
| - | 501274D1 | 2 | FILM-NOTICE * |
| - | 501273D1 | 1 | FILM-NOTICE * |
| - | 501406D1 | 1 | FILM-WIPER DELUXE * |
| - | 501272D1 | 2 | FILM-ATERNATE EXIT * |
| - | 501503D1 | 1 | DECAL SHEET-VEHICLE (SEE BREAKDOWN) |
| - | 501505D1 | 1 | DECAL SHEET-VEHICLE (INCLUDES ** ITEMS |
| - | 501257D1 | 2 | FILM-NOTICE ** |
| - | 501263D1 | 2 | FILM-NOTICE ** |
| - | 501254D1 | 2 | FILM-WARNING ** |
| - | 501296D1 | 1 | FILM-HITCH (LEFT) ** |
| - | 501262D1 | 4 | FILM-NOTICE ** |
| - | 501303D1 | 1 | FILM-COOLANT (COLD FILL) ** |
| - | 501277D1 | 1 | FILM-BATTERY (INST) ** |
| - | 501295D1 | 1 | FILM-HITCH (RIGHT) ** |
| - | 501294D1 | 2 | FILM-WARNING (HITCH) ** |
| - | 501264D1 | 2 | FILM-NOTICE ** |
| - | 501290D1 | 2 | FILM-CRUSH/SEVER ** |
| - | 501259D1 | 1 | FILM-NOTICE * ** |
| - | 501293D1 | 2 | FILM-WARNING ** |
| - | 501267D1 | 1 | FILM-HYD COUPLERS (INST) ** |
| - | 501301D1 | 2 | FILM-TIGHTENING (BOLT) ** |
| - | 501300D1 | 2 | FILM-TIGHTENING (BOLT) ** |
| - | 501299D1 | 4 | FILM-TIGHTENING (BOLT) ** |
| 11 | 501286D1 | 2 | FILM-INSTALLATION DATE * |
| 12 | 501306D1 | 1 | FILM-AIR CLEANER ** |
| 15 | 501291D1 | 1 | FILM-BATTERY ** |
| 16 | 501302D1 | 1 | FILM-BRAKE * |
| 21 | 501271D1 | 1 | FILM-FUSE PANEL |
| 27 | 501252D1 | 1 | FILM-IDENT (12V) |
| 28 | 501253D1 | 3 | FILM-IDENT (12V) * ** |
| 29 | 501103D1 | 1 | FILM-INST (FUEL FILTER) |
| 32 | 501276D1 | 1 | FILM-ENGINE OIL FILTER(INST) |
| 34 | 501281D1 | 1 | FILM-MIRRORS * |
| 35 | 501251D1 | 2 | FILM-NO STEP |
| 46 | 501260D1 | 2 | FILM-NOTICE ** |
| 47 | 501261D1 | 1 | FILM-NOTICE ** |
| 48 | 501262D1 | 4 | FILM-NOTICE ** |
| 53 | 501287D1 | 1 | FILM-WARNING ** |
| 54 | 501292D1 | 1 | FILM-WARNING (OVERFLOW) ** |
| 57 | 501297D1 | 1 | FILM-WIRE ACCESS * |

PART OF 501811D1 BASE COMMON AR

1792261C
PR: t05i29k58b0559

## FILM GP-PAINT & - 179-2261

**EAME ONLY**
**(PAGE 4 OF 9)**

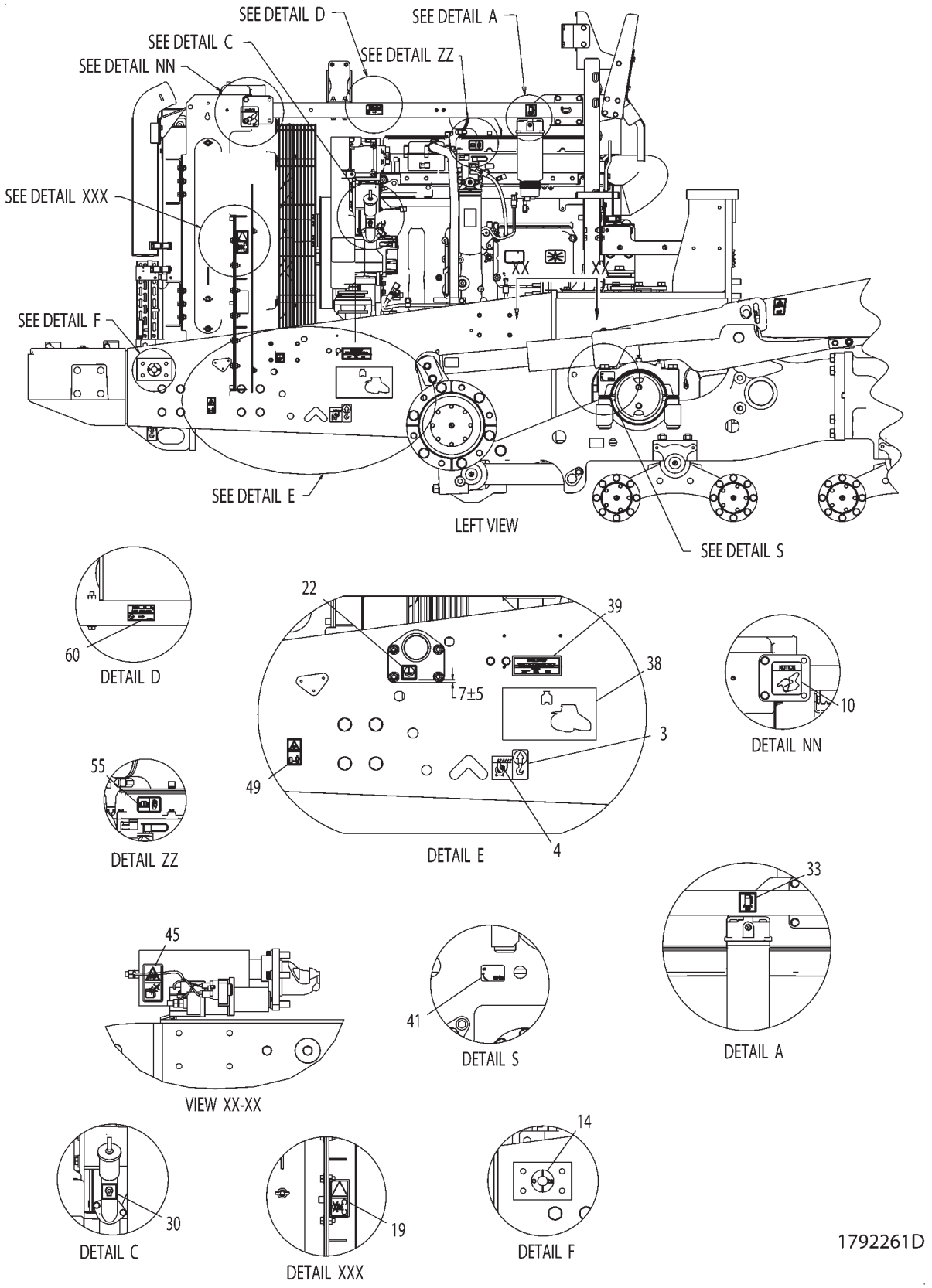

## FILM GP-PAINT & - 179-2261

**EAME ONLY**
**(PAGE 4 OF 9)**

| ITEM | NUMBER | QTY | DESCRIPTION |
|---|---|---|---|
| - | 179-2261 | -- | FILM GP-PLATE & FILM |
| 3 | 500371D1 | 4 | FILM-LIFT |
| 4 | 500372D1 | 4 | FILM-TIE-DOWN |
| - | 501501D1 | 1 | DECAL SHEET-CAB (INCLUDES * ITEMS) |
| - | 501259D1 | 1 | FILM-NOTICE * ** |
| - | 501281D1 | 1 | FILM-MIRRORS * |
| - | 501297D1 | 1 | FILM-WIRE ACCESS * |
| - | 501298D1 | 1 | FILM-WARNING * |
| - | 501265D1 | 1 | FILM-NOTICE * |
| - | 501282D1 | 1 | FILM-ROAD SPEED * |
| - | 501253D1 | 3 | FILM-IDENT (12V) * ** |
| - | 501302D1 | 1 | FILM-BRAKE * |
| - | 501274D1 | 2 | FILM-NOTICE * |
| - | 501273D1 | 1 | FILM-NOTICE * |
| - | 501406D1 | 1 | FILM-WIPER DELUXE * |
| - | 501272D1 | 2 | FILM-ATERNATE EXIT * |
| - | 501286D1 | 2 | FILM-INSTALLATION DATE * |
| - | 501503D1 | 1 | DECAL SHEET-VEHICLE (SEE BREAKDOWN) |
| - | 501505D1 | 1 | DECAL SHEET-VEHICLE (INCLUDES ** ITEMS |
| - | 501257D1 | 2 | FILM-NOTICE ** |
| - | 501260D1 | 2 | FILM-NOTICE ** |
| - | 501263D1 | 2 | FILM-NOTICE ** |
| - | 501254D1 | 2 | FILM-WARNING ** |
| - | 501296D1 | 1 | FILM-HITCH (LEFT) ** |
| - | 501262D1 | 4 | FILM-NOTICE ** |
| - | 501303D1 | 1 | FILM-COOLANT (COLD FILL) ** |
| - | 501253D1 | 3 | FILM-IDENT (12V) * ** |
| - | 501291D1 | 1 | FILM-BATTERY ** |
| - | 501295D1 | 1 | FILM-HITCH (RIGHT) ** |
| - | 501294D1 | 2 | FILM-WARNING (HITCH) ** |
| - | 501264D1 | 2 | FILM-NOTICE ** |
| - | 501292D1 | 1 | FILM-WARNING (OVERFLOW) ** |
| - | 501259D1 | 1 | FILM-NOTICE * ** |
| - | 501293D1 | 2 | FILM-WARNING ** |
| - | 501306D1 | 1 | FILM-AIR CLEANER ** |
| - | 501287D1 | 1 | FILM-WARNING ** |
| - | 501261D1 | 1 | FILM-NOTICE ** |
| - | 501267D1 | 1 | FILM-HYD COUPLERS (INST) ** |
| - | 501301D1 | 2 | FILM-TIGHTENING (BOLT) ** |
| - | 501299D1 | 4 | FILM-TIGHTENING (BOLT) ** |
| 10 | 501278D1 | 1 | FILM-BELT (ROUTING) |
| 14 | 501277D1 | 1 | FILM-BATTERY (INST) ** |
| 19 | 501290D1 | 2 | FILM-CRUSH/SEVER ** |
| 22 | 501105D1 | 1 | FILM-GROUND GEN |
| 30 | 501108D1 | 1 | FILM-INSTRUCTION |
| 33 | 501280D1 | 1 | FILM-WATER SEPARATOR |
| 38 | 501269D1 | 1 | FILM-NOTICE (SHIPPING) |
| 39 | 501305D1 | 1 | FILM-PATENT |
| 41 | 501300D1 | 2 | FILM-TIGHTENING (BOLT) ** |
| 45 | 501258D1 | 2 | FILM-NOTICE |
| 49 | 501263D1 | 2 | FILM-NOTICE ** |
| 55 | 501293D1 | 2 | FILM-WARNING ** |
| 60 | 502279D1 | 1 | PLATE-INST (A/C) |

PART OF 501811D1 BASE COMMON AR

## FILM GP-PAINT & - 179-2261

**EAME ONLY**
**(PAGE 5 OF 9)**

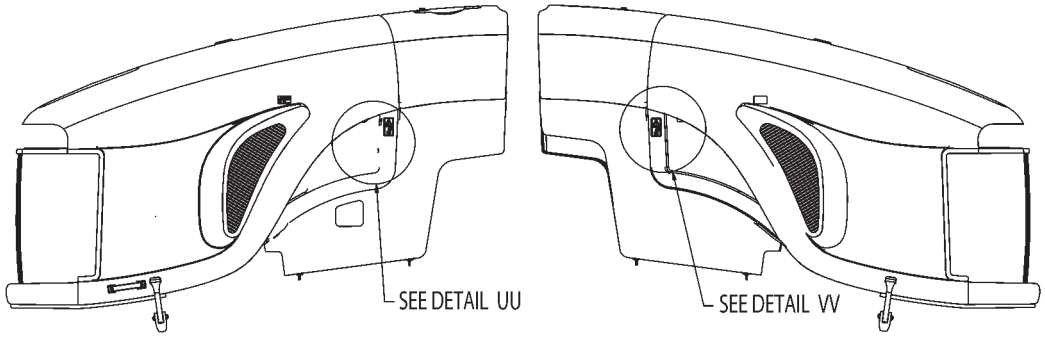


LEFT SIDE OF HOOD

RIGHT SIDE OF HOOD

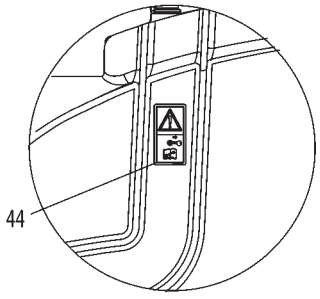


DETAIL UU

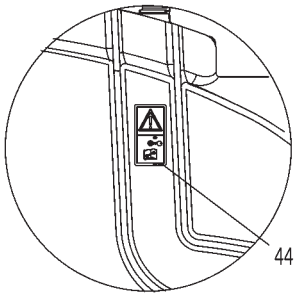


DETAIL VV

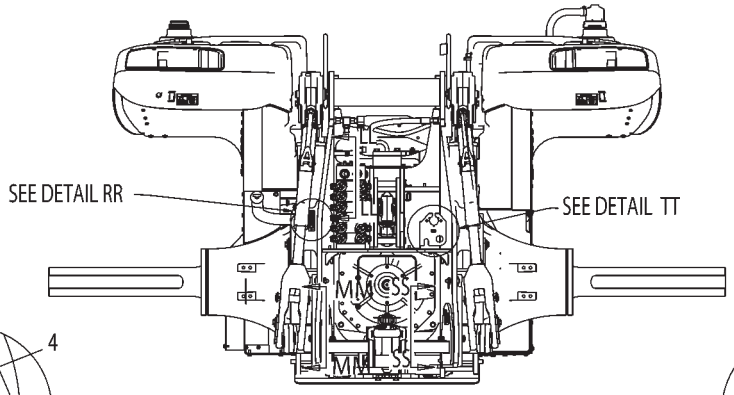


ALTERNATE PLACEMENT REAR VIEW
(3PT HITCH INSTALLED)

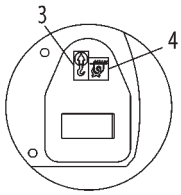


VIEW SS-SS
ALTERNATE PLACEMENT
(USE WHEN 3PT HITCH IS INSTALLED)

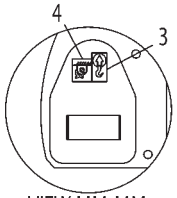


VIEW MM-MM
ALTERNATE PLACEMENT
(USE WHEN 3PT HITCH IS INSTALLED)

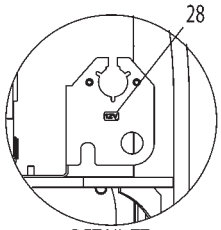


DETAIL TT
ALTERNATE PLACEMENT

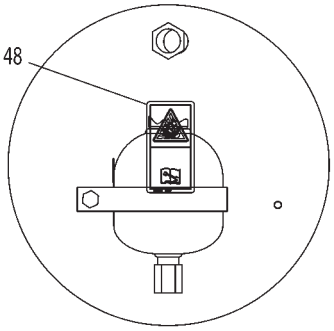


VIEW LL-LL

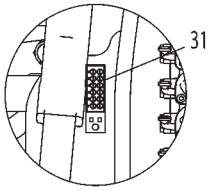


DETAIL RR
ALTERNATE PLACEMENT
(USE WHEN 3PT HITCH IS INSTALLED)

1792261E

## FILM GP-PAINT & - 179-2261

**EAME ONLY**
**(PAGE 5 OF 9)**

| ITEM | NUMBER | QTY | DESCRIPTION |
|---|---|---|---|
| - | 179-2261 | -- | FILM GP-PLATE & FILM |
| 3 | 500371D1 | 4 | FILM-LIFT |
| 4 | 500372D1 | 4 | FILM-TIE-DOWN |
| - | 501501D1 | 1 | DECAL SHEET-CAB (INCLUDES * ITEMS) |
| - | 501259D1 | 1 | FILM-NOTICE * ** |
| - | 501281D1 | 1 | FILM-MIRRORS * |
| - | 501297D1 | 1 | FILM-WIRE ACCESS * |
| - | 501298D1 | 1 | FILM-WARNING * |
| - | 501265D1 | 1 | FILM-NOTICE * |
| - | 501282D1 | 1 | FILM-ROAD SPEED * |
| - | 501253D1 | 3 | FILM-IDENT (12V) * ** |
| - | 501302D1 | 1 | FILM-BRAKE * |
| - | 501274D1 | 2 | FILM-NOTICE * |
| - | 501273D1 | 1 | FILM-NOTICE * |
| - | 501406D1 | 1 | FILM-WIPER DELUXE * |
| - | 501272D1 | 2 | FILM-ATERNATE EXIT * |
| - | 501286D1 | 2 | FILM-INSTALLATION DATE * |
| - | 501503D1 | 1 | DECAL SHEET-VEHICLE (SEE BREAKDOWN) |
| - | 501505D1 | 1 | DECAL SHEET-VEHICLE (INCLUDES ** ITEMS |
| - | 501260D1 | 2 | FILM-NOTICE ** |
| - | 501263D1 | 2 | FILM-NOTICE ** |
| - | 501254D1 | 2 | FILM-WARNING ** |
| - | 501296D1 | 1 | FILM-HITCH (LEFT) ** |
| - | 501303D1 | 1 | FILM-COOLANT (COLD FILL) ** |
| - | 501277D1 | 1 | FILM-BATTERY (INST) ** |
| - | 501291D1 | 1 | FILM-BATTERY ** |
| - | 501295D1 | 1 | FILM-HITCH (RIGHT) ** |
| - | 501294D1 | 2 | FILM-WARNING (HITCH) ** |
| - | 501264D1 | 2 | FILM-NOTICE ** |
| - | 501290D1 | 2 | FILM-CRUSH/SEVER ** |
| - | 501292D1 | 1 | FILM-WARNING (OVERFLOW) ** |
| - | 501259D1 | 1 | FILM-NOTICE * ** |
| - | 501293D1 | 2 | FILM-WARNING ** |
| - | 501306D1 | 1 | FILM-AIR CLEANER ** |
| - | 501287D1 | 1 | FILM-WARNING ** |
| - | 501261D1 | 1 | FILM-NOTICE ** |
| - | 501301D1 | 2 | FILM-TIGHTENING (BOLT) ** |
| - | 501300D1 | 2 | FILM-TIGHTENING (BOLT) ** |
| - | 501299D1 | 4 | FILM-TIGHTENING (BOLT) ** |
| 28 | 501253D1 | 3 | FILM-IDENT (12V) * ** |
| 31 | 501267D1 | 1 | FILM-HYD COUPLERS (INST) ** |
| 44 | 501257D1 | 2 | FILM-NOTICE ** |
| 48 | 501262D1 | 4 | FILM-NOTICE ** |

PART OF 501811D1 BASE COMMON AR

1792261E
PR: t05i29k58b0561

## FILM GP-PAINT & - 179-2261

**EAME ONLY**
**(PAGE 6 OF 9)**

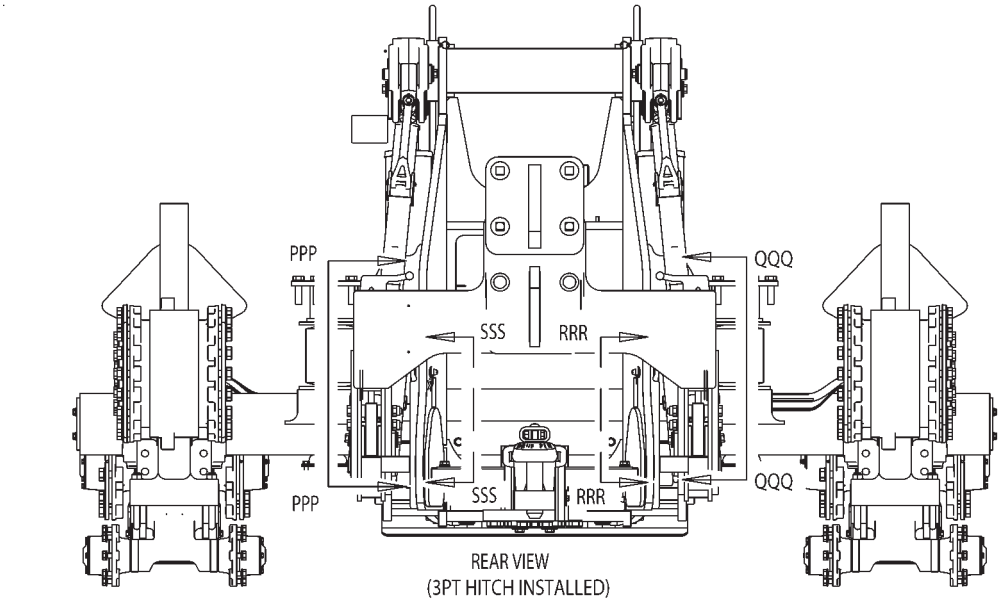


REAR VIEW
(3PT HITCH INSTALLED)

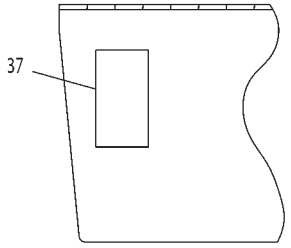


VIEW SSS-SSS

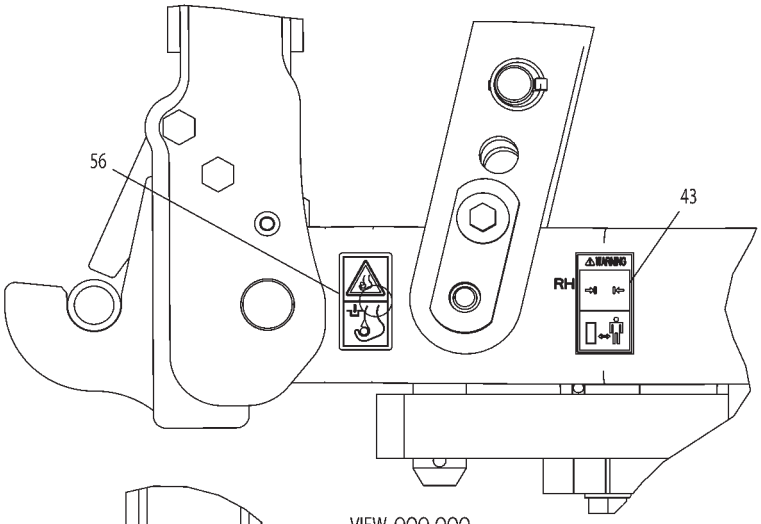


VIEW QQQ-QQQ

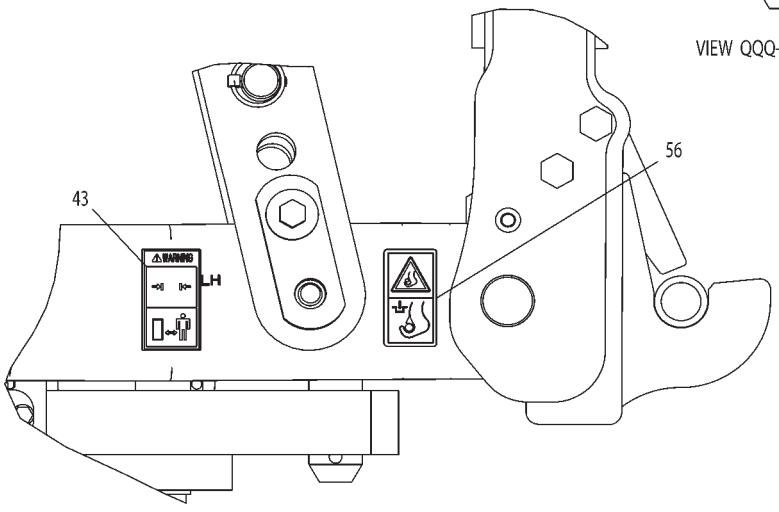


VIEW PPP-PPP

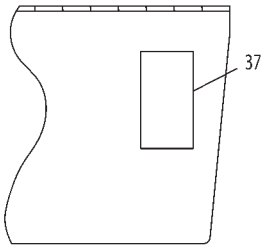


VIEW RRR-RRR

1792261F

## FILM GP-PAINT & - 179-2261

**EAME ONLY**
**(PAGE 6 OF 9)**

| ITEM | NUMBER | QTY | DESCRIPTION |
|---|---|---|---|
| - | 179-2261 | -- | FILM GP-PLATE & FILM |
| - | 501501D1 | 1 | DECAL SHEET-CAB (INCLUDES * ITEMS) |
| - | 501259D1 | 1 | FILM-NOTICE * ** |
| - | 501281D1 | 1 | FILM-MIRRORS * |
| - | 501297D1 | 1 | FILM-WIRE ACCESS * |
| - | 501298D1 | 1 | FILM-WARNING * |
| - | 501265D1 | 1 | FILM-NOTICE * |
| - | 501282D1 | 1 | FILM-ROAD SPEED * |
| - | 501253D1 | 3 | FILM-IDENT (12V) * ** |
| - | 501302D1 | 1 | FILM-BRAKE * |
| - | 501274D1 | 2 | FILM-NOTICE * |
| - | 501273D1 | 1 | FILM-NOTICE * |
| - | 501406D1 | 1 | FILM-WIPER DELUXE * |
| - | 501272D1 | 2 | FILM-ATERNATE EXIT * |
| - | 501286D1 | 2 | FILM-INSTALLATION DATE * |
| - | 501503D1 | 1 | DECAL SHEET-VEHICLE (SEE BREAKDOWN) |
| - | 501505D1 | 1 | DECAL SHEET-VEHICLE (INCLUDES ** ITEMS |
| - | 501257D1 | 2 | FILM-NOTICE ** |
| - | 501260D1 | 2 | FILM-NOTICE ** |
| - | 501263D1 | 2 | FILM-NOTICE ** |
| - | 501296D1 | 1 | FILM-HITCH (LEFT) ** |
| - | 501262D1 | 4 | FILM-NOTICE ** |
| - | 501303D1 | 1 | FILM-COOLANT (COLD FILL) ** |
| - | 501253D1 | 3 | FILM-IDENT (12V) * ** |
| - | 501277D1 | 1 | FILM-BATTERY (INST) ** |
| - | 501291D1 | 1 | FILM-BATTERY ** |
| - | 501295D1 | 1 | FILM-HITCH (RIGHT) ** |
| - | 501290D1 | 2 | FILM-CRUSH/SEVER ** |
| - | 501292D1 | 1 | FILM-WARNING (OVERFLOW) ** |
| - | 501259D1 | 1 | FILM-NOTICE * ** |
| - | 501293D1 | 2 | FILM-WARNING ** |
| - | 501306D1 | 1 | FILM-AIR CLEANER ** |
| - | 501287D1 | 1 | FILM-WARNING ** |
| - | 501261D1 | 1 | FILM-NOTICE ** |
| - | 501267D1 | 1 | FILM-HYD COUPLERS (INST) ** |
| - | 501301D1 | 2 | FILM-TIGHTENING (BOLT) ** |
| - | 501300D1 | 2 | FILM-TIGHTENING (BOLT) ** |
| - | 501299D1 | 4 | FILM-TIGHTENING (BOLT) ** |
| 37 | 501264D1 | 2 | FILM-NOTICE ** |
| 43 | 501254D1 | 2 | FILM-WARNING ** |
| 56 | 501294D1 | 2 | FILM-WARNING (HITCH) ** |

PART OF 501811D1 BASE COMMON AR

1792261F
PR: t05i29k58b0562

**FILM GP-PAINT & - 179-2261**
**EAME ONLY**
**(PAGE 7 OF 9)**

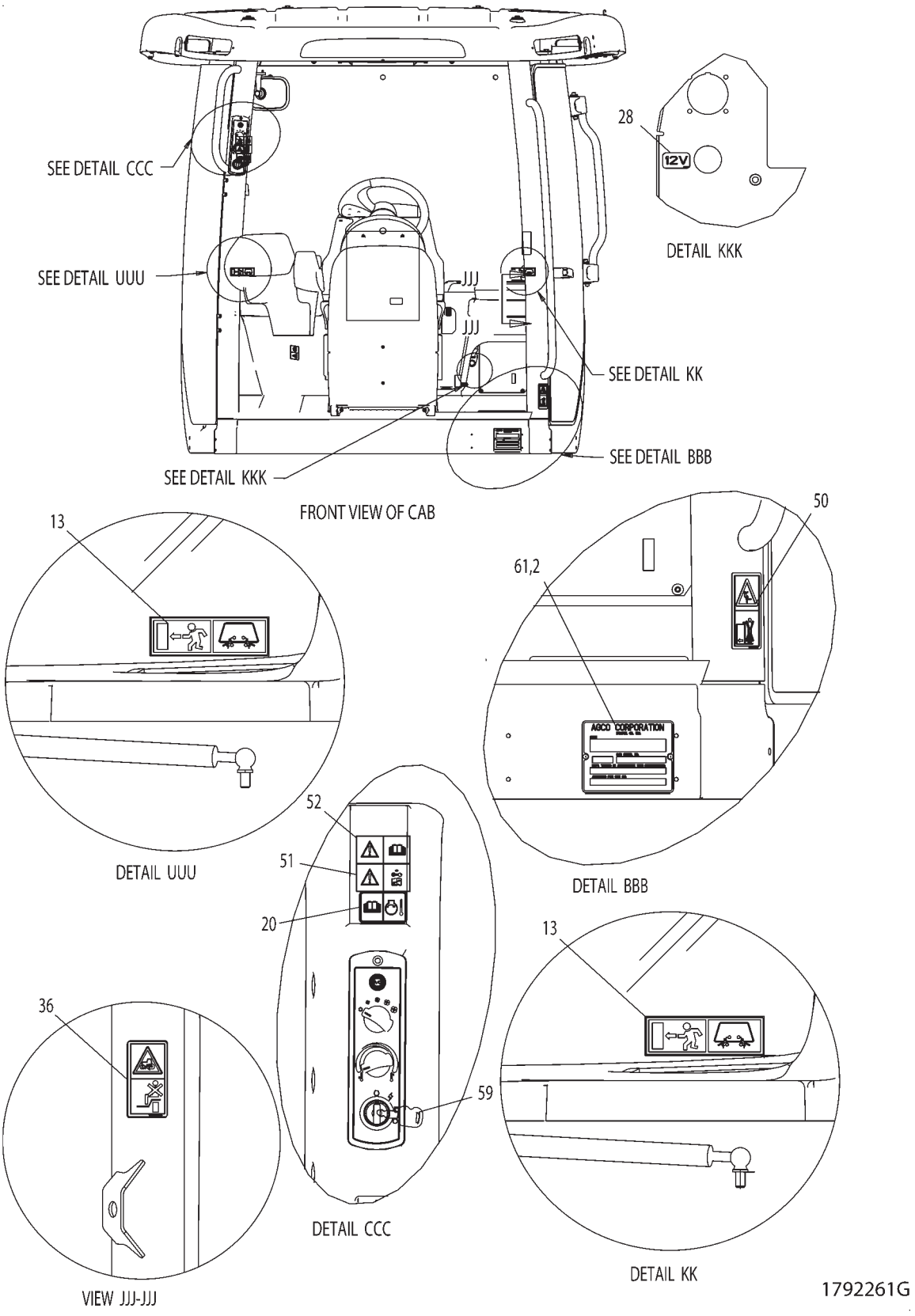

## FILM GP-PAINT & - 179-2261

**EAME ONLY**
**(PAGE 7 OF 9)**

| ITEM | NUMBER | QTY | DESCRIPTION |
|---|---|---|---|
| - | 179-2261 | -- | FILM GP-PLATE & FILM |
| 2 | 502620D1 | 1 | PLATE-ROPS (NOT SERVICED) |
| - | 501501D1 | 1 | DECAL SHEET-CAB (INCLUDES * ITEMS) |
| - | 501281D1 | 1 | FILM-MIRRORS * |
| - | 501297D1 | 1 | FILM-WIRE ACCESS * |
| - | 501282D1 | 1 | FILM-ROAD SPEED * |
| - | 501302D1 | 1 | FILM-BRAKE * |
| - | 501406D1 | 1 | FILM-WIPER DELUXE * |
| - | 501286D1 | 2 | FILM-INSTALLATION DATE * |
| - | 501503D1 | 1 | DECAL SHEET-VEHICLE (SEE BREAKDOWN) |
| - | 501505D1 | 1 | DECAL SHEET-VEHICLE (INCLUDES ** ITEMS |
| - | 501257D1 | 2 | FILM-NOTICE ** |
| - | 501260D1 | 2 | FILM-NOTICE ** |
| - | 501263D1 | 2 | FILM-NOTICE ** |
| - | 501254D1 | 2 | FILM-WARNING ** |
| - | 501296D1 | 1 | FILM-HITCH (LEFT) ** |
| - | 501262D1 | 4 | FILM-NOTICE ** |
| - | 501303D1 | 1 | FILM-COOLANT (COLD FILL) ** |
| - | 501277D1 | 1 | FILM-BATTERY (INST) ** |
| - | 501291D1 | 1 | FILM-BATTERY ** |
| - | 501295D1 | 1 | FILM-HITCH (RIGHT) ** |
| - | 501294D1 | 2 | FILM-WARNING (HITCH) ** |
| - | 501264D1 | 2 | FILM-NOTICE ** |
| - | 501290D1 | 2 | FILM-CRUSH/SEVER ** |
| - | 501292D1 | 1 | FILM-WARNING (OVERFLOW) ** |
| - | 501293D1 | 2 | FILM-WARNING ** |
| - | 501306D1 | 1 | FILM-AIR CLEANER ** |
| - | 501287D1 | 1 | FILM-WARNING ** |
| - | 501261D1 | 1 | FILM-NOTICE ** |
| - | 501267D1 | 1 | FILM-HYD COUPLERS (INST) ** |
| - | 501301D1 | 2 | FILM-TIGHTENING (BOLT) ** |
| - | 501300D1 | 2 | FILM-TIGHTENING (BOLT) ** |
| - | 501299D1 | 4 | FILM-TIGHTENING (BOLT) ** |
| 13 | 501272D1 | 2 | FILM-ATERNATE EXIT * |
| 20 | 501298D1 | 1 | FILM-WARNING * |
| 28 | 501253D1 | 3 | FILM-IDENT (12V) * ** |
| 36 | 501259D1 | 1 | FILM-NOTICE * ** |
| 50 | 501265D1 | 1 | FILM-NOTICE * |
| 51 | 501273D1 | 1 | FILM-NOTICE * |
| 52 | 501274D1 | 2 | FILM-NOTICE * |
| 59 | CH5P-8500 | 2 | KEY |
| 61 | CH8C-3348 | 2 | RIVET-BLIND 1.6-3.18GRIPX3.18 |

PART OF 501811D1 BASE COMMON AR

1792261G
PR: t05i29k58b0563

## FILM GP-PAINT & - 179-2261

**EAME ONLY**
**(PAGE 8 OF 9)**

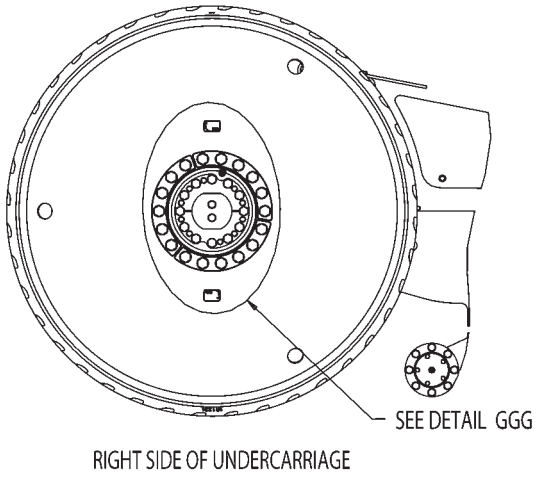


RIGHT SIDE OF UNDERCARRIAGE

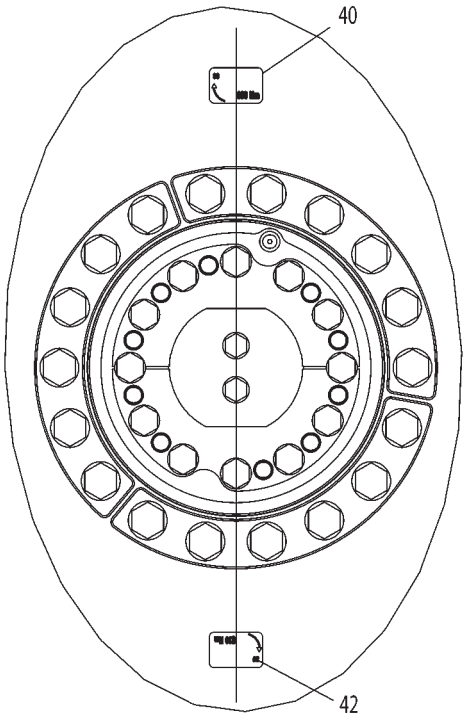


DETAIL GGG

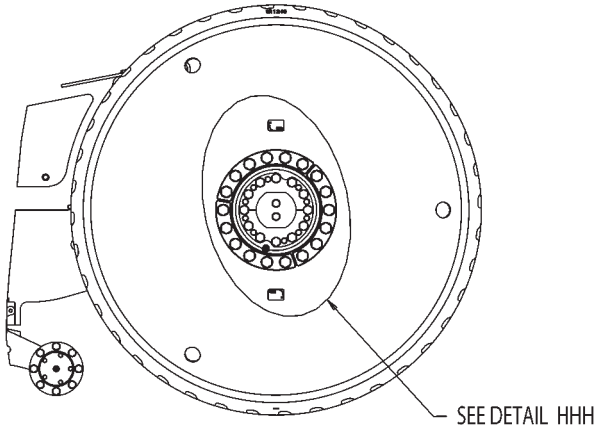


LEFT SIDE OF UNDERCARRIAGE

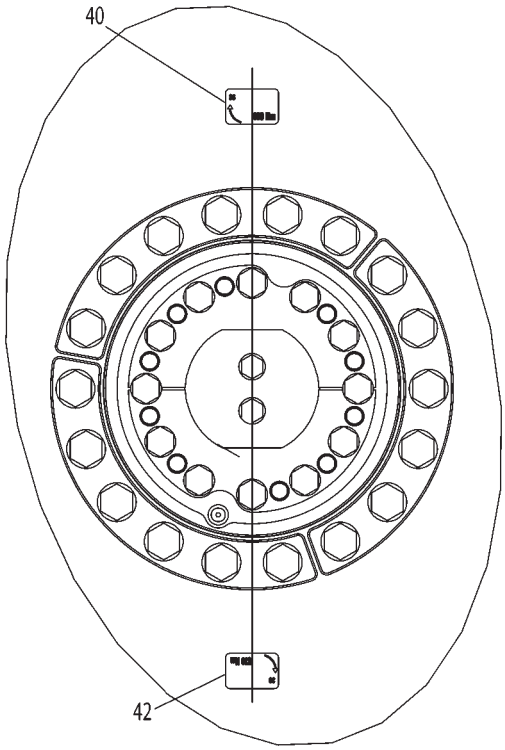


DETAIL HHH

1792261H

## FILM GP-PAINT & - 179-2261

**EAME ONLY**
**(PAGE 8 OF 9)**

| ITEM | NUMBER | QTY | DESCRIPTION |
|---|---|---|---|
| - | 179-2261 | -- | FILM GP-PLATE & FILM |
| - | 501501D1 | 1 | DECAL SHEET-CAB (INCLUDES * ITEMS) |
| - | 501259D1 | 1 | FILM-NOTICE * ** |
| - | 501281D1 | 1 | FILM-MIRRORS * |
| - | 501297D1 | 1 | FILM-WIRE ACCESS * |
| - | 501298D1 | 1 | FILM-WARNING * |
| - | 501265D1 | 1 | FILM-NOTICE * |
| - | 501282D1 | 1 | FILM-ROAD SPEED * |
| - | 501253D1 | 3 | FILM-IDENT (12V) * ** |
| - | 501302D1 | 1 | FILM-BRAKE * |
| - | 501274D1 | 2 | FILM-NOTICE * |
| - | 501273D1 | 1 | FILM-NOTICE * |
| - | 501406D1 | 1 | FILM-WIPER DELUXE * |
| - | 501272D1 | 2 | FILM-ATERNATE EXIT * |
| - | 501286D1 | 2 | FILM-INSTALLATION DATE * |
| - | 501503D1 | 1 | DECAL SHEET-VEHICLE (SEE BREAKDOWN) |
| - | 501505D1 | 1 | DECAL SHEET-VEHICLE (INCLUDES ** ITEMS |
| - | 501257D1 | 2 | FILM-NOTICE ** |
| - | 501260D1 | 2 | FILM-NOTICE ** |
| - | 501263D1 | 2 | FILM-NOTICE ** |
| - | 501254D1 | 2 | FILM-WARNING ** |
| - | 501296D1 | 1 | FILM-HITCH (LEFT) ** |
| - | 501262D1 | 4 | FILM-NOTICE ** |
| - | 501303D1 | 1 | FILM-COOLANT (COLD FILL) ** |
| - | 501253D1 | 3 | FILM-IDENT (12V) * ** |
| - | 501277D1 | 1 | FILM-BATTERY (INST) ** |
| - | 501291D1 | 1 | FILM-BATTERY ** |
| - | 501295D1 | 1 | FILM-HITCH (RIGHT) ** |
| - | 501294D1 | 2 | FILM-WARNING (HITCH) ** |
| - | 501264D1 | 2 | FILM-NOTICE ** |
| - | 501290D1 | 2 | FILM-CRUSH/SEVER ** |
| - | 501292D1 | 1 | FILM-WARNING (OVERFLOW) ** |
| - | 501259D1 | 1 | FILM-NOTICE * ** |
| - | 501293D1 | 2 | FILM-WARNING ** |
| - | 501306D1 | 1 | FILM-AIR CLEANER ** |
| - | 501287D1 | 1 | FILM-WARNING ** |
| - | 501261D1 | 1 | FILM-NOTICE ** |
| - | 501267D1 | 1 | FILM-HYD COUPLERS (INST) ** |
| - | 501300D1 | 2 | FILM-TIGHTENING (BOLT) ** |
| 40 | 501299D1 | 4 | FILM-TIGHTENING (BOLT) ** |
| 42 | 501301D1 | 2 | FILM-TIGHTENING (BOLT) ** |

PART OF 501811D1 BASE COMMON AR

1792261H
PR: t05i29k58b0564

## FILM GP-PAINT & - 179-2261

**EAME ONLY**
**(PAGE 9 OF 9)**

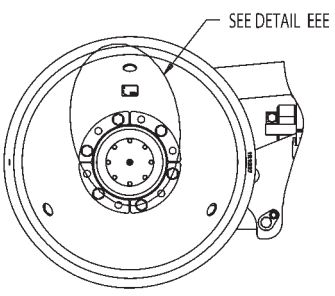


LEFT SIDE OF UNDERCARRIAGE

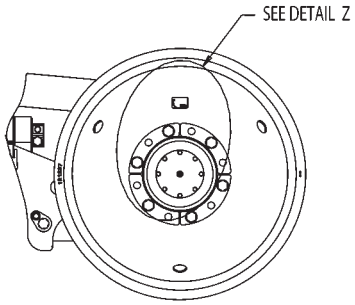


RIGHT SIDE OF UNDERCARRIAGE

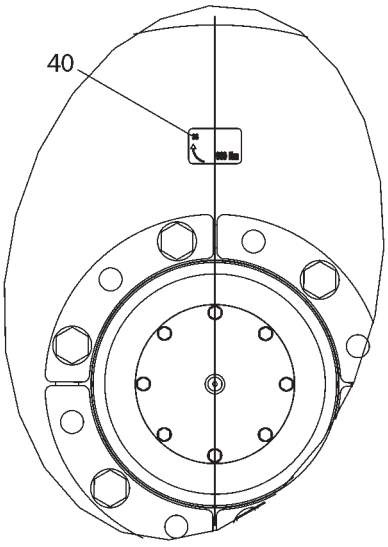


DETAIL Z

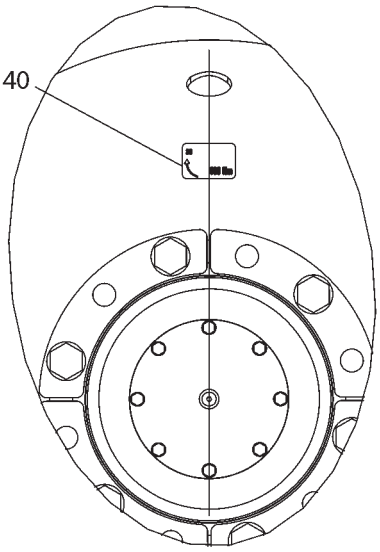


DETAIL EEE

1792261J

## FILM GP-PAINT & - 179-2261

**EAME ONLY**
**(PAGE 9 OF 9)**

| ITEM | NUMBER | QTY | DESCRIPTION |
|---|---|---|---|
| - | 179-2261 | -- | FILM GP-PLATE & FILM |
| - | 501501D1 | 1 | DECAL SHEET-CAB (INCLUDES * ITEMS) |
| - | 501259D1 | 1 | FILM-NOTICE * ** |
| - | 501281D1 | 1 | FILM-MIRRORS * |
| - | 501297D1 | 1 | FILM-WIRE ACCESS * |
| - | 501298D1 | 1 | FILM-WARNING * |
| - | 501265D1 | 1 | FILM-NOTICE * |
| - | 501282D1 | 1 | FILM-ROAD SPEED * |
| - | 501253D1 | 3 | FILM-IDENT (12V) * ** |
| - | 501302D1 | 1 | FILM-BRAKE * |
| - | 501274D1 | 2 | FILM-NOTICE * |
| - | 501273D1 | 1 | FILM-NOTICE * |
| - | 501406D1 | 1 | FILM-WIPER DELUXE * |
| - | 501272D1 | 2 | FILM-ATERNATE EXIT * |
| - | 501286D1 | 2 | FILM-INSTALLATION DATE * |
| - | 501503D1 | 1 | DECAL SHEET-VEHICLE (SEE BREAKDOWN) |
| - | 501505D1 | 1 | DECAL SHEET-VEHICLE (INCLUDES ** ITEMS |
| - | 501257D1 | 2 | FILM-NOTICE ** |
| - | 501260D1 | 2 | FILM-NOTICE ** |
| - | 501263D1 | 2 | FILM-NOTICE ** |
| - | 501254D1 | 2 | FILM-WARNING ** |
| - | 501296D1 | 1 | FILM-HITCH (LEFT) ** |
| - | 501262D1 | 4 | FILM-NOTICE ** |
| - | 501303D1 | 1 | FILM-COOLANT (COLD FILL) ** |
| - | 501253D1 | 3 | FILM-IDENT (12V) * ** |
| - | 501277D1 | 1 | FILM-BATTERY (INST) ** |
| - | 501291D1 | 1 | FILM-BATTERY ** |
| - | 501295D1 | 1 | FILM-HITCH (RIGHT) ** |
| - | 501294D1 | 2 | FILM-WARNING (HITCH) ** |
| - | 501264D1 | 2 | FILM-NOTICE ** |
| - | 501290D1 | 2 | FILM-CRUSH/SEVER ** |
| - | 501292D1 | 1 | FILM-WARNING (OVERFLOW) ** |
| - | 501259D1 | 1 | FILM-NOTICE * ** |
| - | 501293D1 | 2 | FILM-WARNING ** |
| - | 501306D1 | 1 | FILM-AIR CLEANER ** |
| - | 501287D1 | 1 | FILM-WARNING ** |
| - | 501261D1 | 1 | FILM-NOTICE ** |
| - | 501267D1 | 1 | FILM-HYD COUPLERS (INST) ** |
| - | 501301D1 | 2 | FILM-TIGHTENING (BOLT) ** |
| - | 501300D1 | 2 | FILM-TIGHTENING (BOLT) ** |
| 40 | 501299D1 | 4 | FILM-TIGHTENING (BOLT) ** |

PART OF 501811D1 BASE COMMON AR

1792261J
PR: t05i29k58b0565

## FILM GP - & PLATES - 179-2185

**ROW & SPECIAL**
**(PAGE 1 OF 5)**

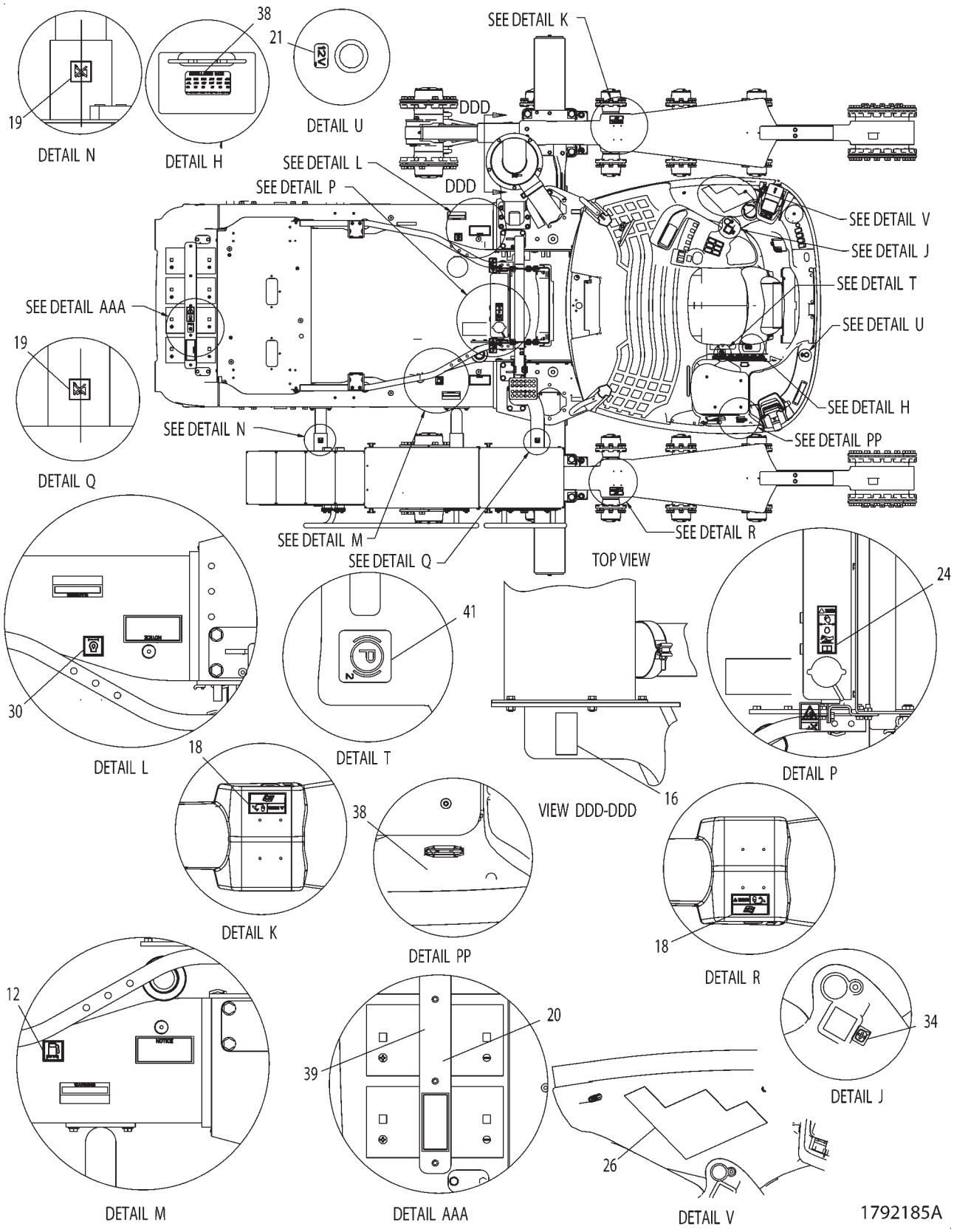

## FILM GP - & PLATES - 179-2185

**ROW & SPECIAL**
**(PAGE 1 OF 5)**

| ITEM | NUMBER | QTY | DESCRIPTION |
|---|---|---|---|
| - | 179-2185 | -- | FILM GP-PAINT & |
| 12 | 501103D1 | -- | FILM-INST (FUEL FILTER) |
| 16 | 501107D1 | -- | FILM-WARNING (HOT SURFACE) |
| 18 | 501250D1 | -- | FILM-WARNING |
| 19 | 501251D1 | -- | FILM-NO STEP |
| 20 | 501252D1 | -- | FILM-IDENT (12V) |
| 21 | 501253D1 | -- | FILM-IDENT (12V) * ** |
| 24 | 501268D1 | -- | FILM-WARNING |
| 26 | 501270D1 | 1 | FILM-FUSE PANEL |
| 30 | 501276D1 | -- | FILM-ENGINE OIL FILTER(INST) |
| 34 | 501281D1 | -- | FILM-MIRRORS * |
| 38 | 501286D1 | -- | FILM-INSTALLATION DATE * |
| 39 | 501287D1 | -- | FILM-WARNING ** |
| 41 | 501289D1 | -- | FILM-PARK BRAKE * |
| - | 501500D1 | 1 | DECAL SHEET-CAB (INCLUDES * ITEMS) |
| - | 501272D1 | -- | FILM ALTERNATE EXIT * |
| - | 501405D1 | -- | FILM-NOTICE (WIDE GAUGE) * |
| - | 501256D1 | -- | FILM-WIPER BASIC * |
| - | 501406D1 | -- | FILM-WIPER DELUXE * |
| - | 501274D1 | -- | FILM-WARNING * |
| - | 501503D1 | 1 | DECAL SHEET-VEHICLE (SEE BREAKDOWN) |
| - | 501504D1 | 1 | DECAL SHEET-VEHICLE (INCLUDES ** ITEMS) |
| - | 501277D1 | -- | PLATE-INST BATTERY ** |
| - | 501306D1 | -- | FILM-AIR CLEANER ** |
| - | 501267D1 | -- | FILM-HYD COUPLER ** |

PART OF 179-1952 BASE COMMON AR

1792185A
PR: t05i29k58b0566

## FILM GP - & PLATES - 179-2185

**ROW & SPECIAL**
**(PAGE 2 OF 5)**

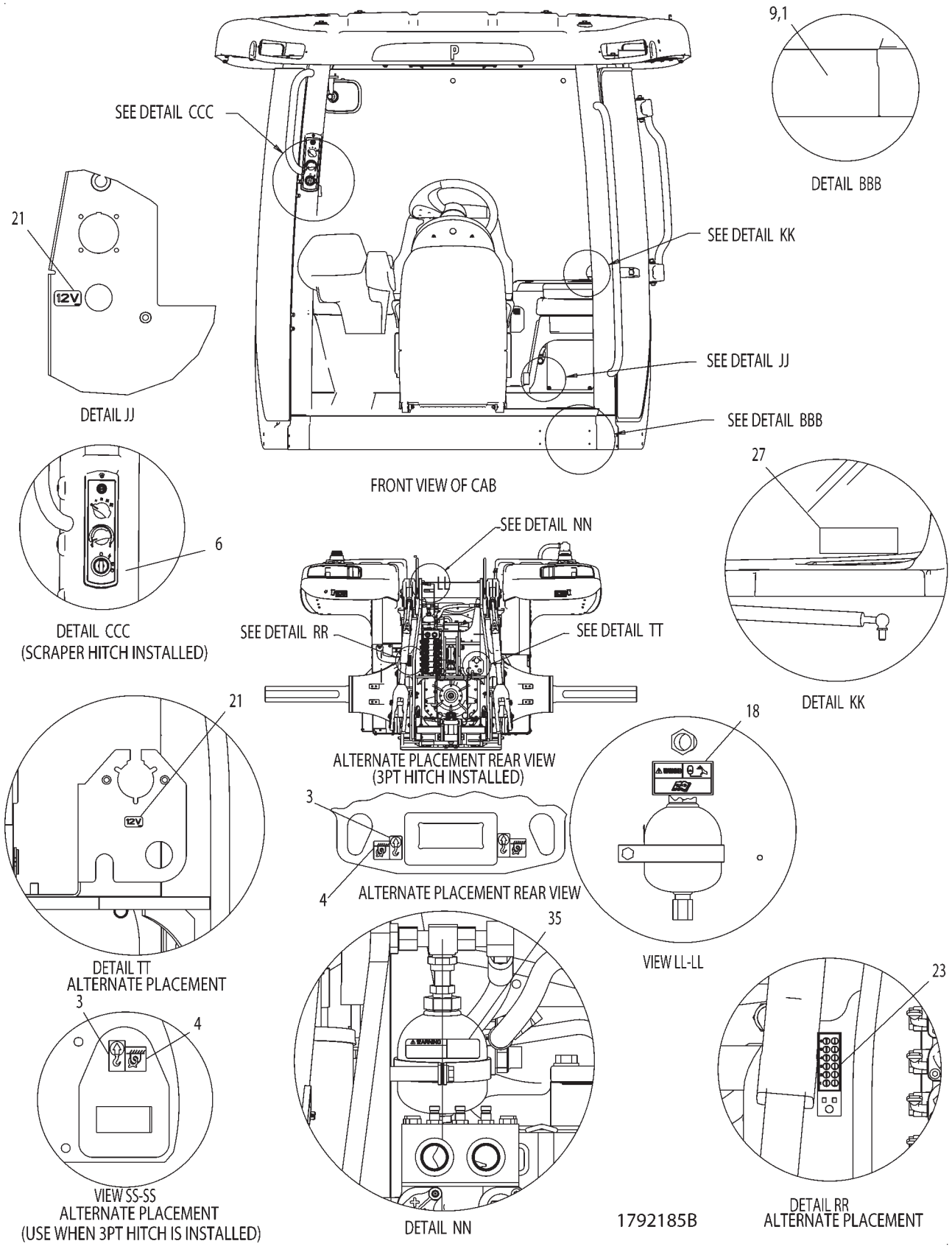

## FILM GP - & PLATES - 179-2185

**ROW & SPECIAL**
**(PAGE 2 OF 5)**

| ITEM | NUMBER | QTY | DESCRIPTION |
|---|---|---|---|
| - | 179-2185 | -- | FILM GP-PAINT & |
| 1 | 502619D1 | 1 | PLATE-ROPS (NOT SERVICED) |
| 3 | 500371D1 | -- | FILM-LIFT |
| 4 | 500372D1 | -- | FILM-TIE-DOWN |
| 6 | CH5P-8500 | 2 | KEY |
| 9 | CH8C-3348 | 2 | RIVET-BLIND 1.6-3.18GRIPX3.18 |
| 18 | 501250D1 | -- | FILM-WARNING |
| 21 | 501253D1 | -- | FILM-IDENT (12V) * ** |
| 23 | 501267D1 | -- | FILM-HYD COUPLERS (INST) ** |
| 27 | 501272D1 | -- | FILM-ATERNATE EXIT * |
| 35 | 501283D1 | -- | FILM-WARNING |
| - | 501500D1 | 1 | DECAL SHEET-CAB (INCLUDES * ITEMS) |
| - | 501289D1 | -- | FILM-PARK BRAKE * |
| - | 501405D1 | -- | FILM-NOTICE (WIDE GAUGE) * |
| - | 501256D1 | -- | FILM-WIPER BASIC * |
| - | 501406D1 | -- | FILM-WIPER DELUXE * |
| - | 501281D1 | -- | FILM-MIRRORS * |
| - | 501286D1 | -- | FILM-INSTALLATION DATE * |
| - | 501274D1 | -- | FILM-WARNING * |
| - | 501503D1 | 1 | DECAL SHEET-VEHICLE (SEE BREAKDOWN) |
| - | 501504D1 | 1 | DECAL SHEET-VEHICLE (INCLUDES ** ITEMS) |
| - | 501287D1 | -- | FILM-WARNING ** |
| - | 501277D1 | -- | PLATE-INST BATTERY ** |
| - | 501306D1 | -- | FILM-AIR CLEANER ** |

PART OF 179-1952 BASE COMMON AR

1792185B
PR: t05i29k58b0567

## FILM GP - & PLATES - 179-2185

**ROW & SPECIAL**
**(PAGE 3 OF 5)**

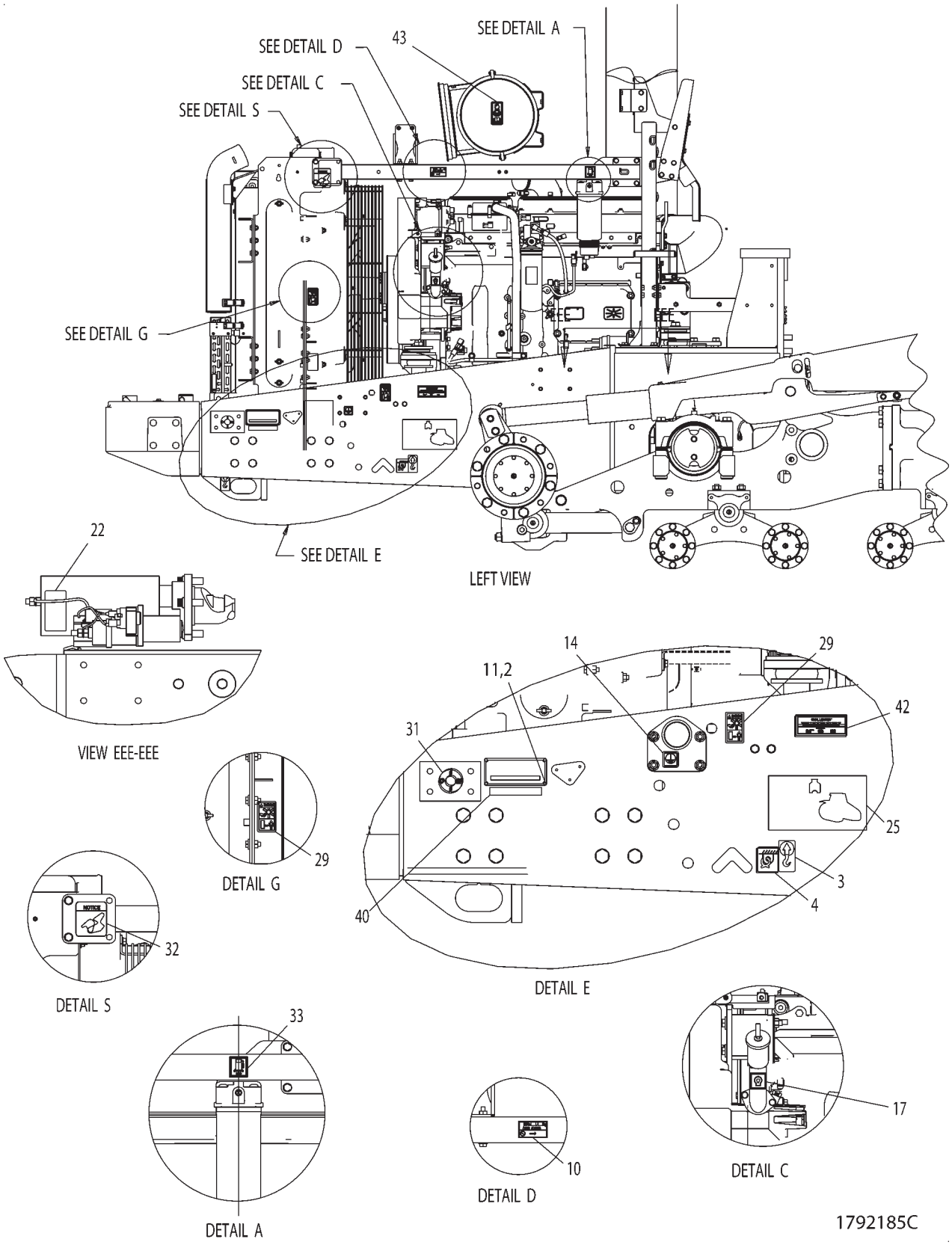

## FILM GP - & PLATES - 179-2185

ROW & SPECIAL
(PAGE 3 OF 5)

| ITEM | NUMBER | QTY | DESCRIPTION |
|---|---|---|---|
| - | 179-2185 | -- | FILM GP-PAINT & |
| 2 | 222-2281 | 1 | PLATE-SERIAL NO. (NOT SERVICED) |
| 3 | 500371D1 | -- | FILM-LIFT |
| 4 | 500372D1 | -- | FILM-TIE-DOWN |
| 10 | 110-6393 | 1 | PLATE-INST (A/C) |
| 11 | CH168-8389 | 4 | TACK-FASTENER (METAL) |
| 14 | 501105D1 | -- | FILM-GROUND GEN |
| 17 | 501108D1 | -- | FILM-INSTRUCTION |
| 22 | 501258D1 | -- | FILM-NOTICE |
| 25 | 501269D1 | -- | FILM-NOTICE (SHIPPING) |
| 29 | 501275D1 | -- | FILM-WARNING (FAN) |
| 31 | 501277D1 | -- | FILM-BATTERY (INST) ** |
| 32 | 501278D1 | -- | FILM-BELT (ROUTING) |
| 33 | 501280D1 | -- | FILM-WATER SEPARATOR |
| 40 | 501288D1 | -- | FILM-CLEAR COVER |
| 42 | 501305D1 | -- | FILM-PATENT |
| 43 | 501306D1 | -- | FILM-AIR CLEANER ** |
| - | 501500D1 | 1 | DECAL SHEET-CAB (INCLUDES * ITEMS) |
| - | 501289D1 | -- | FILM-PARK BRAKE * |
| - | 501272D1 | -- | FILM ALTERNATE EXIT * |
| - | 501405D1 | -- | FILM-NOTICE (WIDE GAUGE) * |
| - | 501256D1 | -- | FILM-WIPER BASIC * |
| - | 501406D1 | -- | FILM-WIPER DELUXE * |
| - | 501253D1 | -- | FILM-IDENT (12V) * ** |
| - | 501281D1 | -- | FILM-MIRRORS * |
| - | 501286D1 | -- | FILM-INSTALLATION DATE * |
| - | 501274D1 | -- | FILM-WARNING * |
| - | 501503D1 | 1 | DECAL SHEET-VEHICLE (SEE BREAKDOWN) |
| - | 501504D1 | 1 | DECAL SHEET-VEHICLE (INCLUDES ** ITEMS) |
| - | 501253D1 | -- | FILM-IDENT (12V) * ** |
| - | 501287D1 | -- | FILM-WARNING ** |
| - | 501267D1 | -- | FILM-HYD COUPLERS (INST) ** |

PART OF 179-1952 BASE COMMON AR

1792185C
PR: t05i29k58b0568

## FILM GP - & PLATES - 179-2185
**ROW & SPECIAL**
**(PAGE 4 OF 5)**

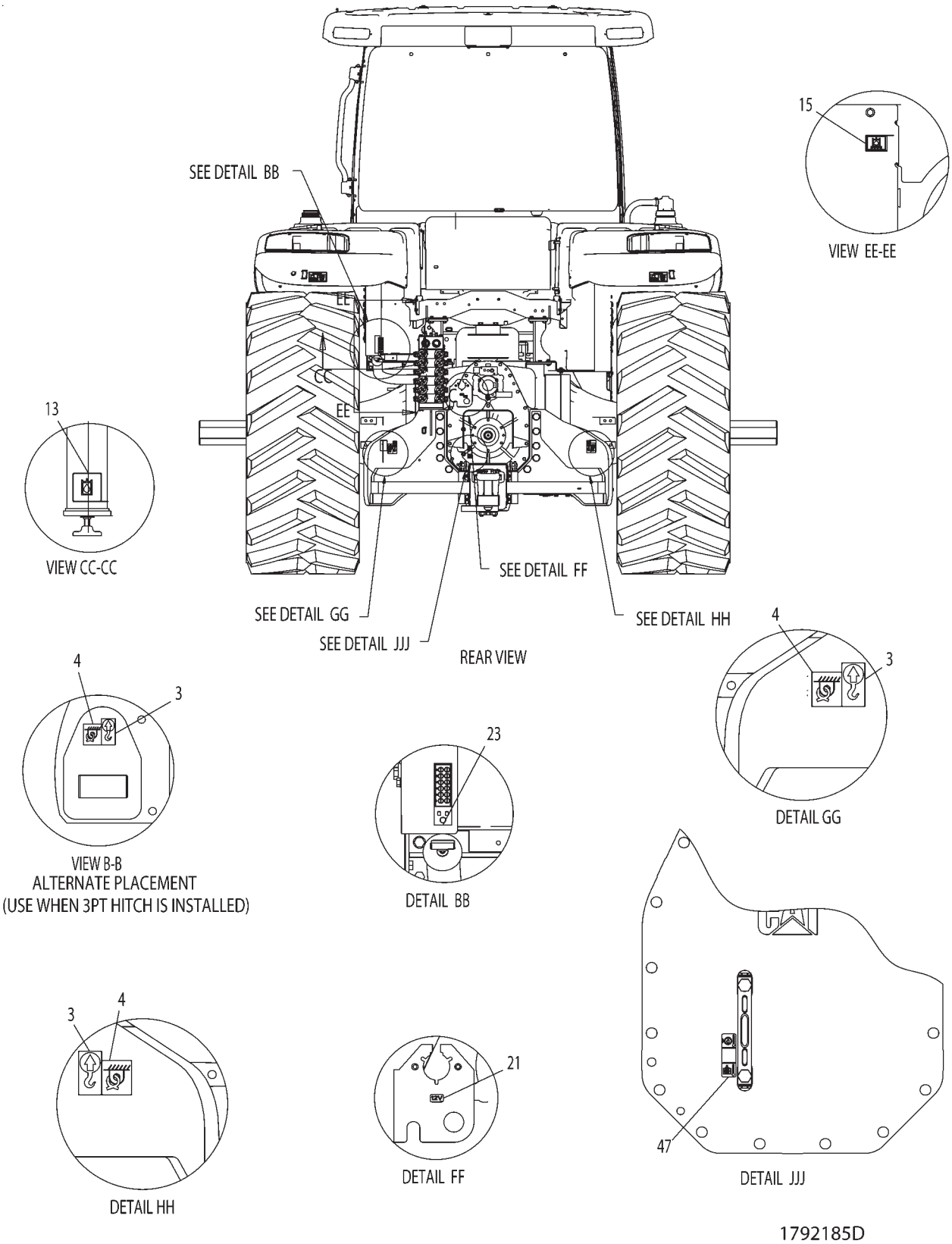

## FILM GP - & PLATES - 179-2185

ROW & SPECIAL
(PAGE 4 OF 5)

| ITEM | NUMBER | QTY | DESCRIPTION |
|---|---|---|---|
| - | 179-2185 | -- | FILM GP-PAINT & |
| 3 | 500371D1 | -- | FILM-LIFT |
| 4 | 500372D1 | -- | FILM-TIE-DOWN |
| 13 | 501104D1 | -- | FILM-HYDRAULIC OIL |
| 15 | 501106D1 | -- | FILM-IDENT (HYD OIL FILTER) |
| 21 | 501253D1 | -- | FILM-IDENT (12V) * ** |
| 23 | 501267D1 | -- | FILM-HYD COUPLERS (INST) ** |
| - | 501500D1 | 1 | DECAL SHEET-CAB (INCLUDES * ITEMS) |
| - | 501289D1 | -- | FILM-PARK BRAKE * |
| - | 501272D1 | -- | FILM ALTERNATE EXIT * |
| - | 501405D1 | -- | FILM-NOTICE (WIDE GAUGE) * |
| - | 501256D1 | -- | FILM-WIPER BASIC * |
| - | 501406D1 | -- | FILM-WIPER DELUXE * |
| - | 501281D1 | -- | FILM-MIRRORS * |
| - | 501286D1 | -- | FILM-INSTALLATION DATE * |
| - | 501274D1 | -- | FILM-WARNING * |
| - | 501503D1 | 1 | DECAL SHEET-VEHICLE (SEE BREAKDOWN) |
| - | 501504D1 | 1 | DECAL SHEET-VEHICLE (INCLUDES ** ITEMS) |
| - | 501287D1 | -- | FILM-WARNING ** |
| - | 501277D1 | -- | FILM-BATTERY (INST) ** |
| - | 501306D1 | -- | FILM-AIR CLEANER ** |
| 47 | 501307D1 | -- | FILM-XMSN OIL FILL |

PART OF 179-1952 BASE COMMON AR

1792185D
PR: t05i29k58b0569

## FILM GP - & PLATES - 179-2185

**ROW & SPECIAL**
**(PAGE 5 OF 5)**

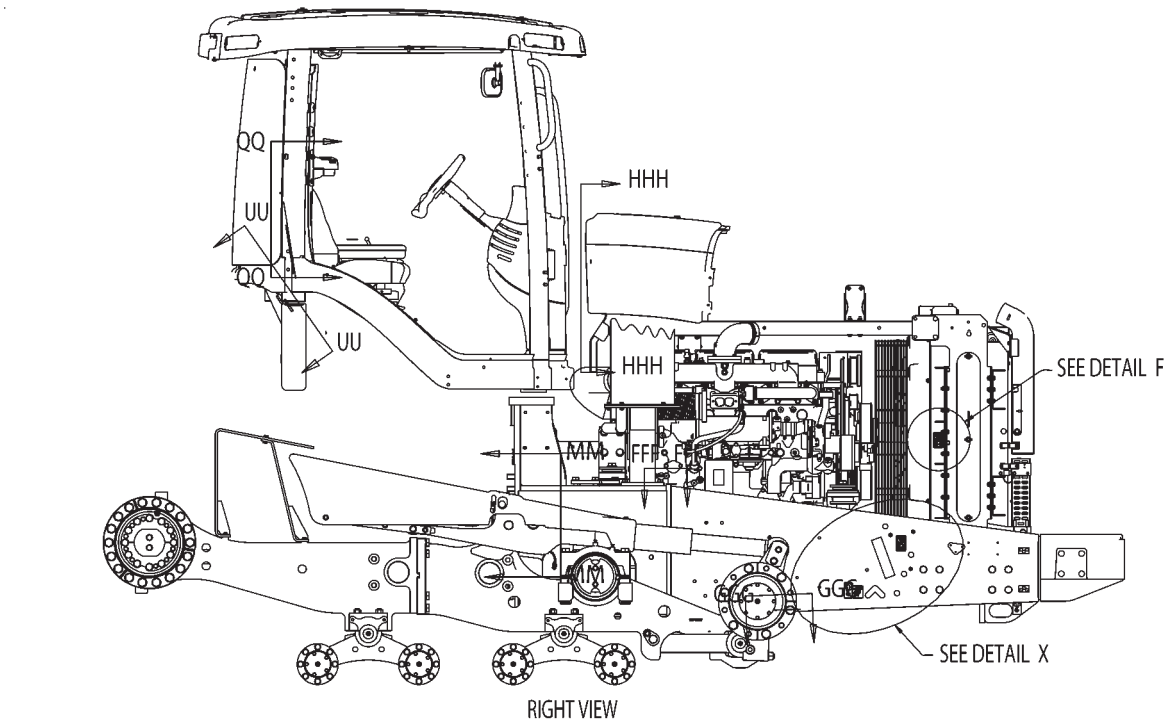


RIGHT VIEW

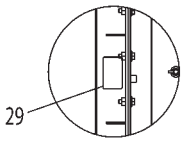


DETAIL F

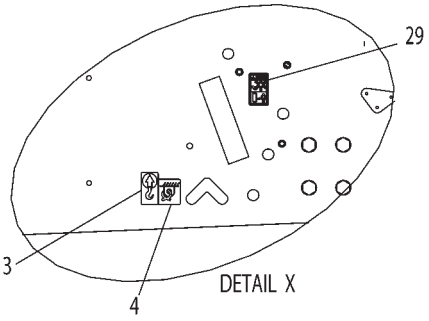


DETAIL X

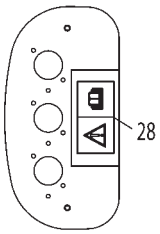


VIEW UU-UU

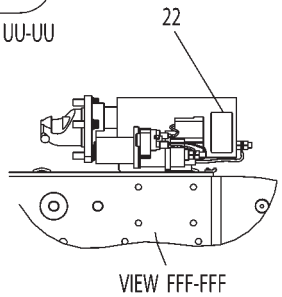


VIEW FFF-FFF

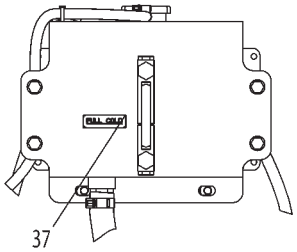


SECTION HHH-HHH

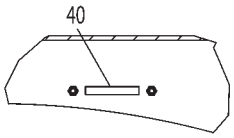


VIEW GGG-GGG

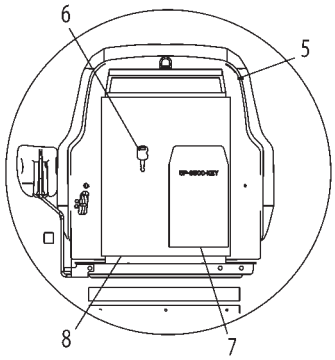


VIEW QQ-QQ

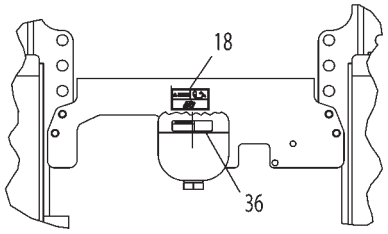


VIEW MM-MM

1792185E

## FILM GP - & PLATES - 179-2185

**ROW & SPECIAL**
**(PAGE 5 OF 5)**

| ITEM | NUMBER | QTY | DESCRIPTION |
|---|---|---|---|
| - | 179-2185 | -- | FILM GP-PAINT & |
| 3 | 500371D1 | -- | FILM-LIFT |
| 4 | 500372D1 | -- | FILM-TIE-DOWN |
| 5 | CH5P-7958 | 1 | SLEEVE-CABLE SPLICE 2.38 OD |
| 6 | CH5P-8500 | 2 | KEY |
| 7 | CH6V-2405 | 1 | ENVELOPE-KEY |
| 8 | CH7F-3400 | 1 | BAG-POLYETHYLENE 305 X 380 |
| 18 | 501250D1 | -- | FILM-WARNING |
| 22 | 501258D1 | -- | FILM-NOTICE |
| 28 | 501274D1 | -- | FILM-NOTICE * |
| 29 | 501275D1 | -- | FILM-WARNING (FAN) |
| 36 | 501284D1 | -- | FILM-WARNING |
| 37 | 501285D1 | -- | FILM-FULL COLD |
| 40 | 501288D1 | -- | FILM-CLEAR COVER |
| - | 501500D1 | 1 | DECAL SHEET-CAB (INCLUDES * ITEMS) |
| - | 501289D1 | -- | FILM-PARK BRAKE * |
| - | 501272D1 | -- | FILM ALTERNATE EXIT * |
| - | 501405D1 | -- | FILM-NOTICE (WIDE GAUGE) * |
| - | 501256D1 | -- | FILM-WIPER BASIC * |
| - | 501406D1 | -- | FILM-WIPER DELUXE * |
| - | 501253D1 | -- | FILM-IDENT (12V) * ** |
| - | 501281D1 | -- | FILM-MIRRORS * |
| - | 501286D1 | -- | FILM-INSTALLATION DATE * |
| - | 501503D1 | 1 | DECAL SHEET-VEHICLE (SEE BREAKDOWN) |
| - | 501504D1 | 1 | DECAL SHEET-VEHICLE (INCLUDES ** ITEMS) |
| - | 501253D1 | -- | FILM-IDENT (12V) * ** |
| - | 501287D1 | -- | FILM-WARNING ** |
| - | 501277D1 | -- | FILM-BATTERY (INST) ** |
| - | 501306D1 | -- | FILM-AIR CLEANER ** |
| - | 501267D1 | -- | FILM-HYD COUPLERS (INST) ** |

PART OF 179-1952 BASE COMMON AR

1792185E
PR: t05i29k58b0570

## DECAL SHEET-VEHICLE - 501503D1



1

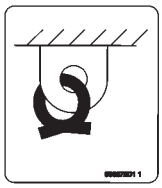
2



3

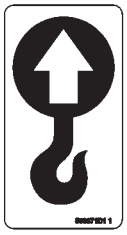
4


5



6



7


8


9

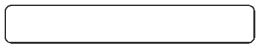
10

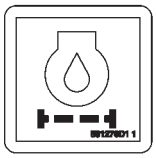
11


14

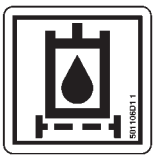
12

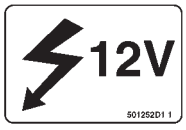

15

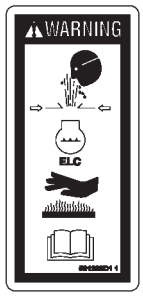

18

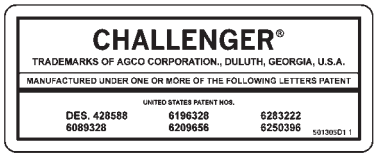

19



13



16



17

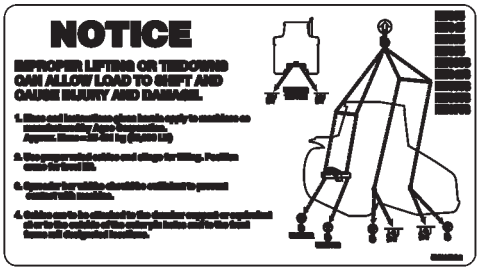

20

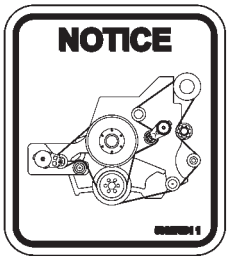

21


22


23


24

501503DC

## DECAL SHEET-VEHICLE - 501503D1

| ITEM | NUMBER | QTY | DESCRIPTION |
|---|---|---|---|
| - | 501503D1 | -- | DECAL SHEET-VEHICLE [A] |
| 1 | 501250D1 | 4 | FILM-WARNING |
| 2 | 500372D1 | 4 | FILM-TIE-DOWN |
| 3 | 501275D1 | 2 | FILM-WARNING (FAN) |
| 4 | 500371D1 | 4 | FILM-LIFT |
| 5 | 501251D1 | 2 | FILM-NO STEP |
| 6 | 501105D1 | 1 | FILM-GROUND GEN |
| 7 | 501285D1 | 1 | FILM-FULL COLD |
| 8 | 501104D1 | 1 | FILM-HYDRAULIC OIL |
| 9 | 501108D1 | 1 | FILM-INSTRUCTION |
| 10 | 501288D1 | 2 | FILM-CLEAR COVER |
| 11 | 501276D1 | 1 | FILM-ENGINE OIL FILTER(INST) |
| 12 | 501106D1 | 1 | FILM-IDENT (HYD OIL FILTER) |
| 13 | 501280D1 | 1 | FILM-WATER SEPARATOR |
| 14 | 501103D1 | 1 | FILM-INST (FUEL FILTER) |
| 15 | 501252D1 | 1 | FILM-IDENT (12V) |
| 16 | 501284D1 | 1 | FILM-WARNING |
| 17 | 501283D1 | 1 | FILM-WARNING |
| 18 | 501268D1 | 1 | FILM-WARNING |
| 19 | 501305D1 | 1 | FILM-PATENT |
| 20 | 501269D1 | 1 | FILM-NOTICE (SHIPPING) |
| 21 | 501278D1 | 1 | FILM-BELT (ROUTING) |
| 22 | 501107D1 | 1 | FILM-WARNING (HOT SURFACE) |
| 23 | 501258D1 | 2 | FILM-NOTICE |
| 24 | 501307D1 | 1 | FILM-XMSN OIL FILL |

[A] PART OF 186-0979 HITCH AR

501503DC
PR: t05i29k58b0571

## DECAL SHEET-VEHICLE - 501504D1

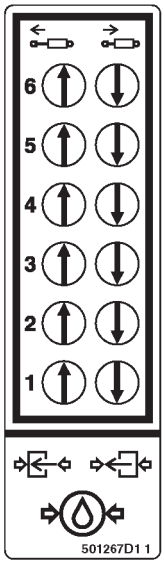


1

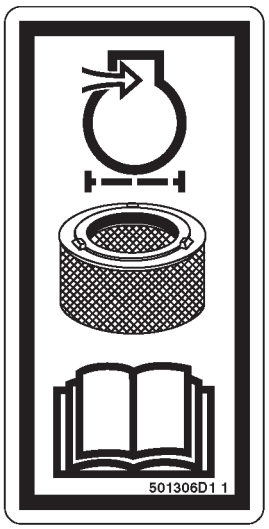


2

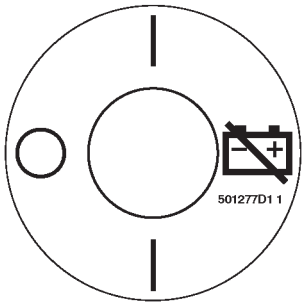


3

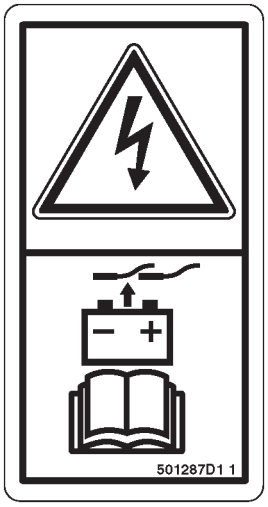


4




5

501504DB

## DECAL SHEET-VEHICLE - 501504D1

| ITEM | NUMBER | QTY | DESCRIPTION |
|---|---|---|---|
| - | 501504D1 | -- | DECAL SHEET-VEHICLE [A] |
| 1 | 501267D1 | 1 | FILM-WARNING |
| 2 | 501306D1 | 1 | FILM-TIE-DOWN |
| 3 | 501277D1 | 1 | FILM-WARNING (FAN) |
| 4 | 501287D1 | 1 | FILM-LIFT |
| 5 | 501253D1 | 1 | FILM-NO STEP |

[A] PART OF 169-0028 HITCH AR

501504DB
PR: t05i29k58b0572

## DECAL SHEET-VEHICLE
**501505D1**
**EAME ONLY**

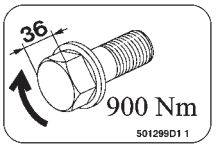

1

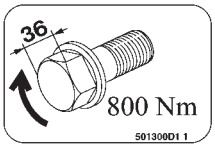

2

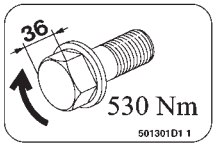

3

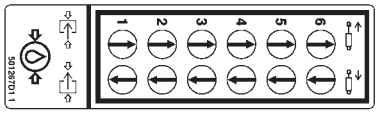

4



5

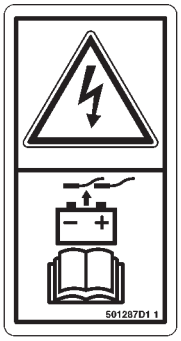

6

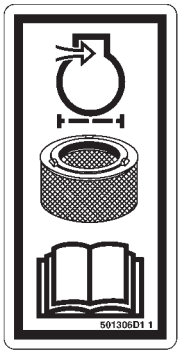

7



8



9

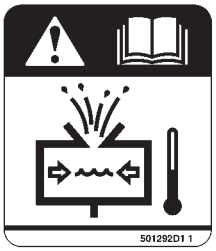

10



23



11



12

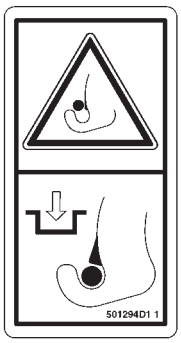

13



14



15



24

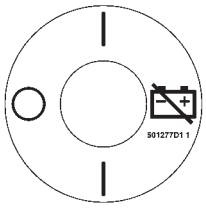

16

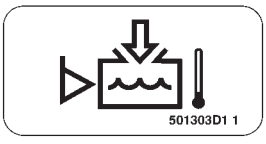

18

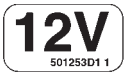

17

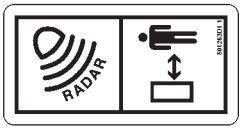

22

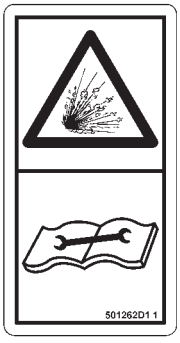

19



20

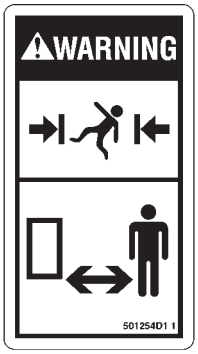

21

501505DB

## DECAL SHEET-VEHICLE
**501505D1**
**EAME ONLY**

| ITEM | NUMBER | QTY | DESCRIPTION |
|---|---|---|---|
| - | 501505D1 | -- | DECAL SHEET-VEHICLE [A] |
| 1 | 501299D1 | 4 | FILM-TIGHTENING |
| 2 | 501300D1 | 2 | FILM-TIGHTENING |
| 3 | 501301D1 | 2 | FILM-TIGHTENING |
| 4 | 501267D1 | 1 | FILM-HYD COUPLER |
| 5 | 501261D1 | 1 | FILM-NOTICE |
| 6 | 501287D1 | 1 | FILM-WARNING (VOLTAGE) |
| 7 | 501306D1 | 1 | FILM-AIR CLEANER |
| 8 | 501293D1 | 1 | FILM-WARNING ELE |
| 9 | 501259D1 | 1 | FILM-WARNING |
| 10 | 501292D1 | 1 | FILM-WARNING |
| 11 | 501290D1 | 2 | FILM-CRUSH/SEVER |
| 12 | 501264D1 | 2 | FILM-NOTICE PTO WARNING |
| 13 | 501294D1 | 2 | FILM-NOTICE |
| 14 | 501295D1 | 1 | FILM-HITCH |
| 15 | 501291D1 | 2 | FILM-BATTERY |
| 16 | 501277D1 | 2 | PLATE-INST (BATTERY) |
| 17 | 501253D1 | 1 | FILM-IDENT (12V) |
| 18 | 501303D1 | 1 | FILM-COOLANT |
| 19 | 501262D1 | 4 | FILM-NOTICE ACCUMULATOR WRNG |
| 20 | 501296D1 | 1 | FILM-HITCH |
| 21 | 501254D1 | 2 | FILM-WARNING |
| 22 | 501263D1 | 2 | FILM-NOTICE BYSTANDERS |
| 23 | 501260D1 | 2 | FILM-NOTICE SERVICE MANUAL |
| 24 | 501257D1 | 2 | FILM-NOTICE SERVICE MANUAL |

[A] PART OF 186-0979 HITCH AR

501505DB
PR: t05i29k58b0573

## DECAL SHEET-COMPLETING AR - 501513D1
**ENGLISH**

### SERVICE GUIDE

**10 HOUR/DAILY CHECKS**
1. CHECK ENGINE COOLANT LEVEL
2. CHECK ENGINE OIL LEVEL
3. CHECK FUEL/WATER SEPARATOR BOWL AS
4. CHECK FUEL LEVEL
5. INSPECT UNDERCARRIAGE
6. CHECK HYDRAULIC/TRANSMISSION FLUID LEVEL

**50 HOURS**
7. DRAIN AIR TANK (IF EQUIPPED)
8. LUBRICATE 3 PT HITCH (IF EQUIPPED)

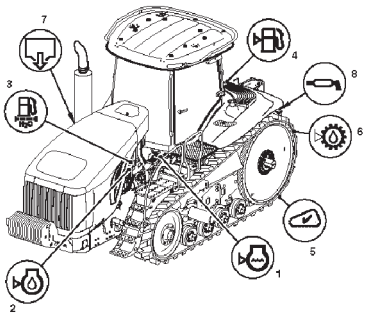


| CAB | PART NUMBER | APPROX. CAPACITY |
|---|---|---|
| RECIRCULATION AIR FILTER | 501153D1 | |
| FRESH AIR FILTER | 501881D1 | |
| A/C SYSTEM | R134a | 2.3 kg (5.0 lb) |
| **ENGINE** | | |
| ENGINE OIL FILTER | 504594D1 | |
| PRIMARY FUEL FILTER | CH18-9771 | |
| SECONDARY FUEL FILTER | CH18-9762 | |
| ENGINE AIR FILTER (PRIMARY) | | |
| MT835/MT845 | CH9I-2505 | |
| MT855/MT865 | CH9I-2509 | |
| ENGINE AIR FILTER (SECONDARY) | | |
| MT835/MT845 | CH9I-2508 | |
| MT855/MT865 | CH9I-2510 | |
| OIL* (DEO SAE 10W30) | | |
| MT835/MT845 | | 30 L (8 gal) |
| MT855/MT865 | | 34 L (9 gal) |
| COOLANT (EXTENDED LIFE 50/50 MIX) | | |
| MT835/MT845 | | 44 L (12 gal) |
| MT855/MT865 | | 48 L (13 gal) |
| **HYDRAULIC/TRANSMISSION** | | |
| IMPLEMENT STEERING FILTER | 501746D2 | |
| TRANSMISSION FILTER | 501746D2 | |
| IMPLEMENT CASE DRAIN FILTER | 501771D1 | |
| OIL (MTO SAE 10W30) | | 287 L (75.5 gal) |
| **BELTS** | | |
| ACCESSORY | 500685D1 | |
| **FAN** | | |
| MT835/MT845 | 197-6290 | |
| MT855 | 197-6291 | |
| MT865 | 197-6292 | |
| **BATTERIES** | 502445D1 | 1000 CCA/ PER BATTERY |
| **LUBRICATION** | | |
| HITCH (GREASE NLGI GRADE 2-MPGM (DRMoS2)) | | 1 hg (25.4 oz) |

* SEE OMM FOR TEMPERATURE APPLICATION RANGE

501397D1.3

7

**⚠ WARNING**

Improper jumper cable connections can cause explosion resulting in personal injury.

Use only the recommended locations to connect jumper cables. Follow procedure in the operation & maintenance manual.

501384D1.1

1

**⚠ WARNING**

Failure to follow these instructions can result in operator or bystander injury

- Pull only from drawbar. Pulling from any other point may cause overturn.
- Use safety chains to tow equipment.

501377D1.1

2

**⚠ WARNING**

Microwave radiation may cause eye damage. To avoid injury to eyes, do not look directly into the face of the ground speed sensor.

501349D1.1

3

**⚠ CAUTION**

The instructional seat has been provided only for training operators or diagnosing machine problems. Keep all riders off the tractor and equipment. Always wear your seat belt.

501214D1.1

4

**WIRE ACCESS**

501396D1.1

5

**⚠ WARNING**

Do not operate or work on this machine unless you have read and understand the instructions and warnings in the operation and maintenance manuals. Failure to follow the instructions or heed the warnings could result in injury or death. Contact any authorized dealer for replacement manuals. proper care is your responsibility.

**NOTICE**

Operate engine at low idle for five minutes before shutdown after full load operation.

Sustained operation of this machine at full-power drawbar loads at ground speed below 6.4 km/h (4 mph) will reduce powertrain life and may void warranty due to overload conditions. Refer to operator's manual.

6

**⚠ WARNING**

Personal injury could result from improperly coupled implements. Be certain latches are fully engaged on both sides before transporting or pulling the implement.

501342D1.1

8

**⚠ WARNING**



To avoid injury do not stand on or between implement and tractor while operating lift control.

501335D1.1

9

**⚠ WARNING**

Failure to follow these instructions can result in serious operator or bystander injury.

- Stop PTO and engine before servicing tractor or changing implements.
- Do not operate with unshielded PTO.



501328D1.1

10

**NOTICE**

Use only the recomended locations for jump start cable connections. Follow the procedure in the operation & maintenance manual for jump start cable use.

501370D1.1

11

## DECAL SHEET-COMPLETING AR - 501513D1

ENGLISH

| ITEM | NUMBER | QTY | DESCRIPTION |
|---|---|---|---|
| - | 179-2248 | -- | COMPLETING AR-ENGLISH (NOT SERVICED) |
| - | 501513D1 | -- | DECAL SHEET [A] (INCLS ITEMS 1-11) |
| 1 | 501384D1 | 1 | FILM-WARNING |
| 2 | 501377D1 | 1 | FILM-WARNING |
| 3 | 501349D1 | 2 | FILM-WARNING |
| 4 | 501314D1 | 1 | FILM-CAUTION (ENGLISH) |
| 5 | 501356D1 | 1 | FILM-WIRE ACCESS |
| 6 | 501321D1 | 1 | FILM-WARN UNIV (ENGLISH) |
| 7 | 501397D1 | 1 | FILM-SERVICE INFO |
| 8 | 501342D1 | 1 | FILM-WARNING |
| 9 | 501335D1 | 2 | FILM-WARNING |
| 10 | 501328D1 | 1 | FILM-WARNING (ENGLISH) |
| 11 | 501370D1 | 2 | FILM-NOTICE |

[A] PART OF 169-0028 HITCH AR;
179-2248 COMPLETING AR

501513DA
PR: t05i29k58b0574

## DECAL SHEET-COMPLETING AR - 501514D1
**DUTCH**

# ONDERHOUDSOVERZICHT

**CONTROLE OM DE 10 UUR/DAGELIJKS**
1. Controleer motorkoelvloeistofpeil
2. Controleer motoroliepeil
3. Controleer brandstof/waterafscheiderpotje
4. Controleer brandstofpeil
5. Inspecteer onderwagen
6. Controleer hydrauliek/ transmissievloeistofpeil

**OM DE 50 UUR**
7. Tap luchtvat (indien aanwezig) af
8. Smeer 3-puntstrekinrichting (indien aanwezig)

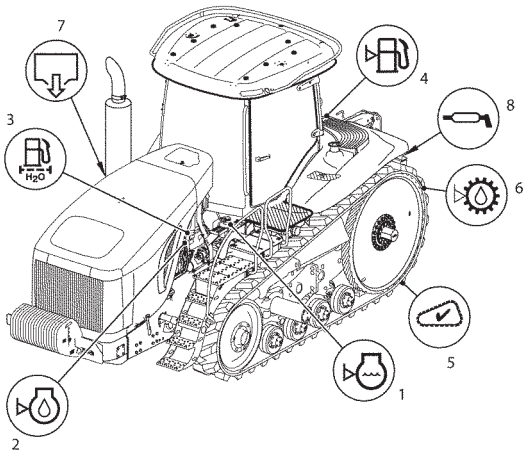


| CABINE | ONDER-DEELNR. | INHOUD (ONG.) |
|---|---|---|
| LUCHTCIRCULATIEFILTER | 501153D1 | |
| BUITENLUCHTFILTER | 501881D1 | |
| AIRCO-SYSTEEM | R134a | 23 hg (5,0 lb) |
| **MOTOR** | | |
| MOTOROLIEFILTER | 504594D1 | |
| BRANDSTOFVOORFILTER | CH1R-0771 | |
| SECUNDAIR BRANDSTOFFILTER | CH1R-0762 | |
| MOTORLUCHTFILTER (VOORFILTER) | | |
| MT835/ MT845 | CH6I-2505 | |
| MT855/ MT865 | CH6I-2509 | |
| MOTORLUCHTFILTER (SECUNDAIR) | | |
| MT835/ MT845 | CH6I-2506 | |
| MT855/ MT865 | CH6I-2510 | |
| OLIE* (DEO SAE 10W30) | | |
| MT835/ MT845 | | 30 L (8 gal) |
| MT855/ MT865 | | 34 L (9 gal) |
| KOELVLOEISTOF (EXTENDED LIFE 50:50) | | |
| MT835/ MT845 | | 44 L (12 gal) |
| MT855/ MT865 | | 48 L (13 gal) |
| **HYDRAULISCH SYSTEEM/TRANSMISSIE** | | |
| STUURSYSTEEMFILTER WERKTUIG | 501766D2 | |
| TRANSMISSIEFILTER | 501766D2 | |
| CARTERAFTAPFILTER WERKTUIG | 501771D1 | |
| OLIE (MTO SAE 10W30) | | 267 L (70,5 gal) |
| **RIEMEN** | | |
| HULPUITRUSTING | 500685D1 | |
| VENTILATOR | | |
| MT835/ MT845 | 197-6290 | |
| MT855 | 197-6291 | |
| MT865 | 197-6292 | |
| **ACCU'S** | 502445D1 | 1000 CCA/ ACCU |
| **SMERING** | | |
| TREKINRICHTING (SMEERVET NLGI 2-MPGM (3% MoS2)) | | 1 hg (25,4 oz) |

* Zie bedienings- en onderhoudshandleiding voor temperatuurtoepassingsbereik

Dutch 501394D1 3

7

**⚠ WAARSCHUWING**

Verkeerd aansluiten van hulpstartkabels kan ontploffing veroorzaken wat lichamelijk letsel tot gevolg heeft.

Gebruik uitsluitend de aanbevolen plaatsen om hulpstartkabels te verbinden. Volg de procedure in de bedienings- en onderhoudshandleiding.

501388D1 1

1

**⚠ WAARSCHUWING**

Het niet opvolgen van deze instructies kan letsel van de machinist of omstanders tot gevolg hebben.

- Trek alleen met de trekstang. Trekken met een ander punt kan omkantelen veroorzaken.
- Gebruik veiligheidskettingen om materieel te slepen.

501378D1 1

2

**⚠ WAARSCHUWING**

Microgolfstralen kunnen ogen beschadigen. Om oogletsel te vermijden, niet rechtstreeks naar plaat van grondsnelheid sensor kijken.

501350D1 1

3

**⚠ WAARSCHUWING**

Alleen deze machine gebruiken en eraan werken als u de instructies en waarschuwingen in de bedienings- en onderhoudshandleidingen hebt gelezen en begrijpt. Het niet opvolgen van de instructies of het niet in acht nemen van de waarschuwingen kan ernstig of dodelijk letsel tot gevolg hebben. Neem contact op met een erkende dealer voor nieuwe handleidingen. U bent verantwoordelijk voor het juiste onderhoud.

**OPGELET**

Laat de motor vijf minuten met laagtoeren onbelast draaien alvorens hem stop te zetten na gebruik bij vollast. Aanhoudende bediening van deze machine bij maximale belasting op de trekstang en rijsnelheden onder 6,4 km/u verkorten de levensduur van de aandrijving en kunnen de garantie ongeldig maken vanwege overbelasting. Raadpleeg de gebruikers-handleiding.

Dutch 501322D1 1

6

**⚠ PAS OP**

De stoel voor de instructeur is uitsluitend bedoeld voor het trainen van machinisten of het vaststellen van problemen met de machine. Laat niemand meerijden op de trekker en uitrusting. Draag altijd uw veiligheidsgordel.

501319D1 1

4

TOEGANG TOT

501357D1 1

5

**⚠ WAARSCHUWING**



Voorkom letsel: ga niet op of tussen het werktuig en de trekker staan terwijl de hefhendel wordt bediend.

501336D1 1

9

**⚠ WAARSCHUWING**

Verkeerd aangekoppelde werktuigen kunnen lichamelijk letsel veroorzaken. Verzekert u ervan dat pallan aan beide zijden goed vastzitten alvorens het werktuig te vervoeren of te trekken.

501343D1 1

8

**⚠ WAARSCHUWING**

Het niet opvolgen van deze instructies kan ernstig letsel van de machinist of omstanders tot gevolg hebben.

- Stop de aftakas en motor alvorens onderhoud of reparaties aan de trekker uit te voeren of werktuigen te verwisselen.
- Niet gebruiken met aftakas zonder afschermplaat.



501329D1 1

10

**OPGELET**

Gebruik uitsluitend de aanbevolen plaatsen voor hulpstartkabelverbindingen. Volg de procedure in de bedienings- en onderhoud-shandleiding voor het gebruik van hulpstart-kabels.

501374D1 1

11

501514DA

## DECAL SHEET-COMPLETING AR - 501514D1
DUTCH

| ITEM | NUMBER | QTY | DESCRIPTION |
|---|---|---|---|
| - | 179-2252 | -- | COMPLETING AR-DUTCH (NOT SERVICED) |
| - | 501514D1 | -- | DECAL SHEET [A] (INCLS ITEMS 1-11) |
| 1 | 501388D1 | 1 | FILM-WARNING |
| 2 | 501378D1 | 1 | FILM-WARNING |
| 3 | 501350D1 | 2 | FILM-WARNING |
| 4 | 501319D1 | 1 | FILM-CAUTION (DUTCH) |
| 5 | 501357D1 | 1 | FILM-WIRE ACCESS (DUTCH) |
| 6 | 501322D1 | 1 | FILM-WARNING UNIV (DUTCH) |
| 7 | 501394D1 | 1 | FILM-SERVICE INFO (DUTCH) |
| 8 | 501343D1 | 1 | FILM-WARNING |
| 9 | 501336D1 | 2 | FILM-WARNING (DUTCH) |
| 10 | 501329D1 | 1 | FILM-WARNING |
| 11 | 501374D1 | 2 | FILM-NOTICE |

[A] PART OF 179-2252 COMPLETING AR

501514DA
PR: t05i29k58b0575

## DECAL SHEET-COMPLETING AR - 501515D1
**FRENCH**

# GUIDE D'ENTRETIEN

**CONTRÔLES TOUTES LES 10 HEURES/TOUS LES JOURS**
1. Contrôler le niveau de liquide de refroidissement moteur
2. Contrôler le niveau d'huile moteur
3. Contrôler la cuve du séparateur d'eau/carburant
4. Contrôler le niveau de carburant
5. Inspecter le train de roulment
6. Contrôler le niveau de liquide hydraulique/boîte de vitesses

**TOUTES LES 50 HEURES**
7. Vidanger le réservoir d'air (selon équipement)
8. Graisser le relevage à trois points (selon équipement)

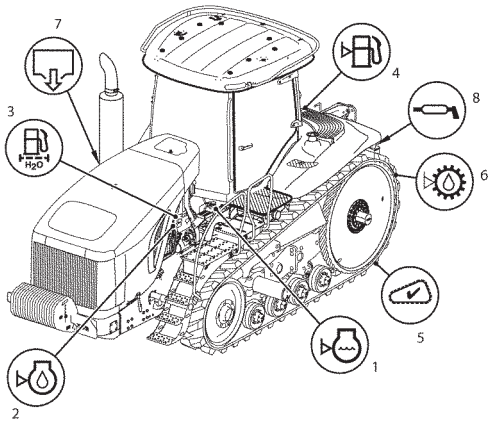


| CABINE | NO PIÈCE | CONTENANCE APPROX. |
|---|---|---|
| FILTRE DE RECIRCULATION D'AIR | 501153D1 | |
| FILTRE À AIR FRAIS | 501881D1 | |
| CLIMATISATION | R134a | 23 hg (5,0 lb) |
| **MOTEUR** | | |
| FILTRE À HUILE MOTEUR | 504594D1 | |
| FILTRE À CARBURANT PRIMAIRE | CH1R-0771 | |
| FILTRE À CARBURANT SECONDAIRE | CH1R-0762 | |
| FILTRE À AIR (PRIMAIRE) DU MOTEUR | | |
| MT835/ MT845 | CH6I-2505 | |
| MT855/ MT865 | CH6I-2509 | |
| FILTRE À AIR (SECONDAIRE) DU MOTEUR | | |
| MT835/ MT845 | CH6I-2506 | |
| MT855/ MT865 | CH6I-2510 | |
| HUILE* (DEO SAE 10W30) | | |
| MT835/ MT845 | | 30 L (8 gal) |
| MT855/ MT865 | | 34 L (9 gal) |
| LIQUIDE DE REFROIDISSEMENT (LONGUE DURÉE MÉLANGE 50/50) | | |
| MT835/ MT845 | | 44 L (12 gal) |
| MT855/ MT865 | | 48 L (13 gal) |
| **HYDRAULIQUE/BOÎTE DE VITESSES** | | |
| FILTRE DE DIRECTION/ÉQUIPEMENT | 501766D2 | |
| FILTRE DE BOÎTE DE VITESSES | 501766D2 | |
| FILTRE DE RETOUR (ÉQUIPEMENT) | 501771D1 | |
| HUILE (MTO SAE 10W30) | | 267 L (70,5 gal) |
| **COURROIES** | | |
| ACCESSOIRES | 500685D1 | |
| VENTILATEUR | | |
| MT835/ MT845 | 197-6290 | |
| MT855 | 197-6291 | |
| MT865 | 197-6292 | |
| **BATTERIES** | 502445D1 | 1000 CCA/ BATTERIE |
| **GRAISSAGE** | | |
| RELEVAGE À TROIS POINTS (Graisse NLGI No 2-MPGM (3%MoS2)) | | 1 hg (25,4 oz) |

*Voir la plage de température dans le guide d'utilisation et d'entretien

French 501391D1 3

7

**DANGER**

Des connexions de câbles volants incorrectes peuvent causer une explosion entraînant des blessures.

Utiliser uniquement les emplacements conseillés pour brancher les câbles volants. Suivre la procédure dans le guide d'utilisation et d'entretien.

501385D1 1

1

**DANGER**

L'inobservation de se conformer à ces consignes peut entraîner des blessures au conducteur ou aux personnes à proximité

- Tirer uniquement à partir de la barre d'attelage. Il y a risque de renversement si l'on tire à partir d'un autre point.
- Utiliser des chaînes de sécurité pour remorquer l'équipment.

501379D1 1

2

**DANGER**

Les rayons émis par les microondes peuvent provoquer des lésions aux yeux. Pour éviter ce risque, ne regardez pas le capteur de vitesse directement en face.

501351D1 1

3

**ATTENTION**

Le siège du formateur est fourni uniquement pour les conducteurs en formation et pour les diagnostiques de machine. Les conducteurs doivent rester à l'écart du tracteur et de l'equipement. Toujours boucler la ceinture de sécurité.

501315D1 1

4

ACCÈS AUX CÂBLES

501358D1 1

5

**DANGER**

Ne pas conduire cette machine et ne pas travailler dessus sans avoir lu et bien assimilé les instructions et les consignes donnés dans le manuel d'utilisation et d'entretien. Toute entorse est dangereuse et risque d'être à l'origine d'accidents graves, voire mortels. Si le manuel est à remplacer, s'adresser au concessionnaire caterpillar pour en obtenir un autre. Il incombe à l'utilisateur de prendre soin de cette machine.

**REMARQUE**

Faire fonctionner le moteur au régime de ralenti pendant cinq minutes avant de couper le moteur après tout fonctionnement à pleine charge.
Une utilisation invensive de cette machine avec un effort à la barre maximum en Se ou dans un rapport inférieur (vitesse inférieure à 6,4 km/h) peut réduire la durée de service de la transmission. Se référer au guide d'utilisation.

French 501323D1 1

6

**DANGER**

Des équipements incorrectement accouplés risquent de provoquer des accidents corporels. assurez-vous que les verrous sont complètement engagés des deux côtés avant de transporter ou de tirer l'équipement.

501344D1 1

8

**DANGER**



Afin d'éviter toute blessure, ne pas monter sur l'equipement ou rester entre l'équipment et le tracteur lorsque l'on utilise la commande de levage.

501337D1 1

9

**DANGER**

L'inobservation de se conformer à ces instructions peut entraîner de graves blessures au conducteur ou à une personne à proximité.

- Arrêter la prise de force et le moteur avant de réparer le tracteur ou de changer des équipements.
- Ne pas utiliser avec une prise de force non protégé.



501330D1 1

10

**REMARQUE**

Utiliser uniquement les emplacements conseillés pour les connexions des câbles volants. Suivre la procédure dans le guide d'utilisation et d'entretien pour l'utilisation des câbles volants.

501371D1

11

501515DA

## DECAL SHEET-COMPLETING AR - 501515D1
FRENCH

| ITEM | NUMBER | QTY | DESCRIPTION |
|---|---|---|---|
| - | 179-2249 | -- | COMPLETING AR-FRENCH (NOT SERVICED) |
| - | 501515D1 | -- | DECAL SHEET [A] (INCLS ITEMS 1-11) |
| 1 | 501385D1 | 1 | FILM-WARNING |
| 2 | 501379D1 | 1 | FILM-WARNING |
| 3 | 501351D1 | 2 | FILM-WARNING |
| 4 | 501315D1 | 1 | FILM-CAUTION (FRENCH) |
| 5 | 501358D1 | 1 | FILM-WIRE ACCESS (FRENCH) |
| 6 | 501323D1 | 1 | FILM-WARN UNIV. (FRENCH) |
| 7 | 501391D1 | 1 | FILM-SERVICE INFO (FRENCH) |
| 8 | 501344D1 | 1 | FILM-WARNING |
| 9 | 501337D1 | 2 | FILM-WARNING |
| 10 | 501330D1 | 1 | FILM-WARNING |
| 11 | 501371D1 | 2 | FILM-NOTICE |

[A] PART OF 179-2249 COMPLETING AR

501515DA
PR: t05i29k58b0576

## DECAL SHEET-COMPLETING AR - 501516D1
**JAPANESE**

# サービスガイド

**10時間毎、または、日常の点検**
1．エンジン冷却液（クーラント）レベルの点検
2．エンジン・オイル・レベルの点検
3．燃料／水分離器トレイの点検
4．燃料レベルの点検
5．駆動走行部の検査
6．油圧および、トランスミッション・オイル・レベルの点検

**50時間毎の点検**
7．エア・タンクの水抜き（装備されている場合）
8．3ポイント・ヒッチへの給脂（装備されている場合）

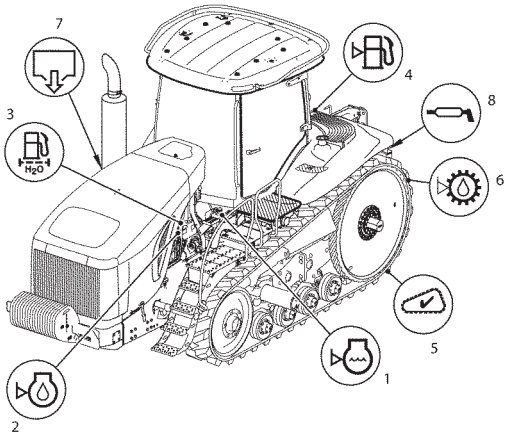


| キャブ | 部品番号 | 容量（標準） |
|---|---|---|
| 循環エア・フィルタ | 501153D1 | |
| 外気エア・フィルタ | 501881D1 | |
| A/C システム | R134A | 23 hg (5,0 lb) |
| **エンジン** | | |
| エンジン・オイル・フィルタ | 504594D1 | |
| 一次燃料フィルタ | CH1R-0771 | |
| 二次燃料フィルタ | CH1R-0762 | |
| エンジン・エア・フィルタ（一次） | | |
| MT835/MT845 | CH6I-2505 | |
| MT855/MT865 | CH6I-2509 | |
| エンジン・エア・フィルタ（二次） | | |
| MT835/MT845 | CH6I-2506 | |
| MT855/MT865 | CH6I-2510 | |
| オイル*（DEO SAE 10W30） | | |
| MT835/MT845 | | 30 L (8 gal) |
| MT855/MT865 | | 34 L (9 gal) |
| 冷却液（冷却水エクステンダ 50/50 混合） | | |
| MT835/MT845 | | 44 L (12 gal) |
| MT855/MT865 | | 48 L (13 gal) |
| **油圧／トランスミッション** | | |
| ステアリング・フィルタ | 501766D2 | |
| トランスミッション・フィルタ | 501766D2 | |
| 油圧装置オイル・フィルタ | 501771D1 | |
| オイル（MTO SAE 10W30） | | 267 L (70,5 gal) |
| **ベルト** | | |
| 付属品 | 500685D1 | |
| ファン | | |
| MT835/MT845 | 197-6290 | |
| MT855 | 197-6291 | |
| MT865 | 197-6292 | |
| バッテリ | 502445D1 | 1000 CCA/（バッテリー当たり） |
| **潤滑油** | | |
| ヒッチ（グリース：NLGI／グレード：2-MPGM（3%MoS2）） | | 1 hg (25,4 oz) |

* 取扱説明書のエンジン・オイル粘度別温度表を参照してください。

Japanese 501395D1 3

7

---

**⚠ 警告**

ジャンパーケーブルを誤って接続すると、バッテリーが爆発し重大な事故につながるおそれがります。

取扱説明書のジャンパーケーブル接続方法に従い、必ずジャンパーケーブル接続部にケーブルを接続してください。

501389D1 1

1

---

**⚠ 警 告**

下記の指示に従わない場合は、作業員および周囲の人に人身事故や死亡事故を招くおそれがあります。

- けん引する時は、必ずけん引バーを使用して下さい。他部位を使ってけん引すると横転を引き起こすことがあります。
- けん引する場合は、安全チェーンを使用して下さい。

501380D1 1

2

---

**⚠ 警告**

電磁波から出る放射性物質は目に障害を及ぼすことがあります。眼を守るためグランドスピードセンサーの正面を直視しないで下さい。

501352D1 1

3

---

**⚠ 注 意**

補助席は教育実習中のオペレータまたはマシンの診断作業を実施する担当者が使用するために設けられたものです。トラクタおよびマシンには同乗者を搭乗させないで下さい。シートベルトは常に着用してください。

501320D1 1

4

---

**ワイヤアクセス**

501359D1 1

5

---

**⚠ 警 告**

取扱説明書の内容や警告ラベルの記載事項を読まなかったり、理解せずに運転操作をしないでください。取り扱い方法や警告文を無視すると、重大な人身事故、または、死亡事故を引き起こすおそれがあります。交換方法の手引きについては、キャタピラー社特約販売店にお問い合わせください。正しく取り扱うことは、ユーザー自身の義務です。

**注 記**

エンジンをフル稼働させたあとエンジンを停止させる場合は、ローアイドルで5分間の冷却運転（アイドリング）を行ってください。6.4 km/h 未満の速度で、全出力の 負荷をドローバーに掛け続けると、過重負荷によりパワートレーンの寿命を縮める原因と なり、この場合の故障保証については対象外 となります。
取扱説明書を参照してください。

Japanese 501324D1 1

6

---

**⚠ 警 告**

作業装置の取り付けが不適切であると、人身傷害発生の原因となることがあります。作業装置を搬送したり牽引する際は、ラッチを両側からしっかりと固定して下さい。

501348D1 1

8

---

**⚠ 警 告**



傷害事故を防ぐためリフトコントロールを作動中は作業装置と車体の間に立たないで下さい。

501338D1 1

9

---

**⚠ 警 告**

手順を順守しないと、オペレータまたは第3者に重大な傷害が発生することがあります。

- トラクタを整備する前にPTOとエンジンを停止し、作業装置を交換してして下さい。
- シールドを外したPTOを稼動しないで下さい。



501331D1 1

10

---

**注 意**

ジャンパーケーブルを接続する場合は、取扱説明書のジャンパーケーブルの接続方法に従い、決められた位置にケーブルを接続するようにしてください。

501375D1

11

501516DA

## DECAL SHEET-COMPLETING AR - 501516D1

JAPANESE

| ITEM | NUMBER | QTY | DESCRIPTION |
|---|---|---|---|
| - | 179-2254 | -- | COMPLETING AR-JAPANESE (NOT SERVICED) |
| - | 501516D1 | -- | DECAL SHEET [A] (INCLS ITEMS 1-11) |
| 1 | 501389D1 | 1 | FILM-WARNING |
| 2 | 501380D1 | 1 | FILM-WARNING |
| 3 | 501352D1 | 2 | FILM-WARNING |
| 4 | 501320D1 | 1 | FILM-CAUTION (JAPANESE) |
| 5 | 501359D1 | 1 | FILM-WIRE ACCESS (JAPANESE) |
| 6 | 501324D1 | 1 | FILM-WARNING UNIV. (JAPANESE) |
| 7 | 501395D1 | 1 | FILM-SERVICE INFO (JAPANESE) |
| 8 | 501348D1 | 1 | FILM-WARNING |
| 9 | 501338D1 | 2 | FILM-WARNING |
| 10 | 501331D1 | 1 | FILM-WARNING |
| 11 | 501375D1 | 2 | FILM-NOTICE |

[A] PART OF 179-2254 COMPLETING AR

501516DA
PR: t05i29k58b0577

## DECAL SHEET-COMPLETING AR - 501517D1
**PORTUGUESE**

# GUIDE D'ENTRETIEN

**CONTRÔLES TOUTES LES 10 HEURES/TOUS LES JOURS**
1. Contrôler le niveau de liquide de refroidissement moteur
2. Contrôler le niveau d'huile moteur
3. Contrôler la cuve du séparateur d'eau/carburant
4. Contrôler le niveau de carburant
5. inspecter le train de roulment
6. Contrôler le niveau de liquide hydraulique/boîte de vitesses

**TOUTES LES 50 HEURES**
7. Vidanger le réservoir d'air (selon équipement)
8. Graisser le relevage à trois points (selon équipement)

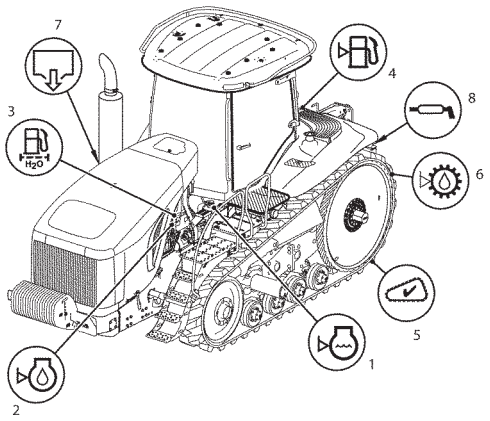


| | NO PIÈCE | CONTENANCE APPROX. |
|---|---|---|
| **CABINE** | | |
| FILTRE DE RECIRCULATION D'AIR | 501153D1 | |
| FILTRE À AIR FRAIS | 501881D1 | |
| CLIMATISATION | R134a | 23 hg (5,0 lb) |
| **MOTEUR** | | |
| FILTRE À HUILE MOTEUR | 504594D1 | |
| FILTRE À CARBURANT PRIMAIRE | CH1R-0771 | |
| FILTRE À CARBURANT SECONDAIRE | CH1R-0762 | |
| FILTRE À AIR (PRIMAIRE) DU MOTEUR | | |
| MT835/ MT845 | CH6I-2505 | |
| MT855/ MT865 | CH6I-2509 | |
| FILTRE À AIR (SECONDAIRE) DU MOTEUR | | |
| MT835/ MT845 | CH6I-2506 | |
| MT855/ MT865 | CH6I-2510 | |
| HUILE* (DEO SAE 10W30) | | |
| MT835/ MT845 | | 30 L (8 gal) |
| MT855/ MT865 | | 34 L (9 gal) |
| LIQUIDE DE REFROIDISSEMENT (LONGUE DURÉE MÉLANGE 50/50) | | |
| MT835/ MT845 | | 44 L (12 gal) |
| MT855/ MT865 | | 48 L (13 gal) |
| **HYDRAULIQUE/BOÎTE DE VITESSES** | | |
| FILTRE DE DIRECTION/ÉQUIPEMENT | 501766D2 | |
| FILTRE DE BOÎTE DE VITESSES | 501766D2 | |
| FILTRE DE RETOUR (ÉQUIPEMENT) | 501771D1 | |
| HUILE (MTO SAE 10W30) | | 267 L (70,5 gal) |
| **COURROIES** | | |
| ACCESSOIRES | 500685D1 | |
| VENTILATEUR | | |
| MT835/ MT845 | 197-6290 | |
| MT855 | 197-6291 | |
| MT865 | 197-6292 | |
| **BATTERIES** | 502445D1 | 1000 CCA/ BATTERIE |
| **GRAISSAGE** | | |
| RELEVAGE À TROIS POINTS [Graisse NLGI No 2-MPGM (3%MoS2)] | | 1 hg (25,4 oz) |

*Voir la plage de température dans le guide d'utilisation et d'entretien

French 501391D1 3

7

**DANGER**

Des connexions de câbles volants incorrectes peuvent causer une explosion entraînant des blessures.

Utiliser uniquement les emplacements conseillés pour brancher les câbles volants. Suivre la procédure dans le guide d'utilisation et d'entretien.

501385D1 1

1

**DANGER**

L'inobservation de se conformer à ces consignes peut entraîner des blessures au conducteur ou aux personnes à proximité.

- Tirer uniquement à partir de la barre d'attelage. Il y a risque de renversement si l'on tire à partir d'un autre point.
- Utiliser des chaînes de sécurité pour remorquer l'équipment.

501379D1 1

2

**DANGER**

Les rayons émis par les microondes peuvent provoquer des lésions aux yeux. Pour éviter ce risque, ne regardez pas le capteur de vitesse directement en face.

501351D1 1

3

**ATTENTION**

Le siège du formateur est fourni uniquement pour les conducteurs en formation et pour les diagnostiques de machine. Les conducteurs doivent rester à l'écart du tracteur et de l'equipement. Toujours boucler la ceinture de sécurité.

501316D1 1

4

**ACCÈS AUX CÂBLES**

501358D1 1

5

**DANGER**

Des équipements incorrectement accouplés risquent de provoquer des accidents corporels. assurez-vous que les verrous sont complètement engagés des deux côtés avant de transporter ou de tirer l'équipement.

501344D1 1

8

**DANGER**

Afin d'éviter toute blessure, ne pas monter sur l'equipement ou rester entre l'équipment et le tracteur lorsque l'on utilise la commande de levage.

501337D1 1

9

**DANGER**

L'inobservation de se conformer à ces instructions peut entraîner de graves blessures au conducteur ou à une personne à proximité.

- Arrêter la prise de force et le moteur avant de réparer le tracteur ou de changer des équipements.
- Ne pas utiliser avec une prise de force non protégée.

501330D1 1

10

**REMARQUE**

Utiliser uniquement les emplacements conseillés pour les connexions des câbles volants. Suivre la procédure dans le guide d'utilisation et d'entretien pour l'utilisation des câbles volants.

501371D1

11

**DANGER**

Ne pas conduire cette machine et ne pas travailler dessus sans avoir lu et bien assimilé les instructions et les consignes donnés dans le manuel d'utilisation et d'entretien. Toute entorse est dangereuse et risque d'être à l'origine d'accidents graves, voire mortels. Si le manuel est à remplacer, s'adresser au concessionnaire caterpillar pour en obtenir un autre. Il incombe à l'utilisateur de prendre soin de cette machine.

**REMARQUE**

Faire fonctionner le moteur au régime de ralenti pendant cinq minutes avant de couper le moteur après tout fonctionnement à pleine charge.
Une utilisation invensive de cette machine avec un effort à la barre maximum en 5e ou dans un rapport inférieur (vitesse inférieure à 6,4 km/h) peut réduire la durée de service de la transmission. Se référer au guide d'utilisation.

French 501323D1 1

6

## DECAL SHEET-COMPLETING AR - 501517D1
### PORTUGUESE

| ITEM | NUMBER | QTY | DESCRIPTION |
|---|---|---|---|
| - | 179-2251 | -- | COMPLETING AR-PORTUGUESE (NOT SERVICED) |
| - | 501517D1 | -- | DECAL SHEET [A] (INCLS ITEMS 1-11) |
| 1 | 501387D1 | 1 | FILM-WARNING |
| 2 | 501381D1 | 1 | FILM-WARNING |
| 3 | 501353D1 | 2 | FILM-WARNING |
| 4 | 501317D1 | 1 | FILM-CAUTION (PORTUGUESE) |
| 5 | 501360D1 | 1 | FILM-WIRE ACCESS (PORTUGUESE) |
| 6 | 501325D1 | 1 | FILM-WARNING UNIV. (PORTUGUESE) |
| 7 | 501393D1 | 1 | FILM-SERVICE INFO (PORTUGUESE) |
| 8 | 501345D1 | 1 | FILM-WARNING |
| 9 | 501339D1 | 2 | FILM-WARNING |
| 10 | 501332D1 | 1 | FILM-WARNING |
| 11 | 501373D1 | 2 | FILM-NOTICE |

[A] PART OF 179-2251 COMPLETING AR

501517DA
PR: t05i29k58b0578

## DECAL SHEET-COMPLETING AR - 501518D1
**RUSSIAN**

### РУКОВОДСТВО ПО ТЕХНИЧЕСКОМУ ОБСЛУЖИВАНИЮ

**КАЖДЫЕ 10 МОТОЧАСОВ ИЛИ ЕЖЕДНЕВНО**
1. ПРОВЕРКА УРОВНЯ ОХЛАЖДАЮЩЕЙ ЖИДКОСТИ ДВИГАТЕЛЯ
2. ПРОВЕРКА УРОВНЯ МОТОРНОГО МАСЛА
3. ПРОВЕРКА СТАКАНА ТОПЛИВНОГО ВОДООТДЕЛИТЕЛЯ
4. ПРОВЕРКА УРОВНЯ ТОПЛИВА
5. ОСМОТР ХОДОВОЙ ЧАСТИ
6. ПРОВЕРКА УРОВНЯ РАБОЧЕЙ ЖИДКОСТИ В ГИДРОСИСТЕМЕ И КОРОБКЕ ПЕРЕДАЧ

**КАЖДЫЕ 50 МОТОЧАСОВ**
7. СЛИВ КОНДЕНСАТА ИЗ ВОЗДУШНОГО РЕСИВЕРА (ПРИ НАЛИЧИИ)
8. СМАЗКА ТРЕХ-ТОЧЕЧНОГО НАВЕСНОГО УСТРОЙСТВА (ПРИ НАЛИЧИИ)

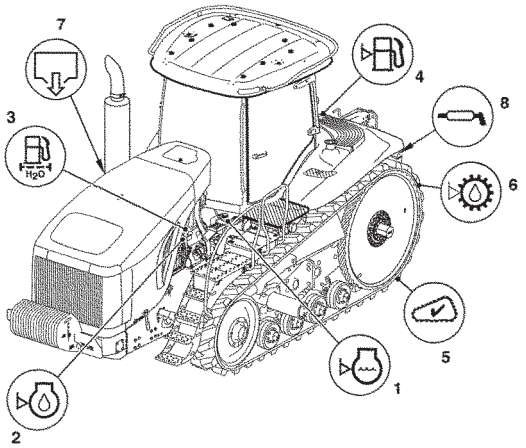


| КАБИНА | № ДЕТАЛИ ПО КАТАЛОГУ | ПРИМЕРНАЯ ВМЕСТИМОСТЬ |
|---|---|---|
| РЕЦИРКУЛЯЦИОННЫЙ ВОЗДУШНЫЙ ФИЛЬТР | 501163D1 | |
| ФИЛЬТР СВЕЖЕГО ВОЗДУХА | 501881D1 | |
| СИСТЕМА КОНДИЦИОНИРОВАНИЯ ВОЗДУХА | R134a | 23 кг (5,0 фунтов) |
| **ДВИГАТЕЛЬ** | | |
| МАСЛЯНЫЙ ФИЛЬТР ДВИГАТЕЛЯ | 504594D1 | |
| ТОПЛИВНЫЙ ФИЛЬТР ГРУБОЙ ОЧИСТКИ | CH1R-0771 | |
| ТОПЛИВНЫЙ ФИЛЬТР ТОНКОЙ ОЧИСТКИ | CH1R-0762 | |
| ОСНОВНОЙ ВОЗДУШНЫЙ ФИЛЬТР ДВИГАТЕЛЯ | | |
| MT835/ MT845 | CH6I-2505 | |
| MT855/ MT865 | CH6I-2509 | |
| ВСПОМОГАТЕЛЬНЫЙ ВОЗДУШНЫЙ ФИЛЬТР ДВИГАТЕЛЯ | | |
| MT835/ MT845 | CH6I-2508 | |
| MT855/ MT865 | CH6I-2510 | |
| МАСЛО* (DEO SAE 10W30) | | |
| MT835/ MT845 | | 30 л (8 галлонов) |
| MT855/ MT865 | | 34 л (9 галлонов) |
| ОХЛАЖДАЮЩАЯ ЖИДКОСТЬ FELCC УВЕЛИЧЕННЫМ СРОКОМ СЛУЖБЫ, ГОТОВАЯ К ПРИМЕНЕНИЮ СМЕСЬ 50/50 | | |
| MT835/ MT845 | | 44 л (12 галлонов) |
| MT855/ MT865 | | 48 л (13 галлонов) |
| **ГИДРОСИСТЕМА И КОРОБКА ПЕРЕДАЧ** | | |
| ФИЛЬТР КОНТУРА РАСЧЕТО ОБОРУДОВАНИЯ И РУЛЕВОГО УПРАВЛЕНИЯ | 501766D2 | |
| ФИЛЬТР КОРОБКИ ПЕРЕДАЧ | 501766D2 | |
| ФИЛЬТР ПРИЖИМ ОТКАЧКИ КАРТЕРА СИСТЕМЫ РАБОЧЕГО ОБОРУДОВАНИЯ | 501771D1 | |
| МАСЛО* (MTO SAE 10W30) | | 267 л (70,5 галлона) |
| **РЕМНИ** | | |
| ВСПОМОГАТЕЛЬНОГО ОБОРУДОВАНИЯ | 500885D1 | |
| ВЕНТИЛЯТОРА | | |
| MT835/ MT845 | 197-6290 | |
| MT855 | 197-6291 | |
| MT865 | 197-6292 | |
| **АККУМУЛЯТОРНЫЕ БАТАРЕИ** | 502445D1 | 1000 А ПУСКОВОЙ МОЩНОСТИ КАЖДАЯ |
| **СМАЗКА** | | |
| ПРИЦЕПНОЕ УСТРОЙСТВО (КОНСИСТЕНТНАЯ СМАЗКА МРGM [3%$MoS_2$] СОРТА NGLI 2) | | 100 г (25,4 унции) |

* СМ. РЕКОМЕНДАЦИИ ПО ВЫБОРУ ВЯЗКОСТИ МАСЛА ДЛЯ КОНКРЕТНЫХ ТЕМПЕРАТУРНЫХ УСЛОВИЙ В РУКОВОДСТВЕ ПО ЭКСПЛУАТАЦИИ И ТЕХНИЧЕСКОМУ ОБСЛУЖИВАНИЮ.

Russian 501396D1 3

7

---

**⚠ ОСТОРОЖНО**

НЕВЕРНОЕ ПОДСОЕДИНЕНИЕ ПУСКОВЫХ КАБЕЛЕЙ МОЖЕТ СТАТЬ ПРИЧИНОЙ ВЗРЫВА И НЕСЧАСТНОГО СЛУЧАЯ.

ОСУЩЕСТВЛЯЙТЕ СОЕДИНЕНИЯ ПУСКОВЫХ КАБЕЛЕЙ ТОЛЬКО В РЕКОМЕНДОВАННЫХ ДЛЯ ЭТОГО ТОЧКАХ. СЛЕДУЙТЕ УКАЗАНИЯМ РУКОВОДСТВА ПО ЭКСПЛУАТАЦИИ И ТЕХНИЧЕСКОМУ ОБСЛУЖИВАНИЮ.

501390D1 1

1

---

**⚠ ОСТОРОЖНО**

НЕСОБЛЮДЕНИЕ ДАННЫХ УКАЗАНИЙ МОЖЕТ ПРИВЕСТИ К ТРАВМЕ ОПЕРАТОРА ИЛИ НАХОДЯЩИХСЯ ПОБЛИЗОСТИ ЛЮДЕЙ.

- КРЕПЛЕНИЕ ПРИЦЕПНОГО ОБОРУДОВАНИЯ ДОПУСКАЕТСЯ ТОЛЬКО К СЦЕПНОМУ УСТРОЙСТВУ ТЯГОВОГО БРУСА. БУКСИРОВКА С КРЕПЛЕНИЕМ В ЛЮБОЙ ДРУГОЙ ТОЧКЕ МОЖЕТ СТАТЬ ПРИЧИНОЙ ОПРОКИДЫВАНИЯ.
- ПРИ БУКСИРОВКЕ ПРИЦЕПНОГО ОБОРУДОВАНИЯ ПОЛЬЗУЙТЕСЬ ПРЕДОХРАНИТЕЛЬНЫМИ ЦЕПЯМИ.

501382D1 1

2

---

**⚠ ОСТОРОЖНО**

МИКРОВОЛНОВОЕ ИЗЛУЧЕНИЕ МОЖЕТ ПОВРЕДИТЬ ОРГАНЫ ЗРЕНИЯ. ВО ИЗБЕЖАНИЕ НЕСЧАСТНОГО СЛУЧАЯ НЕ СМОТРИТЕ ПРЯМО В ПЕРЕДНЮЮ ЧАСТЬ ДАТЧИКА СКОРОСТИ.

501354D1 1

3

---

**⚠ ПРЕДУПРЕЖДЕНИЕ**

СИДЕНЬЕ ИНСТРУКТОРА ПРЕДНАЗНАЧЕНО ДЛЯ ИСПОЛЬЗОВАНИЯ ТОЛЬКО В ЦЕЛЯХ ОБУЧЕНИЯ ОПЕРАТОРОВ И ДИАГНОСТИКИ НЕИСПРАВНОСТЕЙ. ПЕРЕВОЗКА ПАССАЖИРОВ НА ТРАКТОРЕ И ОБОРУДОВАНИИ ЗАПРЕЩЕНА. ВСЕГДА ПРИСТЕГИВАЙТЕСЬ РЕМНЕМ БЕЗОПАСНОСТИ.

501318D1 1

4

---

ДОСТУП К ЭЛЕКТРОПРОВОДКЕ

501361D1 1

5

---

**⚠ ОСТОРОЖНО**

ЗАПРЕЩАЕТСЯ ПРОВОДИТЬ ЭКСПЛУАТАЦИЮ ИЛИ ТЕХНИЧЕСКОЕ ОБСЛУЖИВАНИЕ ДАННОЙ МАШИНЫ, НЕ ПРОЧИТАВ И НЕ УСВОИВ УКАЗАНИЙ И ПРЕДУПРЕЖДЕНИЙ, СОДЕРЖАЩИХСЯ В РУКОВОДСТВЕ ПО ЭКСПЛУАТАЦИИ И ТЕХНИЧЕСКОМУ ОБСЛУЖИВАНИЮ. НЕСОБЛЮДЕНИЕ УКАЗАНИЙ ИЛИ ПРЕНЕБРЕЖЕНИЕ ПРЕДУПРЕЖДЕНИЯМИ МОЖЕТ СТАТЬ ПРИЧИНОЙ НЕСЧАСТНОГО СЛУЧАЯ, В ТОМ ЧИСЛЕ И СО СМЕРТЕЛЬНЫМ ИСХОДОМ. ЗА ДОПОЛНИТЕЛЬНЫМИ ЭКЗЕМПЛЯРАМИ РУКОВОДСТВ ОБРАЩАЙТЕСЬ К ЛЮБОМУ УПОЛНОМОЧЕННОМУ ДИЛЕРУ. ЗАБОТА О БЕЗОПАСНОСТИ - ВАША ОБЯЗАННОСТЬ.

**ВНИМАНИЕ**

ПЕРЕД ОСТАНОВОМ ДВИГАТЕЛЯ ПОСЛЕ РАБОТЫ С ПОЛНОЙ НАГРУЗКОЙ ДАЙТЕ ДВИГАТЕЛЮ ПОРАБОТАТЬ В РЕЖИМЕ ХОЛОСТОГО ХОДА В ТЕЧЕНИЕ ПЯТИ МИНУТ.

ДЛИТЕЛЬНАЯ ЭКСПЛУАТАЦИЯ МАШИНЫ С ПОЛНОЙ НАГРУЗКОЙ НА ТЯГОВОМ БРУСЕ СО СКОРОСТЬЮ ХОДА НИЖЕ 6,4 км/ч ВЫЗЫВАЕТ УСКОРЕННЫЙ ИЗНОС СИЛОВОЙ ПЕРЕДАЧИ И МОЖЕТ ПРИВЕСТИ К ПОТЕРЕ ПРАВ НА ГАРАНТИЙНОЕ ОБСЛУЖИВАНИЕ ВВИДУ ЭКСПЛУАТАЦИИ С ПЕРЕГРУЗКОЙ. СМ. РУКОВОДСТВО ОПЕРАТОРА.

Russian 501328D1 1

6

---

**⚠ ОСТОРОЖНО**



ВО ИЗБЕЖАНИЕ ТРАВМ ПРИ ВКЛЮЧЕНИИ ПОДЪЕМНОГО УСТРОЙСТВА ЗАПРЕЩАЕТСЯ СТОЯТЬ НА РАБОЧЕМ ОБОРУДОВАНИИ ИЛИ НАХОДИТЬСЯ МЕЖДУ ТРАКТОРОМ И ОБОРУД-ОВАНИЕМ.

501340D1 1

9

---

**⚠ ОСТОРОЖНО**

ИРИ НЕПРАВИЛЬНОЙ СЦЕПКЕ РАБОЧЕГО ОБОРУДОВАНИЯ МОЖЕТ ПРОИЗОЙТИ НЕСЧАСТНЫЙ СЛУЧАЙ. ПЕРЕД ТРАНСПОРТИРОВКОЙ ИЛИ БУКСИРОВКОЙ РАБОЧЕГО ОБОРУДОВАНИЯ ФИКСАТОРЫ ДОЛЖНЫ БЫТЬ ПОЛНОСТЬЮ ВСТАВЛЕНЫС ДВУХСТОРОН.

501346D1 1

8

---

**⚠ ОСТОРОЖНО**

НЕСОБЛЮДЕНИЕ УКАЗАНИЙ МОЖЕТ ПРИВЕСТИ К ТЯЖЕЛОЙ ТРАВМЕ ОПЕРАТОРА ИЛИ НАХОДЯЩЕГОСЯ РЯДОМ ПЕРСОНАЛА

- ПЕРЕД ПРОВЕДЕНИЕМ ТЕХНИЧЕСКОГО ОБСЛУЖИВАНИЯ ТРАКТОРА ИЛИ СМЕНОЙ РАБОЧЕГО ОБОРУДОВАНИЯ ОСТАНОВИТЕ МЕХАНИЗМ ОТБОРА МОЩНОСТИ И ЗАГЛУШИТЕ ДВИГАТЕЛЬ.
- ЗАПРЕЩАЕТСЯ РАБОТА СО СНЯТЫМ ОГРАЖДЕНИЕМ ВАЛА МЕХАНИЗМА ОТБОРА МОЩНОСТИ.



501333D1 1

10

---

**ВНИМАНИЕ**

ПОДКЛЮЧЕНИЕ ПУСКОВЫХ СОЕДИНИТЕЛЬНЫХ КАБЕЛЕЙ ОСУЩЕСТВЛЯЙТЕ ТОЛЬКО В РЕКОМЕНДОВАННЫХ ДЛЯ ЭТОГО ТОЧКАХ. СЛЕДУЙТЕ УКАЗАНИЯМ ПО ПРИМЕНЕНИЮ ПУСКОВЫХ СОЕДИНИТЕЛЬНЫХ КАБЕЛЕЙ (СМ. РУКОВОДСТВО ПО ЭКСПЛУАТАЦИИ И ТЕХНИЧЕСКОМУ ОБСЛУЖИВАНИЮ.)

501376D1 1

11

501518DA

## DECAL SHEET-COMPLETING AR - 501518D1
RUSSIAN

| ITEM | NUMBER | QTY | DESCRIPTION |
|---|---|---|---|
| - | 179-2255 | -- | COMPLETING AR-PORTUGUESE (NOT SERVICED) |
| - | 501518D1 | -- | DECAL SHEET [A] (INCLS ITEMS 1-11) |
| 1 | 501390D1 | 1 | FILM-WARNING |
| 2 | 501382D1 | 1 | FILM-WARNING |
| 3 | 501354D1 | 2 | FILM-WARNING |
| 4 | 501318D1 | 1 | FILM-CAUTION (RUSSIAN) |
| 5 | 501361D1 | 1 | FILM-WIRE ACCESS (RUSSIAN) |
| 6 | 501326D1 | 1 | FILM-WARNING UNIV. (RUSSIAN) |
| 7 | 501396D1 | 1 | FILM-SERVICE INFO (RUSSIAN) |
| 8 | 501346D1 | 1 | FILM-WARNING |
| 9 | 501340D1 | 2 | FILM-WARNING |
| 10 | 501333D1 | 1 | FILM-WARNING |
| 11 | 501376D1 | 2 | FILM-NOTICE |

[A] PART OF 179-2255 COMPLETING AR

501518DA
PR: t05i29k58b0579

## DECAL SHEET-COMPLETING AR - 501519D1
**SPANISH**

# GUÍA DE SERVICIO

**COMPROBACIONES DIARIAS / 10 HORAS**
1. Comprobar nivel de refrigerante del motor
2. Comprobar nivel del aceite del motor
3. Comprobar recipiente de separador de combustible/agua
4. Comprobar nivel del combustible
5. Inspeccionar tren de rodaje
6. Comprobar nivel del fluido hidráulico/ de la transmisió

**50 HORAS**
7. Drenar tanque de aire (si tiene)
8. Lubricar enganche de 3 puntos (si tiene)

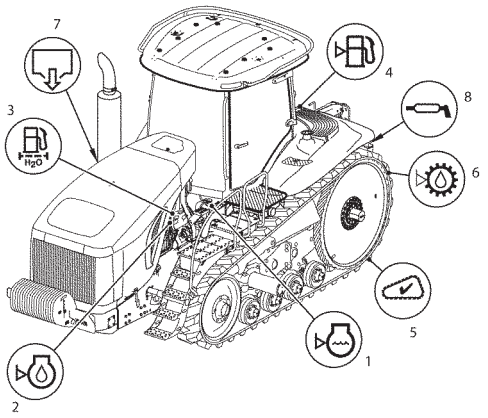


| CABINA | NO. DE PIEZA | CAPACIDAD APROX. |
|---|---|---|
| FILTRO DE AIRE DE RECIRCULACIÓN | 501153D1 | |
| FILTRO DE AIRE FRESCO | 501881D1 | |
| SISTEMA DE AIRE ACONDICIONADO | R134a | 23 hg (5,0 lb) |
| **MOTOR** | | |
| FILTRO DE ACEITE DEL MOTOR | 504594D1 | |
| FILTRO DE COMBUSTIBLE PRIMARIO | CH1R-0771 | |
| FILTRO DE COMBUSTIBLE SECUNDARIO | CH1R-0762 | |
| FILTRO DE AIRE DEL MOTOR (PRIMARIO) | | |
| MT835/ MT845 | CH6I-2505 | |
| MT855/ MT865 | CH6I-2509 | |
| FILTRO DE AIRE DEL MOTOR (SECUNDARIO) | | |
| MT835/ MT845 | CH6I-2506 | |
| MT855/ MT865 | CH6I-2510 | |
| ACEITE* (DEO SAE 10W30) | | |
| MT835/ MT845 | | 30 L (8 gal) |
| MT855/ MT865 | | 34 L (9 gal) |
| REFRIGERANTE (DE LARGA DURACIÓN, MEZCLA 50/50) | | |
| MT835/ MT845 | | 44 L (12 gal) |
| MT855/ MT865 | | 48 L (13 gal) |
| **HIDRAULICA / TRANSMISIÓN** | | |
| FILTRO DE LA DIRECCIÓN DEL IMPLEMENTO | 501766D2 | |
| FILTRO DE LA TRANSMISIÓN | 501766D2 | |
| FILTRO DE DRENAJE DE LA CAJA DEL IMPLEMENTO | 501771D1 | |
| ACEITE (MTO SAE 10W30) | | 267 L (70,5 gal) |
| **CORREAS** | | |
| ACCESORIO | 500685D1 | |
| VENTILADOR | | |
| MT835/ MT845 | 197-6290 | |
| MT855 | 197-6291 | |
| MT865 | 197-6292 | |
| **BATERÍAS** | 502445D1 | 1000 CCA/ POR BATERÍA |
| **LUBRICACIÓN** | | |
| ENGANCHE (GRASA NLGI GRADO 2-MPGM (3%MoS2)) | | 1 hg (25,4 oz) |

* Ver manual de operació y mantenimiento para obtener informació sobre la gama de aplicaciones y temperaturas

Spanish 501392D1 3

7

**⚠ ADVERTENCIA**

La conexi—n inapropiada de los cables auxiliares de arranque puede causar una explosi—n resultando en lesiones.

Use só lo las ubicaciones recomendadas para conectar los cables auxiliares de arranque. Siga el procedimiento indicado en el manual de operacion y mantenimiento.

501386D1 1

1

**⚠ ADVERTENCIA**

De no seguir estas instrucciones, se pueden ocasionar lesiones al operador o a otras personas que esten presentes.

- Tire solo mediante la barra de tiro. Si se tira desde cualquier otro punto, la maquina puede volcarse.
- Use cadenas de seguridad para remolcar el equipo.

501383D1 1

2

**⚠ ADVERTENCIA**

La radiacion de microonda puede da ñ ar los ojos. Para evitar lesiones de los ojos, no mire directamente a la faz irradiante del sensor de velocidad de desplazamiento.

501355D1 1

3

**⚠ ADVERTENCIA**

No haga funcionar ni trabaje en esta maquina a menos de haber leido y entendido las instrucciones y advertencias de los manuales de operacion y mantenimiento. De no seguir las instrucciones o de no hacer caso de las advertencias podrain resultar lesiones o accidentes fatales. Solicite a caulquier distribuidor caterpillar manuales de reemplazo. Cae bajo su responsabilidad tomar las precauiones debidas.

**ATENCION**

Despues de operar el motor con carga plena, hagalo funcionar a baja en vacío por cinco minutos antes de pararlo.
No opere esta maquina con una carga maxima en la barra de tiro en quinta velocidad o menos la velocidades inferiores a 6,4 km/h) si la masa continua maxima en funcionamiento es superior a 14,061 kg. consulte el manual de operacion y mantenimiento.

Spanish 501327D1 1

6

**⚠ ADVERTENCIA**

El asiento de instruccion ha sido diseñado con el proposito de entrenar operadores y/o para diagnosticar problemas de la maquina. No permita pasajeros en el tractor ni en el equipo. Siempre use su cinturon de seguridad.

501316D1 1

4

**ACCESO A LOS CABLES**

501362D1 1

5

**⚠ ADVERTENCIA**

**Un implemento mal acoplado puede causar lesiones. Asegurese que los pestillos esten bien enganchados en ambos lados antes de transportar o halar el implemento.**

501347D1 1

8

**⚠ ADVERTENCIA**



Para evitar lesiones graves no se pare sobre el implemento y el tractor ni entre los mismos mientras opera el control de levant-amiento.

501341D1 1

9

**⚠ ADVERTENCIA**

El operador o algun observador podria sufrir serias lesiones si no se siguen las siguientes instrucciones.

¥ Detenga la PTO y el motor antes de dar servicio al tractor o antes de cambiar accesorios.

¥ No opere la PTO sin protectores.



501334D1 1

10

**ATENCIÓN**

Use s—lo las ubicaciones recomendadas para las conexiones de cabels auxiliares de arranque. Siga el procedimiento indicado en el manual de operaci—n y mantenimiento en lo que respecta al uso de cables auxiliares de arranque .

501372D1

11

## DECAL SHEET-COMPLETING AR - 501519D1

SPANISH

| ITEM | NUMBER | QTY | DESCRIPTION |
|---|---|---|---|
| - | 179-2250 | -- | COMPLETING AR-SPANISH (NOT SERVICED) |
| - | 501519D1 | -- | DECAL SHEET [A] (INCLS ITEMS 1-11) |
| 1 | 501386D1 | 1 | FILM-WARNING |
| 2 | 501383D1 | 1 | FILM-WARNING |
| 3 | 501355D1 | 2 | FILM-WARNING |
| 4 | 501316D1 | 1 | FILM-CAUTION (SPANISH) |
| 5 | 501362D1 | 1 | FILM-WIRE ACCESS (SPANISH) |
| 6 | 501327D1 | 1 | FILM-WARNING UNIV (SPANISH) |
| 7 | 501392D1 | 1 | FILM-SERVICE INFO (SPANISH) |
| 8 | 501347D1 | 1 | FILM-WARNING |
| 9 | 501341D1 | 2 | FILM-WARNING |
| 10 | 501334D1 | 1 | FILM-WARNING |
| 11 | 501372D1 | 2 | FILM-NOTICE |

[A] PART OF 179-2250 COMPLETING AR

501519DA
PR: t05i29k58b0580

## PROTECTION GP-VANDALISM
185-8848

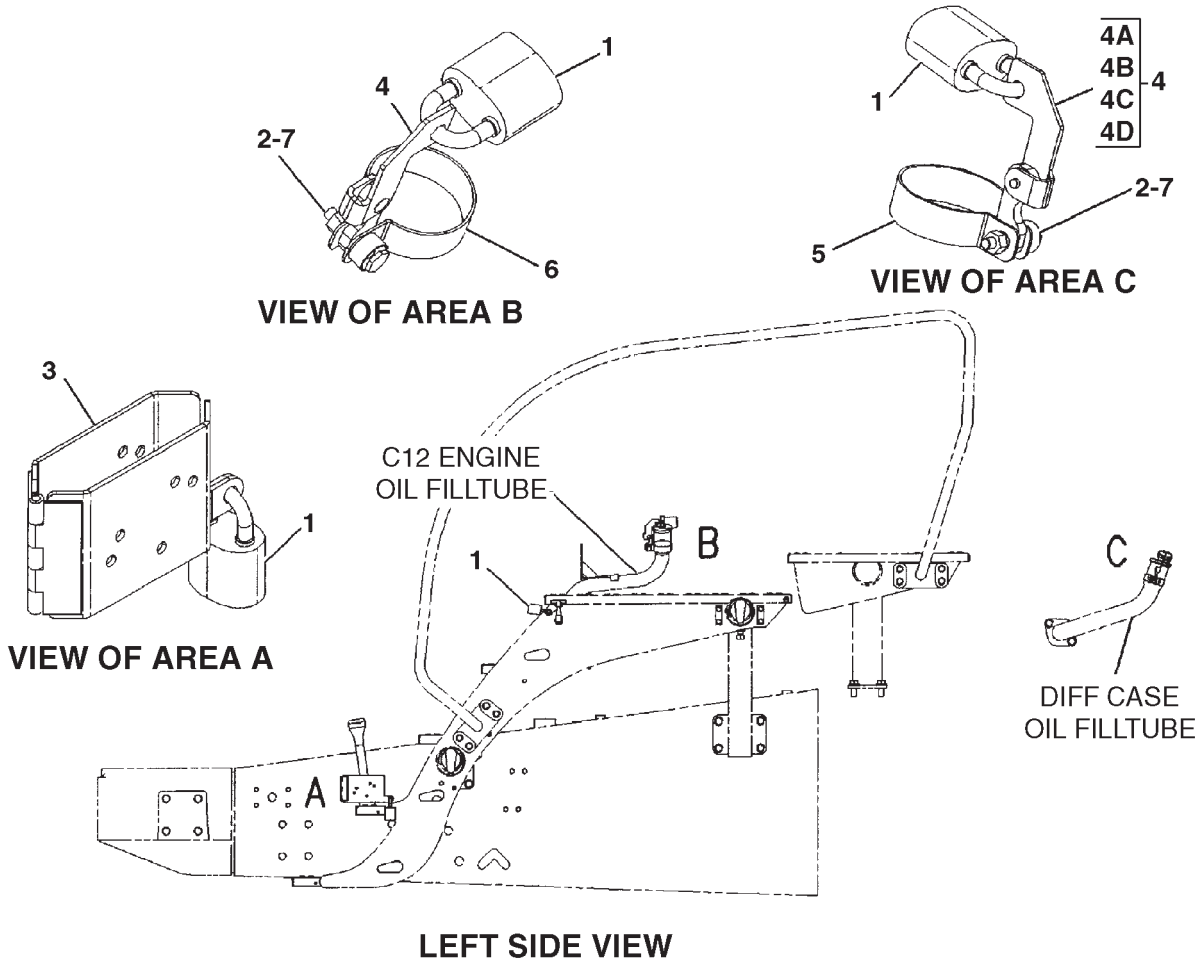


0891372A

## PROTECTION GP-VANDALISM
185-8848

| ITEM | NUMBER | QTY | DESCRIPTION |
|---|---|---|---|
| - | 185-8848 | -- | PROTECTION GP-VANDALISM (NOT SERVICED) |
| 1 | CH5P-8502 | 4 | PADLOCK (W/KEY) |
| | CH5P-8500 | 1 | KEY |
| 2 | 400135X1 | 2 | BOLT-TAMPERPROOF (1/4-20X1 IN) |
| 3 | 188-1155 | 1 | COVER ASM (INCLUDES 2 PLATES AND HINGE) |
| 4 | 191-8006 | 2 | LOCK ASM (INCLS 4A-4D) |
| 4A | CH2P-2717 | 1 | HASP |
| 4B | CH8D-9558 | 1 | RIVET |
| 4C | 191-8007 | 1 | LUG |
| 4D | CH2A-3211 | 1 | WASHER |
| 5 | CH191-8010 | 1 | CLAMP |
| 6 | CH196-9321 | 1 | CLAMP |
| 7 | CH3E-9865 | 2 | LOCKNUT (1/4-20) |
| - | CH123-4950 | 3 | SCREW-PAN HD (M16X1) (NOT SHOWN) |

0891372A
PR: t05i29k58b0581

## TOOL GP-AXLE GAUGE CHANGE - 203-9712

FACTORY OPTION

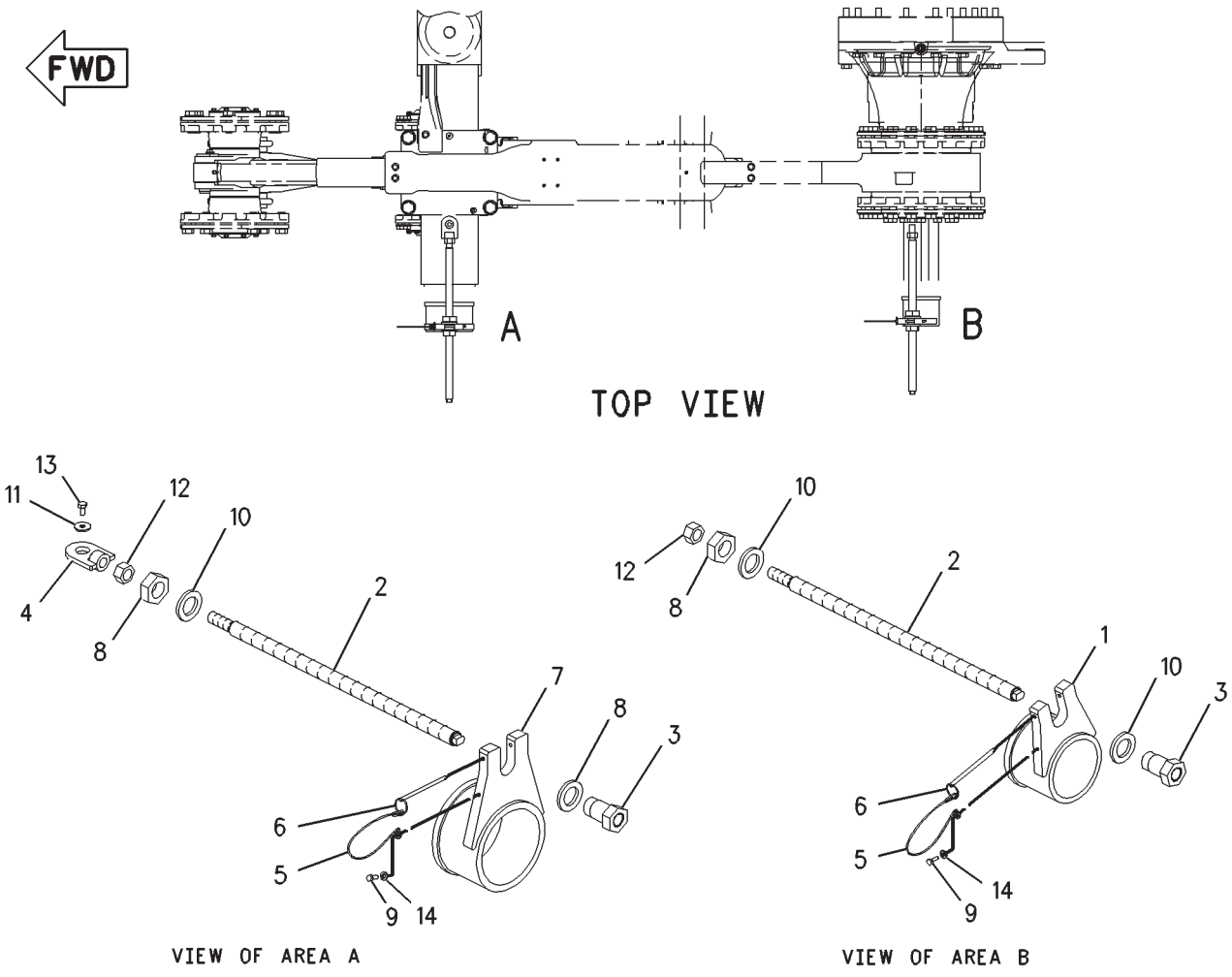


00816200

## TOOL GP-AXLE GAUGE CHANGE - 203-9712

FACTORY OPTION

| ITEM | NUMBER | QTY | DESCRIPTION |
|---|---|---|---|
| - | 502763D1 | -- | KIT-AXLE GAUGE CHANGE TOOL (FIELD) |
| - | 203-9712 | -- | TOOL GP-AXLE GAUGE CHANGE [A] (FACT OPT) (NOT SERVICED, ORDER FIELD KIT) |
| 1 | 198-4474 | 1 | BRACKET ASM |
| 2 | 198-4475 | 2 | ROD |
| 3 | 400354X1 | 2 | NUT-SPECIAL (1-1/4"-12) |
| 4 | 198-4477 | 1 | ADAPTER ASM |
| 5 | 203-6604 | 2 | LANYARD |
| 6 | 203-7787 | 2 | PIN |
| 7 | 205-8790 | 1 | BRACKET |
| 8 | 400083X1 | 2 | NUT-JAM (1-1/4"-12-2B LH) |
| 9 | 400152X1 | 2 | BOLT (M6X1X16MM) |
| 10 | CH7X-0533 | 4 | WASHER-HARD (34X55X6) |
| 11 | CH8C-9987 | 1 | WASHER (8.3X28X2.5) |
| 12 | 400286X1 | 2 | NUT (M20X2.5) |
| 13 | 400227X1 | 1 | BOLT (M8X1.25X16MM) |
| 14 | CH8T-4205 | 2 | WASHER-HARD (7.2X14.5X2MM) |

[A] PART OF 502763D1 KIT-AXLE GA CHANGE

00816200
PR: t05i29k58b0582

PAINT

NO ILLUSTRATION

| ITEM | NUMBER | QTY | DESCRIPTION |
|---|---|---|---|
| | 4C-4200 | | YELLOW, AEROSOL |
| | 4C-6129 | | YELLOW, 1 GALLON |
| | 4C-6122 | | YELLOW, 5 GALLON |
| | 4C-6127 | | YELLOW, 55 GALLON |
| | 4C-4184 | | YELLOW, FAST DRY 1 GALLON |
| | 4C-4192 | | YELLOW, FAST DRY 5 GALLON |
| | 4C-4207 | | YELLOW, FAST DRY 55 GALLON |
| | 9U-7725 | | YELLOW, WATER REDUCIBLE 1 GALLON |
| | 4C-4198 | | BLACK, MED GLOSS AEROSOL |
| | 4C-4183 | | BLACK, MED GLOSS 1 GALLON |
| | 4C-4191 | | BLACK, MED GLOSS 5 GALLON |
| | 4C-4206 | | BLACK, MED GLOSS 55 GALLON |
| | 4C-4199 | | BLACK, MUFFLER AEROSOL |
| | 4C-6134 | | URETHANE, YELLOW TOUCH-UP 1 GALLON |
| | 4C-6126 | | URETHANE, YELLOW TOUCH-UP 5 GALLON |
| | 4C-6133 | | URETHANE, BLACK TOUCH-UP 1 GALLON |
| | 4C-5843 | | BLACK, GLOSS AEROSOL |
| | 173-4060 | | GRAY, MACHINE DARK AEROSOL |
| | 171-9773 | | GRAY, MACHINE DARK 1 GALLON |
| | 171-9774 | | GRAY, MACHINE DARK 5 GALLON |
| | 9U-7948 | | GRAY, DAWN GLOSS AEROSOL<br>ORDER THRU CAT DEALER) |
| | 4C-4205 | | PRIMER, YELLOW AEROSOL |
| | 4C-4190 | | PRIMER, YELLOW 1 GALLON |
| | 4C-4197 | | PRIMER, YELLOW 5 GALLON |
| | 4C-4211 | | PRIMER, YELLOW 55 GALLON |

PAINTGP1
PR: t05i29k58b0583

RECOMMENDED DEALER STOCK

# RECOMMENDED DEALER'S STOCK

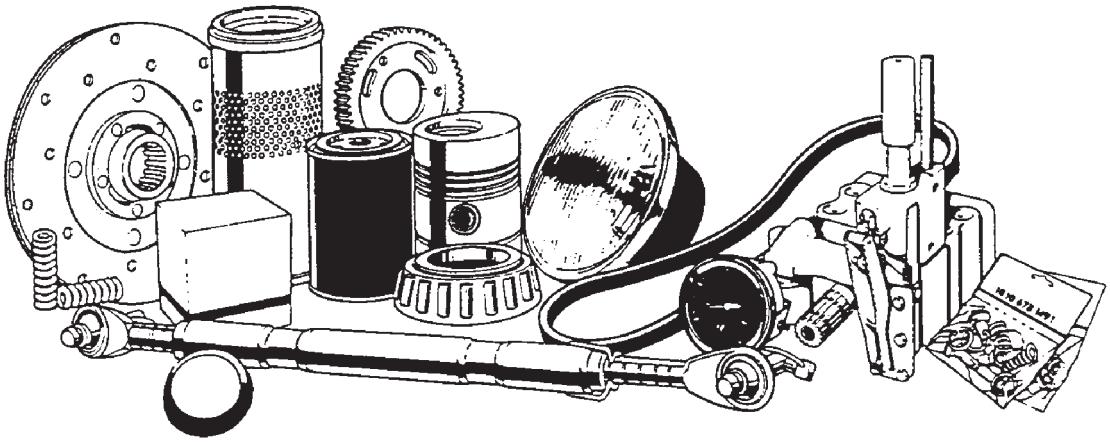

## RECOMMENDED DEALER STOCK

| ITEM | NUMBER | QTY | DESCRIPTION |
|---|---|---|---|
| | 185-2151 | 1 | BELT |
| | 500685D1 | 1 | BELT-ALT |
| | 501178D1 | 1 | BELT-FAN (MT835/MT845) |
| | 197-6291 | 1 | BELT-FAN (MT855) |
| | 197-6292 | 1 | BELT-FAN (MT865) |
| | 501688D1 | 1 | BLADE/ASY WIPE |
| | CH134-1935 | 1 | BLADE/WIPER |
| | CH189-8610 | 1 | BLADE-WIPER (RH WINDOW) |
| | CH9X-8118 | 1 | BULB/12 V 55 W |
| | 400862X1 | 1 | BULB/885-12.8V |
| | 500678D1 | 1 | BULB/HALOGEN/8 |
| | CH175-1323 | 1 | BULB/HEADLAMP |
| | CH8I-4256 | 1 | BULB/HEADLIGHT |
| | 502183D1 | 1 | CABLE/AS. - NE |
| | CH3S-5096 | 3 | CLAMP/HOSE |
| | 177-5249 | 4 | DISC |
| | 187-8947 | 1 | DISC |
| | 168-2313 | 1 | FAN |
| | 501153D1 | 2 | FILTER/AIR |
| | 501766D1 | 2 | FILTER/ELEMENT |
| | 501771D1 | 2 | FILTER/ELEMENT |
| | 136-5600 | 1 | FUSE |
| | 220-5736 | 1 | FUSE |
| | CH113-8490 | 1 | FUSE/MINI (10A) |
| | CH113-8491 | 1 | FUSE/MINI (15A) |
| | CH113-8492 | 1 | FUSE/MINI (20A) |
| | CH124-3548 | 1 | FUSE/MINI (30A) |
| | CH141-2759 | 1 | FUSE/MINI (5A) |
| | 230-9563 | 1 | HOSE |
| | 201-2442 | 1 | KEY |
| | CH5P-8500 | 1 | KEY |
| | 209-9680 | 1 | KIT, SEAL |
| | 189-3142 | 1 | KIT/CASE DRAIN |
| | 171-9687 | 1 | LAMP |
| | 171-9688 | 1 | LAMP |
| | 216-6980 | 1 | ORIFICE |
| | 131-3718 | 1 | O-RING |
| | 7M-8485 | 1 | O-RING |
| | 8F-3469 | 1 | O-RING |
| | 162-6738 | 1 | PAD |
| | 4N-0952 | 1 | PLUG/SOFT |
| | 221-1233 | 1 | PULLEY |
| | 154-8264 | 1 | RETAINER |
| | 177-6801 | 1 | RING |
| | 207-5993 | 1 | SCREEN |
| | 184-1695 | 1 | SEAL |
| | 186-2869 | 1 | SHIM |
| | 9X-1813 | 1 | SLEEVE |
| | 501026D1 | 1 | SPRING/ AS. - |
| | 169-8227 | 1 | SWITCH |
| | 171-1229 | 1 | SWITCH |
| | 500717D1 | 1 | SWITCH/PUSH BU |
| | 216-5343 | 1 | VALVE |

NOTE: THIS LIST REPRESENTS ITEMS
RECOMMENDED TO SERVICE 5 UNITS.

RDL
PR: t05i29k58b0584