PC1250-8R

PARTBOOK

RUTHZIL TRATOR COMERCIAL DE PEÇAS LTDA 11 97083-6812 ROLANDO

KOMATSU



EXCAVATOR

PC1250-8R

SN : 35001 - uP

Printed By : Dwi Iswanto (airafather6107170)

Printed By : Dwi Iswanto (airafather6107170)

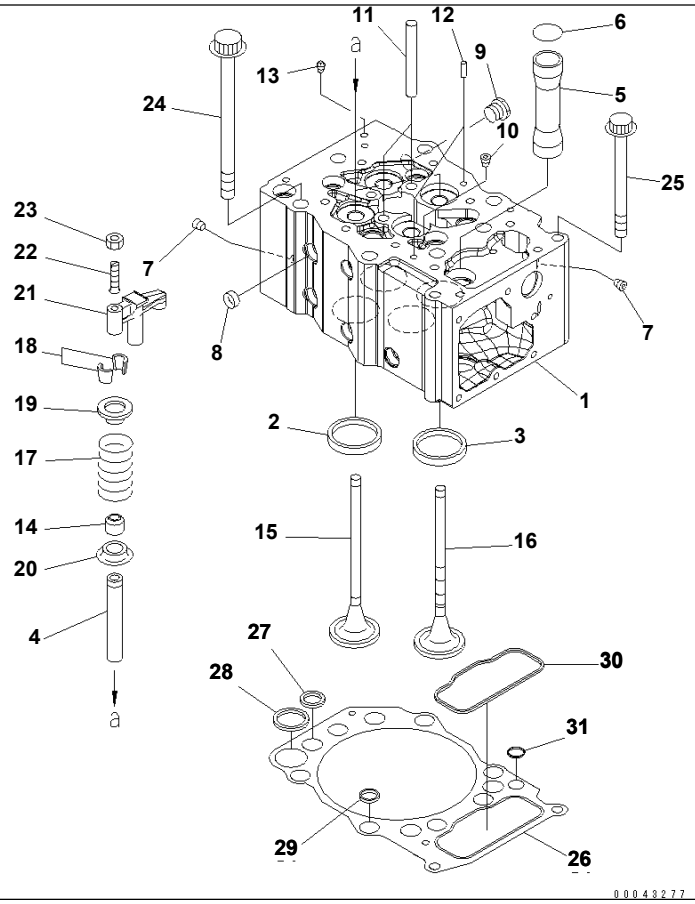

Ref. A1010-A6B8 **Page 030010**

SAA6D170E-5CR-W S/N 610001-UP

CYLINDER HEAD

Item	Part No.	Description	Qty	Options
	6245-11-1100	CYLINDER HEAD ASS'Y	6	SN:610001--
1	☆	· HEAD,CYLINDER	1	SN:610001--
2	6240-11-1330	· INSERT,INTAKE VALVE (STD)	2	SN:610001--
	6240-16-1330	· INSERT¤ 1.00MM,INTAKE VALVE (OS)	2	SN:610001--
	6240-17-1330	· INSERT¤ 0.75MM,INTAKE VALVE (OS)	2	SN:610001--
	6240-18-1330	· INSERT¤ 0.50MM,INTAKE VALVE (OS)	2	SN:610001--
	6240-19-1330	· INSERT¤ 0.25MM,INTAKE VALVE (OS)	2	SN:610001--
3	6245-11-1320	· SEAT,EXHAUST VALVE (STD)	2	SN:610001--
	6245-16-1320	· INSERT¤ 1.00MM,EXHAUST VALVE (OS)	2	SN:610001--
	6245-17-1320	· INSERT¤ 0.75MM,EXHAUST VALVE (OS)	2	SN:610001--
	6245-18-1320	· INSERT¤ 0.50MM,EXHAUST VALVE (OS)	2	SN:610001--
	6245-19-1320	· INSERT¤ 0.25MM,EXHAUST VALVE (OS)	2	SN:610001--
4	6240-16-1340	· GUIDE,VALVE	4	SN:610001--
5	6240-11-1160	· TUBE,PUSH ROD	1	SN:610001--
6	07000-73038	· O-RING	1	SN:610001--
7	07043-70108	· PLUG	3	SN:610001--
8	6162-13-1150	· PLUG,EXPANSION	17	SN:610001--
9	6215-81-9530	· PLUG,BOLT	1	SN:610001--
10	07043-70312	· PLUG	1	SN:610001--
11	6240-11-1140	· GUIDE,CROSSHEAD	2	SN:610001--
12	04020-00820	· PIN,DOWEL	2	SN:610001--
13	07042-00108	· PLUG	1	SN:610001--
14	6240-11-1370	SEAL,VALVE STEM	24	SN:610001--
15	6240-41-4110	VALVE,INTAKE	12	SN:610001--
16	6240-41-4220	VALVE,EXHAUST	12	SN:610001--
17	6240-41-4411	SPRING,VALVE	24	SN:610001--
18	6240-41-4520	COTTER,VALVE	48	SN:610001--

Ref. A1010-A6B8 **Page 030010**

Printed By : Dwi Iswanto (airafather6107170)

CYLINDER HEAD

Item	Part No.	Description	Qty	Options
19	6240-41-4430	SEAT,UPPER	24	SN:610001--
20	6240-41-4440	SEAT,LOWER	24	SN:610001--
21	6240-41-5610	CROSSHEAD	12	SN:610001--
22	6240-41-5641	SCREW,ADJUSTING	12	SN:610001--
23	6162-43-5630	NUT,LOCK	12	SN:610001--
24	6240-11-1610	BOLT,HEAD	42	SN:610001--
25	01438-01270	BOLT	12	SN:610001--
STANDARD				
26	6240-11-1810	GASKET	6	SN:610001--
27	☆	· GROMMET,WATER	4	SN:610001--
28	☆	· GROMMET,WATER	1	SN:610001--
29	☆	· GROMMET,WATER	7	SN:610001--
30	☆	· GROMMET,OIL	1	SN:610001--
31	☆	· GROMMET,OIL	1	SN:610001--
OVERSIZE 0.40MM				
26	6240-19-1810	GASKET	6	SN:610001--
27	☆	· GROMMET,WATER	4	SN:610001--
28	☆	· GROMMET,WATER	1	SN:610001--
29	☆	· GROMMET,WATER	7	SN:610001--
30	☆	· GROMMET,OIL	1	SN:610001--
31	☆	· GROMMET,OIL	1	SN:610001--

Printed By : Dwi Iswanto (airafather6107170)

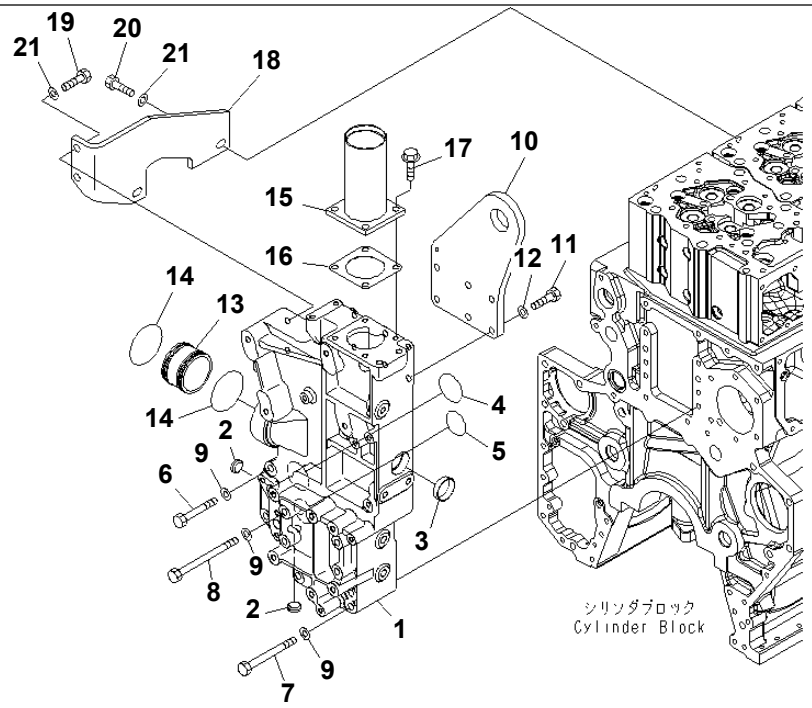

00043285

SAA6D170E-5CR-W S/N 610001-UP

FRONT HANGER

Item	Part No.	Description	Qty	Options
1	6245-21-6110	BLOCK,WATER	1	SN:610001--
2	07046-42516	PLUG	2	SN:610001--
3	07046-44516	PLUG	1	SN:610001--
4	07000-A3050	O-RING	1	SN:610001--
5	07000-A3042	O-RING	1	SN:610001--
6	01010-81280	BOLT	2	SN:610001--
7	01011-81225	BOLT	4	SN:610001--
8	01011-81260	BOLT	4	SN:610001--
9	01643-31232	WASHER	10	SN:610001--
10	6245-21-3410	PLATE,HANGER	1	SN:610001--
11	01010-81235	BOLT	6	SN:610001--
12	01643-31232	WASHER	6	SN:610001--
13	6245-61-6210	TUBE,JOINT	1	SN:610001--
14	07000-A2075	O-RING	2	SN:610001--
15	6245-61-6250	TUBE,WATER OUTLET	1	SN:610001--
16	6162-63-7480	GASKET	1	SN:610001--
17	01435-01025	BOLT	4	SN:610001--
18	6245-21-6190	BRACKET	1	SN:610001--
19	01010-81235	BOLT	2	SN:610001--
20	01010-E1235	BOLT	2	SN:610001--
21	01643-31232	WASHER	4	SN:610001--

Printed By : Dwi Iswanto (airafather6107170)

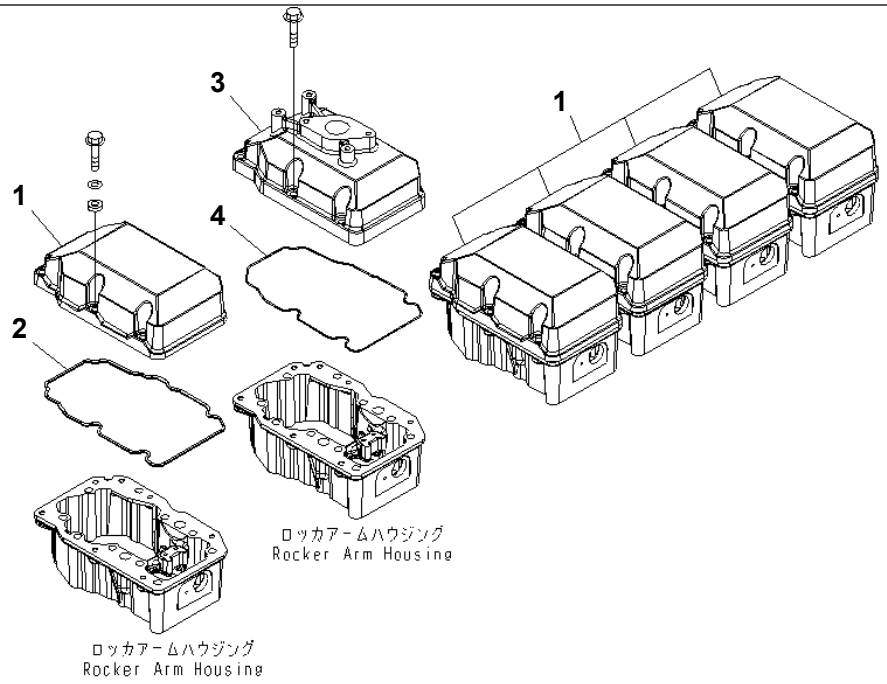

00043349

SAA6D170E-5CR-W S/N 610001-UP

ROCKER ARM HOUSING COVER

Item	Part No.	Description	Qty	Options
1	6240-11-8110	COVER,ROCKER ARM HOUSING	5	SN:610001--
2	6240-11-8810	GASKET	5	SN:610001--
3	6245-11-8110	COVER,ROCKER HOUSING (FOR BREATHER)	1	SN:610001--
4	6245-11-8120	O-RING	1	SN:610001--

Printed By : Dwi Iswanto (airafather6107170)

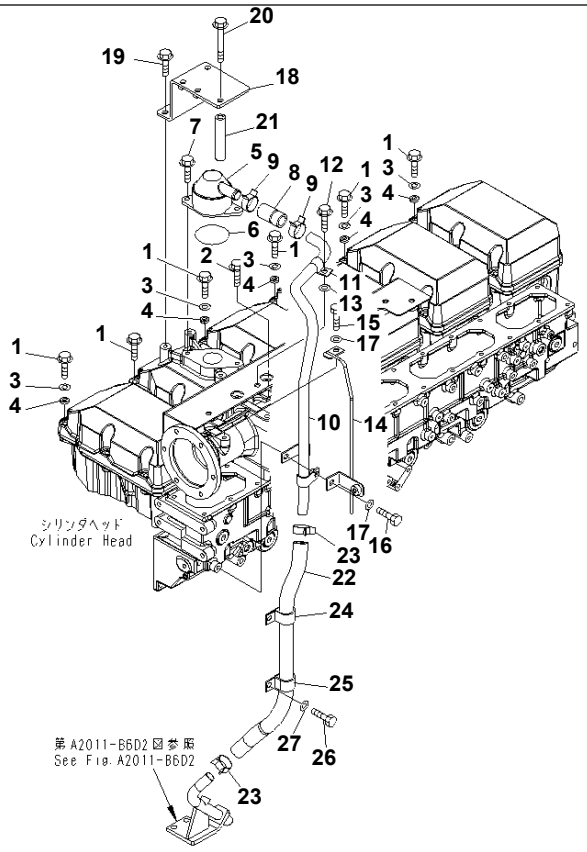

SAA6D170E-5CR-W S/N 610001-UP

ROCKER HOUSING COVER MOUNTING AND BREATHER

Item	Part No.	Description	Qty	Options
1	01435-01045	BOLT	35	SN:610001--
2	01435-01070	BOLT	1	SN:610001--
3	01640-21016	WASHER	30	SN:610001--
4	6150-11-8820	RUBBER,SEAL	30	SN:610001--
5	6210-21-8711	BREATHER	1	SN:610001--
6	07000-72060	O-RING	1	SN:610001--
7	01435-01025	BOLT	2	SN:610001--
8	6245-21-8830	HOSE	1	SN:610001--
9	07285-00280	CLIP	2	SN:610001--
10	6245-21-8770	TUBE	1	SN:610001--
11	112-946-4170	CLIP	1	SN:610001--
12	01435-01030	BOLT	1	SN:610001--
13	01643-31032	WASHER	1	SN:610001--
14	6245-81-5220	BRACKET	1	SN:610001--
15	01010-81020	BOLT	1	SN:610001--
16	01010-81025	BOLT	1	SN:610001--
17	01643-31032	WASHER	2	SN:610001--
18	6245-21-7120	BRACKET	1	SN:610001--
19	01435-01020	BOLT	2	SN:610001--
20	01436-01030	BOLT	1	SN:610001--
21	6206-81-9870	SPACER	1	SN:610001--
22	6245-21-8840	HOSE	1	SN:610001--
23	07285-00280	CLIP	2	SN:610001--
24	04434-53211	CLIP	1	SN:610001--
25	04434-53211	CLIP	1	SN:610001--
26	01010-81030	BOLT	1	SN:610001--
27	01643-31032	WASHER	1	SN:610001--

Printed By : Dwi Iswanto (airafather6107170)

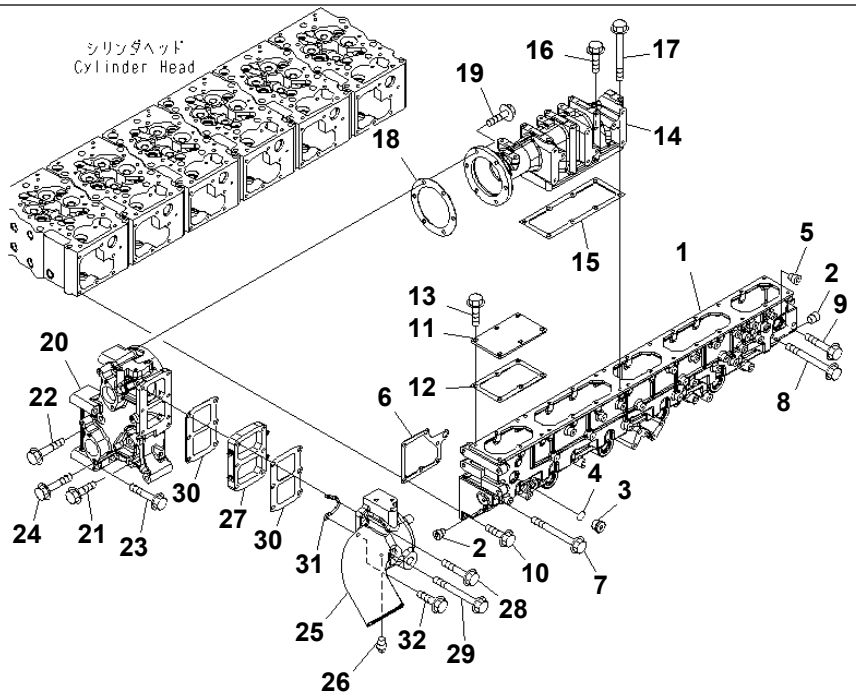

00056992

AIR INTAKE MANIFOLD AND CONNECTION

Item	Part No.	Description	Qty	Options
1	6245-11-4110	MANIFOLD,AIR INTAKE	1	SN:610001--
2	07043-70108	PLUG	2	SN:610001--
3	6215-81-9540	PLUG	6	SN:610001--
4	6215-81-9740	O-RING	6	SN:610001--
5	07043-A0108	PLUG	1	SN:610001--
6	6245-11-4810	GASKET	6	SN:610001--
7	01436-01045	BOLT	15	SN:610001--
8	01436-01040	BOLT	2	SN:610001--
9	01435-01055	BOLT	1	SN:610001--
10	01435-01030	BOLT	18	SN:610001--
11	6245-11-4120	PLATE	1	SN:610001--
12	6245-11-4130	GASKET	1	SN:610001--
13	01435-01020	BOLT	6	SN:610001--
14	6245-11-7410	CONNECTOR,AIR	1	SN:610001--
15	6245-11-4140	GASKET	1	SN:610001--
16	01436-01080	BOLT	7	SN:610001--
17	01435-01035	BOLT	1	SN:610001--
18	6245-11-7420	GASKET	1	SN:610001--
19	01435-01030	BOLT	6	SN:610001--
20	6245-11-4210	CONNECTOR,AIR JUNCTION	1	SN:610001--
21	01435-01235	BOLT	1	SN:610001--
22	01436-01200	BOLT	1	SN:610001--
23	01436-01205	BOLT	3	SN:610001--
24	01436-01220	BOLT	2	SN:610001--
25	6245-11-4420	CONNECTOR,AIR INTAKE	1	SN:610001--
26	07042-A0108	PLUG	1	SN:610001--
27	600-815-3811	HEATER,RIBBON	1	SN:610001--

Printed By : Dwi Iswanto (airafather6107170)

AIR INTAKE MANIFOLD AND CONNECTION

Item	Part No.	Description	Qty	Options
28	01435-01060	BOLT	5	SN:610001--
29	01436-01060	BOLT	1	SN:610001--
30	6150-11-4821	GASKET	2	SN:610001--
31	6212-82-4350	WIRE	1	SN:610001--
32	01435-01016	BOLT	1	SN:610001--

Printed By : Dwi Iswanto (airafather6107170)

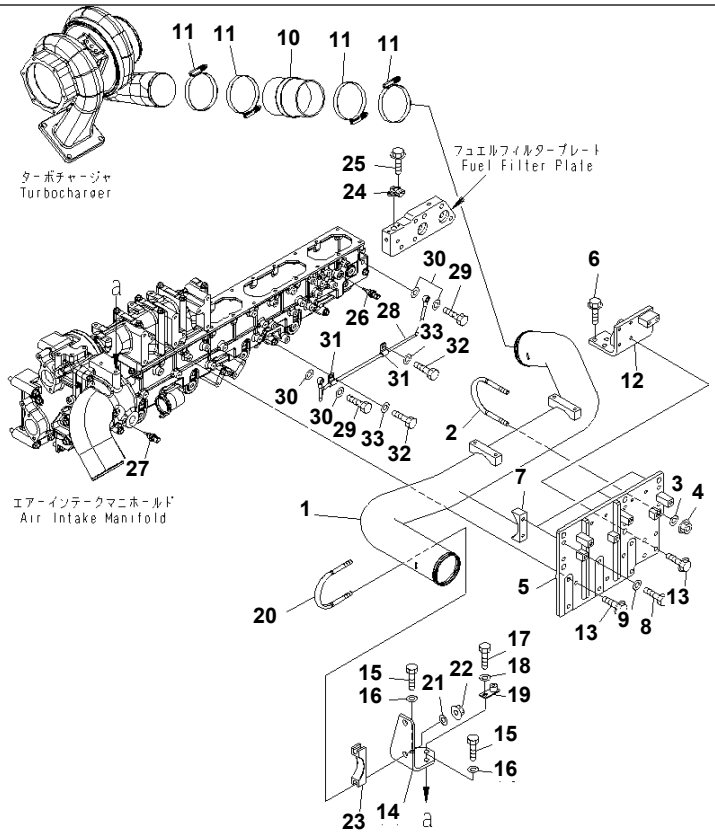

Ref. A1310-B6F5 **Page 030060**

SAA6D170E-5CR-W S/N 610001-UP

AIR PIPING

Item	Part No.	Description	Qty	Options
1	6245-11-4360	TUBE,AIR	1	SN:610001--
2	07283-31087	CLIP	3	SN:610001--
3	01643-31232	WASHER	6	SN:610001--
4	01597-01211	NUT	6	SN:610001--
5	6245-11-4331	BRACKET	1	SN:610001--
6	01435-01025	BOLT	3	SN:610001--
7	6245-11-4390	SEAT	3	SN:610001--
8	01010-81025	BOLT	6	SN:610001--
9	01643-31032	WASHER	6	SN:610001--
10	6212-11-4410	HOSE	1	SN:610001--
11	6162-14-4750	CLAMP	4	SN:610001--
12	6245-11-4240	BRACKET	1	SN:610001--
13	01435-01025	BOLT	8	SN:610001--
14	6245-11-4370	PLATE	1	SN:610001--
15	01010-81235	BOLT	2	SN:610001--
16	01643-31232	WASHER	2	SN:610001--
17	01010-81240	BOLT	1	SN:610001--
18	01643-31232	WASHER	1	SN:610001--
19	426-06-11570	BRACKET	1	SN:610001--
20	07283-31087	CLIP	1	SN:610001--
21	01643-31232	WASHER	2	SN:610001--
22	01597-01211	NUT	2	SN:610001--
23	6218-11-4971	SEAT	1	SN:610001--
24	6261-81-2700	SENSOR ASS'Y	1	SN:610001--
	6261-81-2710	· SENSOR,BOOST PRESSURE	1	SN:610001--
	6261-81-2720	· O-RING	1	SN:610001--
25	01435-00614	BOLT	2	SN:610001--

Printed By : Dwi Iswanto (airafather6107170)

AIR PIPING

Item	Part No.	Description	Qty	Options
26	6560-61-7300	SENSOR ASS'Y	1	SN:610001--
	6560-61-7310	· SENSOR,BOOST TEMPERATURE	1	SN:610001--
	6735-21-1930	· O-RING	1	SN:610001--
27	6261-81-6900	SENSOR	1	SN:610001--
	6261-81-6910	· SENSOR,FUEL TEMPERATURE	1	SN:610001--
	6261-84-9740	· O-RING	1	SN:610001--
28	6245-71-5390	TUBE	1	SN:610001--
29	07206-30812	BOLT,JOINT	2	SN:610001--
30	07005-01212	GASKET	4	SN:610001--
31	6210-51-8320	CLIP	2	SN:610001--
32	01010-81020	BOLT	2	SN:610001--
33	01643-31032	WASHER	2	SN:610001--

Printed By : Dwi Iswanto (airafather6107170)

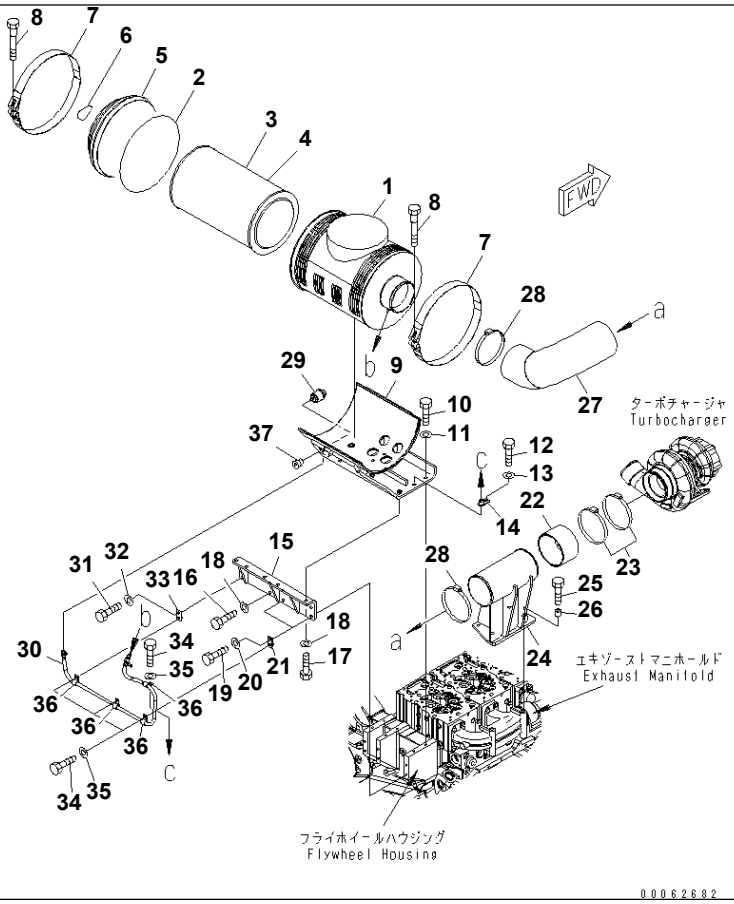

Ref. A1410-A6K5 **Page 030070**

SAA6D170E-5CR-W S/N 610001-UP
AIR CLEANER AND INDICATOR PIPING

Item	Part No.	Description	Qty	Options
1	6240-81-7710	BODY,AIR CLEANER	1	SN:610001--
	600-185-6100	ELEMENT ASS'Y	1	SN:610001--
2	600-184-1671	· O-RING	1	SN:610001--
3	☆	· ELEMENT,OUTER	1	SN:610001--
4	☆	· ELEMENT,INNER	1	SN:610001--
5	600-184-1632	COVER	1	SN:610001--
6	600-184-2810	· PLATE,MARK	1	SN:610001--
7	6240-11-9910	BAND	2	SN:610001--
8	6643-11-4641	BOLT	2	SN:610001--
9	6245-11-8710	BRACKET	1	SN:610001--
10	01010-81230	BOLT	5	SN:610001--
11	01643-31232	WASHER	5	SN:610001--
12	01010-81235	BOLT	1	SN:610001--
13	01643-31232	WASHER	1	SN:610001--
14	426-06-11570	BRACKET	1	SN:610001--
15	6245-11-8720	BRACKET	1	SN:610001--
16	01010-81230	BOLT	4	SN:610001--
17	01010-81240	BOLT	5	SN:610001--
18	01643-31232	WASHER	9	SN:610001--
19	01010-81235	BOLT	2	SN:610001--
20	01643-31232	WASHER	2	SN:610001--
21	426-01-11310	BRACKET	2	SN:610001--
22	6245-11-7540	HOSE	1	SN:610001--
23	07289-00170	CLAMP	2	SN:610001--
24	6245-11-7510	TUBE,SUPPORT	1	SN:610001--
25	01010-E1270	BOLT	4	SN:610001--
26	6144-81-6680	SPACER	4	SN:610001--

Printed By : Dwi Iswanto (airafather6107170)

AIR CLEANER AND INDICATOR PIPING

Item	Part No.	Description	Qty	Options
27	6245-11-8730	HOSE	1	SN:610001--
28	07289-00170	CLAMP	2	SN:610001--
29	08672-01000	INDICATOR,DUST	1	SN:610001--
30	08671-70140	HOSE	1	SN:610001--
31	01010-81020	BOLT	1	SN:610001--
32	01643-31032	WASHER	1	SN:610001--
33	426-01-11310	BRACKET	1	SN:610001--
34	01010-81020	BOLT	4	SN:610001--
35	01643-31032	WASHER	4	SN:610001--
36	04434-51410	CLIP	4	SN:610001--
37	02720-20204	PLUG	1	SN:610001--

Printed By : Dwi Iswanto (airafather6107170)

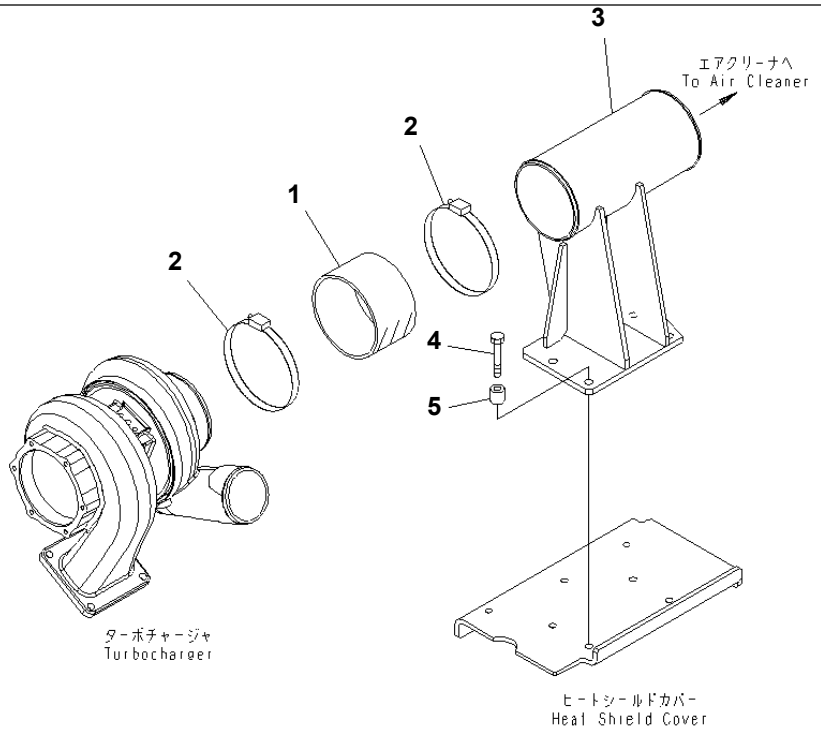

00062189

Ref. A1410-A6K7 **Page 030080**

SAA6D170E-5CR-W S/N 610001-UP

AIR CLEANER ATTACHMENT (+55ßC SPEC.)

Item	Part No.	Description	Qty	Options
1	6245-11-7540	HOSE	1	SN:610001--
2	07289-00170	CLAMP	2	SN:610001--
3	6245-11-7580	TUBE	1	SN:610001--
4	01010-E1270	BOLT	4	SN:610001--
5	6144-81-6680	SPACER	4	SN:610001--

Printed By : Dwi Iswanto (airafather6107170)

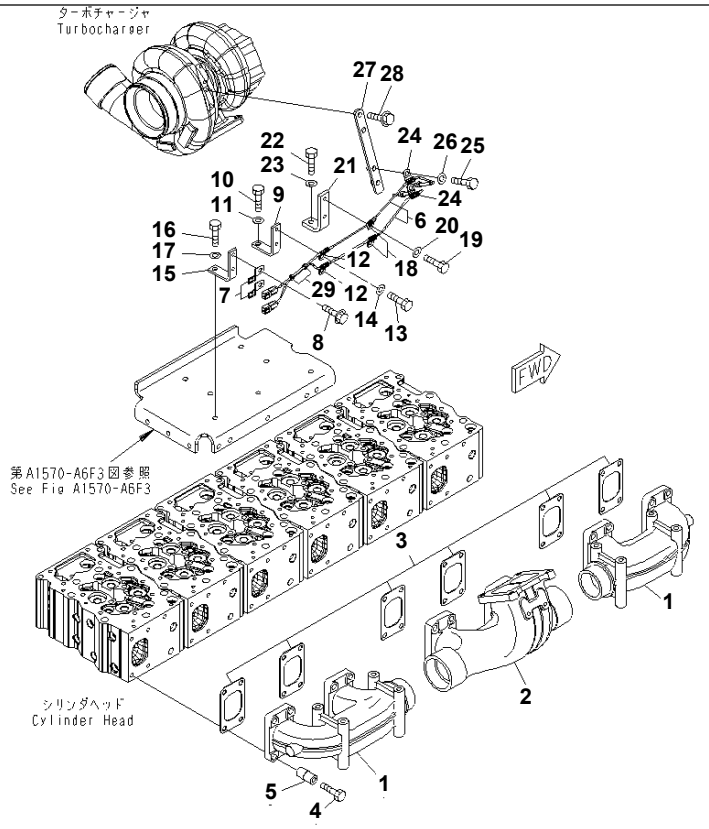

Ref. A1510-A6G2 Page 030090

SAA6D170E-5CR-W S/N 610001-UP

EXHAUST MANIFOLD

Item	Part No.	Description	Qty	Options
1	6240-11-5110	MANIFOLD,FRONT AND REAR	2	SN:610001--
2	6245-11-5230	MANIFOLD,CENTER	1	SN:610001--
3	6240-11-5820	GASKET	6	SN:610001--
4	01010-E1290	BOLT	24	SN:610001--
5	6245-11-5190	SPACER	24	SN:610001--
6	6215-11-8281	SENSOR,EXHAUST TEMPERATURE	2	SN:610001--
7	08193-20010	CLIP	2	SN:610001--
8	01435-01016	BOLT	2	SN:610001--
9	6215-85-4120	STAY	1	SN:610001--
10	01010-81030	BOLT	1	SN:610001--
11	01643-31032	WASHER	1	SN:610001--
12	6240-81-4431	CLIP	2	SN:610001--
13	01010-81016	BOLT	2	SN:610001--
14	01643-31032	WASHER	2	SN:610001--
15	6215-85-4120	STAY	1	SN:610001--
16	01010-81030	BOLT	1	SN:610001--
17	01643-31032	WASHER	1	SN:610001--
18	6240-81-4431	CLIP	2	SN:610001--
19	01010-81016	BOLT	2	SN:610001--
20	01643-31032	WASHER	2	SN:610001--
21	6162-13-7360	BRACKET	1	SN:610001--
22	01010-81030	BOLT	1	SN:610001--
23	01643-31032	WASHER	1	SN:610001--
24	6240-81-4431	CLIP	2	SN:610001--
25	01010-81030	BOLT	2	SN:610001--
26	01643-31032	WASHER	2	SN:610001--
27	6245-81-9280	BRACKET	1	SN:610001--

Ref. A1510-A6G2 Page 030090

Printed By : Dwi Iswanto (airafather6107170)

EXHAUST MANIFOLD

Item	Part No.	Description	Qty	Options
28	01435-01030	BOLT	2	SN:610001--
29	6218-81-8480	BAND	2	SN:610001--

Printed By : Dwi Iswanto (airafather6107170)

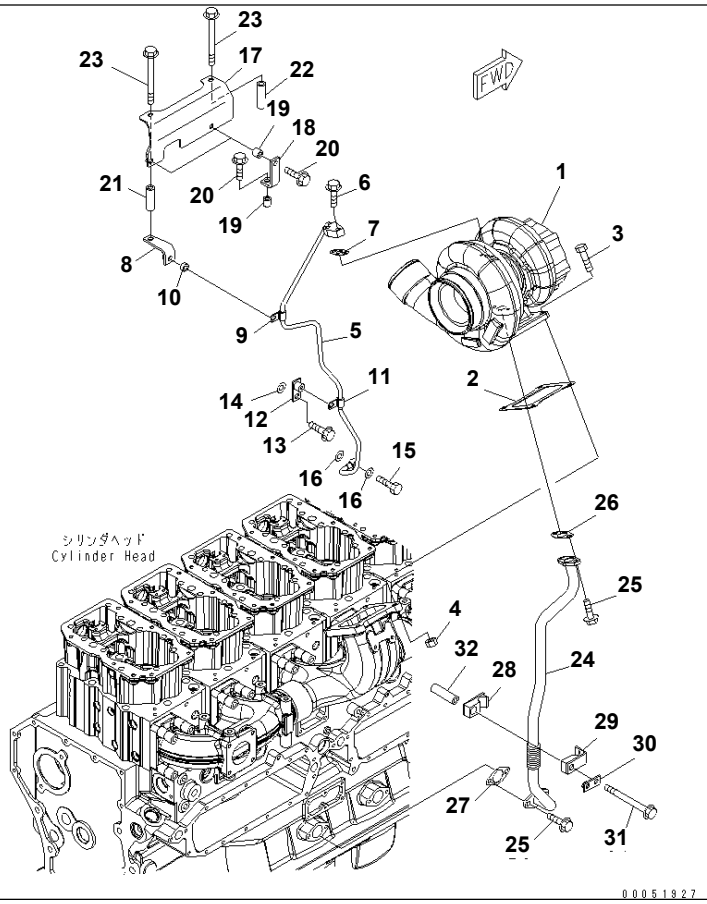

Ref. A1530-A6J1 **Page 030100**

SAA6D170E-5CR-W S/N 610001-UP

TURBOCHARGER MOUNTING AND LUBRICATOR

Item	Part No.	Description	Qty	Options
1	(6502-52-5020)	TURBOCHARGER ASS'Y,(SEE FIG.A1530-C6J1)	1	SN:610001--
2	6240-11-5920	GASKET	1	SN:610001--
3	6166-11-9910	BOLT	4	SN:610001--
4	6685-11-5550	NUT	4	SN:610001--
5	6245-51-8150	TUBE,SUPPLY	1	SN:610001--
6	01435-01030	BOLT	2	SN:610001--
7	6151-51-8161	GASKET	1	SN:610001--
8	6240-51-8910	BRACKET	1	SN:610001--
9	6151-53-8280	CLIP	1	SN:610001--
10	21T-72-14930	BOSS	1	SN:610001--
11	6151-53-8280	CLIP	1	SN:610001--
12	426-06-11570	BRACKET	1	SN:610001--
13	01435-01030	BOLT	1	SN:610001--
14	6110-23-6490	SPACER	1	SN:610001--
15	07206-31014	BOLT,JOINT	1	SN:610001--
16	07005-01412	GASKET	2	SN:610001--
17	6240-51-8710	COVER	1	SN:610001--
18	6136-21-5630	BRACKET	2	SN:610001--
19	6631-11-5630	SPACER	4	SN:610001--
20	01435-01035	BOLT	4	SN:610001--
21	6240-51-8760	SPACER	1	SN:610001--
22	6240-51-8770	SPACER	1	SN:610001--
23	01435-01095	BOLT	2	SN:610001--
24	6245-51-8120	TUBE,RETURN	1	SN:610001--
25	01435-01025	BOLT	4	SN:610001--
26	6151-51-8151	GASKET	1	SN:610001--
27	6127-51-6822	GASKET	1	SN:610001--

Printed By : Dwi Iswanto (airafather6107170)

TURBOCHARGER MOUNTING AND LUBRICATOR

Item	Part No.	Description	Qty	Options
28	6245-51-8350	CLAMP,HALF	1	SN:610001--
29	6245-51-8340	CLAMP,HALF	1	SN:610001--
30	426-01-11310	BRACKET	1	SN:610001--
31	01436-01040	BOLT	1	SN:610001--
32	6130-12-4571	SPACER	1	SN:610001--

Printed By : Dwi Iswanto (airafather6107170)

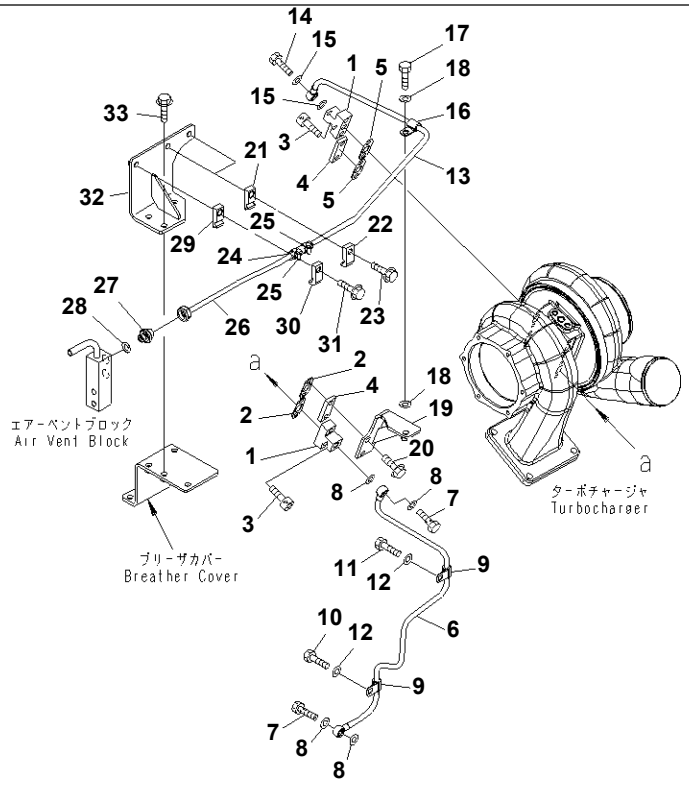

TURBOCHARGER WATER PIPING

Item	Part No.	Description	Qty	Options
1	6162-63-8570	JOINT	2	SN:610001--
2	6164-62-8241	GASKET	2	SN:610001--
3	01252-31035	BOLT	4	SN:610001--
4	6164-62-8230	PLATE	2	SN:610001--
5	6164-62-8241	GASKET	2	SN:610001--
6	6245-61-6810	TUBE,INLET	1	SN:610001--
7	07206-31014	BOLT,JOINT	2	SN:610001--
8	07003-01419	GASKET	4	SN:610001--
9	6151-53-8280	CLIP	2	SN:610001--
10	01010-81020	BOLT	1	SN:610001--
11	01010-81035	BOLT	1	SN:610001--
12	01643-31032	WASHER	2	SN:610001--
13	6245-61-6820	TUBE,RETURN	1	SN:610001--
14	07206-31014	BOLT,JOINT	1	SN:610001--
15	07003-01419	GASKET	2	SN:610001--
16	6151-53-8280	CLIP	1	SN:610001--
17	01010-81030	BOLT	1	SN:610001--
18	01643-31032	WASHER	2	SN:610001--
19	6245-61-6840	BRACKET	1	SN:610001--
20	01435-01025	BOLT	2	SN:610001--
21	6240-51-8350	CLAMP	2	SN:610001--
22	6240-51-8340	CLAMP	2	SN:610001--
23	01435-01040	BOLT	2	SN:610001--
24	6245-61-6790	HOSE	1	SN:610001--
25	07281-00197	CLAMP	2	SN:610001--
26	6245-61-6830	TUBE,RETURN	1	SN:610001--
27	07211-81016	CONNECTOR	1	SN:610001--

Printed By : Dwi Iswanto (airafather6107170)

TURBOCHARGER WATER PIPING

Item	Part No.	Description	Qty	Options
28	07005-01612	GASKET	1	SN:610001--
29	6240-51-8350	CLAMP	1	SN:610001--
30	6240-51-8340	CLAMP	1	SN:610001--
31	01435-01040	BOLT	1	SN:610001--
32	6245-61-6460	BRACKET	1	SN:610001--
33	01435-01025	BOLT	3	SN:610001--

Printed By : Dwi Iswanto (airafather6107170)

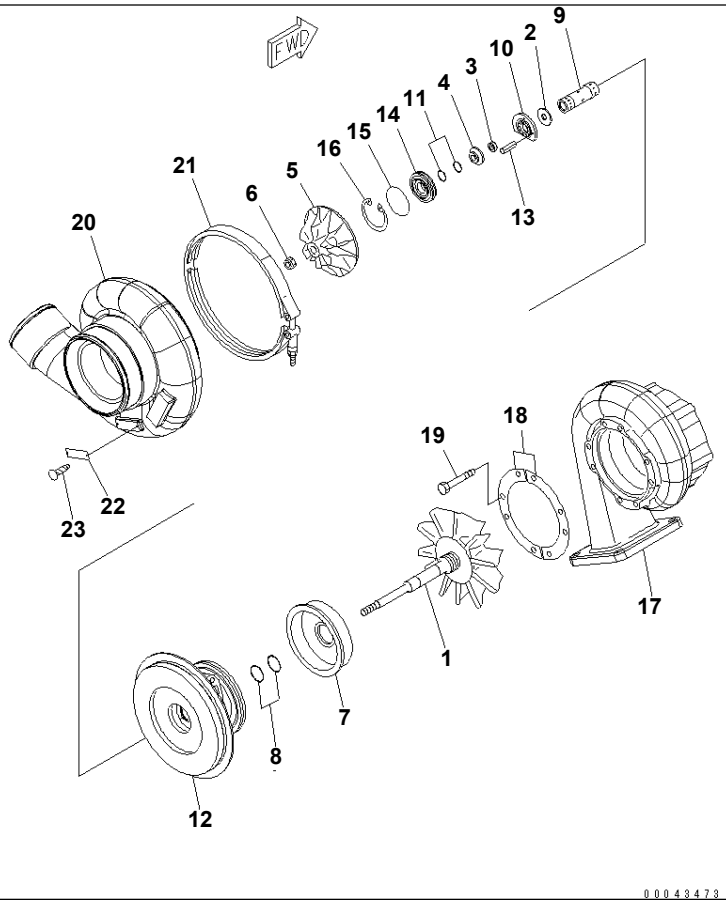

TURBOCHARGER (KTR130E-33BAW) (INNER PARTS)

Item	Part No.	Description	Qty	Options
	6502-52-5020	TURBOCHARGER ASS'Y,(KTR130E-33BAW)	1	SN:610001--
	6502-52-5810	· CORE ASS'Y	1	SN:610001--
1	(★6502-52-3010)	· · ROTOR,TURBINE	1	SN:610001--
2	(★6505-71-0210)	· · PLATE,COLLAR	1	SN:610001--
3	(★6505-71-0230)	· · SPACER,COLLAR	1	SN:610001--
4	(★6505-51-0252)	· · FLINGER	1	SN:610001--
5	(★6502-52-1010)	· · IMPELLER,BLOWER	1	SN:610001--
6	(★6502-51-0410)	· · NUT	1	SN:610001--
7	(★6502-51-0710)	· · SHIELD,HEAT	1	SN:610001--
8	(★6505-51-0310)	· · RING	2	SN:610001--
9	(★6502-51-0110)	· · BEARING,JOURNAL	1	SN:610001--
10	(★6502-51-0150)	· · BEARING,THRUST	1	SN:610001--
11	(★6505-51-0351)	· · RING,SEAL	2	SN:610001--
12	(★6502-52-0010)	· · HOUSING,CENTER	1	SN:610001--
13	(★04022-04008)	· · PIN,DOWEL	1	SN:610001--
14	(★6505-71-0850)	· · INSERT	1	SN:610001--
15	(★07000-E2050)	· · O-RING	1	SN:610001--
16	(★6505-71-0480)	· · RING,SNAP	1	SN:610001--
17	6502-52-4310	· HOUSING,TURBINE	1	SN:610001--
18	6502-51-0510	· PLATE	2	SN:610001--
19	01020-01016	· BOLT	8	SN:610001--
20	6502-52-2010	· HOUSING,BLOWER	1	SN:610001--
21	6502-12-1722	· V-BAND ASS'Y	1	SN:610001--
22	6505-99-9011	· PLATE¤ NAME	1	SN:610001--
23	04418-02550	· SCREW	2	SN:610001--

Printed By : Dwi Iswanto (airafather6107170)

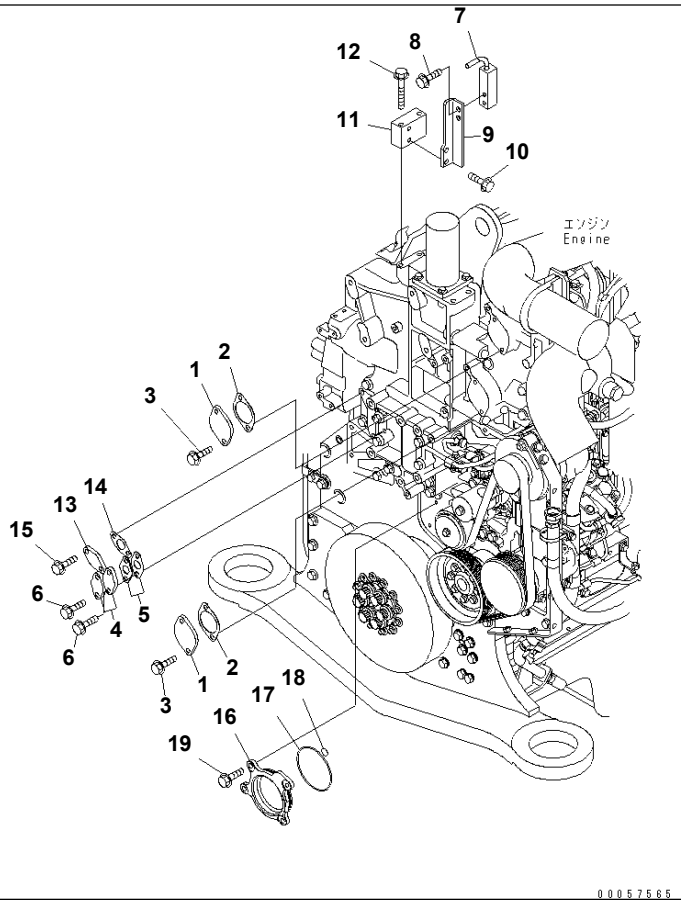

SAA6D170E-5CR-W S/N 610001-UP

COVER FOR EGR LESS

Item	Part No.	Description	Qty	Options
1	6245-11-4220	PLATE	2	SN:610001--
2	6166-61-6341	GASKET	2	SN:610001--
3	01435-01025	BOLT	4	SN:610001--
4	6245-61-6490	COVER	2	SN:610001--
5	6110-51-6811	GASKET	2	SN:610001--
6	01435-01025	BOLT	4	SN:610001--
7	6245-61-6320	BLOCK	1	SN:610001--
8	01435-01020	BOLT	2	SN:610001--
9	6245-61-6390	BRACKET	1	SN:610001--
10	01435-01020	BOLT	2	SN:610001--
11	6245-61-6380	BLOCK	1	SN:610001--
12	01435-01075	BOLT	2	SN:610001--
13	6933-21-5970	PLATE	1	SN:610001--
14	6151-51-8151	GASKET	1	SN:610001--
15	01435-01025	BOLT	2	SN:610001--
16	6245-51-9130	COVER	1	SN:610001--
17	07000-72110	O-RING	1	SN:610001--
18	07000-72018	O-RING	1	SN:610001--
19	01435-01020	BOLT	4	SN:610001--

Printed By : Dwi Iswanto (airafather6107170)

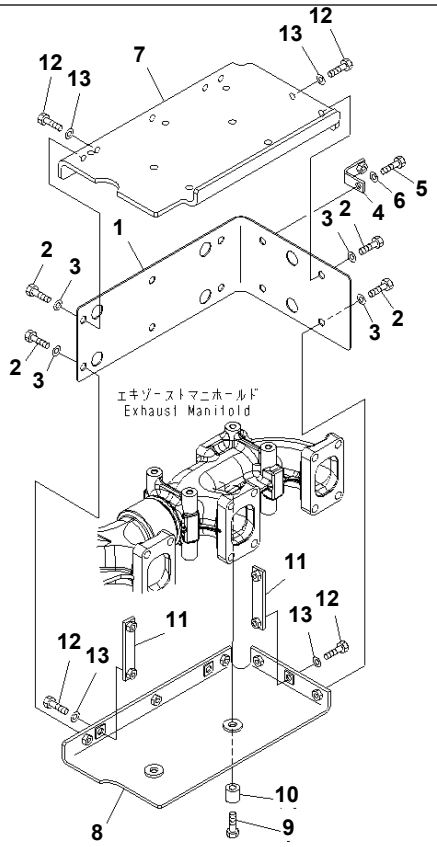

HEAT SHIELD

Item	Part No.	Description	Qty	Options
1	6245-11-7220	COVER	1	SN:610001--
2	01010-81025	BOLT	8	SN:610001--
3	01643-31032	WASHER	8	SN:610001--
4	6934-71-5860	BRACKET	2	SN:610001--
5	01010-81030	BOLT	2	SN:610001--
6	01643-31032	WASHER	2	SN:610001--
7	6245-11-7270	BRACKET	1	SN:610001--
8	6245-11-7280	BRACKET	1	SN:610001--
9	01010-E1255	BOLT	2	SN:610001--
10	6144-81-6680	SPACER	2	SN:610001--
11	6245-11-7290	PLATE	3	SN:610001--
12	01010-81030	BOLT	6	SN:610001--
13	01643-31032	WASHER	6	SN:610001--

Printed By : Dwi Iswanto (airafather6107170)

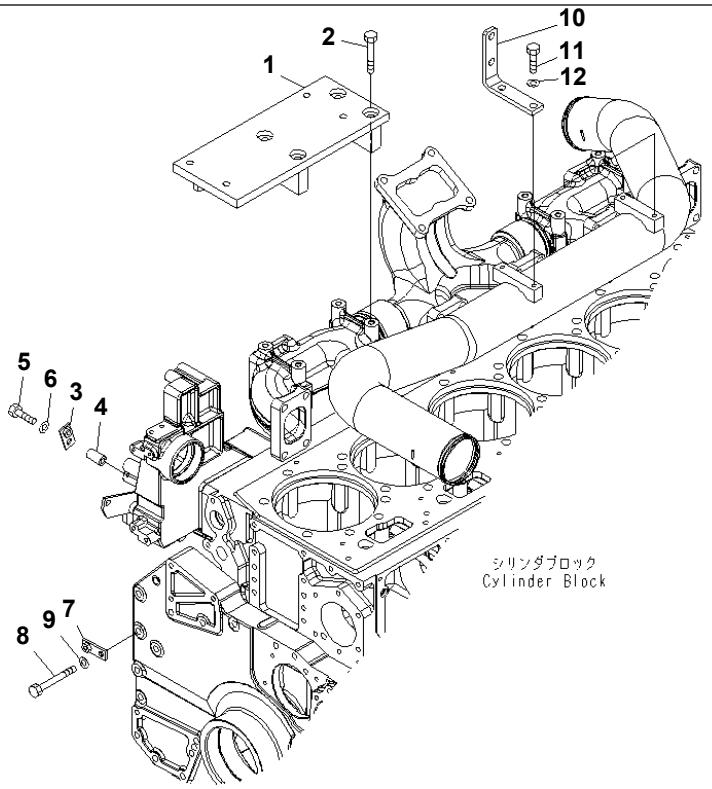

SAA6D170E-5CR-W S/N 610001-UP

MUFFLER ATTACHMENT

Item	Part No.	Description	Qty	Options
1	6240-11-5770	BRACKET	1	SN:610001--
2	01010-E1290	BOLT	4	SN:610001--
3	426-01-11310	BRACKET	1	SN:610001--
4	6206-81-6830	SPACER	1	SN:610001--
5	01010-81075	BOLT	1	SN:610001--
6	01643-31032	WASHER	1	SN:610001--
7	6212-85-2440	PLATE	1	SN:610001--
8	01011-81220	BOLT	1	SN:610001--
9	01643-31232	WASHER	1	SN:610001--
10	6245-11-5650	BRACKET	2	SN:610001--
11	01010-81025	BOLT	4	SN:610001--
12	01643-31032	WASHER	4	SN:610001--

Printed By : Dwi Iswanto (airafather6107170)

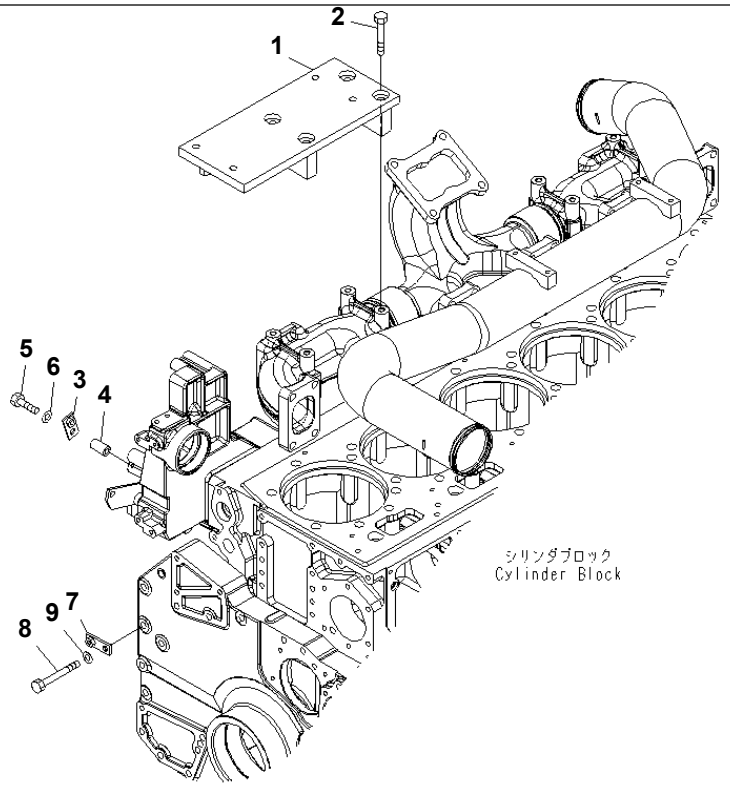

00062190

SAA6D170E-5CR-W S/N 610001-UP

MUFFLER ATTACHMENT (+55ßC SPEC.)

Item	Part No.	Description	Qty	Options
1	6240-11-5770	BRACKET	1	SN:610001--
2	01010-E1290	BOLT	4	SN:610001--
3	426-01-11310	BRACKET	1	SN:610001--
4	6206-81-6830	SPACER	1	SN:610001--
5	01010-81075	BOLT	1	SN:610001--
6	01643-31032	WASHER	1	SN:610001--
7	6212-85-2440	PLATE	1	SN:610001--
8	01011-81220	BOLT	1	SN:610001--
9	01643-31232	WASHER	1	SN:610001--

Printed By : Dwi Iswanto (airafather6107170)

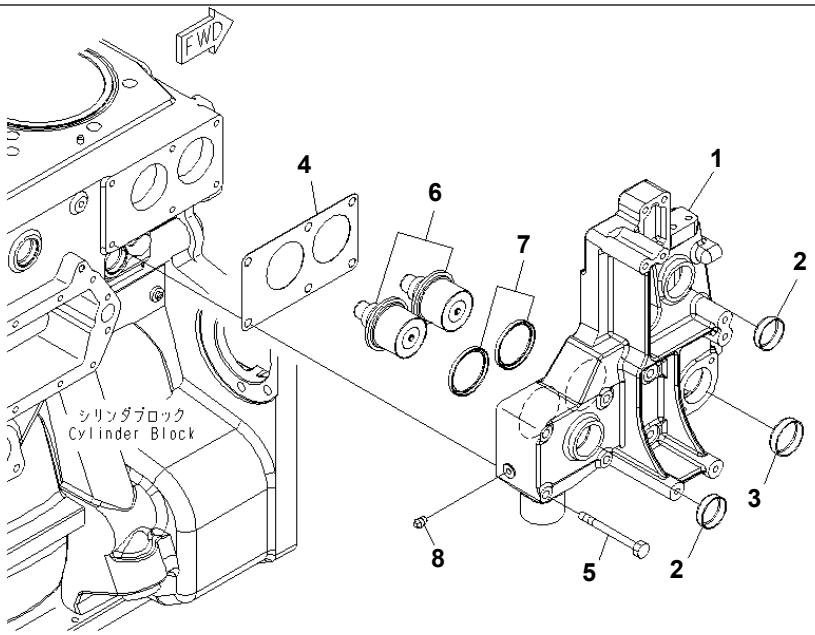

00057485

THERMOSTAT HOUSING

Item	Part No.	Description	Qty	Options
	6245-11-6401	HOUSING ASS'Y	1	SN:610001--
1	☆	· HOUSING,THERMOSTAT	1	SN:610001--
2	07046-44516	· PLUG	2	SN:610001--
3	07046-45016	· PLUG	1	SN:610001--
4	6240-11-6470	GASKET	1	SN:610001--
5	01010-81095	BOLT	6	SN:610001--
6	600-421-6630	THERMOSTAT	2	SN:610001--
7	6162-13-6440	SEAL,THERMOSTAT	2	SN:610001--
8	07042-A0108	PLUG	1	SN:610001--

Printed By : Dwi Iswanto (airafather6107170)

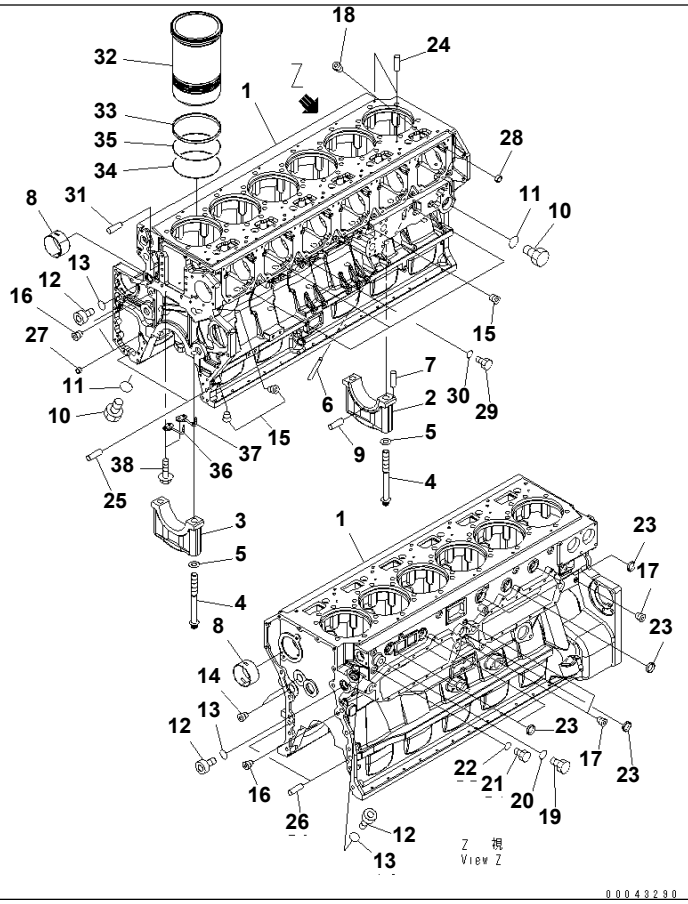

Ref. A2010-A6D3 **Page 030180**

SAA6D170E-5CR-W S/N 610001-UP
CYLINDER BLOCK

Item	Part No.	Description	Qty	Options
	6245-21-1100	CYLINDER BLOCK ASS'Y	1	SN:610001--
1	☆	· BLOCK,CYLINDER	1	SN:610001--
2	△6240-29-1250	· CAP,MAIN METAL¤ NO.6	1	SN:610001--
3	△6240-29-1210	· CAP,MAIN METAL¤ NO.1¤2¤3¤4¤5¤7	6	SN:610001--
4	6215-21-1710	· BOLT,MAIN CAP	14	SN:610001--
5	01643-32460	· WASHER	14	SN:610001--
6	6162-23-1140	· TUBE,OIL TRANSFER	1	SN:610001--
7	04020-00514	· PIN	2	SN:610001--
8	6245-21-1482	· BUSHING	7	SN:610001--
9	6162-23-1260	· PIN,DOWEL	2	SN:610001--
10	07040-14220	· PLUG	2	SN:610001--
11	07002-34234	· O-RING	2	SN:610001--
12	07040-13316	· PLUG	3	SN:610001--
13	07002-33334	· O-RING	3	SN:610001--
14	07043-71019	· PLUG	2	SN:610001--
15	07043-70211	· PLUG	6	SN:610001--
16	07043-70415	· PLUG	2	SN:610001--
17	07043-70108	· PLUG	3	SN:610001--
18	07043-00108	· PLUG	6	SN:610001--
19	07040-12012	· PLUG	1	SN:610001--
20	07002-62034	· O-RING	1	SN:610001--
21	07040-11409	· PLUG	1	SN:610001--
22	07005-01412	· GASKET	1	SN:610001--
23	07046-44016	· PLUG	7	SN:610001--
24	04020-00820	· PIN,DOWEL	12	SN:610001--
25	04020-01434	· PIN,DOWEL	2	SN:610001--
26	6127-21-1160	· PIN,DOWEL	2	SN:610001--

Printed By : Dwi Iswanto (airafather6107170)

CYLINDER BLOCK

Item	Part No.	Description	Qty	Options
27	6150-41-2430	· PIN	2	SN:610001--
28	6162-43-2430	· RING,DOWEL	12	SN:610001--
29	07040-11409	· PLUG	1	SN:610001--
30	07002-31423	· O-RING	1	SN:610001--
31	04020-01228	· PIN,DOWEL	2	SN:610001--
32	6240-21-2220	LINER,CYLINDER	6	SN:610001--
33	6162-23-2250	SEAL,CREVICE	6	SN:610001--
34	6162-23-2240	O-RING,LOWER	6	SN:610001--
35	6162-23-2220	O-RING,CENTER	6	SN:610001--
36	6240-21-1810	NOZZLE,PISTON COOLING¤ FRONT	6	SN:610001--
37	6245-21-1910	NOZZLE,PISTON COOLING¤ REAR	6	SN:610001--
38	01435-00816	BOLT	12	SN:610001--

Printed By : Dwi Iswanto (airafather6107170)

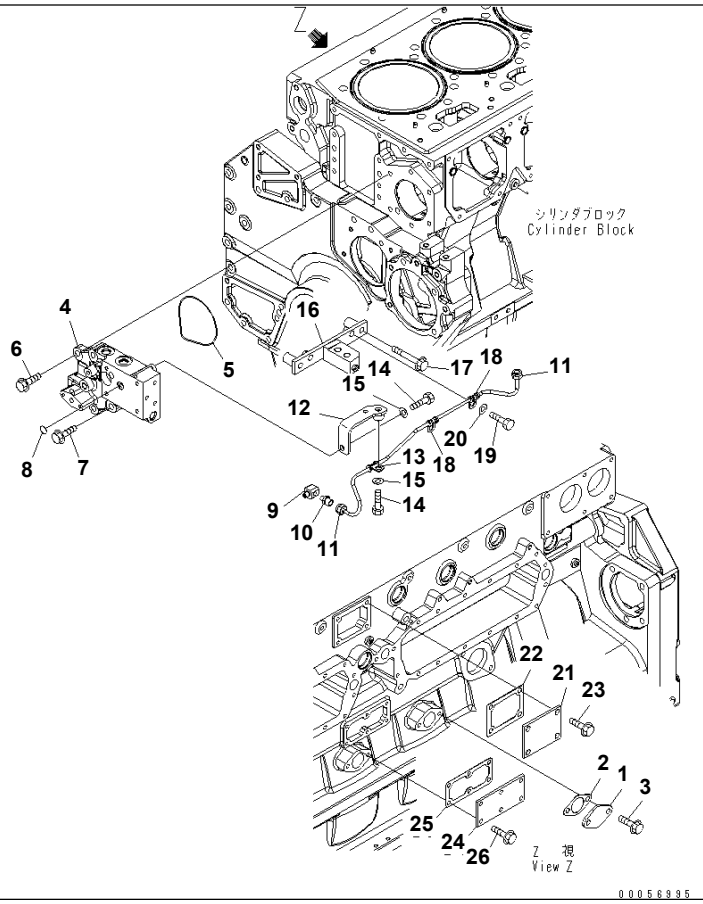

CYLINDER BLOCK ACCESSORY (1/2) (GREASE FITTING TUBE AND BLIND COVER)

Item	Part No.	Description	Qty	Options
1	6162-23-6530	PLATE	1	SN:610001--
2	6127-51-6822	GASKET	1	SN:610001--
3	01435-01020	BOLT	2	SN:610001--
4	6245-81-6130	BLOCK	1	SN:610001--
5	07000-72115	O-RING	1	SN:610001--
6	01435-01235	BOLT	1	SN:610001--
7	01435-01250	BOLT	5	SN:610001--
8	07000-72014	O-RING	1	SN:610001--
9	6127-81-4690	NIPPLE	1	SN:610001--
10	07213-50710	CONNECTOR	1	SN:610001--
11	6245-81-6710	TUBE	1	SN:610001--
12	6245-81-6730	BRACKET	1	SN:610001--
13	6150-71-8231	CLIP	1	SN:610001--
14	01010-81025	BOLT	2	SN:610001--
15	01643-31032	WASHER	2	SN:610001--
16	6245-81-6740	BRACKET	1	SN:610001--
17	01435-01070	BOLT	2	SN:610001--
18	6150-71-8231	CLIP	2	SN:610001--
19	01010-81025	BOLT	2	SN:610001--
20	01643-31032	WASHER	2	SN:610001--
21	6240-21-1960	PLATE	1	SN:610001--
22	6210-21-1971	GASKET	1	SN:610001--
23	01435-01020	BOLT	3	SN:610001--
24	6162-63-6710	PLATE	1	SN:610001--
25	6162-63-6731	GASKET	1	SN:610001--
26	01435-00820	BOLT	6	SN:610001--

Printed By : Dwi Iswanto (airafather6107170)

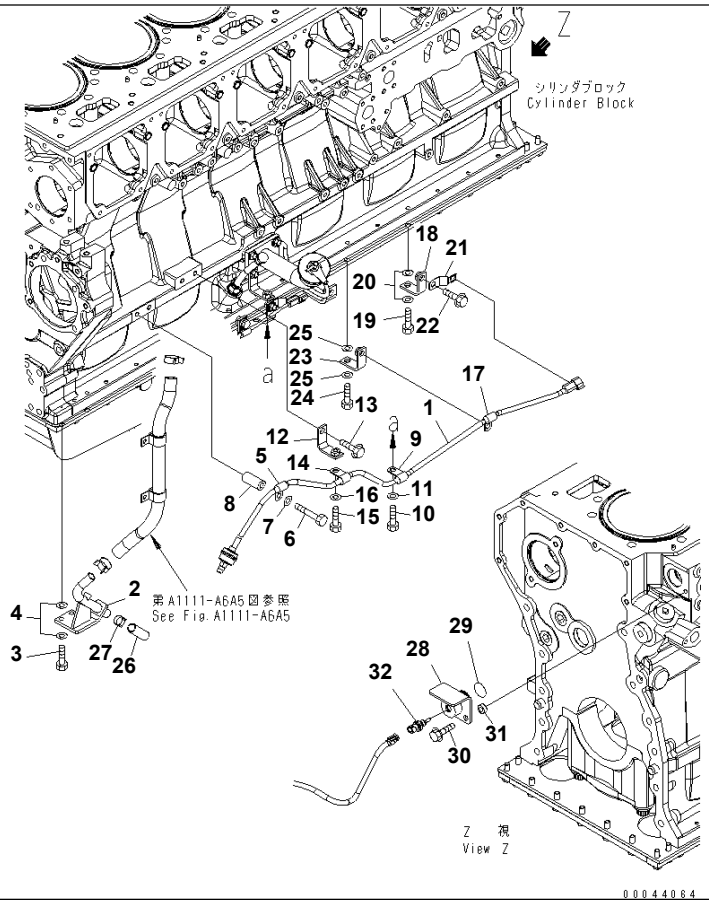

SAA6D170E-5CR-W S/N 610001-UP

CYLINDER BLOCK ACCESSORY (2/2) (BLOWBY AND WATER TEMPERATURE SENSOR)

Item	Part No.	Description	Qty	Options
1	6218-81-4111	SENSOR ASS'Y,BLOWBY	1	SN:610001--
2	6245-21-6220	TUBE	1	SN:610001--
3	01010-81050	BOLT	2	SN:610001--
4	01643-31032	WASHER	4	SN:610001--
5	600-051-2080	CLIP	1	SN:610001--
6	01010-81065	BOLT	1	SN:610001--
7	01643-31032	WASHER	1	SN:610001--
8	6152-21-6590	SPACER	1	SN:610001--
9	600-051-2080	CLIP	1	SN:610001--
10	01010-81020	BOLT	1	SN:610001--
11	01643-31032	WASHER	1	SN:610001--
12	6934-71-5860	BRACKET	1	SN:610001--
13	01435-01020	BOLT	1	SN:610001--
14	600-051-2080	CLIP	1	SN:610001--
15	01010-81020	BOLT	1	SN:610001--
16	01643-31032	WASHER	1	SN:610001--
17	600-051-2080	CLIP	1	SN:610001--
18	6934-71-5860	BRACKET	1	SN:610001--
19	01010-81055	BOLT	1	SN:610001--
20	01643-31032	WASHER	2	SN:610001--
21	08193-20010	CLIP	1	SN:610001--
22	01435-01016	BOLT	1	SN:610001--
23	6934-71-5860	BRACKET	1	SN:610001--
24	01010-81055	BOLT	1	SN:610001--
25	01643-31032	WASHER	2	SN:610001--
26	07286-01983	HOSE	1	SN:610001--

Printed By : Dwi Iswanto (airafather6107170)

CYLINDER BLOCK ACCESSORY (2/2) (BLOWBY AND WATER TEMPERATURE SENSOR)

Item	Part No.	Description	Qty	Options
27	07285-00220	CLIP	1	SN:610001--
28	6245-21-6810	ADAPTER	1	SN:610001--
29	6240-61-6370	O-RING	1	SN:610001--
30	01435-01025	BOLT	1	SN:610001--
31	417-823-1460	SPACER	1	SN:610001--
32	6261-81-6900	SENSOR	1	SN:610001--
	6261-81-6910	· SENSOR,WATER TEMPERATURE	1	SN:610001--
	6261-84-9740	· O-RING	1	SN:610001--

Printed By : Dwi Iswanto (airafather6107170)

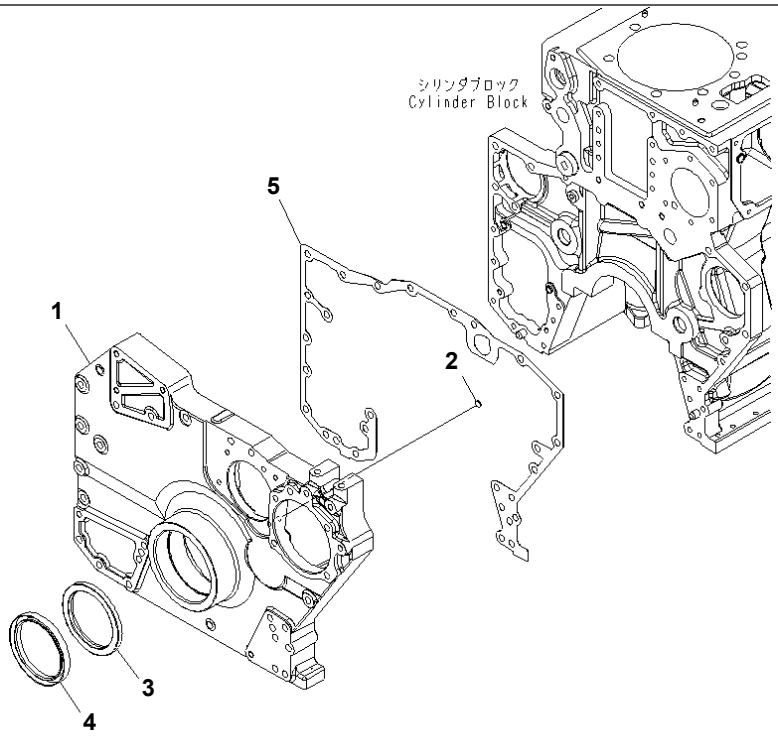

00043910

Ref. A2040-A6C6 **Page 030210**

SAA6D170E-5CR-W S/N 610001-UP
FRONT COVER (WITH DUST SEAL)

Item	Part No.	Description	Qty	Options
1	6245-21-3211	COVER,FRONT	1	SN:610001--
2	07046-11216	PLUG	1	SN:610001--
3	6245-21-3120	SEAL¤ FRONT	1	SN:610001--
4	6245-21-3111	RING,DUST	1	SN:610001--
5	6245-21-3290	GASKET	1	SN:610001--

Printed By : Dwi Iswanto (airafather6107170)

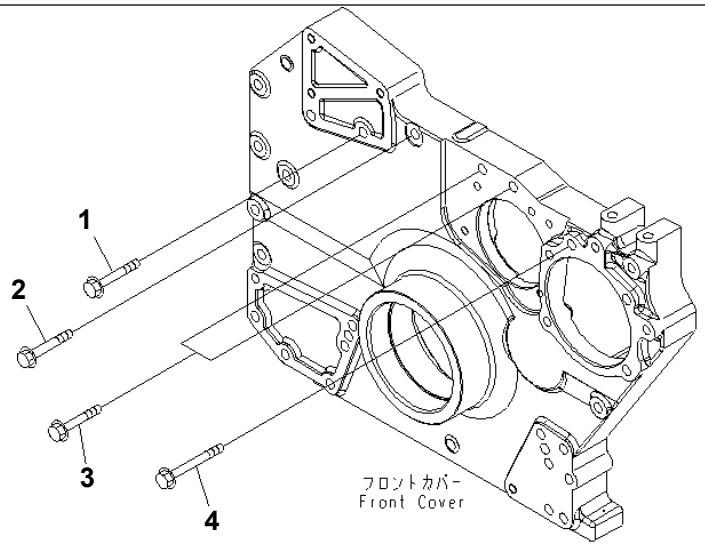

00043911

SAA6D170E-5CR-W S/N 610001-UP

FRONT COVER MOUNTING

Item	Part No.	Description	Qty	Options
1	01010-81275	BOLT	1	SN:610001--
2	01010-81270	BOLT	1	SN:610001--
3	01010-81265	BOLT	2	SN:610001--
4	01011-81215	BOLT	1	SN:610001--

Printed By : Dwi Iswanto (airafather6107170)

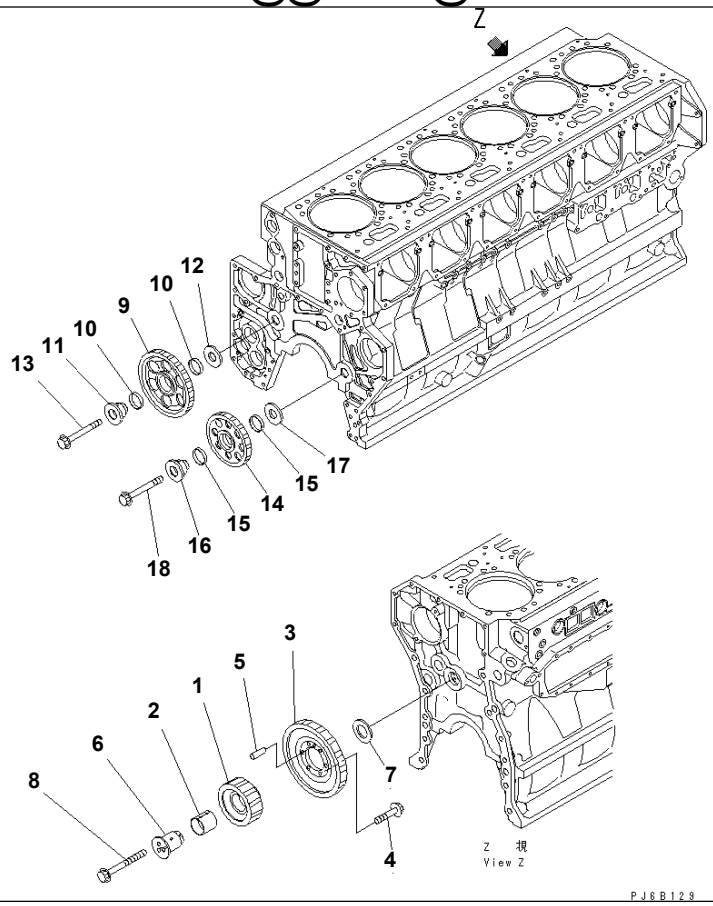

Ref. A2050-A6A4 **Page 030230**

SAA6D170E-5CR-W S/N 610001-UP
IDLER GEAR

Item	Part No.	Description	Qty	Options
	6240-31-6101	GEAR ASS'Y	1	SN:610001--
1	☆	· GEAR,IDLER	1	SN:610001--
2	6240-31-6120	· BUSHING	1	SN:610001--
3	6240-31-6330	GEAR	1	SN:610001--
4	01437-01230	BOLT	6	SN:610001--
5	04020-01024	PIN,DOWEL	1	SN:610001--
6	6240-21-2460	SHAFT	1	SN:610001--
7	6240-21-2470	PLATE	1	SN:610001--
8	6240-21-2430	BOLT	3	SN:610001--
	6240-31-6500	IDLER GEAR ASS'Y	1	SN:610001--
9	☆	· GEAR	1	SN:610001--
10	6150-31-6220	· BUSHING	2	SN:610001--
11	6150-21-2411	SHAFT	1	SN:610001--
12	6150-21-2421	PLATE	1	SN:610001--
13	01437-21680	BOLT	1	SN:610001--
	6240-31-6600	IDLER GEAR ASS'Y	1	SN:610001--
14	☆	· GEAR	1	SN:610001--
15	6150-31-6220	· BUSHING	2	SN:610001--
16	6150-21-2411	SHAFT	1	SN:610001--
17	6150-21-2421	PLATE	1	SN:610001--
18	01437-21680	BOLT	1	SN:610001--

Printed By : Dwi Iswanto (airafather6107170)

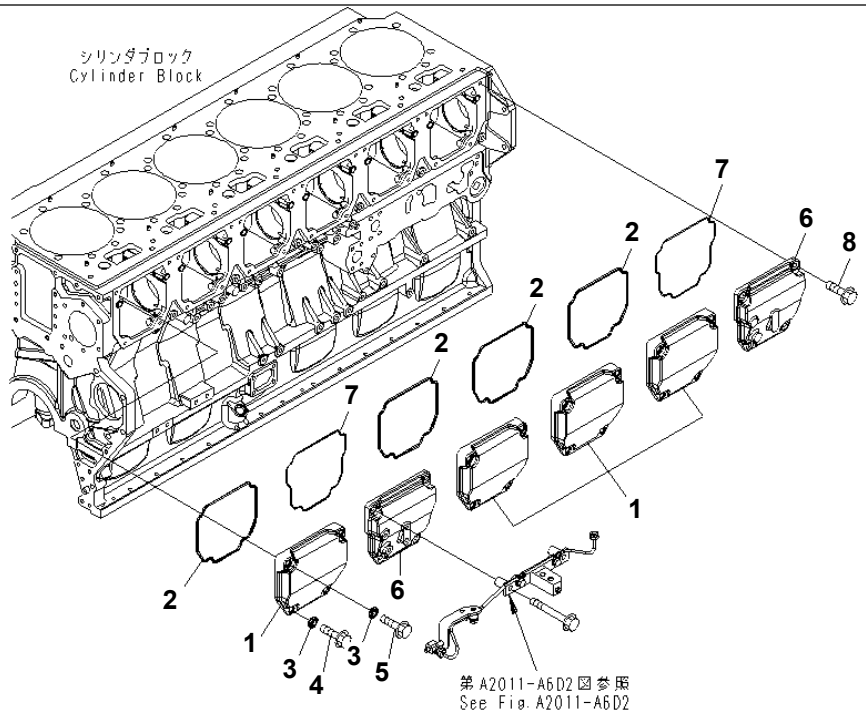

00044072

CAMFOLLOWER COVER

Item	Part No.	Description	Qty	Options
1	6240-21-6410	COVER,CAMFOLLOWER	4	SN:610001--
2	6240-21-6450	O-RING	4	SN:610001--
3	6150-21-6391	PACKING	16	SN:610001--
4	01435-01030	BOLT	8	SN:610001--
5	01435-01050	BOLT	8	SN:610001--
6	6245-21-6411	COVER,CAMFOLLOWER	2	SN:610001--
7	6245-21-6420	O-RING	2	SN:610001--
8	01435-01025	BOLT	6	SN:610001--

Printed By : Dwi Iswanto (airafather6107170)

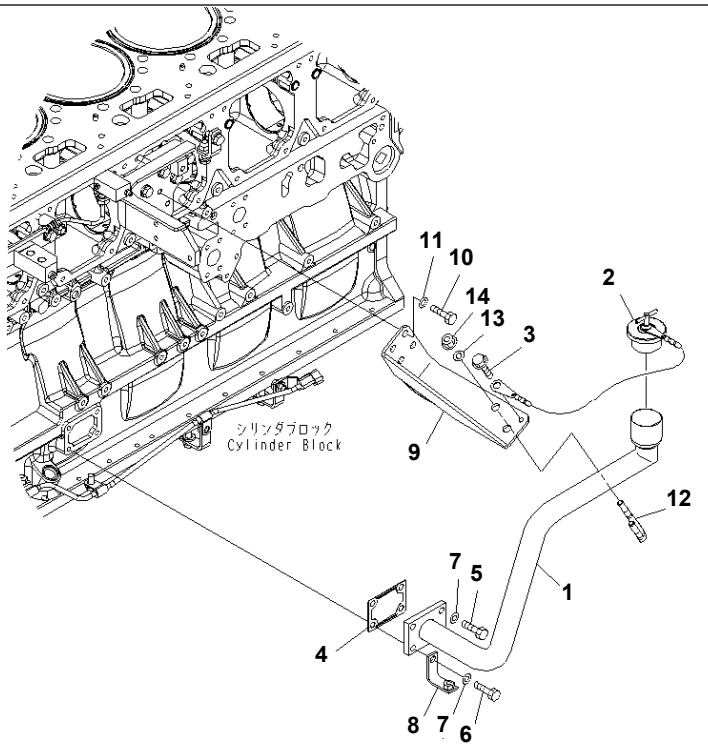

SAA6D170E-5CR-W S/N 610001-UP

OIL FILLER

Item	Part No.	Description	Qty	Options
1	6245-21-7610	FILLER,OIL	1	SN:610001--
2	07025-00100	CAP,OIL FILLER	1	SN:610001--
3	01435-00816	BOLT	1	SN:610001--
4	6206-21-6871	GASKET	1	SN:610001--
5	01010-81030	BOLT	3	SN:610001--
6	01010-81035	BOLT	1	SN:610001--
7	01643-31032	WASHER	4	SN:610001--
8	6934-71-5860	BRACKET	1	SN:610001--
9	6245-21-7630	BRACKET	1	SN:610001--
10	01010-81025	BOLT	4	SN:610001--
11	01643-31032	WASHER	4	SN:610001--
12	07283-34346	CLIP	1	SN:610001--
13	01643-31032	WASHER	2	SN:610001--
14	01597-01009	NUT	2	SN:610001--

Printed By : Dwi Iswanto (airafather6107170)

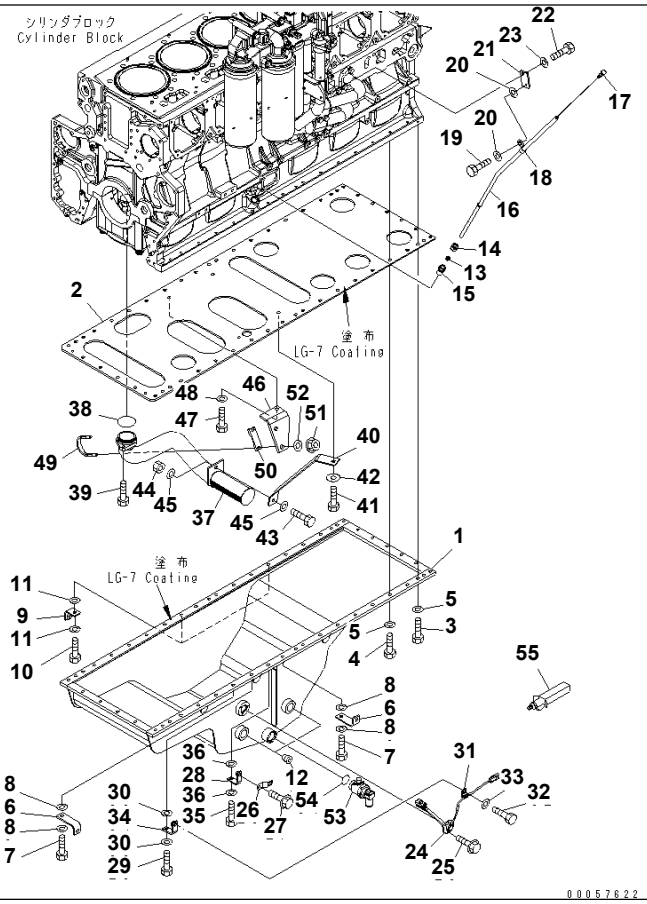

Ref. A2110-A6J9 **Page 030260**

SAA6D170E-5CR-W S/N 610001-UP
OIL PAN AND SUCTION TUBE

Item	Part No.	Description	Qty	Options
1	6245-21-5120	PAN,OIL	1	SN:610001--
2	6240-21-5290	PLATE,UNDER	1	SN:610001--
3	01010-81035	BOLT	19	SN:610001--
4	01010-81045	BOLT	21	SN:610001--
5	01640-21016	WASHER	40	SN:610001--
6	6202-11-5920	BRACKET	2	SN:610001--
7	01010-81055	BOLT	2	SN:610001--
8	01643-31032	WASHER	4	SN:610001--
9	154-49-51640	BRACKET	2	SN:610001--
10	01010-81055	BOLT	2	SN:610001--
11	01643-31032	WASHER	4	SN:610001--
12	02720-41616	PLUG	2	SN:610001--
13	6150-21-5920	COLLAR	1	SN:610001--
14	6150-21-5930	NUT	1	SN:610001--
15	6150-21-5910	BUSHING	1	SN:610001--
16	6245-25-5410	GUIDE,OIL GAUGE	1	SN:610001--
17	6245-21-5330	GAUGE,OIL LEVEL	1	SN:610001--
18	6162-23-5820	CLAMP	1	SN:610001--
19	01010-80820	BOLT	1	SN:610001--
20	01640-20816	WASHER	2	SN:610001--
21	6218-71-8161	PLATE	1	SN:610001--
22	01010-81025	BOLT	1	SN:610001--
23	01643-31032	WASHER	1	SN:610001--
24	6741-81-9220	SENSOR,OIL LEVEL	1	SN:610001--
	7861-91-4220	· O-RING	1	SN:610001--
25	01435-00612	BOLT	3	SN:610001--
26	08193-20010	CLIP	1	SN:610001--

Printed By : Dwi Iswanto (airafather6107170)

OIL PAN AND SUCTION TUBE

Item	Part No.	Description	Qty	Options
27	01435-01016	BOLT	1	SN:610001--
28	6934-71-5860	BRACKET	1	SN:610001--
29	01010-81055	BOLT	1	SN:610001--
30	01643-31032	WASHER	2	SN:610001--
31	6240-81-4431	CLIP	1	SN:610001--
32	01010-81020	BOLT	1	SN:610001--
33	01643-31032	WASHER	1	SN:610001--
34	6934-71-5860	BRACKET	1	SN:610001--
35	01010-81055	BOLT	1	SN:610001--
36	01643-31032	WASHER	2	SN:610001--
37	6245-51-6310	TUBE,SUCTION	1	SN:610001--
38	07000-E2060	O-RING	1	SN:610001--
39	01010-81030	BOLT	1	SN:610001--
40	6245-51-6320	BRACKET	1	SN:610001--
41	01010-81030	BOLT	1	SN:610001--
42	6110-23-6490	SPACER	1	SN:610001--
43	01010-81025	BOLT	1	SN:610001--
44	01580-01008	NUT	1	SN:610001--
45	01643-31032	WASHER	2	SN:610001--
46	6245-51-6330	BRACKET	1	SN:610001--
47	01010-81030	BOLT	1	SN:610001--
48	01643-31032	WASHER	1	SN:610001--
49	07283-36163	CLIP	1	SN:610001--
50	6240-51-6391	PLATE	1	SN:610001--
51	01597-01009	NUT	2	SN:610001--
52	01643-31032	WASHER	2	SN:610001--
53	6245-21-5600	VALVE,OIL DRAIN	1	SN:610001--
54	07002-23634	O-RING	1	SN:610001--
55	09920-00150	LIQUID GASKET,LG-7¤ 150G	AR	SN:610001--

Printed By : Dwi Iswanto (airafather6107170)

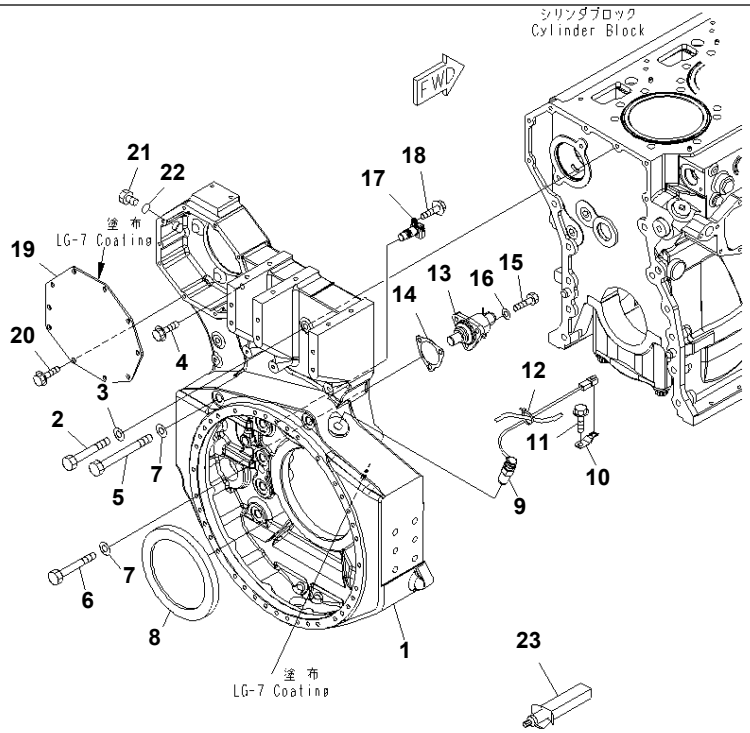

00057630

Ref. A2210-A6G2 **Page 030270**

SAA6D170E-5CR-W S/N 610001-UP

FLYWHEEL HOUSING

Item	Part No.	Description	Qty	Options
1	6245-21-4140	HOUSING,FLYWHEEL	1	SN:610001--
2	01011-81215	BOLT	5	SN:610001--
3	01643-31232	WASHER	5	SN:610001--
4	6245-21-4220	BOLT	2	SN:610001--
5	208-27-52341	BOLT	2	SN:610001--
6	01011-61810	BOLT	9	SN:610001--
7	01643-21845	WASHER	11	SN:610001--
8	6240-21-4250	SEAL¤ REAR	1	SN:610001--
9	7861-93-2330	SENSOR,REVOLUTION	1	SN:610001--
10	08193-20010	CLIP	1	SN:610001--
11	01435-01016	BOLT	1	SN:610001--
12	6218-81-8480	BAND	1	SN:610001--
13	6162-23-4500	BARING DIVICE ASS'Y	1	SN:610001--
	6162-23-4520	· CASE	1	SN:610001--
	6162-23-4510	· SHAFT	1	SN:610001--
	6162-23-4930	· GEAR	1	SN:610001--
	565-62-11320	· SPRING	1	SN:610001--
	6162-23-4530	· PIN	1	SN:610001--
	07016-00306	· SEAL	1	SN:610001--
14	6162-23-4941	GASKET	1	SN:610001--
15	01010-81030	BOLT	3	SN:610001--
16	01643-01032	WASHER	3	SN:610001--
17	6261-81-2901	SENSOR,REVOLUTION	1	SN:610001--
	6261-81-2911	· SENSOR	1	SN:610001--
	6271-81-9220	· O-RING	1	SN:610001--
18	01435-00816	BOLT	1	SN:610001--
19	6245-21-4150	PLATE	1	SN:610001--

Printed By : Dwi Iswanto (airafather6107170)

FLYWHEEL HOUSING

Item	Part No.	Description	Qty	Options
20	01435-01020	BOLT	10	SN:610001--
21	07040-12412	PLUG	1	SN:610001--
22	07002-22434	O-RING	1	SN:610001--
23	(09920-00150)	LIQUID GASKET,LG-7¤150G	AR	SN:610001--

Printed By : Dwi Iswanto (airafather6107170)

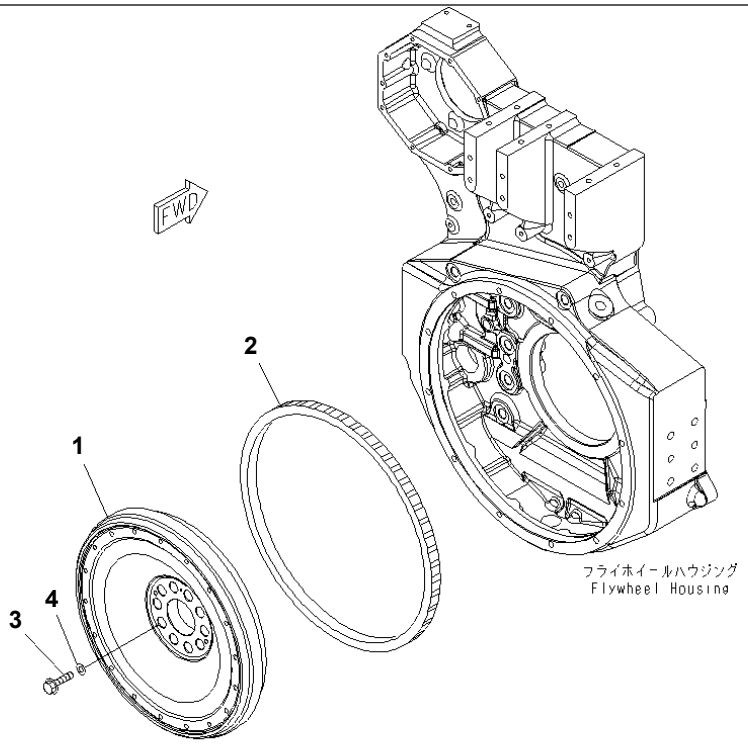

FLYWHEEL

Item	Part No.	Description	Qty	Options
	6245-31-1600	FLYWHEEL ASS'Y	1	SN:610001--
1	☆	· FLYWHEEL	1	SN:610001--
2	6640-31-1321	· GEAR,RING	1	SN:610001--
3	6245-31-1420	BOLT	10	SN:610001--
4	6162-33-1740	WASHER	10	SN:610001--

Printed By : Dwi Iswanto (airafather6107170)

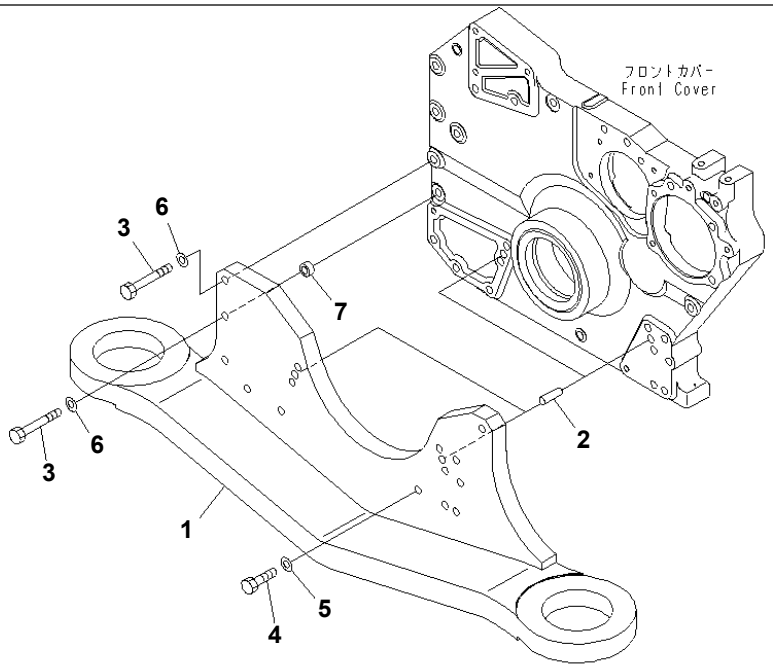

00044155

ENGINE MOUNTING

Item	Part No.	Description	Qty	Options
1	21N-01-41121	BRACKET,FRONT SUPPORT	1	SN:610001--
2	04020-01434	PIN,DOWEL	2	SN:610001--
3	01011-81210	BOLT	14	SN:610001--
4	01010-81250	BOLT	1	SN:610001--
5	01643-31232	WASHER	13	SN:610001--
6	01643-51232	WASHER	2	SN:610001--
7	6240-21-5660	SPACER	1	SN:610001--

Printed By : Dwi Iswanto (airafather6107170)

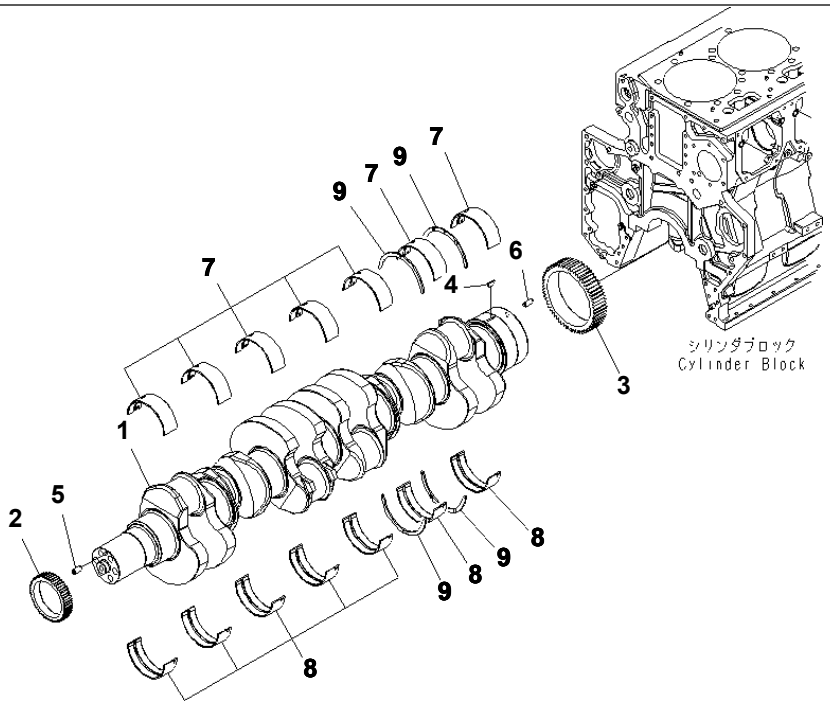

00043343

SAA6D170E-5CR-W S/N 610001-UP

CRANKSHAFT

Item	Part No.	Description	Qty	Options
	6245-31-1100	CRANKSHAFT ASS'Y	1	SN:610001--
1	☆	· CRANKSHAFT	1	SN:610001--
2	6240-31-1410	· GEAR,CRANK¤ FRONT	1	SN:610001--
3	6245-31-1510	· GEAR,CRANK¤ REAR	1	SN:610001--
4	04010-00728	· KEY	1	SN:610001--
5	04020-01024	· PIN,DOWEL	1	SN:610001--
6	04020-01228	· PIN,DOWEL	1	SN:610001--
STANDARD				
	6240-21-8100	MAIN METAL ASS'Y	7	SN:610001--
7	☆	· METAL,UPPER	1	SN:610001--
8	☆	· METAL,LOWER	1	SN:610001--
9	6162-23-8050	THRUST METAL ASS'Y	1	SN:610001--
	☆	· METAL,THRUST	4	SN:610001--
UNDERSIZE 0.25MM				
	6240-29-8100	MAIN METAL ASS'Y	7	SN:610001--
7	☆	· METAL,UPPER	1	SN:610001--
8	☆	· METAL,LOWER	1	SN:610001--
UNDERSIZE 0.50MM				
	6240-28-8100	MAIN METAL ASS'Y	7	SN:610001--
7	☆	· METAL,UPPER	1	SN:610001--
8	☆	· METAL,LOWER	1	SN:610001--
UNDERSIZE 0.75MM				
	6240-27-8100	MAIN METAL ASS'Y	7	SN:610001--
7	☆	· METAL,UPPER	1	SN:610001--
8	☆	· METAL,LOWER	1	SN:610001--
UNDERSIZE 1.00MM				
	6240-26-8100	MAIN METAL ASS'Y	7	SN:610001--

Printed By : Dwi Iswanto (airafather6107170)

CRANKSHAFT

Item	Part No.	Description	Qty	Options
7	☆	· METAL,UPPER	1	SN:610001--
8	☆	· METAL,LOWER	1	SN:610001--
OVERSIZE 0.25MM				
9	6162-29-8050	THRUST METAL ASS'Y	1	SN:610001--
	☆	· METAL,THRUST	4	SN:610001--
OVERSIZE 0.50MM				
9	6162-28-8050	THRUST METAL ASS'Y	1	SN:610001--
	☆	· METAL,THRUST	4	SN:610001--
OVERSIZE 0.75MM				
9	6162-27-8050	THRUST METAL ASS'Y	1	SN:610001--
	☆	· METAL,THRUST	4	SN:610001--
OVERSIZE 1.00MM				
9	6162-26-8050	THRUST METAL ASS'Y	1	SN:610001--
	☆	· METAL,THRUST	4	SN:610001--

Printed By : Dwi Iswanto (airafather6107170)

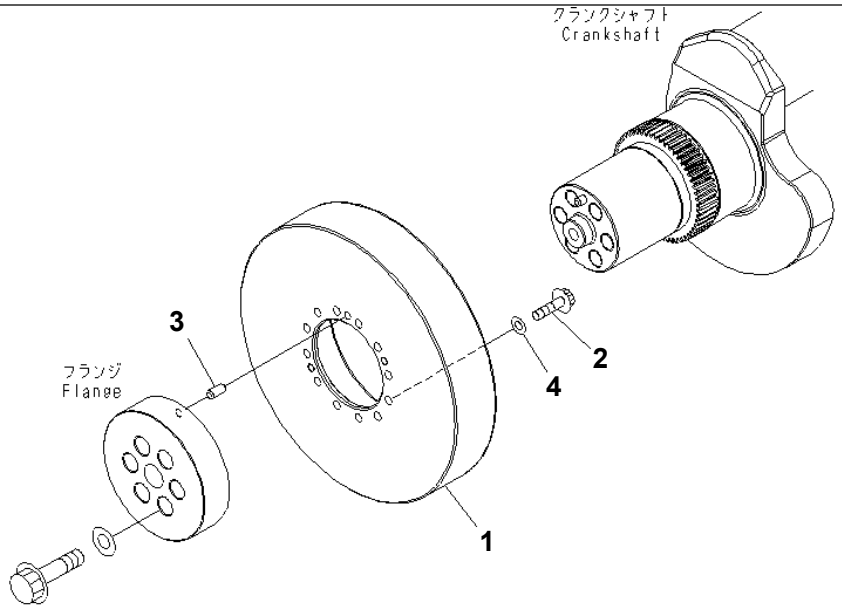

00044130

VIBRATION DAMPER

Item	Part No.	Description	Qty	Options
1	6240-31-8100	DAMPER ASS'Y	1	SN:610001--
2	01437-11025	BOLT	12	SN:610001--
3	04020-01024	PIN,DOWEL	1	SN:610001--
4	01643-31032	WASHER	12	SN:610001--

Printed By : Dwi Iswanto (airafather6107170)

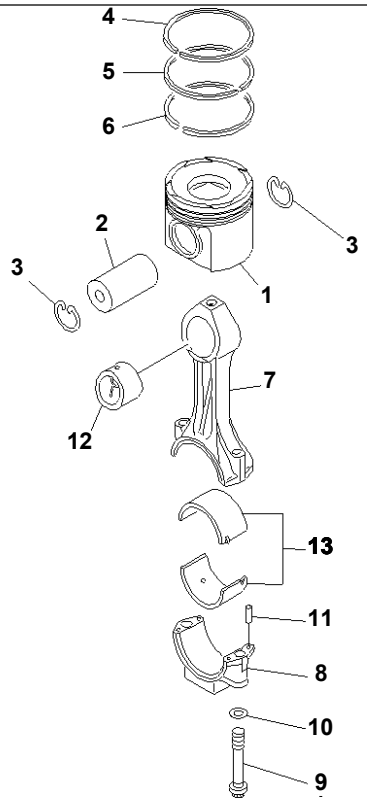

00043383

PISTON AND CONNECTING ROD

Item	Part No.	Description	Qty	Options
1	6245-31-2110	PISTON	6	SN:610001--
2	6248-31-2410	PIN,PISTON	6	SN:610001--
3	6162-33-2420	RING,SNAP	12	SN:610001--
	6245-31-2010	PISTON RING ASS'Y,(PER CYLINDER)	6	SN:610001--
4	☆	· RING,TOP	1	SN:610001--
5	☆	· RING,SECOND	1	SN:610001--
6	☆	· RING,OIL	1	SN:610001--
	6245-31-3100	CONNECTING ROD ASS'Y	6	SN:610001--
7	☆	· ROD,CONNECTING	1	SN:610001--
8	☆	· CAP,CONNECTING ROD	1	SN:610001--
9	6162-33-3310	· BOLT	2	SN:610001--
10	6162-33-3330	· WASHER	2	SN:610001--
11	02400-10413	· PIN,DOWEL	4	SN:610001--
12	6245-31-3130	· BUSHING	1	SN:610001--
STANDARD				
13	6162-33-3041	METAL ASS'Y	6	SN:610001--
	☆	· METAL	2	SN:610001--
UNDERSIZE 0.25MM				
13	6162-39-3041	METAL ASS'Y	6	SN:610001--
	☆	· METAL	2	SN:610001--
UNDERSIZE 0.50MM				
13	6162-38-3041	METAL ASS'Y	6	SN:610001--
	☆	· METAL	2	SN:610001--
UNDERSIZE 0.75MM				
13	6162-37-3041	METAL ASS'Y	6	SN:610001--
	☆	· METAL	2	SN:610001--
UNDERSIZE 1.00MM				

Printed By : Dwi Iswanto (airafather6107170)

PISTON AND CONNECTING ROD

Item	Part No.	Description	Qty	Options
13	6162-36-3041	METAL ASS'Y	6	SN:610001--
	☆	· METAL	2	SN:610001--

Printed By : Dwi Iswanto (airafather6107170)

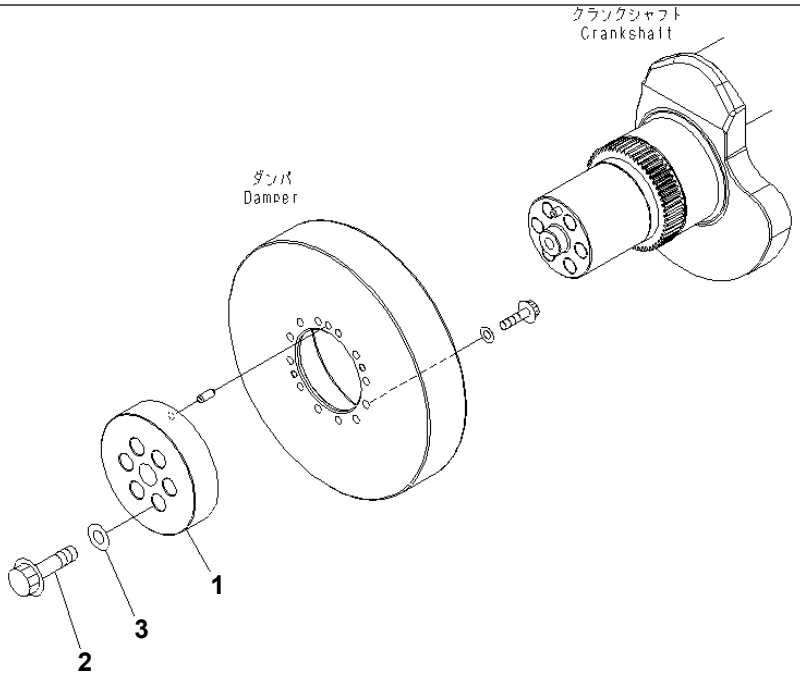

00044131

SAA6D170E-5CR-W S/N 610001-UP

CRANK PULLEY (FLANGE TYPE)

Item	Part No.	Description	Qty	Options
1	6245-31-8110	FLANGE	1	SN:610001--
2	6162-33-1731	BOLT	6	SN:610001--
3	6162-13-1620	WASHER	6	SN:610001--

Printed By : Dwi Iswanto (airafather6107170)

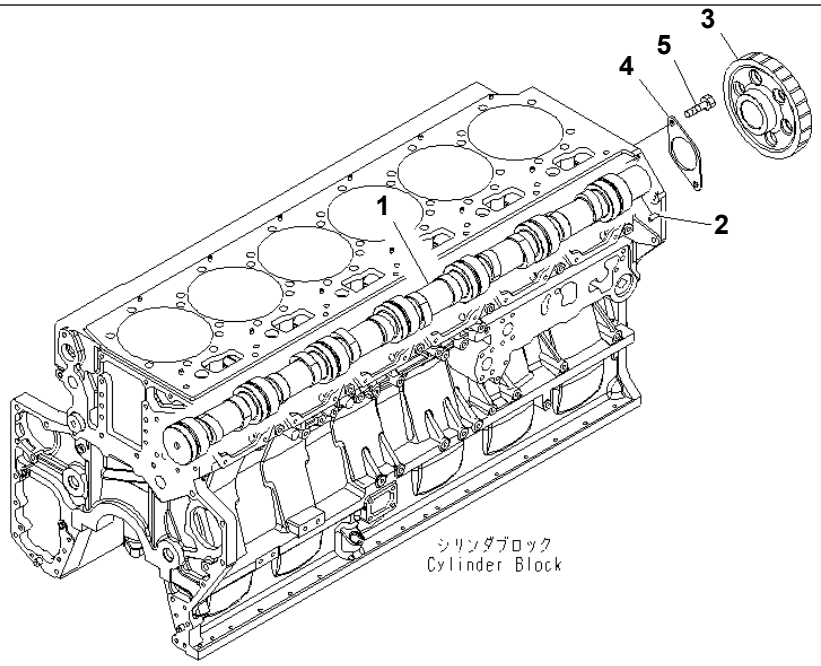

00043345

Ref. A2410-A6C1 **Page 030340**

SAA6D170E-5CR-W S/N 610001-UP
CAMSHAFT

Item	Part No.	Description	Qty	Options
	6245-41-1100	CAMSHAFT ASS'Y	1	SN:610001--
1	☆	· CAMSHAFT	1	SN:610001--
2	04010-00728	· KEY	1	SN:610001--
3	6245-41-1120	· GEAR,CAMSHAFT	1	SN:610001--
4	6245-41-1130	· PLATE,THRUST	1	SN:610001--
5	01010-81225	BOLT	2	SN:610001--

Ref. A2410-A6C1 **Page 030340**

Printed By : Dwi Iswanto (airafather6107170)

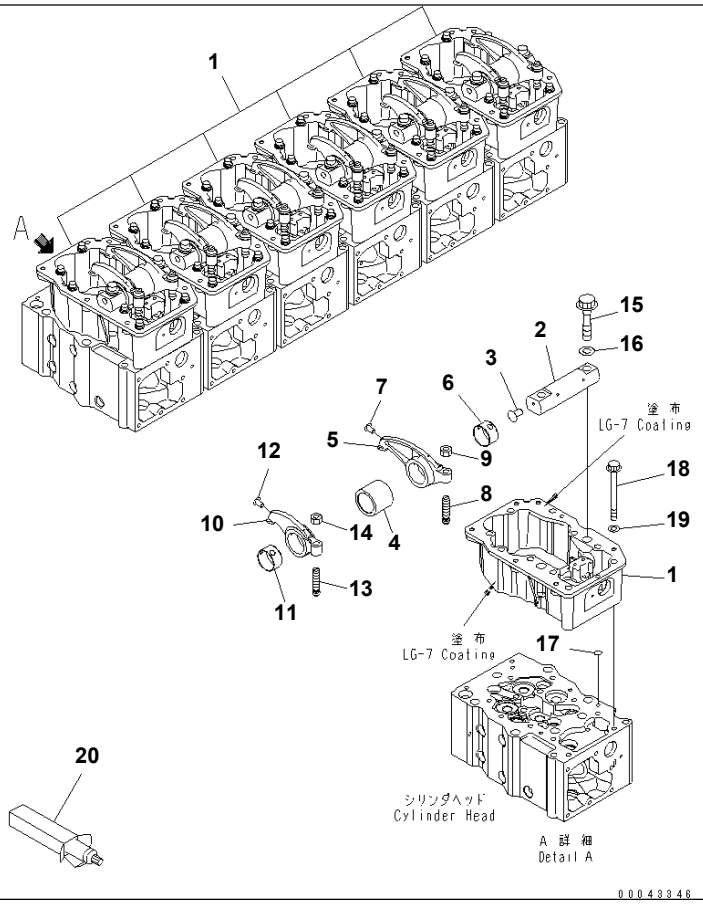

ROCKER ARM HOUSING AND ROCKER LEVER

Item	Part No.	Description	Qty	Options
1	6245-11-7110	HOUSING,ROCKER	6	SN:610001--
	6245-41-5300	SHAFT ASS'Y	6	SN:610001--
2	☆	· SHAFT,ARM	1	SN:610001--
3	6240-41-5340	· RIVET	1	SN:610001--
4	6245-41-5440	COLLAR	6	SN:610001--
	6240-41-5400	ROCKER ARM ASS'Y,EXHAUST	6	SN:610001--
5	☆	· ARM,ROCKER	1	SN:610001--
6	6240-41-5420	· BUSHING	1	SN:610001--
7	6240-41-5430	· RIVET	1	SN:610001--
8	6240-41-5460	SCREW,ADJUSTING	6	SN:610001--
9	6127-41-5431	NUT,LOCK	6	SN:610001--
	6240-41-5500	ROCKER ARM ASS'Y,INTAKE	6	SN:610001--
10	☆	· ARM,ROCKER	1	SN:610001--
11	6240-41-5420	· BUSHING	1	SN:610001--
12	6240-41-5430	· RIVET	1	SN:610001--
13	6240-41-5460	SCREW,ADJUSTING	6	SN:610001--
14	6127-41-5431	NUT,LOCK	6	SN:610001--
15	6240-41-5350	BOLT	12	SN:610001--
16	6150-31-1810	WASHER	12	SN:610001--
17	07000-72012	O-RING	6	SN:610001--
18	01438-01220	BOLT	60	SN:610001--
19	6240-11-7150	WASHER	60	SN:610001--
20	(09920-00150)	LIQUID GASKET,LG-7¤ 150G	AR	SN:610001--

Printed By : Dwi Iswanto (airafather6107170)

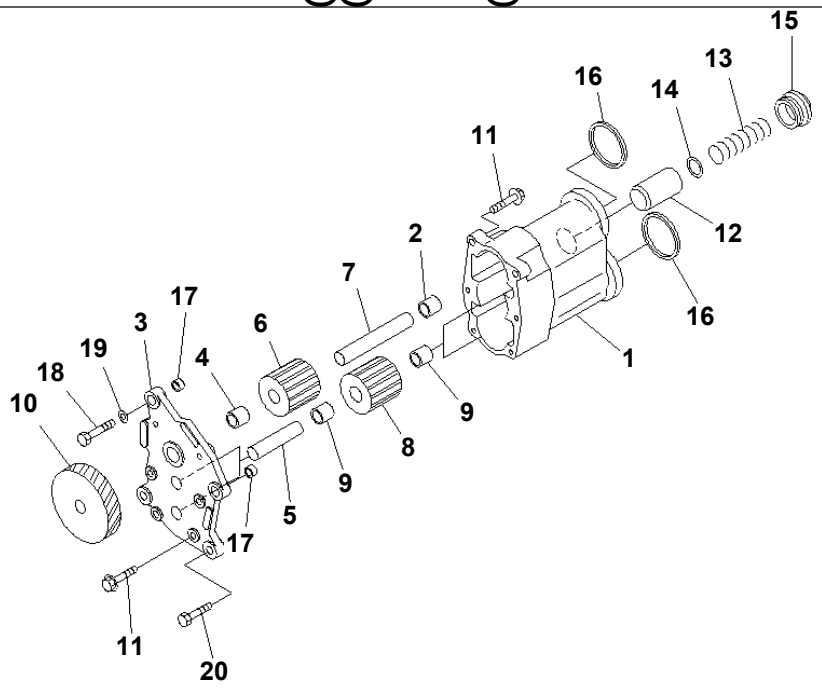

PJ6B145

SAA6D170E-5CR-W S/N 610001-UP

OIL PUMP

Item	Part No.	Description	Qty	Options
	6240-51-1100	OIL PUMP ASS'Y	1	SN:610001--
	6240-51-1130	· BODY ASS'Y	1	SN:610001--
1	☆	· · BODY	1	SN:610001--
2	6151-51-1421	· · BUSHING	1	SN:610001--
	6240-51-1200	· COVER ASS'Y	1	SN:610001--
3	☆	· · COVER	1	SN:610001--
4	6151-51-1421	· · BUSHING	1	SN:610001--
5	6212-51-1320	· · SHAFT,DRIVEN	2	SN:610001--
	6240-51-1300	· DRIVE SHAFT ASS'Y	1	SN:610001--
6	☆	· · GEAR,DRIVE	1	SN:610001--
7	6240-51-1310	· · SHAFT,DRIVE	1	SN:610001--
	6212-51-1250	· DRIVEN GEAR ASS'Y	2	SN:610001--
8	☆	· · GEAR,DRIVE	1	SN:610001--
9	6151-51-1421	· · BUSHING	2	SN:610001--
10	6240-51-1610	· GEAR	1	SN:610001--
11	01435-00830	· BOLT	6	SN:610001--
12	6240-51-1710	· VALVE	1	SN:610001--
13	6240-51-1750	· SPRING	1	SN:610001--
14	6240-51-1780	· SHIM¤ 1.00MM	1	SN:610001--
15	6240-51-1760	· PLUG	1	SN:610001--
16	6240-51-1810	GASKET	2	SN:610001--
17	6150-41-2430	PIN	2	SN:610001--
18	01010-81040	BOLT	2	SN:610001--
19	01643-31032	WASHER	2	SN:610001--
20	01010-81030	BOLT	2	SN:610001--

Printed By : Dwi Iswanto (airafather6107170)

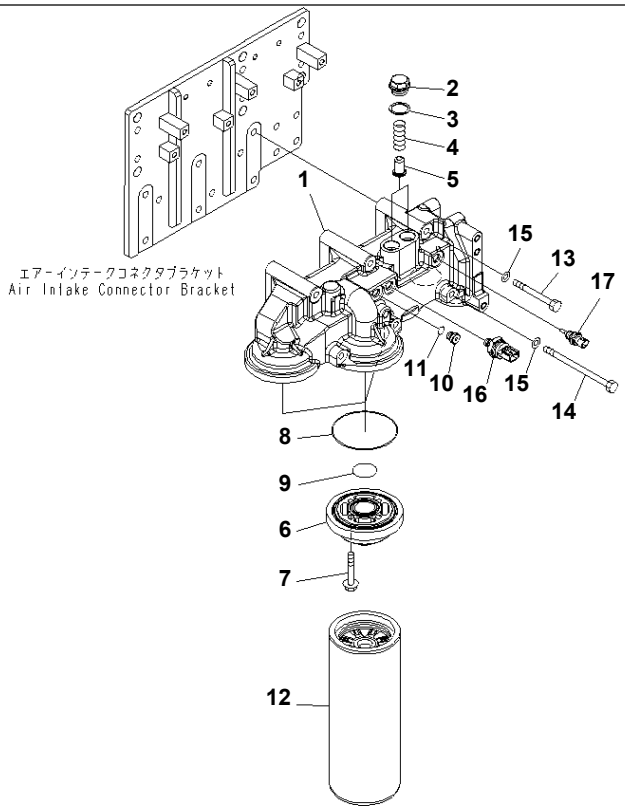

00043460

OIL FILTER

Item	Part No.	Description	Qty	Options
	6245-51-5100	HEAD ASS'Y	1	SN:610001--
1	6245-51-5110	· HEAD,OIL FILTER	1	SN:610001--
2	6162-55-5210	· CAP	2	SN:610001--
3	6162-53-5430	· PACKING	2	SN:610001--
4	600-211-1990	· SPRING	2	SN:610001--
5	6162-55-5230	· VALVE	2	SN:610001--
6	6261-51-5120	· ADAPTER,FILTER HEAD	3	SN:610001--
7	01435-00845	· BOLT	12	SN:610001--
8	07000-72105	· O-RING	3	SN:610001--
9	07000-72040	· O-RING	3	SN:610001--
10	6215-81-9520	· PLUG	1	SN:610001--
11	6215-81-9720	· O-RING	1	SN:610001--
12	600-211-1340	CARTRIDGE	3	SN:610001--
13	01011-81040	BOLT	3	SN:610001--
14	6164-61-7170	BOLT	3	SN:610001--
15	01643-31032	WASHER	6	SN:610001--
16	6219-81-1961	SENSOR ASS'Y,OIL PRESSURE	1	SN:610001--
	6219-81-2040	· SENSOR	1	SN:610001--
	6219-81-1991	· O-RING	1	SN:610001--
17	6261-81-6900	SENSOR,OIL TEMPERATURE	1	SN:610001--
	6261-81-6910	· SENSOR	1	SN:610001--
	6261-84-9740	· O-RING	1	SN:610001--

Printed By : Dwi Iswanto (airafather6107170)

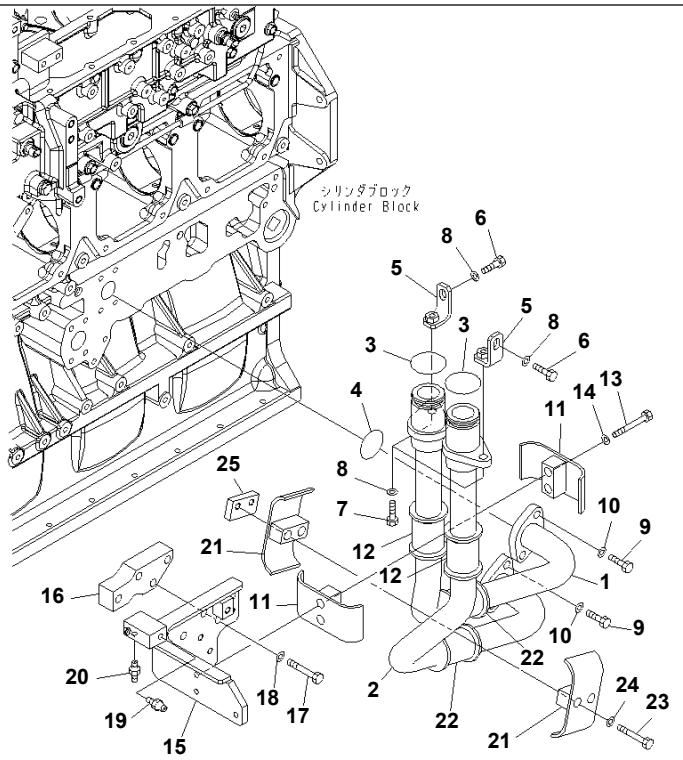

Ref. A3110-B6D1 **Page 030390**

SAA6D170E-5CR-W S/N 610001-UP
OIL FILTER PIPING(#510037-)

Item	Part No.	Description	Qty	Options
1	6245-51-5130	TUBE,OUTLET	1	SN:510037--
2	6245-51-5140	TUBE,INLET	1	SN:510037--
3	6219-51-5610	O-RING	2	SN:510037--
4	07000-E3042	O-RING	2	SN:510037--
5	6245-51-5170	BRACKET	2	SN:510037--
6	01010-81025	BOLT	2	SN:510037--
7	01010-81035	BOLT	2	SN:510037--
8	01643-31032	WASHER	4	SN:510037--
9	01010-81030	BOLT	4	SN:510037--
10	01643-51032	WASHER	4	SN:510037--
11	07094-31024	CLAMP	2	SN:510037--
12	6245-51-5190	CUSHION	2	SN:510037--
13	01010-81075	BOLT	2	SN:510037--
14	01643-31032	WASHER	2	SN:510037--
15	6245-51-5180	BRACKET	1	SN:510037--
16	6245-51-5220	PLATE	1	SN:510037--
17	01010-81060	BOLT	4	SN:510037--
18	01643-31032	WASHER	4	SN:510037--
19	07020-00000	FITTING	1	SN:510037--
20	07213-50710	CONNECTOR	1	SN:510037--
21	07094-31024	CLAMP	2	SN:510037--
22	6245-51-5190	CUSHION	2	SN:510037--
23	01010-81075	BOLT	2	SN:510037--
24	01643-31032	WASHER	2	SN:510037--
25	22X-22-13140	SEAT	1	SN:510037--

Printed By : Dwi Iswanto (airafather6107170)

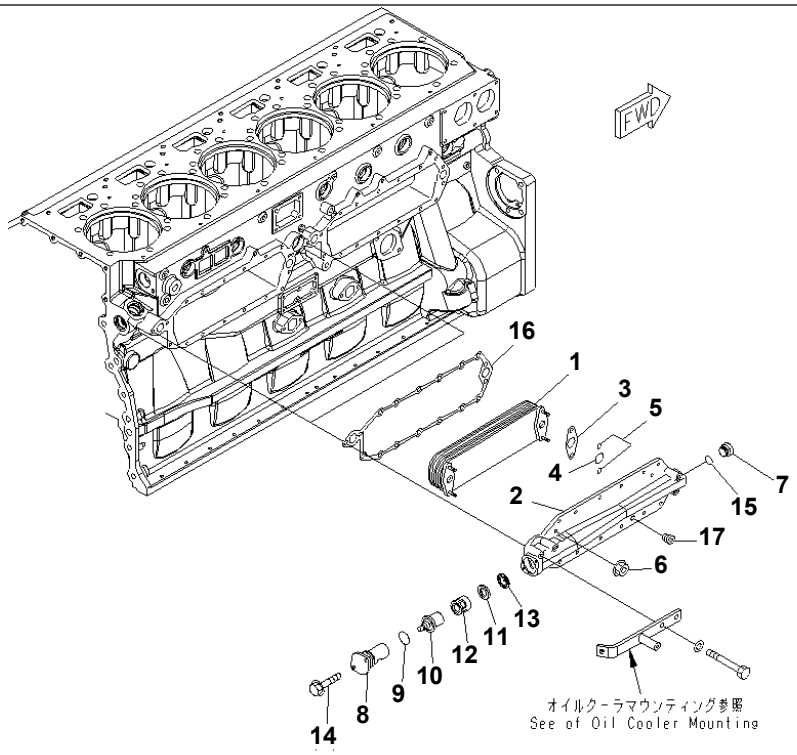

00043486

Ref. A3310-A6C4 **Page 030400**

SAA6D170E-5CR-W S/N 610001-UP

OIL COOLER

Item	Part No.	Description	Qty	Options
1	6240-61-2110	ELEMENT	2	SN:610001--
2	6240-61-2120	COVER	2	SN:610001--
3	6240-61-2560	GASKET	4	SN:610001--
4	6150-61-2510	O-RING	4	SN:610001--
5	6150-61-2520	O-RING	8	SN:610001--
6	6150-61-2580	NUT	8	SN:610001--
7	6150-61-2530	PLUG	2	SN:610001--
8	6151-62-2130	COVER	2	SN:610001--
9	07000-63042	O-RING	2	SN:610001--
10	6212-65-2610	THERMOSTAT	2	SN:610001--
11	6150-61-2540	SEAL	2	SN:610001--
12	6150-61-2141	CASE	2	SN:610001--
13	6150-61-2151	PLATE	2	SN:610001--
14	01435-00825	BOLT	4	SN:610001--
15	6150-61-2550	O-RING	2	SN:610001--
16	6150-61-2815	GASKET	2	SN:610001--
17	07043-70312	PLUG	2	SN:610001--

Ref. A3310-A6C4 **Page 030400**

Printed By : Dwi Iswanto (airafather6107170)

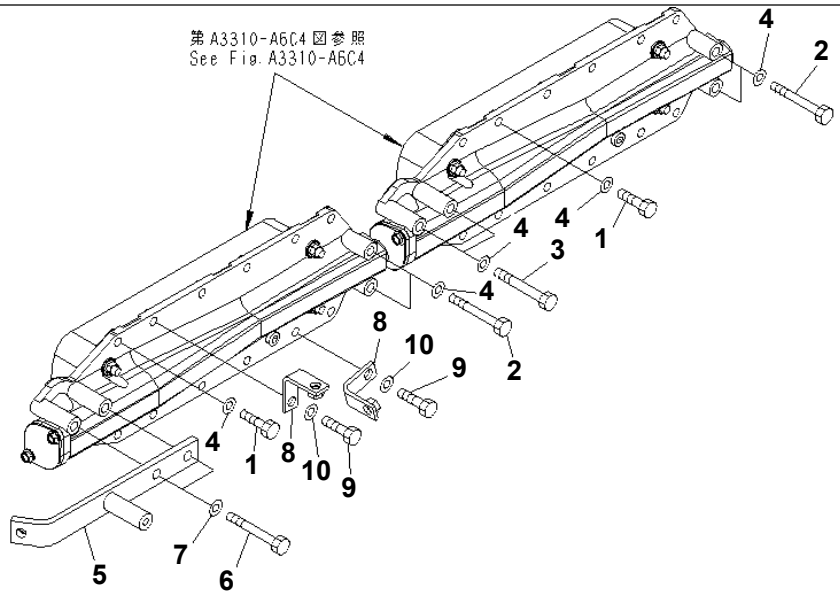

00043500

OIL COOLER MOUNTING AND ACCESSORY

Item	Part No.	Description	Qty	Options
1	01010-81025	BOLT	23	SN:610001--
2	01010-81065	BOLT	4	SN:610001--
3	01010-81080	BOLT	2	SN:610001--
4	01640-21016	WASHER	29	SN:610001--
5	6245-81-9270	BRACKET	1	SN:610001--
6	01010-81090	BOLT	2	SN:610001--
7	01643-31032	WASHER	2	SN:610001--
8	6934-71-5860	BRACKET,ADJUST	2	SN:610001--
9	01010-81035	BOLT	2	SN:610001--
10	01643-31032	WASHER	2	SN:610001--

Printed By : Dwi Iswanto (airafather6107170)

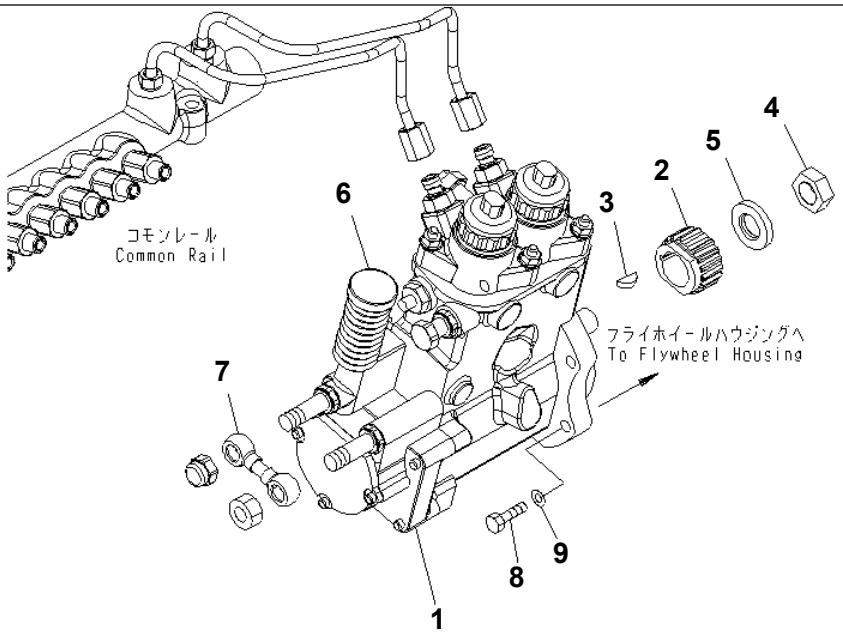

00043498

Ref. A4010-A6K4 Page 030420

SAA6D170E-5CR-W S/N 610001-UP

FUEL INJECTION (1/5) (FUEL SUPPLY PUMP AND COUPLING)

Item	Part No.	Description	Qty	Options
	6245-71-1100	PUMP ASS'Y,SUPPLY	1	SN:610001--
1	☆	· PUMP	1	SN:610001--
2	6245-71-3150	· COUPLING	1	SN:610001--
3	04010-00519	· KEY	1	SN:610001--
4	01583-02012	· NUT	1	SN:610001--
5	01643-32060	· WASHER	1	SN:610001--
6	6217-71-1910	COVER,PRIMING PUMP	1	SN:610001--
7	6217-71-5910	TUBE,CROSS	1	SN:610001--
8	01010-81035	BOLT	4	SN:610001--
9	01643-31032	WASHER	4	SN:610001--

Ref. A4010-A6K4 Page 030420

Printed By : Dwi Iswanto (airafather6107170)

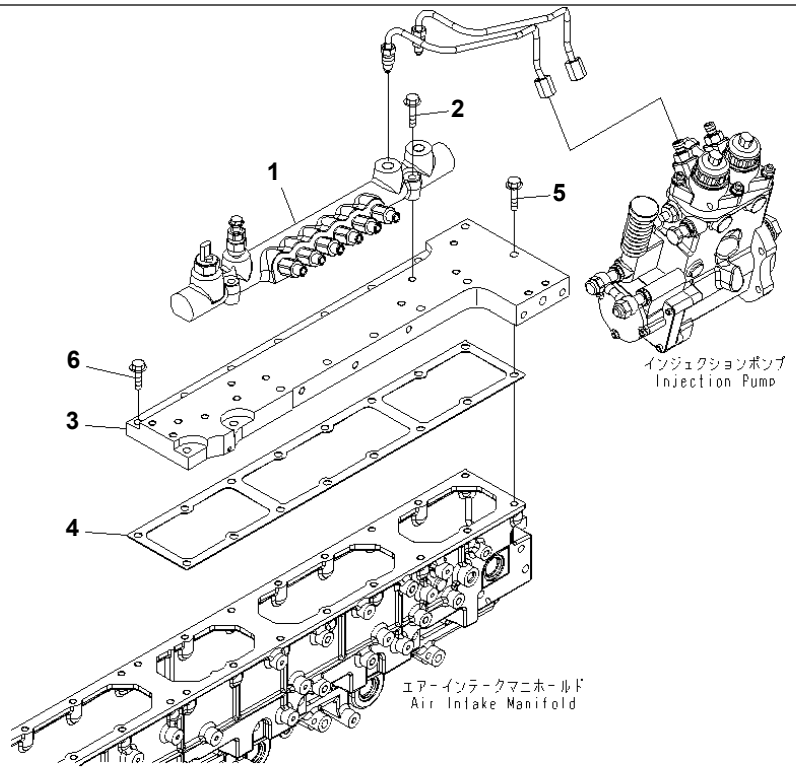

00057001

Ref. A4010-B6K4 Page 030430

SAA6D170E-5CR-W S/N 610001-UP

FUEL INJECTION (2/5) (COMMON RAIL MOUNTING)

Item	Part No.	Description	Qty	Options
1	(6261-71-1220)	RAIL ASS'Y,(SEE FIG.A4010-E6K4)	1	SN:610001--
2	01435-01045	BOLT	2	SN:610001--
3	6245-71-6310	PLATE	1	SN:610001--
4	6245-11-4170	GASKET	1	SN:610001--
5	01435-01050	BOLT	7	SN:610001--
6	01435-01035	BOLT	9	SN:610001--

Printed By : Dwi Iswanto (airafather6107170)

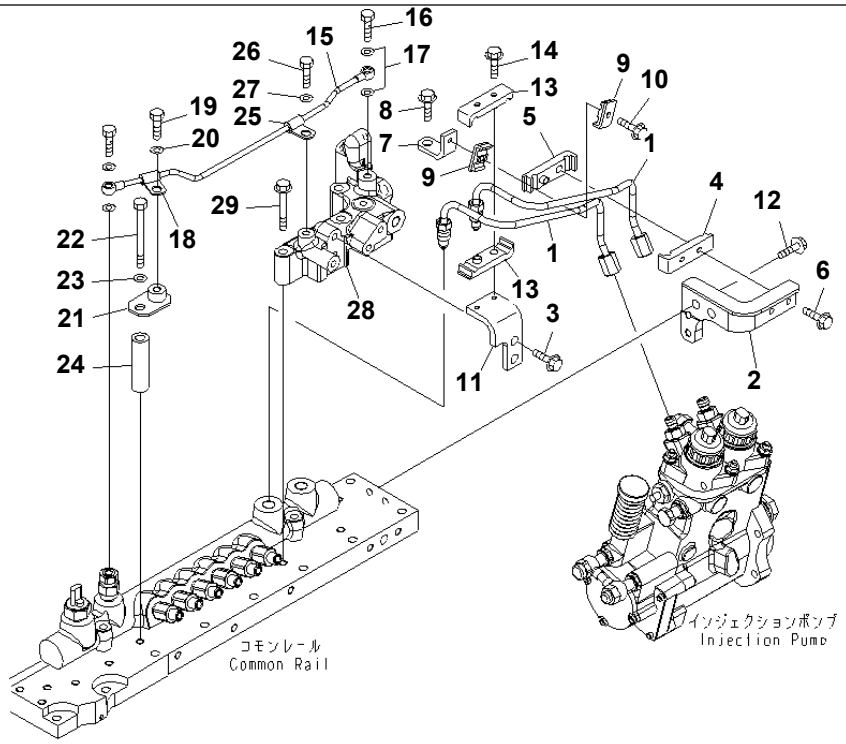

00043519

SAA6D170E-5CR-W S/N 610001-UP

FUEL INJECTION (3/5) (FUEL SUPPLY AND RETURN PIPING)

Item	Part No.	Description	Qty	Options
1	6245-71-5180	TUBE	2	SN:610001--
2	6245-71-5410	BRACKET	1	SN:610001--
3	01435-01025	BOLT	2	SN:610001--
4	6217-71-5210	CLAMP	1	SN:610001--
5	6217-71-5170	CLAMP	1	SN:610001--
6	01435-00635	BOLT	2	SN:610001--
7	6245-71-5420	BRACKET	1	SN:610001--
8	01435-01020	BOLT	1	SN:610001--
9	6162-75-5820	CLAMP	2	SN:610001--
10	01435-00625	BOLT	1	SN:610001--
11	6245-71-5490	BRACKET	1	SN:610001--
12	01435-01025	BOLT	2	SN:610001--
13	6217-71-5210	CLAMP	2	SN:610001--
14	01435-00630	BOLT	2	SN:610001--
15	6245-71-5520	TUBE	1	SN:610001--
16	07206-30710	BOLT,JOINT	1	SN:610001--
17	07005-01012	GASKET	2	SN:610001--
18	6933-71-8230	CLIP	1	SN:610001--
19	01010-81020	BOLT	1	SN:610001--
20	01643-31032	WASHER	1	SN:610001--
21	6245-71-5570	BRACKET	1	SN:610001--
22	01010-81095	BOLT	1	SN:610001--
23	01643-31032	WASHER	1	SN:610001--
24	6130-12-4571	SPACER	1	SN:610001--
25	6933-71-8230	CLIP	1	SN:610001--
26	01010-81020	BOLT	1	SN:610001--
27	01643-31032	WASHER	1	SN:610001--

Printed By : Dwi Iswanto (airafather6107170)

FUEL INJECTION (3/5) (FUEL SUPPLY AND RETURN PIPING)

Item	Part No.	Description	Qty	Options
28	6245-71-5430	BLOCK	1	SN:610001--
29	01435-01060	BOLT	3	SN:610001--

Printed By : Dwi Iswanto (airafather6107170)

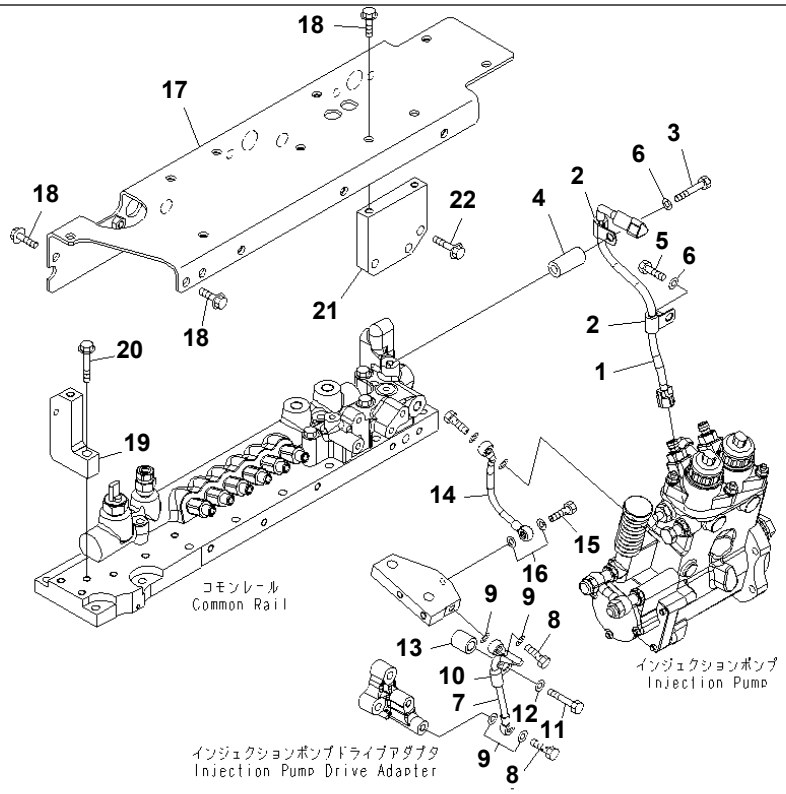

00043520

Ref. A4010-D6K4 **Page 030450**

SAA6D170E-5CR-W S/N 610001-UP

FUEL INJECTION (4/5) (FUEL SUPPLY PUMP WIRING AND LUBRICATOR)

Item	Part No.	Description	Qty	Options
1	6245-81-9130	WIRING HARNESS	1	SN:610001--
2	600-051-2100	CLIP	2	SN:610001--
3	01010-81065	BOLT	1	SN:610001--
4	6152-21-6590	SPACER	1	SN:610001--
5	01010-81020	BOLT	1	SN:610001--
6	01643-31032	WASHER	2	SN:610001--
7	6245-51-6130	TUBE	1	SN:610001--
8	07206-30710	BOLT,JOINT	2	SN:610001--
9	07005-01012	GASKET	4	SN:610001--
10	6210-51-8320	CLIP	1	SN:610001--
11	01010-81045	BOLT	1	SN:610001--
12	01643-31032	WASHER	1	SN:610001--
13	6128-21-6730	SPACER	1	SN:610001--
14	6245-51-6120	TUBE	1	SN:610001--
15	07206-30710	BOLT,JOINT	1	SN:610001--
16	07005-01012	GASKET	2	SN:610001--
17	6245-11-4151	BRACKET	1	SN:610001--
18	01435-01020	BOLT	5	SN:610001--
19	6245-11-4230	BLOCK	1	SN:610001--
20	01435-01055	BOLT	1	SN:610001--
21	6245-11-4250	PLATE	1	SN:610001--
22	01435-01040	BOLT	3	SN:610001--

Ref. A4010-D6K4 **Page 030450**

Printed By : Dwi Iswanto (airafather6107170)

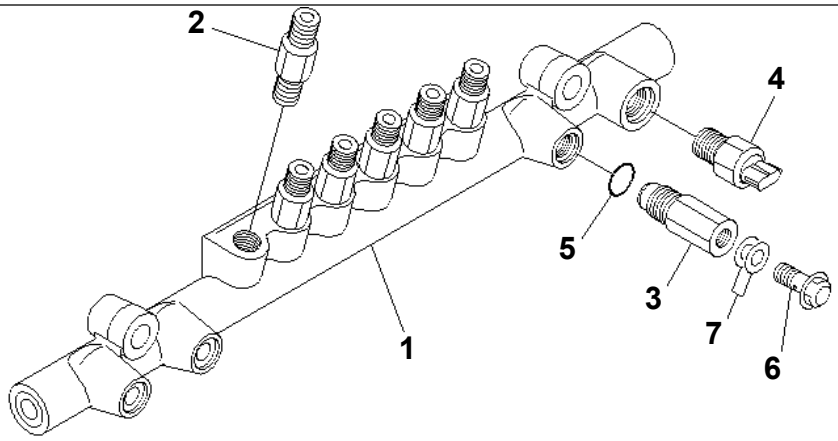

00053657

FUEL INJECTION (5/5) (COMMON RAIL) (INNER PARTS)

Item	Part No.	Description	Qty	Options
1	6261-71-1220	RAIL ASS'Y,COMMON	1	SN:610001--
2	ND095400-0310	· LIMITER ASS'Y,FUEL FLOW	6	SN:610001--
3	ND095420-0440	· LIMITER ASS'Y,FUEL PRESSURE	1	SN:610001--
4	ND499000-6160	· SENSOR ASS'Y,FUEL PRESSURE	1	SN:610001--
5	ND095444-0020	· PICCO RING	1	SN:610001--
6	ND095438-0090	· BOLT,JOINT	1	SN:610001--
7	ND949010-2530	· GASKET	2	SN:610001--

Printed By : Dwi Iswanto (airafather6107170)

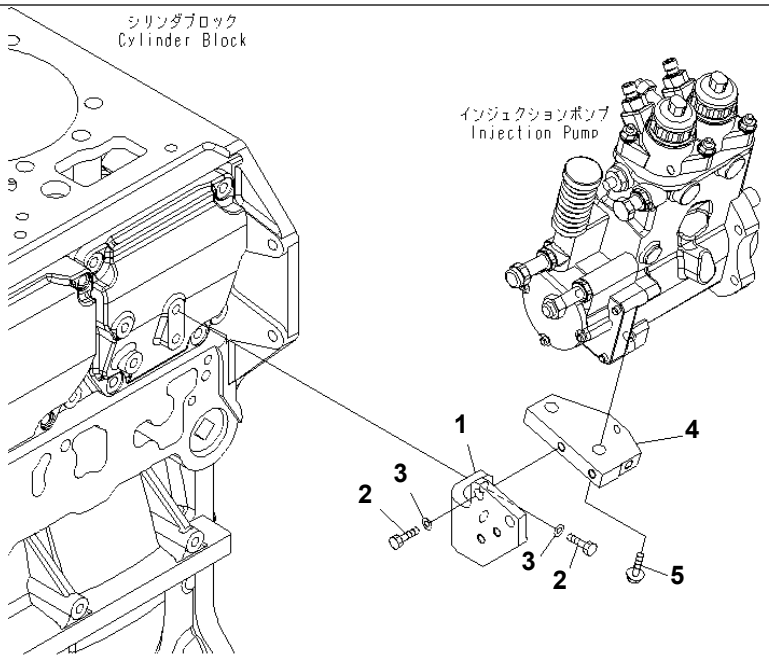

00057222

SAA6D170E-5CR-W S/N 610001-UP

FUEL INJECTION PUMP BRACKET

Item	Part No.	Description	Qty	Options
1	6245-21-6150	BRACKET	1	SN:610001--
2	01010-81030	BOLT	4	SN:610001--
3	01643-31032	WASHER	4	SN:610001--
4	6245-21-6160	PLATE	1	SN:610001--
5	01435-01230	BOLT	2	SN:610001--

Printed By : Dwi Iswanto (airafather6107170)

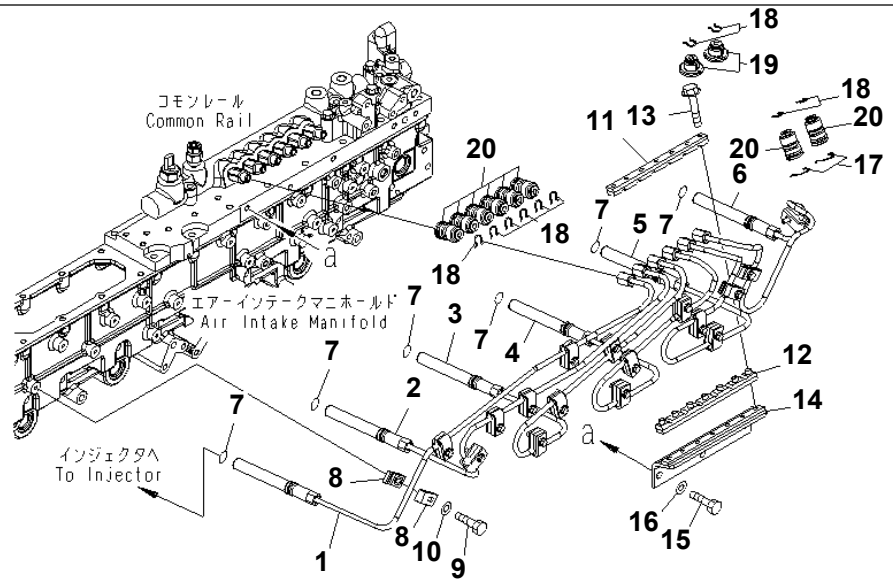

00043536

FUEL INJECTION PUMP PIPING

Item	Part No.	Description	Qty	Options
1	6245-71-5110	TUBE,FUEL SUPPLY¤ NO.1	1	SN:610001--
2	6245-71-5120	TUBE,FUEL SUPPLY¤ NO.2	1	SN:610001--
3	6245-71-5130	TUBE,FUEL SUPPLY¤ NO.3	1	SN:610001--
4	6245-71-5140	TUBE,FUEL SUPPLY¤ NO.4	1	SN:610001--
5	6245-71-5150	TUBE,FUEL SUPPLY¤ NO.5	1	SN:610001--
6	6245-71-5160	TUBE,FUEL SUPPLY¤ NO.6	1	SN:610001--
7	07000-E2018	O-RING	6	SN:610001--
8	6245-71-5270	CLAMP	34	SN:610001--
9	01010-80635	BOLT	17	SN:610001--
10	01643-30623	WASHER	17	SN:610001--
11	6217-71-5760	CLAMP	1	SN:610001--
12	6245-71-5740	CLAMP	1	SN:610001--
13	01435-00640	BOLT	7	SN:610001--
14	6245-71-5750	BRACKET	1	SN:610001--
15	01010-81025	BOLT	3	SN:610001--
16	01643-31032	WASHER	3	SN:610001--
17	6156-71-9730	CLIP	2	SN:610001--
18	6217-71-5770	CLAMP	10	SN:610001--
19	6217-71-9780	CAP	2	SN:610001--
20	6217-71-9791	COVER	8	SN:610001--

Printed By : Dwi Iswanto (airafather6107170)

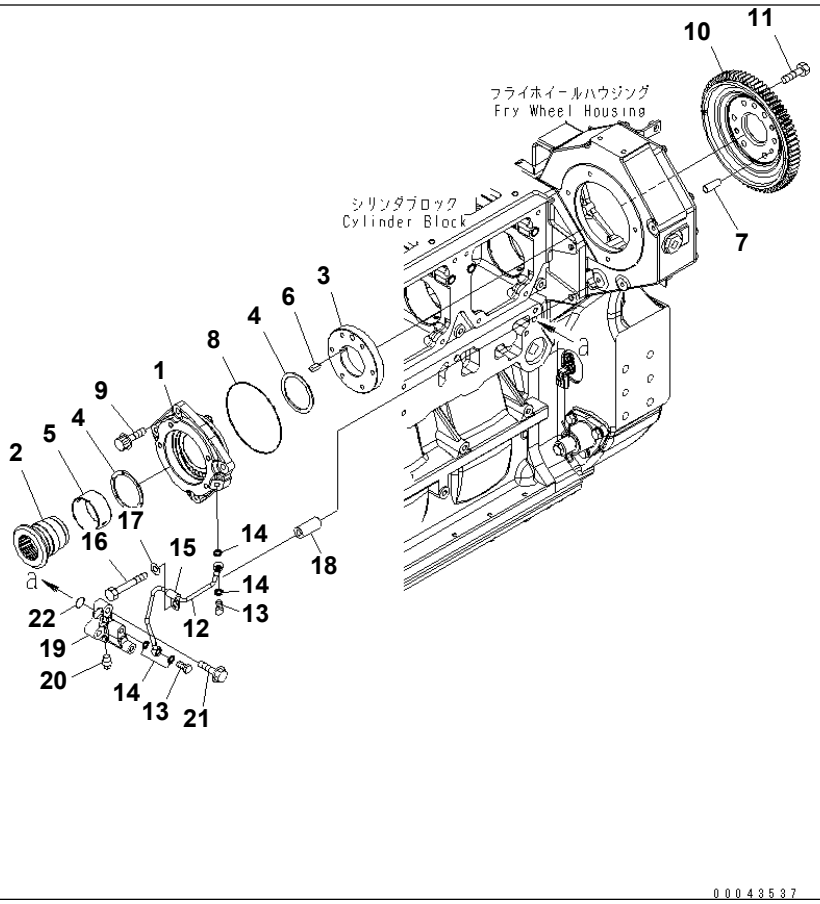

FUEL INJECTION PUMP DRIVE

Item	Part No.	Description	Qty	Options
	6245-71-3100	HOUSING ASS'Y	1	SN:610001--
1	6245-71-3110	· HOUSING	1	SN:610001--
2	6245-71-3120	· SHAFT	1	SN:610001--
3	6245-71-3130	· FLANGE	1	SN:610001--
4	6212-81-3550	· BEARING	2	SN:610001--
5	6210-21-1491	· BUSHING	1	SN:610001--
6	04000-00515	· KEY	1	SN:610001--
7	04020-00820	· PIN,DOWEL	1	SN:610001--
8	07000-72135	O-RING	1	SN:610001--
9	01437-01030	BOLT	4	SN:610001--
10	6245-71-3140	GEAR	1	SN:610001--
11	01010-81025	BOLT	6	SN:610001--
12	6245-51-6110	TUBE	1	SN:610001--
13	07206-30710	BOLT,JOINT	2	SN:610001--
14	07005-01012	GASKET	4	SN:610001--
15	6933-71-8230	CLIP	1	SN:610001--
16	01010-81070	BOLT	1	SN:610001--
17	01643-31032	WASHER	1	SN:610001--
18	6152-21-6590	SPACER	1	SN:610001--
19	6245-21-6130	ADAPTER	1	SN:610001--
20	07042-70108	PLUG	1	SN:610001--
21	01435-01040	BOLT	2	SN:610001--
22	07000-72018	O-RING	1	SN:610001--

Printed By : Dwi Iswanto (airafather6107170)

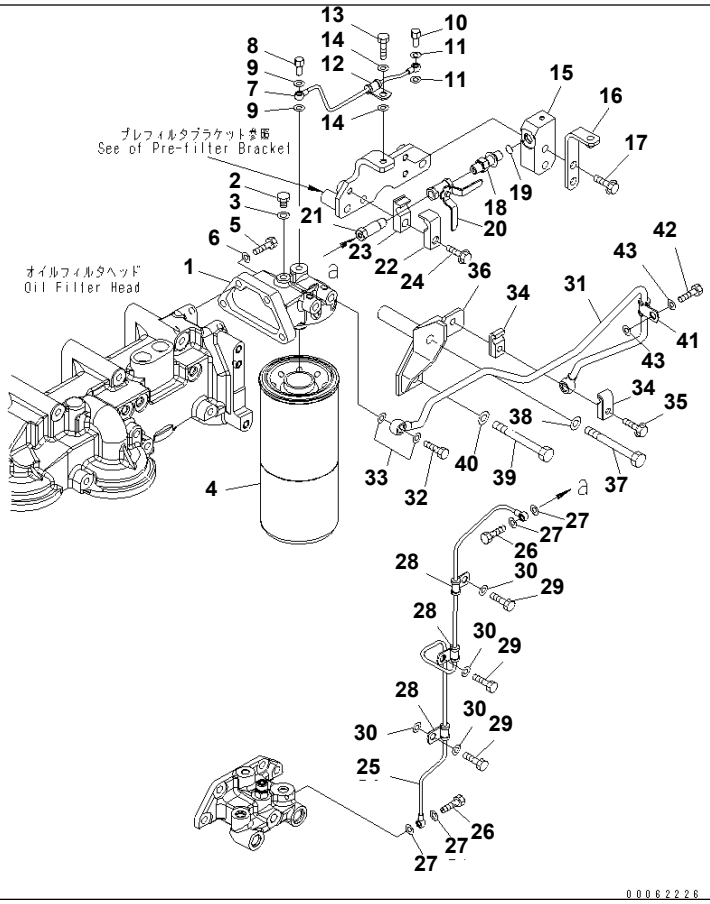

FUEL FILTER AND FUEL PIPING (MAIN FILTER)(#610001-610006)

Item	Part No.	Description	Qty	Options
1	6261-71-6410	HEAD (1-5/8),FUEL FILTER	1	SN:610001--@
2	6110-73-6231	PLUG	1	SN:610001--@
3	07005-00812	GASKET	1	SN:610001--@
4	☆	CARTRIDGE (1-5/8),(SEE FIG.A4119-A6A4)	1	SN:610001--@
5	01010-81040	BOLT	4	SN:610001--@
6	01643-31032	WASHER	4	SN:610001--@
7	6245-71-6160	TUBE,AIR BLOW	1	SN:610001--@
8	6245-71-5960	BOLT,JOINT	1	SN:610001--@
9	07005-00812	GASKET	2	SN:610001--@
10	07206-30508	BOLT,JOINT	1	SN:610001--@
11	07005-00812	GASKET	2	SN:610001--@
12	6245-71-5950	CLIP	1	SN:610001--@
13	01010-81020	BOLT	1	SN:610001--@
14	01643-31032	WASHER	2	SN:610001--@
15	6245-71-6240	BLOCK	1	SN:610001--@
16	6245-71-6340	BRACKET	1	SN:610001--@
17	01435-01045	BOLT	2	SN:610001--@
18	205-62-74690	NIPPLE	1	SN:610001--@
19	07002-11423	O-RING	1	SN:610001--@
20	6128-81-4810	VALVE	1	SN:610001--@
21	6245-71-6180	BOLT	1	SN:610001--@
22	6240-71-6530	CLAMP	1	SN:610001--@
23	6240-71-6540	CLAMP	1	SN:610001--@
24	01435-01040	BOLT	1	SN:610001--@
25	6245-71-6170	TUBE,BYPASS	1	SN:610001--@
26	07206-30508	BOLT,JOINT	2	SN:610001--@
27	07005-00812	GASKET	4	SN:610001--@

Printed By : Dwi Iswanto (airafather6107170)

FUEL FILTER AND FUEL PIPING (MAIN FILTER)(#610001-610006)

Item	Part No.	Description	Qty	Options
28	6245-71-5950	CLIP	3	SN:610001--@
29	01010-81020	BOLT	3	SN:610001--@
30	01643-31032	WASHER	4	SN:610001--@
31	6245-71-5790	TUBE	1	SN:610001--610006
32	07206-31014	BOLT,JOINT	1	SN:610001--@
33	07005-01412	GASKET	2	SN:610001--@
34	6166-75-6810	CLAMP	2	SN:610001--610006
35	01435-00840	BOLT	1	SN:610001--610006
36	6245-71-6430	BRACKET	1	SN:610001--610006
37	01011-81015	BOLT	1	SN:610001--610006
38	01643-31032	WASHER	1	SN:610001--610006
39	01011-81215	BOLT	1	SN:610001--610006
40	01643-31232	WASHER	1	SN:610001--610006
41	6933-71-8220	CLIP	1	SN:610001--610006
42	01010-81025	BOLT	1	SN:610001--610006
43	01643-31032	WASHER	2	SN:610001--610006

Printed By : Dwi Iswanto (airafather6107170)

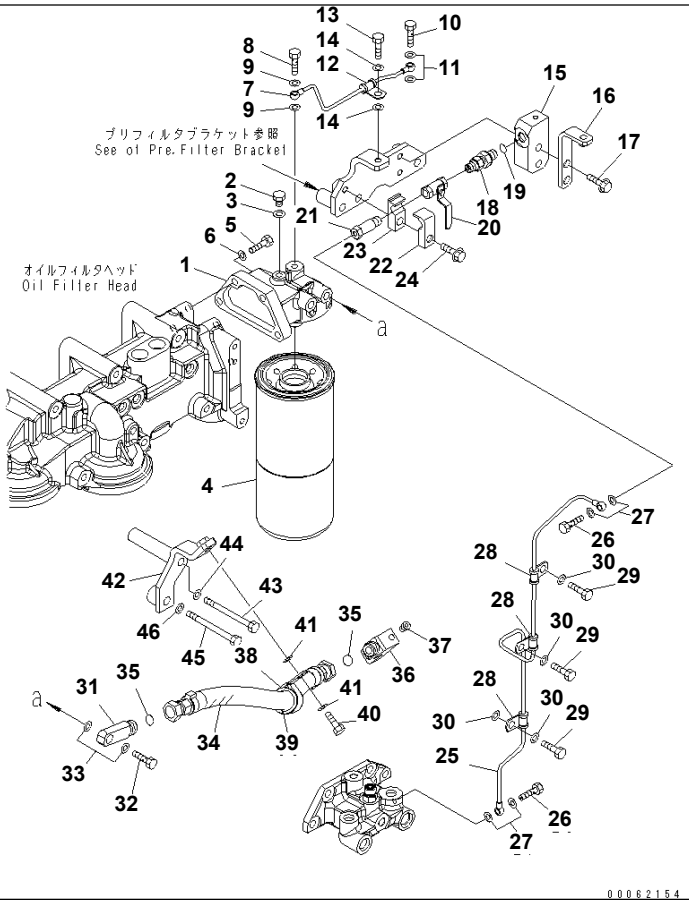

FUEL FILTER AND FUEL PIPING (MAIN FILTER)(#610007-)

Item	Part No.	Description	Qty	Options
1	6261-71-6410	HEAD (1-5/8),FUEL FILTER	1	SN:610001--
2	6110-73-6231	PLUG	1	SN:610001--
3	07005-00812	GASKET	1	SN:610001--
4	☆	CARTRIDGE (1-5/8),(SEE FIG.A4119-A6A4)	1	SN:610028--
	☆	CARTRIDGE (1-5/8),(SEE FIG.A4119-A6A4)	1	SN:610001--610027
5	01010-81040	BOLT	4	SN:610001--
6	01643-31032	WASHER	4	SN:610001--
7	6245-71-6160	TUBE,AIR BLOW	1	SN:610001--
8	6245-71-5960	BOLT,JOINT	1	SN:610001--
9	07005-00812	GASKET	2	SN:610001--
10	07206-30508	BOLT,JOINT	1	SN:610001--
11	07005-00812	GASKET	2	SN:610001--
12	6245-71-5950	CLIP	1	SN:610001--
13	01010-81020	BOLT	1	SN:610001--
14	01643-31032	WASHER	2	SN:610001--
15	6245-71-6240	BLOCK	1	SN:610001--
16	6245-71-6340	BRACKET	1	SN:610001--
17	01435-01045	BOLT	2	SN:610001--
18	205-62-74690	NIPPLE	1	SN:610001--
19	07002-11423	O-RING	1	SN:610001--
20	6128-81-4810	VALVE	1	SN:610001--
21	6245-71-6180	BOLT	1	SN:610001--
22	6240-71-6530	CLAMP	1	SN:610001--
23	6240-71-6540	CLAMP	1	SN:610001--
24	01435-01040	BOLT	1	SN:610001--
25	6245-71-6170	TUBE,BYPASS	1	SN:610001--
26	07206-30508	BOLT,JOINT	2	SN:610001--

Printed By : Dwi Iswanto (airafather6107170)

FUEL FILTER AND FUEL PIPING (MAIN FILTER)(#610007-)

Item	Part No.	Description	Qty	Options
27	07005-00812	GASKET	4	SN:610001--
28	6245-71-5950	CLIP	3	SN:610001--
29	01010-81020	BOLT	3	SN:610001--
30	01643-31032	WASHER	4	SN:610001--
31	6245-71-6520	JOINT	1	SN:610007--
32	07206-31014	BOLT,JOINT	1	SN:610001--
33	07005-01412	GASKET	2	SN:610001--
34	6245-71-6540	HOSE	1	SN:610007--
35	02896-11012	O-RING	2	SN:610007--
36	6245-71-6450	JOINT	1	SN:610007--
37	07043-70108	PLUG	1	SN:610007--
38	04434-52711	CLIP	1	SN:610007--
39	07095-20418	CUSHION	1	SN:610007--
40	01010-81030	BOLT	1	SN:610007--
41	01643-31032	WASHER	2	SN:610007--
42	6245-71-6440	BRACKET	1	SN:610007--
43	01011-81020	BOLT	1	SN:610007--
44	01643-31032	WASHER	1	SN:610007--
45	01011-81220	BOLT	1	SN:610007--
46	01643-31232	WASHER	1	SN:610007--

Printed By : Dwi Iswanto (airafather6107170)

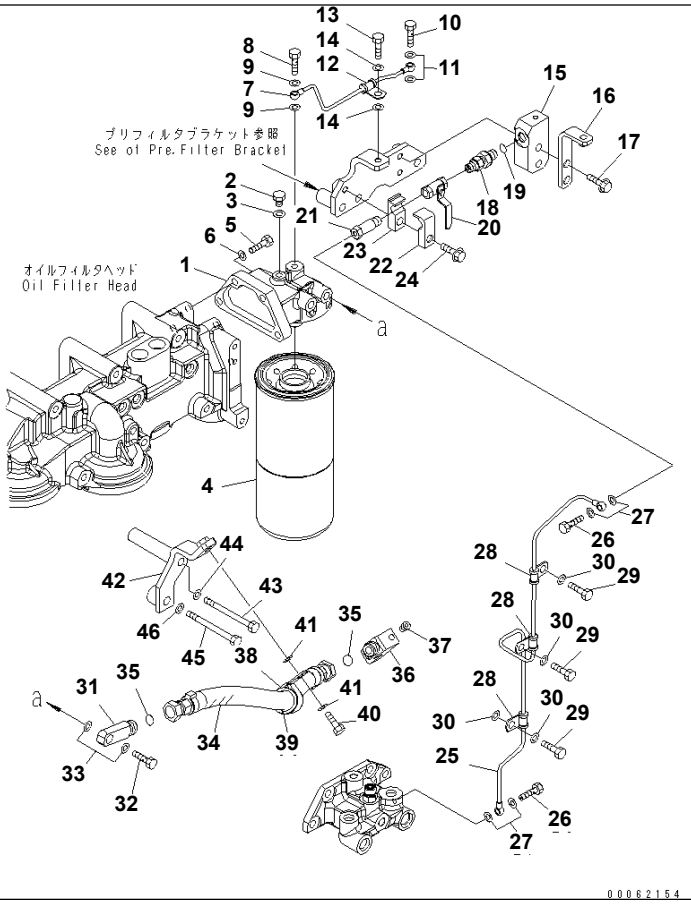

Ref. A4110-A6J7 Page 030520

FUEL FILTER AND FUEL PIPING (MAIN FILTER) (+55ßC SPEC.)

Item	Part No.	Description	Qty	Options
1	6261-71-6410	HEAD (1-5/8),FUEL FILTER	1	SN:610001--
2	6110-73-6231	PLUG	1	SN:610001--
3	07005-00812	GASKET	1	SN:610001--
4	☆	CARTRIDGE (1-5/8),(SEE FIG.A4119-A6A4)	1	SN:610001--
5	01010-81040	BOLT	4	SN:610001--
6	01643-31032	WASHER	4	SN:610001--
7	6245-71-6160	TUBE,AIR BLOW	1	SN:610001--
8	6245-71-5960	BOLT,JOINT	1	SN:610001--
9	07005-00812	GASKET	2	SN:610001--
10	07206-30508	BOLT,JOINT	1	SN:610001--
11	07005-00812	GASKET	2	SN:610001--
12	6245-71-5950	CLIP	1	SN:610001--
13	01010-81020	BOLT	1	SN:610001--
14	01643-31032	WASHER	2	SN:610001--
15	6245-71-6240	BLOCK	1	SN:610001--
16	6245-71-6340	BRACKET	1	SN:610001--
17	01435-01045	BOLT	2	SN:610001--
18	205-62-74690	NIPPLE	1	SN:610001--
19	07002-11423	O-RING	1	SN:610001--
20	6128-81-4810	VALVE	1	SN:610001--
21	6245-71-6180	BOLT	1	SN:610001--
22	6240-71-6530	CLAMP	1	SN:610001--
23	6240-71-6540	CLAMP	1	SN:610001--
24	01435-01040	BOLT	1	SN:610001--
25	6245-71-6170	TUBE,BYPASS	1	SN:610001--
26	07206-30508	BOLT,JOINT	2	SN:610001--
27	07005-00812	GASKET	4	SN:610001--

Ref. A4110-A6J7 Page 030520

Printed By : Dwi Iswanto (airafather6107170)

FUEL FILTER AND FUEL PIPING (MAIN FILTER) (+55ßC SPEC.)

Item	Part No.	Description	Qty	Options
28	6245-71-5950	CLIP	3	SN:610001--
29	01010-81020	BOLT	3	SN:610001--
30	01643-31032	WASHER	4	SN:610001--
31	6245-71-6520	JOINT	1	SN:610001--
32	07206-31014	BOLT,JOINT	1	SN:610001--
33	07005-01412	GASKET	2	SN:610001--
34	6245-71-6560	HOSE	1	SN:610001--
35	02896-11012	O-RING	2	SN:610001--
36	6245-71-6450	JOINT	1	SN:610001--
37	07043-70108	PLUG	1	SN:610001--
38	04434-53411	CLIP	1	SN:610001--
39	6245-71-6550	CUSHION	1	SN:610001--
40	01010-81030	BOLT	1	SN:610001--
41	01643-31032	WASHER	2	SN:610001--
42	6245-71-6440	BRACKET	1	SN:610001--
43	01011-81020	BOLT	1	SN:610001--
44	01643-31032	WASHER	1	SN:610001--
45	01011-81220	BOLT	1	SN:610001--
46	01643-31232	WASHER	1	SN:610001--

Printed By : Dwi Iswanto (airafather6107170)

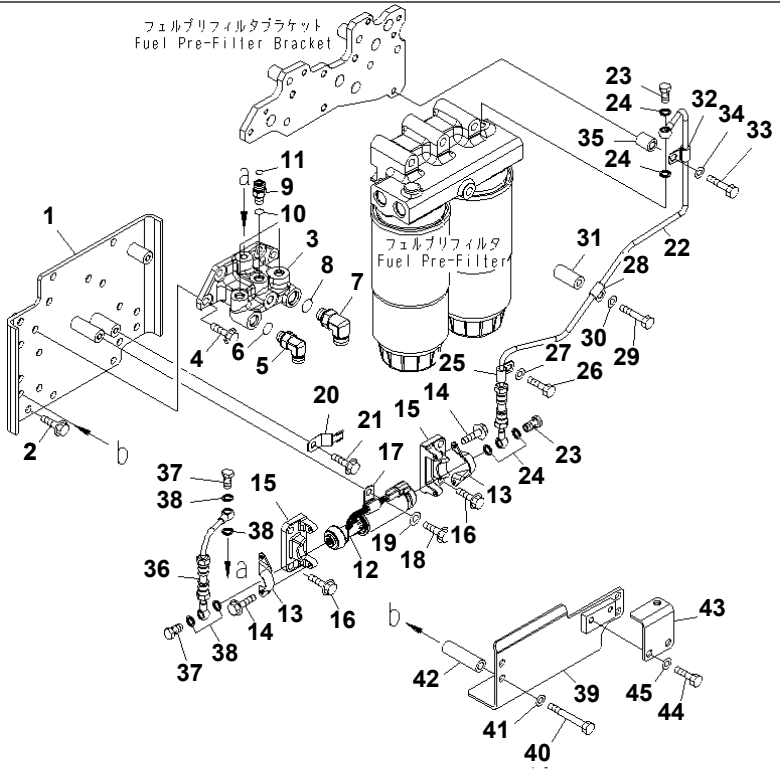

Ref. A4110-B6J3 Page 030530

SAA6D170E-5CR-W S/N 610001-UP

FUEL PRIMING PUMP

Item	Part No.	Description	Qty	Options
1	6245-71-5510	BRACKET	1	SN:610001--
2	01435-01020	BOLT	5	SN:610001--
3	6245-71-5650	BLOCK	1	SN:610001--
4	01435-01030	BOLT	4	SN:610001--
5	02782-10420	ELBOW	1	SN:610001--
6	07002-11823	O-RING	1	SN:610001--
7	02782-10516	ELBOW	1	SN:610001--
8	07002-12034	O-RING	1	SN:610001--
9	02781-0031D	UNION	3	SN:610001--
10	07002-11423	O-RING	3	SN:610001--
11	02896-11009	O-RING	3	SN:610001--
12	6245-71-8110	PUMP ASS'Y,PRIMING	1	SN:610001--
13	6245-71-5680	BRACKET	2	SN:610001--
14	01435-00612	BOLT	4	SN:610001--
15	6245-71-5640	BLOCK	2	SN:610001--
16	01435-01030	BOLT	4	SN:610001--
17	600-051-2100	CLIP	1	SN:610001--
18	01435-01016	BOLT	1	SN:610001--
19	01643-31032	WASHER	1	SN:610001--
20	08193-20010	CLIP	1	SN:610001--
21	01435-01016	BOLT	1	SN:610001--
22	6245-71-5620	HOSE	1	SN:610001--
23	07206-30812	BOLT,JOINT	2	SN:610001--
24	07005-01212	GASKET	4	SN:610001--
25	6210-51-8320	CLIP	1	SN:610001--
26	01010-81020	BOLT	1	SN:610001--
27	01643-31032	WASHER	1	SN:610001--

Printed By : Dwi Iswanto (airafather6107170)

FUEL PRIMING PUMP

Item	Part No.	Description	Qty	Options
28	6210-51-8320	CLIP	1	SN:610001--
29	01010-81065	BOLT	1	SN:610001--
30	01643-31032	WASHER	1	SN:610001--
31	6152-21-6590	SPACER	1	SN:610001--
32	6210-51-8320	CLIP	1	SN:610001--
33	01010-81045	BOLT	1	SN:610001--
34	01643-31032	WASHER	1	SN:610001--
35	6128-21-6730	SPACER	1	SN:610001--
36	6245-71-5610	HOSE	1	SN:610001--
37	07206-30812	BOLT,JOINT	2	SN:610001--
38	07005-01212	GASKET	4	SN:610001--
39	6245-71-5660	COVER	1	SN:610001--
40	01011-81000	BOLT	4	SN:610001--
41	01643-31032	WASHER	4	SN:610001--
42	6130-12-4571	SPACER	4	SN:610001--
43	6245-71-5940	BRACKET	1	SN:610001--
44	01010-81020	BOLT	2	SN:610001--
45	01643-31032	WASHER	2	SN:610001--

Printed By : Dwi Iswanto (airafather6107170)

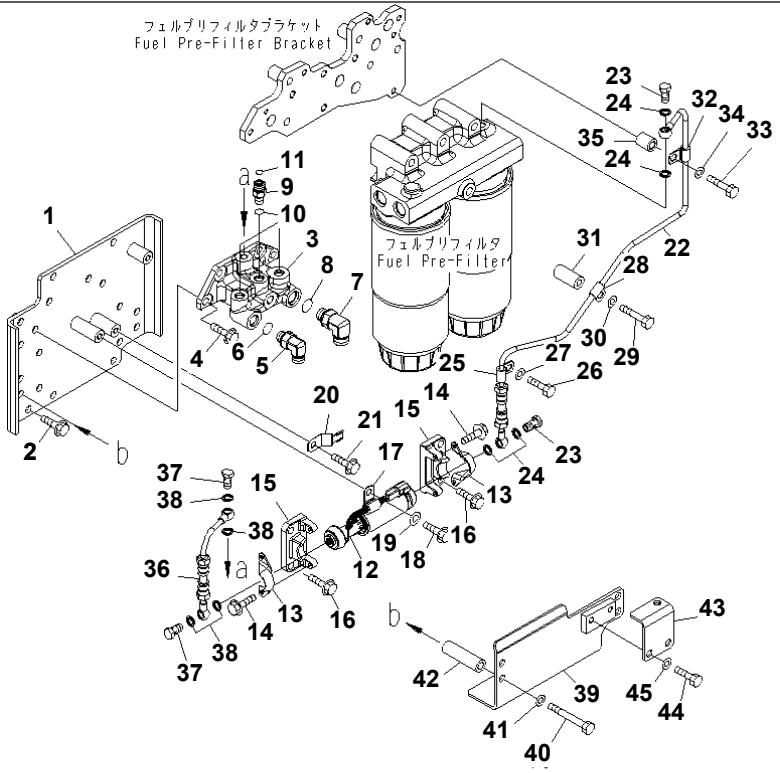

Ref. A4110-B6J7 **Page 030540**

SAA6D170E-5CR-W S/N 610001-UP

FUEL PRIMING PUMP AND FUEL PIPING (+55ßC SPEC.)

Item	Part No.	Description	Qty	Options
1	6245-71-5510	BRACKET	1	SN:610001--
2	01435-01020	BOLT	5	SN:610001--
3	6245-71-5650	BLOCK	1	SN:610001--
4	01435-01030	BOLT	4	SN:610001--
5	02782-10420	ELBOW	1	SN:610001--
6	07002-11823	O-RING	1	SN:610001--
7	02782-10516	ELBOW	1	SN:610001--
8	07002-12034	O-RING	1	SN:610001--
9	02781-0031D	UNION	3	SN:610001--
10	07002-11423	O-RING	3	SN:610001--
11	02896-11009	O-RING	3	SN:610001--
12	6245-71-8110	PUMP ASS'Y,PRIMING	1	SN:610001--
13	6245-71-5680	BRACKET	2	SN:610001--
14	01435-00612	BOLT	4	SN:610001--
15	6245-71-5640	BLOCK	2	SN:610001--
16	01435-01030	BOLT	4	SN:610001--
17	600-051-2100	CLIP	1	SN:610001--
18	01435-01016	BOLT	1	SN:610001--
19	01643-31032	WASHER	1	SN:610001--
20	08193-20010	CLIP	1	SN:610001--
21	01435-01016	BOLT	1	SN:610001--
22	6245-71-5620	HOSE	1	SN:610001--
23	07206-30812	BOLT,JOINT	2	SN:610001--
24	07005-01212	GASKET	4	SN:610001--
25	6210-51-8320	CLIP	1	SN:610001--
26	01010-81020	BOLT	1	SN:610001--
27	01643-31032	WASHER	1	SN:610001--

Printed By : Dwi Iswanto (airafather6107170)

FUEL PRIMING PUMP AND FUEL PIPING (+55ßC SPEC.)

Item	Part No.	Description	Qty	Options
28	6210-51-8320	CLIP	1	SN:610001--
29	01010-81065	BOLT	1	SN:610001--
30	01643-31032	WASHER	1	SN:610001--
31	6152-21-6590	SPACER	1	SN:610001--
32	6210-51-8320	CLIP	1	SN:610001--
33	01010-81045	BOLT	1	SN:610001--
34	01643-31032	WASHER	1	SN:610001--
35	6128-21-6730	SPACER	1	SN:610001--
36	6245-71-5610	HOSE	1	SN:610001--
37	07206-30812	BOLT,JOINT	2	SN:610001--
38	07005-01212	GASKET	4	SN:610001--
39	6245-71-5660	COVER	1	SN:610001--
40	01011-81000	BOLT	4	SN:610001--
41	01643-31032	WASHER	4	SN:610001--
42	6130-12-4571	SPACER	4	SN:610001--
43	6245-71-5940	BRACKET	1	SN:610001--
44	01010-81020	BOLT	2	SN:610001--
45	01643-31032	WASHER	2	SN:610001--

Printed By : Dwi Iswanto (airafather6107170)

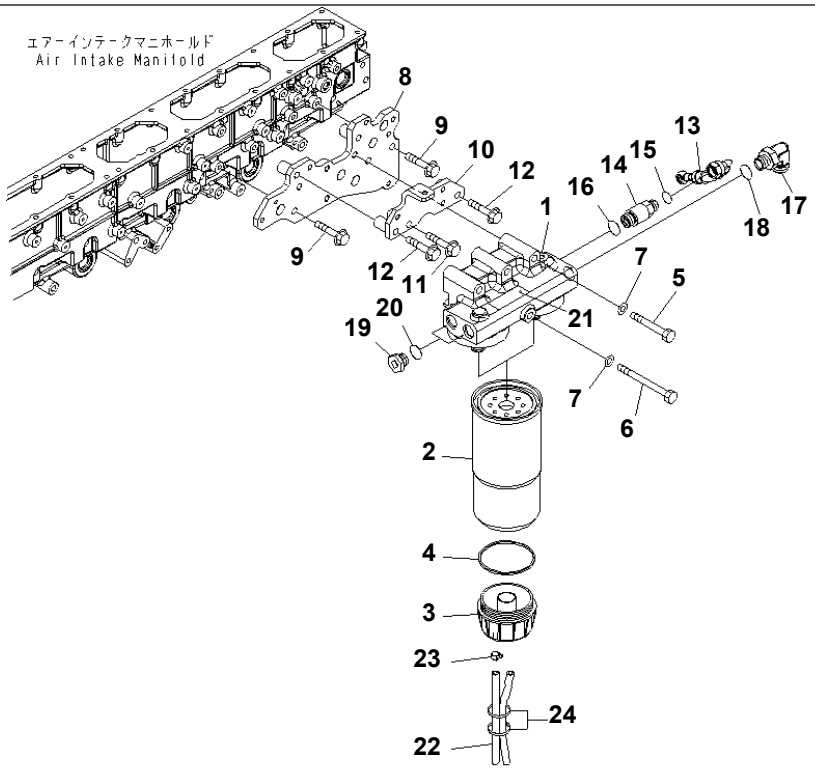

Ref. A4110-C6J3 Page 030550

SAA6D170E-5CR-W S/N 610001-UP

FUEL PRE-FILTER

Item	Part No.	Description	Qty	Options
1	6245-71-6111	HEAD,FILTER	1	SN:610001--
	600-311-4500	FILTER ASS'Y	2	SN:610028--
	□600-311-3400	FILTER ASS'Y	2	SN:610001--610027
2	☆	· CARTRIDGE (1-1/4),(SEE FIG.A4159-A6A2)	1	SN:610028--
	☆	· CARTRIDGE (1-1/4),(SEE FIG.A4159-A6A2)	1	SN:610001--610027
3	600-311-3220	· CAP	1	SN:610001--
4	600-311-3230	· SEAL	1	SN:610001--
5	01010-81290	BOLT	2	SN:610001--
6	01011-81255	BOLT	1	SN:610001--
7	01643-31232	WASHER	3	SN:610001--
8	6245-71-6420	BRACKET	1	SN:610001--
9	01435-01055	BOLT	3	SN:610001--
10	6245-71-6190	BRACKET	1	SN:610001--
11	01435-01060	BOLT	1	SN:610001--
12	01436-01000	BOLT	2	SN:610001--
13	6245-71-5470	HOSE	1	SN:610001--
14	6245-71-6150	UNION	1	SN:610001--
15	02896-11012	O-RING	1	SN:610001--
16	07002-12434	O-RING	1	SN:610001--
17	02782-10628	ELBOW	1	SN:610001--
18	07002-12434	O-RING	1	SN:610001--
19	07040-12412	PLUG	2	SN:610001--
20	07002-12434	O-RING	2	SN:610001--
21	6245-81-9420	PLATE,INSTRUCTION	1	SN:610001--
22	07270-40811	TUBE	2	SN:610001--
23	07285-00125	CLIP	2	SN:610001--
24	08034-20536	BAND	2	SN:610001--

Ref. A4110-C6J3 Page 030550

Printed By : Dwi Iswanto (airafather6107170)

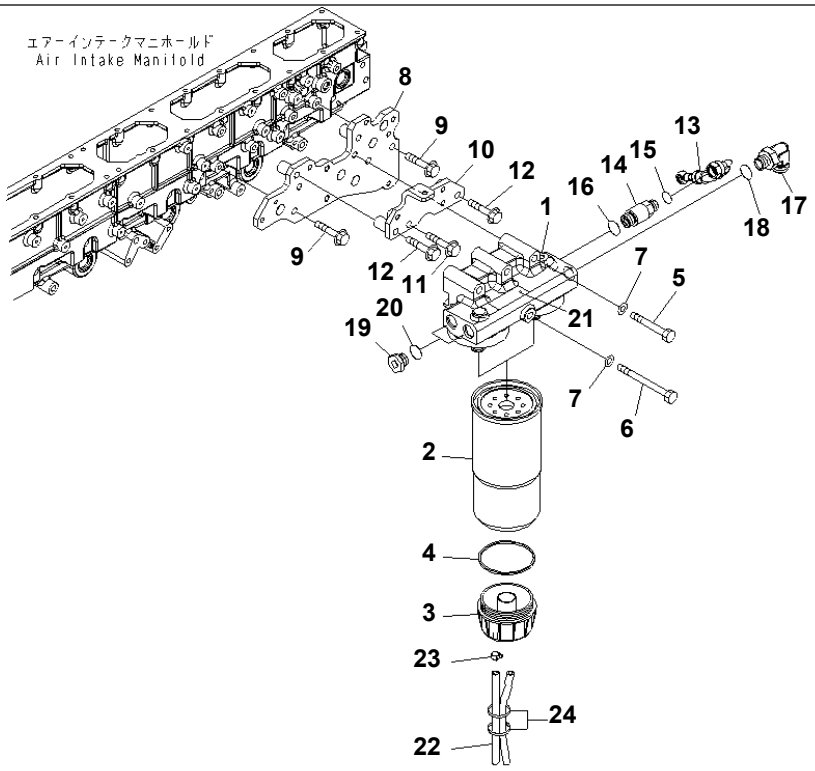

SAA6D170E-5CR-W S/N 610001-UP

FUEL PRE FILTER MOUNTING (+55ßC SPEC.)

Item	Part No.	Description	Qty	Options
1	6245-71-6111	HEAD,FILTER	1	SN:610001--
	600-311-4500	FILTER ASS'Y	2	SN:610001--
2	☆	· CARTRIDGE (1-1/4),(SEE FIG.A4159-A6A2)	1	SN:610001--
3	600-311-3220	· CAP	1	SN:610001--
4	600-311-3230	· SEAL	1	SN:610001--
5	01010-81290	BOLT	2	SN:610001--
6	01011-81255	BOLT	1	SN:610001--
7	01643-31232	WASHER	3	SN:610001--
8	6245-71-6420	BRACKET	1	SN:610001--
9	01435-01055	BOLT	3	SN:610001--
10	6245-71-6190	BRACKET	1	SN:610001--
11	01435-01060	BOLT	1	SN:610001--
12	01436-01000	BOLT	2	SN:610001--
13	6245-71-5470	HOSE	1	SN:610001--
14	6245-71-6150	UNION	1	SN:610001--
15	02896-11012	O-RING	1	SN:610001--
16	07002-12434	O-RING	1	SN:610001--
17	02782-10628	ELBOW	1	SN:610001--
18	07002-12434	O-RING	1	SN:610001--
19	07040-12412	PLUG	2	SN:610001--
20	07002-12434	O-RING	2	SN:610001--
21	6245-81-9420	PLATE,INSTRUCTION	1	SN:610001--
22	07270-40811	TUBE	2	SN:610001--
23	07285-00125	CLIP	2	SN:610001--
24	08034-20536	BAND	2	SN:610001--

Printed By : Dwi Iswanto (airafather6107170)

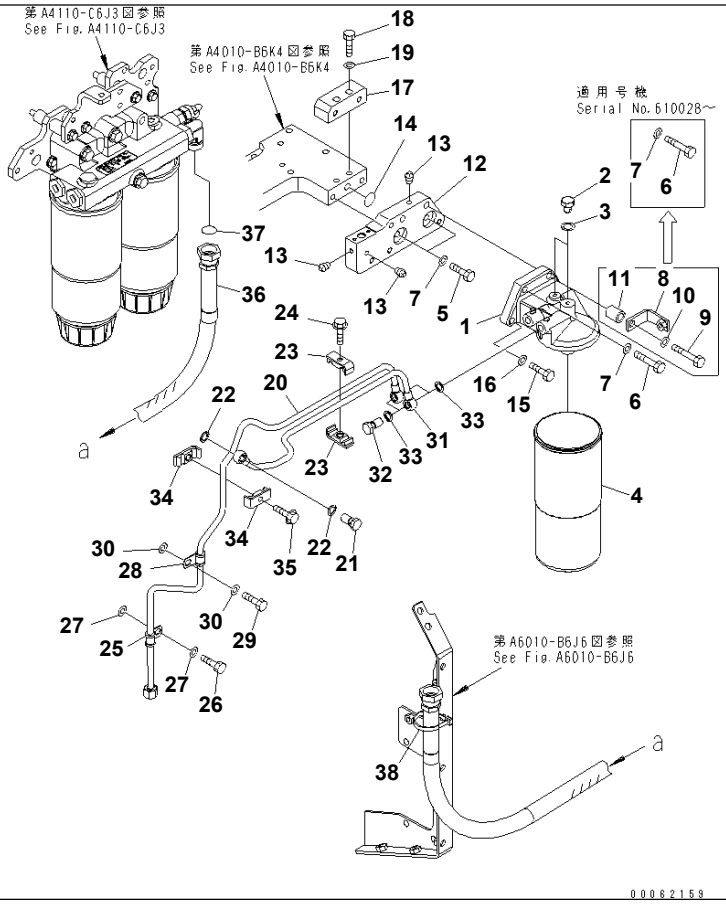

Ref. A4110-D6J3 **Page 030570**

SAA6D170E-5CR-W S/N 610001-UP

FUEL FILTER (ADDITIONAL) AND FUEL PIPING

Item	Part No.	Description	Qty	Options
	6261-71-6400	HEAD ASS'Y (1-5/8),FUEL FILTER	1	SN:610001--
1	6261-71-6410	· HEAD (1-5/8)	1	SN:610001--
2	6110-73-6231	· PLUG	2	SN:610001--
3	07005-00812	· GASKET	2	SN:610001--
4	☆	CARTRIDGE (1-5/8),(SEE FIG.A4119-A6A4)	1	SN:610028--
	☆	CARTRIDGE (1-5/8),(SEE FIG.A4119-A6A4)	1	SN:610001--610027
5	01010-81040	BOLT	2	SN:610001--
6	01010-81065	BOLT	2	SN:610028--
	01010-81065	BOLT	1	SN:610001--610027
7	01643-31032	WASHER	4	SN:610028--
	01643-31032	WASHER	3	SN:610001--610027
8	6934-71-5860	BRACKET	1	SN:610001--610027
9	01010-81095	BOLT	1	SN:610001--610027
10	01643-31032	WASHER	1	SN:610001--610027
11	6128-21-6730	SPACER	1	SN:610001--610027
12	6245-71-6320	PLATE	1	SN:610001--
13	07042-A0108	PLUG	3	SN:610001--
14	07000-A2021	O-RING	1	SN:610001--
15	01010-81040	BOLT	2	SN:610001--
16	01643-31032	WASHER	2	SN:610001--
17	6245-71-6330	BLOCK	1	SN:610001--
18	01010-81050	BOLT	2	SN:610001--
19	01643-31032	WASHER	2	SN:610001--
20	6245-71-5770	TUBE	1	SN:610001--
21	07206-31014	BOLT,JOINT	1	SN:610001--
22	07005-01412	GASKET	2	SN:610001--
23	6166-75-6820	CLAMP	2	SN:610001--

Ref. A4110-D6J3 **Page 030570**

Printed By : Dwi Iswanto (airafather6107170)

FUEL FILTER (ADDITIONAL) AND FUEL PIPING

Item	Part No.	Description	Qty	Options
24	01435-00830	BOLT	1	SN:610001--
25	6933-71-8220	CLIP	1	SN:610001--
26	01010-81020	BOLT	1	SN:610001--
27	01643-31032	WASHER	2	SN:610001--
28	6933-71-8220	CLIP	1	SN:610001--
29	01010-81020	BOLT	1	SN:610001--
30	01643-31032	WASHER	2	SN:610001--
31	6245-71-5780	TUBE	1	SN:610001--
32	07206-31014	BOLT,JOINT	2	SN:610001--
33	07005-01412	GASKET	4	SN:610001--
34	6166-75-6820	CLAMP	2	SN:610001--
35	01435-00835	BOLT	1	SN:610001--
36	02762-00618	HOSE	1	SN:610001--
37	02896-11018	O-RING	1	SN:610001--
38	6218-81-8490	BAND	2	SN:610001--

Printed By : Dwi Iswanto (airafather6107170)

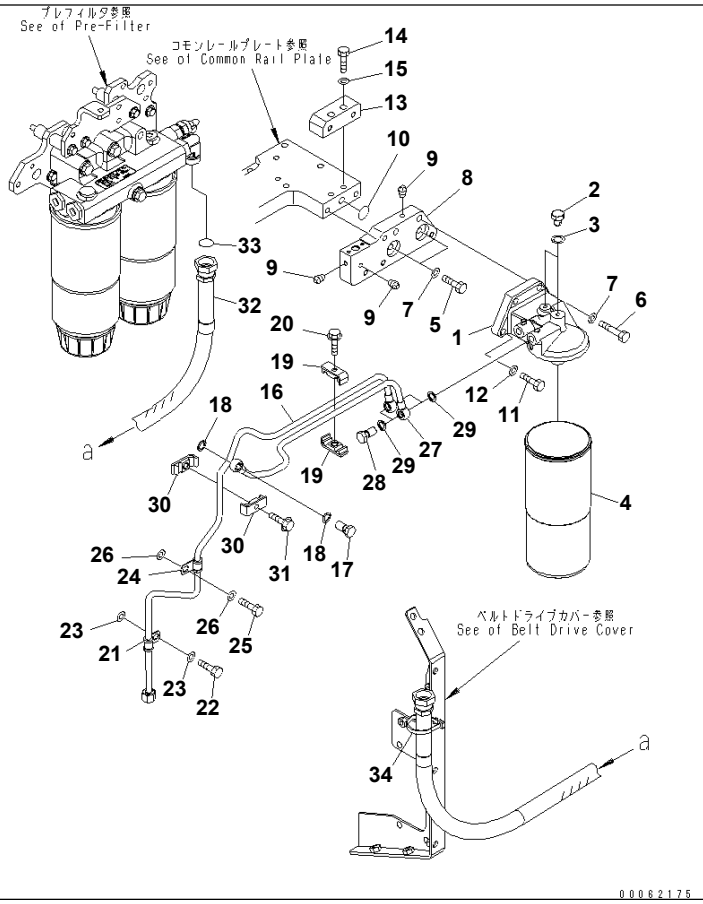

Ref. A4110-D6J7 Page 030580

SAA6D170E-5CR-W S/N 610001-UP

FUEL FILTER (ADDITIONAL) AND FUEL PIPING (+55ßC SPEC.)

Item	Part No.	Description	Qty	Options
	6261-71-6400	HEAD ASS'Y (1-5/8),FUEL FILTER	1	SN:610001--
1	6261-71-6410	· HEAD (1-5/8)	1	SN:610001--
2	6110-73-6231	· PLUG	2	SN:610001--
3	07005-00812	· GASKET	2	SN:610001--
4	☆	CARTRIDGE (1-5/8),(SEE FIG.A4119-A6A4)	1	SN:610001--
5	01010-81040	BOLT	2	SN:610001--
6	01010-81065	BOLT	2	SN:610001--
7	01643-31032	WASHER	4	SN:610001--
8	6245-71-6320	PLATE	1	SN:610001--
9	07042-A0108	PLUG	3	SN:610001--
10	07000-A2021	O-RING	1	SN:610001--
11	01010-81040	BOLT	2	SN:610001--
12	01643-31032	WASHER	2	SN:610001--
13	6245-71-6330	BLOCK	1	SN:610001--
14	01010-81050	BOLT	2	SN:610001--
15	01643-31032	WASHER	2	SN:610001--
16	6245-71-5770	TUBE	1	SN:610001--
17	07206-31014	BOLT,JOINT	1	SN:610001--
18	07005-01412	GASKET	2	SN:610001--
19	6166-75-6820	CLAMP	2	SN:610001--
20	01435-00830	BOLT	1	SN:610001--
21	6933-71-8220	CLIP	1	SN:610001--
22	01010-81020	BOLT	1	SN:610001--
23	01643-31032	WASHER	1	SN:610001--
24	6933-71-8220	CLIP	1	SN:610001--
25	01010-81020	BOLT	1	SN:610001--
26	01643-31032	WASHER	2	SN:610001--

Ref. A4110-D6J7 Page 030580

Printed By : Dwi Iswanto (airafather6107170)

FUEL FILTER (ADDITIONAL) AND FUEL PIPING (+55ßC SPEC.)

Item	Part No.	Description	Qty	Options
27	6245-71-5780	TUBE	1	SN:610001--
28	07206-31014	BOLT,JOINT	2	SN:610001--
29	07005-01412	GASKET	4	SN:610001--
30	6166-75-6820	CLAMP	2	SN:610001--
31	01435-00835	BOLT	1	SN:610001--
32	02762-00618	HOSE	1	SN:610001--
33	02896-11018	O-RING	1	SN:610001--
34	6218-81-8490	BAND	2	SN:610001--

Printed By : Dwi Iswanto (airafather6107170)

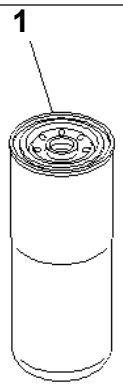

00042185

SAA6D170E-5CR-W S/N 610001-UP

FUEL FILTER (SERVICE ONLY)

Item	Part No.	Description	Qty	Options
1	600-319-3550	CARTRIDGE (1-5/8),FUEL	2	SN:610001--
	(☒600-319-3520)	CARTRIDGE (1-5/8),FUEL	2	SN:(610001--610027)

Printed By : Dwi Iswanto (airafather6107170)

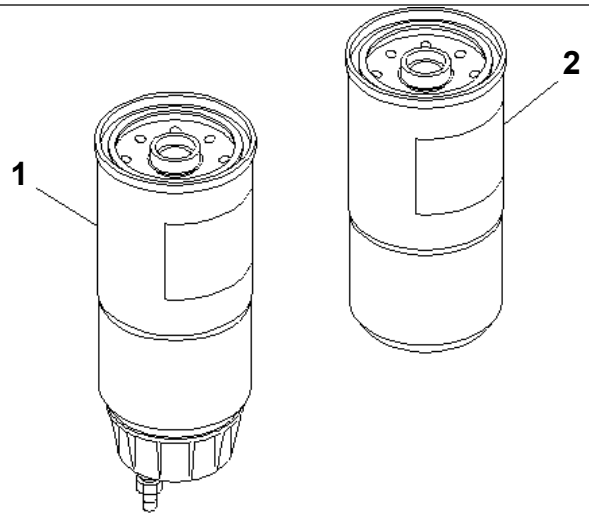

00044908

FUEL PRE-FILTER (SERVICE ONLY)

Item	Part No.	Description	Qty	Options
1	600-319-4500	CARTRIDGE ASS'Y,(1-1/4)	2	SN:610001--
2	600-319-4540	CARTRIDGE (1-1/4),WITH SEAL	2	SN:610001--

Printed By : Dwi Iswanto (airafather6107170)

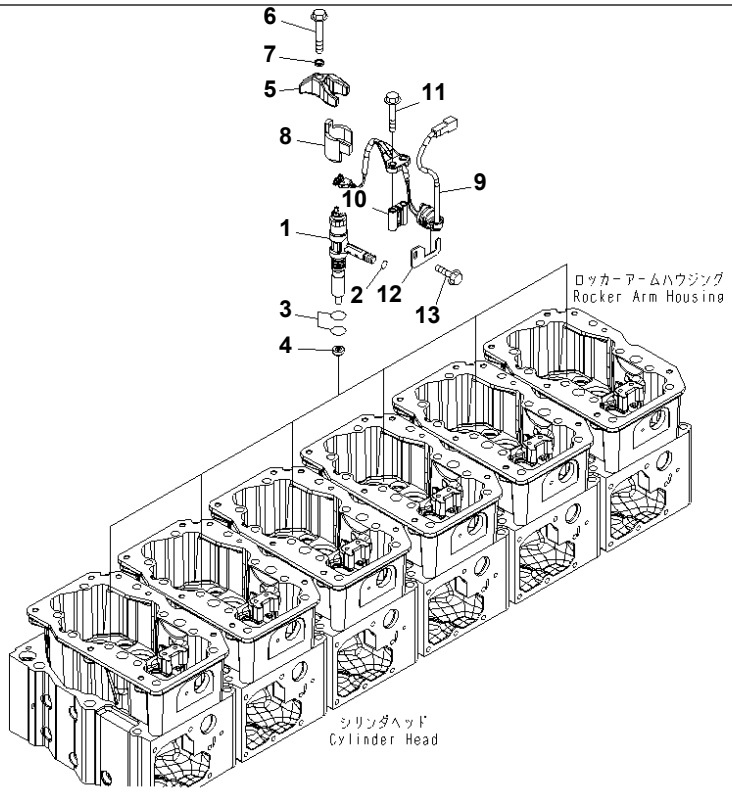

FUEL INJECTOR

Item	Part No.	Description	Qty	Options
1	6245-11-3100	INJECTOR ASS'Y	6	SN:610001--
	☆	· HOLDER	1	SN:610001--
	☆	· NOZZLE	1	SN:610001--
2	6219-71-1160	GASKET	6	SN:610001--
3	6219-71-1150	GASKET	12	SN:610001--
4	6261-71-6150	GASKET	6	SN:610001--
5	6245-71-1160	HOLDER,INJECTOR	6	SN:610001--
6	01437-01075	BOLT	6	SN:610001--
7	6217-71-1140	WASHER	6	SN:610001--
8	6245-71-1170	ADAPTER	6	SN:610001--
9	6245-81-9110	WIRING HARNESS	6	SN:610001--
10	6245-81-9140	SPACER	6	SN:610001--
11	01435-00865	BOLT	12	SN:610001--
12	6245-81-9120	PLATE	6	SN:610001--
13	01435-00614	BOLT	6	SN:610001--

Printed By : Dwi Iswanto (airafather6107170)

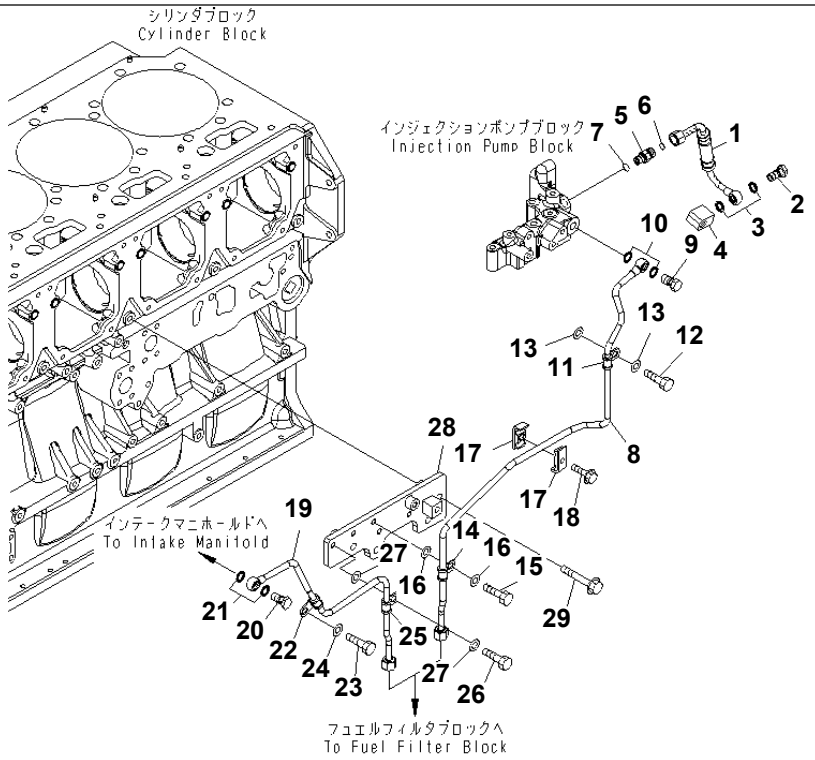

00057002

SAA6D170E-5CR-W S/N 610001-UP

FUEL RETURN

Item	Part No.	Description	Qty	Options
1	6245-71-5380	HOSE	1	SN:610001--
2	07206-31014	BOLT,JOINT	1	SN:610001--
3	07005-01412	GASKET	2	SN:610001--
4	6245-71-5760	BLOCK	1	SN:610001--
5	02781-0031D	UNION	1	SN:610001--
6	02896-11009	O-RING	1	SN:610001--
7	07002-11423	O-RING	1	SN:610001--
8	6245-71-5530	TUBE	1	SN:610001--
9	07206-31014	BOLT,JOINT	1	SN:610001--
10	07005-01412	GASKET	2	SN:610001--
11	6933-71-8220	CLIP	1	SN:610001--
12	01010-81020	BOLT	1	SN:610001--
13	01643-31032	WASHER	2	SN:610001--
14	6933-71-8220	CLIP	1	SN:610001--
15	01010-81020	BOLT	1	SN:610001--
16	01643-31032	WASHER	2	SN:610001--
17	6166-75-6820	CLAMP	2	SN:610001--
18	01435-00835	BOLT	1	SN:610001--
19	6245-71-5540	TUBE	1	SN:610001--
20	07206-31014	BOLT,JOINT	1	SN:610001--
21	07005-01412	GASKET	2	SN:610001--
22	6933-71-8220	CLIP	1	SN:610001--
23	01010-81020	BOLT	1	SN:610001--
24	01643-31032	WASHER	1	SN:610001--
25	6933-71-8220	CLIP	1	SN:610001--
26	01010-81020	BOLT	1	SN:610001--
27	01643-31032	WASHER	2	SN:610001--

Printed By : Dwi Iswanto (airafather6107170)

FUEL RETURN

Item	Part No.	Description	Qty	Options
28	6245-71-5590	BRACKET	1	SN:610001--
29	01435-01065	BOLT	4	SN:610001--

Printed By : Dwi Iswanto (airafather6107170)

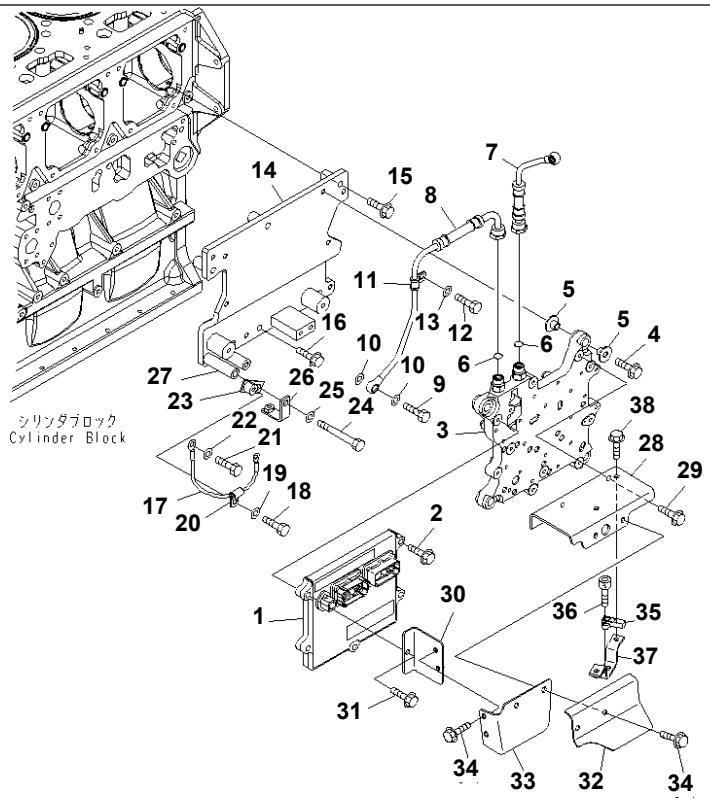

00057003

FUEL CONTROLLER AND PIPING

Item	Part No.	Description	Qty	Options
1	600-463-7100	CONTROLLER ASS'Y	1	SN:610001--
2	01435-00840	BOLT	4	SN:610001--
3	6261-81-7100	COOLER	1	SN:610001--
	6261-81-7120	· COVER	1	SN:610001--
	6261-81-7110	· CASE	1	SN:610001--
	6261-81-7130	· O-RING	1	SN:610001--
	01435-00825	· BOLT	21	SN:610001--
	02781-00420	· UNION	2	SN:610001--
	07002-11823	· O-RING	2	SN:610001--
4	01435-01045	BOLT	4	SN:610001--
5	6251-81-7210	CUSHION	8	SN:610001--
6	02896-11012	O-RING	2	SN:610001--
7	6245-71-5290	HOSE	1	SN:610001--
8	6245-71-5310	HOSE	1	SN:610001--
9	07206-31014	BOLT,JOINT	1	SN:610001--
10	07005-01412	GASKET	2	SN:610001--
11	6933-71-8220	CLIP	1	SN:610001--
12	01010-81020	BOLT	1	SN:610001--
13	01643-31032	WASHER	1	SN:610001--
14	6245-21-6120	BRACKET	1	SN:610001--
15	01435-01060	BOLT	3	SN:610001--
16	01435-01025	BOLT	2	SN:610001--
17	6245-81-5820	WIRE	1	SN:610001--
18	01010-81020	BOLT	1	SN:610001--
19	01643-31032	WASHER	1	SN:610001--
20	600-051-2080	CLIP	1	SN:610001--
21	01010-81020	BOLT	1	SN:610001--

Printed By : Dwi Iswanto (airafather6107170)

FUEL CONTROLLER AND PIPING

Item	Part No.	Description	Qty	Options
22	01643-31032	WASHER	1	SN:610001--
23	426-06-11570	BRACKET	1	SN:610001--
24	01011-81015	BOLT	1	SN:610001--
25	01643-31032	WASHER	1	SN:610001--
26	6934-71-5860	BRACKET	1	SN:610001--
27	6130-12-4571	SPACER	1	SN:610001--
28	6245-81-9350	COVER	1	SN:610001--
29	01435-00820	BOLT	2	SN:610001--
30	6245-81-9360	BRACKET	1	SN:610001--
31	01435-00845	BOLT	1	SN:610001--
32	6245-81-9390	COVER	1	SN:610001--
33	6245-81-9380	COVER	1	SN:610001--
34	01435-00820	BOLT	4	SN:610001--
35	6261-81-2600	SENSOR	1	SN:610001--
36	01252-60520	BOLT	1	SN:610001--
37	6245-81-9210	BRACKET	1	SN:610001--
38	01435-00820	BOLT	2	SN:610001--

Printed By : Dwi Iswanto (airafather6107170)

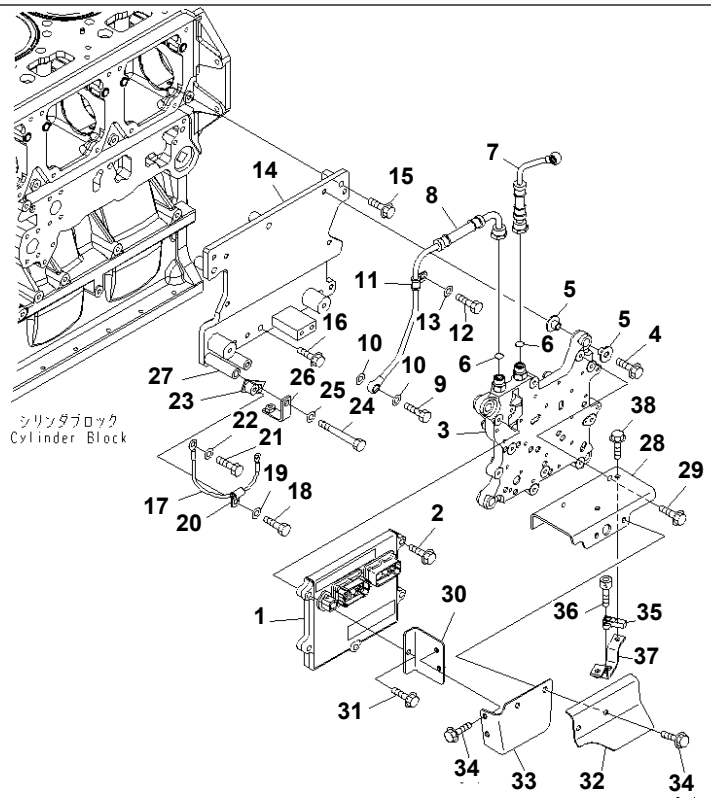

FUEL CONTROLLER AND PIPING (+55ßC SPEC.)

Item	Part No.	Description	Qty	Options
1	600-463-7200	CONTROLLER ASS'Y	1	SN:610001--
2	01435-00840	BOLT	4	SN:610001--
3	6261-81-7100	COOLER	1	SN:610001--
	6261-81-7120	· COVER	1	SN:610001--
	6261-81-7110	· CASE	1	SN:610001--
	6261-81-7130	· O-RING	1	SN:610001--
	01435-00825	· BOLT	21	SN:610001--
	02781-00420	· UNION	2	SN:610001--
	07002-11823	· O-RING	2	SN:610001--
4	01435-01045	BOLT	4	SN:610001--
5	6251-81-7210	CUSHION	8	SN:610001--
6	02896-11012	O-RING	2	SN:610001--
7	6245-71-5290	HOSE,FUEL INLET	1	SN:610001--
8	6245-71-5310	HOSE,FUEL RETURN	1	SN:610001--
9	07206-31014	BOLT,JOINT	1	SN:610001--
10	07005-01412	GASKET	2	SN:610001--
11	6933-71-8220	CLIP	1	SN:610001--
12	01010-81020	BOLT	1	SN:610001--
13	01643-31032	WASHER	1	SN:610001--
14	6245-21-6120	BRACKET	1	SN:610001--
15	01435-01060	BOLT	3	SN:610001--
16	01435-01025	BOLT	2	SN:610001--
17	6245-81-5820	WIRE	1	SN:610001--
18	01010-81020	BOLT	1	SN:610001--
19	01643-31032	WASHER	1	SN:610001--
20	600-051-2080	CLIP	1	SN:610001--
21	01010-81020	BOLT	1	SN:610001--

Printed By : Dwi Iswanto (airafather6107170)

FUEL CONTROLLER AND PIPING (+55ßC SPEC.)

Item	Part No.	Description	Qty	Options
22	01643-31032	WASHER	1	SN:610001--
23	426-06-11570	BRACKET	1	SN:610001--
24	01011-81015	BOLT	1	SN:610001--
25	01643-31032	WASHER	1	SN:610001--
26	6934-71-5860	BRACKET	1	SN:610001--
27	6130-12-4571	SPACER	1	SN:610001--
28	6245-81-9350	COVER	1	SN:610001--
29	01435-00820	BOLT	2	SN:610001--
30	6245-81-9360	BRACKET	1	SN:610001--
31	01435-00845	BOLT	1	SN:610001--
32	6245-81-9390	COVER	1	SN:610001--
33	6245-81-9380	COVER	1	SN:610001--
34	01435-00820	BOLT	4	SN:610001--
35	6261-81-2600	SENSOR,AMBIENT TEMPERATURE	1	SN:610001--
36	01252-60520	BOLT	1	SN:610001--
37	6245-81-9210	BRACKET	1	SN:610001--
38	01435-00820	BOLT	2	SN:610001--

Printed By : Dwi Iswanto (airafather6107170)

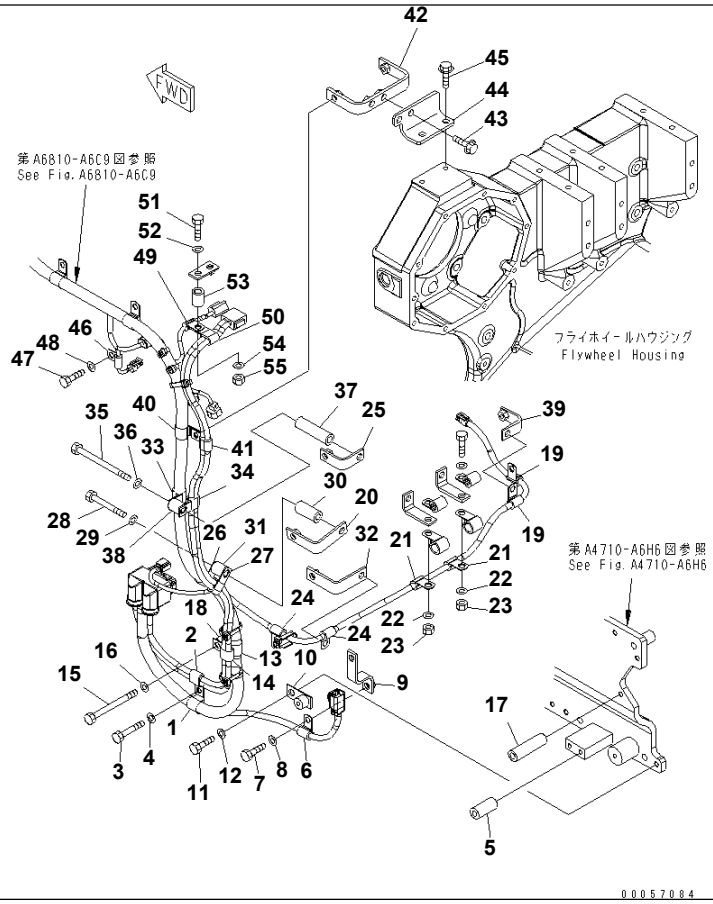

Ref. A4750-A6C3 Page 030650

CABLE SUPPORT (1/5) ENGINE WIRING

Item	Part No.	Description	Qty	Options
1	600-051-2160	CLIP	1	SN:610001--
2	04435-51010	CLIP	1	SN:610001--
3	01010-81070	BOLT	1	SN:610001--
4	01643-31032	WASHER	1	SN:610001--
5	6152-21-6590	SPACER	1	SN:610001--
6	600-051-2100	CLIP	1	SN:610001--
7	01010-81020	BOLT	1	SN:610001--
8	01643-31032	WASHER	1	SN:610001--
9	6245-81-9220	BRACKET	1	SN:610001--
10	426-06-11570	BRACKET	1	SN:610001--
11	01010-81025	BOLT	1	SN:610001--
12	01643-31032	WASHER	1	SN:610001--
13	600-051-2160	CLIP	1	SN:610001--
14	04435-51010	CLIP	1	SN:610001--
15	01011-81025	BOLT	1	SN:610001--
16	01643-31032	WASHER	1	SN:610001--
17	6130-12-4571	SPACER	1	SN:610001--
18	6128-21-6730	SPACER	1	SN:610001--
19	600-051-2100	CLIP	2	SN:610001--
20	17M-911-1220	PLATE	1	SN:610001--
21	600-051-2100	CLIP	2	SN:610001--
22	01643-31032	WASHER	2	SN:610001--
23	01580-01008	NUT	2	SN:610001--
24	600-051-2100	CLIP	2	SN:610001--
25	6934-71-5860	BRACKET	1	SN:610001--
26	600-051-2160	CLIP	1	SN:610001--
27	04435-51010	CLIP	1	SN:610001--

Ref. A4750-A6C3 Page 030650

Printed By : Dwi Iswanto (airafather6107170)

CABLE SUPPORT (1/5) ENGINE WIRING

Item	Part No.	Description	Qty	Options
28	01011-81000	BOLT	1	SN:610001--
29	01643-31032	WASHER	1	SN:610001--
30	6152-21-6590	SPACER	1	SN:610001--
31	6128-21-6730	SPACER	1	SN:610001--
32	17M-911-1220	PLATE	1	SN:610001--
33	600-051-2160	CLIP	1	SN:610001--
34	04435-51010	CLIP	1	SN:610001--
35	01011-81030	BOLT	1	SN:610001--
36	01643-31032	WASHER	1	SN:610001--
37	6130-12-4571	SPACER	1	SN:610001--
38	6128-21-6730	SPACER	1	SN:610001--
39	6934-71-5860	BRACKET	1	SN:610001--
40	600-051-2160	CLIP	1	SN:610001--
41	04435-51010	CLIP	1	SN:610001--
42	6245-81-5210	BRACKET	1	SN:610001--
43	01435-01020	BOLT	2	SN:610001--
44	6245-81-5190	BRACKET	1	SN:610001--
45	01435-01020	BOLT	2	SN:610001--
46	600-051-2120	CLIP	1	SN:610001--
47	01010-81020	BOLT	1	SN:610001--
48	01643-31032	WASHER	1	SN:610001--
49	600-051-2060	CLIP	1	SN:610001--
50	04435-51010	CLIP	1	SN:610001--
51	01010-81050	BOLT	1	SN:610001--
52	01643-31032	WASHER	1	SN:610001--
53	6128-21-6730	SPACER	1	SN:610001--
54	01643-31032	WASHER	1	SN:610001--
55	01580-01008	NUT	1	SN:610001--

Printed By : Dwi Iswanto (airafather6107170)

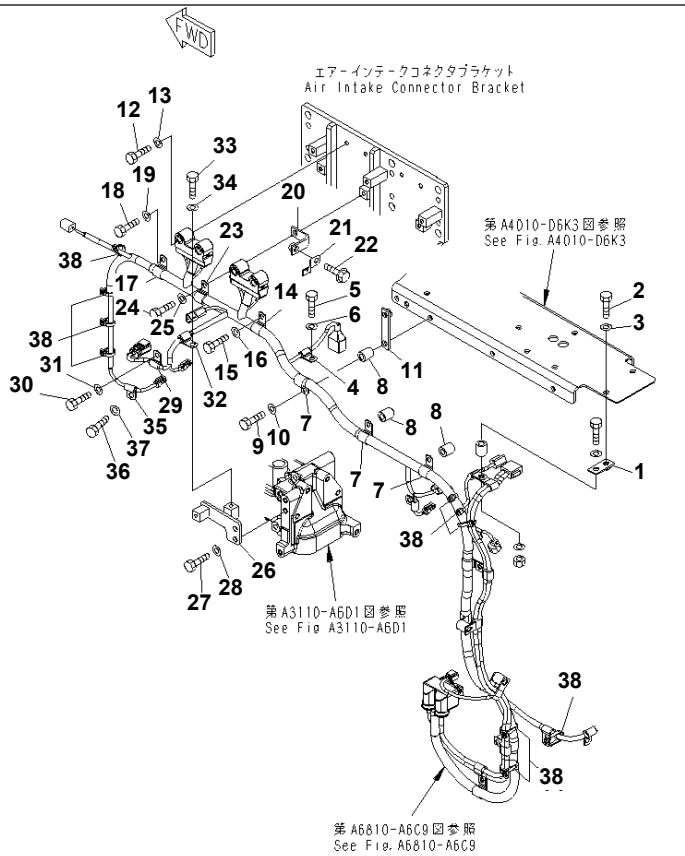

Ref. A4750-B6C3 **Page 030660**

SAA6D170E-5CR-W S/N 610001-UP

CABLE SUPPORT (2/5) ENGINE WIRING

Item	Part No.	Description	Qty	Options
1	426-01-11310	BRACKET	1	SN:610001--
2	01010-81020	BOLT	1	SN:610001--
3	01643-31032	WASHER	1	SN:610001--
4	600-051-2060	CLIP	1	SN:610001--
5	01010-81020	BOLT	1	SN:610001--
6	01643-31032	WASHER	1	SN:610001--
7	600-051-2160	CLIP	3	SN:610001--
8	6128-21-6730	SPACER	3	SN:610001--
9	01010-81050	BOLT	1	SN:610001--
10	01643-31032	WASHER	1	SN:610001--
11	421-62-11940	PLATE	1	SN:610001--
12	01010-81045	BOLT	2	SN:610001--
13	01643-31032	WASHER	2	SN:610001--
14	600-051-2160	CLIP	1	SN:610001--
15	01010-81020	BOLT	1	SN:610001--
16	01643-31032	WASHER	1	SN:610001--
17	600-051-2160	CLIP	1	SN:610001--
18	01010-81020	BOLT	1	SN:610001--
19	01643-31032	WASHER	1	SN:610001--
20	6934-71-5860	BRACKET	1	SN:610001--
21	08193-20010	CLIP	1	SN:610001--
22	01435-01016	BOLT	1	SN:610001--
23	600-051-2160	CLIP	1	SN:610001--
24	01010-81020	BOLT	1	SN:610001--
25	01643-31032	WASHER	1	SN:610001--
26	6245-81-9340	BRACKET	1	SN:610001--
27	01010-81025	BOLT	2	SN:610001--

Printed By : Dwi Iswanto (airafather6107170)

CABLE SUPPORT (2/5) ENGINE WIRING

Item	Part No.	Description	Qty	Options
28	01643-31032	WASHER	2	SN:610001--
29	600-051-2060	CLIP	1	SN:610001--
30	01010-81020	BOLT	1	SN:610001--
31	01643-31032	WASHER	1	SN:610001--
32	600-051-2100	CLIP	1	SN:610001--
33	01010-81020	BOLT	1	SN:610001--
34	01643-31032	WASHER	1	SN:610001--
35	600-051-2060	CLIP	1	SN:610001--
36	01010-81020	BOLT	1	SN:610001--
37	01643-31032	WASHER	1	SN:610001--
38	6218-81-8490	BAND	11	SN:610001--

Printed By : Dwi Iswanto (airafather6107170)

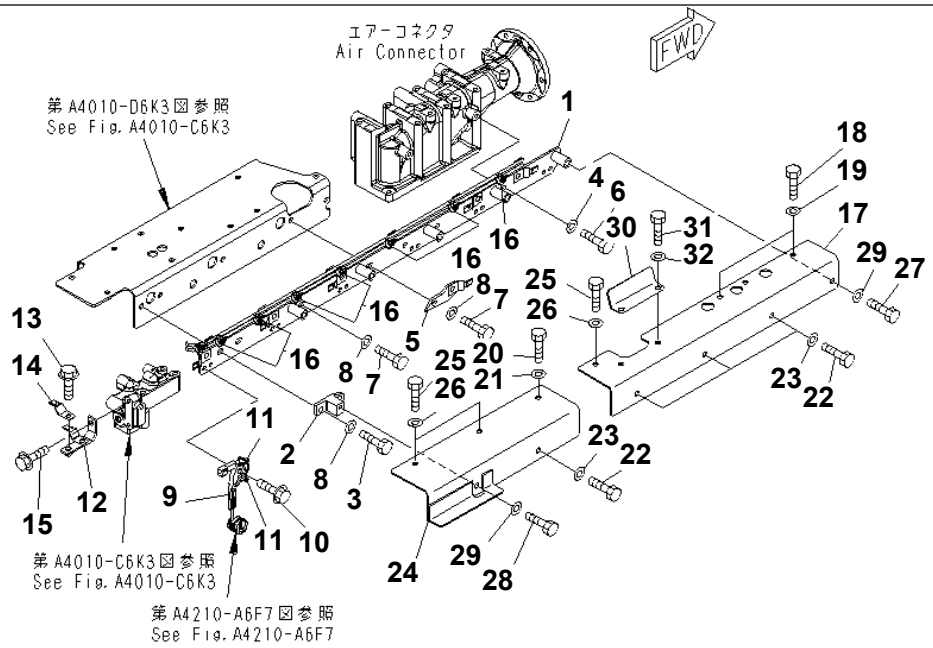

00044126

CABLE SUPPORT (3/5) INJECTOR WIRING

Item	Part No.	Description	Qty	Options
1	6245-81-5131	BRACKET	1	SN:610001--
2	6245-81-5250	BLOCK	1	SN:610001--
3	01010-81045	BOLT	2	SN:610001--
4	01643-31032	WASHER	2	SN:610001--
5	6245-81-5240	PLATE	1	SN:610001--
6	01010-81020	BOLT	2	SN:610001--
7	01010-81035	BOLT	3	SN:610001--
8	01643-31032	WASHER	5	SN:610001--
9	6245-81-9330	HOLDER	6	SN:610001--
10	01435-00825	BOLT	6	SN:610001--
11	6218-81-8480	BAND	12	SN:610001--
12	6245-81-5180	BRACKET	1	SN:610001--
13	01435-01020	BOLT	1	SN:610001--
14	08193-20010	CLIP	1	SN:610001--
15	01435-01020	BOLT	1	SN:610001--
16	6218-81-8490	BAND	8	SN:610001--
17	6245-81-5151	COVER	1	SN:610001--
18	01010-81030	BOLT	2	SN:610001--
19	01643-31032	WASHER	2	SN:610001--
20	01010-81035	BOLT	1	SN:610001--
21	01643-31032	WASHER	1	SN:610001--
22	01010-81060	BOLT	4	SN:610001--
23	01643-31032	WASHER	4	SN:610001--
24	6245-81-5160	COVER	1	SN:610001--
25	01010-81035	BOLT	3	SN:610001--
26	01643-31032	WASHER	3	SN:610001--
27	01010-81060	BOLT	1	SN:610001--

Printed By : Dwi Iswanto (airafather6107170)

CABLE SUPPORT (3/5) INJECTOR WIRING

Item	Part No.	Description	Qty	Options
28	01010-81020	BOLT	1	SN:610001--
29	01643-31032	WASHER	2	SN:610001--
30	6245-81-5170	COVER	1	SN:610001--
31	01010-81020	BOLT	2	SN:610001--
32	01643-31032	WASHER	2	SN:610001--

Printed By : Dwi Iswanto (airafather6107170)

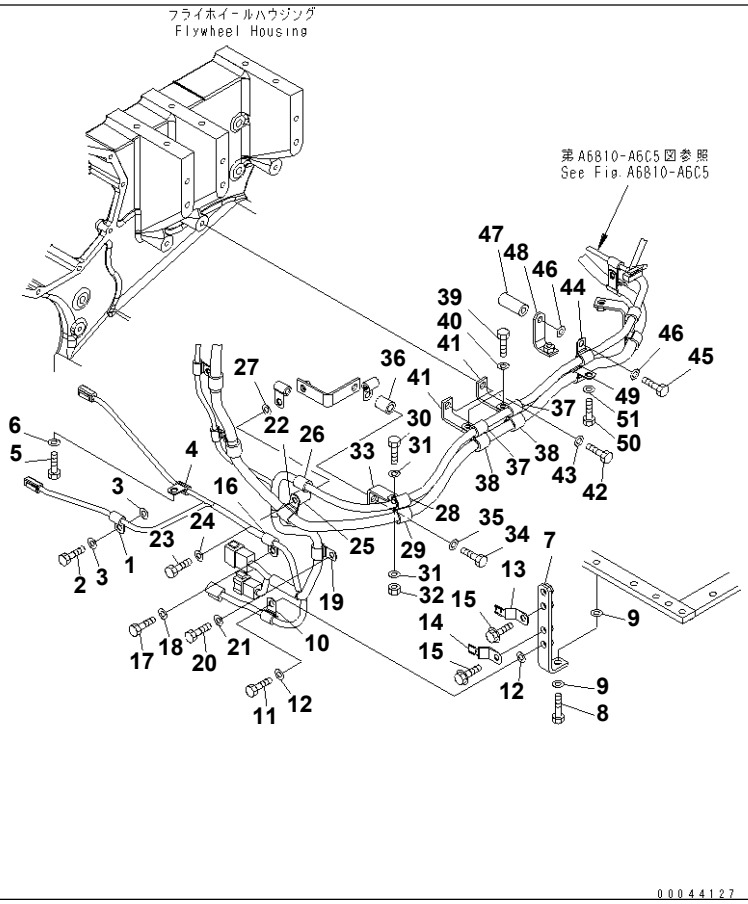

CABLE SUPPORT (4/5) CHASSIS RELATED WIRING

Item	Part No.	Description	Qty	Options
1	600-051-2080	CLIP	1	SN:610001--
2	01010-81025	BOLT	1	SN:610001--
3	01643-31032	WASHER	2	SN:610001--
4	600-051-2080	CLIP	1	SN:610001--
5	01010-81020	BOLT	1	SN:610001--
6	01643-31032	WASHER	1	SN:610001--
7	6245-81-9250	BRACKET	1	SN:610001--
8	01010-81055	BOLT	1	SN:610001--
9	01643-31032	WASHER	2	SN:610001--
10	600-051-2100	CLIP	1	SN:610001--
11	01010-81025	BOLT	1	SN:610001--
12	01643-31032	WASHER	2	SN:610001--
13	08193-20010	CLIP	1	SN:610001--
14	08193-30010	CLIP	1	SN:610001--
15	01435-01016	BOLT	2	SN:610001--
16	600-051-2100	CLIP	1	SN:610001--
17	01010-81025	BOLT	1	SN:610001--
18	01643-31032	WASHER	1	SN:610001--
19	600-051-2140	CLIP	1	SN:610001--
20	01010-81020	BOLT	1	SN:610001--
21	01643-31032	WASHER	1	SN:610001--
22	600-051-2180	CLIP	1	SN:610001--
23	01010-81050	BOLT	1	SN:610001--
24	01643-31032	WASHER	1	SN:610001--
25	6128-21-6730	SPACER	1	SN:610001--
26	600-051-2140	CLIP	1	SN:610001--
27	01643-31032	WASHER	1	SN:610001--

Printed By : Dwi Iswanto (airafather6107170)

CABLE SUPPORT (4/5) CHASSIS RELATED WIRING

Item	Part No.	Description	Qty	Options
28	600-051-2140	CLIP	1	SN:610001--
29	600-051-2180	CLIP	1	SN:610001--
30	01010-81025	BOLT	1	SN:610001--
31	01643-31032	WASHER	2	SN:610001--
32	01580-01008	NUT	1	SN:610001--
33	6150-65-7440	STAY	1	SN:610001--
34	01010-81055	BOLT	1	SN:610001--
35	01643-31032	WASHER	1	SN:610001--
36	6128-21-6730	SPACER	1	SN:610001--
37	600-051-2140	CLIP	2	SN:610001--
38	600-051-2180	CLIP	2	SN:610001--
39	01010-81025	BOLT	2	SN:610001--
40	01643-31032	WASHER	2	SN:610001--
41	6150-65-7440	STAY	2	SN:610001--
42	01010-81020	BOLT	2	SN:610001--
43	01643-31032	WASHER	2	SN:610001--
44	600-051-2140	CLIP	1	SN:610001--
45	01010-81085	BOLT	1	SN:610001--
46	01643-31032	WASHER	2	SN:610001--
47	6152-51-5520	SPACER	1	SN:610001--
48	6204-23-5910	STAY	1	SN:610001--
49	600-051-2180	CLIP	1	SN:610001--
50	01010-81020	BOLT	1	SN:610001--
51	01643-31032	WASHER	1	SN:610001--

Printed By : Dwi Iswanto (airafather6107170)

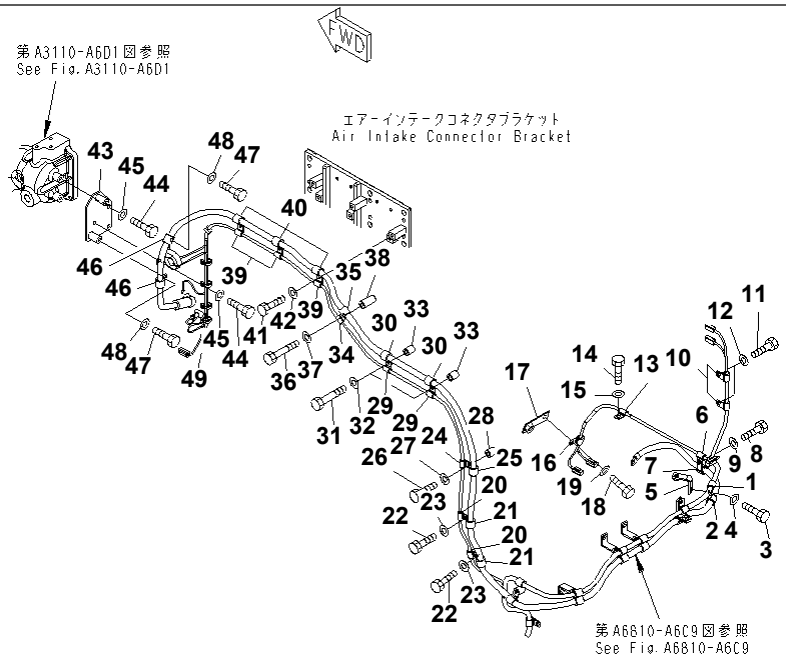

00057086

Ref. A4750-E6C3 Page 030690

SAA6D170E-5CR-W S/N 610001-UP

CABLE SUPPORT (5/5) CHASSIS RELATED WIRING

Item	Part No.	Description	Qty	Options
1	600-051-2140	CLIP	1	SN:610001--
2	600-051-2180	CLIP	1	SN:610001--
3	01010-81030	BOLT	1	SN:610001--
4	01643-31032	WASHER	1	SN:610001--
5	6934-71-5860	BRACKET	1	SN:610001--
6	600-051-2100	CLIP	1	SN:610001--
7	600-051-2180	CLIP	1	SN:610001--
8	01010-81020	BOLT	1	SN:610001--
9	01643-31032	WASHER	1	SN:610001--
10	600-051-2100	CLIP	2	SN:610001--
11	01010-81020	BOLT	2	SN:610001--
12	01643-31032	WASHER	2	SN:610001--
13	600-051-2120	CLIP	1	SN:610001--
14	01010-81020	BOLT	1	SN:610001--
15	01643-31032	WASHER	1	SN:610001--
16	600-051-2120	CLIP	1	SN:610001--
17	21N-979-4151	BRACKET	1	SN:610001--
18	01010-81025	BOLT	1	SN:610001--
19	01643-31032	WASHER	1	SN:610001--
20	600-051-2080	CLIP	2	SN:610001--
21	600-051-2180	CLIP	2	SN:610001--
22	01010-81020	BOLT	2	SN:610001--
23	01643-31032	WASHER	2	SN:610001--
24	600-051-2080	CLIP	1	SN:610001--
25	600-051-2180	CLIP	1	SN:610001--
26	01010-81050	BOLT	1	SN:610001--
27	01643-31032	WASHER	1	SN:610001--

Printed By : Dwi Iswanto (airafather6107170)

CABLE SUPPORT (5/5) CHASSIS RELATED WIRING

Item	Part No.	Description	Qty	Options
28	6128-21-6730	SPACER	1	SN:610001--
29	600-051-2080	CLIP	2	SN:610001--
30	600-051-2180	CLIP	2	SN:610001--
31	01010-81075	BOLT	2	SN:610001--
32	01643-31032	WASHER	2	SN:610001--
33	6128-21-6730	SPACER	2	SN:610001--
34	600-051-2080	CLIP	1	SN:610001--
35	600-051-2180	CLIP	1	SN:610001--
36	01010-81075	BOLT	1	SN:610001--
37	01643-31032	WASHER	1	SN:610001--
38	6152-21-6590	SPACER	1	SN:610001--
39	600-051-2080	CLIP	3	SN:610001--
40	600-051-2180	CLIP	3	SN:610001--
41	01010-81020	BOLT	3	SN:610001--
42	01643-31032	WASHER	3	SN:610001--
43	6245-81-9260	BRACKET	1	SN:610001--
44	01010-81025	BOLT	3	SN:610001--
45	01643-31032	WASHER	3	SN:610001--
46	600-051-2180	CLIP	2	SN:610001--
47	01010-81020	BOLT	2	SN:610001--
48	01643-31032	WASHER	2	SN:610001--
49	6218-81-8490	BAND	1	SN:610001--

Printed By : Dwi Iswanto (airafather6107170)

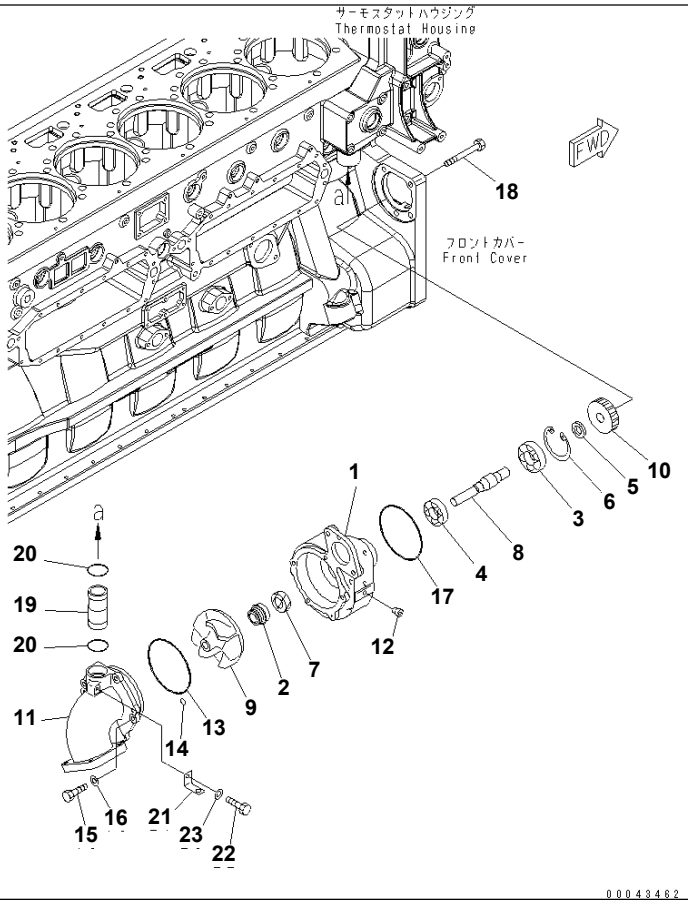

Ref. A5010-A6E2 Page 030700

SAA6D170E-5CR-W S/N 610001-UP

WATER PUMP

Item	Part No.	Description	Qty	Options
	6240-61-1102	WATER PUMP ASS'Y	1	SN:610001--
1	6240-61-1110	· BODY	1	SN:610001--
2	6162-63-1515	· SEAL¤ WATER	1	SN:610001--
3	06340-06305	· BEARING,BALL	1	SN:610001--
4	06030-06205	· BEARING,BALL	1	SN:610001--
5	6240-61-1470	· SPACER	1	SN:610001--
6	6240-61-1440	· RING,SNAP	1	SN:610001--
7	07012-D0022	· SEAL,OIL	1	SN:610001--
8	6240-61-1312	· SHAFT	1	SN:610001--
9	6240-61-1210	· IMPELLER	1	SN:610001--
10	6240-61-1410	· GEAR	1	SN:610001--
11	6240-61-1150	· COVER	1	SN:610001--
12	07043-70211	· PLUG	1	SN:610001--
13	07000-G2140	· O-RING	1	SN:610001--
14	07000-G2012	· O-RING	1	SN:610001--
15	01010-81030	· BOLT	4	SN:610001--
16	01643-31032	· WASHER	4	SN:610001--
17	07000-72095	O-RING	1	SN:610001--
18	01011-81215	BOLT	3	SN:610001--
19	6240-61-1560	TUBE	1	SN:610001--
20	07000-A3039	O-RING	2	SN:610001--
21	6150-21-5720	BRACKET	1	SN:610001--
22	01010-80812	BOLT	1	SN:610001--
23	01640-20816	WASHER	1	SN:610001--

Printed By : Dwi Iswanto (airafather6107170)

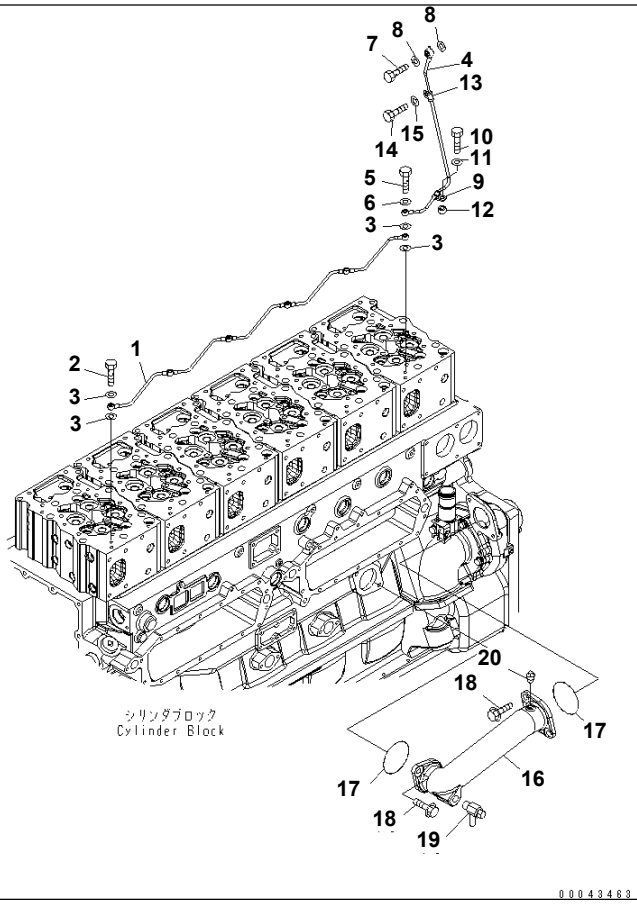

Ref. A5010-B6E2 **Page 030710**

SAA6D170E-5CR-W S/N 610001-UP
AIR VENT AND WATER C0NNECTION

Item	Part No.	Description	Qty	Options
1	6245-11-6510	TUBE,AIR VENT	1	SN:610001--
2	07206-30710	BOLT,JOINT	5	SN:610001--
3	07003-01015	GASKET	12	SN:610001--
4	6245-11-6520	TUBE,AIR VENT	1	SN:610001--
5	6215-11-6560	BOLT,JOINT	1	SN:610001--
6	07003-01015	GASKET	1	SN:610001--
7	07206-31014	BOLT,JOINT	1	SN:610001--
8	07005-01412	GASKET	2	SN:610001--
9	6245-61-8310	CLIP	1	SN:610001--
10	01010-81030	BOLT	1	SN:610001--
11	01643-31032	WASHER	1	SN:610001--
12	6131-12-5920	SPACER	1	SN:610001--
13	6245-61-8310	CLIP	1	SN:610001--
14	01010-81020	BOLT	1	SN:610001--
15	01643-31032	WASHER	1	SN:610001--
16	6240-61-1660	ELBOW	1	SN:610001--
17	07000-G2075	O-RING	2	SN:610001--
18	01435-01230	BOLT	4	SN:610001--
19	07730-50004	VALVE,WATER DRAIN	1	SN:610001--
20	07042-30108	PLUG	1	SN:610001--

Printed By : Dwi Iswanto (airafather6107170)

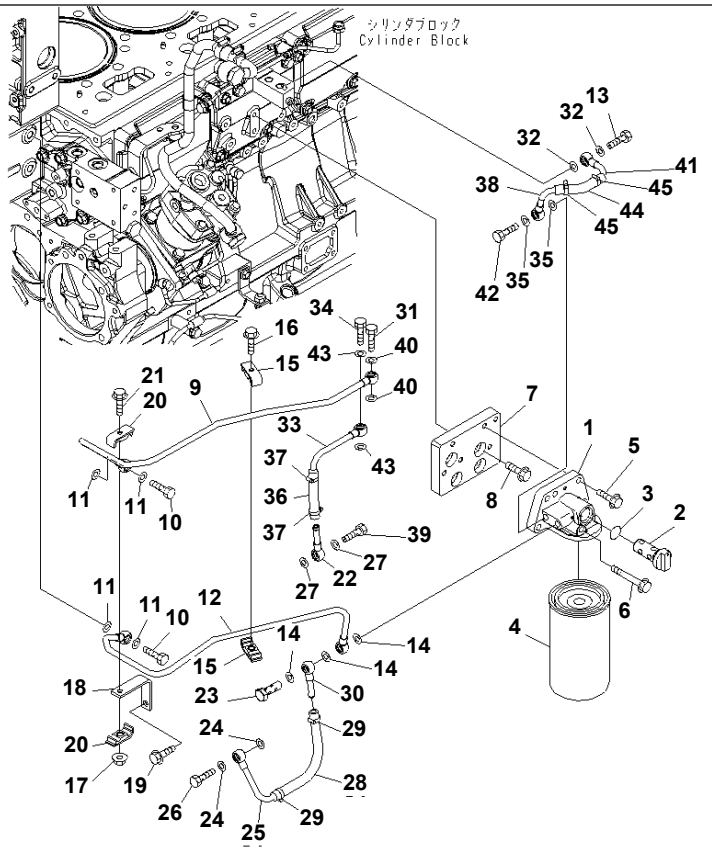

CORROSION RESISTOR

Item	Part No.	Description	Qty	Options
	6217-61-8231	HEAD ASS'Y	1	SN:610001--
1	6217-61-8211	· HEAD,CORROSION	1	SN:610001--
2	6217-61-8221	· VALVE	1	SN:610001--
3	07000-A2021	· O-RING	1	SN:610001--
4	600-411-1171	CARTRIDGE	1	SN:610001--
5	01435-01035	BOLT	4	SN:610001--
6	01436-01000	BOLT	1	SN:610001--
7	6245-61-8110	PLATE	1	SN:610001--
8	01435-01025	BOLT	4	SN:610001--
9	6245-61-8210	TUBE,INLET	1	SN:610001--
10	07206-31014	BOLT,JOINT	2	SN:610001--
11	07005-01412	GASKET	4	SN:610001--
12	6245-61-8130	TUBE,RETURN	1	SN:610001--
13	07206-31014	BOLT,JOINT	1	SN:610001--
14	07005-01412	GASKET	3	SN:610001--
15	6166-75-6820	CLAMP	2	SN:610001--
16	01435-00835	BOLT	1	SN:610001--
17	01584-00806	NUT	1	SN:610001--
18	6354-71-5630	BRACKET	1	SN:610001--
19	01435-01020	BOLT	1	SN:610001--
20	6166-75-6820	CLAMP	2	SN:610001--
21	01435-00835	BOLT	1	SN:610001--
22	6141-71-1710	JOINT	1	SN:610001--
23	6127-71-5710	BOLT,JOINT	1	SN:610001--
24	07005-01412	GASKET	2	SN:610001--
25	6136-61-8510	JOINT	1	SN:610001--
26	07206-31014	BOLT,JOINT	1	SN:610001--

Printed By : Dwi Iswanto (airafather6107170)

CORROSION RESISTOR

Item	Part No.	Description	Qty	Options
27	07005-01412	GASKET	2	SN:610001--
28	07260-20922	HOSE	1	SN:610001--
29	07281-00197	CLAMP	2	SN:610001--
30	6141-71-1710	JOINT	1	SN:610001--
31	07206-31014	BOLT,JOINT	1	SN:610001--
32	07005-01412	GASKET	2	SN:610001--
33	6245-61-8240	JOINT	1	SN:610001--
34	07206-31014	BOLT,JOINT	1	SN:610001--
35	07005-01412	GASKET	2	SN:610001--
36	07260-20910	HOSE	1	SN:610001--
37	07281-00197	CLAMP	2	SN:610001--
38	6245-61-8230	TUBE	1	SN:610001--
39	07206-31014	BOLT,JOINT	1	SN:610001--
40	07005-01412	GASKET	2	SN:610001--
41	6144-71-5760	JOINT	1	SN:610001--
42	07206-31014	BOLT,JOINT	1	SN:610001--
43	07005-01412	GASKET	2	SN:610001--
44	07260-20910	HOSE	1	SN:610001--
45	07281-00197	CLAMP	2	SN:610001--

Printed By : Dwi Iswanto (airafather6107170)

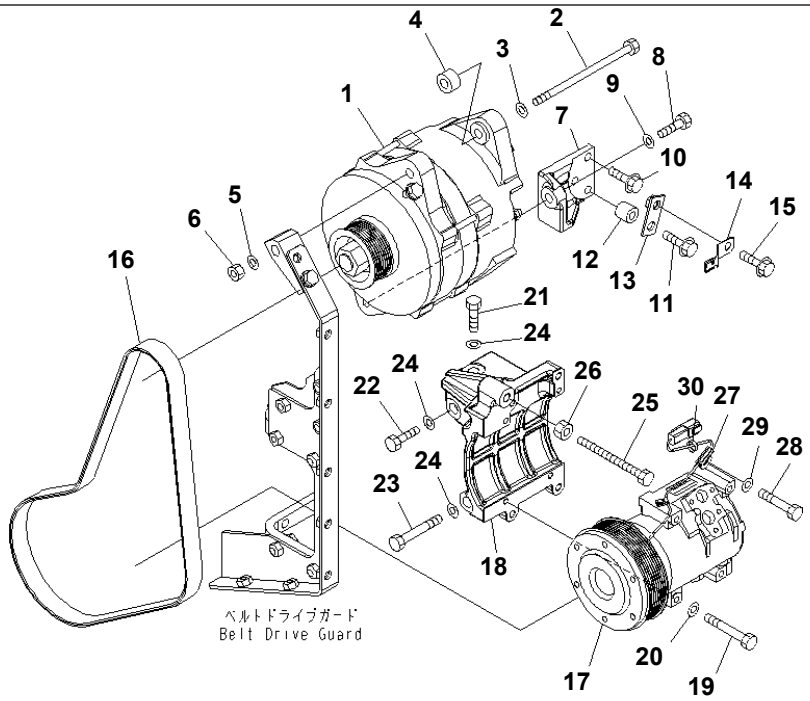

00052055

SAA6D170E-5CR-W S/N 610001-UP

ALTERNATOR(90A) AND FREON COMPRESSOR

Item	Part No.	Description	Qty	Options
1	(600-861-9120)	ALTERNATOR A. (90A),(SEE FIG.A6010-C6J5)	1	SN:610001--
2	6217-81-6840	BOLT	1	SN:610001--
3	01640-21323	WASHER	1	SN:610001--
4	6245-81-6190	SPACER	1	SN:610001--
5	01643-31232	WASHER	1	SN:610001--
6	01582-11210	NUT	1	SN:610001--
7	6245-81-6610	BRACKET	1	SN:610001--
8	01050-51240	BOLT	1	SN:610001--
9	01643-31232	WASHER	1	SN:610001--
10	01435-01025	BOLT	2	SN:610001--
11	01435-01045	BOLT	1	SN:610001--
12	6152-11-4970	SPACER	1	SN:610001--
13	426-01-11310	BRACKET	1	SN:610001--
14	08193-20010	CLIP	1	SN:610001--
15	01435-01016	BOLT	1	SN:610001--
16	6245-81-6360	BELT	1	SN:610001--
17	14X-911-7110	COMPRESSOR ASS'Y,(FOR AIR CONDITIONER)	1	SN:610001--
18	6245-81-6810	BRACKET	1	SN:610001--
19	01010-80875	BOLT	4	SN:610001--
20	01643-30823	WASHER	4	SN:610001--
21	01010-81225	BOLT	2	SN:610001--
22	01010-81230	BOLT	2	SN:610001--
23	01010-81290	BOLT	1	SN:610001--
24	01643-31232	WASHER	5	SN:610001--
25	6212-61-3980	BOLT	1	SN:610001--
26	01580-11210	NUT	1	SN:610001--
27	6240-81-4431	CLIP	1	SN:610001--

Ref. A6010-A6J5 Page 030730

Printed By : Dwi Iswanto (airafather6107170)

ALTERNATOR(90A) AND FREON COMPRESSOR

Item	Part No.	Description	Qty	Options
28	01010-81035	BOLT	1	SN:610001--
29	01643-31032	WASHER	1	SN:610001--
30	6218-81-8480	BAND	1	SN:610001--

Printed By : Dwi Iswanto (airafather6107170)

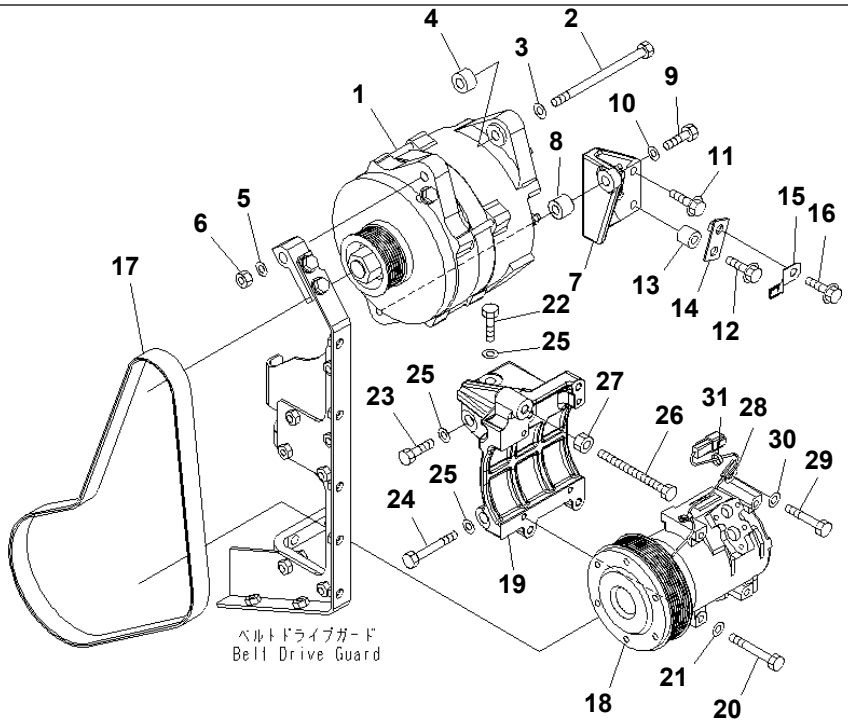

00057689

ALTERNATOR(60A) AND FREON COMPRESSOR

Item	Part No.	Description	Qty	Options
1	(600-861-6110)	ALTERNATOR A. (60A),(SEE FIG.A6010-C6J6)	1	SN:610001--
2	6732-81-6840	BOLT	1	SN:610001--
3	01640-21323	WASHER	1	SN:610001--
4	6245-81-6190	SPACER	1	SN:610001--
5	01643-31232	WASHER	1	SN:610001--
6	01582-11210	NUT	1	SN:610001--
7	6245-81-6621	BRACKET	1	SN:610001--
8	6127-92-1250	SPACER	1	SN:610001--
9	01050-51255	BOLT	1	SN:610001--
10	01643-31232	WASHER	1	SN:610001--
11	01435-01025	BOLT	2	SN:610001--
12	01435-01045	BOLT	1	SN:610001--
13	6152-11-4970	SPACER	1	SN:610001--
14	426-01-11310	BRACKET	1	SN:610001--
15	08193-20010	CLIP	1	SN:610001--
16	01435-01016	BOLT	1	SN:610001--
17	6245-81-6370	BELT	1	SN:610001--
18	14X-911-7111	COMPRESSOR ASS'Y,(FOR AIR CONDITIONER)	1	SN:610001--
19	6245-81-6810	BRACKET	1	SN:610001--
20	01010-80875	BOLT	4	SN:610001--
21	01643-30823	WASHER	4	SN:610001--
22	01010-81225	BOLT	2	SN:610001--
23	01010-81230	BOLT	2	SN:610001--
24	01010-81290	BOLT	1	SN:610001--
25	01643-31232	WASHER	5	SN:610001--
26	6212-61-3980	BOLT,ADJUSTING	1	SN:610001--
27	01580-11210	NUT	1	SN:610001--

Printed By : Dwi Iswanto (airafather6107170)

ALTERNATOR(60A) AND FREON COMPRESSOR

Item	Part No.	Description	Qty	Options
28	6240-81-4431	CLIP	1	SN:610001--
29	01010-81035	BOLT	1	SN:610001--
30	01643-31032	WASHER	1	SN:610001--
31	6218-81-8480	BAND	1	SN:610001--

Printed By : Dwi Iswanto (airafather6107170)

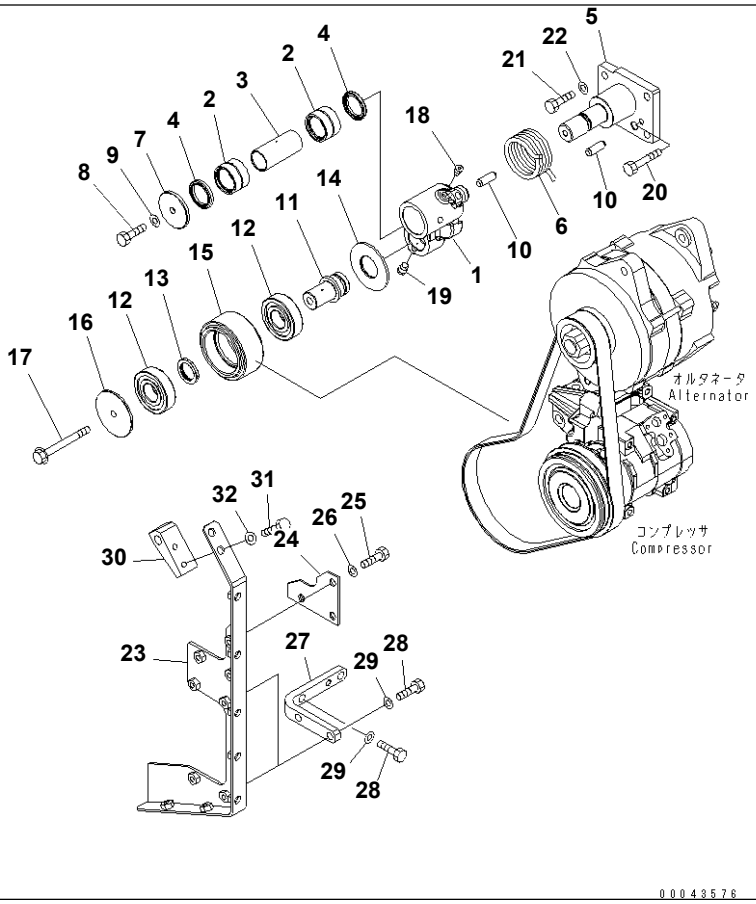

00043576

Ref. A6010-B6J5 **Page 030750**

SAA6D170E-5CR-W S/N 610001-UP
BELT TENSION AND SAFETY COVER

Item	Part No.	Description	Qty	Options
	6245-81-6902	TENSION ASS'Y	1	SN:610001--
1	6245-81-6912	· BRACKET	1	SN:610001--
2	6162-64-3910	· BEARING	2	SN:610001--
3	6245-81-6840	· RACE,INNER	1	SN:610001--
4	6162-64-3930	· SEAL,DUST	2	SN:610001--
5	6245-81-6941	· SHAFT	1	SN:610001--
6	6245-81-6950	· SPRING,TENSION	1	SN:610001--
7	6245-81-6961	· PLATE	1	SN:610001--
8	01010-81020	· BOLT	1	SN:610001--
9	01643-31032	· WASHER	1	SN:610001--
10	04022-12035	· PIN,DOWEL	2	SN:610001--
11	6245-81-6971	· SHAFT	1	SN:610001--
12	06301-06306	· BEARING,BALL	2	SN:610001--
13	6245-81-6981	· SPACER	1	SN:610001--
14	6245-81-6990	· PLATE	1	SN:610001--
15	6245-81-6820	· PULLEY,TENSION	1	SN:610001--
16	6245-81-6830	· PLATE	1	SN:610001--
17	01435-01020	· BOLT	1	SN:610001--
18	07043-00108	· PLUG	3	SN:610001--
19	07029-00000	· VALVE,RELIEF	1	SN:610001--
20	01010-81090	· BOLT	1	SN:610001--
21	01010-81030	BOLT	4	SN:610001--
22	01643-31032	WASHER	4	SN:610001--
23	6245-81-6270	BRACKET	1	SN:610001--
24	6245-81-6280	PLATE	1	SN:610001--
25	01010-81020	BOLT	3	SN:610001--
26	01643-31032	WASHER	3	SN:610001--

Printed By : Dwi Iswanto (airafather6107170)

BELT TENSION AND SAFETY COVER

Item	Part No.	Description	Qty	Options
27	6245-81-6230	BRACKET	2	SN:610001--
28	01010-81030	BOLT	6	SN:610001--
29	01643-31032	WASHER	6	SN:610001--
30	6245-81-6290	BLOCK	1	SN:610001--
31	01010-81020	BOLT	2	SN:610001--
32	01643-31032	WASHER	2	SN:610001--

Printed By : Dwi Iswanto (airafather6107170)

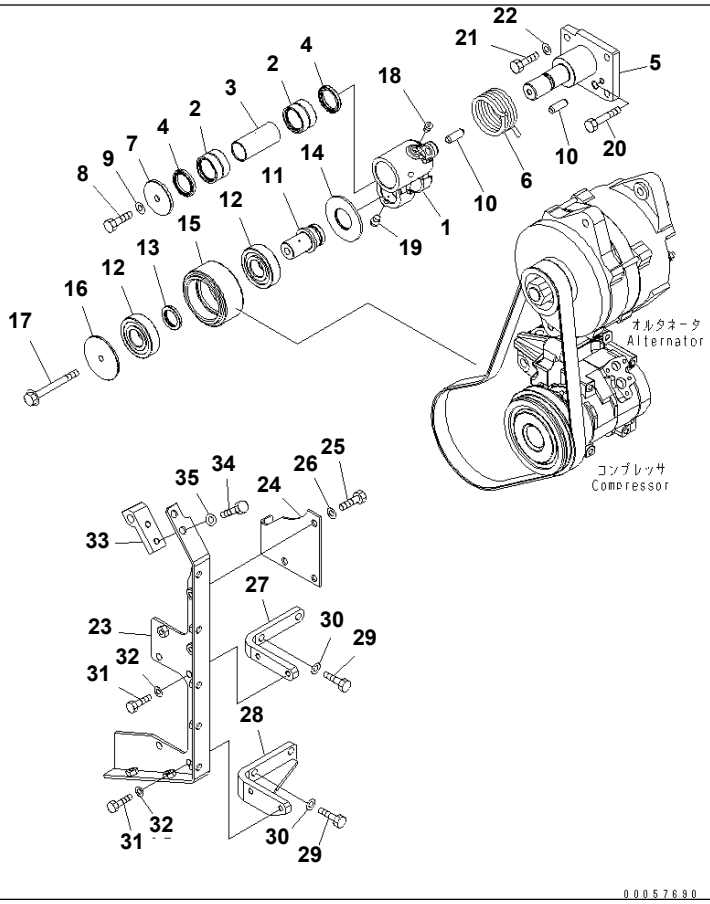

BELT TENSION AND SAFETY COVER

Item	Part No.	Description	Qty	Options
	6245-81-6902	TENSION ASS'Y	1	SN:610001--
1	6245-81-6912	· BRACKET	1	SN:610001--
2	6162-64-3910	· BEARING	2	SN:610001--
3	6245-81-6840	· RACE,INNER	1	SN:610001--
4	6162-64-3930	· SEAL,DUST	2	SN:610001--
5	6245-81-6941	· SHAFT	1	SN:610001--
6	6245-81-6950	· SPRING,TENSION	1	SN:610001--
7	6245-81-6961	· PLATE	1	SN:610001--
8	01010-81020	· BOLT	1	SN:610001--
9	01643-31032	· WASHER	1	SN:610001--
10	04022-12035	· PIN,DOWEL	2	SN:610001--
11	6245-81-6971	· SHAFT	1	SN:610001--
12	06301-06306	· BEARING,BALL	2	SN:610001--
13	6245-81-6981	· SPACER	1	SN:610001--
14	6245-81-6990	· PLATE	1	SN:610001--
15	6245-81-6820	· PULLEY,TENSION	1	SN:610001--
16	6245-81-6830	· PLATE	1	SN:610001--
17	01435-01020	· BOLT	1	SN:610001--
18	07043-00108	· PLUG	3	SN:610001--
19	07029-00000	· VALVE,RELIEF	1	SN:610001--
20	01010-81090	· BOLT	1	SN:610001--
21	01010-81030	BOLT	4	SN:610001--
22	01643-31032	WASHER	4	SN:610001--
23	6245-81-6351	BRACKET	1	SN:610001--
24	6245-81-6340	PLATE	1	SN:610001--
25	01010-81020	BOLT	3	SN:610001--
26	01643-31032	WASHER	3	SN:610001--

Printed By : Dwi Iswanto (airafather6107170)

BELT TENSION AND SAFETY COVER

Item	Part No.	Description	Qty	Options
27	6245-81-6561	BRACKET	1	SN:610001--
28	6245-81-6550	BRACKET	1	SN:610001--
29	01010-81030	BOLT	2	SN:610001--
30	01643-31032	WASHER	2	SN:610001--
31	01010-81025	BOLT	4	SN:610001--
32	01643-31032	WASHER	4	SN:610001--
33	6245-81-6320	BLOCK	1	SN:610001--
34	01010-81020	BOLT	2	SN:610001--
35	01643-31032	WASHER	2	SN:610001--

Printed By : Dwi Iswanto (airafather6107170)

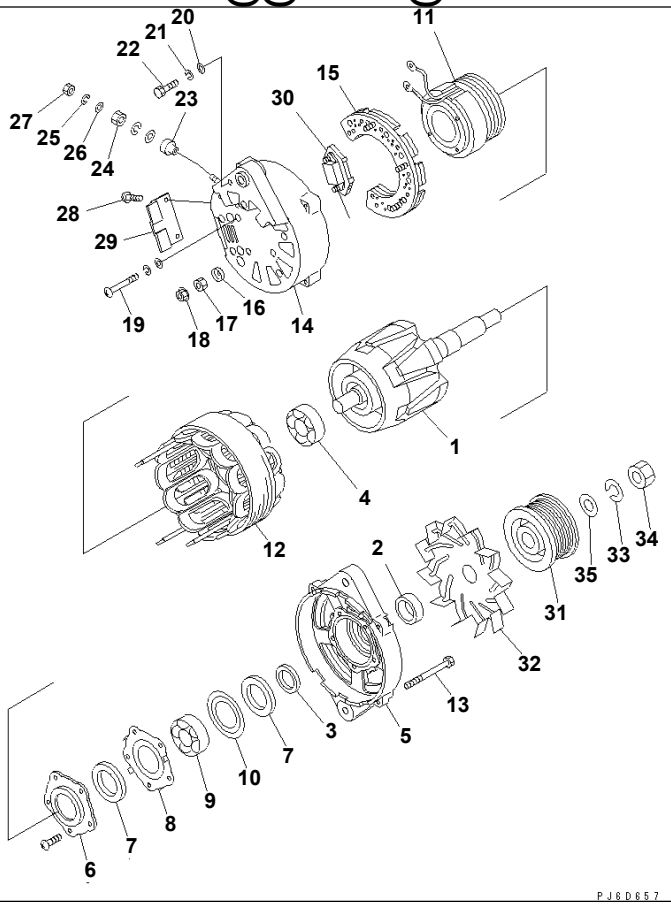

SAA6D170E-5CR-W S/N 610001-UP

ALTERNATOR (90A) (INNER PARTS)

Item	Part No.	Description	Qty	Options
	600-861-9120	ALTERNATOR A. (90A)	1	SN:610001--
1	KD0-35100-0310	· ROTOR ASS'Y	1	SN:610001--
2	KD1-33923-0890	· COLLAR	1	SN:610001--
3	KD1-35923-0030	· COLLAR	1	SN:610001--
4	KD0-09201-0770	· BEARING,BALL	1	SN:610001--
5	KD0-35300-0200	· BRACKET ASS'Y,FRONT	1	SN:610001--
6	KD0-35926-0080	· RETAINER	1	SN:610001--
7	KD0-35951-0080	· PACKING	2	SN:610001--
8	KD1-33926-0660	· RETAINER	1	SN:610001--
9	KD0-09201-0760	· BEARING,BALL	1	SN:610001--
10	KD1-33926-0790	· RETAINER	1	SN:610001--
11	KD0-35120-0250	· FIELD COIL ASS'Y	1	SN:610001--
12	KD0-35200-0320	· STATOR ASS'Y	1	SN:610001--
13	KD0-0083-08802	· BOLT	4	SN:610001--
	KD0-35700-0970	· BRACKET ASS'Y,REAR	1	SN:610001--
14	KD0-35710-1190	· · BRACKET,REAR	1	SN:610001--
15	KD0-35730-0162	· · RECTIFIER ASS'Y	1	SN:610001--
16	KD0-35943-0210	· · BUSHING,INSULATE	1	SN:610001--
17	KD0-33902-0090	· · NUT	1	SN:610001--
18	KD0-33902-0080	· · NUT	6	SN:610001--
19	KD1-0020-06452	· · SCREW	4	SN:610001--
20	KD1-0330-06012	· · WASHER	5	SN:610001--
21	KD1-0335-06002	· · WASHER,SPRING	5	SN:610001--
22	KD0-0080-06142	· · BOLT	1	SN:610001--
23	KD0-35943-0100	· · BUSHING,INSULATE	1	SN:610001--
24	KD0-33902-0100	· · NUT	1	SN:610001--
25	KD1-0335-08002	· · WASHER,SPRING	2	SN:610001--

Printed By : Dwi Iswanto (airafather6107170)

ALTERNATOR (90A) (INNER PARTS)

Item	Part No.	Description	Qty	Options
26	KD1-0331-08020	· · WASHER	2	SN:610001--
27	KD0-0291-08010	· · NUT	1	SN:610001--
28	KD0-0055-05122	· · SCREW	2	SN:610001--
29	KD0-35761-0190	· · COVER	1	SN:610001--
30	KD0-35719-0180	· · REGULATOR ASS'Y	1	SN:610001--
31	KD0-35411-0650	· PULLEY	1	SN:610001--
32	KD0-35421-0190	· FAN	1	SN:610001--
33	KD1-0335-20002	· WASHER,SPRING	1	SN:610001--
34	KD0-0290-20022	· NUT	1	SN:610001--
35	KD1-35921-0010	· WASHER	1	SN:610001--

Printed By : Dwi Iswanto (airafather6107170)

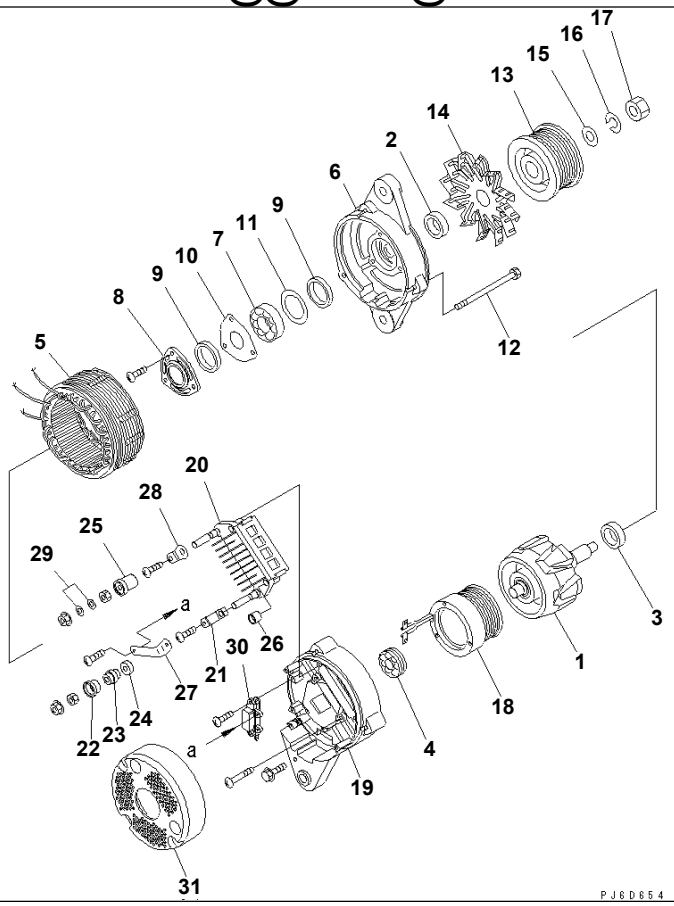

ALTERNATOR (60A) (INNER PARTS)

Item	Part No.	Description	Qty	Options
	600-861-6110	ALTERNATOR A. (60A)	1	SN:610001--
1	KD0-35100-0300	· ROTOR ASS'Y	1	SN:610001--
2	KD1-33923-0790	· COLLAR	1	SN:610001--
3	KD1-35923-0160	· COLLAR	1	SN:610001--
4	KD0-09201-0980	· BEARING,BALL	1	SN:610001--
5	KD0-35200-0460	· STATOR ASS'Y	1	SN:610001--
6	KD0-35300-0350	· FRONT BRACKET ASS'Y	1	SN:610001--
7	KD0-09201-1140	· · BEARING,BALL	1	SN:610001--
8	KD0-35926-0070	· · RETAINER	1	SN:610001--
9	KD0-35951-0060	· · PACKING	2	SN:610001--
10	KD0-35926-0090	· · RETAINER	1	SN:610001--
11	KD1-33926-0730	· · RETAINER	1	SN:610001--
12	KD0-0275-06802	· BOLT	3	SN:610001--
13	KD0-35411-0640	· PULLEY	1	SN:610001--
14	KD0-35421-0240	· FAN	1	SN:610001--
15	KD1-0330-16012	· WASHER,PLAIN	1	SN:610001--
16	KD1-0335-16002	· WASHER,SPRING	1	SN:610001--
17	KD0-0280-16022	· NUT	1	SN:610001--
18	KD0-35120-0290	· FIELD COIL	1	SN:610001--
	KD0-35700-0950	· REAR BRACKET ASS'Y	1	SN:610001--
19	KD0-35710-1150	· · BRACKET,REAR	1	SN:610001--
20	KD0-35730-0700	· · RECTIFIER ASS'Y	1	SN:610001--
21	KD0-09170-2501	· · CONDENSER	1	SN:610001--
22	KD0-35943-0150	· · BUSHING,INSULATE	1	SN:610001--
23	KD0-35923-0130	· · COLLAR	1	SN:610001--
24	KD0-35943-0160	· · BUSHING,INSULATE	1	SN:610001--
25	KD0-35943-0140	· · BUSHING,INSULATE	1	SN:610001--

Printed By : Dwi Iswanto (airafather6107170)

ALTERNATOR (60A) (INNER PARTS)

Item	Part No.	Description	Qty	Options
26	KD0-35943-0170	· · BUSHING,INSULATE	2	SN:610001--
27	KD0-35784-0210	· · BAR,CONNECT	1	SN:610001--
28	KD0-35784-0290	· · BAR,PLATE	1	SN:610001--
29	KD0-09057-0220	· · WASHER	2	SN:610001--
30	KD0-35719-0210	· · REGULATOR ASS'Y	1	SN:610001--
31	KD0-35761-0250	· COVER	1	SN:610001--

Printed By : Dwi Iswanto (airafather6107170)

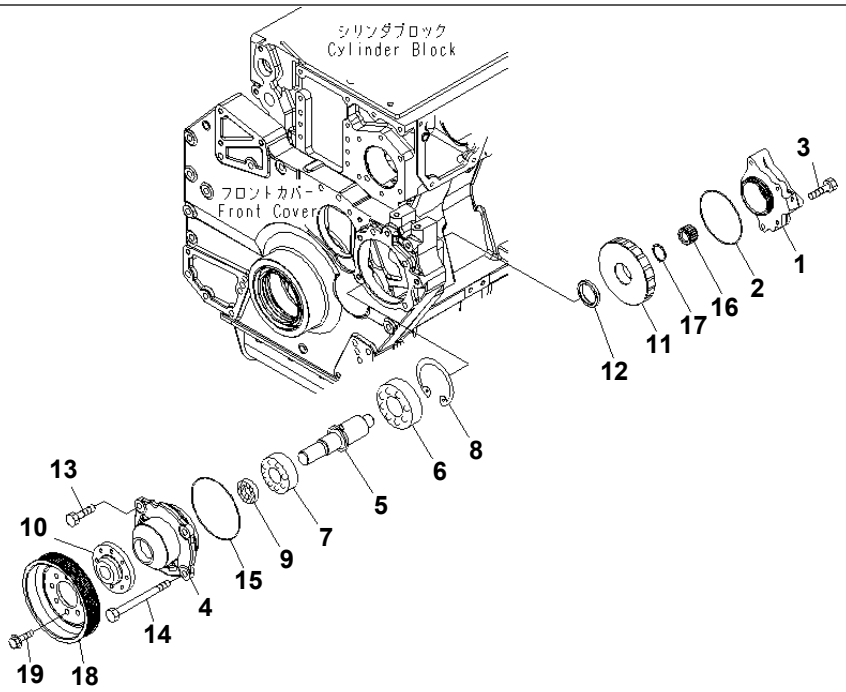

00043631

SAA6D170E-5CR-W S/N 610001-UP

ALTERNATOR DRIVE

Item	Part No.	Description	Qty	Options
1	6245-81-3110	HOUSING	1	SN:610001--
2	07000-72095	O-RING	1	SN:610001--
3	01010-81265	BOLT	1	SN:610001--
	6240-61-4201	HOUSING ASS'Y	1	SN:610001--
4	6240-61-4210	· HOUSING	1	SN:610001--
5	6240-61-4251	· SHAFT	1	SN:610001--
6	06330-06309	· BEARING,BALL	1	SN:610001--
7	06330-06307	· BEARING,BALL	1	SN:610001--
8	04065-01030	· RING,SNAP	1	SN:610001--
9	6151-71-3150	· SEAL,OIL	1	SN:610001--
10	6240-61-4171	· FLANGE,PULLEY	1	SN:610001--
11	6240-61-1620	GEAR,DRIVE	1	SN:610001--
12	6240-61-4260	SPACER	1	SN:610001--
13	01010-81230	BOLT	2	SN:610001--
14	01011-81230	BOLT	2	SN:610001--
15	07000-72135	O-RING	1	SN:610001--
16	6245-81-3180	COUPLING	1	SN:610001--
17	04064-04218	RING	1	SN:610001--
18	6245-81-6150	PULLEY	1	SN:610001--
19	01435-01020	BOLT	8	SN:610001--

Printed By : Dwi Iswanto (airafather6107170)

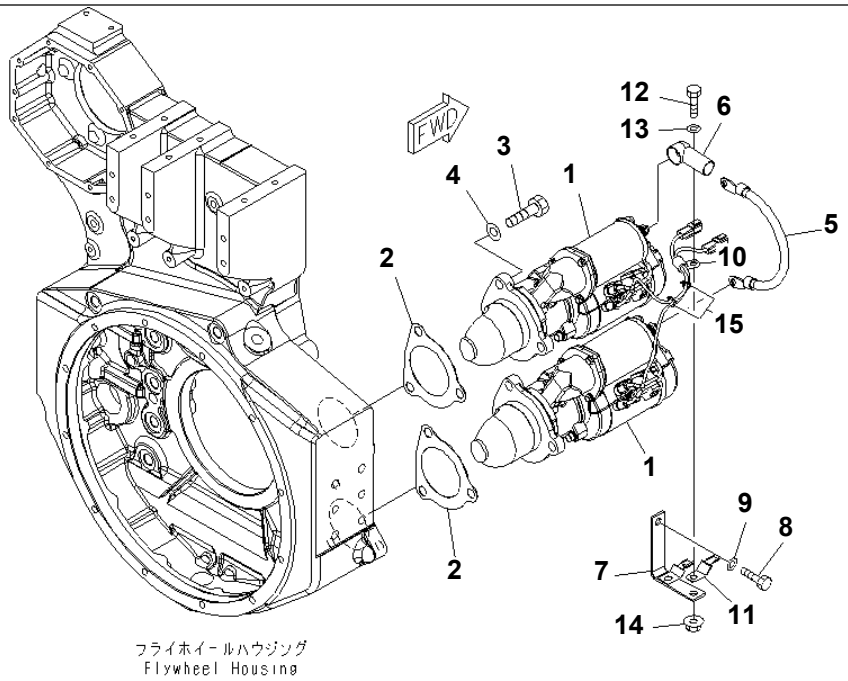

00052116

STARTING MOTOR MOUNTING (11KW)

Item	Part No.	Description	Qty	Options
1	(600-813-9511)	STARTING MOTOR ASS'Y,(11KW) (SEE FIG.A6210-B6E4)	2	SN:610001--
2	6221-81-6810	GASKET	2	SN:610001--
3	01010-81645	BOLT	6	SN:610001--
4	01643-31645	WASHER	6	SN:610001--
5	08028-73035	CABLE	1	SN:610001--
6	154-06-13130	CAP,TERMINAL	1	SN:610001--
7	6245-81-6120	BRACKET	1	SN:610001--
8	01010-81030	BOLT	1	SN:610001--
9	01643-31032	WASHER	1	SN:610001--
10	600-051-2080	CLIP	1	SN:610001--
11	08193-20010	CLIP	1	SN:610001--
12	01010-81025	BOLT	1	SN:610001--
13	01643-31032	WASHER	1	SN:610001--
14	01584-01008	NUT	1	SN:610001--
15	6218-81-8470	BAND	2	SN:610001--

Printed By : Dwi Iswanto (airafather6107170)

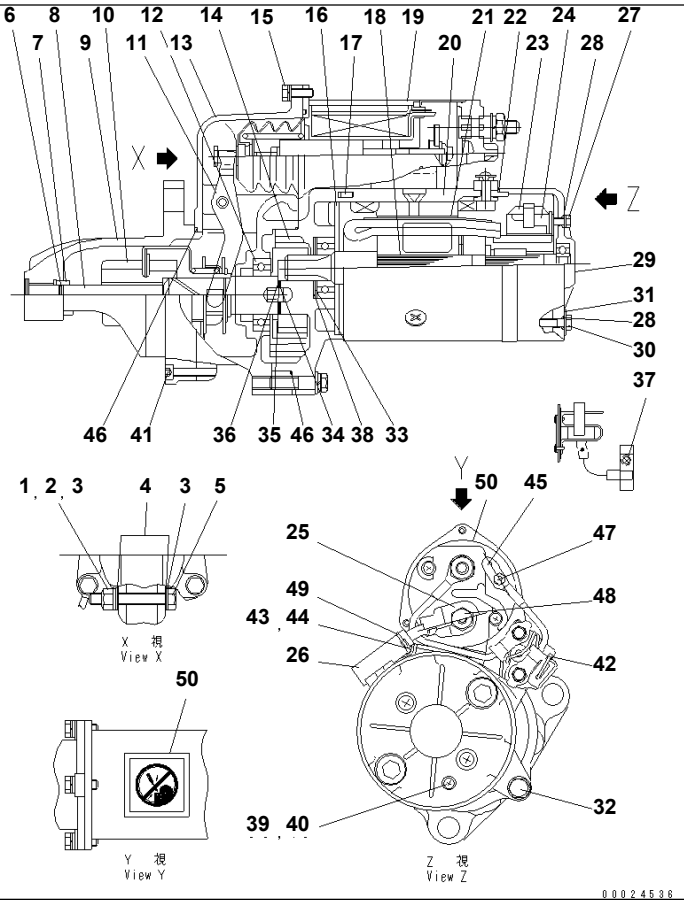

STARTING MOTOR (11KW) (INNER PARTS)

Item	Part No.	Description	Qty	Options
	600-813-9511	STARTING MOTOR ASS'Y,(11KW)	1	SN:610001--
1	KD1-09279-0090	· NUT	1	SN:610001--
2	KD1-0335-08002	· WASHER,SPRING	4	SN:610001--
3	KD1-0330-08022	· WASHER	5	SN:610001--
4	KD1-0345-08001	· WASHER	2	SN:610001--
5	KD0-23303-0020	· PIN,LEVER	1	SN:610001--
6	KD1-23914-0020	· RING,CLIP	1	SN:610001--
7	KD1-23181-0020	· STOPPER,PINION	1	SN:610001--
8	KD0-23120-0180	· SHAFT ASS'Y	1	SN:610001--
9	KD0-23310-1750	· FRONT BRACKET ASS'Y	1	SN:610001--
10	KD0-23500-1020	· CLUTCH ASS'Y,OVER RUNNING	1	SN:610001--
11	KD0-23320-0290	· SHIFT LEVER ASS'Y	1	SN:610001--
12	KD0-09201-0850	· BEARING,BALL	1	SN:610001--
13	KD0-23600-0470	· CENTER BRACKET A.	1	SN:610001--
14	KD0-23611-1101	· BRACKET,CENTER	1	SN:610001--
15	KD0-0274-06202	· BOLT	3	SN:610001--
16	KD1-23951-0051	· PACKING	1	SN:610001--
17	KD1-0400-30100	· PIN,STRAIGHT	1	SN:610001--
18	KD0-23100-0430	· ARMATURE ASS'Y	1	SN:610001--
19	KD0-47100-4651	· MAGNETIC SWITCH A.	1	SN:610001--
20	KD0-23200-0671	· YOKE ASS'Y	1	SN:610001--
21	KD0-09271-3620	· NAME PLATE	1	SN:610001--
22	KD1-09211-1120	· O-RING	1	SN:610001--
23	KD0-23740-0351	· BRUSH ASS'Y	2	SN:610001--
24	KD0-23750-0490	· BRUSH HOLDER A.	1	SN:610001--
25	KD0-47761-2681	· COVER	1	SN:610001--
26	KD0-47761-2691	· COVER	1	SN:610001--

Printed By : Dwi Iswanto (airafather6107170)

STARTING MOTOR (11KW) (INNER PARTS)

Item	Part No.	Description	Qty	Options
27	KD0-09011-3140	· SCREW	2	SN:610001--
28	KD1-09211-0081	· O-RING	4	SN:610001--
29	KD0-23710-0221	· BRACKET,REAR	1	SN:610001--
30	KD0-09001-4380	· BOLT	2	SN:610001--
31	KD1-47921-0790	· WASHER	2	SN:610001--
32	KD0-0276-08402	· BOLT	3	SN:610001--
33	KD0-09057-0110	· WASHER	1	SN:610001--
34	KD1-23941-0040	· WASHER,INSULATE	1	SN:610001--
35	KD1-23921-0140	· WASHER	1	SN:610001--
36	KD1-23921-0130	· WASHER	1	SN:610001--
37	KD0-0055-05082	· SCREW,REAR	2	SN:610001--
38	KD0-09057-0190	· WASHER	1	SN:610001--
39	KD0-0020-05062	· SCREW	1	SN:610001--
40	KD1-0345-05001	· WASHER	1	SN:610001--
41	KD1-0240-06305	· BOLT	6	SN:610001--
42	KD0-25000-8551	· SWITCH ASS'Y	1	SN:610001--
43	KD0-0270-06602	· BOLT	1	SN:610001--
44	KD0-47927-1390	· HOLDER	1	SN:610001--
45	KD0-47761-2671	· COVER	1	SN:610001--
46	KD1-09211-0981	· O-RING	2	SN:610001--
47	KD0-09006-0660	· NUT	1	SN:610001--
48	KD0-09006-0670	· NUT	1	SN:610001--
49	KD1-09257-0050	· BAND	1	SN:610001--
50	KD0-09275-1430	· PLATE,CAUTION	1	SN:610001--

Printed By : Dwi Iswanto (airafather6107170)

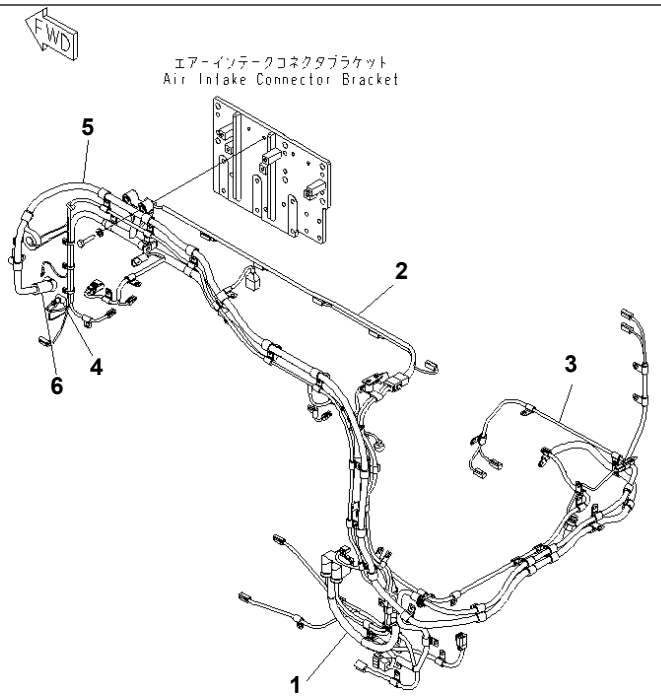

Ref. A6810-A6C9 Page 030820

ELECTRICAL WIRING

Item	Part No.	Description	Qty	Options
1	6245-81-5380	WIRING HARNESS	1	SN:610001--
2	6245-81-5320	WIRING HARNESS	1	SN:610001--
3	6245-81-9230	WIRING HARNESS	1	SN:610001--
4	6162-83-4970	CAP	1	SN:610001--
5	6219-81-7160	WIRE	1	SN:610001--
6	203-06-71420	CAP	1	SN:610001--

Ref. A6810-A6C9 Page 030820

Printed By : Dwi Iswanto (airafather6107170)

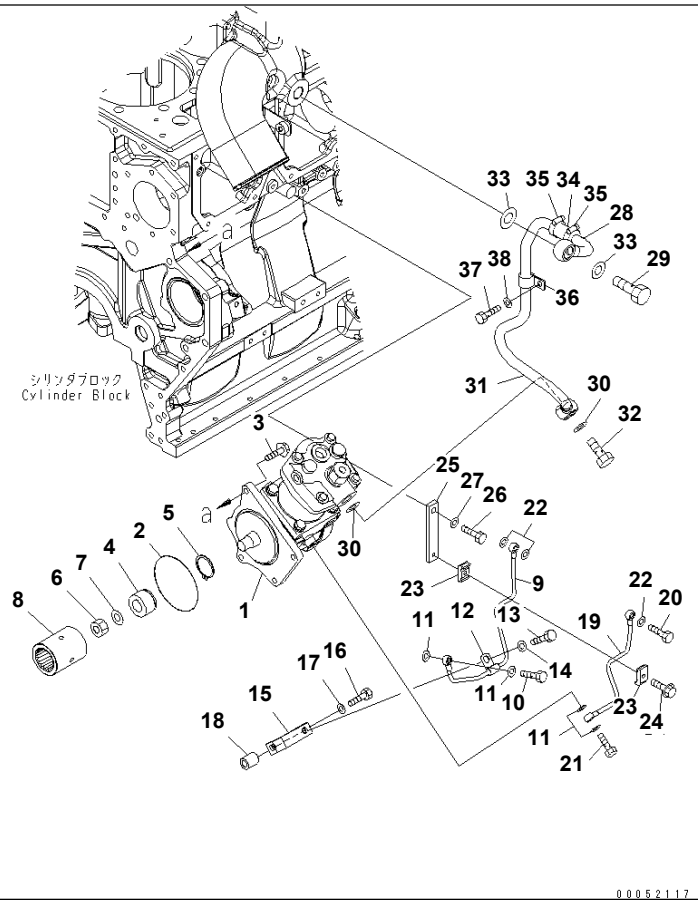

SAA6D170E-5CR-W S/N 610001-UP

AIR COMPRESSOR MOUNTING AND PIPING

Item	Part No.	Description	Qty	Options
1	(6210-81-3122)	AIR COMPRESSOR ASS'Y,(SEE FIG.A7010-B6C6)	1	SN:610001--
2	6210-81-3150	O-RING	1	SN:610001--
3	01435-01030	BOLT	3	SN:610001--
4	6162-83-6630	COUPLING,HALF	1	SN:610001--
5	04064-04218	RING,SNAP	1	SN:610001--
6	01583-02012	NUT	1	SN:610001--
7	6127-11-1620	WASHER	1	SN:610001--
8	6245-81-3130	COUPLING	1	SN:610001--
9	6245-81-3160	TUBE,OIL SUPPLY	1	SN:610001--
10	07206-30710	BOLT,JOINT	1	SN:610001--
11	07005-01012	GASKET	4	SN:610001--
12	6933-71-8230	CLIP	1	SN:610001--
13	01010-81020	BOLT	1	SN:610001--
14	01643-31032	WASHER	1	SN:610001--
15	425-03-11420	PLATE	1	SN:610001--
16	01010-81065	BOLT	1	SN:610001--
17	01643-31032	WASHER	1	SN:610001--
18	6128-21-6730	SPACER	1	SN:610001--
19	6245-81-3170	TUBE,OIL SUPPLY	1	SN:610001--
20	6215-11-6560	BOLT,JOINT	1	SN:610001--
21	07206-30710	BOLT,JOINT	1	SN:610001--
22	07005-01012	GASKET	3	SN:610001--
23	6150-71-5661	CLIP	2	SN:610001--
24	01435-00630	BOLT	1	SN:610001--
25	6162-23-7810	PLATE	1	SN:610001--
26	01010-81025	BOLT	1	SN:610001--
27	01643-31032	WASHER	1	SN:610001--

Printed By : Dwi Iswanto (airafather6107170)

AIR COMPRESSOR MOUNTING AND PIPING

Item	Part No.	Description	Qty	Options
28	6245-81-3140	TUBE,AIR	1	SN:610001--
29	07206-31824	BOLT,JOINT	1	SN:610001--
30	6164-91-6220	GASKET	2	SN:610001--
31	6245-81-3150	TUBE,AIR	1	SN:610001--
32	6137-81-3140	BOLT,JOINT	1	SN:610001--
33	6164-91-6220	GASKET	2	SN:610001--
34	6162-83-6950	HOSE	1	SN:610001--
35	07281-00289	CLAMP	2	SN:610001--
36	04434-51810	CLIP	1	SN:610001--
37	01010-81020	BOLT	1	SN:610001--
38	01643-31032	WASHER	1	SN:610001--

Printed By : Dwi Iswanto (airafather6107170)

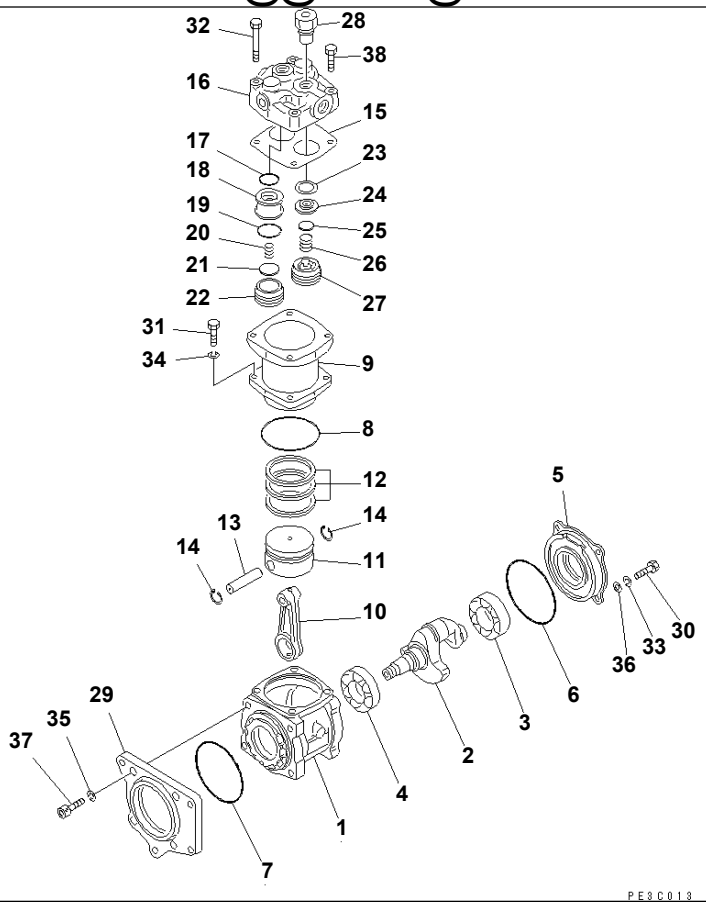

AIR COMPRESSOR (INNER PARTS)

Item	Part No.	Description	Qty	Options
	6210-81-3122	AIR COMPRESSOR ASS'Y	1	SN:610001--
1	DK487000-6500	· CASE,CRANK	1	SN:610001--
2	DK487653-0300	· CRANKSHAFT	1	SN:610001--
3	DK035620-6000	· BEARING	1	SN:610001--
4	DK036202-0700	· BEARING	1	SN:610001--
5	DK487003-7301	· COVER,BEARING	1	SN:610001--
6	DK487061-4300	· O-RING	1	SN:610001--
7	DK487061-4500	· O-RING	1	SN:610001--
8	DK487061-3700	· O-RING	1	SN:610001--
9	DK487001-3200	· CYLINDER	1	SN:610001--
10	DK487013-2100	· CONNECTING ROD A.	1	SN:610001--
11	DK487009-2000	· PISTON	1	SN:610001--
12	DK487010-4720	· RING KIT,PISTON	1	SN:610001--
13	DK487012-0100	· PIN,PISTON	1	SN:610001--
14	DK016110-1610	· RING,SNAP	2	SN:610001--
15	DK487020-2200	· GASKET	1	SN:610001--
	DK487018-8421	· CYLINDER HEAD ASS'Y	1	SN:610001--
	DK487018-8321	· · CYLINDER HEAD A.	1	SN:610001--
16	DK487018-5300	· · · HEAD,CYLINDER	1	SN:610001--
17	DK487061-4000	· · · O-RING	1	SN:610001--
18	DK487042-1100	· · · GUIDE,SPRING	1	SN:610001--
19	DK487061-4100	· · · O-RING	1	SN:610001--
20	DK487031-2000	· · · SPRING,DELIVERY VALVE	1	SN:610001--
21	DK487026-1700	· · · VALVE,PLATE	1	SN:610001--
22	DK487030-2200	· · · SEAT,DELIVERY VALVE	1	SN:610001--
23	DK487039-0300	· · · GASKET	1	SN:610001--
24	DK487025-1200	· · · SEAT,INTAKE VALVE	1	SN:610001--

Printed By : Dwi Iswanto (airafather6107170)

AIR COMPRESSOR (INNER PARTS)

Item	Part No.	Description	Qty	Options
25	DK487026-2800	· · · VALVE,PLATE	1	SN:610001--
26	DK487027-1200	· · · SPRING,INTAKE VALVE	1	SN:610001--
27	DK487028-2700	· · · GUIDE,INTAKE VALVE	1	SN:610001--
28	DK487021-3420	· · UNLOADER VALVE A.	1	SN:610001--
29	DK487073-0900	· FLANGE	1	SN:610001--
30	DK156603-4400	· BOLT	4	SN:610001--
31	DK010110-2570	· BOLT	4	SN:610001--
32	DK487088-0000	· BOLT	2	SN:610001--
33	DK014110-8440	· WASHER,SPRING	4	SN:610001--
34	DK014111-0440	· WASHER,SPRING	4	SN:610001--
35	DK487351-0800	· WASHER,SPRING	4	SN:610001--
36	DK014020-8140	· WASHER	4	SN:610001--
37	DK487017-1600	· BOLT	4	SN:610001--
38	DK487088-0100	· BOLT	2	SN:610001--

Printed By : Dwi Iswanto (airafather6107170)

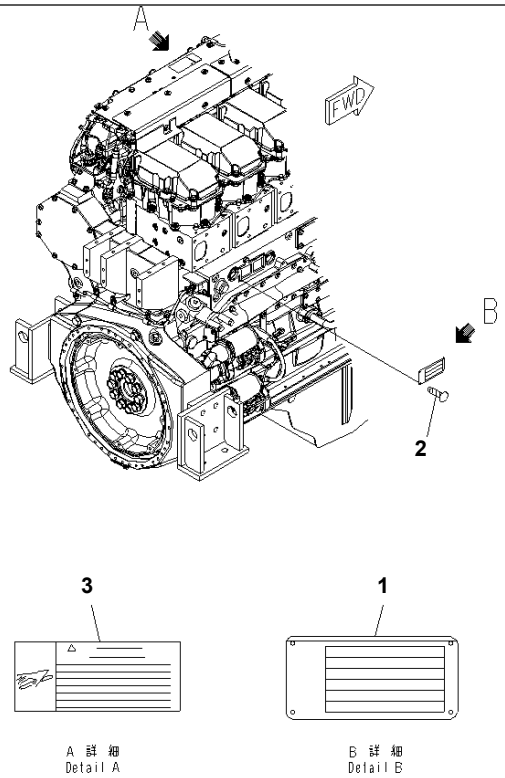

00045124

Ref. A9810-A6Y3 Page 030850

SAA6D170E-5CR-W S/N 610001-UP

NAME PLATE AND CAUTION (ENGLISH)

Item	Part No.	Description	Qty	Options
1	600-023-2340	PLATE¤ NAME,(LIMITED SUPPLY)	1	SN:610001--
2	04418-02550	SCREW	4	SN:610001--
3	6217-71-9331	PLATE,WARNING	1	SN:610001--

Printed By : Dwi Iswanto (airafather6107170)

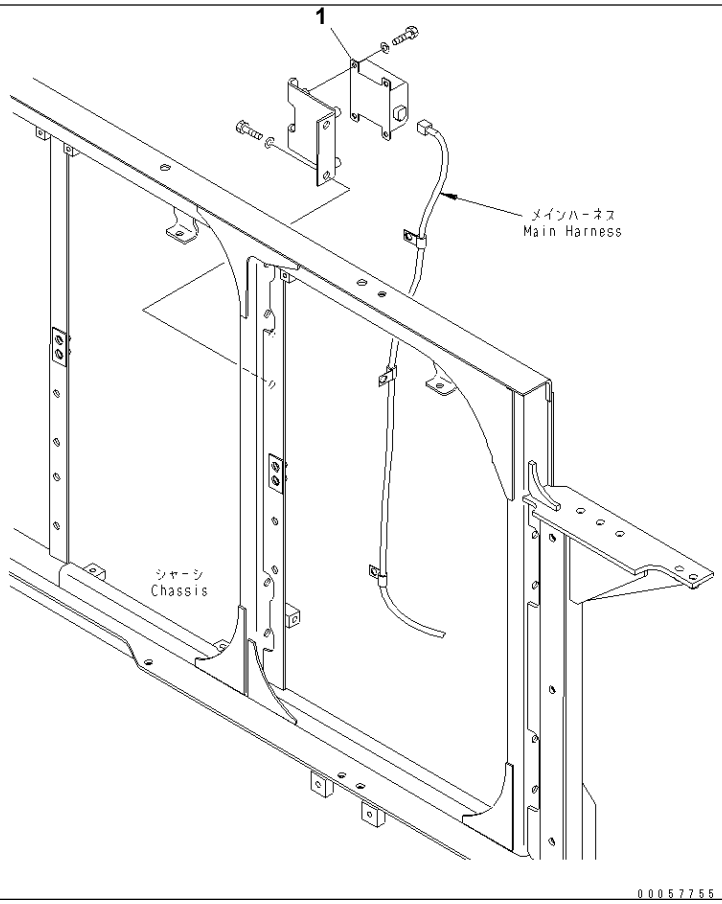

PRIMING PUMP CONTROL SWITCH

Item	Part No.	Description	Qty	Options
1	600-815-9470	SWITCH,TIMER	1	SN:610001--

Printed By : Dwi Iswanto (airafather6107170)

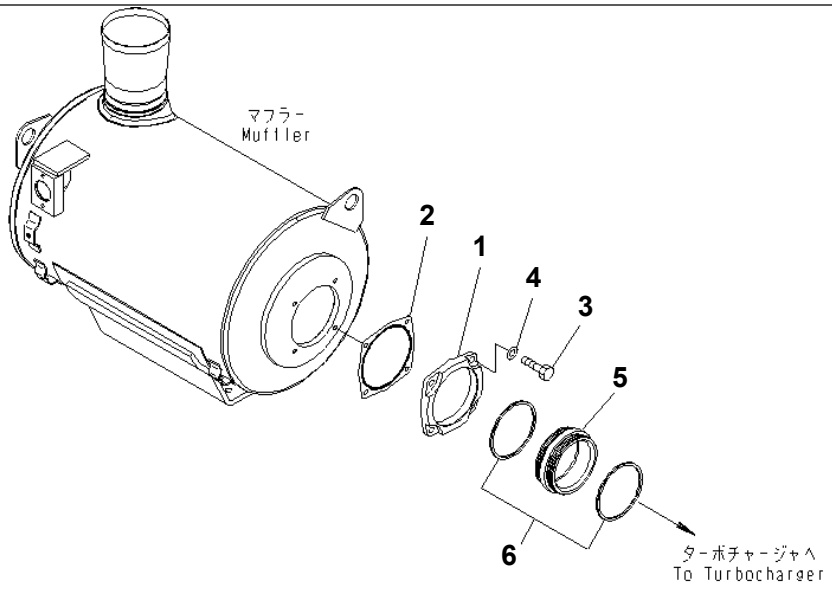

00057908

Ref. B9999-A6X6 **Page 030870**

SAA6D170E-5CR-W S/N 610001-UP
MUFFLER JOINT PARTS

Item	Part No.	Description	Qty	Options
1	6245-11-5750	FLANGE	1	SN:610001--
2	6240-11-5760	GASKET	1	SN:610001--
3	01020-11025	BOLT	4	SN:610001--
4	01643-31032	WASHER	4	SN:610001--
5	6245-11-5740	JOINT	1	SN:610001--
6	6162-13-5480	SEAL	2	SN:610001--

Printed By : Dwi Iswanto (airafather6107170)

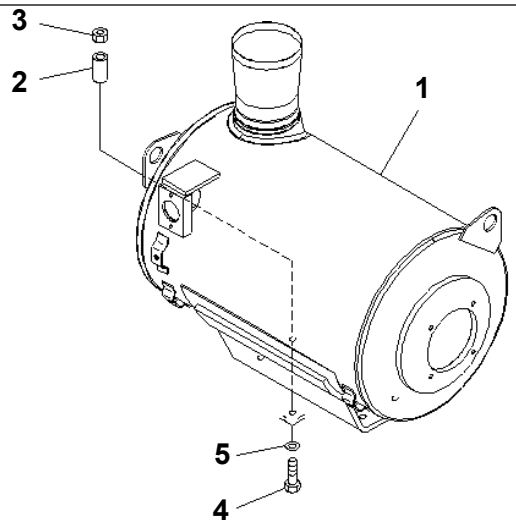

00057197

MUFFLER MOUNTING

Item	Part No.	Description	Qty	Options
1	6245-11-5900	MUFFLER	1	SN:610001--
2	6142-22-4640	SPACER	4	SN:610001--
3	01580-01210	NUT	4	SN:610001--
4	01010-E1285	BOLT	4	SN:610001--
5	01643-31232	WASHER	4	SN:610001--

Printed By : Dwi Iswanto (airafather6107170)

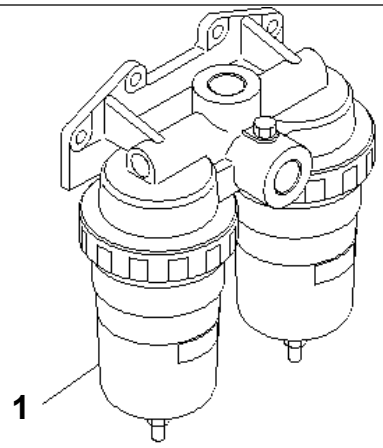

00057198

WATER SEPARATOR

Item	Part No.	Description	Qty	Options
1	600-311-9330	SEPARATOR ASS'Y	1	SN:610001--

Printed By : Dwi Iswanto (airafather6107170)

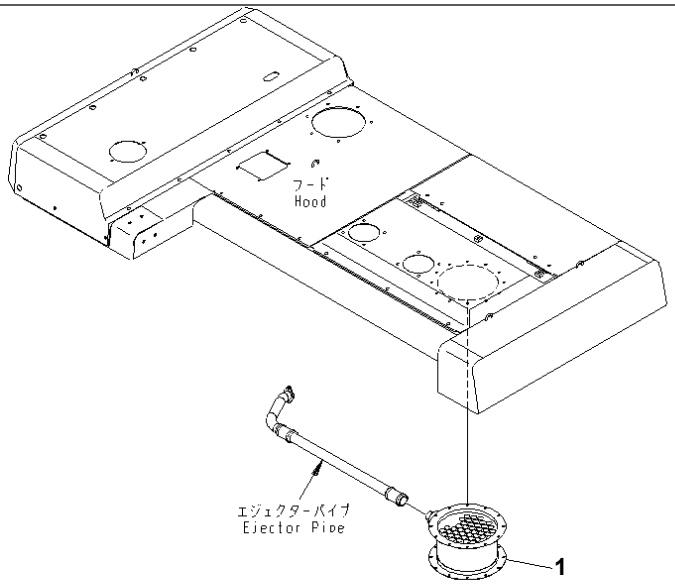

00057756

PRECLEANER

Item	Part No.	Description	Qty	Options
1	600-183-7552	AIR CLEANER	1	SN:610001--

Printed By : Dwi Iswanto (airafather6107170)

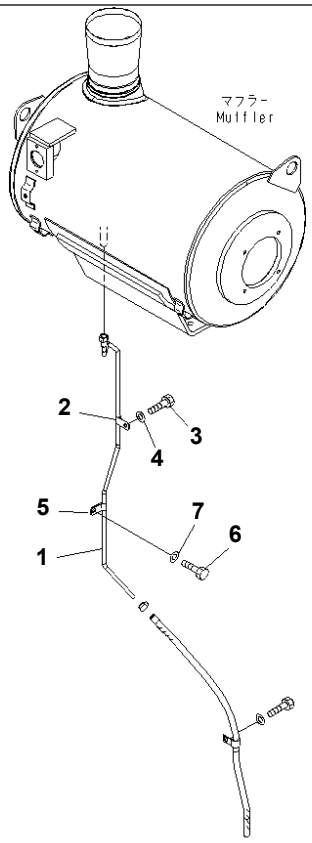

00057757

Ref. B9999-A6Y6 **Page 030910**

SAA6D170E-5CR-W S/N 610001-UP
MUFFLER DRAIN PIPING

Item	Part No.	Description	Qty	Options
1	6245-11-5510	TUBE	1	SN:610001--
2	6162-13-5660	CLAMP	1	SN:610001--
3	01010-81020	BOLT	1	SN:610001--
4	01643-31032	WASHER	1	SN:610001--
5	6162-13-5660	CLAMP	1	SN:610001--
6	01010-81020	BOLT	1	SN:610001--
7	01643-31032	WASHER	1	SN:610001--

Printed By : Dwi Iswanto (airafather6107170)

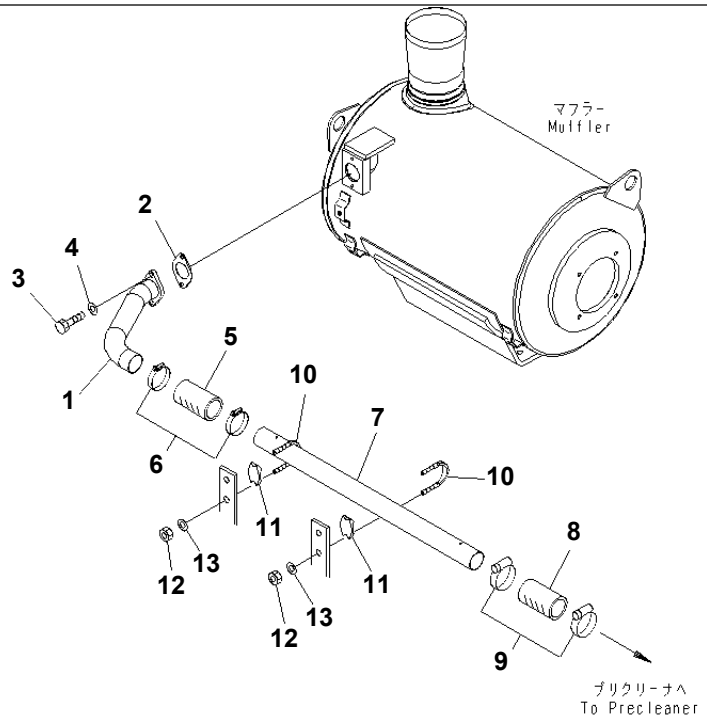

00057904

MUFFLER EJECTOR PIPING

Item	Part No.	Description	Qty	Options
1	6245-11-5730	TUBE	1	SN:610001--
2	6162-13-5611	GASKET	1	SN:610001--
3	01010-E1030	BOLT	2	SN:610001--
4	01643-31032	WASHER	2	SN:610001--
5	6130-12-8620	HOSE	1	SN:610001--
6	07281-00709	CLAMP	2	SN:610001--
7	6245-11-5660	TUBE	1	SN:610001--
8	6240-11-8750	HOSE	1	SN:610001--
9	07281-00709	CLAMP	2	SN:610001--
10	07283-35158	CLIP	2	SN:610001--
11	07283-55161	SEAT	2	SN:610001--
12	01597-01009	NUT	4	SN:610001--
13	01643-31032	WASHER	4	SN:610001--

Printed By : Dwi Iswanto (airafather6107170)

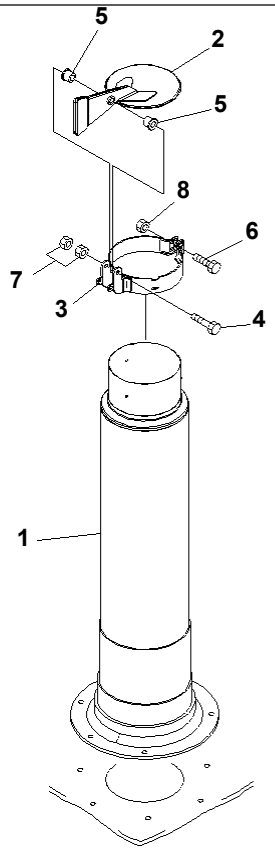

00057905

EXHAUST PIPE AND RAIN CAP

Item	Part No.	Description	Qty	Options
1	6245-11-5810	PIPE	1	SN:610001--
	6162-14-5640	CAP	1	SN:610001--
2	6164-12-5910	· PLATE	1	SN:610001--
3	6162-14-5660	· BAND	1	SN:610001--
4	6715-11-5270	· BOLT	1	SN:610001--
5	6715-11-5280	· BUSHING	2	SN:610001--
6	6715-11-5290	· BOLT	1	SN:610001--
7	01580-11008	· NUT	2	SN:610001--
8	01580-10605	· NUT	2	SN:610001--

Printed By : Dwi Iswanto (airafather6107170)

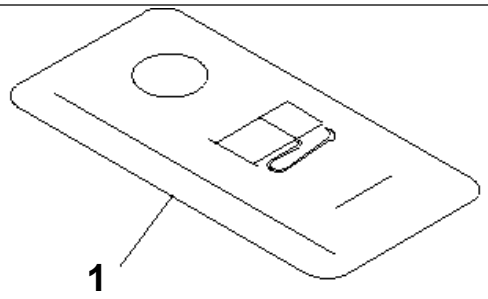

STICKER (FOR FUEL PRIMING PUMP)

Item	Part No.	Description	Qty	Options
1	6245-81-9410	PLATE	1	SN:610001--

Printed By : Dwi Iswanto (airafather6107170)

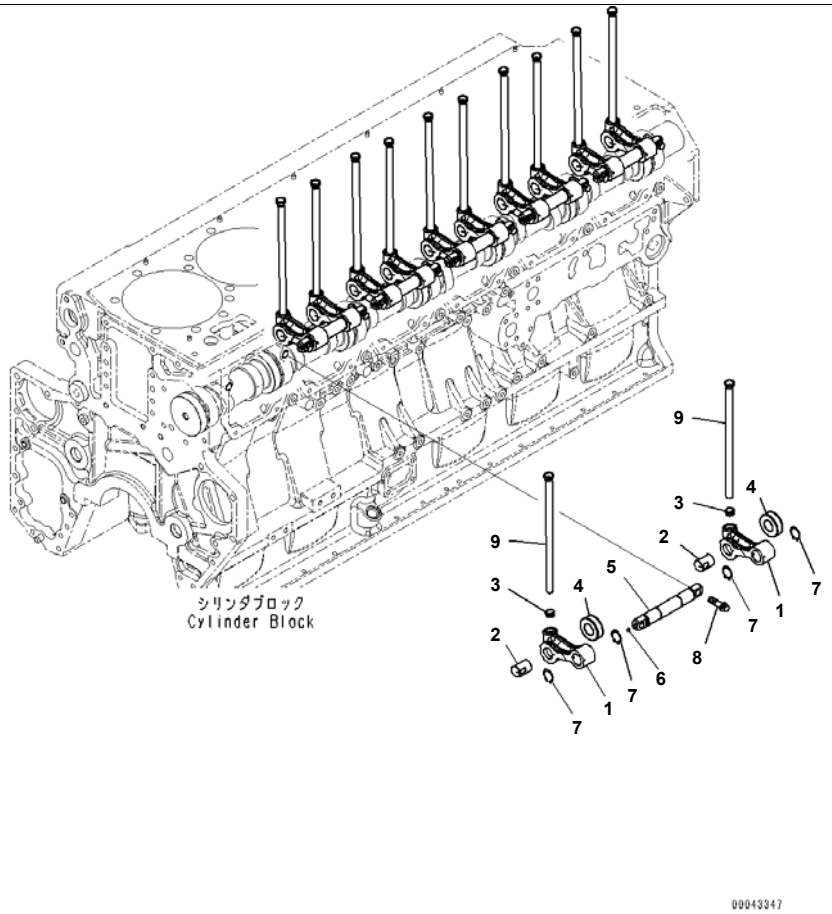

Index	Code	Part Number	Description	Qty	Serial No.
		6240-41-2300	Cam Follower Assembly	12	610984-
1	C1		· Follower, Cam	1	610984-
2	C1		· Pin	1	610984-
3	C1		· Socket	1	610984-
4	C1		· Roller	1	610984-
		6245-41-2400	Shaft Assembly	6	610984-
5		6245-41-2410	· Shaft	1	610984-
6		04260-00635	· Ball, Steel	1	610984-
7		04064-02512	Ring, Snap	24	610984-
8		6240-41-2450	Bolt	12	610984-
9		6245-41-3110	Rod ,Push	12	610984-

Printed By : Dwi Iswanto (airafather6107170)

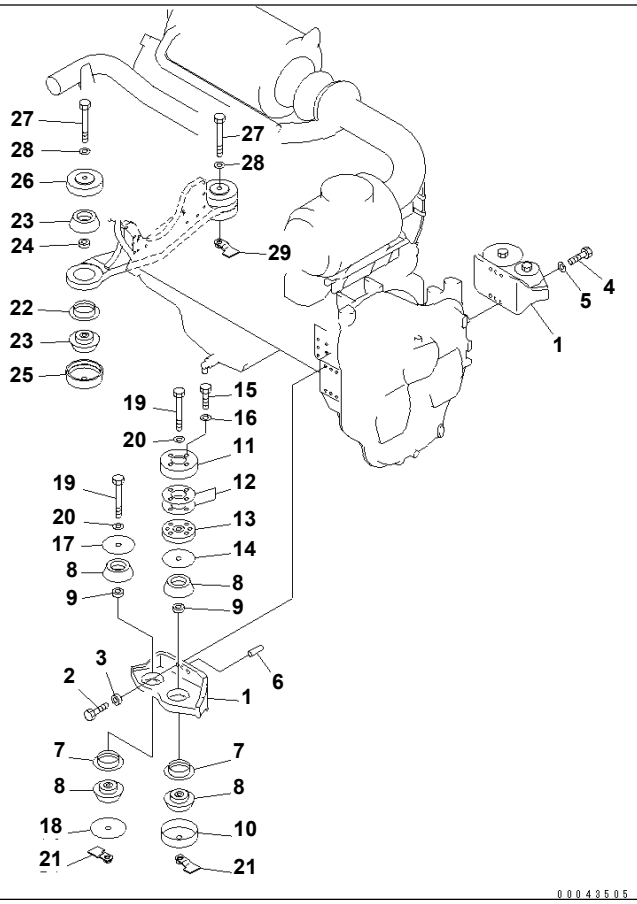

Ref. B0100-01A0 **Page 030010**

PC1250SP-8R S/N 35001-UP (W/O EGR, +55C DEGREE)
ENGINE MOUNT

Item	Part No.	Part Name	Qty	Serial No.
1	21N-01-11170	BRACKET	2	35001-
2	01010-82070	BOLT	4	35001-
3	21T-01-11130	WASHER	4	35001-
4	21N-01-41130	BOLT	4	35001-
5	01643-32060	WASHER	4	35001-
6	04020-01842	PIN	4	35001-
7	21T-01-11210	COLLAR	4	35001-
8	21N-01-11120	CUSHION	8	35001-
9	21T-01-11220	COLLAR	4	35001-
10	21N-01-11130	STOPPER	2	35001-
11	21N-01-11141	STOPPER	2	35001-
12	21N-01-00010	SHIM KIT	2	35001-
13	21N-01-11190	PLATE	2	35001-
14	209-01-51210	SPACER	2	35001-
15	01010-81645	BOLT	8	35001-
16	01643-31645	WASHER	8	35001-
17	21N-01-11150	WASHER	2	35001-
18	21T-01-11190	WASHER	2	35001-
19	21N-01-41110	BOLT	4	35001-
20	01643-32460	WASHER	4	35001-
21	21N-01-31140	PLATE	4	35001-
22	21T-01-11210	COLLAR	2	35001-
23	21N-01-11120	CUSHION	4	35001-
24	21T-01-11220	COLLAR	2	35001-
25	21N-01-37120	STOPPER	2	35001-
26	21N-01-37130	STOPPER	2	35001-
27	21N-01-41110	BOLT	2	35001-
28	01643-32460	WASHER	2	35001-
29	21N-01-31140	PLATE	1	35001-

Printed By : Dwi Iswanto (airafather6107170)

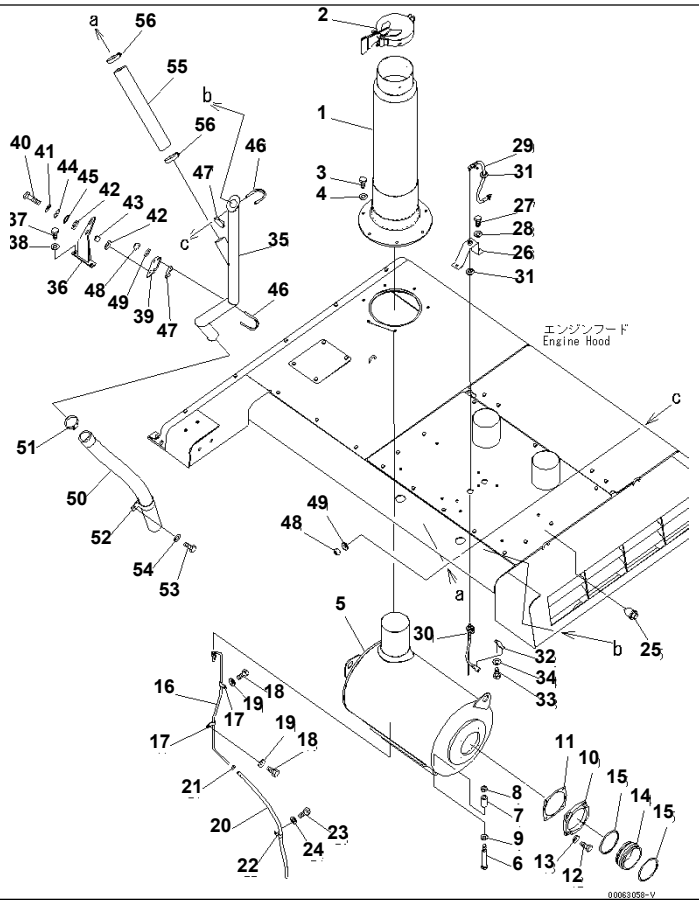

Ref. B0300-01A2 **Page 030020**

PC1250SP-8R S/N 35001-UP (W/O EGR, +55C DEGREE)
EXHAUST (+55C SPEC.)

Item	Part No.	Part Name	Qty	Serial No.
1	6245-11-5810	PIPE	1	35001-
2	6162-14-5640	CAP	1	35001-
3	01010-81235	BOLT	6	35001-
4	01643-31232	WASHER	6	35001-
5	(6245-11-5500)	MUFFLER	1	35001-
6	(01010-E1285)	BOLT	4	35001-
7	(6142-22-4640)	SPACER	4	35001-
8	(01580-11210)	NUT	4	35001-
9	(01643-31232)	WASHER	4	35001-
10	(6245-11-5750)	FLANGE	1	35001-
11	(6240-11-5760)	GASKET	1	35001-
12	(01020-11025)	BOLT	4	35001-
13	(01643-31032)	WASHER	4	35001-
14	(6245-11-5740)	JOINT	1	35001-
15	(6162-13-5480)	SEAL	2	35001-
16	(6245-11-5510)	TUBE	1	35001-
17	(6162-13-5660)	CLAMP	2	35001-
18	(01010-81020)	BOLT	2	35001-
19	(01643-31032)	WASHER	2	35001-
20	21N-01-41150	HOSE	1	35001-
21	07285-00150	CLIP	1	35001-
22	04434-51612	CLIP	1	35001-
23	01010-81225	BOLT	1	35001-
24	01643-31232	WASHER	1	35001-
25	08672-01000	INDICATOR	1	35001-
26	21N-01-37220	BRACKET	1	35001-
27	01010-81230	BOLT	2	35001-
28	01643-31232	WASHER	2	35001-
29	08671-50060	HOSE	1	35001-
30	7861-93-1420	SENSOR	1	35001-

Printed By : Dwi Iswanto (airafather6107170)

EXHAUST (+55C SPEC.)

Item	Part No.	Part Name	Qty	Serial No.
31	08037-02512	GROMMET	2	35001-
32	08193-21012	CLIP	1	35001-
33	01010-81225	BOLT	1	35001-
34	01643-31232	WASHER	1	35001-
35	21N-54-43351	TUBE	1	35001-
36	21N-54-43370	BRACKET	1	35001-
37	01010-81235	BOLT	2	35001-
38	01643-31232	WASHER	2	35001-
39	21N-54-43380	BRACKET	1	35001-
40	01010-81250	BOLT	2	35001-
41	01643-31232	WASHER	2	35001-
42	203-62-42770	CUSHION	4	35001-
43	21W-62-11620	SPACER	2	35001-
44	566-35-42430	PLATE	2	35001-
45	07000-13025	O-RING	2	35001-
46	07283-36163	CLIP	2	35001-
47	07283-56170	SEAT	2	35001-
48	01597-01009	NUT	4	35001-
49	01643-31032	WASHER	4	35001-
50	07261-25810	HOSE	1	35001-
51	07289-00070	CLAMP	1	35001-
52	281-03-11710	CLIP	1	35001-
53	01010-81225	BOLT	1	35001-
54	01643-31232	WASHER	1	35001-
55	07260-25850	HOSE	1	35001-
56	07289-00070	CLAMP	2	35001-

Printed By : Dwi Iswanto (airafather6107170)

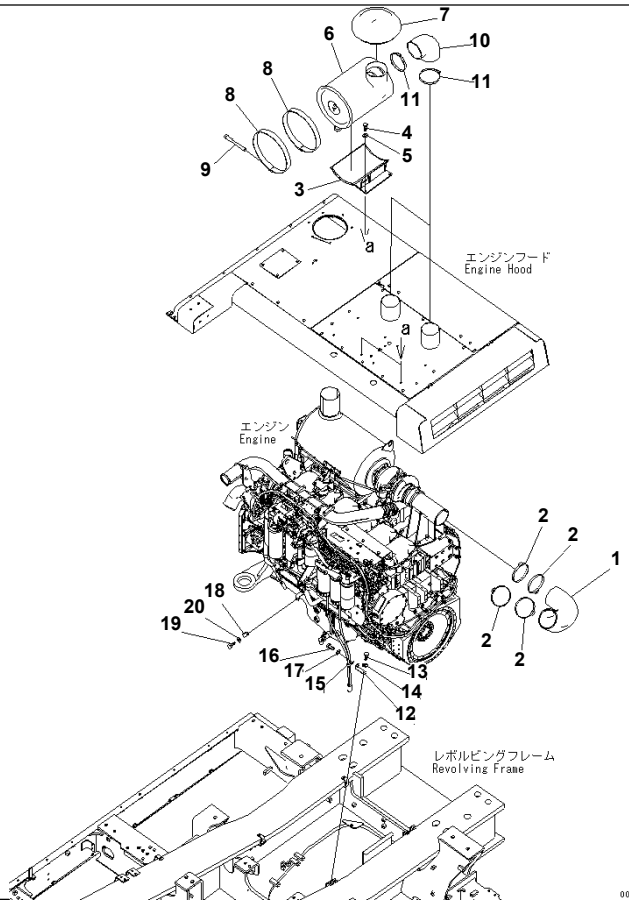

Ref. B0300-02A2 Page 030030

PC1250SP-8R S/N 35001-UP (W/O EGR, +55C DEGREE)

EXHAUST (INTAKE) (+55C SPEC.)

Item	Part No.	Part Name	Qty	Serial No.
1	21N-01-41211	HOSE	1	35071-
	21N-01-41210	HOSE	1	35001-35070
2	208-01-72180	CLAMP	4	35071-
	07289-00170	CLAMP	4	35001-35070
3	21N-01-37211	BRACKET	2	35001-
4	01010-81230	BOLT	8	35001-
5	01643-31232	WASHER	8	35001-
6	(21T-01-64260)	AIR CLEANER	2	35001-
7	600-181-3960	CAP	2	35001-
8	6151-11-9970	BAND ASS'Y	4	35001-
9	6643-11-4641	BOLT	4	35001-
10	561-02-12150	ELBOW	2	35001-
11	561-02-62280	CLAMP	4	35001-
12	21N-01-41140	BRACKET	1	35001-
13	01010-81230	BOLT	1	35001-
14	01643-31232	WASHER	1	35001-
15	04435-51512	CLIP	1	35001-
16	01010-81225	BOLT	1	35001-
17	01643-31232	WASHER	1	35001-
18	04434-52511	CLIP	1	35001-
19	01010-81020	BOLT	1	35001-
20	01643-31032	WASHER	1	35001-

Printed By : Dwi Iswanto (airafather6107170)

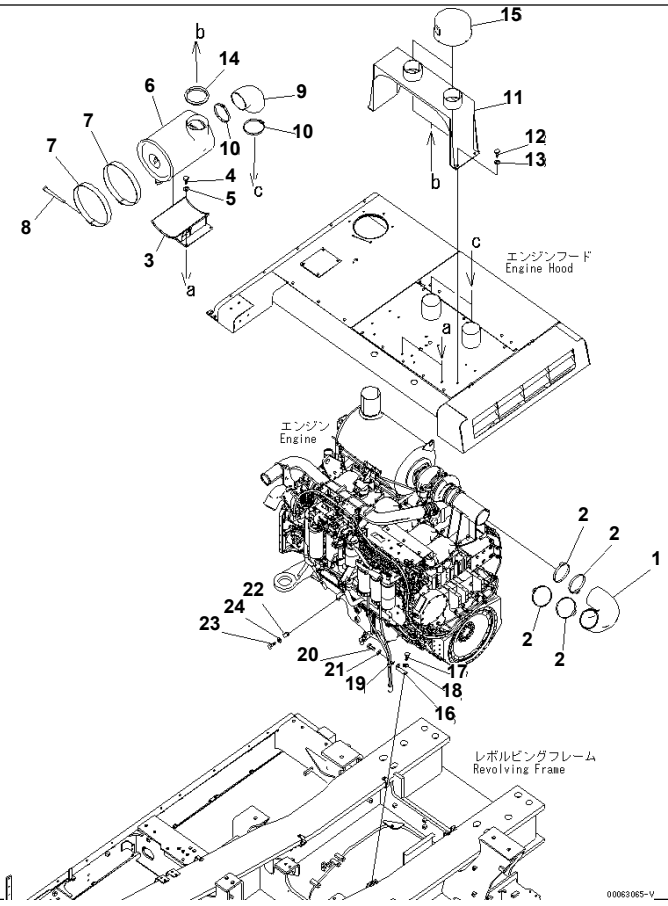

Ref. B0300-02A3 Page 030040

PC1250SP-8R S/N 35001-UP (W/O EGR, +55C DEGREE)

EXHAUST (INTAKE) (+55C SPEC.) (SANDY AND DUSTY TERRAIN SPEC.)

Item	Part No.	Part Name	Qty	Serial No.
1	21N-01-41211	HOSE	1	35071-
	21N-01-41210	HOSE	1	35001-35070
2	208-01-72180	CLAMP	4	35071-
	07289-00170	CLAMP	4	35001-35070
3	21N-01-37211	BRACKET	2	35001-
4	01010-81230	BOLT	8	35001-
5	01643-31232	WASHER	8	35001-
6	(21T-01-64260)	AIR CLEANER	2	35001-
7	6151-11-9970	BAND ASS'Y	4	35001-
8	6643-11-4641	BOLT	4	35001-
9	561-02-12150	ELBOW	2	35001-
10	561-02-62280	CLAMP	4	35001-
11	21N-01-37310	BRACKET	1	35001-
12	01010-81225	BOLT	4	35001-
13	01643-31232	WASHER	4	35001-
14	21N-01-37320	SEAL	2	35001-
15	(421-U12-3100)	PRE-CLEANER	2	35001-
16	21N-01-41140	BRACKET	1	35001-
17	01010-81230	BOLT	1	35001-
18	01643-31232	WASHER	1	35001-
19	04435-51512	CLIP	1	35001-
20	01010-81225	BOLT	1	35001-
21	01643-31232	WASHER	1	35001-
22	04434-52511	CLIP	1	35001-
23	01010-81020	BOLT	1	35001-
24	01643-31032	WASHER	1	35001-

Printed By : Dwi Iswanto (airafather6107170)

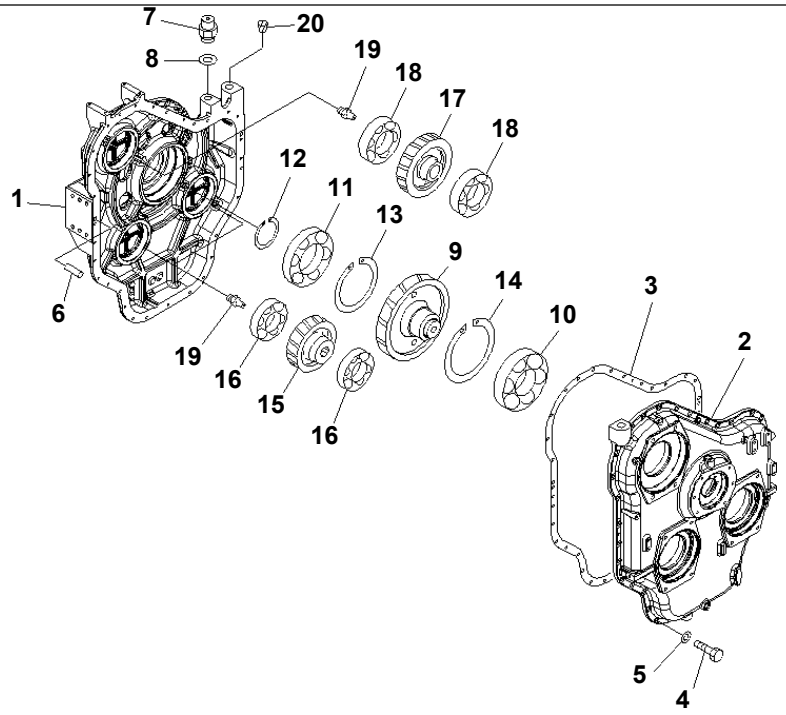

00043392

Ref. B0600-01A0 **Page 030050**

PC1250SP-8R S/N 35001-UP (W/O EGR, +55C DEGREE)
POWER TAKE OFF (P.T.O. ASS'Y)

Item	Part No.	Part Name	Qty	Serial No.
	21N-38-00080	PTO ASS'Y	1	35001-
1	21N-38-51110	· CASE	1	35001-
2	21N-38-51120	· CASE	1	35001-
3	209-38-73170	· GASKET	1	35001-
4	01010-81240	· BOLT	32	35001-
5	01643-31232	· WASHER	32	35001-
6	04020-01638	· PIN	2	35001-
7	07030-03034	· BREATHER	1	35001-
8	07005-03016	· GASKET	1	35001-
9	21N-38-51210	· GEAR	1	35001-
10	06030-06324	· BEARING	1	35001-
11	209-38-73360	· BEARING	1	35001-
12	04070-00140	· RING	1	35001-
13	04071-00250	· RING	1	35001-
14	04071-00260	· RING	1	35001-
15	209-38-73140	· GEAR	2	35001-
16	06030-06219	· BEARING	4	35001-
17	21N-38-31130	· GEAR	1	35001-
18	06030-06219	· BEARING	2	35001-
19	209-38-11270	· NIPPLE	3	35001-
20	07049-03645	· PLUG	2	35001-

Printed By : Dwi Iswanto (airafather6107170)

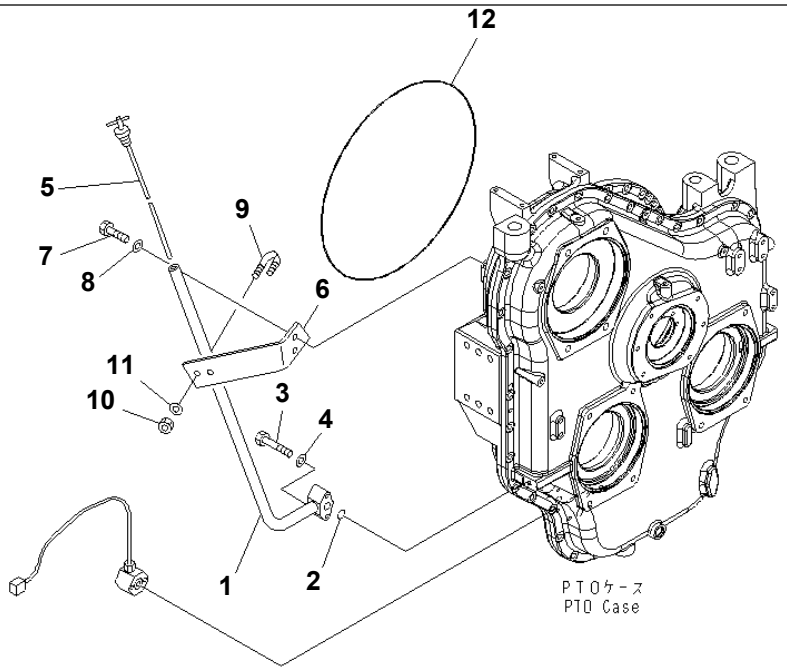

00043414

Ref. B0600-02A0 **Page 030060**

PC1250SP-8R S/N 35001-UP (W/O EGR, +55C DEGREE)
POWER TAKE OFF (OIL CHECK GAUGE)

Item	Part No.	Part Name	Qty	Serial No.
1	21N-38-32151XC	TUBE	1	35002-
	21N-38-32151	TUBE	1	35001-
2	07000-E3028	O-RING	1	35001-
3	01010-81065	BOLT	2	35001-
4	01643-31032	WASHER	2	35001-
5	21N-38-31161	GAUGE	1	35001-
6	21N-38-32161	BRACKET	1	35001-
7	01010-81030	BOLT	2	35001-
8	01643-31032	WASHER	2	35001-
9	07283-22746	CLIP	1	35001-
10	01599-01011	NUT	2	35001-
11	01643-31032	WASHER	2	35001-
12	07000-E5500	O-RING	1	35001-

Printed By : Dwi Iswanto (airafather6107170)

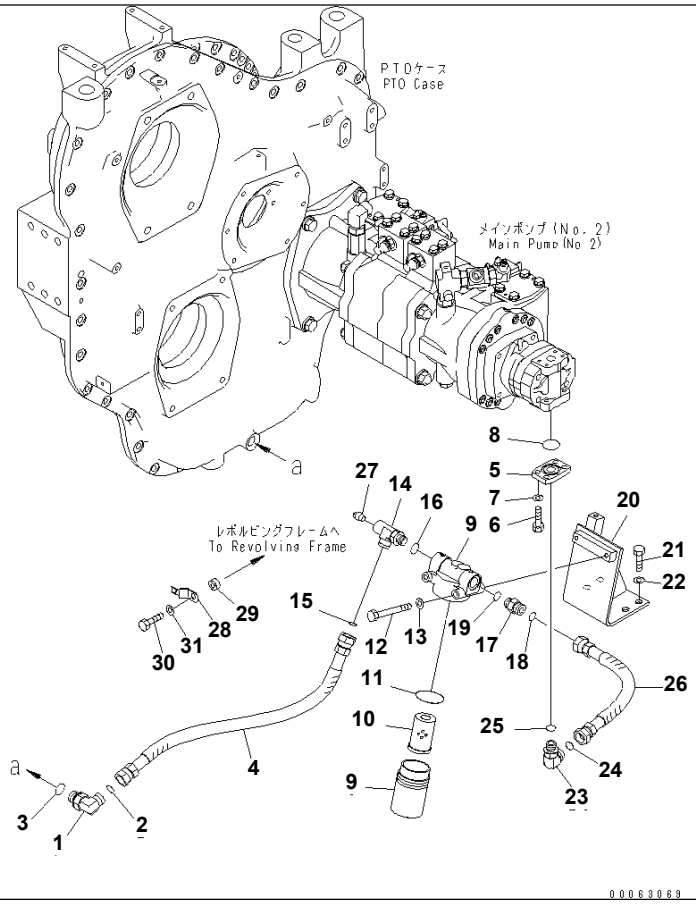

Ref. B0600-03A4 **Page 030070**

PC1250SP-8R S/N 35001-UP (W/O EGR, +55C DEGREE)

POWER TAKE OFF (P.T.O. PIPING) (SUCTION LINES) (+55C SPEC.)

Item	Part No.	Part Name	Qty	Serial No.
1	02782-10522	ELBOW	1	35001-
2	02896-21015	O-RING	1	35001-
3	07002-22434	O-RING	1	35001-
4	02762-00506	HOSE	1	35001-
5	21N-38-12310	FLANGE	1	35001-
6	01010-81030	BOLT	4	35001-
7	01643-31032	WASHER	4	35001-
8	07000-E3035	O-RING	1	35001-
9	209-01-42251	FILTER ASS'Y	1	35001-
10	209-01-42260	· ELEMENT ASS'Y	1	35001-
11	07000-F2065	· O-RING	1	35001-
12	01011-81000	BOLT	2	35001-
13	01643-31032	WASHER	2	35001-
14	21N-38-41121	ELBOW	1	35001-
15	02896-21015	O-RING	1	35001-
16	07002-21823	O-RING	1	35001-
17	21N-64-36620	NIPPLE	1	35001-
18	02896-21015	O-RING	1	35001-
19	07002-21823	O-RING	1	35001-
20	21N-38-41220	BRACKET	1	35001-
21	01010-81230	BOLT	4	35001-
22	01643-31232	WASHER	4	35001-
23	02782-10516	ELBOW	1	35001-
24	02896-21015	O-RING	1	35001-
25	07002-22034	O-RING	1	35001-
26	02762-00504	HOSE	1	35001-
27	07042-30211	PLUG	1	35001-
28	08193-20012	CLIP	1	35001-
29	198-43-15310	COLLAR, 10MM	1	35001-
30	01010-81235	BOLT	1	35001-

Printed By : Dwi Iswanto (airafather6107170)

POWER TAKE OFF (P.T.O. PIPING) (SUCTION LINES) (+55C SPEC.)

Item	Part No.	Part Name	Qty	Serial No.
31	01643-31232	WASHER	1	35001-

Printed By : Dwi Iswanto (airafather6107170)

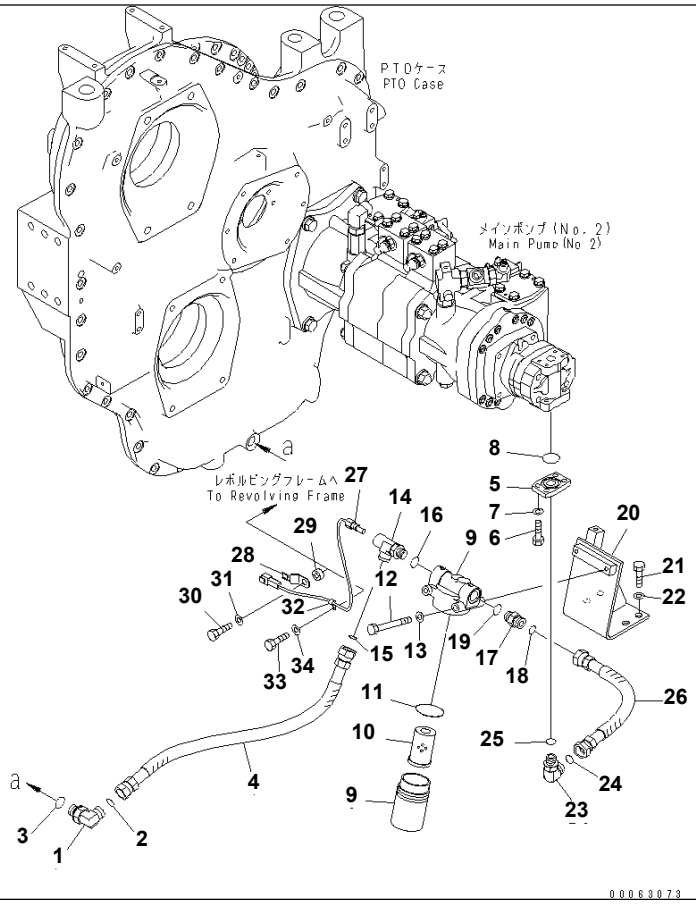

Ref. B0600-03A5 **Page 030080**

PC1250SP-8R S/N 35001-UP (W/O EGR, +55C DEGREE)
POWER TAKE OFF (P.T.O. PIPING) (SUCTION LINES) (VHMS) (+55C SPEC.)

Item	Part No.	Part Name	Qty	Serial No.
1	02782-10522	ELBOW	1	35001-
2	02896-21015	O-RING	1	35001-
3	07002-22434	O-RING	1	35001-
4	02762-00506	HOSE	1	35001-
5	21N-38-12310	FLANGE	1	35001-
6	01010-81030	BOLT	4	35001-
7	01643-31032	WASHER	4	35001-
8	07000-E3035	O-RING	1	35001-
9	209-01-42251	FILTER ASS'Y	1	35001-
10	209-01-42260	· ELEMENT ASS'Y	1	35001-
11	07000-F2065	· O-RING	1	35001-
12	01011-81000	BOLT	2	35001-
13	01643-31032	WASHER	2	35001-
14	21N-38-41121	ELBOW	1	35001-
15	02896-21015	O-RING	1	35001-
16	07002-21823	O-RING	1	35001-
17	21N-64-36620	NIPPLE	1	35001-
18	02896-21015	O-RING	1	35001-
19	07002-21823	O-RING	1	35001-
20	21N-38-41220	BRACKET	1	35001-
21	01010-81230	BOLT	4	35001-
22	01643-31232	WASHER	4	35001-
23	02782-10516	ELBOW	1	35001-
24	02896-21015	O-RING	1	35001-
25	07002-22034	O-RING	1	35001-
26	02762-00504	HOSE	1	35001-
27	7861-93-3500	SENSOR	1	35001-
28	08193-20012	CLIP	1	35001-
29	198-43-15310	COLLAR, 10MM	1	35001-
30	01010-81235	BOLT	1	35001-

Printed By : Dwi Iswanto (airafather6107170)

POWER TAKE OFF (P.T.O. PIPING) (SUCTION LINES) (VHMS) (+55C SPEC.)

Item	Part No.	Part Name	Qty	Serial No.
31	01643-31232	WASHER	1	35001-
32	04434-50612	CLIP	1	35001-
33	01010-81225	BOLT	1	35001-
34	01643-31232	WASHER	1	35001-

Printed By : Dwi Iswanto (airafather6107170)

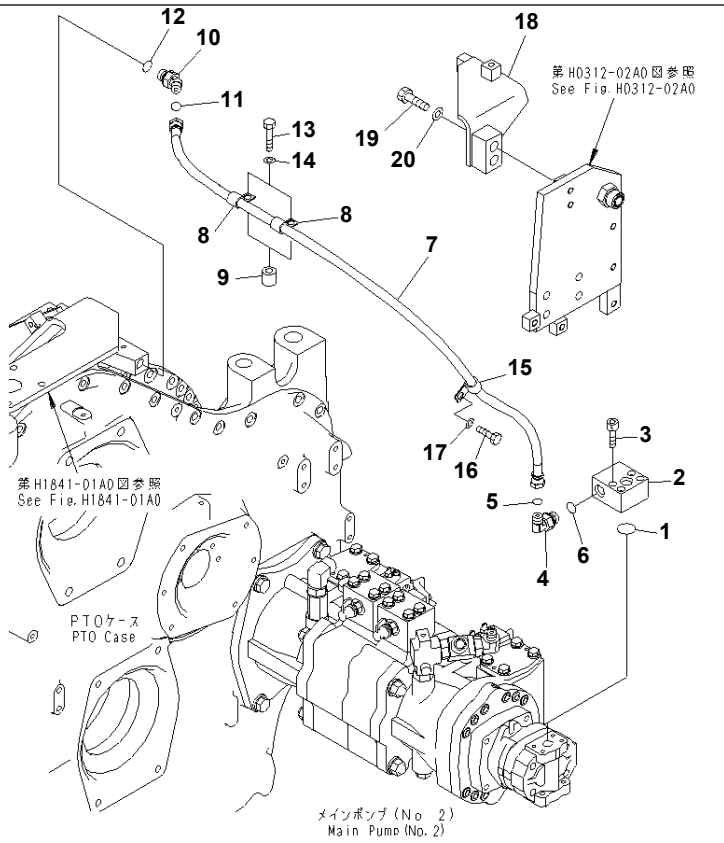

Ref. B0600-04A4 **Page 030090**

PC1250SP-8R S/N 35001-UP (W/O EGR, +55C DEGREE)

POWER TAKE OFF (P.T.O. PIPING) (DERIVERY LINES) (+55C SPEC.)

Item	Part No.	Part Name	Qty	Serial No.
1	07000-E3030	O-RING	1	35001-
2	21N-62-42210	BLOCK	1	35001-
3	01252-70850	BOLT	4	35001-
4	02782-10315	ELBOW	1	35001-
5	02896-21009	O-RING	1	35001-
6	07002-22034	O-RING	1	35001-
7	21N-38-41260	HOSE	1	35001-
8	04434-51612	CLIP	2	35001-
9	195-33-11220	SPACER	2	35001-
10	02783-10315	ELBOW	1	35001-
11	02896-21009	O-RING	1	35001-
12	07002-22034	O-RING	1	35001-
13	01010-81250	BOLT	2	35001-
14	01643-31232	WASHER	2	35001-
15	04434-51612	CLIP	1	35001-
16	01010-81220	BOLT	1	35001-
17	01643-31232	WASHER	1	35001-
18	21N-62-41640	BRACKET	1	35001-
19	01010-81265	BOLT	2	35001-
20	01643-31232	WASHER	2	35001-

Printed By : Dwi Iswanto (airafather6107170)

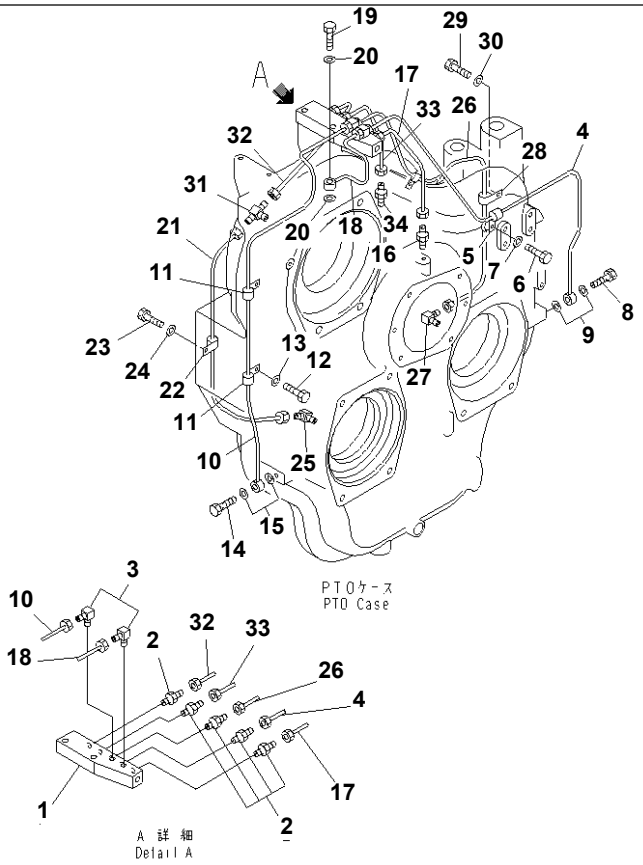

00043395

Ref. B0600-05A0 **Page 030100**

PC1250SP-8R S/N 35001-UP (W/O EGR, +55C DEGREE)

POWER TAKE OFF (P.T.O. PIPING) (LUBRICATION LINES)

Item	Part No.	Part Name	Qty	Serial No.
1	209-38-73281	BLOCK	1	35001-
2	07213-50710	CONNECTOR	5	35001-
3	176-43-41350	ELBOW	2	35001-
4	209-38-73220	TUBE	1	35001-
5	21T-38-12270	CLIP	2	35001-
6	01010-81020	BOLT	2	35001-
7	01643-31032	WASHER	2	35001-
8	209-38-51440	JOINT	1	35001-
9	07005-01012	GASKET	2	35001-
10	209-38-73270	TUBE	1	35001-
11	21T-38-12270	CLIP	2	35001-
12	01010-81020	BOLT	2	35001-
13	01643-31032	WASHER	2	35001-
14	209-38-51440	JOINT	1	35001-
15	07005-01012	GASKET	2	35001-
16	07213-50710	CONNECTOR	1	35001-
17	209-38-73210	TUBE	1	35001-
18	21N-38-31140	TUBE	1	35001-
19	209-38-51440	JOINT	1	35001-
20	07005-01012	GASKET	2	35001-
21	209-38-73260	TUBE	1	35001-
22	21T-38-12270	CLIP	1	35001-
23	01010-81020	BOLT	1	35001-
24	01643-31032	WASHER	1	35001-
25	176-43-41350	ELBOW	1	35001-
26	209-38-73240	TUBE	1	35001-
27	176-43-41350	ELBOW	1	35001-
28	21T-38-12270	CLIP	2	35001-
29	01010-81020	BOLT	2	35001-
30	01643-31032	WASHER	2	35001-

Printed By : Dwi Iswanto (airafather6107170)

POWER TAKE OFF (P.T.O. PIPING) (LUBRICATION LINES)

Item	Part No.	Part Name	Qty	Serial No.
31	209-38-12291	TEE	1	35002-
	209-38-12290	TEE	1	35001-35001
32	209-38-73250	TUBE	1	35001-
33	209-38-73230	TUBE	1	35001-
34	07213-50710	CONNECTOR	1	35001-

Printed By : Dwi Iswanto (airafather6107170)

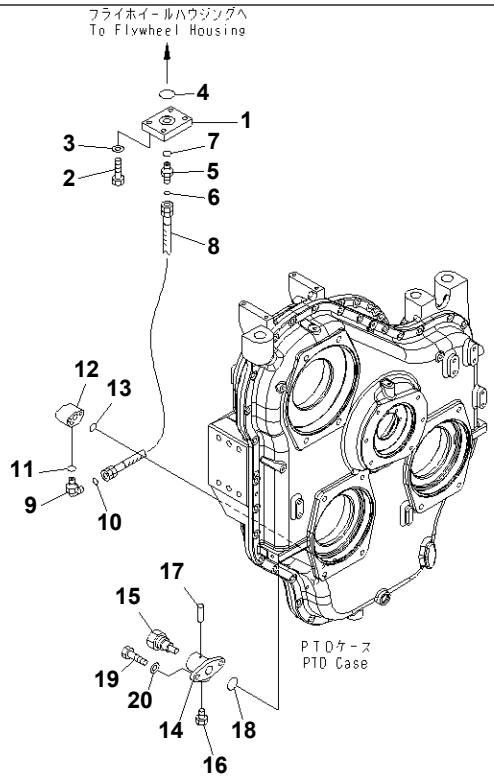

00043433

Ref. B0600-06A0 **Page 030110**

PC1250SP-8R S/N 35001-UP (W/O EGR, +55C DEGREE)
POWER TAKE OFF (P.T.O. PIPING) (FLYWHEEL PIPING)

Item	Part No.	Part Name	Qty	Serial No.
1	21N-38-41130	ELBOW	1	35001-
2	01010-81245	BOLT	4	35001-
3	01643-31232	WASHER	4	35001-
4	07000-E2055	O-RING	1	35001-
5	02781-00628	UNION	1	35001-
6	02896-21018	O-RING	1	35001-
7	07002-22434	O-RING	1	35001-
8	02762-00606	HOSE	1	35001-
9	02782-10628	ELBOW	1	35001-
10	02896-21018	O-RING	1	35001-
11	07002-22434	O-RING	1	35001-
12	21T-38-31430	ELBOW	1	35001-
13	07000-E3028	O-RING	1	35001-
	6693-22-5600	VALVE ASS'Y	1	35001-
14	6693-22-5610	· BODY	1	35001-
15	6693-22-5620	· VALVE	1	35001-
16	07040-02412	· PLUG	1	35001-
17	04020-00514	· PIN	1	35001-
18	07000-E3028	O-RING	1	35001-
19	01010-81080	BOLT	2	35001-
20	01643-31032	WASHER	2	35001-

Printed By : Dwi Iswanto (airafather6107170)

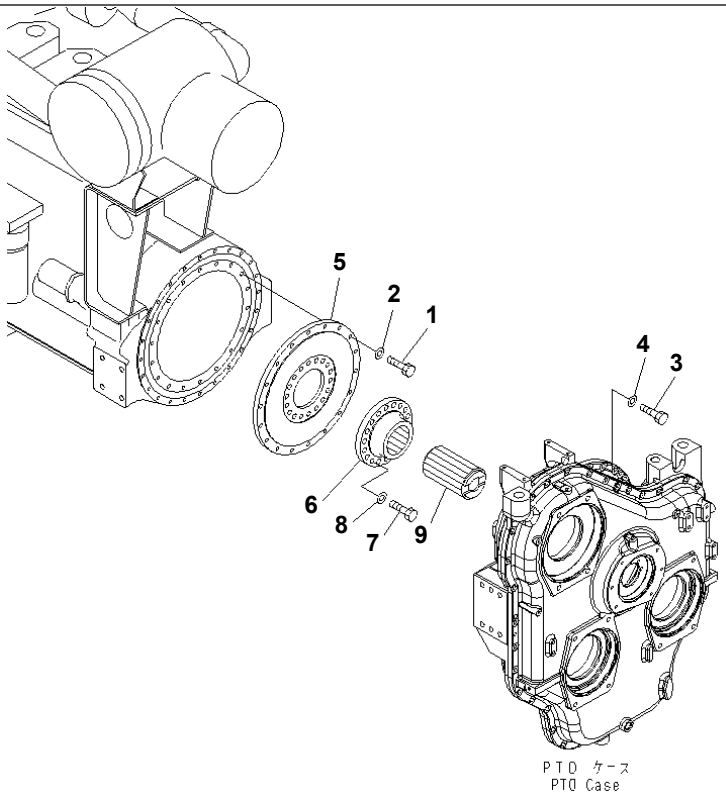

00043396

Ref. B0600-07A0 **Page 030120**

PC1250SP-8R S/N 35001-UP (W/O EGR, +55C DEGREE)
POWER TAKE OFF (COUPLING)

Item	Part No.	Part Name	Qty	Serial No.
1	01010-81240	BOLT	18	35001-
2	01643-31232	WASHER	18	35001-
3	01010-81245	BOLT	30	35001-
4	01643-31232	WASHER	30	35001-
5	21N-38-51240	PLATE	1	35001-
6	21N-38-51220	HUB	1	35001-
7	209-38-11280	BOLT	18	35001-
8	01643-31645	WASHER	18	35001-
9	21N-38-51230	SHAFT	1	35001-

Printed By : Dwi Iswanto (airafather6107170)

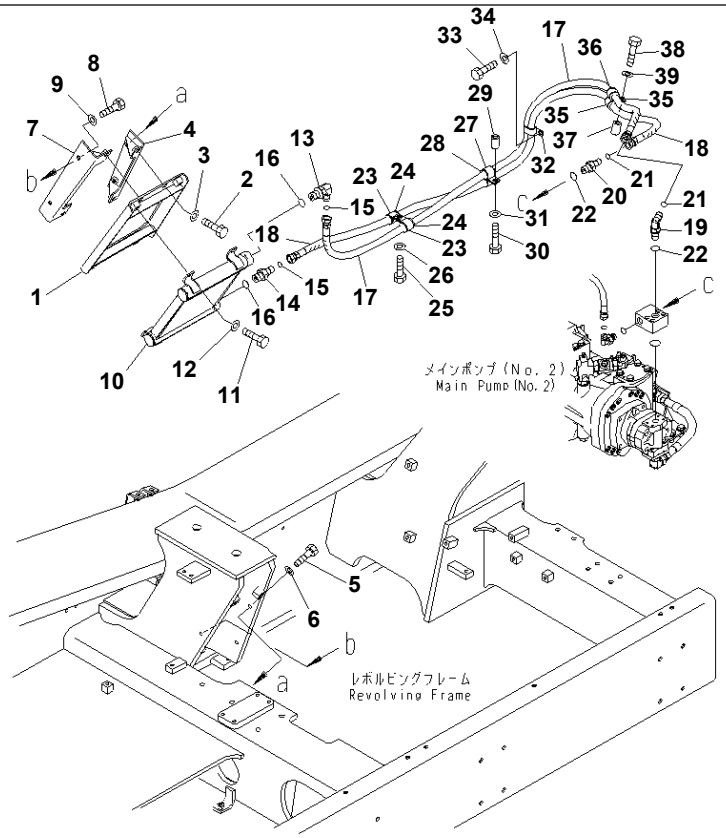

Ref. B0600-09A4 **Page 030130**

PC1250SP-8R S/N 35001-UP (W/O EGR, +55C DEGREE)
POWER TAKE OFF (ADDITIONAL P.T.O. COOLER) (+55C SPEC.)

Item	Part No.	Part Name	Qty	Serial No.
1	21N-38-41211	BRACKET	1	35001-
2	01010-81230	BOLT	4	35001-
3	01643-31232	WASHER	4	35001-
4	21N-38-41241	BRACKET	1	35001-
5	01010-81240	BOLT	2	35064-
	01010-81230	BOLT	2	35001-35063
6	01643-31232	WASHER	2	35001-
7	21N-38-41251	BRACKET	1	35001-
8	01010-81230	BOLT	2	35001-
9	01643-31232	WASHER	2	35001-
10	21M-38-21430	OIL COOLER	1	35001-
11	01010-81025	BOLT	4	35001-
12	01643-31032	WASHER	4	35001-
13	02782-10425	ELBOW	1	35001-
14	02781-0042A	JOINT	1	35001-
15	02896-21012	O-RING	2	35001-
16	07002-22434	O-RING	2	35001-
17	02762-00421	HOSE	1	35001-
18	02762-00420	HOSE	1	35001-
19	02782-10422	ELBOW	1	35001-
20	02781-00422	UNION	1	35001-
21	02896-21012	O-RING	2	35001-
22	07002-22034	O-RING	2	35001-
23	04434-52512	CLIP	2	35001-
24	07095-20318	CUSHION	2	35001-
25	01010-81230	BOLT	1	35001-
26	01643-31232	WASHER	1	35001-
27	04434-52512	CLIP	2	35001-
28	07095-20318	CUSHION	2	35001-
29	20Y-03-11220	COLLAR	1	35001-

Printed By : Dwi Iswanto (airafather6107170)

POWER TAKE OFF (ADDITIONAL P.T.O. COOLER) (+55C SPEC.)

Item	Part No.	Part Name	Qty	Serial No.
30	01010-81260	BOLT	1	35001-
31	01643-31232	WASHER	1	35001-
32	04435-51912	CLIP	1	35001-
33	01010-81225	BOLT	1	35001-
34	01643-31232	WASHER	1	35001-
35	04434-52512	CLIP	2	35001-
36	07095-20318	CUSHION	2	35001-
37	20Y-03-11220	COLLAR	1	35001-
38	01010-81260	BOLT	1	35001-
39	01643-31232	WASHER	1	35001-

Printed By : Dwi Iswanto (airafather6107170)

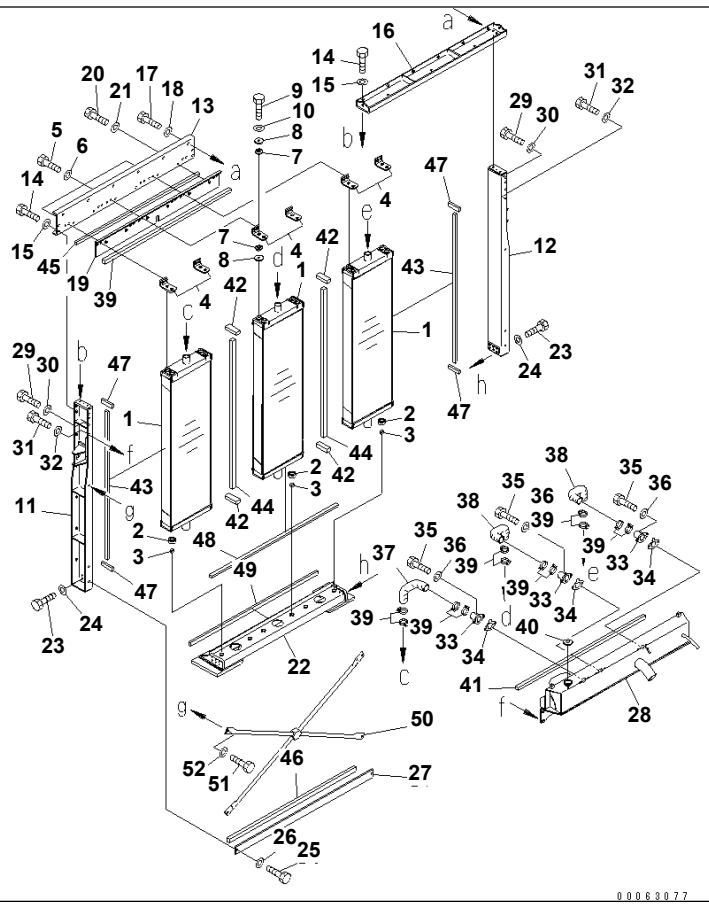

Ref. C0100-01A1 **Page 060010**

PC1250SP-8R S/N 35001-UP (W/O EGR, +55C DEGREE)
COOLING (RADIATOR) (+55C SPEC.)

Item	Part No.	Part Name	Qty	Serial No.
1	21N-03-41110	RADIATOR CORE ASS'Y	3	35001-
2	209-03-41280	CUSHION	6	35001-
3	22B-03-12590	CUSHION	6	35001-
4	21N-03-41270	BRACKET	6	35001-
5	01010-81240	BOLT	12	35001-
6	01643-31232	WASHER	12	35001-
7	21T-03-32440	CUSHION	24	35001-
8	207-03-75590	PLATE	24	35001-
9	01010-81060	BOLT	12	35001-
10	01643-31032	WASHER	12	35001-
11	21N-03-43880	BRACKET,(L.H.)	1	35001-
12	21N-03-43890	BRACKET,(R.H.)	1	35001-
13	21N-03-41250	BRACKET	1	35001-
14	01010-81235	BOLT	10	35001-
15	01643-31232	WASHER	10	35001-
16	21N-03-41380	BRACKET	1	35001-
17	01010-81235	BOLT	6	35001-
18	01643-31232	WASHER	6	35001-
19	21N-03-43720	BRACKET	1	35001-
20	01010-81235	BOLT	6	35001-
21	01643-31232	WASHER	6	35001-
22	21N-03-41220	BRACKET	1	35001-
23	01010-81235	BOLT	12	35001-
24	01643-31232	WASHER	12	35001-
25	21N-03-41260	BRACKET	1	35001-
26	01010-81235	BOLT	2	35001-
27	01643-31232	WASHER	2	35001-
28	21N-03-41210	TANK	1	35001-
29	01010-81235	BOLT	6	35001-
30	01643-31232	WASHER	6	35001-

Printed By : Dwi Iswanto (airafather6107170)

COOLING (RADIATOR) (+55C SPEC.)

Item	Part No.	Part Name	Qty	Serial No.
31	01010-81245	BOLT	2	35001-
32	01643-31232	WASHER	2	35001-
33	209-03-42310	TUBE	3	35001-
34	209-03-42320	GASKET	3	35001-
35	01010-81030	BOLT	6	35001-
36	01643-31032	WASHER	6	35001-
37	209-03-41340	HOSE	1	35001-
38	209-03-41330	HOSE	2	35001-
39	07289-00055	CLAMP	12	35001-
40	561-03-61512	CAP	1	35001-
41	209-03-41350	SHEET	2	35001-
42	209-03-41380	SHEET	4	35001-
43	21N-03-41280	SHEET	2	35001-
44	21N-03-41290	SHEET	2	35001-
45	21N-03-43730	SHEET	1	35001-
46	21N-03-41331	SHEET	1	35001-
47	21N-03-41340	SHEET	4	35001-
48	21N-03-41540	SHEET	1	35001-
49	21N-03-43740	SHEET	1	35001-
50	21N-03-41490	PIPE	1	35001-
51	01010-81240	BOLT	4	35001-
52	01643-31232	WASHER	4	35001-

Printed By : Dwi Iswanto (airafather6107170)

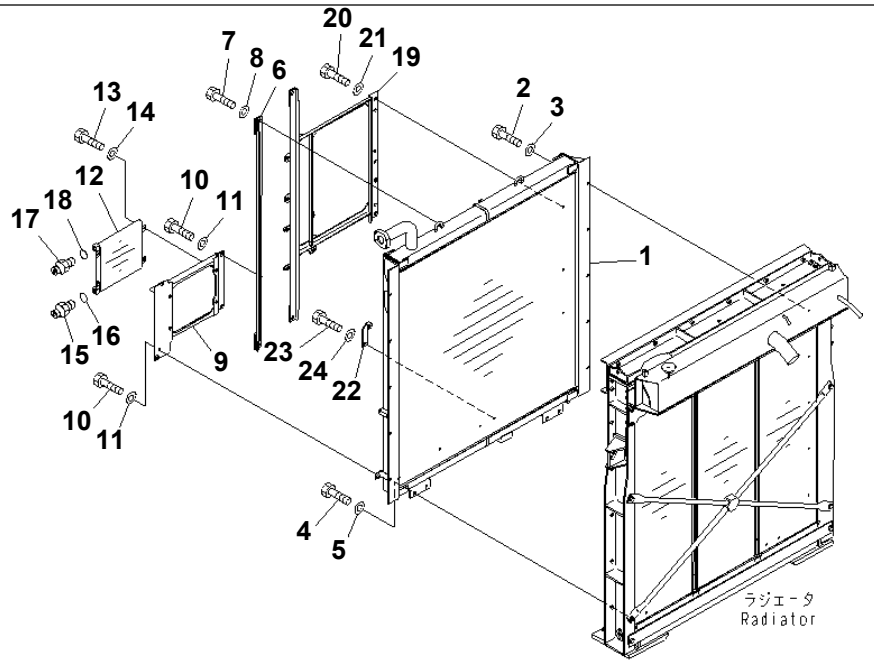

00056655

Ref. C0100-02A1 **Page 060020**

PC1250SP-8R S/N 35001-UP (W/O EGR, +55C DEGREE)
COOLING (OIL COOLER) (+55C SPEC.)

Item	Part No.	Part Name	Qty	Serial No.
1	21N-03-43710	OIL COOLER	1	35001-
2	01010-81235	BOLT	10	35001-
3	01643-31232	WASHER	10	35001-
4	01010-81430	BOLT	4	35001-
5	01643-31445	WASHER	4	35001-
6	21N-03-41410	BRACKET	1	35001-
7	01010-81235	BOLT	2	35001-
8	01643-31232	WASHER	2	35001-
9	21N-03-41421	BRACKET	1	35001-
10	01010-81235	BOLT	4	35001-
11	01643-31232	WASHER	4	35001-
12	21N-03-41180	OIL COOLER ASS'Y	1	35001-
13	01010-80825	BOLT	4	35001-
14	01643-30823	WASHER	4	35001-
15	02781-00516	UNION	1	35001-
16	07002-12034	O-RING	1	35001-
17	02781-00516	UNION	1	35001-
18	07002-12034	O-RING	1	35001-
19	21N-03-41431	BRACKET	1	35001-
20	01010-81235	BOLT	5	35001-
21	01643-31232	WASHER	5	35001-
22	21N-03-41440	BRACKET	1	35001-
23	01010-81225	BOLT	1	35001-
24	01643-31232	WASHER	1	35001-

Printed By : Dwi Iswanto (airafather6107170)

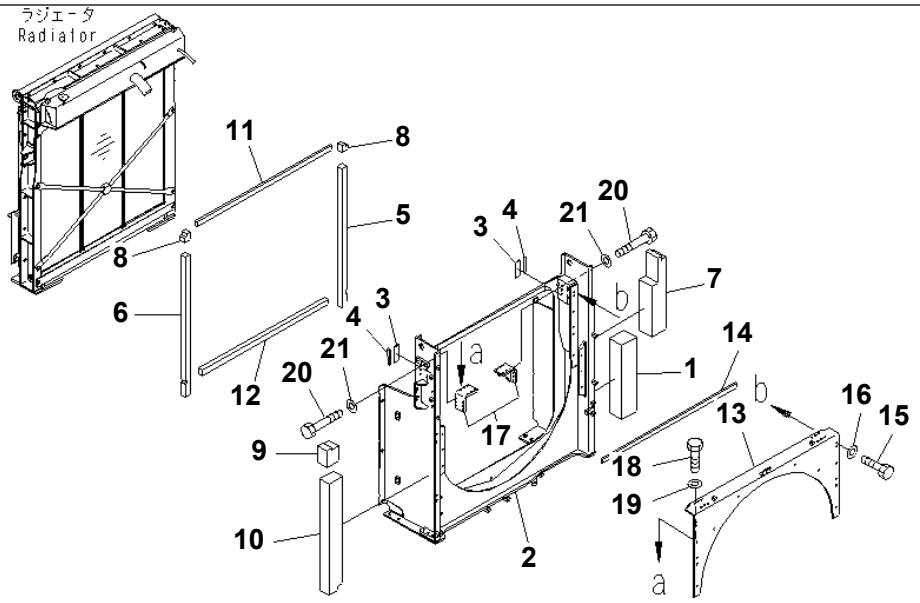

00046309

Ref. C0100-03A1 **Page 060030**

PC1250SP-8R S/N 35001-UP (W/O EGR, +55C DEGREE)
COOLING (SHROUD) (+55C SPEC.)

Item	Part No.	Part Name	Qty	Serial No.
	21N-03-43920	SHROUD	1	35001-
1	21N-03-37450	· SHEET	1	35001-
2	☆	· SHROUD	1	35001-
3	21N-03-41472	· SHEET	2	35001-
4	21N-03-41481	· SHEET	2	35001-
5	21N-03-42121	· SHEET	1	35001-
6	21N-03-42131	· SHEET	1	35001-
7	21N-03-42151	· SHEET	1	35001-
8	21N-03-42170	· SHEET	2	35001-
9	21N-03-42340	· SHEET	1	35001-
10	21N-03-42781	· SHEET	1	35001-
11	21N-03-42871	· SHEET	1	35001-
12	21N-03-42880	· SHEET	1	35001-
	21N-03-41161	SHROUD	1	35001-
13	☆	· SHROUD	1	35001-
14	21N-03-42231	· SHEET	1	35001-
15	01010-81240	BOLT	10	35001-
16	01643-31232	WASHER	10	35001-
17	21N-03-41370	BRACKET	2	35001-
18	01010-81230	BOLT	12	35001-
19	01643-31232	WASHER	12	35001-
20	01011-81205	BOLT	10	35001-
21	01643-31232	WASHER	10	35001-

Printed By : Dwi Iswanto (airafather6107170)

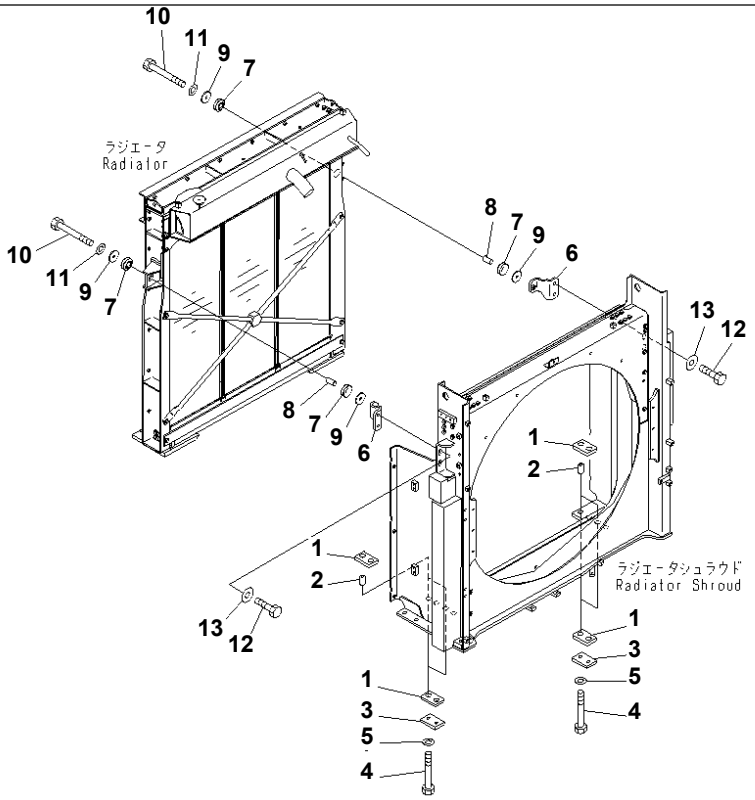

Ref. C0100-04A0 **Page 060040**

PC1250SP-8R S/N 35001-UP (W/O EGR, +55C DEGREE)
COOLING (RADIATOR AND OIL COOLER MOUNT)

Item	Part No.	Part Name	Qty	Serial No.
1	209-03-42710	CUSHION	8	35001-
2	209-03-42730	COLLAR	8	35001-
3	21N-03-31630	PLATE	4	35001-
4	01011-81600	BOLT	8	35001-
5	01643-31645	WASHER	8	35001-
6	21N-03-41811	BRACKET	2	35001-
7	566-54-12212	CUSHION	4	35001-
8	569-03-12190	SPACER	2	35001-
9	565-54-12841	WASHER	4	35001-
10	01011-81605	BOLT	2	35001-
11	01643-31645	WASHER	2	35001-
12	01010-81650	BOLT	4	35001-
13	21T-54-16150	WASHER	4	35001-

Printed By : Dwi Iswanto (airafather6107170)

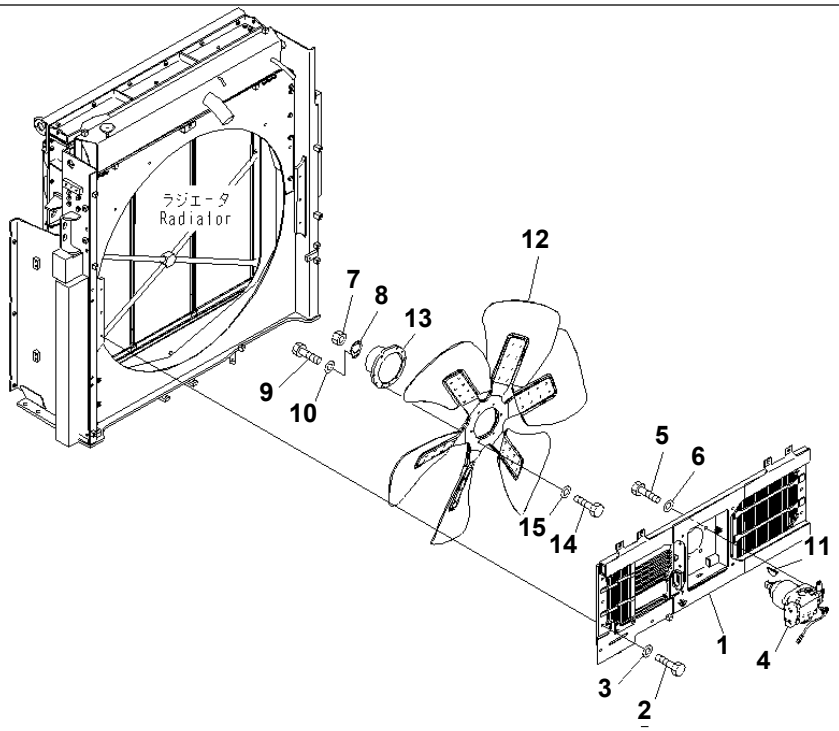

00046311

Ref. C0100-05A0 **Page 060050**

PC1250SP-8R S/N 35001-UP (W/O EGR, +55C DEGREE)
COOLING (FAN MOUNT) (FAN AND MOTOR)

Item	Part No.	Part Name	Qty	Serial No.
1	21N-03-41192	BRACKET	1	35001-
2	01010-81235	BOLT	6	35001-
3	01643-31232	WASHER	6	35001-
4	(708-7W-00130)	MOTOR ASS'Y	1	35001-
5	01010-81640	BOLT	4	35001-
6	01643-31645	WASHER	4	35001-
7	01583-13621	NUT	1	35001-
8	01660-03650	LOCK	1	35001-
9	01010-81020	BOLT	1	35001-
10	01643-31032	WASHER	1	35001-
11	04010-01032	KEY	1	35001-
12	600-645-7450	FAN	1	35001-
13	21M-03-22250	BOSS	1	35001-
14	01010-81245	BOLT	6	35001-
15	01643-31232	WASHER	6	35001-

Printed By : Dwi Iswanto (airafather6107170)

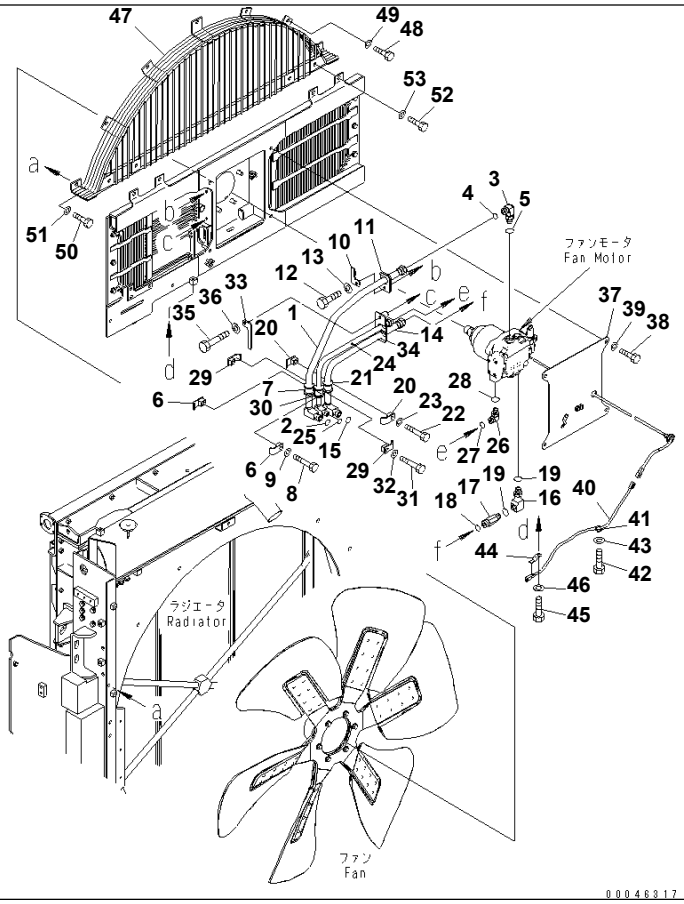

Ref. C0100-06A0 **Page 060060**

PC1250SP-8R S/N 35001-UP (W/O EGR, +55C DEGREE)

COOLING (FAN MOUNT) (FAN MOTOR PIPING)

Item	Part No.	Part Name	Qty	Serial No.
1	21N-03-41830	TUBE	1	35001-
2	02896-61018	O-RING	1	35001-
3	02782-1062A	ELBOW	1	35001-
4	02896-61018	O-RING	1	35001-
5	07002-62434	O-RING	1	35001-
6	07094-10518	CLAMP	2	35001-
7	07095-00526	CUSHION	1	35001-
8	01010-81275	BOLT	1	35001-
9	01643-31232	WASHER	1	35001-
10	209-03-41860	BRACKET	1	35001-
11	209-03-41870	COVER	1	35001-
12	01010-81035	BOLT	1	35001-
13	01643-31032	WASHER	1	35001-
14	21N-03-41840	TUBE	1	35001-
15	02896-61018	O-RING	1	35001-
16	21N-62-41391	ELBOW	1	35001-
17	11Y-62-12440	NIPPLE	1	35001-
18	02896-61018	O-RING	1	35001-
19	07002-62434	O-RING	2	35001-
20	07094-10518	CLAMP	2	35001-
21	07095-00526	CUSHION	1	35001-
22	01010-81275	BOLT	1	35001-
23	01643-31232	WASHER	1	35001-
24	21N-03-41850	TUBE	1	35001-
25	02896-61012	O-RING	1	35001-
26	02782-10516	ELBOW	1	35001-
27	02896-61015	O-RING	1	35001-
28	07002-62034	O-RING	1	35001-
29	07094-10417	CLAMP	2	35001-
30	07095-00420	CUSHION	1	35001-

Printed By : Dwi Iswanto (airafather6107170)

COOLING (FAN MOUNT) (FAN MOTOR PIPING)

Item	Part No.	Part Name	Qty	Serial No.
31	01010-81275	BOLT	1	35001-
32	01643-31232	WASHER	1	35001-
33	21N-03-41920	BRACKET	1	35001-
34	21N-03-41930	COVER	1	35001-
35	01010-81065	BOLT	1	35001-
36	01643-31032	WASHER	1	35001-
37	21N-03-41941	COVER	1	35001-
38	01010-81230	BOLT	4	35001-
39	01643-31232	WASHER	4	35001-
40	21M-06-21190	WIRING HARNESS	1	35001-
41	04434-51012	CLIP	1	35001-
42	01010-81225	BOLT	1	35001-
43	01643-31232	WASHER	1	35001-
44	08193-21012	CLIP	1	35001-
45	01010-81225	BOLT	1	35001-
46	01643-31232	WASHER	1	35001-
47	21N-03-41792	GUARD	1	35001-
48	01010-81235	BOLT	5	35001-
49	01643-31232	WASHER	5	35001-
50	01010-81250	BOLT	2	35001-
51	01643-31232	WASHER	2	35001-
52	01010-81225	BOLT	4	35001-
53	01643-31232	WASHER	4	35001-

Printed By : Dwi Iswanto (airafather6107170)

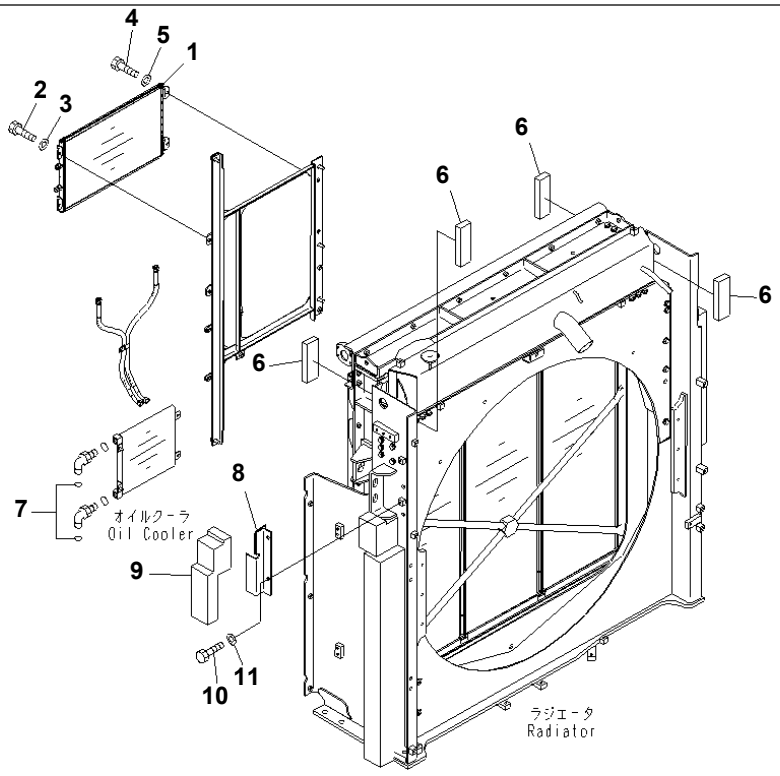

00063078

Ref. C0100-07A1 **Page 060070**

PC1250SP-8R S/N 35001-UP (W/O EGR, +55C DEGREE)
COOLING (CONDENSER) (+55C SPEC.)

Item	Part No.	Part Name	Qty	Serial No.
1	20Y-979-6131	CONDENSER ASS'Y	1	35001-
2	01010-80820	BOLT	2	35001-
3	01643-30823	WASHER	2	35001-
4	01010-80830	BOLT	2	35001-
5	01643-30823	WASHER	2	35001-
6	21N-03-42810	SHEET	4	35001-
7	02896-11015	O-RING	2	35001-
8	21N-03-42490	COVER	1	35001-
9	21N-03-42771	· SHEET	1	35001-
10	01010-81225	BOLT	2	35001-
11	01643-31232	WASHER	2	35001-

Printed By : Dwi Iswanto (airafather6107170)

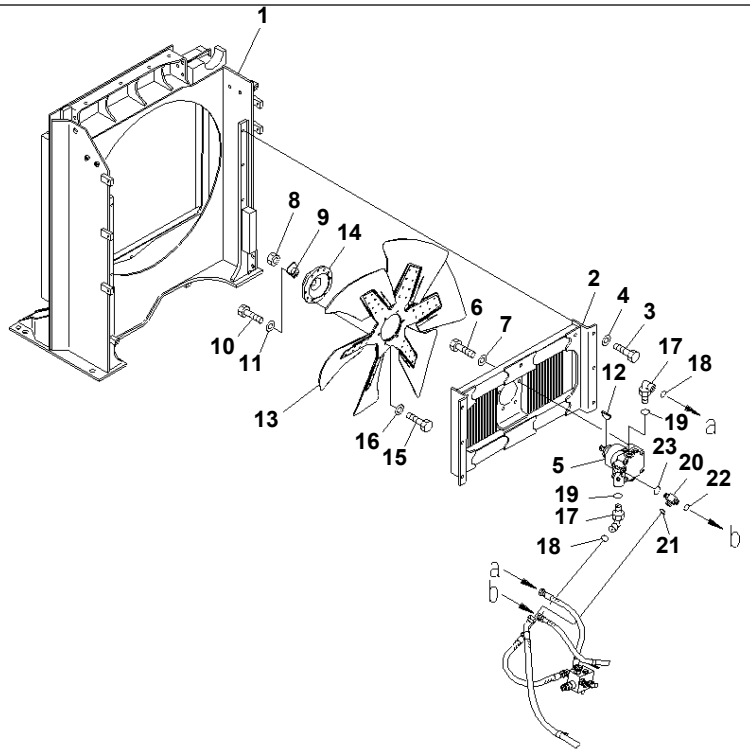

00046319

Ref. C0100-08A0 **Page 060080**

PC1250SP-8R S/N 35001-UP (W/O EGR, +55C DEGREE)
COOLING (AFTER COOLER) (SHROUD AND FAN MOUNT)

Item	Part No.	Part Name	Qty	Serial No.
1	21N-03-42511	SHROUD	1	35001-
2	21N-03-42521	SUPPORT	1	35001-
3	01010-81230	BOLT	6	35001-
4	01643-31232	WASHER	6	35001-
5	(708-7S-00610)	MOTOR ASS'Y	1	35001-
6	01010-81230	BOLT	4	35001-
7	01643-31232	WASHER	4	35001-
8	01583-12012	NUT	1	35001-
9	154-03-72270	LOCK	1	35001-
10	01010-81020	BOLT	1	35001-
11	01643-31032	WASHER	1	35001-
12	04010-00722	KEY	1	35001-
13	600-645-7850	FAN	1	35001-
14	423-03-31710	BOSS	1	35001-
15	01010-81030	BOLT	6	35001-
16	01643-31032	WASHER	6	35001-
17	02782-10425	ELBOW	2	35001-
18	02896-61012	O-RING	2	35001-
19	07002-62434	O-RING	2	35001-
20	21N-62-41661	TEE	1	35001-
21	02896-61012	O-RING	1	35001-
22	02896-61015	O-RING	1	35001-
23	07002-61823	O-RING	1	35001-

Printed By : Dwi Iswanto (airafather6107170)

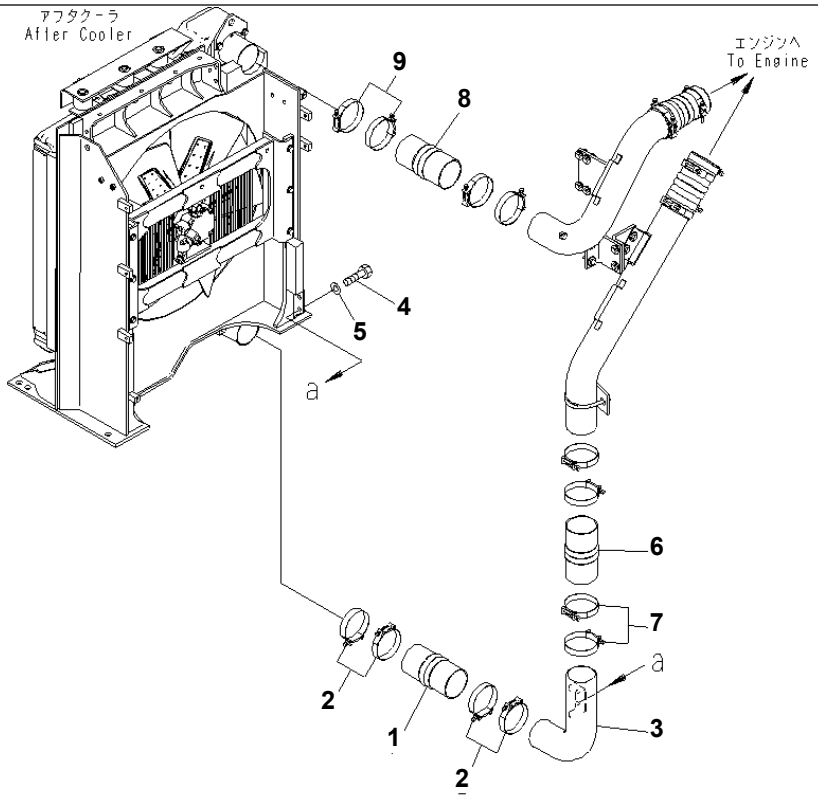

00046320

Ref. C0100-09A0 **Page 060090**

PC1250SP-8R S/N 35001-UP (W/O EGR, +55C DEGREE)
COOLING (AFTER COOLER) (AIR PIPING)

Item	Part No.	Part Name	Qty	Serial No.
1	209-03-41711	HOSE	1	35001-
2	208-62-73910	CLAMP	4	35001-
3	21N-03-42540	TUBE	1	35001-
4	01010-81230	BOLT	2	35001-
5	01643-31232	WASHER	2	35001-
6	209-03-41711	HOSE	1	35001-
7	208-62-73910	CLAMP	2	35001-
8	209-03-41711	HOSE	1	35001-
9	208-62-73910	CLAMP	2	35001-

Printed By : Dwi Iswanto (airafather6107170)

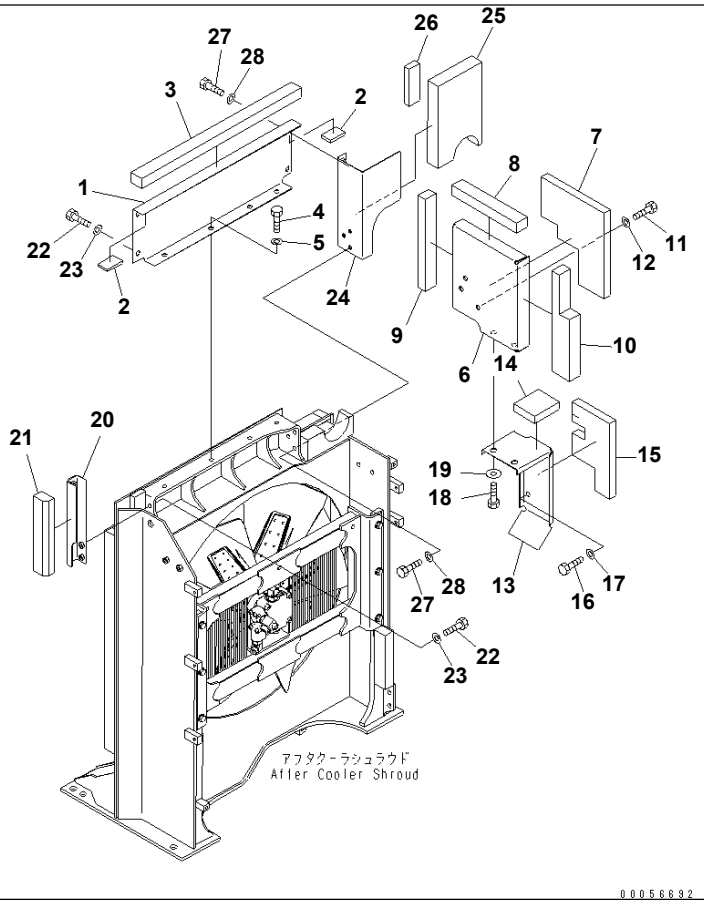

Ref. C0100-10A0 Page 060100

PC1250SP-8R S/N 35001-UP (W/O EGR, +55C DEGREE)

COOLING (AFTER COOLER) (COVER)

Item	Part No.	Part Name	Qty	Serial No.
1	21N-03-42691	COVER	1	35001-
2	21N-03-42460	· SHEET	2	35001-
3	21N-03-42721	· SHEET	1	35001-
4	01010-81230	BOLT	4	35001-
5	01643-31232	WASHER	4	35001-
6	21N-03-42911	COVER	1	35001-
7	21N-03-42931	· SHEET	1	35001-
8	21N-03-42941	· SHEET	1	35001-
9	21N-03-42951	· SHEET	1	35001-
10	21N-03-42961	· SHEET	1	35001-
11	01010-81225	BOLT	3	35001-
12	01643-31232	WASHER	3	35001-
13	21N-03-43610	COVER	1	35001-
14	21N-03-43620	· SHEET	1	35001-
15	21N-03-43630	· SHEET	1	35001-
16	01010-81225	BOLT	2	35001-
17	01643-31232	WASHER	2	35001-
18	01010-81225	BOLT	2	35001-
19	175-54-34170	WASHER	2	35001-
20	21N-03-42441	BRACKET	1	35001-
21	21N-03-42711	· SHEET	1	35001-
22	01010-81230	BOLT	4	35001-
23	01643-31232	WASHER	4	35001-
24	21N-03-42451	COVER	1	35001-
25	21N-03-42741	· SHEET	1	35001-
26	21N-03-42751	· SHEET	1	35001-
27	01010-81230	BOLT	5	35001-
28	01643-31232	WASHER	5	35001-

Printed By : Dwi Iswanto (airafather6107170)

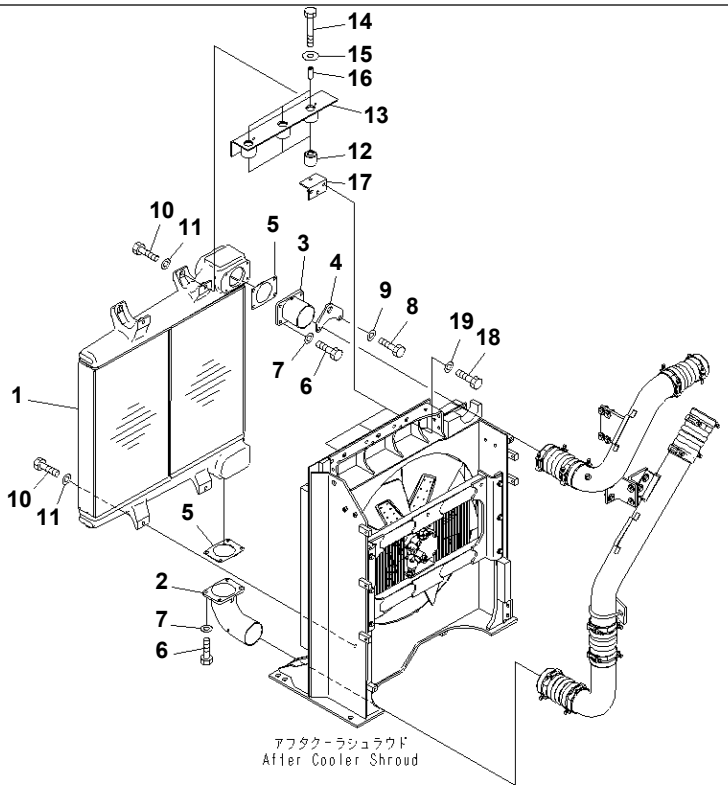

00046358

PC1250SP-8R S/N 35001-UP (W/O EGR, +55C DEGREE)

COOLING (AFTER COOLER)

Item	Part No.	Part Name	Qty	Serial No.
1	21N-03-43510	AFTER COOLER	1	35001-
2	21N-03-43550	TUBE	1	35001-
3	21N-03-43560	TUBE	1	35001-
4	21N-03-43570	PLATE	1	35001-
5	6162-15-4750	GASKET	2	35001-
6	01010-81240	BOLT	6	35001-
7	01643-31232	WASHER	6	35001-
8	01010-81245	BOLT	2	35001-
9	01643-31232	WASHER	2	35001-
10	01010-81240	BOLT	4	35001-
11	01643-31232	WASHER	4	35001-
	21N-03-42501	ISOLATOR ASS'Y	1	35001-
12	198-03-22290	· ISOLATOR	3	35001-
13	21N-03-42591	· BRACKET	1	35001-
14	01018-31280	BOLT	3	35001-
15	175-54-34170	WASHER	3	35001-
16	21N-03-37960	SPACER	3	35001-
17	21N-03-37950	BRACKET	3	35001-
18	01010-81230	BOLT	9	35001-
19	01643-31232	WASHER	9	35001-

Printed By : Dwi Iswanto (airafather6107170)

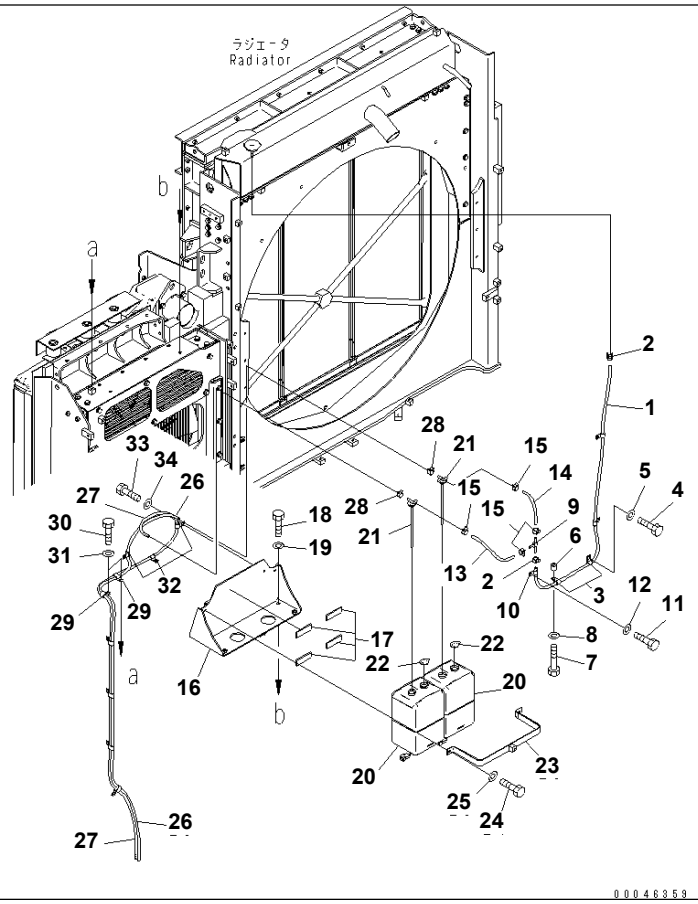

Ref. C0100-12A0 Page 060120

PC1250SP-8R S/N 35001-UP (W/O EGR, +55C DEGREE)
COOLING (AFTER COOLER) (RESERVE TANK)

Item	Part No.	Part Name	Qty	Serial No.
1	14S-03-11620	HOSE	1	35001-
2	07285-00110	CLIP	2	35001-
3	04434-51212	CLIP	2	35001-
4	01010-81225	BOLT	1	35001-
5	01643-31232	WASHER	1	35001-
6	195-33-11220	SPACER	1	35001-
7	01010-81250	BOLT	1	35001-
8	01643-31232	WASHER	1	35001-
9	21N-03-32210	JOINT	1	35001-
10	04434-51212	CLIP	1	35001-
11	01010-81225	BOLT	1	35001-
12	01643-31232	WASHER	1	35001-
13	206-03-43331	HOSE	1	35001-
14	6138-85-8531	HOSE	1	35001-
15	07285-00110	CLIP	4	35001-
16	21N-03-42611	BRACKET	1	35001-
17	205-03-71440	· SHEET	4	35001-
18	01010-81230	BOLT	6	35001-
19	01643-31232	WASHER	6	35001-
20	21N-03-31490	TANK	2	35001-
21	21N-03-32360	· CAP ASS'Y	1	35001-
22	21N-03-32350	· CAP ASS'Y	1	35001-
	ND071370-0190	· SWITCH,LEVEL	1	35001-
23	21N-03-42290	BAND	1	35001-
24	01010-80820	BOLT	2	35001-
25	01643-30823	WASHER	2	35001-
26	21T-03-64350	HOSE	1	35001-
27	21N-03-43310	HOSE	1	35001-
28	07285-00110	CLIP	2	35001-
29	04435-51212	CLIP	2	35001-

Printed By : Dwi Iswanto (airafather6107170)

COOLING (AFTER COOLER) (RESERVE TANK)

Item	Part No.	Part Name	Qty	Serial No.
30	01010-81225	BOLT	2	35001-
31	01643-31232	WASHER	2	35001-
32	04434-51212	CLIP	3	35001-
33	01010-81225	BOLT	3	35001-
34	01643-31232	WASHER	3	35001-

Printed By : Dwi Iswanto (airafather6107170)

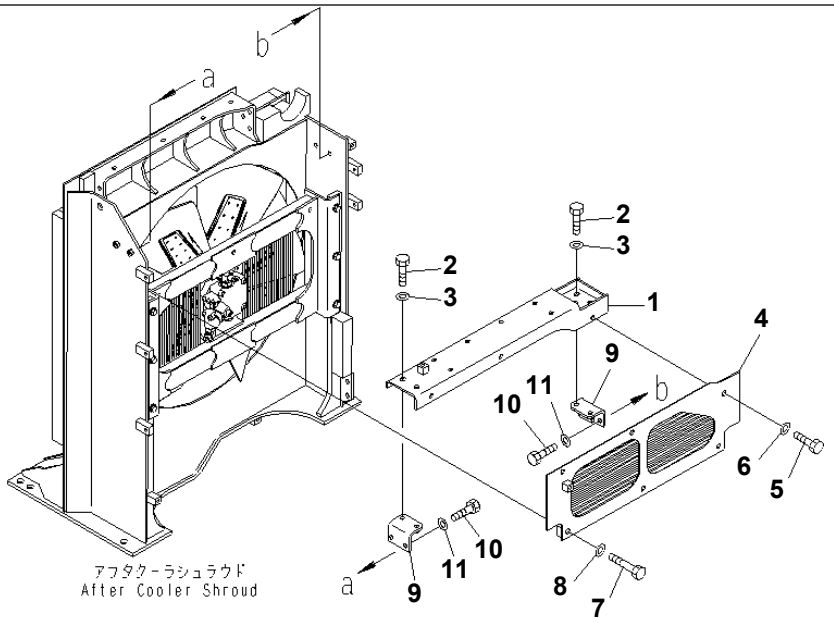

00046360

Ref. C0100-13A0 **Page 060130**

PC1250SP-8R S/N 35001-UP (W/O EGR, +55C DEGREE)
COOLING (AFTER COOLER) (FAN GUARD)

Item	Part No.	Part Name	Qty	Serial No.
1	21N-03-42260	BRACKET	1	35001-
2	01010-81235	BOLT	4	35001-
3	01643-31232	WASHER	4	35001-
4	21N-03-42270	GUARD	1	35001-
5	01010-81230	BOLT	3	35001-
6	01643-31232	WASHER	3	35001-
7	01010-81255	BOLT	3	35001-
8	01643-31232	WASHER	3	35001-
9	21N-03-42280	BRACKET	2	35001-
10	01010-81235	BOLT	4	35001-
11	01643-31232	WASHER	4	35001-

Printed By : Dwi Iswanto (airafather6107170)

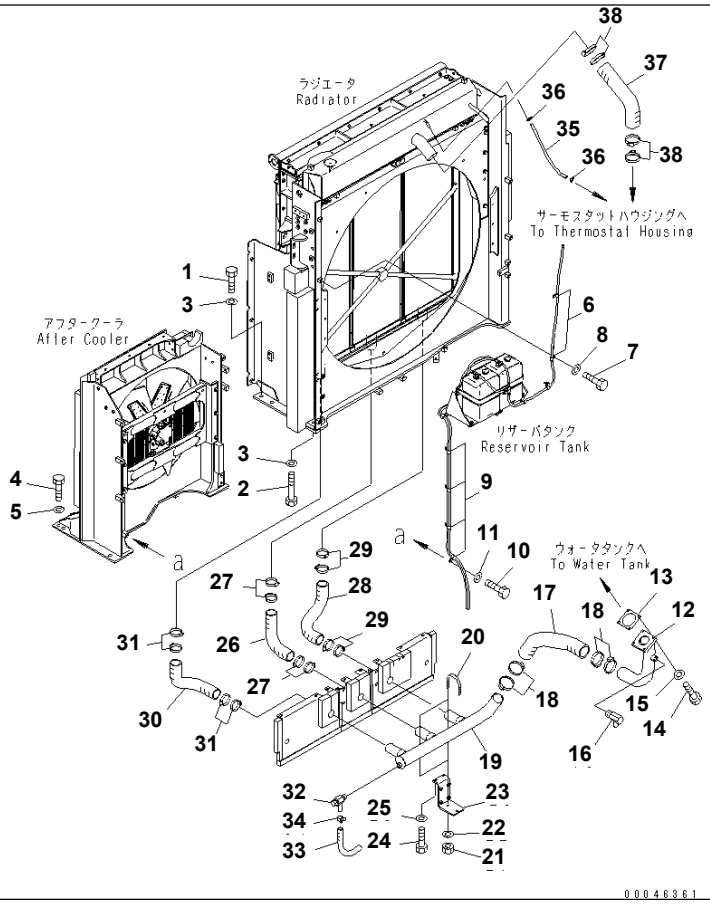

Ref. C0100-14A0 **Page 060140**

PC1250SP-8R S/N 35001-UP (W/O EGR, +55C DEGREE)

COOLING (MOUNT AND TANK PIPING)

Item	Part No.	Part Name	Qty	Serial No.
1	01010-82065	BOLT	6	35001-
2	01010-82090	BOLT	5	35001-
3	01643-32060	WASHER	11	35001-
4	01010-82065	BOLT	5	35001-
5	01643-32060	WASHER	5	35001-
6	04434-51210	CLIP	2	35001-
7	01010-81020	BOLT	2	35001-
8	01643-31032	WASHER	2	35001-
9	04435-51212	CLIP	4	35001-
10	01010-81225	BOLT	1	35001-
11	01643-31232	WASHER	1	35001-
12	21N-03-42841	TUBE	1	35001-
13	195-03-41481	GASKET	1	35001-
14	01010-81045	BOLT	4	35001-
15	01643-31032	WASHER	4	35001-
16	202-98-11340	JOINT	1	35001-
17	21N-03-41731	HOSE	1	35001-
18	07289-00095	CLAMP	4	35001-
19	209-03-42351	TUBE	1	35001-
20	07283-37663	CLIP	2	35001-
21	01597-01009	NUT	4	35001-
22	01643-31032	WASHER	4	35001-
23	21N-03-42360	BRACKET	2	35001-
24	01010-81230	BOLT	4	35001-
25	01643-31232	WASHER	4	35001-
26	209-03-42411	HOSE	1	35001-
27	07289-00070	CLAMP	4	35001-
28	209-03-42421	HOSE	1	35001-
29	07289-00070	CLAMP	4	35001-
30	209-03-42431	HOSE	1	35001-

Printed By : Dwi Iswanto (airafather6107170)

COOLING (MOUNT AND TANK PIPING)

Item	Part No.	Part Name	Qty	Serial No.
31	07289-00070	CLAMP	4	35001-
32	07730-50004	VALVE	1	35001-
33	07270-31525	TUBE	1	35001-
34	07285-00180	CLIP	1	35001-
35	21N-03-41741	HOSE	1	35001-
36	07289-00095	CLAMP	4	35001-
37	07260-20945	HOSE	1	35001-
38	07281-00197	CLAMP	2	35001-

Printed By : Dwi Iswanto (airafather6107170)

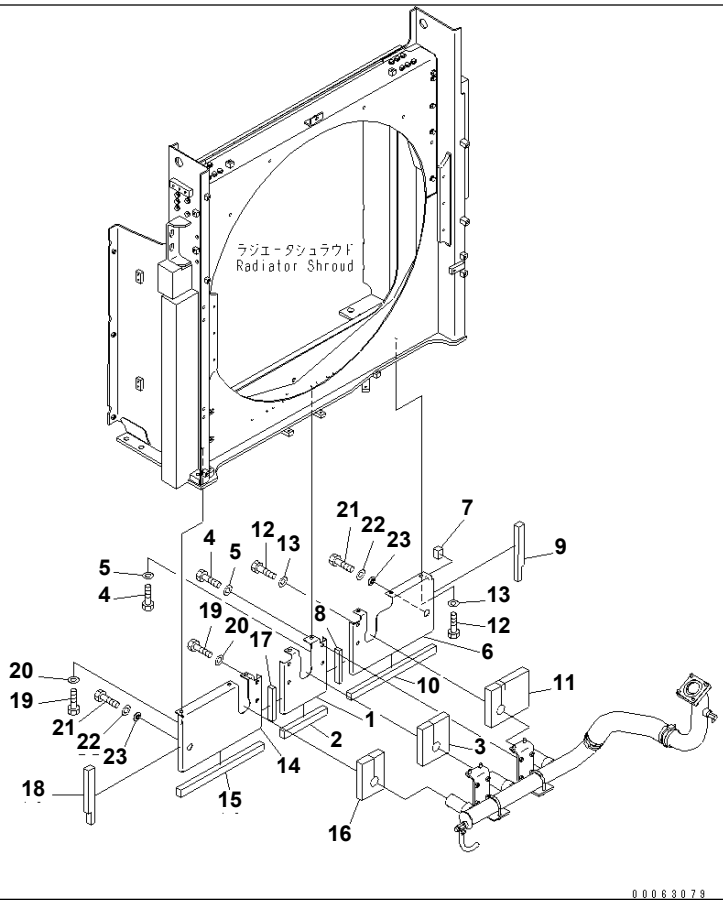

Ref. C0100-15A1 **Page 060150**

PC1250SP-8R S/N 35001-UP (W/O EGR, +55C DEGREE)
COOLING (COVER) (+55C SPEC.)

Item	Part No.	Part Name	Qty	Serial No.
1	21N-03-42371	COVER	1	35001-
2	21N-03-42141	・SHEET	1	35001-
3	21N-03-42210	・SHEET	1	35001-
4	01010-81230	BOLT	6	35001-
5	01643-31232	WASHER	6	35001-
6	21N-03-43640	COVER	1	35001-
7	21N-03-37750	・SHEET	1	35001-
8	21N-03-42250	・SHEET	1	35001-
9	21N-03-43210	・SHEET	1	35001-
10	21N-03-43230	・SHEET	1	35001-
11	21N-03-43650	・SHEET	1	35001-
12	01010-81230	BOLT	5	35001-
13	01643-31232	WASHER	5	35001-
14	21N-03-42391	COVER	1	35001-
15	21N-03-42161	・SHEET	1	35001-
16	21N-03-42181	・SHEET	1	35001-
17	21N-03-42250	・SHEET	1	35001-
18	21N-03-43220	・SHEET	1	35001-
19	01010-81230	BOLT	5	35001-
20	01643-31232	WASHER	5	35001-
21	01010-81230	BOLT	2	35001-
22	01643-31232	WASHER	2	35001-
23	203-54-62670	COLLAR	2	35001-

Printed By : Dwi Iswanto (airafather6107170)

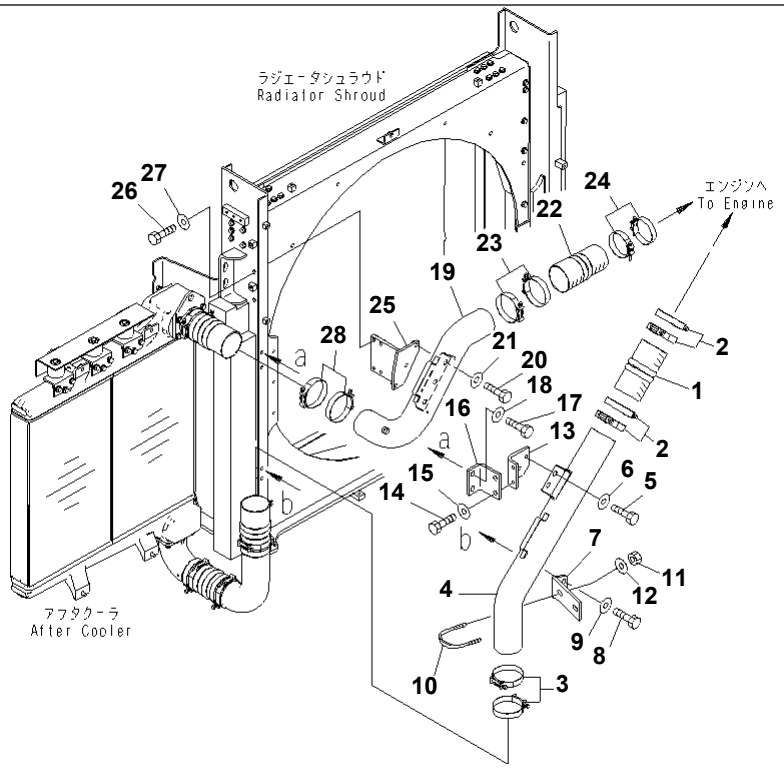

Ref. C0100-16A0 Page 060160

PC1250SP-8R S/N 35001-UP (W/O EGR, +55C DEGREE)
COOLING (AIR PIPING)

Item	Part No.	Part Name	Qty	Serial No.
1	209-03-41711	HOSE	1	35001-
2	208-62-73910	CLAMP	4	35001-
3	208-62-73910	CLAMP	2	35001-
4	21N-03-42551	TUBE	1	35001-
5	01010-81235	BOLT	2	35001-
6	175-54-34170	WASHER	2	35001-
7	21N-03-41680	PLATE	1	35001-
8	01010-81240	BOLT	2	35001-
9	175-54-34170	WASHER	2	35001-
10	07283-31185	CLIP	1	35001-
11	01597-01211	NUT	2	35001-
12	175-54-34170	WASHER	2	35001-
13	21N-03-41670	BRACKET	1	35001-
14	01010-81240	BOLT	2	35001-
15	175-54-34170	WASHER	2	35001-
16	21N-03-41690	PLATE	1	35001-
17	01010-81240	BOLT	2	35001-
18	175-54-34170	WASHER	2	35001-
19	21N-03-42530	TUBE	1	35001-
20	01010-81240	BOLT	3	35001-
21	175-54-34170	WASHER	3	35001-
22	195-03-64451	HOSE	1	35001-
23	208-62-73910	CLAMP	2	35001-
24	20Y-62-51671	CLAMP	2	35001-
25	21N-03-41661	BRACKET	1	35001-
26	01010-81240	BOLT	4	35001-
27	175-54-34170	WASHER	4	35001-
28	208-62-73910	CLAMP	2	35001-

Printed By : Dwi Iswanto (airafather6107170)

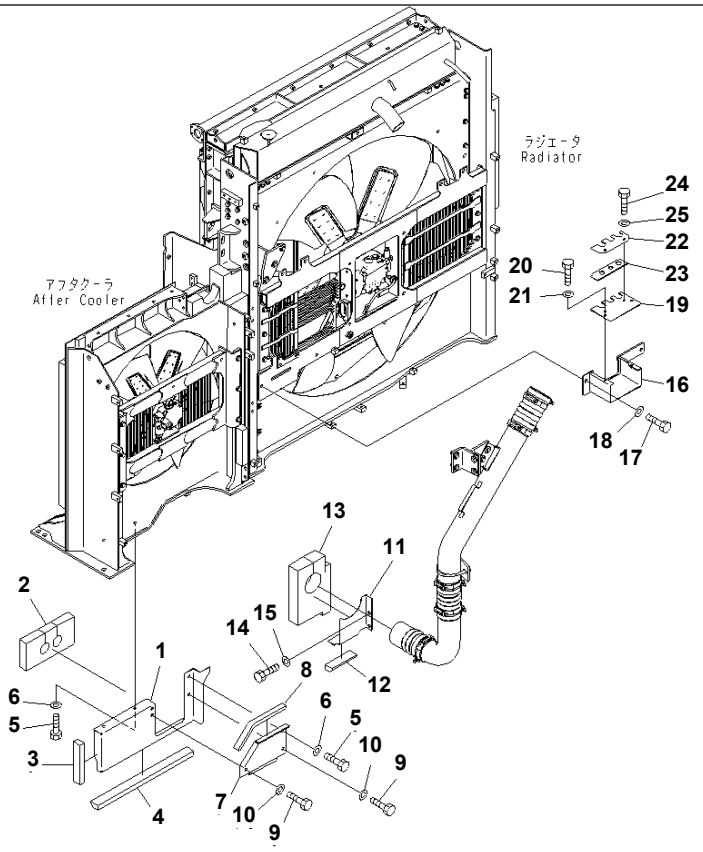

Ref. C0100-17A0 **Page 060170**

PC1250SP-8R S/N 35001-UP (W/O EGR, +55C DEGREE)
COOLING (AFTER COOLER COVER)

Item	Part No.	Part Name	Qty	Serial No.
1	21N-03-42641	COVER	1	35001-
2	21N-03-42651	· SHEET	1	35001-
3	21N-03-42661	· SHEET	1	35001-
4	21N-03-42671	· SHEET	1	35001-
5	01010-81230	BOLT	3	35001-
6	01643-31232	WASHER	3	35001-
7	21N-03-42410	COVER	1	35001-
8	21N-03-42430	· SHEET	1	35001-
9	01010-81230	BOLT	3	35001-
10	01643-31232	WASHER	3	35001-
11	21N-03-42421	COVER	1	35001-
12	21N-03-42480	· SHEET	1	35001-
13	21N-03-42681	· SHEET	1	35001-
14	01010-81235	BOLT	2	35001-
15	01643-31232	WASHER	2	35001-
16	21N-03-41750	COVER	1	35001-
17	01010-81230	BOLT	2	35001-
18	01643-31232	WASHER	2	35001-
19	21N-03-41760	COVER	1	35001-
20	01010-81025	BOLT	2	35001-
21	01643-31032	WASHER	2	35001-
22	21N-03-41770	COVER	1	35001-
23	21N-03-41780	· SHEET	1	35001-
24	01010-81025	BOLT	2	35001-
25	01643-31032	WASHER	2	35001-

Printed By : Dwi Iswanto (airafather6107170)

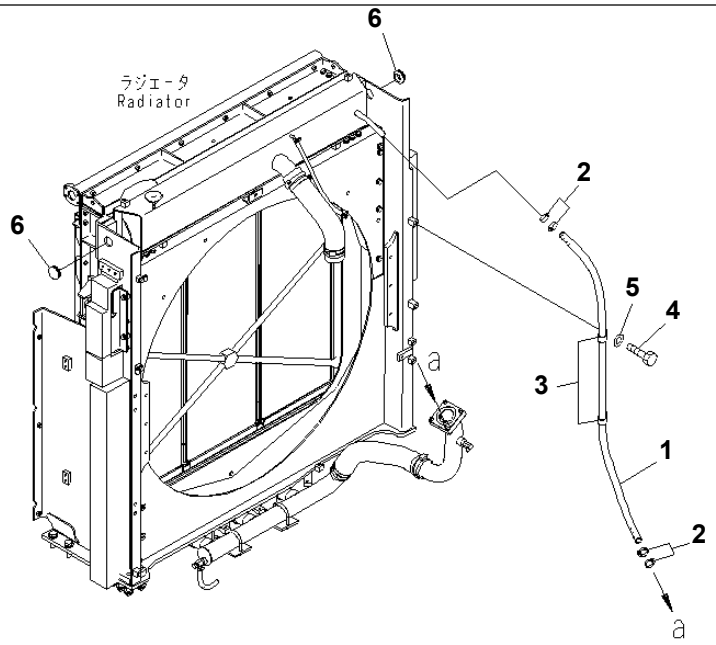

00063080

Ref. C0100-18A1 **Page 060180**

PC1250SP-8R S/N 35001-UP (W/O EGR, +55C DEGREE)
COOLING (RADIATOR BYPASS HOSE) (+55C SPEC.)

Item	Part No.	Part Name	Qty	Serial No.
1	21N-03-42851	HOSE	1	35001-
2	07281-00359	CLAMP	4	35001-
3	04434-53212	CLIP	2	35001-
4	01010-81225	BOLT	2	35001-
5	01643-31232	WASHER	2	35001-
6	09415-03620	CAP	2	35001-

Printed By : Dwi Iswanto (airafather6107170)

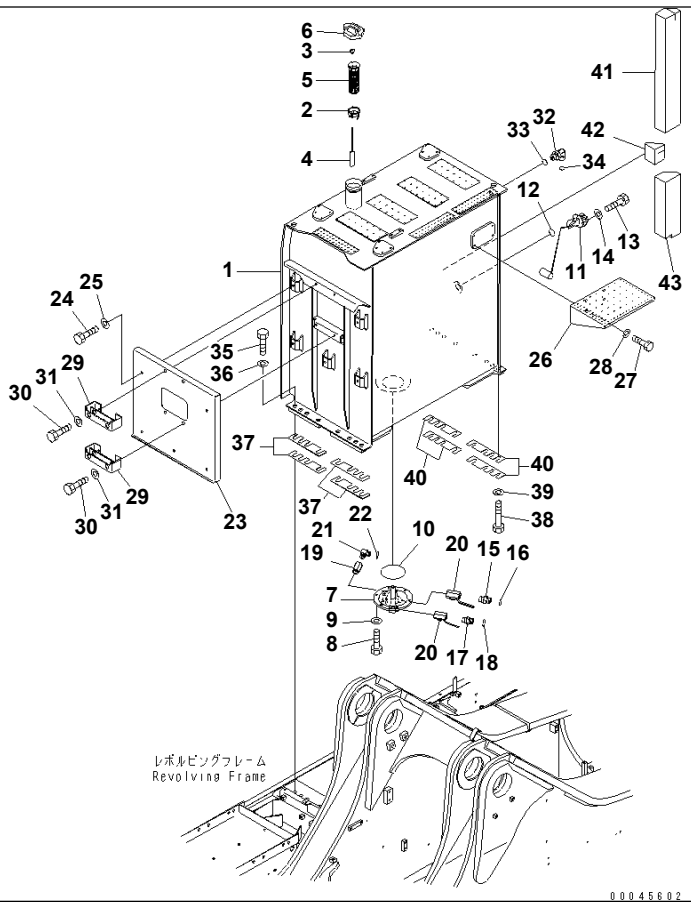

Ref. D0100-01A0 **Page 090010**

PC1250SP-8R S/N 35001-UP (W/O EGR, +55C DEGREE)

FUEL TANK(#35001-35015)

Item	Part No.	Part Name	Qty	Serial No.
1	21N-04-41111	TANK	1	35001-35015
	22U-04-21241	STRAINER ASS'Y	1	35001-@
	22U-04-21200	· FLOAT ASS'Y	1	35001-@
2	22U-04-21210	· · GUIDE	1	35001-@
3	20Y-04-21580	· · CAP	1	35001-@
4	22U-04-21220	· · FLOAT	1	35001-@
5	07056-18425	· STRAINER	1	35001-@
6	07091-21200	CAP	1	35001-35015
7	21N-04-41211	FLANGE	1	35001-@
8	01010-81235	BOLT	6	35001-@
9	01643-31232	WASHER	6	35001-@
10	07000-15200	O-RING	1	35001-@
11	7861-93-5810	SENSOR	1	35001-@
12	07000-13050	O-RING	1	35001-@
13	01010-80612	BOLT	4	35001-@
14	01643-30623	WASHER	4	35001-@
15	209-04-42150	UNION	1	35001-@
16	02896-11015	O-RING	1	35001-@
17	21N-04-41232	UNION	1	35001-@
18	02896-11018	O-RING	1	35001-@
19	07700-40460	VALVE	1	35001-@
20	07700-40661	VALVE	2	35001-@
21	21N-64-36520	ELBOW	1	35001-@
22	02896-11012	O-RING	1	35001-@
23	21N-54-41191	COVER	1	35001-@
24	01010-81230	BOLT	5	35001-@
25	175-54-34170	WASHER	5	35001-@
26	21N-54-42551	BRACKET	1	35001-@
27	01010-81225	BOLT	4	35001-@
28	175-54-34170	WASHER	4	35001-@

Printed By : Dwi Iswanto (airafather6107170)

FUEL TANK(#35001-35015)

Item	Part No.	Part Name	Qty	Serial No.
29	21N-54-39990	STEP	2	35001-@
30	01010-81230	BOLT	4	35001-@
31	01643-31232	WASHER	4	35001-@
32	02782-10422	ELBOW	1	35001-@
33	07002-12034	O-RING	1	35001-@
34	02896-11012	O-RING	1	35001-@
35	21N-04-41410	BOLT	8	35001-@
36	01643-32460	WASHER	8	35001-@
37	21N-04-41290	PLATE	4	35001-@
38	01011-82015	BOLT	8	35001-@
39	01643-32060	WASHER	8	35001-@
40	21N-04-41241	PLATE	4	35001-@
41	21N-04-41261	SHEET	1	35001-@
42	21N-04-41271	SHEET	1	35001-@
43	21N-04-41281	SHEET	1	35001-@

Printed By : Dwi Iswanto (airafather6107170)

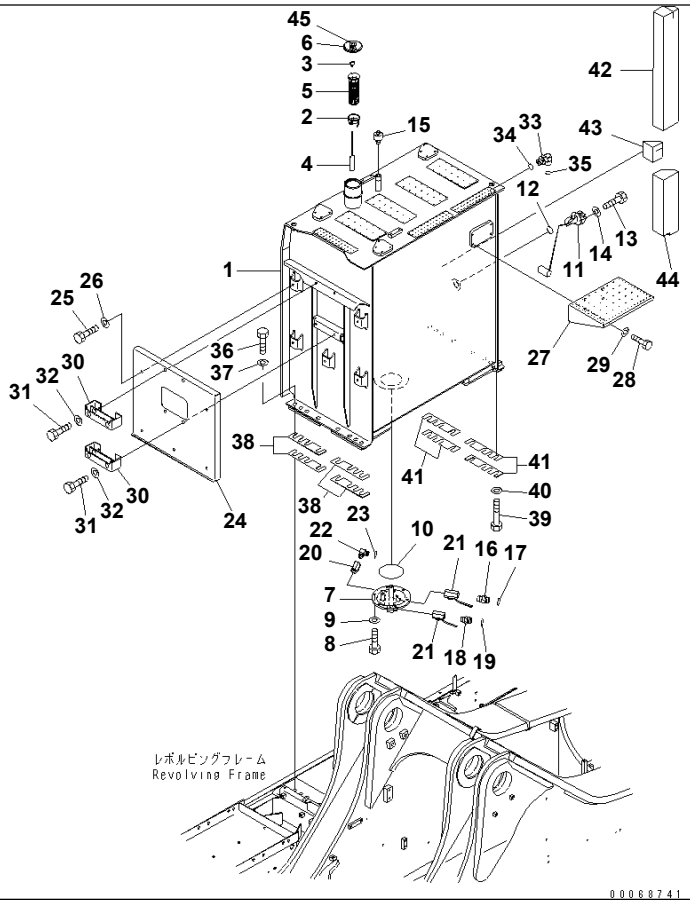

Ref. D0100-01A0A **Page 090020**

PC1250SP-8R S/N 35001-UP (W/O EGR, +55C DEGREE)
FUEL TANK(#35016-)

Item	Part No.	Part Name	Qty	Serial No.
1	21N-04-41112	TANK	1	35016-
	22U-04-21241	STRAINER ASS'Y	1	35001-
	22U-04-21200	· FLOAT ASS'Y	1	35001-
2	22U-04-21210	· · GUIDE	1	35001-
3	20Y-04-21580	· · CAP	1	35001-
4	22U-04-21220	· · FLOAT	1	35001-
5	07056-18425	· STRAINER	1	35001-
6	17A-04-41411	CAP	1	35016-
7	21N-04-41212	FLANGE	1	35137-
	□21N-04-41211	FLANGE	1	35001-35136
8	01010-81235	BOLT	6	35001-
9	01643-31232	WASHER	6	35001-
10	07000-15200	O-RING	1	35001-
11	7861-93-5810	SENSOR	1	35001-
12	07000-13050	O-RING	1	35001-
13	01010-80612	BOLT	4	35001-
14	01643-30623	WASHER	4	35001-
15	22U-60-21520	BREATHER	1	35016-
16	209-04-42150	UNION	1	35001-
17	02896-11015	O-RING	1	35001-
18	21N-04-41232	UNION	1	35001-
19	02896-11018	O-RING	1	35001-
20	07700-40460	VALVE	1	35001-
21	07700-40661	VALVE	2	35001-
22	21N-64-36520	ELBOW	1	35001-
23	02896-11012	O-RING	1	35001-
24	21N-54-41191	COVER	1	35001-
25	01010-81230	BOLT	5	35001-
26	175-54-34170	WASHER	5	35001-
27	21N-54-42551	BRACKET	1	35001-

Printed By : Dwi Iswanto (airafather6107170)

FUEL TANK(#35016-)

Item	Part No.	Part Name	Qty	Serial No.
28	01010-81225	BOLT	4	35001-
29	175-54-34170	WASHER	4	35001-
30	21N-54-39990	STEP	2	35001-
31	01010-81230	BOLT	4	35001-
32	01643-31232	WASHER	4	35001-
33	02782-10422	ELBOW	1	35001-
34	07002-12034	O-RING	1	35001-
35	02896-11012	O-RING	1	35001-
36	21N-04-41410	BOLT	8	35001-
37	01643-32460	WASHER	8	35001-
38	21N-04-41290	PLATE	4	35001-
39	01011-82015	BOLT	8	35001-
40	01643-32060	WASHER	8	35001-
41	21N-04-41241	PLATE	4	35001-
42	21N-04-41261	SHEET	1	35001-
43	21N-04-41271	SHEET	1	35001-
44	21N-04-41281	SHEET	1	35001-
45	09460-00000	LOCK	1	35016-

Printed By : Dwi Iswanto (airafather6107170)

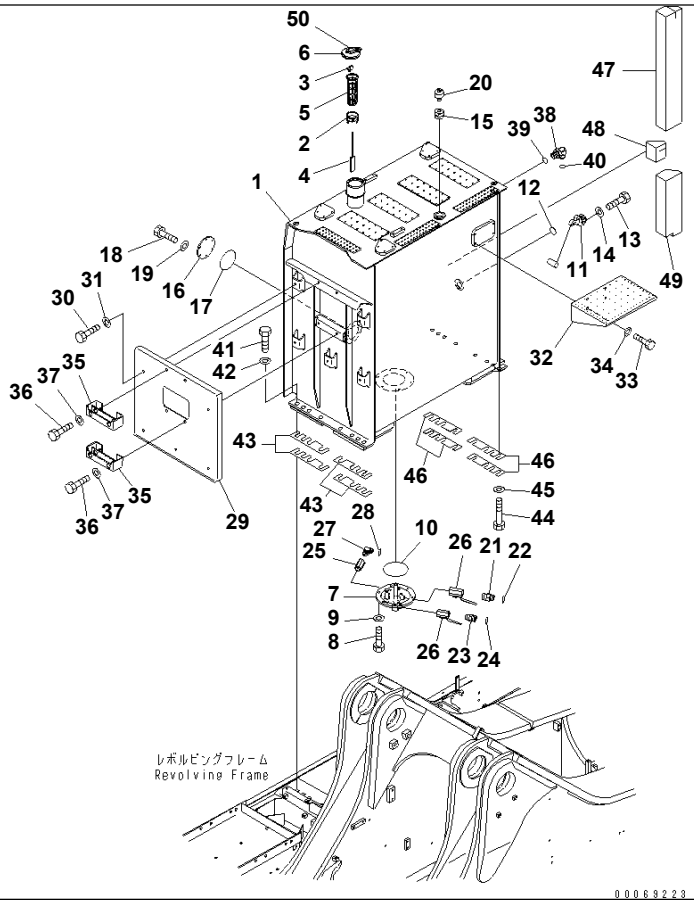

Ref. D0100-01A1 **Page 090030**

PC1250SP-8R S/N 35001-UP (W/O EGR, +55C DEGREE)
FUEL TANK (WITH QUICK CHARGE)

Item	Part No.	Part Name	Qty	Serial No.
1	21N-04-41511	TANK	1	35001-
	22U-04-21241	STRAINER ASS'Y	1	35001-
	22U-04-21200	· FLOAT ASS'Y	1	35001-
2	22U-04-21210	· · GUIDE	1	35001-
3	20Y-04-21580	· · CAP	1	35001-
4	22U-04-21220	· · FLOAT	1	35001-
5	07056-18425	· STRAINER	1	35001-
6	17A-04-41411	CAP	1	35001-
7	21N-04-41212	FLANGE	1	35137-
	□21N-04-41211	FLANGE	1	35001-35136
8	01010-81235	BOLT	6	35001-
9	01643-31232	WASHER	6	35001-
10	07000-15200	O-RING	1	35001-
11	7861-93-5810	SENSOR	1	35001-
12	07000-13050	O-RING	1	35001-
13	01010-80612	BOLT	4	35001-
14	01643-30623	WASHER	4	35001-
15	17A-04-42150	ADAPTER	1	35001-
16	195-04-31160	COVER	1	35001-
17	07000-12115	O-RING	1	35001-
18	01010-80820	BOLT	6	35001-
19	01602-20825	WASHER	6	35001-
20	22U-60-21520	BREATHER	1	35001-
21	209-04-42150	UNION	1	35001-
22	02896-11015	O-RING	1	35001-
23	21N-04-41232	UNION	1	35001-
24	02896-11018	O-RING	1	35001-
25	07700-40460	VALVE	1	35001-
26	07700-40661	VALVE	2	35001-
27	21N-64-36520	ELBOW	1	35001-

Printed By : Dwi Iswanto (airafather6107170)

FUEL TANK (WITH QUICK CHARGE)

Item	Part No.	Part Name	Qty	Serial No.
28	02896-11012	O-RING	1	35001-
29	21N-54-41191	COVER	1	35001-
30	01010-81230	BOLT	5	35001-
31	175-54-34170	WASHER	5	35001-
32	21N-54-42551	BRACKET	1	35001-
33	01010-81225	BOLT	4	35001-
34	175-54-34170	WASHER	4	35001-
35	21N-54-39990	STEP	2	35001-
36	01010-81230	BOLT	4	35001-
37	01643-31232	WASHER	4	35001-
38	02782-10422	ELBOW	1	35001-
39	07002-12034	O-RING	1	35001-
40	02896-11012	O-RING	1	35001-
41	21N-04-41410	BOLT	8	35001-
42	01643-32460	WASHER	8	35001-
43	21N-04-41290	PLATE	4	35001-
44	01011-82015	BOLT	8	35001-
45	01643-32060	WASHER	8	35001-
46	21N-04-41241	PLATE	4	35001-
47	21N-04-41261	SHEET	1	35001-
48	21N-04-41271	SHEET	1	35001-
49	21N-04-41281	SHEET	1	35001-
50	09460-00000	LOCK	1	35001-

Printed By : Dwi Iswanto (airafather6107170)

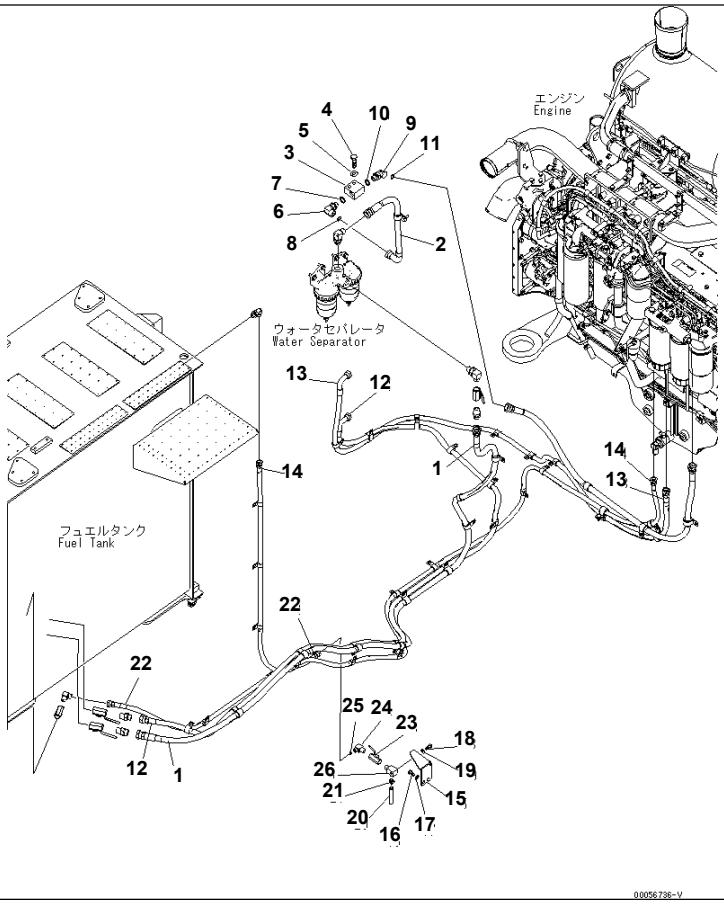

Ref. D0200-01A0 **Page 090040**

PC1250SP-8R S/N 35001-UP (W/O EGR, +55C DEGREE)

FUEL LINE

Item	Part No.	Part Name	Qty	Serial No.
1	02762-00640	HOSE	1	35001-
2	02763-00606	HOSE	1	35001-
3	21N-04-41160	BLOCK	1	35001-
4	01010-81265	BOLT	2	35001-
5	01643-31232	WASHER	2	35001-
6	02782-10628	ELBOW	1	35001-
7	07002-12434	O-RING	1	35001-
8	02896-11018	O-RING	1	35001-
9	02783-10628	ELBOW	1	35001-
10	07002-12434	O-RING	1	35001-
11	02896-11018	O-RING	1	35001-
12	21N-04-41420	HOSE	1	35001-
13	21N-04-41430	HOSE	1	35001-
14	02762-00449	HOSE	1	35001-
15	21N-04-41121	BRACKET	1	35001-
16	01010-81230	BOLT	2	35001-
17	01643-31232	WASHER	2	35001-
18	01010-81025	BOLT	1	35001-
19	01643-31032	WASHER	1	35001-
20	07270-51210	TUBE	1	35001-
21	07281-00167	CLAMP	1	35001-
22	02762-00412	HOSE	1	35001-
23	07700-40460	VALVE	1	35001-
24	21N-64-36520	ELBOW	1	35001-
25	02896-11012	O-RING	1	35001-
26	195-04-11431	ELBOW	1	35001-

Printed By : Dwi Iswanto (airafather6107170)

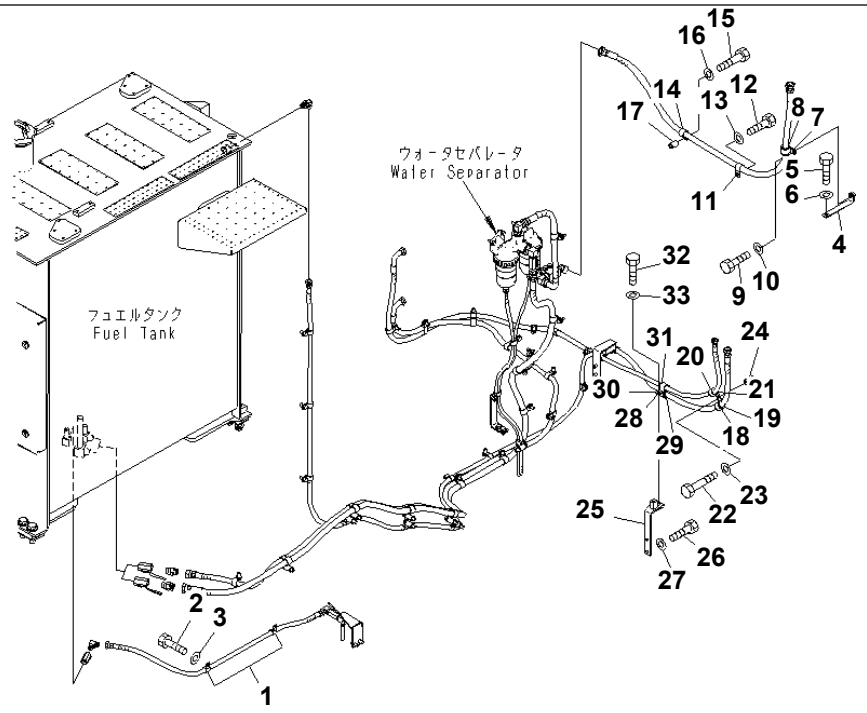

00056741

Ref. D0200-02A0 **Page 090050**

PC1250SP-8R S/N 35001-UP (W/O EGR, +55C DEGREE)
FUEL LINE (CLAMP) (1/2)

Item	Part No.	Part Name	Qty	Serial No.
1	04434-51912	CLIP	2	35001-
2	01010-81225	BOLT	2	35001-
3	01643-31232	WASHER	2	35001-
4	21N-04-41151	BRACKET	1	35001-
5	01010-81230	BOLT	1	35001-
6	01643-31232	WASHER	1	35001-
7	04434-53412	CLIP	1	35001-
8	07095-20627	CUSHION	1	35001-
9	01010-81225	BOLT	1	35001-
10	01643-31232	WASHER	1	35001-
11	04434-52712	CLIP	1	35001-
12	01010-81225	BOLT	1	35001-
13	01643-31232	WASHER	1	35001-
14	04434-52712	CLIP	1	35001-
15	01010-81260	BOLT	1	35001-
16	01643-31232	WASHER	1	35001-
17	20Y-03-11220	COLLAR	1	35001-
18	04434-53211	CLIP	1	35001-
19	07095-20523	CUSHION	1	35001-
20	04434-52711	CLIP	1	35001-
21	07095-20418	CUSHION	1	35001-
22	01010-81085	BOLT	1	35001-
23	01643-31032	WASHER	1	35001-
24	6152-51-5520	SPACER	1	35001-
25	21N-04-41130	BRACKET	1	35001-
26	01010-81230	BOLT	2	35001-
27	01643-31232	WASHER	2	35001-
28	04434-53212	CLIP	1	35001-
29	07095-20523	CUSHION	1	35001-
30	04434-52712	CLIP	1	35001-

Printed By : Dwi Iswanto (airafather6107170)

FUEL LINE (CLAMP) (1/2)

Item	Part No.	Part Name	Qty	Serial No.
31	07095-20418	CUSHION	1	35001-
32	01010-81230	BOLT	1	35001-
33	01643-31232	WASHER	1	35001-

Printed By : Dwi Iswanto (airafather6107170)

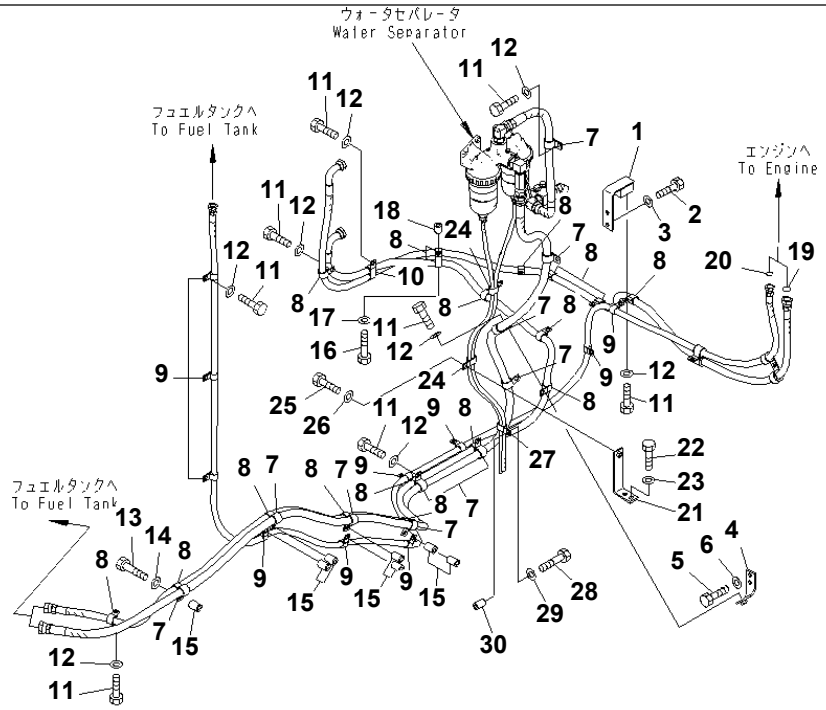

Ref. D0200-03A0 Page 090060

PC1250SP-8R S/N 35001-UP (W/O EGR, +55C DEGREE)

FUEL LINE (CLAMP) (2/2)

Item	Part No.	Part Name	Qty	Serial No.
1	21N-04-41140	BRACKET	1	35001-
2	01010-81225	BOLT	2	35001-
3	01643-31232	WASHER	2	35001-
4	21N-04-41171	BRACKET	1	35001-
5	01010-81225	BOLT	2	35001-
6	01643-31232	WASHER	2	35001-
7	04434-52712	CLIP	10	35001-
8	04434-52312	CLIP	17	35001-
9	04434-51912	CLIP	10	35001-
10	04435-52212	CLIP	1	35001-
11	01010-81225	BOLT	23	35001-
12	01643-31232	WASHER	23	35001-
13	01010-81260	BOLT	7	35001-
14	01643-31232	WASHER	7	35001-
15	20Y-03-11220	COLLAR	7	35001-
16	01010-81250	BOLT	1	35001-
17	01643-31232	WASHER	1	35001-
18	195-33-11220	SPACER	1	35001-
19	02896-11015	O-RING	1	35001-
20	02896-11012	O-RING	1	35001-
21	21N-04-41180	BRACKET	1	35001-
22	01010-81225	BOLT	2	35001-
23	01643-31232	WASHER	2	35001-
24	04435-51512	CLIP	2	35001-
25	01010-81225	BOLT	2	35001-
26	01643-31232	WASHER	2	35001-
27	04435-51512	CLIP	1	35001-
28	01010-81260	BOLT	1	35001-
29	01643-31232	WASHER	1	35001-
30	20Y-03-11220	COLLAR	1	35001-

Printed By : Dwi Iswanto (airafather6107170)

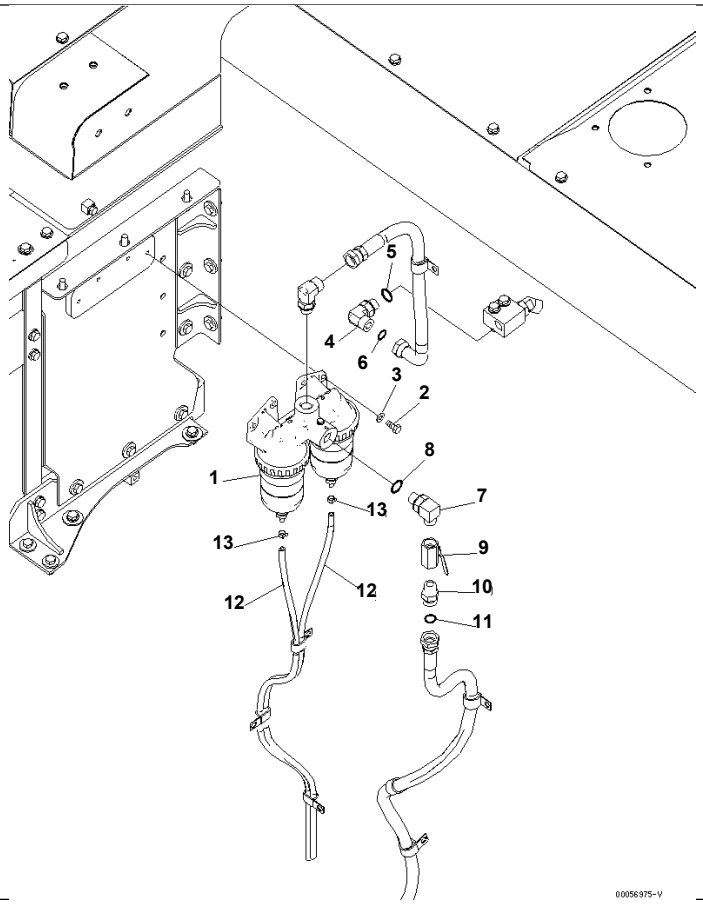

Ref. D0200-04A0 **Page 090070**

PC1250SP-8R S/N 35001-UP (W/O EGR, +55C DEGREE)
FUEL LINE (WATER SEPARATOR)

Item	Part No.	Part Name	Qty	Serial No.
1	600-311-9330	WATER SEPARATOR A.	1	35001-
2	01010-81030	BOLT	4	35001-
3	01643-31032	WASHER	4	35001-
4	02782-10628	ELBOW	1	35001-
5	07002-12434	O-RING	1	35001-
6	02896-11018	O-RING	1	35001-
7	201-62-27880	ELBOW	1	35001-
8	07002-12434	O-RING	1	35001-
9	07700-40661	VALVE	1	35001-
10	21N-04-41232	UNION	1	35001-
11	02896-11018	O-RING	1	35001-
12	07287-00814	HOSE	2	35001-
13	07285-00125	CLIP	2	35001-

Printed By : Dwi Iswanto (airafather6107170)

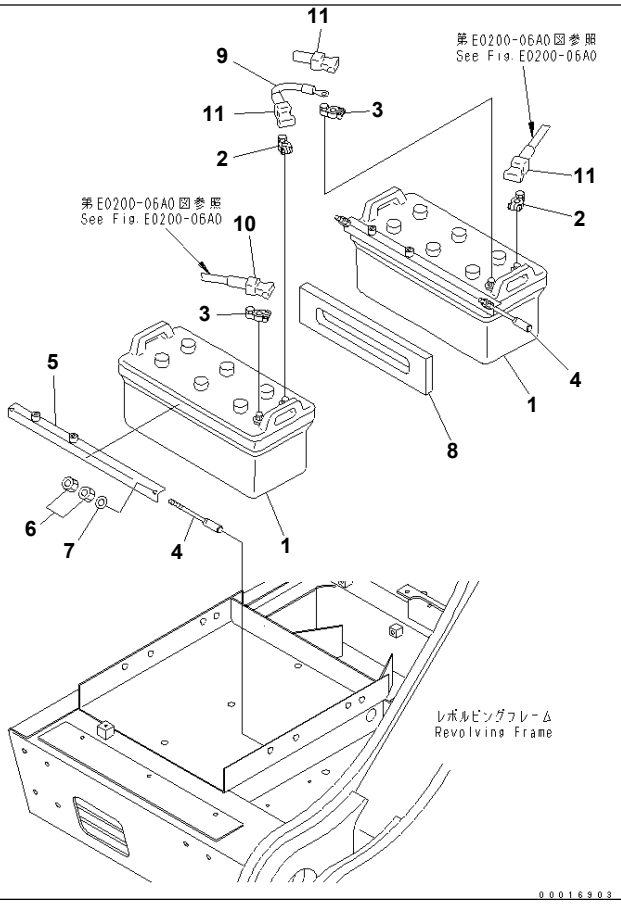

Ref. E0110-01A0 **Page 120010**

PC1250SP-8R S/N 35001-UP (W/O EGR, +55C DEGREE)
BATTERY (WET) (C200)

Item	Part No.	Part Name	Qty	Serial No.
1	08000-02221	BATTERY, WET(C200)	2	35001-
2	08000-00000	TERMINAL, (+)	2	35001-
3	08000-00001	TERMINAL, (-)	2	35001-
4	08006-40255	ROD	4	35001-
5	08005-52056	HOLDER	2	35001-
6	01580-11008	NUT	8	35001-
7	01640-21016	WASHER	4	35001-
8	154-06-13262	SEAT	1	35001-
9	08028-65005	WIRE	1	35001-
10	08038-22511	CAP	1	35001-
11	08038-42511	CAP	3	35001-

Printed By : Dwi Iswanto (airafather6107170)

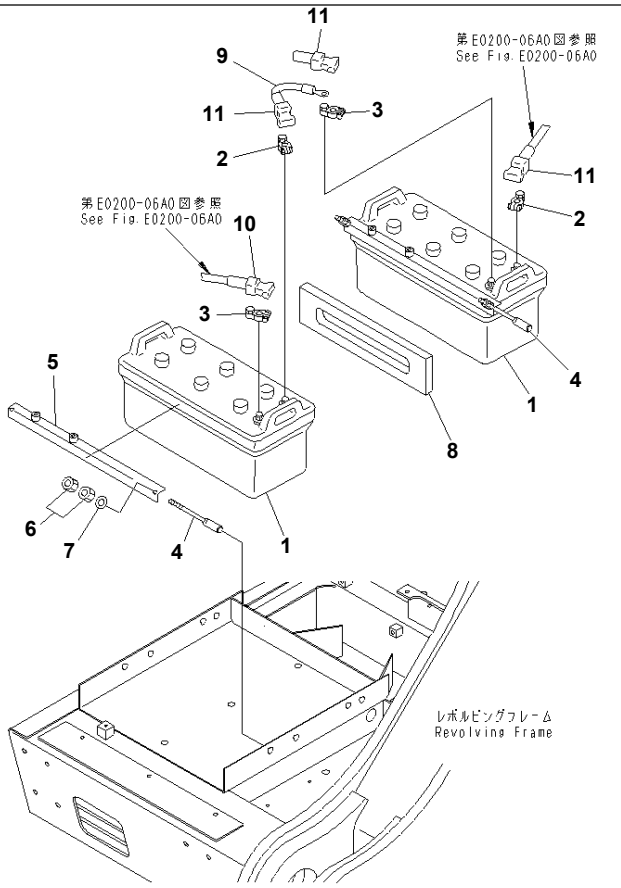

Ref. E0110-01A1 **Page 120020**

PC1250SP-8R S/N 35001-UP (W/O EGR, +55C DEGREE)
BATTERY (DRY) (C200)

Item	Part No.	Part Name	Qty	Serial No.
1	08000-12221	BATTERY, DRY(C200)	2	35001-
2	08000-00000	TERMINAL, (+)	2	35001-
3	08000-00001	TERMINAL, (-)	2	35001-
4	08006-40255	ROD	4	35001-
5	08005-52056	HOLDER	2	35001-
6	01580-11008	NUT	8	35001-
7	01640-21016	WASHER	4	35001-
8	154-06-13262	SEAT	1	35001-
9	08028-65005	WIRE	1	35001-
10	08038-22511	CAP	1	35001-
11	08038-42511	CAP	3	35001-

Printed By : Dwi Iswanto (airafather6107170)

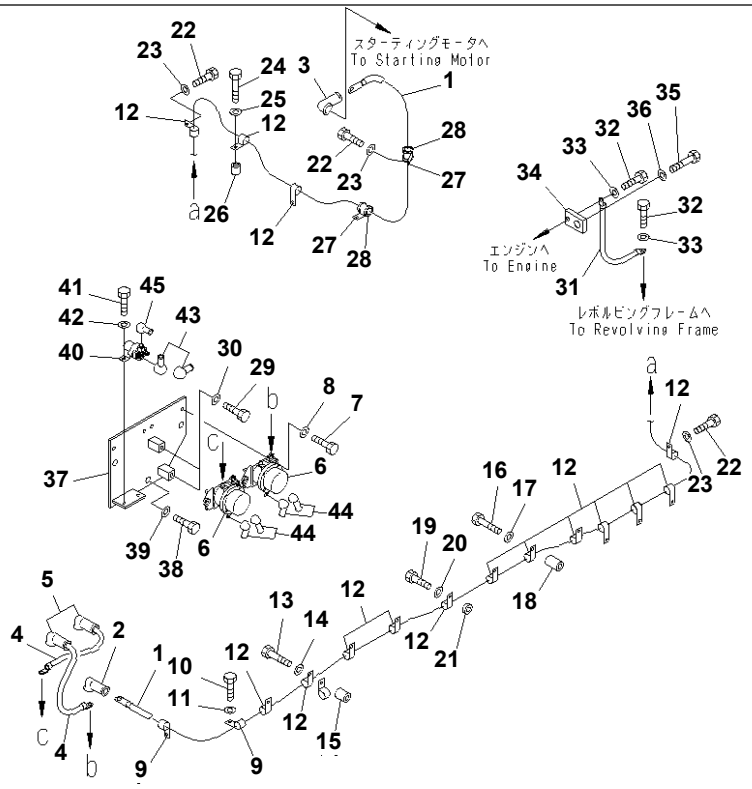

Ref. E0200-01A0 **Page 120030**

PC1250SP-8R S/N 35001-UP (W/O EGR, +55C DEGREE)

WIRING (STARTING HARNESS)

Item	Part No.	Part Name	Qty	Serial No.
1	21N-06-33241	CABLE	1	35001-
2	08038-10035	CAP	1	35001-
3	08038-10035	CAP	1	35001-
4	08028-72020	CABLE	2	35001-
5	08038-04030	CAP	2	35001-
6	08088-40000	RELAY	2	35001-
7	01010-80830	BOLT	4	35001-
8	01643-30823	WASHER	4	35001-
9	04434-52312	CLIP	2	35001-
10	01010-81225	BOLT	2	35001-
11	01643-31232	WASHER	2	35001-
12	04434-52312	CLIP	15	35001-
13	01010-81260	BOLT	4	35001-
14	01643-31232	WASHER	4	35001-
15	203-62-51880	SPACER	4	35001-
16	01010-81270	BOLT	6	35001-
17	01643-31232	WASHER	6	35001-
18	205-03-71330	COLLAR	6	35001-
19	01010-81235	BOLT	1	35001-
20	01643-31232	WASHER	1	35001-
21	198-43-15310	COLLAR, 10MM	1	35001-
22	01010-81225	BOLT	3	35001-
23	01643-31232	WASHER	3	35001-
24	01010-81265	BOLT	1	35001-
25	01643-31232	WASHER	1	35001-
26	20Y-03-11220	COLLAR	1	35001-
27	04434-53212	CLIP	2	35001-
28	07095-20523	CUSHION	2	35001-
29	01010-81225	BOLT	2	35001-
30	01643-31232	WASHER	2	35001-

Printed By : Dwi Iswanto (airafather6107170)

WIRING (STARTING HARNESS)

Item	Part No.	Part Name	Qty	Serial No.
31	08028-56055	CABLE	1	35001-
32	01010-81220	BOLT	2	35001-
33	01643-31232	WASHER	2	35001-
34	21N-06-33250	PLATE	1	35001-
35	01010-81845	BOLT	1	35001-
36	01643-31845	WASHER	1	35001-
37	21N-06-41150	BRACKET	1	35001-
38	01010-81225	BOLT	3	35001-
39	01643-31232	WASHER	3	35001-
40	600-815-2170	SWITCH	1	35001-
41	01010-80620	BOLT	2	35001-
42	01643-30623	WASHER	2	35001-
43	08038-02027	CAP	2	35001-
44	08038-00519	CAP	4	35001-
45	08038-00519	CAP	1	35001-

Printed By : Dwi Iswanto (airafather6107170)

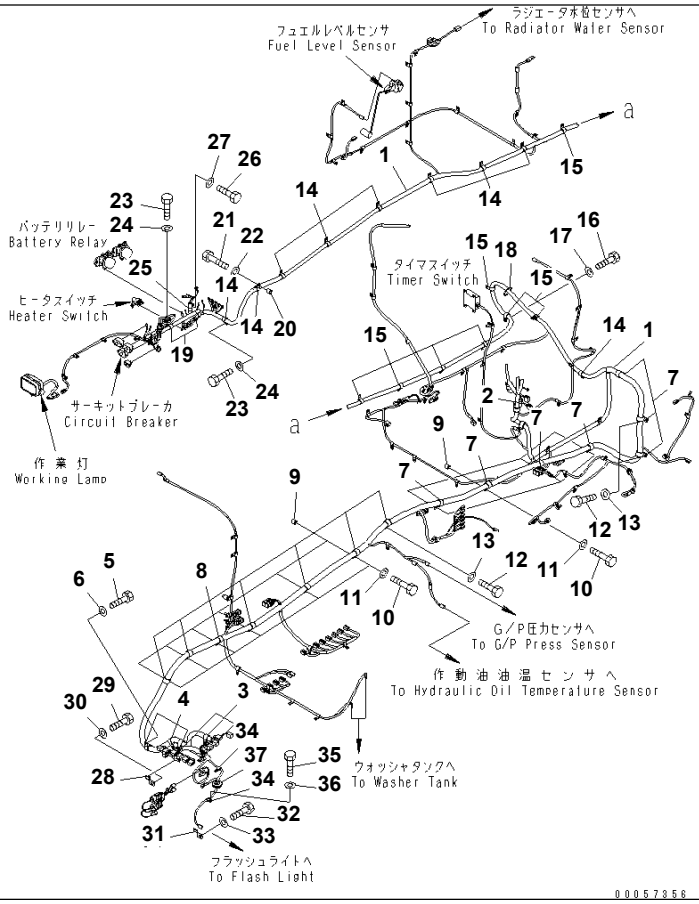

Ref. E0200-02A0 **Page 120040**

PC1250SP-8R S/N 35001-UP (W/O EGR, +55C DEGREE)
WIRING (MAIN HARNESS) (HARNESS AND CLIP)

Item	Part No.	Part Name	Qty	Serial No.
1	21N-06-41114	WIRING HARNESS	1	35006-
	□21N-06-41113	WIRING HARNESS	1	35001-35005
2	19M-06-31720	· RESISTOR	1	35001-
3	04434-52712	CLIP	3	35001-
4	208-06-19170	CLIP	3	35001-
5	01010-81225	BOLT	6	35001-
6	01643-31232	WASHER	6	35001-
7	04434-53412	CLIP	7	35001-
8	208-06-19170	CLIP	7	35001-
9	195-33-11220	SPACER	10	35001-
10	01010-81250	BOLT	10	35001-
11	01643-31232	WASHER	10	35001-
12	01010-81225	BOLT	3	35001-
13	01643-31232	WASHER	3	35001-
14	04434-52712	CLIP	9	35001-
15	04434-53212	CLIP	8	35001-
16	01010-81225	BOLT	1	35001-
17	01643-31232	WASHER	1	35001-
18	08034-20519	BAND	1	35001-
19	04434-52312	CLIP	2	35001-
20	195-33-11220	SPACER	1	35001-
21	01010-81250	BOLT	1	35001-
22	01643-31232	WASHER	1	35001-
23	01010-81225	BOLT	3	35001-
24	01643-31232	WASHER	3	35001-
25	04434-51912	CLIP	1	35001-
26	01010-81225	BOLT	1	35001-
27	01643-31232	WASHER	1	35001-
28	08193-20012	CLIP	1	35001-
29	01010-81225	BOLT	1	35001-

Printed By : Dwi Iswanto (airafather6107170)

WIRING (MAIN HARNESS) (HARNESS AND CLIP)

Item	Part No.	Part Name	Qty	Serial No.
30	01643-31232	WASHER	1	35001-
31	08193-20012	CLIP	1	35001-
32	01010-81225	BOLT	1	35001-
33	01643-31232	WASHER	1	35001-
34	04434-51012	CLIP	2	35001-
35	01010-81225	BOLT	2	35001-
36	01643-31232	WASHER	2	35001-
37	08037-03620	GROMMET	1	35001-

Printed By : Dwi Iswanto (airafather6107170)

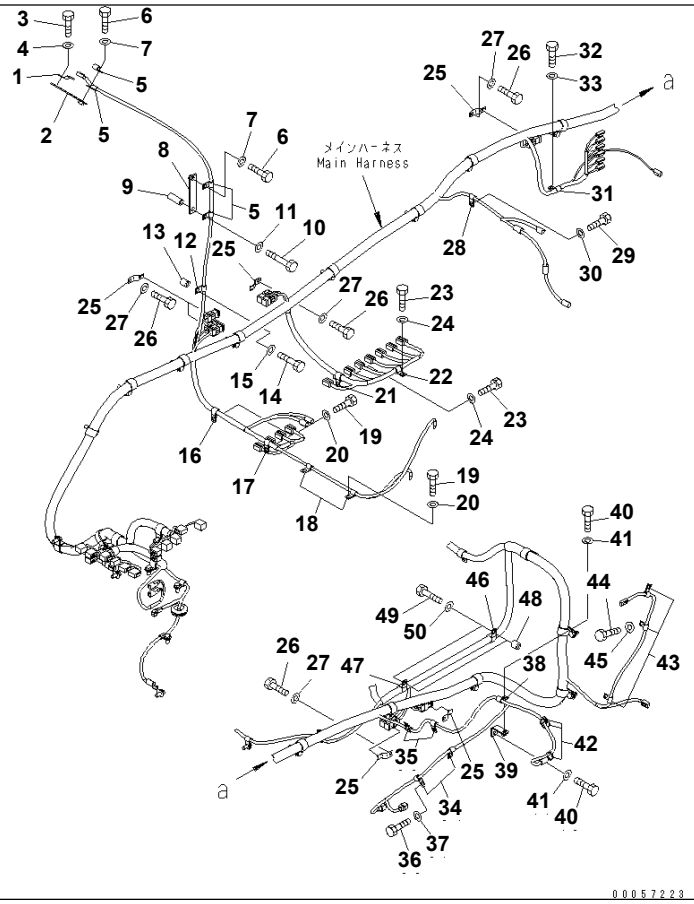

Ref. E0200-03A0 **Page 120050**

PC1250SP-8R S/N 35001-UP (W/O EGR, +55C DEGREE)

WIRING (MAIN HARNESS) (CLIP) (LEFT DECK)

Item	Part No.	Part Name	Qty	Serial No.
1	08193-20012	CLIP	1	35001-
2	207-977-5120	BRACKET	1	35001-
3	01010-81225	BOLT	1	35001-
4	01643-31232	WASHER	1	35001-
5	04434-51012	CLIP	4	35001-
6	01010-81225	BOLT	2	35001-
7	01643-31232	WASHER	2	35001-
8	207-977-5120	BRACKET	1	35001-
9	175-61-17240	COLLAR	1	35001-
10	01010-81285	BOLT	1	35001-
11	01643-31232	WASHER	1	35001-
12	04434-51012	CLIP	1	35001-
13	195-33-11220	SPACER	1	35001-
14	01010-81250	BOLT	1	35001-
15	01643-31232	WASHER	1	35001-
16	04434-51712	CLIP	1	35001-
17	04434-51412	CLIP	1	35001-
18	04434-51012	CLIP	2	35001-
19	01010-81225	BOLT	4	35001-
20	01643-31232	WASHER	4	35001-
21	04434-51712	CLIP	1	35001-
22	04434-51412	CLIP	1	35001-
23	01010-81225	BOLT	2	35001-
24	01643-31232	WASHER	2	35001-
25	08193-30012	CLIP	6	35001-
26	01010-81225	BOLT	6	35001-
27	01643-31232	WASHER	6	35001-
28	04434-51012	CLIP	1	35001-
29	01010-81225	BOLT	1	35001-
30	01643-31232	WASHER	1	35001-

Printed By : Dwi Iswanto (airafather6107170)

WIRING (MAIN HARNESS) (CLIP) (LEFT DECK)

Item	Part No.	Part Name	Qty	Serial No.
31	04434-51412	CLIP	1	35001-
32	01010-81225	BOLT	1	35001-
33	01643-31232	WASHER	1	35001-
34	04434-51212	CLIP	2	35001-
35	04434-51412	CLIP	2	35001-
36	01010-81225	BOLT	4	35001-
37	01643-31232	WASHER	4	35001-
38	04434-51410	CLIP	1	35001-
39	203-62-56381	BRACKET	1	35001-
40	01010-81020	BOLT	2	35001-
41	01643-31032	WASHER	2	35001-
42	08034-20519	BAND	3	35001-
43	04434-51012	CLIP	3	35001-
44	01010-81225	BOLT	3	35001-
45	01643-31232	WASHER	3	35001-
46	04434-53212	CLIP	1	35001-
47	04434-52712	CLIP	1	35001-
48	195-33-11220	SPACER	2	35001-
49	01010-81250	BOLT	2	35001-
50	01643-31232	WASHER	2	35001-

Printed By : Dwi Iswanto (airafather6107170)

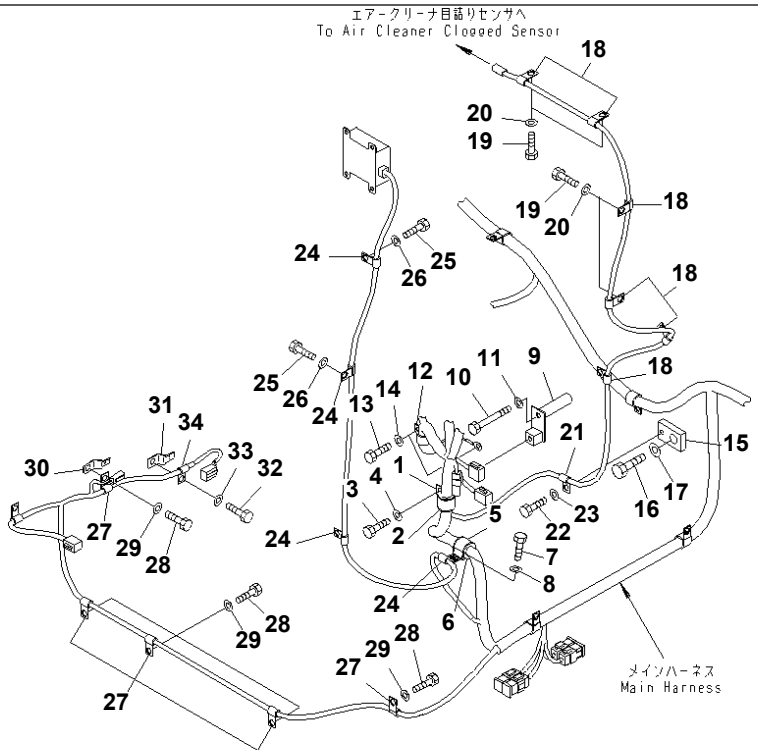

Ref. E0200-04A0 Page 120060

PC1250SP-8R S/N 35001-UP (W/O EGR, +55C DEGREE)

WIRING (MAIN HARNESS) (CLIP) (REAR DECK)(#35001-35009)

Item	Part No.	Part Name	Qty	Serial No.
1	04434-53412	CLIP	1	35001-@
2	07095-20627	CUSHION	1	35001-@
3	01010-81225	BOLT	1	35001-@
4	01643-31232	WASHER	1	35001-@
5	04434-53412	CLIP	1	35001-@
6	07095-20627	CUSHION	1	35001-@
7	01010-81225	BOLT	1	35001-@
8	01643-31232	WASHER	1	35001-@
9	21N-06-41290	BRACKET	1	35001-@
10	01011-81010	BOLT	1	35001-@
11	01643-31032	WASHER	1	35001-@
12	04434-52310	CLIP	1	35001-@
13	01010-81025	BOLT	2	35001-35009
14	01643-31032	WASHER	2	35001-35009
15	21N-06-33250	PLATE	1	35001-@
16	01010-81835	BOLT	1	35001-@
17	01643-31845	WASHER	1	35001-@
18	04434-51012	CLIP	6	35001-@
19	01010-81225	BOLT	6	35001-@
20	01643-31232	WASHER	6	35001-@
21	04434-51012	CLIP	1	35001-@
22	01010-81220	BOLT	1	35001-@
23	01643-31232	WASHER	1	35001-@
24	04434-51012	CLIP	4	35001-@
25	01010-81225	BOLT	2	35001-@
26	01643-31232	WASHER	2	35001-@
27	04434-51012	CLIP	5	35001-@
28	01010-81225	BOLT	5	35001-@
29	01643-31232	WASHER	5	35001-@
30	08193-20012	CLIP	1	35001-@

Printed By : Dwi Iswanto (airafather6107170)

WIRING (MAIN HARNESS) (CLIP) (REAR DECK)(#35001-35009)

Item	Part No.	Part Name	Qty	Serial No.
31	08053-01512	CLIP	1	35001-@
32	01010-81225	BOLT	1	35001-@
33	01643-31232	WASHER	1	35001-@
34	04434-51012	CLIP	1	35001-@

Printed By : Dwi Iswanto (airafather6107170)

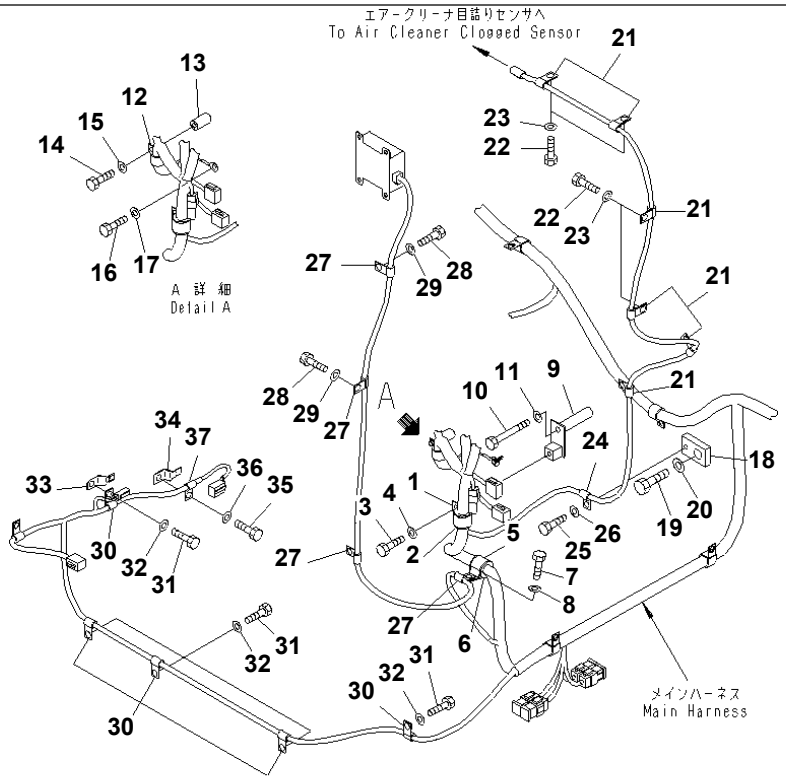

Ref. E0200-04A0A Page 120070

PC1250SP-8R S/N 35001-UP (W/O EGR, +55C DEGREE)

WIRING (MAIN HARNESS) (CLIP) (REAR DECK)(#35010-)

Item	Part No.	Part Name	Qty	Serial No.
1	04434-53412	CLIP	1	35001-
2	07095-20627	CUSHION	1	35001-
3	01010-81225	BOLT	1	35001-
4	01643-31232	WASHER	1	35001-
5	04434-53412	CLIP	1	35001-
6	07095-20627	CUSHION	1	35001-
7	01010-81225	BOLT	1	35001-
8	01643-31232	WASHER	1	35001-
9	21N-06-41290	BRACKET	1	35001-
10	01011-81010	BOLT	1	35001-
11	01643-31032	WASHER	1	35001-
12	04434-52310	CLIP	1	35001-
13	22D-62-12440	SPACER	1	35010-
14	01010-81060	BOLT	1	35010-
15	01643-31032	WASHER	1	35010-
16	01010-81025	BOLT	1	35010-
17	01643-31032	WASHER	1	35010-
18	21N-06-33250	PLATE	1	35001-
19	01010-81835	BOLT	1	35001-
20	01643-31845	WASHER	1	35001-
21	04434-51012	CLIP	6	35001-
22	01010-81225	BOLT	6	35001-
23	01643-31232	WASHER	6	35001-
24	04434-51012	CLIP	1	35001-
25	01010-81220	BOLT	1	35001-
26	01643-31232	WASHER	1	35001-
27	04434-51012	CLIP	4	35001-
28	01010-81225	BOLT	2	35001-
29	01643-31232	WASHER	2	35001-
30	04434-51012	CLIP	5	35001-

Printed By : Dwi Iswanto (airafather6107170)

WIRING (MAIN HARNESS) (CLIP) (REAR DECK)(#35010-)

Item	Part No.	Part Name	Qty	Serial No.
31	01010-81225	BOLT	5	35001-
32	01643-31232	WASHER	5	35001-
33	08193-20012	CLIP	1	35001-
34	08053-01512	CLIP	1	35001-
35	01010-81225	BOLT	1	35001-
36	01643-31232	WASHER	1	35001-
37	04434-51012	CLIP	1	35001-

Printed By : Dwi Iswanto (airafather6107170)

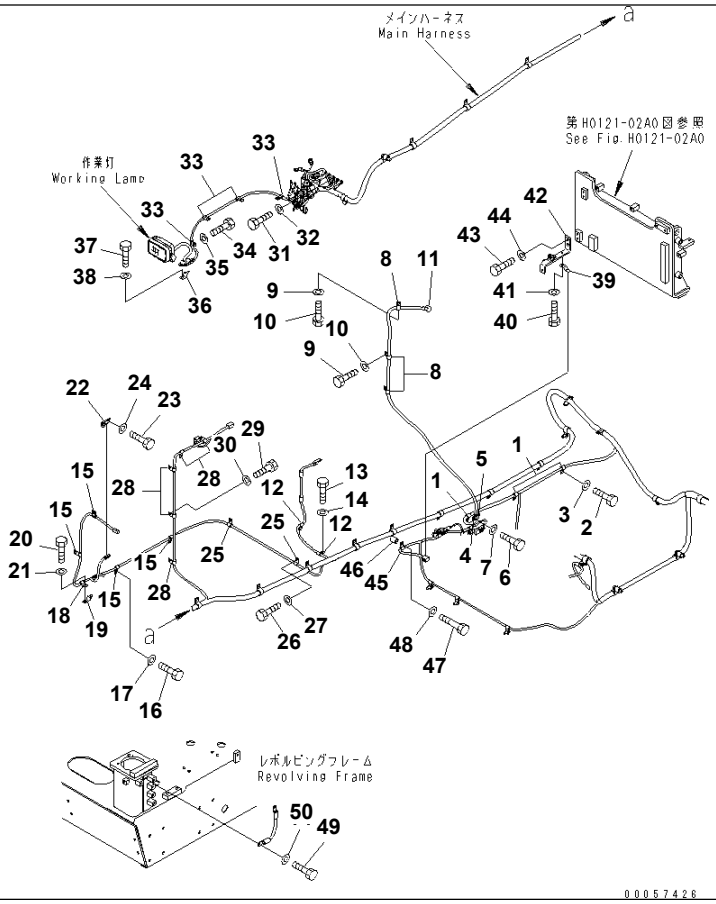

Ref. E0200-05A0 Page 120080

PC1250SP-8R S/N 35001-UP (W/O EGR, +55C DEGREE)
WIRING (MAIN HARNESS) (CLIP) (RIGHT DECK)

Item	Part No.	Part Name	Qty	Serial No.
1	04434-51412	CLIP	3	35001-
2	01010-81225	BOLT	3	35001-
3	01643-31232	WASHER	3	35001-
4	04434-52112	CLIP	1	35001-
5	07095-20314	CUSHION	1	35001-
6	01010-81225	BOLT	1	35001-
7	01643-31232	WASHER	1	35001-
8	04434-51410	CLIP	3	35001-
9	01010-81020	BOLT	3	35001-
10	01643-31032	WASHER	3	35001-
11	08038-02027	CAP	1	35001-
12	04434-51012	CLIP	2	35001-
13	01010-81225	BOLT	2	35001-
14	01643-31232	WASHER	2	35001-
15	04434-51012	CLIP	4	35001-
16	01010-81225	BOLT	4	35001-
17	01643-31232	WASHER	4	35001-
18	04434-51012	CLIP	1	35001-
19	08193-20012	CLIP	1	35001-
20	01010-81225	BOLT	1	35001-
21	01643-31232	WASHER	1	35001-
22	20Y-979-6271	BRACKET	1	35001-
23	01010-80620	BOLT	1	35001-
24	01643-30623	WASHER	1	35001-
25	04434-51012	CLIP	2	35001-
26	01010-81225	BOLT	2	35001-
27	01643-31232	WASHER	2	35001-
28	04434-51012	CLIP	5	35001-
29	01010-81225	BOLT	5	35001-
30	01643-31232	WASHER	5	35001-

Printed By : Dwi Iswanto (airafather6107170)

WIRING (MAIN HARNESS) (CLIP) (RIGHT DECK)

Item	Part No.	Part Name	Qty	Serial No.
31	01010-81020	BOLT	5	35001-
32	01643-31032	WASHER	5	35001-
33	04434-51012	CLIP	4	35001-
34	01010-81225	BOLT	4	35001-
35	01643-31232	WASHER	4	35001-
36	08053-00912	CLIP	1	35001-
37	01010-81225	BOLT	1	35001-
38	01643-31232	WASHER	1	35001-
39	08193-30012	CLIP	1	35001-
40	01010-81225	BOLT	1	35001-
41	01643-31232	WASHER	1	35001-
42	21N-06-33521	BRACKET	1	35001-
43	01010-81230	BOLT	2	35001-
44	01643-31232	WASHER	2	35001-
45	04434-51012	CLIP	1	35001-
46	20Y-03-11220	COLLAR	1	35001-
47	01010-81260	BOLT	1	35001-
48	01643-31232	WASHER	1	35001-
49	01010-81020	BOLT	1	35001-
50	01643-31032	WASHER	1	35001-

Printed By : Dwi Iswanto (airafather6107170)

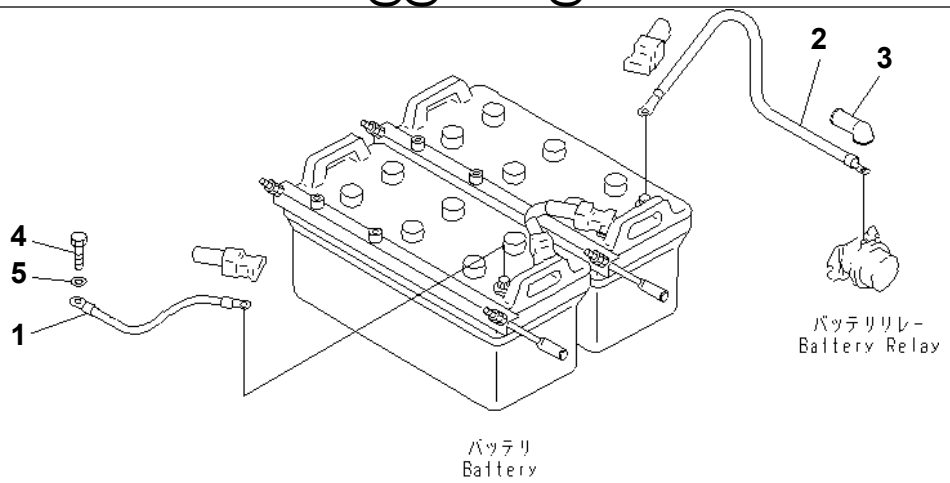

P W 1 E 4 8 2

Ref. E0200-06A0 **Page 120090**

PC1250SP-8R S/N 35001-UP (W/O EGR, +55C DEGREE)

WIRING (BATTERY CASE)

Item	Part No.	Part Name	Qty	Serial No.
1	08028-45050	CABLE	1	35001-
2	08028-DE045	CABLE	1	35001-
3	08038-00035	CAP	1	35001-
4	01010-81020	BOLT	1	35001-
5	01643-31032	WASHER	1	35001-

Printed By : Dwi Iswanto (airafather6107170)

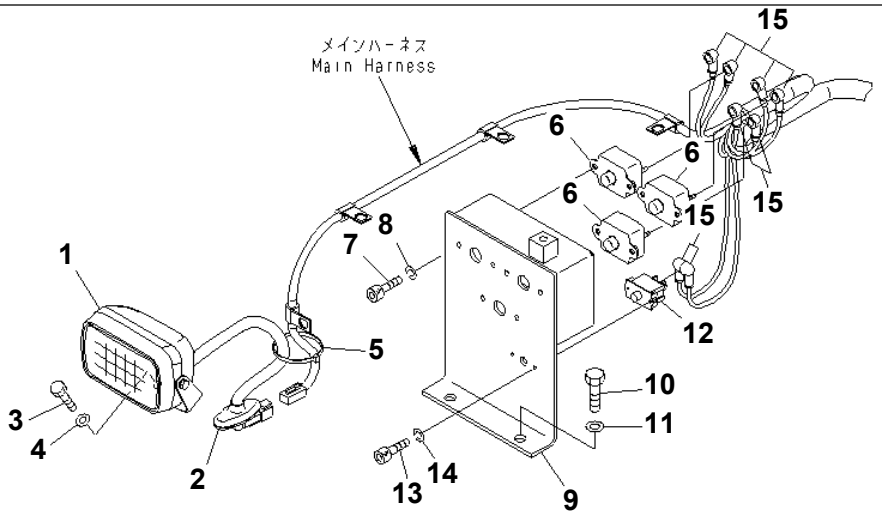

00057257

Ref. E0200-07A0 **Page 120100**

PC1250SP-8R S/N 35001-UP (W/O EGR, +55C DEGREE)
WIRING (WORKING LAMP AND CIRCUIT BREAKER)

Item	Part No.	Part Name	Qty	Serial No.
1	21N-54-38340	WORK LAMP ASS'Y	1	35001-
2	22B-54-17271	· GROMMET	1	35001-
	421-06-23330	· BULB, 70W	1	35001-
3	01010-81020	BOLT	1	35001-
4	01643-31032	WASHER	1	35001-
5	08034-20519	BAND	1	35001-
6	21T-06-68290	BREAKER	3	35001-
7	01252-70616	BOLT	6	35001-
8	01602-20619	WASHER	6	35001-
9	21N-06-41240	BRACKET	1	35001-
10	01010-81225	BOLT	2	35001-
11	01643-31232	WASHER	2	35001-
12	209-06-77350	CIRCUIT BREAKER	1	35001-
13	01252-70410	BOLT	2	35001-
14	01601-20410	WASHER	2	35001-
15	08038-00519	CAP	8	35001-

Printed By : Dwi Iswanto (airafather6107170)

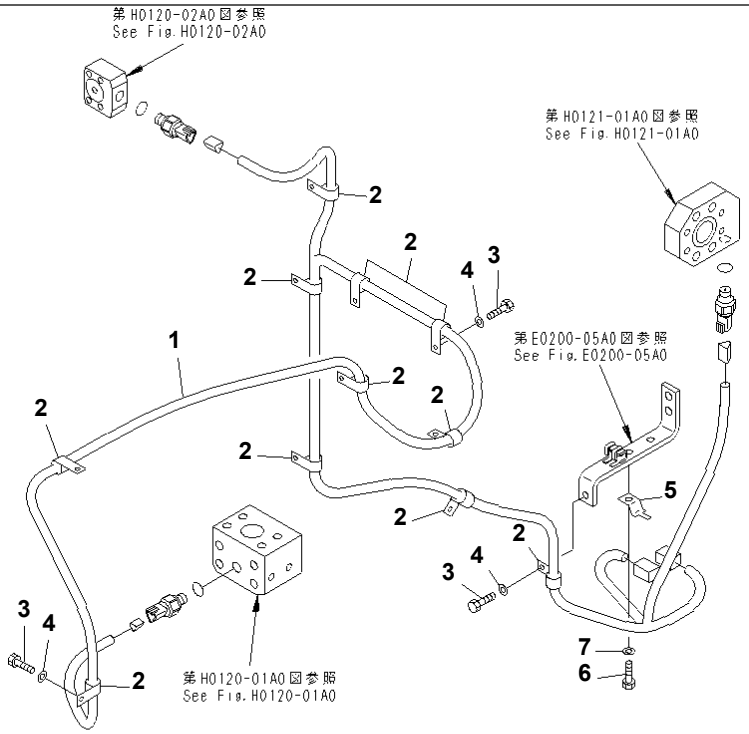

00043139

Ref. E0200-08A0 **Page 120110**

PC1250SP-8R S/N 35001-UP (W/O EGR, +55C DEGREE)
WIRING (VHMS SENSOR HARNESS) (HARNESS)

Item	Part No.	Part Name	Qty	Serial No.
1	21N-06-41270	WIRING HARNESS	1	35001-
2	04434-51012	CLIP	11	35001-
3	01010-81225	BOLT	11	35001-
4	01643-31232	WASHER	11	35001-
5	08193-30012	CLIP	1	35001-
6	01010-81225	BOLT	1	35001-
7	01643-31232	WASHER	1	35001-

Printed By : Dwi Iswanto (airafather6107170)

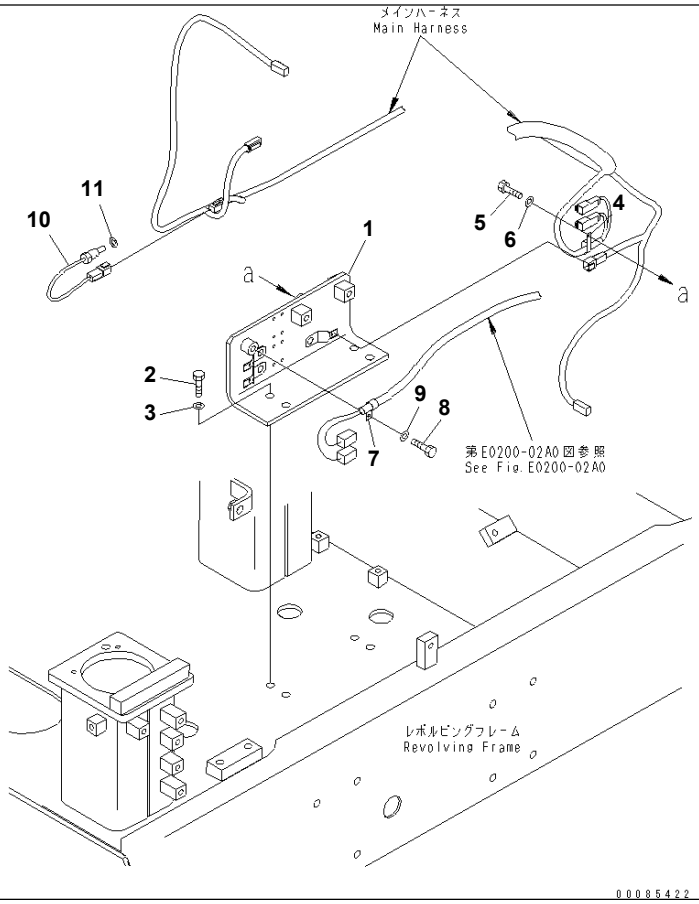

Ref. E0200-09A0 **Page 120120**

PC1250SP-8R S/N 35001-UP (W/O EGR, +55C DEGREE)
WIRING (VHMS SENSOR HARNESS) (BRACKET)

Item	Part No.	Part Name	Qty	Serial No.
1	21N-06-33532	BRACKET	1	35001-
2	01010-81235	BOLT	4	35001-
3	01643-31232	WASHER	4	35001-
4	04434-51012	CLIP	1	35001-
5	01010-81220	BOLT	1	35001-
6	01643-31232	WASHER	1	35001-
7	04434-51412	CLIP	1	35001-
8	01010-81220	BOLT	1	35001-
9	01643-31232	WASHER	1	35001-
10	7861-93-3510	SENSOR	1	35001-
11	01643-31645	WASHER	1	35001-

Printed By : Dwi Iswanto (airafather6107170)

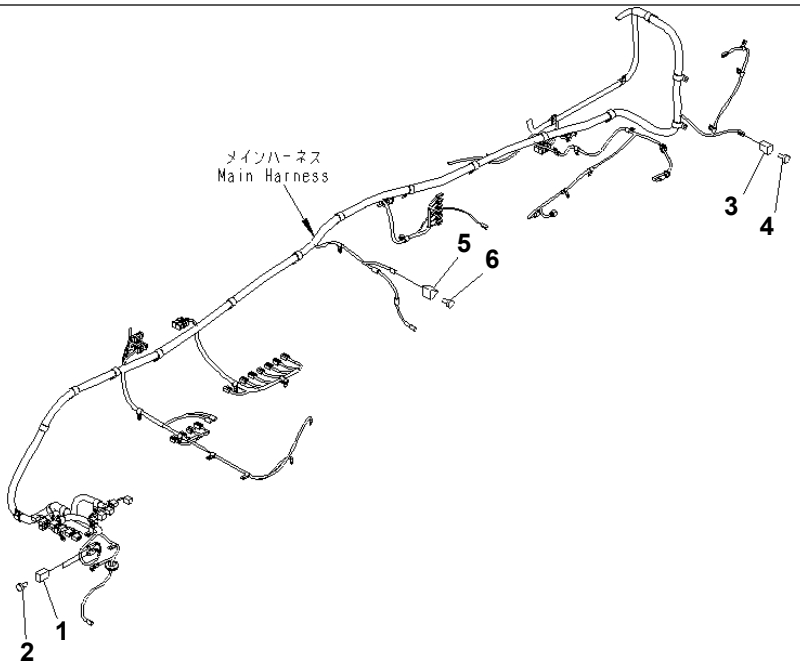

00043511

Ref. E0200-10A0 **Page 120130**

PC1250SP-8R S/N 35001-UP (W/O EGR, +55C DEGREE)
WIRING (VHMS LESS)

Item	Part No.	Part Name	Qty	Serial No.
1	08192-12200	CONNECTOR	2	35001-
2	08191-00770	PLUG	4	35001-
3	08192-12100	CONNECTOR	1	35001-
4	08191-00770	PLUG	2	35001-
5	08192-23100	CONNECTOR	1	35001-
6	08191-00770	PLUG	3	35001-

Printed By : Dwi Iswanto (airafather6107170)

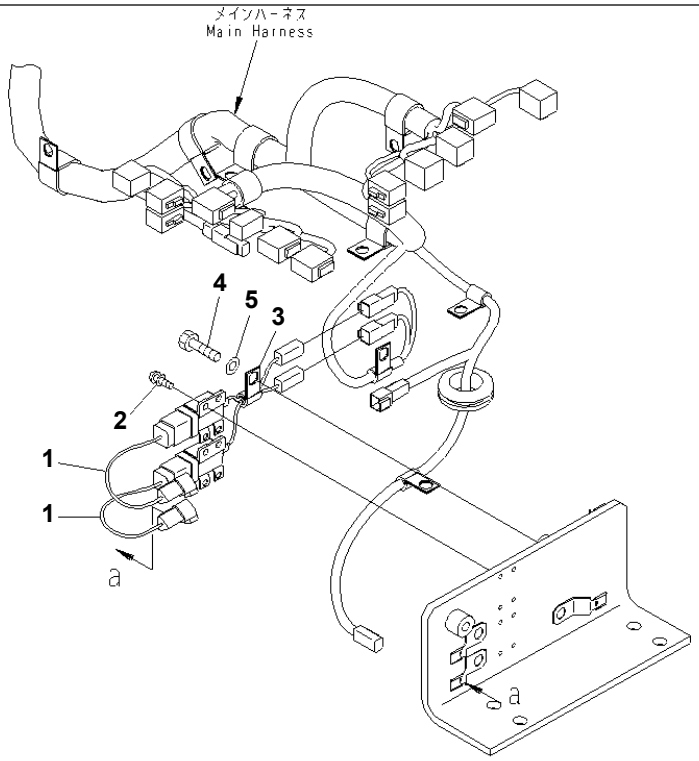

00045301

Ref. E0200-10A1 **Page 120140**

PC1250SP-8R S/N 35001-UP (W/O EGR, +55C DEGREE)
WIRING (VHMS ADDITIONAL PARTS)

Item	Part No.	Part Name	Qty	Serial No.
1	6215-81-8150	AMPLIFIER	2	35001-
2	01023-10614	SCREW	8	35001-
3	04434-51012	CLIP	1	35001-
4	01010-81220	BOLT	1	35001-
5	01643-31232	WASHER	1	35001-

Printed By : Dwi Iswanto (airafather6107170)

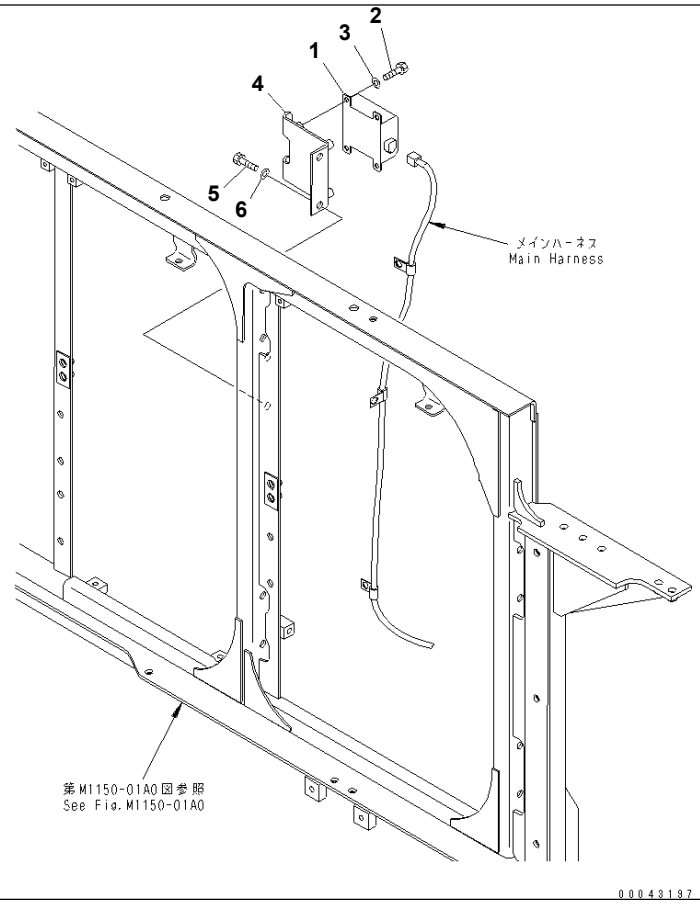

Ref. E0200-11A0 **Page 120150**

PC1250SP-8R S/N 35001-UP (W/O EGR, +55C DEGREE)
WIRING (PRIMING PUMP SWITCH)

Item	Part No.	Part Name	Qty	Serial No.
1	600-815-9471	SWITCH	1	35021-
	600-815-9470	SWITCH	1	35001-35020
2	01010-80816	BOLT	4	35001-
3	01643-30823	WASHER	4	35001-
4	21N-06-41251	BRACKET	1	35001-
5	01010-81230	BOLT	2	35001-
6	01643-31232	WASHER	2	35001-

Printed By : Dwi Iswanto (airafather6107170)

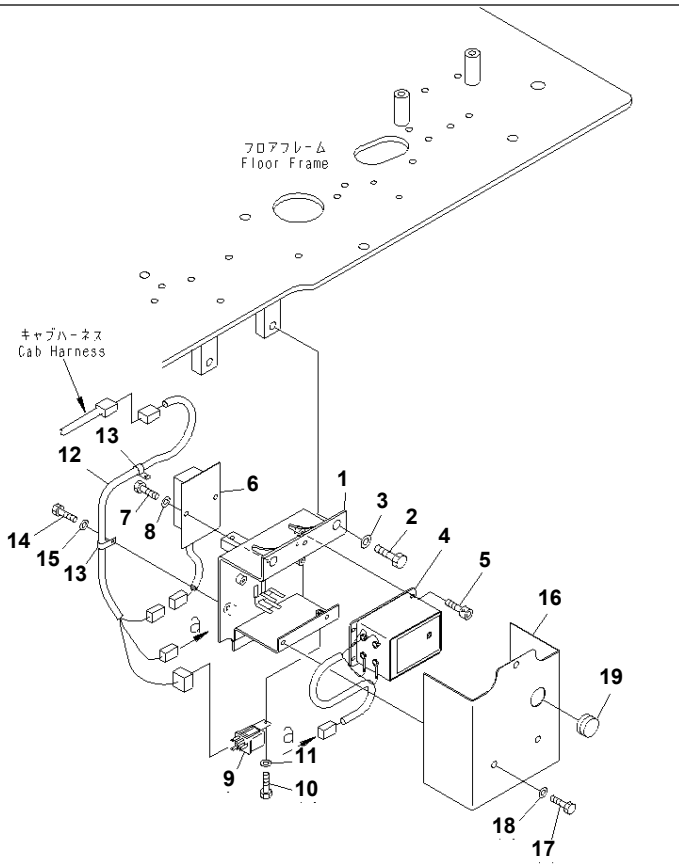

Ref. E0200-12A4 **Page 120160**

PC1250SP-8R S/N 35001-UP (W/O EGR, +55C DEGREE)
WIRING (AUTO GREASE TIMER)

Item	Part No.	Part Name	Qty	Serial No.
1	21N-68-37640	BRACKET	1	35001-
2	01010-81225	BOLT	2	35001-
3	01643-31232	WASHER	2	35001-
4	21N-06-31420	TIMER ASS'Y	1	35001-
	21N-06-31410	・ TIMER	1	35001-
5	01252-60510	BOLT	3	35001-
6	209-06-72181	TIMER	1	35001-
7	01010-80612	BOLT	2	35001-
8	01643-30623	WASHER	2	35001-
9	569-06-61960	RELAY	1	35001-
10	01010-80612	BOLT	1	35001-
11	01643-30623	WASHER	1	35001-
12	21N-06-33580	WIRING HARNESS	1	35001-
13	04434-51508	CLIP	2	35001-
14	01010-80816	BOLT	2	35001-
15	01643-30823	WASHER	2	35001-
16	21N-68-37630	COVER	1	35001-
17	01010-80816	BOLT	3	35001-
18	01643-30823	WASHER	3	35001-
19	195-06-22430	CAP	1	35001-

Printed By : Dwi Iswanto (airafather6107170)

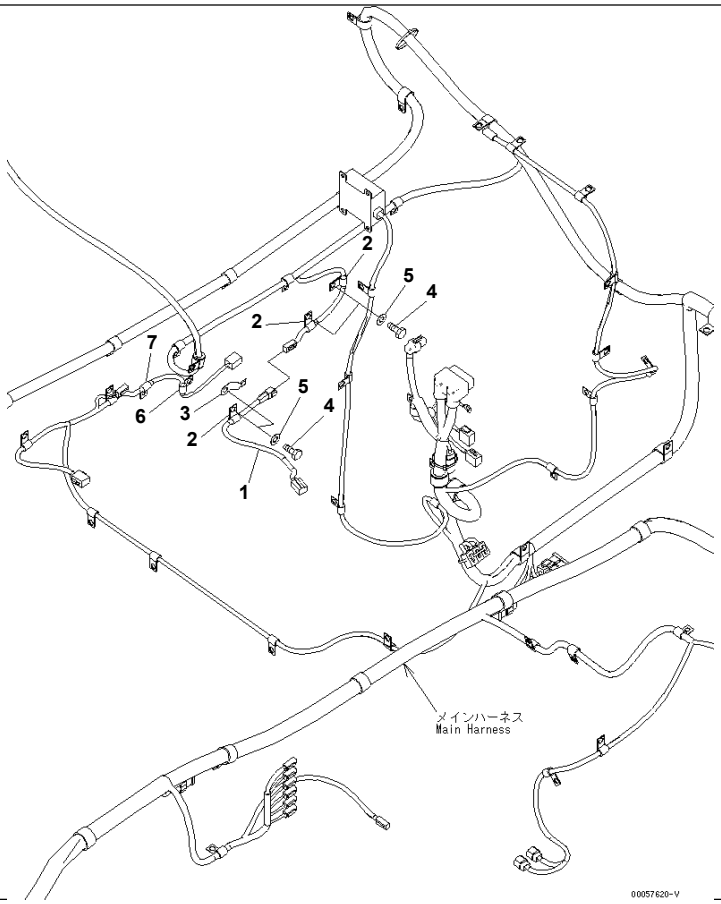

Ref. E0200-13A4 **Page 120170**

PC1250SP-8R S/N 35001-UP (W/O EGR, +55C DEGREE)
WIRING (AUTO GREASE ADDITIONAL HARNESS)

Item	Part No.	Part Name	Qty	Serial No.
1	21N-06-41410	WIRING HARNESS	1	35001-
2	04434-51012	CLIP	3	35001-
3	08193-20012	CLIP	1	35001-
4	01010-81225	BOLT	4	35001-
5	01643-31232	WASHER	4	35001-
6	04434-51012	CLIP	1	35001-
7	04434-51008	CLIP	1	35001-

Printed By : Dwi Iswanto (airafather6107170)

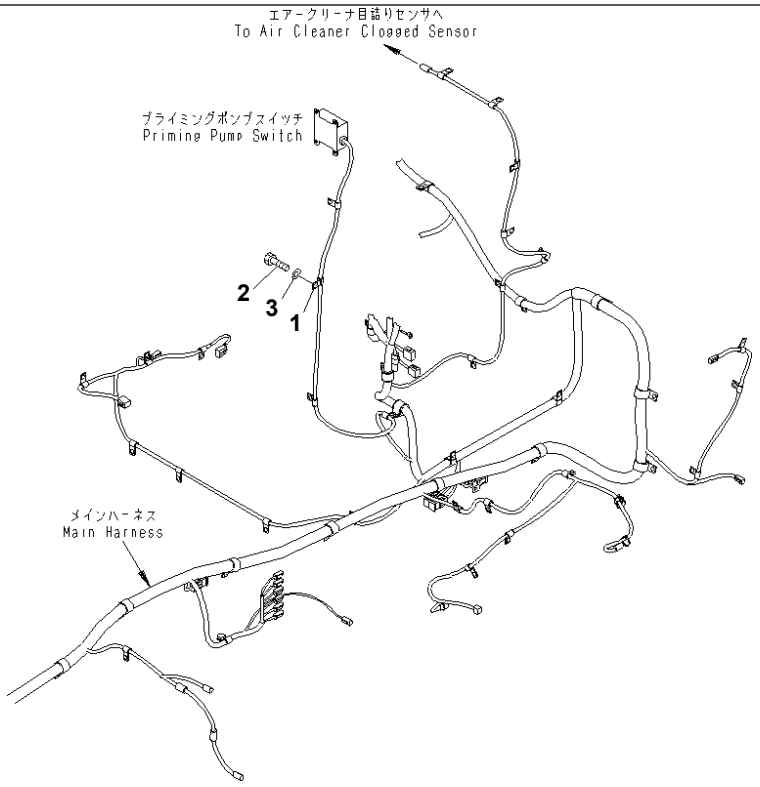

00063082

Ref. E0200-14A0 **Page 120180**

PC1250SP-8R S/N 35001-UP (W/O EGR, +55C DEGREE)
WIRING (PRIMING PUMP SWITCH CLAMP)

Item	Part No.	Part Name	Qty	Serial No.
1	04434-51012	CLIP	1	35001-
2	01010-81225	BOLT	1	35001-
3	01643-31232	WASHER	1	35001-

Printed By : Dwi Iswanto (airafather6107170)

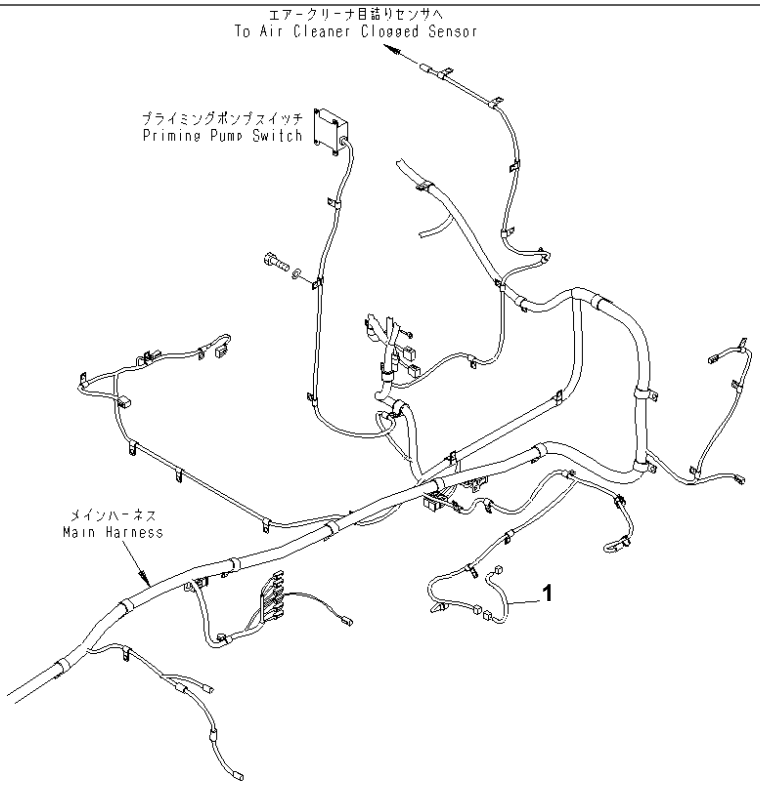

00068752

Ref. E0200-15A5 **Page 120190**

PC1250SP-8R S/N 35001-UP (W/O EGR, +55C DEGREE)
WIRING (ADDITIONAL HARNESS) (+55C SPEC.)

Item	Part No.	Part Name	Qty	Serial No.
1	21N-06-41420	WIRING HARNESS	1	35001-

Printed By : Dwi Iswanto (airafather6107170)

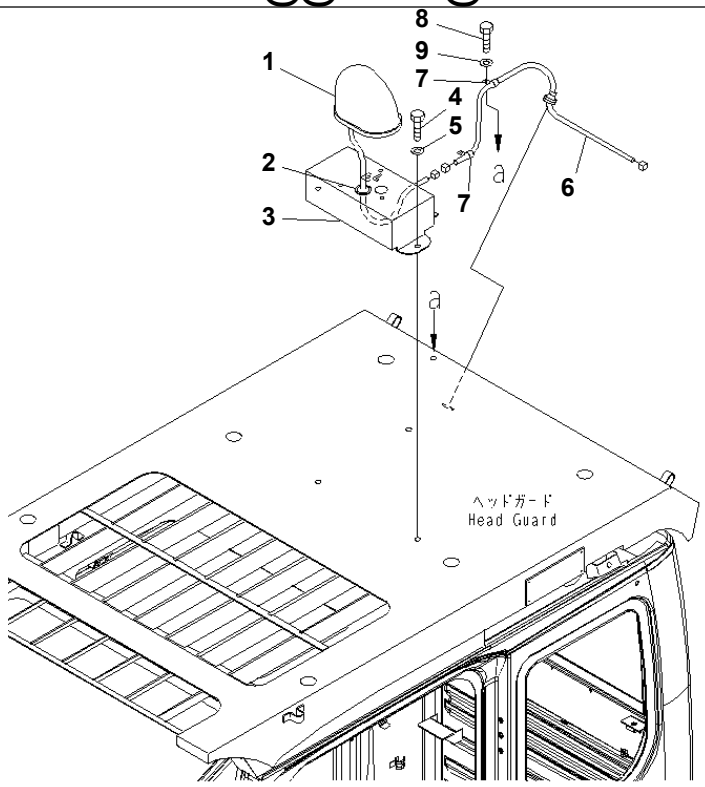

PW1E484

Ref. E0201-01A0 **Page 120200**

PC1250SP-8R S/N 35001-UP (W/O EGR, +55C DEGREE)
BEACON

Item	Part No.	Part Name	Qty	Serial No.
1	22B-54-17612	LAMP	1	35001-
	22B-54-17660	· BULB	1	35001-
2	08037-02512	GROMMET	1	35001-
3	21N-54-38990	BRACKET	1	35001-
4	01010-D1220	BOLT	2	35001-
5	01643-71232	WASHER	2	35001-
6	22B-54-17641	WIRING HARNESS	1	35001-
7	04434-51412	CLIP	2	35001-
8	01010-D1220	BOLT	2	35001-
9	01643-71232	WASHER	2	35001-

Printed By : Dwi Iswanto (airafather6107170)

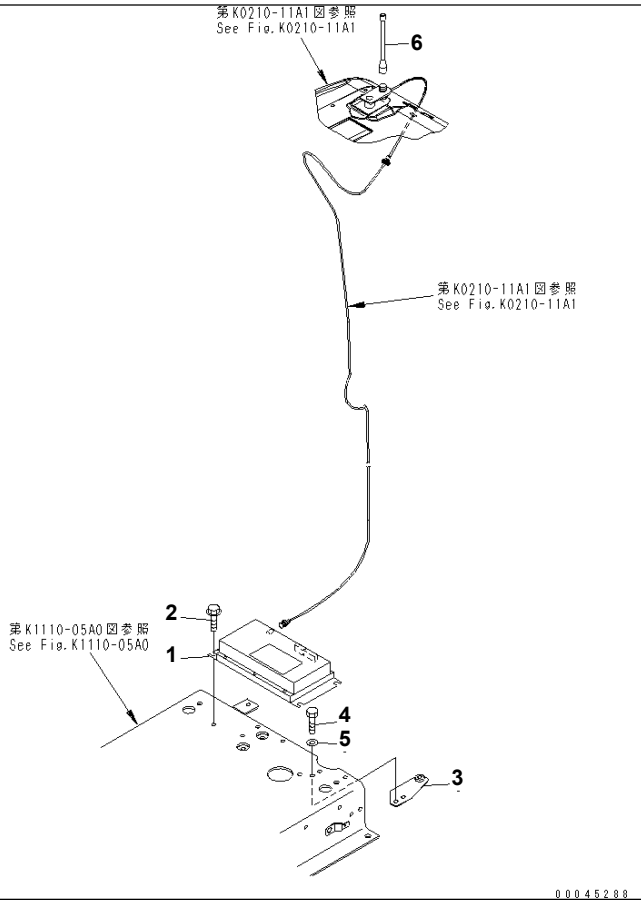

Ref. E0250-01A0 **Page 120210**

PC1250SP-8R S/N 35001-UP (W/O EGR, +55C DEGREE)
ORBCOMM (EXCEPT JAPAN)

Item	Part No.	Part Name	Qty	Serial No.
1	7826-12-2302	CONTROLLER	1	35021-
	7826-12-2301	CONTROLLER	1	35001-35020
2	01435-00825	BOLT	4	35001-
3	21N-43-37291	BRACKET	1	35001-
4	01010-D0820	BOLT	2	35001-
5	01643-70823	WASHER	2	35001-
6	8A13-10-2100	ANTENNA	1	35001-

Printed By : Dwi Iswanto (airafather6107170)

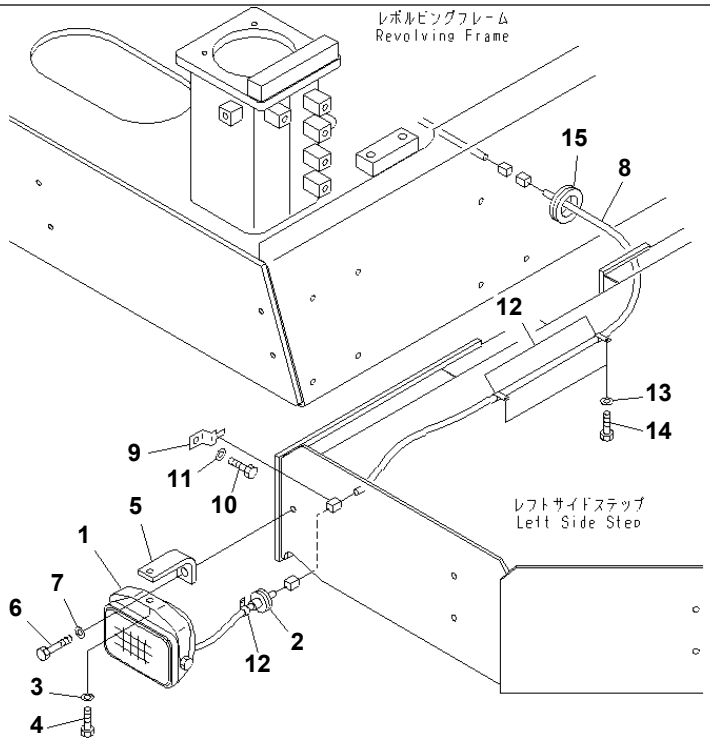

00016982

Ref. E0310-01A0 **Page 120220**

PC1250SP-8R S/N 35001-UP (W/O EGR, +55C DEGREE)

FLASH LIGHT

Item	Part No.	Part Name	Qty	Serial No.
1	22B-54-17511	WORK LAMP ASS'Y	1	35001-
2	22B-54-17271	· GROMMET	1	35001-
	421-06-23330	· BULB, 70W	1	35001-
3	01010-81025	BOLT	1	35001-
4	01643-31032	WASHER	1	35001-
5	21N-06-33370	BRACKET	1	35001-
6	01010-81235	BOLT	1	35001-
7	01643-31232	WASHER	1	35001-
8	21N-06-33550	WIRING HARNESS	1	35001-
9	08053-00912	CLIP	1	35001-
10	01010-81220	BOLT	1	35001-
11	01643-31232	WASHER	1	35001-
12	04434-51012	CLIP	3	35001-
13	01010-81220	BOLT	3	35001-
14	01643-31232	WASHER	3	35001-
15	08037-03614	GROMMET	1	35001-

Printed By : Dwi Iswanto (airafather6107170)

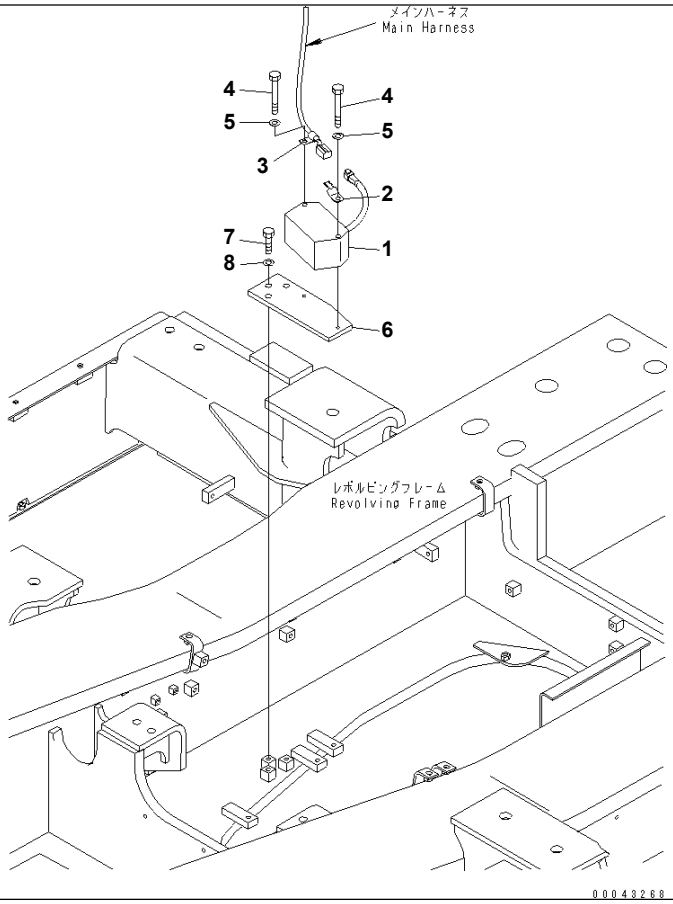

Ref. E0420-01A0 **Page 120230**

PC1250SP-8R S/N 35001-UP (W/O EGR, +55C DEGREE)
TRAVEL ALARM

Item	Part No.	Part Name	Qty	Serial No.
1	08164-B1100	BUZZER	1	35001-
2	08193-20010	CLIP	1	35001-
3	04434-51010	CLIP	1	35001-
4	01011-81000	BOLT	2	35001-
5	01643-31032	WASHER	2	35001-
6	21N-06-41260	PLATE	1	35001-
7	01010-81235	BOLT	3	35001-
8	01643-31232	WASHER	3	35001-

Printed By : Dwi Iswanto (airafather6107170)

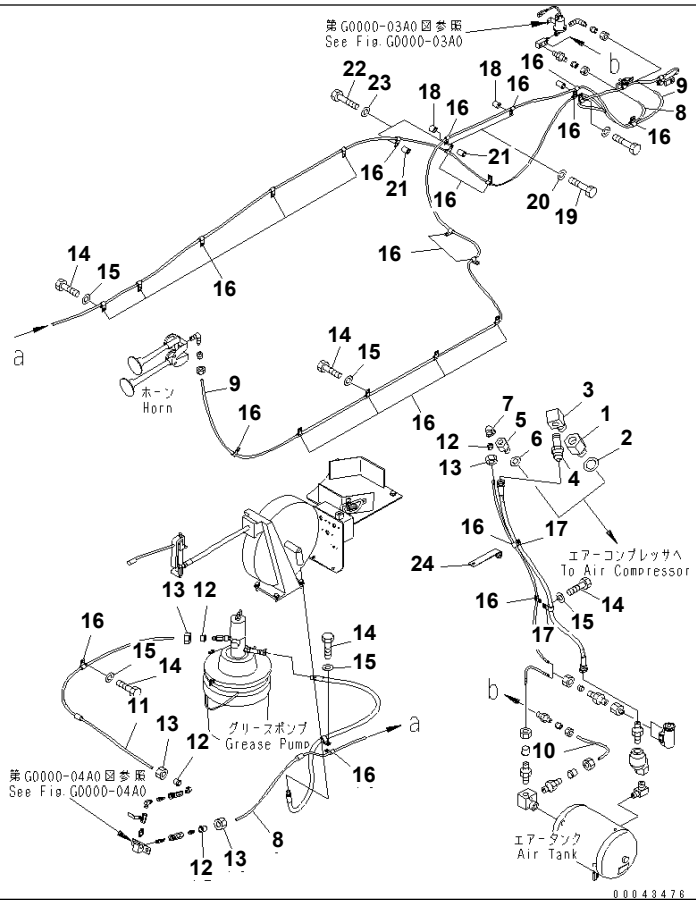

Ref. G0000-01A0 **Page 150010**

PC1250SP-8R S/N 35001-UP (W/O EGR, +55C DEGREE)

AIR SYSTEM (AIR PIPING)

Item	Part No.	Part Name	Qty	Serial No.
1	209-68-51170	NIPPLE	1	35001-
2	205-68-51210	GASKET	1	35001-
3	209-68-51180	ELBOW	1	35001-
4	209-68-51110	NIPPLE	1	35001-
5	209-68-51150	NIPPLE	1	35001-
6	07004-01525	GASKET	1	35001-
7	07834-00613	ELBOW	1	35001-
8	07822-00648	TUBE	1	35001-
9	07822-00651	TUBE	1	35001-
10	07822-00603	TUBE	1	35001-
11	07822-00615	TUBE	1	35001-
12	07831-00612	SLEEVE	4	35001-
13	07832-00614	NUT	4	35001-
14	01010-81225	BOLT	18	35001-
15	01643-31232	WASHER	18	35001-
16	04434-51012	CLIP	25	35001-
17	04434-51612	CLIP	2	35001-
18	195-33-11220	SPACER	2	35001-
19	01010-81245	BOLT	2	35001-
20	01643-31232	WASHER	2	35001-
21	154-979-1480	COLLAR	2	35001-
22	01010-81275	BOLT	2	35001-
23	01643-31232	WASHER	2	35001-
24	21N-68-41130	BRACKET	1	35001-

Printed By : Dwi Iswanto (airafather6107170)

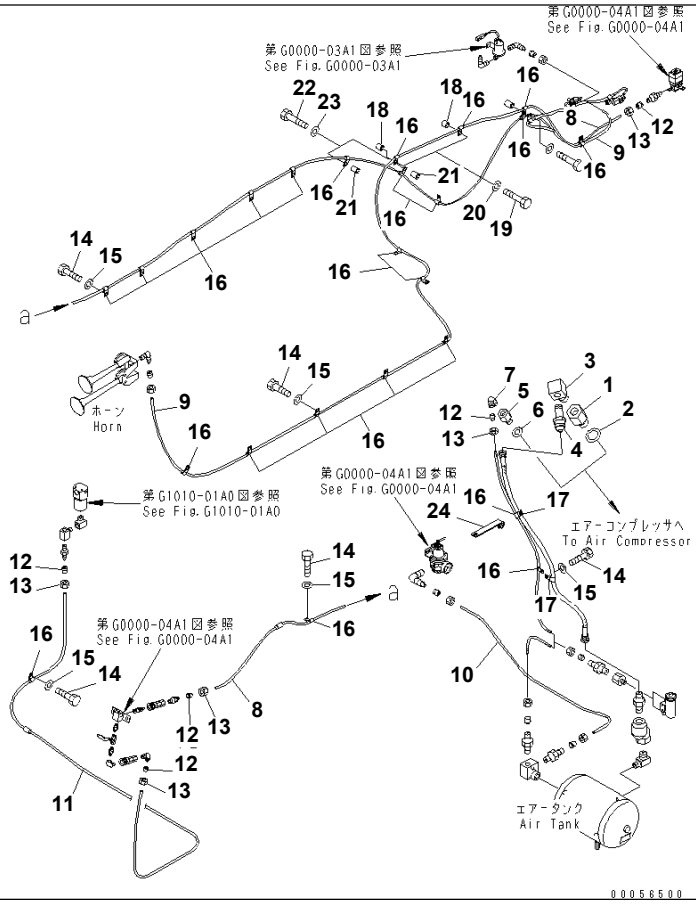

Ref. G0000-01A1 **Page 150020**

PC1250SP-8R S/N 35001-UP (W/O EGR, +55C DEGREE)

AIR SYSTEM (AIR PIPING) (AUTO GREASE)

Item	Part No.	Part Name	Qty	Serial No.
1	209-68-51170	NIPPLE	1	35001-
2	205-68-51210	GASKET	1	35001-
3	209-68-51180	ELBOW	1	35001-
4	209-68-51110	NIPPLE	1	35001-
5	209-68-51150	NIPPLE	1	35001-
6	07004-01525	GASKET	1	35001-
7	07834-00613	ELBOW	1	35001-
8	07822-00651	TUBE	1	35001-
9	07822-00651	TUBE	1	35001-
10	201-62-41920	TUBE	1	35001-
11	07822-00604	TUBE	1	35001-
12	07831-00612	SLEEVE	5	35001-
13	07832-00614	NUT	5	35001-
14	01010-81225	BOLT	18	35001-
15	01643-31232	WASHER	18	35001-
16	04434-51012	CLIP	25	35001-
17	04434-51612	CLIP	2	35001-
18	195-33-11220	SPACER	2	35001-
19	01010-81245	BOLT	2	35001-
20	01643-31232	WASHER	2	35001-
21	154-979-1480	COLLAR	2	35001-
22	01010-81275	BOLT	2	35001-
23	01643-31232	WASHER	2	35001-
24	21N-68-41130	BRACKET	1	35001-

Printed By : Dwi Iswanto (airafather6107170)

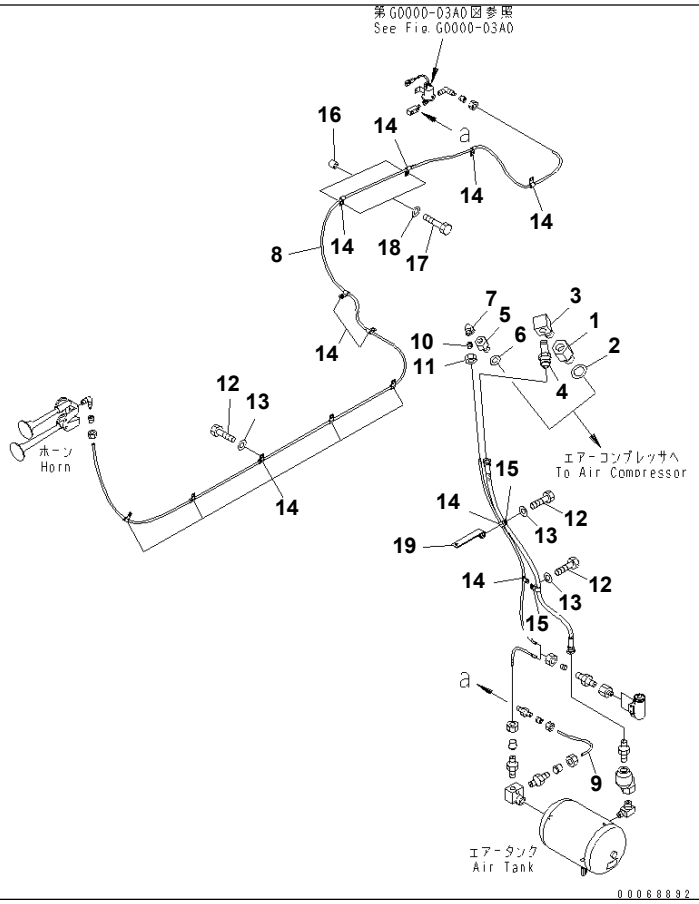

Ref. G0000-01A3 Page 150030

PC1250SP-8R S/N 35001-UP (W/O EGR, +55C DEGREE)

AIR SYSTEM (AIR PIPING) (GREASE PUMP LESS)

Item	Part No.	Part Name	Qty	Serial No.
1	209-68-51170	NIPPLE	1	35001-
2	205-68-51210	GASKET	1	35001-
3	209-68-51180	ELBOW	1	35001-
4	209-68-51110	NIPPLE	1	35001-
5	209-68-51150	NIPPLE	1	35001-
6	07004-01525	GASKET	1	35001-
7	07834-00613	ELBOW	1	35001-
8	07822-00651	TUBE	1	35001-
9	07822-00603	TUBE	1	35001-
10	07831-00612	SLEEVE	1	35001-
11	07832-00614	NUT	1	35001-
12	01010-81225	BOLT	11	35001-
13	01643-31232	WASHER	11	35001-
14	04434-51012	CLIP	13	35001-
15	04434-51612	CLIP	2	35001-
16	195-33-11220	SPACER	2	35001-
17	01010-81245	BOLT	2	35001-
18	01643-31232	WASHER	2	35001-
19	21N-68-41130	BRACKET	1	35001-

Printed By : Dwi Iswanto (airafather6107170)

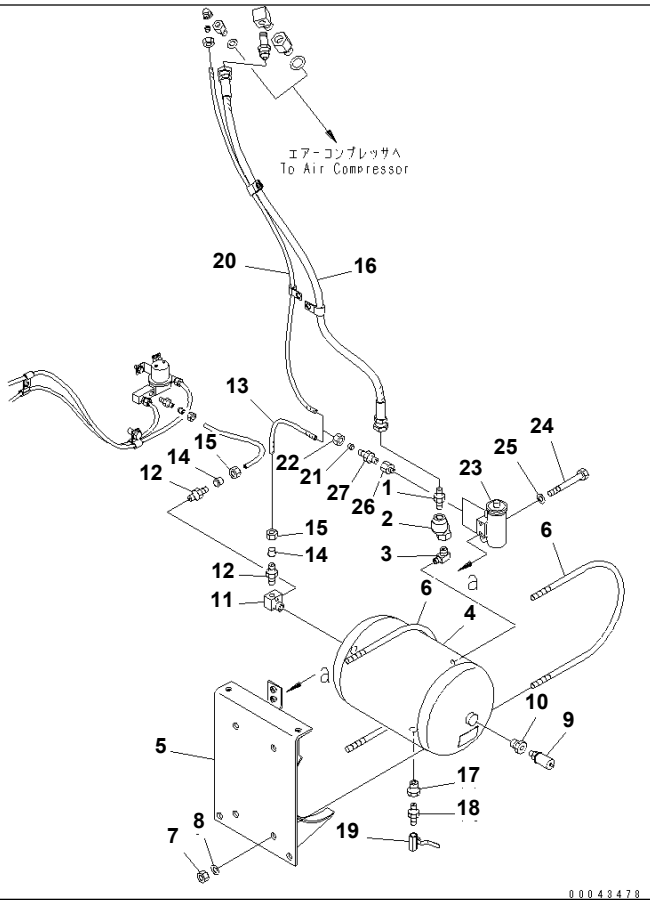

Ref. G0000-02A0 **Page 150040**

PC1250SP-8R S/N 35001-UP (W/O EGR, +55C DEGREE)
AIR SYSTEM (AIR TANK)

Item	Part No.	Part Name	Qty	Serial No.
1	07821-10801	NIPPLE	1	35001-
2	205-68-51180	VALVE	1	35001-
3	209-68-11430	ELBOW	1	35001-
4	205-68-51170	TANK	1	35001-
5	21N-68-41111	BRACKET	1	35001-
6	209-68-61180	U-BOLT	2	35001-
7	01597-01211	NUT	4	35001-
8	01643-31232	WASHER	4	35001-
9	206-68-11120	VALVE ASS'Y	1	35001-
10	07326-10402	ADAPTER	1	35001-
11	209-68-51140	NIPPLE	1	35001-
12	07836-00613	CONNECTOR	2	35001-
13	07822-00603	TUBE	1	35001-
14	07831-00612	SLEEVE	2	35001-
15	07832-00614	NUT	2	35001-
16	21N-68-41121	HOSE	1	35001-
17	07326-10402	ADAPTER	1	35001-
18	07325-10200	NIPPLE	1	35001-
19	07700-40240	VALVE	1	35001-
20	07822-00611	TUBE	1	35001-
21	07831-00612	SLEEVE	2	35001-
22	07832-00614	NUT	2	35001-
23	500-44-14110	AIR GOVERNOR ASS'Y	1	35001-
24	01010-80875	BOLT	2	35001-
25	01643-30823	WASHER	2	35001-
26	234-43-12510	JOINT	2	35001-
27	07836-00613	CONNECTOR	2	35001-

Printed By : Dwi Iswanto (airafather6107170)

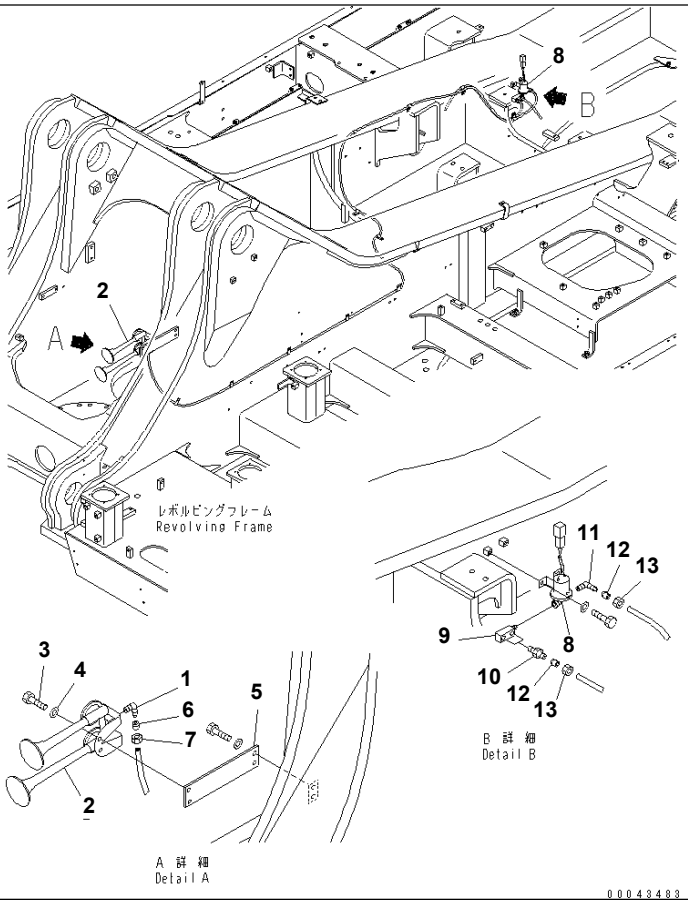

Ref. G0000-03A0 **Page 150050**

PC1250SP-8R S/N 35001-UP (W/O EGR, +55C DEGREE)
AIR SYSTEM (HORN VALVE)

Item	Part No.	Part Name	Qty	Serial No.
1	07834-00613	ELBOW	1	35001-
2	281-34-13901	HORN	1	35001-
3	01010-81020	BOLT	2	35001-
4	01643-31032	WASHER	2	35001-
5	21N-68-37120	PLATE	1	35001-
6	07831-00612	SLEEVE	1	35001-
7	07832-00614	NUT	1	35001-
8	21N-06-41280	VALVE	1	35001-
9	207-43-34140	NIPPLE	1	35001-
10	07836-00613	CONNECTOR	2	35001-
11	07834-00613	ELBOW	1	35001-
12	07831-00612	SLEEVE	3	35001-
13	07832-00614	NUT	3	35001-

Printed By : Dwi Iswanto (airafather6107170)

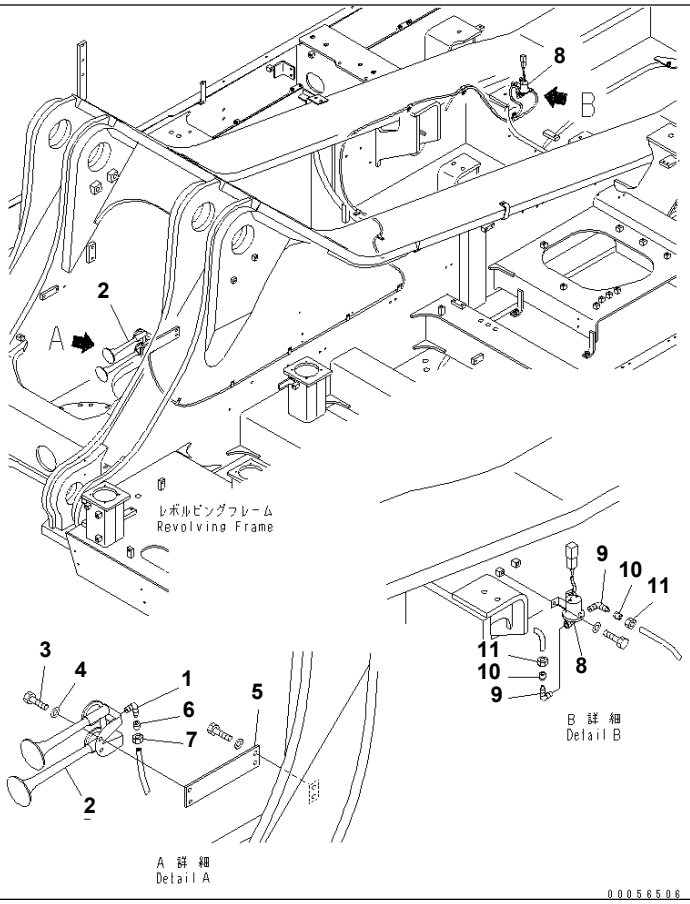

Ref. G0000-03A1 **Page 150060**

PC1250SP-8R S/N 35001-UP (W/O EGR, +55C DEGREE)

AIR SYSTEM (HORN VALVE) (AUTO GREASE)

Item	Part No.	Part Name	Qty	Serial No.
1	07834-00613	ELBOW	1	35001-
2	281-34-13901	HORN	1	35001-
3	01010-81020	BOLT	2	35001-
4	01643-31032	WASHER	2	35001-
5	21N-68-37120	PLATE	1	35001-
6	07831-00612	SLEEVE	1	35001-
7	07832-00614	NUT	1	35001-
8	21N-06-41280	VALVE	1	35001-
9	07834-00613	ELBOW	2	35001-
10	07831-00612	SLEEVE	2	35001-
11	07832-00614	NUT	2	35001-

Printed By : Dwi Iswanto (airafather6107170)

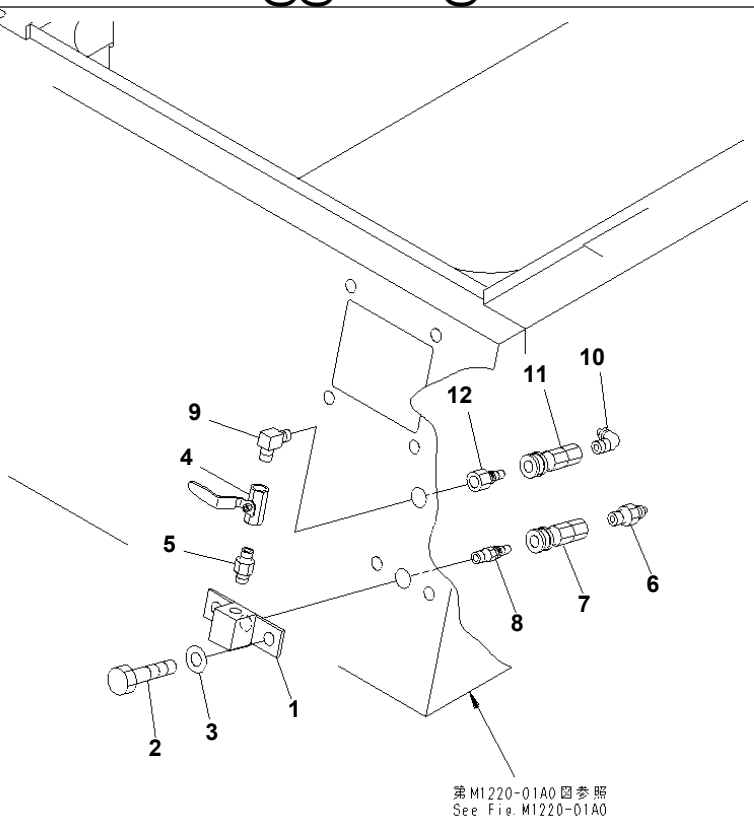

P W 1 E 4 4 8

Ref. G0000-04A0 **Page 150070**

PC1250SP-8R S/N 35001-UP (W/O EGR, +55C DEGREE)
AIR SYSTEM (AIR VALVE)

Item	Part No.	Part Name	Qty	Serial No.
1	21N-68-37150	BLOCK	1	35001-
2	01010-81225	BOLT	2	35001-
3	01643-31232	WASHER	2	35001-
4	07700-40240	VALVE	1	35001-
5	07325-10200	NIPPLE	1	35001-
6	07836-00613	CONNECTOR	1	35001-
7	07880-20500	SOCKET	1	35001-
8	07881-10500	PLUG	1	35001-
9	20D-68-11670	ELBOW	1	35001-
10	07834-00613	ELBOW	1	35001-
11	07880-20500	SOCKET	1	35001-
12	07881-20500	PLUG	1	35001-

Printed By : Dwi Iswanto (airafather6107170)

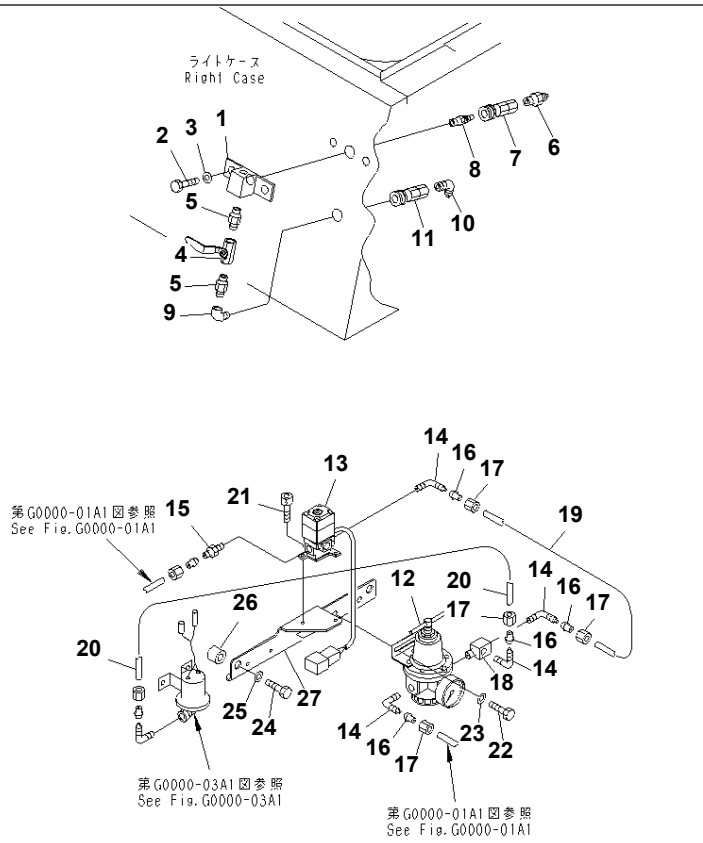

Ref. G0000-04A1 **Page 150080**

PC1250SP-8R S/N 35001-UP (W/O EGR, +55C DEGREE)
AIR SYSTEM (AIR VALVE) (AUTO GREASE)

Item	Part No.	Part Name	Qty	Serial No.
1	21N-68-37150	BLOCK	1	35001-
2	01010-81225	BOLT	2	35001-
3	01643-31232	WASHER	2	35001-
4	07700-40240	VALVE	1	35001-
5	07325-10200	NIPPLE	2	35001-
6	07836-00613	CONNECTOR	1	35001-
7	07880-20500	SOCKET	1	35001-
8	07881-10500	PLUG	1	35001-
9	07323-10200	ELBOW	1	35001-
10	07834-00613	ELBOW	1	35001-
11	175-45-17790	NIPPLE	1	35001-
12	21N-68-32740	REGULATOR	1	35001-
	21N-68-32580	VALVE	1	35001-
13	21N-68-32680	・ SOLENOID VALVE	1	35001-
14	07834-00613	ELBOW	4	35001-
15	07836-00613	CONNECTOR	1	35001-
16	07831-00612	SLEEVE	4	35001-
17	07832-00614	NUT	4	35001-
18	20F-36-13420	TEE	1	35001-
19	07822-00603	TUBE	1	35001-
20	07822-00606	TUBE	1	35001-
21	01252-60512	BOLT	2	35001-
22	01010-80816	BOLT	2	35001-
23	01643-30823	WASHER	2	35001-
24	01010-81245	BOLT	2	35001-
25	01643-31232	WASHER	2	35001-
26	6127-92-1250	SPACER	2	35001-
27	21N-68-32260	BRACKET	1	35001-

Printed By : Dwi Iswanto (airafather6107170)

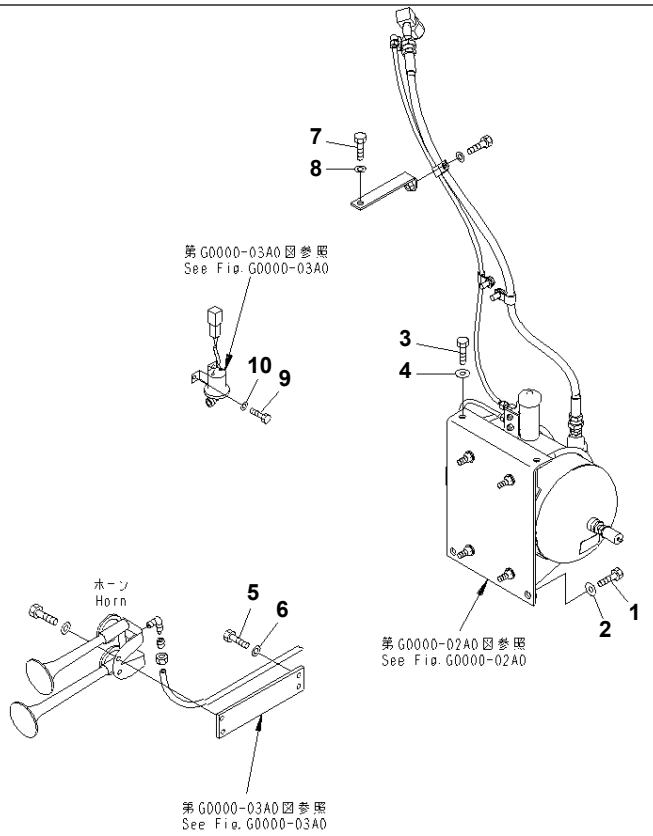

00043484

Ref. G0000-05A0 **Page 150090**

PC1250SP-8R S/N 35001-UP (W/O EGR, +55C DEGREE)

AIR SYSTEM (MOUNTING PARTS)

Item	Part No.	Part Name	Qty	Serial No.
1	01010-81225	BOLT	2	35001-
2	175-54-34170	WASHER	2	35001-
3	01010-81240	BOLT	2	35001-
4	175-54-34170	WASHER	2	35001-
5	01010-81230	BOLT	2	35001-
6	01643-31232	WASHER	2	35001-
7	01010-81225	BOLT	1	35001-
8	01643-31232	WASHER	1	35001-
9	01010-80816	BOLT	2	35001-
10	01643-30823	WASHER	2	35001-

Printed By : Dwi Iswanto (airafather6107170)

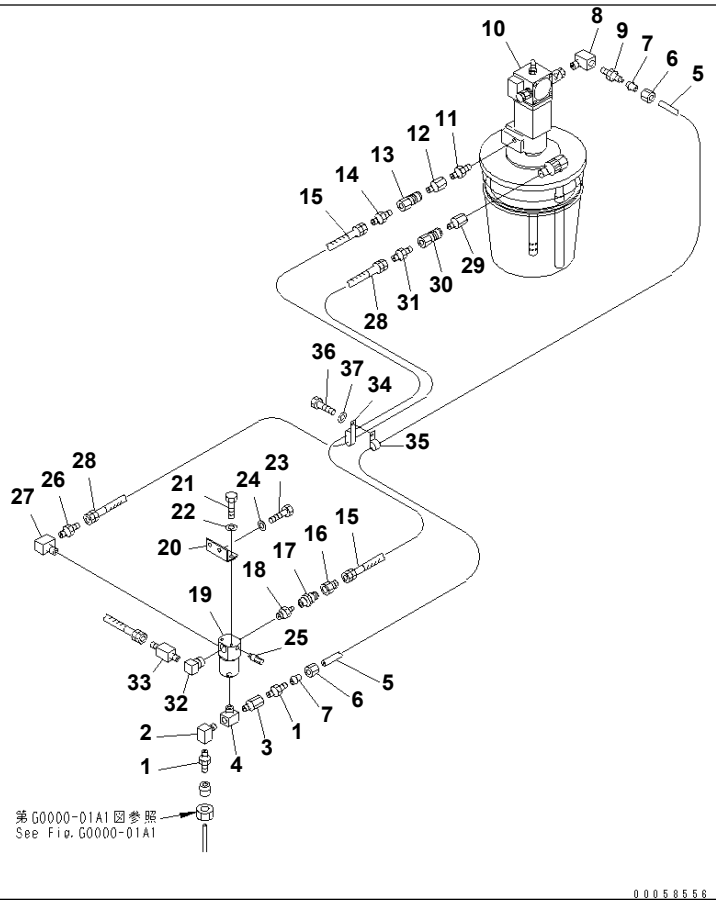

Ref. G1010-01A0 **Page 150100**

PC1250SP-8R S/N 35001-UP (W/O EGR, +55C DEGREE)

AUTO GREASE (GREASE PUMP) (1/2)

Item	Part No.	Part Name	Qty	Serial No.
1	07836-00613	CONNECTOR	2	35001-
2	565-43-14640	NIPPLE	1	35001-
3	175-45-21320	NIPPLE	1	35001-
4	209-01-52190	TEE	1	35001-
5	07822-00618	TUBE	1	35001-
6	07832-00614	NUT	2	35001-
7	07831-00612	SLEEVE	2	35001-
8	565-43-14640	NIPPLE	1	35001-
9	07836-00613	CONNECTOR	1	35001-
10	21N-68-32130	GREASE PUMP ASS'Y	1	35001-
11	21N-68-32140	NIPPLE	1	35001-
12	21N-68-32150	PLUG	1	35001-
13	21N-68-32160	SOCKET	1	35001-
14	21N-68-37610	CONNECTOR	1	35001-
15	07086-00412	HOSE	1	35001-
16	21N-68-32170	UNION	1	35001-
17	21N-68-32180	VALVE ASS'Y	1	35001-
18	21N-68-32190	NIPPLE	1	35001-
19	21N-68-32210	VALVE	1	35001-
20	21N-68-37580	BRACKET	1	35001-
21	02100-10519	BOLT	2	35001-
22	01643-30823	WASHER	2	35001-
23	01010-81020	BOLT	2	35001-
24	01643-31032	WASHER	2	35001-
25	21N-68-32230	VALVE	1	35001-
26	561-01-38140	NIPPLE	1	35001-
27	145-A90-4210	ELBOW	1	35001-
28	07086-00413	HOSE	1	35001-
29	21N-68-32150	PLUG	1	35001-
30	21N-68-32160	SOCKET	1	35001-

Printed By : Dwi Iswanto (airafather6107170)

AUTO GREASE (GREASE PUMP) (1/2)

Item	Part No.	Part Name	Qty	Serial No.
31	21N-68-37610	CONNECTOR	1	35001-
32	21N-68-32250	ELBOW	1	35001-
33	154-60-25250	NIPPLE	1	35001-
34	421-07-11550	CLIP	1	35001-
35	04434-51012	CLIP	1	35001-
36	01010-81225	BOLT	1	35001-
37	01643-31232	WASHER	1	35001-

Printed By : Dwi Iswanto (airafather6107170)

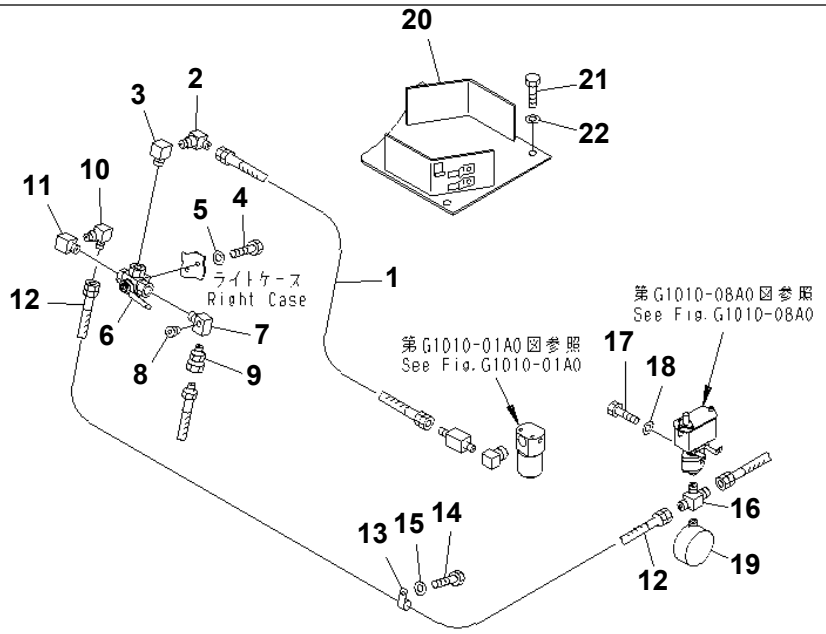

00085423

Ref. G1010-02A0 Page 150110

PC1250SP-8R S/N 35001-UP (W/O EGR, +55C DEGREE)

AUTO GREASE (GREASE PUMP) (2/2)

Item	Part No.	Part Name	Qty	Serial No.
1	07086-004A3	HOSE	1	35001-
2	20C-973-1220	ELBOW	1	35001-
3	565-44-15380	ELBOW	1	35001-
4	01010-80612	BOLT	2	35001-
5	01643-30623	WASHER	2	35001-
6	21T-68-68490	VALVE	1	35001-
7	209-68-51140	NIPPLE	1	35001-
8	07043-70211	PLUG	1	35001-
9	209-68-51220	ADAPTER	1	35001-
10	20C-973-1220	ELBOW	1	35001-
11	565-44-15380	ELBOW	1	35001-
12	07086-004A9	HOSE	1	35001-
13	04434-52512	CLIP	1	35001-
14	01010-81225	BOLT	1	35001-
15	01643-31232	WASHER	1	35001-
16	21N-68-32280	TEE	1	35001-
17	01010-80612	BOLT	2	35001-
18	01643-30623	WASHER	2	35001-
19	427-S95-2410	GAUGE	1	35001-
20	21N-68-31160	BRACKET	1	35001-
21	01010-81230	BOLT	3	35001-
22	01643-31232	WASHER	3	35001-

Printed By : Dwi Iswanto (airafather6107170)

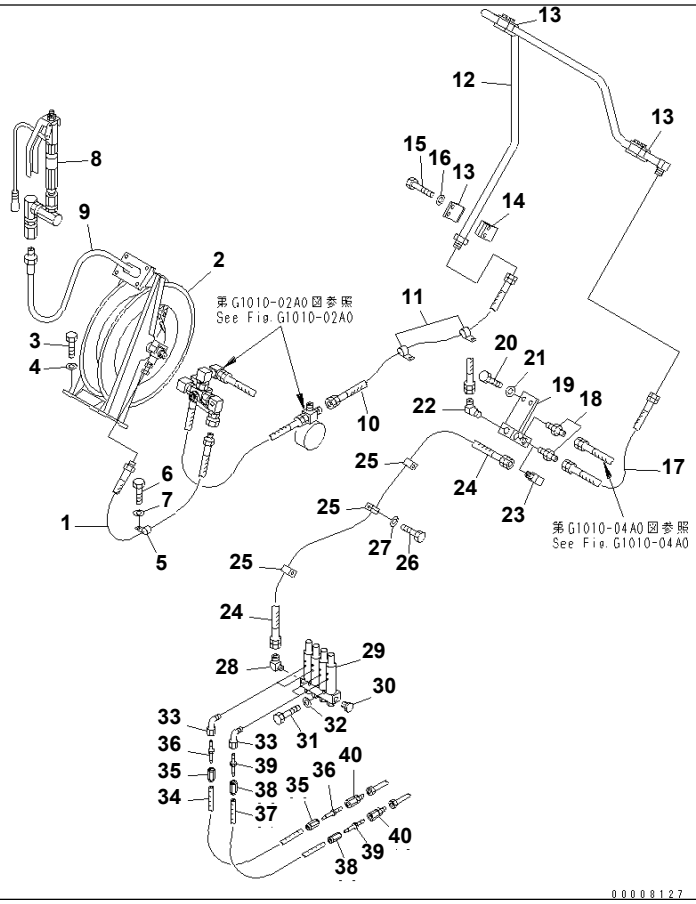

Ref. G1010-03A0 **Page 150120**

PC1250SP-8R S/N 35001-UP (W/O EGR, +55C DEGREE)

AUTO GREASE (REEL AND MAIN LINES)

Item	Part No.	Part Name	Qty	Serial No.
1	21N-68-37590	HOSE, 700MM	1	35001-
2	(209-68-51241)	HOSE REEL ASS'Y	1	35001-
3	01010-81030	BOLT	4	35001-
4	01643-31032	WASHER	4	35001-
5	04434-52110	CLIP	1	35001-
6	01010-81020	BOLT	1	35001-
7	01643-31032	WASHER	1	35001-
8	(209-68-11230)	GREASE GUN ASS'Y	1	35001-
9	21T-68-72450	HOSE	1	35001-
10	07086-00411	HOSE	1	35001-
11	04434-52512	CLIP	2	35001-
12	21N-68-37560	TUBE	1	35001-
13	203-973-5660	CLAMP	3	35001-
14	203-973-5720	SEAT	3	35001-
15	01010-81055	BOLT	6	35001-
16	01643-31032	WASHER	6	35001-
17	07086-004A4	HOSE	1	35001-
18	07238-10424	CONNECTOR	2	35001-
19	21N-68-37570	BLOCK	1	35001-
20	01010-81030	BOLT	4	35001-
21	01643-31032	WASHER	4	35001-
22	23S-44-34140	ELBOW	1	35001-
23	195-04-12280	ELBOW	1	35001-
24	07086-00416	HOSE	1	35001-
25	04434-52511	CLIP	3	35001-
26	01010-81020	BOLT	3	35001-
27	01643-31032	WASHER	3	35001-
28	566-01-61190	ELBOW	1	35001-
29	561-95-37450	INJECTOR ASS'Y	1	35001-
30	581-96-19590	PLUG	1	35001-

Printed By : Dwi Iswanto (airafather6107170)

AUTO GREASE (REEL AND MAIN LINES)

Item	Part No.	Part Name	Qty	Serial No.
31	01010-81050	BOLT	2	35001-
32	01643-31032	WASHER	2	35001-
33	561-95-63250	ELBOW	4	35001-
34	21N-68-32460	HOSE	2	35001-
35	425-S95-2140	SLEEVE	4	35001-
36	425-S95-2160	STUD	4	35001-
37	425-S95-1280	HOSE	2	35001-
38	425-S95-2140	SLEEVE	4	35001-
39	425-S95-2160	STUD	4	35001-
40	561-95-63310	CONNECTOR	4	35001-

Printed By : Dwi Iswanto (airafather6107170)

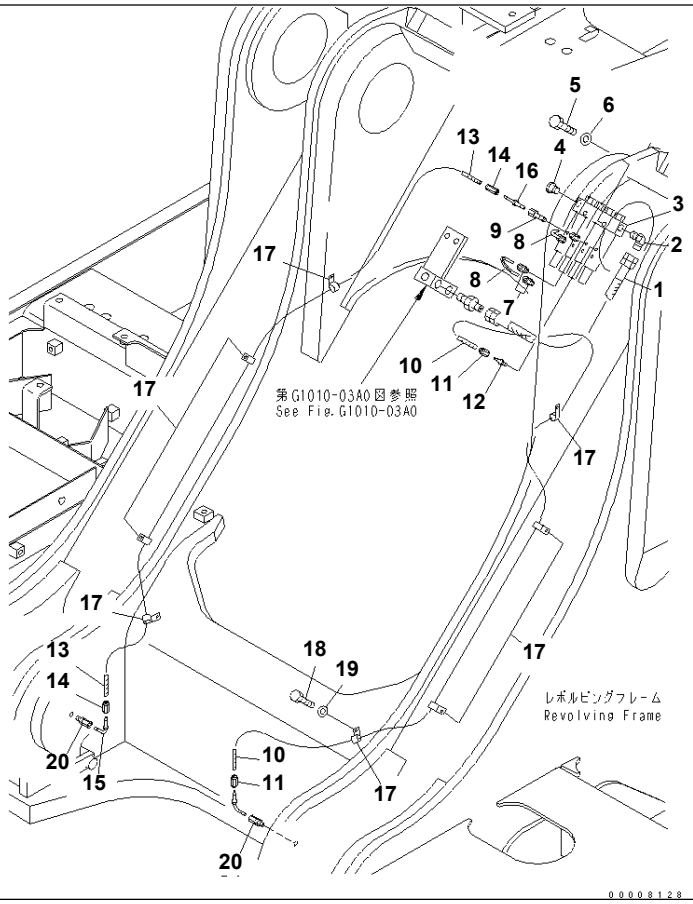

Ref. G1010-04A0 **Page 150130**

PC1250SP-8R S/N 35001-UP (W/O EGR, +55C DEGREE)
AUTO GREASE (BOOM CYLINDER LINES)

Item	Part No.	Part Name	Qty	Serial No.
1	07086-004A4	HOSE	1	35001-
2	566-01-61190	ELBOW	1	35001-
3	561-95-37450	INJECTOR ASS'Y	1	35001-
4	581-96-19590	PLUG	1	35001-
5	01010-81050	BOLT	2	35001-
6	01643-31032	WASHER	2	35001-
7	21N-68-32320	CONNECTOR	4	35001-
8	21N-68-32360	TUBE	2	35001-
9	561-95-63250	ELBOW	2	35001-
10	21N-68-32540	HOSE	1	35001-
11	425-S95-2140	SLEEVE	2	35001-
12	425-S95-2160	STUD	2	35001-
13	21N-68-32530	HOSE	1	35001-
14	425-S95-2140	SLEEVE	2	35001-
15	425-S95-2150	STUD	1	35001-
16	425-S95-2160	STUD	1	35001-
17	04434-51010	CLIP	11	35001-
18	01010-81020	BOLT	9	35001-
19	01643-31032	WASHER	9	35001-
20	561-95-63310	CONNECTOR	2	35001-

Printed By : Dwi Iswanto (airafather6107170)

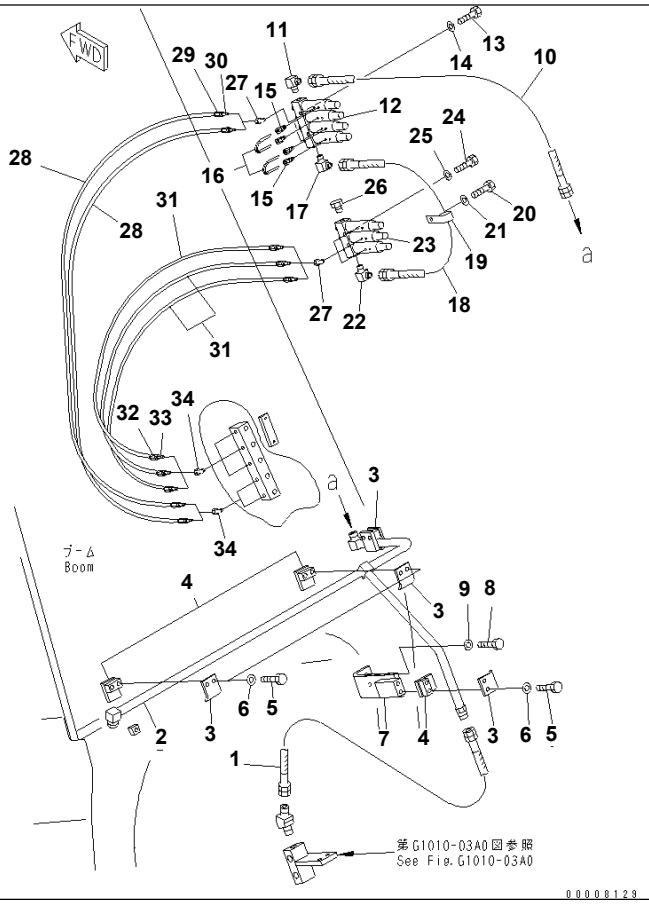

Ref. G1010-05A0 **Page 150140**

PC1250SP-8R S/N 35001-UP (W/O EGR, +55C DEGREE)

AUTO GREASE (BOOM LINES)

Item	Part No.	Part Name	Qty	Serial No.
1	07086-00415	HOSE	1	35001-
2	21N-68-37530	TUBE	1	35001-
3	203-973-5660	CLAMP	4	35001-
4	203-973-5720	SEAT	4	35001-
5	01010-81055	BOLT	8	35001-
6	01643-31032	WASHER	8	35001-
7	21N-68-37550	BRACKET	1	35001-
8	01010-81230	BOLT	2	35001-
9	01643-31232	WASHER	2	35001-
10	07086-004A4	HOSE	1	35001-
11	566-01-61190	ELBOW	1	35001-
12	561-95-37450	INJECTOR ASS'Y	1	35001-
13	01010-81050	BOLT	2	35001-
14	01643-31032	WASHER	2	35001-
15	21N-68-32320	CONNECTOR	4	35001-
16	21N-68-32360	TUBE	2	35001-
17	567-01-12140	ELBOW	1	35001-
18	07086-00305	HOSE	1	35001-
19	04434-52110	CLIP	1	35001-
20	01010-81020	BOLT	1	35001-
21	01643-31032	WASHER	1	35001-
22	567-01-12140	ELBOW	1	35001-
23	581-96-19520	INJECTOR ASS'Y	1	35001-
24	01010-81050	BOLT	2	35001-
25	01643-31032	WASHER	2	35001-
26	581-96-19590	PLUG	1	35001-
27	561-95-63250	ELBOW	5	35001-
28	569-95-64430	HOSE	2	35001-
29	425-S95-2140	SLEEVE	4	35001-
30	425-S95-2160	STUD	4	35001-

Printed By : Dwi Iswanto (airafather6107170)

AUTO GREASE (BOOM LINES)

Item	Part No.	Part Name	Qty	Serial No.
31	21N-68-32460	HOSE	3	35001-
32	425-S95-2140	SLEEVE	6	35001-
33	425-S95-2160	STUD	6	35001-
34	561-95-63290	ELBOW	5	35001-

Printed By : Dwi Iswanto (airafather6107170)

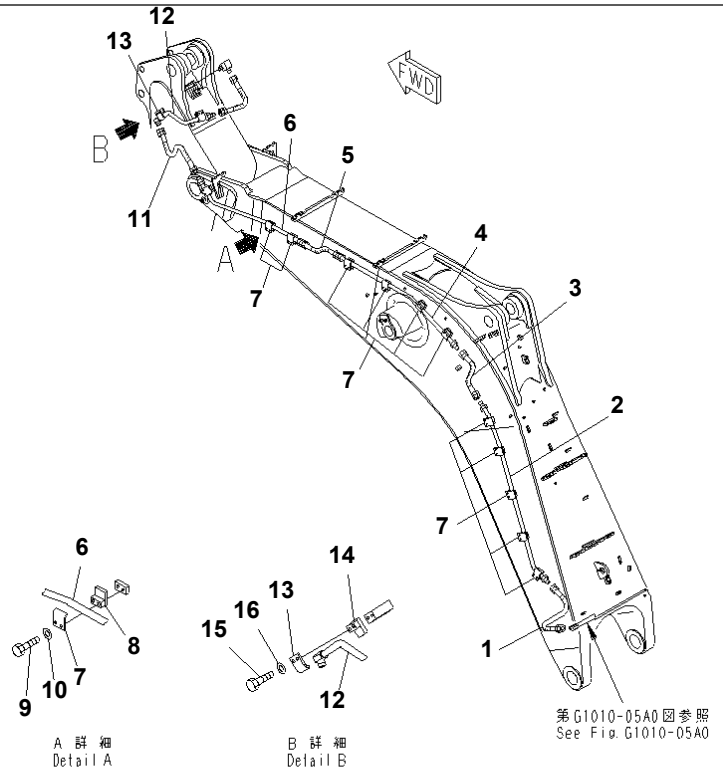

00043640

Ref. G1010-06A1 **Page 150150**

PC1250SP-8R S/N 35001-UP (W/O EGR, +55C DEGREE)
AUTO GREASE (BOOM MAIN LINES) (SP)

Item	Part No.	Part Name	Qty	Serial No.
1	07086-00405	HOSE, 500MM	1	35001-
2	21N-68-32411	TUBE	1	35001-
3	07086-00406	HOSE	1	35001-
4	21N-68-32420	TUBE	1	35001-
5	07086-00406	HOSE	1	35001-
6	21N-68-32440	TUBE	1	35001-
7	203-973-5660	CLAMP	12	35001-
8	203-973-5720	SEAT	12	35001-
9	01010-81055	BOLT	24	35001-
10	01643-31032	WASHER	24	35001-
11	07086-20412	HOSE	1	35001-
12	21N-68-32450	TUBE	1	35001-
13	203-973-5660	CLAMP	2	35001-
14	203-973-5720	SEAT	2	35001-
15	01010-81055	BOLT	4	35001-
16	01643-31032	WASHER	4	35001-

Printed By : Dwi Iswanto (airafather6107170)

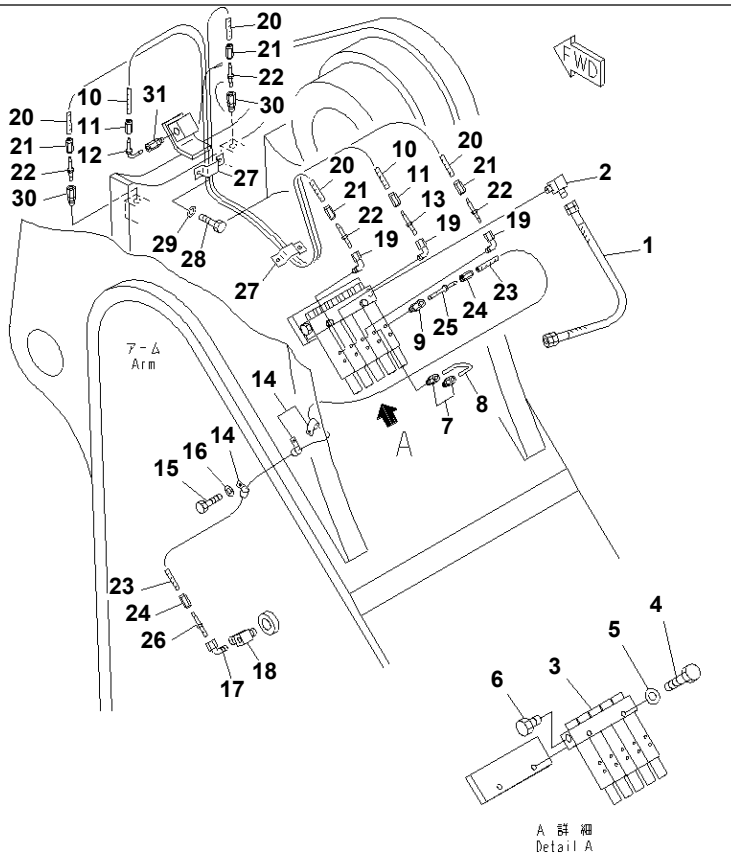

Ref. G1010-07A0 **Page 150160**

PC1250SP-8R S/N 35001-UP (W/O EGR, +55C DEGREE)
AUTO GREASE (ARM LINES)

Item	Part No.	Part Name	Qty	Serial No.
1	07086-20406	HOSE	1	35001-
2	566-01-61190	ELBOW	1	35001-
3	581-96-19530	INJECTOR ASS'Y	1	35001-
4	01010-81050	BOLT	2	35001-
5	01643-31032	WASHER	2	35001-
6	581-96-19590	PLUG	1	35001-
7	21N-68-32320	CONNECTOR	2	35001-
8	21N-68-32360	TUBE	1	35001-
9	21N-68-32370	CONNECTOR	1	35001-
10	569-95-64430	HOSE	1	35001-
11	425-S95-2140	SLEEVE	2	35001-
12	425-S95-2150	STUD	1	35001-
13	425-S95-2160	STUD	1	35001-
14	04434-51010	CLIP	3	35001-
15	01010-81020	BOLT	3	35001-
16	01643-31032	WASHER	3	35001-
17	561-95-63290	ELBOW	1	35001-
18	21N-68-32390	ELBOW	1	35001-
19	561-95-63250	ELBOW	3	35001-
20	569-95-64430	HOSE	2	35001-
21	425-S95-2140	SLEEVE	4	35001-
22	425-S95-2160	STUD	4	35001-
23	569-95-64430	HOSE	1	35001-
24	425-S95-2140	SLEEVE	2	35001-
25	425-S95-2150	STUD	1	35001-
26	425-S95-2160	STUD	1	35001-
27	207-70-11770	CLIP	2	35001-
28	01010-80610	BOLT	4	35001-
29	01643-30623	WASHER	4	35001-
30	561-95-63310	CONNECTOR	2	35001-

Printed By : Dwi Iswanto (airafather6107170)

AUTO GREASE (ARM LINES)

Item	Part No.	Part Name	Qty	Serial No.
31	561-95-63310	CONNECTOR	1	35001-

Printed By : Dwi Iswanto (airafather6107170)

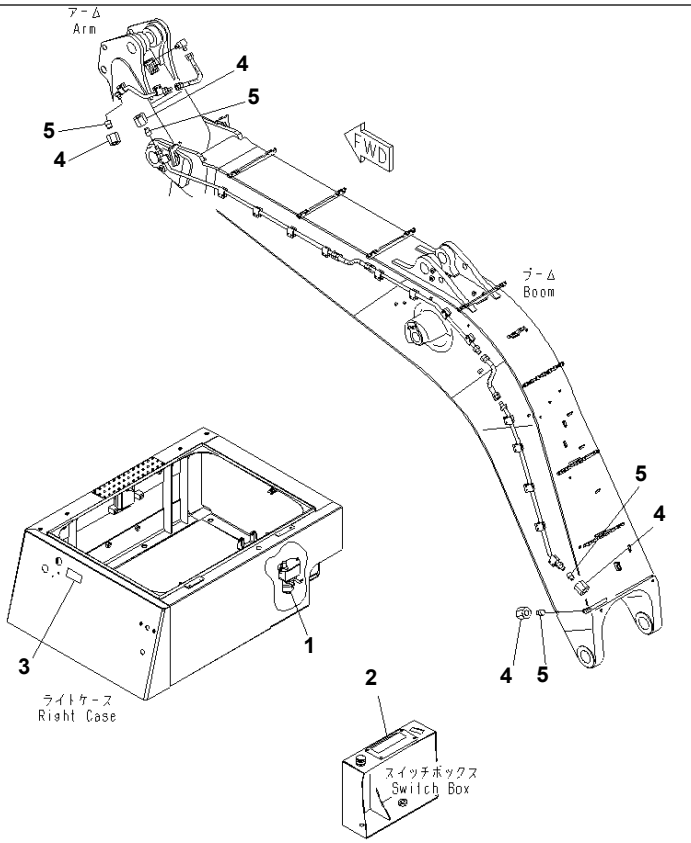

Ref. G1010-08A0 **Page 150170**

PC1250SP-8R S/N 35001-UP (W/O EGR, +55C DEGREE)

AUTO GREASE (PRESSURE SWITCH AND PLATE)

Item	Part No.	Part Name	Qty	Serial No.
1	21N-68-32590	PRESSURE SWITCH	1	35001-
	21N-68-32710	· PRESSURE SWITCH	1	35001-
2	21N-00-31480	PLATE	1	35001-
3	21N-00-31470	PLATE	1	35001-
4	07221-20422	NUT	4	35001-
5	07222-00414	PLUG	4	35001-

Printed By : Dwi Iswanto (airafather6107170)

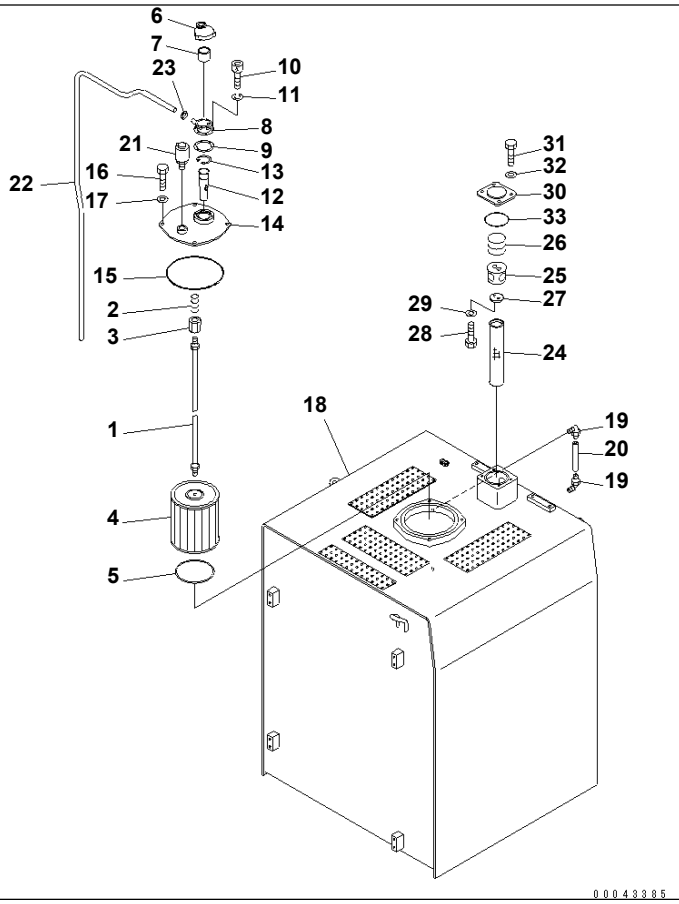

Ref. H0110-01A0 **Page 180010**

PC1250SP-8R S/N 35001-UP (W/O EGR, +55C DEGREE)

HYDRAULIC TANK

Item	Part No.	Part Name	Qty	Serial No.
	21N-60-31350	STRAINER ASS'Y	1	35001-
1	21N-60-31360	· ROD ASS'Y	1	35001-
2	12R-60-11230	· · SPRING	1	35001-
3	20Y-60-21320	· · HOLDER	1	35001-
4	209-60-51120	· STRAINER	1	35001-
5	21N-09-11140	O-RING	1	35001-
6	17A-60-11310	CAP ASS'Y	1	35001-
7	20Y-60-21470	· ELEMENT	1	35001-
8	208-60-71180	FILLER NECK	1	35001-
9	20Y-60-21340	GASKET	2	35001-
10	01252-70516	BOLT	6	35001-
11	01601-20513	WASHER	6	35001-
12	07056-10045	STRAINER	1	35001-
13	04065-04718	RING	1	35001-
14	209-60-77120	COVER	1	35001-
15	07000-15230	O-RING	1	35001-
16	01010-81225	BOLT	4	35001-
17	01643-31232	WASHER	4	35001-
18	21N-60-41150	TANK	1	35001-
19	203-60-31100	ELBOW ASS'Y	2	35001-
20	21T-60-71160	TUBE	1	35001-
21	(198-60-55510)	BREATHER	1	35001-
22	07270-61422	TUBE	1	35001-
23	07285-00155	CLIP	1	35001-
24	21N-60-32950	STRAINER	1	35001-
25	21N-60-31230	SPACER	1	35001-
26	102-10-43260	SPRING	1	35001-
27	150-67-12331	WASHER	1	35001-
28	01010-80825	BOLT	2	35001-
29	01643-30823	WASHER	2	35001-

Printed By : Dwi Iswanto (airafather6107170)

HYDRAULIC TANK

Item	Part No.	Part Name	Qty	Serial No.
30	21N-60-31221	COVER	1	35001-
31	01010-81230	BOLT	4	35001-
32	01643-31232	WASHER	4	35001-
33	07000-12095	O-RING	1	35001-

Printed By : Dwi Iswanto (airafather6107170)

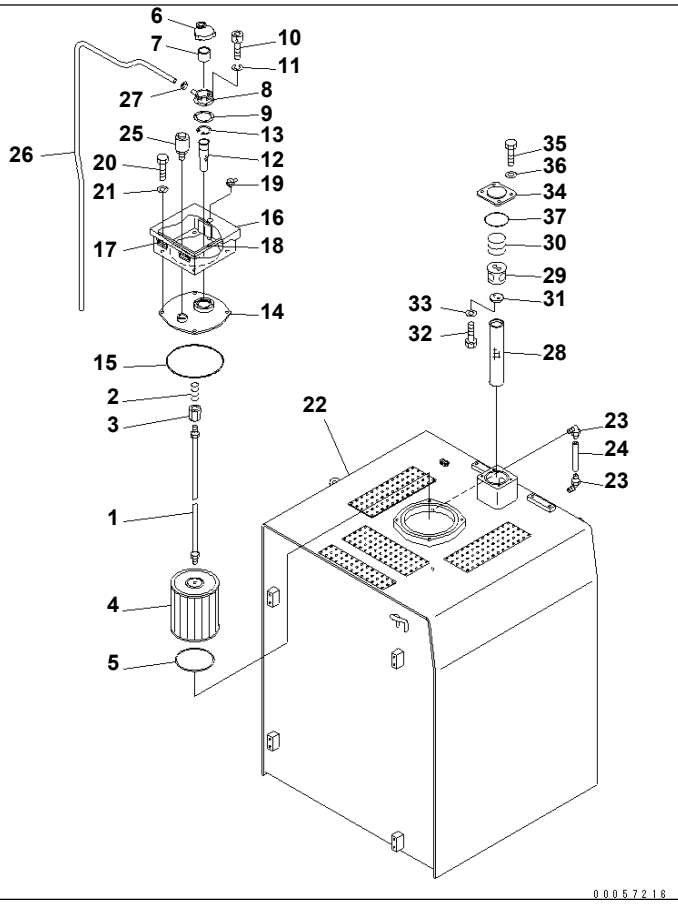

Ref. H0110-01A4 **Page 180020**

PC1250SP-8R S/N 35001-UP (W/O EGR, +55C DEGREE)

HYDRAULIC TANK (SANDY AND DUSTY TERRAIN SPEC.)

Item	Part No.	Part Name	Qty	Serial No.
	21N-60-31350	STRAINER ASS'Y	1	35001-
1	21N-60-31360	· ROD ASS'Y	1	35001-
2	12R-60-11230	· · SPRING	1	35001-
3	20Y-60-21320	· · HOLDER	1	35001-
4	209-60-51120	· STRAINER	1	35001-
5	21N-09-11140	O-RING	1	35001-
6	17A-60-11310	CAP ASS'Y	1	35001-
7	20Y-60-21470	· ELEMENT	1	35001-
8	208-60-71180	FILLER NECK	1	35001-
9	20Y-60-21340	GASKET	2	35001-
10	01252-70516	BOLT	6	35001-
11	01601-20513	WASHER	6	35001-
12	07056-10045	STRAINER	1	35001-
13	04065-04718	RING	1	35001-
14	209-60-77120	COVER	1	35001-
15	07000-15230	O-RING	1	35001-
16	21N-60-41160	COVER	1	35001-
17	09455-12013	· HINGE (WELDED)	2	35001-
18	209-04-51330	· SEAL	1	35001-
19	205-60-71220	LOCK ASS'Y	1	35001-
20	01010-81230	BOLT	4	35001-
21	01643-31232	WASHER	4	35001-
22	21N-60-41150	TANK	1	35001-
23	203-60-31100	ELBOW ASS'Y	2	35001-
24	21T-60-71160	TUBE	1	35001-
25	(198-60-55510)	BREATHER	1	35001-
26	07270-61422	TUBE	1	35001-
27	07285-00155	CLIP	1	35001-
28	21N-60-32950	STRAINER	1	35001-
29	21N-60-31230	SPACER	1	35001-

Printed By : Dwi Iswanto (airafather6107170)

HYDRAULIC TANK (SANDY AND DUSTY TERRAIN SPEC.)

Item	Part No.	Part Name	Qty	Serial No.
30	102-10-43260	SPRING	1	35001-
31	150-67-12331	WASHER	1	35001-
32	01010-80825	BOLT	2	35001-
33	01643-30823	WASHER	2	35001-
34	21N-60-31221	COVER	1	35001-
35	01010-81230	BOLT	4	35001-
36	01643-31232	WASHER	4	35001-
37	07000-12095	O-RING	1	35001-

Printed By : Dwi Iswanto (airafather6107170)

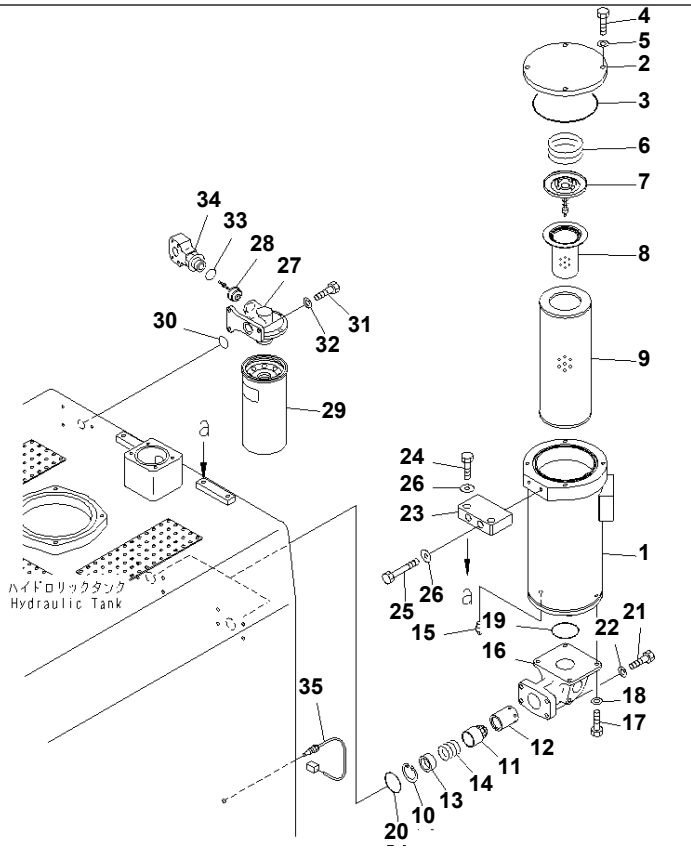

Ref. H0110-02A0 **Page 180030**

PC1250SP-8R S/N 35001-UP (W/O EGR, +55C DEGREE)

HYDRAULIC TANK (RETURN FILTER)

Item	Part No.	Part Name	Qty	Serial No.
1	21N-60-41121	CASE	2	35001-
2	21N-60-41131	COVER	2	35001-
3	07000-15180	O-RING	2	35001-
4	01010-81235	BOLT	8	35001-
5	01643-31232	WASHER	8	35001-
6	07069-34057	SPRING	2	35001-
7	20Y-60-31131	VALVE ASS'Y	2	35001-
8	20Y-60-31140	STRAINER	2	35001-
9	209-60-77532	ELEMENT	2	35021-
	209-60-77531	ELEMENT	2	35001-35020
	209-60-77310	VALVE ASS'Y	2	35001-
10	04065-04218	· RING	1	35001-
11	208-60-51411	· POPPET	1	35001-
12	208-60-51420	· COLLAR	1	35001-
13	209-60-77320	· SPACER	1	35001-
14	708-1D-14130	· SPRING	1	35001-
15	07042-30211	PLUG	2	35001-
16	208-60-61321	BRACKET	2	35001-
17	01010-81025	BOLT	8	35001-
18	01643-31032	WASHER	8	35001-
19	07000-12095	O-RING	2	35001-
20	07000-12060	O-RING	2	35001-
21	01010-81245	BOLT	8	35001-
22	01643-31232	WASHER	8	35001-
23	21N-60-41140	BRACKET	2	35001-
24	01010-81255	BOLT	4	35001-
25	01011-81205	BOLT	4	35001-
26	175-54-34170	WASHER	8	35001-
	21N-60-12200	FILTER ASS'Y	1	35001-
27	103-60-23250	· BASE	1	35001-

Printed By : Dwi Iswanto (airafather6107170)

HYDRAULIC TANK (RETURN FILTER)

Item	Part No.	Part Name	Qty	Serial No.
28	103-60-23260	· VALVE	1	35001-
29	21N-60-12210	· CARTRIDGE	1	35001-
30	07000-13032	O-RING	1	35001-
31	01010-81030	BOLT	3	35001-
32	01643-31032	WASHER	3	35001-
33	07002-13334	O-RING	1	35001-
34	21N-62-31892	TEE	1	35001-
35	7861-93-3320	SENSOR	1	35001-

Printed By : Dwi Iswanto (airafather6107170)

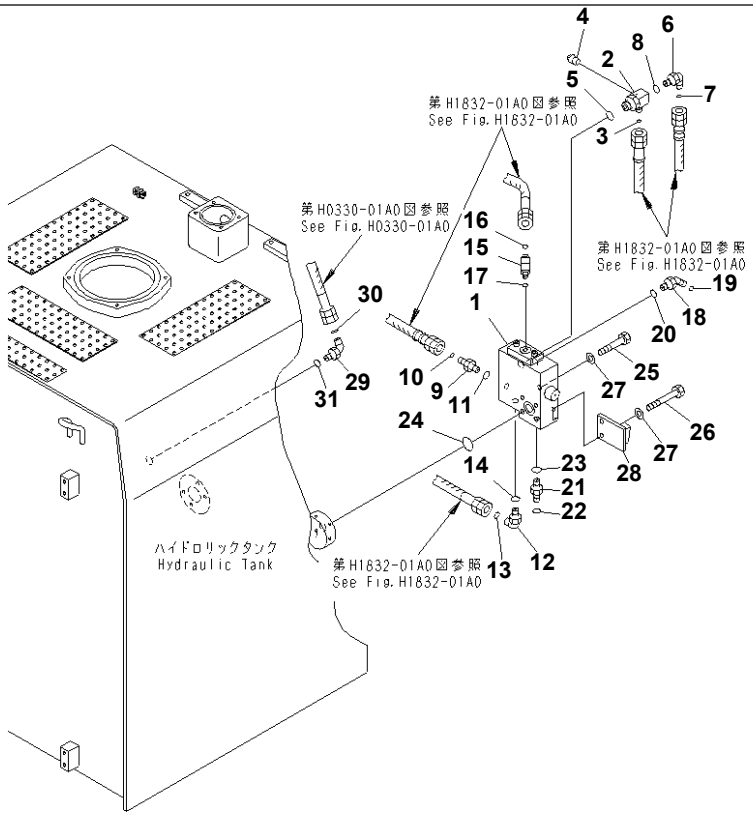

Ref. H0110-03A0 **Page 180040**

PC1250SP-8R S/N 35001-UP (W/O EGR, +55C DEGREE)
HYDRAULIC TANK (RELIEF VALVE)

Item	Part No.	Part Name	Qty	Serial No.
1	(21N-60-32202)	VALVE ASS'Y	1	35001-
2	21N-64-36661	TEE	1	35001-
3	02896-11009	O-RING	1	35001-
4	07042-30108	PLUG	1	35001-
5	07002-12434	O-RING	1	35001-
6	02782-10315	ELBOW	1	35001-
7	02896-11009	O-RING	1	35001-
8	07002-12034	O-RING	1	35001-
9	02781-00315	UNION	1	35001-
10	02896-11009	O-RING	1	35001-
11	07002-12034	O-RING	1	35001-
12	02782-10315	ELBOW	1	35001-
13	02896-11009	O-RING	1	35001-
14	07002-12034	O-RING	1	35001-
15	21N-64-36480	ELBOW	1	35001-
16	02896-11009	O-RING	1	35001-
17	07002-11423	O-RING	1	35001-
18	02783-10628	ELBOW	1	35001-
19	02896-11018	O-RING	1	35001-
20	07002-12434	O-RING	1	35001-
21	02781-00628	UNION	1	35001-
22	02896-11018	O-RING	1	35001-
23	07002-12434	O-RING	1	35001-
24	07000-13035	O-RING	1	35001-
25	01011-81200	BOLT	2	35001-
26	01011-81205	BOLT	2	35001-
27	01643-31232	WASHER	4	35001-
28	21N-62-33340	BRACKET	1	35001-
29	02782-1052A	ELBOW	1	35001-
30	02896-11015	O-RING	1	35001-

Printed By : Dwi Iswanto (airafather6107170)

HYDRAULIC TANK (RELIEF VALVE)

Item	Part No.	Part Name	Qty	Serial No.
31	07002-12434	O-RING	1	35001-

Printed By : Dwi Iswanto (airafather6107170)

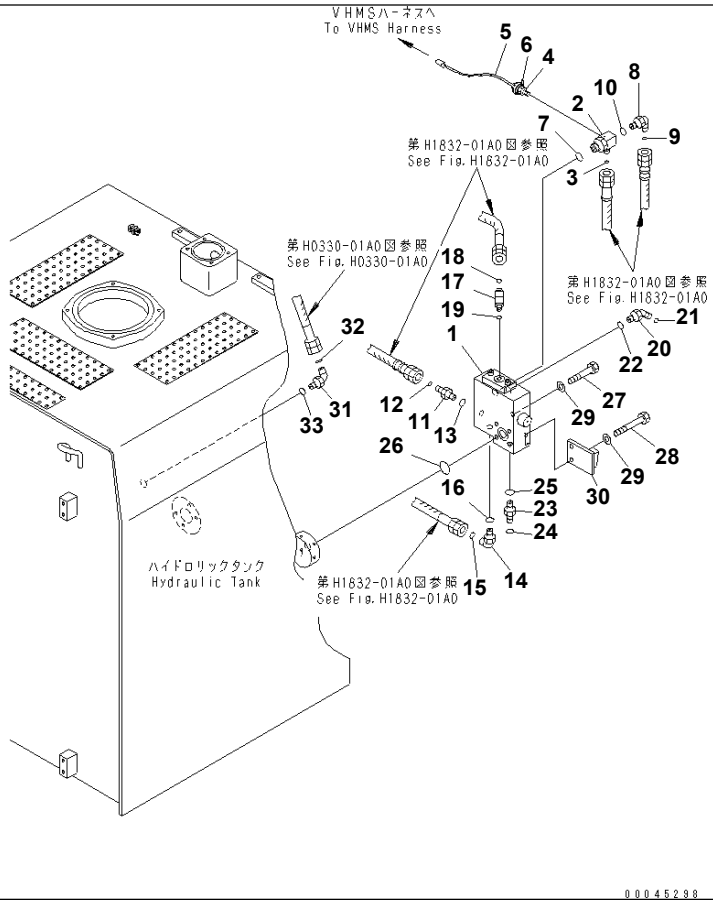

Ref. H0110-03A1 **Page 180050**

PC1250SP-8R S/N 35001-UP (W/O EGR, +55C DEGREE)
HYDRAULIC TANK (RELIEF VALVE) (VHMS)

Item	Part No.	Part Name	Qty	Serial No.
1	(21N-60-32202)	VALVE ASS'Y	1	35001-
2	21N-64-36661	TEE	1	35001-
3	02896-11009	O-RING	1	35001-
4	7861-93-1670	SENSOR	1	35001-
5	21N-06-33660	CONDUIT	1	35001-
6	08034-20519	BAND	1	35001-
7	07002-12434	O-RING	1	35001-
8	02782-10315	ELBOW	1	35001-
9	02896-11009	O-RING	1	35001-
10	07002-12034	O-RING	1	35001-
11	02781-00315	UNION	1	35001-
12	02896-11009	O-RING	1	35001-
13	07002-12034	O-RING	1	35001-
14	02782-10315	ELBOW	1	35001-
15	02896-11009	O-RING	1	35001-
16	07002-12034	O-RING	1	35001-
17	21N-64-36480	ELBOW	1	35001-
18	02896-11009	O-RING	1	35001-
19	07002-11423	O-RING	1	35001-
20	02783-10628	ELBOW	1	35001-
21	02896-11018	O-RING	1	35001-
22	07002-12434	O-RING	1	35001-
23	02781-00628	UNION	1	35001-
24	02896-11018	O-RING	1	35001-
25	07002-12434	O-RING	1	35001-
26	07000-13035	O-RING	1	35001-
27	01011-81200	BOLT	2	35001-
28	01011-81205	BOLT	2	35001-
29	01643-31232	WASHER	4	35001-
30	21N-62-33340	BRACKET	1	35001-

Printed By : Dwi Iswanto (airafather6107170)

HYDRAULIC TANK (RELIEF VALVE) (VHMS)

Item	Part No.	Part Name	Qty	Serial No.
31	02782-1052A	ELBOW	1	35001-
32	02896-11015	O-RING	1	35001-
33	07002-12434	O-RING	1	35001-

Printed By : Dwi Iswanto (airafather6107170)

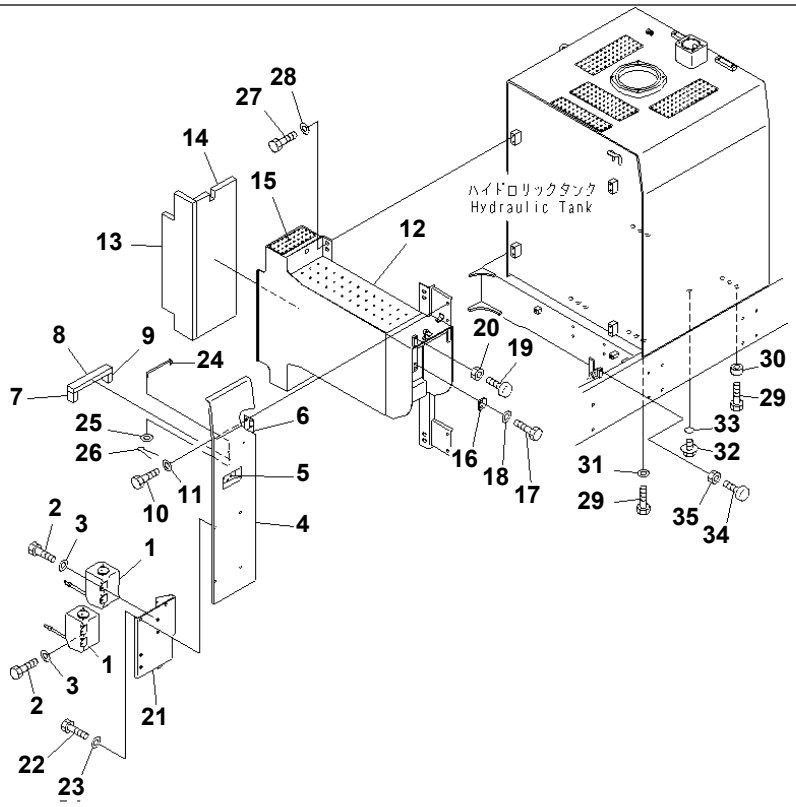

Ref. H0110-04A0 **Page 180060**

PC1250SP-8R S/N 35001-UP (W/O EGR, +55C DEGREE)

HYDRAULIC TANK (WASHER TANK AND CAB REAR COVER)

Item	Part No.	Part Name	Qty	Serial No.
1	21T-06-11350	WASHER TANK ASS'Y	2	35001-
2	01010-80616	BOLT	8	35001-
3	01643-30623	WASHER	8	35001-
4	21N-53-32170	COVER	1	35001-
5	198-54-41982	· LOCK ASS'Y (WELDED)	1	35001-
6	21K-54-22460	· HINGE (WELDED)	2	35001-
7	21N-54-32430	· SHEET	1	35001-
8	21N-54-32960	· SHEET	1	35001-
9	21N-54-32970	· SHEET	1	35001-
10	01010-81230	BOLT	4	35001-
11	01643-31232	WASHER	4	35001-
12	21N-54-42711	CASE	1	35001-
13	21N-53-32180	· SHEET	1	35001-
14	21N-54-32351	· SHEET	1	35001-
15	21N-54-42420	· PLATE	1	35001-
16	209-54-63260	BRACKET	1	35001-
17	01010-81230	BOLT	2	35001-
18	01643-31232	WASHER	2	35001-
19	20Y-54-11611	STOPPER	1	35001-
20	01580-11008	NUT	1	35001-
21	21N-54-31331	BRACKET	1	35001-
22	01010-81225	BOLT	4	35001-
23	01643-31232	WASHER	4	35001-
24	175-43-41261	ROD	1	35001-
25	01643-30623	WASHER	1	35001-
26	04050-11612	PIN	1	35001-
27	01010-81230	BOLT	8	35001-
28	175-54-34170	WASHER	8	35001-
29	01010-82065	BOLT	12	35001-
30	21T-01-11130	WASHER	6	35001-

Printed By : Dwi Iswanto (airafather6107170)

HYDRAULIC TANK (WASHER TANK AND CAB REAR COVER)

Item	Part No.	Part Name	Qty	Serial No.
31	01643-32060	WASHER	6	35001-
32	07044-12412	PLUG	1	35001-
33	07002-12434	O-RING	1	35001-
34	20Y-54-11611	STOPPER	1	35001-
35	01580-11008	NUT	1	35001-

Printed By : Dwi Iswanto (airafather6107170)

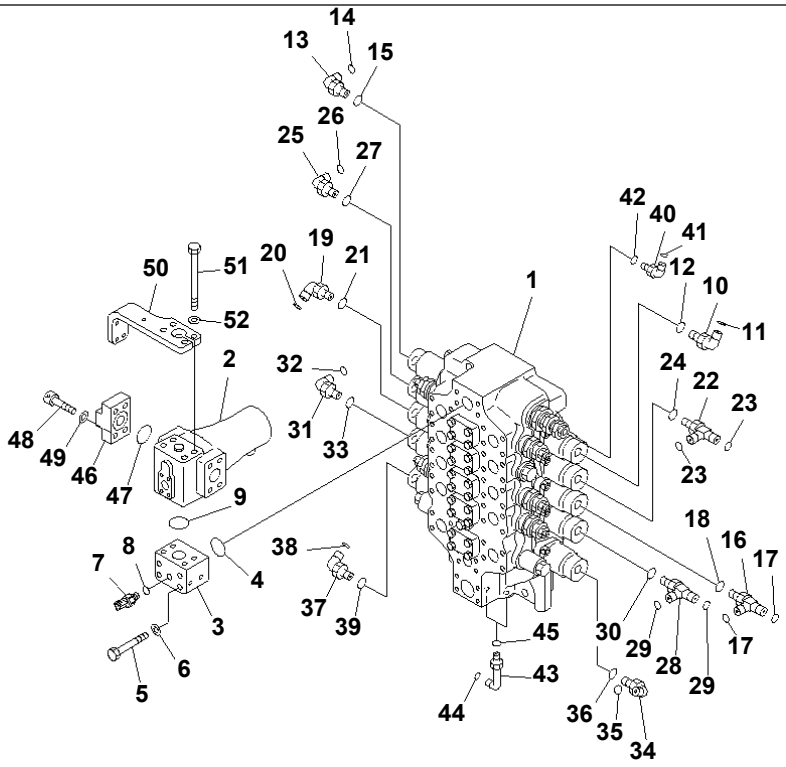

00043703

Ref. H0120-01A0 **Page 180070**

PC1250SP-8R S/N 35001-UP (W/O EGR, +55C DEGREE)
MAIN VALVE (NO.1 VALVE AND JOINT PARTS)(#35001-35016)

Item	Part No.	Part Name	Qty	Serial No.
1	(709-15-94000)	CONTROL VALVE	1	35001-@
2	(21N-62-31201)	FILTER ASS'Y	1	35001-@
3	21N-62-37121	BLOCK	1	35001-@
4	07000-B3048	O-RING	1	35001-@
5	01011-81415	BOLT	4	35001-@
6	01643-31445	WASHER	4	35001-@
7	7861-93-1811	SENSOR	1	35001-@
8	07002-11823	· O-RING	1	35001-@
9	07000-B3048	O-RING	1	35001-@
10	02782-10315	ELBOW	1	35001-@
11	02896-11009	O-RING	1	35001-@
12	07002-12034	O-RING	1	35001-@
13	02782-10315	ELBOW	1	35001-@
14	02896-11009	O-RING	1	35001-@
15	07002-12034	O-RING	1	35001-@
16	21N-64-37150	TEE	1	35001-@
17	02896-11009	O-RING	2	35001-@
18	07002-12034	O-RING	1	35001-@
19	02782-10315	ELBOW	1	35001-@
20	02896-11009	O-RING	1	35001-@
21	07002-12034	O-RING	1	35001-@
22	21N-64-37140	TEE	1	35001-@
23	02896-11009	O-RING	2	35001-@
24	07002-12034	O-RING	1	35001-@
25	02782-10315	ELBOW	1	35001-@
26	02896-11009	O-RING	1	35001-@
27	07002-12034	O-RING	1	35001-@
28	19M-61-35140	TEE	1	35001-@
29	02896-11009	O-RING	2	35001-@
30	07002-12034	O-RING	1	35001-@

Printed By : Dwi Iswanto (airafather6107170)

MAIN VALVE (NO.1 VALVE AND JOINT PARTS)(#35001-35016)

Item	Part No.	Part Name	Qty	Serial No.
31	02782-10315	ELBOW	1	35001-@
32	02896-11009	O-RING	1	35001-@
33	07002-12034	O-RING	1	35001-@
34	21N-64-36440	ELBOW	1	35001-@
35	02896-11009	O-RING	1	35001-@
36	07002-12034	O-RING	1	35001-@
37	21N-64-36440	ELBOW	1	35001-@
38	02896-11009	O-RING	1	35001-@
39	07002-12034	O-RING	1	35001-@
40	21W-62-42490	ELBOW	1	35001-@
41	02896-11009	O-RING	1	35001-@
42	07002-11423	O-RING	1	35001-@
43	02782-10312	ELBOW	2	35001-@
44	02896-11009	O-RING	2	35001-@
45	07002-11423	O-RING	2	35001-@
46	21N-62-33190	FLANGE	1	35001-@
47	07000-B3048	O-RING	1	35001-@
48	01252-71460	BOLT	4	35001-@
49	01643-31445	WASHER	4	35001-@
50	21N-62-33271	BRACKET	1	35001-35016
51	01011-81490	BOLT	4	35001-@
52	01643-31445	WASHER	4	35001-@

Printed By : Dwi Iswanto (airafather6107170)

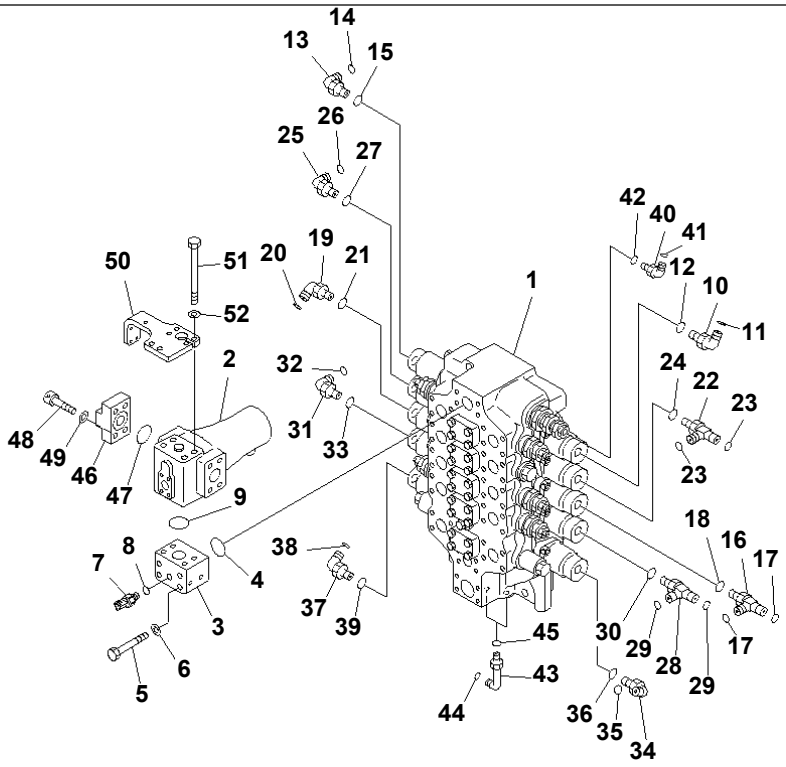

PC1250SP-8R S/N 35001-UP (W/O EGR, +55C DEGREE)

MAIN VALVE (NO.1 VALVE AND JOINT PARTS)(#35017-)

Item	Part No.	Part Name	Qty	Serial No.
1	(709-15-94000)	CONTROL VALVE	1	35001-
2	(21N-62-31201)	FILTER ASS'Y	1	35001-
3	21N-62-37121	BLOCK	1	35001-
4	07000-B3048	O-RING	1	35001-
5	01011-81415	BOLT	4	35001-
6	01643-31445	WASHER	4	35001-
7	7861-93-1811	SENSOR	1	35001-
8	07002-11823	O-RING	1	35001-
9	07000-B3048	O-RING	1	35001-
10	02782-10315	ELBOW	1	35001-
11	02896-11009	O-RING	1	35001-
12	07002-12034	O-RING	1	35001-
13	02782-10315	ELBOW	1	35001-
14	02896-11009	O-RING	1	35001-
15	07002-12034	O-RING	1	35001-
16	21N-64-37150	TEE	1	35001-
17	02896-11009	O-RING	2	35001-
18	07002-12034	O-RING	1	35001-
19	02782-10315	ELBOW	1	35001-
20	02896-11009	O-RING	1	35001-
21	07002-12034	O-RING	1	35001-
22	21N-64-37140	TEE	1	35001-
23	02896-11009	O-RING	2	35001-
24	07002-12034	O-RING	1	35001-
25	02782-10315	ELBOW	1	35001-
26	02896-11009	O-RING	1	35001-
27	07002-12034	O-RING	1	35001-
28	19M-61-35140	TEE	1	35001-
29	02896-11009	O-RING	2	35001-
30	07002-12034	O-RING	1	35001-

Printed By : Dwi Iswanto (airafather6107170)

MAIN VALVE (NO.1 VALVE AND JOINT PARTS)(#35017-)

Item	Part No.	Part Name	Qty	Serial No.
31	02782-10315	ELBOW	1	35001-
32	02896-11009	O-RING	1	35001-
33	07002-12034	O-RING	1	35001-
34	21N-64-36440	ELBOW	1	35001-
35	02896-11009	O-RING	1	35001-
36	07002-12034	O-RING	1	35001-
37	21N-64-36440	ELBOW	1	35001-
38	02896-11009	O-RING	1	35001-
39	07002-12034	O-RING	1	35001-
40	21W-62-42490	ELBOW	1	35001-
41	02896-11009	O-RING	1	35001-
42	07002-11423	O-RING	1	35001-
43	02782-10312	ELBOW	2	35001-
44	02896-11009	O-RING	2	35001-
45	07002-11423	O-RING	2	35001-
46	21N-62-33190	FLANGE	1	35001-
47	07000-B3048	O-RING	1	35001-
48	01252-71460	BOLT	4	35001-
49	01643-31445	WASHER	4	35001-
50	21N-62-42380	BRACKET	1	35017-
51	01011-81490	BOLT	4	35001-
52	01643-31445	WASHER	4	35001-

Printed By : Dwi Iswanto (airafather6107170)

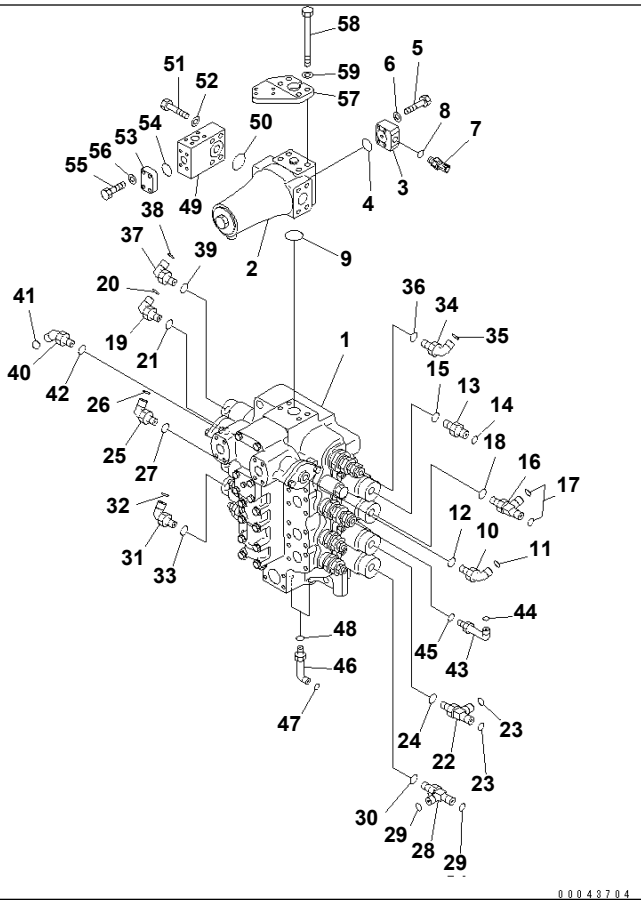

Ref. H0120-02A0 **Page 180090**

PC1250SP-8R S/N 35001-UP (W/O EGR, +55C DEGREE)
MAIN VALVE (NO.2 VALVE AND JOINT PARTS)

Item	Part No.	Part Name	Qty	Serial No.
1	(709-14-94001)	CONTROL VALVE	1	35001-
2	(21N-62-31201)	FILTER ASS'Y	1	35001-
3	21N-62-38480	FLANGE	1	35001-
4	07000-B3035	O-RING	1	35001-
5	07372-21055	BOLT	4	35001-
6	01643-51032	WASHER	4	35001-
7	7861-93-1811	SENSOR	1	35001-
8	07002-11823	· O-RING	1	35001-
9	07000-B3048	O-RING	1	35001-
10	21N-64-36440	ELBOW	1	35001-
11	02896-11009	O-RING	1	35001-
12	07002-12034	O-RING	1	35001-
13	21N-64-36740	ELBOW	1	35001-
14	02896-11009	O-RING	1	35001-
15	07002-12034	O-RING	1	35001-
16	19M-61-35140	TEE	1	35001-
17	02896-11009	O-RING	2	35001-
18	07002-12034	O-RING	1	35001-
19	02782-10315	ELBOW	1	35001-
20	02896-11009	O-RING	1	35001-
21	07002-12034	O-RING	1	35001-
22	19M-61-35140	TEE	1	35001-
23	02896-11009	O-RING	2	35001-
24	07002-12034	O-RING	1	35001-
25	02782-10315	ELBOW	1	35001-
26	02896-11009	O-RING	1	35001-
27	07002-12034	O-RING	1	35001-
28	21N-64-37150	TEE	1	35001-
29	02896-11009	O-RING	2	35001-
30	07002-12034	O-RING	1	35001-

Printed By : Dwi Iswanto (airafather6107170)

MAIN VALVE (NO.2 VALVE AND JOINT PARTS)

Item	Part No.	Part Name	Qty	Serial No.
31	02782-10315	ELBOW	1	35001-
32	02896-11009	O-RING	1	35001-
33	07002-12034	O-RING	1	35001-
34	21W-62-42490	ELBOW	1	35001-
35	02896-11009	O-RING	1	35001-
36	07002-11423	O-RING	1	35001-
37	21N-64-36440	ELBOW	1	35001-
38	02896-11009	O-RING	1	35001-
39	07002-12034	O-RING	1	35001-
40	21N-64-36430	ELBOW	1	35001-
41	02896-11009	O-RING	1	35001-
42	07002-12034	O-RING	1	35001-
43	02782-10312	ELBOW	1	35001-
44	02896-11009	O-RING	1	35001-
45	07002-11423	O-RING	1	35001-
46	02782-10312	ELBOW	2	35001-
47	02896-11009	O-RING	2	35001-
48	07002-11423	O-RING	2	35001-
49	21N-62-33260	BLOCK	1	35001-
50	07000-B3048	O-RING	1	35001-
51	01010-81480	BOLT	4	35001-
52	01643-31445	WASHER	4	35001-
53	207-62-56190	FLANGE	1	35001-
54	07000-B3035	O-RING	1	35001-
55	07372-21040	BOLT	4	35001-
56	01643-51032	WASHER	4	35001-
57	21N-62-33280	BRACKET	1	35001-
58	01011-81490	BOLT	4	35001-
59	01643-31445	WASHER	4	35001-

Printed By : Dwi Iswanto (airafather6107170)

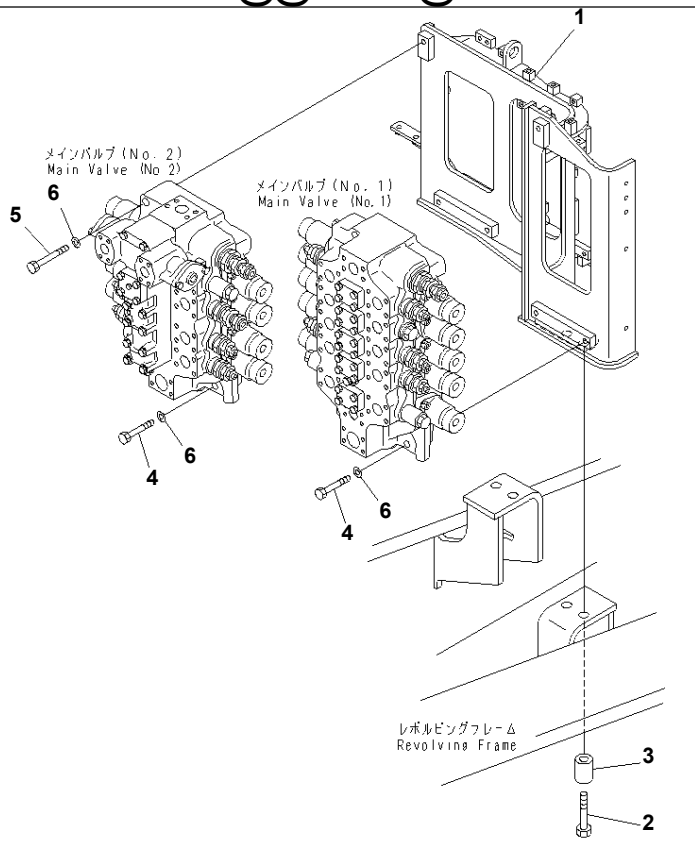

Ref. H0120-03A0 **Page 180100**

PC1250SP-8R S/N 35001-UP (W/O EGR, +55C DEGREE)
MAIN VALVE (VALVE STAND)

Item	Part No.	Part Name	Qty	Serial No.
1	21N-62-37112	STAND	1	35001-
2	01011-82420	BOLT	4	35001-
3	17M-54-25570	SPACER	4	35001-
4	01011-81605	BOLT	4	35001-
5	01011-81630	BOLT	2	35001-
6	01643-31645	WASHER	6	35001-

Printed By : Dwi Iswanto (airafather6107170)

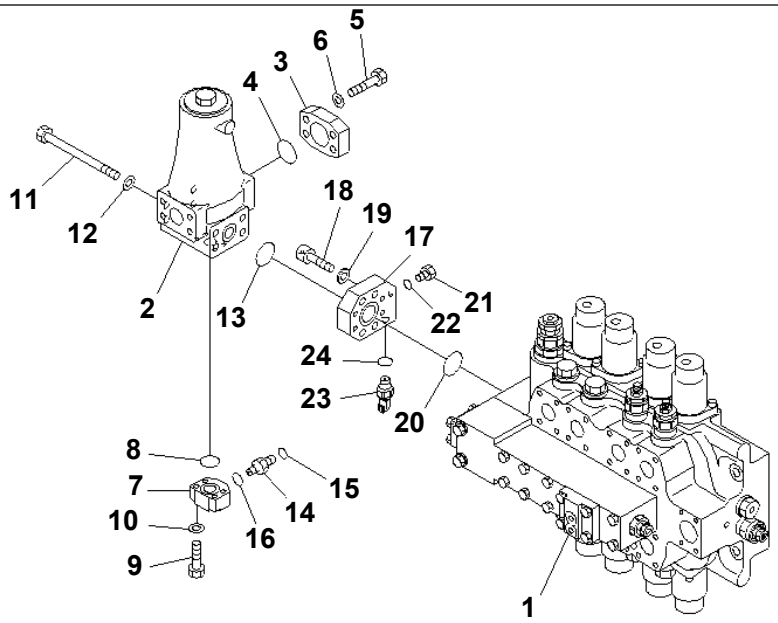

00043705

Ref. H0121-01A0 **Page 180110**

PC1250SP-8R S/N 35001-UP (W/O EGR, +55C DEGREE)
SWING CONTROL VALVE (NO.3 VALVE AND LINE FILTER)

Item	Part No.	Part Name	Qty	Serial No.
1	(709-14-93500)	CONTROL VALVE	1	35001-
2	(21N-62-31201)	FILTER ASS'Y	1	35001-
3	21N-62-12210	FLANGE	1	35001-
4	07000-B3048	O-RING	1	35001-
5	01010-81455	BOLT	4	35001-
6	01643-31445	WASHER	4	35001-
7	21N-62-37140	FLANGE	1	35001-
8	07000-B3035	O-RING	1	35001-
9	01010-81050	BOLT	4	35001-
10	01643-31032	WASHER	4	35001-
11	01011-81470	BOLT	4	35001-
12	01643-31445	WASHER	4	35001-
13	07000-B3048	O-RING	1	35001-
14	02781-00315	UNION	1	35001-
15	02896-61009	O-RING	1	35001-
16	07002-62034	O-RING	1	35001-
17	21N-62-33251	FLANGE	1	35001-
18	01252-71440	BOLT	4	35001-
19	20D-14-11510	WASHER	4	35001-
20	07000-B3048	O-RING	1	35001-
21	07040-10807	PLUG	1	35001-
22	07002-10823	O-RING	1	35001-
23	7861-93-1811	SENSOR	1	35001-
24	07002-11823	· O-RING	1	35001-

Printed By : Dwi Iswanto (airafather6107170)

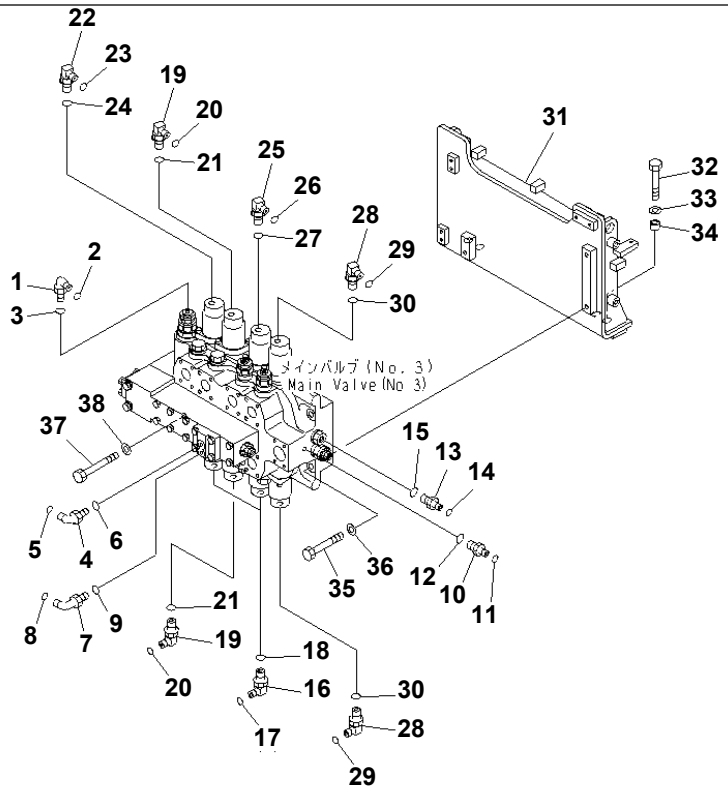

00043706

PC1250SP-8R S/N 35001-UP (W/O EGR, +55C DEGREE)

SWING CONTROL VALVE (JOINT PARTS)

Item	Part No.	Part Name	Qty	Serial No.
1	21W-62-42490	ELBOW	1	35001-
2	02896-11009	O-RING	1	35001-
3	07002-11423	O-RING	1	35001-
4	21W-62-42490	ELBOW	1	35001-
5	02896-11009	O-RING	1	35001-
6	07002-21423	O-RING	1	35001-
7	02782-10312	ELBOW	1	35001-
8	02896-11009	O-RING	1	35001-
9	07002-11423	O-RING	1	35001-
10	11Y-62-12520	NIPPLE	1	35001-
11	02896-11009	O-RING	1	35001-
12	07002-11423	O-RING	1	35001-
13	21N-64-37130	UNION	1	35001-
14	02896-11009	O-RING	1	35001-
15	07002-11423	O-RING	1	35001-
16	21N-64-36440	ELBOW	2	35001-
17	02896-11009	O-RING	2	35001-
18	07002-12034	O-RING	2	35001-
19	21N-64-37120	ELBOW	2	35001-
20	02896-11009	O-RING	2	35001-
21	07002-12034	O-RING	2	35001-
22	21N-64-36440	ELBOW	1	35001-
23	02896-11009	O-RING	1	35001-
24	07002-12034	O-RING	1	35001-
25	02782-10315	ELBOW	1	35001-
26	02896-11009	O-RING	1	35001-
27	07002-12034	O-RING	1	35001-
28	21N-64-37110	ELBOW	2	35001-
29	02896-11009	O-RING	2	35001-
30	07002-12034	O-RING	2	35001-

Printed By : Dwi Iswanto (airafather6107170)

SWING CONTROL VALVE (JOINT PARTS)

Item	Part No.	Part Name	Qty	Serial No.
31	21N-62-41590	STAND	1	35001-
32	01011-81600	BOLT	4	35001-
33	01643-31645	WASHER	4	35001-
34	198-01-11191	SPACER	4	35001-
35	01011-81605	BOLT	2	35001-
36	01643-31645	WASHER	2	35001-
37	01011-81630	BOLT	1	35001-
38	01643-31645	WASHER	1	35001-

Printed By : Dwi Iswanto (airafather6107170)

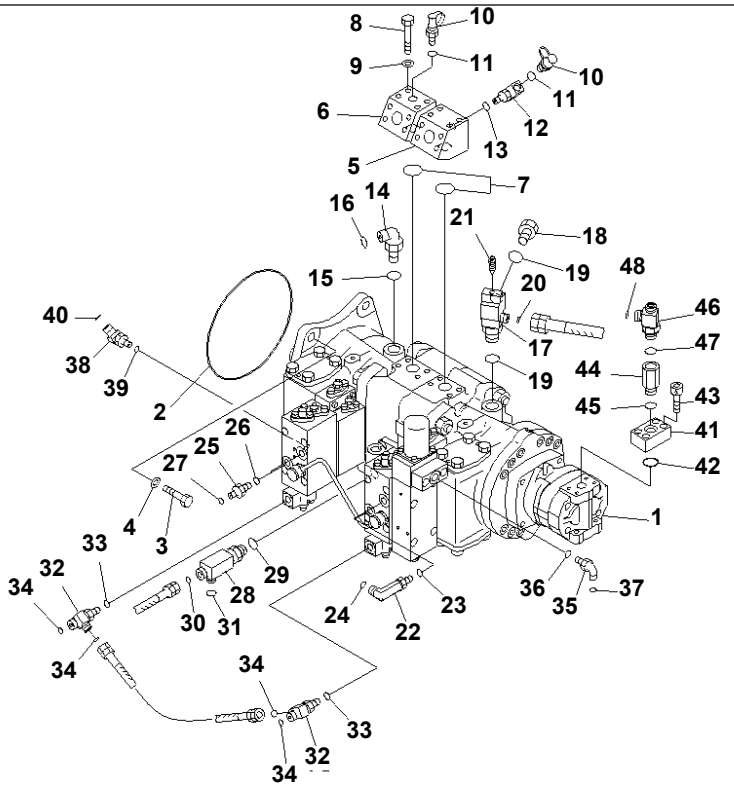

00043941

Ref. H0210-01A0 **Page 180130**

PC1250SP-8R S/N 35001-UP (W/O EGR, +55C DEGREE)
NO.1 PUMP (JOINT PARTS)(#35001-35106)

Item	Part No.	Part Name	Qty	Serial No.
1	(708-2L-00680)	PUMP ASS'Y	1	35001-@
2	07000-E5230	O-RING	1	35001-@
3	01010-81650	BOLT	4	35001-@
4	01643-31645	WASHER	4	35001-@
5	21N-62-31641	BLOCK	1	35001-35106
6	21N-62-31540	BLOCK	1	35001-35106
7	07000-B3035	O-RING	2	35001-@
8	01010-81090	BOLT	8	35001-@
9	01643-31032	WASHER	8	35001-@
10	209-62-61310	NIPPLE ASS'Y	2	35001-35106
11	209-62-61330	· O-RING	1	35001-35106
12	208-62-61140	ELBOW	1	35001-35106
13	209-62-61330	O-RING	1	35001-35106
14	02782-10628	ELBOW	1	35001-@
15	07002-12434	O-RING	1	35001-@
16	02896-11018	O-RING	1	35001-@
17	21N-64-36970	TEE	1	35001-@
18	07040-12412	PLUG	1	35001-@
19	07002-12434	O-RING	2	35001-@
20	02896-11009	O-RING	1	35001-@
21	20B-27-11210	BLEEDER	1	35001-@
22	02782-10312	ELBOW	2	35001-@
23	07002-11423	O-RING	2	35001-@
24	02896-11009	O-RING	2	35001-@
25	11Y-62-12520	NIPPLE	2	35001-@
26	07002-11423	O-RING	2	35001-@
27	02896-11009	O-RING	2	35001-@
28	21N-64-36710	TEE	1	35001-@
29	07002-12034	O-RING	1	35001-@
30	02896-11009	O-RING	1	35001-@

Printed By : Dwi Iswanto (airafather6107170)

NO.1 PUMP (JOINT PARTS)(#35001-35106)

Item	Part No.	Part Name	Qty	Serial No.
31	02896-11015	O-RING	1	35001-@
32	21N-64-36680	TEE	2	35001-@
33	07002-11423	O-RING	2	35001-@
34	02896-11009	O-RING	4	35001-@
35	02782-10311	ELBOW	1	35001-@
36	07002-21423	O-RING	1	35001-@
37	02896-21009	O-RING	1	35001-@
38	21N-64-36410	ELBOW	1	35001-@
39	07002-11023	O-RING	1	35001-@
40	02896-11009	O-RING	1	35001-@
41	21N-62-31920	FLANGE	1	35001-@
42	07000-B3030	O-RING	1	35001-@
43	01252-70835	BOLT	4	35001-@
44	21J-62-18340	JOINT	1	35001-@
45	07002-62034	O-RING	1	35001-@
46	21N-64-36690	TEE	1	35001-@
47	07002-62034	O-RING	1	35001-@
48	02896-61012	O-RING	2	35001-@

Printed By : Dwi Iswanto (airafather6107170)

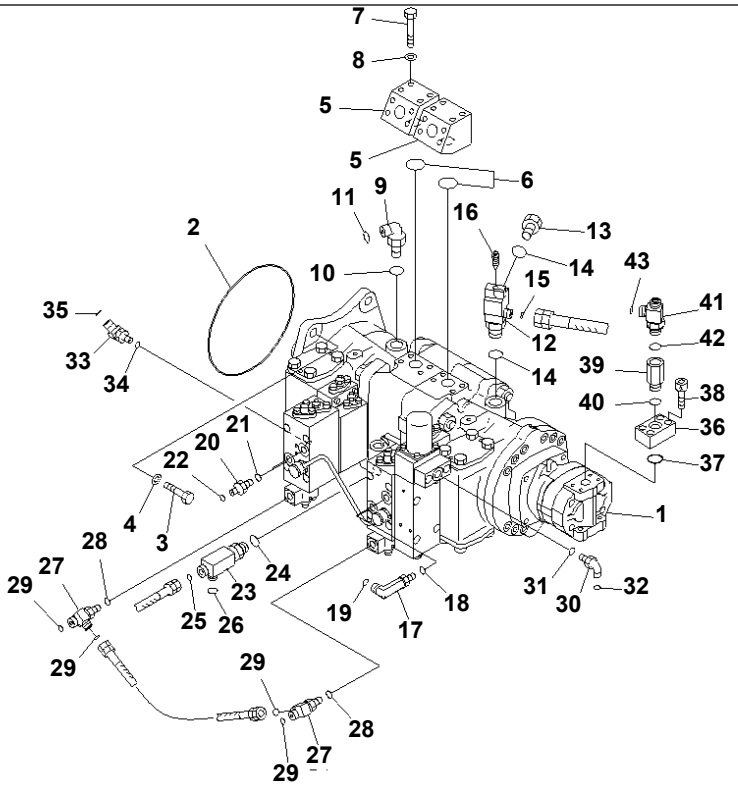

00085424

Ref. H0210-01A0A **Page 180140**

PC1250SP-8R S/N 35001-UP (W/O EGR, +55C DEGREE)
NO.1 PUMP (JOINT PARTS)(#35107-)

Item	Part No.	Part Name	Qty	Serial No.
1	(708-2L-00680)	PUMP ASS'Y	1	35001-
2	07000-E5230	O-RING	1	35001-
3	01010-81650	BOLT	4	35001-
4	01643-31645	WASHER	4	35001-
5	21N-62-42460	BLOCK	2	35107-
6	07000-B3035	O-RING	2	35001-
7	01010-81090	BOLT	8	35001-
8	01643-31032	WASHER	8	35001-
9	02782-10628	ELBOW	1	35001-
10	07002-12434	O-RING	1	35001-
11	02896-11018	O-RING	1	35001-
12	21N-64-36970	TEE	1	35001-
13	07040-12412	PLUG	1	35001-
14	07002-12434	O-RING	2	35001-
15	02896-11009	O-RING	1	35001-
16	20B-27-11210	BLEEDER	1	35001-
17	02782-10312	ELBOW	2	35001-
18	07002-11423	O-RING	2	35001-
19	02896-11009	O-RING	2	35001-
20	11Y-62-12520	NIPPLE	2	35001-
21	07002-11423	O-RING	2	35001-
22	02896-11009	O-RING	2	35001-
23	21N-64-36710	TEE	1	35001-
24	07002-12034	O-RING	1	35001-
25	02896-11009	O-RING	1	35001-
26	02896-11015	O-RING	1	35001-
27	21N-64-36680	TEE	2	35001-
28	07002-11423	O-RING	2	35001-
29	02896-11009	O-RING	4	35001-
30	02782-10311	ELBOW	1	35001-

Printed By : Dwi Iswanto (airafather6107170)

NO.1 PUMP (JOINT PARTS)(#35107-)

Item	Part No.	Part Name	Qty	Serial No.
31	07002-21423	O-RING	1	35001-
32	02896-21009	O-RING	1	35001-
33	21N-64-36410	ELBOW	1	35001-
34	07002-11023	O-RING	1	35001-
35	02896-11009	O-RING	1	35001-
36	21N-62-31920	FLANGE	1	35001-
37	07000-B3030	O-RING	1	35001-
38	01252-70835	BOLT	4	35001-
39	21J-62-18340	JOINT	1	35001-
40	07002-62034	O-RING	1	35001-
41	21N-64-36690	TEE	1	35001-
42	07002-62034	O-RING	1	35001-
43	02896-61012	O-RING	2	35001-

Printed By : Dwi Iswanto (airafather6107170)

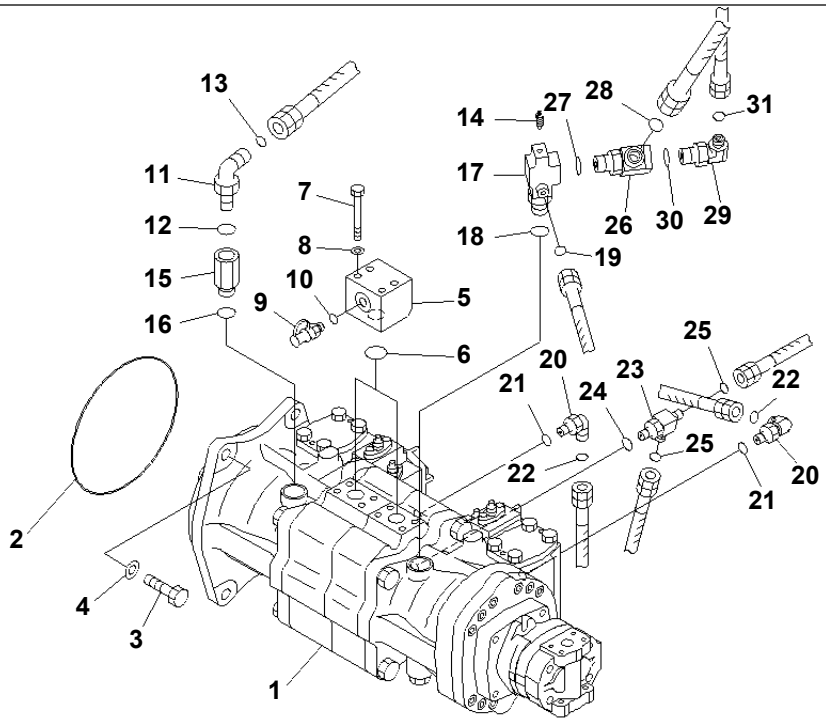

00043948

Ref. H0220-01A0 **Page 180150**

PC1250SP-8R S/N 35001-UP (W/O EGR, +55C DEGREE)
NO.2 PUMP (JOINT PARTS)

Item	Part No.	Part Name	Qty	Serial No.
1	(708-2L-00690)	PUMP ASS'Y	1	35001-
2	07000-E5230	O-RING	1	35001-
3	01010-81650	BOLT	4	35001-
4	01643-31645	WASHER	4	35001-
5	21N-62-41840	BLOCK	2	35001-
6	07000-B3035	O-RING	2	35001-
7	01010-81085	BOLT	8	35001-
8	01643-31032	WASHER	8	35001-
9	209-62-61310	NIPPLE ASS'Y	2	35001-
10	209-62-61330	· O-RING	2	35001-
11	02782-10628	ELBOW	1	35001-
12	07002-12434	O-RING	1	35001-
13	02896-11018	O-RING	1	35001-
14	20B-27-11210	BLEEDER	1	35001-
15	201-62-71820	JOINT	1	35001-
16	07002-12434	O-RING	1	35001-
17	21N-64-36970	TEE	1	35001-
18	07002-12434	O-RING	1	35001-
19	02896-11009	O-RING	1	35001-
20	21W-62-42490	ELBOW	2	35001-
21	07002-11423	O-RING	2	35001-
22	02896-11009	O-RING	2	35001-
23	19M-61-35140	TEE	1	35001-
24	07002-12034	O-RING	1	35001-
25	02896-11009	O-RING	2	35001-
26	21N-64-36980	ELBOW	1	35001-
27	07002-12434	O-RING	1	35001-
28	02896-11018	O-RING	1	35001-
29	56B-43-17380	ELBOW	1	35001-
30	07002-12434	O-RING	1	35001-

Printed By : Dwi Iswanto (airafather6107170)

NO.2 PUMP (JOINT PARTS)

Item	Part No.	Part Name	Qty	Serial No.
31	02896-11009	O-RING	1	35001-

Printed By : Dwi Iswanto (airafather6107170)

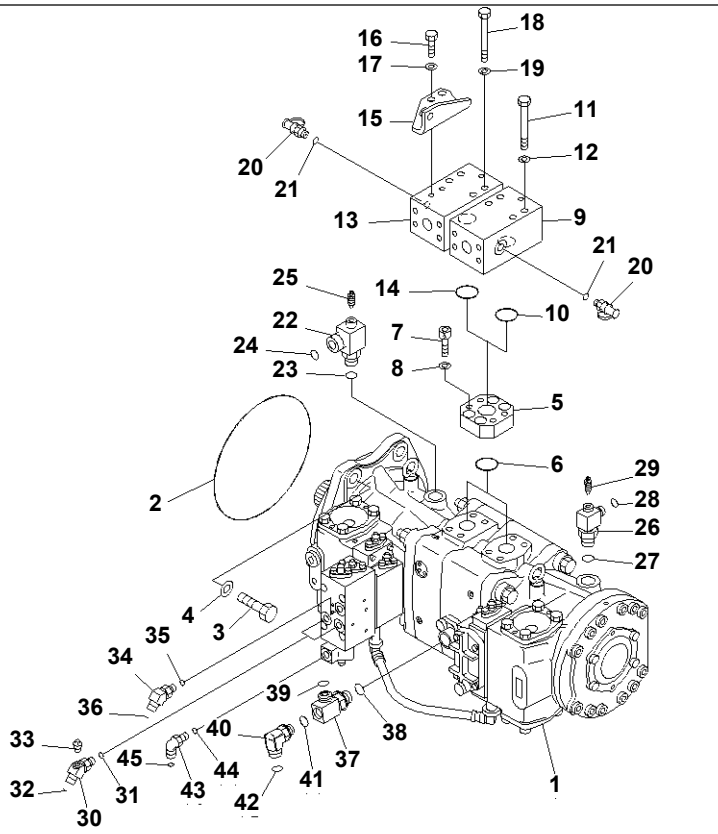

Ref. H0230-01A0 **Page 180160**

PC1250SP-8R S/N 35001-UP (W/O EGR, +55C DEGREE)
NO.3 PUMP (JOINT PARTS)

Item	Part No.	Part Name	Qty	Serial No.
1	(708-2H-00440)	PUMP ASS'Y	1	35001-
2	07000-E5270	O-RING	1	35001-
3	01010-82065	BOLT	4	35001-
4	01643-32060	WASHER	4	35001-
5	21N-62-11361	FLANGE	2	35001-
6	07000-B3038	O-RING	2	35001-
7	01252-71235	BOLT	8	35001-
8	01643-51232	WASHER	8	35001-
9	21N-62-41860	BLOCK	1	35001-
10	07000-B3038	O-RING	1	35001-
11	01011-81205	BOLT	4	35001-
12	01643-31232	WASHER	4	35001-
13	21N-62-41850	BLOCK	1	35001-
14	07000-B3038	O-RING	1	35001-
15	21N-62-41870	BRACKET	1	35001-
16	01010-81230	BOLT	2	35001-
17	01643-31232	WASHER	2	35001-
18	01011-81205	BOLT	4	35001-
19	01643-31232	WASHER	4	35001-
20	209-62-61310	NIPPLE ASS'Y	2	35001-
21	209-62-61330	· O-RING	1	35001-
22	21N-64-36840	ELBOW	1	35001-
23	07002-12434	O-RING	1	35001-
24	207-62-64740	O-RING	1	35001-
25	20B-27-11210	BLEEDER	1	35001-
26	21N-64-36890	ELBOW	1	35001-
27	07002-12434	O-RING	1	35001-
28	02896-11018	O-RING	1	35001-
29	20B-27-11210	BLEEDER	1	35001-
30	21N-64-36420	ELBOW	2	35001-

Printed By : Dwi Iswanto (airafather6107170)

NO.3 PUMP (JOINT PARTS)

Item	Part No.	Part Name	Qty	Serial No.
31	07002-11423	O-RING	2	35001-
32	02896-11009	O-RING	2	35001-
33	07042-30108	PLUG	2	35001-
34	11Y-62-12510	ELBOW	1	35001-
35	07002-11423	O-RING	1	35001-
36	02896-11009	O-RING	1	35001-
37	20U-62-46570	ELBOW	1	35001-
38	07002-12434	O-RING	1	35001-
39	02896-11015	O-RING	1	35001-
40	21W-62-42690	ELBOW	1	35001-
41	07002-12034	O-RING	1	35001-
42	02896-11015	O-RING	1	35001-
43	21W-62-42490	ELBOW	1	35001-
44	07002-11423	O-RING	1	35001-
45	02896-11009	O-RING	1	35001-

Printed By : Dwi Iswanto (airafather6107170)

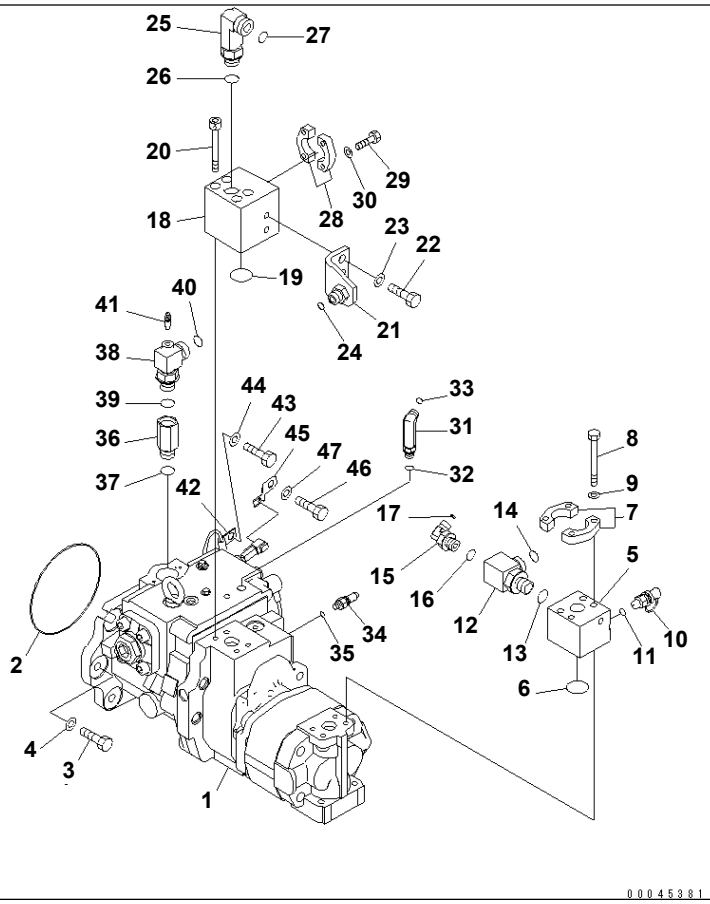

PC1250SP-8R S/N 35001-UP (W/O EGR, +55C DEGREE)

GEAR PUMP (JOINT PARTS)

Item	Part No.	Part Name	Qty	Serial No.
1	(708-1L-00800)	PUMP ASS'Y	1	35001-
2	07000-E5160	O-RING	1	35001-
3	01010-81240	BOLT	6	35001-
4	01643-31232	WASHER	6	35001-
5	21N-62-41211	BLOCK	1	35001-
6	07000-13035	O-RING	1	35001-
7	07371-31049	FLANGE	2	35001-
8	21N-62-41830	BOLT	4	35001-
9	01643-51032	WASHER	4	35001-
10	209-62-61310	NIPPLE ASS'Y	1	35001-
11	209-62-61330	· O-RING	1	35001-
12	21N-64-36550	ELBOW	1	35001-
13	07002-12434	O-RING	1	35001-
14	02896-11018	O-RING	1	35001-
15	21N-64-37230	ELBOW	1	35001-
16	07002-12034	O-RING	1	35001-
17	02896-11009	O-RING	1	35001-
18	21N-62-41221	BLOCK	1	35001-
19	07000-B3035	O-RING	1	35001-
20	195-15-76410	BOLT	4	35001-
21	21N-62-41460	BRACKET	1	35001-
22	01010-81230	BOLT	2	35001-
23	01643-31232	WASHER	2	35001-
24	02896-11012	O-RING	1	35001-
25	02782-10630	ELBOW	1	35001-
26	07002-62434	O-RING	1	35001-
27	02896-61018	O-RING	1	35001-
28	07371-30640	FLANGE	2	35001-
29	07372-21035	BOLT	4	35001-
30	01643-51032	WASHER	4	35001-

Printed By : Dwi Iswanto (airafather6107170)

GEAR PUMP (JOINT PARTS)

Item	Part No.	Part Name	Qty	Serial No.
31	02782-10312	ELBOW	1	35001-
32	07002-11423	O-RING	1	35001-
33	02896-11009	O-RING	1	35001-
34	799-101-5220	NIPPLE	1	35001-
35	07002-61023	O-RING	1	35001-
36	201-62-71820	JOINT	1	35001-
37	07002-12434	O-RING	1	35001-
38	21N-64-36890	ELBOW	1	35001-
39	07002-12434	O-RING	1	35001-
40	02896-11018	O-RING	1	35001-
41	20B-27-11210	BLEEDER	1	35001-
42	04434-50612	CLIP	1	35001-
43	01010-81225	BOLT	1	35001-
44	01643-31232	WASHER	1	35001-
45	08193-20012	CLIP	1	35001-
46	01010-81225	BOLT	1	35001-
47	01643-31232	WASHER	1	35001-

Printed By : Dwi Iswanto (airafather6107170)

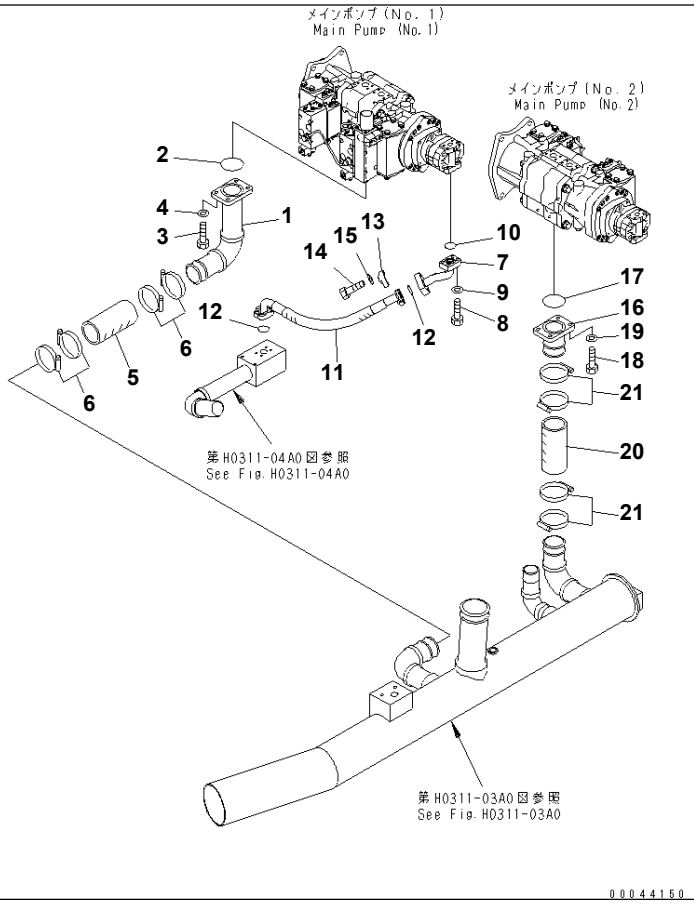

Ref. H0311-01A0 **Page 180180**

PC1250SP-8R S/N 35001-UP (W/O EGR, +55C DEGREE)
SUCTION LINE (NO.1 PUMP AND NO.2 PUMP LINE)

Item	Part No.	Part Name	Qty	Serial No.
1	21N-62-41130	TUBE	1	35001-
2	07000-12080	O-RING	1	35001-
3	07372-21240	BOLT	4	35001-
4	01643-51232	WASHER	4	35001-
5	07260-07422	HOSE	1	35001-
6	21N-62-37921	CLAMP	4	35001-
7	21N-62-41190	TUBE	1	35001-
8	07372-21040	BOLT	4	35001-
9	01643-51032	WASHER	4	35001-
10	07000-13032	O-RING	1	35001-
11	07298-01006	HOSE	1	35001-
12	07000-13032	O-RING	2	35001-
13	07371-31049	FLANGE	4	35001-
14	07372-21035	BOLT	8	35001-
15	01643-51032	WASHER	8	35001-
16	21N-62-41140	TUBE	1	35001-
17	07000-12080	O-RING	1	35001-
18	07372-21240	BOLT	4	35001-
19	01643-51232	WASHER	4	35001-
20	07260-07422	HOSE	1	35001-
21	21N-62-37921	CLAMP	4	35001-

Printed By : Dwi Iswanto (airafather6107170)

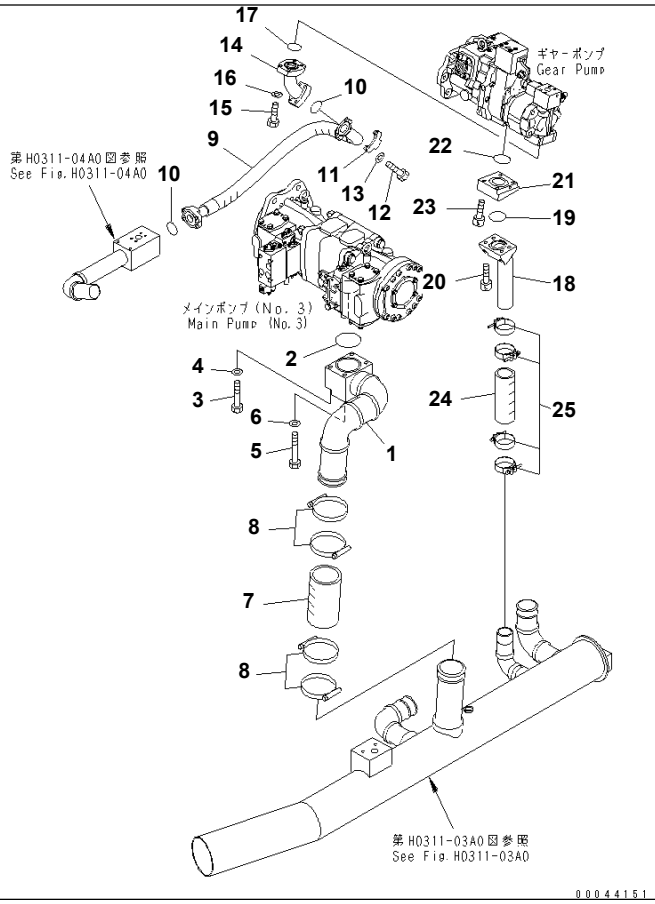

Ref. H0311-02A0 **Page 180190**

PC1250SP-8R S/N 35001-UP (W/O EGR, +55C DEGREE)
SUCTION LINE (NO.3 PUMP AND GEAR PUMP LINE)

Item	Part No.	Part Name	Qty	Serial No.
1	21N-62-41170	TUBE	1	35001-
2	07000-12095	O-RING	1	35001-
3	01011-81215	BOLT	2	35001-
4	01643-31232	WASHER	2	35001-
5	01011-81235	BOLT	2	35001-
6	01643-31232	WASHER	2	35001-
7	07260-09925	HOSE	1	35001-
8	208-62-73910	CLAMP	4	35001-
9	21N-62-41740	HOSE	1	35001-
10	07000-13048	O-RING	2	35001-
11	07371-31465	FLANGE	4	35001-
12	07372-21240	BOLT	8	35001-
13	01643-51232	WASHER	8	35001-
14	21N-62-41161	TUBE	1	35001-
15	07372-21245	BOLT	4	35001-
16	01643-51232	WASHER	4	35001-
17	07000-12055	O-RING	1	35001-
18	21N-62-41551	TUBE	1	35001-
19	07000-12065	O-RING	1	35001-
20	01252-71230	BOLT	4	35001-
21	21N-62-41530	BLOCK	1	35001-
22	07000-12075	O-RING	1	35001-
23	01252-71230	BOLT	4	35001-
24	07260-05822	HOSE	1	35001-
25	21T-62-69711	CLAMP	4	35001-

Printed By : Dwi Iswanto (airafather6107170)

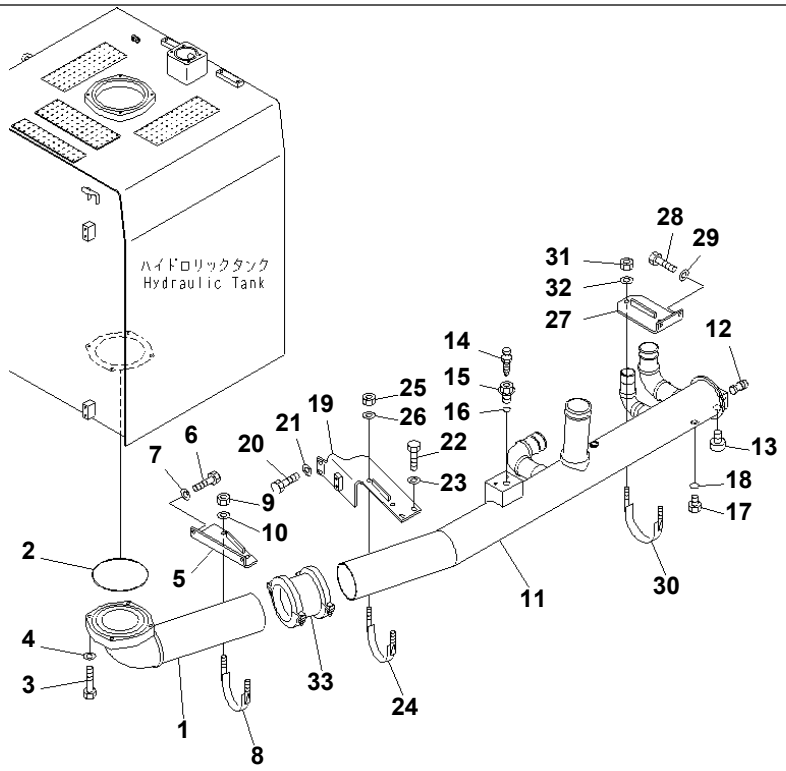

Ref. H0311-03A0 **Page 180200**

PC1250SP-8R S/N 35001-UP (W/O EGR, +55C DEGREE)
SUCTION LINE (TANK LINE)(#35001-35016)

Item	Part No.	Part Name	Qty	Serial No.
1	21N-62-31111	TUBE	1	35001-@
2	07000-15230	O-RING	1	35001-@
3	01010-81265	BOLT	4	35001-@
4	01643-31232	WASHER	4	35001-@
5	21N-62-31182	BRACKET	1	35001-@
6	01010-81240	BOLT	2	35001-@
7	01643-31232	WASHER	2	35001-@
8	21T-62-75351	CLIP	1	35001-@
9	01597-01615	NUT	2	35001-@
10	01643-31645	WASHER	2	35001-@
11	21N-62-41121	TUBE	1	35001-@
12	198-60-19820	VALVE	1	35001-@
13	07040-13618	PLUG	1	35001-@
14	20B-27-11210	BLEEDER	1	35001-@
15	706-87-40150	PLUG	1	35001-@
16	07002-12434	O-RING	1	35001-@
17	07040-12412	PLUG	2	35001-@
18	07002-12434	O-RING	2	35001-@
19	21N-62-31171	BRACKET	1	35001-@
20	01010-81240	BOLT	2	35001-@
21	175-54-34170	WASHER	2	35001-@
22	01010-81240	BOLT	2	35001-@
23	175-54-34170	WASHER	2	35001-@
24	21T-62-75351	CLIP	1	35001-@
25	01597-01615	NUT	2	35001-@
26	01643-31645	WASHER	2	35001-@
27	21N-62-31191	BRACKET	1	35001-@
28	01010-81230	BOLT	2	35001-@
29	01643-31232	WASHER	2	35001-@
30	21T-62-75351	CLIP	1	35001-@

Printed By : Dwi Iswanto (airafather6107170)

SUCTION LINE (TANK LINE)(#35001-35016)

Item	Part No.	Part Name	Qty	Serial No.
31	01597-01615	NUT	2	35001-@
32	01643-31645	WASHER	2	35001-@
33	07332-06000	COUPLING	1	35001-@

Printed By : Dwi Iswanto (airafather6107170)

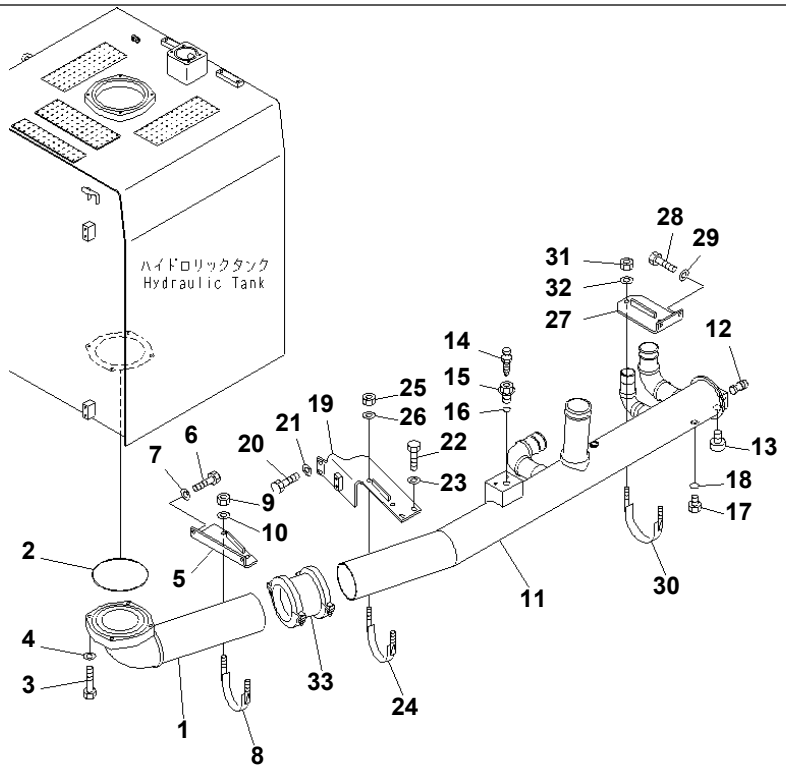

00044152

Ref. H0311-03A0A **Page 180210**

PC1250SP-8R S/N 35001-UP (W/O EGR, +55C DEGREE)
SUCTION LINE (TANK LINE)(#35017-)

Item	Part No.	Part Name	Qty	Serial No.
1	21N-62-31111	TUBE	1	35001-
2	07000-15230	O-RING	1	35001-
3	01010-81265	BOLT	4	35001-
4	01643-31232	WASHER	4	35001-
5	21N-62-31182	BRACKET	1	35001-
6	01010-81240	BOLT	2	35001-
7	01643-31232	WASHER	2	35001-
8	21T-62-75351	CLIP	1	35001-
9	01597-01615	NUT	2	35001-
10	01643-31645	WASHER	2	35001-
11	21N-62-41121	TUBE	1	35001-
12	198-60-19820	VALVE	1	35001-
13	07040-13618	PLUG	1	35001-
14	20B-27-11210	BLEEDER	1	35001-
15	706-87-40150	PLUG	1	35001-
16	07002-12434	O-RING	1	35001-
17	07040-12412	PLUG	2	35001-
18	07002-12434	O-RING	2	35001-
19	21N-62-31171	BRACKET	1	35001-
20	01010-81240	BOLT	2	35001-
21	175-54-34170	WASHER	2	35001-
22	01010-81240	BOLT	2	35001-
23	175-54-34170	WASHER	2	35001-
24	21T-62-75351	CLIP	1	35001-
25	01597-01615	NUT	2	35001-
26	01643-31645	WASHER	2	35001-
27	21N-62-31191	BRACKET	1	35001-
28	01010-81230	BOLT	2	35001-
29	01643-31232	WASHER	2	35001-
30	21T-62-75351	CLIP	1	35001-

Printed By : Dwi Iswanto (airafather6107170)

SUCTION LINE (TANK LINE)(#35017-)

Item	Part No.	Part Name	Qty	Serial No.
31	01597-01615	NUT	2	35001-
32	01643-31645	WASHER	2	35001-
33	07332-06000	COUPLING	1	35001-

Printed By : Dwi Iswanto (airafather6107170)

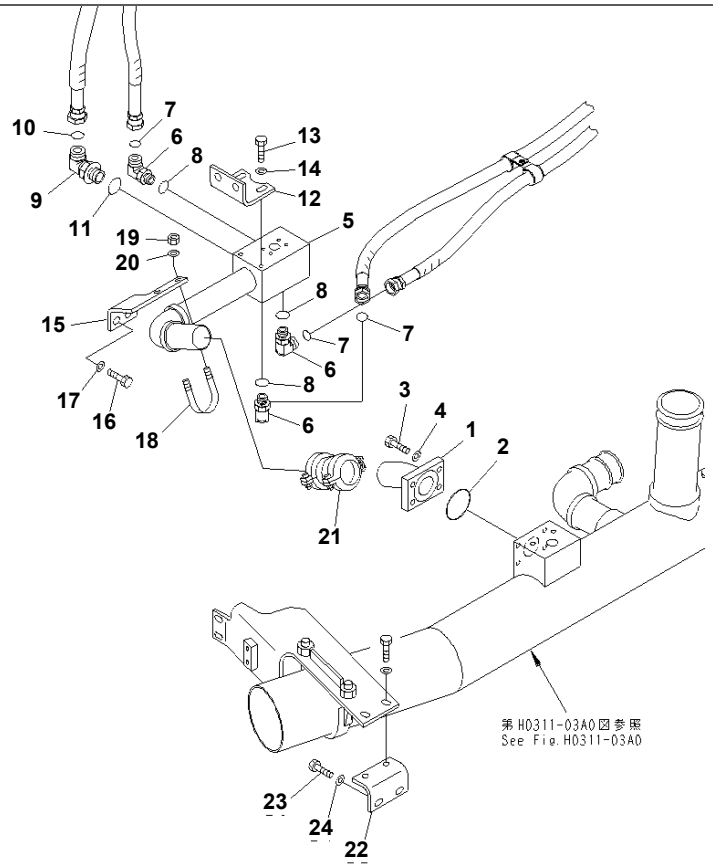

Ref. H0311-04A0 **Page 180220**

PC1250SP-8R S/N 35001-UP (W/O EGR, +55C DEGREE)
SUCTION LINE (TANK LINE) (GEAR PUMP)(#35001-35016)

Item	Part No.	Part Name	Qty	Serial No.
1	21N-62-31291	TUBE	1	35001-@
2	07000-12075	O-RING	1	35001-@
3	01010-81240	BOLT	4	35001-@
4	01643-31232	WASHER	4	35001-@
5	21N-62-41151	TUBE	1	35001-35016
6	02782-10628	ELBOW	3	35001-35016
7	02896-11018	O-RING	3	35001-35016
8	07002-12434	O-RING	3	35001-35016
9	21W-62-42640	ELBOW	1	35001-@
10	207-62-64740	O-RING	1	35001-@
11	07002-13334	O-RING	1	35001-@
12	21N-62-31271	BRACKET	1	35001-35016
13	01010-81230	BOLT	4	35001-35016
14	175-54-34170	WASHER	4	35001-@
15	21N-62-31461	BRACKET	1	35001-@
16	01010-81235	BOLT	2	35001-@
17	175-54-34170	WASHER	2	35001-@
18	07283-36155	CLIP	1	35001-@
19	01597-01009	NUT	2	35001-@
20	01643-31032	WASHER	2	35001-@
21	07332-02000	COUPLING	1	35001-@
22	21N-62-32930	BRACKET	1	35001-@
23	01010-81230	BOLT	2	35001-@
24	175-54-34170	WASHER	2	35001-@

Printed By : Dwi Iswanto (airafather6107170)

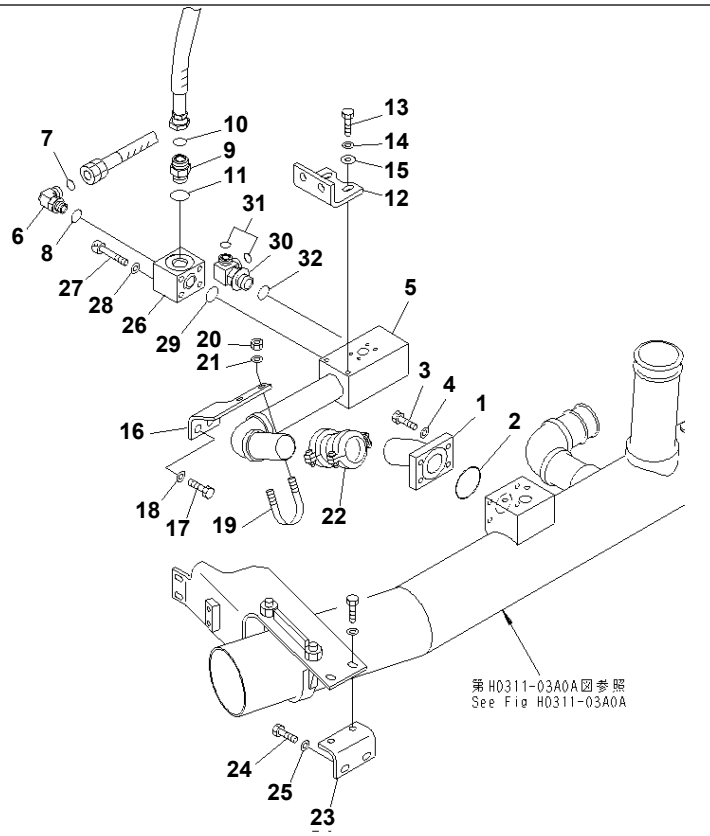

Ref. H0311-04A0A **Page 180230**

PC1250SP-8R S/N 35001-UP (W/O EGR, +55C DEGREE)
SUCTION LINE (TANK LINE) (GEAR PUMP)(#35017-)

Item	Part No.	Part Name	Qty	Serial No.
1	21N-62-31291	TUBE	1	35001-
2	07000-12075	O-RING	1	35001-
3	01010-81240	BOLT	4	35001-
4	01643-31232	WASHER	4	35001-
5	21N-62-41152	TUBE	1	35017-
6	02782-10628	ELBOW	1	35017-
7	02896-11018	O-RING	1	35017-
8	07002-12434	O-RING	1	35017-
9	207-62-72110	UNION	1	35001-
10	207-62-64740	O-RING	1	35001-
11	07002-13334	O-RING	1	35001-
12	21N-62-42320	BRACKET	1	35017-
13	01010-81235	BOLT	4	35017-
14	01643-31232	WASHER	4	35017-
15	175-54-34170	WASHER	4	35001-
16	21N-62-31461	BRACKET	1	35001-
17	01010-81235	BOLT	2	35001-
18	175-54-34170	WASHER	2	35001-
19	07283-36155	CLIP	1	35001-
20	01597-01009	NUT	2	35001-
21	01643-31032	WASHER	2	35001-
22	07332-02000	COUPLING	1	35001-
23	21N-62-32930	BRACKET	1	35001-
24	01010-81230	BOLT	2	35001-
25	175-54-34170	WASHER	2	35001-
26	21N-62-42270	BLOCK	1	35017-
27	01252-71280	BOLT	4	35017-
28	01643-51232	WASHER	4	35017-
29	07000-13038	O-RING	1	35017-
30	21N-62-42260	TEE	1	35017-

Printed By : Dwi Iswanto (airafather6107170)

SUCTION LINE (TANK LINE) (GEAR PUMP)(#35017-)

Item	Part No.	Part Name	Qty	Serial No.
31	02896-11018	O-RING	2	35017-
32	07002-13334	O-RING	1	35017-

Printed By : Dwi Iswanto (airafather6107170)

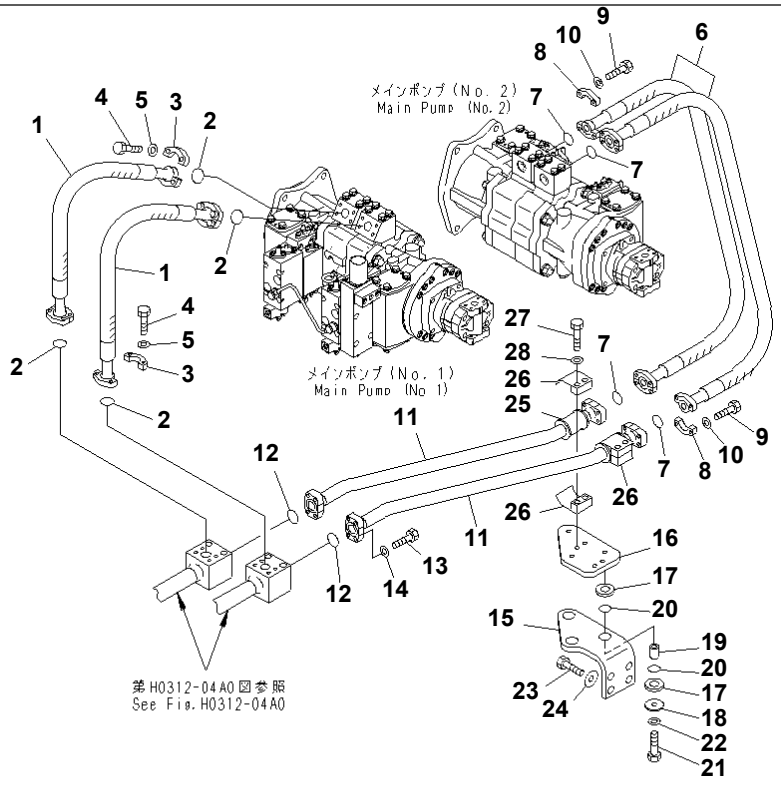

00044160

Ref. H0312-01A0 **Page 180240**

PC1250SP-8R S/N 35001-UP (W/O EGR, +55C DEGREE)
DELIVERY LINE (NO.1 AND NO.2 PUMP)

Item	Part No.	Part Name	Qty	Serial No.
1	07085-01008	HOSE	2	35001-
2	07000-B3032	O-RING	4	35001-
3	07371-31049	FLANGE	8	35001-
4	07372-21035	BOLT	16	35001-
5	01643-51032	WASHER	16	35001-
6	07085-01011	HOSE	2	35001-
7	07000-B3032	O-RING	4	35001-
8	07371-31049	FLANGE	8	35001-
9	07372-21035	BOLT	16	35001-
10	01643-51032	WASHER	16	35001-
11	21N-62-37150	TUBE	2	35001-
12	07000-B3035	O-RING	2	35001-
13	07372-21040	BOLT	8	35001-
14	01643-51032	WASHER	8	35001-
15	21N-62-31411	BRACKET	1	35001-
16	21N-62-32960	PLATE	1	35001-
17	203-62-42770	CUSHION	6	35001-
18	566-35-42430	PLATE	3	35001-
19	203-62-51880	SPACER	3	35001-
20	07000-13025	O-RING	6	35001-
21	01010-81255	BOLT	3	35001-
22	01643-31232	WASHER	3	35001-
23	01010-81240	BOLT	4	35001-
24	175-54-34170	WASHER	4	35001-
25	07095-01035	CUSHION	2	35001-
26	07094-11024	CLAMP	4	35001-
27	01010-81280	BOLT	4	35001-
28	01643-31232	WASHER	4	35001-

Printed By : Dwi Iswanto (airafather6107170)

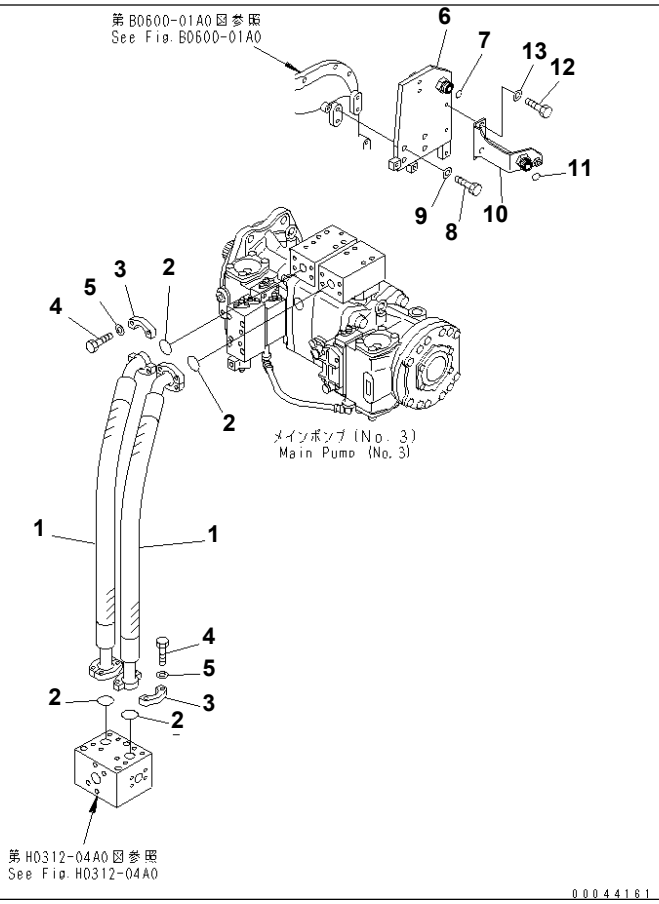

Ref. H0312-02A0 **Page 180250**

PC1250SP-8R S/N 35001-UP (W/O EGR, +55C DEGREE)
DELIVERY LINE (NO.3 PUMP)

Item	Part No.	Part Name	Qty	Serial No.
1	07083-012A9	HOSE	2	35001-
2	07000-B3038	O-RING	4	35001-
3	07371-51260	FLANGE	8	35001-
4	01010-81245	BOLT	16	35001-
5	01643-31232	WASHER	16	35001-
6	21N-62-41232	BRACKET	1	35001-
7	02896-11018	O-RING	1	35001-
8	01010-81240	BOLT	4	35001-
9	01643-31232	WASHER	4	35001-
10	21N-62-41810	BRACKET	1	35001-
11	02896-11018	O-RING	1	35001-
12	01010-81225	BOLT	2	35001-
13	01643-31232	WASHER	2	35001-

Printed By : Dwi Iswanto (airafather6107170)

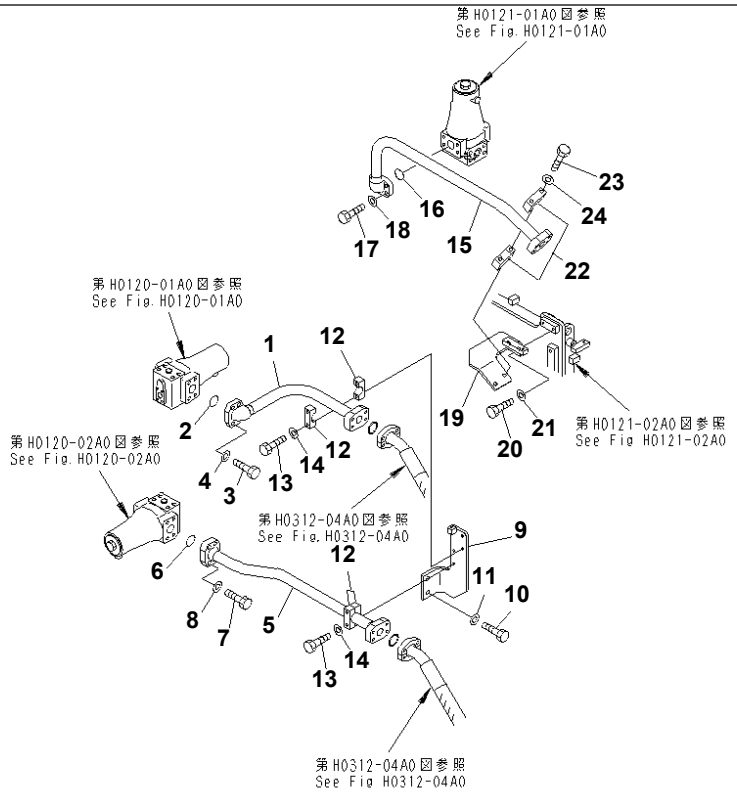

00044162

Ref. H0312-03A0 **Page 180260**

PC1250SP-8R S/N 35001-UP (W/O EGR, +55C DEGREE)
DELIVERY LINE (NO.1¤ NO.2 AND NO.3 VALVE)

Item	Part No.	Part Name	Qty	Serial No.
1	21N-62-37180	TUBE	1	35001-
2	07000-B3048	O-RING	1	35001-
3	01010-81445	BOLT	4	35001-
4	01643-31445	WASHER	4	35001-
5	21N-62-37190	TUBE	1	35001-
6	07000-B3048	O-RING	1	35001-
7	01010-81455	BOLT	4	35001-
8	01643-31445	WASHER	4	35001-
9	21N-62-37230	BRACKET	1	35001-
10	01010-81230	BOLT	2	35001-
11	01643-31232	WASHER	2	35001-
12	176-61-41330	CLAMP	4	35001-
13	01010-81295	BOLT	4	35001-
14	01643-31232	WASHER	4	35001-
15	21N-62-37210	TUBE	1	35001-
16	07000-B3048	O-RING	1	35001-
17	01010-81445	BOLT	4	35001-
18	01643-31445	WASHER	4	35001-
19	21N-62-37240	BRACKET	1	35001-
20	01010-81230	BOLT	2	35001-
21	01643-31232	WASHER	2	35001-
22	176-61-41330	CLAMP	2	35001-
23	01010-81295	BOLT	2	35001-
24	01643-31232	WASHER	2	35001-

Printed By : Dwi Iswanto (airafather6107170)

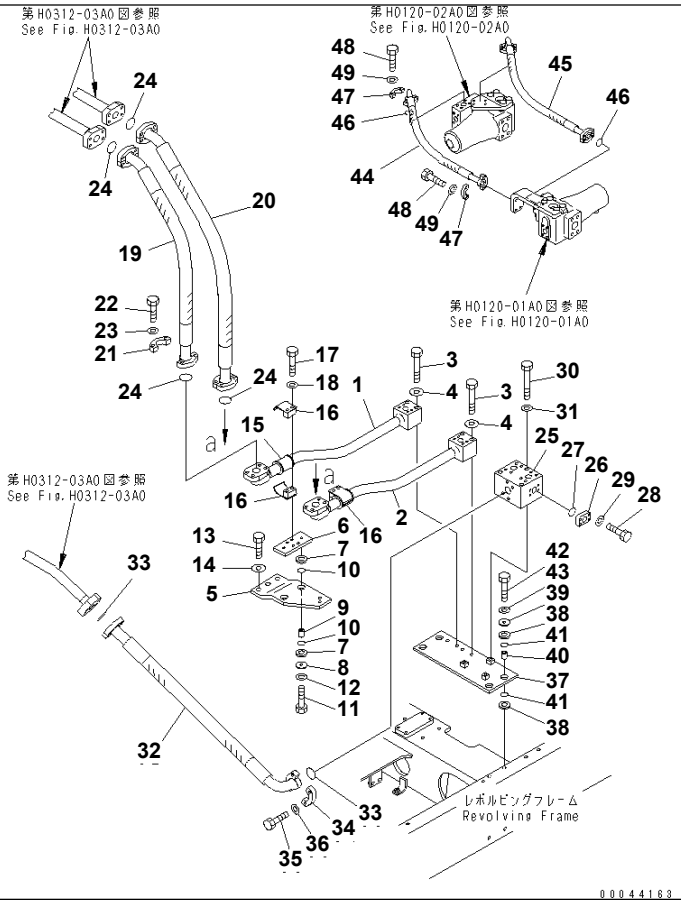

Ref. H0312-04A0 Page 180270

PC1250SP-8R S/N 35001-UP (W/O EGR, +55C DEGREE)

DELIVERY LINE (PIPING AND VALVE BRANCH)

Item	Part No.	Part Name	Qty	Serial No.
1	21N-62-37160	TUBE	1	35001-
2	21N-62-37170	TUBE	1	35001-
3	01011-81210	BOLT	4	35001-
4	01643-31232	WASHER	4	35001-
5	21N-62-37870	BRACKET	1	35001-
6	21N-62-37880	PLATE	1	35001-
7	203-62-42770	CUSHION	4	35001-
8	566-35-42430	PLATE	2	35001-
9	203-62-51880	SPACER	2	35001-
10	07000-13025	O-RING	4	35001-
11	01010-81255	BOLT	2	35001-
12	01643-31232	WASHER	2	35001-
13	01010-81240	BOLT	3	35001-
14	175-54-34170	WASHER	3	35001-
15	07095-01241	CUSHION	2	35001-
16	07094-11228	CLAMP	4	35001-
17	01010-81285	BOLT	4	35001-
18	01643-31232	WASHER	4	35001-
19	07083-01413	HOSE	1	35001-
20	07083-01414	HOSE	1	35001-
21	07371-51470	FLANGE	8	35001-
22	01010-81455	BOLT	16	35001-
23	01643-31445	WASHER	16	35001-
24	07000-B3048	O-RING	4	35001-
25	21N-62-37220	BLOCK	1	35001-
26	207-62-56190	FLANGE	1	35001-
27	07000-B3035	O-RING	1	35001-
28	07372-21040	BOLT	4	35001-
29	01643-51032	WASHER	4	35001-
30	01011-81235	BOLT	3	35001-

Printed By : Dwi Iswanto (airafather6107170)

DELIVERY LINE (PIPING AND VALVE BRANCH)

Item	Part No.	Part Name	Qty	Serial No.
31	01643-31232	WASHER	3	35001-
32	07084-01412	HOSE	1	35001-
33	07000-B3048	O-RING	2	35001-
34	07371-51470	FLANGE	4	35001-
35	01010-81455	BOLT	8	35001-
36	01643-31445	WASHER	8	35001-
37	21N-62-37250	BRACKET	1	35001-
38	203-62-58360	CUSHION	8	35001-
39	566-35-42430	PLATE	4	35001-
40	21K-62-34670	SPACER	4	35001-
41	07000-13025	O-RING	8	35001-
42	01010-81265	BOLT	4	35001-
43	01643-31232	WASHER	4	35001-
44	21N-62-38770	HOSE	1	35001-
45	21N-62-38780	HOSE	1	35001-
46	07000-B3032	O-RING	2	35001-
47	07371-31049	FLANGE	8	35001-
48	07372-21035	BOLT	16	35001-
49	01643-51032	WASHER	16	35001-

Printed By : Dwi Iswanto (airafather6107170)

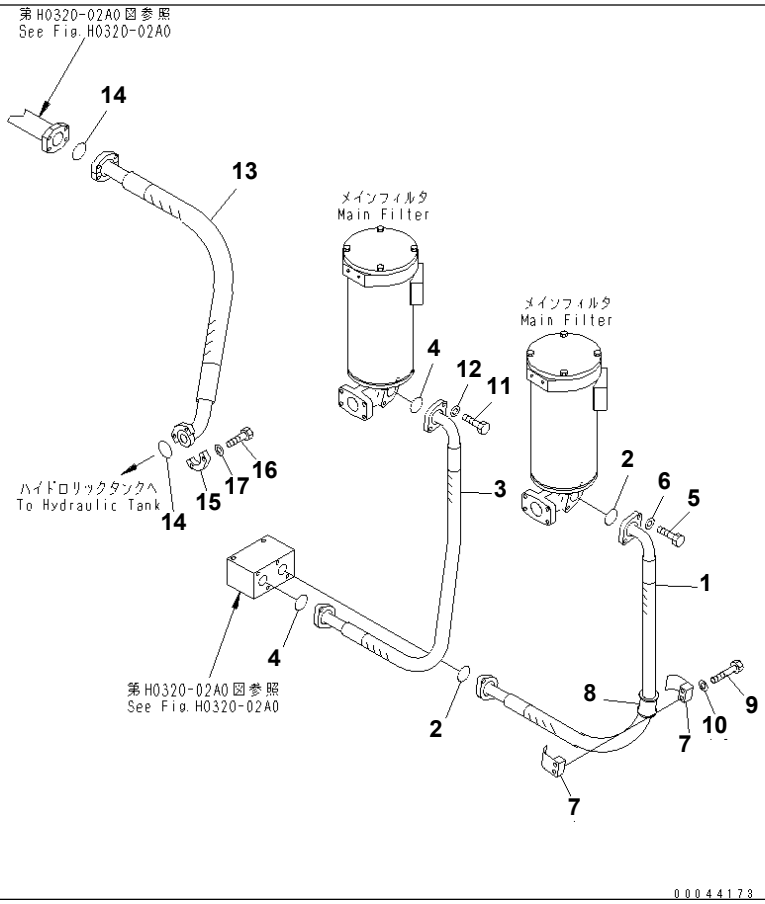

Ref. H0320-01A0 **Page 180280**

PC1250SP-8R S/N 35001-UP (W/O EGR, +55C DEGREE)
OIL COOLER LINE (HYDRAULIC TANK)

Item	Part No.	Part Name	Qty	Serial No.
1	21N-62-31730	HOSE	1	35001-
2	07000-B3048	O-RING	2	35001-
3	21N-62-31741	HOSE	1	35001-
4	07000-B3048	O-RING	2	35001-
5	01010-81240	BOLT	4	35001-
6	01643-31232	WASHER	4	35001-
7	07094-11228	CLAMP	2	35001-
8	07095-01245	CUSHION	1	35001-
9	01010-81285	BOLT	2	35001-
10	01643-31232	WASHER	2	35001-
11	01010-81240	BOLT	4	35001-
12	01643-31232	WASHER	4	35001-
13	07297-02013	HOSE	1	35001-
14	07000-B2060	O-RING	2	35001-
15	07371-32076	FLANGE	4	35001-
16	07372-21240	BOLT	8	35001-
17	01643-51232	WASHER	8	35001-

Printed By : Dwi Iswanto (airafather6107170)

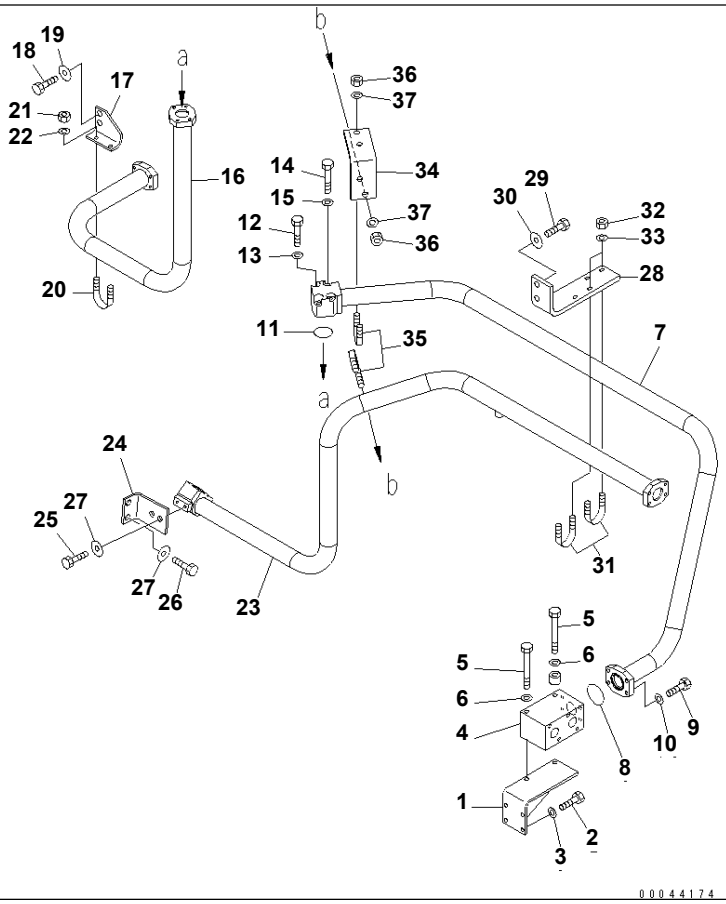

Ref. H0320-02A0 **Page 180290**

PC1250SP-8R S/N 35001-UP (W/O EGR, +55C DEGREE)
OIL COOLER LINE (REVOLVING FRAME SIDE)

Item	Part No.	Part Name	Qty	Serial No.
1	21N-62-31761	BRACKET	1	35001-
2	01010-81240	BOLT	4	35001-
3	01643-31232	WASHER	4	35001-
4	21N-62-31751	BLOCK	1	35001-
5	01011-81230	BOLT	2	35001-
6	01643-31232	WASHER	2	35001-
7	21N-62-41340	TUBE	1	35001-
8	07000-B2060	O-RING	1	35001-
9	01010-81240	BOLT	4	35001-
10	01643-31232	WASHER	4	35001-
11	07000-B2060	O-RING	1	35001-
12	01010-81275	BOLT	2	35001-
13	01643-31232	WASHER	2	35001-
14	01010-81285	BOLT	2	35001-
15	01643-31232	WASHER	2	35001-
16	21N-62-41350	TUBE	1	35001-
17	21N-62-31452	BRACKET	1	35001-
18	01010-81235	BOLT	2	35001-
19	175-54-34170	WASHER	2	35001-
20	07283-36155	CLIP	1	35001-
21	01597-01009	NUT	2	35001-
22	01643-31032	WASHER	2	35001-
23	21N-62-41361	TUBE	1	35001-
24	21N-62-31440	BRACKET	1	35001-
25	01010-81230	BOLT	2	35001-
26	01010-81235	BOLT	2	35001-
27	175-54-34170	WASHER	4	35001-
28	21N-62-37290	BRACKET	1	35001-
29	01010-81235	BOLT	2	35001-
30	175-54-34170	WASHER	2	35001-

Printed By : Dwi Iswanto (airafather6107170)

OIL COOLER LINE (REVOLVING FRAME SIDE)

Item	Part No.	Part Name	Qty	Serial No.
31	07283-36163	CLIP	2	35001-
32	01597-01009	NUT	4	35001-
33	01643-31032	WASHER	4	35001-
34	21N-62-41380	BRACKET	1	35001-
35	07283-36163	CLIP	2	35001-
36	01597-01009	NUT	4	35001-
37	417-43-16210	WASHER	4	35001-

Printed By : Dwi Iswanto (airafather6107170)

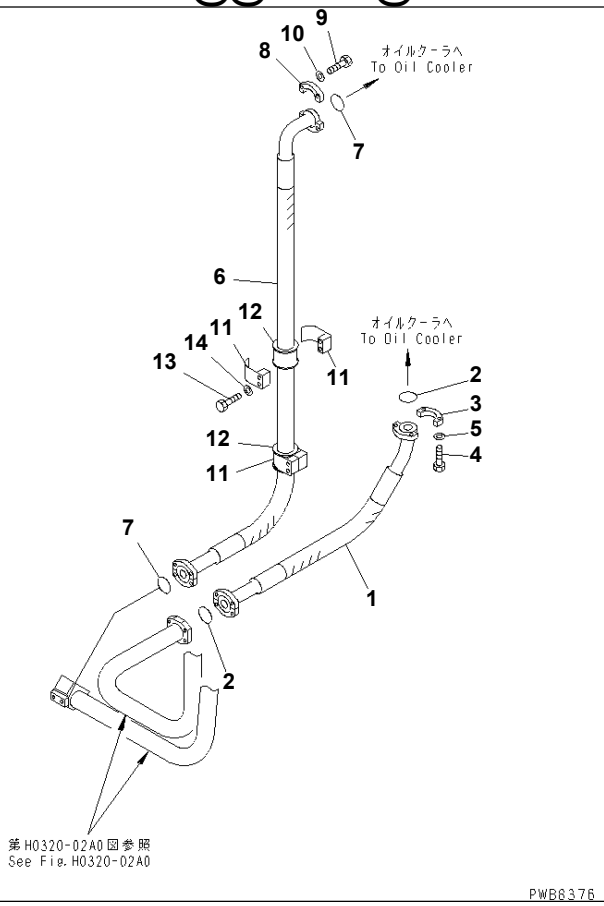

Ref. H0320-03A0 **Page 180300**

PC1250SP-8R S/N 35001-UP (W/O EGR, +55C DEGREE)

OIL COOLER LINE (HOSE)

Item	Part No.	Part Name	Qty	Serial No.
1	07297-02011	HOSE	1	35001-
2	07000-B2060	O-RING	2	35001-
3	07371-32076	FLANGE	4	35001-
4	07372-21240	BOLT	8	35001-
5	01643-51232	WASHER	8	35001-
6	07298-02022	HOSE	1	35001-
7	07000-B2060	O-RING	2	35001-
8	07371-32076	FLANGE	4	35001-
9	07372-21240	BOLT	8	35001-
10	01643-51232	WASHER	8	35001-
11	209-62-78930	CLAMP	4	35001-
12	07095-02062	CUSHION	2	35001-
13	01011-81210	BOLT	4	35001-
14	01643-31232	WASHER	4	35001-

Printed By : Dwi Iswanto (airafather6107170)

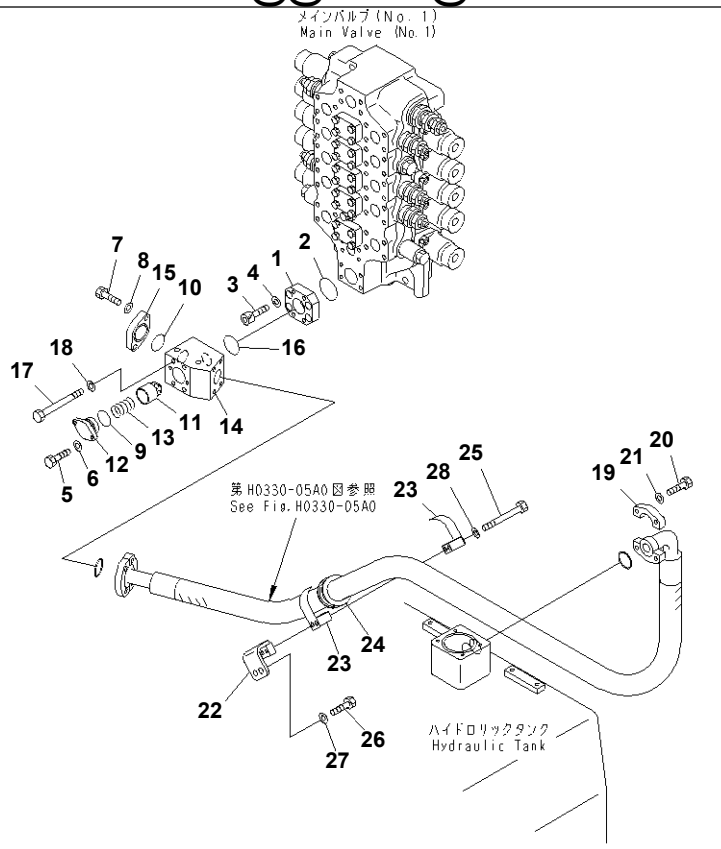

Ref. H0330-01A0 **Page 180310**

PC1250SP-8R S/N 35001-UP (W/O EGR, +55C DEGREE)
RETURN LINE (NO.1 VALVE)

Item	Part No.	Part Name	Qty	Serial No.
1	21N-62-31580	BLOCK	1	35001-
2	07000-B2060	O-RING	1	35001-
3	01252-71235	BOLT	4	35001-
4	01643-51232	WASHER	4	35001-
	21N-60-32802	VALVE ASS'Y	1	35001-
5	01010-81030	· BOLT	2	35001-
6	01643-31032	· WASHER	2	35001-
7	01010-81235	· BOLT	2	35001-
8	01643-31232	· WASHER	2	35001-
9	07000-13042	· O-RING	1	35001-
10	07000-13050	· O-RING	1	35001-
11	209-60-52120	· POPPET	1	35001-
12	21N-60-32720	· FLANGE	1	35001-
13	706-77-72250	· SPRING	1	35001-
14	☆	· BLOCK	1	35001-
15	21N-60-32821	· FLANGE	1	35001-
16	07000-B2055	O-RING	1	35001-
17	01011-81235	BOLT	4	35001-
18	01643-31232	WASHER	4	35001-
19	07371-32076	FLANGE	4	35001-
20	07372-21240	BOLT	8	35001-
21	01643-51232	WASHER	8	35001-
22	21N-62-33440	BRACKET	1	35001-
23	209-62-78930	CLAMP	2	35001-
24	07095-02062	CUSHION	1	35001-
25	01011-81210	BOLT	2	35001-
26	01010-81230	BOLT	2	35001-
27	01643-31232	WASHER	2	35001-
28	01643-31232	WASHER	2	35001-

Printed By : Dwi Iswanto (airafather6107170)

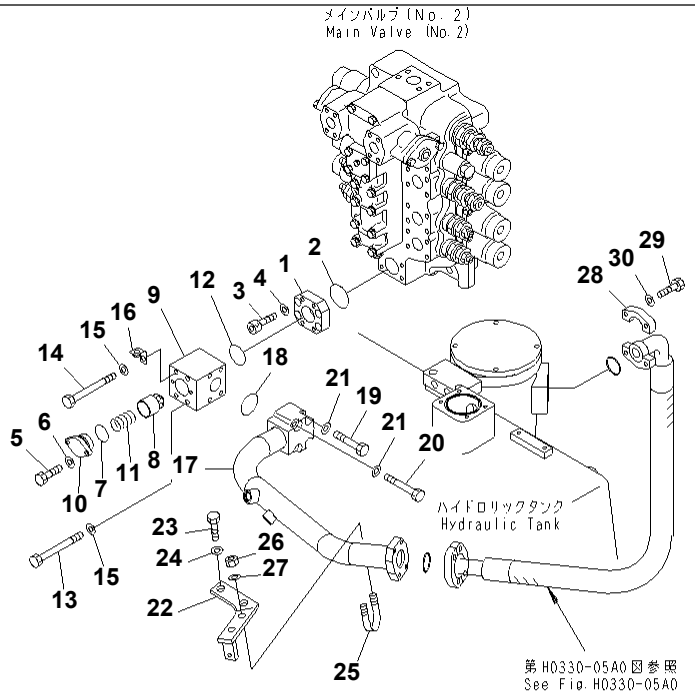

0 0 0 4 4 1 7 5

Ref. H0330-02A0 **Page 180320**

PC1250SP-8R S/N 35001-UP (W/O EGR, +55C DEGREE)
RETURN LINE (NO.2 VALVE)(#35001-35016)

Item	Part No.	Part Name	Qty	Serial No.
1	21N-62-31580	BLOCK	1	35001-35016
2	07000-B2060	O-RING	1	35001-@
3	01252-71235	BOLT	4	35001-35016
4	01643-51232	WASHER	4	35001-@
	21N-60-32701	VALVE ASS'Y	1	35001-@
5	01010-81030	· BOLT	2	35001-@
6	01643-31032	· WASHER	2	35001-@
7	07000-13042	· O-RING	1	35001-@
8	209-60-52120	· POPPET	1	35001-@
9	☆	· BLOCK	1	35001-@
10	21N-60-32720	· FLANGE	1	35001-@
11	706-77-72250	· SPRING	1	35001-@
12	07000-B2055	O-RING	1	35001-@
13	01011-81235	BOLT	3	35001-@
14	01011-81240	BOLT	1	35001-@
15	01643-31232	WASHER	4	35001-@
16	21T-38-71260	BRACKET	1	35001-@
17	21N-62-41371	TUBE	1	35001-35016
18	07000-B2060	O-RING	1	35001-@
19	01010-81270	BOLT	2	35001-@
20	01010-81285	BOLT	2	35001-@
21	01643-51232	WASHER	4	35001-@
22	21N-62-41730	BRACKET	1	35001-@
23	01010-81640	BOLT	2	35001-@
24	01643-31645	WASHER	2	35001-@
25	07283-36163	CLIP	1	35001-@
26	01597-01009	NUT	2	35001-@
27	417-43-16210	WASHER	2	35001-@
28	07371-32076	FLANGE	4	35001-@
29	07372-21240	BOLT	8	35001-@

Printed By : Dwi Iswanto (airafather6107170)

RETURN LINE (NO.2 VALVE)(#35001-35016)

Item	Part No.	Part Name	Qty	Serial No.
30	01643-51232	WASHER	8	35001-@

Printed By : Dwi Iswanto (airafather6107170)

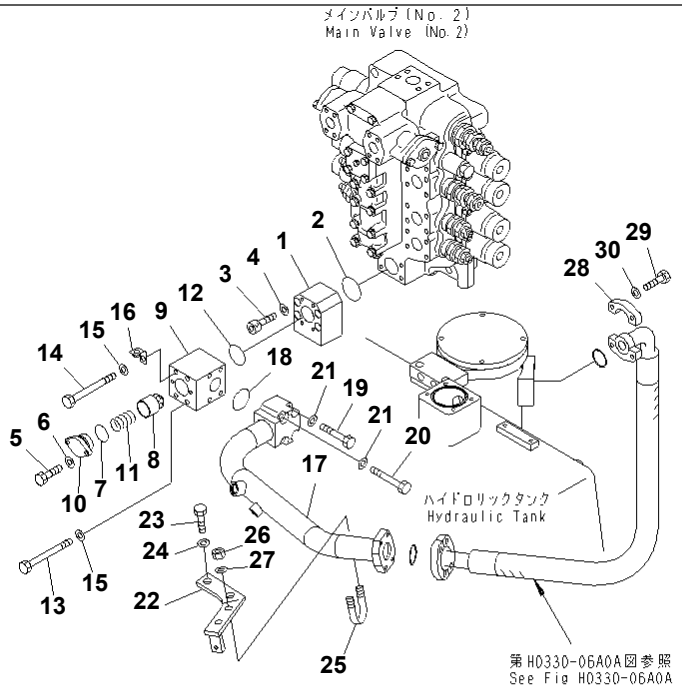

00063264

Ref. H0330-02A0A **Page 180330**

PC1250SP-8R S/N 35001-UP (W/O EGR, +55C DEGREE)
RETURN LINE (NO.2 VALVE)(#35017-)

Item	Part No.	Part Name	Qty	Serial No.
1	21N-62-42410	FLANGE	1	35017-
2	07000-B2060	O-RING	1	35001-
3	01252-71285	BOLT	4	35017-
4	01643-51232	WASHER	4	35001-
	21N-60-32701	VALVE ASS'Y	1	35001-
5	01010-81030	· BOLT	2	35001-
6	01643-31032	· WASHER	2	35001-
7	07000-13042	· O-RING	1	35001-
8	209-60-52120	· POPPET	1	35001-
9	☆	· BLOCK	1	35001-
10	21N-60-32720	· FLANGE	1	35001-
11	706-77-72250	· SPRING	1	35001-
12	07000-B2055	O-RING	1	35001-
13	01011-81235	BOLT	3	35001-
14	01011-81240	BOLT	1	35001-
15	01643-31232	WASHER	4	35001-
16	21T-38-71260	BRACKET	1	35001-
17	21N-62-42160	TUBE	1	35017-
18	07000-B2060	O-RING	1	35001-
19	01010-81270	BOLT	2	35001-
20	01010-81285	BOLT	2	35001-
21	01643-51232	WASHER	4	35001-
22	21N-62-41730	BRACKET	1	35001-
23	01010-81640	BOLT	2	35001-
24	01643-31645	WASHER	2	35001-
25	07283-36163	CLIP	1	35001-
26	01597-01009	NUT	2	35001-
27	417-43-16210	WASHER	2	35001-
28	07371-32076	FLANGE	4	35001-
29	07372-21240	BOLT	8	35001-

Printed By : Dwi Iswanto (airafather6107170)

RETURN LINE (NO.2 VALVE)(#35017-)

Item	Part No.	Part Name	Qty	Serial No.
30	01643-51232	WASHER	8	35001-

Printed By : Dwi Iswanto (airafather6107170)

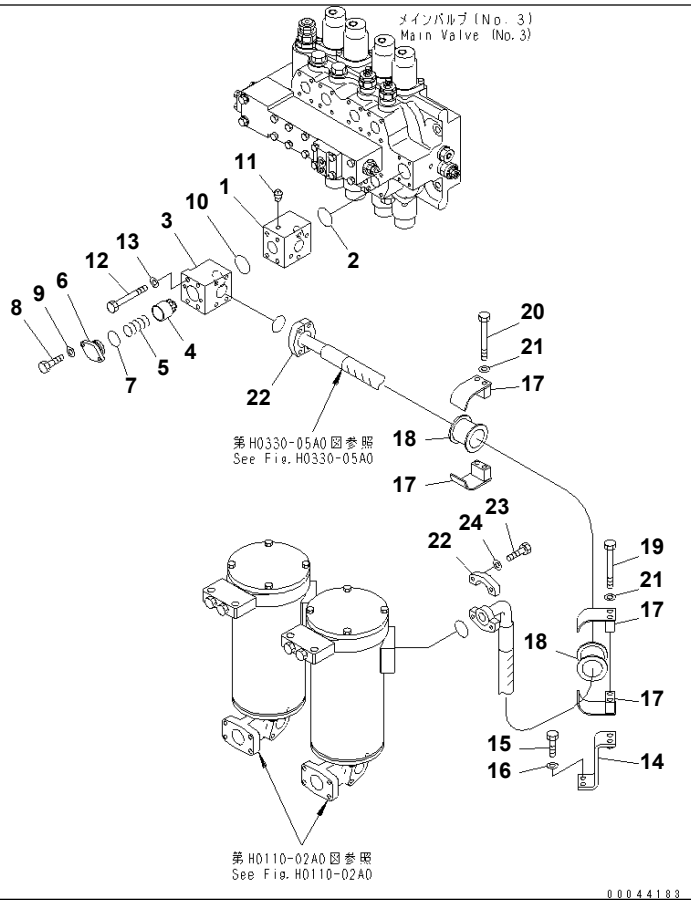

Ref. H0330-03A0 **Page 180340**

PC1250SP-8R S/N 35001-UP (W/O EGR, +55C DEGREE)
RETURN LINE (NO.3 VALVE)

Item	Part No.	Part Name	Qty	Serial No.
1	21N-62-37330	BLOCK	1	35001-
2	07000-B2055	O-RING	1	35001-
	21N-60-12401	CHECK VALVE ASS'Y	1	35001-
3	☆	· BLOCK	1	35001-
4	209-60-52120	· POPPET	1	35001-
5	706-77-72250	· SPRING	1	35001-
6	21N-60-12420	· FLANGE	1	35001-
7	07000-13042	· O-RING	1	35001-
8	01010-81030	· BOLT	2	35001-
9	01643-31032	· WASHER	2	35001-
10	07000-B2060	O-RING	1	35001-
11	07042-30108	PLUG	1	35001-
12	700-85-11120	BOLT	4	35001-
13	01643-31232	WASHER	4	35001-
14	21N-62-37380	BRACKET	1	35001-
15	01010-81230	BOLT	2	35001-
16	01643-31232	WASHER	2	35001-
17	209-62-78930	CLAMP	4	35001-
18	07095-02062	CUSHION	2	35001-
19	01011-81215	BOLT	2	35001-
20	01011-81210	BOLT	2	35001-
21	01643-31232	WASHER	4	35001-
22	07371-32076	FLANGE	4	35001-
23	07372-21240	BOLT	8	35001-
24	01643-51232	WASHER	8	35001-

Printed By : Dwi Iswanto (airafather6107170)

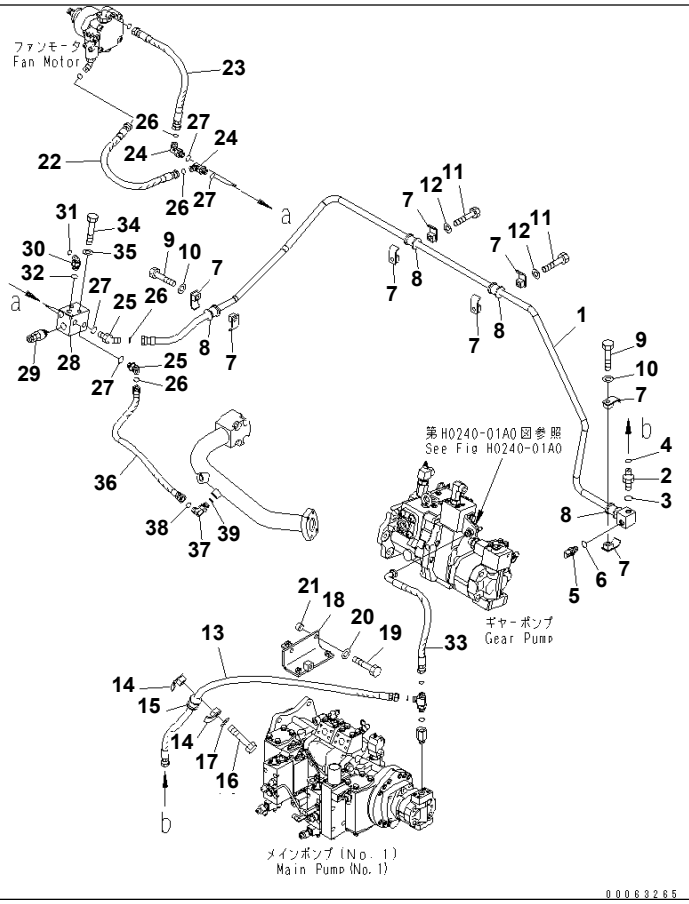

Ref. H0330-04A1 **Page 180350**

PC1250SP-8R S/N 35001-UP (W/O EGR, +55C DEGREE)

RETURN LINE (AFTER COOLER MOTOR PIPING) (+55C SPEC.)

Item	Part No.	Part Name	Qty	Serial No.
1	21N-62-42230	TUBE	1	35001-
2	02781-00420	UNION	1	35001-
3	07002-61823	O-RING	1	35001-
4	02896-61012	O-RING	1	35001-
5	7861-93-1811	SENSOR	1	35001-
6	07002-61823	O-RING	1	35001-
7	07094-10417	CLAMP	8	35001-
8	07095-00421	CUSHION	4	35001-
9	01010-81265	BOLT	2	35001-
10	01643-31232	WASHER	2	35001-
11	01010-81270	BOLT	2	35001-
12	01643-31232	WASHER	2	35001-
13	02753-00412	HOSE	1	35001-
14	07094-10417	CLAMP	2	35001-
15	07095-00421	CUSHION	1	35001-
16	01010-81265	BOLT	1	35001-
17	01643-31232	WASHER	1	35001-
18	21N-62-42340	BRACKET	1	35001-
19	01010-81265	BOLT	2	35001-
20	01643-31232	WASHER	2	35001-
21	198-33-12380	WASHER	2	35001-
22	02753-00406	HOSE	1	35001-
23	02753-00405	HOSE	1	35001-
24	02783-10422	ELBOW	2	35001-
25	02782-10422	ELBOW	2	35001-
26	02896-61012	O-RING	4	35001-
27	07002-62034	O-RING	4	35001-
	21N-60-37700	VALVE ASS'Y	1	35001-
28	☆	· BLOCK	1	35001-
29	(709-70-74700)	· VALVE ASS'Y	1	35001-

Printed By : Dwi Iswanto (airafather6107170)

RETURN LINE (AFTER COOLER MOTOR PIPING) (+55C SPEC.)

Item	Part No.	Part Name	Qty	Serial No.
30	02783-10315	ELBOW	1	35001-
31	02896-11009	O-RING	1	35001-
32	07002-12034	O-RING	1	35001-
33	02754-00405	HOSE	1	35001-
34	01011-81210	BOLT	2	35001-
35	01643-31232	WASHER	2	35001-
36	02762-004A7	HOSE	1	35001-
37	02782-10422	ELBOW	1	35001-
38	02896-61012	O-RING	1	35001-
39	07002-62034	O-RING	1	35001-

Printed By : Dwi Iswanto (airafather6107170)

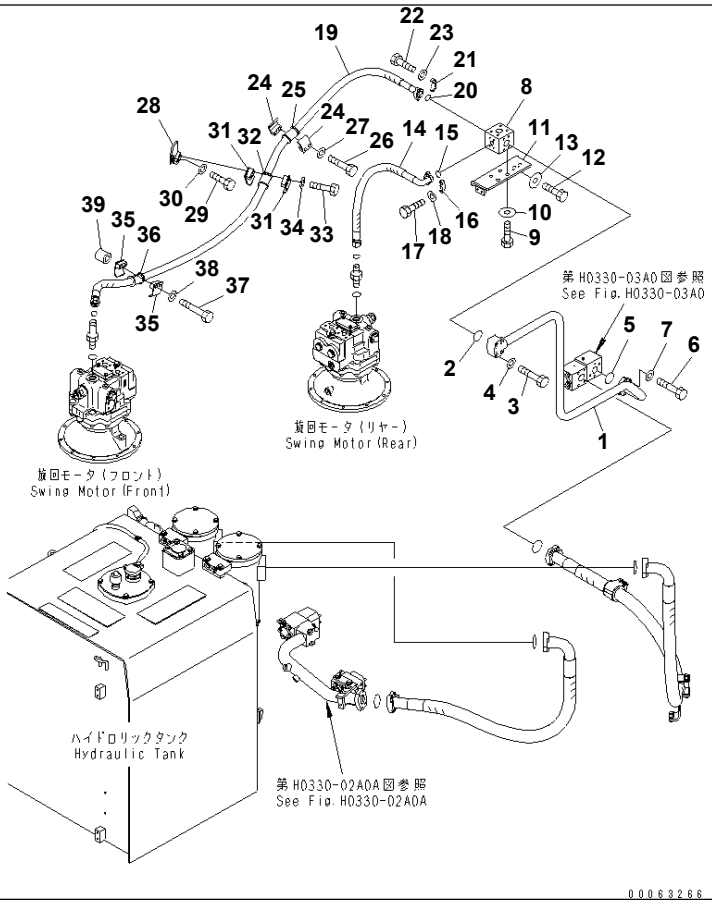

Ref. H0330-05A0A **Page 180360**

PC1250SP-8R S/N 35001-UP (W/O EGR, +55C DEGREE)
RETURN LINE (SWING SUCTION) (1/2)(#35017-)

Item	Part No.	Part Name	Qty	Serial No.
1	21N-62-37320	TUBE	1	35001-
2	07000-B3048	O-RING	1	35001-
3	07372-21240	BOLT	4	35001-
4	01643-51232	WASHER	4	35001-
5	07000-B3045	O-RING	1	35001-
6	01010-81275	BOLT	4	35001-
7	01643-31232	WASHER	4	35001-
8	21N-62-42170	BLOCK	1	35017-
9	01010-81235	BOLT	4	35017-
10	175-54-34170	WASHER	4	35017-
11	21N-62-42370	BRACKET	1	35017-
12	01010-81235	BOLT	2	35017-
13	175-54-34170	WASHER	2	35001-
14	21N-62-41490	HOSE	1	35017-
15	07000-B3032	O-RING	1	35017-
16	07371-31049	FLANGE	2	35001-
17	07372-21035	BOLT	4	35001-
18	01643-51032	WASHER	4	35001-
19	21N-62-41480	HOSE	1	35017-
20	07000-B3032	O-RING	1	35017-
21	07371-31049	FLANGE	2	35017-
22	07372-21035	BOLT	4	35001-
23	01643-51032	WASHER	4	35001-
24	07094-11024	CLAMP	2	35001-
25	07095-01035	CUSHION	1	35001-
26	01010-81280	BOLT	2	35001-
27	01643-31232	WASHER	2	35001-
28	21N-62-41420	BRACKET	1	35017-
29	01010-81235	BOLT	2	35001-
30	01643-31232	WASHER	2	35001-

Printed By : Dwi Iswanto (airafather6107170)

RETURN LINE (SWING SUCTION) (1/2)(#35017-)

Item	Part No.	Part Name	Qty	Serial No.
31	07094-11024	CLAMP	2	35001-
32	07095-01035	CUSHION	1	35001-
33	01010-81280	BOLT	2	35001-
34	01643-31232	WASHER	2	35001-
35	07094-11024	CLAMP	2	35001-
36	07095-01035	CUSHION	1	35001-
37	01011-81205	BOLT	2	35001-
38	01643-31232	WASHER	2	35001-
39	195-33-11220	SPACER	2	35001-

Printed By : Dwi Iswanto (airafather6107170)

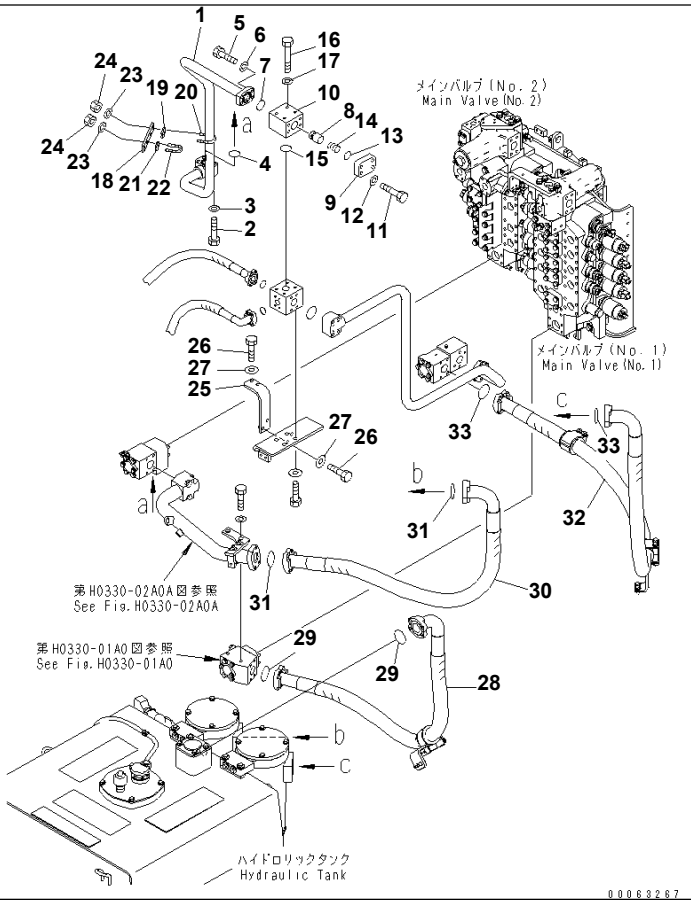

Ref. H0330-06A0A **Page 180370**

PC1250SP-8R S/N 35001-UP (W/O EGR, +55C DEGREE)
RETURN LINE (SWING SUCTION) (2/2)(#35017-)

Item	Part No.	Part Name	Qty	Serial No.
1	21N-62-42350	TUBE	1	35017-
2	01010-81275	BOLT	4	35017-
3	01643-31232	WASHER	4	35017-
4	07000-B3045	O-RING	1	35017-
5	07372-21240	BOLT	4	35017-
6	01643-51232	WASHER	4	35017-
7	07000-B3048	O-RING	1	35017-
	21N-60-41200	VALVE ASS'Y	1	35017-
8	209-60-52720	· POPPET	1	35017-
9	21N-60-32420	· FLANGE	1	35017-
10	☆	· BODY	1	35017-
11	01010-81455	· BOLT	4	35017-
12	01643-31445	· WASHER	4	35017-
13	07000-B3048	· O-RING	1	35017-
14	07750-04595	· SPRING	1	35017-
15	07000-B3048	O-RING	1	35017-
16	01011-81205	BOLT	4	35017-
17	01643-31232	WASHER	4	35017-
18	21N-62-42430	BRACKET	1	35017-
19	07283-54353	SEAT	1	35017-
20	07283-34354	CLIP	1	35017-
21	07283-53444	SEAT	1	35017-
22	07283-33450	CLIP	1	35017-
23	01643-31032	WASHER	4	35017-
24	01597-01009	NUT	4	35017-
25	21N-62-42390	BRACKET	1	35017-
26	01010-81250	BOLT	4	35017-
27	175-54-34170	WASHER	4	35017-
28	07298-02018	HOSE	1	35001-
29	07000-B2060	O-RING	2	35001-

Printed By : Dwi Iswanto (airafather6107170)

RETURN LINE (SWING SUCTION) (2/2)(#35017-)

Item	Part No.	Part Name	Qty	Serial No.
30	07298-02015	HOSE	1	35001-
31	07000-B2060	O-RING	2	35001-
32	07298-02025	HOSE	1	35001-
33	07000-B2060	O-RING	2	35001-

Printed By : Dwi Iswanto (airafather6107170)

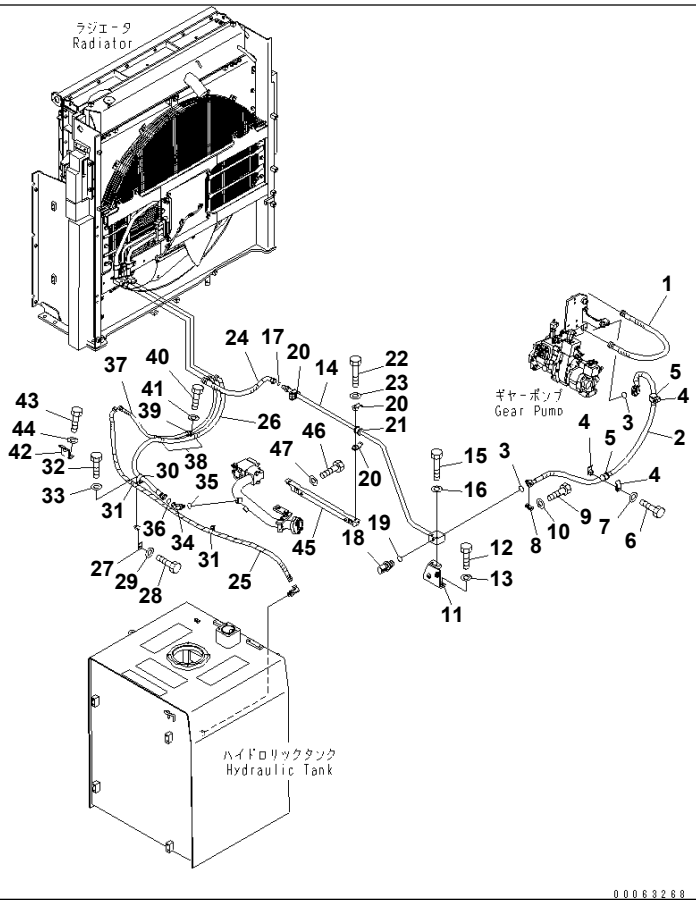

Ref. H0330-07A1 **Page 180380**

PC1250SP-8R S/N 35001-UP (W/O EGR, +55C DEGREE)

RETURN LINE (RADIATOR MOTER PIPING) (+55C SPEC.)

Item	Part No.	Part Name	Qty	Serial No.
1	02756-00611	HOSE	1	35001-
2	07097-00623	HOSE	1	35001-
3	07000-B3025	O-RING	2	35001-
4	07094-10620	CLAMP	4	35001-
5	07095-00628	CUSHION	2	35001-
6	01010-81270	BOLT	2	35001-
7	01643-31232	WASHER	2	35001-
8	07371-30640	FLANGE	2	35001-
9	07372-21035	BOLT	4	35001-
10	01643-51032	WASHER	4	35001-
11	21N-62-42251	BRACKET	1	35001-
12	01010-81240	BOLT	2	35001-
13	01643-31232	WASHER	2	35001-
14	21N-62-42240	TUBE	1	35001-
15	01010-81270	BOLT	2	35001-
16	01643-31232	WASHER	2	35001-
17	02896-61018	O-RING	1	35001-
18	7861-93-1811	SENSOR	1	35001-
19	07002-61823	O-RING	1	35001-
20	07094-10620	CLAMP	4	35001-
21	07095-00627	CUSHION	2	35001-
22	01010-81270	BOLT	2	35001-
23	01643-31232	WASHER	2	35001-
24	02757-006A5	HOSE	1	35001-
25	21N-62-41890	HOSE ASS'Y	1	35001-
26	02764-00618	HOSE	1	35001-
27	21N-62-41880	BRACKET	1	35001-
28	01010-81230	BOLT	2	35001-
29	01643-31232	WASHER	2	35001-
30	203-06-56390	CLIP	1	35001-

Printed By : Dwi Iswanto (airafather6107170)

RETURN LINE (RADIATOR MOTER PIPING) (+55C SPEC.)

Item	Part No.	Part Name	Qty	Serial No.
31	04434-52512	CLIP	2	35001-
32	01010-81225	BOLT	2	35001-
33	01643-31232	WASHER	2	35001-
34	02782-10628	ELBOW	1	35001-
35	07002-62434	O-RING	1	35001-
36	02896-61018	O-RING	1	35001-
37	02764-00413	HOSE	1	35001-
38	04434-52712	CLIP	2	35001-
39	04434-51912	CLIP	2	35001-
40	01010-81230	BOLT	2	35001-
41	01643-31232	WASHER	2	35001-
42	21N-62-41450	BRACKET	1	35001-
43	01010-81230	BOLT	2	35001-
44	01643-31232	WASHER	2	35001-
45	21N-62-41570	BRACKET	1	35001-
46	01010-81225	BOLT	2	35001-
47	01643-31232	WASHER	2	35001-

Printed By : Dwi Iswanto (airafather6107170)

@@1E287@

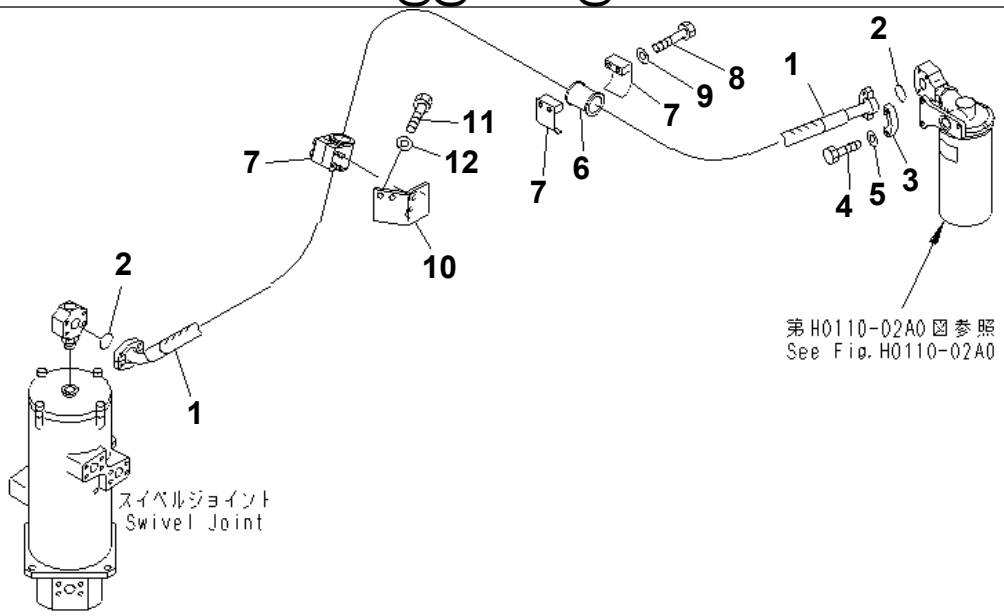

P W 1 E 2 8 7

Ref. H0340-01A0 **Page 180390**

PC1250SP-8R S/N 35001-UP (W/O EGR, +55C DEGREE)

DRAIN LINE

Item	Part No.	Part Name	Qty	Serial No.
1	07297-41223	HOSE	1	35001-
2	07000-13038	O-RING	2	35001-
3	07371-31255	FLANGE	2	35001-
4	07372-21035	BOLT	4	35001-
5	01643-51032	WASHER	4	35001-
6	07095-01241	CUSHION	2	35001-
7	07094-11228	CLAMP	4	35001-
8	01010-81285	BOLT	4	35001-
9	01643-31232	WASHER	4	35001-
10	21N-62-37391	BRACKET	1	35001-
11	01010-81230	BOLT	2	35001-
12	01643-31232	WASHER	2	35001-

Printed By : Dwi Iswanto (airafather6107170)

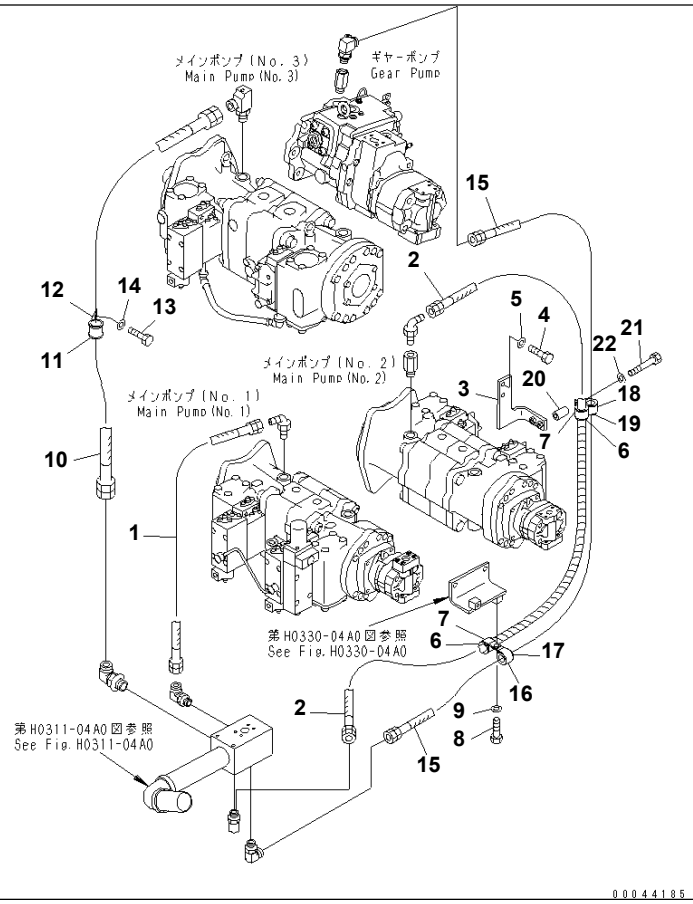

Ref. H0340-02A0 **Page 180400**

PC1250SP-8R S/N 35001-UP (W/O EGR, +55C DEGREE)
DRAIN LINE (PUMP PIPING)(#35001-35016)

Item	Part No.	Part Name	Qty	Serial No.
1	02762-00608	HOSE	1	35001-35016
2	02762-00618	HOSE	1	35001-35016
3	21N-62-41240	BRACKET	1	35001-@
4	01010-81025	BOLT	2	35001-@
5	01643-31032	WASHER	2	35001-@
6	07095-20627	CUSHION	2	35001-35016
7	04434-53412	CLIP	2	35001-35016
8	01010-81230	BOLT	1	35001-35016
9	01643-31232	WASHER	1	35001-35016
10	21N-62-36670	HOSE	1	35001-35016
11	21T-62-76840	CUSHION	1	35001-@
12	21T-62-76850	CLIP	1	35001-@
13	01010-81220	BOLT	1	35001-@
14	01643-31232	WASHER	1	35001-@
15	02762-00622	HOSE	1	35001-35016
16	04434-53412	CLIP	1	35001-@
17	07095-20627	CUSHION	1	35001-@
18	04434-53412	CLIP	1	35001-@
19	07095-20627	CUSHION	1	35001-@
20	205-03-71331	COLLAR	1	35001-@
21	01010-81275	BOLT	1	35001-@
22	01643-31232	WASHER	1	35001-@

Printed By : Dwi Iswanto (airafather6107170)

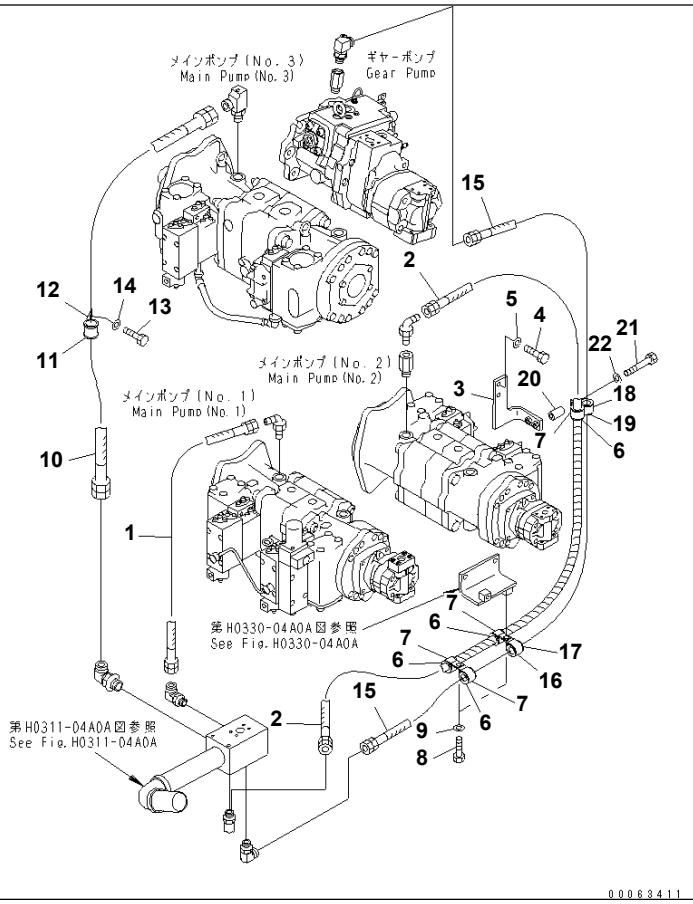

Ref. H0340-02A0A **Page 180410**

PC1250SP-8R S/N 35001-UP (W/O EGR, +55C DEGREE)
DRAIN LINE (PUMP PIPING)(#35017-)

Item	Part No.	Part Name	Qty	Serial No.
1	02762-006A7	HOSE	1	35001-
2	21N-62-42440	HOSE	1	35017-
3	21N-62-41240	BRACKET	1	35001-
4	01010-81025	BOLT	2	35001-
5	01643-31032	WASHER	2	35001-
6	07095-20627	CUSHION	4	35017-
7	04434-53412	CLIP	4	35017-
8	01010-81230	BOLT	2	35017-
9	01643-31232	WASHER	2	35017-
10	21N-62-41510	HOSE	1	35017-
11	21T-62-76840	CUSHION	1	35001-
12	21T-62-76850	CLIP	1	35001-
13	01010-81220	BOLT	1	35001-
14	01643-31232	WASHER	1	35001-
15	21N-62-42450	HOSE	1	35017-
16	04434-53412	CLIP	1	35001-
17	07095-20627	CUSHION	1	35001-
18	04434-53412	CLIP	1	35001-
19	07095-20627	CUSHION	1	35001-
20	205-03-71331	COLLAR	1	35001-
21	01010-81275	BOLT	1	35001-
22	01643-31232	WASHER	1	35001-

Printed By : Dwi Iswanto (airafather6107170)

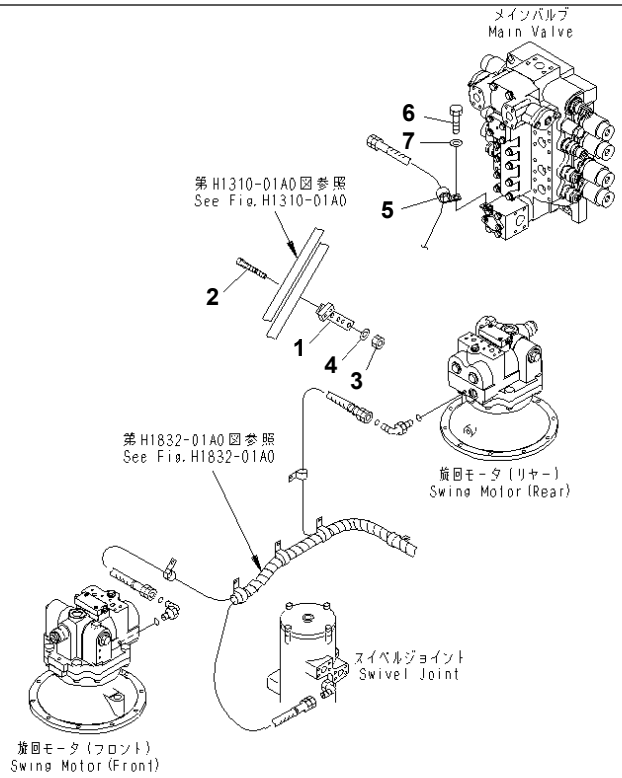

00044249

Ref. H0340-03A0 **Page 180420**

PC1250SP-8R S/N 35001-UP (W/O EGR, +55C DEGREE)
DRAIN LINE (AFTER COOLER MOTOR)

Item	Part No.	Part Name	Qty	Serial No.
1	21N-62-41431	BRACKET	1	35001-
2	07283-33450	CLIP	2	35001-
3	01597-01009	NUT	4	35001-
4	01643-31032	WASHER	4	35001-
5	04434-51512	CLIP	1	35001-
6	01010-81225	BOLT	1	35001-
7	01643-31232	WASHER	1	35001-

Printed By : Dwi Iswanto (airafather6107170)

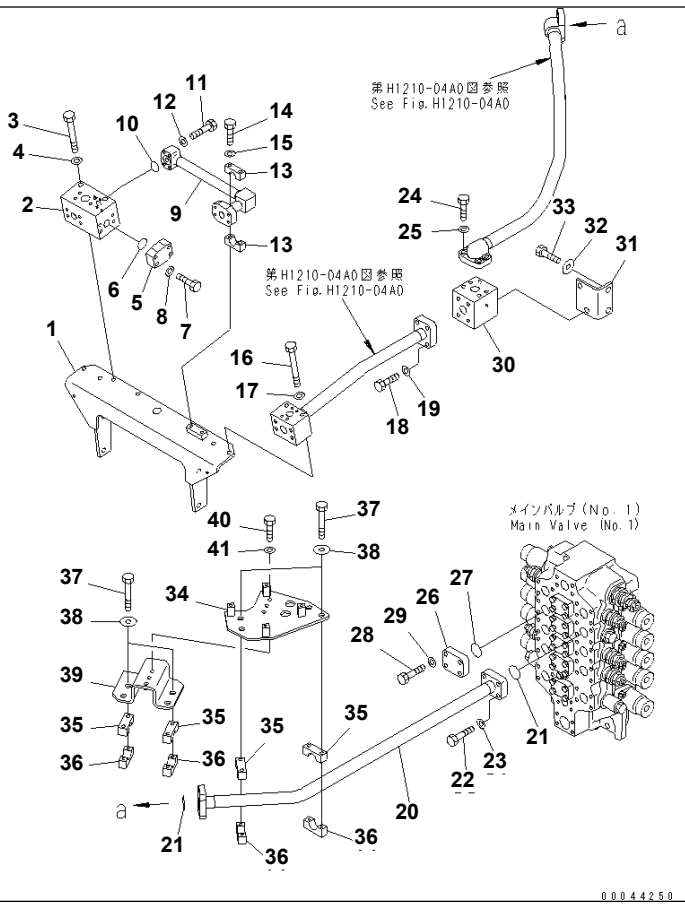

Ref. H1210-01A0 **Page 180430**

PC1250SP-8R S/N 35001-UP (W/O EGR, +55C DEGREE)

BOOM LINE (BOOM FRONT PIPING AND NO.1 VALVE)

Item	Part No.	Part Name	Qty	Serial No.
1	21N-62-37980	BRACKET	1	35001-
2	21N-62-37970	BLOCK	1	35001-
3	01011-81245	BOLT	2	35001-
4	01643-31232	WASHER	2	35001-
5	21N-62-14330	FLANGE	1	35001-
6	07000-B3038	O-RING	1	35001-
7	01010-81245	BOLT	4	35001-
8	01643-31232	WASHER	4	35001-
9	21N-62-32211	TUBE	1	35001-
10	07000-B3035	O-RING	1	35001-
11	01010-81060	BOLT	4	35001-
12	01643-51032	WASHER	4	35001-
13	205-62-54460	CLAMP	2	35001-
14	01010-81275	BOLT	2	35001-
15	01643-31232	WASHER	2	35001-
16	01011-81225	BOLT	2	35001-
17	01643-31232	WASHER	2	35001-
18	01010-81455	BOLT	4	35001-
19	01643-31445	WASHER	4	35001-
20	21N-62-37440	TUBE	1	35001-
21	07000-B3048	O-RING	2	35001-
22	01010-81455	BOLT	8	35001-
23	01643-31445	WASHER	8	35001-
24	01010-81445	BOLT	4	35001-
25	01643-31445	WASHER	4	35001-
26	209-62-52220	PLATE	1	35001-
27	07000-B3048	O-RING	1	35001-
28	01010-81455	BOLT	4	35001-
29	01643-31445	WASHER	4	35001-
30	21N-60-37111	BLOCK	1	35001-

Printed By : Dwi Iswanto (airafather6107170)

BOOM LINE (BOOM FRONT PIPING AND NO.1 VALVE)

Item	Part No.	Part Name	Qty	Serial No.
31	21N-62-33220	BRACKET	1	35001-
32	01010-81230	BOLT	4	35001-
33	175-54-34170	WASHER	4	35001-
34	21N-62-41681	BRACKET	1	35001-
35	176-61-41330	CLAMP	4	35001-
36	176-61-41320	CLAMP	4	35001-
37	01010-81270	BOLT	8	35001-
38	175-54-34170	WASHER	8	35001-
39	21N-62-41691	BRACKET	1	35001-
40	01010-81235	BOLT	3	35001-
41	01643-31232	WASHER	3	35001-

Printed By : Dwi Iswanto (airafather6107170)

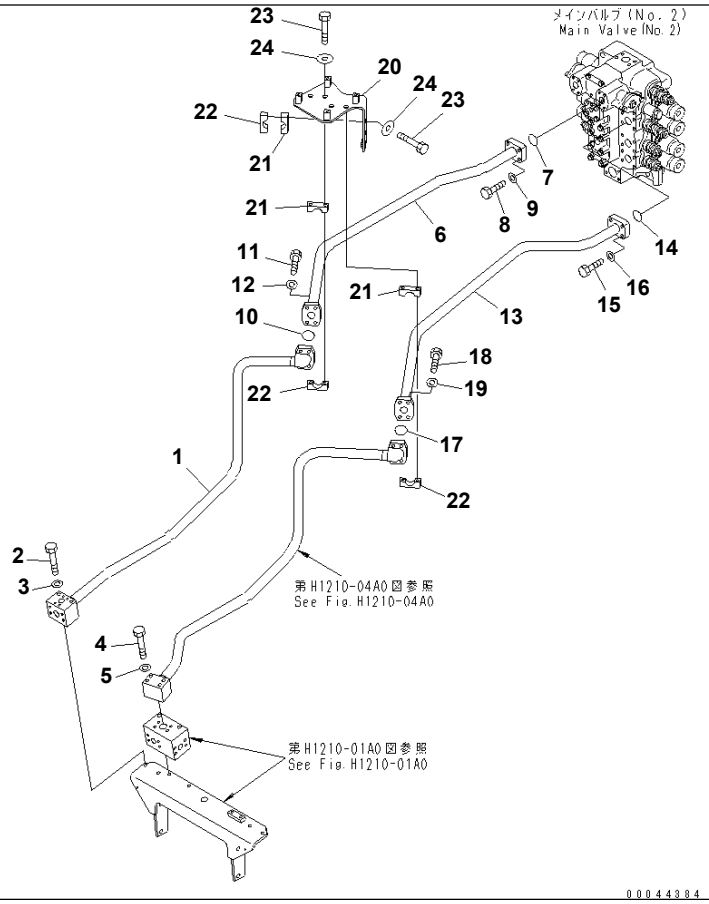

Ref. H1210-02A0 **Page 180440**

PC1250SP-8R S/N 35001-UP (W/O EGR, +55C DEGREE)
BOOM LINE (NO.2 VALVE)

Item	Part No.	Part Name	Qty	Serial No.
1	21N-62-37450	TUBE	1	35001-
2	01011-81225	BOLT	2	35001-
3	01643-31232	WASHER	2	35001-
4	01011-81205	BOLT	4	35001-
5	01643-31232	WASHER	4	35001-
6	21N-62-37470	TUBE	1	35001-
7	07000-B3048	O-RING	1	35001-
8	01010-81455	BOLT	4	35001-
9	01643-31445	WASHER	4	35001-
10	07000-B3048	O-RING	1	35001-
11	01010-81455	BOLT	4	35001-
12	01643-31445	WASHER	4	35001-
13	21N-62-37480	TUBE	1	35001-
14	07000-B3048	O-RING	1	35001-
15	01010-81455	BOLT	4	35001-
16	01643-31445	WASHER	4	35001-
17	07000-B3048	O-RING	1	35001-
18	01010-81455	BOLT	4	35001-
19	01643-31445	WASHER	4	35001-
20	21N-62-41670	BRACKET	1	35001-
21	176-61-41330	CLAMP	3	35001-
22	176-61-41320	CLAMP	3	35001-
23	01010-81270	BOLT	6	35001-
24	175-54-34170	WASHER	6	35001-

Printed By : Dwi Iswanto (airafather6107170)

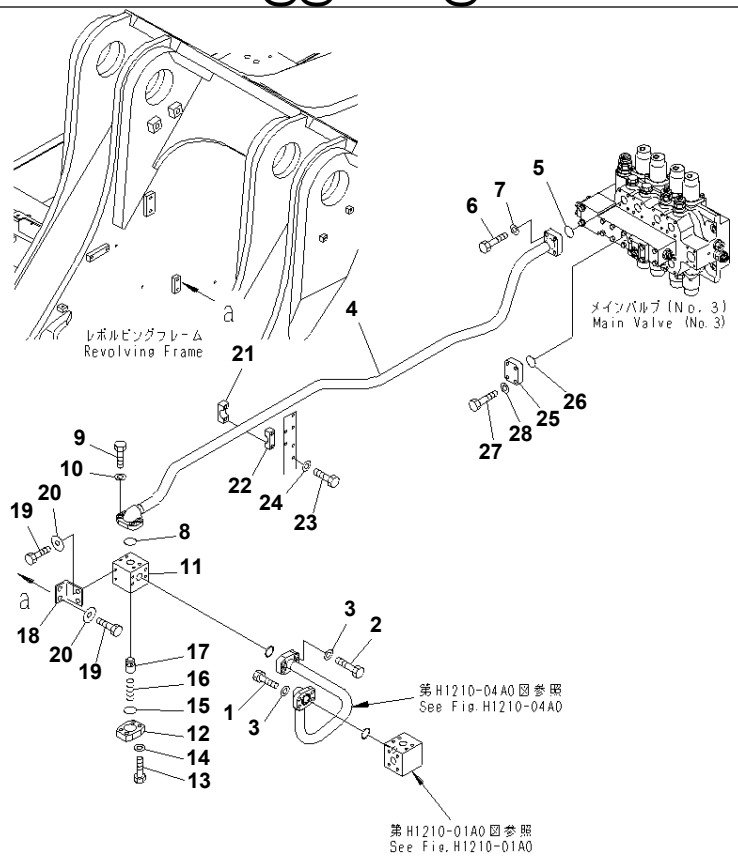

Ref. H1210-03A0 **Page 180450**

BOOM LINE (NO.3 VALVE)

Item	Part No.	Part Name	Qty	Serial No.
1	01010-81445	BOLT	4	35001-
2	01010-81455	BOLT	4	35001-
3	01643-31445	WASHER	8	35001-
4	21N-62-37510	TUBE	1	35001-
5	07000-B3048	O-RING	1	35001-
6	01010-81455	BOLT	4	35001-
7	01643-31445	WASHER	4	35001-
8	07000-B3048	O-RING	1	35001-
9	01010-81445	BOLT	4	35001-
10	01643-31445	WASHER	4	35001-
	21N-60-37200	VALVE ASS'Y	1	35001-
11	☆	· BODY	1	35001-
12	21N-62-12210	· FLANGE	1	35001-
13	01010-81455	· BOLT	4	35001-
14	01643-31445	· WASHER	4	35001-
15	07000-B3048	· O-RING	1	35001-
16	07750-04595	· SPRING	1	35001-
17	209-60-52720	· POPPET	1	35001-
18	21T-62-72760	BRACKET	1	35001-
19	01010-81230	BOLT	4	35001-
20	175-54-34170	WASHER	4	35001-
21	176-61-41330	CLAMP	1	35001-
22	176-61-41320	CLAMP	1	35001-
23	01010-81265	BOLT	2	35001-
24	01643-31232	WASHER	2	35001-
25	209-62-52220	PLATE	1	35001-
26	07000-B3048	O-RING	1	35001-
27	01010-81455	BOLT	4	35001-
28	01643-31445	WASHER	4	35001-

Printed By : Dwi Iswanto (airafather6107170)

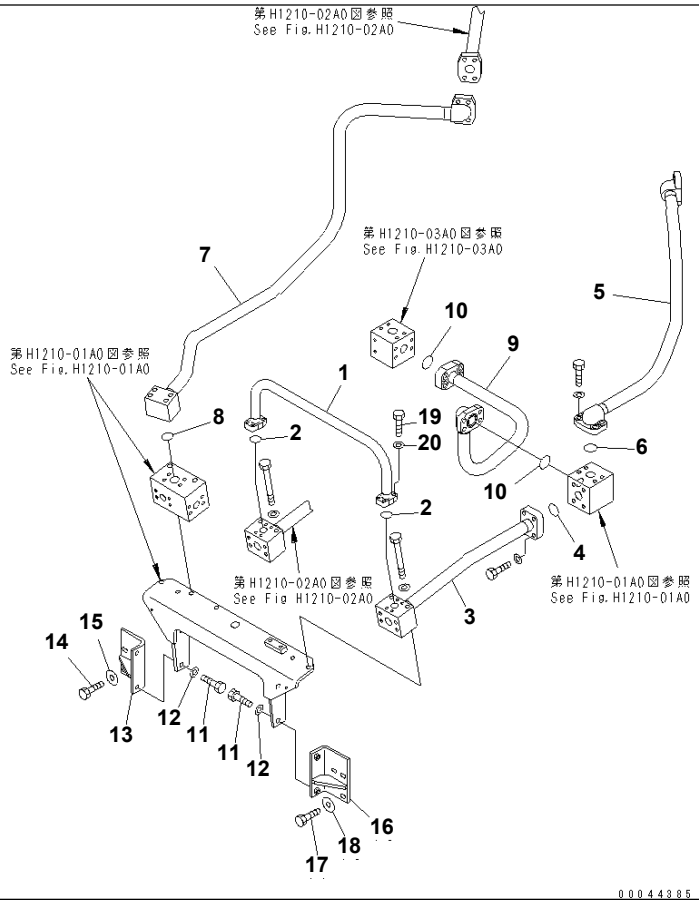

Ref. H1210-04A0 **Page 180460**

PC1250SP-8R S/N 35001-UP (W/O EGR, +55C DEGREE)

BOOM LINE (BOOM LINES TUBE AND FRONT BRACKET)

Item	Part No.	Part Name	Qty	Serial No.
1	21N-62-32191	TUBE	1	35001-
2	07000-B3035	O-RING	2	35001-
3	21N-62-37410	TUBE	1	35001-
4	07000-B3048	O-RING	1	35001-
5	21N-62-37431	TUBE	1	35001-
6	07000-B3048	O-RING	1	35001-
7	21N-62-37460	TUBE	1	35001-
8	07000-B3042	O-RING	1	35001-
9	21N-62-37490	TUBE	1	35001-
10	07000-B3048	O-RING	2	35001-
11	01010-81240	BOLT	4	35001-
12	175-54-34170	WASHER	4	35001-
13	21N-62-32850	BRACKET	1	35001-
14	01010-81235	BOLT	3	35001-
15	175-54-34170	WASHER	3	35001-
16	21N-62-32860	BRACKET	1	35001-
17	01010-81235	BOLT	3	35001-
18	175-54-34170	WASHER	3	35001-
19	07372-21040	BOLT	8	35001-
20	01643-51032	WASHER	8	35001-

Printed By : Dwi Iswanto (airafather6107170)

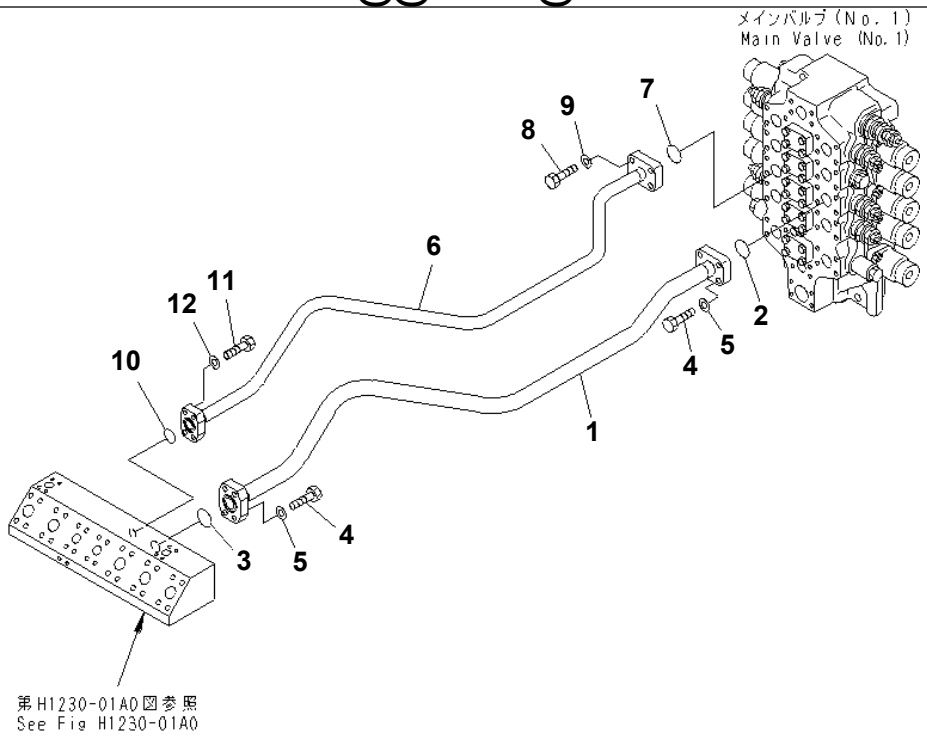

P W 1 E 3 8 1

Ref. H1221-01A0 **Page 180470**

PC1250SP-8R S/N 35001-UP (W/O EGR, +55C DEGREE)
VALVE DELIVERY PIPING (ARM) (NO.1 VALVE)

Item	Part No.	Part Name	Qty	Serial No.
1	21N-62-37540	TUBE	1	35001-
2	07000-B3048	O-RING	1	35001-
3	07000-B3048	O-RING	1	35001-
4	01010-81455	BOLT	8	35001-
5	01643-31445	WASHER	8	35001-
6	21N-62-37550	TUBE	1	35001-
7	07000-B3048	O-RING	1	35001-
8	01010-81455	BOLT	4	35001-
9	01643-31445	WASHER	4	35001-
10	07000-B3038	O-RING	1	35001-
11	01010-81245	BOLT	4	35001-
12	01643-31232	WASHER	4	35001-

Printed By : Dwi Iswanto (airafather6107170)

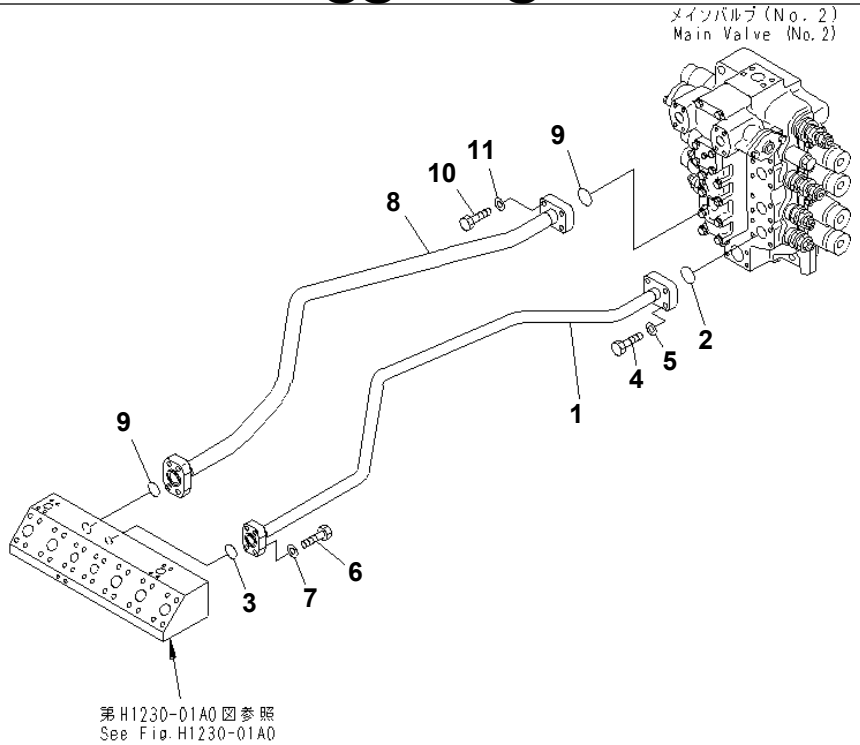

P W 1 E 3 8 2

Ref. H1221-02A0 **Page 180480**

PC1250SP-8R S/N 35001-UP (W/O EGR, +55C DEGREE)
VALVE DELIVERY PIPING (ARM) (NO.2 VALVE)

Item	Part No.	Part Name	Qty	Serial No.
1	21N-62-37560	TUBE	1	35001-
2	07000-B3048	O-RING	1	35001-
3	07000-B3038	O-RING	1	35001-
4	01010-81455	BOLT	4	35001-
5	01643-31445	WASHER	4	35001-
6	01010-81245	BOLT	4	35001-
7	01643-31232	WASHER	4	35001-
8	21N-62-37570	TUBE	1	35001-
9	07000-B3048	O-RING	2	35001-
10	01010-81455	BOLT	8	35001-
11	01643-31445	WASHER	8	35001-

Printed By : Dwi Iswanto (airafather6107170)

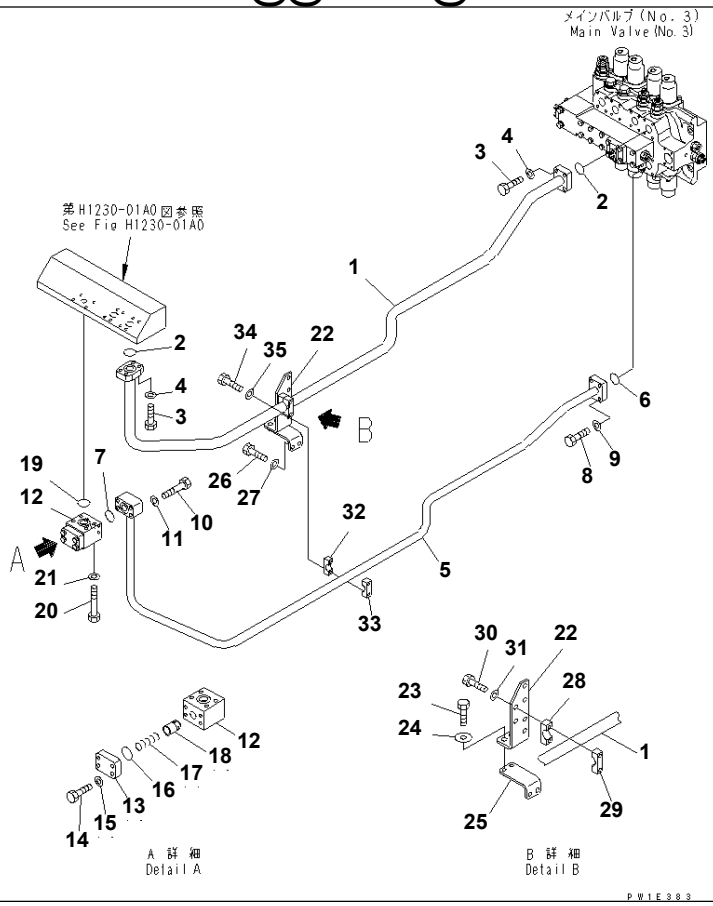

Ref. H1221-03A0 **Page 180490**

PC1250SP-8R S/N 35001-UP (W/O EGR, +55C DEGREE)
VALVE DELIVERY PIPING (ARM) (NO.3 VALVE)

Item	Part No.	Part Name	Qty	Serial No.
1	21N-62-37580	TUBE	1	35001-
2	07000-B3048	O-RING	2	35001-
3	01010-81455	BOLT	8	35001-
4	01643-31445	WASHER	8	35001-
5	21N-62-37590	TUBE	1	35001-
6	07000-B3048	O-RING	1	35001-
7	07000-B3045	O-RING	1	35001-
8	01010-81455	BOLT	4	35001-
9	01643-31445	WASHER	4	35001-
10	01010-81485	BOLT	4	35001-
11	01643-31445	WASHER	4	35001-
	21N-60-37300	VALVE ASS'Y	1	35001-
12	☆	· BODY	1	35001-
13	21N-60-32420	· FLANGE	1	35001-
14	01010-81455	· BOLT	4	35001-
15	01643-31445	· WASHER	4	35001-
16	07000-B3048	· O-RING	1	35001-
17	07750-04595	· SPRING	1	35001-
18	209-60-52720	· POPPET	1	35001-
19	07000-B3048	O-RING	1	35001-
20	01011-81415	BOLT	4	35001-
21	01643-31445	WASHER	4	35001-
22	21N-62-37610	BRACKET	1	35001-
23	01010-81240	BOLT	2	35001-
24	175-54-34170	WASHER	2	35001-
25	209-62-73390	BRACKET	1	35001-
26	01010-81230	BOLT	2	35001-
27	01643-31232	WASHER	2	35001-
28	176-61-41330	CLAMP	1	35001-
29	176-61-41320	CLAMP	1	35001-

Printed By : Dwi Iswanto (airafather6107170)

VALVE DELIVERY PIPING (ARM) (NO.3 VALVE)

Item	Part No.	Part Name	Qty	Serial No.
30	01010-81265	BOLT	2	35001-
31	01643-31232	WASHER	2	35001-
32	205-62-54460	CLAMP	1	35001-
33	207-62-14580	CLAMP	1	35001-
34	01010-81265	BOLT	2	35001-
35	01643-31232	WASHER	2	35001-

Printed By : Dwi Iswanto (airafather6107170)

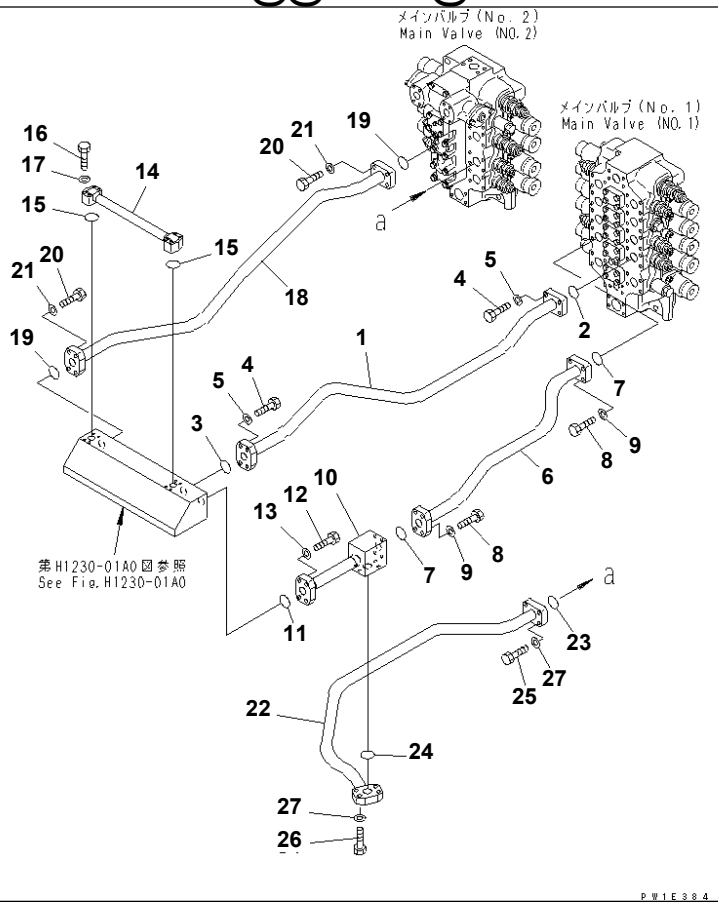

Ref. H1222-01A0 **Page 180500**

PC1250SP-8R S/N 35001-UP (W/O EGR, +55C DEGREE)

VALVE DELIVERY PIPING (BUCKET) (NO.1 AND NO.2 VALVE)

Item	Part No.	Part Name	Qty	Serial No.
1	21N-62-37620	TUBE	1	35001-
2	07000-B3048	O-RING	1	35001-
3	07000-B3048	O-RING	1	35001-
4	01010-81455	BOLT	8	35001-
5	01643-31445	WASHER	8	35001-
6	21N-62-37630	TUBE	1	35001-
7	07000-B3048	O-RING	2	35001-
8	01010-81455	BOLT	8	35001-
9	01643-31445	WASHER	8	35001-
10	21N-62-37640	TUBE	1	35001-
11	07000-B3048	O-RING	1	35001-
12	01010-81455	BOLT	4	35001-
13	01643-31445	WASHER	4	35001-
14	21N-62-37860	TUBE	1	35001-
15	07000-B3035	O-RING	2	35001-
16	01010-81060	BOLT	8	35001-
17	01643-51032	WASHER	8	35001-
18	21N-62-37650	TUBE	1	35001-
19	07000-B3048	O-RING	2	35001-
20	01010-81455	BOLT	8	35001-
21	01643-31445	WASHER	8	35001-
22	21N-62-37660	TUBE	1	35001-
23	07000-B3048	O-RING	1	35001-
24	07000-B3048	O-RING	1	35001-
25	01010-81445	BOLT	4	35001-
26	01010-81455	BOLT	4	35001-
27	01643-31445	WASHER	8	35001-

Printed By : Dwi Iswanto (airafather6107170)

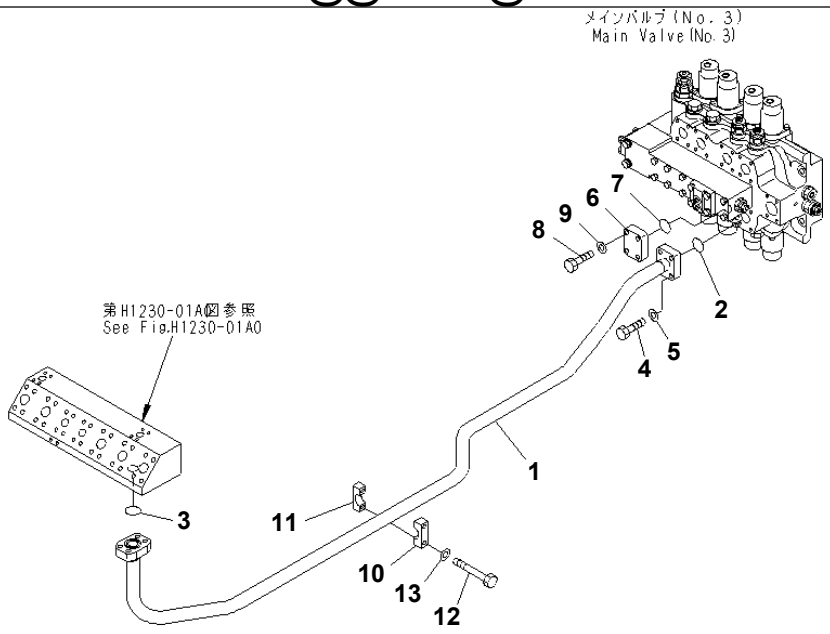

P W1E385

Ref. H1222-02A0 **Page 180510**

PC1250SP-8R S/N 35001-UP (W/O EGR, +55C DEGREE)
VALVE DELIVERY PIPING (BUCKET) (NO.3 VALVE)

Item	Part No.	Part Name	Qty	Serial No.
1	21N-62-37670	TUBE	1	35001-
2	07000-B3048	O-RING	1	35001-
3	07000-B3048	O-RING	1	35001-
4	01010-81455	BOLT	8	35001-
5	01643-31445	WASHER	8	35001-
6	209-62-52220	PLATE	1	35001-
7	07000-B3048	O-RING	1	35001-
8	01010-81455	BOLT	4	35001-
9	01643-31445	WASHER	4	35001-
10	176-61-41330	CLAMP	1	35001-
11	176-61-41320	CLAMP	1	35001-
12	01010-81265	BOLT	2	35001-
13	01643-31232	WASHER	2	35001-

Printed By : Dwi Iswanto (airafather6107170)

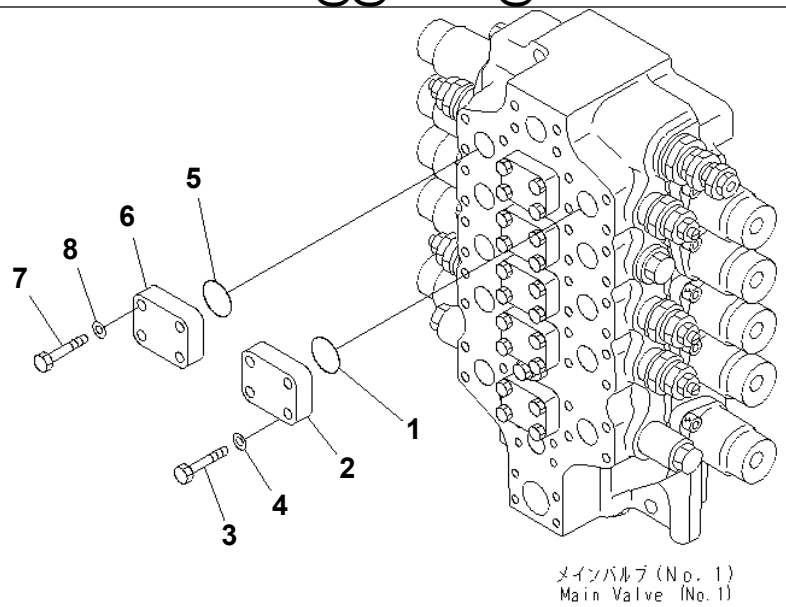

PWB8395

Ref. H1223-01A0 **Page 180520**

PC1250SP-8R S/N 35001-UP (W/O EGR, +55C DEGREE)
VALVE SERVICE PORT PLUG

Item	Part No.	Part Name	Qty	Serial No.
1	07000-B3048	O-RING	1	35001-
2	209-62-52220	PLATE	1	35001-
3	01010-81455	BOLT	4	35001-
4	01643-31445	WASHER	4	35001-
5	07000-B3048	O-RING	1	35001-
6	209-62-52220	PLATE	1	35001-
7	01010-81455	BOLT	4	35001-
8	01643-31445	WASHER	4	35001-

Printed By : Dwi Iswanto (airafather6107170)

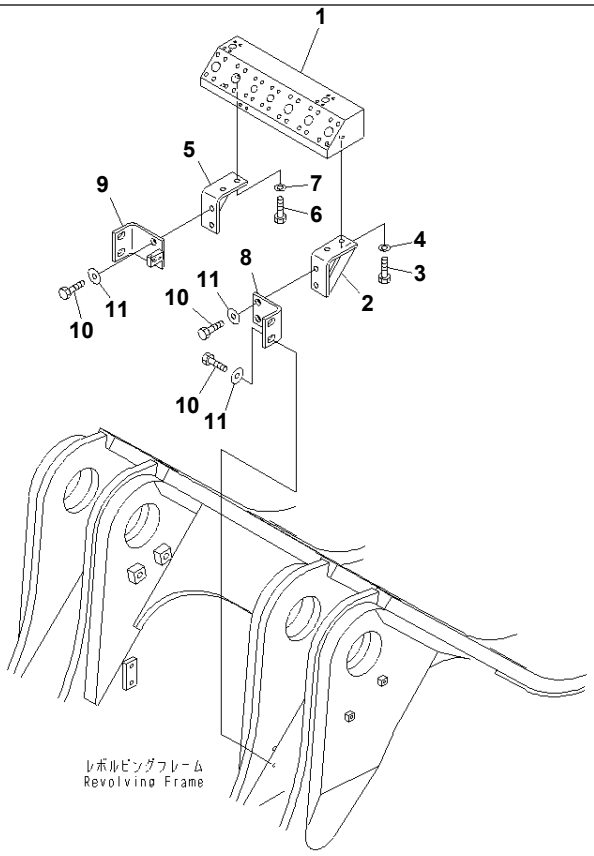

Ref. H1230-01A0 **Page 180530**

PC1250SP-8R S/N 35001-UP (W/O EGR, +55C DEGREE)
BOOM FOOT BRACKET(#35001-35016)

Item	Part No.	Part Name	Qty	Serial No.
1	21N-62-37680	BLOCK	1	35001-@
2	21N-62-37690	BRACKET	1	35001-@
3	01010-81640	BOLT	2	35001-@
4	01643-31645	WASHER	2	35001-@
5	21N-62-37710	BRACKET	1	35001-@
6	01010-81640	BOLT	2	35001-@
7	01643-31645	WASHER	2	35001-@
8	21N-62-37720	BRACKET	1	35001-@
9	21N-62-37361	BRACKET	1	35001-35016
10	01010-81645	BOLT	8	35001-@
11	21T-72-12620	WASHER	8	35001-@

Printed By : Dwi Iswanto (airafather6107170)

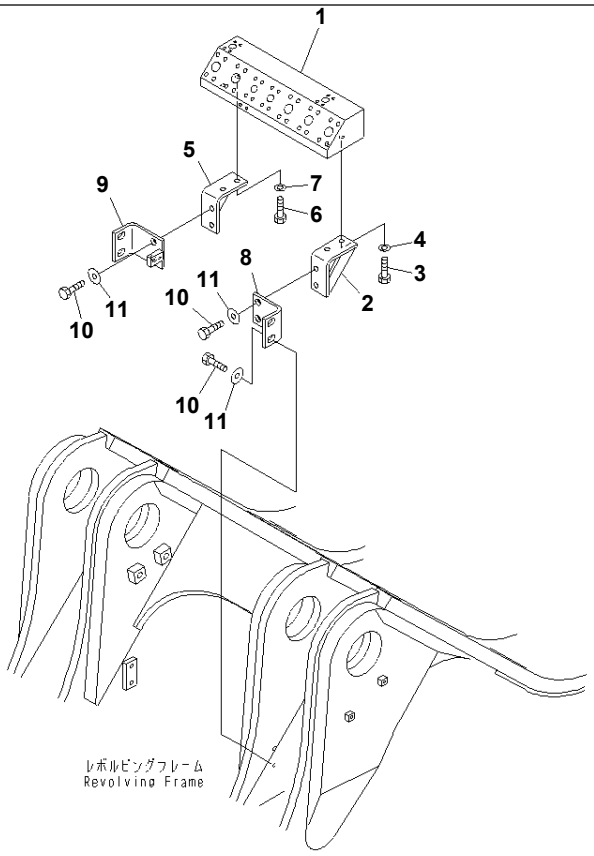

Ref. H1230-01A0A **Page 180540**

PC1250SP-8R S/N 35001-UP (W/O EGR, +55C DEGREE)
BOOM FOOT BRACKET(#35017-)

Item	Part No.	Part Name	Qty	Serial No.
1	21N-62-37680	BLOCK	1	35001-
2	21N-62-37690	BRACKET	1	35001-
3	01010-81640	BOLT	2	35001-
4	01643-31645	WASHER	2	35001-
5	21N-62-37710	BRACKET	1	35001-
6	01010-81640	BOLT	2	35001-
7	01643-31645	WASHER	2	35001-
8	21N-62-37720	BRACKET	1	35001-
9	21N-62-41440	BRACKET	1	35017-
10	01010-81645	BOLT	8	35001-
11	21T-72-12620	WASHER	8	35001-

Printed By : Dwi Iswanto (airafather6107170)

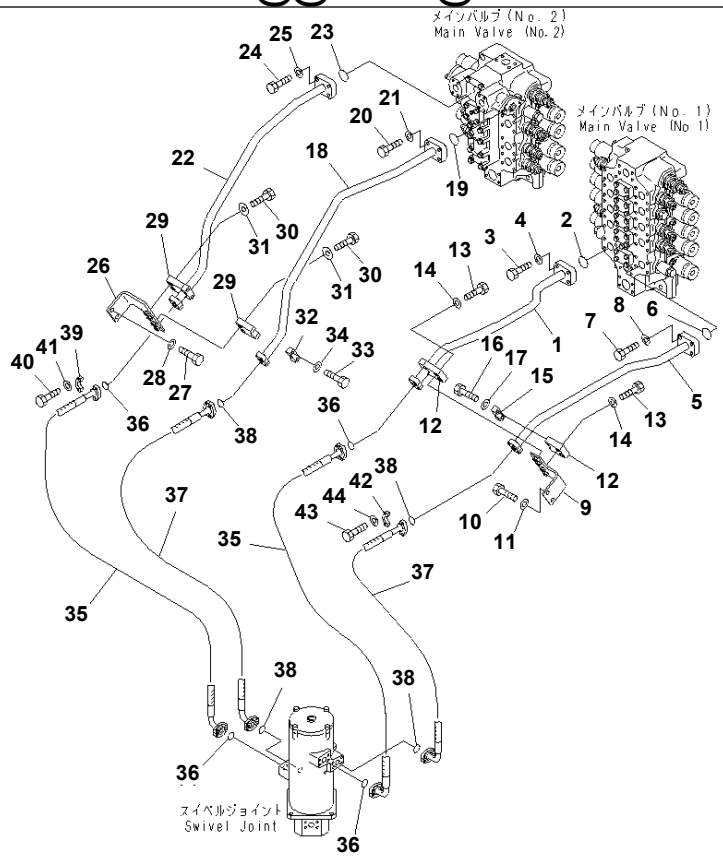

Ref. H1310-01A0 **Page 180550**

PC1250SP-8R S/N 35001-UP (W/O EGR, +55C DEGREE)

VALVE DELIVERY PIPING (TRAVEL)

Item	Part No.	Part Name	Qty	Serial No.
1	21N-62-37730	TUBE	1	35001-
2	07000-B3048	O-RING	1	35001-
3	01010-81455	BOLT	4	35001-
4	01643-31445	WASHER	4	35001-
5	21N-62-37740	TUBE	1	35001-
6	07000-B3048	O-RING	1	35001-
7	01010-81455	BOLT	4	35001-
8	01643-31445	WASHER	4	35001-
9	21N-62-37770	BRACKET	1	35001-
10	01010-81230	BOLT	2	35001-
11	01643-31232	WASHER	2	35001-
12	21N-62-33411	CLAMP	2	35001-
13	01010-81255	BOLT	4	35001-
14	175-54-34170	WASHER	4	35001-
15	205-62-54460	CLAMP	2	35001-
16	01010-81250	BOLT	4	35001-
17	01643-31232	WASHER	4	35001-
18	21N-62-37750	TUBE	1	35001-
19	07000-B3048	O-RING	1	35001-
20	01010-81455	BOLT	4	35001-
21	01643-31445	WASHER	4	35001-
22	21N-62-37760	TUBE	1	35001-
23	07000-B3048	O-RING	1	35001-
24	01010-81455	BOLT	4	35001-
25	01643-31445	WASHER	4	35001-
26	21N-62-37780	BRACKET	1	35001-
27	01010-81230	BOLT	2	35001-
28	01643-31232	WASHER	2	35001-
29	21N-62-33411	CLAMP	2	35001-
30	01010-81255	BOLT	4	35001-

Printed By : Dwi Iswanto (airafather6107170)

VALVE DELIVERY PIPING (TRAVEL)

Item	Part No.	Part Name	Qty	Serial No.
31	175-54-34170	WASHER	4	35001-
32	205-62-54460	CLAMP	2	35001-
33	01010-81250	BOLT	4	35001-
34	01643-31232	WASHER	4	35001-
35	07073-01A08	HOSE	2	35001-
36	07000-B3032	O-RING	4	35001-
37	07073-01AA7	HOSE	2	35001-
38	07000-B3032	O-RING	4	35001-
39	07371-31049	FLANGE	4	35001-
40	07372-21035	BOLT	8	35001-
41	01643-51032	WASHER	8	35001-
42	07371-31049	FLANGE	4	35001-
43	07372-21035	BOLT	8	35001-
44	01643-51032	WASHER	8	35001-

Printed By : Dwi Iswanto (airafather6107170)

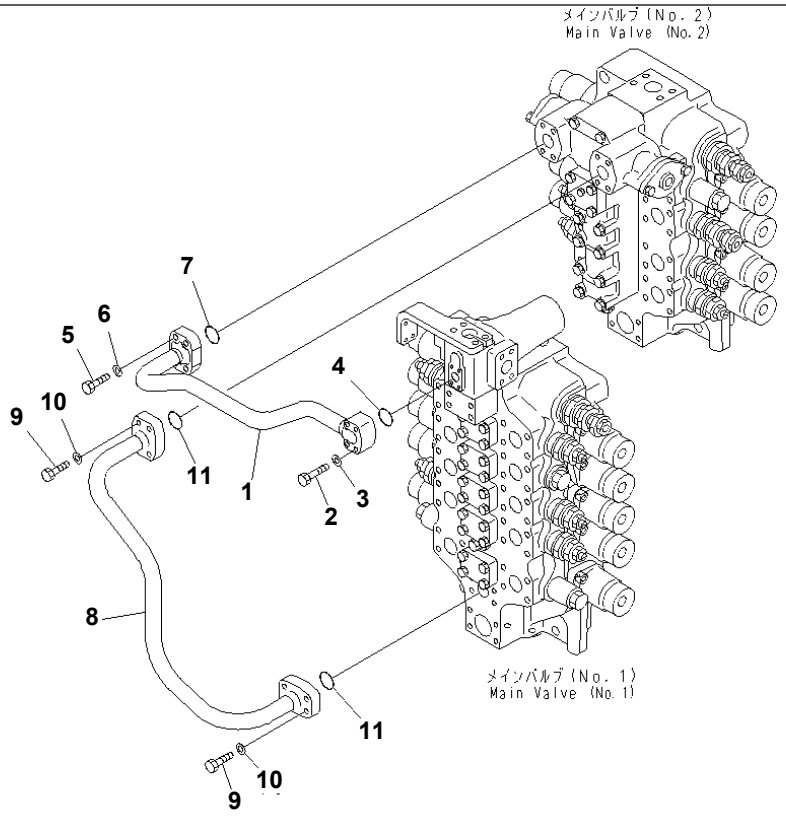

00063138

Ref. H1320-01A0A **Page 180560**

PC1250SP-8R S/N 35001-UP (W/O EGR, +55C DEGREE)
VALVE DELIVERY PIPING (STRAIGHT TRAVEL)(#35017-)

Item	Part No.	Part Name	Qty	Serial No.
1	21N-62-42360	TUBE	1	35017-
2	01010-81060	BOLT	4	35017-
3	01643-31032	WASHER	4	35017-
4	07000-B3035	O-RING	1	35017-
5	01010-81250	BOLT	4	35017-
6	01643-31232	WASHER	4	35017-
7	07000-B3038	O-RING	1	35017-
8	209-62-52120	TUBE	1	35017-
9	01010-81250	BOLT	8	35017-
10	01643-31232	WASHER	8	35017-
11	07000-B3038	O-RING	2	35017-

Printed By : Dwi Iswanto (airafather6107170)

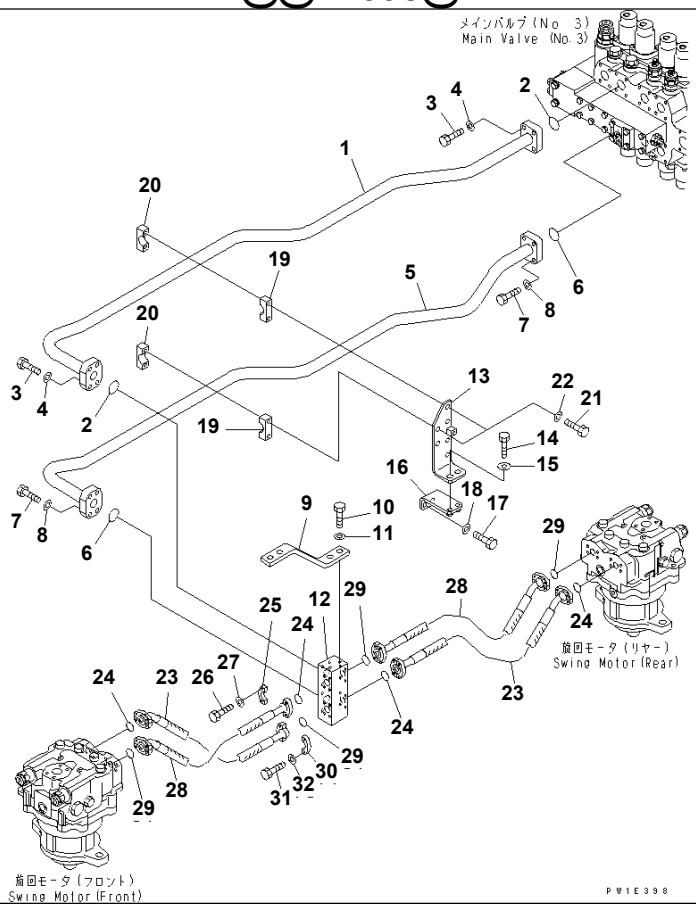

Ref. H1340-01A0 **Page 180570**

PC1250SP-8R S/N 35001-UP (W/O EGR, +55C DEGREE)

VALVE DELIVERY PIPING (SWING)(#35001-35016)

Item	Part No.	Part Name	Qty	Serial No.
1	21N-62-37790	TUBE	1	35001-@
2	07000-B3048	O-RING	2	35001-@
3	01010-81455	BOLT	8	35001-@
4	01643-31445	WASHER	8	35001-@
5	21N-62-37810	TUBE	1	35001-@
6	07000-B3048	O-RING	2	35001-@
7	01010-81455	BOLT	8	35001-@
8	01643-31445	WASHER	8	35001-@
9	21N-62-37830	BRACKET	1	35001-@
10	01010-81240	BOLT	4	35001-@
11	175-54-34170	WASHER	4	35001-@
12	21N-62-37820	BLOCK	1	35001-@
13	21N-62-37841	BRACKET	1	35001-@
14	01010-81240	BOLT	2	35001-@
15	175-54-34170	WASHER	2	35001-@
16	209-62-73390	BRACKET	1	35001-@
17	01010-81230	BOLT	2	35001-@
18	01643-31232	WASHER	2	35001-@
19	176-61-41330	CLAMP	2	35001-@
20	176-61-41320	CLAMP	2	35001-@
21	01010-81265	BOLT	4	35001-@
22	01643-31232	WASHER	4	35001-@
23	07097-01008	HOSE	2	35001-35016
24	07000-B3032	O-RING	4	35001-@
25	07371-31049	FLANGE	4	35001-@
26	07372-21035	BOLT	8	35001-@
27	01643-51032	WASHER	8	35001-@
28	07097-010A7	HOSE	2	35001-35016
29	07000-B3032	O-RING	4	35001-@
30	07371-31049	FLANGE	4	35001-@

Printed By : Dwi Iswanto (airafather6107170)

VALVE DELIVERY PIPING (SWING)(#35001-35016)

Item	Part No.	Part Name	Qty	Serial No.
31	07372-21035	BOLT	8	35001-@
32	01643-51032	WASHER	8	35001-@

Printed By : Dwi Iswanto (airafather6107170)

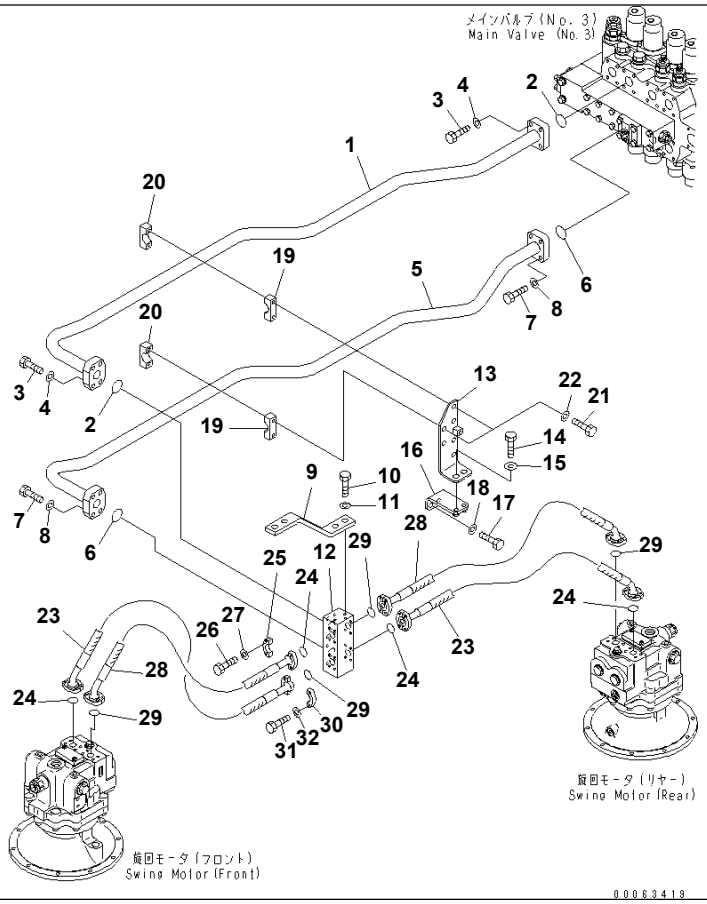

Ref. H1340-01A0A **Page 180580**

PC1250SP-8R S/N 35001-UP (W/O EGR, +55C DEGREE)

VALVE DELIVERY PIPING (SWING)(#35017-)

Item	Part No.	Part Name	Qty	Serial No.
1	21N-62-37790	TUBE	1	35001-
2	07000-B3048	O-RING	2	35001-
3	01010-81455	BOLT	8	35001-
4	01643-31445	WASHER	8	35001-
5	21N-62-37810	TUBE	1	35001-
6	07000-B3048	O-RING	2	35001-
7	01010-81455	BOLT	8	35001-
8	01643-31445	WASHER	8	35001-
9	21N-62-37830	BRACKET	1	35001-
10	01010-81240	BOLT	4	35001-
11	175-54-34170	WASHER	4	35001-
12	21N-62-37820	BLOCK	1	35001-
13	21N-62-37841	BRACKET	1	35001-
14	01010-81240	BOLT	2	35001-
15	175-54-34170	WASHER	2	35001-
16	209-62-73390	BRACKET	1	35001-
17	01010-81230	BOLT	2	35001-
18	01643-31232	WASHER	2	35001-
19	176-61-41330	CLAMP	2	35001-
20	176-61-41320	CLAMP	2	35001-
21	01010-81265	BOLT	4	35001-
22	01643-31232	WASHER	4	35001-
23	07098-01010	HOSE	2	35017-
24	07000-B3032	O-RING	4	35001-
25	07371-31049	FLANGE	4	35001-
26	07372-21035	BOLT	8	35001-
27	01643-51032	WASHER	8	35001-
28	07098-01009	HOSE	2	35017-
29	07000-B3032	O-RING	4	35001-
30	07371-31049	FLANGE	4	35001-

Printed By : Dwi Iswanto (airafather6107170)

VALVE DELIVERY PIPING (SWING)(#35017-)

Item	Part No.	Part Name	Qty	Serial No.
31	07372-21035	BOLT	8	35001-
32	01643-51032	WASHER	8	35001-

Printed By : Dwi Iswanto (airafather6107170)

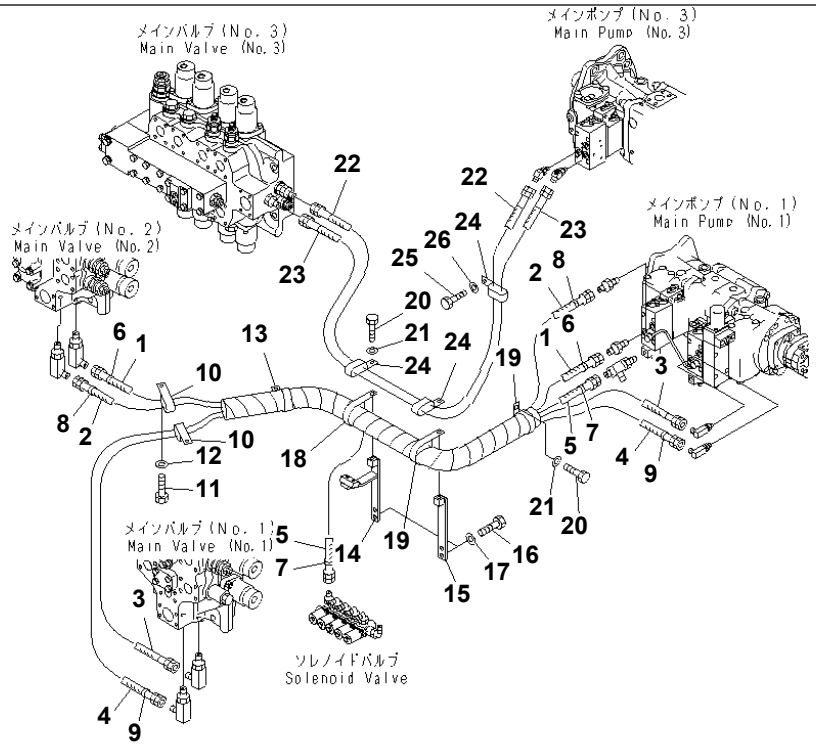

Ref. H1810-01A0 **Page 180590**

PC1250SP-8R S/N 35001-UP (W/O EGR, +55C DEGREE)
O.L.S.S. LINE (1/2)

Item	Part No.	Part Name	Qty	Serial No.
1	02753-00324	HOSE	1	35001-
2	02753-00325	HOSE	1	35001-
3	02753-00326	HOSE	1	35001-
4	02753-00327	HOSE	1	35001-
5	02760-00311	HOSE	1	35001-
6	20Y-62-22790	BAND, RED	2	35001-
7	20Y-62-22810	BAND, YELLOW	2	35001-
8	20Y-62-22820	BAND, BLUE	2	35001-
9	20Y-62-22830	BAND, WHITE	2	35001-
10	04435-51712	CLIP	2	35001-
11	01010-81225	BOLT	2	35001-
12	01643-31232	WASHER	2	35001-
13	20Y-62-15951	CLIP	1	35001-
14	21N-62-36390	BRACKET	1	35001-
15	21N-62-36420	BRACKET	1	35001-
16	01010-81230	BOLT	4	35001-
17	01643-31232	WASHER	4	35001-
18	20Y-62-15951	CLIP	1	35001-
19	20Y-62-15950	CLIP	2	35001-
20	01010-81225	BOLT	3	35001-
21	01643-31232	WASHER	3	35001-
22	427-S33-3360	HOSE	1	35153-
	02753-00314	HOSE	1	35001-35152
23	02753-00315	HOSE	1	35001-
24	04435-51812	CLIP	3	35001-
25	01010-81225	BOLT	1	35001-
26	01643-31232	WASHER	1	35001-

Printed By : Dwi Iswanto (airafather6107170)

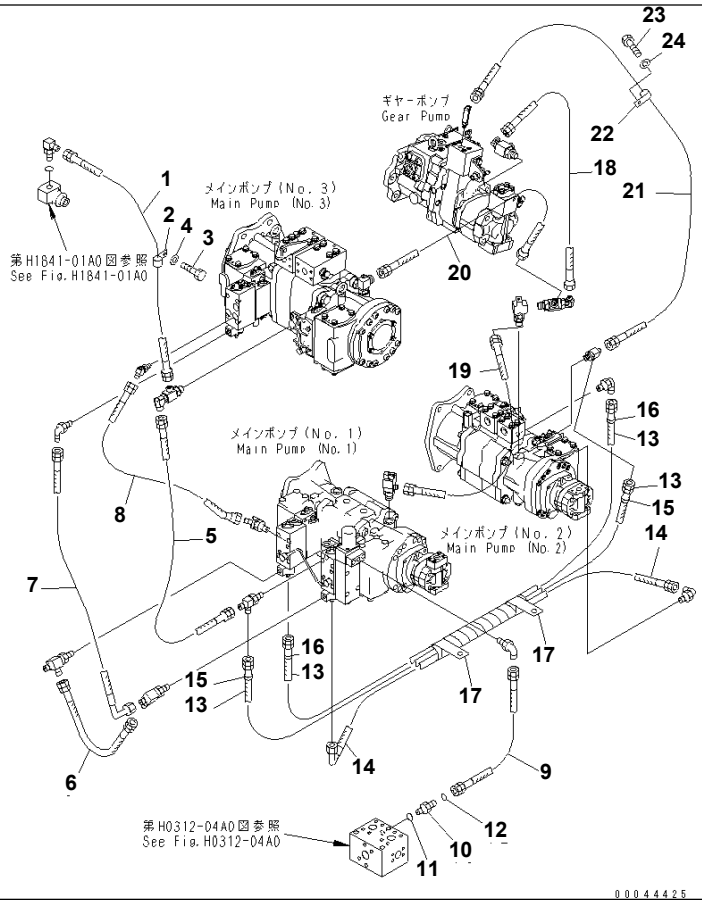

Ref. H1810-02A0 **Page 180600**

PC1250SP-8R S/N 35001-UP (W/O EGR, +55C DEGREE)
O.L.S.S. LINE (2/2)

Item	Part No.	Part Name	Qty	Serial No.
1	02762-00508	HOSE	1	35001-
2	04434-52312	CLIP	1	35001-
3	01010-81225	BOLT	1	35001-
4	01643-31232	WASHER	1	35001-
5	02762-00507	HOSE	1	35001-
6	21N-62-36660	HOSE	1	35001-
7	02761-003A5	HOSE	1	35001-
8	02761-00306	HOSE	1	35001-
9	02777-00304	HOSE	1	35001-
10	02781-00315	UNION	1	35001-
11	07002-62034	O-RING	1	35001-
12	02896-61009	O-RING	1	35001-
13	02760-003A9	HOSE	2	35001-
14	02761-00311	HOSE	1	35001-
15	20Y-62-22790	BAND, RED	2	35001-
16	20Y-62-22820	BAND, BLUE	2	35001-
17	113-899-7950	CLIP	2	35001-
18	02762-003A4	HOSE	1	35001-
19	02762-00305	HOSE	1	35001-
20	02762-00607	HOSE	1	35001-
21	02764-00309	HOSE	1	35001-
22	04434-51512	CLIP	1	35001-
23	01010-81225	BOLT	1	35001-
24	01643-31232	WASHER	1	35001-

Printed By : Dwi Iswanto (airafather6107170)

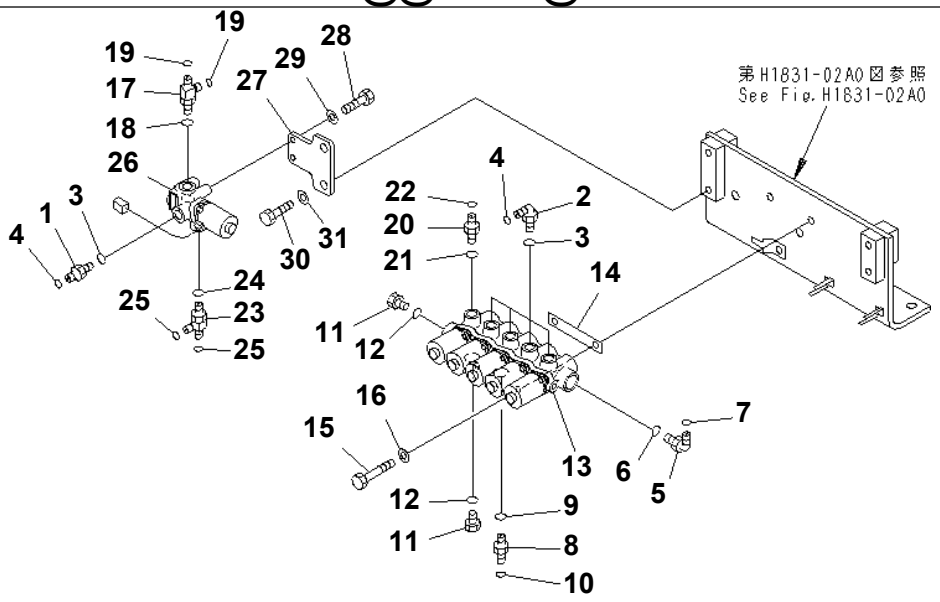

P W 1 E 4 3 0

Ref. H1831-01A0 **Page 180610**

PC1250SP-8R S/N 35001-UP (W/O EGR, +55C DEGREE)
SOLENOID VALVE (VALVE)

Item	Part No.	Part Name	Qty	Serial No.
1	11Y-62-12520	NIPPLE	1	35001-
2	21W-62-42490	ELBOW	4	35001-
3	07002-11423	O-RING	5	35001-
4	02896-11009	O-RING	5	35001-
5	21N-64-36450	ELBOW	1	35001-
6	07002-12034	O-RING	1	35001-
7	02896-11009	O-RING	1	35001-
8	02781-00315	UNION	1	35001-
9	07002-12034	O-RING	1	35001-
10	02896-11009	O-RING	1	35001-
11	07040-12012	PLUG	2	35001-
12	07002-12034	O-RING	2	35001-
13	(209-60-77240)	VALVE ASS'Y	1	35001-
14	207-60-61230	PLATE	1	35001-
15	01011-81000	BOLT	2	35001-
16	01643-31032	WASHER	2	35001-
17	21N-64-36680	TEE	1	35001-
18	07002-11423	O-RING	1	35001-
19	02896-11009	O-RING	2	35001-
20	11Y-62-12520	NIPPLE	1	35001-
21	07002-11423	O-RING	1	35001-
22	02896-11009	O-RING	1	35001-
23	21N-64-36680	TEE	1	35001-
24	07002-11423	O-RING	1	35001-
25	02896-11009	O-RING	2	35001-
26	(20Y-60-32110)	VALVE ASS'Y	1	35001-
27	209-64-11420	PLATE	1	35001-
28	01010-80825	BOLT	2	35001-
29	01643-30823	WASHER	2	35001-
30	01010-81225	BOLT	2	35001-

Printed By : Dwi Iswanto (airafather6107170)

SOLENOID VALVE (VALVE)

Item	Part No.	Part Name	Qty	Serial No.
31	01643-31232	WASHER	2	35001-

Printed By : Dwi Iswanto (airafather6107170)

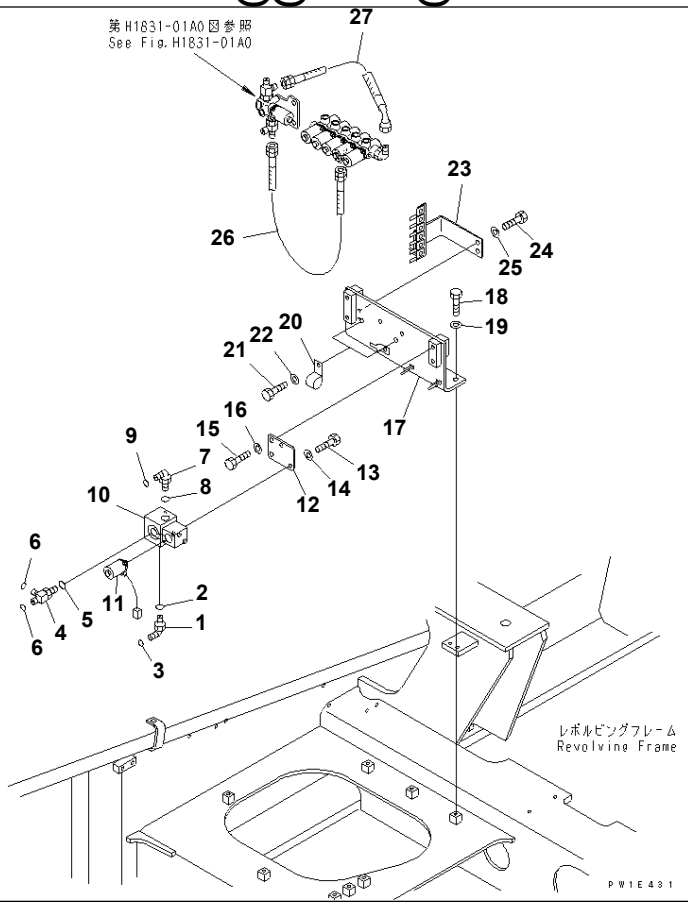

Ref. H1831-02A0 **Page 180620**

PC1250SP-8R S/N 35001-UP (W/O EGR, +55C DEGREE)
SOLENOID VALVE (SWING PRIORITY VALVE AND HOSE)

Item	Part No.	Part Name	Qty	Serial No.
1	02782-10315	ELBOW	1	35001-
2	07002-12034	O-RING	1	35001-
3	02896-11009	O-RING	1	35001-
4	19M-61-35140	TEE	1	35001-
5	07002-12034	O-RING	1	35001-
6	02896-11009	O-RING	2	35001-
7	21N-64-36450	ELBOW	1	35001-
8	07002-12034	O-RING	1	35001-
9	02896-11009	O-RING	1	35001-
10	209-60-77220	VALVE ASS'Y	1	35001-
11	209-60-77250	・ SOLENOID ASS'Y	1	35001-
12	209-64-11410	PLATE	1	35001-
13	01010-81025	BOLT	2	35001-
14	01643-31032	WASHER	2	35001-
15	01010-81225	BOLT	2	35001-
16	01643-31232	WASHER	2	35001-
17	21N-62-36430	BRACKET	1	35001-
18	01010-81230	BOLT	3	35001-
19	01643-31232	WASHER	3	35001-
20	04434-51212	CLIP	2	35001-
21	01010-81225	BOLT	2	35001-
22	01643-31232	WASHER	2	35001-
23	21N-62-36440	BRACKET	1	35001-
24	01010-81225	BOLT	2	35001-
25	01643-31232	WASHER	2	35001-
26	02760-00305	HOSE	1	35001-
27	02761-003A5	HOSE	1	35001-

Printed By : Dwi Iswanto (airafather6107170)

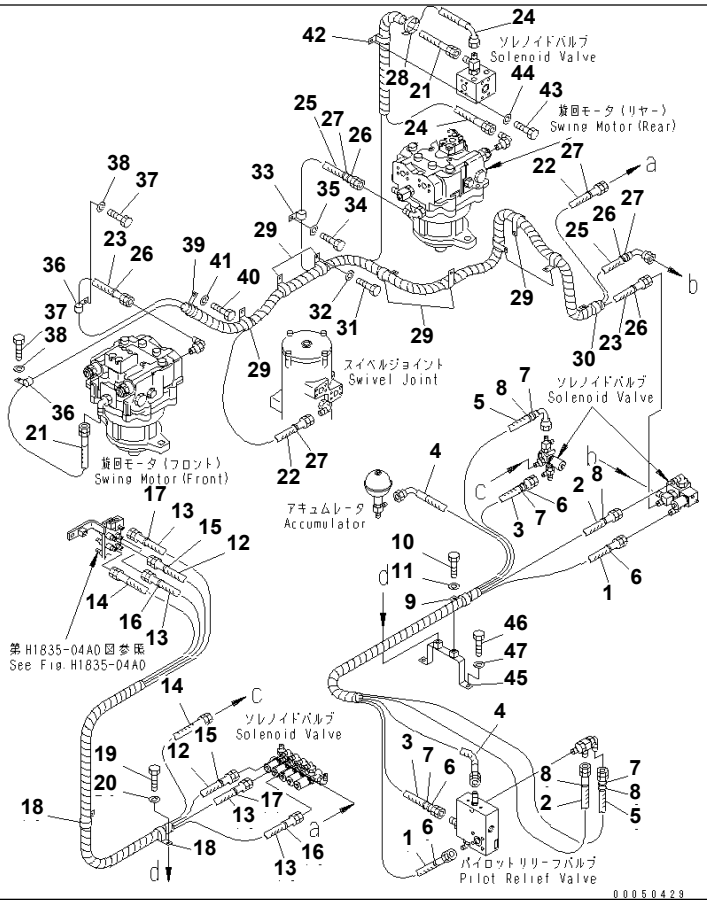

Ref. H1832-01A0 **Page 180630**

SOLENOID VALVE LINE(#35001-35016)

Item	Part No.	Part Name	Qty	Serial No.
1	02760-00313	HOSE	1	35001-@
2	02760-00314	HOSE	1	35001-@
3	02760-00315	HOSE	1	35001-@
4	02761-00316	HOSE	1	35001-@
5	02761-00317	HOSE	1	35001-@
6	20Y-62-22820	BAND, BLUE	4	35001-@
7	20Y-62-22830	BAND, WHITE	4	35001-@
8	20Y-62-22840	BAND, BLACK	4	35001-@
9	20Y-62-15951	CLIP	1	35001-@
10	01010-81225	BOLT	1	35001-@
11	01643-31232	WASHER	1	35001-@
12	02760-00319	HOSE	1	35001-@
13	02760-00320	HOSE	2	35001-@
14	02760-00321	HOSE	1	35001-@
15	20Y-62-22790	BAND, RED	2	35001-@
16	20Y-62-22850	BAND, GREEN	2	35001-@
17	20Y-62-22860	BAND, BROWN	2	35001-@
18	23S-61-24870	CLIP	2	35001-@
19	01010-81225	BOLT	1	35001-@
20	01643-31232	WASHER	1	35001-@
21	02760-00344	HOSE	1	35001-35016
22	02760-00349	HOSE	1	35001-35016
23	02760-00353	HOSE	1	35001-35016
24	02761-00313	HOSE	1	35001-35016
25	02761-00340	HOSE	1	35001-35016
26	20Y-62-22810	BAND, YELLOW	4	35001-35016
27	20Y-62-22830	BAND, WHITE	4	35001-35016
28	08034-20519	BAND	1	35001-35016
29	04434-53412	CLIP	8	35001-35016
30	20Y-62-15951	CLIP	1	35001-35016

Printed By : Dwi Iswanto (airafather6107170)

SOLENOID VALVE LINE(#35001-35016)

Item	Part No.	Part Name	Qty	Serial No.
31	01010-81225	BOLT	9	35001-35016
32	01643-31232	WASHER	9	35001-35016
33	04434-51512	CLIP	1	35001-35016
34	01010-81225	BOLT	1	35001-35016
35	01643-31232	WASHER	1	35001-35016
36	04434-51512	CLIP	2	35001-35016
37	01010-81225	BOLT	2	35001-@
38	01643-31232	WASHER	2	35001-@
39	04435-51812	CLIP	1	35001-@
40	01010-81225	BOLT	1	35001-@
41	01643-31232	WASHER	1	35001-@
42	04435-51812	CLIP	1	35001-@
43	01010-81225	BOLT	1	35001-35016
44	01643-31232	WASHER	1	35001-35016
45	21N-62-36480	BRACKET	1	35001-@
46	01010-81225	BOLT	2	35001-@
47	01643-31232	WASHER	2	35001-@

Printed By : Dwi Iswanto (airafather6107170)

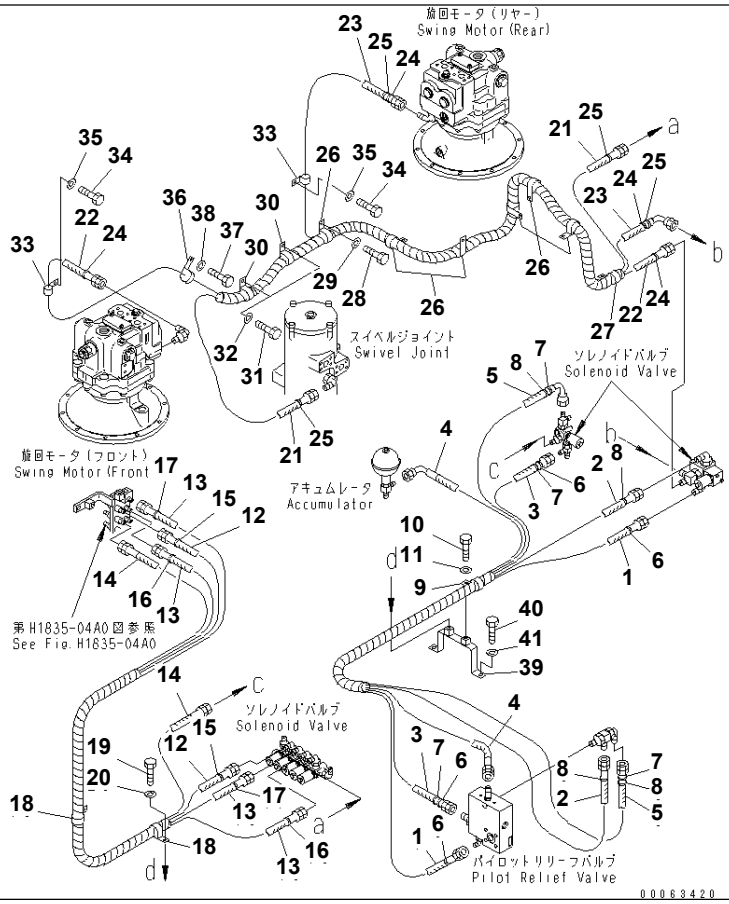

Ref. H1832-01A0A **Page 180640**

PC1250SP-8R S/N 35001-UP (W/O EGR, +55C DEGREE)
SOLENOID VALVE LINE(#35017-)

Item	Part No.	Part Name	Qty	Serial No.
1	02760-00313	HOSE	1	35001-
2	02760-00314	HOSE	1	35001-
3	02760-00315	HOSE	1	35001-
4	02761-00316	HOSE	1	35001-
5	02761-00317	HOSE	1	35001-
6	20Y-62-22820	BAND, BLUE	4	35001-
7	20Y-62-22830	BAND, WHITE	4	35001-
8	20Y-62-22840	BAND, BLACK	4	35001-
9	20Y-62-15951	CLIP	1	35001-
10	01010-81225	BOLT	1	35001-
11	01643-31232	WASHER	1	35001-
12	02760-00319	HOSE	1	35001-
13	02760-00320	HOSE	2	35001-
14	02760-00321	HOSE	1	35001-
15	20Y-62-22790	BAND, RED	2	35001-
16	20Y-62-22850	BAND, GREEN	2	35001-
17	20Y-62-22860	BAND, BROWN	2	35001-
18	23S-61-24870	CLIP	2	35001-
19	01010-81225	BOLT	1	35001-
20	01643-31232	WASHER	1	35001-
21	02760-00349	HOSE	1	35017-
22	02760-00353	HOSE	1	35017-
23	02761-00340	HOSE	1	35017-
24	20Y-62-22810	BAND, YELLOW	4	35017-
25	20Y-62-22830	BAND, WHITE	4	35017-
26	04434-53412	CLIP	6	35017-
27	04434-53412	CLIP	1	35017-
28	01010-81225	BOLT	7	35017-
29	01643-31232	WASHER	7	35017-
30	04435-51812	CLIP	2	35017-

Printed By : Dwi Iswanto (airafather6107170)

SOLENOID VALVE LINE(#35017-)

Item	Part No.	Part Name	Qty	Serial No.
31	01010-81225	BOLT	2	35017-
32	01643-31232	WASHER	2	35017-
33	04434-51512	CLIP	2	35001-
34	01010-81225	BOLT	2	35001-
35	01643-31232	WASHER	2	35001-
36	04434-51512	CLIP	1	35017-
37	01010-81225	BOLT	1	35001-
38	01643-31232	WASHER	1	35001-
39	21N-62-36480	BRACKET	1	35001-
40	01010-81225	BOLT	2	35001-
41	01643-31232	WASHER	2	35001-

Printed By : Dwi Iswanto (airafather6107170)

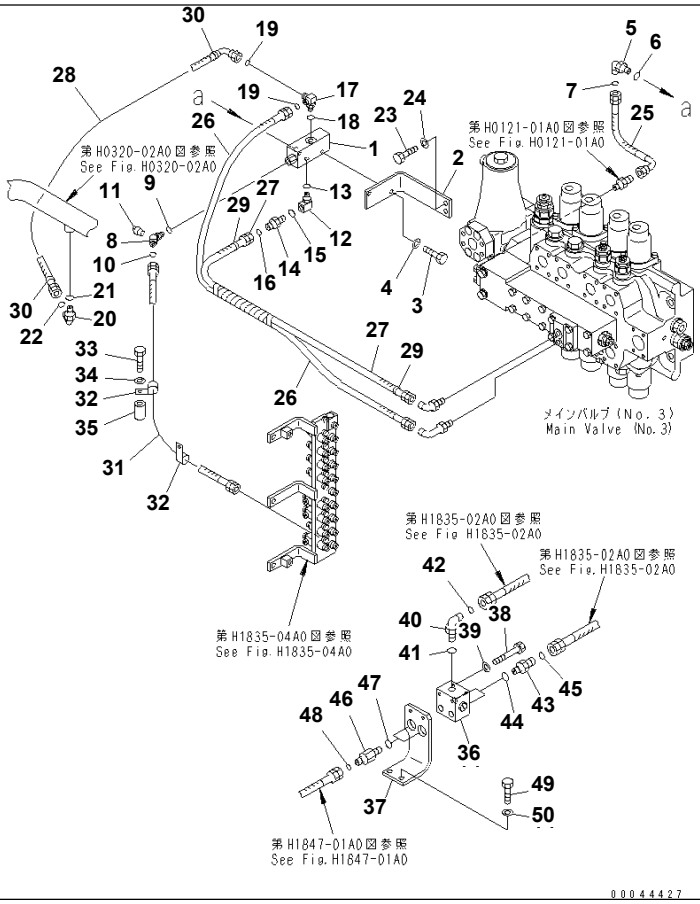

Ref. H1833-01A0 **Page 180650**

PC1250SP-8R S/N 35001-UP (W/O EGR, +55C DEGREE)

SHUTTLE VALVE LINE

Item	Part No.	Part Name	Qty	Serial No.
1	21N-60-31190	VALVE ASS'Y	1	35001-
2	21N-62-36510	BRACKET	1	35001-
3	01010-81025	BOLT	2	35001-
4	01643-31032	WASHER	2	35001-
5	02782-10311	ELBOW	1	35001-
6	07002-11423	O-RING	1	35001-
7	02896-11009	O-RING	1	35001-
8	21N-64-36420	ELBOW	1	35001-
9	07002-11423	O-RING	1	35001-
10	02896-11009	O-RING	1	35001-
11	07042-30108	PLUG	1	35001-
12	20F-61-12460	ELBOW	1	35001-
13	07002-11423	O-RING	1	35001-
14	21N-64-36580	UNION	1	35001-
15	07002-11423	O-RING	1	35001-
16	02896-11009	O-RING	1	35001-
17	21W-62-45140	ELBOW	1	35001-
18	07002-11423	O-RING	1	35001-
19	02896-11009	O-RING	2	35001-
20	02782-10315	ELBOW	1	35001-
21	07002-12034	O-RING	1	35001-
22	02896-11009	O-RING	1	35001-
23	01010-81230	BOLT	2	35001-
24	01643-31232	WASHER	2	35001-
25	02778-003A3	HOSE	1	35001-
26	02777-00309	HOSE	1	35001-
27	02777-00308	HOSE	1	35001-
28	02761-003A5	HOSE	1	35001-
29	20Y-62-22820	BAND, BLUE	2	35001-
30	20Y-62-22790	BAND, RED	2	35001-

Printed By : Dwi Iswanto (airafather6107170)

SHUTTLE VALVE LINE

Item	Part No.	Part Name	Qty	Serial No.
31	02760-00312	HOSE	1	35001-
32	04434-51512	CLIP	2	35001-
33	01010-81275	BOLT	1	35001-
34	01643-31232	WASHER	1	35001-
35	195-979-5190	COLLAR	1	35001-
36	(702-19-22000)	CHECK VALVE ASS'Y	1	35001-
37	21N-62-35421	BRACKET	1	35001-
38	01010-81080	BOLT	2	35001-
39	01643-31032	WASHER	2	35001-
40	02782-10315	ELBOW	1	35001-
41	07002-12034	O-RING	1	35001-
42	02896-11009	O-RING	1	35001-
43	02781-00315	UNION	2	35001-
44	07002-12034	O-RING	2	35001-
45	02896-11009	O-RING	2	35001-
46	21N-64-36730	UNION	2	35001-
47	07002-12034	O-RING	2	35001-
48	02896-11009	O-RING	2	35001-
49	01010-81230	BOLT	2	35001-
50	01643-31232	WASHER	2	35001-

Printed By : Dwi Iswanto (airafather6107170)

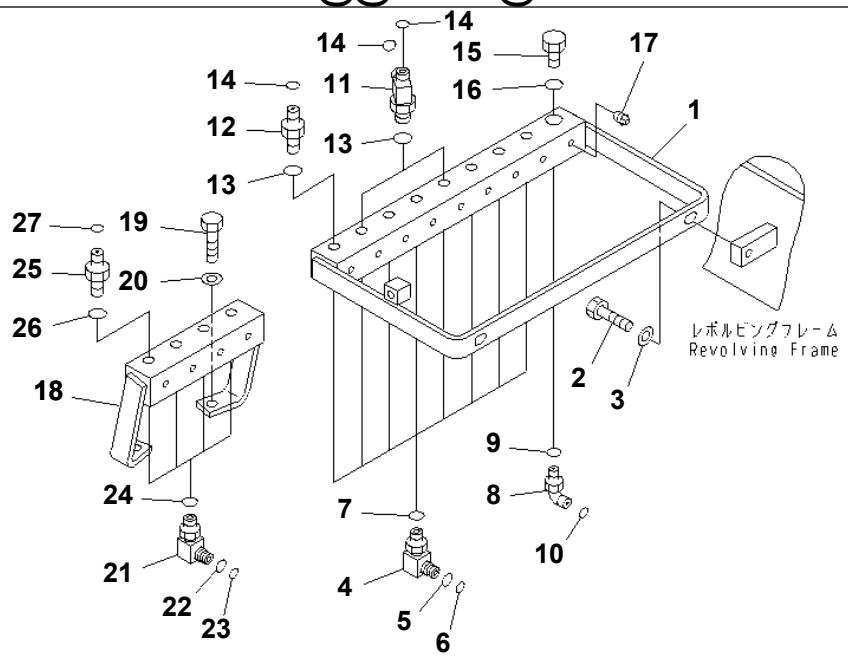

P W 1 E 4 9 9

Ref. H1835-01A0 **Page 180660**

PC1250SP-8R S/N 35001-UP (W/O EGR, +55C DEGREE)

PPC LINE JOINT (JOINT¤DECK)

Item	Part No.	Part Name	Qty	Serial No.
1	21N-62-36520	JOINT	1	35001-
2	01010-81230	BOLT	2	35001-
3	175-54-34170	WASHER	2	35001-
4	209-62-79130	ELBOW	8	35001-
5	201-60-11390	· O-RING	1	35001-
6	20Y-62-19560	· O-RING	1	35001-
7	07002-11423	O-RING	8	35001-
8	02782-10422	ELBOW	1	35001-
9	07002-12034	O-RING	1	35001-
10	02896-11012	O-RING	1	35001-
11	21N-64-36680	TEE	2	35001-
12	11Y-62-12520	NIPPLE	6	35001-
13	07002-11423	O-RING	8	35001-
14	02896-11009	O-RING	10	35001-
15	07040-12012	PLUG	1	35001-
16	07002-12034	O-RING	1	35001-
17	07042-30108	PLUG	1	35001-
18	21N-62-36530NK	JOINT	1	35001-35159
	21N-62-36530	JOINT	1	35001-
19	01010-81230	BOLT	2	35001-
20	01643-31232	WASHER	2	35001-
21	209-62-79130	ELBOW	4	35001-
22	201-60-11390	· O-RING	1	35001-
23	20Y-62-19560	· O-RING	1	35001-
24	07002-11423	O-RING	4	35001-
25	11Y-62-12520	NIPPLE	4	35001-
26	07002-11423	O-RING	4	35001-
27	02896-11009	O-RING	4	35001-

Printed By : Dwi Iswanto (airafather6107170)

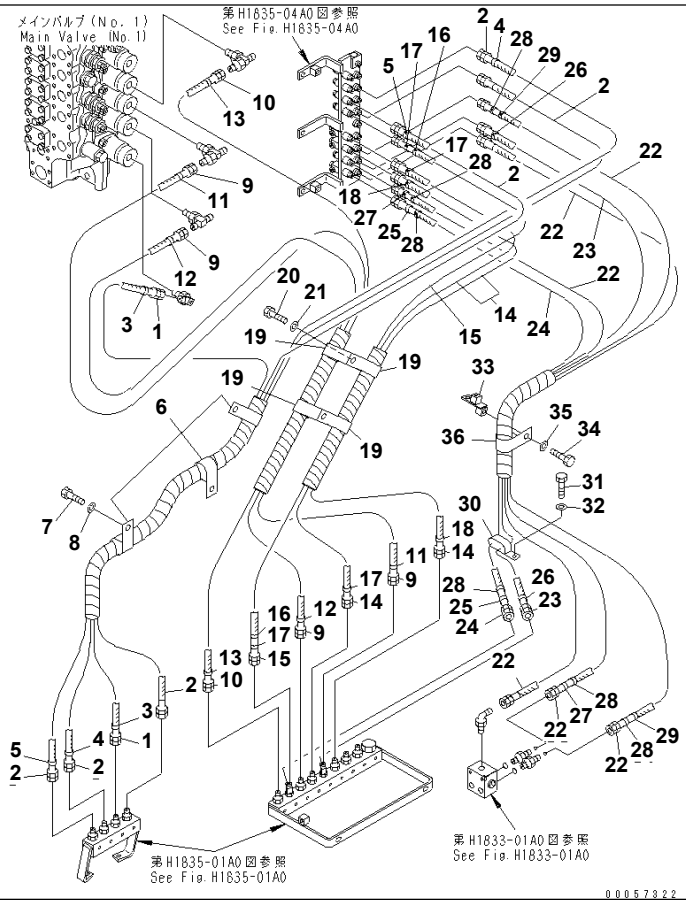

Ref. H1835-02A0 **Page 180670**

PPC LINE JOINT (HOSE¤ DECK)

Item	Part No.	Part Name	Qty	Serial No.
1	02760-00324	HOSE	1	35001-
2	02760-00326	HOSE	3	35001-
3	20Y-62-22790	BAND, RED	2	35001-
4	20Y-62-22820	BAND, BLUE	2	35001-
5	20Y-62-22850	BAND, GREEN	2	35001-
6	23S-61-24870	CLIP	3	35001-
7	01010-81225	BOLT	3	35001-
8	01643-31232	WASHER	3	35001-
9	02760-00314	HOSE	2	35001-
10	02760-00315	HOSE	1	35001-
11	20Y-62-22810	BAND, YELLOW	2	35001-
12	20Y-62-22840	BAND, BLACK	2	35001-
13	20Y-62-22860	BAND, BROWN	2	35001-
14	02760-00317	HOSE	2	35001-
15	02760-00318	HOSE	1	35001-
16	20Y-62-22790	BAND, RED	2	35001-
17	20Y-62-22830	BAND, WHITE	4	35001-
18	20Y-62-22850	BAND, GREEN	2	35001-
19	04434-53412	CLIP	4	35001-
20	01010-81225	BOLT	2	35001-
21	01643-31232	WASHER	2	35001-
22	02760-00310	HOSE	3	35001-
23	02760-00318	HOSE	1	35001-
24	02760-00319	HOSE	1	35001-
25	20Y-62-22790	BAND, RED	2	35001-
26	20Y-62-22810	BAND, YELLOW	2	35001-
27	20Y-62-22820	BAND, BLUE	2	35001-
28	20Y-62-22830	BAND, WHITE	6	35001-
29	20Y-62-22850	BAND, GREEN	2	35001-
30	04435-51512	CLIP	1	35001-

Printed By : Dwi Iswanto (airafather6107170)

PPC LINE JOINT (HOSE¤ DECK)

Item	Part No.	Part Name	Qty	Serial No.
31	01010-81225	BOLT	1	35001-
32	01643-31232	WASHER	1	35001-
33	21N-62-36580	BRACKET	1	35001-
34	01010-81225	BOLT	1	35001-
35	01643-31232	WASHER	1	35001-
36	20Y-62-15951	CLIP	1	35001-

Printed By : Dwi Iswanto (airafather6107170)

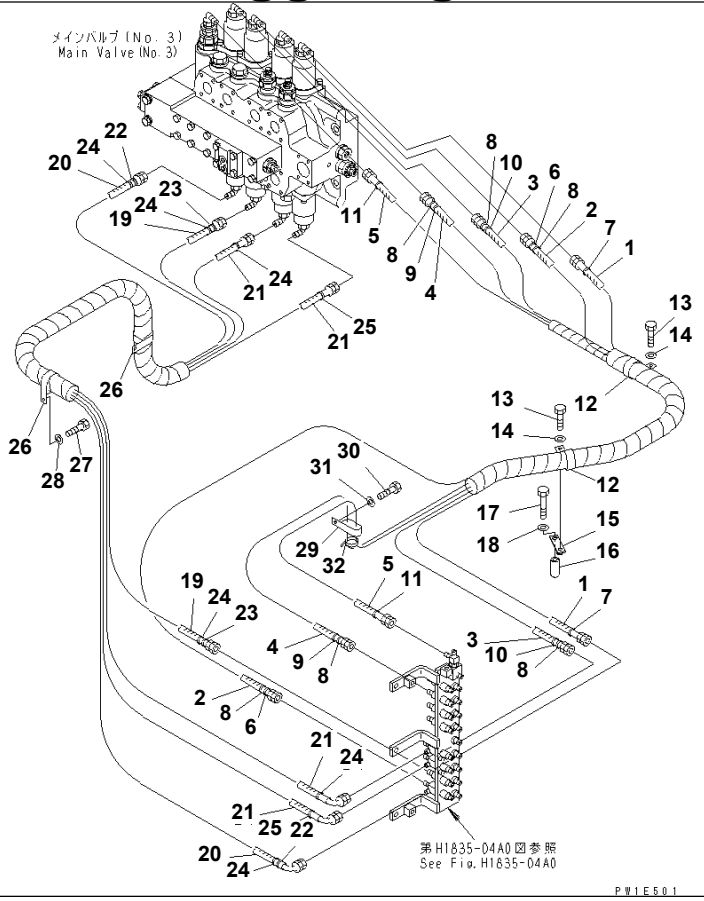

Ref. H1835-03A0 **Page 180680**

PC1250SP-8R S/N 35001-UP (W/O EGR, +55C DEGREE)
PPC LINE JOINT (HOSE¤ VALVE)

Item	Part No.	Part Name	Qty	Serial No.
1	02760-00313	HOSE	1	35001-
2	02760-00315	HOSE	1	35001-
3	02760-00316	HOSE	1	35001-
4	02760-00322	HOSE	1	35001-
5	02760-00324	HOSE	1	35001-
6	20Y-62-22790	BAND, RED	2	35001-
7	20Y-62-22810	BAND, YELLOW	2	35001-
8	20Y-62-22830	BAND, WHITE	6	35001-
9	20Y-62-22840	BAND, BLACK	2	35001-
10	20Y-62-22850	BAND, GREEN	2	35001-
11	20Y-62-22860	BAND, BROWN	2	35001-
12	20Y-62-15951	CLIP	2	35001-
13	01010-81225	BOLT	2	35001-
14	01643-31232	WASHER	2	35001-
15	209-62-67420	PLATE	1	35001-
16	203-62-44510	SPACER	1	35001-
17	01010-81280	BOLT	1	35001-
18	01643-31232	WASHER	1	35001-
19	02760-00314	HOSE	1	35001-
20	02761-00314	HOSE	1	35001-
21	02761-00315	HOSE	2	35001-
22	20Y-62-22790	BAND, RED	2	35001-
23	20Y-62-22820	BAND, BLUE	2	35001-
24	20Y-62-22830	BAND, WHITE	6	35001-
25	20Y-62-22850	BAND, GREEN	2	35001-
26	23S-61-24870	CLIP	2	35001-
27	01010-81225	BOLT	2	35001-
28	01643-31232	WASHER	2	35001-
29	04435-51512	CLIP	1	35001-
30	01010-81225	BOLT	1	35001-

Printed By : Dwi Iswanto (airafather6107170)

PPC LINE JOINT (HOSE¤ VALVE)

Item	Part No.	Part Name	Qty	Serial No.
31	01643-31232	WASHER	1	35001-
32	08034-20519	BAND	1	35001-

Printed By : Dwi Iswanto (airafather6107170)

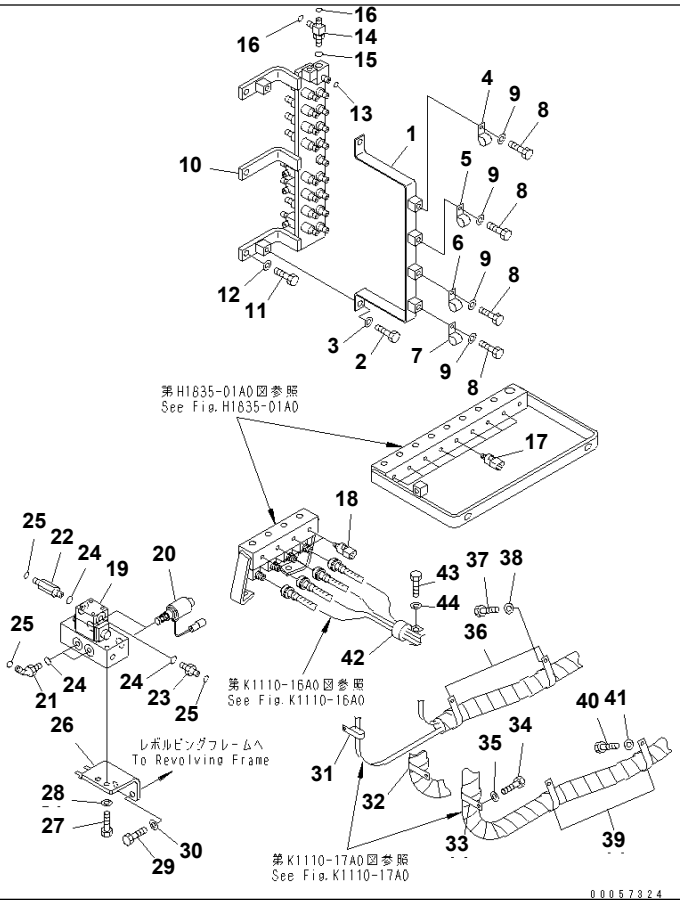

Ref. H1835-04A0 **Page 180690**

PPC LINE JOINT (JOINT¤ VALVE AND CLAMP)

Item	Part No.	Part Name	Qty	Serial No.
1	21N-62-36591	BRACKET	1	35001-
2	01010-81225	BOLT	2	35001-
3	01643-31232	WASHER	2	35001-
4	20Y-62-17930	CLIP	1	35001-
5	281-01-13180	CLIP	1	35001-
6	23S-61-24870	CLIP	1	35001-
7	20Y-62-15951	CLIP	1	35001-
8	01010-81225	BOLT	4	35001-
9	01643-31232	WASHER	4	35001-
10	21N-62-36611	JOINT	1	35001-
11	01010-81230	BOLT	3	35001-
12	01643-31232	WASHER	3	35001-
13	02896-11009	O-RING	39	35001-
14	19M-61-35140	TEE	1	35001-
15	07002-12034	O-RING	1	35001-
16	02896-11009	O-RING	2	35001-
17	206-06-61130	SWITCH	8	35001-
18	206-06-61130	SWITCH	4	35001-
19	21N-60-34110	VALVE ASS'Y	1	35001-
20	209-60-77290	· SOLENOID VALVE	2	35001-
	209-60-77280	· · SOLENOID ASS'Y	1	35001-
21	11Y-62-12510	ELBOW	2	35001-
22	20U-62-41710	NIPPLE	1	35001-
23	11Y-62-12520	NIPPLE	1	35001-
24	07002-11423	O-RING	4	35001-
25	02896-11009	O-RING	4	35001-
26	209-64-11230	BRACKET	1	35001-
27	01010-81025	BOLT	2	35001-
28	01643-31032	WASHER	2	35001-
29	01010-81230	BOLT	2	35001-

Printed By : Dwi Iswanto (airafather6107170)

PPC LINE JOINT (JOINT¤ VALVE AND CLAMP)

Item	Part No.	Part Name	Qty	Serial No.
30	01643-31232	WASHER	2	35001-
31	04435-51512	CLIP	1	35001-
32	20Y-62-15951	CLIP	1	35001-
33	20Y-62-17930	CLIP	1	35001-
34	01010-81225	BOLT	3	35001-
35	01643-31232	WASHER	3	35001-
36	20Y-62-15951	CLIP	2	35001-
37	01010-81225	BOLT	2	35001-
38	01643-31232	WASHER	2	35001-
39	20Y-62-17930	CLIP	2	35001-
40	01010-81225	BOLT	2	35001-
41	01643-31232	WASHER	2	35001-
42	20Y-62-15951	CLIP	1	35001-
43	01010-81225	BOLT	1	35001-
44	01643-31232	WASHER	1	35001-

Printed By : Dwi Iswanto (airafather6107170)

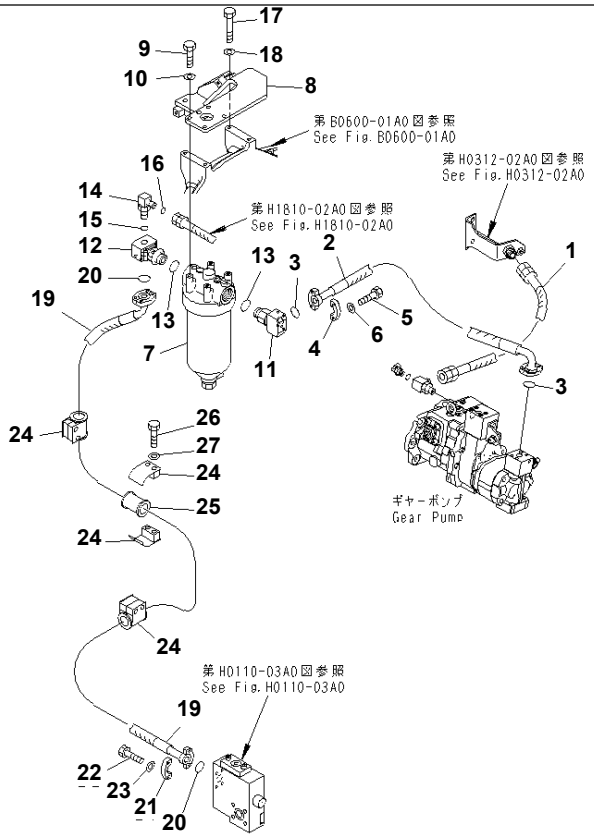

00044530

Ref. H1841-01A0 **Page 180700**

PC1250SP-8R S/N 35001-UP (W/O EGR, +55C DEGREE)
PPC PUMP LINE (PUMP DELIVERY)

Item	Part No.	Part Name	Qty	Serial No.
1	02762-00605	HOSE	1	35001-
2	07298-01010	HOSE	1	35001-
3	07000-13032	O-RING	2	35001-
4	07371-31049	FLANGE	2	35001-
5	07372-21035	BOLT	4	35001-
6	01643-51032	WASHER	4	35001-
7	(419-15-14800)	FILTER ASS'Y	1	35001-
8	21N-62-41631	BRACKET	1	35001-
9	01010-81030	BOLT	4	35001-
10	01643-31032	WASHER	4	35001-
11	209-62-57390	ELBOW	1	35001-
12	21N-62-31520	TEE	1	35001-
13	07002-13334	O-RING	2	35001-
14	02782-10518	ELBOW	1	35001-
15	07002-12034	O-RING	1	35001-
16	02896-11015	O-RING	1	35001-
17	01010-81265	BOLT	4	35001-
18	01643-31232	WASHER	4	35001-
19	07297-01028	HOSE	1	35001-
20	07000-13032	O-RING	2	35001-
21	07371-31049	FLANGE	4	35001-
22	07372-21035	BOLT	8	35001-
23	01643-51032	WASHER	8	35001-
24	07094-11024	CLAMP	6	35001-
25	07095-01035	CUSHION	3	35001-
26	01010-81280	BOLT	6	35001-
27	01643-31232	WASHER	6	35001-

Printed By : Dwi Iswanto (airafather6107170)

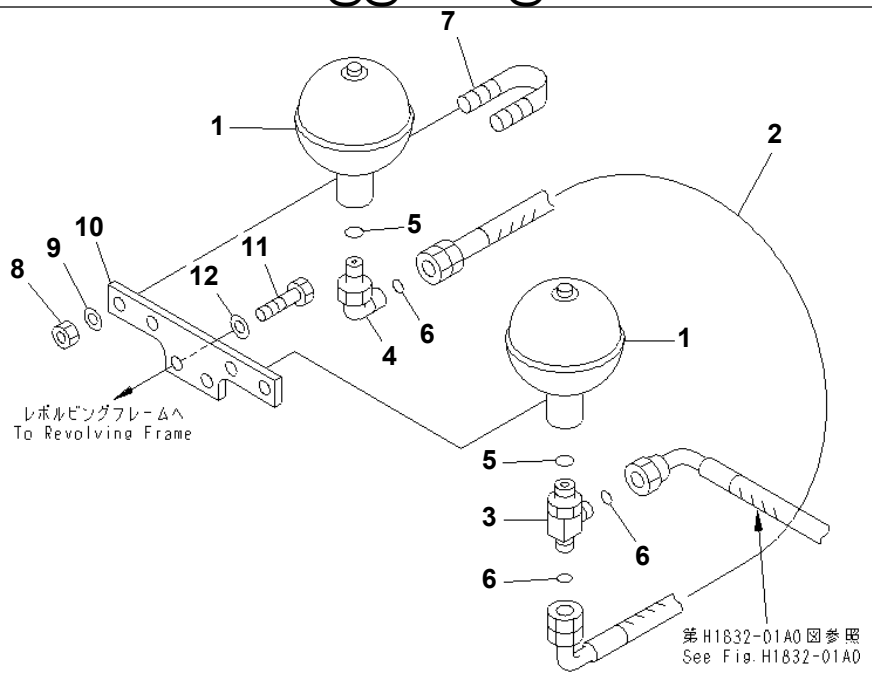

PW1E461

PPC PUMP LINE (PPC ACCUMULATOR)

Item	Part No.	Part Name	Qty	Serial No.
1	20Y-60-11430	ACCUMULATOR	2	35001-
2	02761-00304	HOSE	1	35001-
3	19M-61-35140	TEE	1	35001-
4	02782-10315	ELBOW	1	35001-
5	07002-12034	O-RING	2	35001-
6	02896-11009	O-RING	3	35001-
7	07283-33450	CLIP	2	35001-
8	01597-01009	NUT	4	35001-
9	01643-31032	WASHER	4	35001-
10	21N-62-36650	BRACKET	1	35001-
11	01010-81230	BOLT	2	35001-
12	01643-31232	WASHER	2	35001-

Printed By : Dwi Iswanto (airafather6107170)

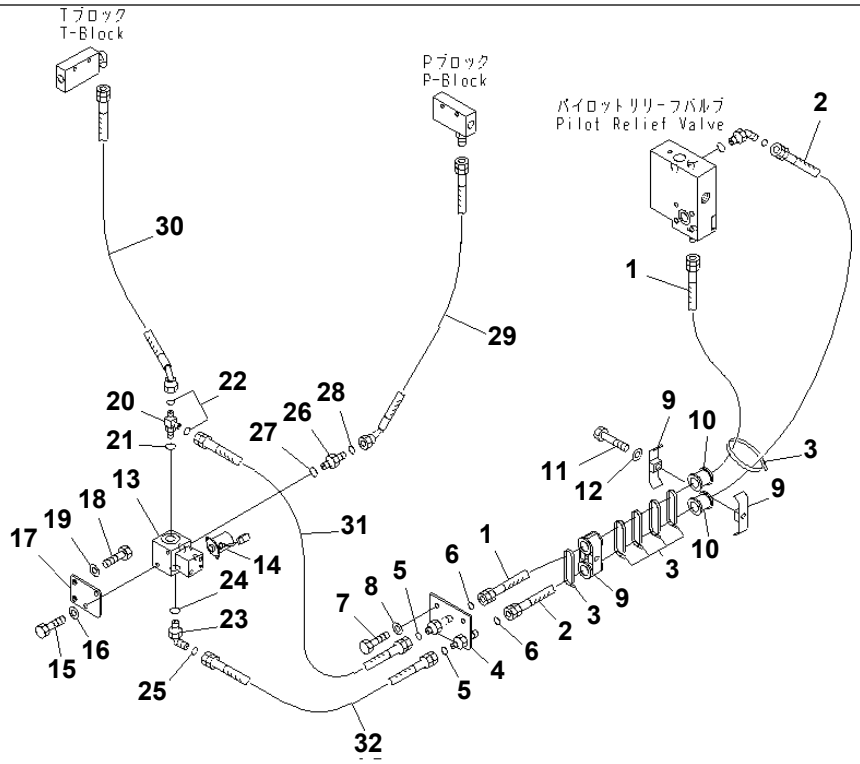

Ref. H1841-03A0 Page 180720

PC1250SP-8R S/N 35001-UP (W/O EGR, +55C DEGREE)

PPC PUMP LINE (PILOT DELIVERY AND PPC LOCK SOLENOID)

Item	Part No.	Part Name	Qty	Serial No.
1	02762-00622	HOSE	1	35001-
2	02762-00624	HOSE	1	35001-
3	08034-20536	BAND	11	35001-
4	21N-62-36351	PLATE	1	35001-
5	02896-11012	O-RING	2	35001-
6	02896-11018	O-RING	2	35001-
7	01010-81025	BOLT	2	35001-
8	01643-31032	WASHER	2	35001-
9	07094-30518	CLAMP	4	35001-
10	07095-10526	CUSHION	4	35001-
11	01010-81270	BOLT	2	35001-
12	01643-31232	WASHER	2	35001-
13	209-60-77220	VALVE ASS'Y	1	35001-
14	209-60-77250	・ SOLENOID ASS'Y	1	35001-
15	01010-81025	BOLT	2	35001-
16	01643-31032	WASHER	2	35001-
17	209-64-11410	PLATE	1	35001-
18	01010-81225	BOLT	2	35001-
19	01643-31232	WASHER	2	35001-
20	21N-64-36690	TEE	1	35001-
21	07002-12034	O-RING	1	35001-
22	02896-11012	O-RING	2	35001-
23	21N-64-37410	ELBOW	1	35001-
24	07002-12034	O-RING	1	35001-
25	02896-11012	O-RING	1	35001-
26	02781-00422	UNION	1	35001-
27	07002-12034	O-RING	1	35001-
28	02896-11012	O-RING	1	35001-
29	02763-00404	HOSE	1	35001-
30	02763-00405	HOSE	1	35001-

Printed By : Dwi Iswanto (airafather6107170)

PPC PUMP LINE (PILOT DELIVERY AND PPC LOCK SOLENOID)

Item	Part No.	Part Name	Qty	Serial No.
31	02762-004A5	HOSE	1	35001-
32	02762-00406	HOSE	1	35001-

Printed By : Dwi Iswanto (airafather6107170)

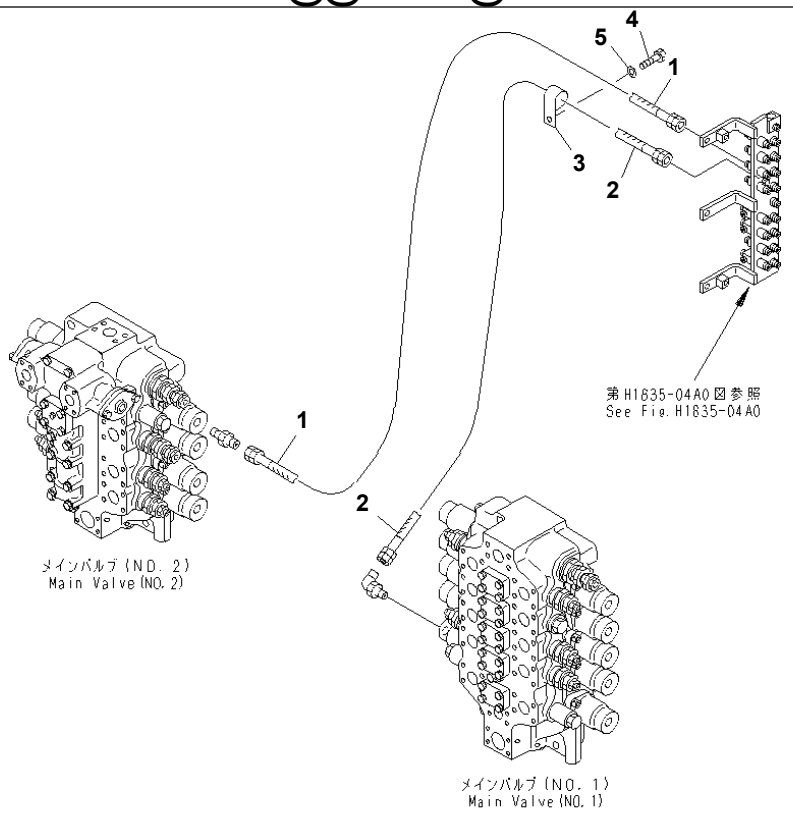

PW1E505

Ref. H1842-01A0 **Page 180730**

PC1250SP-8R S/N 35001-UP (W/O EGR, +55C DEGREE)
PPC TRAVEL LINE

Item	Part No.	Part Name	Qty	Serial No.
1	02760-00305	HOSE	1	35001-
2	02760-00309	HOSE, 900MM	1	35001-
3	04434-51512	CLIP	1	35001-
4	01010-81225	BOLT	1	35001-
5	01643-31232	WASHER	1	35001-

Printed By : Dwi Iswanto (airafather6107170)

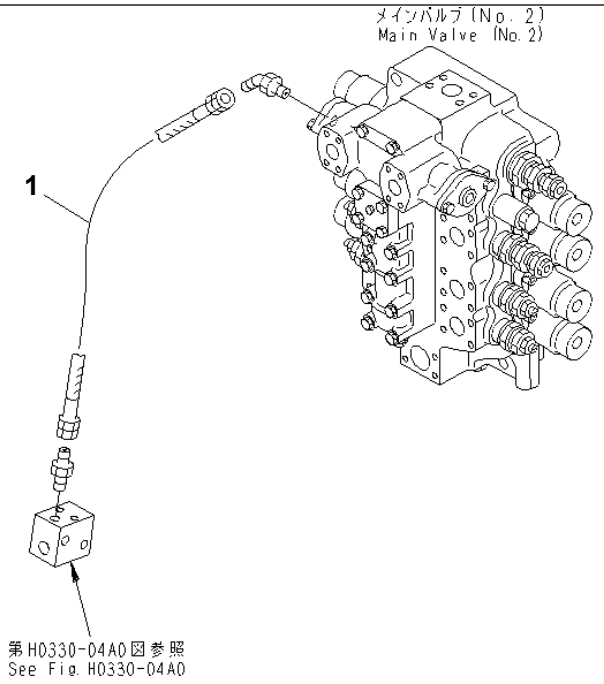

00044428

Ref. H1844-01A0 **Page 180740**

PC1250SP-8R S/N 35001-UP (W/O EGR, +55C DEGREE)
PPC STRAIGHT TRAVEL LINE

Item	Part No.	Part Name	Qty	Serial No.
1	02760-003A5	HOSE	1	35001-

Printed By : Dwi Iswanto (airafather6107170)

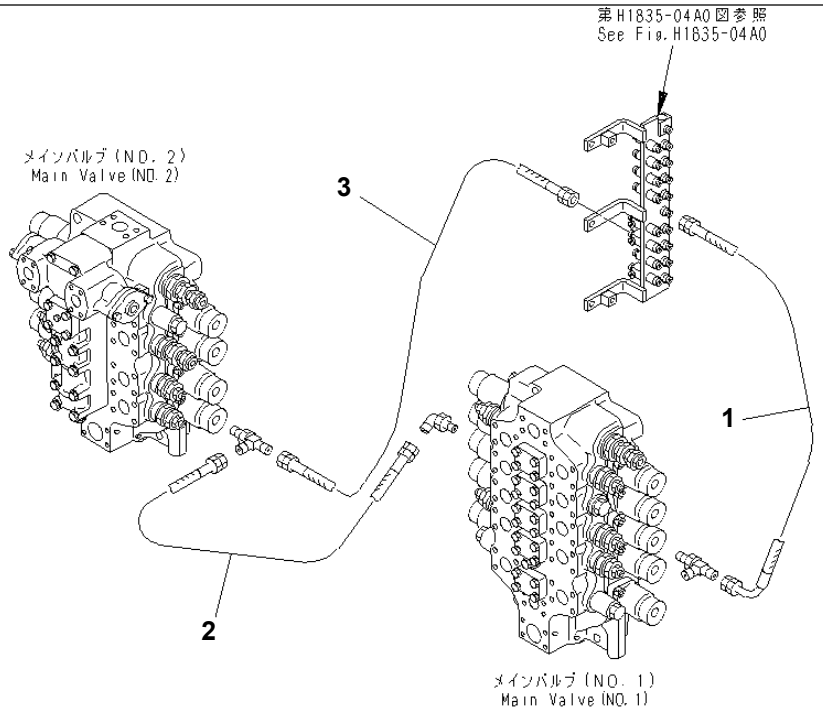

00057282

Ref. H1845-01A0 **Page 180750**

PC1250SP-8R S/N 35001-UP (W/O EGR, +55C DEGREE)
PPC ARM LINE

Item	Part No.	Part Name	Qty	Serial No.
1	02761-00305	HOSE	1	35001-
2	02760-00305	HOSE	1	35001-
3	02760-00305	HOSE	1	35001-

Printed By : Dwi Iswanto (airafather6107170)

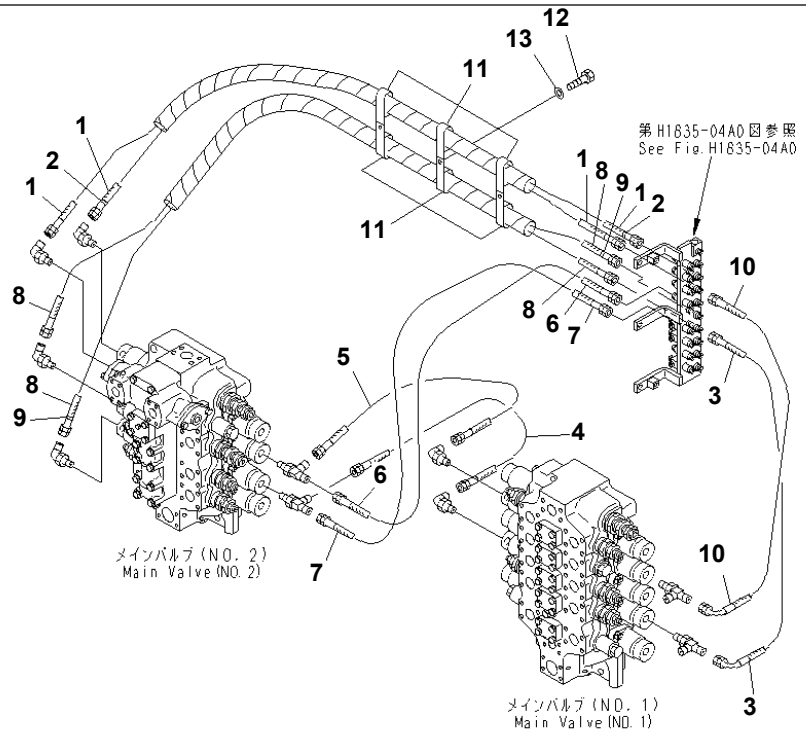

00057290

Ref. H1846-01A0 **Page 180760**

PC1250SP-8R S/N 35001-UP (W/O EGR, +55C DEGREE)
PPC BOOM AND BUCKET LINE

Item	Part No.	Part Name	Qty	Serial No.
1	02760-00313	HOSE	2	35001-
2	20Y-62-22820	BAND, BLUE	2	35001-
3	02761-00305	HOSE	1	35001-
4	02760-00305	HOSE	1	35001-
5	02760-00304	HOSE	1	35001-
6	02760-003A4	HOSE	1	35001-
7	02760-00305	HOSE	1	35001-
8	02760-00314	HOSE	2	35001-
9	20Y-62-22810	BAND, YELLOW	2	35001-
10	02761-00305	HOSE	1	35001-
11	04435-51512	CLIP	6	35001-
12	01010-81225	BOLT	3	35001-
13	01643-31232	WASHER	3	35001-

Printed By : Dwi Iswanto (airafather6107170)

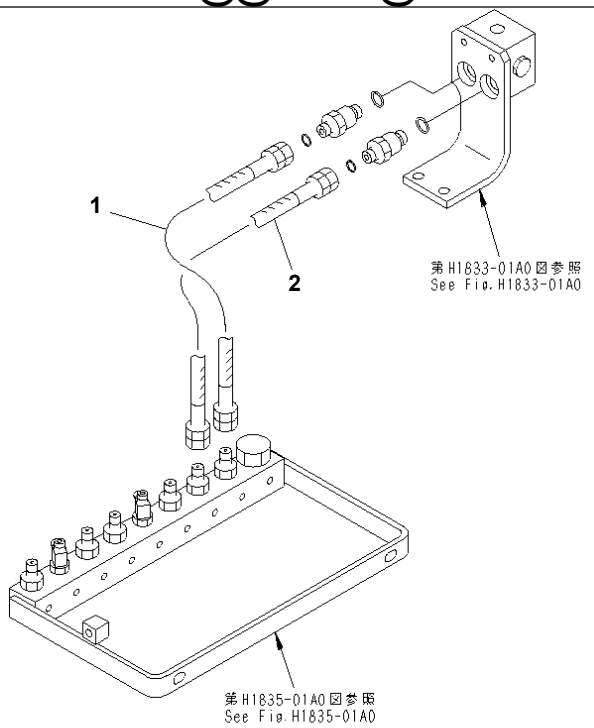

P W 1 E 5 5 9

Ref. H1847-01A0 **Page 180770**

PC1250SP-8R S/N 35001-UP (W/O EGR, +55C DEGREE)
PPC SWING LINE

Item	Part No.	Part Name	Qty	Serial No.
1	02760-00305	HOSE	1	35001-
2	02760-003A4	HOSE	1	35001-

Printed By : Dwi Iswanto (airafather6107170)

@@1E560@

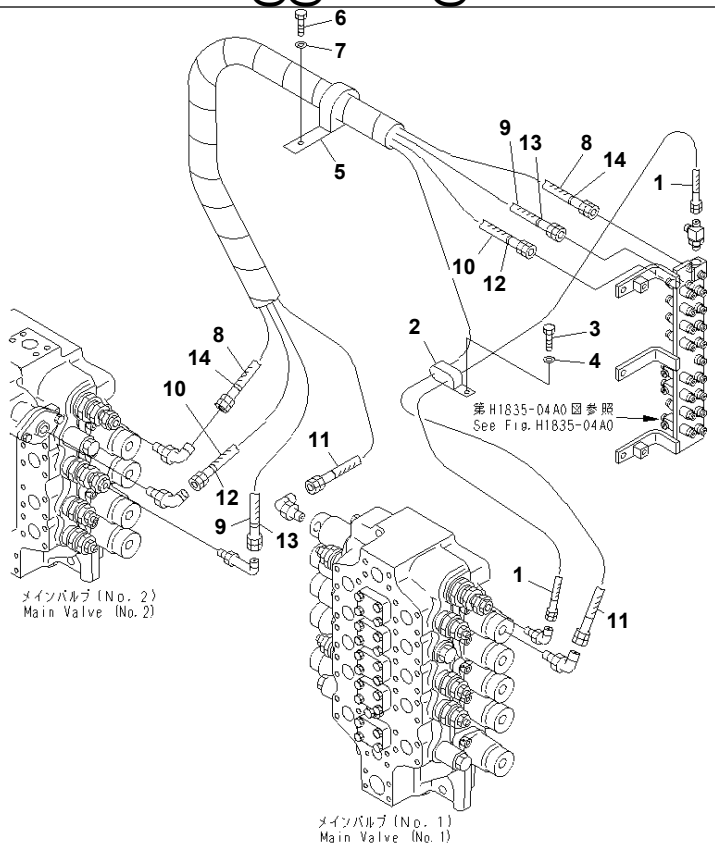

Ref. H1850-01A0 **Page 180780**

PC1250SP-8R S/N 35001-UP (W/O EGR, +55C DEGREE)

PPC HEAVY LIFT LINE

Item	Part No.	Part Name	Qty	Serial No.
1	02760-003A5	HOSE	1	35001-
2	04435-51512	CLIP	1	35001-
3	01010-81225	BOLT	1	35001-
4	01643-31232	WASHER	1	35001-
5	23S-61-24870	CLIP	1	35001-
6	01010-81225	BOLT	1	35001-
7	01643-31232	WASHER	1	35001-
8	02760-00307	HOSE	1	35001-
9	02760-003A7	HOSE, 750MM	1	35001-
10	02760-00308	HOSE	1	35001-
11	02760-00312	HOSE	1	35001-
12	20Y-62-22790	BAND, RED	2	35001-
13	20Y-62-22850	BAND, GREEN	2	35001-
14	20Y-62-22860	BAND, BROWN	2	35001-

Printed By : Dwi Iswanto (airafather6107170)

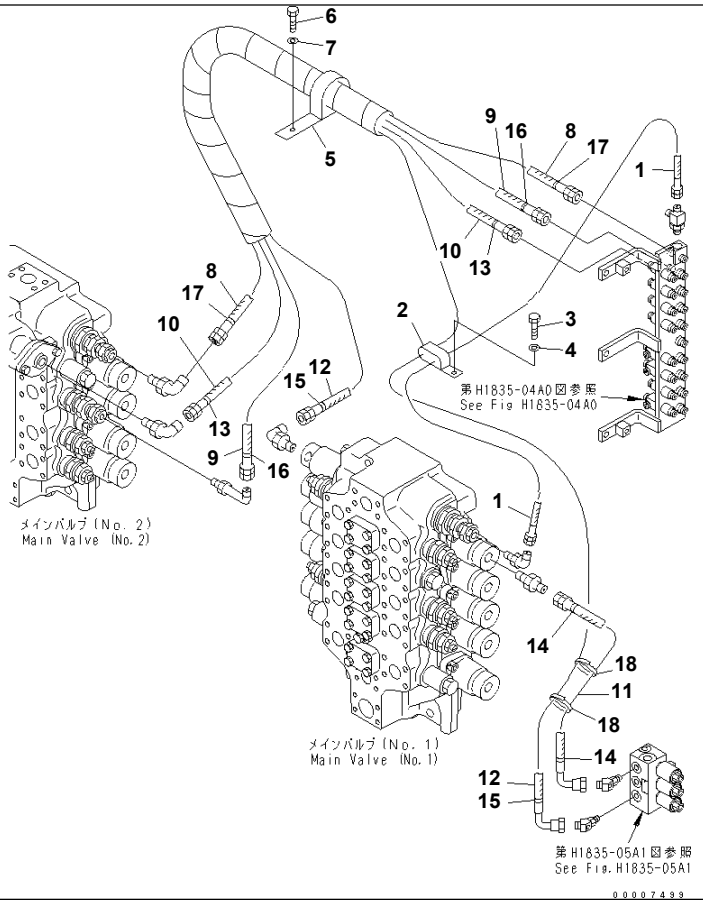

Ref. H1850-01A1 **Page 180790**

PC1250SP-8R S/N 35001-UP (W/O EGR, +55C DEGREE)
PPC HEAVY LIFT LINE (FOR LOADER)

Item	Part No.	Part Name	Qty	Serial No.
1	02760-003A5	HOSE	1	35001-
2	04435-51512	CLIP	1	35001-
3	01010-81225	BOLT	1	35001-
4	01643-31232	WASHER	1	35001-
5	23S-61-24870	CLIP	1	35001-
6	01010-81225	BOLT	1	35001-
7	01643-31232	WASHER	1	35001-
8	02760-00307	HOSE	1	35001-
9	02760-003A7	HOSE, 750MM	1	35001-
10	02760-00308	HOSE	1	35001-
11	02761-00313	HOSE	1	35001-
12	02761-00326	HOSE	1	35001-
13	20Y-62-22790	BAND, RED	2	35001-
14	20Y-62-22820	BAND, BLUE	2	35001-
15	20Y-62-22830	BAND, WHITE	2	35001-
16	20Y-62-22850	BAND, GREEN	2	35001-
17	20Y-62-22860	BAND, BROWN	2	35001-
18	08034-20536	BAND	2	35001-

Printed By : Dwi Iswanto (airafather6107170)

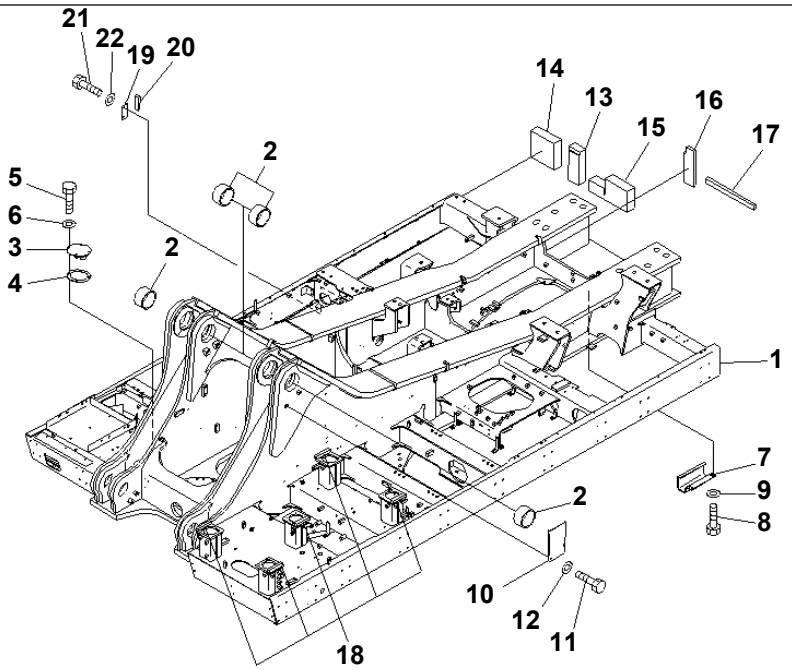

00043461

Ref. J1110-01A0 **Page 210010**

PC1250SP-8R S/N 35001-UP (W/O EGR, +55C DEGREE)
REVOLVING FRAME

Item	Part No.	Part Name	Qty	Serial No.
1	21N-46-41102	FRAME	1	35015-
	21N-46-41101	FRAME	1	35001-35014
2	21N-46-31261	BUSHING	4	35001-
3	21N-46-31211	COVER	1	35001-
4	21N-46-31230	GASKET	1	35001-
5	01010-81230	BOLT	4	35001-
6	01643-31232	WASHER	4	35001-
7	21N-46-37321	BRACKET	1	35001-
8	01010-81225	BOLT	4	35001-
9	01643-31232	WASHER	4	35001-
10	21N-46-37280	PLATE	1	35001-
11	01010-81220	BOLT	2	35001-
12	01643-31232	WASHER	2	35001-
13	21N-03-32171	SHEET	1	35001-
14	21N-03-32192	SHEET	1	35001-
15	21N-03-32331	SHEET	1	35001-
16	21N-46-41190	SHEET	1	35001-
17	21N-46-37420	SHEET	1	35001-
18	21N-46-37330	SHEET	5	35001-
19	21N-03-41950	COVER	1	35001-
20	21N-03-41960	· SHEET	1	35001-
21	01010-81230	BOLT	2	35001-
22	01643-31232	WASHER	2	35001-

Printed By : Dwi Iswanto (airafather6107170)

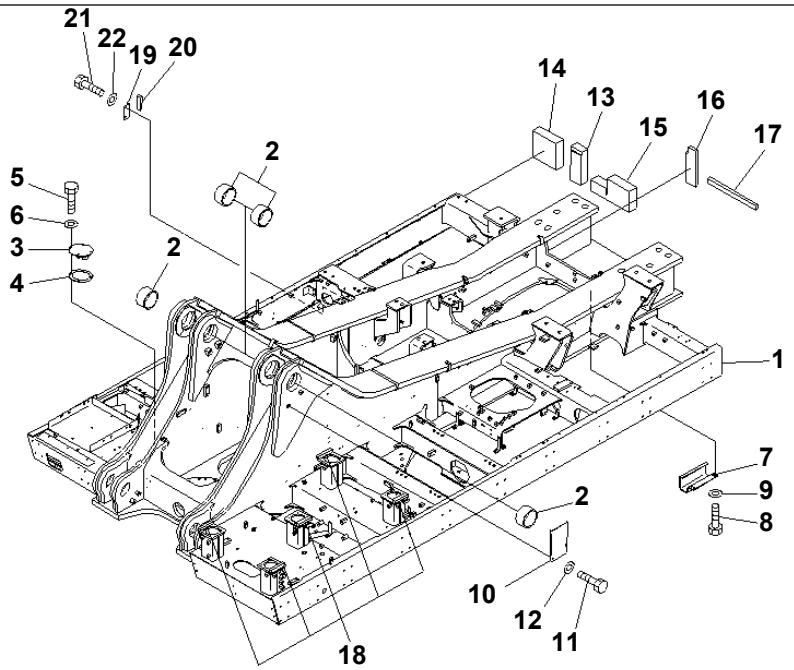

00043461

Ref. J1110-01A2 **Page 210020**

PC1250SP-8R S/N 35001-UP (W/O EGR, +55C DEGREE)
REVOLVING FRAME (AUTO GREASE)

Item	Part No.	Part Name	Qty	Serial No.
1	21N-46-41151	FRAME	1	35015-
	21N-46-41150	FRAME	1	35001-35014
2	21N-46-31261	BUSHING	4	35001-
3	21N-46-31211	COVER	1	35001-
4	21N-46-31230	GASKET	1	35001-
5	01010-81230	BOLT	4	35001-
6	01643-31232	WASHER	4	35001-
7	21N-46-37321	BRACKET	1	35001-
8	01010-81225	BOLT	4	35001-
9	01643-31232	WASHER	4	35001-
10	21N-46-37280	PLATE	1	35001-
11	01010-81220	BOLT	2	35001-
12	01643-31232	WASHER	2	35001-
13	21N-03-32171	SHEET	1	35001-
14	21N-03-32192	SHEET	1	35001-
15	21N-03-32331	SHEET	1	35001-
16	21N-46-41190	SHEET	1	35001-
17	21N-46-37420	SHEET	1	35001-
18	21N-46-37330	SHEET	5	35001-
19	21N-03-41950	COVER	1	35001-
20	21N-03-41960	· SHEET	1	35001-
21	01010-81230	BOLT	2	35001-
22	01643-31232	WASHER	2	35001-

Printed By : Dwi Iswanto (airafather6107170)

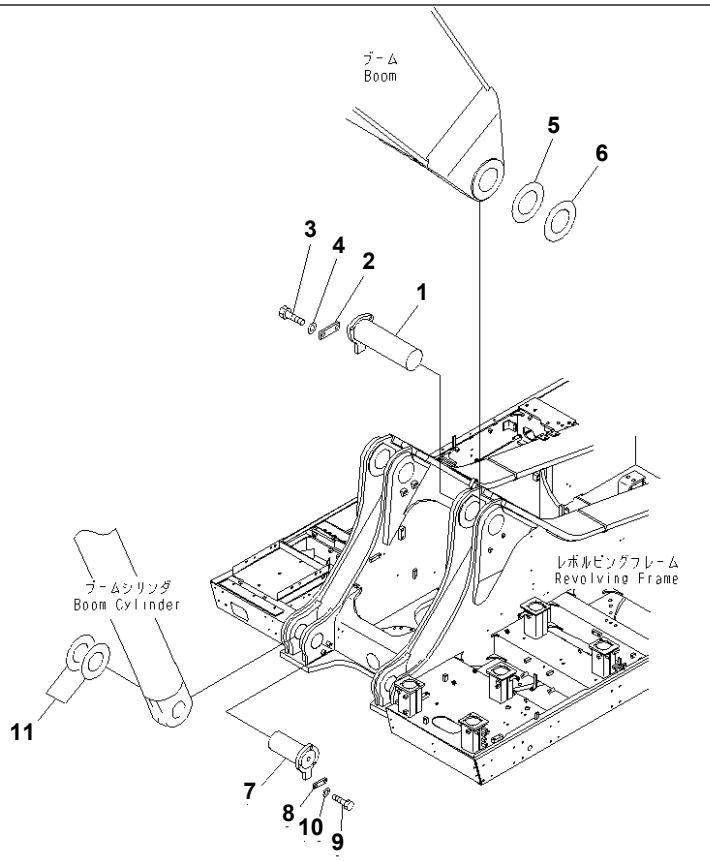

Ref. J1310-01A0 **Page 210030**

PC1250SP-8R S/N 35001-UP (W/O EGR, +55C DEGREE)
BOOM FOOT PIN(#35001-35004)

Item	Part No.	Part Name	Qty	Serial No.
1	21N-70-37210	PIN	2	35001-@
2	21N-70-11210	PLATE	2	35001-@
3	01010-82455	BOLT	4	35001-@
4	01643-32460	WASHER	4	35001-@
5	21N-72-11210	SHIM, 1.0MM	3	35001-@
6	21N-72-11220	SHIM, 1.5MM	3	35001-@
7	21N-72-11152	PIN	2	35001-@
8	21N-70-11230	PLATE	2	35001-@
9	01010-81640	BOLT	4	35001-@
10	01643-31645	WASHER	4	35001-@
11	21N-72-11230	SHIM, 1.0MM	8	35001-@

Printed By : Dwi Iswanto (airafather6107170)

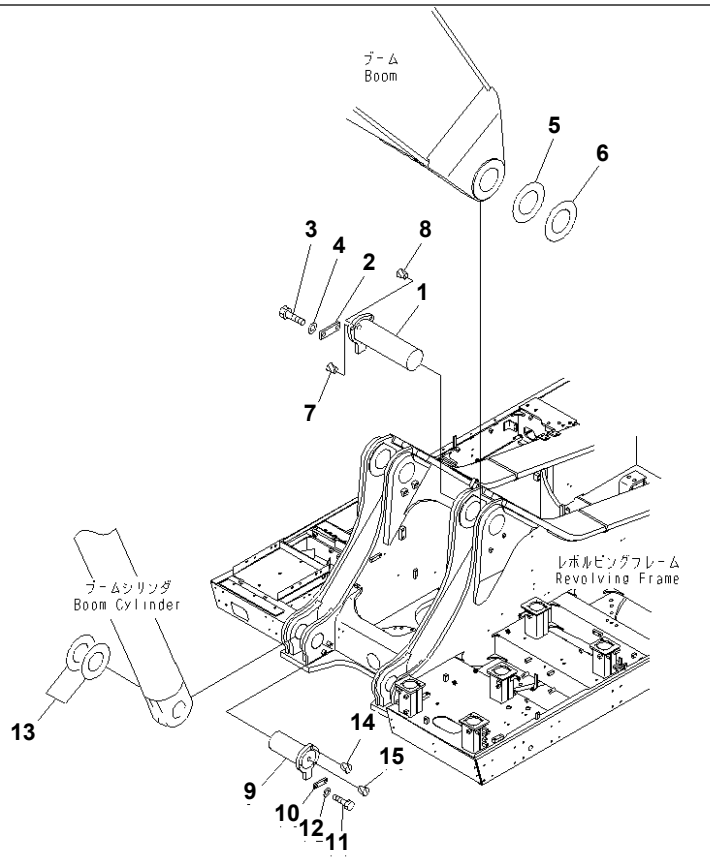

Ref. J1310-01A0A **Page 210040**

PC1250SP-8R S/N 35001-UP (W/O EGR, +55C DEGREE)
BOOM FOOT PIN(#35005-)

Item	Part No.	Part Name	Qty	Serial No.
1	21N-70-37210	PIN	2	35001-
2	21N-70-11210	PLATE	2	35001-
3	01010-82455	BOLT	4	35001-
4	01643-32460	WASHER	4	35001-
5	21N-72-11210	SHIM, 1.0MM	3	35001-
6	21N-72-11220	SHIM, 1.5MM	3	35001-
7	07049-02430	PLUG	6	35005-
8	07049-03038	PLUG	2	35005-
9	21N-72-11152	PIN	2	35001-
10	21N-70-11230	PLATE	2	35001-
11	01010-81640	BOLT	4	35001-
12	01643-31645	WASHER	4	35001-
13	21N-72-11230	SHIM, 1.0MM	8	35001-
14	07049-02430	PLUG	6	35005-
15	07049-03038	PLUG	2	35005-

Printed By : Dwi Iswanto (airafather6107170)

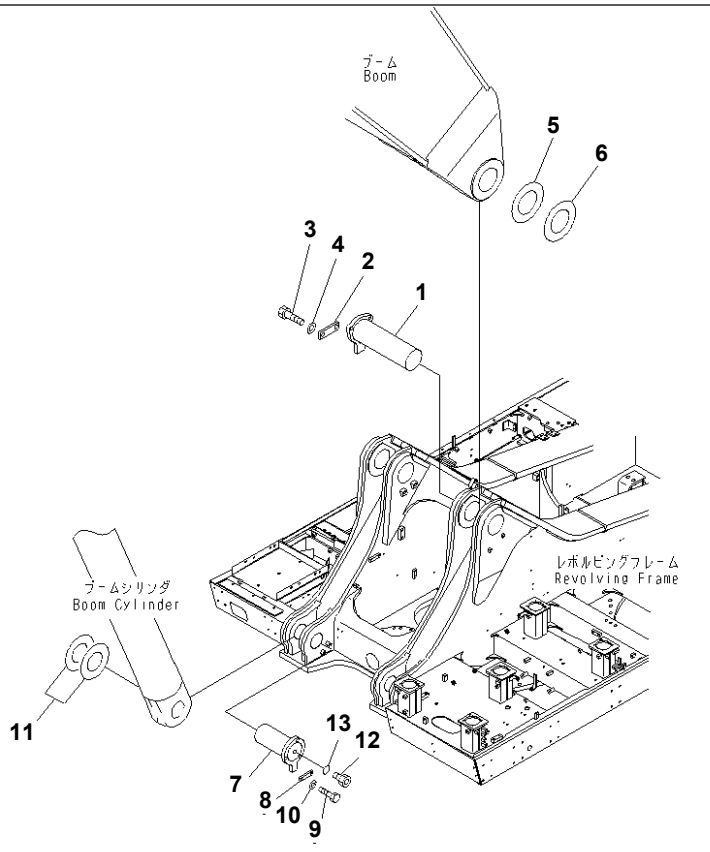

Ref. J1310-01A1 **Page 210050**

PC1250SP-8R S/N 35001-UP (W/O EGR, +55C DEGREE)

BOOM FOOT PIN (AUTO GREASE)(#35001-35004)

Item	Part No.	Part Name	Qty	Serial No.
1	21N-70-37210	PIN	2	35001-@
2	21N-70-11210	PLATE	2	35001-@
3	01010-82455	BOLT	4	35001-@
4	01643-32460	WASHER	4	35001-@
5	21N-72-11210	SHIM, 1.0MM	3	35001-@
6	21N-72-11220	SHIM, 1.5MM	3	35001-@
7	21N-70-31150	PIN	2	35001-@
8	21N-70-11230	PLATE	2	35001-@
9	01010-81640	BOLT	4	35001-@
10	01643-31645	WASHER	4	35001-@
11	21N-72-11230	SHIM, 1.0MM	8	35001-@
12	21T-70-71460	PLUG	2	35001-@
13	07002-13034	O-RING	2	35001-@

Printed By : Dwi Iswanto (airafather6107170)

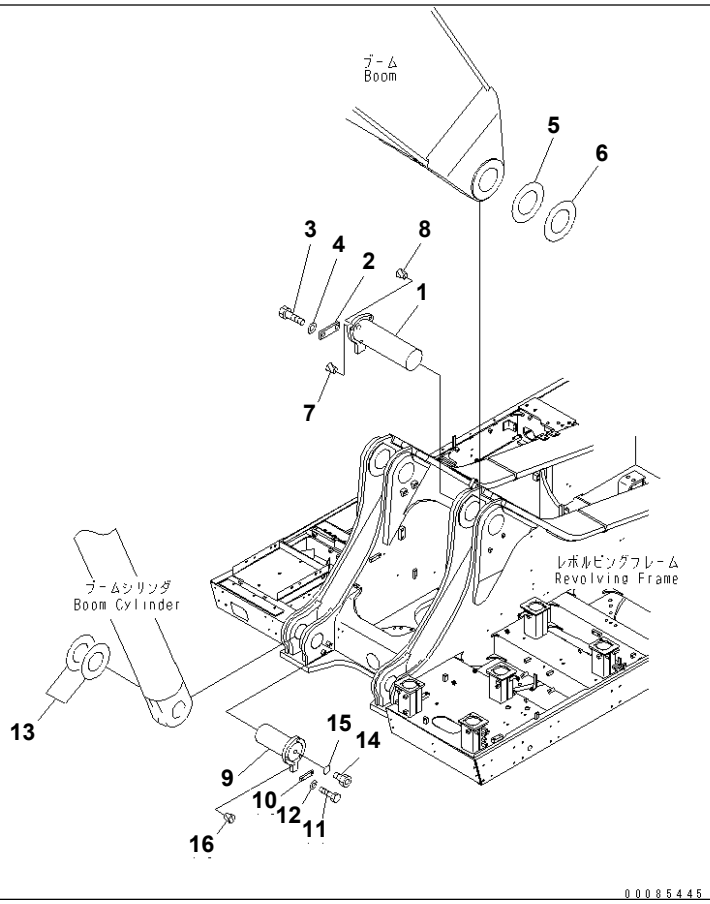

Ref. J1310-01A1A **Page 210060**

PC1250SP-8R S/N 35001-UP (W/O EGR, +55C DEGREE)
BOOM FOOT PIN (AUTO GREASE)(#35005-)

Item	Part No.	Part Name	Qty	Serial No.
1	21N-70-37210	PIN	2	35001-
2	21N-70-11210	PLATE	2	35001-
3	01010-82455	BOLT	4	35001-
4	01643-32460	WASHER	4	35001-
5	21N-72-11210	SHIM, 1.0MM	3	35001-
6	21N-72-11220	SHIM, 1.5MM	3	35001-
7	07049-02430	PLUG	6	35005-
8	07049-03038	PLUG	2	35005-
9	21N-70-31150	PIN	2	35001-
10	21N-70-11230	PLATE	2	35001-
11	01010-81640	BOLT	4	35001-
12	01643-31645	WASHER	4	35001-
13	21N-72-11230	SHIM, 1.0MM	8	35001-
14	21T-70-71460	PLUG	2	35001-
15	07002-13034	O-RING	2	35001-
16	07049-02430	PLUG	6	35005-

Printed By : Dwi Iswanto (airafather6107170)

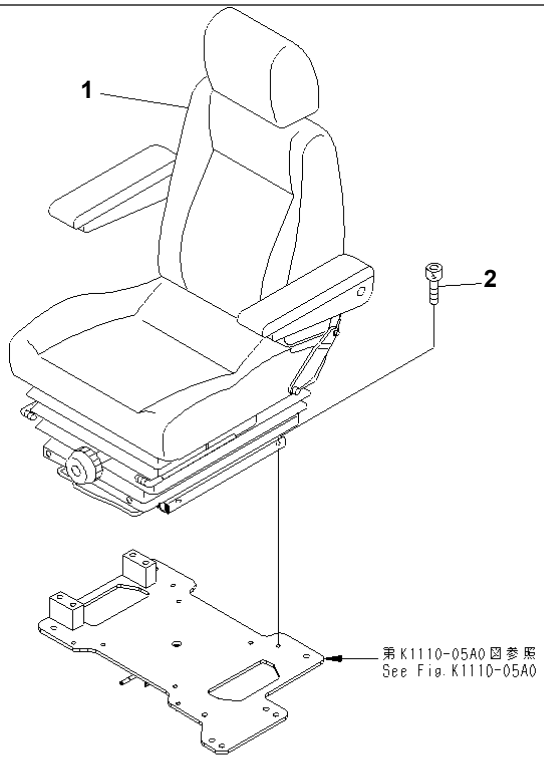

00044545

Ref. K0110-01A0 **Page 240010**

PC1250SP-8R S/N 35001-UP (W/O EGR, +55C DEGREE)
OPERATOR'S SEAT (SUSPENSION TYPE)

Item	Part No.	Part Name	Qty	Serial No.
1	(20Y-57-31100)	SEAT ASS'Y	1	35001-
2	01252-80825	BOLT	4	35001-

Printed By : Dwi Iswanto (airafather6107170)

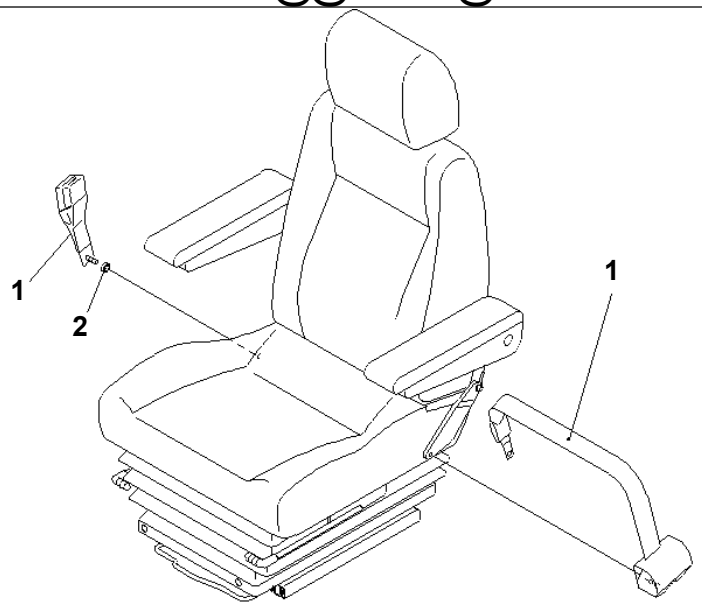

PW1B855

Ref. K0160-01A0 **Page 240020**

PC1250SP-8R S/N 35001-UP (W/O EGR, +55C DEGREE)
SEAT BELT (48MM WIDE)

Item	Part No.	Part Name	Qty	Serial No.
1	22B-57-11812	BELT, LAP	1	35001-
2	22B-57-11830	· SPACER	1	35001-

Printed By : Dwi Iswanto (airafather6107170)

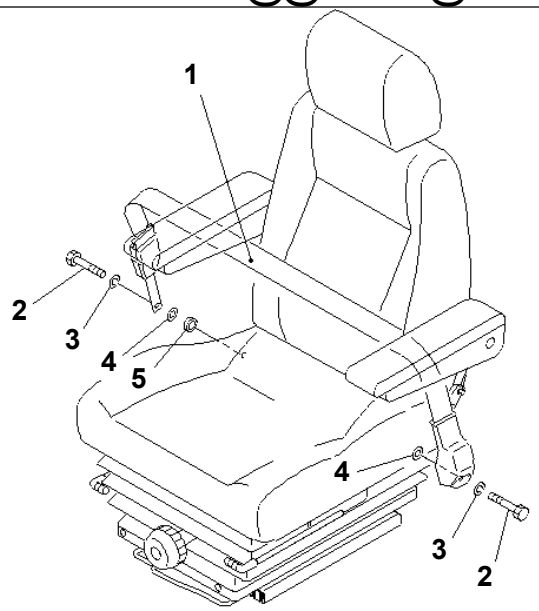

PW1B862

Ref. K0160-01A1 **Page 240030**

PC1250SP-8R S/N 35001-UP (W/O EGR, +55C DEGREE)
SEAT BELT (78MM WIDE)

Item	Part No.	Part Name	Qty	Serial No.
1	22B-57-11911	BELT, LAP	1	35001-
2	02030-70751	· BOLT	2	35001-
3	09409-00002	· WASHER	2	35001-
4	01643-11232	WASHER	2	35001-
5	208-01-11270	WASHER	1	35001-

Printed By : Dwi Iswanto (airafather6107170)

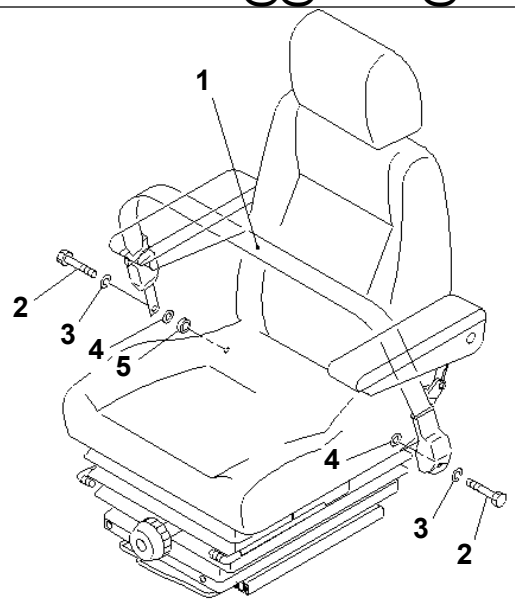

PW1F837

Ref. K0160-01A2 **Page 240040**

PC1250SP-8R S/N 35001-UP (W/O EGR, +55C DEGREE)
SEAT BELT (78MM WIDE) (NON-CINCHING)

Item	Part No.	Part Name	Qty	Serial No.
1	20Y-57-A1661	BELT	1	35001-
2	02030-70757	· BOLT	2	35001-
3	09409-00002	· WASHER	2	35001-
4	01643-11232	WASHER	2	35001-
5	208-01-11270	WASHER	1	35001-

Printed By : Dwi Iswanto (airafather6107170)

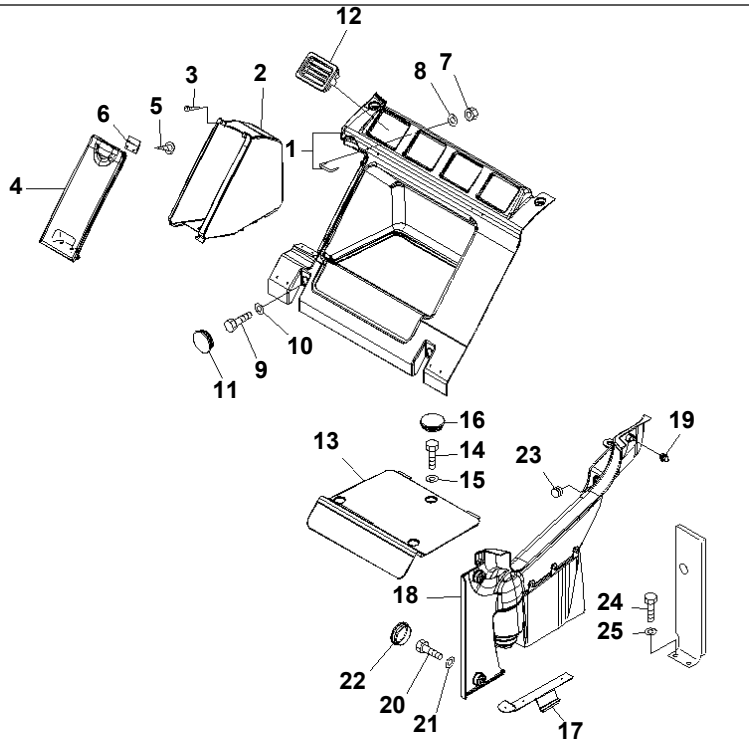

00007993

Ref. K0180-01A2 **Page 240050**

PC1250SP-8R S/N 35001-UP (W/O EGR, +55C DEGREE)
SEAT REAR COVER (WITH BIG WIND AIR CONDITIONER) (+55C SPEC.)

Item	Part No.	Part Name	Qty	Serial No.
	20Y-54-65250	COVER ASS'Y	1	35001-
1	☆	· COVER	1	35001-
2	20Y-54-65370	· BOX	1	35001-
3	14X-54-18450	· · CUSHION	2	35001-
4	20Y-54-65350	· COVER	1	35001-
5	01370-00512	· · SCREW	2	35001-
6	14X-54-18540	· · LOCK ASS'Y	1	35001-
7	01580-10403	· NUT	8	35001-
8	01601-20410	· WASHER	8	35001-
9	01010-80825	BOLT	4	35001-
10	01643-30823	WASHER	4	35001-
11	22U-54-25331	CAP	4	35001-
12	201-979-7820	GRILLE	4	35001-
13	20Y-54-65380	COVER	1	35001-
14	01010-80820	BOLT	3	35001-
15	01643-30823	WASHER	3	35001-
16	22U-54-25331	CAP	3	35001-
	20Y-54-65260	COVER ASS'Y	1	35001-
17	20Y-54-65270	· BRACKET	1	35001-
18	☆	· COVER	1	35001-
19	22U-54-25360	· · CLIP	1	35001-
20	01010-80820	BOLT	2	35001-
21	01643-30823	WASHER	2	35001-
22	22U-54-25331	CAP	2	35001-
23	09415-02110	CAP	1	35001-
24	01010-D0816	BOLT	2	35001-
25	01643-70823	WASHER	2	35001-

Printed By : Dwi Iswanto (airafather6107170)

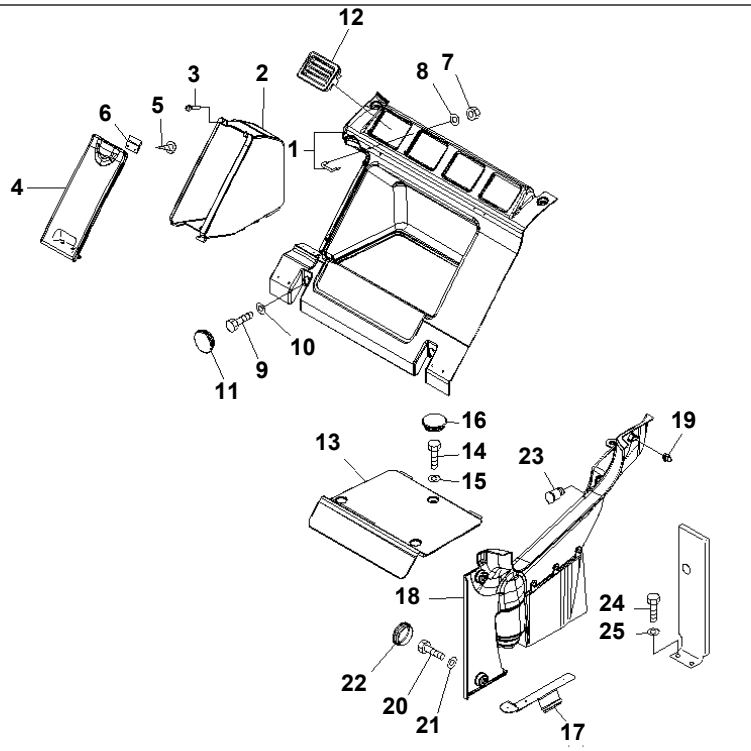

00017578

Ref. K0180-01A3 **Page 240060**

PC1250SP-8R S/N 35001-UP (W/O EGR, +55C DEGREE)
SEAT REAR COVER (WITH BIG WIND AIR CONDITIONER) (12V POWER SOURCE) (+55C SPEC.)

Item	Part No.	Part Name	Qty	Serial No.
	20Y-54-65250	COVER ASS'Y	1	35001-
1	☆	· COVER	1	35001-
2	20Y-54-65370	· BOX	1	35001-
3	14X-54-18450	· · CUSHION	2	35001-
4	20Y-54-65350	· COVER	1	35001-
5	01370-00512	· · SCREW	2	35001-
6	14X-54-18540	· · LOCK ASS'Y	1	35001-
7	01580-10403	· NUT	8	35001-
8	01601-20410	· WASHER	8	35001-
9	01010-80825	BOLT	4	35001-
10	01643-30823	WASHER	4	35001-
11	22U-54-25331	CAP	4	35001-
12	201-979-7820	GRILLE	4	35001-
13	20Y-54-65380	COVER	1	35001-
14	01010-80820	BOLT	3	35001-
15	01643-30823	WASHER	3	35001-
16	22U-54-25331	CAP	3	35001-
	20Y-54-65260	COVER ASS'Y	1	35001-
17	20Y-54-65270	· BRACKET	1	35001-
18	☆	· COVER	1	35001-
19	22U-54-25360	· · CLIP	1	35001-
20	01010-80820	BOLT	2	35001-
21	01643-30823	WASHER	2	35001-
22	22U-54-25331	CAP	2	35001-
23	198-Z11-2640	SOCKET ASS'Y	1	35001-
24	01010-D0816	BOLT	2	35001-
25	01643-70823	WASHER	2	35001-

Printed By : Dwi Iswanto (airafather6107170)

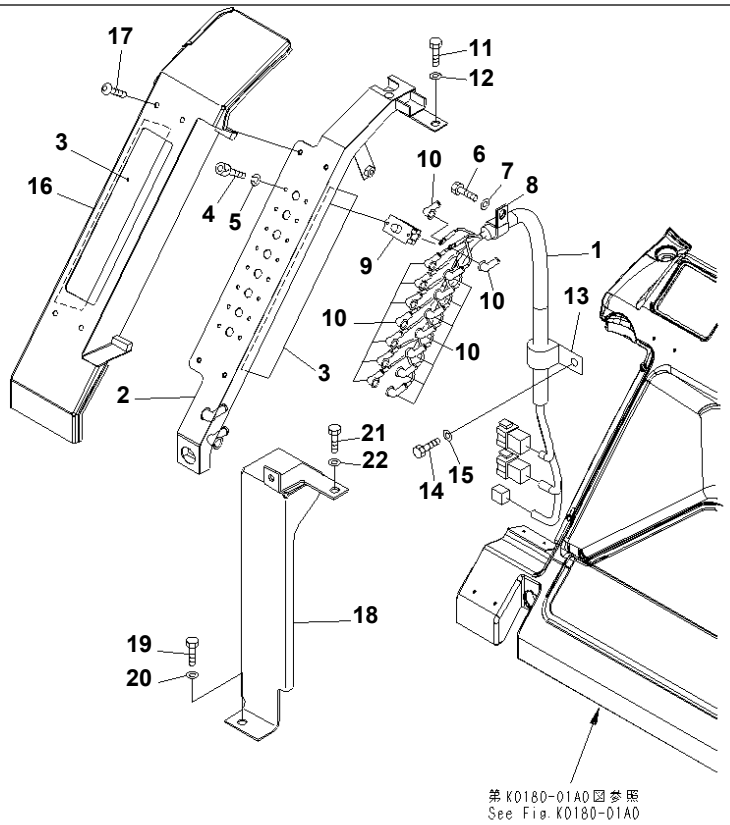

00057631

Ref. K0180-02A0 **Page 240070**

PC1250SP-8R S/N 35001-UP (W/O EGR, +55C DEGREE)
SEAT REAR COVER (CIRCUIT BRAKER)

Item	Part No.	Part Name	Qty	Serial No.
	21N-06-41101	COVER ASS'Y	1	35001-
1	21N-06-41160	· WIRING HARNESS	1	35001-
2	21N-06-33122	· BRACKET	1	35001-
3	21N-06-33480	· SHEET	2	35001-
4	01252-70410	· BOLT	16	35001-
5	01601-20410	· WASHER	16	35001-
6	01010-80816	· BOLT	1	35001-
7	01643-30823	· WASHER	1	35001-
8	04434-51910	· CLIP	1	35001-
9	209-06-77350	· CIRCUIT BREAKER	8	35001-
10	08038-00519	· CAP	16	35001-
11	01010-D0816	BOLT	1	35001-
12	01643-70823	WASHER	1	35001-
13	04434-51910	CLIP	1	35001-
14	01010-D0825	BOLT	2	35001-
15	01643-70823	WASHER	2	35001-
16	21N-06-33381	COVER	1	35001-
17	01245-00616	SCREW	4	35001-
18	21N-54-39752	COVER	1	35001-
19	01010-D1016	BOLT	1	35001-
20	01643-71032	WASHER	1	35001-
21	01010-81020	BOLT	1	35001-
22	01643-31032	WASHER	1	35001-

Printed By : Dwi Iswanto (airafather6107170)

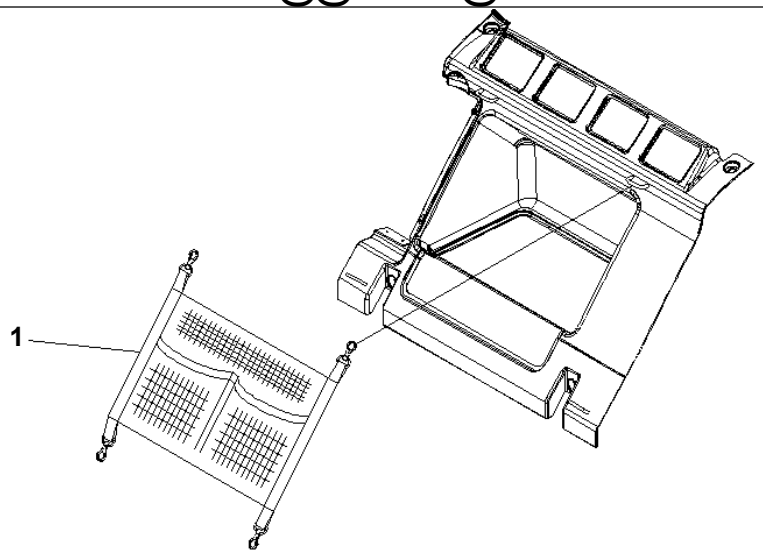

P W 1 C 7 8 8

Ref. K0190-01A0 **Page 240080**

PC1250SP-8R S/N 35001-UP (W/O EGR, +55C DEGREE)
LUGGAGE BOX NET

Item	Part No.	Part Name	Qty	Serial No.
1	20Y-54-65640	NET	1	35001-

Printed By : Dwi Iswanto (airafather6107170)

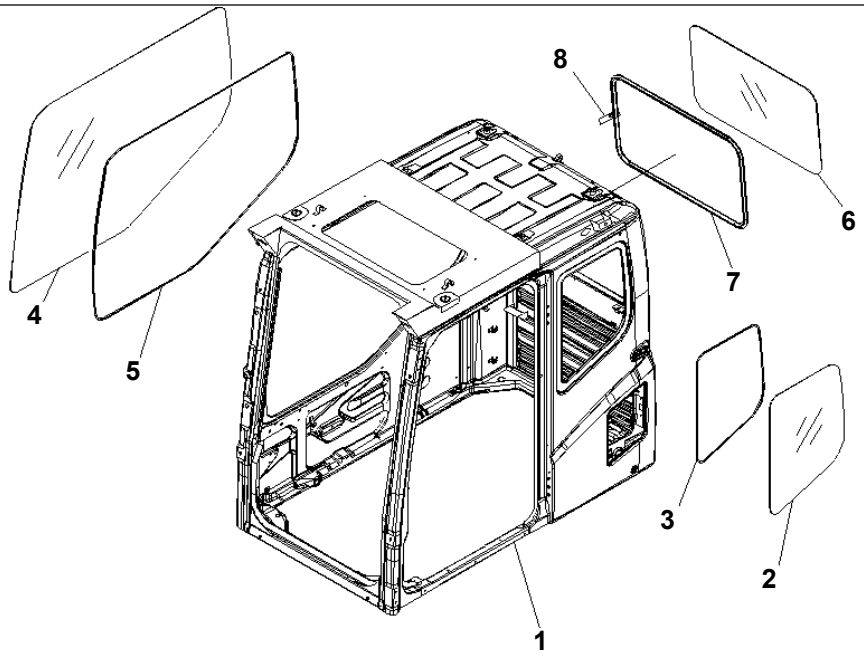

00042760

Ref. K0210-01A0 **Page 240090**

PC1250SP-8R S/N 35001-UP (W/O EGR, +55C DEGREE)
OPERATOR'S CAB (CAB) (QUARRY SPEC.)

Item	Part No.	Part Name	Qty	Serial No.
	21N-54-00480	CAB ASS'Y, QUARRY	1	35001-
	21N-54-00540	CAB ASS'Y,(WITH VHMS AND ORBCOM)	1	35001-
1	☆	· CAB	1	35001-
2	20Y-54-51241	· GLASS	1	35001-
3	20Y-54-51261	· SEAL	1	35001-
4	20Y-54-51842	· GLASS	1	35001-
5	20Y-54-51851	· DAM	1	35001-
6	21N-54-38270	· GLASS	1	35001-
7	21N-54-38250	· WEATHER STRIP	1	35001-
8	20T-54-75250	· TAG	1	35001-

Printed By : Dwi Iswanto (airafather6107170)

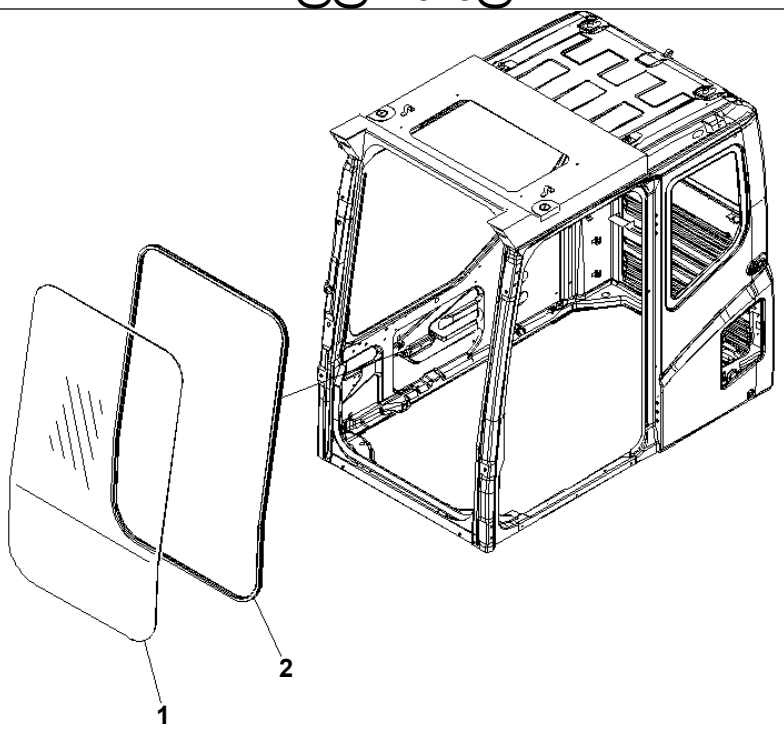

P W 1 E 5 2 8

Ref. K0210-02A0 **Page 240100**

PC1250SP-8R S/N 35001-UP (W/O EGR, +55C DEGREE)
OPERATOR'S CAB (FRONT WINDOW) (QUARRY SPEC.)

Item	Part No.	Part Name	Qty	Serial No.
	(21N-54-00480)	CAB ASS'Y, QUARRY	1	35001-
	(21N-54-00540)	CAB ASS'Y,(WITH VHMS AND ORBCOM)	1	35001-
1	21N-54-38280	· GLASS	1	35001-
2	21N-54-38260	· WEATHER STRIP	1	35001-

Printed By : Dwi Iswanto (airafather6107170)

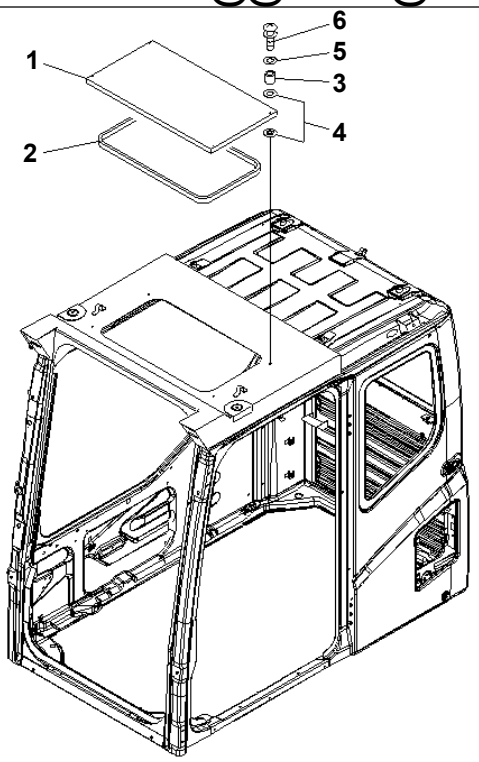

PW1E531

Ref. K0210-04A0 **Page 240110**

PC1250SP-8R S/N 35001-UP (W/O EGR, +55C DEGREE)
OPERATOR'S CAB (ROOF WINDOW) (QUARRY SPEC.)

Item	Part No.	Part Name	Qty	Serial No.
	(21N-54-00480)	CAB ASS'Y, QUARRY	1	35001-
	(21N-54-00540)	CAB ASS'Y,(WITH VHMS AND ORBCOM)	1	35001-
1	21N-54-35312	· COVER	1	35001-
2	21N-54-35321	· SPACER	1	35001-
3	10E-60-14420	· COLLAR	4	35001-
4	20T-54-74880	· GROMMET	8	35001-
5	12F-14-18690	· WASHER	4	35001-
6	01023-20625	· SCREW	4	35001-

Printed By : Dwi Iswanto (airafather6107170)

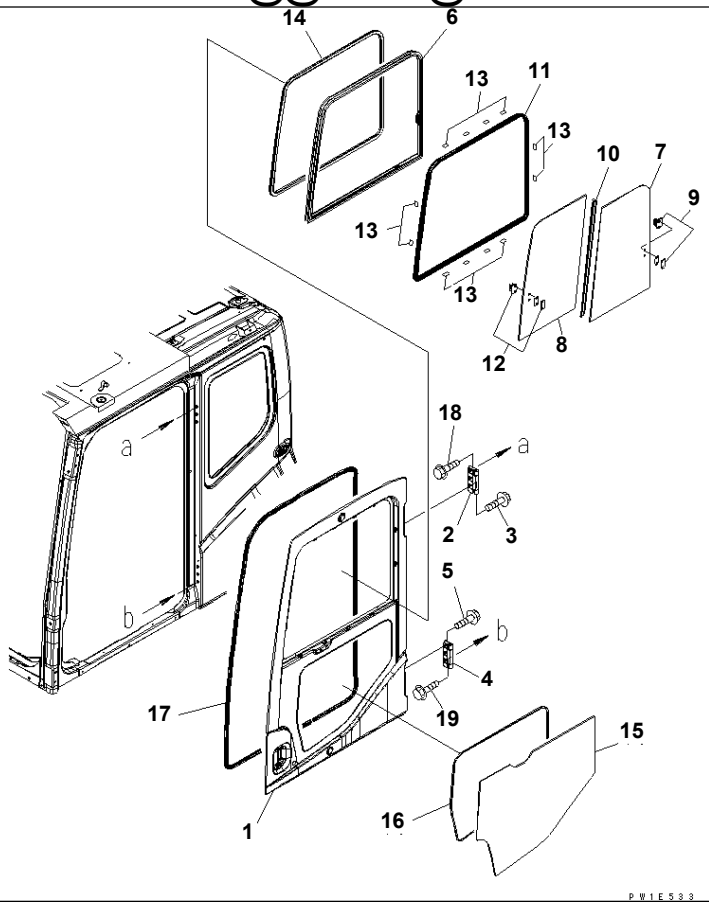

Ref. K0210-05A0 **Page 240120**

PC1250SP-8R S/N 35001-UP (W/O EGR, +55C DEGREE)
OPERATOR'S CAB (DOOR) (QUARRY SPEC.)

Item	Part No.	Part Name	Qty	Serial No.
	(21N-54-00480)	CAB ASS'Y, QUARRY	1	35001-
	(21N-54-00520)	CAB ASS'Y, PULL UP	1	35001-
	(21N-54-00540)	CAB ASS'Y,(WITH VHMS AND ORBCOM)	1	35001-
	(21N-54-00530)	CAB ASS'Y	1	35001-
	21N-54-00430	· DOOR ASS'Y	1	35001-
	☆	· · DOOR	1	35001-
1	☆	· · · DOOR	1	35001-
2	21N-54-38430	· · · HINGE	1	35001-
3	01435-41225	· · · BOLT	3	35001-
4	21N-54-38440	· · · HINGE	1	35001-
5	01435-01225	· · · BOLT	3	35001-
	20Y-54-51401	· · SASH ASS'Y	1	35001-
6	☆	· · · SASH FRAME	1	35001-
7	20Y-54-52840	· · · GLASS	1	35001-
8	20Y-54-52850	· · · GLASS	1	35001-
9	20Y-54-52860	· · · LOCK ASS'Y	1	35001-
10	20Y-54-52870	· · · SEAL	1	35001-
11	20Y-54-52880	· · · SEAL	1	35001-
12	20Y-54-13322	· · · LOCK ASS'Y	1	35001-
13	20Y-54-13180	· · SEAT	12	35001-
14	20Y-54-51470	· · TRIM	1	35001-
15	20Y-54-51451	· · GLASS	1	35001-
16	20Y-54-51461	· · SEAL	1	35001-
17	20Y-54-51482	· · SEAL	1	35001-
18	01435-41225	· · BOLT	3	35001-
19	01435-01225	· · BOLT	3	35001-

Printed By : Dwi Iswanto (airafather6107170)

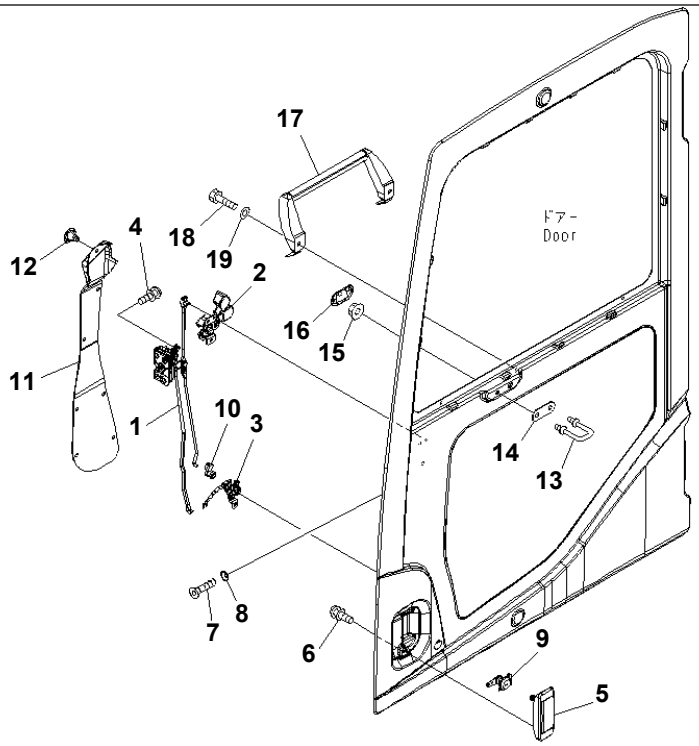

00031312

Ref. K0210-06A0 **Page 240130**

PC1250SP-8R S/N 35001-UP (W/O EGR, +55C DEGREE)
OPERATOR'S CAB (DOOR LOCK) (QUARRY SPEC.)

Item	Part No.	Part Name	Qty	Serial No.
	(21N-54-00480)	CAB ASS'Y, QUARRY	1	35001-
	(21N-54-00520)	CAB ASS'Y, PULL UP	1	35001-
	(21N-54-00540)	CAB ASS'Y,(WITH VHMS AND ORBCOM)	1	35001-
	(21N-54-00530)	CAB ASS'Y	1	35001-
	(21N-54-00430)	· DOOR ASS'Y	1	35001-
1	20Y-54-52200	· · LATCH ASS'Y	1	35001-
2	20Y-54-52300	· · HANDLE ASS'Y	1	35001-
3	20Y-54-52400	· · BELL CRANK ASS'Y	1	35001-
4	01023-10612	· · SCREW	8	35001-
5	20Y-54-52990	· · HANDLE	1	35001-
6	01023-10612	· · SCREW	2	35001-
7	01240-00616	· · SCREW	3	35001-
8	195-Z11-1690	· · WASHER	3	35001-
9	20Y-54-52820	· · LOCK ASS'Y	1	35001-
10	22B-54-16330	· · SNAP	1	35001-
11	20Y-54-51441	· · COVER	1	35001-
12	22B-54-16461	· · RIVET	7	35001-
13	20Y-54-51321	· · STRIKER	1	35001-
14	20Y-54-51341	· · PLATE	1	35001-
15	01584-01008	· · NUT	2	35001-
16	20Y-54-51490	· · COVER	1	35001-
17	20Y-54-51393	· · GRIP	1	35001-
18	01010-80820	· · BOLT	2	35001-
19	01643-30823	· · WASHER	2	35001-

Printed By : Dwi Iswanto (airafather6107170)

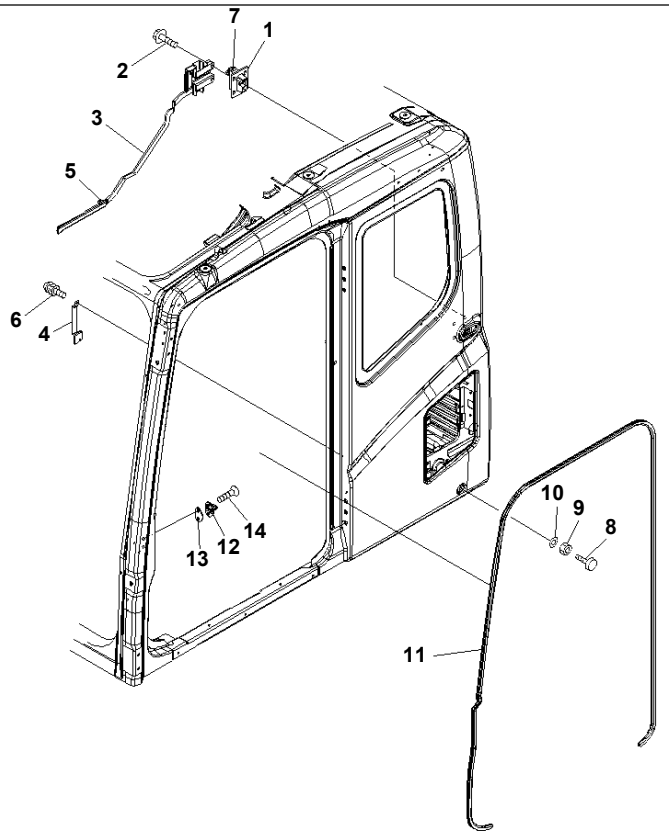

Ref. K0210-07A0 **Page 240140**

PC1250SP-8R S/N 35001-UP (W/O EGR, +55C DEGREE)
OPERATOR'S CAB (OPEN LOCK) (QUARRY SPEC.)

Item	Part No.	Part Name	Qty	Serial No.
	(21N-54-00480)	CAB ASS'Y, QUARRY	1	35001-
	(21N-54-00520)	CAB ASS'Y, PULL UP	1	35001-
	(21N-54-00540)	CAB ASS'Y,(WITH VHMS AND ORBCOM)	1	35001-
	(21N-54-00530)	CAB ASS'Y	1	35001-
1	20Y-54-36380	· LOCK	1	35001-
2	01435-00820	· BOLT	4	35001-
3	20Y-54-51801	· LEVER	1	35001-
4	20Y-54-51972	· PLATE	1	35001-
5	20Y-54-51941	· STOPPER	1	35001-
6	01023-70616	· SCREW	2	35001-
7	20Y-54-51930	· COVER	1	35001-
8	20Y-54-11611	· STOPPER	2	35001-
9	01580-11008	· NUT	2	35001-
10	01643-31032	· WASHER	2	35001-
11	20Y-54-51910	· TRIM	1	35001-
12	20Y-54-35470	· STRIKER	1	35001-
13	20Y-54-35480	· SHIM	1	35001-
14	01240-01025	· SCREW	2	35001-

Printed By : Dwi Iswanto (airafather6107170)

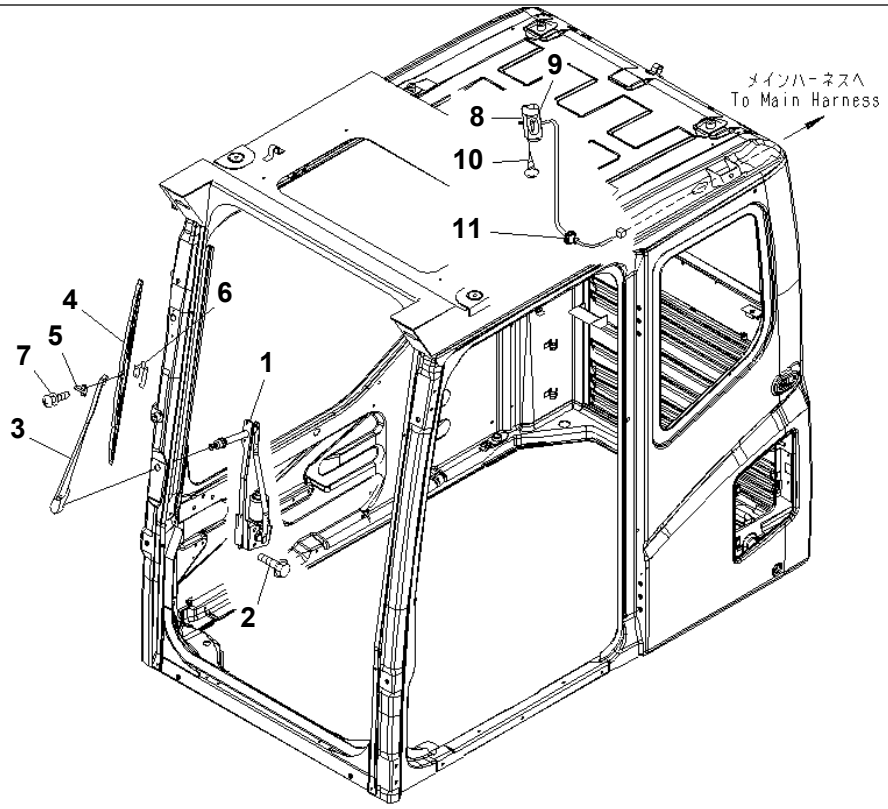

00042756

Ref. K0210-08A0 **Page 240150**

PC1250SP-8R S/N 35001-UP (W/O EGR, +55C DEGREE)
OPERATOR'S CAB (WIPER AND ROOM LAMP) (QUARRY SPEC.)

Item	Part No.	Part Name	Qty	Serial No.
	(21N-54-00480)	CAB ASS'Y, QUARRY	1	35001-
	(21N-54-00540)	CAB ASS'Y,(WITH VHMS AND ORBCOM)	1	35001-
1	22B-54-17111	· WIPER MOTOR	1	35001-
2	01435-40616	· BOLT	6	35001-
	21N-54-35750	· WIPER ASS'Y	1	35001-
3	21N-54-35461	· · ARM	1	35001-
4	21N-54-35481	· · BLADE	1	35001-
5	20Y-54-39460	· · SLIDER	1	35001-
6	20Y-54-39480	· · PLATE	1	35001-
7	ND949007-2540	· · SCREW AND WASHER	2	35001-
8	20Y-54-53520	· LAMP	1	35001-
9	08116-02410	· · BULB, 10W	1	35001-
10	01370-00420	· SCREW	2	35001-
11	08037-11025	· GROMMET	1	35001-

Printed By : Dwi Iswanto (airafather6107170)

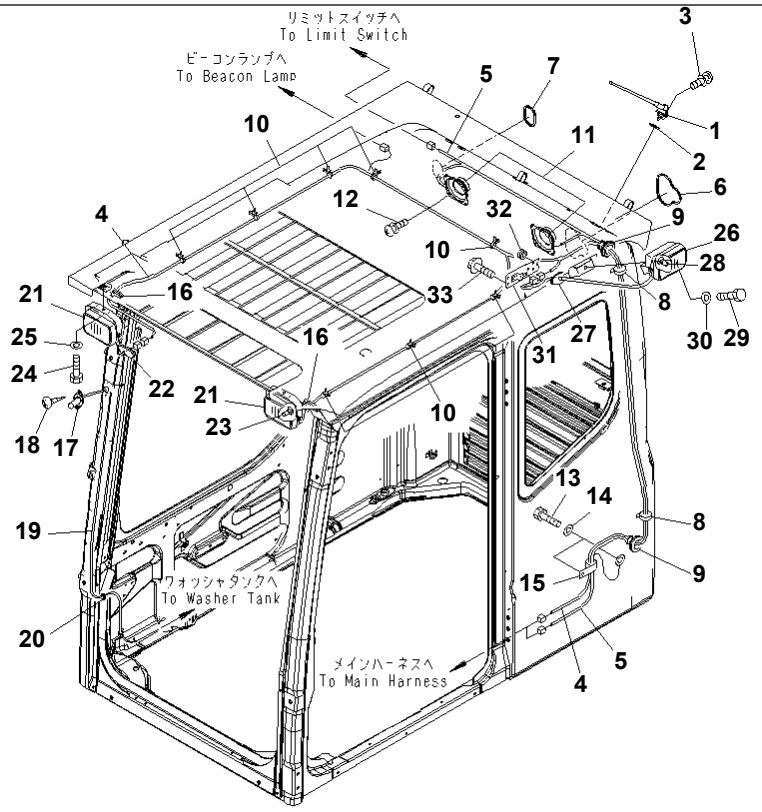

Ref. K0210-09A0 Page 240160

PC1250SP-8R S/N 35001-UP (W/O EGR, +55C DEGREE)

OPERATOR'S CAB (ELECTRICAL) (RADIO ¤ WORK LAMP AND STEP LAMP) (QUARRY SPEC.)

Item	Part No.	Part Name	Qty	Serial No.
	(21N-54-00480)	CAB ASS'Y, QUARRY	1	35001-
	(21N-54-00540)	CAB ASS'Y,(WITH VHMS AND ORBCOM)	1	35001-
1	(20Y-06-41990)	· RUBBER ANTENNA,(SEE FIG. Y1062-01A0A)	1	35087-
	(198-Z11-4610)	· RUBBER ANTENNA,(SEE FIG. Y1062-01A0)	1	35001-35086
2	01643-30623	· WASHER	1	35001-
3	01023-20412	· SCREW	2	35001-
4	21N-06-41211	· WIRING HARNESS	1	35001-
5	21N-54-38290	· WIRING HARNESS	1	35001-
6	20Y-54-52470	· GROMMET	1	35001-
7	20Y-54-36150	· GROMMET	1	35001-
8	08034-00414	· BAND	2	35001-
9	08037-12536	· GROMMET	2	35001-
10	08059-00413	· CLIP	8	35001-
11	08910-10000	· SPEAKER	2	35001-
12	01023-10412	· SCREW	8	35001-
13	01010-81020	· BOLT	2	35001-
14	01643-31032	· WASHER	2	35001-
15	04434-52310	· CLIP	1	35001-
16	08037-02512	· GROMMET	2	35001-
17	20Y-54-39511	· NOZZLE	1	35001-
18	01370-40412	· SCREW	2	35001-
19	17M-911-2670	· HOSE	1	35001-
20	08037-01008	· GROMMET	1	35001-
21	21N-54-38340	· WORK LAMP ASS'Y	2	35001-
22	22B-54-17271	· · GROMMET	1	35001-
23	421-06-23330	· · BULB, 70W	1	35001-
24	01010-D1016	· BOLT	2	35001-
25	01643-71032	· WASHER	2	35001-
26	209-53-14430	· WORK LAMP ASS'Y	1	35001-

Printed By : Dwi Iswanto (airafather6107170)

OPERATOR'S CAB (ELECTRICAL) (RADIO ¤ WORK LAMP AND STEP LAMP) (QUARRY SPEC.)

Item	Part No.	Part Name	Qty	Serial No.
27	22B-54-17271	· · GROMMET	1	35001-
28	421-06-23330	· · BULB, 70W	1	35001-
29	01010-D1016	· BOLT	1	35001-
30	01643-71032	· WASHER	1	35001-
31	21N-54-38411	· PLATE	1	35001-
32	175-06-81610	· GROMMET	1	35001-
33	01435-40616	· BOLT	4	35001-

Printed By : Dwi Iswanto (airafather6107170)

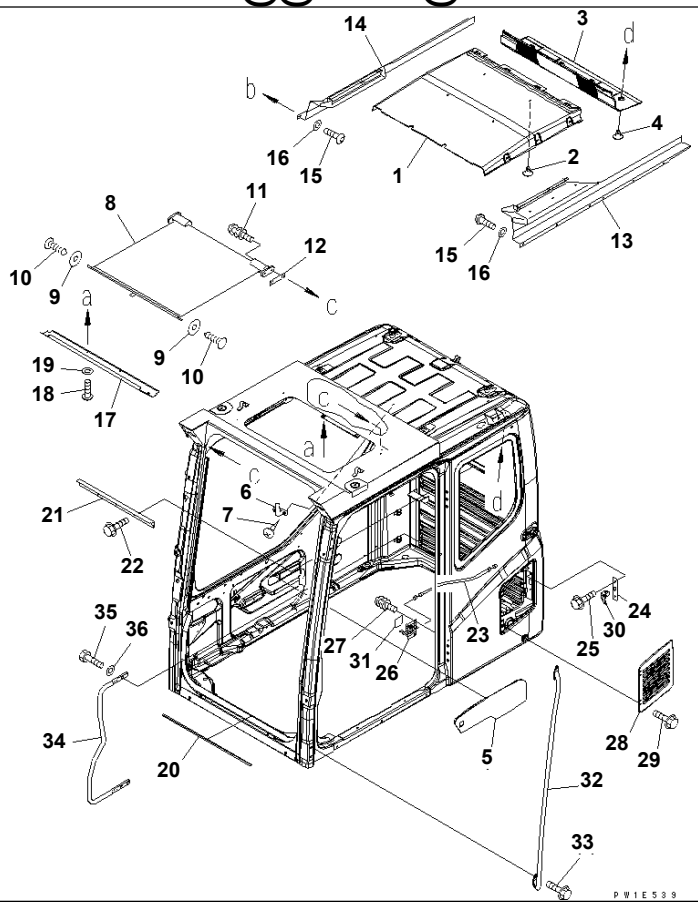

Ref. K0210-10A0 **Page 240170**

PC1250SP-8R S/N 35001-UP (W/O EGR, +55C DEGREE)

OPERATOR'S CAB (ACCESSORIES) (QUARRY SPEC.)

Item	Part No.	Part Name	Qty	Serial No.
	(21N-54-00480)	CAB ASS'Y, QUARRY	1	35001-
	(21N-54-00540)	CAB ASS'Y,(WITH VHMS AND ORBCOM)	1	35001-
1	21N-54-38321	· COVER	1	35001-
2	20Y-54-18690	· RIVET	10	35001-
3	20Y-54-53223	· COVER	1	35001-
4	20Y-54-18690	· RIVET	8	35001-
5	20Y-54-52432	· LINING	1	35001-
6	205-54-51250	· HANGER	1	35001-
7	01370-30412	· SCREW	2	35001-
8	22T-55-31310	· CURTAIN	1	35001-
9	209-72-12230	· WASHER	2	35001-
10	21N-54-38420	· RIVET	2	35001-
11	01023-70516	· SCREW	4	35001-
12	21N-54-38330	· SHIM	2	35001-
13	21N-54-38371	· COVER	1	35001-
14	21N-54-38381	· COVER	1	35001-
15	01245-00616	· SCREW	18	35001-
16	01643-70623	· WASHER	18	35001-
17	21N-54-38391	· COVER	1	35001-
18	01245-00616	· SCREW	4	35001-
19	01643-70623	· WASHER	4	35001-
20	21N-54-38180	· SPACER	1	35001-
21	20Y-54-53470	· PLATE	1	35001-
22	01435-00616	· BOLT	3	35001-
23	20Y-54-52740	· CABLE	1	35001-
24	20Y-54-52781	· PLATE	1	35001-
25	01435-40610	· BOLT	2	35001-
26	20Y-54-52731	· LEVER ASS'Y	1	35001-
27	01023-70616	· SCREW	1	35001-
28	20Y-54-52751	· COVER	1	35001-

Printed By : Dwi Iswanto (airafather6107170)

OPERATOR'S CAB (ACCESSORIES) (QUARRY SPEC.)

Item	Part No.	Part Name	Qty	Serial No.
29	01435-40610	· BOLT	4	35001-
30	20Y-54-52720	· LOCK ASS'Y	2	35001-
31	20Y-54-52910	· DECAL	1	35001-
32	20Y-54-51820	· GRIP	1	35001-
33	01435-40820	· BOLT	4	35001-
34	20Y-54-51832	· GRIP	1	35001-
35	01010-D1025	· BOLT	3	35001-
36	01643-71032	· WASHER	3	35001-

Printed By : Dwi Iswanto (airafather6107170)

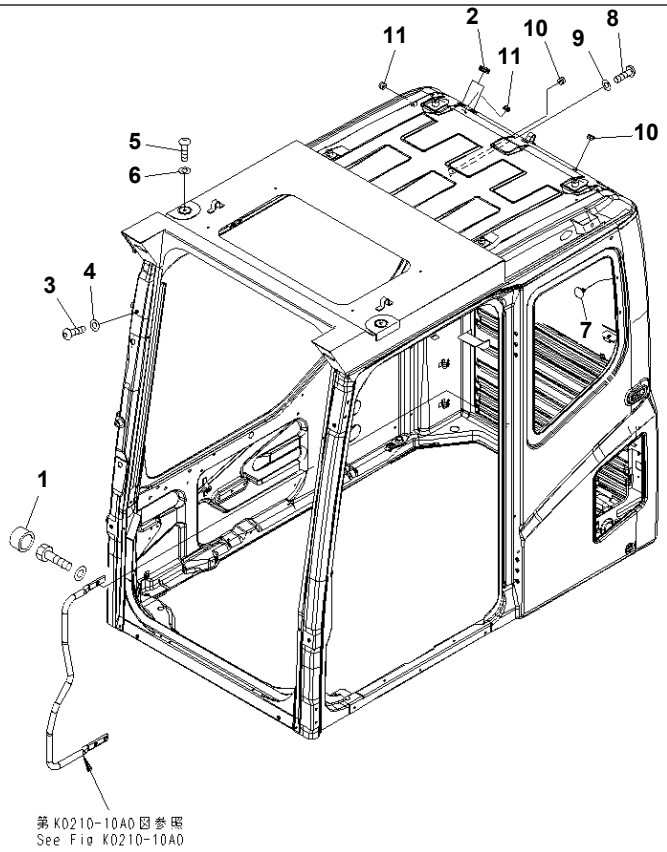

00042758

Ref. K0210-11A0 **Page 240180**

PC1250SP-8R S/N 35001-UP (W/O EGR, +55C DEGREE)
OPERATOR'S CAB (BOLT) (QUARRY SPEC.)

Item	Part No.	Part Name	Qty	Serial No.
	(21N-54-00480)	CAB ASS'Y, QUARRY	1	35001-
1	20Y-54-52440	· CAP	3	35001-
2	09415-02512	· CAP	2	35001-
3	01245-01220	· SCREW	10	35001-
4	01643-71232	· WASHER	10	35001-
5	01245-01220	· SCREW	7	35001-
6	01643-71232	· WASHER	7	35001-
7	208-53-13270	· RIVET	2	35001-
8	01245-00612	· SCREW	2	35001-
9	01643-70623	· WASHER	2	35001-
10	09415-01008	· CAP	2	35001-
11	09415-01008	· CAP	2	35001-

Printed By : Dwi Iswanto (airafather6107170)

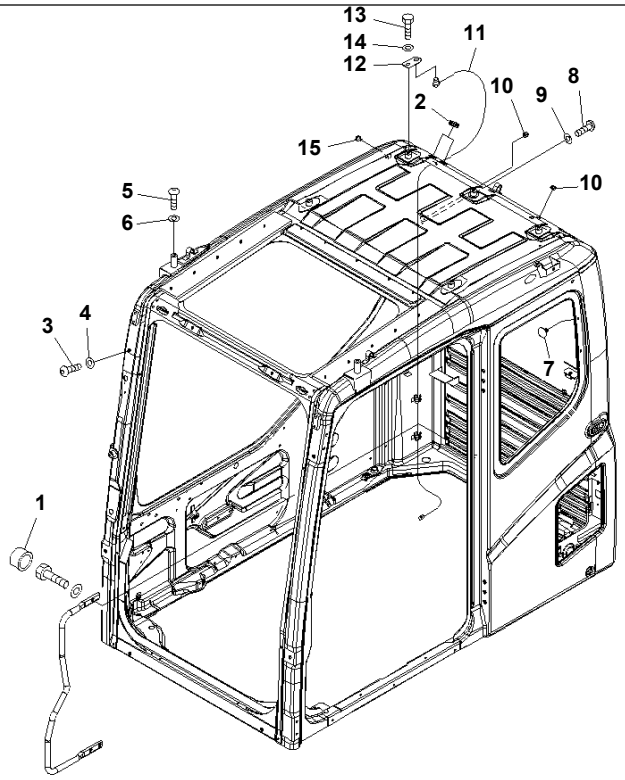

00056519

Ref. K0210-11A2 **Page 240190**

PC1250SP-8R S/N 35001-UP (W/O EGR, +55C DEGREE)
OPERATOR'S CAB (BOLT) (QUARRY SPEC.) (WITH ORBCOMM)

Item	Part No.	Part Name	Qty	Serial No.
	(21N-54-00540)	CAB ASS'Y,(WITH VHMS AND ORBCOM)	1	35001-
1	20Y-54-52440	· CAP	3	35001-
2	09415-02512	· CAP	2	35001-
3	01245-01220	· SCREW	10	35001-
4	01643-71232	· WASHER	10	35001-
5	01245-01220	· SCREW	7	35001-
6	01643-71232	· WASHER	7	35001-
7	208-53-13270	· RIVET	2	35001-
8	01245-00612	· SCREW	2	35001-
9	01643-70623	· WASHER	2	35001-
10	09415-01008	· CAP	2	35001-
11	8A13-10-2200	· CABLE	1	35001-
12	20Y-53-15140	· PLATE	1	35001-
13	01010-D1220	· BOLT	1	35001-
14	01643-71232	· WASHER	1	35001-
15	08037-10610	· GROMMET	1	35001-

Printed By : Dwi Iswanto (airafather6107170)

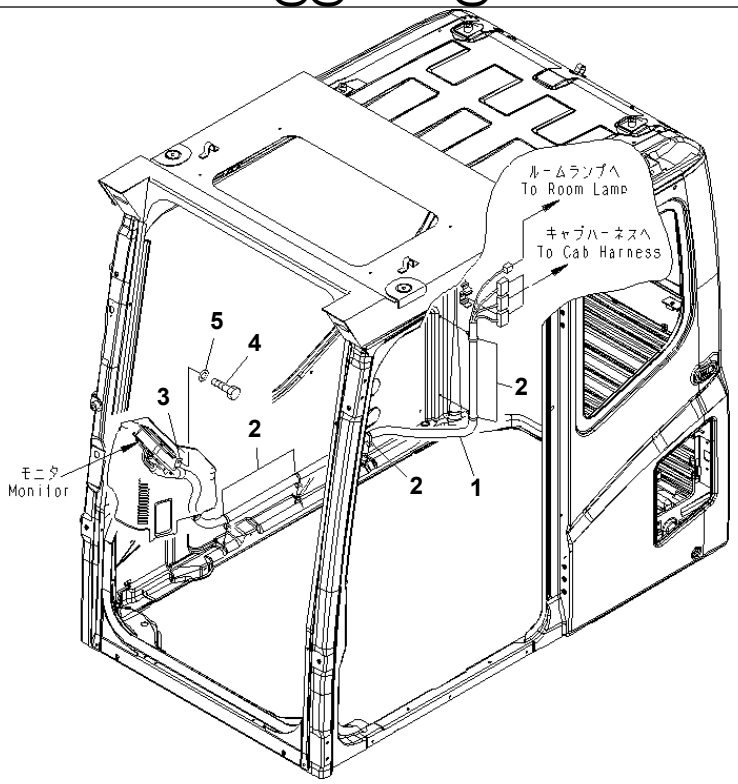

PW1E543

Ref. K0210-12A0 **Page 240200**

PC1250SP-8R S/N 35001-UP (W/O EGR, +55C DEGREE)
OPERATOR'S CAB (WIRING) (QUARRY SPEC.)

Item	Part No.	Part Name	Qty	Serial No.
1	21N-06-41171	WIRING HARNESS	1	35001-
2	08059-00413	CLIP	5	35001-
3	04434-51910	CLIP	1	35001-
4	01010-81020	BOLT	1	35001-
5	01643-31032	WASHER	1	35001-

Printed By : Dwi Iswanto (airafather6107170)

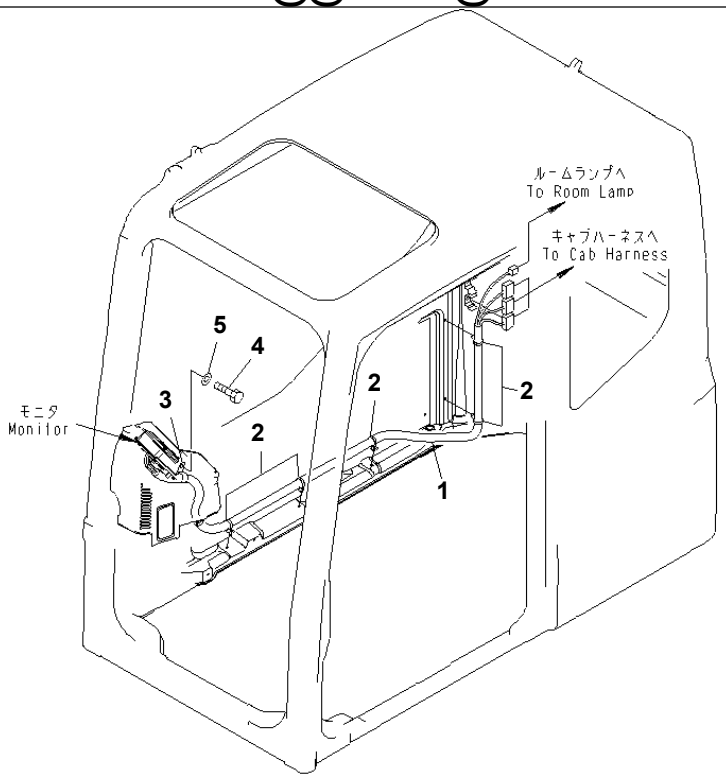

PW1B913

Ref. K0210-12A1 **Page 240210**

PC1250SP-8R S/N 35001-UP (W/O EGR, +55C DEGREE)
OPERATOR'S CAB (WIRING) (PULL UP WINDOW)

Item	Part No.	Part Name	Qty	Serial No.
1	21N-06-41180	WIRING HARNESS	1	35001-
2	08059-00413	CLIP	5	35001-
3	04434-51910	CLIP	1	35001-
4	01010-81020	BOLT	1	35001-
5	01643-31032	WASHER	1	35001-

Printed By : Dwi Iswanto (airafather6107170)

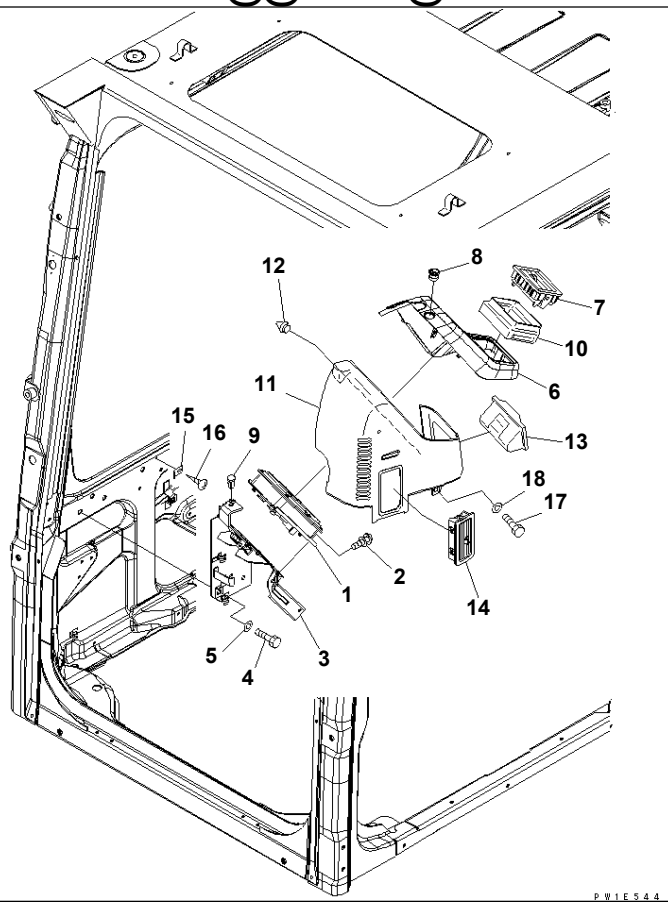

Ref. K0210-13A0 **Page 240220**

PC1250SP-8R S/N 35001-UP (W/O EGR, +55C DEGREE)
OPERATOR'S CAB (MONITOR SYSTEM) (QUARRY SPEC.)

Item	Part No.	Part Name	Qty	Serial No.
1	7835-16-4002	MONITOR	1	35001-
2	01023-10616	SCREW	3	35001-
3	22U-06-22151	BRACKET	1	35001-
4	01010-81020	BOLT	3	35001-
5	01643-31032	WASHER	3	35001-
6	20Y-54-65580	COVER ASS'Y	1	35001-
7	201-979-7820	GRILLE	1	35001-
8	20Y-54-65310	ADAPTER	1	35001-
9	20Y-979-6161	SENSOR	1	35001-
10	20Y-979-6420	DUCT	1	35001-
11	22U-54-25221	COVER	1	35001-
12	22U-54-25340	· CLIP	2	35001-
13	22U-54-25371	· ASHTRAY	1	35001-
14	22U-979-2381	GRILLE	1	35001-
15	22U-06-22590	BRACKET	1	35001-
16	01370-00508	SCREW	1	35001-
17	01010-80616	BOLT	1	35001-
18	01643-30623	WASHER	1	35001-

Printed By : Dwi Iswanto (airafather6107170)

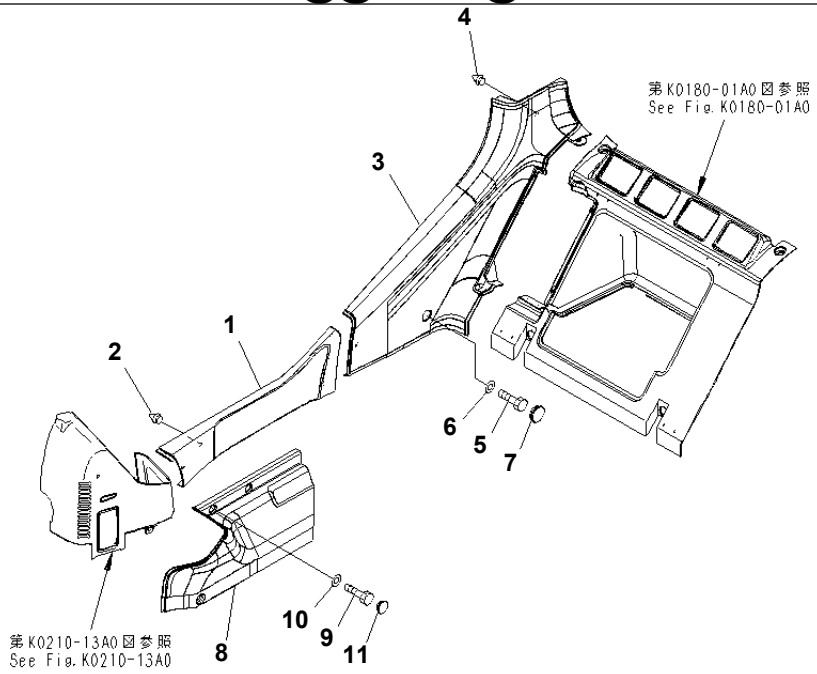

P W 1 B 9 1 5

Ref. K0210-14A0 **Page 240230**

PC1250SP-8R S/N 35001-UP (W/O EGR, +55C DEGREE)
OPERATOR'S CAB (COVER) (QUARRY SPEC.)

Item	Part No.	Part Name	Qty	Serial No.
1	20Y-54-65230	COVER	1	35001-
2	22U-54-25360	· CLIP	4	35001-
3	20Y-54-65240	COVER	1	35001-
4	22U-54-25360	· CLIP	2	35001-
5	01010-80820	BOLT	1	35001-
6	01643-30823	WASHER	1	35001-
7	22U-54-25331	CAP	1	35001-
8	20Y-54-65220	COVER	1	35001-
9	01010-80616	BOLT	3	35001-
10	01643-30623	WASHER	3	35001-
11	22U-54-25351	CAP	2	35001-

Printed By : Dwi Iswanto (airafather6107170)

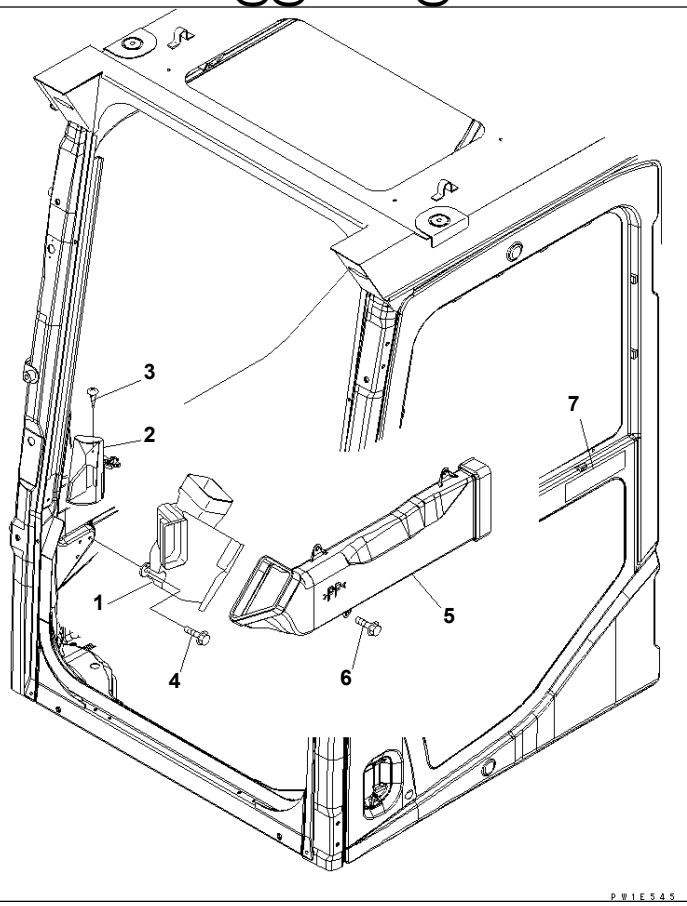

Ref. K0210-15A0 **Page 240240**

PC1250SP-8R S/N 35001-UP (W/O EGR, +55C DEGREE)
OPERATOR'S CAB (DUCT) (QUARRY SPEC.)

Item	Part No.	Part Name	Qty	Serial No.
	22U-979-2300	DUCT ASS'Y	1	35001-
1	☆	· DUCT	1	35001-
2	22U-979-2351	· DEFROSTER ASS'Y	1	35001-
3	01370-40408	· SCREW	4	35001-
4	01435-00612	BOLT	2	35001-
5	20Y-979-6222	DUCT	1	35001-
6	01435-40612	BOLT	3	35001-
7	09970-00230	PLATE	1	35001-35080

Printed By : Dwi Iswanto (airafather6107170)

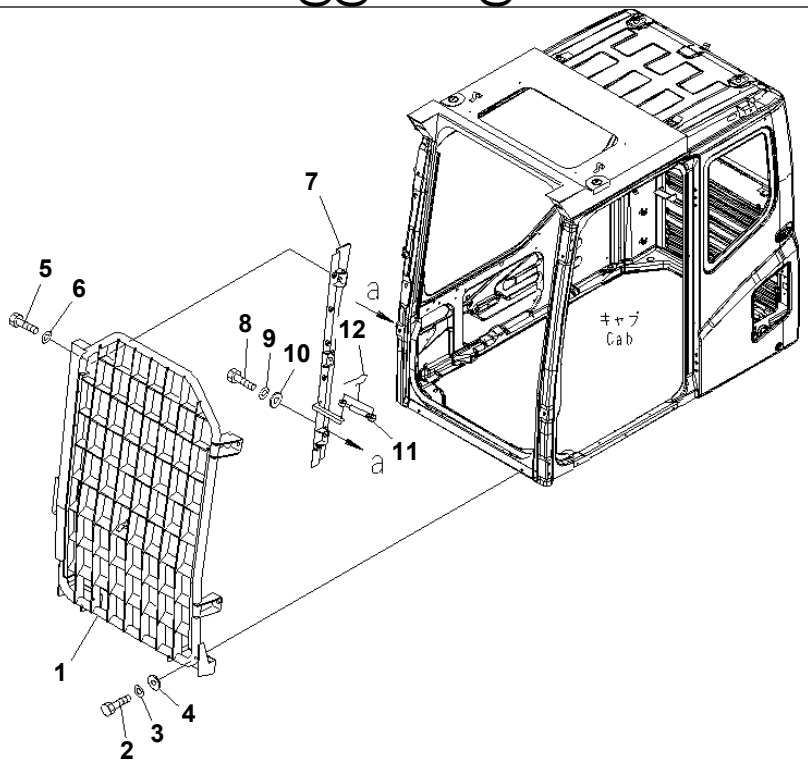

PW1E459

Ref. K0230-01A0 **Page 240250**

PC1250SP-8R S/N 35001-UP (W/O EGR, +55C DEGREE)
FRONT GUARD

Item	Part No.	Part Name	Qty	Serial No.
1	21N-956-1410	GUARD	1	35001-
2	01010-D1240	BOLT	4	35001-
3	01643-71232	WASHER	4	35001-
4	130-43-64260	COLLAR	4	35001-
5	01010-D1020	BOLT	6	35001-
6	01643-71032	WASHER	6	35001-
7	21N-956-1420	BRACKET	1	35001-
8	01010-D1240	BOLT	6	35001-
9	01643-71232	WASHER	6	35001-
10	130-43-64260	COLLAR	6	35001-
11	20Y-54-36342	GAS SPRING ASS'Y	1	35001-
12	04052-10833	PIN	2	35001-

Printed By : Dwi Iswanto (airafather6107170)

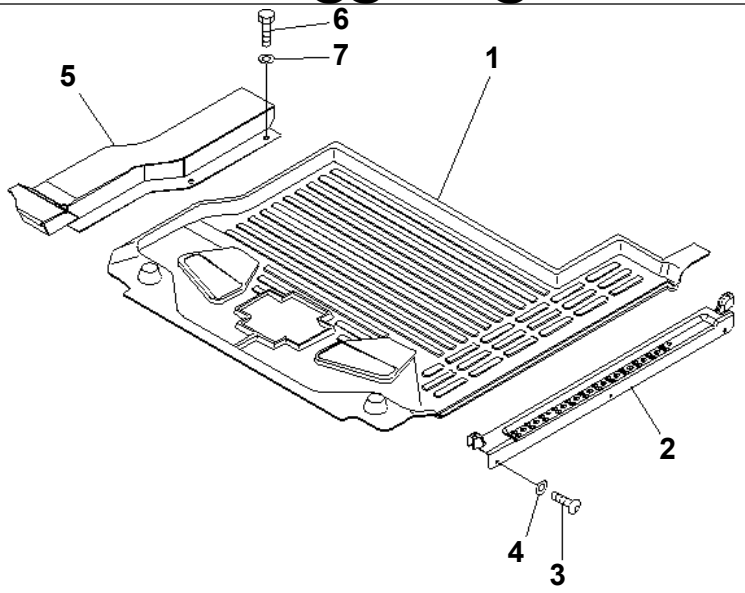

P W 1 E 4 5 3

Ref. K0310-01A0 **Page 240260**

PC1250SP-8R S/N 35001-UP (W/O EGR, +55C DEGREE)
FLOOR MAT

Item	Part No.	Part Name	Qty	Serial No.
1	20Y-54-65610	FLOOR MAT	1	35001-
2	20Y-54-51952	COVER	1	35001-
3	01245-00612	SCREW	5	35001-
4	01643-70623	WASHER	5	35001-
5	21N-54-39971	COVER	1	35001-
6	01010-81016	BOLT	2	35001-
7	01643-31032	WASHER	2	35001-

Printed By : Dwi Iswanto (airafather6107170)

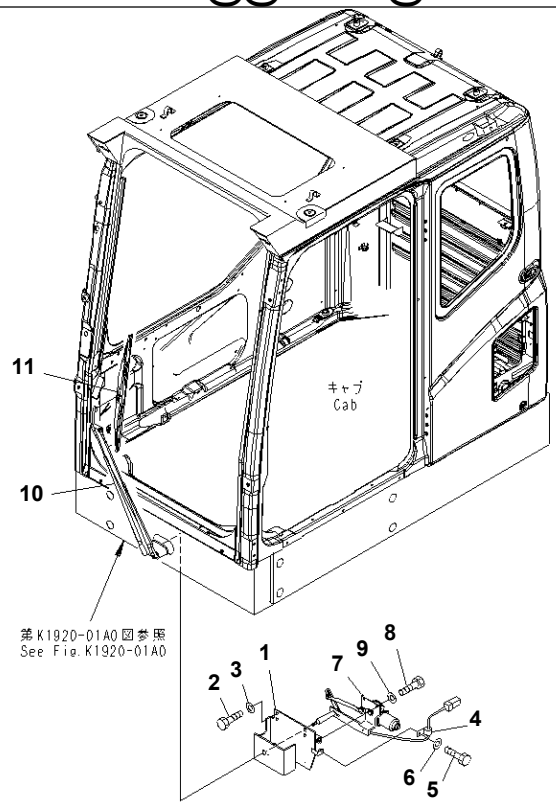

P W 1 E 4 5 4

Ref. K0340-01A0 **Page 240270**

PC1250SP-8R S/N 35001-UP (W/O EGR, +55C DEGREE)
LOWER WIPER

Item	Part No.	Part Name	Qty	Serial No.
1	21N-53-31411	BRACKET	1	35001-
2	01010-81025	BOLT	4	35001-
3	01643-31032	WASHER	4	35001-
4	04434-50608	CLIP	1	35001-
5	01010-80620	BOLT	1	35001-
6	01643-30623	WASHER	1	35001-
7	21N-53-31270	WIPER MOTOR ASS'Y	1	35001-
8	01010-80620	BOLT	4	35001-
9	01643-30623	WASHER	4	35001-
10	21N-53-31280	WIPER ARM	1	35001-
11	20U-54-24850	BLADE	1	35001-

Printed By : Dwi Iswanto (airafather6107170)

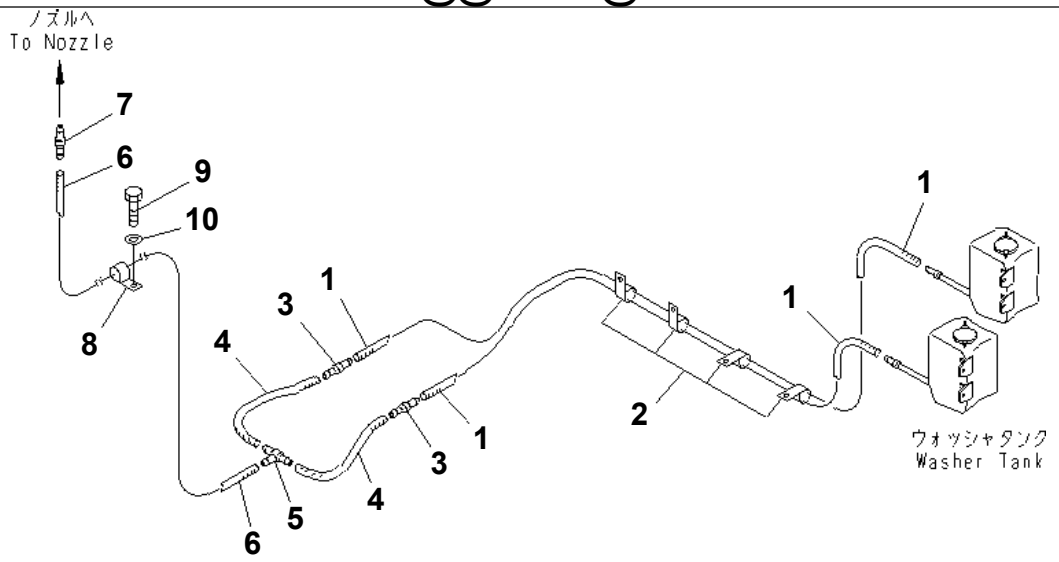

P W 1 E 4 8 6

Ref. K0350-01A0 **Page 240280**

PC1250SP-8R S/N 35001-UP (W/O EGR, +55C DEGREE)
WINDOW WASHER

Item	Part No.	Part Name	Qty	Serial No.
1	20Y-06-21620	HOSE	2	35001-
2	198-904-4280	CLIP	4	35001-
3	207-06-61490	VALVE	2	35001-
4	21T-06-11430	HOSE	2	35001-
5	21T-06-11370	TEE	1	35001-
6	205-06-61230	HOSE	1	35001-
7	21T-06-71230	JOINT	1	35001-
8	04434-50610	CLIP	1	35001-
9	01010-81016	BOLT	1	35001-
10	01643-31032	WASHER	1	35001-

Printed By : Dwi Iswanto (airafather6107170)

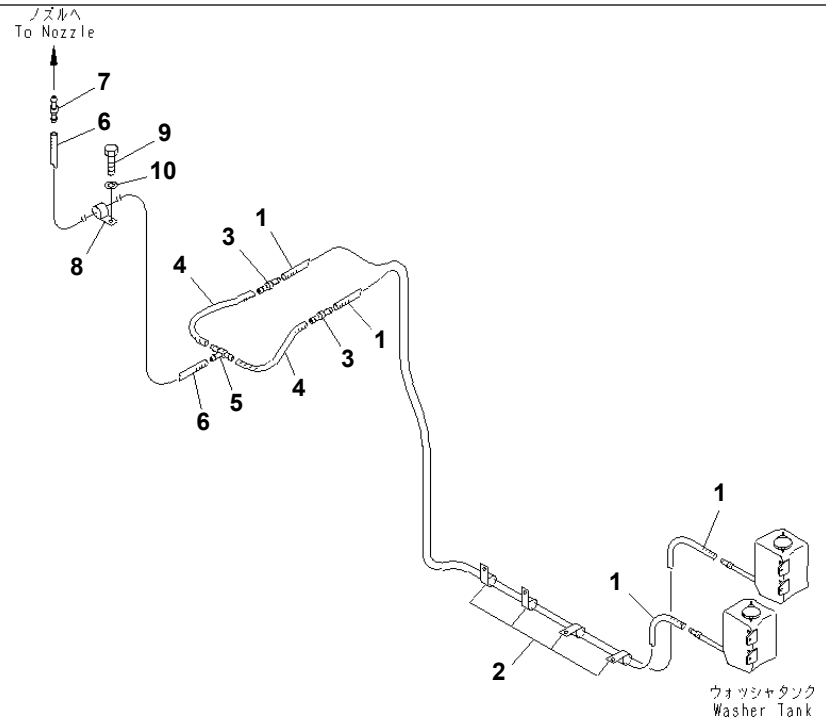

00012329

Ref. K0350-01A1 **Page 240290**

PC1250SP-8R S/N 35001-UP (W/O EGR, +55C DEGREE)
WINDOW WASHER (FOR HIGH CAB)

Item	Part No.	Part Name	Qty	Serial No.
1	21T-06-11411	HOSE	2	35001-
2	198-904-4280	CLIP	4	35001-
3	207-06-61490	VALVE	2	35001-
4	21T-06-11430	HOSE	2	35001-
5	21T-06-11370	TEE	1	35001-
6	205-06-61230	HOSE	1	35001-
7	21T-06-71230	JOINT	1	35001-
8	04434-50610	CLIP	1	35001-
9	01010-81016	BOLT	1	35001-
10	01643-31032	WASHER	1	35001-

Printed By : Dwi Iswanto (airafather6107170)

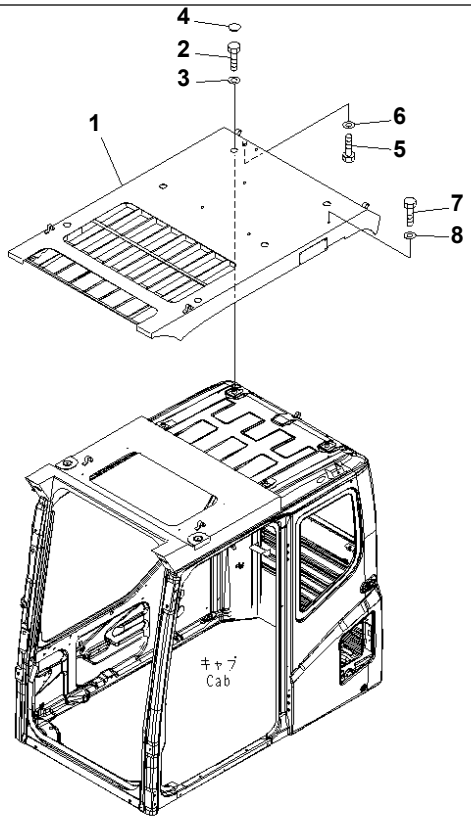

00044532

Ref. K0600-01A0 **Page 240300**

PC1250SP-8R S/N 35001-UP (W/O EGR, +55C DEGREE)
TOP GUARD (LEVEL2)

Item	Part No.	Part Name	Qty	Serial No.
1	21N-54-38312	GUARD	1	35118-
	□21N-54-38311	GUARD	1	35001-35117
2	01010-D1250	BOLT	6	35001-
3	01643-71232	WASHER	6	35001-
4	195-Z11-2970	CAP	6	35001-
5	01010-D1220	BOLT	1	35001-
6	01643-71232	WASHER	1	35001-
7	01010-D1016	BOLT	1	35001-
8	01643-71032	WASHER	1	35001-

Printed By : Dwi Iswanto (airafather6107170)

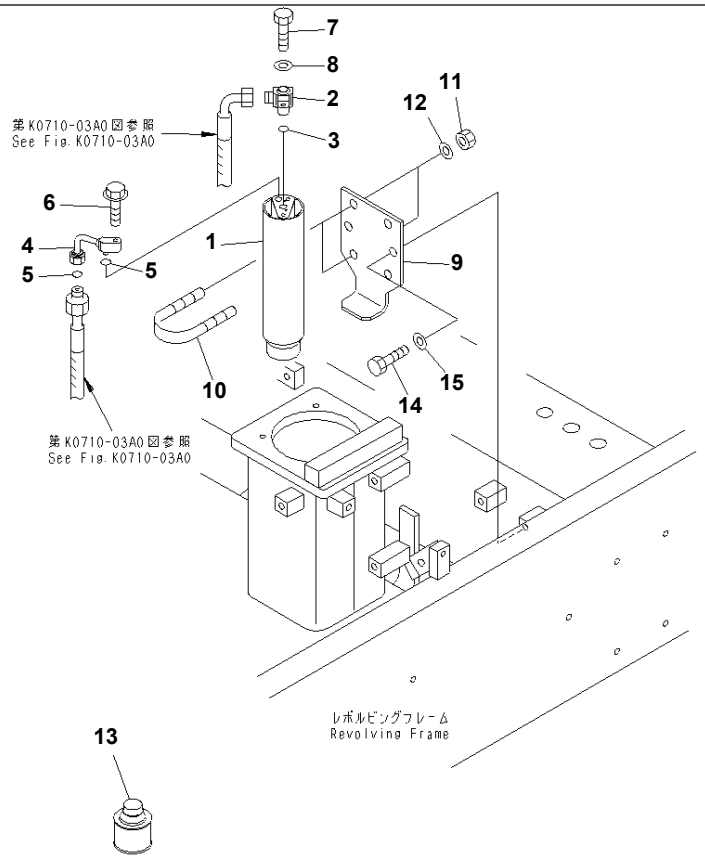

Ref. K0710-01A0 **Page 240310**

PC1250SP-8R S/N 35001-UP (W/O EGR, +55C DEGREE)

AIR CONDITIONER (RECEIVER TANK)

Item	Part No.	Part Name	Qty	Serial No.
1	20Y-979-3120	TANK	1	35001-
2	21N-979-3420	JOINT	1	35001-
3	20Y-979-3150	· O-RING	1	35001-
4	21N-979-3431	TUBE	1	35001-
5	20Y-979-3150	· O-RING	2	35001-
6	01435-00625	BOLT	1	35001-
7	01010-80625	BOLT	1	35001-
8	01643-30623	WASHER	1	35001-
9	21N-979-4160	BRACKET	1	35001-
10	07283-36155	CLIP	2	35001-
11	01597-01009	NUT	4	35001-
12	01643-31032	WASHER	4	35001-
13	21N-979-8160	OIL	1	35001-
14	01010-81225	BOLT	2	35001-
15	01643-31232	WASHER	2	35001-

Printed By : Dwi Iswanto (airafather6107170)

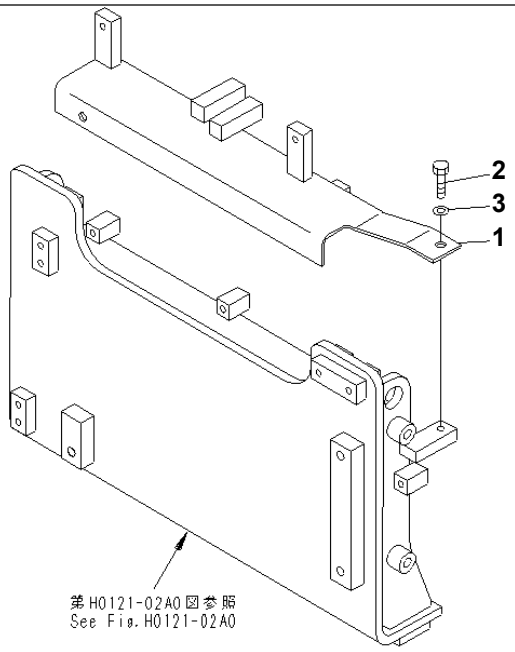

00056551

Ref. K0710-02A0 **Page 240320**

PC1250SP-8R S/N 35001-UP (W/O EGR, +55C DEGREE)
AIR CONDITIONER (BRACKET)

Item	Part No.	Part Name	Qty	Serial No.
1	21N-979-4112	BRACKET	1	35001-
2	01010-81225	BOLT	2	35001-
3	01643-31232	WASHER	2	35001-

Printed By : Dwi Iswanto (airafather6107170)

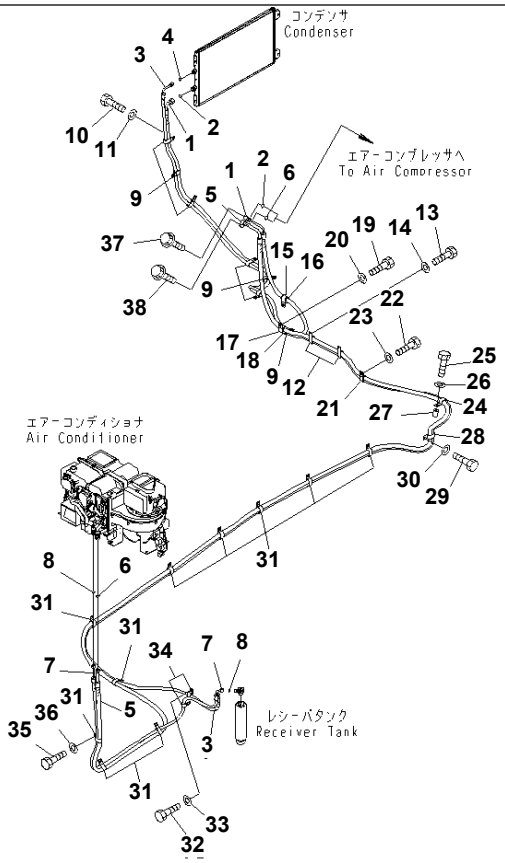

Ref. K0710-03A0 **Page 240330**

PC1250SP-8R S/N 35001-UP (W/O EGR, +55C DEGREE)
AIR CONDITIONER (HOSE JOINT)

Item	Part No.	Part Name	Qty	Serial No.
1	21N-979-4121	HOSE, 3500MM	1	35001-
2	20Y-979-3140	· O-RING	2	35001-
3	21N-979-3751	HOSE, 8000MM	1	35001-
4	20Y-979-3150	· O-RING	1	35001-
5	21N-979-4142	HOSE, 6600MM	1	35001-
6	20Y-979-3130	· O-RING	2	35001-
7	21N-979-3680	HOSE, 1800MM	1	35001-
8	20Y-979-3150	· O-RING	2	35001-
9	04435-51812	CLIP	7	35001-
10	01010-81225	BOLT	5	35001-
11	01643-31232	WASHER	5	35001-
12	04435-51912	CLIP	2	35001-
13	01010-81225	BOLT	2	35001-
14	01643-31232	WASHER	2	35001-
15	04434-52712	CLIP	1	35001-
16	07095-20419	CUSHION	1	35001-
17	04434-53212	CLIP	1	35001-
18	07095-20522	CUSHION	1	35001-
19	01010-81225	BOLT	1	35001-
20	01643-31232	WASHER	1	35001-
21	04435-51912	CLIP	1	35001-
22	01010-81225	BOLT	1	35001-
23	01643-31232	WASHER	1	35001-
24	04435-51912	CLIP	1	35001-
25	01010-81260	BOLT	1	35001-
26	01643-31232	WASHER	1	35001-
27	20Y-03-11220	COLLAR	1	35001-
28	04435-51912	CLIP	1	35001-
29	01010-81225	BOLT	1	35001-
30	01643-31232	WASHER	1	35001-

Printed By : Dwi Iswanto (airafather6107170)

AIR CONDITIONER (HOSE JOINT)

Item	Part No.	Part Name	Qty	Serial No.
31	04435-51912	CLIP	10	35001-
32	01010-81225	BOLT	3	35001-
33	01643-31232	WASHER	3	35001-
34	04434-51512	CLIP	2	35001-
35	01010-81225	BOLT	2	35001-
36	01643-31232	WASHER	2	35001-
37	01435-00625	BOLT	1	35001-
38	01435-00630	BOLT	1	35001-

Printed By : Dwi Iswanto (airafather6107170)

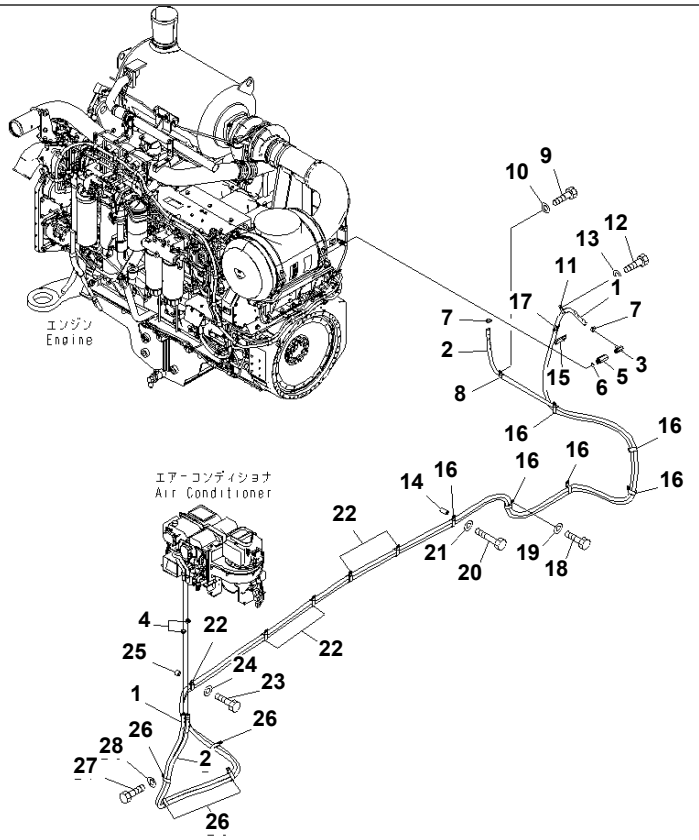

Ref. K0710-04A0 **Page 240340**

PC1250SP-8R S/N 35001-UP (W/O EGR, +55C DEGREE)

AIR CONDITIONER (HEATER HOSE)

Item	Part No.	Part Name	Qty	Serial No.
1	21N-979-4170	HOSE ASS'Y	1	35001-
2	21N-979-4180	HOSE ASS'Y	1	35001-
3	202-98-11340	JOINT	1	35001-
4	11Y-09-11160	CLIP	2	35001-
5	201-62-52120	NIPPLE	1	35001-
6	07002-12034	O-RING	1	35001-
7	11Y-09-11160	CLIP	2	35001-
8	04434-52112	CLIP	1	35001-
9	01010-81225	BOLT	1	35001-
10	01643-31232	WASHER	1	35001-
11	04434-52110	CLIP	1	35001-
12	01010-81025	BOLT	1	35001-
13	01643-31032	WASHER	1	35001-
14	195-979-5190	COLLAR	1	35001-
15	21N-979-4150	BRACKET	1	35001-35001
16	04435-52112	CLIP	6	35001-
17	04434-52112	CLIP	1	35001-
18	01010-81225	BOLT	2	35001-
19	01643-31232	WASHER	2	35001-
20	01010-81275	BOLT	1	35001-
21	01643-31232	WASHER	1	35001-
22	04435-52112	CLIP	5	35001-
23	01010-81245	BOLT	5	35001-
24	01643-31232	WASHER	5	35001-
25	195-33-11220	SPACER	5	35001-
26	04435-52112	CLIP	4	35001-
27	01010-81225	BOLT	3	35001-
28	01643-31232	WASHER	3	35001-

Printed By : Dwi Iswanto (airafather6107170)

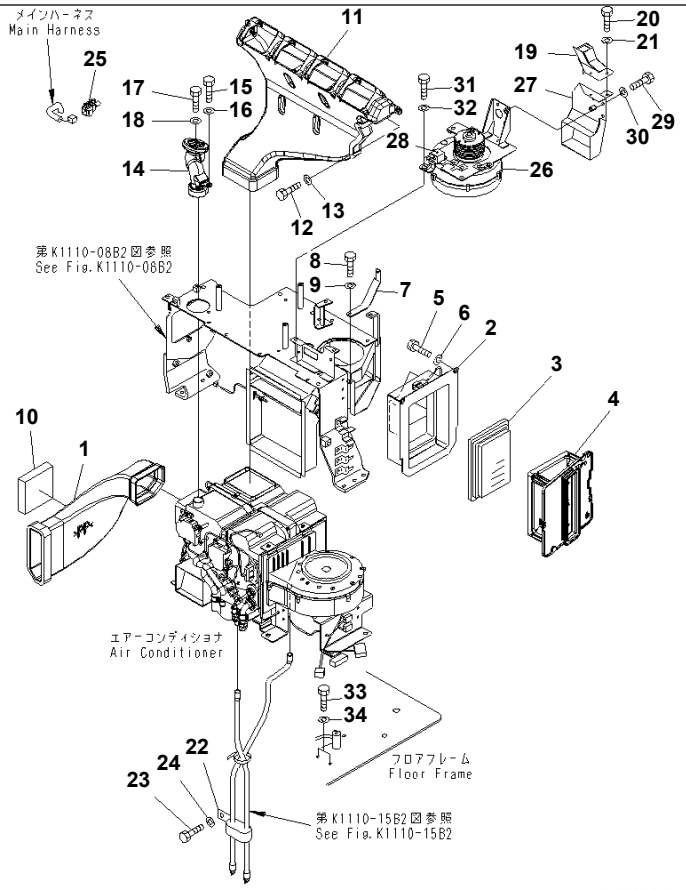

Ref. K0710-05A1 **Page 240350**

PC1250SP-8R S/N 35001-UP (W/O EGR, +55C DEGREE)

AIR CONDITIONER (DUCT¤ DRAIN HOSE AND BLOWER) (BIG WIND) (+55C SPEC.)

Item	Part No.	Part Name	Qty	Serial No.
1	20Y-979-6212	DUCT	1	35001-
2	21N-979-3240	DUCT	1	35001-
3	17M-911-3530	ELEMENT	1	35001-
4	20Y-54-52761	HOLDER	1	35001-
5	01010-80816	BOLT	2	35001-
6	01643-30823	WASHER	2	35001-
7	21N-979-3220	PLATE	1	35001-
8	01010-80612	BOLT	2	35001-
9	01643-30623	WASHER	2	35001-
10	20Y-979-7250	SEAL	1	35001-
11	20Y-979-6791	DUCT	1	35001-
12	01010-80820	BOLT	2	35001-
13	01643-30823	WASHER	2	35001-
14	20Y-979-6430	DUCT	1	35001-
15	01010-80820	BOLT	1	35001-
16	01643-30823	WASHER	1	35001-
17	01016-50845	BOLT	1	35001-
18	01643-30823	WASHER	1	35001-
19	20Y-979-6751	DUCT	1	35001-
20	01010-80612	BOLT	2	35001-
21	01643-30623	WASHER	2	35001-
22	04435-51512	CLIP	1	35001-
23	01010-81235	BOLT	1	35001-
24	01643-31232	WASHER	1	35001-
25	20Y-979-6191	SENSOR	1	35001-
26	21N-979-3210	BLOWER	1	35001-
27	20Y-979-6761	DUCT	1	35001-
28	20Y-979-6771	RELAY	1	35001-
29	01010-80820	BOLT	3	35001-

Printed By : Dwi Iswanto (airafather6107170)

AIR CONDITIONER (DUCT¤ DRAIN HOSE AND BLOWER) (BIG WIND) (+55C SPEC.)

Item	Part No.	Part Name	Qty	Serial No.
30	01643-30823	WASHER	3	35001-
31	01010-80820	BOLT	4	35001-
32	01643-30823	WASHER	4	35001-
33	01010-D0816	BOLT	2	35001-
34	01643-70823	WASHER	2	35001-

Printed By : Dwi Iswanto (airafather6107170)

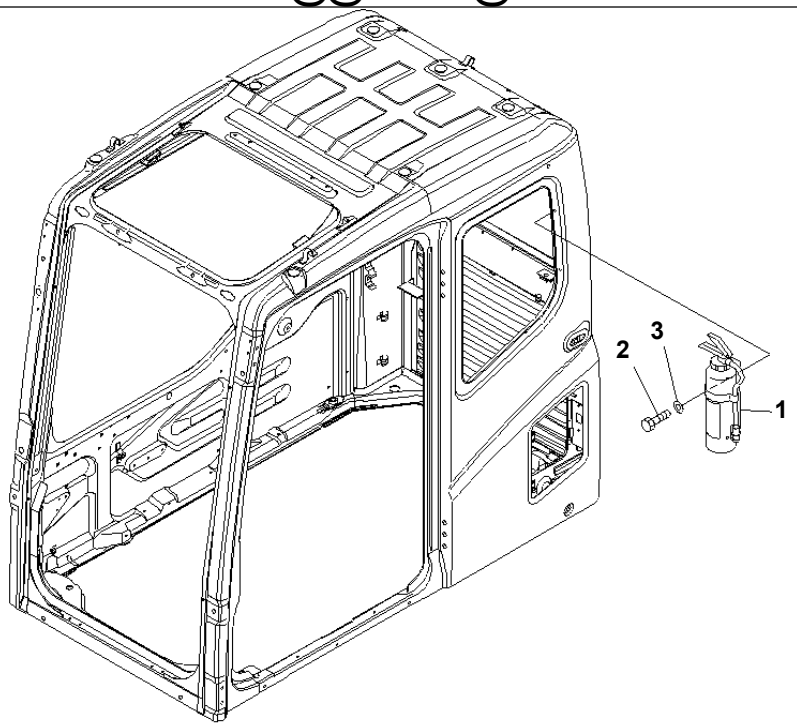

P W 1 B 7 9 9

Ref. K0830-01A1 **Page 240360**

PC1250SP-8R S/N 35001-UP (W/O EGR, +55C DEGREE)
FIRE EXTINGUISHER (ENGLISH)

Item	Part No.	Part Name	Qty	Serial No.
1	22B-98-11120	EXTINGUISHER	1	35001-
2	01010-D0820	BOLT	2	35001-
3	01643-70823	WASHER	2	35001-

Printed By : Dwi Iswanto (airafather6107170)

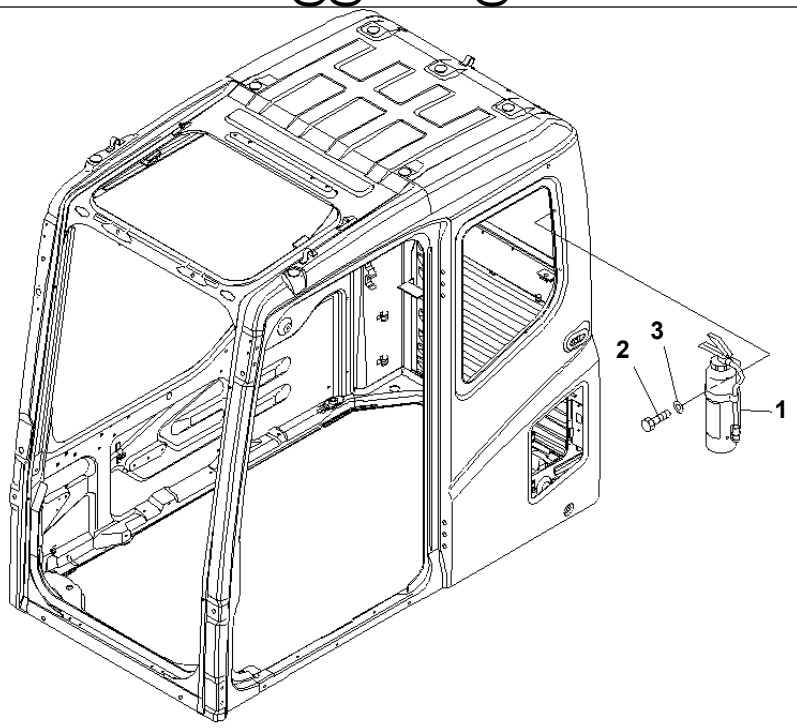

P W 1 B 7 9 9

Ref. K0830-01A2 **Page 240370**

PC1250SP-8R S/N 35001-UP (W/O EGR, +55C DEGREE)
FIRE EXTINGUISHER (RUSSIAN)

Item	Part No.	Part Name	Qty	Serial No.
1	22B-98-11140	EXTINGUISHER	1	35001-
2	01010-D0820	BOLT	2	35001-
3	01643-70823	WASHER	2	35001-

Printed By : Dwi Iswanto (airafather6107170)

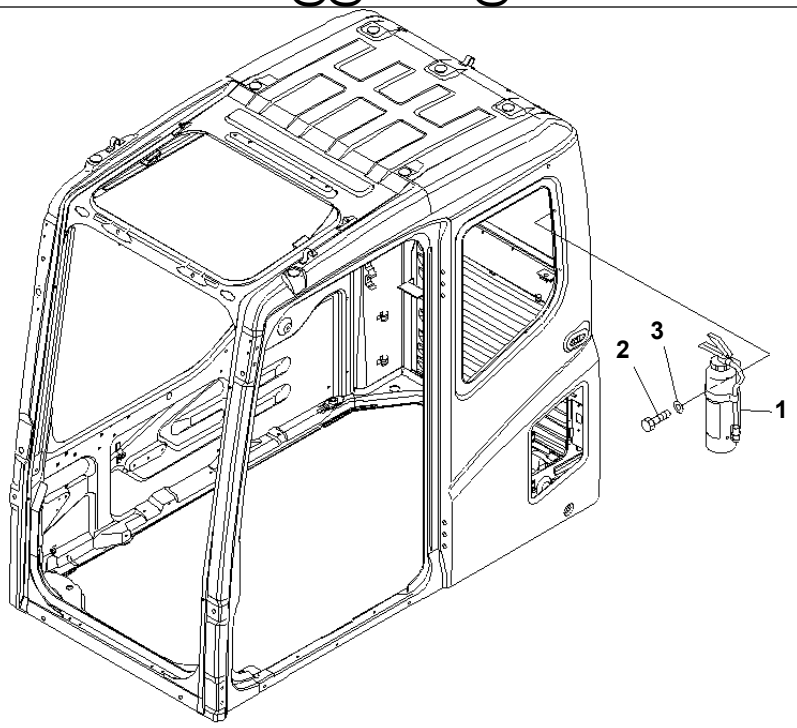

P W 1 B 7 9 9

Ref. K0830-01A3 **Page 240380**

PC1250SP-8R S/N 35001-UP (W/O EGR, +55C DEGREE)
FIRE EXTINGUISHER (CHINESE)

Item	Part No.	Part Name	Qty	Serial No.
1	22B-98-11150	EXTINGUISHER	1	35001-
2	01010-D0820	BOLT	2	35001-
3	01643-70823	WASHER	2	35001-

Printed By : Dwi Iswanto (airafather6107170)

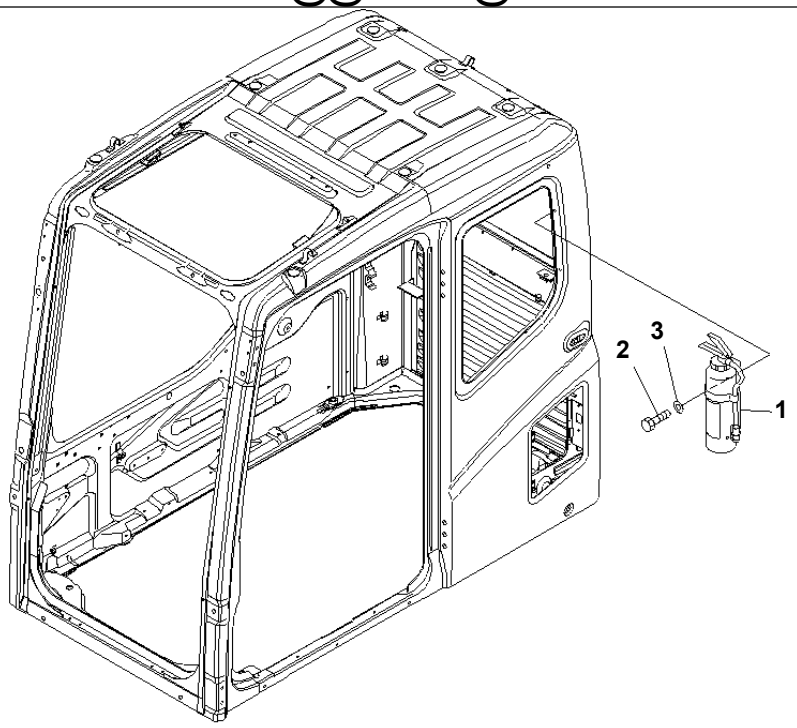

P W 1 B 7 9 9

Ref. K0830-01A4 **Page 240390**

PC1250SP-8R S/N 35001-UP (W/O EGR, +55C DEGREE)
FIRE EXTINGUISHER (SPANISH)

Item	Part No.	Part Name	Qty	Serial No.
1	22B-98-11160	EXTINGUISHER	1	35001-
2	01010-D0820	BOLT	2	35001-
3	01643-70823	WASHER	2	35001-

Printed By : Dwi Iswanto (airafather6107170)

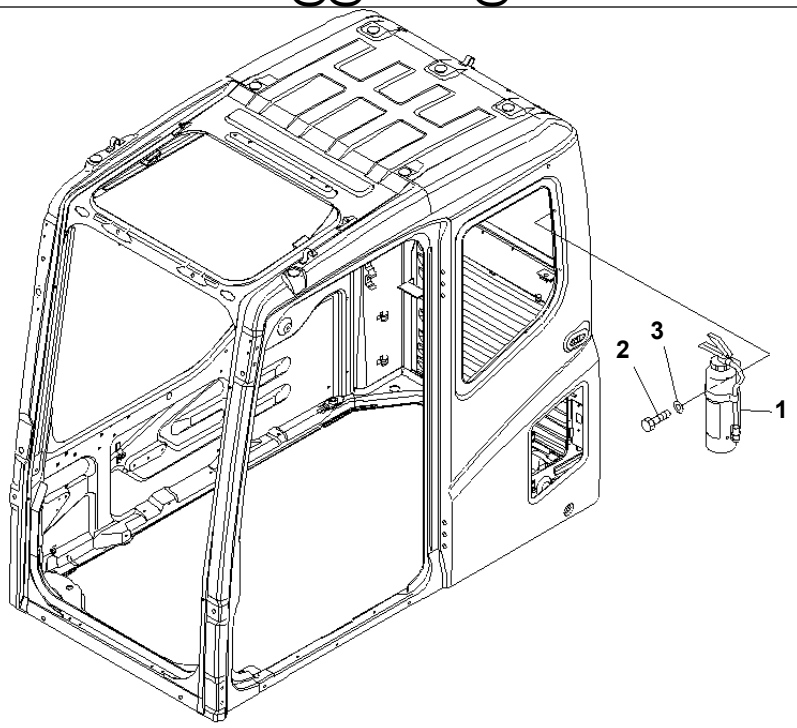

PW1B799

Ref. K0830-01A5 **Page 240400**

PC1250SP-8R S/N 35001-UP (W/O EGR, +55C DEGREE)
FIRE EXTINGUISHER (INDONESIAN)

Item	Part No.	Part Name	Qty	Serial No.
1	22B-98-11170	EXTINGUISHER	1	35001-
2	01010-D0820	BOLT	2	35001-
3	01643-70823	WASHER	2	35001-

Printed By : Dwi Iswanto (airafather6107170)

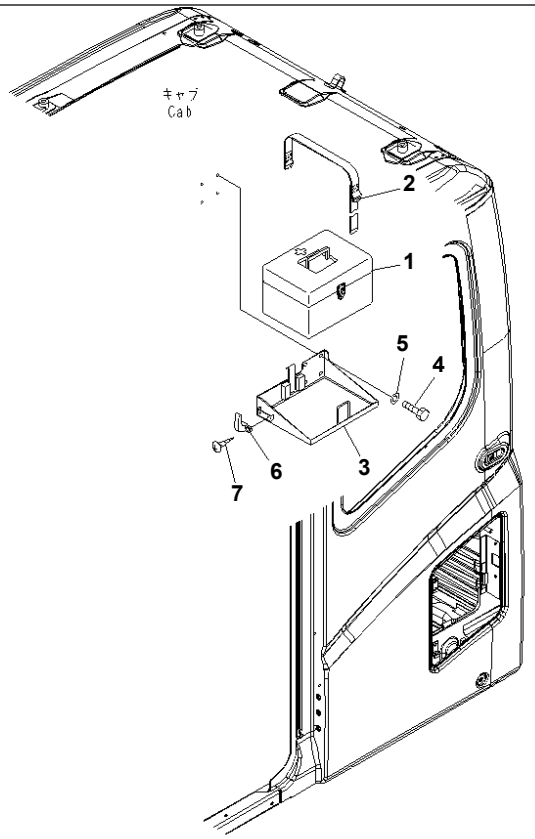

Ref. K0840-01A0 **Page 240410**

PC1250SP-8R S/N 35001-UP (W/O EGR, +55C DEGREE)
FIRST AID BOX

Item	Part No.	Part Name	Qty	Serial No.
1	195-911-6531	BOX	1	35001-
2	195-911-6562	BAND	1	35001-
3	20Y-54-53370	BRACKET	1	35001-
4	01010-80816	BOLT	4	35001-
5	01643-30823	WASHER	4	35001-
6	205-54-51250	HANGER	1	35001-
7	01370-30412	SCREW	2	35001-

Printed By : Dwi Iswanto (airafather6107170)

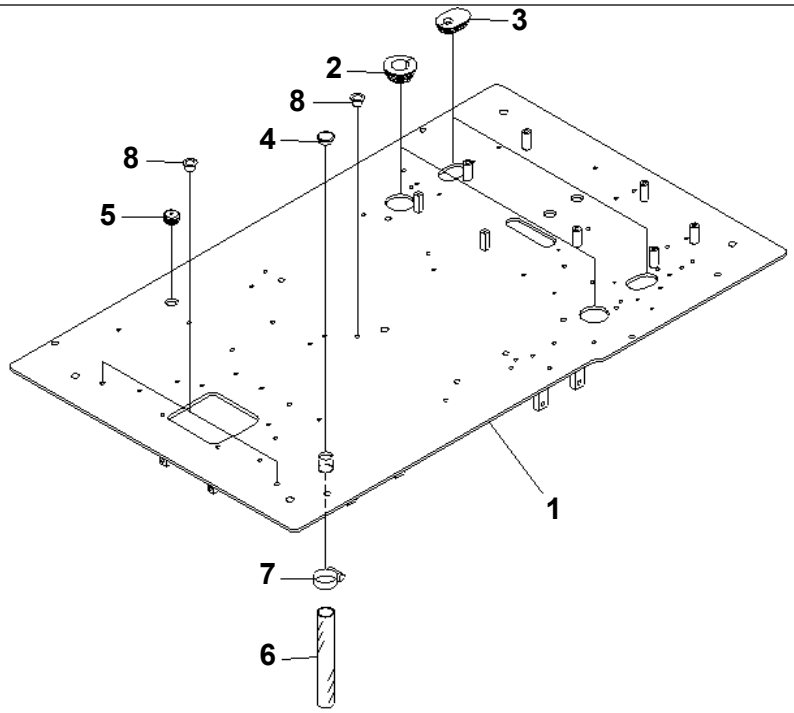

00007500

Ref. K1110-01A0 **Page 240420**

PC1250SP-8R S/N 35001-UP (W/O EGR, +55C DEGREE)
FLOOR FRAME (FLOOR FRAME)

Item	Part No.	Part Name	Qty	Serial No.
1	21N-54-39913	FLOOR FRAME	1	35001-
2	207-54-71190	GROMMET	2	35001-
3	209-53-13250	GROMMET	2	35001-
4	22U-54-25581	GROMMET	1	35001-
5	22U-54-25590	GROMMET	1	35001-
6	07286-03865	HOSE	1	35001-
7	07280-04726	CLAMP	1	35001-
8	07048-01310	PLUG	3	35001-

Printed By : Dwi Iswanto (airafather6107170)

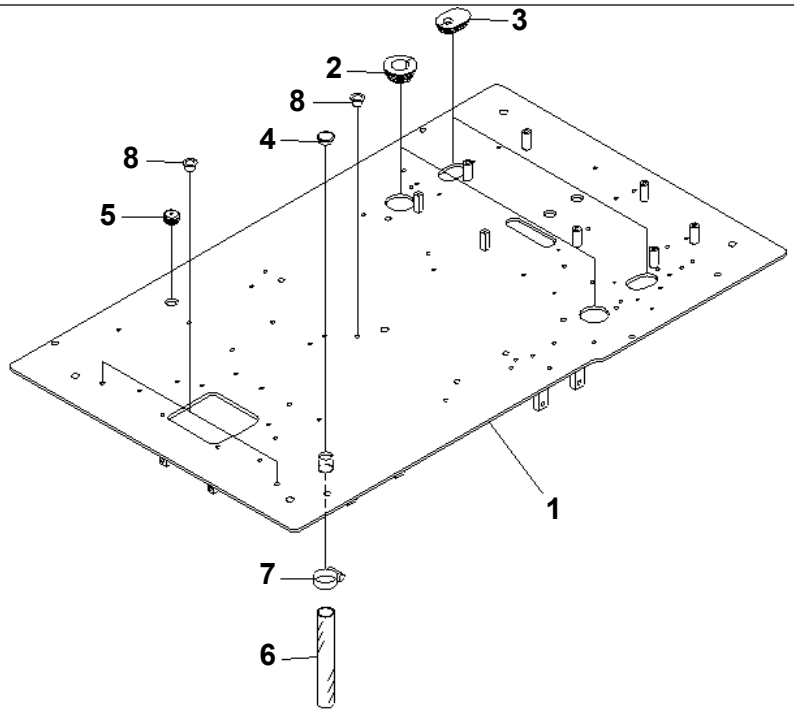

00007500

Ref. K1110-01B6 **Page 240430**

PC1250SP-8R S/N 35001-UP (W/O EGR, +55C DEGREE)
FLOOR FRAME (FLOOR FRAME) (FOR HIGH CAB MOUNT)

Item	Part No.	Part Name	Qty	Serial No.
1	21N-54-39913	FLOOR FRAME	1	35001-
2	207-54-71190	GROMMET	2	35001-
3	209-53-13250	GROMMET	2	35001-
4	22U-54-25581	GROMMET	1	35001-
5	22U-54-25590	GROMMET	1	35001-
6	07287-03813	HOSE	1	35001-
7	07280-04726	CLAMP	1	35001-
8	07048-01310	PLUG	3	35001-

Printed By : Dwi Iswanto (airafather6107170)

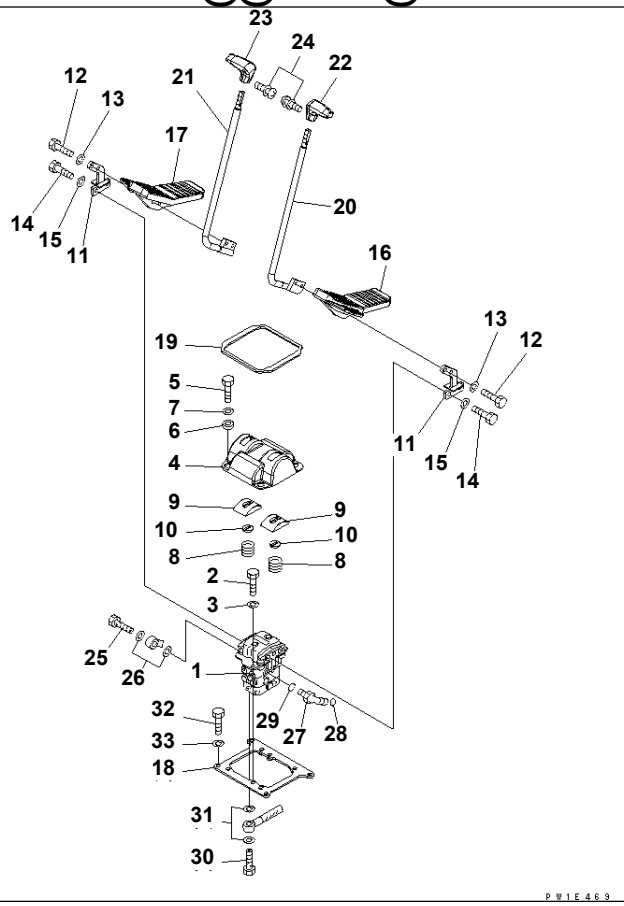

Ref. K1110-02A0 **Page 240440**

PC1250SP-8R S/N 35001-UP (W/O EGR, +55C DEGREE)

FLOOR FRAME (TRAVEL CONTROL)

Item	Part No.	Part Name	Qty	Serial No.
1	(702-16-01682)	PILOT VALVE	1	35001-
2	01010-81025	BOLT	2	35001-
3	01643-31032	WASHER	2	35001-
4	20Y-43-21151	COVER	1	35001-
5	01010-81025	BOLT	4	35001-
6	20Y-43-21260	COLLAR	4	35001-
7	203-54-56970	WASHER	4	35001-
8	203-43-51620	SPRING	2	35001-
	22U-43-21350	COVER ASS'Y	1	35001-
9	☆	· COVER	1	35001-
10	22U-43-21360	· SEAL	1	35001-
11	22U-43-21150	LEVER	2	35001-
12	01010-D1045	BOLT	4	35001-
13	01643-71032	WASHER	4	35001-
14	01010-81030	BOLT	4	35001-
15	01643-31032	WASHER	4	35001-
16	22U-43-21111	PEDAL	1	35001-
17	22U-43-21121	PEDAL	1	35001-
18	20Y-43-21161	PLATE	1	35001-
19	22U-43-21380	SEAL	1	35001-
20	22U-43-21130	LEVER	1	35001-
21	22U-43-21140	LEVER	1	35001-
22	20Y-43-21231	KNOB	1	35001-
23	20Y-43-21241	KNOB	1	35001-
24	01023-20416	SCREW	2	35001-
25	702-16-53240	PLUG	1	35001-
26	07000-12018	O-RING	2	35001-
27	02782-10311	ELBOW	1	35001-
28	02896-11009	O-RING	1	35001-
29	07002-11423	O-RING	1	35001-

Printed By : Dwi Iswanto (airafather6107170)

FLOOR FRAME (TRAVEL CONTROL)

Item	Part No.	Part Name	Qty	Serial No.
30	20Y-62-16170	BOLT	4	35001-
31	07000-12015	O-RING	8	35001-
32	01010-81025	BOLT	4	35001-
33	01643-31032	WASHER	4	35001-

Printed By : Dwi Iswanto (airafather6107170)

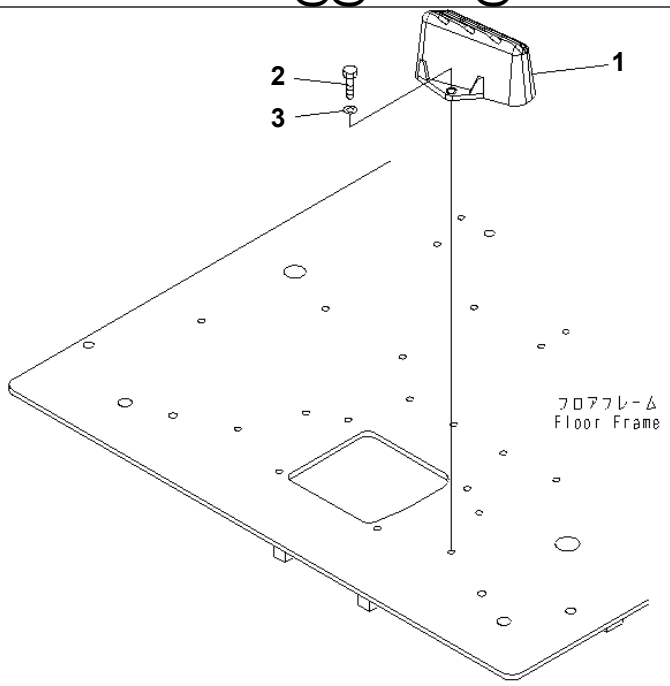

P W 1 E 4 7 0

Ref. K1110-03A0 **Page 240450**

PC1250SP-8R S/N 35001-UP (W/O EGR, +55C DEGREE)
FLOOR FRAME (FOOT REST) (L.H.)

Item	Part No.	Part Name	Qty	Serial No.
1	22U-54-25110	FOOT REST	1	35001-
2	01010-81025	BOLT	2	35001-
3	01643-31032	WASHER	2	35001-

Printed By : Dwi Iswanto (airafather6107170)

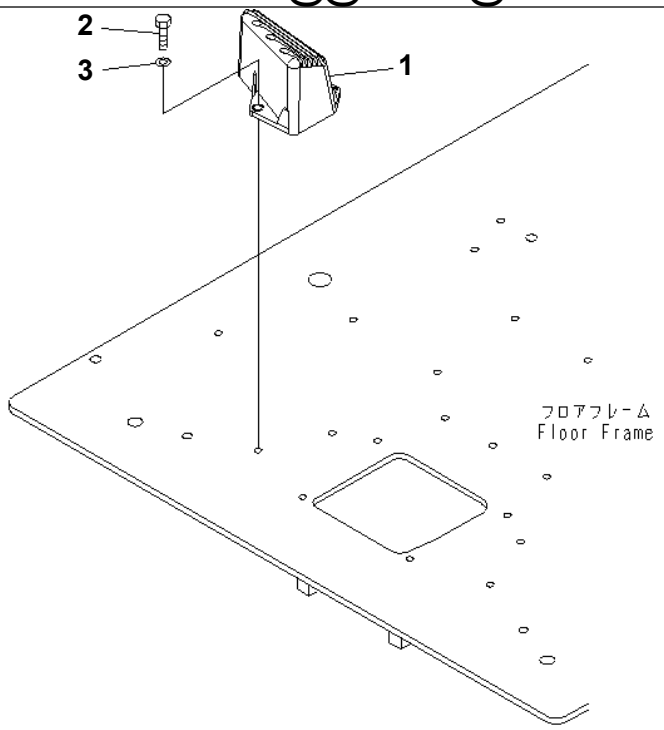

P W 1 E 4 7 1

Ref. K1110-04A0 **Page 240460**

PC1250SP-8R S/N 35001-UP (W/O EGR, +55C DEGREE)
FLOOR FRAME (FOOT REST) (R.H.)

Item	Part No.	Part Name	Qty	Serial No.
1	22U-54-25120	FOOT REST	1	35001-
2	01010-81025	BOLT	2	35001-
3	01643-31032	WASHER	2	35001-

Printed By : Dwi Iswanto (airafather6107170)

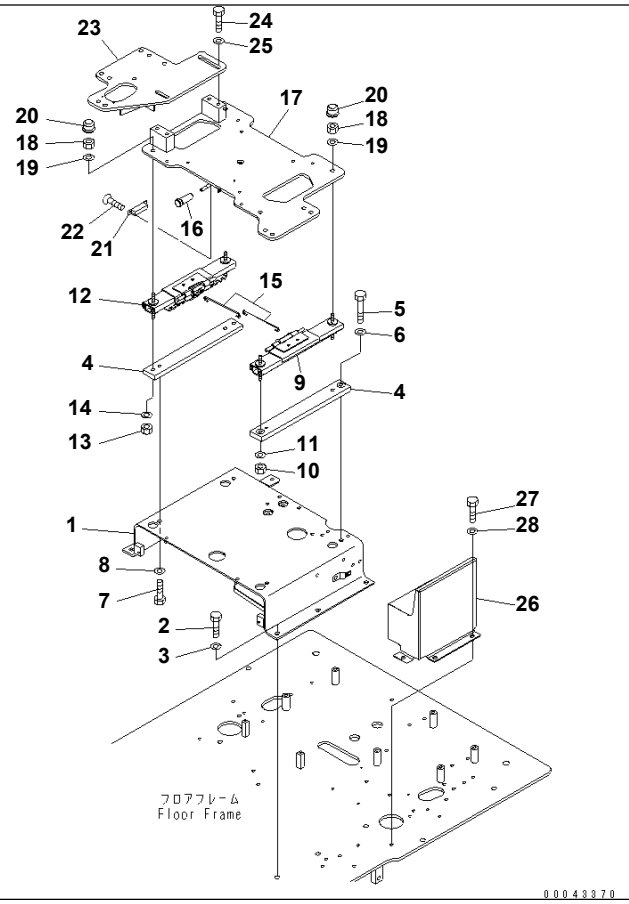

Ref. K1110-05A0 **Page 240470**

PC1250SP-8R S/N 35001-UP (W/O EGR, +55C DEGREE)
FLOOR FRAME (BASE)(#35001-35019)

Item	Part No.	Part Name	Qty	Serial No.
1	21N-43-37114	BRACKET	1	35001-@
2	01010-D1235	BOLT	5	35001-@
3	01643-71232	WASHER	5	35001-@
4	21N-43-37240	PLATE	2	35001-@
5	01010-D1050	BOLT	2	35001-@
6	01643-71032	WASHER	2	35001-@
7	01010-81025	BOLT	2	35001-@
8	01643-31032	WASHER	2	35001-@
9	20Y-43-31141	ADJUSTER	1	35001-35019
10	20Y-54-65340	NUT	2	35001-@
11	01643-71032	WASHER	2	35001-@
12	20Y-43-31151	ADJUSTER	1	35001-35019
13	20Y-54-65340	NUT	2	35001-@
14	01643-71032	WASHER	2	35001-@
15	22U-43-21260	WIRE	2	35001-35019
16	20Y-54-43150	KNOB	1	35001-@
17	20Y-43-31181	FRAME	1	35001-35019
18	20Y-54-65340	NUT	4	35001-@
19	01643-71032	WASHER	4	35001-@
20	20Y-54-65540	CAP	2	35001-@
21	09452-06506	CATCHER	1	35001-@
22	01224-40410	SCREW	2	35001-@
23	21N-43-41120	FRAME	1	35001-@
24	01010-D1230	BOLT	4	35001-@
25	22U-54-25170	WASHER	4	35001-@
26	20Y-43-31231	COVER	1	35001-@
27	01010-D1016	BOLT	3	35001-@
28	01643-71032	WASHER	3	35001-@

Printed By : Dwi Iswanto (airafather6107170)

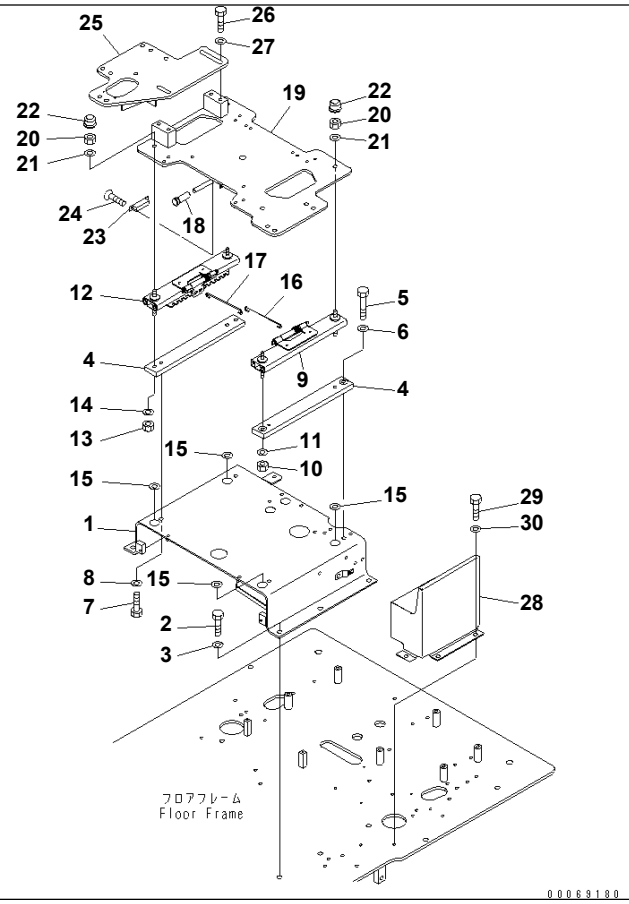

Ref. K1110-05A0A **Page 240480**

PC1250SP-8R S/N 35001-UP (W/O EGR, +55C DEGREE)
FLOOR FRAME (BASE)(#35020-35086)

Item	Part No.	Part Name	Qty	Serial No.
1	21N-43-37114	BRACKET	1	35001-@
2	01010-D1235	BOLT	5	35001-@
3	01643-71232	WASHER	5	35001-@
4	21N-43-37240	PLATE	2	35001-@
5	01010-D1050	BOLT	2	35001-@
6	01643-71032	WASHER	2	35001-@
7	01010-81025	BOLT	2	35001-@
8	01643-31032	WASHER	2	35001-@
9	21N-43-37340	ADJUSTER	1	35020-@
10	20Y-54-65340	NUT	2	35001-@
11	01643-71032	WASHER	2	35001-@
12	21N-43-37350	ADJUSTER	1	35020-@
13	20Y-54-65340	NUT	2	35001-@
14	01643-71032	WASHER	2	35001-@
15	01640-21016	WASHER	4	35020-@
16	208-43-71731	WIRE	1	35087-@
	□208-43-71730	WIRE	1	35020-35086
17	208-43-71762	WIRE	1	35087-@
	□208-43-71760	WIRE	1	35020-35086
18	22U-43-21390	CAP	1	35087-@
	□20Y-54-43150	KNOB	1	35001-35086
19	208-43-71561	FRAME	1	35020-@
20	20Y-54-65340	NUT	4	35001-@
21	01643-71032	WASHER	4	35001-@
22	20Y-54-65540	CAP	2	35001-@
23	20Y-979-6630	CATCHER	1	35087-@
	□09452-06506	CATCHER	1	35001-35086
24	01224-40410	SCREW	2	35001-@
25	21N-43-41120	FRAME	1	35001-@
26	01010-D1230	BOLT	4	35001-@

Printed By : Dwi Iswanto (airafather6107170)

FLOOR FRAME (BASE)(#35020-35086)

Item	Part No.	Part Name	Qty	Serial No.
27	22U-54-25170	WASHER	4	35001-@
28	20Y-43-31231	COVER	1	35001-@
29	01010-D1016	BOLT	3	35001-@
30	01643-71032	WASHER	3	35001-@

Printed By : Dwi Iswanto (airafather6107170)

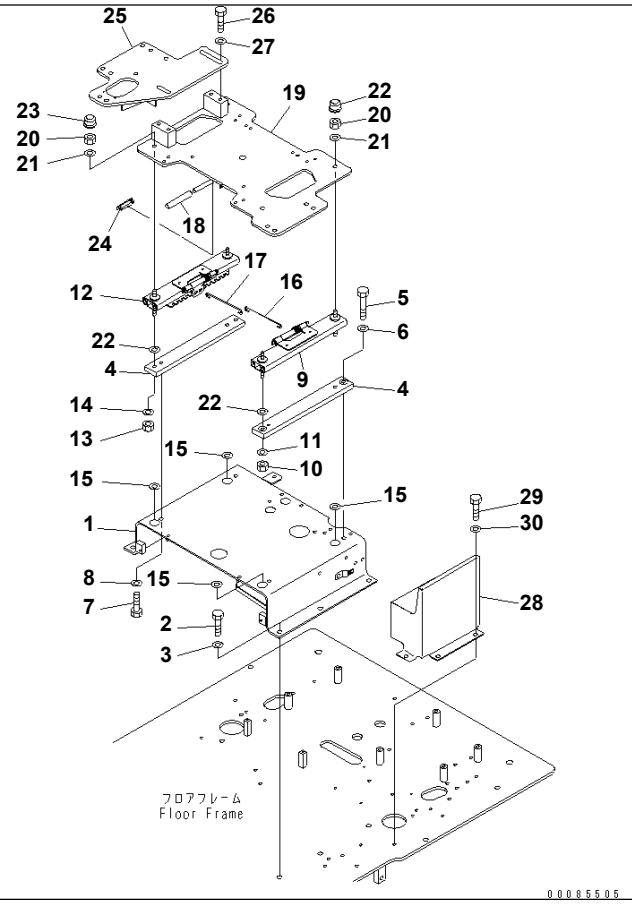

Ref. K1110-05A0B **Page 240490**

PC1250SP-8R S/N 35001-UP (W/O EGR, +55C DEGREE)
FLOOR FRAME (BASE)(#35087-)

Item	Part No.	Part Name	Qty	Serial No.
1	21N-43-37114	BRACKET	1	35001-
2	01010-D1235	BOLT	5	35001-
3	01643-71232	WASHER	5	35001-
4	21N-43-37240	PLATE	2	35001-
5	01010-D1050	BOLT	2	35001-
6	01643-71032	WASHER	2	35001-
7	01010-81025	BOLT	2	35001-
8	01643-31032	WASHER	2	35001-
9	21N-43-37341	ADJUSTER	1	35153-
	□21N-43-37340	ADJUSTER	1	35020-35152
10	20Y-54-65340	NUT	2	35001-
11	01643-71032	WASHER	2	35001-
12	21N-43-37351	ADJUSTER	1	35153-
	□21N-43-37350	ADJUSTER	1	35020-35152
13	20Y-54-65340	NUT	2	35001-
14	01643-71032	WASHER	2	35001-
15	01640-21016	WASHER	4	35020-
16	208-43-71731	WIRE	1	35087-
17	208-43-71762	WIRE	1	35087-
18	22U-43-21390	CAP	1	35087-
19	208-43-71561	FRAME	1	35020-
20	20Y-54-65340	NUT	4	35001-
21	01643-71032	WASHER	4	35001-
22	01640-21016	WASHER	4	35087-
23	20Y-54-65540	CAP	2	35001-
24	20Y-979-6630	CATCHER	1	35087-
25	21N-43-41120	FRAME	1	35001-
26	01010-D1230	BOLT	4	35001-
27	22U-54-25170	WASHER	4	35001-
28	20Y-43-31231	COVER	1	35001-

Printed By : Dwi Iswanto (airafather6107170)

FLOOR FRAME (BASE)(#35087-)

Item	Part No.	Part Name	Qty	Serial No.
29	01010-D1016	BOLT	3	35001-
30	01643-71032	WASHER	3	35001-

Printed By : Dwi Iswanto (airafather6107170)

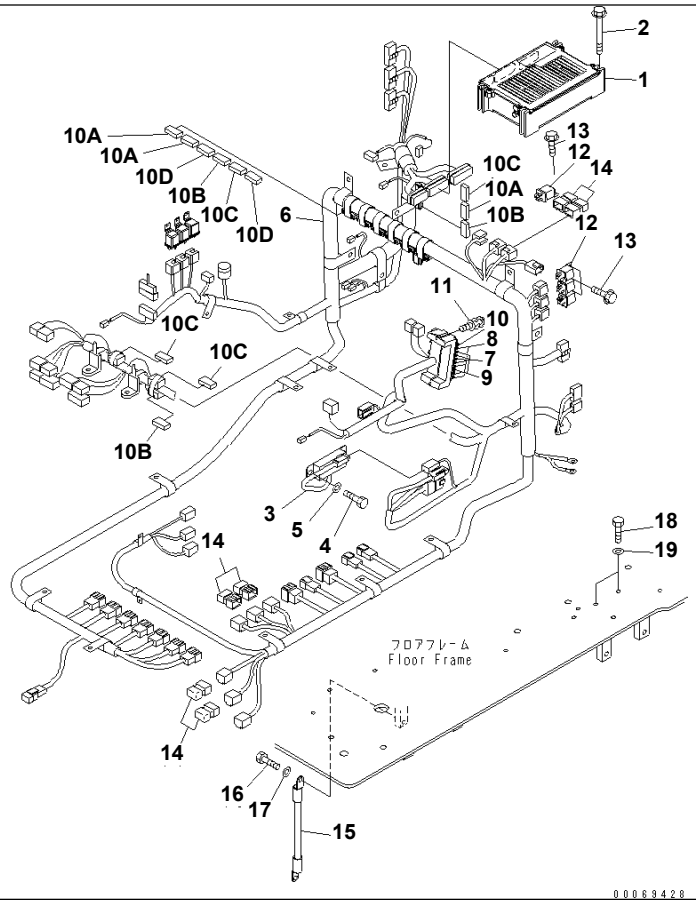

Ref. K1110-06A0A **Page 240500**

PC1250SP-8R S/N 35001-UP (W/O EGR, +55C DEGREE)
FLOOR FRAME (ELECTRICAL)(#35002-)

Item	Part No.	Part Name	Qty	Serial No.
1	7835-48-1003	CONTROLLER	1	35157-
	□7835-48-1002	CONTROLLER	1	35002-35156
2	01435-00880	BOLT	4	35001-
3	7861-94-2000	RESISTOR	1	35001-
4	01010-80820	BOLT	2	35001-
5	01643-30823	WASHER	2	35001-
6	21N-06-41131	WIRING HARNESS	1	35001-
7	08041-00500	· FUSE, 5A	1	35001-
8	08041-01000	· FUSE, 10A	15	35001-
9	08041-02000	· FUSE, 20A	3	35001-
10	08041-02500	· FUSE, 25A	1	35001-
10A	HM6400-0012	· F-CONNECTOR, BLACK	3	35001-
	HM6409-0071	· M-CONNECTOR, BLACK	3	35001-
10B	HM6400-0013	· F-CONNECTOR, GREEN	3	35001-
	HM6409-0072	· M-CONNECTOR, GREEN	3	35001-
10C	HM6440-0129	· F-CONNECTOR, PINK	4	35001-
	HM6440-0128	· M-CONNECTOR, PINK	4	35001-
10D	HM6400-0016	· F-CONNECTOR, ORANGE	2	35001-
	HM6409-0075	· M-CONNECTOR, ORANGE	2	35001-
11	01023-60620	SCREW	2	35001-
12	569-06-61960	RELAY	4	35001-
13	01435-00612	BOLT	4	35001-
14	8233-06-3350	DIODE	6	35001-
15	08028-43030	CABLE	1	35001-
16	01010-81020	BOLT	1	35001-
17	01643-31032	WASHER	1	35001-
18	01010-81020	BOLT	2	35001-
19	01643-31032	WASHER	2	35001-

Printed By : Dwi Iswanto (airafather6107170)

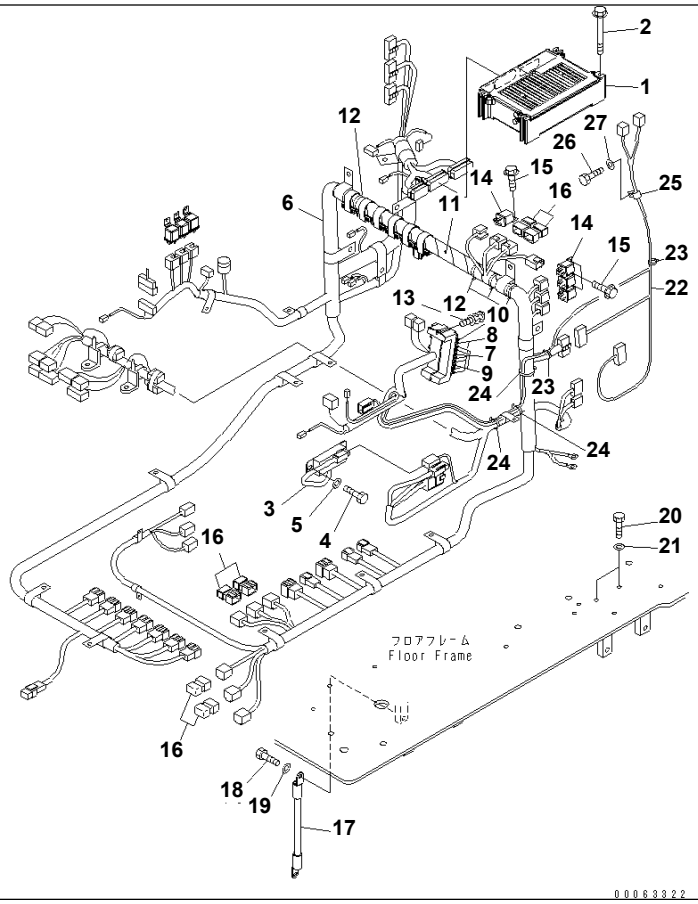

Ref. K1110-06B2 **Page 240510**

PC1250SP-8R S/N 35001-UP (W/O EGR, +55C DEGREE)
FLOOR FRAME (ELECTRICAL) (BIG WIND AIR CONDITIONER) (+55C SPEC.)

Item	Part No.	Part Name	Qty	Serial No.
1	7835-48-1003	CONTROLLER	1	35157-
	□7835-48-1002	CONTROLLER	1	35001-35156
2	01435-00880	BOLT	4	35001-
3	7861-94-2000	RESISTOR	1	35001-
4	01010-80820	BOLT	2	35001-
5	01643-30823	WASHER	2	35001-
6	21N-06-41131	WIRING HARNESS	1	35001-
7	08041-00500	· FUSE, 5A	1	35001-
8	08041-01000	· FUSE, 10A	15	35001-
9	08041-02000	· FUSE, 20A	3	35001-
10	08041-02500	· FUSE, 25A	1	35001-
11	20Y-979-6870	SHEET	1	35001-
12	08034-20519	BAND	4	35001-
13	01023-60620	SCREW	2	35001-
14	569-06-61960	RELAY	4	35001-
15	01435-00612	BOLT	4	35001-
16	8233-06-3350	DIODE	6	35001-
17	08028-43030	CABLE	1	35001-
18	01010-81020	BOLT	1	35001-
19	01643-31032	WASHER	1	35001-
20	01010-81020	BOLT	2	35001-
21	01643-31032	WASHER	2	35001-
22	20Y-979-6861	WIRING HARNESS	1	35001-
23	08034-20414	BAND	2	35001-
24	08034-20823	BAND	3	35001-
25	04434-51408	CLIP	1	35001-
26	01010-80820	BOLT	1	35001-
27	01643-30823	WASHER	1	35001-

Printed By : Dwi Iswanto (airafather6107170)

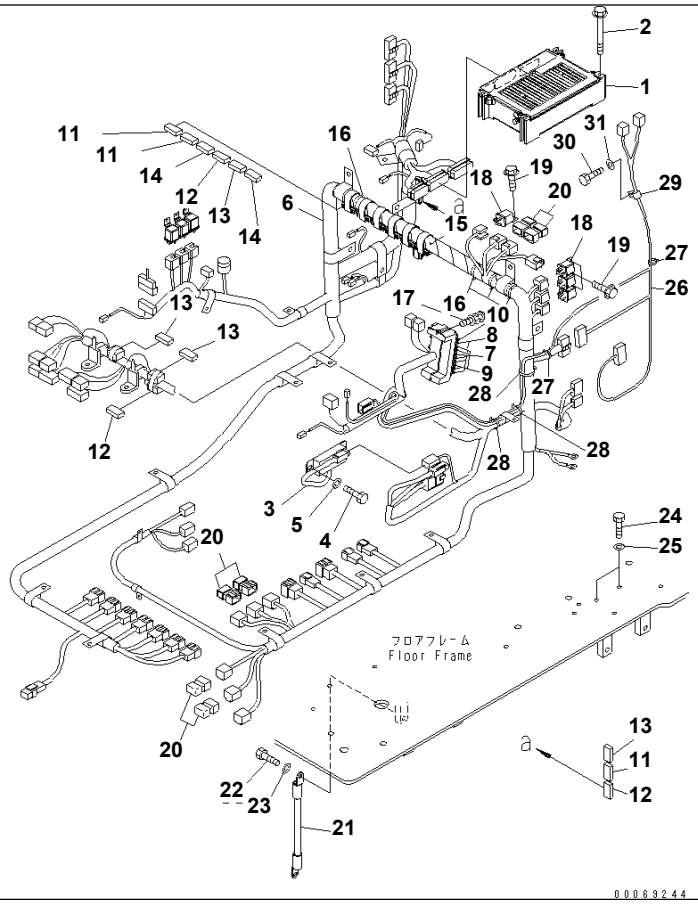

Ref. K1110-06B4 **Page 240520**

PC1250SP-8R S/N 35001-UP (W/O EGR, +55C DEGREE)
FLOOR FRAME (ELECTRICAL) (BIG WIND AIR CONDITIONER) (+55C SPEC.) (FOR LOADER)

Item	Part No.	Part Name	Qty	Serial No.
1	7835-48-1003	CONTROLLER	1	35157-
	□7835-48-1002	CONTROLLER	1	35001-35156
2	01435-00880	BOLT	4	35001-
3	7861-94-2000	RESISTOR	1	35001-
4	01010-80820	BOLT	2	35001-
5	01643-30823	WASHER	2	35001-
6	21N-06-41320	WIRING HARNESS	1	35001-
7	08041-00500	· FUSE, 5A	1	35001-
8	08041-01000	· FUSE, 10A	15	35001-
9	08041-02000	· FUSE, 20A	3	35001-
10	08041-02500	· FUSE, 25A	1	35001-
11	HM6400-0012	· F-CONNECTOR, BLACK	3	35001-
	HM6409-0071	· M-CONNECTOR, BLACK	3	35001-
12	HM6400-0013	· F-CONNECTOR, GREEN	3	35001-
	HM6409-0072	· M-CONNECTOR, GREEN	3	35001-
13	HM6440-0129	· F-CONNECTOR, PINK	4	35001-
	HM6440-0128	· M-CONNECTOR, PINK	4	35001-
14	HM6400-0016	· F-CONNECTOR, ORANGE	2	35001-
	HM6409-0075	· M-CONNECTOR, ORANGE	2	35001-
15	20Y-979-6870	SHEET	1	35001-
16	08034-20519	BAND	4	35001-
17	01023-60620	SCREW	2	35001-
18	569-06-61960	RELAY	4	35001-
19	01435-00612	BOLT	4	35001-
20	8233-06-3350	DIODE	6	35001-
21	08028-43030	CABLE	1	35001-
22	01010-81020	BOLT	1	35001-
23	01643-31032	WASHER	1	35001-
24	01010-81020	BOLT	2	35001-

Printed By : Dwi Iswanto (airafather6107170)

FLOOR FRAME (ELECTRICAL) (BIG WIND AIR CONDITIONER) (+55C SPEC.) (FOR LOADER)

Item	Part No.	Part Name	Qty	Serial No.
25	01643-31032	WASHER	2	35001-
26	20Y-979-6861	WIRING HARNESS	1	35001-
27	08034-20414	BAND	2	35001-
28	08034-20823	BAND	3	35001-
29	04434-51408	CLIP	1	35001-
30	01010-80820	BOLT	1	35001-
31	01643-30823	WASHER	1	35001-

Printed By : Dwi Iswanto (airafather6107170)

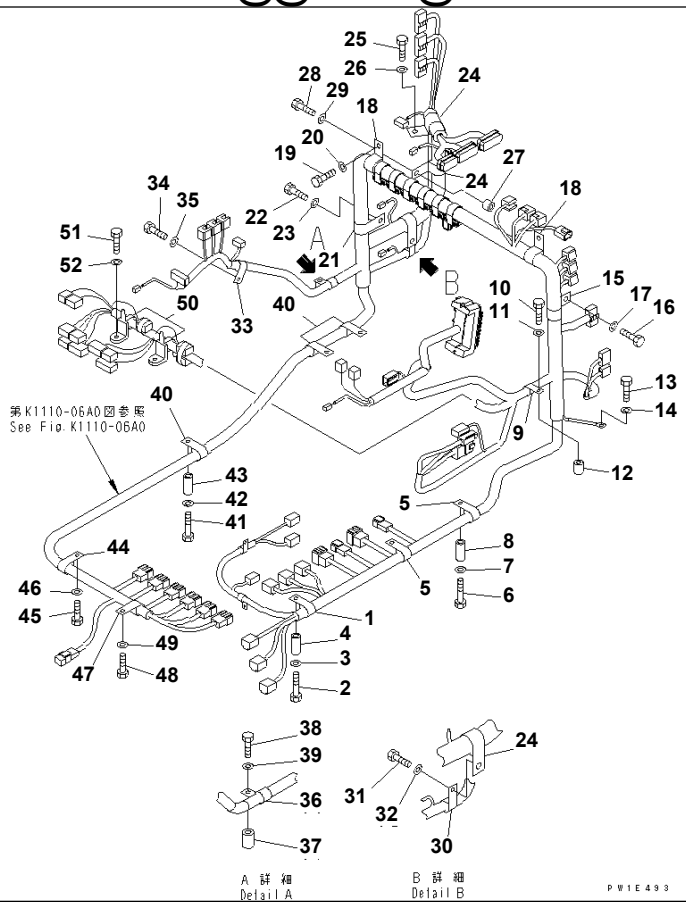

Ref. K1110-07A0 **Page 240530**

PC1250SP-8R S/N 35001-UP (W/O EGR, +55C DEGREE)

FLOOR FRANE (CLIP)

Item	Part No.	Part Name	Qty	Serial No.
1	04434-51910	CLIP	1	35001-
2	01010-81065	BOLT	1	35001-
3	01643-31032	WASHER	1	35001-
4	195-979-5190	COLLAR	1	35001-
5	04434-53211	CLIP	2	35001-
6	01010-81065	BOLT	2	35001-
7	01643-31032	WASHER	2	35001-
8	195-979-5190	COLLAR	2	35001-
9	04434-53211	CLIP	1	35001-
10	01010-D1065	BOLT	1	35001-
11	01643-71032	WASHER	1	35001-
12	6150-81-6920	SPACER	1	35001-
13	01010-81020	BOLT	2	35001-
14	01643-31032	WASHER	2	35001-
15	04434-53211	CLIP	1	35001-
16	01010-81020	BOLT	1	35001-
17	01643-31032	WASHER	1	35001-
18	04434-53411	CLIP	2	35001-
19	01010-81020	BOLT	2	35001-
20	01643-31032	WASHER	2	35001-
21	04434-53411	CLIP	1	35001-
22	01010-81020	BOLT	1	35001-
23	01643-31032	WASHER	1	35001-
24	04434-53411	CLIP	3	35001-
25	01010-81020	BOLT	1	35001-
26	01643-31032	WASHER	1	35001-
27	103-21-21260	BOSS	1	35001-
28	01010-81030	BOLT	1	35001-
29	01643-31032	WASHER	1	35001-
30	04434-52711	CLIP	1	35001-

Printed By : Dwi Iswanto (airafather6107170)

FLOOR FRANE (CLIP)

Item	Part No.	Part Name	Qty	Serial No.
31	01010-81030	BOLT	1	35001-
32	01643-31032	WASHER	1	35001-
33	04434-52310	CLIP	1	35001-
34	01010-81020	BOLT	1	35001-
35	01643-31032	WASHER	1	35001-
36	04434-52711	CLIP	1	35001-
37	6202-83-6760	SPACER	1	35001-
38	01010-D1050	BOLT	1	35001-
39	01643-71032	WASHER	1	35001-
40	04434-53211	CLIP	3	35001-
41	01010-81065	BOLT	3	35001-
42	01643-31032	WASHER	3	35001-
43	195-979-5190	COLLAR	3	35001-
44	04434-53211	CLIP	1	35001-
45	01010-81016	BOLT	1	35001-
46	01643-31032	WASHER	1	35001-
47	04434-51910	CLIP	1	35001-
48	01010-81016	BOLT	1	35001-
49	01643-31032	WASHER	1	35001-
50	08058-10840	CLIP	2	35001-
51	01010-80825	BOLT	2	35001-
52	01643-30823	WASHER	2	35001-

Printed By : Dwi Iswanto (airafather6107170)

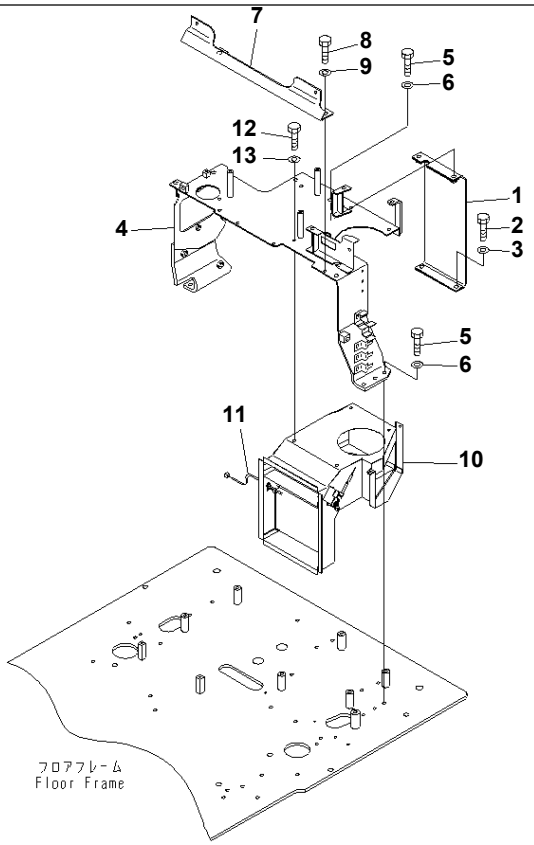

00063323

Ref. K1110-08B2 **Page 240540**

PC1250SP-8R S/N 35001-UP (W/O EGR, +55C DEGREE)

FLOOR FRAME (REAR FRAME) (BIG WIND AIR CONDITIONER) (+55C SPEC.)

Item	Part No.	Part Name	Qty	Serial No.
1	20Y-54-65970	BRACKET	1	35001-
2	01010-81016	BOLT	2	35001-
3	01643-31032	WASHER	2	35001-
4	21N-54-38911	BRACKET	1	35001-
5	01010-81025	BOLT	7	35001-
6	01643-31032	WASHER	7	35001-
7	20Y-54-65920	BRACKET	1	35001-
8	01010-80820	BOLT	2	35001-
9	113-43-23230	WASHER	2	35001-
10	21N-979-3230	DUCT	1	35001-
11	20Y-979-6341	・ SENSOR	1	35001-
12	01010-80820	BOLT	4	35001-
13	01643-30823	WASHER	4	35001-

Printed By : Dwi Iswanto (airafather6107170)

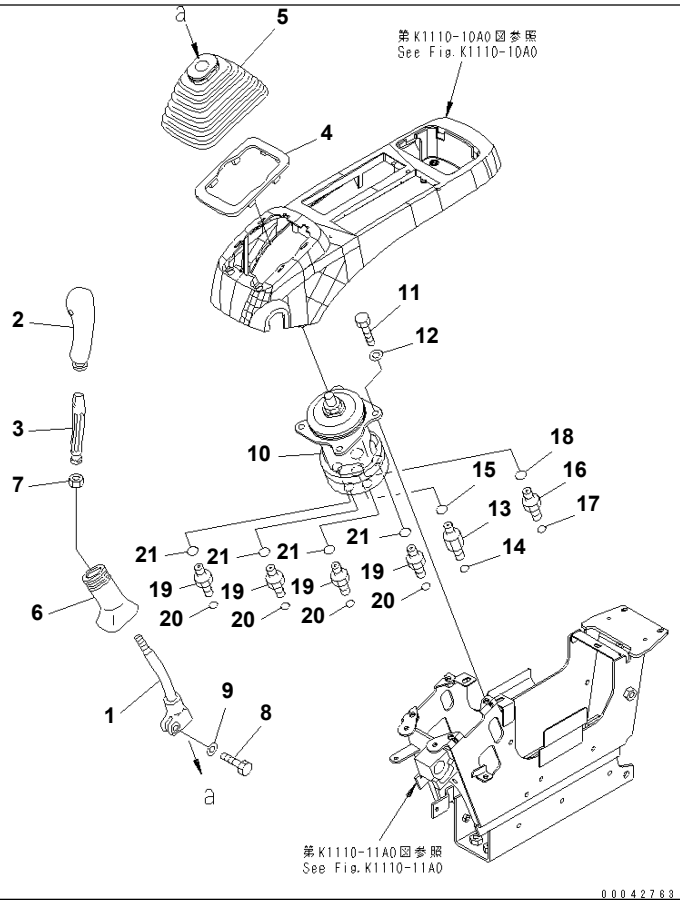

Ref. K1110-09A0 **Page 240550**

PC1250SP-8R S/N 35001-UP (W/O EGR, +55C DEGREE)

FLOOR FRANE (LEVER AND VALVE) (L.H.)

Item	Part No.	Part Name	Qty	Serial No.
1	20Y-43-22211	LEVER	1	35001-
	20Y-43-22621	KNOB	1	35001-
2	20Y-43-22630	· KNOB	1	35001-
3	20Y-43-22421	· INSERT	1	35001-
4	20Y-43-22250	PLATE	1	35001-
5	20Y-43-22261	BOOT	1	35001-
6	20Y-43-22370	BOOT	1	35001-
7	600-411-1280	NUT	1	35001-
8	01252-41025	BOLT	1	35001-
9	01643-51032	WASHER	1	35001-
10	(702-16-05091)	PILOT VALVE	1	35150-
	(702-16-05090)	PILOT VALVE	1	35001-35149
11	01010-80820	BOLT	4	35001-
12	01643-30823	WASHER	4	35001-
13	21W-62-42410	NIPPLE	1	35001-
14	02896-11009	O-RING	1	35001-
15	07002-11823	O-RING	1	35001-
16	02781-00313	UNION	1	35001-
17	02896-11009	O-RING	1	35001-
18	07002-11823	O-RING	1	35001-
19	11Y-62-12520	NIPPLE	4	35001-
20	02896-11009	O-RING	4	35001-
21	07002-11423	O-RING	4	35001-

Printed By : Dwi Iswanto (airafather6107170)

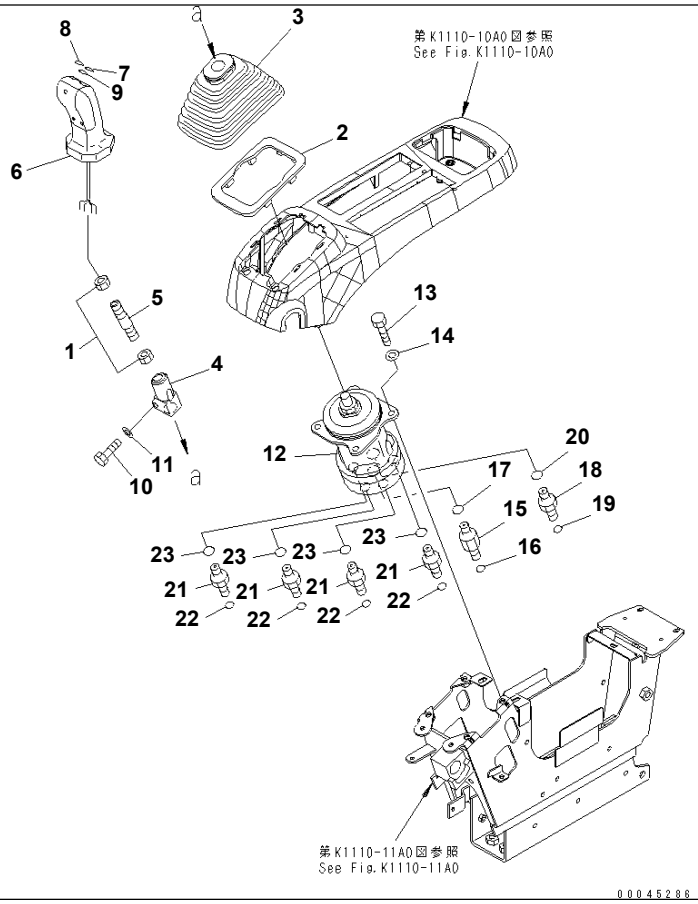

Ref. K1110-09A3 **Page 240560**

PC1250SP-8R S/N 35001-UP (W/O EGR, +55C DEGREE)
FLOOR FRANE (LEVER AND VALVE) (L.H.) (FOR LOADER)

Item	Part No.	Part Name	Qty	Serial No.
	21N-43-37321	LEVER ASS'Y	1	35001-
1	01583-11408	· NUT	2	35001-
2	20Y-43-22250	· PLATE	1	35001-
3	20Y-43-22261	· BOOT	1	35001-
4	702-16-56531	· PLATE	1	35001-
5	702-16-56540	· ROD	1	35001-
6	702-16-71490	· LEVER	1	35001-
7	702-16-72750	· · CAP L1	1	35001-
8	702-16-72760	· · CAP R1	1	35001-
9	702-16-72770	· · CAP C1	1	35001-
10	01010-81030	BOLT	1	35001-
11	01643-31032	WASHER	1	35001-
12	(702-16-05091)	PILOT VALVE	1	35150-
	(702-16-05090)	PILOT VALVE	1	35001-35149
13	01010-80820	BOLT	4	35001-
14	01643-30823	WASHER	4	35001-
15	21W-62-42410	NIPPLE	1	35001-
16	02896-11009	O-RING	1	35001-
17	07002-11823	O-RING	1	35001-
18	02781-00313	UNION	1	35001-
19	02896-11009	O-RING	1	35001-
20	07002-11823	O-RING	1	35001-
21	11Y-62-12520	NIPPLE	4	35001-
22	02896-11009	O-RING	4	35001-
23	07002-11423	O-RING	4	35001-

Printed By : Dwi Iswanto (airafather6107170)

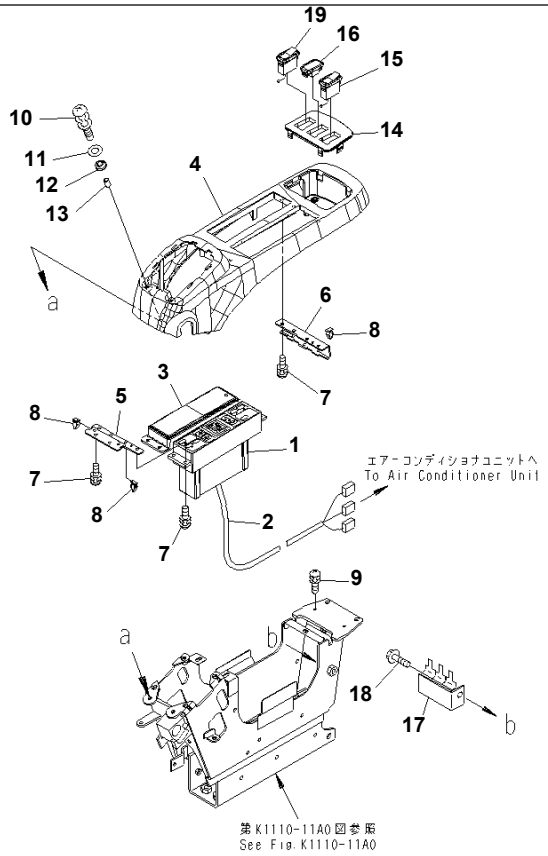

Ref. K1110-10B2 **Page 240570**

PC1250SP-8R S/N 35001-UP (W/O EGR, +55C DEGREE)

FLOOR FRAME (CONSOLE¤ L.H.) (UPPER) (WITH AIR CONDITIONER) (+55C SPEC.)

Item	Part No.	Part Name	Qty	Serial No.
1	20Y-979-6141	CONTROL PANEL ASS'Y	1	35001-
2	20Y-979-6151	WIRING HARNESS	1	35001-
3	22U-43-22550	COVER	1	35001-
4	208-43-71680	COVER	1	35001-
5	22U-43-22220	PLATE	1	35001-
6	22U-43-22230	STAY	1	35001-
7	01023-60516	SCREW	10	35001-
8	20Y-06-23770	CLIP	3	35001-
9	01023-60620	SCREW	2	35001-
10	01023-60625	SCREW	2	35001-
11	01640-20610	WASHER	2	35001-
12	208-43-71610	CUSHION	2	35001-
13	208-43-71620	PIPE	2	35001-
14	22U-43-22120	PANEL	1	35001-
15	20Y-06-31350	SWITCH ASS'Y,WIPER	1	35001-
16	22U-06-22320	COVER	1	35001-
17	22U-43-22451	BRACKET	1	35001-
18	01435-01020	BOLT	1	35001-
19	23A-952-1510	SWITCH	1	35001-

Printed By : Dwi Iswanto (airafather6107170)

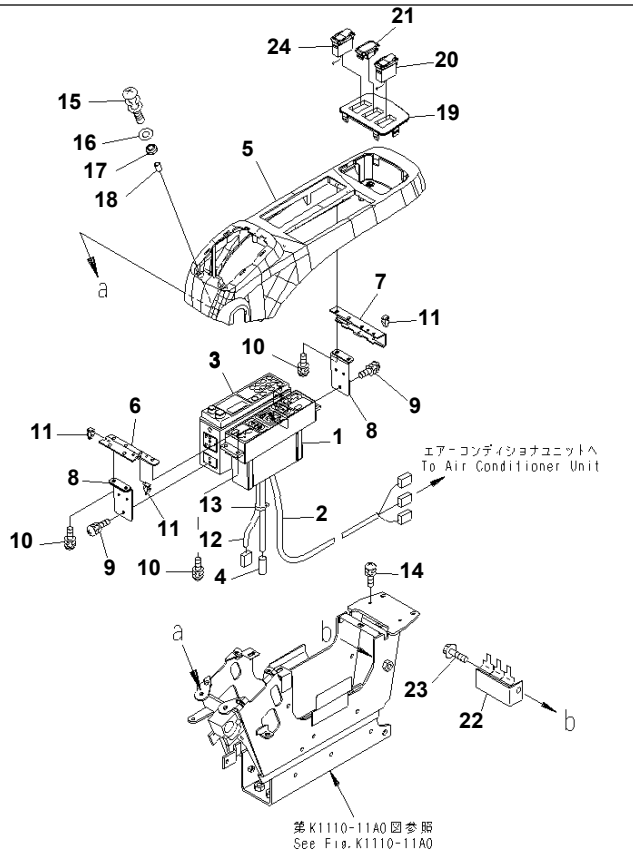

Ref. K1110-10B3 **Page 240580**

PC1250SP-8R S/N 35001-UP (W/O EGR, +55C DEGREE)

FLOOR FRAME (CONSOLE¤ L.H.) (UPPER) (WITH AIR CONDITIONER AND RADIO) (FOR ASIA) (+55C SPEC.)

Item	Part No.	Part Name	Qty	Serial No.
1	20Y-979-6141	CONTROL PANEL ASS'Y	1	35001-
2	20Y-979-6151	WIRING HARNESS	1	35001-
3	20Y-06-41238	RADIO	1	35030-
	□20Y-06-41237	RADIO	1	35020-35029
	□20Y-06-41236	RADIO	1	35001-35019
4	08912-51600	CORD	1	35001-
5	208-43-71680	COVER	1	35001-
6	22U-43-22220	PLATE	1	35001-
7	22U-43-22230	STAY	1	35001-
8	22U-06-22510	BRACKET	2	35001-
9	01023-60510	SCREW	4	35001-
10	01023-60516	SCREW	10	35001-
11	20Y-06-23770	CLIP	3	35001-
12	22U-06-22350	WIRING HARNESS	1	35001-
13	08034-00310	BAND	1	35001-
14	01023-60620	SCREW	2	35001-
15	01023-60625	SCREW	2	35001-
16	01640-20610	WASHER	2	35001-
17	208-43-71610	CUSHION	2	35001-
18	208-43-71620	PIPE	2	35001-
19	22U-43-22120	PANEL	1	35001-
20	20Y-06-31350	SWITCH ASS'Y	1	35001-
21	22U-06-22320	COVER	1	35001-
22	22U-43-22451	BRACKET	1	35001-
23	01435-01020	BOLT	1	35001-
24	23A-952-1510	SWITCH	1	35001-

Printed By : Dwi Iswanto (airafather6107170)

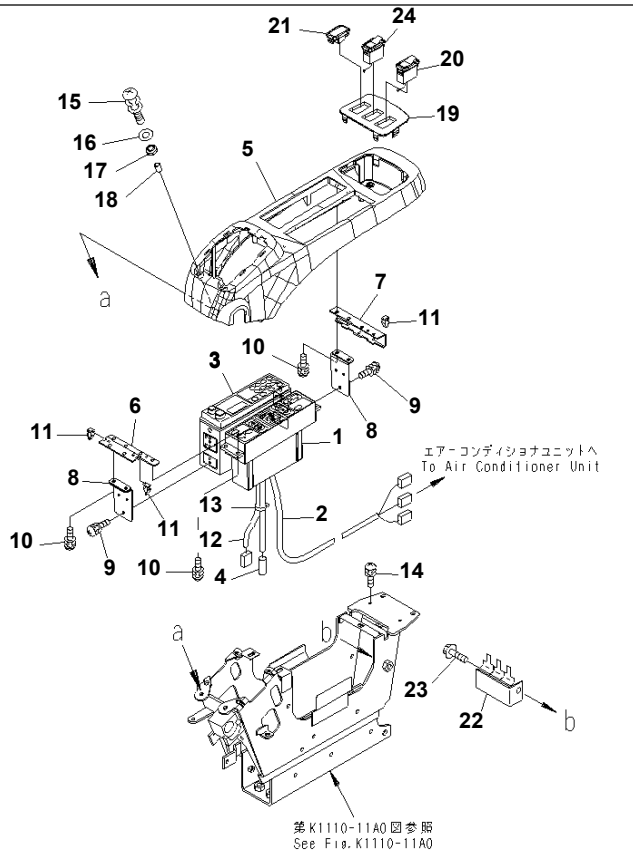

Ref. K1110-10B5 **Page 240590**

PC1250SP-8R S/N 35001-UP (W/O EGR, +55C DEGREE)

FLOOR FRAME (CONSOLE¤ L.H.) (UPPER) (WITH AIR CONDITIONER AND RADIO) (FOR ASIA) (WITH BEACON)

Item	Part No.	Part Name	Qty	Serial No.
1	20Y-979-6141	CONTROL PANEL ASS'Y	1	35001-
2	20Y-979-6151	WIRING HARNESS	1	35001-
3	20Y-06-41238	RADIO	1	35001-
4	08912-51600	CORD	1	35001-
5	208-43-71680	COVER	1	35001-
6	22U-43-22220	PLATE	1	35001-
7	22U-43-22230	STAY	1	35001-
8	22U-06-22510	BRACKET	2	35001-
9	01023-60510	SCREW	4	35001-
10	01023-60516	SCREW	10	35001-
11	20Y-06-23770	CLIP	3	35001-
12	22U-06-22350	WIRING HARNESS	1	35001-
13	08034-00310	BAND	1	35001-
14	01023-60620	SCREW	2	35001-
15	01023-60625	SCREW	2	35001-
16	01640-20610	WASHER	2	35001-
17	208-43-71610	CUSHION	2	35001-
18	208-43-71620	PIPE	2	35001-
19	22U-43-22120	PANEL	1	35001-
20	20Y-06-31350	SWITCH ASS'Y	1	35001-
21	22U-06-22320	COVER	1	35001-
22	22U-43-22451	BRACKET	1	35001-
23	01435-01020	BOLT	1	35001-
24	22U-06-22310	SWITCH ASS'Y	1	35001-

Printed By : Dwi Iswanto (airafather6107170)

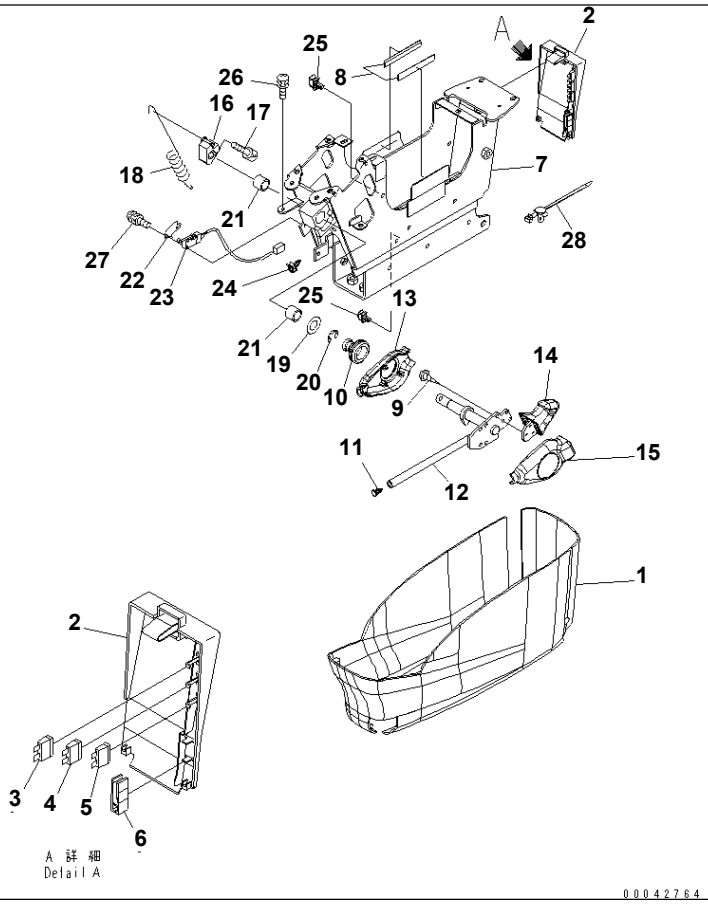

Ref. K1110-11A0 **Page 240600**

FLOOR FRAME (CONSOLE¤ L.H.) (LOWER)

Item	Part No.	Part Name	Qty	Serial No.
1	22U-43-22310	COVER	1	35001-
	21N-43-41230	COVER	1	35001-
2	☆	· COVER	1	35001-
3	08041-00500	· FUSE, 5A	1	35001-
4	08041-02000	· FUSE, 20A	1	35001-
5	08041-02500	· FUSE, 25A	1	35001-
6	22U-43-22340	· PULLER	1	35001-
7	20Y-43-31412	FRAME	1	35001-
8	208-43-71410	· SHEET	2	35001-
9	01023-60410	SCREW	6	35001-
10	08037-11425	GROMMET	1	35001-
11	208-53-12280	CAP	1	35001-
12	20Y-43-31513	LEVER	1	35001-
13	20Y-43-31522	COVER	1	35001-
14	20Y-43-31611	KNOB	1	35001-
15	20Y-43-31621	COVER	1	35001-
16	20Y-43-31432	CAM	1	35001-
17	01252-70816	BOLT	1	35001-
18	20Y-43-31421	SPRING	1	35001-
19	20Y-43-31440	RING	1	35001-
20	20Y-43-31450	RING	1	35001-
21	06124-01616	BEARING	2	35001-
22	22U-06-22490	PLATE	1	35001-
23	22U-06-22360	SWITCH ASS'Y	1	35001-
24	22U-43-22410	CLIP	1	35001-
25	22U-43-23260	CLIP	2	35001-
26	01023-60616	SCREW	4	35001-
27	01023-60316	SCREW	2	35001-
28	22U-43-22430	CLIP	1	35001-

Printed By : Dwi Iswanto (airafather6107170)

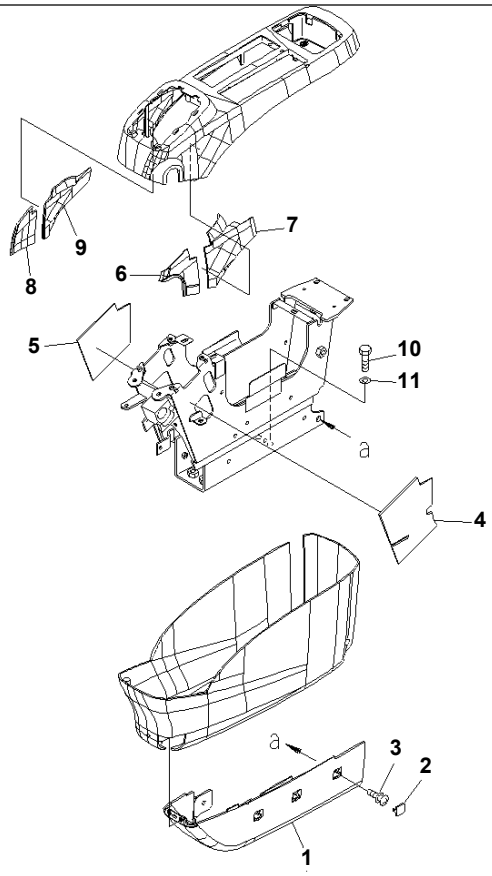

Ref. K1110-12A0 **Page 240610**

PC1250SP-8R S/N 35001-UP (W/O EGR, +55C DEGREE)
FLOOR FRAME (CONSOLE¤ L.H.) (UNDER)

Item	Part No.	Part Name	Qty	Serial No.
1	20Y-43-31690	COVER	1	35001-
2	22U-43-22830	CAP	3	35001-
3	01023-20614	SCREW	4	35001-
4	21N-43-41130	SHEET	1	35001-
5	21N-43-41140	SHEET	1	35001-
6	21N-43-41160	SHEET	1	35001-
7	21N-43-41170	SHEET	1	35001-
8	21N-43-41180	SHEET	1	35001-
9	21N-43-41190	SHEET	1	35001-
10	01010-81030	BOLT	4	35001-
11	01643-31032	WASHER	4	35001-

Printed By : Dwi Iswanto (airafather6107170)

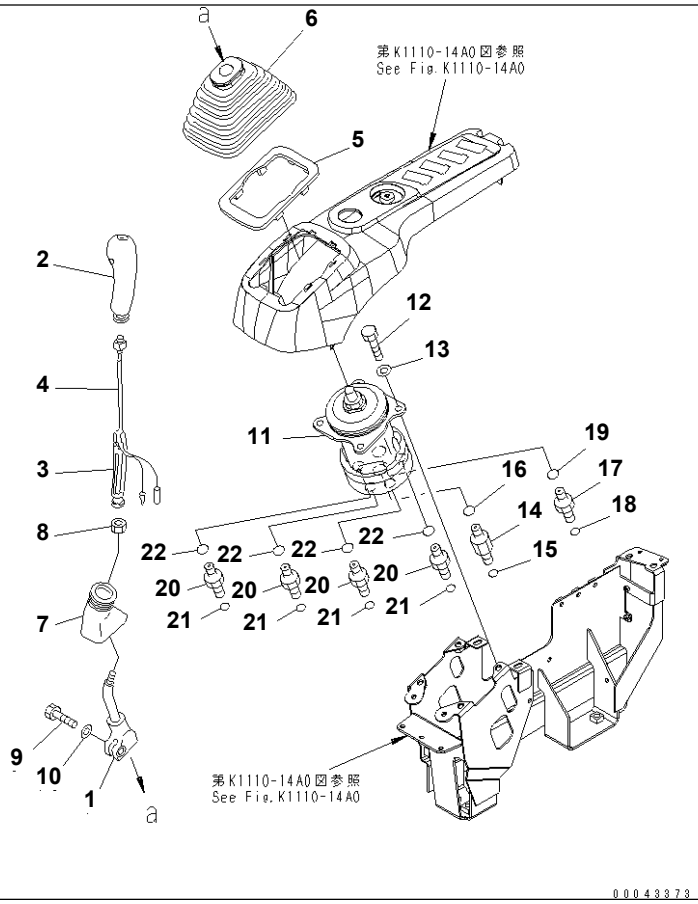

Ref. K1110-13A0 **Page 240620**

PC1250SP-8R S/N 35001-UP (W/O EGR, +55C DEGREE)
FLOOR FRAME (LEVER AND VALVE) (R.H.)

Item	Part No.	Part Name	Qty	Serial No.
1	20Y-43-22221	LEVER	1	35001-
	22U-43-21192	KNOB	1	35001-
2	20Y-43-22390	· KNOB	1	35001-
3	20Y-43-22421	· INSERT	1	35001-
4	22U-43-21211	· SWITCH	1	35001-
5	20Y-43-22250	PLATE	1	35001-
6	20Y-43-22261	BOOT	1	35001-
7	20Y-43-22370	BOOT	1	35001-
8	600-411-1280	NUT	1	35001-
9	01252-41025	BOLT	1	35001-
10	01643-51032	WASHER	1	35001-
11	(702-16-05091)	PILOT VALVE	1	35150-
	(702-16-05090)	PILOT VALVE	1	35001-35149
12	01010-80820	BOLT	4	35001-
13	01643-30823	WASHER	4	35001-
14	21W-62-42410	NIPPLE	1	35001-
15	02896-11009	O-RING	1	35001-
16	07002-11823	O-RING	1	35001-
17	02781-00313	UNION	1	35001-
18	02896-11009	O-RING	1	35001-
19	07002-11823	O-RING	1	35001-
20	11Y-62-12520	NIPPLE	4	35001-
21	02896-11009	O-RING	4	35001-
22	07002-11423	O-RING	4	35001-

Printed By : Dwi Iswanto (airafather6107170)

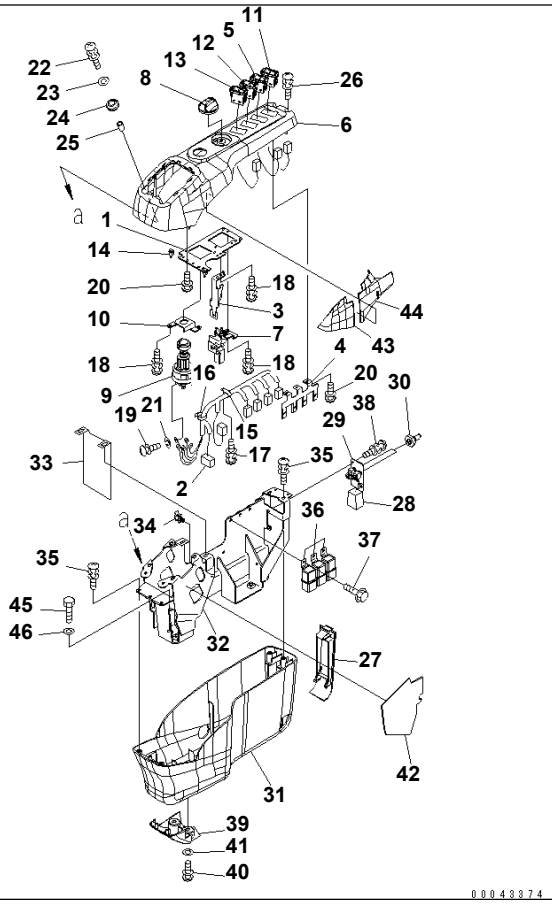

Ref. K1110-14A0 **Page 240630**

PC1250SP-8R S/N 35001-UP (W/O EGR, +55C DEGREE)
FLOOR FRAME (CONSOLE) (R.H.)

Item	Part No.	Part Name	Qty	Serial No.
1	22U-43-23111	PLATE	1	35001-
2	21N-06-41140	WIRING HARNESS	1	35001-
3	22U-43-23120	BRACKET	1	35001-
4	22U-43-23130	STAY	1	35001-
5	207-06-71180	SWITCH	1	35001-
6	208-43-71690	COVER	1	35001-
7	22U-06-22420	POTENTIOMETER ASS'Y	1	35001-
8	22U-06-22470	KNOB	1	35001-
9	08086-20000	SWITCH	1	35001-
10	22U-06-22480	PLATE	1	35001-
11	21N-06-33291	SWITCH	1	35001-
12	22U-06-22290	SWITCH	1	35001-
13	22U-06-22390	SWITCH	1	35001-
14	20Y-06-23770	CLIP	2	35001-
15	20Y-06-23920	CLAMP	1	35001-
16	08034-10414	BAND	2	35001-
17	01023-60408	SCREW	1	35001-
18	01023-60512	SCREW	6	35001-
19	01023-10508	SCREW	5	35001-
20	01023-10512	SCREW	6	35001-
21	01601-20513	WASHER	5	35001-
22	01023-60625	SCREW	2	35001-
23	01640-20610	WASHER	2	35001-
24	208-43-71610	CUSHION	2	35001-
25	208-43-71620	PIPE	2	35001-
26	01023-70514	SCREW	2	35001-
27	22U-43-23210	COVER	1	35001-
	20Y-06-31320	SWITCH ASS'Y	1	35001-
28	20Y-06-31330	· WIRING HARNESS	1	35001-
29	☆	· PLATE	1	35001-

Printed By : Dwi Iswanto (airafather6107170)

FLOOR FRAME (CONSOLE) (R.H.)

Item	Part No.	Part Name	Qty	Serial No.
30	208-43-71420	· CAP	2	35001-
31	22U-43-23230	COVER	1	35001-
32	208-43-71670	FRAME	1	35001-
33	22U-43-23250	SHEET	1	35001-
34	22U-43-23260	CLIP	2	35001-
35	01023-60616	SCREW	4	35001-
36	569-06-61960	RELAY	3	35001-
37	01435-00612	BOLT	3	35001-
38	01023-60410	SCREW	2	35001-
39	22U-43-23711	COVER	1	35001-
40	01023-10614	SCREW	2	35001-
41	01643-30623	WASHER	2	35001-
42	21N-43-41150	SHEET	1	35001-
43	21N-43-41210	SHEET	1	35001-
44	21N-43-41220	SHEET	1	35001-
45	01010-81030	BOLT	4	35001-
46	01643-31032	WASHER	4	35001-

Printed By : Dwi Iswanto (airafather6107170)

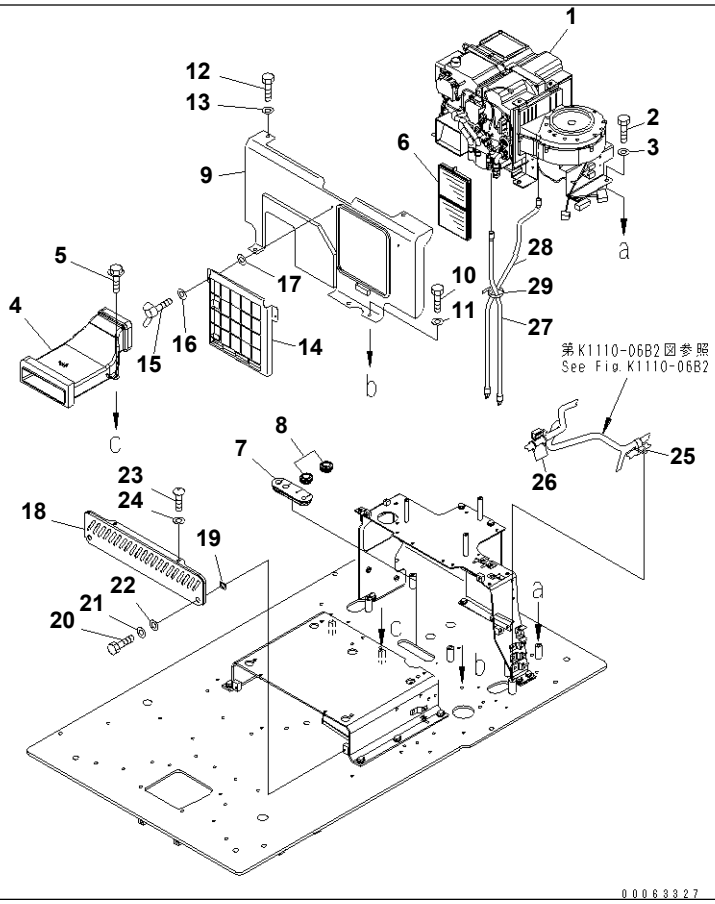

Ref. K1110-15B2 **Page 240640**

PC1250SP-8R S/N 35001-UP (W/O EGR, +55C DEGREE)

FLOOR FRAME (AIR CONDITIONER AND FOOT COVER) (BIG WIND AIR CONDITIONER) (+55C SPEC.)

Item	Part No.	Part Name	Qty	Serial No.
1	(20Y-979-6821)	UNIT ASS'Y,(SEE FIG. Y1979-11A1)	1	35001-
2	01010-81020	BOLT	6	35001-
3	01643-31032	WASHER	6	35001-
4	20Y-979-6231	DUCT	1	35001-
5	01435-40612	BOLT	2	35001-
6	20Y-979-6261	FILTER	2	35001-
7	20Y-54-65130	GROMMET	1	35001-
8	20Y-54-65180	GROMMET	2	35001-
9	21N-54-38920	COVER	1	35001-
10	01010-D1016	BOLT	3	35001-
11	01643-71032	WASHER	3	35001-
12	01010-D1016	BOLT	2	35001-
13	417-43-16210	WASHER	2	35001-
14	20Y-979-6810	COVER	1	35001-
15	20Y-54-65790	BOLT	2	35001-
16	01643-70623	WASHER	2	35001-
17	20Y-54-65690	WASHER	2	35001-
18	20Y-979-6591	COVER	1	35001-
19	22U-43-21340	SHEET	2	35001-
20	01010-80820	BOLT	2	35001-
21	01643-30823	WASHER	2	35001-
22	102-60-15240	SEAT	2	35001-
23	01245-00820	SCREW	2	35001-
24	01643-70823	WASHER	2	35001-
25	04434-51910	CLIP	1	35001-
26	08034-00519	BAND	2	35001-
27	21N-979-3770	HOSE	1	35001-
28	21N-979-3780	HOSE	1	35001-
29	08034-20519	BAND	1	35001-

Printed By : Dwi Iswanto (airafather6107170)

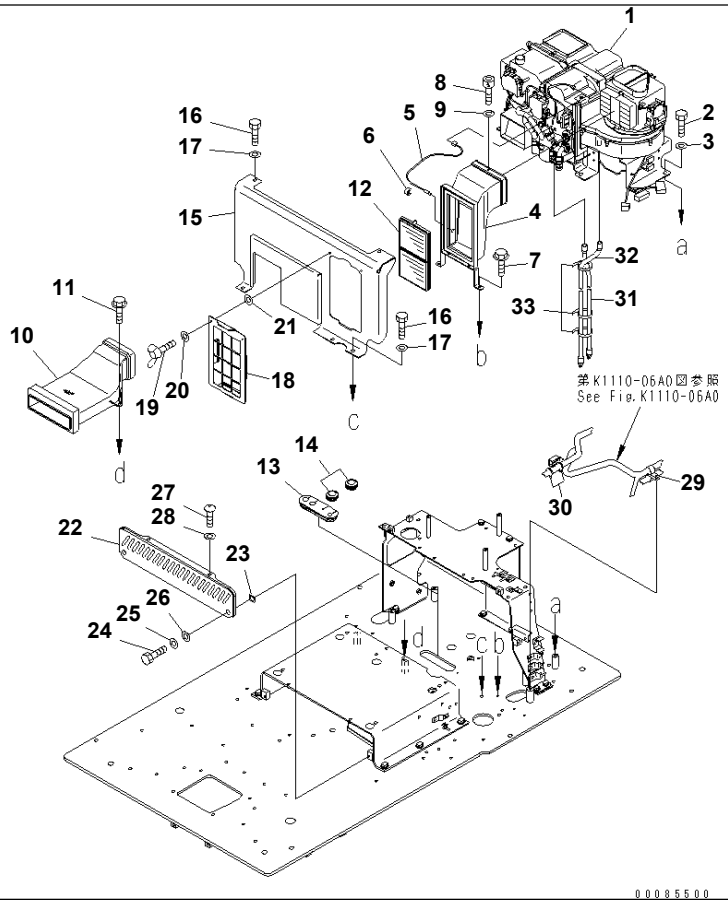

Ref. K1110-15B6 **Page 240650**

PC1250SP-8R S/N 35001-UP (W/O EGR, +55C DEGREE)

FLOOR FRAME (AIR CONDITIONER AND FOOT COVER) (FOR HIGH CAB MOUNT)

Item	Part No.	Part Name	Qty	Serial No.
1	(20Y-979-6111)	UNIT ASS'Y,(SEE FIG. Y1979-11A0)	1	35001-
2	01010-81020	BOLT	6	35001-
3	01643-31032	WASHER	6	35001-
4	20Y-979-6241	DUCT ASS'Y	1	35001-
5	20Y-979-6341	· SENSOR	1	35001-
6	20Y-979-6351	· CLAMP	1	35001-
7	01435-00612	BOLT	2	35001-
8	01252-70516	BOLT	1	35001-
9	01640-20508	WASHER	1	35001-
10	20Y-979-6231	DUCT	1	35001-
11	01435-40612	BOLT	2	35001-
12	20Y-979-6261	FILTER	1	35001-
13	20Y-54-65130	GROMMET	1	35001-
14	20Y-54-65180	GROMMET	2	35001-
15	20Y-54-65190	COVER	1	35001-
16	01010-D1016	BOLT	5	35001-
17	01643-71032	WASHER	5	35001-
18	20Y-979-6481	COVER	1	35001-
19	20Y-54-65790	BOLT	2	35001-
20	01643-70623	WASHER	2	35001-
21	20Y-54-65690	WASHER	2	35001-
22	20Y-979-6591	COVER	1	35001-
23	22U-43-21340	SHEET	2	35001-
24	01010-80820	BOLT	2	35001-
25	01643-30823	WASHER	2	35001-
26	102-60-15240	SEAT	2	35001-
27	01245-00820	SCREW	2	35001-
28	01643-70823	WASHER	2	35001-
29	04434-51910	CLIP	1	35001-

Printed By : Dwi Iswanto (airafather6107170)

FLOOR FRAME (AIR CONDITIONER AND FOOT COVER) (FOR HIGH CAB MOUNT)

Item	Part No.	Part Name	Qty	Serial No.
30	08034-00519	BAND	2	35001-
31	21N-979-3870	HOSE	1	35001-
32	21N-979-3890	HOSE	1	35001-
33	08034-20519	BAND	3	35001-

Printed By : Dwi Iswanto (airafather6107170)

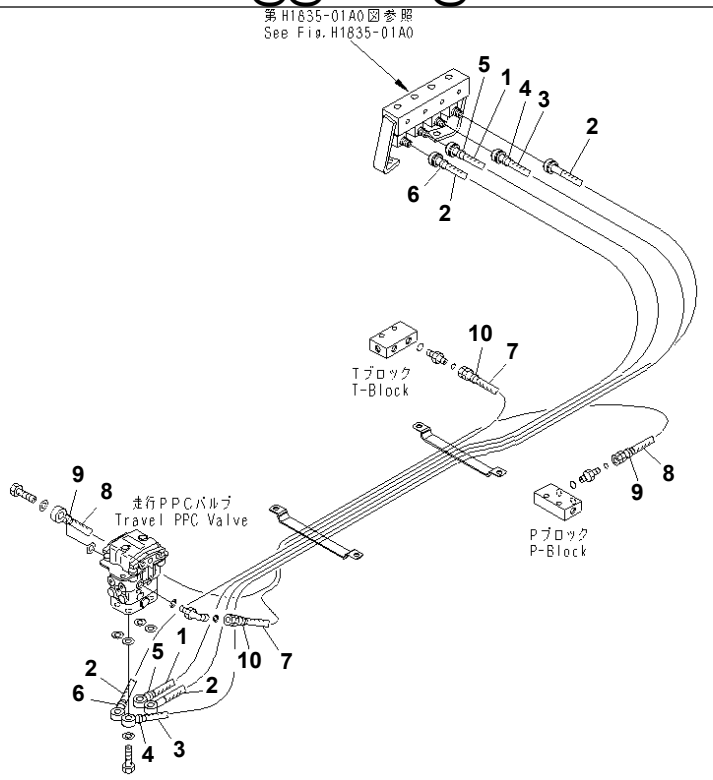

P W 1 E 5 1 7

Ref. K1110-16A0 **Page 240660**

PC1250SP-8R S/N 35001-UP (W/O EGR, +55C DEGREE)
FLOOR FRAME (PPC HOSE) (1/2)

Item	Part No.	Part Name	Qty	Serial No.
1	21N-62-35542	HOSE, 2800MM	1	35001-
2	21N-62-35553	HOSE, 2900MM	2	35001-
3	21N-62-36810	HOSE, 3000MM	1	35001-
4	20Y-62-22790	BAND, RED	2	35001-
5	20Y-62-22820	BAND, BLUE	2	35001-
6	20Y-62-22850	BAND, GREEN	2	35001-
7	02760-003A8	HOSE, 850MM	1	35001-
8	21N-62-35521	HOSE, 1000MM	1	35001-
9	20Y-62-22790	BAND, RED	2	35001-
10	20Y-62-22820	BAND, BLUE	2	35001-

Printed By : Dwi Iswanto (airafather6107170)

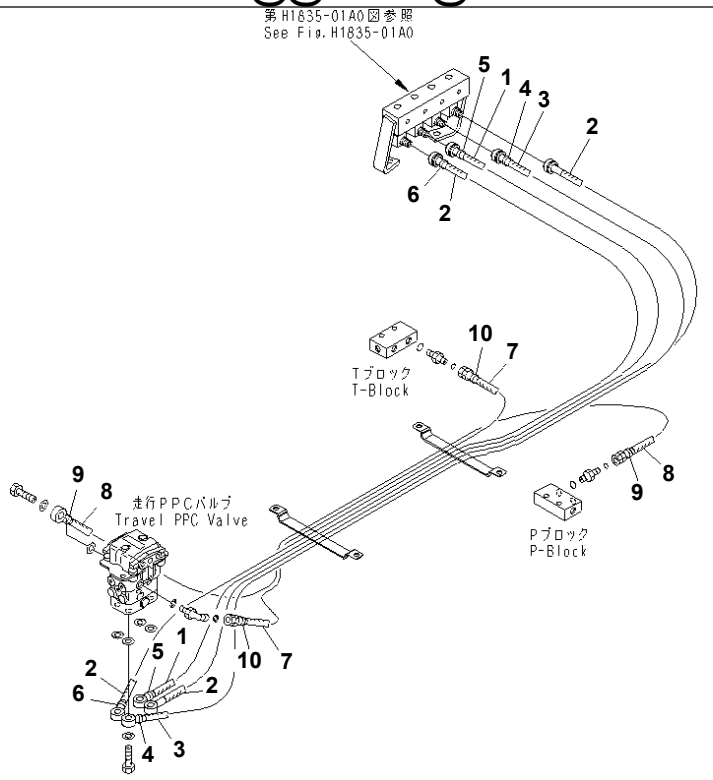

Ref. K1110-16B6 **Page 240670**

PC1250SP-8R S/N 35001-UP (W/O EGR, +55C DEGREE)
FLOOR FRAME (PPC HOSE) (FOR HIGH CAB MOUNT) (1/2)

Item	Part No.	Part Name	Qty	Serial No.
1	21N-64-37340	HOSE, 3500MM	1	35001-
2	21N-64-37350	HOSE, 3600MM	2	35001-
3	21N-64-37360	HOSE, 3700MM	1	35001-
4	20Y-62-22790	BAND, RED	2	35001-
5	20Y-62-22820	BAND, BLUE	2	35001-
6	20Y-62-22850	BAND, GREEN	2	35001-
7	02760-003A8	HOSE, 850MM	1	35001-
8	21N-62-35521	HOSE, 1000MM	1	35001-
9	20Y-62-22790	BAND, RED	2	35001-
10	20Y-62-22820	BAND, BLUE	2	35001-

Printed By : Dwi Iswanto (airafather6107170)

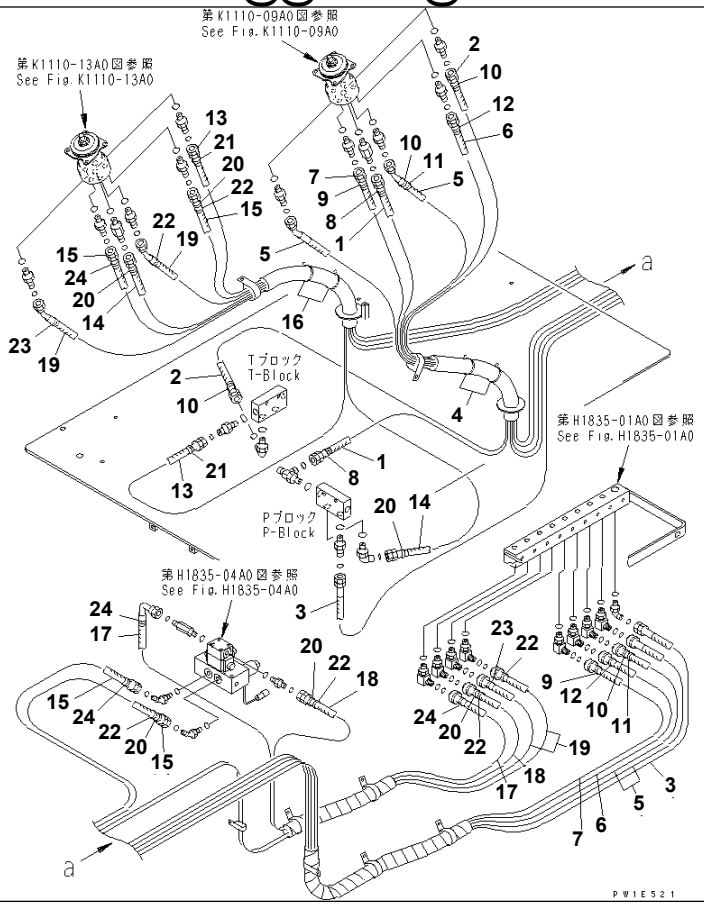

Ref. K1110-17A0 **Page 240680**

PC1250SP-8R S/N 35001-UP (W/O EGR, +55C DEGREE)

FLOOR FRAME (PPC HOSE) (2/2)

Item	Part No.	Part Name	Qty	Serial No.
1	02760-00314	HOSE	1	35001-
2	02760-00315	HOSE	1	35001-
3	02762-00427	HOSE	1	35001-
4	08034-20536	BAND	2	35001-
5	21N-62-36770	HOSE, 3200MM	2	35001-
6	21N-62-36780	HOSE, 3100MM	1	35001-
7	21N-62-36790	HOSE, 3200MM	1	35001-
8	20Y-62-22790	BAND, RED	2	35001-
9	20Y-62-22810	BAND, YELLOW	2	35001-
10	20Y-62-22820	BAND, BLUE	4	35001-
11	20Y-62-22830	BAND, WHITE	2	35001-
12	20Y-62-22850	BAND, GREEN	2	35001-
13	02760-00311	HOSE	1	35001-
14	02760-00315	HOSE	1	35001-
15	02760-00322	HOSE	2	35001-
16	08034-20536	BAND	2	35001-
17	21N-62-36321	HOSE, 1700MM	1	35001-
18	21N-62-36341	HOSE, 1500MM	1	35001-
19	21N-62-36760	HOSE, 3500MM	2	35001-
20	20Y-62-22790	BAND, RED	6	35001-
21	20Y-62-22820	BAND, BLUE	2	35001-
22	20Y-62-22830	BAND, WHITE	6	35001-
23	20Y-62-22840	BAND, BLACK	2	35001-
24	20Y-62-22860	BAND, BROWN	4	35001-

Printed By : Dwi Iswanto (airafather6107170)

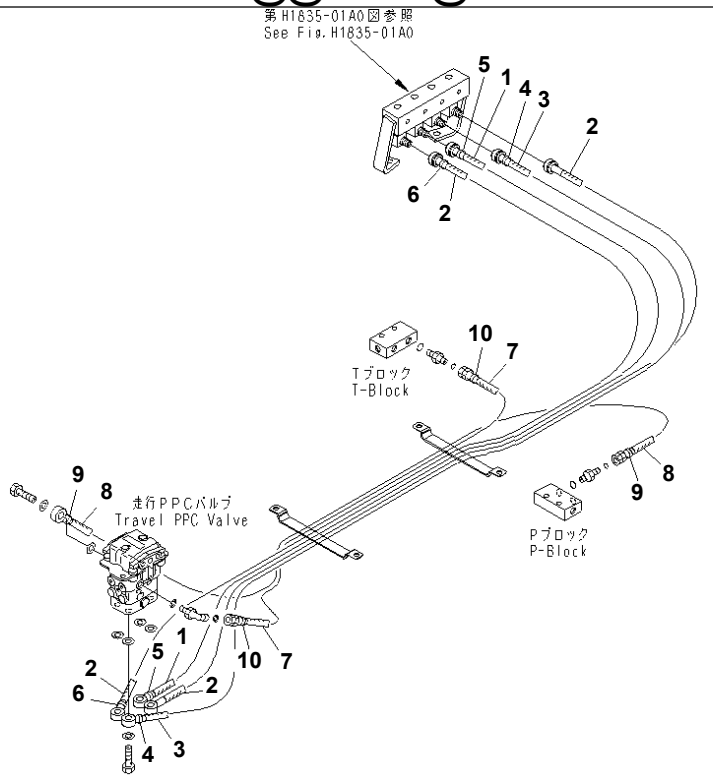

P W 1 E 5 1 7

Ref. K1110-17B6 **Page 240690**

PC1250SP-8R S/N 35001-UP (W/O EGR, +55C DEGREE)

FLOOR FRAME (PPC HOSE) (FOR HIGH CAB MOUNT) (2/2)

Item	Part No.	Part Name	Qty	Serial No.
1	21N-64-37340	HOSE, 3500MM	1	35001-
2	21N-64-37350	HOSE, 3600MM	2	35001-
3	21N-64-37360	HOSE, 3700MM	1	35001-
4	20Y-62-22790	BAND, RED	2	35001-
5	20Y-62-22820	BAND, BLUE	2	35001-
6	20Y-62-22850	BAND, GREEN	2	35001-
7	02760-003A8	HOSE, 850MM	1	35001-
8	21N-62-35521	HOSE, 1000MM	1	35001-
9	20Y-62-22790	BAND, RED	2	35001-
10	20Y-62-22820	BAND, BLUE	2	35001-

Printed By : Dwi Iswanto (airafather6107170)

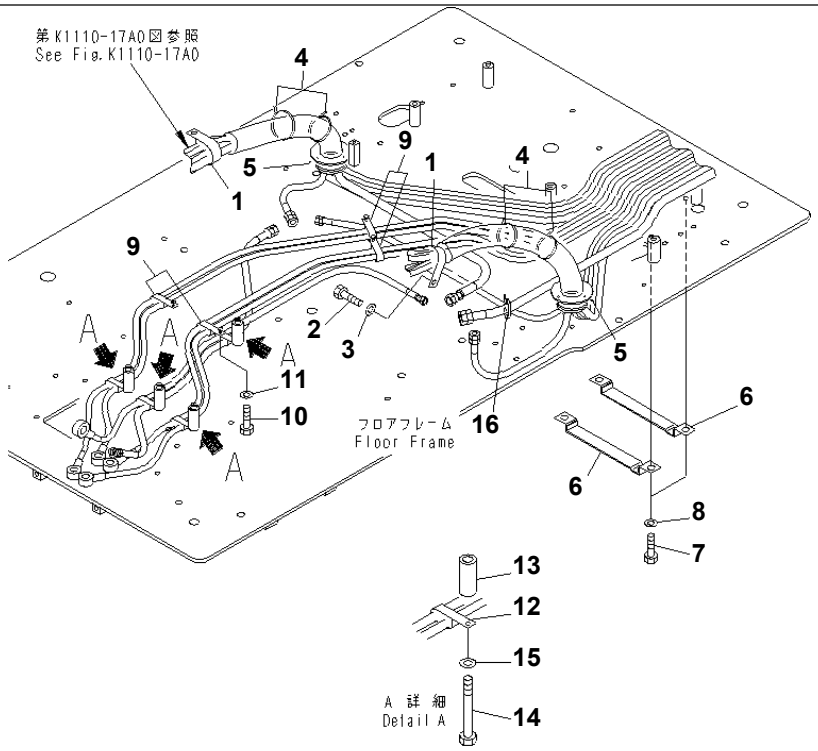

00056656

Ref. K1110-18A0 **Page 240700**

PC1250SP-8R S/N 35001-UP (W/O EGR, +55C DEGREE)
FLOOR FRAME (PPC CLAMP)

Item	Part No.	Part Name	Qty	Serial No.
1	20Y-62-17930	CLIP	2	35001-
2	01010-81020	BOLT	2	35001-
3	01643-31032	WASHER	2	35001-
4	08034-20536	BAND	4	35001-
5	08034-20536	BAND	2	35001-
6	21N-62-35620	CLAMP	2	35001-
7	01010-81016	BOLT	4	35001-
8	01643-31032	WASHER	4	35001-
9	04435-51510	CLIP	4	35001-
10	01010-81016	BOLT	4	35001-
11	01643-31032	WASHER	4	35001-
12	04435-51510	CLIP	4	35001-
13	195-979-5190	COLLAR	4	35001-
14	01010-81065	BOLT	4	35001-
15	01643-31032	WASHER	4	35001-
16	08034-20536	BAND	1	35001-

Printed By : Dwi Iswanto (airafather6107170)

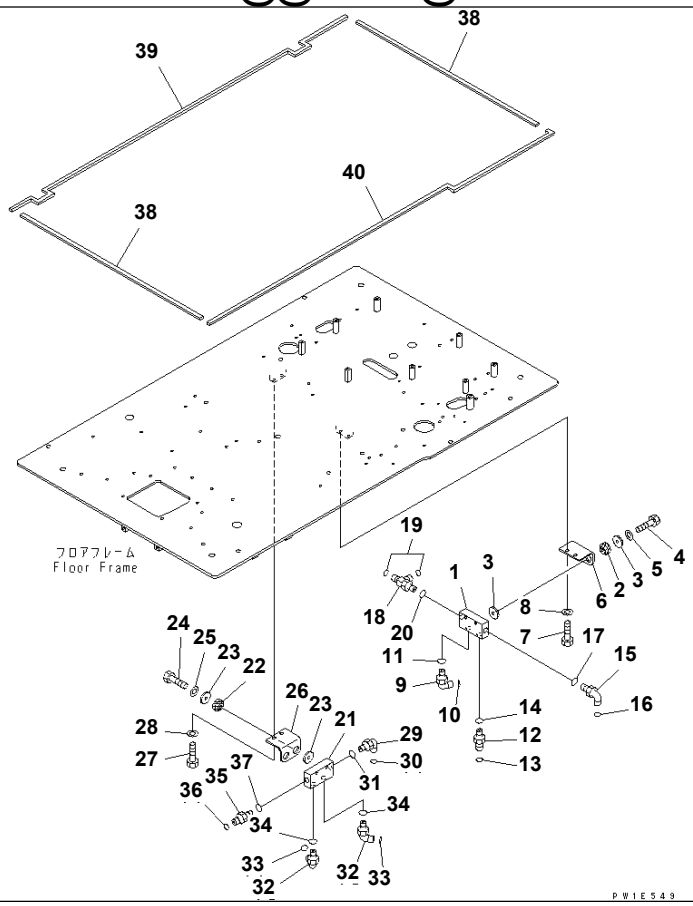

Ref. K1110-19A0 **Page 240710**

PC1250SP-8R S/N 35001-UP (W/O EGR, +55C DEGREE)
FLOOR FRAME (P¤T BLOCK AND SEAL)

Item	Part No.	Part Name	Qty	Serial No.
1	209-62-77181	BLOCK	1	35001-
2	195-03-41380	CUSHION	2	35001-
3	178-60-12250	COLLAR	4	35001-
4	01010-81050	BOLT	2	35001-
5	01643-31032	WASHER	2	35001-
6	21N-62-35140	BRACKET	1	35001-
7	01010-81025	BOLT	2	35001-
8	01643-31032	WASHER	2	35001-
9	02782-10422	ELBOW	1	35001-
10	02896-11012	O-RING	1	35001-
11	07002-12034	O-RING	1	35001-
12	02781-00422	UNION	1	35001-
13	02896-11012	O-RING	1	35001-
14	07002-12034	O-RING	1	35001-
15	02782-10315	ELBOW	1	35001-
16	02896-11009	O-RING	1	35001-
17	07002-12034	O-RING	1	35001-
18	19M-61-35140	TEE	1	35001-
19	02896-11009	O-RING	2	35001-
20	07002-12034	O-RING	1	35001-
21	209-62-77181	BLOCK	1	35001-
22	195-03-41380	CUSHION	2	35001-
23	178-60-12250	COLLAR	4	35001-
24	01010-81050	BOLT	2	35001-
25	01643-31032	WASHER	2	35001-
26	21N-62-35140	BRACKET	1	35001-
27	01010-81025	BOLT	2	35001-
28	01643-31032	WASHER	2	35001-
29	02782-10422	ELBOW	1	35001-
30	02896-11012	O-RING	1	35001-

Printed By : Dwi Iswanto (airafather6107170)

FLOOR FRAME (P¤T BLOCK AND SEAL)

Item	Part No.	Part Name	Qty	Serial No.
31	07002-12034	O-RING	1	35001-
32	02782-10315	ELBOW	2	35001-
33	02896-11009	O-RING	2	35001-
34	07002-12034	O-RING	2	35001-
35	02781-00315	UNION	1	35001-
36	02896-11009	O-RING	1	35001-
37	07002-12034	O-RING	1	35001-
38	21N-54-39940	SEAL	2	35001-
39	20Y-54-65760	SEAL	1	35001-
40	20Y-54-65770	SEAL	1	35001-

Printed By : Dwi Iswanto (airafather6107170)

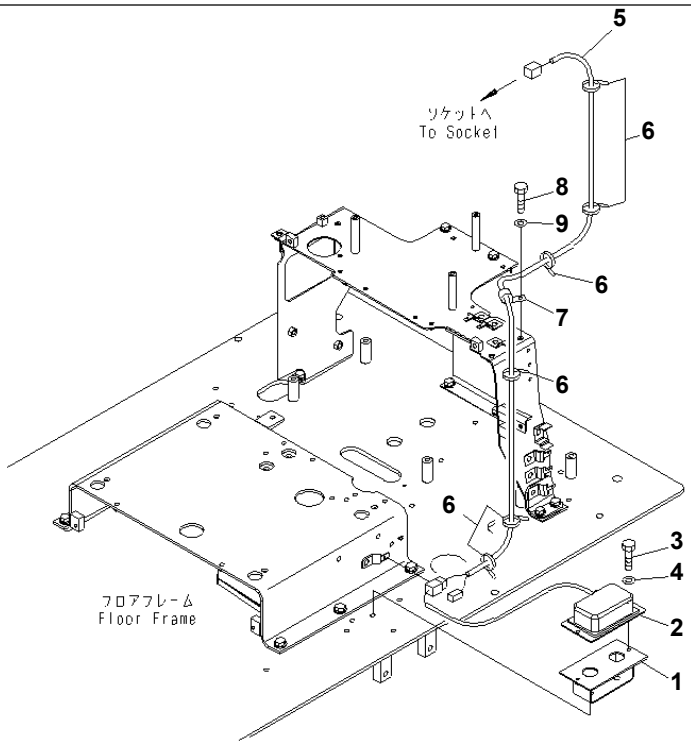

00007652

Ref. K1110-20A0 **Page 240720**

PC1250SP-8R S/N 35001-UP (W/O EGR, +55C DEGREE)
FLOOR FRAME (12V CONVERTER)

Item	Part No.	Part Name	Qty	Serial No.
1	20Y-06-31190	BRACKET	1	35001-
2	22U-06-22250	CONVERTER	1	35001-
3	01010-80620	BOLT	2	35001-
4	01643-30623	WASHER	2	35001-
5	20Y-06-31150	WIRING HARNESS	1	35001-
6	08034-20519	BAND	6	35001-
7	04434-51010	CLIP	1	35001-
8	01010-81020	BOLT	1	35001-
9	01643-31032	WASHER	1	35001-

Printed By : Dwi Iswanto (airafather6107170)

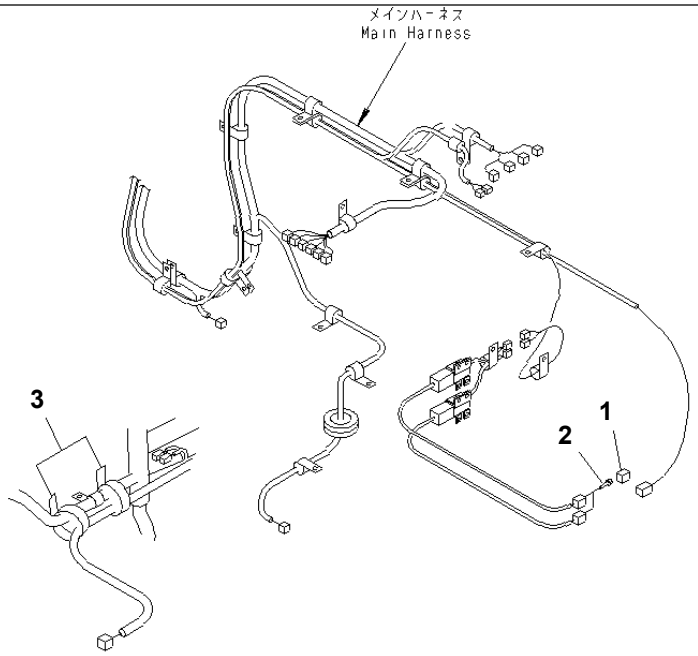

00043375

Ref. K1110-21A0 **Page 240730**

PC1250SP-8R S/N 35001-UP (W/O EGR, +55C DEGREE)
FLOOR FRAME (VHMS CONTROLLER LESS)

Item	Part No.	Part Name	Qty	Serial No.
1	08192-23100	CONNECTOR	2	35001-
2	08191-00770	PLUG	6	35001-
3	08034-20536	BAND	2	35001-

Printed By : Dwi Iswanto (airafather6107170)

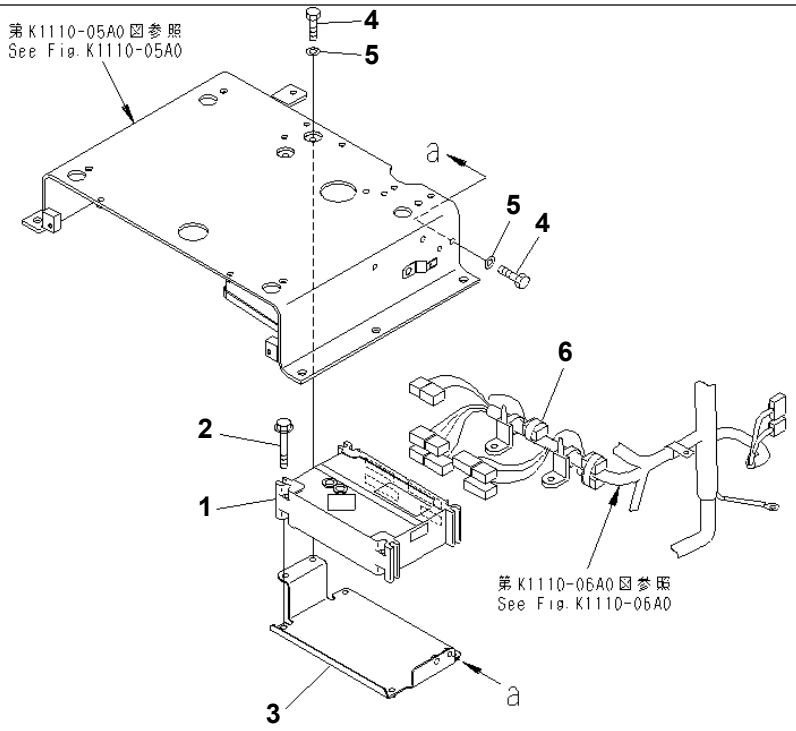

00045285

Ref. K1110-21A1 **Page 240740**

PC1250SP-8R S/N 35001-UP (W/O EGR, +55C DEGREE)
FLOOR FRAME (VHMS CONTROLLER)(#35001-35001)

Item	Part No.	Part Name	Qty	Serial No.
1	7826-14-3000	CONTROLLER	1	35001-35001
2	01435-00880	BOLT	4	35001-@
3	21N-43-37280	BRACKET	1	35001-@
4	01010-D0820	BOLT	4	35001-@
5	01643-70823	WASHER	4	35001-@
6	08034-20536	BAND	1	35001-@

Printed By : Dwi Iswanto (airafather6107170)

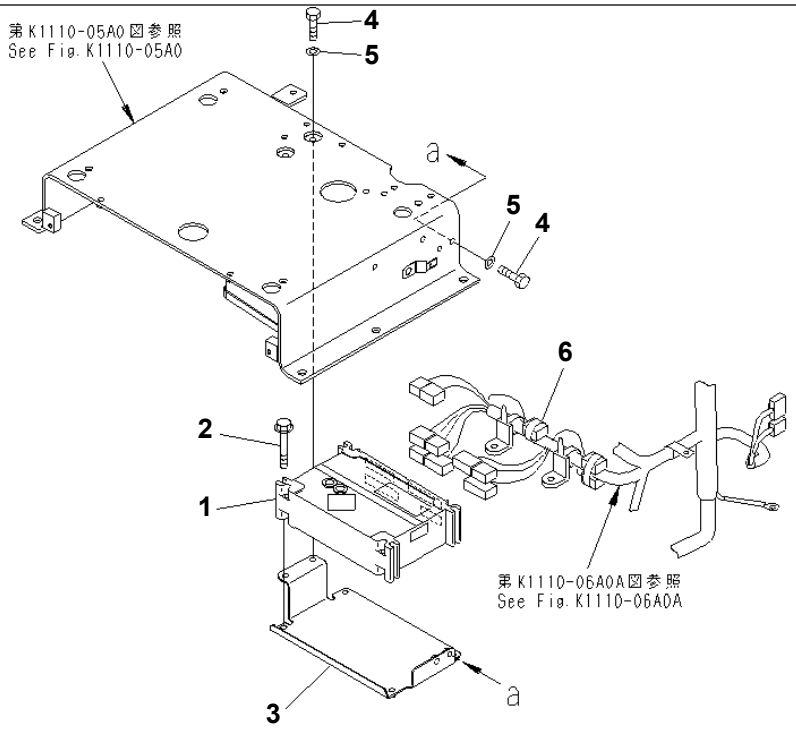

00063509

Ref. K1110-21A1A **Page 240750**

PC1250SP-8R S/N 35001-UP (W/O EGR, +55C DEGREE)
FLOOR FRAME (VHMS CONTROLLER)(#35002-)

Item	Part No.	Part Name	Qty	Serial No.
1	7826-14-3501	CONTROLLER	1	35020-
	7826-14-3500	CONTROLLER	1	35002-35019
2	01435-00880	BOLT	4	35001-
3	21N-43-37280	BRACKET	1	35001-
4	01010-D0820	BOLT	4	35001-
5	01643-70823	WASHER	4	35001-
6	08034-20536	BAND	1	35001-

Printed By : Dwi Iswanto (airafather6107170)

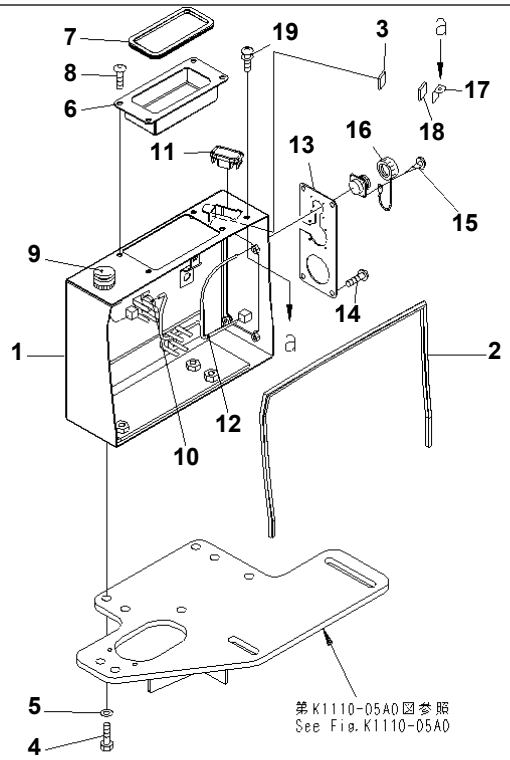

00043376

Ref. K1110-22A0 **Page 240760**

PC1250SP-8R S/N 35001-UP (W/O EGR, +55C DEGREE)
FLOOR FRAME (SWITCH BOX)

Item	Part No.	Part Name	Qty	Serial No.
1	21N-43-41111	COVER	1	35001-
2	21N-43-37161	· SEAL	1	35001-
3	21N-43-37180	· SHEET	1	35001-
4	01010-D1030	BOLT	4	35001-
5	01643-71032	WASHER	4	35001-
6	21N-43-37150	COVER	1	35001-
7	21N-43-37171	· SEAL	1	35153-
	□21N-43-37170	· SEAL	1	35001-35152
8	01245-00612	SCREW	4	35001-
9	195-06-41180	SWITCH	1	35001-
10	20Y-06-21460	CLIP	1	35001-
11	22U-06-22320	COVER	1	35001-
12	21N-06-41190	WIRING HARNESS	1	35001-
13	21N-43-37250	COVER	1	35001-
14	01245-00612	SCREW	4	35001-
15	01370-10308	SCREW	4	35001-
16	562-43-15810	CAP	1	35001-
17	21N-43-37190	BRACKET	1	35001-
18	21N-43-37180	· SHEET	1	35001-
19	01023-20410	SCREW	1	35001-

Printed By : Dwi Iswanto (airafather6107170)

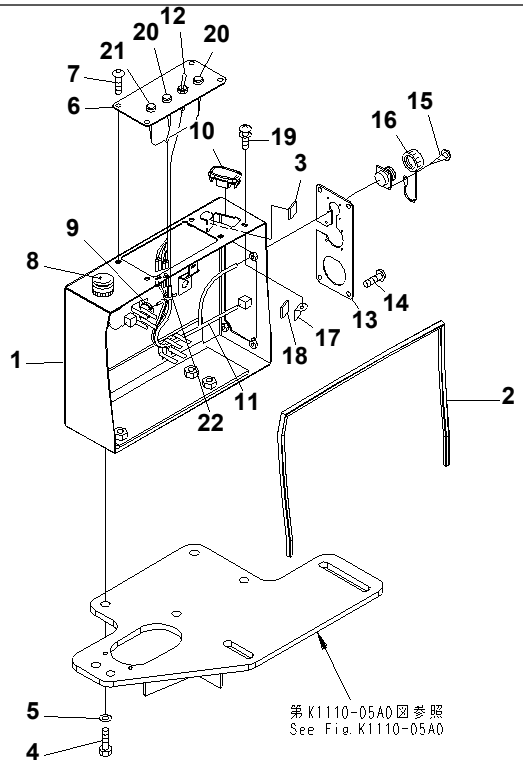

00057169

Ref. K1110-22A5 **Page 240770**

PC1250SP-8R S/N 35001-UP (W/O EGR, +55C DEGREE)
FLOOR FRAME (SWITCH BOX) (AUTO GREASE)

Item	Part No.	Part Name	Qty	Serial No.
1	21N-43-41111	COVER	1	35001-
2	21N-43-37161	· SEAL	1	35001-
3	21N-43-37180	· SHEET	1	35001-
4	01010-D1030	BOLT	4	35001-
5	01643-71032	WASHER	4	35001-
6	21N-68-37620	PLATE	1	35001-
7	01245-00612	SCREW	4	35001-
8	195-06-41180	SWITCH	1	35001-
9	20Y-06-21460	CLIP	1	35001-
10	22U-06-22320	COVER	1	35001-
11	21N-06-41220	WIRING HARNESS	1	35001-
12	08501-42513	· SWITCH	1	35001-
13	21N-43-37250	COVER	1	35001-
14	01245-00612	SCREW	4	35001-
15	01370-10308	SCREW	4	35001-
16	562-43-15810	CAP	1	35001-
17	21N-43-37190	BRACKET	1	35001-
18	21N-43-37180	· SHEET	1	35001-
19	01023-20410	SCREW	1	35001-
20	203-06-65140	LAMP ASS'Y	2	35001-
	203-06-65130	· LAMP	2	35001-
21	21N-06-31390	LAMP ASS'Y	1	35001-
	21N-06-31380	· LAMP	1	35001-
22	08034-20519	BAND	1	35001-

Printed By : Dwi Iswanto (airafather6107170)

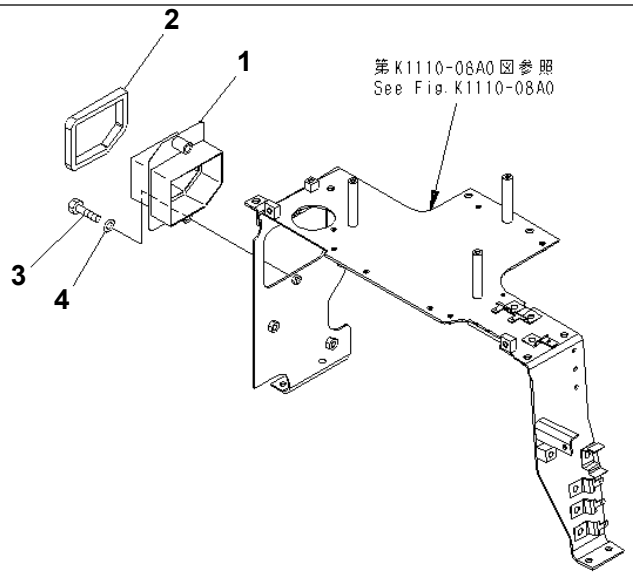

00031380

Ref. K1110-23A0 **Page 240780**

PC1250SP-8R S/N 35001-UP (W/O EGR, +55C DEGREE)
FLOOR FRAME (AIR CONDITIONER DUCT)

Item	Part No.	Part Name	Qty	Serial No.
1	21N-979-3812	DUCT	1	35001-
2	21N-979-3821	・ SEAL	1	35001-
3	01010-80845	BOLT	2	35001-
4	01643-30823	WASHER	2	35001-

Printed By : Dwi Iswanto (airafather6107170)

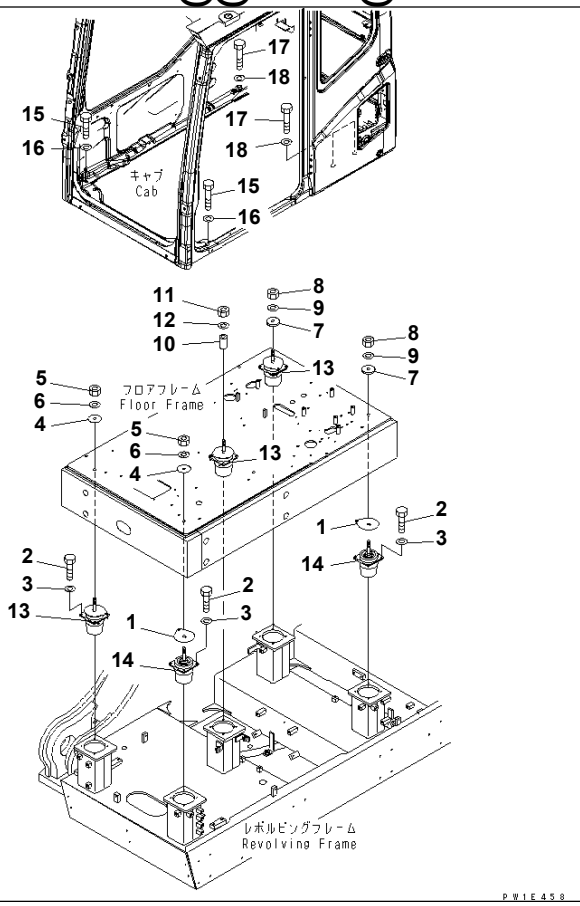

Ref. K1120-01A0 **Page 240790**

PC1250SP-8R S/N 35001-UP (W/O EGR, +55C DEGREE)
FLOOR MOUNT

Item	Part No.	Part Name	Qty	Serial No.
1	207-54-65130	SPACER	5	35001-
2	01010-81035	BOLT	20	35001-
3	01643-31032	WASHER	20	35001-
4	113-01-21120	WASHER	2	35001-
5	01580-11613	NUT	2	35001-
6	01643-31645	WASHER	2	35001-
7	21T-27-71220	HOLDER	2	35001-
8	01580-11613	NUT	2	35001-
9	01643-31645	WASHER	2	35001-
10	156-70-13150	COLLAR	1	35001-
11	01580-11613	NUT	1	35001-
12	01643-31645	WASHER	1	35001-
13	21N-54-42820	CUSHION	3	35001-
14	21N-54-42830	CUSHION	2	35001-
15	01010-81240	BOLT	2	35001-
16	01643-31232	WASHER	2	35001-
17	01010-81285	BOLT	3	35001-
18	01643-31232	WASHER	3	35001-

Printed By : Dwi Iswanto (airafather6107170)

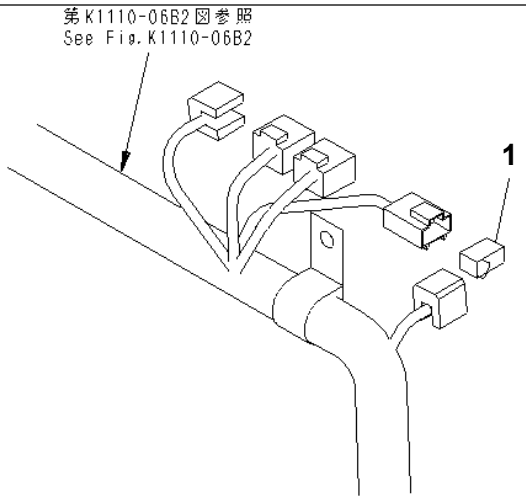

00063505

Ref. K1730-01A1 **Page 240800**

PC1250SP-8R S/N 35001-UP (W/O EGR, +55C DEGREE)
SWITCH (MODEL SELECTION) (+55C SPEC.)

Item	Part No.	Part Name	Qty	Serial No.
1	21N-06-41440	SWITCH	1	35001-

Printed By : Dwi Iswanto (airafather6107170)

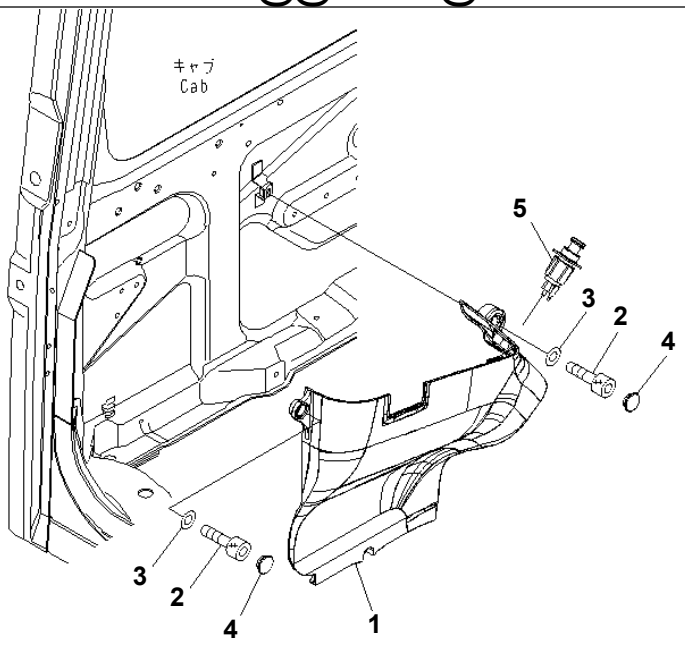

P W 1 B 8 0 2

Ref. K1740-01A0 **Page 240810**

PC1250SP-8R S/N 35001-UP (W/O EGR, +55C DEGREE)
COVER

Item	Part No.	Part Name	Qty	Serial No.
1	22U-54-25231	COVER	1	35001-
2	01252-70616	BOLT	3	35001-
3	01643-30623	WASHER	3	35001-
4	22U-54-25351	CAP	2	35001-
5	20Y-06-23472	LIGHTER	1	35001-

Printed By : Dwi Iswanto (airafather6107170)

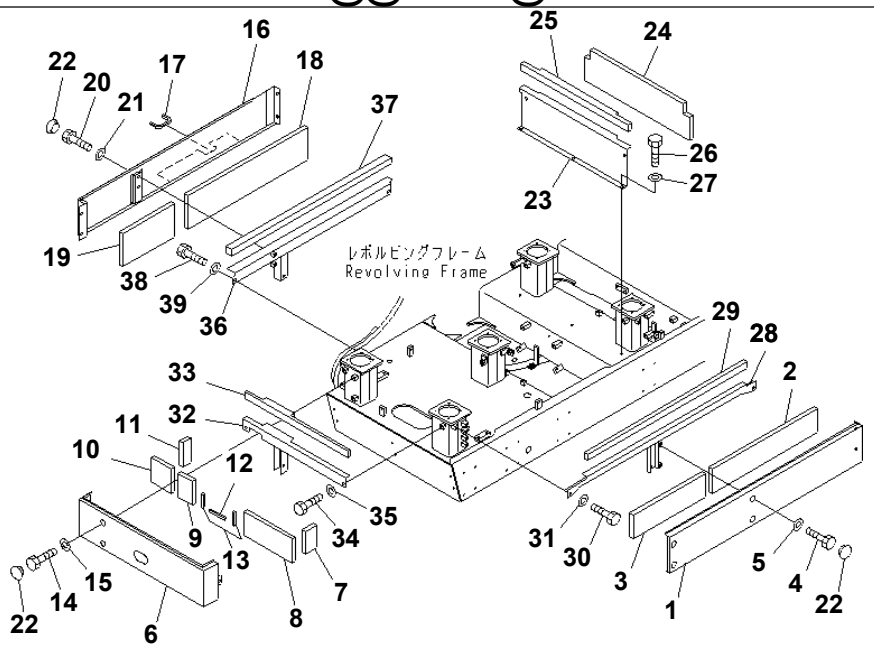

P W 1 E 5 9 3

Ref. K1920-01A0 **Page 240820**

PC1250SP-8R S/N 35001-UP (W/O EGR, +55C DEGREE)
CAB COVER (FOR LOW CAB AND LOW WIPER)

Item	Part No.	Part Name	Qty	Serial No.
1	21N-54-39782	COVER	1	35001-
2	21N-53-31770	· SHEET	1	35001-
3	21N-53-31780	· SHEET	1	35001-
4	01010-81230	BOLT	6	35001-
5	01643-31232	WASHER	6	35001-
6	21N-53-31440	COVER	1	35001-
7	21N-53-31790	· SHEET	1	35001-
8	21N-53-31810	· SHEET	1	35001-
9	21N-53-31820	· SHEET	1	35001-
10	21N-53-31830	· SHEET	1	35001-
11	21N-53-31840	· SHEET	1	35001-
12	21N-53-31850	· SHEET	1	35001-
13	21N-53-31860	· SHEET	2	35001-
14	01010-81225	BOLT	4	35001-
15	01643-31232	WASHER	4	35001-
16	21N-54-39812	COVER	1	35001-
17	209-54-74670	· SEAL	1	35001-
18	21N-53-31730	· SHEET	1	35001-
19	21N-53-31740	· SHEET	1	35001-
20	01010-81230	BOLT	6	35001-
21	01643-31232	WASHER	6	35001-
22	21N-53-31870	CAP	8	35001-
23	21N-54-39821	COVER	1	35001-
24	21N-53-31750	· SHEET	1	35001-
25	21N-54-39861	· SEAL	1	35001-
26	01010-81235	BOLT	5	35001-
27	01643-31232	WASHER	5	35001-
28	21N-54-39832	FRAME	1	35001-
29	21N-54-39871	· SEAL	1	35001-
30	01010-81230	BOLT	3	35001-

Printed By : Dwi Iswanto (airafather6107170)

CAB COVER (FOR LOW CAB AND LOW WIPER)

Item	Part No.	Part Name	Qty	Serial No.
31	01643-31232	WASHER	3	35001-
32	21N-54-39841	FRAME	1	35001-
33	21N-54-39881	· SEAL	1	35001-
34	01010-81230	BOLT	3	35001-
35	01643-31232	WASHER	3	35001-
36	21N-54-39851	FRAME	1	35001-
37	21N-54-39891	· SEAL	1	35001-
38	01010-81230	BOLT	3	35001-
39	01643-31232	WASHER	3	35001-

Printed By : Dwi Iswanto (airafather6107170)

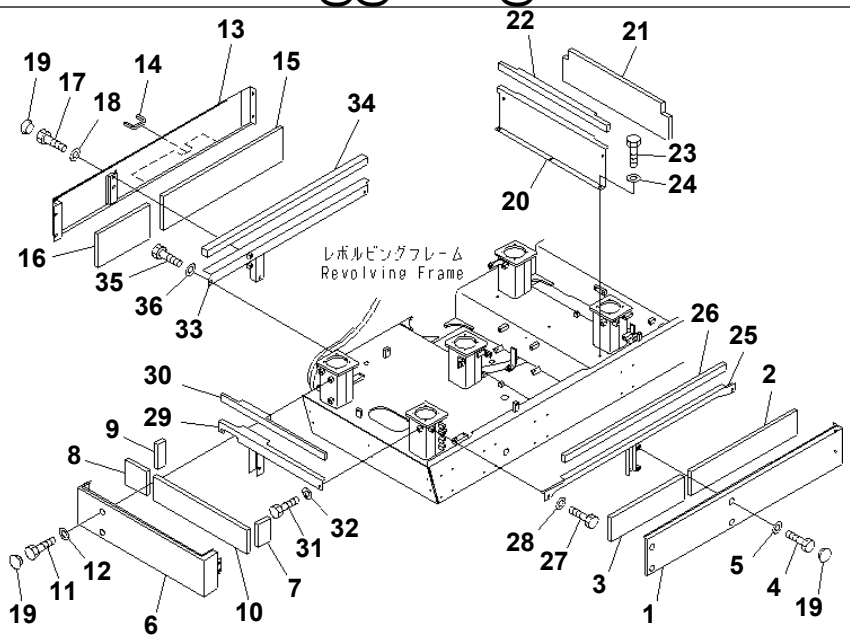

Ref. K1920-01A1 **Page 240830**

PC1250SP-8R S/N 35001-UP (W/O EGR, +55C DEGREE)
CAB COVER (FOR LOW CAB)

Item	Part No.	Part Name	Qty	Serial No.
1	21N-54-39782	COVER	1	35001-
2	21N-53-31770	· SHEET	1	35001-
3	21N-53-31780	· SHEET	1	35001-
4	01010-81230	BOLT	6	35001-
5	01643-31232	WASHER	6	35001-
6	21N-54-39791	COVER	1	35001-
7	21N-53-31790	· SHEET	1	35001-
8	21N-53-31830	· SHEET	1	35001-
9	21N-53-31840	· SHEET	1	35001-
10	21N-53-32430	· SHEET	1	35001-
11	01010-81225	BOLT	4	35001-
12	01643-31232	WASHER	4	35001-
13	21N-54-39812	COVER	1	35001-
14	209-54-74670	· SEAL	1	35001-
15	21N-53-31730	· SHEET	1	35001-
16	21N-53-31740	· SHEET	1	35001-
17	01010-81230	BOLT	6	35001-
18	01643-31232	WASHER	6	35001-
19	21N-53-31870	CAP	8	35001-
20	21N-54-39821	COVER	1	35001-
21	21N-53-31750	· SHEET	1	35001-
22	21N-54-39861	· SEAL	1	35001-
23	01010-81235	BOLT	5	35001-
24	01643-31232	WASHER	5	35001-
25	21N-54-39832	FRAME	1	35001-
26	21N-54-39871	· SEAL	1	35001-
27	01010-81230	BOLT	3	35001-
28	01643-31232	WASHER	3	35001-
29	21N-54-39841	FRAME	1	35001-
30	21N-54-39881	· SEAL	1	35001-

Printed By : Dwi Iswanto (airafather6107170)

CAB COVER (FOR LOW CAB)

Item	Part No.	Part Name	Qty	Serial No.
31	01010-81230	BOLT	3	35001-
32	01643-31232	WASHER	3	35001-
33	21N-54-39851	FRAME	1	35001-
34	21N-54-39891	· SEAL	1	35001-
35	01010-81230	BOLT	3	35001-
36	01643-31232	WASHER	3	35001-

Printed By : Dwi Iswanto (airafather6107170)

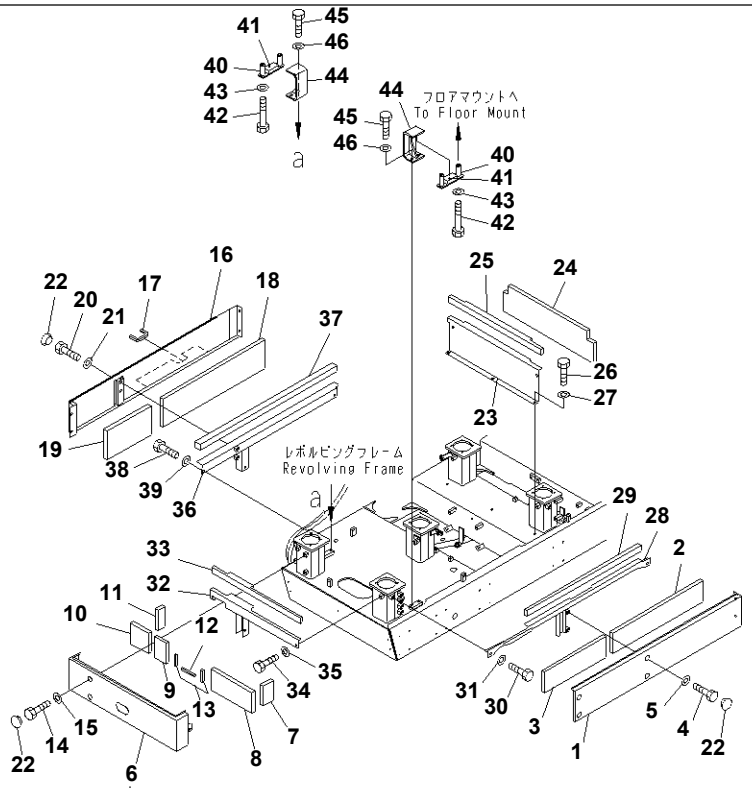

00017567

Ref. K1920-01A2 **Page 240840**

PC1250SP-8R S/N 35001-UP (W/O EGR, +55C DEGREE)
CAB COVER (FOR LOW CAB AND LOW WIPER) (WITH FRONT GUARD)(#35001-35029)

Item	Part No.	Part Name	Qty	Serial No.
1	21N-54-39782	COVER	1	35001-35029
2	21N-53-31770	· SHEET	1	35001-@
3	21N-53-31780	· SHEET	1	35001-@
4	01010-81230	BOLT	6	35001-35029
5	01643-31232	WASHER	6	35001-35029
6	21N-53-31440	COVER	1	35001-@
7	21N-53-31790	· SHEET	1	35001-@
8	21N-53-31810	· SHEET	1	35001-@
9	21N-53-31820	· SHEET	1	35001-@
10	21N-53-31830	· SHEET	1	35001-@
11	21N-53-31840	· SHEET	1	35001-@
12	21N-53-31850	· SHEET	1	35001-@
13	21N-53-31860	· SHEET	2	35001-@
14	01010-81225	BOLT	4	35001-35029
15	01643-31232	WASHER	4	35001-35029
16	21N-54-39812	COVER	1	35001-@
17	209-54-74670	· SEAL	1	35001-@
18	21N-53-31730	· SHEET	1	35001-@
19	21N-53-31740	· SHEET	1	35001-@
20	01010-81230	BOLT	6	35001-@
21	01643-31232	WASHER	6	35001-@
22	21N-53-31870	CAP	8	35001-@
23	21N-54-39821	COVER	1	35001-@
24	21N-53-31750	· SHEET	1	35001-@
25	21N-54-39861	· SEAL	1	35001-@
26	01010-81235	BOLT	5	35001-@
27	01643-31232	WASHER	5	35001-@
28	21N-53-32441	FRAME	1	35001-@
29	21N-53-32450	· SEAL	1	35001-@

Printed By : Dwi Iswanto (airafather6107170)

CAB COVER (FOR LOW CAB AND LOW WIPER) (WITH FRONT GUARD)(#35001-35029)

Item	Part No.	Part Name	Qty	Serial No.
30	01010-81230	BOLT	3	35001-@
31	01643-31232	WASHER	3	35001-@
32	21N-54-39841	FRAME	1	35001-@
33	21N-54-39881	· SEAL	1	35001-@
34	01010-81230	BOLT	3	35001-@
35	01643-31232	WASHER	3	35001-@
36	21N-54-39851	FRAME	1	35001-@
37	21N-54-39891	· SEAL	1	35001-@
38	01010-81230	BOLT	3	35001-@
39	01643-31232	WASHER	3	35001-@
40	21N-53-32460	BRACKET	2	35001-@
41	21N-53-32470	· SHEET	1	35001-@
42	01011-81625	BOLT	4	35001-@
43	01643-31645	WASHER	4	35001-@
44	21N-53-32480	BRACKET	2	35001-@
45	01010-81640	BOLT	4	35001-@
46	01643-31645	WASHER	4	35001-@

Printed By : Dwi Iswanto (airafather6107170)

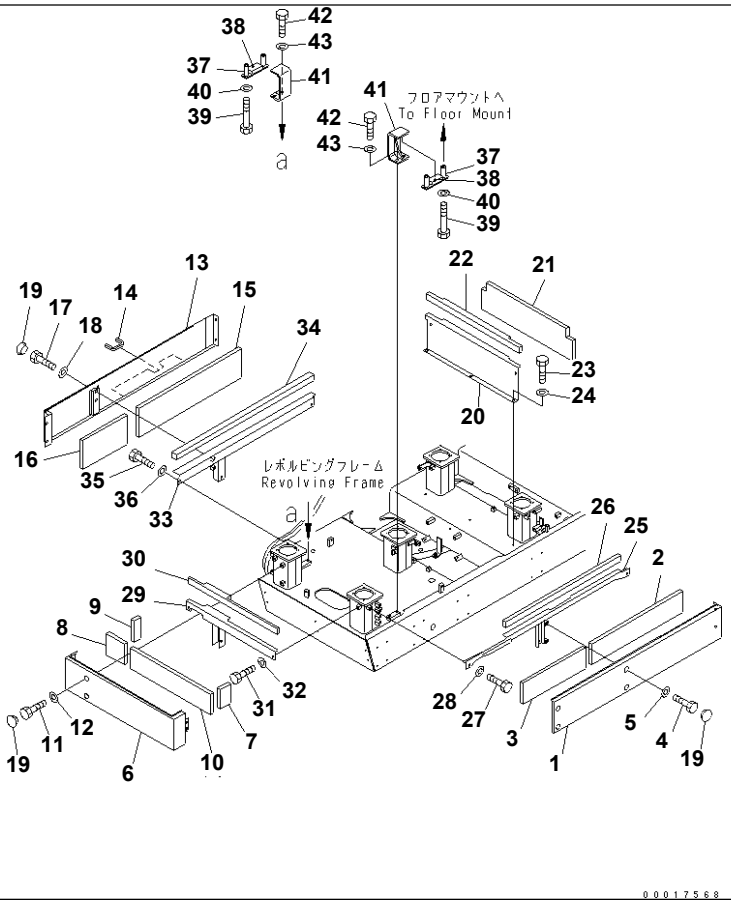

Ref. K1920-01A3 **Page 240850**

PC1250SP-8R S/N 35001-UP (W/O EGR, +55C DEGREE)

CAB COVER (FOR LOW CAB) (WITH FRONT GUARD)(#35001-35029)

Item	Part No.	Part Name	Qty	Serial No.
1	21N-54-39782	COVER	1	35001-35029
2	21N-53-31770	· SHEET	1	35001-@
3	21N-53-31780	· SHEET	1	35001-@
4	01010-81230	BOLT	6	35001-35029
5	01643-31232	WASHER	6	35001-35029
6	21N-54-39791	COVER	1	35001-@
7	21N-53-31790	· SHEET	1	35001-@
8	21N-53-31830	· SHEET	1	35001-@
9	21N-53-31840	· SHEET	1	35001-@
10	21N-53-32430	· SHEET	1	35001-@
11	01010-81225	BOLT	4	35001-35029
12	01643-31232	WASHER	4	35001-35029
13	21N-54-39812	COVER	1	35001-@
14	209-54-74670	· SEAL	1	35001-@
15	21N-53-31730	· SHEET	1	35001-@
16	21N-53-31740	· SHEET	1	35001-@
17	01010-81230	BOLT	6	35001-@
18	01643-31232	WASHER	6	35001-@
19	21N-53-31870	CAP	8	35001-@
20	21N-54-39821	COVER	1	35001-@
21	21N-53-31750	· SHEET	1	35001-@
22	21N-54-39861	· SEAL	1	35001-@
23	01010-81235	BOLT	5	35001-@
24	01643-31232	WASHER	5	35001-@
25	21N-53-32441	FRAME	1	35001-@
26	21N-53-32450	· SEAL	1	35001-@
27	01010-81230	BOLT	3	35001-@
28	01643-31232	WASHER	3	35001-@
29	21N-54-39841	FRAME	1	35001-@
30	21N-54-39881	· SEAL	1	35001-@

Printed By : Dwi Iswanto (airafather6107170)

CAB COVER (FOR LOW CAB) (WITH FRONT GUARD)(#35001-35029)

Item	Part No.	Part Name	Qty	Serial No.
31	01010-81230	BOLT	3	35001-@
32	01643-31232	WASHER	3	35001-@
33	21N-54-39851	FRAME	1	35001-@
34	21N-54-39891	· SEAL	1	35001-@
35	01010-81230	BOLT	3	35001-@
36	01643-31232	WASHER	3	35001-@
37	21N-53-32460	BRACKET	2	35001-@
38	21N-53-32470	· SHEET	1	35001-@
39	01011-81625	BOLT	4	35001-@
40	01643-31645	WASHER	4	35001-@
41	21N-53-32480	BRACKET	2	35001-@
42	01010-81640	BOLT	4	35001-@
43	01643-31645	WASHER	4	35001-@

Printed By : Dwi Iswanto (airafather6107170)

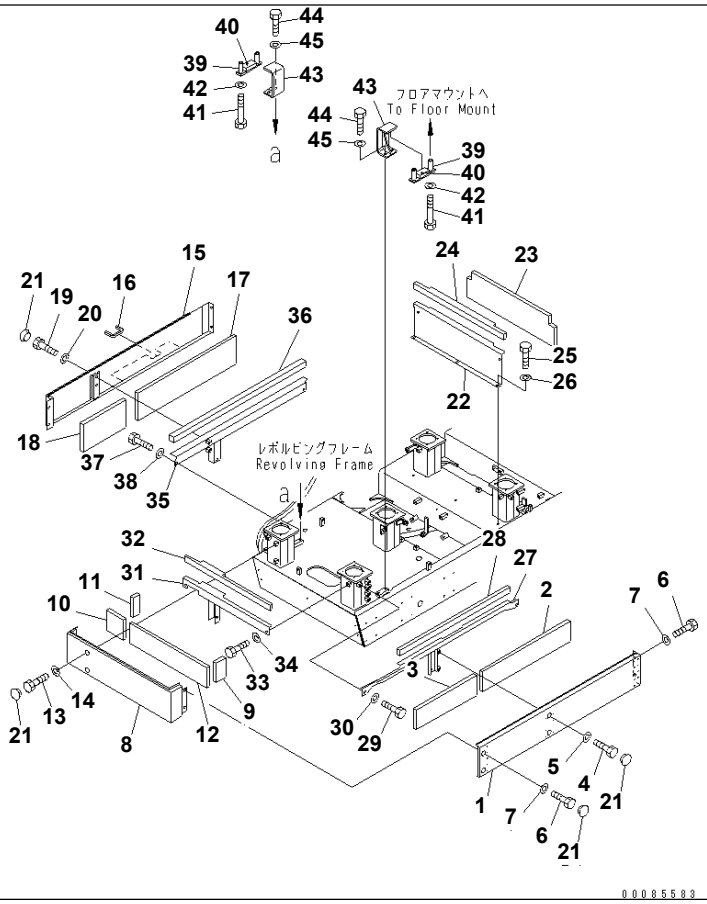

Ref. K1920-01A3A **Page 240860**

PC1250SP-8R S/N 35001-UP (W/O EGR, +55C DEGREE)
CAB COVER (FOR LOW CAB) (WITH FRONT GUARD)(#35030-)

Item	Part No.	Part Name	Qty	Serial No.
1	21N-54-39784	COVER	1	35030-
2	21N-53-31770	· SHEET	1	35001-
3	21N-53-31780	· SHEET	1	35001-
4	01010-81230	BOLT	2	35001-
5	01643-31232	WASHER	2	35001-
6	01010-81230	BOLT	4	35030-
7	175-54-34170	WASHER	4	35030-
8	21N-54-39792	COVER	1	35030-
9	21N-53-31790	· SHEET	1	35001-
10	21N-53-31830	· SHEET	1	35001-
11	21N-53-31840	· SHEET	1	35001-
12	21N-53-32430	· SHEET	1	35001-
13	01010-81225	BOLT	2	35001-
14	01643-31232	WASHER	2	35001-
15	21N-54-39812	COVER	1	35001-
16	209-54-74670	· SEAL	1	35001-
17	21N-53-31730	· SHEET	1	35001-
18	21N-53-31740	· SHEET	1	35001-
19	01010-81230	BOLT	6	35001-
20	01643-31232	WASHER	6	35001-
21	21N-53-31870	CAP	8	35001-
22	21N-54-39821	COVER	1	35001-
23	21N-53-31750	· SHEET	1	35001-
24	21N-54-39861	· SEAL	1	35001-
25	01010-81235	BOLT	5	35001-
26	01643-31232	WASHER	5	35001-
27	21N-53-32441	FRAME	1	35001-
28	21N-53-32450	· SEAL	1	35001-
29	01010-81230	BOLT	3	35001-
30	01643-31232	WASHER	3	35001-

Printed By : Dwi Iswanto (airafather6107170)

CAB COVER (FOR LOW CAB) (WITH FRONT GUARD)(#35030-)

Item	Part No.	Part Name	Qty	Serial No.
31	21N-54-39841	FRAME	1	35001-
32	21N-54-39881	· SEAL	1	35001-
33	01010-81230	BOLT	3	35001-
34	01643-31232	WASHER	3	35001-
35	21N-54-39851	FRAME	1	35001-
36	21N-54-39891	· SEAL	1	35001-
37	01010-81230	BOLT	3	35001-
38	01643-31232	WASHER	3	35001-
39	21N-53-32460	BRACKET	2	35001-
40	21N-53-32470	· SHEET	1	35001-
41	01011-81625	BOLT	4	35001-
42	01643-31645	WASHER	4	35001-
43	21N-53-32480	BRACKET	2	35001-
44	01010-81640	BOLT	4	35001-
45	01643-31645	WASHER	4	35001-

Printed By : Dwi Iswanto (airafather6107170)

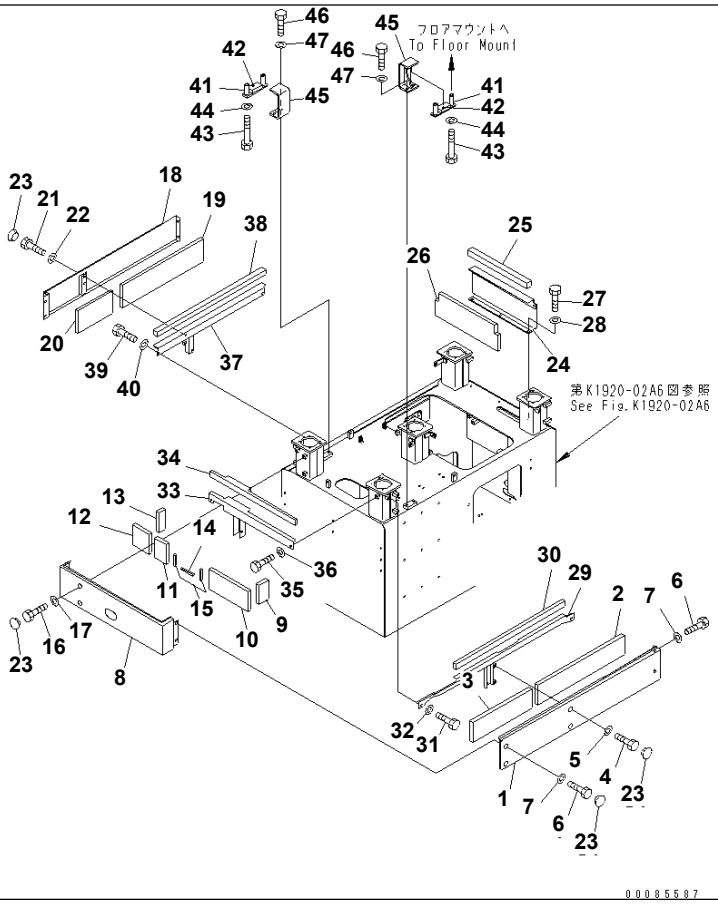

Ref. K1920-01A6 **Page 240870**

PC1250SP-8R S/N 35001-UP (W/O EGR, +55C DEGREE)
CAB COVER (FOR 1000MM HIGH CAB)

Item	Part No.	Part Name	Qty	Serial No.
1	21N-54-39784	COVER	1	35001-
2	21N-53-31770	· SHEET	1	35001-
3	21N-53-31780	· SHEET	1	35001-
4	01010-81230	BOLT	2	35001-
5	01643-31232	WASHER	2	35001-
6	01010-81230	BOLT	4	35001-
7	175-54-34170	WASHER	4	35001-
8	21N-53-31441	COVER	1	35001-
9	21N-53-31790	· SHEET	1	35001-
10	21N-53-31810	· SHEET	1	35001-
11	21N-53-31820	· SHEET	1	35001-
12	21N-53-31830	· SHEET	1	35001-
13	21N-53-31840	· SHEET	1	35001-
14	21N-53-31850	· SHEET	1	35001-
15	21N-53-31860	· SHEET	1	35001-
16	01010-81225	BOLT	2	35001-
17	01643-31232	WASHER	2	35001-
18	21N-54-43830	COVER	1	35001-
19	21N-53-31730	· SHEET	1	35001-
20	21N-53-31740	· SHEET	1	35001-
21	01010-81230	BOLT	6	35001-
22	01643-31232	WASHER	6	35001-
23	21N-53-31870	CAP	10	35001-
24	21N-54-43840	COVER	1	35001-
25	21N-54-43850	· SEAL	1	35001-
26	21N-54-43860	· SHEET	1	35001-
27	01010-81230	BOLT	5	35001-
28	01643-31232	WASHER	5	35001-
29	21N-53-32441	FRAME	1	35001-
30	21N-53-32450	· SEAL	1	35001-

Printed By : Dwi Iswanto (airafather6107170)

CAB COVER (FOR 1000MM HIGH CAB)

Item	Part No.	Part Name	Qty	Serial No.
31	01010-81230	BOLT	3	35001-
32	01643-31232	WASHER	3	35001-
33	21N-54-39841	FRAME	1	35001-
34	21N-54-39881	· SEAL	1	35001-
35	01010-81230	BOLT	3	35001-
36	01643-31232	WASHER	3	35001-
37	21N-54-39851	FRAME	1	35001-
38	21N-54-39891	· SEAL	1	35001-
39	01010-81230	BOLT	3	35001-
40	01643-31232	WASHER	3	35001-
41	21N-53-32460	BRACKET	2	35001-
42	21N-53-32470	SHEET	1	35001-
43	01011-81625	BOLT	4	35001-
44	01643-31645	WASHER	4	35001-
45	21N-53-32480	BRACKET	2	35001-
46	01010-81640	BOLT	4	35001-
47	01643-31645	WASHER	4	35001-

Printed By : Dwi Iswanto (airafather6107170)

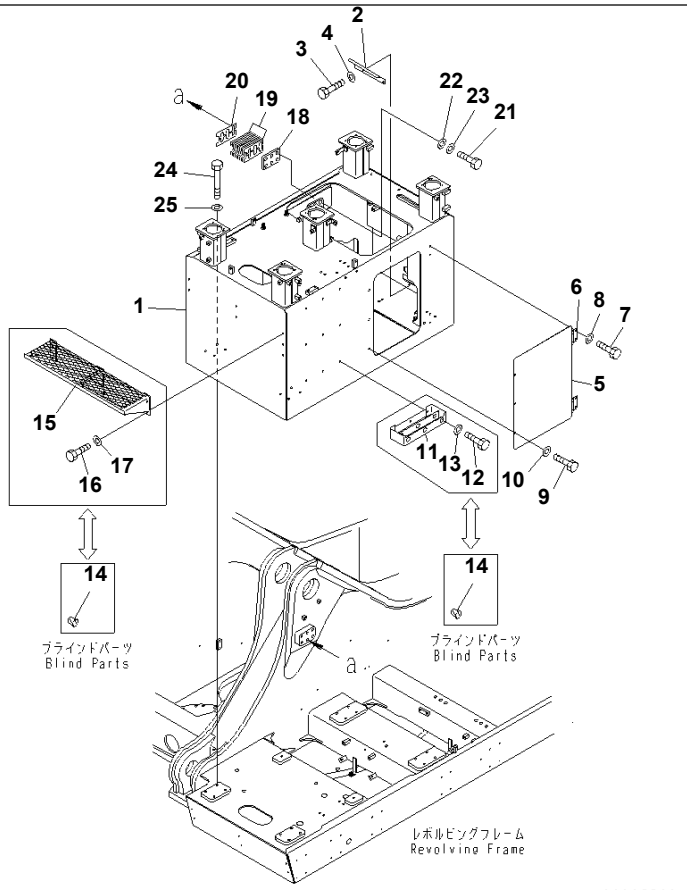

Ref. K1920-02A6 **Page 240880**

PC1250SP-8R S/N 35001-UP (W/O EGR, +55C DEGREE)
CAB COVER (CAB MOUNT) (FOR 1000MM HIGH CAB)

Item	Part No.	Part Name	Qty	Serial No.
1	21N-54-43810	FRAME	1	35001-
2	21N-53-34240	BRACKET	1	35001-
3	01010-81225	BOLT	2	35001-
4	01643-31232	WASHER	2	35001-
5	21N-54-43820	COVER	1	35001-
6	203-54-32230	· HINGE (WELDED)	2	35001-
7	01010-81025	BOLT	4	35001-
8	01643-31032	WASHER	4	35001-
9	01010-81225	BOLT	3	35001-
10	01643-31232	WASHER	3	35001-
11	21N-54-34140	STEP	3	35001-
12	01010-81235	BOLT	9	35001-
13	01643-31232	WASHER	9	35001-
14	07049-01215	PLUG	16	35001-
15	21N-54-34170	STEP	1	35001-
16	01010-81235	BOLT	6	35001-
17	01643-31232	WASHER	6	35001-
18	21N-54-43870	PLATE	1	35001-
19	21N-54-43880	SHIM	20	35001-
20	21N-54-43890	SHIM	2	35001-
21	01011-82030	BOLT	6	35001-
22	437-85-12380	WASHER	6	35001-
23	01643-32060	WASHER	6	35001-
24	01011-81605	BOLT	18	35001-
25	21T-54-16150	WASHER	18	35001-

Printed By : Dwi Iswanto (airafather6107170)

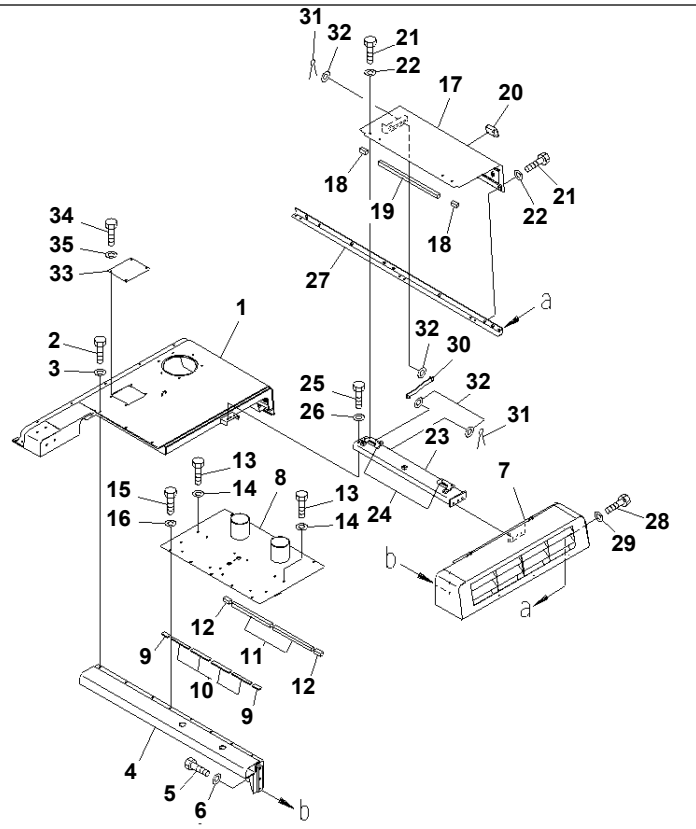

Ref. M1110-01A2 Page 270010

PC1250SP-8R S/N 35001-UP (W/O EGR, +55C DEGREE)

HOOD (+55C SPEC.) (1/2)

Item	Part No.	Part Name	Qty	Serial No.
1	21N-54-41111	COVER	1	35001-
2	01010-81230	BOLT	3	35001-
3	01643-31232	WASHER	3	35001-
4	21N-54-43221	BRACKET	1	35001-
5	01010-81255	BOLT	4	35001-
6	01643-31232	WASHER	4	35001-
7	21N-53-32532	COVER	1	35001-
8	21N-54-43711	COVER	1	35001-
9	21N-53-32590	· SHEET	2	35001-
10	21N-53-32670	· SHEET	4	35001-
11	21N-53-32680	· SHEET	2	35001-
12	21N-53-32690	· SHEET	2	35001-
13	01010-81230	BOLT	4	35001-
14	01643-31232	WASHER	4	35001-
15	01010-81230	BOLT	8	35001-
16	01643-31232	WASHER	8	35001-
17	21N-53-32540	COVER	1	35001-
18	21N-53-32190	· SHEET	2	35001-
19	21N-53-32210	· SHEET	1	35001-
20	209-54-12280	HANDLE	1	35001-
21	01010-81230	BOLT	7	35001-
22	01643-31232	WASHER	7	35001-
23	21N-54-31162	FRAME	1	35001-
24	20Y-54-28161	· HINGE (WELDED)	2	35001-
25	01010-81230	BOLT	6	35001-
26	01643-31232	WASHER	6	35001-
27	21N-54-39230	FRAME	1	35001-
28	01010-81230	BOLT	5	35001-
29	01643-31232	WASHER	5	35001-
30	209-54-53151	STAY	1	35001-

Printed By : Dwi Iswanto (airafather6107170)

HOOD (+55C SPEC.) (1/2)

Item	Part No.	Part Name	Qty	Serial No.
31	04050-14028	PIN	2	35001-
32	01643-31645	WASHER	4	35001-
33	21N-54-42350	PLATE	1	35001-
34	01010-81230	BOLT	4	35001-
35	01643-31232	WASHER	4	35001-

Printed By : Dwi Iswanto (airafather6107170)

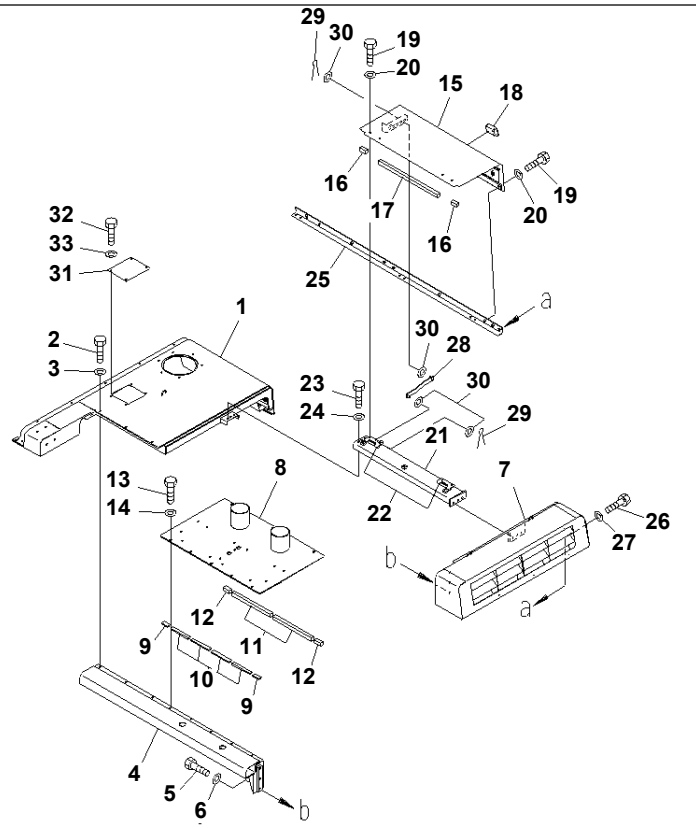

Ref. M1110-01A3 **Page 270020**

PC1250SP-8R S/N 35001-UP (W/O EGR, +55C DEGREE)

HOOD (+55C SPEC.) (SANDY AND DUSTY TERRAIN SPEC.) (1/2)

Item	Part No.	Part Name	Qty	Serial No.
1	21N-54-41111	COVER	1	35001-
2	01010-81230	BOLT	3	35001-
3	01643-31232	WASHER	3	35001-
4	21N-54-43221	BRACKET	1	35001-
5	01010-81255	BOLT	4	35001-
6	01643-31232	WASHER	4	35001-
7	21N-53-32532	COVER	1	35001-
8	21N-54-43711	COVER	1	35001-
9	21N-53-32590	· SHEET	2	35001-
10	21N-53-32670	· SHEET	4	35001-
11	21N-53-32680	· SHEET	2	35001-
12	21N-53-32690	· SHEET	2	35001-
13	01010-81230	BOLT	8	35001-
14	01643-31232	WASHER	8	35001-
15	21N-53-32540	COVER	1	35001-
16	21N-53-32190	· SHEET	2	35001-
17	21N-53-32210	· SHEET	1	35001-
18	209-54-12280	HANDLE	1	35001-
19	01010-81230	BOLT	7	35001-
20	01643-31232	WASHER	7	35001-
21	21N-54-31162	FRAME	1	35001-
22	20Y-54-28161	· HINGE	2	35001-
23	01010-81230	BOLT	6	35001-
24	01643-31232	WASHER	6	35001-
25	21N-54-39230	FRAME	1	35001-
26	01010-81230	BOLT	5	35001-
27	01643-31232	WASHER	5	35001-
28	209-54-53151	STAY	1	35001-
29	04050-14028	PIN	2	35001-
30	01643-31645	WASHER	4	35001-

Printed By : Dwi Iswanto (airafather6107170)

HOOD (+55C SPEC.) (SANDY AND DUSTY TERRAIN SPEC.) (1/2)

Item	Part No.	Part Name	Qty	Serial No.
31	21N-54-42350	PLATE	1	35001-
32	01010-81230	BOLT	4	35001-
33	01643-31232	WASHER	4	35001-

Printed By : Dwi Iswanto (airafather6107170)

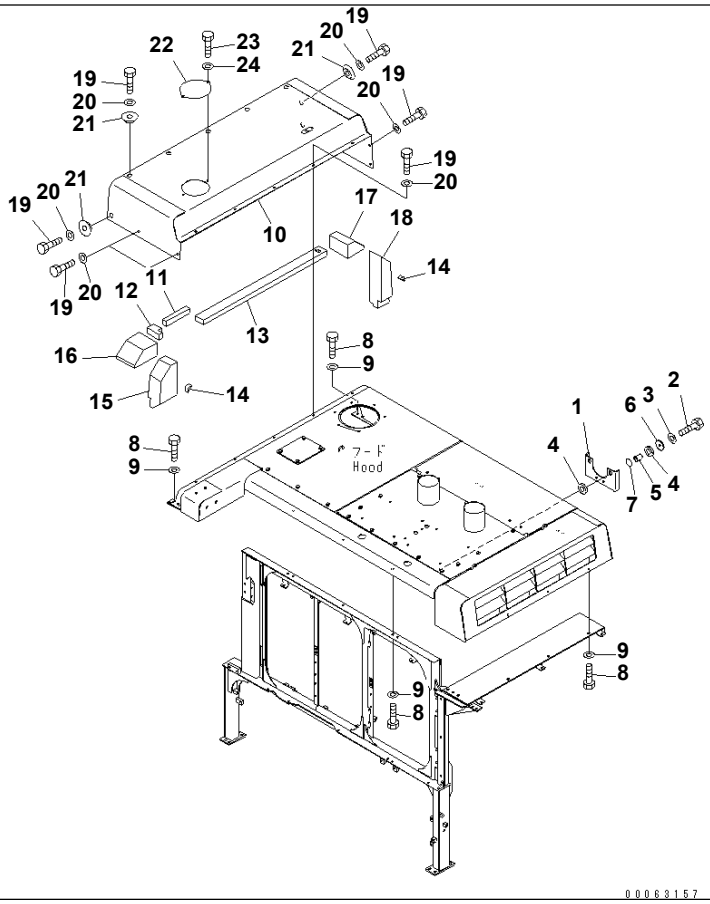

Ref. M1110-02A2 **Page 270030**

PC1250SP-8R S/N 35001-UP (W/O EGR, +55C DEGREE)
HOOD (+55C SPEC.) (2/2)

Item	Part No.	Part Name	Qty	Serial No.
1	21N-54-43310	PLATE	1	35001-
2	01010-81250	BOLT	2	35001-
3	01643-31232	WASHER	2	35001-
4	203-62-42770	CUSHION	4	35001-
5	21W-62-11620	SPACER	2	35001-
6	566-35-42430	PLATE	2	35001-
7	07000-13025	O-RING	2	35001-
8	01010-81230	BOLT	14	35001-
9	01643-31232	WASHER	14	35001-
10	21N-54-41131	COVER	1	35001-
11	21N-54-41150	· SHEET	1	35001-
12	21N-54-41160	· SHEET	1	35001-
13	21N-54-41171	· SHEET	1	35001-
14	21N-54-41181	· SHEET	2	35001-
15	21N-54-41761	· SHEET	1	35001-
16	21N-54-41771	· SHEET	1	35001-
17	21N-54-41781	· SHEET	1	35001-
18	21N-54-41791	· SHEET	1	35001-
19	01010-81230	BOLT	17	35001-
20	01643-31232	WASHER	17	35001-
21	203-54-62670	COLLAR	8	35001-
22	207-54-51440	PLATE	1	35001-
23	01010-81230	BOLT	2	35001-
24	01643-31232	WASHER	2	35001-

Printed By : Dwi Iswanto (airafather6107170)

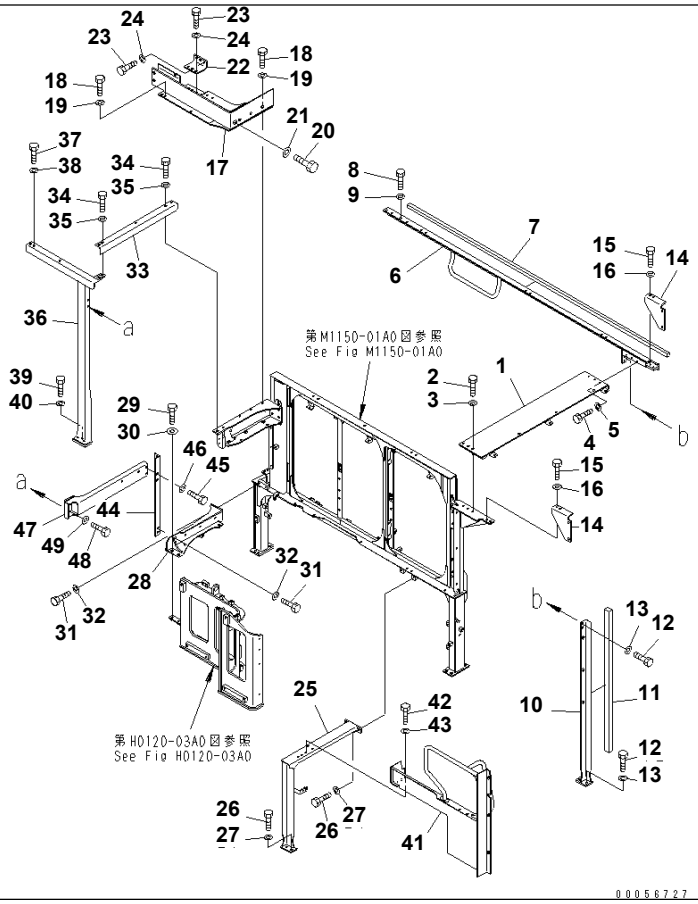

Ref. M1120-01A0 **Page 270040**

PC1250SP-8R S/N 35001-UP (W/O EGR, +55C DEGREE)
FRAME

Item	Part No.	Part Name	Qty	Serial No.
1	21N-54-42210	FRAME	1	35001-
2	01010-81250	BOLT	3	35001-
3	01643-31232	WASHER	3	35001-
4	01010-81230	BOLT	3	35001-
5	01643-31232	WASHER	3	35001-
6	21N-54-42361	FRAME	1	35001-
7	21N-54-42370	· SHEET	1	35001-
8	01010-81235	BOLT	2	35001-
9	01643-31232	WASHER	2	35001-
	21N-54-42281	BRACKET	1	35001-
10	☆	· BRACKET	1	35001-
11	21N-54-42291	· SHEET	1	35001-
12	01010-81240	BOLT	4	35001-
13	01643-31232	WASHER	4	35001-
14	21N-54-31640	BRACKET	2	35001-
15	01010-81230	BOLT	8	35001-
16	01643-31232	WASHER	8	35001-
17	21N-54-41211	BRACKET	1	35001-
18	01010-81235	BOLT	4	35001-
19	01643-31232	WASHER	4	35001-
20	01010-81020	BOLT	1	35001-
21	01643-31032	WASHER	1	35001-
22	21N-54-41240	BRACKET	1	35001-
23	01010-81235	BOLT	6	35001-
24	01643-31232	WASHER	6	35001-
25	21N-54-39431	FRAME	1	35001-
26	01010-81240	BOLT	4	35001-
27	01643-31232	WASHER	4	35001-
28	21N-54-43461	BRACKET	1	35001-
29	01010-81235	BOLT	2	35001-

Printed By : Dwi Iswanto (airafather6107170)

FRAME

Item	Part No.	Part Name	Qty	Serial No.
30	175-54-34170	WASHER	2	35001-
31	01010-81230	BOLT	4	35001-
32	01643-31232	WASHER	4	35001-
33	21N-54-41231	FRAME	1	35001-
34	01010-81235	BOLT	2	35001-
35	01643-31232	WASHER	2	35001-
36	21N-54-41221	FRAME	1	35001-
37	01010-81235	BOLT	1	35001-
38	01643-31232	WASHER	1	35001-
39	01010-81250	BOLT	3	35001-
40	01643-31232	WASHER	3	35001-
41	21N-54-39451	BRACKET	1	35001-
42	01010-81230	BOLT	6	35001-
43	01643-31232	WASHER	6	35001-
44	21N-54-41262	FRAME	1	35001-
45	01010-81230	BOLT	2	35001-
46	01643-31232	WASHER	2	35001-
47	21N-54-42410	FRAME	1	35001-
48	01010-81230	BOLT	4	35001-
49	01643-31232	WASHER	4	35001-

Printed By : Dwi Iswanto (airafather6107170)

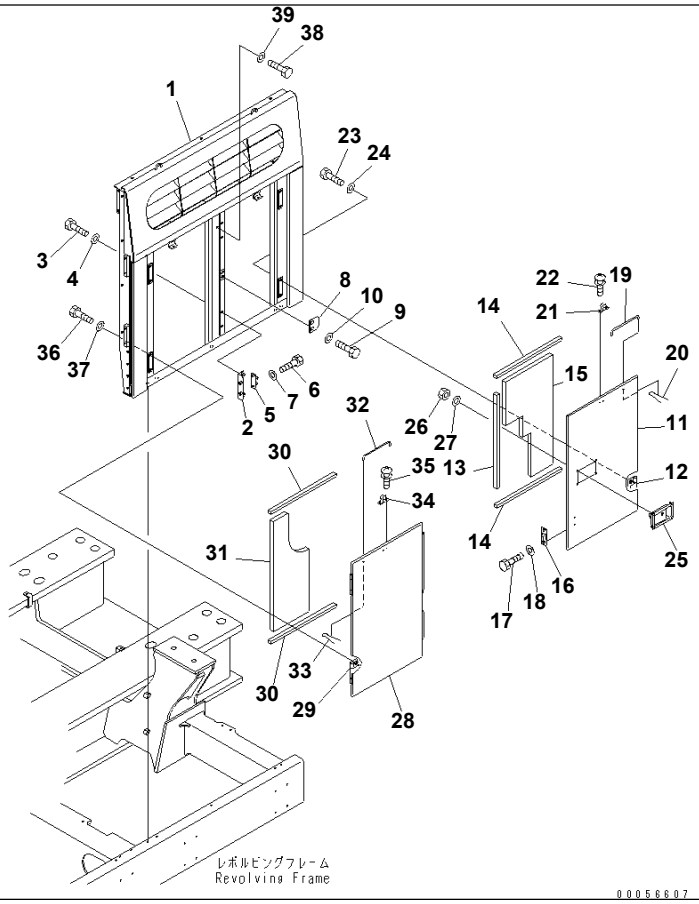

Ref. M1130-01A0 **Page 270050**

PC1250SP-8R S/N 35001-UP (W/O EGR, +55C DEGREE)
LEFT SIDE COVER (REAR SIDE)

Item	Part No.	Part Name	Qty	Serial No.
1	21N-54-39414	FRAME	1	35001-
2	20Y-54-28170	BRACKET	2	35001-
3	01010-81230	BOLT	4	35001-
4	01643-31232	WASHER	4	35001-
5	205-54-51970	DOVE TAIL	2	35001-
6	01010-80616	BOLT	4	35001-
7	01643-30623	WASHER	4	35001-
8	209-54-63260	BRACKET	1	35001-
9	01010-81230	BOLT	2	35001-
10	01643-31232	WASHER	2	35001-
11	21N-54-41560	COVER	1	35001-
12	20Y-54-28161	· HINGE (WELDED)	2	35001-
13	21N-54-31390	· SHEET	2	35001-
14	21N-54-31760	· SHEET	2	35001-
15	21N-54-41580	· SHEET	1	35001-
16	205-54-53550	DOVE TAIL	2	35001-
17	01010-80616	BOLT	4	35001-
18	01643-30623	WASHER	4	35001-
19	205-54-64140	BAR	1	35001-
20	04050-13018	PIN	1	35001-
21	20B-54-12210	SPRING	1	35001-
22	01023-10408	SCREW	2	35001-
23	01010-81230	BOLT	4	35001-
24	01643-31232	WASHER	4	35001-
25	198-54-55990	LOCK ASS'Y	1	35001-
26	01580-10806	NUT	4	35001-
27	01643-30823	WASHER	4	35001-
28	21N-54-41570	COVER	1	35001-
29	20Y-54-28161	· HINGE (WELDED)	2	35001-
30	21N-54-31760	· SHEET	2	35001-

Printed By : Dwi Iswanto (airafather6107170)

LEFT SIDE COVER (REAR SIDE)

Item	Part No.	Part Name	Qty	Serial No.
31	21N-54-41590	· SHEET	1	35001-
32	205-54-64140	BAR	1	35001-
33	04050-13018	PIN	1	35001-
34	20B-54-12210	SPRING	1	35001-
35	01023-10408	SCREW	2	35001-
36	01010-81230	BOLT	4	35001-
37	01643-31232	WASHER	4	35001-
38	01010-81230	BOLT	1	35001-
39	01643-31232	WASHER	1	35001-

Printed By : Dwi Iswanto (airafather6107170)

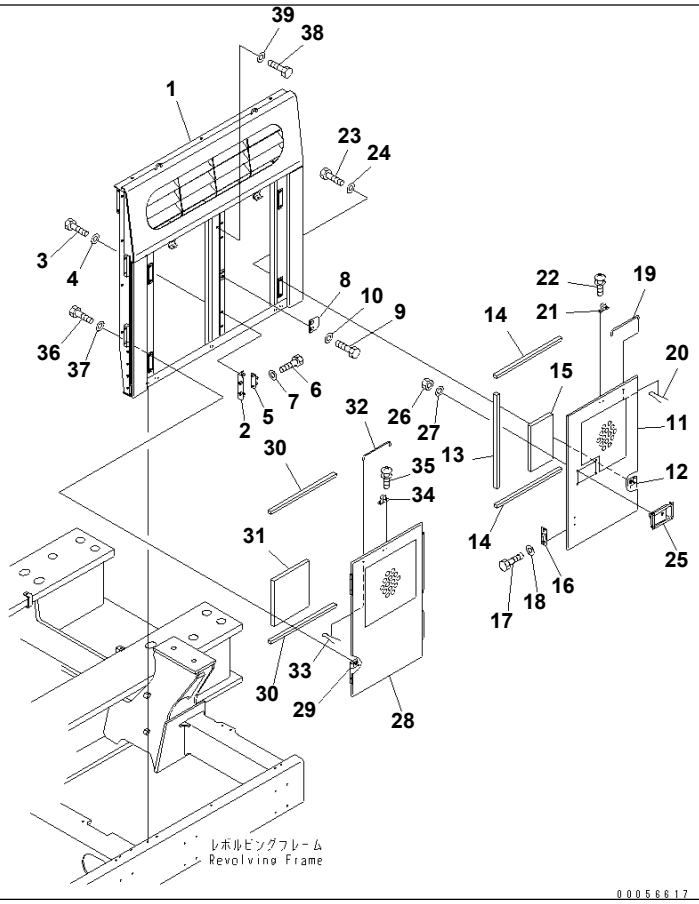

Ref. M1130-01A1 **Page 270060**

PC1250SP-8R S/N 35001-UP (W/O EGR, +55C DEGREE)
LEFT SIDE COVER (REAR SIDE) (PERFORATE)

Item	Part No.	Part Name	Qty	Serial No.
1	21N-54-39414	FRAME	1	35001-
2	20Y-54-28170	BRACKET	2	35001-
3	01010-81230	BOLT	4	35001-
4	01643-31232	WASHER	4	35001-
5	205-54-51970	DOVE TAIL	2	35001-
6	01010-80616	BOLT	4	35001-
7	01643-30623	WASHER	4	35001-
8	209-54-63260	BRACKET	1	35001-
9	01010-81230	BOLT	2	35001-
10	01643-31232	WASHER	2	35001-
11	21N-54-43110	COVER	1	35001-
12	20Y-54-28161	· HINGE (WELDED)	2	35001-
13	21N-54-31390	· SHEET	1	35001-
14	21N-54-31760	· SHEET	2	35001-
15	21N-54-43130	· SHEET	1	35001-
16	205-54-53550	DOVE TAIL	2	35001-
17	01010-80616	BOLT	4	35001-
18	01643-30623	WASHER	4	35001-
19	205-54-64140	BAR	1	35001-
20	04050-13018	PIN	1	35001-
21	20B-54-12210	SPRING	1	35001-
22	01023-10408	SCREW	2	35001-
23	01010-81230	BOLT	4	35001-
24	01643-31232	WASHER	4	35001-
25	198-54-55990	LOCK ASS'Y	1	35001-
26	01580-10806	NUT	4	35001-
27	01643-30823	WASHER	4	35001-
28	21N-54-43120	COVER	1	35001-
29	20Y-54-28161	· HINGE (WELDED)	2	35001-
30	21N-54-31760	· SHEET	1	35001-

Printed By : Dwi Iswanto (airafather6107170)

LEFT SIDE COVER (REAR SIDE) (PERFORATE)

Item	Part No.	Part Name	Qty	Serial No.
31	21N-54-43140	· SHEET	1	35001-
32	205-54-64140	BAR	1	35001-
33	04050-13018	PIN	1	35001-
34	20B-54-12210	SPRING	1	35001-
35	01023-10408	SCREW	2	35001-
36	01010-81230	BOLT	4	35001-
37	01643-31232	WASHER	4	35001-
38	01010-81230	BOLT	1	35001-
39	01643-31232	WASHER	1	35001-

Printed By : Dwi Iswanto (airafather6107170)

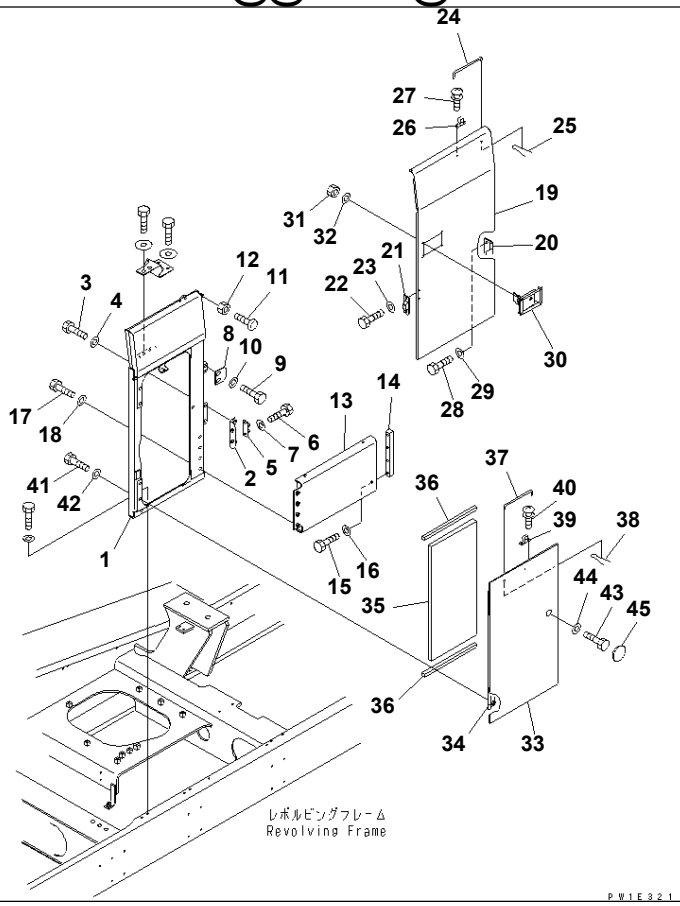

Ref. M1130-02A0 **Page 270070**

PC1250SP-8R S/N 35001-UP (W/O EGR, +55C DEGREE)
LEFT SIDE COVER (FRONT SIDE)

Item	Part No.	Part Name	Qty	Serial No.
1	21N-53-31680	FRAME	1	35001-
2	20Y-54-28170	BRACKET	1	35001-
3	01010-81230	BOLT	2	35001-
4	01643-31232	WASHER	2	35001-
5	205-54-51970	DOVE TAIL	1	35001-
6	01010-80616	BOLT	2	35001-
7	01643-30623	WASHER	2	35001-
8	209-54-63260	BRACKET	1	35001-
9	01010-81230	BOLT	2	35001-
10	01643-31232	WASHER	2	35001-
11	20Y-54-11611	STOPPER	1	35001-
12	01580-11008	NUT	1	35001-
13	21N-54-32291	FRAME	1	35001-
14	21N-54-32390	PLATE	1	35001-
15	01010-81270	BOLT	4	35001-
16	01643-31232	WASHER	4	35001-
17	01010-81230	BOLT	4	35001-
18	01643-31232	WASHER	4	35001-
19	21N-53-32322	COVER	1	35001-
20	21K-54-22460	・ HINGE (WELDED)	2	35001-
21	205-54-53550	DOVE TAIL	1	35001-
22	01010-80616	BOLT	2	35001-
23	01643-30623	WASHER	2	35001-
24	205-54-64140	BAR	1	35001-
25	04050-13018	PIN	1	35001-
26	20B-54-12210	SPRING	1	35001-
27	01023-10408	SCREW	2	35001-
28	01010-81225	BOLT	4	35001-
29	01643-31232	WASHER	4	35001-
30	21N-53-31660	LOCK	1	35001-

Printed By : Dwi Iswanto (airafather6107170)

LEFT SIDE COVER (FRONT SIDE)

Item	Part No.	Part Name	Qty	Serial No.
31	01580-10806	NUT	4	35001-
32	01643-30823	WASHER	4	35001-
33	21N-53-31710	COVER	1	35001-
34	20Y-54-28161	· HINGE (WELDED)	2	35001-
35	21N-53-31720	· SHEET	1	35001-
36	21N-54-31760	· SHEET	2	35001-
37	205-54-64140	BAR	1	35001-
38	04050-13018	PIN	1	35001-
39	20B-54-12210	SPRING	1	35001-
40	01023-10408	SCREW	2	35001-
41	01010-81230	BOLT	4	35001-
42	01643-31232	WASHER	4	35001-
43	01010-81230	BOLT	1	35001-
44	01643-31232	WASHER	1	35001-
45	21N-53-31870	CAP	1	35001-

Printed By : Dwi Iswanto (airafather6107170)

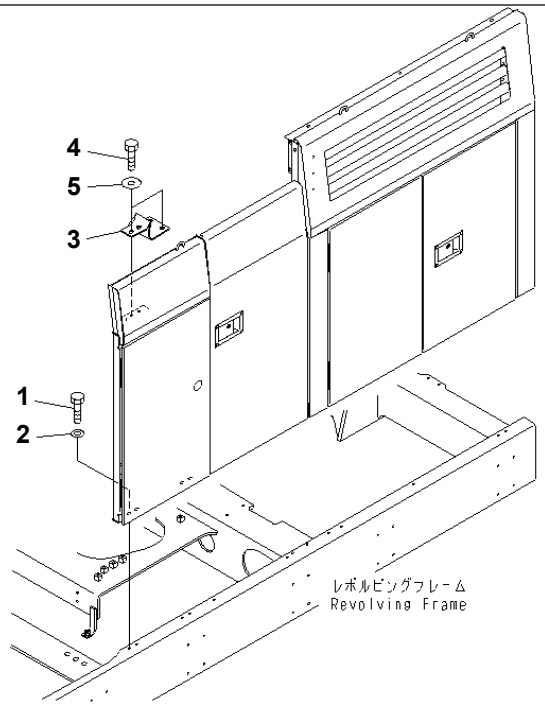

00056611

Ref. M1130-04A0 **Page 270080**

PC1250SP-8R S/N 35001-UP (W/O EGR, +55C DEGREE)
LEFT SIDE COVER

Item	Part No.	Part Name	Qty	Serial No.
1	01010-81230	BOLT	11	35001-
2	01643-31232	WASHER	11	35001-
3	21N-54-42810	BRACKET	1	35001-
4	01010-81230	BOLT	4	35001-
5	175-54-34170	WASHER	4	35001-

Printed By : Dwi Iswanto (airafather6107170)

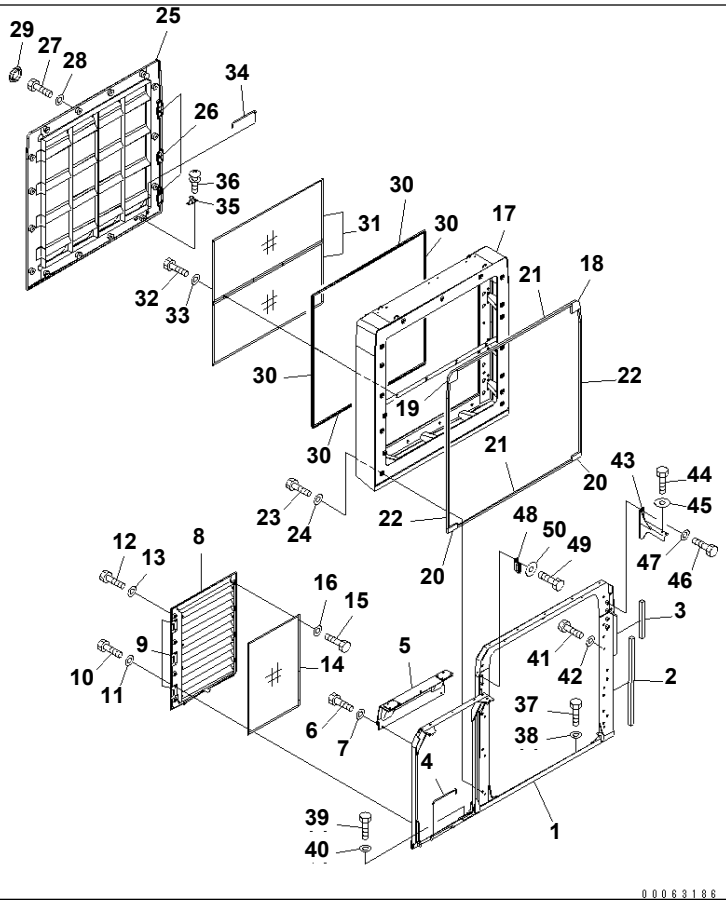

Ref. M1140-01A1 **Page 270090**

PC1250SP-8R S/N 35001-UP (W/O EGR, +55C DEGREE)
RIGHT SIDE COVER (DUCT) (+55C SPEC.)

Item	Part No.	Part Name	Qty	Serial No.
1	21N-54-41311	FRAME	1	35001-
2	21N-53-31420	· SHEET	1	35001-
3	21N-53-31430	· SHEET	1	35001-
4	22U-54-24180	BAR	1	35001-
5	21N-54-41331	COVER	1	35001-
6	01010-81230	BOLT	3	35001-
7	01643-31232	WASHER	3	35001-
8	21N-54-41321	DUCT	1	35001-
9	21K-54-22460	· HINGE (WELDED)	3	35001-
10	01010-81230	BOLT	6	35001-
11	01643-31232	WASHER	6	35001-
12	01010-81240	BOLT	8	35001-
13	01643-31232	WASHER	8	35001-
14	21N-54-41340	NET	1	35001-
15	01010-80816	BOLT	8	35001-
16	01643-30823	WASHER	8	35001-
17	21N-54-41811	DUCT	1	35001-
18	21N-53-31180	· SHEET	1	35001-
19	21N-53-31190	· SHEET	1	35001-
20	21N-53-31230	· SHEET	2	35001-
21	21N-54-41840	· SHEET	2	35001-
22	21N-54-41890	· SHEET	2	35001-
23	01010-81240	BOLT	14	35001-
24	01643-31232	WASHER	14	35001-
25	21N-54-43170	COVER	1	35001-
26	21K-54-22460	· HINGE (WELDED)	3	35001-
27	01010-81235	BOLT	23	35001-
28	01643-31232	WASHER	23	35001-
29	195-Z11-2970	CAP	17	35001-
30	21N-54-41880	SEAL	4	35001-

Printed By : Dwi Iswanto (airafather6107170)

RIGHT SIDE COVER (DUCT) (+55C SPEC.)

Item	Part No.	Part Name	Qty	Serial No.
31	21N-54-41830	NET	2	35001-
32	01010-80816	BOLT	8	35001-
33	01643-30823	WASHER	8	35001-
34	20Y-54-29232	BAR	1	35001-
35	20B-54-12210	SPRING	1	35001-
36	01023-10408	SCREW	2	35001-
37	01010-81230	BOLT	7	35001-
38	01643-31232	WASHER	7	35001-
39	01010-81250	BOLT	1	35001-
40	01643-31232	WASHER	1	35001-
41	01010-81230	BOLT	6	35001-
42	124-54-26540	WASHER	6	35001-
43	21N-54-41380	BRACKET	1	35001-
44	01010-81230	BOLT	2	35001-
45	175-54-34170	WASHER	2	35001-
46	01010-81230	BOLT	4	35001-
47	01643-31232	WASHER	4	35001-
48	21N-54-31560	BRACKET	1	35001-
49	01010-81225	BOLT	4	35001-
50	175-54-34170	WASHER	4	35001-

Printed By : Dwi Iswanto (airafather6107170)

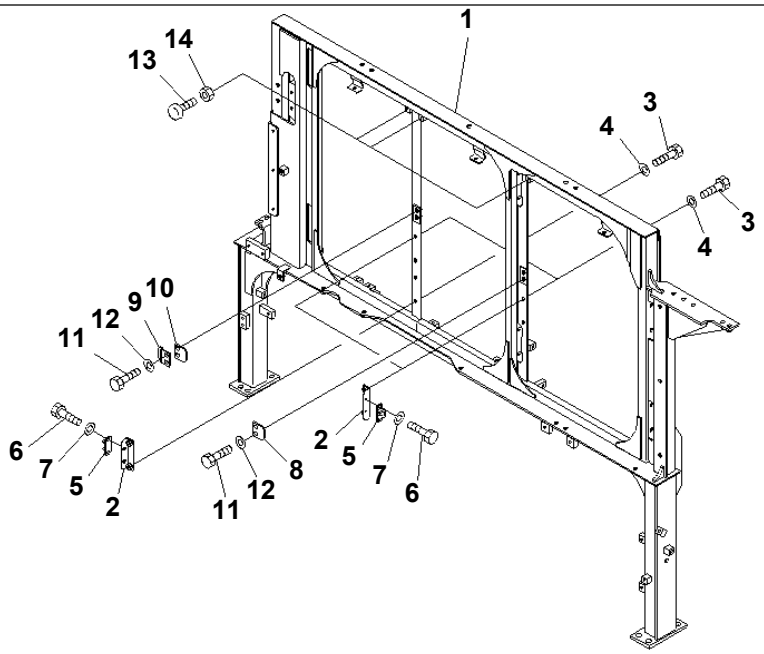

00056670

Ref. M1150-01A1 **Page 270100**

PC1250SP-8R S/N 35001-UP (W/O EGR, +55C DEGREE)

PARTITION (MACHINE CAB) (COVER) (+55C SPEC.) (1/6)

Item	Part No.	Part Name	Qty	Serial No.
1	21N-54-43390	FRAME	1	35001-
2	21N-54-31280	BRACKET	3	35001-
3	01010-81230	BOLT	6	35001-
4	01643-31232	WASHER	6	35001-
5	205-54-51970	DOVE TAIL	3	35001-
6	01010-80616	BOLT	6	35001-
7	01643-30623	WASHER	6	35001-
8	209-54-63260	BRACKET	1	35001-
9	21N-53-31670	BRACKET	1	35001-
10	209-54-63260	BRACKET	1	35001-
11	01010-81230	BOLT	4	35001-
12	01643-31232	WASHER	4	35001-
13	20Y-54-11611	STOPPER	3	35001-
14	01580-11008	NUT	3	35001-

Printed By : Dwi Iswanto (airafather6107170)

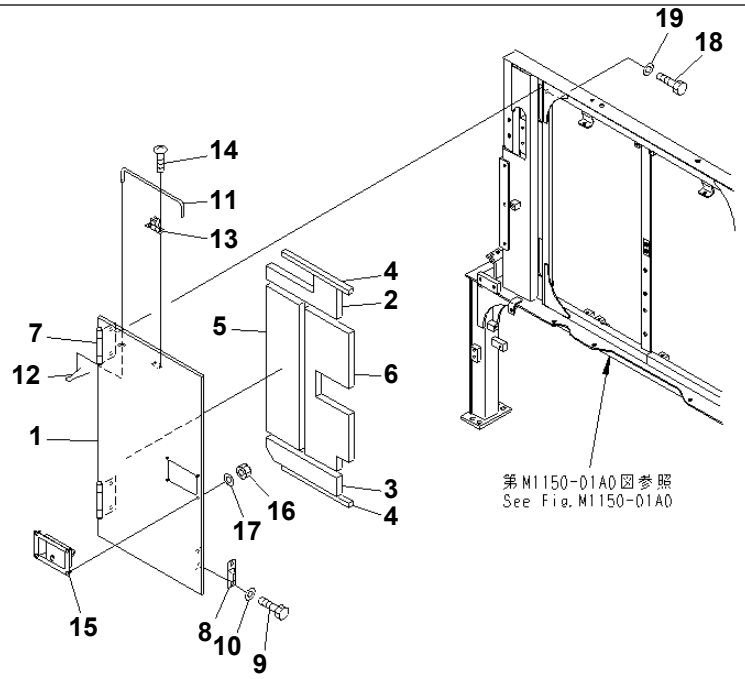

00056678

Ref. M1150-02A0 **Page 270110**

PC1250SP-8R S/N 35001-UP (W/O EGR, +55C DEGREE)
PARTITION (MACHINE CAB) (COVER) (2/6)

Item	Part No.	Part Name	Qty	Serial No.
1	21N-54-39321	COVER	1	35001-
2	21N-54-32540	· SHEET	1	35001-
3	21N-54-32550	· SHEET	1	35001-
4	21N-54-32940	· SHEET	2	35001-
5	21N-54-32520	· SHEET	1	35001-
6	21N-54-32531	· SHEET	1	35001-
7	21T-54-73190	· HINGE (WELDED)	2	35001-
8	205-54-53550	DOVE TAIL	1	35001-
9	01010-80616	BOLT	2	35001-
10	01643-30623	WASHER	2	35001-
11	205-54-64140	BAR	1	35001-
12	04050-13018	PIN	1	35001-
13	20B-54-12210	SPRING	1	35001-
14	01023-10408	SCREW	2	35001-
15	198-54-55990	LOCK ASS'Y	1	35001-
16	01580-10806	NUT	4	35001-
17	01643-30823	WASHER	4	35001-
18	01010-81230	BOLT	4	35001-
19	01643-31232	WASHER	4	35001-

Printed By : Dwi Iswanto (airafather6107170)

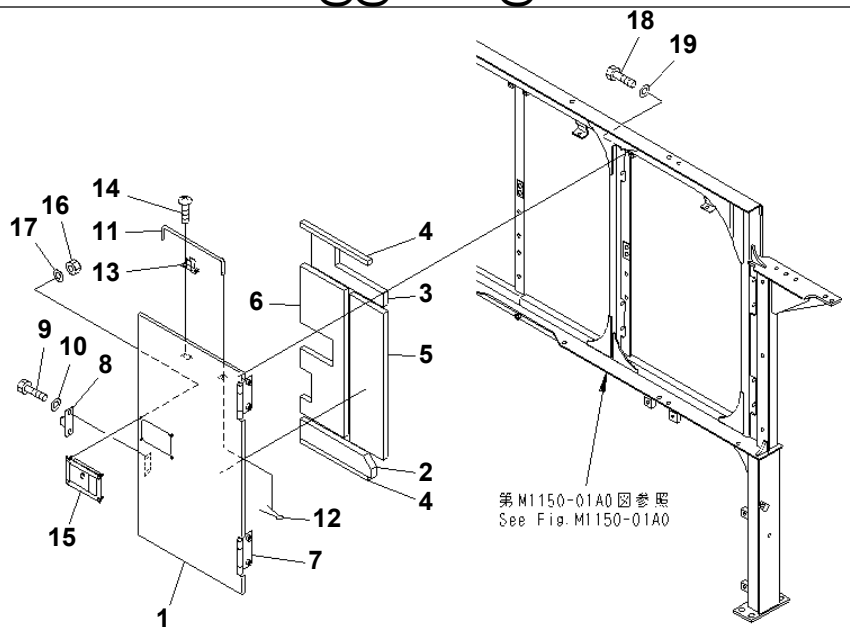

P W 1 E 3 5 0

Ref. M1150-03A0 **Page 270120**

PC1250SP-8R S/N 35001-UP (W/O EGR, +55C DEGREE)
PARTITION (MACHINE CAB) (COVER) (3/6)

Item	Part No.	Part Name	Qty	Serial No.
1	21N-54-39331	COVER	1	35001-
2	21N-54-32550	· SHEET	1	35001-
3	21N-54-32570	· SHEET	1	35001-
4	21N-54-32940	· SHEET	1	35001-
5	21N-54-32520	· SHEET	1	35001-
6	21N-54-32541	· SHEET	1	35001-
7	21T-54-73190	· HINGE (WELDED)	2	35001-
8	205-54-53550	DOVE TAIL	1	35001-
9	01010-80616	BOLT	2	35001-
10	01643-30623	WASHER	2	35001-
11	205-54-64140	BAR	1	35001-
12	04050-13018	PIN	1	35001-
13	20B-54-12210	SPRING	1	35001-
14	01023-10408	SCREW	2	35001-
15	198-54-55990	LOCK ASS'Y	1	35001-
16	01580-10806	NUT	4	35001-
17	01643-30823	WASHER	4	35001-
18	01010-81230	BOLT	4	35001-
19	01643-31232	WASHER	4	35001-

Printed By : Dwi Iswanto (airafather6107170)

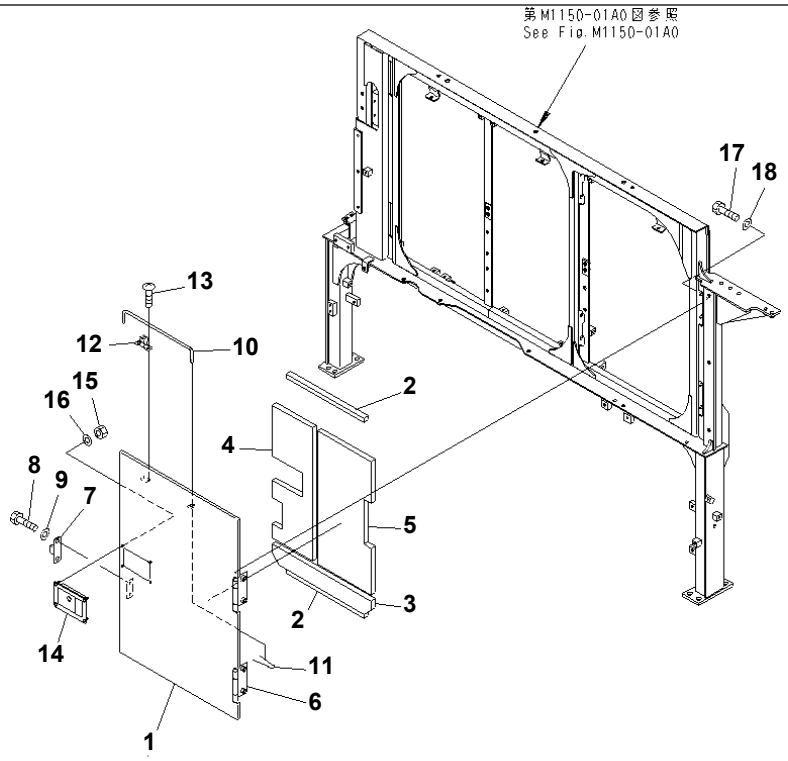

00056693

Ref. M1150-04A0 **Page 270130**

PC1250SP-8R S/N 35001-UP (W/O EGR, +55C DEGREE)
PARTITION (MACHINE CAB) (COVER) (4/6)

Item	Part No.	Part Name	Qty	Serial No.
1	21N-54-39341	COVER	1	35001-
2	21N-54-31750	· SHEET	2	35001-
3	21N-54-32610	· SHEET	1	35001-
4	21N-54-39541	· SHEET	1	35001-
5	21N-54-39550	· SHEET	1	35001-
6	21T-54-73190	· HINGE (WELDED)	2	35001-
7	205-54-53550	DOVE TAIL	1	35001-
8	01010-80616	BOLT	2	35001-
9	01643-30623	WASHER	2	35001-
10	21N-54-32660	BAR	1	35001-
11	04050-13018	PIN	1	35001-
12	20B-54-12210	SPRING	1	35001-
13	01023-10408	SCREW	2	35001-
14	198-54-55990	LOCK ASS'Y	1	35001-
15	01580-10806	NUT	4	35001-
16	01643-30823	WASHER	4	35001-
17	01010-81230	BOLT	4	35001-
18	01643-31232	WASHER	4	35001-

Printed By : Dwi Iswanto (airafather6107170)

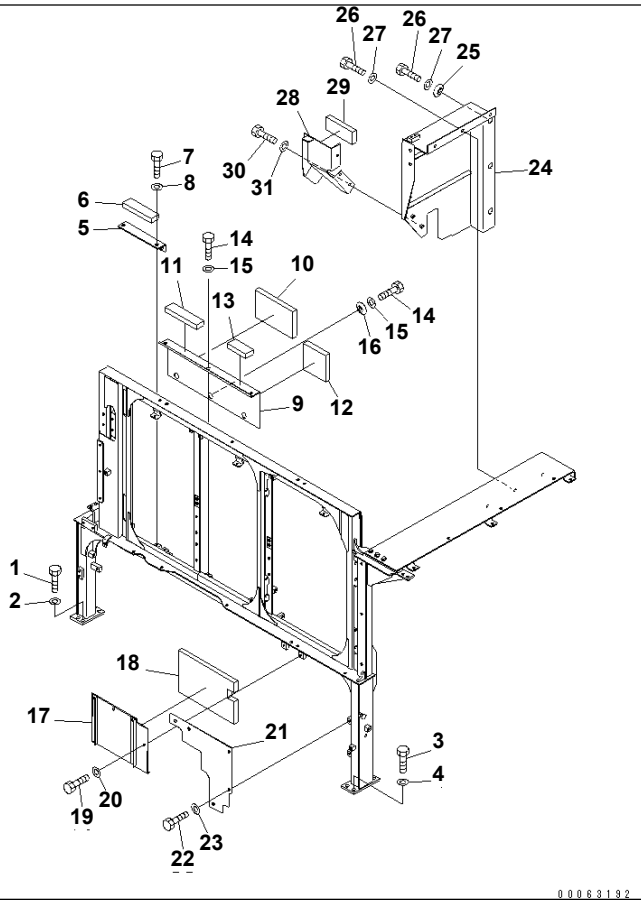

Ref. M1150-05A1 **Page 270140**

PC1250SP-8R S/N 35001-UP (W/O EGR, +55C DEGREE)
PARTITION (MACHINE CAB) (COVER) (+55C SPEC.) (5/6)

Item	Part No.	Part Name	Qty	Serial No.
1	01010-81230	BOLT	4	35001-
2	01643-31232	WASHER	4	35001-
3	01010-81230	BOLT	4	35001-
4	175-54-34170	WASHER	4	35001-
5	21N-54-41431	COVER	1	35001-
6	21N-54-41480	· SHEET	1	35001-
7	01010-81230	BOLT	2	35001-
8	01643-31232	WASHER	2	35001-
9	21N-54-41421	COVER	1	35001-
10	21N-54-41441	· SHEET	1	35001-
11	21N-54-41451	· SHEET	1	35001-
12	21N-54-41540	· SHEET	1	35001-
13	21N-54-41550	· SHEET	1	35001-
14	01010-81230	BOLT	6	35001-
15	01643-31232	WASHER	6	35001-
16	203-54-62670	COLLAR	3	35001-
17	21N-53-31620	COVER	1	35001-
18	21N-54-39511	· SHEET	1	35001-
19	01010-81230	BOLT	3	35001-
20	01643-31232	WASHER	3	35001-
21	21N-54-43630	PLATE	1	35001-
22	01010-81230	BOLT	5	35001-
23	01643-31232	WASHER	5	35001-
24	21N-54-41271	COVER	1	35001-
25	208-54-57181	COLLAR	3	35001-
26	01010-81230	BOLT	8	35001-
27	01643-31232	WASHER	8	35001-
28	21N-54-43261	COVER	1	35001-
29	21N-54-43240	· SHEET	1	35001-
30	01010-81230	BOLT	3	35001-

Printed By : Dwi Iswanto (airafather6107170)

PARTITION (MACHINE CAB) (COVER) (+55C SPEC.) (5/6)

Item	Part No.	Part Name	Qty	Serial No.
31	01643-31232	WASHER	3	35001-

Printed By : Dwi Iswanto (airafather6107170)

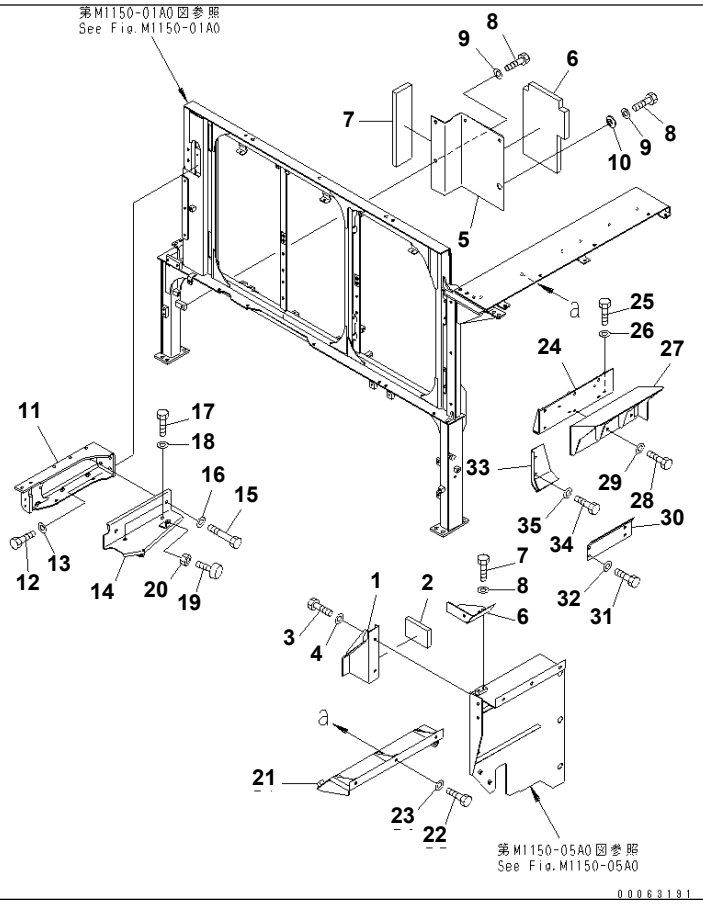

Ref. M1150-06A1 **Page 270150**

PC1250SP-8R S/N 35001-UP (W/O EGR, +55C DEGREE)

PARTITION (MACHINE CAB) (COVER) (+55C SPEC.) (6/6)

Item	Part No.	Part Name	Qty	Serial No.
1	21N-54-43291	COVER	1	35001-
2	21N-54-43640	･ SHEET	1	35001-
3	01010-81230	BOLT	2	35001-
4	01643-31232	WASHER	2	35001-
5	21N-54-41531	COVER	1	35001-
6	21N-54-41461	･ SHEET	1	35001-
7	21N-54-41470	･ SHEET	1	35001-
8	01010-81230	BOLT	5	35001-
9	01643-31232	WASHER	5	35001-
10	208-54-57181	COLLAR	1	35001-
11	21N-54-43440	FRAME	1	35001-
12	01010-81230	BOLT	4	35001-
13	01643-31232	WASHER	4	35001-
14	21N-54-43451	COVER	1	35001-
15	01010-81275	BOLT	2	35001-
16	01643-31232	WASHER	2	35001-
17	01010-81230	BOLT	2	35001-
18	01643-31232	WASHER	2	35001-
19	20Y-54-11611	STOPPER	1	35001-
20	01580-11008	NUT	1	35001-
21	21N-54-43250	COVER	1	35001-
22	01010-81230	BOLT	4	35001-
23	01643-31232	WASHER	4	35001-
24	21N-54-43271	BRACKET	1	35001-
25	01010-81225	BOLT	4	35001-
26	01643-31232	WASHER	4	35001-
27	21N-54-43281	COVER	1	35001-
28	01010-81230	BOLT	6	35001-
29	175-54-34170	WASHER	6	35001-
30	21N-54-43181	COVER	1	35001-

Printed By : Dwi Iswanto (airafather6107170)

PARTITION (MACHINE CAB) (COVER) (+55C SPEC.) (6/6)

Item	Part No.	Part Name	Qty	Serial No.
31	01010-81225	BOLT	4	35001-
32	01643-31232	WASHER	4	35001-
33	21N-38-41230	COVER	1	35001-
34	01010-81230	BOLT	2	35001-
35	01643-31232	WASHER	2	35001-

Printed By : Dwi Iswanto (airafather6107170)

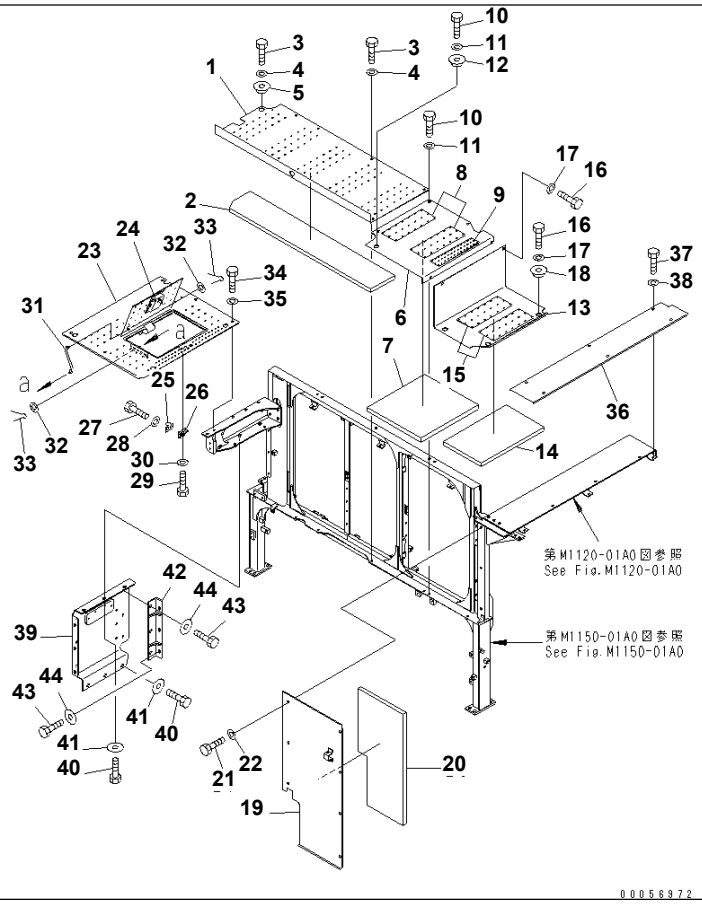

Ref. M1210-01A0 **Page 270160**

COVER (MACHINE CAB) (1/2)

Item	Part No.	Part Name	Qty	Serial No.
1	21N-54-43480	COVER	1	35001-
2	21N-54-43531	· SHEET	1	35001-
3	01010-81230	BOLT	7	35001-
4	01643-31232	WASHER	7	35001-
5	208-54-57181	COLLAR	2	35001-
6	21N-54-42521	COVER	1	35001-
7	21N-54-39680	· SHEET	1	35001-
8	21N-54-42160	· PLATE	2	35001-
9	21N-54-42170	· PLATE	1	35001-
10	01010-81230	BOLT	4	35001-
11	01643-31232	WASHER	4	35001-
12	20Y-54-12821	COLLAR	1	35001-
13	21N-54-42531	COVER	1	35001-
14	21N-54-37650	· SHEET	1	35001-
15	21N-54-42160	· PLATE	2	35001-
16	01010-81230	BOLT	5	35001-
17	01643-31232	WASHER	5	35001-
18	20Y-54-12821	COLLAR	3	35001-
19	21N-54-39421	COVER	1	35001-
20	21N-54-39561	· SHEET	1	35001-
21	01010-81235	BOLT	7	35001-
22	01643-31232	WASHER	7	35001-
23	21N-54-41521	COVER	1	35001-
24	421-54-11372	· LOCK ASS'Y (WELDED)	1	35001-
25	20Y-54-29651	BRACKET	1	35001-
26	21N-54-32990	PLATE	1	35001-
27	01010-81225	BOLT	2	35001-
28	01643-31232	WASHER	2	35001-
29	01010-81220	BOLT	2	35001-
30	01643-31232	WASHER	2	35001-

Printed By : Dwi Iswanto (airafather6107170)

COVER (MACHINE CAB) (1/2)

Item	Part No.	Part Name	Qty	Serial No.
31	203-54-56630	ROD	1	35001-
32	01643-30623	WASHER	2	35001-
33	04050-11612	PIN	2	35001-
34	01010-81235	BOLT	7	35001-
35	01643-31232	WASHER	7	35001-
36	21N-54-31850	COVER	1	35001-
37	01010-81235	BOLT	6	35001-
38	01643-31232	WASHER	6	35001-
39	21N-54-43491	BRACKET	1	35001-
40	01010-81230	BOLT	9	35001-
41	175-54-34170	WASHER	9	35001-
42	21N-54-43512	BRACKET	1	35071-
	□21N-54-43511	BRACKET	1	35001-35070
43	01010-81230	BOLT	6	35001-
44	175-54-34170	WASHER	6	35001-

Printed By : Dwi Iswanto (airafather6107170)

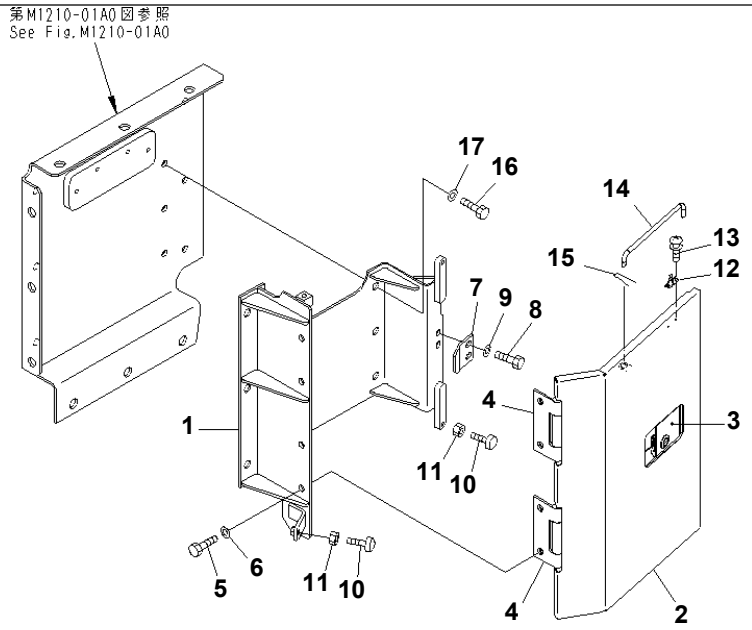

00056974

Ref. M1210-02A0 **Page 270170**

PC1250SP-8R S/N 35001-UP (W/O EGR, +55C DEGREE)
COVER (MACHINE CAB) (2/2)

Item	Part No.	Part Name	Qty	Serial No.
1	21N-54-43591	BRACKET	1	35001-
2	21N-54-43571	COVER	1	35001-
3	198-54-41982	· LOCK ASS'Y (WELDED)	1	35001-
4	205-54-64160	· HINGE (WELDED)	2	35001-
5	01010-81230	BOLT	4	35001-
6	01643-31232	WASHER	4	35001-
7	21N-53-31670	BRACKET	1	35001-
8	01010-81230	BOLT	2	35001-
9	01643-31232	WASHER	2	35001-
10	20Y-54-11611	STOPPER	3	35001-
11	01580-11008	NUT	3	35001-
12	20B-54-12210	SPRING	1	35001-
13	01023-10408	SCREW	2	35001-
14	205-54-64140	BAR	1	35001-
15	04050-13018	PIN	1	35001-
16	01010-81230	BOLT	6	35001-
17	01643-31232	WASHER	6	35001-

Printed By : Dwi Iswanto (airafather6107170)

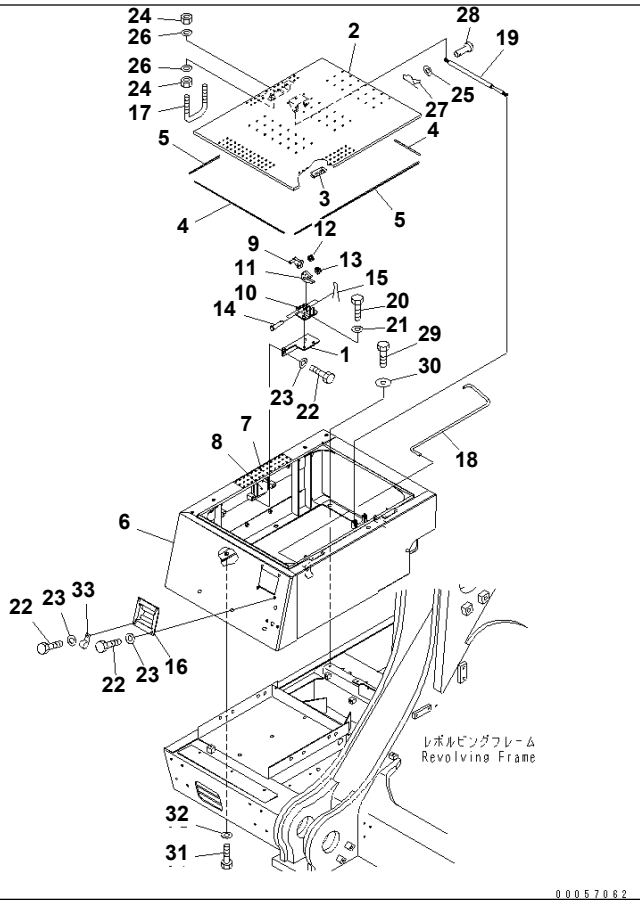

Ref. M1220-01A0 **Page 270180**

PC1250SP-8R S/N 35001-UP (W/O EGR, +55C DEGREE)

RIGHT SIDE CASE

Item	Part No.	Part Name	Qty	Serial No.
1	21N-54-39160	BRACKET	1	35001-
	21N-54-42610	COVER	1	35001-
2	21N-54-42631	· COVER	1	35001-
3	20Y-54-29711	· · HINGE (WELDED)	1	35001-
4	21N-54-39130	· SEAL	2	35001-
5	21N-54-39140	· SEAL	2	35001-
6	☆	· COVER	1	35001-
7	21N-54-42170	· · PLATE	1	35001-
8	421-54-11372	· · LOCK ASS'Y (WELDED)	1	35001-
9	21N-54-39920	PLATE	1	35001-
10	21N-54-39930	BRACKET	1	35001-
11	21K-54-26341	LEVER	1	35001-
12	21K-54-26351	SPRING	1	35001-
13	20X-54-21460	SPRING	1	35001-
14	04205-11038	PIN	2	35001-
15	04050-13020	PIN	2	35001-
16	21N-68-37140	BRACKET	1	35001-
17	20Y-54-27172	U-BOLT	1	35001-
18	203-54-61151	SPRING	1	35001-
19	201-54-71180	DAMPER	2	35001-
20	01010-81030	BOLT	2	35001-
21	01643-31032	WASHER	2	35001-
22	01010-81225	BOLT	6	35001-
23	01643-31232	WASHER	6	35001-
24	01580-11210	NUT	4	35001-
25	01640-20816	WASHER	4	35001-
26	01643-31232	WASHER	4	35001-
27	04052-20833	PIN	4	35001-
28	04205-30825	PIN	4	35001-
29	01010-81230	BOLT	8	35001-

Printed By : Dwi Iswanto (airafather6107170)

RIGHT SIDE CASE

Item	Part No.	Part Name	Qty	Serial No.
30	175-54-34170	WASHER	8	35001-
31	01010-81230	BOLT	1	35001-
32	01643-31232	WASHER	1	35001-
33	04434-51012	CLIP	1	35001-

Printed By : Dwi Iswanto (airafather6107170)

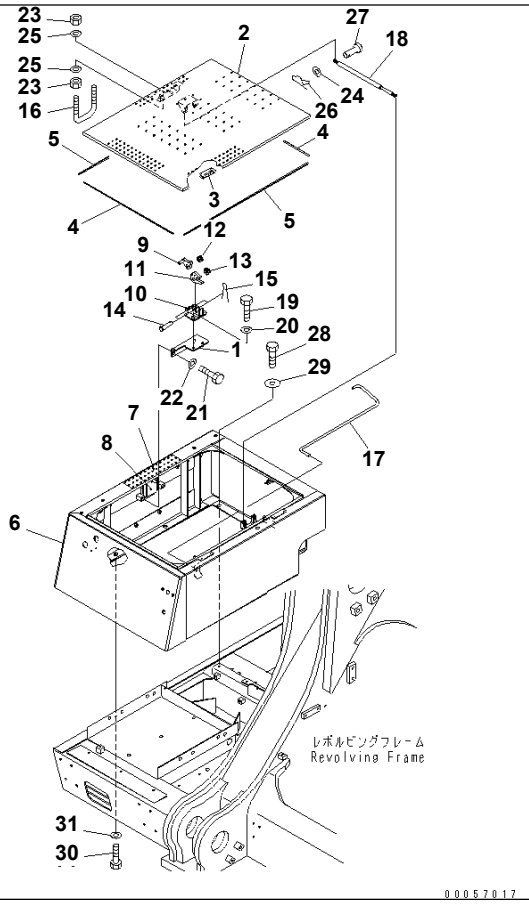

Ref. M1220-01A1 Page 270190

PC1250SP-8R S/N 35001-UP (W/O EGR, +55C DEGREE)
RIGHT SIDE CASE (AUTO GREASE)

Item	Part No.	Part Name	Qty	Serial No.
1	21N-54-39160	BRACKET	1	35001-
	21N-54-43610	COVER	1	35001-
2	21N-54-42631	· COVER	1	35001-
3	20Y-54-29711	· · HINGE (WELDED)	1	35001-
4	21N-54-39130	· SEAL	2	35001-
5	21N-54-39140	· SEAL	2	35001-
6	☆	· COVER	1	35001-
7	21N-54-42170	· · PLATE	1	35001-
8	421-54-11372	· · LOCK ASS'Y (WELDED)	1	35001-
9	21N-54-39920	PLATE	1	35001-
10	21N-54-39930	BRACKET	1	35001-
11	21K-54-26341	LEVER	1	35001-
12	21K-54-26351	SPRING	1	35001-
13	20X-54-21460	SPRING	1	35001-
14	04205-11038	PIN	2	35001-
15	04050-13020	PIN	2	35001-
16	20Y-54-27172	U-BOLT	1	35001-
17	203-54-61151	SPRING	1	35001-
18	201-54-71180	DAMPER	2	35001-
19	01010-81030	BOLT	2	35001-
20	01643-31032	WASHER	2	35001-
21	01010-81225	BOLT	2	35001-
22	01643-31232	WASHER	2	35001-
23	01580-11210	NUT	4	35001-
24	01640-20816	WASHER	4	35001-
25	01643-31232	WASHER	4	35001-
26	04052-20833	PIN	4	35001-
27	04205-30825	PIN	4	35001-
28	01010-81230	BOLT	8	35001-
29	175-54-34170	WASHER	8	35001-

Printed By : Dwi Iswanto (airafather6107170)

RIGHT SIDE CASE (AUTO GREASE)

Item	Part No.	Part Name	Qty	Serial No.
30	01010-81230	BOLT	1	35001-
31	01643-31232	WASHER	1	35001-

Printed By : Dwi Iswanto (airafather6107170)

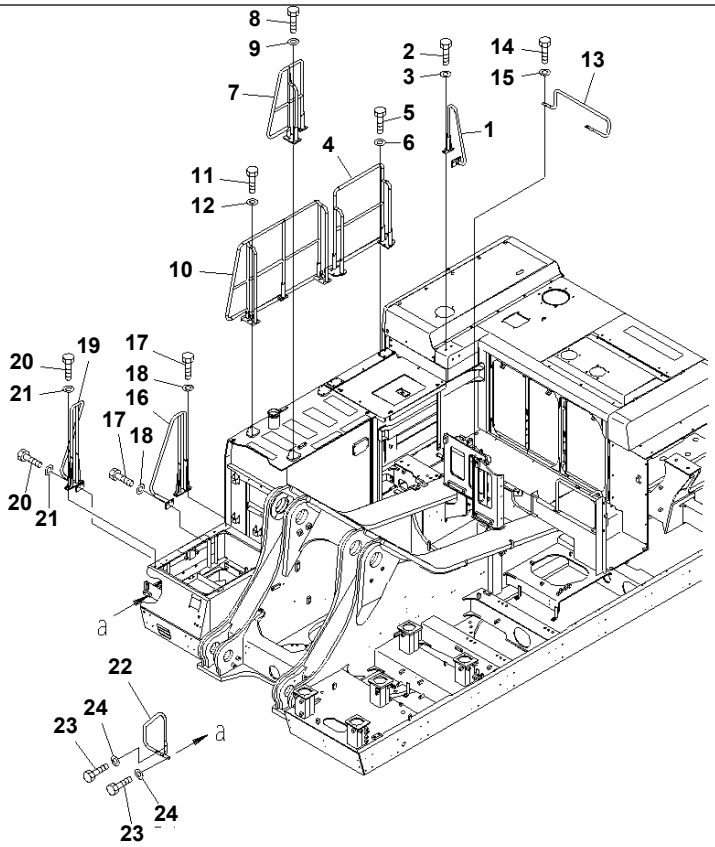

Ref. M1310-01A0 **Page 270200**

PC1250SP-8R S/N 35001-UP (W/O EGR, +55C DEGREE)

HANDRAIL

Item	Part No.	Part Name	Qty	Serial No.
1	21N-54-41741	HAND RAIL	1	35001-
2	01010-81235	BOLT	4	35001-
3	01643-31232	WASHER	4	35001-
4	21N-54-41721	HAND RAIL	1	35001-
5	01010-81245	BOLT	8	35002-
	01010-81240	BOLT	8	35001-35001
6	01643-31232	WASHER	8	35001-
7	21N-54-37241	HAND RAIL	1	35001-
8	01010-81230	BOLT	6	35001-
9	01643-31232	WASHER	6	35001-
10	21N-54-41711	HAND RAIL	1	35001-
11	01010-81230	BOLT	10	35001-
12	01643-31232	WASHER	10	35001-
13	21N-54-39571	HAND RAIL	1	35001-
14	01010-81235	BOLT	2	35001-
15	01643-31232	WASHER	2	35001-
16	21N-54-39611	HAND RAIL	1	35001-
17	01010-81230	BOLT	4	35001-
18	01643-31232	WASHER	4	35001-
19	21N-54-39621	HAND RAIL	1	35001-
20	01010-81230	BOLT	4	35001-
21	01643-31232	WASHER	4	35001-
22	21N-54-39650	HAND RAIL	2	35001-
23	01010-81235	BOLT	8	35001-
24	01643-31232	WASHER	8	35001-

Printed By : Dwi Iswanto (airafather6107170)

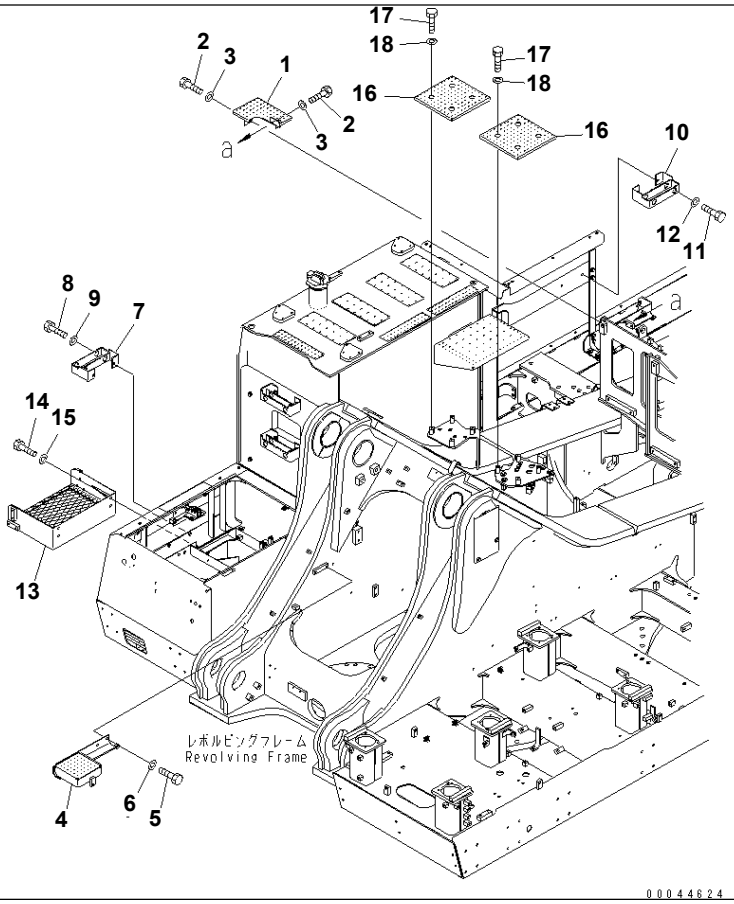

Ref. M1310-02A0 **Page 270210**

PC1250SP-8R S/N 35001-UP (W/O EGR, +55C DEGREE)
HANDRAIL (STEP)

Item	Part No.	Part Name	Qty	Serial No.
1	21N-54-41731	BRACKET	1	35001-
2	01010-81230	BOLT	4	35001-
3	01643-31232	WASHER	4	35001-
4	21N-54-42540	BRACKET	1	35001-
5	01010-81230	BOLT	2	35001-
6	01643-31232	WASHER	2	35001-
7	21N-54-42430	STEP	1	35001-
8	01010-81230	BOLT	2	35001-
9	01643-31232	WASHER	2	35001-
10	21N-54-42430	STEP	1	35001-
11	01010-81230	BOLT	2	35001-
12	01643-31232	WASHER	2	35001-
13	21N-54-39661	STEP	1	35001-
14	01010-81230	BOLT	4	35001-
15	01643-31232	WASHER	4	35001-
16	21N-54-42140	BRACKET	2	35001-
17	01010-81235	BOLT	8	35001-
18	01643-31232	WASHER	8	35001-

Printed By : Dwi Iswanto (airafather6107170)

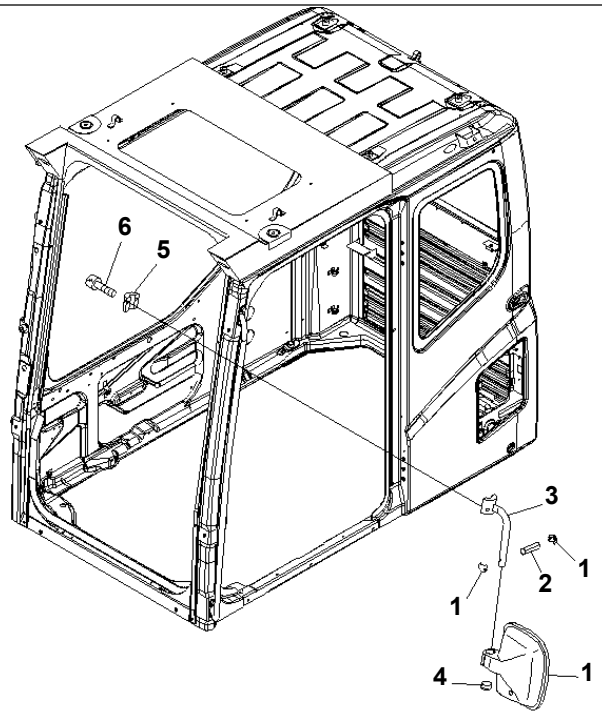

00043377

Ref. M1410-01A0 **Page 270220**

PC1250SP-8R S/N 35001-UP (W/O EGR, +55C DEGREE)
REAR VIEW MIRROR (L.H.)

Item	Part No.	Part Name	Qty	Serial No.
1	421-54-25610	MIRROR	1	35001-
	421-54-25620	· BUSHING	2	35001-
	421-54-25630	· HOLDER	1	35001-
2	04025-00632	PIN	1	35001-
3	21N-53-32510	SUPPORT	1	35001-
4	21N-53-32120	· CAP	1	35001-
5	20Y-54-35430	CLAMP	1	35001-
6	01252-71025	BOLT	2	35001-

Printed By : Dwi Iswanto (airafather6107170)

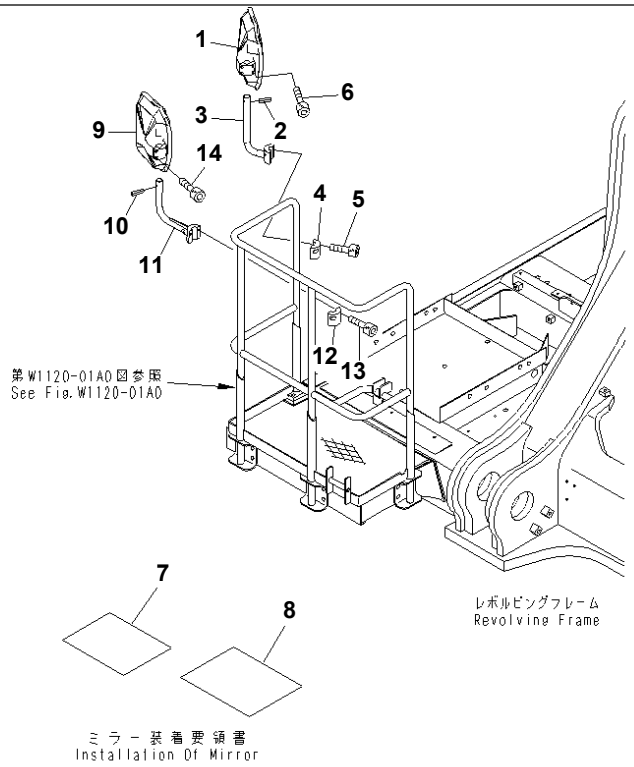

00044622

PC1250SP-8R S/N 35001-UP (W/O EGR, +55C DEGREE)
REAR VIEW MIRROR (R.H.)

Item	Part No.	Part Name	Qty	Serial No.
1	421-54-25610	MIRROR	1	35001-
2	04025-00632	PIN	1	35001-
3	21N-54-42440	SUPPORT	1	35001-
4	20Y-54-27991	CLAMP	1	35001-
5	01252-71025	BOLT	2	35001-
6	01252-70545	BOLT	4	35001-
7	21N-98-41131	PLATE	1	35001-
8	209-98-77220	PLATE	1	35001-
9	421-54-25610	MIRROR	1	35001-
10	04025-00632	PIN	1	35001-
11	21N-54-41751	SUPPORT	1	35001-
12	20Y-54-27991	CLAMP	1	35001-
13	01252-71025	BOLT	2	35001-
14	01252-70545	BOLT	4	35001-

Printed By : Dwi Iswanto (airafather6107170)

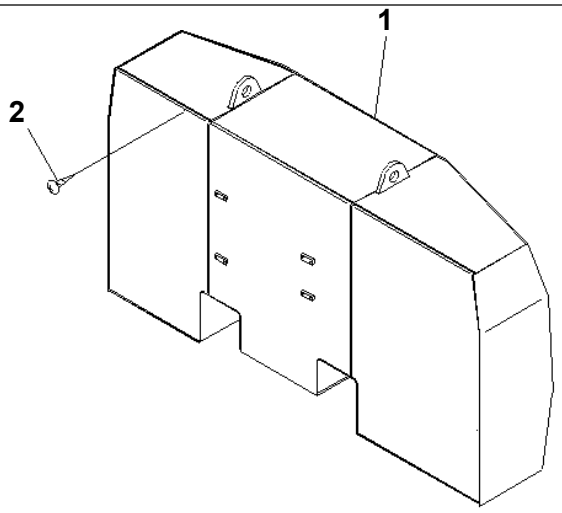

00031498

Ref. M1510-01A0 **Page 270240**

PC1250SP-8R S/N 35001-UP (W/O EGR, +55C DEGREE)
COUNTER WEIGHT (17400 KG)

Item	Part No.	Part Name	Qty	Serial No.
1	21N-46-35122	WEIGHT	1	35001-
2	01370-00508	SCREW	2	35001-

Printed By : Dwi Iswanto (airafather6107170)

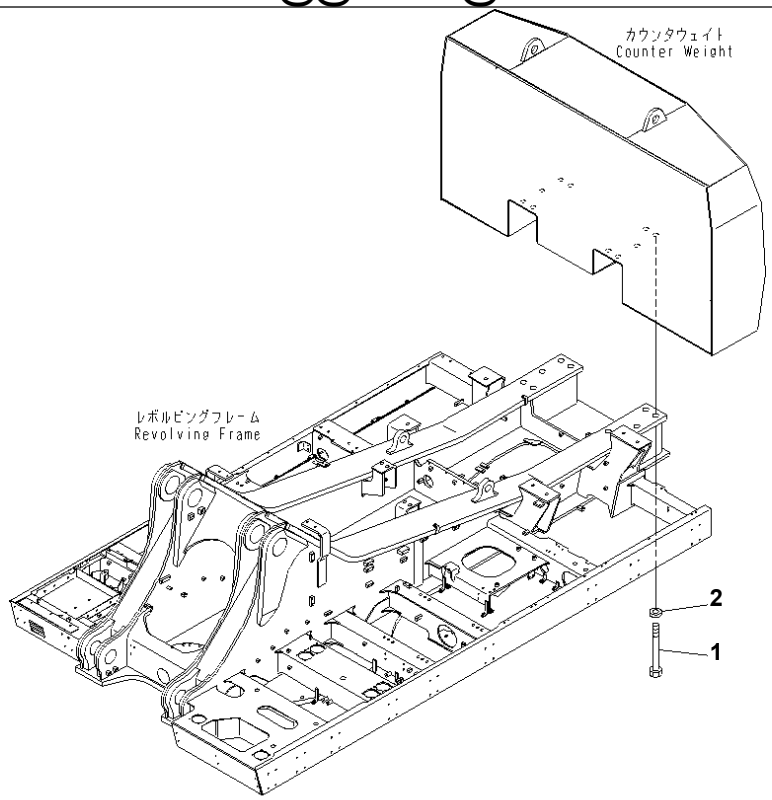

Ref. M1520-01A0 **Page 270250**

PC1250SP-8R S/N 35001-UP (W/O EGR, +55C DEGREE)
WEIGHT MOUNTING

Item	Part No.	Part Name	Qty	Serial No.
1	209-09-51170	BOLT	10	35001-
2	209-46-11210	SPACER	10	35001-

Printed By : Dwi Iswanto (airafather6107170)

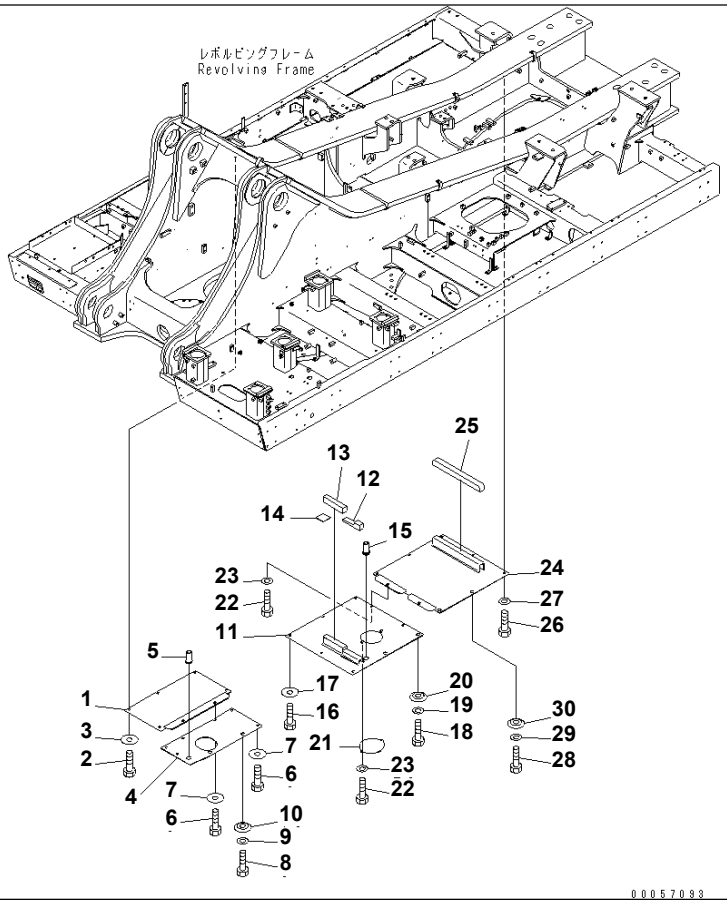

Ref. M1810-01A0 Page 270260

PC1250SP-8R S/N 35001-UP (W/O EGR, +55C DEGREE)

UNDER COVER (REVOLVING FRAME) (R.H.)

Item	Part No.	Part Name	Qty	Serial No.
1	21N-54-41610	COVER	1	35001-
2	01010-81230	BOLT	5	35001-
3	175-54-34170	WASHER	5	35001-
4	21N-54-41621	COVER	1	35001-
5	22U-54-24760	GROMMET	1	35001-
6	01010-81230	BOLT	6	35001-
7	175-54-34170	WASHER	6	35001-
8	01010-81230	BOLT	2	35001-
9	01643-31232	WASHER	2	35001-
10	208-54-57181	COLLAR	2	35001-
11	21N-54-43550	COVER	1	35001-
12	21N-54-41671	· SHEET	1	35001-
13	21N-54-42260	· SHEET	1	35001-
14	21N-54-42270	· SHEET	1	35001-
15	22U-54-24760	GROMMET	1	35001-
16	01010-81230	BOLT	7	35001-
17	175-54-34170	WASHER	7	35001-
18	01010-81230	BOLT	2	35001-
19	01643-31232	WASHER	2	35001-
20	208-54-57181	COLLAR	2	35001-
21	207-54-51440	PLATE	1	35001-
22	01010-81230	BOLT	2	35001-
23	01643-31232	WASHER	2	35001-
24	21N-54-41640	COVER	1	35001-
25	21N-54-41661	· SHEET	1	35001-
26	01010-81230	BOLT	5	35001-
27	175-54-34170	WASHER	5	35001-
28	01010-81230	BOLT	2	35001-
29	01643-31232	WASHER	2	35001-
30	208-54-57181	COLLAR	2	35001-

Printed By : Dwi Iswanto (airafather6107170)

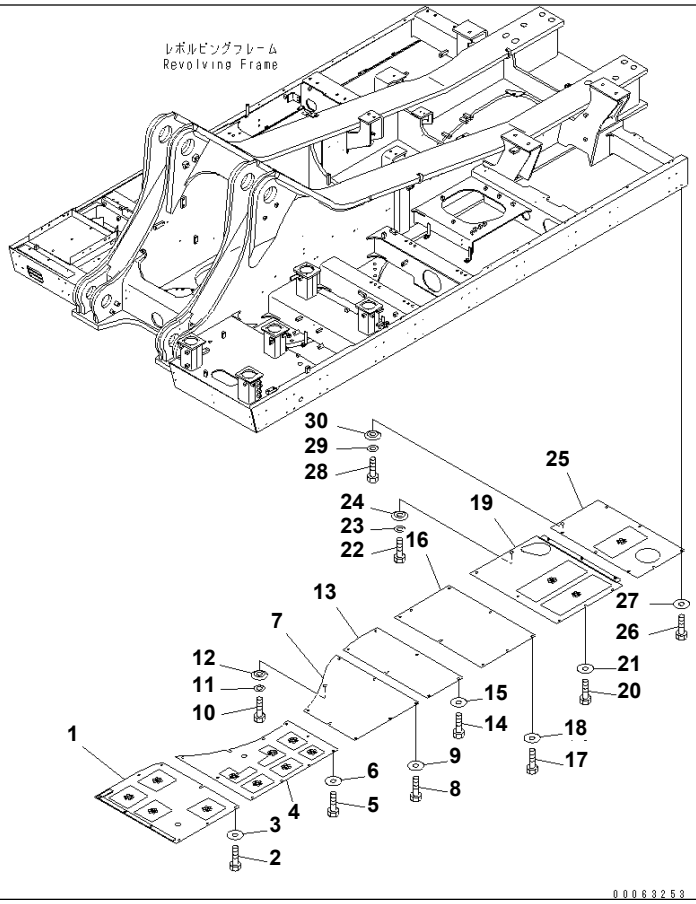

Ref. M1810-02A1 Page 270270

PC1250SP-8R S/N 35001-UP (W/O EGR, +55C DEGREE)

UNDER COVER (REVOLVING FRAME) (L.H.) (+55C SPEC.)

Item	Part No.	Part Name	Qty	Serial No.
1	21N-54-39761	COVER	1	35001-
2	01010-81230	BOLT	9	35001-
3	175-54-34170	WASHER	9	35001-
4	21N-53-31490	PLATE	1	35001-
5	01010-81230	BOLT	10	35001-
6	175-54-34170	WASHER	10	35001-
7	21N-53-31510	PLATE	1	35001-
8	01010-81230	BOLT	7	35001-
9	175-54-34170	WASHER	7	35001-
10	01010-81230	BOLT	1	35001-
11	01643-31232	WASHER	1	35001-
12	208-54-57181	COLLAR	1	35001-
13	21N-53-31520	PLATE	1	35001-
14	01010-81230	BOLT	6	35001-
15	175-54-34170	WASHER	6	35001-
16	21N-53-31530	PLATE	1	35001-
17	01010-81230	BOLT	8	35001-
18	175-54-34170	WASHER	8	35001-
19	21N-54-43190	COVER	1	35001-
20	01010-81230	BOLT	5	35001-
21	175-54-34170	WASHER	5	35001-
22	01010-81230	BOLT	1	35001-
23	01643-31232	WASHER	1	35001-
24	208-54-57181	COLLAR	1	35001-
25	21N-53-31550	PLATE	1	35001-
26	01010-81230	BOLT	7	35001-
27	175-54-34170	WASHER	7	35001-
28	01010-81230	BOLT	1	35001-
29	01643-31232	WASHER	1	35001-
30	208-54-57181	COLLAR	1	35001-

Printed By : Dwi Iswanto (airafather6107170)

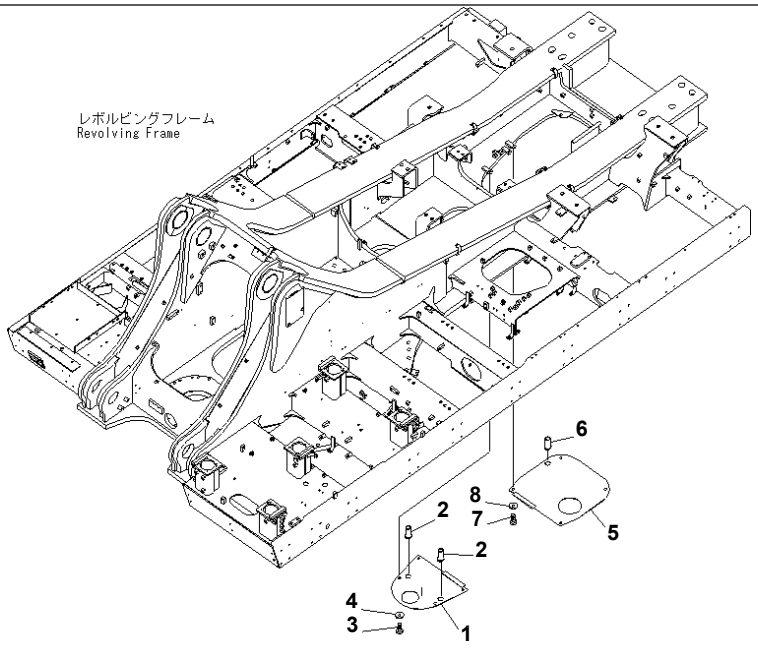

00044621

Ref. M1810-03A0 **Page 270280**

PC1250SP-8R S/N 35001-UP (W/O EGR, +55C DEGREE)
UNDER COVER (REVOLVING FRAME) (CENTER)

Item	Part No.	Part Name	Qty	Serial No.
1	21N-54-41651	COVER	1	35001-
2	22U-54-24760	GROMMET	2	35001-
3	01010-81230	BOLT	4	35001-
4	175-54-34170	WASHER	4	35001-
5	21N-54-41680	COVER	1	35001-
6	22U-54-24760	GROMMET	1	35001-
7	01010-81230	BOLT	4	35001-
8	175-54-34170	WASHER	4	35001-

Printed By : Dwi Iswanto (airafather6107170)

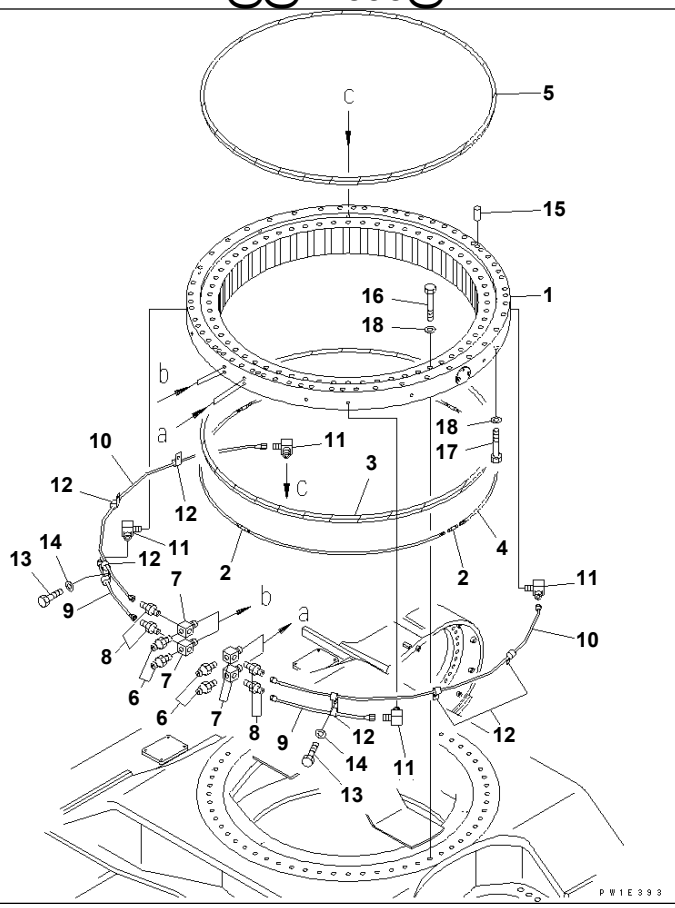

Ref. N1110-01A0 **Page 300010**

PC1250SP-8R S/N 35001-UP (W/O EGR, +55C DEGREE)

SWING CIRCLE

Item	Part No.	Part Name	Qty	Serial No.
1	21N-25-00201	SWING CIRCLE ASS'Y	1	35001-
2	209-25-11150	· JOINT	4	35001-
3	21N-25-31120	· SEAL	1	35001-
4	21N-25-31130	· WIRE	4	35001-
5	21N-25-31110	· SEAL	1	35001-
6	07020-00000	FITTING	4	35001-
7	205-25-71280	NIPPLE	4	35001-
8	07214-50813	CONNECTOR	4	35001-
9	21N-25-31321	TUBE	2	35001-
10	21N-25-31311	TUBE	2	35001-
11	20Y-25-11270	ELBOW	4	35001-
12	08036-00814	CLIP	8	35001-
13	01010-81220	BOLT	6	35001-
14	01643-31232	WASHER	6	35001-
15	170-27-12250	PIN	3	35001-
16	198-61-11260	BOLT	60	35001-
17	150-74-11140	BOLT	56	35001-
18	01643-33380	WASHER	116	35001-

Printed By : Dwi Iswanto (airafather6107170)

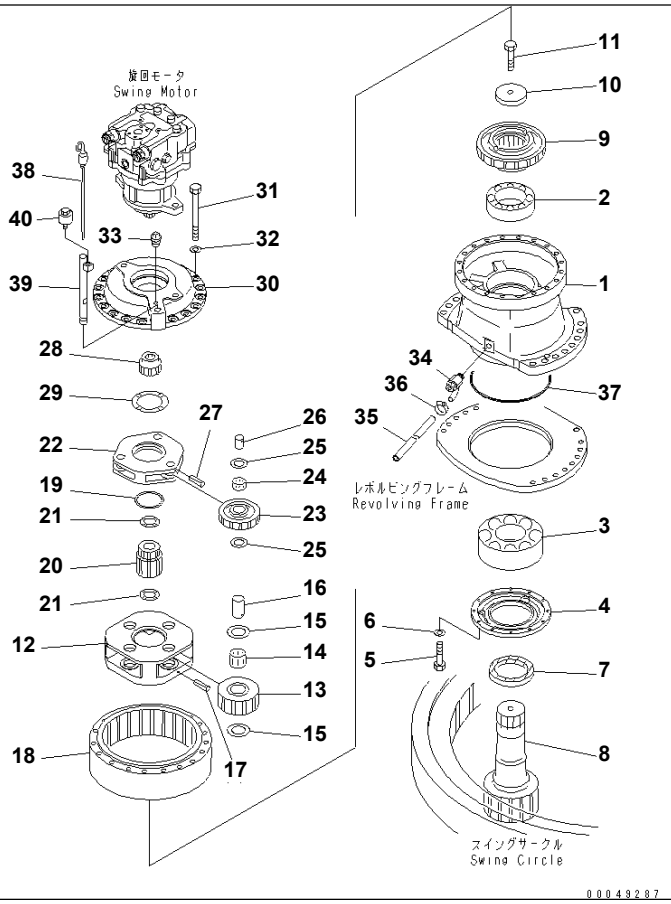

Ref. N1210-01A0 **Page 300020**

PC1250SP-8R S/N 35001-UP (W/O EGR, +55C DEGREE)

SWING MACHINERY (FRONT)(#35001-35016)

Item	Part No.	Part Name	Qty	Serial No.
1	208-26-63170	CASE	1	35001-35016
2	06000-23124	BEARING	1	35001-35016
3	21N-26-31140	BEARING	1	35001-35016
4	208-26-52263	COVER	1	35001-35016
5	01010-81040	BOLT	12	35001-35016
6	01643-31032	WASHER	12	35001-35016
7	208-26-61291	OIL SEAL	1	35001-35016
8	21N-26-31110	SHAFT, 13 TEETH	1	35001-35016
9	208-26-61151	COUPLING	1	35001-35016
10	208-26-52230	PLATE	1	35001-35016
11	205-32-51211	BOLT	1	35001-35016
12	207-27-63170	CARRIER	1	35001-35016
13	208-26-63140	GEAR	4	35001-35016
14	207-27-63210	BEARING	4	35001-35016
15	20Y-27-21250	WASHER	8	35001-35016
16	207-27-63230	PIN	4	35001-35016
17	20Y-26-21330	PIN	4	35001-35016
18	207-27-63150	GEAR	1	35001-35016
19	207-27-63250	WASHER	1	35001-35016
20	208-26-63131	GEAR	1	35001-35016
21	20Y-27-13310	WASHER	2	35001-35016
22	208-26-63150	CARRIER	1	35001-35016
23	208-26-63120	GEAR	3	35001-35016
24	20Y-27-22210	BEARING	3	35001-35016
25	20Y-27-21240	WASHER	6	35001-35016
26	20Y-27-21220	PIN	3	35001-35016
27	20Y-27-21280	PIN	3	35001-35016
28	208-26-63110	GEAR	1	35001-35016
29	20Y-27-11250	SPACER	1	35001-35016
30	208-26-63161	COVER	1	35001-35016

Printed By : Dwi Iswanto (airafather6107170)

SWING MACHINERY (FRONT)(#35001-35016)

Item	Part No.	Part Name	Qty	Serial No.
31	01011-61880	BOLT	19	35001-35016
32	01643-31845	WASHER	19	35001-35016
33	07042-00312	PLUG	1	35001-35016
34	07730-40004	VALVE	1	35001-35016
35	07270-21590	TUBE	1	35001-35016
36	07281-00197	CLAMP	1	35001-35016
37	07000-15335	O-RING	1	35001-35016
38	21N-26-31170	GAUGE	1	35001-35016
39	21N-26-31150	FILTER	1	35001-35016
40	07030-00252	BREATHER	1	35001-35016

Printed By : Dwi Iswanto (airafather6107170)

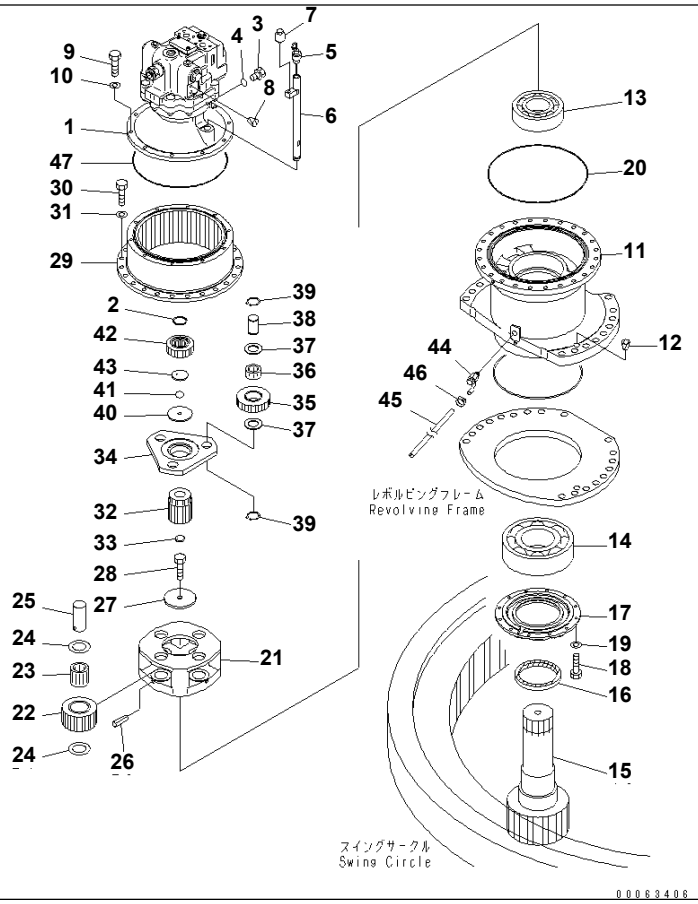

Ref. N1210-01A0A **Page 300030**

PC1250SP-8R S/N 35001-UP (W/O EGR, +55C DEGREE)

SWING MACHINERY (FRONT)(#35017-)

Item	Part No.	Part Name	Qty	Serial No.
1	(706-7K-01110)	MOTOR ASS'Y	1	35017-
2	207-26-71240	RING	1	35017-
3	07040-11209	PLUG	1	35017-
4	07002-11223	O-RING	1	35017-
5	21N-26-33170	GAUGE	1	35017-
6	21N-26-33150	FILLER	1	35017-
7	07030-00252	BREATHER	1	35017-
8	07049-01012	PLUG	2	35017-
9	01010-81240	BOLT	10	35017-
10	01643-31232	WASHER	10	35017-
11	21N-26-33190	CASE	1	35017-
12	07049-02430	PLUG	2	35017-
13	06000-23124	BEARING	1	35017-
14	21N-26-31140	BEARING	1	35017-
15	21N-26-31110	SHAFT, 13 TEETH	1	35017-
16	208-26-61291	OIL SEAL	1	35017-
17	21N-26-33230	COVER	1	35017-
18	01010-81030	BOLT	12	35017-
19	01643-31032	WASHER	12	35017-
20	07000-15390	O-RING	1	35017-
21	208-26-71181	CARRIER	1	35017-
22	208-26-71140	GEAR	4	35017-
23	207-27-61230	BEARING	4	35017-
24	20Y-27-21250	WASHER	8	35017-
25	207-27-61250	PIN	4	35017-
26	20Y-27-21290	PIN	4	35017-
27	208-26-71230	PLATE	1	35017-
28	205-32-51211	BOLT	1	35017-
29	208-26-71151	GEAR	1	35017-
30	01010-81645	BOLT	24	35017-

Printed By : Dwi Iswanto (airafather6107170)

SWING MACHINERY (FRONT)(#35017-)

Item	Part No.	Part Name	Qty	Serial No.
31	01643-31645	WASHER	24	35017-
32	208-26-71130	GEAR	1	35017-
33	208-26-71241	PLATE	1	35017-
34	208-26-71170	CARRIER	1	35017-
35	207-26-71520	GEAR	3	35017-
36	22U-26-21320	BEARING	3	35017-
37	22U-26-21240	WASHER	6	35017-
38	207-26-71210	PIN	3	35017-
39	04064-04018	RING	6	35017-
40	208-26-71210	HOLDER	1	35017-
41	04260-01270	BALL	1	35017-
42	207-26-71510	GEAR	1	35017-
43	207-26-71261	PLATE	1	35017-
44	07730-40004	VALVE	1	35017-
45	07270-21590	TUBE	1	35017-
46	07281-00197	CLAMP	1	35017-
47	208-26-71380	O-RING	1	35017-

Printed By : Dwi Iswanto (airafather6107170)

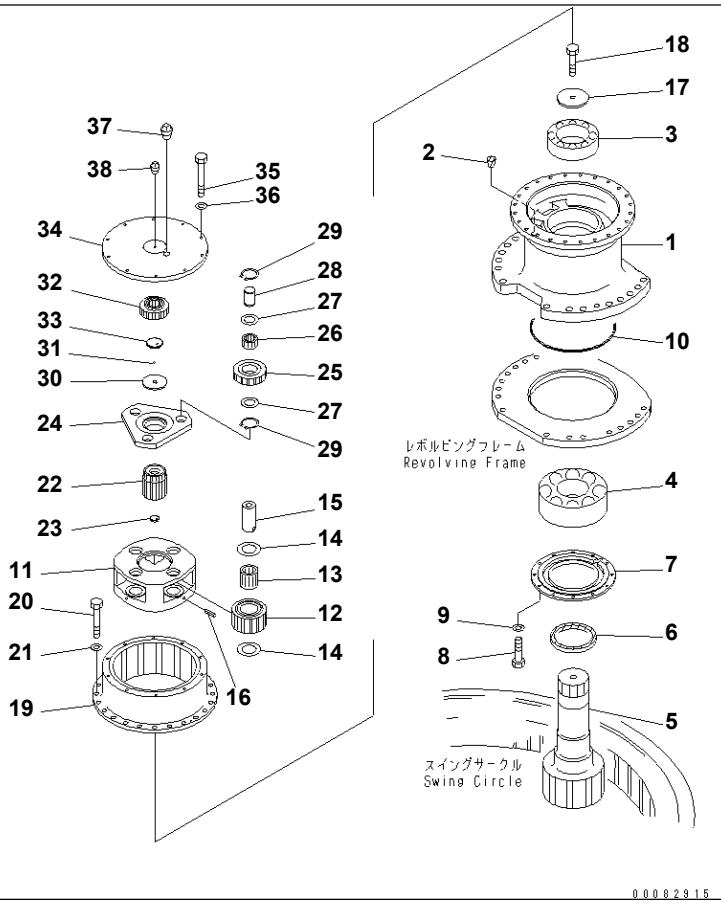

Ref. N1210-01A1 **Page 300040**

SWING MACHINERY ASS'Y (SUPPLY ONLY)(#35017-)

Item	Part No.	Part Name	Qty	Serial No.
	21N-26-00110	SWING MACHINERY A.	1	35017-
1	21N-26-33190	· CASE	1	35017-
2	07049-02430	· PLUG	2	35017-
3	06000-23124	· BEARING	1	35017-
4	21N-26-31140	· BEARING	1	35017-
5	21N-26-31110	· SHAFT, 13 TEETH	1	35017-
6	208-26-61291	· OIL SEAL	1	35017-
7	21N-26-33230	· COVER	1	35017-
8	01010-81030	· BOLT	12	35017-
9	01643-31032	· WASHER	12	35017-
10	07000-15390	· O-RING	1	35017-
11	208-26-71181	· CARRIER	1	35017-
12	208-26-71140	· GEAR	4	35017-
13	207-27-61230	· BEARING	4	35017-
14	20Y-27-21250	· WASHER	8	35017-
15	207-27-61250	· PIN	4	35017-
16	20Y-27-21290	· PIN	4	35017-
17	208-26-71230	· PLATE	1	35017-
18	205-32-51211	· BOLT	1	35017-
19	208-26-71151	· GEAR	1	35017-
20	01010-81645	· BOLT	24	35017-
21	01643-31645	· WASHER	24	35017-
22	208-26-71130	· GEAR	1	35017-
23	208-26-71241	· PLATE	1	35017-
24	208-26-71170	· CARRIER	1	35017-
25	207-26-71520	· GEAR	3	35017-
26	22U-26-21320	· BEARING	3	35017-
27	22U-26-21240	· WASHER	6	35017-
28	207-26-71210	· PIN	3	35017-
29	04064-04018	· RING	6	35017-

Printed By : Dwi Iswanto (airafather6107170)

SWING MACHINERY ASS'Y (SUPPLY ONLY)(#35017-)

Item	Part No.	Part Name	Qty	Serial No.
30	208-26-71210	· HOLDER	1	35017-
31	04260-01270	· BALL	1	35017-
32	207-26-71510	· GEAR	1	35017-
33	207-26-71261	· PLATE	1	35017-
34	207-26-71610	· COVER	1	35017-
35	01010-81240	· BOLT	10	35017-
36	01643-31232	· WASHER	10	35017-
37	07042-30617	· PLUG	2	35017-
38	07042-30108	· PLUG	1	35017-

Printed By : Dwi Iswanto (airafather6107170)

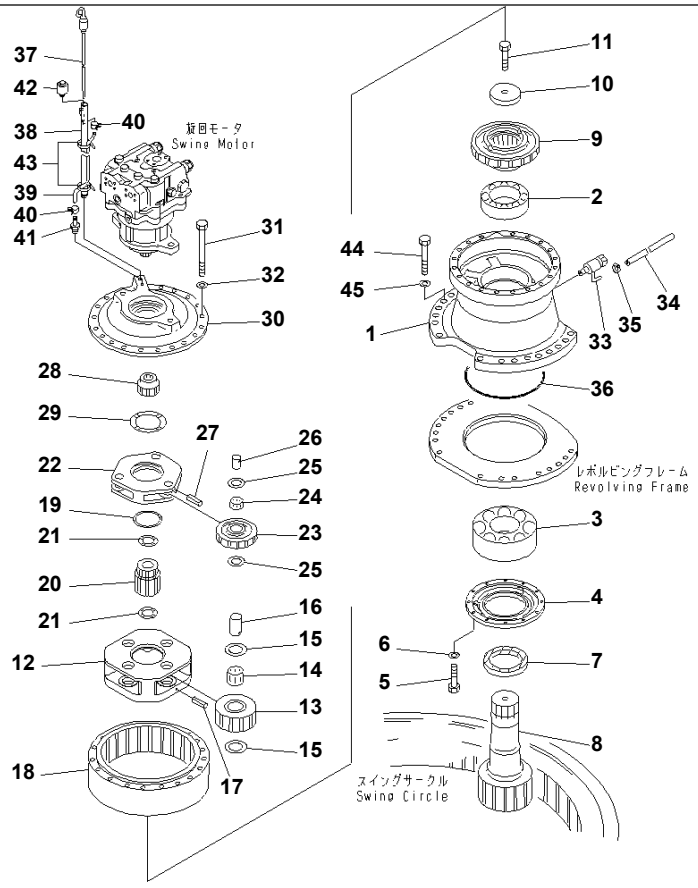

Ref. N1210-02A0 **Page 300050**

PC1250SP-8R S/N 35001-UP (W/O EGR, +55C DEGREE)
SWING MACHINERY (REAR)(#35001-35016)

Item	Part No.	Part Name	Qty	Serial No.
1	208-26-63170	CASE	1	35001-35016
2	06000-23124	BEARING	1	35001-35016
3	21N-26-31140	BEARING	1	35001-35016
4	208-26-52263	COVER	1	35001-35016
5	01010-81040	BOLT	12	35001-35016
6	01643-31032	WASHER	12	35001-35016
7	208-26-61291	OIL SEAL	1	35001-35016
8	21N-26-31110	SHAFT, 13 TEETH	1	35001-35016
9	208-26-61151	COUPLING	1	35001-35016
10	208-26-52230	PLATE	1	35001-35016
11	205-32-51211	BOLT	1	35001-35016
12	207-27-63170	CARRIER	1	35001-35016
13	208-26-63140	GEAR	4	35001-35016
14	207-27-63210	BEARING	4	35001-35016
15	20Y-27-21250	WASHER	8	35001-35016
16	207-27-63230	PIN	4	35001-35016
17	20Y-26-21330	PIN	4	35001-35016
18	207-27-63150	GEAR	1	35001-35016
19	207-27-63250	WASHER	1	35001-35016
20	208-26-63131	GEAR	1	35001-35016
21	20Y-27-13310	WASHER	2	35001-35016
22	208-26-63150	CARRIER	1	35001-35016
23	208-26-63120	GEAR	3	35001-35016
24	20Y-27-22210	BEARING	3	35001-35016
25	20Y-27-21240	WASHER	6	35001-35016
26	20Y-27-21220	PIN	3	35001-35016
27	20Y-27-21280	PIN	3	35001-35016
28	208-26-63110	GEAR	1	35001-35016
29	20Y-27-11250	SPACER	1	35001-35016
30	208-26-63161	COVER	1	35001-35016

Printed By : Dwi Iswanto (airafather6107170)

SWING MACHINERY (REAR)(#35001-35016)

Item	Part No.	Part Name	Qty	Serial No.
31	01011-61880	BOLT	19	35001-35016
32	01643-31845	WASHER	19	35001-35016
33	07730-40004	VALVE	1	35001-35016
34	07270-21590	TUBE	1	35001-35016
35	07281-00197	CLAMP	1	35001-35016
36	07000-15335	O-RING	1	35001-35016
37	21N-26-33210	GAUGE	1	35001-35016
38	21N-26-33220	FILLER	1	35001-35016
39	07286-01085	HOSE	1	35001-35016
40	07285-00130	CLIP	2	35001-35016
41	6138-55-7610	NIPPLE	1	35001-35016
42	07030-00252	BREATHER	1	35001-35016
43	08034-40521	BAND	2	35001-35016
44	01010-82485	BOLT	34	35001-35016
45	01643-32460	WASHER	34	35001-35016

Printed By : Dwi Iswanto (airafather6107170)

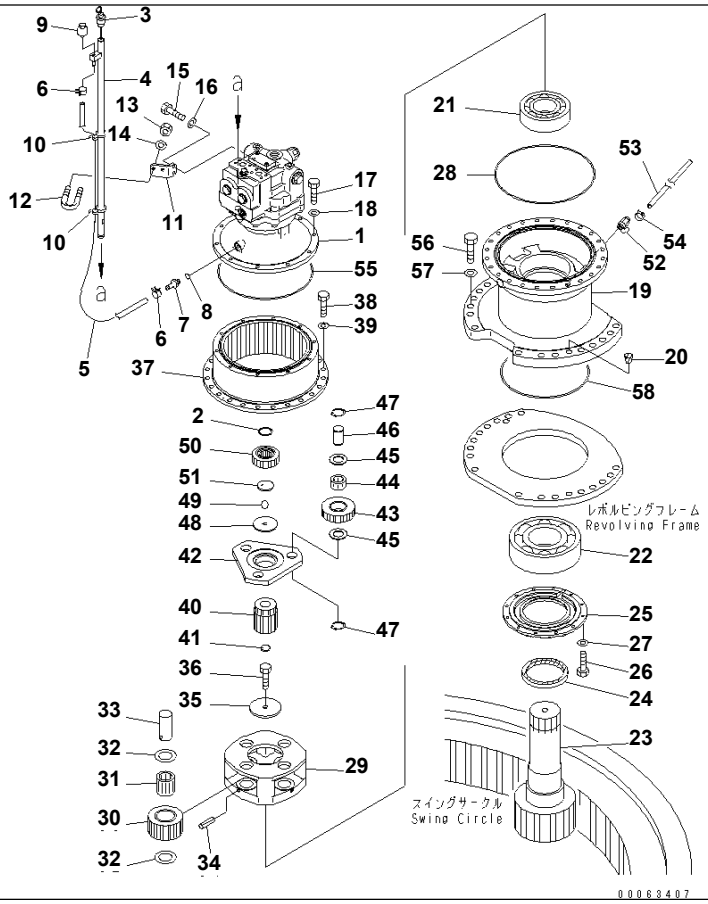

Ref. N1210-02A0A **Page 300060**

PC1250SP-8R S/N 35001-UP (W/O EGR, +55C DEGREE)
SWING MACHINERY (REAR)(#35017-)

Item	Part No.	Part Name	Qty	Serial No.
1	(706-7K-01110)	MOTOR ASS'Y	1	35017-
2	207-26-71240	RING	1	35017-
3	21N-26-33210	GAUGE	1	35017-
4	21N-26-33220	FILLER	1	35017-
5	07287-01012	HOSE	1	35017-
6	07285-00130	CLIP	2	35017-
7	208-871-5170	JOINT	1	35017-
8	07002-11223	O-RING	1	35017-
9	07030-00252	BREATHER	1	35017-
10	08034-40521	BAND	2	35017-
11	208-871-5161	BRACKET	1	35017-
12	07283-32738	CLIP	1	35017-
13	01597-01009	NUT	2	35017-
14	01643-31032	WASHER	2	35017-
15	01010-81030	BOLT	2	35017-
16	01643-31032	WASHER	2	35017-
17	01010-81240	BOLT	10	35017-
18	01643-31232	WASHER	10	35017-
19	21N-26-33190	CASE	1	35017-
20	07049-02430	PLUG	2	35017-
21	06000-23124	BEARING	1	35017-
22	21N-26-31140	BEARING	1	35017-
23	21N-26-31110	SHAFT, 13 TEETH	1	35017-
24	208-26-61291	OIL SEAL	1	35017-
25	21N-26-33230	COVER	1	35017-
26	01010-81030	BOLT	12	35017-
27	01643-31032	WASHER	12	35017-
28	07000-15390	O-RING	1	35017-
29	208-26-71181	CARRIER	1	35017-
30	208-26-71140	GEAR	4	35017-

Printed By : Dwi Iswanto (airafather6107170)

SWING MACHINERY (REAR)(#35017-)

Item	Part No.	Part Name	Qty	Serial No.
31	207-27-61230	BEARING	4	35017-
32	20Y-27-21250	WASHER	8	35017-
33	207-27-61250	PIN	4	35017-
34	20Y-27-21290	PIN	4	35017-
35	208-26-71230	PLATE	1	35017-
36	205-32-51211	BOLT	1	35017-
37	208-26-71151	GEAR	1	35017-
38	01010-81645	BOLT	24	35017-
39	01643-31645	WASHER	24	35017-
40	208-26-71130	GEAR	1	35017-
41	208-26-71241	PLATE	1	35017-
42	208-26-71170	CARRIER	1	35017-
43	207-26-71520	GEAR	3	35017-
44	22U-26-21320	BEARING	3	35017-
45	22U-26-21240	WASHER	6	35017-
46	207-26-71210	PIN	3	35017-
47	04064-04018	RING	6	35017-
48	208-26-71210	HOLDER	1	35017-
49	04260-01270	BALL	1	35017-
50	207-26-71510	GEAR	1	35017-
51	207-26-71261	PLATE	1	35017-
52	07730-40004	VALVE	1	35017-
53	07270-21590	TUBE	1	35017-
54	07281-00197	CLAMP	1	35017-
55	208-26-71380	O-RING	1	35017-
56	01010-82485	BOLT	34	35017-
57	01643-32460	WASHER	34	35017-
58	07000-15335	O-RING	2	35017-

Printed By : Dwi Iswanto (airafather6107170)

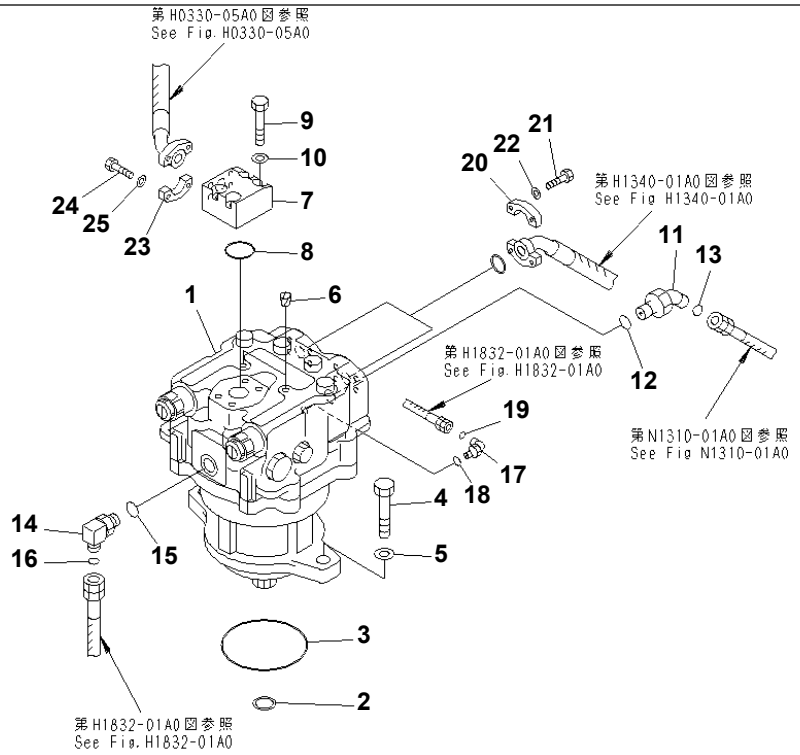

00049290

Ref. N1220-01A0 **Page 300070**

PC1250SP-8R S/N 35001-UP (W/O EGR, +55C DEGREE)
SWING MOTOR (FRONT)(#35001-35016)

Item	Part No.	Part Name	Qty	Serial No.
1	(706-77-01320)	MOTOR ASS'Y	1	35001-35016
2	207-26-61190	RING	1	35001-35016
3	07000-15150	O-RING	1	35001-35016
4	01010-82470	BOLT	2	35001-35016
5	01643-32460	WASHER	2	35001-35016
6	07049-01215	PLUG	2	35001-35016
7	21N-62-33421	BLOCK	1	35001-35016
8	07000-B3048	O-RING	1	35001-35016
9	07372-21260	BOLT	4	35001-35016
10	01643-51232	WASHER	4	35001-35016
11	02783-10522	ELBOW	1	35001-35016
12	07002-12434	O-RING	1	35001-35016
13	02896-11015	O-RING	1	35001-35016
14	21N-64-37190	ELBOW	1	35001-35016
15	07002-12434	O-RING	1	35001-35016
16	02896-11009	O-RING	1	35001-35016
17	02782-10311	ELBOW	1	35001-35016
18	07002-11423	O-RING	1	35001-35016
19	02896-11009	O-RING	1	35001-35016
20	07371-31049	FLANGE	4	35001-35016
21	07372-21035	BOLT	8	35001-35016
22	01643-51032	WASHER	8	35001-35016
23	07371-31049	FLANGE	2	35001-35016
24	07372-21035	BOLT	4	35001-35016
25	01643-51032	WASHER	4	35001-35016

Printed By : Dwi Iswanto (airafather6107170)

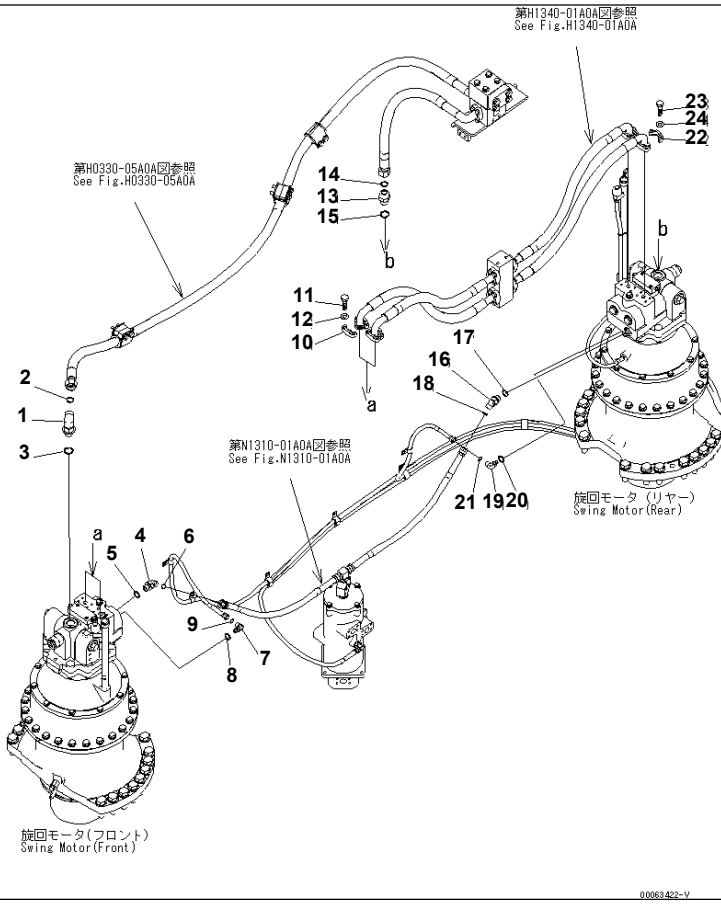

Ref. N1220-01A0A **Page 300080**

PC1250SP-8R S/N 35001-UP (W/O EGR, +55C DEGREE)
SWING MOTOR ELBOW GROUP(#35017-)

Item	Part No.	Part Name	Qty	Serial No.
1	21W-62-42640	ELBOW	1	35017-
2	207-62-64740	O-RING	1	35017-
3	07002-13334	O-RING	1	35017-
4	02783-10522	ELBOW	1	35017-
5	07002-12434	O-RING	1	35017-
6	02896-11015	O-RING	1	35017-
7	02782-10311	ELBOW	1	35017-
8	07002-11423	O-RING	1	35017-
9	02896-11009	O-RING	1	35017-
10	07371-31049	FLANGE	4	35017-
11	07372-21035	BOLT	8	35017-
12	01643-51032	WASHER	8	35017-
13	207-62-72110	UNION	1	35017-
14	207-62-64740	O-RING	1	35017-
15	07002-13334	O-RING	1	35017-
16	02783-10522	ELBOW	1	35017-
17	07002-12434	O-RING	1	35017-
18	02896-11015	O-RING	1	35017-
19	02782-10311	ELBOW	1	35017-
20	07002-11423	O-RING	1	35017-
21	02896-11009	O-RING	1	35017-
22	07371-31049	FLANGE	4	35017-
23	07372-21035	BOLT	8	35017-
24	01643-51032	WASHER	8	35017-

Printed By : Dwi Iswanto (airafather6107170)

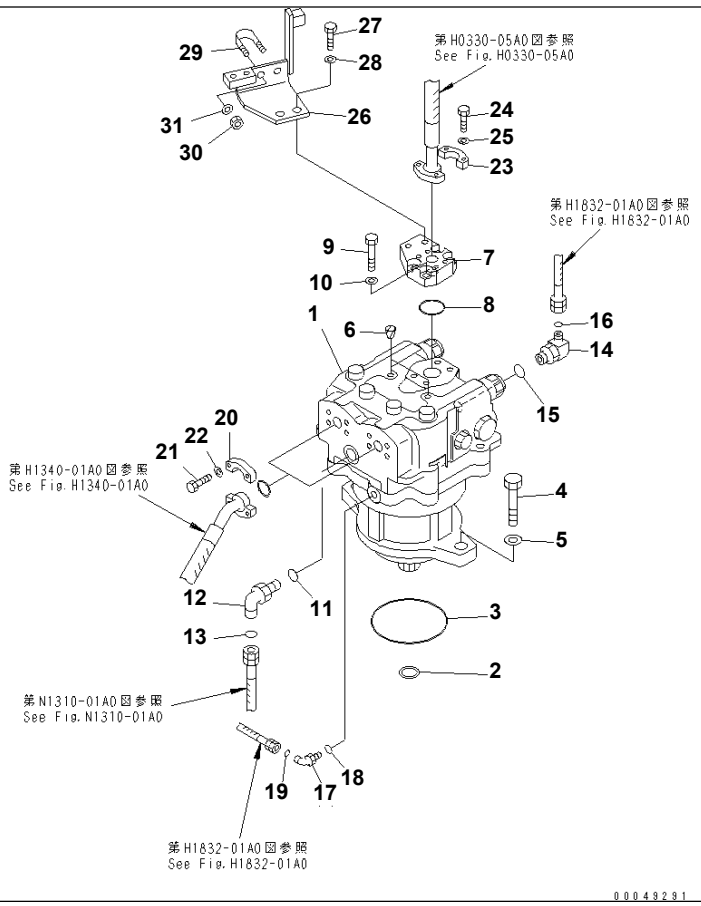

Ref. N1220-02A0 **Page 300090**

PC1250SP-8R S/N 35001-UP (W/O EGR, +55C DEGREE)

SWING MOTOR (REAR)(#35001-35016)

Item	Part No.	Part Name	Qty	Serial No.
1	(706-77-01320)	MOTOR ASS'Y	1	35001-35016
2	207-26-61190	RING	1	35001-35016
3	07000-15150	O-RING	1	35001-35016
4	01010-82470	BOLT	2	35001-35016
5	01643-32460	WASHER	2	35001-35016
6	07049-01215	PLUG	2	35001-35016
7	21N-62-33430	BLOCK	1	35001-35016
8	07000-B3048	O-RING	1	35001-35016
9	07372-21240	BOLT	4	35001-35016
10	01643-51232	WASHER	4	35001-35016
11	07002-12434	O-RING	1	35001-35016
12	02783-10522	ELBOW	1	35001-35016
13	02896-11015	O-RING	1	35001-35016
14	21N-64-37190	ELBOW	1	35001-35016
15	07002-12434	O-RING	1	35001-35016
16	02896-11009	O-RING	1	35001-35016
17	02782-10311	ELBOW	1	35001-35016
18	07002-11423	O-RING	1	35001-35016
19	02896-11009	O-RING	1	35001-35016
20	07371-31049	FLANGE	4	35001-35016
21	07372-21035	BOLT	8	35001-35016
22	01643-51032	WASHER	8	35001-35016
23	07371-31049	FLANGE	2	35001-35016
24	07372-21035	BOLT	4	35001-35016
25	01643-51032	WASHER	4	35001-35016
26	21N-62-37851	BRACKET	1	35001-35016
27	01010-81230	BOLT	2	35001-35016
28	01643-31232	WASHER	2	35001-35016
29	07283-32738	CLIP	1	35001-35016
30	01597-01009	NUT	2	35001-35016

Printed By : Dwi Iswanto (airafather6107170)

SWING MOTOR (REAR)(#35001-35016)

Item	Part No.	Part Name	Qty	Serial No.
31	01643-31032	WASHER	2	35001-35016

Printed By : Dwi Iswanto (airafather6107170)

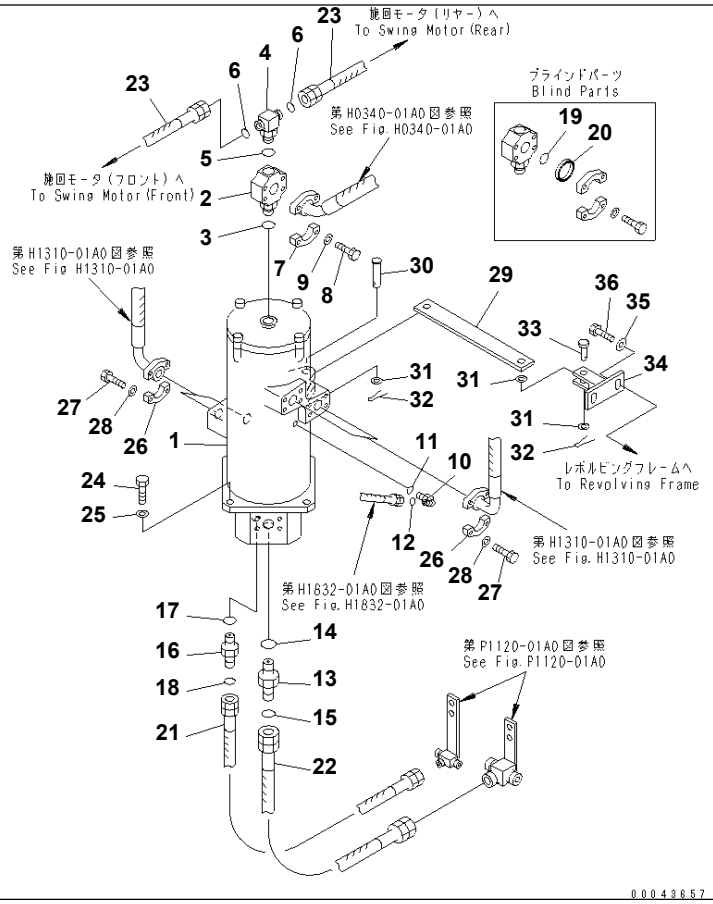

Ref. N1310-01A0 **Page 300100**

SWIVEL JOINT(#35001-35016)

Item	Part No.	Part Name	Qty	Serial No.
1	(703-11-00110)	SWIVEL JOINT ASS'Y	1	35001-35016
2	21N-62-31280	TEE	1	35001-@
3	07002-12434	O-RING	1	35001-@
4	21N-64-36720	TEE	1	35001-@
5	07002-12434	O-RING	1	35001-@
6	02896-11015	O-RING	2	35001-@
7	07371-31255	FLANGE	2	35001-@
8	07372-21035	BOLT	4	35001-@
9	01643-51032	WASHER	4	35001-@
10	02782-10315	ELBOW	1	35001-@
11	07002-12034	O-RING	1	35001-@
12	02896-11009	O-RING	1	35001-@
13	20U-62-41810	NIPPLE	1	35001-@
14	07002-12434	O-RING	1	35001-@
15	207-62-64740	O-RING	1	35001-@
16	02781-00315	UNION	1	35001-@
17	07002-12034	O-RING	1	35001-@
18	02896-11009	O-RING	1	35001-@
19	07378-11200	HEAD	1	35001-@
20	07000-13038	O-RING	1	35001-@
21	21N-62-36820	HOSE ASS'Y	1	35001-@
22	21N-62-36680	HOSE ASS'Y	1	35001-@
23	02762-00508	HOSE	2	35001-35016
24	01010-81440	BOLT	4	35001-@
25	01643-31445	WASHER	4	35001-@
26	07371-31049	FLANGE	8	35001-@
27	07372-21035	BOLT	16	35001-@
28	01643-51032	WASHER	16	35001-@
29	21N-62-33570	PLATE	1	35001-@
30	209-62-52560	PIN	1	35001-@

Printed By : Dwi Iswanto (airafather6107170)

SWIVEL JOINT(#35001-35016)

Item	Part No.	Part Name	Qty	Serial No.
31	01641-21626	WASHER	3	35001-@
32	04050-14028	PIN	2	35001-@
33	04205-11645	PIN	1	35001-@
34	21N-62-33560	BRACKET	1	35001-@
35	175-54-34170	WASHER	2	35001-@
36	01010-81230	BOLT	2	35001-@

Printed By : Dwi Iswanto (airafather6107170)

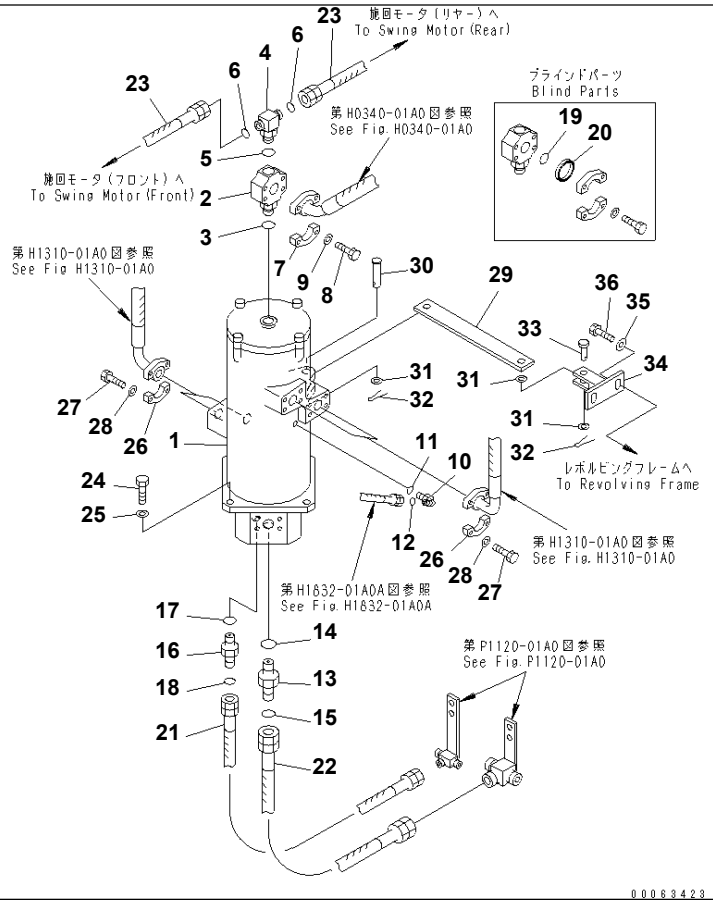

Ref. N1310-01A0A **Page 300110**

PC1250SP-8R S/N 35001-UP (W/O EGR, +55C DEGREE)

SWIVEL JOINT(#35017-)

Item	Part No.	Part Name	Qty	Serial No.
1	(703-11-00111)	SWIVEL JOINT ASS'Y	1	35017-
2	21N-62-31280	TEE	1	35001-
3	07002-12434	O-RING	1	35001-
4	21N-64-36720	TEE	1	35001-
5	07002-12434	O-RING	1	35001-
6	02896-11015	O-RING	2	35001-
7	07371-31255	FLANGE	2	35001-
8	07372-21035	BOLT	4	35001-
9	01643-51032	WASHER	4	35001-
10	02782-10315	ELBOW	1	35001-
11	07002-12034	O-RING	1	35001-
12	02896-11009	O-RING	1	35001-
13	20U-62-41810	NIPPLE	1	35001-
14	07002-12434	O-RING	1	35001-
15	207-62-64740	O-RING	1	35001-
16	02781-00315	UNION	1	35001-
17	07002-12034	O-RING	1	35001-
18	02896-11009	O-RING	1	35001-
19	07378-11200	HEAD	1	35001-
20	07000-13038	O-RING	1	35001-
21	21N-62-36820	HOSE ASS'Y	1	35001-
22	21N-62-36680	HOSE ASS'Y	1	35001-
23	02762-005A7	HOSE	2	35017-
24	01010-81440	BOLT	4	35001-
25	01643-31445	WASHER	4	35001-
26	07371-31049	FLANGE	8	35001-
27	07372-21035	BOLT	16	35001-
28	01643-51032	WASHER	16	35001-
29	21N-62-33570	PLATE	1	35001-
30	209-62-52560	PIN	1	35001-

Printed By : Dwi Iswanto (airafather6107170)

SWIVEL JOINT(#35017-)

Item	Part No.	Part Name	Qty	Serial No.
31	01641-21626	WASHER	3	35001-
32	04050-14028	PIN	2	35001-
33	04205-11645	PIN	1	35001-
34	21N-62-33560	BRACKET	1	35001-
35	175-54-34170	WASHER	2	35001-
36	01010-81230	BOLT	2	35001-

Printed By : Dwi Iswanto (airafather6107170)

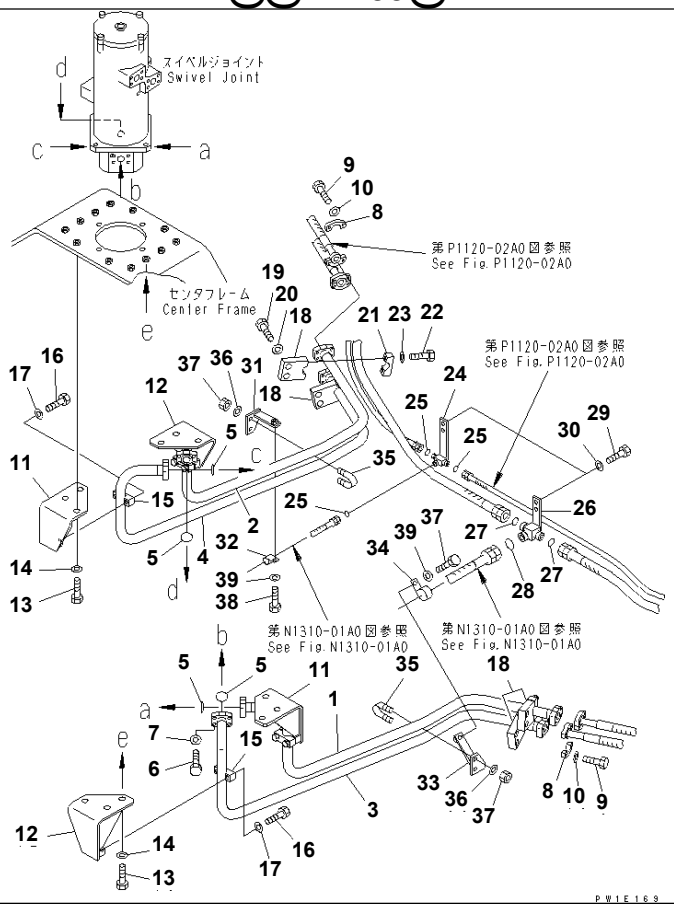

Ref. P1120-01A0 **Page 330010**

PC1250SP-8R S/N 35001-UP (W/O EGR, +55C DEGREE)

TRAVEL PIPING (CENTER FRAME SIDE)

Item	Part No.	Part Name	Qty	Serial No.
1	21N-62-34121	TUBE	1	35001-
2	21N-62-34131	TUBE	1	35001-
3	21N-62-34141	TUBE	1	35001-
4	21N-62-34151	TUBE	1	35001-
5	07000-B3035	O-RING	4	35001-
6	07372-21040	BOLT	16	35001-
7	01643-51032	WASHER	16	35001-
8	07371-31049	FLANGE	8	35001-
9	07372-21035	BOLT	16	35001-
10	01643-51032	WASHER	16	35001-
11	21N-62-34171	CLAMP	2	35001-
12	21N-62-34230	CLAMP	2	35001-
13	01010-81245	BOLT	12	35001-
14	175-54-34170	WASHER	12	35001-
15	205-62-54460	CLAMP	4	35001-
16	01010-81250	BOLT	8	35001-
17	01643-31232	WASHER	8	35001-
18	21N-62-33411	CLAMP	4	35001-
19	01010-81255	BOLT	8	35001-
20	175-54-34170	WASHER	8	35001-
21	205-62-54460	CLAMP	4	35001-
22	01010-81250	BOLT	8	35001-
23	01643-31232	WASHER	8	35001-
24	21N-62-34192	BRACKET	1	35001-35160
25	02896-11009	O-RING	3	35001-
26	21N-62-34182	BRACKET	1	35001-
27	02896-11018	O-RING	2	35001-
28	207-62-64740	O-RING	1	35001-
29	01010-81240	BOLT	4	35001-
30	01643-31232	WASHER	4	35001-

Printed By : Dwi Iswanto (airafather6107170)

TRAVEL PIPING (CENTER FRAME SIDE)

Item	Part No.	Part Name	Qty	Serial No.
31	21N-62-34211	BRACKET	1	35001-
32	04434-52212	CLIP	1	35001-
33	21N-62-34221	BRACKET	1	35001-
34	208-06-19170	CLIP	1	35001-
35	07283-33442	CLIP	2	35001-
36	01643-31032	WASHER	4	35001-
37	01597-01009	NUT	4	35001-
38	01010-81230	BOLT	2	35001-
39	01643-31232	WASHER	2	35001-

Printed By : Dwi Iswanto (airafather6107170)

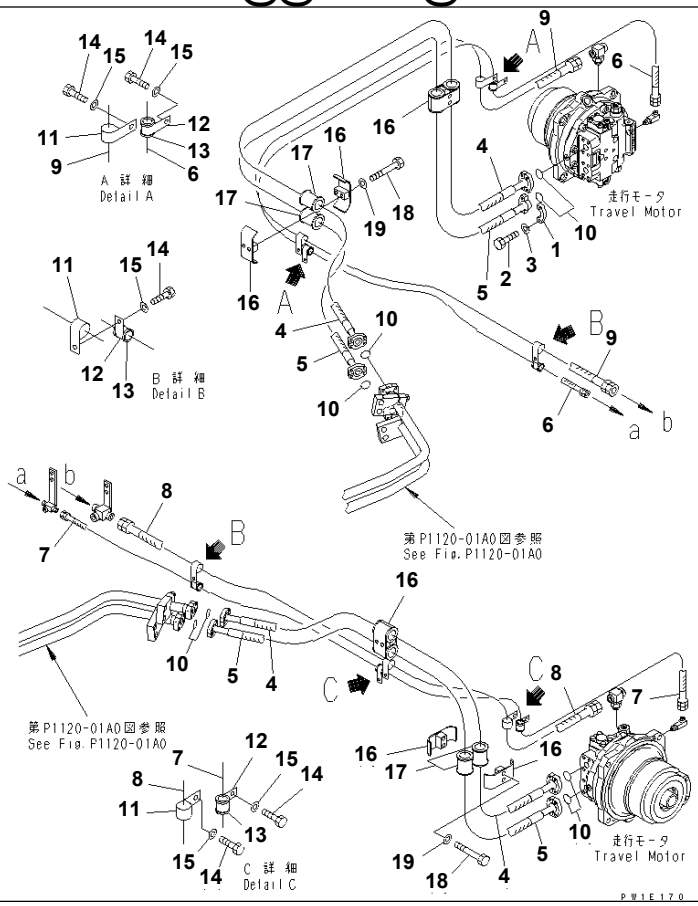

Ref. P1120-02A0 **Page 330020**

TRAVEL PIPING (MOTOR SIDE)

Item	Part No.	Part Name	Qty	Serial No.
1	209-62-64232	FLANGE	8	35001-
2	07372-21240	BOLT	16	35001-
3	01643-51232	WASHER	16	35001-
4	07099-41023	HOSE	2	35001-
5	07099-41022	HOSE	2	35001-
6	21N-62-34670	HOSE ASS'Y,3000MM	1	35001-
7	21N-62-34681	HOSE ASS'Y,3200MM	1	35001-
8	21N-62-34650	HOSE ASS'Y,2600MM	1	35001-
9	21N-62-34660	HOSE ASS'Y,2800MM	1	35001-
10	07000-B3032	O-RING	8	35001-
11	08036-03014	CLIP	6	35001-
12	04434-52512	CLIP	6	35001-
13	07095-20318	CUSHION	6	35001-
14	01010-81225	BOLT	10	35001-
15	01643-31232	WASHER	10	35001-
16	07094-31228	CLAMP	8	35001-
17	07095-01241	CUSHION	8	35001-
18	01010-81285	BOLT	8	35001-
19	01643-31232	WASHER	8	35001-

Printed By : Dwi Iswanto (airafather6107170)

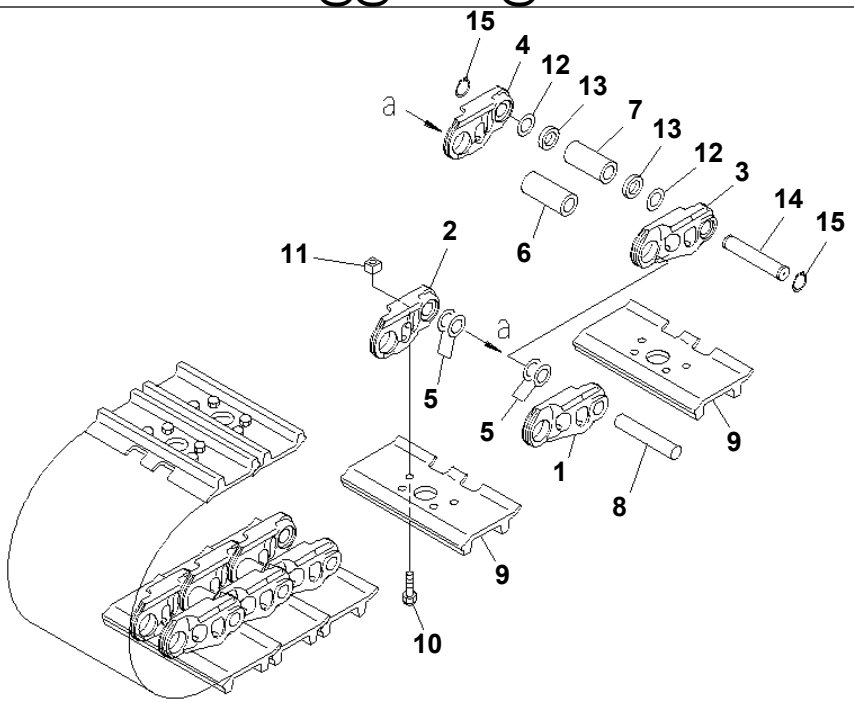

PWB7684

Ref. R0500-01A0 **Page 360010**

PC1250SP-8R S/N 35001-UP (W/O EGR, +55C DEGREE)
TRACK SHOE (DOUBLE GROUSER WITH HOLE) (700MM WIDE)

Item	Part No.	Part Name	Qty	Serial No.
	21N-32-02001	TRACK SHOE ASS'Y	1	35001-
1	21N-32-31121	· LINK,L.H.	92	35001-
2	21N-32-31131	· LINK,R.H.	92	35001-
3	21N-32-31221	· LINK,L.H.	4	35001-
4	21N-32-31231	· LINK,R.H.	4	35001-
5	195-32-61260	· WASHER	368	35001-
6	21N-32-31140	· BUSHING,REGULAR	92	35001-
7	21N-32-31170	· BUSHING,MASTER	4	35001-
8	195-32-61250	· PIN,REGULAR	92	35001-
9	21N-32-31110	· SHOE	96	35001-
10	21N-32-31211	· BOLT, SHOE (Y0320-K01	384	35001-
11	198-32-31220	· NUT (Y0320-K01	384	35001-
12	195-32-61260	· WASHER	8	35001-
13	21N-32-31250	· SEAL	8	35001-
14	21N-32-31190	· PIN,MASTER	4	35001-
15	04064-06020	· RING	8	35001-

Printed By : Dwi Iswanto (airafather6107170)

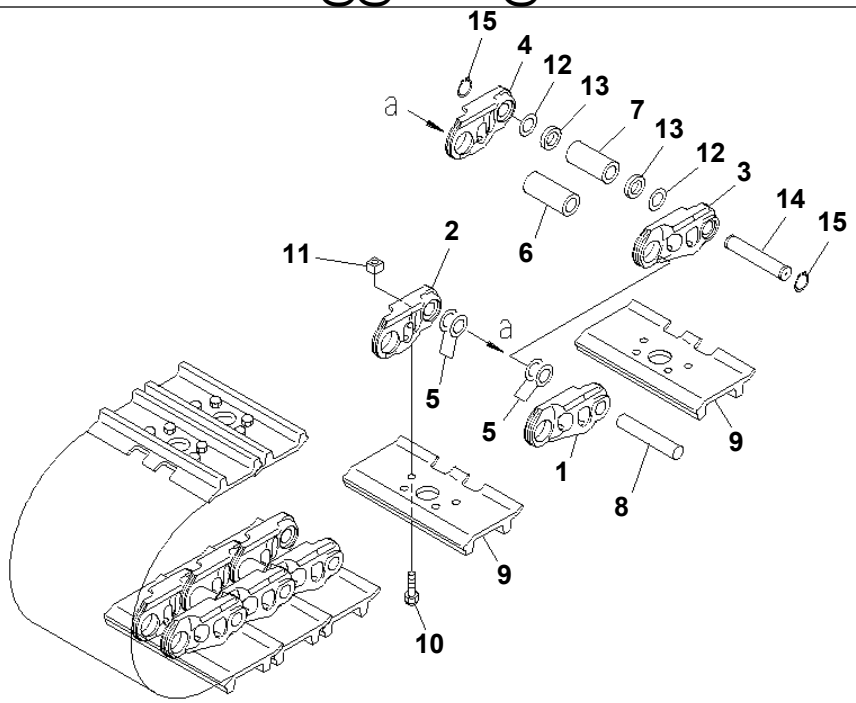

PWB7684

Ref. R0500-01A1 **Page 360020**

PC1250SP-8R S/N 35001-UP (W/O EGR, +55C DEGREE)

TRACK SHOE (DOUBLE GROUSER WITH HOLE) (1000MM WIDE)

Item	Part No.	Part Name	Qty	Serial No.
	21N-32-02011	TRACK SHOE ASS'Y	1	35001-
1	21N-32-31121	· LINK,L.H.	92	35001-
2	21N-32-31131	· LINK,R.H.	92	35001-
3	21N-32-31221	· LINK,L.H.	4	35001-
4	21N-32-31231	· LINK,R.H.	4	35001-
5	195-32-61260	· WASHER	368	35001-
6	21N-32-31140	· BUSHING,REGULAR	92	35001-
7	21N-32-31170	· BUSHING,MASTER	4	35001-
8	195-32-61250	· PIN,REGULAR	92	35001-
9	21N-32-31310	· SHOE	96	35001-
10	21N-32-31211	· BOLT, SHOE (Y0320-K01	384	35001-
11	198-32-31220	· NUT (Y0320-K01	384	35001-
12	195-32-61260	· WASHER	8	35001-
13	21N-32-31250	· SEAL	8	35001-
14	21N-32-31190	· PIN,MASTER	4	35001-
15	04064-06020	· RING	8	35001-

Printed By : Dwi Iswanto (airafather6107170)

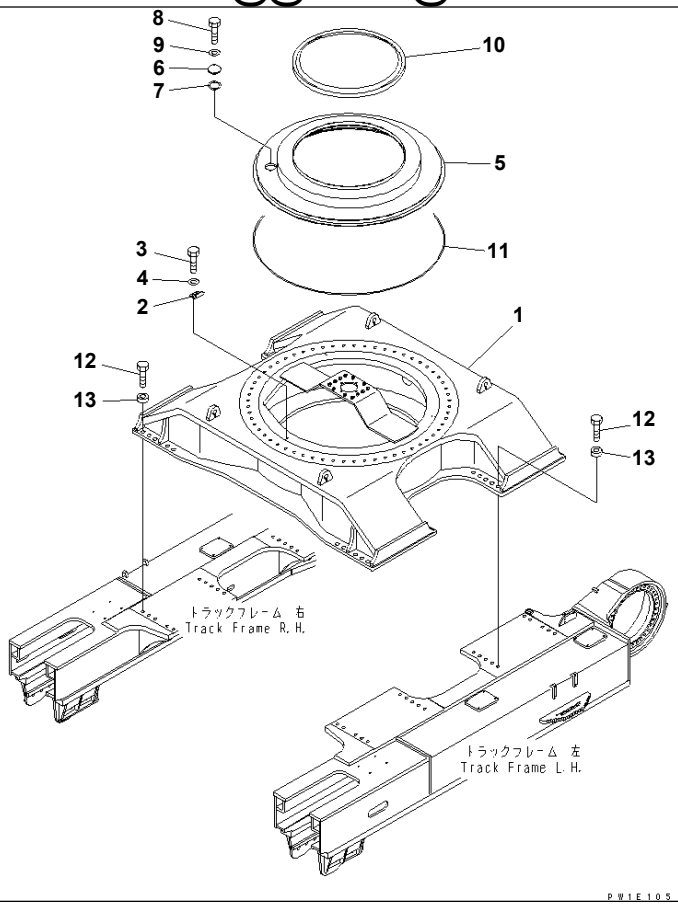

Ref. R1110-01A0 **Page 360030**

PC1250SP-8R S/N 35001-UP (W/O EGR, +55C DEGREE)
CENTER FRAME

Item	Part No.	Part Name	Qty	Serial No.
1	21N-30-37150	FRAME	1	35001-
2	21N-30-31240	BRACKET	3	35001-
3	01010-81225	BOLT	6	35001-
4	01643-31232	WASHER	6	35001-
5	21N-30-31212	COVER	1	35001-
6	205-30-71181	COVER	1	35001-
7	205-30-71191	GASKET	1	35001-
8	01010-81225	BOLT	2	35001-
9	01643-31232	WASHER	2	35001-
10	21N-30-31221	SEAL	1	35001-
11	21N-30-31232	SEAL	1	35001-
12	21N-30-11180	BOLT	40	35001-
13	21N-30-37130	SPACER	40	35001-

Printed By : Dwi Iswanto (airafather6107170)

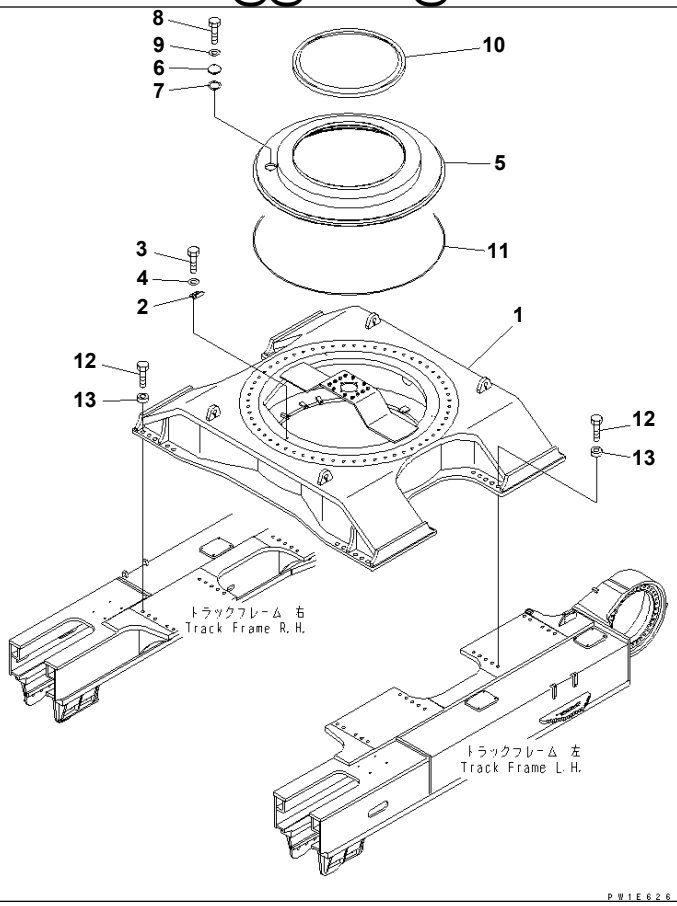

Ref. R1110-01A1 **Page 360040**

PC1250SP-8R S/N 35001-UP (W/O EGR, +55C DEGREE)
CENTER FRAME (WITH UNDER COVER)

Item	Part No.	Part Name	Qty	Serial No.
1	21N-30-37160	FRAME	1	35001-
2	21N-30-31240	BRACKET	3	35001-
3	01010-81225	BOLT	6	35001-
4	01643-31232	WASHER	6	35001-
5	21N-30-31212	COVER	1	35001-
6	205-30-71181	COVER	1	35001-
7	205-30-71191	GASKET	1	35001-
8	01010-81225	BOLT	2	35001-
9	01643-31232	WASHER	2	35001-
10	21N-30-31221	SEAL	1	35001-
11	21N-30-31232	SEAL	1	35001-
12	21N-30-11180	BOLT	40	35001-
13	21N-30-37130	SPACER	40	35001-

Printed By : Dwi Iswanto (airafather6107170)

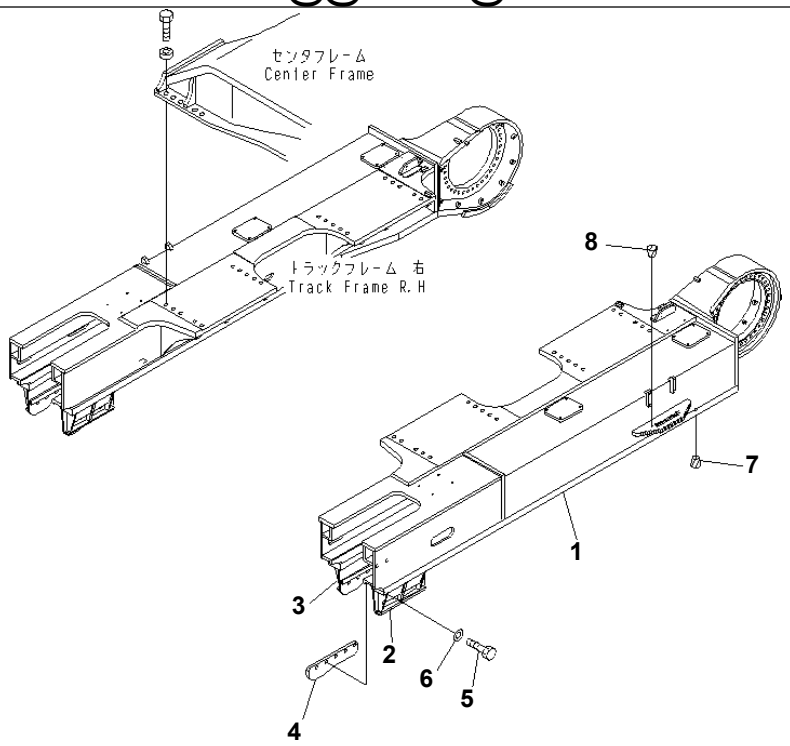

P W 1 E 1 0 6

Ref. R1120-01A0 **Page 360050**

PC1250SP-8R S/N 35001-UP (W/O EGR, +55C DEGREE)

TRACK FRAME (L.H.)

Item	Part No.	Part Name	Qty	Serial No.
1	21N-30-37111	FRAME	1	35001-
2	21N-30-32211	· GUARD (WELDED)	1	35001-
3	21N-30-32221	· GUARD (WELDED)	1	35001-
4	21N-30-32232	PLATE	2	35001-
5	01010-83060	BOLT	10	35001-
6	207-46-52130	WASHER	10	35001-
7	07049-03038	PLUG	12	35001-
8	07049-01822	PLUG	4	35001-

Printed By : Dwi Iswanto (airafather6107170)

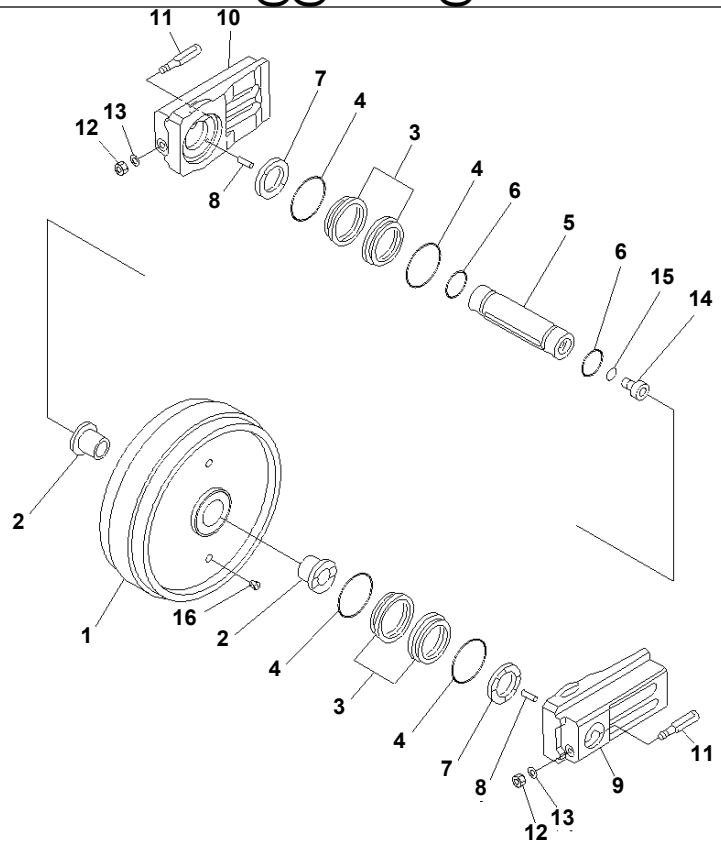

Ref. R1120-02A0 **Page 360060**

PC1250SP-8R S/N 35001-UP (W/O EGR, +55C DEGREE)
TRACK FRAME (FRONT IDLER) (L.H.)

Item	Part No.	Part Name	Qty	Serial No.
	21N-30-00110	IDLER ASS'Y	1	35001-
1	21N-30-33110	· IDLER	1	35001-
2	21N-30-13140	· BUSHING	2	35001-
	207-27-00010	· FLOATING SEAL ASS'Y	2	35001-
3	☆	· · RING	2	35001-
4	☆	· · O-RING	2	35001-
5	21N-30-33130	· SHAFT	1	35001-
6	07000-15115	· O-RING	2	35001-
7	21T-30-16150	· SPACER	2	35001-
8	04020-00820	· PIN	4	35001-
9	21N-30-13152	· SUPPORT	1	35001-
10	21N-30-13162	· SUPPORT	1	35001-
11	21T-30-13170	· BOLT	2	35001-
12	01580-12218	· NUT	2	35001-
13	01643-32260	· WASHER	2	35001-
14	07040-15223	· PLUG	1	35001-
15	07002-15234	· O-RING	1	35001-
16	07049-02430	· PLUG	4	35001-

Printed By : Dwi Iswanto (airafather6107170)

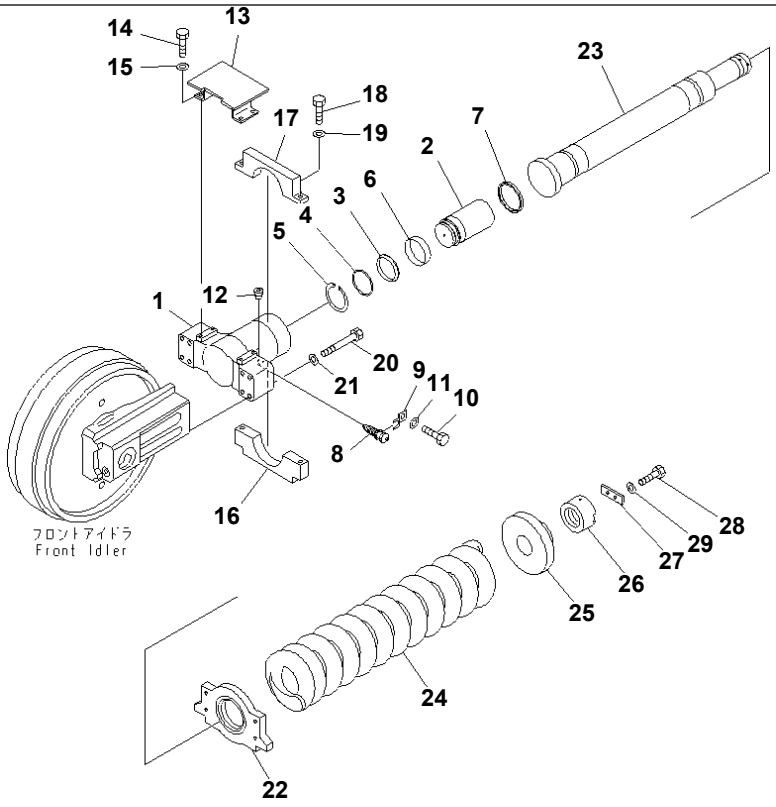

00031463

Ref. R1120-03A0 **Page 360070**

PC1250SP-8R S/N 35001-UP (W/O EGR, +55C DEGREE)
TRACK FRAME (IDLER CUSHION) (L.H.)

Item	Part No.	Part Name	Qty	Serial No.
1	21N-30-37610	YOKE	1	35001-
2	21N-30-34120	PLUNGER	1	35001-
3	21N-30-14160	PACKING	1	35001-
4	21N-30-14170	RING	1	35001-
5	04070-00140	RING	1	35001-
6	07155-01640	RING	1	35001-
7	21N-30-14180	SEAL	1	35001-
8	07959-20001	VALVE	1	35001-
9	205-30-72170	PLATE	1	35001-
10	01010-81225	BOLT	1	35001-
11	01643-31232	WASHER	1	35001-
12	07043-70108	PLUG	1	35001-
13	21N-30-32940	GUARD	1	35001-
14	01010-81635	BOLT	4	35001-
15	01643-31645	WASHER	4	35001-
16	21N-30-32950	PLATE	1	35001-
17	21N-30-32960	PLATE	1	35001-
18	01010-82060	BOLT	2	35001-
19	01643-32060	WASHER	2	35001-
20	20X-46-11320	BOLT	8	35001-
21	01643-32460	WASHER	8	35001-
22	21N-30-34131	FLANGE	1	35001-
23	21N-30-34141	ROD	1	35001-
24	21N-30-34151	SPRING	1	35001-
25	21N-30-34160	COLLAR	1	35001-
26	21N-30-34170	NUT	1	35001-
27	209-30-65160	LOCK	1	35001-
28	01010-81640	BOLT	2	35001-
29	01643-31645	WASHER	2	35001-

Printed By : Dwi Iswanto (airafather6107170)

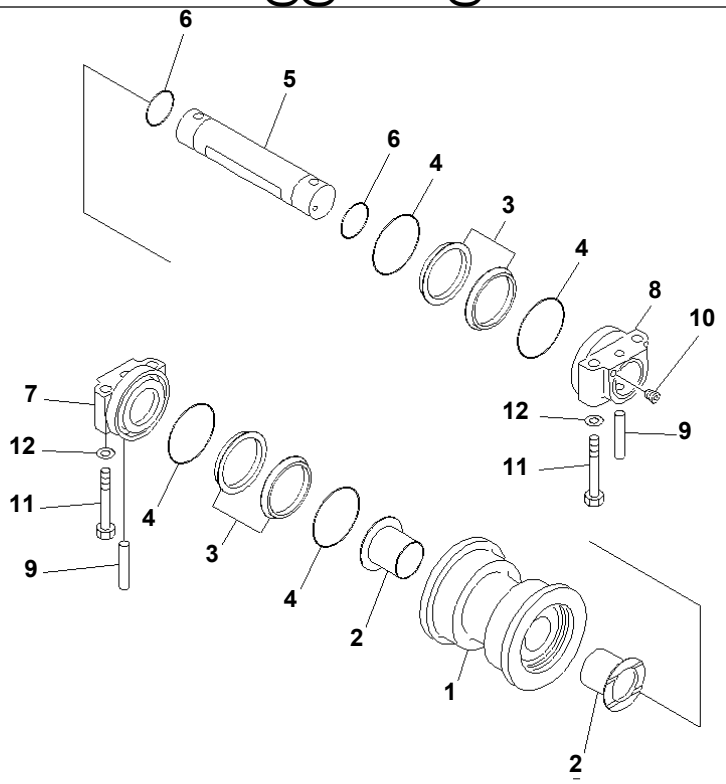

PWB7682

Ref. R1120-04A0 **Page 360080**

PC1250SP-8R S/N 35001-UP (W/O EGR, +55C DEGREE)
TRACK FRAME (TRACK ROLLER) (L.H.)

Item	Part No.	Part Name	Qty	Serial No.
	21N-30-00121	TRACK ROLLER ASS'Y	8	35001-
1	21N-30-36110	· ROLLER	1	35001-
2	21N-30-16140	· BUSHING	2	35001-
	21N-30-00040	· FLOATING SEAL ASS'Y	2	35001-
3	☆	· · RING	2	35001-
4	☆	· · O-RING	2	35001-
5	21N-30-36130	· SHAFT	1	35001-
6	07000-15100	· O-RING	2	35001-
7	21N-30-36151	· COLLAR	1	35001-
8	21N-30-36161	· COLLAR	1	35001-
9	21N-30-36170	· PIN, REGULAR	2	35001-
10	209-30-63150	· PLUG	1	35001-
11	01011-83070	BOLT	32	35001-
12	01643-33080	WASHER	32	35001-

Printed By : Dwi Iswanto (airafather6107170)

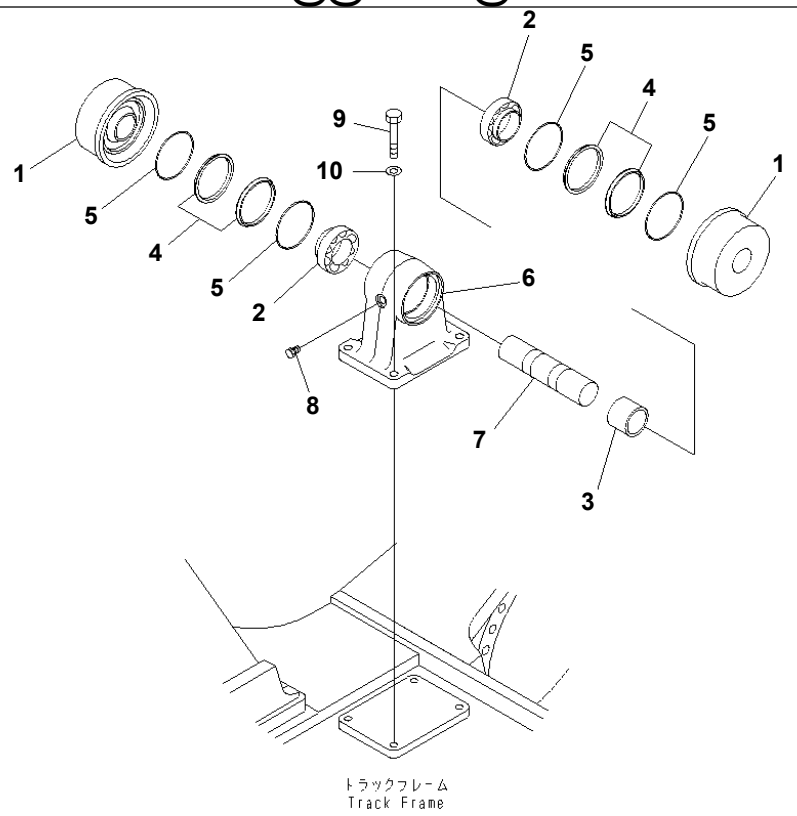

PWB7683

Ref. R1120-05A0 **Page 360090**

PC1250SP-8R S/N 35001-UP (W/O EGR, +55C DEGREE)
TRACK FRAME (CARRIER ROLLER) (L.H.)

Item	Part No.	Part Name	Qty	Serial No.
	21N-30-00130	CARRIER ROLLER ASS'Y	3	35001-
1	21N-30-35210	· ROLLER	2	35001-
2	201-26-62330	· BEARING	2	35001-
3	21N-30-35220	· SPACER	1	35001-
	207-30-00101	· FLOATING SEAL ASS'Y	2	35001-
4	☆	· · RING	2	35001-
5	☆	· · O-RING	2	35001-
6	21N-30-35240	· SUPPORT	1	35001-
7	21N-30-35230	· SHAFT	1	35001-
8	07052-31624	· PLUG	1	35001-
9	01010-82065	BOLT	12	35001-
10	01643-32060	WASHER	12	35001-

Printed By : Dwi Iswanto (airafather6107170)

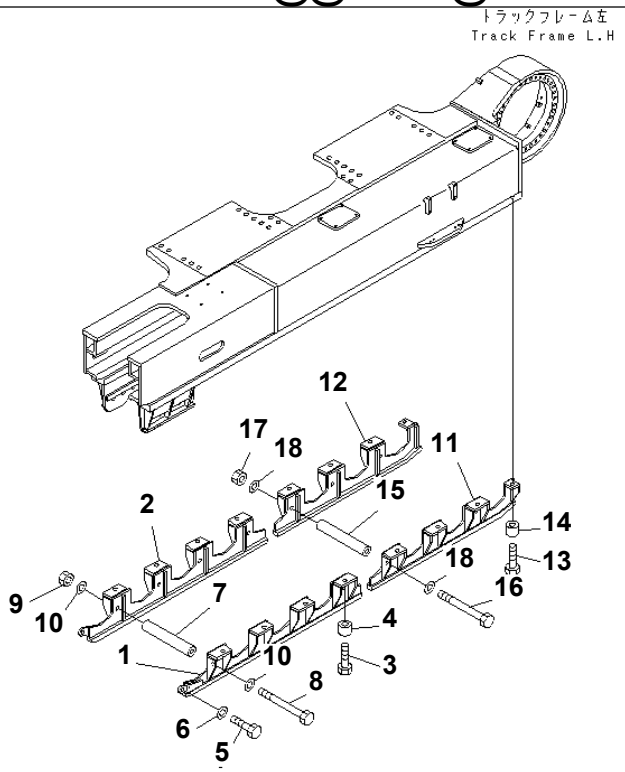

Ref. R1120-06A0 Page 360100

PC1250SP-8R S/N 35001-UP (W/O EGR, +55C DEGREE)

TRACK FRAME (TRACK ROLLER FULL GUARD) (L.H.)

Item	Part No.	Part Name	Qty	Serial No.
1	21N-30-32251	GUARD	1	35001-
2	21N-30-32261	GUARD	1	35001-
3	01011-83010	BOLT	8	35001-
4	21T-26-11460	COLLAR	8	35001-
5	01010-83075	BOLT	2	35001-
6	01643-33080	WASHER	2	35001-
7	21N-30-17640	SPACER	4	35001-
8	198-30-37320	BOLT	4	35001-
9	01580-13024	NUT	4	35001-
10	01643-33080	WASHER	8	35001-
11	21N-30-32271	GUARD	1	35001-
12	21N-30-32281	GUARD	1	35001-
13	01011-83010	BOLT	8	35001-
14	21T-26-11460	COLLAR	8	35001-
15	21N-30-17640	SPACER	3	35001-
16	198-30-37320	BOLT	3	35001-
17	01580-13024	NUT	3	35001-
18	01643-33080	WASHER	6	35001-

Printed By : Dwi Iswanto (airafather6107170)

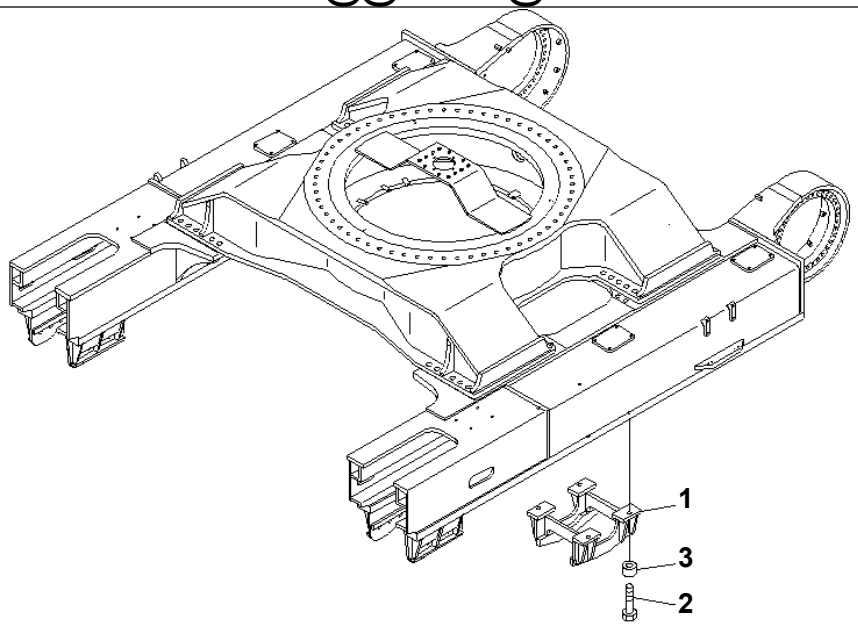

PWB7693

Ref. R1120-06A1 **Page 360110**

PC1250SP-8R S/N 35001-UP (W/O EGR, +55C DEGREE)
TRACK FRAME (ROLLER GUARD) (L.H.)

Item	Part No.	Part Name	Qty	Serial No.
1	21N-30-32240	GUARD	1	35001-
2	01011-83030	BOLT	4	35001-
3	208-30-11971	SPACER	4	35001-

Printed By : Dwi Iswanto (airafather6107170)

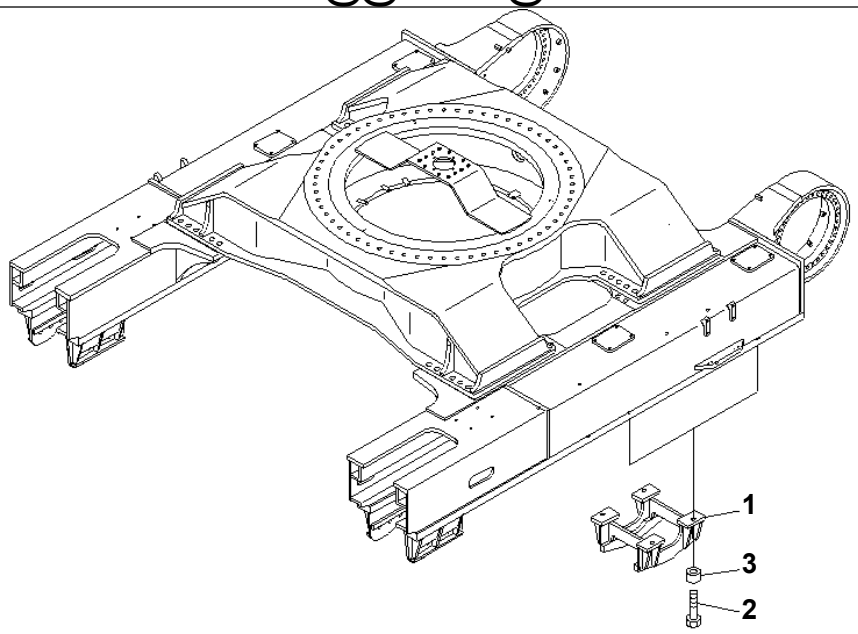

PWB7695

PC1250SP-8R S/N 35001-UP (W/O EGR, +55C DEGREE)
TRACK FRAME (FINAL ROLLER GUARD) (L.H.)

Item	Part No.	Part Name	Qty	Serial No.
1	21N-30-32240	GUARD	2	35001-
2	01011-83030	BOLT	8	35001-
3	208-30-11971	SPACER	8	35001-

Printed By : Dwi Iswanto (airafather6107170)

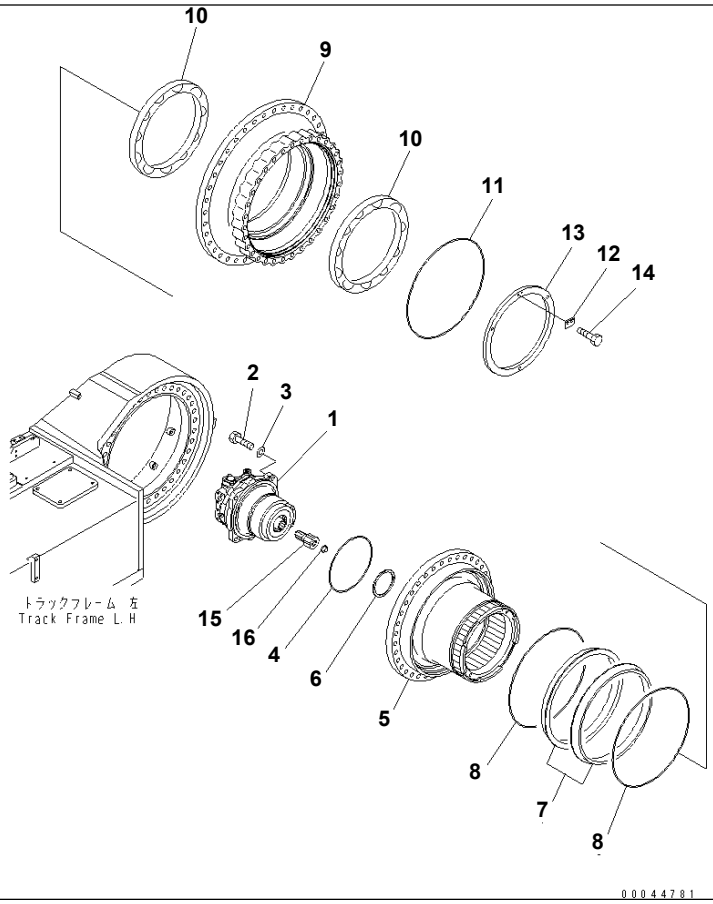

Ref. R1120-07A0 Page 360130

PC1250SP-8R S/N 35001-UP (W/O EGR, +55C DEGREE)
TRACK FRAME (FINAL DRIVE) (SHAFT AND HUB) (L.H.)

Item	Part No.	Part Name	Qty	Serial No.
1	(21N-60-34100)	MOTOR ASS'Y	1	35001-
2	01010-81860	BOLT	4	35001-
3	01643-31845	WASHER	4	35001-
4	209-27-71370	O-RING	1	35001-
5	21N-27-31340	SHAFT	1	35001-
6	209-27-71521	SPACER	1	35001-
	209-27-00160	FLOATING SEAL ASS'Y	1	35001-
7	☆	· RING	2	35001-
8	☆	· O-RING	2	35001-
9	21N-27-31171	HUB	1	35001-
10	209-27-61360	BEARING	2	35001-
11	198-09-31630	O-RING	1	35001-
12	209-27-71291	LOCK	1	35001-
13	21N-27-31271	NUT	1	35001-
14	01010-81025	BOLT	2	35001-
15	21N-27-31310	SHAFT	1	35001-
16	208-27-61350	BUTTON	1	35001-

Printed By : Dwi Iswanto (airafather6107170)

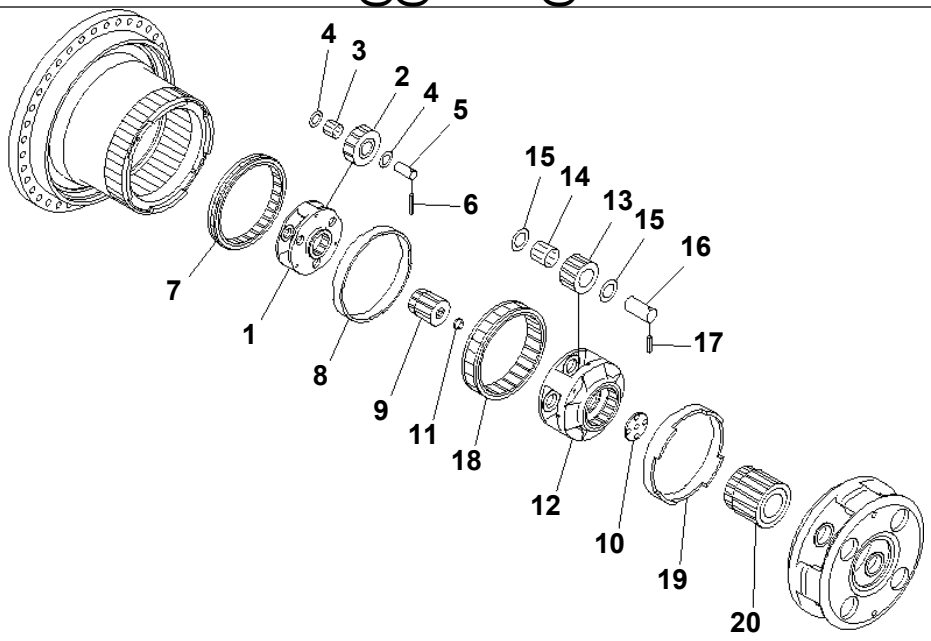

PWB7838

Ref. R1120-08A0 **Page 360140**

PC1250SP-8R S/N 35001-UP (W/O EGR, +55C DEGREE)

TRACK FRAME (FINAL DRIVE) (1ST AND 2ND CARRIER) (L.H.)

Item	Part No.	Part Name	Qty	Serial No.
1	209-27-71190	CARRIER	1	35001-
2	21N-27-31250	GEAR	3	35001-
3	20G-26-11240	BEARING	3	35001-
4	20Y-27-21240	WASHER	6	35001-
5	209-27-71310	PIN	3	35001-
6	20Y-27-21280	PIN	3	35001-
7	21N-27-31260	GEAR, 68 TEETH	1	35001-
8	209-27-71410	SPACER	1	35001-
9	209-27-71141	GEAR	1	35001-
10	209-27-71350	PLATE	1	35001-
11	208-27-61350	BUTTON	1	35001-
12	21N-27-31143	CARRIER	1	35001-
13	209-27-71261	GEAR	4	35001-
14	207-27-61230	BEARING	4	35001-
15	20Y-27-21250	WASHER	8	35001-
16	209-27-71480	PIN	4	35001-
17	20Y-27-21290	PIN	4	35001-
18	209-27-71390	GEAR	1	35001-
19	209-27-71330	SPACER	1	35001-
20	21N-27-31110	GEAR, 13 TEETH	1	35001-

Printed By : Dwi Iswanto (airafather6107170)

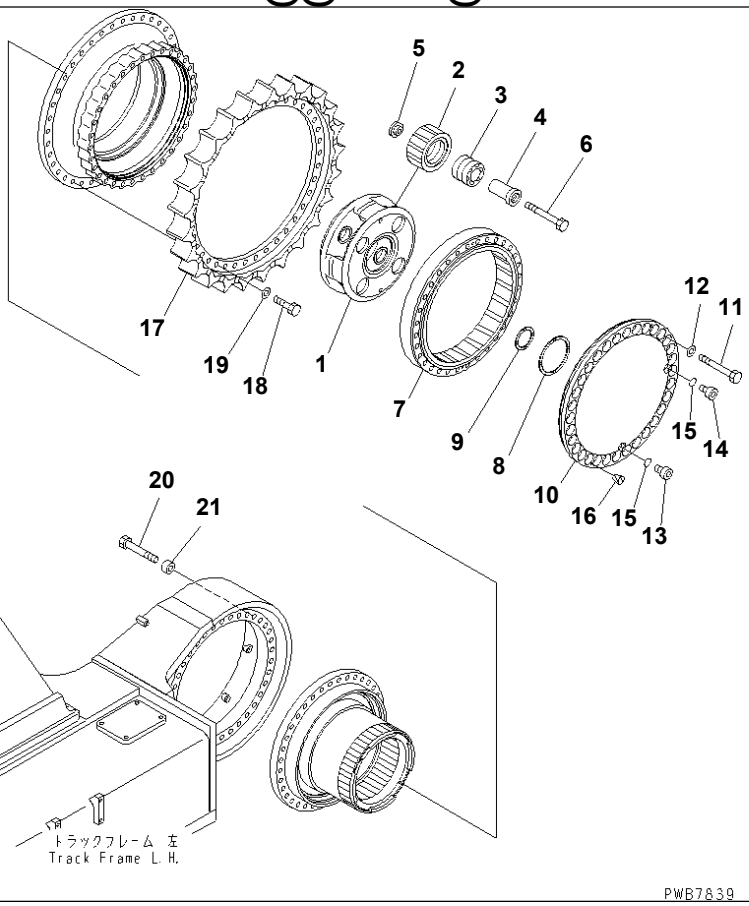

Ref. R1120-09A0 **Page 360150**

PC1250SP-8R S/N 35001-UP (W/O EGR, +55C DEGREE)

TRACK FRAME (FINAL DRIVE) (3RD CARRIER AND SPROCKET) (L.H.)

Item	Part No.	Part Name	Qty	Serial No.
1	21N-27-31150	CARRIER	1	35001-
2	21N-27-31120	GEAR	4	35001-
3	21N-27-31210	BEARING	4	35001-
4	21N-27-31221	PIN	4	35001-
5	21N-27-31231	HOLDER	4	35001-
6	01011-82450	BOLT	4	35001-
7	21N-27-31130	GEAR	1	35001-
8	209-27-71360	THRUST WASHER	1	35001-
9	207-27-52270	SPACER	1	35001-
10	21N-27-31161	COVER	1	35001-
11	01011-82465	BOLT	32	35001-
12	01643-32460	WASHER	32	35001-
13	209-27-61510	PLUG	1	35001-
14	07040-13016	PLUG	1	35001-
15	07002-13034	O-RING	2	35001-
16	07049-01215	PLUG	2	35001-
17	21N-27-31191	TEETH	1	35001-
18	01010-82475	BOLT	38	35001-
19	01643-32460	WASHER	38	35001-
20	01011-82425	BOLT	36	35001-
21	176-50-11170	SPACER	36	35001-

Printed By : Dwi Iswanto (airafather6107170)

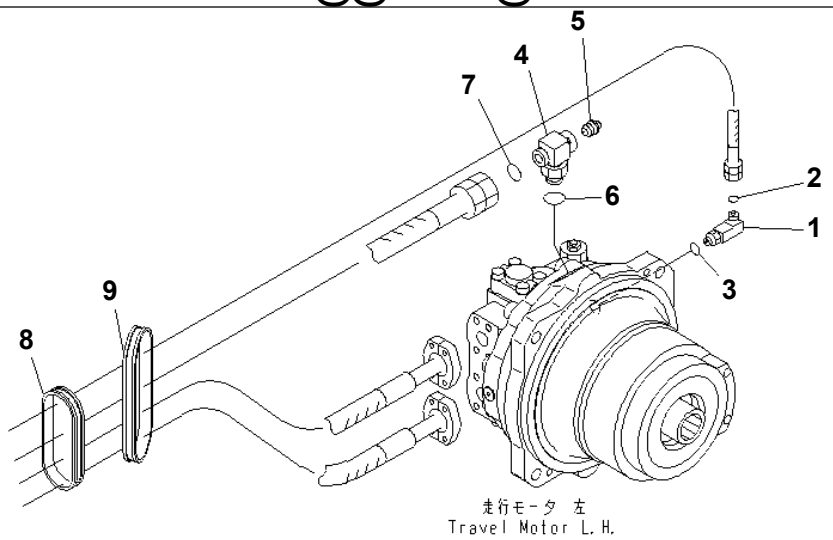

P W 1 E 1 1 7

Ref. R1120-10A0 **Page 360160**

PC1250SP-8R S/N 35001-UP (W/O EGR, +55C DEGREE)
TRACK FRAME (TRAVEL PIPING) (MOTOR SIDE) (L.H.)(#35001-35049)

Item	Part No.	Part Name	Qty	Serial No.
1	21N-64-36460	ELBOW	1	35001-@
2	02896-11009	O-RING	1	35001-@
3	07000-12011	O-RING	1	35001-@
4	21N-64-36560	ELBOW	1	35001-@
5	20B-27-11210	BLEEDER	1	35001-@
6	720-S0-11920	O-RING	1	35001-@
7	02896-11018	O-RING	1	35001-@
8	21N-62-34630	GROMMET	1	35001-@
9	21N-62-34640	GROMMET	1	35001-@

Printed By : Dwi Iswanto (airafather6107170)

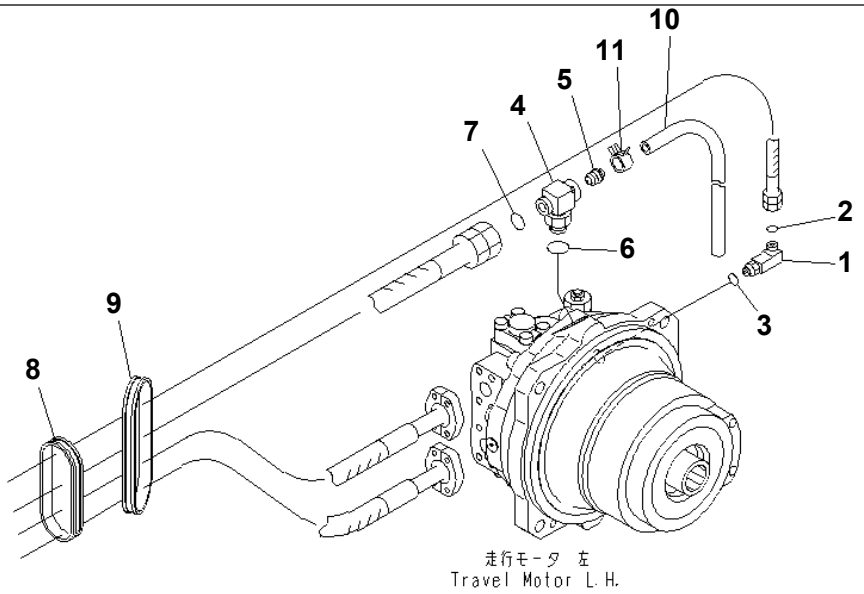

00085611

Ref. R1120-10A0A **Page 360170**

PC1250SP-8R S/N 35001-UP (W/O EGR, +55C DEGREE)

TRACK FRAME (TRAVEL PIPING) (MOTOR SIDE) (L.H.)(#35050-)

Item	Part No.	Part Name	Qty	Serial No.
1	21N-64-36460	ELBOW	1	35001-
2	02896-11009	O-RING	1	35001-
3	07000-12011	O-RING	1	35001-
4	21N-64-36560	ELBOW	1	35001-
5	20B-27-11210	BLEEDER	1	35001-
6	720-S0-11920	O-RING	1	35001-
7	02896-11018	O-RING	1	35001-
8	21N-62-34630	GROMMET	1	35001-
9	21N-62-34640	GROMMET	1	35001-
10	07270-60612	TUBE	1	35050-
11	07285-00068	CLIP	1	35050-

Printed By : Dwi Iswanto (airafather6107170)

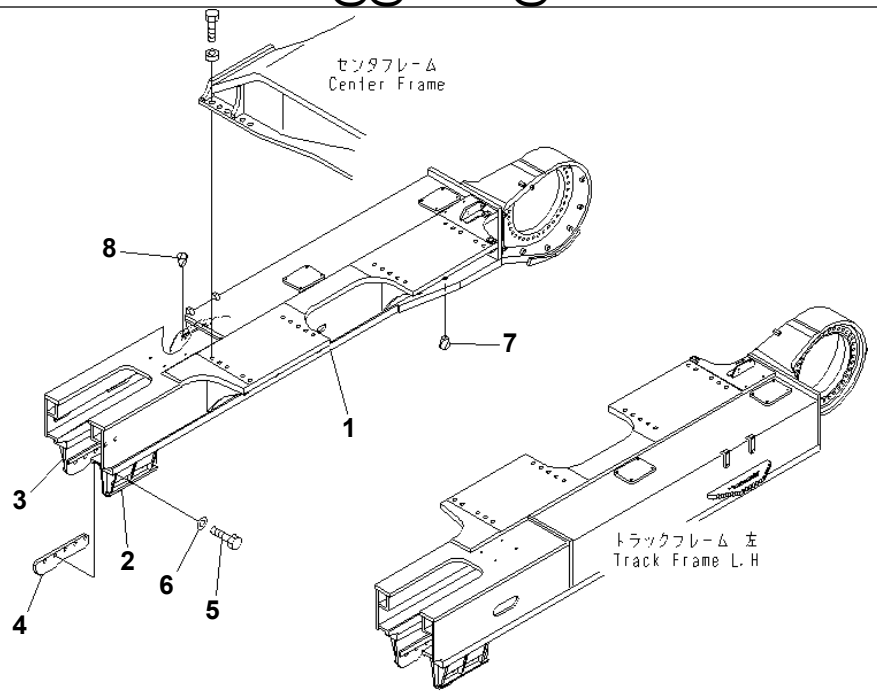

P W 1 E 1 2 4

Ref. R1120-11A0 Page 360180

PC1250SP-8R S/N 35001-UP (W/O EGR, +55C DEGREE)

TRACK FRAME (R.H.)

Item	Part No.	Part Name	Qty	Serial No.
1	21N-30-37121	FRAME	1	35001-
2	21N-30-32211	· GUARD (WELDED)	1	35001-
3	21N-30-32221	· GUARD (WELDED)	1	35001-
4	21N-30-32232	PLATE	2	35001-
5	01010-83060	BOLT	10	35001-
6	207-46-52130	WASHER	10	35001-
7	07049-03038	PLUG	12	35001-
8	07049-01822	PLUG	4	35001-

Printed By : Dwi Iswanto (airafather6107170)

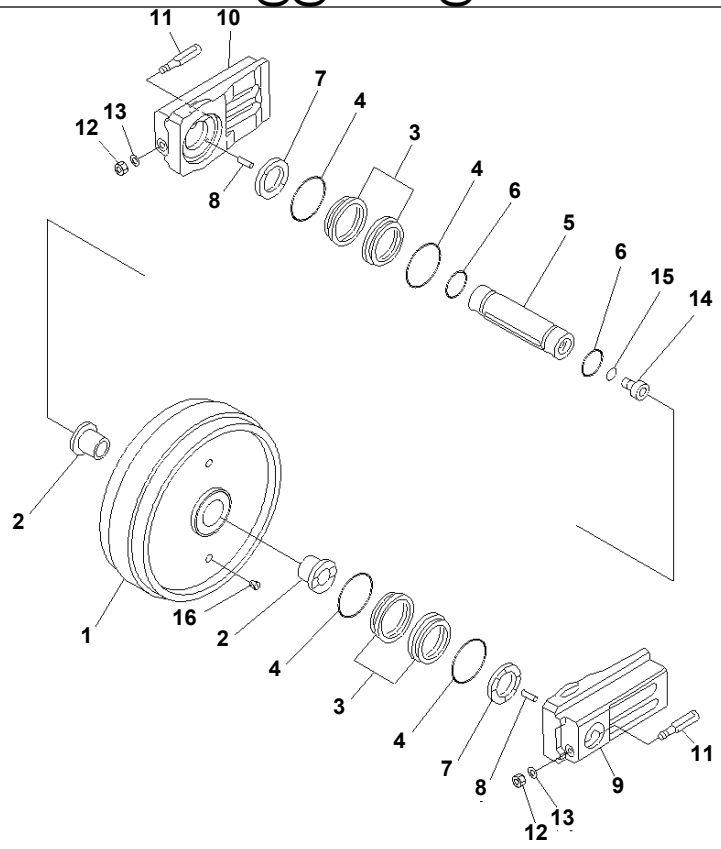

Ref. R1120-12A0 **Page 360190**

PC1250SP-8R S/N 35001-UP (W/O EGR, +55C DEGREE)
TRACK FRAME (FRONT IDLER) (R.H.)

Item	Part No.	Part Name	Qty	Serial No.
	21N-30-00110	IDLER ASS'Y	1	35001-
1	21N-30-33110	· IDLER	1	35001-
2	21N-30-13140	· BUSHING	2	35001-
	207-27-00010	· FLOATING SEAL ASS'Y	2	35001-
3	☆	· · RING	2	35001-
4	☆	· · O-RING	2	35001-
5	21N-30-33130	· SHAFT	1	35001-
6	07000-15115	· O-RING	2	35001-
7	21T-30-16150	· SPACER	2	35001-
8	04020-00820	· PIN	4	35001-
9	21N-30-13152	· SUPPORT	1	35001-
10	21N-30-13162	· SUPPORT	1	35001-
11	21T-30-13170	· BOLT	2	35001-
12	01580-12218	· NUT	2	35001-
13	01643-32260	· WASHER	2	35001-
14	07040-15223	· PLUG	1	35001-
15	07002-15234	· O-RING	1	35001-
16	07049-02430	· PLUG	4	35001-

Printed By : Dwi Iswanto (airafather6107170)

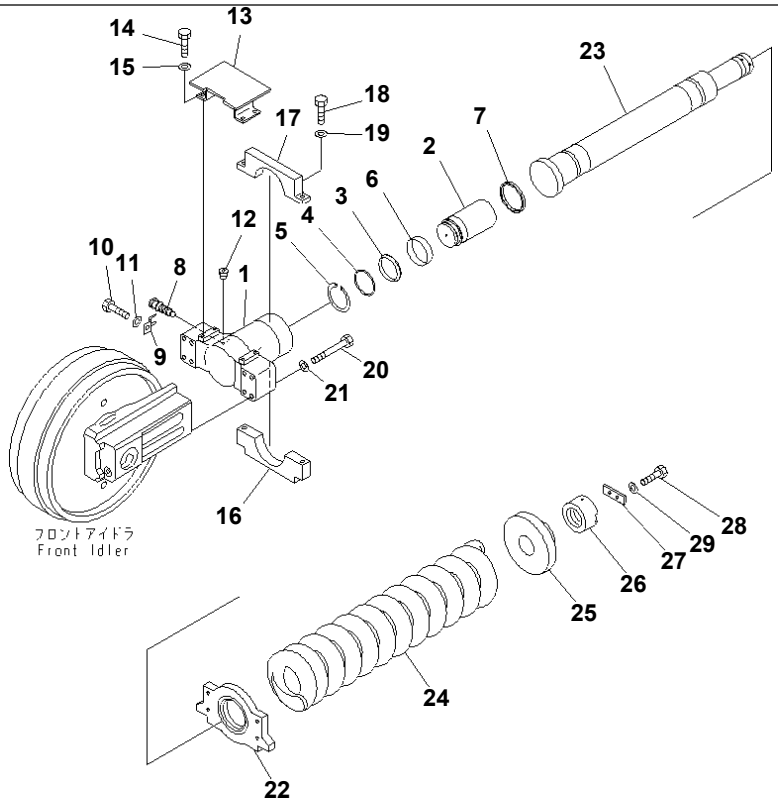

00031464

Ref. R1120-13A0 **Page 360200**

PC1250SP-8R S/N 35001-UP (W/O EGR, +55C DEGREE)
TRACK FRAME (IDLER CUSHION) (R.H.)

Item	Part No.	Part Name	Qty	Serial No.
1	21N-30-37620	YOKE	1	35001-
2	21N-30-34120	PLUNGER	1	35001-
3	21N-30-14160	PACKING	1	35001-
4	21N-30-14170	RING	1	35001-
5	04070-00140	RING	1	35001-
6	07155-01640	RING	1	35001-
7	21N-30-14180	SEAL	1	35001-
8	07959-20001	VALVE	1	35001-
9	205-30-72170	PLATE	1	35001-
10	01010-81225	BOLT	1	35001-
11	01643-31232	WASHER	1	35001-
12	07043-70108	PLUG	1	35001-
13	21N-30-32940	GUARD	1	35001-
14	01010-81635	BOLT	4	35001-
15	01643-31645	WASHER	4	35001-
16	21N-30-32950	PLATE	1	35001-
17	21N-30-32960	PLATE	1	35001-
18	01010-82060	BOLT	2	35001-
19	01643-32060	WASHER	2	35001-
20	20X-46-11320	BOLT	8	35001-
21	01643-32460	WASHER	8	35001-
22	21N-30-34131	FLANGE	1	35001-
23	21N-30-34141	ROD	1	35001-
24	21N-30-34151	SPRING	1	35001-
25	21N-30-34160	COLLAR	1	35001-
26	21N-30-34170	NUT	1	35001-
27	209-30-65160	LOCK	1	35001-
28	01010-81640	BOLT	2	35001-
29	01643-31645	WASHER	2	35001-

Printed By : Dwi Iswanto (airafather6107170)

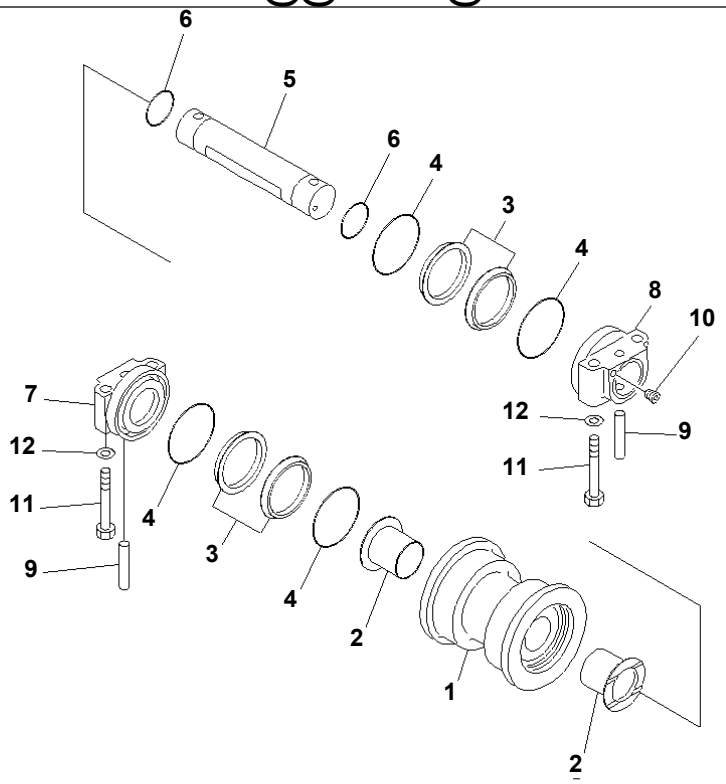

PWB7682

Ref. R1120-14A0 **Page 360210**

PC1250SP-8R S/N 35001-UP (W/O EGR, +55C DEGREE)
TRACK FRAME (TRACK ROLLER) (R.H.)

Item	Part No.	Part Name	Qty	Serial No.
	21N-30-00121	TRACK ROLLER ASS'Y	8	35001-
1	21N-30-36110	· ROLLER	1	35001-
2	21N-30-16140	· BUSHING	2	35001-
	21N-30-00040	· FLOATING SEAL ASS'Y	2	35001-
3	☆	· · RING	2	35001-
4	☆	· · O-RING	2	35001-
5	21N-30-36130	· SHAFT	1	35001-
6	07000-15100	· O-RING	2	35001-
7	21N-30-36151	· COLLAR	1	35001-
8	21N-30-36161	· COLLAR	1	35001-
9	21N-30-36170	· PIN, REGULAR	2	35001-
10	209-30-63150	· PLUG	1	35001-
11	01011-83070	BOLT	32	35001-
12	01643-33080	WASHER	32	35001-

Printed By : Dwi Iswanto (airafather6107170)

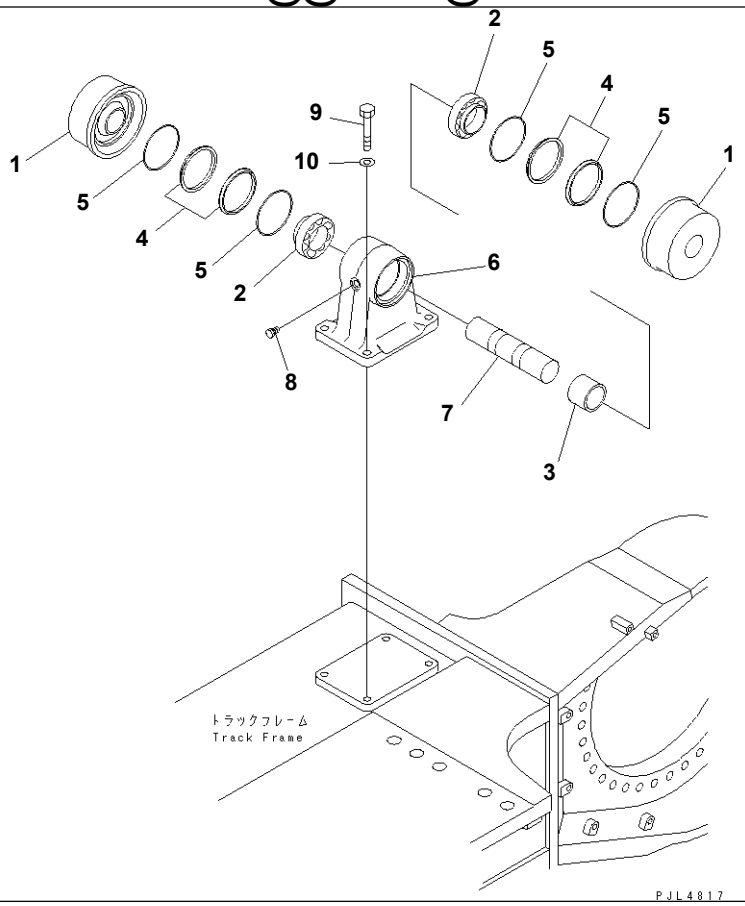

Ref. R1120-15A0 **Page 360220**

PC1250SP-8R S/N 35001-UP (W/O EGR, +55C DEGREE)
TRACK FRAME (CARRIER ROLLER) (R.H.)

Item	Part No.	Part Name	Qty	Serial No.
	21N-30-00130	CARRIER ROLLER ASS'Y	3	35001-
1	21N-30-35210	· ROLLER	2	35001-
2	201-26-62330	· BEARING	2	35001-
3	21N-30-35220	· SPACER	1	35001-
	207-30-00101	· FLOATING SEAL ASS'Y	2	35001-
4	☆	· · RING	2	35001-
5	☆	· · O-RING	2	35001-
6	21N-30-35240	· SUPPORT	1	35001-
7	21N-30-35230	· SHAFT	1	35001-
8	07052-31624	· PLUG	1	35001-
9	01010-82065	BOLT	12	35001-
10	01643-32060	WASHER	12	35001-

Printed By : Dwi Iswanto (airafather6107170)

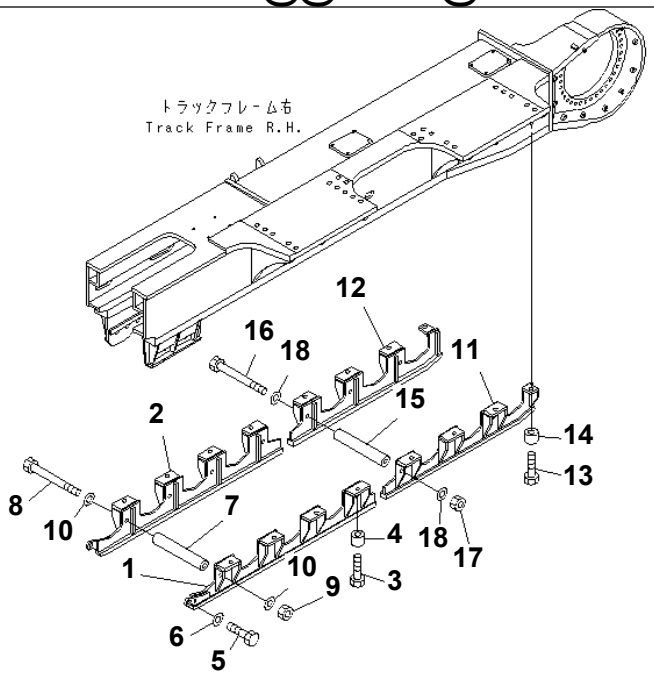

PJL4821

Ref. R1120-16A0 Page 360230

PC1250SP-8R S/N 35001-UP (W/O EGR, +55C DEGREE)
TRACK FRAME (FINAL ROLLER GUARD) (R.H.)

Item	Part No.	Part Name	Qty	Serial No.
1	21N-30-32251	GUARD	1	35001-
2	21N-30-32261	GUARD	1	35001-
3	01011-83010	BOLT	8	35001-
4	21T-26-11460	COLLAR	8	35001-
5	01010-83075	BOLT	2	35001-
6	01643-33080	WASHER	2	35001-
7	21N-30-17640	SPACER	4	35001-
8	198-30-37320	BOLT	4	35001-
9	01580-13024	NUT	4	35001-
10	01643-33080	WASHER	8	35001-
11	21N-30-32271	GUARD	1	35001-
12	21N-30-32281	GUARD	1	35001-
13	01011-83010	BOLT	8	35001-
14	21T-26-11460	COLLAR	8	35001-
15	21N-30-17640	SPACER	3	35001-
16	198-30-37320	BOLT	3	35001-
17	01580-13024	NUT	3	35001-
18	01643-33080	WASHER	6	35001-

Printed By : Dwi Iswanto (airafather6107170)

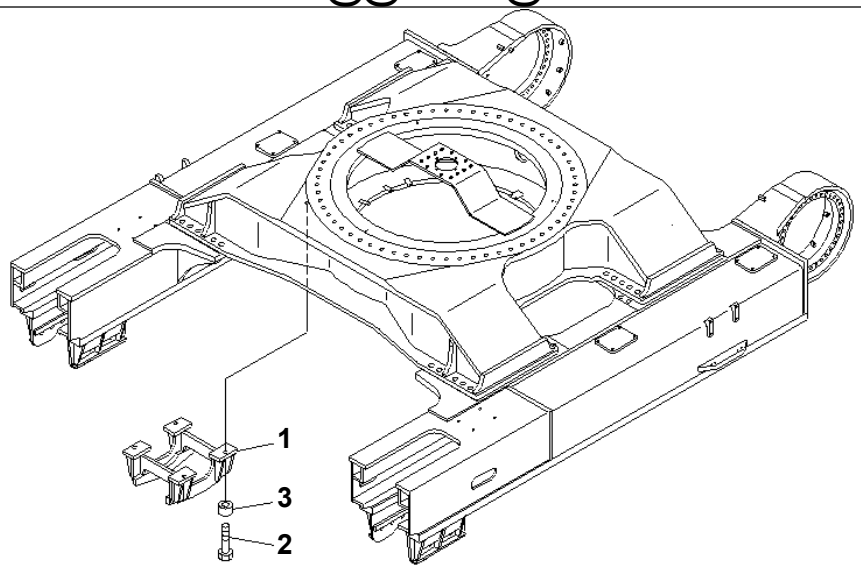

PJL4819

Ref. R1120-16A1 **Page 360240**

PC1250SP-8R S/N 35001-UP (W/O EGR, +55C DEGREE)
TRACK FRAME (ROLLER GUARD) (R.H.)

Item	Part No.	Part Name	Qty	Serial No.
1	21N-30-32240	GUARD	1	35001-
2	01011-83030	BOLT	4	35001-
3	208-30-11971	SPACER	4	35001-

Printed By : Dwi Iswanto (airafather6107170)

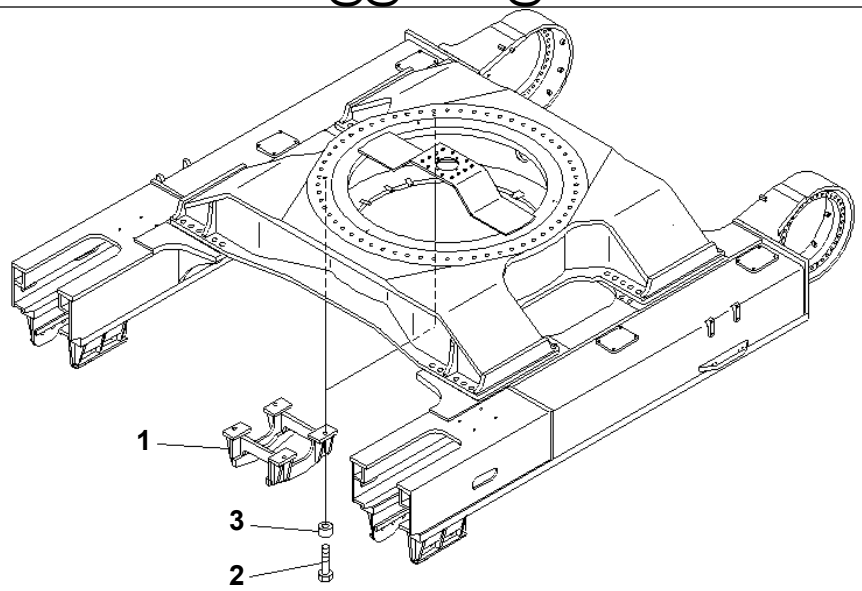

PJL4820

Ref. R1120-16A2 **Page 360250**

PC1250SP-8R S/N 35001-UP (W/O EGR, +55C DEGREE)
TRACK FRAME (FINAL ROLLER GUARD) (R.H.)

Item	Part No.	Part Name	Qty	Serial No.
1	21N-30-32240	GUARD	2	35001-
2	01011-83030	BOLT	8	35001-
3	208-30-11971	SPACER	8	35001-

Printed By : Dwi Iswanto (airafather6107170)

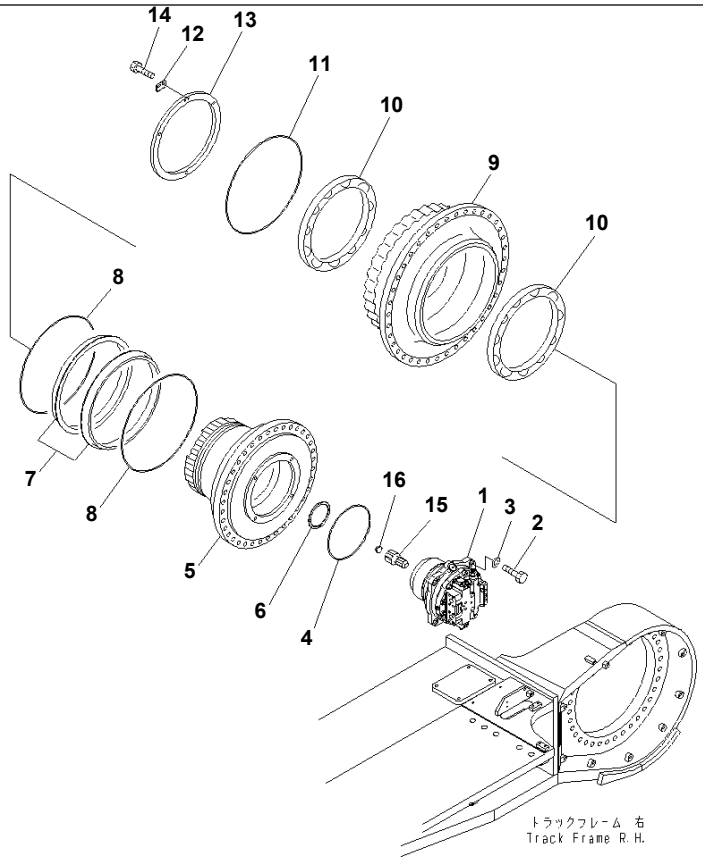

Ref. R1120-17A0 **Page 360260**

PC1250SP-8R S/N 35001-UP (W/O EGR, +55C DEGREE)

TRACK FRAME (FINAL DRIVE) (SHAFT AND HUB) (R.H.)

Item	Part No.	Part Name	Qty	Serial No.
1	(21N-60-34100)	MOTOR ASS'Y	1	35001-
2	01010-81860	BOLT	4	35001-
3	01643-31845	WASHER	4	35001-
4	209-27-71370	O-RING	1	35001-
5	21N-27-31340	SHAFT	1	35001-
6	209-27-71521	SPACER	1	35001-
	209-27-00160	FLOATING SEAL ASS'Y	1	35001-
7	☆	· RING	2	35001-
8	☆	O-RING	2	35001-
9	21N-27-31171	HUB	1	35001-
10	209-27-61360	BEARING	2	35001-
11	198-09-31630	O-RING	1	35001-
12	209-27-71291	LOCK	1	35001-
13	21N-27-31271	NUT	1	35001-
14	01010-81025	BOLT	2	35001-
15	21N-27-31310	SHAFT	1	35001-
16	208-27-61350	BUTTON	1	35001-

Printed By : Dwi Iswanto (airafather6107170)

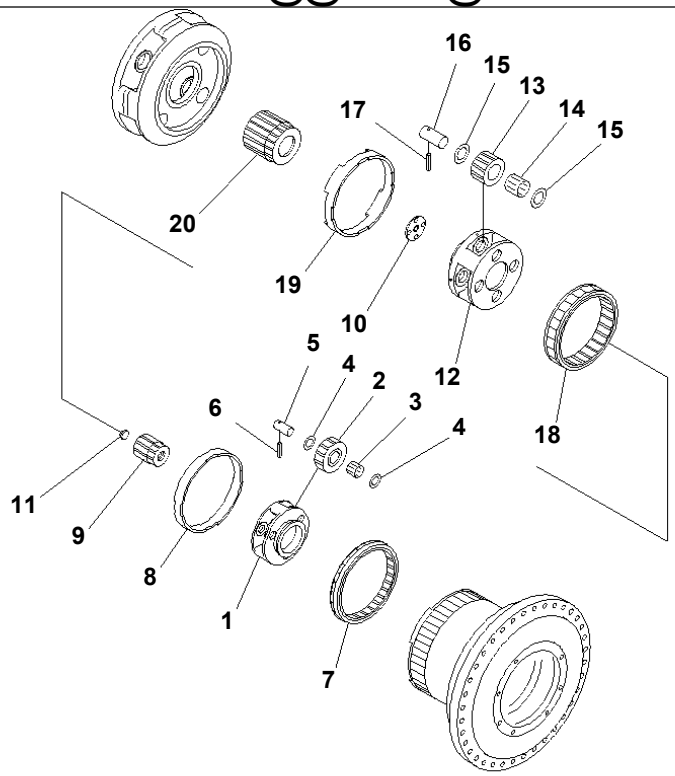

PJL4823

Ref. R1120-18A0 **Page 360270**

PC1250SP-8R S/N 35001-UP (W/O EGR, +55C DEGREE)
TRACK FRAME (FINAL DRIVE) (1ST AND 2ND CARRIER) (R.H.)

Item	Part No.	Part Name	Qty	Serial No.
1	209-27-71190	CARRIER	1	35001-
2	21N-27-31250	GEAR	3	35001-
3	20G-26-11240	BEARING	3	35001-
4	20Y-27-21240	WASHER	6	35001-
5	209-27-71310	PIN	3	35001-
6	20Y-27-21280	PIN	3	35001-
7	21N-27-31260	GEAR, 68 TEETH	1	35001-
8	209-27-71410	SPACER	1	35001-
9	209-27-71141	GEAR	1	35001-
10	209-27-71350	PLATE	1	35001-
11	208-27-61350	BUTTON	1	35001-
12	21N-27-31143	CARRIER	1	35001-
13	209-27-71261	GEAR	4	35001-
14	207-27-61230	BEARING	4	35001-
15	20Y-27-21250	WASHER	8	35001-
16	209-27-71480	PIN	4	35001-
17	20Y-27-21290	PIN	4	35001-
18	209-27-71390	GEAR	1	35001-
19	209-27-71330	SPACER	1	35001-
20	21N-27-31110	GEAR, 13 TEETH	1	35001-

Printed By : Dwi Iswanto (airafather6107170)

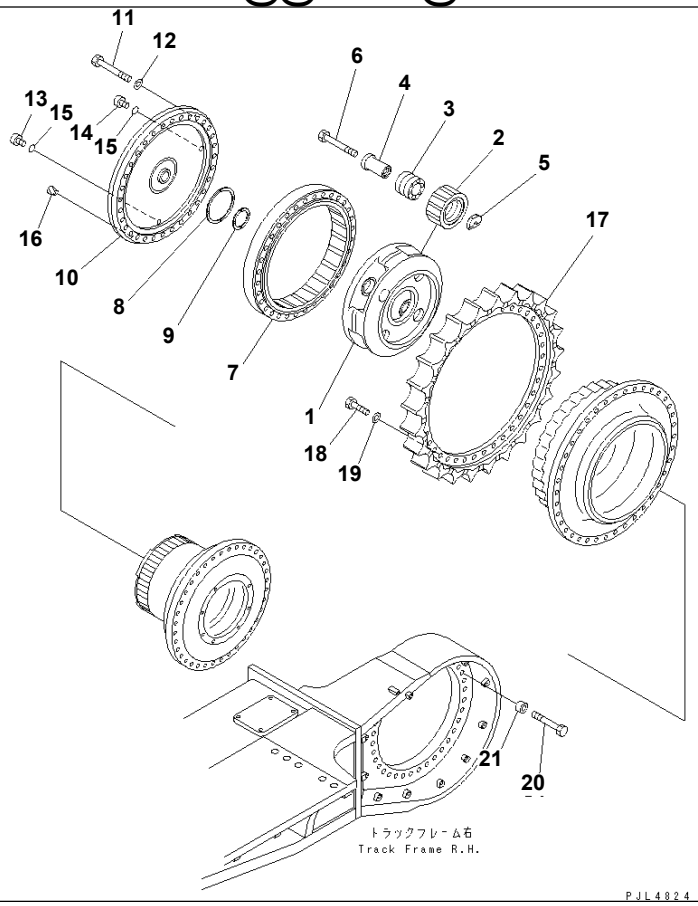

Ref. R1120-19A0 **Page 360280**

PC1250SP-8R S/N 35001-UP (W/O EGR, +55C DEGREE)

TRACK FRAME (FINAL DRIVE) (3RD CARRIER AND SPROCKET) (R.H.)

Item	Part No.	Part Name	Qty	Serial No.
1	21N-27-31150	CARRIER	1	35001-
2	21N-27-31120	GEAR	4	35001-
3	21N-27-31210	BEARING	4	35001-
4	21N-27-31221	PIN	4	35001-
5	21N-27-31231	HOLDER	4	35001-
6	01011-82450	BOLT	4	35001-
7	21N-27-31130	GEAR	1	35001-
8	209-27-71360	THRUST WASHER	1	35001-
9	207-27-52270	SPACER	1	35001-
10	21N-27-31161	COVER	1	35001-
11	01011-82465	BOLT	32	35001-
12	01643-32460	WASHER	32	35001-
13	209-27-61510	PLUG	1	35001-
14	07040-13016	PLUG	1	35001-
15	07002-13034	O-RING	2	35001-
16	07049-01215	PLUG	2	35001-
17	21N-27-31191	TEETH	1	35001-
18	01010-82475	BOLT	38	35001-
19	01643-32460	WASHER	38	35001-
20	01011-82425	BOLT	36	35001-
21	176-50-11170	SPACER	36	35001-

Printed By : Dwi Iswanto (airafather6107170)

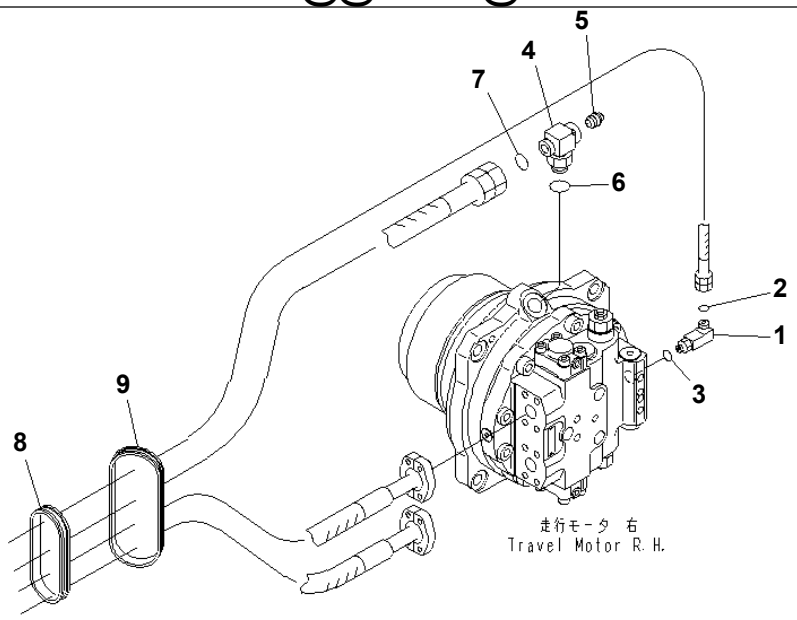

P W 1 E 1 1 9

Ref. R1120-20A0 **Page 360290**

PC1250SP-8R S/N 35001-UP (W/O EGR, +55C DEGREE)
TRACK FRAME (TRAVEL PIPING) (MOTOR SIDE) (R.H.)(#35001-35049)

Item	Part No.	Part Name	Qty	Serial No.
1	21N-64-36460	ELBOW	1	35001-@
2	02896-11009	O-RING	1	35001-@
3	07000-12011	O-RING	1	35001-@
4	21N-64-36560	ELBOW	1	35001-@
5	20B-27-11210	BLEEDER	1	35001-@
6	720-S0-11920	O-RING	1	35001-@
7	02896-11018	O-RING	1	35001-@
8	21N-62-34630	GROMMET	1	35001-@
9	21N-62-34640	GROMMET	1	35001-@

Printed By : Dwi Iswanto (airafather6107170)

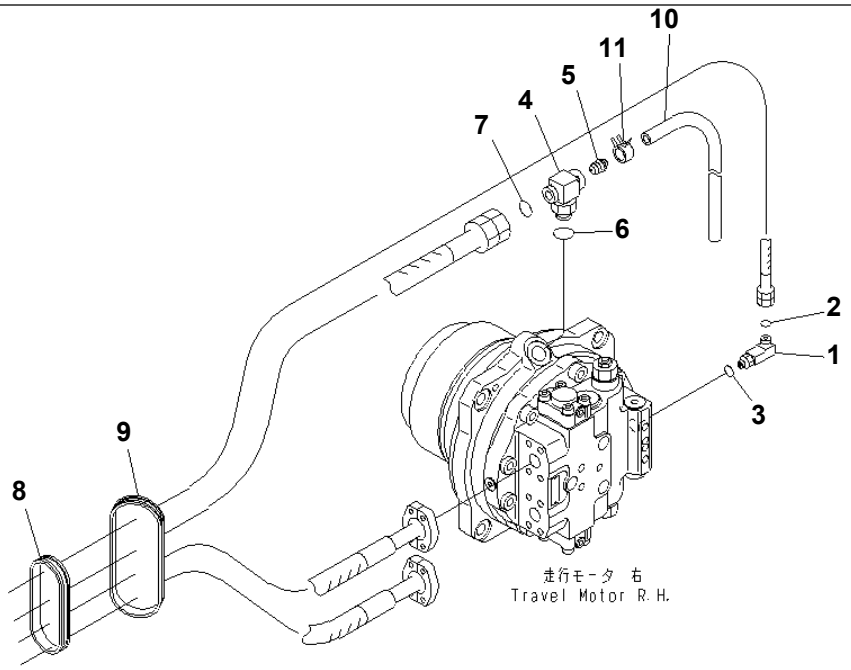

00085612

Ref. R1120-20A0A **Page 360300**

PC1250SP-8R S/N 35001-UP (W/O EGR, +55C DEGREE)
TRACK FRAME (TRAVEL PIPING) (MOTOR SIDE) (R.H.)(#35050-)

Item	Part No.	Part Name	Qty	Serial No.
1	21N-64-36460	ELBOW	1	35001-
2	02896-11009	O-RING	1	35001-
3	07000-12011	O-RING	1	35001-
4	21N-64-36560	ELBOW	1	35001-
5	20B-27-11210	BLEEDER	1	35001-
6	720-S0-11920	O-RING	1	35001-
7	02896-11018	O-RING	1	35001-
8	21N-62-34630	GROMMET	1	35001-
9	21N-62-34640	GROMMET	1	35001-
10	07270-60612	TUBE	1	35050-
11	07285-00068	CLIP	1	35050-

Printed By : Dwi Iswanto (airafather6107170)

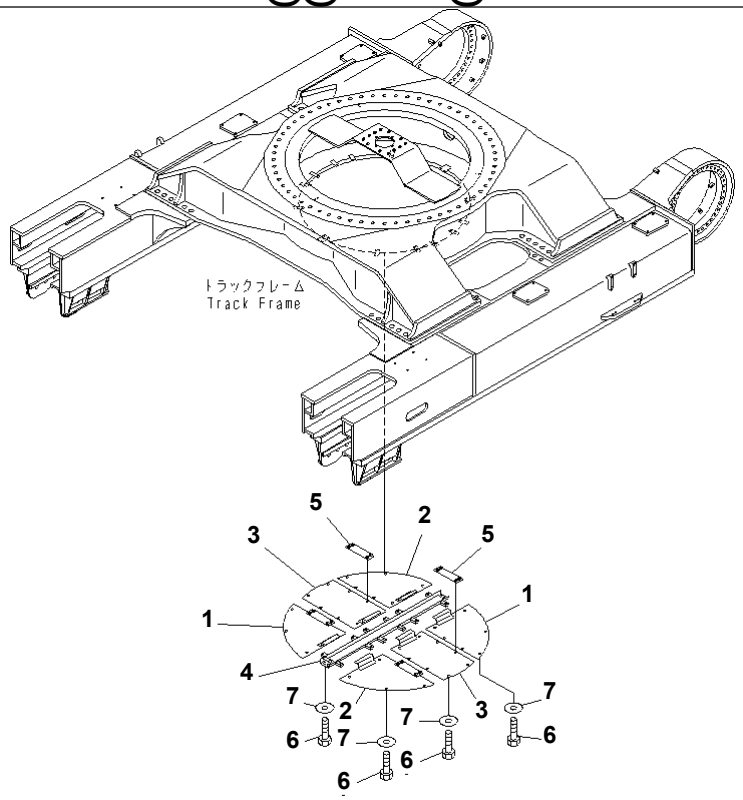

Ref. R1140-01A0 **Page 360310**

PC1250SP-8R S/N 35001-UP (W/O EGR, +55C DEGREE)
TRACK FRAME UNDER COVER

Item	Part No.	Part Name	Qty	Serial No.
1	21N-30-31411	COVER	2	35001-
2	21N-30-31421	COVER	2	35001-
3	21N-30-31431	COVER	2	35001-
4	21N-30-31441	COVER	1	35001-
5	21N-30-31450	PLATE	4	35001-
6	01010-81435	BOLT	44	35001-
7	195-71-32220	WASHER	44	35001-

Printed By : Dwi Iswanto (airafather6107170)

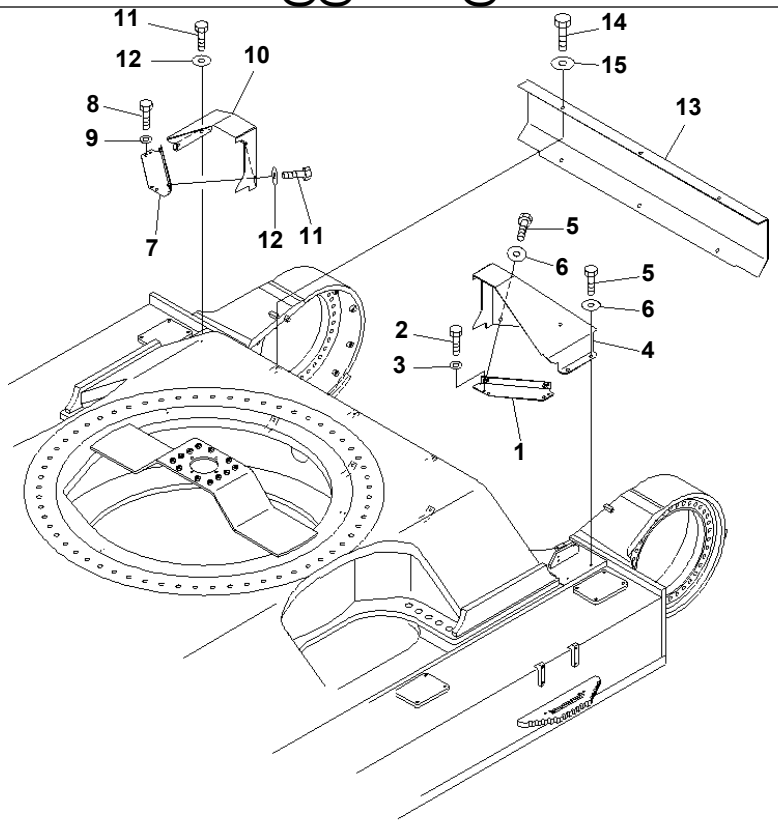

P W 1 E 1 2 5

Ref. R1150-01A0 **Page 360320**

PC1250SP-8R S/N 35001-UP (W/O EGR, +55C DEGREE)
TRAVEL PIPING COVER

Item	Part No.	Part Name	Qty	Serial No.
1	21N-30-37411	COVER	1	35001-
2	01010-81225	BOLT	4	35001-
3	01643-31232	WASHER	4	35001-
4	21N-30-37370	COVER	1	35001-
5	01010-81230	BOLT	4	35001-
6	175-54-34170	WASHER	4	35001-
7	21N-30-37421	COVER	1	35001-
8	01010-81225	BOLT	4	35001-
9	01643-31232	WASHER	4	35001-
10	21N-30-37381	COVER	1	35001-
11	01010-81230	BOLT	4	35001-
12	175-54-34170	WASHER	4	35001-
13	21N-30-37390	COVER	1	35001-
14	01010-81230	BOLT	6	35001-
15	175-54-34170	WASHER	6	35001-

Printed By : Dwi Iswanto (airafather6107170)

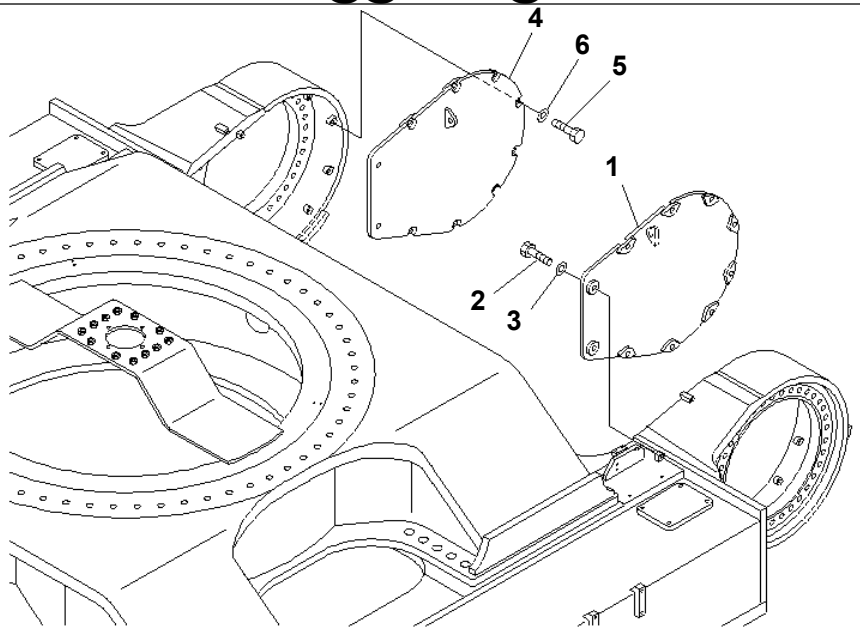

P W 1 E 1 2 8

Ref. R1160-01A0 **Page 360330**

PC1250SP-8R S/N 35001-UP (W/O EGR, +55C DEGREE)
TRAVEL MOTOR GUARD

Item	Part No.	Part Name	Qty	Serial No.
1	21N-30-37311	GUARD	1	35001-
2	01010-81645	BOLT	10	35001-
3	01643-31645	WASHER	10	35001-
4	21N-30-37321	GUARD	1	35001-
5	01010-81645	BOLT	10	35001-
6	01643-31645	WASHER	10	35001-

Printed By : Dwi Iswanto (airafather6107170)

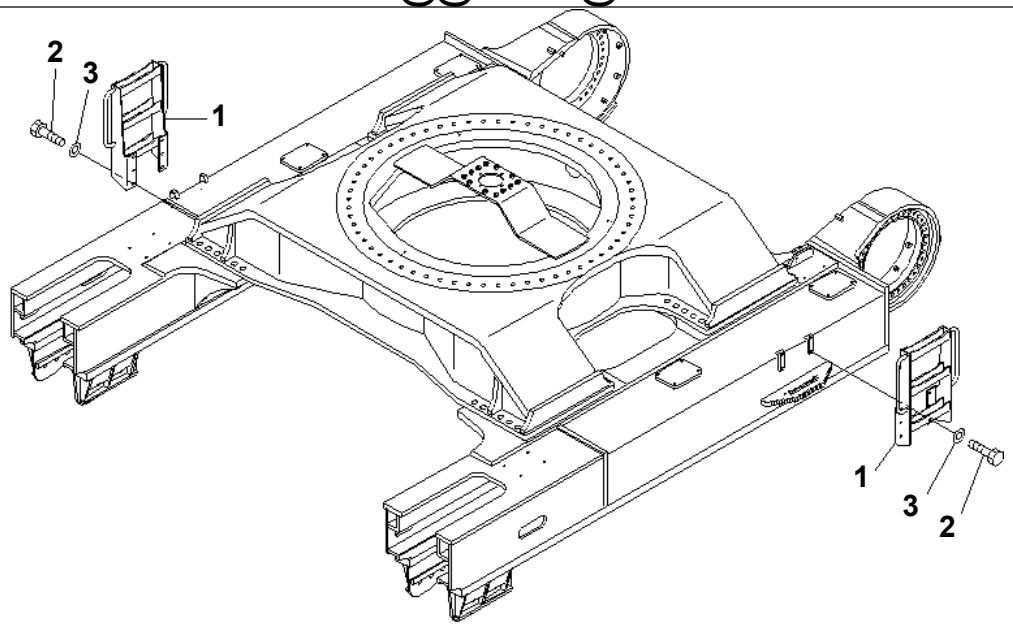

P W 1 E 1 2 9

Ref. R1170-01A0 **Page 360340**

PC1250SP-8R S/N 35001-UP (W/O EGR, +55C DEGREE)
STEP (TRACK FRAME SIDE) (FOR 700MM WIDE SHOE)

Item	Part No.	Part Name	Qty	Serial No.
1	21N-30-37140	LADDER	2	35001-
2	01010-81635	BOLT	8	35001-
3	01643-31645	WASHER	8	35001-

Printed By : Dwi Iswanto (airafather6107170)

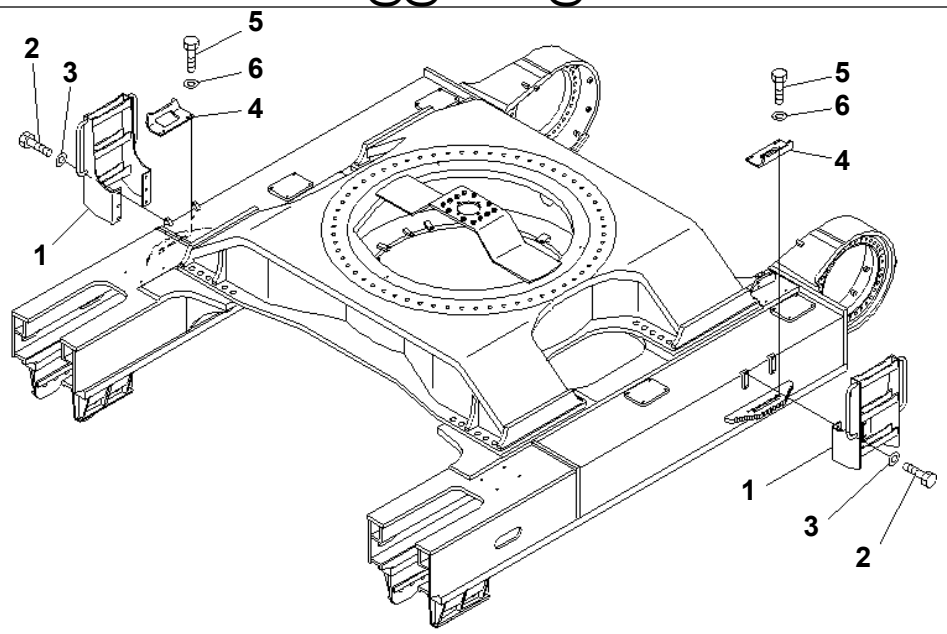

PW1E631

Ref. R1170-01A1 **Page 360350**

PC1250SP-8R S/N 35001-UP (W/O EGR, +55C DEGREE)
STEP (TRACK FRAME SIDE) (FOR 1000MM WIDE SHOE)

Item	Part No.	Part Name	Qty	Serial No.
1	21N-30-37540	LADDER	2	35001-
2	01010-81635	BOLT	8	35001-
3	01643-31645	WASHER	8	35001-
4	21N-30-32160	LADDER	2	35001-
5	01010-81645	BOLT	8	35001-
6	01643-31645	WASHER	8	35001-

Printed By : Dwi Iswanto (airafather6107170)

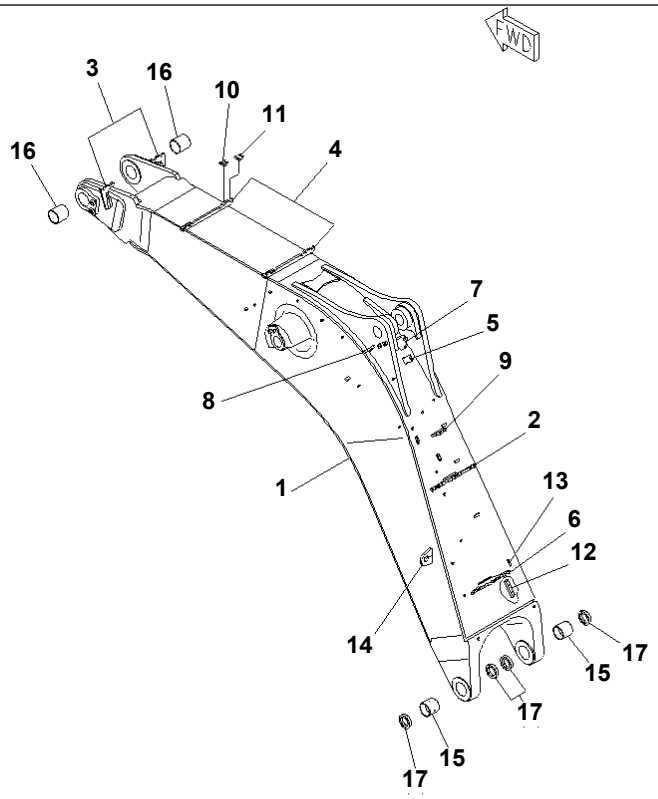

00045290

Ref. T1110-01A0 **Page 390010**

PC1250SP-8R S/N 35001-UP (W/O EGR, +55C DEGREE)
BOOM (7.8M) (FOR BACKHOE)

Item	Part No.	Part Name	Qty	Serial No.
	21N-942-0031	BOOM ASS'Y	1	35001-
1	☆	· BOOM	1	35001-
2	21N-62-18551	· · CLAMP (WELDED)	1	35001-
3	21N-62-38381	· · CLAMP (WELDED)	2	35001-
4	21N-62-38430	· · CLAMP (WELDED)	2	35001-
5	21N-62-38461	· · CLAMP (WELDED)	1	35001-
6	21N-62-39211	· · CLAMP (WELDED)	1	35001-
7	21N-942-3180	· · BRACKET (WELDED)	1	35001-
8	21N-942-3421	· · CLAMP (WELDED)	2	35001-
9	21N-942-3431	· · CLAMP (WELDED)	1	35001-
10	205-62-54622	· · SEAT	7	35001-
11	209-62-58520	· · SEAT	11	35001-
12	209-70-57170	· · SEAT (WELDED)	1	35001-
13	209-72-15120	· · SEAT (WELDED)	1	35001-
14	209-72-12140	· · BRACKET (WELDED)	2	35001-
15	21N-70-31160	· BUSHING	2	35001-
16	21N-70-31181	· BUSHING	2	35001-
17	209-72-11311	SEAL	4	35001-

Printed By : Dwi Iswanto (airafather6107170)

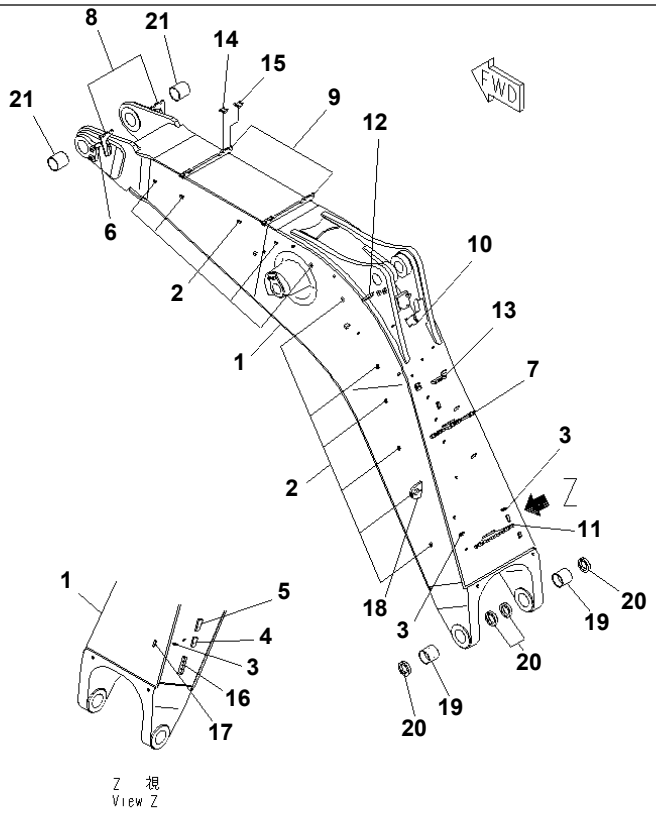

0 0 0 1 3 6 5 1

Ref. T1110-01A3 **Page 390020**

PC1250SP-8R S/N 35001-UP (W/O EGR, +55C DEGREE)
BOOM (7.8M) (FOR BACKHOE) (AUTO GREASE)

Item	Part No.	Part Name	Qty	Serial No.
1	21N-942-3730	BOOM	1	35001-
2	156-21-11150	· SEAT (WELDED)	11	35001-
3	207-62-31350	· SEAT (WELDED)	3	35001-
4	21N-68-32610	· SEAT (WELDED)	1	35001-
5	21N-68-32620	· SEAT (WELDED)	1	35001-
6	21N-68-32650	· SEAT (WELDED)	1	35001-
7	21N-62-18551	· CLAMP (WELDED)	1	35001-
8	21N-62-38381	· CLAMP (WELDED)	2	35001-
9	21N-62-38430	· CLAMP (WELDED)	2	35001-
10	21N-62-38461	· CLAMP (WELDED)	1	35001-
11	21N-62-39211	· CLAMP (WELDED)	1	35001-
12	21N-942-3421	· CLAMP (WELDED)	2	35001-
13	21N-942-3431	· CLAMP (WELDED)	1	35001-
14	205-62-54622	· SEAT	7	35001-
15	209-62-58520	· SEAT	11	35001-
16	209-70-57170	· SEAT (WELDED)	1	35001-
17	209-72-15120	· SEAT (WELDED)	1	35001-
18	209-72-12140	· BRACKET (WELDED)	2	35001-
19	21N-70-31160	BUSHING	2	35001-
20	209-72-11311	SEAL	4	35001-
21	21N-70-31181	BUSHING	2	35001-

Printed By : Dwi Iswanto (airafather6107170)

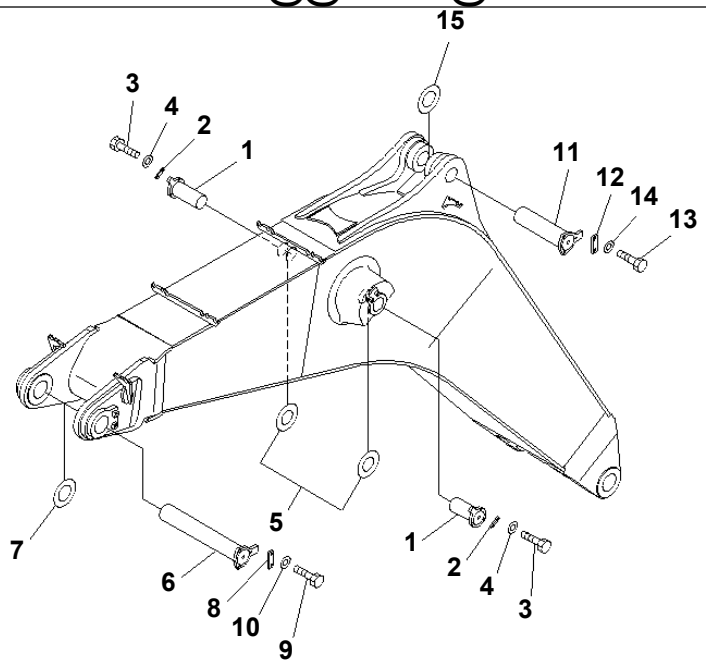

PWB7699

Ref. T1110-02A0 **Page 390030**

PC1250SP-8R S/N 35001-UP (W/O EGR, +55C DEGREE)
BOOM (7.8M) (BOOM PIN) (FOR BACKHOE)

Item	Part No.	Part Name	Qty	Serial No.
1	21N-72-11152	PIN	2	35001-
2	21N-70-11230	PLATE	2	35001-
3	01010-81640	BOLT	4	35001-
4	01643-31645	WASHER	4	35001-
5	21N-72-11230	SHIM, 1.0MM	2	35001-
6	21N-70-31140	PIN	1	35001-
7	21N-72-11210	SHIM, 1.0MM	1	35001-
8	21N-70-11210	PLATE	1	35001-
9	01010-82455	BOLT	2	35001-
10	01643-32460	WASHER	2	35001-
11	21N-942-3140	PIN	1	35001-
12	21N-70-11210	PLATE	1	35001-
13	01010-82455	BOLT	2	35001-
14	01643-32460	WASHER	2	35001-
15	21N-72-11210	SHIM, 1.0MM	2	35001-

Printed By : Dwi Iswanto (airafather6107170)

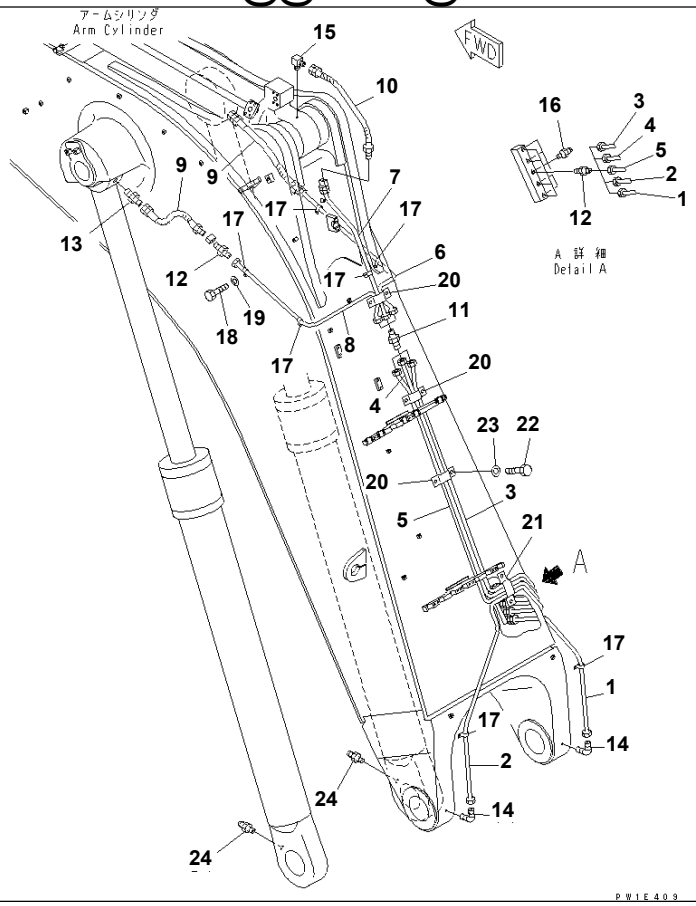

Ref. T1110-03A0 **Page 390040**

PC1250SP-8R S/N 35001-UP (W/O EGR, +55C DEGREE)
BOOM (7.8M) (LUBRICATION) (FOR BACKHOE)

Item	Part No.	Part Name	Qty	Serial No.
1	21N-70-35112	TUBE	1	35001-
2	21N-70-35122	TUBE	1	35001-
3	21N-70-35131	TUBE	1	35001-
4	21N-70-35141	TUBE	1	35001-
5	21N-70-35151	TUBE	1	35001-
6	21N-70-35331	TUBE	1	35001-
7	21N-70-35541	TUBE	1	35001-
8	21N-70-35351	TUBE	1	35001-
9	198-79-19280	HOSE, 890MM	2	35001-
10	205-70-51360	HOSE, 540MM	1	35001-
11	21N-70-35230	NIPPLE	3	35001-
12	07214-51013	CONNECTOR	8	35001-
13	205-70-51390	NIPPLE	2	35001-
14	07217-51013	ELBOW	2	35001-
15	205-70-51380	ELBOW	1	35001-
16	07020-00000	FITTING	5	35001-
17	04434-51010	CLIP	9	35001-
18	01010-81016	BOLT	9	35001-
19	01643-31032	WASHER	9	35001-
20	207-70-11770	CLIP	3	35001-
21	209-72-16110	CLIP	1	35001-
22	01010-80610	BOLT	8	35001-
23	01643-30623	WASHER	8	35001-
24	07020-00675	FITTING	2	35001-

Printed By : Dwi Iswanto (airafather6107170)

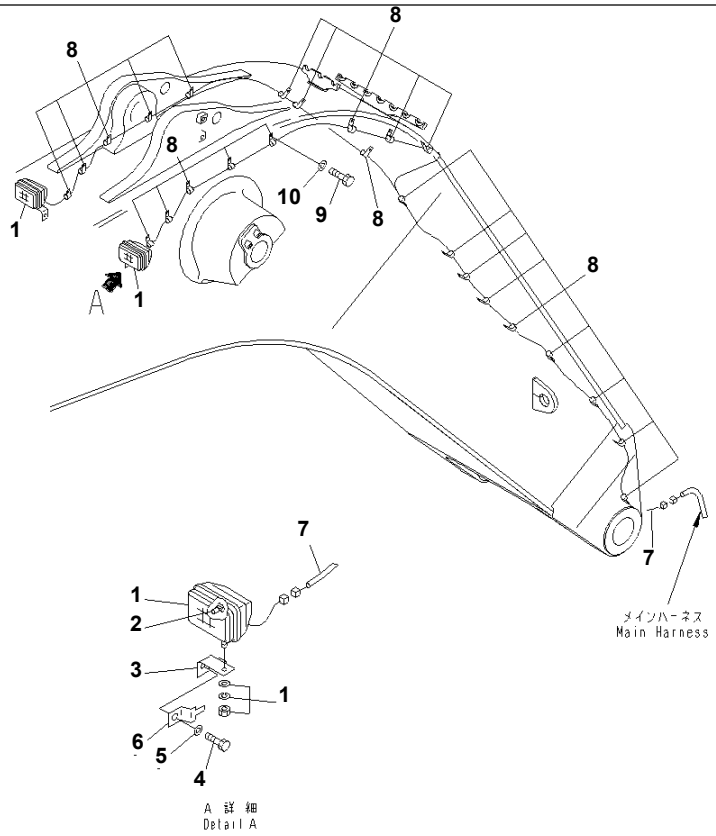

Ref. T1110-04A0 Page 390050

PC1250SP-8R S/N 35001-UP (W/O EGR, +55C DEGREE)

BOOM (7.8M) (WORKING LAMP) (FOR BACKHOE)

Item	Part No.	Part Name	Qty	Serial No.
1	17A-06-17931	LAMP ASS'Y	2	35001-
2	17A-06-17970	· BULB, 70W	1	35001-
3	20Y-06-21551	BRACKET	2	35001-
4	01010-81230	BOLT	2	35001-
5	01643-31232	WASHER	2	35001-
6	08193-20012	CLIP	2	35001-
7	21N-06-33222	WIRING HARNESS	1	35001-
8	04434-51010	CLIP	25	35001-
9	01010-81016	BOLT	24	35001-
10	01643-31032	WASHER	24	35001-

Printed By : Dwi Iswanto (airafather6107170)

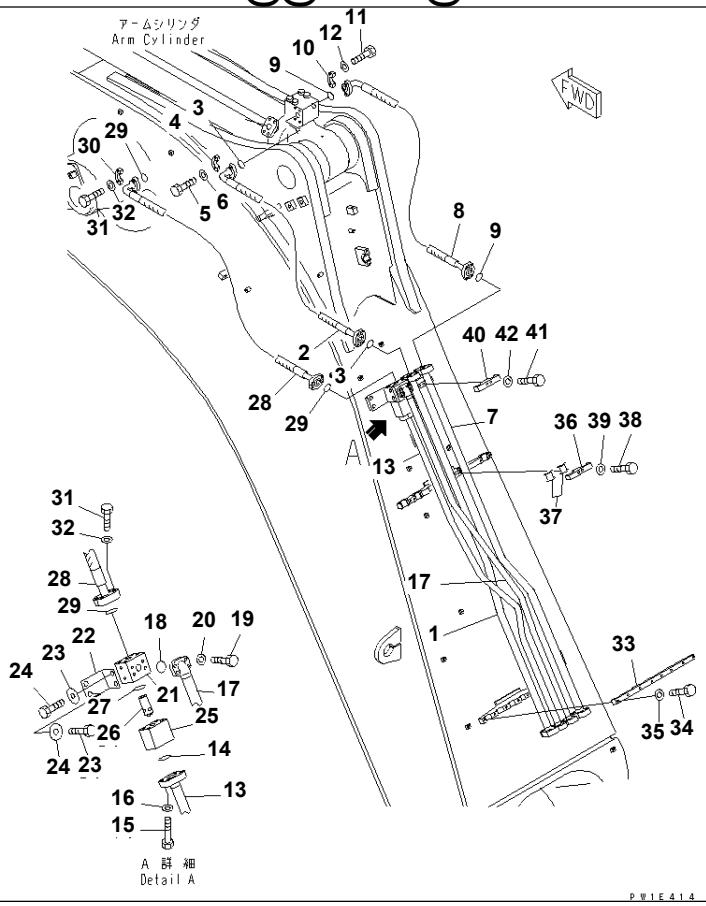

Ref. T1110-05A0 **Page 390060**

PC1250SP-8R S/N 35001-UP (W/O EGR, +55C DEGREE)

BOOM (7.8M) (ARM CYLINDER LINE) (FOR BACKHOE)

Item	Part No.	Part Name	Qty	Serial No.
1	21N-942-3820	TUBE	1	35001-
2	07098-01421	HOSE	1	35001-
3	07000-13048	O-RING	2	35001-
4	07371-51470	FLANGE	4	35001-
5	01010-81455	BOLT	8	35001-
6	01643-31445	WASHER	8	35001-
7	21N-942-3810	TUBE	1	35001-
8	07098-01421	HOSE	1	35001-
9	07000-13048	O-RING	2	35001-
10	07371-51470	FLANGE	4	35001-
11	01010-81455	BOLT	8	35001-
12	01643-31445	WASHER	8	35001-
13	21N-942-3840	TUBE	1	35001-
14	07000-13038	O-RING	1	35001-
15	01011-81215	BOLT	4	35001-
16	01643-31232	WASHER	4	35001-
17	21N-942-3830	TUBE	1	35001-
18	07000-13038	O-RING	1	35001-
19	01010-81240	BOLT	4	35001-
20	01643-31232	WASHER	4	35001-
21	21N-62-18250	BLOCK	1	35001-
22	21N-62-18270	BRACKET	1	35001-
23	01010-81230	BOLT	4	35001-
24	175-54-34170	WASHER	4	35001-
25	21N-62-18660	BODY	1	35001-
26	21N-62-18651	POPPET	1	35094-
	□21N-62-18650	POPPET	1	35001-35093
27	07000-13038	O-RING	1	35001-
28	07098-01421	HOSE	1	35001-
29	07000-13048	O-RING	2	35001-

Printed By : Dwi Iswanto (airafather6107170)

BOOM (7.8M) (ARM CYLINDER LINE) (FOR BACKHOE)

Item	Part No.	Part Name	Qty	Serial No.
30	07371-51470	FLANGE	4	35001-
31	01010-81455	BOLT	8	35001-
32	01643-31445	WASHER	8	35001-
33	21N-62-39191	CLAMP	1	35001-
34	01010-81260	BOLT	8	35001-
35	01643-31232	WASHER	8	35001-
36	209-62-58270	CLAMP	1	35001-
37	209-62-58520	· SEAT	2	35001-
38	01010-81260	BOLT	2	35001-
39	01643-31232	WASHER	2	35001-
40	21N-62-18520	CLAMP	1	35001-
41	01010-81260	BOLT	2	35001-
42	01643-31232	WASHER	2	35001-

Printed By : Dwi Iswanto (airafather6107170)

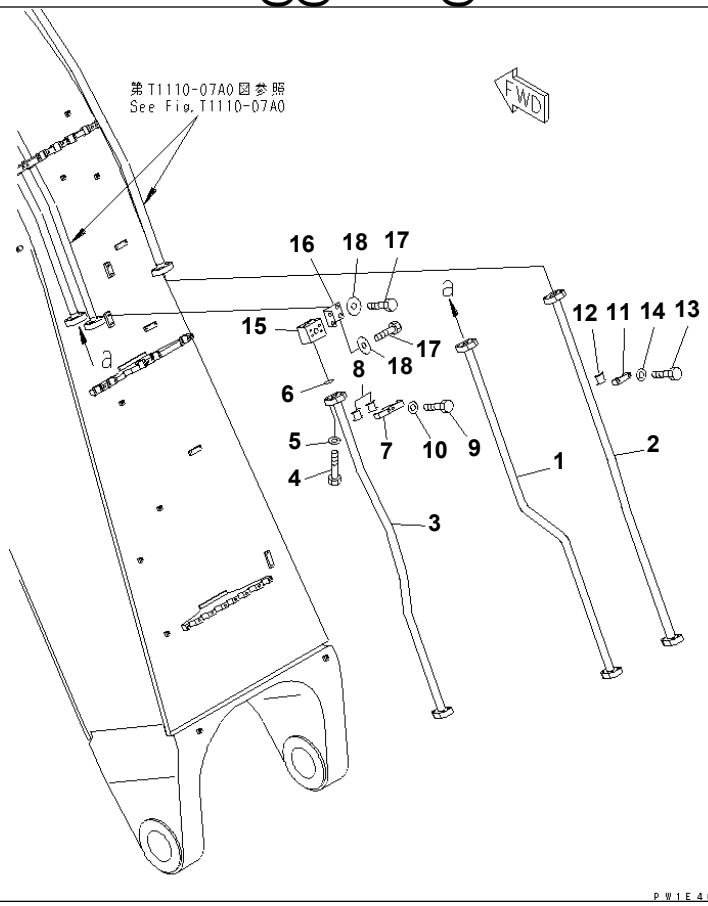

Ref. T1110-06A0 **Page 390070**

PC1250SP-8R S/N 35001-UP (W/O EGR, +55C DEGREE)

BOOM (7.8M) (BUCKET CYLINDER PIPING) (BOTTOM) (BACKHOE)

Item	Part No.	Part Name	Qty	Serial No.
1	21N-62-39140	TUBE	1	35001-
2	21N-62-39170	TUBE	1	35001-
3	21N-62-39130	TUBE	1	35001-
4	01010-81455	BOLT	4	35001-
5	01643-31445	WASHER	4	35001-
6	07000-13048	O-RING	1	35001-
7	209-62-58270	CLAMP	1	35001-
8	209-62-58520	· SEAT	2	35001-
9	01010-81260	BOLT	2	35001-
10	01643-31232	WASHER	2	35001-
11	209-62-58370	CLAMP	1	35001-
12	209-62-58520	· SEAT	1	35001-
13	01010-81260	BOLT	2	35001-
14	01643-31232	WASHER	2	35001-
15	21N-62-18250	BLOCK	1	35001-
16	21N-62-18270	BRACKET	1	35001-
17	01010-81230	BOLT	4	35001-
18	175-54-34170	WASHER	4	35001-

Printed By : Dwi Iswanto (airafather6107170)

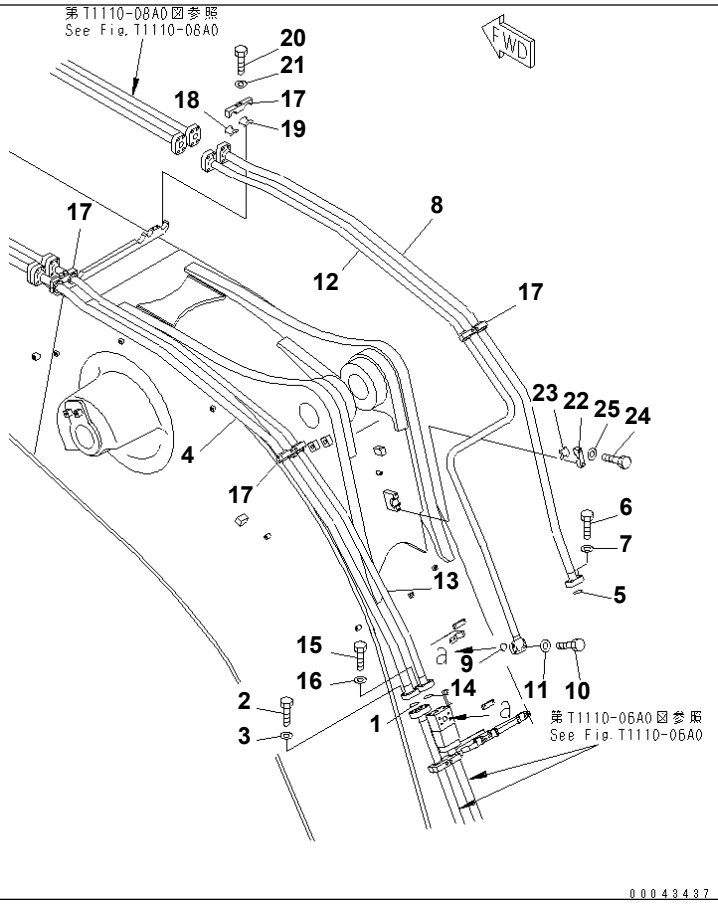

Ref. T1110-07A0 **Page 390080**

PC1250SP-8R S/N 35001-UP (W/O EGR, +55C DEGREE)

BOOM (7.8M) (BUCKET CYLINDER PIPING) (CENTER) (BACKHOE)

Item	Part No.	Part Name	Qty	Serial No.
1	07000-13048	O-RING	1	35001-
2	01010-81455	BOLT	4	35001-
3	01643-31445	WASHER	4	35001-
4	21N-942-3341	TUBE	1	35001-
5	07000-13048	O-RING	1	35001-
6	01010-81455	BOLT	4	35001-
7	01643-31445	WASHER	4	35001-
8	21N-942-3361	TUBE	1	35001-
9	07000-13038	O-RING	1	35001-
10	01010-81240	BOLT	4	35001-
11	01643-31232	WASHER	4	35001-
12	21N-942-3351	TUBE	1	35001-
13	21N-942-3331	TUBE	1	35001-
14	07000-13038	O-RING	1	35001-
15	01010-81245	BOLT	4	35001-
16	01643-31232	WASHER	4	35001-
17	21N-62-13160	CLAMP	4	35001-
18	205-62-54622	· SEAT	1	35001-
19	209-62-58520	· SEAT	1	35001-
20	01010-81260	BOLT	8	35001-
21	01643-31232	WASHER	8	35001-
22	21N-62-38470	CLAMP	1	35001-
23	205-62-54622	· SEAT	1	35001-
24	01010-81260	BOLT	2	35001-
25	01643-31232	WASHER	2	35001-

Printed By : Dwi Iswanto (airafather6107170)

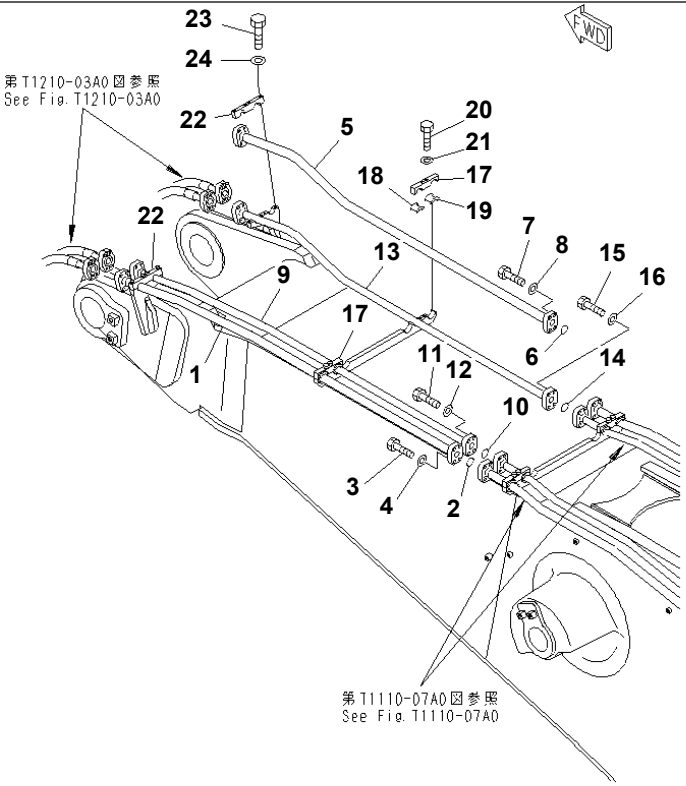

00043438

Ref. T1110-08A0 **Page 390090**

PC1250SP-8R S/N 35001-UP (W/O EGR, +55C DEGREE)

BOOM (7.8M) (BUCKET CYLINDER PIPING) (TOP) (BACKHOE)

Item	Part No.	Part Name	Qty	Serial No.
1	21N-942-3371	TUBE	1	35001-
2	07000-13048	O-RING	1	35001-
3	01010-81455	BOLT	4	35001-
4	01643-31445	WASHER	4	35001-
5	21N-942-3411	TUBE	1	35001-
6	07000-13048	O-RING	1	35001-
7	01010-81455	BOLT	4	35001-
8	01643-31445	WASHER	4	35001-
9	21N-942-3381	TUBE	1	35001-
10	07000-13038	O-RING	1	35001-
11	01010-81245	BOLT	4	35001-
12	01643-31232	WASHER	4	35001-
13	21N-942-3391	TUBE	1	35001-
14	07000-13038	O-RING	1	35001-
15	01010-81245	BOLT	4	35001-
16	01643-31232	WASHER	4	35001-
17	21N-62-13160	CLAMP	2	35001-
18	205-62-54622	· SEAT	1	35001-
19	209-62-58520	· SEAT	1	35001-
20	01010-81260	BOLT	4	35001-
21	01643-31232	WASHER	4	35001-
22	21N-62-38440	CLAMP	2	35001-
23	01010-81260	BOLT	8	35001-
24	01643-31232	WASHER	8	35001-

Printed By : Dwi Iswanto (airafather6107170)

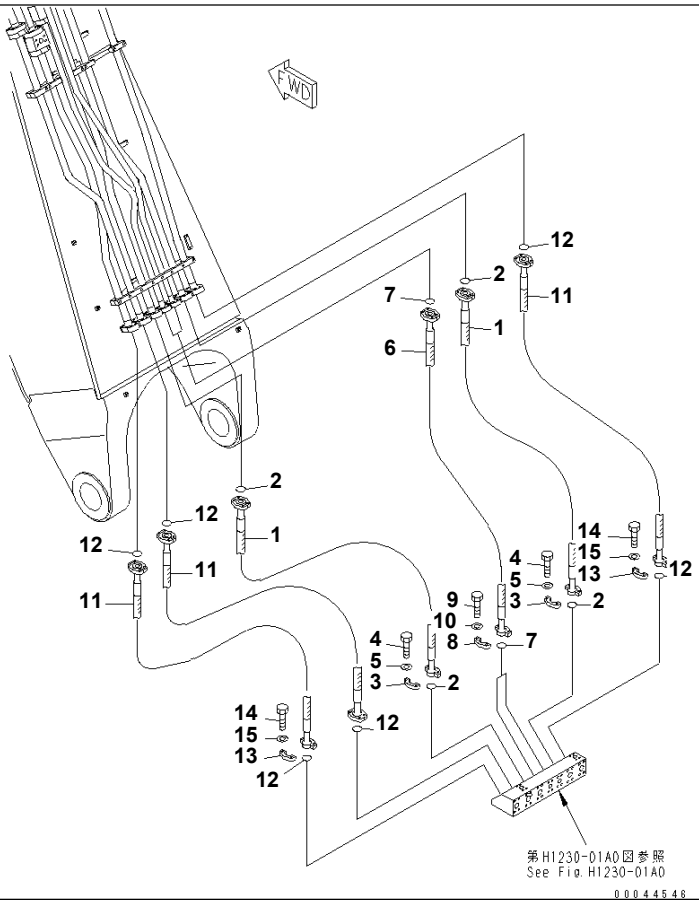

Ref. T1110-09A0 **Page 390100**

PC1250SP-8R S/N 35001-UP (W/O EGR, +55C DEGREE)

BOOM (HOSE) (BACKHOE)

Item	Part No.	Part Name	Qty	Serial No.
1	07099-01418	HOSE	2	35001-
2	07000-13048	O-RING	4	35001-
3	07371-51470	FLANGE	8	35001-
4	01010-81455	BOLT	16	35001-
5	01643-31445	WASHER	16	35001-
6	07099-01218	HOSE	2	35001-
7	07000-13038	O-RING	4	35001-
8	07371-51260	FLANGE	8	35001-
9	01010-81245	BOLT	16	35001-
10	01643-31232	WASHER	16	35001-
11	07099-01418	HOSE	3	35001-
12	07000-13048	O-RING	6	35001-
13	07371-51470	FLANGE	12	35001-
14	01010-81455	BOLT	24	35001-
15	01643-31445	WASHER	24	35001-

Printed By : Dwi Iswanto (airafather6107170)

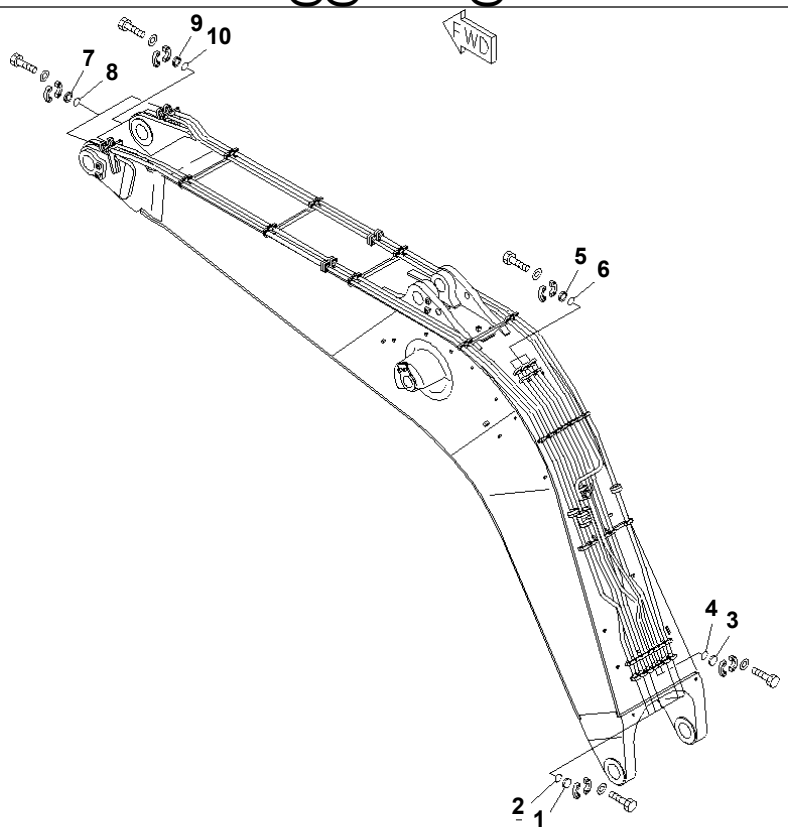

Ref. T1110-10A0 **Page 390110**

PC1250SP-8R S/N 35001-UP (W/O EGR, +55C DEGREE)
BOOM (BLIND PARTS) (FOR BACKHOE)

Item	Part No.	Part Name	Qty	Serial No.
1	07378-11410	HEAD	5	35001-
2	07000-13048	O-RING	5	35001-
3	07378-11210	HEAD	2	35001-
4	07000-13038	O-RING	2	35001-
5	07378-11410	HEAD	3	35001-
6	07000-13048	O-RING	3	35001-
7	07378-11410	HEAD	2	35001-
8	07000-13048	O-RING	2	35001-
9	07378-11210	HEAD	2	35001-
10	07000-13038	O-RING	2	35001-

Printed By : Dwi Iswanto (airafather6107170)

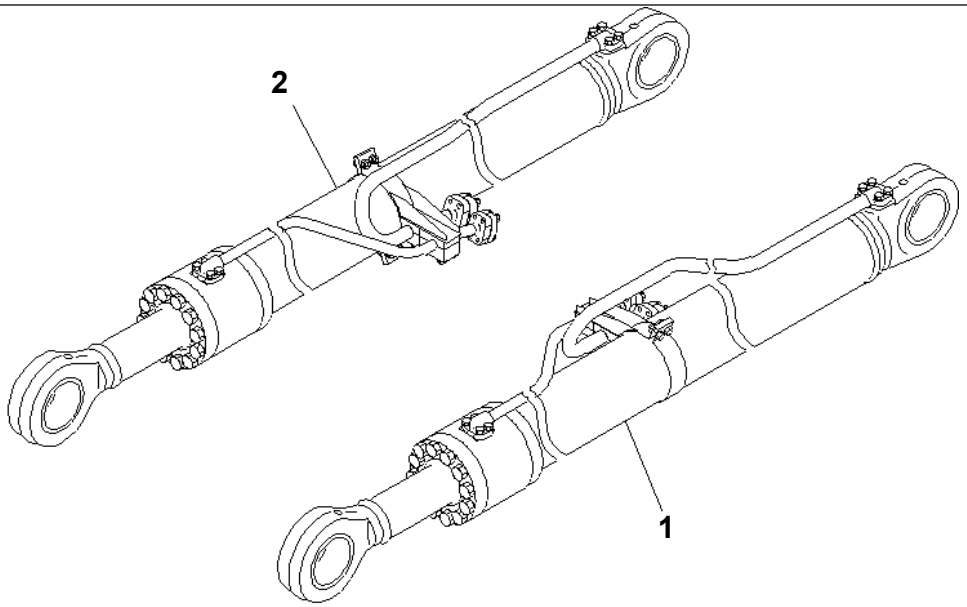

00055061

Ref. T1120-01A0 **Page 390120**

PC1250SP-8R S/N 35001-UP (W/O EGR, +55C DEGREE)
BOOM CYLINDER (FOR BACKHOE)

Item	Part No.	Part Name	Qty	Serial No.
1	(⊙707-01-XZ502)	CYLINDER GROUP	1	35001-
2	(⊙707-01-XZ512)	CYLINDER GROUP	1	35001-

Printed By : Dwi Iswanto (airafather6107170)

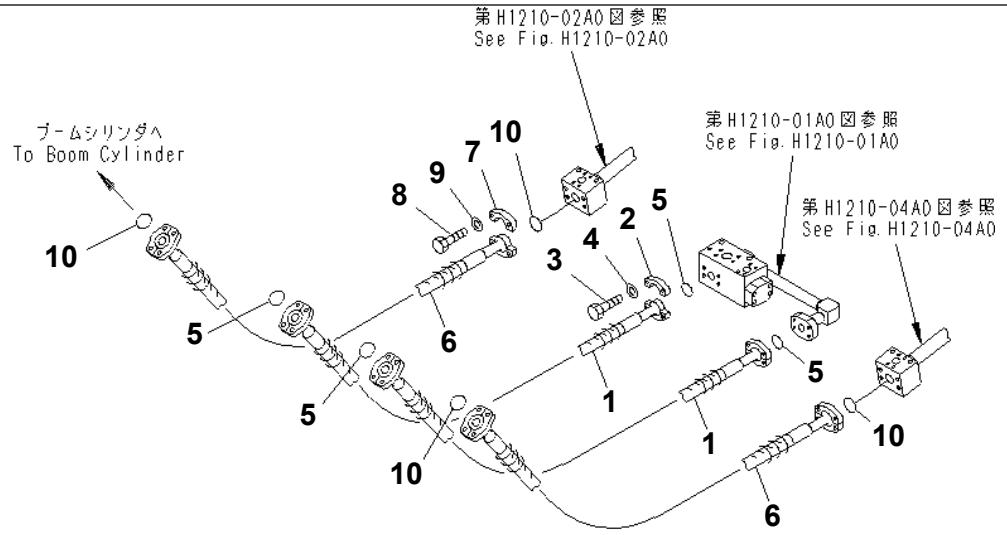

00044429

Ref. T1130-01A0 Page 390130

PC1250SP-8R S/N 35001-UP (W/O EGR, +55C DEGREE)

BOOM CYLINDER PIPING (FOR BACKHOE)

Item	Part No.	Part Name	Qty	Serial No.
1	07099-01216	HOSE	2	35001-
2	07371-51260	FLANGE	8	35001-
3	01010-81245	BOLT	16	35001-
4	01643-31232	WASHER	16	35001-
5	07000-13038	O-RING	4	35001-
6	07099-01416	HOSE	2	35001-
7	07371-51470	FLANGE	8	35001-
8	01010-81455	BOLT	16	35001-
9	01643-31445	WASHER	16	35001-
10	07000-13048	O-RING	4	35001-

Printed By : Dwi Iswanto (airafather6107170)

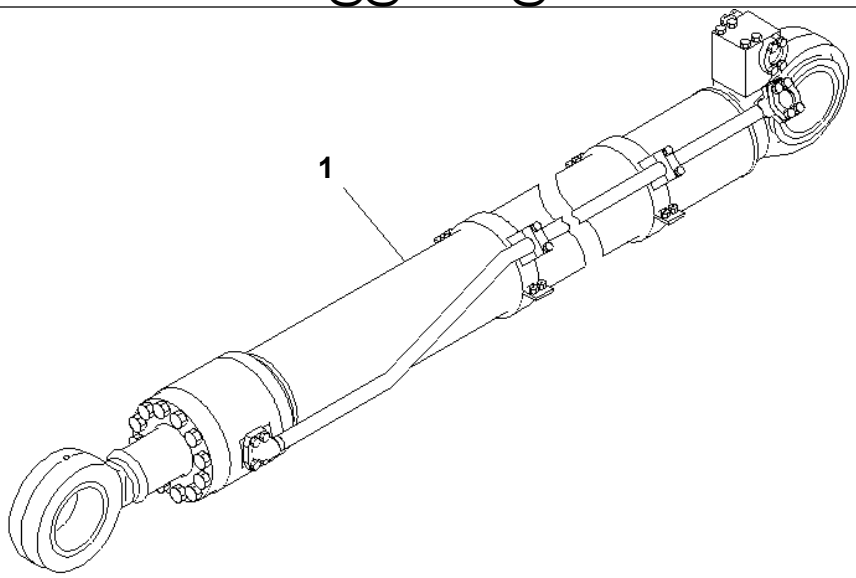

PWB7714

Ref. T1140-01A0 **Page 390140**

PC1250SP-8R S/N 35001-UP (W/O EGR, +55C DEGREE)
ARM CYLINDER

Item	Part No.	Part Name	Qty	Serial No.
1	(⊙707-01-XZ522)	CYLINDER GROUP	1	35001-

Printed By : Dwi Iswanto (airafather6107170)

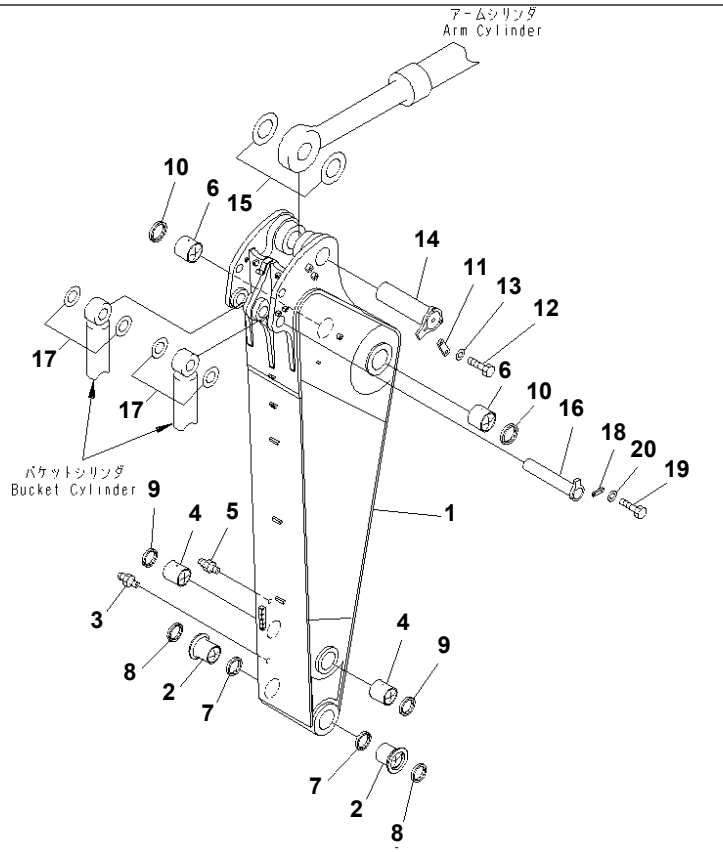

Ref. T1210-01A0 **Page 390150**

PC1250SP-8R S/N 35001-UP (W/O EGR, +55C DEGREE)

ARM (3.4M) (FOR BACKHOE) (SP)

Item	Part No.	Part Name	Qty	Serial No.
	21N-70-00304	ARM ASS'Y	1	35001-
1	☆	· ARM	1	35001-
2	21N-70-32550	· BUSHING	2	35001-
3	07020-00000	· FITTING	2	35001-
4	21N-70-12170	· BUSHING	2	35001-
5	07020-00000	· FITTING	1	35001-
6	21N-70-11181	· BUSHING	2	35001-
7	209-72-11261	· SEAL	2	35001-
8	21N-70-12160	SEAL	2	35001-
9	209-72-11261	SEAL	2	35001-
10	209-72-11311	SEAL	2	35001-
11	21N-70-11210	PLATE	1	35001-
12	01010-82455	BOLT	2	35001-
13	01643-32460	WASHER	2	35001-
14	21N-70-31171	PIN	1	35001-
15	21N-72-11210	SHIM, 1.0MM	3	35001-
16	21N-70-32140	PIN	1	35001-
17	207-70-11340	SPACER, 0.8MM	6	35001-
18	21N-70-11230	PLATE	1	35001-
19	01010-81640	BOLT	2	35001-
20	01643-31645	WASHER	2	35001-

Printed By : Dwi Iswanto (airafather6107170)

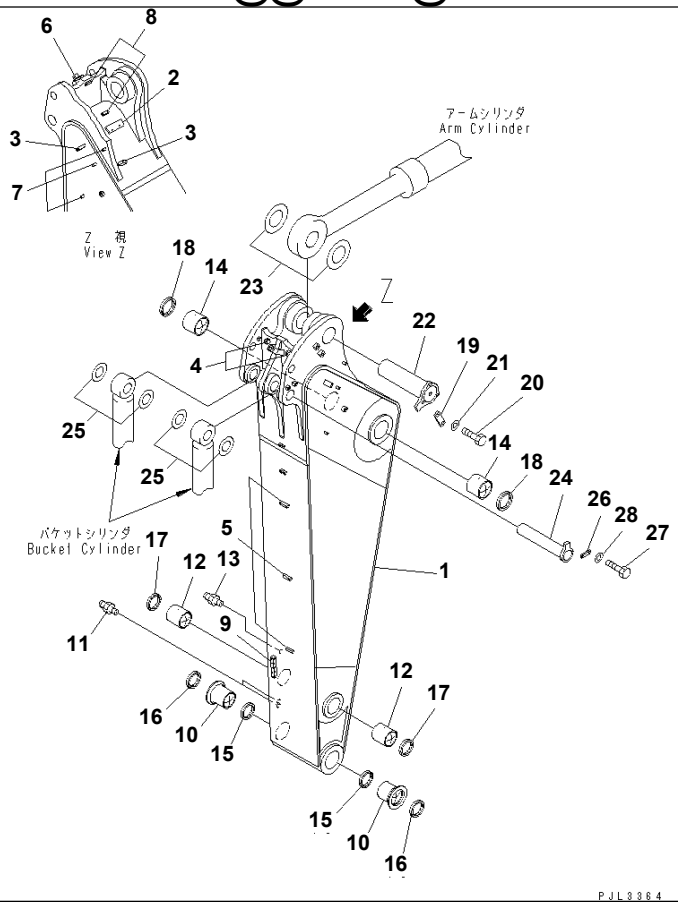

Ref. T1210-01B0 **Page 390160**

PC1250SP-8R S/N 35001-UP (W/O EGR, +55C DEGREE)

ARM (3.4M) (FOR BACKHOE) (AUTO GREASE) (SP)

Item	Part No.	Part Name	Qty	Serial No.
	21N-70-00353	ARM ASS'Y	1	35001-
1	☆	· ARM	1	35001-
2	21N-68-32630	· · SEAT (WELDED)	1	35001-
3	21N-68-32650	· · SEAT (WELDED)	2	35001-
4	21N-70-32160	· · BLOCK (WELDED)	2	35001-
5	21N-70-35250	· · SEAT (WELDED)	3	35001-
6	21N-70-35620	· · BRACKET (WELDED)	1	35001-
7	175-21-41130	· · SEAT (WELDED)	3	35001-
8	176-06-41490	· · SEAT (WELDED)	2	35001-
9	209-70-57170	· · SEAT (WELDED)	1	35001-
10	21N-70-32550	· BUSHING	2	35001-
11	07020-00000	· FITTING	2	35001-
12	21N-70-12170	· BUSHING	2	35001-
13	07020-00000	· FITTING	1	35001-
14	21N-70-11181	· BUSHING	2	35001-
15	209-72-11261	· SEAL	2	35001-
16	21N-70-12160	SEAL	2	35001-
17	209-72-11261	SEAL	2	35001-
18	209-72-11311	SEAL	2	35001-
19	21N-70-11210	PLATE	1	35001-
20	01010-82455	BOLT	2	35001-
21	01643-32460	WASHER	2	35001-
22	21N-70-31171	PIN	1	35001-
23	21N-72-11210	SHIM, 1.0MM	3	35001-
24	21N-70-32140	PIN	1	35001-
25	207-70-11340	SPACER, 0.8MM	6	35001-
26	21N-70-11230	PLATE	1	35001-
27	01010-81640	BOLT	2	35001-
28	01643-31645	WASHER	2	35001-

Printed By : Dwi Iswanto (airafather6107170)

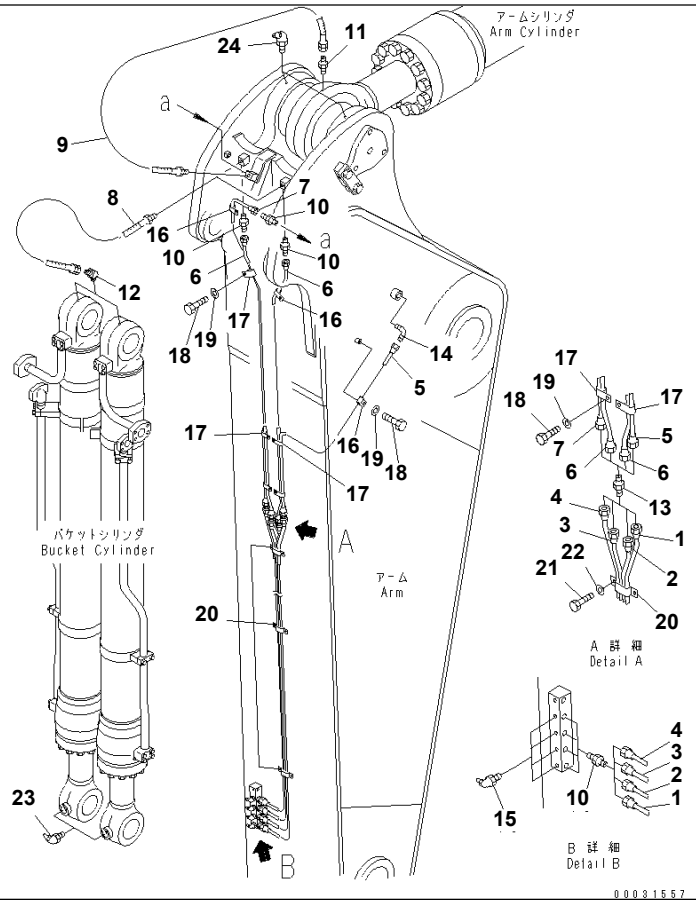

Ref. T1210-02A0 Page 390170

PC1250SP-8R S/N 35001-UP (W/O EGR, +55C DEGREE)

ARM (3.4M) (LUBRICATION) (FOR BACKHOE) (SP)

Item	Part No.	Part Name	Qty	Serial No.
1	21N-70-35161	TUBE	1	35001-
2	21N-70-35171	TUBE	1	35001-
3	21N-70-35181	TUBE	1	35001-
4	21N-70-35191	TUBE	1	35001-
5	21N-70-35561	TUBE	1	35001-
6	21N-70-35571	TUBE	2	35001-
7	21N-70-35581	TUBE	1	35001-
8	205-70-51370	HOSE	2	35001-
9	21N-70-15240	HOSE	1	35001-
10	07214-51013	CONNECTOR	7	35001-
11	205-70-51390	NIPPLE	1	35001-
12	205-70-65780	ELBOW	2	35001-
13	21N-70-35230	NIPPLE	4	35001-
14	07217-51013	ELBOW	1	35001-
15	07020-00900	FITTING	4	35001-
16	04434-51010	CLIP	3	35001-
17	04435-51010	CLIP	5	35001-
18	01010-81020	BOLT	8	35001-
19	01643-31032	WASHER	8	35001-
20	209-72-16110	CLIP	3	35001-
21	01010-80610	BOLT	6	35001-
22	01643-30623	WASHER	6	35001-
23	07020-00675	FITTING	2	35001-
24	07020-00675	FITTING	2	35001-

Printed By : Dwi Iswanto (airafather6107170)

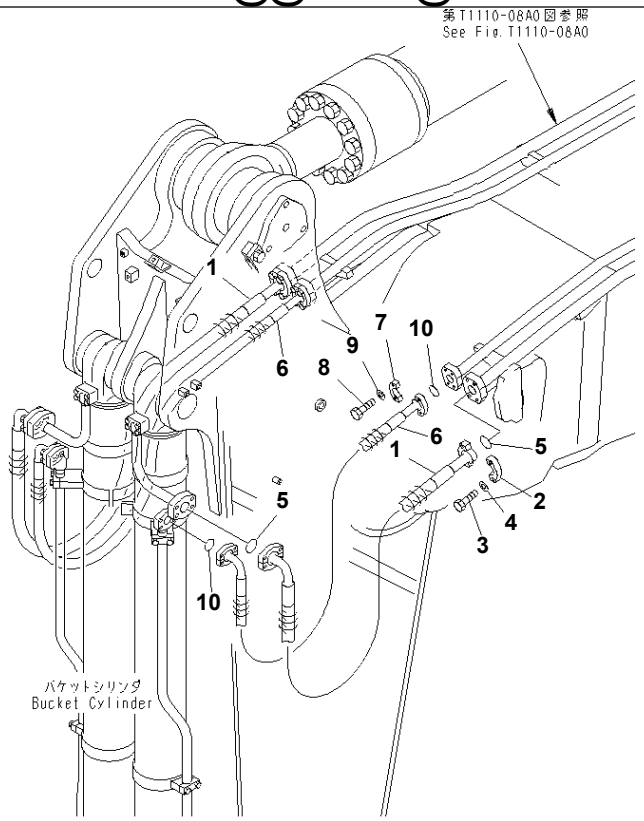

PWB7720

Ref. T1210-03A0 Page 390180

PC1250SP-8R S/N 35001-UP (W/O EGR, +55C DEGREE)

ARM (3.4M) (BUCKET CYLINDER PIPING) (FOR BACKHOE) (SP)

Item	Part No.	Part Name	Qty	Serial No.
1	21N-62-38610	HOSE, 2200MM	2	35001-
2	07371-51470	FLANGE	8	35001-
3	01010-81455	BOLT	16	35001-
4	01643-31445	WASHER	16	35001-
5	07000-13048	O-RING	4	35001-
6	21N-62-38620	HOSE, 2200MM	2	35001-
7	07371-51260	FLANGE	8	35001-
8	01010-81245	BOLT	16	35001-
9	01643-31232	WASHER	16	35001-
10	07000-13038	O-RING	4	35001-

Printed By : Dwi Iswanto (airafather6107170)

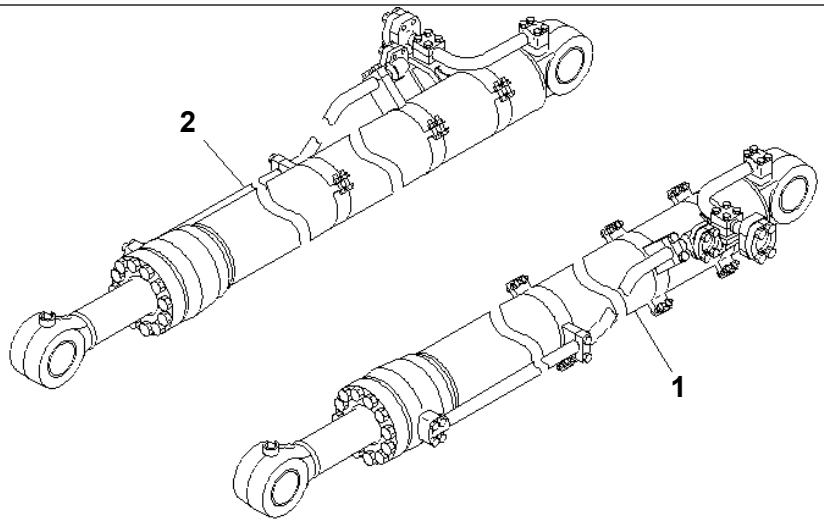

00055062

Ref. T1220-01A1 **Page 390190**

PC1250SP-8R S/N 35001-UP (W/O EGR, +55C DEGREE)

BUCKET CYLINDER (FOR BACKHOE) (FOR 3.4M ARM) (SP)

Item	Part No.	Part Name	Qty	Serial No.
1	(⊙707-01-XR721)	CYLINDER GROUP	1	35001-
2	(⊙707-01-XR731)	CYLINDER GROUP	1	35001-

Printed By : Dwi Iswanto (airafather6107170)

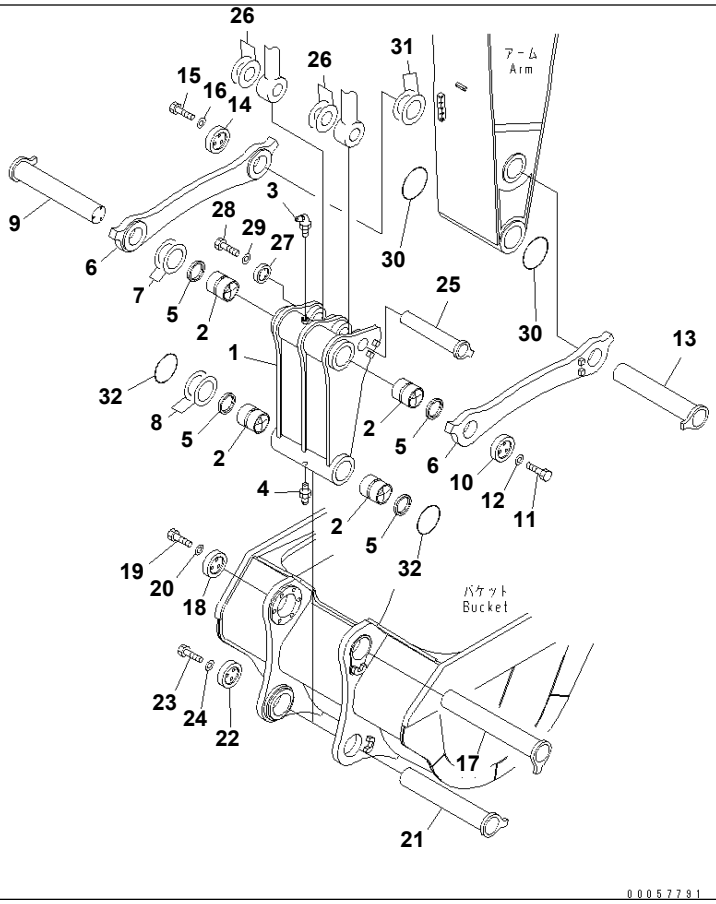

Ref. T1230-01A1 **Page 390200**

PC1250SP-8R S/N 35001-UP (W/O EGR, +55C DEGREE)
BUCKET LINK (FOR BACKHOE) (SP)

Item	Part No.	Part Name	Qty	Serial No.
	21N-70-00412	LINK ASS'Y	1	35001-
1	☆	· LINK	1	35001-
2	21N-70-12170	· BUSHING	4	35001-
3	07020-00675	· FITTING	1	35001-
4	07020-00000	· FITTING	1	35001-
5	209-72-11261	SEAL	4	35001-
6	21N-70-33221	LINK	2	35001-
7	21N-72-11230	SHIM, 1.0MM	5	35001-
8	21N-72-11230	SHIM, 1.0MM	5	35001-
9	21N-70-33131	PIN	1	35001-
10	209-70-73180	HOLDER	1	35001-
11	01010-82460	BOLT	3	35001-
12	01643-32460	WASHER	3	35001-
13	21N-70-33131	PIN	1	35001-
14	209-70-73180	HOLDER	1	35001-
15	01010-82460	BOLT	3	35001-
16	01643-32460	WASHER	3	35001-
17	21N-70-33142	PIN	1	35001-
18	209-70-73180	HOLDER	1	35001-
19	01010-82460	BOLT	3	35001-
20	01643-32460	WASHER	3	35001-
21	21N-70-33161	PIN	1	35001-
22	209-70-73180	HOLDER	1	35001-
23	01010-82460	BOLT	3	35001-
24	01643-32460	WASHER	3	35001-
25	21N-70-32140	PIN	1	35001-
26	207-70-11340	SPACER, 0.8MM	6	35001-
27	21N-70-33170	STOPPER	1	35001-
28	01010-81645	BOLT	3	35001-
29	01643-31645	WASHER	3	35001-

Printed By : Dwi Iswanto (airafather6107170)

BUCKET LINK (FOR BACKHOE) (SP)

Item	Part No.	Part Name	Qty	Serial No.
30	21N-70-13150	O-RING	2	35001-
31	21N-72-11230	SHIM, 1.0MM	3	35001-
32	07000-16215	O-RING	2	35001-

Printed By : Dwi Iswanto (airafather6107170)

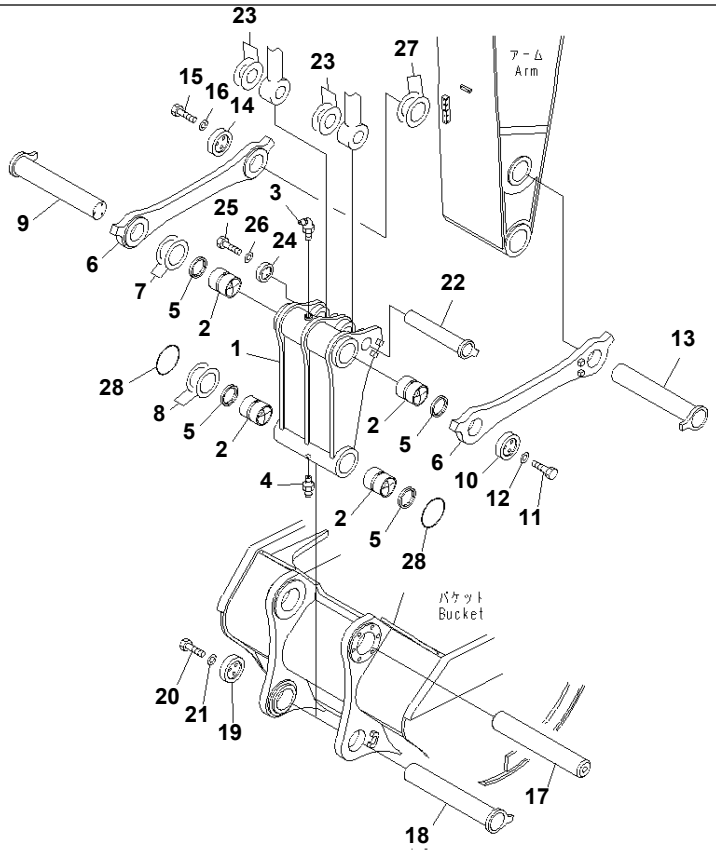

Ref. T1230-01A4 **Page 390210**

PC1250SP-8R S/N 35001-UP (W/O EGR, +55C DEGREE)

BUCKET LINK (FOR BACKHOE) (SP) (FOR LIMESTONE)

Item	Part No.	Part Name	Qty	Serial No.
	21N-70-00412	LINK ASS'Y	1	35001-
1	☆	· LINK	1	35001-
2	21N-70-12170	· BUSHING	4	35001-
3	07020-00675	· FITTING	1	35001-
4	07020-00000	· FITTING	1	35001-
5	209-72-11261	SEAL	4	35001-
6	21N-70-33221	LINK	2	35001-
7	21N-72-11230	SHIM, 1.0MM	5	35001-
8	21N-72-11230	SHIM, 1.0MM	5	35001-
9	21N-70-33131	PIN	1	35001-
10	209-70-73180	HOLDER	1	35001-
11	01010-82460	BOLT	3	35001-
12	01643-32460	WASHER	3	35001-
13	21N-70-33131	PIN	1	35001-
14	209-70-73180	HOLDER	1	35001-
15	01010-82460	BOLT	3	35001-
16	01643-32460	WASHER	3	35001-
17	21N-939-3950	PIN	1	35001-
18	21N-70-33161	PIN	1	35001-
19	209-70-73180	HOLDER	1	35001-
20	01010-82460	BOLT	3	35001-
21	01643-32460	WASHER	3	35001-
22	21N-70-32140	PIN	1	35001-
23	207-70-11340	SPACER, 0.8MM	6	35001-
24	21N-70-33170	STOPPER	1	35001-
25	01010-81645	BOLT	3	35001-
26	01643-31645	WASHER	3	35001-
27	21N-72-11230	SHIM, 1.0MM	3	35001-
28	07000-16215	O-RING	2	35001-

Printed By : Dwi Iswanto (airafather6107170)

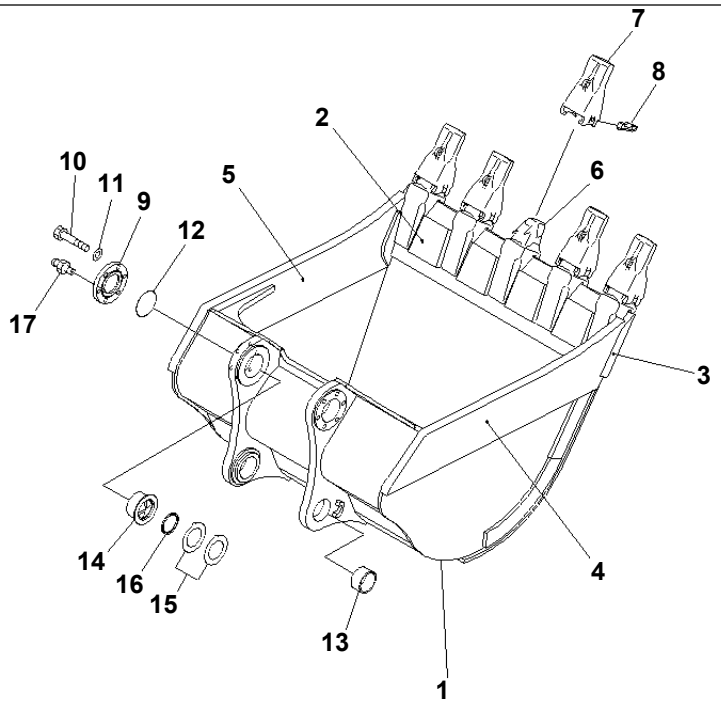

00031560

Ref. T1510-01A6 **Page 390220**

PC1250SP-8R S/N 35001-UP (W/O EGR, +55C DEGREE)
BUCKET 6.5M3¤ 2255MM (VERTICAL PIN TYPE) (FOR LIMESTONE) (SP)

Item	Part No.	Part Name	Qty	Serial No.
1	21N-939-4110	BUCKET	1	35001-
2	21N-939-4B80	· PLATE (WELDED)	4	35001-
3	21N-939-4140	· PLATE (WELDED)	1	35001-
4	21N-939-4120	· PLATE L.H. (WELDED)	1	35001-
5	21N-939-4130	· PLATE R.H. (WELDED)	1	35001-
6	21N-72-34130	· ADAPTER (WELDED)	5	35001-
7	21N-72-34150	TOOTH	5	35001-
8	21N-72-34180	PIN	5	35001-
9	21N-939-3970	COVER	2	35001-
10	01010-81665	BOLT	12	35001-
11	01643-31645	WASHER	12	35001-
12	07000-A5200	O-RING	2	35001-
13	21N-70-34180	BUSHING	2	35001-
14	21N-939-3960	BUSHING	2	35001-
15	21N-939-3980	SHIM	4	35001-
16	21N-70-12160	SEAL	2	35001-
17	07020-00000	FITTING	2	35001-

Printed By : Dwi Iswanto (airafather6107170)

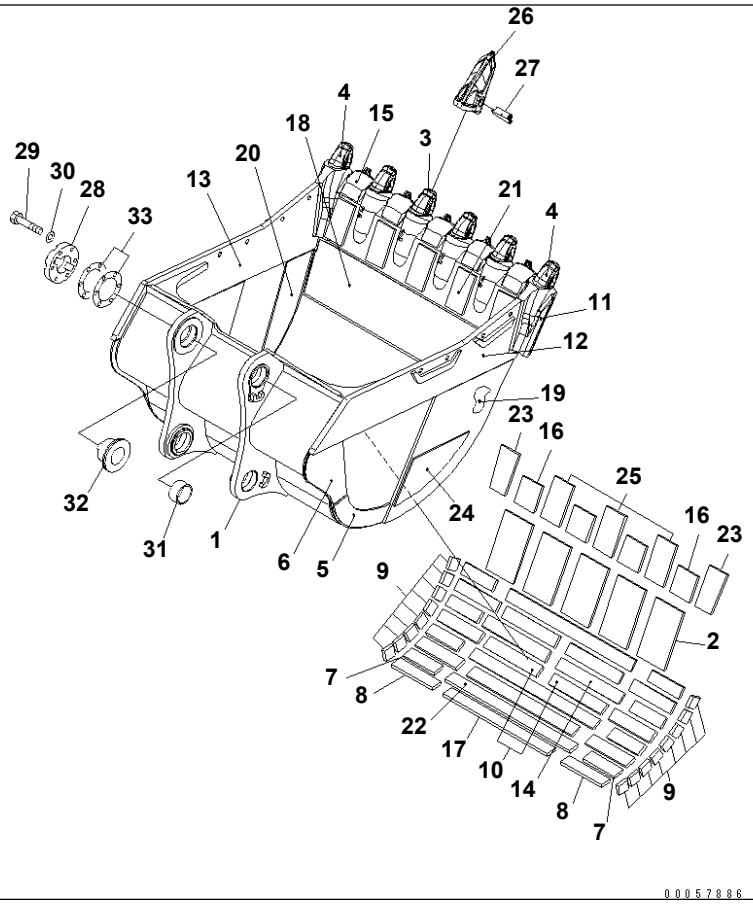

PC1250SP-8R S/N 35001-UP (W/O EGR, +55C DEGREE)

BUCKET 6.7M3¤ 2280MM (HORIZONTAL PIN TYPE) (SP)

Item	Part No.	Part Name	Qty	Serial No.
1	21N-939-4811	BUCKET	1	35160-
	□21N-939-4810	BUCKET	1	35001-35159
2	21N-70-34410	· PLATE (WELDED)	5	35001-
3	21N-70-37711	· ADAPTER (WELDED)	4	35001-
4	21N-70-41241	· ADAPTER (WELDED)	2	35001-
5	21N-939-3N30	· PLATE (WELDED)	2	35001-
6	21N-939-3N40	· PLATE (WELDED)	2	35001-
7	21N-939-4350	· PLATE (WELDED)	8	35001-
8	21N-939-4360	· PLATE (WELDED)	8	35001-
9	21N-939-4370	· PLATE (WELDED)	16	35001-
10	21N-939-4380	· PLATE (WELDED)	4	35001-
11	21N-939-4820	· PLATE (WELDED)	1	35001-
12	21N-939-4831	· PLATE, L.H. (WELDED)	1	35160-
	□21N-939-4830	· PLATE, L.H.,(L.H) (WELDED)	1	35001-35159
13	21N-939-4841	· PLATE, R.H. (WELDED)	1	35160-
	□21N-939-4840	· PLATE, R.H. (WELDED)	1	35001-35159
14	21N-939-4870	· PLATE (WELDED)	2	35001-
15	21N-939-4891	· SHROUD (WELDED)	5	35160-
	□21N-939-4890	· SHROUD (WELDED)	5	35001-35159
16	21N-939-4C90	· PLATE (WELDED)	4	35001-
17	21N-939-4D10	· PLATE (WELDED)	2	35001-
18	21N-939-4E20	· PLATE (WELDED)	1	35001-
19	21N-939-4E30	· PLATE (WELDED)	1	35001-
20	21N-939-4E40	· PLATE (WELDED)	1	35001-
21	21N-939-4E50	· PLATE (WELDED)	5	35001-
22	21N-939-4E60	· PLATE (WELDED)	5	35001-
23	21N-939-4E70	· PLATE (WELDED)	2	35001-
24	21N-939-4E80	· PLATE (WELDED)	2	35001-
25	21N-939-4E90	· PLATE (WELDED)	3	35001-
26	21N-70-37721	TOOTH	6	35001-

Printed By : Dwi Iswanto (airafather6107170)

BUCKET 6.7M3¤ 2280MM (HORIZONTAL PIN TYPE) (SP)

Item	Part No.	Part Name	Qty	Serial No.
27	21N-70-37731	PIN	6	35001-
28	21N-70-14310	COVER	1	35001-
29	01010-83085	BOLT	6	35001-
30	01643-33080	WASHER	6	35001-
31	21N-70-34180	BUSHING	3	35001-
32	21N-70-14220	BUSHING	1	35001-
33	21N-70-00060	SHIM ASS'Y	1	35001-
	☆	· SHIM, 1.0MM	14	35001-
	☆	· SHIM, 0.5MM	4	35001-

Printed By : Dwi Iswanto (airafather6107170)

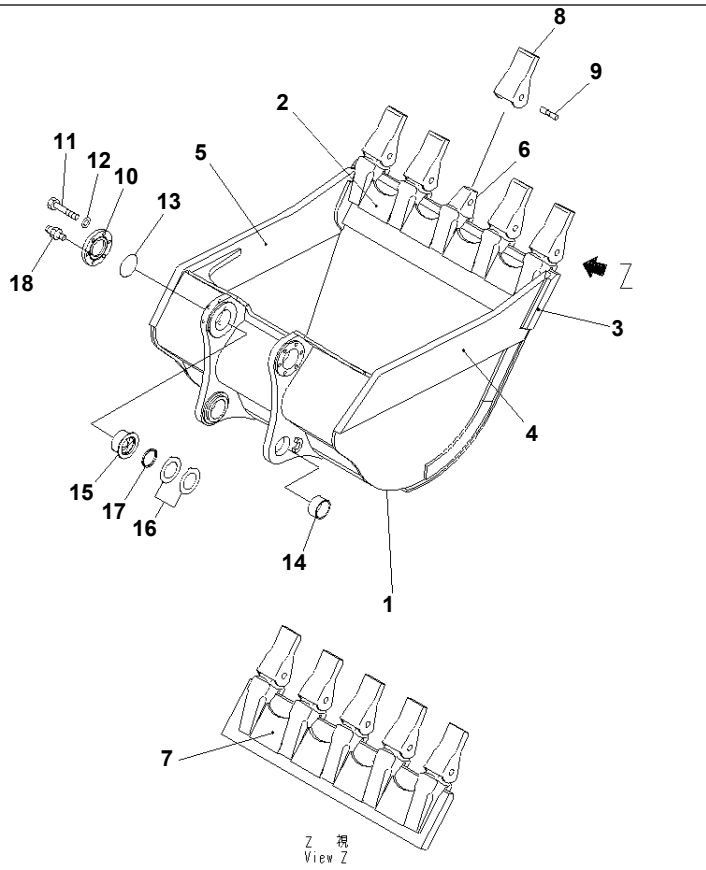

Ref. T1510-01B2 **Page 390240**

PC1250SP-8R S/N 35001-UP (W/O EGR, +55C DEGREE)

BUCKET 6.0M3¤ 2135MM (HORIZONTAL PIN TYPE) (FOR LIMESTONE)

Item	Part No.	Part Name	Qty	Serial No.
1	21N-939-4150	BUCKET	1	35001-
2	21N-939-4H10	· PLATE (WELDED)	4	35001-
3	21N-939-4180	· PLATE (WELDED)	1	35001-
4	21N-939-4160	· PLATE L.H. (WELDED)	1	35001-
5	21N-939-4170	· PLATE R.H. (WELDED)	1	35001-
6	21N-70-14140	· ADAPTER (WELDED)	5	35001-
7	21N-939-4H40	· PLATE (WELDED)	4	35001-
8	21N-72-14430	TOOTH	5	35001-
9	21N-72-14331	PIN ASS'Y	5	35001-
10	21N-939-3970	COVER	2	35001-
11	01010-81665	BOLT	12	35001-
12	01643-31645	WASHER	12	35001-
13	07000-A5200	O-RING	2	35001-
14	21N-70-34180	BUSHING	2	35001-
15	21N-939-3960	BUSHING	2	35001-
16	21N-939-3980	SHIM	4	35001-
17	21N-70-12160	SEAL	2	35001-
18	07020-00000	FITTING	2	35001-

Printed By : Dwi Iswanto (airafather6107170)

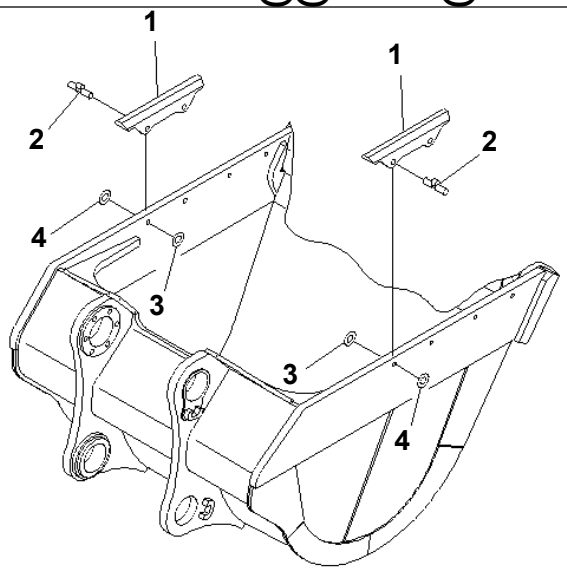

PJB7726

Ref. T1510-02A9 **Page 390250**

PC1250SP-8R S/N 35001-UP (W/O EGR, +55C DEGREE)
SIDE SHROUD (FOR BACKHOE BUCKET)

Item	Part No.	Part Name	Qty	Serial No.
1	427-70-13611	GUARD	4	35001-
2	21N-939-3330	PIN	8	35001-
3	209-939-7110	SHIM, 1.0MM	16	35001-
4	209-939-7120	SHIM, 0.5MM	8	35001-

Printed By : Dwi Iswanto (airafather6107170)

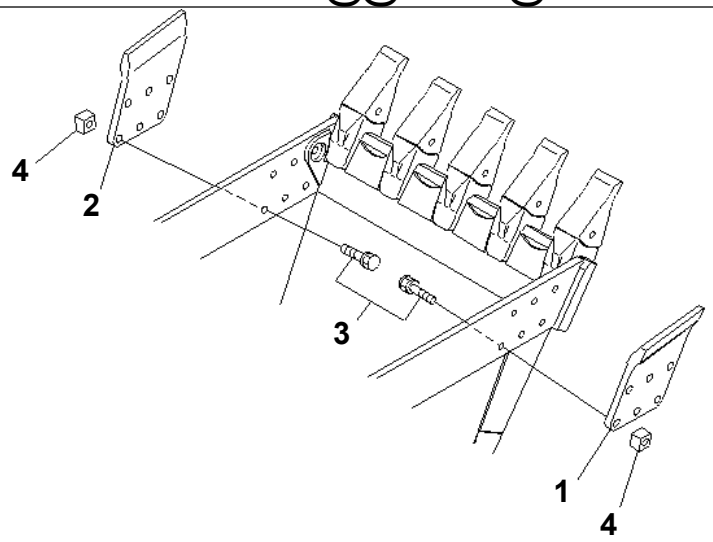

PWB7727

Ref. T1530-01A0 **Page 390260**

PC1250SP-8R S/N 35001-UP (W/O EGR, +55C DEGREE)
SIDE CUTTER (FOR BACKHOE BUCKET)

Item	Part No.	Part Name	Qty	Serial No.
1	21N-70-14180	CUTTER	1	35001-
2	21N-70-14190	CUTTER	1	35001-
3	21N-09-11121	BOLT	12	35001-
4	21N-09-11131	NUT	12	35001-

Printed By : Dwi Iswanto (airafather6107170)

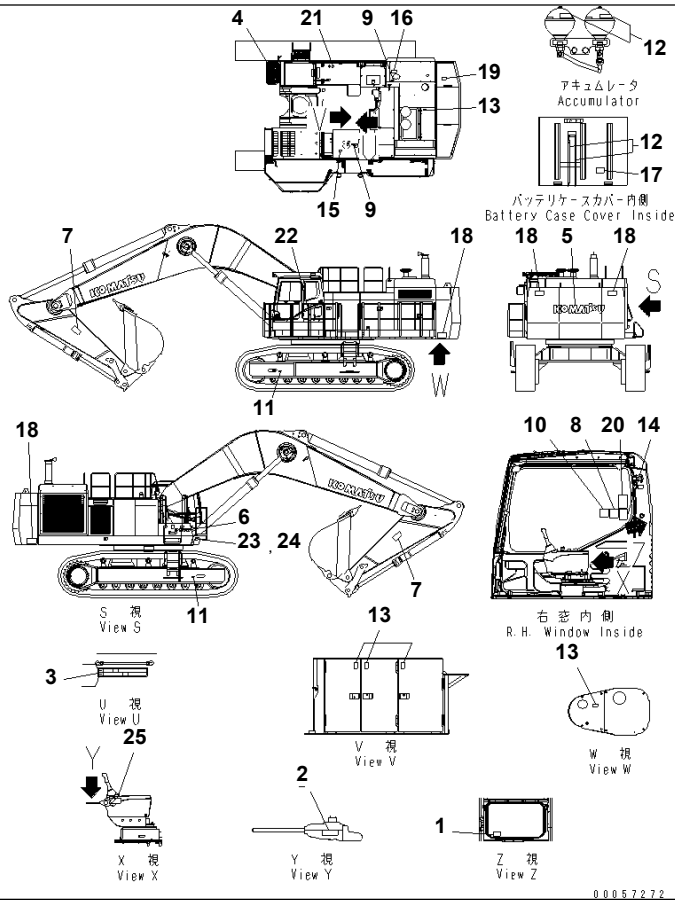

Ref. U0100-01A1 **Page 420010**

PC1250SP-8R S/N 35001-UP (W/O EGR, +55C DEGREE)

MARKS AND PLATES (OPERATING AND CAUTION PLATE) (ENGLISH) (SP)

Item	Part No.	Part Name	Qty	Serial No.
1	20Y-00-31170	PLATE, SAFETY	1	35001-
2	09685-00002	PLATE, OPERATING	1	35001-
3	21N-00-31340	LEVEL GAUGE	1	35001-
4	09690-M0063	PLATE, MARK	1	35001-
5	09690-P1800	PLATE, MARK	1	35001-
6	09690-P0560	PLATE, MARK	1	35001-
7	09134-A1681	PLATE, CAUTION	2	35001-
8	09651-A0641	PLATE, SAFETY	1	35001-
9	09653-A0481	PLATE, SAFETY	2	35001-
10	09654-A0641	PLATE, SAFETY	1	35001-
11	09657-A0881	PLATE, SAFETY	2	35001-
12	09659-A057B	PLATE, SAFETY	4	35001-
13	09667-A0481	PLATE, SAFETY	5	35001-
14	09801-A0641	PLATE, SAFETY	1	35001-
15	09805-A0881	PLATE, SAFETY	1	35001-
16	09805-C0881	PLATE, SAFETY	1	35001-
17	09808-A0881	PLATE, SAFETY	1	35001-
18	09133-A3281	PLATE, SAFETY	4	35001-
19	09805-C0881	PLATE, SAFETY	1	35001-
20	09802-03000	PLATE, SAFETY	1	35001-
21	09669-0000E	PLATE, CAUTION	1	35001-
22	21N-00-41271	PLATE	1	35010-
	□21N-00-41270	PLATE	1	35001-35009
23	(★09601-10001)	PLATE, NAME	1	35001-
24	04418-13060	SCREW	4	35001-
25	09963-03001	TAG	1	35001-

Printed By : Dwi Iswanto (airafather6107170)

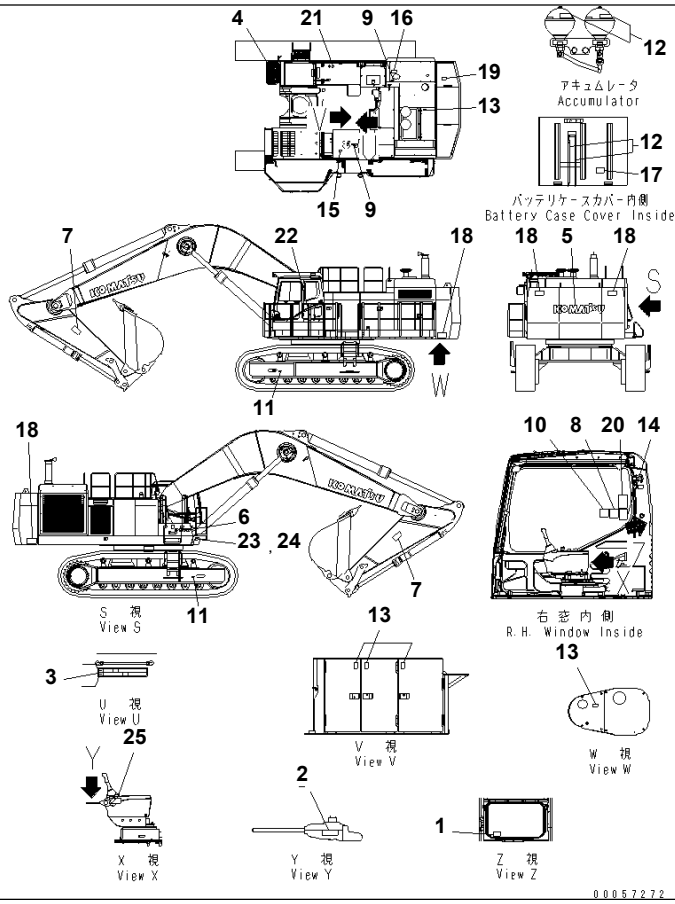

Ref. U0100-01A3 **Page 420020**

PC1250SP-8R S/N 35001-UP (W/O EGR, +55C DEGREE)

MARKS AND PLATES (OPERATING AND CAUTION PLATE) (INDONESIAN) (SP)

Item	Part No.	Part Name	Qty	Serial No.
1	20Y-00-31170	PLATE, SAFETY	1	35001-
2	09685-00002	PLATE, OPERATING	1	35001-
3	21N-00-31340	LEVEL GAUGE	1	35001-
4	09690-M0063	PLATE, MARK	1	35001-
5	09690-P1800	PLATE, MARK	1	35001-
6	09690-P0560	PLATE, MARK	1	35001-
7	09134-A1681	PLATE, CAUTION	2	35001-
8	09651-A0641	PLATE, SAFETY	1	35001-
9	09653-A0481	PLATE, SAFETY	2	35001-
10	09654-A0641	PLATE, SAFETY	1	35001-
11	09657-A0881	PLATE, SAFETY	2	35001-
12	09659-A057B	PLATE, SAFETY	4	35001-
13	09667-A0481	PLATE, SAFETY	5	35001-
14	09801-A0641	PLATE, SAFETY	1	35001-
15	09805-A0881	PLATE, SAFETY	1	35001-
16	09805-C0881	PLATE, SAFETY	1	35001-
17	09808-A0881	PLATE, SAFETY	1	35001-
18	09133-A3281	PLATE, SAFETY	4	35001-
19	09805-C0881	PLATE, SAFETY	1	35001-
20	09802-00500	PLATE, SAFETY	1	35001-
21	09669-0000E	PLATE, CAUTION	1	35001-
22	21N-00-41271	PLATE	1	35010-
	□21N-00-41270	PLATE	1	35001-35009
23	(★09601-10001)	PLATE, NAME	1	35001-
24	04418-13060	SCREW	4	35001-
25	09963-A1640	TAG	1	35001-

Printed By : Dwi Iswanto (airafather6107170)

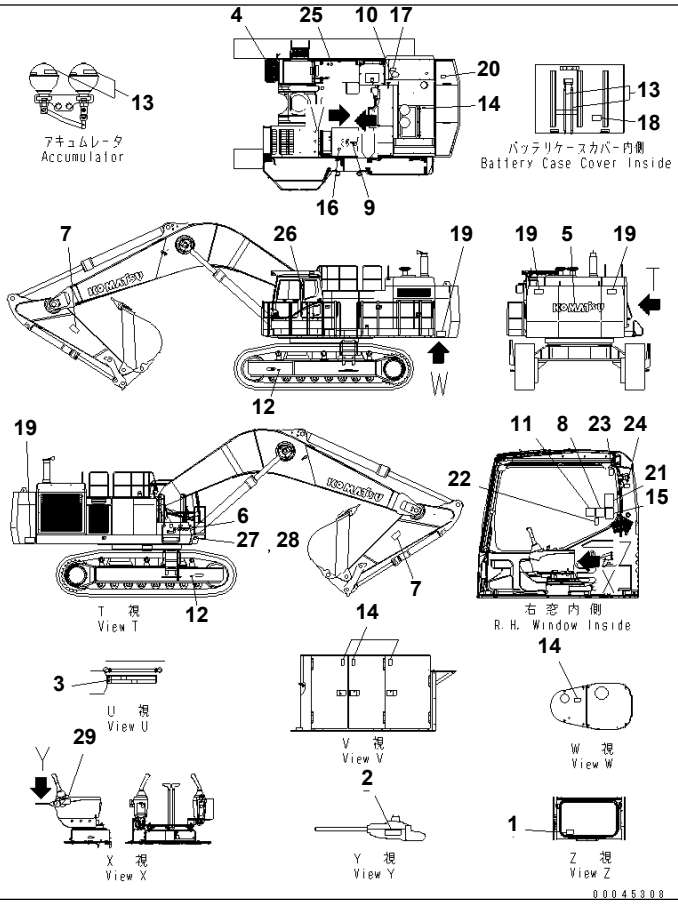

Ref. U0100-01A4 **Page 420030**

PC1250SP-8R S/N 35001-UP (W/O EGR, +55C DEGREE)

MARKS AND PLATES (OPERATING AND CAUTION PLATE) (ENGLISH) (FOR U.S.A.) (LETTERING TYPE)

Item	Part No.	Part Name	Qty	Serial No.
1	20Y-00-31170	PLATE, SAFETY	1	35001-
2	09685-00002	PLATE, OPERATING	1	35001-
3	21N-00-31340	LEVEL GAUGE	1	35001-
4	09690-M0063	PLATE, MARK	1	35001-
5	09690-P1800	PLATE, MARK	1	35001-
6	09690-P0560	PLATE, MARK	1	35001-
7	09134-A1681	PLATE, CAUTION	2	35001-
8	09651-03001	PLATE, SAFETY	1	35001-
9	09653-03001	PLATE, SAFETY	1	35001-
10	09668-03001	PLATE, SAFETY	1	35001-
11	09654-03001	PLATE, SAFETY	1	35001-
12	09657-03003	PLATE, SAFETY	2	35001-
13	09659-53000	PLATE, SAFETY	4	35001-
14	09667-03001	PLATE, SAFETY	5	35001-
15	09801-03001	PLATE, SAFETY	1	35001-
16	09805-23000	PLATE, SAFETY	1	35001-
17	09805-13000	PLATE, SAFETY	1	35001-
18	09808-03000	PLATE, SAFETY	1	35001-
19	09133-23000	PLATE, SAFETY	4	35001-
20	09805-13000	PLATE, SAFETY	1	35001-
21	09802-03000	PLATE, SAFETY	1	35001-
22	09839-03000	PLATE, SAFETY	1	35001-
23	09803-03000	PLATE, SAFETY	1	35001-
24	20Y-00-31350	PLATE, CAUTION	1	35001-
25	09669-0000E	PLATE, CAUTION	1	35001-
26	21N-00-41271	PLATE	1	35001-
27	(★09601-10001)	PLATE, NAME	1	35001-
28	04418-13060	SCREW	4	35001-
29	09963-03001	TAG	1	35001-

Printed By : Dwi Iswanto (airafather6107170)

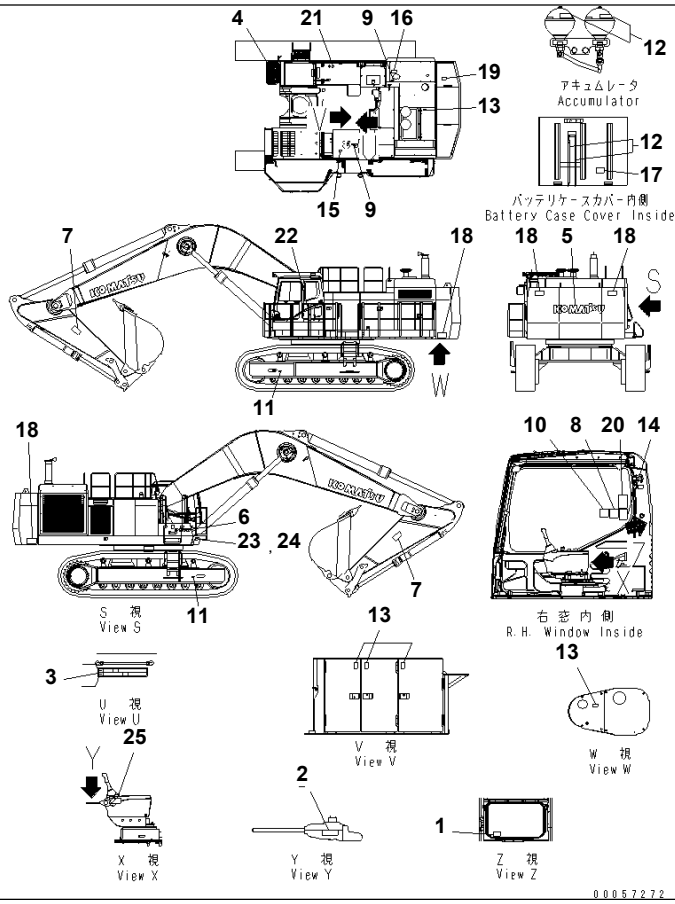

Ref. U0100-01A7 **Page 420040**

PC1250SP-8R S/N 35001-UP (W/O EGR, +55C DEGREE)

MARKS AND PLATES (OPERATING AND CAUTION PLATE) (TURKISH)

Item	Part No.	Part Name	Qty	Serial No.
1	20Y-00-31170	PLATE, SAFETY	1	35001-
2	09685-00002	PLATE, OPERATING	1	35001-
3	21N-00-31340	LEVEL GAUGE	1	35001-
4	09690-M0063	PLATE, MARK	1	35001-
5	09690-P1800	PLATE, MARK	1	35001-
6	09690-P0560	PLATE, MARK	1	35001-
7	09134-A1681	PLATE, CAUTION	2	35001-
8	09651-A0641	PLATE, SAFETY	1	35001-
9	09653-A0481	PLATE, SAFETY	2	35001-
10	09654-A0641	PLATE, SAFETY	1	35001-
11	09657-A0881	PLATE, SAFETY	2	35001-
12	09659-A057B	PLATE, SAFETY	4	35001-
13	09667-A0481	PLATE, SAFETY	5	35001-
14	09801-A0641	PLATE, SAFETY	1	35001-
15	09805-A0881	PLATE, SAFETY	1	35001-
16	09805-C0881	PLATE, SAFETY	1	35001-
17	09808-A0881	PLATE, SAFETY	1	35001-
18	09133-A3281	PLATE, SAFETY	4	35001-
19	09805-C0881	PLATE, SAFETY	1	35001-
20	208-00-61750	PLATE	1	35001-
21	09669-0000E	PLATE, CAUTION	1	35001-
22	21N-00-41271	PLATE	1	35001-
23	(★09601-00001)	PLATE, NAME	1	35001-
24	04418-13060	SCREW	4	35001-
25	09963-A1640	TAG	1	35001-

Printed By : Dwi Iswanto (airafather6107170)

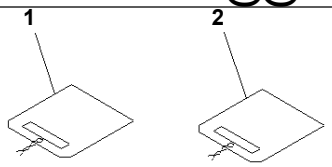

PDB4218

Ref. U0100-02A1 **Page 420050**

PC1250SP-8R S/N 35001-UP (W/O EGR, +55C DEGREE)
MARKS AND PLATES (TAG PLATE) (ENGLISH)

Item	Part No.	Part Name	Qty	Serial No.
1	21N-98-32110	PLATE	1	35001-
2	209-98-52170	PLATE	1	35001-

Printed By : Dwi Iswanto (airafather6107170)

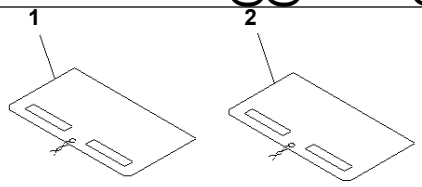

PDB7286

Ref. U0100-02A2 **Page 420060**

PC1250SP-8R S/N 35001-UP (W/O EGR, +55C DEGREE)
MARKS AND PLATES (TAG PLATE) (INDONESIAN)

Item	Part No.	Part Name	Qty	Serial No.
1	21N-98-34110	PLATE	1	35001-
2	209-98-54170	PLATE	1	35001-

Printed By : Dwi Iswanto (airafather6107170)

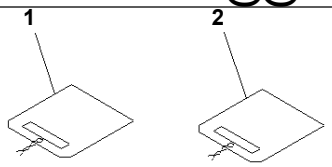

PDB4218

Ref. U0100-02A7 **Page 420070**

PC1250SP-8R S/N 35001-UP (W/O EGR, +55C DEGREE)
MARKS AND PLATES (TAG PLATE) (TURKISH)

Item	Part No.	Part Name	Qty	Serial No.
1	209-98-77270	PLATE	1	35001-
2	209-98-77280	PLATE	1	35001-

Printed By : Dwi Iswanto (airafather6107170)

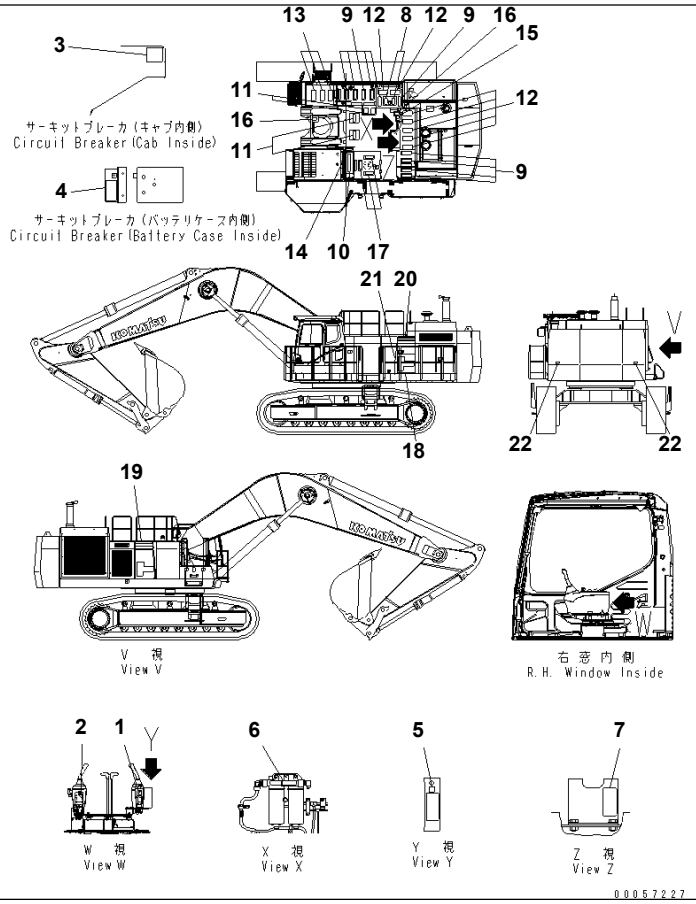

Ref. U0100-03A1 **Page 420080**

PC1250SP-8R S/N 35001-UP (W/O EGR, +55C DEGREE)
MARKS AND PLATES (ANTI SLIP) (ENGLISH) (SP)(#35001-35049)

Item	Part No.	Part Name	Qty	Serial No.
1	20Y-00-31330	PLATE, OPERATING	1	35001-@
2	21N-00-41340	PLATE	1	35001-@
3	21N-00-32370	PLATE	1	35001-@
4	21N-00-41350	PLATE	1	35001-@
5	209-00-71940	PLATE	1	35001-@
6	6217-71-6470	PLATE, CAUTION	1	35001-@
7	6245-81-9410	PLATE	1	35001-@
8	22U-00-28110	PLATE	2	35001-@
9	20Y-00-42110	PLATE	10	35001-@
10	20Y-00-42130	PLATE	1	35001-@
11	207-00-76230	PLATE	2	35001-@
12	207-00-76250	PLATE	7	35001-@
13	20Y-00-42140	PLATE	3	35001-@
14	21N-00-41320	PLATE	1	35001-@
15	21M-00-21280	PLATE	1	35001-@
16	21M-00-21290	PLATE	2	35001-@
17	21N-00-41310	PLATE	5	35001-@
18	21N-00-32410	PLATE	1	35001-@
19	21N-00-41130	PLATE	1	35001-@
20	21N-00-41150	PLATE	1	35001-@
21	21N-00-41160	PLATE	1	35001-@
22	14X-98-35181	PLATE	2	35001-@

Printed By : Dwi Iswanto (airafather6107170)

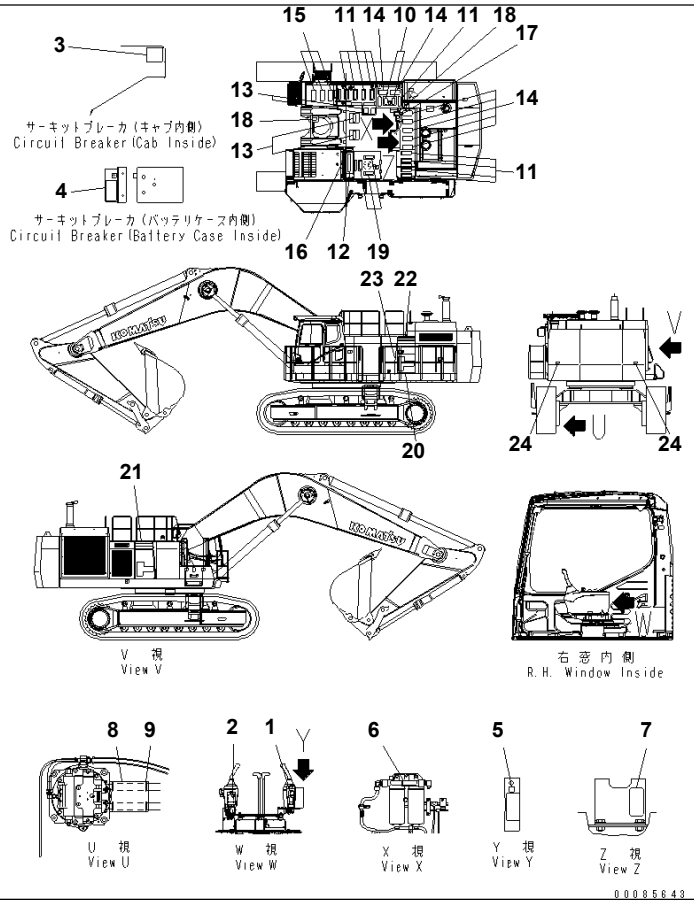

Ref. U0100-03A1A **Page 420090**

PC1250SP-8R S/N 35001-UP (W/O EGR, +55C DEGREE)
MARKS AND PLATES (ANTI SLIP) (ENGLISH) (SP)(#35050-)

Item	Part No.	Part Name	Qty	Serial No.
1	20Y-00-31330	PLATE, OPERATING	1	35001-
2	21N-00-41340	PLATE	1	35001-
3	21N-00-32370	PLATE	1	35001-
4	21N-00-41350	PLATE	1	35001-
5	209-00-71940	PLATE	1	35001-
6	6217-71-6470	PLATE, CAUTION	1	35001-
7	6245-81-9410	PLATE	1	35001-
8	21N-98-41140	PLATE	2	35050-
9	08034-20536	BAND	8	35050-
10	22U-00-28110	PLATE	2	35001-
11	20Y-00-42110	PLATE	10	35001-
12	20Y-00-42130	PLATE	1	35001-
13	207-00-76230	PLATE	2	35001-
14	207-00-76250	PLATE	7	35001-
15	20Y-00-42140	PLATE	3	35001-
16	21N-00-41320	PLATE	1	35001-
17	21M-00-21280	PLATE	1	35001-
18	21M-00-21290	PLATE	2	35001-
19	21N-00-41310	PLATE	5	35001-
20	21N-00-32410	PLATE	1	35001-
21	21N-00-41130	PLATE	1	35001-
22	21N-00-41150	PLATE	1	35001-
23	21N-00-41160	PLATE	1	35001-
24	14X-98-35181	PLATE	2	35001-

Printed By : Dwi Iswanto (airafather6107170)

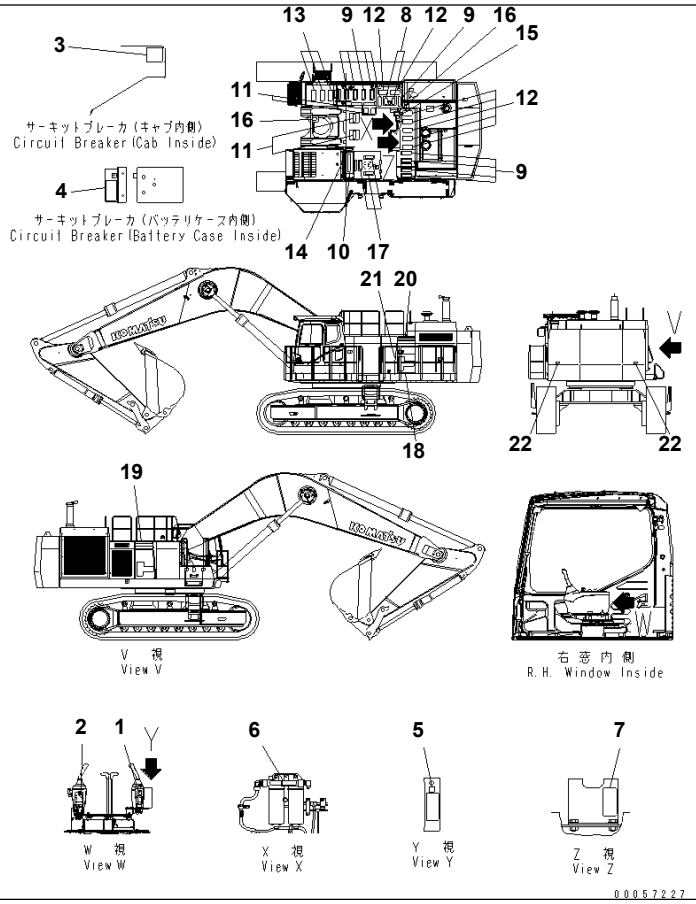

Ref. U0100-03A3 **Page 420100**

PC1250SP-8R S/N 35001-UP (W/O EGR, +55C DEGREE)
MARKS AND PLATES (ANTI SLIP) (INDONESIAN) (SP)(#35001-35049)

Item	Part No.	Part Name	Qty	Serial No.
1	20Y-00-31450	PLATE	1	35001-@
2	21N-00-41510	PLATE	1	35001-@
3	21N-00-34370	PLATE	1	35001-@
4	21N-00-41520	PLATE	1	35001-@
5	209-00-71940	PLATE	1	35001-@
6	6217-71-6530	PLATE	1	35001-@
7	6245-81-9410	PLATE	1	35001-@
8	22U-00-28110	PLATE	2	35001-@
9	20Y-00-42110	PLATE	10	35001-@
10	20Y-00-42130	PLATE	1	35001-@
11	207-00-76230	PLATE	2	35001-@
12	207-00-76250	PLATE	7	35001-@
13	20Y-00-42140	PLATE	3	35001-@
14	21N-00-41320	PLATE	1	35001-@
15	21M-00-21280	PLATE	1	35001-@
16	21M-00-21290	PLATE	2	35001-@
17	21N-00-41310	PLATE	5	35001-@
18	21N-00-32410	PLATE	1	35001-@
19	21N-00-41130	PLATE	1	35001-@
20	21N-00-41150	PLATE	1	35001-@
21	21N-00-41160	PLATE	1	35001-@
22	14X-98-35181	PLATE	2	35001-@

Printed By : Dwi Iswanto (airafather6107170)

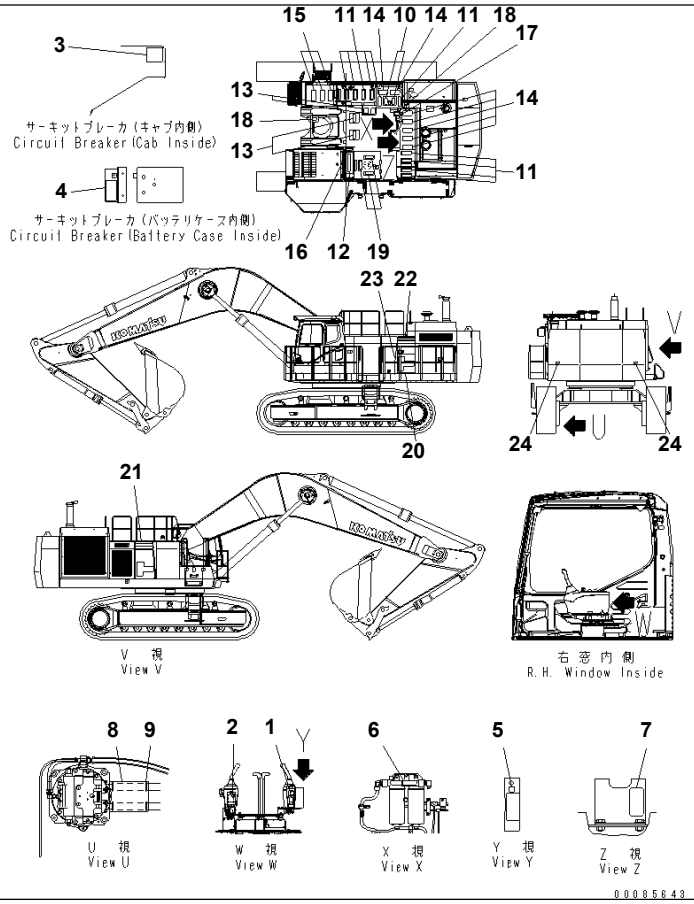

Ref. U0100-03A3A **Page 420110**

PC1250SP-8R S/N 35001-UP (W/O EGR, +55C DEGREE)

MARKS AND PLATES (ANTI SLIP) (INDONESIAN) (SP)(#35050-)

Item	Part No.	Part Name	Qty	Serial No.
1	20Y-00-31450	PLATE	1	35001-
2	21N-00-41510	PLATE	1	35001-
3	21N-00-34370	PLATE	1	35001-
4	21N-00-41520	PLATE	1	35001-
5	209-00-71940	PLATE	1	35001-
6	6217-71-6530	PLATE	1	35001-
7	6245-81-9410	PLATE	1	35001-
8	21N-98-41140	PLATE	2	35050-
9	08034-20536	BAND	8	35050-
10	22U-00-28110	PLATE	2	35001-
11	20Y-00-42110	PLATE	10	35001-
12	20Y-00-42130	PLATE	1	35001-
13	207-00-76230	PLATE	2	35001-
14	207-00-76250	PLATE	7	35001-
15	20Y-00-42140	PLATE	3	35001-
16	21N-00-41320	PLATE	1	35001-
17	21M-00-21280	PLATE	1	35001-
18	21M-00-21290	PLATE	2	35001-
19	21N-00-41310	PLATE	5	35001-
20	21N-00-32410	PLATE	1	35001-
21	21N-00-41130	PLATE	1	35001-
22	21N-00-41150	PLATE	1	35001-
23	21N-00-41160	PLATE	1	35001-
24	14X-98-35181	PLATE	2	35001-

Printed By : Dwi Iswanto (airafather6107170)

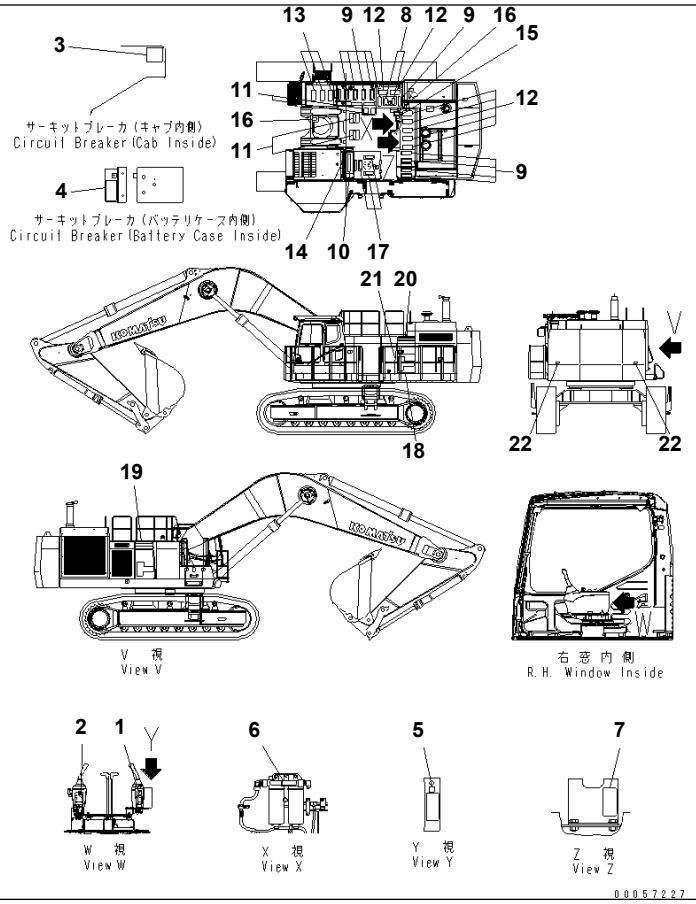

Ref. U0100-03A4 **Page 420120**

PC1250SP-8R S/N 35001-UP (W/O EGR, +55C DEGREE)

MARKS AND PLATES (ANTI SLIP) (ENGLISH) (FOR U.S.A.) (LETTERING TYPE) (SP)(#35001-35049)

Item	Part No.	Part Name	Qty	Serial No.
1	20Y-00-31330	PLATE, OPERATING	1	35001-@
2	21N-00-41170	PLATE	1	35001-@
3	21N-00-32370	PLATE	1	35001-@
4	21N-00-41180	PLATE	1	35001-@
5	209-00-71940	PLATE	1	35001-@
6	6217-71-6470	PLATE, CAUTION	1	35001-@
7	6245-81-9410	PLATE	1	35001-@
8	22U-00-28110	PLATE	2	35001-@
9	20Y-00-42110	PLATE	10	35001-@
10	20Y-00-42130	PLATE	1	35001-@
11	207-00-76230	PLATE	2	35001-@
12	207-00-76250	PLATE	7	35001-@
13	20Y-00-42140	PLATE	3	35001-@
14	21N-00-41320	PLATE	1	35001-@
15	21M-00-21280	PLATE	1	35001-@
16	21M-00-21290	PLATE	2	35001-@
17	21N-00-41310	PLATE	5	35001-@
18	21N-00-32410	PLATE	1	35001-@
19	21N-00-41130	PLATE	1	35001-@
20	21N-00-41150	PLATE	1	35001-@
21	21N-00-41160	PLATE	1	35001-@
22	14X-98-35181	PLATE	2	35001-@

Printed By : Dwi Iswanto (airafather6107170)

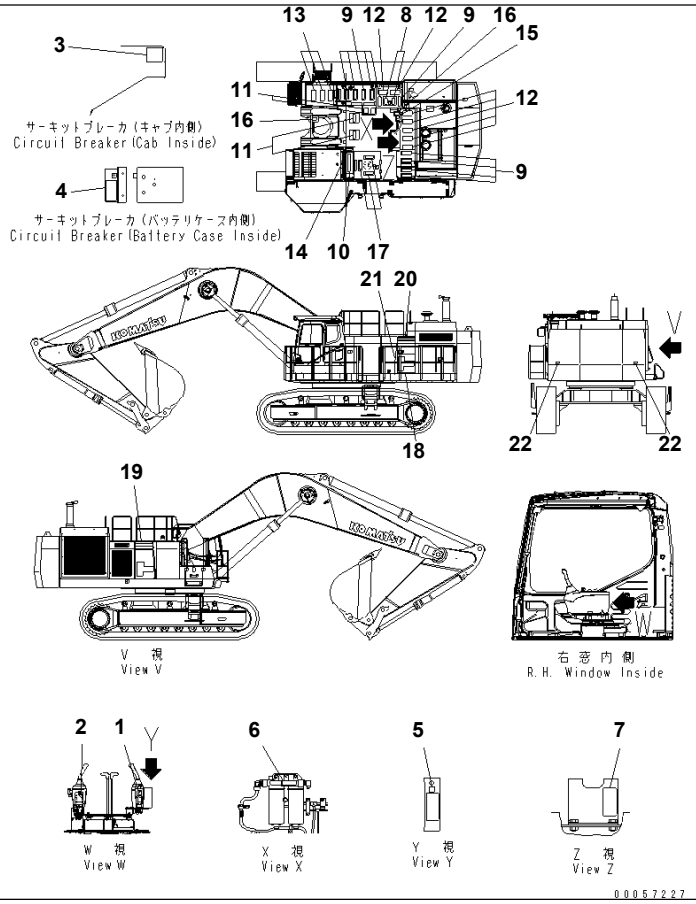

Ref. U0100-03A9 **Page 420160**

PC1250SP-8R S/N 35001-UP (W/O EGR, +55C DEGREE)
MARKS AND PLATES (ANTI SLIP) (INDONESIAN) (WITH QUICK CHARGE) (SP)(#35001-35049)

Item	Part No.	Part Name	Qty	Serial No.
1	20Y-00-31450	PLATE	1	35001-@
2	21N-00-41510	PLATE	1	35001-@
3	21N-00-34370	PLATE	1	35001-@
4	21N-00-41520	PLATE	1	35001-@
5	209-00-71940	PLATE	1	35001-@
6	6217-71-6530	PLATE	1	35001-@
7	6245-81-9410	PLATE	1	35001-@
8	22U-00-28110	PLATE	2	35001-@
9	20Y-00-42110	PLATE	10	35001-@
10	20Y-00-42130	PLATE	1	35001-@
11	207-00-76230	PLATE	2	35001-@
12	207-00-76250	PLATE	7	35001-@
13	20Y-00-42140	PLATE	3	35001-@
14	21N-00-41320	PLATE	1	35001-@
15	21M-00-21280	PLATE	1	35001-@
16	21M-00-21290	PLATE	2	35001-@
17	21N-00-41310	PLATE	5	35001-@
18	21N-00-32410	PLATE	1	35001-@
19	21N-00-41630	PLATE	1	35001-@
20	21N-00-41150	PLATE	1	35001-@
21	21N-00-41160	PLATE	1	35001-@
22	14X-98-35181	PLATE	2	35001-@

Printed By : Dwi Iswanto (airafather6107170)

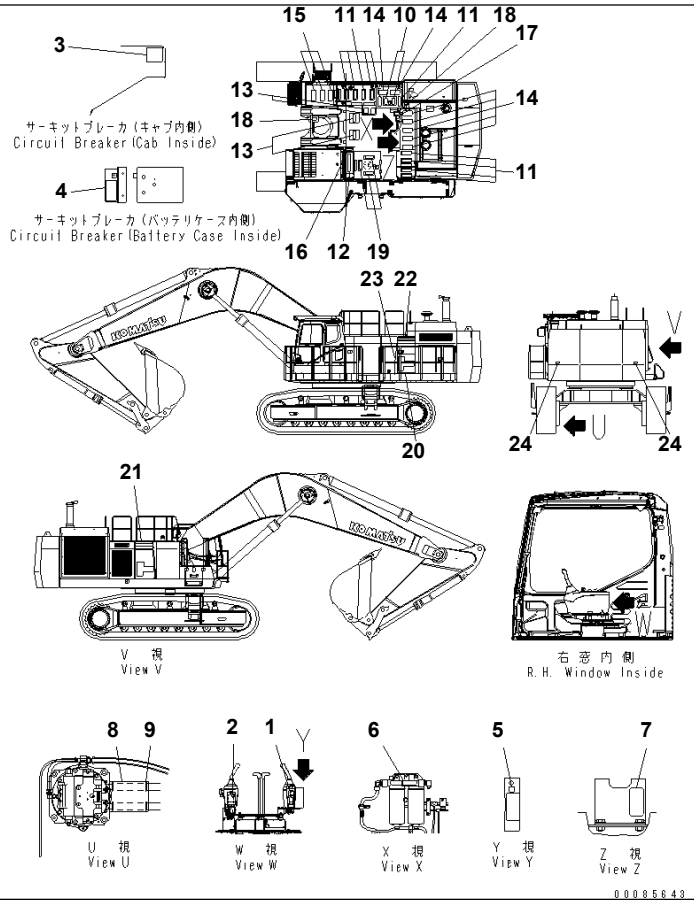

Ref. U0100-03A9A **Page 420170**

PC1250SP-8R S/N 35001-UP (W/O EGR, +55C DEGREE)

MARKS AND PLATES (ANTI SLIP) (INDONESIAN) (WITH QUICK CHARGE) (SP)(#35050-)

Item	Part No.	Part Name	Qty	Serial No.
1	20Y-00-31450	PLATE	1	35001-
2	21N-00-41510	PLATE	1	35001-
3	21N-00-34370	PLATE	1	35001-
4	21N-00-41520	PLATE	1	35001-
5	209-00-71940	PLATE	1	35001-
6	6217-71-6530	PLATE	1	35001-
7	6245-81-9410	PLATE	1	35001-
8	21N-98-41140	PLATE	2	35050-
9	08034-20536	BAND	8	35052-
10	22U-00-28110	PLATE	2	35001-
11	20Y-00-42110	PLATE	10	35001-
12	20Y-00-42130	PLATE	1	35001-
13	207-00-76230	PLATE	2	35001-
14	207-00-76250	PLATE	7	35001-
15	20Y-00-42140	PLATE	3	35001-
16	21N-00-41320	PLATE	1	35001-
17	21M-00-21280	PLATE	1	35001-
18	21M-00-21290	PLATE	2	35001-
19	21N-00-41310	PLATE	5	35001-
20	21N-00-32410	PLATE	1	35001-
21	21N-00-41630	PLATE	1	35001-
22	21N-00-41150	PLATE	1	35001-
23	21N-00-41160	PLATE	1	35001-
24	14X-98-35181	PLATE	2	35001-

Printed By : Dwi Iswanto (airafather6107170)

@@1E525@

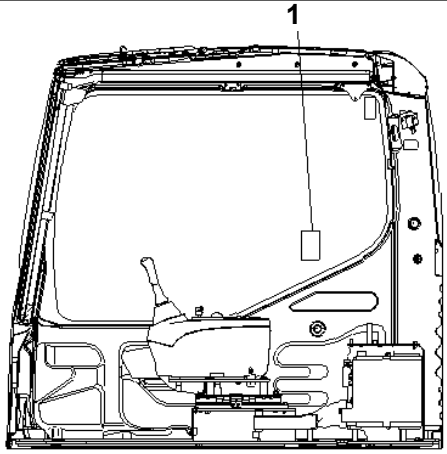

P W 1 E 5 2 5

Ref. U0300-01A8 **Page 420280**

PC1250SP-8R S/N 35001-UP (W/O EGR, +55C DEGREE)

MARKS AND PLATES (SIFT PATTERN¤ ISO) (INDONESIAN)

Item	Part No.	Part Name	Qty	Serial No.
1	09822-00400	PLATE, SAFETY	1	35001-

Printed By : Dwi Iswanto (airafather6107170)

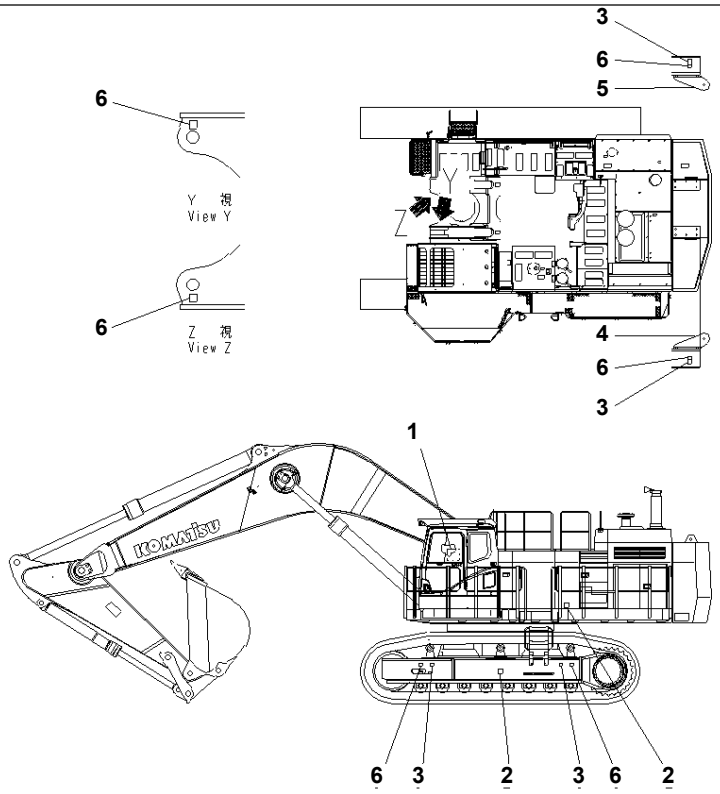

00038140

Ref. U0400-01A1 Page 420300

PC1250SP-8R S/N 35001-UP (W/O EGR, +55C DEGREE)
LIFTING POINT DECAL (ENGLISH)

Item	Part No.	Part Name	Qty	Serial No.
1	21N-00-41290	PLATE	1	35001-
2	09960-01012	PLATE, MARK	4	35001-
3	09960-00801	MARK	8	35001-
4	21N-98-31810	BRACKET	1	35001-
5	21N-98-31820	BRACKET	1	35001-
6	09960-00802	MARK	8	35001-

Printed By : Dwi Iswanto (airafather6107170)

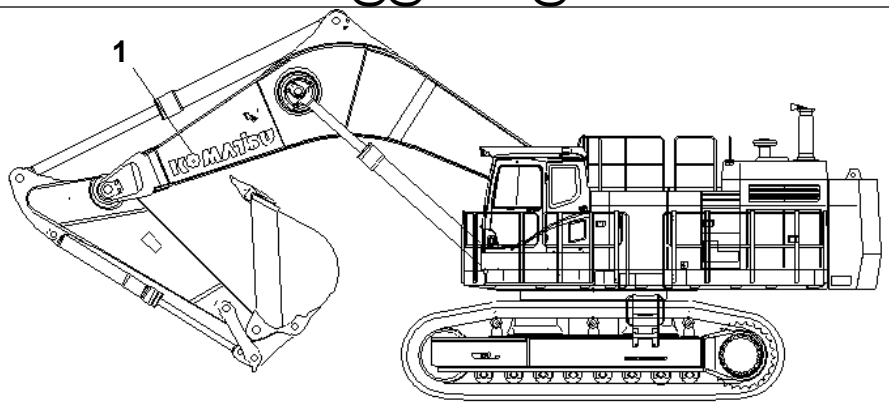

PW1E567

Ref. U0510-01A0 **Page 420310**

PC1250SP-8R S/N 35001-UP (W/O EGR, +55C DEGREE)
BOOM MARK PLATE (SP)

Item	Part No.	Part Name	Qty	Serial No.
1	09690-P1800	PLATE, MARK	2	35001-

Printed By : Dwi Iswanto (airafather6107170)

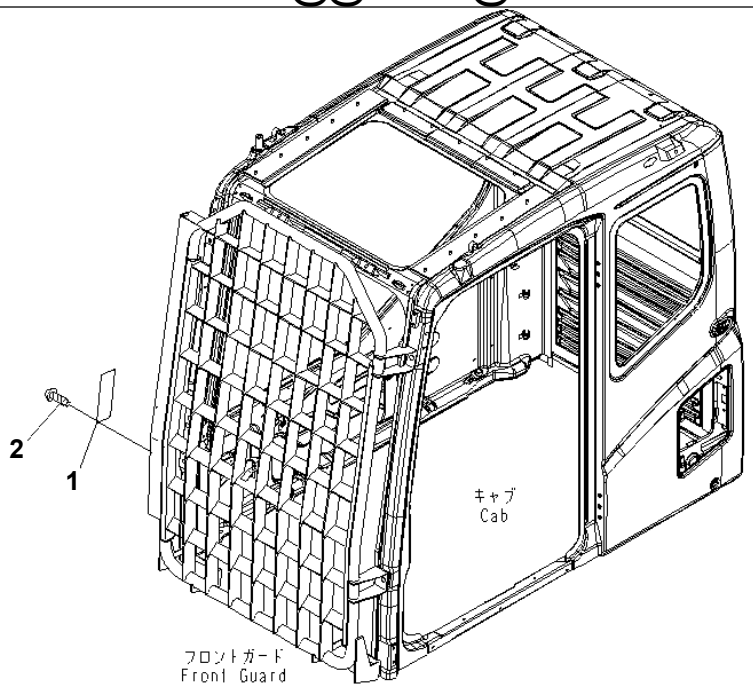

P W 1 E 5 6 9

Ref. U0520-01A0 **Page 420320**

PC1250SP-8R S/N 35001-UP (W/O EGR, +55C DEGREE)
CAUTION PLATE (FOR LV2 GUARD) (FRONT FULL GUARD) (ENGLISH)

Item	Part No.	Part Name	Qty	Serial No.
1	20Y-00-31610	PLATE	1	35001-
2	04418-13060	SCREW	4	35001-

Printed By : Dwi Iswanto (airafather6107170)

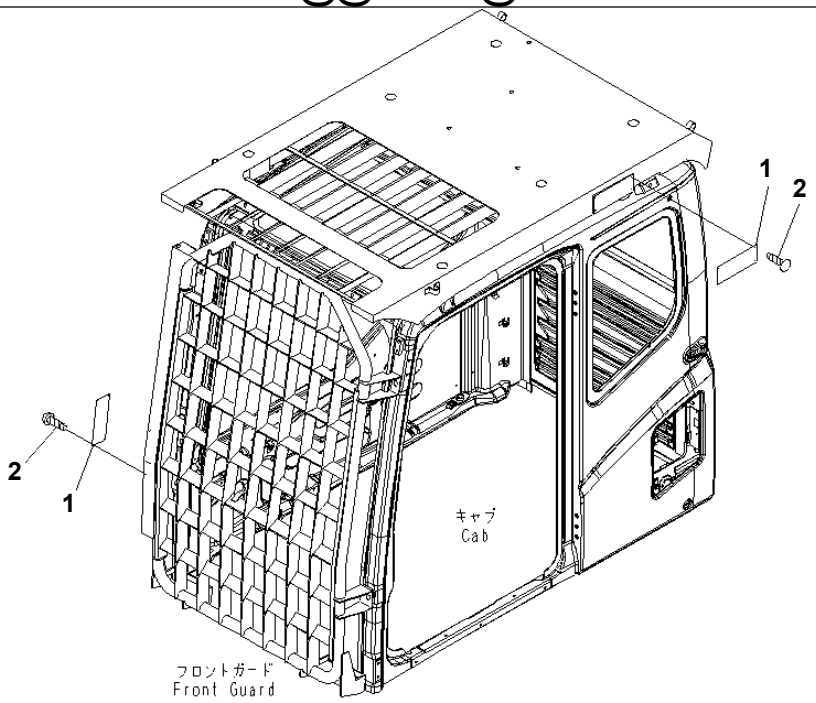

PW1E568

Ref. U0520-01A1 **Page 420330**

PC1250SP-8R S/N 35001-UP (W/O EGR, +55C DEGREE)
CAUTION PLATE (FOR LV2 GUARD) (FRONT FULL GUARD AND TOP GUARD) (ENGLISH)

Item	Part No.	Part Name	Qty	Serial No.
1	20Y-00-31610	PLATE	2	35001-
2	04418-13060	SCREW	8	35001-

Printed By : Dwi Iswanto (airafather6107170)

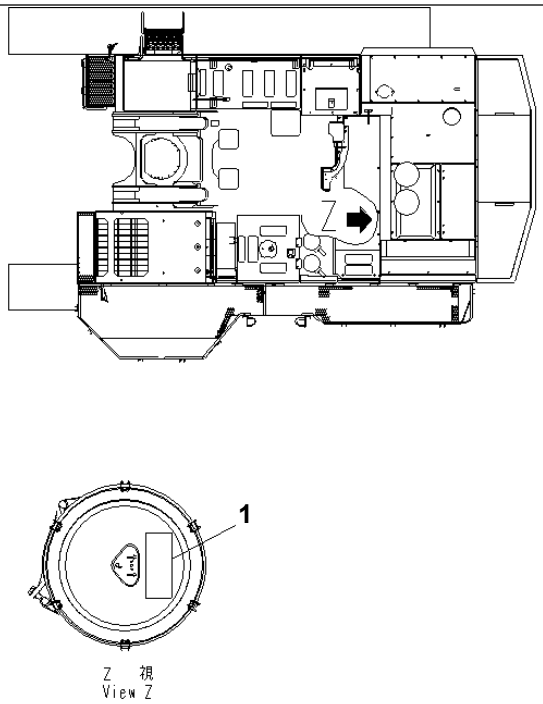

00044850

Ref. U0550-01A8 Page 420400

PC1250SP-8R S/N 35001-UP (W/O EGR, +55C DEGREE)

PLATE (AIR CLEANER¤ DOUBLE ELEMENT) (INDONESIAN)

Item	Part No.	Part Name	Qty	Serial No.
1	09637-05163	PLATE, INSTRUCTION	1	35001-

Printed By : Dwi Iswanto (airafather6107170)

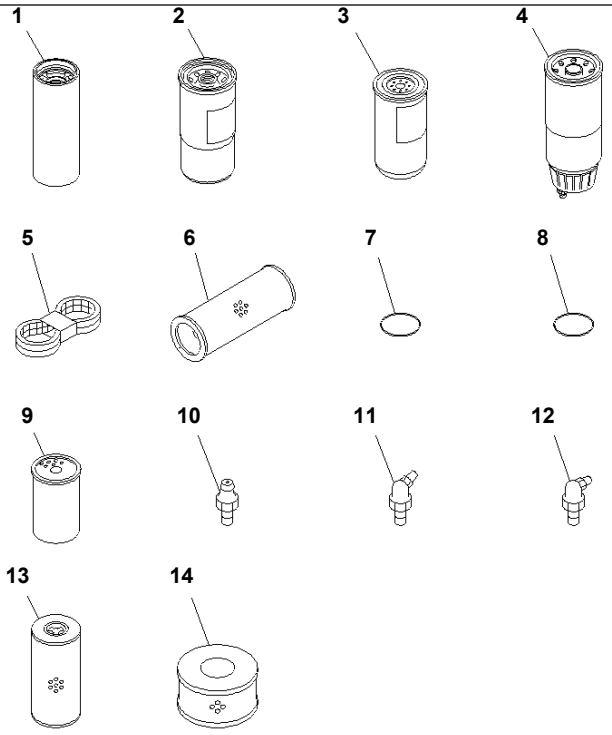

00068202

Ref. V0100-01A0 **Page 450010**

PC1250SP-8R S/N 35001-UP (W/O EGR, +55C DEGREE)
SPARE PARTS (50A)

Item	Part No.	Part Name	Qty	Serial No.
1	600-211-1340	CARTRIDGE	3	35001-
2	600-319-3550	CARTRIDGE (1-5/8)	2	35001-
3	600-411-1171	CARTRIDGE	1	35001-
4	600-319-4540	CARTRIDGE (1-1/4)	2	35001-
5	6245-81-6370	BELT	1	35001-
6	209-60-77532	ELEMENT	2	35021-
	□209-60-77531	ELEMENT	2	35001-35020
7	07000-15180	O-RING	2	35001-
8	07002-13034	O-RING	4	35001-
9	21N-60-12210	CARTRIDGE	1	35001-
10	07020-00000	FITTING	4	35001-
11	07020-00675	FITTING	5	35001-
12	07020-00900	FITTING	4	35001-
13	424-16-11140	ELEMENT	1	35001-
14	421-60-35170	ELEMENT	2	35001-

Printed By : Dwi Iswanto (airafather6107170)

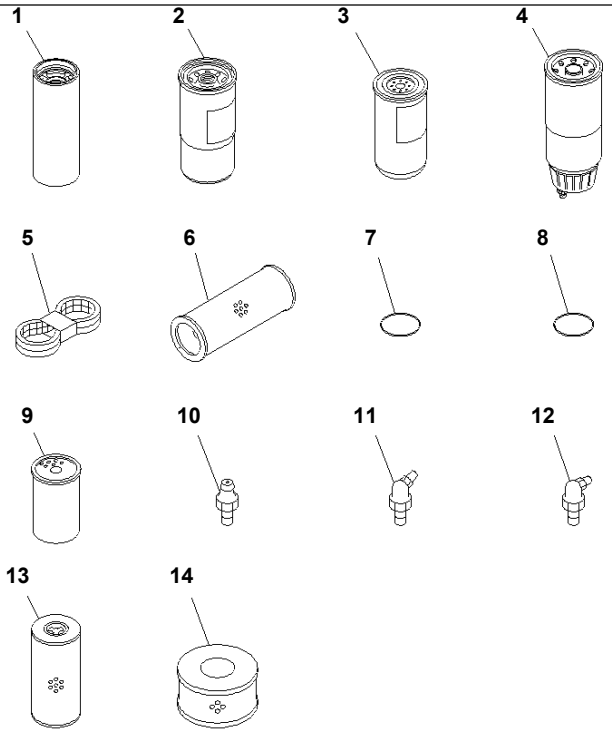

00068202

Ref. V0100-01A1 **Page 450020**

PC1250SP-8R S/N 35001-UP (W/O EGR, +55C DEGREE)
SPARE PARTS (90A)

Item	Part No.	Part Name	Qty	Serial No.
1	600-211-1340	CARTRIDGE	3	35001-
2	600-319-3550	CARTRIDGE (1-5/8)	2	35001-
3	600-411-1171	CARTRIDGE	1	35001-
4	600-319-4540	CARTRIDGE (1-1/4)	2	35001-
5	6245-81-6360	BELT	1	35001-
6	209-60-77532	ELEMENT	2	35021-
	□209-60-77531	ELEMENT	2	35001-35020
7	07000-15180	O-RING	2	35001-
8	07002-13034	O-RING	4	35001-
9	21N-60-12210	CARTRIDGE	1	35001-
10	07020-00000	FITTING	4	35001-
11	07020-00675	FITTING	5	35001-
12	07020-00900	FITTING	4	35001-
13	424-16-11140	ELEMENT	1	35001-
14	421-60-35170	ELEMENT	2	35001-

Printed By : Dwi Iswanto (airafather6107170)

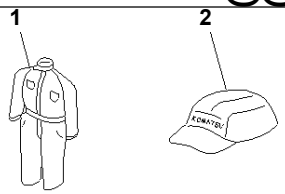

PC1250SP-8R S/N 35001-UP (W/O EGR, +55C DEGREE)

CAP AND OVERALL

Item	Part No.	Part Name	Qty	Serial No.
	09980-92550	CAP AND OVERALL KIT	1	35001-
1	09980-10550	· OVERALL	1	35001-
2	09982-20057	· CAP	1	35001-

Printed By : Dwi Iswanto (airafather6107170)

PC1250SP-8R S/N 35001-UP (W/O EGR, +55C DEGREE)

00057314

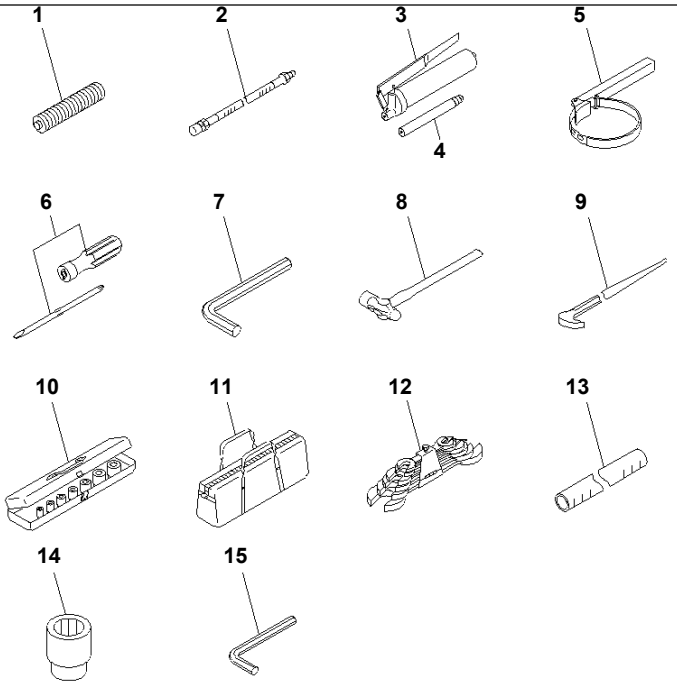

00057314

Ref. V0300-01A0 **Page 450040**

PC1250SP-8R S/N 35001-UP (W/O EGR, +55C DEGREE)

TOOL

Item	Part No.	Part Name	Qty	Serial No.
1	07950-90403	CARTRIDGE	1	35001-
2	07951-11400	NOZZLE	1	35001-
	07952-80002	GREASE PUMP ASS'Y	1	35001-
3	07950-10450	· PUMP	1	35001-
4	07951-21045	· NOZZLE	1	35001-
5	09019-28036	WRENCH	1	35001-
6	09033-00190	DRIVER	1	35001-
7	09007-00836	WRENCH, 8	1	35001-
8	09039-00150	HAMMER	1	35001-
9	09055-10390	BAR	1	35001-
10	09020-10284	SOCKET WRENCH SET	1	35001-
	09021-01016	· SOCKET, 10	1	35001-
	09021-01319	· SOCKET, 13	1	35001-
	09021-01422	· SOCKET, 14	1	35001-
	09021-01725	· SOCKET, 17	1	35001-
	09021-01928	· SOCKET, 19	1	35001-
	09021-02233	· SOCKET, 22	1	35001-
	09021-02436	· SOCKET, 24	1	35001-
	09021-02739	· SOCKET, 27	1	35001-
	09021-03044	· SOCKET, 30	1	35001-
	09021-03246	· SOCKET, 32	1	35001-
	09021-03653	· SOCKET, 36	1	35001-
	09022-00150	· EXTENSION	1	35001-
	09022-00250	· EXTENSION	1	35001-
	09023-00300	· HANDLE	1	35001-
	09024-00300	· HANDLE	1	35001-
	09025-00075	· UNIVERSAL JOINT	1	35001-
	09026-00250	· HANDLE	1	35001-
	09027-00300	· BAR	1	35001-
11	09056-05513	BAG	1	35001-

Printed By : Dwi Iswanto (airafather6107170)

TOOL

Item	Part No.	Part Name	Qty	Serial No.
12	09000-30006	WRENCH SET	1	35001-
	09002-00810	· WRENCH, 8X10	1	35001-
	09002-01214	· WRENCH, 12X14	1	35001-
	09002-01317	· WRENCH, 13X17	1	35001-
	09002-01922	· WRENCH, 19X22	1	35001-
	09002-02427	· WRENCH, 24X27	1	35001-
	09002-03032	· WRENCH, 30X32	1	35001-
13	07287-02613	HOSE	1	35001-
14	09084-01524	SOCKET, 5/8	1	35001-
15	09007-00425	WRENCH, 4	1	35001-

Printed By : Dwi Iswanto (airafather6107170)

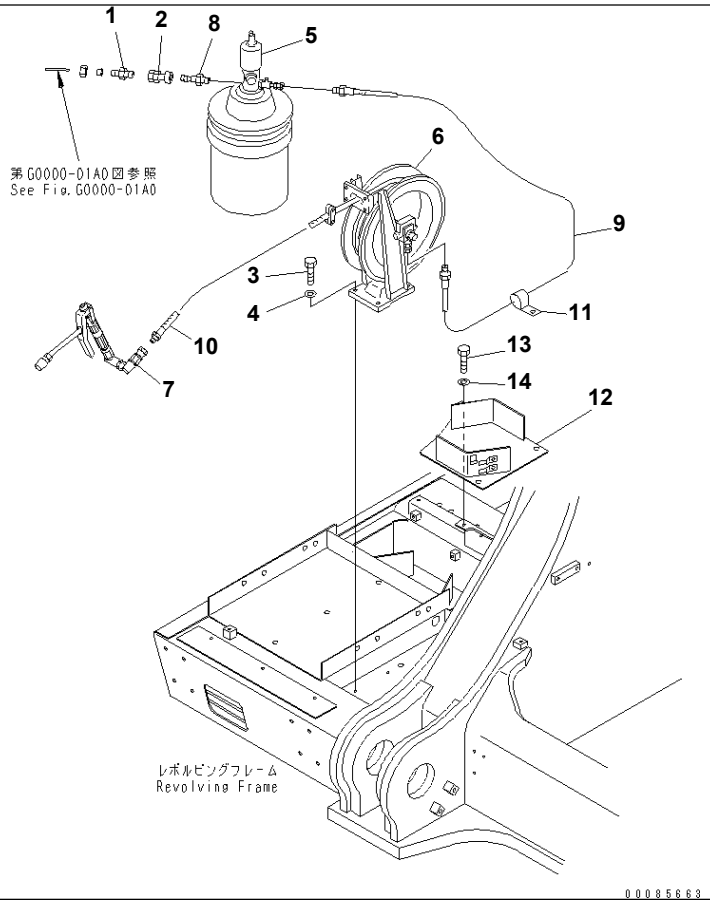

Ref. W1117-01A0 **Page 480010**

PC1250SP-8R S/N 35001-UP (W/O EGR, +55C DEGREE)

GREASE PUMP

Item	Part No.	Part Name	Qty	Serial No.
1	07836-00613	CONNECTOR	1	35001-
2	07880-20500	SOCKET	1	35001-
3	01010-81030	BOLT	4	35001-
4	01643-31032	WASHER	4	35001-
5	(209-68-11202)	GREASE PUMP ASS'Y	1	35001-
6	(209-68-51241)	HOSE REEL ASS'Y	1	35001-
7	(209-68-11230)	GREASE GUN ASS'Y	1	35001-
8	07881-10500	PLUG	1	35001-
9	21N-68-37131	HOSE	1	35001-
10	21T-68-72450	HOSE	1	35001-
11	04434-51912	CLIP	1	35001-
12	21N-68-31160	BRACKET	1	35001-
13	01010-81230	BOLT	3	35001-
14	01643-31232	WASHER	3	35001-

Printed By : Dwi Iswanto (airafather6107170)

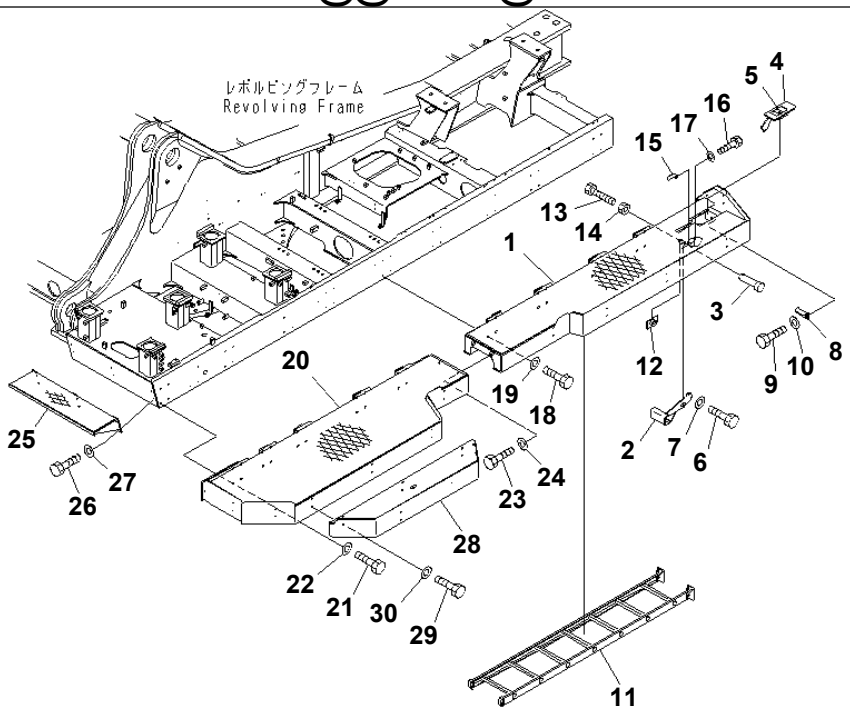

P W 1 E 4 9 5

Ref. W1118-01A0 **Page 480020**

PC1250SP-8R S/N 35001-UP (W/O EGR, +55C DEGREE)
LEFT SIDE STEP (STEP)

Item	Part No.	Part Name	Qty	Serial No.
1	21N-53-32132	STEP	1	35001-
2	21N-54-31982	BRACKET	1	35001-
3	04205-11655	PIN	1	35001-
4	21N-54-31991	COVER	1	35001-
5	198-54-41982	･ LOCK ASS'Y (WELDED)	1	35001-
6	01010-81225	BOLT	2	35001-
7	01643-31232	WASHER	2	35001-
8	21N-54-31970	BRACKET	1	35001-
9	01010-81230	BOLT	2	35001-
10	01643-31232	WASHER	2	35001-
11	21N-54-32490	LADDER	1	35001-
12	21N-54-32680	PLATE	1	35001-
13	01016-51260	BOLT	1	35001-
14	01580-11210	NUT	1	35001-
15	21N-54-32690	BRACKET	1	35001-
16	01010-80820	BOLT	1	35001-
17	01643-30823	WASHER	1	35001-
18	01010-81240	BOLT	20	35001-
19	01643-31232	WASHER	20	35001-
20	21N-53-31362	STEP	1	35001-
21	01010-81240	BOLT	20	35001-
22	01643-31232	WASHER	20	35001-
23	01010-81230	BOLT	2	35001-
24	01643-31232	WASHER	2	35001-
25	21N-54-39950	STEP	1	35001-
26	01010-81240	BOLT	6	35001-
27	01643-31232	WASHER	6	35001-
28	21N-53-31982	BRACKET	1	35001-
29	01010-81230	BOLT	6	35001-
30	01643-31232	WASHER	6	35001-

Printed By : Dwi Iswanto (airafather6107170)

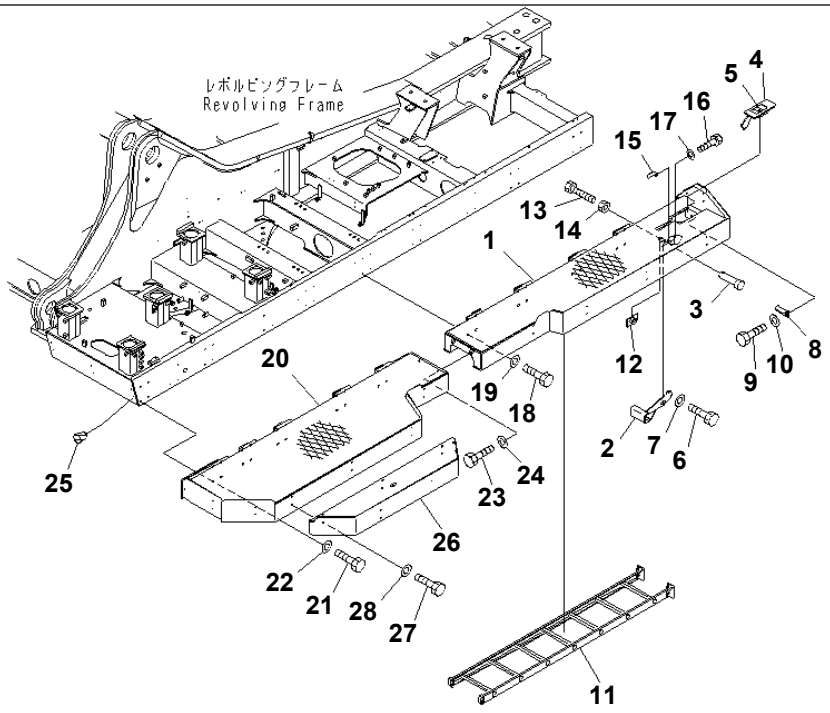

00017415

Ref. W1118-01A1 **Page 480030**

PC1250SP-8R S/N 35001-UP (W/O EGR, +55C DEGREE)
LEFT SIDE STEP (STEP) (FOR HIGH CAB)

Item	Part No.	Part Name	Qty	Serial No.
1	21N-53-32132	STEP	1	35001-
2	21N-54-31982	BRACKET	1	35001-
3	04205-11655	PIN	1	35001-
4	21N-54-31991	COVER	1	35001-
5	198-54-41982	· LOCK ASS'Y (WELDED)	1	35001-
6	01010-81225	BOLT	2	35001-
7	01643-31232	WASHER	2	35001-
8	21N-54-31970	BRACKET	1	35001-
9	01010-81230	BOLT	2	35001-
10	01643-31232	WASHER	2	35001-
11	21N-54-32490	LADDER	1	35001-
12	21N-54-32680	PLATE	1	35001-
13	01016-51260	BOLT	1	35001-
14	01580-11210	NUT	1	35001-
15	21N-54-32690	BRACKET	1	35001-
16	01010-80820	BOLT	1	35001-
17	01643-30823	WASHER	1	35001-
18	01010-81240	BOLT	20	35001-
19	01643-31232	WASHER	20	35001-
20	21N-53-31362	STEP	1	35001-
21	01010-81240	BOLT	20	35001-
22	01643-31232	WASHER	20	35001-
23	01010-81230	BOLT	2	35001-
24	01643-31232	WASHER	2	35001-
25	07049-01215	PLUG	6	35001-
26	21N-53-31982	BRACKET	1	35001-
27	01010-81230	BOLT	6	35001-
28	01643-31232	WASHER	6	35001-

Printed By : Dwi Iswanto (airafather6107170)

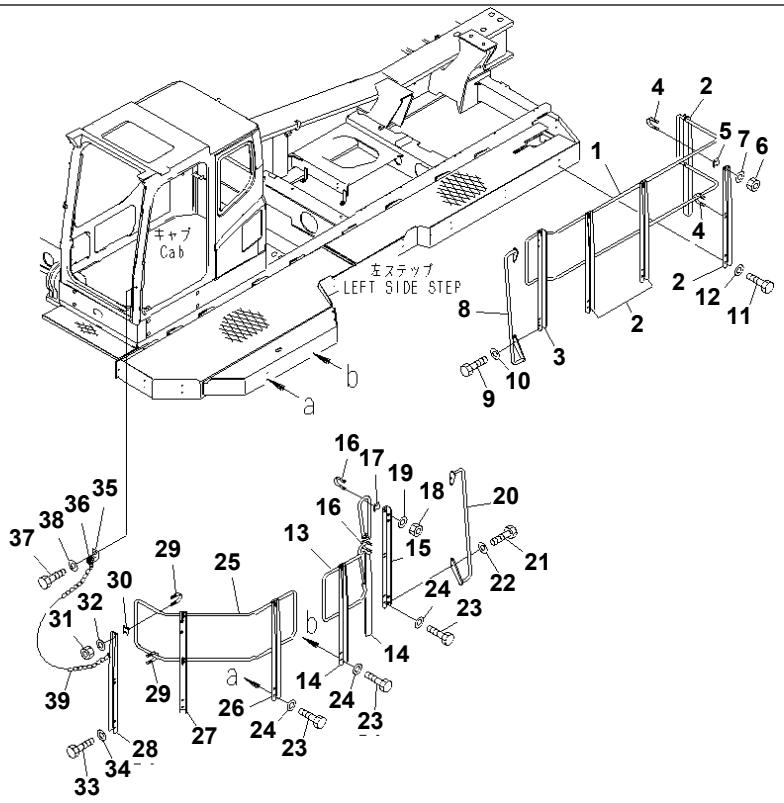

00056504

Ref. W1118-02A0 **Page 480040**

PC1250SP-8R S/N 35001-UP (W/O EGR, +55C DEGREE)
LEFT SIDE STEP (HANDRAIL)

Item	Part No.	Part Name	Qty	Serial No.
1	21N-53-32151	HAND RAIL	1	35001-
2	21N-53-31952	BRACKET	4	35001-
3	21N-53-32142	BRACKET	1	35001-
4	07283-32738	CLIP	10	35001-
5	07283-52737	SEAT	10	35001-
6	01597-01009	NUT	20	35001-
7	01643-71032	WASHER	20	35001-
8	21N-53-32160	HAND RAIL	1	35001-
9	01010-81230	BOLT	4	35001-
10	01643-31232	WASHER	4	35001-
11	01010-81645	BOLT	10	35001-
12	01643-31645	WASHER	10	35001-
13	21N-53-31931	HAND RAIL	1	35001-
14	21N-53-31952	BRACKET	2	35001-
15	21N-53-31972	BRACKET	1	35001-
16	07283-32738	CLIP	6	35001-
17	07283-52737	SEAT	6	35001-
18	01597-01009	NUT	12	35001-
19	01643-71032	WASHER	12	35001-
20	21N-53-31940	HAND RAIL	1	35001-
21	01010-81230	BOLT	4	35001-
22	01643-31232	WASHER	4	35001-
23	01010-81645	BOLT	6	35001-
24	01643-31645	WASHER	6	35001-
25	21N-53-31922	PIPE	1	35001-
26	21N-53-31952	BRACKET	1	35001-
27	21N-53-31962	BRACKET	1	35001-
28	21N-53-32412	BRACKET	1	35001-
29	07283-32738	CLIP	6	35001-
30	07283-52737	SEAT	6	35001-

Printed By : Dwi Iswanto (airafather6107170)

LEFT SIDE STEP (HANDRAIL)

Item	Part No.	Part Name	Qty	Serial No.
31	01597-01009	NUT	12	35001-
32	01643-71032	WASHER	12	35001-
33	01010-81645	BOLT	6	35001-
34	01643-31645	WASHER	6	35001-
35	21N-53-32420	BRACKET	1	35001-
36	08037-01610	GROMMET	1	35001-
37	01010-D1225	BOLT	1	35001-
38	01643-71232	WASHER	1	35001-
39	8285-54-1570	CHAIN	1	35001-

Printed By : Dwi Iswanto (airafather6107170)

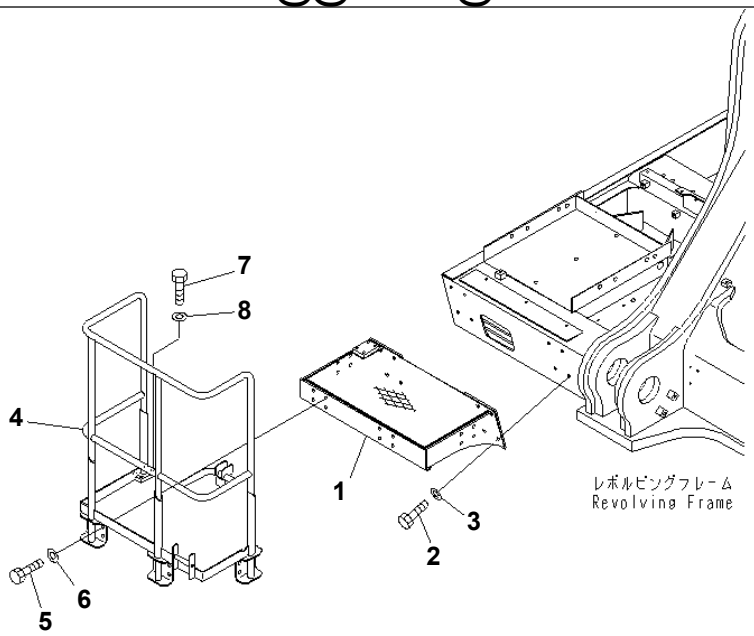

P W 1 E 5 0 3

Ref. W1120-01A0 **Page 480050**

PC1250SP-8R S/N 35001-UP (W/O EGR, +55C DEGREE)
RIGHT SIDE STEP

Item	Part No.	Part Name	Qty	Serial No.
1	21N-54-39640	STEP	1	35001-
2	01010-81240	BOLT	8	35001-
3	01643-31232	WASHER	8	35001-
4	21N-54-39631	HAND RAIL	1	35001-
5	01010-81230	BOLT	12	35001-
6	01643-31232	WASHER	12	35001-
7	01010-81240	BOLT	4	35001-
8	01643-31232	WASHER	4	35001-

Printed By : Dwi Iswanto (airafather6107170)

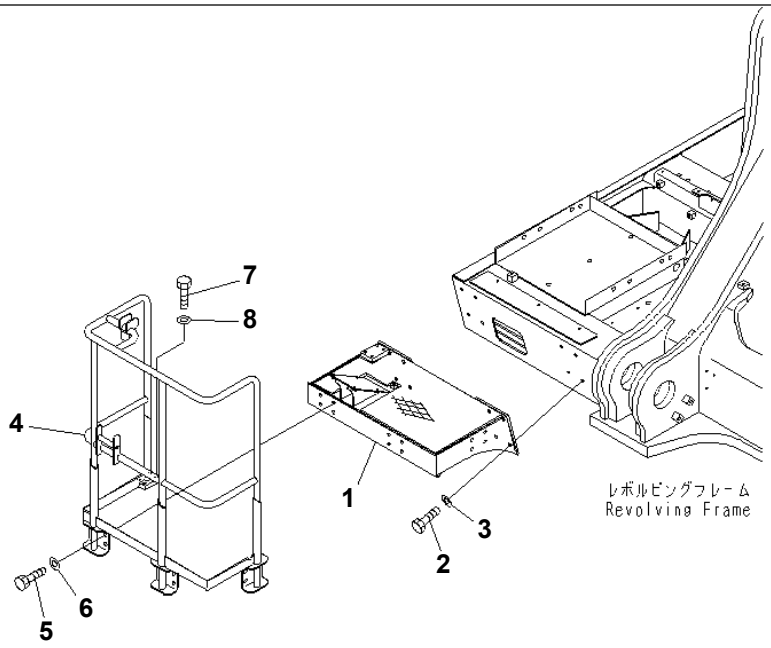

00013649

Ref. W1120-01A1 **Page 480060**

PC1250SP-8R S/N 35001-UP (W/O EGR, +55C DEGREE)
RIGHT SIDE STEP (AUTO GREASE)

Item	Part No.	Part Name	Qty	Serial No.
1	21N-53-32940	STEP	1	35001-
2	01010-81240	BOLT	8	35001-
3	01643-31232	WASHER	8	35001-
4	21N-53-32930	HAND RAIL	1	35001-
5	01010-81230	BOLT	12	35001-
6	01643-31232	WASHER	12	35001-
7	01010-81240	BOLT	4	35001-
8	01643-31232	WASHER	4	35001-

Printed By : Dwi Iswanto (airafather6107170)

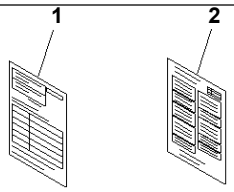

PC1250SP-8R S/N 35001-UP (W/O EGR, +55C DEGREE)

VHMS REGISTRATION

Item	Part No.	Part Name	Qty	Serial No.
1	21T-00-64511	PLATE	1	35001-
2	21T-00-64520	PLATE	1	35001-

Printed By : Dwi Iswanto (airafather6107170)

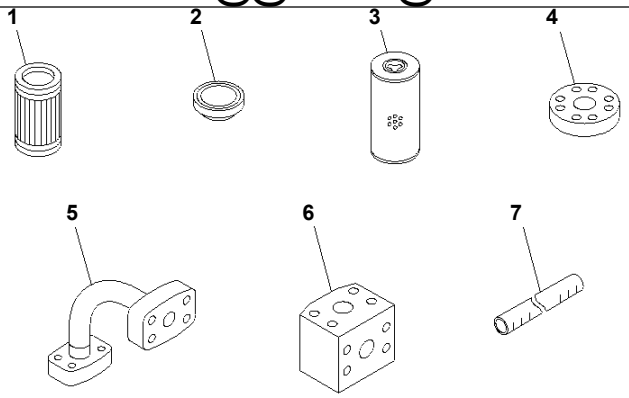

PWB7739

Ref. W9960-01A0 **Page 480080**

PC1250SP-8R S/N 35001-UP (W/O EGR, +55C DEGREE)
FLUSHING AND BLIND PARTS (FLUSHING PARTS)

Item	Part No.	Part Name	Qty	Serial No.
1	209-60-77551	ELEMENT	2	35001-
2	21T-60-13730	PLATE	2	35001-
3	424-16-11140	ELEMENT	1	35001-
4	07377-01018	FLANGE	2	35001-
5	21N-62-19370	TUBE	4	35001-
6	21N-62-19340	TEE	1	35001-
7	07287-01613	HOSE	1	35001-

Printed By : Dwi Iswanto (airafather6107170)

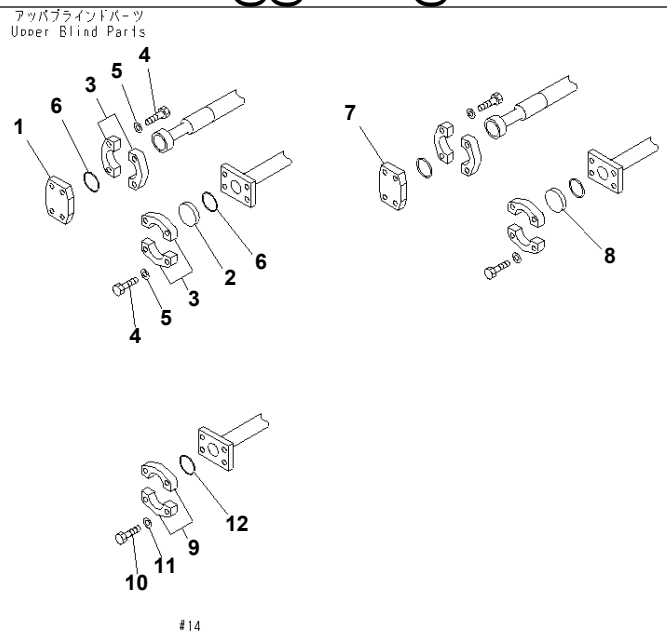

P W 1 E 4 7 4

Ref. W9960-02A0 **Page 480090**

PC1250SP-8R S/N 35001-UP (W/O EGR, +55C DEGREE)
FLUSHING AND BLIND PARTS (UPPER BLIND PARTS)

Item	Part No.	Part Name	Qty	Serial No.
1	07379-01260	FLANGE	2	35001-
2	07378-11210	HEAD	2	35001-
3	07371-51260	FLANGE	8	35001-
4	01010-81245	BOLT	16	35001-
5	01643-31232	WASHER	16	35001-
6	07000-13038	O-RING	4	35001-
7	07379-01470	FLANGE	2	35001-
8	07378-11410	HEAD	5	35001-
9	07371-51470	FLANGE	14	35001-
10	01010-81455	BOLT	28	35001-
11	01643-31445	WASHER	28	35001-
12	07000-13048	O-RING	7	35001-

Printed By : Dwi Iswanto (airafather6107170)

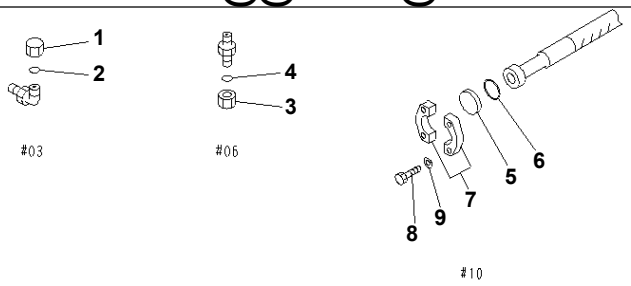

P W 1 F 5 7 4

Ref. W9960-03A0 **Page 480100**

PC1250SP-8R S/N 35001-UP (W/O EGR, +55C DEGREE)
FLUSHING AND BLIND PARTS (LOWER BLIND PARTS)

Item	Part No.	Part Name	Qty	Serial No.
1	02789-00315	PLUG	2	35001-
2	02896-11009	O-RING	2	35001-
3	02789-00628	PLUG	2	35001-
4	02896-11018	O-RING	2	35001-
5	07378-11000	HEAD	4	35001-
6	07000-13032	O-RING	4	35001-
7	07371-31049	FLANGE	8	35001-
8	07372-21035	BOLT	16	35001-
9	01643-51032	WASHER	16	35001-

Printed By : Dwi Iswanto (airafather6107170)

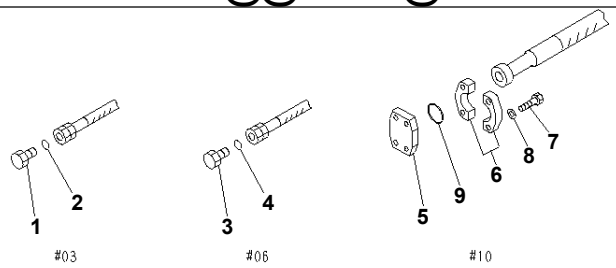

P W 1 F 5 7 5

Ref. W9960-04A0 **Page 480110**

PC1250SP-8R S/N 35001-UP (W/O EGR, +55C DEGREE)
FLUSHING AND BLIND PARTS (TRAVEL MOTOR BLIND PARTS)

Item	Part No.	Part Name	Qty	Serial No.
1	07376-70315	PLUG	2	35001-
2	02896-11009	O-RING	2	35001-
3	07376-70628	PLUG	2	35001-
4	02896-11018	O-RING	2	35001-
5	07379-01044	FLANGE	4	35001-
6	07371-31049	FLANGE	8	35001-
7	07372-21035	BOLT	16	35001-
8	01643-51032	WASHER	16	35001-
9	07000-13032	O-RING	4	35001-

Printed By : Dwi Iswanto (airafather6107170)

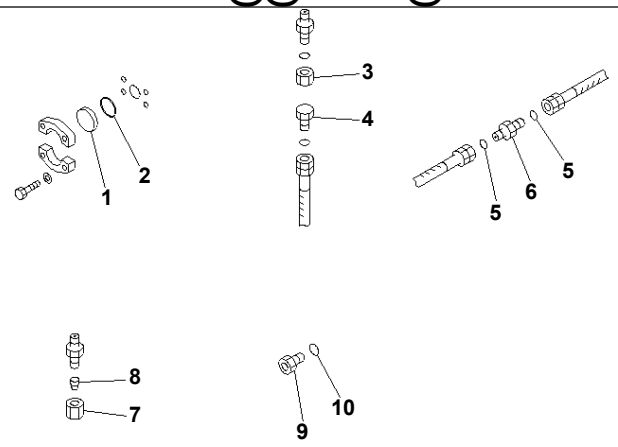

P W 1 F 5 7 6

Ref. W9960-05A0 **Page 480120**

PC1250SP-8R S/N 35001-UP (W/O EGR, +55C DEGREE)
FLUSHING AND BLIND PARTS (SEIVEL BLIND PARTS)

Item	Part No.	Part Name	Qty	Serial No.
1	07378-11000	HEAD	8	35001-
2	07000-13032	O-RING	8	35001-
3	02789-00315	PLUG	1	35001-
4	07376-70315	PLUG	1	35001-
5	02896-11009	O-RING	2	35001-
6	363-Z23-3120	NIPPLE	1	35001-
7	07221-20315	NUT	1	35001-
8	07222-00312	PLUG	1	35001-
9	07040-12412	PLUG	1	35001-
10	07002-12434	O-RING	2	35001-

Printed By : Dwi Iswanto (airafather6107170)

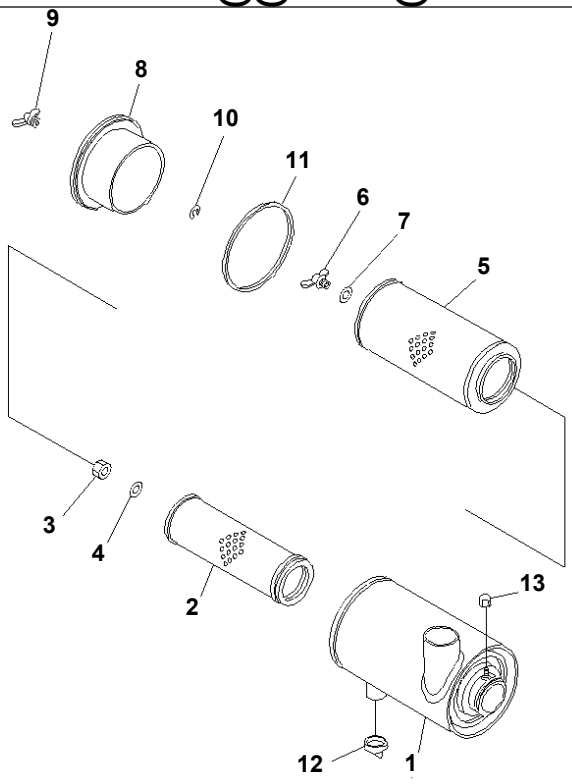

PJ21504

Ref. Y0010-01A0 **Page 510010**

PC1250SP-8R S/N 35001-UP (W/O EGR, +55C DEGREE)
AIR CLEANER ASS'Y

Item	Part No.	Part Name	Qty	Serial No.
	21T-01-64260	AIR CLEANER	2	35001-
	561-02-62500	· AIR CLEANER ASS'Y	1	35001-
1	561-02-62510	· · BODY	1	35001-
	561-02-00010	· · ELEMENT ASS'Y	1	35001-
2	561-02-62520	· · · ELEMENT,INNER	1	35001-
3	600-181-4370	· · · NUT	1	35001-
4	600-181-7511	· · · WASHER	1	35001-
	561-02-00020	· · · ELEMENT ASS'Y	1	35001-
5	561-02-62530	· · · · ELEMENT,OUTER	1	35001-
6	561-02-62550	· · · · NUT	1	35001-
7	600-181-4440	· · · · GASKET	1	35001-
8	561-02-62560	· · COVER	1	35001-
9	561-02-62370	· · NUT ASS'Y	1	35001-
10	561-02-12380	· · CLIP	1	35001-
11	561-02-12390	· · GASKET	1	35001-
12	600-181-1370	· · VALVE	1	35001-
13	561-02-12420	· · CAP,(FOR SHIPPING)	1	35001-

Printed By : Dwi Iswanto (airafather6107170)

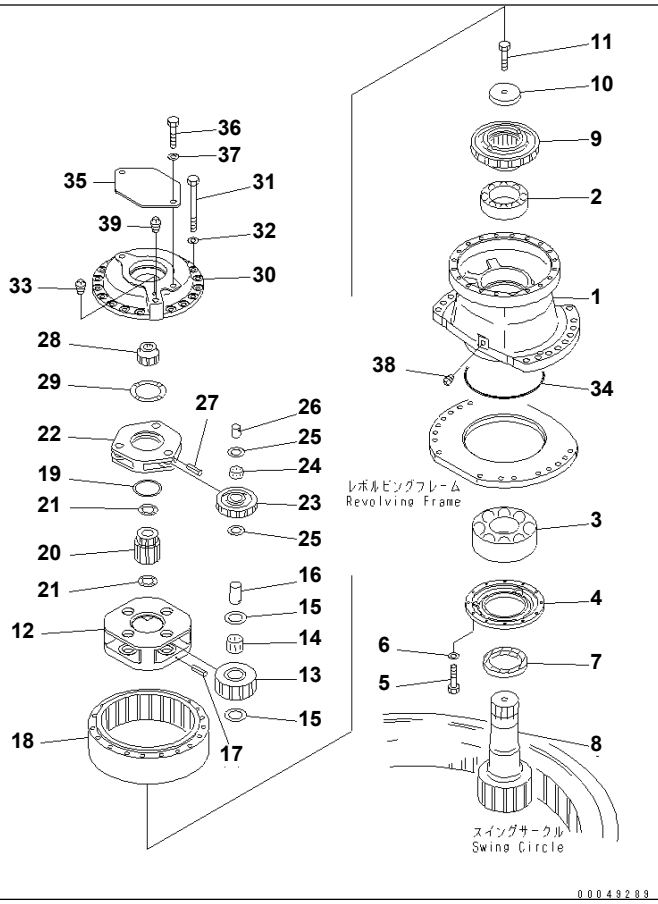

Ref. Y0260-01A0 **Page 510020**

PC1250SP-8R S/N 35001-UP (W/O EGR, +55C DEGREE)

SWING MACHINERY ASS'Y (SUPPLY ONLY)(#35001-35016)

Item	Part No.	Part Name	Qty	Serial No.
	21N-26-00070	SWING MACHINERY A.	1	35001-35016
1	208-26-63170	· CASE	1	35001-35016
2	06000-23124	· BEARING	1	35001-35016
3	21N-26-31140	· BEARING	1	35001-35016
4	208-26-52263	· COVER	1	35001-35016
5	01010-81040	· BOLT	12	35001-35016
6	01643-31032	· WASHER	12	35001-35016
7	208-26-61291	· OIL SEAL	1	35001-35016
8	21N-26-31110	· SHAFT, 13 TEETH	1	35001-35016
9	208-26-61151	· COUPLING	1	35001-35016
10	208-26-52230	· PLATE	1	35001-35016
11	205-32-51211	· BOLT	1	35001-35016
12	207-27-63170	· CARRIER	1	35001-35016
13	208-26-63140	· GEAR	4	35001-35016
14	207-27-63210	· BEARING	4	35001-35016
15	20Y-27-21250	· WASHER	8	35001-35016
16	207-27-63230	· PIN	4	35001-35016
17	20Y-26-21330	· PIN	4	35001-35016
18	207-27-63150	· GEAR	1	35001-35016
19	207-27-63250	· WASHER	1	35001-35016
20	208-26-63131	· GEAR	1	35001-35016
21	20Y-27-13310	· WASHER	2	35001-35016
22	208-26-63150	· CARRIER	1	35001-35016
23	208-26-63120	· GEAR	3	35001-35016
24	20Y-27-22210	· BEARING	3	35001-35016
25	20Y-27-21240	· WASHER	6	35001-35016
26	20Y-27-21220	· PIN	3	35001-35016
27	20Y-27-21280	· PIN	3	35001-35016
28	208-26-63110	· GEAR	1	35001-35016
29	20Y-27-11250	· SPACER	1	35001-35016

Printed By : Dwi Iswanto (airafather6107170)

SWING MACHINERY ASS'Y (SUPPLY ONLY)(#35001-35016)

Item	Part No.	Part Name	Qty	Serial No.
30	208-26-63161	· COVER	1	35001-35016
31	01011-61880	· BOLT	19	35001-35016
32	01643-31845	· WASHER	19	35001-35016
33	07042-00312	· PLUG	1	35001-35016
34	07000-15335	· O-RING	1	35001-35016
35	207-26-51350	· PLATE	1	35001-35016
36	01010-82450	· BOLT	2	35001-35016
37	01643-32460	· WASHER	2	35001-35016
38	07042-00415	· PLUG	1	35001-35016
39	07042-00617	· PLUG	1	35001-35016

Printed By : Dwi Iswanto (airafather6107170)

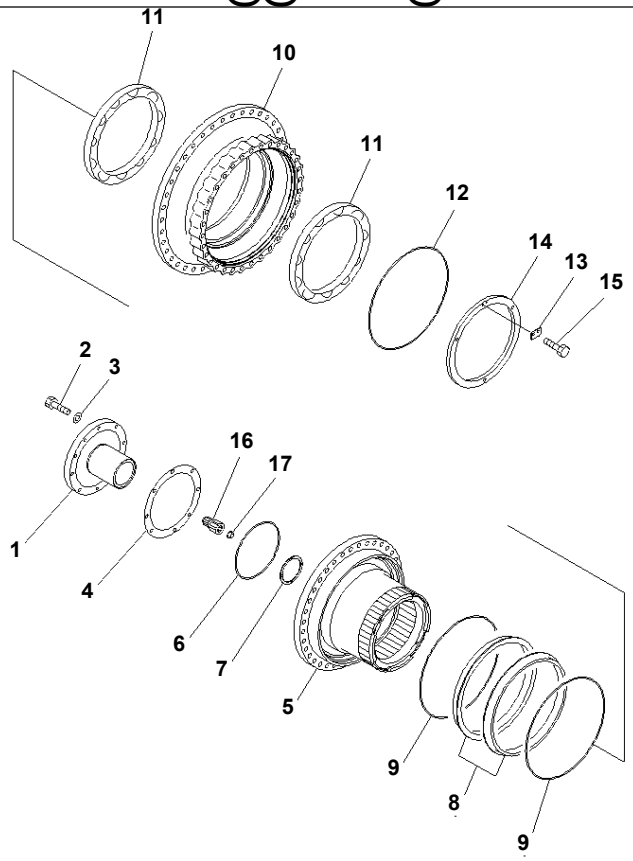

Ref. Y0270-01A0 Page 510030

PC1250SP-8R S/N 35001-UP (W/O EGR, +55C DEGREE)

FINAL DRIVE (SHAFT AND HUB) (SUPPLY ONLY)

Item	Part No.	Part Name	Qty	Serial No.
	21N-27-00130	FINAL DRIVE ASS'Y	2	35001-
	21N-27-00140	· FINAL DRIVE ASS'Y	1	35001-
1	21N-27-31321	· · COVER	1	35001-
2	01010-81845	· · BOLT	8	35001-
3	01643-31845	· · WASHER	8	35001-
4	21N-27-31330	· · GASKET	1	35001-
5	21N-27-31340	· · SHAFT	1	35001-
6	209-27-71370	· · O-RING	1	35001-
7	209-27-71521	· · SPACER	1	35001-
	209-27-00160	· · FLOATING SEAL ASS'Y	1	35001-
8	☆	· · · RING	2	35001-
9	☆	· · · O-RING	2	35001-
10	21N-27-31171	· · HUB	1	35001-
11	209-27-61360	· · BEARING	2	35001-
12	198-09-31630	· · O-RING	1	35001-
13	209-27-71291	· · LOCK	1	35001-
14	21N-27-31271	· · NUT	1	35001-
15	01010-81025	· · BOLT	2	35001-
16	21N-27-31310	· · SHAFT	1	35001-
17	208-27-61350	· · BUTTON	1	35001-

Printed By : Dwi Iswanto (airafather6107170)

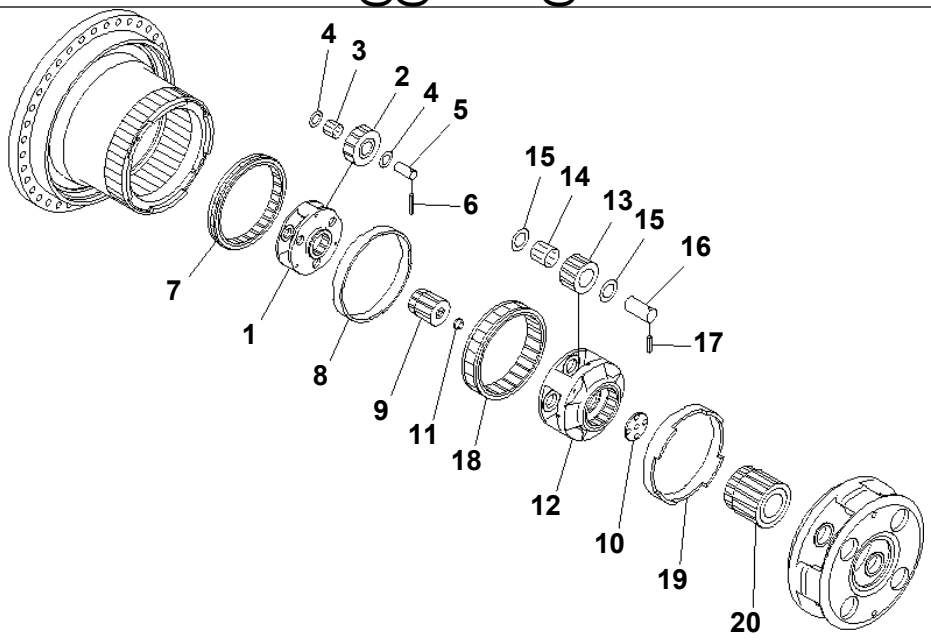

PWB7838

Ref. Y0270-02A0 **Page 510040**

PC1250SP-8R S/N 35001-UP (W/O EGR, +55C DEGREE)
FINAL DRIVE (1ST AND 2ND CARRIER) (SUPPLY ONLY)

Item	Part No.	Part Name	Qty	Serial No.
	(21N-27-00130)	FINAL DRIVE ASS'Y	2	35001-
	(21N-27-00140)	· FINAL DRIVE ASS'Y	1	35001-
1	209-27-71190	· · CARRIER	1	35001-
2	21N-27-31250	· · GEAR	3	35001-
3	20G-26-11240	· · BEARING	3	35001-
4	20Y-27-21240	· · WASHER	6	35001-
5	209-27-71310	· · PIN	3	35001-
6	20Y-27-21280	· · PIN	3	35001-
7	21N-27-31260	· · GEAR, 68 TEETH	1	35001-
8	209-27-71410	· · SPACER	1	35001-
9	209-27-71141	· · GEAR	1	35001-
10	209-27-71350	· · PLATE	1	35001-
11	208-27-61350	· · BUTTON	1	35001-
12	21N-27-31143	· · CARRIER	1	35001-
13	209-27-71261	· · GEAR	4	35001-
14	207-27-61230	· · BEARING	4	35001-
15	20Y-27-21250	· · WASHER	8	35001-
16	209-27-71480	· · PIN	4	35001-
17	20Y-27-21290	· · PIN	4	35001-
18	209-27-71390	· · GEAR	1	35001-
19	209-27-71330	· · SPACER	1	35001-
20	21N-27-31110	· · GEAR, 13 TEETH	1	35001-

Printed By : Dwi Iswanto (airafather6107170)

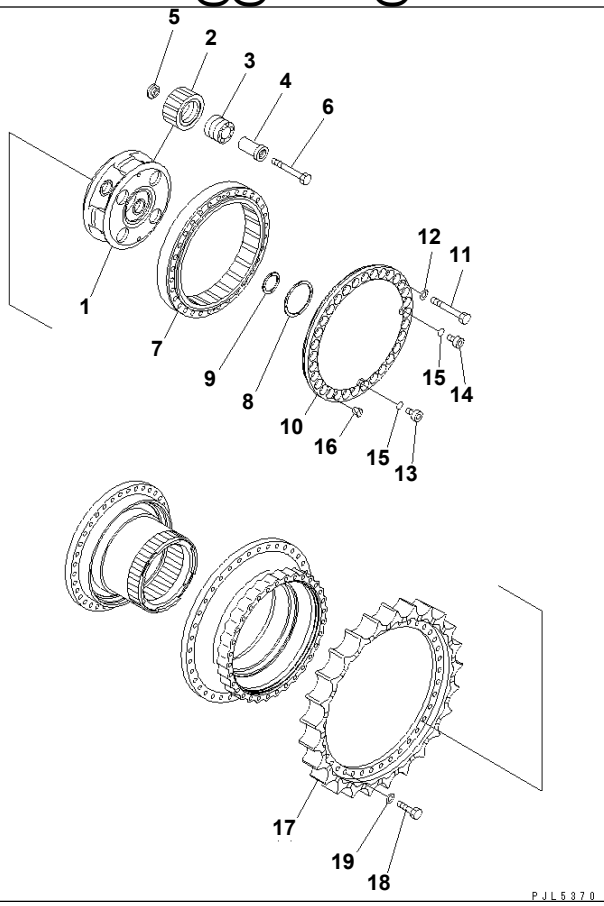

Ref. Y0270-03A0 Page 510050

PC1250SP-8R S/N 35001-UP (W/O EGR, +55C DEGREE)

FINAL DRIVE (3RD CARRIER AND SPROCKET) (SUPPLY ONLY)

Item	Part No.	Part Name	Qty	Serial No.
	(21N-27-00130)	FINAL DRIVE ASS'Y	2	35001-
	(21N-27-00140)	· FINAL DRIVE ASS'Y	1	35001-
1	21N-27-31150	· · CARRIER	1	35001-
2	21N-27-31120	· · GEAR	4	35001-
3	21N-27-31210	· · BEARING	4	35001-
4	21N-27-31221	· · PIN	4	35001-
5	21N-27-31231	· · HOLDER	4	35001-
6	01011-82450	· · BOLT	4	35001-
7	21N-27-31130	· · GEAR	1	35001-
8	209-27-71360	· · THRUST WASHER	1	35001-
9	207-27-52270	· · SPACER	1	35001-
10	21N-27-31161	· · COVER	1	35001-
11	01011-82465	· · BOLT	32	35001-
12	01643-32460	· · WASHER	32	35001-
13	209-27-61510	· · PLUG	1	35001-
14	07040-13016	· · PLUG	1	35001-
15	07002-13034	· · O-RING	2	35001-
16	07049-01215	· · PLUG	2	35001-
17	21N-27-31191	· TEETH	1	35001-
18	01010-82475	· BOLT	38	35001-
19	01643-32460	· WASHER	38	35001-

Printed By : Dwi Iswanto (airafather6107170)

KIT 詳細については次のページを参照して下さい。
See subsequent pages for details.

21N-32-05020 シュー ボルト および ナット サービスキット
SHOE BOLT AND NUT SERVICE KIT

PC1250SP-8R S/N 35001-UP (W/O EGR, +55C DEGREE)

SHOE BOLT AND NUT SERVICE KIT

Item	Part No.	Part Name	Qty	Serial No.
K01	21N-32-05020	SHOE BOLT AND NUT K.	1	35001-
	21N-32-31211	· BOLT, SHOE	30	35001-
	198-32-31220	· NUT	30	35001-

Printed By : Dwi Iswanto (airafather6107170)

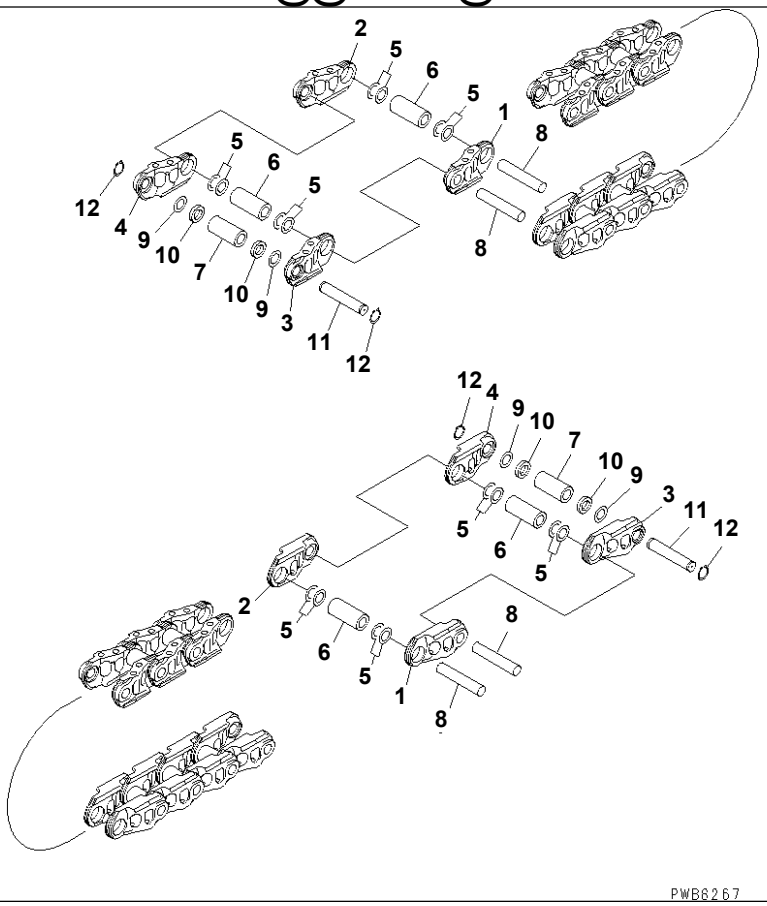

Ref. Y0321-01A0 **Page 510070**

PC1250SP-8R S/N 35001-UP (W/O EGR, +55C DEGREE)
TRACK LINK (SUPPLY PARTS) (96 SET)

Item	Part No.	Part Name	Qty	Serial No.
	21N-32-00101	TRACK LINK ASS'Y	1	35001-
1	21N-32-31121	· LINK,L.H.	92	35001-
2	21N-32-31131	· LINK,R.H.	92	35001-
3	21N-32-31221	· LINK,L.H.	4	35001-
4	21N-32-31231	· LINK,R.H.	4	35001-
5	195-32-61260	· WASHER	368	35001-
6	21N-32-31140	· BUSHING,REGULAR	92	35001-
7	21N-32-31170	· BUSHING,MASTER	4	35001-
8	195-32-61250	· PIN,REGULAR	92	35001-
9	195-32-61260	· WASHER	8	35001-
10	21N-32-31250	· SEAL	8	35001-
11	21N-32-31190	· PIN,MASTER	4	35001-
12	04064-06020	· RING	8	35001-

Printed By : Dwi Iswanto (airafather6107170)

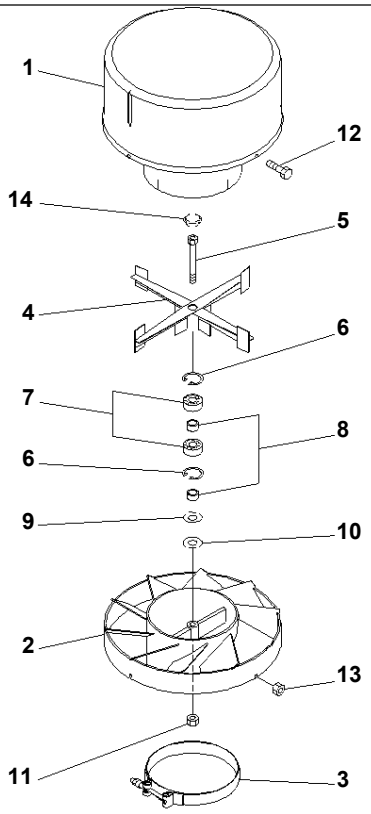

00002318

Ref. Y1011-01A0 **Page 510080**

PC1250SP-8R S/N 35001-UP (W/O EGR, +55C DEGREE)
PRECLEANER (INNER PART)

Item	Part No.	Part Name	Qty	Serial No.
	421-U12-3100	PRE-CLEANER	1	35001-
1	☆	· HOOD	1	35001-
2	421-U12-3130	· BODY	1	35001-
3	421-U12-3140	· CLAMP	1	35001-
4	421-U12-3150	· ROTOR	1	35001-
5	421-U12-3160	· BOLT	1	35001-
6	421-U12-3170	· RING	2	35001-
7	421-U12-3180	· BEARING	2	35001-
8	421-U12-3190	· BUSHING	2	35001-
9	421-U12-3210	· WASHER	1	35001-
10	421-U12-3220	· WASHER	1	35001-
11	421-U12-3230	· NUT	1	35001-
12	421-U12-3240	· BOLT	4	35001-
13	421-U12-3250	· NUT	4	35001-
14	421-U12-3260	· PLUG	1	35001-

Printed By : Dwi Iswanto (airafather6107170)

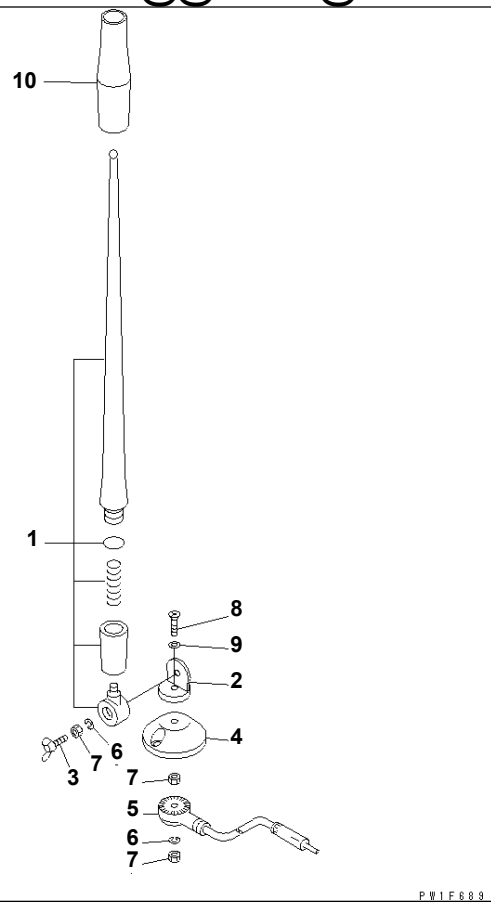

Ref. Y1062-01A0 **Page 510090**

PC1250SP-8R S/N 35001-UP (W/O EGR, +55C DEGREE)
RUBBER ANTENNA(#35001-35028)

Item	Part No.	Part Name	Qty	Serial No.
	198-Z11-4610	RUBBER ANTENNA	1	35001-
1	EP72-540-901	· RUBBER ELEMENT ASS'Y	1	35001-
2	☆	· HOLDER	1	35001-
3	EP23-141-001	· WING BOLT	1	35001-
4	☆	· BASE	1	35001-
5	☆	· CORD ASS'Y	1	35001-
6	EP23-141-003	· SPRING WASHER	2	35001-
7	EP23-141-004	· NUT	3	35001-
8	☆	· SCREW	1	35001-
9	☆	· WASHER	1	35001-
10	☆	· TUBE	1	35001-

Printed By : Dwi Iswanto (airafather6107170)

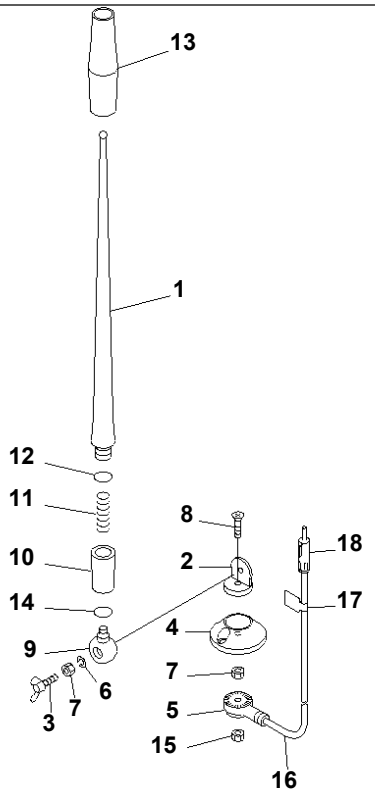

00084650

Ref. Y1062-01A0A **Page 510100**

PC1250SP-8R S/N 35001-UP (W/O EGR, +55C DEGREE)

RUBBER ANTENNA(#35029-)

Item	Part No.	Part Name	Qty	Serial No.
	20Y-06-41990	RUBBER ANTENNA	1	35029-
1	RFU419B-418-A	ROD	1	35029-
2	☆	HOLDER	1	35029-
3	RFU419B-418-D	BOLT, WING	1	35029-
4	RFU419B-418-E	BASE	1	35029-
5	☆	HOLDER	1	35029-
6	RFU419B-418-B	SPRING WASHER	1	35029-
7	RFU419B-418-C	NUT	2	35029-
8	☆	SCREW	1	35029-
9	☆	HOLDER	1	35029-
10	☆	HOLDER ASS'Y	1	35029-
11	☆	SPRING	1	35029-
12	☆	O-RING	1	35029-
13	☆	TUBE	1	35029-
14	☆	O-RING	1	35029-
15	REU419B-418-C	NUT	1	35029-
16	RFU419B-418-F	CABLE	1	35029-
17	☆	PLATE	1	35029-
18	☆	PLUG	1	35029-

Printed By : Dwi Iswanto (airafather6107170)

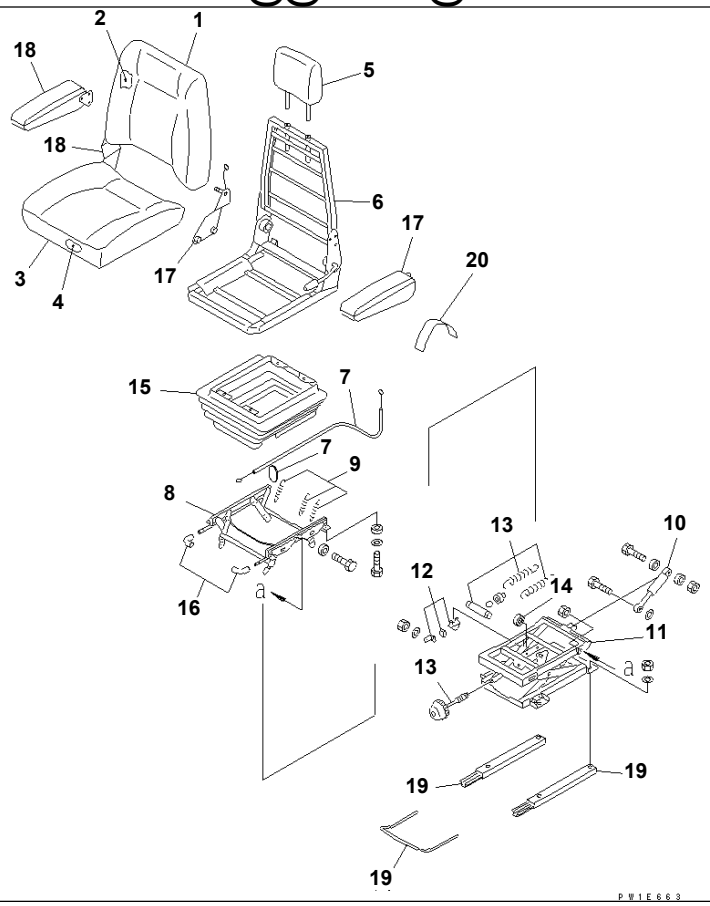

Ref. Y1570-01A0 **Page 510110**

PC1250SP-8R S/N 35001-UP (W/O EGR, +55C DEGREE)
OPERATOR'S SEAT ASS'Y (SUSPENSION)

Item	Part No.	Part Name	Qty	Serial No.
	20Y-57-31100	SEAT ASS'Y	1	35001-
	AS186829	· SEAT	1	35001-
1	AS182431	· · SEAT	1	35001-
2	AS160430	· · FRAME	1	35001-
3	AS182432	· · SEAT	1	35001-
4	AS160432	· · SEAT	1	35001-
5	AS182326	· REST	1	35001-
6	AS170691	· FRAME	1	35001-
7	AS162032	· CABLE KIT	1	35001-
8	AS186830	· HEIGHT RISER KIT	1	35001-
9	AS162056	· SPRING KIT	1	35001-
10	AS156718	· DAMPER ASS'Y	1	35001-
11	AS186831	· SUSPENSION ASS'Y	1	35001-
12	AS156717	· UP STOP/BUMP STOP K.	1	35001-
13	AS156737	· WEIGHT ADJUSTER KIT	1	35001-
14	AS156738	· BEARING KIT	1	35001-
15	AS186832	· COVER	1	35001-
16	AS186833	· HANDLE KIT	1	35001-
17	AS186834	· ARMREST	1	35001-
18	AS186835	· ARMREST	1	35001-
19	AS186836	· RAIL	1	35001-
20	AS172287	· PLATE	1	35001-

Printed By : Dwi Iswanto (airafather6107170)

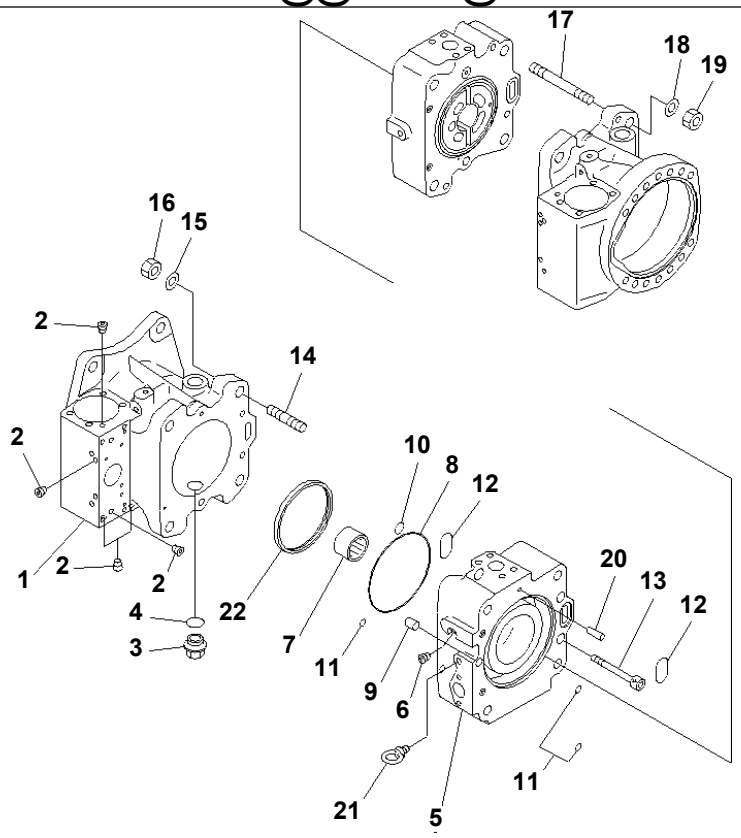

Ref. Y1600-01A0 **Page 510120**

PC1250SP-8R S/N 35001-UP (W/O EGR, +55C DEGREE)
MAIN PUMP (1/16) (N0.1 PUMP)

Item	Part No.	Part Name	Qty	Serial No.
	708-2L-00680	PUMP ASS'Y THIS ASSEMBLY CONSISTS OF ALL PARTS SHOWN IN FIGS.Y1600-01A0 T0 Y1600-16A0.	1	35001-
	708-2L-01680	· PUMP SUB ASS'Y	1	35001-
	(★708-2L-04950)	· · CASE ASS'Y,FRONT	1	35001-
1	☆	· · · CASE,FRONT	1	35001-
2	☆	· · · PLUG	11	35001-
3	07044-12412	· · PLUG	1	35001-
4	07002-62434	· · O-RING	1	35001-
	(★708-2L-04970)	· · END CAP ASS'Y,FRONT	1	35001-
5	☆	· · · CAP,END	1	35001-
6	☆	· · · PLUG	1	35001-
7	(★708-2L-32260)	· · BEARING	1	35001-
8	(★07000-B2135)	· · O-RING	1	35001-
9	(★6130-21-1910)	· · PIN,DOWEL	1	35001-
10	(★07000-B2015)	· · O-RING	1	35001-
11	(★07000-B1009)	· · O-RING	3	35001-
12	(★07000-B3032)	· · O-RING	2	35001-
13	(★01252-61080)	· · BOLT	2	35001-
14	(★01141-81620)	· · STUD	4	35001-
15	(★01643-31645)	· · WASHER	4	35001-
16	(★01582-01613)	· · NUT	4	35001-
17	(★01140-81645)	· · STUD	4	35001-
18	(★01643-31645)	· · WASHER	4	35001-
19	(★01582-01613)	· · NUT	4	35001-
20	(★720-68-19610)	· · PIN	1	35001-
21	04530-11018	· · BOLT,EYE	1	35001-
22	(★708-25-13630)	· · RING	1	35001-

Printed By : Dwi Iswanto (airafather6107170)

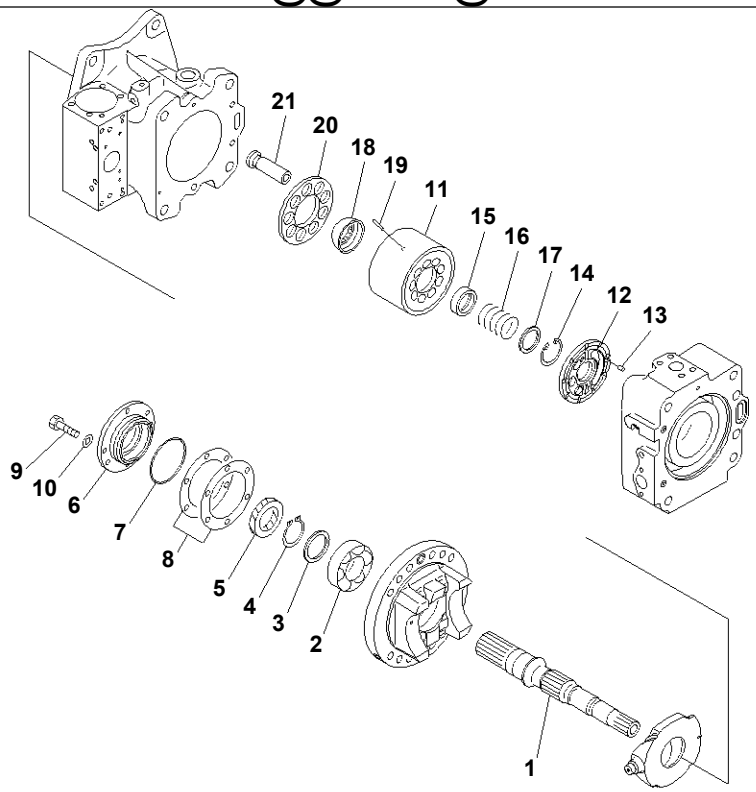

PDB6939

Ref. Y1600-02A0 **Page 510130**

PC1250SP-8R S/N 35001-UP (W/O EGR, +55C DEGREE)
MAIN PUMP (2/16) (N0.1 PUMP)

Item	Part No.	Part Name	Qty	Serial No.
	(708-2L-00680)	PUMP ASS'Y THIS ASSEMBLY CONSISTS OF ALL PARTS SHOWN IN FIGS.Y1600-01A0 T0 Y1600-16A0.	1	35001-
	(708-2L-01680)	· PUMP SUB ASS'Y	1	35001-
1	(★708-2L-22430)	· · SHAFT,FRONT	1	35001-
2	(★708-2L-32150)	· · BEARING	1	35001-
3	(★708-2E-05040)	· · WASHER KIT	1	35001-
	☆	· · · WASHER, 3.1MM	1	35001-
	☆	· · · WASHER, 3.0MM	1	35001-
	☆	· · · WASHER, 2.9MM	1	35001-
	☆	· · · WASHER, 2.8MM	1	35001-
4	(★708-25-12790)	· · RING,SNAP	1	35001-
5	708-25-52861	· · SEAL,OIL	1	35001-
6	(★708-25-12812)	· · HOUSING	1	35001-
7	07000-A2080	· · O-RING	1	35001-
8	(★708-25-05130)	· · SHIM KIT	1	35001-
	☆	· · · SHIM, 0.2MM	2	35001-
	☆	· · · SHIM, 0.1MM	1	35001-
9	01010-80820	· · BOLT	4	35001-
10	01643-30823	· · WASHER	4	35001-
	(★708-2L-04151)	· · BLOCK ASS'Y,REAR	1	35001-
11	☆	· · · BLOCK,CYLINDER	1	35001-
12	☆	· · · PLATE,VALVE	1	35001-
13	(★720-68-19610)	· · PIN	1	35001-
14	(★04065-04818)	· · RING,SNAP	1	35001-
15	(★708-2L-23131)	· · SEAT	1	35001-
16	(★708-2L-33160)	· · SPRING	1	35001-
17	(★708-7L-13140)	· · SEAT	1	35001-
18	(★708-2L-23351)	· · GUIDE,RETAINER	1	35001-
19	(★708-2L-23360)	· · PIN	3	35001-

Printed By : Dwi Iswanto (airafather6107170)

MAIN PUMP (2/16) (N0.1 PUMP)

Item	Part No.	Part Name	Qty	Serial No.
20	(★708-2L-33340)	・・RETAINER,SHOE	1	35001-
21	(★708-2L-33310)	・・PISTON SUB ASS'Y	9	35001-

Printed By : Dwi Iswanto (airafather6107170)

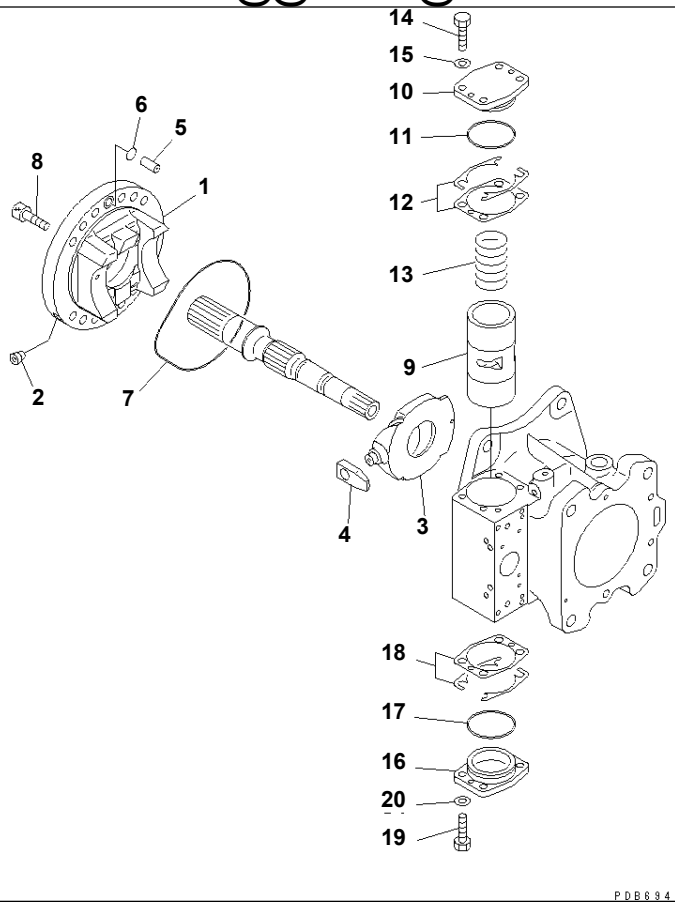

Ref. Y1600-03A0 Page 510140

PC1250SP-8R S/N 35001-UP (W/O EGR, +55C DEGREE)

MAIN PUMP (3/16) (N0.1 PUMP)

Item	Part No.	Part Name	Qty	Serial No.
	(708-2L-00680)	PUMP ASS'Y THIS ASSEMBLY CONSISTS OF ALL PARTS SHOWN IN FIGS.Y1600-01A0 T0 Y1600-16A0.	1	35001-
	(708-2L-01680)	· PUMP SUB ASS'Y	1	35001-
	(★708-2L-04730)	· · CRADLE ASS'Y,FRONT	1	35001-
	(★708-2L-04840)	· · · CRADLE SUB ASS'Y,FRONT	1	35001-
1	☆	· · · · CRADLE,FRONT	1	35001-
2	☆	· · · · PLUG	1	35001-
3	☆	· · · CAM,ROCKER	1	35001-
4	(★708-2L-23730)	· · SLIDER	1	35001-
5	(★708-25-12330)	· · JOINT	1	35001-
6	(★07000-B2015)	· · O-RING	1	35001-
7	(★708-25-62361)	· · O-RING	1	35001-
8	(★01252-61230)	· · BOLT	12	35001-
9	(★708-25-14211)	· · PISTON	1	35001-
10	(★708-25-14140)	· · CAP	1	35001-
11	07000-B2065	· · O-RING	1	35001-
12	(★708-25-05050)	· · SHIM KIT	1	35001-
	☆	· · · SHIM, 0.5MM	3	35001-
	☆	· · · SHIM, 0.2MM	2	35001-
	☆	· · · SHIM, 0.1MM	2	35001-
	☆	· · · SHIM, 0.1MM	4	35001-
13	708-25-14130	· · SPRING	1	35001-
14	01016-51035	· · BOLT	4	35001-
15	01643-31032	· · WASHER	4	35001-
16	(★708-25-14150)	· · CAP	1	35001-
17	07000-B2065	· · O-RING	1	35001-
18	(★708-25-05050)	· · SHIM KIT	1	35001-
	☆	· · · SHIM, 0.5MM	3	35001-
	☆	· · · SHIM, 0.2MM	2	35001-

Printed By : Dwi Iswanto (airafather6107170)

MAIN PUMP (3/16) (N0.1 PUMP)

Item	Part No.	Part Name	Qty	Serial No.
18	☆	・・・ SHIM, 0.1MM	2	35001-
	☆	・・・ SHIM, 0.1MM	4	35001-
19	01016-51035	・・ BOLT	4	35001-
20	01643-31032	・・ WASHER	4	35001-

Printed By : Dwi Iswanto (airafather6107170)

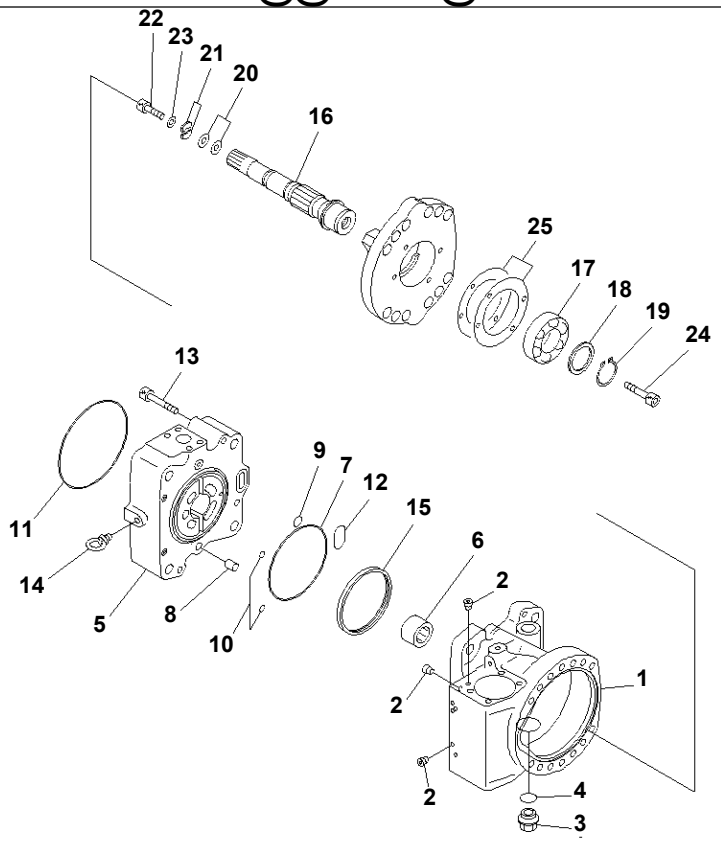

Ref. Y1600-04A0 Page 510150

PC1250SP-8R S/N 35001-UP (W/O EGR, +55C DEGREE)
MAIN PUMP (4/16) (N0.1 PUMP)

Item	Part No.	Part Name	Qty	Serial No.
	(708-2L-00680)	PUMP ASS'Y THIS ASSEMBLY CONSISTS OF ALL PARTS SHOWN IN FIGS.Y1600-01A0 T0 Y1600-16A0.	1	35001-
	(708-2L-01680)	· PUMP SUB ASS'Y	1	35001-
	(★708-2L-04960)	· · CASE ASS'Y,REAR	1	35001-
1	☆	· · · CASE,REAR	1	35001-
2	☆	· · · PLUG	12	35001-
3	07044-12412	· · PLUG	1	35001-
4	07002-62434	· · O-RING	1	35001-
5	708-2L-21540	· · CAP,END	1	35001-
6	(★708-2L-32260)	· · BEARING	1	35001-
7	(★07000-B2135)	· · O-RING	1	35001-
8	(★6130-21-1910)	· · PIN,DOWEL	1	35001-
9	(★07000-B2015)	· · O-RING	1	35001-
10	(★07000-B1009)	· · O-RING	2	35001-
11	(★07000-B5165)	· · O-RING	1	35001-
12	(★07000-B3032)	· · O-RING	1	35001-
13	(★01252-61080)	· · BOLT	4	35001-
14	04530-11018	· · BOLT,EYE	1	35001-
15	(★708-25-13630)	· · RING	1	35001-
16	(★708-2L-22450)	· · SHAFT,REAR	1	35001-
17	(★708-2L-32150)	· · BEARING	1	35001-
18	(★708-2E-05040)	· · WASHER KIT	1	35001-
	☆	· · · WASHER, 3.1MM	1	35001-
	☆	· · · WASHER, 3.0MM	1	35001-
	☆	· · · WASHER, 2.9MM	1	35001-
	☆	· · · WASHER, 2.8MM	1	35001-
19	(★708-25-12790)	· · RING,SNAP	1	35001-
20	(★708-25-05021)	· · SHIM KIT	1	35001-
	☆	· · · SHIM, 0.5MM	4	35001-

Printed By : Dwi Iswanto (airafather6107170)

MAIN PUMP (4/16) (N0.1 PUMP)

Item	Part No.	Part Name	Qty	Serial No.
20	☆	・・・ SHIM, 0.2MM	2	35001-
	☆	・・・ SHIM, 0.15MM	1	35001-
	☆	・・・ SHIM, 0.1MM	1	35001-
21	(★708-25-12950)	・・ PLATE	2	35001-
22	(★01252-61040)	・・ BOLT	1	35001-
23	(★01643-31032)	・・ WASHER	1	35001-
24	(★01252-31016)	・・ BOLT	1	35001-
25	(★708-25-05130)	・・ SHIM KIT	1	35001-
	☆	・・・ SHIM, 0.2MM	2	35001-
	☆	・・・ SHIM, 0.1MM	1	35001-

Printed By : Dwi Iswanto (airafather6107170)

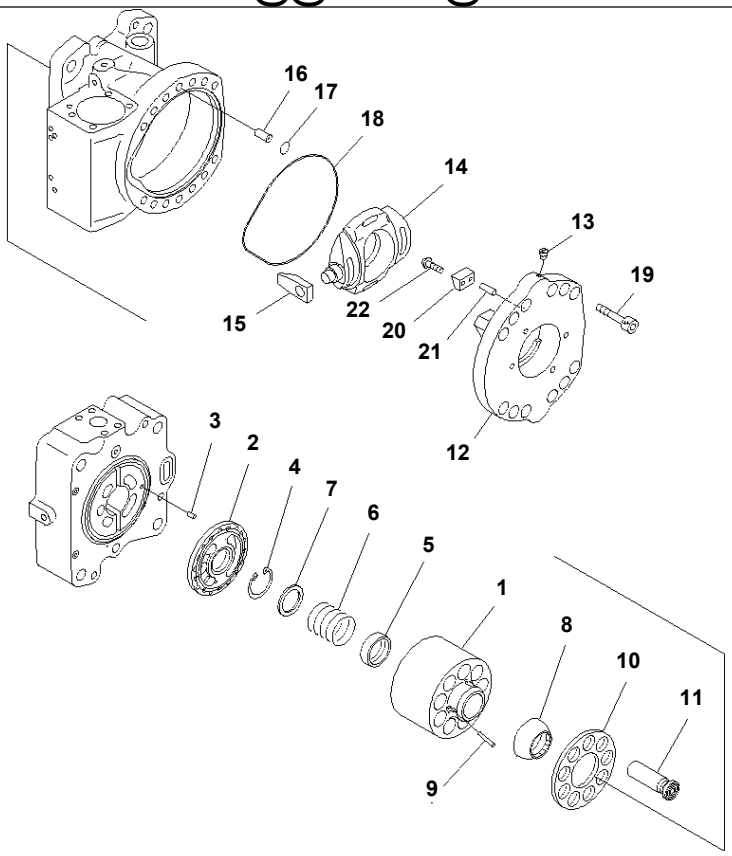

Ref. Y1600-05A0 **Page 510160**

PC1250SP-8R S/N 35001-UP (W/O EGR, +55C DEGREE)
MAIN PUMP (5/16) (N0.1 PUMP)

Item	Part No.	Part Name	Qty	Serial No.
	(708-2L-00680)	PUMP ASS'Y THIS ASSEMBLY CONSISTS OF ALL PARTS SHOWN IN FIGS.Y1600-01A0 T0 Y1600-16A0.	1	35001-
	(708-2L-01680)	· PUMP SUB ASS'Y	1	35001-
	(★708-2L-04141)	· · BLOCK ASS'Y,FRONT	1	35001-
1	☆	· · · BLOCK,CYLINDER	1	35001-
2	☆	· · · PLATE,VALVE	1	35001-
3	(★720-68-19610)	· · PIN	1	35001-
4	(★04065-04818)	· · RING,SNAP	1	35001-
5	(★708-2L-23131)	· · SEAT	1	35001-
6	(★708-2L-33160)	· · SPRING	1	35001-
7	(★708-7L-13140)	· · SEAT	1	35001-
8	(★708-2L-23351)	· · GUIDE,RETAINER	1	35001-
9	(★708-2L-23360)	· · PIN	3	35001-
10	(★708-2L-33340)	· · RETAINER,SHOE	1	35001-
11	(★708-2L-33310)	· · PISTON SUB ASS'Y	9	35001-
	(★708-2L-04430)	· · CRADLE ASS'Y,REAR	1	35001-
	(★708-2L-04650)	· · · CRADLE SUB ASS'Y,REAR	1	35001-
12	☆	· · · · CRADLE,REAR	1	35001-
13	☆	· · · · PLUG	1	35001-
14	☆	· · · CAM,ROCKER	1	35001-
15	(★708-2L-23730)	· · SLIDER	1	35001-
16	(★708-25-12330)	· · JOINT	1	35001-
17	(★07000-B2015)	· · O-RING	1	35001-
18	(★708-25-62361)	· · O-RING	1	35001-
19	(★01252-61230)	· · BOLT	12	35001-
20	(★708-2L-23790)	· · STOPPER	1	35001-
21	(★04020-00616)	· · PIN	1	35001-
22	(★706-75-42270)	· · SCREW	1	35001-

Printed By : Dwi Iswanto (airafather6107170)

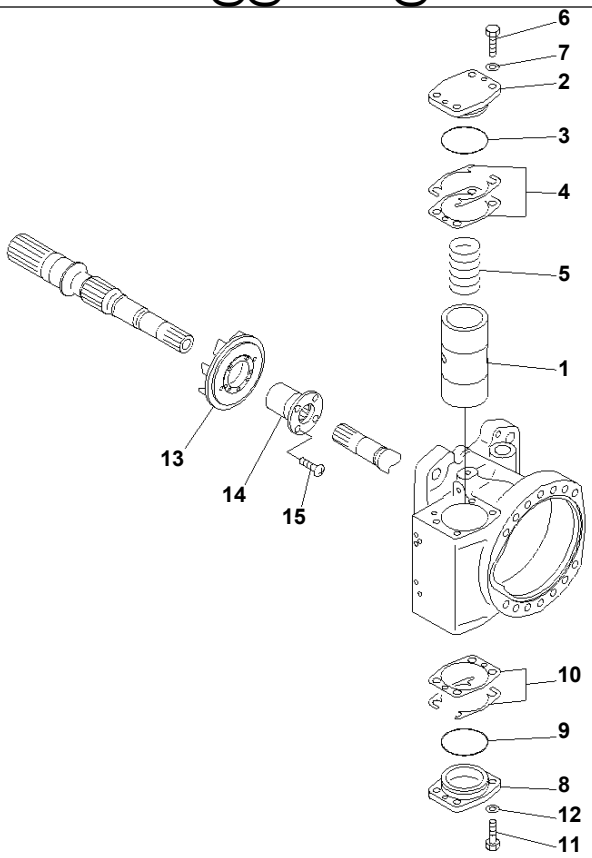

Ref. Y1600-06A0 **Page 510170**

PC1250SP-8R S/N 35001-UP (W/O EGR, +55C DEGREE)
MAIN PUMP (6/16) (N0.1 PUMP)

Item	Part No.	Part Name	Qty	Serial No.
	(708-2L-00680)	PUMP ASS'Y THIS ASSEMBLY CONSISTS OF ALL PARTS SHOWN IN FIGS.Y1600-01A0 T0 Y1600-16A0.	1	35001-
	(708-2L-01680)	· PUMP SUB ASS'Y	1	35001-
1	(★708-25-14112)	· · PISTON	1	35001-
2	(★708-25-14140)	· · CAP	1	35001-
3	07000-B2065	· · O-RING	1	35001-
4	(★708-25-05050)	· · SHIM KIT	1	35001-
	☆	· · · SHIM, 0.5MM	3	35001-
	☆	· · · SHIM, 0.2MM	2	35001-
	☆	· · · SHIM, 0.1MM	2	35001-
	☆	· · · SHIM, 0.1MM	4	35001-
5	708-25-14130	· · SPRING	1	35001-
6	01016-51035	· · BOLT	4	35001-
7	01643-31032	· · WASHER	4	35001-
8	(★708-25-14150)	· · CAP	1	35001-
9	07000-B2065	· · O-RING	1	35001-
10	(★708-25-05050)	· · SHIM KIT	1	35001-
	☆	· · · SHIM, 0.5MM	3	35001-
	☆	· · · SHIM, 0.2MM	2	35001-
	☆	· · · SHIM, 0.1MM	2	35001-
	☆	· · · SHIM, 0.1MM	4	35001-
11	01016-51035	· · BOLT	4	35001-
12	01643-31032	· · WASHER	4	35001-
13	(★708-25-12542)	· · IMPELLER	1	35001-
14	(★708-25-52550)	· · COUPLING	1	35001-
15	(★706-73-42270)	· · SCREW	4	35001-

Printed By : Dwi Iswanto (airafather6107170)

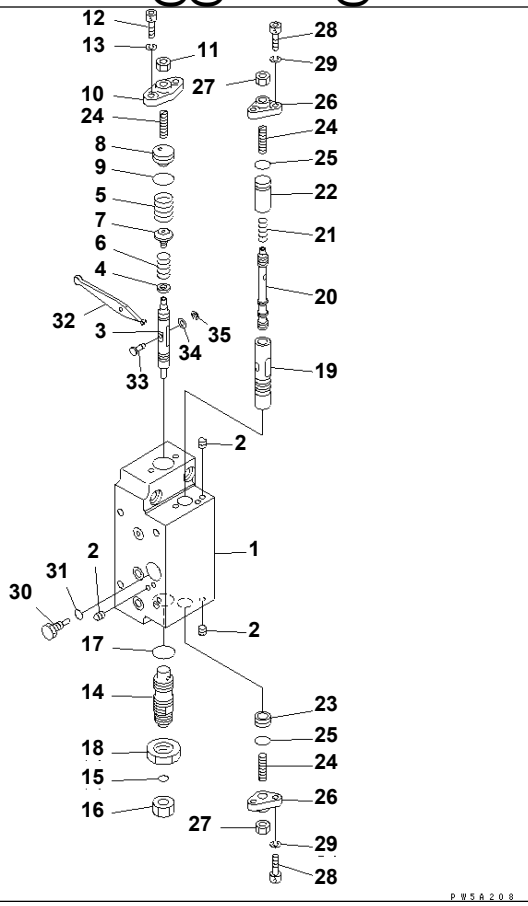

Ref. Y1600-07A0 Page 510180

PC1250SP-8R S/N 35001-UP (W/O EGR, +55C DEGREE)

MAIN PUMP (7/16) (N0.1 PUMP)

Item	Part No.	Part Name	Qty	Serial No.
	(708-2L-00680)	PUMP ASS'Y THIS ASSEMBLY CONSISTS OF ALL PARTS SHOWN IN FIGS.Y1600-01A0 T0 Y1600-16A0.	1	35001-
	708-25-85160	· SERVO VALVE ASS'Y,FRONT	1	35001-
	708-25-85360	· · SERVO VALVE SUB A.,FRONT	1	35001-
	(★708-25-00830)	· · · BODY ASS'Y	1	35001-
1	☆	· · · · BODY,FRONT	1	35001-
2	☆	· · · · EXPANDER	5	35001-
3	(★708-25-15120)	· · · PISTON	1	35001-
4	(★708-25-15130)	· · · SEAT	1	35001-
5	(★708-25-25130)	· · · SPRING	1	35001-
6	(★708-25-55250)	· · · SPRING	1	35001-
7	(★708-23-15120)	· · · SEAT	1	35001-
8	(★708-23-15160)	· · · PLUG	1	35001-
9	(★07000-B2018)	· · · O-RING	1	35001-
10	(★708-25-15150)	· · · COVER	1	35001-
11	(★01580-10806)	· · · NUT	1	35001-
12	(★01252-60616)	· · · BOLT	2	35021-
	(★708-25-15320)	· · · BOLT	2	35001-35020
13	(★01602-20619)	· · · WASHER	2	35001-
14	(★708-25-55680)	· · · PLUG	1	35001-
15	(★02896-61009)	· · · O-RING	1	35001-
16	(★02789-00315)	· · · PLUG,CAP	1	35001-
17	(★07002-62034)	· · · O-RING	1	35001-
18	(★07239-12009)	· · · NUT	1	35001-
19	(★708-25-15180)	· · · SLEEVE	1	35001-
20	(★708-25-15280)	· · · SPOOL	1	35001-
21	(★708-25-15310)	· · · SPRING	1	35001-
22	(★708-25-15330)	· · · SPACER	1	35001-
23	(★708-25-15430)	· · · PLUG	1	35001-

Printed By : Dwi Iswanto (airafather6107170)

MAIN PUMP (7/16) (N0.1 PUMP)

Item	Part No.	Part Name	Qty	Serial No.
24	(★708-25-15340)	· · · SCREW	3	35001-
25	(★07000-B2012)	· · · O-RING	2	35001-
26	(★708-25-15250)	· · · COVER	2	35001-
27	(★01580-10806)	· · · NUT	2	35001-
28	(★01252-60616)	· · · BOLT	4	35021-
	(★708-25-15320)	· · · BOLT	4	35001-35020
29	(★01602-20619)	· · · WASHER	4	35001-
30	(★708-25-15260)	· · · PLUG	1	35001-
31	(★07002-60823)	· · · O-RING	1	35001-
32	(★708-25-15270)	· · · ARM	1	35001-
33	(★708-25-15360)	· · · PIN	1	35001-
34	(★708-25-15370)	· · · WASHER	1	35001-
35	(★708-25-15380)	· · · E-RING	1	35001-

Printed By : Dwi Iswanto (airafather6107170)

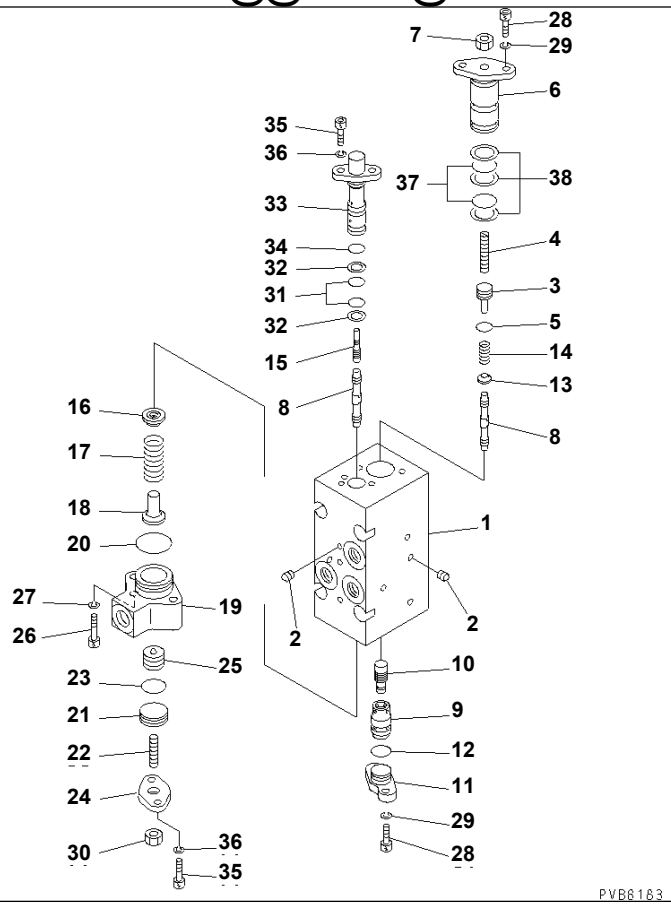

Ref. Y1600-08A0 **Page 510190**

PC1250SP-8R S/N 35001-UP (W/O EGR, +55C DEGREE)
MAIN PUMP (8/16) (N0.1 PUMP)

Item	Part No.	Part Name	Qty	Serial No.
	(708-2L-00680)	PUMP ASS'Y THIS ASSEMBLY CONSISTS OF ALL PARTS SHOWN IN FIGS.Y1600-01A0 T0 Y1600-16A0.	1	35001-
	(708-25-85160)	· SERVO VALVE ASS'Y,FRONT	1	35001-
	708-25-09581	· · VALVE ASS'Y,CO + NC	1	35001-
	(★708-23-00430)	· · · BODY ASS'Y	1	35001-
1	☆	· · · · BODY	1	35001-
2	☆	· · · · EXPANDER	16	35001-
3	(★708-25-17460)	· · · PLUG	1	35001-
4	(★708-25-17430)	· · · SCREW	1	35001-
5	(★07000-B2010)	· · · O-RING	1	35001-
6	(★708-25-17131)	· · · COVER	1	35001-
7	(★01580-10806)	· · · NUT	1	35001-
8	(★708-25-17141)	· · · SPOOL	2	35001-
9	(★708-25-17150)	· · · SLEEVE	1	35001-
10	(★708-25-17160)	· · · PISTON	1	35001-
11	(★708-25-17170)	· · · COVER	1	35001-
12	(★07000-B2014)	· · · O-RING	1	35001-
13	(★708-25-17180)	· · · SEAT	1	35001-
14	(★708-25-17690)	· · · SPRING	1	35001-
15	(★708-25-17220)	· · · PISTON	1	35001-
16	(★708-25-17370)	· · · SEAT	1	35001-
17	(★708-25-17250)	· · · SPRING	1	35001-
18	(★708-25-17470)	· · · SEAT	1	35001-
19	(★708-23-17290)	· · · COVER	1	35001-
20	(★07000-B3028)	· · · O-RING	1	35001-
21	(★708-25-17380)	· · · PLUG	1	35001-
22	(★708-25-15340)	· · · SCREW	1	35001-
23	(★07000-B2021)	· · · O-RING	1	35001-
24	(★708-23-17240)	· · · COVER	1	35001-

Printed By : Dwi Iswanto (airafather6107170)

MAIN PUMP (8/16) (N0.1 PUMP)

Item	Part No.	Part Name	Qty	Serial No.
25	(★708-25-17480)	・・・ PISTON	1	35001-
26	(★01252-60630)	・・・ BOLT	2	35021-
	(★706-75-40310)	・・・ BOLT	2	35001-35020
27	(★01602-20619)	・・・ WASHER	2	35001-
28	(★01252-60616)	・・・ BOLT	4	35021-
	(★708-25-15320)	・・・ BOLT	4	35001-35020
29	(★01602-20619)	・・・ WASHER	4	35001-
30	(★01580-10806)	・・・ NUT	1	35001-
31	(★07000-B2012)	・・・ O-RING	2	35001-
32	(★07001-02012)	・・・ RING,BACK-UP	2	35001-
33	(★708-25-17451)	・・・ SLEEVE	1	35001-
34	(★07000-B2012)	・・・ O-RING	1	35001-
35	(★01252-60616)	・・・ BOLT	4	35021-
	(★708-25-15320)	・・・ BOLT	4	35001-35020
36	(★01602-20619)	・・・ WASHER	4	35001-
37	(★07000-B2021)	・・・ O-RING	2	35001-
38	(★07001-02021)	・・・ RING,BACK-UP	3	35001-

Printed By : Dwi Iswanto (airafather6107170)

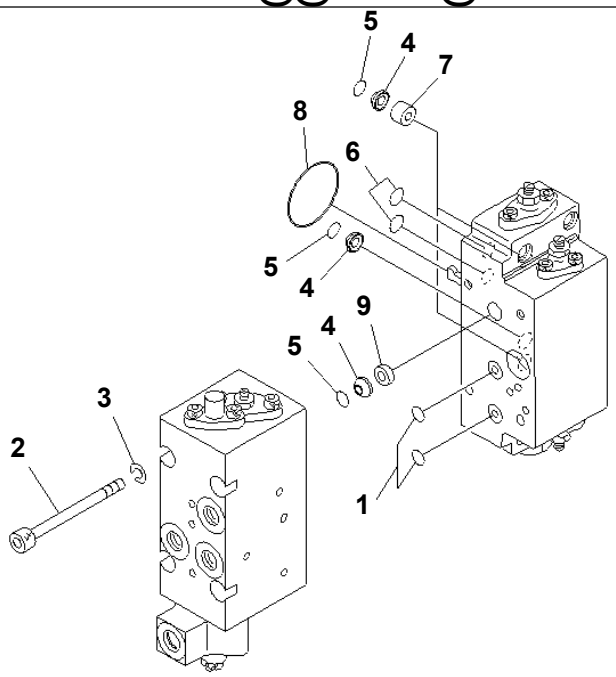

PEB7056

Ref. Y1600-09A0 **Page 510200**

PC1250SP-8R S/N 35001-UP (W/O EGR, +55C DEGREE)
MAIN PUMP (9/16) (N0.1 PUMP)

Item	Part No.	Part Name	Qty	Serial No.
	(708-2L-00680)	PUMP ASS'Y THIS ASSEMBLY CONSISTS OF ALL PARTS SHOWN IN FIGS.Y1600-01A0 T0 Y1600-16A0.	1	35001-
	(708-25-85160)	· SERVO VALVE ASS'Y,FRONT	1	35001-
1	07000-B2011	· · O-RING	2	35001-
2	708-25-19160	· · BOLT	4	35001-
3	01602-20825	· · WASHER	4	35001-
4	708-2L-25480	· · FILTER	4	35001-
5	708-2L-25490	· · O-RING	4	35001-
6	07000-B1009	· · O-RING	2	35001-
7	708-25-19230	· · ORIFICE	2	35001-
8	07000-B3048	· · O-RING	1	35001-
9	708-25-19240	· · ORIFICE	1	35001-

Printed By : Dwi Iswanto (airafather6107170)

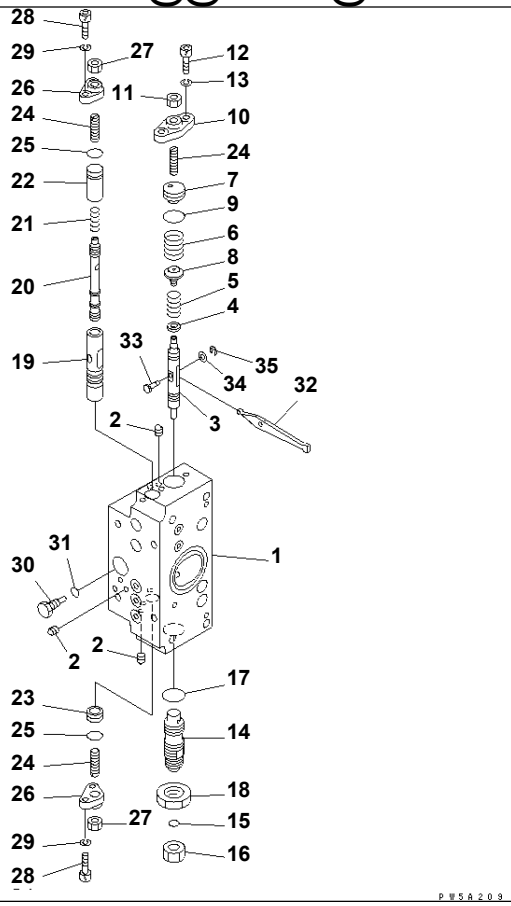

Ref. Y1600-10A0 **Page 510210**

PC1250SP-8R S/N 35001-UP (W/O EGR, +55C DEGREE)
MAIN PUMP (10/16) (N0.1 PUMP)

Item	Part No.	Part Name	Qty	Serial No.
	(708-2L-00680)	PUMP ASS'Y THIS ASSEMBLY CONSISTS OF ALL PARTS SHOWN IN FIGS.Y1600-01A0 T0 Y1600-16A0.	1	35001-
	708-25-85260	· SERVO VALVE ASS'Y,REAR	1	35001-
	708-25-85460	· · SERVO VALVE SUB A.,REAR	1	35001-
	(★708-25-00840)	· · · BODY ASS'Y	1	35001-
1	☆	· · · · BODY	1	35001-
2	☆	· · · · EXPANDER	7	35001-
3	(★708-25-15120)	· · · PISTON	1	35001-
4	(★708-25-15130)	· · · SEAT	1	35001-
5	(★708-25-55250)	· · · SPRING	1	35001-
6	(★708-25-25130)	· · · SPRING	1	35001-
7	(★708-23-15160)	· · · PLUG	1	35001-
8	(★708-23-15120)	· · · SEAT	1	35001-
9	(★07000-B2018)	· · · O-RING	1	35001-
10	(★708-25-15150)	· · · COVER	1	35001-
11	(★01580-10806)	· · · NUT	1	35001-
12	(★01252-60616)	· · · BOLT	2	35021-
	(★708-25-15320)	· · · BOLT	2	35001-35020
13	(★01602-20619)	· · · WASHER	2	35001-
14	(★708-25-55680)	· · · PLUG	1	35001-
15	(★02896-61009)	· · · O-RING	1	35001-
16	(★02789-00315)	· · · PLUG,CAP	1	35001-
17	(★07002-62034)	· · · O-RING	1	35001-
18	(★07239-12009)	· · · NUT	1	35001-
19	(★708-25-15180)	· · · SLEEVE	1	35001-
20	(★708-25-15280)	· · · SPOOL	1	35001-
21	(★708-25-15310)	· · · SPRING	1	35001-
22	(★708-25-15330)	· · · SPACER	1	35001-
23	(★708-25-15430)	· · · PLUG	1	35001-

Printed By : Dwi Iswanto (airafather6107170)

MAIN PUMP (10/16) (N0.1 PUMP)

Item	Part No.	Part Name	Qty	Serial No.
24	(★708-25-15340)	· · · SCREW	3	35001-
25	(★07000-B2012)	· · · O-RING	2	35001-
26	(★708-25-15250)	· · · COVER	2	35001-
27	(★01580-10806)	· · · NUT	2	35001-
28	(★01252-60616)	· · · BOLT	4	35021-
	(★708-25-15320)	· · · BOLT	4	35001-35020
29	(★01602-20619)	· · · WASHER	4	35001-
30	(★708-25-15260)	· · · PLUG	1	35001-
31	(★07002-60823)	· · · O-RING	1	35001-
32	(★708-25-15270)	· · · ARM	1	35001-
33	(★708-25-15360)	· · · PIN	1	35001-
34	(★708-25-15370)	· · · WASHER	1	35001-
35	(★708-25-15380)	· · · E-RING	1	35001-

Printed By : Dwi Iswanto (airafather6107170)

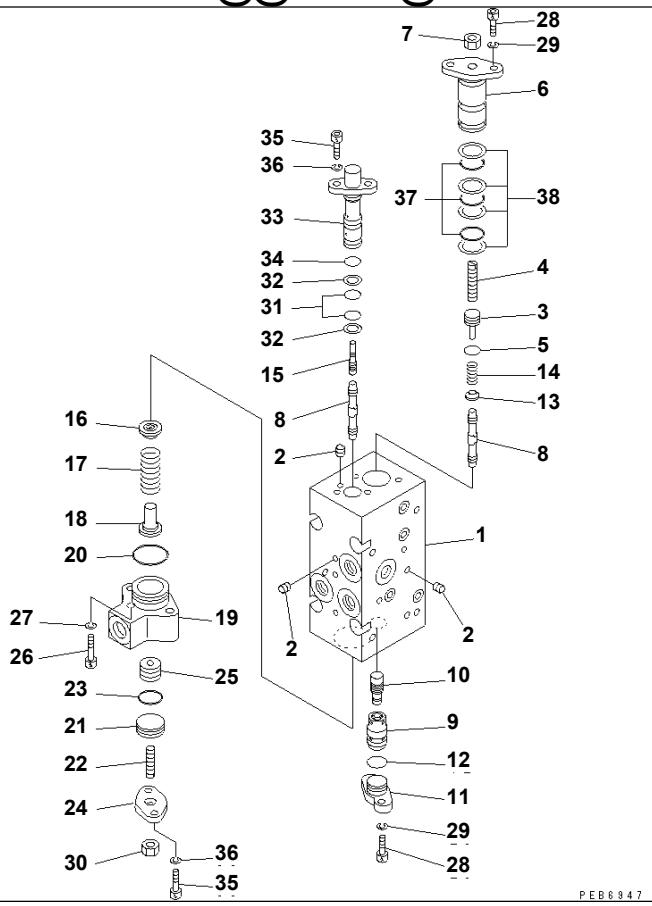

Ref. Y1600-11A0 **Page 510220**

PC1250SP-8R S/N 35001-UP (W/O EGR, +55C DEGREE)

MAIN PUMP (11/16) (N0.1 PUMP)

Item	Part No.	Part Name	Qty	Serial No.
	(708-2L-00680)	PUMP ASS'Y THIS ASSEMBLY CONSISTS OF ALL PARTS SHOWN IN FIGS.Y1600-01A0 T0 Y1600-16A0.	1	35001-
	(708-25-85260)	· SERVO VALVE ASS'Y,REAR	1	35001-
	708-25-09681	· · VALVE ASS'Y,CO + NC	1	35001-
	(★708-23-00441)	· · · BODY ASS'Y	1	35001-
1	☆	· · · · BODY	1	35001-
2	☆	· · · · EXPANDER	15	35001-
3	(★708-25-17460)	· · · PLUG	1	35001-
4	(★708-25-17430)	· · · SCREW	1	35001-
5	(★07000-B2010)	· · · O-RING	1	35001-
6	(★708-25-17131)	· · · COVER	1	35001-
7	(★01580-10806)	· · · NUT	1	35001-
8	(★708-25-17141)	· · · SPOOL	2	35001-
9	(★708-25-17150)	· · · SLEEVE	1	35001-
10	(★708-25-17160)	· · · PISTON	1	35001-
11	(★708-25-17170)	· · · COVER	1	35001-
12	(★07000-B2014)	· · · O-RING	1	35001-
13	(★708-25-17180)	· · · SEAT	1	35001-
14	(★708-25-17690)	· · · SPRING	1	35001-
15	(★708-25-17220)	· · · PISTON	1	35001-
16	(★708-25-17370)	· · · SEAT	1	35001-
17	(★708-25-17250)	· · · SPRING	1	35001-
18	(★708-25-17470)	· · · SEAT	1	35001-
19	(★708-23-17290)	· · · COVER	1	35001-
20	(★07000-B3028)	· · · O-RING	1	35001-
21	(★708-25-17380)	· · · PLUG	1	35001-
22	(★708-25-15340)	· · · SCREW	1	35001-
23	(★07000-B2021)	· · · O-RING	1	35001-
24	(★708-23-17240)	· · · COVER	1	35001-

Printed By : Dwi Iswanto (airafather6107170)

MAIN PUMP (11/16) (N0.1 PUMP)

Item	Part No.	Part Name	Qty	Serial No.
25	(★708-25-17480)	・・・ PISTON	1	35001-
26	(★01252-60630)	・・・ BOLT	2	35021-
	(★706-75-40310)	・・・ BOLT	2	35001-35020
27	(★01602-20619)	・・・ WASHER	2	35001-
28	(★01252-60616)	・・・ BOLT	4	35021-
	(★708-25-15320)	・・・ BOLT	4	35001-35020
29	(★01602-20619)	・・・ WASHER	4	35001-
30	(★01580-10806)	・・・ NUT	1	35001-
31	(★07000-B2012)	・・・ O-RING	2	35001-
32	(★07001-02012)	・・・ RING,BACK-UP	2	35001-
33	(★708-25-17451)	・・・ SLEEVE	1	35001-
34	(★07000-B2012)	・・・ O-RING	1	35001-
35	(★01252-60616)	・・・ BOLT	4	35021-
	(★708-25-15320)	・・・ BOLT	4	35001-35020
36	(★01602-20619)	・・・ WASHER	4	35001-
37	(★07000-B2021)	・・・ O-RING	3	35001-
38	(★07001-02021)	・・・ RING,BACK-UP	4	35001-

Printed By : Dwi Iswanto (airafather6107170)

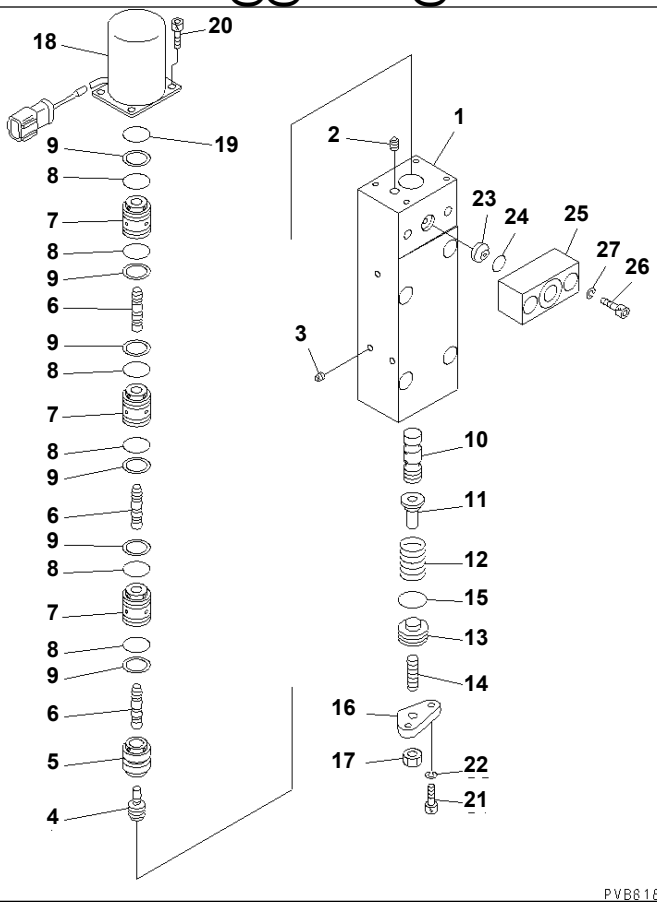

Ref. Y1600-12A0 **Page 510230**

PC1250SP-8R S/N 35001-UP (W/O EGR, +55C DEGREE)

MAIN PUMP (12/16) (N0.1 PUMP)

Item	Part No.	Part Name	Qty	Serial No.
	(708-2L-00680)	PUMP ASS'Y THIS ASSEMBLY CONSISTS OF ALL PARTS SHOWN IN FIGS.Y1600-01A0 T0 Y1600-16A0.	1	35001-
	(708-25-85260)	· SERVO VALVE ASS'Y,REAR	1	35001-
	708-25-85760	· · VALVE ASS'Y,TVC	1	35001-
	(★708-25-00850)	· · · BODY ASS'Y	1	35001-
1	☆	· · · · BODY	1	35001-
2	☆	· · · · PLUG	2	35001-
3	☆	· · · · EXPANDER	13	35001-
4	(★708-23-18120)	· · · PISTON	1	35001-
5	(★708-23-18130)	· · · SLEEVE	1	35001-
6	(★708-27-18240)	· · · PISTON	3	35001-
7	(★708-27-18250)	· · · SLEEVE	3	35001-
8	(★07000-B2016)	· · · O-RING	6	35001-
9	(★07001-02016)	· · · RING,BACK-UP	6	35001-
10	(★708-23-18161)	· · · SPOOL	1	35001-
11	(★708-23-18170)	· · · SEAT	1	35001-
12	(★708-23-18181)	· · · SPRING	1	35001-
13	(★708-23-15160)	· · · PLUG	1	35001-
14	(★708-25-15340)	· · · SCREW	1	35001-
15	(★07000-B2018)	· · · O-RING	1	35001-
16	(★708-23-18210)	· · · COVER	1	35001-
17	(★01580-10806)	· · · NUT	1	35001-
18	(★708-2L-25190)	· · · SOLENOID ASS'Y	1	35001-
19	(★07000-B2016)	· · · O-RING	1	35001-
20	(★708-23-18250)	· · · BOLT	4	35001-
21	(★01252-60616)	· · · BOLT	2	35021-
	(★708-25-15320)	· · · BOLT	2	35001-35020
22	(★01602-20619)	· · · WASHER	2	35001-
23	(★708-2L-25480)	· · · FILTER	1	35001-

Printed By : Dwi Iswanto (airafather6107170)

MAIN PUMP (12/16) (N0.1 PUMP)

Item	Part No.	Part Name	Qty	Serial No.
24	(★708-2L-25490)	・・・ O-RING	1	35001-
25	(★708-25-58310)	・・・ FLANGE	1	35001-
26	(★01252-60830)	・・・ BOLT	2	35021-
	(★708-25-58320)	・・・ BOLT	2	35001-35020
27	(★01602-20825)	・・・ WASHER	2	35001-

Printed By : Dwi Iswanto (airafather6107170)

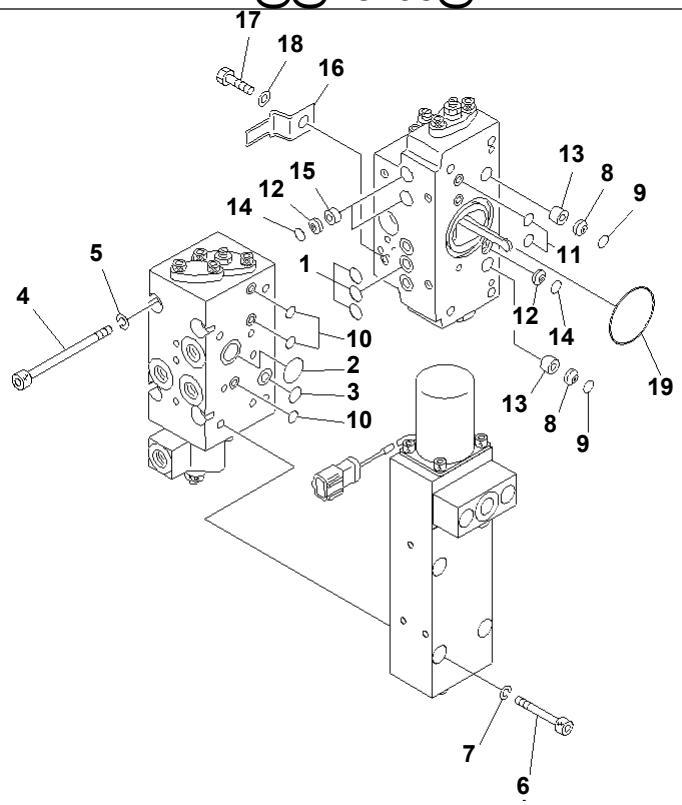

PVB8205

Ref. Y1600-13A0 **Page 510240**

PC1250SP-8R S/N 35001-UP (W/O EGR, +55C DEGREE)
MAIN PUMP (13/16) (N0.1 PUMP)

Item	Part No.	Part Name	Qty	Serial No.
	(708-2L-00680)	PUMP ASS'Y THIS ASSEMBLY CONSISTS OF ALL PARTS SHOWN IN FIGS.Y1600-01A0 T0 Y1600-16A0.	1	35001-
	(708-25-85260)	· SERVO VALVE ASS'Y,REAR	1	35001-
1	07000-B2011	· · O-RING	3	35001-
2	07000-B2018	· · O-RING	1	35001-
3	07000-B2011	· · O-RING	1	35001-
4	708-25-19160	· · BOLT	4	35001-
5	01602-20825	· · WASHER	4	35001-
6	01252-60850	· · BOLT	4	35001-
7	01602-20825	· · WASHER	4	35001-
8	708-2L-25480	· · FILTER	2	35001-
9	708-2L-25490	· · O-RING	2	35001-
10	07000-B1009	· · O-RING	3	35001-
11	07000-B1009	· · O-RING	2	35001-
12	708-2L-25480	· · FILTER	3	35001-
13	708-25-19230	· · ORIFICE	2	35001-
14	708-2L-25490	· · O-RING	3	35001-
15	708-25-19240	· · ORIFICE	2	35001-
16	08193-21012	· · CLIP	1	35001-
17	01010-80812	· · BOLT	1	35001-
18	01643-30823	· · WASHER	1	35001-
19	07000-B3048	· · O-RING	1	35001-

Printed By : Dwi Iswanto (airafather6107170)

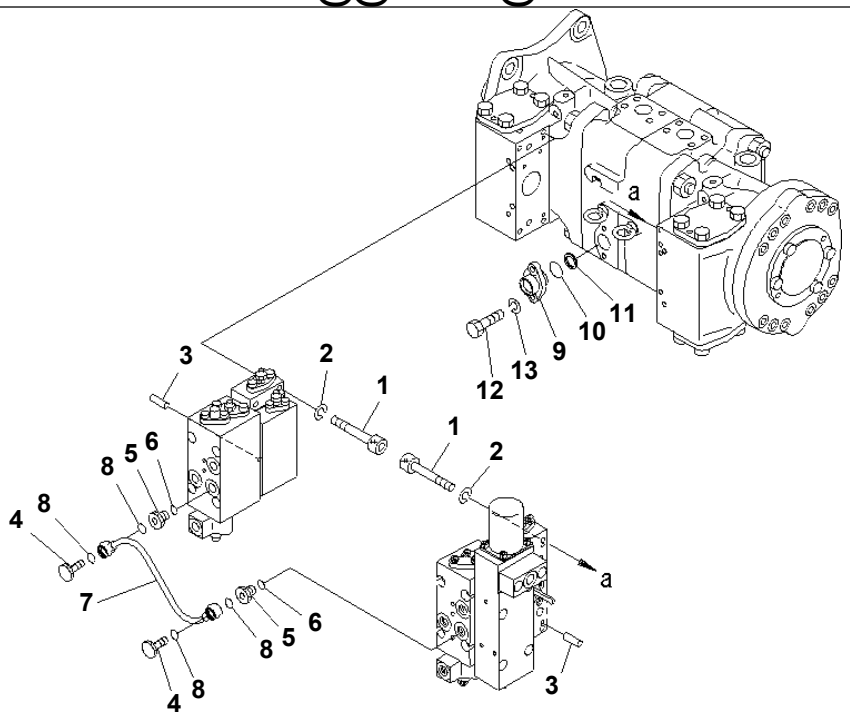

P W 5 A 2 1 0

Ref. Y1600-14A0 **Page 510250**

PC1250SP-8R S/N 35001-UP (W/O EGR, +55C DEGREE)
MAIN PUMP (14/16) (N0.1 PUMP)

Item	Part No.	Part Name	Qty	Serial No.
	(708-2L-00680)	PUMP ASS'Y THIS ASSEMBLY CONSISTS OF ALL PARTS SHOWN IN FIGS.Y1600-01A0 T0 Y1600-16A0.	1	35001-
1	01252-60850	· BOLT	8	35001-
2	01602-20825	· WASHER	8	35001-
3	04020-00616	· PIN	4	35001-
4	706-46-53180	· BOLT,EYE	2	35001-
5	706-46-53260	· PLUG	2	35001-
6	07002-61423	· O-RING	2	35001-
7	708-25-19140	· TUBE	1	35001-
8	07000-B2012	· O-RING	4	35001-
9	708-25-19120	· FLANGE	1	35001-
10	07000-B2021	· O-RING	1	35001-
11	720-68-15240	· FILTER	1	35001-
12	01010-80820	· BOLT	2	35001-
13	01602-20825	· WASHER	2	35001-

Printed By : Dwi Iswanto (airafather6107170)

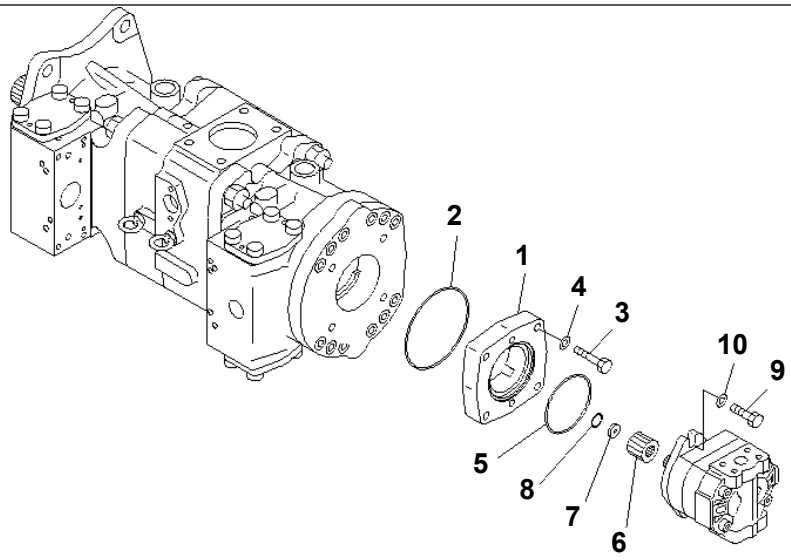

00048683

Ref. Y1600-15A0 Page 510260

PC1250SP-8R S/N 35001-UP (W/O EGR, +55C DEGREE)

MAIN PUMP (15/16) (N0.1 PUMP)

Item	Part No.	Part Name	Qty	Serial No.
	(708-2L-00680)	PUMP ASS'Y THIS ASSEMBLY CONSISTS OF ALL PARTS SHOWN IN FIGS.Y1600-01A0 T0 Y1600-16A0.	1	35001-
1	708-45-12330	· COVER	1	35001-
2	07000-B2120	· O-RING	1	35001-
3	01010-81050	· BOLT	4	35001-
4	01643-31032	· WASHER	4	35001-
5	07000-B2085	· O-RING	1	35001-
6	708-45-12810	· BOSS	1	35001-
7	708-45-12820	· COLLAR	1	35001-
8	708-45-12830	· RING	1	35001-
9	01010-81030	· BOLT	2	35001-
10	01643-31032	· WASHER	2	35001-

Printed By : Dwi Iswanto (airafather6107170)

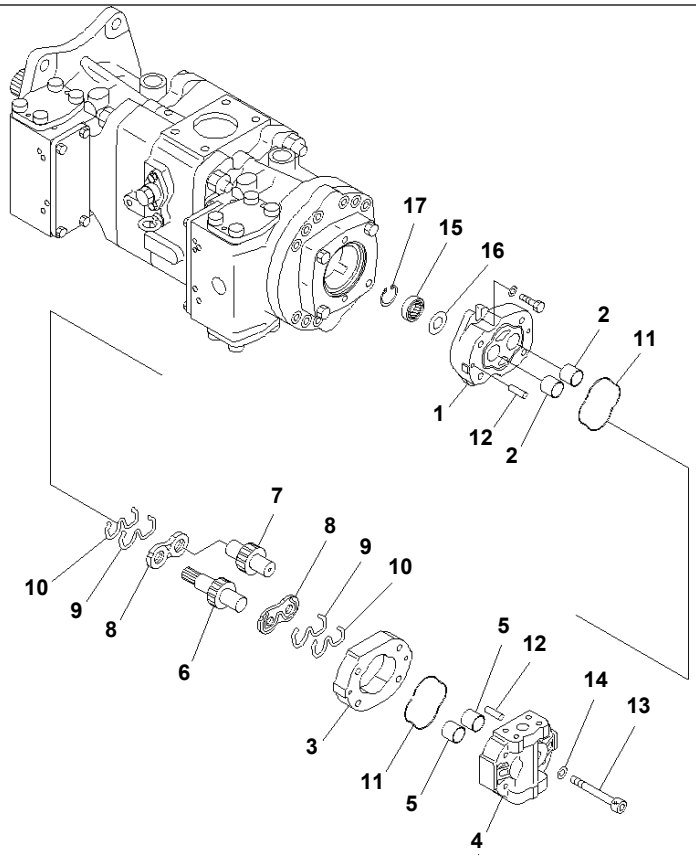

Ref. Y1600-16A0 **Page 510270**

PC1250SP-8R S/N 35001-UP (W/O EGR, +55C DEGREE)
MAIN PUMP (16/16) (N0.1 PUMP)

Item	Part No.	Part Name	Qty	Serial No.
	(708-2L-00680)	PUMP ASS'Y THIS ASSEMBLY CONSISTS OF ALL PARTS SHOWN IN FIGS.Y1600-01A0 T0 Y1600-16A0.	1	35001-
	705-11-23040	· PUMP ASS'Y	1	35001-
1	(★705-17-01010)	· · BRACKET ASS'Y	1	35001-
2	(★705-17-01350)	· · · BUSHING,PLANE	2	35001-
3	(★705-17-23010)	· · CASE,GEAR	1	35001-
4	(★705-17-01120)	· · COVER ASS'Y	1	35001-
5	(★705-17-01350)	· · · BUSHING,PLANE	2	35001-
6	(★705-17-23410)	· · GEAR,DRIVE	1	35001-
7	(★705-17-23510)	· · GEAR,DRIVEN	1	35001-
8	(★705-17-01610)	· · PLATE	2	35001-
9	(★705-67-01470)	· · SEAL,RING	2	35001-
10	(★705-67-01440)	· · RING,BACK-UP	2	35001-
11	(★705-67-01380)	· · O-RING	2	35001-
12	(★04020-00820)	· · PIN,DOWEL	4	35001-
13	(★01252-61280)	· · BOLT	4	35001-
14	(★01643-31232)	· · WASHER	4	35001-
15	07430-71360	· · SEAL,OIL	1	35001-
16	705-17-01870	· · PLATE	1	35001-
17	04065-03515	· · RING,SNAP	1	35001-

Printed By : Dwi Iswanto (airafather6107170)

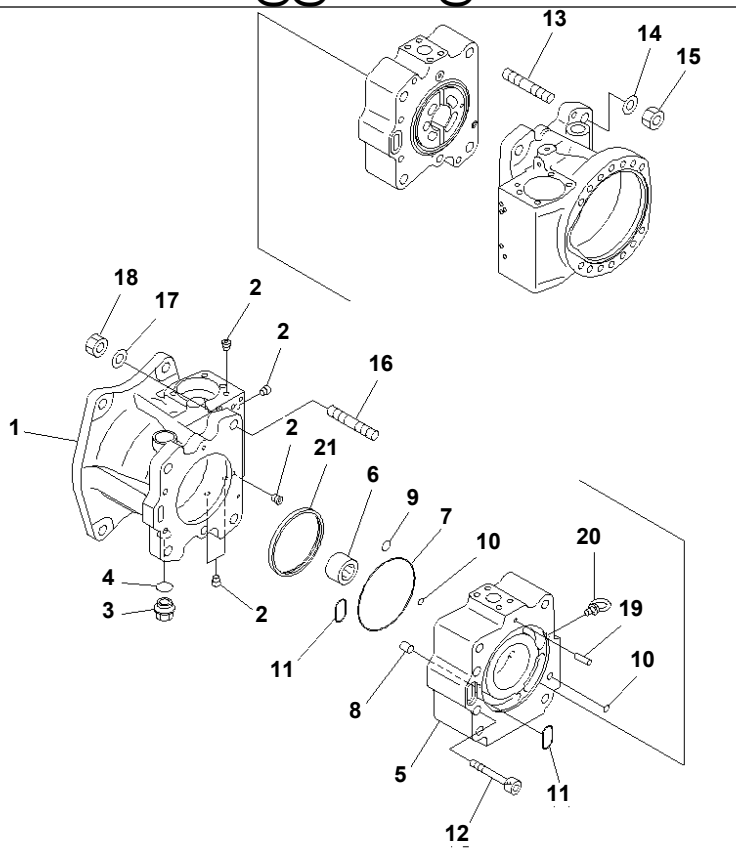

Ref. Y1600-21A0 **Page 510280**

PC1250SP-8R S/N 35001-UP (W/O EGR, +55C DEGREE)

MAIN PUMP (1/11) (N0.2 PUMP)

Item	Part No.	Part Name	Qty	Serial No.
	708-2L-00690	PUMP ASS'Y THIS ASSEMBLY CONSISTS OF ALL PARTS SHOWN IN FIGS.Y1600-21A0 T0 Y1600-31A0.	1	35001-
	708-2L-01690	· PUMP SUB ASS'Y	1	35001-
	(★708-2L-04930)	· · CASE ASS'Y,FRONT	1	35001-
1	☆	· · · CASE,FRONT	1	35001-
2	☆	· · · PLUG	8	35001-
3	07044-12412	· · PLUG	1	35001-
4	07002-62434	· · O-RING	1	35001-
5	(★708-2L-21721)	· · CAP,END	1	35001-
6	(★708-2L-32260)	· · BEARING	1	35001-
7	(★07000-B2135)	· · O-RING	1	35001-
8	(★6130-21-1910)	· · PIN,DOWEL	1	35001-
9	(★07000-B2015)	· · O-RING	1	35001-
10	(★07000-B1009)	· · O-RING	2	35001-
11	(★07000-B3032)	· · O-RING	2	35001-
12	(★01252-61080)	· · BOLT	2	35001-
13	(★01141-81620)	· · STUD	4	35001-
14	(★01643-31645)	· · WASHER	4	35001-
15	(★01582-01613)	· · NUT	4	35001-
16	(★01140-81645)	· · STUD	4	35001-
17	(★01643-31645)	· · WASHER	4	35001-
18	(★01582-01613)	· · NUT	4	35001-
19	(★720-68-19610)	· · PIN	1	35001-
20	04530-01018	· · BOLT,EYE	1	35001-
21	(★708-25-13630)	· · RING	1	35001-

Printed By : Dwi Iswanto (airafather6107170)

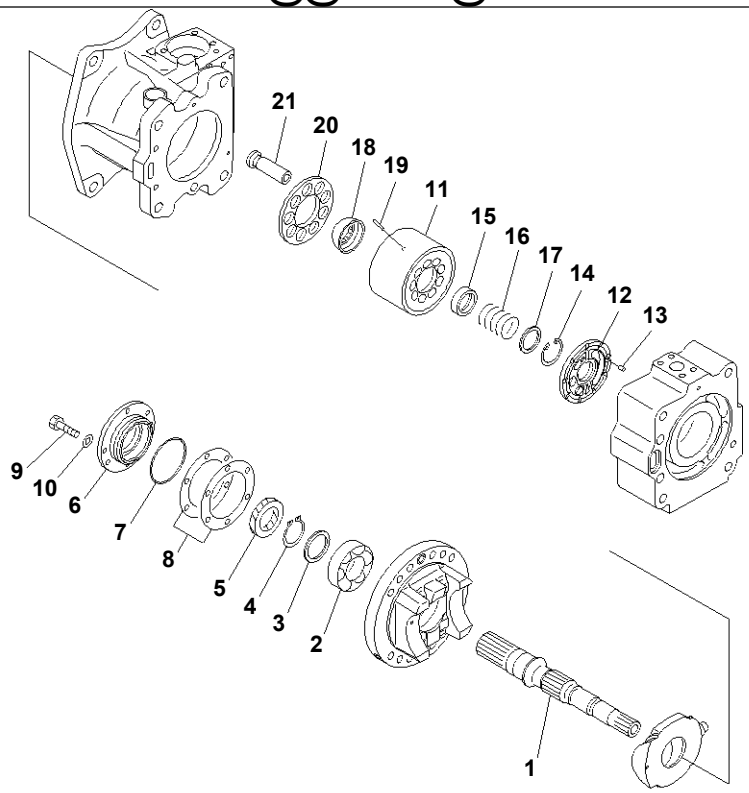

Ref. Y1600-22A0 **Page 510290**

PC1250SP-8R S/N 35001-UP (W/O EGR, +55C DEGREE)

MAIN PUMP (2/11) (N0.2 PUMP)

Item	Part No.	Part Name	Qty	Serial No.
	(708-2L-00690)	PUMP ASS'Y THIS ASSEMBLY CONSISTS OF ALL PARTS SHOWN IN FIGS.Y1600-21A0 T0 Y1600-31A0.	1	35001-
	(708-2L-01690)	· PUMP SUB ASS'Y	1	35001-
1	(★708-2L-22430)	· · SHAFT,FRONT	1	35001-
2	(★708-2L-32150)	· · BEARING	1	35001-
3	(★708-2E-05040)	· · WASHER KIT	1	35001-
	☆	· · · WASHER, 3.1MM	1	35001-
	☆	· · · WASHER, 3.0MM	1	35001-
	☆	· · · WASHER, 2.9MM	1	35001-
	☆	· · · WASHER, 2.8MM	1	35001-
4	(★708-25-12790)	· · RING,SNAP	1	35001-
5	708-25-52861	· · SEAL,OIL	1	35001-
6	(★708-25-12812)	· · HOUSING	1	35001-
7	07000-A2080	· · O-RING	1	35001-
8	(★708-25-05130)	· · SHIM KIT	1	35001-
	☆	· · · SHIM, 0.2MM	2	35001-
	☆	· · · SHIM, 0.1MM	1	35001-
9	01010-80820	· · BOLT	4	35001-
10	01643-30823	· · WASHER	4	35001-
	(★708-2L-04151)	· · BLOCK ASS'Y,REAR	1	35001-
11	☆	· · · BLOCK,CYLINDER	1	35001-
12	☆	· · · PLATE,VALVE	1	35001-
13	(★720-68-19610)	· · PIN	1	35001-
14	(★04065-04818)	· · RING,SNAP	1	35001-
15	(★708-2L-23131)	· · SEAT	1	35001-
16	(★708-2L-33160)	· · SPRING	1	35001-
17	(★708-7L-13140)	· · SEAT	1	35001-
18	(★708-2L-23351)	· · GUIDE,RETAINER	1	35001-
19	(★708-2L-23360)	· · PIN	3	35001-

Printed By : Dwi Iswanto (airafather6107170)

MAIN PUMP (2/11) (N0.2 PUMP)

Item	Part No.	Part Name	Qty	Serial No.
20	(★708-2L-33340)	・・RETAINER,SHOE	1	35001-
21	(★708-2L-33310)	・・PISTON SUB ASS'Y	9	35001-

Printed By : Dwi Iswanto (airafather6107170)

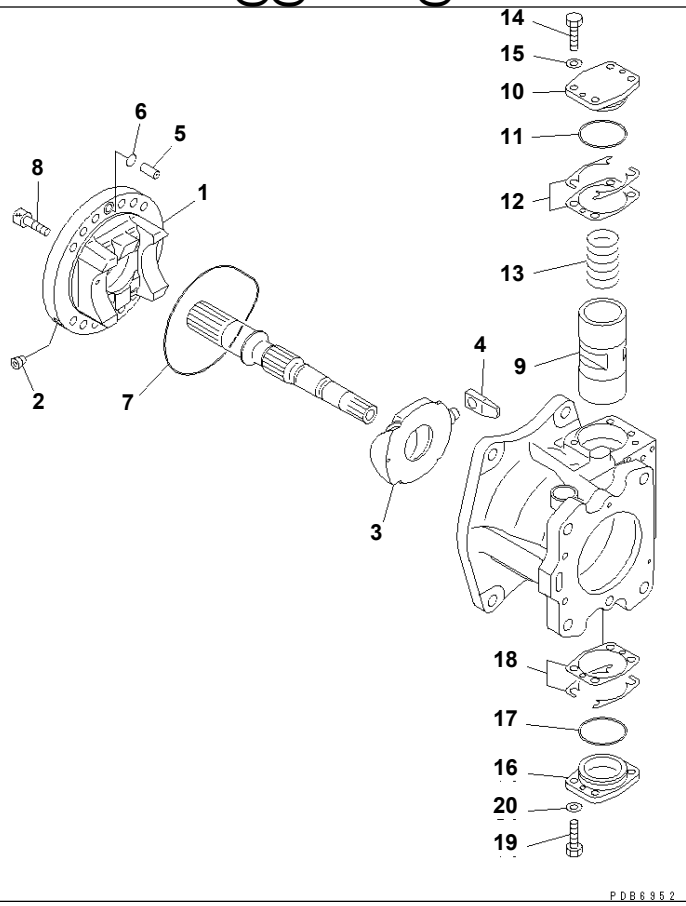

Ref. Y1600-23A0 **Page 510300**

PC1250SP-8R S/N 35001-UP (W/O EGR, +55C DEGREE)
MAIN PUMP (3/11) (N0.2 PUMP)

Item	Part No.	Part Name	Qty	Serial No.
	(708-2L-00690)	PUMP ASS'Y THIS ASSEMBLY CONSISTS OF ALL PARTS SHOWN IN FIGS.Y1600-21A0 T0 Y1600-31A0.	1	35001-
	(708-2L-01690)	· PUMP SUB ASS'Y	1	35001-
	(★708-2L-04810)	· · CRADLE ASS'Y,FRONT	1	35001-
	(★708-2L-04840)	· · · CRADLE SUB ASS'Y,FRONT	1	35001-
1	☆	· · · · CRADLE,FRONT	1	35001-
2	☆	· · · · PLUG	1	35001-
3	☆	· · · CAM,ROCKER	1	35001-
4	(★708-2L-23730)	· · SLIDER	1	35001-
5	(★708-25-12330)	· · JOINT	1	35001-
6	(★07000-B2015)	· · O-RING	1	35001-
7	(★708-25-62361)	· · O-RING	1	35001-
8	(★01252-61230)	· · BOLT	12	35001-
9	(★708-25-14211)	· · PISTON	1	35001-
10	(★708-25-14140)	· · CAP	1	35001-
11	07000-B2065	· · O-RING	1	35001-
12	(★708-25-05050)	· · SHIM KIT	1	35001-
	☆	· · · SHIM, 0.5MM	3	35001-
	☆	· · · SHIM, 0.2MM	2	35001-
	☆	· · · SHIM, 0.1MM	2	35001-
	☆	· · · SHIM, 0.1MM	4	35001-
13	708-25-14130	· · SPRING	1	35001-
14	01016-51035	· · BOLT	4	35001-
15	01643-31032	· · WASHER	4	35001-
16	(★708-25-14150)	· · CAP	1	35001-
17	07000-B2065	· · O-RING	1	35001-
18	(★708-25-05050)	· · SHIM KIT	1	35001-
	☆	· · · SHIM, 0.5MM	3	35001-
	☆	· · · SHIM, 0.2MM	2	35001-

Printed By : Dwi Iswanto (airafather6107170)

MAIN PUMP (3/11) (N0.2 PUMP)

Item	Part No.	Part Name	Qty	Serial No.
18	☆	・・・ SHIM, 0.1MM	2	35001-
	☆	・・・ SHIM, 0.1MM	4	35001-
19	01016-51035	・・ BOLT	4	35001-
20	01643-31032	・・ WASHER	4	35001-

Printed By : Dwi Iswanto (airafather6107170)

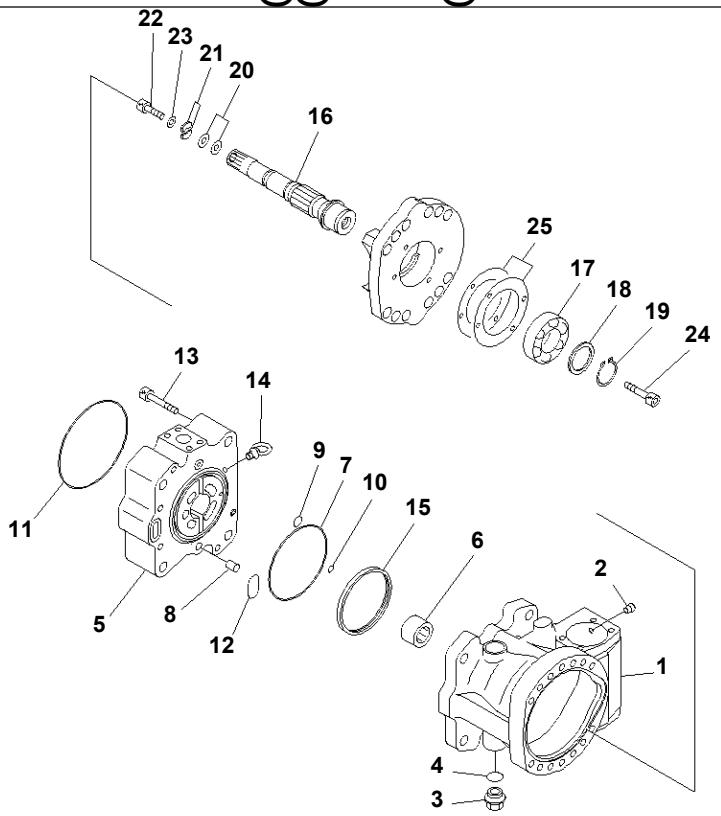

Ref. Y1600-24A0 **Page 510310**

PC1250SP-8R S/N 35001-UP (W/O EGR, +55C DEGREE)
MAIN PUMP (4/11) (N0.2 PUMP)

Item	Part No.	Part Name	Qty	Serial No.
	(708-2L-00690)	PUMP ASS'Y THIS ASSEMBLY CONSISTS OF ALL PARTS SHOWN IN FIGS.Y1600-21A0 T0 Y1600-31A0.	1	35001-
	(708-2L-01690)	· PUMP SUB ASS'Y	1	35001-
	(★708-2L-04940)	· · CASE ASS'Y,REAR	1	35001-
1	☆	· · · CASE,REAR	1	35001-
2	☆	· · · PLUG	8	35001-
3	07044-12412	· · PLUG	1	35001-
4	07002-62434	· · O-RING	1	35001-
5	(★708-2L-21711)	· · CAP,END	1	35001-
6	(★708-2L-32260)	· · BEARING	1	35001-
7	(★07000-B2135)	· · O-RING	1	35001-
8	(★6130-21-1910)	· · PIN,DOWEL	1	35001-
9	(★07000-B2015)	· · O-RING	1	35001-
10	(★07000-B1009)	· · O-RING	1	35001-
11	(★07000-B5165)	· · O-RING	1	35001-
12	(★07000-B3032)	· · O-RING	1	35001-
13	(★01252-61080)	· · BOLT	4	35001-
14	04530-01018	· · BOLT,EYE	1	35001-
15	(★708-25-13630)	· · RING	1	35001-
16	(★708-2L-22450)	· · SHAFT,REAR	1	35001-
17	(★708-2L-32150)	· · BEARING	1	35001-
18	(★708-2E-05040)	· · WASHER KIT	1	35001-
	☆	· · · WASHER, 3.1MM	1	35001-
	☆	· · · WASHER, 3.0MM	1	35001-
	☆	· · · WASHER, 2.9MM	1	35001-
	☆	· · · WASHER, 2.8MM	1	35001-
19	(★708-25-12790)	· · RING,SNAP	1	35001-
20	(★708-25-05021)	· · SHIM KIT	1	35001-
	☆	· · · SHIM, 0.5MM	4	35001-

Printed By : Dwi Iswanto (airafather6107170)

MAIN PUMP (4/11) (N0.2 PUMP)

Item	Part No.	Part Name	Qty	Serial No.
20	☆	・・・ SHIM, 0.2MM	2	35001-
	☆	・・・ SHIM, 0.15MM	1	35001-
	☆	・・・ SHIM, 0.1MM	1	35001-
21	(★708-25-12950)	・・ PLATE	2	35001-
22	(★01252-61040)	・・ BOLT	1	35001-
23	(★01643-31032)	・・ WASHER	1	35001-
24	(★01252-31016)	・・ BOLT	1	35001-
25	(★708-25-05130)	・・ SHIM KIT	1	35001-
	☆	・・・ SHIM, 0.2MM	2	35001-
	☆	・・・ SHIM, 0.1MM	1	35001-

Printed By : Dwi Iswanto (airafather6107170)

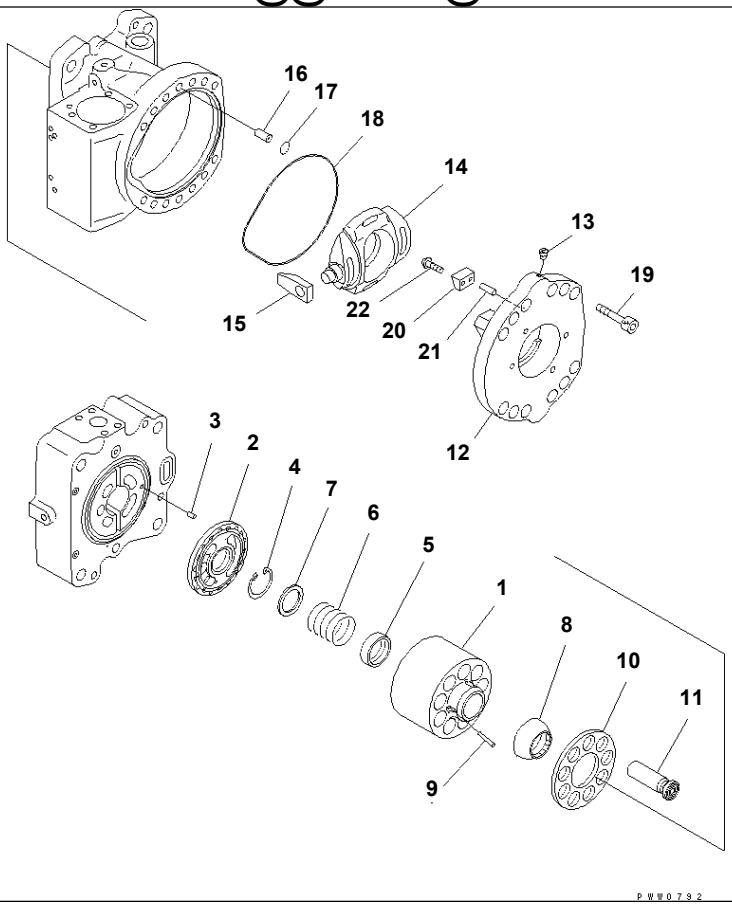

Ref. Y1600-25A0 **Page 510320**

PC1250SP-8R S/N 35001-UP (W/O EGR, +55C DEGREE)
MAIN PUMP (5/11) (N0.2 PUMP)

Item	Part No.	Part Name	Qty	Serial No.
	(708-2L-00690)	PUMP ASS'Y THIS ASSEMBLY CONSISTS OF ALL PARTS SHOWN IN FIGS.Y1600-21A0 T0 Y1600-31A0.	1	35001-
	(708-2L-01690)	· PUMP SUB ASS'Y	1	35001-
	(★708-2L-04141)	· · BLOCK ASS'Y,FRONT	1	35001-
1	☆	· · · BLOCK,CYLINDER	1	35001-
2	☆	· · · PLATE,VALVE	1	35001-
3	(★720-68-19610)	· · PIN	1	35001-
4	(★04065-04818)	· · RING,SNAP	1	35001-
5	(★708-2L-23131)	· · SEAT	1	35001-
6	(★708-2L-33160)	· · SPRING	1	35001-
7	(★708-7L-13140)	· · SEAT	1	35001-
8	(★708-2L-23351)	· · GUIDE,RETAINER	1	35001-
9	(★708-2L-23360)	· · PIN	3	35001-
10	(★708-2L-33340)	· · RETAINER,SHOE	1	35001-
11	(★708-2L-33310)	· · PISTON SUB ASS'Y	9	35001-
	(★708-2L-06930)	· · CRADLE ASS'Y,REAR	1	35001-
	(★708-2L-06940)	· · · CRADLE SUB ASS'Y,REAR	1	35001-
12	☆	· · · · CRADLE,REAR	1	35001-
13	☆	· · · · PLUG	1	35001-
14	☆	· · · CAM,ROCKER	1	35001-
15	(★708-2L-23730)	· · SLIDER	1	35001-
16	(★708-25-12330)	· · JOINT	1	35001-
17	(★07000-B2015)	· · O-RING	1	35001-
18	(★708-25-62361)	· · O-RING	1	35001-
19	(★01252-61230)	· · BOLT	12	35001-
20	(★708-2L-23790)	· · STOPPER	1	35001-
21	(★04020-00616)	· · PIN	1	35001-
22	(★706-75-42270)	· · SCREW	1	35001-

Printed By : Dwi Iswanto (airafather6107170)

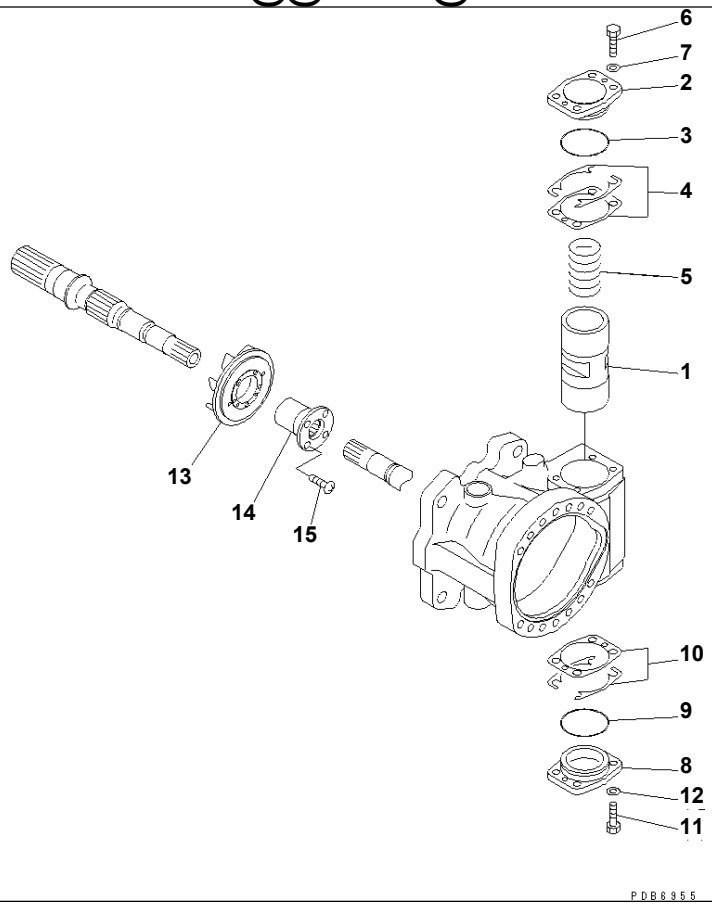

Ref. Y1600-26A0 **Page 510330**

PC1250SP-8R S/N 35001-UP (W/O EGR, +55C DEGREE)
MAIN PUMP (6/11) (N0.2 PUMP)

Item	Part No.	Part Name	Qty	Serial No.
	(708-2L-00690)	PUMP ASS'Y THIS ASSEMBLY CONSISTS OF ALL PARTS SHOWN IN FIGS.Y1600-21A0 T0 Y1600-31A0.	1	35001-
	(708-2L-01690)	· PUMP SUB ASS'Y	1	35001-
1	(★708-25-14112)	· · PISTON	1	35001-
2	(★708-25-14140)	· · CAP	1	35001-
3	07000-B2065	· · O-RING	1	35001-
4	(★708-25-05050)	· · SHIM KIT	1	35001-
	☆	· · · SHIM, 0.5MM	3	35001-
	☆	· · · SHIM, 0.2MM	2	35001-
	☆	· · · SHIM, 0.1MM	2	35001-
	☆	· · · SHIM, 0.1MM	4	35001-
5	708-25-14130	· · SPRING	1	35001-
6	01016-51035	· · BOLT	4	35001-
7	01643-31032	· · WASHER	4	35001-
8	(★708-25-14150)	· · CAP	1	35001-
9	07000-B2065	· · O-RING	1	35001-
10	(★708-25-05050)	· · SHIM KIT	1	35001-
	☆	· · · SHIM, 0.5MM	3	35001-
	☆	· · · SHIM, 0.2MM	2	35001-
	☆	· · · SHIM, 0.1MM	2	35001-
	☆	· · · SHIM, 0.1MM	4	35001-
11	01016-51035	· · BOLT	4	35001-
12	01643-31032	· · WASHER	4	35001-
13	(★708-25-12542)	· · IMPELLER	1	35001-
14	(★708-25-52550)	· · COUPLING	1	35001-
15	(★706-73-42270)	· · SCREW	4	35001-

Printed By : Dwi Iswanto (airafather6107170)

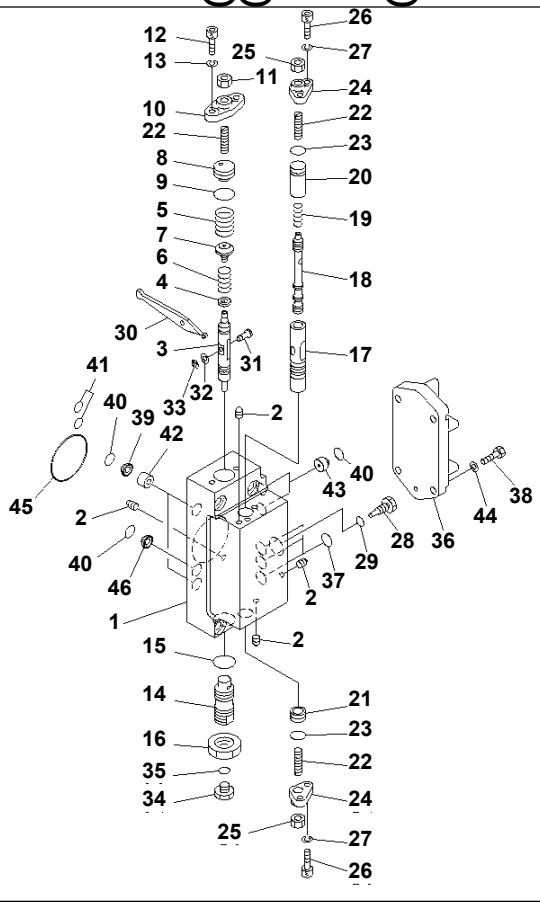

Ref. Y1600-27A0 **Page 510340**

MAIN PUMP (7/11) (N0.2 PUMP)

Item	Part No.	Part Name	Qty	Serial No.
	(708-2L-00690)	PUMP ASS'Y THIS ASSEMBLY CONSISTS OF ALL PARTS SHOWN IN FIGS.Y1600-21A0 T0 Y1600-31A0.	1	35001-
	708-25-09191	· SERVO VALVE ASS'Y,FRONT	1	35001-
	(★708-25-00840)	· · BODY ASS'Y	1	35001-
1	☆	· · · BODY	1	35001-
2	☆	· · · EXPANDER	7	35001-
3	(★708-25-15120)	· · PISTON	1	35001-
4	(★708-25-15130)	· · SEAT	1	35001-
5	(★708-25-25130)	· · SPRING	1	35001-
6	(★708-25-55250)	· · SPRING	1	35001-
7	(★708-23-15120)	· · SEAT	1	35001-
8	(★708-23-15160)	· · PLUG	1	35001-
9	(★07000-B2018)	· · O-RING	1	35001-
10	(★708-25-15150)	· · COVER	1	35001-
11	(★01580-10806)	· · NUT	1	35001-
12	(★708-25-15320)	· · BOLT	2	35001-
13	(★01602-20619)	· · WASHER	2	35001-
14	(★708-25-15171)	· · PLUG	1	35001-
15	(★07002-62034)	· · O-RING	1	35001-
16	(★07239-12009)	· · NUT	1	35001-
17	(★708-25-15180)	· · SLEEVE	1	35001-
18	(★708-25-15280)	· · SPOOL	1	35001-
19	(★708-25-15310)	· · SPRING	1	35001-
20	(★708-25-15330)	· · SPACER	1	35001-
21	(★708-25-15430)	· · PLUG	1	35001-
22	(★708-25-15340)	· · SCREW	3	35001-
23	(★07000-B2012)	· · O-RING	2	35001-
24	(★708-25-15250)	· · COVER	2	35001-
25	(★01580-10806)	· · NUT	2	35001-

Printed By : Dwi Iswanto (airafather6107170)

MAIN PUMP (7/11) (N0.2 PUMP)

Item	Part No.	Part Name	Qty	Serial No.
26	(★708-25-15320)	· · BOLT	4	35001-
27	(★01602-20619)	· · WASHER	4	35001-
28	(★708-25-15260)	· · PLUG	1	35001-
29	(★07002-60823)	· · O-RING	1	35001-
30	(★708-25-15270)	· · ARM	1	35001-
31	(★708-25-15360)	· · PIN	1	35001-
32	(★708-25-15370)	· · WASHER	1	35001-
33	(★708-25-15380)	· · E-RING	1	35001-
34	(★07040-11007)	· · PLUG	1	35001-
35	(★07002-61023)	· · O-RING	1	35001-
36	708-25-55110	· · PLATE	1	35001-
37	07000-B2011	· · O-RING	3	35001-
38	01010-80825	· · BOLT	4	35001-
39	708-2L-25480	· · FILTER	2	35001-
40	708-2L-25490	· · O-RING	5	35001-
41	07000-B1009	· · O-RING	2	35001-
42	708-25-19230	· · ORIFICE	2	35001-
43	(★708-25-19250)	· · PLUG	2	35001-
44	01643-50823	· · WASHER	4	35001-
45	07000-B3048	· · O-RING	1	35001-
46	708-2L-25480	· · FILTER	1	35001-

Printed By : Dwi Iswanto (airafather6107170)

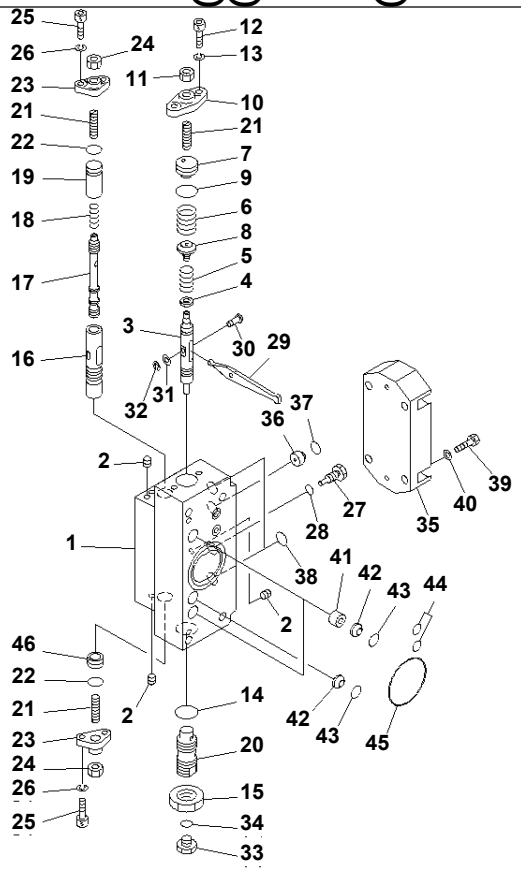

Ref. Y1600-28A0 **Page 510350**

PC1250SP-8R S/N 35001-UP (W/O EGR, +55C DEGREE)
MAIN PUMP (8/11) (N0.2 PUMP)

Item	Part No.	Part Name	Qty	Serial No.
	(708-2L-00690)	PUMP ASS'Y THIS ASSEMBLY CONSISTS OF ALL PARTS SHOWN IN FIGS.Y1600-21A0 T0 Y1600-31A0.	1	35001-
	708-25-09291	· SERVO VALVE ASS'Y,REAR	1	35001-
	(★708-25-00830)	· · BODY ASS'Y	1	35001-
1	☆	· · · BODY,FRONT	1	35001-
2	☆	· · · EXPANDER	5	35001-
3	(★708-25-15120)	· · PISTON	1	35001-
4	(★708-25-15130)	· · SEAT	1	35001-
5	(★708-25-55250)	· · SPRING	1	35001-
6	(★708-25-25130)	· · SPRING	1	35001-
7	(★708-23-15160)	· · PLUG	1	35001-
8	(★708-23-15120)	· · SEAT	1	35001-
9	(★07000-B2018)	· · O-RING	1	35001-
10	(★708-25-15150)	· · COVER	1	35001-
11	(★01580-10806)	· · NUT	1	35001-
12	(★708-25-15320)	· · BOLT	2	35001-
13	(★01602-20619)	· · WASHER	2	35001-
14	(★07002-62034)	· · O-RING	1	35001-
15	(★07239-12009)	· · NUT	1	35001-
16	(★708-25-15180)	· · SLEEVE	1	35001-
17	(★708-25-15280)	· · SPOOL	1	35001-
18	(★708-25-15310)	· · SPRING	1	35001-
19	(★708-25-15330)	· · SPACER	1	35001-
20	(★708-25-15171)	· · PLUG	1	35001-
21	(★708-25-15340)	· · SCREW	3	35001-
22	(★07000-B2012)	· · O-RING	2	35001-
23	(★708-25-15250)	· · COVER	2	35001-
24	(★01580-10806)	· · NUT	2	35001-
25	(★708-25-15320)	· · BOLT	4	35001-

Printed By : Dwi Iswanto (airafather6107170)

MAIN PUMP (8/11) (N0.2 PUMP)

Item	Part No.	Part Name	Qty	Serial No.
26	(★01602-20619)	· · WASHER	4	35001-
27	(★708-25-15260)	· · PLUG	1	35001-
28	(★07002-60823)	· · O-RING	1	35001-
29	(★708-25-15270)	· · ARM	1	35001-
30	(★708-25-15360)	· · PIN	1	35001-
31	(★708-25-15370)	· · WASHER	1	35001-
32	(★708-25-15380)	· · E-RING	1	35001-
33	(★07040-11007)	· · PLUG	1	35001-
34	(★07002-61023)	· · O-RING	1	35001-
35	(★708-25-55110)	· · PLATE	1	35001-
36	(★708-25-19250)	· · PLUG	1	35001-
37	708-2L-25490	· · O-RING	1	35001-
38	07000-B2011	· · O-RING	2	35001-
39	01010-80825	· · BOLT	4	35001-
40	01643-50823	· · WASHER	4	35001-
41	708-25-19230	· · ORIFICE	2	35001-
42	708-2L-25480	· · FILTER	3	35001-
43	708-2L-25490	· · O-RING	3	35001-
44	07000-B1009	· · O-RING	2	35001-
45	07000-B3048	· · O-RING	1	35001-
46	(★708-25-15430)	· · PLUG	1	35001-

Printed By : Dwi Iswanto (airafather6107170)

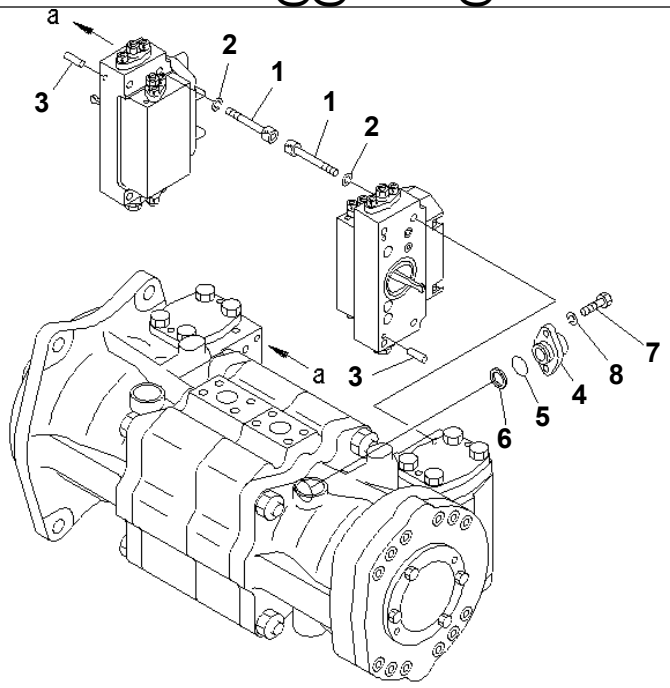

PDB6958

Ref. Y1600-29A0 **Page 510360**

PC1250SP-8R S/N 35001-UP (W/O EGR, +55C DEGREE)
MAIN PUMP (9/11) (N0.2 PUMP)

Item	Part No.	Part Name	Qty	Serial No.
	(708-2L-00690)	PUMP ASS'Y THIS ASSEMBLY CONSISTS OF ALL PARTS SHOWN IN FIGS.Y1600-21A0 T0 Y1600-31A0.	1	35001-
1	01252-60850	· BOLT	8	35001-
2	01602-20825	· WASHER	8	35001-
3	04020-00616	· PIN	4	35001-
4	708-25-19120	· FLANGE	1	35001-
5	07000-B2021	· O-RING	1	35001-
6	720-68-15240	· FILTER	1	35001-
7	01010-80820	· BOLT	2	35001-
8	01602-20825	· WASHER	2	35001-

Printed By : Dwi Iswanto (airafather6107170)

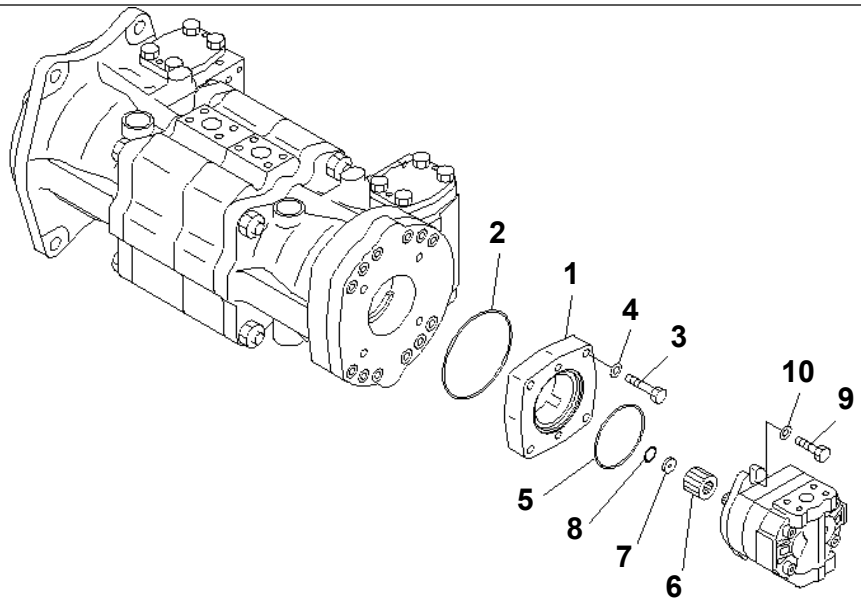

00048685

Ref. Y1600-30A0 **Page 510370**

PC1250SP-8R S/N 35001-UP (W/O EGR, +55C DEGREE)
MAIN PUMP (10/11) (N0.2 PUMP)

Item	Part No.	Part Name	Qty	Serial No.
	(708-2L-00690)	PUMP ASS'Y THIS ASSEMBLY CONSISTS OF ALL PARTS SHOWN IN FIGS.Y1600-21A0 T0 Y1600-31A0.	1	35001-
1	708-45-12330	· COVER	1	35001-
2	07000-B2120	· O-RING	1	35001-
3	01010-81050	· BOLT	4	35001-
4	01643-31032	· WASHER	4	35001-
5	07000-B2085	· O-RING	1	35001-
6	708-45-12810	· BOSS	1	35001-
7	708-45-12820	· COLLAR	1	35001-
8	708-45-12830	· RING	1	35001-
9	01010-81030	· BOLT	2	35001-
10	01643-31032	· WASHER	2	35001-

Printed By : Dwi Iswanto (airafather6107170)

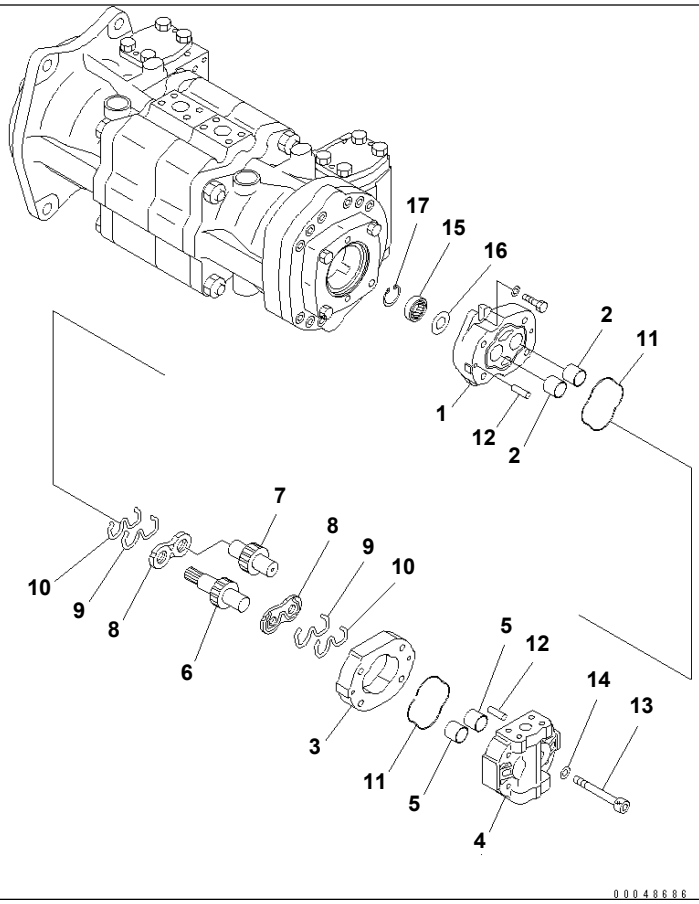

Ref. Y1600-31A0 **Page 510380**

PC1250SP-8R S/N 35001-UP (W/O EGR, +55C DEGREE)
MAIN PUMP (11/11) (N0.2 PUMP)

Item	Part No.	Part Name	Qty	Serial No.
	(708-2L-00690)	PUMP ASS'Y THIS ASSEMBLY CONSISTS OF ALL PARTS SHOWN IN FIGS.Y1600-21A0 T0 Y1600-31A0.	1	35001-
	705-11-20050	· PUMP ASS'Y	1	35001-
1	(★705-17-01010)	· · BRACKET ASS'Y	1	35001-
2	(★705-17-01350)	· · · BUSHING,PLANE	2	35001-
3	(★705-17-20011)	· · CASE,GEAR	1	35001-
4	(★705-17-01120)	· · COVER ASS'Y	1	35001-
5	(★705-17-01350)	· · · BUSHING,PLANE	2	35001-
6	(★705-17-20411)	· · GEAR,DRIVE	1	35001-
7	(★705-17-20511)	· · GEAR,DRIVEN	1	35001-
8	(★705-17-01610)	· · PLATE	2	35001-
9	(★705-67-01470)	· · SEAL,RING	2	35001-
10	(★705-67-01440)	· · RING,BACK-UP	2	35001-
11	(★705-67-01380)	· · O-RING	2	35001-
12	(★04020-00820)	· · PIN,DOWEL	4	35001-
13	(★01252-61275)	· · BOLT	4	35001-
14	(★01643-31232)	· · WASHER	4	35001-
15	07430-71360	· · SEAL,OIL	1	35001-
16	705-17-01870	· · PLATE	1	35001-
17	04065-03515	· · RING,SNAP	1	35001-

Printed By : Dwi Iswanto (airafather6107170)

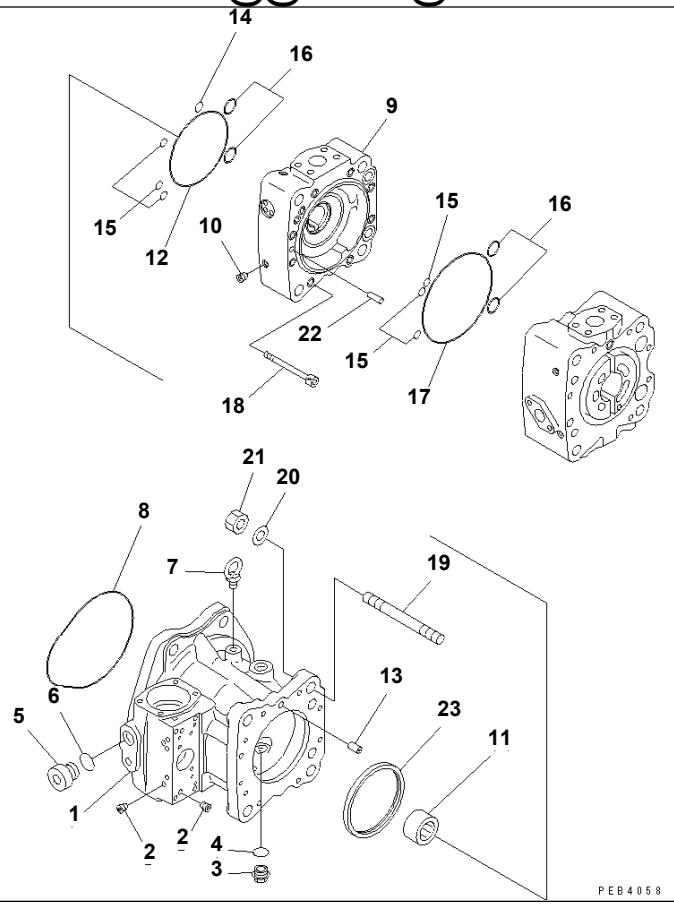

Ref. Y1600-41A0 **Page 510390**

PC1250SP-8R S/N 35001-UP (W/O EGR, +55C DEGREE)
MAIN PUMP (1/16) (N0.3 PUMP)

Item	Part No.	Part Name	Qty	Serial No.
	708-2H-00440	PUMP ASS'Y THIS ASSEMBLY CONSISTS OF ALL PARTS SHOWN IN FIGS.Y1600-41A0 T0 Y1600-56A0.	1	35001-
	708-2H-01440	· PUMP SUB ASS'Y	1	35001-
	(★708-2H-04710)	· · CASE ASS'Y,FRONT	1	35001-
1	☆	· · · CASE,FRONT	1	35001-
2	☆	· · · PLUG	10	35001-
3	07044-12412	· · PLUG	1	35001-
4	07002-62434	· · O-RING	1	35001-
5	07040-12414	· · PLUG	3	35001-
6	07002-62434	· · O-RING	3	35001-
7	04530-11222	· · BOLT,EYE	1	35001-
8	(★708-27-22131)	· · O-RING	1	35001-
	(★708-2H-04381)	· · END CAP ASS'Y,FRONT	1	35001-
9	☆	· · · CAP,END	1	35001-
10	☆	· · · PLUG	6	35001-
11	(★708-1H-12262)	· · BEARING	1	35001-
12	(★708-27-22140)	· · O-RING	1	35001-
13	(★708-25-12330)	· · JOINT	1	35001-
14	(★07000-B2015)	· · O-RING	1	35001-
15	(★07000-B2012)	· · O-RING	6	35001-
16	(★07000-B3025)	· · O-RING	4	35001-
17	(★708-27-22150)	· · O-RING	1	35001-
18	(★708-27-12550)	· · BOLT	7	35001-
19	(★01141-82040)	· · STUD	4	35001-
20	(★01643-32060)	· · WASHER	4	35001-
21	(★708-27-12570)	· · NUT	4	35001-
22	(★04020-01024)	· · PIN	1	35001-
23	(★708-2H-23290)	· · RING	1	35001-

Printed By : Dwi Iswanto (airafather6107170)

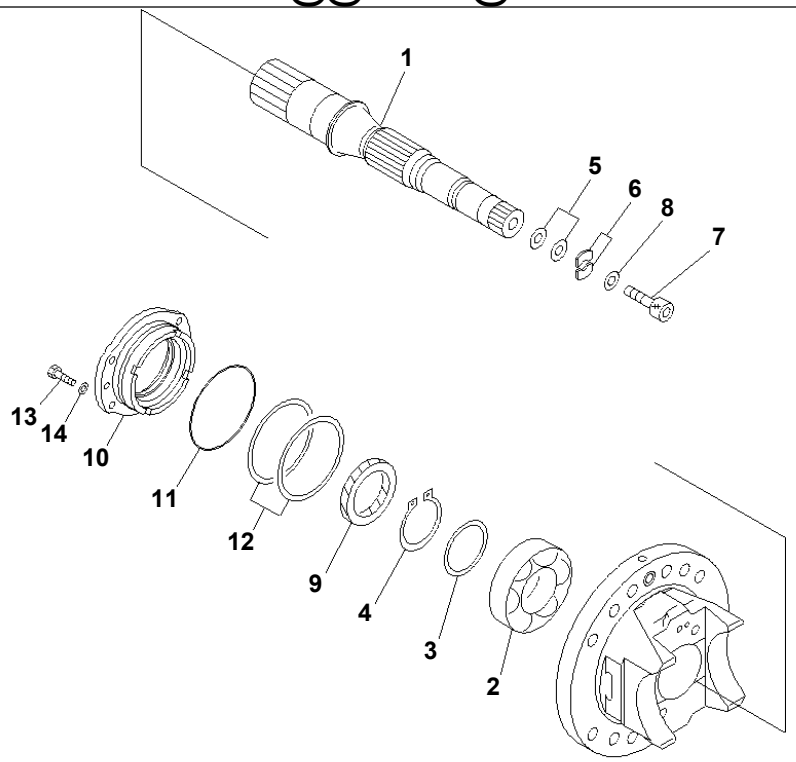

PDB4059

Ref. Y1600-42A0 **Page 510400**

PC1250SP-8R S/N 35001-UP (W/O EGR, +55C DEGREE)
MAIN PUMP (2/16) (N0.3 PUMP)

Item	Part No.	Part Name	Qty	Serial No.
	(708-2H-00440)	PUMP ASS'Y THIS ASSEMBLY CONSISTS OF ALL PARTS SHOWN IN FIGS.Y1600-41A0 T0 Y1600-56A0.	1	35001-
	(708-2H-01440)	· PUMP SUB ASS'Y	1	35001-
1	(★708-2H-22310)	· · SHAFT,FRONT	1	35001-
2	(★708-1H-22150)	· · BEARING	1	35001-
3	(★708-17-05010)	· · WASHER KIT	1	35001-
	☆	· · · WASHER, 3.0MM	1	35001-
	☆	· · · WASHER, 3.1MM	1	35001-
	☆	· · · WASHER, 3.2MM	1	35001-
4	(★708-17-12780)	· · RING,SNAP	1	35001-
5	(★708-2H-05110)	· · SHIM KIT	1	35001-
	☆	· · · SHIM, 0.10MM	1	35001-
	☆	· · · SHIM, 0.15MM	1	35001-
	☆	· · · SHIM, 0.20MM	1	35001-
	☆	· · · SHIM, 0.50MM	1	35001-
6	(★708-2H-22340)	· · PLATE	2	35001-
7	(★01252-61225)	· · BOLT	1	35001-
8	(★01643-31232)	· · WASHER	1	35001-
9	(★708-27-22811)	· · SEAL,OIL	1	35001-
10	(★708-17-12790)	· · HOUSING	1	35001-
11	(★07000-A2105)	· · O-RING	1	35001-
12	(★708-27-05010)	· · SHIM KIT	1	35001-
	☆	· · · SHIM, 0.15MM	2	35001-
	☆	· · · SHIM, 0.10MM	2	35001-
	☆	· · · SHIM, 0.50MM	2	35001-
13	(★01010-80820)	· · BOLT	4	35001-
14	(★01643-30823)	· · WASHER	4	35001-

Printed By : Dwi Iswanto (airafather6107170)

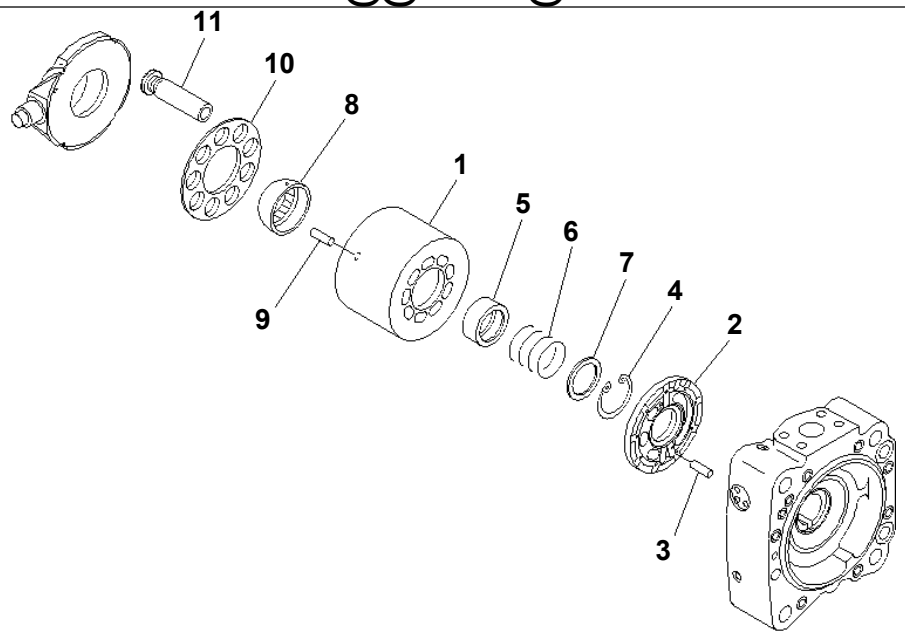

PDB4060

Ref. Y1600-43A0 **Page 510410**

PC1250SP-8R S/N 35001-UP (W/O EGR, +55C DEGREE)
MAIN PUMP (3/16) (N0.3 PUMP)

Item	Part No.	Part Name	Qty	Serial No.
	(708-2H-00440)	PUMP ASS'Y THIS ASSEMBLY CONSISTS OF ALL PARTS SHOWN IN FIGS.Y1600-41A0 T0 Y1600-56A0.	1	35001-
	(708-2H-01440)	· PUMP SUB ASS'Y	1	35001-
	(★708-2H-04720)	· · BLOCK ASS'Y,REAR	1	35001-
1	☆	· · · BLOCK,CYLINDER	1	35001-
2	☆	· · · PLATE,VALVE	1	35001-
3	(★708-18-13230)	· · PIN	1	35001-
4	(★04065-05820)	· · RING	1	35001-
5	(★708-2H-23130)	· · SEAT	1	35001-
6	(★708-2H-23151)	· · SPRING	1	35001-
7	(★708-2H-23141)	· · SEAT	1	35001-
8	(★708-2H-23350)	· · GUIDE,RETAINER	1	35001-
9	(★708-2H-23360)	· · PIN	3	35001-
10	(★708-2H-23340)	· · RETAINER,SHOE	1	35001-
11	(★708-2H-23311)	· · PISTON SUB ASS'Y	9	35001-

Printed By : Dwi Iswanto (airafather6107170)

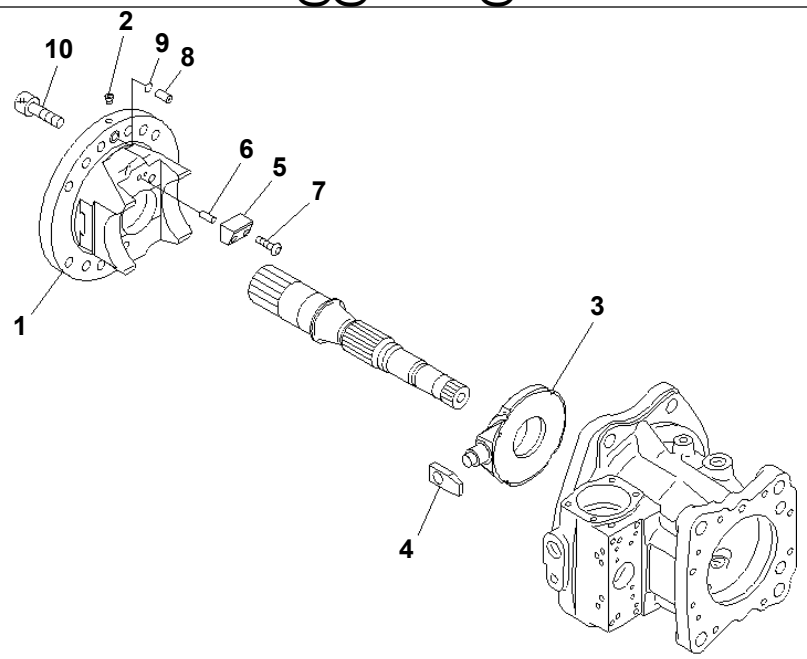

PDB4061

Ref. Y1600-44A0 **Page 510420**

PC1250SP-8R S/N 35001-UP (W/O EGR, +55C DEGREE)
MAIN PUMP (4/16) (N0.3 PUMP)

Item	Part No.	Part Name	Qty	Serial No.
	(708-2H-00440)	PUMP ASS'Y THIS ASSEMBLY CONSISTS OF ALL PARTS SHOWN IN FIGS.Y1600-41A0 T0 Y1600-56A0.	1	35001-
	(708-2H-01440)	· PUMP SUB ASS'Y	1	35001-
	(★708-2H-04340)	· · CRADLE ASS'Y,FRONT	1	35001-
	(★708-2H-04360)	· · · CRADLE SUB ASS'Y	1	35001-
1	☆	· · · · CRADLE,FRONT	1	35001-
2	☆	· · · · PLUG	4	35001-
3	☆	· · · CAM,ROCKER	1	35001-
4	(★708-2H-23530)	· · SLIDER	1	35001-
5	(★708-2H-23630)	· · STOPPER	1	35001-
6	(★04020-00820)	· · PIN	1	35001-
7	(★706-75-42270)	· · SCREW	1	35001-
8	(★708-25-12330)	· · JOINT	1	35001-
9	(★07000-B2015)	· · O-RING	1	35001-
10	(★01252-61440)	· · BOLT	12	35001-

Printed By : Dwi Iswanto (airafather6107170)

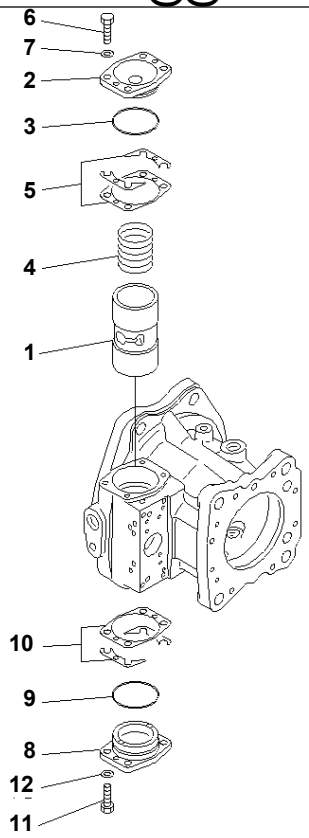

Ref. Y1600-45A0 **Page 510430**

PC1250SP-8R S/N 35001-UP (W/O EGR, +55C DEGREE)

MAIN PUMP (5/16) (N0.3 PUMP)

Item	Part No.	Part Name	Qty	Serial No.
	(708-2H-00440)	PUMP ASS'Y THIS ASSEMBLY CONSISTS OF ALL PARTS SHOWN IN FIGS.Y1600-41A0 T0 Y1600-56A0.	1	35001-
	(708-2H-01440)	· PUMP SUB ASS'Y	1	35001-
1	(★708-27-14110)	· · PISTON	1	35001-
2	(★708-27-14150)	· · CAP	1	35001-
3	07000-B2075	· · O-RING	1	35001-
4	708-27-14130	· · SPRING	1	35001-
5	(★708-27-05060)	· · SHIM KIT	1	35001-
	☆	· · · SHIM, 0.5MM	2	35001-
	☆	· · · SHIM, 0.2MM	2	35001-
	☆	· · · SHIM, 0.1MM	1	35001-
	☆	· · · SHIM, 0.1MM	1	35001-
6	01016-51045	· · BOLT	4	35001-
7	01643-31032	· · WASHER	4	35001-
8	(★708-27-14140)	· · CAP	1	35001-
9	(★07000-B2075)	· · O-RING	1	35001-
10	(★708-27-05060)	· · SHIM KIT	1	35001-
	☆	· · · SHIM, 0.5MM	2	35001-
	☆	· · · SHIM, 0.2MM	2	35001-
	☆	· · · SHIM, 0.1MM	1	35001-
	☆	· · · SHIM, 0.1MM	1	35001-
11	01016-51045	· · BOLT	4	35001-
12	01643-31032	· · WASHER	4	35001-

Printed By : Dwi Iswanto (airafather6107170)

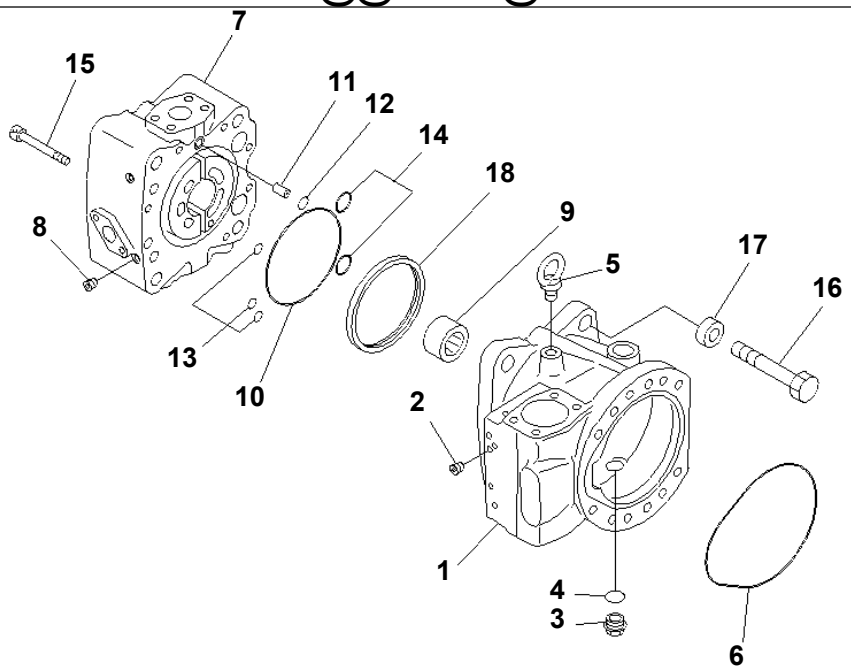

PEB4063

Ref. Y1600-46A0 **Page 510440**

PC1250SP-8R S/N 35001-UP (W/O EGR, +55C DEGREE)
MAIN PUMP (6/16) (N0.3 PUMP)

Item	Part No.	Part Name	Qty	Serial No.
	(708-2H-00440)	PUMP ASS'Y THIS ASSEMBLY CONSISTS OF ALL PARTS SHOWN IN FIGS.Y1600-41A0 T0 Y1600-56A0.	1	35001-
	(708-2H-01440)	· PUMP SUB ASS'Y	1	35001-
	(★708-2H-04730)	· · CASE ASS'Y,REAR	1	35001-
1	☆	· · · CASE,REAR	1	35001-
2	☆	· · · PLUG	10	35001-
3	07044-12412	· · PLUG	1	35001-
4	07002-62434	· · O-RING	1	35001-
5	04530-11222	· · BOLT,EYE	1	35001-
6	(★708-27-22131)	· · O-RING	1	35001-
	(★708-2H-04391)	· · END CAP ASS'Y,REAR	1	35001-
7	☆	· · · CAP,END	1	35001-
8	☆	· · · PLUG	3	35001-
9	(★708-1H-12262)	· · BEARING	1	35001-
10	(★708-27-22140)	· · O-RING	1	35001-
11	(★708-25-12330)	· · JOINT	1	35001-
12	(★07000-B2015)	· · O-RING	1	35001-
13	(★07000-B2012)	· · O-RING	3	35001-
14	(★07000-B3025)	· · O-RING	2	35001-
15	(★708-27-12560)	· · BOLT	6	35001-
16	(★01010-62075)	· · BOLT	4	35001-
17	(★708-27-12580)	· · WASHER	4	35001-
18	(★708-2H-23290)	· · RING	1	35001-

Printed By : Dwi Iswanto (airafather6107170)

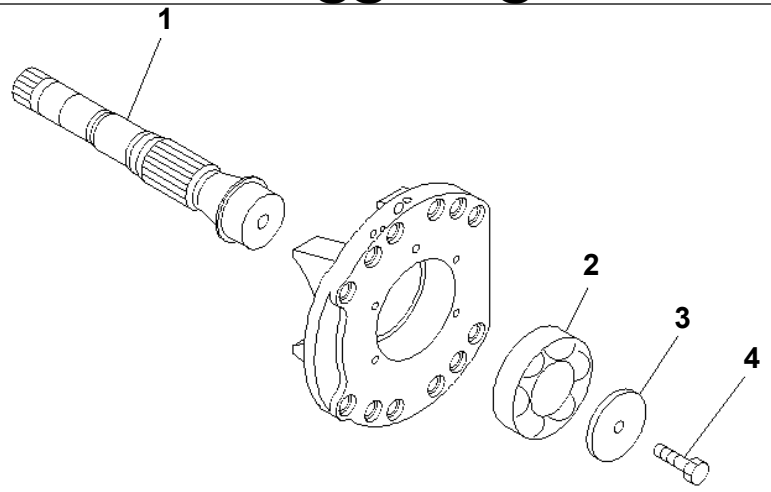

PDB4064

Ref. Y1600-47A0 **Page 510450**

PC1250SP-8R S/N 35001-UP (W/O EGR, +55C DEGREE)
MAIN PUMP (7/16) (N0.3 PUMP)

Item	Part No.	Part Name	Qty	Serial No.
	(708-2H-00440)	PUMP ASS'Y THIS ASSEMBLY CONSISTS OF ALL PARTS SHOWN IN FIGS.Y1600-41A0 T0 Y1600-56A0.	1	35001-
	(708-2H-01440)	· PUMP SUB ASS'Y	1	35001-
1	(★708-2H-22320)	· · SHAFT,REAR	1	35001-
2	(★708-1H-22150)	· · BEARING	1	35001-
3	(★708-27-12780)	· · PLATE	1	35001-
4	(★708-27-14490)	· · BOLT	1	35001-

Printed By : Dwi Iswanto (airafather6107170)

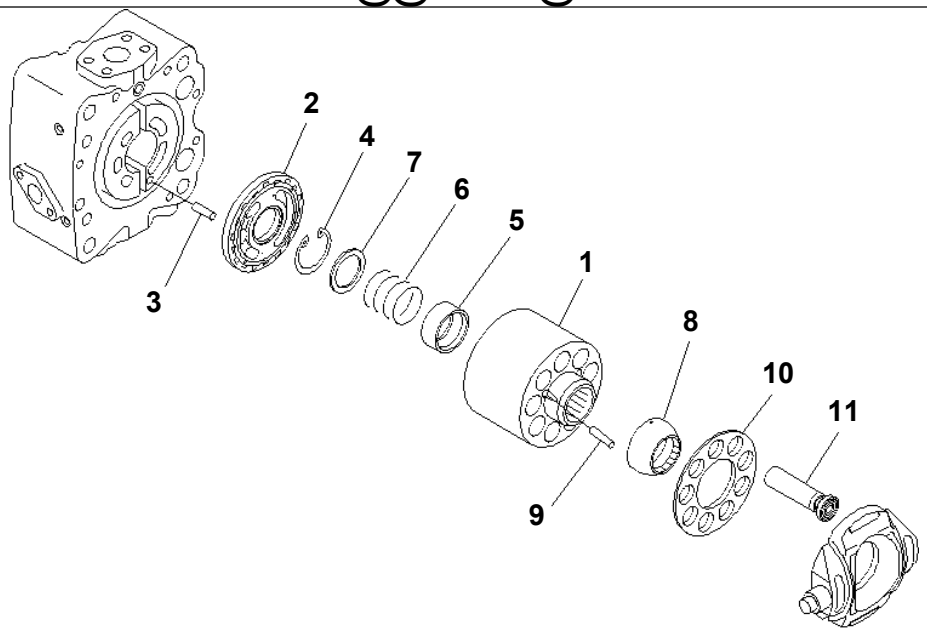

PDB4065

Ref. Y1600-48A0 **Page 510460**

PC1250SP-8R S/N 35001-UP (W/O EGR, +55C DEGREE)
MAIN PUMP (8/16) (N0.3 PUMP)

Item	Part No.	Part Name	Qty	Serial No.
	(708-2H-00440)	PUMP ASS'Y THIS ASSEMBLY CONSISTS OF ALL PARTS SHOWN IN FIGS.Y1600-41A0 T0 Y1600-56A0.	1	35001-
	(708-2H-01440)	· PUMP SUB ASS'Y	1	35001-
	(★708-2H-04740)	· · CYLINDER BLOCK ASS'Y	1	35001-
1	☆	· · · BLOCK,CYLINDER	1	35001-
2	☆	· · · PLATE,VALVE	1	35001-
3	(★708-18-13230)	· · PIN	1	35001-
4	(★04065-05820)	· · RING	1	35001-
5	(★708-2H-23130)	· · SEAT	1	35001-
6	(★708-2H-23151)	· · SPRING	1	35001-
7	(★708-2H-23141)	· · SEAT	1	35001-
8	(★708-2H-23350)	· · GUIDE,RETAINER	1	35001-
9	(★708-2H-23360)	· · PIN	3	35001-
10	(★708-2H-23340)	· · RETAINER,SHOE	1	35001-
11	(★708-2H-23311)	· · PISTON SUB ASS'Y	9	35001-

Printed By : Dwi Iswanto (airafather6107170)

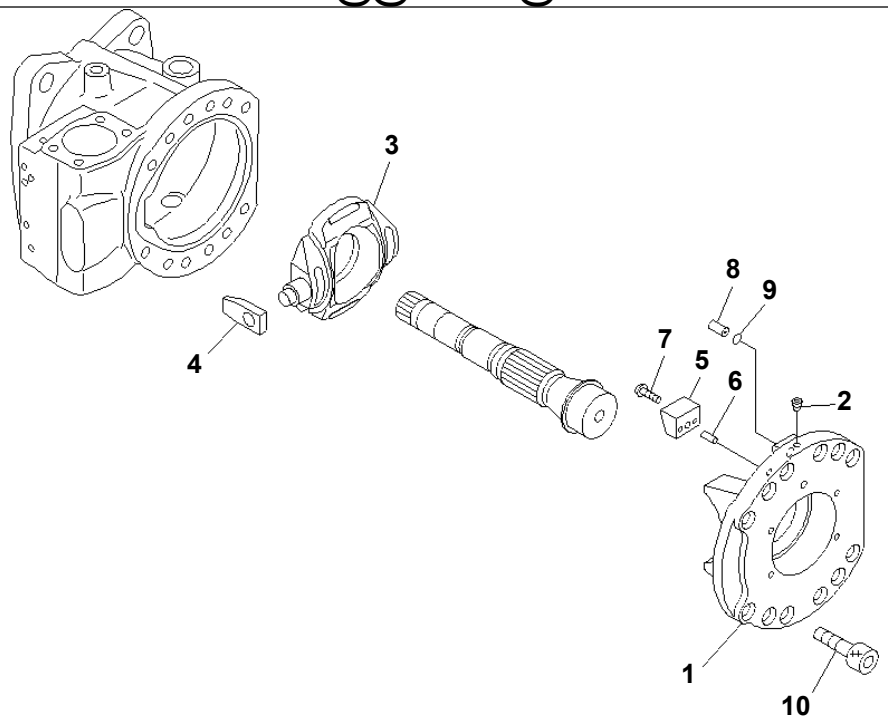

PEB4066

Ref. Y1600-49A0 **Page 510470**

PC1250SP-8R S/N 35001-UP (W/O EGR, +55C DEGREE)
MAIN PUMP (9/16) (N0.3 PUMP)

Item	Part No.	Part Name	Qty	Serial No.
	(708-2H-00440)	PUMP ASS'Y THIS ASSEMBLY CONSISTS OF ALL PARTS SHOWN IN FIGS.Y1600-41A0 T0 Y1600-56A0.	1	35001-
	(708-2H-01440)	· PUMP SUB ASS'Y	1	35001-
	(★708-2H-04350)	· · CRADLE ASS'Y,REAR	1	35001-
	(★708-2H-04370)	· · · CRADLE SUB ASS'Y	1	35001-
1	☆	· · · · CRADLE,REAR	1	35001-
2	☆	· · · · PLUG	4	35001-
3	☆	· · · CAM,ROCKER	1	35001-
4	(★708-2H-23530)	· · SLIDER	1	35001-
5	(★708-2H-23630)	· · STOPPER	1	35001-
6	(★04020-00820)	· · PIN	1	35001-
7	(★706-75-42270)	· · SCREW	1	35001-
8	(★708-25-12330)	· · JOINT	1	35001-
9	(★07000-B2015)	· · O-RING	1	35001-
10	(★01252-61440)	· · BOLT	12	35001-

Printed By : Dwi Iswanto (airafather6107170)

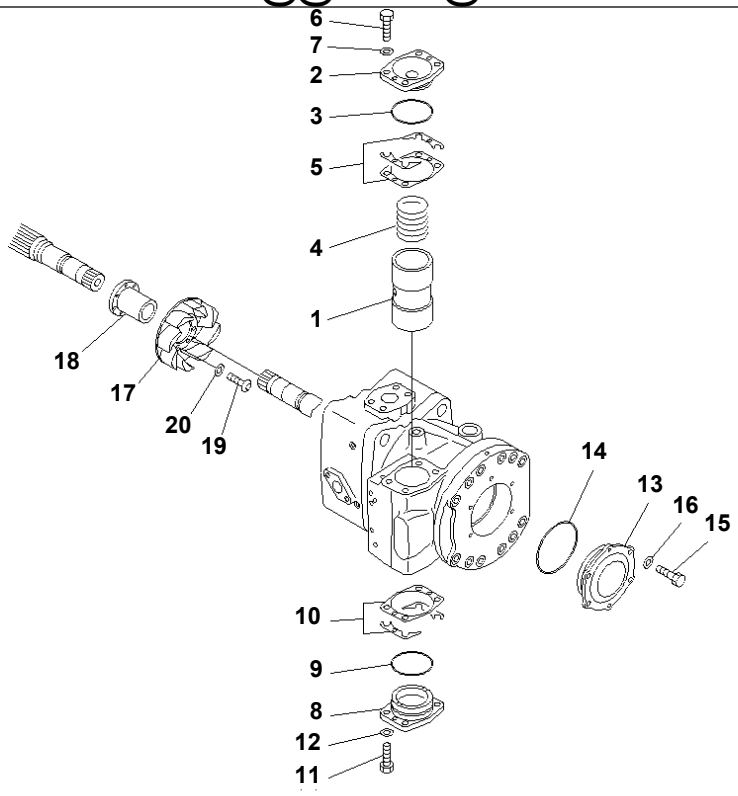

PEB4067

Ref. Y1600-50A0 **Page 510480**

PC1250SP-8R S/N 35001-UP (W/O EGR, +55C DEGREE)
MAIN PUMP (10/16) (N0.3 PUMP)

Item	Part No.	Part Name	Qty	Serial No.
	(708-2H-00440)	PUMP ASS'Y THIS ASSEMBLY CONSISTS OF ALL PARTS SHOWN IN FIGS.Y1600-41A0 T0 Y1600-56A0.	1	35001-
	(708-2H-01440)	· PUMP SUB ASS'Y	1	35001-
1	(★708-27-14110)	· · PISTON	1	35001-
2	(★708-27-14150)	· · CAP	1	35001-
3	07000-B2075	· · O-RING	1	35001-
4	708-27-14130	· · SPRING	1	35001-
5	(★708-27-05060)	· · SHIM KIT	1	35001-
	☆	· · · SHIM, 0.5MM	2	35001-
	☆	· · · SHIM, 0.2MM	2	35001-
	☆	· · · SHIM, 0.1MM	1	35001-
	☆	· · · SHIM, 0.1MM	1	35001-
6	01016-51045	· · BOLT	4	35001-
7	01643-31032	· · WASHER	4	35001-
8	(★708-27-14140)	· · CAP	1	35001-
9	07000-B2075	· · O-RING	1	35001-
10	(★708-27-05060)	· · SHIM KIT	1	35001-
	☆	· · · SHIM, 0.5MM	2	35001-
	☆	· · · SHIM, 0.2MM	2	35001-
	☆	· · · SHIM, 0.1MM	1	35001-
	☆	· · · SHIM, 0.1MM	1	35001-
11	01016-51045	· · BOLT	4	35001-
12	01643-31032	· · WASHER	4	35001-
13	(★708-27-12790)	· · COVER	1	35001-
14	(★07000-A2105)	· · O-RING	1	35001-
15	(★01010-80820)	· · BOLT	4	35001-
16	(★01643-30823)	· · WASHER	4	35001-
17	(★708-2H-21930)	· · IMPELLER	1	35001-
18	(★708-2H-22330)	· · COUPLING	1	35001-

Printed By : Dwi Iswanto (airafather6107170)

MAIN PUMP (10/16) (N0.3 PUMP)

Item	Part No.	Part Name	Qty	Serial No.
19	(★706-75-42270)	・・SCREW	7	35001-
20	(★01643-30623)	・・WASHER	7	35001-

Printed By : Dwi Iswanto (airafather6107170)

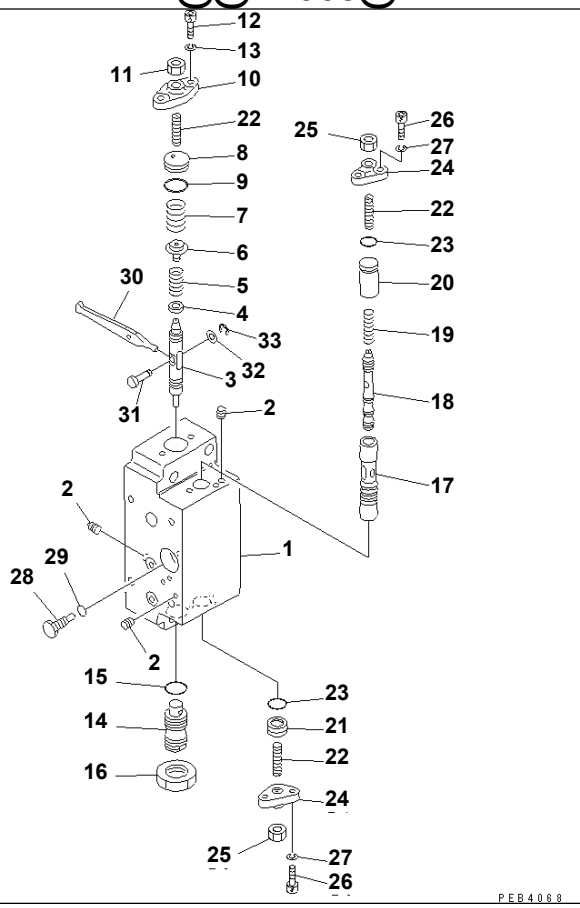

Ref. Y1600-51A0 **Page 510490**

PC1250SP-8R S/N 35001-UP (W/O EGR, +55C DEGREE)
MAIN PUMP (11/16) (N0.3 PUMP)

Item	Part No.	Part Name	Qty	Serial No.
	(708-2H-00440)	PUMP ASS'Y THIS ASSEMBLY CONSISTS OF ALL PARTS SHOWN IN FIGS.Y1600-41A0 T0 Y1600-56A0.	1	35001-
	708-27-09121	· SERVO VALVE ASS'Y,FRONT	1	35001-
	708-27-09321	· · SERVO VALVE SUB A.,FRONT	1	35001-
	(★708-25-00830)	· · · BODY ASS'Y	1	35001-
1	☆	· · · · BODY,FRONT	1	35001-
2	☆	· · · · EXPANDER	5	35001-
3	(★708-25-15120)	· · · PISTON	1	35001-
4	(★708-27-25130)	· · · SEAT	1	35001-
5	(★708-27-16310)	· · · SPRING	1	35001-
6	(★708-23-15120)	· · · SEAT	1	35001-
7	(★708-27-16320)	· · · SPRING	1	35001-
8	(★708-23-15160)	· · · PLUG	1	35001-
9	(★07000-B2018)	· · · O-RING	1	35001-
10	(★708-25-15150)	· · · COVER	1	35001-
11	(★01580-10806)	· · · NUT	1	35001-
12	(★708-25-15320)	· · · BOLT	2	35001-
13	(★01602-20619)	· · · WASHER	2	35001-
14	(★708-25-65170)	· · · PLUG	1	35001-
15	(★07002-62034)	· · · O-RING	1	35001-
16	(★07239-12009)	· · · NUT	1	35001-
17	(★708-25-15180)	· · · SLEEVE	1	35001-
18	(★708-25-15280)	· · · SPOOL	1	35001-
19	(★708-25-15310)	· · · SPRING	1	35001-
20	(★708-25-15330)	· · · SPACER	1	35001-
21	(★708-25-15430)	· · · PLUG	1	35001-
22	(★708-25-15340)	· · · SCREW	3	35001-
23	(★07000-B2012)	· · · O-RING	2	35001-
24	(★708-25-15250)	· · · COVER	2	35001-

Printed By : Dwi Iswanto (airafather6107170)

MAIN PUMP (11/16) (N0.3 PUMP)

Item	Part No.	Part Name	Qty	Serial No.
25	(★01580-10806)	・・・ NUT	2	35001-
26	(★708-25-15320)	・・・ BOLT	4	35001-
27	(★01602-20619)	・・・ WASHER	4	35001-
28	(★708-25-15260)	・・・ PLUG	1	35001-
29	(★07002-60823)	・・・ O-RING	1	35001-
30	(★708-67-16260)	・・・ ARM	1	35001-
31	(★708-25-15360)	・・・ PIN	1	35001-
32	(★708-25-15370)	・・・ WASHER	1	35001-
33	(★708-25-15380)	・・・ E-RING	1	35001-

Printed By : Dwi Iswanto (airafather6107170)

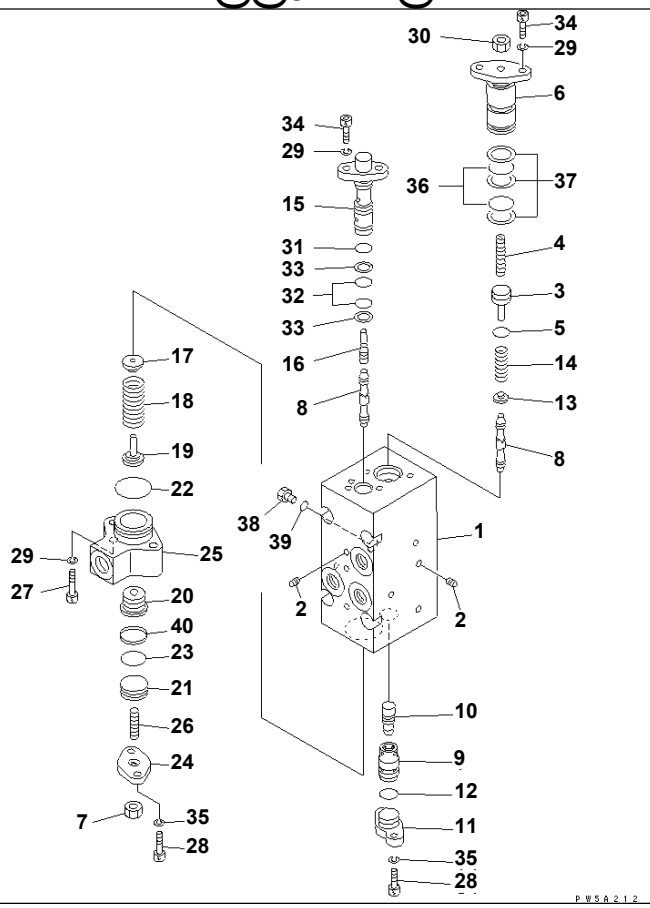

Ref. Y1600-52A0 **Page 510500**

PC1250SP-8R S/N 35001-UP (W/O EGR, +55C DEGREE)
MAIN PUMP (12/16) (N0.3 PUMP)

Item	Part No.	Part Name	Qty	Serial No.
	(708-2H-00440)	PUMP ASS'Y THIS ASSEMBLY CONSISTS OF ALL PARTS SHOWN IN FIGS.Y1600-41A0 T0 Y1600-56A0.	1	35001-
	(708-27-09121)	· SERVO VALVE ASS'Y,FRONT	1	35001-
	708-27-09521	· · VALVE ASS'Y,CO + NC	1	35001-
	(★708-23-00430)	· · · BODY ASS'Y	1	35001-
1	☆	· · · · BODY	1	35001-
2	☆	· · · · EXPANDER	16	35001-
3	(★708-25-17460)	· · · PLUG	1	35001-
4	(★708-25-17430)	· · · SCREW	1	35001-
5	(★07000-B2010)	· · · O-RING	1	35001-
6	(★708-25-17131)	· · · COVER	1	35001-
7	(★01580-10806)	· · · NUT	1	35001-
8	(★708-25-17141)	· · · SPOOL	2	35001-
9	(★708-25-17150)	· · · SLEEVE	1	35001-
10	(★708-25-17160)	· · · PISTON	1	35001-
11	(★708-25-17170)	· · · COVER	1	35001-
12	(★07000-B2014)	· · · O-RING	1	35001-
13	(★708-25-17180)	· · · SEAT	1	35001-
14	(★708-25-17690)	· · · SPRING	1	35001-
15	(★708-25-17451)	· · · SLEEVE	1	35001-
16	(★708-25-17220)	· · · PISTON	1	35001-
17	(★708-25-17370)	· · · SEAT	1	35001-
18	(★708-25-17250)	· · · SPRING	1	35001-
19	(★708-25-17470)	· · · SEAT	1	35001-
20	(★708-25-17480)	· · · PISTON	1	35001-
21	(★708-25-17380)	· · · PLUG	1	35001-
22	(★07000-B3028)	· · · O-RING	1	35001-
23	(★07000-B2021)	· · · O-RING	1	35001-
24	(★708-23-17240)	· · · COVER	1	35001-

Printed By : Dwi Iswanto (airafather6107170)

MAIN PUMP (12/16) (N0.3 PUMP)

Item	Part No.	Part Name	Qty	Serial No.
25	(★708-23-17290)	· · · COVER	1	35001-
26	(★708-25-15340)	· · · SCREW	1	35001-
27	(★706-75-40310)	· · · BOLT	2	35001-
28	(★708-25-15320)	· · · BOLT	4	35001-
29	(★01602-20619)	· · · WASHER	6	35001-
30	(★01580-10806)	· · · NUT	1	35001-
31	(★07000-B2012)	· · · O-RING	1	35001-
32	(★07000-B2012)	· · · O-RING	2	35001-
33	(★07001-02012)	· · · RING,BACK-UP	2	35001-
34	(★708-25-15320)	· · · BOLT	4	35001-
35	(★01602-20619)	· · · WASHER	4	35001-
36	(★07000-B2021)	· · · O-RING	2	35001-
37	(★07001-02021)	· · · RING,BACK-UP	3	35001-
38	(★07040-11007)	· · · PLUG	1	35001-
39	(★07002-61023)	· · · O-RING	1	35001-
40	(★708-25-17390)	· · · PLATE	1	35001-

Printed By : Dwi Iswanto (airafather6107170)

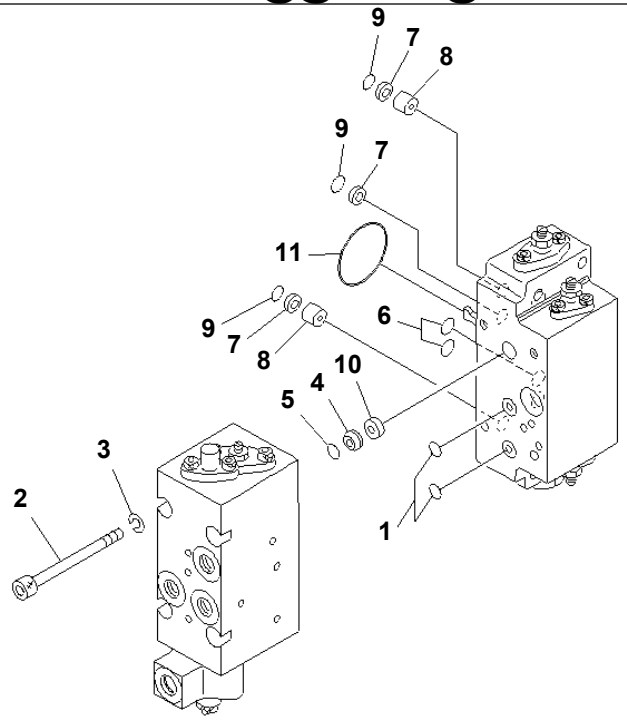

PW5A213

Ref. Y1600-53A0 **Page 510510**

PC1250SP-8R S/N 35001-UP (W/O EGR, +55C DEGREE)
MAIN PUMP (13/16) (N0.3 PUMP)

Item	Part No.	Part Name	Qty	Serial No.
	(708-2H-00440)	PUMP ASS'Y THIS ASSEMBLY CONSISTS OF ALL PARTS SHOWN IN FIGS.Y1600-41A0 T0 Y1600-56A0.	1	35001-
	(708-27-09121)	· SERVO VALVE ASS'Y,FRONT	1	35001-
1	07000-B2011	· · O-RING	2	35001-
2	708-25-19160	· · BOLT	4	35001-
3	01602-20825	· · WASHER	4	35001-
4	708-2L-25480	· · FILTER	1	35001-
5	708-2L-25490	· · O-RING	1	35001-
6	07000-B1009	· · O-RING	2	35001-
7	708-2L-25480	· · FILTER	3	35001-
8	708-25-19230	· · ORIFICE	2	35001-
9	708-2L-25490	· · O-RING	3	35001-
10	708-25-19240	· · ORIFICE	1	35001-
11	07000-B3048	· · O-RING	1	35001-

Printed By : Dwi Iswanto (airafather6107170)

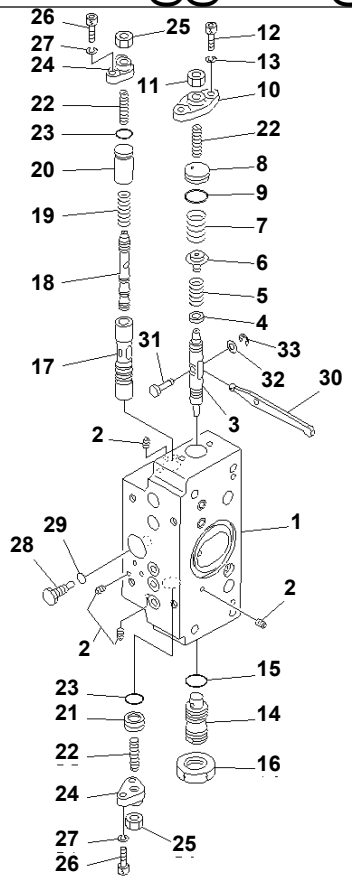

Ref. Y1600-54A0 **Page 510520**

PC1250SP-8R S/N 35001-UP (W/O EGR, +55C DEGREE)
MAIN PUMP (14/16) (N0.3 PUMP)

Item	Part No.	Part Name	Qty	Serial No.
	(708-2H-00440)	PUMP ASS'Y THIS ASSEMBLY CONSISTS OF ALL PARTS SHOWN IN FIGS.Y1600-41A0 T0 Y1600-56A0.	1	35001-
	708-27-09221	· SERVO VALVE ASS'Y,REAR	1	35001-
	(★708-25-00840)	· · BODY ASS'Y	1	35001-
1	☆	· · · BODY	1	35001-
2	☆	· · · EXPANDER	7	35001-
3	(★708-25-15120)	· · PISTON	1	35001-
4	(★708-27-25130)	· · SEAT	1	35001-
5	(★708-27-16310)	· · SPRING	1	35001-
6	(★708-23-15120)	· · SEAT	1	35001-
7	(★708-27-16320)	· · SPRING	1	35001-
8	(★708-23-15160)	· · PLUG	1	35001-
9	(★07000-B2018)	· · O-RING	1	35001-
10	(★708-25-15150)	· · COVER	1	35001-
11	(★01580-10806)	· · NUT	1	35001-
12	(★708-25-15320)	· · BOLT	2	35001-
13	(★01602-20619)	· · WASHER	2	35001-
14	(★708-25-65170)	· · PLUG	1	35001-
15	(★07002-62034)	· · O-RING	1	35001-
16	(★07239-12009)	· · NUT	1	35001-
17	(★708-25-15180)	· · SLEEVE	1	35001-
18	(★708-25-15280)	· · SPOOL	1	35001-
19	(★708-25-15310)	· · SPRING	1	35001-
20	(★708-25-15330)	· · SPACER	1	35001-
21	(★708-25-15430)	· · PLUG	1	35001-
22	(★708-25-15340)	· · SCREW	3	35001-
23	(★07000-B2012)	· · O-RING	2	35001-
24	(★708-25-15250)	· · COVER	2	35001-
25	(★01580-10806)	· · NUT	2	35001-

Printed By : Dwi Iswanto (airafather6107170)

MAIN PUMP (14/16) (N0.3 PUMP)

Item	Part No.	Part Name	Qty	Serial No.
26	(★708-25-15320)	· · BOLT	4	35001-
27	(★01602-20619)	· · WASHER	4	35001-
28	(★708-25-15260)	· · PLUG	1	35001-
29	(★07002-60823)	· · O-RING	1	35001-
30	(★708-67-16260)	· · ARM	1	35001-
31	(★708-25-15360)	· · PIN	1	35001-
32	(★708-25-15370)	· · WASHER	1	35001-
33	(★708-25-15380)	· · E-RING	1	35001-

Printed By : Dwi Iswanto (airafather6107170)

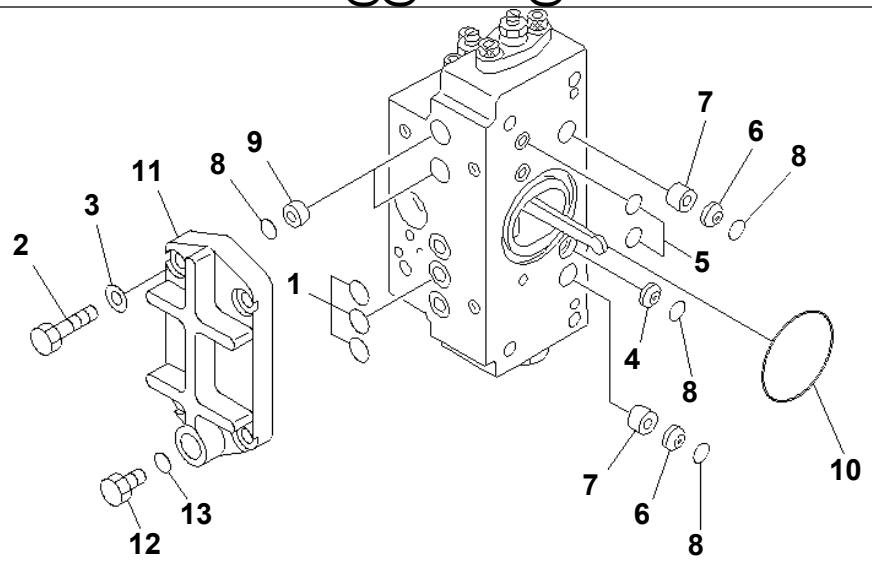

PWB8830

Ref. Y1600-55A0 **Page 510530**

PC1250SP-8R S/N 35001-UP (W/O EGR, +55C DEGREE)
MAIN PUMP (15/16) (N0.3 PUMP)

Item	Part No.	Part Name	Qty	Serial No.
	(708-2H-00440)	PUMP ASS'Y THIS ASSEMBLY CONSISTS OF ALL PARTS SHOWN IN FIGS.Y1600-41A0 T0 Y1600-56A0.	1	35001-
	(708-27-09221)	· SERVO VALVE ASS'Y,REAR	1	35001-
1	07000-B2011	· · O-RING	3	35001-
2	01010-80825	· · BOLT	4	35001-
3	01643-50823	· · WASHER	4	35001-
4	708-2L-25480	· · FILTER	1	35001-
5	07000-B1009	· · O-RING	2	35001-
6	708-2L-25480	· · FILTER	2	35001-
7	708-25-19230	· · ORIFICE	2	35001-
8	708-2L-25490	· · O-RING	5	35001-
9	708-25-19250	· · PLUG	2	35001-
10	07000-B3048	· · O-RING	1	35001-
11	708-25-55110	· · PLATE	1	35001-
12	07040-11409	· · PLUG	1	35001-
13	07002-61423	· · O-RING	1	35001-

Printed By : Dwi Iswanto (airafather6107170)

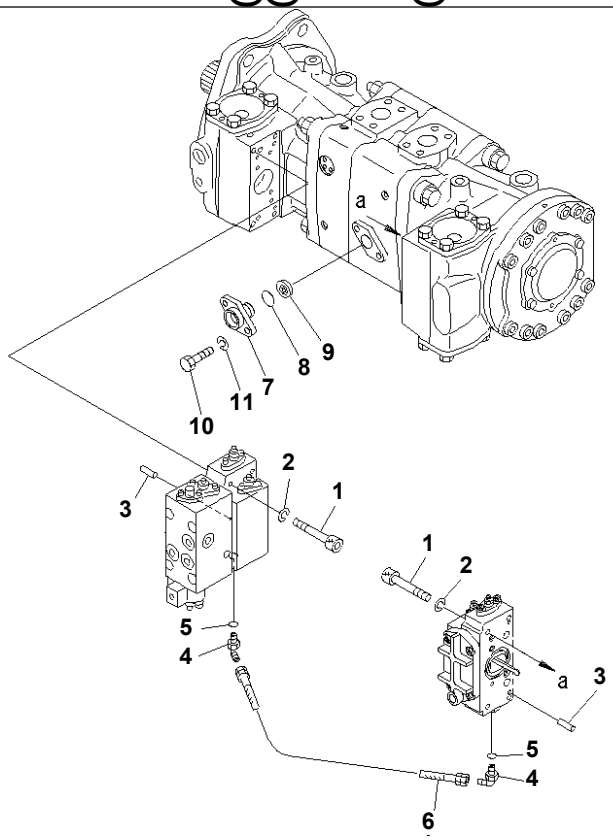

Ref. Y1600-56A0 **Page 510540**

PC1250SP-8R S/N 35001-UP (W/O EGR, +55C DEGREE)
MAIN PUMP (16/16) (N0.3 PUMP)

Item	Part No.	Part Name	Qty	Serial No.
	(708-2H-00440)	PUMP ASS'Y THIS ASSEMBLY CONSISTS OF ALL PARTS SHOWN IN FIGS.Y1600-41A0 T0 Y1600-56A0.	1	35001-
1	01252-60850	· BOLT	8	35001-
2	01602-20825	· WASHER	8	35001-
3	04020-00616	· PIN	4	35001-
4	07235-10210	· ELBOW	2	35001-
5	07002-61423	· O-RING	2	35001-
6	07102-20203	· HOSE	1	35001-
7	708-27-22530	· FLANGE	1	35001-
8	07000-B2021	· O-RING	1	35001-
9	720-68-15240	· FILTER	1	35001-
10	01010-81025	· BOLT	2	35001-
11	01643-31032	· WASHER	2	35001-

Printed By : Dwi Iswanto (airafather6107170)

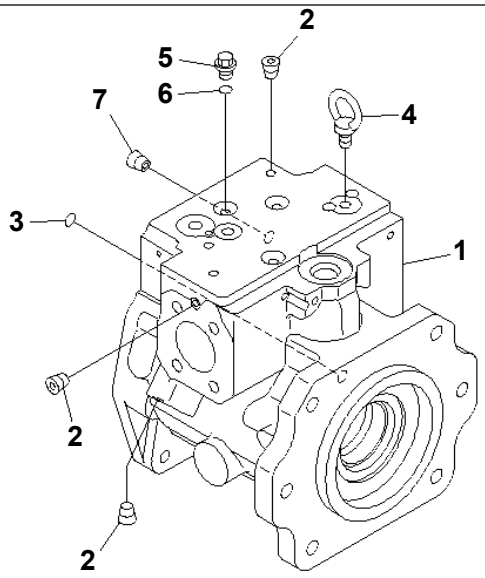

00048676

Ref. Y1600-61A0 Page 510550

PC1250SP-8R S/N 35001-UP (W/O EGR, +55C DEGREE)

GEAR PUMP (1/7)

Item	Part No.	Part Name	Qty	Serial No.
	708-1L-00800	PUMP ASS'Y THIS ASSEMBLY CONSISTS OF ALL PARTS SHOWN IN FIGS.Y1600-61A0 T0 Y1600-67A0.	1	35001-
	708-1L-01800	· PUMP SUB ASS'Y	1	35001-
	(★708-1L-04210)	· · CASE ASS'Y,FRONT	1	35001-
1	☆	· · · CASE,FRONT	1	35001-
2	☆	· · · PLUG	23	35001-
3	(★07000-B1009)	· · O-RING	1	35001-
4	04530-11018	· · BOLT,EYE	1	35001-
5	708-8E-16150	· · PLUG	3	35001-
6	07002-61023	· · O-RING	3	35001-
7	708-1L-29340	· · ORIFICE	1	35001-

Printed By : Dwi Iswanto (airafather6107170)

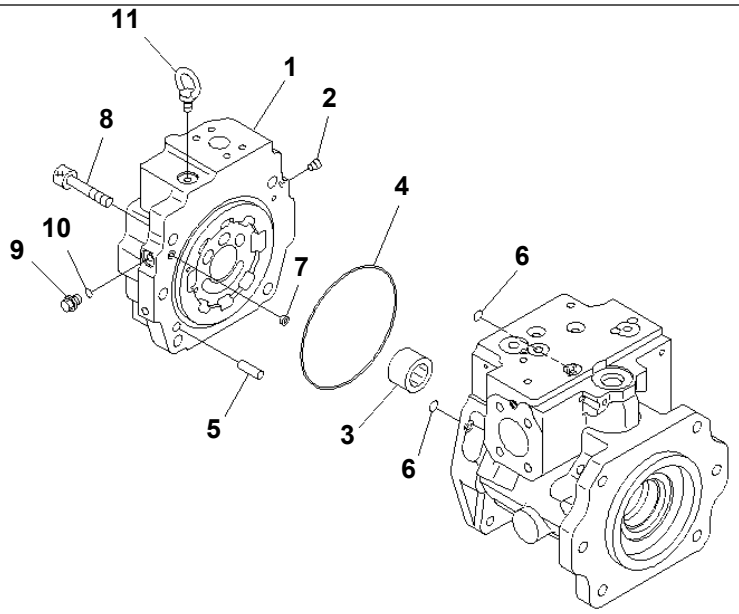

00048677

Ref. Y1600-62A0 **Page 510560**

PC1250SP-8R S/N 35001-UP (W/O EGR, +55C DEGREE)
GEAR PUMP (2/7)

Item	Part No.	Part Name	Qty	Serial No.
	(708-1L-00800)	PUMP ASS'Y THIS ASSEMBLY CONSISTS OF ALL PARTS SHOWN IN FIGS.Y1600-61A0 T0 Y1600-67A0.	1	35001-
	(708-1L-01800)	· PUMP SUB ASS'Y	1	35001-
	(★708-1L-04220)	· · CAP ASS'Y,END	1	35001-
1	☆	· · · CAP,END	1	35001-
2	☆	· · · PLUG	1	35001-
3	(★708-2L-32260)	· · BEARING	1	35001-
4	(★07000-A5165)	· · O-RING	1	35001-
5	(★04020-01228)	· · PIN	2	35001-
6	(★07000-B2012)	· · O-RING	7	35001-
7	(★708-2L-25480)	· · FILTER	1	35001-
8	(★01252-61445)	· · BOLT	6	35001-
9	708-8E-16150	· · PLUG	1	35001-
10	07002-61023	· · O-RING	1	35001-
11	04530-11018	· · BOLT,EYE	1	35001-

Printed By : Dwi Iswanto (airafather6107170)

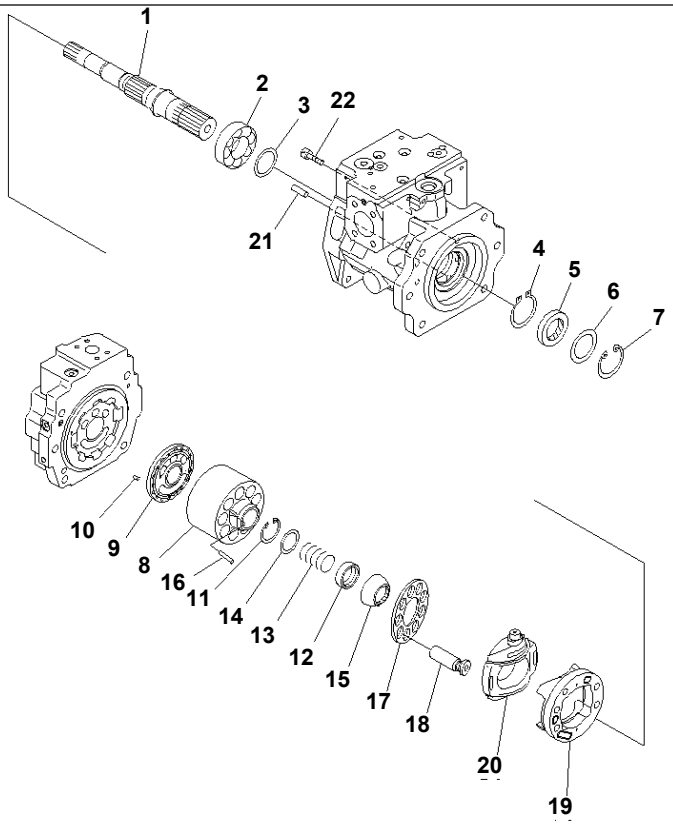

00048678

Ref. Y1600-63A0 **Page 510570**

PC1250SP-8R S/N 35001-UP (W/O EGR, +55C DEGREE)

GEAR PUMP (3/7)

Item	Part No.	Part Name	Qty	Serial No.
	(708-1L-00800)	PUMP ASS'Y THIS ASSEMBLY CONSISTS OF ALL PARTS SHOWN IN FIGS.Y1600-61A0 T0 Y1600-67A0.	1	35001-
	(708-1L-01800)	· PUMP SUB ASS'Y	1	35001-
1	(★708-2L-32110)	· · SHAFT,FRONT	1	35001-
2	(★708-2L-32150)	· · BEARING	1	35001-
3	(★708-2E-05040)	· · WASHER KIT	1	35001-
	☆	· · · WASHER, 3.1MM	1	35001-
	☆	· · · WASHER, 3.0MM	1	35001-
	☆	· · · WASHER, 2.9MM	1	35001-
	☆	· · · WASHER, 2.8MM	1	35001-
4	(★708-25-12790)	· · RING,SNAP	1	35001-
5	708-25-52861	· · SEAL,OIL	1	35001-
6	708-2L-22160	· · SPACER	1	35001-
7	04065-06825	· · RING,SNAP	1	35001-
	(★708-2L-06470)	· · BLOCK ASS'Y,FRONT	1	35001-
8	☆	· · · BLOCK,CYLINDER	1	35001-
9	☆	· · · PLATE,VALVE	1	35001-
10	(★720-68-19610)	· · PIN	1	35001-
11	(★04065-04818)	· · RING,SNAP	1	35001-
12	(★708-2L-23131)	· · SEAT	1	35001-
13	(★708-2L-33160)	· · SPRING	1	35001-
14	(★708-7L-13140)	· · SEAT	1	35001-
15	(★708-2L-23351)	· · GUIDE,RETAINER	1	35001-
16	(★708-2L-23360)	· · PIN	3	35001-
17	(★708-2L-33350)	· · RETAINER,SHOE	1	35001-
18	(★708-2L-33430)	· · PISTON SUB ASS'Y	9	35001-
	(★708-2L-06630)	· · CRADLE ASS'Y	1	35001-
19	☆	· · · CRADLE	1	35001-
20	☆	· · · CAM,ROCKER	1	35001-

Printed By : Dwi Iswanto (airafather6107170)

GEAR PUMP (3/7)

Item	Part No.	Part Name	Qty	Serial No.
21	(★04020-01228)	・・PIN	1	35001-
22	(★01252-61230)	・・BOLT	4	35001-

Printed By : Dwi Iswanto (airafather6107170)

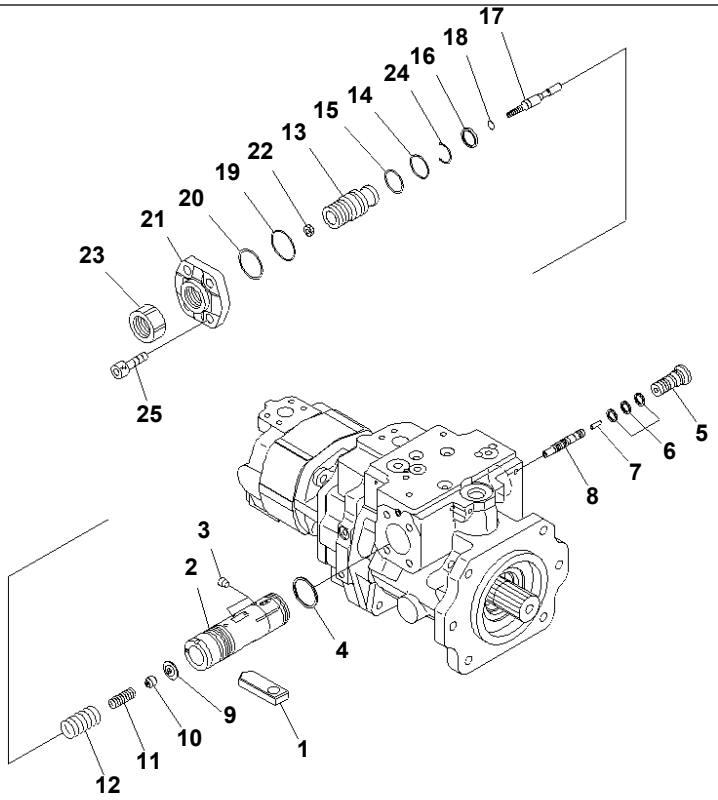

00048679

Ref. Y1600-64A0 **Page 510580**

PC1250SP-8R S/N 35001-UP (W/O EGR, +55C DEGREE)
GEAR PUMP (4/7)

Item	Part No.	Part Name	Qty	Serial No.
	(708-1L-00800)	PUMP ASS'Y THIS ASSEMBLY CONSISTS OF ALL PARTS SHOWN IN FIGS.Y1600-61A0 T0 Y1600-67A0.	1	35001-
	(708-1L-01800)	· PUMP SUB ASS'Y	1	35001-
1	(★708-2L-34180)	· · SLIDER	1	35001-
	(★708-2L-06950)	· · VALVE ASS'Y,PC	1	35001-
	(★708-2L-06960)	· · · PISTON ASS'Y,SERVO	1	35001-
2	☆	· · · · PISTON,SERVO	1	35001-
3	☆	· · · · SCREW	6	35001-
4	(★708-2L-35680)	· · · SEAL	1	35001-
5	(★708-2L-35230)	· · · PLUG	1	35001-
6	(★708-2L-35690)	· · · SEAL	3	35001-
7	(★708-2L-35170)	· · · PIN	1	35001-
8	(★708-2L-35570)	· · · SPOOL	1	35001-
9	(★708-2L-35630)	· · · RETAINER	1	35001-
10	(★708-2L-35641)	· · · SEAT	1	35001-
11	(★708-2L-35580)	· · · SPRING	1	35001-
12	(★708-2L-35730)	· · · SPRING	1	35001-
13	(★708-2L-34250)	· · · SCREW	1	35001-
14	(★07000-B3034)	· · · O-RING	1	35001-
15	(★708-2L-35210)	· · · RING	1	35001-
16	(★708-2L-35710)	· · · SEAL	1	35001-
17	(★708-2L-35590)	· · · PLUG	1	35001-
18	(★07000-B2010)	· · · O-RING	1	35001-
19	(★07000-B3045)	· · · O-RING	1	35001-
20	(★708-2L-35750)	· · · RING	1	35001-
21	(★708-2L-34230)	· · · COVER	1	35001-
22	(★01580-10806)	· · · NUT	1	35001-
23	(★708-2L-35870)	· · · NUT	1	35001-
24	(★708-2L-35670)	· · · RING,WIRE	1	35001-

Printed By : Dwi Iswanto (airafather6107170)

GEAR PUMP (4/7)

Item	Part No.	Part Name	Qty	Serial No.
25	(★01252-61440)	・・BOLT	4	35001-

Printed By : Dwi Iswanto (airafather6107170)

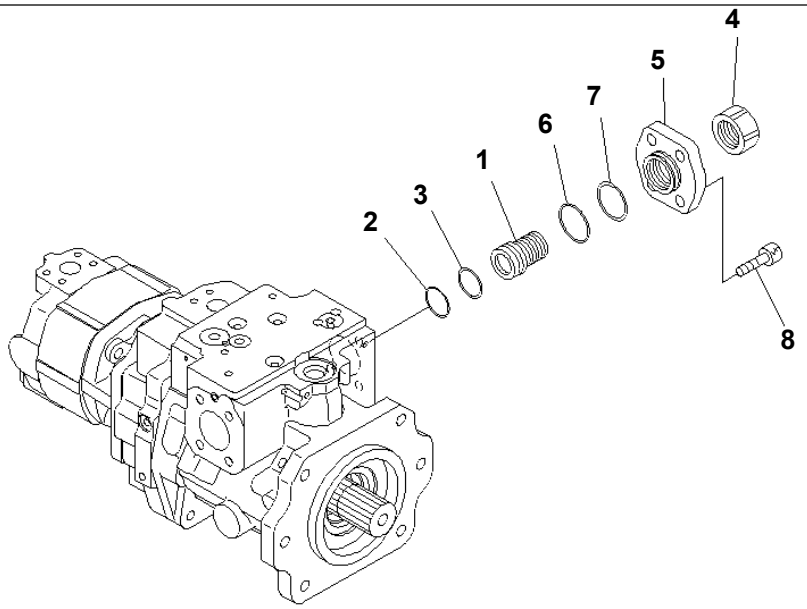

00048680

Ref. Y1600-65A0 **Page 510590**

PC1250SP-8R S/N 35001-UP (W/O EGR, +55C DEGREE)
GEAR PUMP (5/7)

Item	Part No.	Part Name	Qty	Serial No.
	(708-1L-00800)	PUMP ASS'Y THIS ASSEMBLY CONSISTS OF ALL PARTS SHOWN IN FIGS.Y1600-61A0 T0 Y1600-67A0.	1	35001-
	(708-1L-01800)	· PUMP SUB ASS'Y	1	35001-
	(★708-2L-69700)	· · COVER ASS'Y	1	35001-
1	(★708-2L-34270)	· · · SCREW	1	35001-
2	(★07000-B3034)	· · · O-RING	1	35001-
3	(★708-2L-35210)	· · · RING	1	35001-
4	(★708-2L-35870)	· · · NUT	1	35001-
5	(★708-2L-34260)	· · · COVER	1	35001-
6	(★07000-B3045)	· · · O-RING	1	35001-
7	(★708-2L-35750)	· · · RING	1	35001-
8	(★01252-61440)	· · BOLT	4	35001-

Printed By : Dwi Iswanto (airafather6107170)

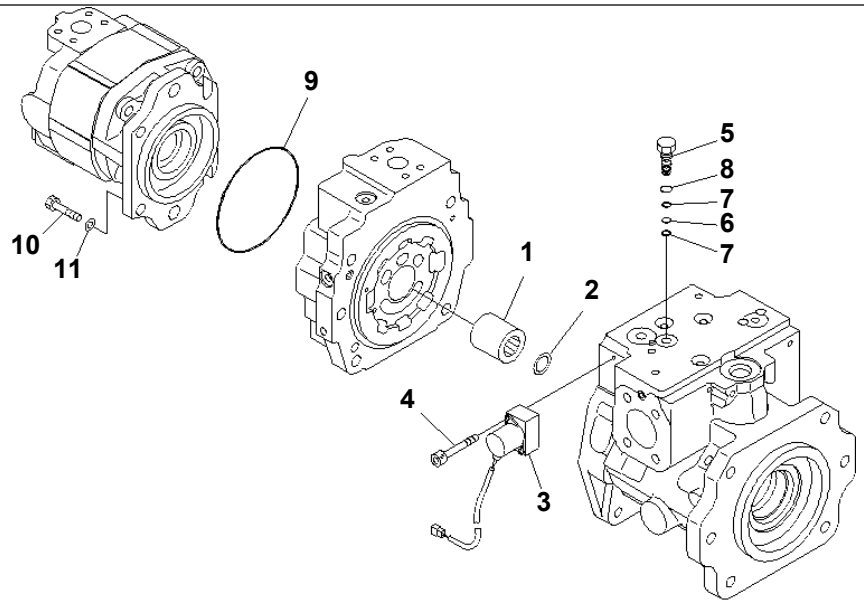

00048681

Ref. Y1600-66A0 **Page 510600**

PC1250SP-8R S/N 35001-UP (W/O EGR, +55C DEGREE)
GEAR PUMP (6/7)

Item	Part No.	Part Name	Qty	Serial No.
	(708-1L-00800)	PUMP ASS'Y THIS ASSEMBLY CONSISTS OF ALL PARTS SHOWN IN FIGS.Y1600-61A0 T0 Y1600-67A0.	1	35001-
1	(★708-2L-22130)	· COUPLING	1	35001-
2	(★708-2E-12140)	· RING	1	35001-
3	702-21-57400	· PILOT VALVE	1	35001-
4	01252-60635	· BOLT	2	35001-
5	(★708-2L-35941)	· PLUG	1	35001-
6	07000-B1008	· O-RING	1	35001-
7	07001-01008	· RING	2	35001-
8	07002-61423	· O-RING	1	35001-
9	07000-B2135	· O-RING	1	35001-
10	07372-21240	· BOLT	4	35001-
11	01643-31232	· WASHER	4	35001-

Printed By : Dwi Iswanto (airafather6107170)

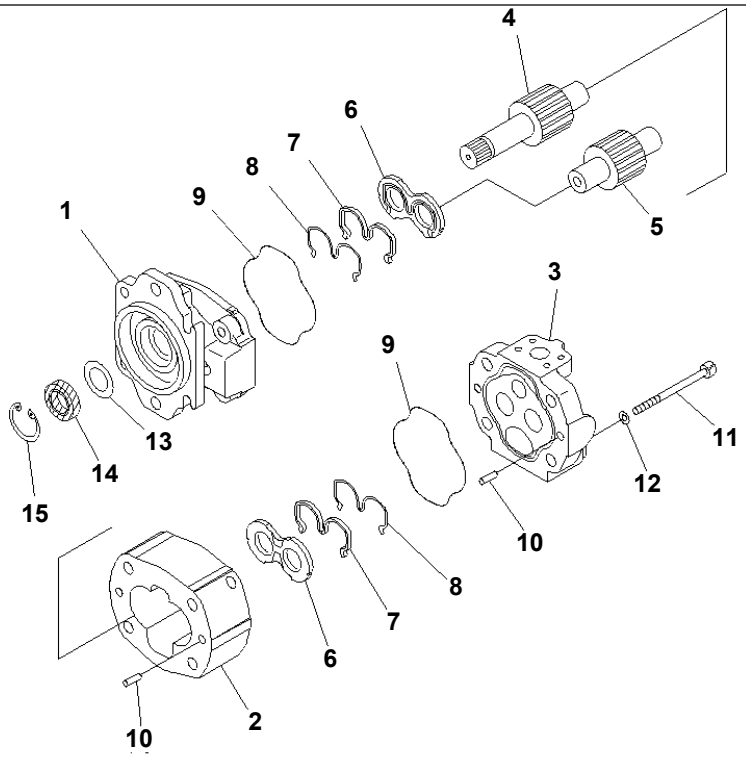

00048682

Ref. Y1600-67A0 **Page 510610**

PC1250SP-8R S/N 35001-UP (W/O EGR, +55C DEGREE)
GEAR PUMP (7/7)

Item	Part No.	Part Name	Qty	Serial No.
	(708-1L-00800)	PUMP ASS'Y THIS ASSEMBLY CONSISTS OF ALL PARTS SHOWN IN FIGS.Y1600-61A0 T0 Y1600-67A0.	1	35001-
	705-22-40380	PUMP ASS'Y,(SAR100)	1	35001-
1	(★705-18-03620)	· BRACKET ASS'Y	1	35001-
	(★705-18-03350)	· · BUSHING,PLANE	2	35001-
2	(★705-17-40010)	· CASE,GEAR	1	35001-
3	(★705-18-03720)	· COVER ASS'Y	1	35001-
	(★705-18-03350)	· · BUSHING,PLANE	2	35001-
4	(★705-17-40720)	· GEAR,DRIVE	1	35001-
5	(★705-17-40810)	· GEAR,DRIVEN	1	35001-
6	705-17-03610	· PLATE,SIDE	2	35001-
7	705-17-03473	· SEAL	2	35001-
8	705-17-03443	· RING,BACK-UP	2	35001-
9	705-17-03381	· O-RING	2	35001-
10	04020-01228	· PIN,DOWEL	6	35001-
11	01253-61635	· BOLT	4	35001-
12	01643-51645	· WASHER	4	35001-
13	705-17-03870	· PLATE	1	35001-
14	705-17-03830	· SEAL,OIL	1	35001-
15	04065-05220	· RING,SNAP	1	35001-

Printed By : Dwi Iswanto (airafather6107170)

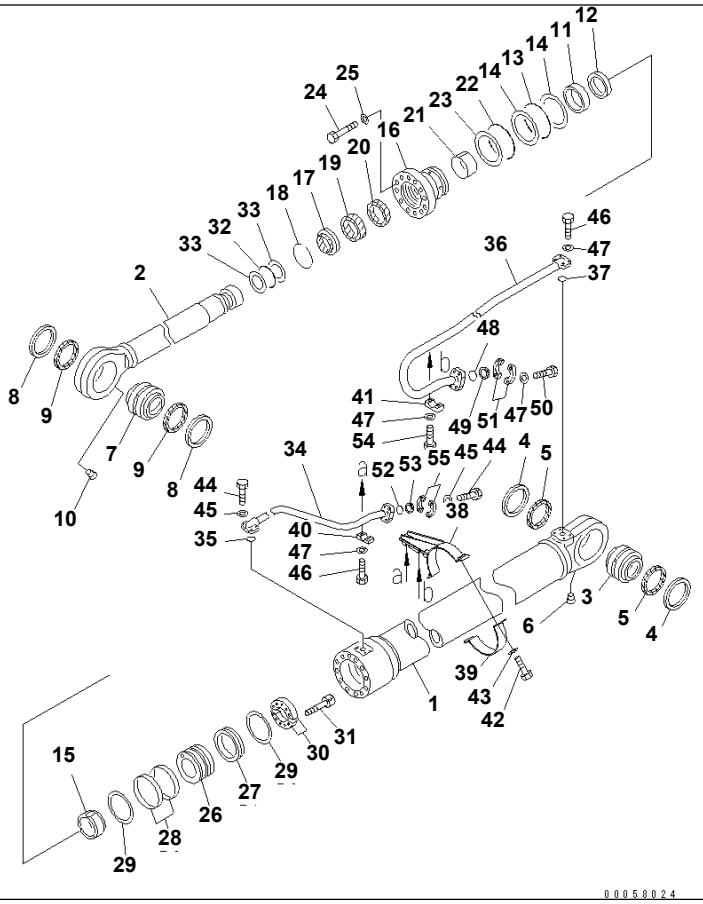

Ref. Y1620-01A0 Page 510620

PC1250SP-8R S/N 35001-UP (W/O EGR, +55C DEGREE)

BOOM CYLINDER (FOR BACKHOE)

Item	Part No.	Part Name	Qty	Serial No.
G1	(⊙707-01-XZ502)	CYLINDER GROUP,L.H. (FINAL COATING)	1	35001-
G2	(⊙707-01-XZ512)	CYLINDER GROUP,R.H. (FINAL COATING)	1	35001-
		==========		
	21N-63-02304	CYLINDER ASS'Y	1	35001-
1	21N-63-52342	· CYLINDER	1	35001-
2	21N-63-52321	· ROD,PISTON	1	35001-
3	707-46-14010	· BUSHING	1	35001-
4	21T-72-15860	· BUSHING	2	35001-
5	21T-72-15870	· SEAL,DUST (KIT)	2	35001-
6	07043-00108	· PLUG	1	35001-
7	707-46-14010	· BUSHING	1	35001-
8	21T-72-15860	· BUSHING	2	35001-
9	21T-72-15870	· SEAL,DUST (KIT)	2	35001-
10	07043-00108	· PLUG	1	35001-
11	707-71-31820	· COLLAR	1	35001-
12	707-71-11750	· RING	1	35001-
13	07000-15220	· O-RING (KIT)	1	35001-
14	07001-05220	· RING,BACK-UP (KIT)	2	35001-
15	707-71-51750	· PLUNGER	1	35001-
16	707-28-22710	· HEAD,CYLINDER	1	35001-
17	566-63-22241	· SEAL,DUST (KIT)	1	35001-
18	07179-14180	· RING,SNAP	1	35001-
19	707-51-16030	· PACKING,ROD (KIT)	1	35001-
20	707-51-16640	· RING,BUFFER (KIT)	1	35001-
21	707-52-91350	· BUSHING	1	35001-
22	07000-15220	· O-RING (KIT)	1	35001-
23	707-35-92300	· RING,BACK-UP	1	35001-
24	01011-83010	· BOLT	12	35001-
25	01643-33080	· WASHER	12	35001-
26	707-36-22300	· PISTON	1	35001-

Printed By : Dwi Iswanto (airafather6107170)

BOOM CYLINDER (FOR BACKHOE)

Item	Part No.	Part Name	Qty	Serial No.
27	707-44-22280	· RING,PISTON (KIT)	1	35001-
28	707-39-22820	· RING,WEAR (KIT)	2	35001-
29	707-44-22920	· RING	2	35001-
30	707-40-22870	· SPACER	2	35001-
31	01252-61670	· BOLT	6	35001-
32	07000-15135	· O-RING (KIT)	1	35001-
33	707-35-91440	· RING,BACK-UP (KIT)	2	35001-
34	21N-63-52371	TUBE,L.H.	1	35001-
	21N-63-52471	TUBE,R.H.	1	35001-
35	07000-13038	O-RING (KIT)	1	35001-
36	21N-63-52380	TUBE,L.H.	1	35001-
	21N-63-52480	TUBE,R.H.	1	35001-
37	07000-13048	O-RING (KIT)	1	35001-
38	707-88-28570	BRACKET	1	35001-
39	21N-62-18440	BAND	1	35001-
40	707-88-28850	SEAT	1	35001-
41	707-88-28860	SEAT	1	35001-
42	01010-81240	BOLT	4	35001-
43	01643-31232	WASHER	4	35001-
44	01010-81245	BOLT	8	35001-
45	01643-31232	WASHER	8	35001-
46	01010-81450	BOLT	6	35001-
47	01643-31445	WASHER	12	35001-
48	07000-13048	O-RING	1	35001-
49	07378-11410	HEAD	1	35001-
50	01010-81455	BOLT	4	35001-
51	07371-51470	FLANGE	2	35001-
52	07000-13038	O-RING	1	35001-
53	07378-11210	HEAD	1	35001-
54	01010-81460	BOLT	2	35001-
55	07371-51260	FLANGE	2	35001-
		==========		
K	707-99-78740	SERVICE KIT	2	35001-

Printed By : Dwi Iswanto (airafather6107170)

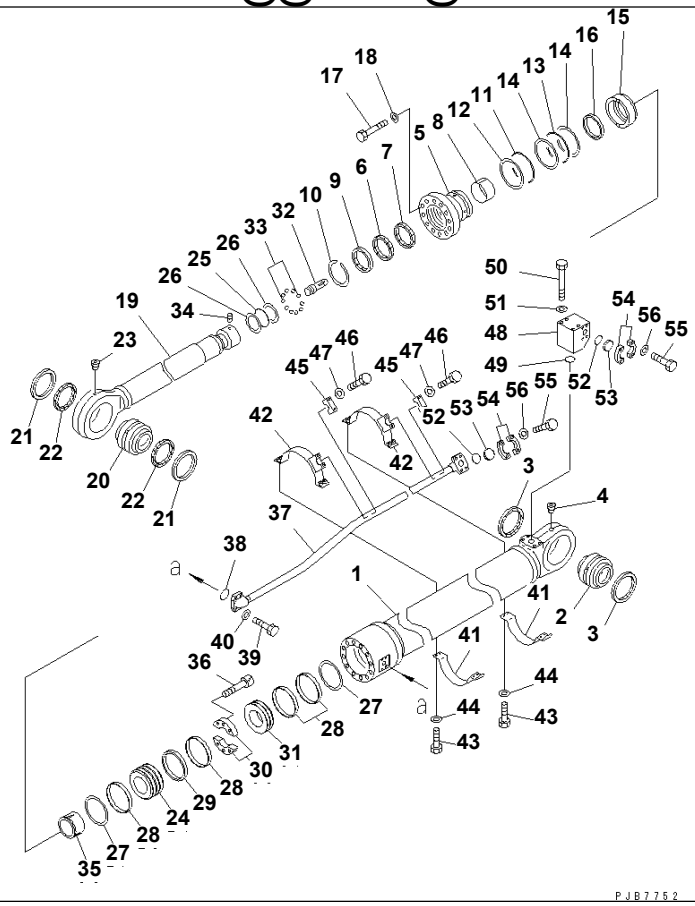

Ref. Y1620-11A0 **Page 510630**

PC1250SP-8R S/N 35001-UP (W/O EGR, +55C DEGREE)

ARM CYLINDER (F0R BACKHOE)

Item	Part No.	Part Name	Qty	Serial No.
G	(⊙707-01-XZ522)	CYLINDER GROUP,(FINAL COATING)	1	35001-
		==========		
	21N-63-02324	CYLINDER ASS'Y	1	35001-
1	21N-63-62341	· CYLINDER	1	35001-
2	707-76-16030	· BUSHING	1	35001-
3	707-77-16020	· SEAL,DUST (KIT)	2	35001-
4	07043-00108	· PLUG	1	35001-
5	707-27-25710	· HEAD,CYLINDER	1	35001-
6	707-51-17030	· PACKING,ROD (KIT)	1	35001-
7	707-51-17640	· RING,BUFFER (KIT)	1	35001-
8	707-52-91450	· BUSHING	1	35001-
9	707-56-17510	· SEAL,DUST (KIT)	1	35001-
10	07179-15190	· RING,SNAP	1	35001-
11	07000-15250	· O-RING (KIT)	1	35001-
12	707-35-92600	· RING,BACK-UP (KIT)	1	35001-
13	07000-15250	· O-RING (KIT)	1	35001-
14	07001-05250	· RING,BACK-UP (KIT)	2	35001-
15	707-71-31830	· COLLAR	1	35001-
16	707-71-11850	· RING	1	35001-
17	01011-83330	· BOLT	12	35001-
18	01643-33380	· WASHER	12	35001-
19	21N-63-62321	· ROD,PISTON	1	35001-
20	707-46-16030	· BUSHING	1	35001-
21	707-46-16040	· BUSHING	2	35001-
22	707-77-16010	· SEAL,DUST (KIT)	2	35001-
23	07043-00108	· PLUG	1	35001-
24	707-36-25110	· PISTON	1	35001-
25	07000-15145	· O-RING (KIT)	1	35001-
26	707-35-91550	· RING,BACK-UP (KIT)	2	35001-
27	707-44-25910	· RING	2	35001-

Printed By : Dwi Iswanto (airafather6107170)

ARM CYLINDER (F0R BACKHOE)

Item	Part No.	Part Name	Qty	Serial No.
28	707-39-25011	· RING,WEAR (KIT)	4	35001-
29	707-44-25180	· RING,PISTON (KIT)	1	35001-
30	707-40-28020	· SPACER	2	35001-
31	707-36-25150	· PISTON	1	35001-
32	707-71-50400	· PLUNGER	1	35001-
33	04260-01270	· BALL	10	35001-
34	707-71-91390	· PIN	1	35001-
35	707-71-51852	· PLUNGER	1	35001-
36	01253-61630	· BOLT	6	35001-
37	21N-63-62371	TUBE	1	35001-
38	07000-13048	O-RING (KIT)	1	35001-
39	01010-81450	BOLT	4	35001-
40	01643-31445	WASHER	4	35001-
41	21N-62-18430	BAND	2	35001-
42	21N-63-62390	BRACKET	2	35001-
43	01010-81240	BOLT	8	35001-
44	01643-31232	WASHER	8	35001-
45	176-61-41330	CLAMP	2	35001-
46	01010-81250	BOLT	4	35001-
47	01643-31232	WASHER	4	35001-
48	21N-62-18450	BLOCK	1	35001-
49	07000-12060	O-RING (KIT)	1	35001-
50	01011-81890	BOLT	4	35001-
51	01643-31845	WASHER	4	35001-
52	07000-13048	O-RING	3	35001-
53	07378-11410	HEAD	3	35001-
54	07371-51470	FLANGE	6	35001-
55	01010-81455	BOLT	12	35001-
56	01643-31445	WASHER	12	35001-
		==========		
K	707-99-89250	SERVICE KIT	1	35001-

Printed By : Dwi Iswanto (airafather6107170)

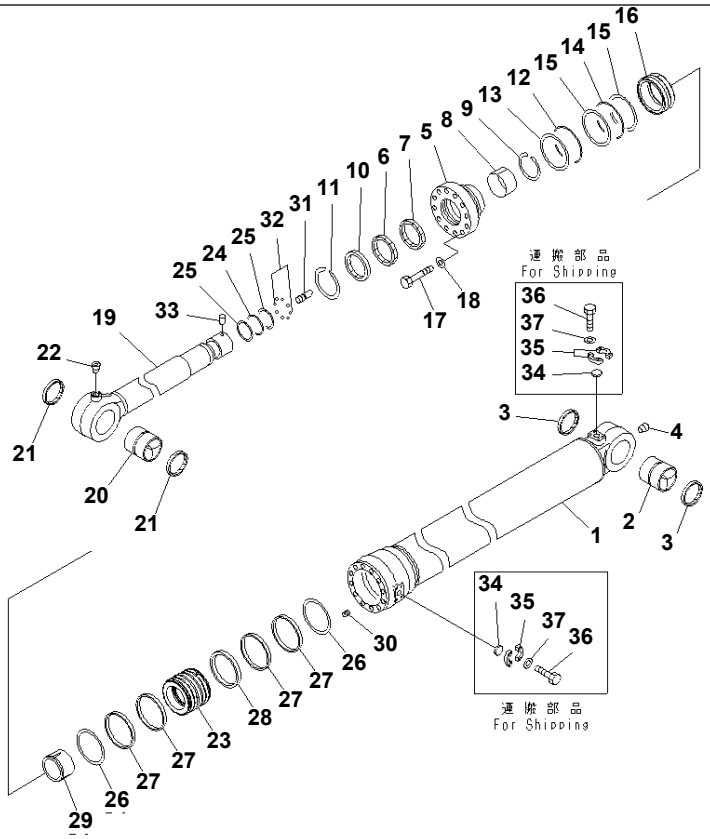

00048662

Ref. Y1620-41A1 **Page 510640**

PC1250SP-8R S/N 35001-UP (W/O EGR, +55C DEGREE)
BUCKET CYLINDER (1/2) (FOR BACKHOE) (FOR 3.4M ARM) (SE)

Item	Part No.	Part Name	Qty	Serial No.
G1	(⊙707-01-XR721)	CYLINDER GROUP,L.H. (FINAL COATING)	1	35001-
G2	(⊙707-01-XR731)	CYLINDER GROUP,R.H. (FINAL COATING)	1	35001-
		==========		
	707-01-0J770	CYLINDER ASS'Y,L.H.	1	35001-
	707-01-0J780	CYLINDER ASS'Y,R.H.	1	35001-
1	721-13-16140	· CYLINDER,L.H.	1	35001-
	721-13-16150	· CYLINDER,R.H.	1	35001-
2	707-76-10130	· BUSHING	1	35001-
3	07145-00100	· SEAL,DUST (KIT)	2	35001-
4	07043-00108	· PLUG	1	35001-
5	707-27-16970	· HEAD,CYLINDER	1	35001-
6	707-51-11050	· PACKING,ROD (KIT)	1	35001-
7	707-51-11690	· RING,BUFFER (KIT)	1	35001-
8	707-52-11630	· BUSHING	1	35001-
9	707-75-10512	· RING,SNAP	1	35001-
10	707-56-11610	· SEAL,DUST (KIT)	1	35001-
11	707-75-11512	· RING	1	35001-
12	07000-15150	· O-RING (KIT)	1	35001-
13	707-35-91640	· RING,BACK-UP (KIT)	1	35001-
14	07000-15150	· O-RING (KIT)	1	35001-
15	707-35-91640	· RING,BACK-UP (KIT)	2	35001-
16	707-71-35040	· COLLAR	1	35001-
17	01010-82090	· BOLT	12	35001-
18	707-88-75310	· WASHER	12	35001-
19	707-58-11790	· ROD,PISTON	1	35001-
20	707-76-10140	· BUSHING	1	35001-
21	208-70-12231	· SEAL,DUST (KIT)	2	35001-
22	07043-00108	· PLUG	1	35001-
23	707-36-16720	· PISTON	1	35001-
24	07000-15105	· O-RING (KIT)	1	35001-

Printed By : Dwi Iswanto (airafather6107170)

BUCKET CYLINDER (1/2) (FOR BACKHOE) (FOR 3.4M ARM) (SE)

Item	Part No.	Part Name	Qty	Serial No.
25	07001-05105	· RING,BACK-UP (KIT)	2	35001-
26	707-44-16910	· RING	2	35001-
27	707-39-16120	· RING,WEAR (KIT)	4	35001-
28	707-44-16150	· RING,PISTON (KIT)	1	35001-
29	707-71-71210	· PLUNGER	1	35001-
30	01310-01225	· SCREW	1	35001-
31	707-71-70850	· PLUNGER	1	35001-
32	04260-00635	· BALL	12	35001-
33	707-71-91270	· CAP	1	35001-
34	707-88-33040	· CAP	2	35001-
35	07371-31049	· FLANGE,SPLIT	4	35001-
36	07372-21035	· BOLT	8	35001-
37	01643-51032	· WASHER	8	35001-

Printed By : Dwi Iswanto (airafather6107170)

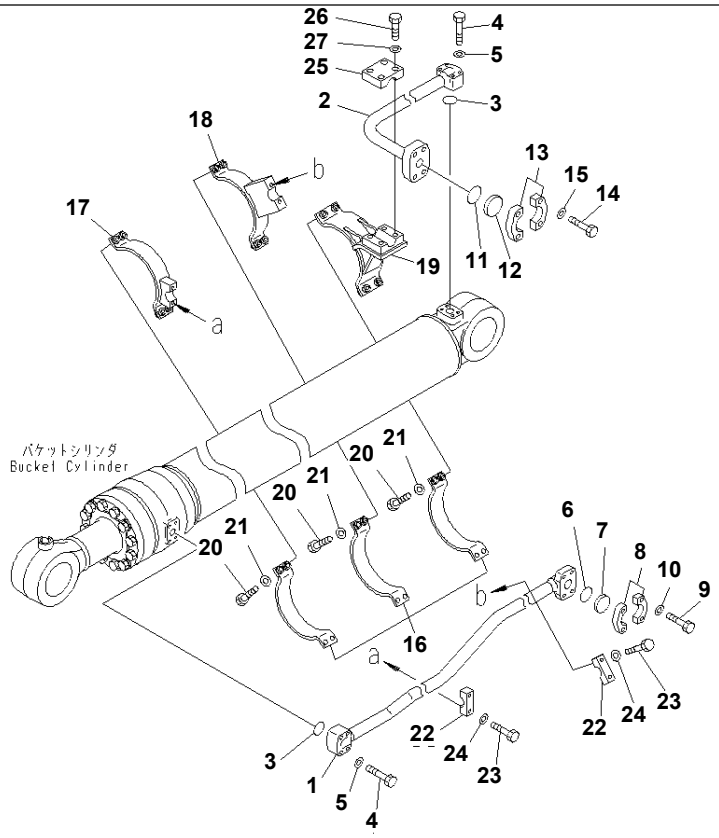

Ref. Y1620-42A1 **Page 510650**

PC1250SP-8R S/N 35001-UP (W/O EGR, +55C DEGREE)
BUCKET CYLINDER (2/2) (FOR BACKHOE) (FOR 3.4M ARM) (SE)

Item	Part No.	Part Name	Qty	Serial No.
G1	(⊙707-01-XR721)	CYLINDER GROUP,L.H. (FINAL COATING)	1	35001-
G2	(⊙707-01-XR731)	CYLINDER GROUP,R.H. (FINAL COATING)	1	35001-
		==========		
1	707-86-13360	TUBE,L.H.	1	35001-
	707-86-13370	TUBE,R.H.	1	35001-
2	21N-63-72780	TUBE,L.H.	1	35001-
	21N-63-72880	TUBE,R.H.	1	35001-
3	07000-13035	O-RING (KIT)	2	35001-
4	07372-21060	BOLT	8	35001-
5	01643-51032	WASHER	8	35001-
6	07000-13038	O-RING	1	35001-
7	07378-11210	HEAD	1	35001-
8	07371-51260	FLANGE	2	35001-
9	01010-81245	BOLT	4	35001-
10	01643-31232	WASHER	4	35001-
11	07000-13048	O-RING	1	35001-
12	07378-11410	HEAD	1	35001-
13	07371-51470	FLANGE	2	35001-
14	01010-81455	BOLT	4	35001-
15	01643-31445	WASHER	4	35001-
16	707-88-26160	BAND	3	35001-
17	707-88-28330	BRACKET	1	35001-
18	707-88-28340	BRACKET	1	35001-
19	707-88-28930	BRACKET	1	35001-
20	07372-21245	BOLT	12	35001-
21	01643-51232	WASHER	12	35001-
22	707-88-10150	CLAMP	2	35001-
23	01010-81245	BOLT	4	35001-
24	01643-31232	WASHER	4	35001-
25	707-88-28940	SEAT	1	35001-

Printed By : Dwi Iswanto (airafather6107170)

BUCKET CYLINDER (2/2) (FOR BACKHOE) (FOR 3.4M ARM) (SE)

Item	Part No.	Part Name	Qty	Serial No.
26	01010-81655	BOLT	4	35001-
27	01643-51645	WASHER	4	35001-
		==========		
K	707-99-72390	SERVICE KIT	2	35001-

Printed By : Dwi Iswanto (airafather6107170)

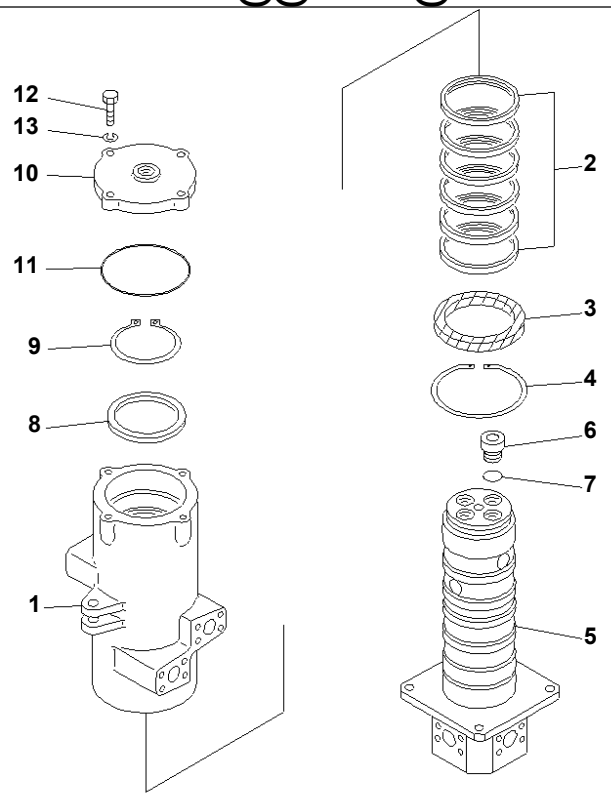

PE11695

Ref. Y1627-01A0 **Page 510660**

PC1250SP-8R S/N 35001-UP (W/O EGR, +55C DEGREE)
SWIVEL JOINT

Item	Part No.	Part Name	Qty	Serial No.
	(⊙703-11-00111)	SWIVEL JOINT ASS'Y,(FINAL COATING)	1	35017-
	(⊙703-11-00110)	SWIVEL JOINT ASS'Y,(FINAL COATING)	1	35001-35016
	703-11-53202	SWIVEL JOINT ASS'Y	1	35017-
	703-11-53201	SWIVEL JOINT ASS'Y	1	35001-35016
1	703-11-91131	· ROTOR	1	35017-
	703-11-91130	· ROTOR	1	35001-35016
2	703-11-95120	· SEAL	6	35001-
3	703-11-96120	· SEAL,OIL	1	35001-
4	04071-00140	· RING,SNAP	1	35001-
5	703-11-92132	· SHAFT	1	35017-
	703-11-92131	· SHAFT	1	35001-35016
6	703-11-98210	· PLUG	4	35001-
7	07002-13034	· O-RING	4	35001-
8	703-11-94120	· PLATE	1	35001-
9	04064-01030	· RING,SNAP	1	35001-
10	703-11-93131	· COVER	1	35001-
11	07000-02140	· O-RING	1	35001-
12	01010-81040	· BOLT	4	35001-
13	01643-31032	· WASHER	4	35001-

Printed By : Dwi Iswanto (airafather6107170)

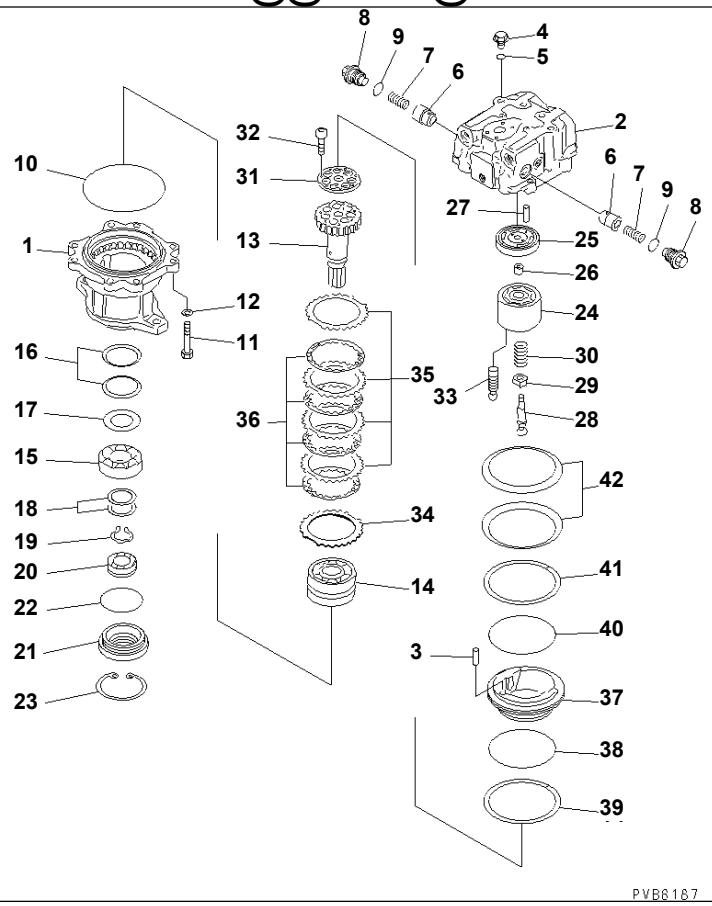

Ref. Y1640-01A0 **Page 510670**

PC1250SP-8R S/N 35001-UP (W/O EGR, +55C DEGREE)
SWING MOTOR (1/2)(#35001-35016)

Item	Part No.	Part Name	Qty	Serial No.
	706-77-01320	MOTOR ASS'Y THIS ASSEMBLY CONSISTS OF ALL PARTS SHOWN IN FIGS.Y1640-01A0 AND Y1640-02A0.	1	35001-35016
	706-77-03140	· MOTOR SUB ASS'Y	1	35001-35016
1	(★706-77-42022)	· · CASE,BRAKE	1	35001-35016
2	(★706-77-72112)	· · HOUSING	1	35001-35016
3	(★706-75-42830)	· · PIN,DOWEL	1	35001-35016
4	706-77-72170	· · PLUG	6	35001-35016
5	07002-12434	· · O-RING	6	35001-35016
6	(★706-77-72130)	· · VALVE	2	35001-35016
7	(★706-77-72140)	· · SPRING	2	35001-35016
8	(★706-77-72150)	· · PLUG	2	35001-35016
9	(★07002-14234)	· · O-RING	2	35001-35016
10	(★07000-15250)	· · O-RING	1	35001-35016
11	(★01010-61860)	· · BOLT	8	35001-35016
12	(★01643-31845)	· · WASHER	8	35001-35016
13	(★706-77-42862)	· · SHAFT,DRIVE	1	35001-35016
14	(★706-77-42881)	· · BEARING	1	35001-35016
15	(★706-77-42890)	· · BEARING	1	35001-35016
16	(★706-77-42051)	· · SPRING	2	35001-35016
17	(★706-77-42041)	· · SEAT	1	35001-35016
18	(★706-77-05010)	· · SPACER KIT	1	35001-35016
	☆	· · · SPACER, 2.3MM	2	35001-35016
	☆	· · · SPACER, 2.5MM	2	35001-35016
	☆	· · · SPACER, 2.7MM	2	35001-35016
19	(★04064-06525)	· · RING,SNAP	1	35001-35016
20	706-77-42920	· · SEAL,OIL	1	35001-35016
21	706-77-42060	· · COVER	1	35001-35016
22	07000-12115	· · O-RING	1	35001-35016
23	04071-00130	· · RING,SNAP	1	35001-35016

Printed By : Dwi Iswanto (airafather6107170)

SWING MOTOR (1/2)(#35001-35016)

Item	Part No.	Part Name	Qty	Serial No.
24	(★706-77-43191)	· · BLOCK	1	35001-35016
25	(★706-77-42851)	· · PLATE,VALVE	1	35001-35016
26	(★706-77-42071)	· · BUSHING	1	35001-35016
27	(★04020-01024)	· · PIN	1	35001-35016
28	(★706-77-42081)	· · SHAFT,CENTER	1	35001-35016
29	(★706-77-42130)	· · RING,CENTER	1	35001-35016
30	(★706-77-42110)	· · SPRING	1	35001-35016
	(★706-77-05020)	· · RETAINER KIT	1	35001-35016
31	☆	· · · RETAINER	1	35001-35016
32	☆	· · · SCREW	7	35001-35016
33	(★706-77-42160)	· · PISTON SUB ASS'Y	7	35001-35016
34	(★706-77-91331)	· · PLATE	1	35001-35016
35	(★706-77-91341)	· · PLATE	4	35001-35016
36	(★706-77-91350)	· · DISC	4	35001-35016
37	(★706-77-91490)	· · PISTON,BRAKE	1	35001-35016
38	(★07000-15200)	· · O-RING	1	35001-35016
39	(★07001-05200)	· · RING,BACK-UP	1	35001-35016
40	(★07000-15220)	· · O-RING	1	35001-35016
41	(★07001-05220)	· · RING,BACK-UP	1	35001-35016
42	(★706-77-91410)	· · SPRING	2	35001-35016

Printed By : Dwi Iswanto (airafather6107170)

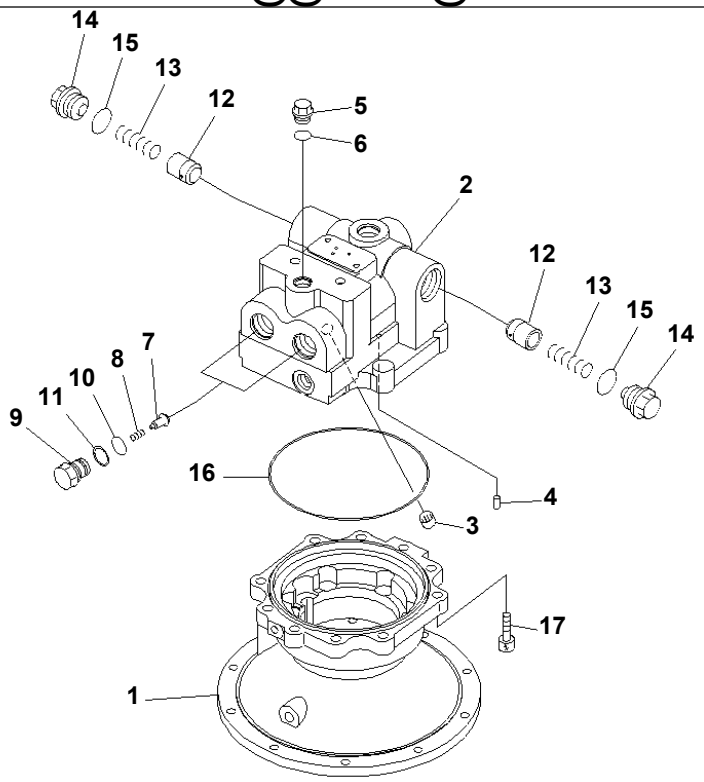

P W 5 S 0 5 1

Ref. Y1640-01A0A **Page 510680**

PC1250SP-8R S/N 35001-UP (W/O EGR, +55C DEGREE)
SWING MOTOR (1/3)(#35017-)

Item	Part No.	Part Name	Qty	Serial No.
	706-7K-01110	MOTOR ASS'Y THIS ASSEMBLY CONSISTS OF ALL PARTS SHOWN IN FIGS.Y1640-01A0A T0 Y1640-03A0A .	1	35017-
	706-7K-03110	· MOTOR SUB ASS'Y	1	35017-
1	(★706-7K-41150)	· · CASE,MOTOR	1	35017-
2	(★706-7K-71120)	· · HOUSING	1	35017-
3	(★706-7K-40010)	· · BEARING	1	35017-
4	(★706-75-42830)	· · PIN,DOWEL	1	35017-
5	706-77-72280	· · PLUG	1	35017-
6	07002-62034	· · O-RING	1	35017-
7	709-74-92810	· · VALVE	2	35017-
8	709-75-92220	· · SPRING	2	35017-
9	709-74-92821	· · PLUG	2	35017-
10	708-2L-23960	· · O-RING	2	35017-
11	700-93-11330	· · RING,BACK-UP	2	35017-
12	706-77-72130	· · VALVE	2	35017-
13	706-77-72140	· · SPRING	2	35017-
14	706-77-72150	· · PLUG	2	35017-
15	07002-64234	· · O-RING	2	35017-
16	(★706-7K-40040)	· · O-RING	1	35017-
17	01252-61450	· · BOLT	10	35017-

Printed By : Dwi Iswanto (airafather6107170)

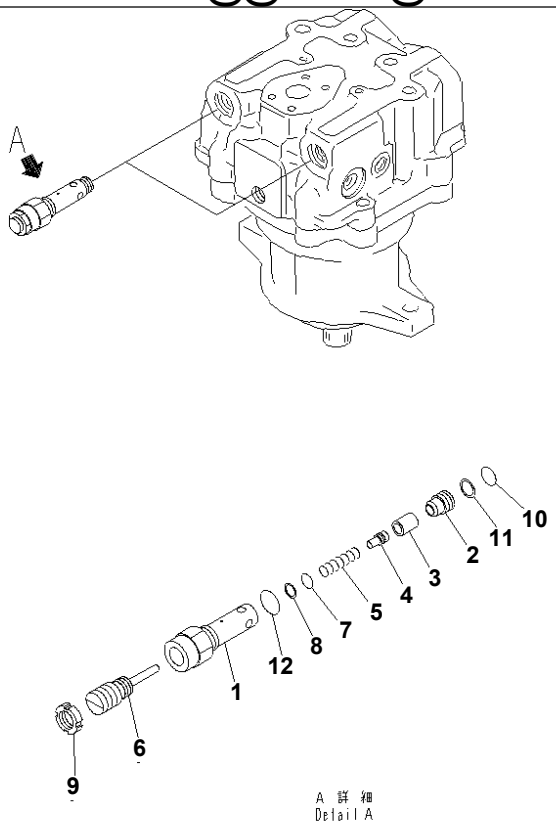

PVB6188

Ref. Y1640-02A0 **Page 510690**

PC1250SP-8R S/N 35001-UP (W/O EGR, +55C DEGREE)
SWING MOTOR (2/2)(#35001-35016)

Item	Part No.	Part Name	Qty	Serial No.
	706-77-01320	MOTOR ASS'Y THIS ASSEMBLY CONSISTS OF ALL PARTS SHOWN IN FIGS.Y1640-01A0 AND Y1640-02A0.	1	35001-35016
	702-77-02700	· VALVE ASS'Y,RELIEF	2	35001-35016
1	☆	· · SLEEVE	1	35001-35016
2	☆	· · SEAT,VALVE	1	35001-35016
3	☆	· · VALVE	1	35001-35016
4	☆	· · PISTON	1	35001-35016
5	☆	· · SPRING	1	35001-35016
6	☆	· · SCREW	1	35001-35016
7	☆	· · O-RING	1	35001-35016
8	☆	· · RING,BACK-UP	1	35001-35016
9	☆	· · NUT,LOCK	1	35001-35016
10	07000-F3022	· · O-RING	1	35001-35016
11	07001-03022	· · RING,BACK-UP	2	35001-35016
12	07002-13634	· · O-RING	1	35001-35016

Printed By : Dwi Iswanto (airafather6107170)

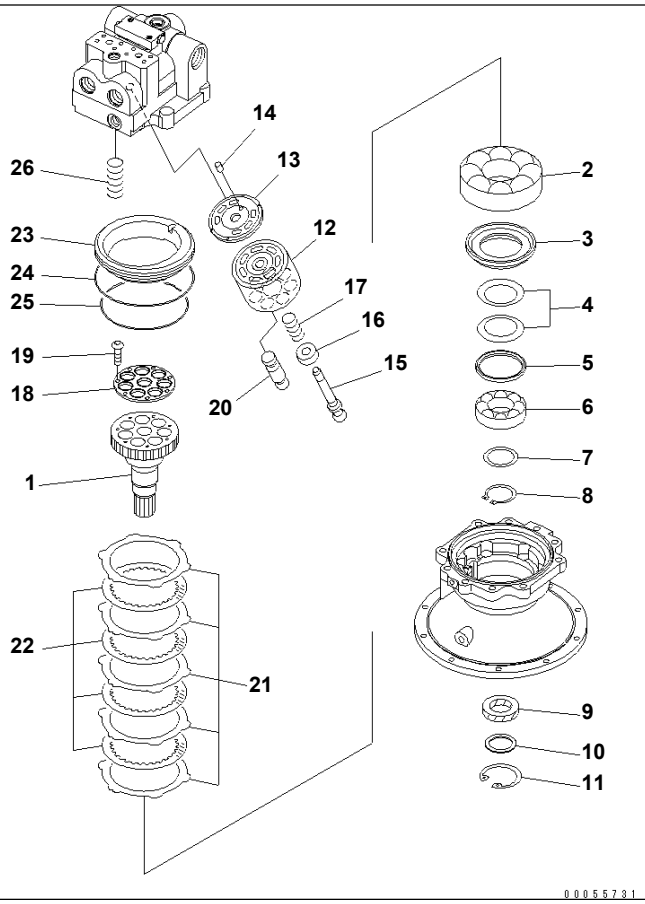

Ref. Y1640-02A0A **Page 510700**

PC1250SP-8R S/N 35001-UP (W/O EGR, +55C DEGREE)
SWING MOTOR (2/3)(#35017-)

Item	Part No.	Part Name	Qty	Serial No.
	(706-7K-01110)	MOTOR ASS'Y THIS ASSEMBLY CONSISTS OF ALL PARTS SHOWN IN FIGS.Y1640-01A0A T0 Y1640-03A0A .	1	35017-
	(706-7K-03110)	· MOTOR SUB ASS'Y	1	35017-
1	(★706-7K-41610)	· · SHAFT	1	35017-
2	(★706-77-43880)	· · BEARING	1	35017-
3	(★706-7K-41810)	· · SPACER	1	35017-
4	(★706-77-42051)	· · SPRING	2	35017-
5	(★706-77-42041)	· · SEAT	1	35017-
6	(★706-77-42890)	· · BEARING	1	35017-
7	(★706-77-05010)	· · SPACER KIT	1	35017-
	☆	· · · SPACER, 2.3MM	2	35017-
	☆	· · · SPACER, 2.5MM	2	35017-
	☆	· · · SPACER, 2.7MM	2	35017-
8	04064-06525	· · RING,SNAP	1	35017-
9	706-8J-41420	· · SEAL,OIL	1	35017-
10	706-7K-41920	· · SPACER	1	35017-
11	04065-07525	· · RING	1	35017-
12	(★706-7K-41210)	· · BLOCK,CYLINDER	1	35017-
13	(★706-7K-41710)	· · PLATE,VALVE	1	35017-
14	(★708-18-13230)	· · PIN	1	35017-
15	(★706-7K-41120)	· · SHAFT,CENTER	1	35017-
16	(★706-77-42130)	· · RING,CENTER	1	35017-
17	(★706-7K-41140)	· · SPRING	1	35017-
	(★706-7K-05010)	· · RETAINER KIT	1	35017-
18	☆	· · · RETAINER	1	35017-
19	☆	· · · SCREW	7	35017-
20	(★706-7K-41160)	· · PISTON SUB ASS'Y	7	35017-
21	(★706-7K-91340)	· · PLATE	5	35017-
22	(★706-7K-91350)	· · DISC	4	35017-

Printed By : Dwi Iswanto (airafather6107170)

SWING MOTOR (2/3)(#35017-)

Item	Part No.	Part Name	Qty	Serial No.
23	(★706-7K-91111)	・・ PISTON,BRAKE	1	35017-
24	(★07000-B5230)	・・ O-RING	1	35017-
25	(★706-86-90290)	・・ O-RING	1	35017-
26	(★706-7K-91360)	・・ SPRING	6	35017-

Printed By : Dwi Iswanto (airafather6107170)

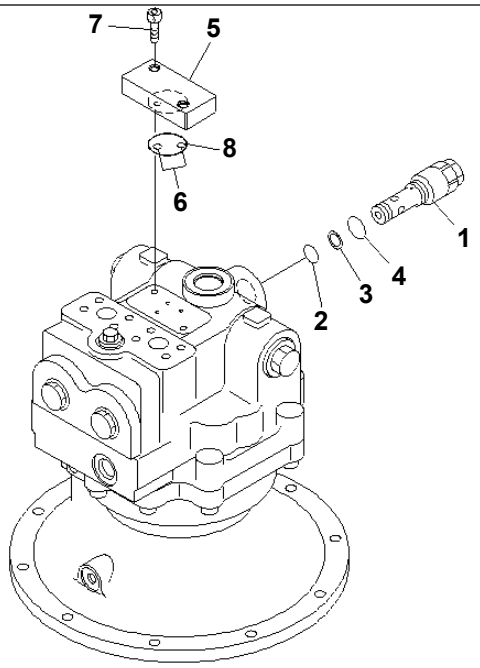

00055732

Ref. Y1640-03A0A **Page 510710**

PC1250SP-8R S/N 35001-UP (W/O EGR, +55C DEGREE)
SWING MOTOR (3/3)(#35017-)

Item	Part No.	Part Name	Qty	Serial No.
	(706-7K-01110)	MOTOR ASS'Y THIS ASSEMBLY CONSISTS OF ALL PARTS SHOWN IN FIGS.Y1640-01A0A T0 Y1640-03A0A .	1	35017-
1	702-77-02150	· VALVE ASS'Y,RELIEF	1	35017-
2	07000-F3022	· · O-RING	1	35017-
3	07001-03022	· · RING,BACK-UP	1	35017-
4	07002-63634	· · O-RING	1	35017-
5	706-7G-71290	· PLATE	1	35017-
6	07000-B1009	· O-RING	2	35017-
7	01252-60825	· BOLT	2	35017-
8	07000-B3042	· O-RING	1	35017-

Printed By : Dwi Iswanto (airafather6107170)

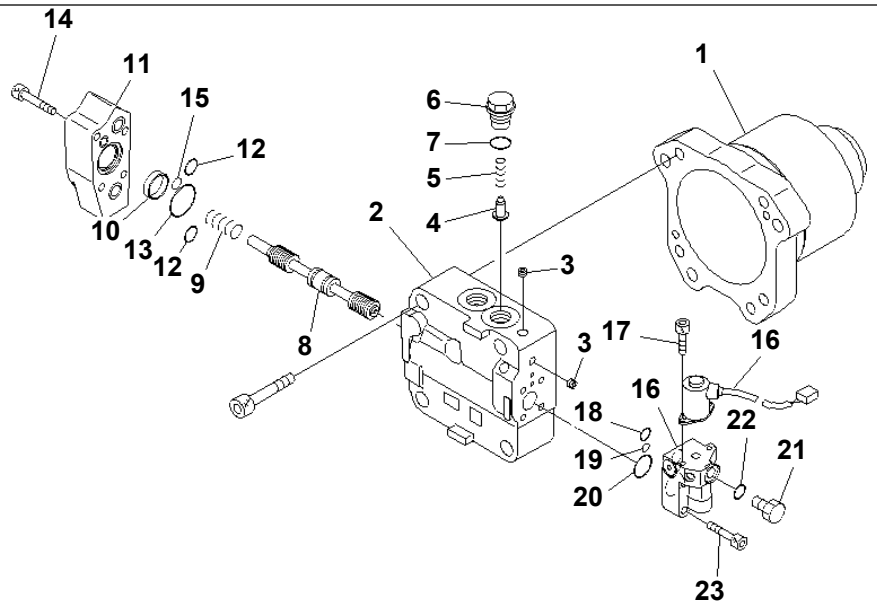

00039374

Ref. Y1642-01A0 **Page 510720**

PC1250SP-8R S/N 35001-UP (W/O EGR, +55C DEGREE)
FAN MOTOR (1/3)

Item	Part No.	Part Name	Qty	Serial No.
	708-7W-00130	MOTOR ASS'Y THIS ASSEMBLY CONSISTS OF ALL PARTS SHOWN IN FIGS.Y1642-01A0 TO Y1642-03A0.	1	35001-
1	(★708-7W-11180)	· CASE	1	35001-
	(★708-7W-01050)	· COVER SUB ASS'Y	1	35001-
2	☆	· · COVER,END	1	35001-
3	☆	· · PLUG	3	35001-
4	(★709-25-11650)	· VALVE,CHECK	1	35001-
5	(★709-25-11361)	· SPRING	1	35001-
6	(★708-7S-21610)	· PLUG	1	35001-
7	07002-22434	· O-RING	1	35001-
8	☆	· SPOOL	1	35001-
9	(★708-7W-18150)	· SPRING	1	35001-
10	(★708-7W-18160)	· SPACER	1	35001-
11	(★708-7W-18170)	· COVER	1	35001-
12	07000-F2016	· O-RING	2	35001-
13	07000-F2035	· O-RING	1	35001-
14	01252-60845	· BOLT	4	35001-
15	07000-F2010	· O-RING	1	35001-
16	708-7W-01070	· PILOT VALVE ASS'Y	1	35001-
17	01252-60612	· · BOLT	2	35001-
18	708-7S-18360	· · O-RING	1	35001-
19	07000-F1008	· · O-RING	1	35001-
20	708-7S-18230	· · O-RING	1	35001-
21	07040-11007	· · PLUG	1	35001-
22	07002-21023	· · O-RING	1	35001-
23	01252-60835	· BOLT	4	35001-

Printed By : Dwi Iswanto (airafather6107170)

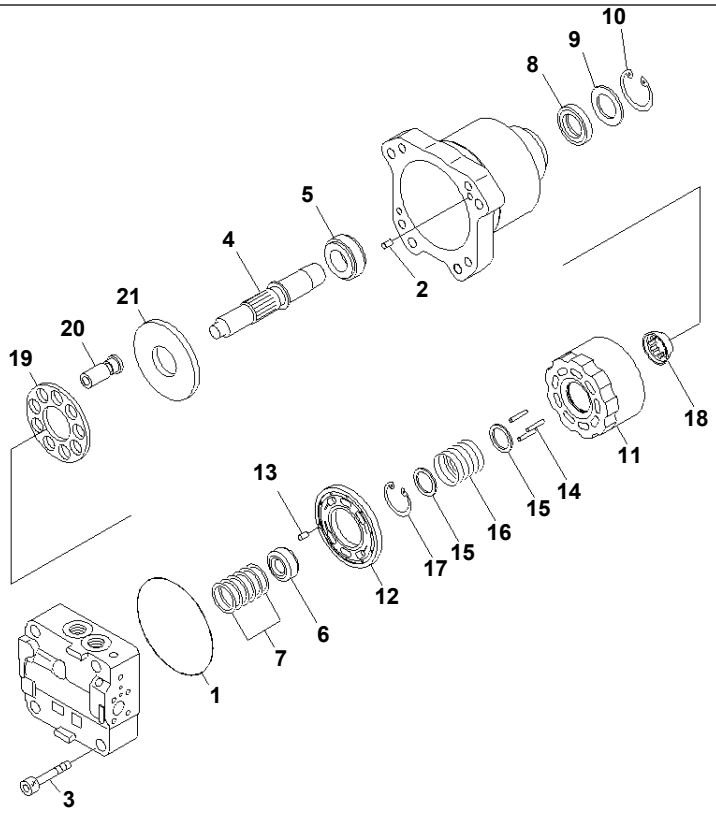

00039375

Ref. Y1642-02A0 **Page 510730**

PC1250SP-8R S/N 35001-UP (W/O EGR, +55C DEGREE)
FAN MOTOR (2/3)

Item	Part No.	Part Name	Qty	Serial No.
	(708-7W-00130)	MOTOR ASS'Y THIS ASSEMBLY CONSISTS OF ALL PARTS SHOWN IN FIGS.Y1642-01A0 TO Y1642-03A0.	1	35001-
1	708-7W-11920	· O-RING	1	35001-
2	04020-01024	· PIN	2	35001-
3	01252-61480	· BOLT	4	35001-
4	(★708-7W-12130)	· SHAFT	1	35001-
5	(★708-7W-12140)	· BEARING	1	35001-
6	(★708-7W-12150)	· BEARING	1	35001-
7	(★708-7L-05010)	· SPACER KIT	1	35001-
	☆	· · SPACER, 1.5MM	1	35001-
	☆	· · SPACER, 1.6MM	1	35001-
	☆	· · SPACER, 1.7MM	1	35001-
	☆	· · SPACER, 1.8MM	1	35001-
	☆	· · SPACER, 1.9MM	1	35001-
	☆	· · SPACER, 2.0MM	1	35001-
8	(★708-25-52861)	· SEAL,OIL	1	35001-
9	(★708-2L-22160)	· SPACER	1	35001-
10	04065-06825	· RING	1	35001-
11	(★708-8F-33121)	· BLOCK,CYLINDER	1	35001-
12	(★708-8F-33230)	· PLATE,VALVE	1	35001-
13	(★720-68-19610)	· PIN	1	35001-
14	(★708-8F-33360)	· PIN	3	35001-
15	(★708-7L-13140)	· SEAT	2	35001-
16	(★708-8F-33160)	· SPRING	1	35001-
17	04065-04818	· RING	1	35001-
18	(★708-8F-33350)	· GUIDE,RETAINER	1	35001-
19	(★708-2L-33350)	· RETAINER,SHOE	1	35001-
20	(★708-8F-33310)	· PISTON SUB ASS'Y	9	35001-
21	(★708-7F-13420)	· PLATE,THRUST	1	35001-

Printed By : Dwi Iswanto (airafather6107170)

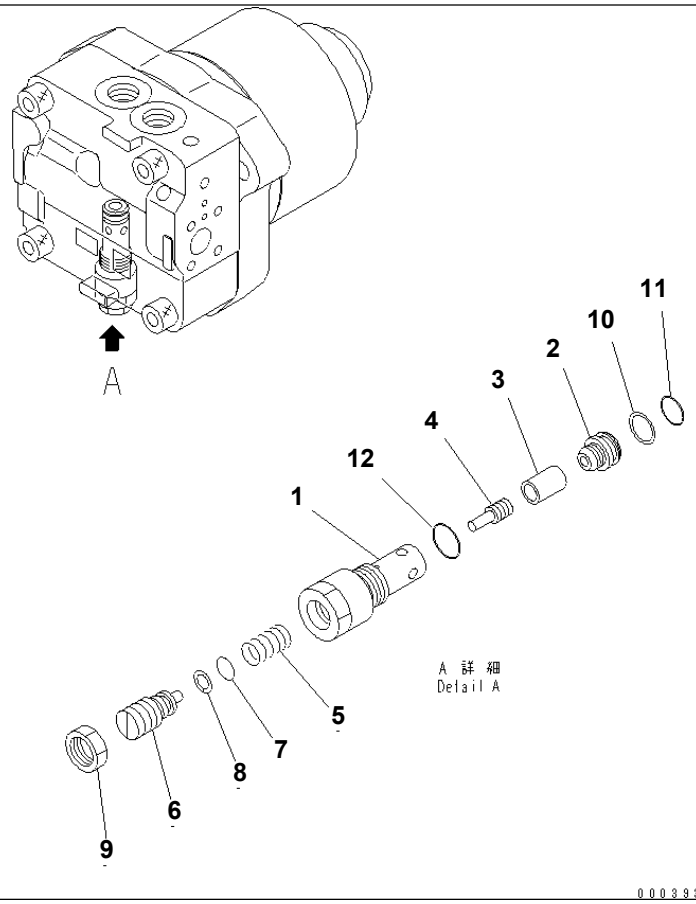

Ref. Y1642-03A0 **Page 510740**

PC1250SP-8R S/N 35001-UP (W/O EGR, +55C DEGREE)

FAN MOTOR (3/3)

Item	Part No.	Part Name	Qty	Serial No.
	708-7W-00130	MOTOR ASS'Y THIS ASSEMBLY CONSISTS OF ALL PARTS SHOWN IN FIGS.Y1642-01A0 TO Y1642-03A0.	1	35001-
	702-73-01660	· VALVE ASS'Y,RELIEF	1	35001-
1	(★702-73-11810)	· · SLEEVE	1	35001-
2	(★702-73-11820)	· · SEAT,VALVE	1	35001-
3	(★702-73-11830)	· · VALVE	1	35001-
4	(★706-75-75280)	· · PISTON	1	35001-
5	(★702-73-11840)	· · SPRING	1	35001-
6	(★702-73-11850)	· · SCREW	1	35001-
7	(★07000-22010)	· · O-RING	1	35001-
8	(★07001-02010)	· · RING	1	35001-
9	(★702-73-11860)	· · NUT	1	35001-
10	723-60-22230	· · RING,BACK-UP	1	35001-
11	07000-F2016	· · O-RING	1	35001-
12	07002-22434	· · O-RING	1	35001-

Printed By : Dwi Iswanto (airafather6107170)

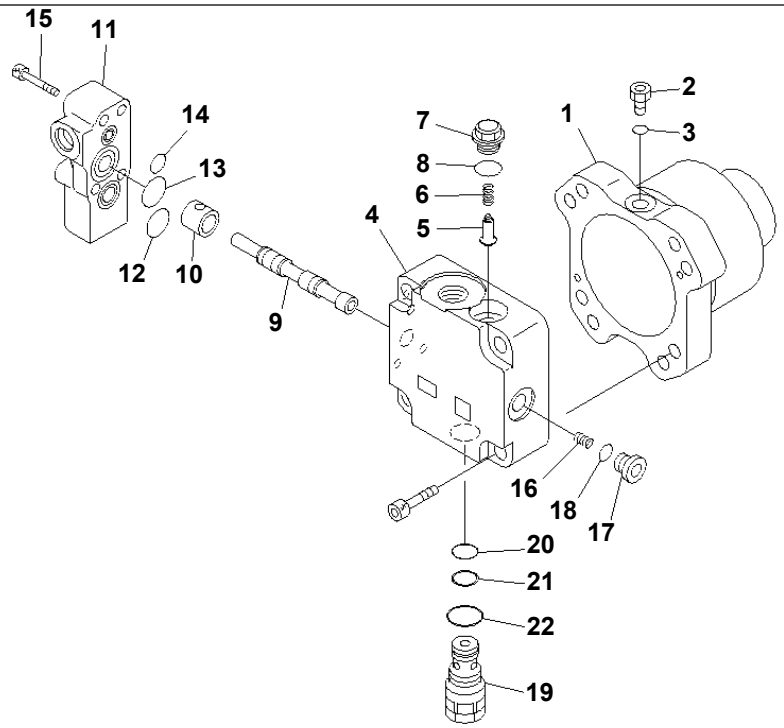

00048671

Ref. Y1642-11A0 **Page 510750**

PC1250SP-8R S/N 35001-UP (W/O EGR, +55C DEGREE)
FAN MOTOR (1/2) (FOR AFTER COOLER)

Item	Part No.	Part Name	Qty	Serial No.
	708-7S-00610	MOTOR ASS'Y THIS ASSEMBLY CONSISTS OF ALL PARTS SHOWN IN FIGS.Y1642-11A0 AND Y1642-12A0.	1	35001-
1	(★708-7S-11740)	· CASE	1	35001-
2	07040-11007	· PLUG	1	35001-
3	07002-21023	· O-RING	1	35001-
	(★708-7S-01520)	· COVER SUB ASS'Y	1	35001-
4	☆	· · COVER,END	1	35001-
5	(★708-7R-11210)	· · VALVE	1	35001-
6	(★722-10-91130)	· · SPRING	1	35001-
7	(★709-32-12861)	· · PLUG	1	35001-
8	07002-21823	· · O-RING	1	35001-
9	☆	· · SPOOL	1	35001-
10	(★708-7S-18310)	· · SPACER	1	35001-
11	(★708-7S-18320)	· · COVER	1	35001-
12	07000-E2020	· · O-RING	1	35001-
13	07000-E2025	· · O-RING	1	35001-
14	07000-E2012	· · O-RING	1	35001-
15	01252-60845	· · BOLT	4	35001-
16	(★708-7S-18510)	· · SPRING	1	35001-
17	(★723-56-31630)	· · PLUG	1	35001-
18	07002-21623	· · O-RING	1	35001-
19	708-7T-02331	· · VALVE ASS'Y,RELIEF	1	35022-
	708-7T-02330	· · VALVE ASS'Y,RELIEF	1	35001-35021
20	07000-F2016	· · · O-RING	1	35001-
21	07001-02016	· · · RING	1	35001-
22	07002-12434	· · · O-RING	1	35001-

Printed By : Dwi Iswanto (airafather6107170)

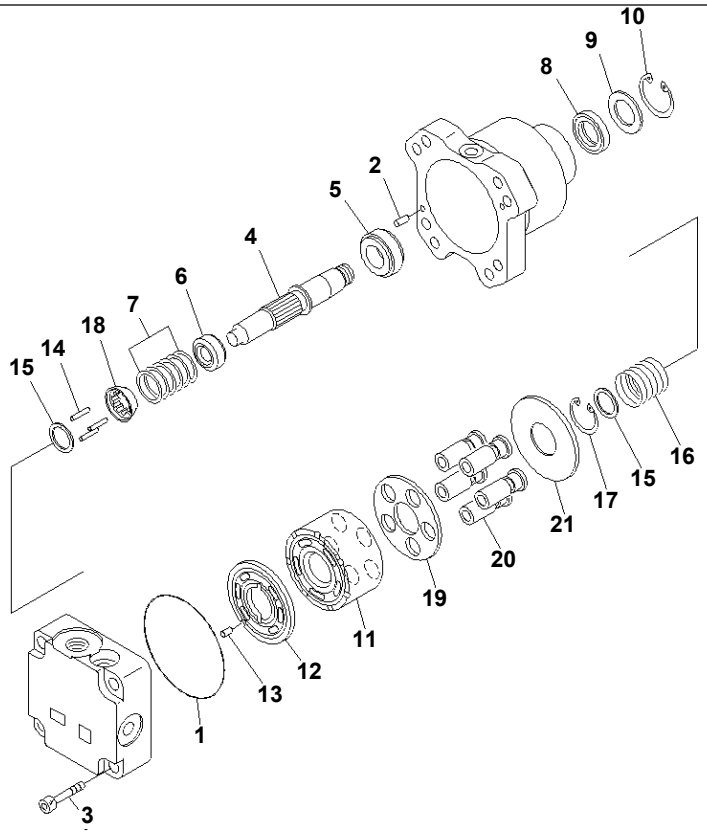

00048672

Ref. Y1642-12A0 **Page 510760**

PC1250SP-8R S/N 35001-UP (W/O EGR, +55C DEGREE)
FAN MOTOR (2/2) (FOR AFTER COOLER)

Item	Part No.	Part Name	Qty	Serial No.
	(708-7S-00610)	MOTOR ASS'Y THIS ASSEMBLY CONSISTS OF ALL PARTS SHOWN IN FIGS.Y1642-11A0 AND Y1642-12A0.	1	35001-
1	07000-E2110	· O-RING	1	35001-
2	04020-00616	· PIN,DOWEL	2	35001-
3	01252-61255	· BOLT	4	35001-
4	(★708-7S-12330)	· SHAFT	1	35001-
5	(★708-7S-12140)	· BEARING	1	35001-
6	(★708-7S-12220)	· BEARING	1	35001-
7	(★708-7S-05110)	· SHIM KIT	1	35001-
	☆	· · SHIM, 0.85MM	1	35001-
	☆	· · SHIM, 1.05MM	1	35001-
	☆	· · SHIM, 1.25MM	1	35001-
	☆	· · SHIM, 0.75MM	1	35001-
	☆	· · SHIM, 0.95MM	1	35001-
	☆	· · SHIM, 1.15MM	1	35001-
8	(★708-7T-12330)	· SEAL,OIL	1	35001-
9	(★708-1S-11890)	· SPACER	1	35001-
10	04065-04518	· RING,SNAP	1	35001-
11	(★708-7S-13120)	· BLOCK,CYLINDER	1	35001-
12	(★708-7S-13250)	· PLATE,VALVE	1	35001-
13	(★720-68-19610)	· PIN	1	35001-
14	(★708-2L-23360)	· PIN	3	35001-
15	(★708-7S-13530)	· SPACER	2	35001-
16	(★708-7S-13560)	· SPRING	1	35001-
17	04065-03212	· RING,SNAP	1	35001-
18	(★708-7S-13550)	· GUIDE,RETAINER	1	35001-
19	(★708-7S-13360)	· RETAINER,SHOE	1	35001-
20	(★708-7S-13350)	· PISTON SUB ASS'Y	5	35001-
21	(★708-7S-13420)	· PLATE,THRUST	1	35001-

Printed By : Dwi Iswanto (airafather6107170)

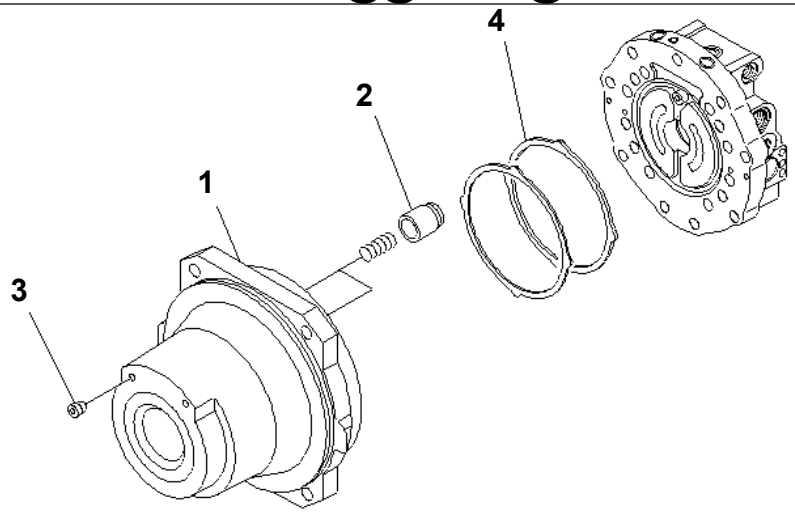

PJ1B683

Ref. Y1650-01A0 **Page 510770**

PC1250SP-8R S/N 35001-UP (W/O EGR, +55C DEGREE)
TRAVEL MOTOR (CASE AND REAR COVER)

Item	Part No.	Part Name	Qty	Serial No.
	21N-60-34100	MOTOR ASS'Y	1	35001-
	KBB044B-21006	· CASE ASS'Y	1	35001-
1	☆	· · CASE	1	35001-
2	☆	· · PISTON ASS'Y	2	35001-
3	☆	· · PLUG	2	35001-
4	KBB0441-96003	· PLATE	1	35001-

Printed By : Dwi Iswanto (airafather6107170)

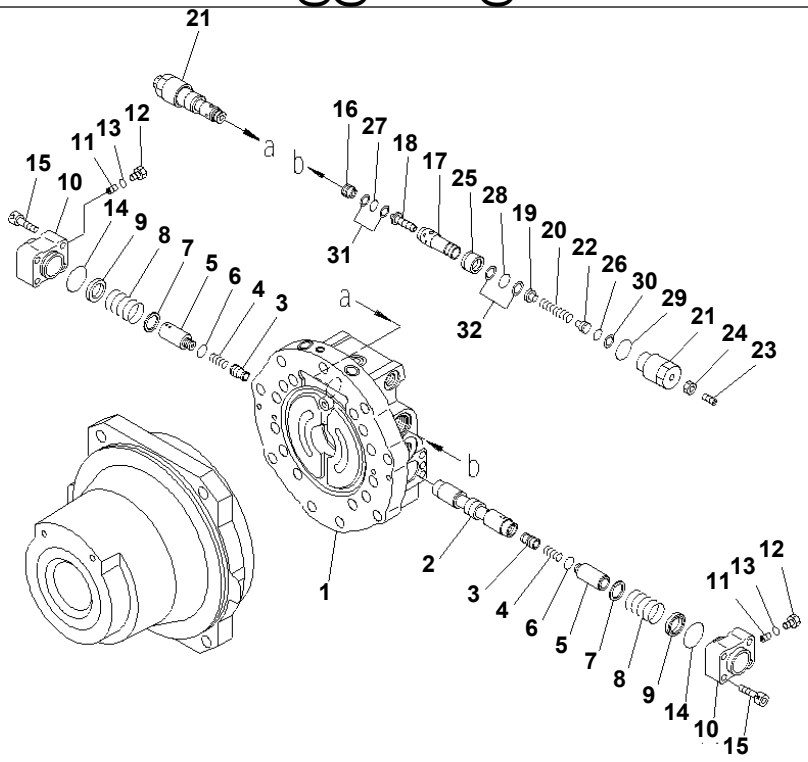

PW1B684

Ref. Y1650-02A0 **Page 510780**

PC1250SP-8R S/N 35001-UP (W/O EGR, +55C DEGREE)
TRAVEL MOTOR (CYLINDER BLOCK AND PISTON ASS'Y) (1/3)

Item	Part No.	Part Name	Qty	Serial No.
	(21N-60-34100)	MOTOR ASS'Y	1	35001-
	KBB0443-13090	· BASE ASS'Y	1	35001-
1	☆	· · BASE (K2)	1	35001-
	☆	· · SPOOL ASS'Y (K2)	1	35001-
2	☆	· · · SPOOL (K2)	1	35001-
3	☆	· · · CHECK VALVE (K2)	2	35001-
4	☆	· · · SPRING (K2)	2	35001-
5	☆	· · · PLUG (K2)	2	35001-
6	☆	· · · O-RING (K1)(K2)	2	35001-
7	KB21961-40504	· · SEAT	2	35001-
8	KB21961-60402	· · SPRING	2	35001-
9	KBB0441-14008	· · SEAT	2	35001-
	☆	· · CAP ASS'Y	2	35001-
10	☆	· · · CAP	1	35001-
11	☆	· · · SCREW	1	35001-
12	☆	· · · PLUG	1	35001-
13	☆	· · · O-RING (K1)	1	35001-
14	☆	· · · O-RING (K1)	1	35001-
15	☆	· · · BOLT	4	35001-
	☆	· · RELIEF VALVE ASS'Y	2	35001-
16	☆	· · · SEAT	1	35001-
17	☆	· · · HOUSING	1	35001-
18	☆	· · · POPPET	1	35001-
19	☆	· · · SEAT	1	35001-
20	☆	· · · SPRING	1	35001-
21	☆	· · · PLUG	1	35001-
22	☆	· · · GUIDE	1	35001-
23	☆	· · · SCREW	1	35001-
24	☆	· · · NUT	1	35001-
25	☆	· · · PISTON	1	35001-

Printed By : Dwi Iswanto (airafather6107170)

TRAVEL MOTOR (CYLINDER BLOCK AND PISTON ASS'Y) (1/3)

Item	Part No.	Part Name	Qty	Serial No.
26	☆	· · · O-RING (K1)	1	35001-
27	☆	· · · O-RING (K1)	1	35001-
28	☆	· · · O-RING (K1)	1	35001-
29	☆	· · · O-RING (K1)	1	35001-
30	☆	· · · RING (K1)	1	35001-
31	☆	· · · RING (K1)	2	35001-
32	☆	· · · RING, BACK-UP (K1)	2	35001-

Printed By : Dwi Iswanto (airafather6107170)

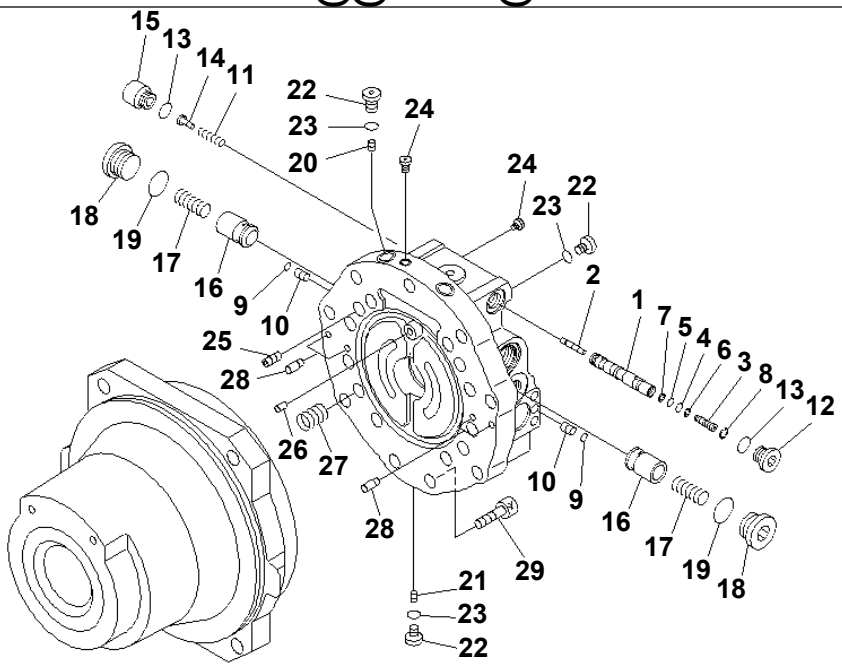

PJ1B685

Ref. Y1650-03A0 **Page 510790**

PC1250SP-8R S/N 35001-UP (W/O EGR, +55C DEGREE)

TRAVEL MOTOR (CYLINDER BLOCK AND PISTON ASS'Y) (2/3)

Item	Part No.	Part Name	Qty	Serial No.
	(21N-60-34100)	MOTOR ASS'Y	1	35001-
	(KBB0443-13090)	· BASE ASS'Y	1	35001-
	☆	· · VALVE ASS'Y (K2)	1	35001-
1	☆	· · · SPOOL (K2)	1	35001-
2	☆	· · · SPOOL (K2)	1	35001-
3	☆	· · · FILTER (K2)	1	35001-
4	☆	· · · O-RING (K1)(K2)	1	35001-
5	☆	· · · O-RING (K1)(K2)	1	35001-
6	☆	· · · RING, BACK-UP (K1)(K2)	1	35001-
7	☆	· · · RING, BACK-UP (K1)(K2)	1	35001-
8	☆	· · · RING, SNAP (K2)	1	35001-
9	KB95113-00700	· · O-RING (K1)	2	35001-
10	☆	· · ORIFICE (K2)	2	35001-
11	KBB0111-13129	· · SPRING	1	35001-
12	KB20461-52406	· · PLUG	1	35001-
13	KB95113-01800	· · O-RING (K1)	2	35001-
14	KBB0441-14003	· · GUIDE	1	35001-
15	KB20461-42414	· · PLUG	1	35001-
16	KB21961-60301	· · VALVE	2	35001-
17	KB21961-60412	· · SPRING	2	35001-
18	KB21961-95014	· · PLUG	2	35001-
19	KB95113-02900	· · O-RING (K1)	2	35001-
20	☆	· · ORIFICE (K2)	2	35001-
21	☆	· · ORIFICE (K2)	1	35001-
22	KB20461-32422	· · PLUG	6	35001-
23	KB95113-01100	· · O-RING (K1)	6	35001-
24	KB97171-06241	· · PLUG (K2)	9	35001-
25	KB21961-40811	· · ORIFICE	1	35001-
26	KB20461-70802	· PIN	1	35001-
27	KBB0111-13074	· SPRING	10	35001-

Printed By : Dwi Iswanto (airafather6107170)

TRAVEL MOTOR (CYLINDER BLOCK AND PISTON ASS'Y) (2/3)

Item	Part No.	Part Name	Qty	Serial No.
28	KB20361-40845	· PIN	4	35001-
29	KB92703-18500	· BOLT	9	35001-
K1	KBB044A-51158	SEAL KIT	1	35001-
1	KB95113-01400	· O-RING	2	35001-
	KB95113-00800	· O-RING	1	35001-
	KB95123-04000	· O-RING	1	35001-
	KB95113-01200	· O-RING	1	35001-
	KB95113-01800	· O-RING	1	35001-
	KB95113-02100	· O-RING	1	35001-
	KB21001-00182	· O-RING	1	35001-
	KB95712-01200	· RING	2	35001-
	KB95712-01800	· RING	2	35001-
	KB95713-02100	· RING, BACK-UP	2	35001-
	KB95113-00600	· O-RING	1	35001-
	KB95113-00500	· O-RING	1	35001-
	KB95712-00600	· RING, BACK-UP	1	35001-
	KB95712-00500	· RING, BACK-UP	1	35001-
	KB95113-00700	· O-RING	2	35001-
	KB95113-01800	· O-RING	2	35001-
	KB95113-02900	· O-RING	2	35001-
	KB95113-01100	· O-RING	6	35001-
K2	KBB044B-23174	PLATE, BASE, KIT	1	35001-
1	KBB0441-79049	· BASE	1	35001-
	KBB0853-02035	· SPOOL ASS'Y	1	35001-
	KBB0443-09048	· VALVE ASS'Y	1	35001-
	KB21961-10802	· ORIFICE	2	35001-
	KBB0111-85005	· ORIFICE	2	35001-
	KBB0111-85001	· ORIFICE	1	35001-
	KB97171-06241	· PLUG	9	35001-
	KB21961-40811	· ORIFICE	1	35001-

Printed By : Dwi Iswanto (airafather6107170)

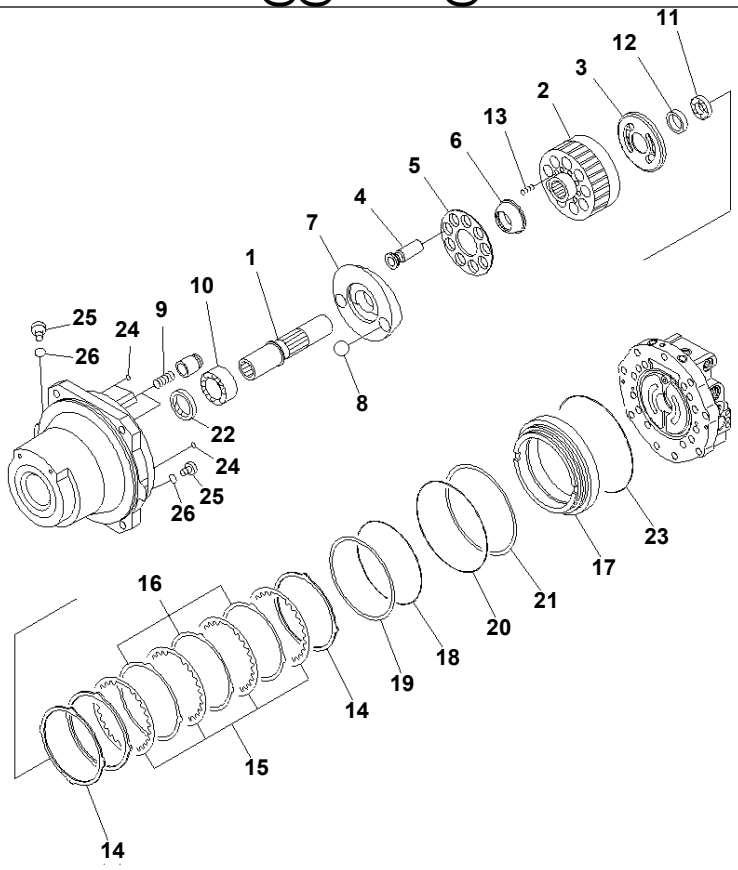

Ref. Y1650-04A0 **Page 510800**

PC1250SP-8R S/N 35001-UP (W/O EGR, +55C DEGREE)

TRAVEL MOTOR (CYLINDER BLOCK AND PISTON ASS'Y) (3/3)

Item	Part No.	Part Name	Qty	Serial No.
	(21N-60-34100)	MOTOR ASS'Y	1	35001-
1	KBB0441-02012	· SHAFT	1	35001-
	KBB0118-12048	· CYLINDER BLOCK ASS'Y	1	35001-
2	☆	· · CYLINDER BLOCK	1	35001-
3	☆	· · PLATE, VALVE	1	35001-
4	KBB0112-01013	· PISTON ASS'Y	9	35001-
5	☆	· PLATE, RETAINER (K4)	1	35001-
6	☆	· HOLDER, RETAINER (K4)	1	35001-
7	KBB0111-74046	· PLATE	1	35001-
8	KB20461-69205	· BALL, STEEL	2	35001-
9	KBB0111-13073	· SPRING	2	35001-
10	KBB0141-69003	· BEARING, ROLLER	1	35001-
11	KBB0141-69004	· BEARING, ROLLER	1	35001-
12	KBB0111-18039	· COLLAR	1	35001-
13	KB20461-61306	· SPRING	9	35001-
14	KB20461-69603	· PLATE, FRICTION	2	35001-
15	KB20461-69503	· PLATE, DISK	4	35001-
16	KB20461-69602	· PLATE, FRICTION	3	35001-
17	KBB0441-94007	· PISTON, BRAKE	1	35001-
18	KB20461-75201	· O-RING (K3)	1	35001-
19	KBB0141-51002	· RING, BACK-UP (K3)	1	35001-
20	KB20461-65213	· O-RING (K3)	1	35001-
21	KB20461-65104	· RING, BACK-UP (K3)	1	35001-
22	KB20461-62103	· SEAL (K3)	1	35001-
23	KB95123-26000	· O-RING (K3)	1	35001-
24	KB95113-01000	· O-RING (K3)	4	35001-
25	KB21961-95025	· PLUG	2	35001-
26	KB95113-02400	· O-RING (K3)	2	35001-
K3	KBB044A-51159	SEAL KIT	1	35001-
1	KB20461-62103	· SEAL	1	35001-

Printed By : Dwi Iswanto (airafather6107170)

TRAVEL MOTOR (CYLINDER BLOCK AND PISTON ASS'Y) (3/3)

Item	Part No.	Part Name	Qty	Serial No.
1	KB20461-75201	· O-RING	1	35001-
	KBB0141-51002	· RING, BACK-UP	1	35001-
	KB20461-65213	· O-RING	1	35001-
	KB20461-65104	· RING, BACK-UP	1	35001-
	KB95123-26000	· O-RING	1	35001-
	KB95113-01000	· O-RING	4	35001-
	KB95113-02400	· O-RING	2	35001-
K4	KBB011B-10003	PLATE, RETAINER, KIT	1	35001-
1	KBB0111-11006	· PLATE, RETAINER	1	35001-
	KBB0111-77002	· HOLDER, RETAINER	1	35001-

Printed By : Dwi Iswanto (airafather6107170)

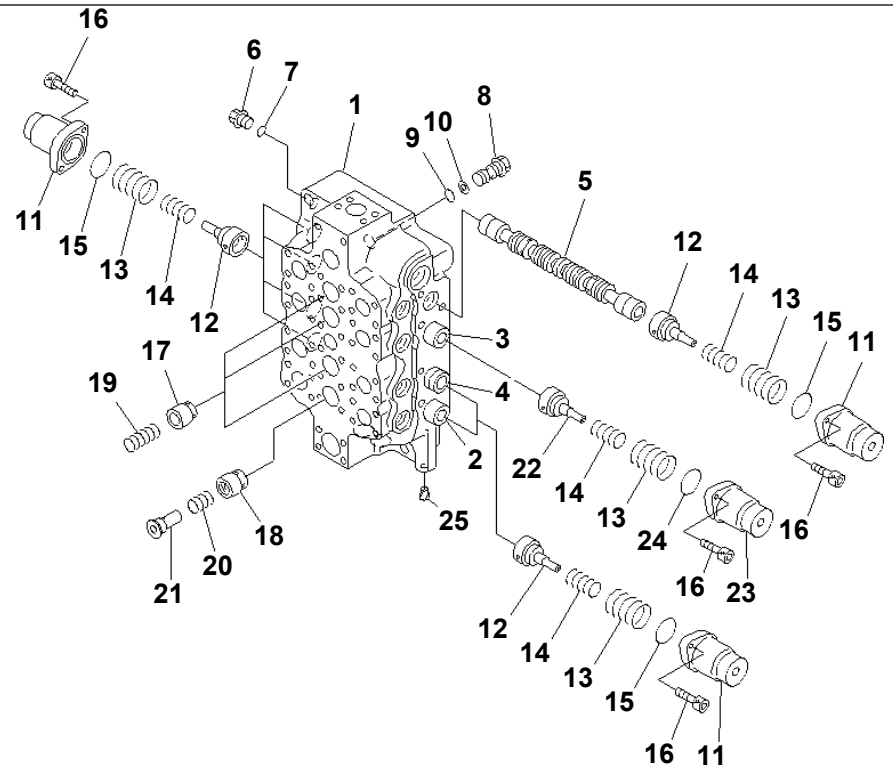

00048673

Ref. Y1664-01A0 **Page 510810**

PC1250SP-8R S/N 35001-UP (W/O EGR, +55C DEGREE)

MAIN VALVE (1/6) (4-SPOOL) (NO.2)

Item	Part No.	Part Name	Qty	Serial No.
	709-14-94001	CONTROL VALVE THIS ASSEMBLY CONSISTS OF ALL PARTS SHOWN IN FIGS.Y1664-01A0 T0 Y1664-06A0.	1	35001-
	☆	· BODY GROUP ASS'Y	1	35001-
1	☆	· · BODY,VALVE	1	35001-
2	☆	· · SPOOL SUB ASS'Y	1	35001-
3	☆	· · SPOOL SUB ASS'Y	1	35001-
4	☆	· · SPOOL SUB ASS'Y	1	35001-
5	☆	· · SPOOL	1	35001-
6	700-22-11370	· · PLUG	1	35001-
7	07002-12434	· · O-RING	1	35001-
8	709-14-11510	· · PLUG	9	35001-
9	700-80-61260	· · O-RING	9	35001-
10	700-80-61430	· · RING	9	35001-
11	709-14-11520	· · CASE	7	35001-
12	709-14-11530	· · RETAINER	7	35001-
13	709-14-11550	· · SPRING	8	35001-
14	709-14-11560	· · SPRING	8	35001-
15	07000-12065	· · O-RING	7	35001-
16	01252-61035	· · BOLT	16	35001-
17	709-12-11411	· · VALVE,CHECK	3	35001-
18	709-14-11581	· · VALVE,CHECK	1	35001-
19	709-12-11430	· · SPRING	3	35001-
20	709-14-11590	· · SPRING	1	35001-
21	709-14-11610	· · SEAT	1	35001-
22	709-14-12380	· · RETAINER	1	35001-
23	709-14-12390	· · CASE	1	35001-
24	6354-81-5670	· · O-RING	1	35001-
25	07049-01012	· · PLUG	1	35001-

Printed By : Dwi Iswanto (airafather6107170)

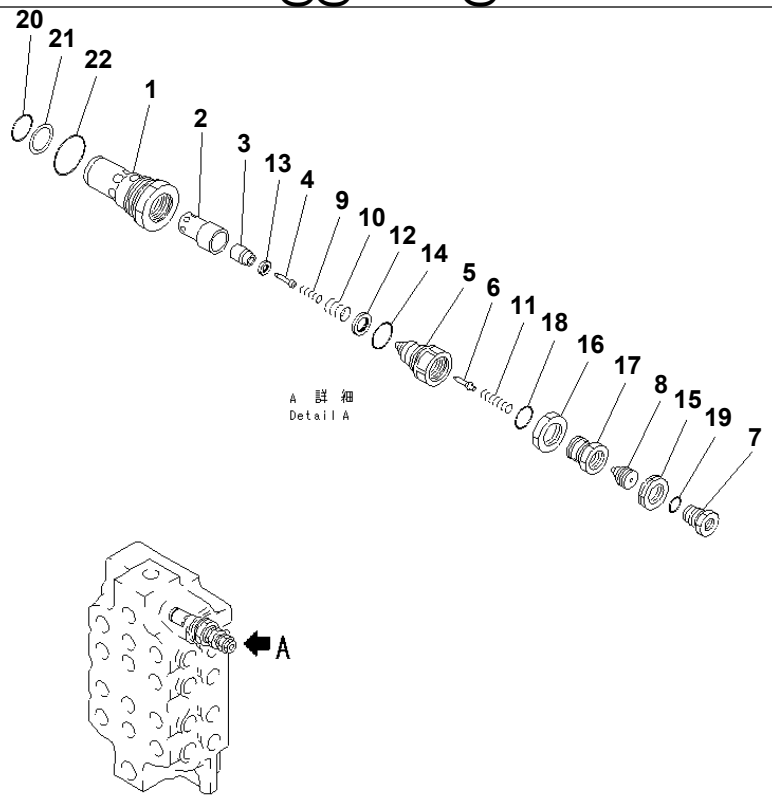

P E B 4 2 9 7

Ref. Y1664-02A0 **Page 510820**

PC1250SP-8R S/N 35001-UP (W/O EGR, +55C DEGREE)
MAIN VALVE (2/6) (4-SPOOL) (NO.2)

Item	Part No.	Part Name	Qty	Serial No.
	(709-14-94001)	CONTROL VALVE THIS ASSEMBLY CONSISTS OF ALL PARTS SHOWN IN FIGS.Y1664-01A0 T0 Y1664-06A0.	1	35001-
	709-10-53800	· VALVE ASS'Y,RELIEF	1	35001-
1	☆	· · SLEEVE	1	35001-
2	☆	· · SLEEVE	1	35001-
3	☆	· · POPPET	1	35001-
4	☆	· · PISTON	1	35001-
5	☆	· · SLEEVE	1	35001-
6	☆	· · POPPET	1	35001-
7	☆	· · UNION	1	35001-
8	☆	· · RETAINER	1	35001-
9	☆	· · SPRING	1	35001-
10	☆	· · SPRING	1	35001-
11	☆	· · SPRING	1	35001-
12	☆	· · SEAL	1	35001-
13	☆	· · SEAL	1	35001-
14	☆	· · O-RING	1	35001-
15	☆	· · NUT	1	35001-
16	☆	· · NUT	1	35001-
17	☆	· · HOLDER	1	35001-
18	☆	· · O-RING	1	35001-
19	☆	· · O-RING	1	35001-
20	07000-13032	· · O-RING	1	35001-
21	07001-03032	· · RING	1	35001-
22	07002-05234	· · O-RING	1	35001-

Printed By : Dwi Iswanto (airafather6107170)

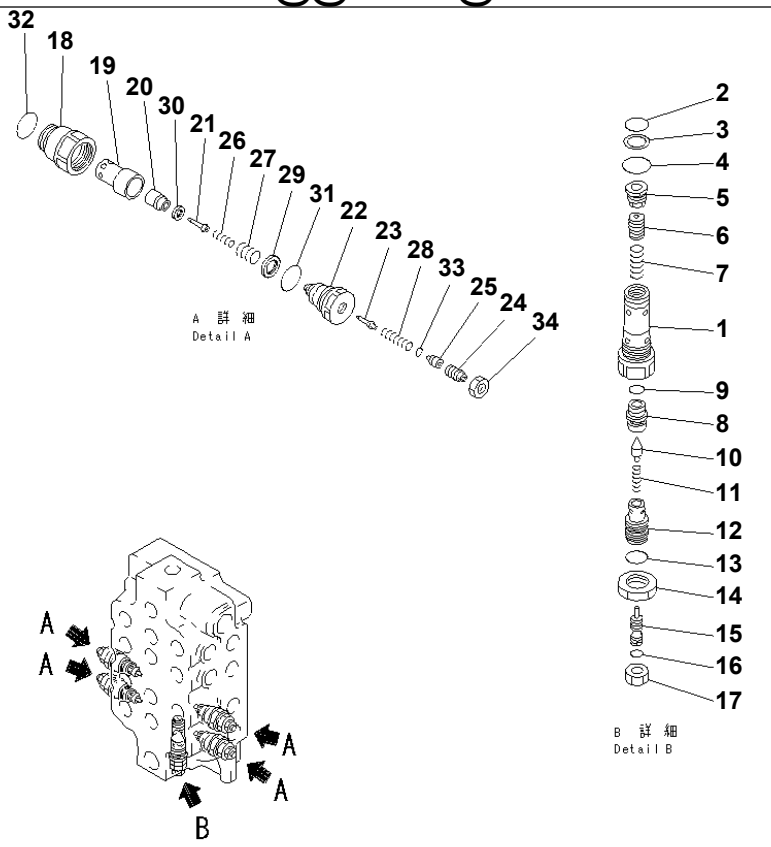

Ref. Y1664-03A0 **Page 510830**

PC1250SP-8R S/N 35001-UP (W/O EGR, +55C DEGREE)
MAIN VALVE (3/6) (4-SPOOL) (NO.2)

Item	Part No.	Part Name	Qty	Serial No.
	(709-14-94001)	CONTROL VALVE THIS ASSEMBLY CONSISTS OF ALL PARTS SHOWN IN FIGS.Y1664-01A0 T0 Y1664-06A0.	1	35001-
	709-10-55403	· VALVE ASS'Y,RELIEF	1	35001-
1	☆	· · SLEEVE	1	35001-
2	700-93-11320	· · O-RING	1	35001-
3	700-93-11330	· · RING,BACK-UP	1	35001-
4	07002-03634	· · O-RING	1	35001-
5	☆	· · PLUG	1	35001-
6	☆	· · VALVE	1	35001-
7	☆	· · SPRING	1	35001-
8	☆	· · SEAT	1	35001-
9	☆	· · O-RING	1	35001-
10	☆	· · POPPET	1	35001-
11	☆	· · SPRING	1	35001-
12	☆	· · HOLDER	1	35001-
13	☆	· · O-RING	1	35001-
14	☆	· · NUT	1	35001-
15	☆	· · SCREW	1	35001-
16	☆	· · O-RING	1	35001-
17	☆	· · NUT	1	35001-
	709-90-71600	· VALVE ASS'Y,SUCTION AND SAFETY	4	35001-
18	☆	· · SLEEVE	1	35001-
19	☆	· · SLEEVE	1	35001-
20	☆	· · POPPET	1	35001-
21	☆	· · PISTON	1	35001-
22	☆	· · PLUG	1	35001-
23	☆	· · POPPET	1	35001-
24	☆	· · SCREW	1	35001-
25	☆	· · SPACER	1	35001-

Printed By : Dwi Iswanto (airafather6107170)

MAIN VALVE (3/6) (4-SPOOL) (NO.2)

Item	Part No.	Part Name	Qty	Serial No.
26	☆	・・SPRING	1	35001-
27	☆	・・SPRING	1	35001-
28	☆	・・SPRING	1	35001-
29	☆	・・SEAL	1	35001-
30	☆	・・SEAL	1	35001-
31	☆	・・O-RING	1	35001-
32	07002-03634	・・O-RING	1	35001-
33	☆	・・O-RING	1	35001-
34	☆	・・NUT	1	35001-

Printed By : Dwi Iswanto (airafather6107170)

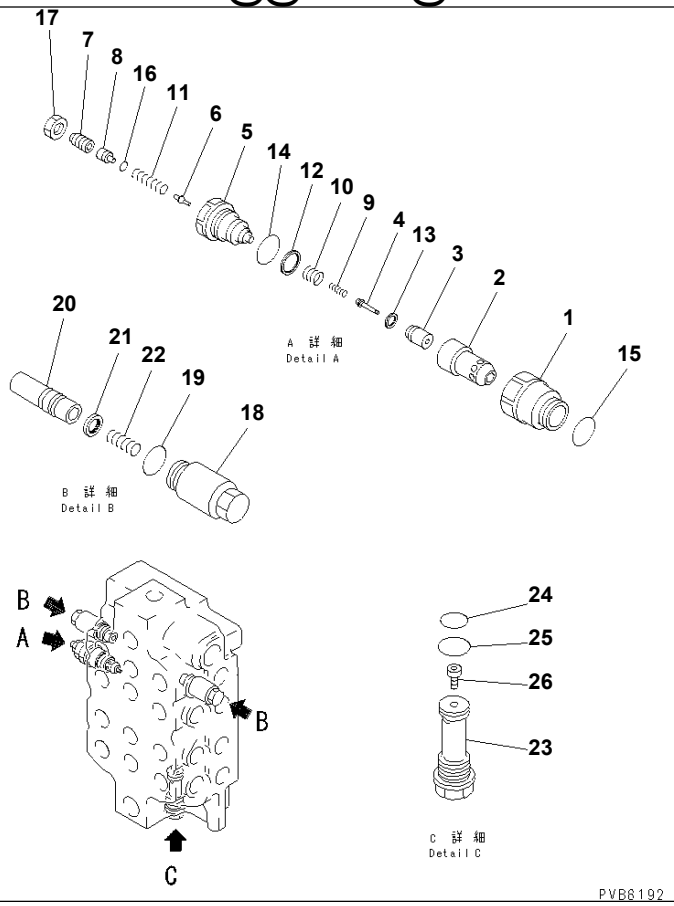

Ref. Y1664-04A0 **Page 510840**

PC1250SP-8R S/N 35001-UP (W/O EGR, +55C DEGREE)
MAIN VALVE (4/6) (4-SPOOL) (NO.2)

Item	Part No.	Part Name	Qty	Serial No.
	(709-14-94001)	CONTROL VALVE THIS ASSEMBLY CONSISTS OF ALL PARTS SHOWN IN FIGS.Y1664-01A0 T0 Y1664-06A0.	1	35001-
	709-90-71100	· VALVE ASS'Y,SUCTION AND SAFETY	1	35001-
1	☆	· · SLEEVE	1	35001-
2	☆	· · SLEEVE	1	35001-
3	☆	· · POPPET	1	35001-
4	☆	· · PISTON	1	35001-
5	☆	· · PLUG	1	35001-
6	☆	· · POPPET	1	35001-
7	☆	· · SCREW	1	35001-
8	☆	· · SPACER	1	35001-
9	☆	· · SPRING	1	35001-
10	☆	· · SPRING	1	35001-
11	☆	· · SPRING	1	35001-
12	☆	· · SEAL	1	35001-
13	☆	· · SEAL	1	35001-
14	☆	· · O-RING	1	35001-
15	07002-03634	· · O-RING	1	35001-
16	☆	· · O-RING	1	35001-
17	☆	· · NUT	1	35001-
	700-90-74001	· VALVE ASS'Y,SUCTION	2	35001-
18	☆	· · SLEEVE	1	35001-
19	07002-03634	· · O-RING	1	35001-
20	☆	· · VALVE	1	35001-
21	☆	· · SEAL	1	35001-
22	☆	· · SPRING	1	35001-
	709-10-92100	· ORIFICE ASS'Y	1	35001-
23	☆	· · ORIFICE	1	35001-
24	700-93-11320	· · O-RING	1	35001-

Printed By : Dwi Iswanto (airafather6107170)

MAIN VALVE (4/6) (4-SPOOL) (NO.2)

Item	Part No.	Part Name	Qty	Serial No.
25	07002-03634	・・O-RING	1	35001-
26	☆	・・SENSOR	1	35001-

Printed By : Dwi Iswanto (airafather6107170)

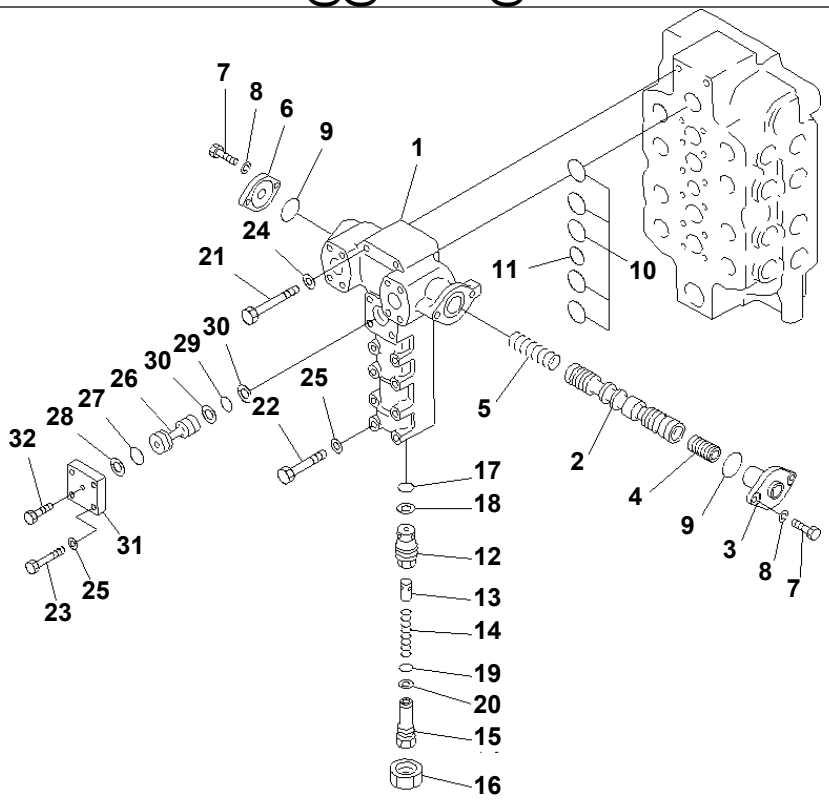

Ref. Y1664-05A0 **Page 510850**

PC1250SP-8R S/N 35001-UP (W/O EGR, +55C DEGREE)
MAIN VALVE (5/6) (4-SPOOL) (NO.2)

Item	Part No.	Part Name	Qty	Serial No.
	(709-14-94001)	CONTROL VALVE THIS ASSEMBLY CONSISTS OF ALL PARTS SHOWN IN FIGS.Y1664-01A0 T0 Y1664-06A0.	1	35001-
	709-10-91501	· VALVE ASS'Y	1	35001-
1	☆	· · BODY	1	35001-
2	☆	· · SPOOL	1	35001-
3	709-10-91210	· · SLEEVE	1	35001-
4	709-10-91220	· · PISTON	1	35001-
5	709-10-91230	· · SPRING	1	35001-
6	709-10-91240	· · FLANGE	1	35001-
7	01010-81030	· · BOLT	4	35001-
8	01602-21030	· · WASHER	4	35001-
9	07000-02055	· · O-RING	2	35001-
10	07000-13048	· · O-RING	5	35001-
11	07000-13040	· · O-RING	1	35001-
12	709-10-91350	· · SLEEVE	1	35001-
13	706-73-70140	· · VALVE,CHECK	1	35001-
14	706-73-70150	· · SPRING	1	35001-
15	709-74-92450	· · PLUG	1	35001-
16	709-74-92460	· · NUT	1	35001-
17	700-93-11320	· · O-RING	1	35001-
18	700-93-11330	· · RING,BACK-UP	1	35001-
19	07000-12010	· · O-RING	1	35001-
20	07001-02010	· · RING	1	35001-
21	01011-61425	· · BOLT	2	35001-
22	01011-81215	· · BOLT	8	35001-
23	01011-81250	· · BOLT	4	35001-
24	01643-31445	· · WASHER	2	35001-
25	01643-31232	· · WASHER	12	35001-
26	709-10-91131	· · PLUG	1	35001-

Printed By : Dwi Iswanto (airafather6107170)

MAIN VALVE (5/6) (4-SPOOL) (NO.2)

Item	Part No.	Part Name	Qty	Serial No.
27	07000-13035	· · O-RING	1	35001-
28	07001-03035	· · RING,BACK-UP	1	35001-
29	07000-13030	· · O-RING	1	35001-
30	07001-03030	· · RING	2	35001-
31	709-10-91140	· · PLATE	1	35001-
32	01010-80835	· · BOLT	1	35001-

Printed By : Dwi Iswanto (airafather6107170)

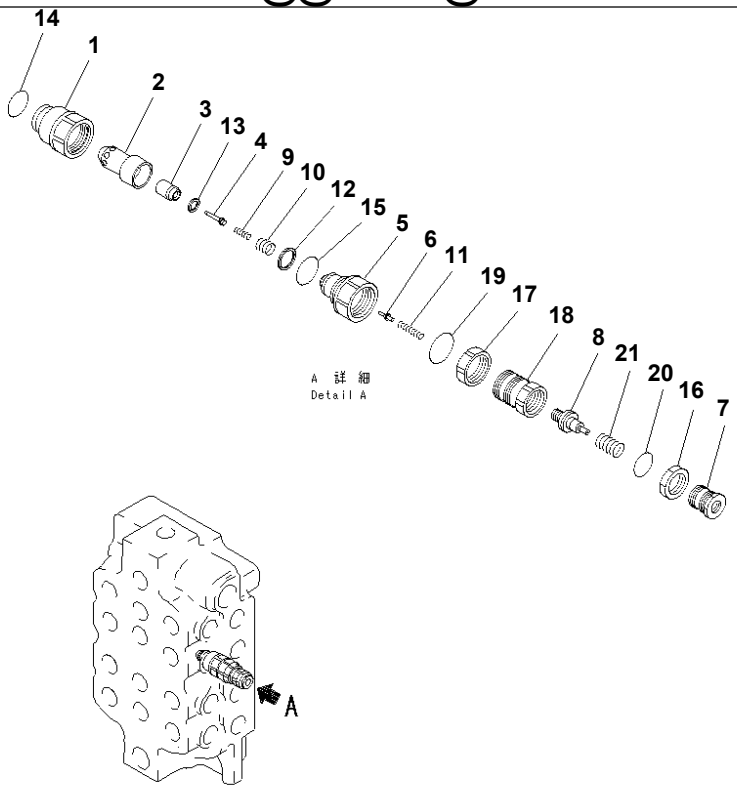

PVB8194

Ref. Y1664-06A0 **Page 510860**

PC1250SP-8R S/N 35001-UP (W/O EGR, +55C DEGREE)
MAIN VALVE (6/6) (4-SPOOL) (NO.2)

Item	Part No.	Part Name	Qty	Serial No.
	(709-14-94001)	CONTROL VALVE THIS ASSEMBLY CONSISTS OF ALL PARTS SHOWN IN FIGS.Y1664-01A0 T0 Y1664-06A0.	1	35001-
	709-90-72700	· VALVE ASS'Y,SUCTION AND SAFETY	1	35001-
1	☆	· · SLEEVE	1	35001-
2	☆	· · SLEEVE	1	35001-
3	☆	· · POPPET	1	35001-
4	☆	· · PISTON	1	35001-
5	☆	· · SLEEVE	1	35001-
6	☆	· · POPPET	1	35001-
7	☆	· · UNION	1	35001-
8	☆	· · PISTON	1	35001-
9	☆	· · SPRING	1	35001-
10	☆	· · SPRING	1	35001-
11	☆	· · SPRING	1	35001-
12	☆	· · SEAL	1	35001-
13	☆	· · SEAL	1	35001-
14	07002-03634	· · O-RING	1	35001-
15	☆	· · O-RING	1	35001-
16	☆	· · NUT	1	35001-
17	☆	· · NUT	1	35001-
18	☆	· · HOLDER	1	35001-
19	☆	· · O-RING	1	35001-
20	☆	· · O-RING	1	35001-
21	☆	· · SPRING	1	35001-

Printed By : Dwi Iswanto (airafather6107170)

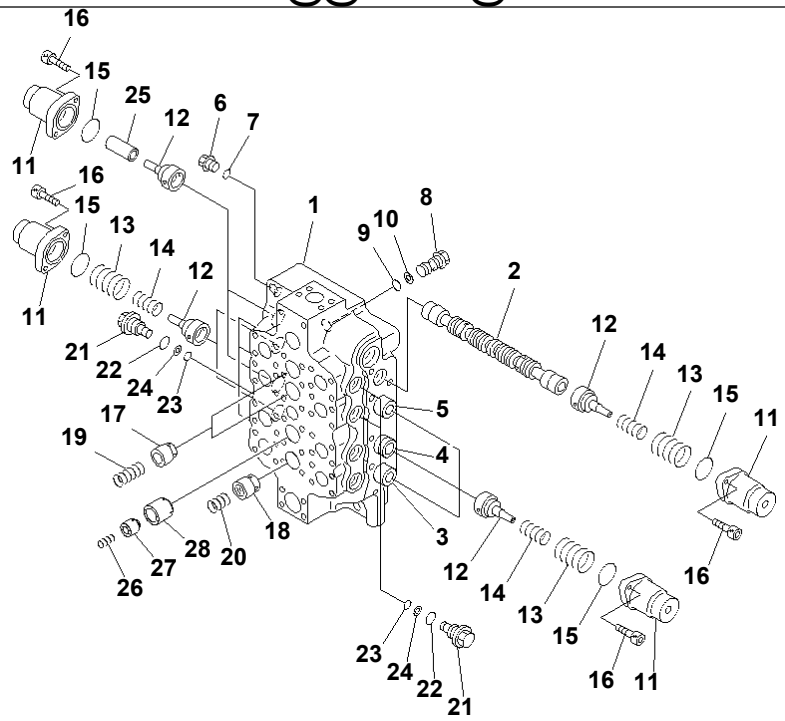

PVB6195

Ref. Y1664-21A0 **Page 510870**

PC1250SP-8R S/N 35001-UP (W/O EGR, +55C DEGREE)

MAIN VALVE (1/5) (4-SPOOL) (NO.3)

Item	Part No.	Part Name	Qty	Serial No.
	709-14-93500	CONTROL VALVE THIS ASSEMBLY CONSISTS OF ALL PARTS SHOWN IN FIGS.Y1664-21A0 T0 Y1664-25A0.	1	35001-
	☆	· BODY GROUP ASS'Y	1	35001-
1	☆	· · BODY,VALVE	1	35001-
2	☆	· · SPOOL	1	35001-
3	☆	· · SPOOL	1	35001-
4	☆	· · SPOOL	1	35001-
5	☆	· · SPOOL	1	35001-
6	700-22-11370	· · PLUG	1	35001-
7	07002-12434	· · O-RING	1	35001-
8	709-14-11510	· · PLUG	9	35001-
9	700-80-61260	· · O-RING	9	35001-
10	700-80-61430	· · RING	9	35001-
11	709-14-11520	· · CASE	8	35001-
12	709-14-11530	· · RETAINER	8	35001-
13	709-14-11550	· · SPRING	6	35001-
14	709-14-11560	· · SPRING	6	35001-
15	07000-12065	· · O-RING	8	35001-
16	01252-61035	· · BOLT	16	35001-
17	709-12-11411	· · VALVE,CHECK	2	35001-
18	709-14-11840	· · VALVE,CHECK	1	35001-
19	709-12-11430	· · SPRING	2	35001-
20	709-14-11721	· · SPRING	1	35001-
21	700-94-11260	· · PLUG	6	35001-
22	07002-13634	· · O-RING	6	35001-
23	07000-12018	· · O-RING	6	35001-
24	07001-02018	· · RING,BACK-UP	6	35001-
25	709-14-11540	· · TUBE	2	35001-
26	709-14-11790	· · SPRING	1	35001-

Printed By : Dwi Iswanto (airafather6107170)

MAIN VALVE (1/5) (4-SPOOL) (NO.3)

Item	Part No.	Part Name	Qty	Serial No.
27	709-14-11771	・・POPPET	1	35001-
28	709-14-11850	・・POPPET	1	35001-

Printed By : Dwi Iswanto (airafather6107170)

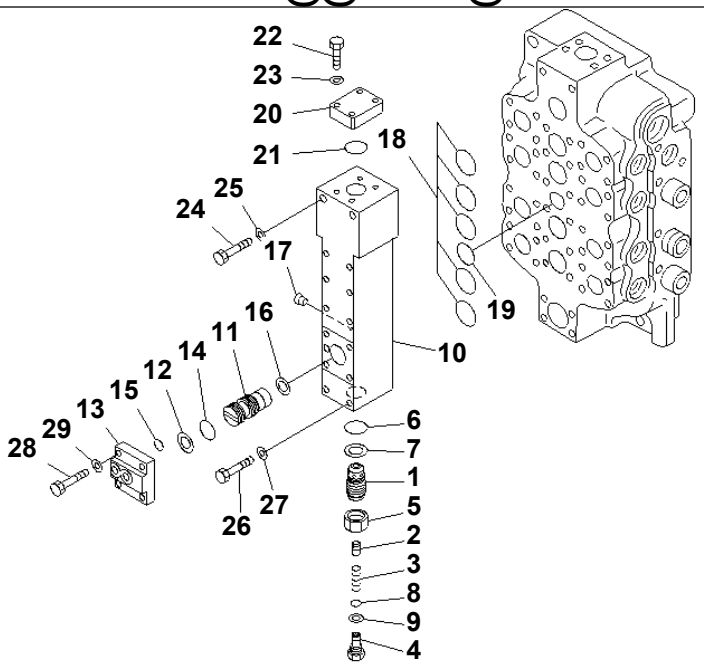

PVB8196

Ref. Y1664-22A0 **Page 510880**

PC1250SP-8R S/N 35001-UP (W/O EGR, +55C DEGREE)

MAIN VALVE (2/5) (4-SPOOL) (NO.3)

Item	Part No.	Part Name	Qty	Serial No.
	(709-14-93500)	CONTROL VALVE THIS ASSEMBLY CONSISTS OF ALL PARTS SHOWN IN FIGS.Y1664-21A0 T0 Y1664-25A0.	1	35001-
	☆	· BODY GROUP ASS'Y	1	35001-
1	709-14-12150	· · PLUG	1	35001-
2	706-73-70140	· · VALVE,CHECK	1	35001-
3	706-73-70150	· · SPRING	1	35001-
4	709-74-92450	· · PLUG	1	35001-
5	709-74-92460	· · NUT	1	35001-
6	700-93-11320	· · O-RING	1	35001-
7	700-93-11330	· · RING,BACK-UP	1	35001-
8	07000-12010	· · O-RING	1	35001-
9	07001-02010	· · RING	1	35001-
10	☆	· · BLOCK	1	35001-
11	☆	· · PISTON	1	35001-
12	709-14-12180	· · RING	1	35001-
13	709-14-12190	· · PLATE	1	35001-
14	706-66-40460	· · O-RING	1	35001-
15	07000-12011	· · O-RING	1	35001-
16	709-14-11760	· · SEAL	1	35001-
17	☆	· · PLUG	1	35001-
18	07000-13048	· · O-RING	5	35001-
19	07000-13040	· · O-RING	1	35001-
20	709-12-12440	· · PLATE	1	35001-
21	07000-13048	· · O-RING	1	35001-
22	01010-81250	· · BOLT	4	35001-
23	01643-51232	· · WASHER	4	35001-
24	01011-61435	· · BOLT	2	35001-
25	01643-31445	· · WASHER	2	35001-
26	01011-81230	· · BOLT	8	35001-

Printed By : Dwi Iswanto (airafather6107170)

MAIN VALVE (2/5) (4-SPOOL) (NO.3)

Item	Part No.	Part Name	Qty	Serial No.
27	01643-51232	・・WASHER	8	35001-
28	01011-81250	・・BOLT	4	35001-
29	01643-51232	・・WASHER	4	35001-

Printed By : Dwi Iswanto (airafather6107170)

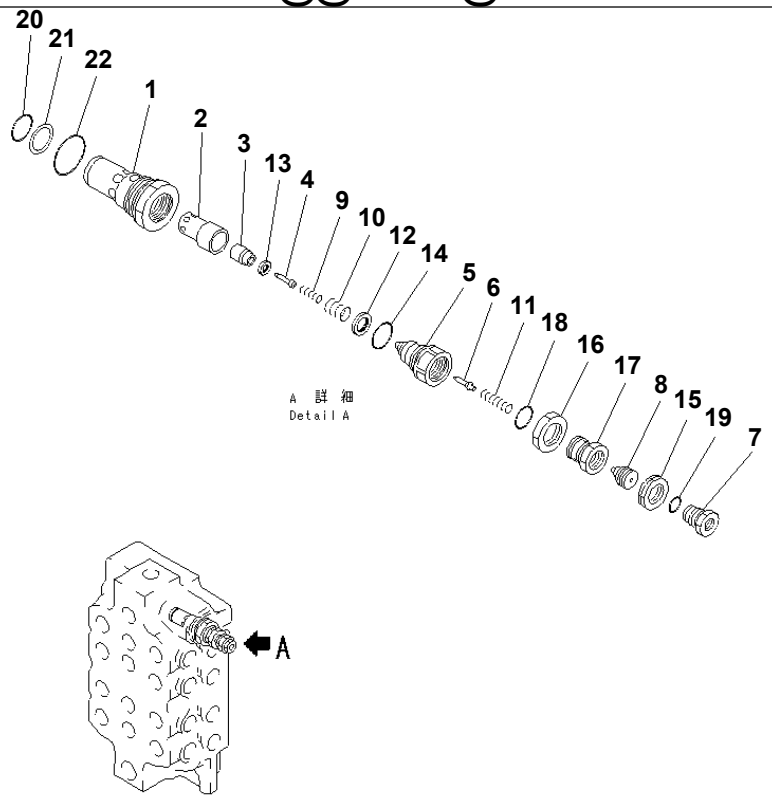

PEB4297

Ref. Y1664-23A0 **Page 510890**

PC1250SP-8R S/N 35001-UP (W/O EGR, +55C DEGREE)
MAIN VALVE (3/5) (4-SPOOL) (NO.3)

Item	Part No.	Part Name	Qty	Serial No.
	(709-14-93500)	CONTROL VALVE THIS ASSEMBLY CONSISTS OF ALL PARTS SHOWN IN FIGS.Y1664-21A0 T0 Y1664-25A0.	1	35001-
	709-10-53800	· VALVE ASS'Y,RELIEF	1	35001-
1	☆	· · SLEEVE	1	35001-
2	☆	· · SLEEVE	1	35001-
3	☆	· · POPPET	1	35001-
4	☆	· · PISTON	1	35001-
5	☆	· · SLEEVE	1	35001-
6	☆	· · POPPET	1	35001-
7	☆	· · UNION	1	35001-
8	☆	· · RETAINER	1	35001-
9	☆	· · SPRING	1	35001-
10	☆	· · SPRING	1	35001-
11	☆	· · SPRING	1	35001-
12	☆	· · SEAL	1	35001-
13	☆	· · SEAL	1	35001-
14	☆	· · O-RING	1	35001-
15	☆	· · NUT	1	35001-
16	☆	· · NUT	1	35001-
17	☆	· · HOLDER	1	35001-
18	☆	· · O-RING	1	35001-
19	☆	· · O-RING	1	35001-
20	07000-13032	· · O-RING	1	35001-
21	07001-03032	· · RING	1	35001-
22	07002-05234	· · O-RING	1	35001-

Printed By : Dwi Iswanto (airafather6107170)

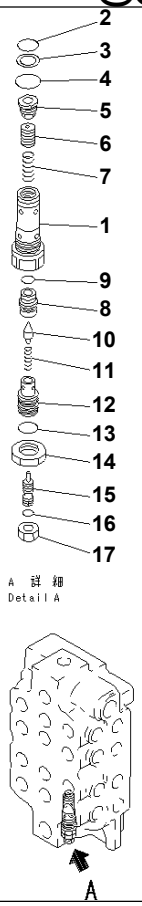

Ref. Y1664-24A0 **Page 510900**

PC1250SP-8R S/N 35001-UP (W/O EGR, +55C DEGREE)
MAIN VALVE (4/5) (4-SPOOL) (NO.3)

Item	Part No.	Part Name	Qty	Serial No.
	(709-14-93500)	CONTROL VALVE THIS ASSEMBLY CONSISTS OF ALL PARTS SHOWN IN FIGS.Y1664-21A0 T0 Y1664-25A0.	1	35001-
	709-10-55403	· VALVE ASS'Y,RELIEF	1	35001-
1	☆	· · SLEEVE	1	35001-
2	700-93-11320	· · O-RING	1	35001-
3	700-93-11330	· · RING,BACK-UP	1	35001-
4	07002-03634	· · O-RING	1	35001-
5	☆	· · PLUG	1	35001-
6	☆	· · VALVE	1	35001-
7	☆	· · SPRING	1	35001-
8	☆	· · SEAT	1	35001-
9	☆	· · O-RING	1	35001-
10	☆	· · POPPET	1	35001-
11	☆	· · SPRING	1	35001-
12	☆	· · HOLDER	1	35001-
13	☆	· · O-RING	1	35001-
14	☆	· · NUT	1	35001-
15	☆	· · SCREW	1	35001-
16	☆	· · O-RING	1	35001-
17	☆	· · NUT	1	35001-

Printed By : Dwi Iswanto (airafather6107170)

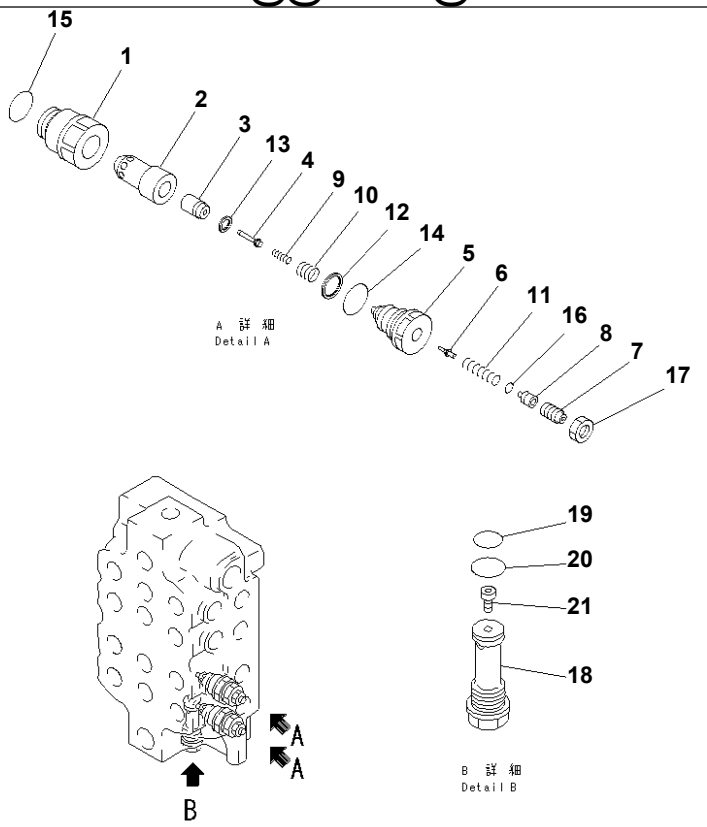

Ref. Y1664-25A0 **Page 510910**

PC1250SP-8R S/N 35001-UP (W/O EGR, +55C DEGREE)
MAIN VALVE (5/5) (4-SPOOL) (NO.3)

Item	Part No.	Part Name	Qty	Serial No.
	(709-14-93500)	CONTROL VALVE THIS ASSEMBLY CONSISTS OF ALL PARTS SHOWN IN FIGS.Y1664-21A0 T0 Y1664-25A0.	1	35001-
	709-90-71600	· VALVE ASS'Y,SUCTION AND SAFETY	2	35001-
1	☆	· · SLEEVE	1	35001-
2	☆	· · SLEEVE	1	35001-
3	☆	· · POPPET	1	35001-
4	☆	· · PISTON	1	35001-
5	☆	· · PLUG	1	35001-
6	☆	· · POPPET	1	35001-
7	☆	· · SCREW	1	35001-
8	☆	· · SPACER	1	35001-
9	☆	· · SPRING	1	35001-
10	☆	· · SPRING	1	35001-
11	☆	· · SPRING	1	35001-
12	☆	· · SEAL	1	35001-
13	☆	· · SEAL	1	35001-
14	☆	· · O-RING	1	35001-
15	07002-03634	· · O-RING	1	35001-
16	☆	· · O-RING	1	35001-
17	☆	· · NUT	1	35001-
	709-10-92100	· ORIFICE ASS'Y	1	35001-
18	☆	· · ORIFICE	1	35001-
19	700-93-11320	· · O-RING	1	35001-
20	07002-03634	· · O-RING	1	35001-
21	☆	· · SENSOR	1	35001-

Printed By : Dwi Iswanto (airafather6107170)

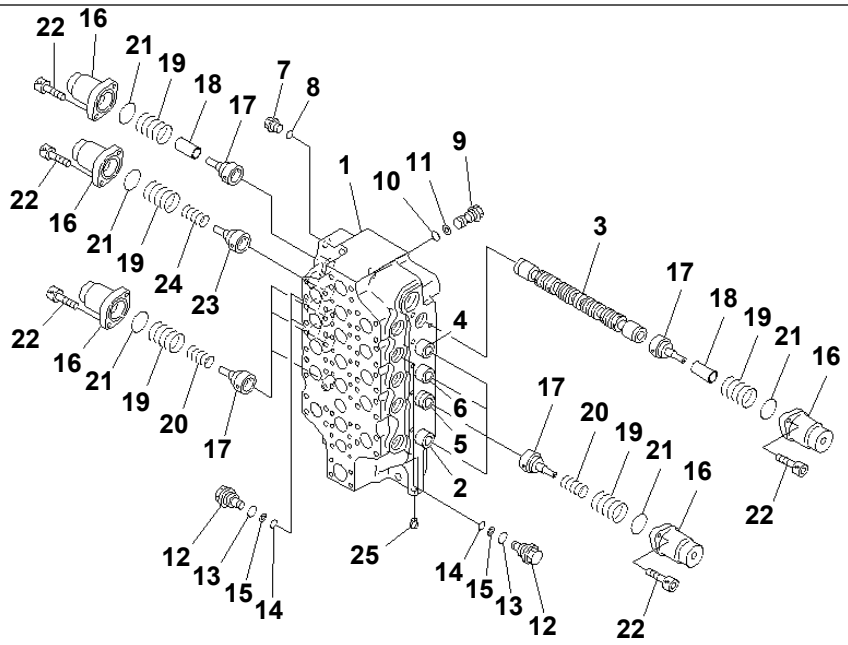

00048674

Ref. Y1665-01A0 **Page 510920**

PC1250SP-8R S/N 35001-UP (W/O EGR, +55C DEGREE)
MAIN VALVE (1/5) (5-SPOOL) (NO.1)

Item	Part No.	Part Name	Qty	Serial No.
	709-15-94000	CONTROL VALVE THIS ASSEMBLY CONSISTS OF ALL PARTS SHOWN IN FIGS.Y1665-01A0 T0 Y1665-05A0.	1	35001-
	☆	· BODY GROUP ASS'Y	1	35001-
1	☆	· · BODY,VALVE	1	35001-
2	☆	· · SPOOL	1	35001-
3	☆	· · SPOOL	1	35001-
4	☆	· · SPOOL SUB ASS'Y	1	35001-
5	☆	· · SPOOL SUB ASS'Y	1	35001-
6	☆	· · SPOOL	1	35001-
7	700-22-11370	· · PLUG	1	35001-
8	07002-12434	· · O-RING	1	35001-
9	709-14-11510	· · PLUG	11	35001-
10	700-80-61260	· · O-RING	11	35001-
11	700-80-61430	· · RING	11	35001-
12	700-94-11260	· · PLUG	3	35001-
13	07002-13634	· · O-RING	3	35001-
14	07000-12018	· · O-RING	3	35001-
15	07001-02018	· · RING,BACK-UP	3	35001-
16	709-14-11520	· · CASE	10	35001-
17	709-14-11530	· · RETAINER	9	35001-
18	709-14-11620	· · TUBE	2	35001-
19	709-14-11550	· · SPRING	10	35001-
20	709-14-11560	· · SPRING	7	35001-
21	07000-12065	· · O-RING	10	35001-
22	01252-61035	· · BOLT	20	35001-
23	709-14-12360	· · RETAINER	1	35001-
24	709-14-12350	· · SPRING	1	35001-
25	07049-01012	· · PLUG	1	35001-

Printed By : Dwi Iswanto (airafather6107170)

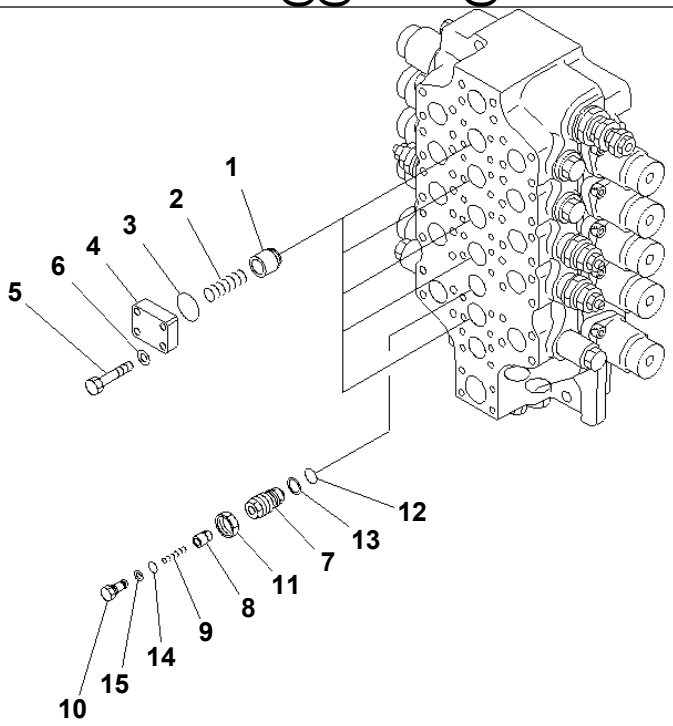

PVB8200

Ref. Y1665-02A0 **Page 510930**

PC1250SP-8R S/N 35001-UP (W/O EGR, +55C DEGREE)
MAIN VALVE (2/5) (5-SPOOL) (NO.1)

Item	Part No.	Part Name	Qty	Serial No.
	(709-15-94000)	CONTROL VALVE THIS ASSEMBLY CONSISTS OF ALL PARTS SHOWN IN FIGS.Y1665-01A0 T0 Y1665-05A0.	1	35001-
	☆	· BODY GROUP ASS'Y	1	35001-
1	709-12-11411	· · VALVE,CHECK	5	35001-
2	709-12-11430	· · SPRING	5	35001-
3	07000-13048	· · O-RING	5	35001-
4	709-12-12440	· · PLATE	5	35001-
5	01010-81250	· · BOLT	20	35001-
6	01602-21236	· · WASHER	20	35001-
7	709-10-91310	· · SLEEVE	1	35001-
8	706-73-70140	· · VALVE,CHECK	1	35001-
9	706-73-70150	· · SPRING	1	35001-
10	709-74-92450	· · PLUG	1	35001-
11	709-74-92460	· · NUT	1	35001-
12	700-93-11320	· · O-RING	1	35001-
13	700-93-11330	· · RING,BACK-UP	1	35001-
14	07000-12010	· · O-RING	1	35001-
15	07001-02010	· · RING	1	35001-

Printed By : Dwi Iswanto (airafather6107170)

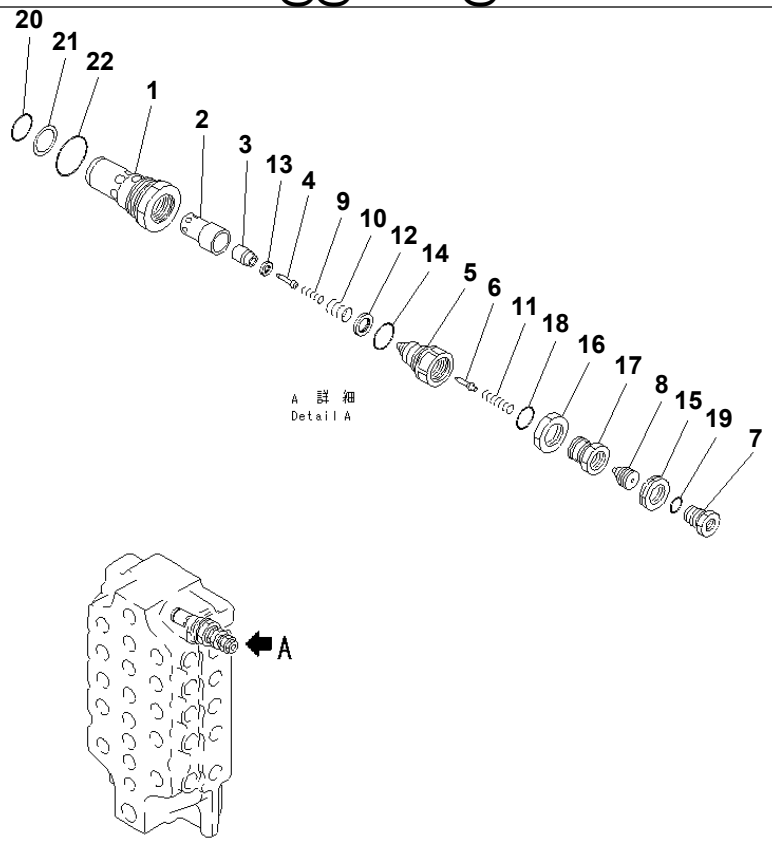

PEB4293

Ref. Y1665-03A0 **Page 510940**

PC1250SP-8R S/N 35001-UP (W/O EGR, +55C DEGREE)
MAIN VALVE (3/5) (5-SPOOL) (NO.1)

Item	Part No.	Part Name	Qty	Serial No.
	(709-15-94000)	CONTROL VALVE THIS ASSEMBLY CONSISTS OF ALL PARTS SHOWN IN FIGS.Y1665-01A0 T0 Y1665-05A0.	1	35001-
	709-10-53800	· VALVE ASS'Y,RELIEF	1	35001-
1	☆	· · SLEEVE	1	35001-
2	☆	· · SLEEVE	1	35001-
3	☆	· · POPPET	1	35001-
4	☆	· · PISTON	1	35001-
5	☆	· · SLEEVE	1	35001-
6	☆	· · POPPET	1	35001-
7	☆	· · UNION	1	35001-
8	☆	· · RETAINER	1	35001-
9	☆	· · SPRING	1	35001-
10	☆	· · SPRING	1	35001-
11	☆	· · SPRING	1	35001-
12	☆	· · SEAL	1	35001-
13	☆	· · SEAL	1	35001-
14	☆	· · O-RING	1	35001-
15	☆	· · NUT	1	35001-
16	☆	· · NUT	1	35001-
17	☆	· · HOLDER	1	35001-
18	☆	· · O-RING	1	35001-
19	☆	· · O-RING	1	35001-
20	07000-13032	· · O-RING	1	35001-
21	07001-03032	· · RING	1	35001-
22	07002-05234	· · O-RING	1	35001-

Printed By : Dwi Iswanto (airafather6107170)

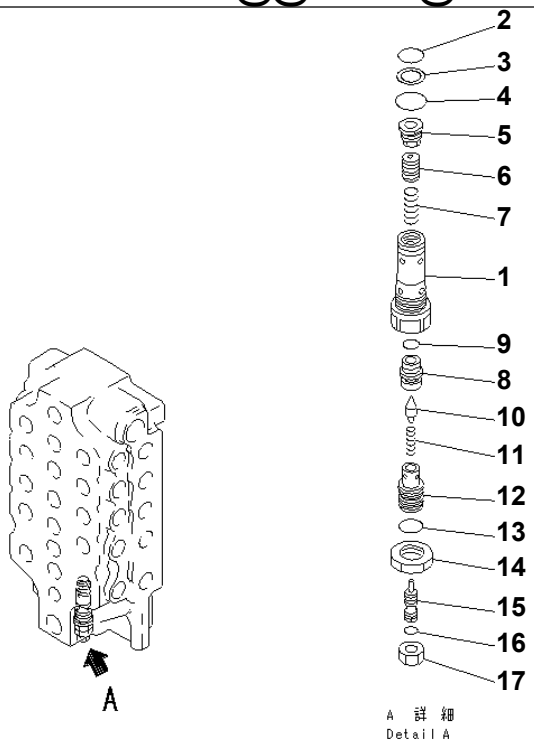

PVB6201

Ref. Y1665-04A0 **Page 510950**

PC1250SP-8R S/N 35001-UP (W/O EGR, +55C DEGREE)
MAIN VALVE (4/5) (5-SPOOL) (NO.1)

Item	Part No.	Part Name	Qty	Serial No.
	(709-15-94000)	CONTROL VALVE THIS ASSEMBLY CONSISTS OF ALL PARTS SHOWN IN FIGS.Y1665-01A0 T0 Y1665-05A0.	1	35001-
	709-10-55403	· VALVE ASS'Y,RELIEF	1	35001-
1	☆	· · SLEEVE	1	35001-
2	700-93-11320	· · O-RING	1	35001-
3	700-93-11330	· · RING,BACK-UP	1	35001-
4	07002-03634	· · O-RING	1	35001-
5	☆	· · PLUG	1	35001-
6	☆	· · VALVE	1	35001-
7	☆	· · SPRING	1	35001-
8	☆	· · SEAT	1	35001-
9	☆	· · O-RING	1	35001-
10	☆	· · POPPET	1	35001-
11	☆	· · SPRING	1	35001-
12	☆	· · HOLDER	1	35001-
13	☆	· · O-RING	1	35001-
14	☆	· · NUT	1	35001-
15	☆	· · SCREW	1	35001-
16	☆	· · O-RING	1	35001-
17	☆	· · NUT	1	35001-

Printed By : Dwi Iswanto (airafather6107170)

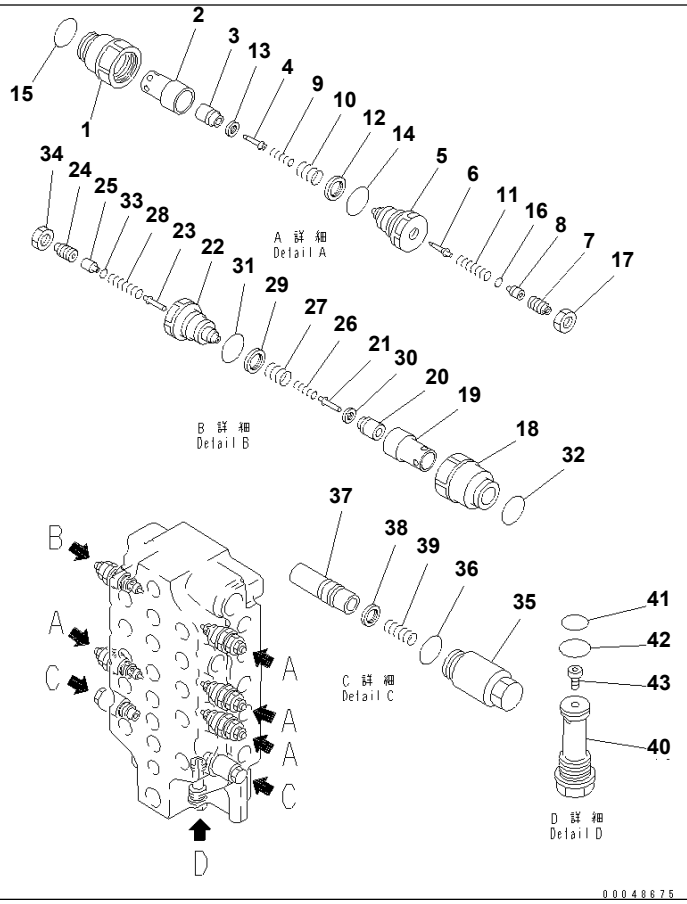

Ref. Y1665-05A0 **Page 510960**

PC1250SP-8R S/N 35001-UP (W/O EGR, +55C DEGREE)
MAIN VALVE (5/5) (5-SPOOL) (NO.1)

Item	Part No.	Part Name	Qty	Serial No.
	(709-15-94000)	CONTROL VALVE THIS ASSEMBLY CONSISTS OF ALL PARTS SHOWN IN FIGS.Y1665-01A0 T0 Y1665-05A0.	1	35001-
	709-90-71600	· VALVE ASS'Y,SUCTION AND SAFETY	4	35001-
1	☆	· · SLEEVE	1	35001-
2	☆	· · SLEEVE	1	35001-
3	☆	· · POPPET	1	35001-
4	☆	· · PISTON	1	35001-
5	☆	· · PLUG	1	35001-
6	☆	· · POPPET	1	35001-
7	☆	· · SCREW	1	35001-
8	☆	· · SPACER	1	35001-
9	☆	· · SPRING	1	35001-
10	☆	· · SPRING	1	35001-
11	☆	· · SPRING	1	35001-
12	☆	· · SEAL	1	35001-
13	☆	· · SEAL	1	35001-
14	☆	· · O-RING	1	35001-
15	07002-03634	· · O-RING	1	35001-
16	☆	· · O-RING	1	35001-
17	☆	· · NUT	1	35001-
	709-90-71700	· VALVE ASS'Y,SUCTION AND SAFETY	1	35001-
18	☆	· · SLEEVE	1	35001-
19	☆	· · SLEEVE	1	35001-
20	☆	· · POPPET	1	35001-
21	☆	· · PISTON	1	35001-
22	☆	· · PLUG	1	35001-
23	☆	· · POPPET	1	35001-
24	☆	· · SCREW	1	35001-
25	☆	· · SPACER	1	35001-

Printed By : Dwi Iswanto (airafather6107170)

MAIN VALVE (5/5) (5-SPOOL) (NO.1)

Item	Part No.	Part Name	Qty	Serial No.
26	☆	・・SPRING	1	35001-
27	☆	・・SPRING	1	35001-
28	☆	・・SPRING	1	35001-
29	☆	・・SEAL	1	35001-
30	☆	・・SEAL	1	35001-
31	☆	・・O-RING	1	35001-
32	07002-03634	・・O-RING	1	35001-
33	☆	・・O-RING	1	35001-
34	☆	・・NUT	1	35001-
	700-90-74001	・VALVE ASS'Y,SUCTION	2	35001-
35	☆	・・SLEEVE	1	35001-
36	07002-03634	・・O-RING	1	35001-
37	☆	・・VALVE	1	35001-
38	☆	・・SEAL	1	35001-
39	☆	・・SPRING	1	35001-
	709-10-92100	・ORIFICE ASS'Y	1	35001-
40	☆	・・ORIFICE	1	35001-
41	700-93-11320	・・O-RING	1	35001-
42	07002-03634	・・O-RING	1	35001-
43	☆	・・SENSOR	1	35001-

Printed By : Dwi Iswanto (airafather6107170)

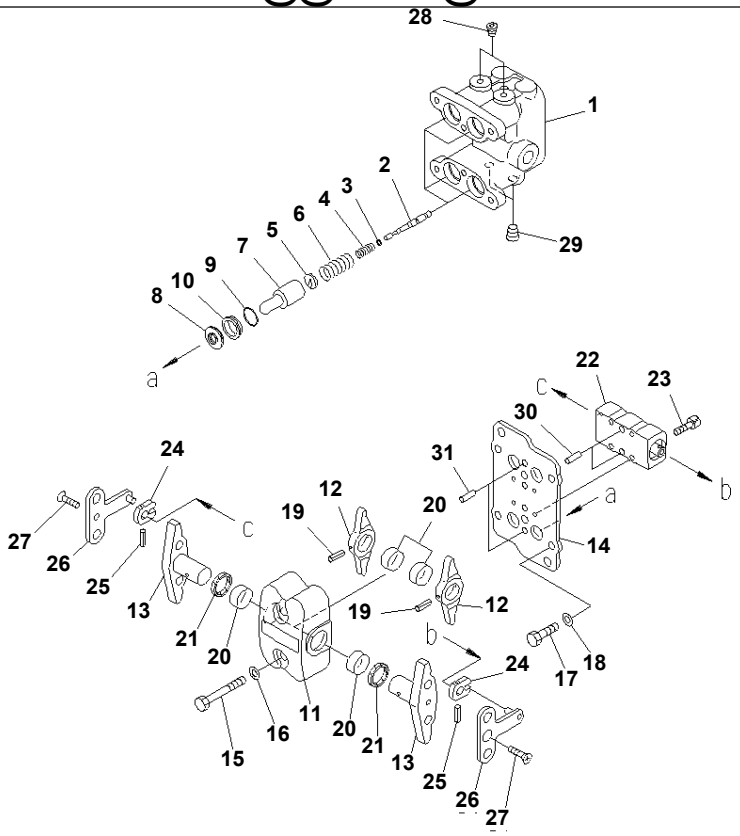

P W 5 X 0 4 8

Ref. Y1670-01A0 **Page 510970**

PC1250SP-8R S/N 35001-UP (W/O EGR, +55C DEGREE)

PPC VALVE (FOR TRAVEL)

Item	Part No.	Part Name	Qty	Serial No.
	702-16-01682	PILOT VALVE	1	35001-
1	☆	· BODY,VALVE	1	35001-
2	☆	· VALVE	4	35001-
3	702-16-51140	· SHIM, 0.30MM	4	35001-
4	702-16-55870	· SPRING	4	35001-
5	702-16-53140	· RETAINER	4	35001-
6	702-16-54420	· SPRING	4	35001-
7	702-16-53170	· PISTON	4	35001-
8	702-16-51270	· SEAL	4	35001-
9	07000-12020	· O-RING	4	35001-
10	702-16-54170	· COLLAR	4	35001-
11	702-16-54311	· CASE	1	35001-
12	☆	· LEVER	2	35001-
13	☆	· SHAFT	2	35001-
14	☆	· PLATE	1	35001-
15	01010-80855	· BOLT	2	35001-
16	01643-30823	· WASHER	2	35001-
17	01010-80816	· BOLT	4	35001-
18	702-16-54331	· WASHER, 1.60MM	4	35001-
	702-16-54341	· WASHER, 1.30MM	4	35001-
	702-16-54351	· WASHER, 1.00MM	4	35001-
19	04025-00432	· PIN,SPRING	2	35001-
20	702-16-54430	· BUSHING	4	35001-
21	702-16-54280	· SEAL,DUST	2	35001-
22	702-16-54506	· DAMPER ASS'Y	1	35001-
23	01252-60525	· BOLT	4	35001-
24	702-16-54511	· PLATE	2	35001-
25	04025-00420	· PIN,SPRING	2	35001-
26	☆	· LEVER	2	35001-
27	01224-40612	· SCREW	2	35001-

Printed By : Dwi Iswanto (airafather6107170)

PPC VALVE (FOR TRAVEL)

Item	Part No.	Part Name	Qty	Serial No.
28	☆	· PLUG	2	35001-
29	708-18-12570	· PLUG	2	35001-
30	04022-04016	· PIN,DOWEL	2	35001-
31	04022-04010	· PIN,DOWEL	2	35001-

Printed By : Dwi Iswanto (airafather6107170)

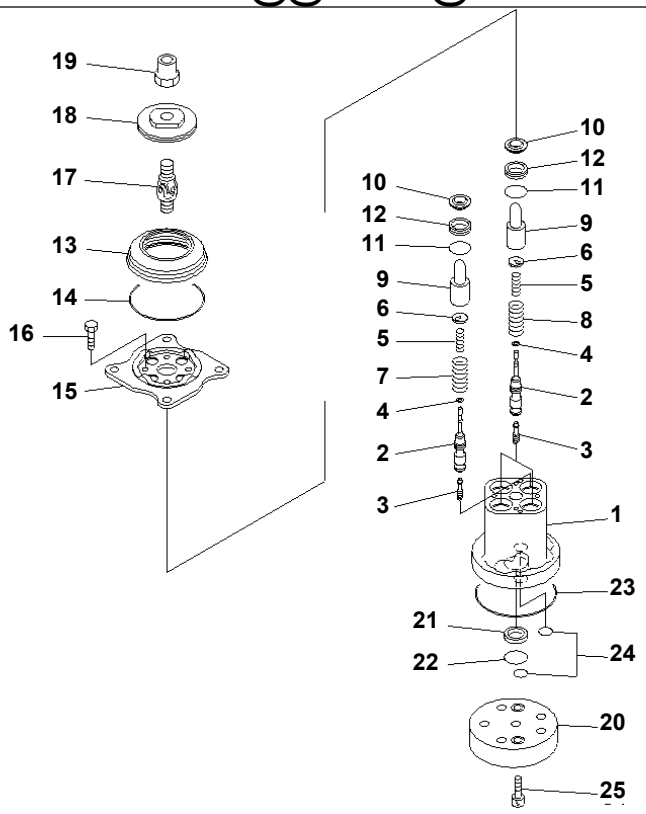

P W 5 X 0 9 7

Ref. Y1670-11A0 **Page 510980**

PC1250SP-8R S/N 35001-UP (W/O EGR, +55C DEGREE)
PPC VALVE (FOR WORK EQUIPMENT)

Item	Part No.	Part Name	Qty	Serial No.
	702-16-05091	PILOT VALVE	1	35150-
	702-16-05090	PILOT VALVE	1	35001-35149
1	☆	· BODY,VALVE	1	35001-
2	☆	· VALVE	4	35001-
3	☆	· PISTON	4	35001-
4	702-16-51140	· SHIM, 0.30MM	4	35001-
5	702-16-55870	· SPRING	4	35001-
6	702-16-53140	· RETAINER	4	35001-
7	702-16-53470	· SPRING	2	35001-
8	702-16-53480	· SPRING	2	35001-
9	702-16-53170	· PISTON	4	35001-
10	702-16-57430	· SEAL	4	35150-
	702-16-51270	· SEAL	4	35001-35149
11	07000-B2020	· O-RING	4	35150-
	07000-12020	· O-RING	4	35001-35149
12	702-16-54170	· COLLAR	4	35001-
13	702-16-58820	· BOOT	1	35001-
14	07000-02070	· O-RING	1	35001-
15	702-16-53210	· PLATE	1	35001-
16	01010-80620	· BOLT	4	35001-
17	702-16-51240	· JOINT,UNIVERSAL	1	35001-
18	☆	· DISC	1	35001-
19	702-16-53230	· NUT	1	35001-
20	702-16-53761	· COVER	1	35001-
21	720-68-15240	· FILTER	1	35001-
22	07000-B2021	· O-RING	1	35150-
	07000-12021	· O-RING	1	35001-35149
23	702-16-57260	· O-RING	1	35150-
	702-16-53910	· O-RING	1	35001-35149
24	702-16-57270	· O-RING	2	35150-

Printed By : Dwi Iswanto (airafather6107170)

PPC VALVE (FOR WORK EQUIPMENT)

Item	Part No.	Part Name	Qty	Serial No.
24	702-16-53920	· O-RING	2	35001-35149
25	01252-60835	· BOLT	2	35001-

Printed By : Dwi Iswanto (airafather6107170)

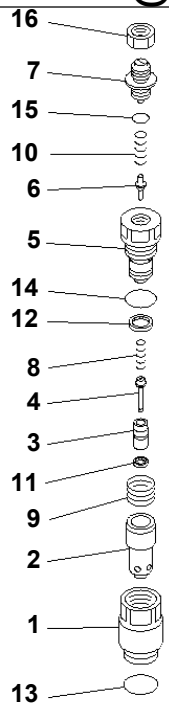

PVB8203

Ref. Y1672-01A0 **Page 510990**

PC1250SP-8R S/N 35001-UP (W/O EGR, +55C DEGREE)
SAFETY VALVE

Item	Part No.	Part Name	Qty	Serial No.
	709-70-74700	VALVE ASS'Y,SUCTION AND SAFETY	1	35001-
1	☆	· SLEEVE	1	35001-
2	☆	· SLEEVE	1	35001-
3	☆	· POPPET	1	35001-
4	☆	· PISTON	1	35001-
5	☆	· PLUG	1	35001-
6	☆	· POPPET	1	35001-
7	☆	· SCREW	1	35001-
8	☆	· SPRING	1	35001-
9	☆	· SPRING	1	35001-
10	☆	· SPRING	1	35001-
11	☆	· SEAL	1	35001-
12	☆	· SEAL	1	35001-
13	709-25-11390	· O-RING	1	35001-
14	☆	· O-RING	1	35001-
15	☆	· O-RING	1	35001-
16	☆	· NUT	1	35001-

Printed By : Dwi Iswanto (airafather6107170)

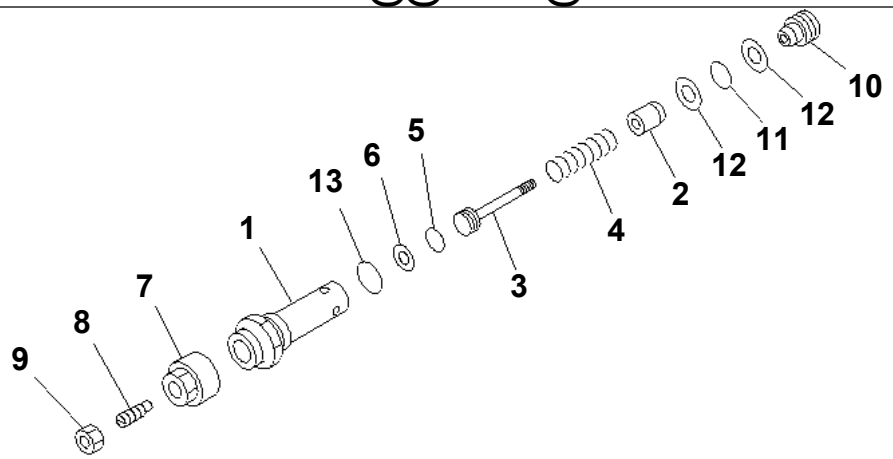

PJ12337

Ref. Y1672-11A0 **Page 511000**

PC1250SP-8R S/N 35001-UP (W/O EGR, +55C DEGREE)
RELIEF VALVE (FOR CYLINDER)

Item	Part No.	Part Name	Qty	Serial No.
	706-77-85301	RELIEF VALVE ASS'Y	1	35001-
1	☆	· SLEEVE	1	35001-
2	☆	· VALVE	1	35001-
3	☆	· PISTON	1	35001-
4	☆	· SPRING	1	35001-
5	☆	· O-RING	1	35001-
6	☆	· RING	1	35001-
7	☆	· PLUG	1	35001-
8	☆	· SCREW	1	35001-
9	☆	· NUT	1	35001-
10	☆	· SEAT	1	35001-
11	07000-23022	· O-RING	1	35001-
12	07001-03022	· RING	2	35001-
13	07002-13634	· O-RING	1	35001-

Printed By : Dwi Iswanto (airafather6107170)

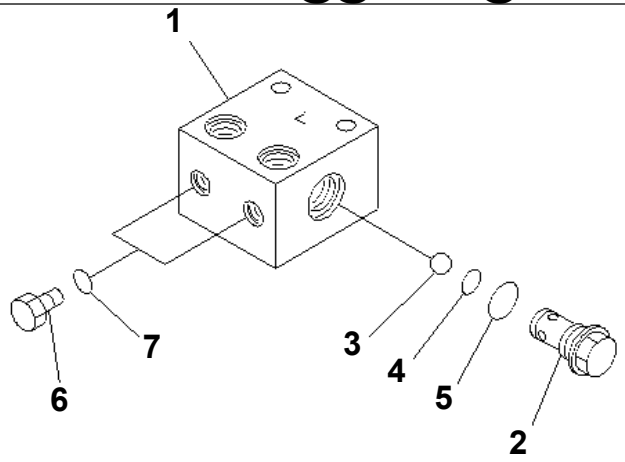

PDB4100

Ref. Y1676-01A0 **Page 511010**

PC1250SP-8R S/N 35001-UP (W/O EGR, +55C DEGREE)
CHECK VALVE

Item	Part No.	Part Name	Qty	Serial No.
	702-19-22000	CHECK VALVE ASS'Y	1	35001-
1	702-19-11210	· BLOCK	1	35001-
2	702-19-11220	· PLUG	1	35001-
3	700-22-12340	· BALL	1	35001-
4	700-22-11410	· O-RING	1	35001-
5	07002-02434	· O-RING	1	35001-
6	07040-11409	· PLUG	2	35001-
7	07002-01423	· O-RING	2	35001-

Printed By : Dwi Iswanto (airafather6107170)

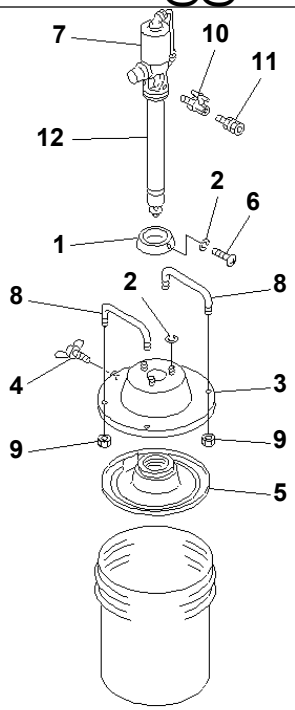

P E 1 4 4 1 1

Ref. Y1680-01A0 **Page 511020**

PC1250SP-8R S/N 35001-UP (W/O EGR, +55C DEGREE)
GREASE PUMP (PUMP ASS'Y)

Item	Part No.	Part Name	Qty	Serial No.
	209-68-11202	GREASE PUMP ASS'Y	1	35001-
1	YU702743-3	· JOINT	1	35001-
2	YU631418-1	· WASHER,SPRING	4	35001-
3	YU831162-4	· COVER	1	35001-
4	YU610623-1	· BOLT	3	35001-
5	YU802161-4	· PLATE	1	35001-
6	YU602296-1	· SCREW	4	35001-
7	YU681170-4	· SILENCER	1	35001-
8	YU681675-4	· HANDLE	2	35001-
9	YU681782-1	· NUT	4	35001-
10	YU800766-4	· VALVE KIT	1	35001-
11	209-68-51220	· ADAPTER	1	35001-
12	(209-68-11212)	· PUMP ASS'Y,(SEE FIG. Y1680-02A0)	1	35001-

Printed By : Dwi Iswanto (airafather6107170)

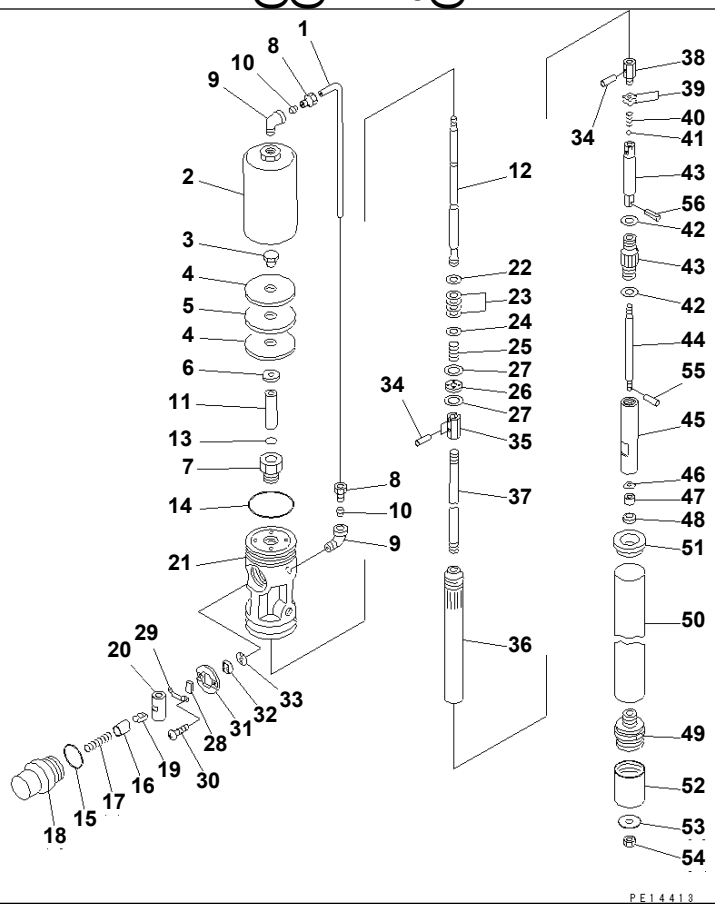

Ref. Y1680-02A0 **Page 511030**

PC1250SP-8R S/N 35001-UP (W/O EGR, +55C DEGREE)
GREASE PUMP (PUMP SUB ASS'Y)

Item	Part No.	Part Name	Qty	Serial No.
	(209-68-11202)	GREASE PUMP ASS'Y	1	35001-
	209-68-11212	· PUMP ASS'Y	1	35001-
1	YU708523-4	· · PIPE	1	35001-
2	YU708311-4	· · BONNET	1	35001-
3	YU701811-4	· · NUT	1	35001-
4	YU701815-4	· · WASHER	2	35001-
5	YU770180-4	· · PACKING	1	35001-
6	YU701810-4	· · WASHER	1	35001-
7	YU706066-4	· · HOUSING,GLAND	1	35001-
8	YU701766-4	· · GLAND,TUBE	2	35001-
9	YU701768-4	· · ELBOW	2	35001-
10	YU701765-4	· · SLEEVE	2	35001-
11	YU706067-4	· · BUSHING	1	35001-
12	YU706068-4	· · SPINDLE	1	35001-
13	YU640012-0	· · O-RING	1	35001-
14	YU770182-4	· · O-RING	1	35001-
15	YU640132-0	· · O-RING	1	35001-
16	YU704893-4	· · PISTON	1	35001-
17	YU701825-4	· · SPRING	1	35001-
18	YU770563-4	· · CAP	1	35001-
19	YU705661-4	· · ARM	1	35001-
20	YU705659-4	· · BUSHING	1	35001-
21	YU706069-3	· · BODY	1	35001-
	YU681-170	· · · SILENCER	1	35001-
22	YU702725-4	· · WASHER	1	35001-
23	YU770287-4	· · PACKING	4	35001-
24	YU702726-4	· · HOLDER	1	35001-
25	YU702727-4	· · SPRING	1	35001-
26	YU702734-4	· · SEAT	1	35001-
27	YU702582-4	· · WASHER	2	35001-

Printed By : Dwi Iswanto (airafather6107170)

GREASE PUMP (PUMP SUB ASS'Y)

Item	Part No.	Part Name	Qty	Serial No.
28	YU701823-4	· · BLOCK	1	35001-
29	YU701816-4	· · HOLDER	1	35001-
30	YU681768-4	· · SCREW	2	35001-
31	YU701818-4	· · PLATE,GUIDE	1	35001-
32	YU701822-4	· · SEAT	1	35001-
33	YU770181-4	· · PACKING	1	35001-
34	YU702971-4	· · PIN	3	35001-
35	YU706091-4	· · UNION	1	35001-
36	YU709042-4	· · TUBE	1	35001-
37	YU709043-4	· · ROD	1	35001-
38	YU702975-4	· · UNION	1	35001-
39	YU702974-4	· · WASHER	2	35001-
40	YU702976-4	· · SPRING	1	35001-
41	YU630313-0	· · BALL	1	35001-
42	YU702977-4	· · WASHER	2	35001-
43	YU801051-4	· · CYLINDER ASS'Y	1	35001-
44	YU706399-4	· · ROD,PLUNGER	1	35001-
45	YU706072-4	· · TUBE,FOOT	1	35001-
46	YU702980-4	· · PLATE	1	35001-
47	YU702981-4	· · VALVE,FOOT	1	35001-
48	YU702982-4	· · SEAT,VALVE	1	35001-
49	YU830407-4	· · VALVE ADAPTER A.	1	35001-
50	YU709597-4	· · OUT TUBE	1	35001-
51	YU770409-4	· · PACKING	1	35001-
52	YU709644-4	· · TUBE	1	35001-
53	YU702984-4	· · PLATE	1	35001-
54	YU627010-4	· · NUT	1	35001-
55	YU632019-1	· · PIN	1	35001-
56	YU632754-4	· · PIN,SPRING	1	35001-

Printed By : Dwi Iswanto (airafather6107170)

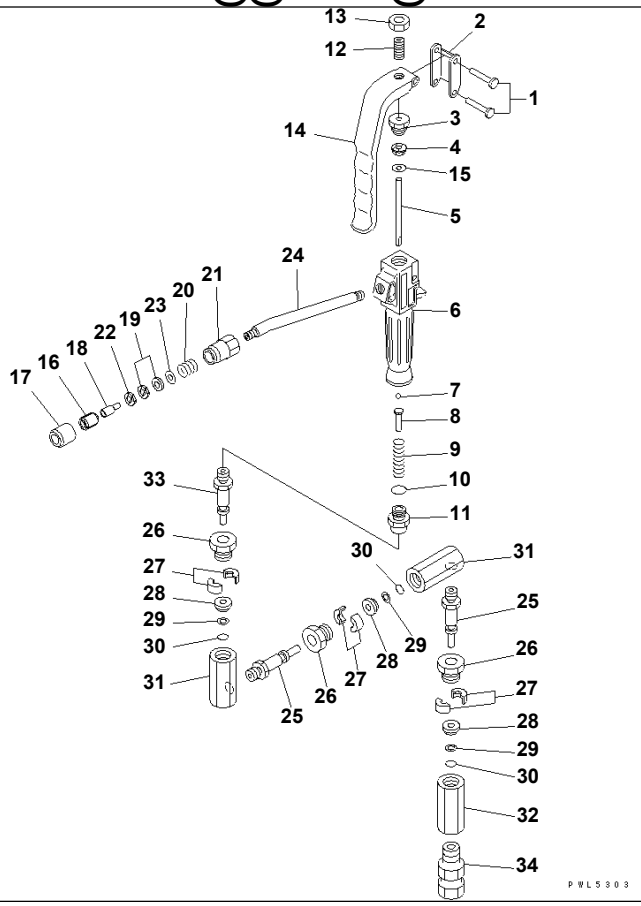

Ref. Y1680-03A0 **Page 511040**

PC1250SP-8R S/N 35001-UP (W/O EGR, +55C DEGREE)
GREASE PUMP (GREASE GUN)

Item	Part No.	Part Name	Qty	Serial No.
	209-68-11230	GREASE GUN ASS'Y	1	35001-
	YU802732	· GUN ASS'Y	1	35001-
1	YU683201	· · RIVET	2	35001-
2	YU711351	· · LINK	1	35001-
3	YU711444	· · NUT	1	35001-
4	YU772160	· · PACKING	2	35001-
5	YU711357	· · ROD	1	35001-
6	YU711352	· · GUN	1	35001-
7	YU630314	· · BALL	1	35001-
8	YU711445	· · HOLDER	1	35001-
9	YU711446	· · SPRING	1	35001-
10	YU640011	· · O-RING	1	35001-
11	YU710971	· · UNION	1	35001-
12	YU711750	· · BOLT	1	35001-
13	YU627641	· · NUT	1	35001-
14	YU711354	· · LEVER	1	35001-
15	YU713638	· · PLATE	1	35001-
	YU800702	· NOZZLE ASS'Y	1	35001-
	YU800573	· · CHUCK ASS'Y	1	35001-
16	YU702450	· · · TOOTH	3	35001-
17	YU702449	· · · COVER	1	35001-
18	YU702451	· · · NOZZLE	1	35001-
19	YU770263	· · · PACKING	2	35001-
20	YU702453	· · · SPRING	1	35001-
21	YU702468	· · · BODY	1	35001-
22	YU702452	· · · WASHER	1	35001-
23	YU702454	· · · WASHER	1	35001-
24	YU703344	· · NOZZLE	1	35001-
	YU802910	· SWIVEL JOINT ASS'Y	1	35001-
25	YU711732	· · NIPPLE	2	35001-

Printed By : Dwi Iswanto (airafather6107170)

GREASE PUMP (GREASE GUN)

Item	Part No.	Part Name	Qty	Serial No.
26	YU711731	· · NUT	3	35001-
27	YU580300	· · SPACER	3	35001-
28	YU711730	· · RETAINER	3	35001-
29	YU682988	· · BACK-UP RING	3	35001-
30	YU640003	· · O-RING	3	35001-
31	YU711729	· · HOUSING	2	35001-
32	YU711728	· · HOUSING	1	35001-
33	YU712212	· · NIPPLE	1	35001-
34	209-68-51220	· ADAPTER	1	35001-

Printed By : Dwi Iswanto (airafather6107170)

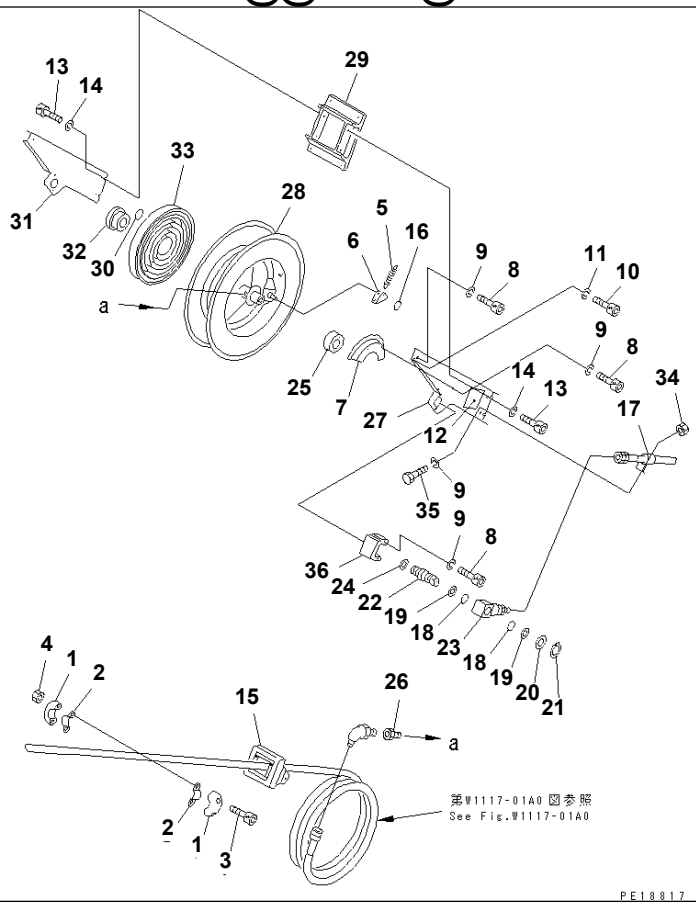

Ref. Y1680-04A0 **Page 511050**

PC1250SP-8R S/N 35001-UP (W/O EGR, +55C DEGREE)
GREASE PUMP (HOSE REEL)

Item	Part No.	Part Name	Qty	Serial No.
	209-68-51241	HOSE REEL ASS'Y	1	35001-
1	YU770199-4	· STOPPER	2	35001-
2	YU702062-4	· BAND	2	35001-
3	YU619154-0	· BOLT	2	35001-
4	YU627012-1	· NUT	2	35001-
5	YU707944-4	· SPRING	1	35001-
6	YU707942-4	· STOPPER	1	35001-
7	YU707954-3	· CAM,STOPPER	1	35001-
8	YU681677-4	· BOLT	11	35001-
9	YU631418-1	· WASHER,SPRING	12	35001-
10	YU619073-0	· BOLT	2	35001-
11	YU631417-1	· WASHER,SPRING	2	35001-
12	YU790372-4	· LABEL	1	35001-
13	YU619145-0	· BOLT	4	35001-
14	YU631420-1	· WASHER,SPRING	4	35001-
15	YU831174-3	· PLATE	1	35001-
16	YU640006-0	· O-RING	1	35001-
17	YU709484-4	· HOLDER	1	35001-
18	YU640020-0	· O-RING	2	35001-
19	YU643680-0	· RING,BACK-UP	2	35001-
20	YU705893-4	· WASHER	1	35001-
21	YU630695-0	· RETAINER	1	35001-
22	YU708673-4	· ADAPTER	1	35001-
23	YU708831-4	· SWIVEL	1	35001-
24	YU770951-4	· PACKING	1	35001-
25	YU708832-4	· BEARING	1	35001-
26	YU680109-4	· ADAPTER	2	35001-
27	YU708833-3	· ARM	1	35001-
28	YU831089-2	· DRUM	1	35001-
29	YU708834-4	· BRACKET	1	35001-

Printed By : Dwi Iswanto (airafather6107170)

GREASE PUMP (HOSE REEL)

Item	Part No.	Part Name	Qty	Serial No.
30	YU790371-4	· LABEL	1	35001-
31	YU708835-3	· ARM	1	35001-
32	YU708671-4	· BEARING	1	35001-
33	YU801941-4	· SPRING	1	35001-
34	YU627010-1	· NUT	1	35001-
35	YU611095-1	· BOLT	1	35001-
36	YU708830-4	· STOPPER	1	35001-

Printed By : Dwi Iswanto (airafather6107170)

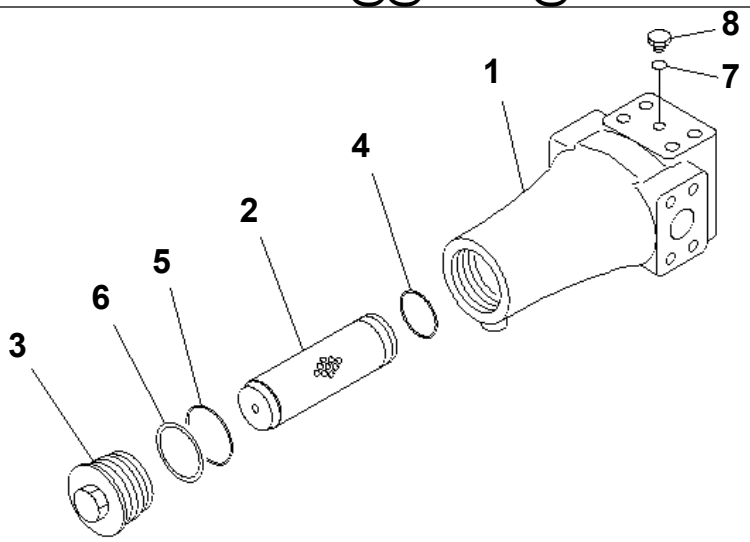

PWB8269

Ref. Y1850-01A0 **Page 511060**

PC1250SP-8R S/N 35001-UP (W/O EGR, +55C DEGREE)
LINE FILTER (FOR PUMP DELIVERY LINE)

Item	Part No.	Part Name	Qty	Serial No.
	21N-62-31201	FILTER ASS'Y	1	35001-
1	☆	· CASE	1	35001-
2	21N-62-31221	· ELEMENT	1	35001-
3	21N-62-31230	· COVER	1	35001-
4	07000-12055	· O-RING	1	35001-
5	07000-12070	· O-RING	1	35001-
6	07001-02070	· RING	1	35001-
7	07002-11423	· O-RING	1	35001-
8	07040-11409	· PLUG	1	35001-

Printed By : Dwi Iswanto (airafather6107170)

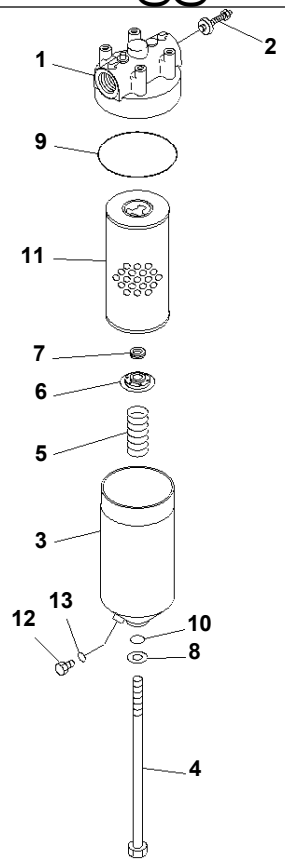

Ref. Y1851-01A0 **Page 511070**

PC1250SP-8R S/N 35001-UP (W/O EGR, +55C DEGREE)
OIL FILTER

Item	Part No.	Part Name	Qty	Serial No.
	419-15-14800	FILTER ASS'Y	1	35001-
	419-15-14880	· COVER ASS'Y,HEAD	1	35001-
1	☆	· · COVER,HEAD	1	35001-
2	☆	· · VALVE	1	35001-
3	419-15-14820	· CASE	1	35001-
4	419-15-14830	· BOLT,CENTER	1	35001-
5	424-16-11190	· SPRING	1	35001-
6	419-15-14840	· PLATE	1	35001-
7	419-15-14870	· GASKET	1	35001-
8	419-15-14850	· WASHER	1	35001-
9	424-16-11130	· O-RING	1	35001-
10	419-15-14860	· O-RING	1	35001-
11	424-16-11140	· ELEMENT	1	35001-
12	07040-11209	· PLUG	1	35001-
13	07002-01223	· O-RING	1	35001-

Printed By : Dwi Iswanto (airafather6107170)

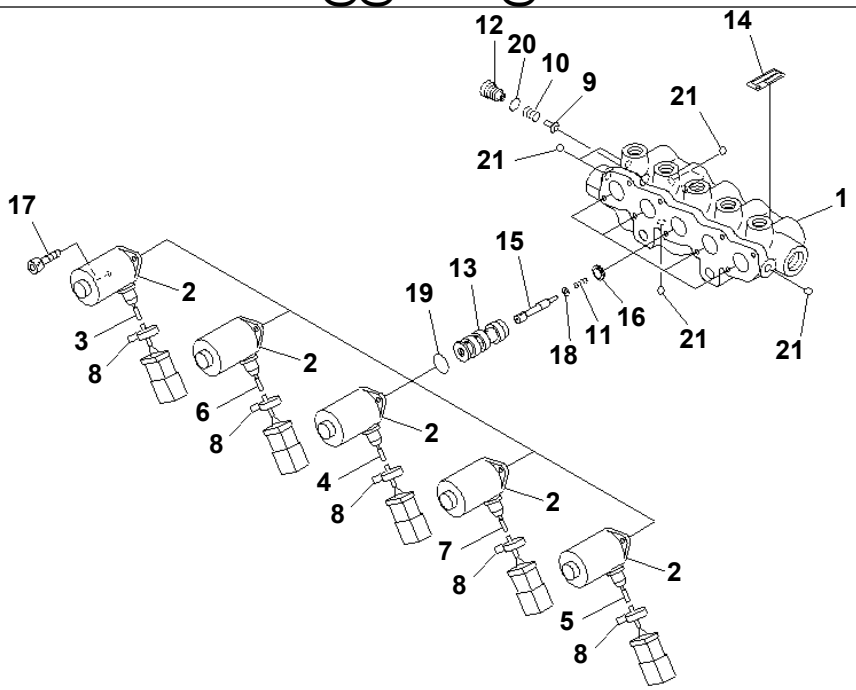

PWL5359

Ref. Y1860-01A0 **Page 511080**

PC1250SP-8R S/N 35001-UP (W/O EGR, +55C DEGREE)
SOLENOID VALVE (INNER PARTS)

Item	Part No.	Part Name	Qty	Serial No.
	209-60-77240	VALVE ASS'Y	1	35001-
1	☆	· BLOCK	1	35001-
2	209-60-77250	· SOLENOID ASS'Y	5	35001-
3	NY07529-10200	· TUBE	1	35001-
4	NY07529-10300	· TUBE	1	35001-
5	NY07529-10400	· TUBE	1	35001-
6	NY07529-10500	· TUBE	1	35001-
7	NY07529-10600	· TUBE	1	35001-
8	NY89103-00090	· BAND	5	35001-
9	NY05062-1170A	· PLUNGER	1	35001-
10	NY05062-11800	· SPRING	1	35001-
11	NY06040-10400	· SPRING	5	35001-
12	NY06277-1320A	· PLUG	1	35001-
13	NY07084-10210	· SLEEVE	5	35001-
14	NY07529-10700	· PLATE	1	35001-
15	NY11076-1040A	· SPOOL	5	35001-
16	NY11076-12600	· STOPPER	5	35001-
17	NY81416-05012	· BOLT	10	35001-
18	NY83007-03040	· WASHER	5	35001-
19	07000-12016	· O-RING	5	35001-
20	07000-11010	· O-RING	1	35001-
21	NY87200-00011	· EXPANDER	7	35001-

Printed By : Dwi Iswanto (airafather6107170)

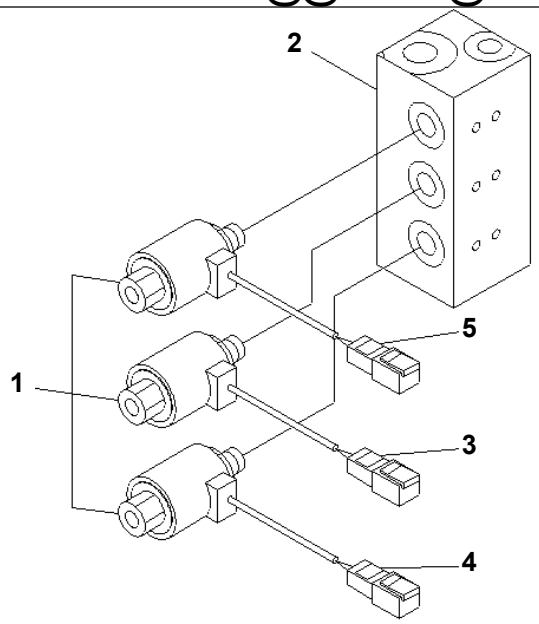

PW1D585

Ref. Y1862-01A0 **Page 511090**

PC1250SP-8R S/N 35001-UP (W/O EGR, +55C DEGREE)
SOLENOID VALVE (INNER PARTS)(#35001-35036)

Item	Part No.	Part Name	Qty	Serial No.
	209-60-77410	VALVE ASS'Y	1	35001-35036
1	209-60-77290	· SOLENOID VALVE	3	35001-35036
	209-60-77280	· · SOLENOID ASS'Y	1	35001-35036
2	☆	· BLOCK	1	35001-35036
3	TT40013770	· PLATE	1	35001-35036
4	TT40013771	· PLATE	1	35001-35036
5	TT40013773	· PLATE	1	35001-35036

Printed By : Dwi Iswanto (airafather6107170)

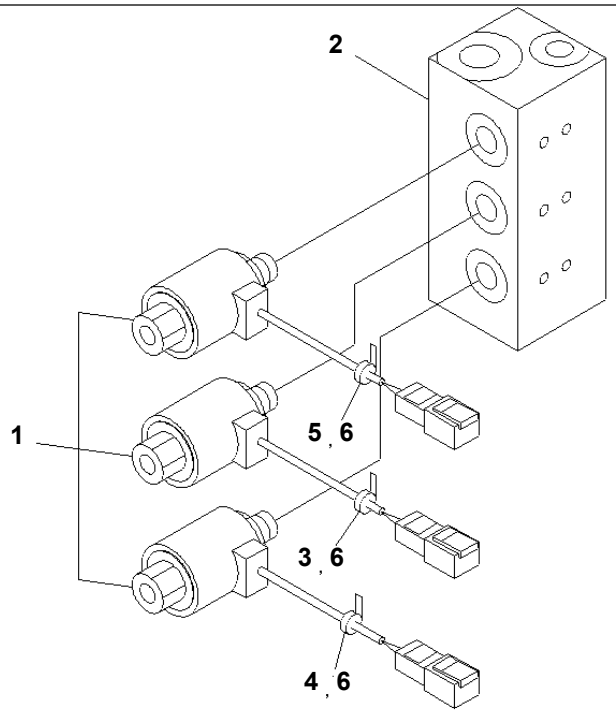

00085613

Ref. Y1862-01A0A **Page 511100**

PC1250SP-8R S/N 35001-UP (W/O EGR, +55C DEGREE)
SOLENOID VALVE (INNER PARTS)(#35037-)

Item	Part No.	Part Name	Qty	Serial No.
	209-60-77411	VALVE A.	1	35037-
1	209-60-77290	· SOLENOID VALVE	3	35037-
	209-60-77280	· · SOLENOID ASS'Y	1	35037-
2	☆	· BLOCK	1	35037-
3	NY07207-11700	· TUBE	1	35037-
4	NY07529-10200	· TUBE	1	35037-
5	NY07505-10200	· TUBE	1	35037-
6	NY89103-00090	· BAND	3	35037-

Printed By : Dwi Iswanto (airafather6107170)

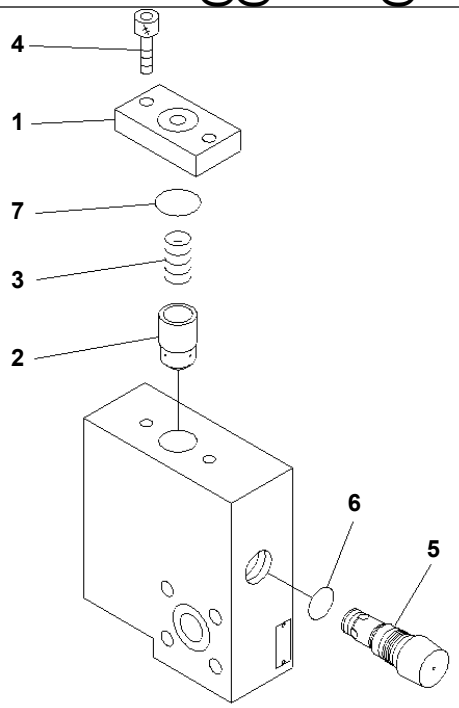

P W 1 E 4 1 0

Ref. Y1870-01A0 **Page 511110**

PC1250SP-8R S/N 35001-UP (W/O EGR, +55C DEGREE)
PILOT RELIEF VALVE

Item	Part No.	Part Name	Qty	Serial No.
	21N-60-32202	VALVE ASS'Y	1	35001-
1	UC1100540292	· COVER	1	35001-
2	☆	· PLUNGER	1	35001-
3	UC1100531528	· SPRING	1	35001-
4	UC1301590009	· BOLT	2	35001-
5	21N-60-32211	· VALVE ASS'Y	1	35001-
6	UC1301243006	· O-RING	1	35001-
7	07000-03035	· O-RING	1	35001-

Printed By : Dwi Iswanto (airafather6107170)

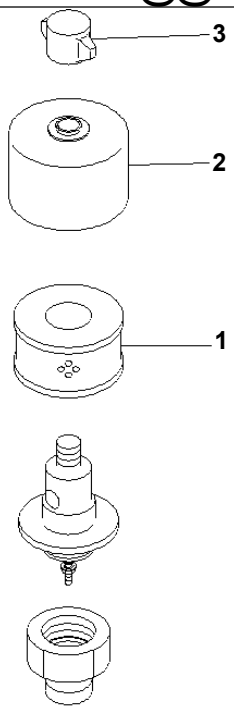

PW1E403

Ref. Y1890-01A0 **Page 511120**

PC1250SP-8R S/N 35001-UP (W/O EGR, +55C DEGREE)
BREATHER (FOR HYDRAULIC TANK)

Item	Part No.	Part Name	Qty	Serial No.
	198-60-55510	BREATHER	1	35001-
1	421-60-35170	· ELEMENT	1	35001-
2	421-60-35180	· COVER	1	35001-
3	421-60-35190	· NUT	1	35001-

Printed By : Dwi Iswanto (airafather6107170)

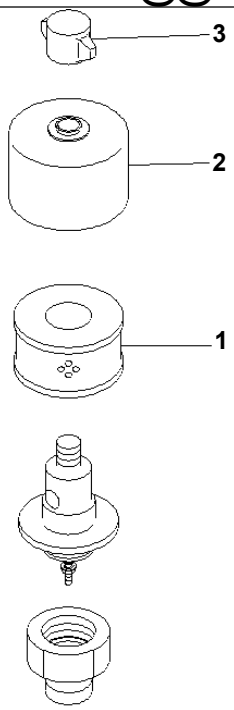

PW1E403

Ref. Y1890-01A1 **Page 511130**

PC1250SP-8R S/N 35001-UP (W/O EGR, +55C DEGREE)
BREATHER (FOR FUEL TANK)(#35016-)

Item	Part No.	Part Name	Qty	Serial No.
	22U-60-21520	BREATHER	1	35016-
1	421-60-35170	· ELEMENT	1	35016-
2	421-60-35180	· COVER	1	35016-
3	421-60-35190	· NUT	1	35016-

Printed By : Dwi Iswanto (airafather6107170)

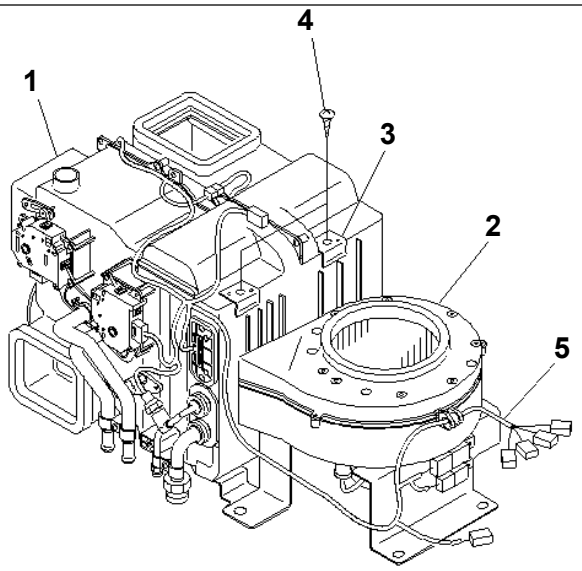

00018108

Ref. Y1979-11A1 **Page 511140**

PC1250SP-8R S/N 35001-UP (W/O EGR, +55C DEGREE)

UNIT ASS'Y (FOR AIR CONDITIONER) (BIG WIND) (+55C SPEC.)

Item	Part No.	Part Name	Qty	Serial No.
	20Y-979-6821	UNIT ASS'Y	1	35001-
1	(ND448800-5222)	· UNIT ASS'Y,COOLING	1	35001-
2	(ND117200-2130)	· BLOWER ASS'Y	1	35001-
3	ND146525-6041	· BRACKET,PARTS	2	35001-
4	ND90930-06141	· SCREW,TAPPING	2	35001-
5	ND246470-0800	· HARNESS SUB ASS'Y,AIR CONDITIONER	1	35001-

Printed By : Dwi Iswanto (airafather6107170)

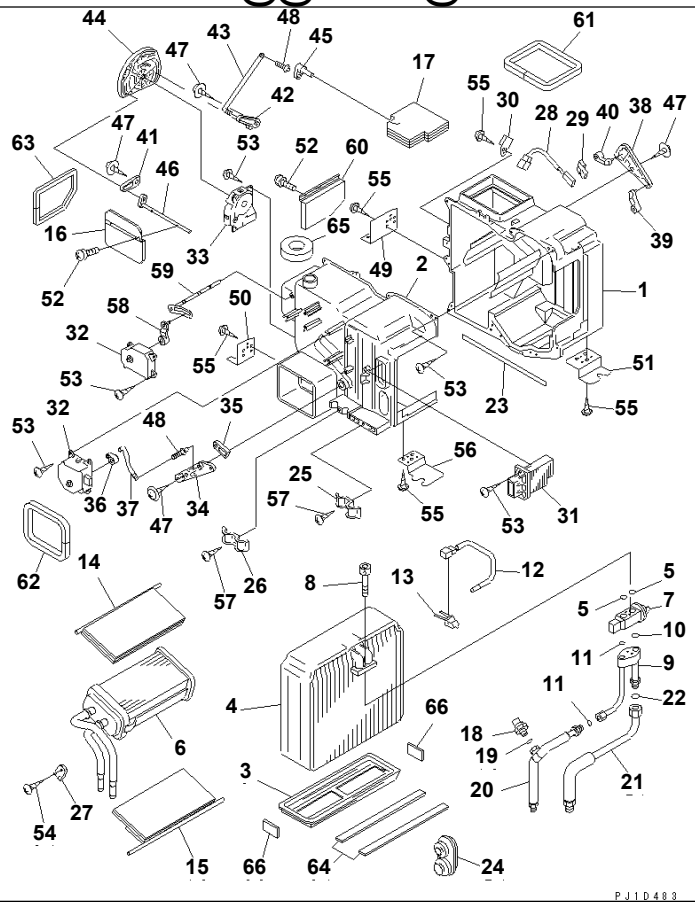

Ref. Y1979-21A0 **Page 511150**

PC1250SP-8R S/N 35001-UP (W/O EGR, +55C DEGREE)
UNIT ASS'Y (COOLING) (FOR AIR CONDITIONER)

Item	Part No.	Part Name	Qty	Serial No.
	ND448800-5222	UNIT ASS'Y,COOLING	1	35001-
1	ND245450-2221	· CASE,COOLING	1	35001-
2	ND245450-1721	· CASE,COOLING	1	35001-
3	ND116569-5010	· PLATE	1	35001-
4	ND447600-4970	· EVAPORATOR	1	35001-
5	ND949142-0030	· · O-RING	2	35001-
6	ND116120-7990	· CORE ASS'Y,HEATER	1	35001-
7	ND447500-1390	· VALVE,EXPANSION	1	35001-
8	ND949046-2150	· BOLT	2	35001-
9	ND446870-5650	· TUBE,ACCESSORY	1	35001-
10	ND949142-0030	· · O-RING	1	35001-
11	ND949142-0010	· · O-RING	2	35001-
12	ND077500-0710	· THERMISTOR	1	35001-
13	ND246690-2840	· CLAMP	2	35001-
14	ND116650-8800	· DOOR ASS'Y	1	35001-
15	ND116650-8820	· DOOR ASS'Y	1	35001-
16	ND116650-8840	· DOOR ASS'Y	1	35001-
17	ND116640-4652	· DAMPER ASS'Y	1	35001-
18	ND443440-0030	· SWITCH,PRESSURE	1	35001-
19	ND949142-0040	· · O-RING	1	35001-
20	ND446830-3880	· TUBE	1	35001-
21	ND446810-9520	· TUBE,SUCTION	1	35001-
22	ND949142-0030	· · O-RING	1	35001-
23	ND146678-4930	· PACKING	1	35001-
24	ND949321-9940	· GROMMET	1	35001-
25	ND246770-6990	· CLAMP,PIPING	1	35001-
26	ND017231-1400	· CLAMP	1	35001-
27	ND017660-3490	· BRACKET	1	35001-
28	ND170400-4310	· SENSOR ASS'Y,THERMO	1	35001-
29	ND146690-6020	· CLAMP	1	35001-

Printed By : Dwi Iswanto (airafather6107170)

UNIT ASS'Y (COOLING) (FOR AIR CONDITIONER)

Item	Part No.	Part Name	Qty	Serial No.
30	ND246634-6010	· BRACKET	1	35001-
31	ND499300-2051	· I.C. POWER	1	35001-
32	ND063700-7200	· SERVO MOTOR ASS'Y	2	35001-
33	ND063700-7210	· SERVO MOTOR ASS'Y	1	35001-
34	ND116569-5020	· PLATE	1	35001-
35	ND116682-0930	· LEVER	1	35001-
36	ND116682-0960	· LEVER	1	35001-
37	ND116662-4850	· SHAFT	1	35001-
38	ND116569-5030	· PLATE	1	35001-
39	ND116682-0940	· LEVER	1	35001-
40	ND116682-0951	· LEVER	1	35001-
41	ND116569-5041	· PLATE	1	35001-
42	ND116569-5051	· PLATE	1	35001-
43	ND116662-4860	· SHAFT	1	35001-
44	ND116569-5062	· PLATE	1	35001-
45	ND116682-0920	· LEVER	1	35001-
46	ND116682-0910	· LEVER	1	35001-
47	ND949008-0460	· SCREW,TAPPING	4	35001-
48	17M-911-3290	· CLAMP	2	35001-
49	ND146535-1311	· BRACKET	1	35001-
50	ND146535-0411	· BRACKET	1	35001-
51	ND146525-6070	· BRACKET	1	35001-
52	ND91310-03081	· SCREW,WASHER	4	35001-
53	ND949001-1730	· SCREW,TAPPING	23	35001-
54	ND90930-05121	· SCREW,TAPPING	1	35001-
55	ND90930-06141	· SCREW,TAPPING	8	35001-
56	ND146535-0421	· BRACKET	1	35001-
57	ND90930-05161	· SCREW,TAPPING	2	35001-
58	ND116682-3440	· LEVER	1	35001-
59	ND017730-8380	· LEVER,CONTROL	1	35001-
60	ND116660-2770	· DOOR ASS'Y	1	35001-
61	ND146698-6930	· PACKING	1	35001-
62	ND146698-6950	· PACKING	1	35001-
63	ND146698-8480	· PACKING	1	35001-
64	ND146637-5650	· PACKING	2	35001-
65	ND146647-0712	· PACKING	1	35001-
66	ND146647-3880	· PACKING	2	35001-

Printed By : Dwi Iswanto (airafather6107170)

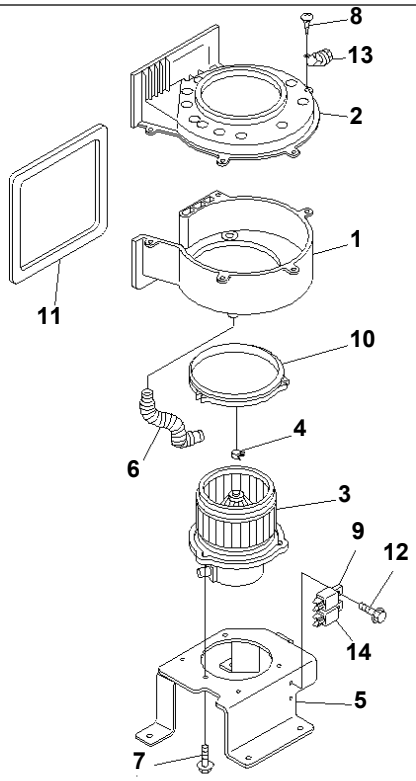

00018109

Ref. Y1979-31A1 **Page 511160**

PC1250SP-8R S/N 35001-UP (W/O EGR, +55C DEGREE)

UNIT ASS'Y (BLOWER ASS'Y) (FOR AIR CONDITIONER) (BIG WIND) (+55C SPEC.)

Item	Part No.	Part Name	Qty	Serial No.
	ND117200-2130	BLOWER ASS'Y	1	35001-
1	ND116241-3220	· CASE,BLOWER	1	35001-
2	ND116241-3230	· CASE,BLOWER	1	35001-
	ND116340-3860	· MOTOR ASS'Y,FAN	1	35001-
3	ND116221-3010	· · FAN	1	35001-
4	ND017231-2370	· · CLAMP	1	35001-
5	ND146535-1320	· BRACKET	1	35001-
6	205-979-7260	· PIPE	1	35001-
7	ND949047-2370	· BOLT,WASHER	3	35001-
8	ND949001-1730	· SCREW,TAPPING	5	35001-
9	ND056700-8170	· RELAY ASS'Y	1	35001-
10	ND146622-6880	· PACKING	1	35001-
11	ND146678-4901	· PACKING	1	35001-
12	ND91570-06141	· BOLT,WASHER	2	35001-
13	ND146625-4450	· BUSH	1	35001-
14	421-07-31270	· RELAY	1	35001-

Printed By : Dwi Iswanto (airafather6107170)