RUTHZIL TRATOR COMERCIAL DE PEÇAS LTDA 11 97083-6812 ROLANDO CITRANGULO

SPARE PARTS CATALOGUE

KOMATSU

PC130-7

Serial Number: NL 50001 and up

December 20, 2006

REGIONAL AND BRANCH OFFICES OF LARSEN & TOUBRO LIMITED

LARSEN AND TOUBRO LIMITED Construction Equipment Division Lakshminarayana Complex (1st Floor), 10/1 Palace Road, Bangalore 560052 Tel : (080) 22256982 / 83 / 84 Fax : 080 - 22250309, 22284893 Email : ced@pro.ltindia.com		40-5-6-1, First Floor, Tickle Road Near Sweet (Magic)Brindavan Colony VIJAYAWADA - 520 010. Tel :(0866)2755493, 2754687,2501467 Fax : (0866) 2485273
L&T-House, P.O.Box 119 191/1, Dhole Patil Road PUNE - 411 001 Tel : (020) 26124447 Fax : (020) 26114007	Post Bag 7156 123, Appuswamy Road COIMBATORE - 641 045 Tel : (0422) 311 562, 313129 Fax : (0422) 313 881	38, Cubbon Road, BANGALORE - 560 000 Tel : (080) 2558 7550, 2558 3612 Fax : (080) 2559 6596
Milanpur Road, Bamuni Maidan GUWAHATI - 781 021 Tel : (0361) 2651 329, 2651 299 10, Club House Road	P.O.Dhansar DHANBAD - 826 001 Tel : (0326) 2307147 Fax : (0326) 2307168	A-28 Indiranagar Faizabad Road First Floor LUCKNOW - 226 016 Tel : (0522) 2506472
32, Shivaji Marg, P.O.Box 6223 NEW DELHI - 110 015 Tel : (011) 2593 1302 Fax : (011) 5141 9595	L&T House Group MIG-5, Padmanabhpur P.O.Box 39, DURG 491 001 (M.P) Tel : (0788)2322 809, 2330727 Fax : (0788) 2210 161	Plot No 518, 4th Main Road K.K Nagar MADURAI - 625 020 Tel : (0452) 2537 305 Fax : (0452) 2537 552
10, Club House Road Anna Road, Post Bag 5247 CHENNAI - 600 002 Tel : (044) 2846 0141 / 2846 2025 Fax : (044) 2846 2102	A1/11, Astronauts Avenue Bidhan Nagar DURGAPUR - 713 212 Tel : (0343) 2535 852, 2537 843 Fax : (0343) 2536 493	Saki Vihar Road Gate No 5, Powai (E) MUMBAI - 400 072 Tel : (022) 2858 1401 / 2858 1803 Fax : (022) 2858 1622
501, Sakar Complex Opp. Gandhigram Rly. Stn AHMEDABAD - 380 009 Tel : (079) 2658 7505, 2658 2536 Fax : (079) 2658 0491	Plot No 15, 6 Hector Land Journalist Colony, Altoporvorim GOA - 403 512 Tel : (0832) 2416 523, 2416 524 Fax : (0832) 2416 523	8 - B Farm Land Ramdaspeth NAGPUR - 440 010 Tel : (0712) 2556253, 2556270 Fax : (0712) 2564364
1-B-15, S.F.S Opp Sheela Chowdhary Nursing Home Talwandi, KOTA - 324 005 Tel : (0744) 2429 617 / 2436 135 Fax : (0744) 428 301 / 426 296	Radhadaya Complex Near Charodar Complex, Old Padra Road VADODARA - 390 015 Tel : (0265) 2334 799 Fax : (0265) 2336 184	Plot No. 763/26, Thana : 194 P.S.Sadar, Kokar Area Hanuman Dharam Kanta (NH 33) Hazaribagh Road, RANCHI - 834 009 Tel : (0651) 2544834 / 2544836 Fax : (0651) 2544836
3-B, Shakespeare Sarani P.O.Box 619 KOLKATA - 700 071 Tel : (033) 2282 2301 /5, 2282 7961 Fax : (033) 2282 7961	5-10-173, Fateh Maidan Road P.O.Box 619 HYDERABAD - 500 004 Tel : (040) 5572 0000, 2323 174 Fax : (040) 2323 0686	328, Star Plaza Poochhah Chowk RAJKOT - 360 001 Tel : (0281) 2453 532 Fax : (0281) 2453 532
131/1, Zone II Mahrana Pratap Nagar BHOPAL - 462 011 Tel : (0755) 2762 943, 2554 581 Fax : (0755) 2553 264	D-24, Prithvi Raj Road C - Scheme, P.O.Box 110 JAIPUR - 302 001 Tel : (0141) 2361 064, 2365 174 Fax : (0141) 2373 280	L&T House, Sector 19 ROURKELA - 769 005 Tel : (0661) 2647 304 Fax : (0661) 2647 304
Plot No. 559, Annapoorna Complex Lewis Road BHUBANESHWAR - 751 014 Tel : (0674) 2537 301, 2537305 Fax : (0674) 2537 309	Akashdeep Plaza 2nd Floor P.O.Golmuri JAMSHEDPUR - 831 003 Tel : (0657) 2340 829, 2487 112 Fax : (0657) 248 558	19, Ahimsa Puri Near jyothi school Near jyothi school, Fathehpur UDAIPUR - 313004 Tel: (0294) 2451 337, 2451 305 Fax: (0294) 2450 188
32, Sector 26-D Madhya Marg P.O.Box 14 CHANDIGARH - 160 019 Tel : (0172) 2790 151, 2790 750 Fax : (0172) 2792 764	Ravipuram Junction P.O.Box 1723, Ernakulam KOCHI - 682 016 Tel : (0484) 2351 513, 2372 982 Fax : (0484) 2372 982	48-8-16 Dwarakanagar VISHAKAPATNAM - 530016 Tel: (0891) 2746 068, 2500 609 Fax: (0891) 2745 095

REGIONAL SERVICE STATIONS OF LARSEN & TOUBRO LIMITED

32, Shivaji Marg **New Delhi - 110015** Tel: (011) 51419560/61/62/63 Fax: (011) 51419564	Degaul Avenue, Khoirasol **Durgapur -713212** Tel: (0343) 2553337/8/9 Fax: (0343) 2553614	Pune- Ahmednagar Road Gat No: 2326, Village: Wagholi Taluka Haveli, Dist: **Pune-412206** Tel: (020) 27051778
Logistics Park, Nimji, Taluk Kamleshwar **Nagpur - 440023** Tel: (07118) 238444/46 Fax: (07118) 238443	Arcot road, Mugalivakkam **Chennai-600116** Tel :(044) 22523220/ 22520128 Fax: (044) 22522319	

DEALERS OF LARSEN & TOUBRO LIMITED

NORTH

Abhinav Industrial Products No.1-B-15, SFS, Talwandi **Kota-324 005, Rajasthan** Tel: (0744) 2429617, 2428301	**Abhinav Industrial Products** 7/B, Shiv Heera Path, Chomu Circle **Jaipur-302 001, Rajasthan** Tel: (0141) 2379028	**J E Enterprises** PB No.164, 32/4, New Fatehpura, **Udaipur-313 004, Rajasthan** Tel: (0294) 2560142/2527719/ 2560322 Fax: 2560327
Chintamani Enserve Pvt Ltd Post Box No.42, Opp LIG Colony Singrauli, **Sidhi- 486 889,** **Madhya Pradesh** Tel:(07805) 267947	**Suchitra Sales Pvt Ltd** No.SCF 381, Motor Market Manimajra, **Chandigarh - 160 101** Tel: (0172) 2732873, 2734092 Fax: 5016719	**Venus Oilfield Services Pvt. Ltd.** D-25, Marg-13, Saket, **New Delhi-110017** Tel: (011) 26854901,26866119 Fax:011-26864153
New JK Excavators & Engineering Services Bazari Batmaloo, Near Water Tank, **Srinagar, Jammu & Kashmir** Tel: (0194) 2456895		

SOUTH - 1

Mithra Earth Movers 38-8-17, M.G. Road, Opp. All India Radio, **Vijayawada - 520 010** **Andhra Pradesh** Tel: (0866) 5566175 / 6	**Mithra Earth Movers** No.3-5-170/1/11&12 Narayanaguda, **Hyderabad- 500 029** **Andhra Pradesh** Tel: (040) 55510245/55109452 Fax: 23227460	**M S Enterprises** No.32, LIC Colony, Opp. New Bus Stand, Alagapuram Post, Hotel Vasantham Main Road, **Salem - 636 004** **Tamil Nadu** Tele fax: (0427) 2332297 Cell: 9443149920
AayCee Excon # 10, 80 Feet Road, Sathya Gardens, Saligramam, **Chennai–600 093** **Tamil Nadu** Tel: (044) 23643364,23644364 Tele Fax: (044) 23644364	**G.P.Enterprises** No:8/27, Ponmeni Periavar Street, Shatkhivel Ammal Nagar, S.S.Colony, **Madurai- 625 010, Tamil Nadu** Tel. Phone: (0452) 4200010	

SOUTH - 2

Anugraha Construction Equipment Services & Support Pvt Ltd. No.1, 1st Floor, 10th Main, 14th Cross, Malleswaram, **Bangalore - 560 003, Karnataka** Tel: (080) 23314699, 23560253,23314818, Fax: 23343371	**Cinzac Corporation** Chittoor Road, Pachalam **Cochin - 682 012, Kerala** Tel: (0484) 2395911-13, 2393296, Fax: 2393513

EAST

Saurav Auto Pvt. Limited Solapar, Paltan Bazar **Guwahati - 781 008, Assam** Tel: (0361) 2516996, 2517014, 2542581, 2516203	**N K Bhojani Private Limited** Main Road **Barbil - 758 035,** Dist: Keonjhar, **Orissa** Tel: (06767) 275067, 276540	**N K B Industrial Products Private Limited** S-2/A-42, 43, 44, Mancheswar Industrial Estate **Bhubaneswar -751 010,** Orissa Tel: (0674) 2588877 - 79, 27516661
Preti Engineering Services 22, Ashutosh Chowdhury Avenue, P.O. Ballygunj, **Kolkata -700 019, West Bengal** Tel:(033) 24614420 & 24614421	**Preti Engineering Services** E-69, Astronauts Avenue. **Durgapur -713 212,** **West Bengal** Tel: (0343) 2534978	
Waliram Taneja Mines Pvt. Ltd. 146, Hazribagh Road, Lalpur Chowk, **Ranchi - 834 001, Jharkhand** Tel: (0651) 3110442	**Waliram Taneja Mines Private Limited** Taneja House, Mannaitand, **Dhanbad - 826 001, Jharkhand** Tel: (0326) 2305250, Tele fax: (0326) 2305628	

WEST - 1

C.S. Diesel Engineering C/O System Device 6, Radha Aprt. 2nd Floor, Telli Galli, Near HeroHonda Showroom Andheri (E), **Mumbai- 400069, Maharastra** Tel: (022) 26822360 & 56061327	**C.S.Diesel Engineering** HFG 32, Housing Board Colony, Behind Cajurao Hotel, Porvorim, **Bardez-403521, GOA** Tel . 9372 8064	**V.B. Techno Enterprise** 7, Auto Friend's Estate Near Mahan Tractors Before Sarkhej-Changother Bridge, Sarkhej, **Ahmedabad – 382210, Gujarat** Tel:(079) 30920609,26891461
V.B. Techno Enterprise # 27, Jay Ambe Commerce Centre Gondal Road, By pass Circle **Rajkot - 360 002,** **Gujarat** Tel: 98258-01180	**Aryan Earthmovers** (A Division of Aryan Automotives Pvt. Ltd) HO: 'Durvankur' Lower Gr. Floor, Shop No. 1 & 2 Near Poona Warehouse, Nagar Road, Wagholi, **Pune-412 207, Maharastra** Tel: (020) 27050118, 27052917	**Aryan Earthmovers** (A Division of Aryan Automotives Pvt. Ltd.) Near Mahadik Bunglow Pune-Bangalore Road Plot No. 69/3, Navin Vasahat **Kolhapur - 416122.** **Maharastra** Tel: (0231) 2641284
Aryan Earthmovers ARYAN FOUNDATION Pune Road, P.O. Box No. 82 **Solapur-413001, Maharastra** Tel: (0217) 2352701,02,03 Fax: 2352705		

WEST - 2

Proficient Equipment Solutions Plot No. W-46, Hingna M.I.D.C, **Nagpur-440 016** **Maharastra** Tel: (07104) 237644, 237544, 235244	**Unitrade & Services** S 3, 239, Sourabh Complex Zone II, MP Nagar, **Bhopal- 462 011,** **Madhya Pradesh** Tel: (0755) 2556606	**Unitrade & Services** LIG-604, Behind Janta Market Padamnabhpur **Durg - 491 004, Chattisgarh** Tel: (0788) 2292723
Unitrade & Services 54, Prabhat Vihar Colony, Panna Naka Road, **Satna – 485001, Madhya Pradesh** Tel :(07672)-224915 Fax: 224664		

L&T-Komatsu Limited
Bellary Road, Byatarayanapura
BANGALORE - 560 092,
INDIA

FOREWORD

When ordering a spare part, specify the part number, part name, and quantity required, and also specify your machine model code, machine serial number, engine serial number and the service meter reading.

This Parts Book describes not only standard items but also optional equipment and attachments. To order a part, please contact your nearest L&T-Komatsu distributor.

This Parts Book contains the information and special symbols as follows:

Figure and list

When you open the Parts Catalogue you will find an illustration on the left page (even-numbered page) for the spare parts group. Each individual part in the group is given an index number.

On the right page, the component parts of the group are listed in the order of the index numbers shown on the illustration page. The part number, part name, and applicable machine serial number are given for each part.

FIG. No.

The FIG. No. is the number of the illustration shown on the page. It is not the spare part number. The numbers are not always continuous.

INDEX

This is the same as the index number in the illustration. The parts are listed in index number order.

PART No.

The number given in the PART No. column is the part number for the part shown. It is the code used when ordering that part it is important that there is no mistake in this code number when ordering.

DESCRIPTION

This gives the name of part that has the part number listed. The mark "**.**" is put in front of the part name of an assembly part and the item is entered following the assembly. If a part marked with "**.**" is a sub assembly, its components are marked "**. .**"

Example:
ELEMENT ASSEMBLY, AIR CLEANER
. ELEMENT ASSEMBLY, OUTER
. . ELEMENT, OUTER
. . NUT, WI NG
. . WASHER

Q'TY (Quantity)

This specifies the number of pieces used for one machine. However, if a part is included in the assembly and/or component, the quantity per such assembly and/or component is specified.

SERIAL No.

Applicable engine serial number is indicated for the engine volume. In the chassis volume, this indicates the machine serial number in which the part is used.

Symbols and codes

Symbols and codes are used in the PART No. and DESCRIPTION columns, and represent the following:

□ The part specified in the line above can be used instead of this part.

Symbols and Codes



This part can be used instead of the part specified in the line immediately above.

◆ This part and the part specified in the line immediately above are interchangeable.

■ The part specified in the DESCRIPTION column can be used instead of this part if it is used as a set.

☒ This shows discontinued part. The part specified in the above line is supplied instead.

▼ This shows a discontinued part. The part specified in the DESCRIPTION column is supplied instead as a set.

This part cannot be supplied as an individual part. It is supplied as an assembly.

★ This part cannot be supplied as an individual part. It is supplied as an assembly. However, it is supplied as an individual part by an authorized distributors only.



This indicates a part group. The part marked with this symbol is not considered a supply part.

==== The parts surrounded by this line are components of the part group specified in the above line.

G-1, G-2 These indicate categories of part groups.

KIT This indicates kit parts. For kit parts, refer to the service kit tables provided in this Parts Book



This indicates a part supplied as semi-finished. It requires additional work before installation.

PAINT (1) This indicates parts shipped painted with undercoat.

PAINT (2) This indicates parts supplied with different colors from the original color of your machine.

(A) This code indicates special parts for cold weather 'A:' specification (-30°C) machines.

(B) This indicates special parts for cold weather "B" specification (-50°C) machines.

PC130-7 Serial No. NL 50001 and up

ENGINE SAA4D95LE-3B-4A Engine No. 101744 and up

CONTENTS

REGIONAL & BRANCH OFFICE ADDRESSES....2-4
FOREWORD....5-6
CONTENTS....7-12

GROUP ASSEMBLY PARTS LIST

AA ENGINE

	FIG NO.	PAGE
CYLINDER HEAD	A1010-A0G2	AA-003
HEAD COVER	A1030-A0B6	AA-005
REAR HANGER	A1050-A0C5	AA-007
HEAD COVER	A1110-A0F7	AA-009
HEAD COVER ACCESSORY	A1111-A0D7	AA-011
AIR INTAKE CONNECTION	A1320-A0AB	AA-013
EXHAUST MANIFOLD	A1510-A0G3	AA-015
TURBOCHARGER	A1530-A0E4	AA-017
HEAT SHIELD	A1570-A0B6	AA-019
MUFFLER	A1610-A0N7	AA-021
EXHAUST CONNECTION	A1670-A0A7	AA-023
CYLINDER BLOCK	A2010-A0P2	AA-025
FRONT COVER (EXCEPT JAPAN)	A2040-A0E5	AA-027
IDLER GEAR	A2050-A0B3	AA-029
BLIND PLUG	A2070-A0C2	AA-031
OIL PAN AND SUCTION TUBE	A2110-A0P1	AA-033
OIL LEVEL GUAGE	A2190-A0B5	AA-035
FLYWHEEL HOUSING	A2210-A0F9	AA-037
FLYWHEEL	A2230-A0B4	AA-039
CRANKSHAFT	A2310-A0B3A	AA-041
PISTON	A2350-A0F1	AA-043
CRANK PULLY	A2370-A0F4	AA-045
CAMSHAFT AND GEAR	A2410-A0B8	AA-047
TAPPET	A2430-A0A1	AA-049
ROCKER ARM	A2450-A0A1	AA-051
COUPLING (PTO MAIN)	A2650-A0B7	AA-053
TACHO DRIVE COVER	A2810-A0A5	AA-055
OIL PUMP	A3010-A0A2	AA-057
TURBOCHARGER LUBRICATING OIL PIPING	A3030-A0A3	AA-059
OIL FILTER	A3110-A0D6	AA-061
OIL PRESSURE SWITCH	A3190-A0A1	AA-063
OIL COOLER	A3310-A0C1	AA-065
INJECTION PUMP	A4010-A0W8	AA-067
FUEL INJECTION PUMP	A4040-A0A6	AA-069
FUEL INJECTION PIPING	A4050-A0C6	AA-071
FUEL INJECTION PUMP LUBRICATOR	A4060-A0B4	AA-073
FUEL CONTROL (BOOST COMPE.)	A4070-A0A1	AA-075
FUEL FILTER	A4110-A0H8	AA-077
INJECTION NOZZLE	A4210-A0F4	AA-079

	FIG NO.	PAGE
FUEL RETURN (CENTER RETURN SPEC.)	A4230-A0G7	AA-081
WATER PUMP	A5010-A0J2	AA-083
WATER PUMP PULLY (NON HARDENING PULLY)	A5020-A0T4	AA-085
COOLING FAN	A5030-A0G1	AA-087
FAN SPACER	A5040-A0B1	AA-089
FAN SPACER MOUNTING	A5070-A0A3	AA-091
WATER CONNECTOR (OUTLET)	A5110-A0A5	AA-093
COOLING FAN BOLT	A5170-A0A2B	AA-095
FAN BELT	A5180-A0B3	AA-097
FAN BELT	A5180-A0B5	AA-099
ALTERNATOR (25A) (WITH NON HARDENING PULLEY (EXCEPT JAPAN)	A6010-A0R9	AA-101
ALTERNATOR MOUNTING (35A) (EXCEPT JAPAN)	A6020-A0A6	AA-103
STARTING MOTOR MOUNTING (3.0KW)	A6210-A0G6	AA-105
CYLINDER BLOCK GASKET KIT	A8116-B0B2	AA-109
CYLINDER HEAD GASKET KIT	A8118-A0B1	AA-111
WATER PIPING	A9530-A0A2	AA-113
ENGINE NAME PLATE AND REGULATION PLATE (EXCEPT JAPAN)	A9850-A0B1	AA-115
MAIN PUMP MOUNT	A9999-01A0	AA-117
ENGINE BRACKET AND MAIN PUMP	A9999-02A0	AA-119

B0 ENGINE RELATED PARTS

ENGINE MOUNT	B0100-01A0	BO-003
ENGINE MOUNT BRACKET	B0100-02A0	BO-005
REMOTE FILTER MOUNT	B0100-03A0	BO-007
AIR CLEANER AND DUCT	B0200-01A0	BO-009
FUEL CONTROL	B0400-01A0	BO-011
CORROSION ASS'Y	B0920-01A0	BO-013
AFTER COOLER CONNECTOR	B9999-A0P3	BO-017
AIR CLEANER	B9999-A0P4	BO-019
SPARE PARTS	B9999-A0P5	BO-021
HEATER SWITCH	B9999-A0P6	BO-023

C0 COOLING SYSTEM

COOLING (RADIATOR CORE AND FRAME)	C0100-01A0	CO-003
COOLING (OIL COOLER)	C0100-02A0	CO-005
COOLING (NET AND SHROUD)	C0100-03A0	CO-007
COOLING (AFTER COOLER AND CONDENSER)	C0100-04A0	CO-009
COOLING (RADIATOR PIPING)	C0100-05A0	CO-011
COOLER (AFTER COOLER PIPING)	C0100-06A0	CO-013
FAN GUARD	C0310-01A0	CO-015

D0 FUEL TANK AND RELATED PARTS

FUEL TANK	D0100-01A0	DO-003
FUEL LINE (FUEL HOSE)(POOR FUEL (CONTAINED WATER) ARRANGE SPEC.)		

	FIG NO.	PAGE
(WITH WATER SEPERATOR)	D0200-01A0	DO-005
FUEL LINE (WATER SEPERATOR) (POOR FUEL (CONTAINED WATER) ARRANGE SPEC.)	D0200-02A0	DO-009

E0 ELECTRICAL SYSTEM

BATTERY	E0100-01A0	EO-003
WIRING (STARTING HARNESS) (HARNESS AND CLIP)	E0200-01A0	EO-007
WIRING (STARTING HARNESS) (RELAY AND HARNESS)	E0200-02A0	EO-009
WIRING (MAIN HARNESS) (HARNESS AND CLIP)	E0200-03A0	EO-011
WIRING (MAIN HARNESS) (CLIP)	E0200-04A0	EO-013
WIRING (MAIN HARNESS) (CLIP)	E0200-05A0	EO-015
WIRING (MAIN HARNESS) (CLIP)	E0200-06A0	EO-017
WIRING (BATTERY HARNESS AND GROUND)	E0200-07A0	EO-021
HORN	E0410-01A0	EO-035

H0 HYDRAULIC SYSTEM

HYDRAULIC TANK	H0110-01A0	HO-003
MAIN VALVE (CONNECTING PARTS)	H0120-01A0	HO-005
MAIN VALVE (CONNECTING PARTS	H0120-02A0	HO-009
MAIN PUMP (CONNECTING PARTS)	H0210-01A0	HO-021
SUCTION LINE	H0311-01A0	HO-023
DELIVERY LINE	H0312-01A0	HO-025
OIL COOLER LINE	H0320-01A0	HO-027
RETURN LINE	H0330-01A0	HO-029
DRAIN LINE	H0340-01A0	HO-031
BOOM LINE	H1210-01A0	HO-033
ARM AND BUCKET LINE	H1220-01A0	HO-035
TRAVEL LINE	H1310-01A0	HO-045
SWING LINE	H1340-01A0	HO-047
LS LINE	H1810-01A0	HO-049
SOLENOID VALVE (VALVE)	H1831-01A0	HO-051
SOLENOID VALVE (HOSE)	H1831-02A0	HO-053
SOLENOID VALVE (CLIP)	H1831-03A0	HO-055
PRESSURE SWITCH	H1833-01A0	HO-057
PPC MAIN LINE (HOSE)	H1840-01A0	HO-059

J0 MAIN REVOLVING FRAME AND RELATED PARTS

REVOLVING FRAME	J1110-01A0	J-003
BOOM FOOT PIN	J1310-01A0	J-005

K0 OPERATOR'S COMPARTMENT AND CONTROL SYSTEM

OPERATOR SEAT	K0110-01A0	KO-003
OPERATOR'S CAB (CAB, GRIP & OPEN LOCK)	K0210-01A0	KO-011
OPERATOR S CAB (FRONT WINDOW)	K0210-02A0	KO-013

	FIG NO.	PAGE
OPERATOR'S CAB (WINDOW & ROOF VENTILATOR)	K0210-05A0	KO-015
OPERATOR' S CAB (ELECTRICAL)	K0210-06A0	KO-017
OPERATOR' S CAB (INSIDE COVER)	K0210-07A0	KO-019
OPERATOR' S CAB (DOOR)	K0210-08A0	KO-021
OPERATOR' S CAB (WIRING)	K0210-12A0	KO-023
OPERATOR' S CAB (MONITOR SYSTEM)	K0210-13A0	KO-025
OPERATOR' S CAB (INSTALLATION PARTS)	K0210-14A0	KO-027
OPERATOR' S CAB (PLATE)	K0210-15A0	KO-029
FLOOR MAT	K0310-01A0	KO-031
WINDOW WASHER	K0350-01A0	KO-041
FLOOR FRAME	K1110-01A0	KO-085
FLOOR FRAME (OPERATOR'S CAB) (TRAVEL CONTROL)	K1110-19A0	KO-087
FLOOR FRAME (OPERATOR' CAB) (FOOT REST) (LH)	K1110-20A0	KO-089
FLOOR FRAME (OPERATOR' CAB) (FOOT REST) (RH)	K1110-21A0	KO-091
FLOOR FRAME (REAR FRAME AND FOOT COVER)	K1110-16A0	KO-093
FLOOR FRAME (BASE)	K1110-05A0	KO-095
FLOOR FRAME (OPERATORS CAB) (HARNESS)	K1110-23A0	KO-097
FLOOR FRAME (OPERATORS CAB) WIPER ELECTRICAL	K1110-24A0	KO-099
(LEVER AND VALVE) (LH)	K1110-25A0	KO-101
FLOOR FRAME (CONSOLE)(UPPER) (WITHOUT AC AND RADIO) (LH)	K1110-27A0	KO-103
FLOOR FRAME (OPERATOR'S CAB) (CONSOLE)(LOWER)(LH)	K1110-28A0	KO-105
FLOOR FRAME (LEVER AND VALVE) (RH)	K1110-29A0	KO-107
FLOOR FRAME (OPERATOR'S CAB) (CONSOLE)(RH)	K1110-30A0	KO-109
FLOOR FRAME (OPERATOR'S CAB)(PPC HOSE)	K1110-34A0	KO-119
FLOOR FRAME (OPERATOR'S CAB) (PPC HOSE)	K1110-35A0	KO-121
FLOOR FRAME (OPERATOR'S CAB)(PPC CLAMP)	K1110-36A0	KO-123
FLOOR FRAME(OPERATOR'S CAB) (P,T BLOCK AND SEAL)	K1110-37A1	KO-125
FLOOR MOUNT	K1120-01A0	KO-129
SWITCH (MODEL SELECTION)	K1730-01A0	KO-131

M0 GUARD

HOOD	M1110-01A0	MO-003
FRAME	M1120-01A0	MO-005
DOOR L.H.	M1130-01A0	MO-009
DOOR R.H.	M1140-01A0	MO-013
PARTITION (1/2)	M1150-01A0	MO-015
PARTITION (2/2)	M1150-02A0	MO-017
COVER (UPPER)	M1210-01A0	MO-019
TOOL CASE	M1220-01A1	MO-021
VALVE UPPER COVER	M1230-01A0	MO-023
HANDRAIL	M1310-01A0	MO-027

	FIG NO.	PAGE
REAR VIEW MIRROR RH	M1420-01A0	MO-033
COUNTERWEIGHT	M1510-01A0	MO-035
COUNTERWEIGHT MOUNTING	M1520-01A0	MO-037
UNDER COVER (L.H.)	M1810-01A0	MO-039
UNDER COVER (R.H.)	M1810-02A0	MO-041

N0 SWING CIRCLE AND RELATED PARTS

SWING CIRCLE	N1110-01A0	NO-003
SWING MACHINERY	N1210-01A0	NO-005
SWING MOTOR (CONNECTING PARTS)	N1220-01A0	NO-007
SWING JOINT (RELATED PARTS)	N1310-01A0	NO-011

PO TRAVEL AND LOWER PIPING

TRAVEL PIPING	P1120-01A0	PO-003
FINAL DRIVE (SPROCKET AND RELATED PARTS)	P1210-01A0	PO-005

RO UNDERCARRIAGE

FRONT IDLER	R0110-01A0	RO-003
IDLER CUSHION	R0120-01A0	RO-005
TRACK ROLLER	R0200-01A0	RO-007
CARRIER ROLLER	R0300-01A0	RO-009
TRACK SHOE (TRIPPLE GROUSER WITH LONG HOLE)(500MM WIDE)	R0500-01A0	RO-011
TRACK FRAME (WITH TRACK FRAME UNDER COVER)	R1100-01A0	RO-021

TO WORK EQUIPMENT

BOOM	T1110-01A0	TO-003
BOOM (WORK LAMP AND PIN)	T1110-02A0	TO-009
BOOM (HYDRAULIC LINE)	T1110-03A3	TO-013
BOOM (CLAMP)	T1110-04A3	TO-017
BOOM (LUBICATION PIPING)	T1110-05A1	TO-023
BOOM CYLINDER	T1120-01A0	TO-047
BOOM CYLINDER TOP PIN	T1125-01A0	TO-057
ARM CYLINDER	T1140-01A0	TO-059
ARM (2.1M) (ARM AND PIN)	T1200-01A4	TO-075
BUCKET CYLINDER	T1220-01A0	TO-085
BUCKET LINK	T1230-01A0	TO-087
BUCKET 0.64M3(HORIZONTAL PIN TYPE)	T1510-01A3	TO-095

UO MARKS AND PLATES

MARK AND PLATES	U0100-01A4	UO-005

	FIG NO.	PAGE
PLATE	U0110-01A1	UO-007
PLATE	U0120-01A1	UO-009

VO ACCESSORY

TOOL	V0300-01A0	V-007

YO SERVICE KIT AND COMPONENT PARTS

SWING MACHINERY (INNER PARTS)	Y0260-01A0	YO-003
SHOE BOLT AND NUT SERVICE KIT	Y0320-01A0	YO-005
TRACK LINK ASSY (SUPPLY ONLY)	Y0321-01A0	YO-007
MAIN PUMP (1/8)	Y1600-01A0	YO-015
MAIN PUMP (2/8)	Y1600-02A0	YO-017
MAIN PUMP (3/8)	Y1600-03A0	YO-019
MAIN PUMP (4/8)	Y1600-04A0	YO-021
MAIN PUMP (5/8)	Y1600-05A0	YO-023
MAIN PUMP (6/8)	Y1600-06A0	YO-025
MAIN PUMP (7/8)	Y1600-07A0	YO-027
MAIN PUMP (8/8)	Y1600-08A0	YO-029
BOOM CYLINDER (INNER PARTS)	Y1620-01A0	YO-031
ARM CYLINDER (INNER PARTS)	Y1620-11A0	YO-041
BUCKET CYLINDER (INNER PARTS)	Y1620-41A0	YO-049
SWIVEL JOINT (INNER PARTS)	Y1627-01A0	YO-051
SWING MOTOR (1/2)	Y1640-01A0	YO-053
SWING MOTOR (2/2)	Y1640-02A0	YO-057
TRAVEL MOTOR (MOTOR ASSY) (1/3)	Y1651-01A0	YO-059
TRAVEL MOTOR (MOTOR ASSY) (2/3)	Y1651-02A0	YO-063
TRAVEL MOTOR (FINAL DRIVE ASSY) (3/3)	Y1651-03A0	YO-065
WORK EQUIPMENT LEVER	Y1670-11A0	YO-097
PILOT VALVE	Y1679-01A0	YO-107
SOLENOID VALVE (INNER PARTS)	Y1860-01A0	YO-117

Z0 NUMERICAL INDEX

ENGINE

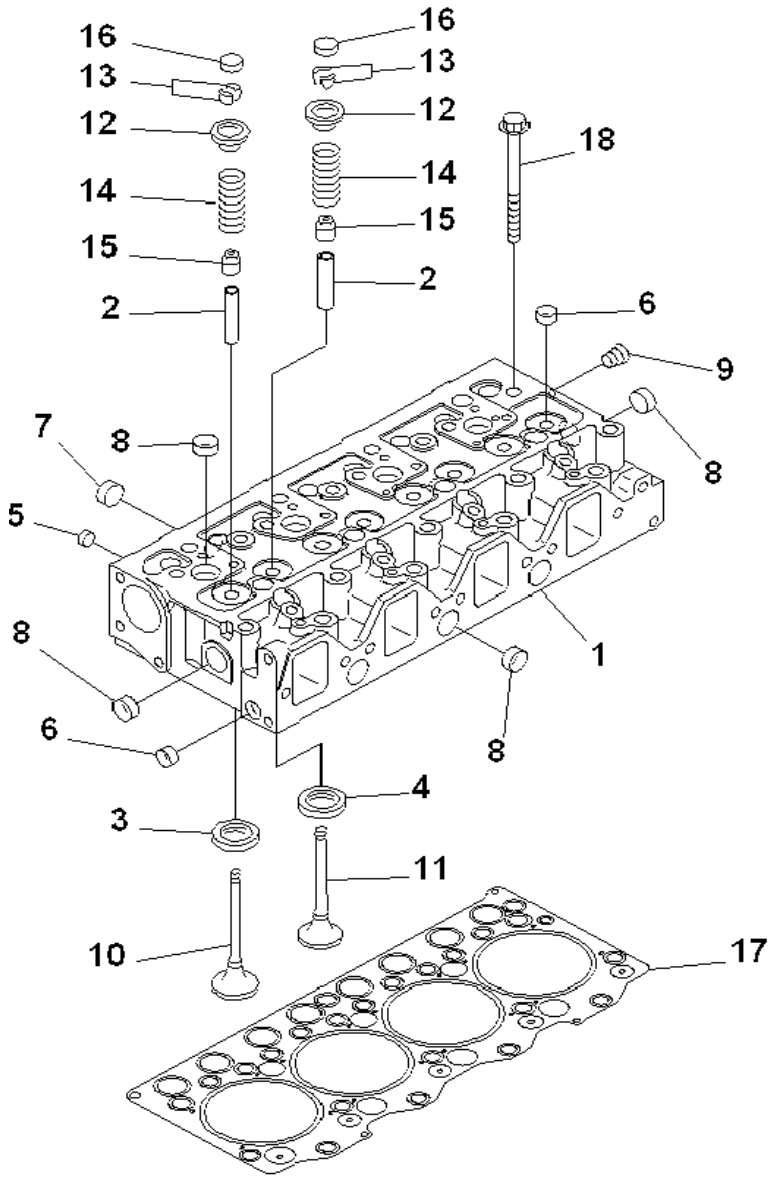

INDEX	PART NUMBER	DESCRIPTION	QTY	SERIAL No.
	6208-11-1100	CYLINDER HEAD A.,VALVE LESS.....	1	101744-
1	#	. HEAD.....	1	101744-
2	6204-19-1310	. GUIDE,VALVE.....	8	101744-
3	6207-11-1431	. SEAT,INTAKE VALVE (STD).....	4	101744-
	6207-19-1431	. SEAT, 0.25MM,INTAKE VALVE (OS).....	4	101744-
	6207-18-1431	. SEAT, 0.50MM,INTAKE VALVE (OS).....	4	101744-
4	6208-11-1440	. SEAT, EXHAUST VALVE (STD).....	4	101744-
	6208-19-1440	. SEAT, 0.25MM,EXHAUST VALVE (OS)....	4	101744-
	6208-18-1440	. SEAT, 0.50MM,EXHAUST VALVE (OS).....	4	101744-
5	07046-41008	. PLUG.....	4	101744-
6	07046-41810	. PLUG.....	9	101744-
7	07046-42216	. PLUG.....	3	101744-
8	07046-42516	. PLUG.....	11	101744-
9	02720-40104	. PLUG.....	1	101744-
10	6207-41-4130	VALVE,INTAKE.....	4	101744-
11	6209-41-4210	VALVE,EXHAUST.....	4	101744-
12	6204-41-4510	SEAT.....	8	101744-
13	6204-41-4520	COTTER.....	16	101744-
14	6204-41-4410	SPRING,VALVE.....	8	101744-
15	6204-41-4541	SEAL (K1).....	8	101744-
16	6204-41-4550	CAP.....	8	101744-
17	6204-11-1840	GASKET (K1).....	1	101744-
18	6204-13-1610	BOLT.....	17	101744-

L&T-KOMATSU

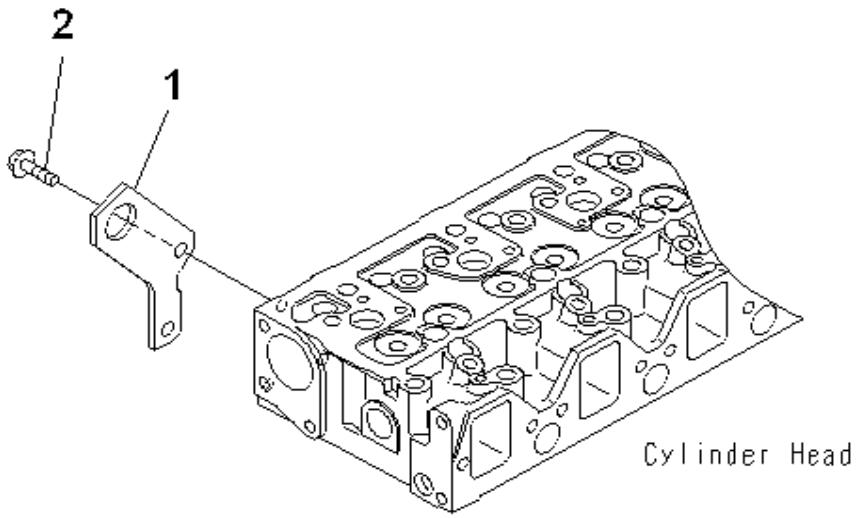

INDEX	PART NUMBER	DESCRIPTION	QTY	SERIAL No.
1	6208-11-1910	HANGER,FRONT.....	1	101744-
2	01435-01020	BOLT.....	2	101744-

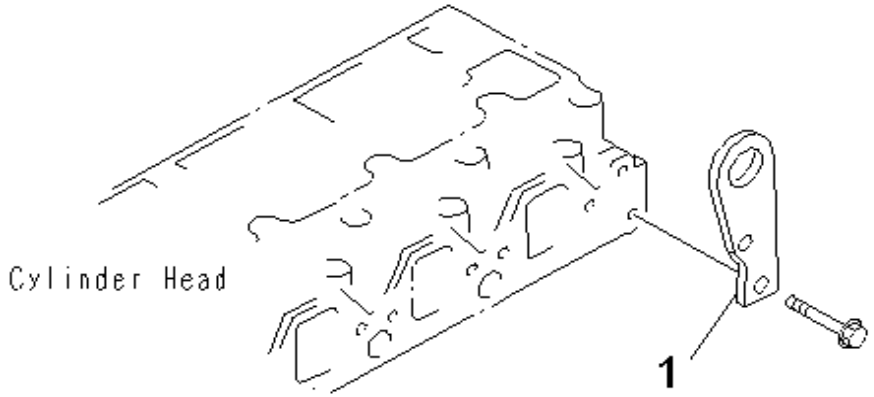

INDEX	PART NUMBER	DESCRIPTION	QTY	SERIAL No.
1	6206-11-1910	HANGER, REAR.....	1	101744-

L&T-KOMATSU

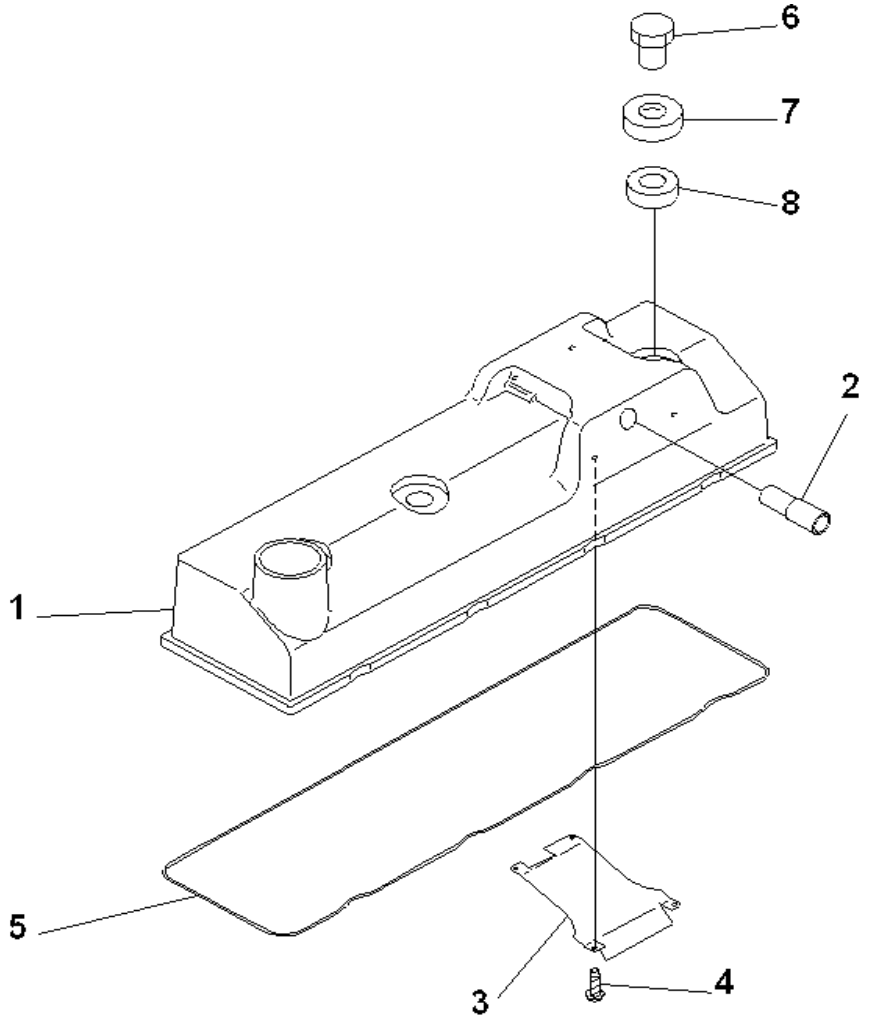

INDEX	PART NUMBER	DESCRIPTION	QTY	SERIAL No.
	6205-11-8301	HEAD COVER ASS'Y.....	1	101744-
1	6205-11-8111	. COVER,HEAD.....	1	101744-
2	6207-11-8170	. TUBE.....	1	101744-
3	6207-11-8140	. PLATE.....	1	101744-
4	04418-02550	. SCREW.....	4	101744-
5	6204-11-8810	O-RING (K1).....	1	101744-
6	6136-11-8120	NUT.....	3	101744-
7	6136-11-8130	WASHER.....	3	101744-
8	6136-11-8142	PACKING (K1).....	3	101744-

Fig. No. **A1110-A0F7** | **HEAD COVER** | Update Index : **A** | **AA-009** 1/1

L&T-KOMATSU

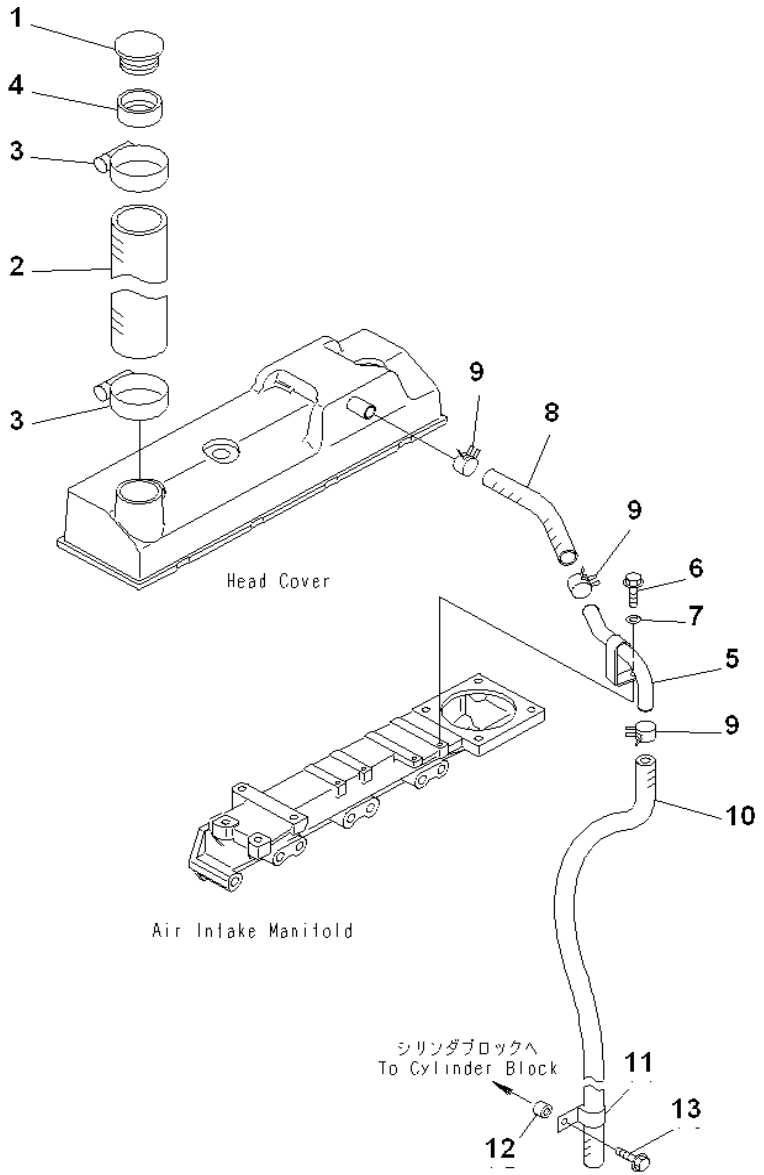

INDEX	PART NUMBER	DESCRIPTION	QTY	SERIAL No.
1	6204-11-8610	CAP,OIL FILLER	1	101744-
2	6202-13-8620	HOSE	1	101744-
3	07281-00709	CLAMP	2	101744-
4	6202-13-8631	PIPE	1	104042-
5	6205-11-8930	TUBE,BREATHER	1	101744-
6	01435-00614	BOLT	1	101744-
7	01643-30623	WASHER	1	101744-
8	07286-01616	HOSE	1	101744-
9	07285-00180	CLIP	3	101744-
10	07286-01685	HOSE	1	101744-
11	04434-52110	CLIP	1	101744-
12	6131-12-5920	SPACER	1	101744-
13	01435-01025	BOLT	1	101744-

Fig. No. **A1111-A0D7** | **HEAD COVER ACCESSORY** | Update Index : **A** | **AA-011** 1/1

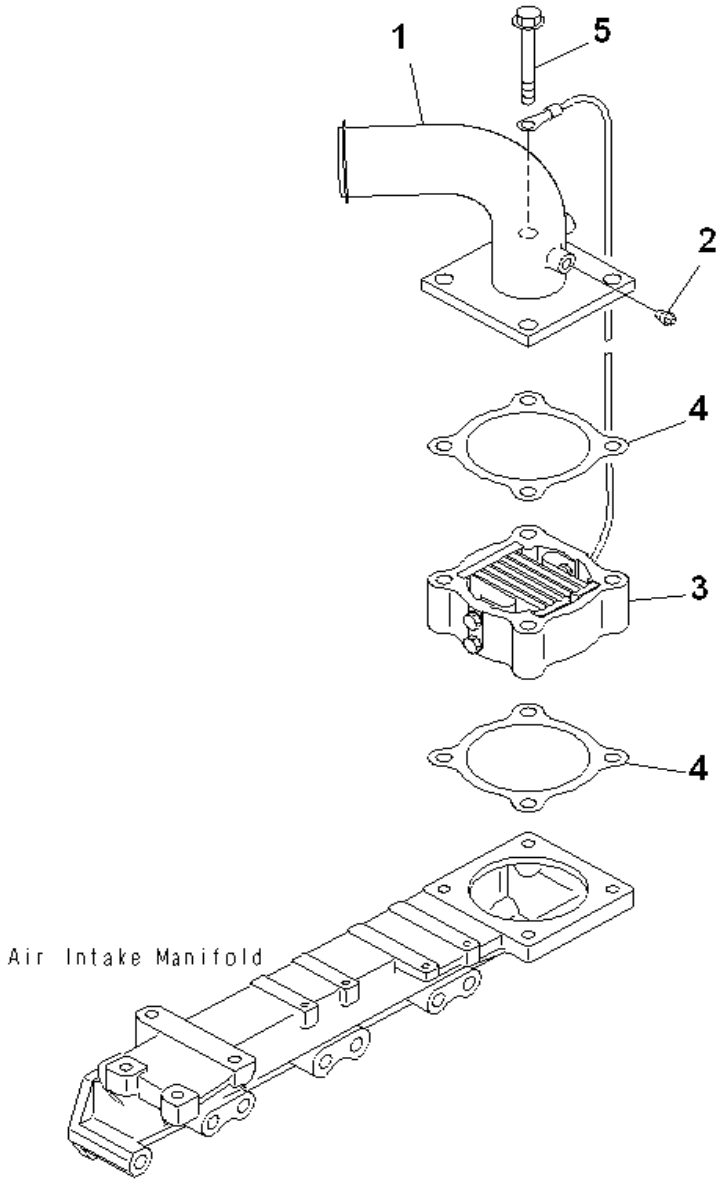

INDEX	PART NUMBER	DESCRIPTION	QTY	SERIAL No.
1	6208-11-4310	CONNECTOR,AIR.....	1	101744-
2	07042-70108	PLUG.....	1	101744-
3	600-815-2341	HEATER,RIBBON.....	1	101744-
4	6204-11-4850	GASKET (K1).....	2	101744-
5	01435-01070	BOLT.....	4	101744-

Fig. No. **A1320-A0A8** | **AIR INTAKE CONNECTION** | Update Index : **A** | **AA-013** 1/1

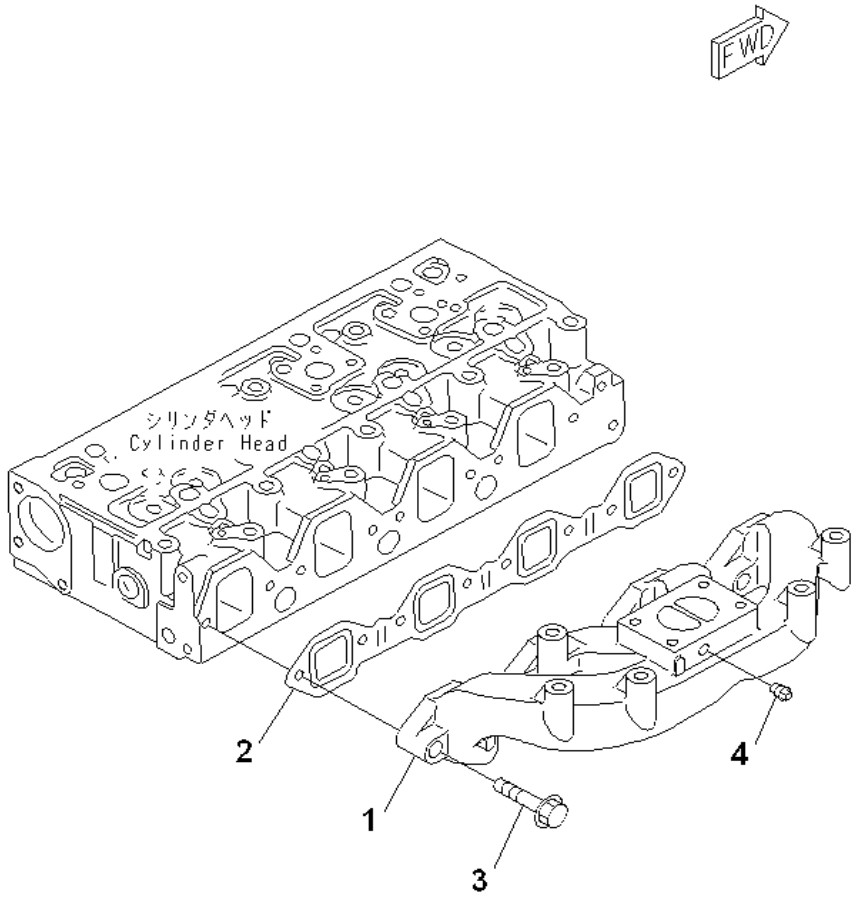

INDEX	PART NUMBER	DESCRIPTION	QTY	SERIAL No.
1	6205-11-5140	MANIFOLD,EXHAUST.....	1	101744-
2	6205-11-5811	GASKET (K1).....	1	101744-
3	01435-01045	BOLT.....	8	101744-
4	07042-20108	PLUG.....	1	101744-

Fig. No. **A1510-A0G3** | **EXHAUST MANIFOLD** | Update Index : **A** | **AA-015** 1/1

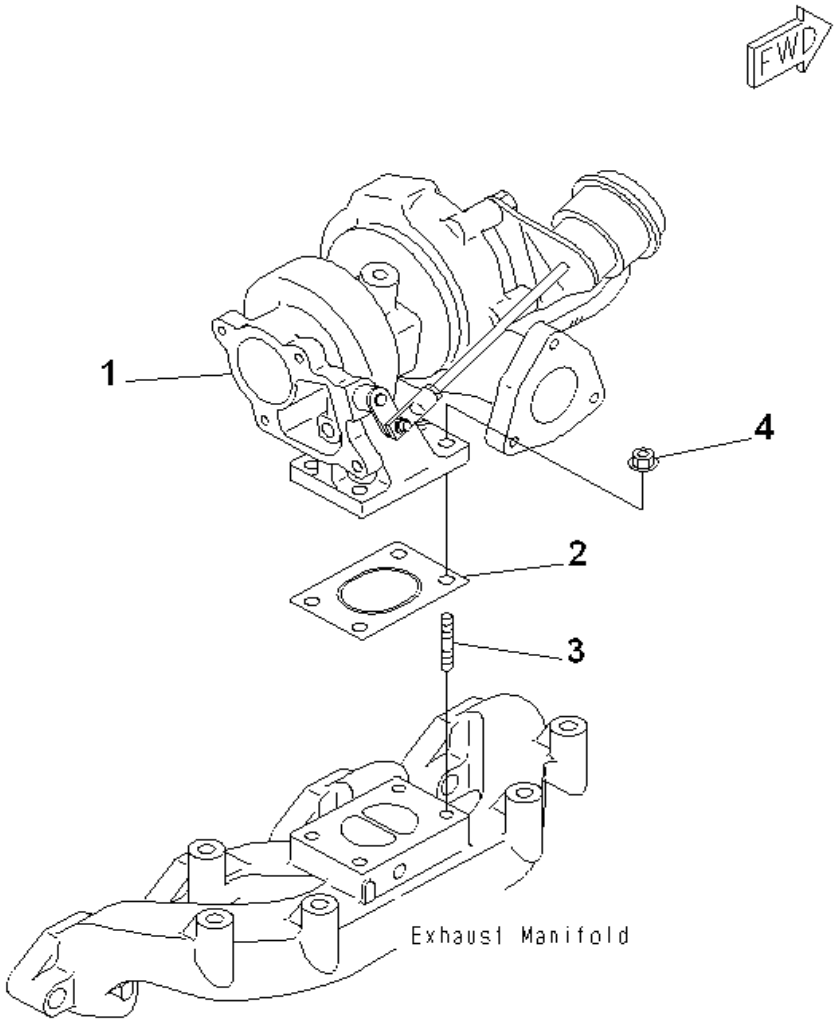

INDEX	PART NUMBER	DESCRIPTION	QTY	SERIAL No.
1	6208-81-8100	TURBOCHARGER ASSY	1	101744-
2	6205-11-5580	GASKET (K1)	1	101744-
3	01124-60825	STUD	4	101744-
4	6201-11-5850	NUT	4	101744-

L&T-KOMATSU

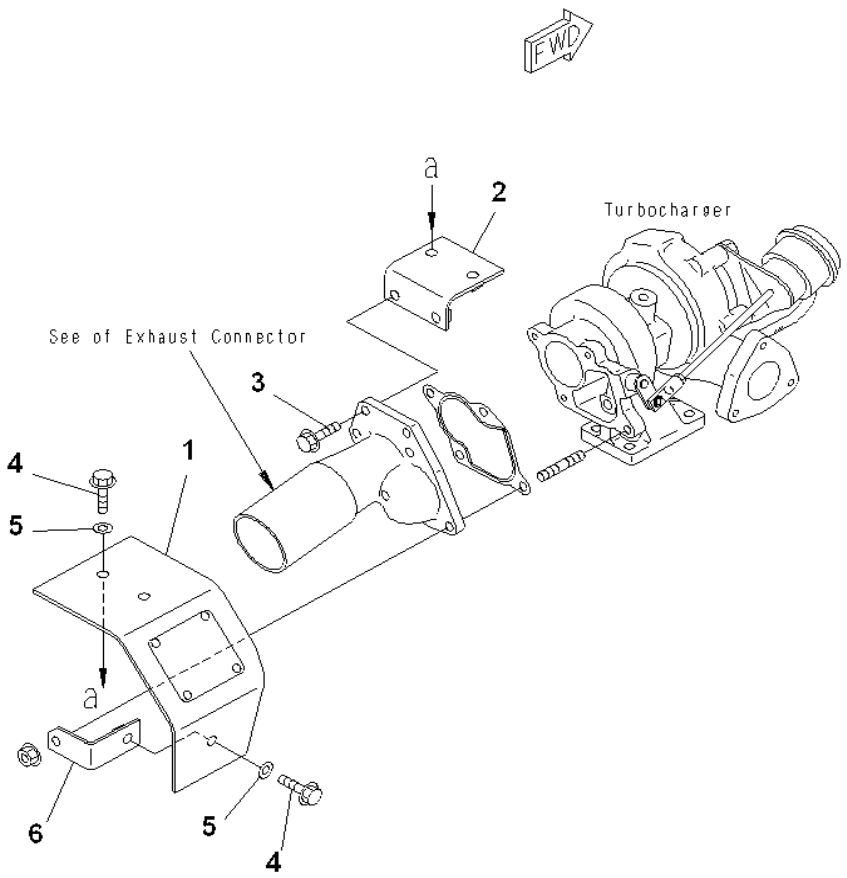

INDEX	PART NUMBER	DESCRIPTION	QTY	SERIAL No.
1	6208-81-8810	COVER,SHIELD	1	101744-
2	6208-81-8820	BRACKET	1	101744-
3	01435-00830	BOLT	2	101744-
4	01435-00820	BOLT	3	101744-
5	154-61-16570	WASHER	3	101744-
6	6208-81-8830	BRACKET	1	101744-

Fig. No. **A1570-A0B6** | **HEAT SHIELD** | Update Index : **A** | **AA-019** 1/1

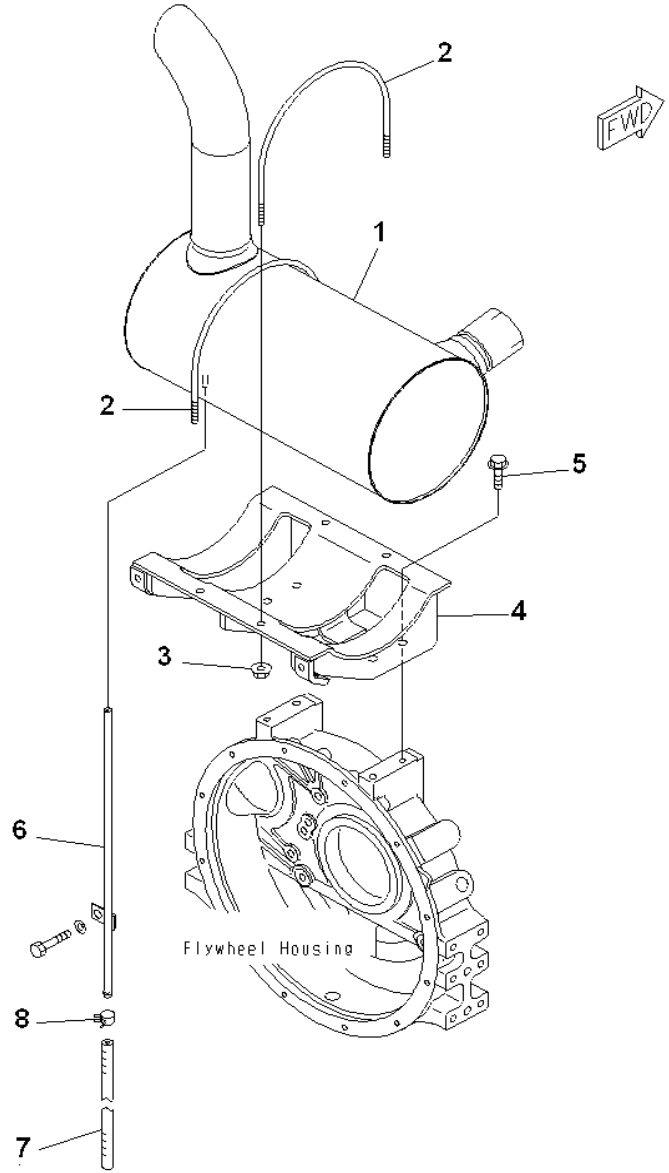

INDEX	PART NUMBER	DESCRIPTION	QTY	SERIAL No.
1	6208-11-5210	MUFFLER	1	101744-
2	6206-11-5980	U-BOLT	2	101744-
3	01584-00806	NUT	4	101744-
4	6732-11-5420	BRACKET	1	101744-
5	01435-01025	BOLT	4	101744-
6	6205-11-5460	TUBE	1	101744-
7	07260-20928	HOSE	1	101744-
8	07285-00150	CLIP	1	101744-

L&T-KOMATSU

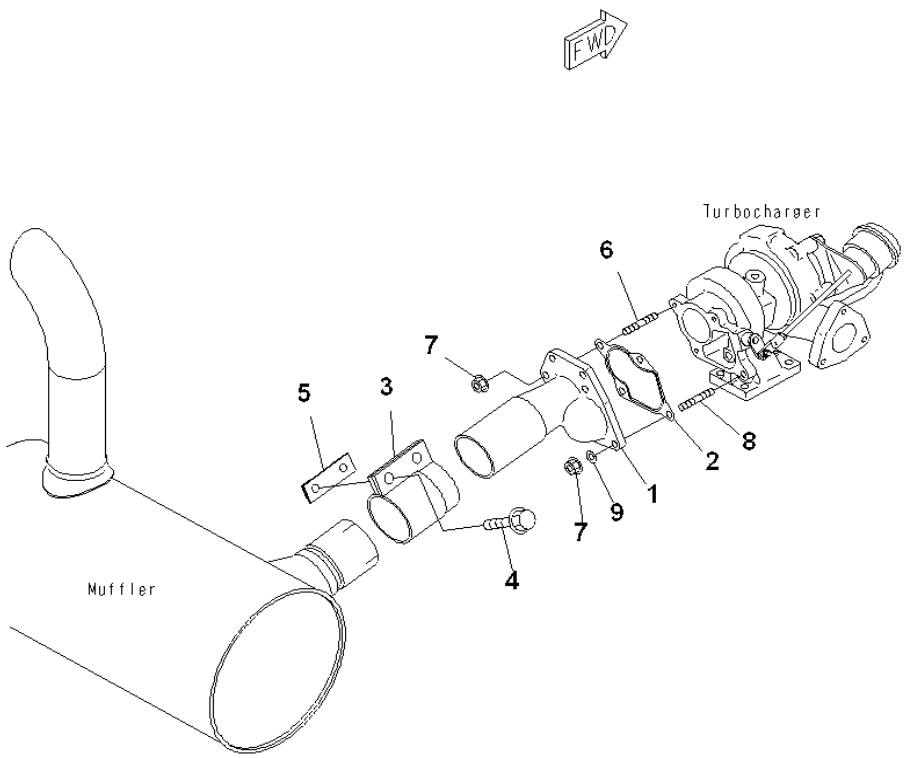

INDEX	PART NUMBER	DESCRIPTION	QTY	SERIAL No.
1	6205-11-5691	CONNECTOR	1	101744-
2	6205-11-5850	GASKET (K1)	1	101744-
3	6206-11-5911	CLAMP	1	101744-
4	01435-01235	BOLT	2	101744-
5	6208-11-5850	PLATE	1	101744-
6	01124-60825	STUD	3	101744-
7	6201-11-5850	NUT	4	101744-
8	01124-60830	STUD	1	101744-
9	01641-20812	WASHER	1	101744-

Fig. No. **A1670-A0A7** | **EXHAUST CONNECTION** | Update Index : **A** | **AA-023** 1/1

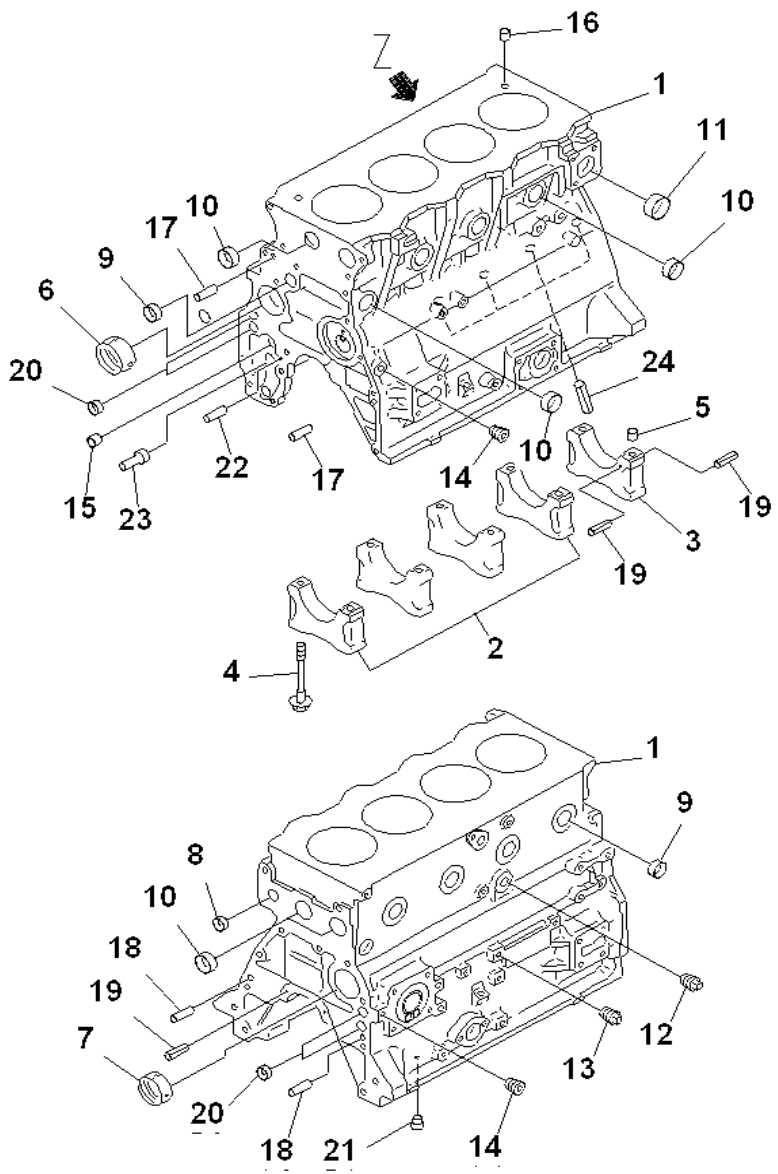

INDEX	PART NUMBER	DESCRIPTION	QTY	SERIAL No.
	6205-21-1504	CYLINDER BLOCK ASS.....	1	101744-
1	#	. BLOCK CYLINDER.....	1	101744-
2	△ 6204-29-1210	. CAP,MAIN METAL NO. 1, 2. 3, 4.....	4	101744-
3	△ 6204-29-1220	. CAP,MAIN METAL NO. 5.....	1	101744-
4	6204-21-1610	. BOLT,MAIN CAP.....	10	101744-
5	6141-21-1530	. RING,DOWEL.....	2	101744-
6	6206-21-1430	. BUSHING,CAMSHAFT.....	1	101744-
7	6206-21-1420	. BUSHING,CAMSHAFT.....	2	101744-
8	07046-42216	. PLUG.....	1	101744-
9	07046-42516	. PLUG.....	5	101744-
10	07046-43016	. PLUG.....	7	101744-
11	07046-44016	. PLUG.....	1	101744-
12	07042-70312	. PLUG.....	1	101744-
13	07042-70108	. PLUG.....	3	101744-
14	07043-70108	. PLUG.....	2	101744-
15	6204-51-1711	. BUSHING,OIL PUMP.....	1	101744-
16	6140-21-1130	. BUSHING,DOWEL.....	2	101744-
17	04020-00820	. PIN,DOWEL.....	2	101744-
18	04020-01228	. PIN,DOWEL.....	2	101744-
19	04025-00408	. PIN,SPRING.....	6	101744-
20	07046-41810	. PLUG.....	4	101744-
21	07043-70108	. PLUG.....	1	101744-
22	6136-52-1620	. PIN,DOWEL? OIL P.....	1	101744-
23	6204-51-1620	. SHAFT,OIL PUMP.....	1	101744-
24	6207-21-1190	. PIN.....	4	101744-

L&T-KOMATSU

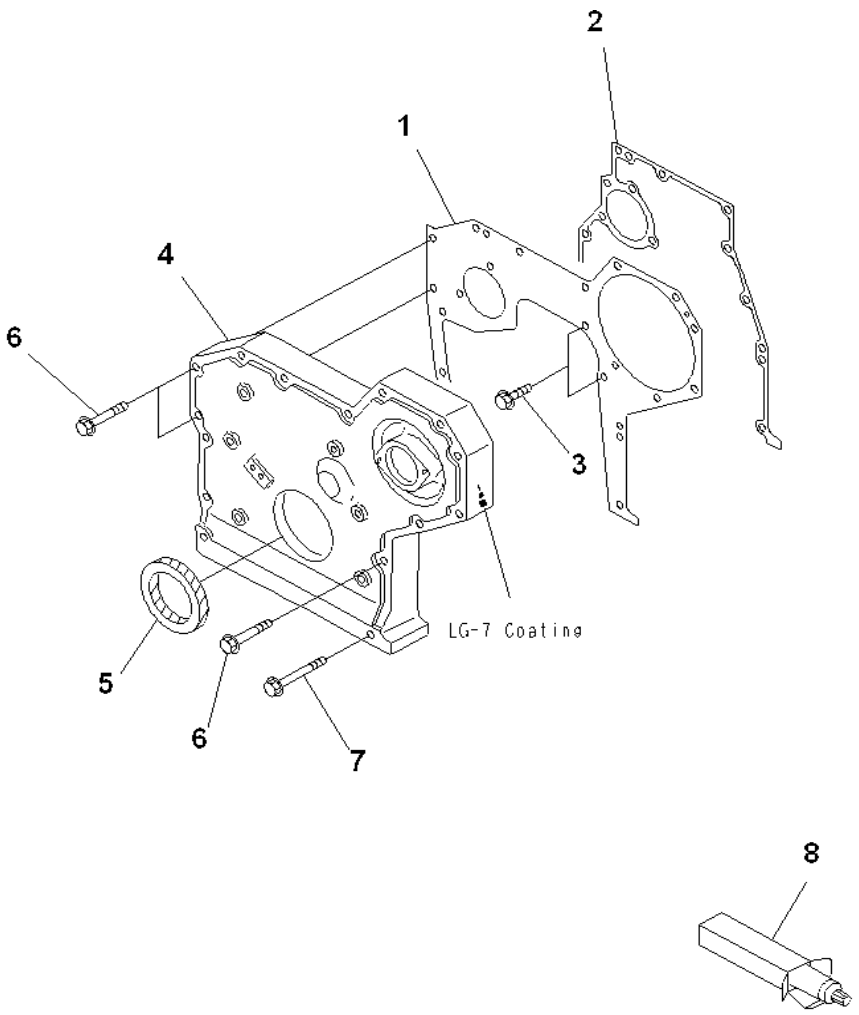

INDEX	PART NUMBER	DESCRIPTION	QTY	SERIAL No.
1	6204-21-3230	PLATE,FRONT	1	101744-
2	6206-21-3840	GASKET (K2)	1	101744-
3	01435-00816	BOLT	2	101744-
4	6204-21-3112	COVER,FRONT	1	101744-
5	6204-21-3510	SEAL? FRONT (K2)	1	101744-
6	01435-00855	BOLT	9	101744-
7	01435-00870	BOLT	2	101744-
8	(09920-00150)	LIQUID GASKET LG-7, 150G	AR	101744-

Fig. No. **A2040-A0E5** | **FRONT COVER (EXCEPT JAPAN)** | Update Index : **A** | **AA-027** 1/1

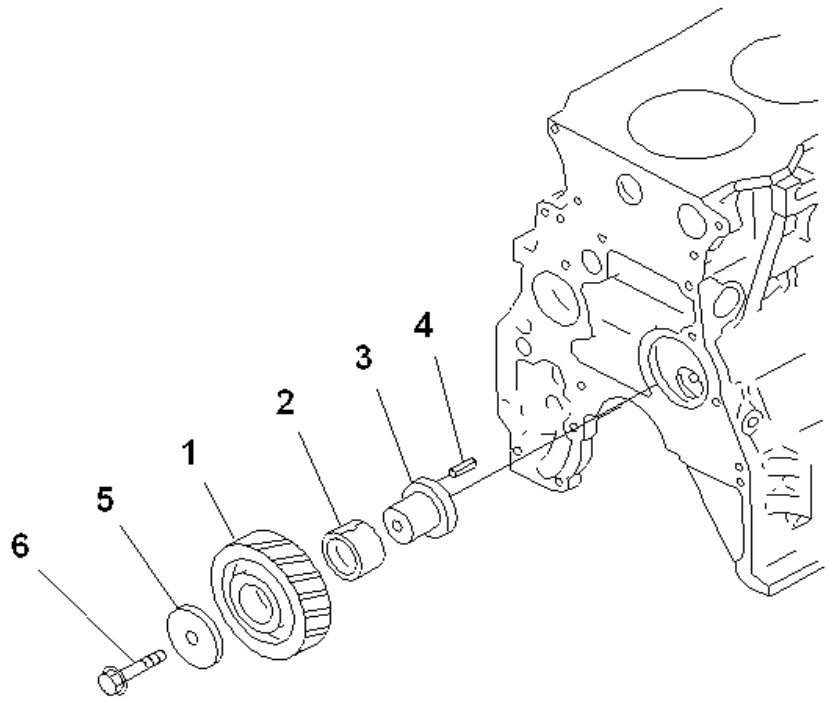

INDEX	PART NUMBER	DESCRIPTION	QTY	SERIAL No.
	6206-31-6301	IDLER GEAR ASS'Y.....	1	101744-
1	#	.GEAR, IDLER.....	1	101744-
2	6204-31-6341	.BUSHING.....	1	101744-
3	6204-31-6331	SHAFT.....	1	101744-
4	04025-00512	PIN,SPRING.....	1	101744-
5	6204-31-6350	WASHER.....	1	101744-
6	01435-01270	BOLT.....	1	101744-

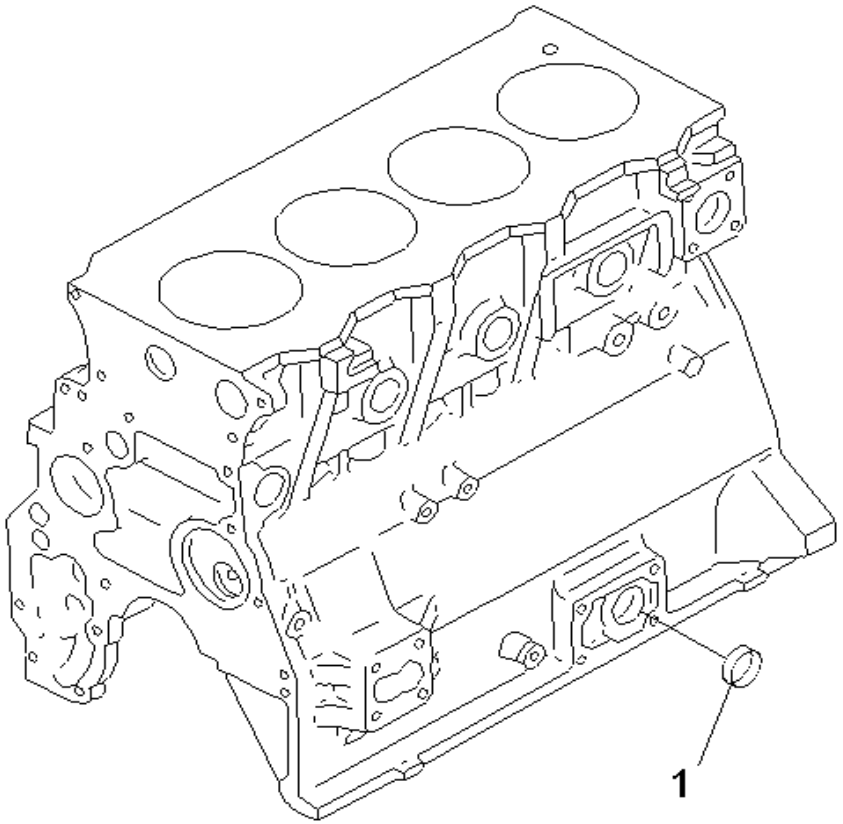

INDEX	PART NUMBER	DESCRIPTION	QTY	SERIAL No.
1	07046-23016	PLUG.....	1	101744-

Fig. No. **A2070-A0C2** | **BLIND PLUG (OIL FILTER UPPER SPECIFICATION)** | Update Index : **A** | **AA-031** 1/1

L&T-KOMATSU

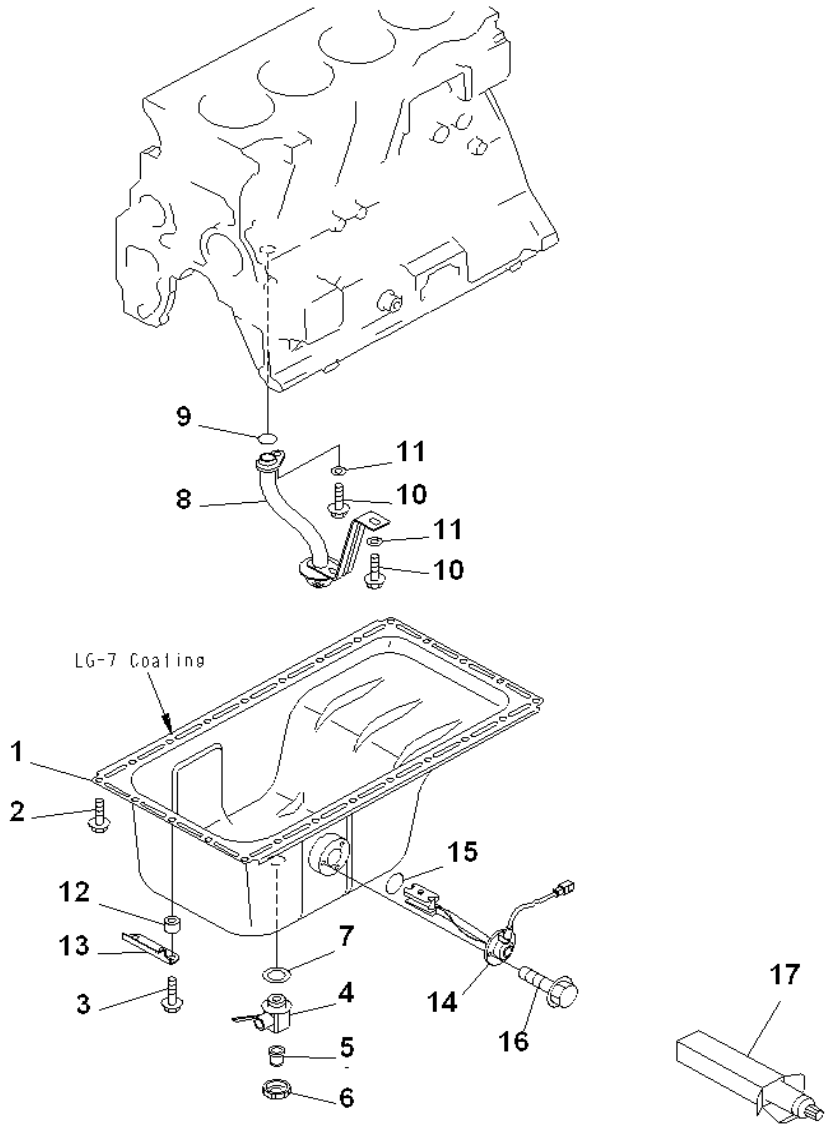

INDEX	PART NUMBER	DESCRIPTION	QTY	SERIAL No.
1	6205-21-5142	OIL PAN,OIL	1	105925-
2	01435-00814	BOLT	22	101744-
3	01435-00835	BOLT	2	101744-
	6738-21-5611	COCK ASS'Y	1	101744-
4	6738-21-5621	. COCK	1	101744-
5	6738-21-5630	. JOINT	1	101744-
6	6738-21-5640	. UNION	1	101744-
7	07005-02216	GASKET (K2)	1	101744-
8	6205-51-6120	TUBE,SUCTION	1	101744-
9	6204-51-6122	O-RING (K2)	1	101744-
10	01435-00816	BOLT	2	101744-
11	01643-30823	WASHER	2	101744-
12	6141-64-2560	SPACER	2	101744-
13	6204-21-3750	PLATE	1	101744-
14	6741-81-9220	SENSOR	1	101744-
15	7861-91-4220	. O'RING	1	101744-
16	01435-00612	BOLT	3	101744-
17	(09920-00150)	LIQUID GASKET LG-7, 150G	AR	101744-

Fig. No. **A2110-A0P1** | **OIL PAN AND SUCTION TUBE** | Update Index : **A** | **AA-033** 1/1

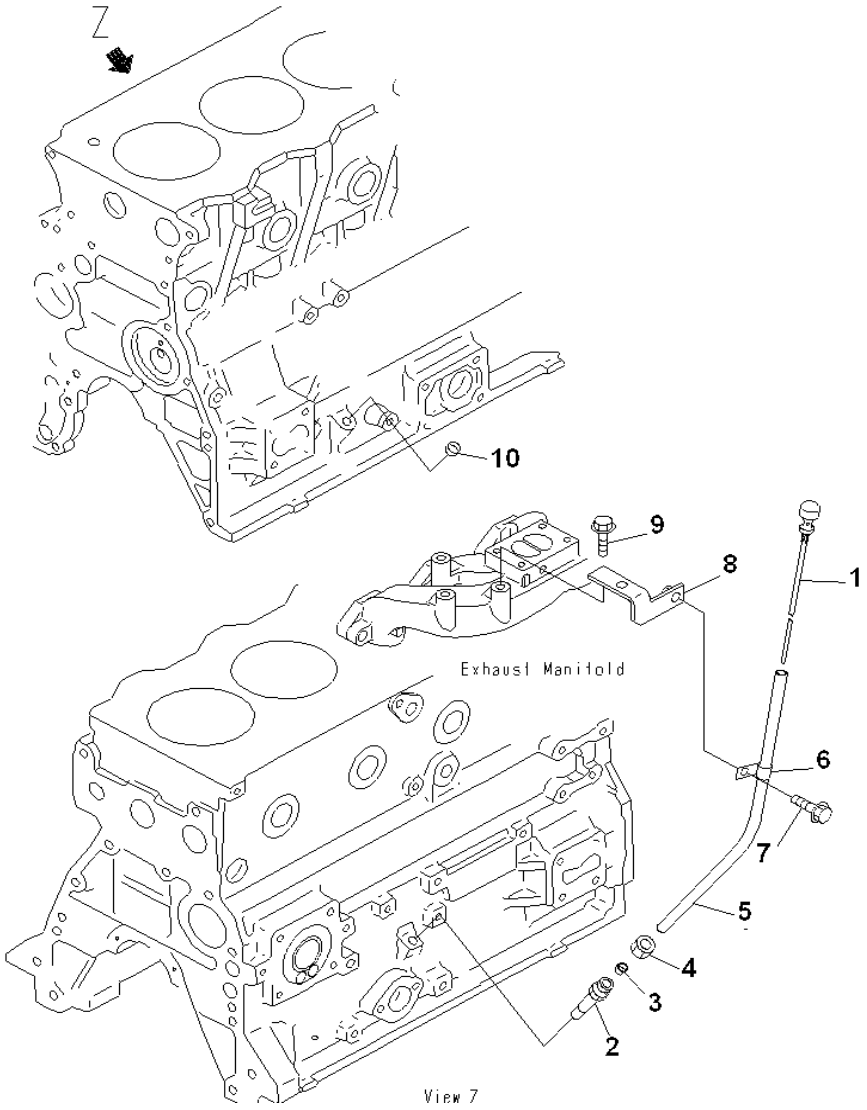

INDEX	PART NUMBER	DESCRIPTION	QTY	SERIAL No.
1	6205-21-5360	GAUGE,OIL	1	101744-
2	6204-21-5510	GUIDE	1	101744-
3	6150-21-5920	COLLAR	1	101744-
4	6150-21-5930	NUT	1	101744-
5	6208-21-5410	GUIDE,OIL GAUGE	1	101744-
6	6144-21-5590	CLAMP	1	101744-
7	01435-01020	BOLT	1	101744-
8	6208-11-8880	BRACKET	1	101744-
9	01435-01016	BOLT	1	101744-
10	07046-21210	PLUG	1	101744-

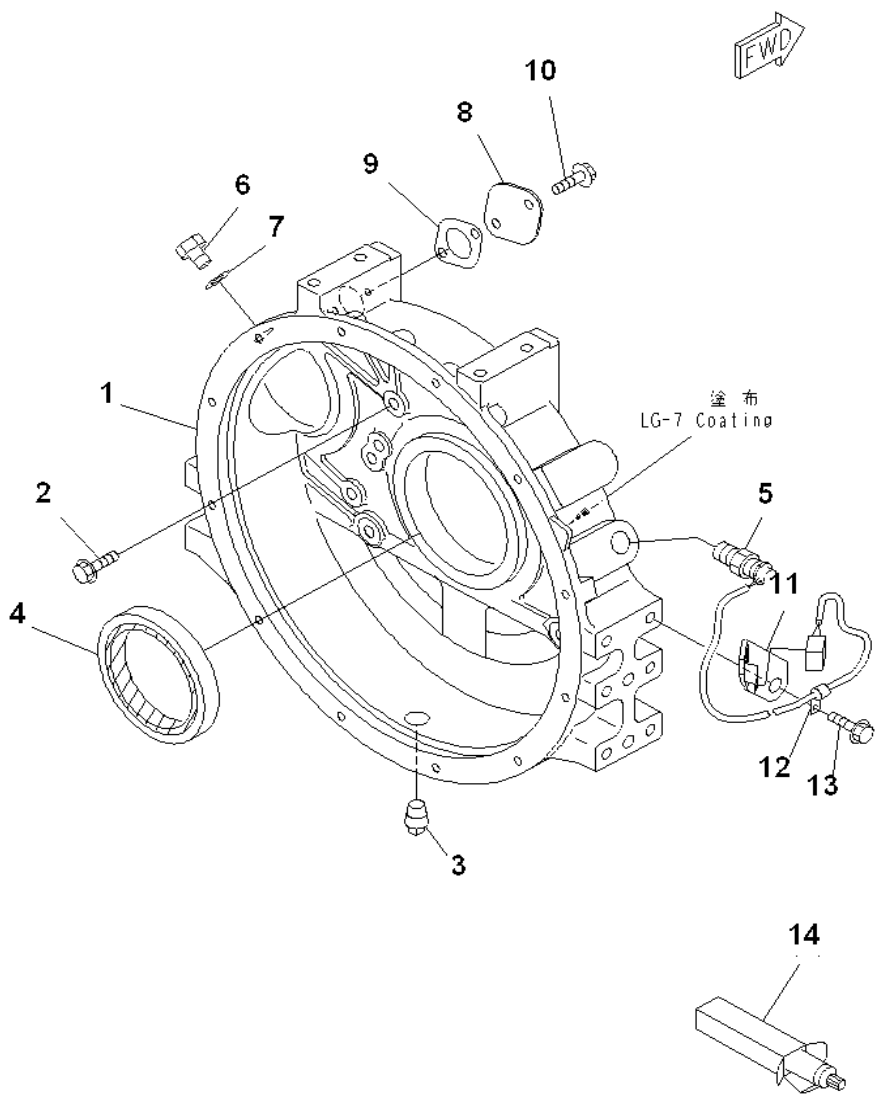

INDEX	PART NUMBER	DESCRIPTION	QTY	SERIAL No.
1	6208-21-4110	HOUSING,FLYWHEEL	1	101744-
2	01435-01030	BOLT	11	101744-
3	07042-00415	PLUG	1	101744-
4	6141-21-1332	SEAL? REAR (K2)	1	101744-
5	7861-93-2330	SENSOR,REVOLUTION	1	101744-
6	6130-22-5190	PLUG	1	101744-
7	07005-02416	GASKET (K2)	1	101744-
8	6204-21-6710	PLATE	1	101744-
9	6204-21-6820	GASKET (K2)	1	101744-
10	01435-00816	BOLT	2	101744-
11	203-06-71251	BRACKET	1	101744-
12	04434-50612	CLIP	1	101744-
13	01435-01220	BOLT	1	101744-
14	(09920-00150)	LIQUID GASKET LG-7, 150G	AR	101744-

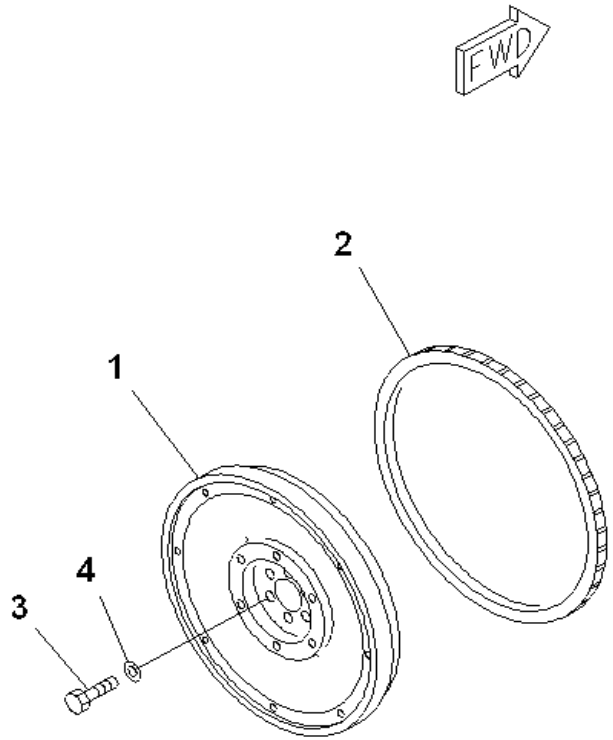

INDEX	PART NUMBER	DESCRIPTION	QTY	SERIAL No.
	6206-31-4232	FLYWHEEL ASS'Y	1	101744-
1	6206-31-4241	. FLYWHEEL	1	101744-
2	6206-31-4792	. GEAR,RING	1	101744-
3	01050-31430	BOLT	6	101744-
4	6130-32-1361	WASHER	6	101744-

Fig. No. **A2230-A0B4** | **FLYWHEEL** | Update Index : **A** | **AA-039** **1/1**

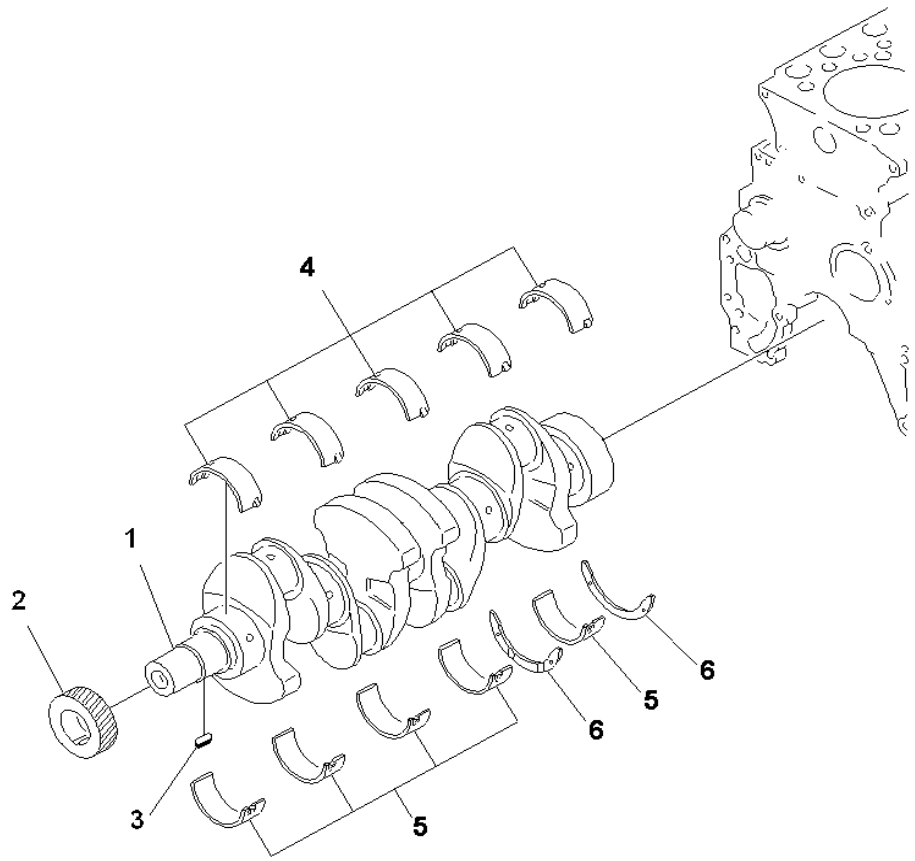

INDEX	PART NUMBER	DESCRIPTION	QTY	SERIAL No.
	6205-31-1202	CRANKSHAFT ASS'Y	1	101744-
1	#	. CRANKSHAFT	1	101744-
2	6204-31-1220	. GEAR,CRANKSHAFT	1	101744-
3	6206-31-1530	. KEY	1	101744-
		STANDARD		
	6204-21-8100	MAIN METAL ASS'Y	5	101744-
4	#	. METAL UPPER	1	101744-
5	#	. METAL LOWER	1	101744-
		UNDERSIZE 0.25MM		
	6204-29-8100	MAIN METAL ASS'Y	5	101744-
4	#	. METAL UPPER	1	101744-
5	#	. METAL LOWER	1	101744-
		UNDERSIZE 0.50MM		
	6204-28-8100	MAIN METAL ASS'Y	5	101744-
4	#	. METAL UPPER	1	101744-
5	#	. METAL LOWER	1	101744-
		UNDERSIZE 0.75MM		
	6204-27-8100	MAIN METAL ASS'Y	5	101744-
4	#	. METAL UPPER	1	101744-
5	#	. METAL LOWER	1	101744-
		UNDERSIZE 1.00MM		
	6204-26-8100	MAIN METAL ASS'Y	5	101744-
4	#	. METAL UPPER	1	101744-
5	#	. METAL LOWER	1	101744-
		STANDARD		
6	6204-21-8600	THRUST METAL ASS'Y	1	101744-
	#	. METAL THRUST	2	101744-
		OVERSIZE 0.25MM		
6	6204-29-8600	THRUST METAL ASS'Y	1	101744-
	#	. METAL THRUST	2	101744-
		OVERSIZE 0.50MM		
6	6204-28-8600	THRUST METAL ASS'Y	1	101744-
	#	. METAL THRUST	2	101744-
		OVERSIZE 0.75MM		
6	6204-27-8600	THRUST METAL ASS'Y	1	101744-
	#	. METAL THRUST	2	101744-
		OVERSIZE 1.00MM		
6	6204-26-8600	THRUST METAL ASS'Y	1	101744-

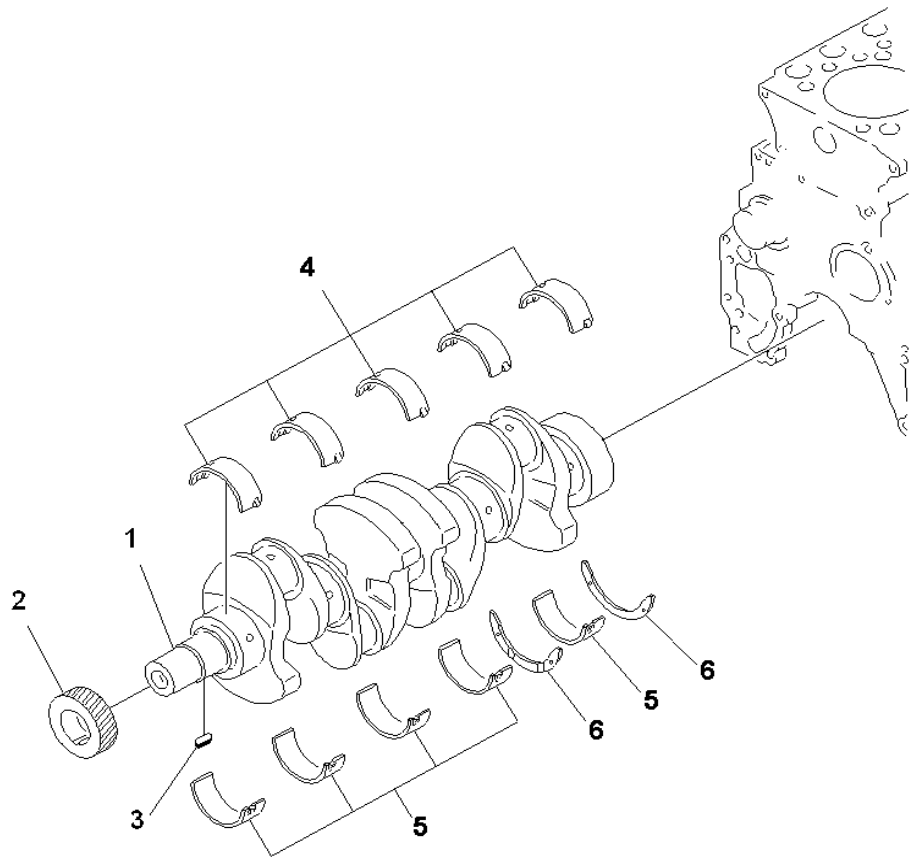

INDEX	PART NUMBER	DESCRIPTION	QTY	SERIAL No.
	#	. METAL THRUST.....	2	101744-

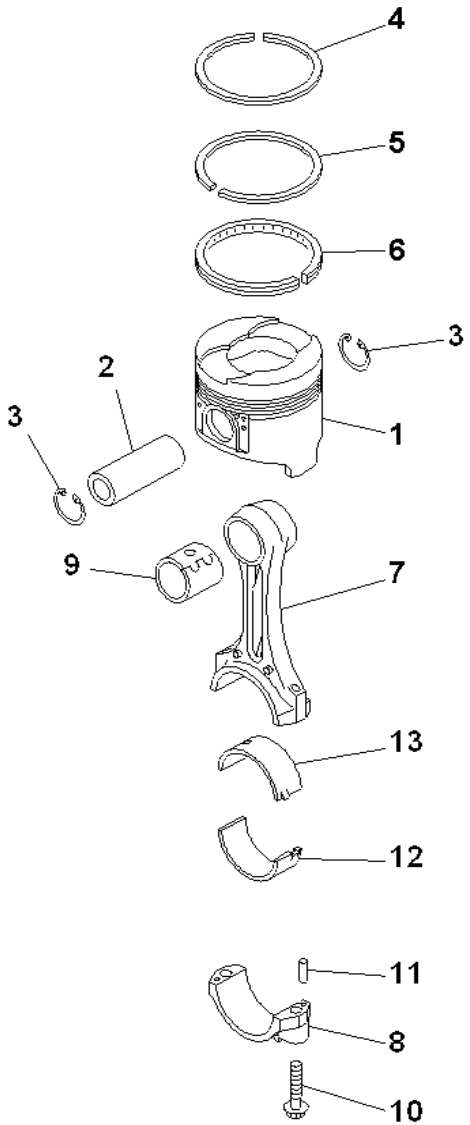

INDEX	PART NUMBER	DESCRIPTION	QTY	SERIAL No.
		STANDARD		
1	6208-39-2110	PISTON (S).....	AR	101744-
		OVERSIZE 0.25MM		
1	6208-38-2110	PISTON (S).....	AR	101744-
		OVERSIZE 0.5MM		
1	6208-38-2110	PISTON (S).....	AR	101744-
2	6207-31-2420	PIN,PISTON.....	4	101744-
3	04065-03012	RING,SNAP.....	8	101744-
		STANDARD		
	6208-31-2100	PISTON RING ASS'Y,PER CYLINDER.....	4	101744-
4	#	. RING, TOP.....	1	101744-
5	#	. RING, SECOND.....	1	101744-
6	#	. RING, OIL.....	1	101744-
		OVERSIZE 0.25MM		
	6208-39-2100	PISTON RING ASS'Y,PER CYLINDER.....	4	101744-
4	#	. RING, TOP.....	1	101744-
5	#	. RING, SECOND.....	1	101744-
6	#	. RING, OIL.....	1	101744-
	#	OVERSIZE 0.5MM.....		
	6208-38-2100	PISTON RING ASS'Y,PER CYLINDER.....	4	101744-
4	#	. RING, TOP.....	1	101744-
5	#	. RING, SECOND.....	1	101744-
6	#	. RING, OIL.....	1	101744-
	6207-31-3101	CONNECTING ROD ASS'Y.....	4	101744-
7	#	. ROD, CONNECTING.....	1	101744-
8	#	. CAP.....	1	101744-
9	6207-31-3130	. BUSHING.....	1	101744-
10	6204-31-3310	. BOLT.....	2	101744-
11	6207-31-3140	. PIN.....	2	101744-
	6208-31-3400	CRANK PIN METAL A.....	4	101744-
12	#	. METAL UPPER.....	1	101744-
13	#	. METAL LOWER.....	1	101744-

L&T-KOMATSU

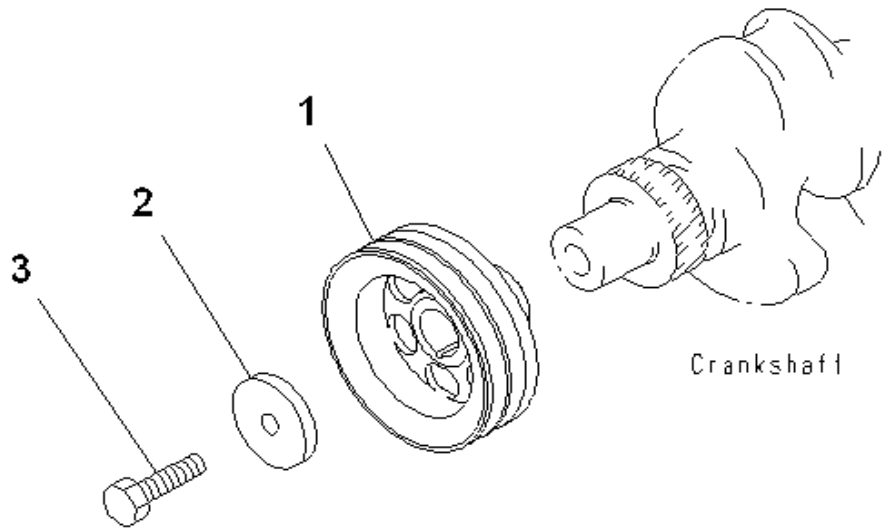

INDEX	PART NUMBER	DESCRIPTION	QTY	SERIAL No.
1	6208-31-1410	PULLEY,NON HARDENING.....	1	101744-
2	6136-31-1431	PLATE.....	1	101744-
3	01050-31845	BOLT.....	1	101744-

Fig. No. **A2370-A0F4** | **CRANK PULLY** | Update Index : **A** | **AA-045** 1/1

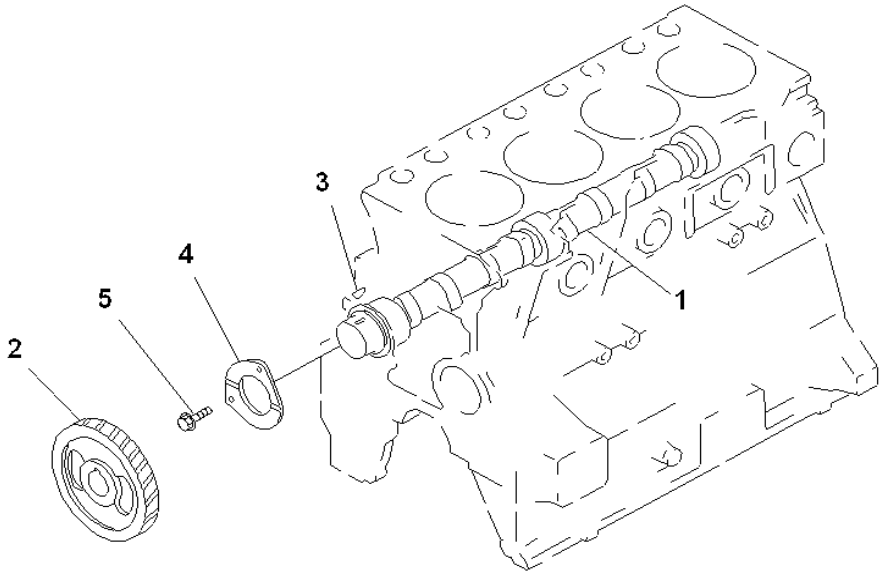

INDEX	PART NUMBER	DESCRIPTION	QTY	SERIAL No.
	6205-41-1500	CAMSHAFT ASS'Y	1	101744-
1	#	. CAM SHAFT	1	101744-
2	6204-41-1221	. GEAR,CAMSHAFT	1	101744-
3	04010-00516	. KEY	1	101744-
4	6204-41-1131	. PLATE,THRUST	1	101744-
5	01435-00820	BOLT	2	101744-

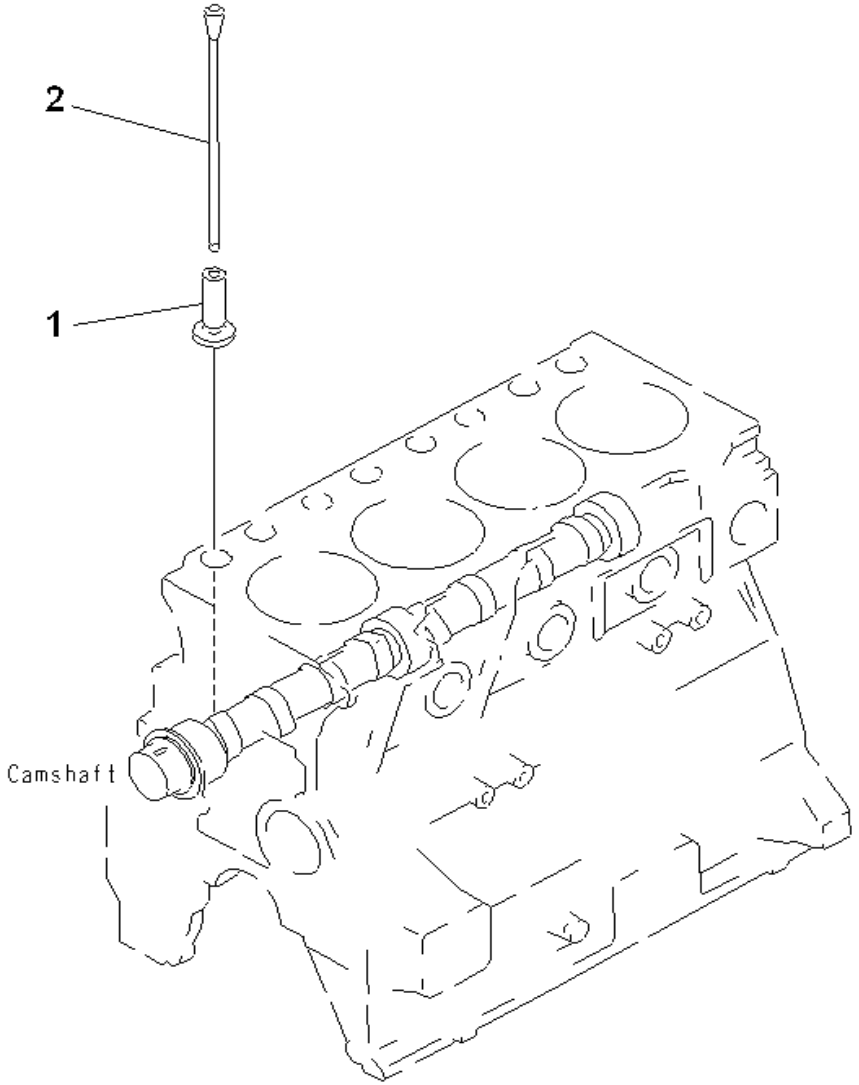

INDEX	PART NUMBER	DESCRIPTION	QTY	SERIAL No.
1	6204-41-2110	TAPPET	8	101744-
2	6204-41-3110	ROD,PUSH	8	101744-

L&T-KOMATSU

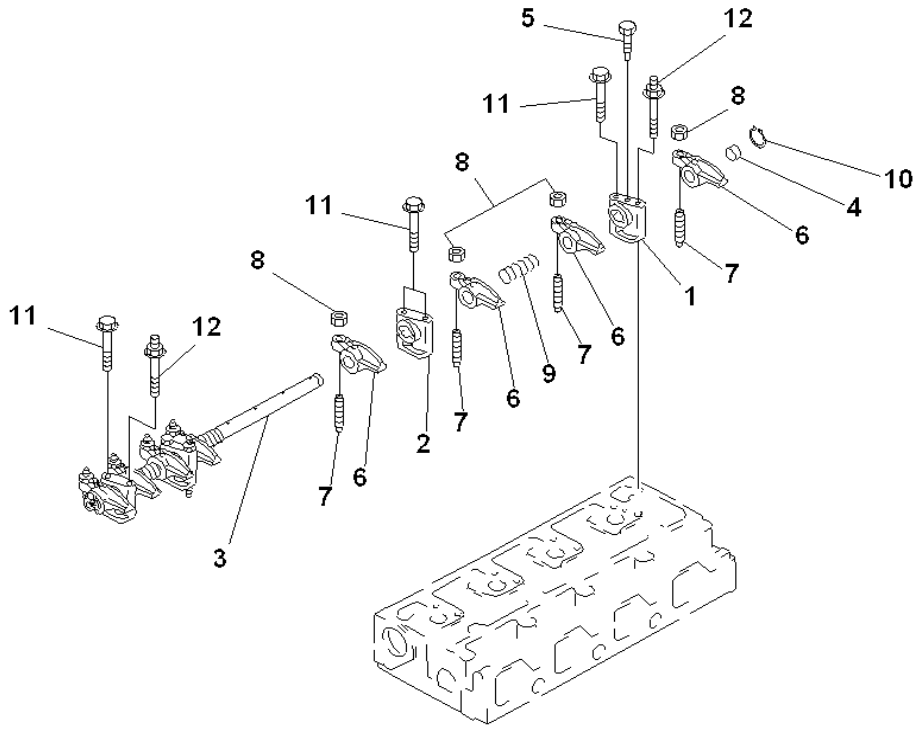

INDEX	PART NUMBER	DESCRIPTION	QTY	SERIAL No.
1	6204-41-5110	BRACKET,ROCKER	1	101744-
2	6204-41-5120	BRACKET,ROCKER	3	101744-
	6205-43-5500	SHAFT ASS'Y	1	101744-
3	#	.SHAFT, ROCKER	1	101744-
	#	.SHAFT, ROCKER	1	101744-
4	6221-41-5540	.PLUG	2	101744-
5	6205-43-5310	BOLT	1	101744-
6	6205-43-5410	ARM,ROCKER	8	101744-
7	6221-41-5410	SCREW,ADJUST	8	101744-
8	6221-41-5420	NUT	8	101744-
9	6202-43-5320	SPRING	3	101744-
10	6204-41-5620	CLIP	2	101744-
11	01435-00865	BOLT	5	101744-
12	6204-41-5710	BOLT	3	101744-

Fig. No. **A2450-A0A1** | **ROCKER ARM** | Update Index : **A** | **AA-051**

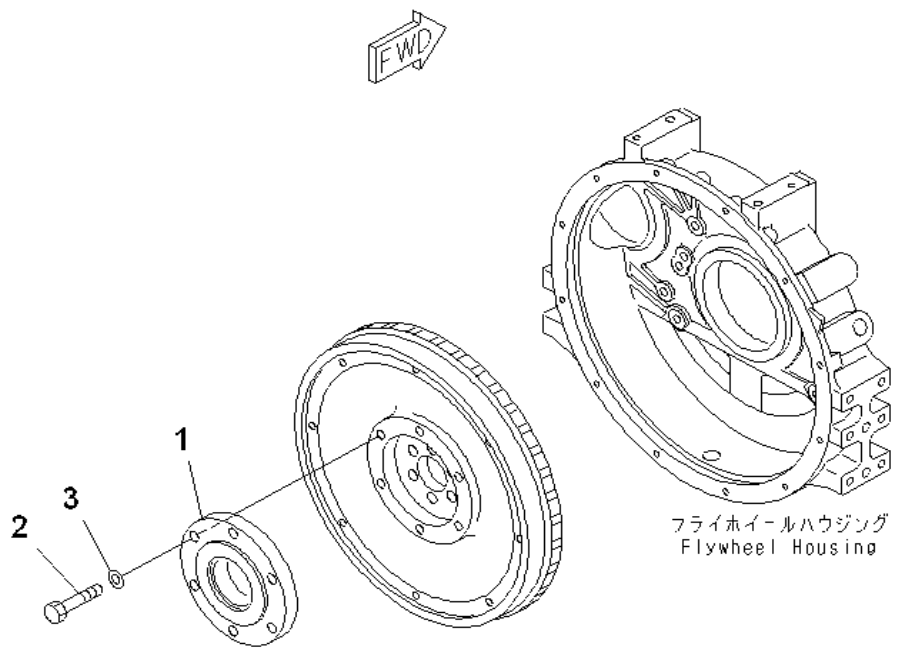

INDEX	PART NUMBER	DESCRIPTION	QTY	SERIAL No.
1	203-01-61181	COUPLING	1	101744-
2	01010-81240	BOLT	6	101744-
3	01643-31232	WASHER	6	101744-

Fig. No. **A2650-A0B7** | **COUPLING (PTO MAIN)** | Update Index : **A** | **AA-053** 1/1

L&T-KOMATSU

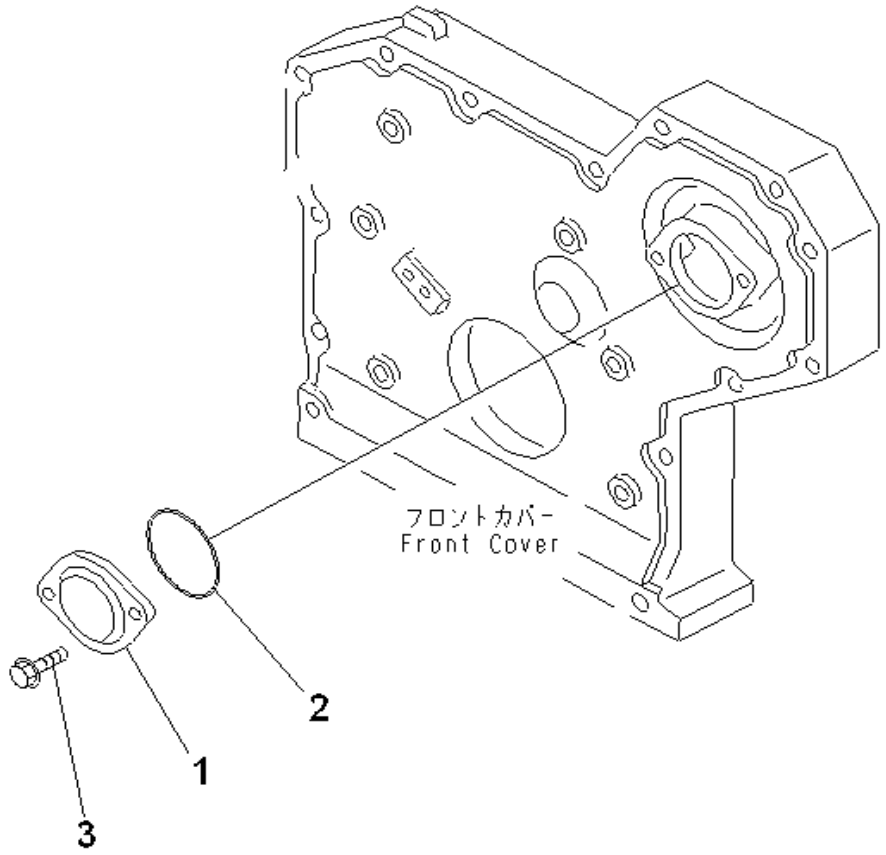

INDEX	PART NUMBER	DESCRIPTION	QTY	SERIAL No.
1	6144-81-5151	COVER	1	101744-
2	07000-13050	O-RING (K2)	1	101744-
3	01435-00616	BOLT	2	101744-

Fig. No. **A2810-A0A5** | **TACHO DRIVE COVER** | Update Index : **A** | **AA-055** 1/1

L&T-KOMATSU

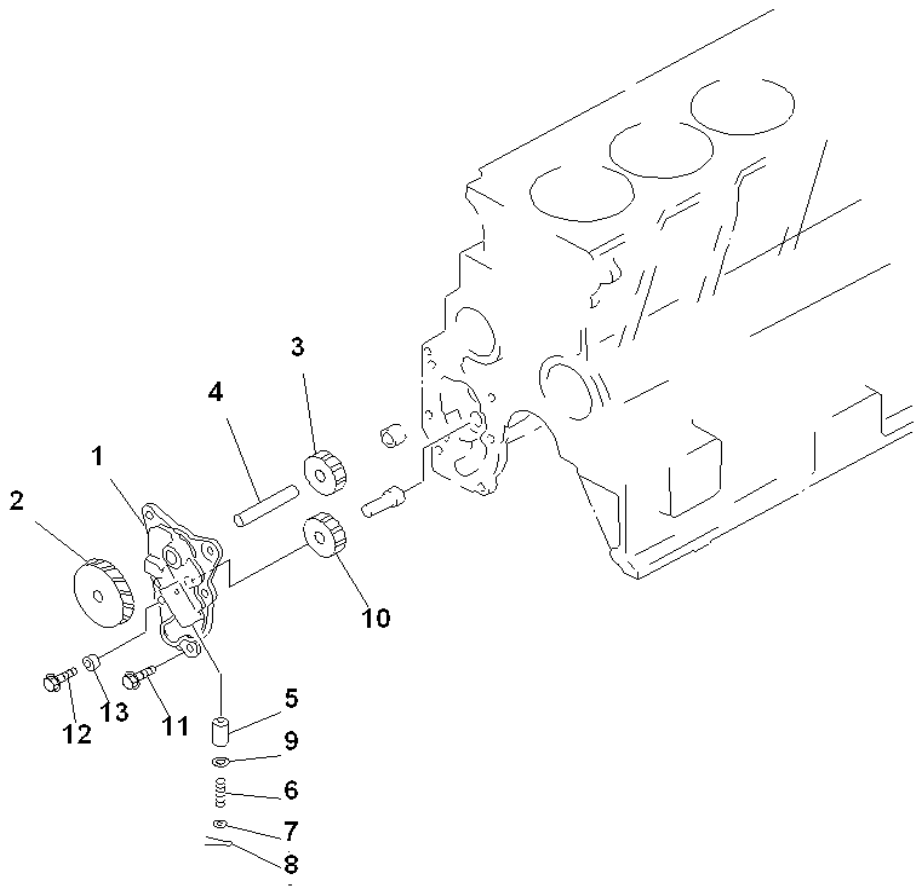

INDEX	PART NUMBER	DESCRIPTION	QTY	SERIAL No.
	6207-51-1201	COVER ASS'Y	1	101744-
1	#	. COVER	1	101744-
2	6204-51-1510	. GEAR	1	101744-
	6207-51-1400	. SHAFT ASS'Y	1	101744-
3	6207-51-1410	. . GEAR,DRIVE	1	101744-
4	#	. . SHAFT	1	101744-
5	6204-51-1310	. VALVE	1	101744-
6	6206-51-1320	. SPRING	1	101744-
7	6204-51-1330	. WASHER	1	101744-
8	6204-51-1340	. PIN,COTTER	1	101744-
9	6204-51-1910	. SHIM	1	101744-
10	6207-51-1610	GEAR,DRIVEN	1	101744-
11	01435-00816	BOLT	4	101744-
12	01435-00825	BOLT	1	101744-
13	6691-41-8230	SPACER, 10MM	1	101744-

Fig. No. **A3010-A0A2** | **OIL PUMP** | Update Index : **A** | **AA-057** 1/1

L&T-KOMATSU

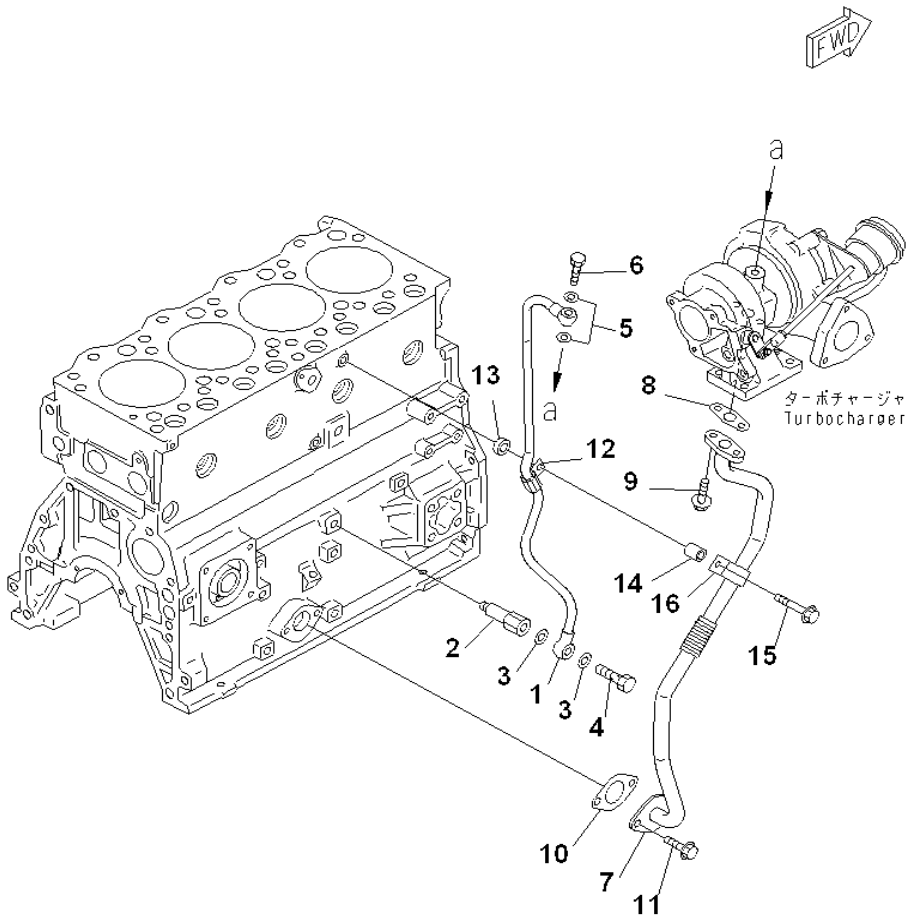

INDEX	PART NUMBER	DESCRIPTION	QTY	SERIAL No.
1	6205-51-8540	TUBE,SUPPLY	1	101744-
2	6205-51-8240	NIPPLE	1	101744-
3	07005-01412	GASKET (K2)	2	101744-
4	07206-31014	BOLT,JOINT	1	101744-
5	07003-01015	GASKET (K1)	2	101744-
6	6205-51-8251	BOLT	1	101744-
7	6205-51-8530	TUBE,RETURN	1	101744-
8	6205-51-7611	GASKET (K1)	1	101744-
9	01435-00616	BOLT	2	101744-
10	6204-21-6820	GASKET (K2)	1	101744-
11	01435-00814	BOLT	2	101744-
12	6205-51-8560	CLIP	1	101744-
13	6162-73-5940	SPACER	1	101744-
14	20D-62-17620	COLLAR	1	101744-
15	01435-00840	BOLT	1	101744-
16	6204-51-8950	CLAMP	1	101744-

Fig. No. **A3030-A0A3** | **TURBOCHARGER LUBRICATING OIL PIPING** | Update Index : **A** | **AA-059** 1/1

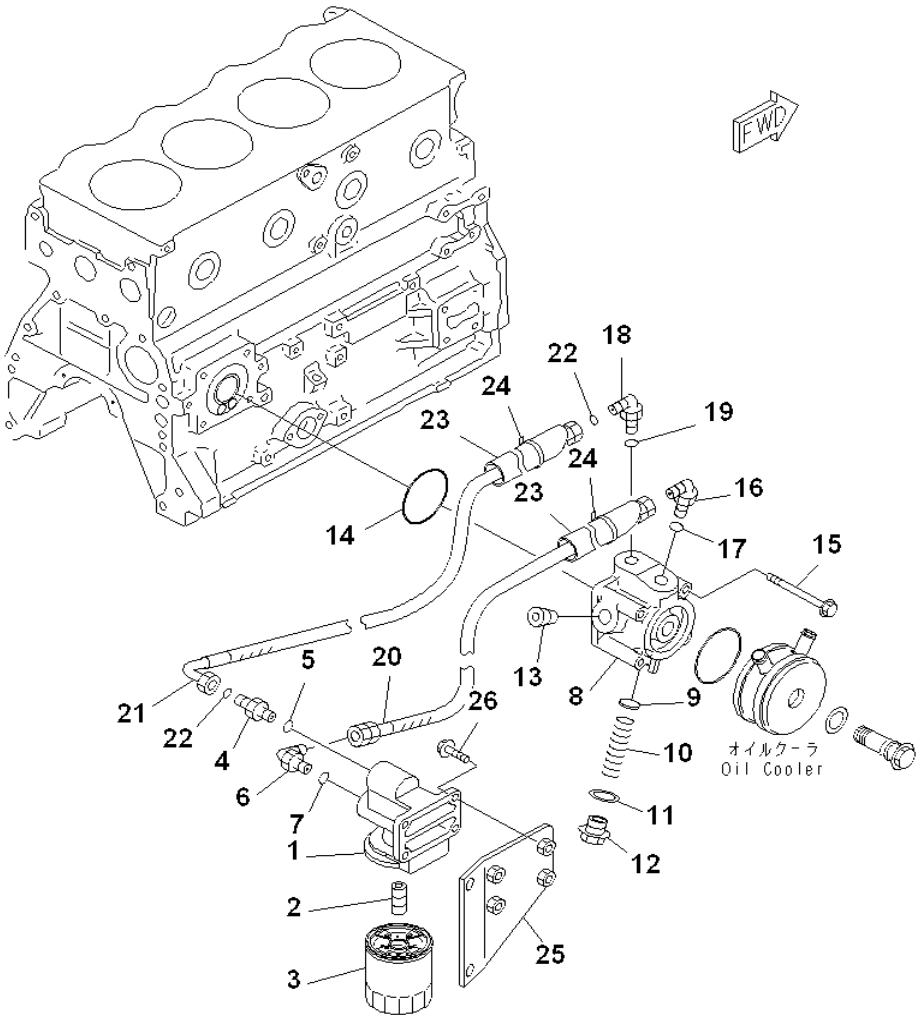

INDEX	PART NUMBER	DESCRIPTION	QTY	SERIAL No.
1	6208-51-5210	HEAD,OIL FILTER	1	101744-
2	6201-51-5910	NIPPLE	1	101744-
3	600-211-2110	CARTRIDGE	1	101744-
4	02781-00628	UNION	1	101744-
5	07002-62434	O-RING (K2)	1	101744-
6	07235-10628	ELBOW	1	101744-
7	07002-62434	O'RING(K2)	1	101744-
	6208-51-5410	ADAPTER ASS'Y	1	101744-
8	6208-51-5420	. ADAPTER	1	101744-
9	6162-53-5450	. PACKING	1	101744-
10	600-211-1870	. SPRING	1	101744-
11	6162-53-5430	. PACKING	1	101744-
12	6162-53-5420	. CAP	1	101744-
13	07043-70415	. PLUG	1	101744-
14	07000-72070	O-RING (K2)	1	101744-
15	01435-00880	BOLT	4	101744-
16	07235-10630	ELBOW	1	101744-
17	07002-62434	O-RING (K2)	1	101744-
18	02782-10630	ELBOW	1	101744-
19	07002-62434	O-RING (K2)	1	101744-
20	07102-206A6	HOSE	1	101744-
21	6208-51-5870	HOSE	1	101744-
22	02896-61018	O-RING (K2)	2	101744-
23	6208-51-5890	COVER	2	101744-
24	08034-20519	BAND	2	101744-
25	203-01-71290	BRACKET	1	101744-
26	01435-00825	BOLT	4	101744-

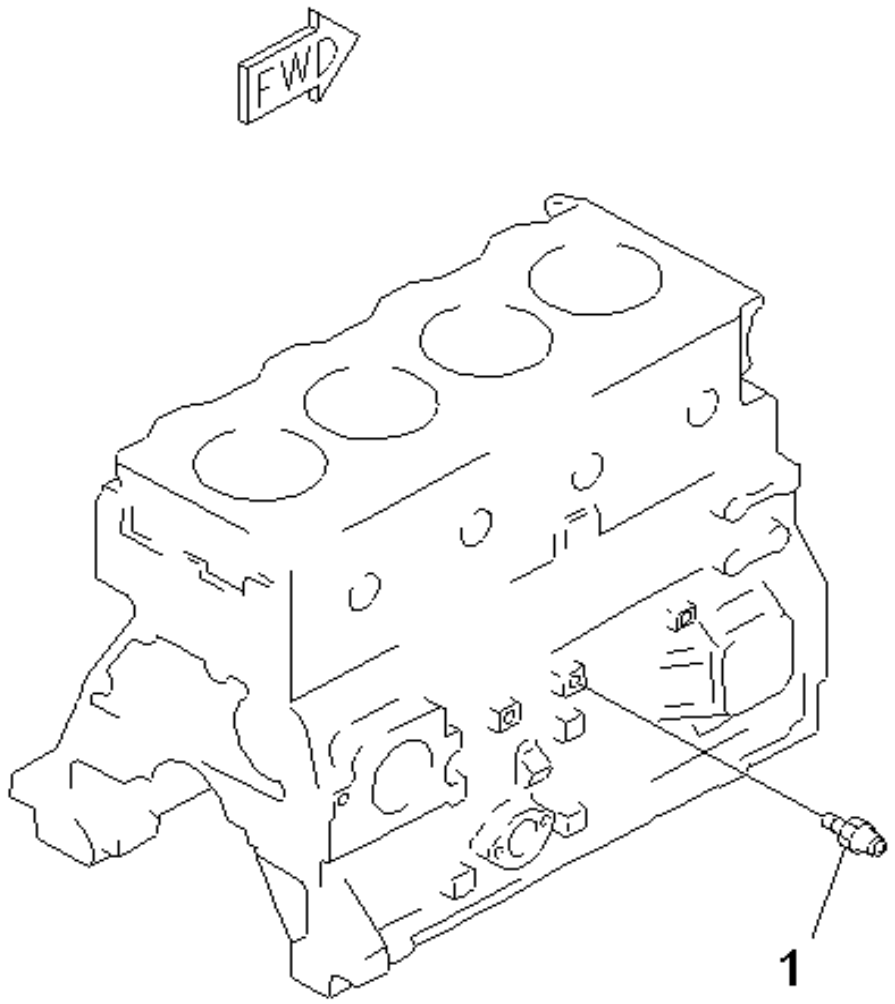

INDEX	PART NUMBER	DESCRIPTION	QTY	SERIAL No.
1	08073-10505	SWITCH.....	1	101744-

Fig. No. **A3190-A0A1** | **OIL PRESSURE SWITCH** | Update Index : **A** | **AA-063** 1/1

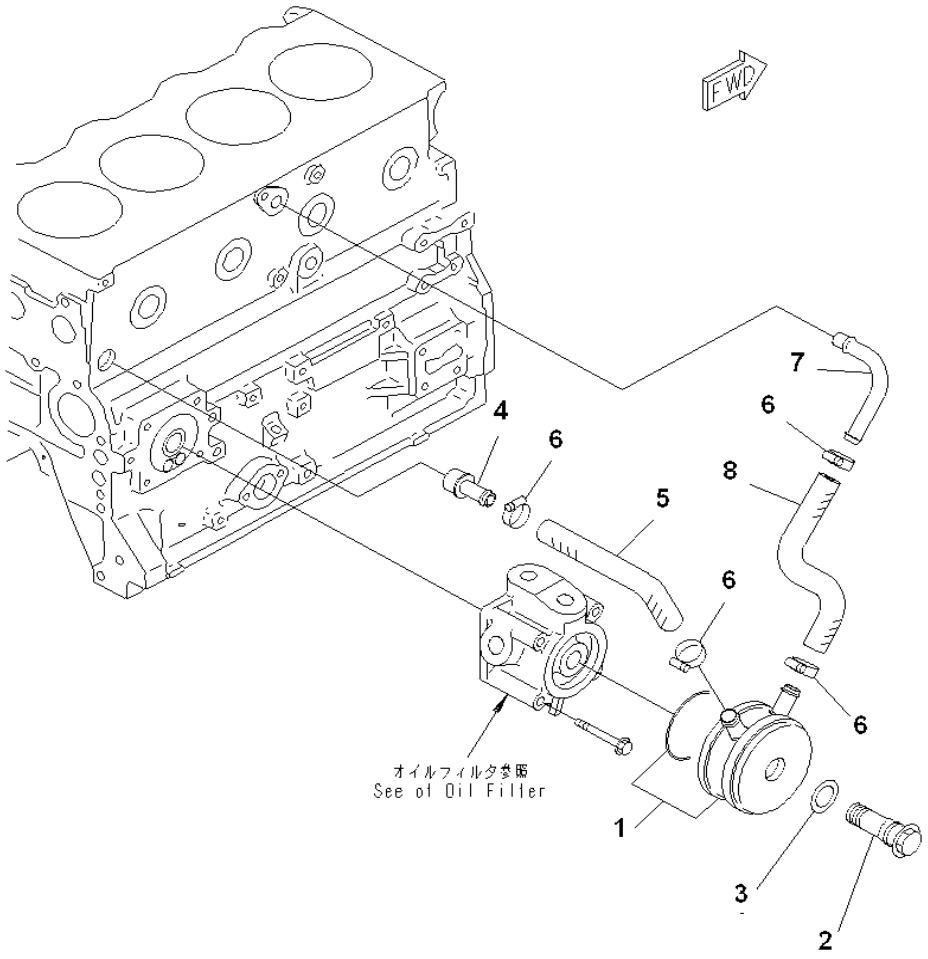

INDEX	PART NUMBER	DESCRIPTION	QTY	SERIAL No.
1	6208-61-5400	OIL COOLER ASS'Y.....	1	101744-
	6205-61-5420	. O-RING.....	1	101744-
2	6208-61-5410	JOINT.....	1	101744-
3	6208-61-5420	GASKET (K2).....	1	101744-
4	6205-61-5261	JOINT.....	1	101744-
5	6208-61-5210	HOSE.....	1	101744-
6	07281-00259	CLAMP.....	4	101744-
7	6205-61-5251	JOINT.....	1	101744-
8	6208-61-5220	HOSE.....	1	101744-

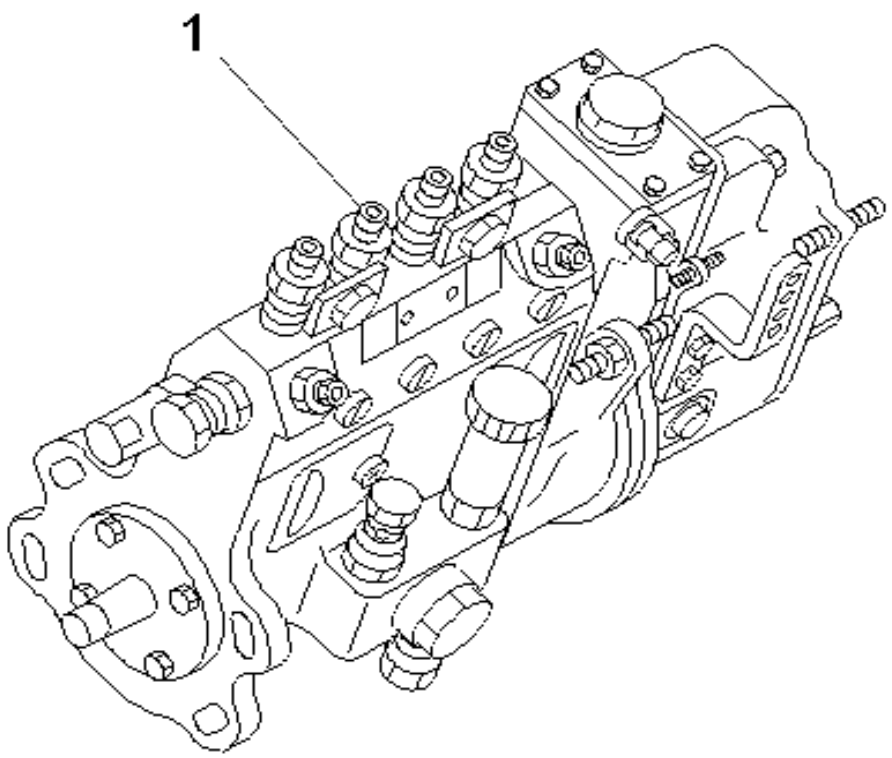

INDEX	PART NUMBER	DESCRIPTION	QTY	SERIAL No.
1	6208-71-1210	INJECTION PUMP.....	1	101744-

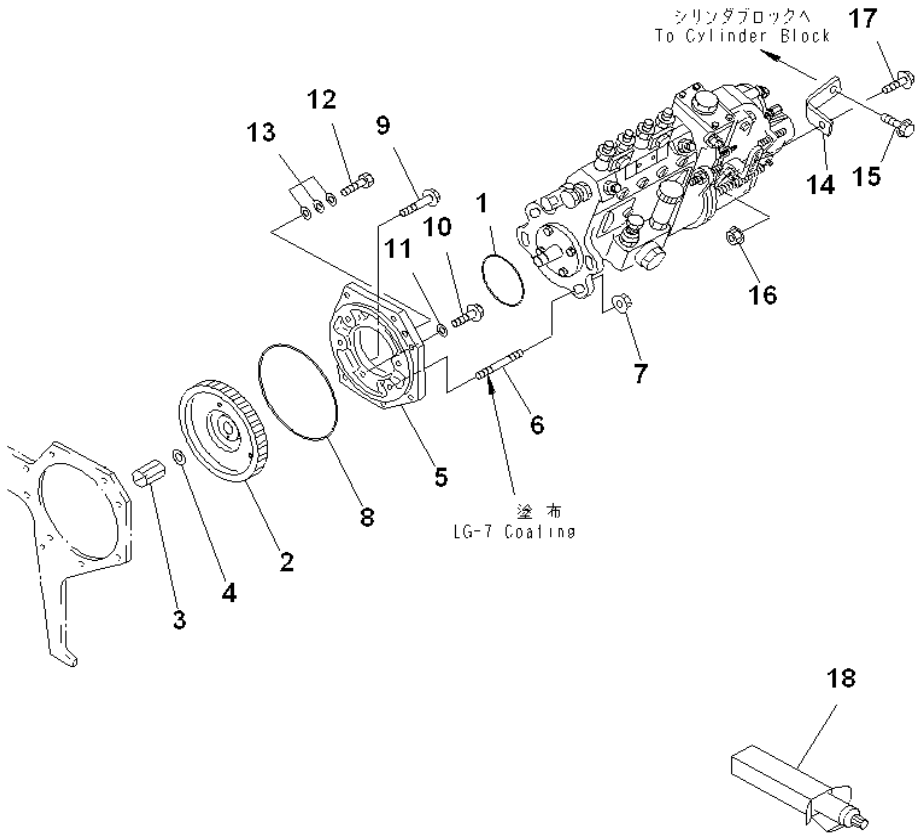

INDEX	PART NUMBER	DESCRIPTION	QTY	SERIAL No.
1	07000-02065	O-RING (K2)	1	101744-
2	6204-71-3170	GEAR,PUMP DRIVE	1	101744-
3	6204-71-3630	NUT	1	101744-
4	6114-31-3330	WASHER (K2)	1	101744-
5	6204-71-3321	HOLDER	1	101744-
6	01144-51035	STUD	4	101744-
7	01584-01008	NUT	4	101744-
8	07000-02135	O-RING (K2)	1	101744-
9	6204-71-3190	BOLT	1	101744-
10	01435-00812	BOLT	1	101744-
11	07005-00812	GASKET (K2)	1	101744-
12	01010-B0620	BOLT	1	101744-
13	01641-20608	WASHER	3	101744-
14	6208-71-1850	BRACKET	1	101744-
15	01435-01025	BOLT	1	101744-
16	01584-01008	NUT	1	101744-
17	01435-01020	BOLT	1	101744-
18	(09920-00150)	LIQUID GASKET LG-7	AR	101744-

Fig. No. **A4040-A0A6** | **FUEL INJECTION PUMP MOUNTING** | Update Index : **A** | **AA-069** 1/1

L&T-KOMATSU

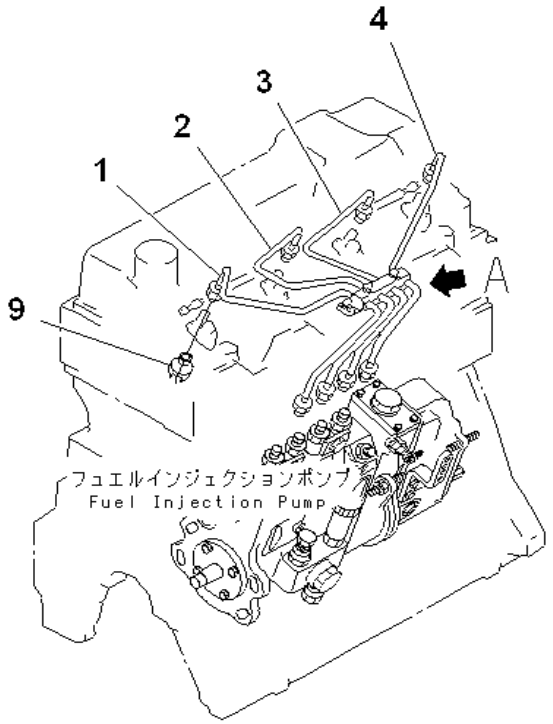

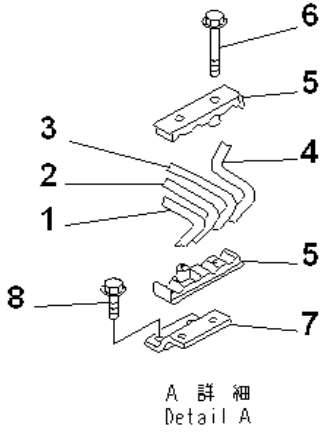

INDEX	PART NUMBER	DESCRIPTION	QTY	SERIAL No.
1	6204-71-5110	TUBE,INJECTION, NO. 1.....	1	101744-
2	6204-71-5120	TUBE,INJECTION, NO. 2.....	1	101744-
3	6204-71-5130	TUBE,INJECTION, NO. 3.....	1	101744-
4	6204-71-5141	TUBE,INJECTION, NO. 4.....	1	101744-
5	6204-71-5710	CLAMP.....	2	101744-
6	01435-00625	BOLT.....	2	101744-
7	6204-71-5810	PLATE.....	1	101744-
8	01435-00612	BOLT.....	2	101744-
9	6204-71-5890	COVER.....	4	101744-

Fig. No. **A4050-A0C6** | **FUEL INJECTION PIPING** | Update Index : **A** | **AA-071** 1/1

L&T-KOMATSU

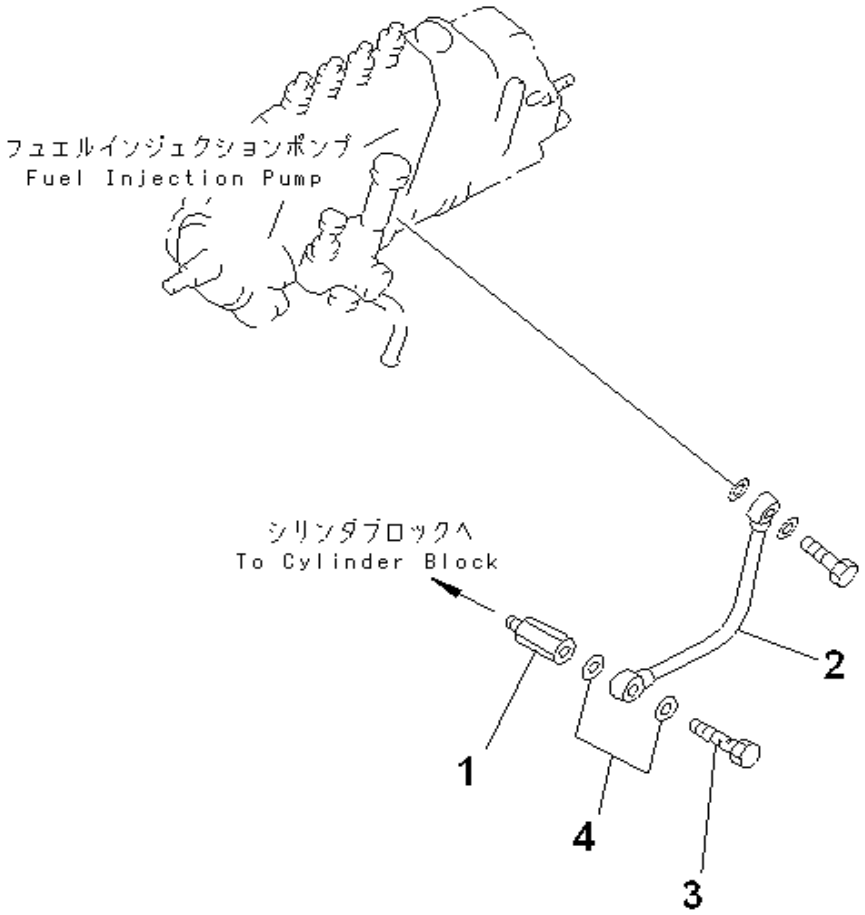

INDEX	PART NUMBER	DESCRIPTION	QTY	SERIAL No.
1	6204-71-4250	CONNECTOR	1	101744-
2	6204-71-4230	PIPE,OIL	1	101744-
3	07206-30710	BOLT,JOINT	1	101744-
4	07005-01012	GASKET (K2)	2	101744-

Fig. No. **A4060-A0B4** | **FUEL INJECTION PUMP LUBRICATOR** | Update Index : **A** | **AA-073** 1/1

L&T-KOMATSU

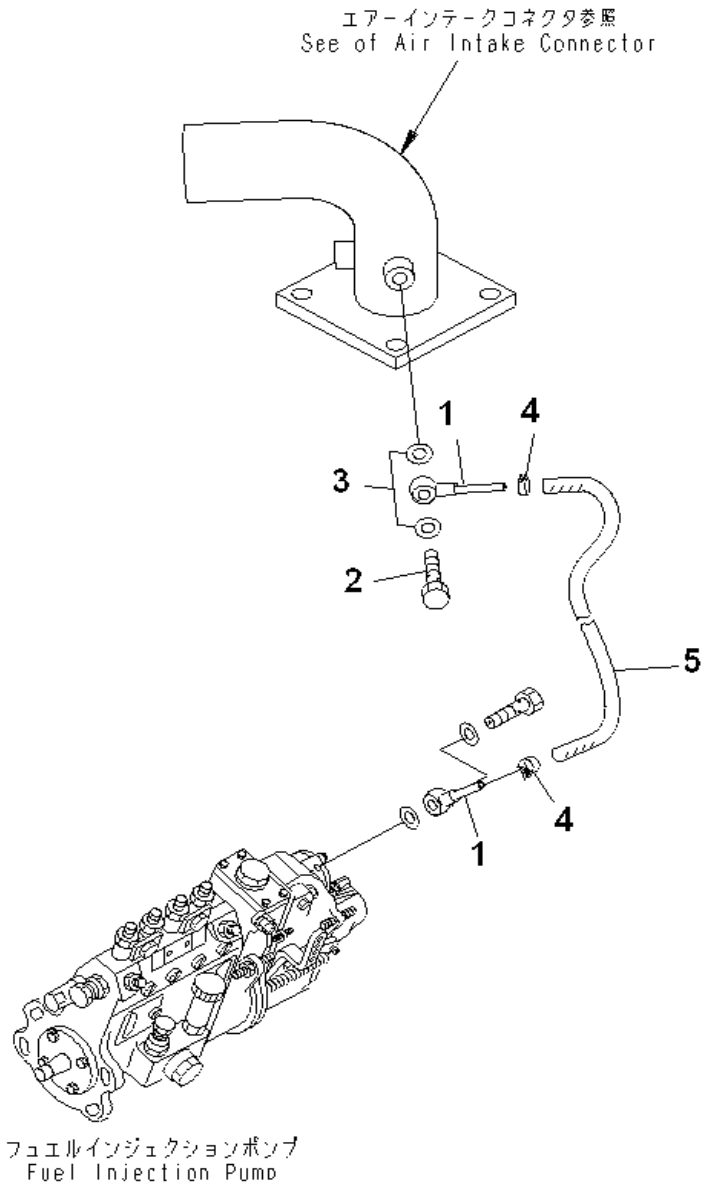

INDEX	PART NUMBER	DESCRIPTION	QTY	SERIAL No.
1	6737-71-5490	JOINT	2	101744-
2	07206-30710	BOLT,JOINT	1	101744-
3	07005-01012	GASKET (K1)	2	101744-
4	07285-00080	CLIP	2	101744-
5	6205-11-4430	HOSE	1	101744-

Fig. No. **A4070-A0A1** | **FUEL CONTROL (BOOST COMPE.)** | Update Index : **A** | **AA-075** 1/1

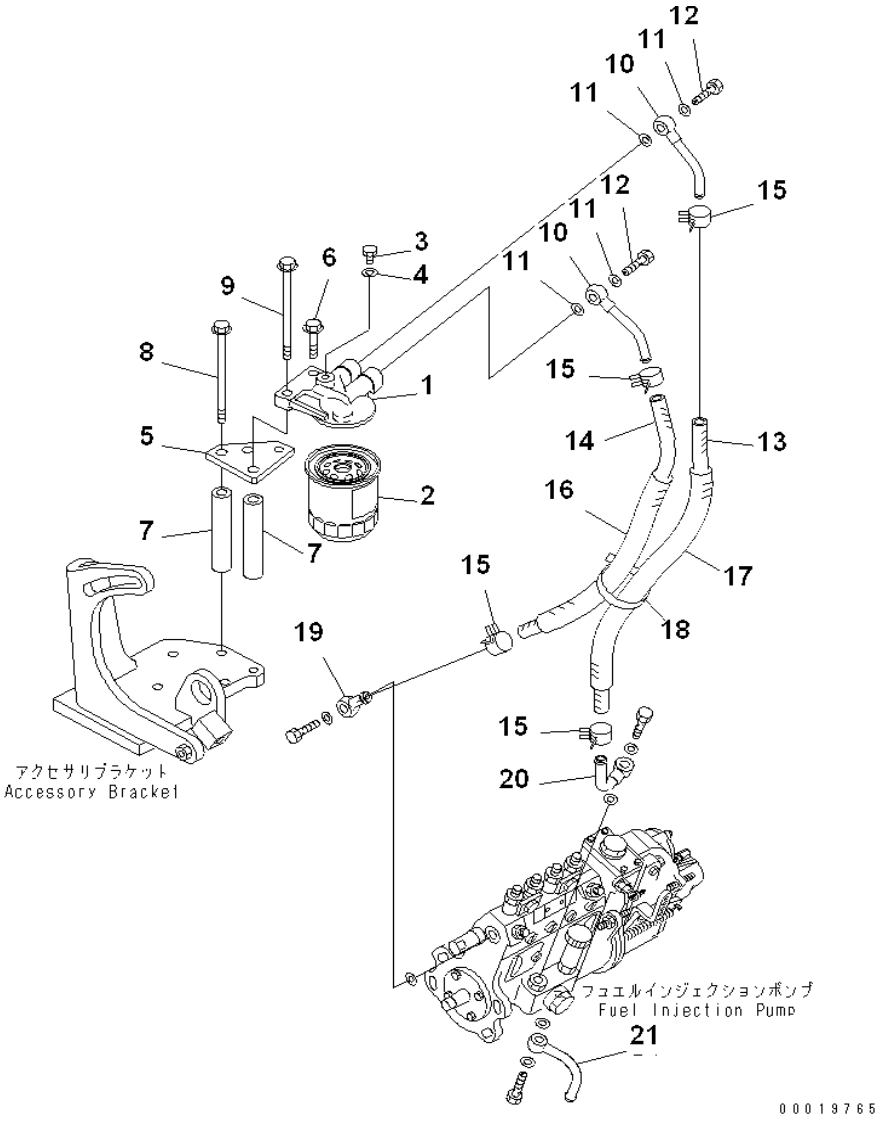

INDEX	PART NUMBER	DESCRIPTION	QTY	SERIAL No.
	6204-71-6500	FUEL FILTER ASS'Y	1	101744-
1	600-311-9640	. HEAD	1	101744-
2	600-311-7460	. CARTRIDGE	1	101744-
3	600-311-6720	. PLUG	1	101744-
4	07005-00812	. GASKET	1	101744-
5	6208-71-6590	PLATE	1	101744-
6	01435-01030	BOLT	1	101744-
7	6206-81-9870	SPACER	2	101744-
8	01436-01030	BOLT	1	101744-
9	01436-01045	BOLT	1	101744-
10	6204-71-5730	JOINT	2	101744-
11	07005-01412	GASKET (K2)	4	101744-
12	07206-31014	BOLT,JOINT	2	101744-
13	6208-71-9400	HOSE	1	114850-
14	6208-71-9500	HOSE	1	114850-
15	11Y-09-11140	CLIP	4	101744-
16	07286-01923	HOSE	1	101744-
17	07286-01933	HOSE	1	101744-
18	08034-20519	BAND	1	101744-
19	6144-71-5750	JOINT	1	101744-
20	6206-71-5850	JOINT	1	101744-
21	6144-71-5760	JOINT	1	101744-

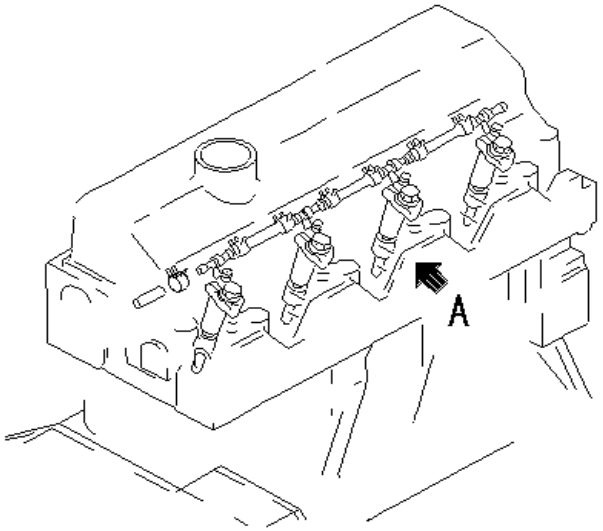

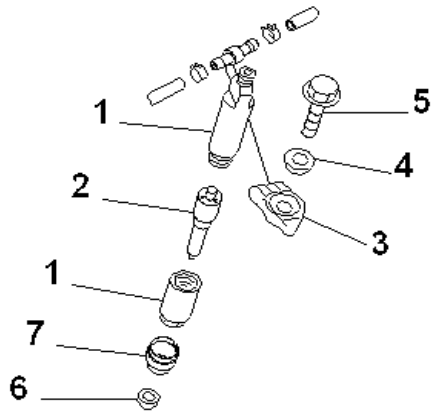

A 詳 細
Detail A

INDEX	PART NUMBER	DESCRIPTION	QTY	SERIAL No.
	6208-11-3100	NOZZLE HOLDER ASS'.....	4	101744-
1	6204-11-3110	.HOLDER ASSY.....	1	101744-
2	6208-11-3120	.NOZZLE.....	1	101744-
3	6204-11-3812	HOLDER.....	4	105178-
4	6204-11-3830	WASHER.....	4	101744-
5	01435-01035	BOLT.....	4	101744-
6	6204-11-3880	GASKET (K1).....	4	101744-
7	6204-11-3850	SEAL,DUST (K1).....	4	101744-

L&T-KOMATSU

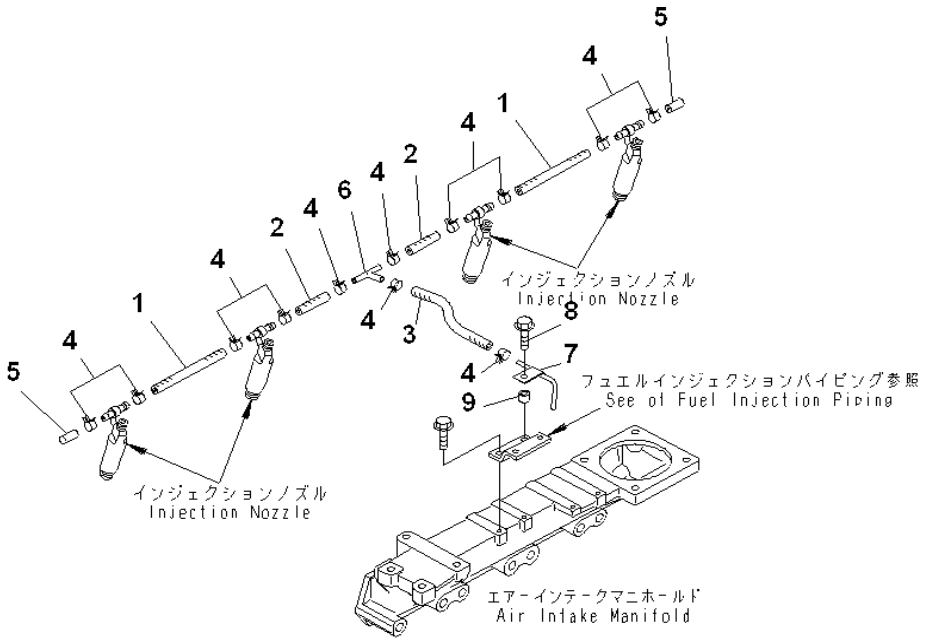

INDEX	PART NUMBER	DESCRIPTION	QTY	SERIAL No.
1	6204-71-9100	HOSE,SPILL	2	101744-
2	6202-71-9450	HOSE,SPILL	2	101744-
3	6204-71-9140	HOSE,SPILL	1	101744-
4	07285-00100	CLIP	12	101744-
5	6204-71-5581	CAP	2	101744-
6	6204-71-5560	CONNECTOR	1	101744-
7	6208-71-5580	CONNECTOR	1	101744-
8	01435-00625	BOLT	1	101744-
9	287-17-11520	SPACER	1	101744-

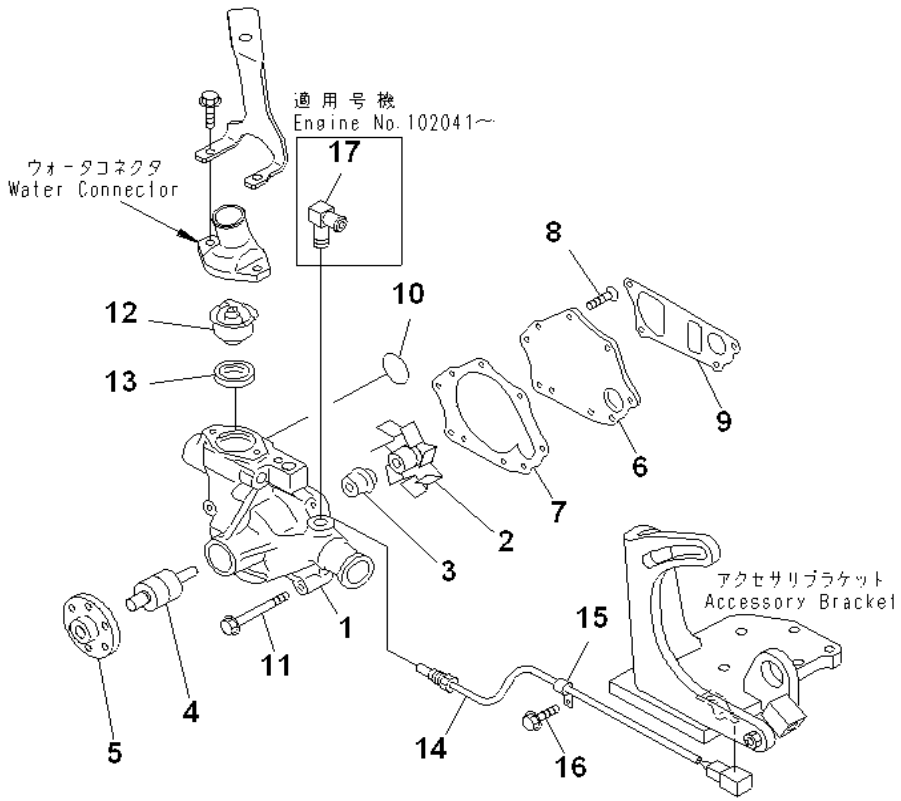

INDEX	PART NUMBER	DESCRIPTION	QTY	SERIAL No.
	6205-61-1202	WATER PUMP ASS'Y	1	101744-
1	#	. BODY	1	101744-
2	6204-61-1630	. IMPELLER	1	101744-
3	6221-61-1520	. SEAL? WATER (K2)	1	101744-
4	6204-61-1650	. SHAFT	1	101744-
5	6205-61-1210	. BOSS	1	101744-
6	6206-61-1121	. COVER	1	101744-
7	6204-61-1660	. GASKET (K2)	1	101744-
8	01236-40816	. SCREW	5	101744-
9	6206-61-1731	GASKET (K1? K2)	1	101744-
10	07000-03040	O-RING (K1? K2)	1	101744-
11	01435-00855	BOLT	3	101744-
12	600-421-6230	THERMOSTAT	1	103062
13	6140-11-6331	GASKET (K1? K2)	1	101744-
14	7861-93-3320	SENSOR	1	101744-
15	04434-50510	CLIP	1	101744-
16	01435-01016	BOLT	1	101744-
17	20M-977-8130	ELBOW	1	102041-

L&T-KOMATSU

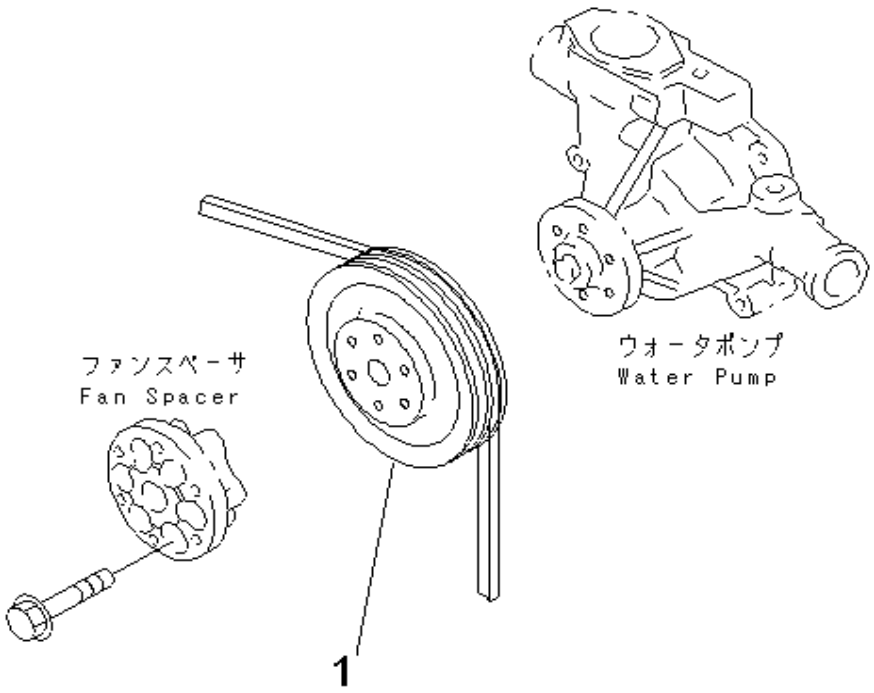

INDEX	PART NUMBER	DESCRIPTION	QTY	SERIAL No.
1	6207-61-3270	PULLEY, NON HARDENING.....1		101744-

Fig. No. **A5020-A0T4**	**WATER PUMP PULLY (NON HARDENING PULLEY)**	Update Index : **A**	**AA-085** 1/1

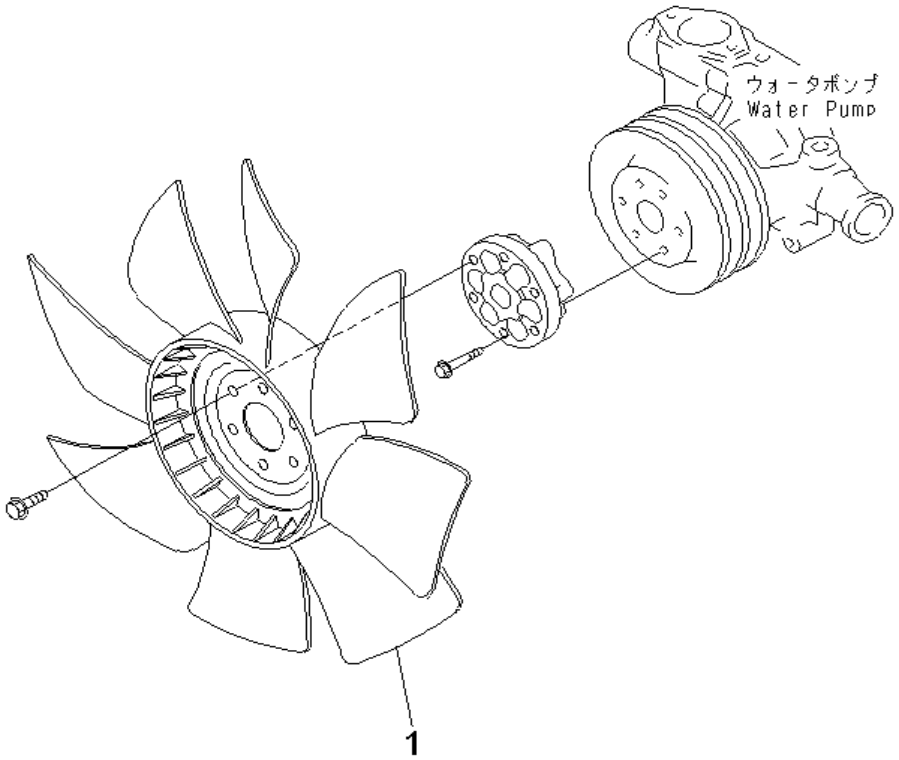

INDEX	PART NUMBER	DESCRIPTION	QTY	SERIAL No.
1	600-625-8550	FAN,COOLING.....	1	101744-

Fig. No. **A5030-A0G1** | **COOLING FAN** | Update Index : **A** | **AA-087** 1/1

L&T-KOMATSU

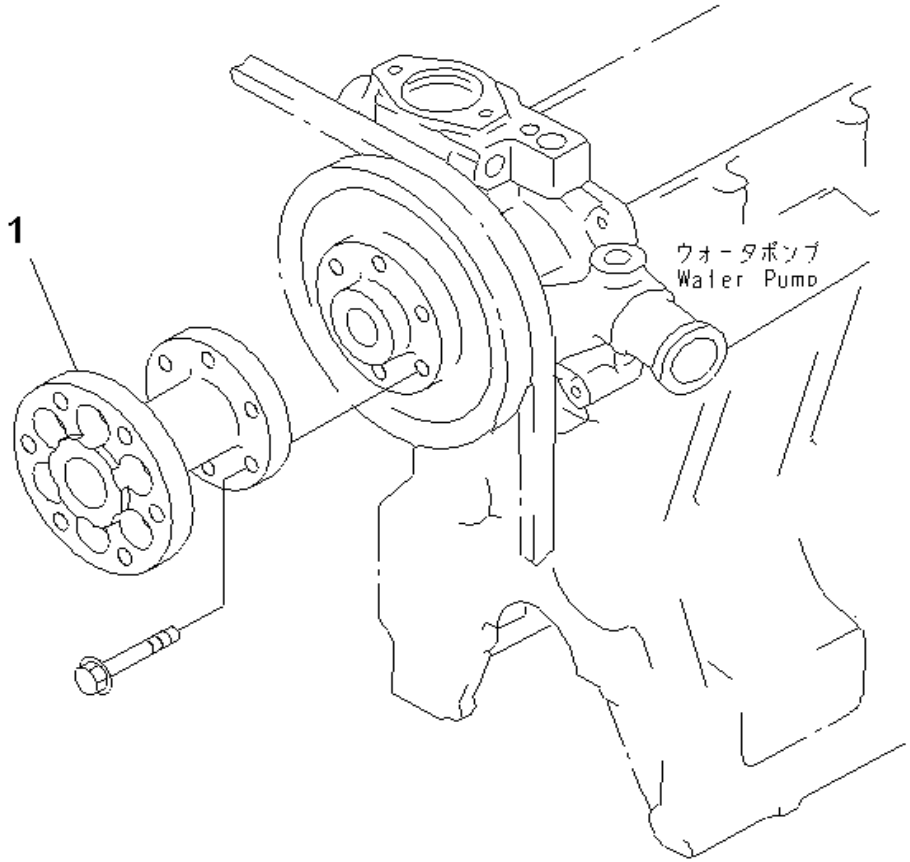

INDEX	PART NUMBER	DESCRIPTION	QTY	SERIAL No.
1	6206-61-3990	SPACER,FAN.....	1	101744-

Fig. No. **A5040-A0B1** | **FAN SPACER** | Update Index : **A** | **AA-089** 1/1

L&T-KOMATSU

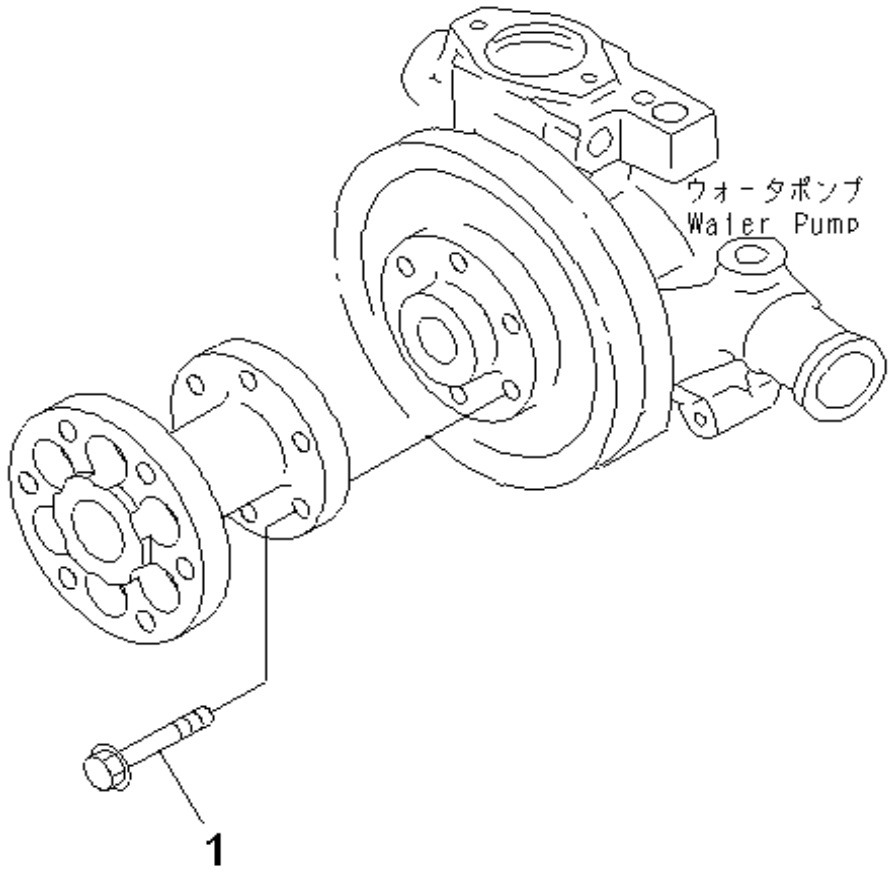

INDEX	PART NUMBER	DESCRIPTION	QTY	SERIAL No.
1	01435-00830	BOLT.....	6	101744-

Fig. No. **A5070-A0A3** | **FAN SPACER MOUNTING** | Update Index : **A** | **AA-091** 1/1

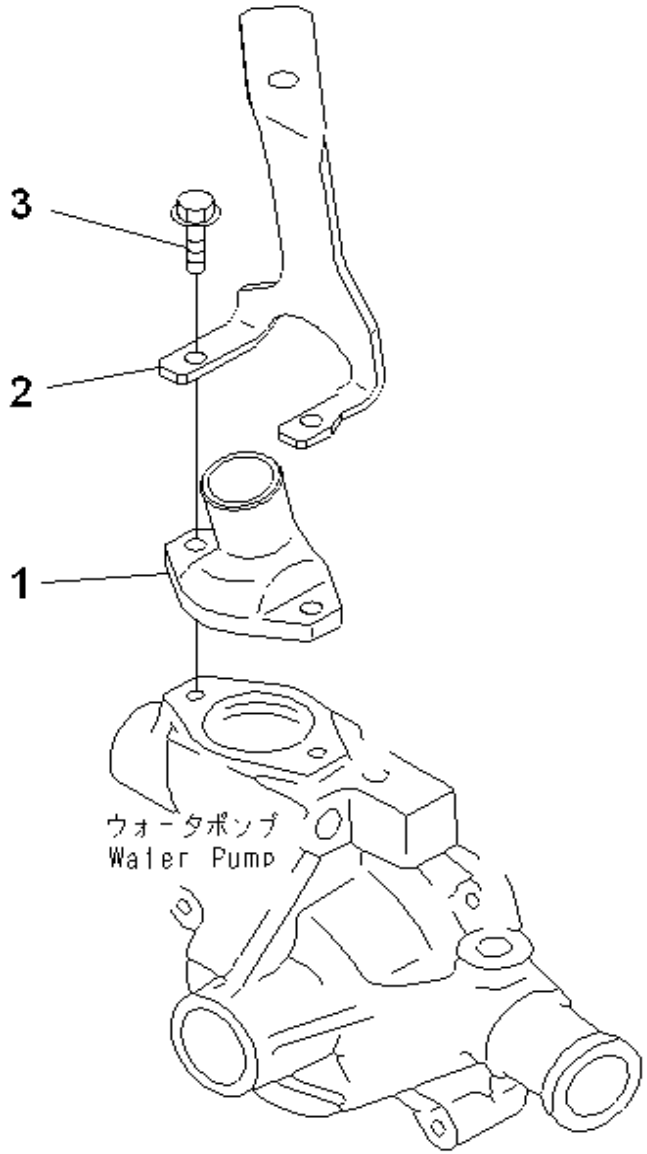

INDEX	PART NUMBER	DESCRIPTION	QTY	SERIAL No.
1	6204-11-6421	CONNECTOR	1	101744-
2	6208-11-4910	BRACKET	1	101744-
3	01435-00825	BOLT	2	101744-

Fig. No. **A5110-A0A5** | **WATER CONNECTOR (OUTLET)** | Update Index : **A** | **AA-093** 1/1

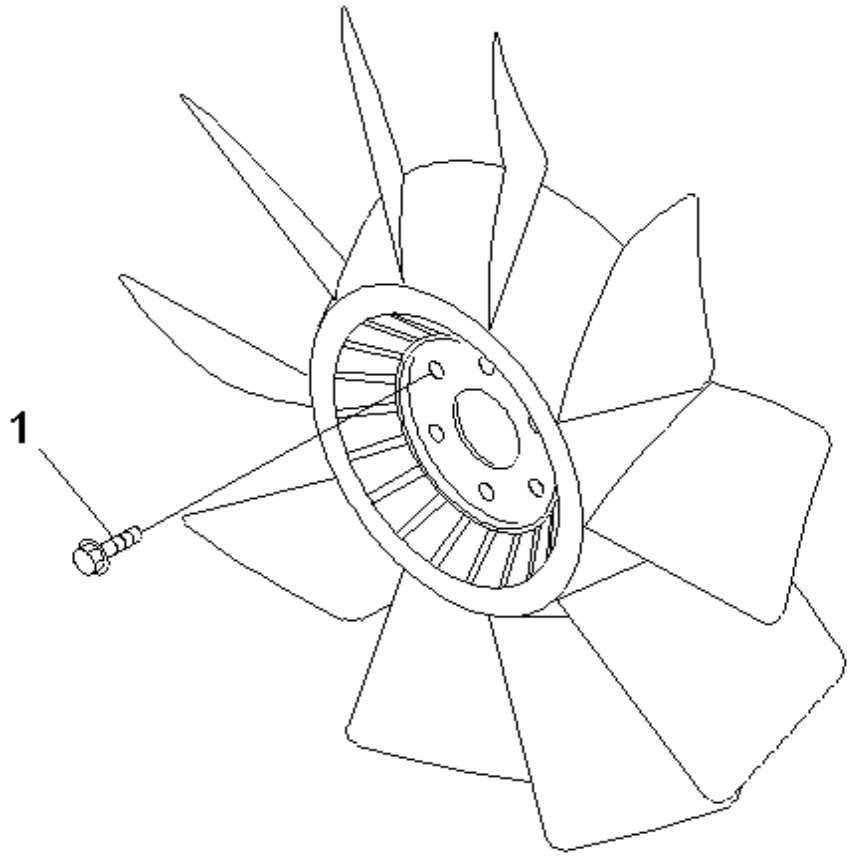

INDEX	PART NUMBER	DESCRIPTION	QTY	SERIAL No.
1	01435-01020	BOLT.....	6	101744-

Fig. No. **A5170-A0A2B** | **COOLING FAN BOLT** | Update Index : **A** | **AA-095** 1/1

L&T-KOMATSU

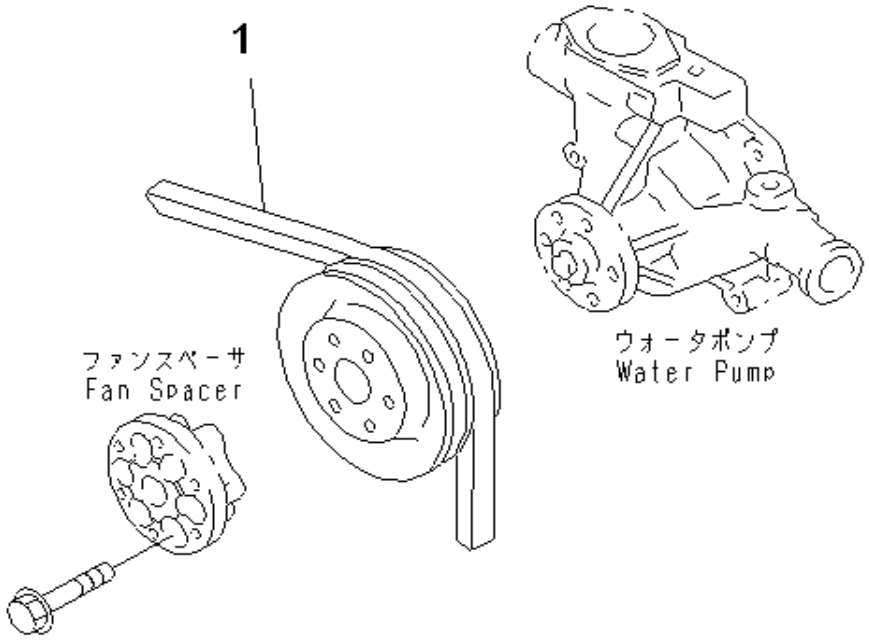

INDEX	PART NUMBER	DESCRIPTION	QTY	SERIAL No.
1	04120-21748	V-BELT.....	1	101744-

Fig. No. **A5180-A0B5** | **FAN BELT** | Update Index : **A** | **AA-099** 1/1

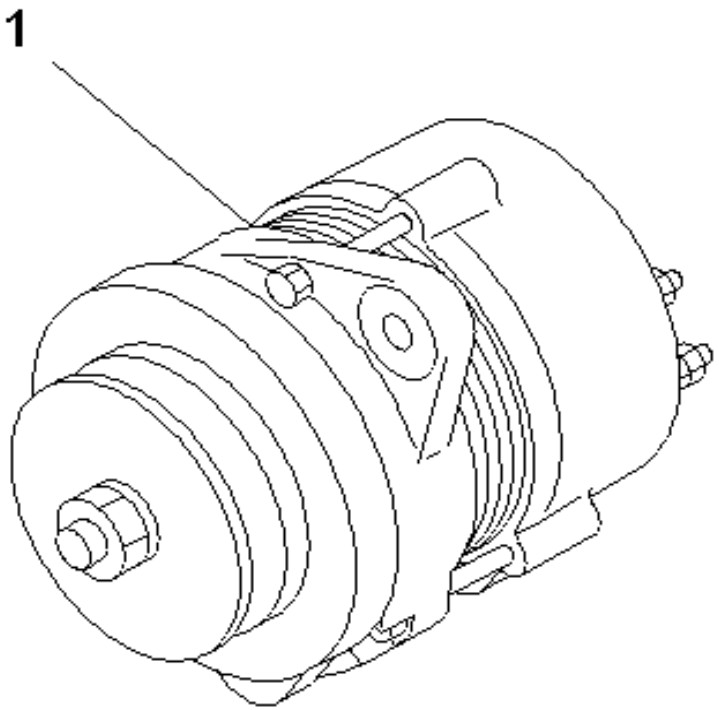

INDEX	PART NUMBER	DESCRIPTION	QTY	SERIAL No.
1	600-821-6120	ALTERNATOR A.....	1	101744-

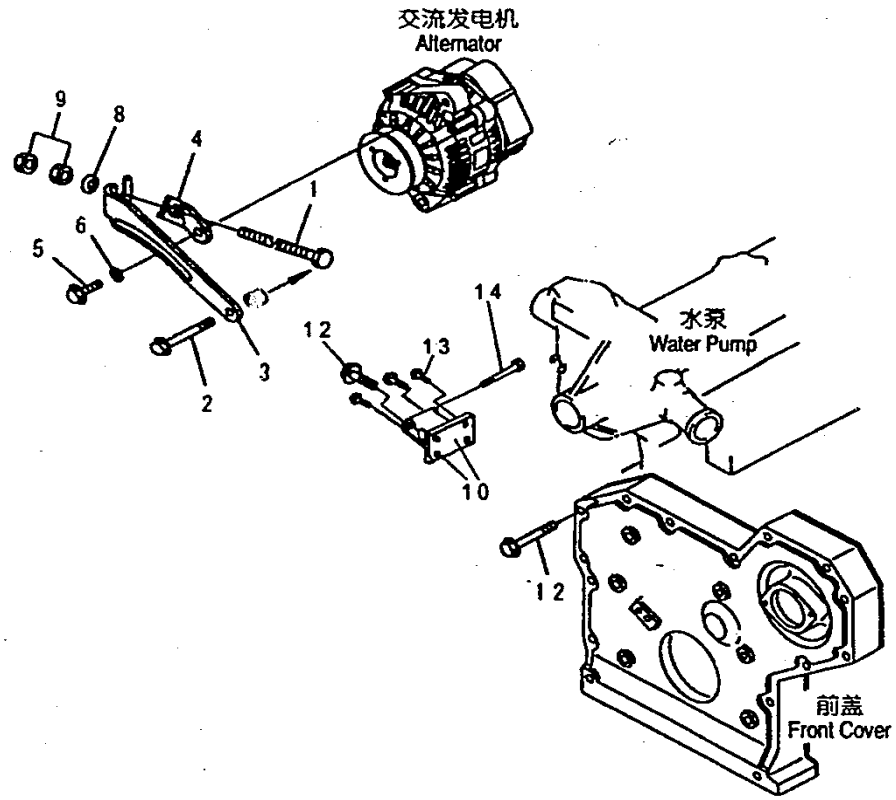

INDEX	PART NUMBER	DESCRIPTION	QTY	SERIAL No.
1	6130-12-1961	SPACER	1	101744-
2	01435-00860	BOLT	1	101744-
3	6208-81-6430	PLATE,ADJUST	1	101744-
4	6208-81-6440	BRACKET,ADJUST	1	101744-
5	01050-31235	BOLT	1	101744-
6	01643-31232	WASHER	1	101744-
7	6208-81-6590	BOLT	1	101744-
8	6204-11-3830	WASHER	1	101744-
9	01580-11008	NUT	2	101744-
10	6207-81-6510	BRACKET	1	101744-
11	01435-00895	BOLT	1	101744-
12	01435-00825	BOLT	3	101744-
13	6112-21-6581	BOLT	1	101744-
14	01641-21423	WASHER	1	101744-

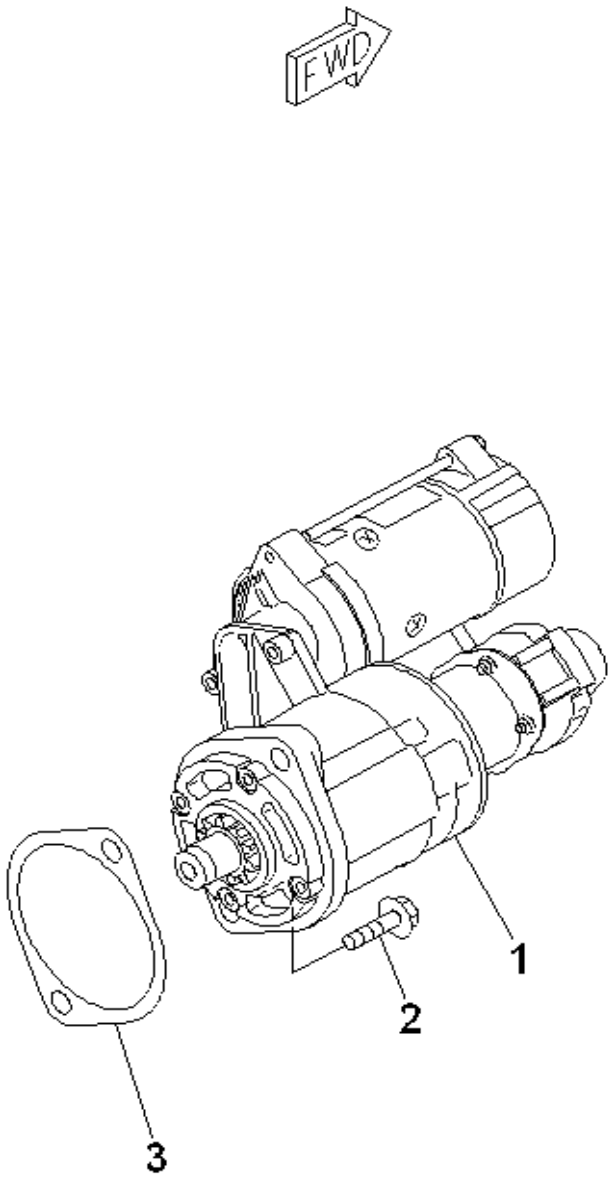

INDEX	PART NUMBER	DESCRIPTION	QTY	SERIAL No.
1	600-863-3210	STARTING MOTOR ASS.....	1	101744-
2	01435-01235	BOLT.....	2	101744-
3	6202-21-4151	GASKET (K2).....	1	101744-

KIT See subsequent pages for details.

K-1 6204-K2-0901 CYLINDER BLOCK GASKET KIT

In addition to the above gasket kit,there are other parts not included in the kit that must be ordered as individual parts.
For details of the part numbers,see the parts list.

INDEX	PART NUMBER	DESCRIPTION	QTY	SERIAL No.
2	6204-K2-0901	GASKET KIT,CYLINDER BLOCK.....	1	101744-
	07000-02065	. O-RING.....	1	101744-
	07000-02135	. O-RING.....	1	101744-
	07000-03040	. O-RING.....	1	101744-
	07000-03050	. O-RING.....	1	101744-
	07005-00812	. GASKET.....	5	101744-
	07005-01012	. GASKET.....	8	101744-
	07005-01412	. GASKET.....	10	101744-
	07005-02216	. GASKET.....	1	101744-
	6114-31-3330	. WASHER.....	1	101744-
	6141-21-1332	. SEAL, REAR.....	1	101744-
	6204-21-3510	. SEAL, FRONT.....	1	101744-
	6204-51-6122	. O-RING.....	1	101744-
	6206-21-3840	. GASKET.....	2	101744-
		THE FOLLOWING PARTS ARE NOT USED		
		FOR THIS MODEL		
	01653-21212	. WASHER.....	1	101744-
	07000-02018	. O-RING.....	1	101744-
	07000-02020	. O-RING.....	1	101744-
	07000-02085	. O-RING.....	1	101744-
	07000-02095	. O-RING.....	1	101744-
	07000-02135	. O-RING.....	1	101744-
	07005-01812	. GASKET.....	2	101744-
	07005-03016	. GASKET.....	1	101744-
	08034-00414	. BAND.....	1	101744-
	08034-00519	. BAND.....	2	101744-
	6144-21-2500	. SHIM ASS'Y.....	1	101744-
	6204-21-3410	. PACKING.....	1	101744-
	6204-21-3451	. GROMMET.....	1	101744-
	6204-21-3460	. GROMMET.....	6	101744-
	6204-21-5280	. GASKET.....	1	101744-
	6204-21-6811	. GASKET.....	1	101744-
	6204-61-5181	. GASKET.....	1	101744-
	6204-61-5191	. GASKET.....	1	101744-
	6204-63-1130	. GASKET.....	1	101744-
	6206-61-1131	. GASKET.....	1	101744-
	6206-61-1730	. GASKET.....	1	101744-
		THE FOLLOWING PARTS ARE THE PARTS		

KIT See subsequent pages for details.

K-1 6204-K2-0901 CYLINDER BLOCK GASKET KIT

In addition to the above gasket kit,there are other parts not included in the kit that must be ordered as individual parts.
For details of the part numbers,see the parts list.

INDEX	PART NUMBER	DESCRIPTION	QTY	SERIAL No.
		NOT INCLUDED IN THE GASKET KIT		
	6204-21-6820	GASKET	1	101744-
	07005-01612	GASKET	2	101744-
	07000-72070	O-RING	2	101744-
	07000-73025	O-RING	4	101744-
	6206-61-1731	GASKET	1	101744-
	6202-21-4151	GASKET	1	101744-
	07005-02416	GASKET,(FOR PC128,138US-2)	1	101744-
	07003-01015	GASKET,(FOR PC128,138US-2)	2	101744-
	6205-51-7611	GASKET,(FOR PC128,138US-2)	1	101744-
	07002-62434	O-RING,(FOR PC128,138US-2)	3	101744-
	02896-61018	O-RING,(FOR PC128,138US-2)	2	101744-
	6208-61-5420	GASKET,(FOR PC128,138US-2)	1	101744-
	6221-61-1520	SEAL? WATER,(FOR PC128,138US-2)	1	101744-

KIT See subsequent pages for details.

K-1 6204-K1-0901 CYLINDER HEAD GASKET KIT

In addition to the above gasket kit,there are other parts not included in the kit that must be ordered as individual parts.
For details of the part numbers,see the parts list.

INDEX	PART NUMBER	DESCRIPTION	QTY	SERIAL No.
1	6204-K1-0901	GASKET KIT,CYLINDER HEAD.....	1	101744-
	07000-03040	. O-RING.....	1	101744-
	6136-11-8142	. PACKING.....	3	101744-
	6140-11-6331	. GASKET.....	1	101744-
	6204-11-3850	. SEAL.....	4	101744-
	6204-11-3880	. GASKET.....	4	101744-
	6204-11-8810	. O-RING.....	1	101744-
		THE FOLLOWING PARTS ARE NOT		
		USED FOR THIS MODEL		
	07005-01612	. GASKET.....	1	101744-
	08034-00414	. BAND.....	1	101744-
	08034-00519	. BAND.....	2	101744-
	6110-11-4431	. GASKET.....	1	101744-
	6130-12-5580	. GASKET.....	1	101744-
	6136-11-4850	. GASKET.....	2	101744-
	6144-11-5821	. GASKET.....	1	101744-
	6204-11-1830	. GASKET.....	1	101744-
	6204-21-6811	. GASKET.....	1	101744-
	6204-41-4540	. SEAL.....	8	101744-
	6205-11-5810	. GASKET.....	1	101744-
	6206-61-1730	. GASKET.....	1	101744-
	6691-11-4381	. GASKET.....	1	101744-
		THE FOLLOWING PARTS ARE THE PARTS		
		NOT INCLUDED IN THE GASKET KIT		
	6204-41-4541	SEAL.....	8	101744-
	6204-11-1840	GASKET.....	1	101744-
	6204-11-4850	GASKET.....	1	101744-
	6205-11-5811	GASKET.....	1	101744-
	6205-11-5580	GASKET.....	1	101744-
	6205-11-5850	GASKET.....	1	101744-
	07003-01015	GASKET.....	2	101744-
	6205-51-7611	GASKET.....	1	101744-
	6208-11-4850	GASKET,(FOR PC128,138US-2).....	1	101744-
	07005-01012	GASKET (FOR PC128, 138US-2).....	2	101744-

L&T-KOMATSU

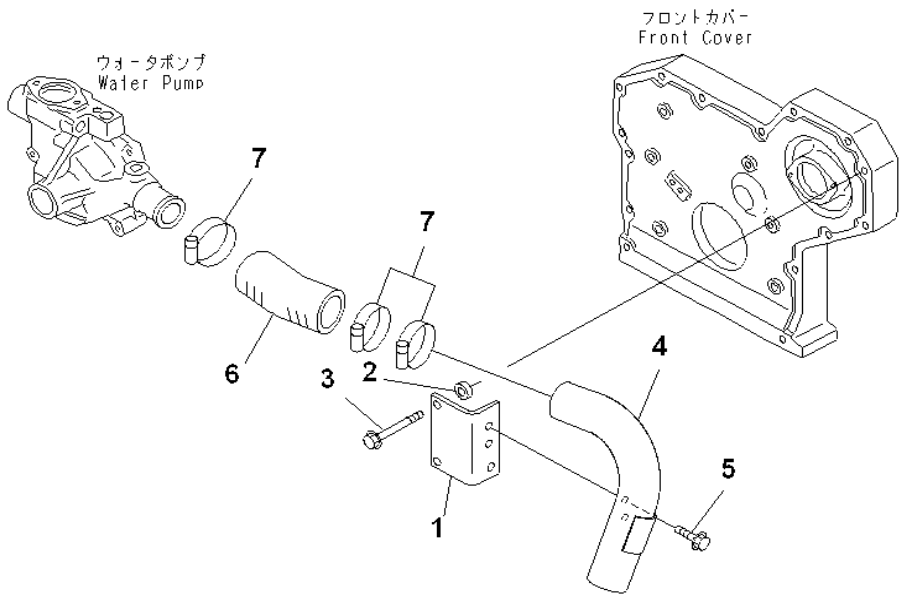

INDEX	PART NUMBER	DESCRIPTION	QTY	SERIAL No.
1	6208-21-6910	BRACKET	1	101744-
2	6130-12-1961	SPACER	2	101744-
3	01435-00875	BOLT	2	101744-
4	6208-61-6120	CONNECTOR	1	101744-
5	01435-00820	BOLT	2	101744-
6	6208-61-6110	HOSE	1	101744-
7	07281-00609	CLAMP	3	101744-

Fig. No. **A9530-A0A2** | **WATER PIPING** | Update Index : **A** | **AA-113** 1/1

L&T-KOMATSU

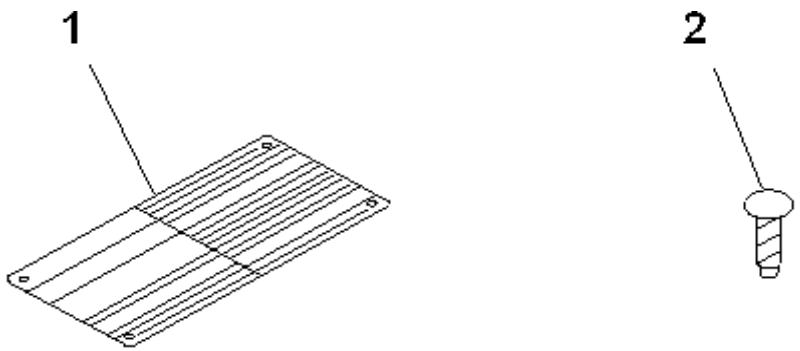

INDEX	PART NUMBER	DESCRIPTION	QTY	SERIAL No.
1	6204-81-2421	PLATE, NAME,(LIMITED SUPPLY).....	1	101744-
2	04418-02550	SCREW.....	4	101744-

Fig. No. **A9850-A0B1** | **ENGINE NAME PLATE AND REGULATION PLATE (EXCEPT JAPAN)** | Update Index : **A** | **AA-115** 1/1

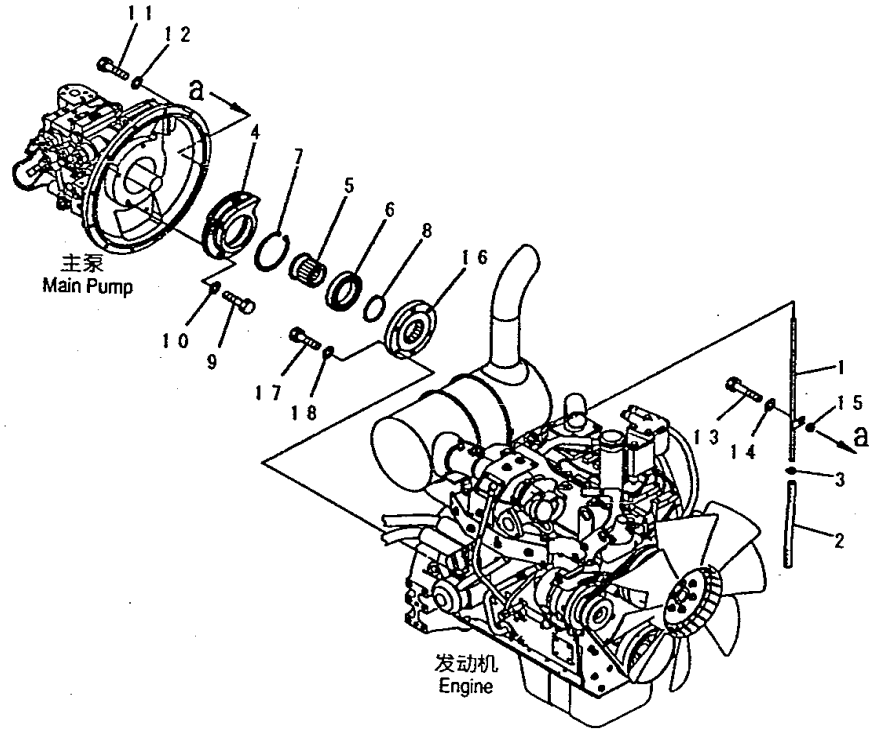

INDEX	PART NUMBER	DESCRIPTION	QTY	SERIAL No.
1	6205-11-5460	TUBE	1	NL 50001-
2	07260-20928	HOSE	1	NL 50001-
3	07285-00150	CLIP	1	NL 50001-
4	203-01-61170	CAGE	1	NL 50001-
5	203-01-61190	SHAFT	1	NL 50001-
6	06045-06014	BEARING	1	NL 50001-
7	04065-01104	RING	1	NL 50001-
8	04064-07025	RING	1	NL 50001-
9	204 338 25 E	BOLT	4	NL 50001-
10	01643-31232	WASHER	4	NL 50001-
11	204 338 34 P	BOLT	11	NL 50001-
12	01643-31032	WASHER	11	NL 50001-
13	204 338 36 R	BOLT	1	NL 50001-
14	01643-31032	WASHER	1	NL 50001-
15	205-917-1610	COLLAR	1	NL 50001-
16	203-01-61181	COUPLING	1	NL 50001-
17	204 338 57 P	BOLT	6	NL 50001-
18	01643-31232	WASHER	6	NL 50001-

Fig. No. **A9999-01A0** | **MAIN PUMP MOUNT** | Update Index : **A** | **AA-117** 1/1

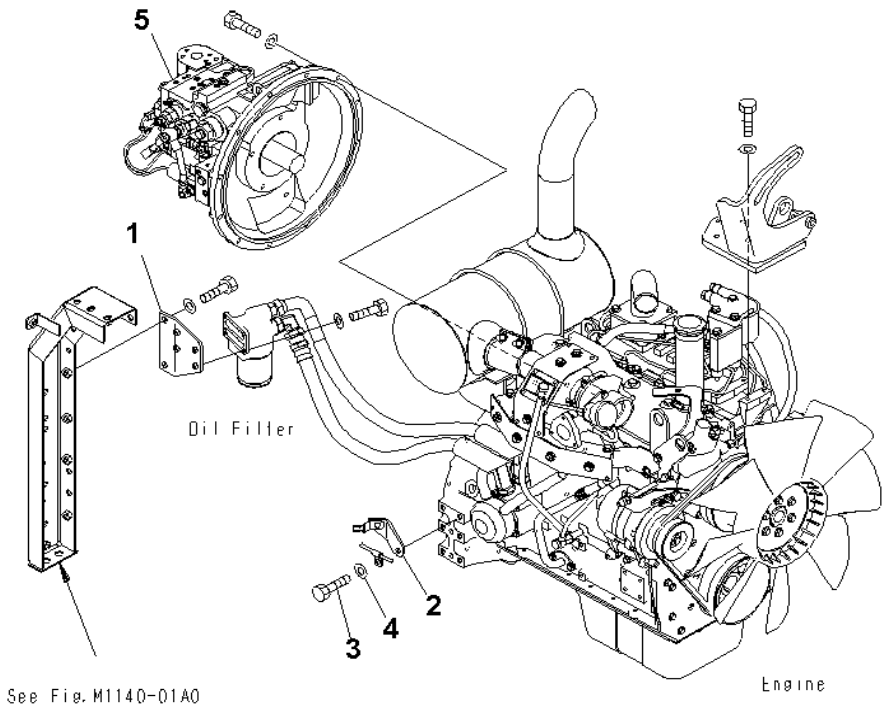

INDEX	PART NUMBER	DESCRIPTION	QTY	SERIAL No.
1	203-01-71290	BRACKET	1	NL 50001-
2	203-06-71251	BRACKET	1	NL 50001-
3	204 338 22 B	BOLT	1	NL 50001-
4	01643-31232	WASHER	1	NL 50001-
5	(708-1L-00650)	PUMP ASSY	1	NL 50001-

Fig. No. **A9999-02A0** | **ENGINE BRACKET AND MAIN PUMP** | Update Index : **A** | **AA-119** 1/1

ENGINE RELATED PARTS

L&T-KOMATSU

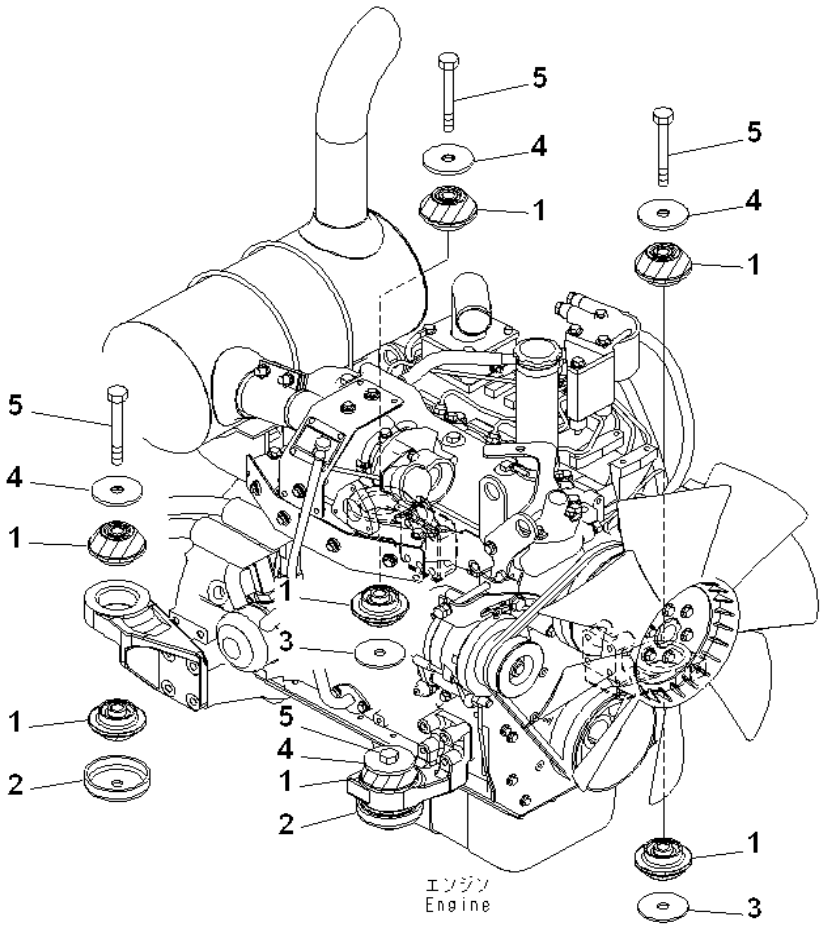

INDEX	PART NUMBER	DESCRIPTION	QTY	SERIAL No.
1	201-01-71250	CUSHION	8	NL 50001-
2	203-01-61160	STOPPER	2	NL 50001-
3	203-01-67540	WASHER	2	NL 50001-
4	113-01-21120	WASHER	4	NL 50001-
5	205 338 17 R	BOLT	4	NL 50001-

Fig. No. **B0100-01A0** | **ENGINE MOUNT** | Update Index : **A** | **BO-003** 1/1

L&T-KOMATSU

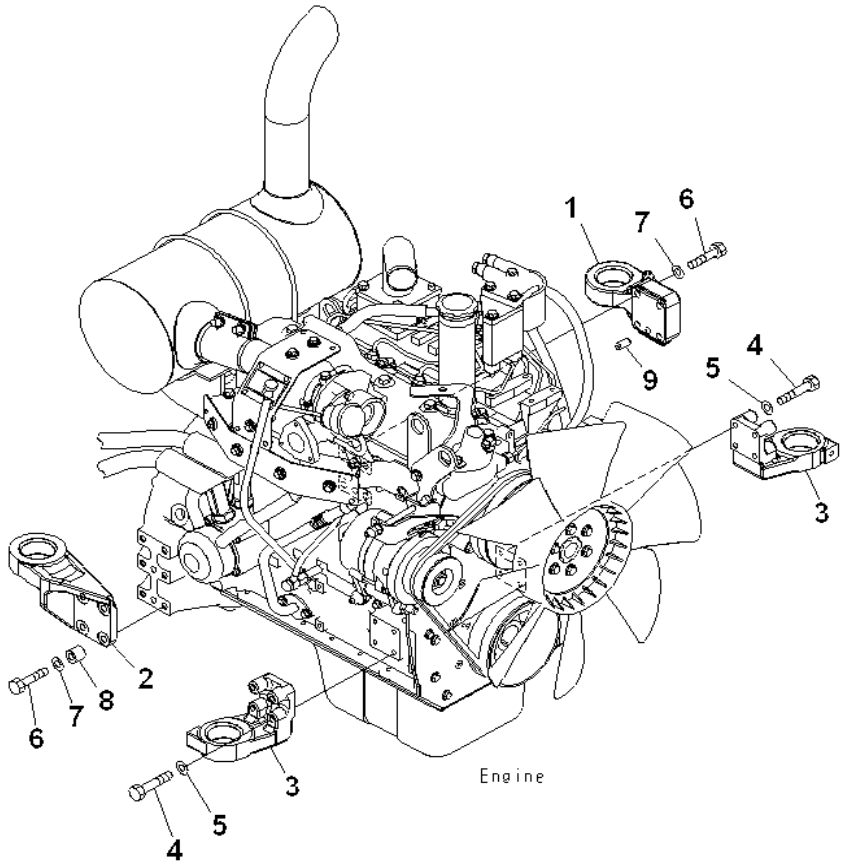

INDEX	PART NUMBER	DESCRIPTION	QTY	SERIAL No.
1	203-01-61110	BRACKET	1	NL 50001-
2	203-01-61120	BRACKET	1	NL 50001-
3	203-01-61131	BRACKET	2	NL 50001-
4	01643-31032	WASHER	8	NL 50001-
5	205 338 16 Q	BOLT	8	NL 50001-
6	22B-01-11190	BOLT	8	NL 50001-
7	01643-31232	WASHER	8	NL 50001-
8	6131-22-3750	BOSS	4	NL 50001-
9	04020-01228	PIN	1	NL 50001-

Fig. No. **B0100-02A0** | **ENGINE MOUNT BRACKET** | Update Index : **A** | **BO-005** 1/1

L&T-KOMATSU

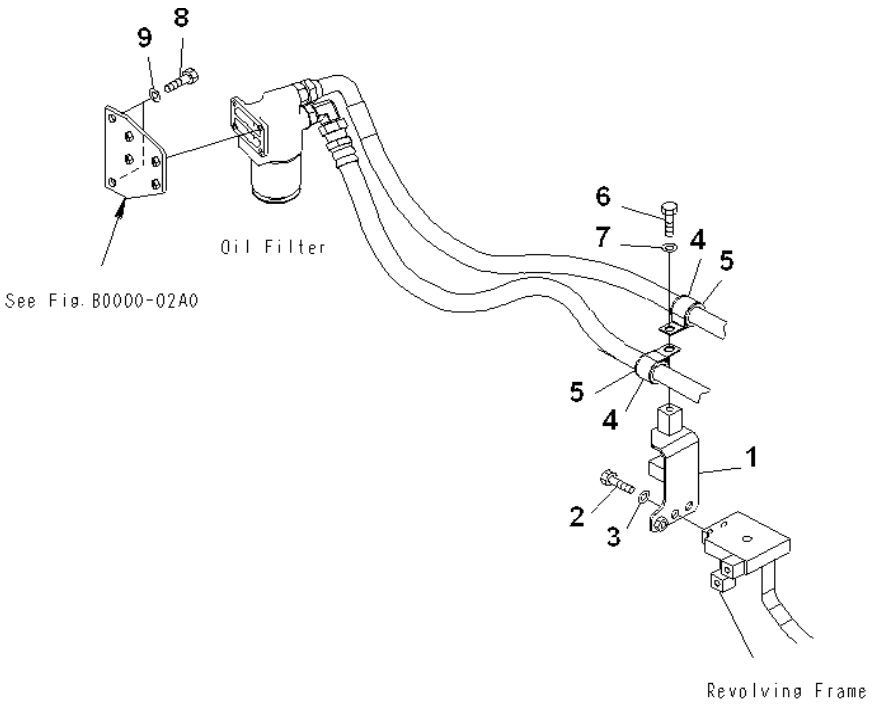

INDEX	PART NUMBER	DESCRIPTION	QTY	SERIAL No.
1	203-01-71270	BRACKET	1	NL 50001-
2	204 338 22 B	BOLT	2	NL 50001-
3	01643-31232	WASHER	2	NL 50001-
4	04434-53412	CLIP	2	NL 50001-
5	07095-20627	CUSHION	2	NL 50001-
6	204 338 22 B	BOLT	1	NL 50001-
7	01643-31232	WASHER	1	NL 50001-
8	204 338 23 C	BOLT	2	NL 50001-
9	01643-31232	WASHER	2	NL 50001-

Fig. No. **B0100-03A0** | **REMOTE FILTER MOUNT** | Update Index : **A** | **BO-007** 1/1

L&T-KOMATSU

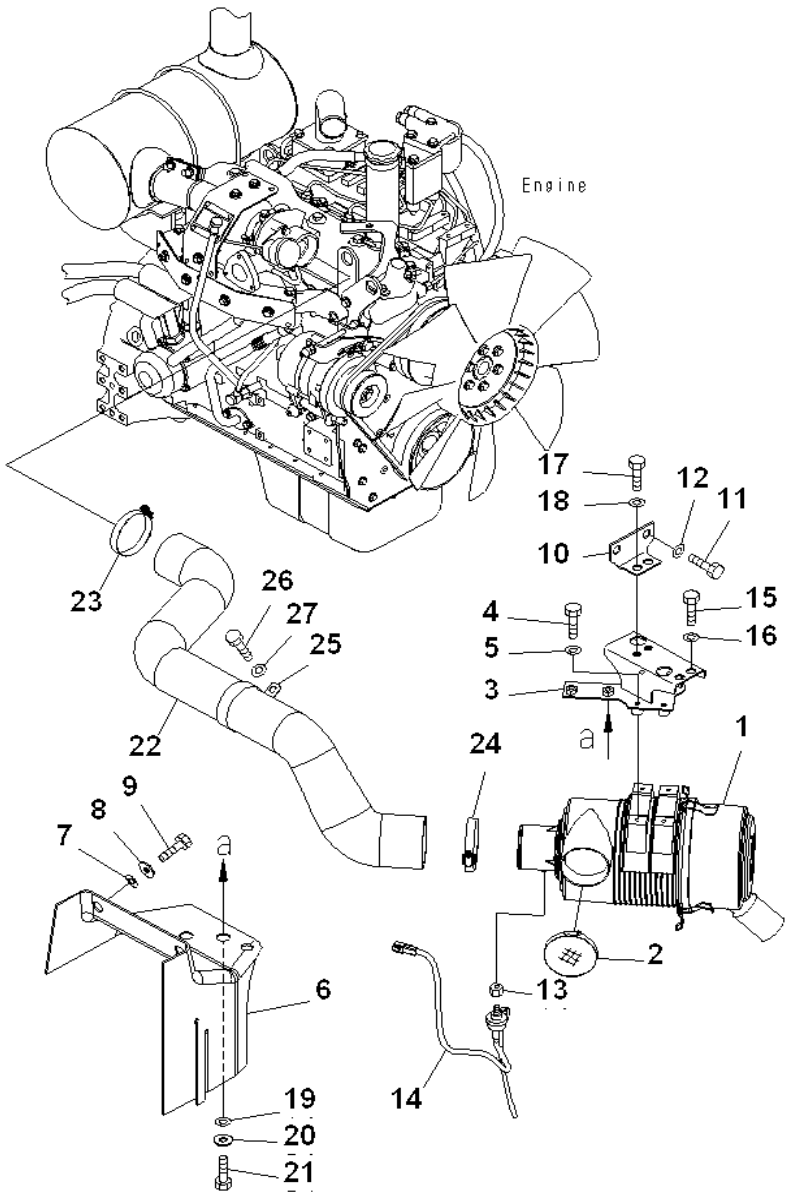

INDEX	PART NUMBER	DESCRIPTION	QTY	SERIAL No.
1	(6208-81-7100)	AIR CLEANER	1	NL 50001-
2	6208-81-7720	CAP	1	NL 50001-
3	203-01-71132	FRAME	1	NL 50001-
4	204 338 46 C	BOLT	4	NL 50001-
5	01643-30823	WASHER	4	NL 50001-
6	203-01-71211	SHEET	1	NL 50001-
7	01643-51232	WASHER	2	NL 50001-
8	124-54-26540	WASHER	2	NL 50001-
9	204 338 23 C	BOLT	2	NL 50001-
10	203-01-71141	BRACKET	1	NL 50001-
11	204 338 23 C	BOLT	2	NL 50001-
12	01643-31232	WASHER	2	NL 50001-
13	11Y-01-11920	JOINT	1	NL 50001-
14	7861-93-1420	SENSOR	1	NL 50001-
15	204 338 23 C	BOLT	2	NL 50001-
16	01643-31232	WASHER	2	NL 50001-
17	204 338 23 C	BOLT	2	NL 50001-
18	01643-31232	WASHER	2	NL 50001-
19	01643-51232	WASHER	2	NL 50001-
20	124-54-26540	WASHER	2	NL 50001-
21	204 338 23 C	BOLT	2	NL 50001-
22	203-01-71121	HOSE	1	NL 50001-
23	07289-00095	CLAMP	1	NL 50001-
24	07289-00105	CLAMP	1	NL 50001-
25	203-01-71220	CLIP	1	NL 50001-
26	204 338 23 C	BOLT	1	NL 50001-
27	01643-31232	WASHER	1	NL 50001-

Fig. No. **B0200-01A0** | **AIR CLEANER AND DUCT** | Update Index : **A** | **BO-009** **1/1**

L&T-KOMATSU

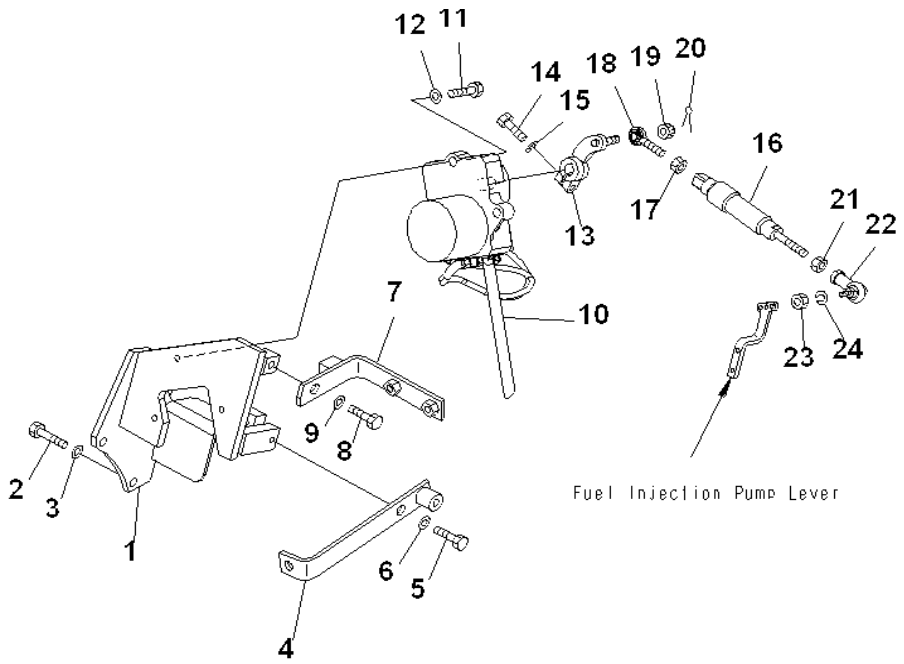

Fuel Injection Pump Lever

INDEX	PART NUMBER	DESCRIPTION	QTY	SERIAL No.
1	203-43-71211	BRACKET	1	NL 50001-
2	204 338 36 R	BOLT	2	NL 50001-
3	01643-31032	WASHER	2	NL 50001-
4	203-43-71242	BRACKET	1	NL 50001-
5	204 338 32 M	BOLT	2	NL 50001-
6	01643-31032	WASHER	2	NL 50001-
7	203-43-71222	BRACKET	1	NL 50001-
8	204 338 22 B	BOLT	1	NL 50001-
9	01643-31232	WASHER	1	NL 50001-
10	7834-41-2002	MOTOR ASS'Y	1	NL 50001-
11	2043 38 34 P	BOLT	3	NL 50001-
12	01643-31032	WASHER	3	NL 50001-
13	203-43-61120	LEVER	1	NL 50001-
14	204 338 33 N	BOLT	1	NL 50001-
15	01602-21030	WASHER	1	NL 50001-
16	203-43-62121	SPRING ASS'Y	1	NL 50001-
17	01582-11008	NUT	1	NL 50001-
18	04252-21061	END	1	NL 50001-
19	01593-31008	NUT	1	NL 50001-
20	04050-12018	PIN	1	NL 50001-
21	01582-11008	NUT	1	NL 50001-
22	20Y-43-12180	JOINT	1	NL 50001-
23	201 341 43 N	NUT	1	NL 50001-
24	01602-20619	WASHER	1	NL 50001-

Fig. No. **B0400-01A0** | **FUEL CONTROL** | Update Index : **A** | **BO-011** 1/1

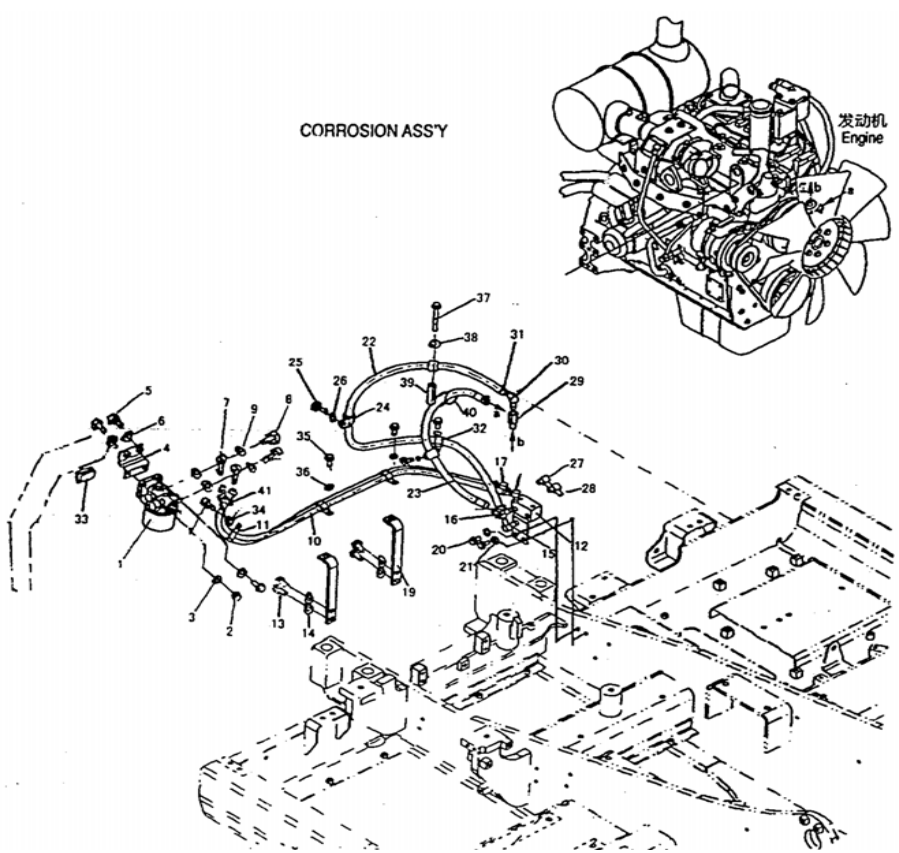

INDEX	PART NUMBER	DESCRIPTION	QTY	SERIAL No.
1	600-411-2400	CORROSION ASSY	1	NL 50001-
	600-411-1181	. CORROSION RESIST	1	NL 50001-
2	204 338 26 F	BOLT	2	NL 50001-
3	01643-31032	WASHER	2	NL 50001-
4	203-01-71621	BRACKET	1	NL 50001-
5	204 338 22 B	BOLT	2	NL 50001-
6	01643-31232	WASHER	2	NL 50001-
7	205-04-62150	JOINT	2	NL 50001-
8	07206-31014	JOINT	2	NL 50001-
9	07005-01412	GASKET	4	NL 50001-
10	203-01-71660	HOSE	1	NL 50001-
11	04435-51612	CLIP	3	NL 50001-
12	203-01-71610	BLOCK	1	NL 50001-
13	204 338 22 B	BOLT	2	NL 50001-
14	01643-31232	WASHER	2	NL 50001-
15	20M-977-8130	ELBOW	1	NL 50001-
16	203-979-7150	ELBOW	1	NL 50001-
17	205-04-62130	ELBOW	1	NL 50001-
18	205-04-62130	ELBOW	1	NL 50001-
19	203-01-71631	BRACKET	2	NL 50001-
20	204 338 23 C	BOLT	4	NL 50001-
21	01643-31232	WASHER	4	NL 50001-
22	203-01-71641	HOSE	1	NL 50001-
23	203-01-71650	HOSE	1	NL 50001-
24	04434-52712	CLIP	3	NL 50001-
25	204 338 23 C	BOLT	3	NL 50001-
26	01643-31232	WASHER	3	NL 50001-
27	07042-70312	PLUG	1	NL 50001-
28	07042-70312	PLUG	1	NL 50001-
29	21W-977-1120	NIPPLE	1	NL 50001-
30	203-979-7150	ELBOW	1	NL 50001-
31	11Y-09-11160	CLIP	4	NL 50001-
32	04434-52112	CLIP	1	NL 50001-
33	203-01-71670	SEAL	1	NL 50001-
34	01643-31232	WASHER	1	NL 50001-
35	204 338 22 B	BOLT	2	NL 50001-
36	01643-31232	WASHER	2	NL 50001-
37	206 338 13 H	BOLT	1	NL 50001-

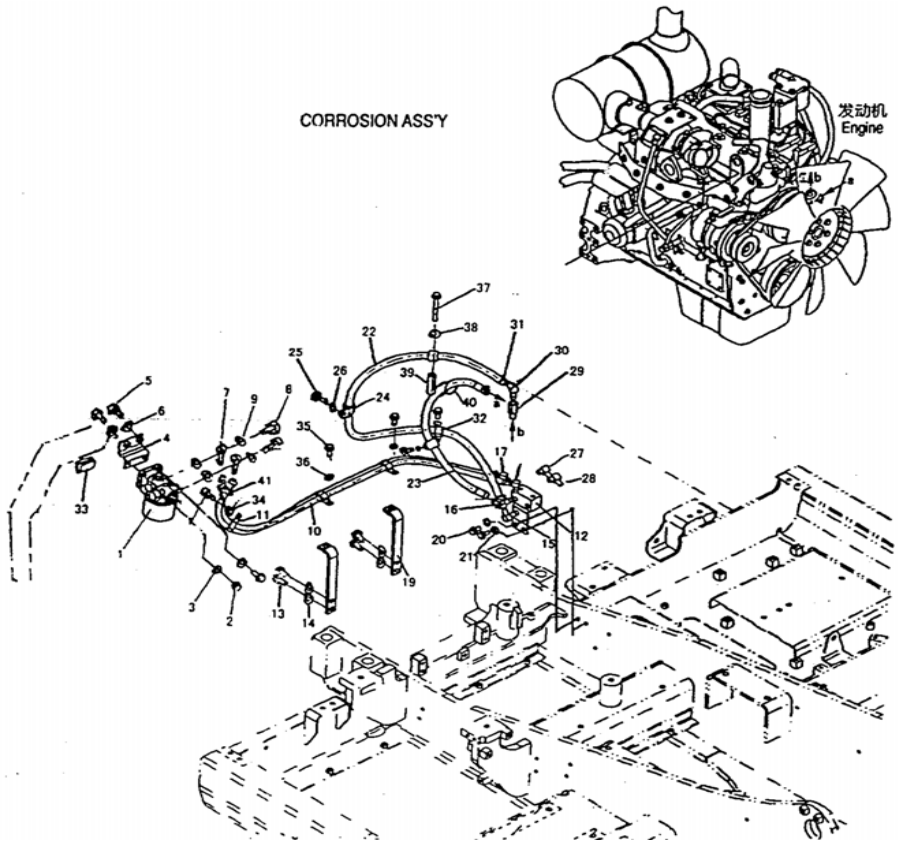

INDEX	PART NUMBER	DESCRIPTION	QTY	SERIAL No.
38	01643-31232	WASHER	1	NL 50001-
39	195-979-3570	COLLAR	1	NL 50001-
40	08034-20823	BAND	2	NL 50001-
41	11Y-09-11140	CLIP	4	NL 50001-

L&T-KOMATSU

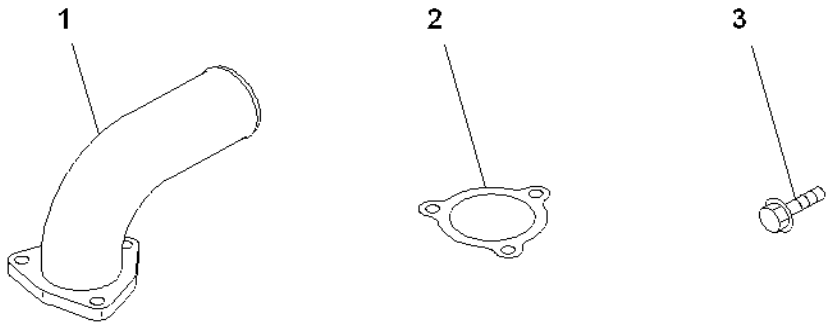

INDEX	PART NUMBER	DESCRIPTION	QTY	SERIAL No.
1	6208-11-4810	CONNECTOR	1	101744-
2	6208-11-4850	GASKET	1	101744-
3	01435-00825	BOLT	3	101744-

Fig. No. **B9999-A0P3** | **AFTER COOLER CONNECTOR** | Update Index : **A** | **BO-017** 1/1

L&T-KOMATSU

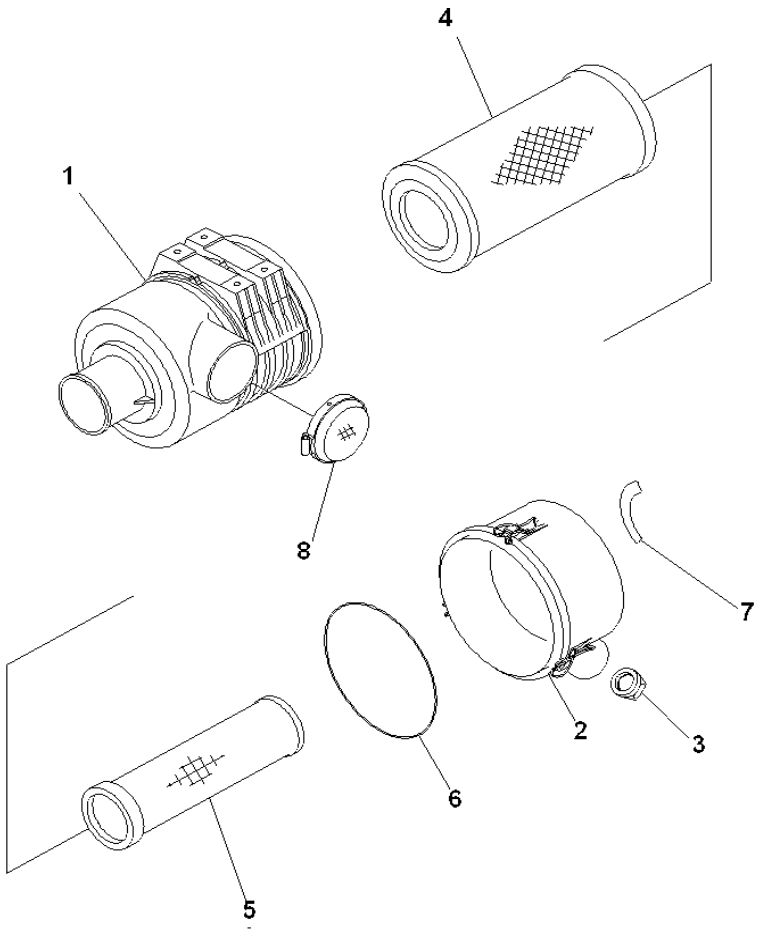

INDEX	PART NUMBER	DESCRIPTION	QTY	SERIAL No.
	6208-81-7100	AIR CLEANER.....	1	NL 50001-
1	6208-81-7110	. BODY.....	1	NL 50001-
	600-184-1210	. COVER ASS'Y.....	1	NL 50001-
2	600-184-1220	. . COVER.....	1	NL 50001-
3	600-184-1250	. . VALVE,VACUATOR.....	1	NL 50001-
	600-185-2100	. ELEMENT ASS'Y.....	1	NL 50001-
4	600-185-2110	. . ELEMENT,OUTER.....	1	NL 50001-
5	#	. . ELEMENT, INNER.....	1	NL 50001-
6	600-184-1270	. . O-RING.....	1	NL 50001-
7	600-181-1930	. PLATE, INSTRUCTI.....	1	NL 50001-
8	6208-81-7720	CAP.....	1	NL 50001-

Fig. No. **B9999-A0P4** | **AIR CLEANER** | Update Index : **A** | **BO-019** 1/1

L&T-KOMATSU

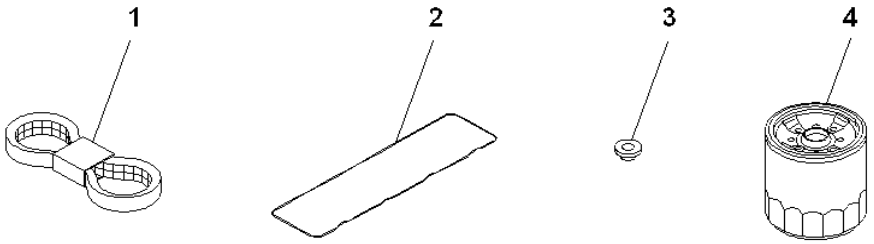

INDEX	PART NUMBER	DESCRIPTION	QTY	SERIAL No.
1	04120-21748	V-BELT	1	101744-
2	6204-11-8810	O-RING,COVER	1	101744-
3	6136-11-8142	PACKING	3	101744-
4	600-211-2110	CARTRIDGE,OIL	1	101744-

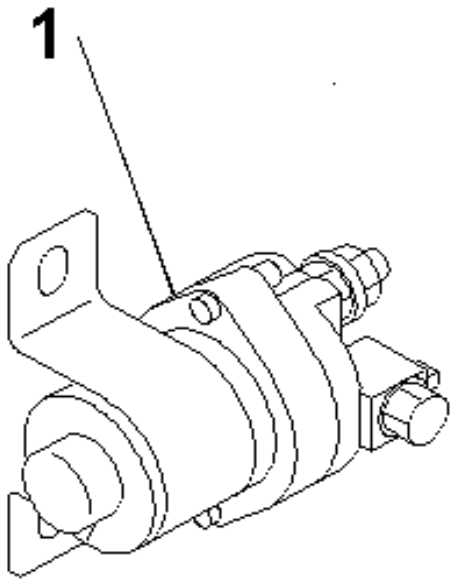

INDEX	PART NUMBER	DESCRIPTION	QTY	SERIAL No.
1	600-815-2170	SWITCH.....	1	101744-

Fig. No. **B9999-A0P6** | **HEATER SWITCH** | Update Index : **A** | **BO-023** 1/1

COOLING SYSTEM

L&T-KOMATSU

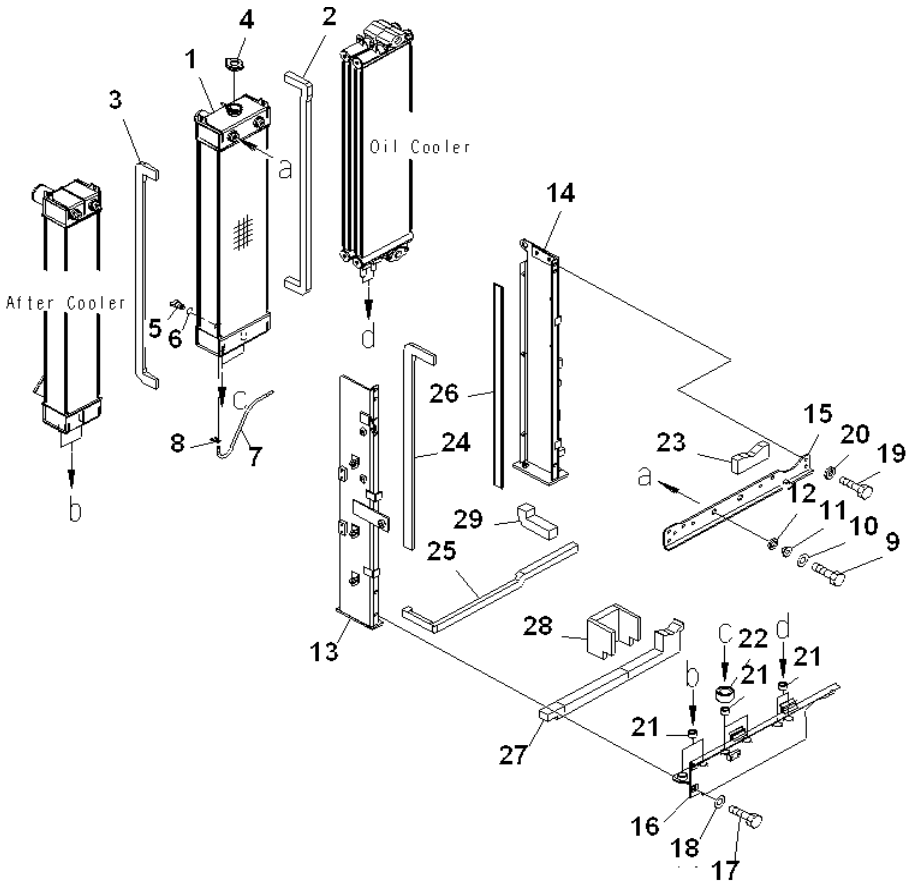

INDEX	PART NUMBER	DESCRIPTION	QTY	SERIAL No.
	203-03-71773	RADIATOR	1	NL 50001-
1	#	. RADIATOR CORE A	1	NL 50001-
2	203-03-71610	. SHEET	1	NL 50001-
3	203-03-71621	. SHEET	1	NL 50001-
4	20Y-03-22110	CAP	1	NL 50001-
5	205-03-62660	PLUG	1	NL 50001-
6	07000-11007	. O-RING	1	NL 50001-
7	203-03-71920	HOSE	1	NL 50001-
8	20Y-03-11330	CLIP	1	NL 50001-
9	204 338 33 N	BOLT	2	NL 50001-
10	01643-31032	WASHER	2	NL 50001-
11	6738-61-4952	COLLAR	2	NL 50001-
12	22U-03-22860	CUSHION	2	NL 50001-
13	203-03-71161	FRAME	1	NL 50001-
14	203-03-71171	FRAME	1	NL 50001-
15	203-03-71181	FRAME	1	NL 50001-
16	203-03-71191	FRAME	1	NL 50001-
17	204 338 32 M	BOLT	3	NL 50001-
18	01643-31032	WASHER	3	NL 50001-
19	204 338 32 M	BOLT	4	NL 50001-
20	20Y-43-15410	WASHER	4	NL 50001-
21	22B-03-12590	CUSHION	6	NL 50001-
22	22U-03-22870	CUSHION	2	NL 50001-
23	203-03-71630	SHEET	1	NL 50001-
24	203-03-71640	SHEET	1	NL 50001-
25	203-03-71650	SHEET	1	NL 50001-
26	203-03-71660	SHEET	1	NL 50001-
27	203-03-71671	SHEET	1	NL 50001-
28	203-03-71681	SHEET	1	NL 50001-
29	203-03-71690	SHEET	1	NL 50001-

Fig. No. **C0100-01A0** | **COOLING (RADIATOR CORE AND FRAME)** | Update Index : **A** | **CO-003** 1/1

L&T-KOMATSU

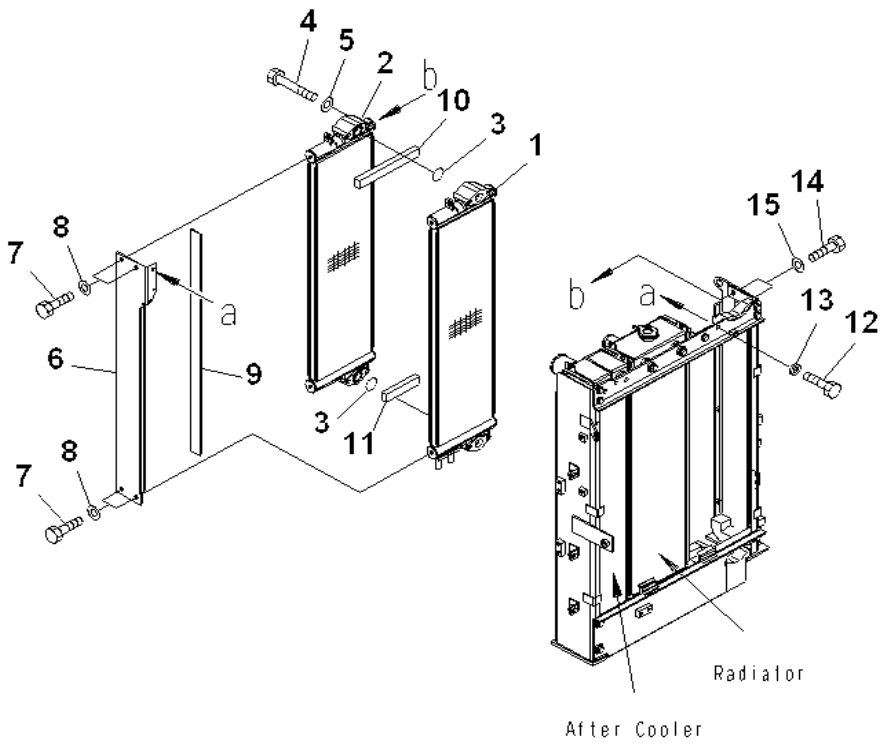

INDEX	PART NUMBER	DESCRIPTION	QTY	SERIAL No.
1	203-03-71130	OIL COOLER	1	NL 50001-
2	203-03-71140	OIL COOLER	1	NL 50001-
3	07000-13035	O-RING	2	NL 50001-
4	204 338 38 T	BOLT	4	NL 50001-
5	01643-31032	WASHER	4	NL 50001-
6	203-03-71150	BRACKET	1	NL 50001-
7	204 338 27 G	BOLT	4	NL 50001-
8	01643-31032	WASHER	4	NL 50001-
9	203-03-71710	SHEET	1	NL 50001-
10	203-03-71720	SHEET	1	NL 50001-
11	203-03-71890	SHEET	1	NL 50001-
12	204 338 32 M	BOLT	1	NL 50001-
13	20Y-43-15410	WASHER	1	NL 50001-
14	204 338 32 M	BOLT	2	NL 50001-
15	01643-31032	WASHER	2	NL 50001-

L&T-KOMATSU

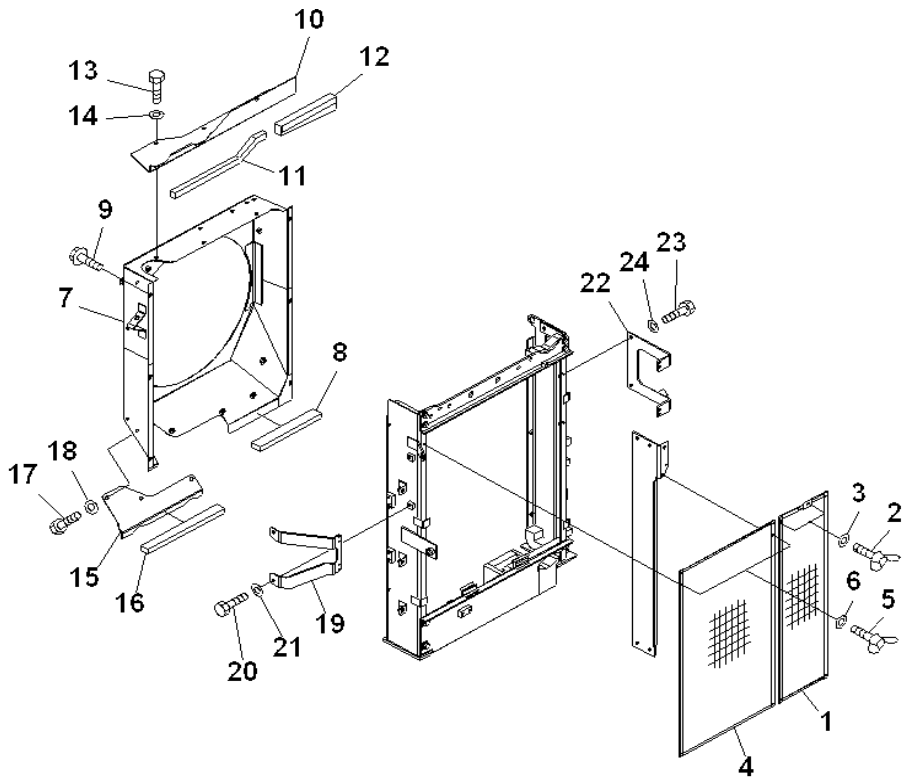

INDEX	PART NUMBER	DESCRIPTION	QTY	SERIAL No.
1	203-03-71851	NET	1	NL 50001-
2	01434-10616	BOLT, WING	2	NL 50001-
3	01643-30623	WASHER	2	NL 50001-
4	203-03-71860	NET	1	NL 50001-
5	01434-10616	BOLT, WING	2	NL 50001-
6	01643-30623	WASHER	2	NL 50001-
7	203-03-71411	SHROUD	1	NL 50001-
8	203-03-71790	SHEET	1	NL 50001-
9	01435-20816	BOLT	6	NL 50001-
10	203-03-71420	COVER	1	NL 50001-
11	203-03-71730	SHEET	1	NL 50001-
12	203-03-71740	SHEET	1	NL 50001-
13	204 338 27 G	BOLT	3	NL 50001-
14	01643-31032	WASHER	3	NL 50001-
15	203-03-71430	COVER	1	NL 50001-
16	203-03-71750	SHEET	1	NL 50001-
17	204 338 27 G	BOLT	3	NL 50001-
18	01643-31032	WASHER	3	NL 50001-
19	203-03-71211	BRACKET	1	NL 50001-
20	204 338 27 G	BOLT	2	NL 50001-
21	01643-31032	WASHER	2	NL 50001-
22	203-03-71221	BRACKET	1	NL 50001-
23	204 338 27 G	BOLT	2	NL 50001-
24	01643-31032	WASHER	2	NL 50001-

Fig. No. **C0100-03A0** | **COOLING (NET AND SHROUD)** | Update Index : **A** | **CO-007** **1/1**

L&T-KOMATSU

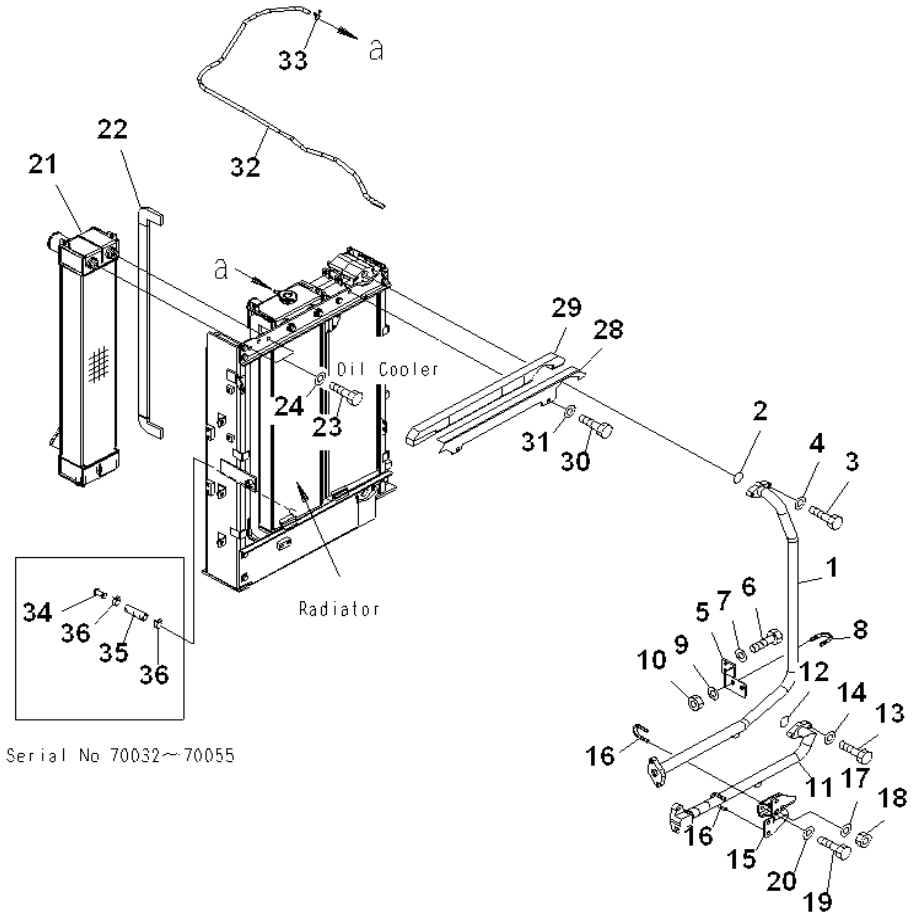

INDEX	PART NUMBER	DESCRIPTION	QTY	SERIAL No.
1	203-03-71231	TUBE	1	NL 50001-
2	07000-13035	O-RING	1	NL 50001-
3	204 338 26 F	BOLT	2	NL 50001-
4	01643-31032	WASHER	2	NL 50001-
5	203-03-71261	BRACKET	1	NL 50001-
6	204 338 27 G	BOLT	2	NL 50001-
7	01643-31032	WASHER	2	NL 50001-
8	07283-33442	CLIP	1	NL 50001-
9	01643-31032	WASHER	2	NL 50001-
10	01597-01009	NUT	2	NL 50001-
11	203-03-71241	TUBE	1	NL 50001-
12	07000-13035	O-RING	1	NL 50001-
13	204 338 26 F	BOLT	2	NL 50001-
14	01643-31032	WASHER	2	NL 50001-
15	203-03-71251	BRACKET	1	NL 50001-
16	07283-33442	CLIP	2	NL 50001-
17	01643-31032	WASHER	4	NL 50001-
18	01597-01009	NUT	4	NL 50001-
19	204 338 32 M	BOLT	2	NL 50001-
20	01643-31032	WASHER	2	NL 50001-
	203-01-71330	AFTER COOLER A	1	NL 50001-
21	#	. AFTER COOLER	1	NL 50001-
22	203-01-71340	. SHEET	1	NL 50001-
23	204 338 32 M	BOLT	2	NL 50001-
24	01643-31032	WASHER	2	NL 50001-
28	203-03-71780	COVER A	1	NL 50001-
29	203-03-71760	. SHEET	1	NL 50001-
30	204 338 27 G	BOLT	2	NL 50001-
31	01643-31032	WASHER	2	NL 50001-
32	203-03-71270	HOSE	1	NL 50001-
33	206-03-43340	CLIP	1	NL 50001-

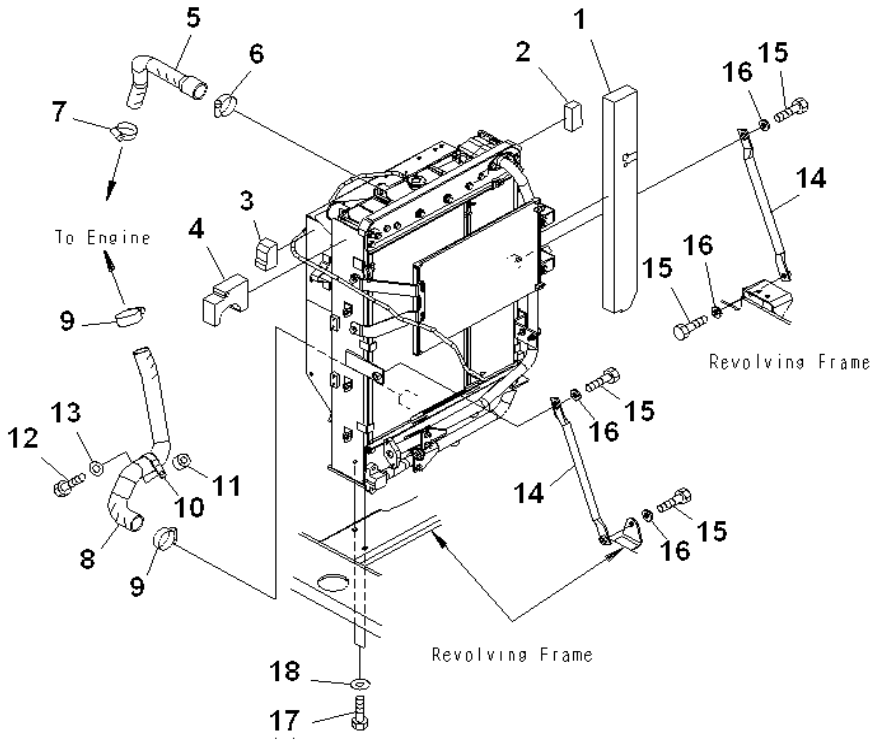

INDEX	PART NUMBER	DESCRIPTION	QTY	SERIAL No.
1	203-03-N1330	SHEET	1	NL 50001-
2	203-03-N1340	SHEET	1	NL 50001-
3	203-03-N1350	SHEET	1	NL 50001-
4	203-03-N1360	SHEET	1	NL 50001-
5	203-03-71310	HOSE	1	NL 50001-
6	07289-00055	CLAMP	1	NL 50001-
7	07289-00045	CLAMP	1	NL 50001-
8	203-03-71321	HOSE	1	NL 50001-
9	07289-00055	CLAMP	2	NL 50001-
10	208-62-38370	CLIP	1	NL 50001-
11	201-03-29160	SPACER	1	NL 50001-
12	204 338 26 F	BOLT	1	NL 50001-
13	01643-31032	WASHER	1	NL 50001-
14	22U-03-22280	STAY	2	NL 50001-
15	204 338 30 K	BOLT	4	NL 50001-
16	21T-54-16150	WASHER	4	NL 50001-
17	204 338 25 E	BOLT	4	NL 50001-
18	175-54-34170	WASHER	4	NL 50001-

L&T-KOMATSU

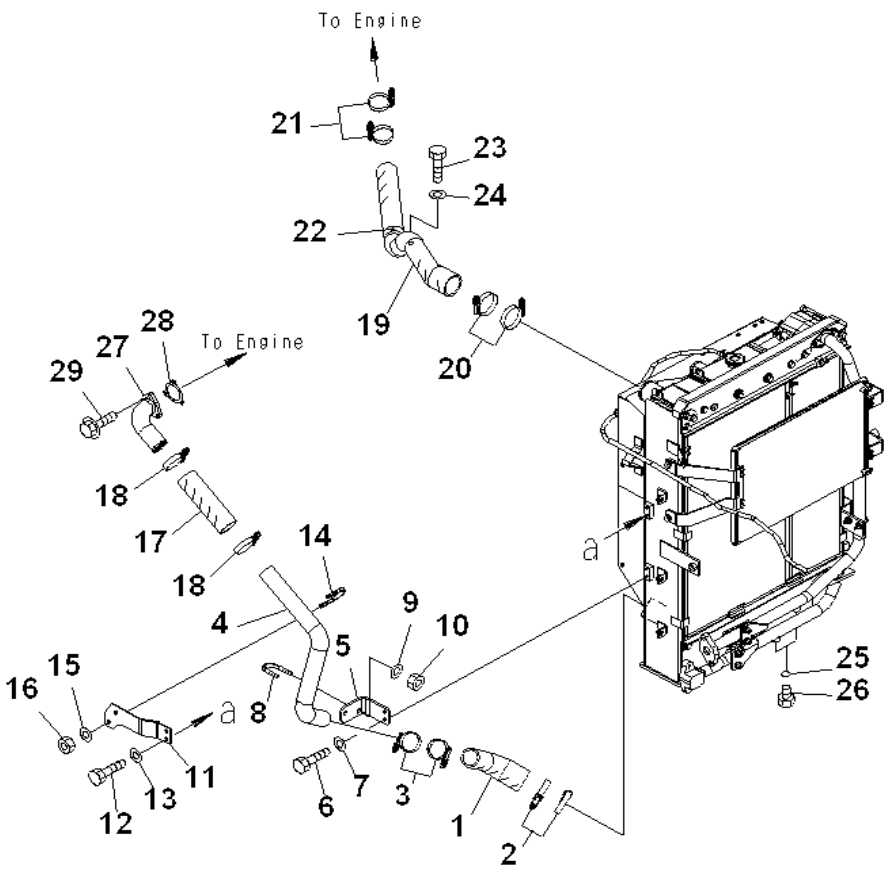

INDEX	PART NUMBER	DESCRIPTION	QTY	SERIAL No.
1	203-01-71150	HOSE	1	NL 50001-
2	07299-00070	CLAMP	2	NL 50001-
3	07299-00055	CLAMP	2	NL 50001-
4	203-01-71160	TUBE	1	NL 50001-
5	203-01-71311	BRACKET	1	NL 50001-
6	204 338 32 M	BOLT	2	NL 50001-
7	01643-31032	WASHER	2	NL 50001-
8	07283-35150	CLIP	1	NL 50001-
9	01643-31032	WASHER	2	NL 50001-
10	01597-01009	NUT	2	NL 50001-
11	203-01-71321	BRACKET	1	NL 50001-
12	204 338 32 M	BOLT	2	NL 50001-
13	01643-31032	WASHER	2	NL 50001-
14	07283-35150	CLIP	1	NL 50001-
15	01643-31032	WASHER	2	NL 50001-
16	01597-01009	NUT	2	NL 50001-
17	203-01-71170	HOSE	1	NL 50001-
18	07299-00055	CLAMP	2	NL 50001-
19	203-01-71180	HOSE	1	NL 50001-
20	07299-00070	CLAMP	2	NL 50001-
21	07299-00055	CLAMP	2	NL 50001-
22	208-62-38370	CLIP	1	NL 50001-
23	204 338 32 M	BOLT	1	NL 50001-
24	01643-31032	WASHER	1	NL 50001-
25	07002-11423	O-RING	2	NL 50001-
26	07040-11409	PLUG	2	NL 50001-
27	6208-11-4810	CONNECTOR	1	NL 50001-
28	6208-11-4850	GASKET	1	NL 50001-
29	01435-00825	BOLT	3	NL 50001-

Fig. No. **C0100-06A0** | **COOLER (AFTER COOLER PIPING)** | Update Index : **A** | **CO-013** 1/1

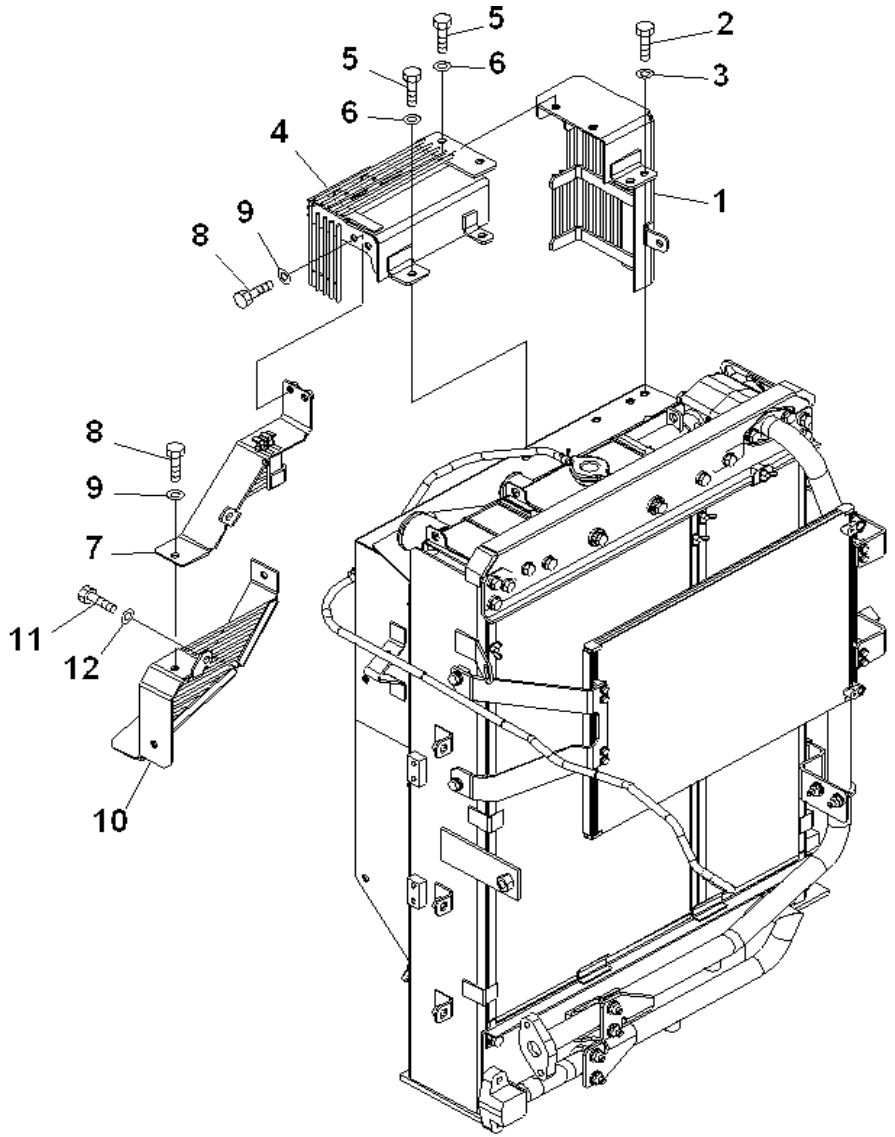

INDEX	PART NUMBER	DESCRIPTION	QTY	SERIAL No.
1	203-03-71461	GUARD	1	NL 50001-
2	204 338 32 M	BOLT	3	NL 50001-
3	01643-31032	WASHER	3	NL 50001-
4	203-03-71471	GUARD	1	NL 50001-
5	204 338 32 M	BOLT	4	NL 50001-
6	01643-31032	WASHER	4	NL 50001-
7	203-03-71481	GUARD	1	NL 50001-
8	204 338 32 M	BOLT	4	NL 50001-
9	01643-31032	WASHER	4	NL 50001-
10	203-03-71492	GUARD	1	NL 50001-
11	2043 38 32 M	BOLT	2	NL 50001-
12	01643-31032	WASHER	2	NL 50001-

Fig. No. **C0310-01A0** | **FAN GUARD** | Update Index : **A** | **CO-015** 1/1

FUEL TANK AND RELATED PARTS

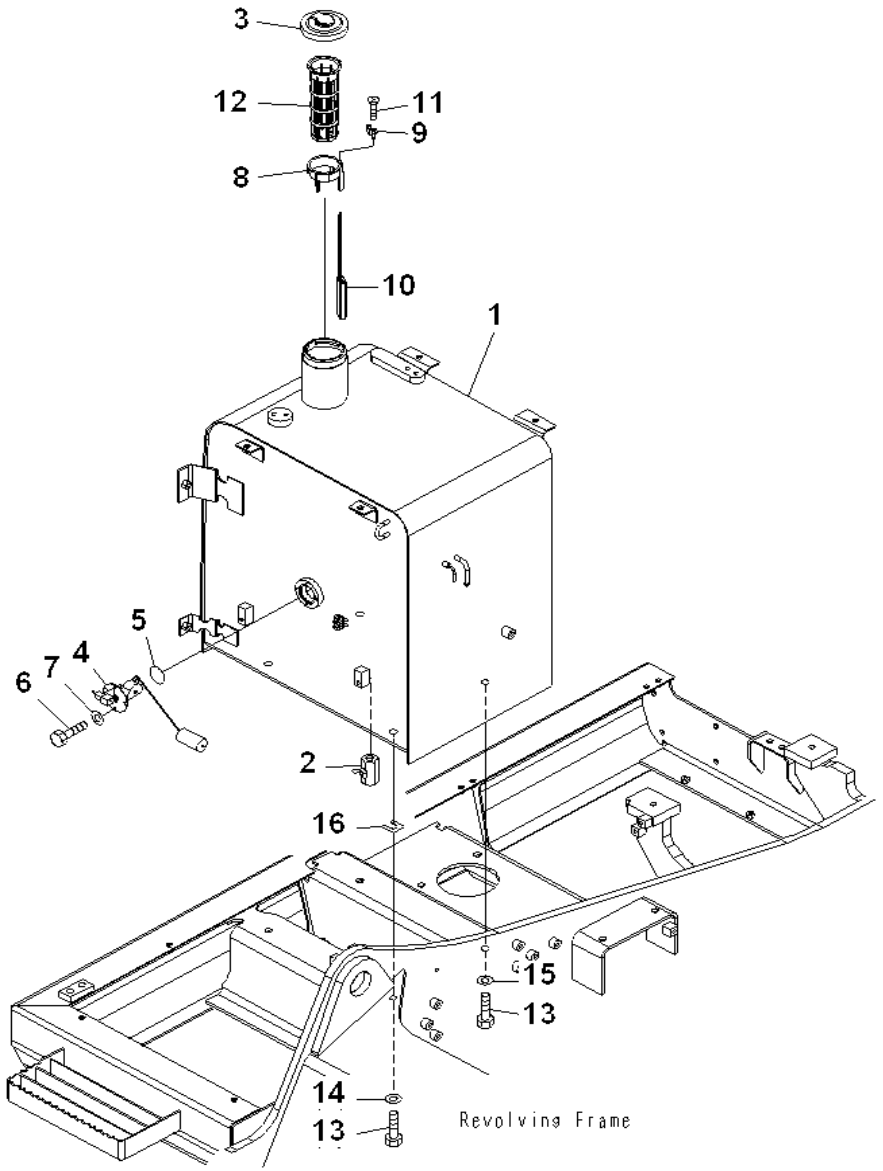

INDEX	PART NUMBER	DESCRIPTION	QTY	SERIAL No.
1	203-04-71120	TANK	1	NL 50001-
2	07700-50240	VALVE	1	NL 50001-
3	20Y-04-11160	CAP	1	NL 50001-
4	7861-92-5810	SENSOR	1	NL 50001-
5	07000-13050	O-RING	1	NL 50001-
6	204 338 40 V	BOLT	4	NL 50001-
7	01643-30623	WASHER	4	NL 50001-
	22U-04-21200	FLOAT ASS'Y	1	NL 50001-
8	22U-04-21210	. GUIDE	1	NL 50001-
9	20Y-04-21580	. CAP	1	NL 50001-
10	22U-04-21220	. FLOAT	1	NL 50001-
11	#	. SCREW	1	NL 50001-
12	07056-18425	STRAINER	1	NL 50001-
13	204 338 30 K	BOLT	4	NL 50001-
14	01643-31645	WASHER	2	NL 50001-
15	21T-54-16150	WASHER	2	NL 50001-
16	195-03-11570	SHIM, 1.0MM	4	NL 50001-

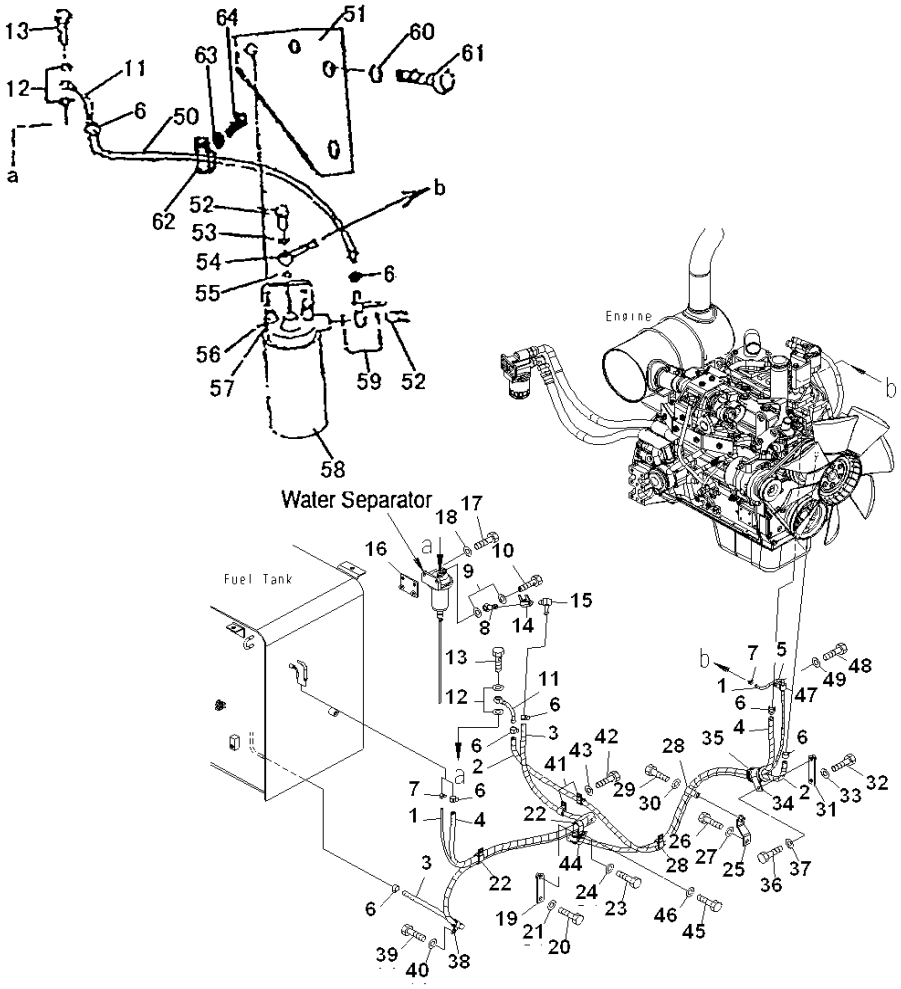

INDEX	PART NUMBER	DESCRIPTION	QTY	SERIAL No.
1	07270-50429	TUBE	1	NL 50001-
2	07288-01019	HOSE	1	NL 50001-
3	07288-01019	HOSE	1	NL 50001-
4	07288-01027	HOSE	1	NL 50001-
5	08017-31005	CONDUIT	1	NL 50001-
6	11Y-09-11140	CLIP	8	NL 50001-
7	07285-00080	CLIP	2	NL 50001-
8	205-04-62140	JOINT	1	NL 50001-
9	07005-01412	GASKET	2	NL 50001-
10	07206-31014	JOINT	1	NL 50001-
11	203-04-56150	JOINT	1	NL 50001-
12	07005-01412	GASKET	2	NL 50001-
13	07206-31014	JOINT	1	NL 50001-
14	07700-50240	VALVE	1	NL 50001-
15	205-04-62130	ELBOW	1	NL 50001-
16	203-04-71160	PLATE	1	NL 50001-
17	204 338 27 G	BOLT	2	NL 50001-
18	01643-31032	WASHER	2	NL 50001-
19	203-04-71150	PLATE	1	NL 50001-
20	204 338 22 B	BOLT	1	NL 50001-
21	01643-31232	WASHER	1	NL 50001-
22	04435-51912	CLIP	2	NL 50001-
23	204 338 22 B	BOLT	2	NL 50001-
24	01643-31232	WASHER	2	NL 50001-
25	203-06-71271	BRACKET	1	NL 50001-
26	204 338 22 B	BOLT	1	NL 50001-
27	01643-31232	WASHER	1	NL 50001-
28	04435-51912	CLIP	2	NL 50001-
29	204 338 22 B	BOLT	2	NL 50001-
30	01643-31232	WASHER	2	NL 50001-
31	203-04-71150	PLATE	1	NL 50001-
32	204 338 22 B	BOLT	1	NL 50001-
33	21T-62-76850	CLIP	1	NL 50001-
34	01643-31232	WASHER	1	NL 50001-
35	07095-01034	CUSHION	1	NL 50001-
36	204 338 22 B	BOLT	1	NL 50001-
37	01643-31232	WASHER	1	NL 50001-
38	04434-51912	CLIP	1	NL 50001-

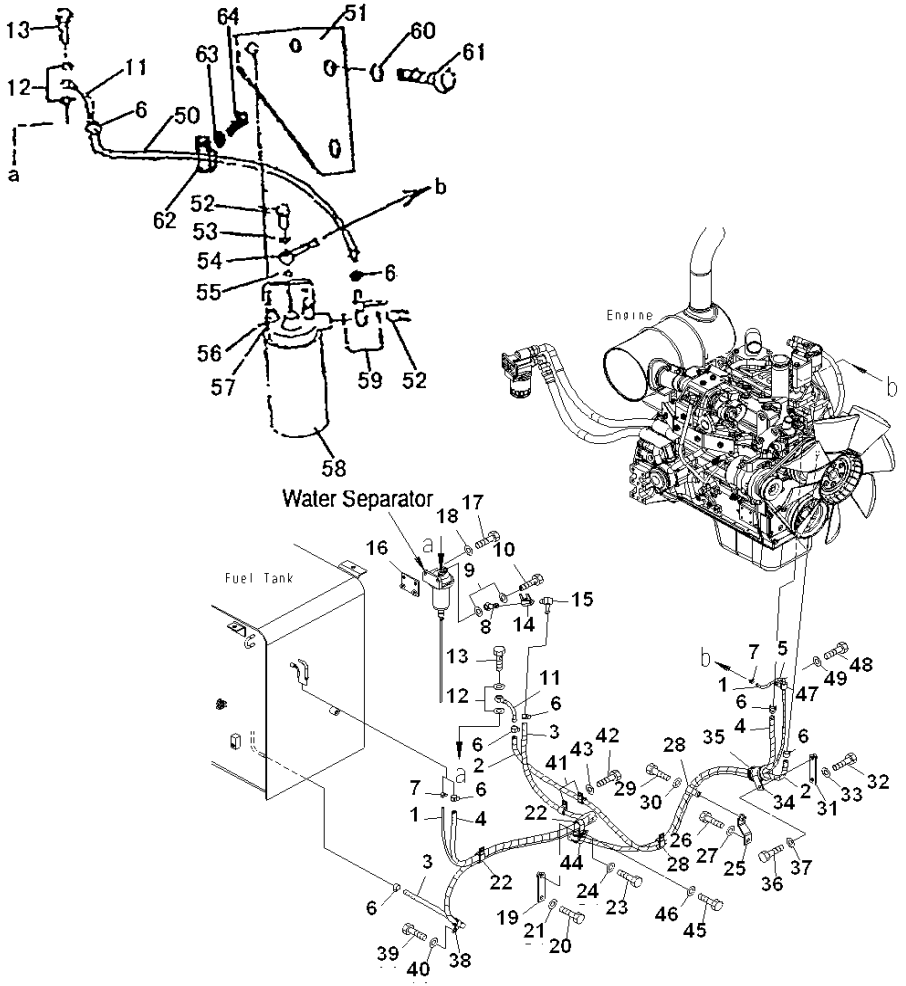

INDEX	PART NUMBER	DESCRIPTION	QTY	SERIAL No.
39	204 338 22 B	BOLT	1	NL 50001-
40	01643-31232	WASHER	1	NL 50001-
41	204 338 22 B	BOLT	2	NL 50001-
42	01643-31232	WASHER	2	NL 50001-
43	04434-52512	CLIP	1	NL 50001-
44	204 338 22 B	BOLT	1	NL 50001-
45	01643-31232	WASHER	1	NL 50001-
46	04434-51912	CLIP	2	NL 50001-
47	04434-51412	CLIP	1	NL 50001-
48	204 338 22 B	BOLT	1	NL 50001-
49	01643-31232	WASHER	1	NL 50001-
50	203-04-71330	HOSE	1	NL 50001-
51	203-04-71310	BRACKET	1	NL 50001-
52	07206-31014	JOINT	2	NL 50001-
53	07005-01412	GASKET	1	NL 50001-
54	205-04-62150	JOINT	2	NL 50001-
55	07005-01412	GASKET	1	NL 50001-
56	01643-31032	WASHER	2	NL 50001-
57	204 338 33 N	BOLT	2	NL 50001-
58	600-311-9101	FUEL FILTER	1	NL 50001-
59	07005-01412	GASKET	2	NL 50001-
60	01643-31232	WASHER	2	NL 50001-
61	204 338 23 C	BOLT	2	NL 50001-
62	04435-51912	CLIP	1	NL 50001-
63	01643-31232	WASHER	1	NL 50001-
64	204 338 22 B	BOLT	1	NL 50001-

L&T-KOMATSU

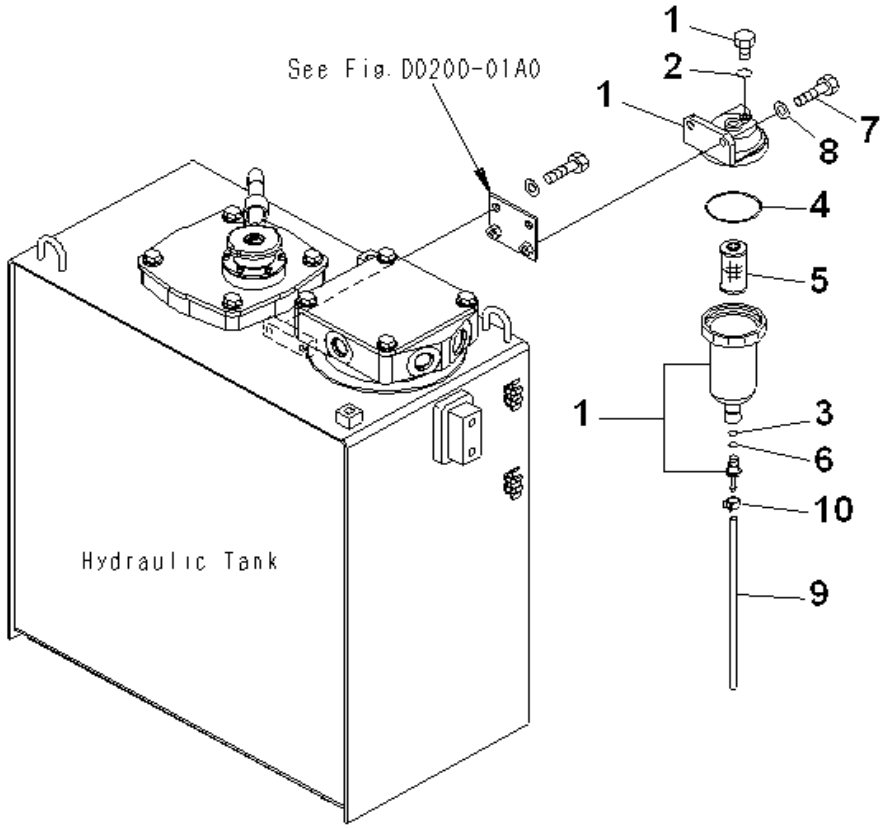

INDEX	PART NUMBER	DESCRIPTION	QTY	SERIAL No.
1	22U-04-21131	WATER SEPARATOR	1	NL 50001-
2	07000-11006	.O-RING	1	NL 50001-
3	07000-11007	.O-RING	1	NL 50001-
4	07000-12065	.O-RING	1	NL 50001-
5	22U-04-21260	.ELEMENT	1	NL 50001-
6	22U-04-21330	.O-RING	1	NL 50001-
7	01643-31032	WASHER	2	NL 50001-
8	07270-00640	TUBE	1	NL 50001-
9	07285-00080	CLIP	1	NL 50001-
10	204 338 33 N	BOLT	2	NL 50001-

Fig. No. **D0200-02A0** | **FUEL LINE (WATER SEPERATOR) (POOR FUEL (CONTAINED WATER) ARRANGE** | Update Index : **A** | **DO-009** 1/1

NOTES:

ELECTRICAL SYSTEM

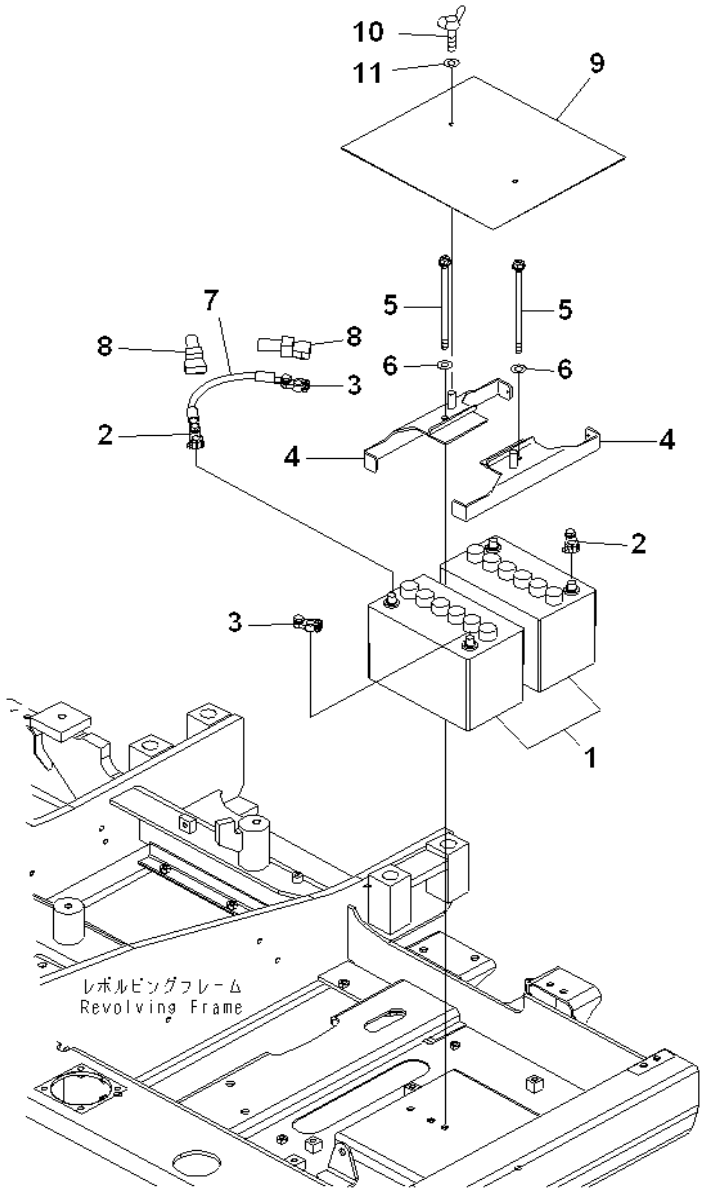

INDEX	PART NUMBER	DESCRIPTION	QTY	SERIAL No.
1	203-06-N1130	BATTERY.(DRY).....	2	NL 50001-
2	08000-00000	TERMINAL, (+).....	2	NL 50001-
3	08000-00001	TERMINAL, (-).....	2	NL 50001-
4	203-06-67510	HOLDER.....	2	NL 50001-
5	204 338 56 N	BOLT.....	2	NL 50001-
6	01643-31232	WASHER.....	2	NL 50001-
7	08028-62035	CABLE.....	1	NL 50001-
8	08038-42009	CAP.....	2	NL 50001-
9	203-06-71380	COVER.....	1	NL 50001-
10	01434-00820	BOLT, WING.....	2	NL 50001-
11	01643-30823	WASHER.....	2	NL 50001-

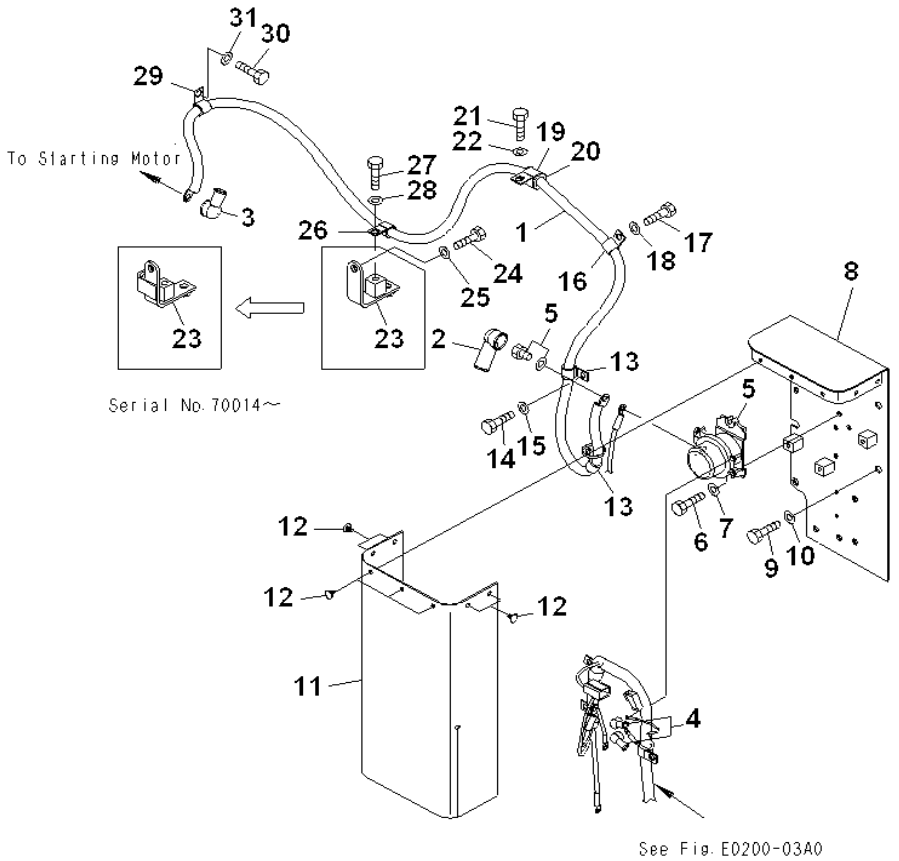

INDEX	PART NUMBER	DESCRIPTION	QTY	SERIAL No.
1	203-06-71120	CABLE	1	NL 50001-
2	08038-00035	CAP	1	NL 50001-
3	203-06-71420	CAP	1	NL 50001-
4	08038-00519	CAP	2	NL 50001-
5	08088-30000	SWITCH	1	NL 50001-
6	204 338 50 G	BOLT	2	NL 50001-
7	01643-30823	WASHER	2	NL 50001-
8	203-06-71212	BRACKET	1	NL 50001-
9	204 338 23 C	BOLT	4	NL 50001-
10	01643-31232	WASHER	4	NL 50001-
11	203-06-71281	SHEET	1	NL 50001-
12	20T-54-74510	CAP	7	NL 50001-
13	04434-51710	CLIP	2	NL 50001-
14	204 338 27 G	BOLT	2	NL 50001-
15	01643-31032	WASHER	2	NL 50001-
16	04434-51712	CLIP	1	NL 50001-
17	204 338 22 B	BOLT	1	NL 50001-
18	01643-31232	WASHER	1	NL 50001-
19	04434-52712	CLIP	1	NL 50001-
20	07095-20418	CUSHION	1	NL 50001-
21	204 338 22 B	BOLT	1	NL 50001-
22	01643-31232	WASHER	1	NL 50001-
23	203-979-7142	BRACKET	1	NL 50001-
24	204 338 23 C	BOLT	1	NL 50001-
25	01643-31232	WASHER	1	NL 50001-
26	04434-51712	CLIP	1	NL 50001-
27	204 338 22 B	BOLT	1	NL 50001-
28	01643-31232	WASHER	1	NL 50001-
29	04434-51712	CLIP	1	NL 50001-
30	204 338 22 B	BOLT	1	NL 50001-
31	01643-31232	WASHER	1	NL 50001-

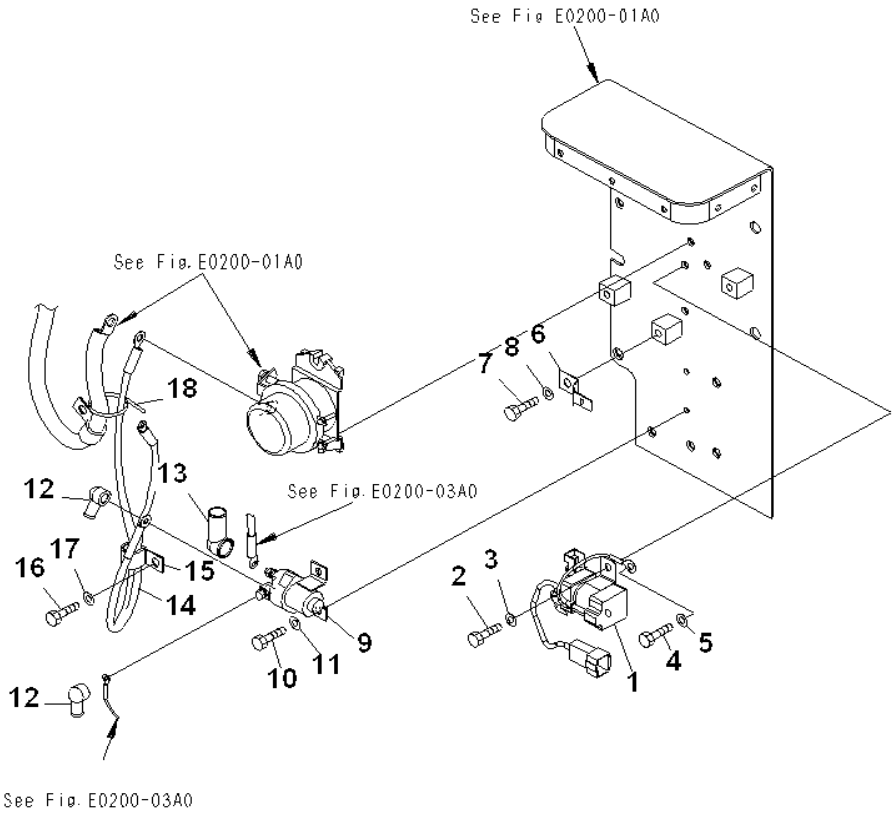

INDEX	PART NUMBER	DESCRIPTION	QTY	SERIAL No.
1	600-815-8941	RELAY	1	NL 50001-
2	204 338 47 D	BOLT	2	NL 50001-
3	01643-30823	WASHER	2	NL 50001-
4	204 338 47 D	BOLT	1	NL 50001-
5	01643-30823	WASHER	1	NL 50001-
6	08053-01510	CLIP	1	NL 50001-
7	204 338 18 W	BOLT	1	NL 50001-
8	01643-31232	WASHER	1	NL 50001-
9	600-815-2170	SWITCH	1	NL 50001-
10	204 338 29 J	BOLT	2	NL 50001-
11	01643-30623	WASHER	2	NL 50001-
12	08038-00519	CAP	2	NL 50001-
13	08038-06031	CAP	1	NL 50001-
14	203-06-71131	CABLE	1	NL 50001-
15	04434-51810	CLIP	1	NL 50001-
16	204 338 27 G	BOLT	1	NL 50001-
17	01643-31032	WASHER	1	NL 50001-
18	08034-20536	BAND	1	NL 50001-

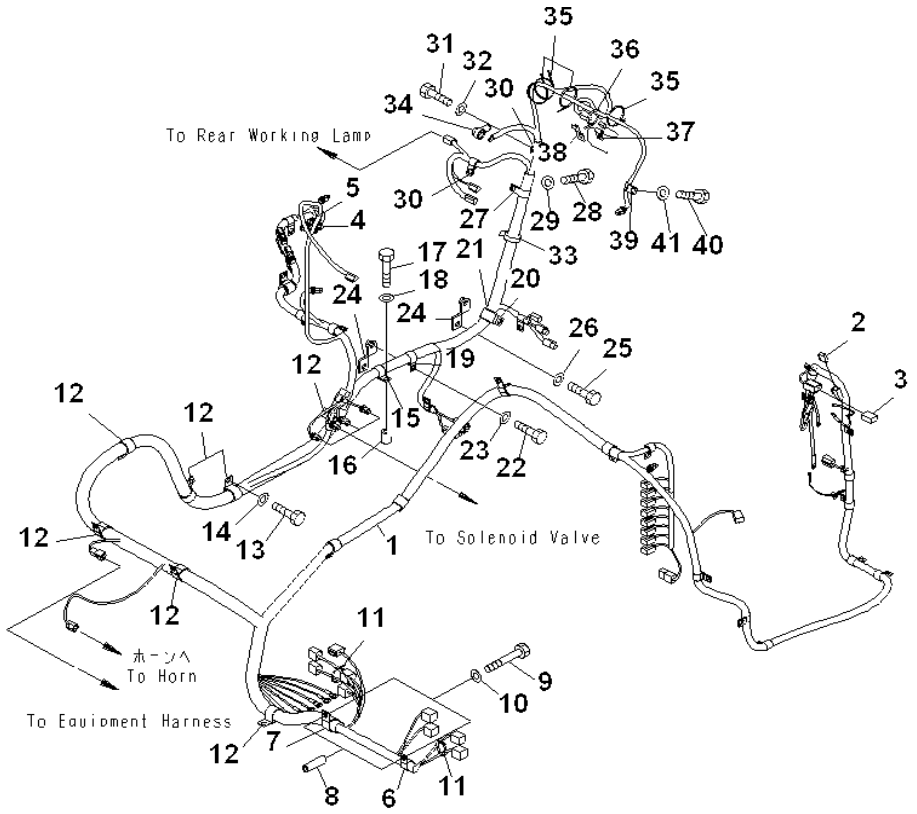

INDEX	PART NUMBER	DESCRIPTION	QTY	SERIAL No.
1	203-06-71712	WIRING HARNESS	1	NL 50001-
2	20Y-06-31660	. FUSIBLE LINK, 30A	1	NL 50001-
3	22U-06-11270	. FUSIBLE LINK, 65A	1	NL 50001-
4	20Y-62-22790	. BAND, RED	1	NL 50001-
5	20Y-62-22830	. BAND, WHITE	1	NL 50001-
6	04434-52312	CLIP	1	NL 50001-
7	04434-53412	CLIP	1	NL 50001-
8	195-979-3570	COLLAR	2	NL 50001-
9	205 338 28 D	BOLT	2	NL 50001-
10	01643-31232	WASHER	2	NL 50001-
11	08034-20519	BAND	2	NL 50001-
12	04434-53412	CLIP	7	NL 50001-
13	204 338 22 B	BOLT	7	NL 50001-
14	01643-31232	WASHER	7	NL 50001-
15	04434-52312	CLIP	1	NL 50001-
16	20Y-03-11220	COLLAR	1	NL 50001-
17	204 338 55 M	BOLT	1	NL 50001-
18	01643-31232	WASHER	1	NL 50001-
19	04434-52312	CLIP	1	NL 50001-
20	04434-53212	CLIP	1	NL 50001-
21	07095-20523	CUSHION	1	NL 50001-
22	204 338 22 B	BOLT	2	NL 50001-
23	01643-31232	WASHER	2	NL 50001-
24	203-06-71271	BRACKET	2	NL 50001-
25	204 338 22 B	BOLT	2	NL 50001-
26	01643-31232	WASHER	2	NL 50001-
27	04434-52312	CLIP	1	NL 50001-
28	204 338 22 B	BOLT	1	NL 50001-
29	01643-31232	WASHER	1	NL 50001-
30	04434-51412	CLIP	2	NL 50001-
31	204 338 22 B	BOLT	2	NL 50001-
32	01643-31232	WASHER	2	NL 50001-
33	08034-20536	BAND	1	NL 50001-
34	08038-02027	CAP	1	NL 50001-
35	08034-20536	BAND	4	NL 50001-
36	04434-50508	CLIP	1	NL 50001-
37	08053-01510	CLIP	1	NL 50001-
38	04434-51012	CLIP	1	NL 50001-

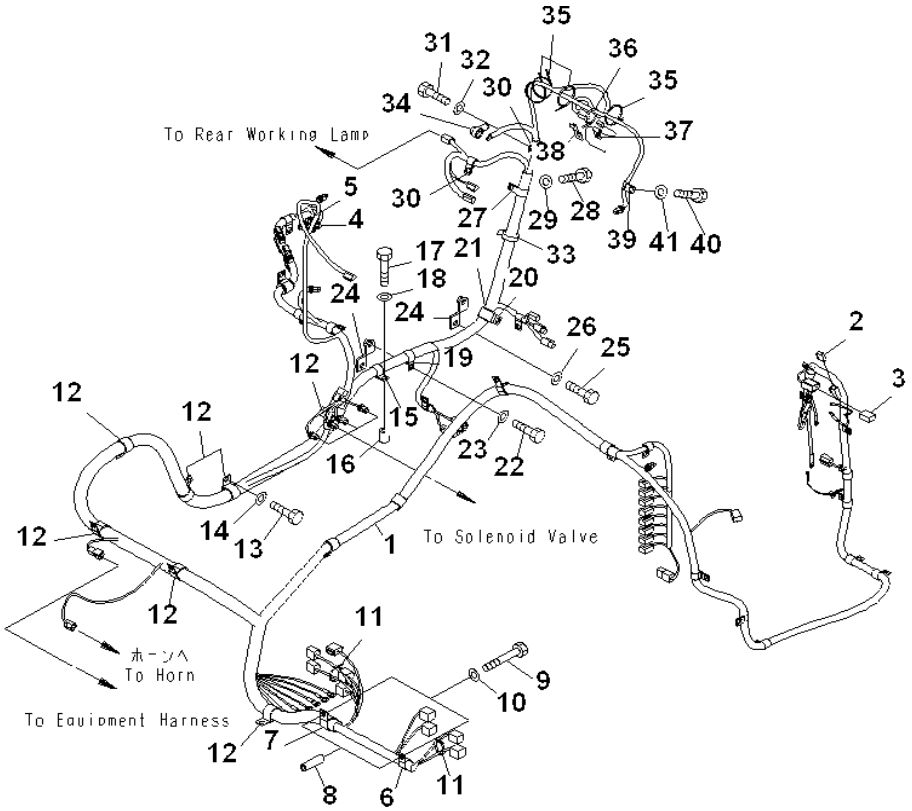

INDEX	PART NUMBER	DESCRIPTION	QTY	SERIAL No.
39	204 338 22 B	BOLT	1	NL 50001-
40	01643-31232	WASHER	1	NL 50001-

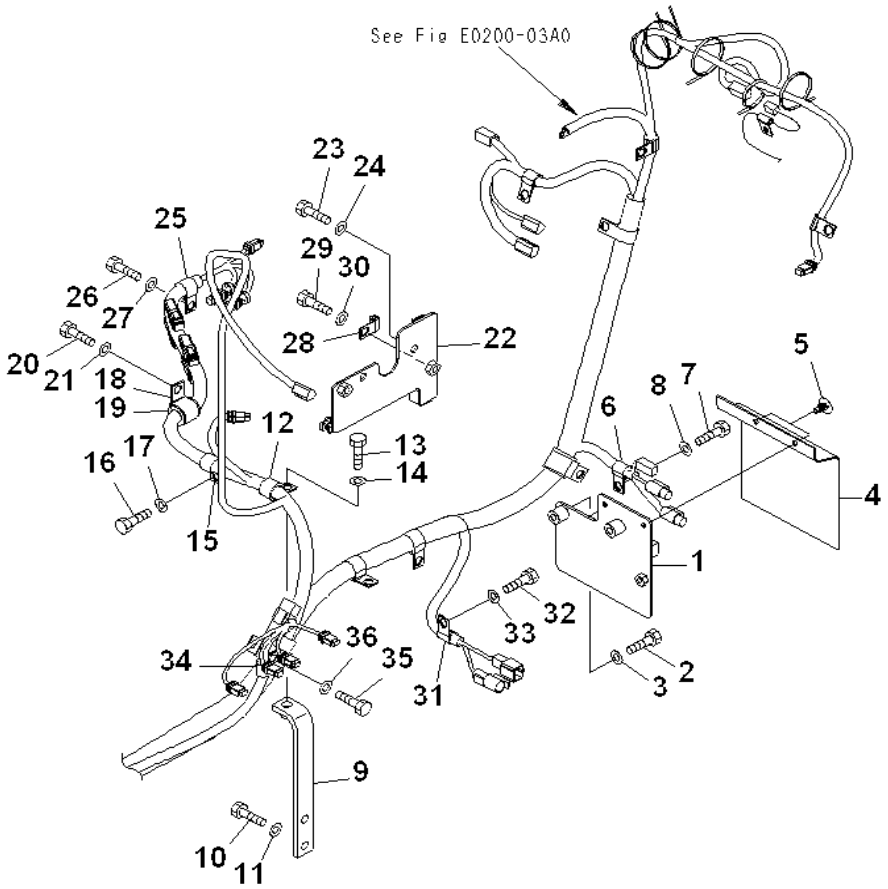

INDEX	PART NUMBER	DESCRIPTION	QTY	SERIAL No.
1	203-06-71311	BRACKET	1	NL 50001-
2	204 338 34 P	BOLT	2	NL 50001-
3	01643-31032	WASHER	2	NL 50001-
4	203-06-71361	SHEET	1	NL 50001-
5	20T-54-74510	CAP	2	NL 50001-
6	04434-51412	CLIP	1	NL 50001-
7	204 338 22 B	BOLT	1	NL 50001-
8	01643-31232	WASHER	1	NL 50001-
9	203-06-71321	BRACKET	1	NL 50001-
10	204 338 23 C	BOLT	2	NL 50001-
11	01643-31232	WASHER	2	NL 50001-
12	04434-52312	CLIP	1	NL 50001-
13	204 338 22 B	BOLT	1	NL 50001-
14	01643-31232	WASHER	1	NL 50001-
15	04434-51912	CLIP	1	NL 50001-
16	204 338 22 B	BOLT	1	NL 50001-
17	01643-31232	WASHER	1	NL 50001-
18	04434-52712	CLIP	1	NL 50001-
19	07095-20419	CUSHION	1	NL 50001-
20	204 338 22 B	BOLT	1	NL 50001-
21	01643-31232	WASHER	1	NL 50001-
22	203-06-71231	BRACKET	1	NL 50001-
23	204 338 27 G	BOLT	2	NL 50001-
24	01643-31032	WASHER	2	NL 50001-
25	04434-51912	CLIP	1	NL 50001-
26	204 338 22 B	BOLT	1	NL 50001-
27	01643-31232	WASHER	1	NL 50001-
28	04434-50612	CLIP	1	NL 50001-
29	204 338 22 B	BOLT	1	NL 50001-
30	01643-31232	WASHER	1	NL 50001-
31	04434-51412	CLIP	1	NL 50001-
32	204 338 22 B	BOLT	1	NL 50001-
33	01643-31232	WASHER	1	NL 50001-
34	04434-51412	CLIP	1	NL 50001-
35	204 338 22 B	BOLT	1	NL 50001-
36	01643-31232	WASHER	1	NL 50001-

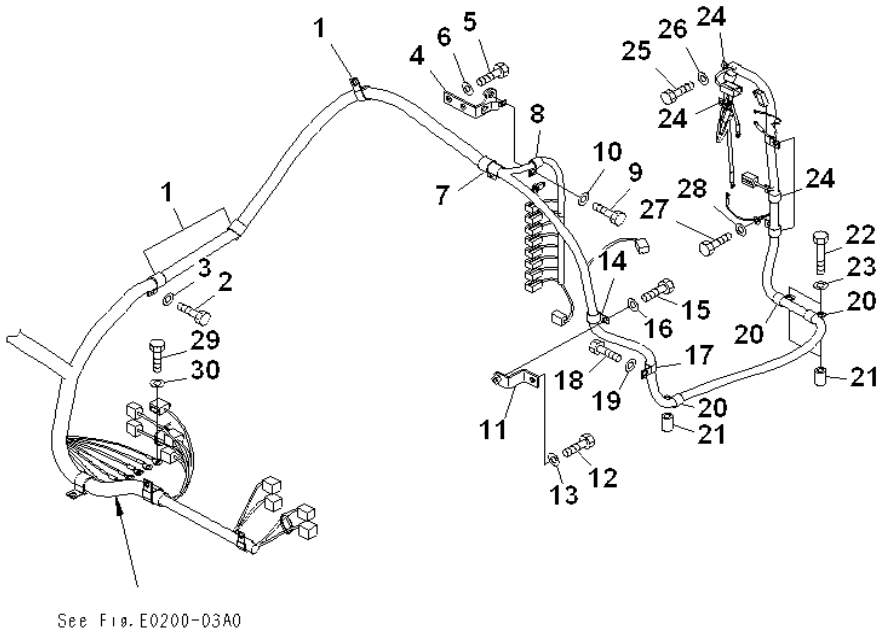

See Fig. E0200-03A0

INDEX	PART NUMBER	DESCRIPTION	QTY	SERIAL No.
1	04434-52712	CLIP	3	NL 50001-
2	204 338 22 B	BOLT	3	NL 50001-
3	01643-31232	WASHER	3	NL 50001-
4	203-06-71351	BRACKET	1	NL 50001-
5	204 338 23 C	BOLT	2	NL 50001-
6	01643-31232	WASHER	2	NL 50001-
7	04434-52712	CLIP	1	NL 50001-
8	04434-51712	CLIP	1	NL 50001-
9	204 338 22 B	BOLT	1	NL 50001-
10	01643-31232	WASHER	1	NL 50001-
11	203-06-71430	BRACKET	1	NL 50001-
12	204 338 23 C	BOLT	1	NL 50001-
13	01643-31232	WASHER	1	NL 50001-
14	04434-51912	CLIP	1	NL 50001-
15	204 338 23 C	BOLT	1	NL 50001-
16	01643-31232	WASHER	1	NL 50001-
17	04434-51912	CLIP	1	NL 50001-
18	204 338 22 B	BOLT	1	NL 50001-
19	01643-31232	WASHER	1	NL 50001-
20	04434-51912	CLIP	3	NL 50001-
21	20Y-03-11220	COLLAR	3	NL 50001-
22	204 338 54 L	BOLT	3	NL 50001-
23	01643-31232	WASHER	3	NL 50001-
24	04434-51910	CLIP	5	NL 50001-
25	204 338 27 G	BOLT	5	NL 50001-
26	01643-31032	WASHER	5	NL 50001-
27	204 338 27 G	BOLT	1	NL 50001-
28	01643-31032	WASHER	1	NL 50001-
29	204 338 27 G	BOLT	6	NL 50001-
30	01643-31032	WASHER	6	NL 50001-

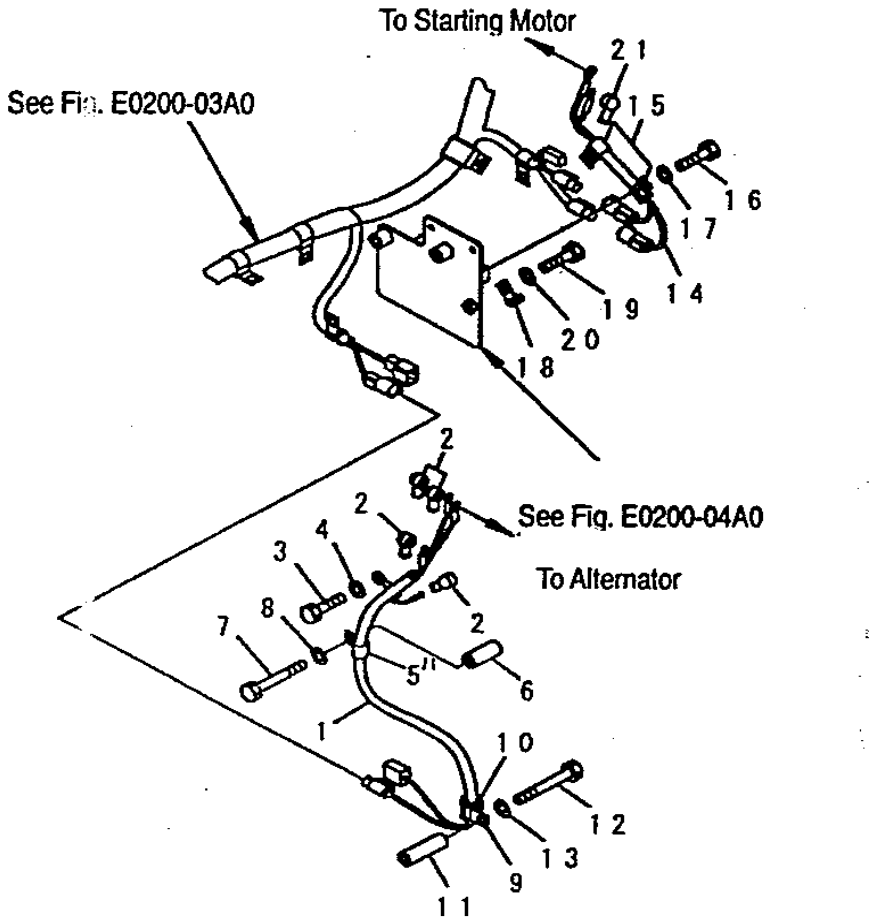

INDEX	PART NUMBER	DESCRIPTION	QTY	SERIAL No.
1	203-06-71142	WIRING HARNESS	1	NL 50001-
2	08038-00519	CAP	4	NL 50001-
3	204 338 27 G	BOLT	1	NL 50001-
4	01643-31032	WASHER	1	NL 50001-
5	04434-51410	CLIP	1	NL 50001-
6	6152-51-5520	SPACER	1	NL 50001-
7	204 338 37 S	BOLT	1	NL 50001-
8	01643-31032	WASHER	1	NL 50001-
9	04434-52112	CLIP	1	NL 50001-
10	07095-20314	CUSHION	1	NL 50001-
11	195-979-3570	COLLAR	1	NL 50001-
12	206 338 13 H	BOLT	1	NL 50001-
13	01643-31232	WASHER	1	NL 50001-
14	203-06-71152	CABLE	1	NL 50001-
15	04434-51410	CLIP	2	NL 50001-
16	204 338 27 G	BOLT	2	NL 50001-
17	01643-31032	WASHER	2	NL 50001-
18	08034-20519	BAND	1	NL 50001-
19	04434-51412	CLIP	1	NL 50001-
20	204 338 27 G	BOLT	1	NL 50001-
21	01643-31032	WASHER	1	NL 50001-
22	08038-00519	CAP	1	NL 50001-

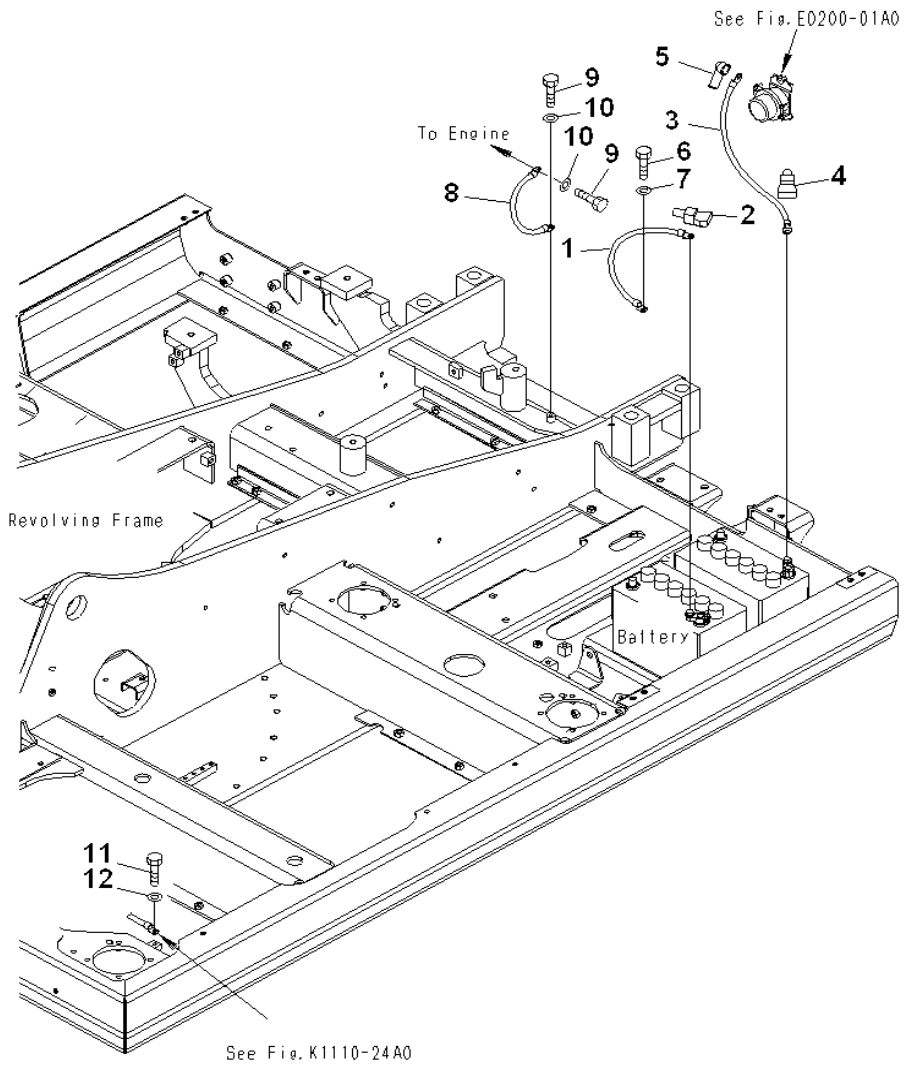

INDEX	PART NUMBER	DESCRIPTION	QTY	SERIAL No.
1	08028-42040	CABLE	1	NL 50001-
2	08038-22009	CAP	1	NL 50001-
3	08028-CB050	CABLE	1	NL 50001-
4	08038-42009	CAP	1	NL 50001-
5	08038-06031	CAP	1	NL 50001-
6	204 338 27 G	BOLT	1	NL 50001-
7	01643-31032	WASHER	1	NL 50001-
8	08028-42030	CABLE	1	NL 50001-
9	204 338 31 L	BOLT	2	NL 50001-
10	01643-31032	WASHER	2	NL 50001-
11	204 338 31 L	BOLT	1	NL 50001-
12	01643-31032	WASHER	1	NL 50001-

L&T-KOMATSU

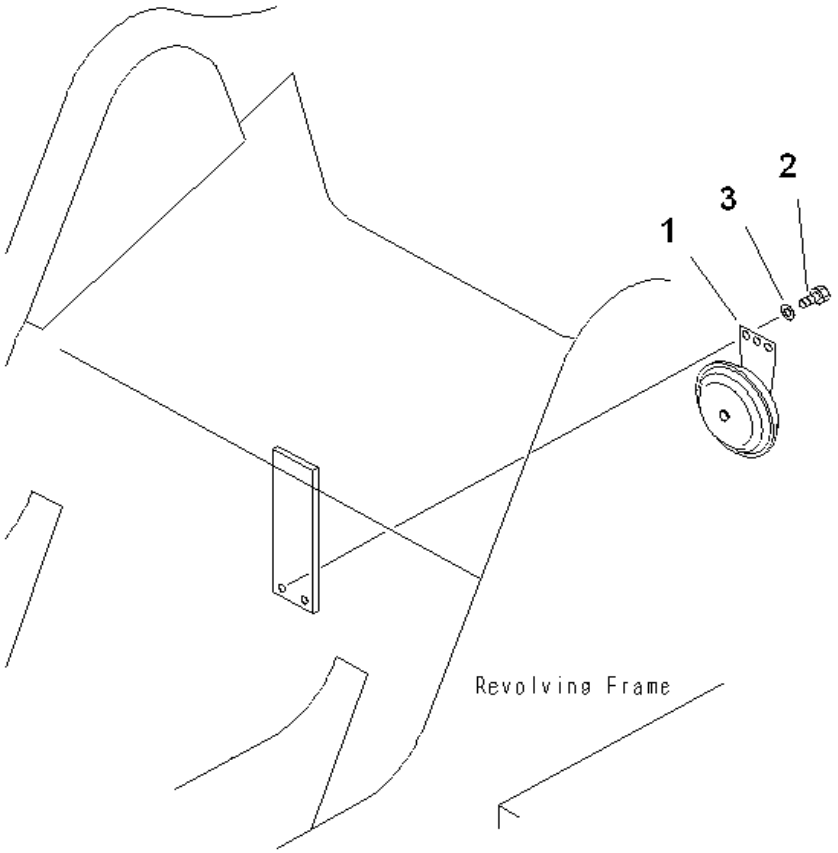

INDEX	PART NUMBER	DESCRIPTION	QTY	SERIAL No.
1	08160-72400	HORN	1	NL 50001-
2	204 338 48 E	BOLT	2	NL 50001-
3	01643-30823	WASHER	2	NL 50001-

Fig. No. **E0410-01A0** | **HORN** | Update Index : **A** | **EO-035** 1/1

NOTES:

HYDRAULIC SYSTEM

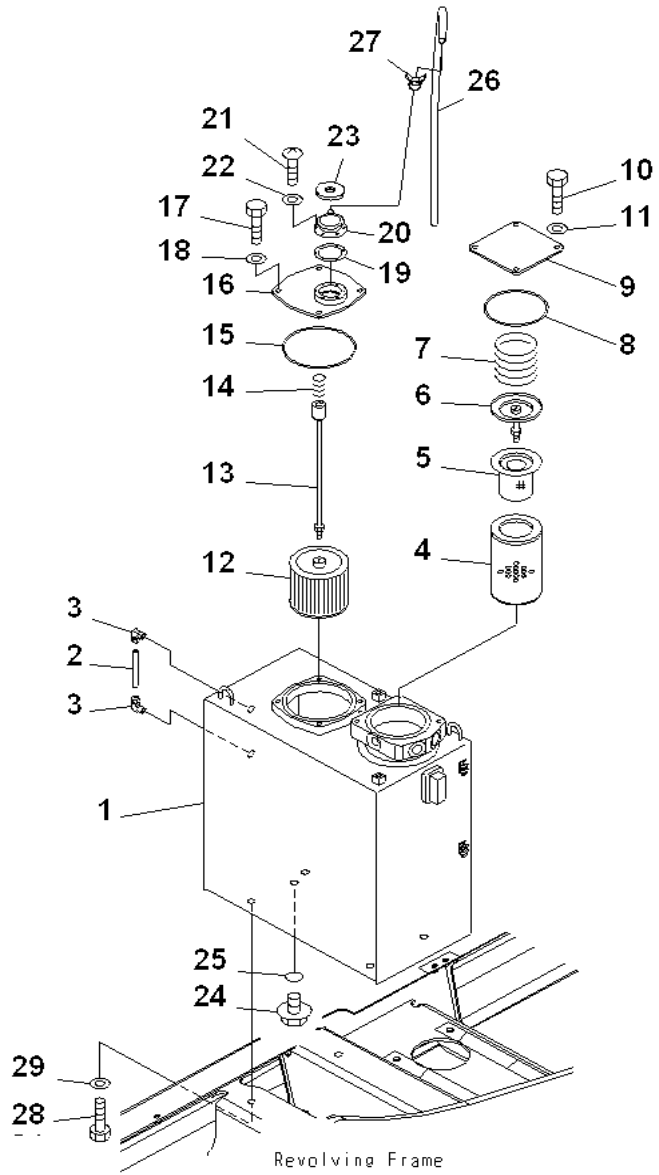

INDEX	PART NUMBER	DESCRIPTION	QTY	SERIAL No.
1	203-60-71111	TANK	1	NL 50001-
2	203-60-31160	TUBE	1	NL 50001-
3	203-60-31100	ELBOW ASS'Y	2	NL 50001-
4	07063-51100	ELEMENT	1	NL 50001-
5	203-60-52260	STRAINER	1	NL 50001-
6	203-60-52250	VALVE ASS'Y	1	NL 50001-
7	175-60-27340	SPRING	1	NL 50001-
8	07000-15155	O-RING	1	NL 50001-
9	203-60-61130	COVER	1	NL 50001-
10	204 338 22 B	BOLT	4	NL 50001-
11	01643-31232	WASHER	4	NL 50001-
12	20Y-60-21311	STRAINER	1	NL 50001-
13	203-60-61161	ROD	1	NL 50001-
14	12R-60-11230	SPRING	1	NL 50001-
15	07000-15180	O-RING	1	NL 50001-
16	203-60-61240	COVER	1	NL 50001-
17	204 338 22 B	BOLT	4	NL 50001-
18	01643-31232	WASHER	4	NL 50001-
19	20Y-60-21340	GASKET	1	NL 50001-
20	208-60-71180	FILLER NECK	1	NL 50001-
21	202 329 43 E	BOLT	6	NL 50001-
22	01601-20513	WASHER	6	NL 50001-
23	20Y-60-21440	CAP	1	NL 50001-
	20Y-60-21470	. ELEMENT	1	NL 50001-
24	07044-12412	PLUG	1	NL 50001-
25	07002-02434	O-RING	1	NL 50001-
26	07270-61410	TUBE	1	NL 50001-
27	07285-00155	CLIP	1	NL 50001-
28	204 338 30 K	BOLT	4	NL 50001-
29	01643-31645	WASHER	4	NL 50001-

Fig. No. **H0110-01A0** | **HYDRAULIC TANK** | Update Index : **A** | **HO-003** 1/1

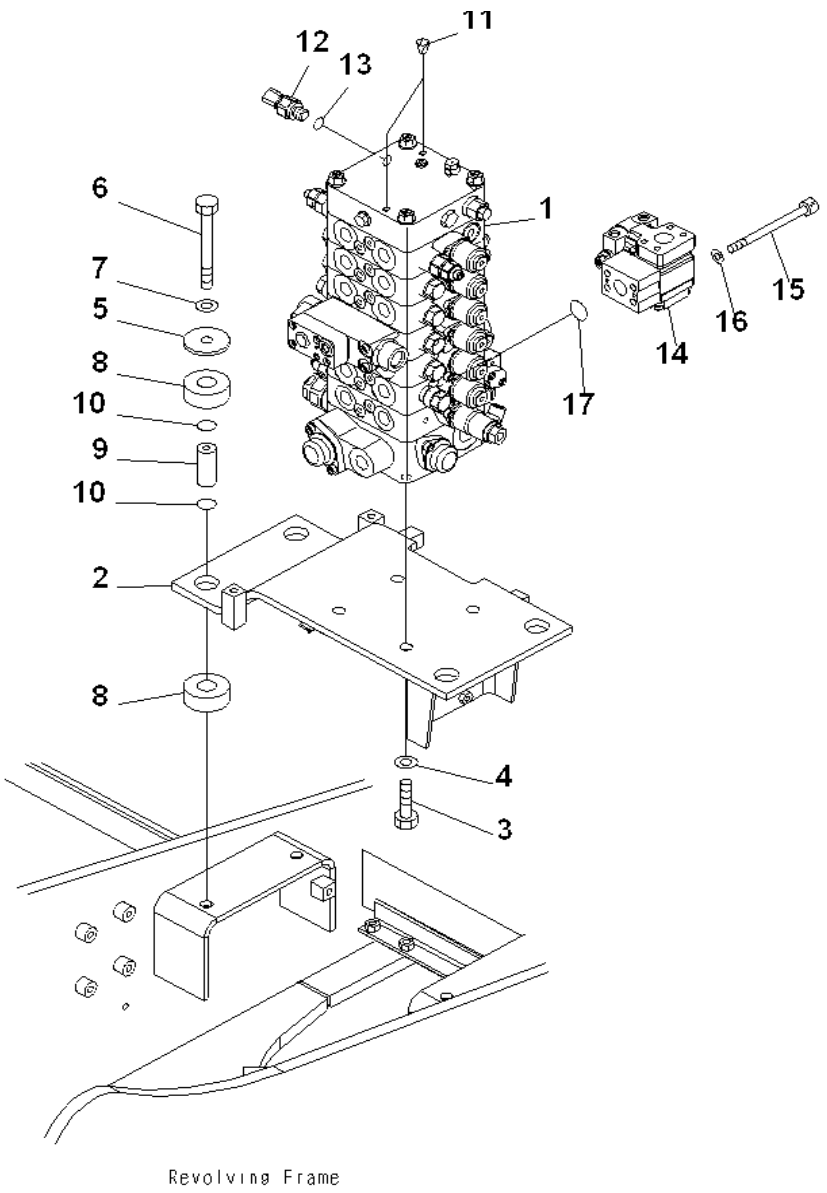

Revolving Frame

INDEX	PART NUMBER	DESCRIPTION	QTY	SERIAL No.
1	(723-56-11501)	CONTROL VALVE	1	NL 50001-
2	203-62-71521	BRACKET	1	NL 50001-
3	204 338 84 T	BOLT	4	NL 50001-
4	01643-31645	WASHER	4	NL 50001-
5	203-62-61572	PLATE	4	NL 50001-
6	01011-81600	BOLT	4	NL 50001-
7	01643-31645	WASHER	4	NL 50001-
8	203-54-21110	CUSHION	8	NL 50001-
9	203-62-61581	SPACER	4	NL 50001-
10	07000-13025	O-RING	8	NL 50001-
11	07049-01012	PLUG	2	NL 50001-
12	7861-93-1650	SENSOR	1	NL 50001-
13	07002-11823	. O-RING	1	NL 50001-
14	(702-21-09230)	VALVE ASS'Y	1	NL 50001-
15	200 329 12 E	BOLT	4	NL 50001-
16	01643-51032	WASHER	4	NL 50001-
17	07000-13032	O-RING	1	NL 50001-

Fig. No. **H0120-01A0** | **MAIN VALVE (CONNECTING PARTS)** | Update Index : **A** | **HO-005** 1/1

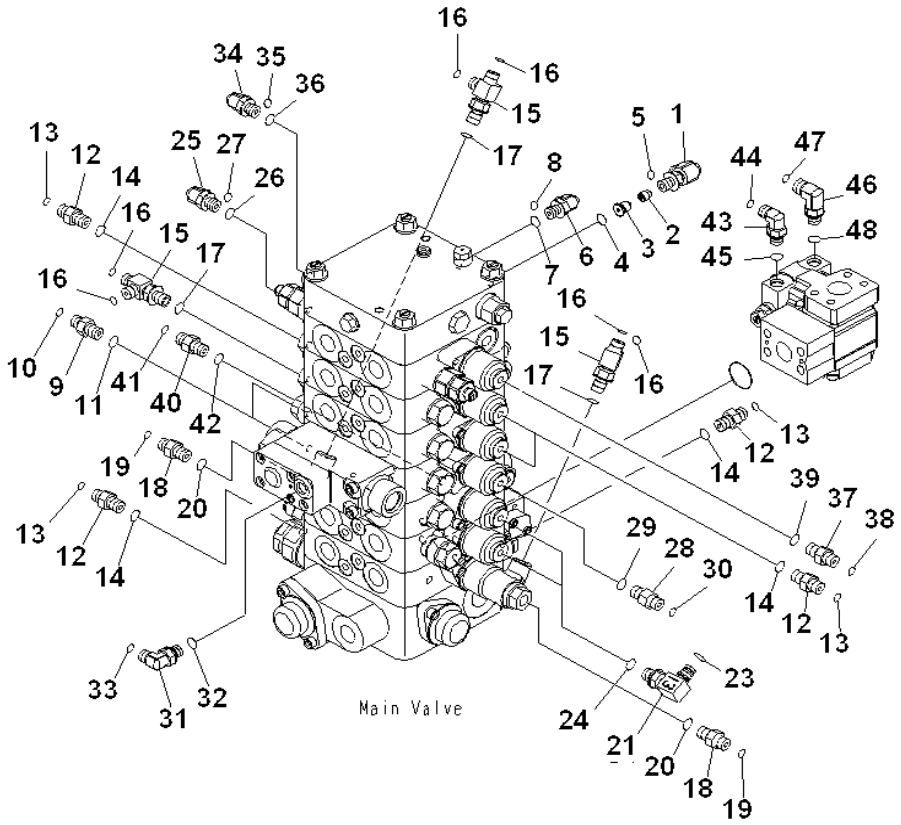

INDEX	PART NUMBER	DESCRIPTION	QTY	SERIAL No.
	21K-60-71230	VALVE ASS'Y	1	NL 50001-
1	21K-62-72730	. ELBOW	1	NL 50001-
2	21W-973-3420	. POPPET	1	NL 50001-
3	21Y-62-11591	.PLUG	1	NL 50001-
4	07002-11423	O-RING	1	NL 50001-
5	02896-11009	O-RING	1	NL 50001-
6	02782-10210	ELBOW	1	NL 50001-
7	07002-11423	O-RING	1	NL 50001-
8	02896-11008	O-RING	1	NL 50001-
9	20Y-62-45610	NIPPLE	2	NL 50001-
10	02896-11008	O-RING	2	NL 50001-
11	07002-11423	O-RING	2	NL 50001-
12	02781-0021D	UNION	5	NL 50001-
13	02896-11008	O-RING	5	NL 50001-
14	07002-11423	O-RING	5	NL 50001-
15	11Y-62-12330	TEE	3	NL 50001-
16	02896-11008	O-RING	6	NL 50001-
17	07002-11423	O-RING	3	NL 50001-
18	203-62-71130	NIPPLE	2	NL 50001-
19	02896-11008	O-RING	2	NL 50001-
20	07002-11423	O-RING	2	NL 50001-
21	20Y-62-45620	ELBOW	2	NL 50001-
23	02896-11008	O-RING	2	NL 50001-
24	07002-11423	O-RING	2	NL 50001-
25	02782-10210	ELBOW	1	NL 50001-
26	07002-11423	O-RING	1	NL 50001-
27	02896-11008	O-RING	1	NL 50001-
28	02781-0021D	UNION	1	NL 50001-
29	02896-11008	O-RING	1	NL 50001-
30	07002-11423	O-RING	1	NL 50001-
31	02782-10210	ELBOW	1	NL 50001-
32	02896-11008	O-RING	1	NL 50001-
33	07002-11423	O-RING	1	NL 50001-
34	02782-10311	ELBOW	1	NL 50001-
35	02896-11009	O-RING	1	NL 50001-
36	07002-11423	O-RING	1	NL 50001-
37	02782-10311	ELBOW	1	NL 50001-
38	02896-11009	O-RING	1	NL 50001-

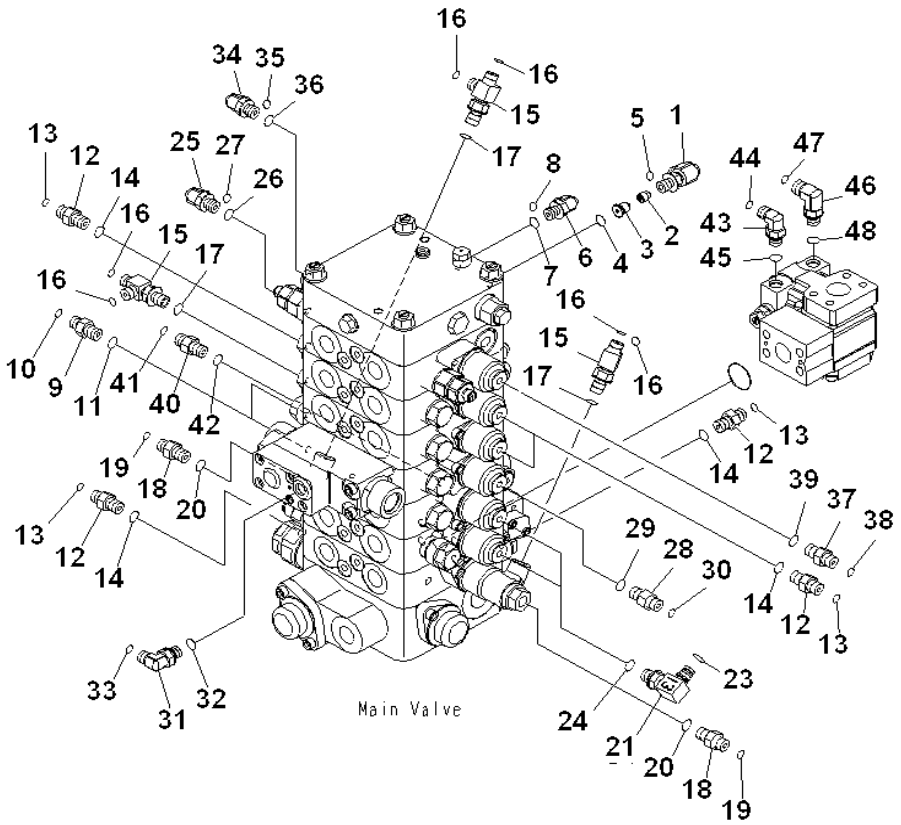

INDEX	PART NUMBER	DESCRIPTION	QTY	SERIAL No.
39	07002-11423	O-RING.....	1	NL 50001-

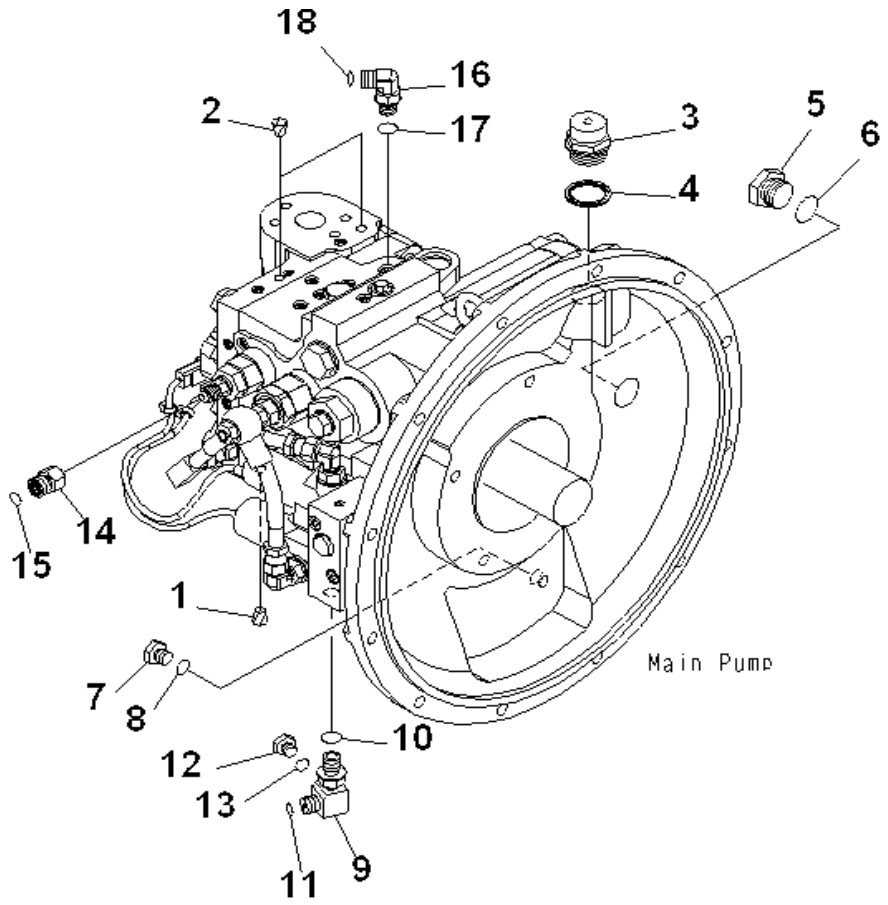

INDEX	PART NUMBER	DESCRIPTION	QTY	SERIAL No.
1	07049-01215	PLUG	1	NL 50001-
2	07049-01012	PLUG	2	NL 50001-
3	07030-03034	BREATHER	1	NL 50001-
4	07005-03016	GASKET	1	NL 50001-
5	07040-12412	PLUG	1	NL 50001-
6	07002-02434	O-RING	1	NL 50001-
7	07040-11209	PLUG	1	NL 50001-
8	07002-11223	O-RING	1	NL 50001-
9	11Y-62-12220	ELBOW	1	NL 50001-
10	07002-11423	O-RING	1	NL 50001-
11	02896-11008	O-RING	1	NL 50001-
12	07040-11007	PLUG	1	NL 50001-
13	07002-11023	O-RING	1	NL 50001-
14	203-62-71120	JOINT	1	NL 50001-
15	02896-11009	O-RING	1	NL 50001-
16	02782-10210	ELBOW	1	NL 50001-
17	07002-11423	O-RING	1	NL 50001-
18	02896-11008	O-RING	1	NL 50001-

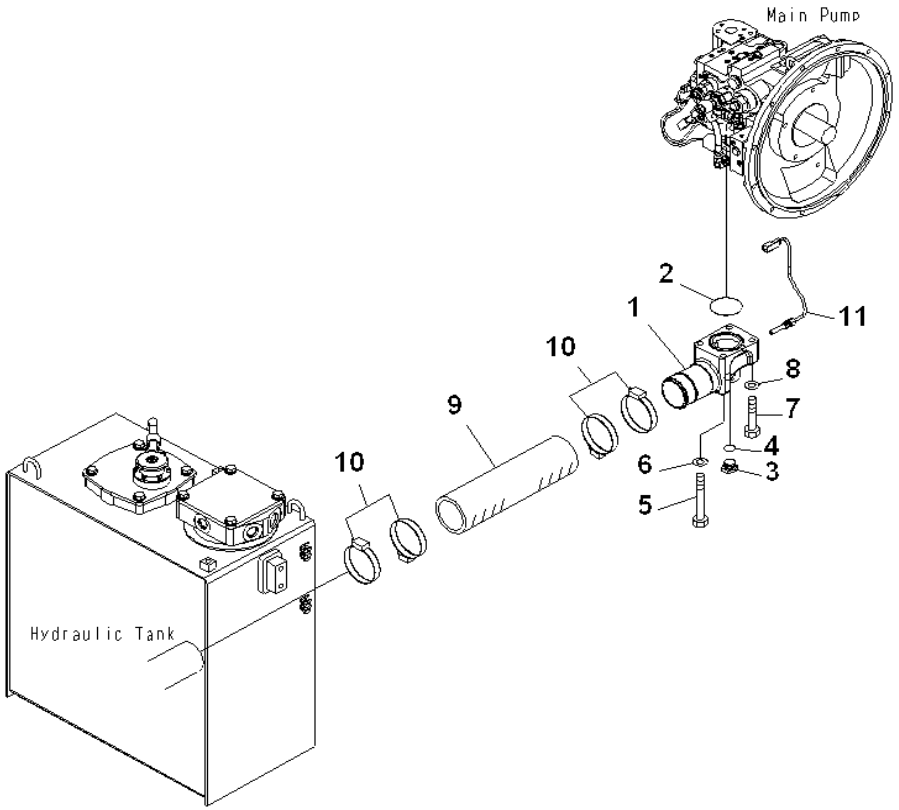

INDEX	PART NUMBER	DESCRIPTION	QTY	SERIAL No.
1	203-62-71110	ELBOW	1	NL 50001-
2	07000-12070	O-RING	1	NL 50001-
3	07040-12412	PLUG	1	NL 50001-
4	07002-12434	O-RING	1	NL 50001-
5	01011-81225	BOLT	2	NL 50001-
6	01643-31232	WASHER	2	NL 50001-
7	01010-81280	BOLT	2	NL 50001-
8	01643-31232	WASHER	2	NL 50001-
9	203-62-71160	HOSE	1	NL 50001-
10	07289-00095	CLAMP	4	NL 50001-
11	7861-93-3320	SENSOR	1	NL 50001-

Fig. No. **H0311-01A0** | **SUCTION LINE** | Update Index : **A** | **HO-023** **1/1**

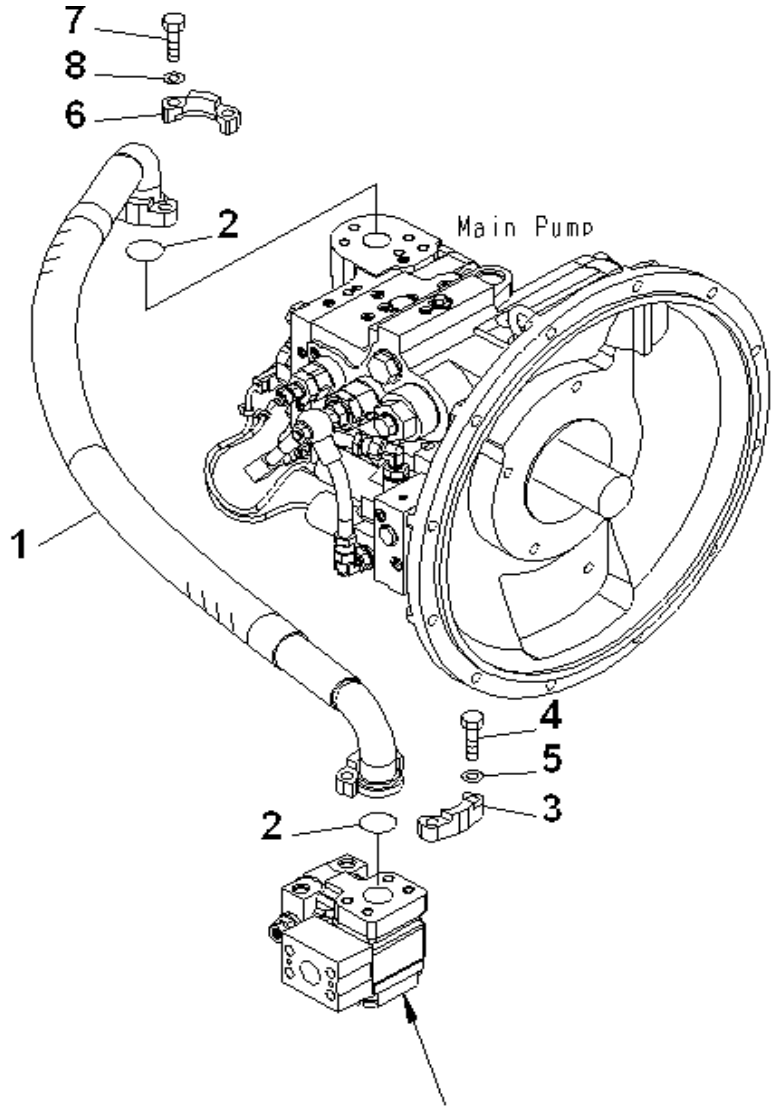

INDEX	PART NUMBER	DESCRIPTION	QTY	SERIAL No.
1	203-62-71320	HOSE, 990MM	1	NL 50001-
2	07000-13032	O-RING	2	NL 50001-
3	07371-31049	FLANGE	2	NL 50001-
4	204 338 24 D	BOLT	4	NL 50001-
5	01643-51032	WASHER	4	NL 50001-
6	07371-31049	FLANGE	2	NL 50001-
7	204 338 24 D	BOLT	4	NL 50001-
8	01643-51032	WASHER	4	NL 50001-

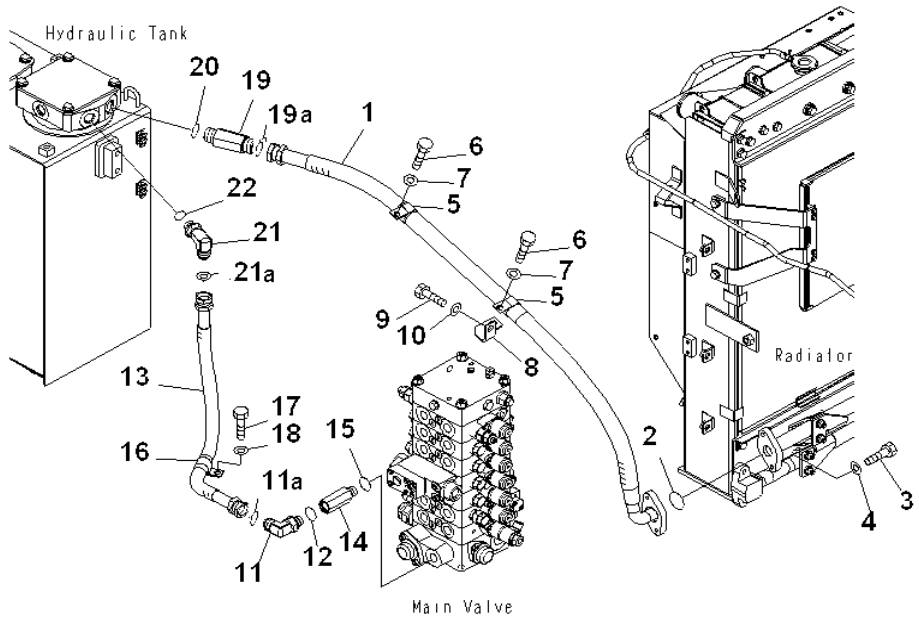

INDEX	PART NUMBER	DESCRIPTION	QTY	SERIAL No.
1	203-62-N1530	HOSE, 1350MM	1	NL 50001-
2	07000-13032	O-RING	1	NL 50001-
3	204 338 34 P	BOLT	2	NL 50001-
4	01643-31032	WASHER	2	NL 50001-
5	281-01-13180	CLIP	2	NL 50001-
6	204 338 22 B	BOLT	2	NL 50001-
7	01643-31232	WASHER	2	NL 50001-
8	203-62-72110	BRACKET	1	NL 50001-
9	204 338 22 B	BOLT	1	NL 50001-
10	01643-31232	WASHER	1	NL 50001-
11	02782-10628	ELBOW	1	NL 50001-
11a	02896-11018	O-RING	1	NL 50001-
12	07002-12434	O-RING	1	NL 50001-
13	203-62-N1760	HOSE	1	NL 50001-
14	203-62-61410	JOINT	1	NL 50001-
15	07002-12434	O-RING	1	NL 50001-
16	04434-53212	CLIP	1	NL 50001-
17	204 338 22 B	BOLT	1	NL 50001-
18	01643-31232	WASHER	1	NL 50001-
19	203-62-N1230	UNION	1	NL 50001-
19a	02896-11018	O'RING	1	NL 50001-
20	07002-13334	O-RING	1	NL 50001-
21	203-62-N1130	ELBOW	1	NL 50001-
21a	02896-11018	O-RING	1	NL 50001-
22	07002-12434	O-RING	1	NL 50001-

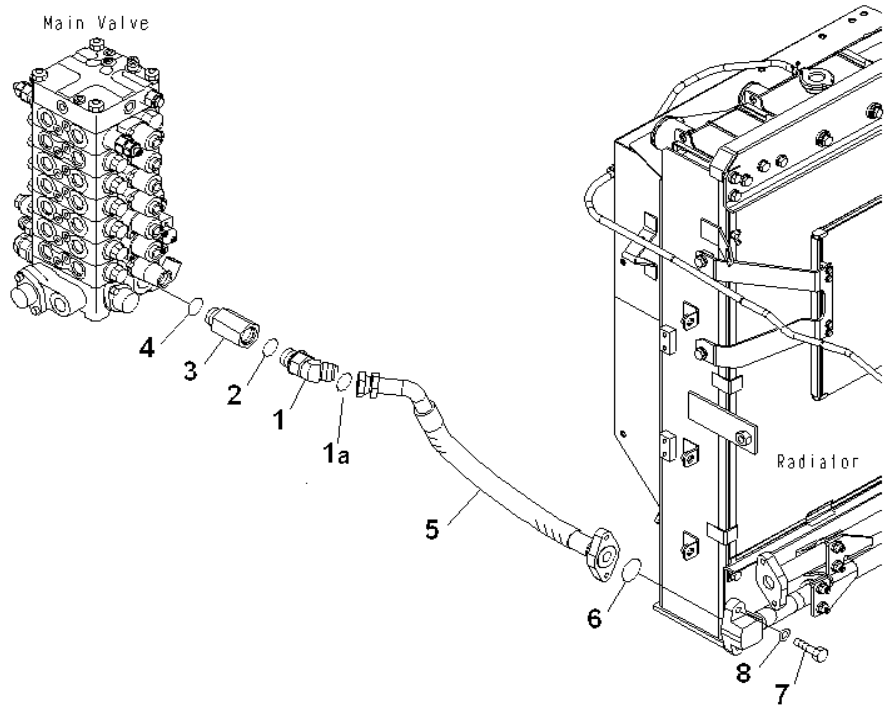

INDEX	PART NUMBER	DESCRIPTION	QTY	SERIAL No.
1	203-62-N1140	ELBOW	1	NL 50001-
1a	02896-11018	O-RING	1	NL 50001-
2	07002-13334	O-RING	1	NL 50001-
3	203-62-63740	JOINT	1	NL 50001-
4	07002-13334	O-RING	1	NL 50001-
5	203-62-N1360	HOSE, 615MM	1	NL 50001-
6	07000-13032	O-RING	1	NL 50001-
7	204 338 34 P	BOLT	2	NL 50001-
8	01643-31032	WASHER	2	NL 50001-

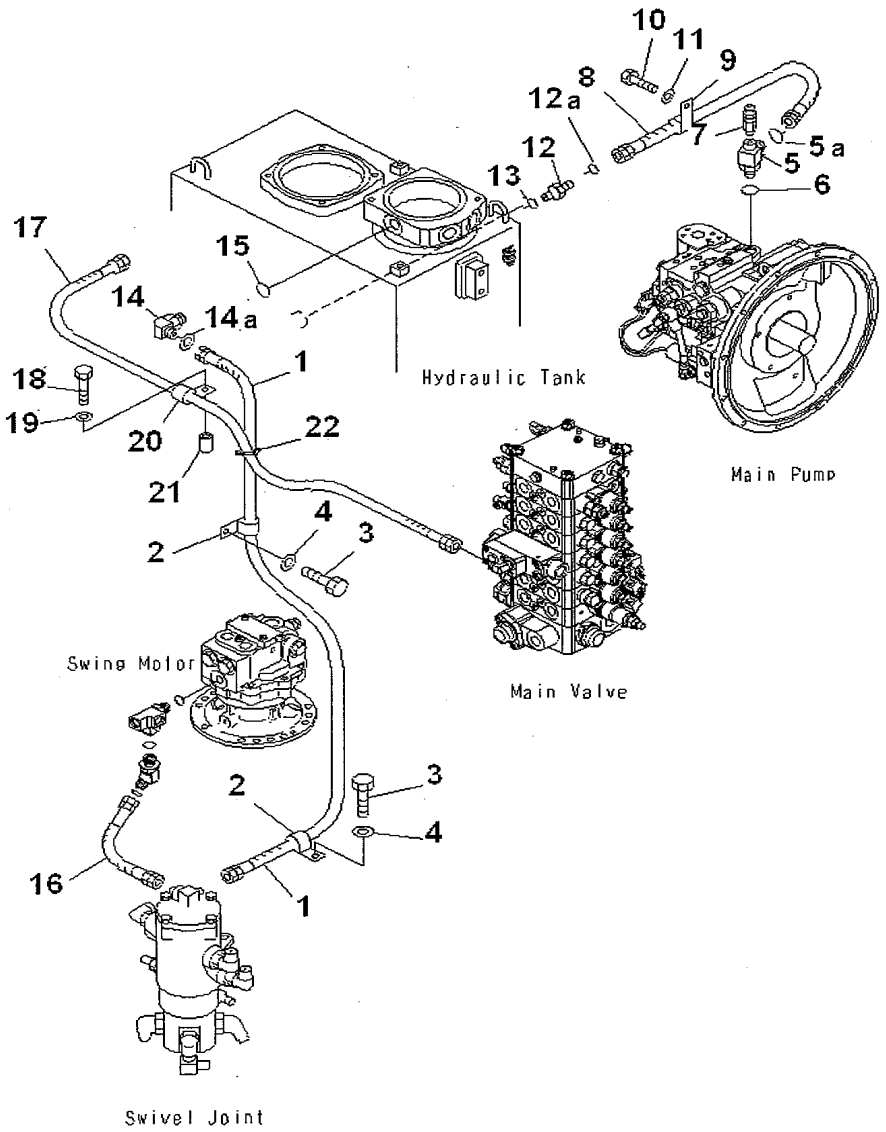

INDEX	PART NUMBER	DESCRIPTION	QTY	SERIAL No.
1	209-62-N1110	ELBOW	1	NL 50001-
2	04434-52312	CLIP	2	NL 50001-
3	204 338 22 B	BOLT	2	NL 50001-
4	01643-31232	WASHER	2	NL 50001-
5	20Y-62-N2540	ELBOW	1	NL 50001-
5a	02896-11018	O-RING	1	NL 50001-
6	07002-12434	O-RING	1	NL 50001-
7	20B-27-11210	BLEEDER	1	NL 50001-
8	203-62-N1770	HOSE	1	NL 50001-
9	04434-53212	CLIP	1	NL 50001-
10	204 338 22 B	BOLT	1	NL 50001-
11	01643-31232	WASHER	1	NL 50001-
12	02781-00628	UNION	1	NL 50001-
12a	02896-11018	O-RING	1	NL 50001-
13	07002-12434	O-RING	1	NL 50001-
14	02782-10425	ELBOW	1	NL 50001-
14a	02896-11012	O-RING	1	NL 50001-
15	07002-12434	O-RING	1	NL 50001-
16	203-62-N1750	HOSE	1	NL 50001-
17	203-62-N1850	HOSE	1	NL 50001-
18	204 338 54 L	BOLT	1	NL 50001-
19	01643-31232	WASHER	1	NL 50001-
20	04434-52112	CLIP	1	NL 50001-
21	20Y-03-11220	COLLAR	1	NL 50001-
22	08034-20536	BAND	1	NL 50001-

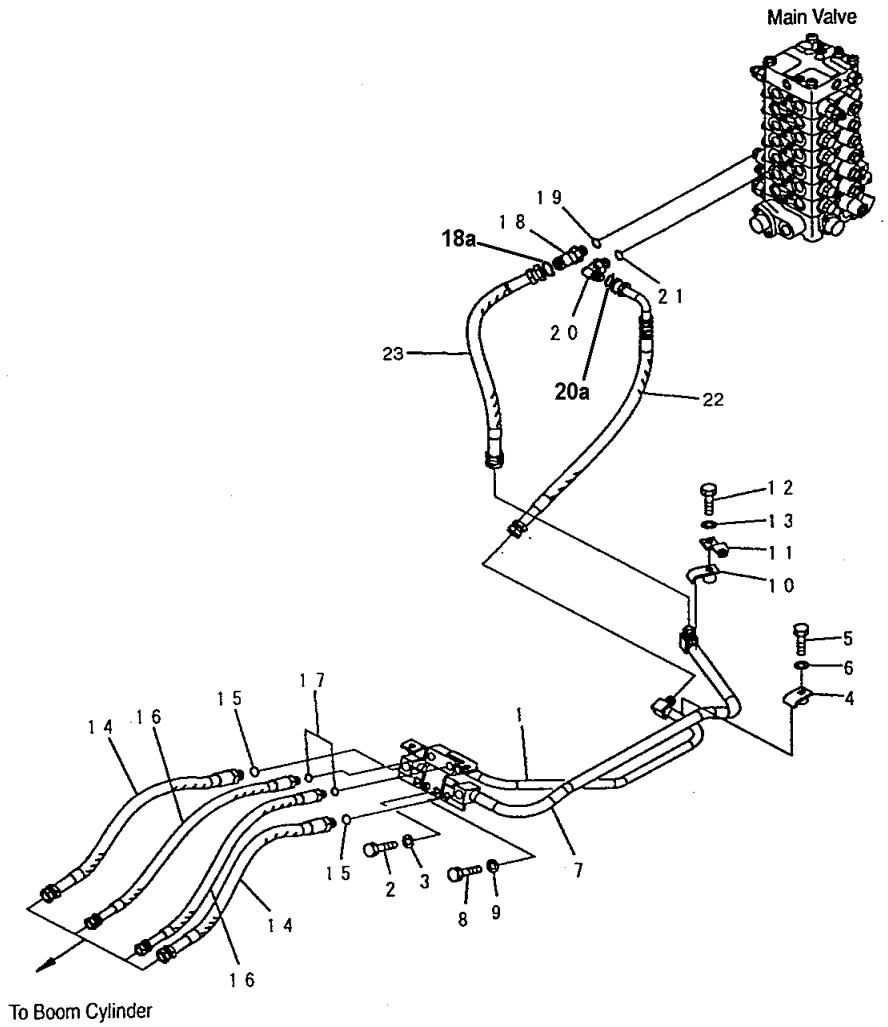

INDEX	PART NUMBER	DESCRIPTION	QTY	SERIAL No.
1	203-62-N1170	TUBE	1	NL 50001-
2	204 338 25 E	BOLT	2	NL 50001-
3	01643-31232	WASHER	2	NL 50001-
4	203-62-61270	CLAMP	1	NL 50001-
5	204 338 58 Q	BOLT	1	NL 50001-
6	01643-31232	WASHER	1	NL 50001-
7	203-62-N1220	TUBE	1	NL 50001-
8	204 338 23 C	BOLT	2	NL 50001-
9	01643-31232	WASHER	2	NL 50001-
10	203-62-63730	CLAMP	1	NL 50001-
11	203-06-71271	BRACKET	1	NL 50001-
12	204 338 54 L	BOLT	1	NL 50001-
13	01643-31232	WASHER	1	NL 50001-
14	203-62-N1250	HOSE	2	NL 50001-
15	07002-12434	O-RING	2	NL 50001-
16	203-62-N1260	HOSE	2	NL 50001-
17	07002-12034	O-RING	2	NL 50001-
18	02782-10628	ELBOW	1	NL 50001-
18a	02896-11018	O-RING	1	NL 50001-
19	07002-12434	O-RING	1	NL 50001-
20	02782-10522	ELBOW	1	NL 50001-
20a	02896-11015	O-RING	1	NL 50001-
21	07002-12434	O-RING	1	NL 50001-
22	21Y-62-N1110	HOSE	1	NL 50001-
23	203-62-N1330	HOSE	1	NL 50001-

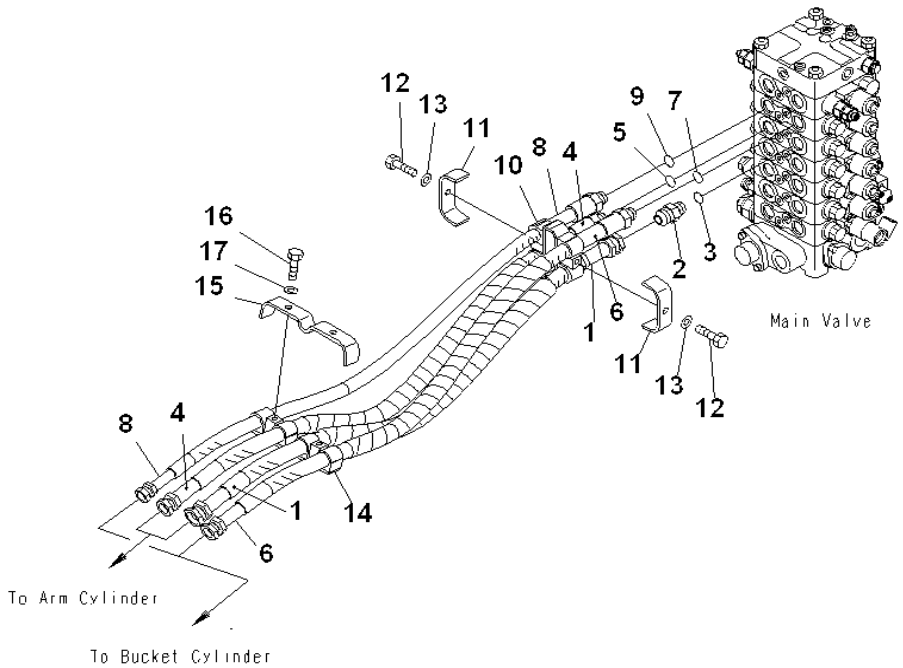

INDEX	PART NUMBER	DESCRIPTION	QTY	SERIAL No.
1	203-62-N1370	HOSE	1	NL 50001-
2	02781-00628	UNION	1	NL 50001-
2a	02896-11008	O-RING	1	NL 50001-
3	07002-12434	O-RING	1	NL 50001-
4	203-62-N1380	HOSE	1	NL 50001-
5	07002-12434	O-RING	1	NL 50001-
6	203-62-N1380	HOSE	1	NL 50001-
7	07002-12434	O-RING	1	NL 50001-
8	203-62-N1280	HOSE	1	NL 50001-
9	07002-12434	O-RING	1	NL 50001-
10	203-62-63750	BRACKET	1	NL 50001-
11	203-62-61240	PLATE	2	NL 50001-
12	204 338 32 M	BOLT	2	NL 50001-
13	01643-31032	WASHER	2	NL 50001-
14	203-62-61760	BRACKET	1	NL 50001-
15	203-62-58280	PLATE	1	NL 50001-
16	204 338 32 M	BOLT	2	NL 50001-
17	01643-31032	WASHER	2	NL 50001-

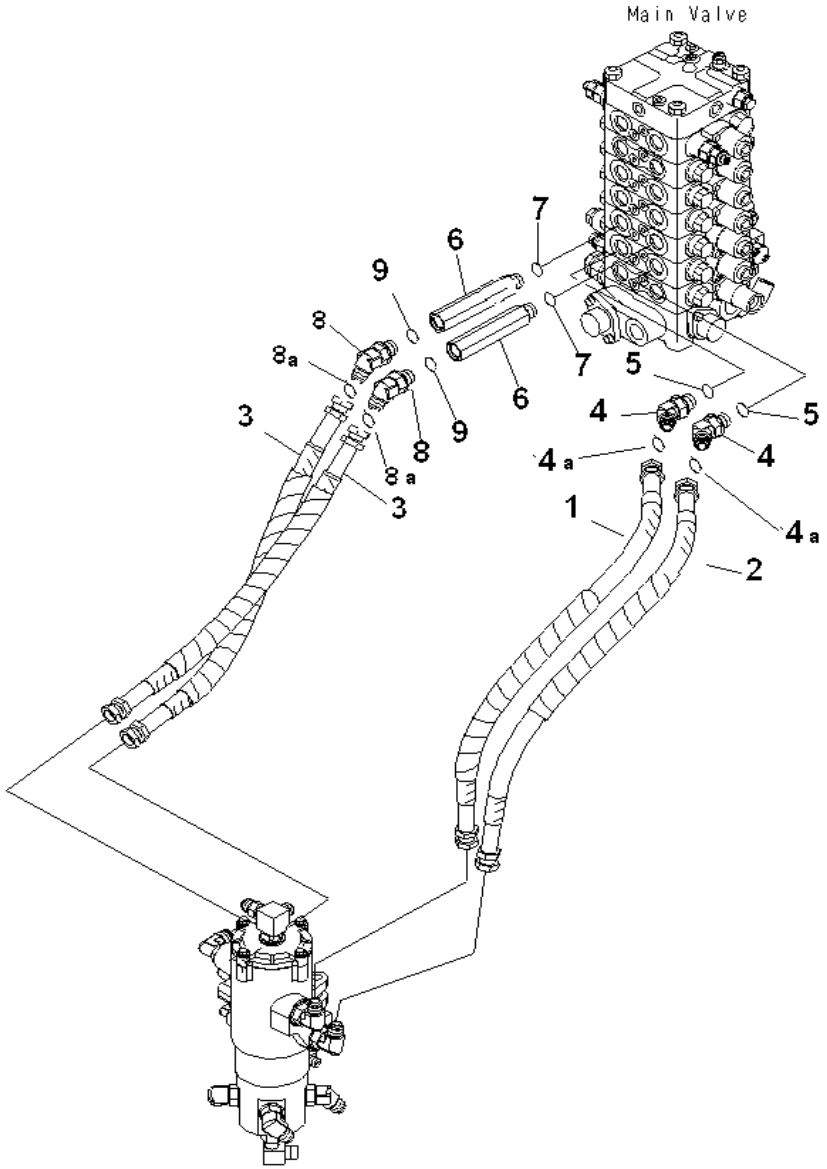

INDEX	PART NUMBER	DESCRIPTION	QTY	SERIAL No.
1	203-62-N1410	HOSE	1	NL 50001-
2	203-62-N1420	HOSE	1	NL 50001-
3	203-62-N1430	HOSE, 700MM	2	NL 50001-
4	203-62-N1120	ELBOW	2	NL 50001-
4a	02896-11015	O-RING	2	NL 50001-
5	07002-12434	O-RING	2	NL 50001-
6	203-62-63760	JOINT	2	NL 50001-
7	07002-12434	O-RING	2	NL 50001-
8	02783-10522	ELBOW	2	NL 50001-
8a	02896-11015	O-RING	2	NL 50001-
9	07002-12434	O-RING	2	NL 50001-

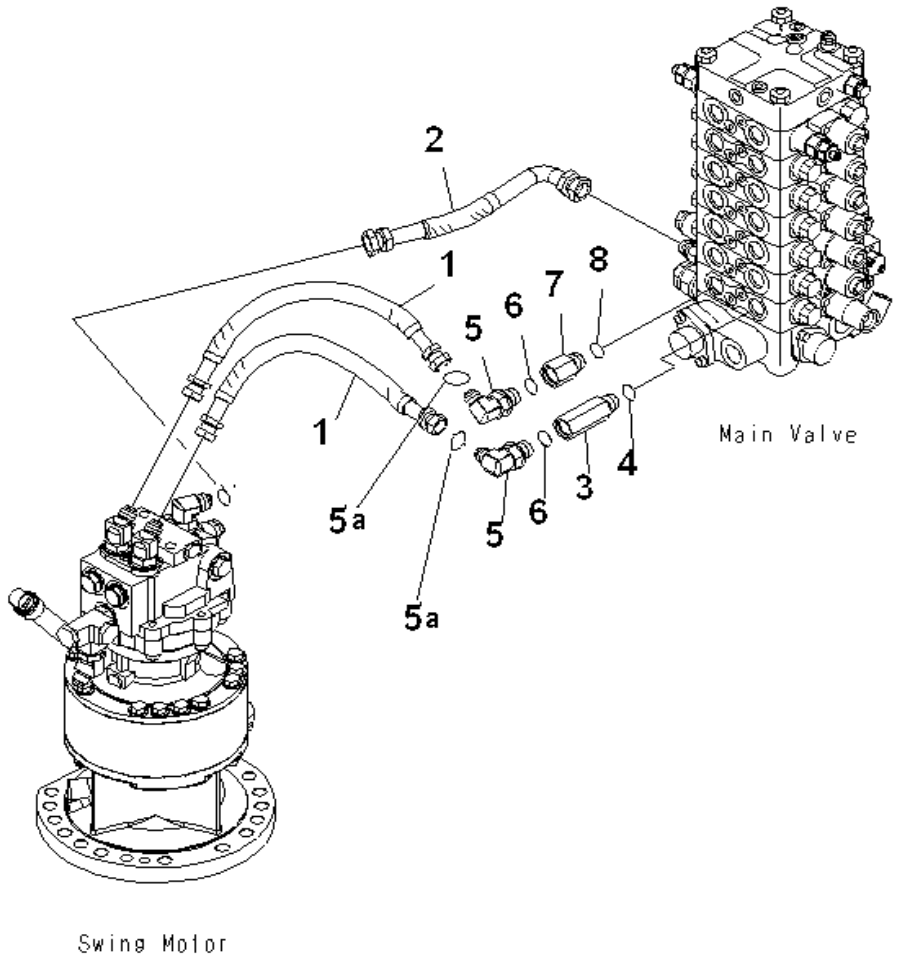

INDEX	PART NUMBER	DESCRIPTION	QTY	SERIAL No.
1	203-62-N1840	HOSE	2	NL 50001-
2	203-62-N1390	HOSE, 300MM	1	NL 50001-
3	203-62-61410	JOINT	1	NL 50001-
4	07002-12434	O-RING	1	NL 50001-
5	02782-10425	ELBOW	2	NL 50001-
5a	02896-11012	O-RING	2	NL 50001-
6	07002-12434	O-RING	2	NL 50001-
7	201-62-71810	JOINT	1	NL 50001-
8	07002-12434	O-RING	1	NL 50001-

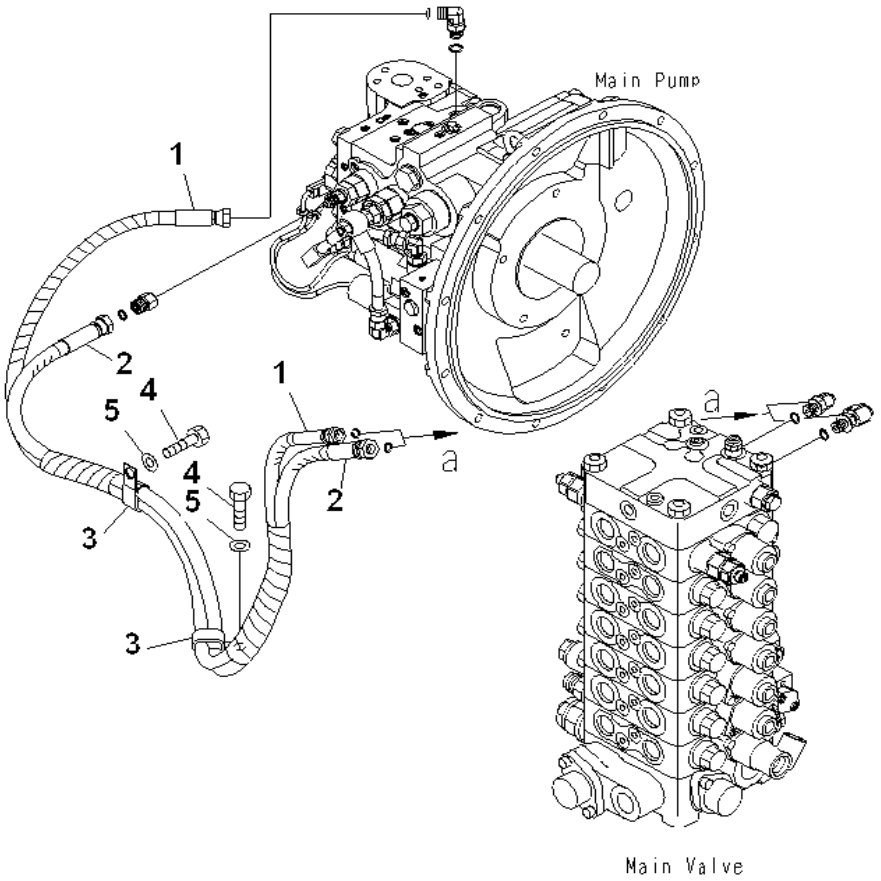

INDEX	PART NUMBER	DESCRIPTION	QTY	SERIAL No.
1	20Y-62-44420	HOSE	1	NL 50001-
2	203-62-72490	HOSE	1	NL 50001-
3	04435-51612	CLIP	2	NL 50001-
4	204 338 22 B	BOLT	2	NL 50001-
5	01643-31232	WASHER	2	NL 50001-

L&T-KOMATSU

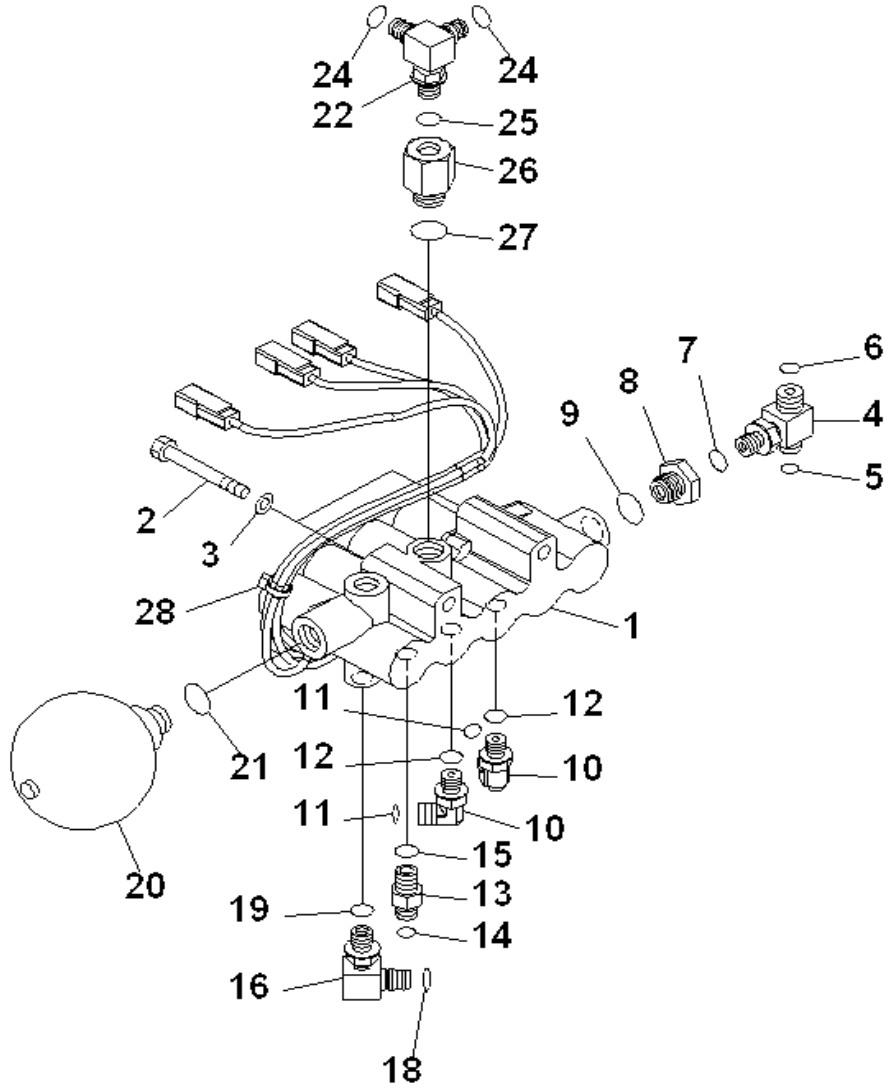

INDEX	PART NUMBER	DESCRIPTION	QTY	SERIAL No.
1	(203-60-71210)	VALVE ASS'Y	1	NL 50001-
2	204 338 39 U	BOLT	2	NL 50001-
3	01643-31032	WASHER	2	NL 50001-
4	11Y-62-12820	TEE	1	NL 50001-
5	02896-11008	O-RING	1	NL 50001-
6	02896-11009	O-RING	1	NL 50001-
7	07002-11423	O-RING	1	NL 50001-
8	20Y-62-21940	FILTER ASS'Y	1	NL 50001-
9	07002-12034	O-RING	1	NL 50001-
10	02782-10210	ELBOW	2	NL 50001-
11	02896-11008	O-RING	2	NL 50001-
12	07002-11423	O-RING	2	NL 50001-
13	20Y-62-41970	NIPPLE	1	NL 50001-
14	02896-11008	O-RING	1	NL 50001-
15	07002-11423	O-RING	1	NL 50001-
16	21W-62-42490	ELBOW	1	NL 50001-
18	02896-11009	O-RING	1	NL 50001-
19	07002-11423	O-RING	1	NL 50001-
20	22U-60-21330	ACCUMULATOR	1	NL 50001-
21	07002-12034	O-RING	1	NL 50001-
22	203-62-N1880	TEE	1	NL 50001-
24	02896-11009	O-RING	2	NL 50001-
25	07002-11423	O-RING	1	NL 50001-
26	21M-62-16780	ADAPTER	1	NL 50001-
27	07002-12034	O-RING	1	NL 50001-
28	08034-20519	BAND	1	NL 50001-

Fig. No. **H1831-01A0** | **SOLENOID VALVE (VALVE)** | Update Index : **A** | **HO-051** 1/1

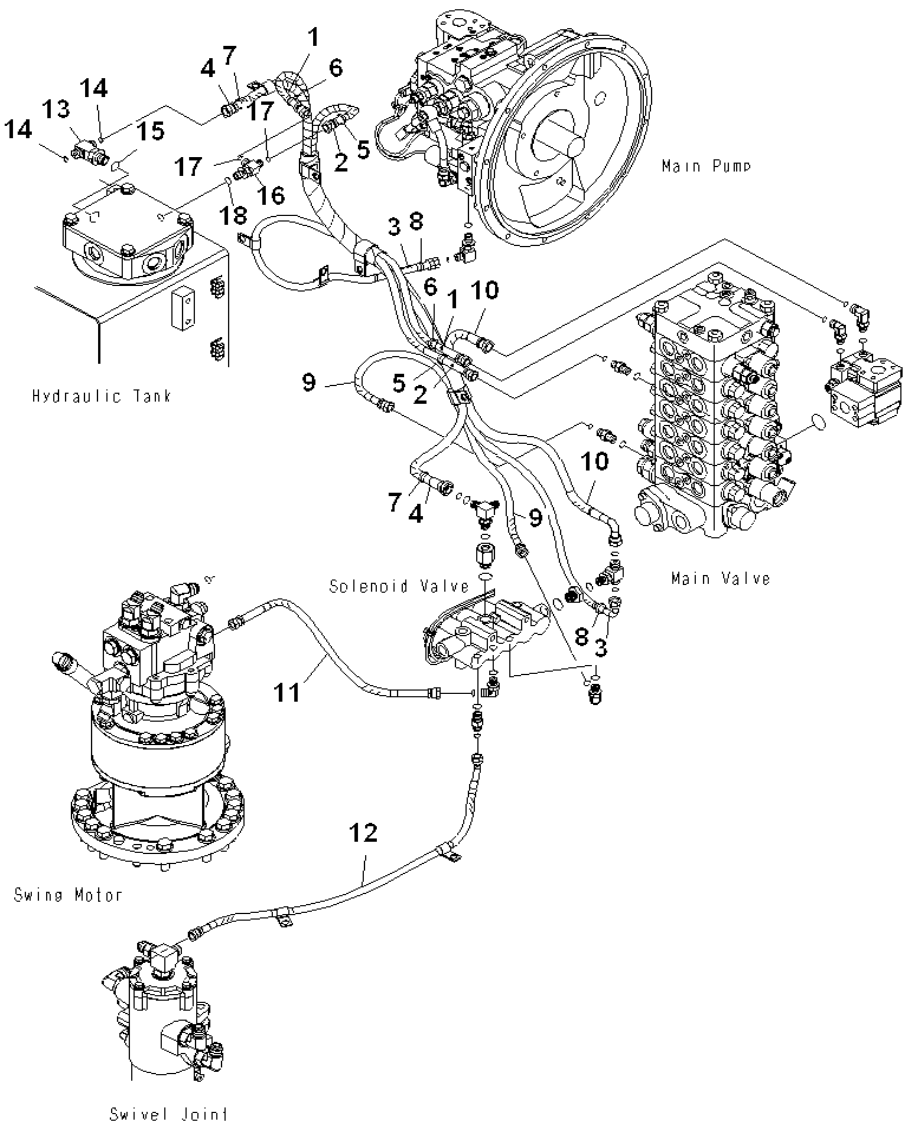

INDEX	PART NUMBER	DESCRIPTION	QTY	SERIAL No.
1	203-62-N1640	HOSE	1	NL 50001-
2	203-62-N1650	HOSE	1	NL 50001-
3	203-62-N1660	HOSE	1	NL 50001-
4	203-62-N1520	HOSE	1	NL 50001-
5	20Y-62-22790	BAND, RED	2	NL 50001-
6	20Y-62-22820	BAND, BLUE	2	NL 50001-
7	20Y-62-22840	BAND, BLACK	2	NL 50001-
8	20Y-62-22850	BAND, GREEN	2	NL 50001-
9	207-62-N1650	HOSE	1	NL 50001-
10	203-62-N1780	HOSE	1	NL 50001-
11	203-62-N1740	HOSE	1	NL 50001-
12	203-62-N1860	HOSE	1	NL 50001-
13	209-64-16721	TEE	1	NL 50001-
14	02896-11009	O-RING	2	NL 50001-
15	07002-12034	O-RING	1	NL 50001-
16	11Y-62-12330	TEE	1	NL 50001-
17	02896-11008	O-RING	2	NL 50001-
18	07002-11423	O-RING	1	NL 50001-

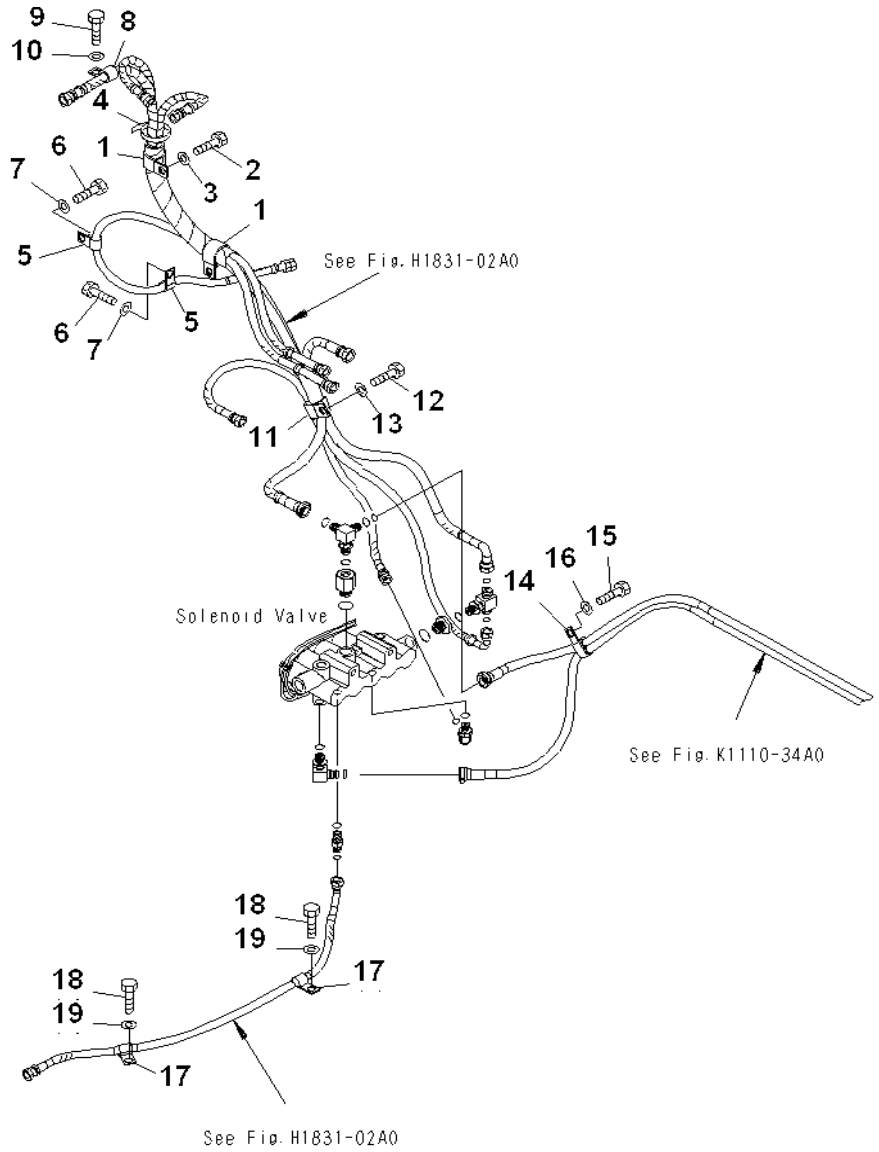

INDEX	PART NUMBER	DESCRIPTION	QTY	SERIAL No.
1	281-01-13180	CLIP	2	NL 50001-
2	204 338 22 B	BOLT	1	NL 50001-
3	01643-31232	WASHER	1	NL 50001-
4	08034-20536	BAND	1	NL 50001-
5	04434-51712	CLIP	2	NL 50001-
6	204 338 22 B	BOLT	2	NL 50001-
7	01643-31232	WASHER	2	NL 50001-
8	04434-52312	CLIP	1	NL 50001-
9	204 338 22 B	BOLT	1	NL 50001-
10	01643-31232	WASHER	1	NL 50001-
11	281-01-13180	CLIP	1	NL 50001-
12	204 338 22 B	BOLT	1	NL 50001-
13	01643-31232	WASHER	1	NL 50001-
14	04435-52112	CLIP	1	NL 50001-
15	204 338 22 B	BOLT	1	NL 50001-
16	01643-31232	WASHER	1	NL 50001-
17	04434-51712	CLIP	2	NL 50001-
18	204 338 22 B	BOLT	2	NL 50001-
19	01643-31232	WASHER	2	NL 50001-

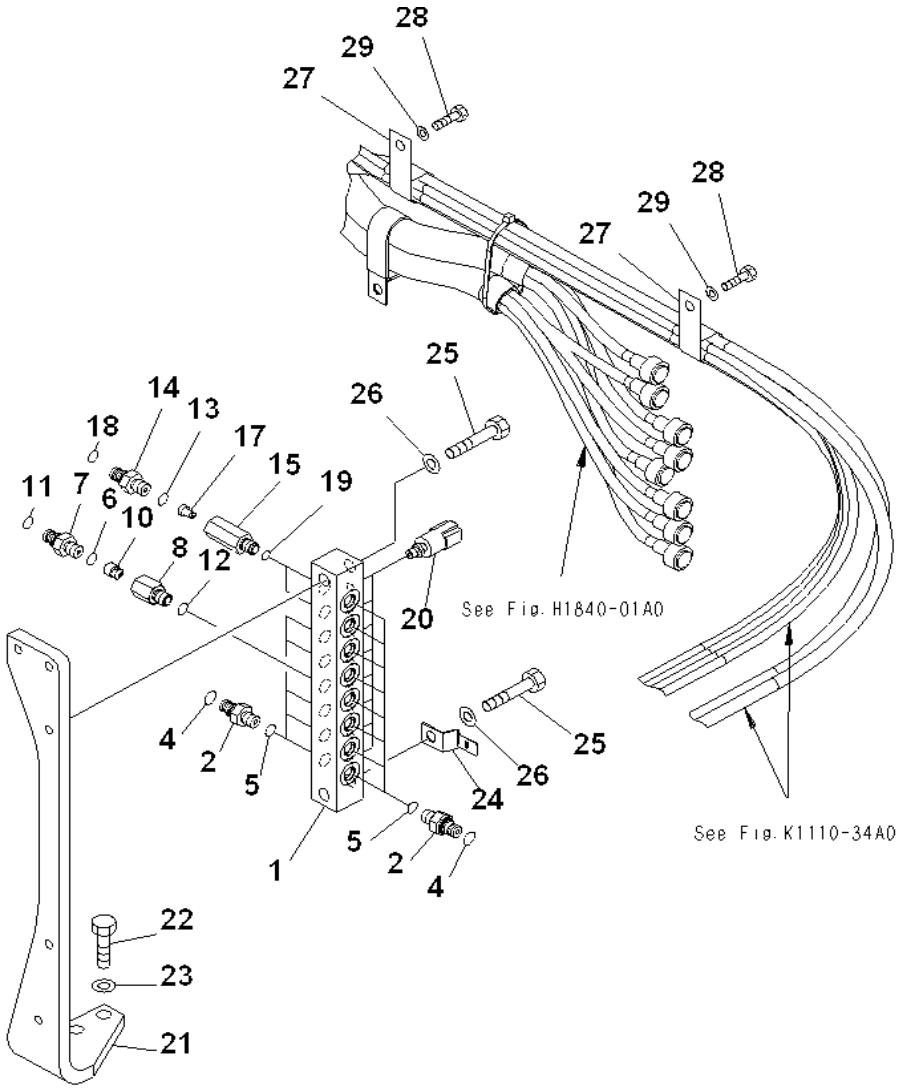

INDEX	PART NUMBER	DESCRIPTION	QTY	SERIAL No.
1	207-62-N1920	BLOCK	1	NL 50001-
2	11Y-62-12130	NIPPLE	13	NL 50001-
4	02896-11008	. O-RING	13	NL 50001-
5	07002-11423	O-RING	13	NL 50001-
	203-60-N1110	VALVE ASS'Y	1	NL 50001-
6	07002-11423	. O-RING	1	NL 50001-
7	20Y-62-47630	. NIPPLE	1	NL 50001-
8	#	. BODY	1	NL 50001-
10	203-60-62320	. POPPET	1	NL 50001-
11	02896-11012	O'RING	1	NL 50001-
12	07002-11423	O-RING	1	NL 50001-
	203-60-N1120	VALVE ASS'Y	2	NL 50001-
13	07002-11423	. O-RING	1	NL 50001-
14	21W-62-43930	. NIPPLE	1	NL 50001-
15	#	. BODY	1	NL 50001-
17	203-60-62430	. POPPET	1	NL 50001-
18	02896-11012	O-RING	1	NL 50001-
19	07002-11423	O-RING	2	NL 50001-
20	206-06-61130	SWITCH	8	NL 50001-
21	203-62-71541	BRACKET	1	NL 50001-
22	204 338 57 P	BOLT	2	NL 50001-
23	01643-31232	WASHER	2	NL 50001-
24	08053-01512	CLIP	1	NL 50001-
25	01010-81280	BOLT	2	NL 50001-
26	01643-31232	WASHER	2	NL 50001-
27	208-06-19170	CLIP	2	NL 50001-
28	204 338 22 B	BOLT	1	NL 50001-
29	01643-31232	WASHER	1	NL 50001-

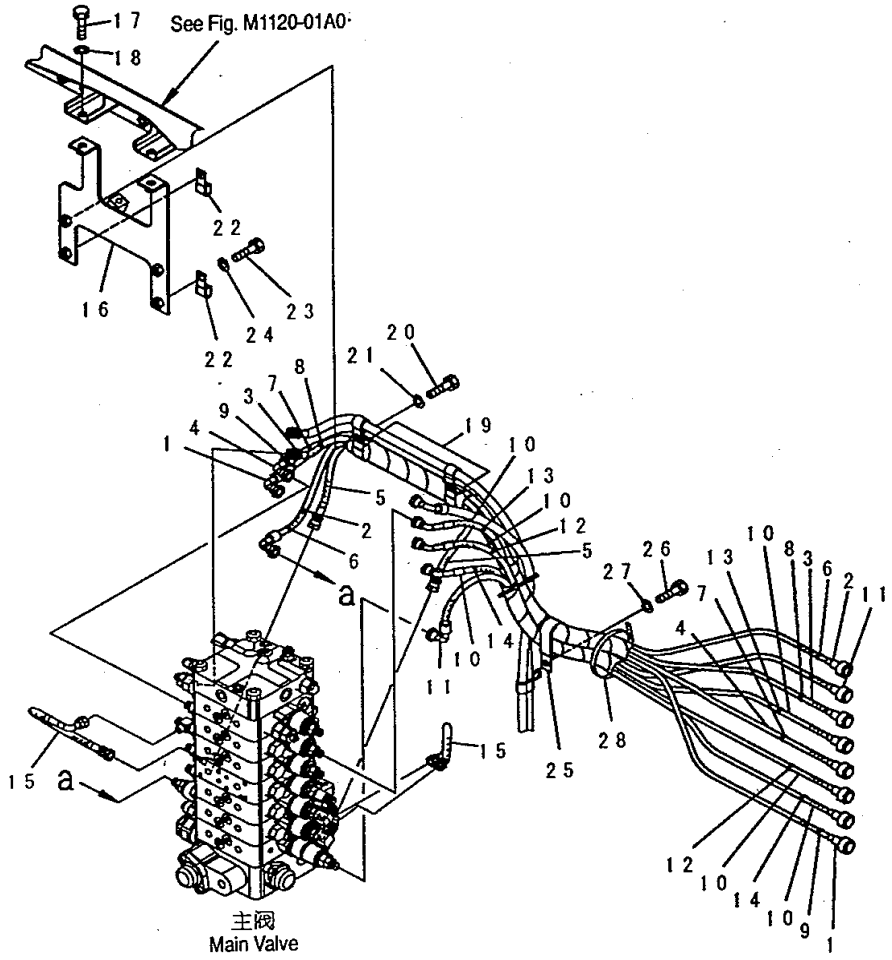

INDEX	PART NUMBER	DESCRIPTION	QTY	SERIAL No.
1	21K-62-N1150	HOSE, 1450 MM	1	NL 50001-
2	203-62-N1550	HOSE, 1350 MM	1	NL 50001-
3	207-62-N1490	HOSE, 1250 MM	1	NL 50001-
4	21K-62-N1130	HOSE, 1300 MM	1	NL 50001-
5	02760-00207	HOSE	1	NL 50001-
6	20Y-62-22790	BAND, RED	2	NL 50001-
7	20Y-62-22810	BAND, YELLOW	2	NL 50001-
8	20Y-62-22840	BAND, BLACK	2	NL 50001-
9	20Y-62-22850	BAND, GREEN	2	NL 50001-
10	203-62-N1540	HOSE, 850 MM	3	NL 50001-
11	203-62-N1560	HOSE, 750 MM	1	NL 50001-
12	20Y-62-22820	BAND, BLUE	2	NL 50001-
13	20Y-62-22830	BAND, WHITE	2	NL 50001-
14	20Y-62-22860	BAND, BROWN	2	NL 50001-
15	203-62-N1790	HOSE	2	NL 50001-
16	203-62-71511	BRACKET	1	NL 50001-
17	204 338 22 B	BOLT	2	NL 50001-
18	01643-31232	WASHER	2	NL 50001-
19	281-01-13180	CLIP	2	NL 50001-
20	204 338 22 B	BOLT	2	NL 50001-
21	01643-31232	WASHER	2	NL 50001-
22	04435-51712	CLIP	2	NL 50001-
23	204 338 22 B	BOLT	2	NL 50001-
24	01643-31232	WASHER	2	NL 50001-
25	196-911-3310	CLIP	1	NL 50001-
26	204 338 22 B	BOLT	1	NL 50001-
27	01643-31232	WASHER	1	NL 50001-
28	08034-20536	BAND	3	NL 50001-

NOTES:

MAIN REVOLVING FRAME AND RELATED PARTS

L&T-KOMATSU

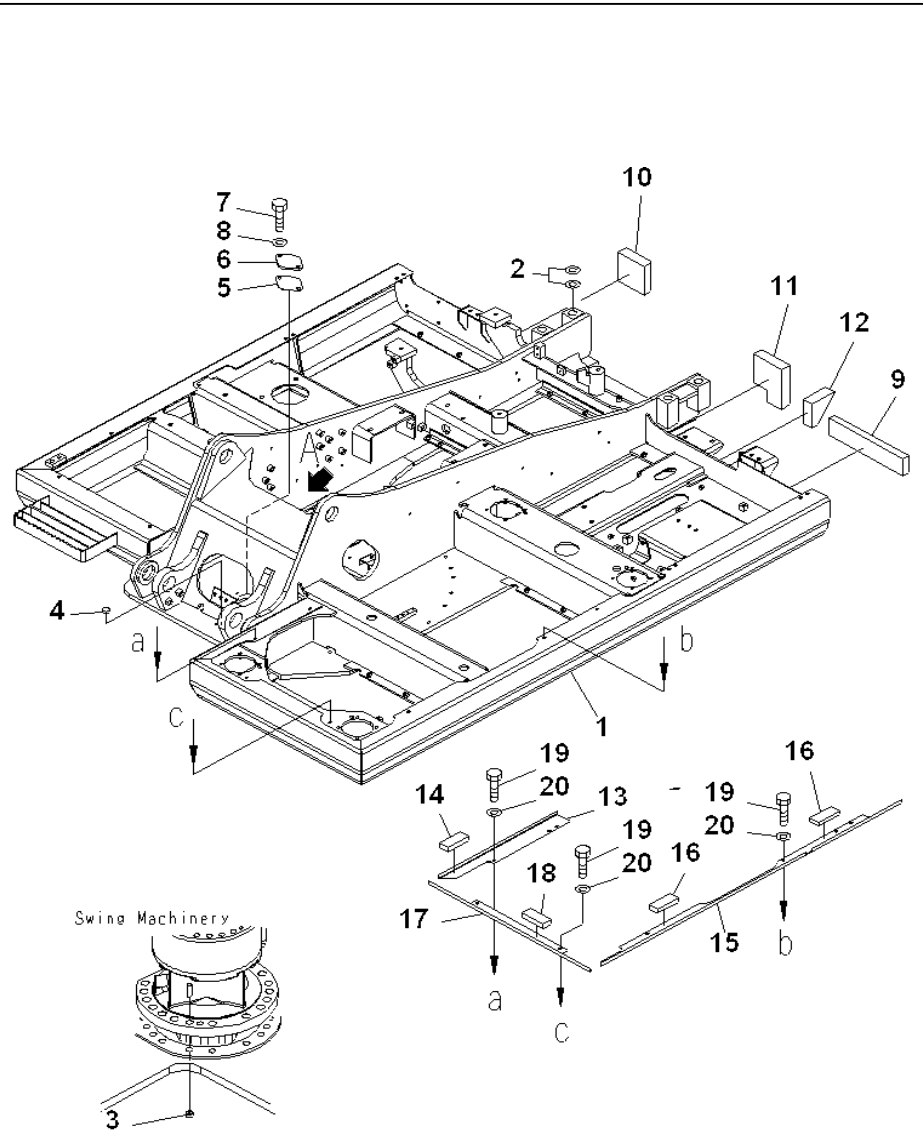

INDEX	PART NUMBER	DESCRIPTION	QTY	SERIAL No.
1	203-46-N1110	FRAME	1	NL 50001-
2	21K-46-21190	PLATE, 1.0MM	3	NL 50001-
3	203-46-61910	PLUG	1	NL 50001-
4	203-46-61920	CAP	1	NL 50001-
5	203-46-61520	GASKET	1	NL 50001-
6	203-46-56160	COVER	1	NL 50001-
7	204 338 23 C	BOLT	2	NL 50001-
8	01643-31232	WASHER	2	NL 50001-
9	203-46-N1210	SHEET	1	NL 50001-
10	203-46-N1220	SHEET	1	NL 50001-
11	203-46-71210	SHEET	1	NL 50001-
12	203-03-N1150	SHEET	1	NL 50001-
	207-46-71520	COVER	1	NL 50001-
13	#	. COVER	1	NL 50001-
14	20Y-46-42460	. SHEET	1	NL 50001-
	207-46-N1290	COVER	1	NL 50001-
15	#	. COVER	1	NL 50001-
16	20Y-46-42460	. SHEET	2	NL 50001-
	207-46-71540	COVER	1	NL 50001-
17	#	. COVER	1	NL 50001-
18	20Y-46-42460	. SHEET	1	NL 50001-
19	204 338 26 F	BOLT	7	NL 50001-
20	01643-31032	WASHER	7	NL 50001-

Fig. No. **J1110-01A0** | **REVOLVING FRAME** | Update Index : **A** | **JO-003** 1/1

L&T-KOMATSU

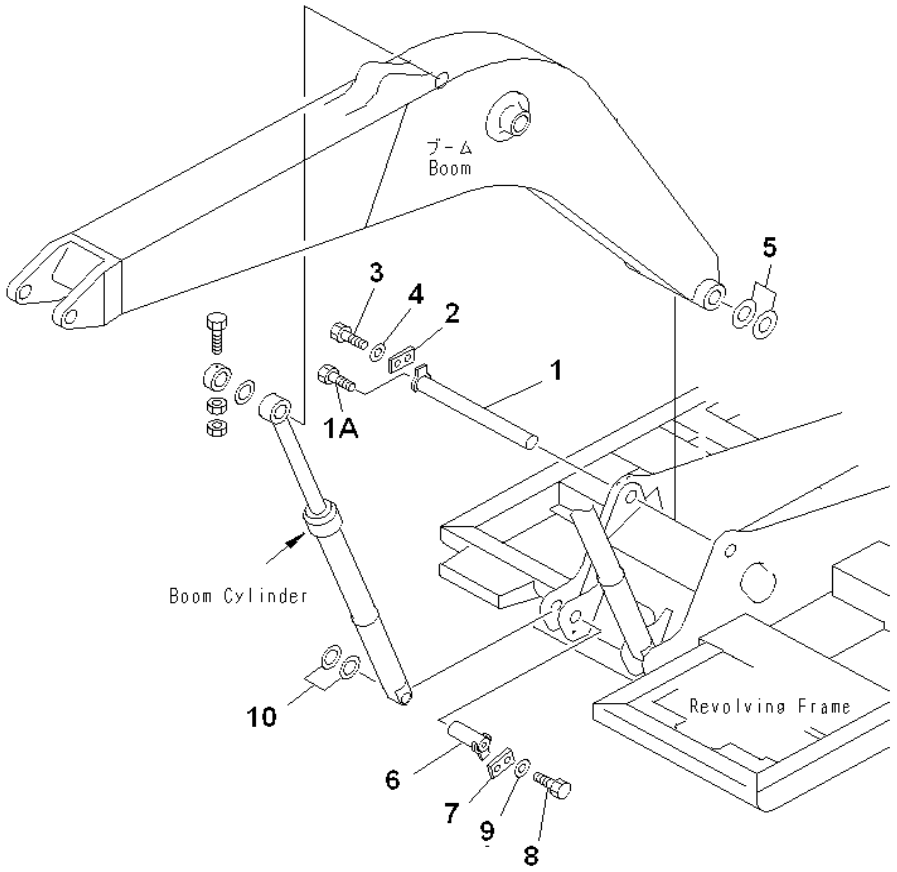

INDEX	PART NUMBER	DESCRIPTION	QTY	SERIAL No.
1	202-70-61160	PIN	1	NL 50001-
1a	205 338 60 N	BOLT	1	NL 50001-
2	205-70-66580	PLATE	1	NL 50001-
3	204 338 23 C	BOLT	2	NL 50001-
4	01643-31232	WASHER	2	NL 50001-
5	21Y-70-14760	SPACER, 2.0MM,2.0M	1	NL 50001-
	20U-70-31340	SPACER, 1.0MM,1.0M	1	NL 50001-
	20U-70-31330	SPACER, 0.5MM,0.5M	1	NL 50001-
6	203-46-56260	PIN	2	NL 50001-
7	205-70-66580	PLATE	2	NL 50001-
8	204 338 23 C	BOLT	4	NL 50001-
9	01643-31232	WASHER	4	NL 50001-
10	21Y-70-14830	SPACER, 1.0MM,1.0M	2	NL 50001-
	21Y-70-14840	SPACER, 2.0MM,2.0M	2	NL 50001-

Fig. No. **J1310-01A0** | **BOOM FOOT PIN** | Update Index : **A** | **JO-005** 1/1

NOTES:

OPERATOR'S COMPARTMENT AND CONTROL SYSTEM

L&T-KOMATSU

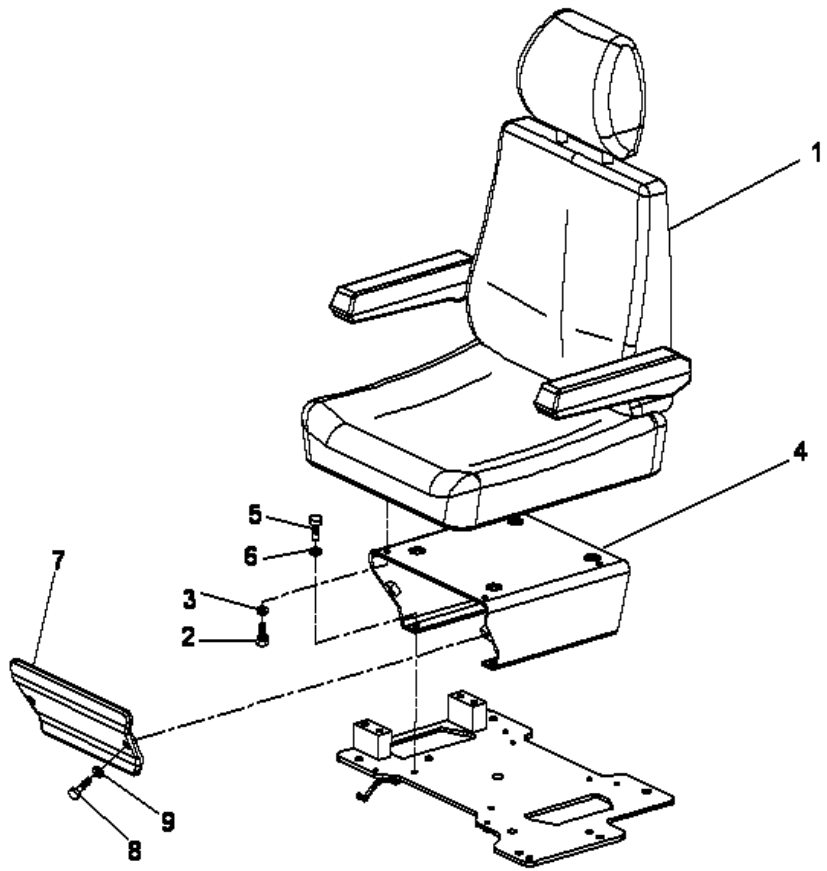

INDEX	PART NUMBER	DESCRIPTION	QTY	SERIAL No.
1	207-57-N1120	SEAT ASSEMBLY	1	NL 50001-
2	204 338 48 E	BOLT	4	NL 50001-
3	01643-03823	WASHER	4	NL 50001-
4	207-57-N1110	BRACKET	1	NL 50001-
5	205 338 83 N	BOLT	4	NL 50001-
6	01643-70823	WASHER	4	NL 50001-
7	20Y-57-N1120	COVER	1	NL 50001-
8	205 338 79 J	BOLT	2	NL 50001-
9	01643-71032	WASHER	2	NL 50001-

Fig. No. **K0110-01A0** | **OPERATOR SEAT** | Update Index : **A** | **KO-003** 1/1

L&T-KOMATSU

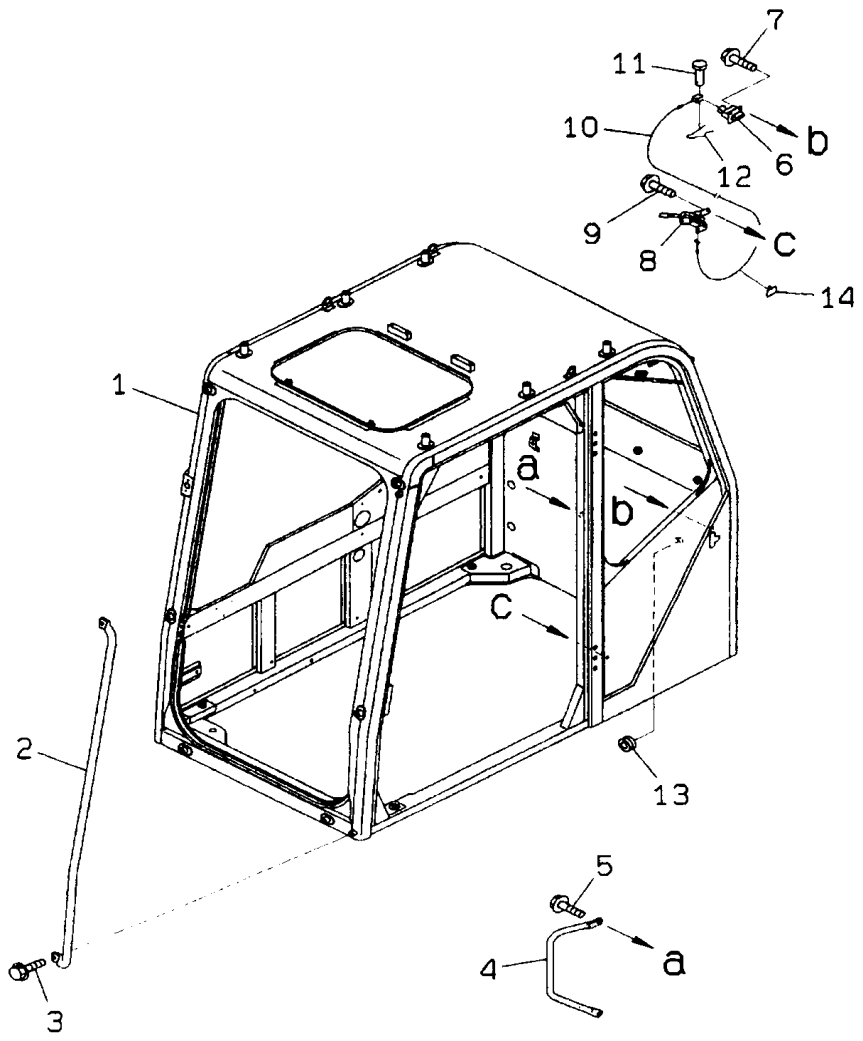

INDEX	PART NUMBER	DESCRIPTION	QTY	SERIAL No.
1	#	CAB	1	NL 50001-
2	20Y-54-44120	GRIP	1	NL 50001-
3	01435-41020	BOLT	2	NL 50001-
4	201-54-72470	GRIP	1	NL 50001-
5	01435-41025	BOLT	2	NL 50001-
6	20Y-54-36380	LOCK	1	NL 50001-
7	01435-40820	BOLT	4	NL 50001-
8	20Y-54-35982	LOCK,RELEASE	1	NL 50001-
9	01435-00616	BOLT	3	NL 50001-
10	20Y-54-N2730	CABLE	1	NL 50001-
11	04205-10520	PIN	1	NL 50001-
12	04052-10530	PIN	1	NL 50001-
13	09415-01610	CAP	1	NL 50001-
14	08051-00801	CLIP	2	NL 50001-

Fig. No. **K0210-01A0** | **OPERATOR'S CAB (CAB, GRIP & OPEN LOCK)** | Update Index : **A** | **KO-011** 1/1

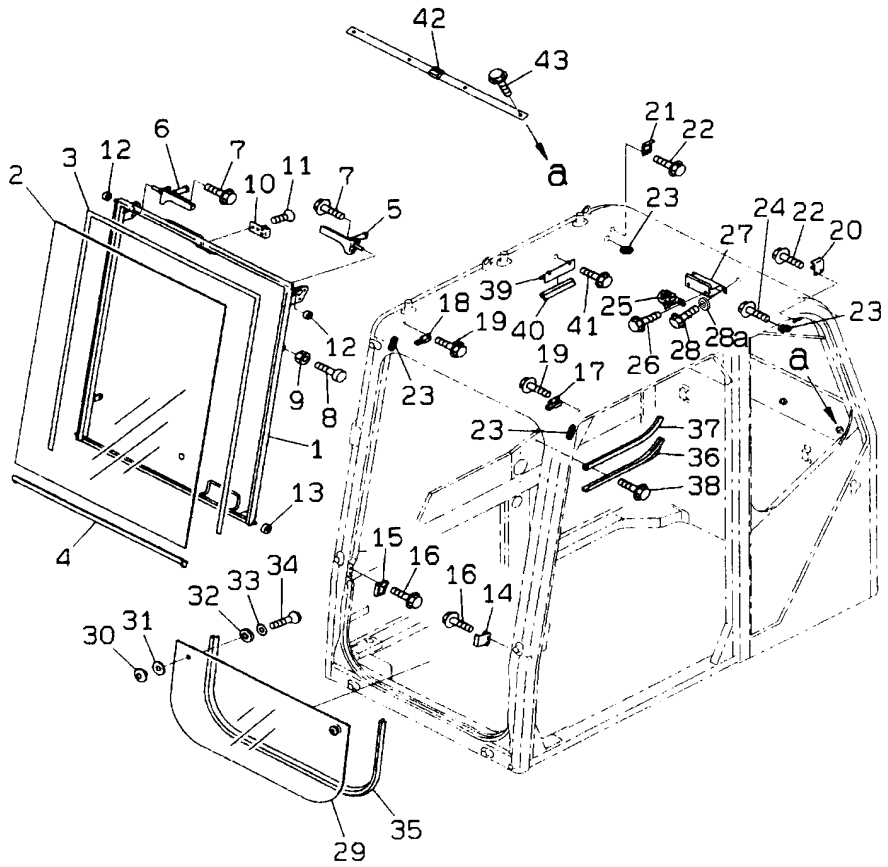

INDEX	PART NUMBER	DESCRIPTION	QTY	SERIAL No.
	20Y-54-N2720	FRONT WINDOW ASSY	1	NL 50001-
1	20Y-54-N2710	. FRONT WINDOW	1	NL 50001-
2	20Y-54-N1610	. GLASS	1	NL 50001-
3	20Y-54-N2360	. SEAL(DUM)	1	NL 50001-
4	20Y-54-44550	. SEAL	1	NL 50001-
5	20Y-54-43130	LATCH ASSY. (LH)	1	NL 50001-
6	20Y-54-43140	LATCH ASSY. (RH)	1	NL 50001-
7	01435-40820	BOLT	4	NL 50001-
8	20Y-54-14290	STOPPER	2	NL 50001-
9	201 341 39 J	NUT	2	NL 50001-
10	20Y-54-14310	STRIKER	1	NL 50001-
11	20Y-54-N1120	SCREW	3	NL 50001-
12	20Y-54-44150	ROLLER	2	NL 50001-
13	20Y-54-44160	ROLLER	2	NL 50001-
14	20Y-54-N2230	BRACKET(L.H)	1	NL 50001-
15	20Y-54-N2240	BRACKET(R.H)	1	NL 50001-
16	01435-40820	BOLT	4	NL 50001-
17	20Y-54-44210	DOVE TAIL(L.H)	1	NL 50001-
18	20Y-54-44220	DOVE TAIL(R.H)	1	NL 50001-
19	01435-40820	BOLT	4	NL 50001-
20	20Y-54-44230	BRACKET(L.H)	1	NL 50001-
21	20Y-54-44240	BRACKET(R.H)	1	NL 50001-
22	01435-40820	BOLT	4	NL 50001-
23	20Y-54-44250	PLATE	3	NL 50001-
24	01435-41020	BOLT	6	NL 50001-
25	205-54-63310	LOCK ASS'Y	1	NL 50001-
26	01435-40820	BOLT	2	NL 50001-
27	20Y-54-44260	BRACKET	1	NL 50001-
28	01435-40820	BOLT	2	NL 50001-
28a	01643-71032	WASHER	2	NL 50001-
	20Y-54-44300	LOWER GLASS ASSY	1	NL 50001-
29	20Y-54-44280	. GLASS	1	NL 50001-
30	20T-54-74870	. NUT	2	NL 50001-
31	20T-54-74880	. GROMMET	2	NL 50001-
32	20T-54-74890	. GROMMET	2	NL 50001-
33	20Y-54-14330	. WASHER	2	NL 50001-
34	01225-70616	. BOLT	2	NL 50001-
35	20Y-54-44560	RUN CHANNEL	1	NL 50001-

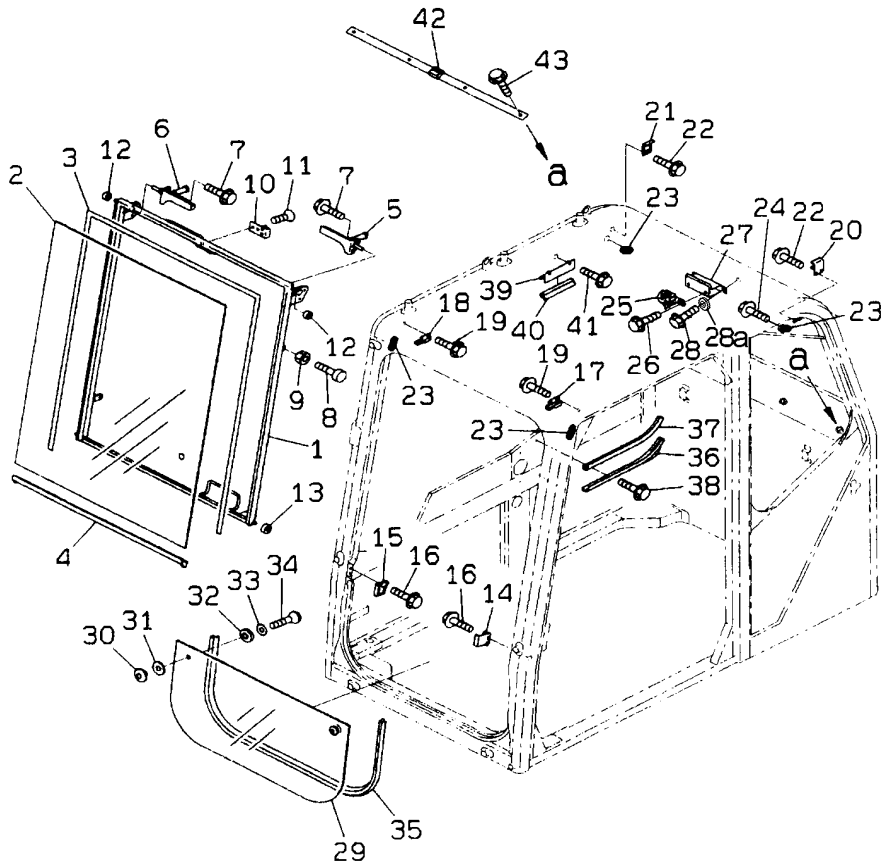

INDEX	PART NUMBER	DESCRIPTION	QTY	SERIAL No.
36	20Y-54-44290	STAY	1	NL 50001-
37	20Y-54-44570	RUN CHANNEL	1	NL 50001-
38	01435-40820	BOLT	3	NL 50001-
39	20Y-54-44310	STAY	1	NL 50001-
40	20Y-54-44850	RUNCHANNEL	1	NL 50001-
41	01435-40820	BOLT	2	NL 50001-
42	20Y-54-N1490	FRAME	1	NL 50001-
43	01435-40830	BOLT	4	NL 50001-

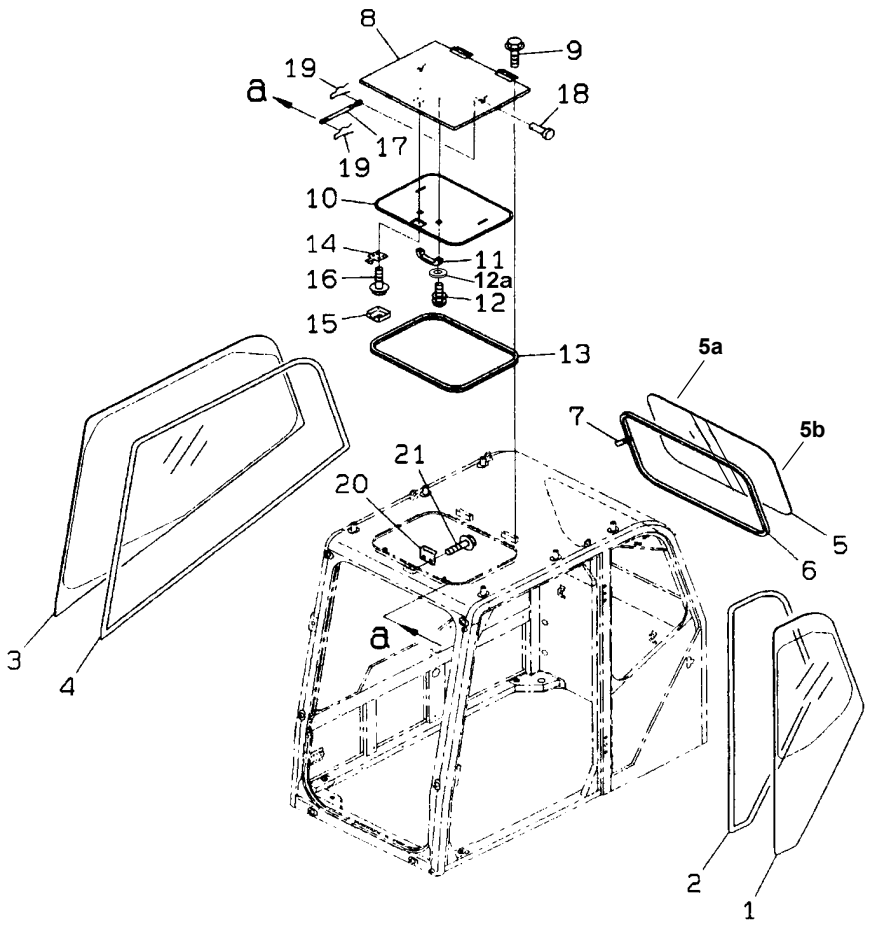

INDEX	PART NUMBER	DESCRIPTION	QTY	SERIAL No.
1	20Y-54-N1620	GLASS	1	NL 50001-
2	20Y-54-N2360	SEAL(DUM)	1	NL 50001-
3	20Y-54-N2650	GLASS	1	NL 50001-
4	20Y-54-N2360	SEAL(DUM)	1	NL 50001-
	20Y-54-N1570	REAR SASH ASSY	1	NL 50001-
5	#	. FRAME	1	NL 50001-
5a	20Y-54-N1550	. GLASS	1	NL 50001-
5b	20Y-54-N1560	. GLASS	1	NL 50001-
6	20Y-54-44380	WEATHER STRIP	1	NL 50001-
7	20T-54-75250	TAG	1	NL 50001-
8	20Y-54-44390	ROOF	1	NL 50001-
9	01435-40820	BOLT	4	NL 50001-
10	20Y-54-44410	LINING	1	NL 50001-
11	20Y-54-N1210	HANDLE	1	NL 50001-
12	201 325 05 H	SCREW	2	NL 50001-
	01641-50405	WASHER	2	NL 50001-
13	20Y-54-N2940	SEAL	1	NL 50001-
14	22B-54-15990	LOCK ASSY	1	NL 50001-
15	20Y-54-36360	COVER	1	NL 50001-
16	01435-40610	BOLT	4	NL 50001-
17	20Y-54-N1140	GAS SPRING ASSY	2	NL 50001-
18	04205-30820	PIN	2	NL 50001-
19	04052-10833	PIN SNAP	4	NL 50001-
20	20Y-54-44430	STRIKER	1	NL 50001-
21	01435-01016	BOLT	2	NL 50001-

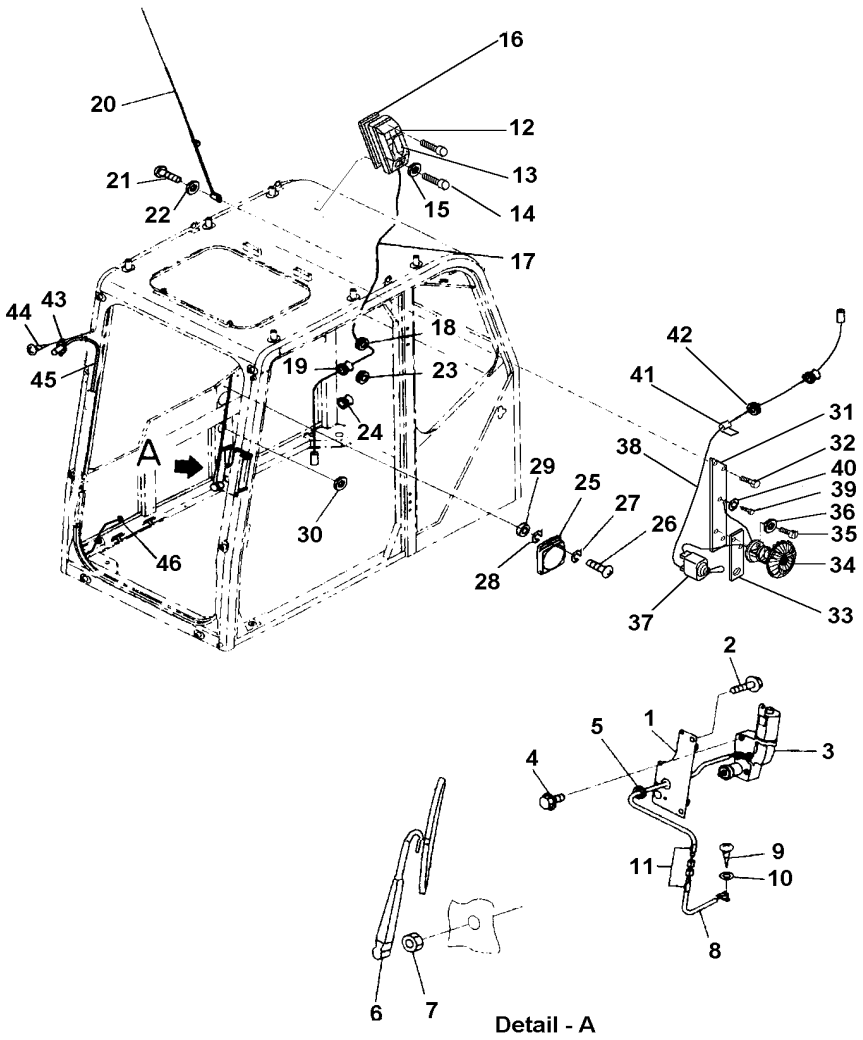

INDEX	PART NUMBER	DESCRIPTION	QTY	SERIAL No.
1	20Y-54-11791	BRACKET	1	NL 50001-
2	01435-41020	BOLT	2	NL 50001-
3	20Y-06-11750	WIPER MOTOR	1	NL 50001-
4	20Y-54-14380	BOLT	4	NL 50001-
5	08037-02512	GROMMET	1	NL 50001-
6	20Y-06-N1220	WIPER ASSEMBLY	1	NL 50001-
7	201 341 40 K	HEX. NUT	1	NL 50001-
8	20Y-06-11382	WIRING HARNESS	1	NL 50001-
9	01370-40408	SCREW	2	NL 50001-
10	01641-50405	WASHER (SPRING SE	2	NL 50001-
11	20Y-54-13440	CLIP	2	NL 50001-
12	20Y-06-N1150	ROOM LAMP	1	NL 50001-
13	20Y-06-N1140	BLUB	1	NL 50001-
14	201 325 09 M	PAN HEAD SCREW	2	NL 50001-
15	01641-50608	WASHER (SPRING SE	2	NL 50001-
16	20Y-54-N1180	RUBBER GASKET	1	NL 50001-
17	20Y-54-44440	WIRING HARNESS	1	NL 50001-
18	08037-01610	GROMMET	1	NL 50001-
19	08037-11025	GROMMET	1	NL 50001-
20	20Y-54-N3160	ANTENNA	1	NL 50001-
21	201 325 05 H	PAN HEAD SCREW	2	NL 50001-
22	01641-50405	WASHER	2	NL 50001-
23	08037-01610	GROMMET	1	NL 50001-
24	08037-11025	GROMMET	1	NL 50001-
25	201-06-71270	SPEAKER	1	NL 50001-
26	201 325 07 K	PAN HEAD SCREW	2	NL 50001-
27	01641-50508	WASHER	2	NL 50001-
28	01601-20513	WASHER	2	NL 50001-
29	20Y-54-N1580	COLLAR	2	NL 50001-
30	20Y-54-36150	GROMMET	1	NL 50001-
31	20Y-54-N2431	PLATE	1	NL 50001-
32	01435-41020	BOLT	2	NL 50001-
33	20Y-54-N1230	PLATE	1	NL 50001-
34	20Y-06-N1160	FAN A	1	NL 50001-
35	201 325 07 K	PAN HEAD SCREW	2	NL 50001-
36	01641-50508	WASHER (SPRING SE	2	NL 50001-
37	20Y-06-N1130	SWITCH	1	NL 50001-
38	20Y-54-44440	WIRING HARNESS	1	NL 50001-

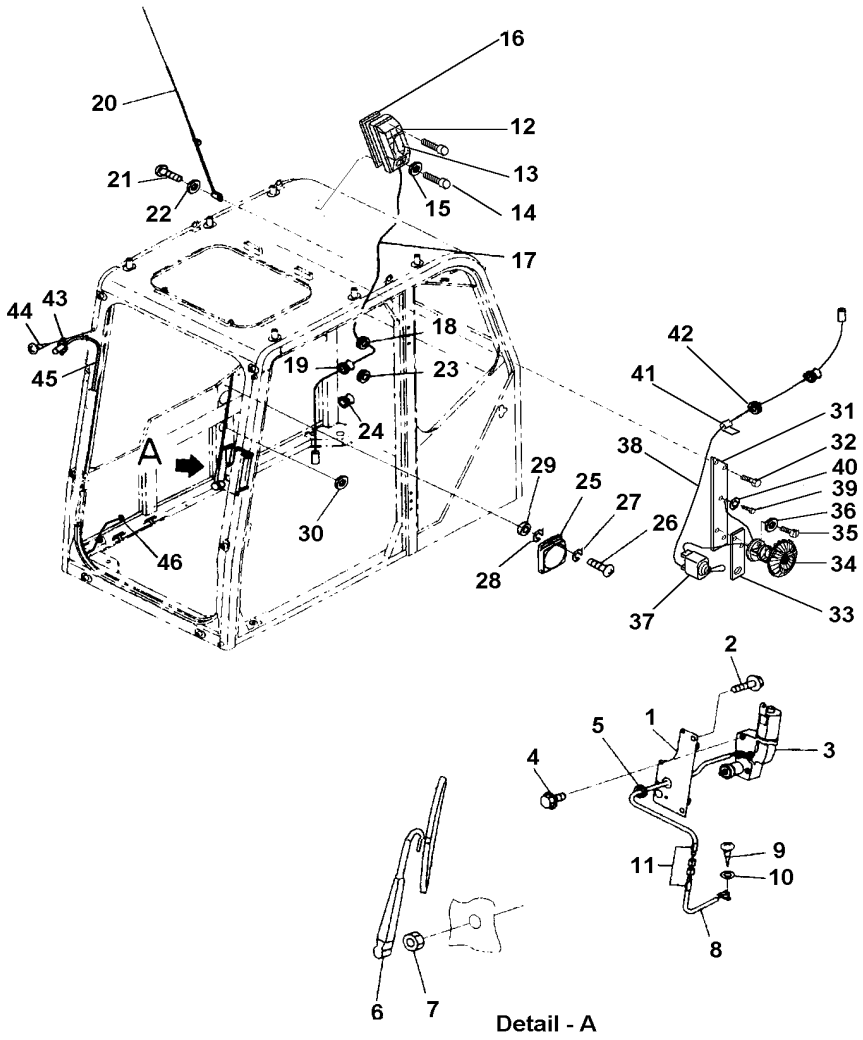

INDEX	PART NUMBER	DESCRIPTION	QTY	SERIAL No.
39	201 325 10 N	PAN HEAD SCREW	1	NL 50001-
40	01641-50405	WASHER	1	NL 50001-
41	20Y-54-13440	CLIP	3	NL 50001-
42	08037-01008	GROMMET	1	NL 50001-
43	20Y-54-39511	NOZZLE	1	NL 50001-
44	01370-40412	SCREW	2	NL 50001-
45	17M-91-12670	HOSE	1	NL 50001-
46	08037-01008	GROMMET	1	NL 50001-

L&T-KOMATSU

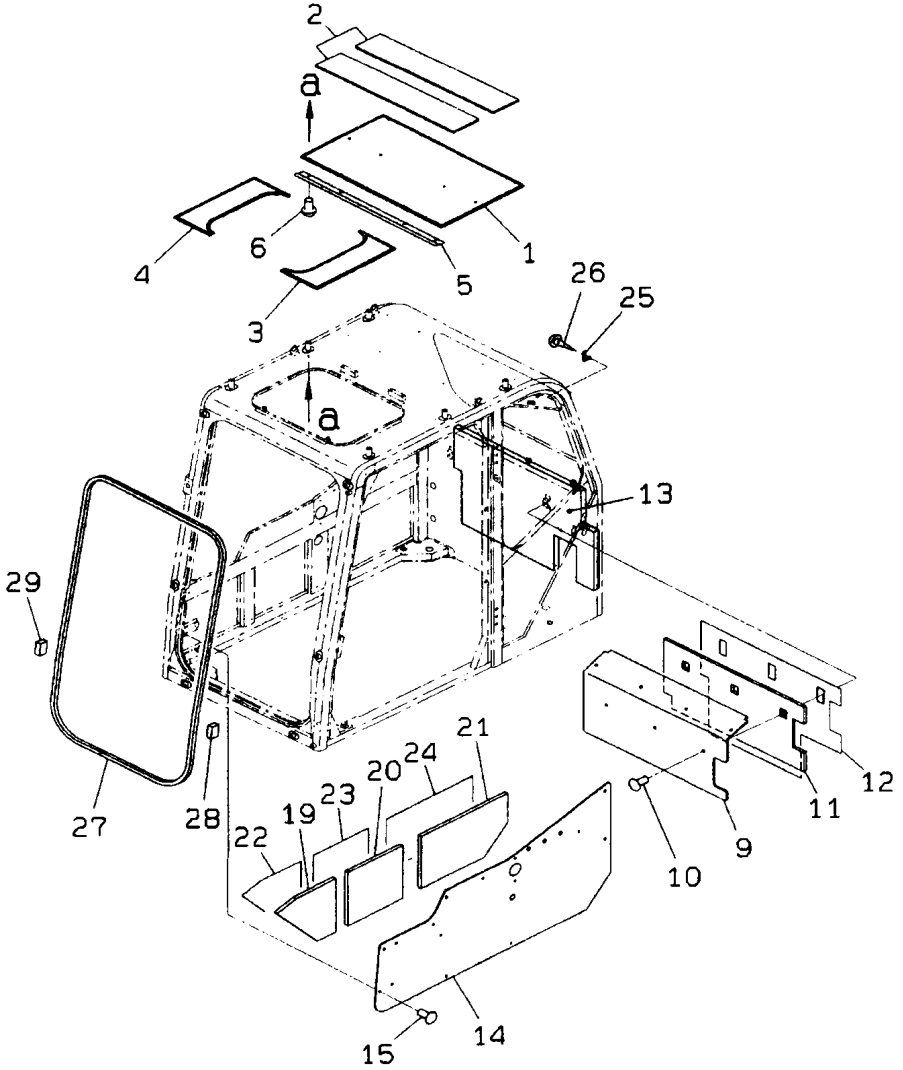

INDEX	PART NUMBER	DESCRIPTION	QTY	SERIAL No.
1	20Y-54-44450	LINING	1	NL 50001-
2	20Y-54-N1980	SHEET	2	NL 50001-
3	20Y-54-44460	LINING(L.H)	1	NL 50001-
4	20Y-54-44470	LINING(R.H)	1	NL 50001-
5	20Y-54-44490	FINISHER	1	NL 50001-
6	20Y-54-18690	RIVET	12	NL 50001-
9	20Y-54-44520	LINING	1	NL 50001-
10	201-54-N1120	PLUG	3	NL 50001-
11	20Y-54-N1970	SHEET	1	NL 50001-
12	20Y-54-44890	SHEET	1	NL 50001-
13	20Y-54-N1930	SHEET	1	NL 50001-
14	20Y-54-N2320	SHEET	1	NL 50001-
15	201-54-N1110	PLUG	13	NL 50001-
19	20Y-54-N1990	SHEET	1	NL 50001-
20	20Y-54-N2010	SHEET	1	NL 50001-
21	20Y-54-N2020	SHEET	1	NL 50001-
22	20Y-54-44960	SHEET	1	NL 50001-
23	20Y-54-44970	SHEET	1	NL 50001-
24	20Y-54-44980	SHEET	1	NL 50001-
25	205-54-51250	HANGER	1	NL 50001-
26	01370-30412	SCREW	2	NL 50001-
27	20Y-54-N1750	TRIM	1	NL 50001-
28	20Y-54-44580	BLOCK(L.H)	1	NL 50001-
29	20Y-54-44590	BLOCK(R.H)	1	NL 50001-

Fig. No. **K0210-07A0** | **OPERATOR' S CAB (INSIDE COVER)** | Update Index : **A** | **KO-019** 1/1

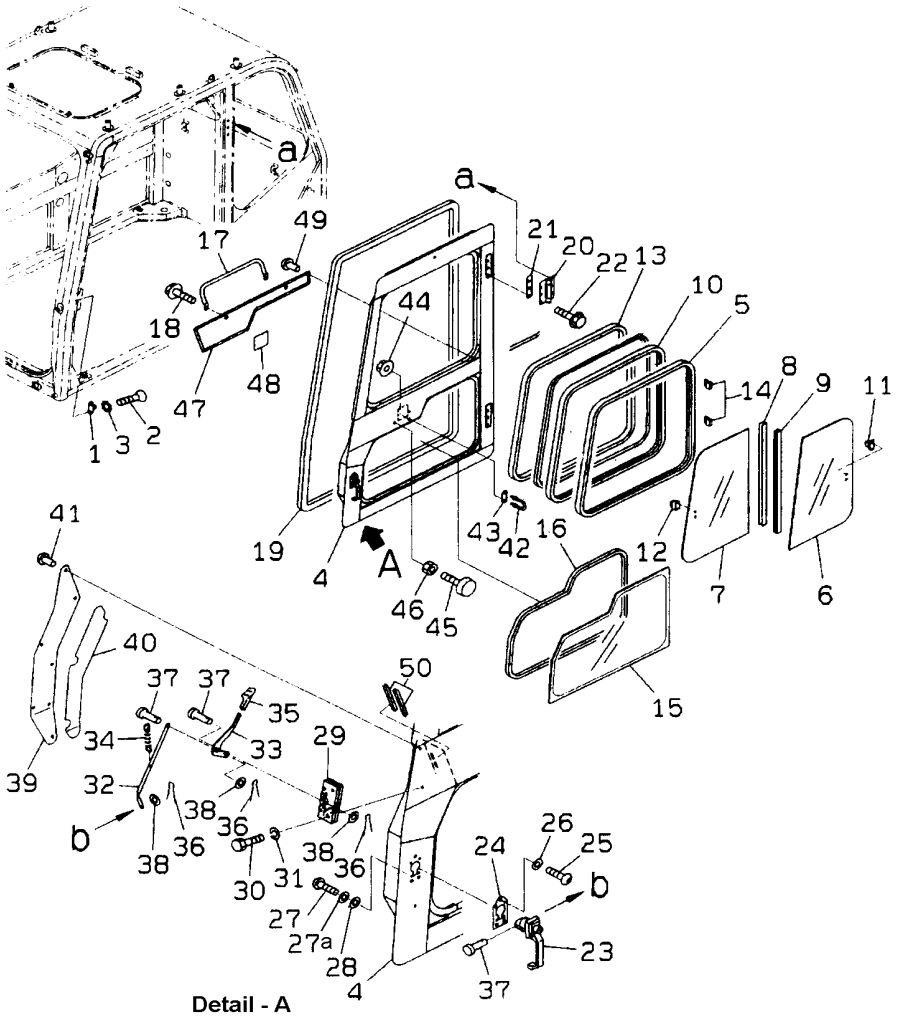

Detail - A

INDEX	PART NUMBER	DESCRIPTION	QTY	SERIAL No.
1	21J-54-16190	STRIKER	1	NL 50001-
2	20Y-54-N1110	SCREW	2	NL 50001-
3	20U-54-25190	WASHER	2	NL 50001-
4	20Y-54-45910	DOOR	1	NL 50001-
	20Y-54-N1540	SASH ASS'Y	1	NL 50001-
5	#	. SASH FRAME	1	NL 50001-
6	20Y-54-N1240	. GLASS	1	NL 50001-
7	20Y-54-N1250	. GLASS	1	NL 50001-
8	#	. FRAME	1	NL 50001-
9	#	. SEAL	1	NL 50001-
10	#	. SEAL	1	NL 50001-
11	#	. LOCK ASS'Y	1	NL 50001-
12	#	. LOCK	1	NL 50001-
13	20Y-54-44810	TRIM	1	NL 50001-
14	20Y-54-44830	SEAT	12	NL 50001-
15	20Y-54-N1640	GLASS	1	NL 50001-
16	20Y-54-N2370	DAM RUBBER	0	NL 50001-
17	20Y-54-44670	GRIP	1	NL 50001-
18	01435-40820	BOLT	2	NL 50001-
19	20Y-54-N2930	SEAL(TRIM)	1	NL 50001-
19	20Y-54-44870	SEAL(TRIM)	1	NL 50001-
20	14X-911-1330	HINGE	2	NL 50001-
21	20Y-54-44820	PLATE	2	NL 50001-
22	01435-41225	BOLT	12	NL 50001-
23	14X-911-1531	HANDLE ASS'Y	1	NL 50001-
24	14X-911-1721	PLATE	1	NL 50001-
25	01245-00816	SCREW	3	NL 50001-
26	01643-30823	WASHER	3	NL 50001-
27	201 325 06 J	SCREW	5	NL 50001-
27a	01641-50508	WASHER	5	NL 50001-
28	01601-20513	WASHER	5	NL 50001-
29	195-Z11-4510	DOOR LOCK(L.H)	1	NL 50001-
30	204 338 44 A	BOLT	4	NL 50001-
31	01602-20619	WASHER	4	NL 50001-
32	20Y-54-44680	PLATE	1	NL 50001-
33	20Y-54-44691	LEVER	1	NL 50001-
34	176-06-42170	SPRING	1	NL 50001-
35	14X-911-1540	KNOB	1	NL 50001-

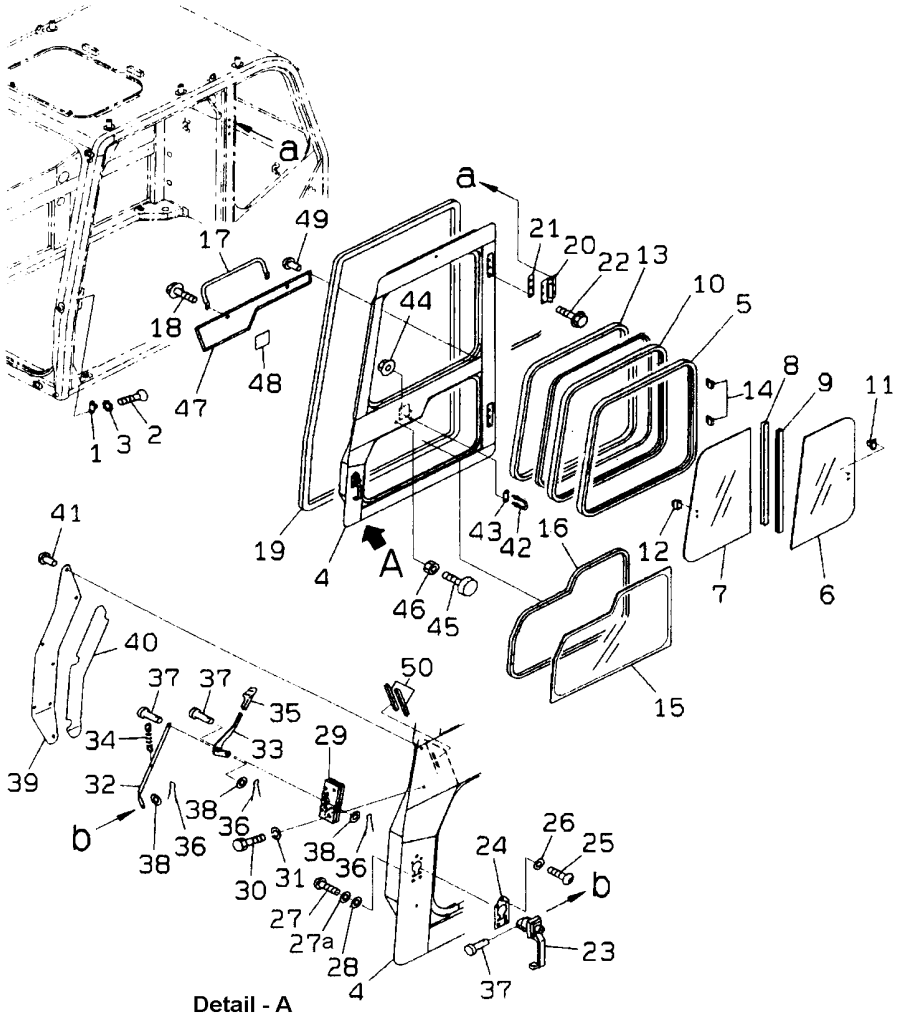

Detail - A

INDEX	PART NUMBER	DESCRIPTION	QTY	SERIAL No.
36	04050-11612	CUTTER PIN	3	NL 50001-
37	04205-10614	PIN	3	NL 50001-
38	01641-20608	WASHER	3	NL 50001-
39	20Y-54-45710	COVER	1	NL 50001-
40	20Y-54-44721	SEAL	1	NL 50001-
41	01245-00612	SCREW	7	NL 50001-
42	20Y-54-44880	STRIKER	1	NL 50001-
43	20Y-54-35710	PLATE	1	NL 50001-
44	01584-01008	NUT	2	NL 50001-
45	20T-54-75290	STOPPER	2	NL 50001-
46	201 341 39 J	NUT	2	NL 50001-
47	20Y-54-44732	COVER	1	NL 50001-
48	20Y-54-44840	PLATE	1	NL 50001-
49	20Y-54-18690	RIVET	6	NL 50001-
50	20Y-54-44190	GROMMET	2	NL 50001-

L&T-KOMATSU

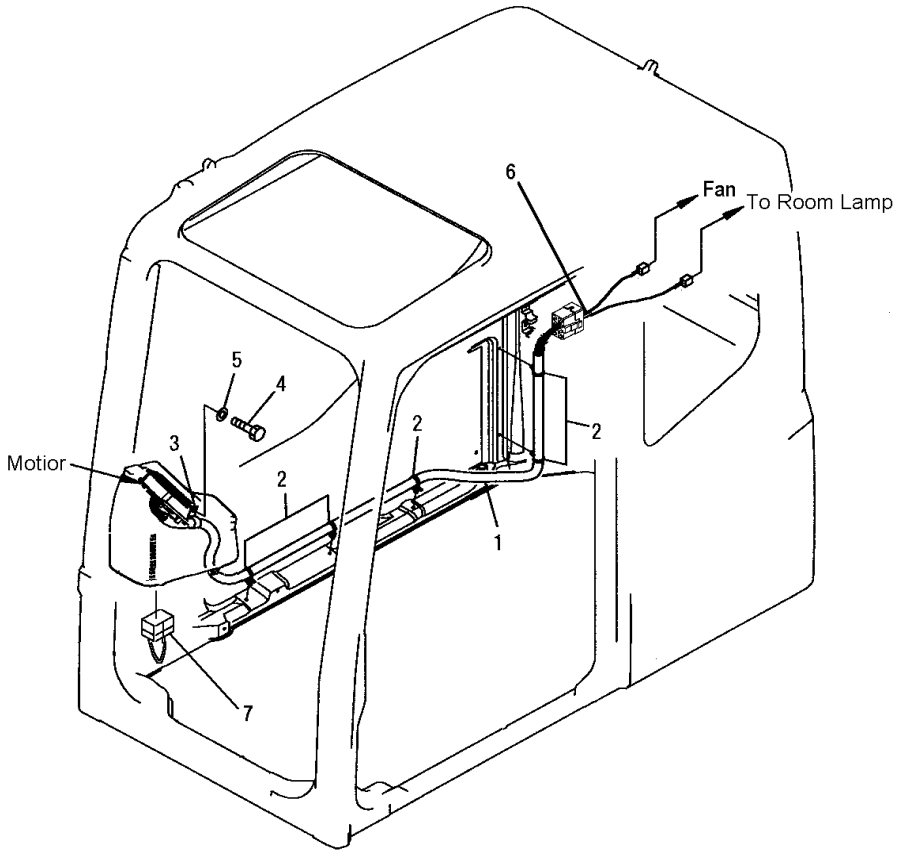

INDEX	PART NUMBER	DESCRIPTION	QTY	SERIAL No.
1	20Y-06-31120	WIRING HARNESS	1	NL 50001-
2	08059-00413	CLIP	5	NL 50001-
3	04434-51910	CLIP	1	NL 50001-
4	204 338 27 G	BOLT	1	NL 50001-
5	01643-31032	WASHER	1	NL 50001-
6	207-06-N1130	WIRING HARNESS	1	NL 50001-
7	207-06-N1140	CONNECTOR	1	NL 50001-

Fig. No. **K0210-12A0** | **OPERATOR' S CAB (WIRING)** | Update Index : **A** | **KO-023** 1/1

L&T-KOMATSU

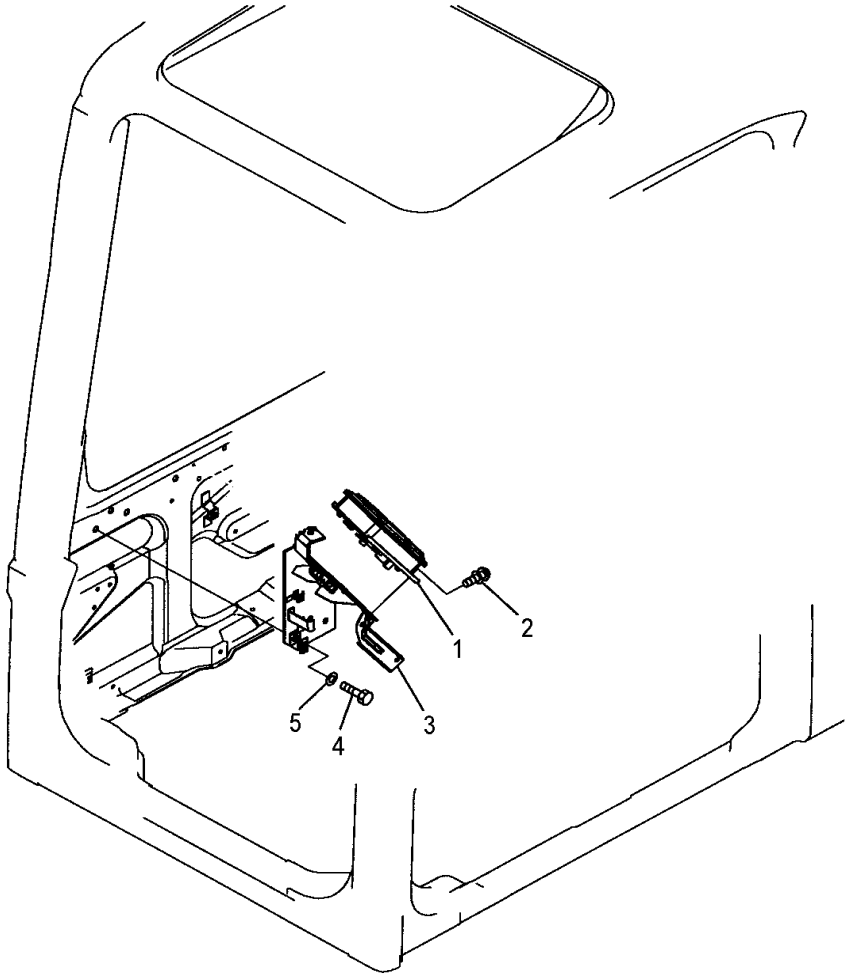

INDEX	PART NUMBER	DESCRIPTION	QTY	SERIAL No.
1	7835-10-5000	MONITOR	1	NL 50001-
2	01023-10616	SCREW	3	NL 50001-
3	22U-06-N1140	BRACKET	1	NL 50001-
4	204 338 27 G	BOLT	3	NL 50001-
5	01643-31032	WASHER	3	NL 50001-

Fig. No. **K0210-13A0** | **OPERATOR' S CAB (MONITOR SYSTEM)** | Update Index : **A** | **KO-025** 1/1

L&T-KOMATSU

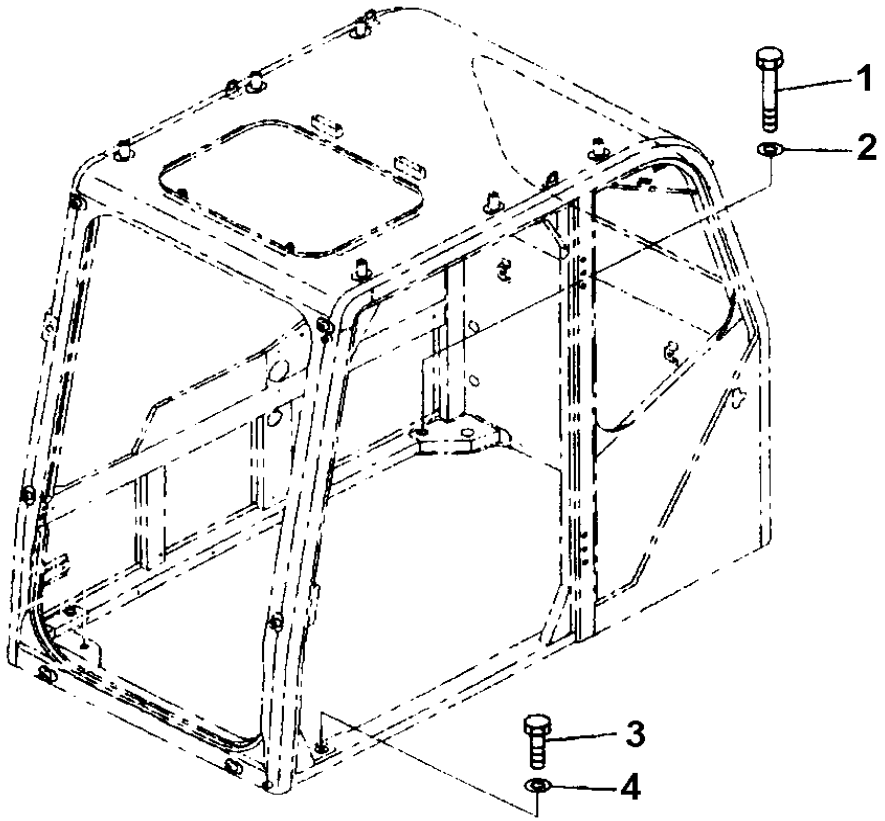

INDEX	PART NUMBER	DESCRIPTION	QTY	SERIAL No.
1	204 338 45 B	BOLT	4	NL 50001-
2	01643-31232	WASHER	4	NL 50001-
3	204 338 23 C	BOLT	1	NL 50001-
4	01643-31232	WASHER	1	NL 50001-

Fig. No. **K0210-14A0** | **OPERATOR' S CAB (INSTALLATION PARTS)** | Update Index : **A** | **KO-027** 1/1

L&T-KOMATSU

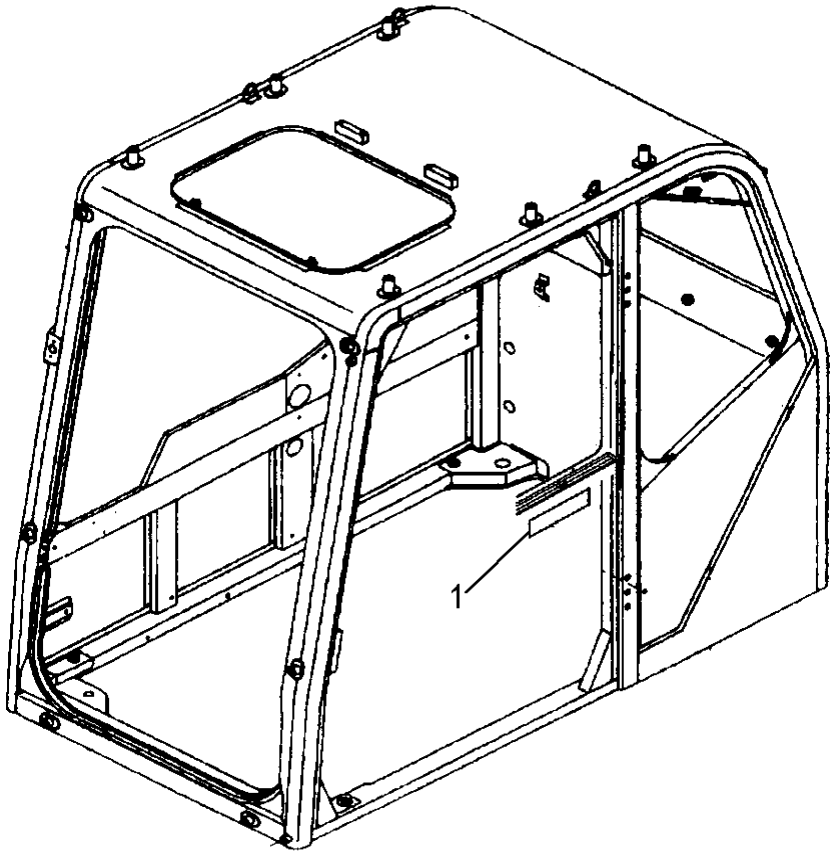

INDEX	PART NUMBER	DESCRIPTION	QTY	SERIAL No.
1	09970-00230	"GALEO" PLATE.....	1	NL 50001-

Fig. No. **K0210-15A0** | **OPERATOR' S CAB (PLATE)** | Update Index : **A** | **KO-029** 1/1

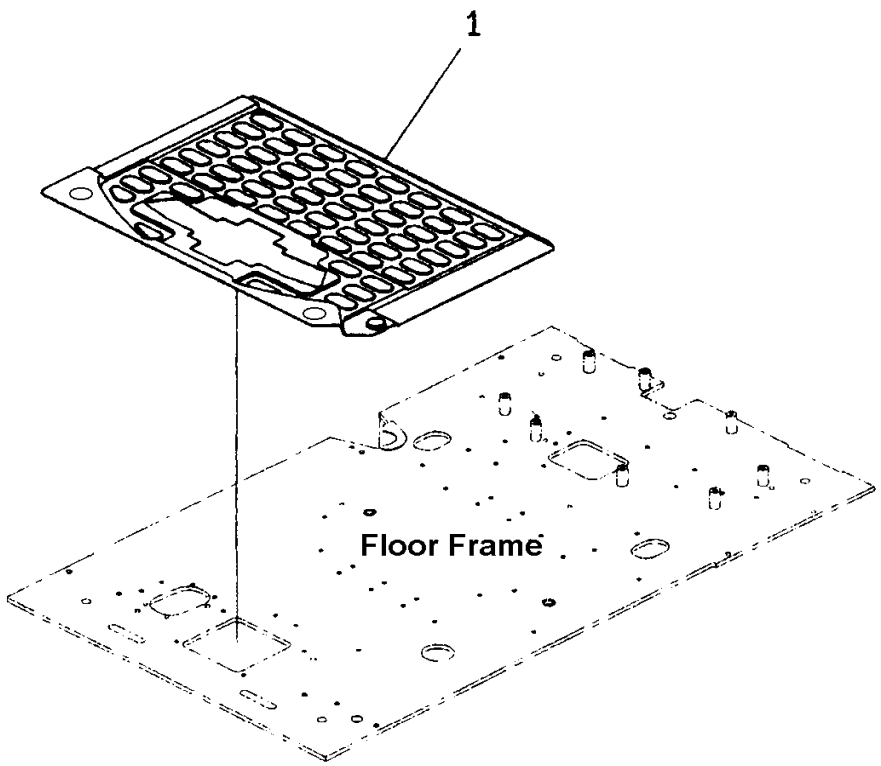

INDEX	PART NUMBER	DESCRIPTION	QTY	SERIAL No.
1	20Y-54-N2640	FLOOR MAT.....	1	NL 50001-

Fig. No. **K0310-01A0** | **FLOOR MAT** | Update Index : **A** | **KO-031** 1/1

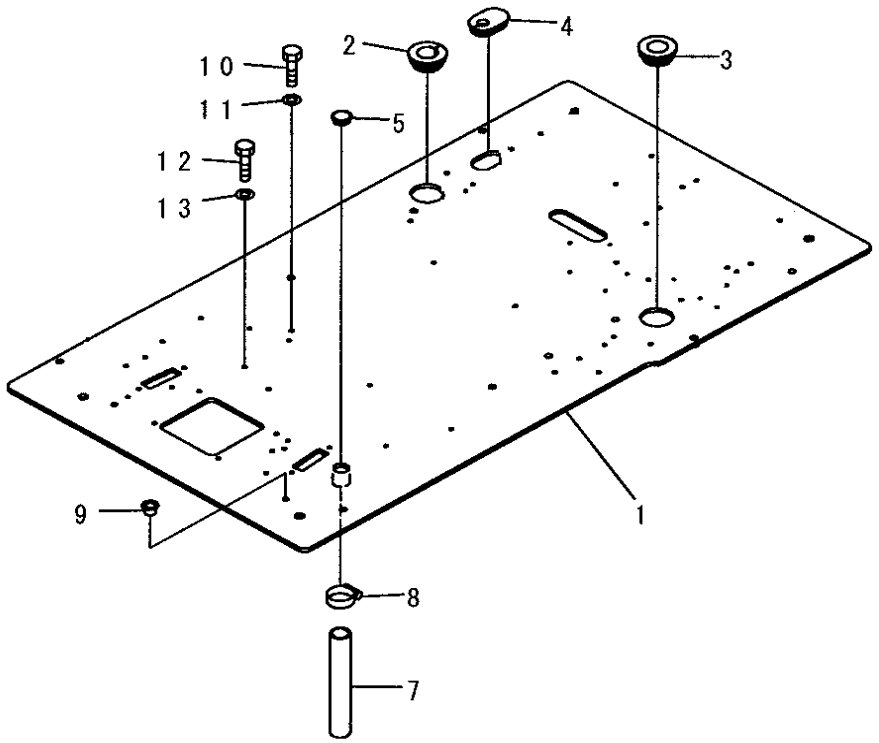

INDEX	PART NUMBER	DESCRIPTION	QTY	SERIAL No.
1	203-54-N1140	FLOOR FRAME	1	NL 50001-
2	20Y-54-65121	GROMMET	1	NL 50001-
3	207-54-71190	GROMMET	1	NL 50001-
4	20Y-54-65170	GROMMET	1	NL 50001-
5	22U-54-25581	GROMMET	1	NL 50001-
7	07286-03828	HOSE	1	NL 50001-
8	07280-04726	CLAMP	1	NL 50001-
9	07048-01310	PLUG	2	NL 50001-
10	204 338 33 N	BOLT	2	NL 50001-
11	01643-31032	WASHER	2	NL 50001-
12	204 338 27 G	BOLT	1	NL 50001-
13	01643-31032	WASHER	1	NL 50001-

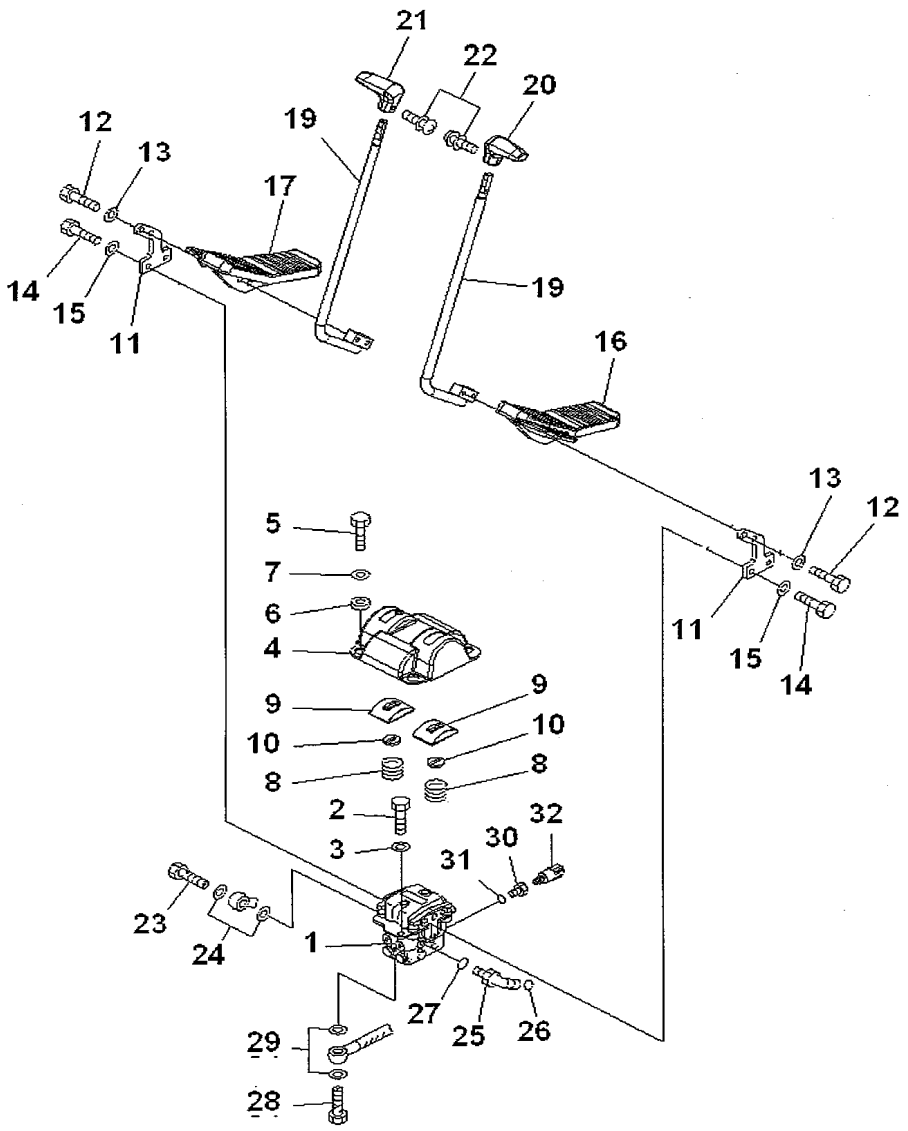

INDEX	PART NUMBER	DESCRIPTION	QTY	SERIAL No.
1	(702-16-04270)	PILOT VALVE	1	NL 50001-
2	204 338 27 G	BOLT	2	NL 50001-
3	01643-31032	WASHER	2	NL 50001-
4	20Y-43-41121	COVER	1	NL 50001-
5	204 338 27 G	BOLT	4	NL 50001-
6	20Y-43-41361	COLLAR	4	NL 50001-
7	203-54-56970	WASHER	4	NL 50001-
8	203-43-51620	SPRING	2	NL 50001-
	22U-43-21350	COVER ASS'Y	2	NL 50001-
9	#	. COVER	1	NL 50001-
10	22U-43-21360	. SEAL	1	NL 50001-
11	20Y-43-41111	LEVER	2	NL 50001-
12	204 338 64 W	BOLT	4	NL 50001-
13	01643-71032	WASHER	4	NL 50001-
14	204 338 33 N	BOLT	4	NL 50001-
15	01643-31032	WASHER	4	NL 50001-
16	22U-43-21111	PEDAL	1	NL 50001-
17	22U-43-21121	PEDAL	1	NL 50001-
19	22U-43-21131	LEVER	2	NL 50001-
20	20Y-43-21231	KNOB	1	NL 50001-
21	20Y-43-21241	KNOB	1	NL 50001-
22	01023-20416	SCREW	2	NL 50001-
23	20Y-62-18910	BOLT	1	NL 50001-
24	07000-12018	O-RING	2	NL 50001-
25	11Y-62-12160	ELBOW	1	NL 50001-
26	02896-11008	O-RING	1	NL 50001-
27	07002-11423	O-RING	1	NL 50001-
28	20Y-62-18890	BOLT	4	NL 50001-
29	07000-12015	O-RING	8	NL 50001-
30	20Y-62-41390	ADAPTER	1	NL 50001-
31	07002-11423	O-RING	1	NL 50001-
32	20Y-06-21710	SWITCH	1	NL 50001-

L&T-KOMATSU

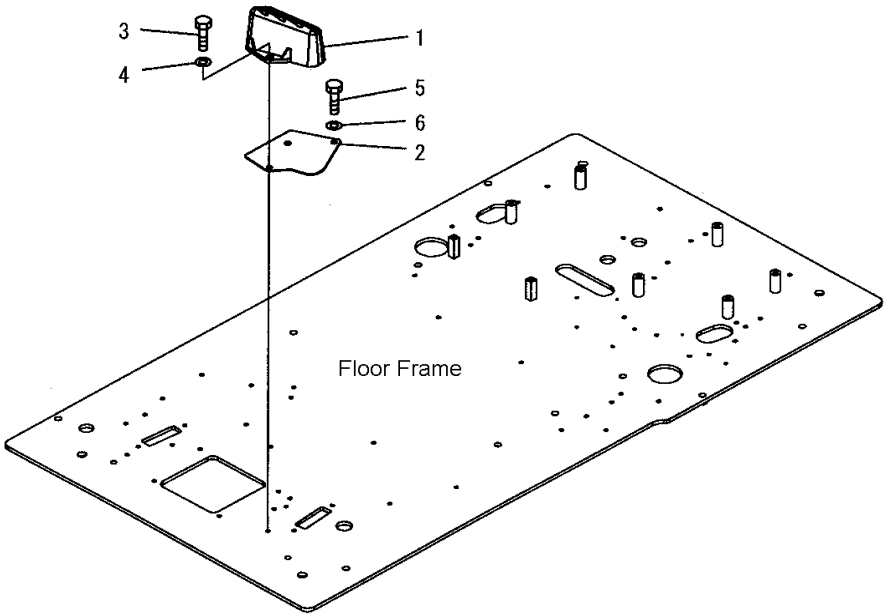

INDEX	PART NUMBER	DESCRIPTION	QTY	SERIAL No.
1	22U-54-N1110	FOOT REST LH	1	NL 50001-
2	22U-54-25521	PLATE	1	NL 50001-
3	204 338 32 M	BOLT	2	NL 50001-
4	01643-31032	WASHER	2	NL 50001-
5	204 338 27 G	BOLT	1	NL 50001-
6	01643-31032	WASHER	1	NL 50001-

Fig. No. **K1110-20A0** | **FLOOR FRAME (OPERATOR' CAB) (FOOT REST) (LH)** | Update Index : **A** | **KO-089** 1/1

L&T-KOMATSU

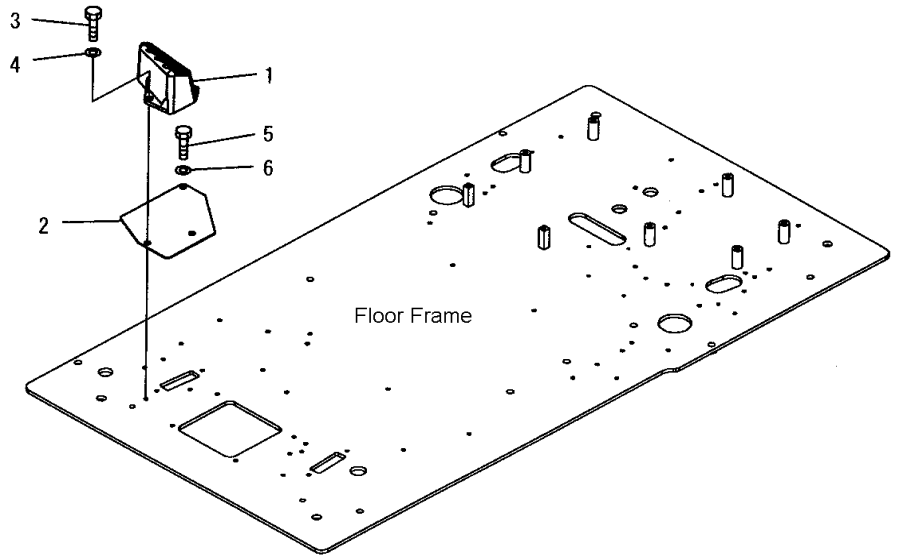

INDEX	PART NUMBER	DESCRIPTION	QTY	SERIAL No.
1	22U-54-N1120	FOOT REST RH	1	NL 50001-
2	22U-54-25531	PLATE	1	NL 50001-
3	204 338 32 M	BOLT	2	NL 50001-
4	01643-31032	WASHER	2	NL 50001-
5	204 338 27 G	BOLT	1	NL 50001-
6	01643-31032	WASHER	1	NL 50001-

Fig. No. **K1110-21A0** | **FLOOR FRAME (OPERATOR' CAB) (FOOT REST) (RH)** | Update Index : **A** | **KO-091** 1/1

L&T-KOMATSU

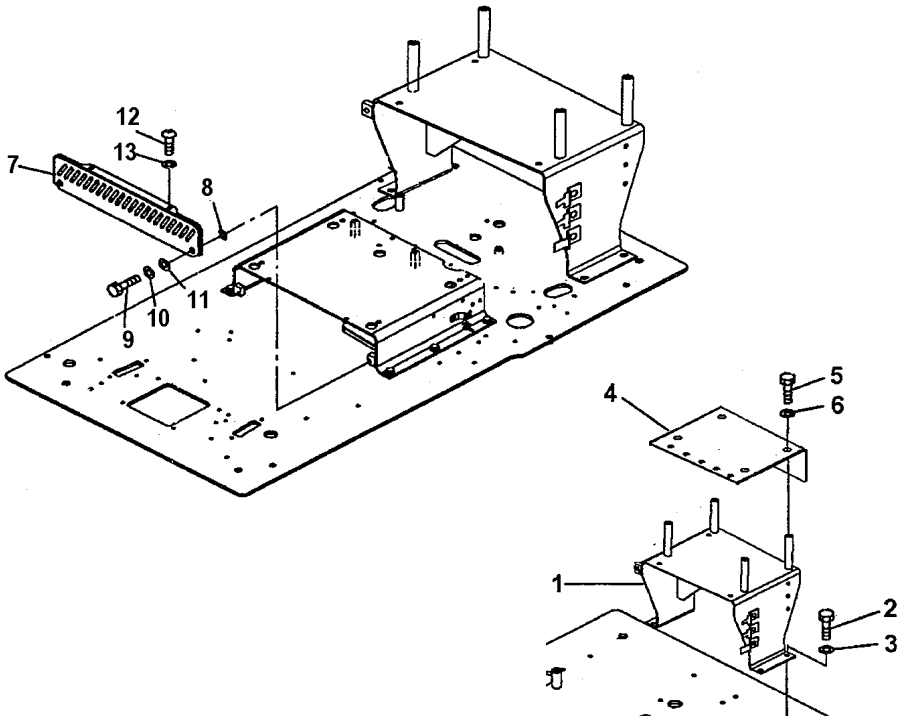

INDEX	PART NUMBER	DESCRIPTION	QTY	SERIAL No.
1	203-54-N1150	BRACKET	1	NL 50001-
2	205 338 79 J	BOLT	4	NL 50001-
3	01643-71032	WASHER	4	NL 50001-
4	20Y-54-N2670	PLATE	1	NL 50001-
5	205 338 81 L	BOLT	4	NL 50001-
6	01643-70823	WASHER	4	NL 50001-
7	20Y-979-6591	COVER	1	NL 50001-
8	22U-43-21340	SHEET	2	NL 50001-
9	204 338 48 E	BOLT	2	NL 50001-
10	01643-30823	WASHER	2	NL 50001-
11	102-60-15240	SEAT	2	NL 50001-
12	01245-00820	SCREW	2	NL 50001-
13	01643-70823	WASHER	2	NL 50001-

Fig. No. **K1110-16A0** | **FLOOR FRAME (REAR FRAME AND FOOT COVER)** | Update Index : **A** | **KO-093** 1/1

L&T-KOMATSU

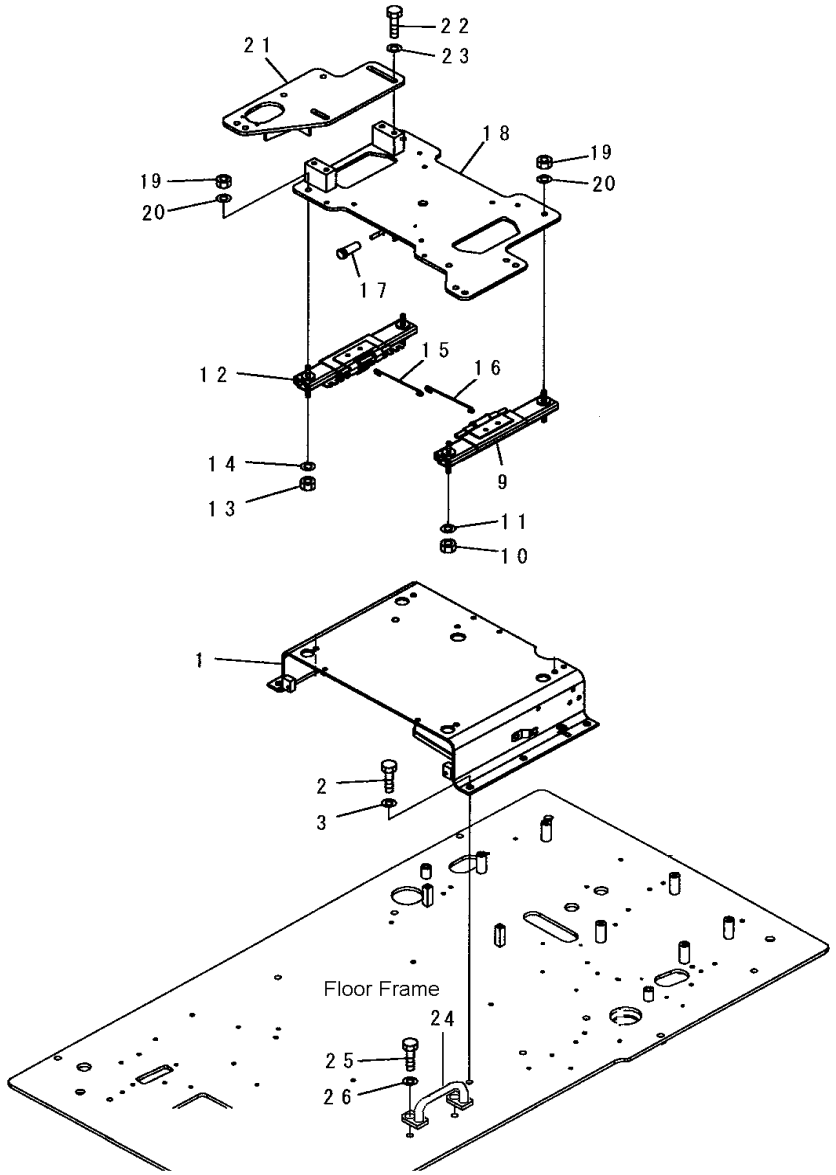

INDEX	PART NUMBER	DESCRIPTION	QTY	SERIAL No.
1	207-43-N1120	BRACKET	1	NL 50001-
2	205 338 78 H	BOLT	5	NL 50001-
3	01643-71232	WASHER	5	NL 50001-
9	20Y-57-21360	ADJUSTER - L.H	1	NL 50001-
10	201 341 44 P	NUT	2	NL 50001-
11	01643-31232	WASHER	2	NL 50001-
12	20Y-57-21370	ADJUSTER,R.H	1	NL 50001-
13	201 341 44 P	NUT	2	NL 50001-
14	01643-31232	WASHER	2	NL 50001-
15	20Y-57-N1130	WIRE	1	NL 50001-
16	20Y-57-N1140	WIRE	1	NL 50001-
17	09305-00800	KNOB	1	NL 50001-
18	207-43-N1110	FRAME	1	NL 50001-
19	201 341 44 P	NUT	4	NL 50001-
20	01643-31232	WASHER	4	NL 50001-
21	20Y-43-31191	FRAME	1	NL 50001-
22	205 338 82 M	BOLT	4	NL 50001-
23	22U-54-25170	WASHER	4	NL 50001-
24	207-54-N1150	GRIP	1	NL 50001-
25	204 338 27 G	BOLT	2	NL 50001-
26	01643-31032	WASHER	2	NL 50001-

Fig. No. **K1110-22A0** | **FLOOR FRAME (BASE)** | Update Index : **A** | **KO-095** 1/1

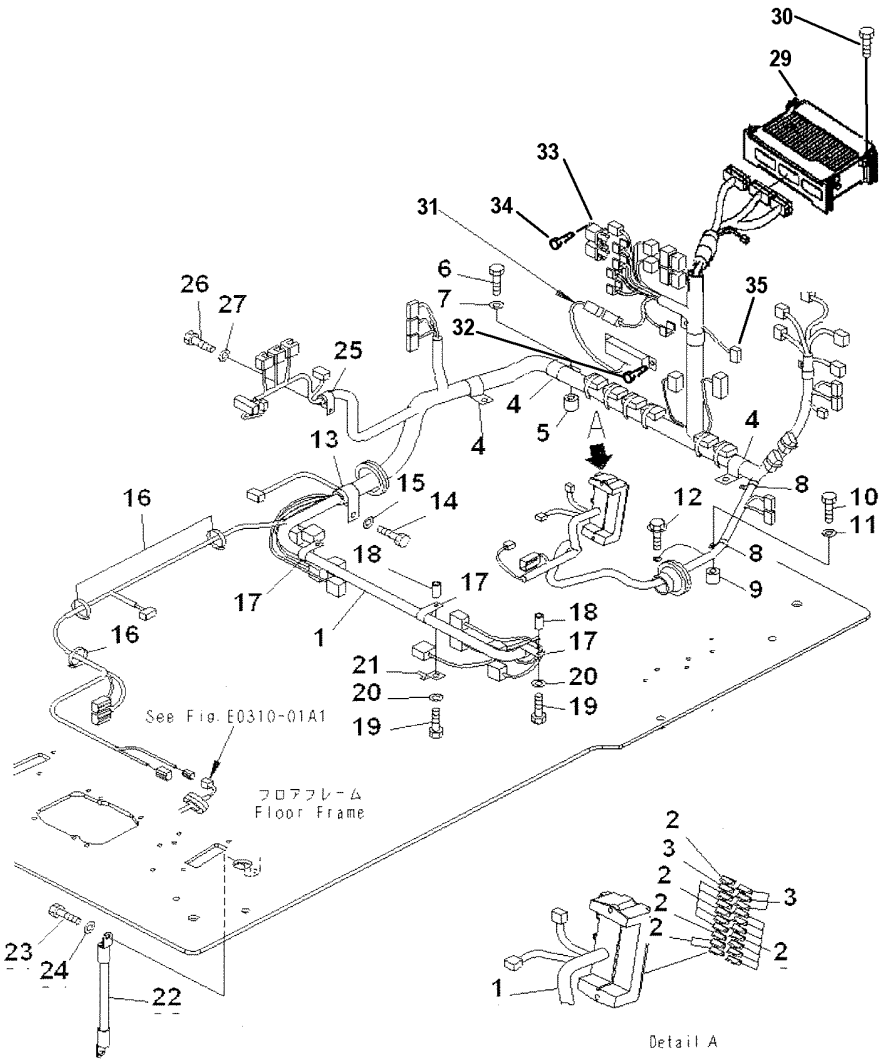

INDEX	PART NUMBER	DESCRIPTION	QTY	SERIAL No.
1	203-06-71731	WIRING HARNESS	1	NL 50001-
2	08041-01000	. FUSE, 10A	15	NL 50001-
3	08041-02000	. FUSE, 20A	4	NL 50001-
4	08011-02500	. FUSE, 25A	1	NL 50001-
5	04434-53411	CLIP	3	NL 50001-
6	195-33-11220	SPACER	3	NL 50001-
7	204 338 34 P	BOLT	3	NL 50001-
8	01643-31032	WASHER	3	NL 50001-
9	04434-51710	CLIP	2	NL 50001-
10	195-33-11220	SPACER	2	NL 50001-
11	204 338 34 P	BOLT	2	NL 50001-
12	01643-31032	WASHER	2	NL 50001-
13	01435-01016	BOLT	1	NL 50001-
14	04434-53411	CLIP	1	NL 50001-
15	204 338 27 G	BOLT	1	NL 50001-
16	01643-31032	WASHER	1	NL 50001-
17	08034-20519	BAND	3	NL 50001-
18	04434-52310	CLIP	3	NL 50001-
19	195-33-11220	SPACER	3	NL 50001-
20	204 338 34 P	BOLT	3	NL 50001-
21	01643-31032	WASHER	3	NL 50001-
22	08193-30010	CLIP	1	NL 50001-
23	08028-43030	CABLE	1	NL 50001-
24	204 338 27 G	BOLT	1	NL 50001-
25	01643-31032	WASHER	1	NL 50001-
26	04434-51910	CLIP	1	NL 50001-
27	204 338 27 G	BOLT	1	NL 50001-
28	01643-31032	WASHER	1	NL 50001-
29	7835-26-5001	CONTROLLER	1	NL 50001-
30	01435-00885	BOLT	4	NL 50001-
31	7861-94-3000	RESISTOR	1	NL 50001-
32	01435-00816	BOLT	2	NL 50001-
33	569-06-61960	RELAY	1	NL 50001-
34	01435-00610	BOLT	1	NL 50001-
35	8233-06-3350	DIODE	2	NL 50001-

L&T-KOMATSU

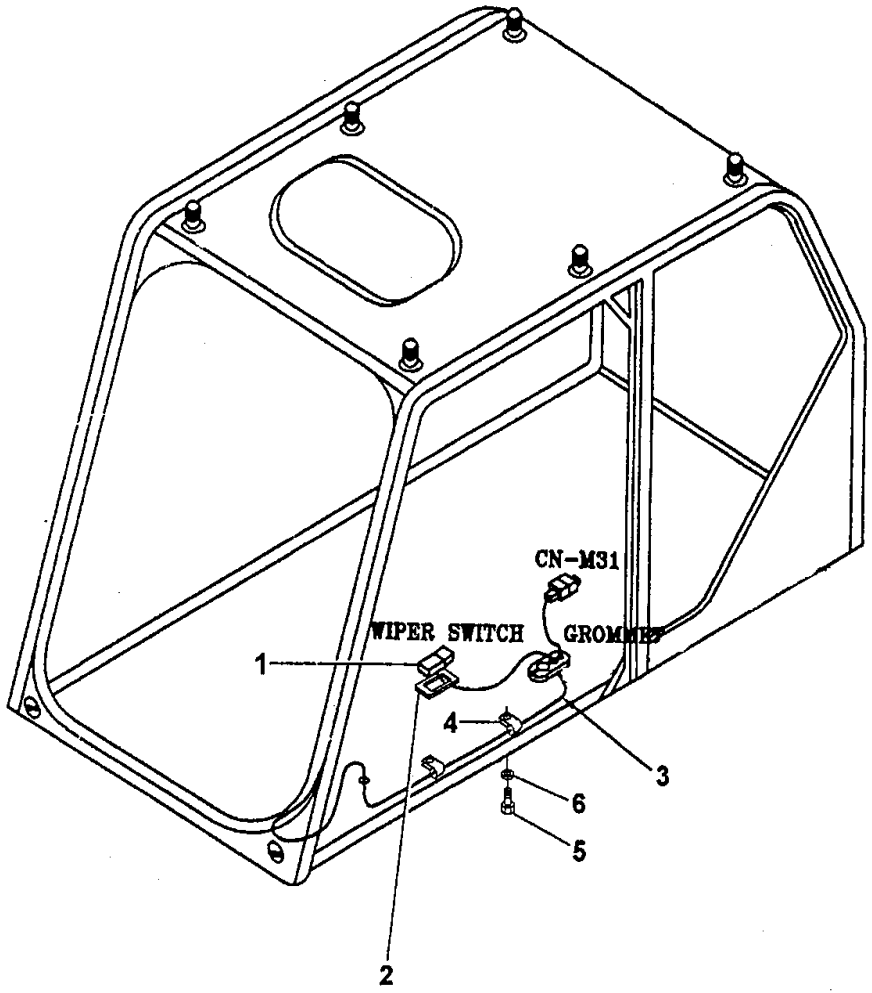

INDEX	PART NUMBER	DESCRIPTION	QTY	SERIAL No.
1	201-06-71230	SWITCH	1	NL 50001-
2	201-54-73190	SPACER	1	NL 50001-
3	207-06-N1110	WIRING HARNESS	1	NL 50001-
4	04434-51610	CLIP	2	NL 50001-
5	204 338 31 L	BOLT	2	NL 50001-
6	01643-31032	WASHER	2	NL 50001-

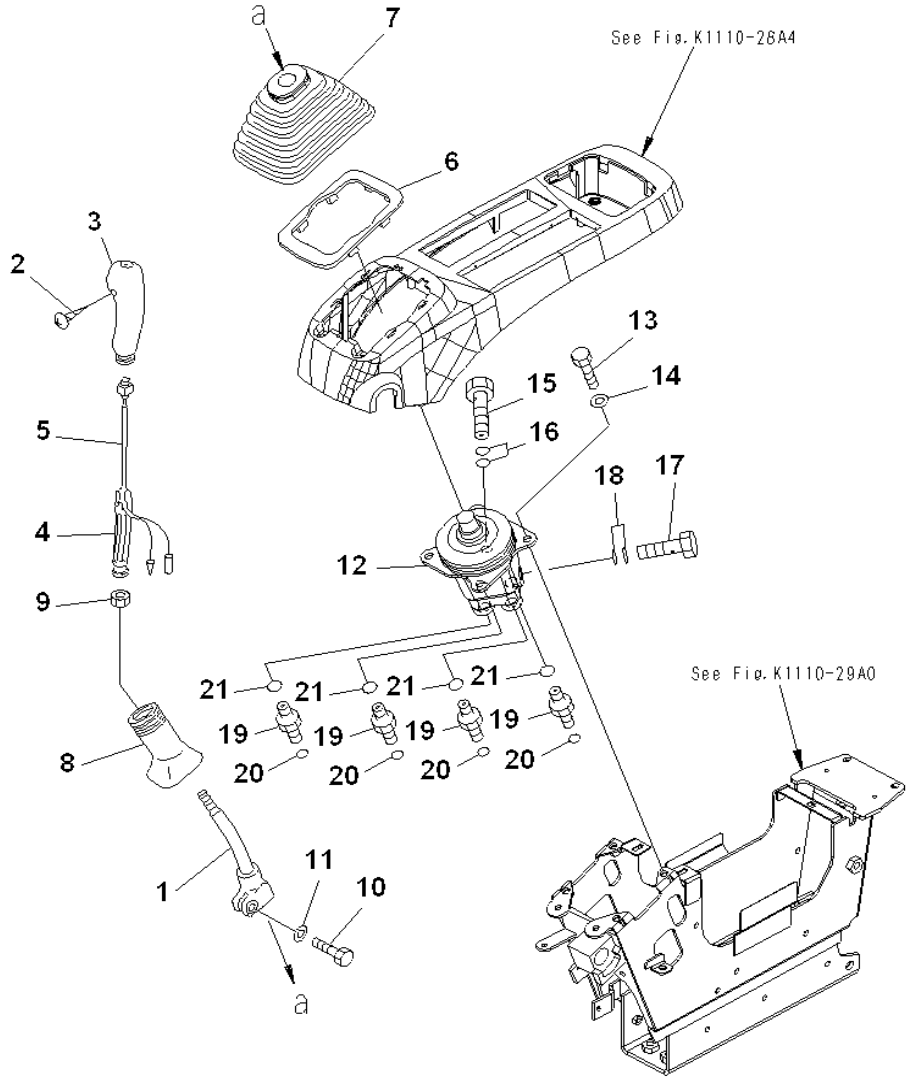

INDEX	PART NUMBER	DESCRIPTION	QTY	SERIAL No.
1	20Y-43-22211	LEVER	1	NL 50001-
	22U-43-21181	KNOB	1	NL 50001-
2	01370-10308	. SCREW	1	NL 50001-
3	20Y-43-22381	. KNOB	1	NL 50001-
4	20Y-43-22421	. INSERT	1	NL 50001-
5	22U-43-21211	. SWITCH	1	NL 50001-
6	20Y-43-22250	PLATE	1	NL 50001-
7	20Y-43-22261	BOOT	1	NL 50001-
8	20Y-43-22370	BOOT	1	NL 50001-
9	600-411-1280	NUT	1	NL 50001-
10	202 329 15 Z	BOLT	1	NL 50001-
11	01643-51032	WASHER	1	NL 50001-
12	(702-16-03910)	PILOT VALVE	1	NL 50001-
13	204 338 48 E	BOLT	4	NL 50001-
14	01643-30823	WASHER	4	NL 50001-
15	20Y-62-18910	BOLT	1	NL 50001-
16	07000-12018	O-RING	2	NL 50001-
17	20Y-62-18890	BOLT	1	NL 50001-
18	07000-12015	O-RING	2	NL 50001-
19	11Y-62-12130	NIPPLE	4	NL 50001-
20	02896-11008	O-RING	4	NL 50001-
21	07002-11423	O-RING	4	NL 50001-

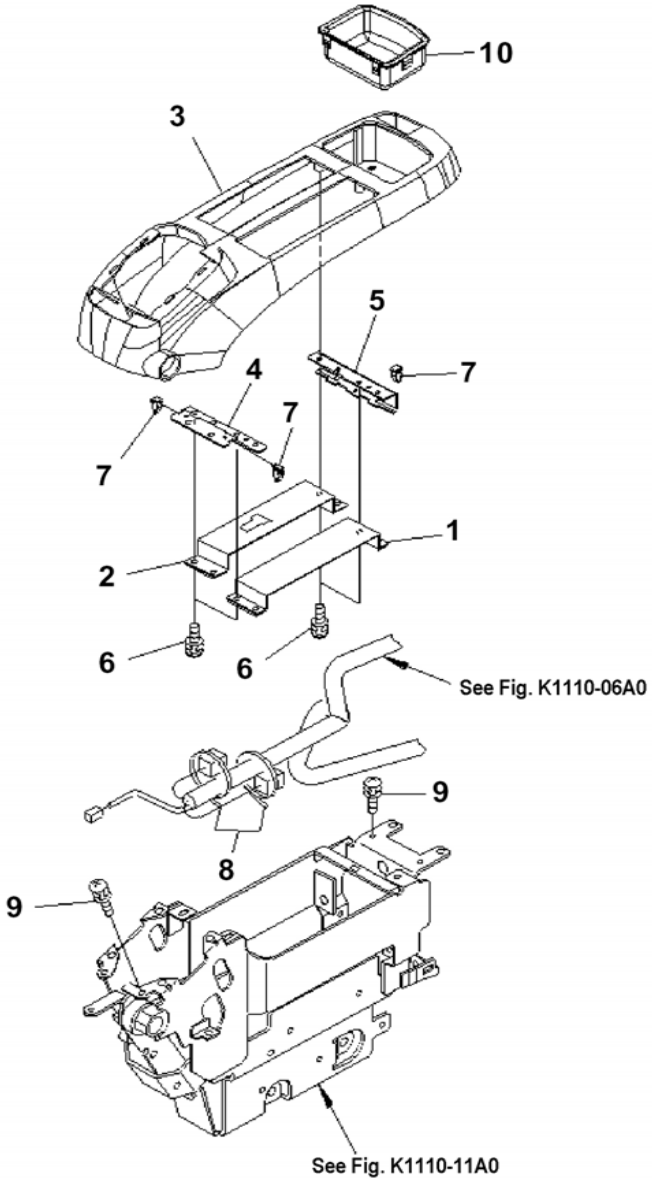

INDEX	PART NUMBER	DESCRIPTION	QTY	SERIAL No.
1	20Y-43-31460	COVER	1	NL 50001-
2	20Y43-N1210	COVER	1	NL 50001-
3	208-43-71680	COVER	1	NL 50001-
4	22U-43-22220	PLATE	1	NL 50001-
5	22U-43-22230	STAY	1	NL 50001-
6	01023-60516	SCREW	10	NL 50001-
7	20Y-06-23770	CLIP	3	NL 50001-
8	08034-00414	BAND	1	NL 50001-
9	01023-60620	SCREW	2	NL 50001-
10	22U-43-22110	PIPE	2	NL 50001-

L&T-KOMATSU

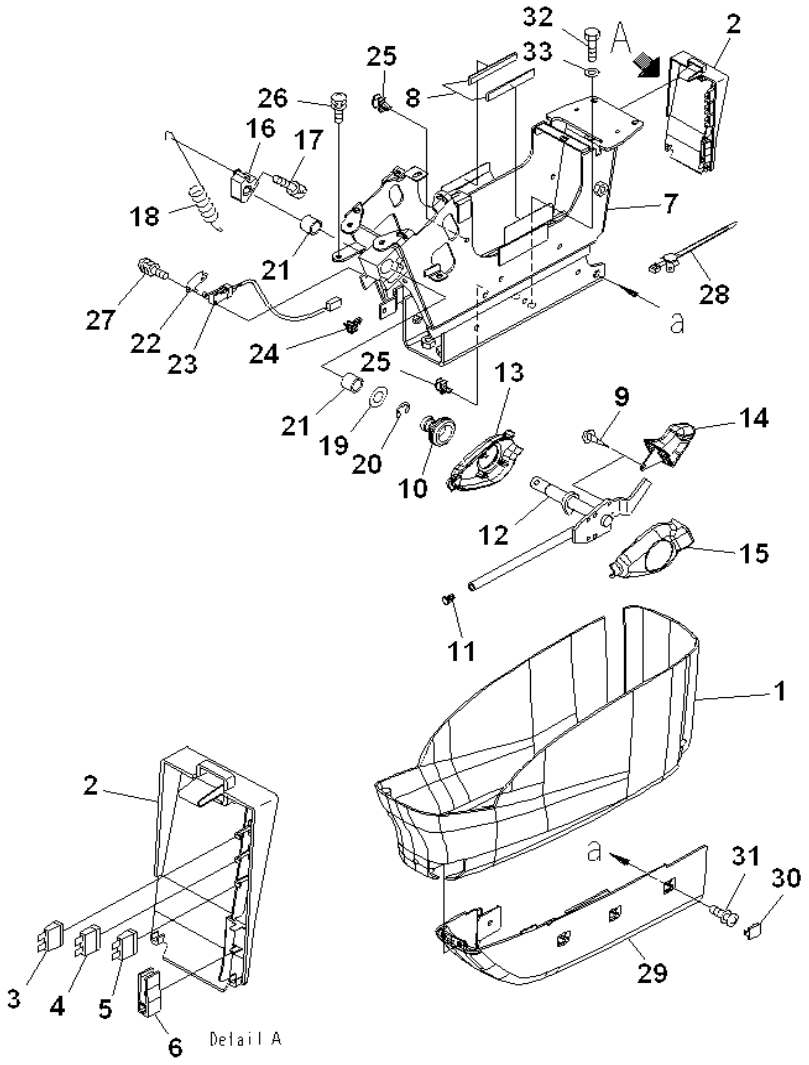

INDEX	PART NUMBER	DESCRIPTION	QTY	SERIAL No.
1	22U-43-22310	COVER	1	NL 50001-
	22U-43-22320	COVER ASSY	1	NL 50001-
2	#	. COVER	1	NL 50001-
3	08041-01000	. FUSE, 10A	1	NL 50001-
4	08041-02000	. FUSE, 20A	1	NL 50001-
5	08041-02500	. FUSE, 25A	1	NL 50001-
6	22U-43-22340	. PULLER	1	NL 50001-
7	20Y-43-31412	FRAME	1	NL 50001-
8	208-43-71410	. SHEET	2	NL 50001-
9	01023-60410	SCREW	4	NL 50001-
	20Y-43-31503	LEVER ASSY	1	NL 50001-
10	08037-11425	. GROMMET	1	NL 50001-
11	208-53-12280	. CAP	1	NL 50001-
12	20Y-43-31513	. LEVER	1	NL 50001-
13	20Y-43-31522	. COVER	1	NL 50001-
14	20Y-43-31611	. KNOB	1	NL 50001-
15	20Y-43-31621	. COVER	1	NL 50001-
16	20Y-43-31432	CAM	1	NL 50001-
17	01252-70816	BOLT	1	NL 50001-
18	20Y-43-31421	SPRING	1	NL 50001-
19	20Y-43-31440	RING	1	NL 50001-
20	20Y-43-31450	RING	1	NL 50001-
21	06124-01616	BEARING	2	NL 50001-
22	22U-06-22490	PLATE	1	NL 50001-
23	22U-06-22360	SWITCH ASS'Y	1	NL 50001-
24	22U-43-22410	CLIP	1	NL 50001-
25	22U-43-23260	CLIP	2	NL 50001-
26	01023-60616	SCREW	4	NL 50001-
27	01023-60316	SCREW	2	NL 50001-
28	22U-43-22430	CLIP	1	NL 50001-
29	20Y-43-31690	COVER	1	NL 50001-
30	22U-43-22830	CAP	3	NL 50001-
31	01023-20614	SCREW	4	NL 50001-
32	204 338 33 N	BOLT	4	NL 50001-
33	01643-31032	WASHER	4	NL 50001-

Fig. No. **K1110-28A0** | **FLOOR FRAME (OPERATOR'S CAB) (CONSOLE)(LOWER)(LH)** | Update Index : **A** | **KO-105** 1/1

L&T-KOMATSU

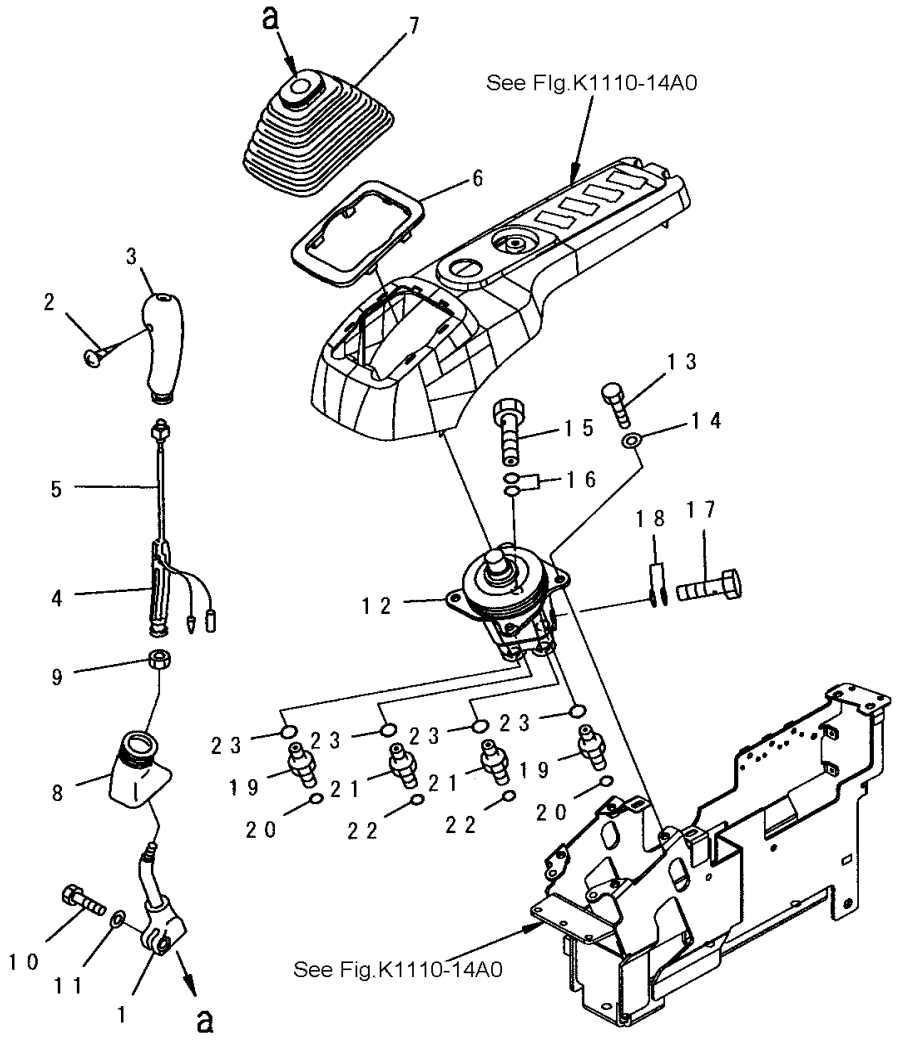

INDEX	PART NUMBER	DESCRIPTION	QTY	SERIAL No.
1	20Y-43-22221	LEVER,R.H	1	NL 50001-
	22U-43-21191	KNOB,R.H	1	NL 50001-
2	01370-10308	. SCREW	1	NL 50001-
3	20Y-43-22390	. KNOB,R.H	1	NL 50001-
4	20Y-43-22421	. INSERT	1	NL 50001-
5	22U-43-21211	. SWITCH	1	NL 50001-
6	20Y-43-22250	PLATE	1	NL 50001-
7	20Y-43-22261	BOOT	1	NL 50001-
8	20Y-43-22370	BOOT	1	NL 50001-
9	600-411-1280	NUT	1	NL 50001-
10	202 329 15 K	BOLT	1	NL 50001-
11	01643-51032	WASHER	1	NL 50001-
12	(702-16-03910)	PILOT VALVE	1	NL 50001-
13	204 338 48 E	BOLT	4	NL 50001-
14	01643-30823	WASHER	4	NL 50001-
15	20Y-62-18910	EYE BOLT	1	NL 50001-
16	07000-12018	O-RING	2	NL 50001-
17	20Y-62-18890	BOLT	1	NL 50001-
18	07000-12015	O-RING	2	NL 50001-
19	11Y-62-12130	NIPPLE	2	NL 50001-
20	02896-11008	O-RING	2	NL 50001-
21	11Y-62-12130	NIPPLE	2	NL 50001-
22	02896-11008	O-RING	2	NL 50001-
23	07002-11423	O-RING	4	NL 50001-

Fig. No. **K1110-29A0** | **FLOOR FRAME (LEVER AND VALVE) (RH)** | Update Index : **A** | **KO-107** 1/1

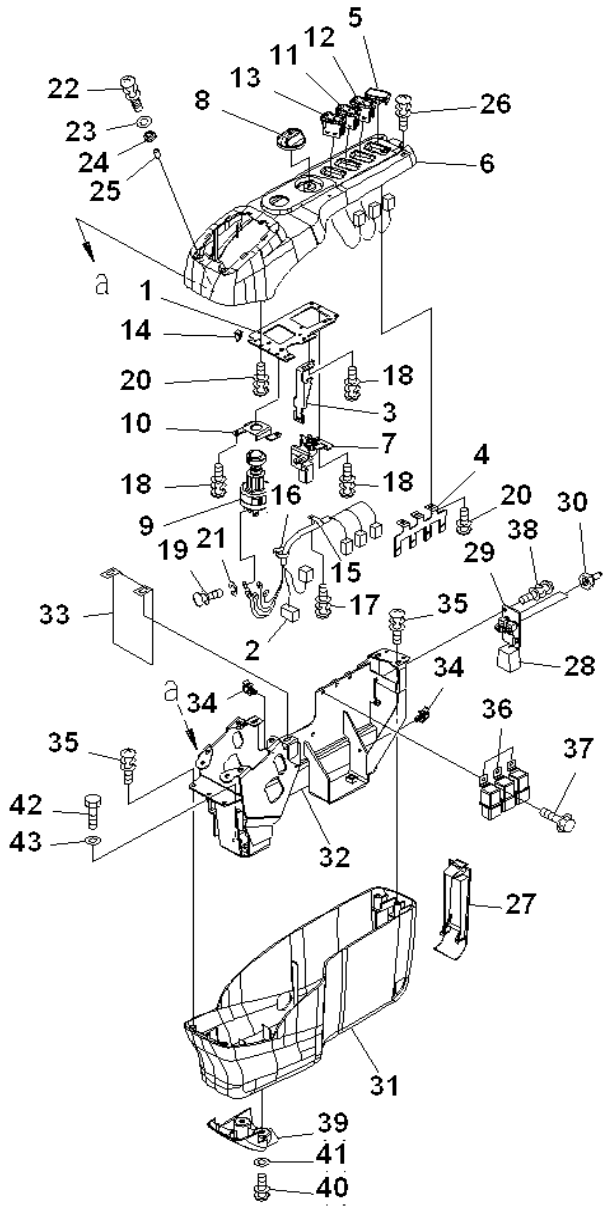

INDEX	PART NUMBER	DESCRIPTION	QTY	SERIAL No.
1	22U-43-23111	PLATE	1	NL 50001-
2	22U-06-22330	WIRING HARNESS	1	NL 50001-
3	22U-43-23120	BRACKET	1	NL 50001-
4	22U-43-23130	STAY	1	NL 50001-
5	22U-06-22320	COVER	1	NL 50001-
6	208-43-71690	COVER	1	NL 50001-
7	22U-06-22420	POTENTIOMETER ASS'	1	NL 50001-
8	22U-06-22470	KNOB	1	NL 50001-
9	08086-20000	SWITCH	1	NL 50001-
10	22U-06-22480	PLATE	1	NL 50001-
11	22U-06-22190	SWITCH	1	NL 50001-
12	22U-06-22290	SWITCH	1	NL 50001-
13	22U-06-22390	SWITCH	1	NL 50001-
14	20Y-06-23770	CLIP	2	NL 50001-
15	20Y-06-23920	CLAMP	1	NL 50001-
16	08034-10414	BAND	2	NL 50001-
17	01023-60408	SCREW	1	NL 50001-
18	01023-60512	SCREW	6	NL 50001-
19	01023-10508	SCREW	5	NL 50001-
20	01023-10512	SCREW	6	NL 50001-
21	01601-20513	WASHER	5	NL 50001-
22	01023-60630	SCREW	2	NL 50001-
23	01640-20610	WASHER	2	NL 50001-
24	208-43-71610	CUSHION	2	NL 50001-
25	208-43-71620	PIPE	2	NL 50001-
26	01023-70514	SCREW	2	NL 50001-
27	22U-43-23210	COVER	1	NL 50001-
	20Y-06-31320	SWITCH ASS'Y	1	NL 50001-
28	20Y-06-31330	. WIRING HARNESS	1	NL 50001-
29	#	. PLATE	1	NL 50001-
30	208-43-71420	. CAP	2	NL 50001-
31	22U-43-23230	COVER	1	NL 50001-
32	208-43-71670	FRAME	1	NL 50001-
33	22U-43-23250	SHEET	1	NL 50001-
34	22U-43-23260	CLIP	2	NL 50001-
35	01023-60616	SCREW	4	NL 50001-
36	569-06-61960	RELAY	3	NL 50001-
37	01435-00612	BOLT	3	NL 50001-

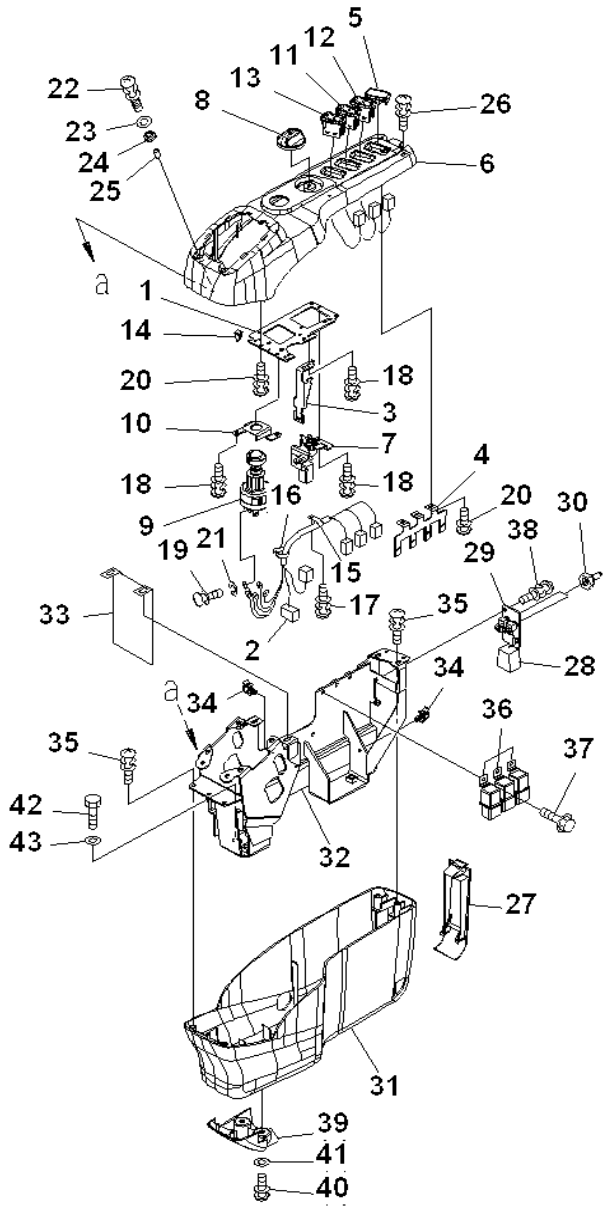

INDEX	PART NUMBER	DESCRIPTION	QTY	SERIAL No.
38	01023-60410	SCREW	2	NL 50001-
39	22U-43-23711	COVER	1	NL 50001-
40	01023-10614	SCREW	2	NL 50001-
41	01643-30623	WASHER	2	NL 50001-
42	204 338 33 N	BOLT	4	NL 50001-
43	01643-31032	WASHER	4	NL 50001-

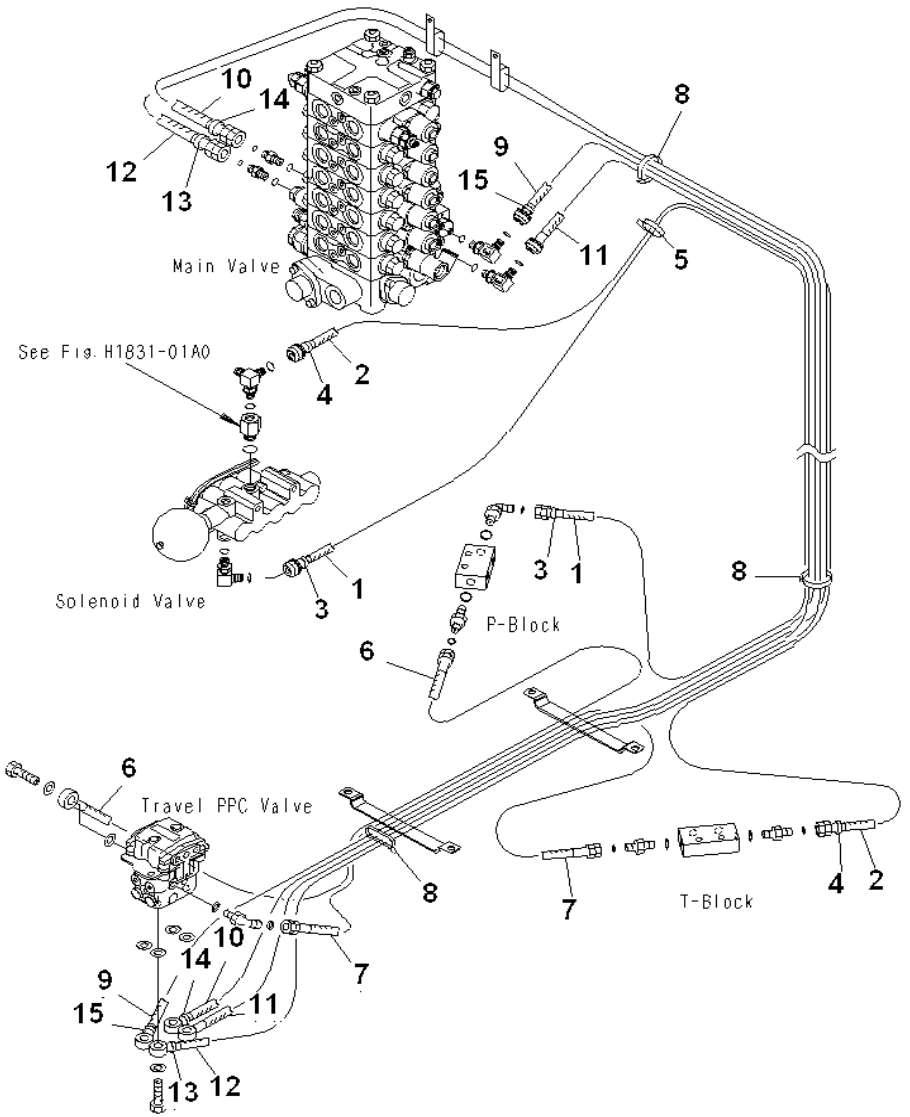

INDEX	PART NUMBER	DESCRIPTION	QTY	SERIAL No.
1	203-62-N1570	HOSE, 2830MM	1	NL 50001-
2	203-62-N1580	HOSE, 2250MM	1	NL 50001-
3	20Y-62-22790	BAND, RED	2	NL 50001-
4	20Y-62-22820	BAND, BLUE	2	NL 50001-
5	08034-20519	BAND	1	NL 50001-
6	208-62-72290	HOSE, 950MM	1	NL 50001-
7	208-62-72310	HOSE, 950MM	1	NL 50001-
8	08034-20536	BAND	3	NL 50001-
9	203-62-N1590	HOSE, 2980MM	1	NL 50001-
10	203-62-71771	HOSE, 3460MM	1	NL 50001-
11	203-62-N1610	HOSE, 2910MM	1	NL 50001-
12	203-62-71791	HOSE, 3530MM	1	NL 50001-
13	20Y-62-22790	BAND, RED	2	NL 50001-
14	20Y-62-22820	BAND, BLUE	2	NL 50001-
15	20Y-62-22850	BAND, GREEN	2	NL 50001-

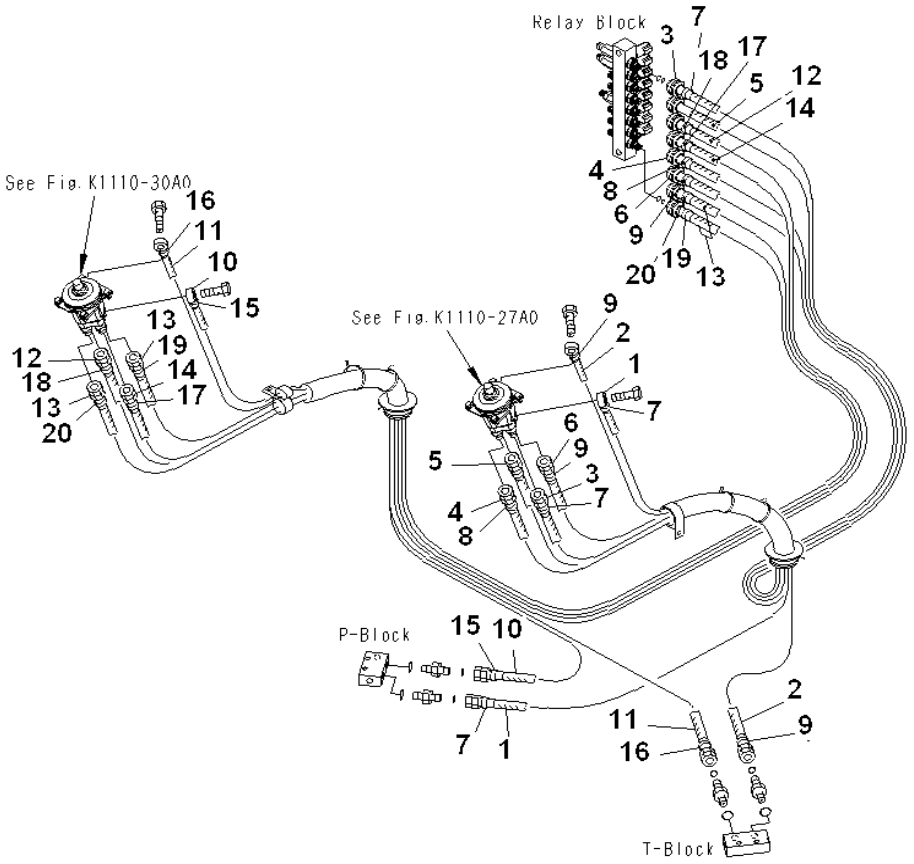

INDEX	PART NUMBER	DESCRIPTION	QTY	SERIAL No.
1	208-62-72770	HOSE, 1450MM	1	NL 50001-
2	208-62-72780	HOSE, 1400MM	1	NL 50001-
3	20Y-62-N2550	HOSE, 2100MM	1	NL 50001-
4	21K-62-N1110	HOSE, 1950MM	1	NL 50001-
5	21K-62-N1120	HOSE, 2050MM	1	NL 50001-
6	21K-62-N1140	HOSE, 1900MM	1	NL 50001-
7	20Y-62-22790	BAND,RED	4	NL 50001-
8	20Y-62-22810	BAND, YELLOW	2	NL 50001-
9	20Y-62-22820	BAND, BLUE	4	NL 50001-
10	208-62-72860	HOSE, 1400MM	1	NL 50001-
11	208-62-72870	HOSE, 1500MM	1	NL 50001-
12	20Y-62-N2570	HOSE, 2350MM	1	NL 50001-
13	20Y-62-N2580	HOSE, 2150MM	2	NL 50001-
14	20Y-62-85250	BAND	1	NL 50001-
15	20Y-62-22790	BAN, RED	2	NL 50001-
16	20Y-62-22820	BAND, BLUE	2	NL 50001-
17	20Y-62-22830	BAND, WHITE	2	NL 50001-
18	20Y-62-22840	BAND, BLACK	2	NL 50001-
19	20Y-62-22850	BAND, GREEN	2	NL 50001-
20	20Y-62-22860	BAND, BROWN	2	NL 50001-

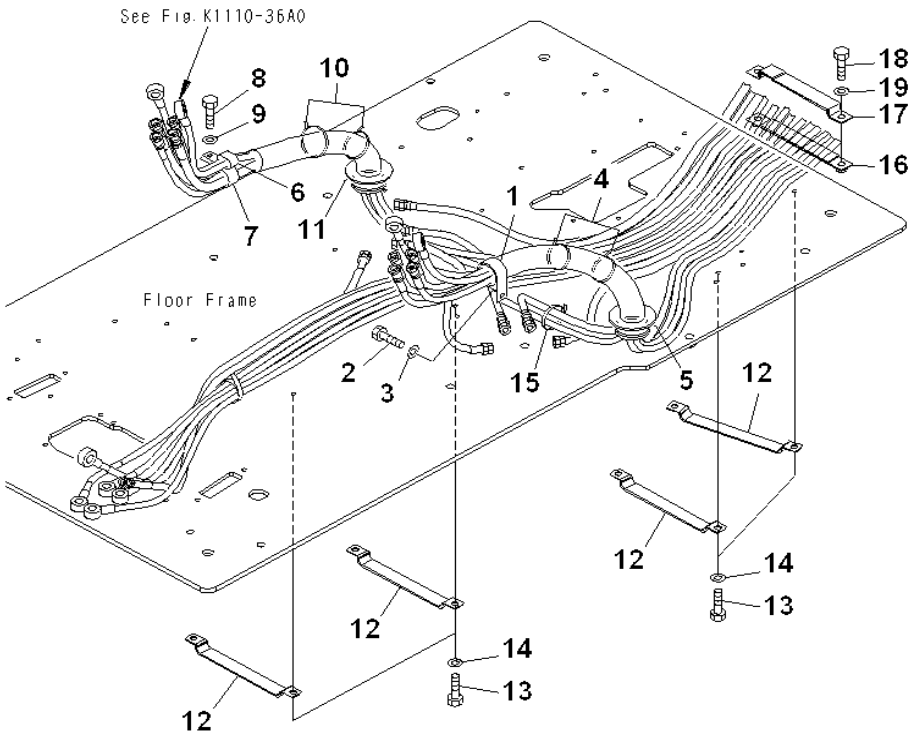

INDEX	PART NUMBER	DESCRIPTION	QTY	SERIAL No.
1	04434-53211	CLIP	1	NL 50001-
2	204 338 27 G	BOLT	1	NL 50001-
3	01643-31032	WASHER	1	NL 50001-
4	08034-20536	BAND	2	NL 50001-
5	08034-20536	BAND	1	NL 50001-
6	04435-51310	CLIP	1	NL 50001-
7	04434-53211	CLIP	1	NL 50001-
8	204 338 27 G	BOLT	1	NL 50001-
9	01643-31032	WASHER	1	NL 50001-
10	08034-20536	BAND	2	NL 50001-
11	08034-20536	BAND	1	NL 50001-
12	20Y-62-N1890	CLAMP	4	NL 50001-
13	204 338 31 L	BOLT	8	NL 50001-
14	08034-20536	BAND	1	NL 50001-
15	01643-31032	WASHER	8	NL 50001-
16	203-62-71560	PLATE	1	NL 50001-
17	203-62-71570	CLAMP	1	NL 50001-
18	204 338 27 G	BOLT	2	NL 50001-
19	01643-31032	WASHER	2	NL 50001-

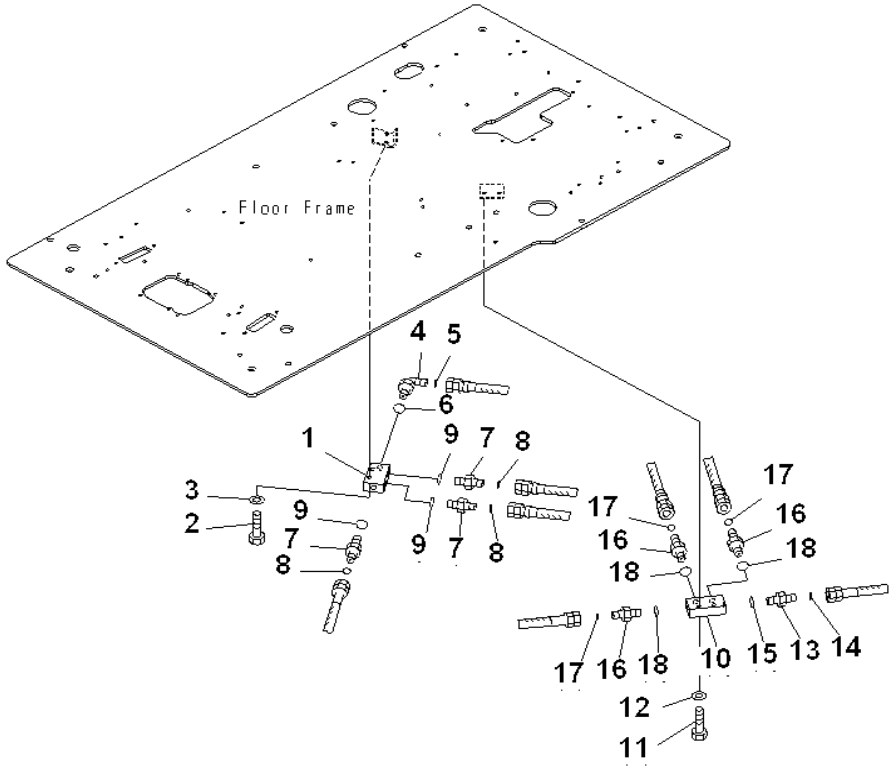

INDEX	PART NUMBER	DESCRIPTION	QTY	SERIAL No.
1	20Y-62-15831	BLOCK	1	NL 50001-
2	204 338 35 Q	BOLT	2	NL 50001-
3	01643-31032	WASHER	2	NL 50001-
4	02782-10311	ELBOW	1	NL 50001-
5	02896-11009	O-RING	1	NL 50001-
6	07002-11423	O-RING	1	NL 50001-
7	02781-0021D	UNION	3	NL 50001-
8	02896-11008	O-RING	3	NL 50001-
9	07002-11423	O-RING	3	NL 50001-
10	20Y-62-15831	BLOCK	1	NL 50001-
11	204 338 35 Q	BOLT	2	NL 50001-
12	01643-31032	WASHER	2	NL 50001-
13	02781-0031D	UNION	1	NL 50001-
14	02896-11009	O-RING	1	NL 50001-
15	07002-11423	O-RING	1	NL 50001-
16	02781-0021D	UNION	3	NL 50001-
17	02896-11008	O-RING	3	NL 50001-
18	07002-11423	O-RING	3	NL 50001-

Fig. No. **K1110-37A1** | **FLOOR FRAME(OPERATOR'S CAB)(P,T BLOCK)** | Update Index : **A** | **KO-125** 1/1

L&T-KOMATSU

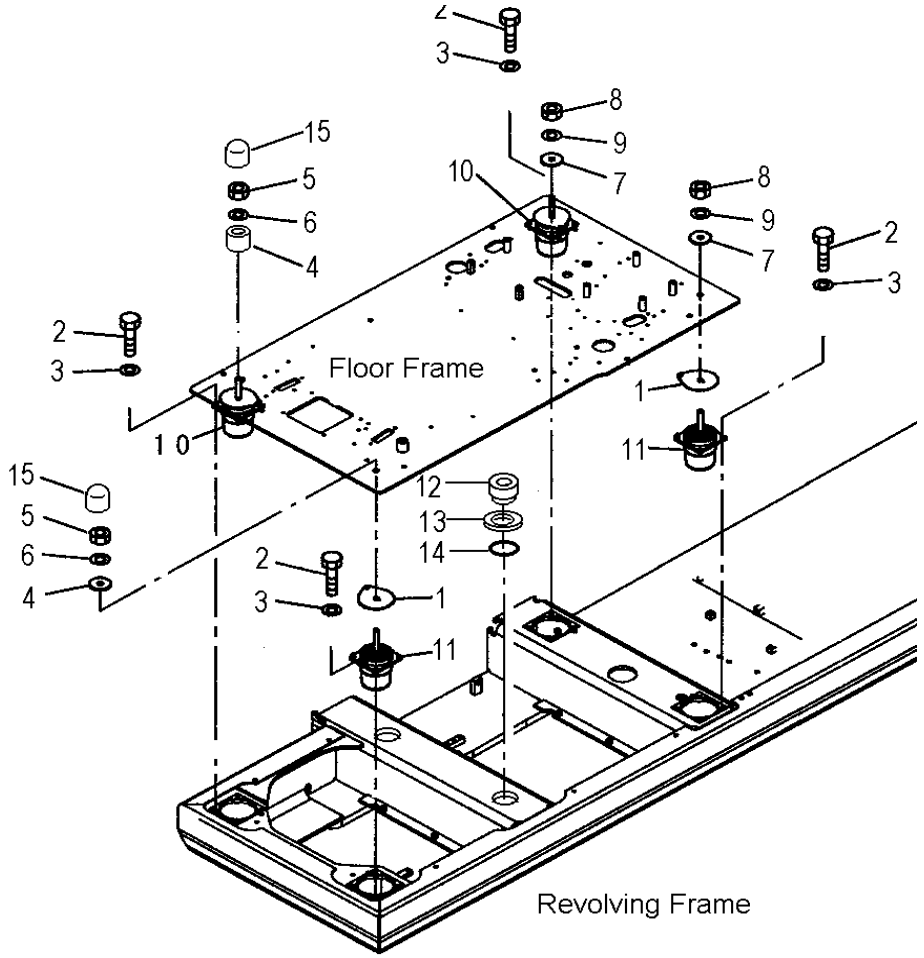

INDEX	PART NUMBER	DESCRIPTION	QTY	SERIAL No.
1	207-54-65130	SPACER	4	NL 50001-
2	204 338 26 F	BOLT	16	NL 50001-
3	01643-31032	WASHER	16	NL 50001-
4	207-54-N1220	SPACER	2	NL 50001-
5	201 341 41 L	NUT	2	NL 50001-
6	01643-31645	WASHER	2	NL 50001-
7	21T-27-71220	HOLDER	2	NL 50001-
8	201 341 41 L	NUT	2	NL 50001-
9	01643-31645	WASHER	2	NL 50001-
10	20Y-54-65810	CUSHION	2	NL 50001-
11	20Y-54-65820	CUSHION	2	NL 50001-
12	207-54-65210	CUSHION	2	NL 50001-
13	207-54-N1210	PLATE	2	NL 50001-
14	07000-13025	O-RING	2	NL 50001-
15	207-54-N1230	CAP	2	NL 50001-

Fig. No. **K1120-01A0** | **FLOOR MOUNT** | Update Index : **A** | **KO-129** 1/1

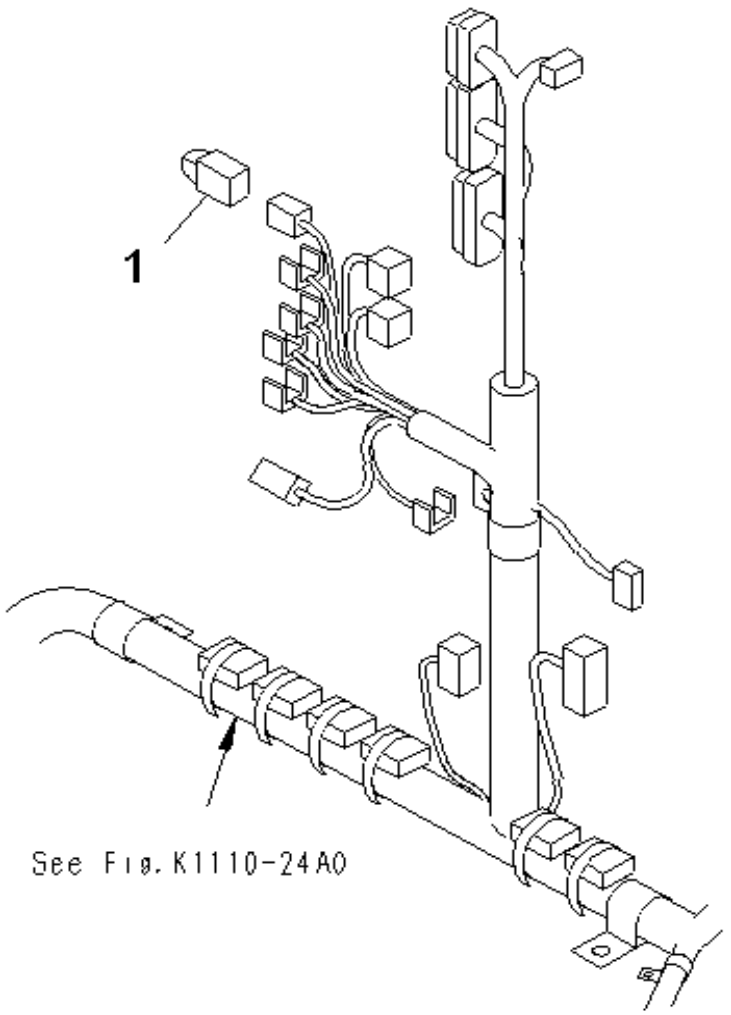

INDEX	PART NUMBER	DESCRIPTION	QTY	SERIAL No.
1	203-06-61230	SWITCH.....	1	NL 50001-

Fig. No. **K1730-01A0**	**SWITCH (MODEL SELECTION)**	Update Index : **A**	**KO-131** 1/1

GUARD

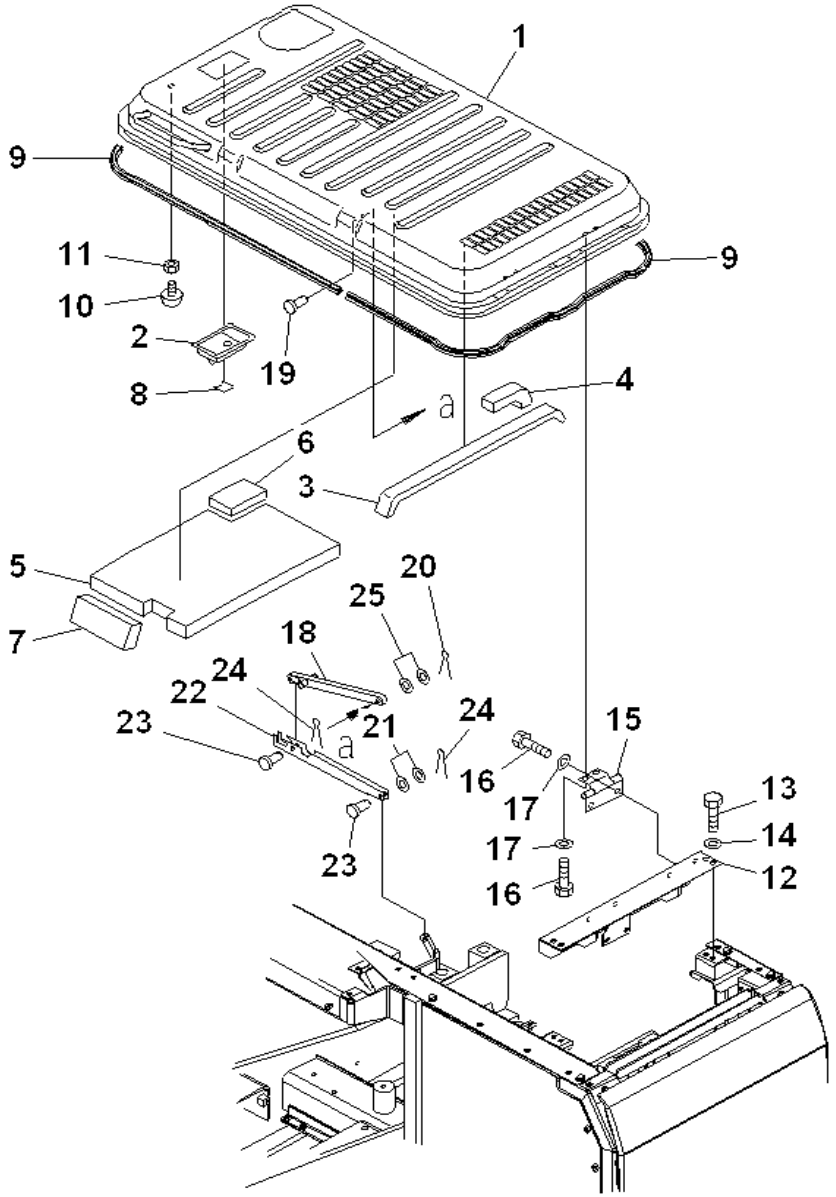

INDEX	PART NUMBER	DESCRIPTION	QTY	SERIAL No.
	203-54-76112	HOOD ASS'Y	1	NL 50001-
1	#	. HOOD	1	NL 50001-
2	198-54-41982	. LOCK ASS'Y	1	NL 50001-
3	203-54-74130	. SHEET	1	NL 50001-
4	203-54-74141	. SHEET	1	NL 50001-
5	203-54-76341	. SHEET	1	NL 50001-
6	203-54-62980	. SHEET	1	NL 50001-
7	203-54-63293	. SHEET	2	NL 50001-
8	21K-54-11310	. STOPPER	2	NL 50001-
9	201 341 44 P	. NUT	2	NL 50001-
10	203-54-73511	BRACKET	1	NL 50001-
11	204 338 23 C	BOLT	4	NL 50001-
12	01643-31232	WASHER	4	NL 50001-
13	203-54-62392	HINGE	2	NL 50001-
14	204 338 23 C	BOLT	8	NL 50001-
15	01643-31232	WASHER	8	NL 50001-
16	203-54-66990	STAY	1	NL 50001-
17	04205-11230	PIN	1	NL 50001-
18	04050-13022	PIN	1	NL 50001-
19	01643-31232	WASHER	2	NL 50001-
20	203-54-73921	STAY	1	NL 50001-
21	04205-11230	PIN	2	NL 50001-
22	04050-13022	PIN	2	NL 50001-
23	01640-21223	WASHER	2	NL 50001-

Fig. No. **M1110-01A0** | **HOOD** | Update Index : **A** | **MO-003** 1/1

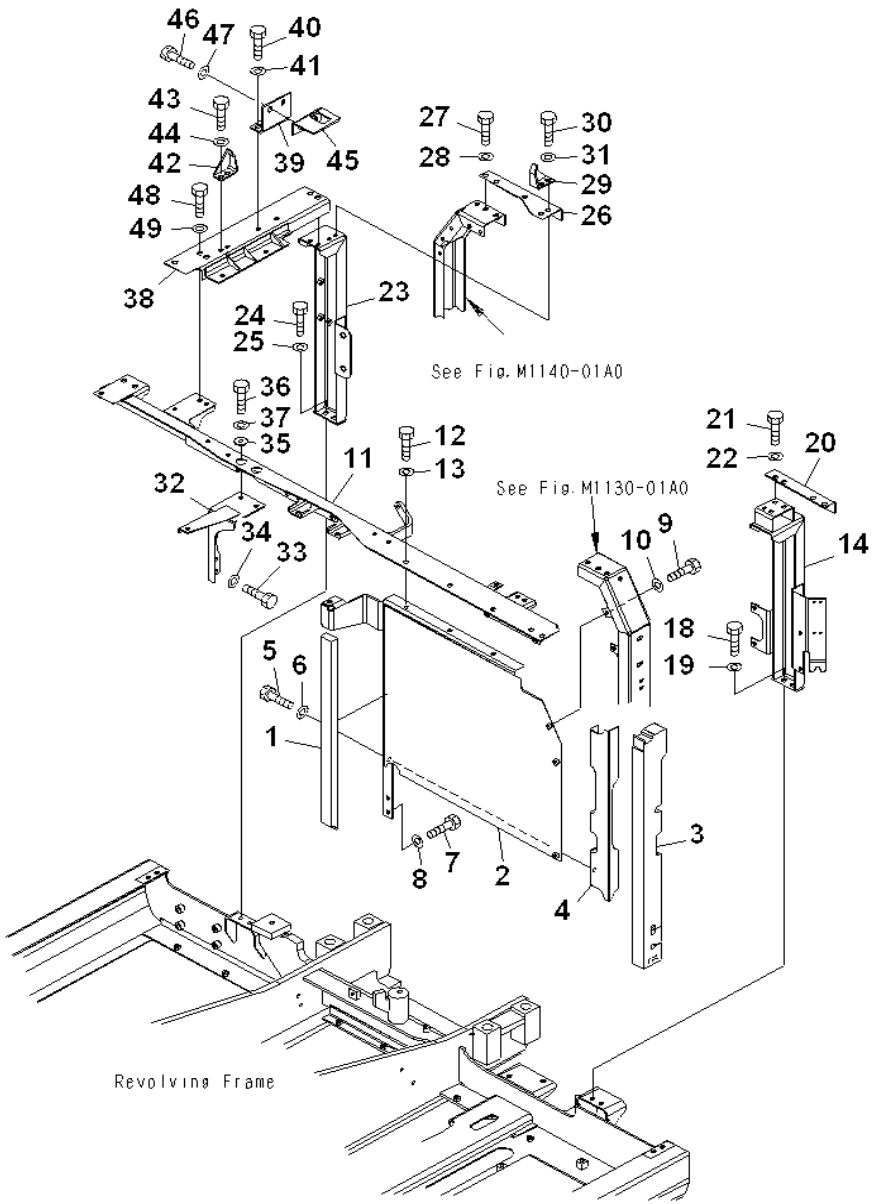

INDEX	PART NUMBER	DESCRIPTION	QTY	SERIAL No.
	203-54-73412	FRAME	1	NL 50001-
1	203-03-N1140	. SHEET	1	NL 50001-
2	#	. FRAME	1	NL 50001-
	203-03-71560	COVER	1	NL 50001-
3	203-03-N1130	. SHEET	1	NL 50001-
4	#	. COVER	1	NL 50001-
5	204 338 22 B	BOLT	3	NL 50001-
6	01643-31232	WASHER	3	NL 50001-
7	204 338 23 C	BOLT	2	NL 50001-
8	01643-31232	WASHER	2	NL 50001-
9	204 338 18 W	BOLT	3	NL 50001-
10	01643-31232	WASHER	3	NL 50001-
11	203-54-73431	FRAME	1	NL 50001-
12	204 338 23 C	BOLT	3	NL 50001-
13	01643-31232	WASHER	3	NL 50001-
14	203-54-73521	FRAME	1	NL 50001-
18	204 338 23 C	BOLT	2	NL 50001-
19	01643-31232	WASHER	2	NL 50001-
20	203-54-73810	PLATE	1	NL 50001-
21	204 338 23 C	BOLT	2	NL 50001-
22	01643-31232	WASHER	2	NL 50001-
23	203-54-73532	FRAME	1	NL 50001-
24	204 338 23 C	BOLT	2	NL 50001-
25	01643-31232	WASHER	2	NL 50001-
26	203-54-73822	FRAME	1	NL 50001-
27	204 338 23 C	BOLT	1	NL 50001-
28	01643-31232	WASHER	1	NL 50001-
29	203-54-73950	BRACKET	1	NL 50001-
30	204 338 23 C	BOLT	2	NL 50001-
31	01643-31232	WASHER	2	NL 50001-
32	203-54-73590	FRAME	1	NL 50001-
33	204 338 23 C	BOLT	2	NL 50001-
34	01643-31232	WASHER	2	NL 50001-
35	208-54-57180	COLLAR	2	NL 50001-
36	204 338 23 C	BOLT	2	NL 50001-
37	01643-31232	WASHER	2	NL 50001-
38	203-54-73540	FRAME	1	NL 50001-
39	203-54-73940	BRACKET	1	NL 50001-

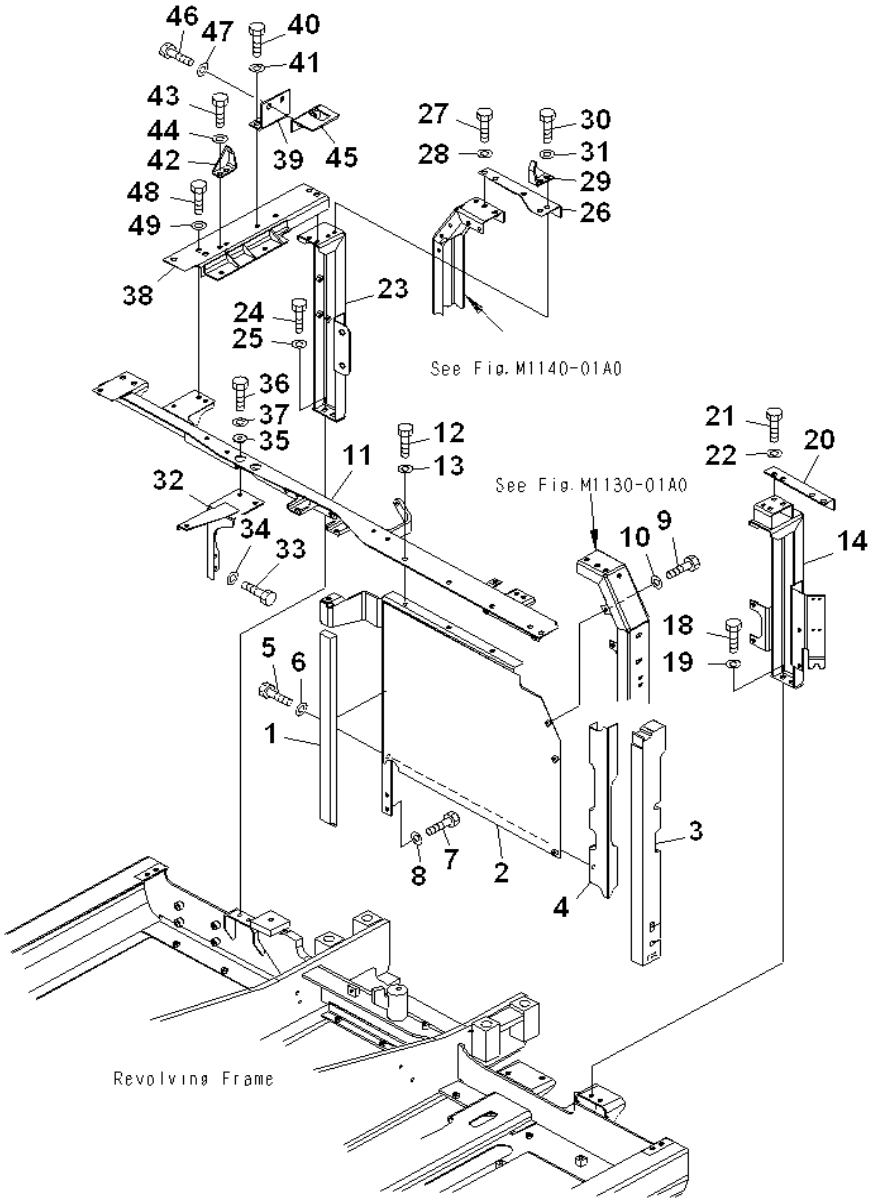

INDEX	PART NUMBER	DESCRIPTION	QTY	SERIAL No.
40	204 338 23 C	BOLT	2	NL 50001-
41	01643-31232	WASHER	2	NL 50001-
42	203-54-73960	BRACKET	1	NL 50001-
43	204 338 23 C	BOLT	2	NL 50001-
44	01643-31232	WASHER	2	NL 50001-
45	203-54-63262	BRACKET	1	NL 50001-
46	204 338 23 C	BOLT	2	NL 50001-
47	01643-31232	WASHER	2	NL 50001-
48	204 338 23 C	BOLT	4	NL 50001-
49	01643-31232	WASHER	4	NL 50001-

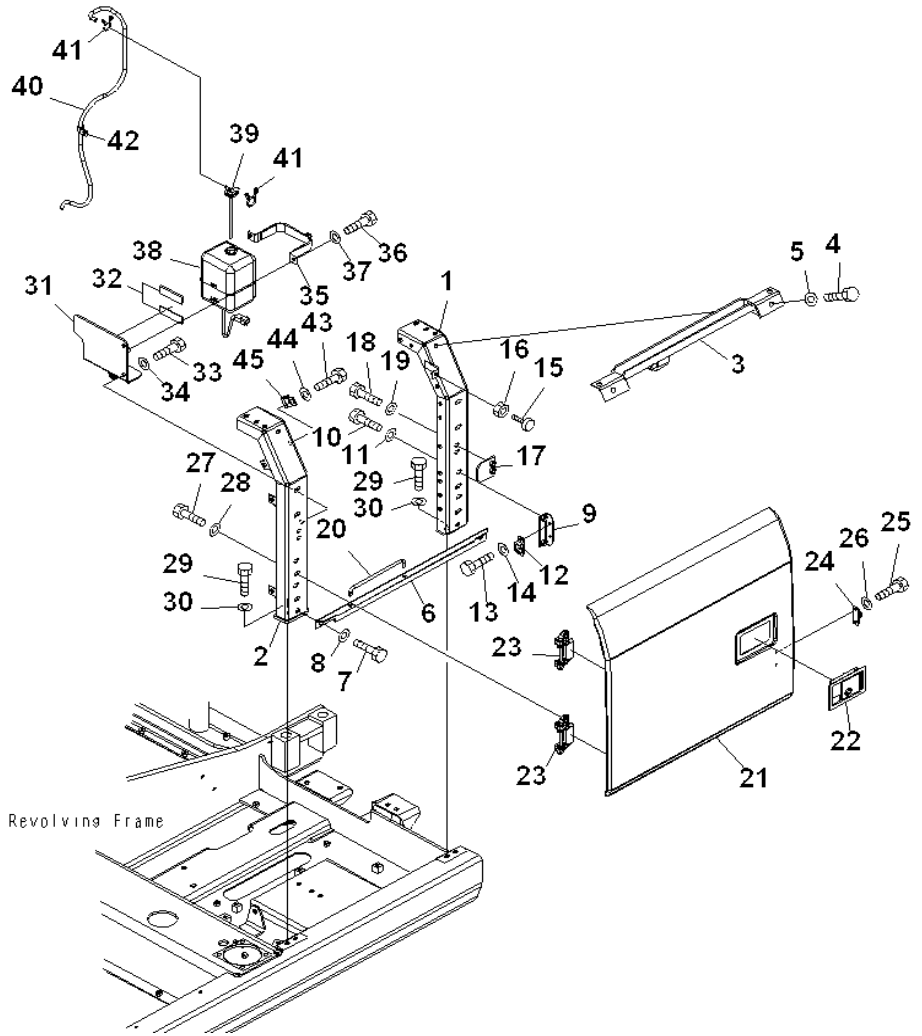

INDEX	PART NUMBER	DESCRIPTION	QTY	SERIAL No.
1	203-54-73221	FRAME	1	NL 50001-
2	203-54-73231	FRAME	1	NL 50001-
3	203-54-73240	FRAME	1	NL 50001-
4	204 338 23 C	BOLT	2	NL 50001-
5	01643-31232	WASHER	2	NL 50001-
6	203-54-73251	PLATE	1	NL 50001-
7	204 338 23 C	BOLT	2	NL 50001-
8	01643-31232	WASHER	2	NL 50001-
9	20Y-54-28170	BRACKET	1	NL 50001-
10	204 338 23 C	BOLT	2	NL 50001-
11	01643-31232	WASHER	2	NL 50001-
12	205-54-51970	DOVE TAIL	1	NL 50001-
13	204 338 29 J	BOLT	2	NL 50001-
14	01643-30623	WASHER	2	NL 50001-
15	20Y-54-11611	STOPPER	1	NL 50001-
16	201 341 39 J	NUT	1	NL 50001-
17	20Y-54-61470	PLATE	1	NL 50001-
18	204 338 23 C	BOLT	2	NL 50001-
19	01643-31232	WASHER	2	NL 50001-
20	20Y-54-29231	BAR	1	NL 50001-
21	203-54-73260	COVER	1	NL 50001-
22	198-54-41982	. LOCK ASS'Y	1	NL 50001-
23	20Y-54-63411	. HINGE (WELDED)	2	NL 50001-
24	205-54-53550	DOVE TAIL	1	NL 50001-
25	204 338 40 V	BOLT	2	NL 50001-
26	01643-30623	WASHER	2	NL 50001-
27	204 338 23 C	BOLT	4	NL 50001-
28	01643-31232	WASHER	4	NL 50001-
29	204 338 57 P	BOLT	4	NL 50001-
30	01643-31232	WASHER	4	NL 50001-
31	203-03-71511	BRACKET	1	NL 50001-
32	205-03-71440	.SHEET	2	NL 50001-
33	204 338 23 C	BOLT	2	NL 50001-
34	01643-31232	WASHER	2	NL 50001-
35	203-03-71531	BRACKET	1	NL 50001-
36	204 338 27 G	BOLT	2	NL 50001-
37	01643-31032	WASHER	2	NL 50001-
38	20Y-06-15240	TANK ASS'Y	1	NL 50001-

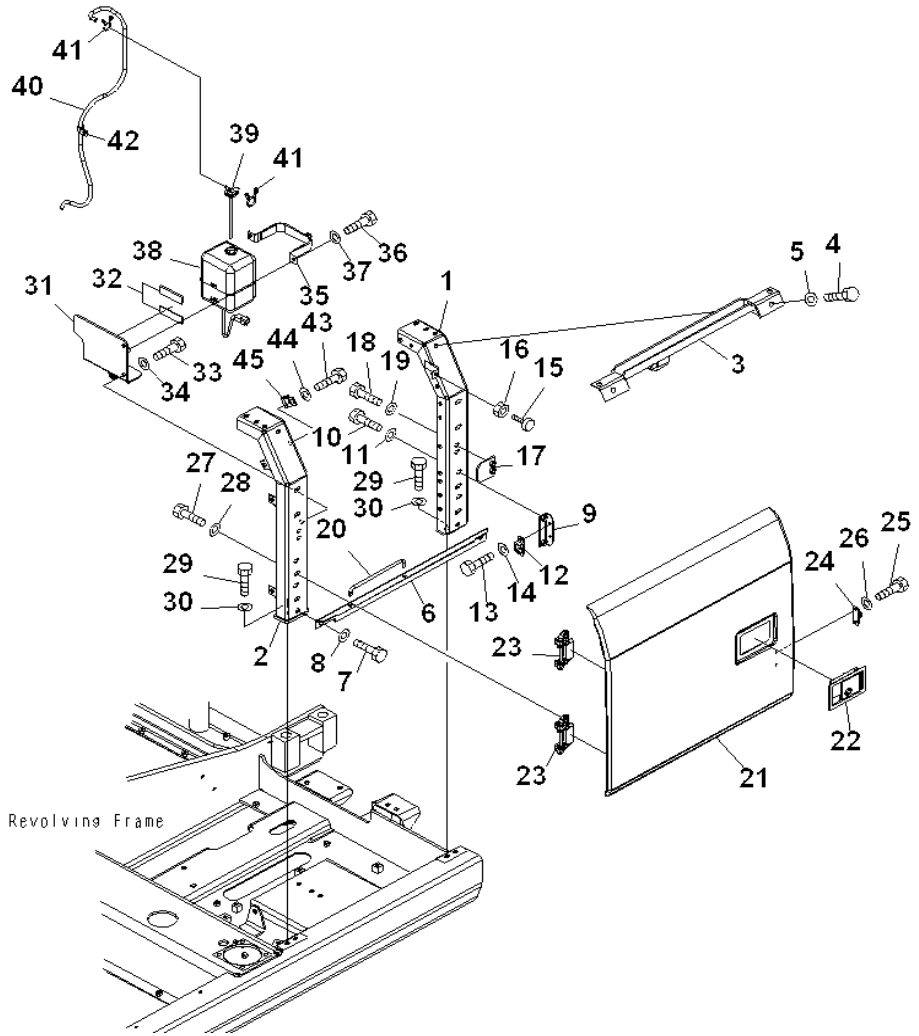

INDEX	PART NUMBER	DESCRIPTION	QTY	SERIAL No.
	#	. TANK	1	NL 50001-
39	205-03-71532	. . CAP	1	NL 50001-
	205-03-71540	. . . PACKING	1	NL 50001-
40	203-03-71390	HOSE	1	NL 50001-
41	206-03-43340	CLIP	2	NL 50001-
42	04434-51212	CLIP	1	NL 50001-
43	204 338 23 C	BOLT	1	NL 50001-
44	01643-31232	WASHER	1	NL 50001-
45	04434-51212	CLIP	1	NL 50001-

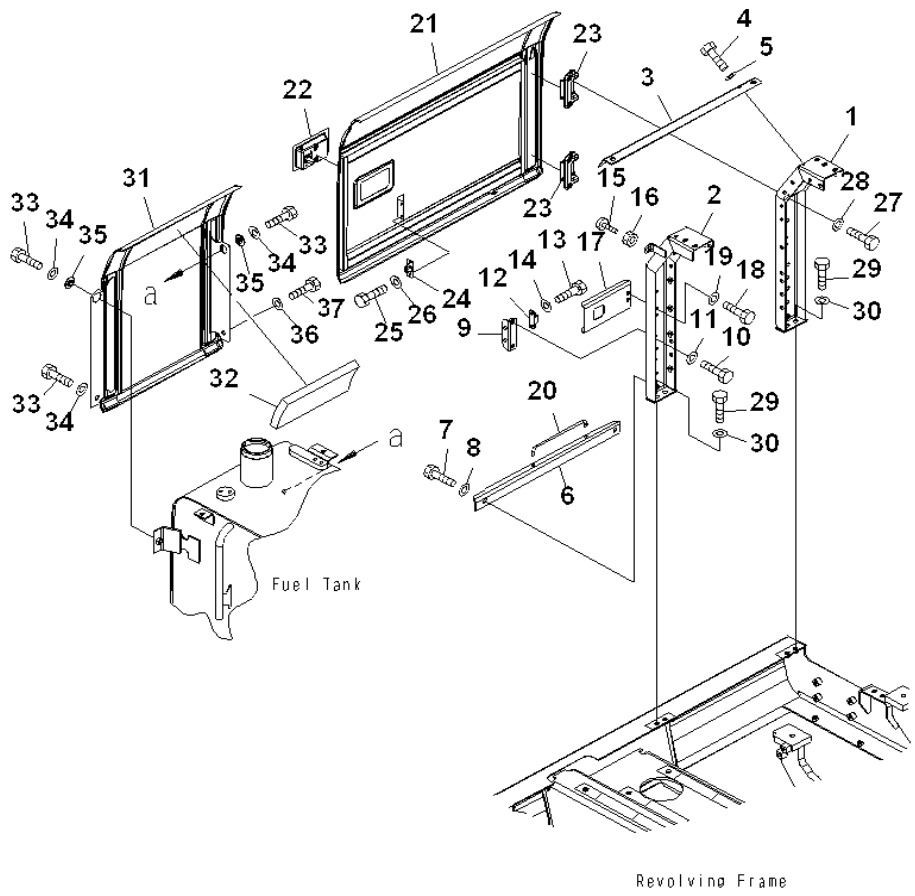

INDEX	PART NUMBER	DESCRIPTION	QTY	SERIAL No.
1	203-54-73321	FRAME	1	NL 50001-
2	203-54-73331	FRAME	1	NL 50001-
3	203-54-73340	PLATE	1	NL 50001-
4	204 338 23 C	BOLT	2	NL 50001-
5	01643-31232	WASHER	2	NL 50001-
6	203-54-73350	PLATE	1	NL 50001-
7	204 338 23 C	BOLT	2	NL 50001-
8	01643-31232	WASHER	2	NL 50001-
9	20Y-54-28170	BRACKET	1	NL 50001-
10	204 338 23 C	BOLT	2	NL 50001-
11	01643-31232	WASHER	2	NL 50001-
12	205-54-51970	DOVE TAIL	1	NL 50001-
13	204 338 29 J	BOLT	2	NL 50001-
14	01643-30623	WASHER	2	NL 50001-
15	20Y-54-11611	STOPPER	1	NL 50001-
16	201 341 39 J	NUT	1	NL 50001-
17	203-54-73991	PLATE	1	NL 50001-
18	204 338 23 C	BOLT	2	NL 50001-
19	01643-31232	WASHER	2	NL 50001-
20	20Y-54-29231	BAR	1	NL 50001-
21	203-54-73311	COVER	1	NL 50001-
22	198-54-41982	. LOCK ASS'Y (WELD	1	NL 50001-
23	20Y-54-63411	. HINGE (WELDED)	2	NL 50001-
24	205-54-53550	DOVE TAIL	1	NL 50001-
25	204 338 40 V	BOLT	2	NL 50001-
26	01643-30623	WASHER	2	NL 50001-
27	204 338 23 C	BOLT	4	NL 50001-
28	01643-31232	WASHER	4	NL 50001-
29	204 338 23 C	BOLT	4	NL 50001-
30	01643-31232	WASHER	4	NL 50001-
	203-54-73711	COVER	1	NL 50001-
31	203-54-73721	. COVER	1	NL 50001-
32	203-54-N1130	. SHEET	1	NL 50001-
33	204 338 23 C	. BOLT	3	NL 50001-
34	01643-31232	WASHER	3	NL 50001-
35	203-54-62670	COLLAR	2	NL 50001-
36	124-54-26540	WASHER	1	NL 50001-
37	204 338 23 C	BOLT	1	NL 50001-

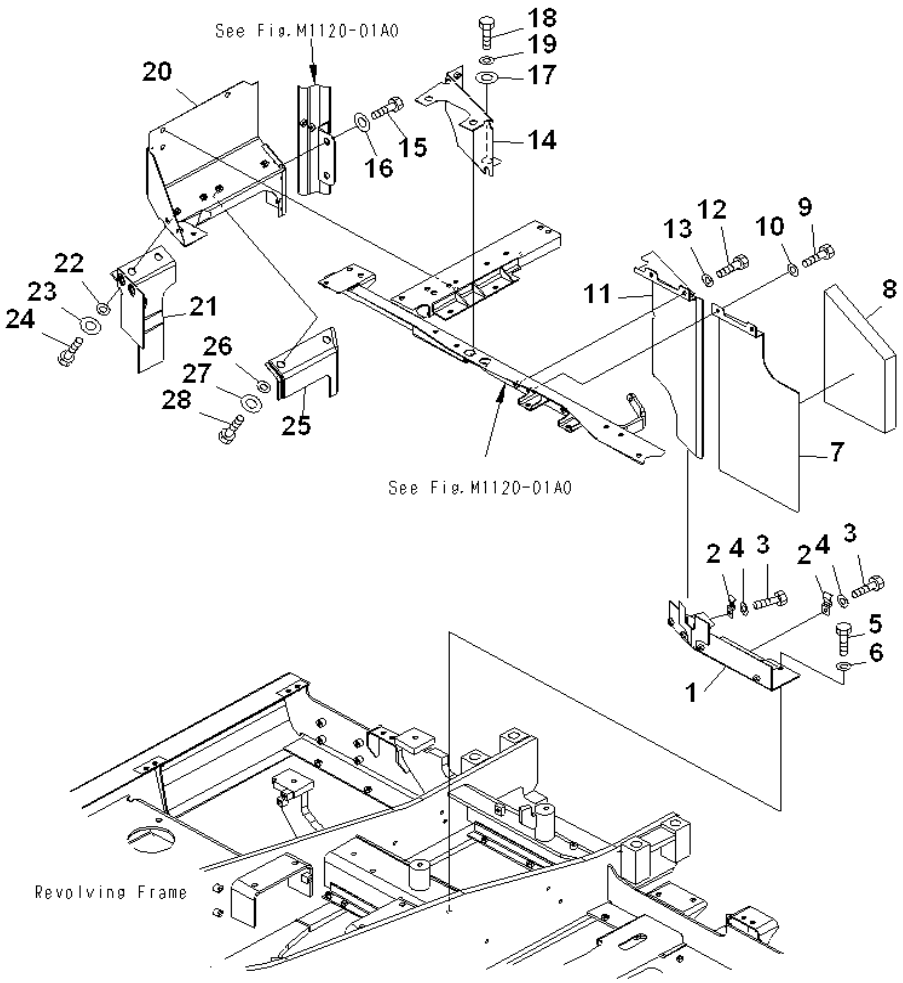

INDEX	PART NUMBER	DESCRIPTION	QTY	SERIAL No.
1	203-54-73441	COVER	1	NL 50001-
2	20Y-54-27761	CATCH	4	NL 50001-
3	204 338 18 W	BOLT	4	NL 50001-
4	01643-31232	WASHER	4	NL 50001-
5	204 338 23 C	BOLT	2	NL 50001-
6	01643-31232	WASHER	2	NL 50001-
	203-54-76150	COVER	1	NL 50001-
7	#	. COVER	1	NL 50001-
8	203-54-74230	. SHEET	1	NL 50001-
9	204 338 23 C	BOLT	2	NL 50001-
10	01643-31232	WASHER	2	NL 50001-
11	203-54-73461	COVER	1	NL 50001-
12	204 338 23 C	BOLT	2	NL 50001-
13	01643-31232	WASHER	2	NL 50001-
14	203-54-73471	COVER	1	NL 50001-
15	124-54-26540	WASHER	2	NL 50001-
16	204 338 23 C	BOLT	2	NL 50001-
17	203-54-62670	COLLAR	1	NL 50001-
18	204 338 23 C	BOLT	1	NL 50001-
19	01643-31232	WASHER	1	NL 50001-
20	203-54-73481	COVER	1	NL 50001-
21	203-62-71490	SHEET	1	NL 50001-
22	01643-51232	WASHER	4	NL 50001-
23	124-54-26540	WASHER	4	NL 50001-
24	204 338 18 W	BOLT	4	NL 50001-
25	203-62-71890	SHEET	1	NL 50001-
26	01643-51232	WASHER	2	NL 50001-
27	124-54-26540	WASHER	2	NL 50001-
28	204 338 18 W	BOLT	2	NL 50001-

L&T-KOMATSU

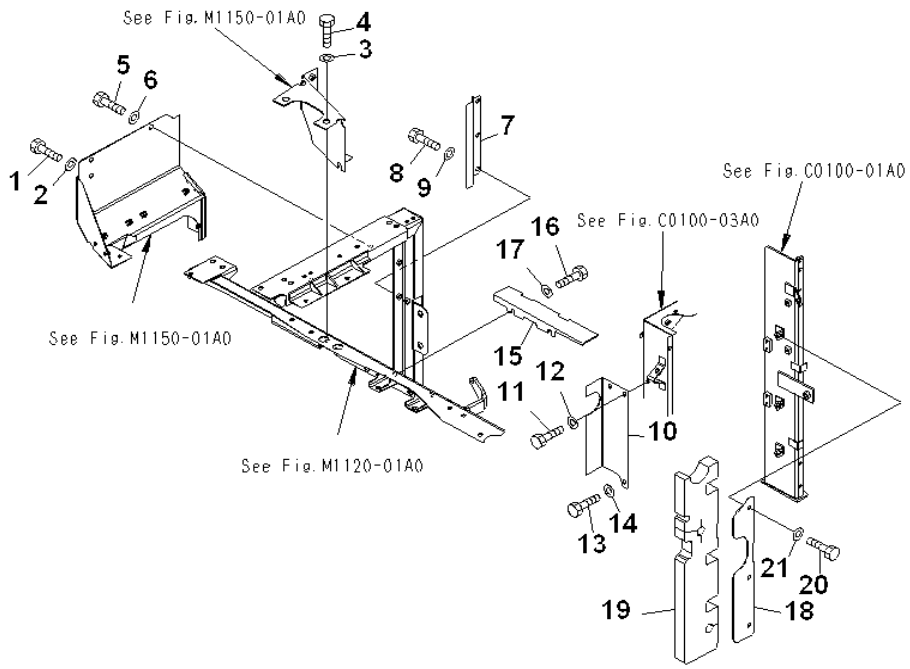

INDEX	PART NUMBER	DESCRIPTION	QTY	SERIAL No.
1	204 338 23 C	BOLT	1	NL 50001-
2	01643-31232	WASHER	1	NL 50001-
3	124-54-26540	WASHER	2	NL 50001-
4	204 338 23 C	BOLT	2	NL 50001-
5	204 338 23 C	BOLT	2	NL 50001-
6	01643-31232	WASHER	2	NL 50001-
7	203-62-71990	COVER	1	NL 50001-
8	204 338 23 C	BOLT	3	NL 50001-
9	01643-31232	WASHER	3	NL 50001-
10	203-54-73491	COVER	1	NL 50001-
11	204 338 27 G	BOLT	2	NL 50001-
12	01643-31032	WASHER	2	NL 50001-
13	204 338 27 G	BOLT	1	NL 50001-
14	01643-31032	WASHER	1	NL 50001-
15	203-54-74430	COVER	1	NL 50001-
16	204 338 23 C	BOLT	2	NL 50001-
17	01643-31232	WASHER	2	NL 50001-
	203-03-71590	PLATE	1	NL 50001-
18	#	COVER	1	NL 50001-
19	203-03-N1120	.SHEET	1	NL 50001-
20	204 338 23 C	BOLT	3	NL 50001-
21	01643-31232	WASHER	3	NL 50001-

Fig. No. **M1150-02A0** | **PARTITION (2/2)** | Update Index : **A** | **MO-017** 1/1

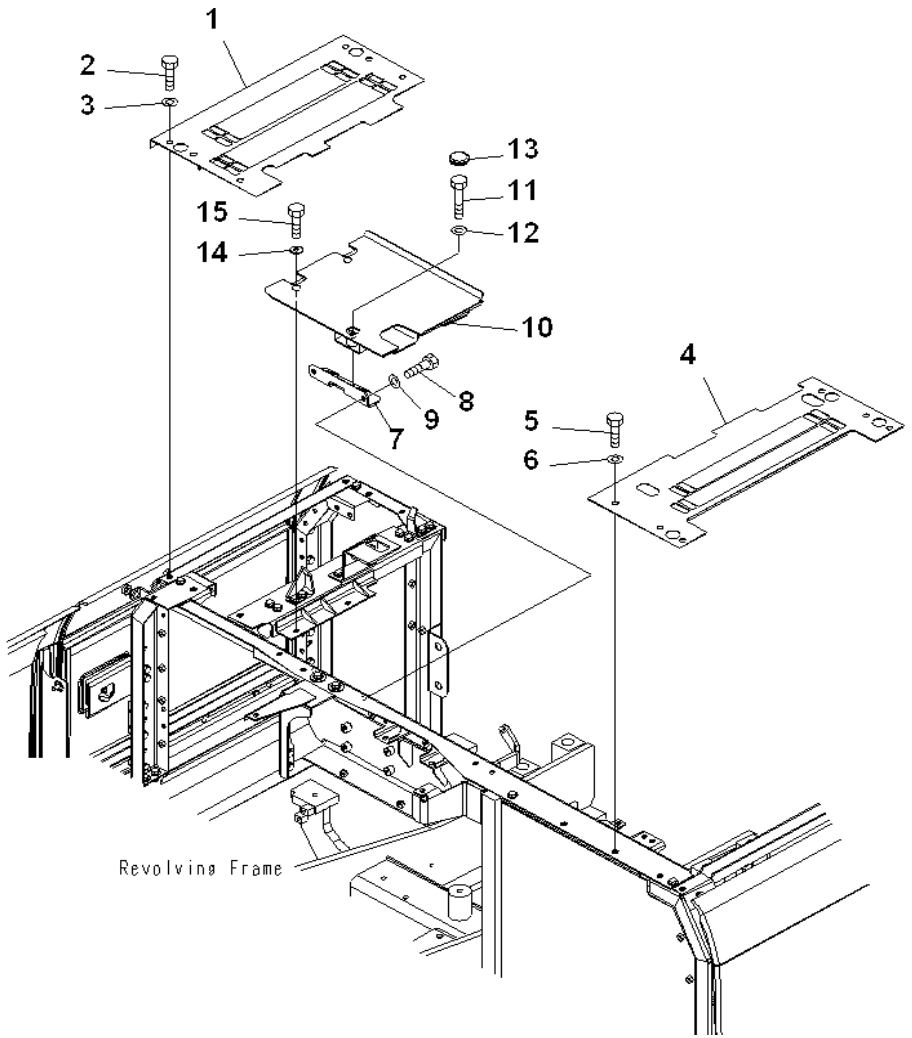

INDEX	PART NUMBER	DESCRIPTION	QTY	SERIAL No.
1	203-54-73151	COVER	1	NL 50001-
2	204 338 23 C	BOLT	6	NL 50001-
3	01643-31232	WASHER	6	NL 50001-
4	203-54-73121	COVER	1	NL 50001-
5	204 338 23 C	BOLT	6	NL 50001-
6	01643-31232	WASHER	6	NL 50001-
7	203-54-77140	BRACKET	1	NL 50001-
8	204 338 23 C	BOLT	2	NL 50001-
9	01643-31232	WASHER	2	NL 50001-
10	203-54-77130	COVER	1	NL 50001-
11	204 338 53 K	BOLT	1	NL 50001-
12	01643-31232	WASHER	1	NL 50001-
13	09415-02512	CAP	1	NL 50001-
14	124-54-26540	WASHER	2	NL 50001-
15	204 338 23 C	BOLT	2	NL 50001-

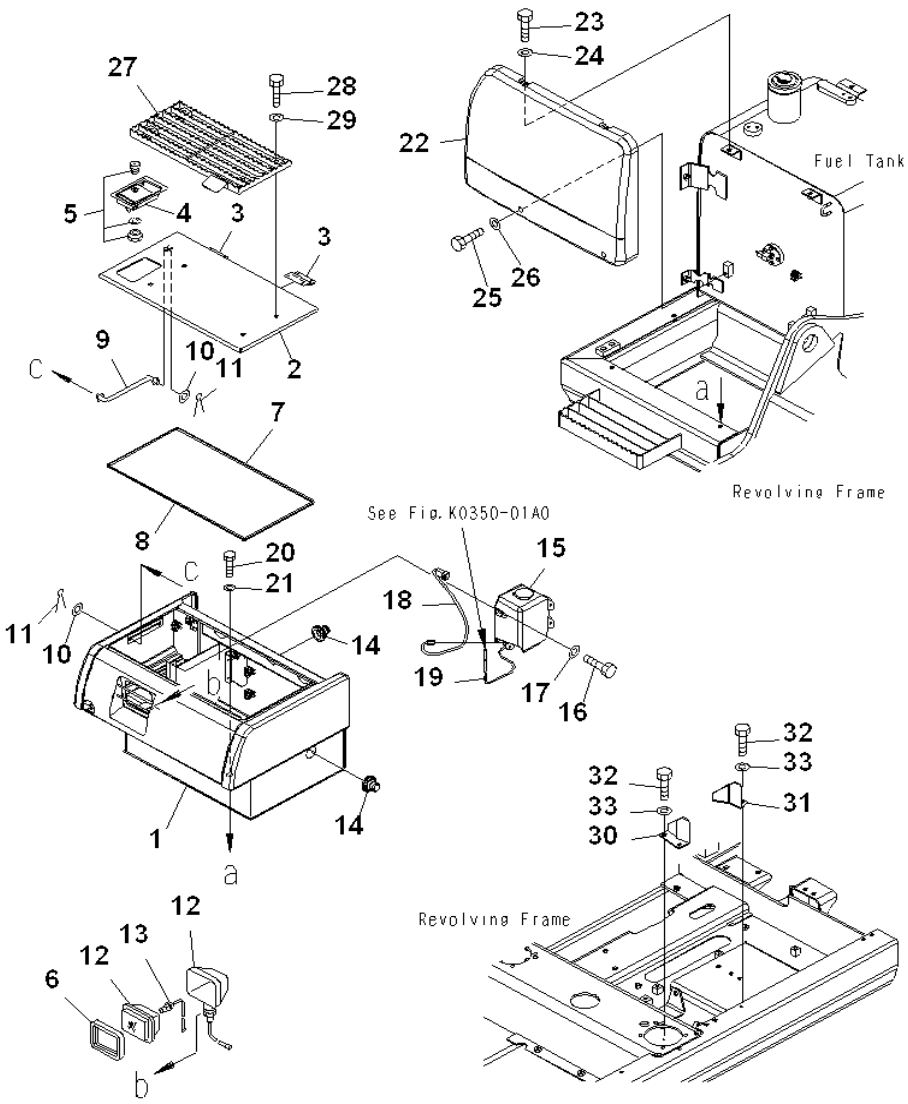

INDEX	PART NUMBER	DESCRIPTION	QTY	SERIAL No.
1	203-54-73610	CASE	1	NL 50001-
2	203-54-76711	. COVER (WELDED)	1	NL 50001-
3	203-54-67741	. . HINGE (WELDED)	2	NL 50001-
4	421-54-11372	. . LOCK ASS'Y (WE	1	NL 50001-
5	421-54-11381	. . . LOCK	1	NL 50001-
6	203-54-67760	. SEAL	1	NL 50001-
7	203-54-76720	. SEAL	1	NL 50001-
8	203-54-76730	. SEAL	1	NL 50001-
9	203-54-56630	ROD	1	NL 50001-
10	01643-30623	WASHER	2	NL 50001-
11	04050-11612	PIN	2	NL 50001-
12	21W-06-22120	LAMP ASS'Y	1	NL 50001-
13	21W-06-22130	. BULB, 60W	1	NL 50001-
14	08037-12536	GROMMET	2	NL 50001-
15	21T-06-11350	TANK ASS'Y	1	NL 50001-
16	204 338 29 J	BOLT	4	NL 50001-
17	01643-30623	WASHER	4	NL 50001-
18	203-06-61132	WIRING HARNESS	1	NL 50001-
19	195-979-8590	VALVE	1	NL 50001-
20	204 338 23 C	BOLT	4	NL 50001-
21	124-54-26540	WASHER	4	NL 50001-
22	203-54-73171	COVER	1	NL 50001-
23	204 338 23 C	BOLT	2	NL 50001-
24	01643-31232	WASHER	2	NL 50001-
25	204 338 22 B	BOLT	2	NL 50001-
26	124-54-26540	WASHER	2	NL 50001-
27	203-54-76811	STEP	1	NL 50001-
28	204 338 52 J	BOLT	4	NL 50001-
29	01643-31232	WASHER	4	NL 50001-
30	20Y-54-61670	BRACKET	1	NL 50001-
31	20Y-54-61680	BRACKET	1	NL 50001-
32	204 338 23 C	BOLT	4	NL 50001-
33	01643-31232	WASHER	4	NL 50001-

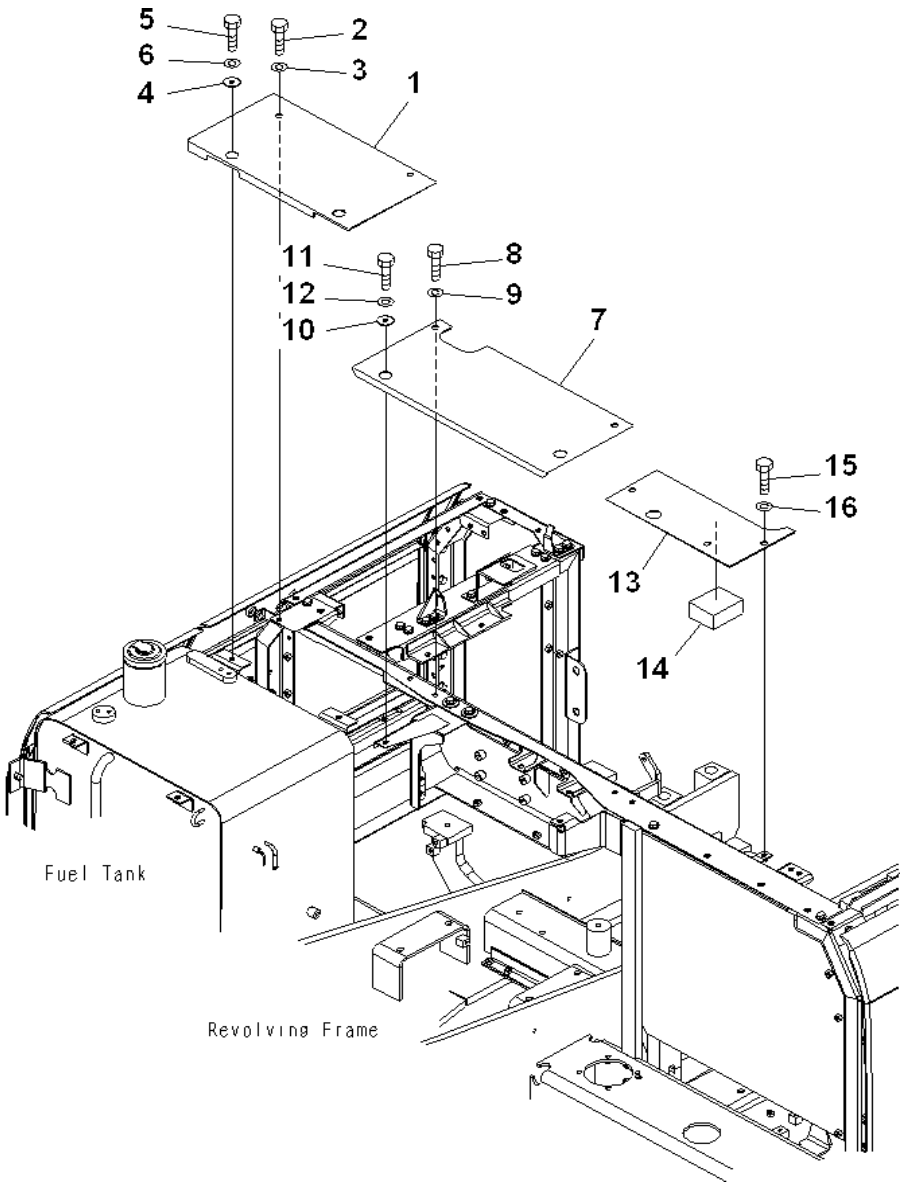

INDEX	PART NUMBER	DESCRIPTION	QTY	SERIAL No.
1	203-54-73141	COVER	1	NL 50001-
2	204 338 23 C	BOLT	2	NL 50001-
3	01643-31232	WASHER	2	NL 50001-
4	203-54-62670	COLLAR	2	NL 50001-
5	204 338 23 C	BOLT	2	NL 50001-
6	01643-31232	WASHER	2	NL 50001-
7	203-54-73770	COVER	1	NL 50001-
8	204 338 23 C	BOLT	2	NL 50001-
9	01643-31232	WASHER	2	NL 50001-
10	203-54-62670	COLLAR	2	NL 50001-
11	204 338 23 C	BOLT	2	NL 50001-
12	01643-31232	WASHER	2	NL 50001-
	203-54-73181	COVER	1	NL 50001-
13	#	. COVER	1	NL 50001-
14	203-54-76920	. SHEET	1	NL 50001-
15	204 338 23 C	BOLT	3	NL 50001-
16	01643-31232	WASHER	3	NL 50001-

Fig. No. **M1230-01A0** | **VALVE UPPER COVER** | Update Index : **A** | **MO-023** 1/1

L&T-KOMATSU

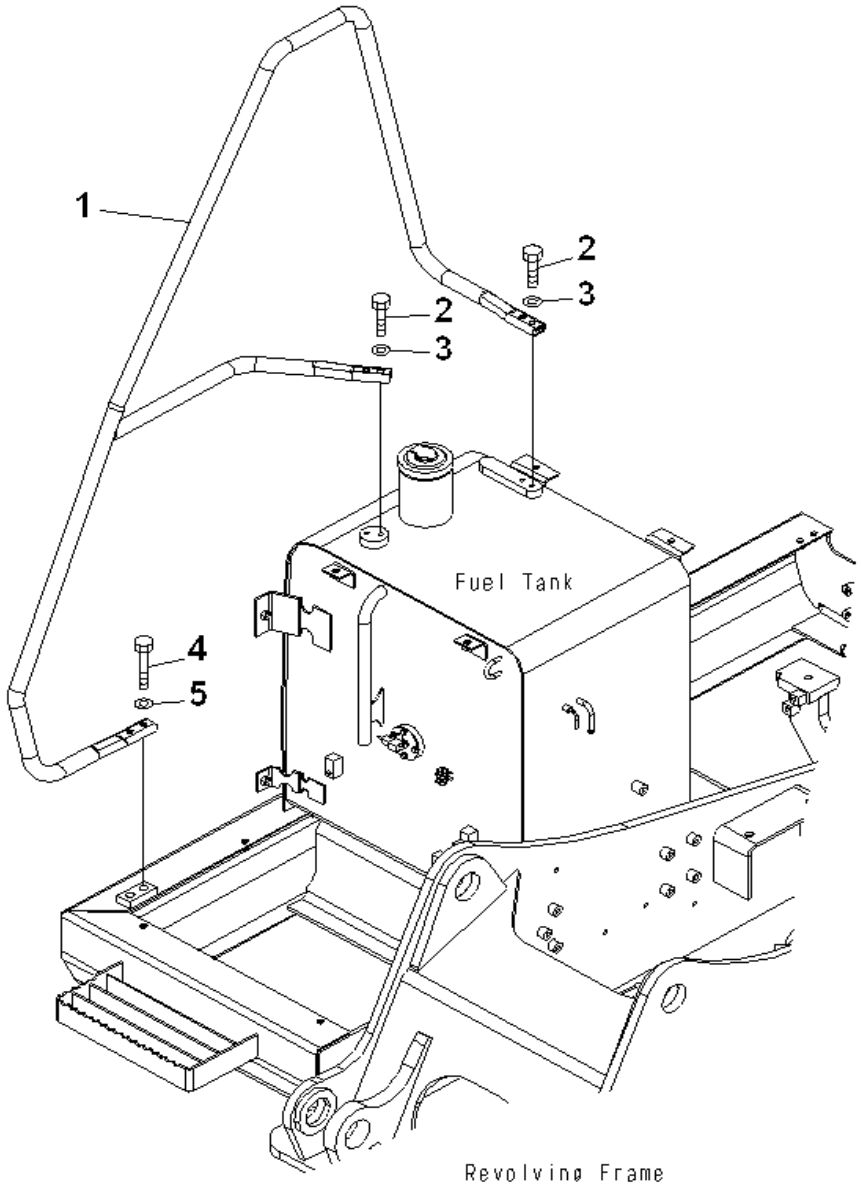

INDEX	PART NUMBER	DESCRIPTION	QTY	SERIAL No.
1	203-54-73392	HAND RAIL	1	NL 50001-
2	204 338 57 P	BOLT	4	NL 50001-
3	01643-31232	WASHER	4	NL 50001-
4	204 338 54 L	BOLT	2	NL 50001-
5	01643-31232	WASHER	2	NL 50001-

Fig. No. **M1310-01A0** | **HAND RAIL** | Update Index : **A** | **MO-027** 1/1

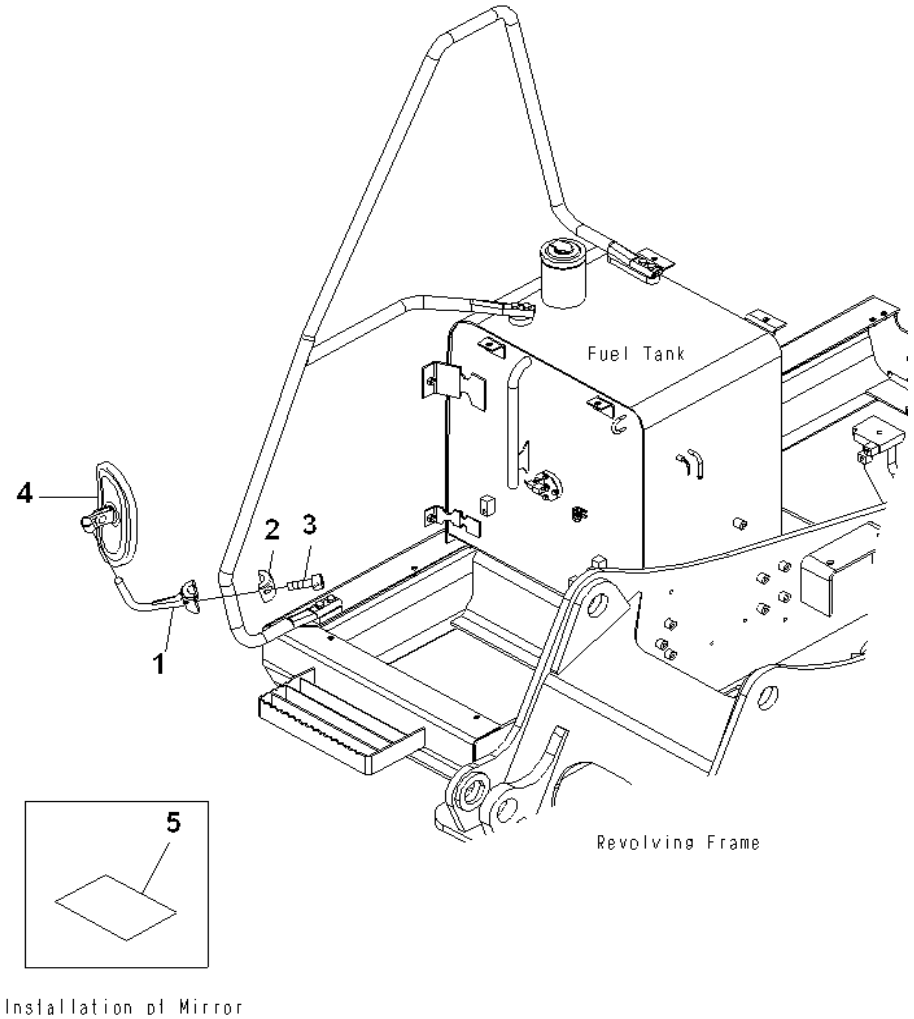

INDEX	PART NUMBER	DESCRIPTION	QTY	SERIAL No.
1	20Y-54-61621	SUPPORT	1	NL 50001-
2	20Y-54-61630	CLAMP	1	NL 50001-
3	202 329 44 F	BOLT	2	NL 50001-
4	20Y-54-N3140	MIRROR	1	NL 50001-
5	203-00-N1240	PLATE	1	NL 50001-

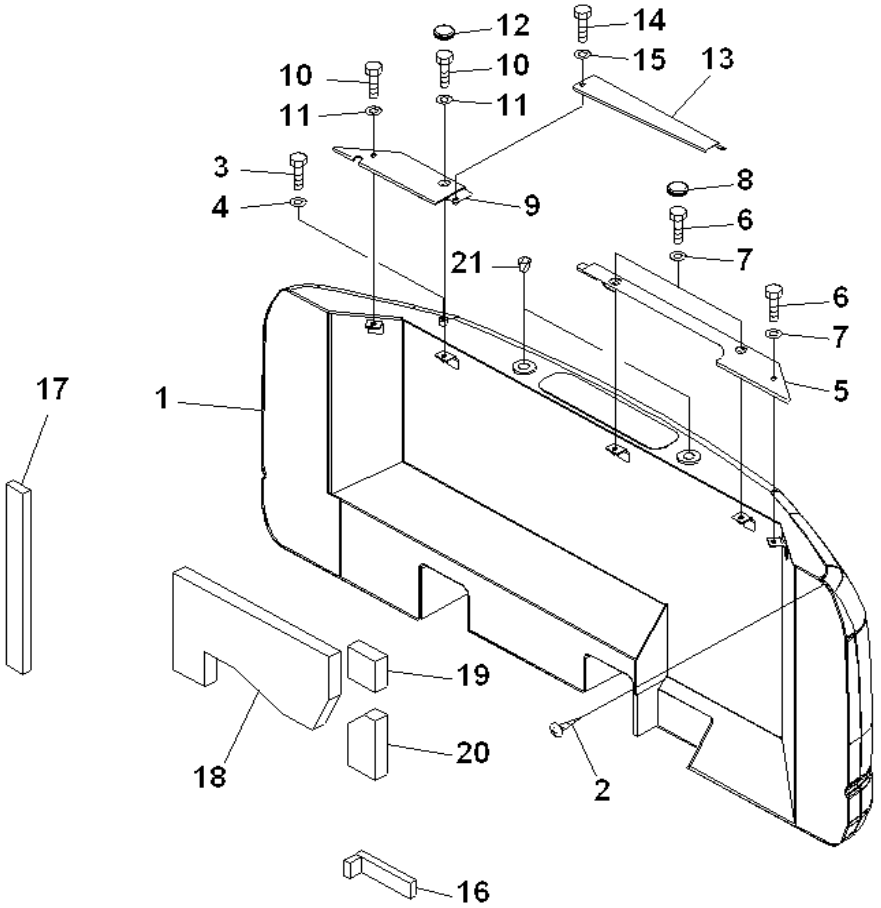

INDEX	PART NUMBER	DESCRIPTION	QTY	SERIAL No.
1	203-46-75120	WEIGHT	1	NL 50001-
2	01370-00508	SCREW	1	NL 50001-
3	204 338 18 W	BOLT	1	NL 50001-
4	01643-31232	WASHER	1	NL 50001-
5	203-54-73161	COVER	1	NL 50001-
6	204 338 22 B	BOLT	3	NL 50001-
7	01643-31232	WASHER	3	NL 50001-
8	09415-02512	CAP	2	NL 50001-
9	203-54-77110	COVER	1	NL 50001-
10	204 338 23 C	BOLT	2	NL 50001-
11	01643-31232	WASHER	2	NL 50001-
12	09415-02512	CAP	1	NL 50001-
13	203-54-77120	COVER	1	NL 50001-
14	204 338 22 B	BOLT	1	NL 50001-
15	01643-31232	WASHER	1	NL 50001-
16	203-03-N1110	SHEET	1	NL 50001-
17	203-46-N1190	SHEET	1	NL 50001-
18	203-46-N1230	SHEET	1	NL 50001-
19	203-46-N1240	SHEET	1	NL 50001-
20	203-46-N1250	SHEET	1	NL 50001-
21	07049-03645	PLUG	2	NL 50001-

L&T-KOMATSU

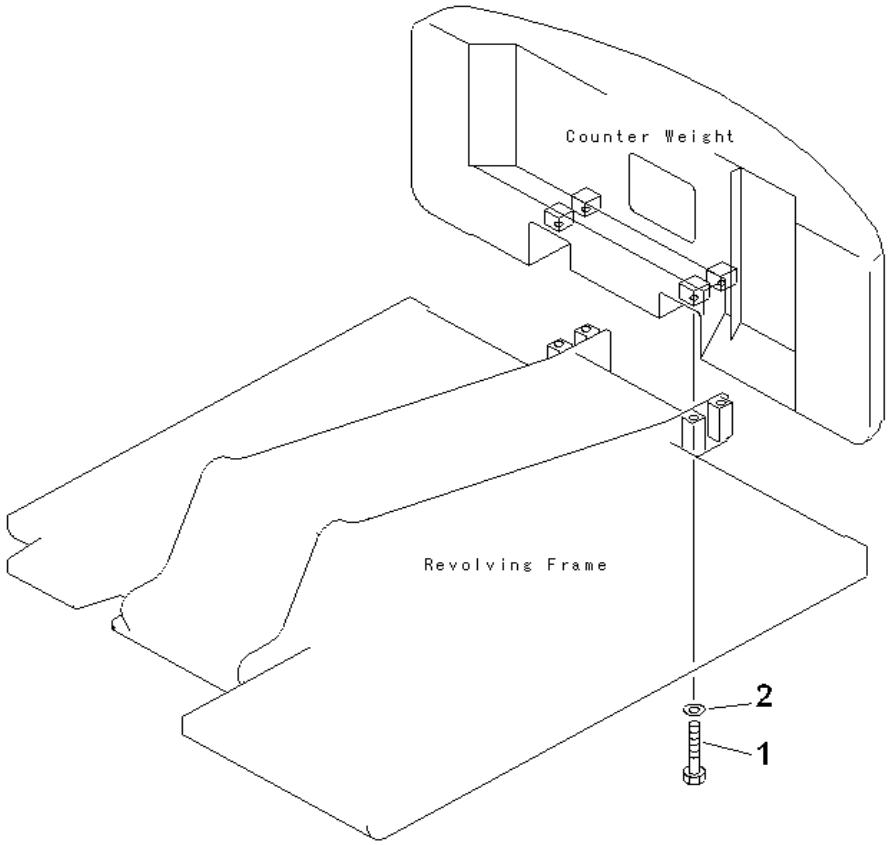

INDEX	PART NUMBER	DESCRIPTION	QTY	SERIAL No.
1	01011-62790	BOLT.....	4	NL 50001-
2	01643-32780	WASHER.....	4	NL 50001-

Fig. No. **M1520-01A0** | **COUNTERWEIGHT MOUNTING** | Update Index : **A** | **MO-037** 1/1

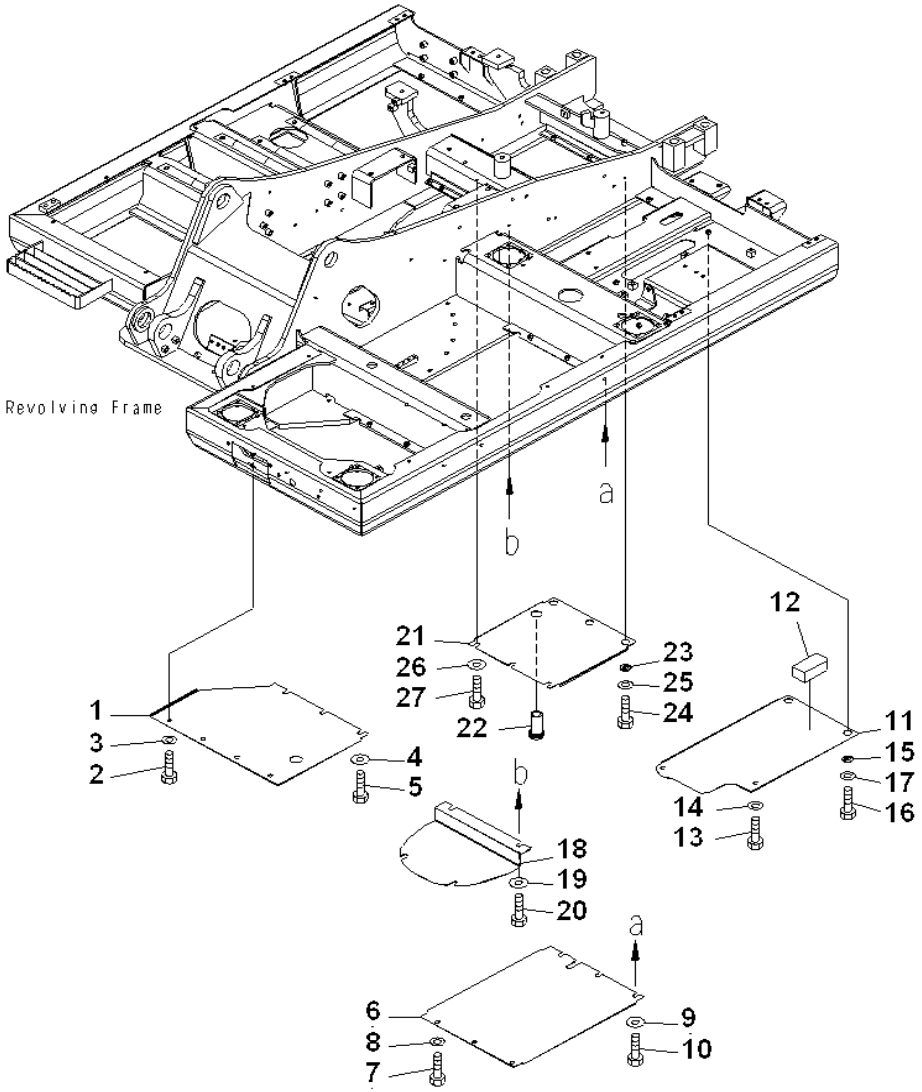

INDEX	PART NUMBER	DESCRIPTION	QTY	SERIAL No.
1	203-54-75310	COVER	1	NL 50001-
2	204 338 23 C	BOLT	4	NL 50001-
3	01643-31232	WASHER	4	NL 50001-
4	124-54-26540	WASHER	3	NL 50001-
5	204 338 23 C	BOLT	3	NL 50001-
6	203-54-N1430	COVER	1	NL 50001-
7	204 338 23 C	BOLT	3	NL 50001-
8	01643-31232	WASHER	3	NL 50001-
9	124-54-26540	WASHER	3	NL 50001-
10	204 338 23 C	BOLT	3	NL 50001-
	203-54-75141	COVER	1	NL 50001-
11	#	. COVER	1	NL 50001-
12	203-54-76910	. SHEET	1	NL 50001-
13	204 338 23 C	BOLT	2	NL 50001-
14	01643-31232	WASHER	2	NL 50001-
15	20Y-54-12550	COLLAR	2	NL 50001-
16	204 338 23 C	BOLT	2	NL 50001-
17	01643-31232	WASHER	2	NL 50001-
18	203-54-75350	COVER	1	NL 50001-
19	124-54-26540	WASHER	4	NL 50001-
20	204 338 23 C	BOLT	4	NL 50001-
21	203-54-75361	PLATE	1	NL 50001-
22	22U-54-24760	GROMMET	1	NL 50001-
23	20Y-54-12550	COLLAR	3	NL 50001-
24	204 338 23 C	BOLT	3	NL 50001-
25	01643-31232	WASHER	3	NL 50001-
26	124-54-26540	WASHER	3	NL 50001-
27	204 338 23 C	BOLT	3	NL 50001-

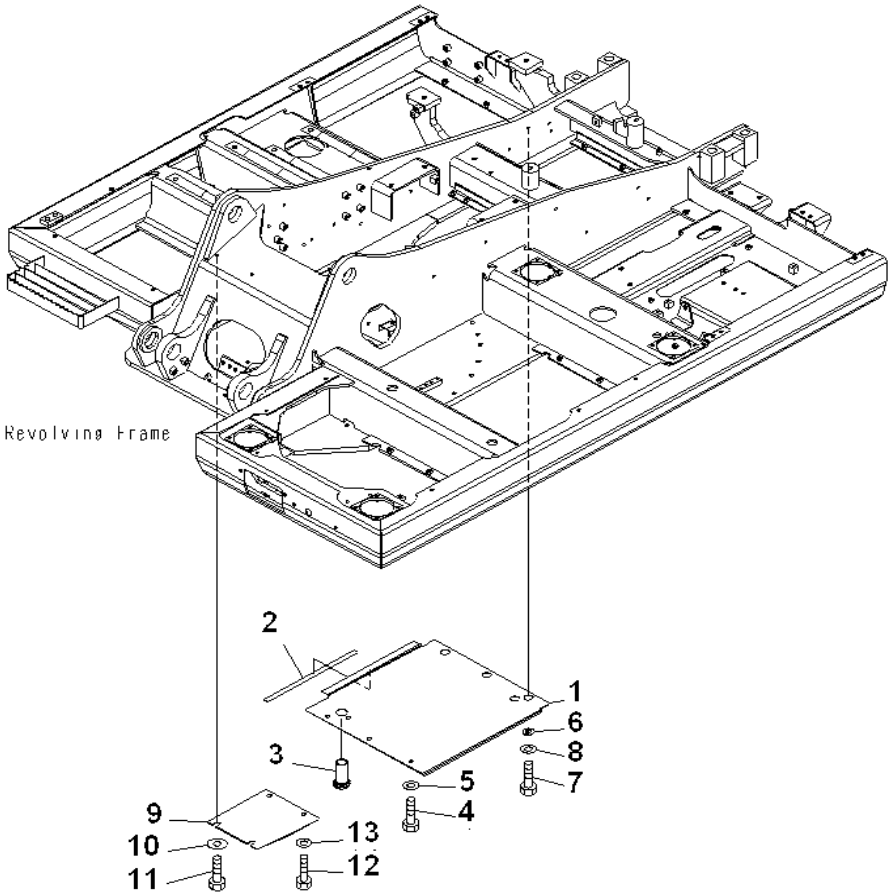

INDEX	PART NUMBER	DESCRIPTION	QTY	SERIAL No.
1	203-54-75380	COVER	1	NL 50001-
2	203-54-62630	. SHEET	1	NL 50001-
3	22U-54-24760	GROMMET	1	NL 50001-
4	204 338 23 C	BOLT	3	NL 50001-
5	01643-31232	WASHER	3	NL 50001-
6	20Y-54-12550	COLLAR	3	NL 50001-
7	204 338 23 C	BOLT	3	NL 50001-
8	01643-31232	WASHER	3	NL 50001-
9	203-54-75421	COVER	1	NL 50001-
10	124-54-26540	WASHER	2	NL 50001-
11	204 338 23 C	BOLT	2	NL 50001-
12	204 338 23 C	BOLT	2	NL 50001-
13	01643-31232	WASHER	2	NL 50001-

Fig. No. **M1810-02A0** | **UNDER COVER (R.H.)** | Update Index : **A** | **MO-041** 1/1

SWING CIRCLE AND RELATED PARTS

NO-001

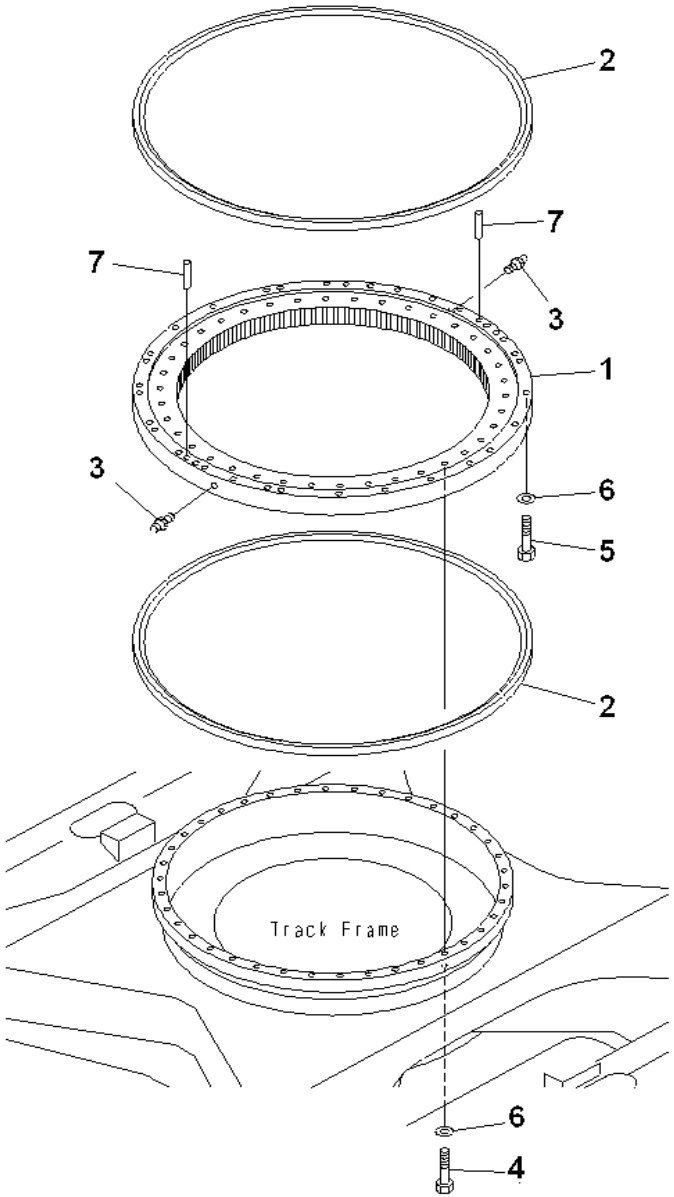

INDEX	PART NUMBER	DESCRIPTION	QTY	SERIAL No.
1	203-25-62100	CIRCLE	1	NL 50001-
2	203-25-62130	. SEAL	2	NL 50001-
3	07020-00000	. FITTING	2	NL 50001-
4	206 338 11 F	BOLT	38	NL 50001-
5	206 338 12 G	BOLT	34	NL 50001-
6	01643-71645	WASHER	72	NL 50001-
7	04020-01434	PIN	2	NL 50001-

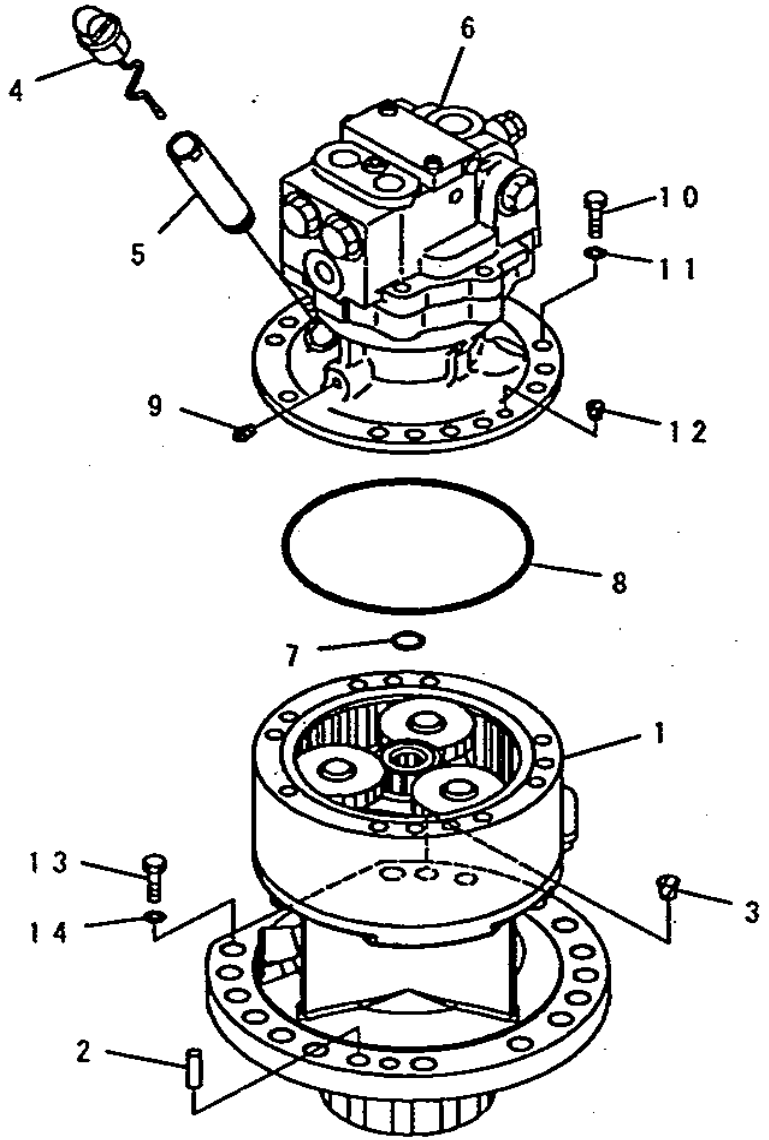

INDEX	PART NUMBER	DESCRIPTION	QTY	SERIAL No.
1	(203-26-00123)	SWING MACHINERY A.....	1	NL 50001-
2	04020-01638	PIN.....	2	NL 50001-
3	07049-02025	PLUG.....	1	NL 50001-
4	203-26-61480	GAUGE.....	1	NL 50001-
5	203-26-61470	FILLER.....	1	NL 50001-
6	(706-73-01400)	MOTOR ASSY.....	1	NL 50001-
7	201-26-62190	RING.....	1	NL 50001-
8	203-26-61360	O'RING.....	1	NL 50001-
9	07042-30108	PLUG.....	1	NL 50001-
10	01011-81230	BOLT.....	13	NL 50001-
11	01643-31232	WASHER.....	13	NL 50001-
12	07049-01215	PLUG.....	2	NL 50001-
13	204 338 43 Z	BOLT.....	14	NL 50001-
14	01643-31645	WASHER.....	14	NL 50001-

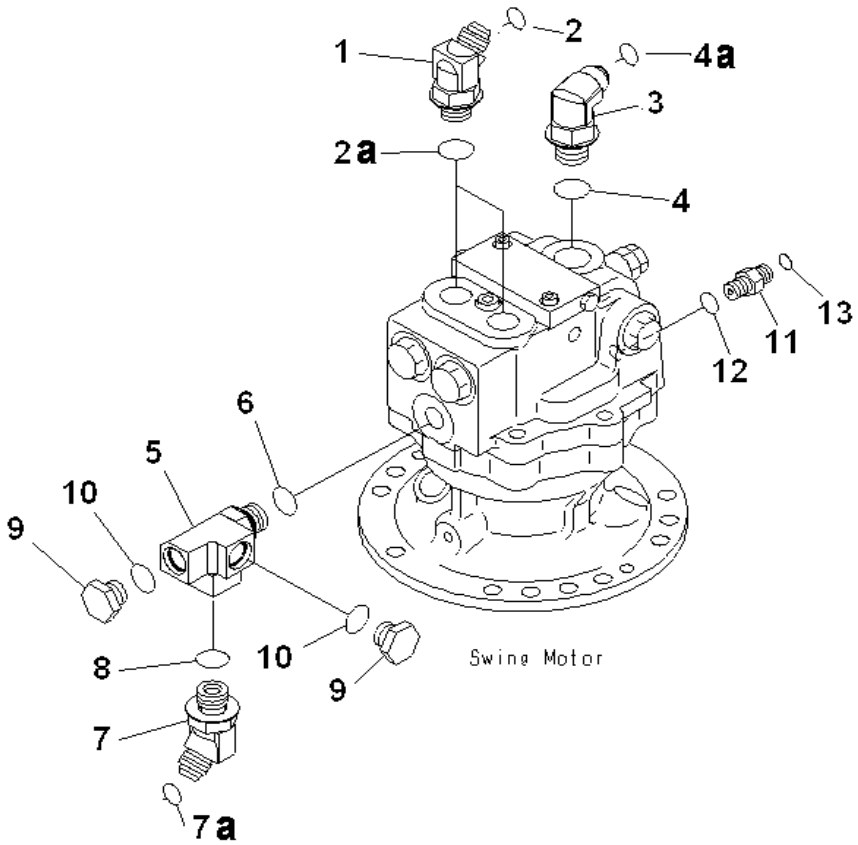

INDEX	PART NUMBER	DESCRIPTION	QTY	SERIAL No.
1	02783-10422	ELBOW	2	NL 50001-
2	02896-11012	O-RING	2	NL 50001-
2a	07002-12034	O-RING	2	NL 50001-
3	02782-10522	ELBOW	1	NL 50001-
4a	02896-11015	O-RING	1	NL 50001-
4	07002-12434	O-RING	1	NL 50001-
5	20Y-62-15660	ADAPTER	1	NL 50001-
6	07002-12034	O-RING	1	NL 50001-
7	02783-10422	ELBOW	1	NL 50001-
7a	02896-11012	O-RING	1	NL 50001-
8	07002-12034	O-RING	1	NL 50001-
9	07040-12012	PLUG	2	NL 50001-
10	07002-12034	O-RING	2	NL 50001-
11	22B-26-11320	UNION	1	NL 50001-
12	07002-11423	O-RING	1	NL 50001-
13	02896-11008	O-RING	1	NL 50001-

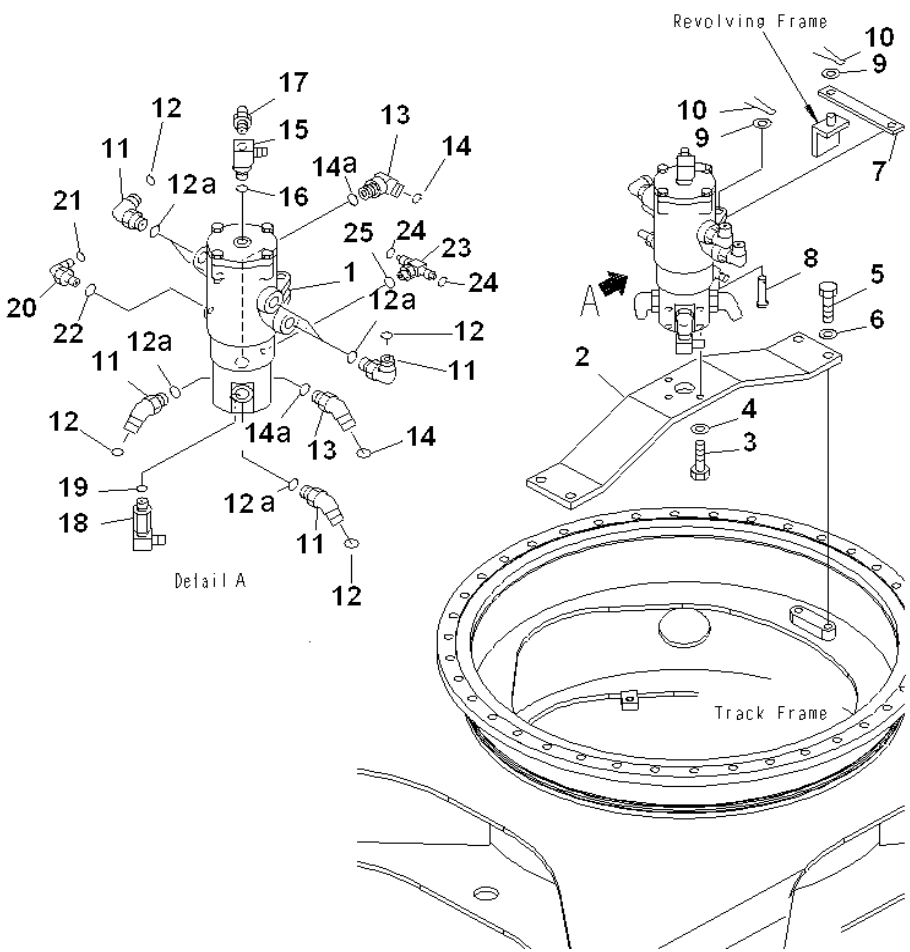

INDEX	PART NUMBER	DESCRIPTION	QTY	SERIAL No.
1	(703-08-00110)	SWIVEL JOINT ASSY	1	NL 50001-
2	203-30-66122	BRACKET	1	NL 50001-
3	204 338 25 E	BOLT	4	NL 50001-
4	01643-31232	WASHER	4	NL 50001-
5	204 338 84 T	BOLT	4	NL 50001-
6	01643-31645	WASHER	4	NL 50001-
7	203-60-52160	LINK	1	NL 50001-
8	209-62-52560	PIN	1	NL 50001-
9	01641-21626	WASHER	2	NL 50001-
10	04050-14025	PIN	2	NL 50001-
11	02782-10522	ELBOW	6	NL 50001-
12	02896-11015	O-RING	6	NL 50001-
12a	07002-12434	O-RING	6	NL 50001-
13	02783-10522	ELBOW	2	NL 50001-
14	02896-11015	O-RING	2	NL 50001-
14a	07002-12434	O-RING	2	NL 50001-
15	203-62-N1510	ELBOW	1	NL 50001-
16	07002-12034	O-RING	1	NL 50001-
17	07238-10422	CONNECTOR	1	NL 50001-
18	203-62-N1490	ELBOW	1	NL 50001-
19	07002-12034	O-RING	1	NL 50001-
20	02782-10210	ELBOW	1	NL 50001-
21	02896-11008	O-RING	1	NL 50001-
22	07002-11423	O-RING	1	NL 50001-
23	11Y-62-12250	TEE	1	NL 50001-
24	02896-11008	O-RING	2	NL 50001-
25	07002-11423	O-RING	1	NL 50001-

NOTES:

TRAVEL AND LOWER PIPING

L&T-KOMATSU

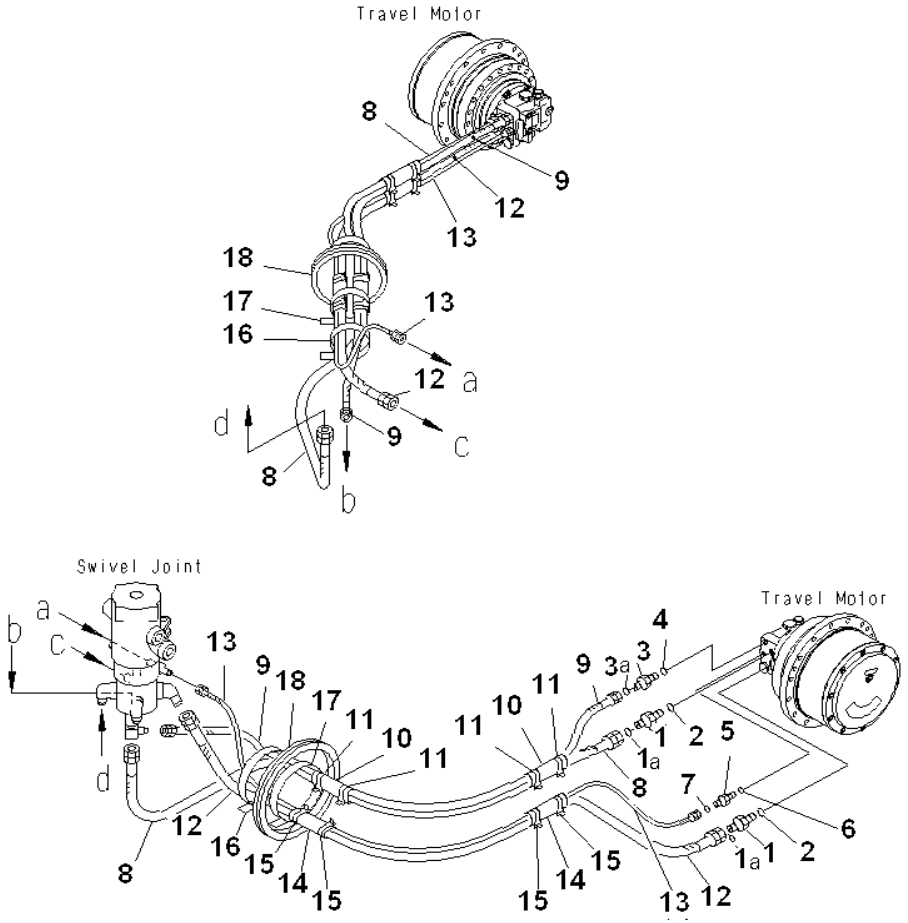

INDEX	PART NUMBER	DESCRIPTION	QTY	SERIAL No.
1	02781-00522	UNION	4	NL 50001-
1a	02896-11015	O'RING	4	NL 50001-
2	07002-12434	O-RING	4	NL 50001-
3	02781-00422	UNION	2	NL 50001-
3a	02896-11012	O'RING	2	NL 50001-
4	07002-12034	O-RING	2	NL 50001-
5	02781-0021D	UNION	2	NL 50001-
6	07002-11423	O-RING	2	NL 50001-
7	02896-11008	O-RING	2	NL 50001-
8	22B-62-N1110	HOSE, 1750MM	2	NL 50001-
9	203-62-N1620	HOSE, 1750MM	2	NL 50001-
10	203-62-52210	RUBBER	4	NL 50001-
11	08034-00823	BAND	8	NL 50001-
12	22B-62-N1120	HOSE, 1650MM	2	NL 50001-
13	203-62-71820	HOSE, 1850MM	2	NL 50001-
14	203-62-52210	RUBBER	4	NL 50001-
15	08034-00823	BAND	8	NL 50001-
16	08034-20536	BAND	2	NL 50001-
17	08034-20536	BAND	2	NL 50001-
18	203-62-67160	GROMMET	2	NL 50001-

Fig. No. **P1120-01A0** | **TRAVEL PIPING** | Update Index : **A** | **PO-003** 1/1

L&T-KOMATSU

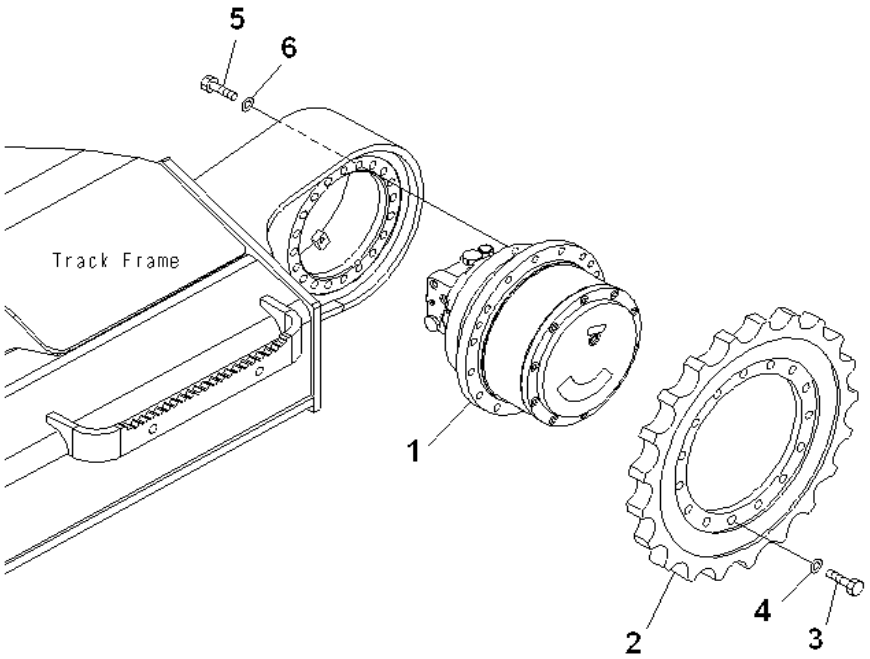

INDEX	PART NUMBER	DESCRIPTION	QTY	SERIAL No.
1	(203-60-63220)	MOTOR A.....	2	NL 50001-
2	203-27-61310	SPROCKET.....	2	NL 50001-
3	203-27-51120	BOLT.....	30	NL 50001-
4	01643-31645	WASHER.....	30	NL 50001-
5	204 338 19 X	BOLT.....	40	NL 50001-
6	01643-31645	WASHER.....	40	NL 50001-

NOTES:

UNDERCARRIAGE

L&T-KOMATSU

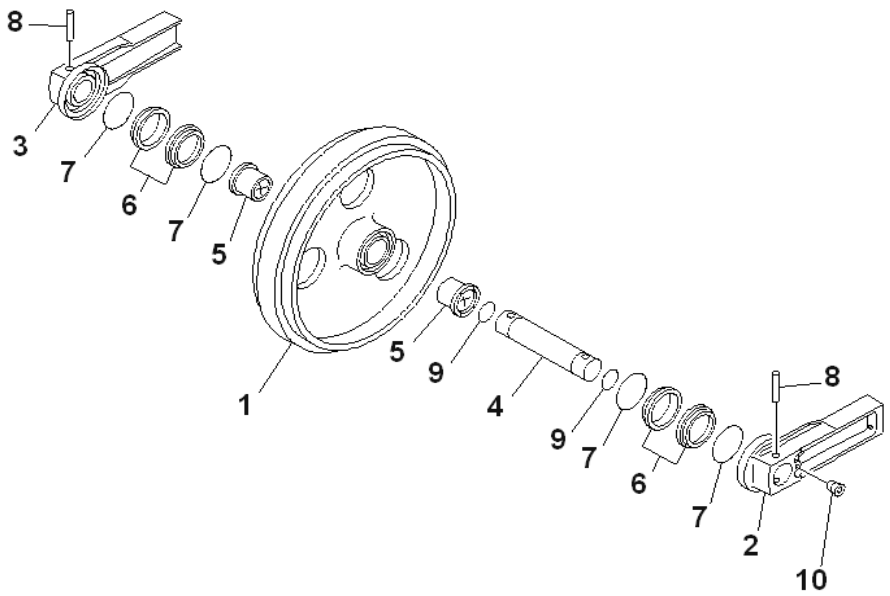

INDEX	PART NUMBER	DESCRIPTION	QTY	SERIAL No.
	203-30-00210	IDLER ASS'Y.....	2	NL 50001-
1	203-30-52112	. IDLER.....	1	NL 50001-
2	203-30-52122	. SUPPORT.....	1	NL 50001-
3	203-30-52133	. SUPPORT.....	1	NL 50001-
4	203-30-52141	. SHAFT.....	1	NL 50001-
5	203-30-52190	. BUSHING.....	2	NL 50001-
	175-30-00702	. FLOATING SEAL AS.....	2	NL 50001-
6	#	. . RING.....	2	NL 50001-
7	#	. . O'RING.....	2	NL 50001-
8	20X-30-22180	. PIN.....	2	NL 50001-
9	07000-13048	. O-RING.....	2	NL 50001-
10	20Y-30-16330	. PLUG.....	1	NL 50001-

L&T-KOMATSU

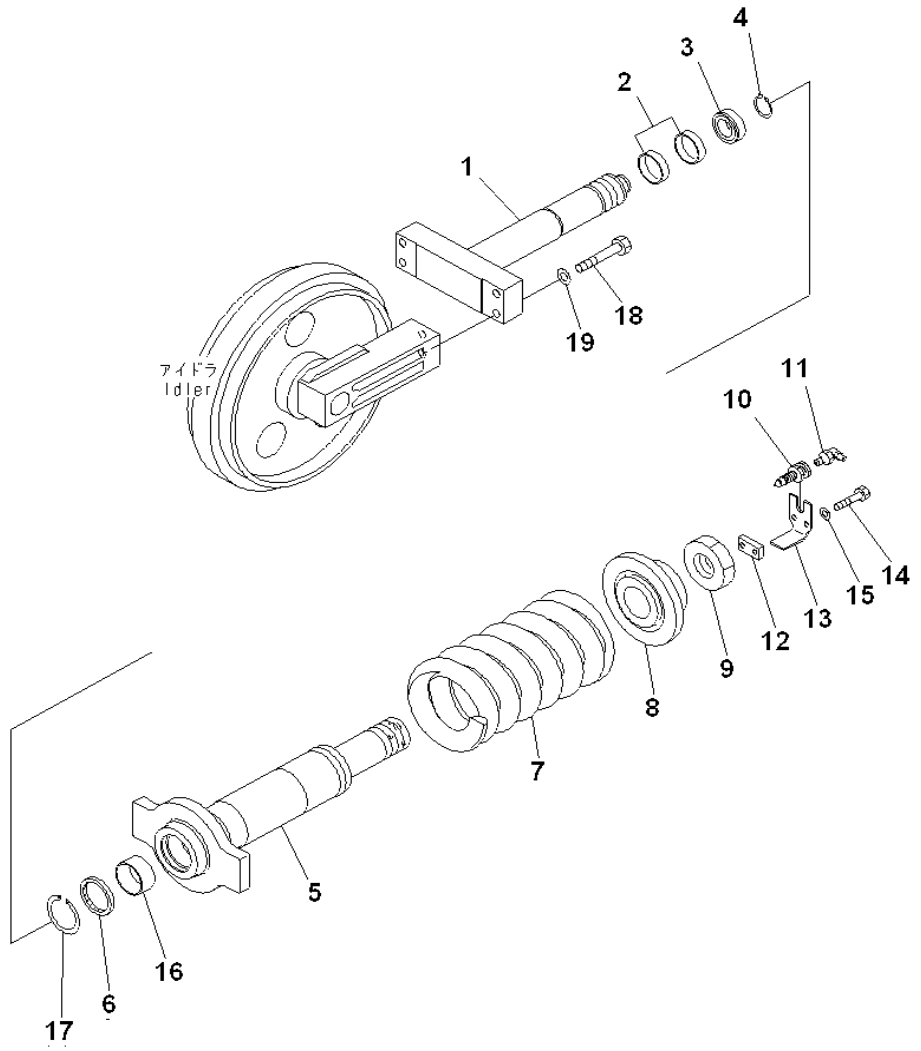

INDEX	PART NUMBER	DESCRIPTION	QTY	SERIAL No.
1	22B-30-13110	ROD	2	NL 50001-
2	07155-00615	RING	4	NL 50001-
3	09370-00060	U-PACKING	2	NL 50001-
4	04064-03515	RING	2	NL 50001-
5	22B-30-13120	CYLINDER	2	NL 50001-
6	707-56-60540	SEAL	2	NL 50001-
7	22B-30-11240	SPRING	2	NL 50001-
8	22B-30-12230	PILOT	2	NL 50001-
9	20X-30-22220	NUT	2	NL 50001-
10	203-30-42260	VALVE	2	NL 50001-
11	07020-00900	FITTING	2	NL 50001-
12	201-30-52280	SEAT	2	NL 50001-
13	203-30-66260	LOCK	2	NL 50001-
14	01643-30823	WASHER	4	NL 50001-
15	204 338 50 G	BOLT	4	NL 50001-
16	07177-06030	BUSHING	2	NL 50001-
17	04077-00075	RING	2	NL 50001-
18	205 338 15 P	BOLT	8	NL 50001-
19	01643-31445	WASHER	8	NL 50001-

Fig. No. **R0120-01A0** | **IDLER CUSHION** | Update Index : **A** | **RO-005** 1/1

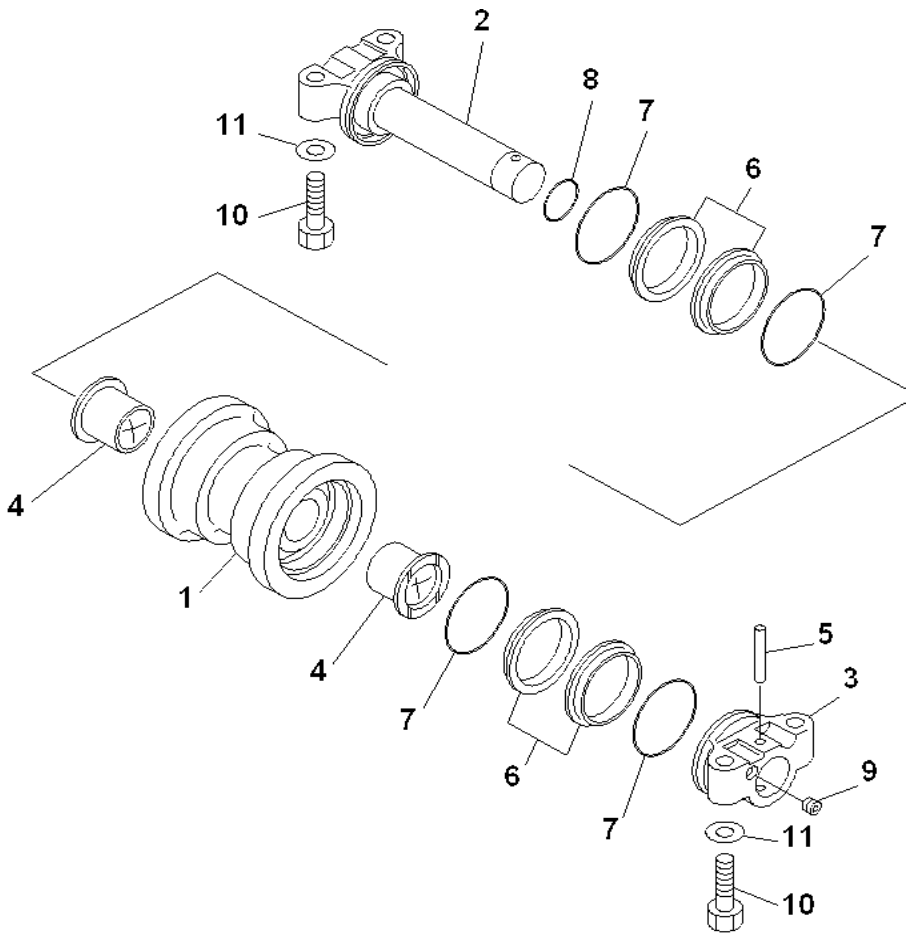

INDEX	PART NUMBER	DESCRIPTION	QTY	SERIAL No.
	22B-30-00010	TRACK ROLLER ASS'Y	14	NL 50001-
1	22B-30-16110	. ROLLER	1	NL 50001-
2	22B-30-16150	. SHAFT	1	NL 50001-
3	#	. COLLAR	1	NL 50001-
4	22B-30-16170	. BUSHING	2	NL 50001-
5	203-30-44150	. PIN	1	NL 50001-
	20Y-30-00070	. FLOATING SEAL AS	2	NL 50001-
6	#	. RING	2	NL 50001-
7	#	O-RING	2	NL 50001-
8	07000-13042	O-RING	1	NL 50001-
9	20Y-30-16130	PLUG	1	NL 50001-
10	204 338 86 V	BOLT	56	NL 50001-
11	01643-31645	WASHER	56	NL 50001-

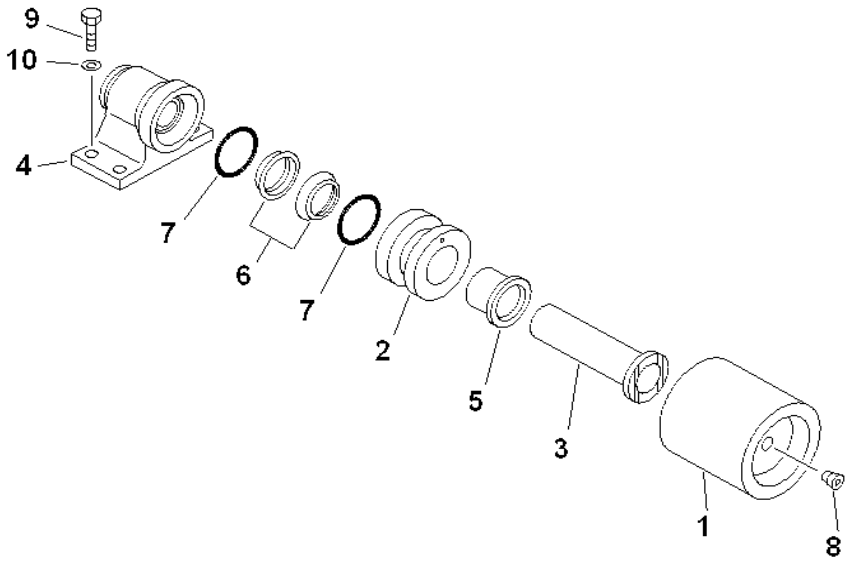

INDEX	PART NUMBER	DESCRIPTION	QTY	SERIAL No.
	203-30-00231	CARRIER ROLLER.....	2	NL 50001-
1	203-30-53111	. ROLLER.....	1	NL 50001-
2	203-30-53120	, COLLAR.....	1	NL 50001-
3	203-30-53141	. SHAFT.....	1	NL 50001-
4	203-30-53150	. COLLAR.....	1	NL 50001-
5	203-30-53160	. BUSHING.....	1	NL 50001-
	110-30-00086	. FLOATING SEAL AS.....	1	NL 50001-
6	#	. RING.....	2	NL 50001-
7	#	. O-RING.....	2	NL 50001-
8	20Y-30-16330	. PLUG.....	1	NL 50001-
9	204 338 25 E	BOLT.....	8	NL 50001-
10	01643-31232	WASHER.....	8	NL 50001-

L&T-KOMATSU

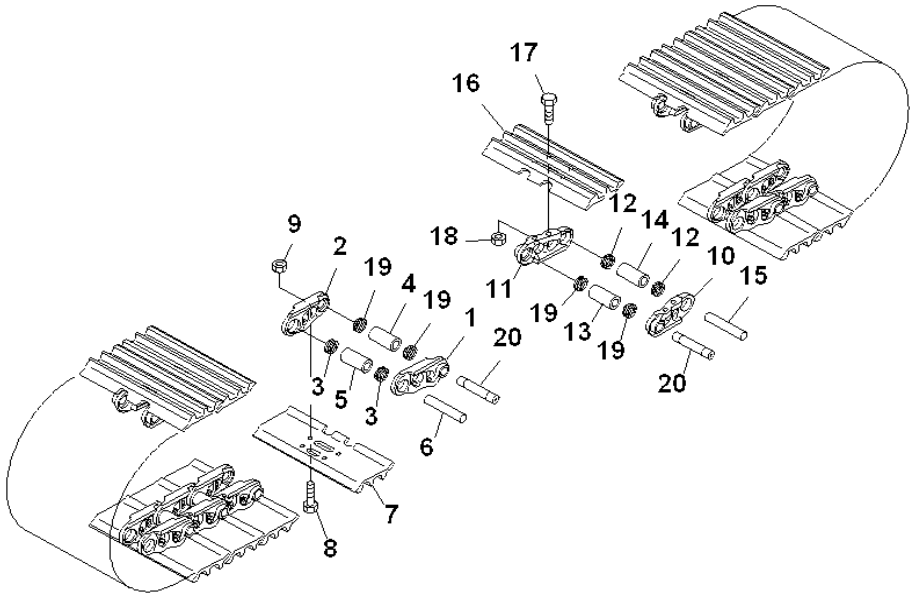

INDEX	PART NUMBER	DESCRIPTION	QTY	SERIAL No.
	203-32-02460	TRACK SHOE ASSY.....	1	NL 50001-
1	203-32-51122	. LINK.....	42	NL 50001-
2	203-32-51132	. LINK.....	42	NL 50001-
3	203-32-11360	. SEAL.....	80	NL 50001-
4	203-32-11372	. BUSHING, MASTER.....	2	NL 50001-
5	203-32-11342	. BUSHING, REGULAR.....	40	NL 50001-
6	203-32-51151	. PIN, REGULAR.....	40	NL 50001-
7	203-32-51461	. SHOE.....	42	NL 50001-
8	203-32-51210	. BOLT (Y0320-K1).....	168	NL 50001-
9	203-32-51220	. NUT (Y0320-K1).....	168	NL 50001-
10	203-32-51122	. LINK.....	44	NL 50001-
11	203-32-51132	. LINK.....	44	NL 50001-
12	203-32-11360	. SEAL.....	84	NL 50001-
13	203-32-11372	. BUSHING, MASTER.....	2	NL 50001-
14	203-32-11342	. BUSHING, REGULAR.....	42	NL 50001-
15	203-32-51151	. PIN, REGULAR.....	42	NL 50001-
16	203-32-51461	. SHOE.....	44	NL 50001-
17	203-32-51210	. BOLT (Y0320-K1).....	176	NL 50001-
18	203-32-51220	. NUT (Y0320-K1).....	176	NL 50001-
19	203-32-11380	. SEAL.....	8	NL 50001-
20	203-32-51191	. PIN, MASTER.....	4	NL 50001-

Fig. No. **R0500-01A0** | **TRACK SHOE (TRIPPLE GROUSER WITH LONG HOLE)(500MM)** | Update Index : **A** | **RO-011** 1/1

L&T-KOMATSU

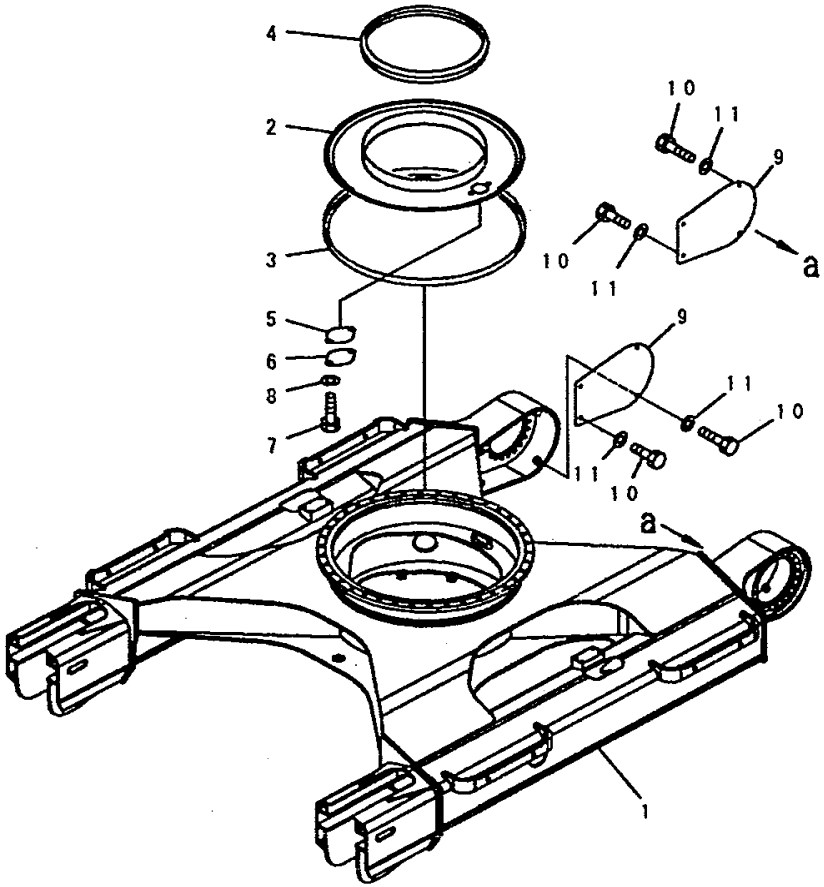

INDEX	PART NUMBER	DESCRIPTION	QTY	SERIAL No.
1	203-30-71212	FRAME	1	NL 50001-
2	203-30-61152	COVER	1	NL 50001-
3	203-30-61161	. SEAL	1	NL 50001-
4	203-30-61172	. SEAL	1	NL 50001-
5	203-46-31181	GASKET	1	NL 50001-
6	203-46-56160	COVER	1	NL 50001-
7	204 338 32 M	BOLT	2	NL 50001-
8	01643-31032	WASHER	2	NL 50001-
9	22B-30-11620	COVER	2	NL 50001-
10	204 338 32 M	BOLT	8	NL 50001-
11	01643-31032	WASHER	8	NL 50001-

Fig. No. **R1100-01A0** | **TRACK FRAME (WITH TRACK FRAME UNDER COVER)** | Update Index : **A** | **RO-021** 1/1

NOTES:

WORK EQUIPMENT

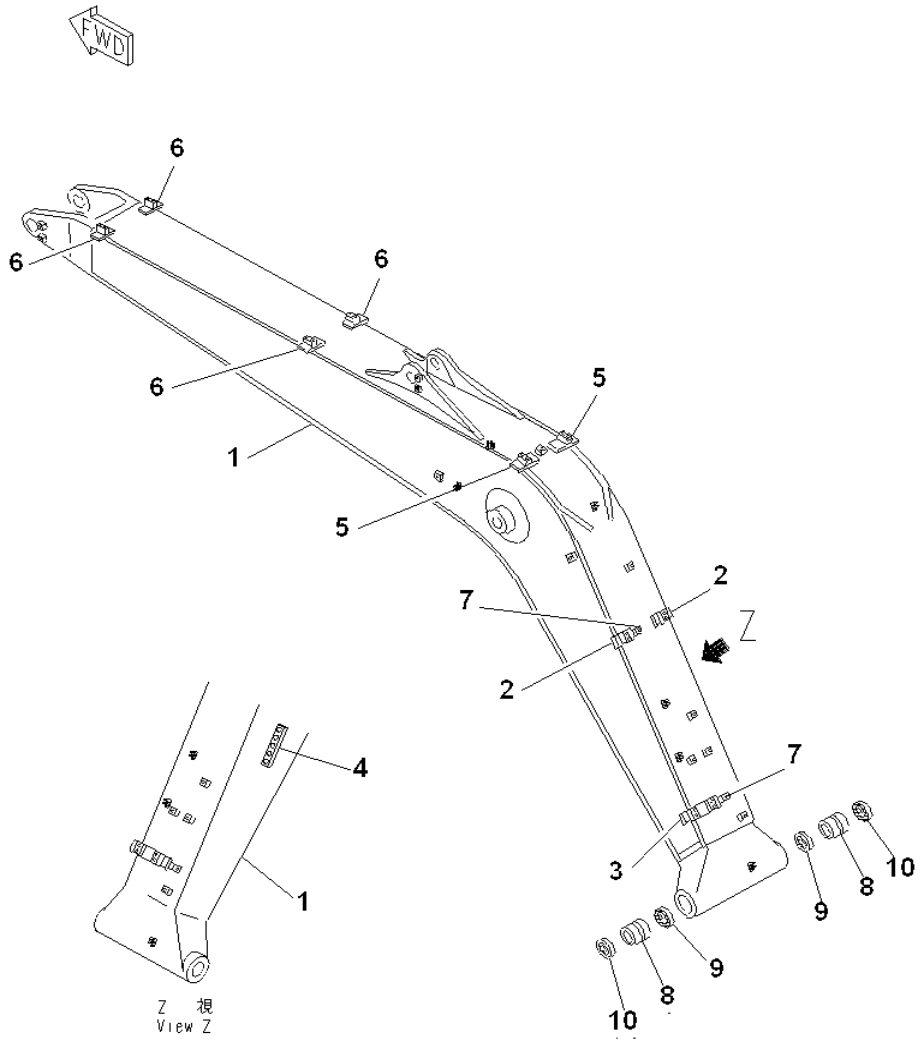

INDEX	PART NUMBER	DESCRIPTION	QTY	SERIAL No.
	203-70-71220	BOOM A.....	1	NL 50001-
1	#	. BOOM.....	1	NL 50001-
2	203-70-51221	. . SEAT (WELDED).....	2	NL 50001-
3	203-70-51260	. . SEAT (WELDED).....	1	NL 50001-
4	203-70-61310	. . PLATE (WELDED).....	1	NL 50001-
5	203-70-61780	. . PLATE (WELDED).....	2	NL 50001-
6	203-70-61790	. . PLATE (WELDED).....	4	NL 50001-
7	203-70-61C60	. . SEAT (WELDED).....	2	NL 50001-
8	203-70-66110	. BUSHING.....	2	NL 50001-
9	07145-00070	. SEAL.....	2	NL 50001-
10	07145-00070	. SEAL.....	2	NL 50001-

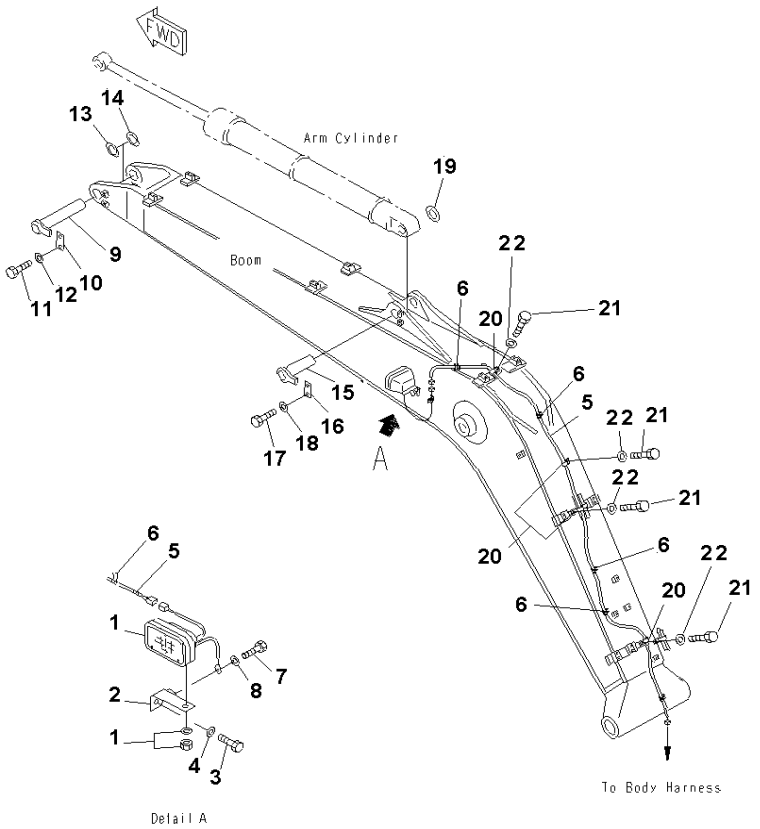

INDEX	PART NUMBER	DESCRIPTION	QTY	SERIAL No.
1	20Y-06-25310	WORK LAMP ASS'Y	1	NL 50001-
	421-06-23330	. BULB	1	NL 50001-
2	20Y-06-21551	BRACKET	1	NL 50001-
3	204 338 22B	BOLT	1	NL 50001-
4	01643-31232	WASHER	1	NL 50001-
5	203-06-71171	WIRE	1	NL 50001-
6	08034-20414	BAND	9	NL 50001-
7	204 338 23 C	BOLT	1	NL 50001-
8	01643-31232	WASHER	1	NL 50001-
9	202-70-61210	PIN	1	NL 50001-
10	205-70-66580	PLATE	1	NL 50001-
11	204 338 23 C	BOLT	2	NL 50001-
12	01643-31232	WASHER	2	NL 50001-
13	20U-70-31340	SPACER,1.0MM	1	NL 50001-
14	20U-70-31330	SPACER, 0.5MM	1	NL 50001-
15	203-70-42121	PIN	1	NL 50001-
16	205-70-66580	PLATE	1	NL 50001-
17	204 338 23 C	BOLT	2	NL 50001-
18	01643-31232	WASHER	2	NL 50001-
19	203-70-41461	SPACER	1	NL 50001-
20	04434-51012	CLIP	4	NL 50001-
21	204 338 27 G	BOLT	4	NL 50001-
22	01643-31032	WASHER	4	NL 50001-

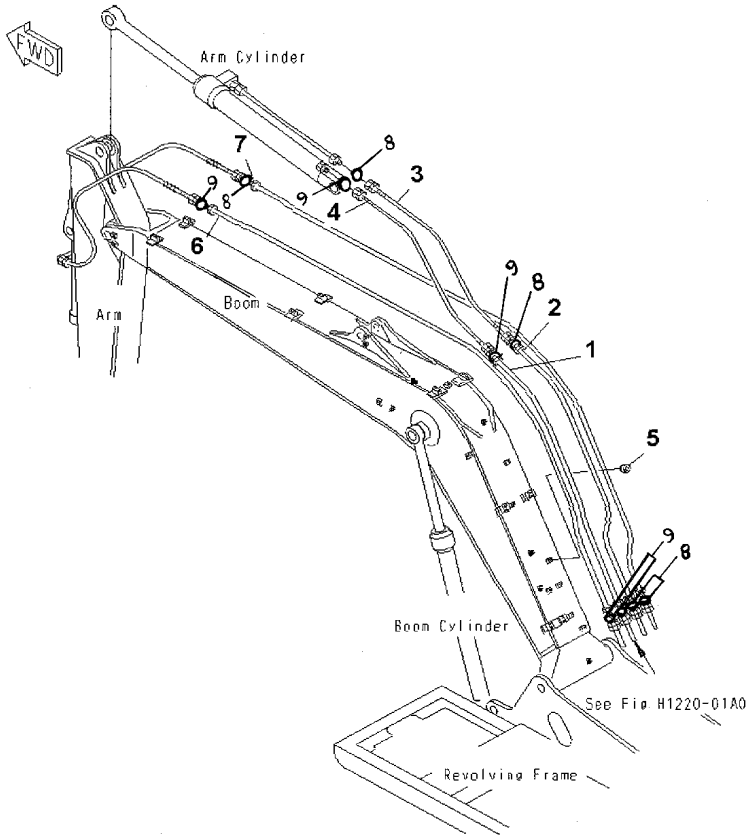

INDEX	PART NUMBER	DESCRIPTION	QTY	SERIAL No.
1	203-62-N1240	TUBE	1	NL 50001-
2	203-62-N1190	TUBE	1	NL 50001-
3	203-62-N1710	HOSE	1	NL 50001-
4	203-62-N1310	HOSE	1	NL 50001-
5	07049-01012	PLUG	4	NL 50001-
6	203-62-N1180	TUBE	1	NL 50001-
7	203-62-N1210	TUBE	1	NL 50001-
8	02896-11015	O-RING	5	NL 50001-
9	02896-11018	O-RING	5	NL 50001-

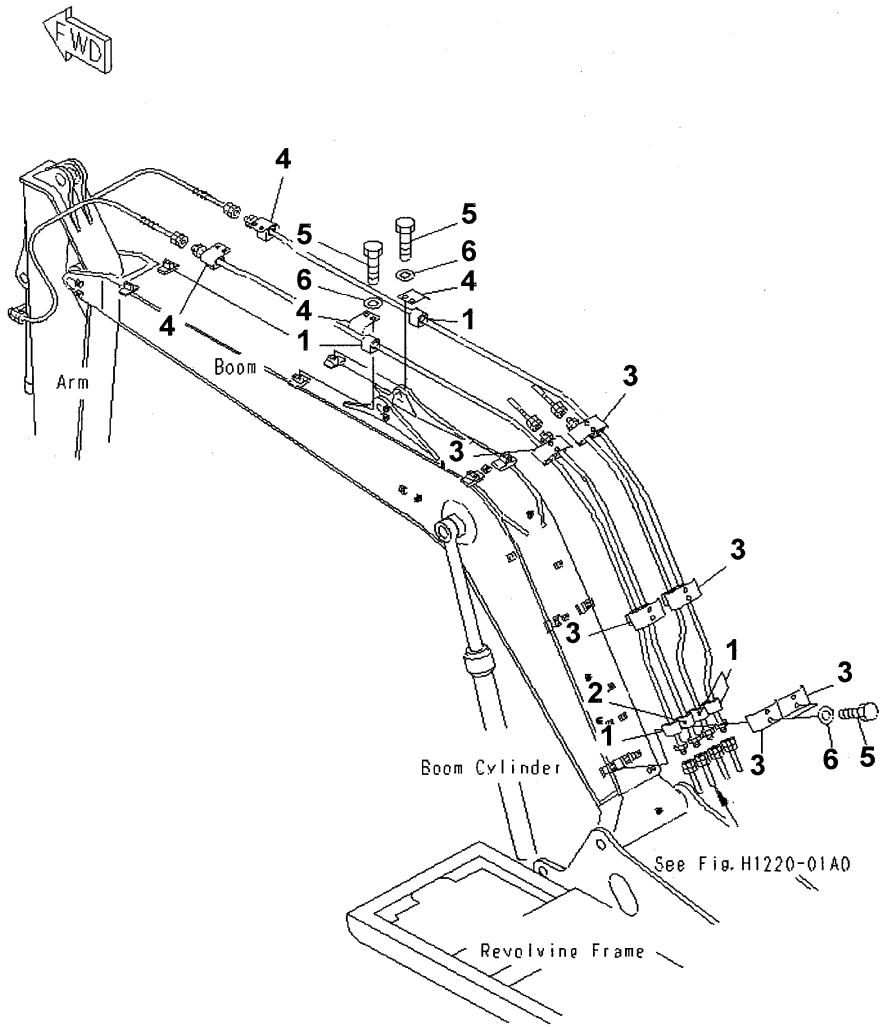

INDEX	PART NUMBER	DESCRIPTION	QTY	SERIAL No.
1	203-62-58810	CUSHION	13	NL 50001-
2	21K-62-35270	CUSHION	3	NL 50001-
3	203-70-53381	PLATE	6	NL 50001-
4	203-70-53391	PLATE	4	NL 50001-
5	204 338 32 M	BOLT	20	NL 50001-
6	01643-31032	WASHER	20	NL 50001-

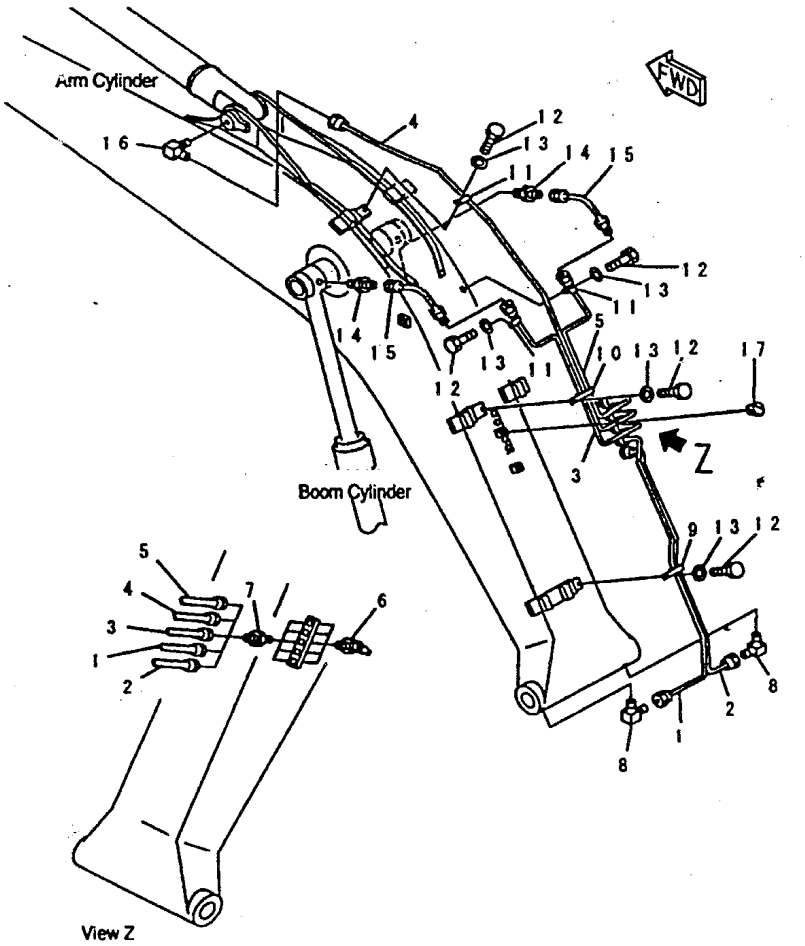

INDEX	PART NUMBER	DESCRIPTION	QTY	SERIAL No.
1	203-70-61251	TUBE	1	NL 50001-
2	203-70-61261	TUBE	1	NL 50001-
3	203-70-61271	TUBE	1	NL 50001-
4	203-70-61281	TUBE	1	NL 50001-
5	203-70-61291	TUBE	1	NL 50001-
6	07020-00900	FITTING	5	NL 50001-
7	20Y-70-11540	CONNECTOR	5	NL 50001-
8	20Y-70-11590	ELBOW	2	NL 50001-
9	04435-50810	CLIP	1	NL 50001-
10	04434-51712	CLIP	1	NL 50001-
11	04434-50812	CLIP	3	NL 50001-
12	204 338 27 G	BOLT	5	NL 50001-
13	01643-31032	WASHER	5	NL 50001-
14	205-70-51390	NIPPLE	2	NL 50001-
15	20Y-70-11520	HOSE, 440MM	2	NL 50001-
16	20Y-25-11270	ELBOW	1	NL 50001-

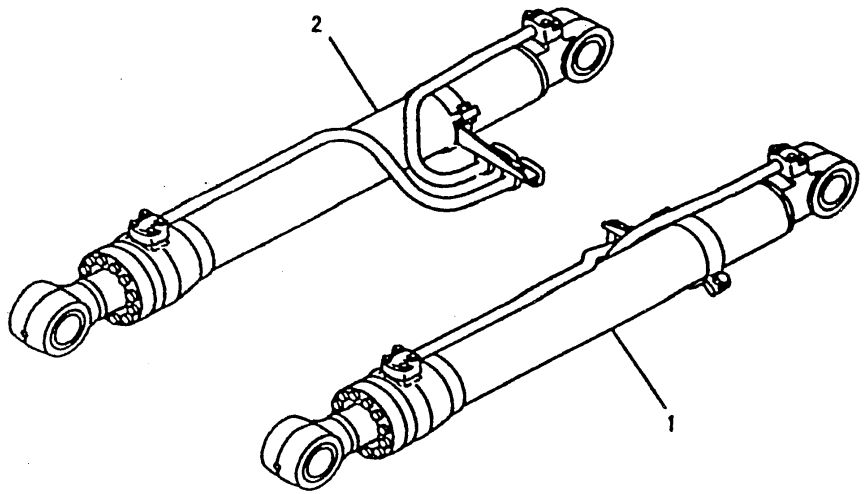

INDEX	PART NUMBER	DESCRIPTION	QTY	SERIAL No.
1	⊙ (707-01-N1420)	CYLINDER G. BOOM (L.H).....	1	NL 50001-
2	⊙ (707-01-N1430)	CYLINDER G. BOOM (R.H).....	1	NL 50001-

Fig. No. **T1120-01A0** | **BOOM CYLINDER** | Update Index : **A** | **TO-047** 1/1

L&T-KOMATSU

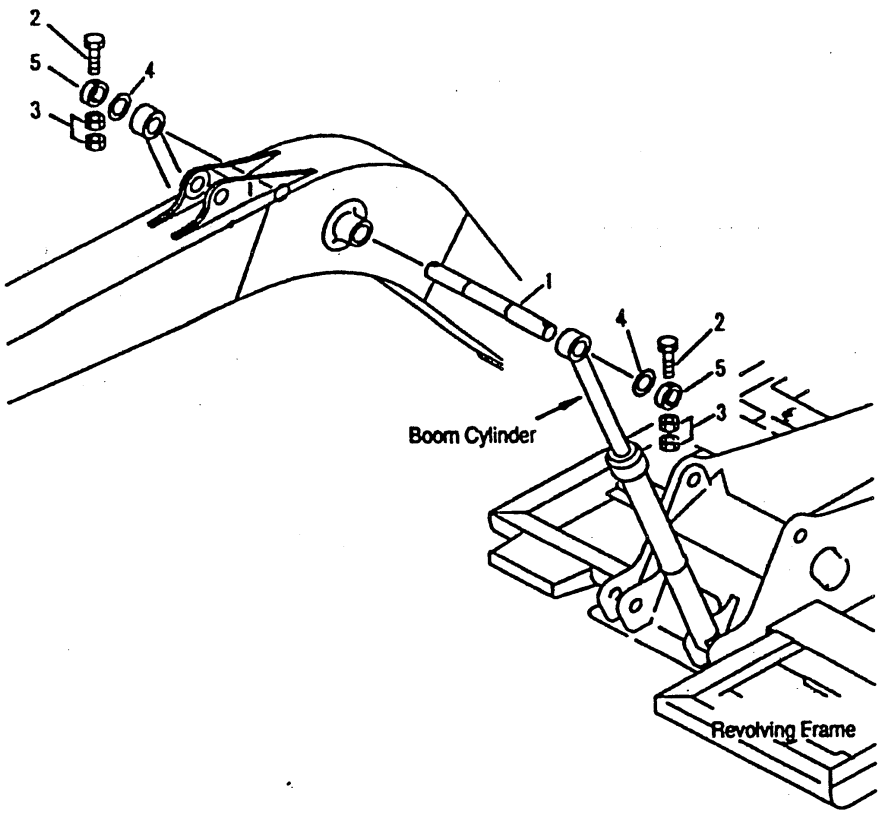

INDEX	PART NUMBER	DESCRIPTION	QTY	SERIAL No.
1	202-70-61180	PIN	1	NL 50001-
2	204 338 90 A	BOLT	2	NL 50001-
3	201 341 41 L	NUT	4	NL 50001-
4	21Y-70-14830	SPACER, 1.0MM	2	NL 50001-
5	21K-70-11410	PLATE	2	NL 50001-

Fig. No. **T1125-01A0** | **BOOM CYLINDER TOP PIN** | Update Index : **A** | **TO-057** 1/1

L&T-KOMATSU

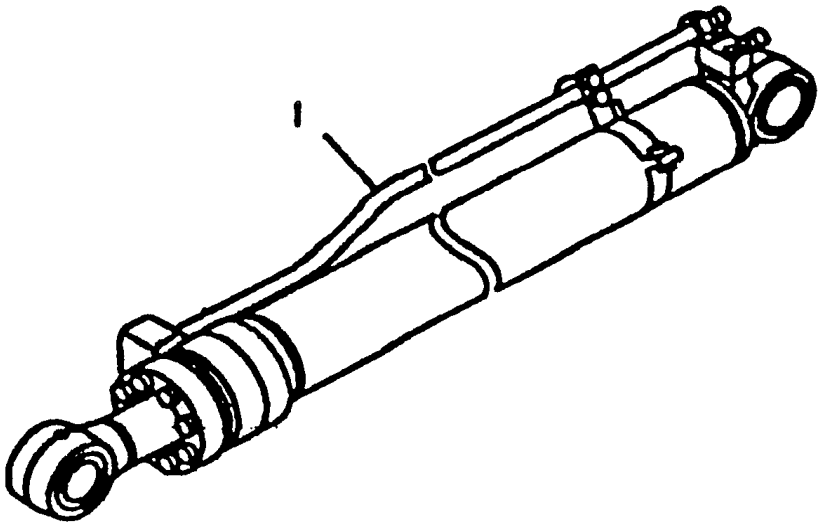

INDEX	PART NUMBER	DESCRIPTION	QTY	SERIAL No.
1	⊙ (707-01-N1440)	CYLINDER G. ARM.....	1	NL 50001-

Fig. No. **T1140-01A0** | **ARM CYLINDER** | Update Index : **A** | **TO-059** 1/1

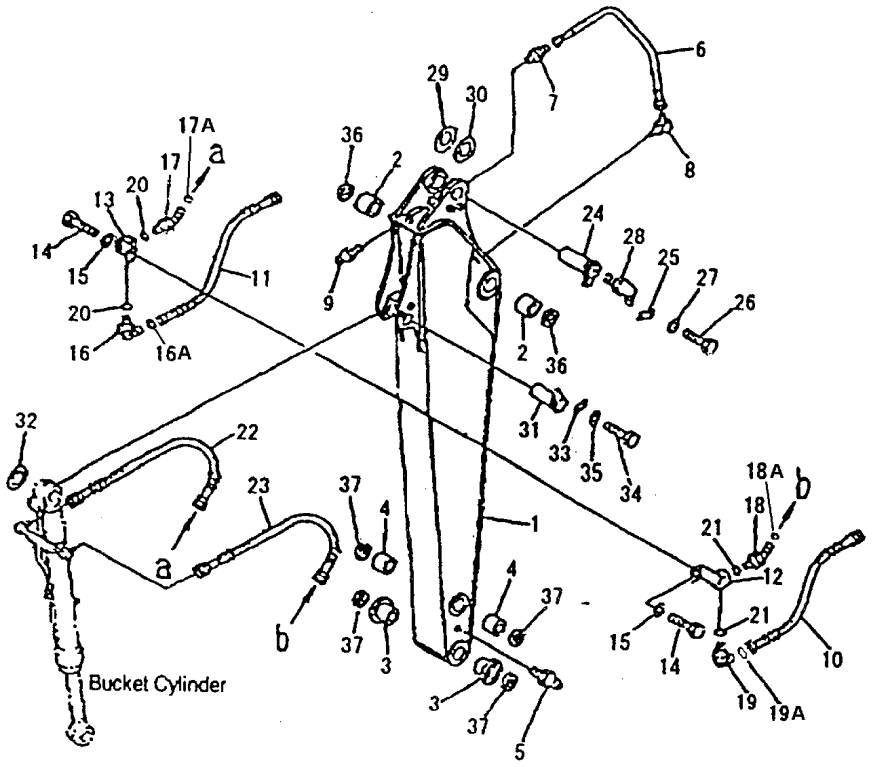

INDEX	PART NUMBER	DESCRIPTION	QTY	SERIAL No.
1	203-944-7221	ARM	1	NL 50001-
2	203-70-56130	BUSHING	2	NL 50001-
3	203-70-42182	BUSHING	2	NL 50001-
4	203-70-56150	BUSHING	2	NL 50001-
5	07020-00000	FITTING	1	NL 50001-
6	22B-70-15210	TUBE	1	NL 50001-
7	20Y-70-11540	CONNECTOR	1	NL 50001-
8	20Y-70-11590	ELBOW	1	NL 50001-
9	07020-00000	FITTING	1	NL 50001-
10	203-62-N1830	HOSE	1	NL 50001-
11	203-62-N1730	HOSE	1	NL 50001-
12	203-943-5620	ELBOW	1	NL 50001-
13	203-943-5130	ELBOW	1	NL 50001-
14	204 338 27 G	BOLT	4	NL 50001-
15	01643-31032	WASHER	4	NL 50001-
16	02782-10422	ELBOW	1	NL 50001-
16A	02896-11012	O-RING	1	NL 50001-
17	02783-10422	ELBOW	1	NL 50001-
17A	02896-11012	O-RING	1	NL 50001-
18	02783-10522	ELBOW	1	NL 50001-
18A	02896-11015	O-RING	1	NL 50001-
19	02782-10522	ELBOW	1	NL 50001-
19A	02896-11015	O-RING	1	NL 50001-
20	07002-22034	O-RING	2	NL 50001-
21	07002-22434	O-RING	2	NL 50001-
22	203-62-N1810	HOSE	1	NL 50001-
23	203-62-N1820	HOSE	1	NL 50001-
24	203-70-42121	PIN	1	NL 50001-
25	205-70-66580	PLATE	1	NL 50001-
26	204 338 23 C	BOLT	2	NL 50001-
27	01643-31232	WASHER	2	NL 50001-
28	07020-00675	FITTING	1	NL 50001-
29	21Y-70-14830	SPACER, 1.0MM	1	NL 50001-
30	21Y-70-14840	SPACER, 2.0MM	1	NL 50001-
31	202-70-52121	PIN	1	NL 50001-
32	21Y-70-14710	SPACER, 1.0MM	1	NL 50001-
33	205-70-66580	PLATE	1	NL 50001-
34	204 338 23 C	BOLT	2	NL 50001-

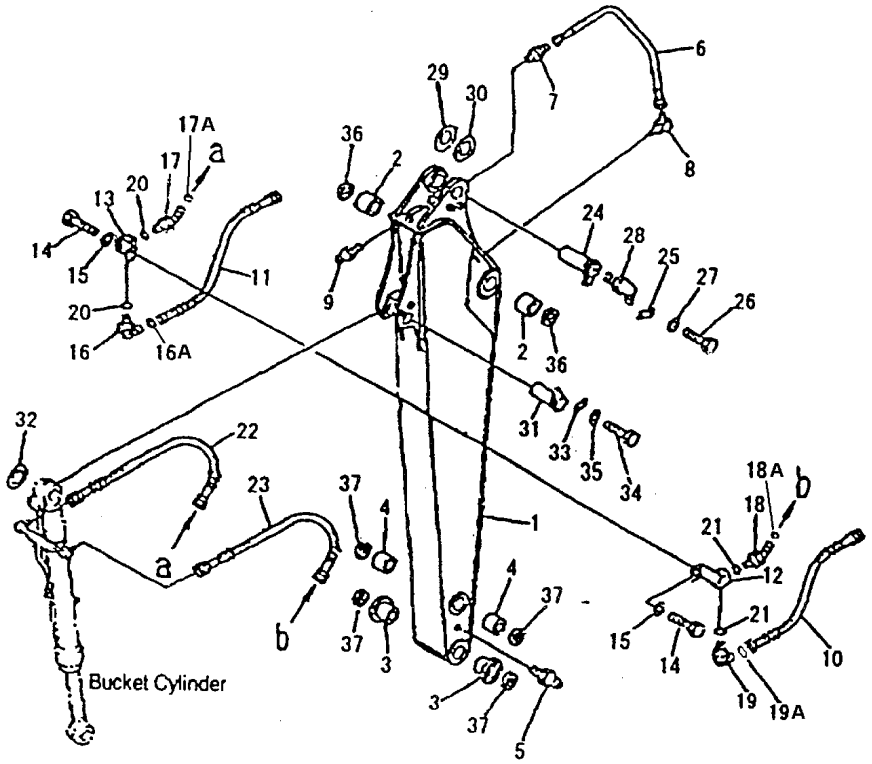

INDEX	PART NUMBER	DESCRIPTION	QTY	SERIAL No.
35	01643-31232	WASHER	2	NL 50001-
36	07145-00070	SEAL	2	NL 50001-
37	21W-70-41440	SEAL	4	NL 50001-

L&T-KOMATSU

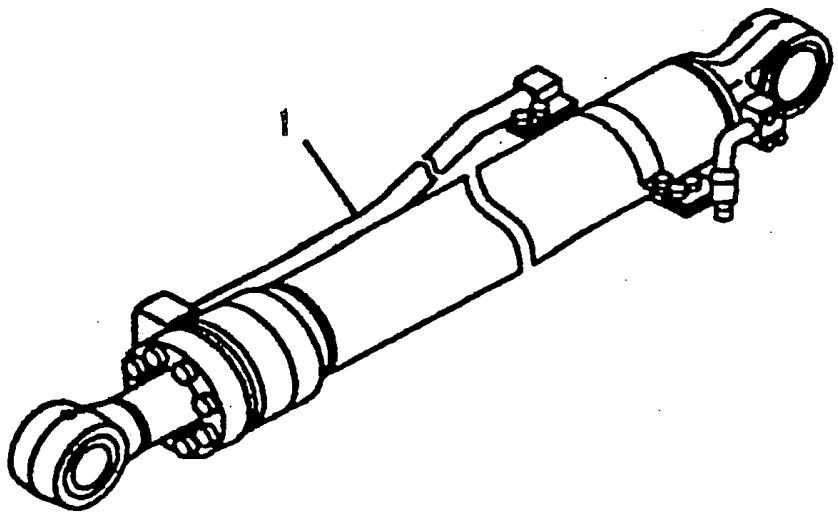

INDEX	PART NUMBER	DESCRIPTION	QTY	SERIAL No.
1	⊙ (707-01-N1450)	CYLINDER G. BUCKET.....	1	NL 50001-

Fig. No. **T1220-01A0** | **BUCKET CYLINDER** | Update Index : **A** | **TO-085** 1/1

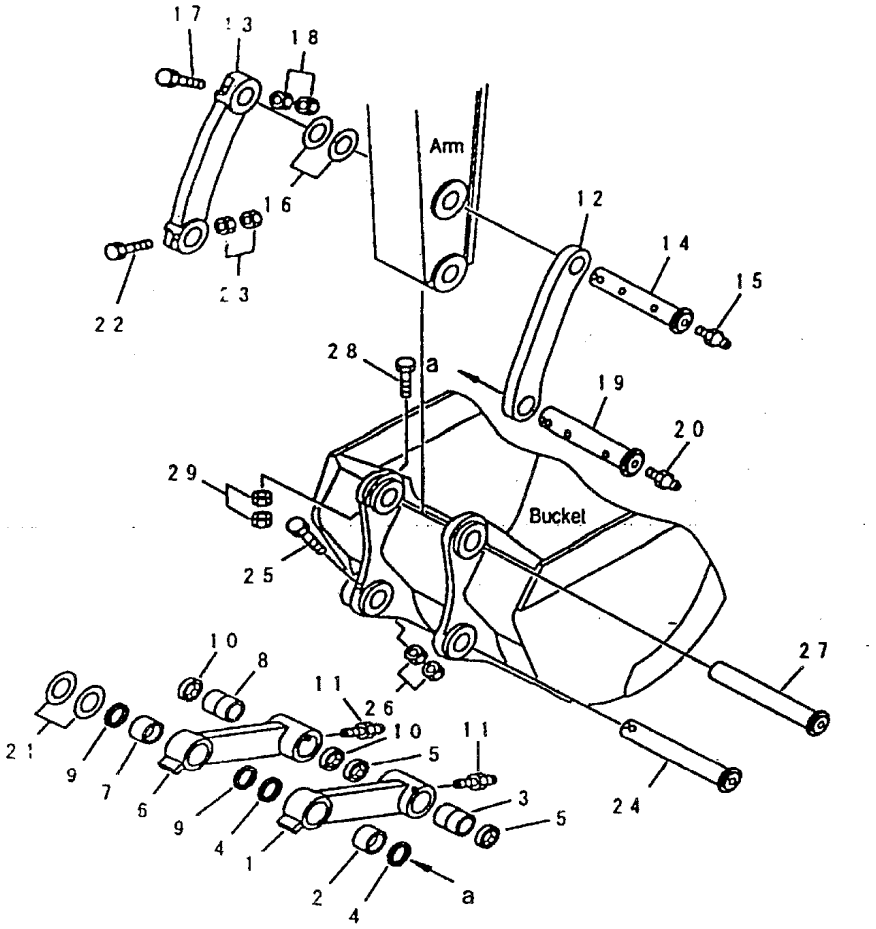

INDEX	PART NUMBER	DESCRIPTION	QTY	SERIAL No.
	203-70-00880	LINK ASS'Y	1	NL 50001-
1	#	. LINK	1	NL 50001-
2	203-70-56140	. BUSHING	1	NL 50001-
3	203-70-56160	. BUSHING	1	NL 50001-
4	07145-00065	. SEAL	2	NL 50001-
5	07145-00060	. SEAL	2	NL 50001-
	203-70-00890	LINK ASS'Y	1	NL 50001-
6	#	. LINK	1	NL 50001-
7	203-70-56140	. BUSHING	1	NL 50001-
8	203-70-56160	. BUSHING	1	NL 50001-
9	07145-00065	. SEAL	2	NL 50001-
10	07145-00060	. SEAL	2	NL 50001-
11	07020-00000	FITTING	2	NL 50001-
12	203-70-54110	LINK	1	NL 50001-
13	203-70-54120	LINK	1	NL 50001-
14	202-70-64151	PIN	1	NL 50001-
15	07020-00000	FITTING	1	NL 50001-
16	21Y-70-14770	SPACER, 1.0MM	1	NL 50001-
	21Y-70-14780	SPACER, 2.0MM	2	NL 50001-
17	205 338 10 J	BOLT	1	NL 50001-
18	201 341 41 L	NUT	2	NL 50001-
19	202-70-64163	PIN	1	NL 50001-
20	07020-00000	FITTING	1	NL 50001-
21	21Y-70-14710	SPACER, 1.0MM	3	NL 50001-
	21Y-70-14850	SPACER, 2.0MM	4	NL 50001-
22	205 338 10 J	BOLT	1	NL 50001-
23	201 341 41 L	NUT	2	NL 50001-
24	203-70-44380	PIN	1	NL 50001-
25	204 338 90 A	BOLT	1	NL 50001-
26	201 341 41L	NUT	2	NL 50001-
27	203-70-44380	PIN	1	NL 50001-
28	206 338 09 D	BOLT	1	NL 50001-
29	201 341 41 L	NUT	2	NL 50001-

Fig. No. **T1230-01A0** | **BUCKET LINK** | Update Index : **A** | **TO-087** **1/1**

L&T-KOMATSU

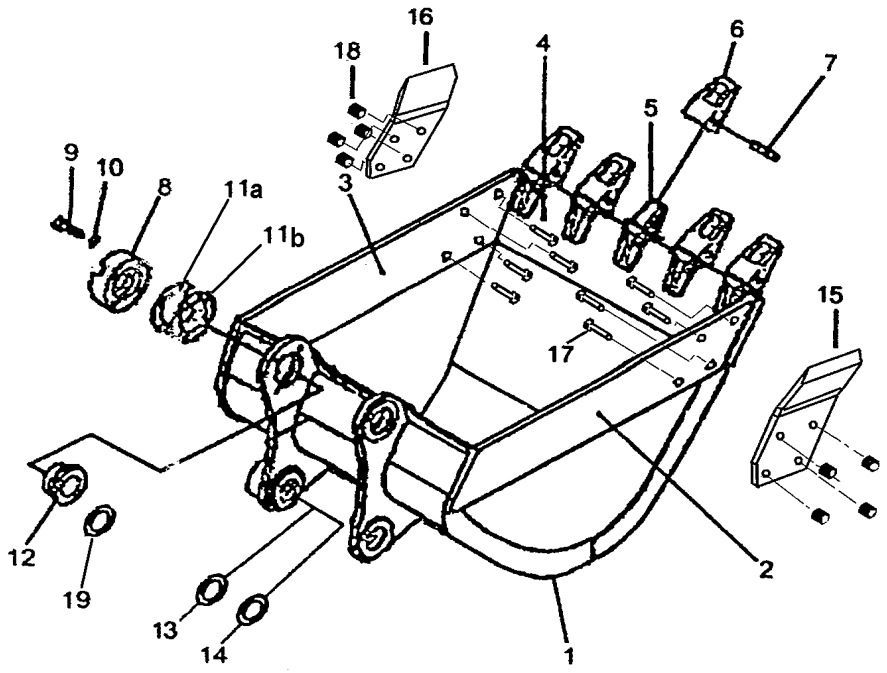

INDEX	PART NUMBER	DESCRIPTION	QTY	SERIAL No.
1	203-920-N120	BUCKET	1	NL 50001-
2	203-70-73131	. PLATE (WELDED)	1	NL 50001-
3	203-70-73141	. PLATE (WELDED)	1	NL 50001-
4	203-920-7121	. PLATE (WELDED)	1	NL 50001-
5	20Y-70-14520	. ADAPTER (WELDED)	5	NL 50001-
6	205-70-N1190	TOOTH	5	NL 50001-
7	09244-02496	PIN	5	NL 50001-
8	202-70-64240	PLATE	1	NL 50001-
9	204 338 99 F	BOLT	4	NL 50001-
10	01643-31445	WASHER	4	NL 50001-
11a	202-70-64210	SPACER 0.5MM	4	NL 50001-
11b	202-70-64220	SPACER 1MM	10	NL 50001-
12	202-70-64250	BUSHING	1	NL 50001-
13	201-70-N1870	SPACER	1	NL 50001-
14	201-70-N1880	SPACER	1	NL 50001-
15	202-70-63161	CUTTER L.H	1	NL 50001-
16	202-70-63171	CUTTER R.H	1	NL 50001-
17	208-32-11231	BOLT SHOE	8	NL 50001-
18	01803-02228	NUT	8	NL 50001-
19	203-70-44470	O-RING	2	NL 50001-

Fig. No. **T1510-01A3** | **BUCKET 0.64M3 (HORIZONTAL PIN TYPE)** | Update Index : **A** | **TO-095** 1/1

MARKS AND PLATES

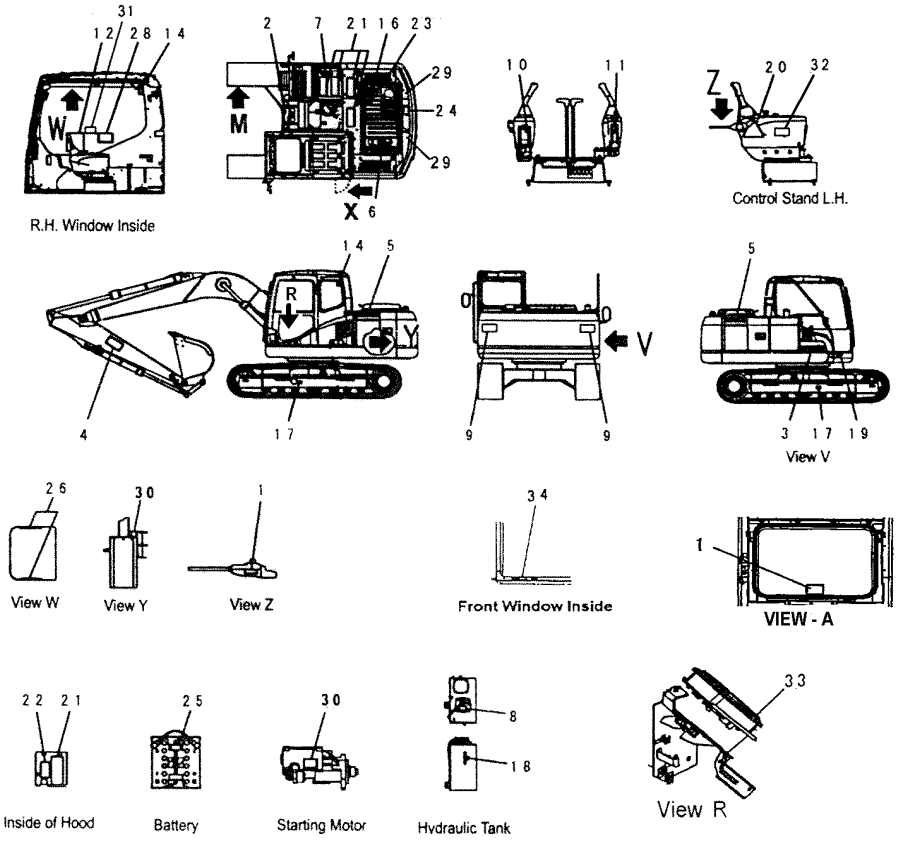

INDEX	PART NUMBER	DESCRIPTION	QTY	SERIAL No.
1	09685-00002	PLATE	1	NL 50001-
2	20Y-00-N1160	PLATE, MARK	1	NL 50001-
3	203-00-N1170	PLATE, MARK	1	NL 50001-
4	09134-A1681	PLATE, MARK	2	NL 50001-
5	203-00-N1210	PLATE	1	NL 50001-
6	09653-A0481	PLATE, SAFETY	2	NL 50001-
7	09669-0000E	PLATE	1	NL 50001-
8	09653-A0481	PLATE, SAFETY	1	NL 50001-
9	09133-A3281	PLATE	1	NL 50001-
10	203-00-71191	PLATE	1	NL 50001-
11	20Y-00-31330	PLATE	1	NL 50001-
12	207-00-N1170	PLATE	1	NL 50001-
14	09803-A0481	PLATE	1	NL 50001-
16	09805-C0481	PLATE	1	NL 50001-
17	09657-A0881	PLATE	2	NL 50001-
18	203-00-31120	PLATE	1	NL 50001-
19	20Y-00-N1310	PLATE, NAME	1	NL 50001-
	04418-13060	. SCREW	4	NL 50001-
20	09963-03001	PLATE	1	NL 50001-
21	20Y-00-N1220	ANTISLIP STICKER	5	NL 50001-
22	203-00-N1230	ANTISLIP STICKER	1	NL 50001-
23	09667-A0481	PLATE, SAFETY	1	NL 50001-
24	09805-A0881	PLATE, SAFETY	1	NL 50001-
25	203-00-71130	PLATE	1	NL 50001-
26	09659-A057B	PLATE	3	NL 50001-
27	20Y-00-31350	PLATE	1	NL 50001-
28	20Y-00-N1170	PLATE, MARK	1	NL 50001-
29	20Y-00-N1140	PLATE	1	NL 50001-
30	09842-A0481	PLATE, CAUTION	2	NL 50001-
31	203-00-71210	PLATE	1	NL 50001-
32	20Y-00-N1280	PLATE	1	NL 50001-
33	207-00-N1210	PLATE	1	NL 50001-
34	203-00-N1110	PULL, CONNECTOR	1	NL 50001-

L&T-KOMATSU

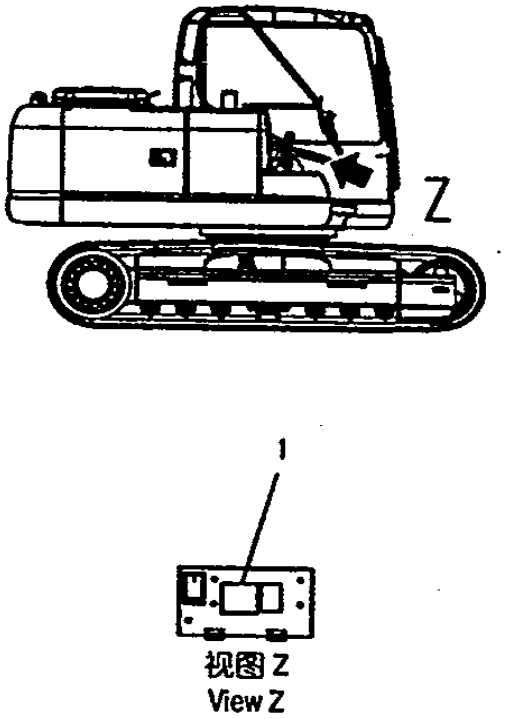

INDEX	PART NUMBER	DESCRIPTION	QTY	SERIAL No.
1	203-00-N1220	OIL CHART.....	1	NL 50001-

L&T-KOMATSU

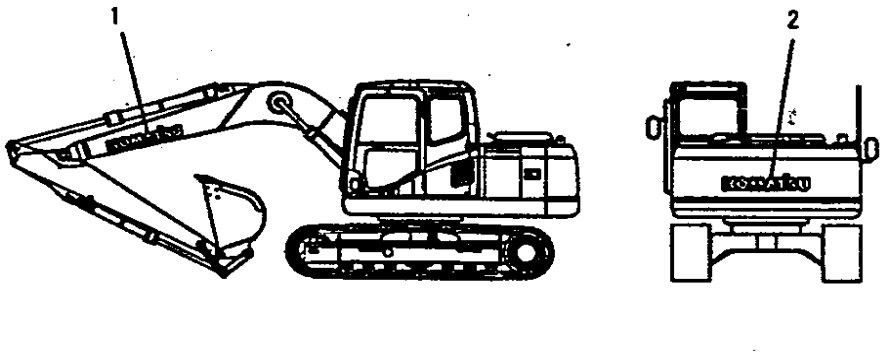

INDEX	PART NUMBER	DESCRIPTION	QTY	SERIAL No.
1	203-00-N1190	PLATE, MARK.....	2	NL 50001-
2	203-00-N1180	PLATE, MARK.....	1	NL 50001-

Fig. No. **U0150-01A1** | **PLATE** | Update Index : **A** | **UO-009** 1/1

ACCESSORY

L&T-KOMATSU

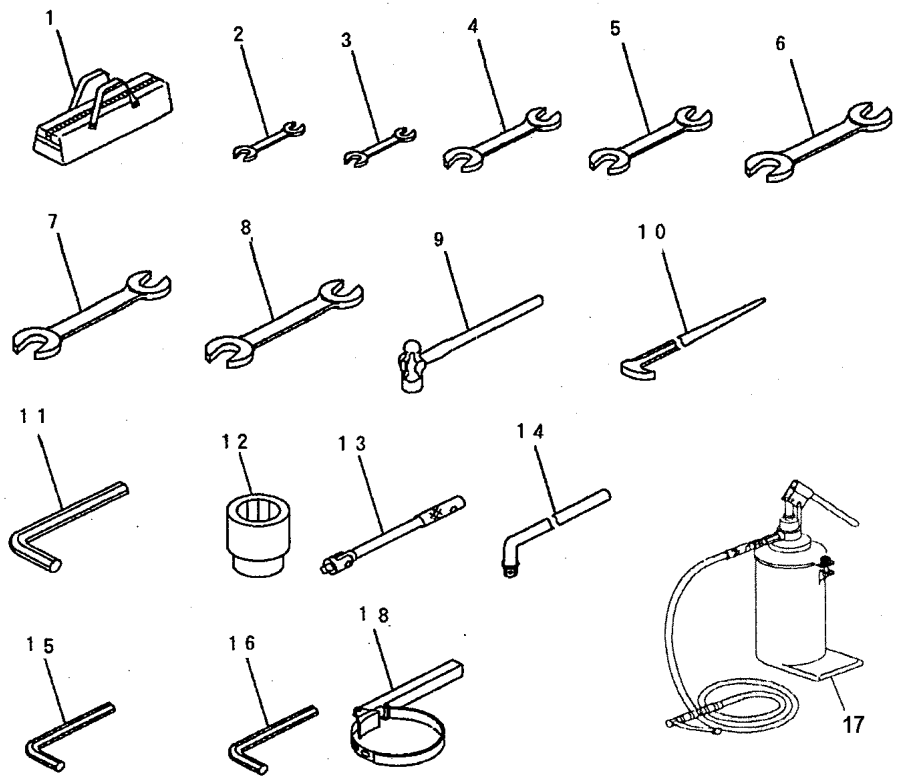

INDEX	PART NUMBER	DESCRIPTION	QTY	SERIAL No.
1	20Y-98-N1250	TOOL BAG	1	NL 50001-
2	201 444 91 L	DOUBLE END SPANNER 10-11	1	NL 50001-
3	200 444 08 A	DOUBLE END SPANNER 12-13	1	NL 50001-
4	200 444 09 B	DOUBLE END SPANNER 14-15	1	NL 50001-
5	200 444 10 C	DOUBLE END SPANNER 16-17	1	NL 50001-
6	200 444 11 D	DOUBLE END SPANNER 18-19	1	NL 50001-
7	201 444 92 M	DOUBLE END SPANNER 22-24	1	NL 50001-
8	201 444 93 N	DOUBLE END SPANNER 27-30	1	NL 50001-
9	20Y-98-N1230	HAMMER	1	NL 50001-
10	20Y-98-N1260	BAR	1	NL 50001-
11	200 520 10 N	ALLEN KEY A/F 8	1	NL 50001-
12	20Y-98-N1170	SOCKET WRENCH A/F 24	1	NL 50001-
13	09024-00300	HANDLE	1	NL 50001-
14	20Y-98-N1240	HANDLE	1	NL 50001-
15	200 520 12 Q	ALLEN KEY A/F 10	1	NL 50001-
16	200 520 07 K	ALLEN KEY A/F 5	1	NL 50001-
17	201 444 89 J	HAND OPERATED GREASE GUN-5KG	1	NL 50001-
18	09019-28036	WRENCH (FILTER)	1	NL 50001-

SERVICE KIT

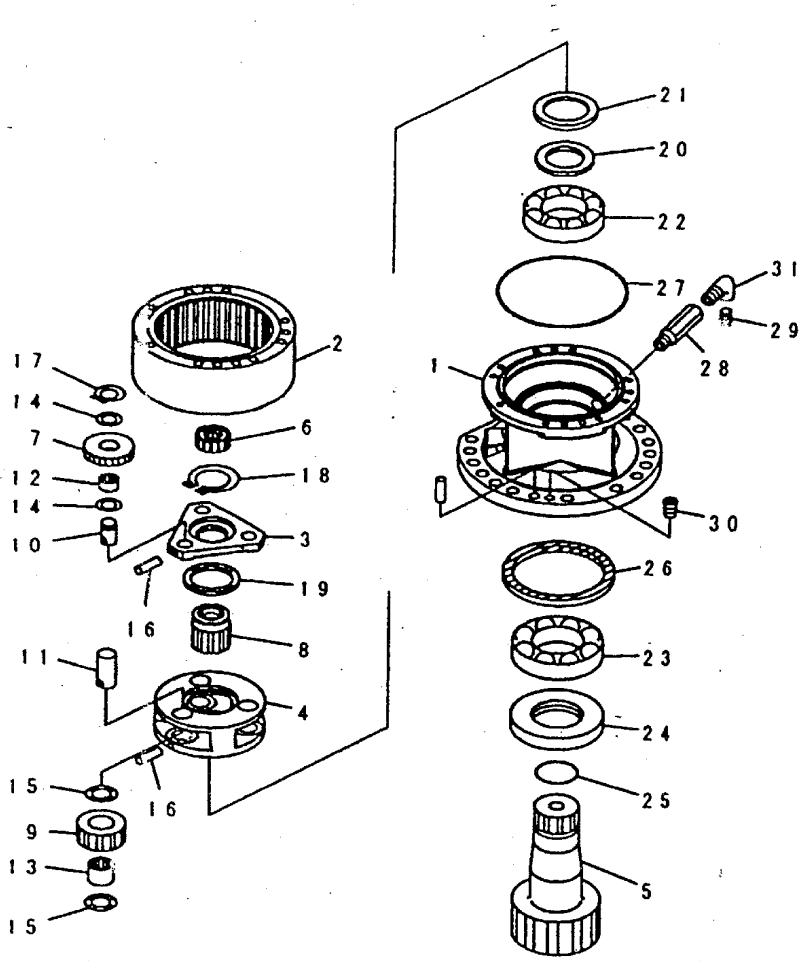

INDEX	PART NUMBER	DESCRIPTION	QTY	SERIAL No.
	203-26-00123	SWING MACHINIRY A.....	1	NL 50001-
1	#	. CASE.....	1	NL 50001-
2	203-26-61110	. GEAR.....	1	NL 50001-
3	203-26-61120	. CARRIER.....	1	NL 50001-
4	203-26-61130	. CARRIER.....	1	NL 50001-
5	203-26-61220	. SHAFT.....	1	NL 50001-
6	203-26-61150	. GEAR.....	1	NL 50001-
7	203-26-61160	. GEAR.....	3	NL 50001-
8	203-26-61170	. GEAR.....	1	NL 50001-
9	203-26-61180	. GEAR.....	3	NL 50001-
10	201-26-62240	. SHAFT.....	3	NL 50001-
11	203-26-61250	. SHAFT.....	3	NL 50001-
12	201-26-62270	. BEARING.....	3	NL 50001-
13	203-26-61270	. BEARING.....	3	NL 50001-
14	20S-26-71160	. WASHER.....	6	NL 50001-
15	09233-12920	. WASHER, THRUST.....	6	NL 50001-
16	20S-26-71250	. PIN.....	6	NL 50001-
17	20S-26-71190	. RING, SNAP.....	3	NL 50001-
18	04064-05520	. RING, SNAP.....	1	NL 50001-
19	203-26-61280	. SPACER.....	1	NL 50001-
20	203-26-61391	. SPACER.....	2	NL 50001-
21	203-26-61310	. COLLAR.....	1	NL 50001-
22	201-26-62330	. BEARING.....	1	NL 50001-
23	203-26-61320	. BEARING.....	1	NL 50001-
24	203-26-61340	. COLLAR.....	1	NL 50001-
25	07000-02080	. O-RING.....	1	NL 50001-
26	07012-00145	. SEAL, OIL.....	1	NL 50001-
27	203-26-61360	. O-RING.....	1	NL 50001-
28	203-26-61370	. NIPPLE.....	1	NL 50001-
29	07042-30415	. PLUG.....	1	NL 50001-
30	07049-01620	. PLUG.....	1	NL 50001-
31	07323-30400	. ELBOW.....	1	NL 50001-

Fig. No. **Y0260-01A0** | **SWING MACHINERY (INNER PARTS)** | Update Index : **A** | **YO-003** 1/1

L&T-KOMATSU

SEE SUBSEQUENT PAGES FOR DETAILS

K1 203-32-05030 SHOE BOLT AND NUT SERVICE KIT

INDEX	PART NUMBER	DESCRIPTION	QTY	SERIAL No.
K1	203-32-05030	SHOE BOLT AND NUT K.....	1	NL 50001-
	203-32-51210	. BOLT.....	50	NL 50001-
	203-32-51220	. NUT.....	50	NL 50001-

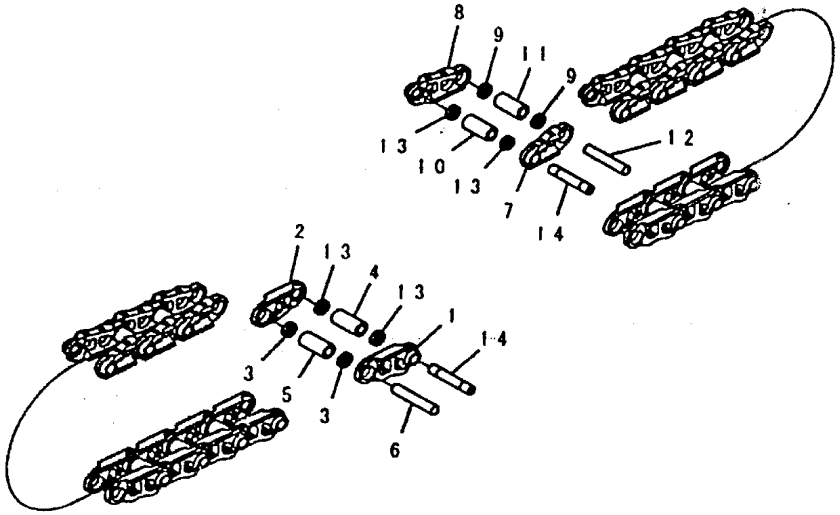

INDEX	PART NUMBER	DESCRIPTION	QTY	SERIAL No.
	203-32-00230	TRACK LINK ASSY.....	1	NL 50001-
1	203-32-51122	. LINK.....	42	NL 50001-
2	203-32-51132	. LINK.....	42	NL 50001-
3	203-32-11360	. SEAL.....	80	NL 50001-
4	203-32-11372	. BUSHING.....	2	NL 50001-
5	203-32-11342	. BUSHING.....	40	NL 50001-
6	203-32-51151	. PIN, REGULAR.....	40	NL 50001-
7	203-32-51122	. LINK.....	44	NL 50001-
8	203-32-51132	. LINK.....	44	NL 50001-
9	203-32-11360	. SEAL.....	84	NL 50001-
10	203-32-11372	. BUSHING.....	2	NL 50001-
11	203-32-11342	. BUSHING.....	42	NL 50001-
12	203-32-51151	. PIN, REGULAR.....	42	NL 50001-
13	203-32-11380	. SEAL.....	8	NL 50001-
14	203-32-51191	. PIN, MASTER.....	4	NL 50001-

Fig. No. **Y0321-01A0** | **TRACK LINK ASSY (SUPPLY ONLY)** | Update Index : **A** | **YO-007** 1/1

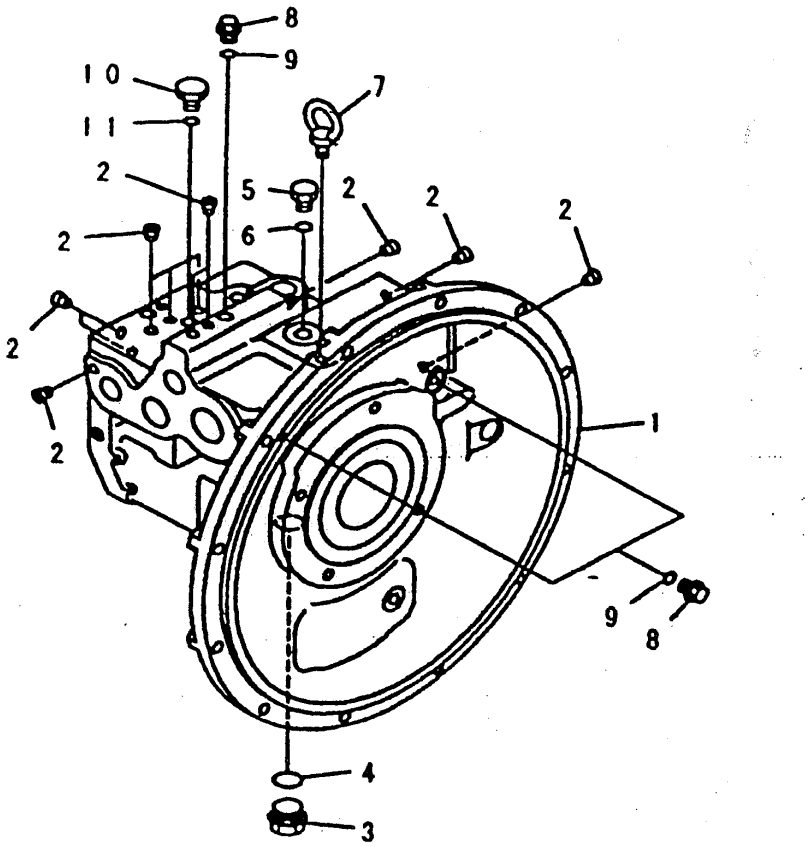

INDEX	PART NUMBER	DESCRIPTION	QTY	SERIAL No.
	708-1L-00650	PUMP ASSY.....	1	NL 50001-
		THIS ASSEMBLY CONSISTS OF ALL		
		PARTS SHOWN IN FIGS. Y1600-01A0		
		TO Y1600-08A0.		
	708-1L-01650	. PUMP SUB ASSY.....	1	NL 50001-
	★ (708-2L-04240)	. . CASE, ASSY FRONT.....	1	NL 50001-
1	#	. . . CASE, FRONT.....	1	NL 50001-
2	#	. . . PLUG.....	16	NL 50001-
3	07044-12412	. . PLUG.....	1	NL 50001-
4	07002-62434	. . O-RING.....	1	NL 50001-
5	720-68-19870	. . PLUG.....	1	NL 50001-
6	07002-61223	. O-RING.....	1	NL 50001-
7	04530-11018	. . BOLT, EVE.....	1	NL 50001-
8	708-8E-16150	. . PLUG.....	3	NL 50001-
9	07002-61023	. . O-RING.....	3	NL 50001-
10	708-8H-11530	. . PLUG.....	1	NL 50001-
11	07002-61423	. . O-RING.....	1	NL 50001-

L&T-KOMATSU

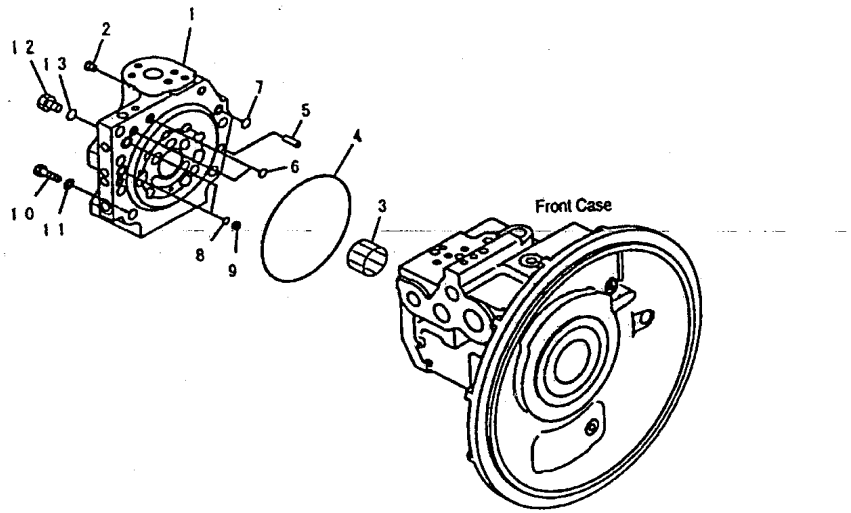

INDEX	PART NUMBER	DESCRIPTION	QTY	SERIAL No.
	(708-1L-00650)	PUMP ASSY.....	1	NL 50001-
		THIS ASSEMBLY CONSISTS OF		
		ALL PARTS SHOWN IN FIGS. Y1600-01A0		
		TO Y1600-08A0.		
	(708-1L-01650)	. PUMP SUB ASSY.....	1	NL 50001-
	★ (708-1L-04150)	. . CAP ASSY, END.....	1	NL 50001-
1	#	. . . CAP, END.....	1	NL 50001-
2	#	. . . PLUG.....	7	NL 50001-
3	★ (708-2L-32260)	. . BEARING.....	1	NL 50001-
4	★ (07000-B5165)	. . O-RING.....	1	NL 50001-
5	★ (04020-01228)	. . PIN.....	1	NL 50001-
6	★ (07000-B2010)	. . O-RING.....	3	NL 50001-
7	★ (07000-B2012)	. . O-RING.....	1	NL 50001-
8	★ (07000-B2014)	. . O-RING.....	2	NL 50001-
9	★ (708-2L-25480)	. . FILTER.....	2	NL 50001-
10	★ (01010-61450)	. . BOLT.....	7	NL 50001-
11	★ (01643-31445)	. . WASHER.....	7	NL 50001-
12	★ (07040-12414)	. . PLUG.....	1	NL 50001-
13	★ (07002-62434)	. . O-RING.....	1	NL 50001-

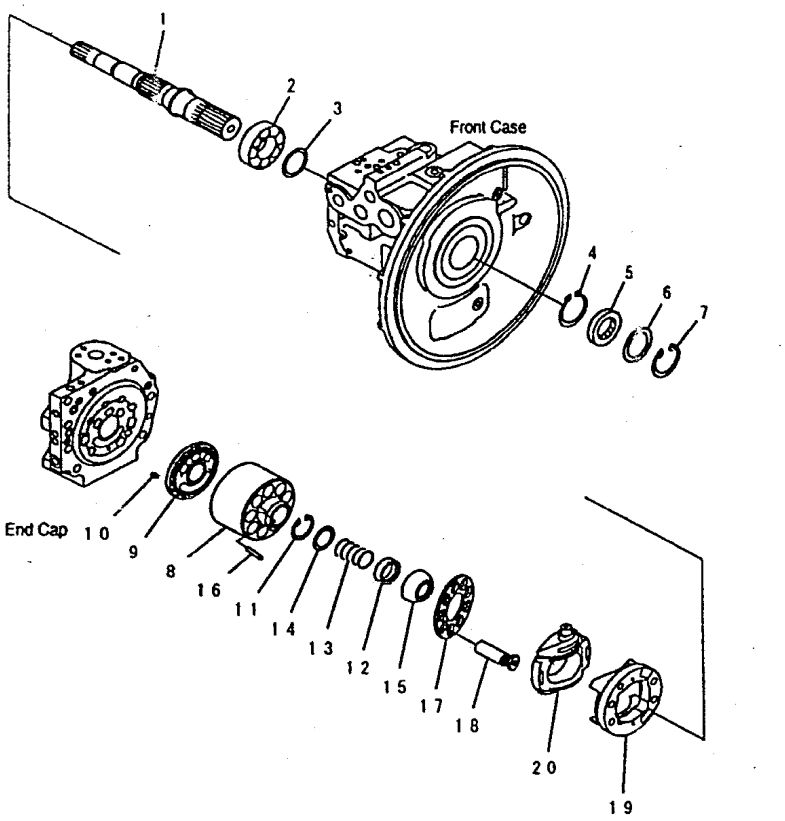

INDEX	PART NUMBER	DESCRIPTION	QTY	SERIAL No.
	(708-1L-00650)	PUMP ASSY.....	1	NL 50001-
		THIS ASSEMBLY CONSISTS OF ALL		
		PARTS SHOWN IN FIGS. Y1600-01A0		
		TO Y1600-08A0.		
	(708-1L-01650)	. PUMP SUB ASSY.....	1	NL 50001-
1	★ (708-2L-32110)	. . SHAFT, FRONT.....	1	NL 50001-
2	★ (708-2L-32150)	. . BEARING.....	1	NL 50001-
3	★ (708-2E-05040)	. . WASHER KIT.....	1	NL 50001-
	#	. . . WASHER , 3.1MM.....	1	NL 50001-
	#	. . . WASHER , 3.0MM.....	1	NL 50001-
	#	. . . WASHER , 2.9MM.....	1	NL 50001-
	#	. . . WASHER , 2.8MM.....	1	NL 50001-
4	★ (708-25-12790)	. . RING, SNAP.....	1	NL 50001-
5	708-25-52861	. . SEAL, OIL.....	1	NL 50001-
6	708-2L-22160	. . SPACER.....	1	NL 50001-
7	04065-06825	. . RING, SNAP.....	1	NL 50001-
	★ (708-2L-06170)	. . BLOCK ASSY, FRONT.....	1	NL 50001-
8	#	. . . BLOCK, CYLINDER.....	1	NL 50001-
9	#	. . . PLATE, VALVE.....	1	NL 50001-
10	★ (720-68-19610)	. . PIN.....	1	NL 50001-
11	★ (04065-04818)	. . RING, SNAP.....	1	NL 50001-
12	★ (708-2L-23131)	. . SEAT.....	1	NL 50001-
13	★ (708-2L-33160)	. . SPRING.....	1	NL 50001-
14	★ (708-7L-13140)	. . SEAT.....	1	NL 50001-
15	★ (708-2L-23351)	. . GUIDE RETAINER.....	1	NL 50001-
16	★ (708-2L-23360)	. . PIN.....	3	NL 50001-
17	★ (708-2L-33350)	. . RETAINER, SHOE.....	1	NL 50001-
18	★ (708-2L-33310)	. . PISTON SUB ASSY.....	9	NL 50001-
	★ (708-2L-04361)	. . CRADLE ASSY.....	1	NL 50001-
19	#	. . . CRADLE.....	1	NL 50001-
20	#	. . . CAM, ROCKER.....	1	NL 50001-

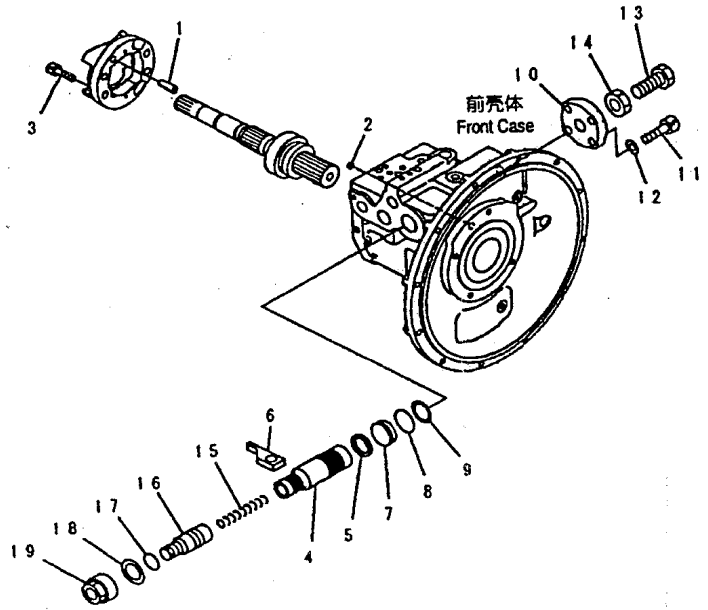

INDEX	PART NUMBER	DESCRIPTION	QTY	SERIAL No.
	(708-1L-00650)	PUMP ASSY	1	NL 50001-
		THIS ASSEMBLY CONSISTS OF ALL PARTS SHOWN IN FIGS. Y1600-01A0 TO Y1600-08A0.		
	(708-1L-01650)	. PUMP SUB ASSY	1	NL 50001-
1	★ (04020-01228)	. . PIN	1	NL 50001-
2	★ (07000-B1009)	. . O-RING	1	NL 50001-
3	★ (01252-61230)	. . BOLT	4	NL 50001-
4	★ (708-2L-24514)	. . PISTON, SERVO	1	NL 50001-
5	★ (708-2L-24670)	. . SEAL	1	NL 50001-
6	★ (708-2L-24570)	. . SLIDER	1	NL 50001-
7	★ (708-2L-24560)	. . STOPPER	1	NL 50001-
8	★ (07000-B3040)	. . O-RING	1	NL 50001-
9	★ (07001-03040)	. . RING, BACK UP	1	NL 50001-
10	★ (708-2L-24522)	. . COVER	1	NL 50001-
11	★ (01252-61445)	. . BOLT	4	NL 50001-
12	★ (113-43-31380)	. . WASHER	4	NL 50001-
13	★ (708-2L-24640)	. . BOLT	1	NL 50001-
14	★ (708-2L-24650)	. . NUT	1	NL 50001-
15	★ (708-2L-24630)	. . SPRING	1	NL 50001-
16	★ (708-2L-24531)	. . SCREW	1	NL 50001-
17	★ (07002-63634)	. . O-RING	1	NL 50001-
18	★ (708-2L-24661)	. . WASHER	1	NL 50001-
19	★ (708-2L-24590)	. . NUT	1	NL 50001-

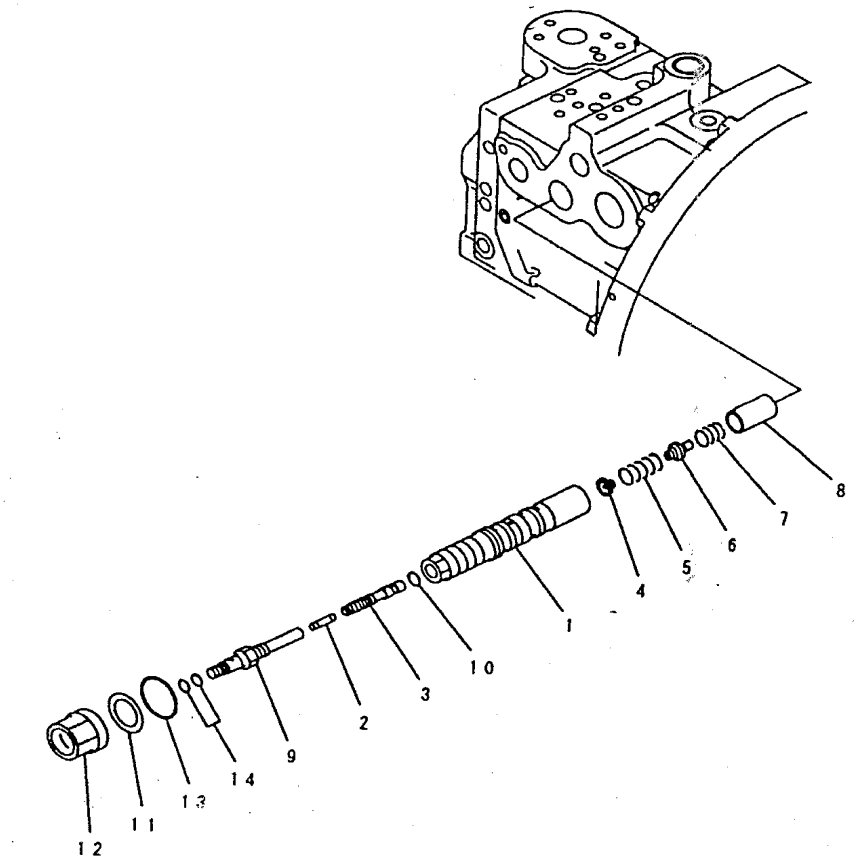

INDEX	PART NUMBER	DESCRIPTION	QTY	SERIAL No.
	(708-1L-00650)	PUMP ASSY.....	1	NL 50001-
		THIS ASSEMBLY CONSISTS OF ALL		
		PARTS SHOWN IN FIGS. Y1600-01A0		
		TO Y1600-08A0.		
	708-1L-04615	. VALVE ASSY, PC.....	1	NL 50001-
1	#	. . SLEEVE.....	1	NL 50001-
2	#	. . PIN.....	1	NL 50001-
3	#	. . SPOOL.....	1	NL 50001-
4	#	. . SEAT.....	1	NL 50001-
5	#	. . SPRING.....	1	NL 50001-
6	#	. . SEAT.....	1	NL 50001-
7	#	. . SPRING.....	1	NL 50001-
8	#	. . PISTON.....	1	NL 50001-
9	#	. . PLUG.....	1	NL 50001-
10	#	. . O-RING.....	1	NL 50001-
11	#	. . WASHER.....	1	NL 50001-
12	#	. . NUT.....	1	NL 50001-
13	07002-63034	. . O-RING.....	1	NL 50001-
14	07000-B1009	. . O-RING.....	2	NL 50001-

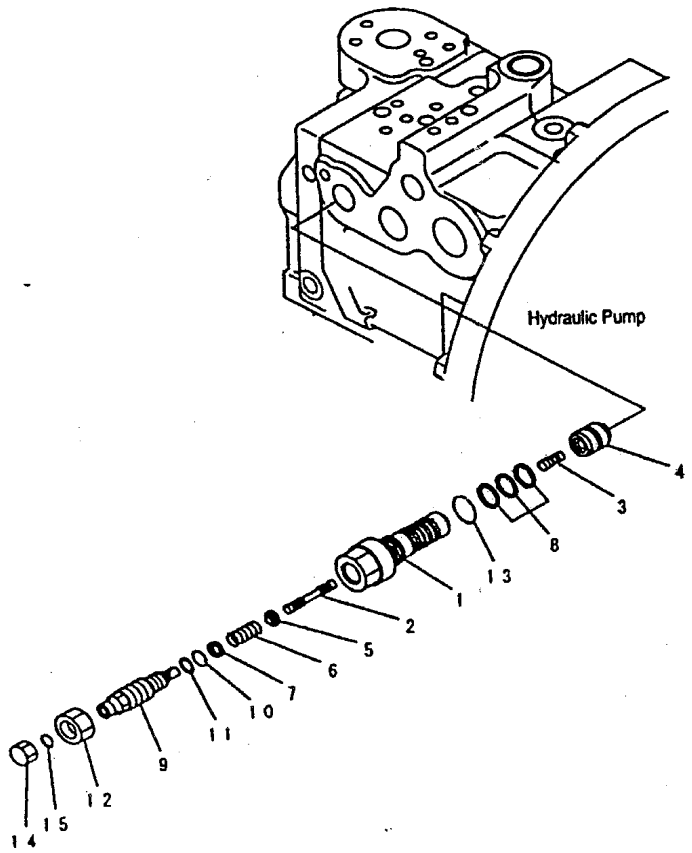

INDEX	PART NUMBER	DESCRIPTION	QTY	SERIAL No.
	(708-1L-00650)	PUMP ASSY.....	1	NL 50001-
		THIS ASSEMBLY CONSISTS OF ALL		
		PARTS SHOWN IN FIGS. Y1600-01A0		
		TO Y1600-08A0.		
	708-1L-04750	. VALVE ASSY, LS.....	1	NL 50001-
1	#	. . SLEEVE.....	1	NL 50001-
2	#	. . SPOOL.....	1	NL 50001-
3	#	. . PISTON.....	1	NL 50001-
4	#	. . SLEEVE.....	1	NL 50001-
5	#	. . SEAT.....	1	NL 50001-
6	#	. . SPRING.....	1	NL 50001-
7	#	. . SEAT.....	1	NL 50001-
8	708-2L-24680	. . SEAL.....	3	NL 50001-
9	#	. . PLUG.....	1	NL 50001-
10	#	. . O-RING.....	1	NL 50001-
11	#	. . RING.....	1	NL 50001-
12	#	. . NUT.....	1	NL 50001-
13	07002-62434	. . O-RING.....	1	NL 50001-
14	02789-00210	. . NUT.....	1	NL 50001-
15	02896-61008	. . O-RING.....	1	NL 50001-

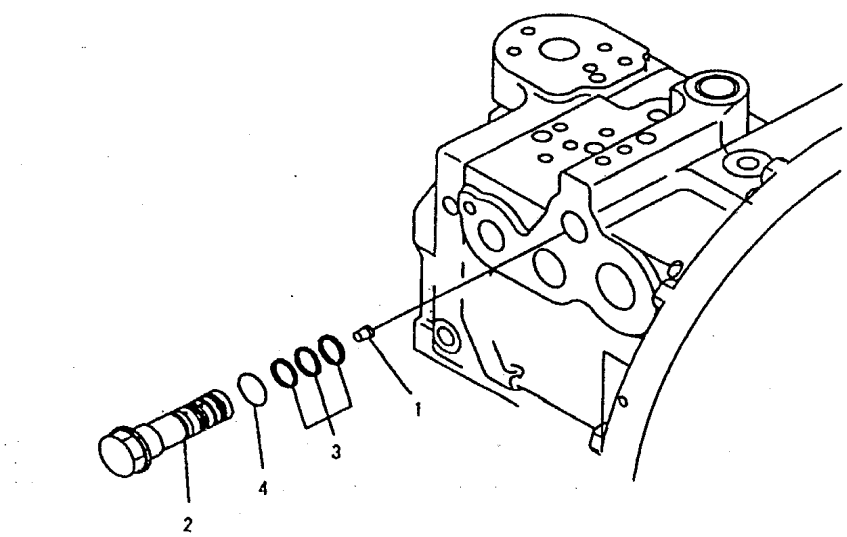

INDEX	PART NUMBER	DESCRIPTION	QTY	SERIAL No.
	(708-1L-00650)	PUMP ASSY.....	1	NL 50001-
		THIS ASSEMBLY CONSISTS OF ALL		
		PARTS SHOWN IN FIGS. Y1600-01A0		
		TO Y1600-08A0.		
	708-1L-04913	. PUMP SUB ASSY.....	1	NL 50001-
1	#	. . PLUG.....	1	NL 50001-
2	#	. . PLUG.....	1	NL 50001-
3	708-2L-24680	. . SEAL.....	3	NL 50001-
4	07002-62434	. . O-RING.....	1	NL 50001-

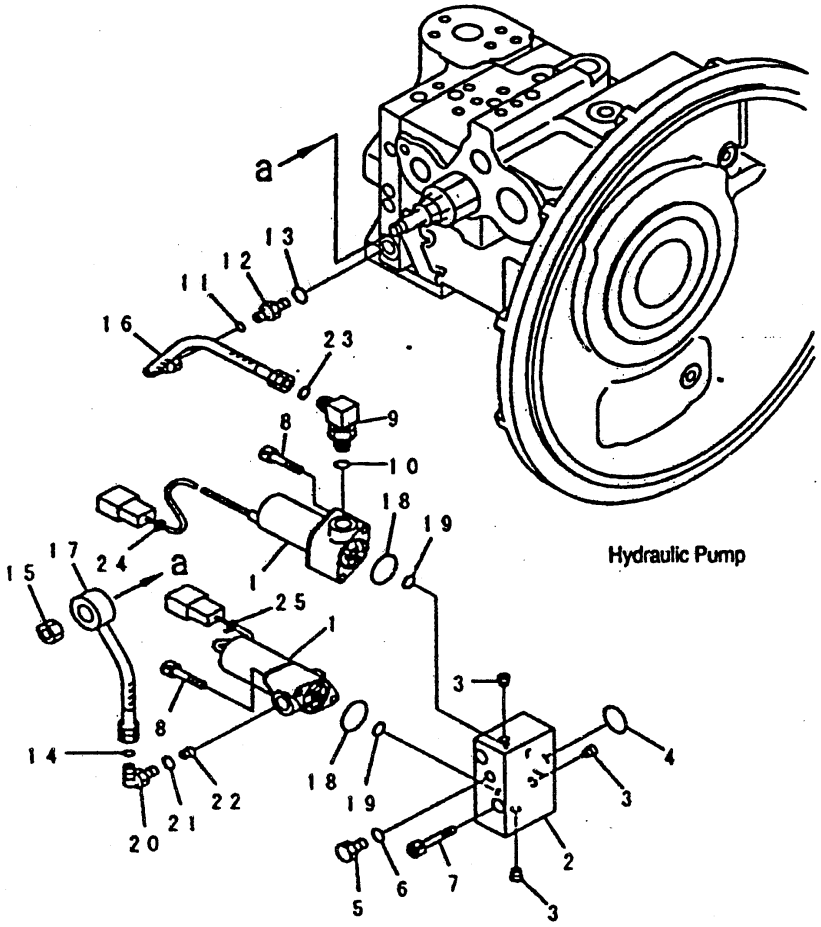

Hydraulic Pump

INDEX	PART NUMBER	DESCRIPTION	QTY	SERIAL No.
	(708-1L-00650)	PUMP ASSY	1	NL 50001-
		THIS ASSEMBLY CONSISTS OF ALL		
		PARTS SHOWN IN FIGS. Y1600-01A0		
		TO Y1600-08A0.		
1	702-21-07311	. VALVE ASSY, EPC	2	NL 50001-
	★ (708-2L-04291)	. BLOCK ASSY	1	NL 50001-
2	#	. . BLOCK	1	NL 50001-
3	#	. . PLUG	3	NL 50001-
4	708-2L-23970	. . O-RING	1	NL 50001-
5	07040-11007	. PLUG	1	NL 50001-
6	07002-61023	. O-RING	1	NL 50001-
7	01252-60865	. BOLT	2	NL 50001-
8	203-60-62220	. BOLT	4	NL 50001-
9	21W-62-43960	. ELBOW	1	NL 50001-
10	07002-61423	. O-RING	1	NL 50001-
11	02896-61008	. O-RING	1	NL 50001-
12	02781-0021D	. ELBOW	1	NL 50001-
13	07002-61423	. O-RING	1	NL 50001-
14	02896-61008	. O-RING	1	NL 50001-
15	01582-11008	. NUT	1	NL 50001-
16	708-1L-29361	. HOSE	1	NL 50001-
17	708-1L-29350	. HOSE	1	NL 50001-
18	708-2L-23960	. O-RING	2	NL 50001-
19	07000-B2011	. O-RING	2	NL 50001-
20	8255-62-4360	. ELBOW	1	NL 50001-
21	07002-61423	. O-RING	1	NL 50001-
22	708-1L-29340	. ORIFICE	1	NL 50001-
23	02896-61008	. O-RING	1	NL 50001-
24	20Y-62-22790	. BAND, RED	1	NL 50001-
25	20Y-62-22830	. BAND, WHITE	1	NL 50001-

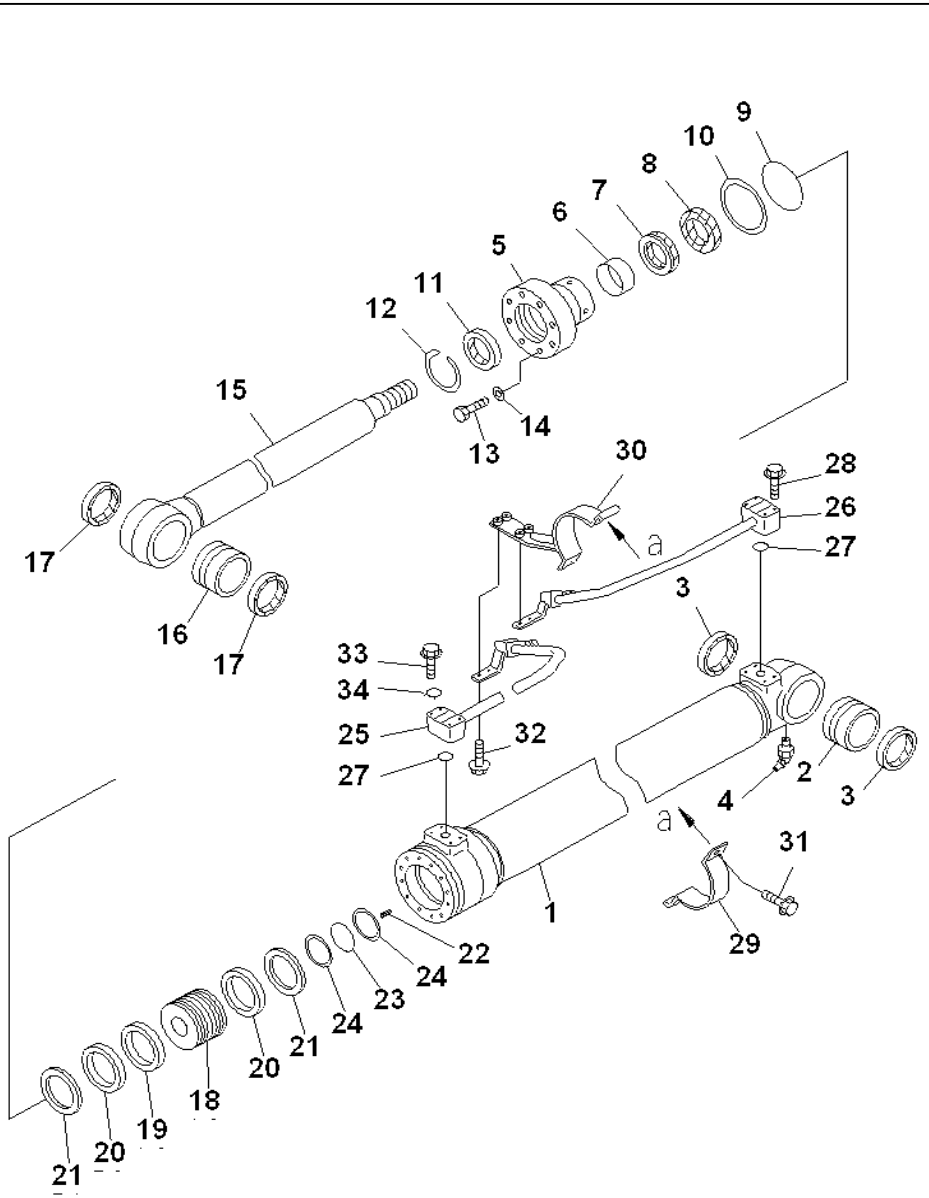

INDEX	PART NUMBER	DESCRIPTION	QTY	SERIAL No.
G1	⊙ (707-01-N1420)	CYLINDER GROUP (LH).....	1	NL 50001-
G2	⊙ (707-01-N1430)	CYLINDER GROUP (RH).....	1	NL 50001-
		=======		
	707-01-0F010	CYLINDER ASS'Y,BOOM.....	2	NL 50001-
1	707-13-10540	. CYLINDER.....	1	NL 50001-
2	707-76-70230	. BUSHING.....	1	NL 50001-
3	07145-00070	. SEAL,DUST (KIT).....	2	NL 50001-
4	07020-00675	. FITTING,GREASE.....	1	NL 50001-
5	707-27-10971	. HEAD,CYLINDER.....	1	NL 50001-
6	707-52-90470	. BUSHING.....	1	NL 50001-
7	707-51-70030	. PACKING,ROD (KIT).....	1	NL 50001-
8	707-51-70640	. RING,BUFFER (KIT).....	1	NL 50001-
9	07000-15095	. O-RING (KIT).....	1	NL 50001-
10	707-35-91060	. RING,BACK-UP (KIT).....	1	NL 50001-
11	144-63-95170	. SEAL,DUST (KIT).....	1	NL 50001-
12	07179-12084	. RING,SNAP.....	1	NL 50001-
13	205 338 14 N	. BOLT.....	12	NL 50001-
14	705-17-04980	. WASHER.....	12	NL 50001-
15	203-63-55521	. ROD.....	1	NL 50001-
16	707-76-70230	. BUSHING.....	1	NL 50001-
17	07145-00070	. SEAL,DUST (KIT).....	2	NL 50001-
18	707-36-10760	. PISTON.....	1	NL 50001-
19	707-44-10280	. RING,PISTON (KIT).....	1	NL 50001-
20	707-39-10550	. RING,WEAR (KIT).....	2	NL 50001-
21	707-44-10911	. RING.....	2	NL 50001-
22	01310-01216	. SCREW.....	1	NL 50001-
23	707-34-60030	. O-RING (KIT).....	1	NL 50001-
24	707-35-90730	. RING,BACK-UP (KIT).....	2	NL 50001-
25	707-86-N1150	TUBE,L.H.....	1	NL 50001-
	707-86-N1160	TUBE,R.H.....	1	NL 50001-
26	202-63-N1110	TUBE,L.H.....	1	NL 50001-
	202-63-N1120	TUBE,R.H.....	1	NL 50001-
27	07000-13025	O-RING (KIT).....	2	NL 50001-
28	01435-00850	BOLT.....	4	NL 50001-
29	707-88-21720	BAND.....	1	NL 50001-
30	707-88-25110	BRACKET.....	1	NL 50001-
31	01435-01030	BOLT.....	2	NL 50001-
32	01435-01025	BOLT.....	4	NL 50001-

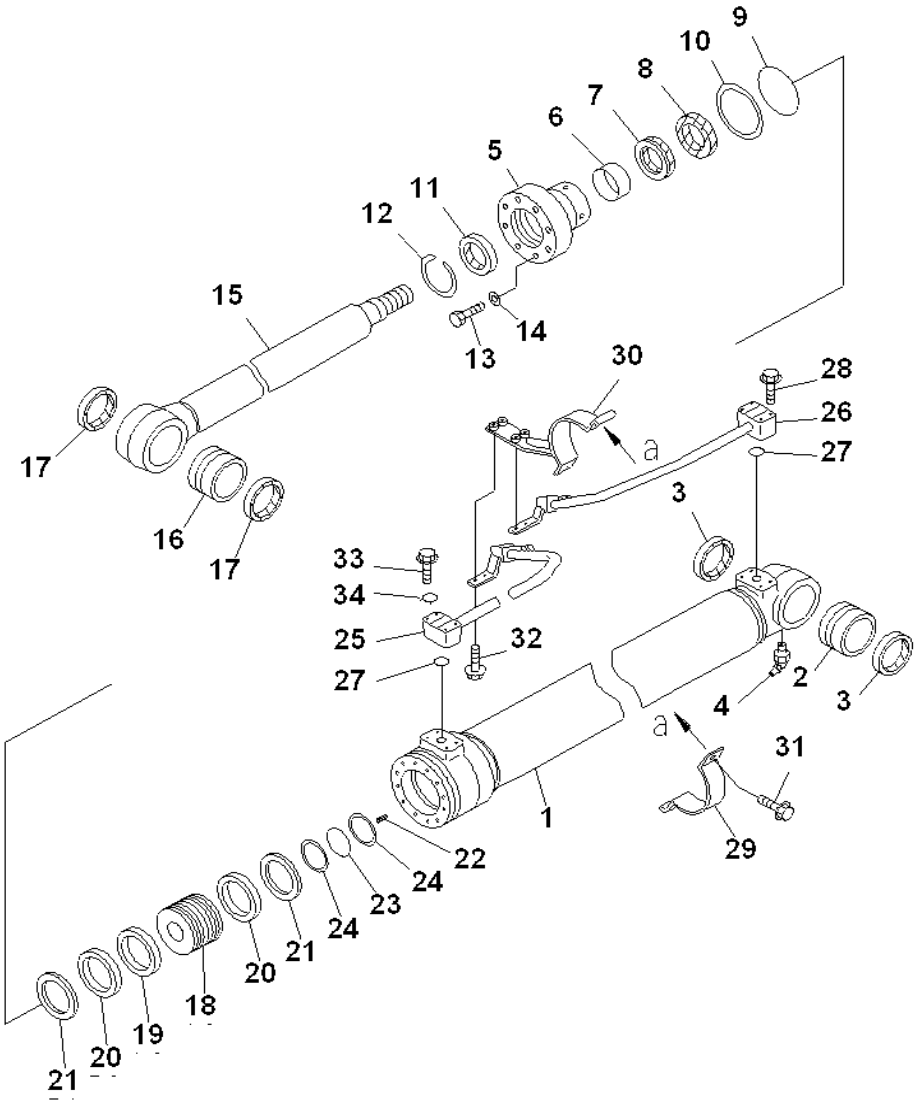

INDEX	PART NUMBER	DESCRIPTION	QTY	SERIAL No.
33	206 338 10 E	BOLT.....	4	NL 50001-
34	01643-50823	WASHER.....	4	NL 50001-
		=======		
	707-99-37300	SERVICE KIT.....	2	NL 50001-

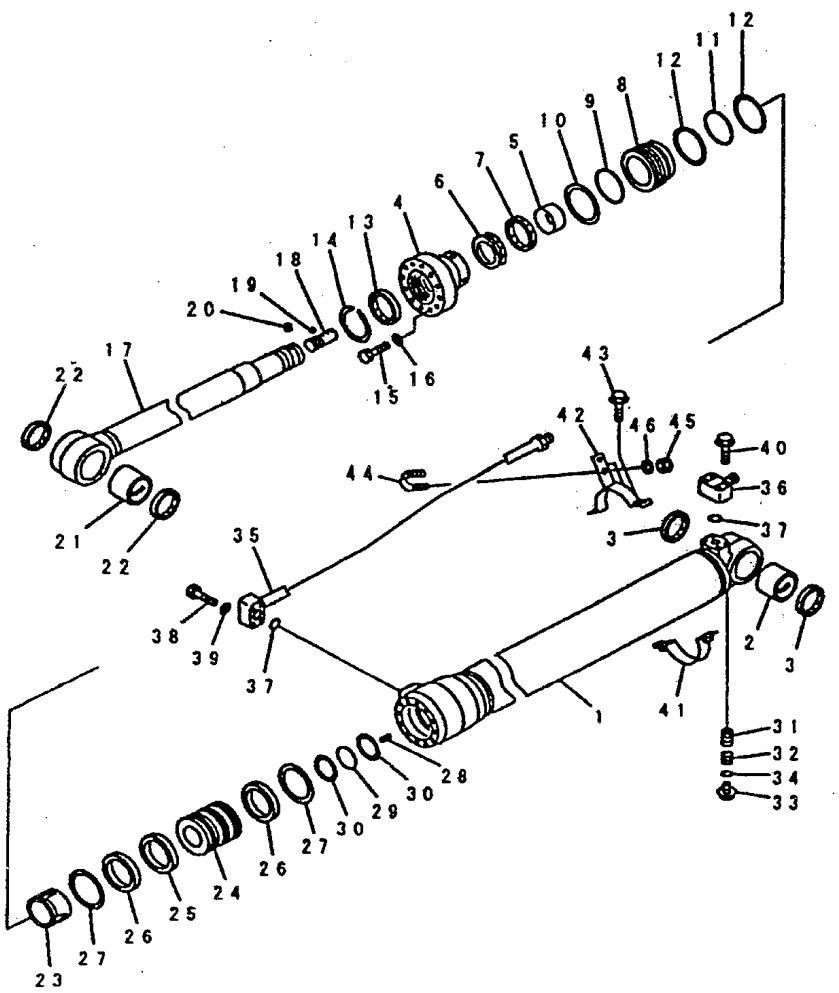

INDEX	PART NUMBER	DESCRIPTION	QTY	SERIAL No.
	⊙ (700-01-N1440)	CYLINDER GROUP, ARM (FINAL COATING)...	1	NL 50001-
		=======		
	707-01-0F030	CYLINDER, ASSY, ARM.....	1	NL 50001-
1	707-13-11640	. CYLINDER, ARM.....	1	NL 50001-
2	707-76-70240	. BUSHING.....	1	NL 50001-
3	07145-00070	. SEAL, DUST (KIT).....	2	NL 50001-
4	707-27-11971	. HEAD, CYLINDER.....	1	NL 50001-
5	707-52-90500	. BUSHING.....	1	NL 50001-
6	707-51-75030	. PACKING, ROD (KIT).....	1	NL 50001-
7	707-51-75640	. RING, BUFFER ROD (KIT).....	1	NL 50001-
8	707-71-32530	. COLLAR.....	1	NL 50001-
9	07000-15105	. O-RING (KIT).....	1	NL 50001-
10	707-35-91150	. RING BACK -UP (KIT).....	1	NL 50001-
11	07000-15105	. O-RING (KIT).....	1	NL 50001-
12	707-35-91150	. RING BACK -UP (KIT).....	2	NL 50001-
13	144-63-94170	. SEAL, DUST (KIT).....	1	NL 50001-
14	07179-13089	. RING, SNAP.....	1	NL 50001-
15	204 338 86 V	. BOLT.....	12	NL 50001-
16	01643-51645	. WASHER.....	12	NL 50001-
17	707-58-75670	. ROD.....	1	NL 50001-
18	707-71-80230	. PLUNGER.....	1	NL 50001-
19	04260-00635	. BALL.....	11	NL 50001-
20	707-71-91270	. CAP.....	1	NL 50001-
21	707-76-70240	. BUSHING.....	1	NL 50001-
22	07145-00070	. SEAL, DUST (KIT).....	2	NL 50001-
23	707-71-60870	. PLUNGER.....	1	NL 50001-
24	707-36-11851	. PISTON.....	1	NL 50001-
25	707-44-11280	. RING, PISTON (KIT).....	1	NL 50001-
26	707-39-11530	. RING, WEAR (KIT).....	2	NL 50001-
27	707-44-11920	. RING.....	2	NL 50001-
28	01310-01216	. SCREW.....	1	NL 50001-
29	07000-15070	. O-RING (KIT).....	1	NL 50001-
30	707-35-90360	. RING, BACK-UP (KIT).....	2	NL 50001-
31	707-83-13010	. VALVE.....	1	NL 50001-
32	07750-01628	. SPRING.....	1	NL 50001-
33	707-87-14070	. PLUG.....	1	NL 50001-
34	07002-12034	. O-RING (KIT).....	1	NL 50001-
35	707-86-N1170	TUBE.....	1	NL 50001-

Fig. No. **Y1620-11A0** | **ARM CYLINDER (INNER PARTS)** | Update Index : **A** | **YO-041** **1/2**

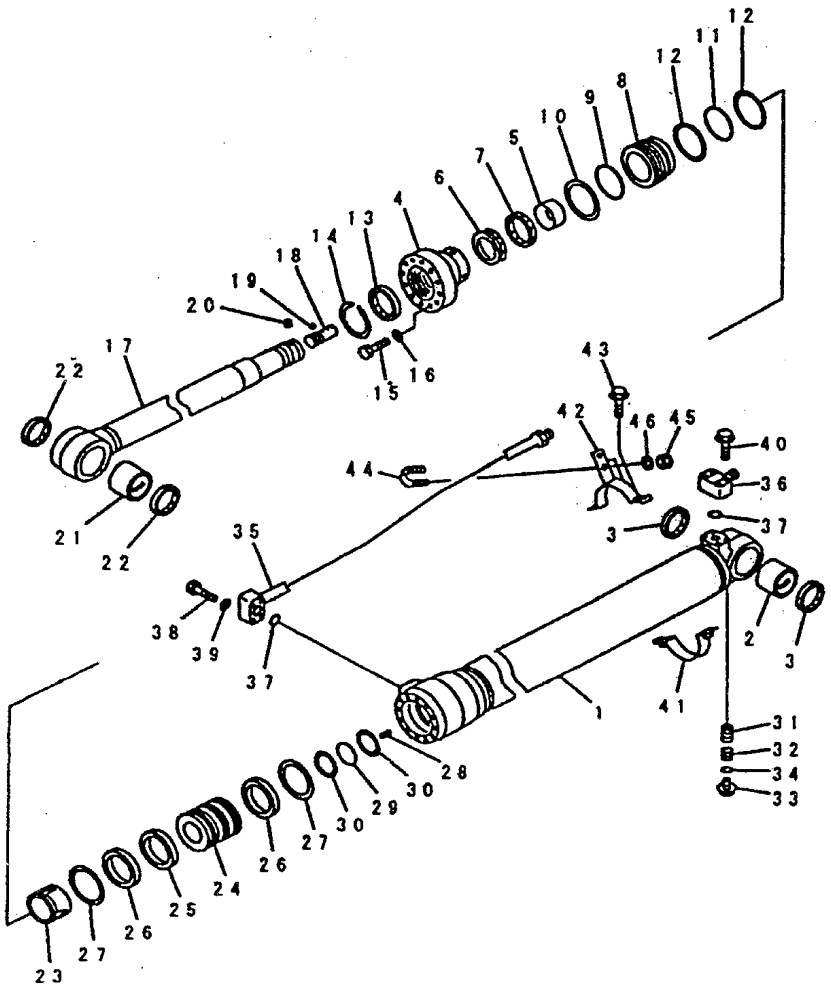

INDEX	PART NUMBER	DESCRIPTION	QTY	SERIAL No.
36	707-87-13570	ELBOW	1	NL 50001-
37	07000-13025	O-RING (KIT)	2	NL 50001-
38	204 338 10 E	BOLT	4	NL 50001-
39	01643-50823	WASHER	4	NL 50001-
40	01435-00855	BOLT	4	NL 50001-
41	707-88-21680	BAND	1	NL 50001-
42	707-88-25080	BRACKET	1	NL 50001-
43	01435-01030	BOLT	2	NL 50001-
44	07283-32236	CLIP	1	NL 50001-
45	01597-01009	NUT	2	NL 50001-
46	01643-31032	WASHER	2	NL 50001-
		=======		
	707-99-44340	SERVICE KIT	1	NL 50001-

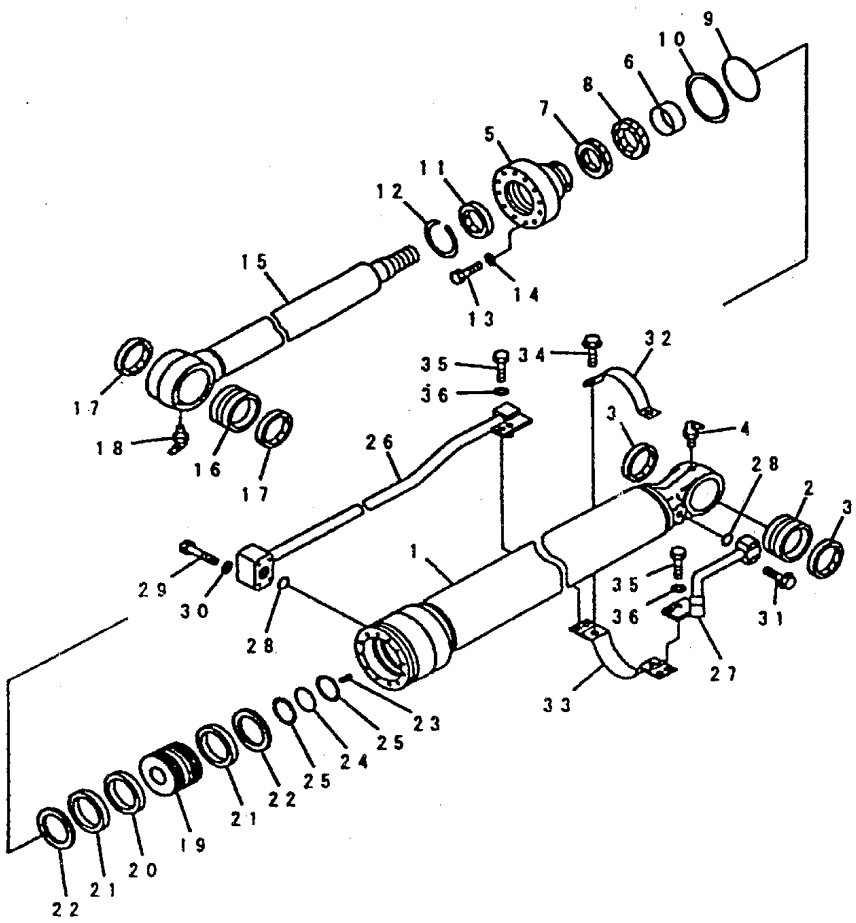

INDEX	PART NUMBER	DESCRIPTION	QTY	SERIAL No.
	⊙ (707-01-N1450)	CYLINDER GROUP, (FINAL COATING).....	1	NL 50001-
		=======		
	707-01-0F040	CYLINDER ASSY, BUCKET.....	1	NL 50001-
1	707-13-95080	. CYLINDER, BUCKET.....	1	NL 50001-
2	707-76-65210	. BUSHING.....	1	NL 50001-
3	07145-00065	. SEAL, DUST (KIT).....	2	NL 50001-
4	07020-00675	. FITTING, GREASE.....	1	NL 50001-
5	707-27-95621	. HEAD, CYLINDER.....	1	NL 50001-
6	707-52-90420	. BUSHING.....	1	NL 50001-
7	707-51-65030	. PACKING, ROD (KIT).....	1	NL 50001-
8	707-51-65640	. RING, BUFFER (KIT).....	1	NL 50001-
9	07000-15085	. O-RING (KIT).....	1	NL 50001-
10	707-35-90970	. RING, SNAP (KIT).....	1	NL 50001-
11	144-63-92170	. SEAL, DUST (KIT).....	1	NL 50001-
12	07179-12079	. RING, SNAP.....	1	NL 50001-
13	205 338 14 N	. BOLT.....	12	NL 50001-
14	705-17-04980	. WASHER.....	12	NL 50001-
15	203-63-75121	. ROD.....	1	NL 50001-
16	707-76-65220	. BISJOMG.....	1	NL 50001-
17	707-77-65110	. SEAL, DUST (KIT).....	2	NL 50001-
18	07020-00675	. FITTING, GREASE.....	1	NL 50001-
19	707-36-95040	. PISTON.....	1	NL 50001-
20	707-44-95180	. RING, PISTON (KIT).....	1	NL 50001-
21	707-39-95030	. RING WEAR (KIT).....	2	NL 50001-
22	707-44-95911	. RING.....	2	NL 50001-
23	01310-01016	. SCREW.....	1	NL 50001-
24	707-34-55020	. O-RING (KIT).....	1	NL 50001-
25	707-35-90610	. RING BACK -UP (KIT).....	2	NL 50001-
26	707-86-47490	TUBE.....	1	NL 50001-
27	202-63-N1180	TUBE.....	1	NL 50001-
28	07000-13025	O-RING (KIT).....	2	NL 50001-
29	204 338 10 E	BOLT.....	4	NL 50001-
30	01643-50823	WASHER.....	4	NL 50001-
31	01435-00850	BOLT.....	4	NL 50001-
32	707-88-21730	BAND.....	1	NL 50001-
33	707-88-25120	BRACKET.....	1	NL 50001-
34	01435-01030	BOLT.....	2	NL 50001-
35	204 338 32 M	BOLT.....	4	NL 50001-

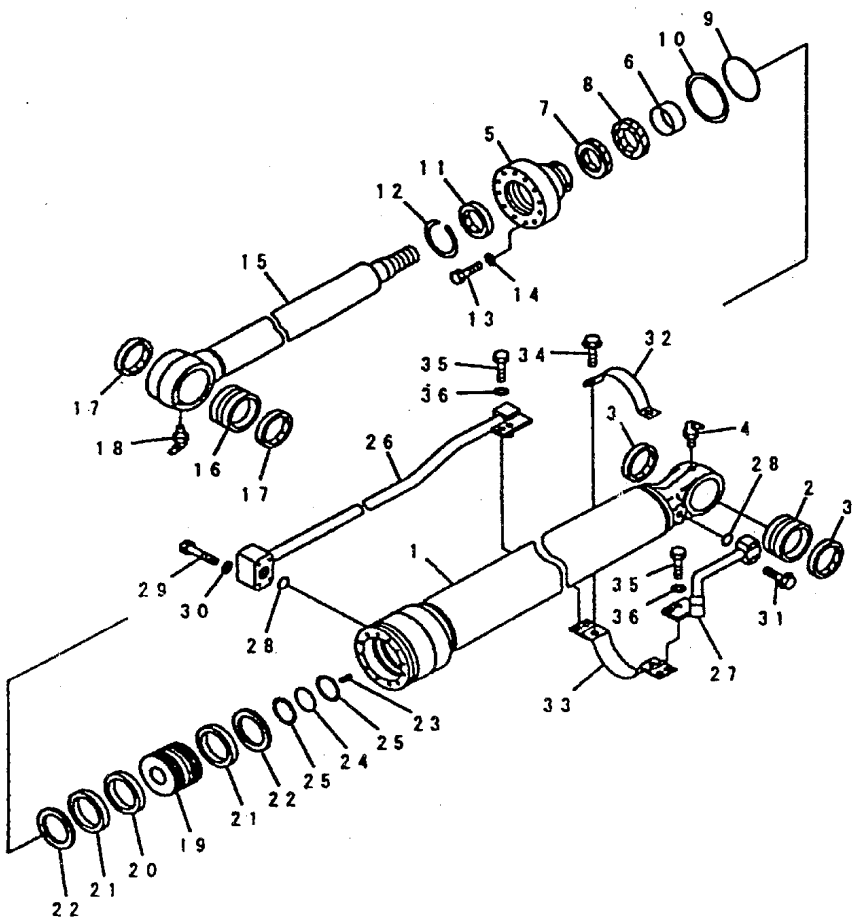

INDEX	PART NUMBER	DESCRIPTION	QTY	SERIAL No.
36	01643-31032	WASHER.....	4	NL 50001-
		=======		
	707-99-25870	SERVICE KIT.....	1	NL 50001-

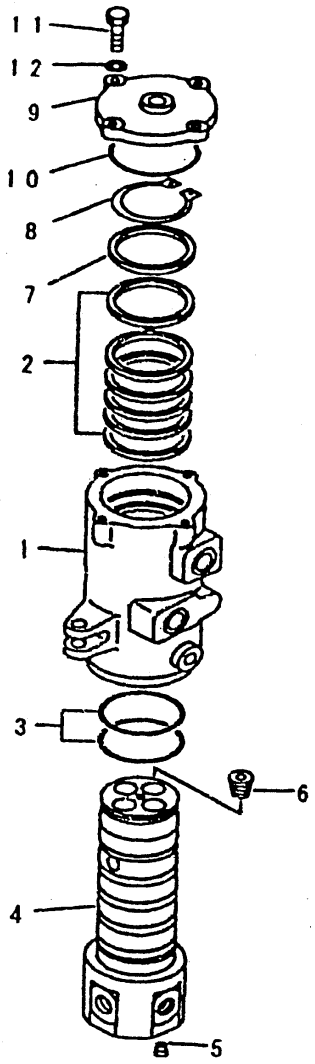

INDEX	PART NUMBER	DESCRIPTION	QTY	SERIAL No.
	703-08-00110	SWIVEL JOINT ASSY.....	1	NL 50001-
1	703-08-91130	. ROTOR.....	1	NL 50001-
2	703-08-95620	. SEAL, OIL.....	6	NL 50001-
3	07000-15080	. O-RING.....	2	NL 50001-
4	703-08-92130	. SHAFT.....	1	NL 50001-
5	703-09-98710	. PLUG.....	1	NL 50001-
6	703-09-98510	. PLUG.....	4	NL 50001-
7	703-08-94510	. RING.....	1	NL 50001-
8	04064-07525	. RING, SNAP.....	1	NL 50001-
9	703-08-93511	. COVER.....	1	NL 50001-
10	07000-02105	. O-RING.....	1	NL 50001-
11	01010-50835	. BOLT.....	4	NL 50001-
12	01643-30823	. WASHER.....	4	NL 50001-

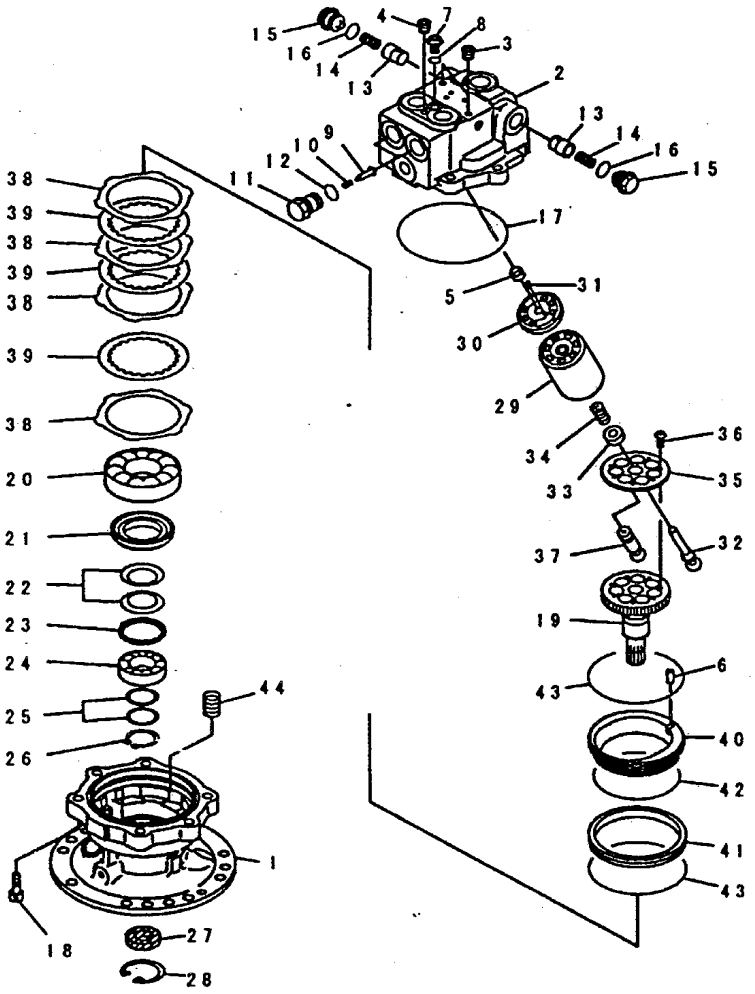

INDEX	PART NUMBER	DESCRIPTION	QTY	SERIAL No.
	706-73-01400	MOTOR ASSY.....	1	NL 50001-
		THIS ASSEMBLY CONSISTS OF ALL		
		PARTS SHOWN IN FIGS. Y1640-01A0		
		AND Y1640-02A0		
	706-73-03580	. MOTOR SUB ASSY.....	1	NL 50001-
1	★ (706-73-43150)	. . CASE, MOTOR.....	1	NL 50001-
	★ (706-73-00020)	. . HOUSING SUB ASSY.....	1	NL 50001-
2	#	. . . HOUSING.....	1	NL 50001-
3	#	. . . PLUG.....	2	NL 50001-
4	#	. . . PLUG.....	1	NL 50001-
5	★ (706-73-40010)	. . BEARING.....	1	NL 50001-
6	★ (706-73-42820)	. . PIN.....	1	NL 50001-
7	706-73-72680	. . PLUG.....	1	NL 50001-
8	07002-11223	. . O-RING.....	1	NL 50001-
9	709-25-11650	. . VALVE, CHECK.....	2	NL 50001-
10	709-25-11361	. . SPRING.....	2	NL 50001-
11	709-25-11640	. . PLUG.....	2	NL 50001-
12	07000-12020	. . O-RING.....	2	NL 50001-
13	706-73-72420	. . VALVE.....	2	NL 50001-
14	706-73-72440	. . SPRING.....	2	NL 50001-
15	706-73-73430	. . PLUG.....	2	NL 50001-
16	07002-12434	. . O-RING.....	2	NL 50001-
17	★ (07000-02145)	. . O-RING.....	1	NL 50001-
18	★ (01252-61240)	. . BOLT.....	6	NL 50001-
19	★ (706-73-43960)	. . SHAFT, DRIVE.....	1	NL 50001-
20	★ (706-73-43880)	. . BEARING.....	1	NL 50001-
21	★ (706-73-43810)	. . SPACER.....	1	NL 50001-
22	★ (706-73-43610)	. . SPRING.....	2	NL 50001-
23	★ (706-73-43620)	. . SEAT.....	1	NL 50001-
24	★ (706-73-43890)	. . BEARING.....	1	NL 50001-
25	★ (706-73-05030)	. . SPACER KIT.....	1	NL 50001-
26	★ (04064-03515)	. . RING, SNAP.....	1	NL 50001-
27	708-7T-12230	. . SEAL, OIL.....	1	NL 50001-
28	04065-04518	. . RING, SNAP.....	1	NL 50001-
29	★ (706-73-43190)	. . BLOCK, CYLINDER.....	1	NL 50001-
30	★ (706-73-43742)	. . PLATE, VALVE.....	1	NL 50001-
31	★ (720-68-19610)	. . PIN.....	1	NL 50001-
32	★ (706-73-43120)	. . SHAFT, CENTER.....	1	NL 50001-

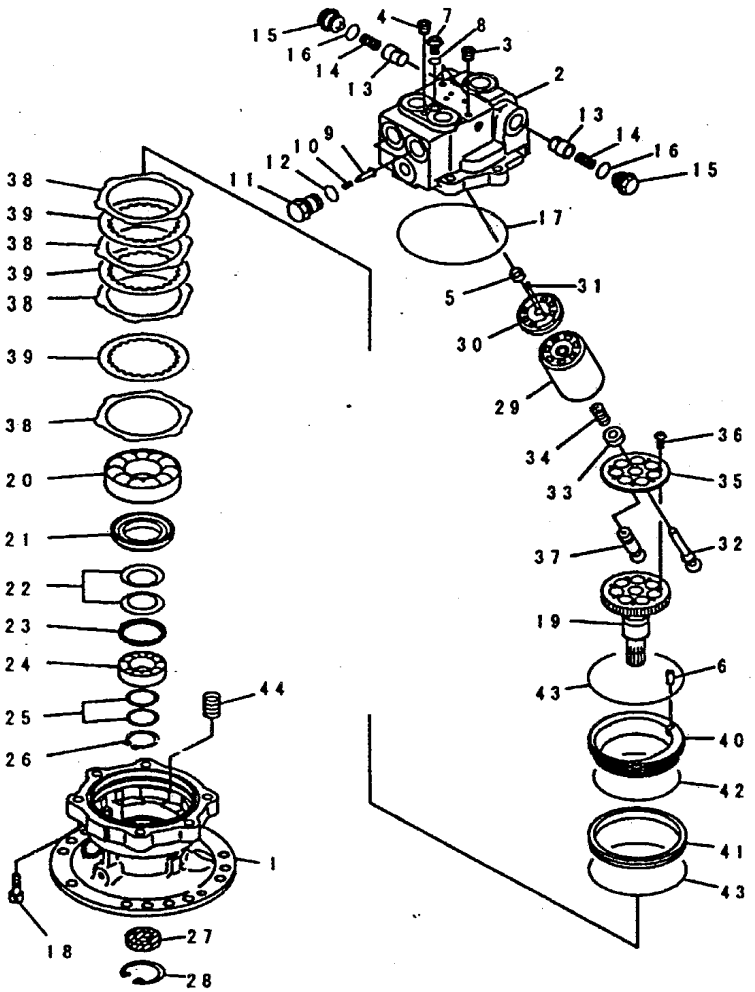

INDEX	PART NUMBER	DESCRIPTION	QTY	SERIAL No.
33	★ (706-73-43130)	. RING, CENTER.....	1	NL 50001-
34	★ (706-73-41110)	. . SPRING.....	1	NL 50001-
	★ (706-73-05020)	. . RETAINER KIT.....	1	NL 50001-
35	#	. . . RETAINER.....	1	NL 50001-
36	#	. . . SCREW.....	7	NL 50001-
37	★ (706-73-43160)	. . PISTON SUB ASSY.....	7	NL 50001-
38	★ (706-73-92340)	. . PLATE.....	4	NL 50001-
39	★ (706-73-92350)	. . DISC.....	3	NL 50001-
40	★ (706-73-92380)	. . PISTON, BRAKE.....	1	NL 50001-
41	★ (706-73-92390)	. . RING, BRAKE.....	1	NL 50001-
42	★ (07000-12115)	. . O-RING.....	1	NL 50001-
43	★ (07000-12130)	. . O-RING.....	2	NL 50001-
44	★ (708-7T-15150)	. . SPRING.....	4	NL 50001-

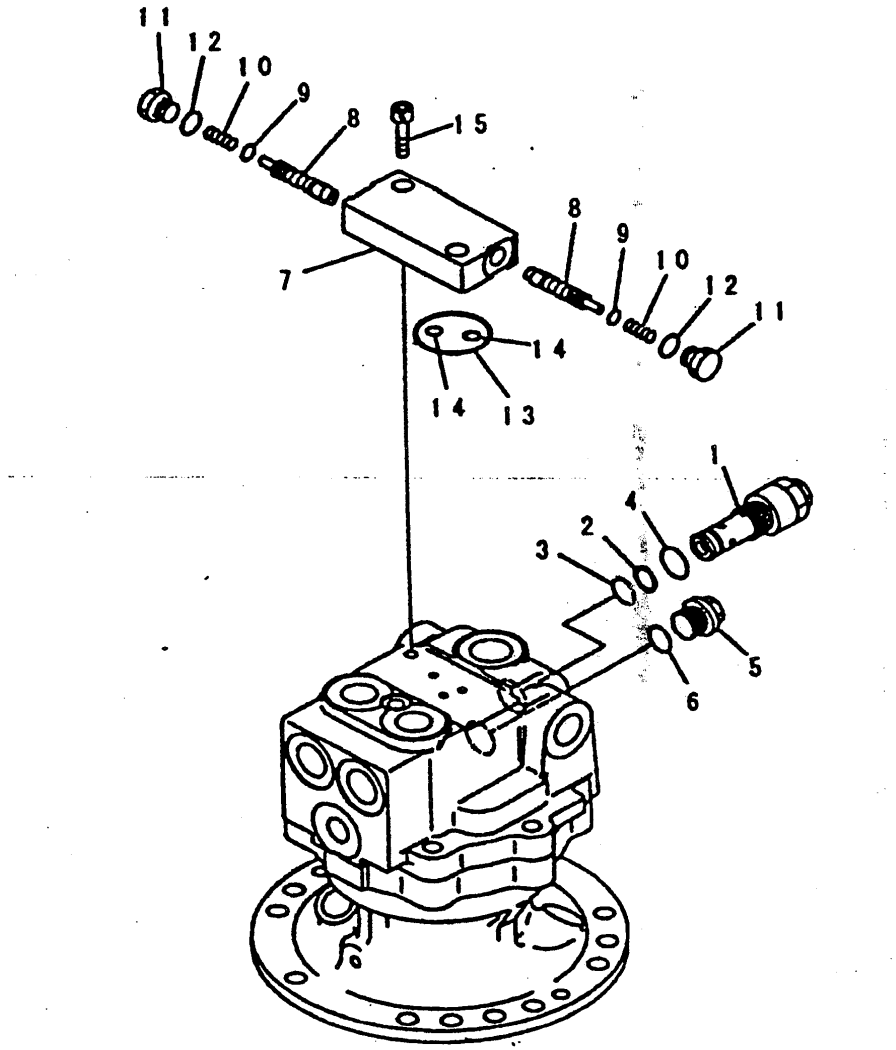

INDEX	PART NUMBER	DESCRIPTION	QTY	SERIAL No.
	(706-73-01400)	MOTOR ASSY.....	1	NL 50001-
		THIS ASSEMBLY CONSISTS OF ALL		
		PARTS SHOWN IN FIGS. Y1640-01A0		
		AND Y1640-02A0		
1	702-73-01520	. VALVE ASSY, RELIEF.....	1	NL 50001-
2	723-60-22230	. . RING, BACK-UP.....	1	NL 50001-
3	07000-F2016	. . O-RING.....	1	NL 50001-
4	07002-12434	. . O-RING.....	1	NL 50001-
5	706-77-72280	. PLUG.....	1	NL 50001-
	07002-12034	. O-RING.....	1	NL 50001-
6	702-15-73000	. VALVE ASSY.....	1	NL 50001-
7	#	. . BODY.....	1	NL 50001-
8	#	. . SPOOL.....	2	NL 50001-
9	#	. . SEAL.....	2	NL 50001-
10	#	. . SPRING.....	2	NL 50001-
11	#	. . PLUG.....	2	NL 50001-
12	#	. . O-RING.....	2	NL 50001-
13	07000-03042	. O-RING.....	1	NL 50001-
14	07000-11007	. O-RING.....	2	NL 50001-
15	01252-60825	. BOLT.....	2	NL 50001-

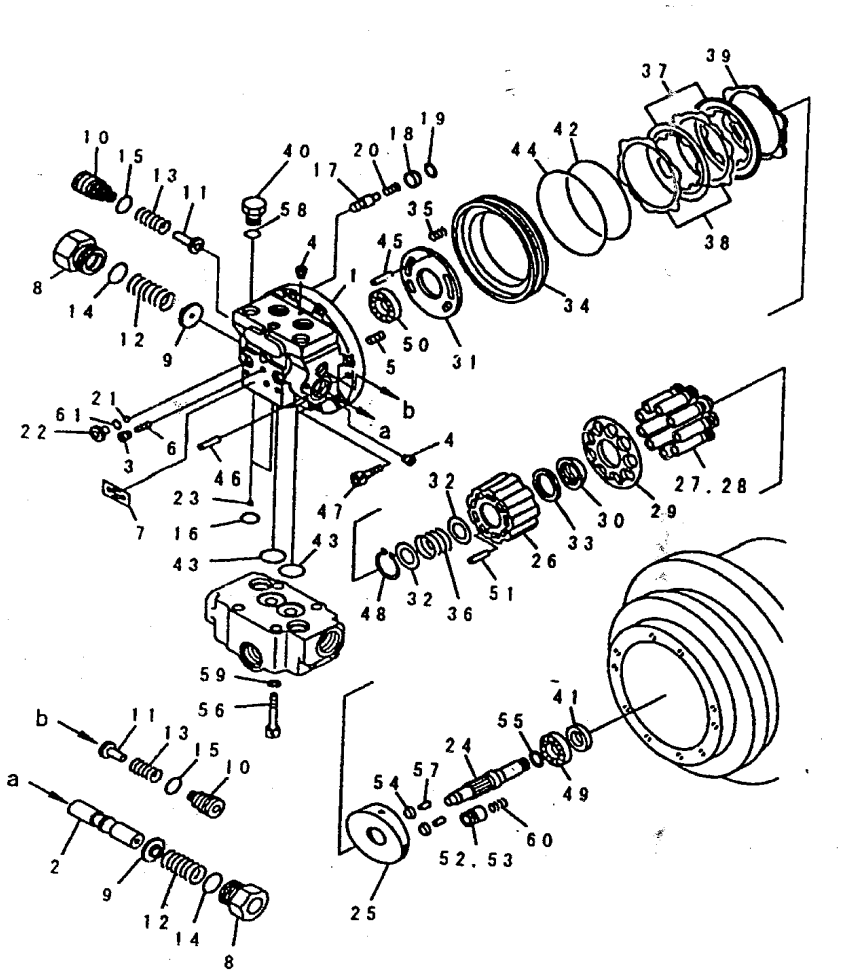

INDEX	PART NUMBER	DESCRIPTION	QTY	SERIAL No.
	203-60-63220	MOTAR A.....	2	NL 50001-
		THIS ASSEMBLY CONSISTS OFALL		
		PARTS SHOWN IN FIGS.Y1651-01A0,		
		02A0 AND 03A0		
	TZ276B200000JR	. MOTOR.....	1	NL 50001-
	TZ276B210000-J	. . FLANGE ASSY.....	1	NL 50001-
	TZ276B210100-J	. . . FLANGE KIT.....	1	NL 50001-
1	#	. . . . FLANGE.....	1	NL 50001-
2	#	. . . . SPOOL.....	1	NL 50001-
3	TZGM1-8	. . . . PLUG.....	3	NL 50001-
4	TZGDL1-16-S	. . . . PLUG.....	7	NL 50001-
5	TZ263B2079-01	. . . . FILTER.....	1	NL 50001-
6	TZ121F2070-00	. . . . ORIFICE.....	1	NL 50001-
7	TZ850A0006-00	. . . . PLATE, NAME.....	1	NL 50001-
8	TZ860A2051-00	. . . PLUG.....	2	NL 50001-
9	TZ869A2052-00	. . . RETAINER.....	2	NL 50001-
10	TZ860A2053-02	. . . PLUG.....	2	NL 50001-
11	TZ860A2054-01	. . . VALVE.....	2	NL 50001-
12	TZ860A2056-00	. . . SPRING.....	2	NL 50001-
13	TZ860A2055-00	. . . SPRING.....	2	NL 50001-
14	TZJB2401-P26-9	. . . O-RING.....	2	NL 50001-
15	07000-12016	. . . O-RING.....	2	NL 50001-
16	07000-12010	. . . O-RING.....	2	NL 50001-
17	TZ200B2073-00	. . . VALVE.....	1	NL 50001-
18	TZ300B2039-00	. . . STOPPER.....	1	NL 50001-
19	TZ300B2042-00	. . . RING.....	1	NL 50001-
20	TZ300B2043-01	. . . SPRING.....	1	NL 50001-
21	04260-00952	. . . BALL.....	2	NL 50001-
22	TZ512B2021-00	. . . PLUG.....	2	NL 50001-
23	04260-00793	. . . BALL.....	2	NL 50001-
24	TZ269B2002-00	. . SHAFT.....	1	NL 50001-
25	TZ263B200301-J	. . PLATE.....	1	NL 50001-
26	TZ263B2004-04	. . BLOCK.....	1	NL 50001-
	TZ263B2105-00	. . PISTON KIT.....	1	NL 50001-
	#	. . . PISTON ASSY.....	9	NL 50001-
27	#	. . . . PISTON.....	1	NL 50001-
28	#	. . . . SHOE.....	1	NL 50001-
29	TZ263B2007-01	. . PLATE.....	1	NL 50001-

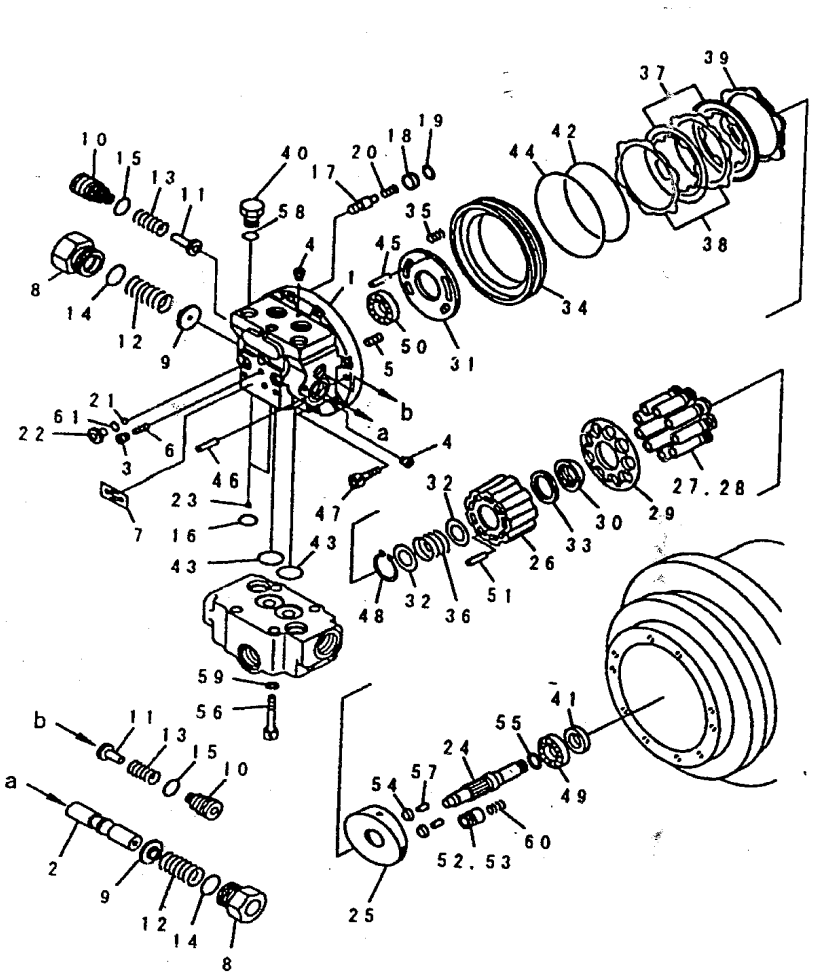

INDEX	PART NUMBER	DESCRIPTION	QTY	SERIAL No.
30	TZ263B2008-00	. . BOWL	1	NL 50001-
31	TZ263B2009-01	. . PLATE	1	NL 50001-
32	TZ880A2010-00	. . WASHER	2	NL 50001-
33	TZ263B2011-03	. . WASHER	1	NL 50001-
34	TZ266B2012-00	. . PISTON	1	NL 50001-
35	TZ800A2013-00	. . SPRING	8	NL 50001-
36	TZ263B2093-01	. . SPRING	1	NL 50001-
37	TZ800A2015-00	. . PLATE	2	NL 50001-
38	TZ800A2016-00	. . PLATE	2	NL 50001-
39	TZ263B2074-00	. . PLATE	1	NL 50001-
40	TZ100A2020-00	. . PLUG	1	NL 50001-
41	TZ15Z-25-42-10	. . SEAL (K1)	1	NL 50001-
42	TZ266B2035-00	. . O-RING (K1)	1	NL 50001-
43	07000-12018	. . O-RING (K1)	2	NL 50001-
44	TZ266B2039-00	. . O-RING (K1)	1	NL 50001-
45	TZJB1354-4-10	. . PIN	1	NL 50001-
46	TZJB1354-10-25	. . PIN	2	NL 50001-
47	01252-31030	. . BOLT	8	NL 50001-
48	TZTH-R-42	. . RING	1	NL 50001-
49	TZ263B2048-00	. . BEARING	1	NL 50001-
50	TZ263B2049-00	. . BEARING	1	NL 50001-
51	TZ263B2098-00	. . PIN	3	NL 50001-
	TZ263B2070-00	. . . PISTON	1	NL 50001-
52	#	. . . . PISTON	1	NL 50001-
53	#	. . . . SHOE	1	NL 50001-
54	TZ263B2076-02	. . PIVOT	2	NL 50001-
55	TZ263B2014-00	. . COLLAR	1	NL 50001-
56	01252-30865	. . BOLT	4	NL 50001-
57	TZ263B2077-01	. . PIN	2	NL 50001-
58	07002-02034	. . O-RING (K1)	1	NL 50001-
59	TZSW-M8	. . WASHER	4	NL 50001-
60	TZ263B2090-00	. . SPRING	1	NL 50001-
61	07000-12011	. . O-RING (K1)	2	NL 50001-

L&T-KOMATSU

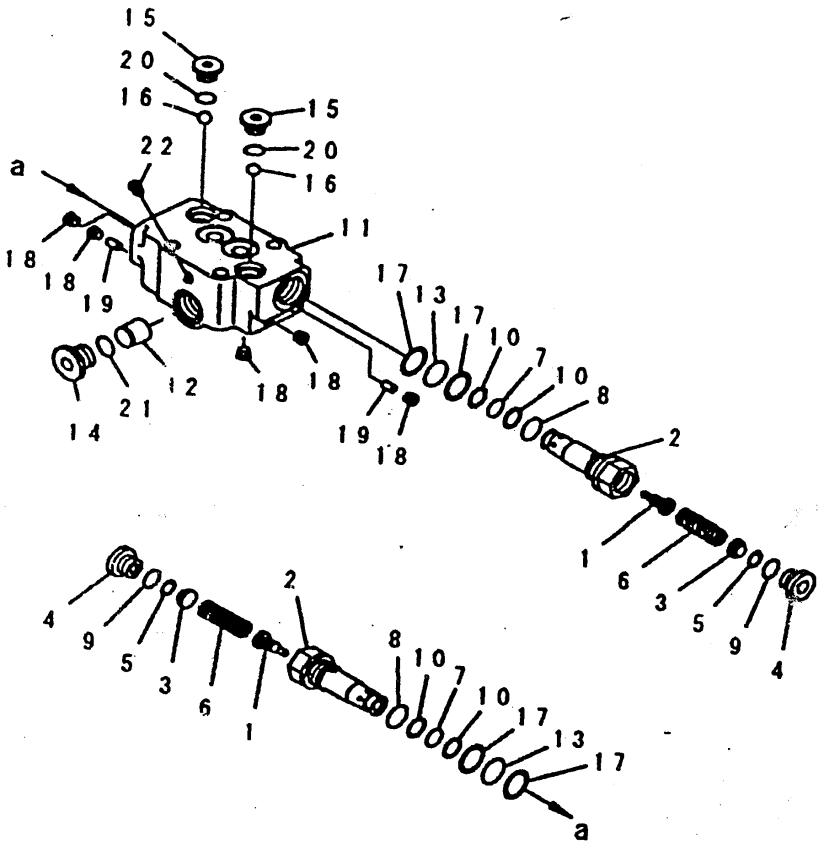

INDEX	PART NUMBER	DESCRIPTION	QTY	SERIAL No.
	(203-60-63111)	MOTOR A.....	2	NL 50001-
		THIS ASSEMBLY CONSISTS OF ALL		
		PARTS SHOWN IN FIGS. Y1651-01A0,		
		02A0 AND 03A0		
	TZ276B300010F	. VALVE ASSY.....	1	NL 50001-
	#	. . VALVE KIT.....	2	NL 50001-
	#	. . . SLEEVE KIT.....	1	NL 50001-
1	#	. . . . VALVE.....	1	NL 50001-
2	#	. . . . SLEEVE.....	1	NL 50001-
3	#	. . . RETAINER.....	1	NL 50001-
4	#	. . . PLUG.....	1	NL 50001-
5	#	. . . SHIM.....	1	NL 50001-
6	#	. . . SPRING.....	1	NL 50001-
7	07000-12014	. . . O-RING (K1).....	1	NL 50001-
8	07000-12020	. . . O-RING (K1).....	1	NL 50001-
9	07000-12016	. . . O-RING (K1).....	1	NL 50001-
10	TZJB2407T2-P14	. . . RING (K1).....	2	NL 50001-
	#	. . PISTON KIT.....	1	NL 50001-
	#	. . . PISTON KIT.....	1	NL 50001-
11	#	. . . . BODY.....	1	NL 50001-
12	#	. . . . PISTON.....	1	NL 50001-
13	07000-12020	. . . O-RING.....	2	NL 50001-
14	#	. . . PLUG.....	1	NL 50001-
15	#	. . . PLUG.....	2	NL 50001-
16	04260-00952	. . . BALL.....	2	NL 50001-
17	TZJB2407T3-P20	. . . RING (K1).....	4	NL 50001-
18	TZGDL1-16-S	. . . PLUG.....	5	NL 50001-
19	TZS0506	. . . ORIFICE.....	2	NL 50001-
20	07000-12011	. . . O-RING (K1).....	2	NL 50001-
21	07000-12018	. . . O-RING (K1).....	1	NL 50001-
22	TZGDL1-16-S	. . . PLUG.....	1	NL 50001-

Fig. No. **Y1651-02A0** | **TRAVEL MOTOR (VALVE ASSY) (2/3)** | Update Index : **A** | **YO-063** 1/1

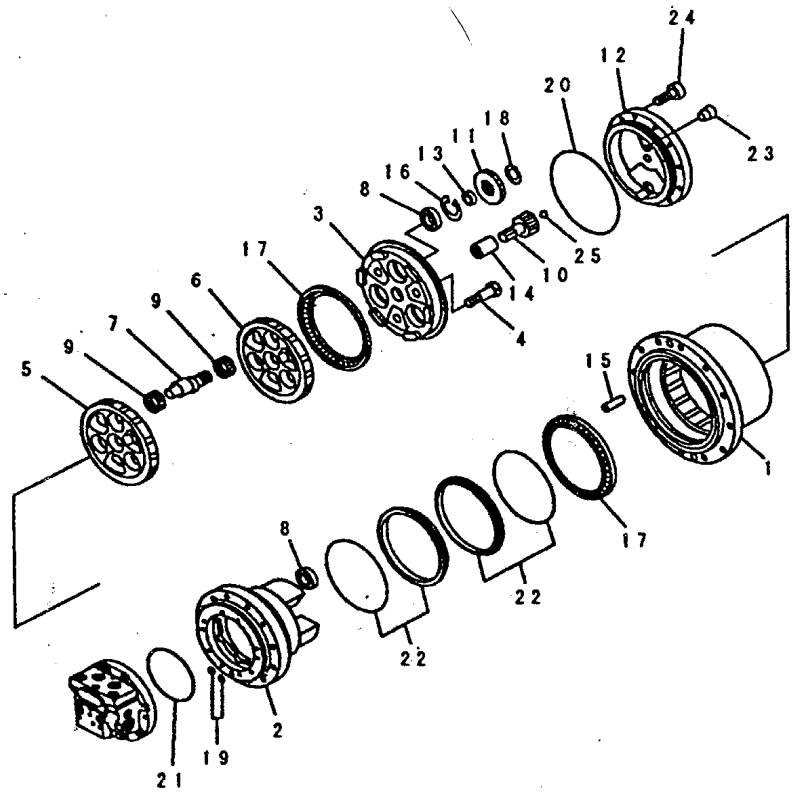

INDEX	PART NUMBER	DESCRIPTION	QTY	SERIAL No.
	(203-60-63111)	MOTOR A.....	2	NL 50001-
		THIS ASSEMBLY CONSISTS OF ALL		
		PARTS SHOWN IN FIGS. Y1651-01A0,		
		02A0 AND 03A0		
	TZ270B1000-00	. FINAL DRIVE ASSY.....	1	NL 50001-
1	★ (TZ266B1001-00)	. . HUB, MOTOR.....	1	NL 50001-
	★ (TZ263B1102-01)	. . SPINDLE KIT.....	1	NL 50001-
	★ (TZ263B1132-05)	. . . SPINDLE ASSY.....	1	NL 50001-
2	#	. . . . SPINDLE.....	1	NL 50001-
3	#	. . . . FLANGE, END.....	1	NL 50001-
4	TZ200B1019-03	. . . . BOLT.....	3	NL 50001-
	★ (TZ263B1104-00)	. . RV GEAR ASSY.....	1	NL 50001-
	★ (TZ263B1204-00)	. . . RV GEAR KIT.....	1	NL 50001-
5	#	. . . . GEAR.....	1	NL 50001-
6	#	. . . . GEAR.....	1	NL 50001-
7	★ (TZ200B1009-01)	. . . SHAFT.....	3	NL 50001-
8	★ (TZ200B1022-00)	. . . BEARING.....	6	NL 50001-
9	★ (TZ200B1023-00)	. . . BEARING.....	6	NL 50001-
10	TZ270B1006-00	. . GEAR.....	1	NL 50001-
	TZ264B1107-00	. . SPUR GEAR KIT.....	1	NL 50001-
11	#	. . . SPUR GEAR.....	3	NL 50001-
12	TZ266B1008-00	. . COVER.....	1	NL 50001-
13	TZ200B1014-01	. . PIECE.....	3	NL 50001-
14	TZ269B1015-00	. . COUPLING.....	1	NL 50001-
15	TZ225B1017-00	. . PIN.....	24	NL 50001-
16	★ (TZ150A1020-00)	. . SNAP RING KIT.....	3	NL 50001-
17	★ (TZ200B1021-01)	. . BEARING.....	2	NL 50001-
18	04064-03515	. . RING, BACK-UP.....	3	NL 50001-
19	07000-11007	. . O-RING.....	2	NL 50001-
20	TZARP568-378-7	. . O-RING.....	1	NL 50001-
21	TZJW1516-G37-7	. . O-RING.....	1	NL 50001-
22	TZES100-250-A	. . SPRING.....	2	NL 50001-
23	TZGM1-2	. . PLUG.....	2	NL 50001-
24	TZJB1176M12-32	. . BOLT.....	10	NL 50001-
25	04260-00952	. . BALL.....	1	NL 50001-
		SERVICE KIT		
K1	TZ276B9000-00	SERVICE KIT.....	1	NL 50001-
	07000-11007	. O-RING.....	2	NL 50001-

Fig. No. **Y1651-03A0** | **TRAVEL MOTOR (FINAL DRIVE ASSY) (3/3)** | Update Index : **A** | **YO-065** **1/2**

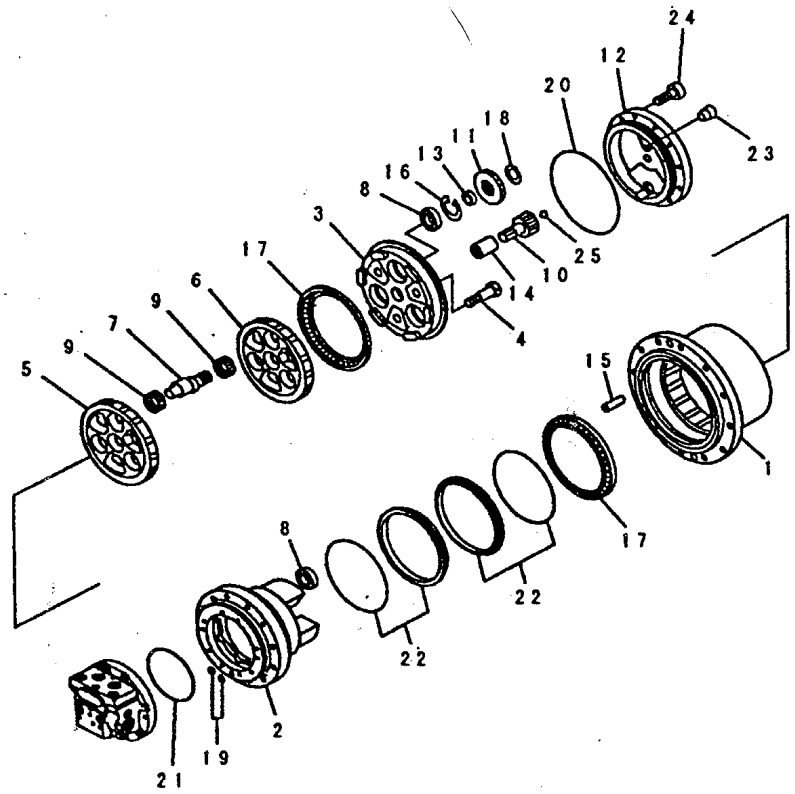

INDEX	PART NUMBER	DESCRIPTION	QTY	SERIAL No.
	TZARP568-378-7	. O-RING	1	NL 50001-
	TZJW1516-G37-7	. O-RING	1	NL 50001-
	TZES100-250-A	. SEAL	2	NL 50001-
	TS15Z-25-42-10	. SEAL	1	NL 50001-
	TZ266B2035-00	. O-RING	1	NL 50001-
	TZJB2401-P26-9	. O-RING	2	NL 50001-
	07000-12016	. O-RING	4	NL 50001-
	07000-12018	. O-RING	3	NL 50001-
	TZ266B2039-00	. O-RING	1	NL 50001-
	07000-12010	. O-RING	2	NL 50001-
	07002-02034	. O-RING	1	NL 50001-
	07000-12011	. O-RING	4	NL 50001-
	07000-12014	. O-RING	2	NL 50001-
	07000-12020	. O-RING	4	NL 50001-
	TZJB2407T2-P14	. RING	4	NL 50001-
	TZJB2407T3-P20	. RING	4	NL 50001-

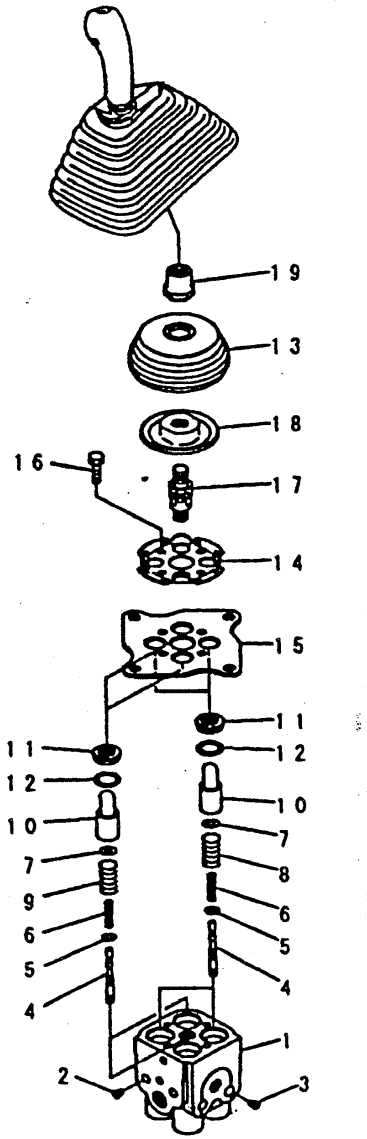

INDEX	PART NUMBER	DESCRIPTION	QTY	SERIAL No.
	702-16-03910	VALVE ASSY, (L.H.).....	1	NL 50001-
1	#	. BODY, VALVE.....	1	NL 50001-
2	#	. . PLUG.....	2	NL 50001-
3	#	. . PLUG.....	2	NL 50001-
4	#	. . VALVE.....	4	NL 50001-
5	702-16-51140	. . SHIM, 0.30MM.....	4	NL 50001-
6	702-16-53420	. . SPRING.....	4	NL 50001-
7	702-16-53140	. . RETAINER.....	4	NL 50001-
8	702-16-53480	. . SPRING.....	2	NL 50001-
9	702-16-53470	. . SPRING.....	2	NL 50001-
10	702-16-53170	. . PISTON.....	4	NL 50001-
11	702-16-71210	. . SEAL.....	4	NL 50001-
12	702-16-71160	. . SEAT.....	4	NL 50001-
13	702-16-71280	. . BOOT.....	1	NL 50001-
14	#	. . PLATE.....	1	NL 50001-
15	#	. . PLATE.....	1	NL 50001-
16	01010-80620	. . BOLT.....	4	NL 50001-
17	702-16-51240	. . JOINT, UNIVERSAL.....	1	NL 50001-
18	#	. . DISC.....	1	NL 50001-
19	702-16-71441	. . NUT.....	1	NL 50001-

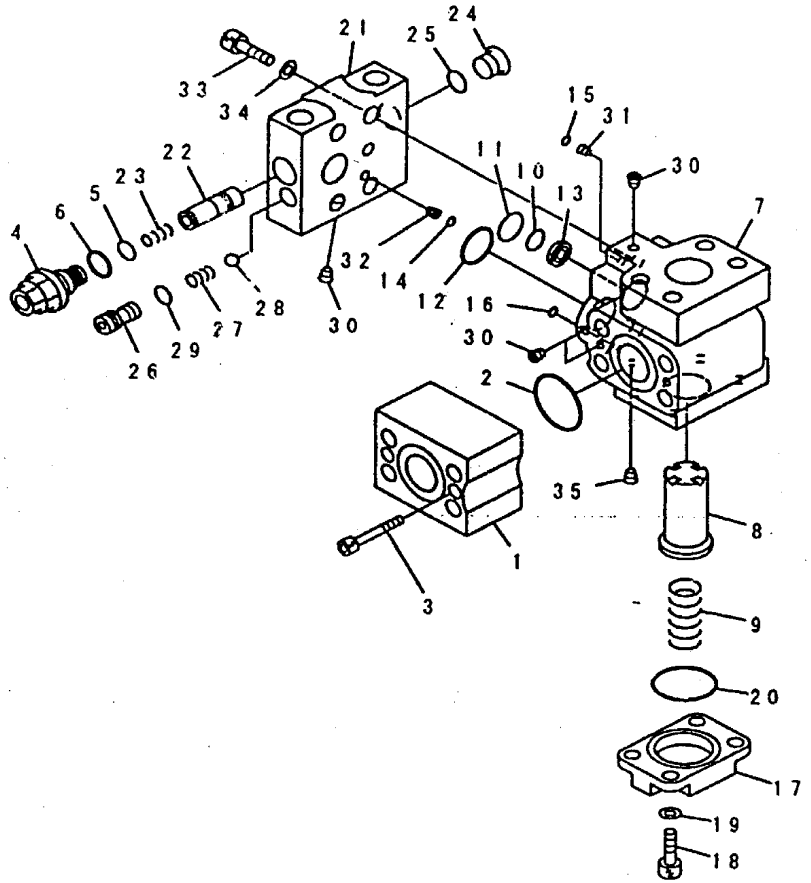

INDEX	PART NUMBER	DESCRIPTION	QTY	SERIAL No.
	702-21-09230	VALVE ASSY	1	NL 50001-
1	702-21-55360	. BLOCK	1	NL 50001-
2	07000-13032	. O-RING	1	NL 50001-
3	01252-60545	. BOLT	2	NL 50001-
	702-21-09240	. PILOT VALVE	1	NL 50001-
4	702-21-55100	. . VALVE ASSY, RELIEF	1	NL 50001-
5	702-16-53920	. . . O-RING	1	NL 50001-
6	07002-11623	. . . O-RING	1	NL 50001-
7	#	. . BLOCK	1	NL 50001-
8	702-21-55310	. . VALVE	1	NL 50001-
9	702-21-55460	. . SPRING	1	NL 50001-
10	702-21-55420	. . O-RING	1	NL 50001-
11	702-21-55520	. . O-RING	1	NL 50001-
12	702-21-55440	. . O-RING	1	NL 50001-
13	702-21-53120	. . FILTER	1	NL 50001-
14	07000-11009	. . O-RING	1	NL 50001-
15	07000-11010	. . O-RING	1	NL 50001-
16	07000-11006	. . O-RING	1	NL 50001-
17	702-21-55410	. . PLATE	1	NL 50001-
18	01252-60820	. . BOLT	4	NL 50001-
19	01643-50823	. . WASHER	4	NL 50001-
20	702-21-55530	. . O-RING	1	NL 50001-
21	#	. . BLOCK	1	NL 50001-
22	#	. . SPOOL	1	NL 50001-
23	702-21-55640	. . SPRING	1	NL 50001-
24	702-21-55620	. . PLUG	1	NL 50001-
25	07002-11423	. . O-RING	1	NL 50001-
26	702-21-55710	. . SEAT	1	NL 50001-
27	702-21-55720	. . SPRING	1	NL 50001-
28	04260-00793	. . BALL	1	NL 50001-
29	07000-11009	. . O-RING	1	NL 50001-
30	#	. . PLUG	4	NL 50001-
31	702-21-55470	. . ORIFICE	1	NL 50001-
32	702-21-55670	. . ORIFICE	1	NL 50001-
33	01252-61040	. . BOLT	4	NL 50001-
34	01643-51032	. . WASHER	4	NL 50001-
35	#	. . SCREW	1	NL 50001-

Fig. No. **Y1679-01A0** | **PILOT VALVE** | Update Index : **A** | **YO-107** 1/1

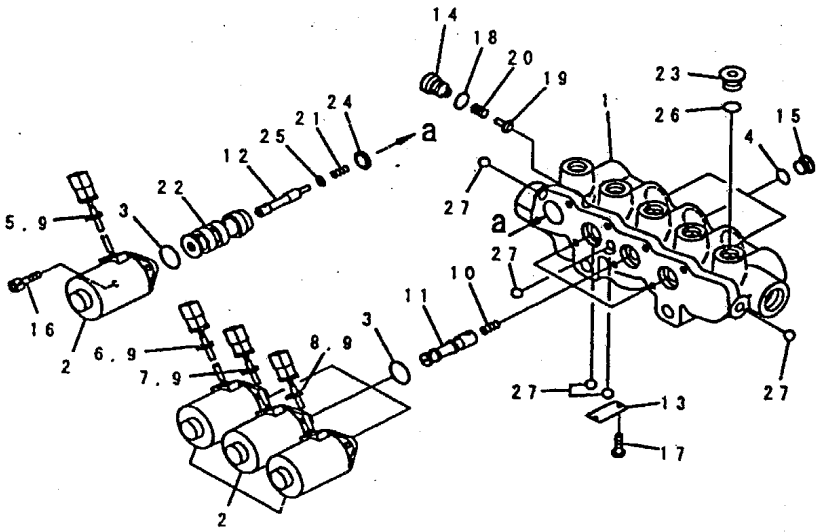

INDEX	PART NUMBER	DESCRIPTION	QTY	SERIAL No.
	203-60-71210	VALVE ASSY	1	NL 50001-
1	#	. BODY, VALVE	1	NL 50001-
2	NY07995-10200	. SOLENOID ASSY	4	NL 50001-
3	NY86710-02016	. O-RING	4	NL 50001-
4	NY86711-02011	. O-RING	3	NL 50001-
5	NY07880-10200	. TUBE	1	NL 50001-
6	NY07880-10500	. TUBE	1	NL 50001-
7	NY07880-10600	. TUBE	1	NL 50001-
8	NY07880-10700	. TUBE	1	NL 50001-
9	NY89103-00090	. BAND	4	NL 50001-
10	NY06339-10200	. SPRING	3	NL 50001-
11	NY07493-10200	. SPOOL	3	NL 50001-
12	NY11076-1040A	. SPOOL	1	NL 50001-
13	NY09000-11400	. PLATE	1	NL 50001-
14	NY06277-1320A	. PLUG	1	NL 50001-
15	NY80000-02200	. PLUG	3	NL 50001-
16	NY81416-05012	. BOLT	8	NL 50001-
17	NY84110-00248	. SCREW	2	NL 50001-
18	NY86711-01010	. O-RING	1	NL 50001-
19	NY05062-1170A	. PLUG	1	NL 50001-
20	NY05062-11800	. SPRING	1	NL 50001-
21	NY06040-10400	. SPRING	1	NL 50001-
22	NY07084-10210	. SLEEVE	1	NL 50001-
23	NY07343-10300	. PLUG	1	NL 50001-
24	NY11076-12600	. STOPPER	1	NL 50001-
25	NY83007-03040	. WASHER	1	NL 50001-
26	NY86792-01423	. O-RING	1	NL 50001-
27	NY87200-00011	. EXPANDER	8	NL 50001-

NUMERICAL INDEX

Partno	Fig No	Index
09019-28036	V0300-01A0	18
(01010-61450)	Y1600-02A0	10
(01252-61230)	Y1600-04A0	3
(01252-61240)	Y1640-01A0	18
(01252-61445)	Y1600-04A0	11
(01643-31445)	Y1600-02A0	11
(04020-01228)	Y1600-02A0	5
(04020-01228)	Y1600-04A0	1
(04064-03515)	Y1640-01A0	26
(04065-04818)	Y1600-03A0	11
(07000-02145)	Y1640-01A0	17
(07000-12115)	Y1640-01A0	42
(07000-12130)	Y1640-01A0	43
(07000-B1009)	Y1600-04A0	2
(07000-B2010)	Y1600-02A0	6
(07000-B2012)	Y1600-02A0	7
(07000-B2014)	Y1600-02A0	8
(07000-B3040)	Y1600-04A0	8
(07000-B5165)	Y1600-02A0	4
(07001-03040)	Y1600-04A0	9
(07002-62434)	Y1600-02A0	13
(07002-63634)	Y1600-04A0	17
(07040-12414)	Y1600-02A0	12
(09920-00150	A2110-A0P1	17
(09920-00150)	A2040-A0E5	8
(09920-00150)	A2210-A0F9	14
(09920-00150)	A4040-A0A6	18
(113-43-31380)	Y1600-04A0	12
(203-26-00123)	N1210-01A0	1
(203-60-63111)	Y1651-02A0	
(203-60-63111)	Y1651-03A0	
(203-60-63220)	P1210-01A0	1
(203-60-71210)	H1831-01A0	1
(6208-81-7100)	B0200-01A0	1
(700-01-N1440)	Y1620-11A0	
(702-16-03910)	K1110-25A0	12
(702-16-03910)	K1110-29A0	12
(702-16-04270)	K1110-19A0	1
(702-21-09230)	H0120-01A0	14
(703-08-00110)	N1310-01A0	1
(706-73-00020)	Y1640-01A0	
(706-73-01400)	N1210-01A0	6
(706-73-01400)	Y1640-02A0	
(706-73-05020)	Y1640-01A0	
(706-73-05030)	Y1640-01A0	25
(706-73-40010)	Y1640-01A0	5
(706-73-41110)	Y1640-01A0	34
(706-73-42820)	Y1640-01A0	6
(706-73-43120)	Y1640-01A0	32
(706-73-43130)	Y1640-01A0	33
(706-73-43150)	Y1640-01A0	1
(706-73-43160)	Y1640-01A0	37
(706-73-43190)	Y1640-01A0	29
(706-73-43610)	Y1640-01A0	22
(706-73-43620)	Y1640-01A0	23
(706-73-43742)	Y1640-01A0	30
(706-73-43810)	Y1640-01A0	21
(706-73-43880)	Y1640-01A0	20
(706-73-43890)	Y1640-01A0	24
(706-73-43960)	Y1640-01A0	19
(706-73-92340)	Y1640-01A0	38
(706-73-92350)	Y1640-01A0	39
(706-73-92380)	Y1640-01A0	40
(706-73-92390)	Y1640-01A0	41
(707-01-N1420)	T1120-01A0	1
(707-01-N1420)	Y1620-01A3	G1
(707-01-N1430)	T1120-01A0	2
(707-01-N1430)	Y1620-01A3	G2
(707-01-N1440)	T1140-01A0	1
(707-01-N1450)	T1220-01A0	1
(707-01-N1450)	Y1620-41A0	
(708-1L-00650)	A9999-02A0	8
(708-1L-00650)	Y1600-02A0	
(708-1L-00650)	Y1600-03A0	
(708-1L-00650)	Y1600-04A0	
(708-1L-00650)	Y1600-05A0	
(708-1L-00650)	Y1600-06A0	
(708-1L-00650)	Y1600-07A0	
(708-1L-00650)	Y1600-08A0	
(708-1L-01650)	Y1600-02A0	
(708-1L-01650)	Y1600-03A0	
(708-1L-01650)	Y1600-04A0	
(708-1L-04150)	Y1600-02A0	
(708-25-12790)	Y1600-03A0	4
(708-2E-05040)	Y1600-03A0	3
(708-2L-04240)	Y1600-01A0	
(708-2L-04291)	Y1600-08A0	
(708-2L-04361)	Y1600-03A0	
(708-2L-06170)	Y1600-03A0	
(708-2L-23131)	Y1600-03A0	12
(708-2L-23351)	Y1600-03A0	15
(708-2L-23360)	Y1600-03A0	16
(708-2L-24514)	Y1600-04A0	4
(708-2L-24522)	Y1600-04A0	10
(708-2L-24531)	Y1600-04A0	16
(708-2L-24560)	Y1600-04A0	7
(708-2L-24570)	Y1600-04A0	6
(708-2L-24590)	Y1600-04A0	19
(708-2L-24630)	Y1600-04A0	15
(708-2L-24640)	Y1600-04A0	13
(708-2L-24650)	Y1600-04A0	14
(708-2L-24661)	Y1600-04A0	18
(708-2L-24670)	Y1600-04A0	5
(708-2L-25480)	Y1600-02A0	9
(708-2L-32110)	Y1600-03A0	1
(708-2L-32150)	Y1600-03A0	2
(708-2L-32260)	Y1600-02A0	3
(708-2L-33160)	Y1600-03A0	13
(708-2L-33310)	Y1600-03A0	18
(708-2L-33350)	Y1600-03A0	17
(708-7L-13140)	Y1600-03A0	14
(708-7T-15150)	Y1640-01A0	44
(720-68-19610)	Y1600-03A0	10
(720-68-19610)	Y1640-01A0	31
(723-56-11501)	H0120-01A0	1
(TZ150A1020-00)	Y1651-03A0	16
(TZ200B1009-01)	Y1651-03A0	7
(TZ200B1021-01)	Y1651-03A0	17
(TZ200B1022-00)	Y1651-03A0	8
(TZ200B1023-00)	Y1651-03A0	9
(TZ263B1102-01)	Y1651-03A0	
(TZ263B1104-00)	Y1651-03A0	
(TZ263B1132-05)	Y1651-03A0	
(TZ263B1204-00)	Y1651-03A0	
(TZ266B1001-00)	Y1651-03A0	1
01010-50835	Y1627-01A0	11
01010-80620	Y1670-11A0	16
01010-81240	A2650-A0B7	2
01010-81280	H0311-01A0	7
01010-81280	H1833-01A0	25
01010-B0620	A4040-A0A6	12
01011-62790	M1520-01A0	1

Partno	Fig No	Index
01011-81225	H0311-01A0	5
01011-81230	N1210-01A0	10
01011-81600	H0120-01A0	6
01023-10508	K1110-30A0	19
01023-10512	K1110-30A0	20
01023-10614	K1110-30A0	40
01023-10616	K0210-13A0	2
01023-20416	K1110-19A0	22
01023-20614	K1110-28A0	31
01023-60316	K1110-28A0	27
01023-60408	K1110-30A0	17
01023-60410	K1110-28A0	9
01023-60410	K1110-30A0	38
01023-60512	K1110-30A0	18
01023-60516	K1110-27A0	6
01023-60616	K1110-28A0	26
01023-60616	K1110-30A0	35
01023-60620	K1110-27A0	9
01023-60630	K1110-30A0	22
01023-70514	K1110-30A0	26
01050-31235	A6020-A0A6	5
01050-31430	A2230-A0B4	3
01050-31845	A2370-A0F4	3
01124-60825	A1530-A0E4	3
01124-60825	A1670-A0A7	6
01124-60830	A1670-A0A7	8
01144-51035	A4040-A0A6	6
01225-70616	K0210-02A0	34
01236-40816	A5010-A0J2	8
01245-00612	K0210-08A0	41
01245-00816	K0210-08A0	25
01245-00820	K1110-16A0	12
01252-30865	Y1651-01A0	56
01252-31030	Y1651-01A0	47
01252-60545	Y1679-01A0	3
01252-60820	Y1679-01A0	18
01252-60825	Y1640-02A0	15
01252-60865	Y1600-08A0	7
01252-61040	Y1679-01A0	33
01252-70816	K1110-28A0	17
01310-01016	Y1620-41A0	23
01310-01216	Y1620-11A0	28
01310-01216	Y1620-01A3	22
01370-00508	M1510-01A0	2
01370-10308	K1110-25A0	2
01370-10308	K1110-29A0	2
01370-30412	K0210-07A0	26
01370-40408	K0210-06A0	9
01370-40412	K0210-06A0	44
01434-00820	E0100-01A0	10
01434-10616	C0100-03A0	2
01434-10616	C0100-03A0	5
01435-00610	K1110-23A0	34
01435-00612	A2110-A0P1	16
01435-00612	K1110-30A0	37
01435-00612	A4050-A0C6	8
01435-00614	A1111-A0D7	6
01435-00616	A2810-A0A5	3
01435-00616	K0210-01A0	9
01435-00616	A3030-A0A3	9
01435-00625	A4050-A0C6	6
01435-00625	A4230-A0G7	8
01435-00812	A4040-A0A6	10
01435-00814	A2110-A0P1	2
01435-00814	A3030-A0A3	11
01435-00816	A2040-A0E5	3
01435-00816	A2110-A0P1	10
01435-00816	A2210-A0F9	10
01435-00816	A3010-A0A2	11
01435-00816	K1110-23A0	32
01435-00820	A1570-A0B6	4
01435-00820	A2410-A0B8	5
01435-00820	A9530-A0A2	5
01435-00825	A3010-A0A2	12
01435-00825	B9999-A0P3	3
01435-00825	C0100-06A0	29
01435-00825	A5110-A0A5	3
01435-00825	A3110-A0D6	26
01435-00825	A6020-A0A6	12
01435-00830	A1570-A0B6	3
01435-00830	A5070-A0A3	1
01435-00835	A2110-A0P1	3
01435-00840	A3030-A0A3	15
01435-00850	Y1620-41A0	31
01435-00850	Y1620-01A3	28
01435-00855	A2040-A0E5	6
01435-00855	A5010-A0J2	11
01435-00855	Y1620-11A0	40
01435-00860	A6020-A0A6	2
01435-00865	A2450-A0A1	11
01435-00870	A2040-A0E5	7
01435-00875	A9530-A0A2	3
01435-00880	A3110-A0D6	15
01435-00885	K1110-23A0	30
01435-00895	A6020-A0A6	11
01435-01016	A2190-A0B5	9
01435-01016	K0210-05A0	21
01435-01016	K1110-23A0	13
01435-01016	A5010-A0J2	16
01435-01020	A1030-A0B6	2
01435-01020	A2190-A0B5	7
01435-01020	A4040-A0A6	17
01435-01020	A5170-A0A2B	1
01435-01025	A1111-A0D7	13
01435-01025	A1610-A0N7	5
01435-01025	A4040-A0A6	15
01435-01025	Y1620-01A3	32
01435-01030	A2210-A0F9	2
01435-01030	A4110-A0H8	6
01435-01030	Y1620-11A0	43
01435-01030	Y1620-41A0	34
01435-01030	Y1620-01A3	31
01435-01035	A4210-A0F4	5
01435-01045	A1510-A0G3	3
01435-01070	A1320-A0AB	5
01435-01220	A2210-A0F9	13
01435-01235	A1670-A0A7	4
01435-01235	A6210-A0G6	2
01435-01270	A2050-A0B3	6
01435-20816	C0100-03A0	9
01435-40610	K0210-05A0	16
01435-40820	K0210-02A0	7
01435-40820	K0210-02A0	16
01435-40820	K0210-02A0	19
01435-40820	K0210-02A0	22
01435-40820	K0210-02A0	26
01435-40820	K0210-02A0	28
01435-40820	K0210-02A0	38
01435-40820	K0210-02A0	41
01435-40820	K0210-05A0	9
01435-40820	K0210-01A0	7
01435-40820	K0210-08A0	18

Partno	Fig No	Index
01435-40830	K0210-02A0	43
01435-41020	K0210-02A0	24
01435-41020	K0210-01A0	3
01435-41020	K0210-06A0	2
01435-41020	K0210-06A0	32
01435-41025	K0210-01A0	5
01435-41225	K0210-08A0	22
01436-01030	A4110-A0H8	8
01436-01045	A4110-A0H8	9
01580-11008	A6020-A0A6	9
01582-11008	B0400-01A0	17
01582-11008	B0400-01A0	21
01582-11008	Y1600-08A0	15
01584-00806	A1610-A0N7	3
01584-01008	K0210-08A0	44
01584-01008	A4040-A0A6	7
01584-01008	A4040-A0A6	16
01593-31008	B0400-01A0	19
01597-01009	C0100-04A0	10
01597-01009	C0100-04A0	18
01597-01009	C0100-06A0	10
01597-01009	C0100-06A0	16
01597-01009	Y1620-11A0	45
01601-20513	H0110-01A0	22
01601-20513	K0210-06A0	28
01601-20513	K0210-08A0	28
01601-20513	K1110-30A0	21
01602-20619	B0400-01A0	24
01602-20619	K0210-08A0	31
01602-21030	B0400-01A0	15
01640-20610	K1110-30A0	23
01640-21223	M1110-01A0	23
01641-20608	K0210-08A0	38
01641-20608	A4040-A0A6	13
01641-20812	A1670-A0A7	9
01641-21423	A6020-A0A6	14
01641-21626	N1310-01A0	9
01641-50405	K0210-05A0	
01641-50405	K0210-06A0	10
01641-50405	K0210-06A0	22
01641-50405	K0210-06A0	40
01641-50508	K0210-06A0	27
01641-50508	K0210-06A0	36
01641-50508	K0210-08A0	27a
01641-50608	K0210-06A0	15
01643-03823	K0110-01A0	3
01643-30623	A1111-A0D7	7
01643-30623	D0100-01A0	7
01643-30623	E0200-02A0	11
01643-30623	C0100-03A0	3
01643-30623	C0100-03A0	6
01643-30623	K1110-30A0	41
01643-30623	M1130-01A0	14
01643-30623	M1130-01A0	26
01643-30623	M1140-01A0	14
01643-30623	M1140-01A0	26
01643-30623	M1220-01A1	10
01643-30623	M1220-01A1	17
01643-30823	A2110-A0P1	11
01643-30823	B0200-01A0	5
01643-30823	E0100-01A0	11
01643-30823	E0410-01A0	3
01643-30823	E0200-01A0	7
01643-30823	E0200-02A0	3
01643-30823	E0200-02A0	5
01643-30823	K0210-08A0	26
01643-30823	K1110-25A0	14
01643-30823	K1110-29A0	14
01643-30823	R0120-01A0	14
01643-30823	Y1627-01A0	12
01643-30823	K1110-16A0	10
01643-31032	B0400-01A0	3
01643-31032	B0400-01A0	6
01643-31032	B0400-01A0	12
01643-31032	B0100-02A0	4
01643-31032	B0920-01A0	3
01643-31032	D0200-02A0	7
01643-31032	E0200-04A0	3
01643-31032	E0200-04A0	24
01643-31032	E0200-05A0	26
01643-31032	E0200-05A0	28
01643-31032	E0200-05A0	30
01643-31032	E0200-07A0	7
01643-31032	E0200-07A0	10
01643-31032	E0200-07A0	12
01643-31032	E0200-06A0	4
01643-31032	E0200-06A0	8
01643-31032	E0200-06A0	17
01643-31032	E0200-06A0	21
01643-31032	E0200-01A0	15
01643-31032	E0200-02A0	17
01643-31032	C0100-01A0	10
01643-31032	C0100-01A0	18
01643-31032	C0100-02A0	5
01643-31032	C0100-02A0	8
01643-31032	C0100-02A0	15
01643-31032	C0100-03A0	14
01643-31032	C0100-03A0	18
01643-31032	C0100-03A0	21
01643-31032	C0100-03A0	24
01643-31032	C0100-04A0	4
01643-31032	C0100-04A0	7
01643-31032	C0100-04A0	9
01643-31032	C0100-04A0	14
01643-31032	C0100-04A0	17
01643-31032	C0100-04A0	20
01643-31032	C0100-04A0	24
01643-31032	C0100-04A0	31
01643-31032	C0100-05A0	13
01643-31032	C0100-06A0	7
01643-31032	C0100-06A0	9
01643-31032	C0100-06A0	13
01643-31032	C0100-06A0	15
01643-31032	C0100-06A0	24
01643-31032	C0310-01A0	3
01643-31032	C0310-01A0	6
01643-31032	C0310-01A0	9
01643-31032	C0310-01A0	12
01643-31032	J1110-01A0	20
01643-31032	H0320-01A0	4
01643-31032	H0330-01A0	8
01643-31032	H1220-01A0	13
01643-31032	H1220-01A0	17
01643-31032	H1831-01A0	3
01643-31032	K0210-12A0	5
01643-31032	K0210-13A0	5
01643-31032	K1110-24A0	6
01643-31032	K1110-01A0	11
01643-31032	K1110-01A0	13
01643-31032	K1110-19A0	3
01643-31032	K1110-19A0	15
01643-31032	K1110-20A0	4

Partno	Fig No	Index
01643-31032	K1110-20A0	6
01643-31032	K1110-21A0	4
01643-31032	K1110-21A0	6
01643-31032	K1110-22A0	26
01643-31032	K1110-23A0	8
01643-31032	K1110-23A0	12
01643-31032	K1110-23A0	16
01643-31032	K1110-23A0	21
01643-31032	K1110-23A0	25
01643-31032	K1110-23A0	28
01643-31032	K1110-28A0	33
01643-31032	K1110-30A0	43
01643-31032	K1110-36A0	3
01643-31032	K1110-36A0	9
01643-31032	K1110-36A0	15
01643-31032	K1110-36A0	19
01643-31032	K1110-37A1	3
01643-31032	K1110-37A1	12
01643-31032	K1120-01A0	3
01643-31032	M1130-01A0	37
01643-31032	M1150-02A0	12
01643-31032	M1150-02A0	14
01643-31032	R1100-01A0	8
01643-31032	R1100-01A0	11
01643-31032	A9999-01A0	12
01643-31032	A9999-01A0	14
01643-31032	A9999-02A0	7
01643-31032	D0200-01A0	18
01643-31032	D0200-01A0	56
01643-31032	T1110-02A0	22
01643-31032	T1110-05A1	13
01643-31032	T1200-01A4	15
01643-31032	Y1620-11A0	46
01643-31032	Y1620-41A0	36
01643-31032	T1110-04A3	6
01643-31232	A2650-A0B7	3
01643-31232	B0400-01A0	9
01643-31232	B0100-02A0	7
01643-31232	B0100-03A0	3
01643-31232	B0100-03A0	7
01643-31232	B0100-03A0	9
01643-31232	B0200-01A0	12
01643-31232	B0200-01A0	16
01643-31232	B0200-01A0	18
01643-31232	B0200-01A0	27
01643-31232	B0920-01A0	6
01643-31232	B0920-01A0	14
01643-31232	B0920-01A0	21
01643-31232	B0920-01A0	26
01643-31232	B0920-01A0	34
01643-31232	B0920-01A0	36
01643-31232	B0920-01A0	38
01643-31232	E0200-03A0	10
01643-31232	E0200-03A0	14
01643-31232	E0200-03A0	18
01643-31232	E0200-03A0	23
01643-31232	E0200-03A0	26
01643-31232	E0200-03A0	29
01643-31232	E0200-03A0	32
01643-31232	E0200-03A0	40
01643-31232	E0200-04A0	8
01643-31232	E0200-04A0	11
01643-31232	E0200-04A0	14
01643-31232	E0200-04A0	17
01643-31232	E0200-04A0	21
01643-31232	E0200-04A0	27
01643-31232	E0200-04A0	30
01643-31232	E0200-04A0	33
01643-31232	E0200-04A0	36
01643-31232	E0200-05A0	3
01643-31232	E0200-05A0	6
01643-31232	E0200-05A0	10
01643-31232	E0200-05A0	13
01643-31232	E0200-05A0	16
01643-31232	E0200-05A0	19
01643-31232	E0200-05A0	23
01643-31232	E0100-01A0	6
01643-31232	E0200-06A0	13
01643-31232	E0200-01A0	10
01643-31232	E0200-01A0	18
01643-31232	E0200-01A0	22
01643-31232	E0200-01A0	25
01643-31232	E0200-01A0	28
01643-31232	E0200-01A0	31
01643-31232	E0200-02A0	8
01643-31232	H0110-01A0	11
01643-31232	H0110-01A0	18
01643-31232	J1110-01A0	8
01643-31232	J1310-01A0	4
01643-31232	J1310-01A0	9
01643-31232	K0210-14A0	2
01643-31232	K0210-14A0	4
01643-31232	H0311-01A0	6
01643-31232	H0311-01A0	8
01643-31232	H0320-01A0	7
01643-31232	H0320-01A0	10
01643-31232	H0320-01A0	18
01643-31232	H0340-01A0	4
01643-31232	H0340-01A0	11
01643-31232	H0340-01A0	19
01643-31232	H1210-01A0	3
01643-31232	H1210-01A0	6
01643-31232	H1210-01A0	9
01643-31232	H1210-01A0	13
01643-31232	H1270-01A0	3
01643-31232	H1810-01A0	5
01643-31232	H1831-03A0	3
01643-31232	H1831-03A0	7
01643-31232	H1831-03A0	10
01643-31232	H1831-03A0	13
01643-31232	H1831-03A0	16
01643-31232	H1831-03A0	19
01643-31232	H1833-01A0	23
01643-31232	H1833-01A0	26
01643-31232	H1833-01A0	29
01643-31232	H1840-01A0	18
01643-31232	H1840-01A0	21
01643-31232	H1840-01A0	24
01643-31232	H1840-01A0	27
01643-31232	K1110-22A0	11
01643-31232	K1110-22A0	14
01643-31232	K1110-22A0	20
01643-31232	M1110-01A0	12
01643-31232	M1110-01A0	15
01643-31232	M1110-01A0	19
01643-31232	M1120-01A0	6
01643-31232	M1120-01A0	8
01643-31232	M1120-01A0	10
01643-31232	M1120-01A0	13
01643-31232	M1120-01A0	19
01643-31232	M1120-01A0	22
01643-31232	M1120-01A0	25

Partno	Fig No	Index
01643-31232	M1120-01A0	28
01643-31232	M1120-01A0	31
01643-31232	M1120-01A0	34
01643-31232	M1120-01A0	37
01643-31232	M1120-01A0	41
01643-31232	M1120-01A0	44
01643-31232	M1120-01A0	47
01643-31232	M1120-01A0	49
01643-31232	M1130-01A0	5
01643-31232	M1130-01A0	8
01643-31232	M1130-01A0	11
01643-31232	M1130-01A0	19
01643-31232	M1130-01A0	28
01643-31232	M1130-01A0	30
01643-31232	M1130-01A0	34
01643-31232	M1130-01A0	44
01643-31232	M1140-01A0	5
01643-31232	M1140-01A0	8
01643-31232	M1140-01A0	11
01643-31232	M1140-01A0	19
01643-31232	M1140-01A0	28
01643-31232	M1140-01A0	30
01643-31232	M1140-01A0	34
01643-31232	M1150-01A0	4
01643-31232	M1150-01A0	6
01643-31232	M1150-01A0	10
01643-31232	M1150-01A0	13
01643-31232	M1150-01A0	19
01643-31232	M1150-02A0	2
01643-31232	M1150-02A0	6
01643-31232	M1150-02A0	9
01643-31232	M1150-02A0	17
01643-31232	M1150-02A0	21
01643-31232	M1210-01A0	3
01643-31232	M1210-01A0	6
01643-31232	M1210-01A0	9
01643-31232	M1210-01A0	12
01643-31232	M1220-01A1	24
01643-31232	M1220-01A1	29
01643-31232	M1220-01A1	33
01643-31232	M1230-01A0	3
01643-31232	M1230-01A0	6
01643-31232	M1230-01A0	9
01643-31232	M1230-01A0	12
01643-31232	M1230-01A0	16
01643-31232	M1310-01A0	3
01643-31232	M1310-01A0	5
01643-31232	M1510-01A0	4
01643-31232	M1510-01A0	7
01643-31232	M1510-01A0	11
01643-31232	M1510-01A0	15
01643-31232	M1810-01A0	3
01643-31232	M1810-01A0	8
01643-31232	M1810-01A0	14
01643-31232	M1810-01A0	17
01643-31232	M1810-01A0	25
01643-31232	M1810-02A0	5
01643-31232	M1810-02A0	8
01643-31232	M1810-02A0	13
01643-31232	N1210-01A0	11
01643-31232	N1310-01A0	4
01643-31232	R0300-01A0	10
01643-31232	A9999-01A0	10
01643-31232	A9999-01A0	18
01643-31232	A9999-02A0	4
01643-31232	D0200-01A0	21
01643-31232	D0200-01A0	24
01643-31232	D0200-01A0	27
01643-31232	D0200-01A0	30
01643-31232	D0200-01A0	34
01643-31232	D0200-01A0	37
01643-31232	D0200-01A0	40
01643-31232	D0200-01A0	42
01643-31232	D0200-01A0	45
01643-31232	D0200-01A0	49
01643-31232	D0200-01A0	60
01643-31232	D0200-01A0	63
01643-31232	A6020-A0A6	6
01643-31232	T1110-02A0	4
01643-31232	T1110-02A0	8
01643-31232	T1110-02A0	12
01643-31232	T1110-02A0	18
01643-31232	T1200-01A4	27
01643-31232	T1200-01A4	35
01643-31445	R0120-01A0	19
01643-31445	T1510-01A3	10
01643-31645	D0100-01A0	14
01643-31645	H0110-01A0	29
01643-31645	H0120-01A0	4
01643-31645	H0120-01A0	7
01643-31645	K1120-01A0	6
01643-31645	K1120-01A0	9
01643-31645	N1210-01A0	14
01643-31645	N1310-01A0	6
01643-31645	P1210-01A0	4
01643-31645	P1210-01A0	6
01643-31645	R0200-01A0	11
01643-32780	M1520-01A0	2
01643-50823	Y1620-11A0	39
01643-50823	Y1620-41A0	30
01643-50823	Y1679-01A0	19
01643-50823	Y1620-01A3	34
01643-51032	H0120-01A0	16
01643-51032	H0312-01A0	5
01643-51032	H0312-01A0	8
01643-51032	K1110-25A0	11
01643-51032	K1110-29A0	11
01643-51032	Y1679-01A0	34
01643-51232	B0200-01A0	7
01643-51232	B0200-01A0	19
01643-51232	M1150-01A0	22
01643-51232	M1150-01A0	26
01643-51645	Y1620-11A0	16
01643-70823	K0110-01A0	6
01643-70823	K1110-16A0	6
01643-70823	K1110-16A0	13
01643-71032	K0110-01A0	9
01643-71032	K0210-02A0	28a
01643-71032	K1110-19A0	13
01643-71032	K1110-16A0	3
01643-71232	K1110-22A0	3
01643-71645	N1110-01A0	6
01653-21212	A8116-B0B2	
01803-02228	T1510-01A3	18
02720-40104	A1010-A0G2	9
02760-00207	H1840-01A0	5
02781-0021D	H0120-02A0	12
02781-0021D	H0120-02A0	28
02781-0021D	K1110-37A1	7
02781-0021D	K1110-37A1	16
02781-0021D	P1120-01A0	5
02781-0021D	Y1600-08A0	12

Partno	Fig No	Index
02781-0031D	K1110-37A1	13
02781-00422	P1120-01A0	3
02781-00522	P1120-01A0	1
02781-00628	H0340-01A0	12
02781-00628	H1220-01A0	2
02781-00628	A3110-A0D6	4
02782-10210	H0120-02A0	6
02782-10210	H0120-02A0	25
02782-10210	H0120-02A0	31
02782-10210	H0210-01A0	16
02782-10210	H1831-01A0	10
02782-10210	N1310-01A0	20
02782-10311	H0120-02A0	34
02782-10311	H0120-02A0	37
02782-10311	K1110-37A1	4
02782-10422	T1200-01A4	16
02782-10425	H0340-01A0	14
02782-10425	H1340-01A0	5
02782-10522	H1210-01A0	20
02782-10522	N1220-01A0	3
02782-10522	N1310-01A0	11
02782-10522	T1200-01A4	19
02782-10628	H0320-01A0	11
02782-10628	H1210-01A0	18
02782-10630	A3110-A0D6	18
02783-10422	N1220-01A0	1
02783-10422	N1220-01A0	7
02783-10422	T1200-01A4	17
02783-10522	H1310-01A0	8
02783-10522	N1310-01A0	13
02783-10522	T1200-01A4	18
02789-00210	Y1600-06A0	14
02896-11008	H0120-02A0	8
02896-11008	H0120-02A0	10
02896-11008	H0120-02A0	13
02896-11008	H0120-02A0	16
02896-11008	H0120-02A0	19
02896-11008	H0120-02A0	23
02896-11008	H0120-02A0	27
02896-11008	H0120-02A0	29
02896-11008	H0120-02A0	32
02896-11008	H0210-01A0	11
02896-11008	H0210-01A0	18
02896-11008	H1220-01A0	2a
02896-11008	H1831-01A0	5
02896-11008	H1831-01A0	11
02896-11008	H1831-01A0	14
02896-11008	H1831-02A0	17
02896-11008	H1833-01A0	4
02896-11008	K1110-19A0	26
02896-11008	K1110-25A0	20
02896-11008	K1110-29A0	20
02896-11008	K1110-29A0	22
02896-11008	K1110-37A1	8
02896-11008	K1110-37A1	17
02896-11008	N1220-01A0	13
02896-11008	N1310-01A0	21
02896-11008	N1310-01A0	24
02896-11008	P1120-01A0	7
02896-11009	H0120-02A0	5
02896-11009	H0120-02A0	35
02896-11009	H0120-02A0	38
02896-11009	H0210-01A0	15
02896-11009	H1831-01A0	6
02896-11009	H1831-02A0	14
02896-11009	K1110-37A1	5
02896-11009	K1110-37A1	14
02896-11012	H0340-01A0	14a
02896-11012	H1833-01A0	11
02896-11012	H1833-01A0	18
02896-11012	H1340-01A0	5a
02896-11012	N1220-01A0	2
02896-11012	N1220-01A0	7a
02896-11012	P1120-01A0	3a
02896-11012	T1200-01A4	16A
02896-11012	T1200-01A4	17A
02896-11015	H1210-01A0	20a
02896-11015	H1310-01A0	4a
02896-11015	H1310-01A0	8a
02896-11015	N1220-01A0	4a
02896-11015	N1310-01A0	12
02896-11015	N1310-01A0	14
02896-11015	P1120-01A0	1a
02896-11015	T1200-01A4	18A
02896-11015	T1200-01A4	19A
02896-11015	T1110-03A3	8
02896-11018	H0320-01A0	11a
02896-11018	H0320-01A0	19a
02896-11018	H0320-01A0	21a
02896-11018	H0330-01A0	1a
02896-11018	H0340-01A0	5a
02896-11018	H0340-01A0	12a
02896-11018	H1210-01A0	18a
02896-11018	H1831-01A0	18
02896-11018	H1831-01A0	24
02896-11018	T1110-03A3	9
02896-61008	Y1600-06A0	15
02896-61008	Y1600-08A0	11
02896-61008	Y1600-08A0	14
02896-61008	Y1600-08A0	23
02896-61018	A3110-A0D6	22
02896-61018	A8116-B0B2	
04010-00516	A2410-A0B8	3
04020-00820	A2010-A0P2	17
04020-01228	A2010-A0P2	18
04020-01228	B0100-02A0	9
04020-01434	N1110-01A0	7
04020-01638	N1210-01A0	2
04025-00408	A2010-A0P2	19
04025-00512	A2050-A0B3	4
04050-11612	K0210-08A0	36
04050-11612	M1220-01A1	11
04050-12018	B0400-01A0	20
04050-13022	M1110-01A0	18
04050-13022	M1110-01A0	22
04050-14025	N1310-01A0	10
04052-10530	K0210-01A0	12
04052-10833	K0210-05A0	19
04064-03515	R0120-01A0	4
04064-03515	Y1651-03A0	18
04064-05520	Y0260-01A0	18
04064-07025	A9999-01A0	8
04064-07525	Y1627-01A0	8
04065-01104	A9999-01A0	7
04065-03012	A2350-A0F1	3
04065-04518	Y1640-01A0	28
04065-06825	Y1600-03A0	7
04077-00075	R0120-01A0	17
04120-21748	B9999-A0P5	1
04120-21748	A5180-A0B5	1
04120-21748	V0100-01A0	6
04205-10520	K0210-01A0	11

Partno	Fig No	Index
04205-10614	K0210-08A0	37
04205-11230	M1110-01A0	17
04205-11230	M1110-01A0	21
04205-30820	K0210-05A0	18
04252-21061	B0400-01A0	18
04260-00635	Y1620-11A0	19
04260-00793	Y1651-01A0	23
04260-00793	Y1679-01A0	28
04260-00952	Y1651-01A0	21
04260-00952	Y1651-02A0	16
04260-00952	Y1651-03A0	25
04418-02550	A1110-A0F7	4
04418-02550	A9850-A0B1	2
04418-13060	U0100-01A4	
04434-50508	E0200-03A0	36
04434-50510	A5010-A0J2	15
04434-50612	A2210-A0F9	12
04434-50612	E0200-04A0	28
04434-50812	T1110-05A1	11
04434-51012	E0200-03A0	38
04434-51012	T1110-02A0	20
04434-51212	M1130-01A0	42
04434-51212	M1130-01A0	45
04434-51410	E0200-06A0	5
04434-51410	E0200-06A0	15
04434-51412	E0200-03A0	30
04434-51412	E0200-04A0	6
04434-51412	E0200-04A0	31
04434-51412	E0200-04A0	34
04434-51412	E0200-06A0	19
04434-51412	D0200-01A0	47
04434-51610	K1110-24A0	4
04434-51710	E0200-01A0	13
04434-51710	K1110-23A0	9
04434-51712	E0200-05A0	8
04434-51712	E0200-01A0	16
04434-51712	E0200-01A0	26
04434-51712	E0200-01A0	29
04434-51712	H1831-03A0	5
04434-51712	H1831-03A0	17
04434-51712	T1110-05A1	10
04434-51810	E0200-02A0	15
04434-51910	E0200-05A0	24
04434-51910	K0210-12A0	3
04434-51910	K1110-23A0	26
04434-51912	E0200-04A0	15
04434-51912	E0200-04A0	25
04434-51912	E0200-05A0	14
04434-51912	E0200-05A0	17
04434-51912	E0200-05A0	20
04434-51912	D0200-01A0	38
04434-51912	D0200-01A0	46
04434-52110	A1111-A0D7	11
04434-52112	B0920-01A0	32
04434-52112	E0200-06A0	9
04434-52112	H0340-01A0	20
04434-52310	K1110-23A0	18
04434-52312	E0200-03A0	6
04434-52312	E0200-03A0	15
04434-52312	E0200-03A0	19
04434-52312	E0200-03A0	27
04434-52312	E0200-04A0	12
04434-52312	H0340-01A0	2
04434-52312	H1831-03A0	8
04434-52512	D0200-01A0	43
04434-52712	B0920-01A0	24
04434-52712	E0200-04A0	18
04434-52712	E0200-05A0	1
04434-52712	E0200-05A0	7
04434-52712	E0200-01A0	19
04434-53211	K1110-36A0	1
04434-53211	K1110-36A0	7
04434-53212	E0200-03A0	20
04434-53212	H0320-01A0	16
04434-53212	H0340-01A0	9
04434-53411	K1110-23A0	5
04434-53411	K1110-23A0	14
04434-53412	B0100-03A0	4
04434-53412	E0200-03A0	7
04434-53412	E0200-03A0	12
04435-50810	T1110-05A1	9
04435-51310	K1110-36A0	6
04435-51612	B0920-01A0	11
04435-51612	H1810-01A0	3
04435-51712	H1840-01A0	22
04435-51912	D0200-01A0	22
04435-51912	D0200-01A0	28
04435-51912	D0200-01A0	62
04435-52112	H1831-03A0	14
04530-11018	Y1600-01A0	7
06045-06014	A9999-01A0	6
06124-01616	K1110-28A0	21
07000-02018	A8116-B0B2	
07000-02020	A8116-B0B2	
07000-02065	A4040-A0A6	1
07000-02065	A8116-B0B2	
07000-02080	Y0260-01A0	25
07000-02085	A8116-B0B2	
07000-02095	A8116-B0B2	
07000-02105	Y1627-01A0	10
07000-02135	A4040-A0A6	8
07000-02135	A8116-B0B2	
07000-02135	A8116-B0B2	
07000-03040	A5010-A0J2	10
07000-03040	A8116-B0B2	
07000-03040	A8118-A0B1	
07000-03042	Y1640-02A0	13
07000-03050	A8116-B0B2	
07000-11006	D0200-02A0	2
07000-11006	Y1679-01A0	16
07000-11007	D0200-02A0	3
07000-11007	C0100-01A0	6
07000-11007	Y1640-02A0	14
07000-11007	Y1651-03A0	19
07000-11007	Y1651-03A0	
07000-11009	Y1679-01A0	14
07000-11009	Y1679-01A0	29
07000-11010	Y1679-01A0	15
07000-12010	Y1651-01A0	16
07000-12010	Y1651-03A0	
07000-12011	Y1651-01A0	61
07000-12011	Y1651-02A0	20
07000-12011	Y1651-03A0	
07000-12014	Y1651-02A0	7
07000-12014	Y1651-03A0	
07000-12015	K1110-19A0	29
07000-12015	K1110-25A0	18
07000-12015	K1110-29A0	18
07000-12016	Y1651-01A0	15
07000-12016	Y1651-02A0	9
07000-12016	Y1651-03A0	
07000-12018	K1110-19A0	24

Partno	Fig No	Index
07000-12018	K1110-25A0	16
07000-12018	K1110-29A0	16
07000-12018	Y1651-01A0	43
07000-12018	Y1651-02A0	21
07000-12018	Y1651-03A0	
07000-12020	Y1640-01A0	12
07000-12020	Y1651-02A0	8
07000-12020	Y1651-02A0	13
07000-12020	Y1651-03A0	
07000-12065	D0200-02A0	4
07000-12070	H0311-01A0	2
07000-13025	H0120-01A0	10
07000-13025	K1120-01A0	14
07000-13025	Y1620-11A0	37
07000-13025	Y1620-41A0	28
07000-13025	Y1620-01A3	27
07000-13032	H0120-01A0	17
07000-13032	H0312-01A0	2
07000-13032	H0320-01A0	2
07000-13032	H0330-01A0	6
07000-13032	Y1679-01A0	2
07000-13035	C0100-02A0	3
07000-13035	C0100-04A0	2
07000-13035	C0100-04A0	12
07000-13042	R0200-01A0	8
07000-13048	R0110-01A0	9
07000-13050	A2810-A0A5	2
07000-13050	D0100-01A0	5
07000-15070	Y1620-11A0	29
07000-15080	Y1627-01A0	3
07000-15085	Y1620-41A0	9
07000-15095	Y1620-01A3	9
07000-15105	Y1620-11A0	9
07000-15105	Y1620-11A0	11
07000-15155	H0110-01A0	8
07000-15155	V0100-01A0	2
07000-15180	H0110-01A0	15
07000-72070	A3110-A0D6	14
07000-72070	A8116-B0B2	
07000-73025	A8116-B0B2	
07000-B1009	Y1600-05A0	14
07000-B2011	Y1600-08A0	19
07000-F2016	Y1640-02A0	3
07002-02034	Y1651-01A0	58
07002-02034	Y1651-03A0	
07002-02434	H0110-01A0	25
07002-02434	H0210-01A0	6
07002-11023	H0210-01A0	13
07002-11223	H0210-01A0	8
07002-11223	Y1640-01A0	8
07002-11423	C0100-06A0	25
07002-11423	H0120-02A0	4
07002-11423	H0120-02A0	7
07002-11423	H0120-02A0	11
07002-11423	H0120-02A0	14
07002-11423	H0120-02A0	17
07002-11423	H0120-02A0	20
07002-11423	H0120-02A0	24
07002-11423	H0120-02A0	26
07002-11423	H0120-02A0	30
07002-11423	H0120-02A0	33
07002-11423	H0120-02A0	36
07002-11423	H0120-02A0	39
07002-11423	H0210-01A0	10
07002-11423	H0210-01A0	17
07002-11423	H1831-01A0	7
07002-11423	H1831-01A0	12
07002-11423	H1831-01A0	15
07002-11423	H1831-01A0	19
07002-11423	H1831-01A0	25
07002-11423	H1831-02A0	18
07002-11423	H1833-01A0	5
07002-11423	H1833-01A0	6
07002-11423	H1833-01A0	12
07002-11423	H1833-01A0	13
07002-11423	H1833-01A0	19
07002-11423	K1110-19A0	27
07002-11423	K1110-19A0	31
07002-11423	K1110-25A0	21
07002-11423	K1110-29A0	23
07002-11423	K1110-37A1	6
07002-11423	K1110-37A1	9
07002-11423	K1110-37A1	15
07002-11423	K1110-37A1	18
07002-11423	N1220-01A0	12
07002-11423	N1310-01A0	22
07002-11423	N1310-01A0	25
07002-11423	P1120-01A0	6
07002-11423	Y1679-01A0	25
07002-11623	Y1679-01A0	6
07002-11823	H0120-01A0	13
07002-12034	H1210-01A0	17
07002-12034	H1831-01A0	9
07002-12034	H1831-01A0	21
07002-12034	H1831-01A0	27
07002-12034	H1831-02A0	15
07002-12034	N1220-01A0	2a
07002-12034	N1220-01A0	6
07002-12034	N1220-01A0	8
07002-12034	N1220-01A0	10
07002-12034	N1310-01A0	16
07002-12034	N1310-01A0	19
07002-12034	P1120-01A0	4
07002-12034	Y1620-11A0	34
07002-12034	Y1640-02A0	
07002-12434	H0311-01A0	4
07002-12434	H0320-01A0	12
07002-12434	H0320-01A0	15
07002-12434	H0320-01A0	22
07002-12434	H0340-01A0	6
07002-12434	H0340-01A0	13
07002-12434	H0340-01A0	15
07002-12434	H1210-01A0	15
07002-12434	H1210-01A0	19
07002-12434	H1210-01A0	21
07002-12434	H1220-01A0	3
07002-12434	H1220-01A0	5
07002-12434	H1220-01A0	7
07002-12434	H1220-01A0	9
07002-12434	H1310-01A0	5
07002-12434	H1310-01A0	7
07002-12434	H1310-01A0	9
07002-12434	H1340-01A0	4
07002-12434	H1340-01A0	6
07002-12434	H1340-01A0	8
07002-12434	N1220-01A0	4
07002-12434	N1310-01A0	12a
07002-12434	N1310-01A0	14a
07002-12434	P1120-01A0	2
07002-12434	Y1640-01A0	16
07002-12434	Y1640-02A0	4
07002-12434	V0100-01A0	11

Partno	Fig No	Index
07002-13334	H0320-01A0	20
07002-13334	H0330-01A0	2
07002-13334	H0330-01A0	4
07002-22034	T1200-01A4	20
07002-22434	T1200-01A4	21
07002-61023	Y1600-01A0	9
07002-61023	Y1600-08A0	6
07002-61223	Y1600-01A0	6
07002-61423	Y1600-01A0	11
07002-61423	Y1600-08A0	10
07002-61423	Y1600-08A0	13
07002-61423	Y1600-08A0	21
07002-62434	A3110-A0D6	5
07002-62434	A3110-A0D6	7
07002-62434	A3110-A0D6	17
07002-62434	A3110-A0D6	19
07002-62434	Y1600-01A0	4
07002-62434	Y1600-06A0	13
07002-62434	Y1600-07A0	4
07002-62434	A8116-B0B2	
07002-63034	Y1600-05A0	13
07003-01015	A3030-A0A3	5
07003-01015	A8116-B0B2	
07003-01015	A8118-A0B1	
07005-00812	A4040-A0A6	11
07005-00812	A4110-A0H8	4
07005-00812	A8116-B0B2	
07005-01012	A4060-A0B4	4
07005-01012	A4070-A0A1	3
07005-01012	A8116-B0B2	
07005-01012	A8118-A0B1	
07005-01412	B0920-01A0	9
07005-01412	A4110-A0H8	11
07005-01412	A3030-A0A3	3
07005-01412	D0200-01A0	9
07005-01412	D0200-01A0	12
07005-01412	D0200-01A0	53
07005-01412	D0200-01A0	55
07005-01412	D0200-01A0	59
07005-01412	A8116-B0B2	
07005-01612	A8116-B0B2	
07005-01612	A8118-A0B1	
07005-01812	A8116-B0B2	
07005-02216	A2110-A0P1	7
07005-02216	A8116-B0B2	
07005-02416	A2210-A0F9	7
07005-02416	A8116-B0B2	
07005-03016	H0210-01A0	4
07005-03016	A8116-B0B2	
07012-00145	Y0260-01A0	26
07020-00000	N1110-01A0	3
07020-00000	T1200-01A4	5
07020-00000	T1200-01A4	9
07020-00000	T1230-01A0	11
07020-00000	T1230-01A0	15
07020-00000	T1230-01A0	20
07020-00000	V0100-01A0	8
07020-00675	T1200-01A4	28
07020-00675	Y1620-41A0	4
07020-00675	Y1620-41A0	18
07020-00675	V0100-01A0	10
07020-00675	Y1620-01A3	4
07020-00900	R0120-01A0	11
07020-00900	T1110-05A1	6
07020-00900	V0100-01A0	9
07030-03034	H0210-01A0	3
07040-11007	H0210-01A0	12
07040-11007	Y1600-08A0	5
07040-11209	H0210-01A0	7
07040-11409	C0100-06A0	26
07040-12012	N1220-01A0	9
07040-12412	H0210-01A0	5
07040-12412	H0311-01A0	3
07042-00415	A2210-A0F9	3
07042-20108	A1510-A0G3	4
07042-30108	N1210-01A0	9
07042-30415	Y0260-01A0	29
07042-70108	A1320-A0A8	2
07042-70108	A2010-A0P2	13
07042-70312	A2010-A0P2	12
07042-70312	B0920-01A0	27
07042-70312	B0920-01A0	28
07043-70108	A2010-A0P2	14
07043-70108	A2010-A0P2	21
07043-70415	A3110-A0D6	13
07044-12412	H0110-01A0	24
07044-12412	Y1600-01A0	3
07046-21210	A2190-A0B5	10
07046-23016	A2070-A0C2	1
07046-41008	A1010-A0G2	5
07046-41810	A1010-A0G2	6
07046-41810	A2010-A0P2	20
07046-42216	A1010-A0G2	7
07046-42216	A2010-A0P2	8
07046-42516	A1010-A0G2	8
07046-42516	A2010-A0P2	9
07046-43016	A2010-A0P2	10
07046-44016	A2010-A0P2	11
07048-01310	K1110-01A0	9
07049-01012	H0120-01A0	11
07049-01012	H0210-01A0	2
07049-01012	T1110-03A3	5
07049-01215	H0210-01A0	1
07049-01215	N1210-01A0	12
07049-01620	Y0260-01A0	30
07049-02025	N1210-01A0	3
07049-03645	M1510-01A0	21
07056-18425	D0100-01A0	12
07063-51100	H0110-01A0	4
07063-51100	V0100-01A0	1
07095-01034	D0200-01A0	35
07095-20314	E0200-06A0	10
07095-20418	E0200-01A0	20
07095-20419	E0200-04A0	19
07095-20523	E0200-03A0	21
07095-20627	B0100-03A0	5
07102-206A6	A3110-A0D6	20
07145-00060	T1230-01A0	5
07145-00060	T1230-01A0	10
07145-00065	T1230-01A0	4
07145-00065	T1230-01A0	9
07145-00065	Y1620-41A0	3
07145-00070	T1110-01A0	9
07145-00070	T1110-01A0	10
07145-00070	T1200-01A4	36
07145-00070	Y1620-11A0	3
07145-00070	Y1620-11A0	22
07145-00070	Y1620-01A3	3
07145-00070	Y1620-01A3	17
07155-00615	R0120-01A0	2
07177-06030	R0120-01A0	16
07179-12079	Y1620-41A0	12

Partno	Fig No	Index
07179-12084	Y1620-01A3	12
07179-13089	Y1620-11A0	14
07206-30710	A4060-A0B4	3
07206-30710	A4070-A0A1	2
07206-31014	B0920-01A0	8
07206-31014	A4110-A0H8	12
07206-31014	A3030-A0A3	4
07206-31014	D0200-01A0	10
07206-31014	D0200-01A0	13
07206-31014	D0200-01A0	52
07235-10628	A3110-A0D6	6
07235-10630	A3110-A0D6	16
07238-10422	N1310-01A0	17
07260-20928	A1610-A0N7	7
07260-20928	A9999-01A0	2
07270-00640	D0200-02A0	8
07270-50429	D0200-01A0	1
07270-61410	H0110-01A0	26
07280-04726	K1110-01A0	8
07281-00259	A3310-A0C1	6
07281-00609	A9530-A0A2	7
07281-00709	A1111-A0D7	3
07283-32236	Y1620-11A0	44
07283-33442	C0100-04A0	8
07283-33442	C0100-04A0	16
07283-35150	C0100-06A0	8
07283-35150	C0100-06A0	14
07285-00080	D0200-02A0	9
07285-00080	A4070-A0A1	4
07285-00080	D0200-01A0	7
07285-00100	A4230-A0G7	4
07285-00150	A1610-A0N7	8
07285-00150	A9999-01A0	3
07285-00155	H0110-01A0	27
07285-00180	A1111-A0D7	9
07286-01616	A1111-A0D7	8
07286-01685	A1111-A0D7	10
07286-01923	A4110-A0H8	16
07286-01933	A4110-A0H8	17
07286-03828	K1110-01A0	7
07288-01019	D0200-01A0	2
07288-01019	D0200-01A0	3
07288-01027	D0200-01A0	4
07289-00045	C0100-05A0	7
07289-00055	C0100-05A0	6
07289-00055	C0100-05A0	9
07289-00095	B0200-01A0	23
07289-00095	H0311-01A0	10
07289-00105	B0200-01A0	24
07299-00055	C0100-06A0	3
07299-00055	C0100-06A0	18
07299-00055	C0100-06A0	21
07299-00070	C0100-06A0	2
07299-00070	C0100-06A0	20
07323-30400	Y0260-01A0	31
07371-31049	H0312-01A0	3
07371-31049	H0312-01A0	6
07700-50240	D0100-01A0	2
07700-50240	D0200-01A0	14
07750-01628	Y1620-11A0	32
08000-00000	E0100-01A0	2
08000-00001	E0100-01A0	3
08011-02500	K1110-23A0	4
08017-31005	D0200-01A0	5
08028-42030	E0200-07A0	8
08028-42040	E0200-07A0	1
08028-43030	K1110-23A0	23
08028-62035	E0100-01A0	7
08028-CB050	E0200-07A0	3
08034-00414	K1110-27A0	8
08034-00414	A8116-B0B2	
08034-00414	A8118-A0B1	
08034-00519	A8116-B0B2	
08034-00519	A8118-A0B1	
08034-00823	P1120-01A0	11
08034-00823	P1120-01A0	15
08034-10414	K1110-30A0	16
08034-20414	T1110-02A0	6
08034-20519	E0200-03A0	11
08034-20519	E0200-06A0	18
08034-20519	H1831-01A0	28
08034-20519	K1110-23A0	17
08034-20519	K1110-34A0	5
08034-20519	A4110-A0H8	18
08034-20519	A3110-A0D6	24
08034-20536	E0200-03A0	33
08034-20536	E0200-03A0	35
08034-20536	E0200-02A0	18
08034-20536	H0340-01A0	22
08034-20536	H1831-03A0	4
08034-20536	H1840-01A0	28
08034-20536	K1110-34A0	8
08034-20536	K1110-36A0	4
08034-20536	K1110-36A0	5
08034-20536	K1110-36A0	10
08034-20536	K1110-36A0	11
08034-20536	K1110-36A0	14
08034-20536	P1120-01A0	16
08034-20536	P1120-01A0	17
08034-20823	B0920-01A0	40
08037-01008	K0210-06A0	42
08037-01008	K0210-06A0	46
08037-01610	K0210-06A0	18
08037-01610	K0210-06A0	23
08037-02512	K0210-06A0	5
08037-11025	K0210-06A0	19
08037-11025	K0210-06A0	24
08037-11425	K1110-28A0	10
08037-12536	M1220-01A1	14
08038-00035	E0200-01A0	2
08038-00519	E0200-06A0	2
08038-00519	E0200-06A0	22
08038-00519	E0200-01A0	4
08038-00519	E0200-02A0	12
08038-02027	E0200-03A0	34
08038-06031	E0200-07A0	5
08038-06031	E0200-02A0	13
08038-22009	E0200-07A0	2
08038-42009	E0200-07A0	4
08038-42009	E0100-01A0	8
08041-01000	K1110-23A0	2
08041-01000	K1110-28A0	3
08041-02000	K1110-23A0	3
08041-02000	K1110-28A0	4
08041-02500	K1110-28A0	5
08051-00801	K0210-01A0	14
08053-01510	E0200-03A0	37
08053-01510	E0200-02A0	6
08053-01512	H1833-01A0	24
08059-00413	K0210-12A0	2
08073-10505	A3190-A0A1	1
08086-20000	K1110-30A0	9

Partno	Fig No	Index
08088-30000	E0200-01A0	5
08160-72400	E0410-01A0	1
08193-30010	K1110-23A0	22
09024-00300	V0300-01A0	13
09133-A3281	U0100-01A4	9
09134-A1681	U0100-01A4	4
09233-12920	Y0260-01A0	15
09244-02496	T1510-01A3	7
09305-00800	K1110-22A0	17
09370-00060	R0120-01A0	3
09415-01610	K0210-01A0	13
09415-02512	M1210-01A0	13
09415-02512	M1510-01A0	8
09415-02512	M1510-01A0	12
09653-A0481	U0100-01A4	6
09653-A0481	U0100-01A4	8
09657-A0881	U0100-01A4	17
09659-A057B	U0100-01A4	26
09667-A0481	U0100-01A4	23
09669-0000E	U0100-01A4	7
09685-00002	U0100-01A4	1
09803-A0481	U0100-01A4	14
09805-A0881	U0100-01A4	24
09805-C0481	U0100-01A4	16
09842-A0481	U0100-01A4	30
09963-03001	U0100-01A4	20
09970-00230	K0210-15A0	1
102-60-15240	K1110-16A0	11
110-30-00086	R0300-01A0	
113-01-21120	B0100-01A0	4
11Y-01-11920	B0200-01A0	13
11Y-09-11140	B0920-01A0	41
11Y-09-11140	A4110-A0H8	15
11Y-09-11140	D0200-01A0	6
11Y-09-11160	B0920-01A0	31
11Y-62-12130	H1833-01A0	2
11Y-62-12130	K1110-25A0	19
11Y-62-12130	K1110-29A0	19
11Y-62-12130	K1110-29A0	21
11Y-62-12160	K1110-19A0	25
11Y-62-12220	H0210-01A0	9
11Y-62-12250	N1310-01A0	23
11Y-62-12330	H0120-02A0	15
11Y-62-12330	H1831-02A0	16
11Y-62-12820	H1831-01A0	4
124-54-26540	B0200-01A0	8
124-54-26540	B0200-01A0	20
124-54-26540	M1140-01A0	36
124-54-26540	M1150-01A0	15
124-54-26540	M1150-01A0	23
124-54-26540	M1150-01A0	27
124-54-26540	M1150-02A0	3
124-54-26540	M1210-01A0	14
124-54-26540	M1220-01A1	21
124-54-26540	M1220-01A1	26
124-54-26540	M1810-01A0	4
124-54-26540	M1810-01A0	9
124-54-26540	M1810-01A0	19
124-54-26540	M1810-01A0	26
124-54-26540	M1810-02A0	10
12R-60-11230	H0110-01A0	14
144-63-92170	Y1620-41A0	11
144-63-94170	Y1620-11A0	13
144-63-95170	Y1620-01A3	11
14X-911-1330	K0210-08A0	20
14X-911-1531	K0210-08A0	23
14X-911-1540	K0210-08A0	35
14X-911-1721	K0210-08A0	24
154-61-16570	A1570-A0B6	5
175-30-00702	R0110-01A0	
175-54-34170	C0100-05A0	18
175-60-27340	H0110-01A0	7
176-06-42170	K0210-08A0	34
17M-91-12670	K0210-06A0	45
195-03-11570	D0100-01A0	16
195-33-11220	K1110-23A0	6
195-33-11220	K1110-23A0	10
195-33-11220	K1110-23A0	19
195-979-3570	B0920-01A0	39
195-979-3570	E0200-03A0	8
195-979-3570	E0200-06A0	11
195-979-8590	M1220-01A1	19
195-Z11-4510	K0210-08A0	29
196-911-3310	H1840-01A0	25
198-54-41982	M1110-01A0	2
198-54-41982	M1130-01A0	22
198-54-41982	M1140-01A0	22
200 329 12 E	H0120-01A0	15
200 444 08 A	V0300-01A0	3
200 444 09 B	V0300-01A0	4
200 444 10 C	V0300-01A0	5
200 444 11 D	V0300-01A0	6
200 520 07 K	V0300-01A0	16
200 520 10 N	V0300-01A0	11
200 520 12 Q	V0300-01A0	15
201 325 05 H	K0210-05A0	12
201 325 05 H	K0210-06A0	21
201 325 06 J	K0210-08A0	27
201 325 07 K	K0210-06A0	26
201 325 07 K	K0210-06A0	35
201 325 09 M	K0210-06A0	14
201 325 10 N	K0210-06A0	39
201 341 39 J	K0210-02A0	9
201 341 39 J	K0210-08A0	46
201 341 39 J	M1130-01A0	16
201 341 39 J	M1140-01A0	16
201 341 40 K	K0210-06A0	7
201 341 41 L	K1120-01A0	5
201 341 41 L	K1120-01A0	8
201 341 41 L	T1125-01A0	3
201 341 41 L	T1230-01A0	18
201 341 41 L	T1230-01A0	23
201 341 41 L	T1230-01A0	29
201 341 41L	T1230-01A0	26
201 341 43 N	B0400-01A0	23
201 341 44 P	K1110-22A0	10
201 341 44 P	K1110-22A0	13
201 341 44 P	K1110-22A0	19
201 341 44 P	M1110-01A0	9
201 444 89 J	V0300-01A0	17
201 444 91 L	V0300-01A0	2
201 444 92 M	V0300-01A0	7
201 444 93 N	V0300-01A0	8
201-01-71250	B0100-01A0	1
201-03-29160	C0100-05A0	11
201-06-71230	K1110-24A0	1
201-06-71270	K0210-06A0	25
201-26-62190	N1210-01A0	7
201-26-62240	Y0260-01A0	10
201-26-62270	Y0260-01A0	12
201-26-62330	Y0260-01A0	22
201-30-52280	R0120-01A0	12

Partno	Fig No	Index
201-54-72470	K0210-01A0	4
201-54-73190	K1110-24A0	2
201-54-N1110	K0210-07A0	15
201-54-N1120	K0210-07A0	10
201-62-71810	H1340-01A0	7
201-70-N1870	T1510-01A3	13
201-70-N1880	T1510-01A3	14
202 329 15 K	K1110-29A0	10
202 329 15 Z	K1110-25A0	10
202 329 43 E	H0110-01A0	21
202 329 44 F	M1420-01A0	3
202-63-N1110	Y1620-01A3	26
202-63-N1120	Y1620-01A3	
202-63-N1180	Y1620-41A0	27
202-70-52121	T1200-01A4	31
202-70-61160	J1310-01A0	1
202-70-61180	T1125-01A0	1
202-70-61210	T1110-02A0	9
202-70-63161	T1510-01A3	15
202-70-63171	T1510-01A3	16
202-70-64151	T1230-01A0	14
202-70-64163	T1230-01A0	19
202-70-64210	T1510-01A3	11a
202-70-64220	T1510-01A3	11b
202-70-64240	T1510-01A3	8
202-70-64250	T1510-01A3	12
203-00-31120	U0100-01A4	18
203-00-71130	U0100-01A4	25
203-00-71191	U0100-01A4	10
203-00-71210	U0100-01A4	31
203-00-N1110	U0100-01A4	34
203-00-N1170	U0100-01A4	3
203-00-N1180	U0150-01A1	2
203-00-N1190	U0150-01A1	1
203-00-N1210	U0100-01A4	5
203-00-N1220	U0110-01A1	1
203-00-N1230	U0100-01A4	22
203-00-N1240	M1420-01A0	5
203-01-61110	B0100-02A0	1
203-01-61120	B0100-02A0	2
203-01-61131	B0100-02A0	3
203-01-61160	B0100-01A0	2
203-01-61170	A9999-01A0	4
203-01-61181	A2650-A0B7	1
203-01-61181	A9999-01A0	16
203-01-61190	A9999-01A0	5
203-01-67540	B0100-01A0	3
203-01-71121	B0200-01A0	22
203-01-71132	B0200-01A0	3
203-01-71141	B0200-01A0	10
203-01-71150	C0100-06A0	1
203-01-71160	C0100-06A0	4
203-01-71170	C0100-06A0	17
203-01-71180	C0100-06A0	19
203-01-71211	B0200-01A0	6
203-01-71220	B0200-01A0	25
203-01-71270	B0100-03A0	1
203-01-71290	A9999-02A0	1
203-01-71290	A3110-A0D6	25
203-01-71311	C0100-06A0	5
203-01-71321	C0100-06A0	11
203-01-71330	C0100-04A0	
203-01-71340	C0100-04A0	22
203-01-71610	B0920-01A0	12
203-01-71621	B0920-01A0	4
203-01-71631	B0920-01A0	19
203-01-71641	B0920-01A0	22
203-01-71650	B0920-01A0	23
203-01-71660	B0920-01A0	10
203-01-71670	B0920-01A0	33
203-03-71130	C0100-02A0	1
203-03-71140	C0100-02A0	2
203-03-71150	C0100-02A0	6
203-03-71161	C0100-01A0	13
203-03-71171	C0100-01A0	14
203-03-71181	C0100-01A0	15
203-03-71191	C0100-01A0	16
203-03-71211	C0100-03A0	19
203-03-71221	C0100-03A0	22
203-03-71231	C0100-04A0	1
203-03-71241	C0100-04A0	11
203-03-71251	C0100-04A0	15
203-03-71261	C0100-04A0	5
203-03-71270	C0100-04A0	32
203-03-71310	C0100-05A0	5
203-03-71321	C0100-05A0	8
203-03-71390	M1130-01A0	40
203-03-71411	C0100-03A0	7
203-03-71420	C0100-03A0	10
203-03-71430	C0100-03A0	15
203-03-71461	C0310-01A0	1
203-03-71471	C0310-01A0	4
203-03-71481	C0310-01A0	7
203-03-71492	C0310-01A0	10
203-03-71511	M1130-01A0	31
203-03-71531	M1130-01A0	35
203-03-71560	M1120-01A0	
203-03-71590	M1150-02A0	
203-03-71610	C0100-01A0	2
203-03-71621	C0100-01A0	3
203-03-71630	C0100-01A0	23
203-03-71640	C0100-01A0	24
203-03-71650	C0100-01A0	25
203-03-71660	C0100-01A0	26
203-03-71671	C0100-01A0	27
203-03-71681	C0100-01A0	28
203-03-71690	C0100-01A0	29
203-03-71710	C0100-02A0	9
203-03-71720	C0100-02A0	10
203-03-71730	C0100-03A0	11
203-03-71740	C0100-03A0	12
203-03-71750	C0100-03A0	16
203-03-71760	C0100-04A0	29
203-03-71773	C0100-01A0	
203-03-71780	C0100-04A0	28
203-03-71790	C0100-03A0	8
203-03-71851	C0100-03A0	1
203-03-71860	C0100-03A0	4
203-03-71890	C0100-02A0	11
203-03-71920	C0100-01A0	7
203-03-N1110	M1510-01A0	16
203-03-N1120	M1150-02A0	19
203-03-N1130	M1120-01A0	3
203-03-N1140	M1120-01A0	1
203-03-N1150	J1110-01A0	12
203-03-N1330	C0100-05A0	1
203-03-N1340	C0100-05A0	2
203-03-N1350	C0100-05A0	3
203-03-N1360	C0100-05A0	4
203-04-56150	D0200-01A0	11
203-04-71120	D0100-01A0	1
203-04-71150	D0200-01A0	19

Partno	Fig No	Index
203-04-71150	D0200-01A0	31
203-04-71160	D0200-01A0	16
203-04-71310	D0200-01A0	51
203-04-71330	D0200-01A0	50
203-06-61132	M1220-01A1	18
203-06-61230	K1730-01A0	1
203-06-67510	E0100-01A0	4
203-06-71120	E0200-01A0	1
203-06-71131	E0200-02A0	14
203-06-71142	E0200-06A0	1
203-06-71152	E0200-06A0	14
203-06-71171	T1110-02A0	5
203-06-71212	E0200-01A0	8
203-06-71231	E0200-04A0	22
203-06-71251	A2210-A0F9	11
203-06-71251	A9999-02A0	2
203-06-71271	E0200-03A0	24
203-06-71271	H1210-01A0	11
203-06-71271	D0200-01A0	25
203-06-71281	E0200-01A0	11
203-06-71311	E0200-04A0	1
203-06-71321	E0200-04A0	9
203-06-71351	E0200-05A0	4
203-06-71361	E0200-04A0	4
203-06-71380	E0100-01A0	9
203-06-71420	E0200-01A0	3
203-06-71430	E0200-05A0	11
203-06-71712	E0200-03A0	1
203-06-71731	K1110-23A0	1
203-06-N1130	E0100-01A0	1
203-25-62100	N1110-01A0	1
203-25-62130	N1110-01A0	2
203-26-00123	Y0260-01A0	

Partno	Fig No	Index
203-26-61110	Y0260-01A0	2
203-26-61120	Y0260-01A0	3
203-26-61130	Y0260-01A0	4
203-26-61150	Y0260-01A0	6
203-26-61160	Y0260-01A0	7
203-26-61170	Y0260-01A0	8
203-26-61180	Y0260-01A0	9
203-26-61220	Y0260-01A0	5
203-26-61250	Y0260-01A0	11
203-26-61270	Y0260-01A0	13
203-26-61280	Y0260-01A0	19
203-26-61310	Y0260-01A0	21
203-26-61320	Y0260-01A0	23
203-26-61340	Y0260-01A0	24
203-26-61360	N1210-01A0	8
203-26-61360	Y0260-01A0	27
203-26-61370	Y0260-01A0	28
203-26-61391	Y0260-01A0	20
203-26-61470	N1210-01A0	5
203-26-61480	N1210-01A0	4
203-27-51120	P1210-01A0	3
203-27-61310	P1210-01A0	2
203-30-00210	R0110-01A0	
203-30-00231	R0300-01A0	
203-30-42260	R0120-01A0	10
203-30-44150	R0200-01A0	5
203-30-52112	R0110-01A0	1
203-30-52122	R0110-01A0	2
203-30-52133	R0110-01A0	3
203-30-52141	R0110-01A0	4
203-30-52190	R0110-01A0	5
203-30-53111	R0300-01A0	1
203-30-53120	R0300-01A0	2

Partno	Fig No	Index
203-30-53141	R0300-01A0	3
203-30-53150	R0300-01A0	4
203-30-53160	R0300-01A0	5
203-30-61152	R1100-01A0	2
203-30-61161	R1100-01A0	3
203-30-61172	R1100-01A0	4
203-30-66122	N1310-01A0	2
203-30-66260	R0120-01A0	13
203-30-71212	R1100-01A0	1
203-32-00230	Y0321-01A0	
203-32-02460	R0500-01A0	
203-32-05030	Y0320-01A0	K1
203-32-11342	R0500-01A0	5
203-32-11342	R0500-01A0	14
203-32-11342	Y0321-01A0	5
203-32-11342	Y0321-01A0	11
203-32-11360	R0500-01A0	3
203-32-11360	R0500-01A0	12
203-32-11360	Y0321-01A0	3
203-32-11360	Y0321-01A0	9
203-32-11372	R0500-01A0	4
203-32-11372	R0500-01A0	13
203-32-11372	Y0321-01A0	4
203-32-11372	Y0321-01A0	10
203-32-11380	R0500-01A0	19
203-32-11380	Y0321-01A0	13
203-32-51122	R0500-01A0	1
203-32-51122	R0500-01A0	10
203-32-51122	Y0321-01A0	1
203-32-51122	Y0321-01A0	7
203-32-51132	R0500-01A0	2
203-32-51132	R0500-01A0	11
203-32-51132	Y0321-01A0	2

Partno	Fig No	Index
203-32-51132	Y0321-01A0	8
203-32-51151	R0500-01A0	6
203-32-51151	R0500-01A0	15
203-32-51151	Y0321-01A0	6
203-32-51151	Y0321-01A0	12
203-32-51191	R0500-01A0	20
203-32-51191	Y0321-01A0	14
203-32-51210	R0500-01A0	8
203-32-51210	R0500-01A0	17
203-32-51210	Y0320-01A0	
203-32-51220	R0500-01A0	9
203-32-51220	R0500-01A0	18
203-32-51220	Y0320-01A0	
203-32-51461	R0500-01A0	7
203-32-51461	R0500-01A0	16
203-43-51620	K1110-19A0	8
203-43-61120	B0400-01A0	13
203-43-62121	B0400-01A0	16
203-43-71211	B0400-01A0	1
203-43-71222	B0400-01A0	7
203-43-71242	B0400-01A0	4
203-46-31181	R1100-01A0	5
203-46-56160	J1110-01A0	6
203-46-56160	R1100-01A0	6
203-46-56260	J1310-01A0	6
203-46-61520	J1110-01A0	5
203-46-61910	J1110-01A0	3
203-46-61920	J1110-01A0	4
203-46-71210	J1110-01A0	11
203-46-75120	M1510-01A0	1
203-46-N1110	J1110-01A0	1
203-46-N1190	M1510-01A0	17
203-46-N1210	J1110-01A0	9

Partno	Fig No	Index
203-46-N1220	J1110-01A0	10
203-46-N1230	M1510-01A0	18
203-46-N1240	M1510-01A0	19
203-46-N1250	M1510-01A0	20
203-54-21110	H0120-01A0	8
203-54-56630	M1220-01A1	9
203-54-56970	K1110-19A0	7
203-54-62392	M1110-01A0	13
203-54-62630	M1810-02A0	2
203-54-62670	M1140-01A0	35
203-54-62670	M1150-01A0	17
203-54-62670	M1230-01A0	4
203-54-62670	M1230-01A0	10
203-54-62980	M1110-01A0	6
203-54-63262	M1120-01A0	45
203-54-63293	M1110-01A0	7
203-54-66990	M1110-01A0	16
203-54-67741	M1220-01A1	3
203-54-67760	M1220-01A1	6
203-54-73121	M1210-01A0	4
203-54-73141	M1230-01A0	1
203-54-73151	M1210-01A0	1
203-54-73161	M1510-01A0	5
203-54-73171	M1220-01A1	22
203-54-73181	M1230-01A0	
203-54-73221	M1130-01A0	1
203-54-73231	M1130-01A0	2
203-54-73240	M1130-01A0	3
203-54-73251	M1130-01A0	6
203-54-73260	M1130-01A0	21
203-54-73311	M1140-01A0	21
203-54-73321	M1140-01A0	1
203-54-73331	M1140-01A0	2
203-54-73340	M1140-01A0	3
203-54-73350	M1140-01A0	6
203-54-73392	M1310-01A0	1
203-54-73412	M1120-01A0	
203-54-73431	M1120-01A0	11
203-54-73441	M1150-01A0	1
203-54-73461	M1150-01A0	11
203-54-73471	M1150-01A0	14
203-54-73481	M1150-01A0	20
203-54-73491	M1150-02A0	10
203-54-73511	M1110-01A0	10
203-54-73521	M1120-01A0	14
203-54-73532	M1120-01A0	23
203-54-73540	M1120-01A0	38
203-54-73590	M1120-01A0	32
203-54-73610	M1220-01A1	1
203-54-73711	M1140-01A0	
203-54-73721	M1140-01A0	31
203-54-73770	M1230-01A0	7
203-54-73810	M1120-01A0	20
203-54-73822	M1120-01A0	26
203-54-73921	M1110-01A0	20
203-54-73940	M1120-01A0	39
203-54-73950	M1120-01A0	29
203-54-73960	M1120-01A0	42
203-54-73991	M1140-01A0	17
203-54-74130	M1110-01A0	3
203-54-74141	M1110-01A0	4
203-54-74230	M1150-01A0	8
203-54-74430	M1150-02A0	15
203-54-75141	M1810-01A0	
203-54-75310	M1810-01A0	1
203-54-75350	M1810-01A0	18
203-54-75361	M1810-01A0	21
203-54-75380	M1810-02A0	1
203-54-75421	M1810-02A0	9
203-54-76112	M1110-01A0	
203-54-76150	M1150-01A0	
203-54-76341	M1110-01A0	5
203-54-76711	M1220-01A1	2
203-54-76720	M1220-01A1	7
203-54-76730	M1220-01A1	8
203-54-76811	M1220-01A1	27
203-54-76910	M1810-01A0	12
203-54-76920	M1230-01A0	14
203-54-77110	M1510-01A0	9
203-54-77120	M1510-01A0	13
203-54-77130	M1210-01A0	10
203-54-77140	M1210-01A0	7
203-54-N1130	M1140-01A0	32
203-54-N1140	K1110-01A0	1
203-54-N1150	K1110-16A0	1
203-54-N1430	M1810-01A0	6
203-60-31100	H0110-01A0	3
203-60-31160	H0110-01A0	2
203-60-52160	N1310-01A0	7
203-60-52250	H0110-01A0	6
203-60-52260	H0110-01A0	5
203-60-61130	H0110-01A0	9
203-60-61161	H0110-01A0	13
203-60-61240	H0110-01A0	16
203-60-62220	Y1600-08A0	8
203-60-62320	H1833-01A0	10
203-60-62430	H1833-01A0	17
203-60-63220	Y1651-01A0	
203-60-71111	H0110-01A0	1
203-60-71210	Y1860-01A0	
203-60-N1110	H1833-01A0	
203-60-N1120	H1833-01A0	
203-62-52210	P1120-01A0	10
203-62-52210	P1120-01A0	14
203-62-58280	H1220-01A0	15
203-62-58810	T1110-04A3	1
203-62-61240	H1220-01A0	11
203-62-61270	H1210-01A0	4
203-62-61410	H0320-01A0	14
203-62-61410	H1340-01A0	3
203-62-61572	H0120-01A0	5
203-62-61581	H0120-01A0	9
203-62-61760	H1220-01A0	14
203-62-63730	H1210-01A0	10
203-62-63740	H0330-01A0	3
203-62-63750	H1220-01A0	10
203-62-63760	H1310-01A0	6
203-62-67160	P1120-01A0	18
203-62-71110	H0311-01A0	1
203-62-71120	H0210-01A0	14
203-62-71130	H0120-02A0	18
203-62-71160	H0311-01A0	9
203-62-71320	H0312-01A0	1
203-62-71490	M1150-01A0	21
203-62-71511	H1840-01A0	16
203-62-71521	H0120-01A0	2
203-62-71541	H1833-01A0	21
203-62-71560	K1110-36A0	16
203-62-71570	K1110-36A0	17
203-62-71771	K1110-34A0	10
203-62-71791	K1110-34A0	12
203-62-71820	P1120-01A0	13

Partno	Fig No	Index
203-62-71890	M1150-01A0	25
203-62-71990	M1150-02A0	7
203-62-72110	H0320-01A0	8
203-62-72490	H1810-01A0	2
203-62-72860	H1270-01A0	1
203-62-N1120	H1310-01A0	4
203-62-N1130	H0320-01A0	21
203-62-N1140	H0330-01A0	1
203-62-N1170	H1210-01A0	1
203-62-N1180	T1110-03A3	6
203-62-N1190	T1110-03A3	2
203-62-N1210	T1110-03A3	7
203-62-N1220	H1210-01A0	7
203-62-N1230	H0320-01A0	19
203-62-N1240	T1110-03A3	1
203-62-N1250	H1210-01A0	14
203-62-N1260	H1210-01A0	16
203-62-N1280	H1220-01A0	8
203-62-N1310	T1110-03A3	4
203-62-N1330	H1210-01A0	23
203-62-N1360	H0330-01A0	5
203-62-N1370	H1220-01A0	1
203-62-N1380	H1220-01A0	4
203-62-N1380	H1220-01A0	6
203-62-N1390	H1340-01A0	2
203-62-N1410	H1310-01A0	1
203-62-N1420	H1310-01A0	2
203-62-N1430	H1310-01A0	3
203-62-N1490	N1310-01A0	18
203-62-N1510	N1310-01A0	15
203-62-N1520	H1831-02A0	4
203-62-N1530	H0320-01A0	1
203-62-N1540	H1840-01A0	10
203-62-N1550	H1840-01A0	2
203-62-N1560	H1840-01A0	11
203-62-N1570	K1110-34A0	1
203-62-N1580	K1110-34A0	2
203-62-N1590	K1110-34A0	9
203-62-N1610	K1110-34A0	11
203-62-N1620	P1120-01A0	9
203-62-N1640	H1831-02A0	1
203-62-N1650	H1831-02A0	2
203-62-N1660	H1831-02A0	3
203-62-N1710	T1110-03A3	3
203-62-N1730	T1200-01A4	11
203-62-N1740	H1831-02A0	11
203-62-N1750	H0340-01A0	16
203-62-N1760	H0320-01A0	13
203-62-N1770	H0340-01A0	8
203-62-N1780	H1831-02A0	10
203-62-N1790	H1840-01A0	15
203-62-N1810	T1200-01A4	22
203-62-N1820	T1200-01A4	23
203-62-N1830	T1200-01A4	10
203-62-N1840	H1340-01A0	1
203-62-N1850	H0340-01A0	17
203-62-N1860	H1831-02A0	12
203-62-N1880	H1831-01A0	22
203-63-55521	Y1620-01A3	15
203-63-75121	Y1620-41A0	15
203-70-00880	T1230-01A0	
203-70-00890	T1230-01A0	
203-70-41461	T1110-02A0	19
203-70-42121	T1110-02A0	15
203-70-42121	T1200-01A4	24
203-70-42182	T1200-01A4	3
203-70-44380	T1230-01A0	24
203-70-44380	T1230-01A0	27
203-70-44470	T1510-01A3	19
203-70-51221	T1110-01A0	2
203-70-51260	T1110-01A0	3
203-70-53381	T1110-04A3	3
203-70-53391	T1110-04A3	4
203-70-54110	T1230-01A0	12
203-70-54120	T1230-01A0	13
203-70-56130	T1200-01A4	2
203-70-56140	T1230-01A0	2
203-70-56140	T1230-01A0	7
203-70-56150	T1200-01A4	4
203-70-56160	T1230-01A0	3
203-70-56160	T1230-01A0	8
203-70-61251	T1110-05A1	1
203-70-61261	T1110-05A1	2
203-70-61271	T1110-05A1	3
203-70-61281	T1110-05A1	4
203-70-61291	T1110-05A1	5
203-70-61310	T1110-01A0	4
203-70-61780	T1110-01A0	5
203-70-61790	T1110-01A0	6
203-70-61C60	T1110-01A0	7
203-70-66110	T1110-01A0	8
203-70-71220	T1110-01A0	
203-70-73131	T1510-01A3	2
203-70-73141	T1510-01A3	3
203-920-7121	T1510-01A3	4
203-920-N120	T1510-01A3	1
203-943-5130	T1200-01A4	13
203-943-5620	T1200-01A4	12
203-944-7221	T1200-01A4	1
203-979-7111	A9999-02A0	5
203-979-7142	E0200-01A0	23
203-979-7150	B0920-01A0	16
203-979-7150	B0920-01A0	30
203-98-71130	V0100-01A0	12
203-98-71140	V0100-01A0	13
204 338 10 E	Y1620-11A0	38
204 338 10 E	Y1620-41A0	29
204 338 18 W	E0200-02A0	7
204 338 18 W	M1120-01A0	9
204 338 18 W	M1150-01A0	3
204 338 18 W	M1150-01A0	24
204 338 18 W	M1150-01A0	28
204 338 18 W	M1510-01A0	3
204 338 19 X	P1210-01A0	5
204 338 22 B	B0400-01A0	8
204 338 22 B	B0100-03A0	2
204 338 22 B	B0100-03A0	6
204 338 22 B	B0920-01A0	5
204 338 22 B	B0920-01A0	13
204 338 22 B	B0920-01A0	35
204 338 22 B	E0200-03A0	13
204 338 22 B	E0200-03A0	22
204 338 22 B	E0200-03A0	25
204 338 22 B	E0200-03A0	28
204 338 22 B	E0200-03A0	31
204 338 22 B	E0200-03A0	39
204 338 22 B	E0200-04A0	7
204 338 22 B	E0200-04A0	13
204 338 22 B	E0200-04A0	16
204 338 22 B	E0200-04A0	20
204 338 22 B	E0200-04A0	26
204 338 22 B	E0200-04A0	29

Partno	Fig No	Index
204 338 22 B	E0200-04A0	32
204 338 22 B	E0200-04A0	35
204 338 22 B	E0200-05A0	2
204 338 22 B	E0200-05A0	9
204 338 22 B	E0200-05A0	18
204 338 22 B	E0200-01A0	17
204 338 22 B	E0200-01A0	21
204 338 22 B	E0200-01A0	27
204 338 22 B	E0200-01A0	30
204 338 22 B	H0110-01A0	10
204 338 22 B	H0110-01A0	17
204 338 22 B	H0320-01A0	6
204 338 22 B	H0320-01A0	9
204 338 22 B	H0320-01A0	17
204 338 22 B	H0340-01A0	3
204 338 22 B	H0340-01A0	10
204 338 22 B	H1810-01A0	4
204 338 22 B	H1831-03A0	2
204 338 22 B	H1831-03A0	6
204 338 22 B	H1831-03A0	9
204 338 22 B	H1831-03A0	12
204 338 22 B	H1831-03A0	15
204 338 22 B	H1831-03A0	18
204 338 22 B	H1833-01A0	28
204 338 22 B	H1840-01A0	17
204 338 22 B	H1840-01A0	20
204 338 22 B	H1840-01A0	23
204 338 22 B	H1840-01A0	26
204 338 22 B	M1120-01A0	5
204 338 22 B	M1220-01A1	25
204 338 22 B	M1510-01A0	6
204 338 22 B	M1510-01A0	14
204 338 22 B	A9999-02A0	3
204 338 22 B	D0200-01A0	20
204 338 22 B	D0200-01A0	23
204 338 22 B	D0200-01A0	26
204 338 22 B	D0200-01A0	29
204 338 22 B	D0200-01A0	32
204 338 22 B	D0200-01A0	36
204 338 22 B	D0200-01A0	39
204 338 22 B	D0200-01A0	41
204 338 22 B	D0200-01A0	44
204 338 22 B	D0200-01A0	48
204 338 22 B	D0200-01A0	64
204 338 22 B	T1110-02A0	3
204 338 23 C	B0100-03A0	8
204 338 23 C	B0200-01A0	9
204 338 23 C	B0200-01A0	11
204 338 23 C	B0200-01A0	15
204 338 23 C	B0200-01A0	17
204 338 23 C	B0200-01A0	21
204 338 23 C	B0200-01A0	26
204 338 23 C	B0920-01A0	20
204 338 23 C	B0920-01A0	25
204 338 23 C	E0200-04A0	10
204 338 23 C	E0200-05A0	5
204 338 23 C	E0200-05A0	12
204 338 23 C	E0200-05A0	15
204 338 23 C	E0200-01A0	9
204 338 23 C	E0200-01A0	24
204 338 23 C	J1110-01A0	7
204 338 23 C	J1310-01A0	3
204 338 23 C	J1310-01A0	8
204 338 23 C	K0210-14A0	3
204 338 23 C	H1210-01A0	8
204 338 23 C	M1110-01A0	11
204 338 23 C	M1110-01A0	14
204 338 23 C	M1120-01A0	7
204 338 23 C	M1120-01A0	12
204 338 23 C	M1120-01A0	18
204 338 23 C	M1120-01A0	21
204 338 23 C	M1120-01A0	24
204 338 23 C	M1120-01A0	27
204 338 23 C	M1120-01A0	30
204 338 23 C	M1120-01A0	33
204 338 23 C	M1120-01A0	36
204 338 23 C	M1120-01A0	40
204 338 23 C	M1120-01A0	43
204 338 23 C	M1120-01A0	46
204 338 23 C	M1120-01A0	48
204 338 23 C	M1130-01A0	4
204 338 23 C	M1130-01A0	7
204 338 23 C	M1130-01A0	10
204 338 23 C	M1130-01A0	18
204 338 23 C	M1130-01A0	27
204 338 23 C	M1130-01A0	33
204 338 23 C	M1130-01A0	43
204 338 23 C	M1140-01A0	4
204 338 23 C	M1140-01A0	7
204 338 23 C	M1140-01A0	10
204 338 23 C	M1140-01A0	18
204 338 23 C	M1140-01A0	27
204 338 23 C	M1140-01A0	29
204 338 23 C	M1140-01A0	33
204 338 23 C	M1140-01A0	37
204 338 23 C	M1150-01A0	5
204 338 23 C	M1150-01A0	9
204 338 23 C	M1150-01A0	12
204 338 23 C	M1150-01A0	16
204 338 23 C	M1150-01A0	18
204 338 23 C	M1150-02A0	1
204 338 23 C	M1150-02A0	4
204 338 23 C	M1150-02A0	5
204 338 23 C	M1150-02A0	8
204 338 23 C	M1150-02A0	16
204 338 23 C	M1150-02A0	20
204 338 23 C	M1210-01A0	2
204 338 23 C	M1210-01A0	5
204 338 23 C	M1210-01A0	8
204 338 23 C	M1210-01A0	15
204 338 23 C	M1220-01A1	20
204 338 23 C	M1220-01A1	23
204 338 23 C	M1220-01A1	32
204 338 23 C	M1230-01A0	2
204 338 23 C	M1230-01A0	5
204 338 23 C	M1230-01A0	8
204 338 23 C	M1230-01A0	11
204 338 23 C	M1230-01A0	15
204 338 23 C	M1510-01A0	10
204 338 23 C	M1810-01A0	2
204 338 23 C	M1810-01A0	5
204 338 23 C	M1810-01A0	7
204 338 23 C	M1810-01A0	10
204 338 23 C	M1810-01A0	13
204 338 23 C	M1810-01A0	16
204 338 23 C	M1810-01A0	20
204 338 23 C	M1810-01A0	24
204 338 23 C	M1810-01A0	27
204 338 23 C	M1810-02A0	4
204 338 23 C	M1810-02A0	7
204 338 23 C	M1810-02A0	11
204 338 23 C	M1810-02A0	12

Partno	Fig No	Index
204 338 23 C	D0200-01A0	61
204 338 23 C	T1110-02A0	7
204 338 23 C	T1110-02A0	11
204 338 23 C	T1110-02A0	17
204 338 23 C	T1200-01A4	26
204 338 23 C	T1200-01A4	34
204 338 24 D	H0312-01A0	4
204 338 24 D	H0312-01A0	7
204 338 25 E	C0100-05A0	17
204 338 25 E	H1210-01A0	2
204 338 25 E	N1310-01A0	3
204 338 25 E	R0300-01A0	9
204 338 25 E	A9999-01A0	9
204 338 26 F	B0920-01A0	2
204 338 26 F	C0100-04A0	3
204 338 26 F	C0100-04A0	13
204 338 26 F	C0100-05A0	12
204 338 26 F	J1110-01A0	19
204 338 26 F	K1120-01A0	2
204 338 26 F	A9999-02A0	6
204 338 27 G	E0200-04A0	23
204 338 27 G	E0200-05A0	25
204 338 27 G	E0200-05A0	27
204 338 27 G	E0200-05A0	29
204 338 27 G	E0200-07A0	6
204 338 27 G	E0200-06A0	3
204 338 27 G	E0200-06A0	16
204 338 27 G	E0200-06A0	20
204 338 27 G	E0200-01A0	14
204 338 27 G	E0200-02A0	16
204 338 27 G	C0100-02A0	7
204 338 27 G	C0100-03A0	13
204 338 27 G	C0100-03A0	17
204 338 27 G	C0100-03A0	20
204 338 27 G	C0100-03A0	23
204 338 27 G	C0100-04A0	6
204 338 27 G	C0100-04A0	30
204 338 27 G	K0210-12A0	4
204 338 27 G	K0210-13A0	4
204 338 27 G	K1110-01A0	12
204 338 27 G	K1110-19A0	2
204 338 27 G	K1110-19A0	5
204 338 27 G	K1110-20A0	5
204 338 27 G	K1110-21A0	5
204 338 27 G	K1110-22A0	25
204 338 27 G	K1110-23A0	15
204 338 27 G	K1110-23A0	24
204 338 27 G	K1110-23A0	27
204 338 27 G	K1110-36A0	2
204 338 27 G	K1110-36A0	8
204 338 27 G	K1110-36A0	18
204 338 27 G	M1130-01A0	36
204 338 27 G	M1150-02A0	11
204 338 27 G	M1150-02A0	13
204 338 27 G	D0200-01A0	17
204 338 27 G	T1110-02A0	21
204 338 27 G	T1110-05A1	12
204 338 27 G	T1200-01A4	14
204 338 29 J	E0200-02A0	10
204 338 29 J	M1130-01A0	13
204 338 29 J	M1140-01A0	13
204 338 29 J	M1220-01A1	16
204 338 30 K	D0100-01A0	13
204 338 30 K	C0100-05A0	15
204 338 30 K	H0110-01A0	28
204 338 31 L	E0200-07A0	9
204 338 31 L	E0200-07A0	11
204 338 31 L	K1110-24A0	5
204 338 31 L	K1110-36A0	13
204 338 32 M	B0400-01A0	5
204 338 32 M	C0100-01A0	17
204 338 32 M	C0100-01A0	19
204 338 32 M	C0100-02A0	12
204 338 32 M	C0100-02A0	14
204 338 32 M	C0100-04A0	19
204 338 32 M	C0100-04A0	23
204 338 32 M	C0100-06A0	6
204 338 32 M	C0100-06A0	12
204 338 32 M	C0100-06A0	23
204 338 32 M	C0310-01A0	2
204 338 32 M	C0310-01A0	5
204 338 32 M	C0310-01A0	8
204 338 32 M	H1220-01A0	12
204 338 32 M	H1220-01A0	16
204 338 32 M	K1110-20A0	3
204 338 32 M	K1110-21A0	3
204 338 32 M	R1100-01A0	7
204 338 32 M	R1100-01A0	10
204 338 32 M	Y1620-41A0	35
204 338 32 M	T1110-04A3	5
204 338 33 N	B0400-01A0	14
204 338 33 N	D0200-02A0	10
204 338 33 N	C0100-01A0	9
204 338 33 N	K1110-01A0	10
204 338 33 N	K1110-19A0	14
204 338 33 N	K1110-28A0	32
204 338 33 N	K1110-30A0	42
204 338 33 N	D0200-01A0	57
204 338 34 P	E0200-04A0	2
204 338 34 P	H0320-01A0	3
204 338 34 P	H0330-01A0	7
204 338 34 P	K1110-23A0	7
204 338 34 P	K1110-23A0	11
204 338 34 P	K1110-23A0	20
204 338 34 P	A9999-01A0	11
204 338 35 Q	K1110-37A1	2
204 338 35 Q	K1110-37A1	11
204 338 36 R	B0400-01A0	2
204 338 36 R	A9999-01A0	13
204 338 37 S	E0200-06A0	7
204 338 38 T	C0100-02A0	4
204 338 39 U	H1831-01A0	2
204 338 40 V	D0100-01A0	6
204 338 40 V	M1130-01A0	25
204 338 40 V	M1140-01A0	25
204 338 43 Z	N1210-01A0	13
204 338 44 A	K0210-08A0	30
204 338 45 B	K0210-14A0	1
204 338 46 C	B0200-01A0	4
204 338 47 D	E0200-02A0	2
204 338 47 D	E0200-02A0	4
204 338 48 E	E0410-01A0	2
204 338 48 E	K0110-01A0	2
204 338 48 E	K1110-25A0	13
204 338 48 E	K1110-29A0	13
204 338 48 E	K1110-16A0	9
204 338 50 G	E0200-01A0	6
204 338 50 G	R0120-01A0	15
204 338 52 J	M1220-01A1	28
204 338 53 K	M1210-01A0	11
204 338 54 L	E0200-05A0	22
204 338 54 L	H0340-01A0	18

Partno	Fig No	Index
204 338 54 L	H1210-01A0	12
204 338 54 L	M1310-01A0	4
204 338 55 M	E0200-03A0	17
204 338 56 N	E0100-01A0	5
204 338 57 P	H1270-01A0	2
204 338 57 P	H1833-01A0	22
204 338 57 P	M1130-01A0	29
204 338 57 P	M1310-01A0	2
204 338 57 P	A9999-01A0	17
204 338 58 Q	H1210-01A0	5
204 338 64 W	K1110-19A0	12
204 338 84 T	H0120-01A0	3
204 338 84 T	N1310-01A0	5
204 338 86 V	R0200-01A0	10
204 338 86 V	Y1620-11A0	15
204 338 90 A	T1125-01A0	2
204 338 90 A	T1230-01A0	25
204 338 99 F	T1510-01A3	9
2043 38 32 M	C0310-01A0	11
2043 38 34 P	B0400-01A0	11
205 338 10 J	T1230-01A0	17
205 338 10 J	T1230-01A0	22
205 338 14 N	Y1620-41A0	13
205 338 14 N	Y1620-01A3	13
205 338 15 P	R0120-01A0	18
205 338 16 Q	B0100-02A0	5
205 338 17 R	B0100-01A0	5
205 338 28 D	E0200-03A0	9
205 338 60 N	J1310-01A0	1a
205 338 78 H	K1110-22A0	2
205 338 79 J	K0110-01A0	8
205 338 79 J	K1110-16A0	2
205 338 81 L	K1110-16A0	5
205 338 82 M	K1110-22A0	22
205 338 83 N	K0110-01A0	5
205-03-62660	C0100-01A0	5
205-03-71440	M1130-01A0	32
205-03-71532	M1130-01A0	39
205-03-71540	M1130-01A0	
205-04-62130	B0920-01A0	17
205-04-62130	B0920-01A0	18
205-04-62130	D0200-01A0	15
205-04-62140	D0200-01A0	8
205-04-62150	B0920-01A0	7
205-04-62150	D0200-01A0	54
205-54-51250	K0210-07A0	25
205-54-51970	M1130-01A0	12
205-54-51970	M1140-01A0	12
205-54-53550	M1130-01A0	24
205-54-53550	M1140-01A0	24
205-54-63310	K0210-02A0	25
205-70-51390	T1110-05A1	14
205-70-66580	J1310-01A0	2
205-70-66580	J1310-01A0	7
205-70-66580	T1110-02A0	10
205-70-66580	T1110-02A0	16
205-70-66580	T1200-01A4	25
205-70-66580	T1200-01A4	33
205-70-N1190	T1510-01A3	6
205-917-1610	A9999-01A0	15
206 338 09 D	T1230-01A0	28
206 338 10 E	Y1620-01A3	33
206 338 11 F	N1110-01A0	4
206 338 12 G	N1110-01A0	5
206 338 13 H	B0920-01A0	37
206 338 13 H	E0200-06A0	12
206-03-43340	C0100-04A0	33
206-03-43340	M1130-01A0	41
206-06-61130	H1833-01A0	20
207-00-N1170	U0100-01A4	12
207-00-N1210	U0100-01A4	33
207-06-N1110	K1110-24A0	3
207-06-N1130	K0210-12A0	6
207-06-N1140	K0210-12A0	7
207-43-N1110	K1110-22A0	18
207-43-N1120	K1110-22A0	1
207-46-71520	J1110-01A0	
207-46-71540	J1110-01A0	
207-46-N1290	J1110-01A0	
207-54-65130	K1120-01A0	1
207-54-65210	K1120-01A0	12
207-54-71190	K1110-01A0	3
207-54-N1150	K1110-22A0	24
207-54-N1210	K1120-01A0	13
207-54-N1220	K1120-01A0	4
207-54-N1230	K1120-01A0	15
207-57-N1110	K0110-01A0	4
207-57-N1120	K0110-01A0	1
207-62-N1490	H1840-01A0	3
207-62-N1650	H1831-02A0	9
207-62-N1920	H1833-01A0	1
208-06-19170	H1833-01A0	27
208-32-11231	T1510-01A3	17
208-43-71410	K1110-28A0	8
208-43-71420	K1110-30A0	30
208-43-71610	K1110-30A0	24
208-43-71620	K1110-30A0	25
208-43-71670	K1110-30A0	32
208-43-71680	K1110-27A0	3
208-43-71690	K1110-30A0	6
208-53-12280	K1110-28A0	11
208-54-57180	M1120-01A0	35
208-60-71180	H0110-01A0	20
208-62-38370	C0100-05A0	10
208-62-38370	C0100-06A0	22
208-62-72290	K1110-34A0	6
208-62-72310	K1110-34A0	7
208-62-72770	K1110-35A0	1
208-62-72780	K1110-35A0	2
208-62-72860	K1110-35A0	10
208-62-72870	K1110-35A0	11
209-62-52560	N1310-01A0	8
209-62-N1110	H0340-01A0	1
209-64-16721	H1831-02A0	13
20B-27-11210	H0340-01A0	7
20D-62-17620	A3030-A0A3	14
20M-977-8130	B0920-01A0	15
20M-977-8130	A5010-A0J2	17
20S-26-71160	Y0260-01A0	14
20S-26-71190	Y0260-01A0	17
20S-26-71250	Y0260-01A0	16
20T-54-74510	E0200-04A0	5
20T-54-74510	E0200-01A0	12
20T-54-74870	K0210-02A0	30
20T-54-74880	K0210-02A0	31
20T-54-74890	K0210-02A0	32
20T-54-75250	K0210-05A0	7
20T-54-75290	K0210-08A0	45
20U-54-25190	K0210-08A0	3
20U-70-31330	J1310-01A0	
20U-70-31330	T1110-02A0	14
20U-70-31340	J1310-01A0	

Partno	Fig No	Index
20U-70-31340	T1110-02A0	13
20X-30-22180	R0110-01A0	8
20X-30-22220	R0120-01A0	9
20Y-00-31330	U0100-01A4	11
20Y-00-31350	U0100-01A4	27
20Y-00-N1140	U0100-01A4	29
20Y-00-N1160	U0100-01A4	2
20Y-00-N1170	U0100-01A4	28
20Y-00-N1220	U0100-01A4	21
20Y-00-N1280	U0100-01A4	32
20Y-00-N1310	U0100-01A4	19
20Y-03-11220	E0200-03A0	16
20Y-03-11220	E0200-05A0	21
20Y-03-11220	H0340-01A0	21
20Y-03-11330	C0100-01A0	8
20Y-03-22110	C0100-01A0	4
20Y-04-11160	D0100-01A0	3
20Y-04-21580	D0100-01A0	9
20Y-06-11382	K0210-06A0	8
20Y-06-11750	K0210-06A0	3
20Y-06-15240	M1130-01A0	38
20Y-06-21551	T1110-02A0	2
20Y-06-21710	K1110-19A0	32
20Y-06-23770	K1110-27A0	7
20Y-06-23770	K1110-30A0	14
20Y-06-23920	K1110-30A0	15
20Y-06-25310	T1110-02A0	1
20Y-06-31120	K0210-12A0	1
20Y-06-31320	K1110-30A0	
20Y-06-31330	K1110-30A0	28
20Y-06-31660	E0200-03A0	2
20Y-06-N1130	K0210-06A0	37
20Y-06-N1140	K0210-06A0	13
20Y-06-N1150	K0210-06A0	12
20Y-06-N1160	K0210-06A0	34
20Y-06-N1220	K0210-06A0	6
20Y-25-11270	T1110-05A1	16
20Y-30-00070	R0200-01A0	
20Y-30-16130	R0200-01A0	9
20Y-30-16330	R0110-01A0	10
20Y-30-16330	R0300-01A0	8
20Y-43-12180	B0400-01A0	22
20Y-43-15410	C0100-01A0	20
20Y-43-15410	C0100-02A0	13
20Y-43-21231	K1110-19A0	20
20Y-43-21241	K1110-19A0	21
20Y-43-22211	K1110-25A0	1
20Y-43-22221	K1110-29A0	1
20Y-43-22250	K1110-25A0	6
20Y-43-22250	K1110-29A0	6
20Y-43-22261	K1110-25A0	7
20Y-43-22261	K1110-29A0	7
20Y-43-22370	K1110-25A0	8
20Y-43-22370	K1110-29A0	8
20Y-43-22381	K1110-25A0	3
20Y-43-22390	K1110-29A0	3
20Y-43-22421	K1110-25A0	4
20Y-43-22421	K1110-29A0	4
20Y-43-31191	K1110-22A0	21
20Y-43-31412	K1110-28A0	7
20Y-43-31421	K1110-28A0	18
20Y-43-31432	K1110-28A0	16
20Y-43-31440	K1110-28A0	19
20Y-43-31450	K1110-28A0	20
20Y-43-31460	K1110-27A0	1
20Y-43-31503	K1110-28A0	
20Y-43-31513	K1110-28A0	12
20Y-43-31522	K1110-28A0	13
20Y-43-31611	K1110-28A0	14
20Y-43-31621	K1110-28A0	15
20Y-43-31690	K1110-28A0	29
20Y-43-41111	K1110-19A0	11
20Y-43-41121	K1110-19A0	4
20Y-43-41361	K1110-19A0	6
20Y-46-42460	J1110-01A0	14
20Y-46-42460	J1110-01A0	16
20Y-46-42460	J1110-01A0	18
20Y-54-11611	M1130-01A0	15
20Y-54-11611	M1140-01A0	15
20Y-54-11791	K0210-06A0	1
20Y-54-12550	M1810-01A0	15
20Y-54-12550	M1810-01A0	23
20Y-54-12550	M1810-02A0	6
20Y-54-13440	K0210-06A0	11
20Y-54-13440	K0210-06A0	41
20Y-54-14290	K0210-02A0	8
20Y-54-14310	K0210-02A0	10
20Y-54-14330	K0210-02A0	33
20Y-54-14380	K0210-06A0	4
20Y-54-18690	K0210-07A0	6
20Y-54-18690	K0210-08A0	49
20Y-54-27761	M1150-01A0	2
20Y-54-28170	M1130-01A0	9
20Y-54-28170	M1140-01A0	9
20Y-54-29231	M1130-01A0	20
20Y-54-29231	M1140-01A0	20
20Y-54-35710	K0210-08A0	43
20Y-54-35982	K0210-01A0	8
20Y-54-36150	K0210-06A0	30
20Y-54-36360	K0210-05A0	15
20Y-54-36380	K0210-01A0	6
20Y-54-39511	K0210-06A0	43
20Y-54-43130	K0210-02A0	5
20Y-54-43140	K0210-02A0	6
20Y-54-44120	K0210-01A0	2
20Y-54-44150	K0210-02A0	12
20Y-54-44160	K0210-02A0	13
20Y-54-44190	K0210-08A0	50
20Y-54-44210	K0210-02A0	17
20Y-54-44220	K0210-02A0	18
20Y-54-44230	K0210-02A0	20
20Y-54-44240	K0210-02A0	21
20Y-54-44250	K0210-02A0	23
20Y-54-44260	K0210-02A0	27
20Y-54-44280	K0210-02A0	29
20Y-54-44290	K0210-02A0	36
20Y-54-44300	K0210-02A0	
20Y-54-44310	K0210-02A0	39
20Y-54-44380	K0210-05A0	6
20Y-54-44390	K0210-05A0	8
20Y-54-44410	K0210-05A0	10
20Y-54-44430	K0210-05A0	20
20Y-54-44440	K0210-06A0	17
20Y-54-44440	K0210-06A0	38
20Y-54-44450	K0210-07A0	1
20Y-54-44460	K0210-07A0	3
20Y-54-44470	K0210-07A0	4
20Y-54-44490	K0210-07A0	5
20Y-54-44520	K0210-07A0	9
20Y-54-44550	K0210-02A0	4
20Y-54-44560	K0210-02A0	35
20Y-54-44570	K0210-02A0	37

Partno	Fig No	Index
20Y-54-44580	K0210-07A0	28
20Y-54-44590	K0210-07A0	29
20Y-54-44670	K0210-08A0	17
20Y-54-44680	K0210-08A0	32
20Y-54-44691	K0210-08A0	33
20Y-54-44721	K0210-08A0	40
20Y-54-44732	K0210-08A0	47
20Y-54-44810	K0210-08A0	13
20Y-54-44820	K0210-08A0	21
20Y-54-44830	K0210-08A0	14
20Y-54-44840	K0210-08A0	48
20Y-54-44850	K0210-02A0	40
20Y-54-44870	K0210-08A0	19
20Y-54-44880	K0210-08A0	42
20Y-54-44890	K0210-07A0	12
20Y-54-44960	K0210-07A0	22
20Y-54-44970	K0210-07A0	23
20Y-54-44980	K0210-07A0	24
20Y-54-45710	K0210-08A0	39
20Y-54-45910	K0210-08A0	4
20Y-54-61470	M1130-01A0	17
20Y-54-61621	M1420-01A0	1
20Y-54-61630	M1420-01A0	2
20Y-54-61670	M1220-01A1	30
20Y-54-61680	M1220-01A1	31
20Y-54-63411	M1130-01A0	23
20Y-54-63411	M1140-01A0	23
20Y-54-65121	K1110-01A0	2
20Y-54-65170	K1110-01A0	4
20Y-54-65810	K1120-01A0	10
20Y-54-65820	K1120-01A0	11
20Y-54-N1110	K0210-08A0	2
20Y-54-N1120	K0210-02A0	11
20Y-54-N1140	K0210-05A0	17
20Y-54-N1180	K0210-06A0	16
20Y-54-N1210	K0210-05A0	11
20Y-54-N1230	K0210-06A0	33
20Y-54-N1240	K0210-08A0	6
20Y-54-N1250	K0210-08A0	7
20Y-54-N1490	K0210-02A0	42
20Y-54-N1540	K0210-08A0	
20Y-54-N1550	K0210-05A0	5a
20Y-54-N1560	K0210-05A0	5b
20Y-54-N1570	K0210-05A0	
20Y-54-N1580	K0210-06A0	29
20Y-54-N1610	K0210-02A0	2
20Y-54-N1620	K0210-05A0	1
20Y-54-N1640	K0210-08A0	15
20Y-54-N1750	K0210-07A0	27
20Y-54-N1930	K0210-07A0	13
20Y-54-N1970	K0210-07A0	11
20Y-54-N1980	K0210-07A0	2
20Y-54-N1990	K0210-07A0	19
20Y-54-N2010	K0210-07A0	20
20Y-54-N2020	K0210-07A0	21
20Y-54-N2230	K0210-02A0	14
20Y-54-N2240	K0210-02A0	15
20Y-54-N2320	K0210-07A0	14
20Y-54-N2360	K0210-02A0	3
20Y-54-N2360	K0210-05A0	2
20Y-54-N2360	K0210-05A0	4
20Y-54-N2370	K0210-08A0	16
20Y-54-N2431	K0210-06A0	31
20Y-54-N2640	K0310-01A0	1
20Y-54-N2650	K0210-05A0	3
20Y-54-N2670	K1110-16A0	4
20Y-54-N2710	K0210-02A0	1
20Y-54-N2720	K0210-02A0	
20Y-54-N2730	K0210-01A0	10
20Y-54-N2930	K0210-08A0	19
20Y-54-N2940	K0210-05A0	13
20Y-54-N3140	M1420-01A0	4
20Y-54-N3160	K0210-06A0	20
20Y-57-21360	K1110-22A0	9
20Y-57-21370	K1110-22A0	12
20Y-57-N1120	K0110-01A0	7
20Y-57-N1130	K1110-22A0	15
20Y-57-N1140	K1110-22A0	16
20Y-60-21311	H0110-01A0	12
20Y-60-21340	H0110-01A0	19
20Y-60-21440	H0110-01A0	23
20Y-60-21470	H0110-01A0	
20Y-62-15660	N1220-01A0	5
20Y-62-15831	K1110-37A1	1
20Y-62-15831	K1110-37A1	10
20Y-62-18890	K1110-19A0	28
20Y-62-18890	K1110-25A0	17
20Y-62-18890	K1110-29A0	17
20Y-62-18910	K1110-19A0	23
20Y-62-18910	K1110-25A0	15
20Y-62-18910	K1110-29A0	15
20Y-62-21940	H1831-01A0	8
20Y-62-22790	E0200-03A0	4
20Y-62-22790	H1831-02A0	5
20Y-62-22790	H1840-01A0	6
20Y-62-22790	K1110-34A0	3
20Y-62-22790	K1110-34A0	13
20Y-62-22790	K1110-35A0	7
20Y-62-22790	K1110-35A0	15
20Y-62-22790	Y1600-08A0	24
20Y-62-22810	H1840-01A0	7
20Y-62-22810	K1110-35A0	8
20Y-62-22820	H1831-02A0	6
20Y-62-22820	H1840-01A0	12
20Y-62-22820	K1110-34A0	4
20Y-62-22820	K1110-34A0	14
20Y-62-22820	K1110-35A0	9
20Y-62-22820	K1110-35A0	16
20Y-62-22830	E0200-03A0	5
20Y-62-22830	H1840-01A0	13
20Y-62-22830	K1110-35A0	17
20Y-62-22830	Y1600-08A0	25
20Y-62-22840	H1831-02A0	7
20Y-62-22840	H1840-01A0	8
20Y-62-22840	K1110-35A0	18
20Y-62-22850	H1831-02A0	8
20Y-62-22850	H1840-01A0	9
20Y-62-22850	K1110-34A0	15
20Y-62-22850	K1110-35A0	19
20Y-62-22860	H1840-01A0	14
20Y-62-22860	K1110-35A0	20
20Y-62-41390	K1110-19A0	30
20Y-62-41970	H1831-01A0	13
20Y-62-44420	H1810-01A0	1
20Y-62-45610	H0120-02A0	9
20Y-62-45620	H0120-02A0	21
20Y-62-47630	H1833-01A0	7
20Y-62-85250	K1110-35A0	14
20Y-62-N1890	K1110-36A0	12
20Y-62-N2540	H0340-01A0	5
20Y-62-N2550	K1110-35A0	3
20Y-62-N2570	K1110-35A0	12

Partno	Fig No	Index
20Y-62-N2580	K1110-35A0	13
20Y-70-11520	T1110-05A1	15
20Y-70-11540	T1110-05A1	7
20Y-70-11540	T1200-01A4	7
20Y-70-11590	T1110-05A1	8
20Y-70-11590	T1200-01A4	8
20Y-70-14520	T1510-01A3	5
20Y-979-6591	K1110-16A0	7
20Y-98-N1170	V0300-01A0	12
20Y-98-N1230	V0300-01A0	9
20Y-98-N1240	V0300-01A0	14
20Y-98-N1250	V0300-01A0	1
20Y-98-N1260	V0300-01A0	10
20Y43-N1210	K1110-27A0	2
21J-54-16190	K0210-08A0	1
21K-46-21190	J1110-01A0	2
21K-54-11310	M1110-01A0	8
21K-60-71230	H0120-02A0	
21K-62-35270	T1110-04A3	2
21K-62-72730	H0120-02A0	1
21K-62-N1110	K1110-35A0	4
21K-62-N1120	K1110-35A0	5
21K-62-N1130	H1840-01A0	4
21K-62-N1140	K1110-35A0	6
21K-62-N1150	H1840-01A0	1
21K-70-11410	T1125-01A0	5
21M-62-16780	H1831-01A0	26
21T-06-11350	M1220-01A1	15
21T-27-71220	K1120-01A0	7
21T-54-16150	D0100-01A0	15
21T-54-16150	C0100-05A0	16
21T-62-76850	D0200-01A0	33
21W-06-22120	M1220-01A1	12
21W-06-22130	M1220-01A1	13
21W-62-42490	H1831-01A0	16
21W-62-43930	H1833-01A0	14
21W-62-43960	Y1600-08A0	9
21W-70-41440	T1200-01A4	37
21W-973-3420	H0120-02A0	2
21W-977-1120	B0920-01A0	29
21Y-62-11591	H0120-02A0	3
21Y-62-N1110	H1210-01A0	22
21Y-70-14710	T1200-01A4	32
21Y-70-14710	T1230-01A0	21
21Y-70-14760	J1310-01A0	5
21Y-70-14770	T1230-01A0	16
21Y-70-14780	T1230-01A0	
21Y-70-14830	J1310-01A0	10
21Y-70-14830	T1125-01A0	4
21Y-70-14830	T1200-01A4	29
21Y-70-14840	J1310-01A0	
21Y-70-14840	T1200-01A4	30
21Y-70-14850	T1230-01A0	
22B-01-11190	B0100-02A0	6
22B-03-12590	C0100-01A0	21
22B-26-11320	N1220-01A0	11
22B-30-00010	R0200-01A0	
22B-30-11240	R0120-01A0	7
22B-30-11620	R1100-01A0	9
22B-30-12230	R0120-01A0	8
22B-30-13110	R0120-01A0	1
22B-30-13120	R0120-01A0	5
22B-30-16110	R0200-01A0	1
22B-30-16150	R0200-01A0	2
22B-30-16170	R0200-01A0	4
22B-54-15990	K0210-05A0	14
22B-62-N1110	P1120-01A0	8
22B-62-N1120	P1120-01A0	12
22B-70-15210	T1200-01A4	6
22U-03-22280	C0100-05A0	14
22U-03-22860	C0100-01A0	12
22U-03-22870	C0100-01A0	22
22U-04-21131	D0200-02A0	1
22U-04-21200	D0100-01A0	
22U-04-21210	D0100-01A0	8
22U-04-21220	D0100-01A0	10
22U-04-21260	D0200-02A0	5
22U-04-21330	D0200-02A0	6
22U-06-11270	E0200-03A0	3
22U-06-22190	K1110-30A0	11
22U-06-22290	K1110-30A0	12
22U-06-22320	K1110-30A0	5
22U-06-22330	K1110-30A0	2
22U-06-22360	K1110-28A0	23
22U-06-22390	K1110-30A0	13
22U-06-22420	K1110-30A0	7
22U-06-22470	K1110-30A0	8
22U-06-22480	K1110-30A0	10
22U-06-22490	K1110-28A0	22
22U-06-N1140	K0210-13A0	3
22U-43-21111	K1110-19A0	16
22U-43-21121	K1110-19A0	17
22U-43-21131	K1110-19A0	19
22U-43-21181	K1110-25A0	
22U-43-21191	K1110-29A0	
22U-43-21211	K1110-25A0	5
22U-43-21211	K1110-29A0	5
22U-43-21340	K1110-16A0	8
22U-43-21350	K1110-19A0	
22U-43-21360	K1110-19A0	10
22U-43-22110	K1110-27A0	10
22U-43-22220	K1110-27A0	4
22U-43-22230	K1110-27A0	5
22U-43-22310	K1110-28A0	1
22U-43-22320	K1110-28A0	
22U-43-22340	K1110-28A0	6
22U-43-22410	K1110-28A0	24
22U-43-22430	K1110-28A0	28
22U-43-22830	K1110-28A0	30
22U-43-23111	K1110-30A0	1
22U-43-23120	K1110-30A0	3
22U-43-23130	K1110-30A0	4
22U-43-23210	K1110-30A0	27
22U-43-23230	K1110-30A0	31
22U-43-23250	K1110-30A0	33
22U-43-23260	K1110-28A0	25
22U-43-23260	K1110-30A0	34
22U-43-23711	K1110-30A0	39
22U-54-24760	M1810-01A0	22
22U-54-24760	M1810-02A0	3
22U-54-25170	K1110-22A0	23
22U-54-25521	K1110-20A0	2
22U-54-25531	K1110-21A0	2
22U-54-25581	K1110-01A0	5
22U-54-N1110	K1110-20A0	1
22U-54-N1120	K1110-21A0	1
22U-60-21330	H1831-01A0	20
281-01-13180	H0320-01A0	5
281-01-13180	H1831-03A0	1
281-01-13180	H1831-03A0	11
281-01-13180	H1840-01A0	19
287-17-11520	A4230-A0G7	9

Partno	Fig No	Index
421-06-23330	T1110-02A0	
421-54-11372	M1220-01A1	4
421-54-11381	M1220-01A1	5
569-06-61960	K1110-23A0	33
569-06-61960	K1110-30A0	36
600-181-1930	B9999-A0P4	7
600-184-1210	B9999-A0P4	
600-184-1220	B9999-A0P4	2
600-184-1250	B9999-A0P4	3
600-184-1270	B9999-A0P4	6
600-185-2100	B9999-A0P4	
600-185-2110	B9999-A0P4	4
600-211-1870	A3110-A0D6	10
600-211-2110	B9999-A0P5	4
600-211-2110	A3110-A0D6	3
600-211-2111	V0100-01A0	3
600-311-6720	A4110-A0H8	3
600-311-7460	A4110-A0H8	2
600-311-7460	V0100-01A0	7
600-311-9101	D0200-01A0	58
600-311-9640	A4110-A0H8	1
600-411-1181	B0920-01A0	
600-411-1280	K1110-25A0	9
600-411-1280	K1110-29A0	9
600-411-2400	B0920-01A0	1
600-421-6230	A5010-A0J2	12
600-625-8550	A5030-A0G1	1
600-815-2170	B9999-A0P6	1
600-815-2170	E0200-02A0	9
600-815-2341	A1320-A0A8	3
600-815-8941	E0200-02A0	1
600-821-6120	A6010-A0S1	1
600-863-3210	A6210-A0G6	1
6110-11-4431	A8118-A0B1	
6112-21-6581	A6020-A0A6	13
6114-31-3330	A4040-A0A6	4
6114-31-3330	A8116-B0B2	
6130-12-1961	A9530-A0A2	2
6130-12-1961	A6020-A0A6	1
6130-12-5580	A8118-A0B1	
6130-22-5190	A2210-A0F9	6
6130-32-1361	A2230-A0B4	4
6131-12-5920	A1111-A0D7	12
6131-22-3750	B0100-02A0	8
6136-11-4850	A8118-A0B1	
6136-11-8120	A1110-A0F7	6
6136-11-8130	A1110-A0F7	7
6136-11-8142	A1110-A0F7	8
6136-11-8142	B9999-A0P5	3
6136-11-8142	V0100-01A0	5
6136-11-8142	A8118-A0B1	
6136-31-1431	A2370-A0F4	2
6136-52-1620	A2010-A0P2	22
6140-11-6331	A5010-A0J2	13
6140-11-6331	A8118-A0B1	
6140-21-1130	A2010-A0P2	16
6141-21-1332	A2210-A0F9	4
6141-21-1332	A8116-B0B2	
6141-21-1530	A2010-A0P2	5
6141-64-2560	A2110-A0P1	12
6144-11-5821	A8118-A0B1	
6144-21-2500	A8116-B0B2	
6144-21-5590	A2190-A0B5	6
6144-71-5750	A4110-A0H8	19
6144-71-5760	A4110-A0H8	21
6144-81-5151	A2810-A0A5	1
6150-21-5920	A2190-A0B5	3
6150-21-5930	A2190-A0B5	4
6152-51-5520	E0200-06A0	6
6162-53-5420	A3110-A0D6	12
6162-53-5430	A3110-A0D6	11
6162-53-5450	A3110-A0D6	9
6162-73-5940	A3030-A0A3	13
6201-11-5850	A1530-A0E4	4
6201-11-5850	A1670-A0A7	7
6201-51-5910	A3110-A0D6	2
6202-13-8620	A1111-A0D7	2
6202-13-8631	A1111-A0D7	4
6202-21-4151	A6210-A0G6	3
6202-21-4151	A8116-B0B2	
6202-43-5320	A2450-A0A1	9
6202-71-9450	A4230-A0G7	2
6204-11-1830	A8118-A0B1	
6204-11-1840	A1010-A0G2	17
6204-11-1840	A8118-A0B1	
6204-11-3110	A4210-A0F4	1
6204-11-3812	A4210-A0F4	3
6204-11-3830	A4210-A0F4	4
6204-11-3830	A6020-A0A6	8
6204-11-3850	A4210-A0F4	7
6204-11-3850	A8118-A0B1	
6204-11-3880	A4210-A0F4	6
6204-11-3880	A8118-A0B1	
6204-11-4850	A1320-A0A8	4
6204-11-4850	A8118-A0B1	
6204-11-6421	A5110-A0A5	1
6204-11-8610	A1111-A0D7	1
6204-11-8810	A1110-A0F7	5
6204-11-8810	B9999-A0P5	2
6204-11-8810	V0100-01A0	4
6204-11-8810	A8118-A0B1	
6204-13-1610	A1010-A0G2	18
6204-19-1310	A1010-A0G2	2
6204-21-1610	A2010-A0P2	4
6204-21-3112	A2040-A0E5	4
6204-21-3230	A2040-A0E5	1
6204-21-3410	A8116-B0B2	
6204-21-3451	A8116-B0B2	
6204-21-3460	A8116-B0B2	
6204-21-3510	A2040-A0E5	5
6204-21-3510	A8116-B0B2	
6204-21-3750	A2110-A0P1	13
6204-21-5280	A8116-B0B2	
6204-21-5510	A2190-A0B5	2
6204-21-6710	A2210-A0F9	8
6204-21-6811	A8116-B0B2	
6204-21-6811	A8118-A0B1	
6204-21-6820	A2210-A0F9	9
6204-21-6820	A3030-A0A3	10
6204-21-6820	A8116-B0B2	
6204-21-8100	A2310-A0B3A	
6204-21-8600	A2310-A0B3A	6
6204-26-8100	A2310-A0B3A	
6204-26-8600	A2310-A0B3A	6
6204-27-8100	A2310-A0B3A	
6204-27-8600	A2310-A0B3A	6
6204-28-8100	A2310-A0B3A	
6204-28-8600	A2310-A0B3A	6
6204-29-1210	A2010-A0P2	2
6204-29-1220	A2010-A0P2	3
6204-29-8100	A2310-A0B3A	
6204-29-8600	A2310-A0B3A	6

Partno	Fig No	Index
6204-31-1220	A2310-A0B3A	2
6204-31-3310	A2350-A0F1	10
6204-31-6331	A2050-A0B3	3
6204-31-6341	A2050-A0B3	2
6204-31-6350	A2050-A0B3	5
6204-41-1131	A2410-A0B8	4
6204-41-1221	A2410-A0B8	2
6204-41-2110	A2430-A0A1	1
6204-41-3110	A2430-A0A1	2
6204-41-4410	A1010-A0G2	14
6204-41-4510	A1010-A0G2	12
6204-41-4520	A1010-A0G2	13
6204-41-4540	A8118-A0B1	
6204-41-4541	A1010-A0G2	15
6204-41-4541	A8118-A0B1	
6204-41-4550	A1010-A0G2	16
6204-41-5110	A2450-A0A1	1
6204-41-5120	A2450-A0A1	2
6204-41-5620	A2450-A0A1	10
6204-41-5710	A2450-A0A1	12
6204-51-1310	A3010-A0A2	5
6204-51-1330	A3010-A0A2	7
6204-51-1340	A3010-A0A2	8
6204-51-1510	A3010-A0A2	2
6204-51-1620	A2010-A0P2	23
6204-51-1711	A2010-A0P2	15
6204-51-1910	A3010-A0A2	9
6204-51-6122	A2110-A0P1	9
6204-51-6122	A8116-B0B2	
6204-51-8950	A3030-A0A3	16
6204-61-1630	A5010-A0J2	2
6204-61-1650	A5010-A0J2	4
6204-61-1660	A5010-A0J2	7
6204-61-5181	A8116-B0B2	
6204-61-5191	A8116-B0B2	
6204-63-1130	A8116-B0B2	
6204-71-3170	A4040-A0A6	2
6204-71-3190	A4040-A0A6	9
6204-71-3321	A4040-A0A6	5
6204-71-3630	A4040-A0A6	3
6204-71-4230	A4060-A0B4	2
6204-71-4250	A4060-A0B4	1
6204-71-5110	A4050-A0C6	1
6204-71-5120	A4050-A0C6	2
6204-71-5130	A4050-A0C6	3
6204-71-5141	A4050-A0C6	4
6204-71-5560	A4230-A0G7	6
6204-71-5581	A4230-A0G7	5
6204-71-5710	A4050-A0C6	5
6204-71-5730	A4110-A0H8	10
6204-71-5810	A4050-A0C6	7
6204-71-5890	A4050-A0C6	9
6204-71-6500	A4110-A0H8	
6204-71-9100	A4230-A0G7	1
6204-71-9140	A4230-A0G7	3
6204-81-2421	A9850-A0B1	1
6204-K1-0901	A8118-A0B1	1
6204-K2-0901	A8116-B0B2	2
6205-11-4430	A4070-A0A1	5
6205-11-5140	A1510-A0G3	1
6205-11-5460	A1610-A0N7	6
6205-11-5460	A9999-01A0	1
6205-11-5580	A1530-A0E4	2
6205-11-5580	A8118-A0B1	
6205-11-5691	A1670-A0A7	1
6205-11-5810	A8118-A0B1	
6205-11-5811	A1510-A0G3	2
6205-11-5811	A8118-A0B1	
6205-11-5850	A1670-A0A7	2
6205-11-5850	A8118-A0B1	
6205-11-8111	A1110-A0F7	1
6205-11-8301	A1110-A0F7	
6205-11-8930	A1111-A0D7	5
6205-21-1504	A2010-A0P2	
6205-21-5142	A2110-A0P1	1
6205-21-5360	A2190-A0B5	1
6205-31-1202	A2310-A0B3A	
6205-41-1500	A2410-A0B8	
6205-43-5310	A2450-A0A1	5
6205-43-5410	A2450-A0A1	6
6205-43-5500	A2450-A0A1	
6205-51-6120	A2110-A0P1	8
6205-51-7611	A3030-A0A3	8
6205-51-7611	A8116-B0B2	
6205-51-7611	A8118-A0B1	
6205-51-8240	A3030-A0A3	2
6205-51-8251	A3030-A0A3	6
6205-51-8530	A3030-A0A3	7
6205-51-8540	A3030-A0A3	1
6205-51-8560	A3030-A0A3	12
6205-61-1202	A5010-A0J2	
6205-61-1210	A5010-A0J2	5
6205-61-5251	A3310-A0C1	7
6205-61-5261	A3310-A0C1	4
6205-61-5420	A3310-A0C1	
6206-11-1910	A1030-A0C5	1
6206-11-5911	A1670-A0A7	3
6206-11-5980	A1610-A0N7	2
6206-21-1420	A2010-A0P2	7
6206-21-1430	A2010-A0P2	6
6206-21-3840	A2040-A0E5	2
6206-21-3840	A8116-B0B2	
6206-31-1530	A2310-A0B3A	3
6206-31-4232	A2230-A0B4	
6206-31-4241	A2230-A0B4	1
6206-31-4792	A2230-A0B4	2
6206-31-6301	A2050-A0B3	
6206-51-1320	A3010-A0A2	6
6206-61-1121	A5010-A0J2	6
6206-61-1131	A8116-B0B2	
6206-61-1730	A8116-B0B2	
6206-61-1730	A8118-A0B1	
6206-61-1731	A5010-A0J2	9
6206-61-1731	A8116-B0B2	
6206-61-3990	A5040-A0B1	1
6206-71-5850	A4110-A0H8	20
6206-81-9870	A4110-A0H8	7
6207-11-1431	A1010-A0G2	3
6207-11-8140	A1110-A0F7	3
6207-11-8170	A1110-A0F7	2
6207-18-1431	A1010-A0G2	
6207-19-1431	A1010-A0G2	
6207-21-1190	A2010-A0P2	24
6207-31-2420	A2350-A0F1	2
6207-31-3101	A2350-A0F1	
6207-31-3130	A2350-A0F1	9
6207-31-3140	A2350-A0F1	11
6207-41-4130	A1010-A0G2	10
6207-51-1201	A3010-A0A2	
6207-51-1400	A3010-A0A2	
6207-51-1410	A3010-A0A2	3
6207-51-1610	A3010-A0A2	10

Partno	Fig No	Index
6207-61-3270	A5020-A0T4	1
6207-81-6510	A6020-A0A6	10
6208-11-1100	A1010-A0G2	
6208-11-1440	A1010-A0G2	4
6208-11-1910	A1030-A0B6	1
6208-11-3100	A4210-A0F4	
6208-11-3120	A4210-A0F4	2
6208-11-4310	A1320-A0A8	1
6208-11-4810	B9999-A0P3	1
6208-11-4810	C0100-06A0	27
6208-11-4850	B9999-A0P3	2
6208-11-4850	C0100-06A0	28
6208-11-4850	A8118-A0B1	
6208-11-4910	A5110-A0A5	2
6208-11-5210	A1610-A0N7	1
6208-11-5850	A1670-A0A7	5
6208-11-8880	A2190-A0B5	8
6208-18-1440	A1010-A0G2	
6208-19-1440	A1010-A0G2	
6208-21-4110	A2210-A0F9	1
6208-21-5410	A2190-A0B5	5
6208-21-6910	A9530-A0A2	1
6208-31-1410	A2370-A0F4	1
6208-31-2100	A2350-A0F1	
6208-31-3400	A2350-A0F1	
6208-38-2100	A2350-A0F1	
6208-38-2110	A2350-A0F1	1
6208-38-2110	A2350-A0F1	1
6208-39-2100	A2350-A0F1	
6208-39-2110	A2350-A0F1	1
6208-51-5210	A3110-A0D6	1
6208-51-5410	A3110-A0D6	
6208-51-5420	A3110-A0D6	8
6208-51-5870	A3110-A0D6	21
6208-51-5890	A3110-A0D6	23
6208-61-5210	A3310-A0C1	5
6208-61-5220	A3310-A0C1	8
6208-61-5400	A3310-A0C1	1
6208-61-5410	A3310-A0C1	2
6208-61-5420	A3310-A0C1	3
6208-61-5420	A8116-B0B2	
6208-61-6110	A9530-A0A2	6
6208-61-6120	A9530-A0A2	4
6208-71-1210	A4010-A0W8	1
6208-71-1850	A4040-A0A6	14
6208-71-5580	A4230-A0G7	7
6208-71-6590	A4110-A0H8	5
6208-71-9400	A4110-A0H8	13
6208-71-9500	A4110-A0H8	14
6208-81-6430	A6020-A0A6	3
6208-81-6440	A6020-A0A6	4
6208-81-6590	A6020-A0A6	7
6208-81-7100	B9999-A0P4	
6208-81-7110	B9999-A0P4	1
6208-81-7720	B0200-01A0	2
6208-81-7720	B9999-A0P4	8
6208-81-8100	A1530-A0E4	1
6208-81-8810	A1570-A0B6	1
6208-81-8820	A1570-A0B6	2
6208-81-8830	A1570-A0B6	6
6209-41-4210	A1010-A0G2	11
6221-41-5410	A2450-A0A1	7
6221-41-5420	A2450-A0A1	8
6221-41-5540	A2450-A0A1	4
6221-61-1520	A5010-A0J2	3
6221-61-1520	A8116-B0B2	
6691-11-4381	A8118-A0B1	
6691-41-8230	A3010-A0A2	13
6732-11-5420	A1610-A0N7	4
6737-71-5490	A4070-A0A1	1
6738-21-5611	A2110-A0P1	
6738-21-5621	A2110-A0P1	4
6738-21-5630	A2110-A0P1	5
6738-21-5640	A2110-A0P1	6
6738-61-4952	C0100-01A0	11
6741-81-9220	A2110-A0P1	14
702-15-73000	Y1640-02A0	6
702-16-03910	Y1670-11A0	
702-16-51140	Y1670-11A0	5
702-16-51240	Y1670-11A0	17
702-16-53140	Y1670-11A0	7
702-16-53170	Y1670-11A0	10
702-16-53420	Y1670-11A0	6
702-16-53470	Y1670-11A0	9
702-16-53480	Y1670-11A0	8
702-16-53920	Y1679-01A0	5
702-16-71160	Y1670-11A0	12
702-16-71210	Y1670-11A0	11
702-16-71280	Y1670-11A0	13
702-16-71441	Y1670-11A0	19
702-21-07311	Y1600-08A0	1
702-21-09230	Y1679-01A0	
702-21-09240	Y1679-01A0	
702-21-53120	Y1679-01A0	13
702-21-55100	Y1679-01A0	4
702-21-55310	Y1679-01A0	8
702-21-55360	Y1679-01A0	1
702-21-55410	Y1679-01A0	17
702-21-55420	Y1679-01A0	10
702-21-55440	Y1679-01A0	12
702-21-55460	Y1679-01A0	9
702-21-55470	Y1679-01A0	31
702-21-55520	Y1679-01A0	11
702-21-55530	Y1679-01A0	20
702-21-55620	Y1679-01A0	24
702-21-55640	Y1679-01A0	23
702-21-55670	Y1679-01A0	32
702-21-55710	Y1679-01A0	26
702-21-55720	Y1679-01A0	27
702-73-01520	Y1640-02A0	1
703-08-00110	Y1627-01A0	
703-08-91130	Y1627-01A0	1
703-08-92130	Y1627-01A0	4
703-08-93511	Y1627-01A0	9
703-08-94510	Y1627-01A0	7
703-08-95620	Y1627-01A0	2
703-09-98510	Y1627-01A0	6
703-09-98710	Y1627-01A0	5
705-17-04980	Y1620-41A0	14
705-17-04980	Y1620-01A3	14
706-73-01400	Y1640-01A0	
706-73-03580	Y1640-01A0	
706-73-72420	Y1640-01A0	13
706-73-72440	Y1640-01A0	14
706-73-72680	Y1640-01A0	7
706-73-73430	Y1640-01A0	15
706-77-72280	Y1640-02A0	5
707-01-0F010	Y1620-01A3	
707-01-0F030	Y1620-11A0	
707-01-0F040	Y1620-41A0	
707-13-10540	Y1620-01A3	1
707-13-11640	Y1620-11A0	1

Partno	Fig No	Index
707-13-95080	Y1620-41A0	1
707-27-10971	Y1620-01A3	5
707-27-11971	Y1620-11A0	4
707-27-95621	Y1620-41A0	5
707-34-55020	Y1620-41A0	24
707-34-60030	Y1620-01A3	23
707-35-90360	Y1620-11A0	30
707-35-90610	Y1620-41A0	25
707-35-90730	Y1620-01A3	24
707-35-90970	Y1620-41A0	10
707-35-91060	Y1620-01A3	10
707-35-91150	Y1620-11A0	10
707-35-91150	Y1620-11A0	12
707-36-10760	Y1620-01A3	18
707-36-11851	Y1620-11A0	24
707-36-95040	Y1620-41A0	19
707-39-10550	Y1620-01A3	20
707-39-11530	Y1620-11A0	26
707-39-95030	Y1620-41A0	21
707-44-10280	Y1620-01A3	19
707-44-10911	Y1620-01A3	21
707-44-11280	Y1620-11A0	25
707-44-11920	Y1620-11A0	27
707-44-95180	Y1620-41A0	20
707-44-95911	Y1620-41A0	22
707-51-65030	Y1620-41A0	7
707-51-65640	Y1620-41A0	8
707-51-70030	Y1620-01A3	7
707-51-70640	Y1620-01A3	8
707-51-75030	Y1620-11A0	6
707-51-75640	Y1620-11A0	7
707-52-90420	Y1620-41A0	6
707-52-90470	Y1620-01A3	6
707-52-90500	Y1620-11A0	5
707-56-60540	R0120-01A0	6
707-58-75670	Y1620-11A0	17
707-71-32530	Y1620-11A0	8
707-71-60870	Y1620-11A0	23
707-71-80230	Y1620-11A0	18
707-71-91270	Y1620-11A0	20
707-76-65210	Y1620-41A0	2
707-76-65220	Y1620-41A0	16
707-76-70230	Y1620-01A3	2
707-76-70230	Y1620-01A3	16
707-76-70240	Y1620-11A0	2
707-76-70240	Y1620-11A0	21
707-77-65110	Y1620-41A0	17
707-83-13010	Y1620-11A0	31
707-86-47490	Y1620-41A0	26
707-86-N1150	Y1620-01A3	25
707-86-N1160	Y1620-01A3	
707-86-N1170	Y1620-11A0	35
707-87-13570	Y1620-11A0	36
707-87-14070	Y1620-11A0	33
707-88-21680	Y1620-11A0	41
707-88-21720	Y1620-01A3	29
707-88-21730	Y1620-41A0	32
707-88-25080	Y1620-11A0	42
707-88-25110	Y1620-01A3	30
707-88-25120	Y1620-41A0	33
707-99-25870	Y1620-41A0	
707-99-37300	Y1620-01A3	
707-99-44340	Y1620-11A0	
708-1L-00650	Y1600-01A0	
708-1L-01650	Y1600-01A0	
708-1L-04615	Y1600-05A0	
708-1L-04750	Y1600-06A0	
708-1L-04913	Y1600-07A0	
708-1L-29340	Y1600-08A0	22
708-1L-29350	Y1600-08A0	17
708-1L-29361	Y1600-08A0	16
708-25-52861	Y1600-03A0	5
708-2L-22160	Y1600-03A0	6
708-2L-23960	Y1600-08A0	18
708-2L-23970	Y1600-08A0	4
708-2L-24680	Y1600-06A0	8
708-2L-24680	Y1600-07A0	3
708-7T-12230	Y1640-01A0	27
708-8E-16150	Y1600-01A0	8
708-8H-11530	Y1600-01A0	10
709-25-11361	Y1640-01A0	10
709-25-11640	Y1640-01A0	11
709-25-11650	Y1640-01A0	9
720-68-19870	Y1600-01A0	5
723-60-22230	Y1640-02A0	2
7834-41-2002	B0400-01A0	10
7835-10-5000	K0210-13A0	1
7835-26-5001	K1110-23A0	29
7861-91-4220	A2110-A0P1	15
7861-92-5810	D0100-01A0	4
7861-93-1420	B0200-01A0	14
7861-93-1650	H0120-01A0	12
7861-93-2330	A2210-A0F9	5
7861-93-3320	H0311-01A0	11
7861-93-3320	A5010-A0J2	14
7861-94-3000	K1110-23A0	31
8233-06-3350	K1110-23A0	35
8255-62-4360	Y1600-08A0	20
NY05062-1170A	Y1860-01A0	19
NY05062-11800	Y1860-01A0	20
NY06040-10400	Y1860-01A0	21
NY06277-1320A	Y1860-01A0	14
NY06339-10200	Y1860-01A0	10
NY07084-10210	Y1860-01A0	22
NY07343-10300	Y1860-01A0	23
NY07493-10200	Y1860-01A0	11
NY07880-10200	Y1860-01A0	5
NY07880-10500	Y1860-01A0	6
NY07880-10600	Y1860-01A0	7
NY07880-10700	Y1860-01A0	8
NY07995-10200	Y1860-01A0	2
NY09000-11400	Y1860-01A0	13
NY11076-1040A	Y1860-01A0	12
NY11076-12600	Y1860-01A0	24
NY80000-02200	Y1860-01A0	15
NY81416-05012	Y1860-01A0	16
NY83007-03040	Y1860-01A0	25
NY84110-00248	Y1860-01A0	17
NY86710-02016	Y1860-01A0	3
NY86711-01010	Y1860-01A0	18
NY86711-02011	Y1860-01A0	4
NY86792-01423	Y1860-01A0	26
NY87200-00011	Y1860-01A0	27
NY89103-00090	Y1860-01A0	9
TS15Z-25-42-10	Y1651-03A0	
TZ100A2020-00	Y1651-01A0	40
TZ121F2070-00	Y1651-01A0	6
TZ15Z-25-42-10	Y1651-01A0	41
TZ200B1014-01	Y1651-03A0	13
TZ200B1019-03	Y1651-03A0	4
TZ200B2073-00	Y1651-01A0	17
TZ225B1017-00	Y1651-03A0	15

Partno	Fig No	Index
TZ263B200301-J	Y1651-01A0	25
TZ263B2004-04	Y1651-01A0	26
TZ263B2007-01	Y1651-01A0	29
TZ263B2008-00	Y1651-01A0	30
TZ263B2009-01	Y1651-01A0	31
TZ263B2011-03	Y1651-01A0	33
TZ263B2014-00	Y1651-01A0	55
TZ263B2048-00	Y1651-01A0	49
TZ263B2049-00	Y1651-01A0	50
TZ263B2070-00	Y1651-01A0	
TZ263B2074-00	Y1651-01A0	39
TZ263B2076-02	Y1651-01A0	54
TZ263B2077-01	Y1651-01A0	57
TZ263B2079-01	Y1651-01A0	5
TZ263B2090-00	Y1651-01A0	60
TZ263B2093-01	Y1651-01A0	36
TZ263B2098-00	Y1651-01A0	51
TZ263B2105-00	Y1651-01A0	
TZ264B1107-00	Y1651-03A0	
TZ266B1008-00	Y1651-03A0	12
TZ266B2012-00	Y1651-01A0	34
TZ266B2035-00	Y1651-01A0	42
TZ266B2035-00	Y1651-03A0	
TZ266B2039-00	Y1651-01A0	44
TZ266B2039-00	Y1651-03A0	
TZ269B1015-00	Y1651-03A0	14
TZ269B2002-00	Y1651-01A0	24
TZ270B1000-00	Y1651-03A0	
TZ270B1006-00	Y1651-03A0	10
TZ276B200000JR	Y1651-01A0	
TZ276B210000-J	Y1651-01A0	
TZ276B210100-J	Y1651-01A0	
TZ276B300010F	Y1651-02A0	
TZ276B9000-00	Y1651-03A0	K1
TZ300B2039-00	Y1651-01A0	18
TZ300B2042-00	Y1651-01A0	19
TZ300B2043-01	Y1651-01A0	20
TZ512B2021-00	Y1651-01A0	22
TZ800A2013-00	Y1651-01A0	35
TZ800A2015-00	Y1651-01A0	37
TZ800A2016-00	Y1651-01A0	38
TZ850A0006-00	Y1651-01A0	7
TZ860A2051-00	Y1651-01A0	8
TZ860A2053-02	Y1651-01A0	10
TZ860A2054-01	Y1651-01A0	11
TZ860A2055-00	Y1651-01A0	13
TZ860A2056-00	Y1651-01A0	12
TZ869A2052-00	Y1651-01A0	9
TZ880A2010-00	Y1651-01A0	32
TZARP568-378-7	Y1651-03A0	20
TZARP568-378-7	Y1651-03A0	
TZES100-250-A	Y1651-03A0	22
TZES100-250-A	Y1651-03A0	
TZGDL1-16-S	Y1651-01A0	4
TZGDL1-16-S	Y1651-02A0	18
TZGDL1-16-S	Y1651-02A0	22
TZGM1-2	Y1651-03A0	23
TZGM1-8	Y1651-01A0	3
TZJB1176M12-32	Y1651-03A0	24
TZJB1354-10-25	Y1651-01A0	46
TZJB1354-4-10	Y1651-01A0	45
TZJB2401-P26-9	Y1651-01A0	14
TZJB2401-P26-9	Y1651-03A0	
TZJB2407T2-P14	Y1651-02A0	10
TZJB2407T2-P14	Y1651-03A0	
TZJB2407T3-P20	Y1651-02A0	17
TZJB2407T3-P20	Y1651-03A0	
TZJW1516-G37-7	Y1651-03A0	21
TZJW1516-G37-7	Y1651-03A0	
TZS0506	Y1651-02A0	19
TZSW-M8	Y1651-01A0	59
TZTH-R-42	Y1651-01A0	48