KEPB171201

RUTHZIL TRATOR COMERCIAL DE PEÇAS LTDA 11 97083-6812 ROLANDO CITRANGULO

PARTS BOOK

KOMATSU

PC130-8
Serial No. B10001 and up

SAA4D95LE-5D
Serial No. 26501795 and up

When ordering a spare part, specify the part number, part name, and quantity required, and also specify your machine model code, machine serial number, engine serial number and the service meter reading.

This Parts Book describes not only standard items but also optional equipment and attachments. To order a part, please contact your nearest Komatsu distributor.

This Parts Book contains the information and special codes as follows:

ILLUSTRATION AND PARTS LIST

When you open this Parts Book, you will find an illustration following its figure number (FIG.) Each individual part in the illustration is given an index number. Following the illustration, the component parts of the unit are listed in the order of the index numbers shown in the illustration. The part number, part name, quantity and applicable serial number are given for each part as a parts list.

FIGURE NUMBER (FIG.)

The figure number (FIG.) is the number which shows the figure of the page. It is not the spare part number. The numbers are not always continuous.

PARTS LIST

Spare parts information are listed in the parts list page as follows:

Index:

This is the same as the index number in the illustration. The parts are listed in index number order.

Code:

Codes are used in this column and represent as follows:

A1 This part and the part specified in the line immediately above are interchangeable.

A2 The part specified in the line above can be used instead of this part.

A3 This part can be used instead of the part specified in the line immediately above.

A4 The part specified in the description column can be used instead of this part if it is used as a set.

B1 This shows discontinued part. The part specified in the above line is supplied instead.

B2 This shows a discontinued part. The part specified in the description column is supplied instead as a set.

C1 This part cannot be supplied as an individual part. It is supplied as an assembly.

C2 This part is supplied for authorized Komatsu distributors only. It cannot be supplied as an individual part. It is supplied as an assembly.

C3 This indicates a part supplied as semi-finished. It requires additional work before installation.

Part Number:

The number given in the part number column is the part number for the part shown. It is the identification code used when ordering that part. It is important that there be no mistake in this code number when ordering.

Description:

This gives the name of part that has the part number listed. The mark "･" is put in front of the component part name of an assembly part and the item is entered following the assembly. If a part marked with "･" is a sub assembly, its components are marked with "･･".

Example: Tank Assembly
･Tank
･Cap
･･Packing

Furthermore, the following marks and abbreviations are used in this column.

Kit	This indicates kit parts. For kit parts, refer to the section FIELD REPAIR SERVICE PARTS in this Parts Book.
D	Diameter
L	Length
LHS	Left-hand side
RHS	Right-hand side
T	Thickness
W	Width

Quantity (Qty):

This specifies the number of pieces used for one machine. However, if a part is included in the assembly and/or component, the quantity per such assembly and/or component is specified.
Code AR (as required) shall be used in the Quantity column if the part cannot be specified numbers requires per machine and/or component. In such case, any number of quantities may be ordered depend on the field service requirement.

Serial Numbers:

Applicable engine serial number is indicated for the engine volume. In the chassis volume, this indicates the machine serial number in which the part is used.

If the serial number is enclosed in parenthesis, it shows that it is the applicable serial number for exclusive use of the equipment of figure number (FIG.)

AVANT-PROPOS

Lorsque vous passez une commande d'une pièce de rechange, vous êtes prié de spécifier le numéro de la pièce, la désignation de la pièce et la quantité requise et d'indiquer également le code du modèle de la machine, le numéro de série de la machine, le numéro de série du moteur et la lecture du compteur de service du véhicule.

Sur le présent catalogue des pièces figurent non seulement les équipements standard, mais également les équipements et accessoires en option. Si vous désirez un équipement ou une pièce quelconque, vous êtes prié de prendre contact avec le concessionnaire Komatsu le plus proche.

Ce catalogue des pièces comprend les informations et codes spéciaux de la manière suivante:

FIGURES ET LISTES DES PIÈCES

Lorsque vous ouvrez le présent catalogue, vous pouvez rechercher les figures en fonction du numéro de figure (FIG.). Chaque pièce individuelle dans la figure est fournie d'un numéro de référence. D'après la figure, les éléments de l'unité sont énumérés dans l'ordre des numéros de référence montrés sur la figure. Le numéro de la pièce, la désignation de la pièce, la quantité et le numéro de série utilisés sont indiqués pour chaque pièce comme liste des pièces.

NUMÉRO DE FIGURE (FIG.)

Le numéro de figure (FIG.) est un numéro qui permet d'identifier une figure sur une page. Il ne représente pas le numéro de la pièce de rechange. Les numéros ne sont pas toujours séquentiels.

LISTE DES PIÈCES DE RECHANGE

Les informations des pièces de rechange sont données dans la page de la liste des pièces comme ci-après:

Numéro de référence (Index):

Les numéros de référence correspondent aux numéros de référence notés sur la figure et sont énumérés dans l'ordre des numéros de référence.

Codification (Code):

Les codes sont utilisés dans cette colonne et représentent comme ci-après:

A1 Cette pièce et la pièce qui figure sur la ligne juste au-dessus sont interchangeables.

A2 La pièce indiquée sur la ligne au-dessus peut être utilisée au lieu de cette pièce.

A3 Cette pièce peut être utilisée au lieu de la pièce indiquée sur la ligne juste au-dessus.

A4 La pièce indiquée dans la colonne de description peut être utilisée au lieu de cette pièce si elle est utilisée comme ensemble.

B1 Ceci montre la pièce dont la production est interrompue. La pièce indiquée dans la ligne au-dessus est fournie à sa place.

B2 Ceci montre la pièce dont la production est interrompue. La pièce indiquée dans la colonne de description est fournie à sa place comme ensemble.

C1 Cette pièce ne peut pas être fournie comme pièce individuelle. Elle est fournie en tant qu'ensemble.

C2 Cette pièce est fournie pour les distributeurs autorisés de Komatsu seulement. Elle ne peut pas être fournie comme pièce individuelle. Elle est fournie en tant qu'ensemble.

C3 Ceci indique une pièce fournie à l'état semi-fini. Ceci exige un travail additionnel avant l'installation.

Numéros de pièce (Part Number):

Les numéros indiqués dans cette colonne correspondent aux numéros des pièces représentées et constituent les codes à spécifier pour toute commande de pièce. Il est important de ne pas faire d'erreur avec ce code au moment de la commande.

Description (Description):

Ceci indique le nom de la pièce qui montre le numéro de la pièce énumérée. La marque "·" est placée devant le nom de la pièce du composant d'une pièce d'ensemble et l'item est introduit suivant l'ensemble. Si une pièce marquée avec "·" est un sous-ensemble, ses composants sont marqués avec "· ·".
Exemple: Tank Assembly (Ensemble de réservoir)
· Tank
· Cap
· · Packing

En outre, les marques et abréviations suivantes sont utilisées dans cette colonne.

Kit Ceci indique les pièces de kit. Pour les pièces de kit, se référer à la Section FIELD REPAIR SERVICE PARTS de ce Catalogue des Pièces.
D Diamètre
L Longueur
LHS Côté gauche
RHS Côté droit
T Épaisseur
W Largeur

Quantité (Qty):

Ceci spécifie le nombre de pièces nécessaires pour l'équipement en question. S'il s'agit de pièces comprises dans un ensemble et/ou composant, et la quantité indiquée est le nombre de pièces nécessaires pour l'ensemble et/ou le composant en question.
Le code AR (comme requis) sera utilisé dans la colonne de Quantité si la pièce ne peut pas se présenter en nombres indiqués comme requis par machine et/ou composant. Dans ce cas, tout nombre de quantités peut être commandé selon la condition de service de champ.

Numéros de série (Serial Numbers):

Le numéro de série du moteur applicable est indiqué pour le volume du moteur. Dans le volume de la carrosserie, ceci indique le numéro de série de l'équipement sur lequel la pièce est utilisée.

Si le numéro de série est placé entre parenthèses, cela signifie qu'il s'agit d'un numéro de série destiné exclusivement à l'utilisation de l'équipement mentionné dans le numéro de figure (FIG.).

Quando fate un ordinazione di una parte di ricambio, siete pregati di precisare il numero della parte, la designazione della parte e la quantità necessaria ed indicare anche il codice del modello della macchina, il numero di serie della macchina, il numero di serie del motore e la lettura dell'indicatore di servizio del veicolo.

Sul presente catalogo delle parti appaiono non solo le attrezzature standard, ma anche le attrezzature ed accessori in opzione. Se desiderate un'attrezzatura o una parte qualunque, siete pregati di prendere contatto con il concessionario Komatsu più vicino.

Questo catalogo delle parti comprende le informazioni ed i codici speciali nel modo seguente:

ILLUSTRAZIONI ED ELENCO DELLE PARTI

Quando aprite il presente catalogo, troverete una figura secondo il suo numero di figura (FIG.). Ogni parte individuale nella figura è fornita di un numero di riferimento. Secondo la figura, gli elementi dell'unità sono enumerati nell'ordine dei numeri di riferimento mostrati sulla figura. Il numero della parte, la designazione della parte, la quantità ed il numero di serie utilizzati sono indicati per ogni parte come elenco delle parti.

NUMERO DI FIGURA (FIG.)

Il numero di figura (FIG.) è il numero che indica la figura della pagina. Non rappresenta il numero della parte di ricambio. I numeri non sono sempre continui.

ELENCO DELLE PARTI DI RICAMBIO

Le informazioni dei pezzi di ricambio sono elencate nella pagina dell'elenco dei pezzi come segue:

Numero di riferimento (Index):

I numeri di riferimento corrispondono ai numeri di riferimento notati sulla figura e sono enumerati nell'ordine dei numeri di riferimento.

Codice (Code):

I codici sono usati in questa colonna e rappresentano come segue:

A1 Questa parte ed la parte specificata nella linea immediatamente sopra sono intercambiabili.

A2 La parte specificata nella linea sopra può essere usata anziché questa parte.

A3 Questa parte può essere usata anziché la parte specificata nella linea immediatamente sopra.

A4 La parte specificata nella colonna di descrizione può essere usata anziché questa parte se è usata come insieme.

B1 Ciò mostra la parte non più in produzione. La parte specificata nella suddetta linea è invece fornita.

B2 Ciò mostra una parte non più in produzione. La parte specificata nella colonna di descrizione è fornita invece come insieme.

C1 Questa parte non può essere fornita come pezzo individuale. È fornita come insieme.

C2 Questa parte è destinata solo ai distributori autorizzati Komatsu. Non può essere fornita come parte individuale. È fornita come insieme.

C3 Ciò indica una parte fornita come semifinito. Richiede un lavoro supplementare prima dell'installazione.

Numeri di parte (Part Number):

I numeri indicati in questa colonna corrispondono ai numeri delle parti rappresentate e costituiscono i codici da precisare per qualsiasi ordinazione di parte. È importante non fare un errore con questo codice al momento dell'ordinazione.

Descrizione (Description):

Ciò dà il nome della parte che presenta il numero di parte elencato. Il contrassegno "·" è messo davanti al nome della parte componente di una parte di gruppo e l'articolo è inserito dopo il gruppo. Se un pezzo segnato con "·" è un sotto-gruppo, i suoi componenti sono segnati con "· ·".
Esempio: Tank Assembly
· Tank
· Cap
· · Packing

Inoltre, i seguenti contrassegni ed abbreviazioni sono usati in questa colonna.

Kit Ciò indica le parti di kit. Per le parti di kit, riferirsi alla sezione PARTI DI RICAMBIO PER SERVIZIO DI RIPARAZIONE IN SEDE in questo Catalogo delle Parti.
D Diametro
L Lunghezza
LHS Lato a sinistra
RHS Lato a destra
T Spessore
W Larghezza

Quantità (Qty):

Questo precisa il numero di parti necessarie per l'attrezzatura in questione. Se si tratta di parti comprese in un insieme e/o componente, e la quantità indicata è il numero di parti necessarie per l'insieme e/o il componente in questione.
Il codice AR (come richiesto) sarà utilizzato nella colonna di Quantità se la parte non può presentarsi in numeri indicati come richiesto per macchina e/o componente. In questo caso, qualsiasi numero di quantità può essere ordinato secondo la condizione di servizio di campo.

Numeri di serie (Serial Numbers):

Il numero di serie del motore applicabile è indicato per il volume del motore. Nel volume della carrozzeria, questo indica il numero di serie dell'attrezzatura sulla quale la parte è utilizzata.

Se il numero seriale è racchiuso tra parentesi, indica che è il numero di serie applicabile per uso esclusivo dell'attrezzatura del numero di figura (FIG.)

Bei der Bestellung von Teilen bitte die Teilenummer, die Teilebezeichnung und die Menge des jeweiligen Teils sowie die Modellnummer, die Seriennummer der Maschine, die Seriennummer des Motors und den Stand des Betriebsstundenzählers angeben.

In dieser Ersatzteilliste ist nicht nur das Standardzubehör aufgeführt, sondern auch als Sonderausstattung erhältliche Teile und Einrichtungen. Bestellungen nimmt Ihr zuständiger Komatsu-Händler entgegen.

Die folgenden Informationen und Kodes sind in der Ersatzteilliste enthalten:

Bilder und Ersatzteilliste

Beim Aufschlagen des Ersatzteilkatalogs finden Sie nach der Bildnummer (BILD) geordnete Bilder. Jedes Einzelteil einer Baugruppe ist mit einer Kennzahl versehen. Ausgehend von den Bildern sind die Bauteile der Baugruppe aufgeführt, und zwar geordnet nach den in den Bildern angegebenen Kennzahlen. Jedes Einzelteil wird mit Teilenummer, Teilebezeichnung und entsprechender Seriennummer angegeben.

Bildnummer (BILD)

Mit der Bildnummer (BILD) können Bilder auf einer Seite identifiziert werden. Es handelt sich dabei nicht um die Nummer des Lieferteils. Auch sind die Bilder nicht fortlaufend nummeriert.

Ersatzteilliste

Angaben zu den Ersatzteilen sind auf der Auflistungsseite wie folgt dargestellt::

Kennzahl (Index):

Hierbei handelt es sich um die Kennzahlen aus den Bildern. Die Bauteile sind nach diesen Kennzahlen geordnet aufgeführt.

Kode (Code):

In dieser Spalte werden Kodes mit den folgenden Bedeutungen benutzt:

A1 Dieses Teil ist mit dem in der vorangegangenen Zeile aufgeführten Teil austauschbar.

A2 Das in der vorangegangen Zeile aufgeführte Teil kann anstelle dieses Teils verwendet werden.

A3 Dieses Teil kann anstelle des in der vorangegangenen Zeile aufgeführten Teils verwendet werden.

A4 Anstelle dieses Teils kann das in der Spalte „Beschreibung“ aufgeführte Teil verwendet werden, wenn das Teil zusammen mit anderen Teilen als ein Bauteilsatz verwendet wird.

B1 Dieses Teil kann nicht mehr geliefert werden. Stattdessen wird das in der vorangegangenen Zeile aufgeführte Teil geliefert.

B2 Dieses Teil kann nicht mehr geliefert werden. Stattdessen wird das in der Spalte „Beschreibung“ aufgeführte Teil als ein Bauteilsatz geliefert.

C1 Dieses Teil kann nicht als Einzelteil, sondern nur als Baugruppe geliefert werden.

C2 Dieses Teil wird nur an autorisierte Komatsu-Händler geliefert. Es kann nicht als Einzelteil, sondern nur als Baugruppe geliefert werden.

C3 Hiermit werden Teile gekennzeichnet, die in vorbearbeitetem Zustand geliefert werden und für den Einbau nachbearbeitet werden müssen.

Teilenummer (Part Number):

Die in der Spalte „Teilenummer“ aufgeführte Nummer entspricht der Teilenummer für das betreffende Teil. Diese Nummer dient zur Identifizierung des Teils bei einer Bestellung. Deshalb sollte bei der Bestellung stets auf die genaue Angabe der Teilenummer geachtet werden.

Beschreibung (Description):

Hierunter wird die Bezeichnung des Teils mit der aufgeführten Teilenummer angegeben. Jedes Baugruppen-Bauteil ist mit dem vorangestellten Symbol „·“ gekennzeichnet und wird hinter der entsprechenden Baugruppe aufgeführt. Handelt es sich bei dem mit „·“ gekennzeichneten Bauteil um eine Baugruppe, sind die Bauteile dieser Baugruppe mit „· ·“ gekennzeichnet.
Beispiel: Tank Assembly
· Tank
· Cap
· · Packing

Zusätzlich werden die folgenden Zeichen und Abkürzungen in dieser Spalte verwendet:

Kit Hiermit werden Teile gekennzeichnet, die nur als Satz erhältlich sind. Siehe dazu den Abschnitt „FIELD REPAIR SERVICE PARTS“ dieses Ersatzteilkatalogs.
D Durchmesser
L Länge
LHS linke Seite
RHS Rechte Seite
T Dicke
W Breite

Menge (Qty):

Hierunter wird die Anzahl der Bauteile für eine Maschine angegeben. Im Falle einer Baugruppe oder eines Aggregats wird allerdings die Anzahl der Teile pro Baugruppe angegeben.
Der Kode AR (nach Bedarf) wird in dieser Spalte dann benutzt, wenn keine genaue Angabe darüber möglich ist, wie groß der Mengenbedarf pro Maschine und/oder Baugruppe ist. In diesem Fall kann eine beliebige Menge je nach Bedarf bestellt werden.

Serial Numbers (Seriennummern):

Im Ersatzteilkatalog für den Motor versteht man hierunter die Seriennummer des Motors, in den das betreffende Teil eingebaut ist. Im Ersatzteilkatalog für die Maschine versteht man hierunter die Seriennummer der Maschine, in die das entsprechende Teil eingebaut ist.
Wenn die Seriennummer in Klammern angegeben ist, ist diese Seriennummer ausschließlich für das in der Bildnummer (BILD) angegebene Zubehör bestimmt.

Ao solicitar uma peça, informe o número, nome e quantidade da peça necessária, bem como o código de modelo da máquina e seu número de série, o número do motor e a leitura do medidor de serviço.

Este catálogo de peças não somente especifica os acessórios padrões mas também as peças opcionais e aditamentos. Para pedir uma peça, entre em contato com o revendedor Komatsu mais próximo.

Este catálogo de peças contém as seguintes informações e códigos especiais:

LISTA DE PEÇAS E ILUSTRAÇÕES

Ao abrir este catálogo de peças, encontrar-se-á uma ilustração seguida do número da figura (FIG.). A cada peça individual na ilustração corresponde um número de índice. Seguindo a ilustração, as peças componentes da unidade são listadas na ordem dos números de índice nela indicados. O número, nome, quantidade e número de série aplicável da peça são aprsentados como uma lista de peças.

NÚMERO DA FIGURA (FIG.)

O número da figura (FIG.) é o número que mostra a ilustração da página. Não é um número para fornecimento de peças sobressalentes. Os números nem sempre são contínuos.ebene Zubehör bestimmt.

LISTA DE PEÇAS

As informações das peças sobressalentes são relacionadas na página com a lista de peças de acordo com o seguinte:

Índice (Index):

Este é o mesmo que o número de índice na ilustração. As peças são relacionadas na ordem dos números de índice.

Código (Code):

Códigos são utilizados nesta coluna e significam o seguinte:

A1 Esta peça e a peça especificada na linha imediatamente acima são intercambiáveis.

A2 A peça especificada na linha acima pode ser utilizada no lugar desta peça.

A3 Esta peça pode ser utilizada no lugar da peça especificada na linha imediatamente acima.

A4 A peça especificada na coluna “Descrição” pode ser utilizada no lugar desta peça se usada como um conjunto.

B1 Indica peça descontinuada. A peça especificada na linha acima é fornecida em seu lugar.

B2 Indica peça descontinuada. A peça especificada na coluna “Descrição” é fornecida em seu lugar como um conjunto.

C1 Esta peça não pode ser fornecida como peça individual. Ela é fornecida como um conjunto.

C2 Esta peça é fornecida somente para revendedores Komatsu autorizados. Não pode ser fornecida como peça individual. Ela é fornecida como um conjunto.

C3 Indica peça fornecida em condição semiacabada. Requer trabalho adicional antes da instalação.

Número da peça (Part Number):

O número indicado na coluna de números de peça corresponde ao número da peça exibida. É o código de identificação usado para o pedido da peça. É importante não enganar-se de número de código ao pedir a peça.

Descrição (Description):

Indica o nome da peça que tem o seu número de peça relacionado. O símbolo "·" é colocado na frente do nome peça do componente de uma peça de conjunto, e o item é lançado seguindo o conjunto. Se uma peça indicada com "·" é um subconjunto, os seus componentes são indicados por "· ·".
Exemplo: Tank Assembly
· Tank
· Cap
· · Packing

Além disso, os seguintes símbolos e abreviações são usados nesta coluna.

Kit Indica peças de um jogo. Para peças de jogo, referir-se à seção "FIELD REPAIR SERVICE PARTS" neste catálogo de peças.

D Diâmetro
L Comprimento
LHS Lado esquerdo
RHS Lado direito
T Espessura
W Largura

Quantidade (Qty):

Indica o número de peças utilizadas em uma máquina. Contudo, se uma peça é incluída no conjunto e/ou componente, a quantidade por conjunto e/ou componente é especificada.
O código AR (como requerido) usar-se-á na coluna "Quantitade" caso o número de peças por máquina e/ou componente não possa ser especificado. Em tal caso, qualquer número de peças pode ser pedido dependendo dos requisitos de serviço em campo.

Números de série (Serial Numbers):

O número de série do motor aplicável é indicado para o volume do motor. No volume da carroceria, indica o número de série da máquina na qual a peça é utilizada.

Se o número de série está entre parêntesis, mostra que é o número de série aplicável para uso exclusivo do equipamento do número da figura (FIG.)

订购零件时，请注明需要零件的货号、品名、数量以及使用机器的车辆编号、发动机型号和系列号、工作时数。

此零件明细表上不仅记载了标准装备零件，还记载了选购零件、附件零件。如果您需要订货，请与最近的小松代理店联系。

为了清楚明了，零件手册中有如下规定：

图表

打开此零件清单后，可以看到附带图号 (FIG.) 的零件明细表图示。在图示上标有各种零件的索引号码。除图之外，还按索引号码的顺序列表表示货号、品名、数量、适用机型。

图号 (FIG.)

图号表示该页图的号码。它不是补充零件用的货号。此号码不一定是连续号码。

零件表

从左栏开始按以下顺序显示零件的明细。

索引 (Index):

与图的索引号码一致，按索引号码顺序编制为表格形式。

代号 (Code):

此栏使用的代号如下所示：

A1　此行零件可与紧挨着的上一行零件互换使用。

A2　上一行的零件可取代此行零件来使用。

A3　此行零件可代替紧挨着的上一行零件使用。

A4　品名栏内的零件配套后，可取代此行零件来使用。

B1　该行零件已停止供应，用上一行的零件代替使用。

B2　该行零件已停止供应，品名栏内的零件配套后代替此行零件供应。

C1　此行零件拟成套供应，不以单一零件供应。

C2　此行零件主要面向特定的代理。不以单一零件供应，只拟成套供应。

C3　此行零件以半成品的形式供应，使用前必需再加工。

货号 (Part Number):

此栏所示的编号是图示零件的货号。它是在订货时需要标明的特定代号，是非常重要的。

品名 (Description):
表示相当于货号的零件名称。构成组装品的零件，在品名的前面有 “·” 标记，记载在组装品之后。
另外，如果标记 “·” 的零件是组装品，则该构成零件的品名前标有 “· ·” 标记。
例： TANK ASSEMBLY
· TANK
· CAP
· · PACKING

另外，说明栏可能显示以下代号。

Kit 表示修理包。关于修理包构件详情，请参考此零件清单中 “现场修理服务零件” 部分的内容。
D 直径
L 全长
LHS 左侧
RHS 右侧
T 厚度
W 全宽

数量 (Qty):

表示一台机器中需要使用的该零件数量。但是，如果是组装零件的构成零件时，表示其组装件的件数。
如果不能指定每个机器以及（或者）组装零件中必须的零件数量时，可以在零件数量栏中使用代码 AR。
此时，数量由现场的服务要件决定，然后进行定购。

适用机型 (Serial Numbers):

发动机篇中表示该使用零件的发动机型号，在机体篇中表示该使用零件的车辆号码。

如果适用机型位于括号中，表明该适用机型专门用于图号 (FIG.) 中所指的设备。

ПРЕДИСЛОВИЕ

При заказе запчасти укажите номер части, наименование части и нужное количество; кроме того, укажите код модели вашей машины, серийный номер машины, серийный номер двигателя и показания счетчика мото-часов.

В Каталоге приведены не только стандартные изделия, но и дополнительное оборудование и принадлежности. Для заказа запчасти пожалуйста обратитесь к ближайшему дилеру "Комацу".

Содержащаяся в Каталоге информация и специальные коды разъясняются ниже:

РИСУНОК И ПЕРЕЧЕНЬ ЧАСТЕЙ

Раскрыв Каталог, вы увидите рисунок после номера рисунка (ПОЗ). Каждой отдельной части на рисунке присвоен позиционный номер. За рисунком следует перечень составных частей устройства в порядке номеров позиций рисунка. Перечень частей указывает для каждой части ее номер, наименование, количество и применимый серийный номер.

НОМЕР РИСУНКА (ПОЗ)

Номер рисунка (ПОЗ) – это номер, который указывает рисунок на странице. Он не является номером запчасти. Последовательность номеров не обязательно непрерывна.

ПЕРЕЧЕНЬ ЧАСТЕЙ

Данные запасных частей приведены на странице перечня частей следующим образом:

Индекс (Index):

То же, что номер позиции на рисунке. Части перечислены в порядке их позиционных номеров.

Код: (Code):

В этой колонке находятся коды, обозначающие следующее:

A1 Данная часть и часть, указанная в предыдущей строке, взаимозаменяемы.

A2 Вместо данной части можно использовать часть, указанную в предыдущей строке.

A3 Данную часть можно использовать вместо части, указанной в предыдущей строке.

A4 В комплекте, вместо данной части можно использовать указанную в колонке описания.

B1 Поставки этой части прекращены. Взамен поставляется часть, указанная в предыдущей строке.

B2 Поставки этой части прекращены. Взамен комплектом поставляется часть, указанная в колонке описания.

C1 Данная часть отдельно не поставляется. Она поставляется с узлом.

C2 Данная часть поставляется лишь уполномоченным дилерам "Комацу". Отдельно не поставляется. Поставляется с узлом.

C3 Обозначает часть, поставляемую без доводки. Требует предустановочной подготовки.

Номер части (Part Number):

Приведенный в колонке номеров частей номер является номером изображенной части. Это код-идентификатор для заказа данной части. Важно, чтобы при заказе этот кодовый номер был указан без ошибок.

Описание (Description):

Здесь приводится наименование части, обозначенной номером в перечне. Значок "·" ставится перед наименованием детали компонента, причем деталь записана после узла. Если помеченная "·" часть является подсборкой узла, то ее составные части обозначаются значком "··".

Пример: Tank Assembly
·Tank
·Cap
··Packing

Далее, в этой колонке используются следующие обозначения и сокращения.

Kit	Указывает на элементы комплекта. Элементы комплекта смотри в разделе ЗАПАСНЫЕ ЧАСТИ ДЛЯ РЕМОНТА В УСЛОВИЯХ ЭКСПЛУАТАЦИИ данного Каталога.
D	Диаметр
L	Длина
LHS	Левая сторона
RHS	Правая сторона
T	Толщина
W	Ширина

Количество (Qty):

Указывает общее число изделий в одной машине. Если же изделие является частью узла и/или устройства, то указывается количество в таком узле и/или устройстве.
При невозможности указать количество частей на машину и/или устройство, в колонке Количество проставляется код AR (по потребности). В таком случае можно заказывать любые количества в зависимости от потребностей обслуживания на месте.

Серийные номера (Serial Numbers):

В книге по двигателю приводится соответствующий серийный номер двигателя. В книге по шасси указывает на серийный номер машины, где используется данная часть.

Серийный номер, заключенный в круглые скобки означает, что он применяется только для оборудования с номером рисунка (ПОЗ.)

. رقم القطعة (Part Number)

الرقم الوارد في عمود رقم القطعة هو رقم القطعة الخاص بالقطعة المبينة. وهو الرمز المستخدم لطلب تلك القطعة. ومن الضروري عدم ارتكاب اي خطأ في تحديد هذا الرقم عند طلب القطع.

. الوصف (Description)

يعطي اسم القطعة المدرج رقمها في القائمة. توضع العلامة "٠" امام اسم المكون لمجموعة ما ويدرج البند بعد المجموعة. اذا كانت القطعة المشار اليها بالعلامة "٠" هي نفسها عبارة عن مجموعة مكونات, فان كلا من مكوناتها يشار اليها بالعلامة "٠٠".
مثال

Tank Assembly
٠Tank
٠Cap
٠٠Packing

بالاضافة الى ذلك, العلامات والمختصرات التالية تستخدم في هذا العمود.

Kit هذا يشير الى قطع الطقم. حول قطع الطقم, راجع قسم "قطع غيار خدمة الإصلاح الميداني" في كتاب القطع هذا.
D قطر
L طول
LHS جانب اليد اليسارى
RHS جانب اليد اليمنى
T السمك
W العرض

. الكمية (Qty)

هذا هو عدد القطع المستخدمة لآلية واحدة. اما بالنسبة لمجموعات المكونات ومجموعات القطع فانه يتم تحديد عدد القطع لكل مجموعة.
الرمز AR (حسب الطلب) سوف يستخدم في عمود الكمية اذا لم يتم تحديد عدد القطع المطلوبة لكل مانكة و/او للمجموعة. في مثل هذه الحالة, فان اي عدد من الكميات ربما يتم طلبه بشكل يعتمد على متطلبات مجال الخدمة.

. الرقم التسلسلي (Serial Numbers)

في كتاب قطع المحرك يشير هذا الرقم الى الرقم التسلسلي للمحرك الذي تستخدم فيه القطعة. قي كتاب قطع الآلية, يشير هذا الرقم الى الرقم التسلسلي للآلية التي تستخدم فيها القطع.

في حالة وضع الرقم التسلسلي بين الأقواس، فهذا يعني أن هذا هو الرقم التسلسلي الساري للاستخدام الحصري للقطعة الموضحة بالشكل.

عند طلب القطع, يرجى تحديد رقم القطعة واسم القطعة والكمية المطلوبة من القطعة, مع تحديد رقم الموديل والرقم التسلسلي وقراءة عداد الخدمة.

قائمة القطع هذه لا تقتصر على الكميات القياسية فقط بل تشمل ايضاً القطع والملحقات الاختيارية. لطلب القطع, يرجى الاتصال باقرب موزع لمنتجات كوماتسو.

كتاب القطع هذا يحتوي على المعلومات ورموز التخصيص وكما مبين ادناه:

الشكل والقائمة

عندما تفتح كتاب القطع هذا, سوف تجد رسومًا توضيحية تتضمن رقم الشكل (الشكل). كل قطعة مفردة في الرسم يعطى لها رقم فهرس. في الرسم التالي, قطع المجموعة للوحدة تم ادراجها حسب ترتيب ارقام الفهرس المبينة في الرسم.. رقم القطعة, اسم القطعة, الكمية والرقم التسلسلي المطابق يعطى لكل قطعة حسب تسلسل القطع في القائمة.

رقم الشكل (الشكل)

رقم الشكل (الشكل) هو الرقم الذي يميز شكل ما داخل الصفحة. إنه ليس رقم القطعة. وليست الأرقام متتابعة دائمًا.

قائمة القطع

معلومات قطع الغيار مثبتة في صفحة قائمة القطع وكلاتي:

. الفهرست (Index)

هذا الرقم هو نفس رقم الفهرس الوارد في الشكل التوضيحي. تدرج القطع في القائمة مرتبة تبعاً لارقام الفهرس.

. الرمز (Code)

الرموز تستخدم في هذا العمود وتوصف كلاتي:

A1 هذه القطعة والقطعة المذكورة في السطر السابق مباشرة يمكن لكل منهما ان تحل محل الاخرى.

A2 القطعة المذكورة في السطر السابق يمكن استعمالها بدلاً من هذه القطعة.

A3 هذه القطعة يمكن استعمالها بدلاً من القطعة المذكورة في السطر السابق مباشرة.

A4 القطعة المذكورة في عمود الوصف يمكن استعمالها بدلاً من هذه القطعة اذا استخدمت كطقم.

B1 هذه القطعة توقف توريدها. يتم توريد القطعة المذكورة في السطر السابق بدلاً منها.

B2 هذه القطعة توقف توريدها. يتم توريد القطعة المذكورة في عمود "الوصف" بدلاً منها كطقم.

C1 هذه القطعة لا يمكن توريدها كقطعة منفردة. يتم توريدها كمجموعة.

C2 هذه القطعة يتم تجهيزها من قبل موزعين كوماتسو المرخصين فقط. لا يمكن تجهيزها كقطعة مفردة. يتم تجهيزها كمجموعة.

C3 هذا يشير الى قطعة موردة شبه مكتملة التصنيع. تتطلب استكمال تصنيعها قبل الاستعمال.

CONTENTS

CONTENTS

	FIG. NO	PAGE
ENGINE		
Cylinder Head Cover	AVC00-001001	A001001
Head Cover Accessory	AOB00-001001	A002001
Breather	ABR00-001001	A003001
Air Intake Manifold	AIM00-001001	A004001
Air Intake Connector	AIC00-001001	A005001
Air Intake Connector Mounting	AIC20-001001	A006001
Air Intake Heater	AAH00-001001	A007001
Air Cleaner	B9999-003001	A008001
Air Transfer Connection	AIT00-001001	A009001
Exhaust Manifold Mounting	ATB30-002001	A010001
Exhaust Manifold	ATB00-002001	A011001
Turbocharger	APP20-001001	A012001
Turbocharger Oil Piping	ATP00-002001	A013001
Exhaust Muffler	A1610-001001	A014001
Exhaust Muffler Piping	A1670-001001	A015001
Heat Shield	A1570-001001	A016001
Lifting Arrangement, Bracket	ALA00-001001	A017001
Spare Parts, For 35Amp. Alternator	B9999-510001	B001001
Rocker Arm	ARL00-001001	B002001
Air Intake Heater Switch	B9999-006001	B003001
Front Cover	AGG00-001001	B004001
Front Gear	ABB10-001001	B005001
Flywheel Housing	AFH00-001001	B006001
Flywheel	AFW00-001001	B007001
Flywheel Mounting	AFW10-001001	B008001
Engine Oil Pan	AOP10-001001	B009001
Engine Oil Pan Drain	ARD00-001001	B010001
Engine Oil Level Gauge	ALG00-001001	B011001
Engine Oil Level Sensor	ASD10-001001	B012001
Cylinder Block, Crankshaft	ABB00-001001	B013001
Cylinder Block, Tappet	ABB00-001002	B013002
Cylinder Block, Gauge Cylinder	ABB00-001003	B013003
Cylinder Block	A2010-001001	B014001
Cylinder Block Plug, Blind Plug	AOB10-001001	B015001
Vibration Damper	ADA00-001001	B016001
Engine Oil Pump	ALP00-001001	C001001
Engine Oil Filter	ALF00-001001	C002001
Engine Oil Cooler, Remote	ALC00-001001	C003001
Fuel Filter Piping	AFT00-002001	D001001
Fuel Injection Pump	AFP10-001001	D002001
Fuel Control, Bracket	A4710-001001	D003001
Fuel Control	A4710-002001	D004001
Fuel Piping	AFF20-001001	D005001
Fuel Filter, 2 in 1	AFF10-002001	D006001
Fuel Filter	B9999-512001	D007001
Pre Filter	B9999-001001	D008001
Cooling Fan Mounting	AFA20-001001	E001001
Cooling Fan Drive Pulley	AFA10-001001	E002001
Cooling Fan	AFN00-001001	E003001
Cooling Fan Spacer	ASP00-001001	E004001
Cooling Fan Belt, For 35Amp. Alternator	AWP20-004001	E005001
Water Pump	AWP00-001001	E006001
Water Pump, Adapter	A5010-001001	E007001
Water Piping	A9530-001001	E008001
Water Outlet Connector, Outlet	AWO00-001001	E009001
Thermostat	AEC00-001001	E010001
Alternator Mounting, 35Amp.	AEH10-002001	F001001
Alternator, 35Amp., (1/2)	AEE00-001001	F002001
Alternator, 35Amp., (2/2)	AEE00-001002	F002002
Starting Motor Mounting	ASM00-001001	F003001
Starting Motor, 4.5KW, (1/2)	AST00-001001	F004001
Starting Motor, 4.5KW, (2/2)	AST00-001002	F004002
Wiring Harness	AWR00-001001	F005001

	FIG. NO	PAGE
Starting Motor Relay	B9999-004001	F006001
Air Compressor, Bracket	A7010-001001	G001001
Engine Controller, (1/2)	APH00-001001	G002001
Engine Controller, (2/2)	APH00-001002	G002002
Parts Performance, Piston	APP10-001001	G003001
Parts Performance, Camshaft	APP10-001002	G003002
Parts Performance, Injector	APP10-001003	G003003
Parts Performance, Common Rail	APP10-001004	G003004
Parts Performance, Cylinder Head	APP10-001005	G003005
Name Plate and Caution Plate	A9850-004001	I001001
Repair Service Parts	A8110-001001	Y001001
ENGINE RELATED PARTS		
Main Piston Pump, Inner Parts (1/9)	A9999-504001	B001001
Main Piston Pump, Inner Parts (2/9)	A9999-504002	B001002
Main Piston Pump, Inner Parts (3/9)	A9999-504003	B001003
Main Piston Pump, Inner Parts (4/9)	A9999-504004	B001004
Main Piston Pump, Inner Parts (5/9)	A9999-504005	B001005
Main Piston Pump, Inner Parts (6/9)	A9999-504006	B001006
Main Piston Pump, Inner Parts (7/9)	A9999-504007	B001007
Main Piston Pump, Inner Parts (8/9)	A9999-504008	B001008
Main Piston Pump, Inner Parts (9/9)	A9999-504009	B001009
Coupling	A9999-003001	B002001
Engine Mounting, (1/2)	B0100-001001	B003001
Engine Mounting, (2/2)	B0100-001002	B003002
Air Cleaner, Inner Parts	B0200-001001	B004001
Air Cleaner, Duct	B0200-001002	B004002
COOLING SYSTEM		
Cooling System, Radiator	C0100-001001	C001001
Cooling System, Oil Cooler	C0100-001002	C001002
Cooling System, Tube and Aftercooler	C0100-001003	C001003
Cooling System, Fuel Cooler and Condenser	C0100-001004	C001004
Cooling System, Fan Guard and Aftercooler Piping	C0100-001005	C001005

	FIG. NO	PAGE
FUEL TANK AND RELATED PARTS		
Fuel Tank	D0100-003001	D001001
Fuel Supply Piping, With Bad Fuel and Poor Fuel Arrangement, Water+Dust, Fuel Piping	D0200-001001	D002001
Fuel Supply Piping, With Bad Fuel and Poor Fuel Arrangement, Water+Dust, Clip, (1/2)	D0200-001002	D002002
Fuel Supply Piping, With Bad Fuel and Poor Fuel Arrangement, Water+Dust, Clip, (2/2)	D0200-001003	D002003
Fuel Supply Piping, With Bad Fuel and Poor Fuel Arrangement, Water+Dust, Pre Filter	D0200-001004	D002004
Fuel Supply Piping, With Bad Fuel and Poor Fuel Arrangement, Water+Dust, Pre Filter Bracket	D0200-001005	D002005
ELECTRICAL SYSTEM		
Battery	E0100-001001	E001001
Electric Wiring Harness, 35Amp., (1/3)	E0200-003001	E002001
Electric Wiring Harness, 35Amp., (2/3)	E0200-003002	E002002
Electric Wiring Harness, 35Amp., (3/3)	E0200-003003	E002003
Additional Working Lamp	E0310-003001	E003001
Working Lamp, Rear	E0320-002001	E004001
Horn	E0410-001001	E005001
Backup Alarm	E0420-001001	E006001
Rear View Camera	E0450-001001	E007001
HYDRAULIC SYSTEM		
Hydraulic Oil Tank	H0110-002001	H001001
Main Control Valve, Without 1-additional Actuator Piping, Inner Parts (1/24)	H0120-005001	H002001
Main Control Valve, Without 1-additional Actuator Piping, Inner Parts (2/24)	H0120-005002	H002002
Main Control Valve, Without 1-additional Actuator Piping, Inner Parts (3/24)	H0120-005003	H002003
Main Control Valve, Without 1-additional Actuator Piping, Inner Parts (4/24)	H0120-005004	H002004
Main Control Valve, Without 1-additional Actuator Piping, Inner Parts (5/24)	H0120-005005	H002005
Main Control Valve, Without 1-additional Actuator Piping, Inner Parts (6/24)	H0120-005006	H002006
Main Control Valve, Without 1-additional Actuator Piping, Inner Parts (7/24)	H0120-005007	H002007
Main Control Valve, Without 1-additional Actuator Piping, Inner Parts (8/24)	H0120-005008	H002008

	FIG. NO	PAGE
Main Control Valve, Without 1-additional Actuator Piping, Inner Parts (9/24)	H0120-005009	H002009
Main Control Valve, Without 1-additional Actuator Piping, Inner Parts (10/24)	H0120-005010	H002010
Main Control Valve, Without 1-additional Actuator Piping, Inner Parts (11/24)	H0120-005011	H002011
Main Control Valve, Without 1-additional Actuator Piping, Inner Parts (12/24)	H0120-005012	H002012
Main Control Valve, Without 1-additional Actuator Piping, Inner Parts (13/24)	H0120-005013	H002013
Main Control Valve, Without 1-additional Actuator Piping, Inner Parts (14/24)	H0120-005014	H002014
Main Control Valve, Without 1-additional Actuator Piping, Inner Parts (15/24)	H0120-005015	H002015
Main Control Valve, Without 1-additional Actuator Piping, Inner Parts (16/24)	H0120-005016	H002016
Main Control Valve, Without 1-additional Actuator Piping, Inner Parts (17/24)	H0120-005017	H002017
Main Control Valve, Without 1-additional Actuator Piping, Inner Parts (18/24)	H0120-005018	H002018
Main Control Valve, Without 1-additional Actuator Piping, Inner Parts (19/24)	H0120-005019	H002019
Main Control Valve, Without 1-additional Actuator Piping, Inner Parts (20/24)	H0120-005020	H002020
Main Control Valve, Without 1-additional Actuator Piping, Inner Parts (21/24)	H0120-005021	H002021
Main Control Valve, Without 1-additional Actuator Piping, Inner Parts (22/24)	H0120-005022	H002022
Main Control Valve, Without 1-additional Actuator Piping, Inner Parts (23/24)	H0120-005023	H002023
Main Control Valve, Without 1-additional Actuator Piping, Inner Parts (24/24)	H0120-005024	H002024
Main Control Valve, Without 1-additional Actuator Piping, Valve Bracket and Sensor	H0120-005025	H002025
Main Control Valve, Without 1-additional Actuator Piping, Connecting Parts, Ls. Pilot Piping, (1/2)	H0120-005026	H002026
Main Control Valve, Without 1-additional Actuator Piping, Connecting Parts, Ls, Pilot Piping, (2/2)	H0120-005027	H002027
Main Control Valve, Without 1-additional Actuator Piping, Connecting Parts, Swing Piping	H0120-005028	H002028
Main Control Valve, Without 1-additional Actuator Piping, Connecting Parts, Travel Piping	H0120-005029	H002029
Main Control Valve, Without 1-additional Actuator Piping, Connecting Parts, Boom Piping	H0120-005030	H002030
Main Control Valve, 1-actuator, Inner Parts (1/27)	H0120-004001	H003001
Main Control Valve, 1-actuator, Inner Parts (2/27)	H0120-004002	H003002
Main Control Valve, 1-actuator, Inner Parts (3/27)	H0120-004003	H003003
Main Control Valve, 1-actuator, Inner Parts (4/27)	H0120-004004	H003004
Main Control Valve, 1-actuator, Inner Parts (5/27)	H0120-004005	H003005
Main Control Valve, 1-actuator, Inner Parts (6/27)	H0120-004006	H003006
Main Control Valve, 1-actuator, Inner Parts (7/27)	H0120-004007	H003007
Main Control Valve, 1-actuator, Inner Parts (8/27)	H0120-004008	H003008
Main Control Valve, 1-actuator, Inner Parts (9/27)	H0120-004009	H003009
Main Control Valve, 1-actuator, Inner Parts (10/27)	H0120-004010	H003010
Main Control Valve, 1-actuator, Inner Parts (11/27)	H0120-004011	H003011
Main Control Valve, 1-actuator, Inner Parts (12/27)	H0120-004012	H003012
Main Control Valve, 1-actuator, Inner Parts (13/27)	H0120-004013	H003013
Main Control Valve, 1-actuator, Inner Parts (14/27)	H0120-004014	H003014
Main Control Valve, 1-actuator, Inner Parts (15/27)	H0120-004015	H003015
Main Control Valve, 1-actuator, Inner Parts (16/27)	H0120-004016	H003016
Main Control Valve, 1-actuator, Inner Parts (17/27)	H0120-004017	H003017
Main Control Valve, 1-actuator, Inner Parts (18/27)	H0120-004018	H003018
Main Control Valve, 1-actuator, Inner Parts (19/27)	H0120-004019	H003019
Main Control Valve, 1-actuator, Inner Parts (20/27)	H0120-004020	H003020
Main Control Valve, 1-actuator, Inner Parts (21/27)	H0120-004021	H003021
Main Control Valve, 1-actuator, Inner Parts (22/27)	H0120-004022	H003022
Main Control Valve, 1-actuator, Inner Parts (23/27)	H0120-004023	H003023
Main Control Valve, 1-actuator, Inner Parts (24/27)	H0120-004024	H003024
Main Control Valve, 1-actuator, Inner Parts (25/27)	H0120-004025	H003025
Main Control Valve, 1-actuator, Inner Parts (26/27)	H0120-004026	H003026
Main Control Valve, 1-actuator, Inner Parts (27/27)	H0120-004027	H003027
Main Control Valve, 1-actuator, Valve Bracket and Sensor	H0120-004028	H003028
Main Control Valve, 1-actuator, Connecting Parts, Ls. Pilot Piping, (1/2)	H0120-004029	H003029
Main Control Valve, 1-actuator, Connecting Parts, Ls, Pilot Piping, (2/2)	H0120-004030	H003030
Main Control Valve, 1-actuator, Connecting Parts	H0120-004031	H003031
Main Control Valve, 1-actuator, Connecting Parts, Swing Piping	H0120-004032	H003032
Main Control Valve, 1-actuator, Connecting Parts, Travel Piping	H0120-004033	H003033
Main Control Valve, 1-actuator, Connecting Parts, Boom Piping	H0120-004034	H003034
Main Control Valve, With Service Valve, 1-actuator, Inner Parts (1/27)	H0120-009001	H004001
Main Control Valve, With Service Valve, 1-actuator, Inner Parts (2/27)	H0120-009002	H004002
Main Control Valve, With Service Valve, 1-actuator, Inner Parts (3/27)	H0120-009003	H004003
Main Control Valve, With Service Valve, 1-actuator, Inner Parts (4/27)	H0120-009004	H004004
Main Control Valve, With Service Valve, 1-actuator, Inner Parts (5/27)	H0120-009005	H004005
Main Control Valve, With Service Valve, 1-actuator, Inner Parts (6/27)	H0120-009006	H004006
Main Control Valve, With Service Valve, 1-actuator, Inner Parts (7/27)	H0120-009007	H004007

	FIG. NO	PAGE
Main Control Valve, With Service Valve, 1-actuator, Inner Parts (8/27)	H0120-009008	H004008
Main Control Valve, With Service Valve, 1-actuator, Inner Parts (9/27)	H0120-009009	H004009
Main Control Valve, With Service Valve, 1-actuator, Inner Parts (10/27)	H0120-009010	H004010
Main Control Valve, With Service Valve, 1-actuator, Inner Parts (11/27)	H0120-009011	H004011
Main Control Valve, With Service Valve, 1-actuator, Inner Parts (12/27)	H0120-009012	H004012
Main Control Valve, With Service Valve, 1-actuator, Inner Parts (13/27)	H0120-009013	H004013
Main Control Valve, With Service Valve, 1-actuator, Inner Parts (14/27)	H0120-009014	H004014
Main Control Valve, With Service Valve, 1-actuator, Inner Parts (15/27)	H0120-009015	H004015
Main Control Valve, With Service Valve, 1-actuator, Inner Parts (16/27)	H0120-009016	H004016
Main Control Valve, With Service Valve, 1-actuator, Inner Parts (17/27)	H0120-009017	H004017
Main Control Valve, With Service Valve, 1-actuator, Inner Parts (18/27)	H0120-009018	H004018
Main Control Valve, With Service Valve, 1-actuator, Inner Parts (19/27)	H0120-009019	H004019
Main Control Valve, With Service Valve, 1-actuator, Inner Parts (20/27)	H0120-009020	H004020
Main Control Valve, With Service Valve, 1-actuator, Inner Parts (21/27)	H0120-009021	H004021
Main Control Valve, With Service Valve, 1-actuator, Inner Parts (22/27)	H0120-009022	H004022
Main Control Valve, With Service Valve, 1-actuator, Inner Parts (23/27)	H0120-009023	H004023
Main Control Valve, With Service Valve, 1-actuator, Inner Parts (24/27)	H0120-009024	H004024
Main Control Valve, With Service Valve, 1-actuator, Inner Parts (25/27)	H0120-009025	H004025
Main Control Valve, With Service Valve, 1-actuator, Inner Parts (26/27)	H0120-009026	H004026
Main Control Valve, With Service Valve, 1-actuator, Inner Parts (27/27)	H0120-009027	H004027
Main Control Valve, With Service Valve, 1-actuator, Valve Bracket and Sensor	H0120-009028	H004028
Main Control Valve, With Service Valve, 1-actuator, Connecting Parts, Ls. Pilot Piping, (1/2)	H0120-009029	H004029
Main Control Valve, With Service Valve, 1-actuator, Connecting Parts, Ls, Pilot Piping, (2/2)	H0120-009030	H004030
Main Control Valve, With Service Valve, 1-actuator, Connecting Parts, Swing Piping	H0120-009031	H004031
Main Control Valve, With Service Valve, 1-actuator, Connecting Parts, Travel Piping	H0120-009032	H004032
Main Control Valve, With Service Valve, 1-actuator, Connecting Parts, Boom Piping	H0120-009033	H004033
Main Control Valve, 2-actuator, Inner Parts (1/27)	H0120-010001	H005001
Main Control Valve, 2-actuator, Inner Parts (2/27)	H0120-010002	H005002
Main Control Valve, 2-actuator, Inner Parts (3/27)	H0120-010003	H005003
Main Control Valve, 2-actuator, Inner Parts (4/27)	H0120-010004	H005004
Main Control Valve, 2-actuator, Inner Parts (5/27)	H0120-010005	H005005
Main Control Valve, 2-actuator, Inner Parts (6/27)	H0120-010006	H005006
Main Control Valve, 2-actuator, Inner Parts (7/27)	H0120-010007	H005007
Main Control Valve, 2-actuator, Inner Parts (8/27)	H0120-010008	H005008
Main Control Valve, 2-actuator, Inner Parts (9/27)	H0120-010009	H005009
Main Control Valve, 2-actuator, Inner Parts (10/27)	H0120-010010	H005010
Main Control Valve, 2-actuator, Inner Parts (11/27)	H0120-010011	H005011
Main Control Valve, 2-actuator, Inner Parts (12/27)	H0120-010012	H005012
Main Control Valve, 2-actuator, Inner Parts (13/27)	H0120-010013	H005013
Main Control Valve, 2-actuator, Inner Parts (14/27)	H0120-010014	H005014
Main Control Valve, 2-actuator, Inner Parts (15/27)	H0120-010015	H005015
Main Control Valve, 2-actuator, Inner Parts (16/27)	H0120-010016	H005016
Main Control Valve, 2-actuator, Inner Parts (17/27)	H0120-010017	H005017
Main Control Valve, 2-actuator, Inner Parts (18/27)	H0120-010018	H005018
Main Control Valve, 2-actuator, Inner Parts (19/27)	H0120-010019	H005019
Main Control Valve, 2-actuator, Inner Parts (20/27)	H0120-010020	H005020
Main Control Valve, 2-actuator, Inner Parts (21/27)	H0120-010021	H005021
Main Control Valve, 2-actuator, Inner Parts (22/27)	H0120-010022	H005022
Main Control Valve, 2-actuator, Inner Parts (23/27)	H0120-010023	H005023
Main Control Valve, 2-actuator, Inner Parts (24/27)	H0120-010024	H005024
Main Control Valve, 2-actuator, Inner Parts (25/27)	H0120-010025	H005025
Main Control Valve, 2-actuator, Inner Parts (26/27)	H0120-010026	H005026
Main Control Valve, 2-actuator, Inner Parts (27/27)	H0120-010027	H005027
Main Control Valve, 2-actuator, Inner Parts (28/28)	H0120-010028	H005028
Main Control Valve, 2-actuator, Inner Parts (29/30)	H0120-010029	H005029
Main Control Valve, 2-actuator, Inner Parts (30/30)	H0120-010030	H005030
Main Control Valve, 2-actuator, Valve Bracket and Sensor	H0120-010031	H005031
Main Control Valve, 2-actuator, Connecting Parts, Ls. Pilot Piping, (1/2)	H0120-010032	H005032
Main Control Valve, 2-actuator, Connecting Parts, Ls, Pilot Piping, (2/2)	H0120-010033	H005033
Main Control Valve, 2-actuator, Connecting Parts, Swing Piping	H0120-010034	H005034
Main Control Valve, 2-actuator, Connecting Parts, Travel Piping	H0120-010035	H005035
Main Control Valve, 2-actuator, Connecting Parts, Boom Piping	H0120-010036	H005036
Main Piston Pump	H0210-002001	H008001

	FIG. NO	PAGE
Main Piston Pump, 1-actuator	H0210-003001	H009001
Suction Piping	H0311-001001	H010001
Delivery Piping	H0312-001001	H011001
Oil Cooler Piping	H0320-002001	H012001
Return Piping, 1-actuator	H0330-001001	H013001
Return Piping	H0330-002001	H014001
Drain Piping	H0340-003001	H015001
Drain Piping, 1-actuator	H0340-004001	H016001
Boom Piping	H1210-002001	H017001
Arm and Bucket Piping	H1220-002001	H018001
Blind Parts, 1-actuator	H1270-006001	H019001
Actuator Piping, 1-actuator, Main Line and Convertible Valve	H1270-004001	H020001
Actuator Piping, 1-actuator, Joint Block Piping	H1270-004002	H020002
Actuator Piping, 1-actuator, Accumulator, LHS	H1270-004003	H020003
Actuator Piping, 1-actuator, Safety Valve	H1270-004004	H020004
Actuator Piping, 1-actuator, Tube and Bracket	H1270-004005	H020005
Actuator Piping, 1-actuator, Arrow Mark Plate	H1270-004006	H020006
2-additional Actuator Piping	H1272-001001	H021001
Travel Piping	H1310-001001	H023001
Swing Piping	H1340-001001	H025001
LS Piping	H1810-002001	H027001
LS Piping, 1-actuator	H1810-003001	H028001
LS Piping, 2-actuator	H1810-004001	H029001
Solenoid Valve Piping, 1-actuator, Solenoid Valve	H1831-001001	H030001
Solenoid Valve Piping, 1-actuator, Connecting Parts	H1831-001002	H030002
Solenoid Valve Piping, 1-actuator, Solenoid Valve Piping	H1831-001003	H030003
Solenoid Valve Piping, 1-actuator, Pilot Filter	H1831-001004	H030004
Solenoid Valve Piping, Solenoid Valve	H1831-002001	H031001
Solenoid Valve Piping, Connecting Parts	H1831-002002	H031002
Solenoid Valve Piping, Solenoid Valve Piping	H1831-002003	H031003
Pressure Switch Block	H1833-001001	H032001
Proportional Pressure Control (PPC) Valve Piping, Without 1-additional Actuator Piping, (1/2)	H1840-003001	H033001
Proportional Pressure Control (PPC) Valve Piping, Without 1-additional Actuator Piping, (2/2)	H1840-003002	H033002
Proportional Pressure Control (PPC) Valve Piping, 1-actuator, (1/2)	H1840-004001	H034001
Proportional Pressure Control (PPC) Valve Piping, 1-actuator, (2/2)	H1840-004002	H034002
Proportional Pressure Control (PPC) Valve Piping, 2-actuator, (1/2)	H1840-005001	H035001
Proportional Pressure Control (PPC) Valve Piping, 2-actuator, (2/2)	H1840-005002	H035002

MAIN/REVOLVING FRAME AND RELATED PARTS

Revolving Frame, With Deck Guard	J1110-001001	J001001
Boom Foot Pin, 100 Hours Greasing Type	J1310-002001	J002001

OPERATOR'S COMPARTMENT AND CONTROL SYSTEM

Operator's Seat, Suspension Type, (1/2)	K0110-003001	K001001
Operator's Seat, Suspension Type, (2/2)	K0110-003002	K001002
Seat Belt, 78mm Width	K0160-002001	K002001
Head Guard, Level 2	K0220-001001	K003001
Front Guard, Half	K0230-002001	K004001
Floor Mat	K0310-001001	K005001
Floor Mat, 1-actuator	K0310-002001	K006001
Floor Mat, 2-actuator	K0310-003001	K007001
Rain Visor	K0320-001001	K008001
Washer and Wiper	K0350-001001	K009001
Air Conditioner Unit, Compressor	K0700-001001	K010001
Air Conditioner Unit, Air Conditioner Piping	K0700-001002	K010002
Air Conditioner Unit, Heater Hose	K0700-001003	K010003
Cab, With Master Key, AM-FM Radio, 12volt Power Supply, Cab Body and Window	K1110-010001	K011001
Cab, With Master Key, AM-FM Radio, 12volt Power Supply, Front Window	K1110-010002	K011002
Cab, With Master Key, AM-FM Radio, 12volt Power Supply, Front Lower Window	K1110-010003	K011003
Cab, With Master Key, AM-FM Radio, 12volt Power Supply, Roof Ventilator	K1110-010004	K011004
Cab, With Master Key, AM-FM Radio, 12volt Power Supply, Door	K1110-010005	K011005
Cab, With Master Key, AM-FM Radio, 12volt Power Supply,		

	FIG. NO	PAGE
Door Lock	K1110-010006	K011006
Cab, With Master Key, AM-FM Radio, 12volt Power Supply, Open Lock and Door Catch	K1110-010007	K011007
Cab, With Master Key, AM-FM Radio, 12volt Power Supply, Wiper and Room Lamp	K1110-010008	K011008
Cab, With Master Key, AM-FM Radio, 12volt Power Supply, Rubber Antenna	K1110-010009	K011009
Cab, With Master Key, AM-FM Radio, 12volt Power Supply, Speaker and Window Washer	K1110-010010	K011010
Cab, With Master Key, AM-FM Radio, 12volt Power Supply, Roof Cover and Air Intake	K1110-010011	K011011
Cab, With Master Key, AM-FM Radio, 12volt Power Supply, Pressure Valve and Grip	K1110-010012	K011012
Cab, With Master Key, AM-FM Radio, 12volt Power Supply, KOMTRAX Film Antenna	K1110-010013	K011013
Cab, With Master Key, AM-FM Radio, 12volt Power Supply, Cab In Parts, Monitor and Cover	K1110-010014	K011014
Cab, With Master Key, AM-FM Radio, 12volt Power Supply, Cab In Parts, Monitor Cover	K1110-010015	K011015
Cab, With Master Key, AM-FM Radio, 12volt Power Supply, Cab In Parts, Luggage Plate, With Air Conditioner	K1110-010016	K011016
Cab, With Master Key, AM-FM Radio, 12volt Power Supply, Cab In Parts, Monitor Duct	K1110-010017	K011017
Cab, With Master Key, AM-FM Radio, 12volt Power Supply, Cab In Parts, Air Duct, With Air Conditioner	K1110-010018	K011018
Cab, With Master Key, AM-FM Radio, 12volt Power Supply, Cab In Parts, Partition and Filter, With Air Conditioner	K1110-010019	K011019
Cab, With Master Key, AM-FM Radio, 12volt Power Supply, Cab In Parts, Sub Plate and Relay	K1110-010020	K011020
Cab, With Master Key, AM-FM Radio, 12volt Power Supply, Cab In Parts, Air Conditioner and KOMTRAX Controller	K1110-010021	K011021
Cab, With Master Key, AM-FM Radio, 12volt Power Supply, Cab In Parts, Main Wiring Harness Clamp	K1110-010022	K011022
Cab, With Master Key, AM-FM Radio, 12volt Power Supply, Cab In Parts, Rear Cover	K1110-010023	K011023
Cab, With Master Key, AM-FM Radio, 12volt Power Supply, Floor, Frame	K1110-010024	K011024
Cab, With Master Key, AM-FM Radio, 12volt Power Supply, Floor, PPC Valve for Travel	K1110-010025	K011025
Cab, With Master Key, AM-FM Radio, 12volt Power Supply, Floor, Travel Control	K1110-010026	K011026
Cab, With Master Key, AM-FM Radio, 12volt Power Supply, Floor, Footrest, LHS	K1110-010027	K011027
Cab, With Master Key, AM-FM Radio, 12volt Power Supply, Floor, Footrest, RHS	K1110-010028	K011028
Cab, With Master Key, AM-FM Radio, 12volt Power Supply, Floor, 1-actuator, PPC Valve for 1-Attachment	K1110-020028	K011028a
Cab, With Master Key, AM-FM Radio, 12volt Power Supply, Floor, 2-actuator, PPC Valve for 1-attachment	K1110-050029	K011028b
Cab, With Master Key, AM-FM Radio, 12volt Power Supply, Floor, 2-actuator, PPC Valve for 2-Attachment	K1110-050027	K011028c
Cab, With Master Key, AM-FM Radio, 12volt Power Supply, Floor, Base	K1110-010029	K011029
Cab, With Master Key, AM-FM Radio, 12volt Power Supply, Floor, 1-actuator, 1st Attachment Control	K1110-020029	K011029a
Cab, With Master Key, AM-FM Radio, 12volt Power Supply, Floor, 2-actuator, 1st Attachment Control	K1110-050030	K011029b
Cab, With Master Key, AM-FM Radio, 12volt Power Supply, Floor, 2-actuator, 2nd Attachment Control	K1110-050028	K011029c
Cab, With Master Key, AM-FM Radio, 12volt Power Supply, Floor, Wiring Harness	K1110-010030	K011030
Cab, With Master Key, AM-FM Radio, 12volt Power Supply, Floor, Wiring Harness Clamp and Ground	K1110-010031	K011031
Cab, With Master Key, AM-FM Radio, 12volt Power Supply, Floor, Window Washer Hose	K1110-010032	K011032
Cab, With Master Key, AM-FM Radio, 12volt Power Supply, Floor, Lever, LHS	K1110-010033	K011033
Cab, With Master Key, AM-FM Radio, 12volt Power Supply, Floor, PPC Valve for Work Equipment, LHS	K1110-010034	K011034

	FIG. NO	PAGE
Cab, With Master Key, AM-FM Radio, 12volt Power Supply, Floor, Valve, LHS	K1110-010035	K011035
Cab, With Master Key, AM-FM Radio, 12volt Power Supply, Floor, Console, LHS	K1110-010036	K011036
Cab, With Master Key, AM-FM Radio, 12volt Power Supply, Floor, PPC Lock Lever and Radio	K1110-010037	K011037
Cab, With Master Key, AM-FM Radio, 12volt Power Supply, Floor, Armrest, LHS	K1110-010038	K011038
Cab, With Master Key, AM-FM Radio, 12volt Power Supply, Floor, Lever, RHS	K1110-010039	K011039
Cab, With Master Key, AM-FM Radio, 12volt Power Supply, Floor, PPC Valve for Work Equipment, RHS	K1110-010040	K011040
Cab, With Master Key, AM-FM Radio, 12volt Power Supply, Floor, Valve, RHS	K1110-010041	K011041
Cab, With Master Key, AM-FM Radio, 12volt Power Supply, Floor, Console, RHS	K1110-010042	K011042
Cab, With Master Key, AM-FM Radio, 12volt Power Supply, Floor, Armrest, RHS	K1110-010043	K011043
Cab, With Master Key, AM-FM Radio, 12volt Power Supply, Floor, Air Conditioner	K1110-010044	K011044
Cab, With Master Key, AM-FM Radio, 12volt Power Supply, Floor, Air Conditioner Unit	K1110-010045	K011045
Cab, With Master Key, AM-FM Radio, 12volt Power Supply, Floor, Air Conditioner Piping	K1110-010046	K011046
Cab, With Master Key, AM-FM Radio, 12volt Power Supply, Floor, Heater Hose	K1110-010047	K011047
Cab, With Master Key, AM-FM Radio, 12volt Power Supply, Floor, PPC Piping for Travel Valve	K1110-010048	K011048
Cab, With Master Key, AM-FM Radio, 12volt Power Supply, Floor, PPC Piping for Pilot Valve	K1110-010049	K011049
Cab, With Master Key, AM-FM Radio, 12volt Power Supply, Floor Piping	K1110-010050	K011050
Cab, With Master Key, AM-FM Radio, 12volt Power Supply, Floor, P, T Block and Seal	K1110-010051	K011051
Cab, With Master Key, AM-FM Radio, 12volt Power Supply, Floor, 1-actuator, P, T Block and Seal	K1110-020052	K011051a
Cab, With Master Key, AM-FM Radio, 12volt Power Supply, Floor, 2-actuator, P, T Block and Seal	K1110-050053	K011051b
Cab, With Master Key, AM-FM Radio, 12volt Power Supply, Floor, Rear View Camera Cable	K1110-010052	K011052
Floor Mounting	K1120-001001	K016001
Mode Selection Connectors	K1730-001001	K017001

GUARD

Hood M1110-001001	M001001	
Machine Cab Frame, (1/2)	M1120-001001	M002001
Machine Cab Frame, (2/2)	M1120-001002	M002002
Side Cover and Machine Cab Door, LHS, Frame	M1130-001001	M003001
Side Cover and Machine Cab Door, LHS, Door Cover	M1130-001002	M003002
Side Cover and Machine Cab Door, LHS, Reserve Tank	M1130-001003	M003003
Side Cover and Machine Cab Door, RHS	M1140-001001	M004001
Machine Cab Partition, Cover and Fire Wall	M1150-001001	M005001
Machine Cab Partition, Cooling Side	M1150-001002	M005002
Machine Cab Cover	M1210-001001	M006001
Side Case, RHS	M1220-002001	M007001
Front Cover	M1230-001001	M008001
Handrail	M1310-002001	M009001
Rearview Mirror, Rearview Mirror, LHS, Except Japan	M1410-006001	M010001
Rearview Mirror, RHS, With Rearview Camera, 1 Set	M1420-003001	M011001
Rearview Mirror, For Counter Weight	M1420-003002	M011002
Counterweight	M1510-001001	M012001
Counterweight Mounting	M1520-001001	M013001
Under Cover	M1810-001001	M014001

SWING CIRCLE AND ITS RELATED PARTS

Swing Circle	N1110-001001	N001001
Swing Machinery, (1/2)	N1210-001001	N002001
Swing Machinery, Inner Parts (1/2)	N1210-001002	N002002

	FIG. NO	PAGE
Swing Machinery, Inner Parts (2/2)	N1210-001003	N002003
Swing Machinery, (2/2)	N1210-001004	N002004
Swing Machinery, Mounting	N1210-001005	N002005
Swivel Joint, (1/2)	N1310-001001	N003001
Swivel Joint, (2/2)	N1310-001002	N003002
TRAVEL SYSTEM AND ITS RELATED PARTS		
Travel Piping	P1120-001001	P001001
Travel Motor and Final Drive, (1/4)	P1210-001001	P003001
Travel Motor and Final Drive, (2/4)	P1210-001002	P003002
Travel Motor and Final Drive, (3/4)	P1210-001003	P003003
Travel Motor and Final Drive, (4/4)	P1210-001004	P003004
UNDER CARRIAGE		
Front Idler and Idler Cushion, Front Idler	R0110-001001	R001001
Front Idler and Idler Cushion, Idler Cushion	R0110-001002	R001002
Track Roller	R0200-002001	R002001
Carrier Roller	R0300-001001	R003001
Track Shoe Assembly, With Large Holed, Triple Shoe Grouser, 500mm Width	R0500-001001	R004001
Track Shoe Assembly, Road Liner, 500mm Width	R0500-003001	R005001
Track Shoe Assembly, Triple Shoe Grouser, City Pad, 500mm Width	R0500-002001	R006001
Track Shoe Assembly, With Large Holed, Triple Shoe Grouser, 600mm Width	R0500-004001	R007001
Track Shoe Assembly, With Large Holed, Triple Shoe Grouser, 700mm Width	R0500-005001	R008001
Track Frame, With Track Roller Guard	R1100-002001	R009001
Track Frame Under Cover (#B10001-B10083)	R1140-001001	R011001
Track Guard	R1200-001001	R012001
Additional Track Frame Step	R1300-002001	R013001
WORK EQUIPMENT		
Boom, 100 Hours Greasing Type, 4.6m	T1110-011001	T001001
Boom, 100 Hours Greasing Type, Working Lamp	T1110-011002	T001002
Boom, 100 Hours Greasing Type, Arm and Bucket Cylinder Piping	T1110-011003	T001003
Boom, 100 Hours Greasing Type, Lubrication Piping	T1110-011004	T001004
Boom, 100 Hours Greasing Type, Boom Foot Shim	T1110-011005	T001005
Boom, 1-actuator, 100 Hours Greasing Type, 4.6m	T1110-012001	T002001
Boom, 1-actuator, 100 Hours Greasing Type, Working Lamp	T1110-012002	T002002
Boom, 1-actuator, 100 Hours Greasing Type, Arm and Bucket Cylinder Piping	T1110-012003	T002003
Boom, 1-actuator, 100 Hours Greasing Type, Bucket Cylinder Piping	T1110-012004	T002004
Boom, 1-actuator, 100 Hours Greasing Type, Bucket Cylinder Piping, Clamp	T1110-012005	T002005
Boom, 1-actuator, 100 Hours Greasing Type, Lubrication Piping	T1110-012006	T002006
Boom, 1-actuator, 100 Hours Greasing Type, Boom Foot Shim	T1110-012007	T002007
Boom, 2-actuator, 4.6m	T1110-007001	T003001
Boom, 2-actuator, Working Lamp	T1110-007002	T003002
Boom, 2-actuator, Arm and Bucket Cylinder Piping	T1110-007003	T003003
Boom, 2-actuator, Bucket Cylinder Piping	T1110-007004	T003004
Boom, 2-actuator, Bucket Cylinder Piping, Clamp	T1110-007005	T003005
Boom, 2-actuator, Lubrication Piping	T1110-007006	T003006
Boom, 2-actuator, 2 Attachment Line	T1110-007007	T003007
Boom, 2-actuator, 100 Hours Greasing Type, Boom Foot Shim	T1110-007008	T003008
Boom Cylinder, 100 Hours Greasing Type, (1/2)	T1120-004001	T004001
Boom Cylinder, 100 Hours Greasing Type, (2/2)	T1120-004002	T004002
Boom Cylinder Head Pin	T1125-002001	T005001
Arm Cylinder, 100 Hours Greasing Type	T1140-004001	T006001
Parts For Less Arm	T1190-001001	T007001
Arm, Heavy Duty, 100 Hours Greasing Type, 2.5m	T1210-013001	T008001
Arm, Heavy Duty, 100 Hours Greasing Type, Bucket Cylinder Hose and Pin	T1210-013002	T008002
Arm, Heavy Duty, 100 Hours Greasing Type, Cylinder Guard	T1210-013003	T008003
Arm, Heavy Duty, 1-actuator, 100 Hours Greasing Type, 2.5m	T1210-014001	T009001
Arm, Heavy Duty, 1-actuator, 100 Hours Greasing Type, Bucket Cylinder Hose and Pin	T1210-014002	T009002
Arm, Heavy Duty, 1-actuator, 100 Hours Greasing Type, Additional Piping	T1210-014003	T009003
Arm, Heavy Duty, 1-actuator, 100 Hours Greasing Type, Cylinder Guard	T1210-014004	T009004
Bucket Cylinder, 100 Hours Greasing Type	T1220-003001	T010001
Bucket Linkage	T1230-004001	T011001
Backhoe Bucket, 0.5m3, 859mm Width, Horizontal Pin Type, With Side		

	FIG. NO	PAGE
Cutter, Width Pin	T1510-003001	T012001
Backhoe Bucket, 0.6m3, 1000mm Width, Horizontal Pin Type, Width Pin	T1510-011001	T013001
MARKS AND PLATES		
Marks and Plates, Lettering Type, Portuguese	U0100-006001	U001001
Marks and Plates, Lettering Type, Spanish	U0100-008001	U002001
Lubrication Chart, 100 Hours Greasing Type	U0110-002001	U003001
Caution Plates, Portuguese, Lettering Type	U0120-003001	U004001
Caution Plates, Spanish, Cab Windshield Lock Operation	U0120-004001	U005001
Komatsu Logo, Counter Weight	U0150-003001	U006001
Komatsu Logo, Boom and Counter Weight	U0150-004001	U007001
Coolant Decal, Portuguese	U0202-002001	U008001
Coolant Decal, Spanish Instruction	U0202-003001	U009001
KOMTRAX Plate	U0205-001001	U010001
Caution Plates, Arm	U0510-002001	U011001
Caution Plates, Top Guard, Portuguese	U0520-020001	U012001
Caution Plates, Top Guard, Spanish	U0520-030001	U013001
Rivet	U0521-001001	U014001
Caution Plates, Portuguese	U0521-002001	U015001
Caution Plates, Spanish-English	U0521-003001	U016001
Service Instruction, Air Cleaner, Portuguese	U0550-003001	U017001
Service Instruction, Air Cleaner, Spanish	U0550-004001	U018001
Caution Plates, 1-accumulator, Portuguese	U0580-003001	U019001
Caution Plates, 1-accumulator, Spanish	U0580-007001	U020001
Caution Plates, Swing or Back-up Warning, Portuguese	U0610-002001	U021001
Caution Plates, Swing or Back-up Warning, Spanish	U0610-003001	U022001
Caution Plates, 12volt Power Source, Portuguese	U0710-001001	U023001
Caution Plates, 12volt Power Source, Spanish	U0710-002001	U024001
AUXILIARY PARTS AND TOOLS		
Spare Parts, 35Amp. Alternator	V0100-002001	V001001
General Tool Set	V0300-001001	V002001

	FIG. NO	PAGE
FIELD REPAIR SERVICE KIT		
Service Kit Parts	KIT	Y001001
NUMERICAL INDEX		
Numerical Index	No Figure Nº	INDEX

ENGINE

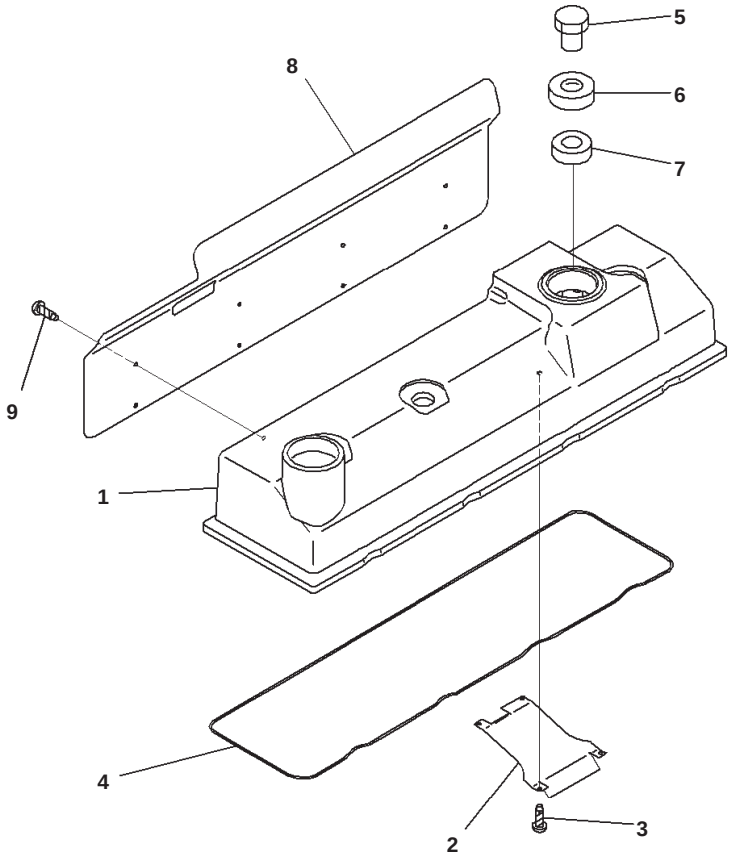

Cylinder Head Cover

Index	Part Number	Description	Qty	Serial No.
	6271-11-8200	Head Cover Assembly	1	26504690-
1	6271-11-8210	・ Cover, Head	1	26504690-
2	6207-11-8140	・ Plate	1	26501795-
3	04418-02550	・ Screw	4	26501795-
4	6204-11-8810	・ O-ring	1	26501795-
5	6136-11-8120	Nut	3	26501795-
6	6136-11-8130	Washer	3	26501795-
7	6136-11-8142	Packing	3	26501795-
8	6271-11-9120	Plate	1	26501795-
9	04418-02550	Screw	8	26501795-

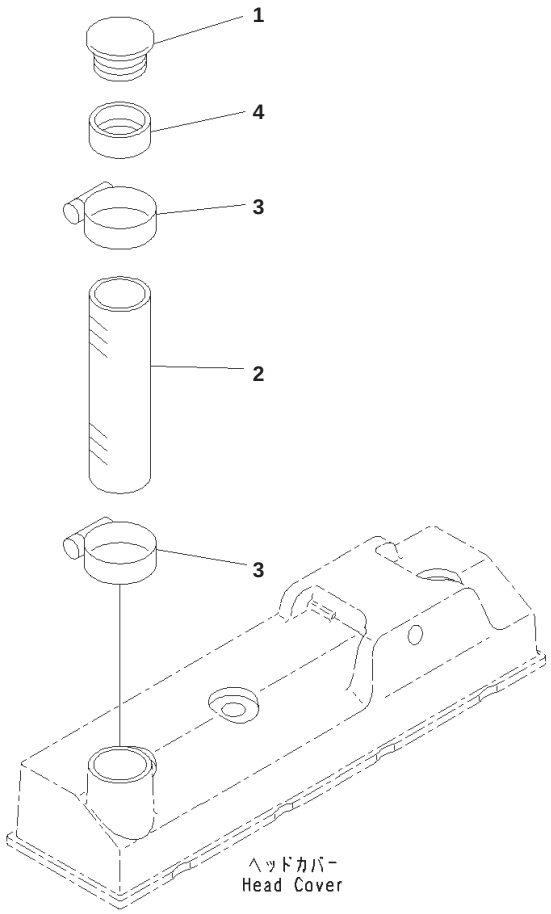

00058515

Head Cover Accessory

Index	Part Number	Description	Qty	Serial No.
1	6204-11-8610	Cap, Oil Filler	1	26501795-
2	6208-11-8610	Hose	1	26501795-
3	07281-00709	Clamp	2	26501795-
4	6202-13-8631	Pipe	1	26501795-

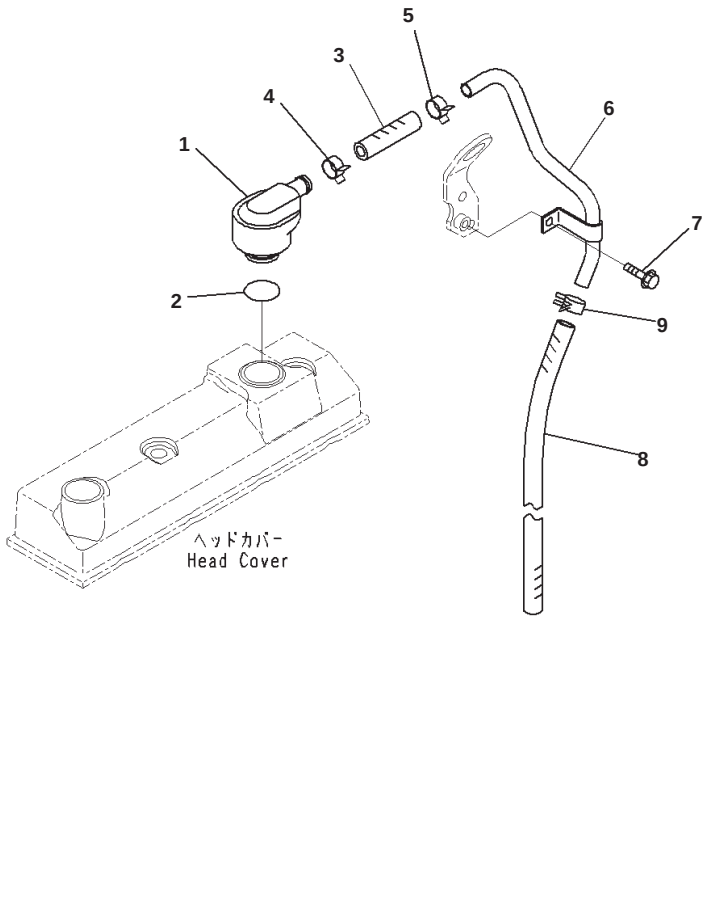

Breather

Index	Part Number	Description	Qty	Serial No.
1	6150-21-6750	Breather	1	26504690-
2	6209-11-8210	O-ring	1	26504690-
3	6271-11-8970	Hose	1	26504690-
4	07285-00220	Clip	1	26504690-
5	07285-00200	Clip, Hose	1	26505260-
6	6271-11-8910	Tube, Breather	1	26501795-
7	01435-00814	Bolt	1	26501795-
8	07286-01664	Hose	1	26501795-
9	07285-00180	Clip	1	26505260-

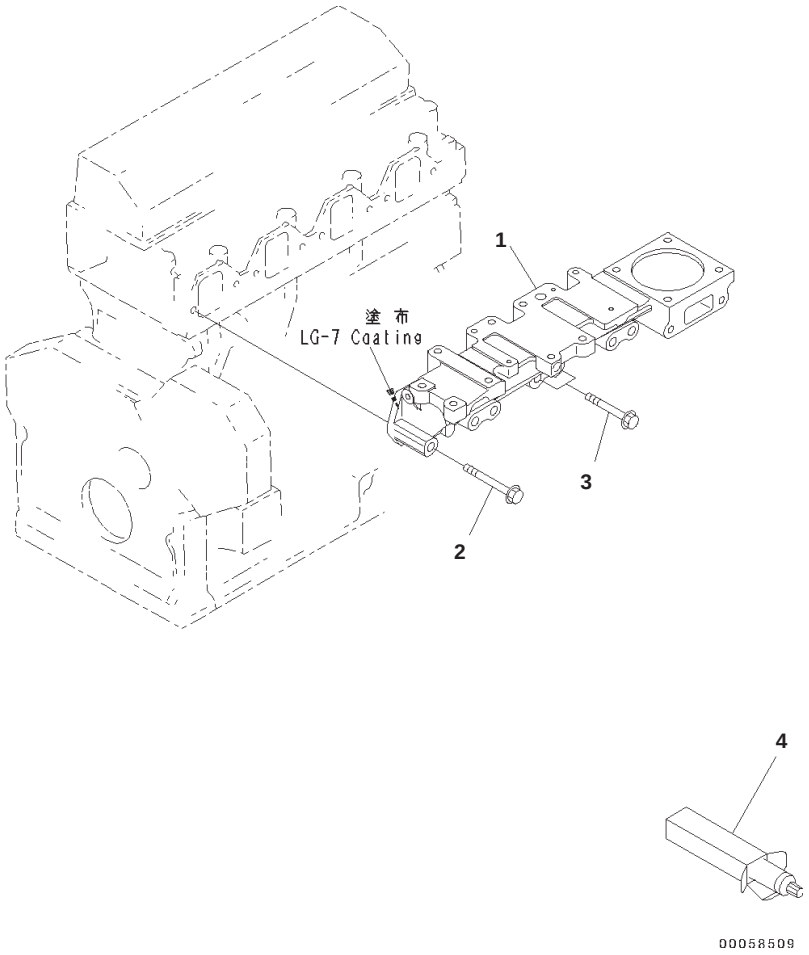

Index	Part Number	Description	Qty	Serial No.
1	6271-11-4130	Manifold, Air Intake	1	26501795-
2	01435-01075	Bolt	6	26501795-
3	01435-01065	Bolt	2	26501795-
4	09920-00150	Liquid gasket, LG-7, 150G	AR	26501795-

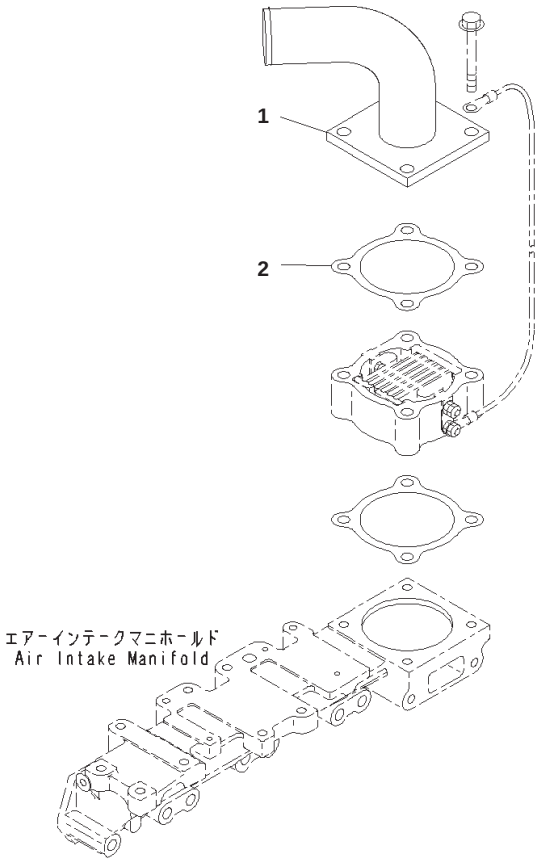

Air Intake Connector

Index	Part Number	Description	Qty	Serial No.
1	6271-11-4321	Connector, Air	1	26501795-
2	6204-11-4850	Gasket	1	26501795-

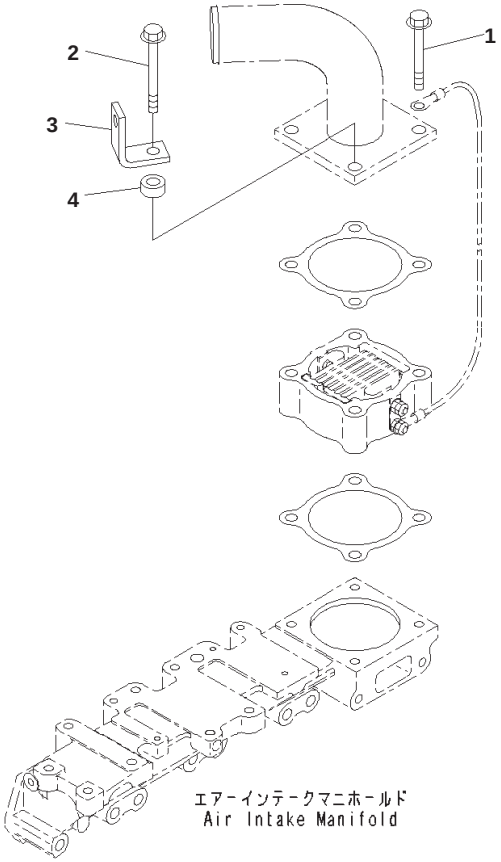

00058508

Air Intake Connector Mounting

Index	Part Number	Description	Qty	Serial No.
1	01435-01070	Bolt	3	26501795-
2	01435-01080	Bolt	1	26501795-
3	6240-71-6640	Bracket	1	26501795-
4	6132-21-4630	Spacer	1	26501795-

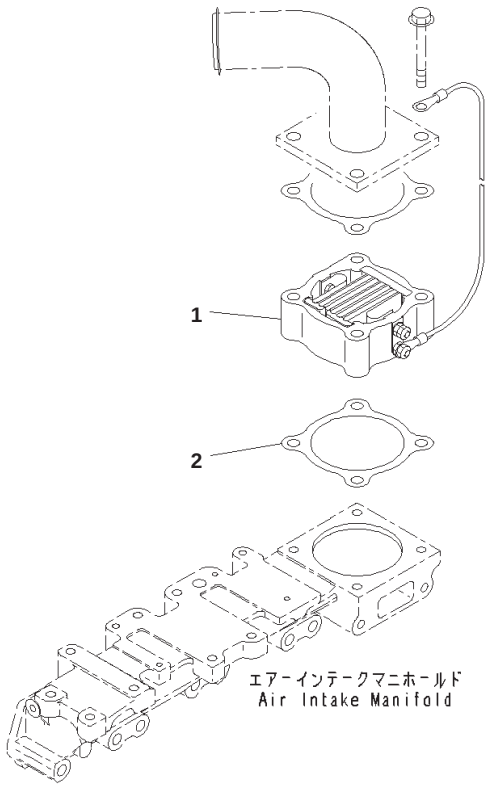

00058490

Air Intake Heater

Index	Part Number	Description	Qty	Serial No.
1	600-815-9140	Heater, Ribbon	1	26509868-
2	6204-11-4850	Gasket	1	26501795-

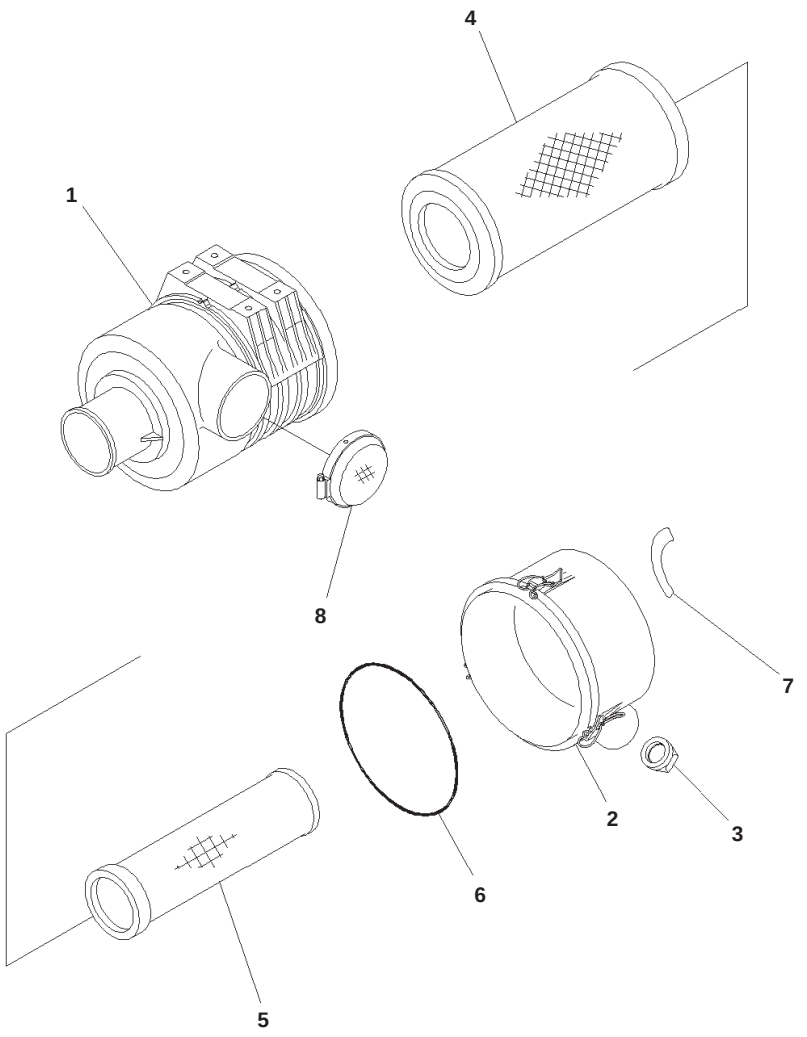

Air Cleaner

Index	Code	Part Number	Description	Qty	Serial No.
		6208-81-7100	Air Cleaner	1	26501795-
1		6208-81-7110	・ Body	1	26501795-
		600-184-1210	・ Cover Assembly	1	26501795-
2		600-184-1220	・・ Cover	1	26501795-
3		600-184-1250	・・ Valve, Vacuator	1	26501795-
		600-185-2100	・ Element Assembly	1	26501795-
4		600-185-2110	・・ Element, Outer	1	26501795-
5	C1		・・ Element, Inner	1	26501795-
6		600-184-1270	・・ O-ring	1	26501795-
7		600-181-1930	・ Plate, Service Instruction, Instruction	1	26501795-
8		6208-81-7720	Cap	1	26501795-

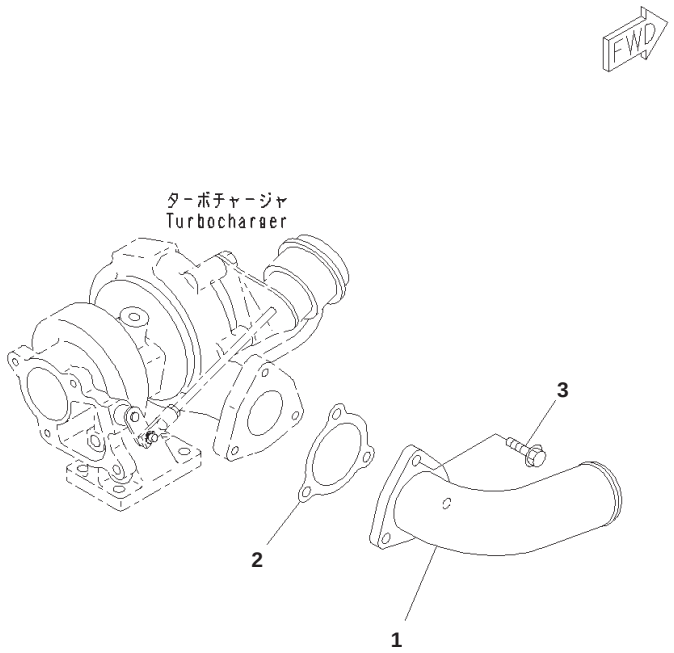

00058510

Air Transfer Connection

Index	Part Number	Description	Qty	Serial No.
1	6208-11-4810	Connector, Air	1	26501795-
2	6208-11-4850	Gasket	1	26501795-
3	01435-00825	Bolt	3	26501795-

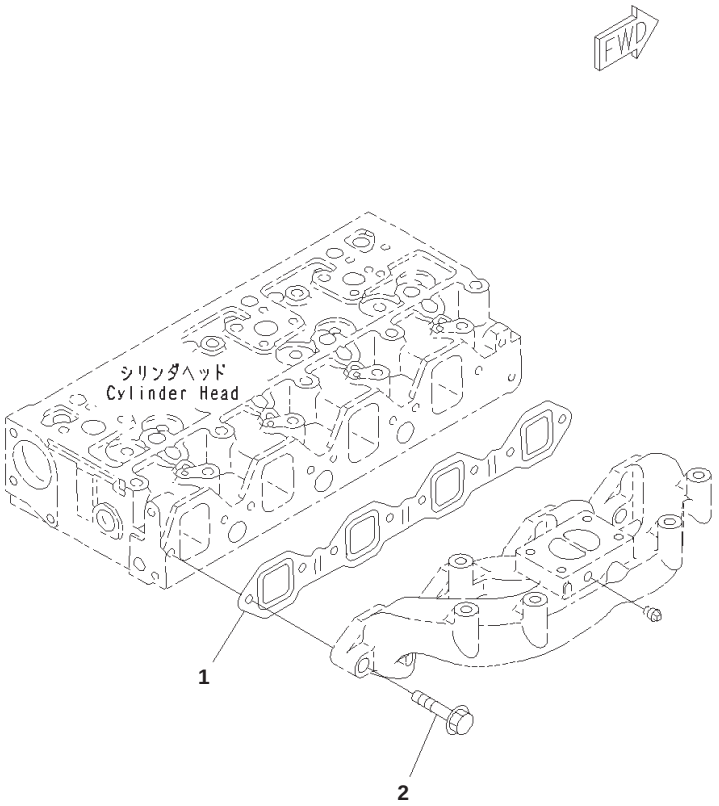

Exhaust Manifold Mounting

Index	Part Number	Description	Qty	Serial No.
1	6205-11-5811	Gasket	1	26501795-
2	01435-01045	Bolt	8	26501795-

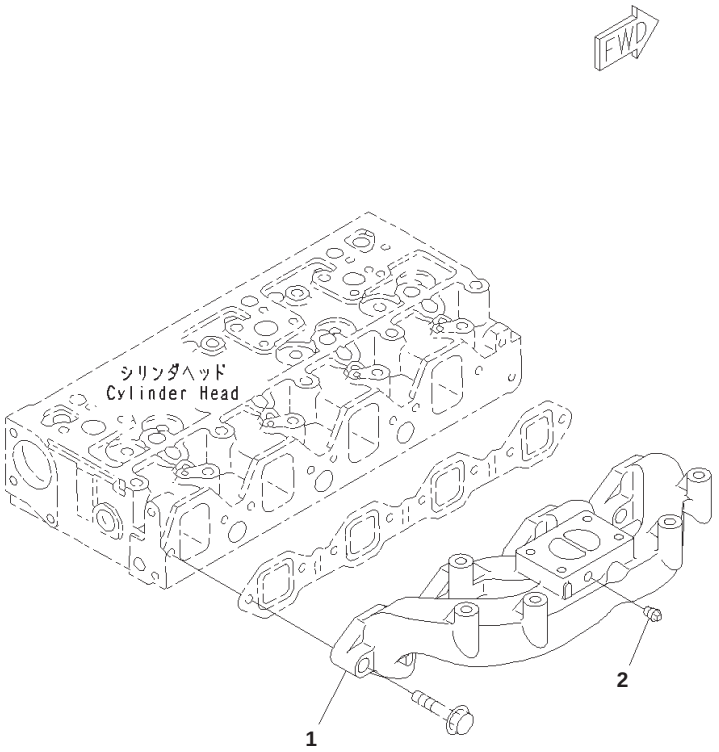

Exhaust Manifold

Index	Part Number	Description	Qty	Serial No.
1	6271-11-5140	Manifold, Exhaust	1	26501795-
2	07042-20108	Plug	2	26501795-

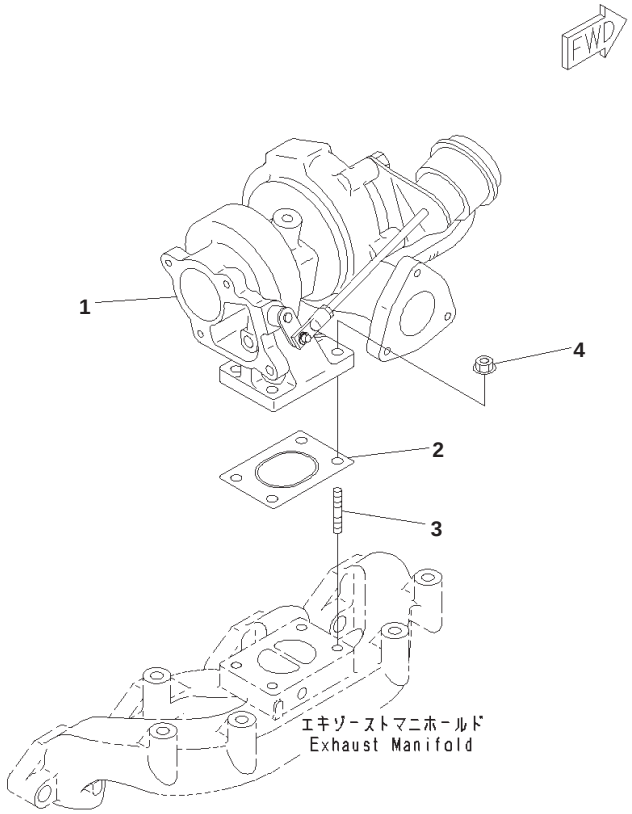

Turbocharger

Index	Part Number	Description	Qty	Serial No.
1	6271-81-8100	Turbocharger Assembly	1	26501795-
2	6205-11-5580	Gasket	1	26501795-
3	01124-60825	Stud	4	26501795-
4	6201-11-5850	Nut	4	26501795-

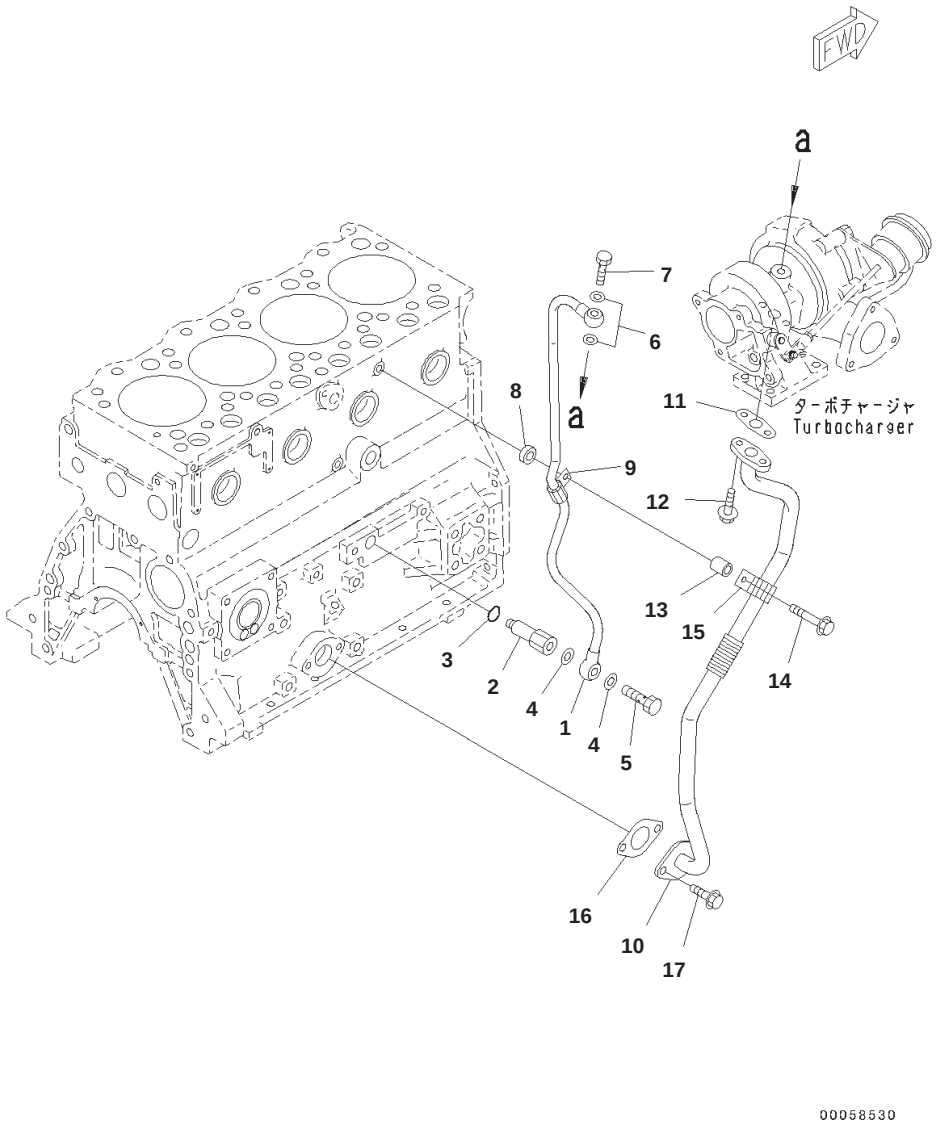

Turbocharger Oil Piping

Index	Part Number	Description	Qty	Serial No.
1	6271-51-8540	Tube, Supply	1	26501795-
2	6271-51-8240	Nipple	1	26501795-
3	6215-81-9720	O-ring	1	26501795-
4	07005-01412	Seal, Washer	2	26501795-
5	07206-31014	Bolt, Joint	1	26501795-
6	07003-01015	Gasket	2	26501795-
7	6205-51-8251	Joint	1	26501795-
8	6162-73-5940	Spacer	1	26501795-
9	6205-51-8560	Clip	1	26501795-
10	6205-51-8530	Tube, Return	1	26501795-
11	6205-51-7611	Gasket	1	26501795-
12	01435-00616	Bolt	2	26501795-
13	20D-62-17620	Collar	1	26501795-
14	01435-00840	Bolt	1	26501795-
15	600-051-5160	Clip	1	26501795-
16	6204-21-6820	Gasket	1	26501795-
17	01435-00814	Bolt	2	26501795-

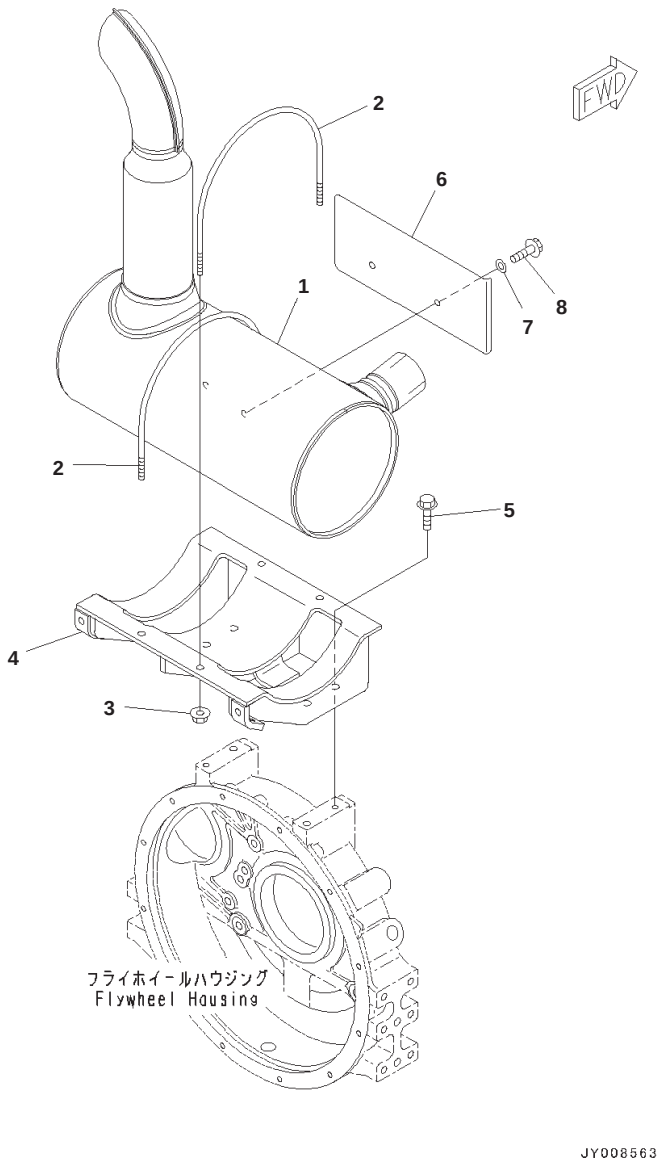

Exhaust Muffler

Index	Part Number	Description	Qty	Serial No.
1	6271-11-5230	Muffler	1	26501795-
2	6206-11-5980	U-bolt	2	26501795-
3	01584-00806	Nut	4	26501795-
4	6732-11-5420	Bracket	1	26501795-
5	01435-01025	Bolt	4	26501795-
6	6271-11-9131	Plate	1	26501795-
7	154-61-16570	Washer	2	26502606-
8	01435-00814	Bolt	2	26502606-

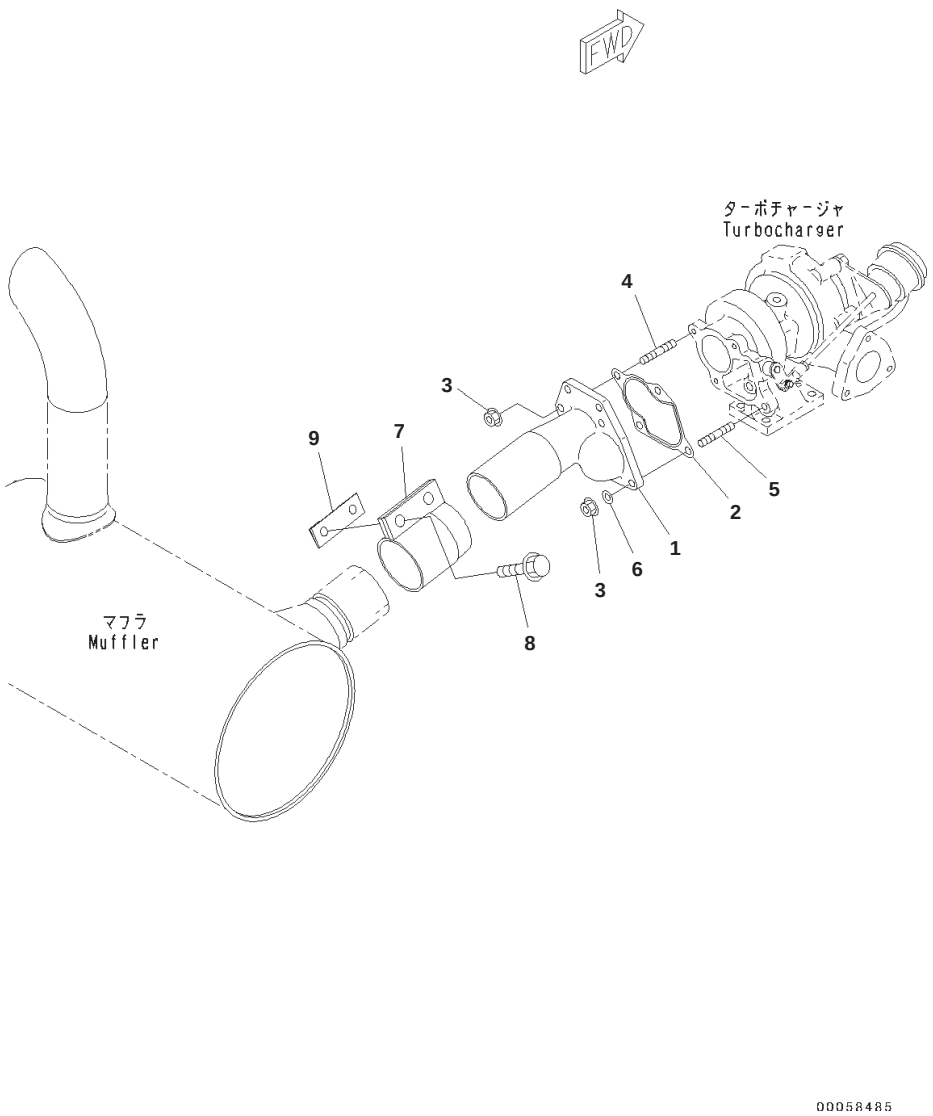

Exhaust Muffler Piping

Index	Part Number	Description	Qty	Serial No.
1	6205-11-5691	Connector	1	26501795-
2	6271-11-5850	Gasket	1	26501795-
3	6201-11-5850	Nut	4	26501795-
4	01124-60825	Stud	3	26501795-
5	01124-60830	Stud	1	26501795-
6	01641-20812	Washer	1	26501795-
7	6206-11-5911	Clamp	1	26501795-
8	01435-01235	Bolt	2	26501795-
9	6208-11-5850	Plate	1	26501795-

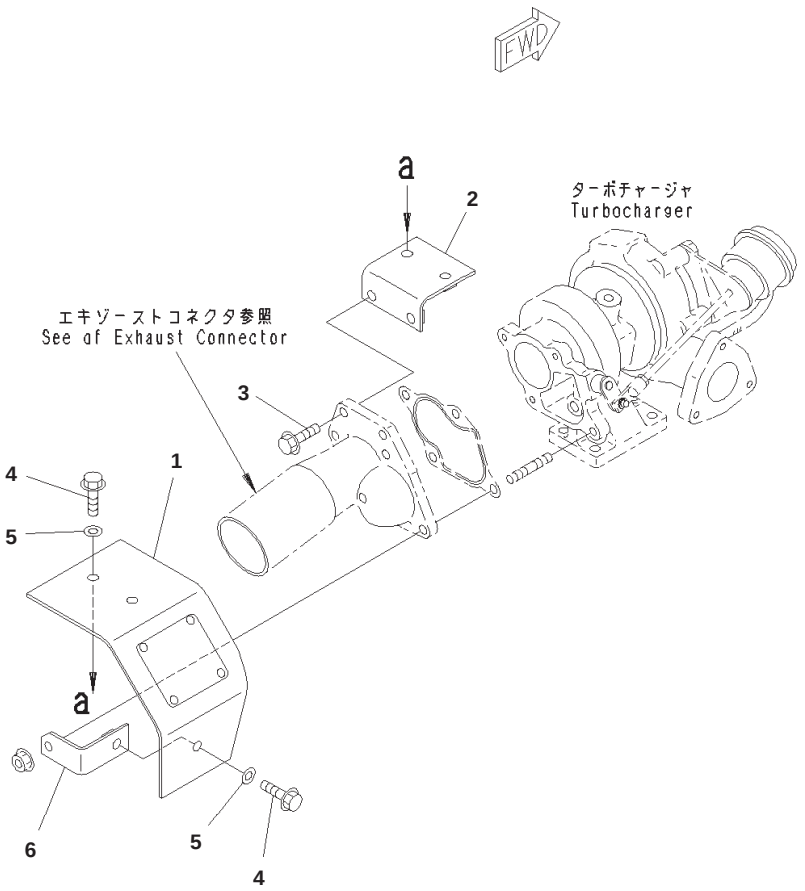

Heat Shield

Index	Part Number	Description	Qty	Serial No.
1	6208-81-8810	Cover, Shield	1	26501795-
2	6208-81-8820	Bracket	1	26501795-
3	01435-00830	Bolt	2	26501795-
4	01435-00820	Bolt	3	26501795-
5	154-61-16570	Washer	3	26501795-
6	6208-81-8830	Bracket	1	26501795-

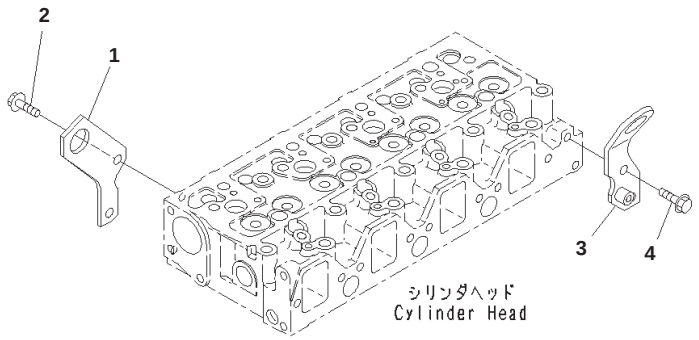

00058511

Index	Part Number	Description	Qty	Serial No.
1	6208-11-1910	Hanger, Front	1	26501795-
2	01435-01020	Bolt	2	26501795-
3	6271-11-1920	Hanger, Rear	1	26501795-
4	01435-01020	Bolt	2	26501795-

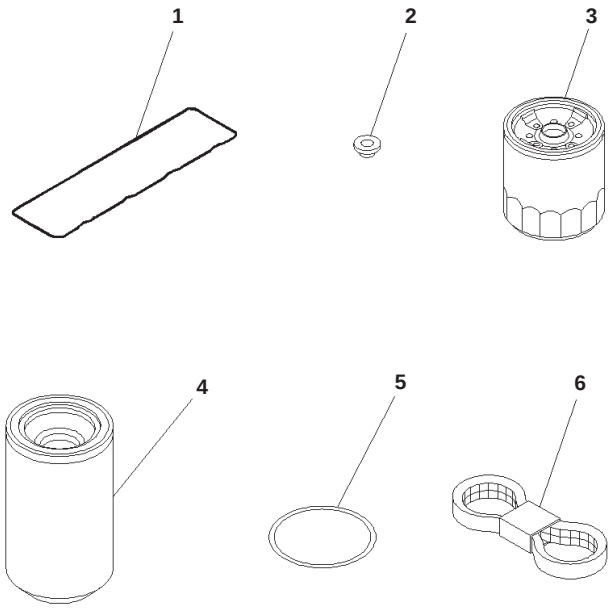

Spare Parts, For 35Amp. Alternator

Index	Code	Part Number	Description	Qty	Serial No.
1		6204-11-8810	O-ring	1	26517172-
2		6136-11-8142	Packing	3	26517172-
3		600-211-2110	Cartridge	1	26517172-
		600-319-3870	Cartridge	1	26517172-
		600-319-4110	Cartridge Assembly	1	26517172-
4	C1		・ Cartridge	1	26517172-
5		600-311-3630	・ Seal	1	26517172-
6		6205-61-3580	V-belt	1	26517172-

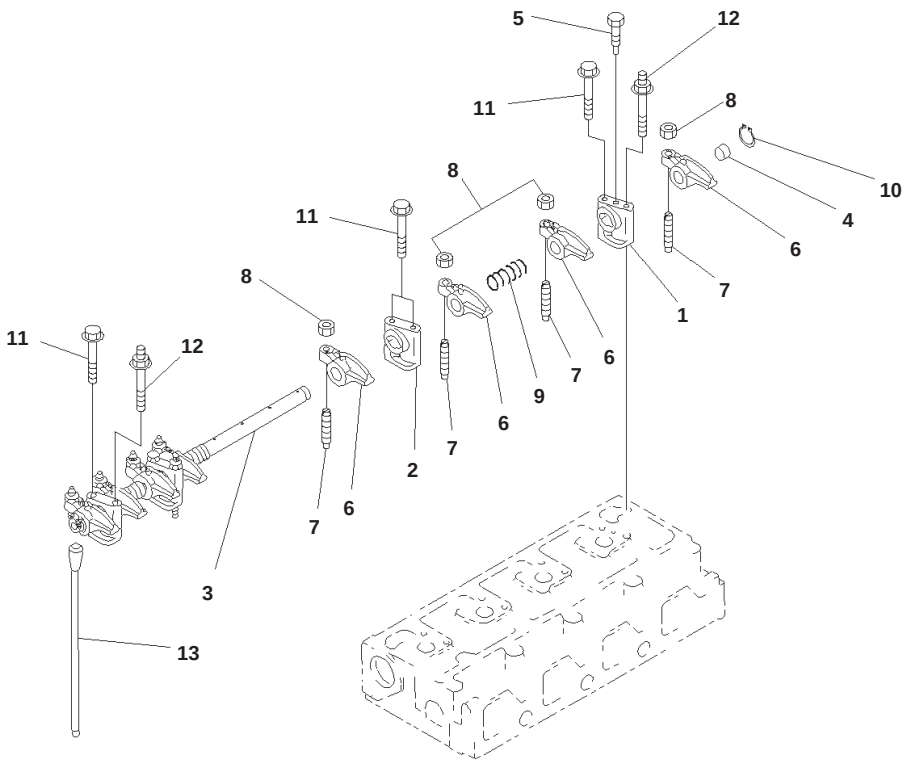

Rocker Arm

Index	Code	Part Number	Description	Qty	Serial No.
1		6204-41-5110	Bracket, Rocker	1	26501795-
2		6204-41-5120	Bracket, Rocker	3	26501795-
		6205-43-5500	Shaft Assembly	1	26501795-
3	C1		・ Shaft, Rocker	1	26501795-
4		6221-41-5540	・ Plug	2	26501795-
5		6205-43-5310	Bolt	1	26501795-
6		6205-43-5410	Arm, Rocker	8	26501795-
7		6221-41-5410	Screw, Adjust	8	26501795-
8		6221-41-5420	Nut	8	26501795-
9		6202-43-5320	Spring	3	26501795-
10		6204-41-5620	Clip	2	26501795-
11		01435-00865	Bolt	5	26501795-
12		6204-41-5710	Bolt	3	26501795-
13		6204-41-3110	Rod, Push	8	26501795-

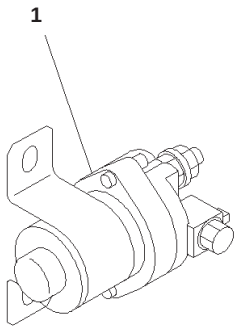

PJ6F064

Air Intake Heater Switch

Index	Part Number	Description	Qty	Serial No.
1	600-815-2170	Switch, Heater	1	26501795-

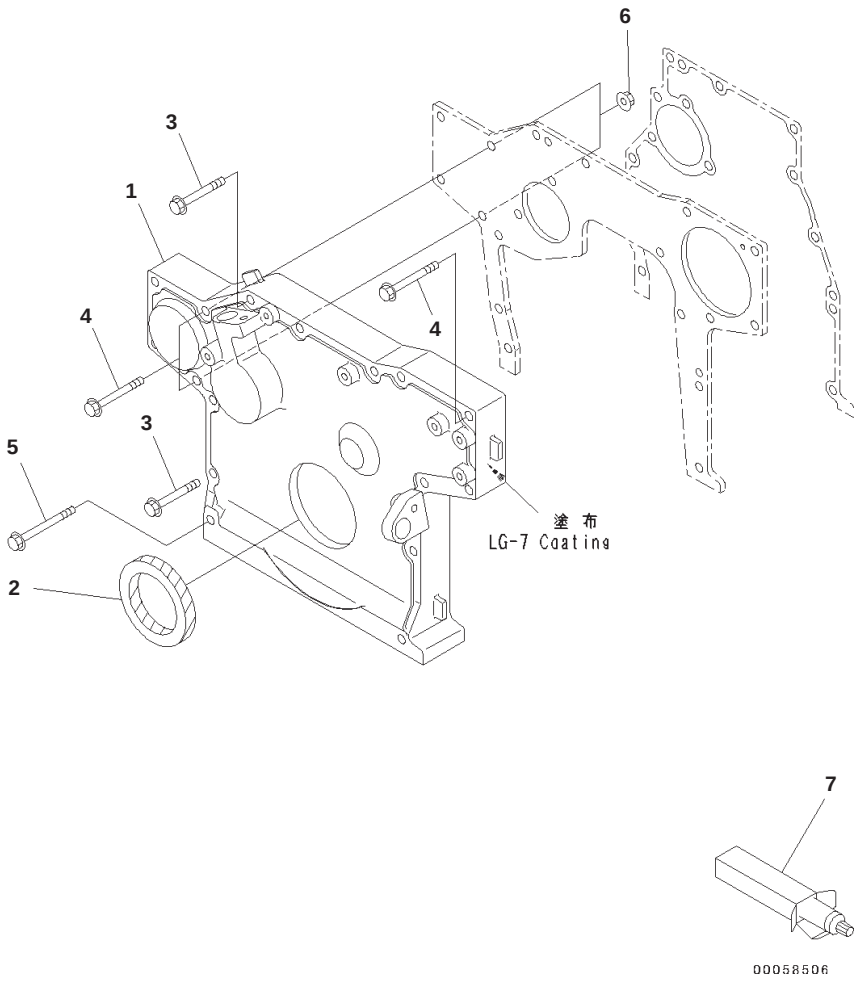

Front Cover

Index	Part Number	Description	Qty	Serial No.
1	6271-21-3110	Cover,Front	1	26501795-
2	6204-21-3530	Seal, Front,Front	1	26508990-
3	01435-00855	Bolt	6	26501795-
4	01435-00860	Bolt	6	26501795-
5	01435-00870	Bolt	2	26501795-
6	01584-00806	Nut	2	26501795-
7	09920-00150	Liquid gasket, LG-7, 150G	AR	26501795-

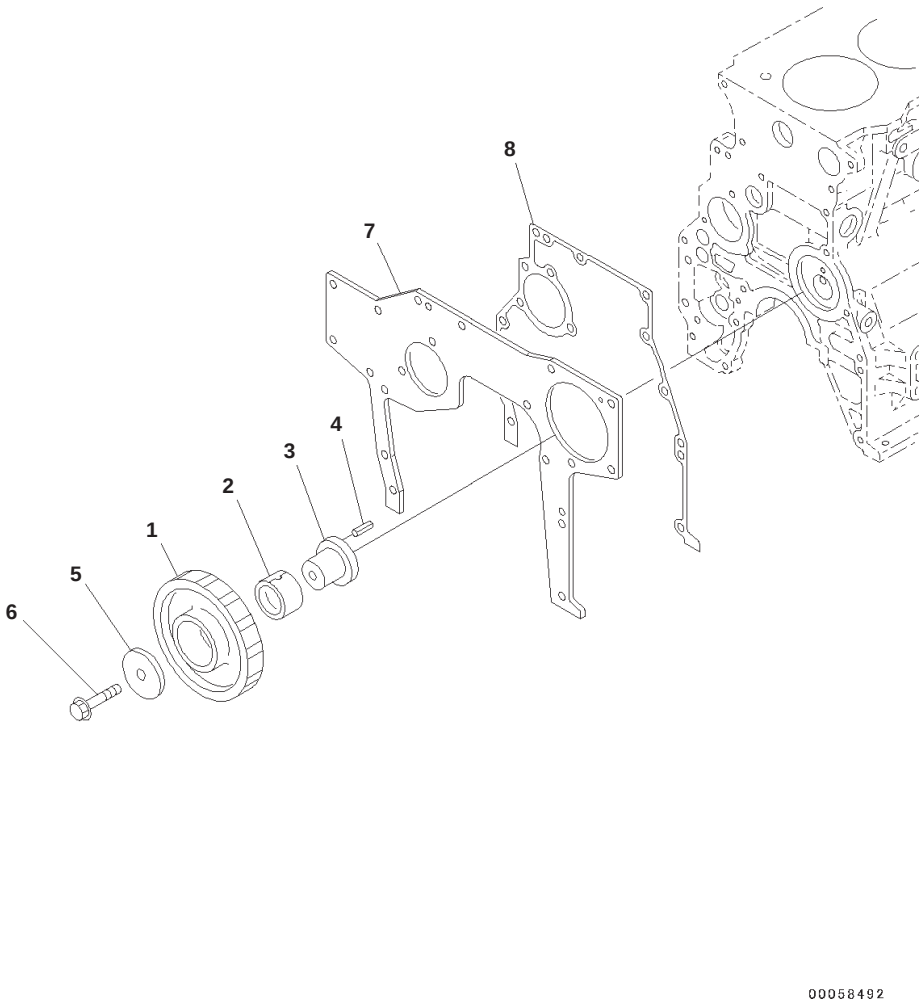

Front Gear

Index	Code	Part Number	Description	Qty	Serial No.
		6271-31-6300	Gear Assembly, Idler	1	26501795-
1	C1		・ Gear, Idler	1	26501795-
2		6204-31-6341	・ Bushing	1	26501795-
3		6204-31-6331	Shaft	1	26501795-
4		04025-00512	Pin, Spring	1	26501795-
5		6204-31-6350	Washer	1	26501795-
6		01435-01270	Bolt	1	26501795-
7		6271-21-3210	Plate	1	26501795-
8		6206-21-3840	Gasket	1	26501795-

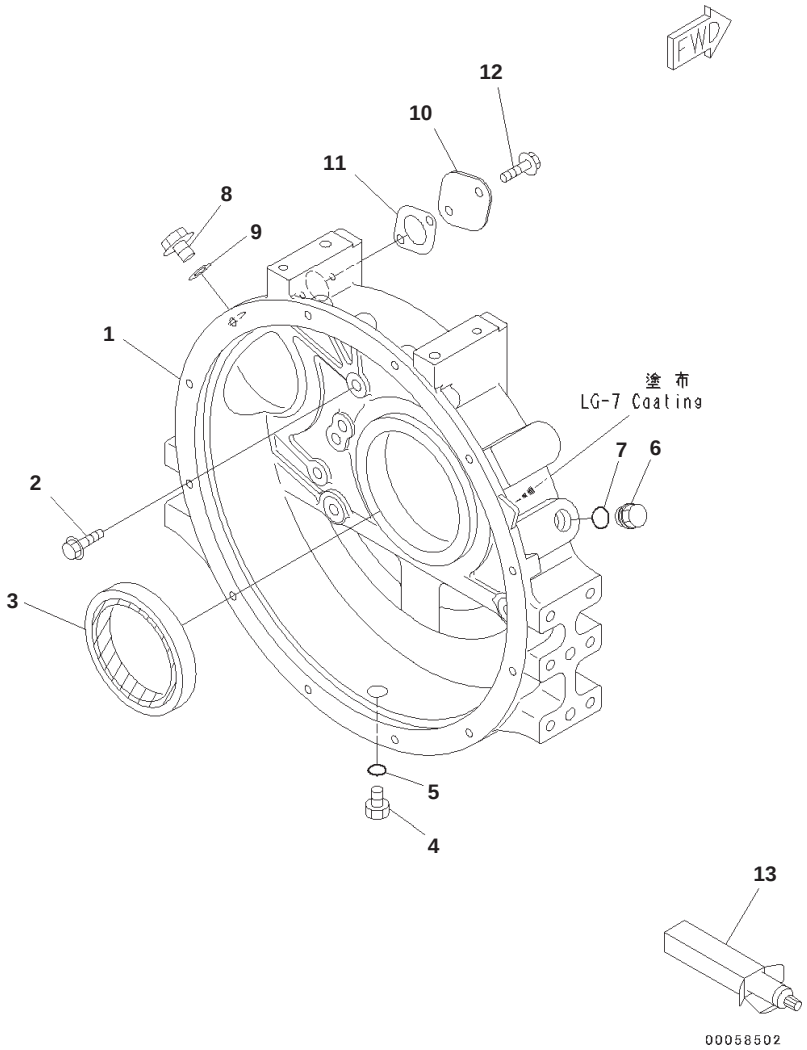

Index	Part Number	Description	Qty	Serial No.
1	6271-21-4110	Housing, Flywheel	1	26501795-
2	01435-01030	Bolt	11	26501795-
3	6141-21-1332	Seal, Rear	1	26501795-
4	07040-12012	Plug	1	26501795-
5	07002-22034	O-ring	1	26501795-
6	6204-21-5180	Plug	1	26501795-
7	07005-02216	Gasket	1	26501795-
8	6130-22-5190	Plug	1	26501795-
9	07005-02416	Gasket	1	26501795-
10	6204-21-6710	Plate	1	26501795-
11	6204-21-6820	Gasket	1	26501795-
12	01435-00816	Bolt	2	26501795-
13	09920-00150	Liquid gasket, LG-7, 150G	AR	26501795-

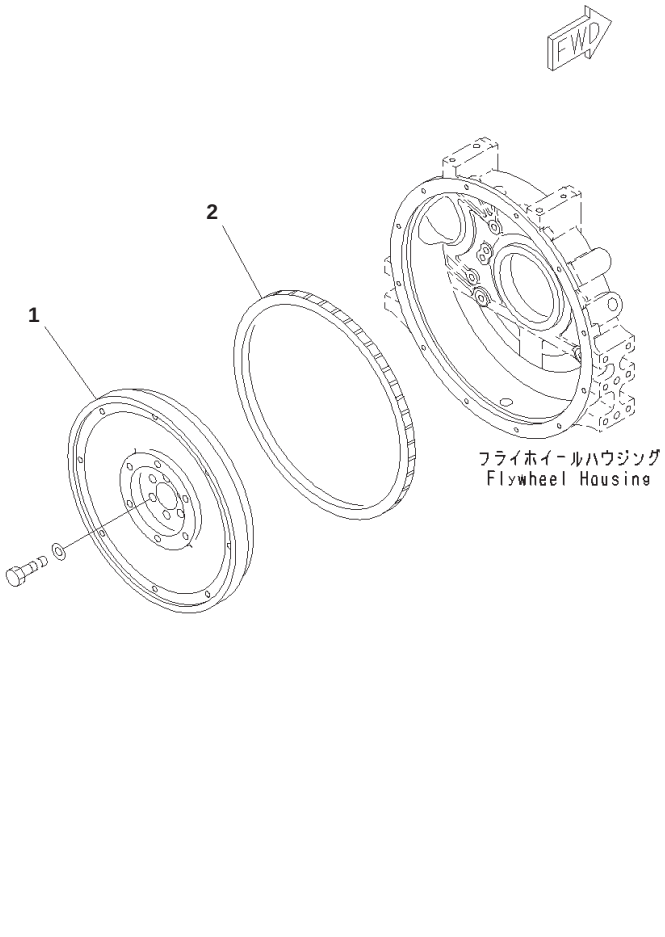

Flywheel

Index	Part Number	Description	Qty	Serial No.
	6206-31-4232	Flywheel Assembly	1	26501795-
1	6206-31-4241	・ Flywheel	1	26501795-
2	6206-31-4792	・ Gear, Ring	1	26501795-

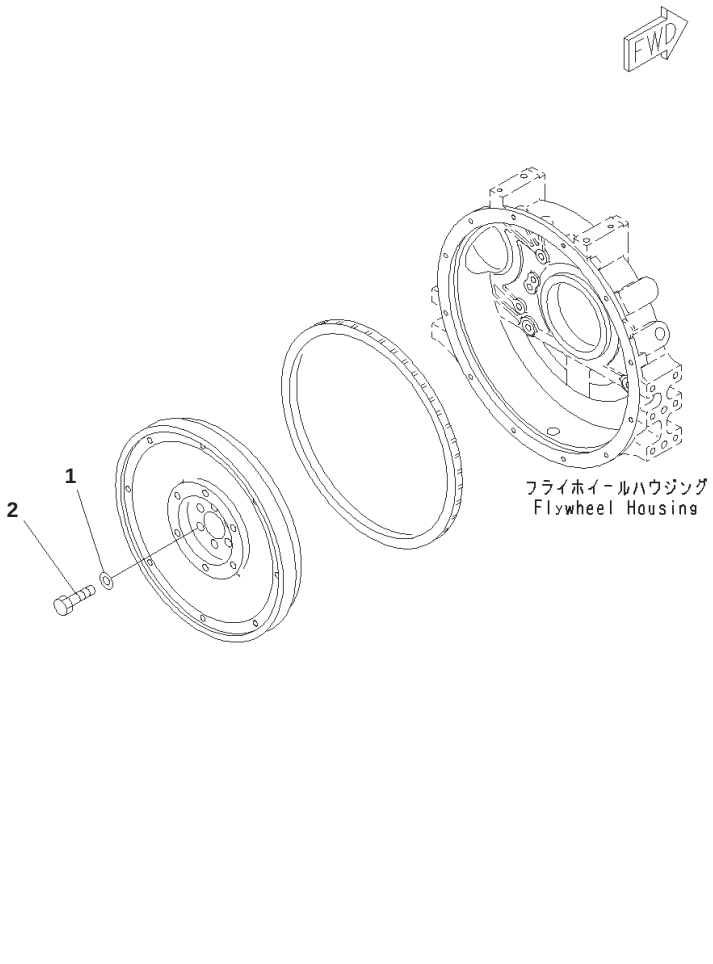

Index	Part Number	Description	Qty	Serial No.
1	6130-32-1361	Washer	6	26501795-
2	01050-61430	Bolt	6	26501795-

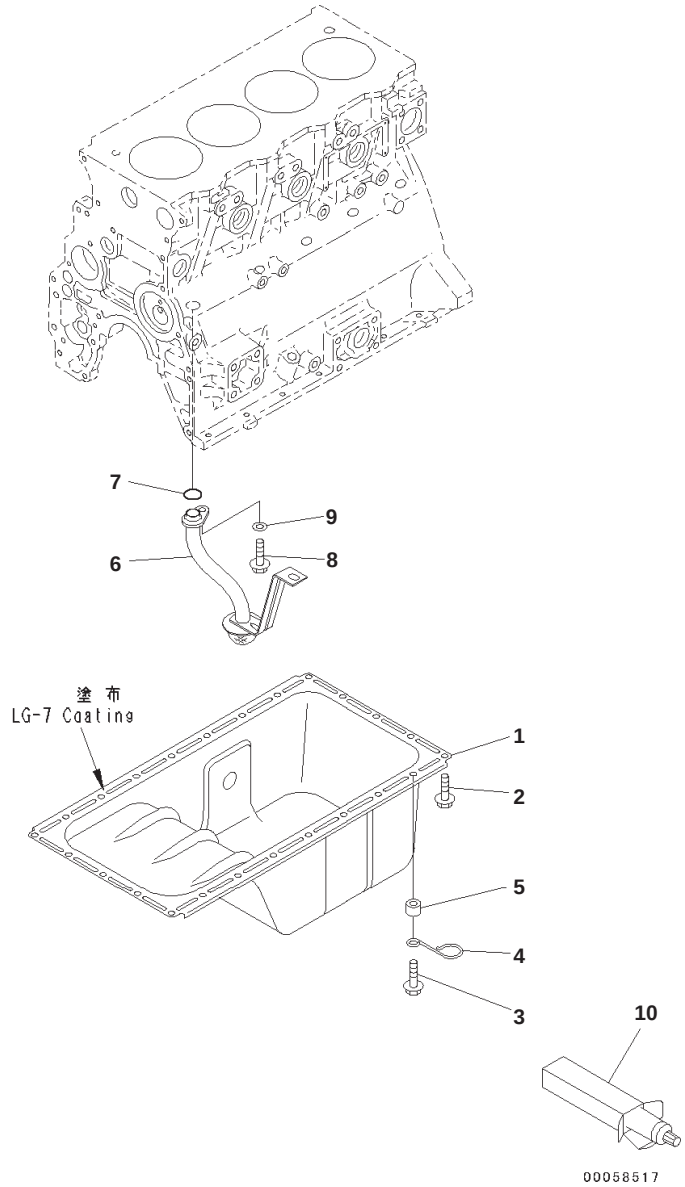

Engine Oil Pan

Index	Part Number	Description	Qty	Serial No.
1	6205-21-5142	Pan, Oil	1	26501795-
2	01435-00814	Bolt	23	26501795-
3	01435-00825	Bolt	1	26504854-
4	6130-22-5290	Clip	1	26501795-
5	6130-12-1961	Spacer	1	26501795-
6	6205-51-6120	Tube, Suction	1	26501795-
7	6204-51-6122	O-ring	1	26501795-
8	01435-00816	Bolt	2	26501795-
9	154-61-16570	Washer	1	26504854-
10	09920-00150	Liquid gasket, LG-7, 150G	AR	26501795-

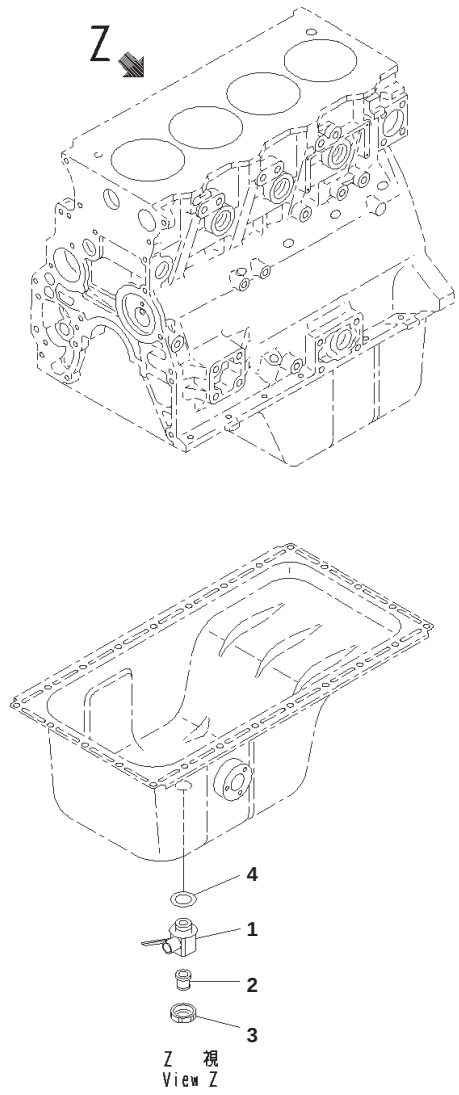

00058520

Index	Part Number	Description	Qty	Serial No.
	6738-21-5610	Valve Assembly	1	26501795-
1	6738-21-5620	・ Valve	1	26501795-
2	6738-21-5630	・ Joint	1	26501795-
3	6738-21-5640	・ Union	1	26501795-
4	07005-02216	Gasket	1	26501795-

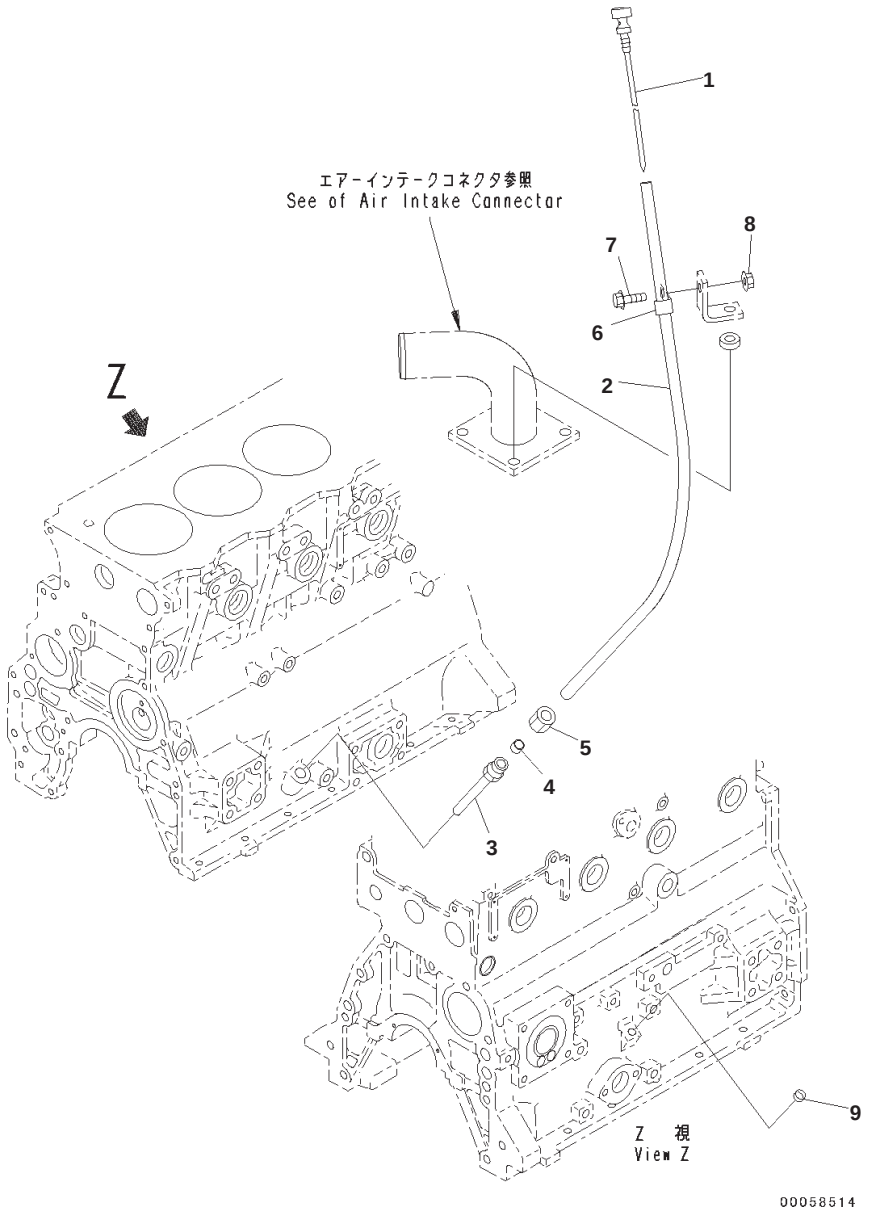

Engine Oil Level Gauge

Index	Part Number	Description	Qty	Serial No.
1	6208-21-5310	Gauge, Oil	1	26501795-
2	6271-21-5810	Guide, Oil Gauge	1	26501795-
3	6204-21-5510	Guide	1	26501795-
4	6150-21-5920	Collar	1	26501795-
5	6150-21-5930	Nut	1	26501795-
6	04434-51210	Clip	1	26501795-
7	01435-01020	Bolt	1	26501795-
8	01584-01008	Nut	1	26501795-
9	07046-21210	Plug	1	26501795-

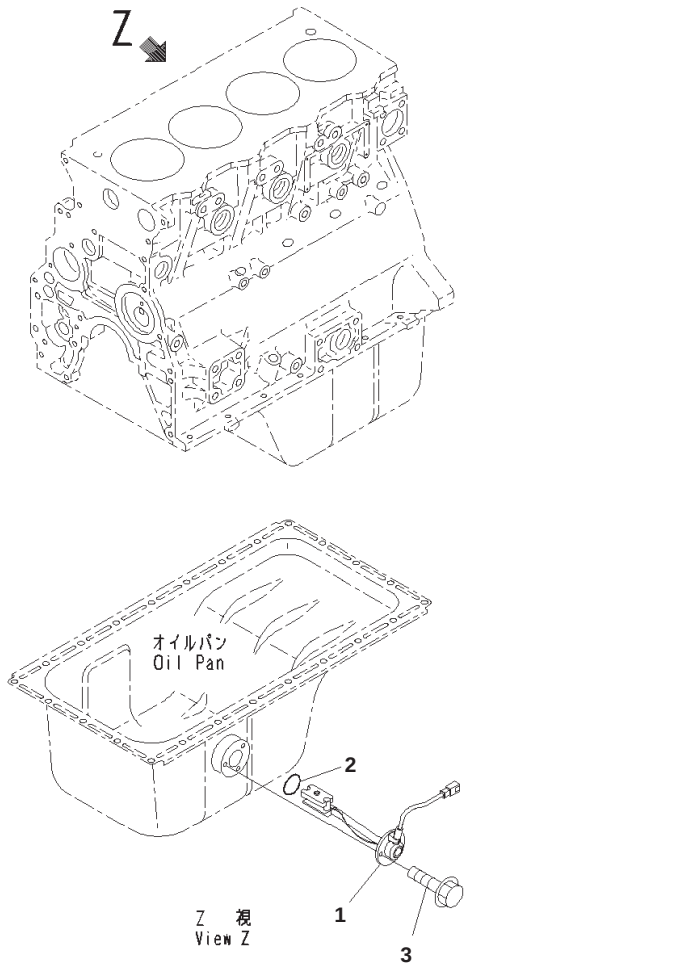

00058522

Engine Oil Level Sensor

Index	Part Number	Description	Qty	Serial No.
1	6741-81-9220	Sensor	1	26501795-
2	7861-91-4220	・ O-ring	1	26501795-
3	01435-00612	Bolt	3	26501795-

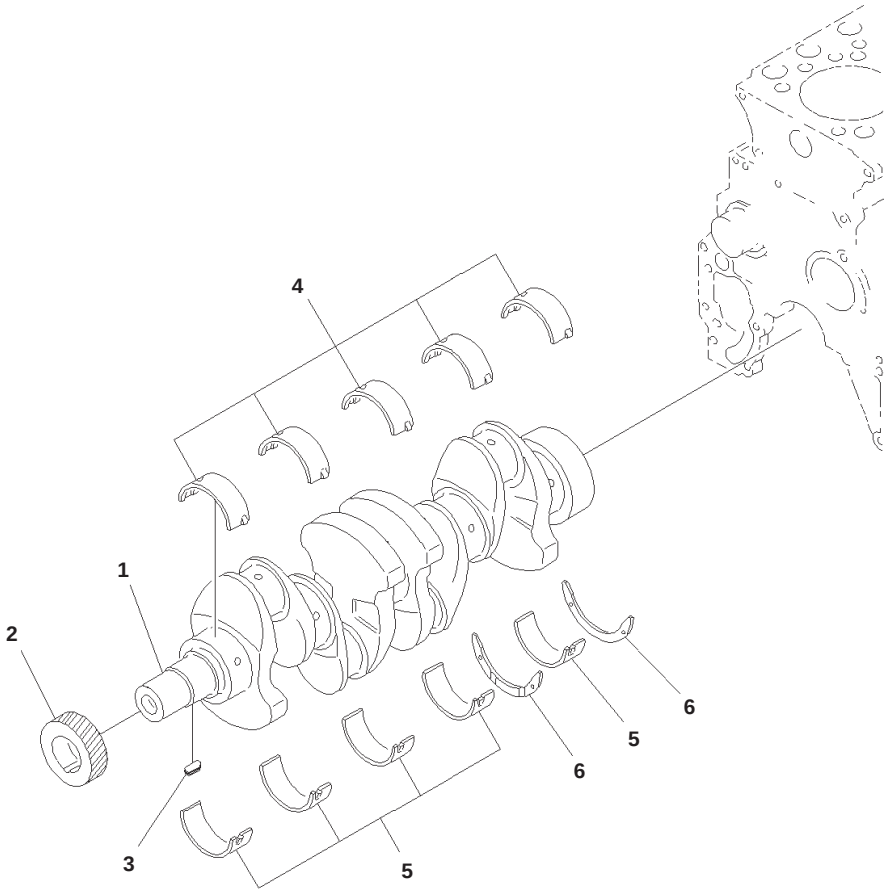

Index	Code	Part Number	Description	Qty	Serial No.
		6271-31-1110	Crankshaft Assembly	1	26501795-
1	C1		・ Crankshaft	1	26501795-
2		6271-31-1220	・ Gear, Crankshaft	1	26501795-
3		6206-31-1530	・ Key	1	26501795-
		6204-21-8100	Main Metal Assembly, Standard	5	26501795-
		6204-29-8100	Main Metal Assembly, Undersize 0.25mm	5	26501795-
		6204-28-8100	Main Metal Assembly, Undersize 0.50mm	5	26501795-
		6204-27-8100	Main Metal Assembly, Undersize 0.75mm	5	26501795-
		6204-26-8100	Main Metal Assembly, Undersize 1.00mm	5	26501795-
4	C1		・ Metal, Upper, Standard	1	26501795-
	C1		・ Metal, Upper, Undersize 0.25mm	1	26501795-
	C1		・ Metal, Upper, Undersize 0.50mm	1	26501795-
	C1		・ Metal, Upper, Undersize 0.75mm	1	26501795-
	C1		・ Metal, Upper, Undersize 1.00mm	1	26501795-
5	C1		・ Metal, Lower, Standard	1	26501795-
	C1		・ Metal, Lower, Undersize 0.25mm	1	26501795-
	C1		・ Metal, Lower, Undersize 0.50mm	1	26501795-
	C1		・ Metal, Lower, Undersize 0.75mm	1	26501795-
	C1		・ Metal, Lower, Undersize 1.00mm	1	26501795-
6		6204-21-8600	Thrust Metal Assembly, Standard	1	26501795-
		6204-29-8600	Thrust Metal Assembly, Oversize 0.25mm	1	26501795-
		6204-28-8600	Thrust Metal Assembly, Oversize 0.50mm	1	26501795-
		6204-27-8600	Thrust Metal Assembly, Oversize 0.75mm	1	26501795-
		6204-26-8600	Thrust Metal Assembly, Oversize 1.00mm	1	26501795-
		6204-21-8510	・ Metal, Thrust, Standard	2	26501795-
	C1		・ Metal, Thrust, Oversize 0.25mm	2	26501795-
	C1		・ Metal, Thrust, Oversize 0.50mm	2	26501795-
	C1		・ Metal, Thrust, Oversize 0.75mm	2	26501795-
	C1		・ Metal, Thrust, Oversize 1.00mm	2	26501795-

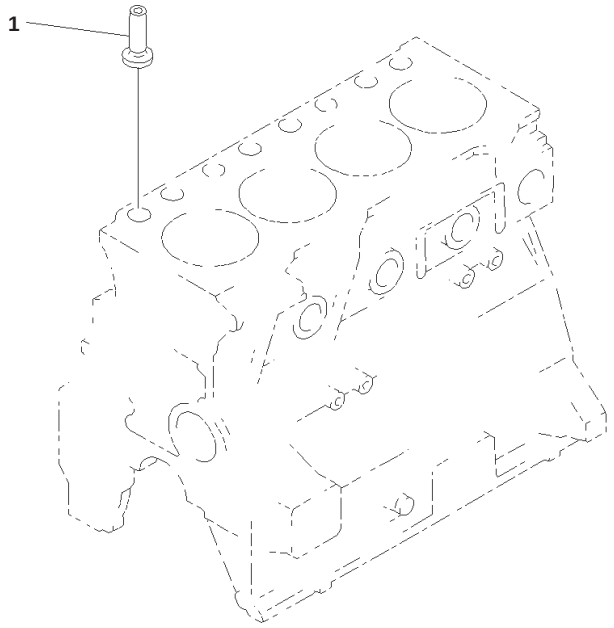

SAA4D95LE-5D S/N 26501795-UP (For PC130-8)
Cylinder Block, Tappet

Index	Part Number	Description	Qty	Serial No.
1	6204-41-2110	Tappet	8	26501795-

Reference:ABB00-001002 Page:B013002

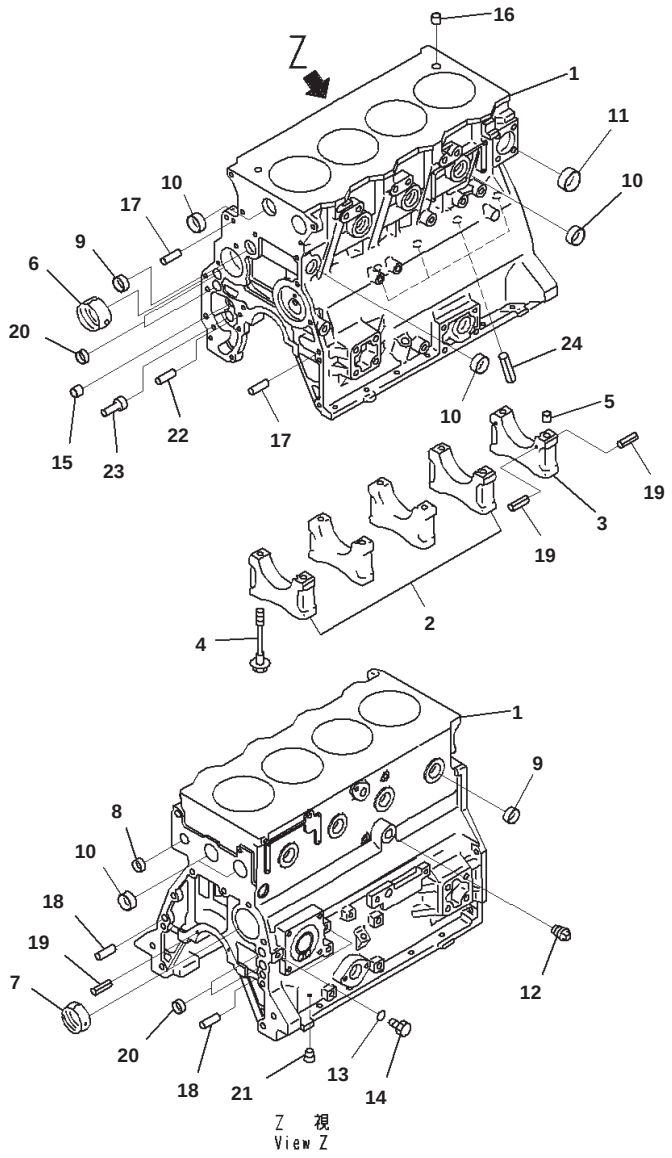

Cylinder Block, Gauge Cylinder

Index	Code	Part Number	Description	Qty	Serial No.
		6271-21-1000	Cylinder Block Assembly	1	26501795-
1	C1		・ Block, Cylinder, Cylinder	1	26541804-
2	C3	6204-29-1210	・ Cap, Main Metal, No.1,2,3,4	4	26501795-
3	C3	6204-29-1220	・ Cap, Main Metal, No.5	1	26501795-
4		6204-21-1610	・ Bolt, Main Cap	10	26501795-
5		6141-21-1530	・ Ring, Dowel	2	26501795-
6		6206-21-1430	・ Bushing, Camshaft	1	26501795-
7		6206-21-1420	・ Bushing, Camshaft	2	26501795-
8		07046-42216	・ Plug	1	26501795-
9		07046-42516	・ Plug	5	26501795-
10		07046-43016	・ Plug	7	26501795-
11		07046-44016	・ Plug	1	26501795-
12		07042-70312	・ Plug	1	26501795-
13		6215-81-9710	・ O-ring	2	26504673-
14		6215-81-9510	・ Plug	2	26504673-
15		6204-51-1711	・ Bushing, Oil Pump	1	26501795-
16		6140-21-1130	・ Bushing, Dowel	2	26501795-
17		04020-00820	・ Pin, Dowel	2	26501795-
18		04020-01228	・ Pin, Dowel, Dowel	2	26501795-
19		04025-00408	・ Pin, Spring	6	26501795-
20		07046-41810	・ Plug	4	26501795-
21		07043-70108	・ Plug	1	26501795-
22		6136-52-1620	・ Pin, Dowel, Oil Pump	1	26501795-
23		6204-51-1620	・ Shaft, Oil Pump	1	26501795-
24		6207-21-1190	・ Pin	4	26501795-

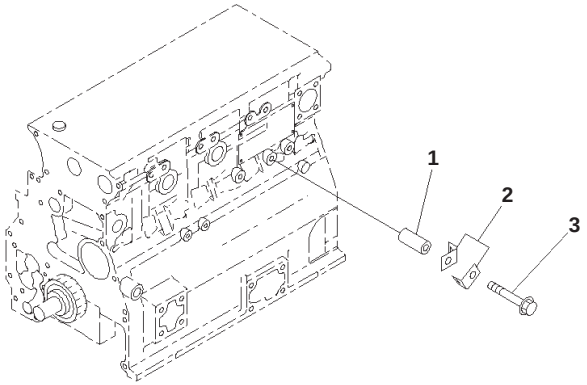

JY008662

Cylinder Block

Index	Part Number	Description	Qty	Serial No.
1	6152-51-5520	Spacer	1	26501795-
2	08057-12010	Clip	2	26501795-
3	01435-01070	Bolt	1	26501795-

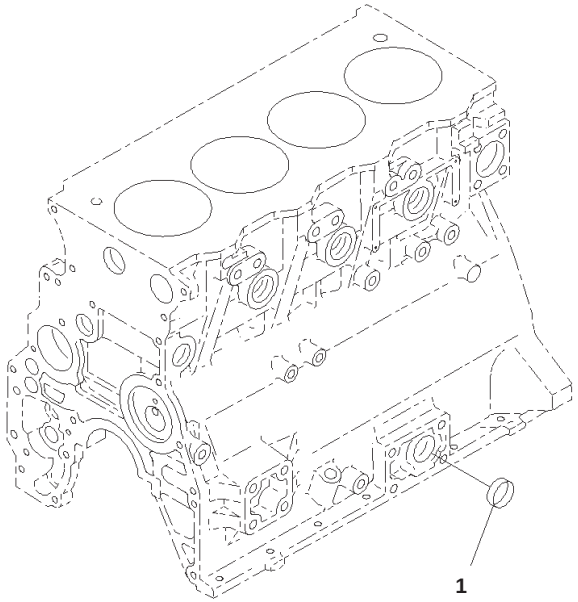

00058516

Cylinder Block Plug, Blind Plug

Index	Part Number	Description	Qty	Serial No.
1	07046-23016	Plug	1	26501795-

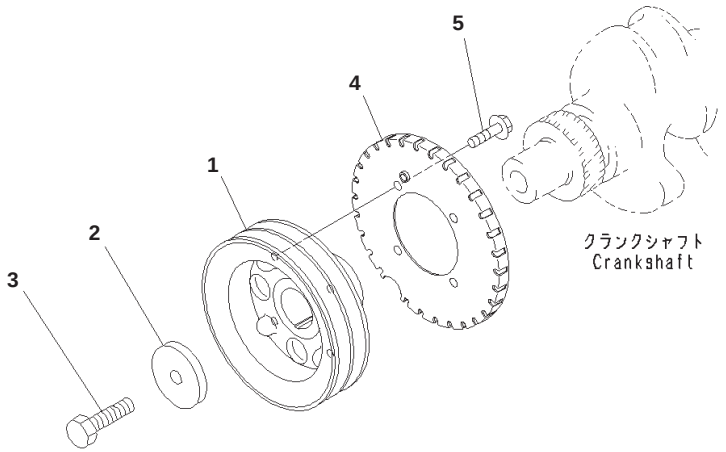

Vibration Damper

Index	Part Number	Description	Qty	Serial No.
1	6271-31-1460	Pulley, Non Hardening	1	26501795-
2	6136-31-1431	Plate	1	26501795-
3	01050-31845	Bolt	1	26501795-
4	6271-31-1990	Plate	1	26501795-
5	01435-00812	Bolt	4	26501795-

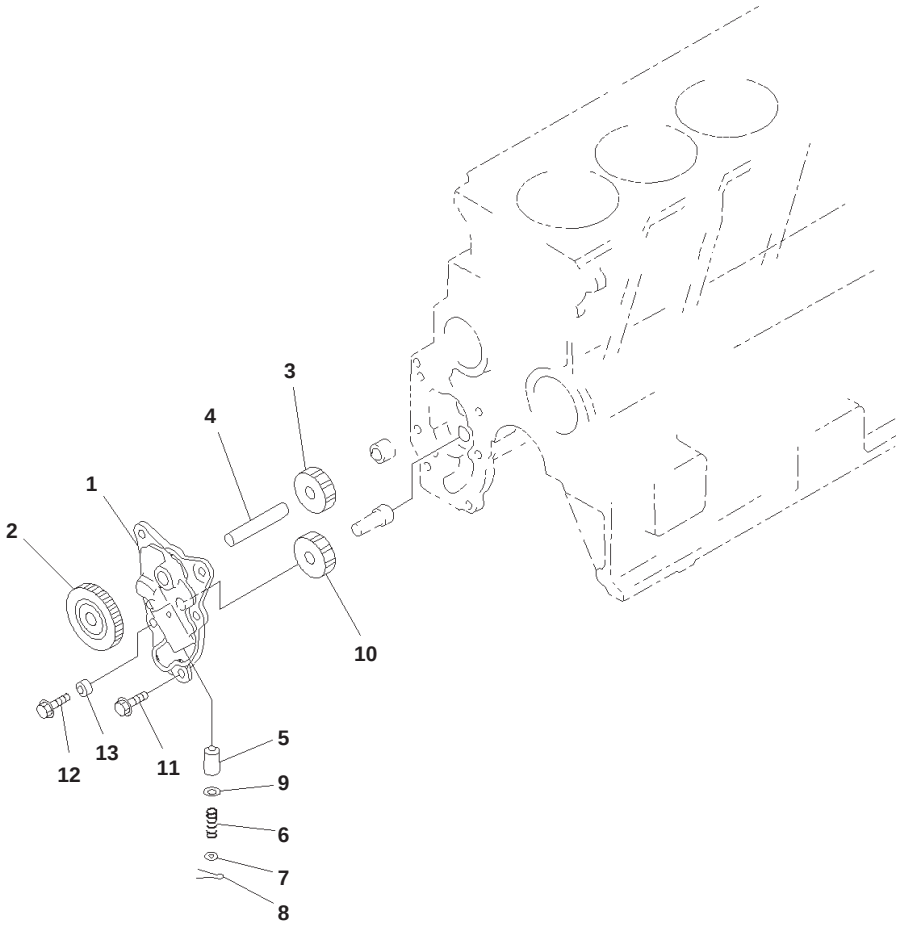

Engine Oil Pump

Index	Code	Part Number	Description	Qty	Serial No.
		6271-51-1200	Cover Assembly	1	26501795-
1	C1		・ Cover	1	26501795-
2		6271-51-1410	・ Gear	1	26501795-
		6207-51-1400	・ Shaft Assembly	1	26501795-
3		6207-51-1410	・・ Gear, Drive	1	26501795-
4	C1		・・ Shaft	1	26501795-
5		6204-51-1310	・ Valve	1	26501795-
6		6206-51-1320	・ Spring	1	26501795-
7		6204-51-1330	・ Washer	1	26501795-
8		6204-51-1340	・ Pin, Cotter	1	26501795-
9		6204-51-1910	・ Shim	1	26501795-
10		6207-51-1610	Gear, Driven	1	26501795-
11		01435-00816	Bolt	4	26501795-
12		01435-00825	Bolt	1	26501795-
13		6691-41-8230	Spacer	1	26501795-

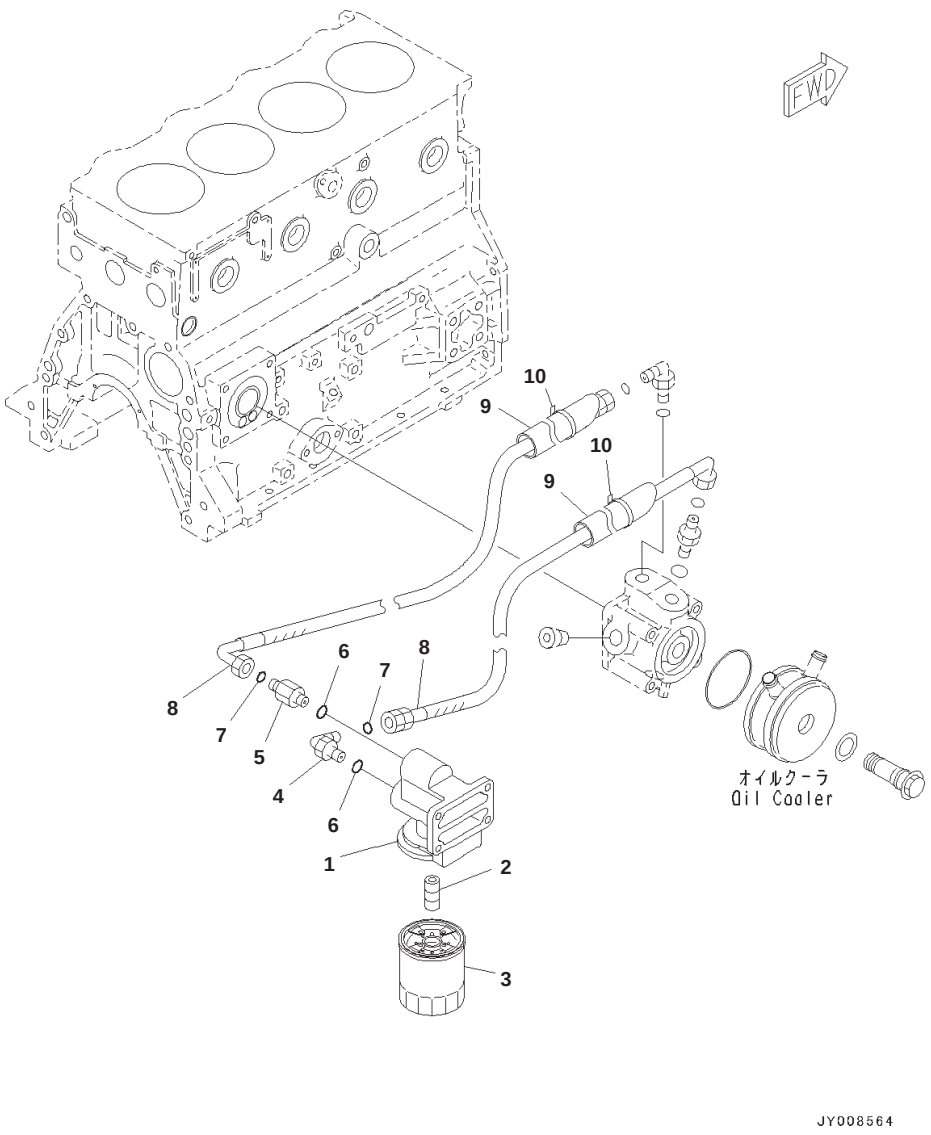

Engine Oil Filter

Index	Part Number	Description	Qty	Serial No.
1	6208-51-5210	Head, Oil Filter	1	26501795-
2	6201-51-5910	Nipple	1	26501795-
3	600-211-2110	Cartridge	1	26501795-
4	02782-1062A	Elbow	1	26501795-
5	22U-62-21480	Nipple	1	26501795-
6	07002-62434	O-ring	2	26501795-
7	02896-61018	O-ring	2	26501795-
8	6271-51-9910	Hose	2	26501795-
9	6208-51-5890	Cover	2	26501795-
10	08034-20519	Band	2	26501795-

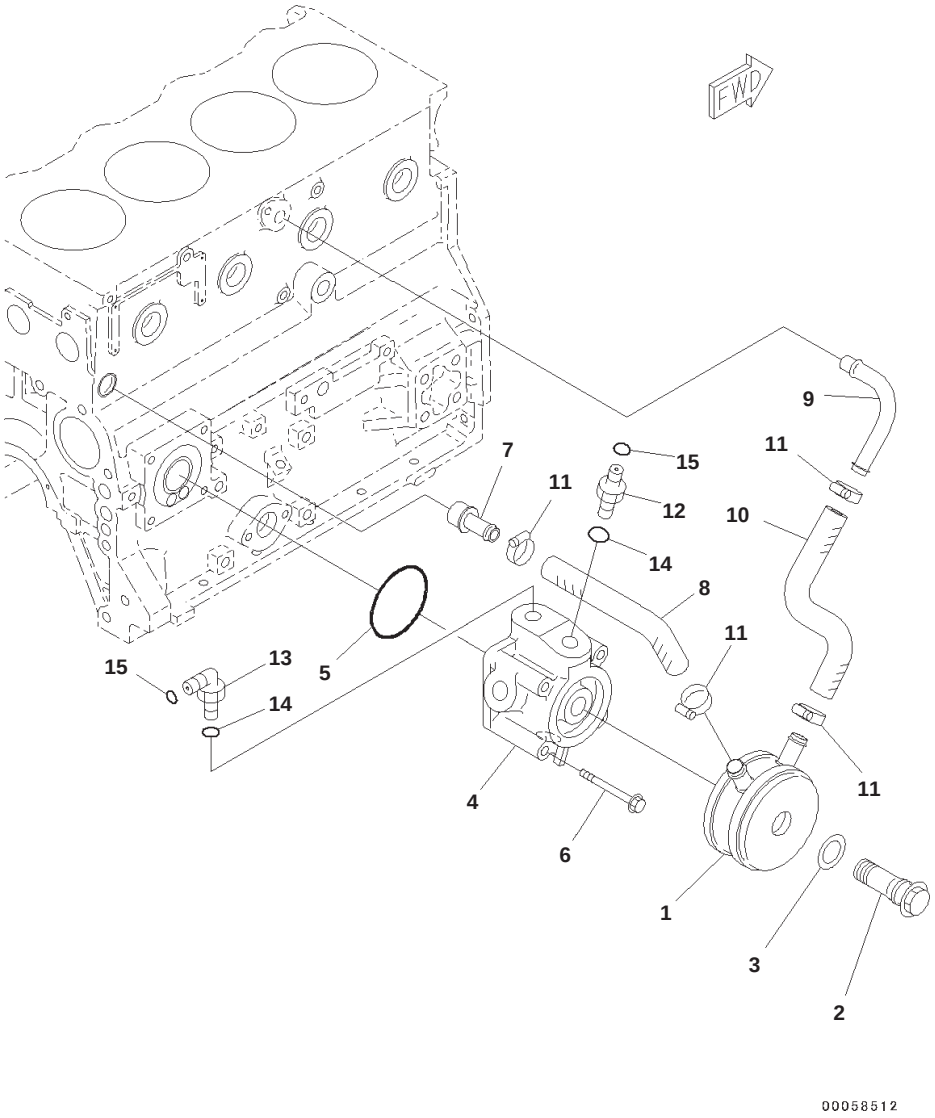

Index	Part Number	Description	Qty	Serial No.
1	6208-61-5400	Oil Cooler Assembly	1	26501795-
2	6208-61-5410	Joint	1	26501795-
3	6208-61-5420	Gasket	1	26501795-
4	6208-51-5410	Adapter Assembly	1	26501795-
5	07000-72070	O-ring	1	26501795-
6	01435-00880	Bolt	4	26501795-
7	6205-61-5261	Joint	1	26501795-
8	6208-61-5210	Hose	1	26501795-
9	6205-61-5251	Joint	1	26501795-
10	6208-61-5220	Hose	1	26501795-
11	07281-00259	Clamp	4	26501795-
12	02781-00628	Union	1	26501795-
13	02782-10630	Elbow	1	26501795-
14	07002-62434	O-ring	2	26501795-
15	02896-61018	O-ring	2	26501795-

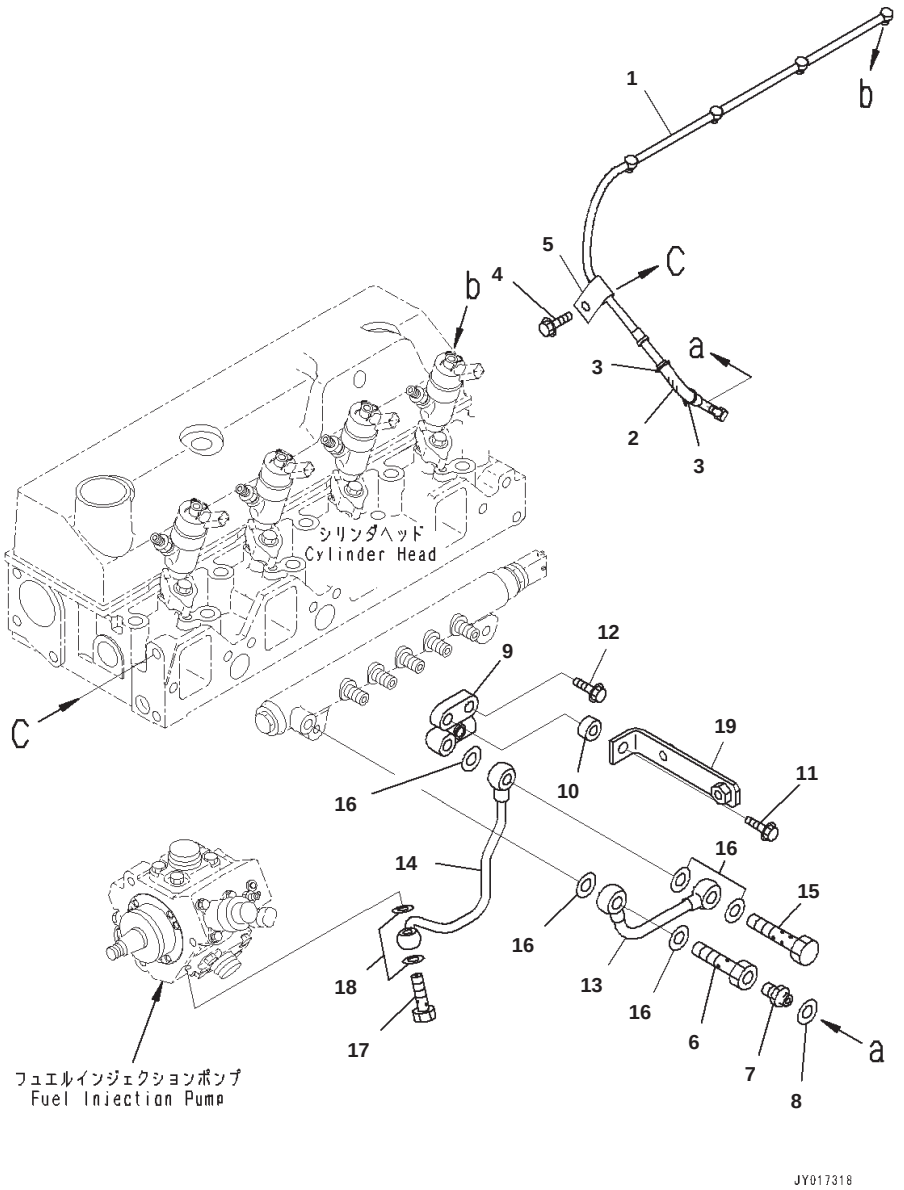

Fuel Filter Piping

Index	Part Number	Description	Qty	Serial No.
1	6271-71-7800	Hose Assembly	1	26517172-
2	6271-71-9890	Hose	1	26517172-
3	08034-20414	Band	2	26517172-
4	01435-01014	Bolt	1	26517172-
5	6204-51-8920	Clip	1	26517172-
6	6161-51-8990	Joint	1	26517172-
7	6271-71-7211	Joint	1	26517172-
8	6271-71-7990	Pin	1	26517172-
9	6271-71-5520	Adapter	1	26517172-
10	6131-12-5920	Spacer	1	26517172-
11	01435-01045	Bolt	1	26517172-
12	01435-01025	Bolt	1	26517172-
13	6271-71-5510	Tube	1	26517172-
14	6271-71-5530	Tube	1	26517172-
15	6127-71-5710	Bolt, Joint	1	26517172-
16	07005-01412	Seal, Washer	5	26517172-
17	07206-30812	Bolt, Joint	1	26517172-
18	07005-01212	Seal, Washer	2	26517172-
19	22B-01-21371	Bracket	1	26517172-

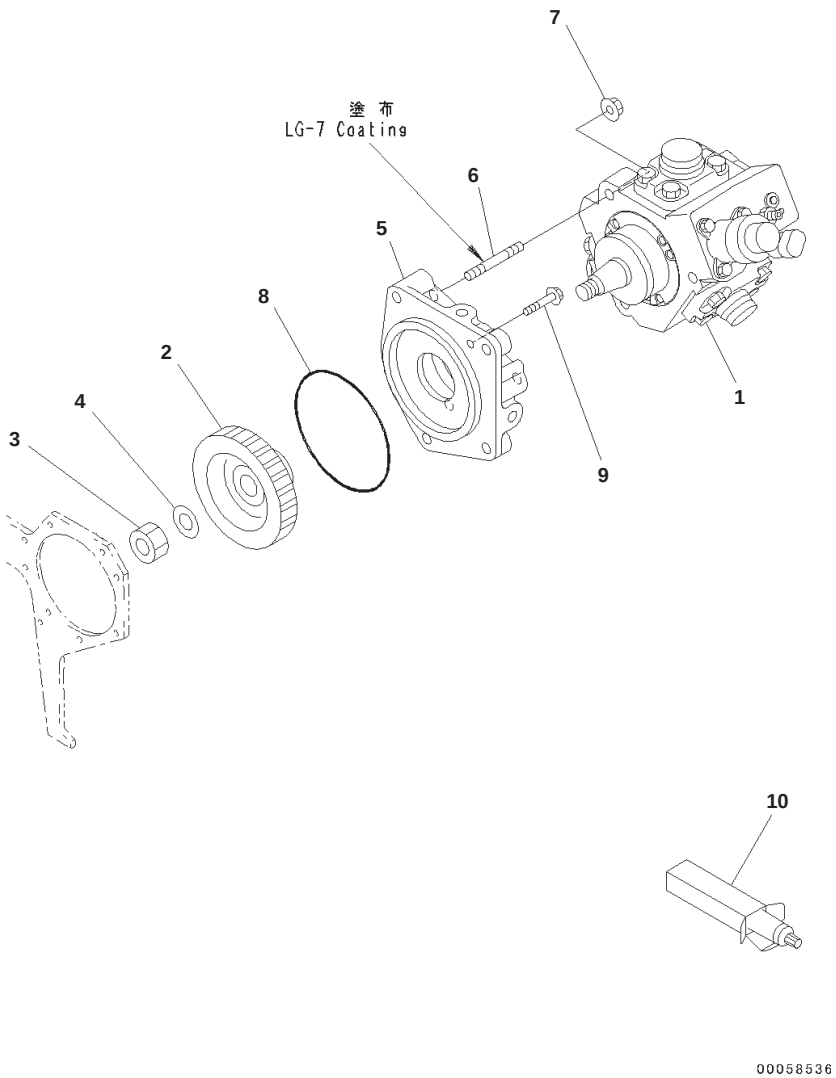

Index	Code	Part Number	Description	Qty	Serial No.
1		6271-71-1110	Pump	1	26501795-
	C1		・ Actuator	1	26510910-
2		6271-71-3170	Gear	1	26501795-
3		01582-01411	Nut	1	26501795-
4		6130-32-1361	Washer	1	26501795-
5		6271-71-3310	Holder	1	26501795-
6		01164-50840	Stud	3	26501795-
7		01584-00806	Nut	3	26501795-
8		07000-12085	O-ring	1	26501795-
9		6206-21-3930	Bolt	1	26501795-
10		09920-00150	Liquid gasket, LG-7, 150G	AR	26501795-

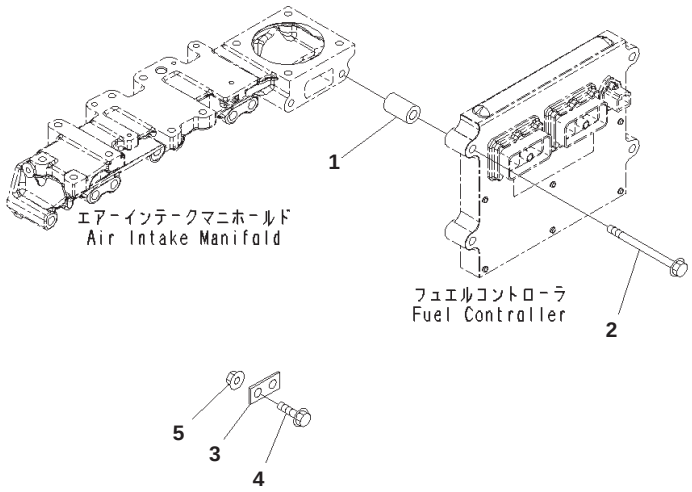

Fuel Control, Bracket

Index	Part Number	Description	Qty	Serial No.
1	6150-81-6920	Spacer	1	26501795-
2	01435-01055	Bolt	1	26502268-
3	6150-81-8980	Plate	1	26502268-
4	01435-00850	Bolt	1	26502268-
5	01584-00806	Nut	1	26502268-

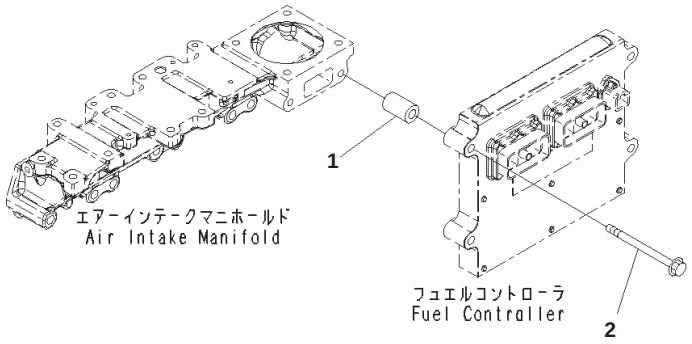

JY008568

Index	Part Number	Description	Qty	Serial No.
1	6131-12-5920	Spacer	1	26503540-
2	01435-01030	Bolt	1	26503540-

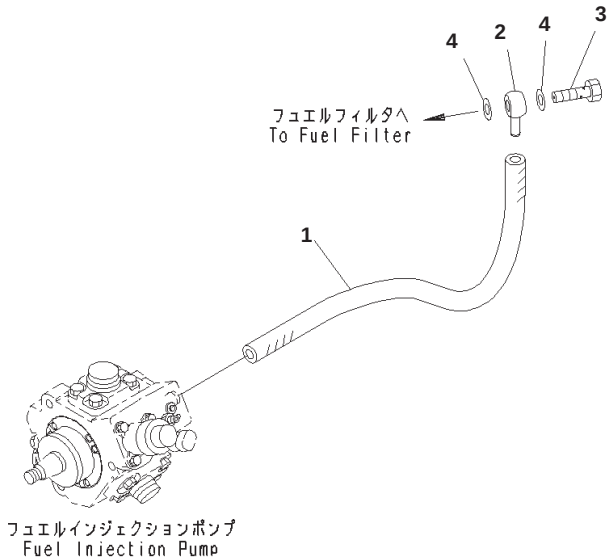

JY008566

Fuel Piping

Index	Part Number	Description	Qty	Serial No.
1	6137-11-4360	Hose	1	26501795-
2	6206-71-5940	Joint	1	26501795-
3	07206-31014	Bolt, Joint, Joint	1	26501795-
4	07005-01412	Seal, Washer	2	26501795-

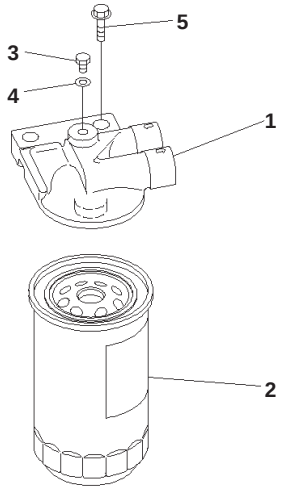

JY008565

Fuel Filter, 2 in 1

Index	Part Number	Description	Qty	Serial No.
	6271-71-6700	Filter Assembly	1	26517172-
1	6271-71-6710	・ Head	1	26517172-
2	600-311-3870	・ Cartridge	1	26517172-
3	600-311-6720	・ Plug	1	26517172-
4	07005-00812	・ Gasket	1	26517172-
5	01435-01030	Bolt	1	26517172-

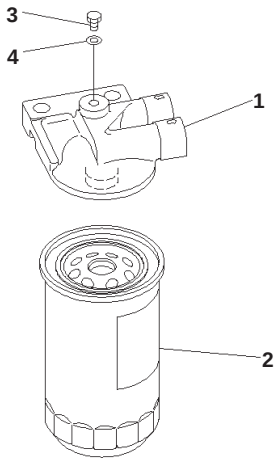

JY008571

Fuel Filter

Index	Part Number	Description	Qty	Serial No.
	6271-71-6700	Filter Assembly	1	26517172-
1	6271-71-6710	・ Head	1	26517172-
2	600-311-3870	・ Cartridge	1	26517172-
3	600-311-6720	・ Plug	1	26517172-
4	07005-00812	・ Gasket	1	26517172-

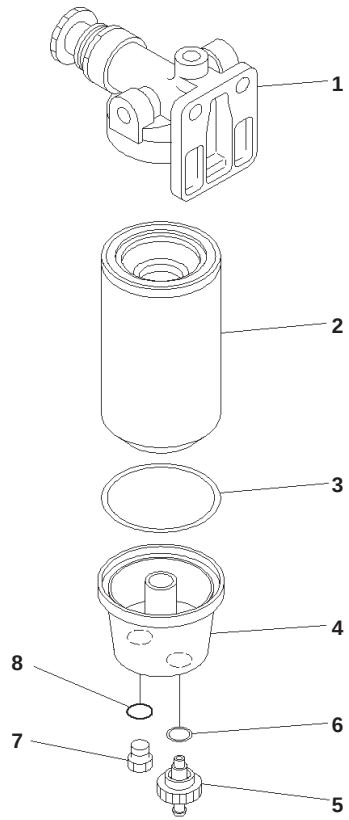

00058489

Pre Filter

Index	Code	Part Number	Description	Qty	Serial No.
		6271-71-6200	Filter Assembly	1	26501795-
1		6271-71-6110	・ Head	1	26501795-
		600-319-4200	・ Cartridge Assembly	1	26501795-
		600-319-4110	・・ Cartridge Assembly	1	26501795-
2	C1		・・・ Cartridge	1	26501795-
3		600-311-3630	・・・ Seal	1	26501795-
4		600-311-3640	・・ Bowl	1	26501795-
		600-311-3660	・・ Valve Assembly	1	26501795-
5		600-311-3710	・・・ Valve	1	26501795-
6		600-311-3670	・・・ Seal	1	26501795-
		600-311-4210	・・ Plug Assembly	1	26501795-
7		600-311-4220	・・・ Plug	1	26501795-
8		600-311-3690	・・・ O-ring	1	26501795-

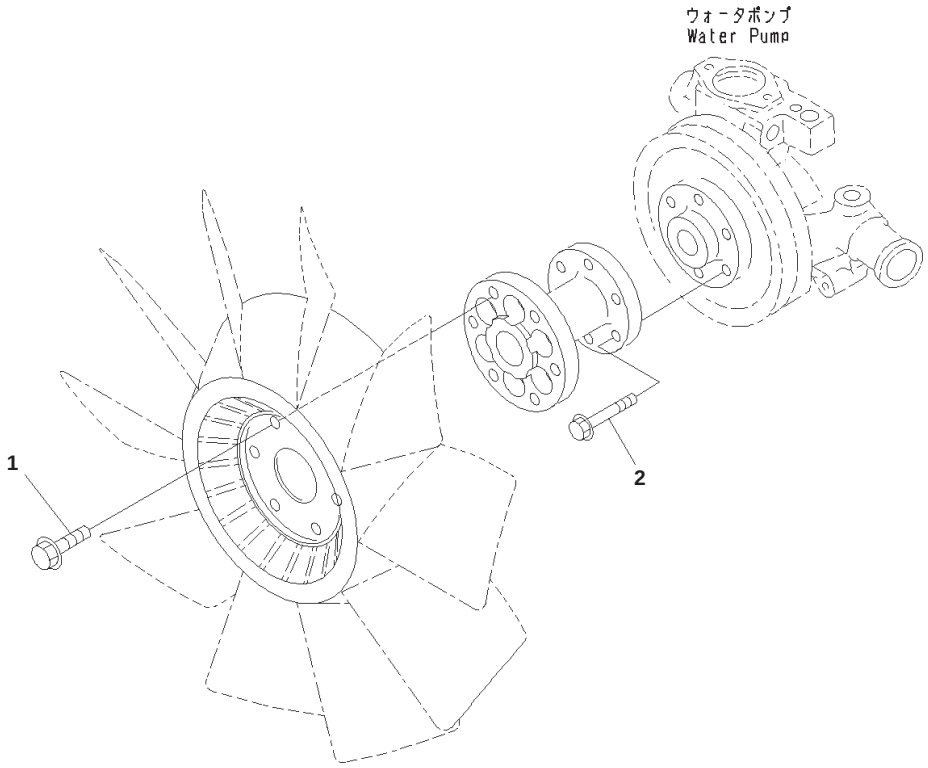

Cooling Fan Mounting

Index	Part Number	Description	Qty	Serial No.
1	01435-01020	Bolt	6	26501795-
2	01435-00830	Bolt	6	26501795-

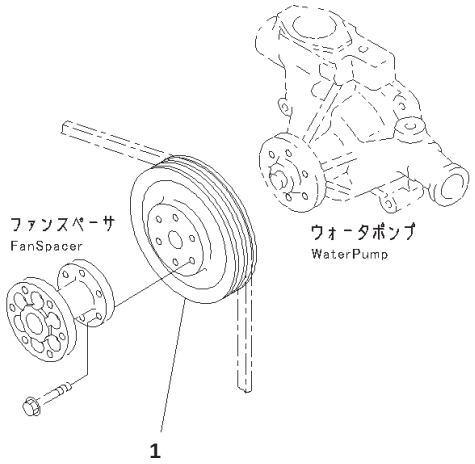

00058498

Index	Part Number	Description	Qty	Serial No.
1	6207-61-3280	Pulley, Non Hardening	1	26501795-

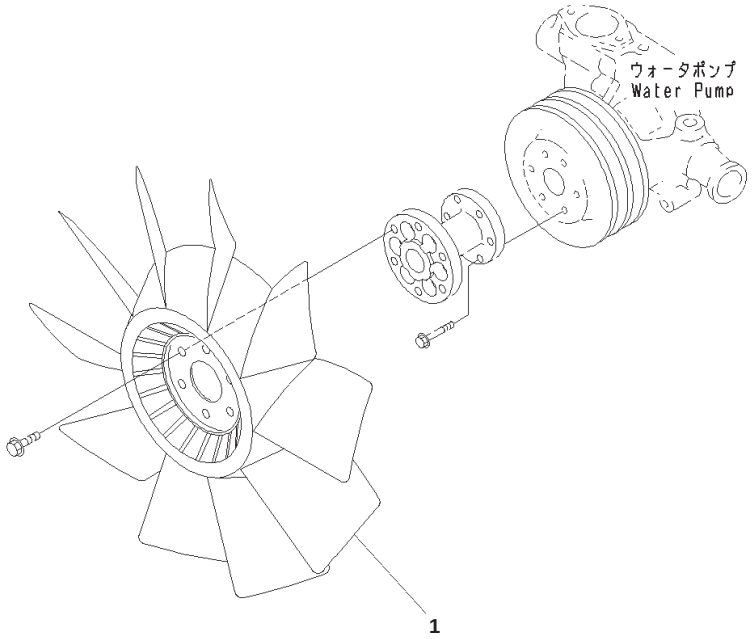

Cooling Fan

Index	Part Number	Description	Qty	Serial No.
1	600-625-7550	Fan, Cooling	1	26501795-

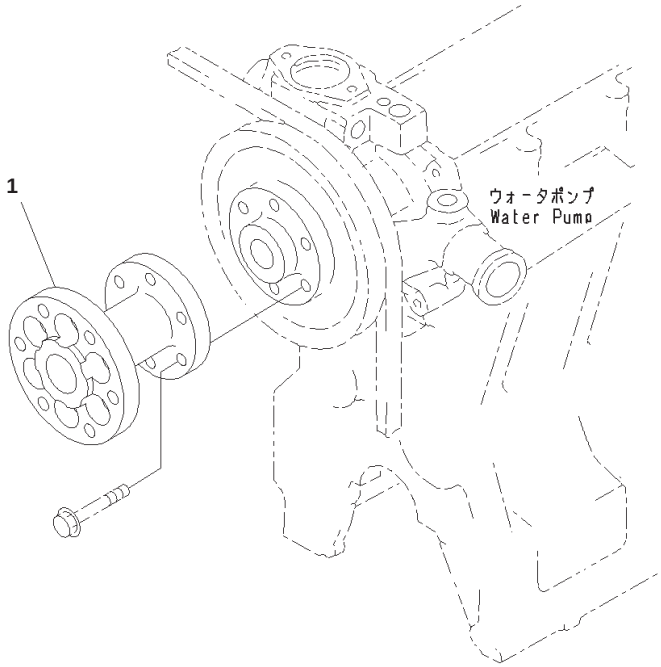

Cooling Fan Spacer

Index	Part Number	Description	Qty	Serial No.
1	6206-61-3990	Spacer, Fan	1	26501795-

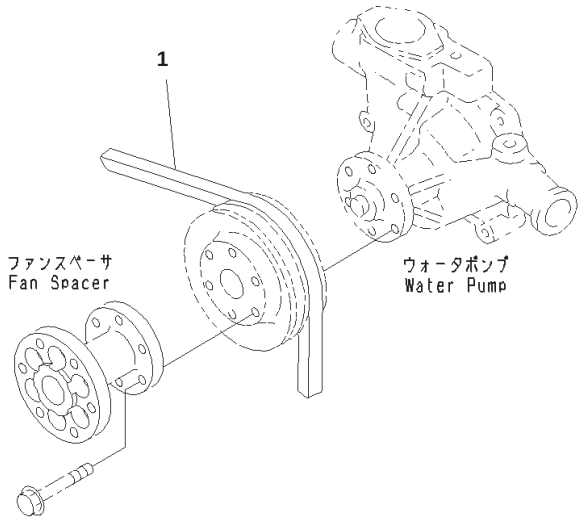

00058533

Cooling Fan Belt, For 35Amp. Alternator

Index	Part Number	Description	Qty	Serial No.
1	6205-61-3580	V-belt	1	26509293-

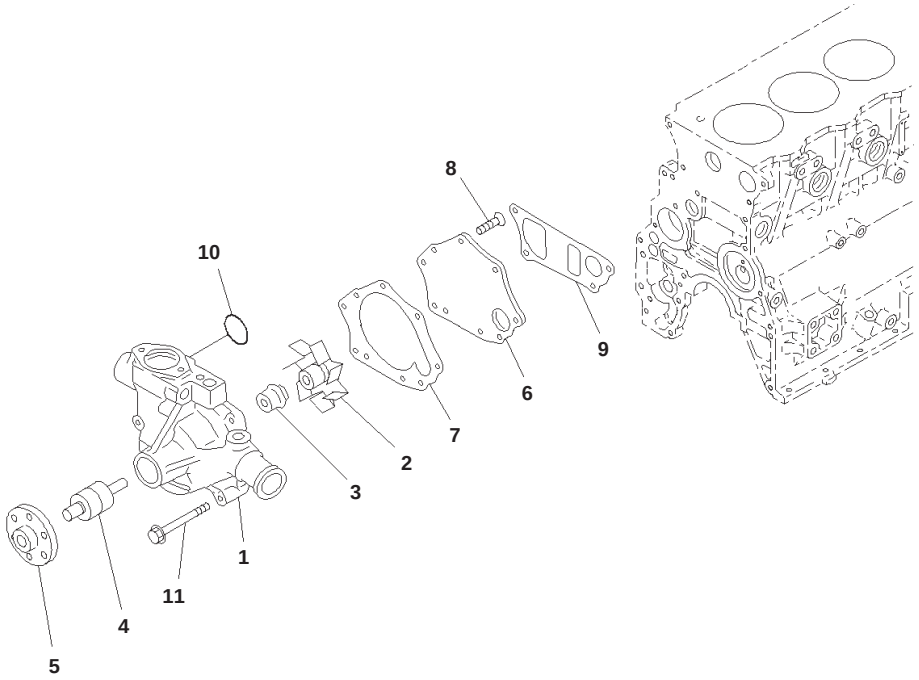

Water Pump

Index	Code	Part Number	Description	Qty	Serial No.
		6205-61-1202	Water Pump Assembly	1	26501795-
1	C1		・ Body	1	26501795-
2		6204-61-1630	・ Impeller	1	26501795-
3		6221-61-1520	・ Seal, Water	1	26501795-
4		6204-61-1650	・ Shaft	1	26501795-
5		6205-61-1210	・ Boss	1	26501795-
6		6206-61-1121	・ Cover	1	26501795-
7		6204-61-1660	・ Gasket	1	26501795-
8		01236-40816	・ Screw	5	26501795-
9		6206-61-1731	Gasket	1	26501795-
10		07000-03040	O-ring	1	26501795-
11		01435-00855	Bolt	3	26501795-

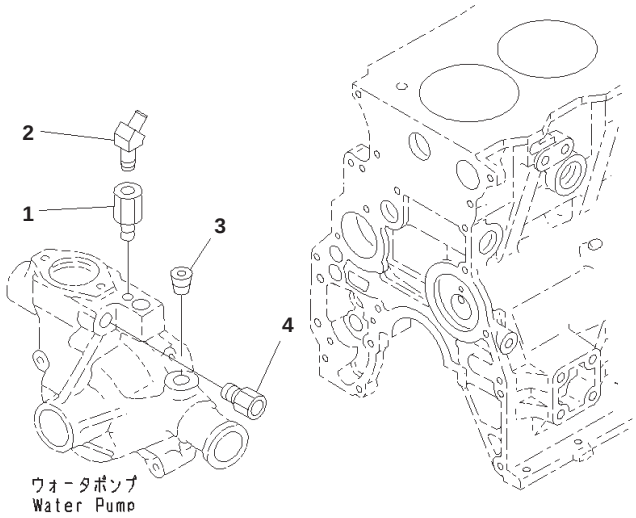

JY008569

Index	Part Number	Description	Qty	Serial No.
3	07043-70312	Plug	1	26501795-
4	6271-81-6990	Adapter	1	26501795-

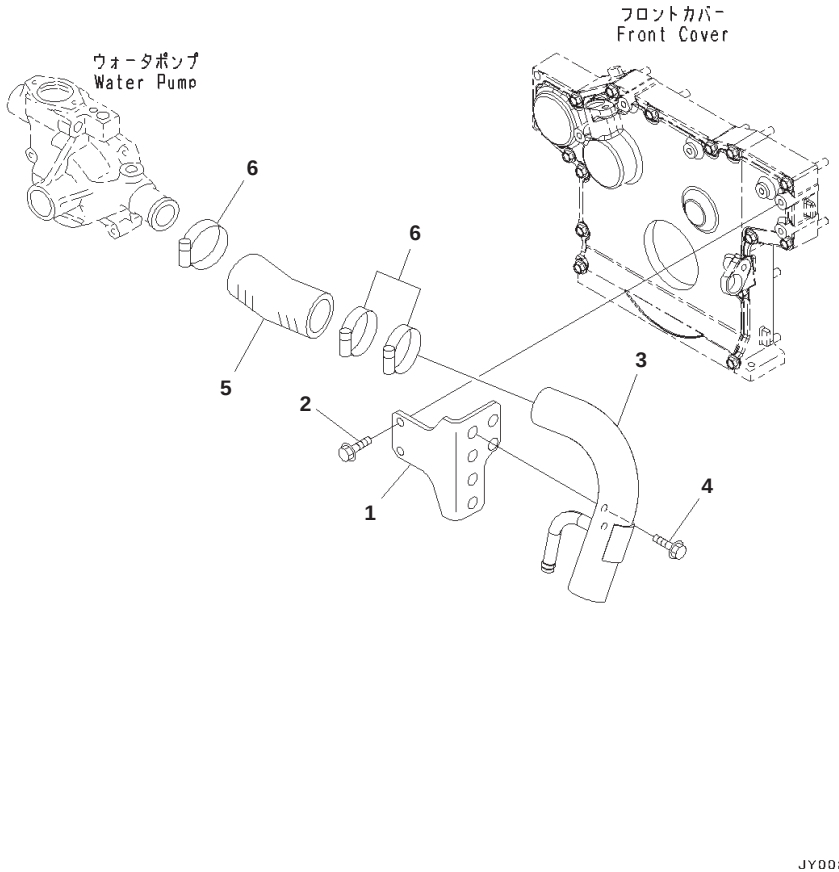

Water Piping

Index	Part Number	Description	Qty	Serial No.
1	203-03-12321	Bracket	1	26506723-
2	01435-00820	Bolt	2	26506723-
3	203-03-12790	Tube	1	26506723-
4	01435-00820	Bolt	2	26506723-
5	6208-61-6110	Hose, Rubber	1	26506723-
6	07281-00609	Clamp	3	26506723-

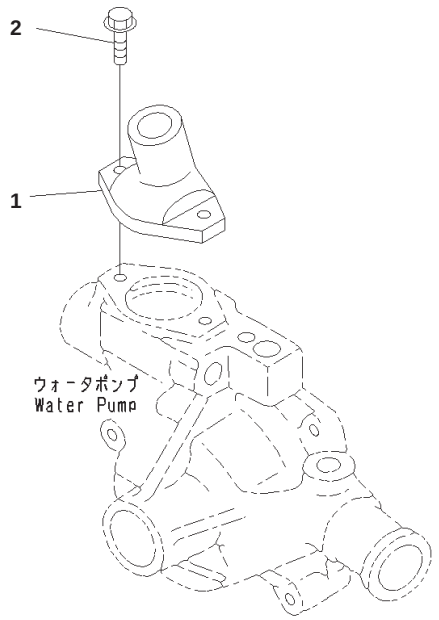

PJ6F372

Index	Part Number	Description	Qty	Serial No.
1	6204-11-6421	Connector, Water	1	26501795-
2	01435-00820	Bolt	2	26501795-

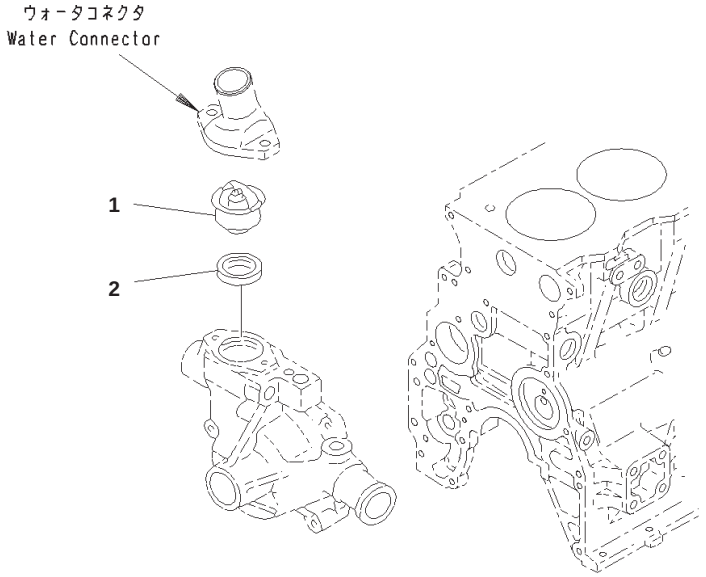

Thermostat

Index	Part Number	Description	Qty	Serial No.
1	600-421-6240	Thermostat	1	26501795-
2	6140-11-6331	Gasket	1	26501795-

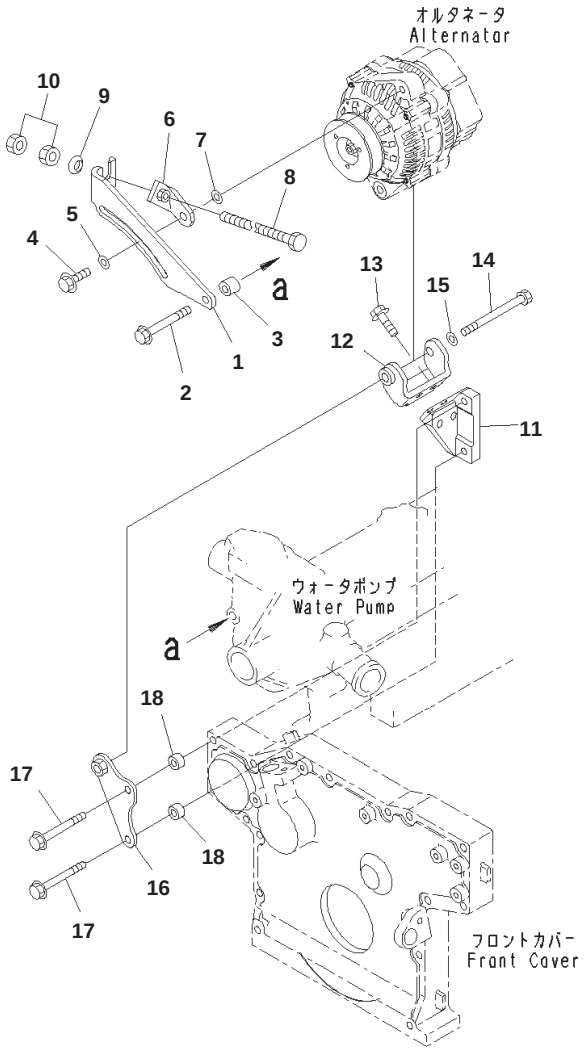

Alternator Mounting, 35Amp.

Index	Part Number	Description	Qty	Serial No.
1	6271-81-6350	Bracket, Adjust	1	26501795-
2	01435-00870	Bolt	1	26501795-
3	6141-64-2560	Spacer	1	26501795-
4	01435-00835	Bolt	1	26501795-
5	154-61-16570	Washer	1	26501795-
6	6208-81-6470	Bracket, Adjust	1	26501795-
7	01643-31032	Washer	1	26501795-
8	6208-81-6590	Bolt	1	26501795-
9	6204-11-3830	Washer	1	26501795-
10	01580-11008	Nut	2	26501795-
11	6271-81-6340	Bracket	1	26501795-
12	6204-81-6321	Bracket	1	26501795-
13	01435-00816	Bolt	2	26501795-
14	01018-31095	Bolt	1	26501795-
15	01640-21016	Washer	1	26501795-
16	6271-81-6380	Plate	1	26501795-
17	01435-00875	Bolt	2	26501795-
18	6204-81-6740	Spacer	2	26501795-

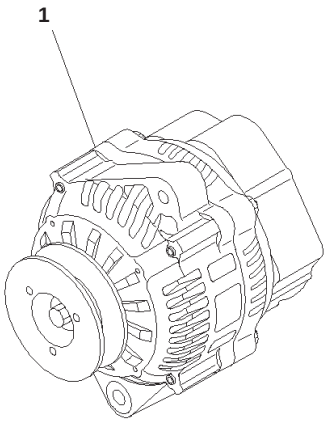

PJ6F271

Index	Part Number	Description	Qty	Serial No.
1	600-861-3610	Alternator Assembly, 35Amp.	1	26501795-

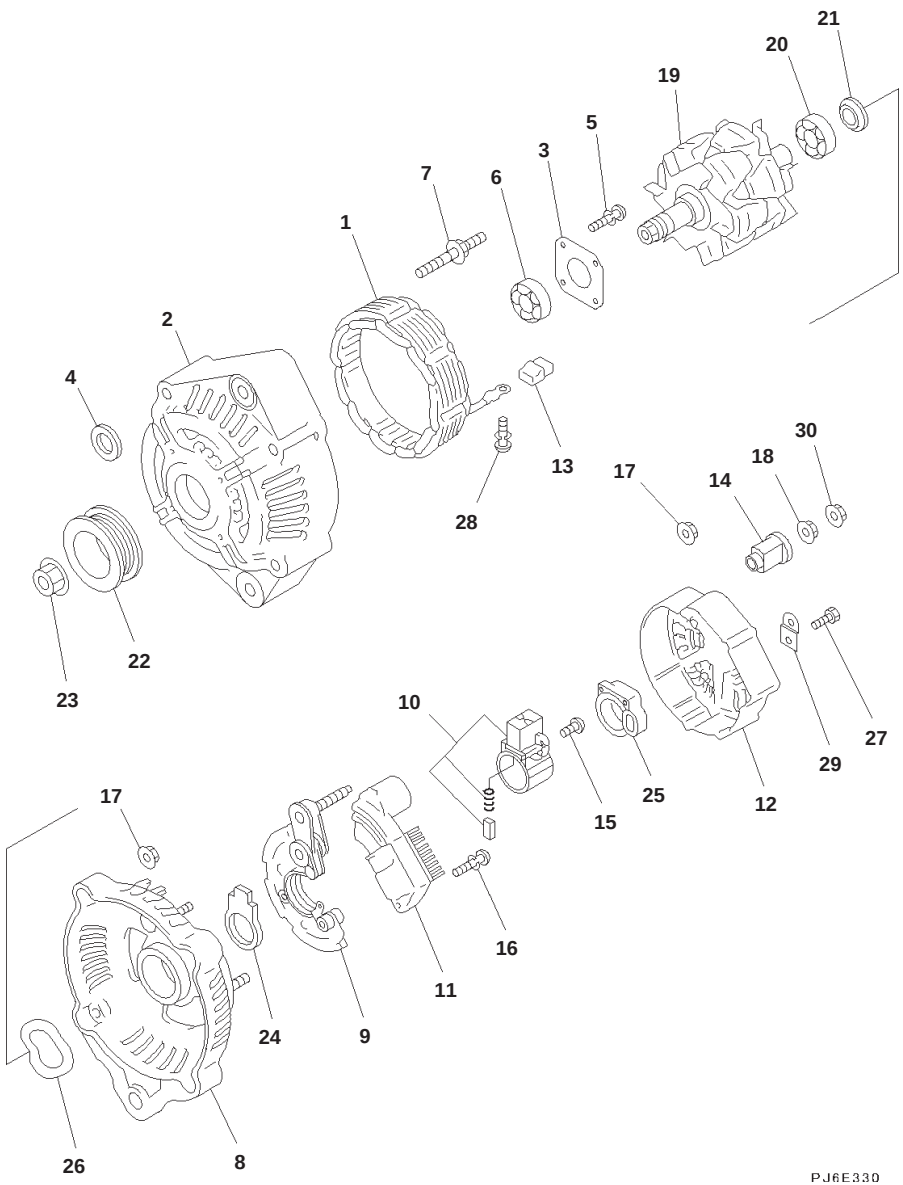

Index	Part Number	Description	Qty	Serial No.
	600-861-3610	Alternator Assembly, 35Amp.	1	26501795-
	ND121400-3950	・ Frame Assembly	1	26501795-
1	ND021100-5060	・・ Stator Assembly	1	26501795-
2	ND021401-4900	・・ Frame,Front	1	26501795-
3	ND021411-0570	・・ Plate	1	26501795-
4	ND021045-0530	・・ Collar	1	26501795-
5	ND949006-5590	・・ Screw	4	26501795-
6	ND949100-5010	・・ Bearing, Ball	1	26501795-
7	ND949043-2000	・・ Bolt	4	26501795-
8	ND021501-7640	・ Frame,Rear	1	26501795-
9	ND021580-4670	・ Rectifier Assembly	1	26501795-
10	ND021620-2720	・ Holder Assembly, Brush	1	26501795-
11	ND126000-3730	・ Regulator Assembly	1	26501795-
12	ND021551-2360	・ Cover,Rear	1	26501795-
13	ND021605-1970	・ Bushing	4	26501795-
14	ND021605-2950	・ Bushing	1	26501795-
15	ND949006-5460	・ Screw	3	26501795-
16	ND949007-5110	・ Screw	2	26501795-
	ND91310-04251	・ Screw	2	26501795-
17	ND949056-2481	・ Nut	7	26501795-
18	ND949056-1001	・ Nut	1	26501795-
19	ND021200-8610	・ Rotor Assembly	1	26501795-
20	ND949100-2790	・ Bearing, Ball	1	26501795-
	ND949100-3980	・ Bearing, Ball	1	26501795-
21	ND021506-0070	・ Cover	1	26501795-
22	ND121041-0270	・ Pulley	1	26501795-
23	ND949056-2520	・ Nut	1	26501795-
24	ND021626-0190	・ Seal	1	26501795-
25	ND021626-0250	・ Seal	1	26501795-
26	ND021542-0160	・ Washer	1	26501795-
27	ND949006-6401	・ Screw	1	26501795-
28	ND949007-6280	・ Screw	4	26501795-
29	ND021602-5230	・ Plate	1	26501795-
30	ND92150-06061	・ Nut	1	26501795-

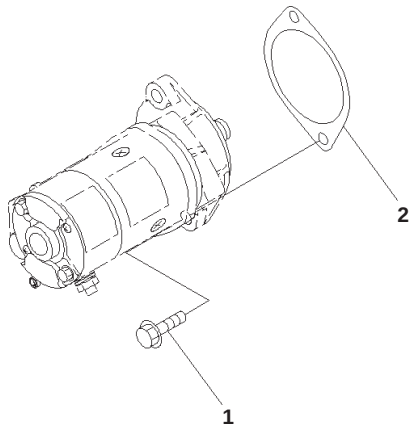

00058523

Starting Motor Mounting

Index	Part Number	Description	Qty	Serial No.
1	01435-01235	Bolt	2	26501795-
2	6202-21-4151	Gasket	1	26501795-

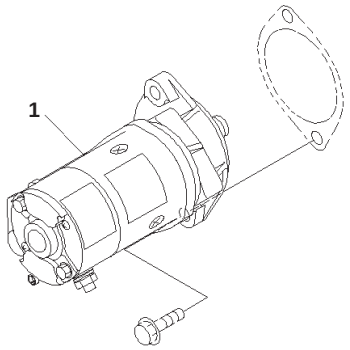

00058527

Index	Part Number	Description	Qty	Serial No.
1	600-813-4461	Starting Motor Assembly, 4.5Kw	1	26501795-

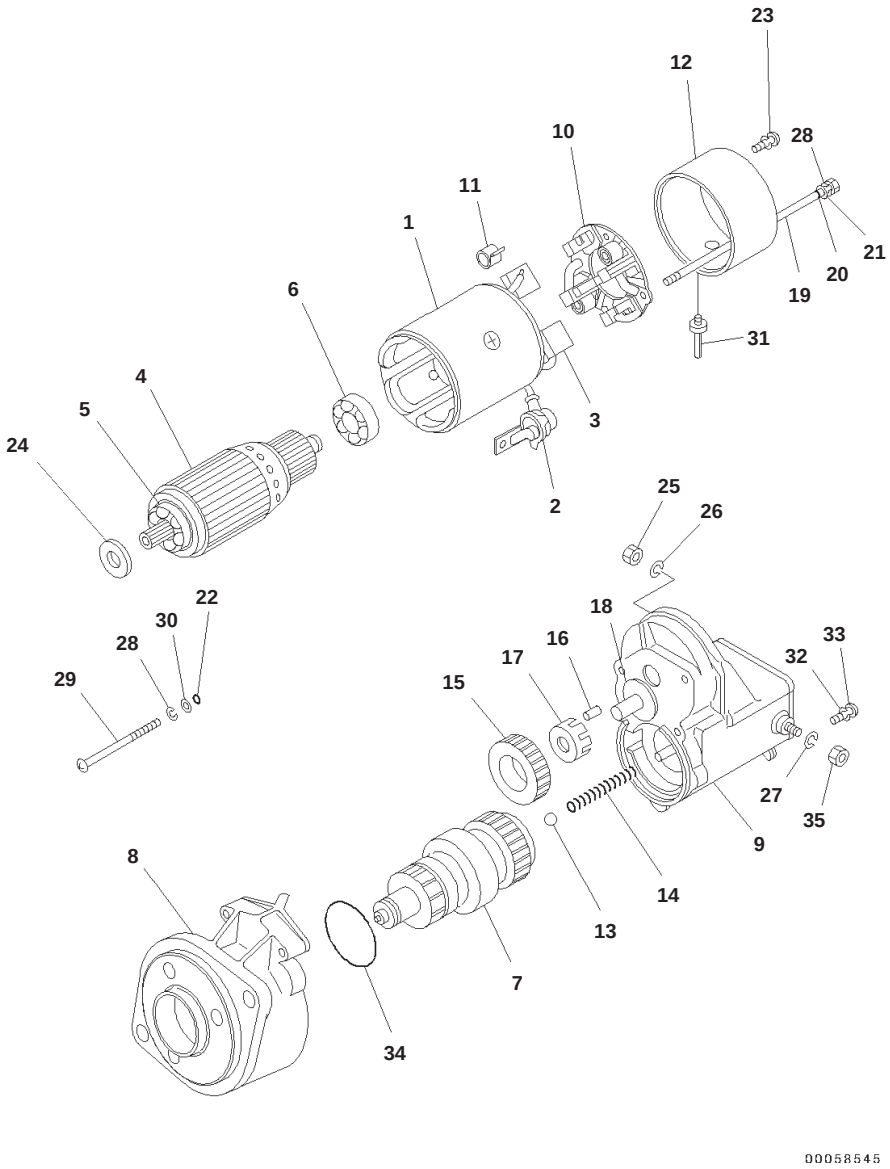

Index	Part Number	Description	Qty	Serial No.
	600-813-4461	Starting Motor Assembly, 4.5Kw	1	26501795-
1	ND028100-2881	・ Yoke Assembly	1	26501795-
2	ND028062-0130	・・ Cover	1	26501795-
3	ND028099-3570	・・ Starting Motor Kit	2	26501795-
4	ND028200-1590	・ Armature Assembly	1	26501795-
5	ND949100-1930	・・ Bearing, Ball	1	26501795-
6	ND949100-1750	・・ Bearing, Ball	1	26501795-
7	ND028300-5091	・ Clutch Assembly	1	26501795-
	ND028099-3310	・・ Stator Kit	1	26501795-
	ND028300-6750	・・ Clutch Assembly	1	26501795-
	ND949100-4500	・・・ Bearing, Ball,Front	1	26501795-
	ND949100-1920	・・・ Bearing, Ball,Rear	1	26501795-
	ND949170-4040	・・ Spring	1	26501795-
	ND028381-0071	・・ Shaft	1	26501795-
8	ND228401-1440	・ Housing Assembly	1	26501795-
9	ND153400-2192	・ Magnet Assembly, Switch	1	26501795-
	ND128099-5830	・・ Starting Motor Kit	1	26501795-
	ND028099-3160	・・ Starting Motor Kit	1	26501795-
	ND053660-0443	・・ Plunger	1	26501795-
	ND053404-0240	・・ Gasket	1	26501795-
	ND053505-0290	・・ Cover	1	26501795-
	ND053480-7560	・・ Bolt Assembly	1	26501795-
10	ND028510-5390	・ Holder Assembly, Brush	1	26501795-
11	ND949173-0571	・・ Spring	4	26501795-
12	ND028501-7880	・ Frame	1	26501795-
13	ND128961-0010	・ Ball	1	26501795-
14	ND949170-4070	・ Spring	1	26501795-
15	ND028371-1500	・ Pinion	1	26501795-
16	ND028306-0070	・ Roller	5	26501795-
17	ND028063-0030	・ Retainer	1	26501795-
18	ND028327-0171	・ Retainer	1	26501795-
19	ND949042-3741	・ Bolt	2	26501795-
20	ND90804-10050	・ O-ring	2	26501795-
21	ND949011-5700	・ Washer	2	26501795-
22	ND90801-10050	・ O-ring	3	26501795-
23	ND949007-6530	・ Screw	2	26501795-
24	ND949020-0600	・ Washer	1	26501795-
25	ND90170-10061	・ Nut	1	26501795-
26	ND90258-10001	・ Washer	1	26501795-
27	ND949017-1290	・ Washer	1	26501795-
28	ND90258-06001	・ Washer	2	26501795-
29	ND949006-6910	・ Screw	3	26501795-
30	ND90200-06241	・ Washer	3	26501795-
31	ND028062-5790	・ Cover	1	26501795-
32	ND90260-00501	・ Washer	1	26501795-
33	ND949007-6850	・ Screw	1	26501795-

SAA4D95LE-5D S/N 26501795-UP (For PC130-8)
Starting Motor, 4.5KW, (2/2)

Index	Part Number	Description	Qty	Serial No.
34	ND028901-5190	・ Seal	1	26501795-
35	ND949056-4480	・ Nut	1	26501795-

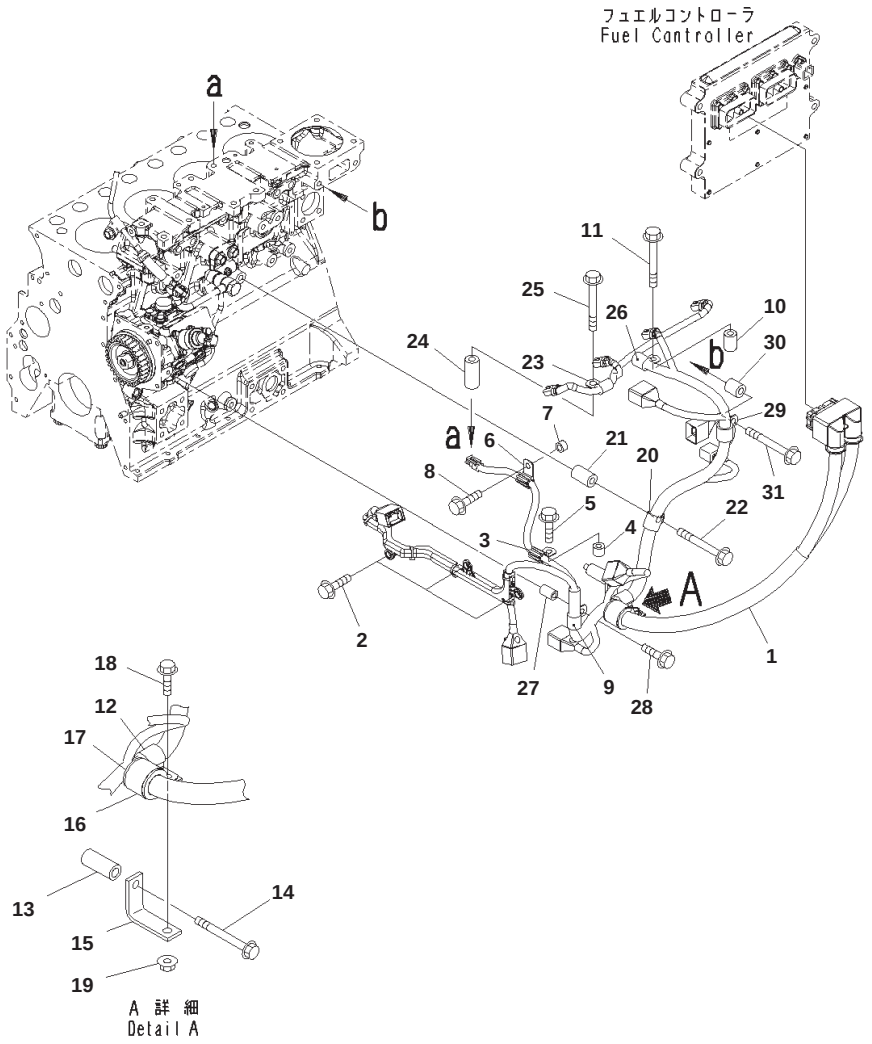

Wiring Harness

Index	Part Number	Description	Qty	Serial No.
1	6271-81-8240	Wiring Harness	1	26501795-
2	01435-00816	Bolt	3	26501795-
3	600-051-1100	Clip	1	26501795-
4	6141-64-2560	Spacer	1	26501795-
5	01435-00825	Bolt	1	26501795-
6	600-051-1100	Clip	1	26501795-
7	6167-11-6640	Spacer	1	26501795-
8	01435-00820	Bolt	1	26501795-
9	600-051-1140	Clip	1	26501795-
10	195-979-3510	Collar	1	26501795-
11	01435-00835	Bolt	1	26501795-
12	600-051-1180	Clip	1	26501795-
13	6143-11-4290	Spacer	1	26501795-
14	01435-00860	Bolt	1	26501795-
15	6271-81-8980	Bracket	1	26501795-
16	04434-53211	Clip	1	26501795-
17	07095-20523	Cushion	1	26501795-
18	01435-00820	Bolt	1	26501795-
19	01584-00806	Nut	1	26501795-
20	600-051-2180	Clip	1	26501795-
21	6150-81-6920	Spacer	1	26501795-
22	01435-01055	Bolt	1	26501795-
23	600-051-2100	Clip	1	26501795-
24	6152-51-5520	Spacer	1	26501795-
25	01435-01065	Bolt	1	26501795-
26	600-051-1140	Clip	1	26501795-
27	6130-12-4581	Spacer	1	26501795-
28	01435-00840	Bolt	1	26501795-
29	600-051-2180	Clip	1	26501795-
30	144-874-7470	Boss	1	26501795-
31	01435-01040	Bolt	1	26501795-

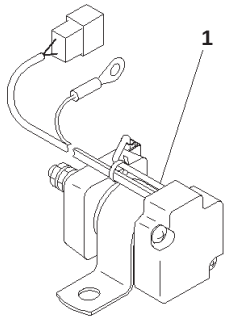

PJ6F066

Starting Motor Relay

Index	Part Number	Description	Qty	Serial No.
1	600-815-8941	Relay	1	26501795-

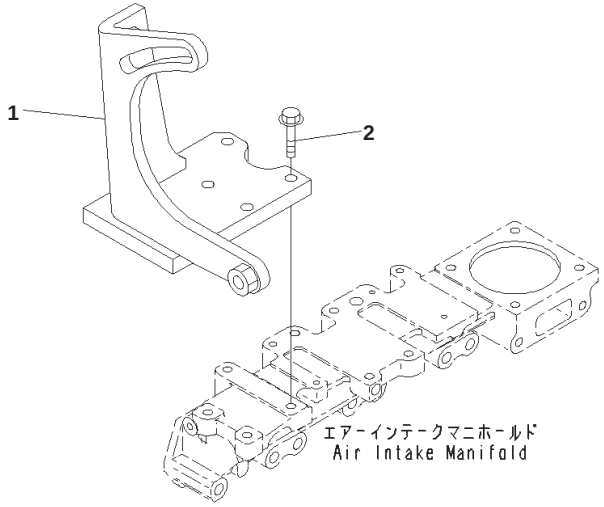

00058542

Air Compressor, Bracket

Index	Part Number	Description	Qty	Serial No.
1	203-979-1211	Bracket	1	26501795-
2	01435-01030	Bolt	4	26501795-

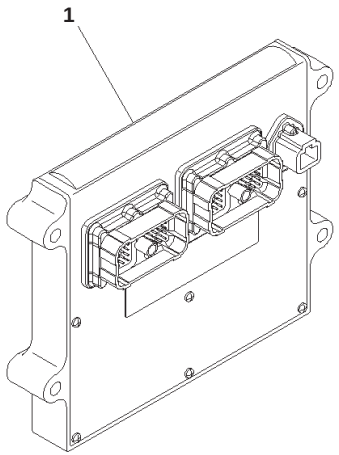

00070843

Engine Controller, (1/2)

Index	Part Number	Description	Qty	Serial No.
1	600-475-1102	Controller Assembly	1	26504653-

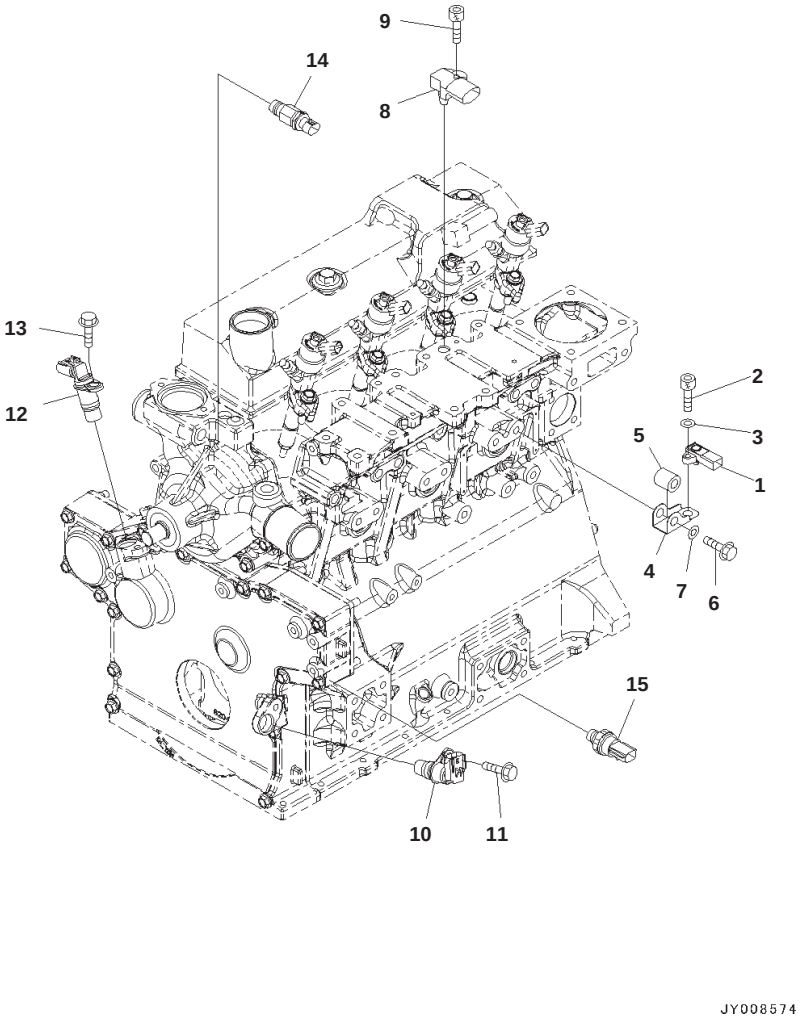

Engine Controller, (2/2)

Index	Part Number	Description	Qty	Serial No.
1	6261-81-2600	Sensor	1	26501795-
2	01252-60516	Bolt	1	26501795-
3	01640-20508	Washer	1	26501795-
4	6271-81-9190	Bracket	1	26501795-
5	6210-11-5820	Spacer	1	26501795-
6	01435-01045	Bolt	1	26501795-
7	01643-31032	Washer	1	26501795-
8	6271-81-1910	Sensor, Boost Pressure And Temperature	1	26501795-
9	01252-60616	Bolt, Hexagon Socket Head	1	26501795-
10	6271-81-9201	Sensor Assembly	1	26510430-
	6754-81-9410	・ Sensor Assembly	1	26501795-
	6271-81-9220	・ O-ring	1	26501795-
11	01435-00820	Bolt	1	26501795-
12	6261-81-2902	Sensor Assembly, Speed, Revolution	1	26510430-
	6261-81-2911	・ Sensor	1	26501795-
	6271-81-9220	・ O-ring	1	26501795-
13	01435-00820	Bolt	1	26501795-
14	6261-81-6901	Sensor Assembly	1	26504673-
	6216-84-9740	・ Seal	1	26504673-
15	6271-81-1940	Switch, Pressure	1	26501795-

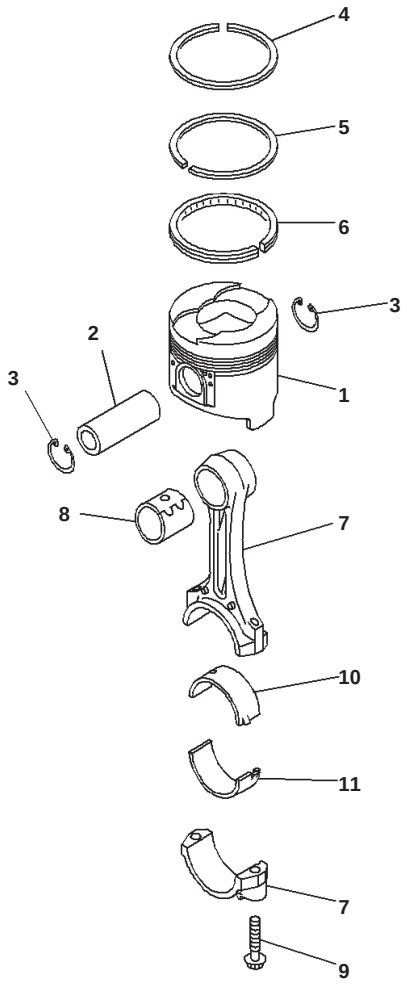

Parts Performance, Piston

Index	Code	Part Number	Description	Qty	Serial No.
1		6271-31-2110	Piston, Standard	4	26501795-
		6271-39-2110	Piston, Oversize 0.25mm	4	26501795-
		6271-38-2110	Piston, Oversize 0.50mm	4	26501795-
2		6207-31-2420	Pin, Piston	4	26501795-
3		04065-03012	Ring, Snap	8	26501795-
		6271-31-2100	Piston Ring Assembly, Standard	4	26501795-
4	C1		・ Ring, Top, Standard	1	26501795-
5	C1		・ Ring, Second, Standard	1	26501795-
6	C1		・ Ring, Oil, Standard	1	26501795-
		6271-39-2100	Piston Ring Assembly, Oversize 0.25mm	4	26501795-
	C1		・ Ring, Top, Oversize 0.25mm	1	26501795-
	C1		・ Ring, Second, Oversize 0.25mm	1	26501795-
	C1		・ Ring, Oil, Oversize 0.25mm	1	26501795-
		6271-38-2100	Piston Ring Assembly, Oversize 0.50mm	4	26501795-
	C1		・ Ring, Top, Oversize 0.50mm	1	26501795-
	C1		・ Ring, Second, Oversize 0.50mm	1	26501795-
	C1		・ Ring, Oil, Oversize 0.50mm	1	26501795-
		6207-31-3800	Connecting Rod Assembly	4	26502022-
7		6207-31-3810	・ Rod	1	26502022-
8		6207-31-3130	・ Bushing	1	26501795-
9		6204-31-3310	・ Bolt	2	26501795-
		6208-31-3500	Crank Pin Metal Assembly, Standard	4	26502022-
		6207-39-3900	Crank Pin Metal Assembly, Undersized, 0.25mm	4	26502022-
		6207-38-3900	Crank Pin Metal Assembly, Undersized, 0.50mm	4	26502022-
		6207-37-3900	Crank Pin Metal Assembly, Undersized, 0.75mm	4	26502022-
		6207-36-3900	Crank Pin Metal Assembly, Undersized, 1.00mm	4	26502022-
10	C1		Metal,Upper	4	26501795-
	C1		Metal,Upper	4	26501795-
	C1		Metal,Upper	4	26501795-
	C1		Metal,Upper	4	26501795-
	C1		Metal,Upper	4	26501795-
11	C1		Metal,Lower	4	26502022-
	C1		Metal,Lower	4	26502022-
	C1		Metal,Lower	4	26502022-
	C1		Metal,Lower	4	26502022-
	C1		Metal,Lower	4	26502022-

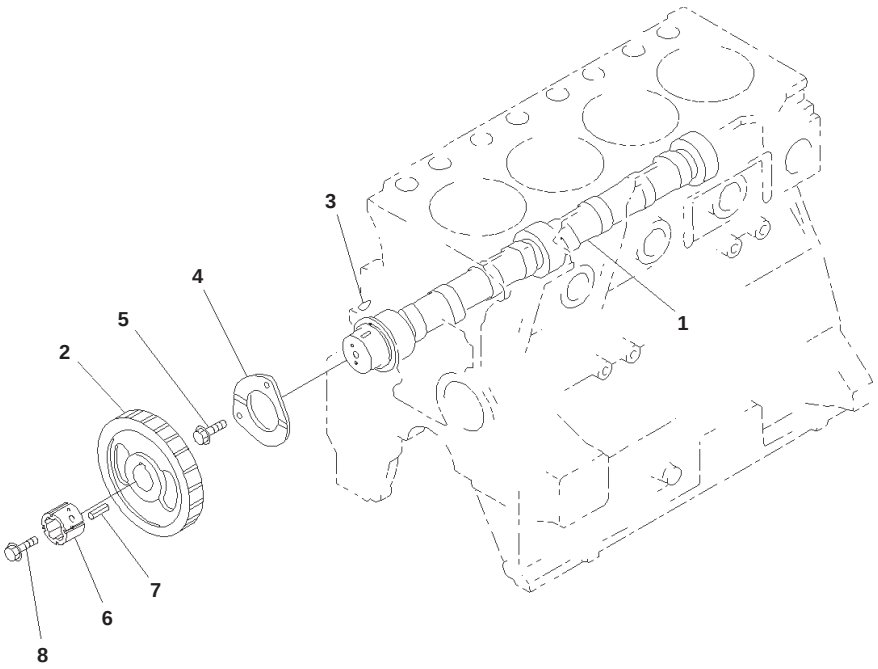

Parts Performance, Camshaft

Index	Code	Part Number	Description	Qty	Serial No.
		6271-41-1500	Camshaft Assembly	1	26501795-
1	C1		・ Camshaft	1	26501795-
2		6271-41-1220	・ Gear, Camshaft	1	26501795-
3		04010-00516	・ Key	1	26501795-
4		6204-41-1131	・ Plate, Thrust	1	26501795-
5		01435-00820	Bolt	2	26501795-
6		6271-41-1190	Ring	1	26501795-
7		04025-00312	Pin, Spring	2	26501795-
8		01435-01025	Bolt	1	26501795-

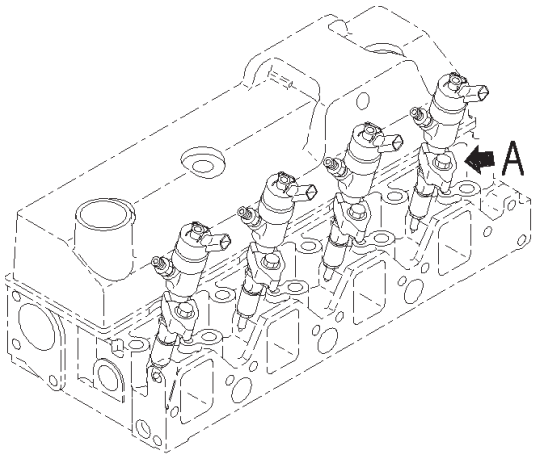

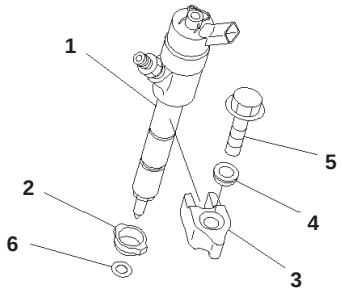

A 詳 細
Detail A

00058541

Parts Performance, Injector

Index	Part Number	Description	Qty	Serial No.
1	6271-11-3100	Injector Assembly	4	26501795-
2	6271-11-3850	Seal	4	26501795-
3	6271-11-3811	Holder	4	26501795-
4	6271-11-3830	Washer	4	26501795-
5	01435-00840	Bolt	4	26501795-
6	6271-11-3880	Gasket	4	26501795-

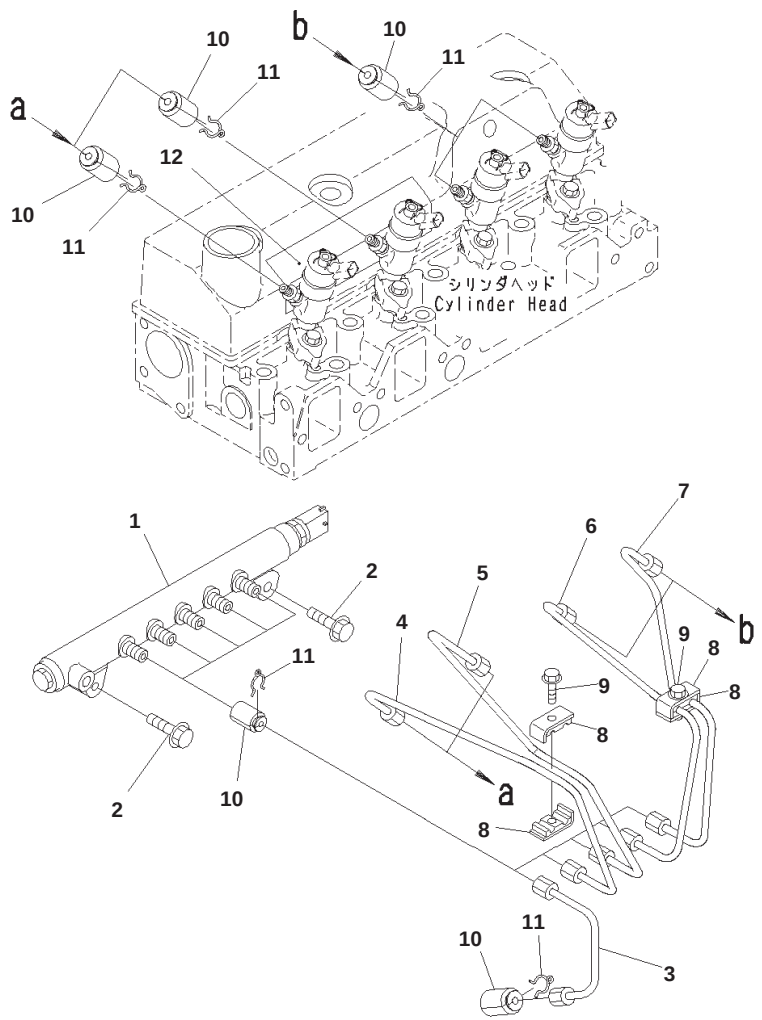

Parts Performance, Common Rail

Index	Part Number	Description	Qty	Serial No.
1	6271-71-1210	Common Rail	1	26501795-
2	01435-01035	Bolt	2	26501795-
3	6271-71-5210	Tube	1	26501795-
4	6271-71-5110	Tube	1	26501795-
5	6271-71-5120	Tube	1	26501795-
6	6271-71-5130	Tube	1	26501795-
7	6271-71-5140	Tube	1	26501795-
8	6215-71-5292	Clamp	4	26501795-
9	01435-00625	Bolt	2	26501795-
10	6271-71-5890	Cover	10	26501795-
11	6217-71-5770	Clamp	10	26501795-
12	6271-81-2990	Plate	1	26501795-

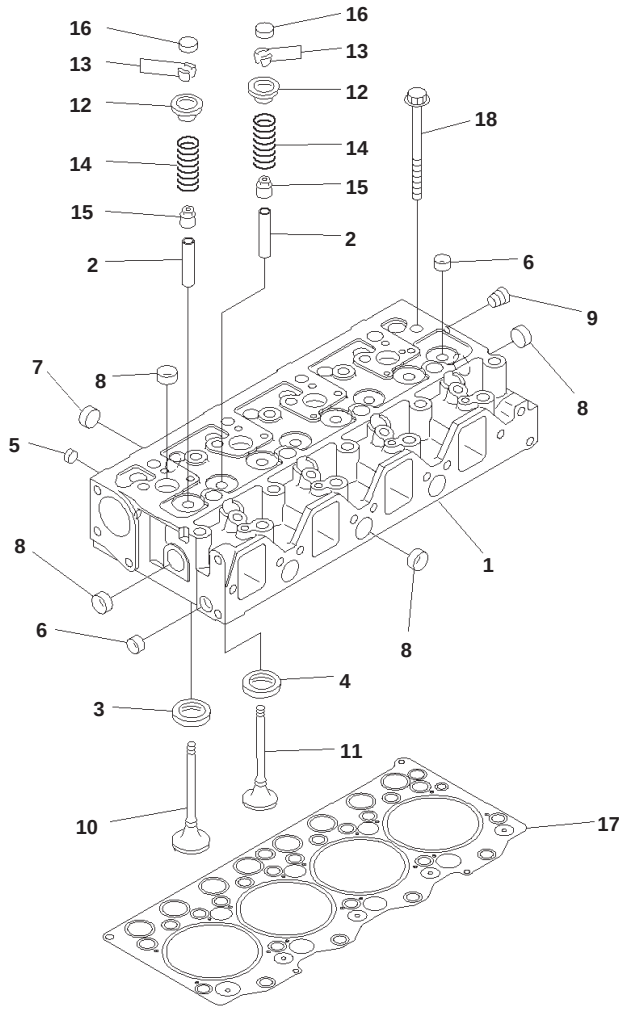

Parts Performance, Cylinder Head

Index	Code	Part Number	Description	Qty	Serial No.
		6271-11-1100	Cylinder Head Assembly, Valve Less	1	26501795-
1	C1		・ Head, Cylinder	1	26501795-
2		6204-19-1310	・ Guide, Valve	8	26501795-
3		6207-11-1431	・ Seat, Intake Valve, Standard	4	26501795-
		6207-19-1431	・ Seat, Intake Valve, Oversize 0.25mm	4	26501795-
		6207-18-1431	・ Seat, Intake Valve, Oversize 0.50mm	4	26501795-
4		6208-11-1440	・ Seat, Exhaust Valve, Standard	4	26501795-
		6208-19-1440	・ Seat, Exhaust Valve, Oversize 0.25mm	4	26501795-
		6208-18-1440	・ Seat, Exhaust Valve, Oversize 0.50mm	4	26501795-
5		07046-41008	・ Plug	4	26501795-
6		07046-41810	・ Plug	9	26501795-
7		07046-42216	・ Plug	3	26501795-
8		07046-42516	・ Plug	11	26501795-
9		02720-40104	・ Plug	1	26501795-
10		6207-41-4130	Valve, Intake	4	26501795-
11		6209-41-4210	Valve, Exhaust	4	26501795-
12		6204-41-4510	Seat	8	26501795-
13		6204-41-4520	Cotter	16	26501795-
14		6204-41-4410	Spring, Valve	8	26501795-
15		6204-41-4541	Seal	8	26501795-
16		6204-41-4550	Cap	8	26501795-
17		6204-11-1840	Gasket	1	26501795-
18		6204-13-1610	Bolt	17	26501795-

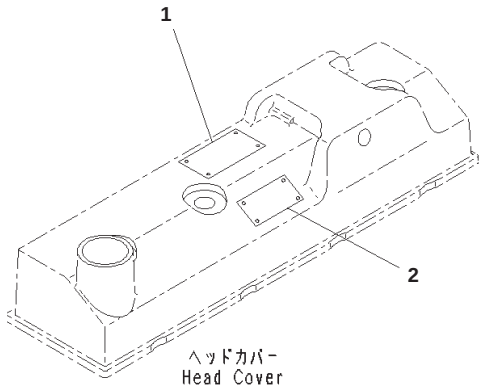

JY008661

Index	Part Number	Description	Qty	Serial No.
1	6271-81-2543	Plate	1	26504821-
2	6204-81-2563	Plate	1	26504821-

Index	Code	Part Number	Description	Qty	Serial No.
		6204-19-1310	Guide, Valve	8	26501795-
		6207-19-1431	Seat, Intake Valve, Oversize 0.25mm	4	26501795-
		6207-18-1431	Seat, Intake Valve, Oversize 0.50mm, 0.50mm, Intake Valve	4	26501795-
		6208-19-1440	Seat, Exhaust Valve, Oversize 0.25mm	4	26501795-
		6208-18-1440	Seat, Exhaust Valve, Oversize 0.50mm	4	26501795-
		6207-21-2111	Liner	4	26501795-
		6207-21-2121	Liner	4	26501795-
		6204-29-8100	Main Metal Assembly, Undersize 0.25mm	5	26501795-
	C1		・ Metal, Upper, Undersize 0.25mm	1	26501795-
	C1		・ Metal, Lower, Undersize 0.25mm	1	26501795-
		6204-28-8100	Main Metal Assembly, Undersize 0.50mm	5	26501795-
	C1		・ Metal, Upper, Undersize 0.50mm	1	26501795-
	C1		・ Metal, Lower, Undersize 0.50mm	1	26501795-
		6204-27-8100	Main Metal Assembly, Undersize 0.75mm	5	26501795-
	C1		・ Metal, Upper, Undersize 0.75mm	1	26501795-
	C1		・ Metal, Lower, Undersize 0.75mm	1	26501795-
		6204-26-8100	Main Metal Assembly, Undersize 1.00mm	5	26501795-
	C1		・ Metal, Upper, Undersize 1.00mm	1	26501795-
	C1		・ Metal, Lower, Undersize 1.00mm	1	26501795-
		6204-29-8600	Thrust Metal Assembly, Oversize 0.25mm	1	26501795-
	C1		・ Metal, Thrust, Oversize 0.25mm	2	26501795-
		6204-28-8600	Thrust Metal Assembly, Oversize 0.50mm	1	26501795-
	C1		・ Metal, Thrust, Oversize 0.50mm	2	26501795-
		6204-27-8600	Thrust Metal Assembly, Oversize 0.75mm	1	26501795-
	C1		・ Metal, Thrust, Oversize 0.75mm	2	26501795-
		6204-26-8600	Thrust Metal Assembly, Oversize 1.00mm	1	26501795-
	C1		・ Metal, Thrust, Oversize 1.00mm	2	26501795-
1		6207-39-3900	Crank Pin Metal Assembly, Undersized, 0.25mm	4	26503176-
2	C1		・ Metal,Upper	1	26503176-
	C1		・ Metal,Lower	1	26501795-
3		6207-38-3900	Crank Pin Metal Assembly, Undersized, 0.50mm	4	26503176-
4	C1		・ Metal,Upper	1	26503176-
	C1		・ Metal,Lower	1	26501795-
5		6207-37-3900	Crank Pin Metal Assembly, Undersized, 0.75mm	4	26503176-
6	C1		・ Metal,Upper	1	26503176-
	C1		・ Metal,Lower	1	26501795-
7		6207-36-3900	Crank Pin Metal Assembly, Undersized, 1.00mm	4	26503176-
8	C1		・ Metal,Upper	1	26503176-
	C1		・ Metal,Lower	1	26501795-
		6271-39-2100	Piston Ring Assembly, Oversize 0.25mm	4	26501795-
	C1		・ Ring, Top, Oversize 0.25mm	1	26501795-
	C1		・ Ring, Second, Oversize 0.25mm	1	26501795-
	C1		・ Ring, Oil, Oversize 0.25mm	1	26501795-
		6271-38-2100	Piston Ring Assembly, Oversize 0.50mm	4	26501795-
	C1		・ Ring, Top, Oversize 0.50mm	1	26501795-
	C1		・ Ring, Second, Oversize 0.50mm	1	26501795-
	C1		・ Ring, Oil, Oversize 0.50mm	1	26501795-
		6271-39-2110	Piston, Oversize 0.25mm	4	26501795-
		6271-38-2110	Piston, Oversize 0.50mm	4	26501795-

SAA4D95LE-5D S/N 26501795-UP (For PC130-8)
Repair Service Parts

Reference:A8110-001001 Page:Y001001

ENGINE RELATED PARTS

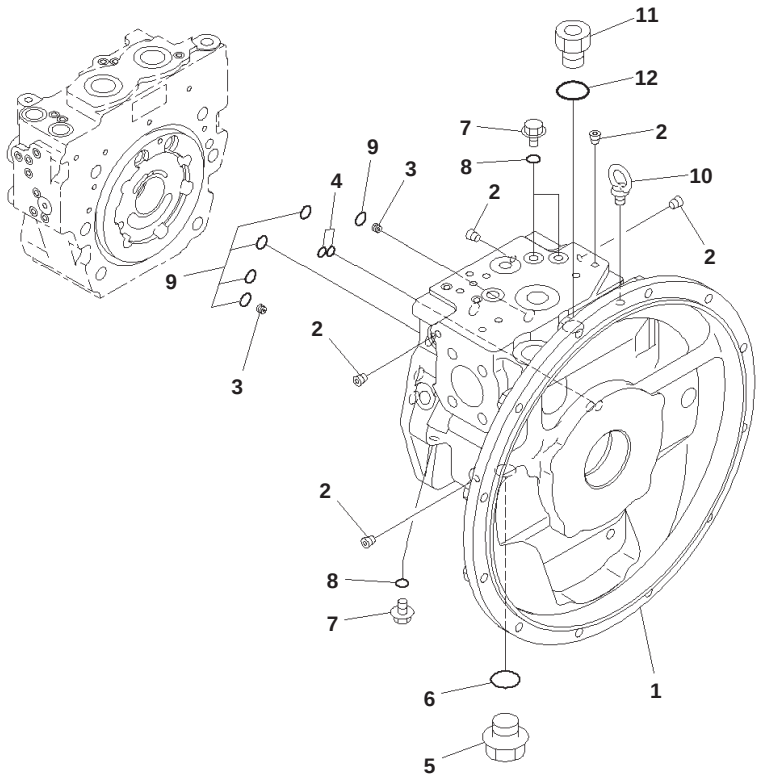

Main Piston Pump, Inner Parts (1/9)

Index	Code	Part Number	Description	Qty	Serial No.
		708-3D-00020	Pump Assembly	1	B10001-
		708-3D-01020	・ Pump Subassembly	1	B10001-
	C2	708-3D-04130	・・ Case Assembly, Front	1	B10001-
1	C1		・・・ Case, Front	1	B10001-
2	C1		・・・ Plug	28	B10001-
3		708-1L-29340	・・ Orifice	2	B10001-
4		07000-B1009	・・ O-ring	2	B10001-
5		07044-12412	・・ Plug	1	B10001-
6		07002-62434	・・ O-ring	1	B10001-
7		708-8E-16150	・・ Plug	3	B10001-
8		07002-61023	・・ O-ring	3	B10001-
9	C2	07000-B2012	・・ O-ring	5	B10001-
10		04530-11018	・・ Bolt, Eye	1	B10001-
11		07040-12414	・・ Plug	1	B10001-
12		07002-62434	・・ O-ring	1	B10001-

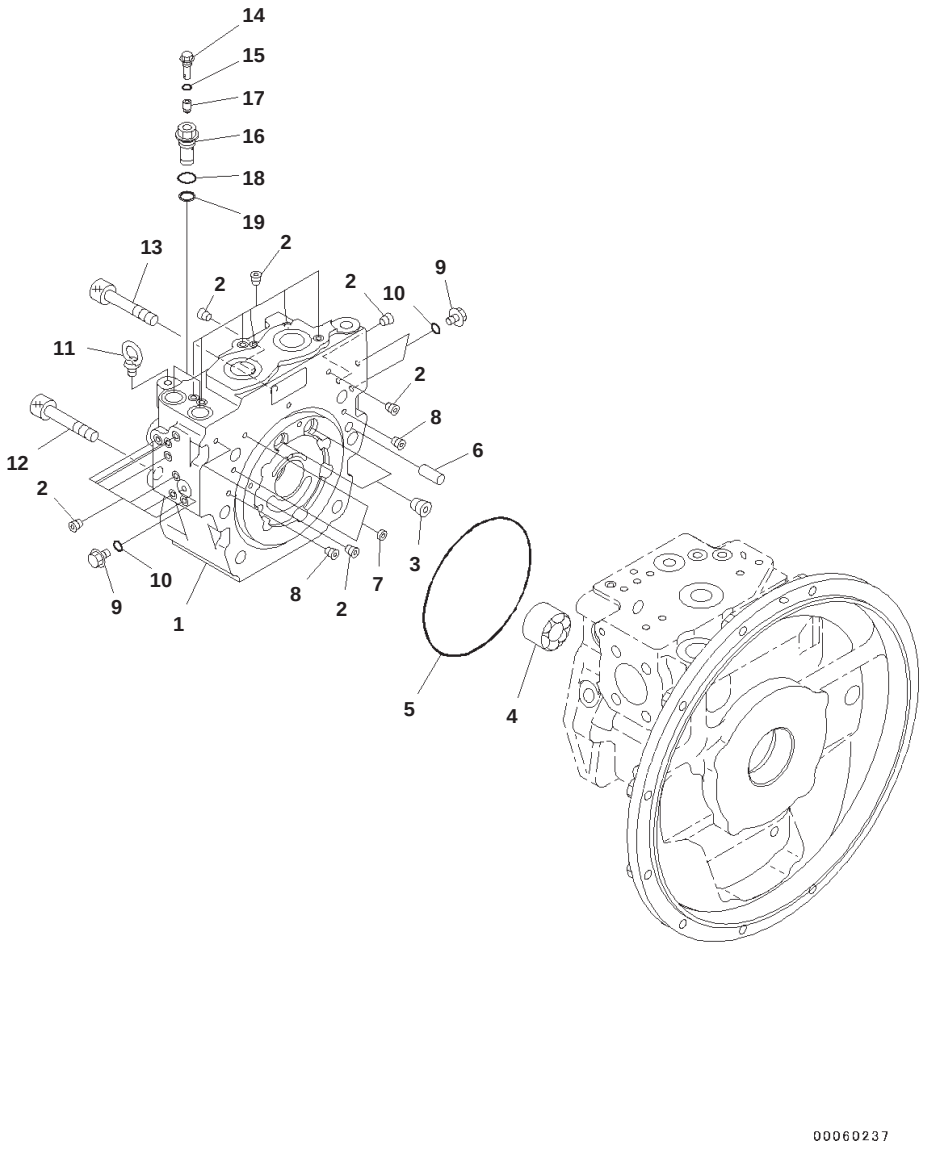

Main Piston Pump, Inner Parts (2/9)

Index	Code	Part Number	Description	Qty	Serial No.
		708-3D-00020	Pump Assembly	1	B10001-
		708-3D-01020	・ Pump Subassembly	1	B10001-
	C2	708-3D-04220	・・ Cap Assembly, End, End	1	B10001-
1	C1		・・・ Cap, End, End	1	B10001-
2	C1		・・・ Plug	17	B10001-
3	C1		・・・ Plug	2	B10001-
4	C2	708-2L-32260	・・ Bearing	1	B10001-
5	C2	07000-A5165	・・ O-ring	1	B10001-
6	C2	04020-01228	・・ Pin, Dowel	1	B10001-
7		708-2L-25480	・・ Filter	2	B10001-
8		708-1L-29340	・・ Orifice	2	B10001-
9		708-8E-16150	・・ Plug	3	B10001-
10		07002-61023	・・ O-ring	3	B10001-
11		04530-11018	・・ Bolt, Eye	1	B10001-
12		708-3D-11810	・・ Bolt	3	B10001-
13		01252-61450	・・ Bolt	3	B10001-
		708-3M-05110	・・ Valve Assembly	2	B10001-
14	C1		・・・ Plug	1	B10001-
15	C1		・・・ O-ring	1	B10001-
16	C1		・・・ Holder	1	B10001-
17	C1		・・・ Valve	1	B10001-
18	C1		・・・ O-ring	1	B10001-
19	C1		・・・ Seal	1	B10001-

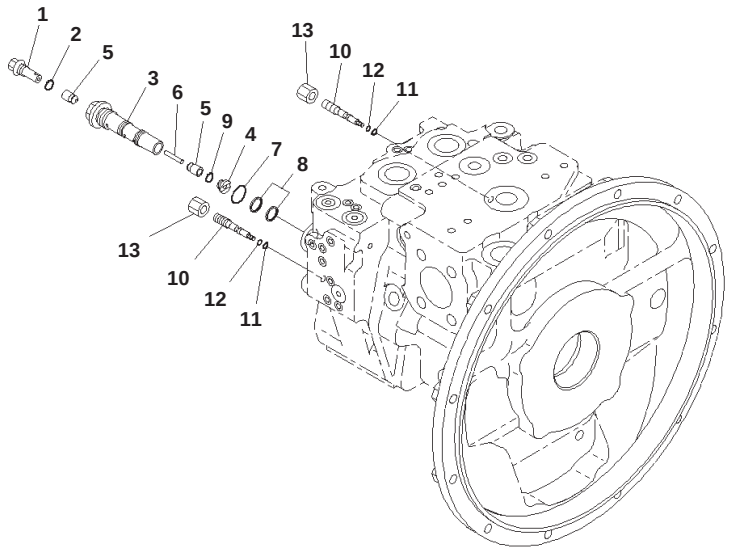

00060238

Main Piston Pump, Inner Parts (3/9)

Index	Code	Part Number	Description	Qty	Serial No.
		708-3D-00020	Pump Assembly	1	B10001-
		708-3D-01020	・ Pump Subassembly	1	B10001-
		708-3M-05210	・・ Valve Assembly, Shuttle	1	B10001-
1	C1		・・・ Plug	1	B10001-
2	C1		・・・ O-ring	1	B10001-
3	C1		・・・ Holder	1	B10001-
4	C1		・・・ Seat	1	B10001-
5	C1		・・・ Valve	2	B10001-
6	C1		・・・ Pin	1	B10001-
7	C1		・・・ O-ring	1	B10001-
8	C1		・・・ Seal	2	B10001-
9	C1		・・・ O-ring	1	B10001-
10		708-3M-15211	・・ Plug	2	B10001-
11		07000-B1003	・・ O-ring	2	B10001-
12		07001-01003	・・ Ring, Back-up	2	B10001-
13		708-3S-15820	・・ Nut	2	B10001-

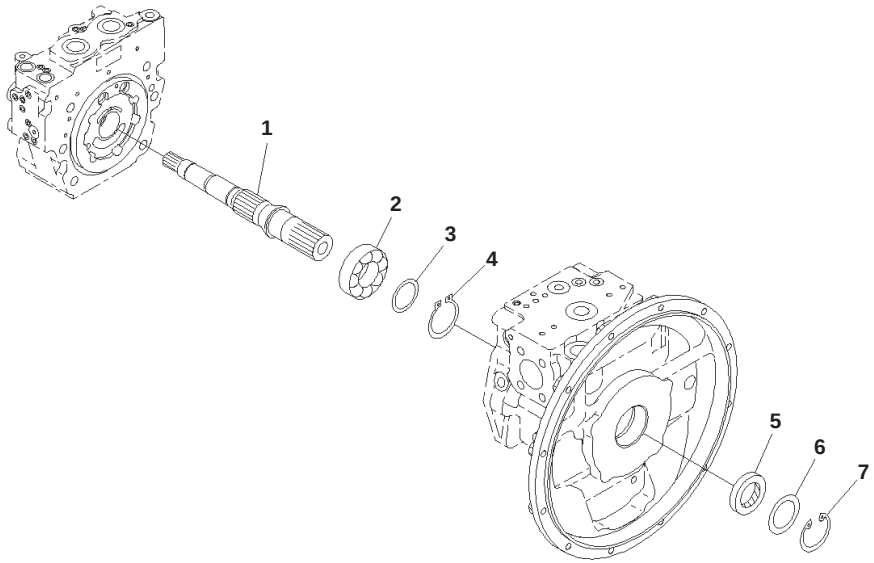

Main Piston Pump, Inner Parts (4/9)

Index	Code	Part Number	Description	Qty	Serial No.
		708-3D-00020	Pump Assembly	1	B10001-
		708-3D-01020	・ Pump Subassembly	1	B10001-
1	C2	708-3D-12130	・・ Shaft	1	B10001-
2	C2	708-2L-32150	・・ Bearing	1	B10001-
3	C2	708-2E-05040	・・ Washer Kit	1	B10001-
	C1		・・・ Washer, T=3.1mm	1	B10001-
	C1		・・・ Washer, T=3.0mm	1	B10001-
	C1		・・・ Washer, T=2.9mm	1	B10001-
	C1		・・・ Washer, T=2.8mm	1	B10001-
4	C2	708-25-12790	・・ Ring, Snap	1	B10001-
5		708-25-52861	・・ Seal, Oil	1	B10001-
6		708-2L-22160	・・ Spacer	1	B10001-
7		04065-06825	・・ Ring, Snap	1	B10001-

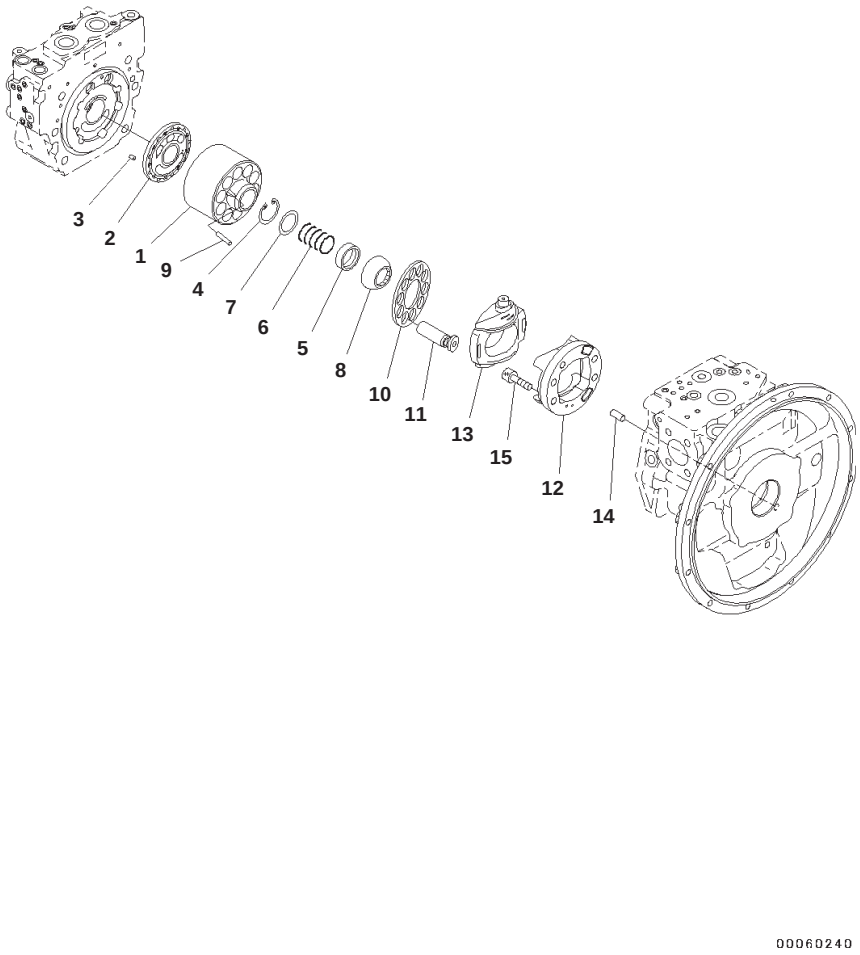

Main Piston Pump, Inner Parts (5/9)

Index	Code	Part Number	Description	Qty	Serial No.
		708-3D-00020	Pump Assembly	1	B10001-
		708-3D-01020	・ Pump Subassembly	1	B10001-
	C2	708-3D-04320	・・ Block Assembly, Cylinder	1	B10001-
1	C1		・・・ Cylinder Block	1	B10001-
2	C1		・・・ Plate, Valve	1	B10001-
3	C2	708-18-13230	・・ Pin	1	B10001-
4	C2	04065-04818	・・ Ring, Snap	1	B10001-
5	C2	708-2L-23131	・・ Seat	1	B10001-
6	C2	708-2L-33160	・・ Spring	1	B10001-
7	C2	708-7L-13140	・・ Seat	1	B10001-
8	C2	708-2L-23351	・・ Guide	1	B10001-
9	C2	708-2L-23360	・・ Pin	3	B10001-
10	C2	708-3D-13330	・・ Retainer, Shoe	1	B10001-
11	C2	708-3D-13340	・・ Piston Subassembly	10	B10001-
	C2	708-3D-04420	・・ Cradle Subassembly	1	B10001-
12	C1		・・・ Cradle	1	B10001-
13	C1		・・・ Cam, Rocker	1	B10001-
14	C2	04020-01228	・・ Pin, Dowel	1	B10001-
15	C2	01252-61230	・・ Bolt	4	B10001-

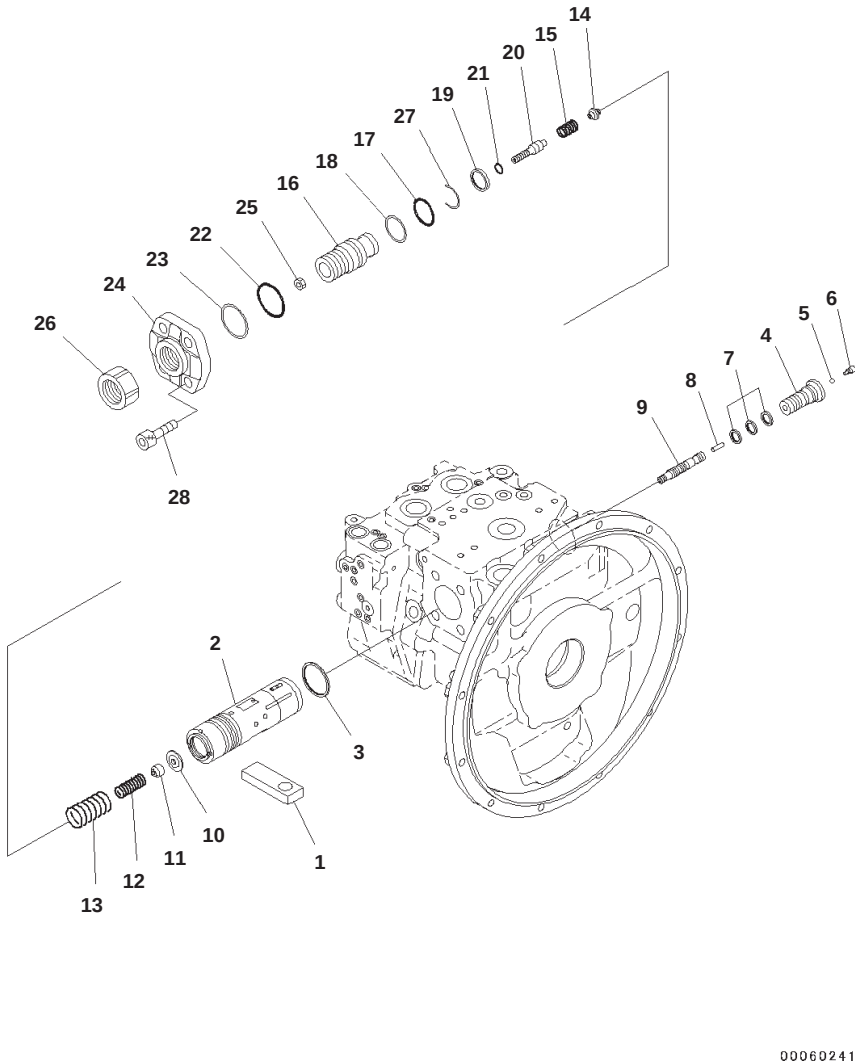

Main Piston Pump, Inner Parts (6/9)

Index	Code	Part Number	Description	Qty	Serial No.
		708-3D-00020	Pump Assembly	1	B10001-
		708-3D-01020	・ Pump Subassembly	1	B10001-
1	C2	708-2L-34120	・・ Slider	1	B10001-
		708-3D-04610	・・ Valve Assembly, PC	1	B10001-
2	C2	708-2L-06660	・・・ Piston Assembly, Servo	1	B10001-
3	C2	708-2L-35680	・・・ Seal	1	B10001-
4	C2	708-3D-15310	・・・ Plug	1	B10001-
5	C2	708-2L-35760	・・・ Ball	1	B10001-
6	C2	708-2L-35770	・・・ Plug	1	B10001-
7	C2	708-2L-35690	・・・ Seal	3	B10001-
8	C2	708-3D-15320	・・・ Pin	1	B10001-
9	C2	708-2L-35860	・・・ Spool	1	B10001-
10	C2	708-2L-35630	・・・ Retainer	1	B10001-
11	C2	708-2L-35641	・・・ Seat	1	B10001-
12	C2	708-3D-15410	・・・ Spring	1	B10001-
13	C2	708-2L-35730	・・・ Spring	1	B10001-
14	C2	708-2L-35650	・・・ Seat	1	B10001-
15	C2	708-3D-15420	・・・ Spring	1	B10001-
16	C2	708-2L-34330	・・・ Screw	1	B10001-
17	C2	07000-B3034	・・・ O-ring	1	B10001-
18	C2	708-2L-35210	・・・ Ring, Back-up	1	B10001-
19	C2	708-2L-35710	・・・ Seal	1	B10001-
20	C2	708-2L-35270	・・・ Plug	1	B10001-
21	C2	07000-B2011	・・・ O-ring	1	B10001-
22	C2	07000-B3045	・・・ O-ring	1	B10001-
23	C2	708-2L-35750	・・・ Ring	1	B10001-
24	C2	708-2L-34230	・・・ Cover	1	B10001-
25	C2	01580-10806	・・・ Nut	1	B10001-
26	C2	708-2L-35290	・・・ Nut	1	B10001-
27	C2	708-2L-35670	・・・ Ring	1	B10001-
28	C2	01252-61440	・・ Bolt, Hexagon Socket Head	4	B10001-

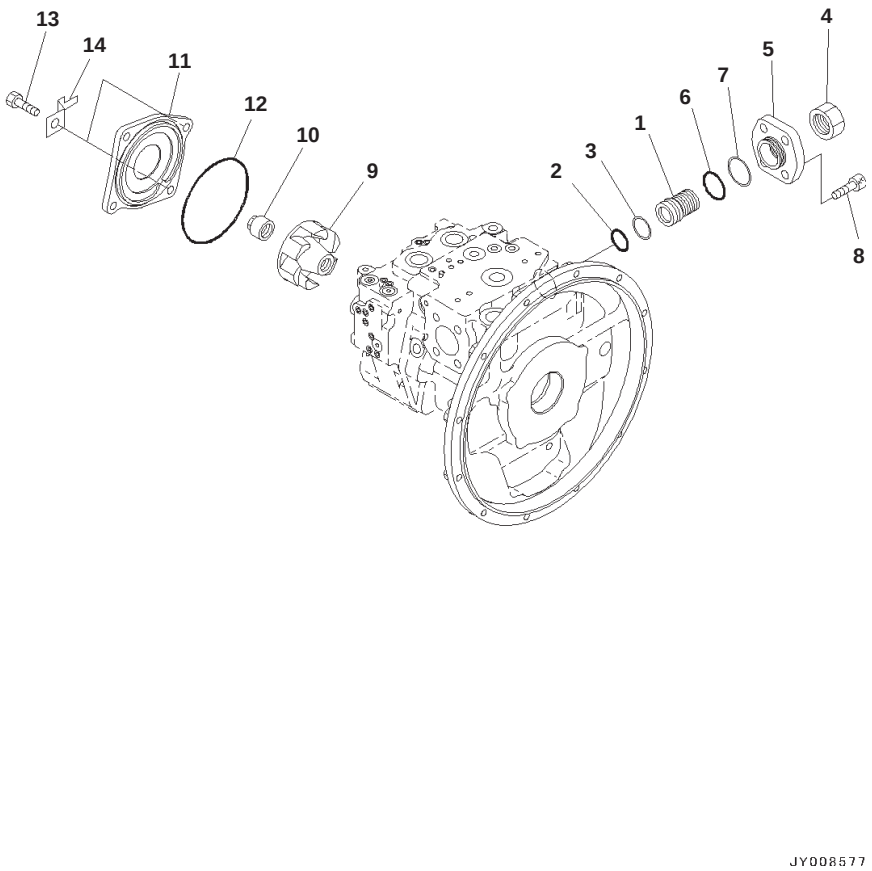

Main Piston Pump, Inner Parts (7/9)

Index	Code	Part Number	Description	Qty	Serial No.
		708-3D-00020	Pump Assembly	1	B10001-
		708-3D-01020	・ Pump Subassembly	1	B10001-
	C2	708-1L-04860	・・ Cover Assembly	1	B10001-
1	C2	708-2L-34270	・・・ Screw	1	B10001-
2	C2	07000-B3034	・・・ O-ring	1	B10001-
3	C2	708-2L-35210	・・・ Ring, Back-up	1	B10001-
4	C2	708-2L-35290	・・・ Nut	1	B10001-
5	C2	708-2L-34260	・・・ Cover	1	B10001-
6	C2	07000-B3045	・・・ O-ring	1	B10001-
7	C2	708-2L-35750	・・・ Ring	1	B10001-
8	C2	01252-61440	・・ Bolt, Hexagon Socket Head	4	B10001-
9	C2	708-3D-11620	・・ Impeller	1	B10001-
10	C2	708-3D-11630	・・ Nut	1	B10001-
11		708-3D-11730	・・ Cover	1	B10001-
12	C2	07000-A2145	・・ O-ring	1	B10001-
13		01010-81230	・・ Bolt	4	B10001-
14		08193-21012	・・ Clip	2	B10001-

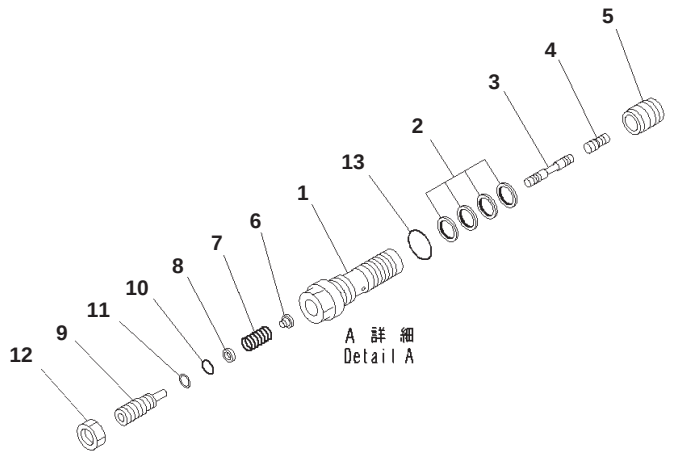

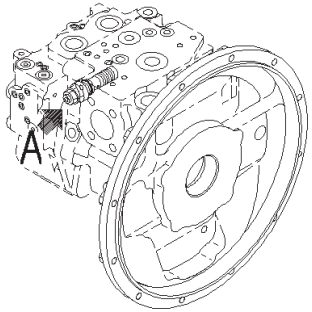

00060243

Index	Code	Part Number	Description	Qty	Serial No.
		708-3D-00020	Pump Assembly	1	B10001-
		708-3D-04710	・ Valve Assembly, LS	1	B10001-
1	C2	708-2L-35311	・・ Sleeve	1	B10001-
2		708-2L-24680	・・ Seal	4	B10001-
3	C2	708-2G-15460	・・ Spool	1	B10001-
4	C2	708-2L-28540	・・ Piston	1	B10001-
5	C2	708-2L-35360	・・ Sleeve	1	B10001-
6	C2	708-2L-35331	・・ Seat	1	B10001-
7	C2	708-2L-35410	・・ Spring	1	B10001-
8	C2	708-2L-35341	・・ Seat	1	B10001-
9	C2	708-2L-35351	・・ Plug	1	B10001-
10	C2	07000-B1009	・・ O-ring	1	B10001-
11	C2	07001-01009	・・ Ring, Back-up	1	B10001-
12		01583-11408	・・ Nut	1	B10001-
13		07002-62434	・・ O-ring	1	B10001-

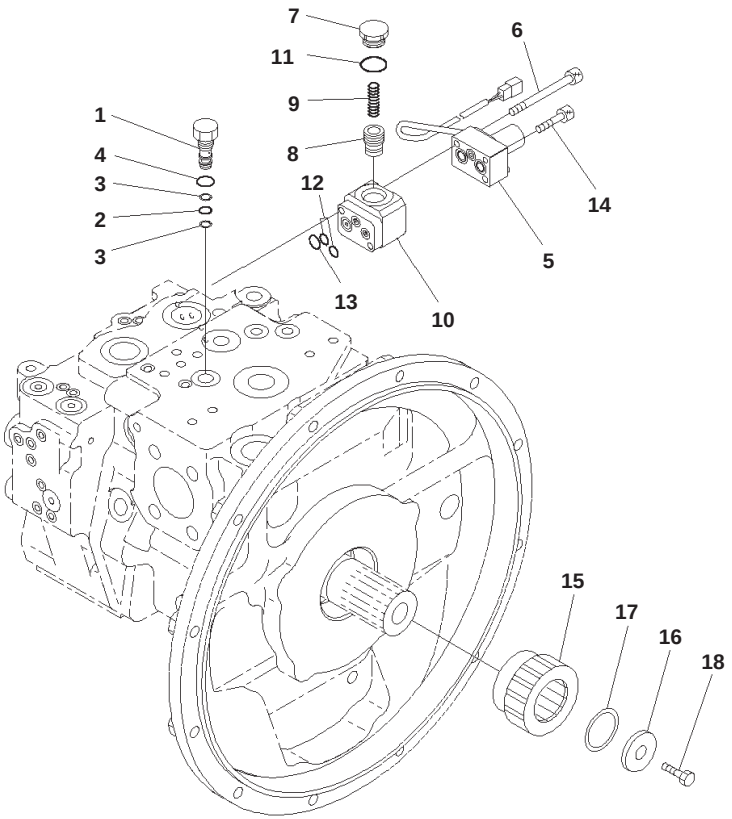

Main Piston Pump, Inner Parts (9/9)

Index	Part Number	Description	Qty	Serial No.
	708-3D-00020	Pump Assembly	1	B10001-
1	708-1G-15910	・ Plug	1	B10001-
2	07000-B1008	・ O-ring	1	B10001-
3	07001-01008	・ Ring	2	B10001-
4	07002-61423	・ O-ring	1	B10001-
5	702-21-58900	・ Valve, Pilot	1	B10001-
6	702-16-55260	・ Bolt	2	B10001-
	702-21-56620	・ Valve Assembly	1	B10001-
7	702-21-55920	・・ Plug	1	B10001-
8	702-21-55930	・・ Piston	1	B10001-
9	702-21-56630	・・ Spring	1	B10001-
10	702-21-55951	・・ Block	1	B10001-
11	07002-12034	・・ O-ring	1	B10001-
12	07000-11008	・ O-ring	2	B10001-
13	722-12-18240	・ O-ring	1	B10001-
14	01252-60530	・ Bolt, Hexagon Socket Head	1	B10001-
15	708-3D-12210	・ Shaft	1	B10001-
16	708-2L-32280	・ Retainer	1	B10001-
17	04065-04018	・ Ring, Snap	1	B10001-
18	01010-81235	・ Bolt	1	B10001-

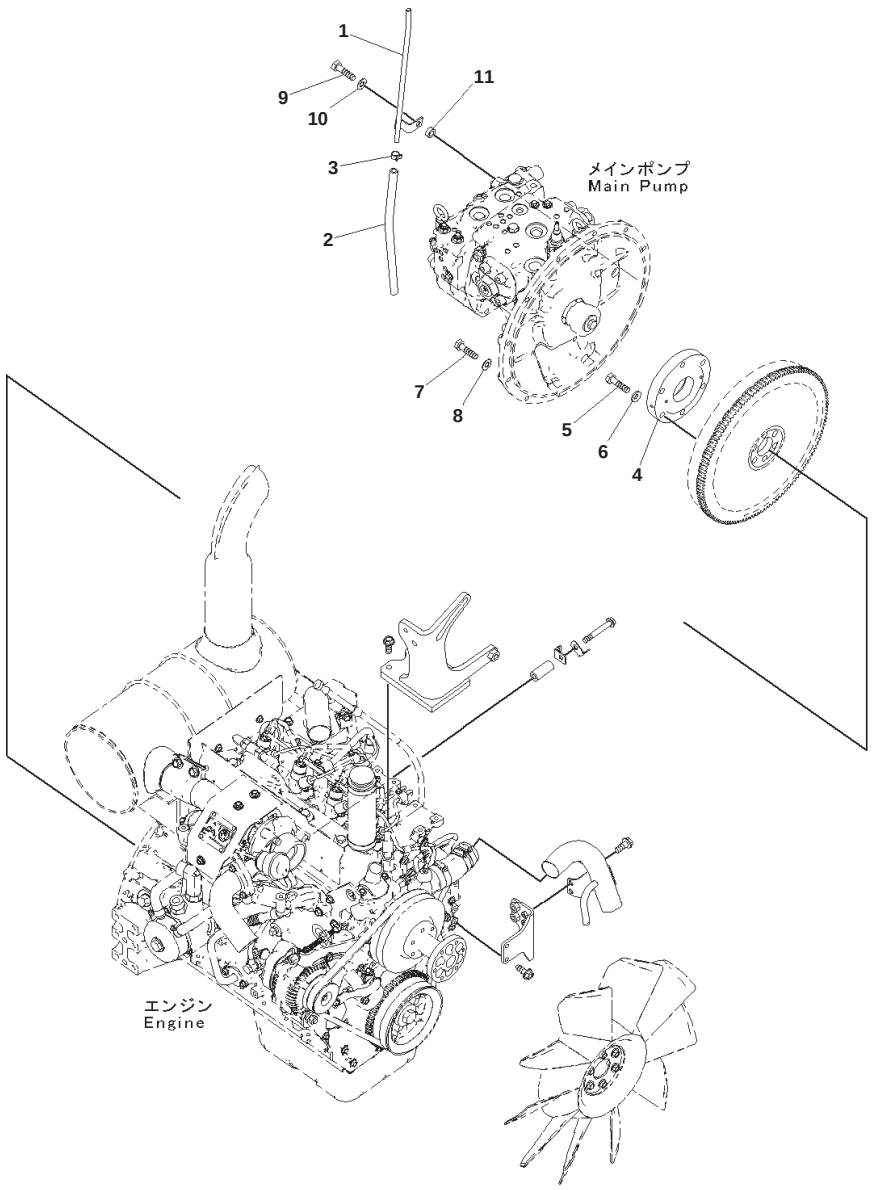

Coupling

Index	Part Number	Description	Qty	Serial No.
1	22B-01-21311	Tube	1	B10001-
2	07260-20936	Hose	1	B10001-
3	07285-00150	Clip, Hose	1	B10001-
4	708-3D-12220	Coupling	1	B10001-
5	01010-81245	Bolt	6	B10001-
6	01643-31232	Washer	6	B10001-
7	01010-81040	Bolt	11	B10001-
8	01643-31032	Washer	11	B10001-
9	01010-81050	Bolt	1	B10001-
10	01643-31032	Washer	1	B10001-
11	205-917-1610	Collar	1	B10001-

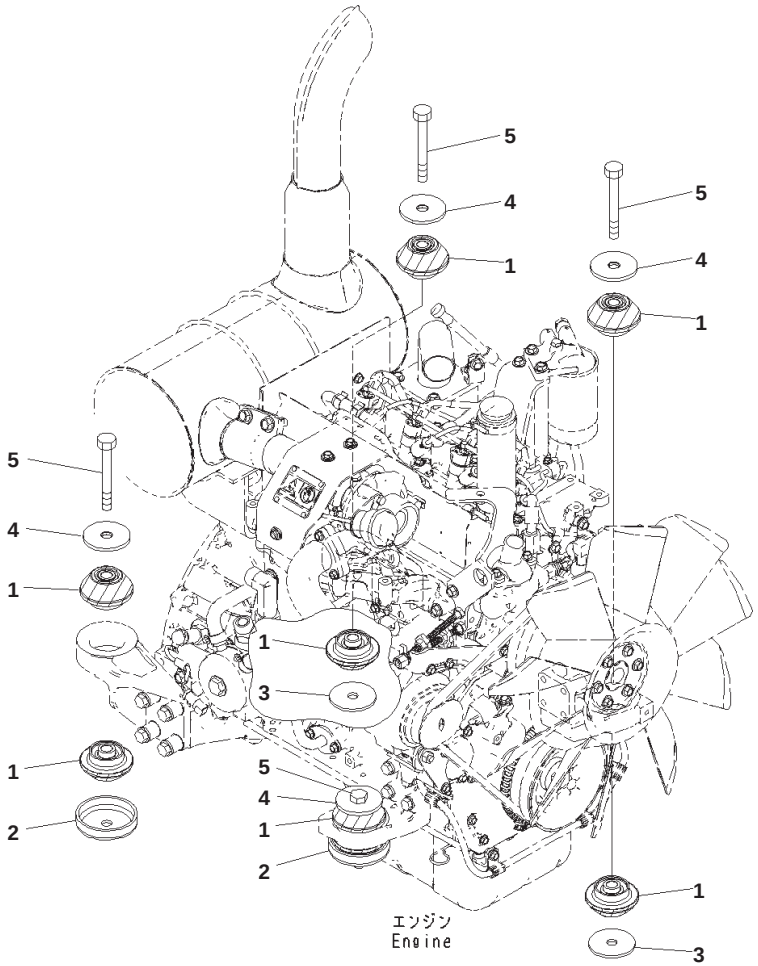

Index	Part Number	Description	Qty	Serial No.
1	201-01-71250	Cushion	8	B10001-
2	203-01-61160	Stopper	2	B10001-
3	203-01-67540	Washer	2	B10001-
4	113-01-21120	Washer	4	B10001-
5	01011-81630	Bolt	4	B10001-

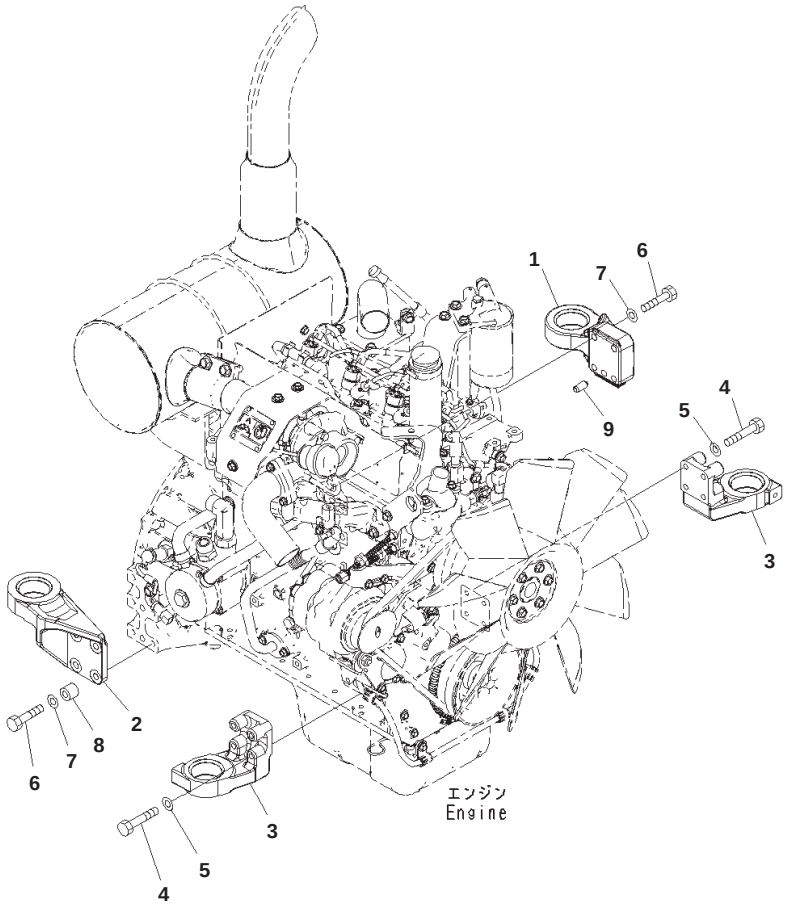

JH000663

Engine Mounting, (2/2)

Index	Code	Part Number	Description	Qty	Serial No.
1		203-01-61110	Bracket	1	B10001-
2		203-01-61120	Bracket	1	B10001-
3		203-01-61131	Bracket	2	B10001-
4		01010-81060	Bolt	8	B10001-
5		01643-31032	Washer	8	B10001-
6		22B-01-11190	Bolt	8	B10001-
7		01643-31232	Washer	8	B10001-
8		20Y-01-21260	Spacer	4	B10002-
	A2	6131-22-3750	Boss	4	B10001-B10001
9		04020-01228	Pin, Dowel	1	B10001-

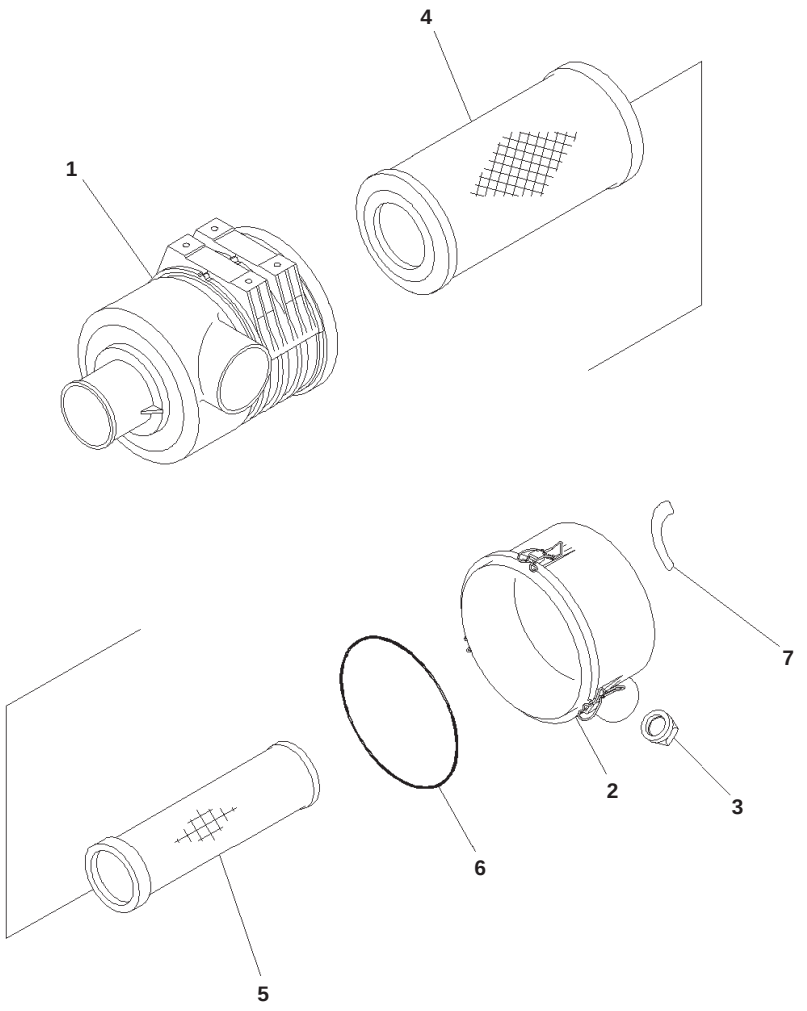

Air Cleaner, Inner Parts

Index	Code	Part Number	Description	Qty	Serial No.
		6208-81-7100	Air Cleaner	1	B10001-
1		6208-81-7110	・ Body	1	B10001-
		600-184-1210	・ Cover Assembly	1	B10001-
2		600-184-1220	・・ Cover	1	B10001-
3		600-184-1250	・・ Valve	1	B10001-
		600-185-2100	・ Element Assembly	1	B10001-
4		600-185-2110	・・ Element,Outer	1	B10001-
5	C1		・・ Element,Inner	1	B10001-
6		600-184-1270	・・ O-ring	1	B10001-
7		600-181-1930	・ Plate, Service Instruction	1	B10001-

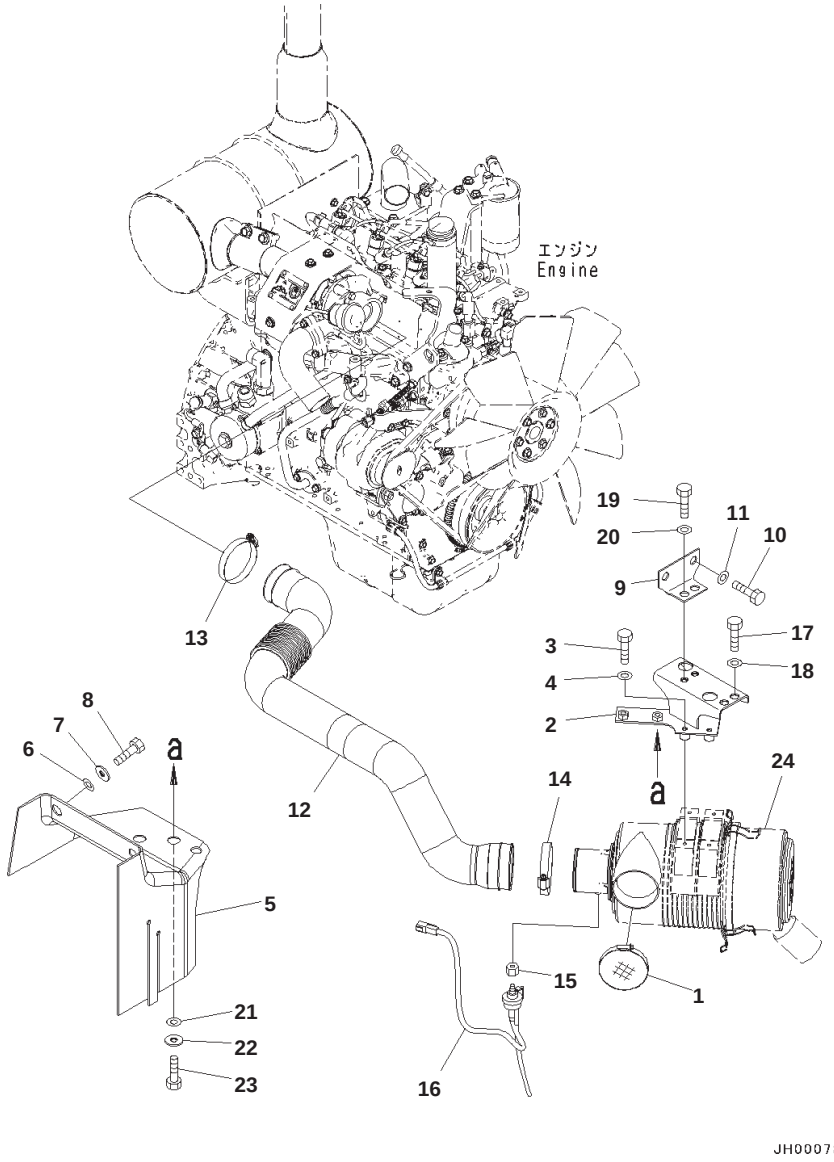

Index	Part Number	Description	Qty	Serial No.
1	6208-81-7720	Cap	1	B10001-
2	203-01-12130	Frame	1	B10001-
3	01010-80835	Bolt	4	B10001-
4	01643-30823	Washer	4	B10001-
5	203-01-71211	Sheet	1	B10001-
6	01643-51232	Washer	2	B10001-
7	124-54-26540	Washer	2	B10001-
8	01010-81230	Bolt	2	B10001-
9	203-01-71141	Bracket	1	B10001-
10	01010-81230	Bolt	2	B10001-
11	01643-31232	Washer	2	B10001-
12	203-01-12111	Hose	1	B10001-
13	07299-00080	Clamp	1	B10001-
14	07299-00095	Clamp, Hose	1	B10001-
15	11Y-01-11920	Joint	1	B10001-
16	7861-93-1430	Sensor, Switch	1	B10001-
17	01010-81230	Bolt	2	B10001-
18	01643-31232	Washer	2	B10001-
19	01010-81230	Bolt	2	B10001-
20	01643-31232	Washer	2	B10001-
21	01643-51232	Washer	2	B10001-
22	124-54-26540	Washer	2	B10001-
23	01010-81230	Bolt	2	B10001-
24	(6208-81-7100)	Air Cleaner		

COOLING SYSTEM

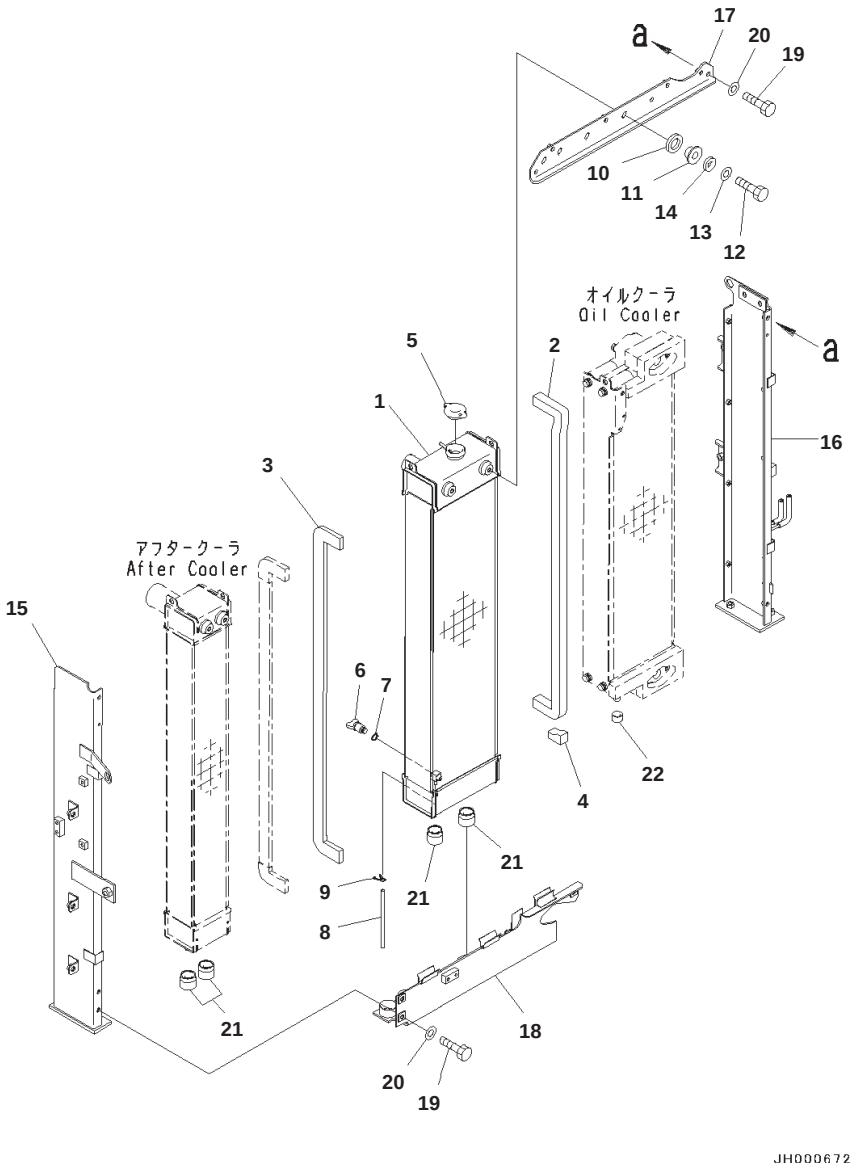

Index	Code	Part Number	Description	Qty	Serial No.
		203-03-12221	Radiator Assembly	1	B10001-
1	C1		・ Radiator	1	B10001-
2		203-03-12521	・ Sheet	1	B10001-
3		203-03-12531	・ Sheet	1	B10001-
4		203-03-12820	・ Sheet	1	B10001-
5		20Y-03-22110	Cap	1	B10001-
6		205-03-62660	Plug	1	B10001-
7		07000-11007	・ O-ring	1	B10001-
8		203-03-41410	Hose	1	B10001-
9		20Y-03-11330	Clip	1	B10001-
10		22U-03-22860	Cushion	2	B10001-
11		6738-61-4952	Collar	2	B10001-
12		01010-81035	Bolt	2	B10001-
13		01643-31032	Washer	2	B10001-
14		20Y-43-15410	Washer	2	B10001-
15		203-03-12171	Frame	1	B10001-
16		203-03-12181	Frame	1	B10001-
17		203-03-12191	Frame	1	B10001-
18		203-03-12211	Frame	1	B10001-
19		01010-81025	Bolt	5	B10001-
20		01643-31032	Washer	5	B10001-
21		203-03-12720	Cushion	4	B10001-
22		22B-03-12590	Cushion	1	B10001-

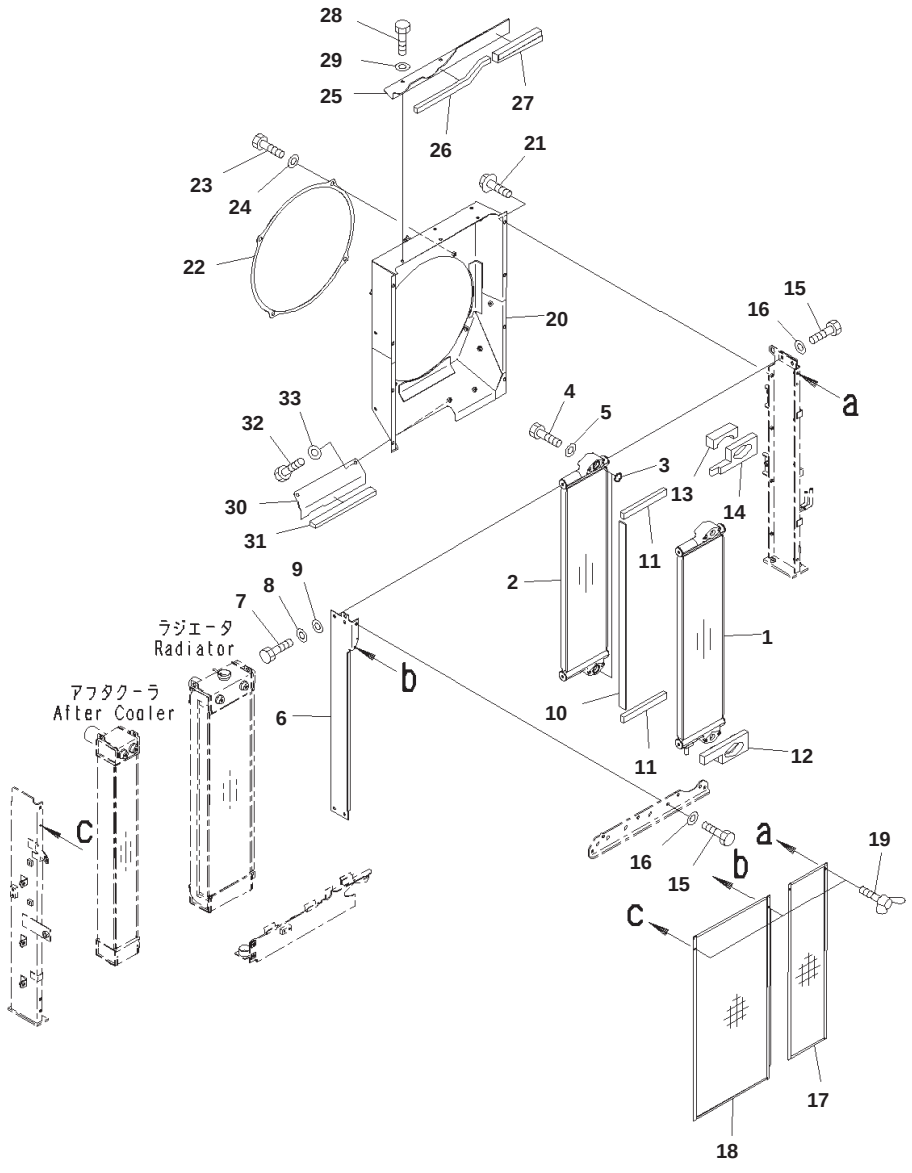

Index	Code	Part Number	Description	Qty	Serial No.
1		203-03-12131	Oil Cooler	1	B10001-
2		203-03-12141	Oil Cooler	1	B10001-
3		07000-13035	O-ring	2	B10001-
4		01010-81080	Bolt	4	B10001-
5		01643-31032	Washer	4	B10001-
6		203-03-12151	Bracket	1	B10001-
7		01010-81025	Bolt	4	B10001-
8		01643-31032	Washer	4	B10001-
9		20Y-43-15410	Washer	4	B10001-
10		203-03-12540	Sheet	1	B10001-
11		203-03-71720	Sheet	2	B10001-
12		203-03-12661	Sheet	1	B10001-
13		203-03-12671	Sheet	2	B10001-
14		203-03-12681	Sheet	1	B10001-
15		01010-81025	Bolt	3	B10001-
16		01643-31032	Washer	3	B10001-
17		203-03-12420	Net	1	B10001-
18		203-03-12411	Net	1	B10001-
19		01434-10616	Bolt, Wing	4	B10001-
20		203-03-12241	Shroud	1	B10001-
21		01435-20816	Bolt	8	B10001-
22		203-03-12651	Plate	1	B10001-
23		01010-81025	Bolt	4	B10001-
24		203-54-56970	Washer	4	B10001-
		203-03-12371	Cover Assembly	1	B10001-
25	C1		・ Cover	1	B10001-
26		203-03-71730	・ Sheet	1	B10001-
27		203-03-71740	・ Sheet	1	B10001-
28		01010-81025	Bolt	3	B10001-
29		01643-31032	Washer	3	B10001-
		203-03-12470	Cover Assembly	1	B10001-
30	C1		・ Cover	1	B10001-
31		203-03-71750	・ Sheet	1	B10001-
32		01010-81025	Bolt	2	B10001-
33		01643-31032	Washer	2	B10001-

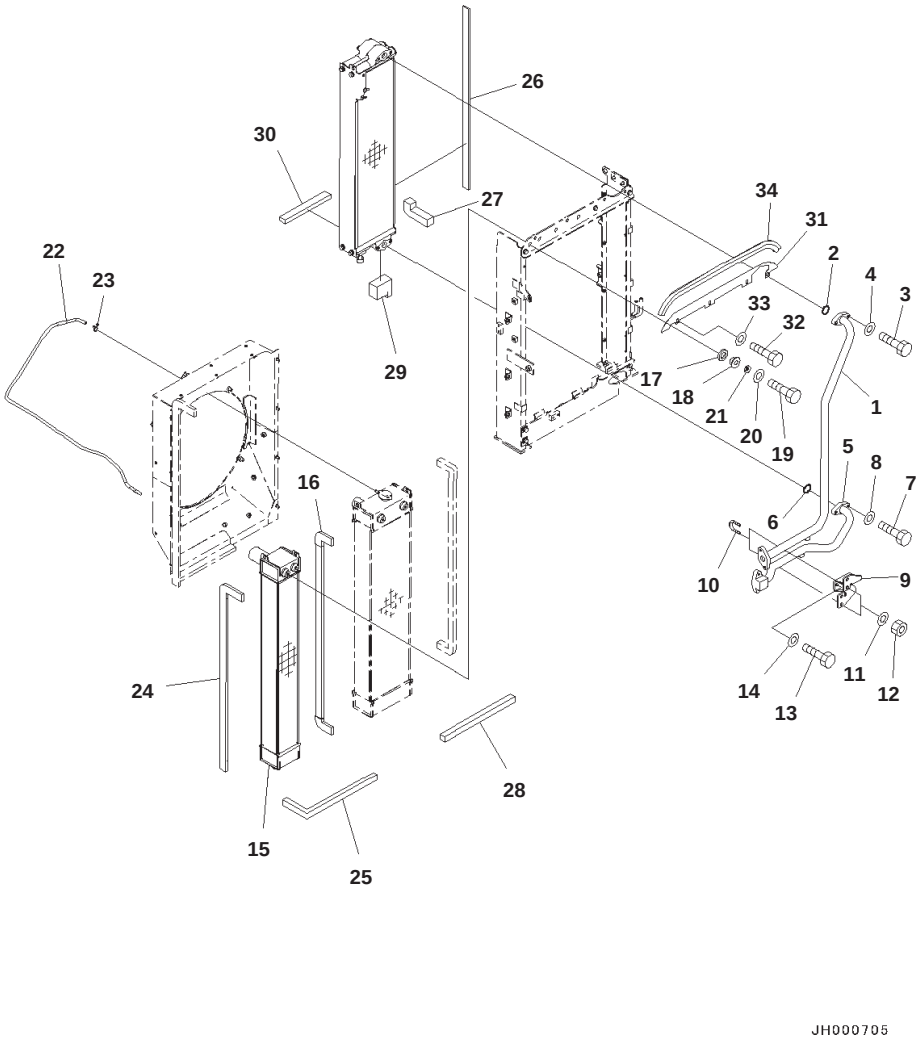

Cooling System, Tube and Aftercooler

Index	Code	Part Number	Description	Qty	Serial No.
1		203-03-12251	Tube	1	B10001-
2		07000-13035	O-ring	1	B10001-
3		01010-81035	Bolt	2	B10001-
4		01643-31032	Washer	2	B10001-
5		203-03-12351	Tube	1	B10001-
6		07000-13035	O-ring	1	B10001-
7		01010-81035	Bolt	2	B10001-
8		01643-31032	Washer	2	B10001-
9		203-03-71251	Bracket	1	B10001-
10		07283-33442	Clip, Pipe	2	B10001-
11		01643-31032	Washer	4	B10001-
12		01597-01009	Nut	4	B10001-
13		01010-81025	Bolt	2	B10001-
14		01643-31032	Washer	2	B10001-
		203-03-12231	Aftercooler Assembly	1	B10001-
15	C1		・ Aftercooler	1	B10001-
16		203-03-12560	・ Sheet	1	B10001-
17		22U-03-22860	Cushion	2	B10001-
18		6738-61-4952	Collar	2	B10001-
19		01010-81035	Bolt	2	B10001-
20		01643-31032	Washer	2	B10001-
21		20Y-43-15410	Washer	2	B10001-
22		203-03-71270	Hose	1	B10001-
23		206-03-43340	Clip	1	B10001-
24		203-03-12570	Sheet	1	B10001-
25		203-03-12580	Sheet	1	B10001-
26		203-03-12591	Sheet	1	B10001-
27		203-03-12690	Sheet	1	B10001-
28		203-03-12551	Sheet	1	B10001-
29		203-03-71690	Sheet	1	B10001-
30		203-03-71790	Sheet	1	B10001-
31		203-03-12381	Cover	1	B10001-
32		01010-81025	Bolt	4	B10001-
33		01643-31032	Washer	4	B10001-
34		203-03-12760	Seal	1	B10001-

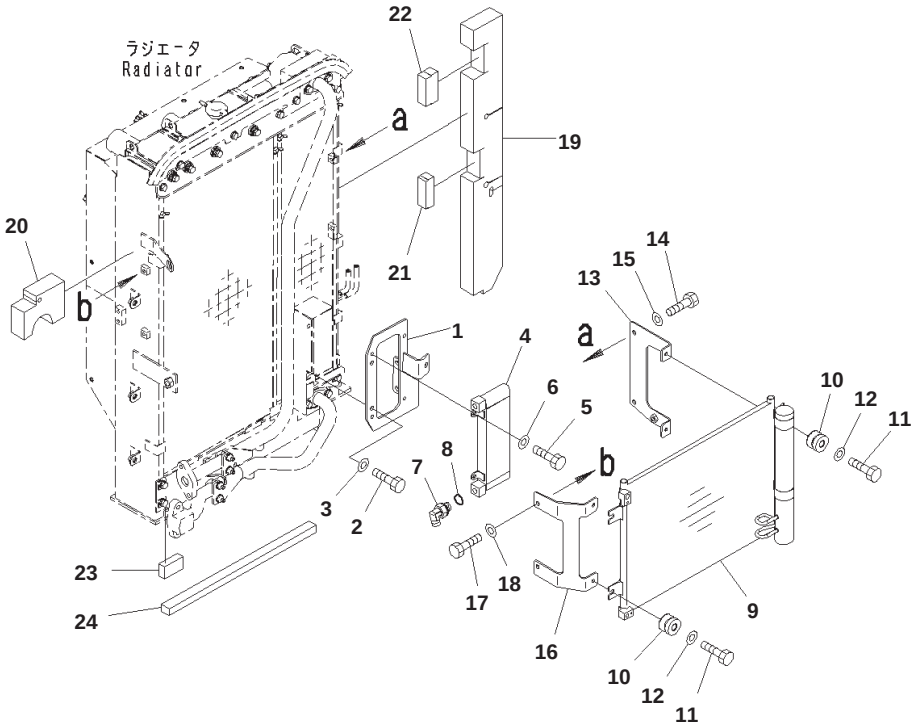

Index	Part Number	Description	Qty	Serial No.
1	203-03-12441	Bracket	1	B10001-
2	01010-81025	Bolt	2	B10001-
3	01643-31032	Washer	2	B10001-
4	208-03-71161	Oil Cooler	1	B10001-
5	01010-80825	Bolt	4	B10001-
6	01643-30823	Washer	4	B10001-
7	02782-10315	Elbow	2	B10001-
8	07002-12034	O-ring	2	B10001-
9	20Y-810-1221	Condenser Assembly	1	B10001-
10	20Y-810-1240	Cushion	4	B10001-
11	01010-80835	Bolt	4	B10001-
12	01643-30823	Washer	4	B10001-
13	203-03-12430	Bracket	1	B10001-
14	01010-81025	Bolt	2	B10001-
15	01643-31032	Washer	2	B10001-
16	203-03-12261	Bracket	1	B10001-
17	01010-81025	Bolt	2	B10001-
18	01643-31032	Washer	2	B10001-
19	203-03-12451	Sheet	1	B10001-
20	203-03-12810	Sheet	1	B10001-
21	203-03-12750	Sheet	1	B10001-
22	203-03-12780	Sheet	1	B10001-
23	203-03-12640	Sheet	1	B10001-
24	203-03-12611	Sheet	1	B10001-

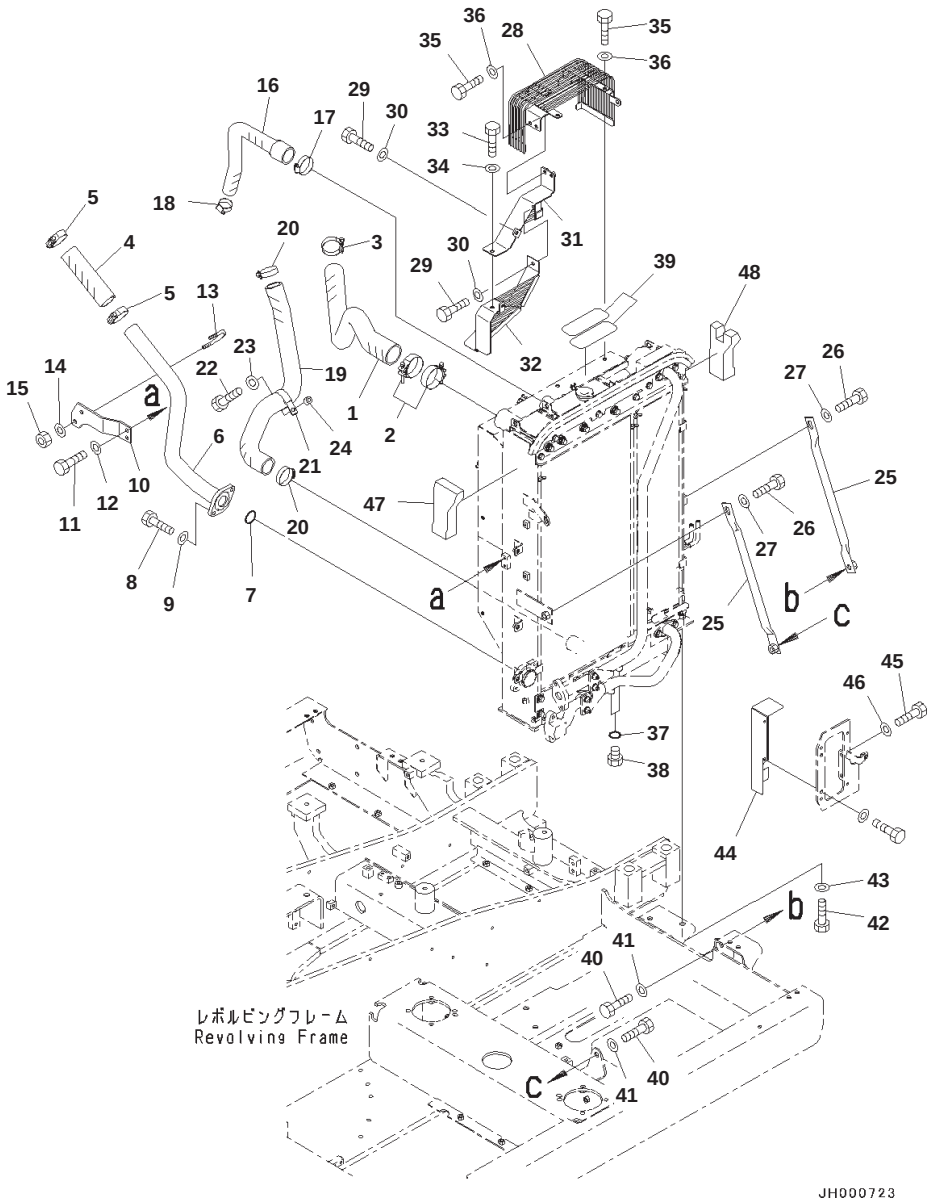

Cooling System, Fan Guard and Aftercooler Piping

Index	Part Number	Description	Qty	Serial No.
1	203-03-12270	Hose	1	B10001-
2	21T-62-69711	Clamp, Hose	2	B10001-
3	17A-03-41540	Clamp	1	B10001-
4	203-03-12830	Hose	1	B10001-
5	17A-03-41540	Clamp	2	B10001-
6	203-03-12341	Tube	1	B10001-
7	07000-E2065	O-ring	1	B10001-
8	01010-81035	Bolt	2	B10001-
9	01643-31032	Washer	2	B10001-
10	203-01-71321	Bracket	1	B10001-
11	01010-81025	Bolt	2	B10001-
12	01643-31032	Washer	2	B10001-
13	07283-35150	Clip	1	B10001-
14	01643-31032	Washer	2	B10001-
15	01597-01009	Nut	2	B10001-
16	203-03-12280	Hose	1	B10001-
17	07289-00055	Clamp	1	B10001-
18	07289-00045	Clamp, Hose	1	B10001-
19	203-03-12331	Hose	1	B10001-
20	07289-00055	Clamp	2	B10001-
21	208-62-38370	Clip	1	B10001-
22	01010-81035	Bolt	1	B10001-
23	01643-31032	Washer	1	B10001-
24	201-03-29160	Spacer	1	B10001-
25	22U-03-22280	Stay	2	B10001-
26	01010-81635	Bolt	2	B10001-
27	21T-54-16150	Washer	2	B10001-
28	203-03-12481	Guard	1	B10001-
29	01010-81020	Bolt	2	B10001-
30	01643-31032	Washer	2	B10001-
31	203-03-12491	Guard	1	B10001-
32	203-03-12511	Guard	1	B10001-
33	01010-81020	Bolt	2	B10001-
34	01643-31032	Washer	2	B10001-
35	01010-81020	Bolt	5	B10001-
36	01643-31032	Washer	5	B10001-
37	07002-11423	O-ring	2	B10001-
38	07040-11409	Plug	2	B10001-
39	203-00-11930	Plate	2	B10001-
40	01010-81635	Bolt	2	B10001-
41	21T-54-16150	Washer	2	B10001-
42	01010-81235	Bolt	4	B10001-
43	175-54-34170	Washer	4	B10001-
44	21K-03-72560	Bracket	1	B10001-
45	01010-81025	Bolt	2	B10001-
46	01643-31032	Washer	2	B10001-

PC130-8 S/N B10001-UP

Cooling System, Fan Guard and Aftercooler Piping

Index	Part Number	Description	Qty	Serial No.
47	203-03-12291	Sheet	1	B10001-
48	203-03-12311	Sheet	1	B10001-

FUEL TANK AND RELATED PARTS

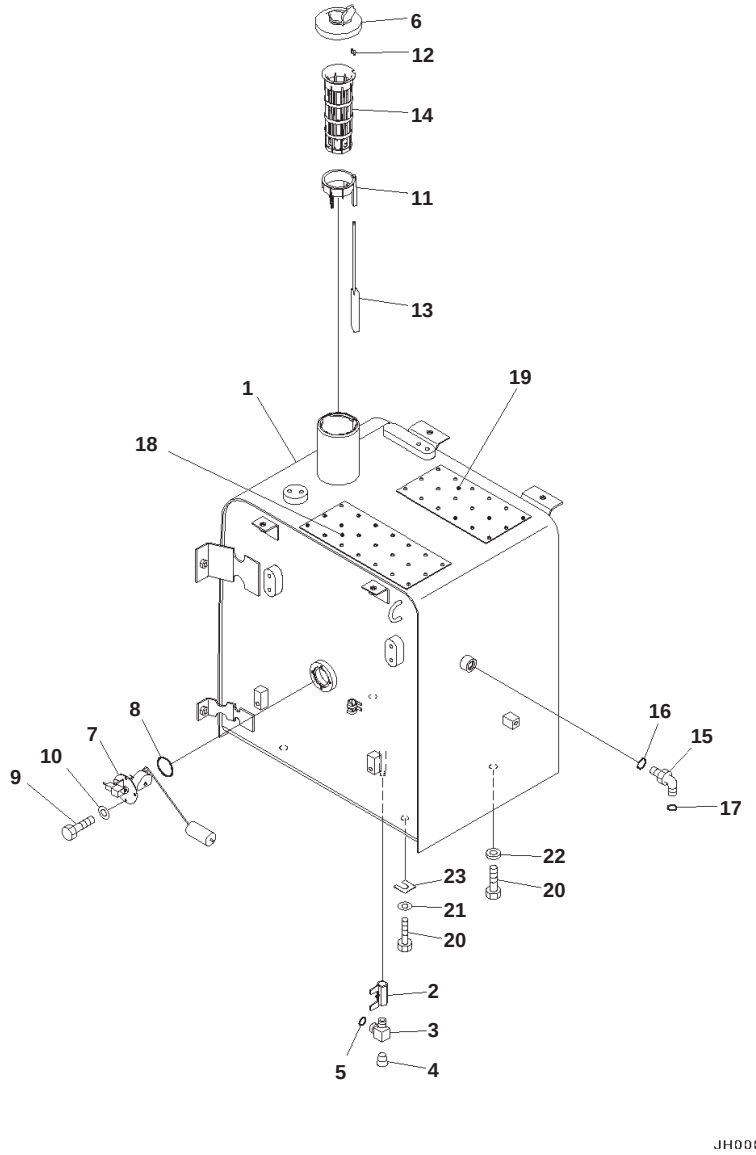

Index	Part Number	Description	Qty	Serial No.
1	203-04-11111	Tank	1	B10001-
2	07700-50240	Valve	1	B10001-
3	20Y-04-41231	Elbow	1	B10001-
4	07043-A0108	Plug	1	B10001-
5	02896-11009	O-ring	1	B10001-
	20Y-04-11161	Cap	1	B10001-
6	20Y-04-11240	・ Packing	1	B10001-
7	7861-92-5810	Sensor	1	B10001-
8	07000-13050	O-ring	1	B10001-
9	01010-80612	Bolt	4	B10001-
10	01643-30623	Washer	4	B10001-
	22U-04-21241	Strainer Assembly	1	B10001-
	22U-04-21200	・ Float Assembly	1	B10001-
11	22U-04-21210	・・ Guide	1	B10001-
12	20Y-04-21580	・・ Cap	1	B10001-
13	22U-04-21220	・・ Float	1	B10001-
14	07056-18425	・ Strainer	1	B10001-
15	02782-10315	Elbow	1	B10001-
16	07002-12034	O-ring	1	B10001-
17	02896-11009	O-ring	1	B10001-
18	203-00-11910	Plate	1	B10001-
19	203-00-11920	Plate	1	B10001-
20	01010-81635	Bolt	4	B10001-
21	01643-31645	Washer	2	B10001-
22	21T-54-16150	Washer	2	B10001-
23	195-03-11570	Shim, T=1.0mm	4	B10001-

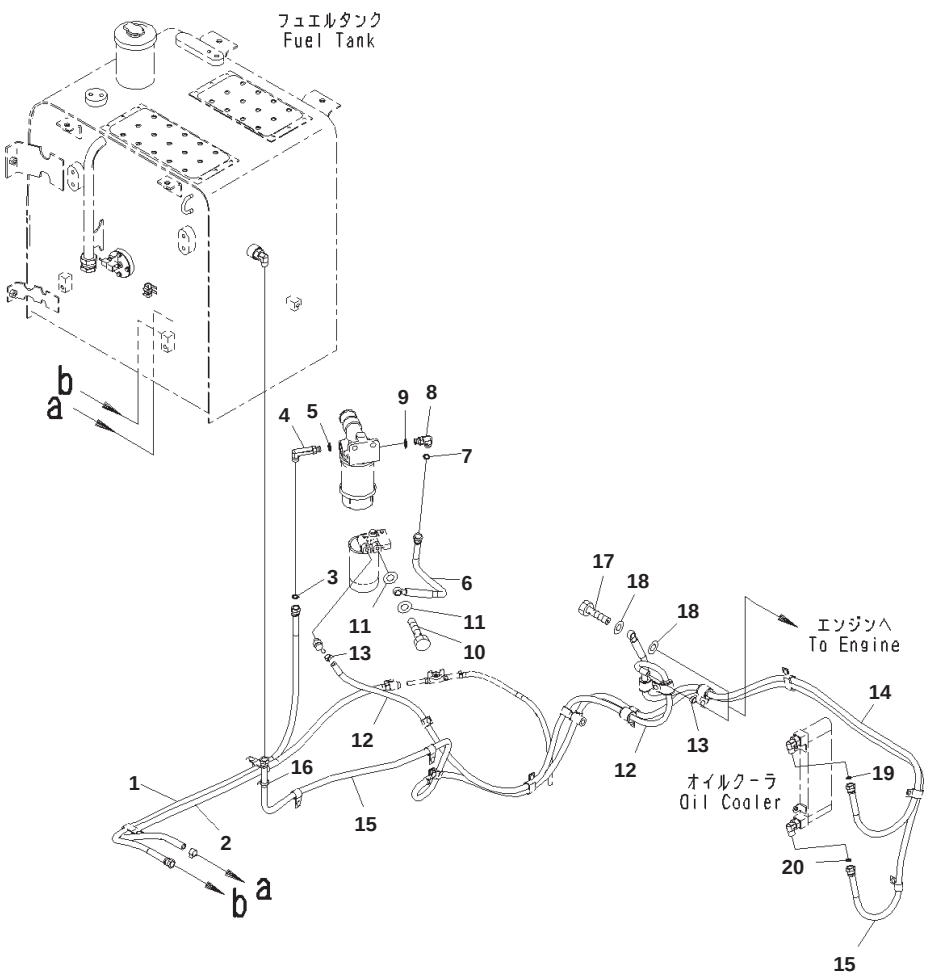

Fuel Supply Piping, With Bad Fuel and Poor Fuel Arrangement, Water+Dust, Fuel Piping

Index	Part Number	Description	Qty	Serial No.
1	02762-00313	Hose, Face Seal Type	1	B10001-
2	203-04-11330	Hose	1	B10001-
3	02896-11009	O-ring	1	B10001-
4	02782-10312	Elbow	1	B10001-
5	07002-11423	O-ring	1	B10001-
6	203-04-11211	Hose	1	B10001-
7	02896-11009	O-ring	1	B10001-
8	02782-10311	Elbow	1	B10001-
9	07002-11423	O-ring	1	B10001-
10	07206-31014	Bolt, Joint	1	B10001-
11	07005-01412	Seal, Washer	2	B10001-
12	203-04-11291	Hose Assembly	1	B10001-
13	11Y-09-11170	Clip	2	B10001-
14	203-04-11221	Hose Assembly	1	B10001-
15	203-04-11252	Hose Assembly	1	B10001-
16	20Y-62-22820	・ Band, Blue	1	B10001-
17	07206-31014	Bolt, Joint	1	B10001-
18	07005-01412	Seal, Washer	2	B10001-
19	02896-11009	O-ring	1	B10001-
20	02896-11009	O-ring	1	B10001-

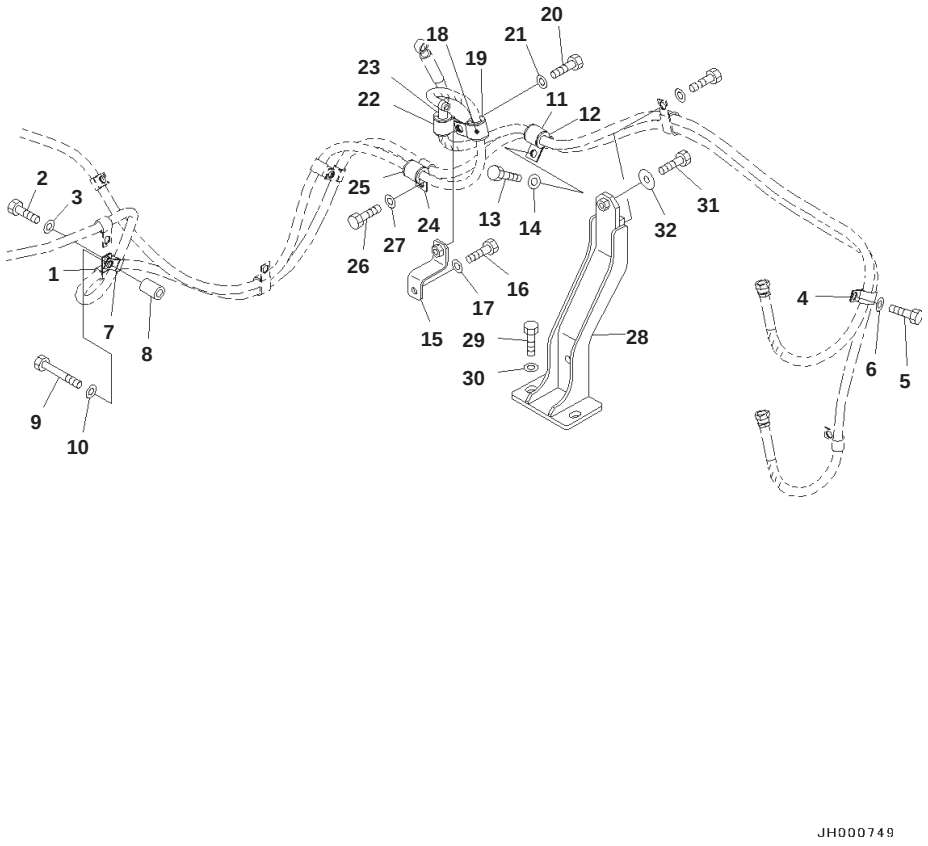

Fuel Supply Piping, With Bad Fuel and Poor Fuel Arrangement, Water+Dust, Clip, (1/2)

Index	Part Number	Description	Qty	Serial No.
1	04434-51512	Clip	1	B10001-
2	01010-81220	Bolt	1	B10001-
3	01643-31232	Washer	1	B10001-
4	04435-51512	Clip	1	B10001-
5	01010-81220	Bolt	1	B10001-
6	01643-31232	Washer	1	B10001-
7	04434-51512	Clip	1	B10001-
8	20Y-03-11220	Collar	1	B10001-
9	01010-81260	Bolt	1	B10001-
10	01643-31232	Washer	1	B10001-
11	04434-52512	Clip	1	B10001-
12	07095-20318	Cushion	1	B10001-
13	01010-81230	Bolt	1	B10001-
14	01643-31232	Washer	1	B10001-
15	203-04-11240	Bracket	1	B10001-
16	01010-81025	Bolt	1	B10001-
17	01643-31032	Washer	1	B10001-
18	04434-52512	Clip	1	B10001-
19	07095-20318	Cushion	1	B10001-
20	01010-81230	Bolt	1	B10001-
21	01643-31232	Washer	1	B10001-
22	04434-52512	Clip	1	B10001-
23	07095-20318	Cushion	1	B10001-
24	04434-52512	Clip	1	B10001-
25	07095-20318	Cushion	1	B10001-
26	01010-81230	Bolt	1	B10001-
27	01643-31232	Washer	1	B10001-
28	203-04-11261	Bracket	1	B10001-
29	01010-81240	Bolt	2	B10001-
30	01643-31232	Washer	2	B10001-
31	01010-81230	Bolt	1	B10001-
32	175-54-34170	Washer	1	B10001-

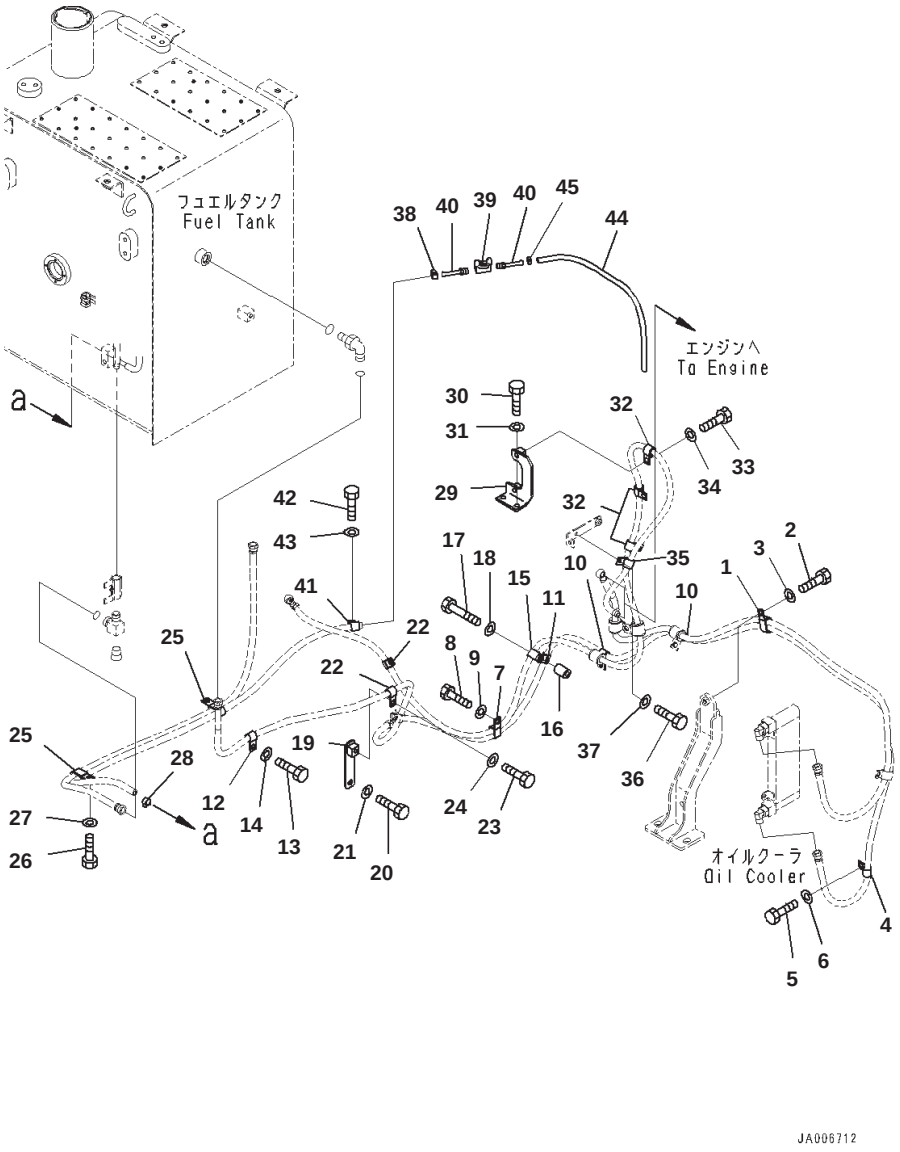

Fuel Supply Piping, With Bad Fuel and Poor Fuel Arrangement, Water+Dust, Clip, (2/2)

Index	Part Number	Description	Qty	Serial No.
1	04435-51812	Clip	1	B10001-
2	01010-81220	Bolt	1	B10001-
3	01643-31232	Washer	1	B10001-
4	04435-51512	Clip	1	B10001-
5	01010-81230	Bolt	1	B10001-
6	01643-31232	Washer	1	B10001-
7	04434-51512	Clip	1	B10001-
8	01010-81230	Bolt	1	B10001-
9	01643-31232	Washer	1	B10001-
10	04434-51712	Clip	2	B10001-
11	04434-51512	Clip	1	B10001-
12	04434-51512	Clip	1	B10001-
13	01010-81220	Bolt	1	B10001-
14	01643-31232	Washer	1	B10001-
15	04434-51512	Clip	1	B10001-
16	20Y-03-11220	Collar	1	B10001-
17	01010-81260	Bolt	1	B10001-
18	01643-31232	Washer	1	B10001-
19	203-04-11181	Plate	1	B10001-
20	01010-81220	Bolt	1	B10001-
21	01643-31232	Washer	1	B10001-
22	04434-51512	Clip	2	B10001-
23	01010-81220	Bolt	2	B10001-
24	01643-31232	Washer	2	B10001-
25	04435-51812	Clip	2	B10001-
26	01010-81220	Bolt	2	B10001-
27	01643-31232	Washer	2	B10001-
28	11Y-09-11140	Clip	1	B10001-
29	203-04-11610	Bracket	1	B10001-
30	01010-81030	Bolt	1	B10001-
31	01643-31032	Washer	1	B10001-
32	04434-51810	Clip	3	B10001-
33	01010-81020	Bolt	3	B10001-
34	01643-31032	Washer	3	B10001-
35	04434-51808	Clip	1	B10001-
36	01010-80820	Bolt	1	B10001-
37	01643-30823	Washer	1	B10001-
38	11Y-09-11140	Clip	1	B10001-
39	07700-50240	Valve	1	B10001-
40	20Y-04-31170	Nipple	2	B10001-
41	04434-51612	Clip	1	B10001-
42	01010-81225	Bolt	1	B10001-
43	01643-31232	Washer	1	B10001-
44	07270-01053	Tube	1	B10001-
45	07285-00115	Clip	1	B10001-

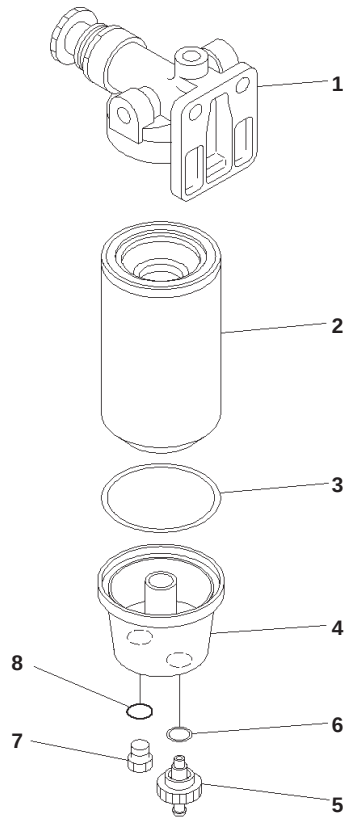

00058489

Fuel Supply Piping, With Bad Fuel and Poor Fuel Arrangement, Water+Dust, Pre Filter

Index	Code	Part Number	Description	Qty	Serial No.
		6271-71-6200	Filter Assembly	1	B10001-
1		6271-71-6110	・ Head	1	B10001-
		600-319-4200	・ Cartridge Assembly	1	B10001-
		600-319-4110	・・ Cartridge Assembly	1	B10001-
2	C1		・・・ Cartridge	1	B10001-
3		600-311-3630	・・・ Seal	1	B10001-
4		600-311-3640	・・ Bowl	1	B10001-
		600-311-3660	・・ Valve Assembly	1	B10001-
5		600-311-3711	・・・ Valve	1	B10001-
6		600-311-3670	・・・ Seal	1	B10001-
		600-311-4210	・・ Plug Assembly	1	B10001-
7		600-311-4220	・・・ Plug	1	B10001-
8		600-311-3690	・・・ O-ring	1	B10001-

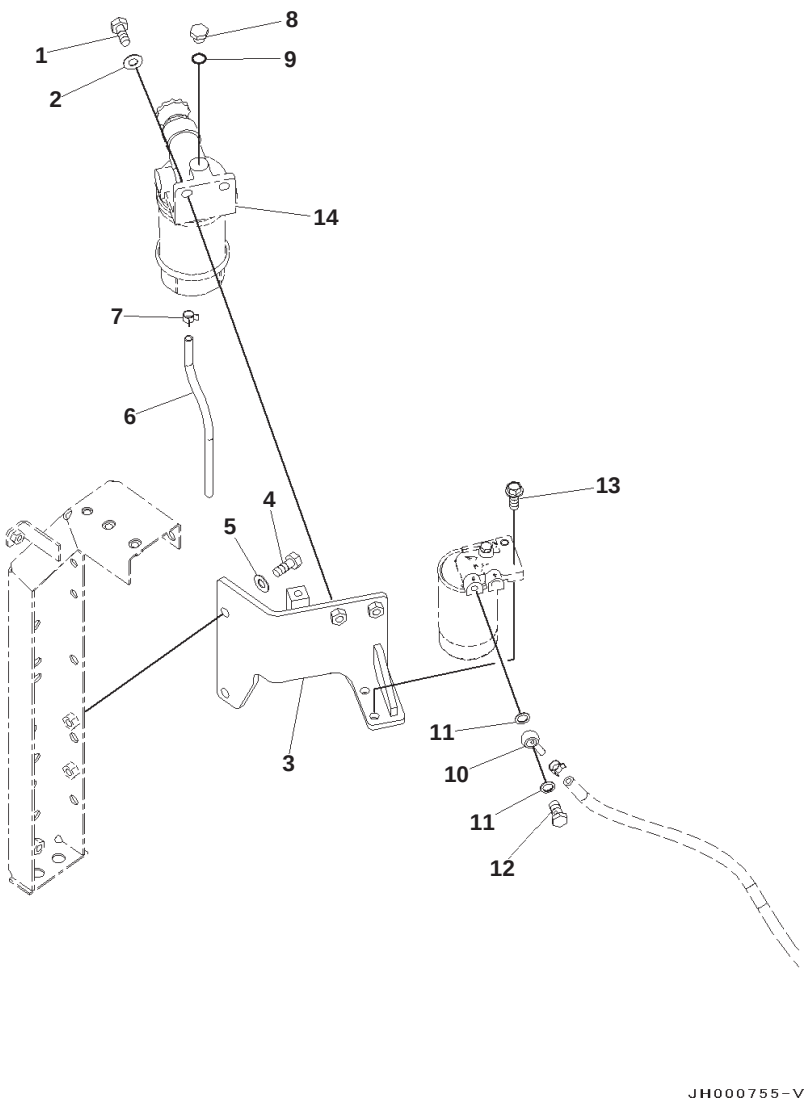

Fuel Supply Piping, With Bad Fuel and Poor Fuel Arrangement, Water+Dust, Pre Filter Bracket

Index	Part Number	Description	Qty	Serial No.
1	07372-21240	Bolt	2	B10001-
2	01643-51232	Washer	2	B10001-
3	203-04-11161	Bracket	1	B10001-
4	01010-81240	Bolt	2	B10001-
5	01643-31232	Washer	2	B10001-
6	07270-00830	Tube	1	B10001-
7	07285-00100	Clip	1	B10001-
8	07040-11409	Plug	1	B10001-
9	07002-11423	O-ring	1	B10001-
10	6206-71-5940	Joint	1	B10001-
11	07005-01412	Seal, Washer	2	B10001-
12	07206-31014	Bolt, Joint	1	B10001-
13	01435-01035	Bolt	2	B10001-
14	(6271-71-6200)	Filter Assembly		

ELECTRICAL SYSTEM

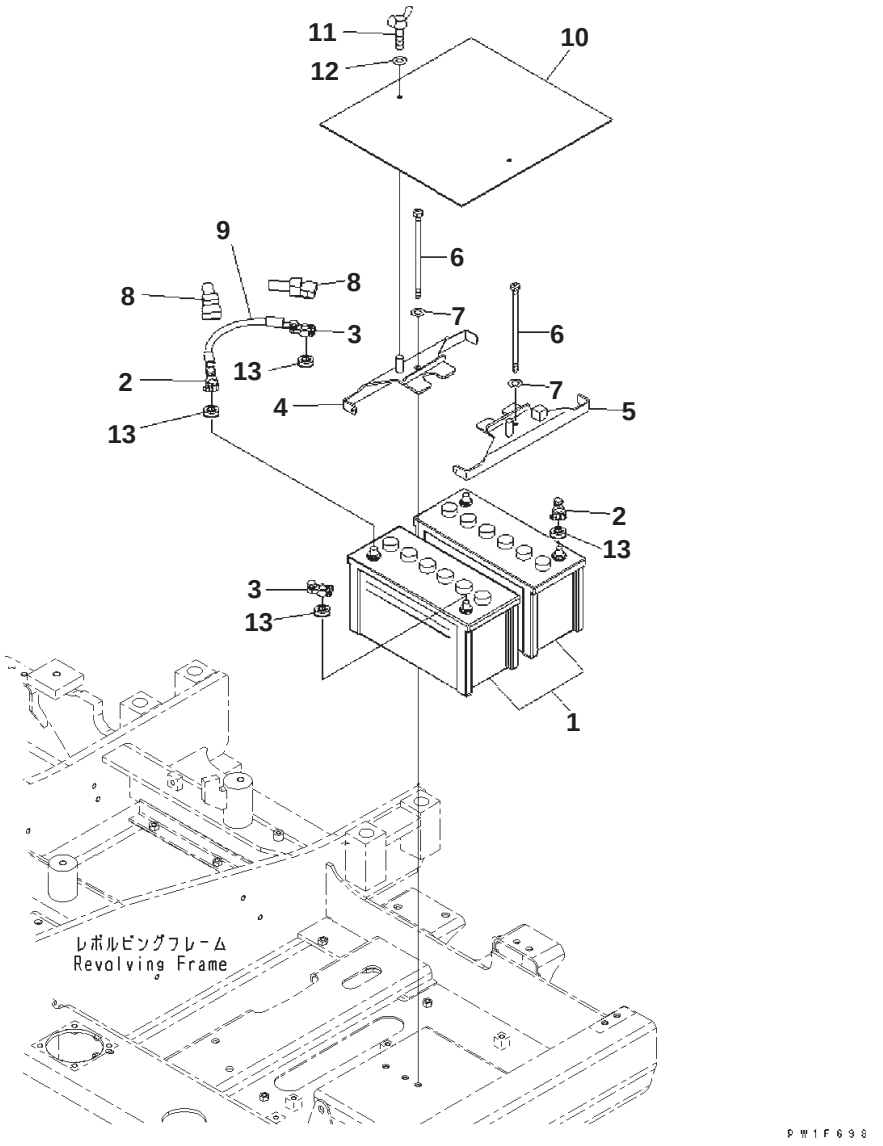

Battery

Index	Part Number	Description	Qty	Serial No.
1	417-06-B1940	Battery, Wet	2	B10001-
2	08000-00000	Terminal	2	B10001-
3	08000-00001	Terminal	2	B10001-
4	21K-06-B7110	Holder	1	B10001-
5	21K-06-B7120	Holder	1	B10001-
6	21K-06-B7130	Bolt	2	B10001-
7	01643-31232	Washer	2	B10001-
8	08038-42009	Cap, Terminal	2	B10001-
9	08028-62035	Cable	1	B10001-
10	21K-06-71150	Cover	1	B10001-
11	01434-00820	Bolt, wing	2	B10001-
12	01643-30823	Washer	2	B10001-
13	417-06-B1830	Spacer	4	B10001-

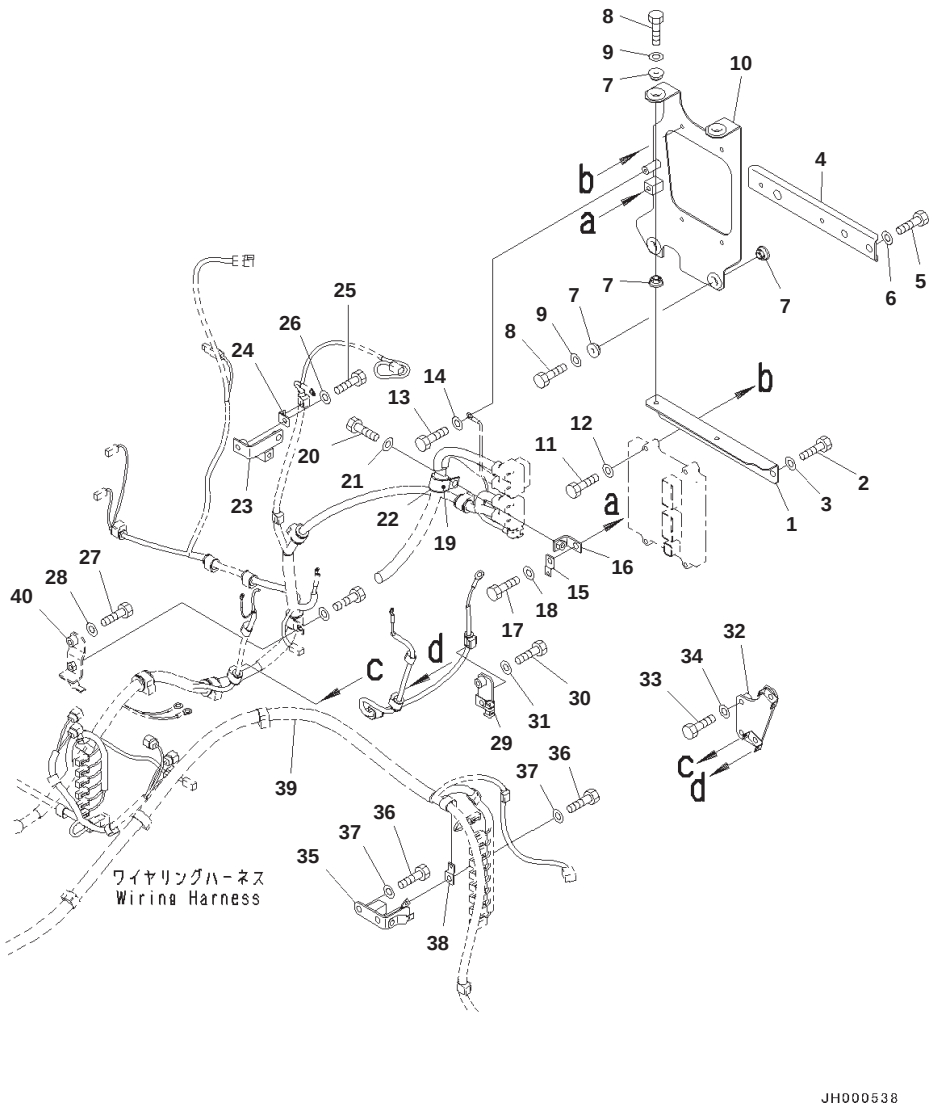

Electric Wiring Harness, 35Amp., (1/3)

Index	Part Number	Description	Qty	Serial No.
1	203-06-11430	Bracket	1	B10001-
2	01010-81230	Bolt	2	B10001-
3	01643-31232	Washer	2	B10001-
4	203-06-11320	Bracket	1	B10001-
5	01010-81230	Bolt	2	B10001-
6	01643-31232	Washer	2	B10001-
7	6251-81-7210	Cushion	8	B10001-
8	01010-80850	Bolt	4	B10001-
9	01643-30823	Washer	4	B10001-
10	203-06-11330	Bracket	1	B10001-
11	01010-80850	Bolt	4	B10001-
12	01643-30823	Washer	4	B10001-
13	01010-80816	Bolt	1	B10001-
14	01643-30823	Washer	1	B10001-
15	08057-00812	Plate	1	B10001-
16	21T-38-71260	Bracket	1	B10001-
17	01010-81230	Bolt	1	B10001-
18	01643-31232	Washer	1	B10001-
19	04434-53212	Clip	1	B10001-
20	01010-81220	Bolt	1	B10001-
21	01643-31232	Washer	1	B10001-
22	07095-20523	Cushion	1	B10001-
23	203-06-11290	Bracket	1	B10001-
24	08057-12010	Clip	1	B10001-
25	01010-81040	Bolt	1	B10001-
26	01643-31032	Washer	1	B10001-
27	01010-81040	Bolt	1	B10001-
28	01643-31032	Washer	1	B10001-
29	203-06-11390	Bracket	1	B10001-
30	01010-81040	Bolt	1	B10001-
31	01643-31032	Washer	1	B10001-
32	203-06-11360	Bracket	1	B10001-
33	01010-81040	Bolt	2	B10001-
34	01643-31032	Washer	2	B10001-
35	203-06-11380	Bracket	1	B10001-
36	01010-81230	Bolt	2	B10001-
37	01643-31232	Washer	2	B10001-
38	08057-00812	Plate	1	B10001-
39	(203-06-11730)	Wiring Harness		
40	(203-06-11310)	Bracket		

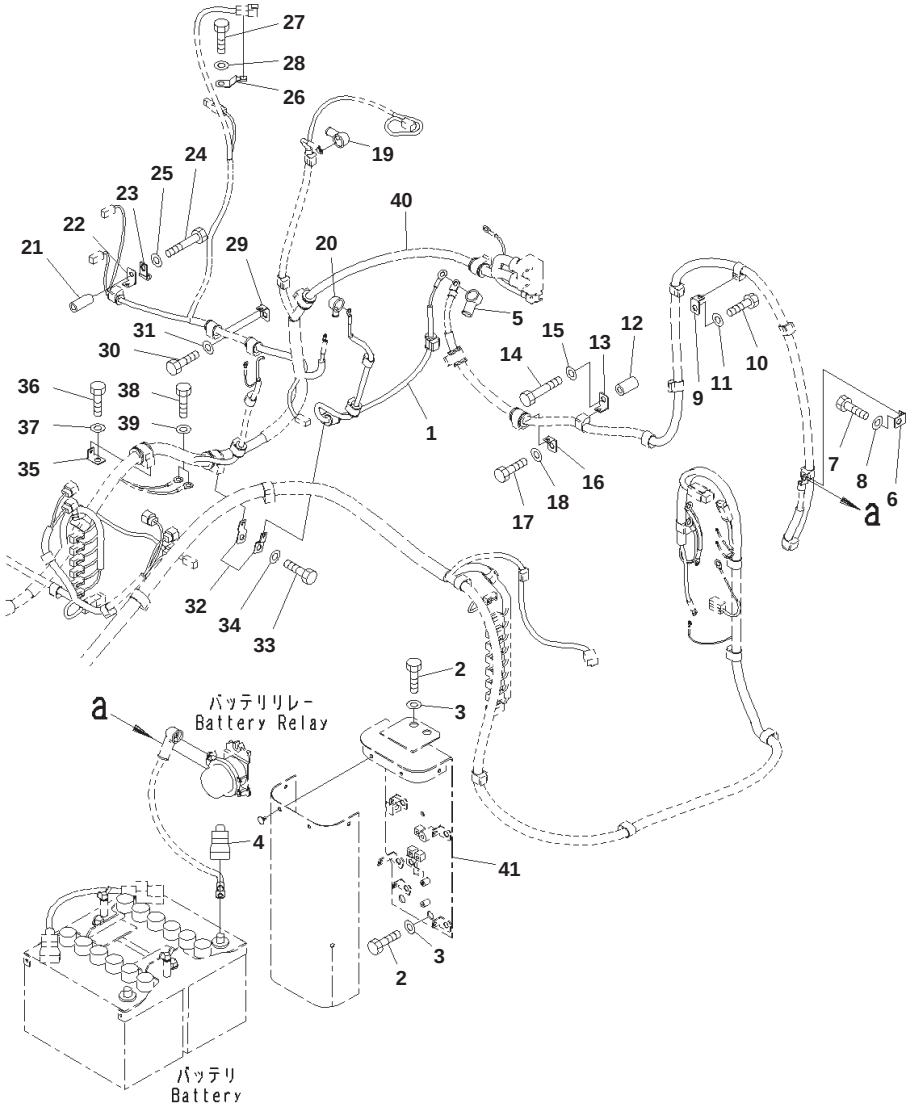

Electric Wiring Harness, 35Amp., (2/3)

Index	Part Number	Description	Qty	Serial No.
1	203-06-11230	Cable	1	B10001-
2	01010-81230	Bolt	4	B10001-
3	01643-31232	Washer	4	B10001-
4	08038-42009	Cap, Terminal	1	B10001-
5	08038-04030	Cap, Terminal	1	B10001-
6	08057-12012	Clip	1	B10001-
7	01010-81220	Bolt	1	B10001-
8	01643-31232	Washer	1	B10001-
9	08057-12012	Clip	5	B10001-
10	01010-81220	Bolt	5	B10001-
11	01643-31232	Washer	5	B10001-
12	205-03-71331	Collar	1	B10001-
13	08057-12012	Clip	1	B10001-
14	01010-81270	Bolt	1	B10001-
15	01643-31232	Washer	1	B10001-
16	08057-12012	Clip	1	B10001-
17	01010-81220	Bolt	1	B10001-
18	01643-31232	Washer	1	B10001-
19	08038-12027	Cap	1	B10001-
20	08038-10525	Cap	1	B10001-
21	14X-54-26640	Collar	1	B10001-
22	08057-12010	Clip	1	B10001-
23	04434-50810	Clip	1	B10001-
24	01010-81070	Bolt	1	B10001-
25	01643-31032	Washer	1	B10001-
26	08193-21012	Clip	1	B10001-
27	01010-81220	Bolt	1	B10001-
28	01643-31232	Washer	1	B10001-
29	08057-12012	Clip	2	B10001-
30	01010-81220	Bolt	2	B10001-
31	01643-31232	Washer	2	B10001-
32	08057-00812	Plate	2	B10001-
33	01010-81220	Bolt	1	B10001-
34	01643-31232	Washer	1	B10001-
35	08057-12012	Clip	1	B10001-
36	01010-81220	Bolt	1	B10001-
37	01643-31232	Washer	1	B10001-
38	01010-81016	Bolt	2	B10001-
39	01643-31032	Washer	2	B10001-
40	(203-06-11730)	Wiring Harness		
41	(203-06-11260)	Bracket		

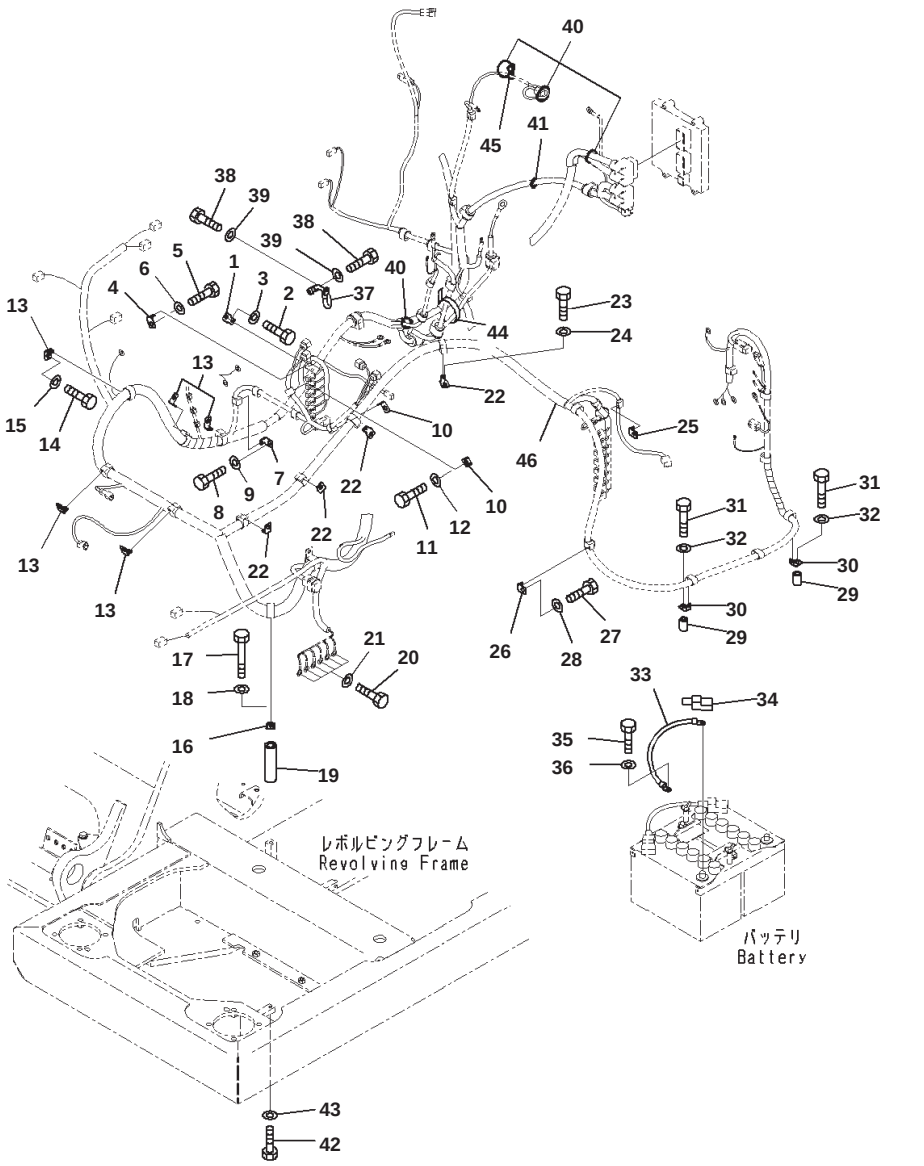

Electric Wiring Harness, 35Amp., (3/3)

Index	Part Number	Description	Qty	Serial No.
1	08057-12012	Clip	1	B10001-
2	01010-81220	Bolt	1	B10001-
3	01643-31232	Washer	1	B10001-
4	08057-12012	Clip	1	B10001-
5	01010-81230	Bolt	1	B10001-
6	01643-31232	Washer	1	B10001-
7	08057-12012	Clip	1	B10001-
8	01010-81230	Bolt	1	B10001-
9	01643-31232	Washer	1	B10001-
10	08057-12012	Clip	2	B10001-
11	01010-81220	Bolt	2	B10001-
12	01643-31232	Washer	2	B10001-
13	08057-12012	Clip	5	B10001-
14	01010-81220	Bolt	5	B10001-
15	01643-31232	Washer	5	B10001-
16	08057-12012	Clip	1	B10001-
17	01011-81200	Bolt	1	B10001-
18	01643-31232	Washer	1	B10001-
19	22S-62-26210	Spacer	1	B10001-
20	01010-81020	Bolt	6	B10001-
21	01643-31032	Washer	6	B10001-
22	08057-12012	Clip	4	B10001-
23	01010-81220	Bolt	4	B10001-
24	01643-31232	Washer	4	B10001-
25	08057-12010	Clip	1	B10001-
26	08057-12012	Clip	1	B10001-
27	01010-81220	Bolt	1	B10001-
28	01643-31232	Washer	1	B10001-
29	20Y-03-11220	Collar	2	B10001-
30	08057-12012	Clip	2	B10001-
31	01010-81260	Bolt	2	B10001-
32	01643-31232	Washer	2	B10001-
33	08028-42040	Cable, Ground	1	B10001-
34	08038-22009	Cap, Terminal	1	B10001-
35	01010-81020	Bolt	1	B10001-
36	01643-31032	Washer	1	B10001-
37	08028-42030	Cable, Ground	1	B10001-
38	01010-81016	Bolt	2	B10001-
39	01643-31032	Washer	2	B10001-
40	08034-20536	Band	5	B10001-
41	134-03-61410	Band	1	B10001-
42	01010-81020	Bolt	1	B10001-
43	01643-31032	Washer	1	B10001-
44	08034-20519	Band	1	B10001-
45	08034-40521	Band	1	B10001-
46	(203-06-11730)	Wiring Harness		

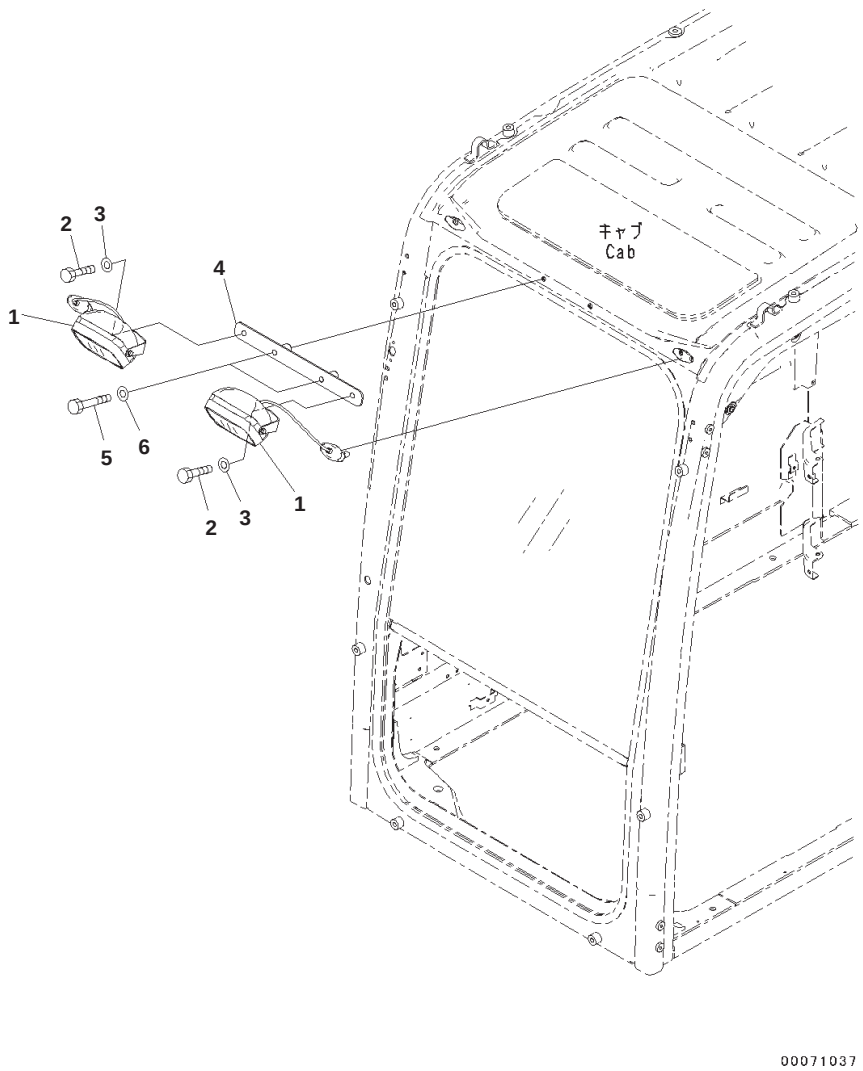

Additional Working Lamp

Index	Code	Part Number	Description	Qty	Serial No.
1		20Y-53-15210	Light Assembly, Working	2	B10001-
		421-06-23330	・ Bulb, 70watt	1	B10001-
2		01010-D1025	Bolt	2	B10001-
3		01643-71032	Washer	2	B10001-
4		20Y-53-15150	Bracket	1	B10001-
5		01010-D1065	Bolt	2	B10038-
	A2	01010-D1060	Bolt	2	B10001-B10037
6		01643-71032	Washer	2	B10001-

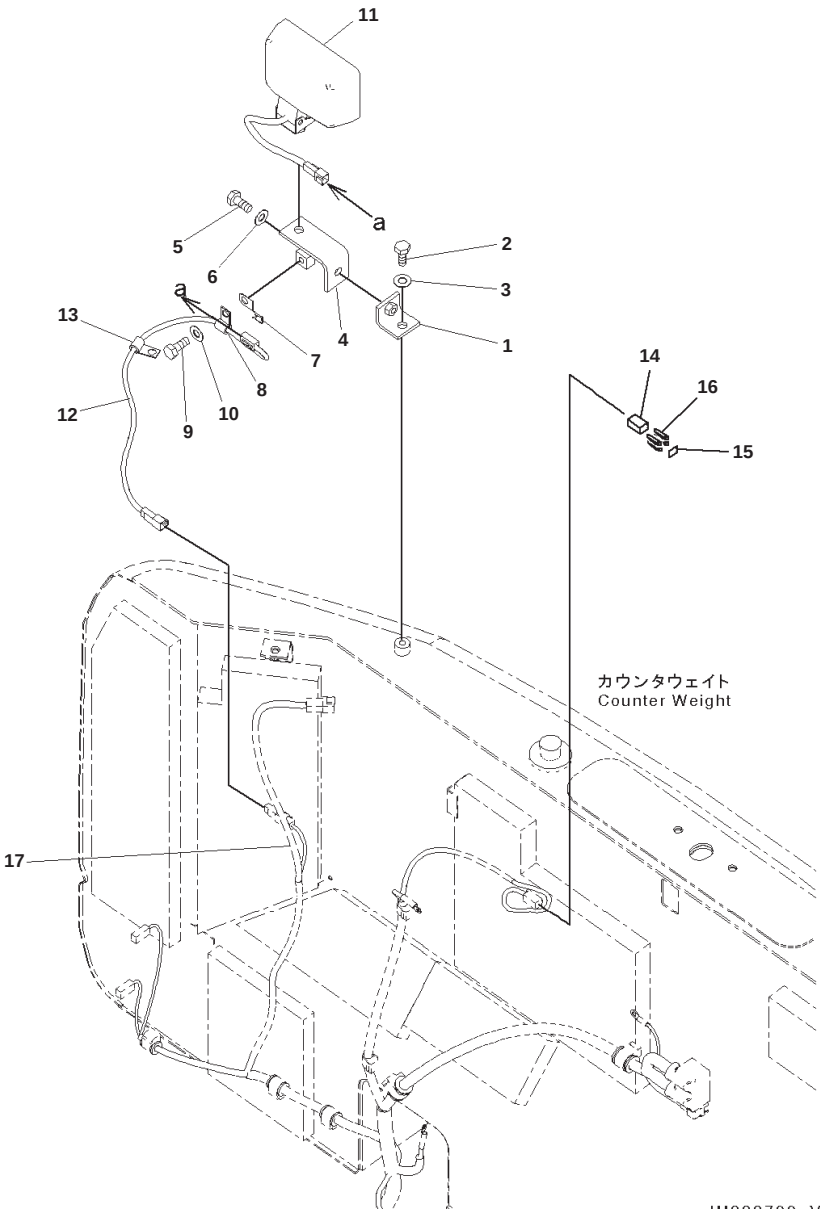

Index	Part Number	Description	Qty	Serial No.
1	20Y-06-21590	Bracket	1	B10001-
2	01010-81225	Bolt	1	B10001-
3	01643-31232	Washer	1	B10001-
4	20Y-06-21551	Bracket	1	B10001-
5	01010-81225	Bolt	1	B10001-
6	01643-31232	Washer	1	B10001-
7	08193-21012	Clip	1	B10001-
8	04434-51012	Clip	1	B10001-
9	01010-81225	Bolt	1	B10001-
10	01643-31232	Washer	1	B10001-
11	21T-06-32810	Working Lamp Assembly, 24volt, 70watt	1	B10001-
	421-06-23330	・ Bulb, 70watt	1	B10001-
12	203-06-11410	Wiring Harness	1	B10001-
13	04434-51012	Clip	1	B10001-
14	08192-24200	Connector	1	B10001-
15	08192-14400	Wedge	1	B10001-
16	08191-00770	Terminal	4	B10001-
17	(203-06-11730)	Wiring Harness		

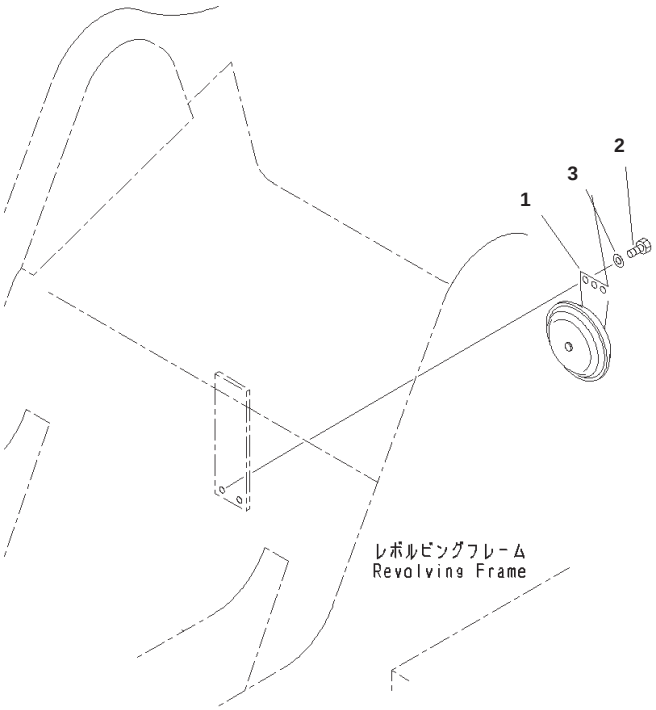

Horn

Index	Part Number	Description	Qty	Serial No.
1	08160-72400	Horn	1	B10001-
2	01010-80820	Bolt	2	B10001-
3	01643-30823	Washer	2	B10001-

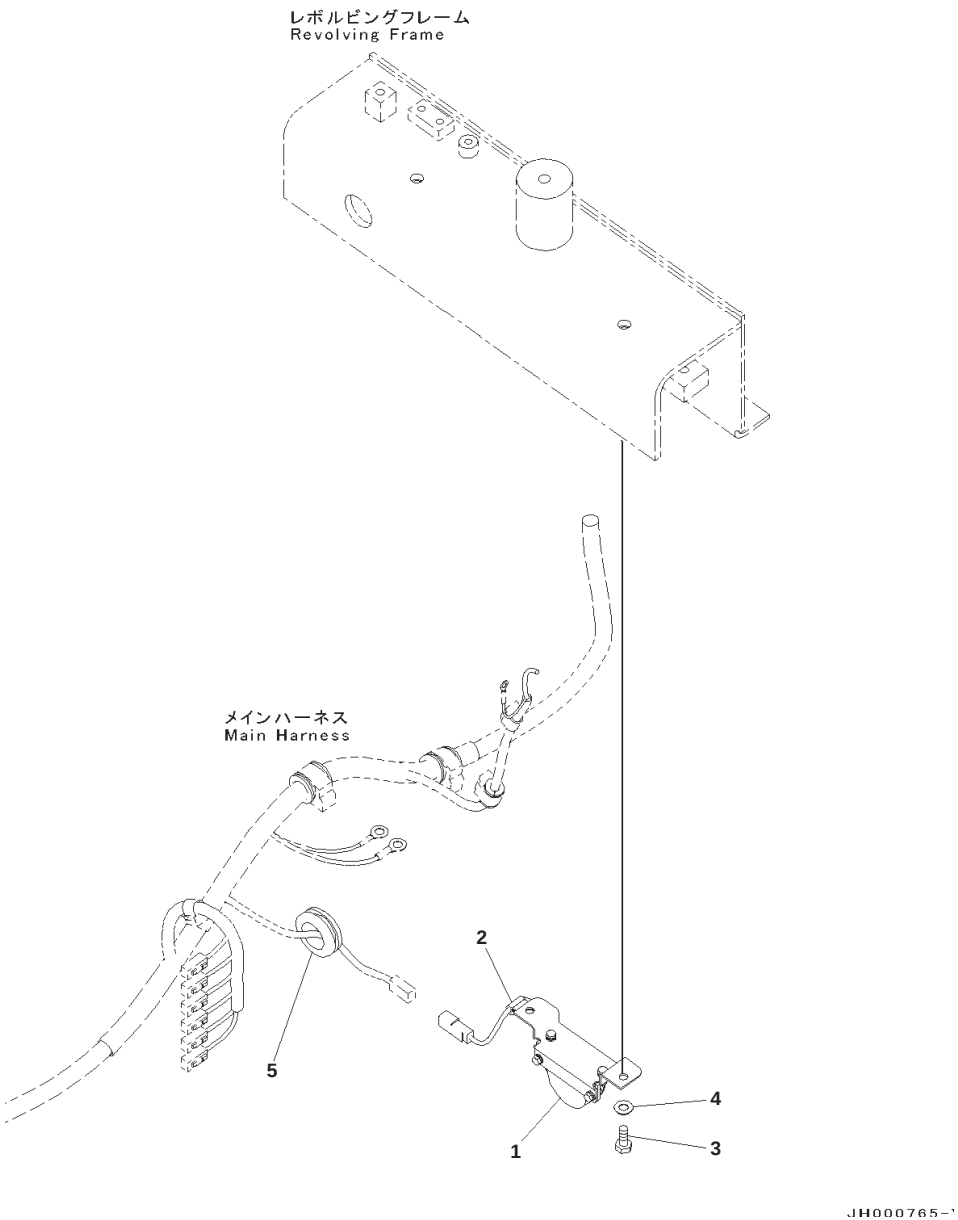

Backup Alarm

Index	Part Number	Description	Qty	Serial No.
1	20Y-06-41822	Back-up Alarm	1	B10001-
2	04434-50610	Clip	1	B10001-
3	01010-81020	Bolt	2	B10001-
4	01643-31032	Washer	2	B10001-
5	08037-03620	Grommet	1	B10001-

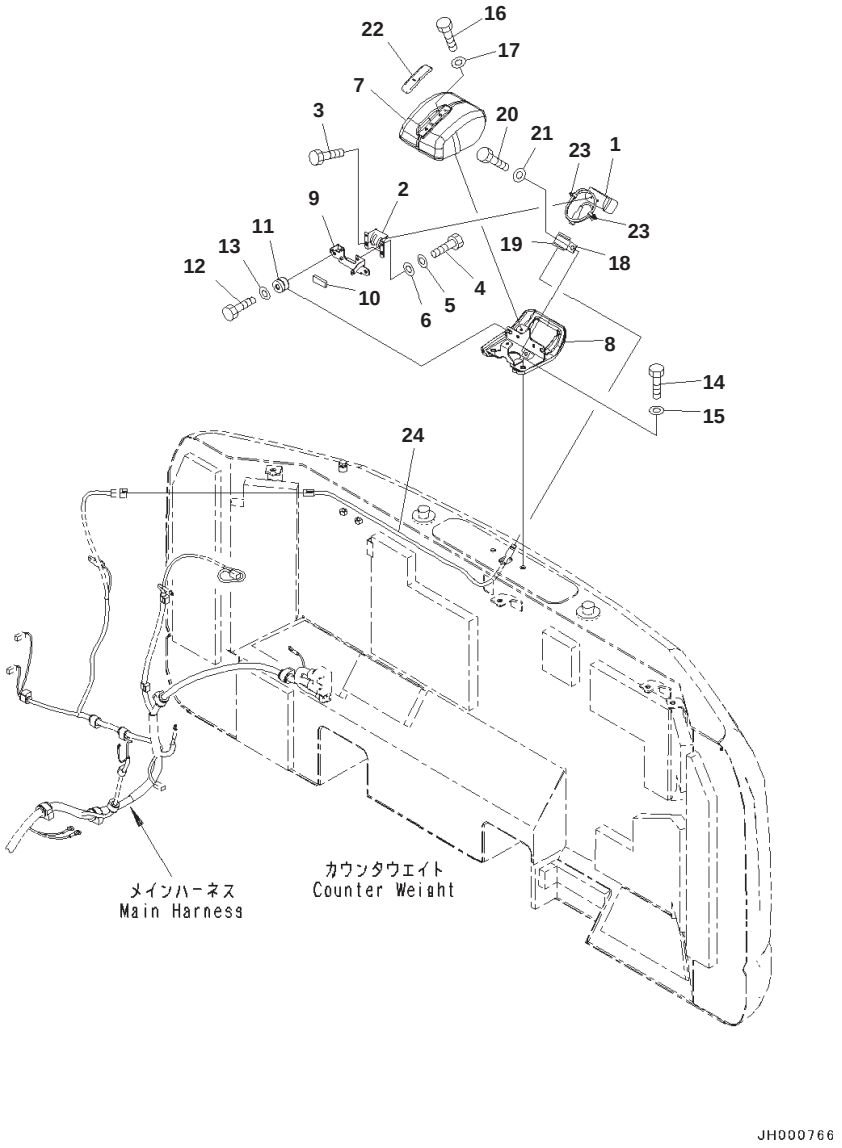

Index	Code	Part Number	Description	Qty	Serial No.
		7835-33-1001	Camera Assembly	1	B10001-
1	C1		・ Camera	1	B10001-
2	C1		・ Bracket	1	B10001-
3	C1		・ Bolt	2	B10001-
4	C1		・ Bolt	4	B10001-
5	C1		・ Washer	4	B10001-
6	C1		・ Washer	4	B10001-
7		207-06-76420	Cover	1	B10001-
8		207-06-76431	Cover	1	B10001-
9		207-06-76440	Bracket	1	B10001-
10		207-06-76460	・ Sheet	1	B10001-
11		20Y-810-1240	Cushion	2	B10001-
12		01010-80835	Bolt	2	B10001-
13		01643-30823	Washer	2	B10001-
14		01010-81230	Bolt	2	B10001-
15		01643-31232	Washer	2	B10001-
16		01010-80616	Bolt	2	B10001-
17		01643-30623	Washer	2	B10001-
18		04434-53211	Clip	1	B10001-
19		07095-00317	Cushion	1	B10001-
20		01010-81020	Bolt	1	B10001-
21		01643-31032	Washer	1	B10001-
22		207-06-76451	Cover	1	B10001-
23		08059-00310	Clip	2	B10001-
24		207-06-76310	Cable	1	B10001-

HYDRAULIC SYSTEM

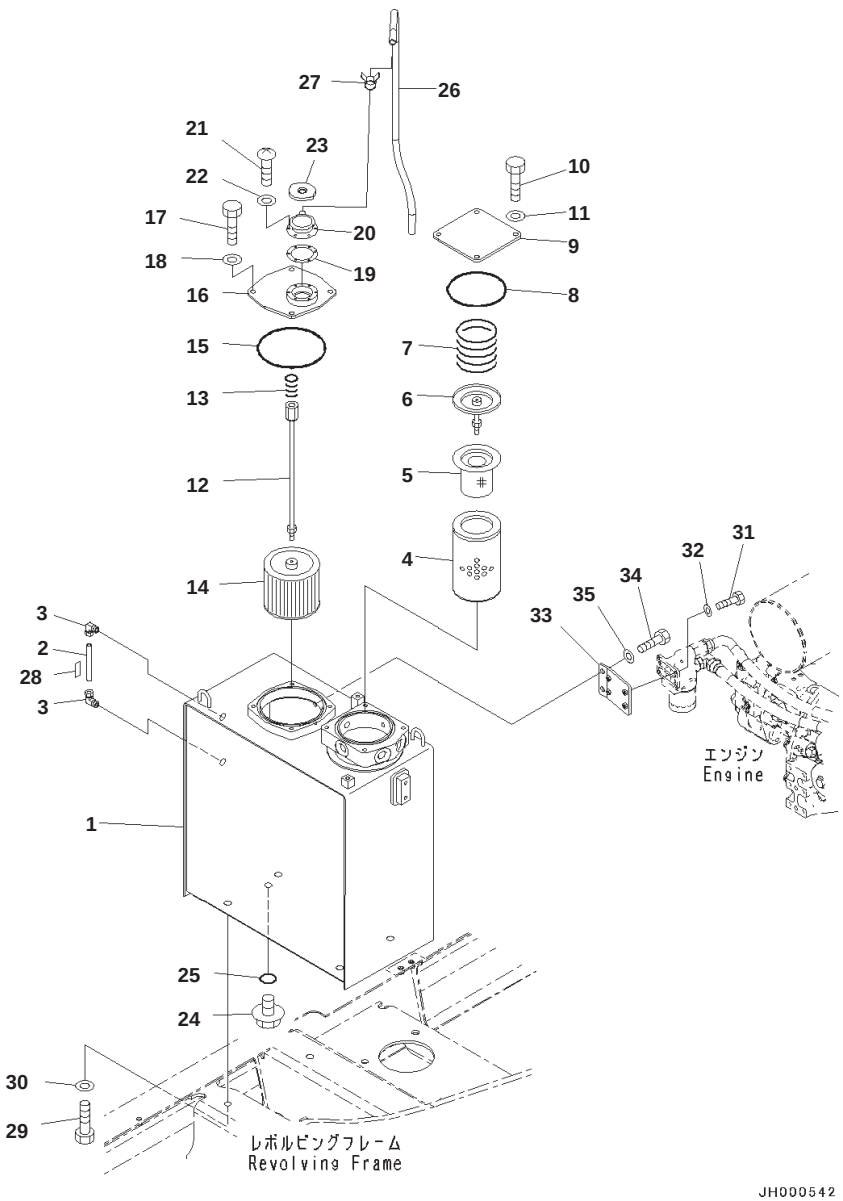

Index	Part Number	Description	Qty	Serial No.
1	203-60-11111	Tank	1	B10001-
2	203-60-31160	Tube	1	B10001-
3	203-60-31100	Elbow Assembly	2	B10001-
4	14X-60-31150	Element	1	B10001-
5	07069-23200	Strainer	1	B10001-
6	21W-60-41170	Valve Assembly	1	B10001-
7	20X-60-22140	Spring	1	B10001-
8	07000-15155	O-ring	1	B10001-
9	203-60-61130	Cover	1	B10001-
10	01010-81225	Bolt	4	B10001-
11	01643-31232	Washer	4	B10001-
	203-60-11120	Strainer Assembly	1	B10001-
12	203-60-11130	・ Rod Assembly	1	B10001-
13	12R-60-11230	・・ Spring	1	B10001-
14	22B-60-11160	・ Strainer	1	B10001-
15	07000-15180	O-ring	1	B10001-
16	203-60-11140	Cover	1	B10001-
17	01010-81225	Bolt	4	B10001-
18	01643-31232	Washer	4	B10001-
19	20Y-60-21340	Gasket	1	B10001-
20	208-60-71181	Filler Neck	1	B10001-
21	01252-70516	Bolt	6	B10001-
22	01601-20513	Washer	6	B10001-
23	20Y-60-21440	Cap	1	B10001-
	20Y-60-21470	・ Element	1	B10001-
24	07044-12412	Plug	1	B10001-
25	07002-12434	O-ring	1	B10001-
26	07270-61410	Tube	1	B10001-
27	07285-00155	Clip	1	B10001-
28	203-00-31120	Plate, Instruction	1	B10001-
29	01010-81635	Bolt	4	B10001-
30	01643-31645	Washer	4	B10001-
31	01010-80825	Bolt	4	B10001-
32	01643-30823	Washer	4	B10001-
33	203-62-13140	Plate	1	B10001-
34	01010-81230	Bolt	2	B10001-
35	01643-31232	Washer	2	B10001-

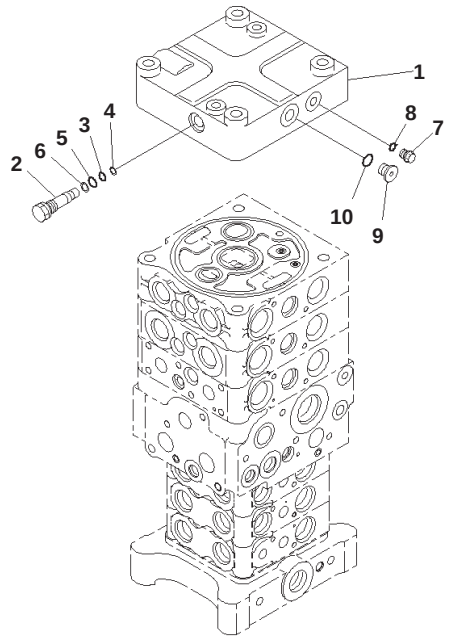

00060090

Main Control Valve, Without 1-additional Actuator Piping, Inner Parts (1/24)

Index	Code	Part Number	Description	Qty	Serial No.
		723-56-12703	Valve, Control	1	B10001-
	C1		・ Cover Group	1	B10001-
1		723-56-11240	・・ Cover	1	B10001-
2		723-26-15190	・・ Plug	1	B10001-
3		07000-11007	・・ O-ring	1	B10001-
4		07001-01007	・・ Ring, Back-up	1	B10001-
5		07000-11009	・・ O-ring	1	B10001-
6		07001-01009	・・ Ring, Back-up	1	B10001-
7		708-8E-16160	・・ Plug	1	B10001-
8		07002-11023	・・ O-ring	1	B10001-
9		702-21-55620	・・ Plug	1	B10001-
10		07002-11423	・・ O-ring	1	B10001-

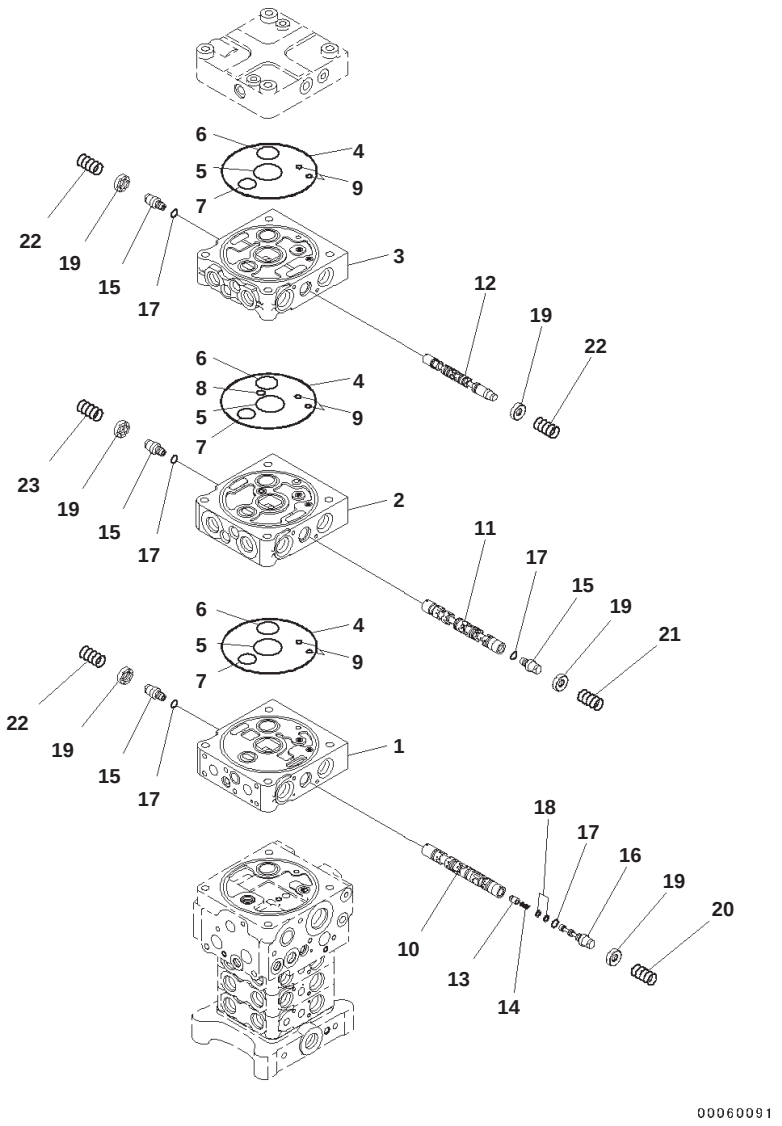

Main Control Valve, Without 1-additional Actuator Piping, Inner Parts (2/24)

Index	Code	Part Number	Description	Qty	Serial No.
		723-56-12703	Valve, Control	1	B10001-
	C1		・ Body Group	1	B10001-
1	C1		・・ Block, Valve	1	B10001-
2	C1		・・ Block, Valve	1	B10001-
3	C1		・・ Block, Valve	1	B10001-
4		144-14-54610	・・ O-ring	3	B10001-
5		723-56-31720	・・ O-ring	3	B10001-
6		723-56-31730	・・ O-ring	3	B10001-
7		702-75-11520	・・ O-ring	3	B10001-
8		07000-12012	・・ O-ring	1	B10001-
9		07000-11008	・・ O-ring	6	B10001-
10	C1		・・ Spool	1	B10001-
11	C1		・・ Spool	1	B10001-
12	C1		・・ Spool	1	B10001-
13	C1		・・ Valve	1	B10001-
14	C1		・・ Spring	1	B10001-
15	C1		・・ Plug	4	B10001-
16	C1		・・ Plug	1	B10001-
17	C1		・・ O-ring	5	B10001-
18	C1		・・ Seal	2	B10001-
19		723-56-31211	・・ Retainer	6	B10001-
20		723-56-32460	・・ Spring	1	B10001-
21		723-36-14110	・・ Spring	1	B10001-
22		723-36-14120	・・ Spring	3	B10001-
23		723-36-14130	・・ Spring	1	B10001-

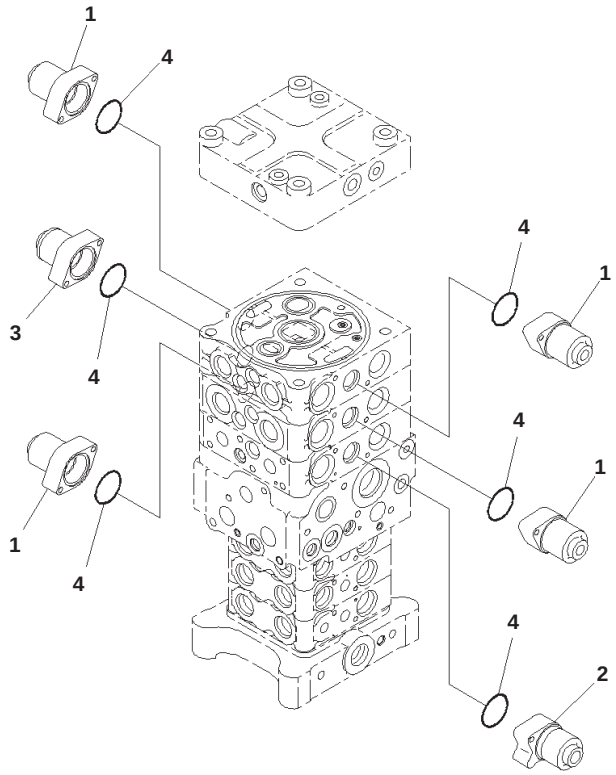

Main Control Valve, Without 1-additional Actuator Piping, Inner Parts (3/24)

Index	Code	Part Number	Description	Qty	Serial No.
		723-56-12703	Valve, Control	1	B10001-
	C1		・ Body Group	1	B10001-
1		723-56-31510	・・ Case	4	B10001-
2		723-56-32560	・・ Case	1	B10001-
3		723-56-31580	・・ Case	1	B10001-
4		702-21-55450	・・ O-ring	6	B10001-

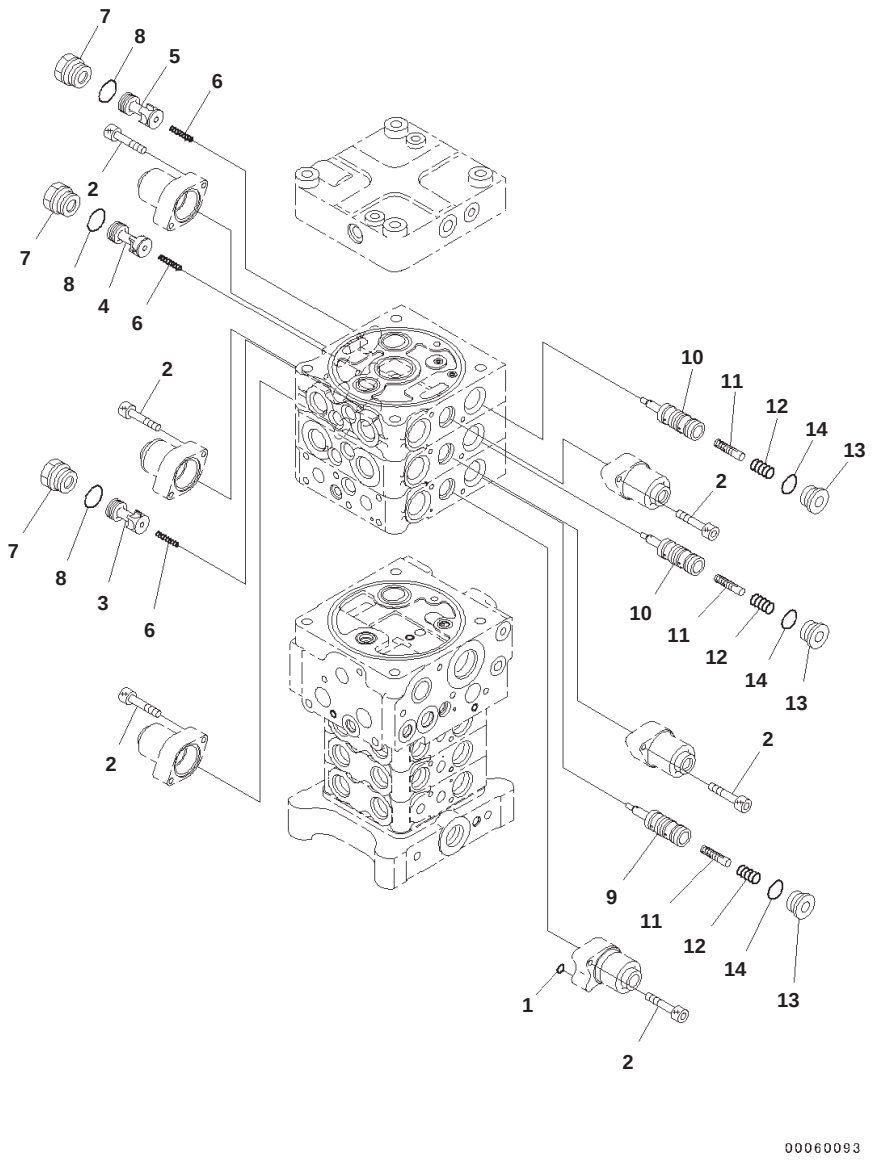

Main Control Valve, Without 1-additional Actuator Piping, Inner Parts (4/24)

Index	Code	Part Number	Description	Qty	Serial No.
		723-56-12703	Valve, Control	1	B10001-
	C1		・ Body Group	1	B10001-
1		07000-11006	・・ O-ring	1	B10001-
2		01252-60630	・・ Bolt, Hexagon Socket Head	12	B10001-
3	C1		・・ Valve	1	B10001-
4	C1		・・ Valve	1	B10001-
5	C1		・・ Valve	1	B10001-
6		723-56-41710	・・ Spring	3	B10001-
7		723-56-41840	・・ Plug	3	B10001-
8		07000-13024	・・ O-ring	3	B10001-
9	C1		・・ Valve	1	B10001-
10	C1		・・ Valve	2	B10001-
11	C1		・・ Piston	3	B10001-
12		723-56-41730	・・ Spring	3	B10001-
13		723-26-15230	・・ Plug	3	B10001-
14		07002-12434	・・ O-ring	3	B10001-

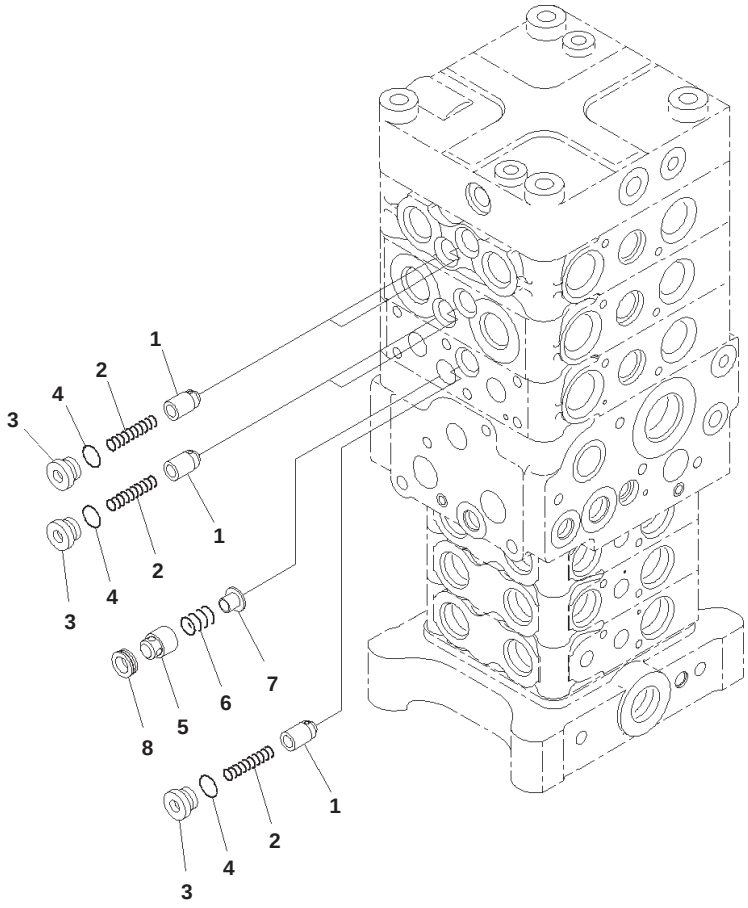

00060094

Main Control Valve, Without 1-additional Actuator Piping, Inner Parts (5/24)

Index	Code	Part Number	Description	Qty	Serial No.
		723-56-12703	Valve, Control	1	B10001-
	C1		・ Body Group	1	B10001-
1	C1		・・ Valve	5	B10001-
2		723-56-31620	・・ Spring	5	B10001-
3		723-56-31630	・・ Plug	5	B10001-
4		07002-11623	・・ O-ring	5	B10001-
5	C1		・・ Valve	1	B10001-
6		709-70-91420	・・ Spring	1	B10001-
7		723-56-31660	・・ Retainer	1	B10001-
8		723-56-31670	・・ Seat	1	B10001-

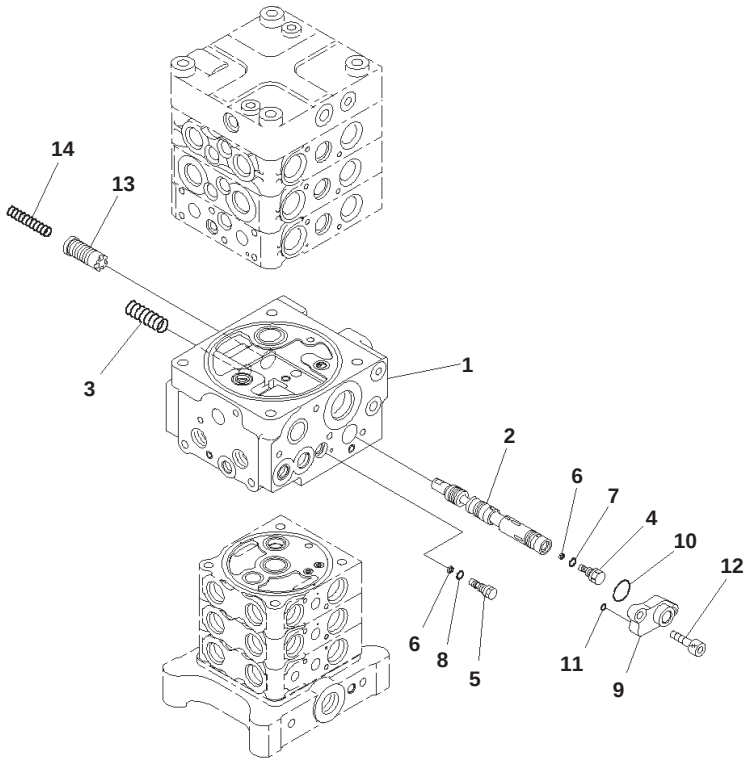

Main Control Valve, Without 1-additional Actuator Piping, Inner Parts (6/24)

Index	Code	Part Number	Description	Qty	Serial No.
		723-56-12703	Valve, Control	1	B10001-
	C1		・ Body Group	1	B10001-
1	C1		・・ Block	1	B10001-
2	C1		・・ Spool	1	B10001-
3		723-56-31970	・・ Spring	1	B10001-
4	C1		・・ Orifice	1	B10001-
5		723-56-31960	・・ Orifice	1	B10001-
6	C1		・・ Ring	2	B10001-
7	C1		・・ O-ring	1	B10001-
8		07002-11223	・・ O-ring	1	B10001-
9		723-56-31940	・・ Flange	1	B10001-
10		723-11-18430	・・ O-ring	1	B10001-
11		07000-11008	・・ O-ring	1	B10001-
12		01252-60825	・・ Bolt, Hexagon Socket Head	2	B10001-
13	C1		・・ Valve	2	B10001-
14		723-56-31990	・・ Spring	2	B10001-

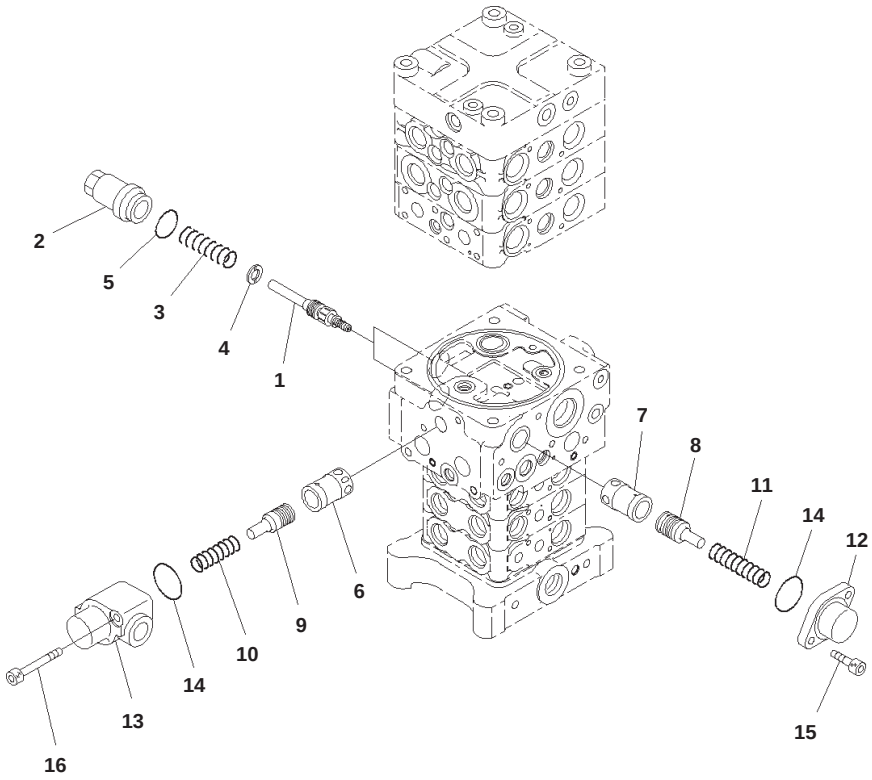

Main Control Valve, Without 1-additional Actuator Piping, Inner Parts (7/24)

Index	Code	Part Number	Description	Qty	Serial No.
		723-56-12703	Valve, Control	1	B10001-
	C1		・ Body Group	1	B10001-
1	C1		・・ Spool	2	B10001-
2		723-50-55250	・・ Sleeve	2	B10001-
3		723-50-55270	・・ Spring	2	B10001-
4		723-50-55280	・・ Spacer	2	B10001-
5		07002-13334	・・ O-ring	2	B10001-
6	C1		・・ Sleeve	1	B10001-
7	C1		・・ Sleeve	1	B10001-
8	C1		・・ Piston	1	B10001-
9	C1		・・ Piston	1	B10001-
10		723-56-33910	・・ Spring	1	B10001-
11		723-36-15240	・・ Spring	1	B10001-
12		723-36-15250	・・ Case	1	B10001-
13	C1		・・ Case	1	B10001-
14		07000-13042	・・ O-ring	2	B10001-
15		01252-60820	・・ Bolt, Hexagon Socket Head	2	B10001-
16		01252-60860	・・ Bolt, Hexagon Socket Head	2	B10001-

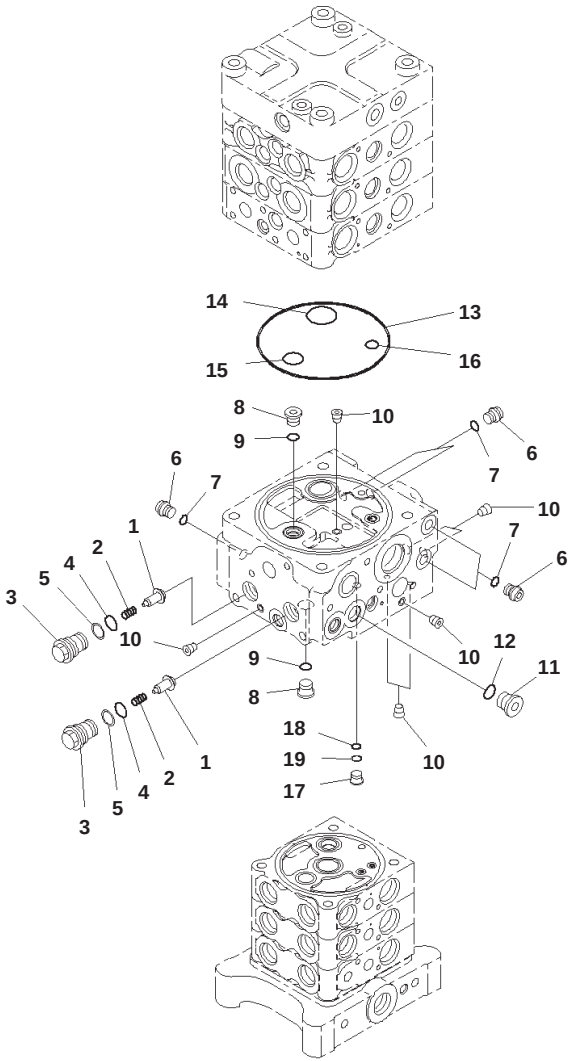

00060097

Main Control Valve, Without 1-additional Actuator Piping, Inner Parts (8/24)

Index	Code	Part Number	Description	Qty	Serial No.
		723-56-12703	Valve, Control	1	B10001-
	C1		・ Body Group	1	B10001-
1	C1		・・ Valve, Check	2	B10001-
2		709-25-11361	・・ Spring	2	B10001-
3		723-26-15580	・・ Plug	2	B10001-
4		07000-12016	・・ O-ring	2	B10001-
5		723-60-22230	・・ Ring, Back-up	2	B10001-
6		708-8E-16160	・・ Plug	5	B10001-
7		07002-11023	・・ O-ring	5	B10001-
8		702-21-55620	・・ Plug	2	B10001-
9		07002-11423	・・ O-ring	2	B10001-
10	C1		・・ Plug	7	B10001-
11		723-11-28920	・・ Plug	1	B10001-
12		07002-11823	・・ O-ring	1	B10001-
13		144-14-54610	・・ O-ring	1	B10001-
14		723-56-31730	・・ O-ring	1	B10001-
15		702-75-11520	・・ O-ring	1	B10001-
16		07000-12014	・・ O-ring	1	B10001-
17		723-26-16460	・・ Plug	1	B10001-
18		07000-11007	・・ O-ring	1	B10001-
19		07001-01007	・・ Ring, Back-up	1	B10001-

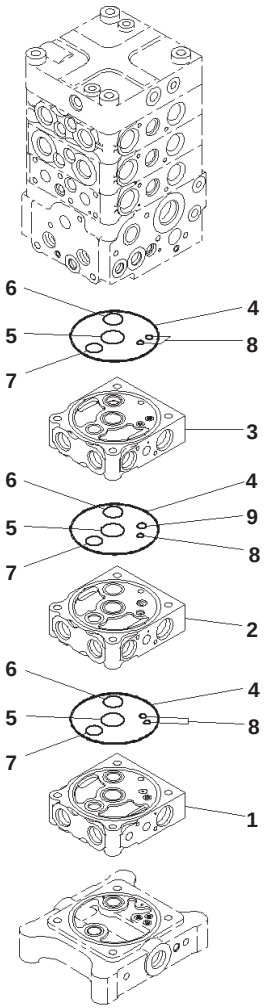

00060098

Main Control Valve, Without 1-additional Actuator Piping, Inner Parts (9/24)

Index	Code	Part Number	Description	Qty	Serial No.
		723-56-12703	Valve, Control	1	B10001-
	C1		・ Body Group	1	B10001-
1	C1		・・ Block	1	B10001-
2	C1		・・ Block	1	B10001-
3	C1		・・ Block	1	B10001-
4		07000-12120	・・ O-ring	3	B10001-
5		723-26-15830	・・ O-ring	3	B10001-
6		723-26-15840	・・ O-ring	3	B10001-
7		07000-12022	・・ O-ring	3	B10001-
8		07000-11008	・・ O-ring	5	B10001-
9		07000-12010	・・ O-ring	1	B10001-

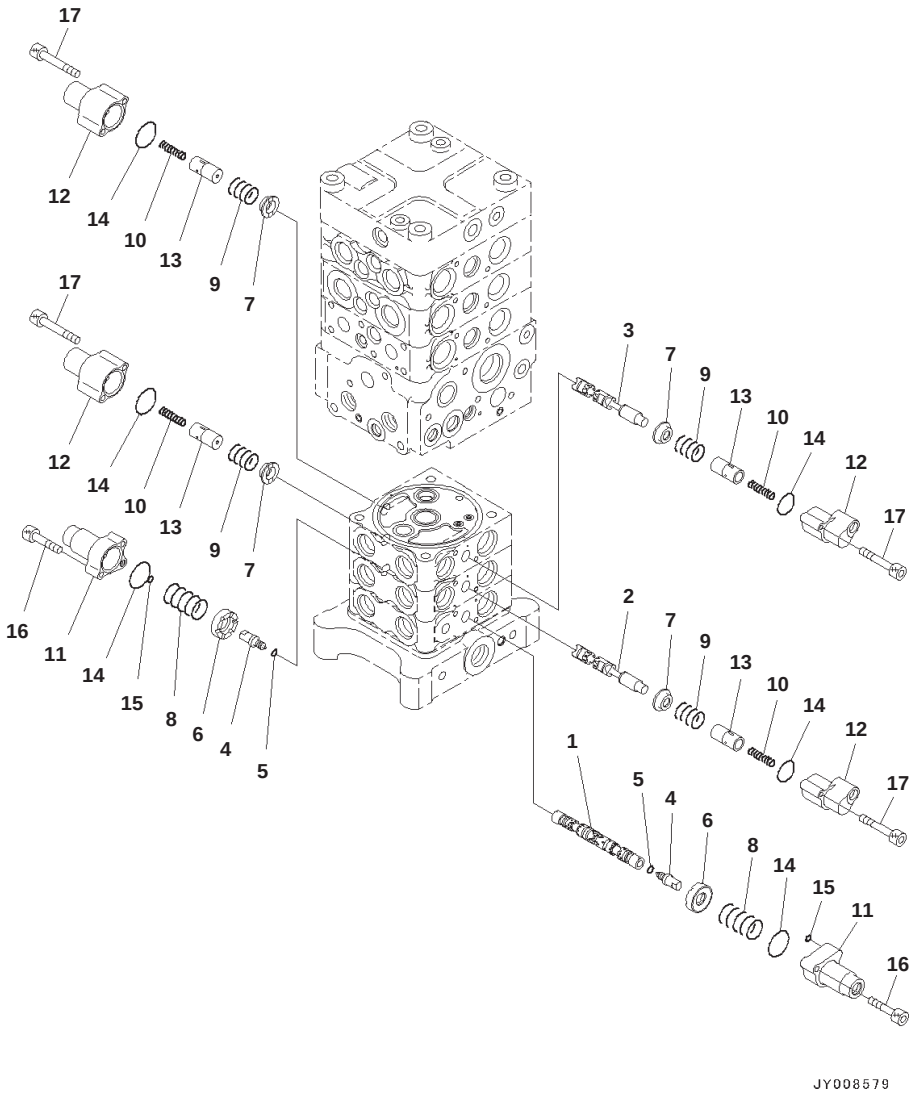

Main Control Valve, Without 1-additional Actuator Piping, Inner Parts (10/24)

Index	Code	Part Number	Description	Qty	Serial No.
		723-56-12703	Valve, Control	1	B10001-
	C1		・ Body Group	1	B10001-
1	C1		・・ Spool	1	B10001-
2	C1		・・ Spool	1	B10001-
3	C1		・・ Spool	1	B10001-
4	C1		・・ Plug	2	B10001-
5	C1		・・ O-ring	2	B10001-
6		723-26-15121	・・ Retainer	2	B10001-
7		723-26-16740	・・ Retainer	4	B10001-
8		723-26-14520	・・ Spring	2	B10001-
9		723-26-14530	・・ Spring	4	B10001-
10		723-26-14540	・・ Spring	4	B10001-
11		723-26-16710	・・ Case	2	B10001-
12		723-26-16720	・・ Case	4	B10001-
13	C1		・・ Piston	4	B10001-
14		575-41-17420	・・ O-ring	6	B10001-
15		07000-11005	・・ O-ring	2	B10001-
16		01252-60630	・・ Bolt, Hexagon Socket Head	4	B10001-
17		01252-60645	・・ Bolt, Hexagon Socket Head	8	B10001-

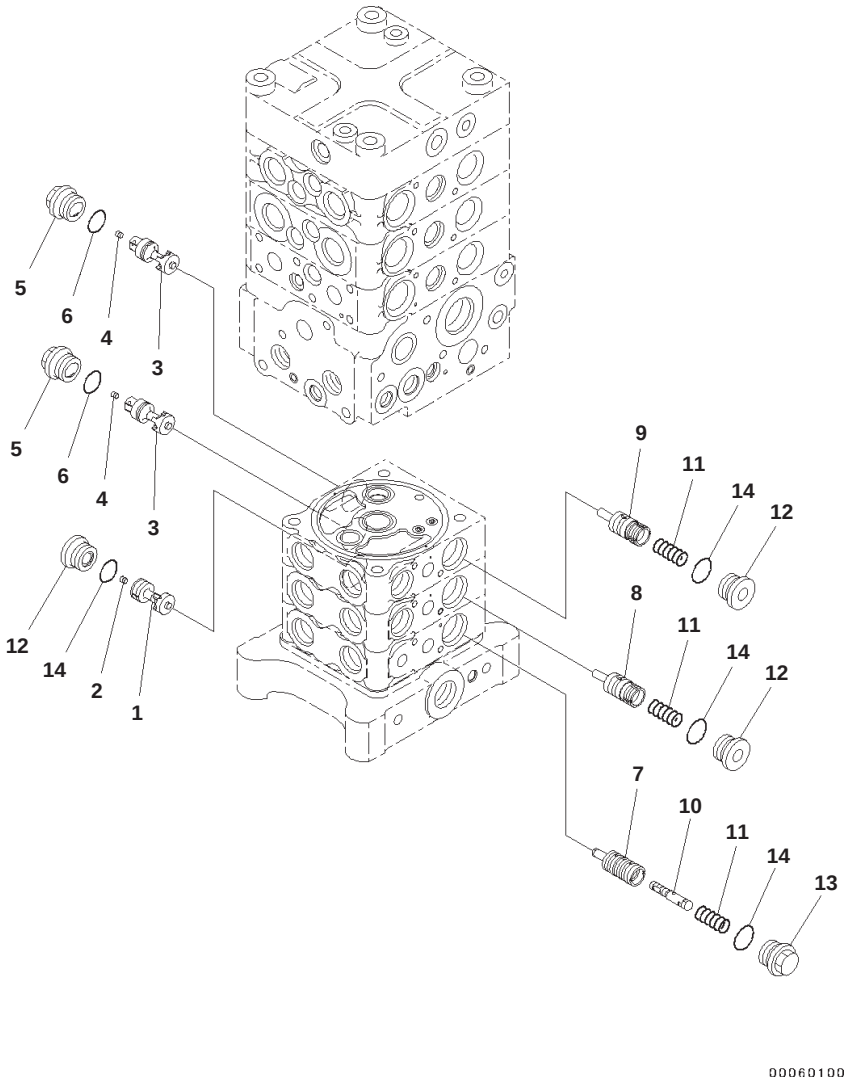

Main Control Valve, Without 1-additional Actuator Piping, Inner Parts (11/24)

Index	Code	Part Number	Description	Qty	Serial No.
		723-56-12703	Valve, Control	1	B10001-
	C1		・ Body Group	1	B10001-
1	C1		・・ Valve	1	B10001-
2	C1		・・ Screw	1	B10001-
3	C1		・・ Valve	2	B10001-
4	C1		・・ Orifice	2	B10001-
5		723-26-16670	・・ Plug	2	B10001-
6		07002-12434	・・ O-ring	2	B10001-
7	C1		・・ Valve	1	B10001-
8	C1		・・ Valve Subassembly	1	B10001-
9	C1		・・ Valve Subassembly	1	B10001-
10	C1		・・ Valve Subassembly	1	B10001-
11		723-26-14140	・・ Spring	3	B10001-
12		723-26-15230	・・ Plug	3	B10001-
13		723-26-15890	・・ Plug	1	B10001-
14		07002-12434	・・ O-ring	4	B10001-

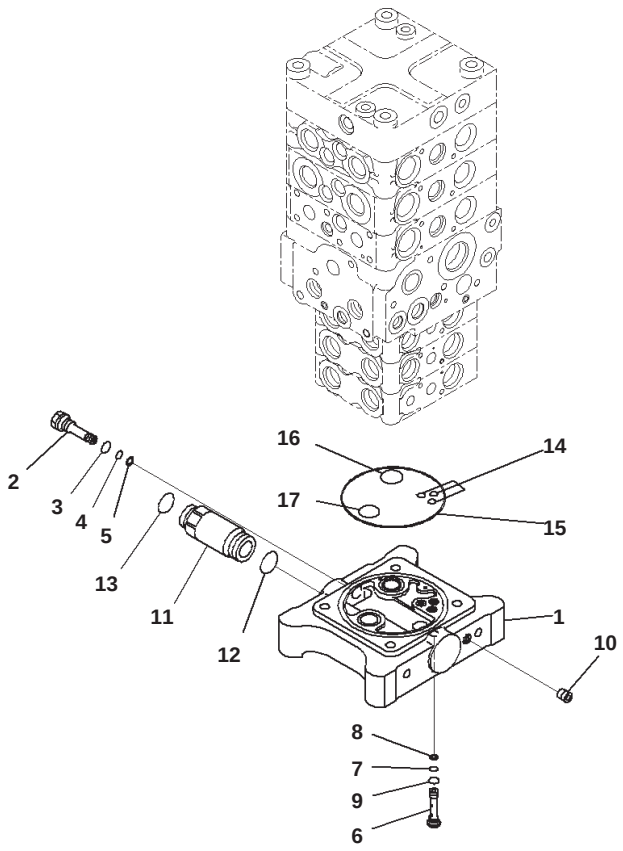

Main Control Valve, Without 1-additional Actuator Piping, Inner Parts (12/24)

Index	Code	Part Number	Description	Qty	Serial No.
		723-56-12703	Valve, Control	1	B10001-
	C1		・ Body Group	1	B10001-
1	C1		・・ Block	1	B10001-
2		723-26-15170	・・ Plug	1	B10001-
3		07002-11423	・・ O-ring	1	B10001-
4		07000-11007	・・ O-ring	1	B10001-
5		07001-01007	・・ Ring, Back-up	1	B10001-
6		723-60-23301	・・ Valve Assembly, Check	1	B10001-
7		07000-11005	・・・ O-ring	1	B10001-
8		07001-01005	・・・ Ring, Back-up	1	B10001-
9		07002-11023	・・・ O-ring	1	B10001-
10	C1		・・ Plug	1	B10001-
11		723-26-15991	・・ Union	1	B10001-
12		07000-13024	・・ O-ring	1	B10001-
13		02896-11018	・・ O-ring	1	B10001-
14		07000-11008	・・ O-ring	3	B10001-
15		07000-12120	・・ O-ring	1	B10001-
16		723-26-15840	・・ O-ring	1	B10001-
17		07000-12022	・・ O-ring	1	B10001-

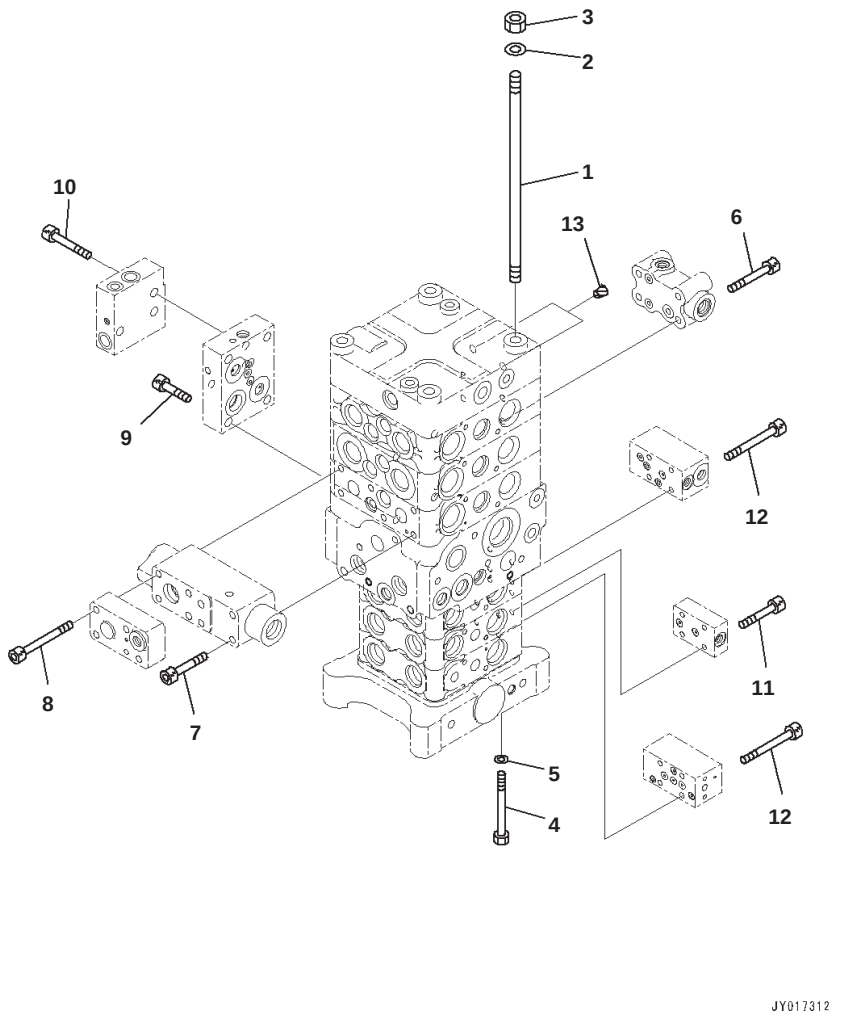

Main Control Valve, Without 1-additional Actuator Piping, Inner Parts (13/24)

Index	Part Number	Description	Qty	Serial No.
	723-56-12703	Valve, Control	1	B10001-
1	723-50-11130	・ Stud	4	B10001-
2	01643-31232	・ Washer	4	B10001-
3	01580-11210	・ Nut	4	B10001-
4	01011-61085	・ Bolt	4	B10001-
5	01643-51032	・ Washer	4	B10001-
6	01252-60850	・ Bolt, Hexagon Socket Head	4	B10001-
7	01252-60865	・ Bolt, Hexagon Socket Head	2	B10001-
8	708-25-19160	・ Bolt, Hexagon Socket Head	4	B10001-
9	01252-61035	・ Bolt, Hexagon Socket Head	4	B10001-
10	01252-61040	・ Bolt, Hexagon Socket Head	3	B10001-
11	01252-60630	・ Bolt, Hexagon Socket Head	4	B10001-
12	01252-60650	・ Bolt, Hexagon Socket Head	8	B10001-
13	07049-01215	・ Plug	2	B10001-

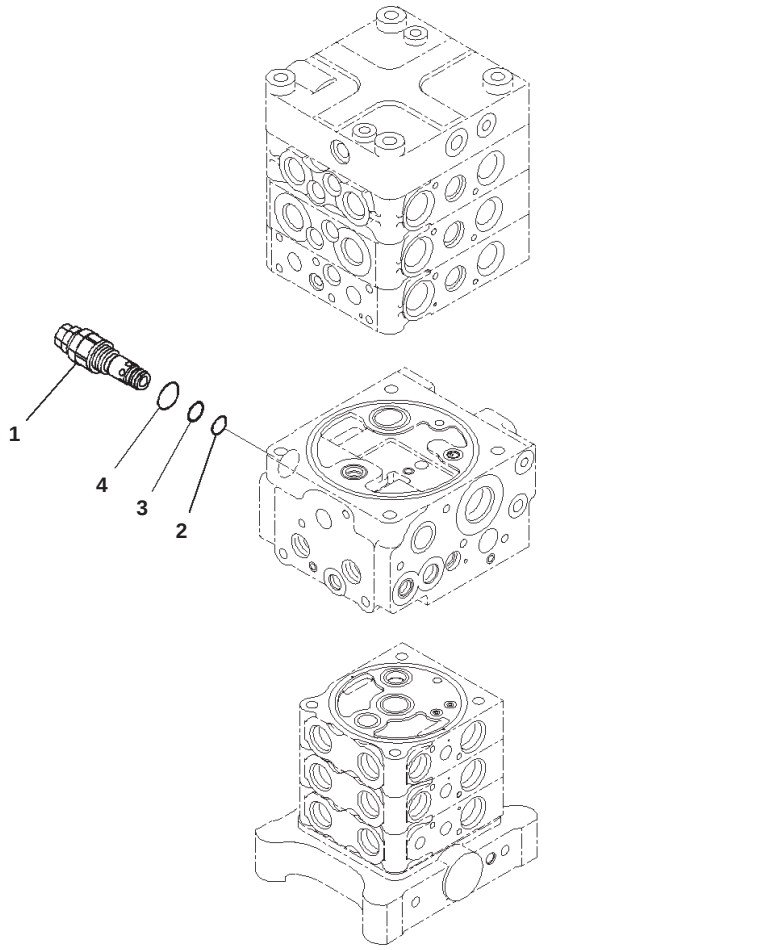

Main Control Valve, Without 1-additional Actuator Piping, Inner Parts (14/24)

Index	Part Number	Description	Qty	Serial No.
	723-56-12703	Valve, Control	1	B10001-
1	723-40-94200	・ Valve, Relief	1	B10001-
2	700-22-11410	・・ O-ring	1	B10001-
3	700-80-64220	・・ Ring	1	B10001-
4	07002-12434	・・ O-ring	1	B10001-

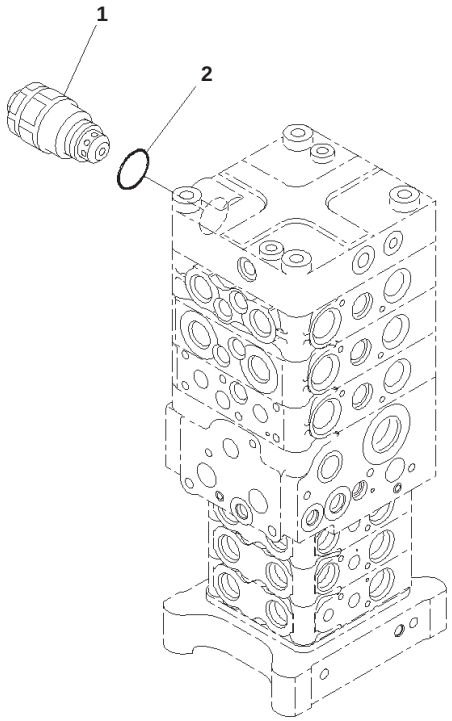

00060104

Main Control Valve, Without 1-additional Actuator Piping, Inner Parts (15/24)

Index	Part Number	Description	Qty	Serial No.
	723-56-12703	Valve, Control	1	B10001-
1	709-90-75300	・ Valve Assembly	1	B10001-
2	07002-13634	・・ O-ring	1	B10001-

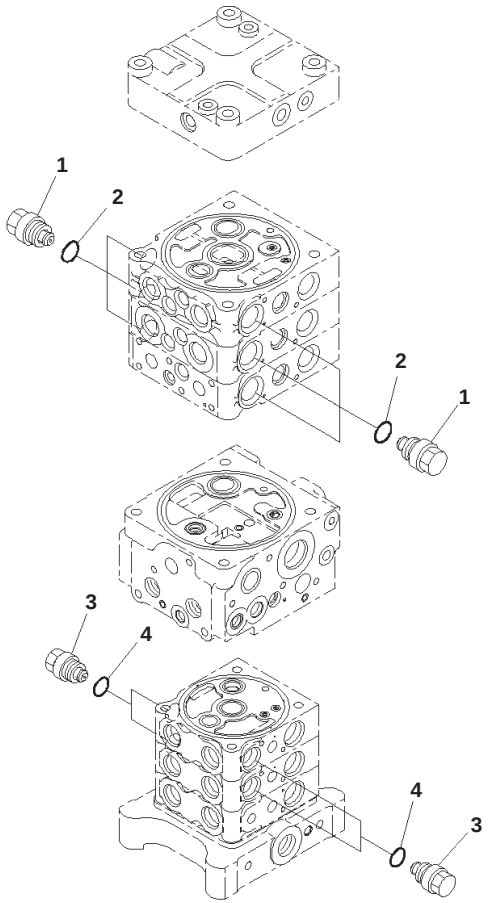

00060105

Main Control Valve, Without 1-additional Actuator Piping, Inner Parts (16/24)

Index	Part Number	Description	Qty	Serial No.
	723-56-12703	Valve, Control	1	B10001-
1	723-40-85100	・ Valve Assembly, Suction	6	B10001-
2	709-25-11390	・・ O-ring	1	B10001-
3	723-20-80100	・ Valve Assembly, Suction	4	B10001-
4	07002-12034	・・ O-ring	1	B10001-

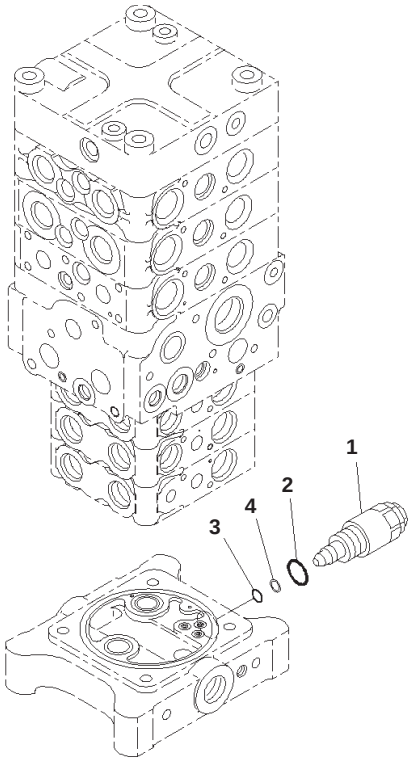

00060106

Main Control Valve, Without 1-additional Actuator Piping, Inner Parts (17/24)

Index	Part Number	Description	Qty	Serial No.
	723-56-12703	Valve, Control	1	B10001-
1	723-50-60200	・ Valve Assembly	1	B10001-
2	709-25-11390	・・ O-ring	1	B10001-
3	07000-12012	・・ O-ring	1	B10001-
4	07001-02012	・・ Ring, Back-up	1	B10001-

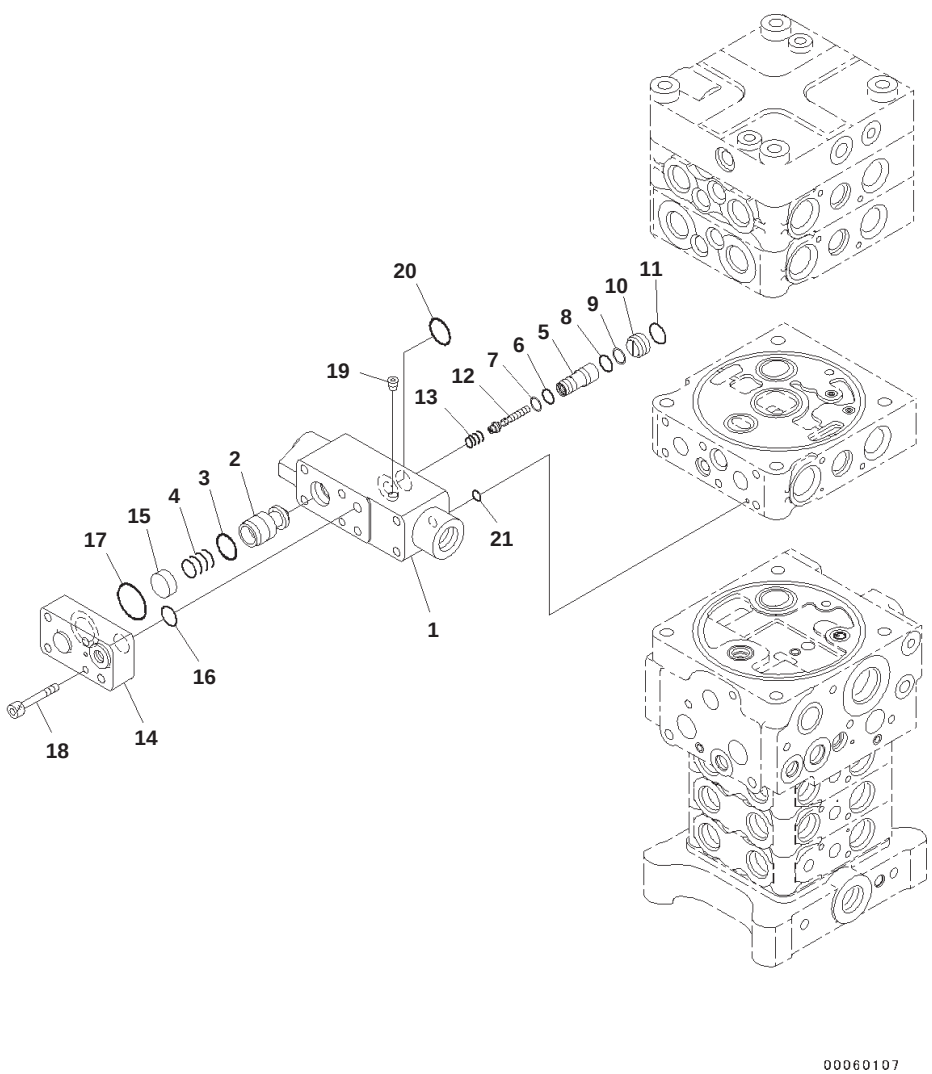

Main Control Valve, Without 1-additional Actuator Piping, Inner Parts (18/24)

Index	Code	Part Number	Description	Qty	Serial No.
		723-56-12703	Valve, Control	1	B10001-
		723-50-53200	・ Valve Assembly	1	B10001-
1	C1		・・ Block	1	B10001-
2	C1		・・ Valve	1	B10001-
3		702-21-35130	・・ Seal	1	B10001-
4		723-50-53330	・・ Spring	1	B10001-
5	C1		・・ Sleeve	1	B10001-
6		07000-12010	・・ O-ring	1	B10001-
7		07001-02010	・・ Ring	1	B10001-
8		07000-12012	・・ O-ring	1	B10001-
9		07001-02012	・・ Ring, Back-up	1	B10001-
10	C1		・・ Seat	1	B10001-
11		07000-12016	・・ O-ring	1	B10001-
12	C1		・・ Piston	1	B10001-
13		723-50-53350	・・ Spring	1	B10001-
14		723-50-53270	・・ Plate	1	B10001-
15		723-50-53260	・・ Retainer	1	B10001-
16		07000-12015	・・ O-ring	1	B10001-
17		07000-13030	・・ O-ring	1	B10001-
18		01252-60630	・・ Bolt, Hexagon Socket Head	1	B10001-
19	C1		・・ Plug	1	B10001-
20		700-13-31161	・・ O-ring	3	B10001-
21		07000-11007	・・ O-ring	1	B10001-

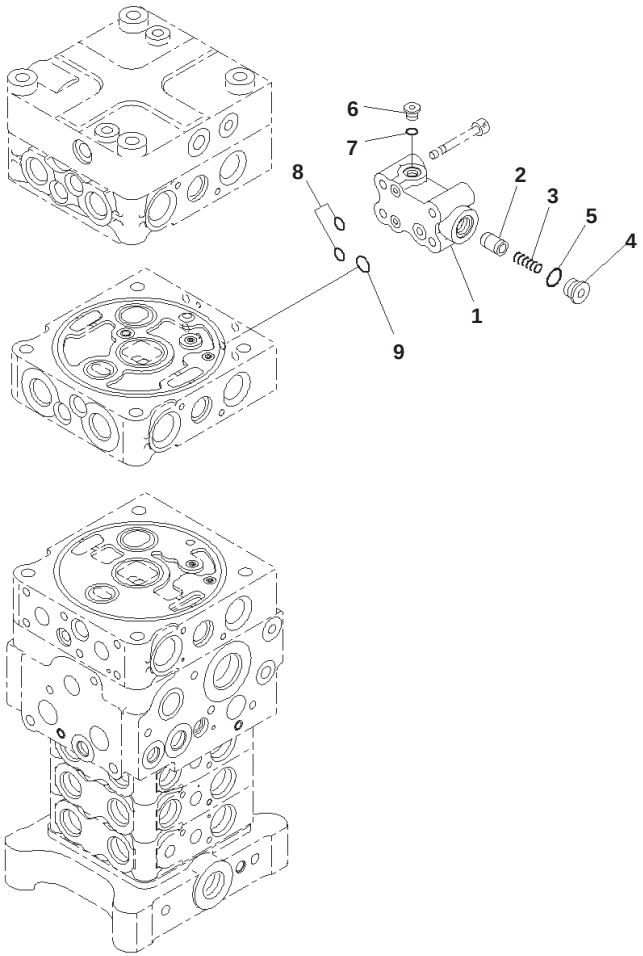

00060108

Main Control Valve, Without 1-additional Actuator Piping, Inner Parts (19/24)

Index	Code	Part Number	Description	Qty	Serial No.
		723-56-12703	Valve, Control	1	B10001-
		723-50-54200	・ Valve Assembly	1	B10001-
1	C1		・・ Block	1	B10001-
2	C1		・・ Valve	1	B10001-
3		723-56-31620	・・ Spring	1	B10001-
4		723-56-31630	・・ Plug	1	B10001-
5		07002-11623	・・ O-ring	1	B10001-
6		723-11-18190	・・ Plug	1	B10001-
7		07002-11023	・・ O-ring	1	B10001-
8		07000-11009	・・ O-ring	2	B10001-
9		708-2L-25490	・・ O-ring	1	B10001-

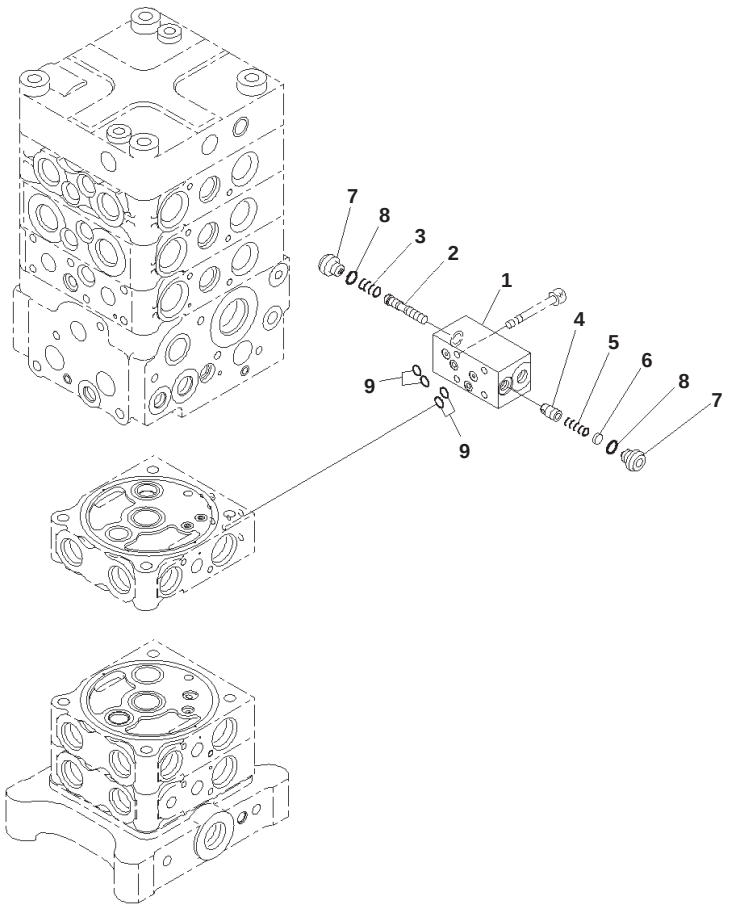

Main Control Valve, Without 1-additional Actuator Piping, Inner Parts (20/24)

Index	Code	Part Number	Description	Qty	Serial No.
		723-56-12703	Valve, Control	1	B10001-
		723-20-95300	・ Valve Assembly	1	B10001-
1	C1		・・ Block	1	B10001-
2	C1		・・ Spool	1	B10001-
3		723-11-27830	・・ Spring	1	B10001-
4	C1		・・ Valve	1	B10001-
5		723-11-18180	・・ Spring	1	B10001-
6		723-20-95140	・・ Spacer	1	B10001-
7		723-11-27850	・・ Plug	2	B10001-
8		07002-11023	・・ O-ring	2	B10001-
9		07000-11007	・・ O-ring	4	B10001-

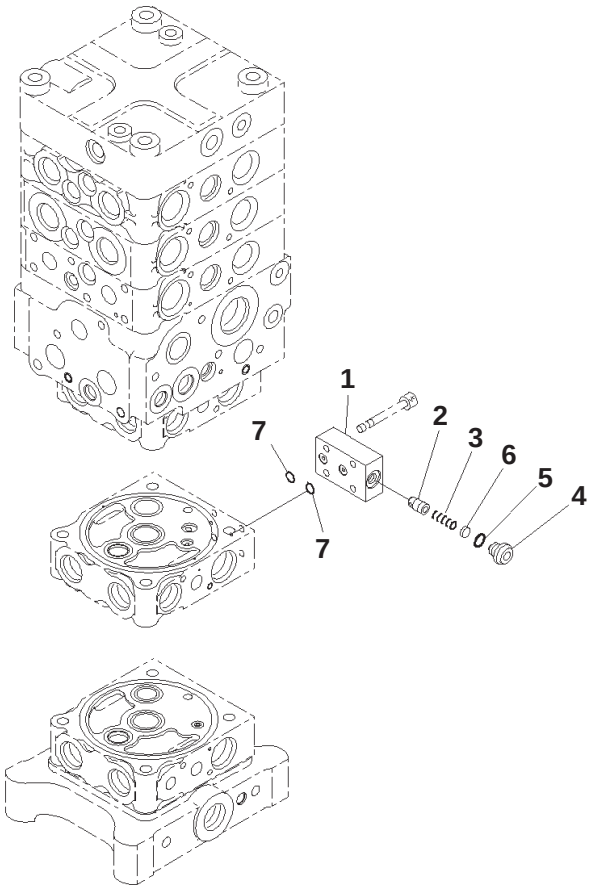

00060110

Main Control Valve, Without 1-additional Actuator Piping, Inner Parts (21/24)

Index	Code	Part Number	Description	Qty	Serial No.
		723-56-12703	Valve, Control	1	B10001-
		723-20-95100	・ Valve Assembly	1	B10001-
1	C1		・・ Block	1	B10001-
2	C1		・・ Valve	1	B10001-
3		723-11-18180	・・ Spring	1	B10001-
4		723-11-27850	・・ Plug	1	B10001-
5		07002-11023	・・ O-ring	1	B10001-
6		723-20-95140	・・ Spacer	1	B10001-
7		07000-11007	・・ O-ring	2	B10001-

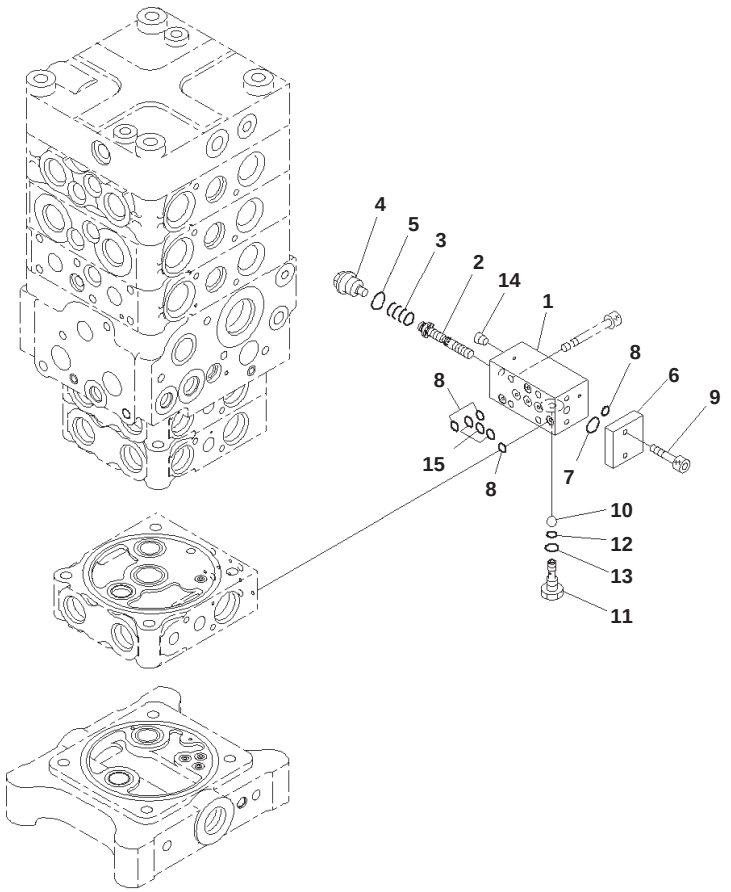

Main Control Valve, Without 1-additional Actuator Piping, Inner Parts (22/24)

Index	Code	Part Number	Description	Qty	Serial No.
		723-56-12703	Valve, Control	1	B10001-
		723-20-94200	・ Valve Assembly	1	B10001-
1	C1		・・ Block	1	B10001-
2	C1		・・ Spool	1	B10001-
3		723-20-94150	・・ Spring	1	B10001-
4		723-20-94130	・・ Plug	1	B10001-
5		07002-11623	・・ O-ring	1	B10001-
6		723-20-94140	・・ Flange	1	B10001-
7		07000-12011	・・ O-ring	1	B10001-
8		07000-11006	・・ O-ring	4	B10001-
9		01252-60616	・・ Bolt, Hexagon Socket Head	2	B10001-
10	C1		・・ Ball	1	B10001-
11	C1		・・ Plug	1	B10001-
12		07000-11003	・・ O-ring	1	B10001-
13		07002-10823	・・ O-ring	1	B10001-
14	C1		・・ Plug	1	B10001-
15		07000-11007	・・ O-ring	3	B10001-

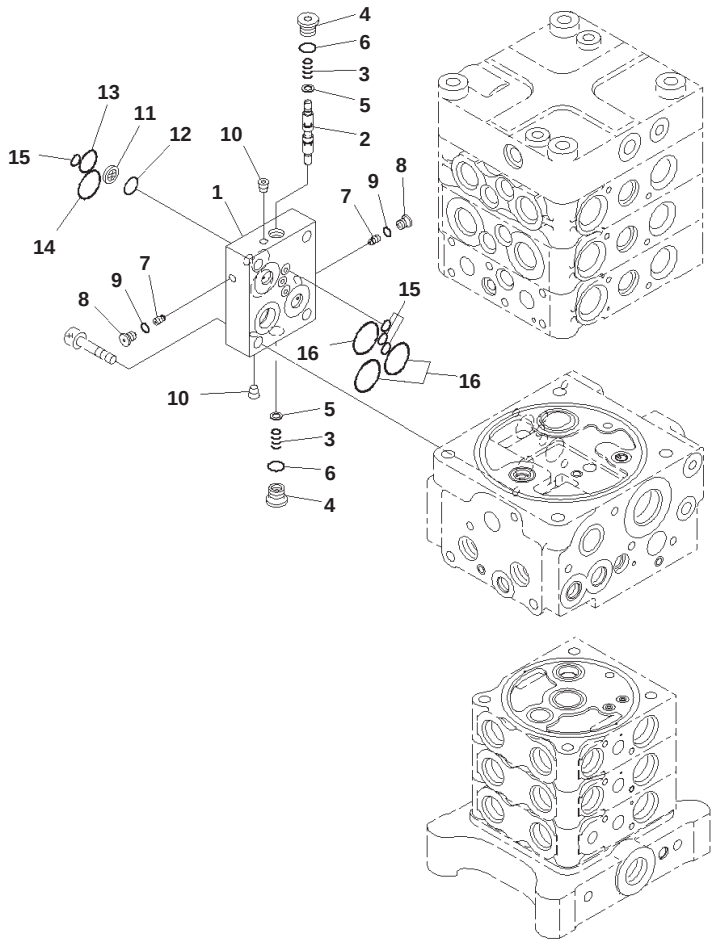

Main Control Valve, Without 1-additional Actuator Piping, Inner Parts (23/24)

Index	Code	Part Number	Description	Qty	Serial No.
		723-56-12703	Valve, Control	1	B10001-
		723-50-61200	・ Valve Assembly	1	B10001-
1	C1		・・ Block	1	B10001-
2	C1		・・ Spool	1	B10001-
3		723-50-61390	・・ Spring	2	B10001-
4		723-50-61330	・・ Plug	2	B10001-
5		723-50-61350	・・ Spacer	2	B10001-
6		07002-11423	・・ O-ring	2	B10001-
7		723-50-61360	・・ Valve	2	B10001-
8		723-11-27280	・・ Plug	2	B10001-
9		07002-10823	・・ O-ring	2	B10001-
10	C1		・・ Plug	2	B10001-
11		702-21-53120	・・ Filter	1	B10001-
12		702-21-55420	・・ O-ring	1	B10001-
13		702-21-55520	・・ O-ring	1	B10001-
14		702-21-55440	・・ O-ring	1	B10001-
15		07000-11008	・・ O-ring	4	B10001-
16		700-93-11320	・・ O-ring	3	B10001-

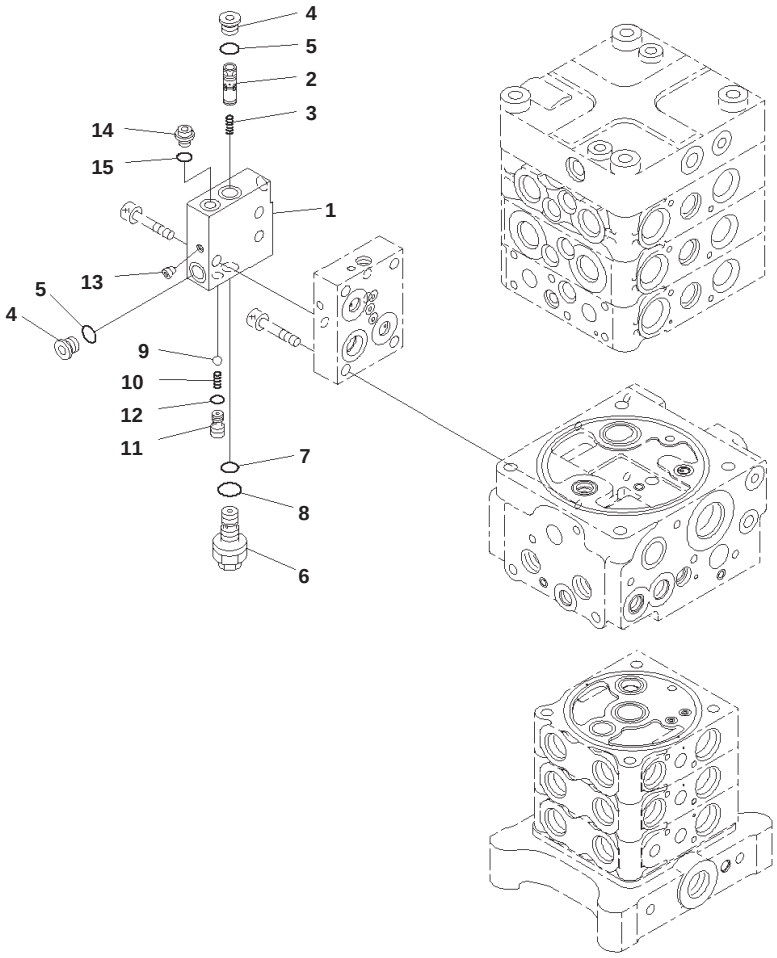

Main Control Valve, Without 1-additional Actuator Piping, Inner Parts (24/24)

Index	Code	Part Number	Description	Qty	Serial No.
		723-56-12703	Valve, Control	1	B10001-
		723-50-62300	・ Valve Assembly	1	B10001-
1	C1		・・ Block	1	B10001-
2	C1		・・ Spool	1	B10001-
3		702-21-55640	・・ Spring	1	B10001-
4		702-21-55620	・・ Plug	2	B10001-
5		07002-11423	・・ O-ring	2	B10001-
6		723-40-91600	・・ Valve Assembly, Relief	1	B10001-
7		702-16-53920	・・・ O-ring	1	B10001-
8		07002-11623	・・・ O-ring	1	B10001-
9	C1		・・ Ball	1	B10001-
10		702-21-55720	・・ Spring	1	B10001-
11	C1		・・ Seat	1	B10001-
12		07000-11009	・・ O-ring	1	B10001-
13	C1		・・ Plug	1	B10001-
14		708-8E-16160	・・ Plug	1	B10001-
15		07002-11023	・・ O-ring	1	B10001-

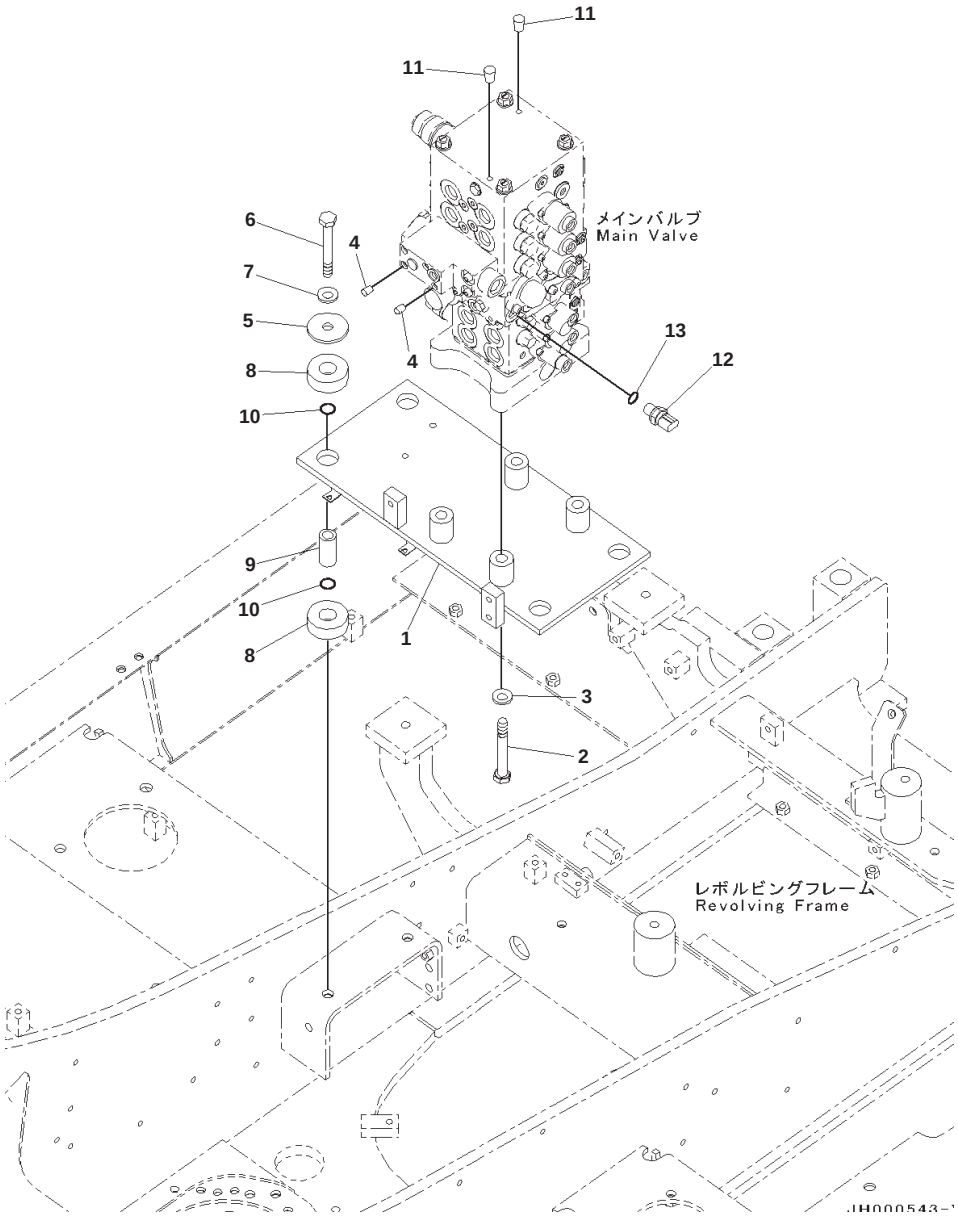

Main Control Valve, Without 1-additional Actuator Piping, Valve Bracket and Sensor

Index	Part Number	Description	Qty	Serial No.
1	203-62-12831	Bracket	1	B10001-
2	01010-81685	Bolt	4	B10001-
3	01643-31645	Washer	4	B10001-
4	07049-01012	Plug	2	B10001-
5	203-62-61572	Plate	4	B10001-
6	01011-81600	Bolt	4	B10001-
7	01643-31645	Washer	4	B10001-
8	203-54-21110	Cushion	8	B10001-
9	203-62-61581	Spacer	4	B10001-
10	07000-13025	O-ring	8	B10001-
11	07049-01012	Plug	2	B10001-
12	7861-93-1812	Sensor, Pressure	1	B10001-
13	07002-61823	・ O-ring	1	B10001-

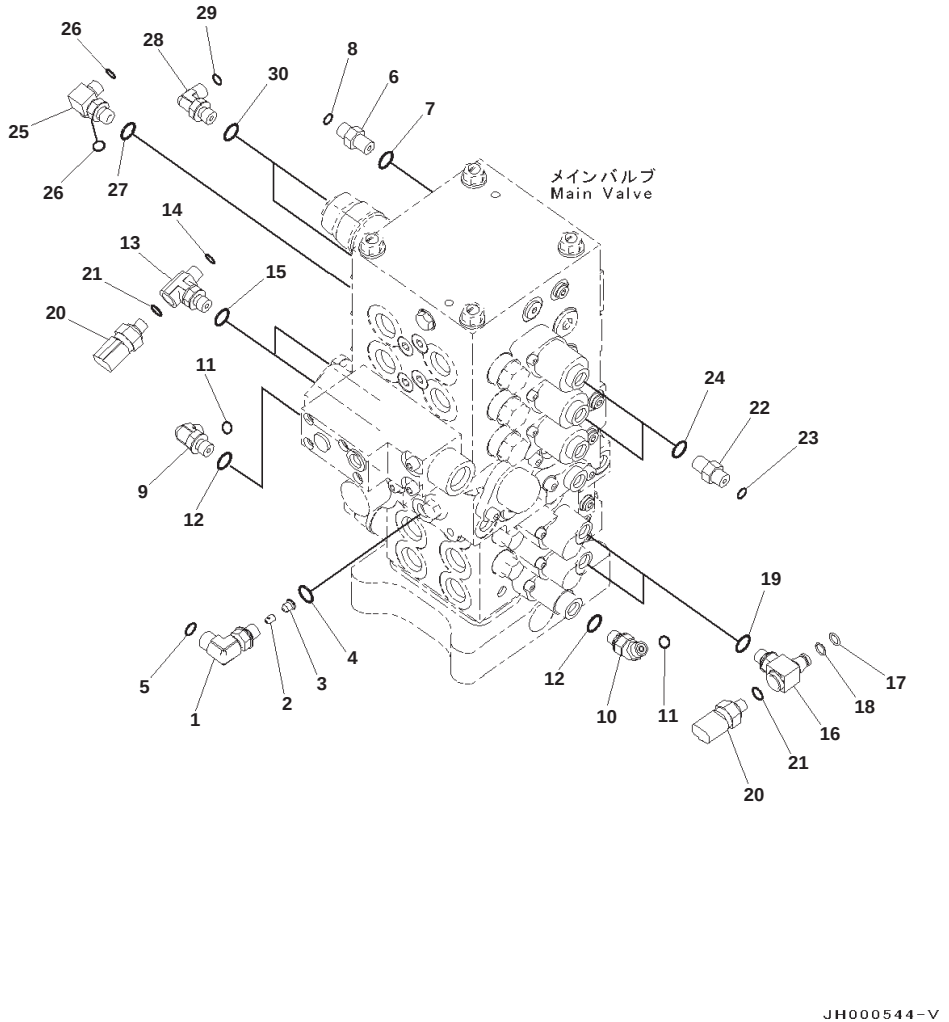

Main Control Valve, Without 1-additional Actuator Piping, Connecting Parts, Ls. Pilot Piping, (1/2)

Index	Part Number	Description	Qty	Serial No.
	22B-62-22390	Elbow Assembly	1	B10001-
1	21K-62-72730	・ Elbow	1	B10001-
2	21Y-60-11250	・ Poppet	1	B10001-
3	21Y-62-11591	・ Plug	1	B10001-
4	07002-11423	O-ring	1	B10001-
5	02896-11009	O-ring	1	B10001-
6	02781-0021D	Union	1	B10001-
7	07002-11423	O-ring	1	B10001-
8	02896-11008	O-ring	1	B10001-
9	22B-62-21381	Elbow	1	B10001-
10	203-62-13520	Elbow	1	B10001-
11	02896-11008	O-ring	2	B10001-
12	07002-11423	O-ring	2	B10001-
13	22B-62-22690	Tee	2	B10001-
14	02896-11008	O-ring	2	B10001-
15	07002-11423	O-ring	2	B10001-
16	203-62-12811	Tee	2	B10001-
17	201-60-11390	・ O-ring	1	B10001-
18	20Y-62-19560	・ O-ring	1	B10001-
19	07002-11423	O-ring	2	B10001-
20	7861-93-1840	Sensor	4	B10001-
21	07000-12011	・ O-ring	1	B10001-
22	02781-0021D	Union	2	B10001-
23	02896-11008	O-ring	2	B10001-
24	07002-11423	O-ring	2	B10001-
25	207-62-72141	Elbow	1	B10001-
26	02896-11008	O-ring	2	B10001-
27	07002-11423	O-ring	1	B10001-
28	02782-10210	Elbow	2	B10001-
29	02896-11008	O-ring	2	B10001-
30	07002-11423	O-ring	2	B10001-

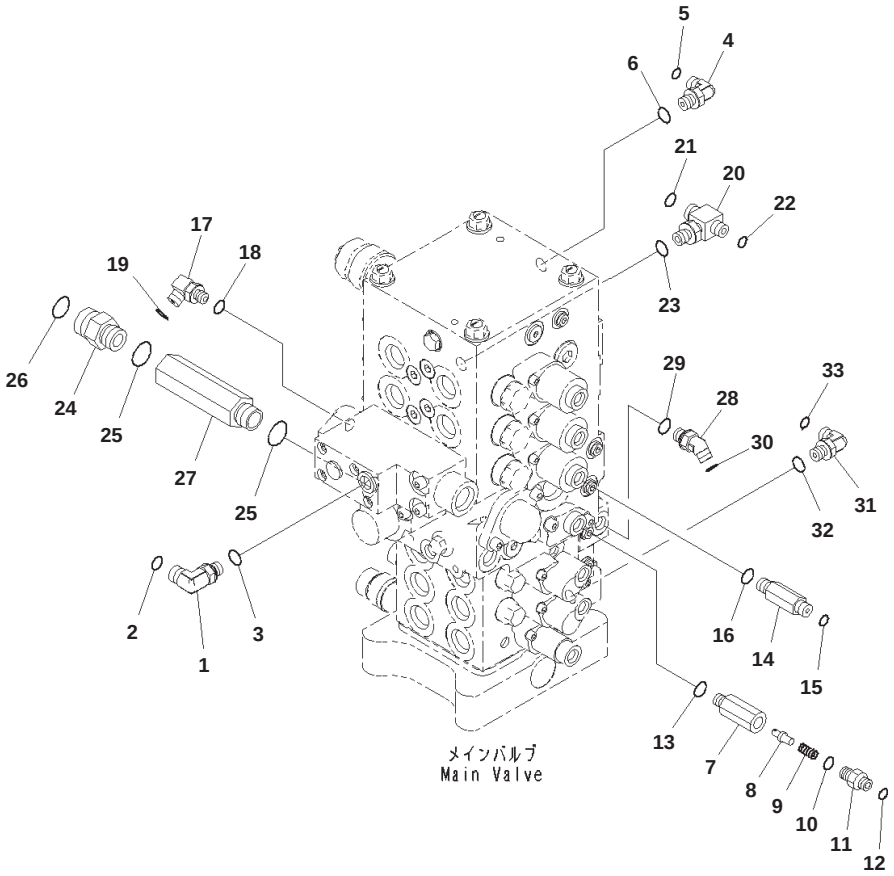

Main Control Valve, Without 1-additional Actuator Piping, Connecting Parts, Ls, Pilot Piping, (2/2)

Index	Code	Part Number	Description	Qty	Serial No.
1		02782-10311	Elbow	1	B10001-
2		02896-11009	O-ring	1	B10001-
3		07002-11423	O-ring	1	B10001-
4		02782-10210	Elbow	1	B10001-
5		02896-11008	O-ring	1	B10001-
6		07002-11423	O-ring	1	B10001-
		20Y-62-41701	Valve Assembly	1	B10001-
7	C1		・ Body	1	B10001-
8		20Y-60-22270	・ Poppet	1	B10001-
9		701-20-61230	・ Spring	1	B10001-
10		07002-11423	・ O-ring	1	B10001-
11		20Y-62-47630	・ Nipple	1	B10001-
12		02896-11008	O-ring	1	B10001-
13		07002-11423	O-ring	1	B10001-
14		11Y-62-12230	Union	1	B10001-
15		02896-11008	O-ring	1	B10001-
16		07002-11423	O-ring	1	B10001-
17		20Y-62-41920	Elbow	1	B10001-
18		07002-11223	O-ring	1	B10001-
19		02896-11008	O-ring	1	B10001-
20		11Y-62-12820	Tee	1	B10001-
21		02896-11009	O-ring	1	B10001-
22		02896-11008	O-ring	1	B10001-
23		07002-11423	O-ring	1	B10001-
24		02781-00628	Union	1	B10001-
25		07002-12434	O-ring	2	B10001-
26		02896-11018	O-ring	1	B10001-
27		203-62-63770	Joint	1	B10001-
28		02783-10210	Elbow	1	B10001-
29		07002-11423	O-ring	1	B10001-
30		02896-11008	O-ring	1	B10001-
31		02782-10210	Elbow	1	B10001-
32		07002-11423	O-ring	1	B10001-
33		02896-11008	O-ring	1	B10001-

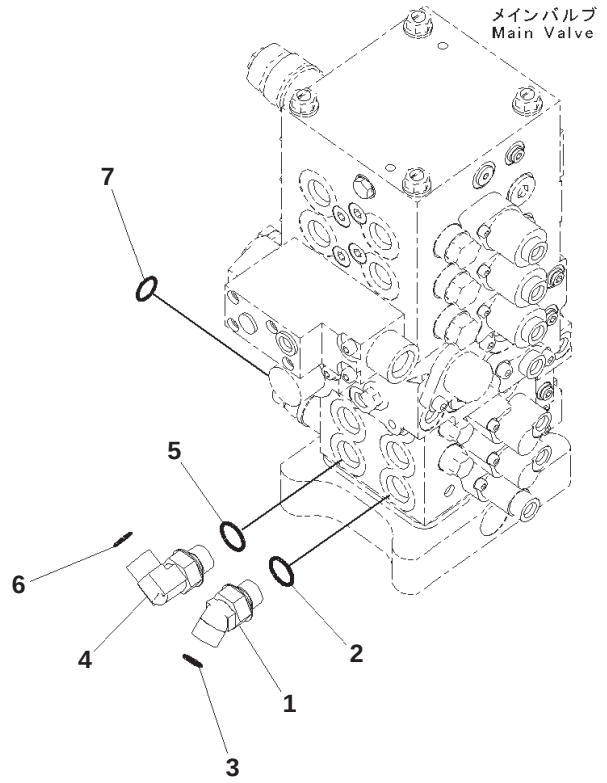

JH000546-V

Main Control Valve, Without 1-additional Actuator Piping, Connecting Parts, Swing Piping

Index	Part Number	Description	Qty	Serial No.
1	02783-10522	Elbow	1	B10001-
2	07002-12434	O-ring	1	B10001-
3	02896-11015	O-ring	1	B10001-
4	02782-10522	Elbow	1	B10001-
5	07002-12434	O-ring	1	B10001-
6	02896-11015	O-ring	1	B10001-
7	02896-11018	O-ring	1	B10001-

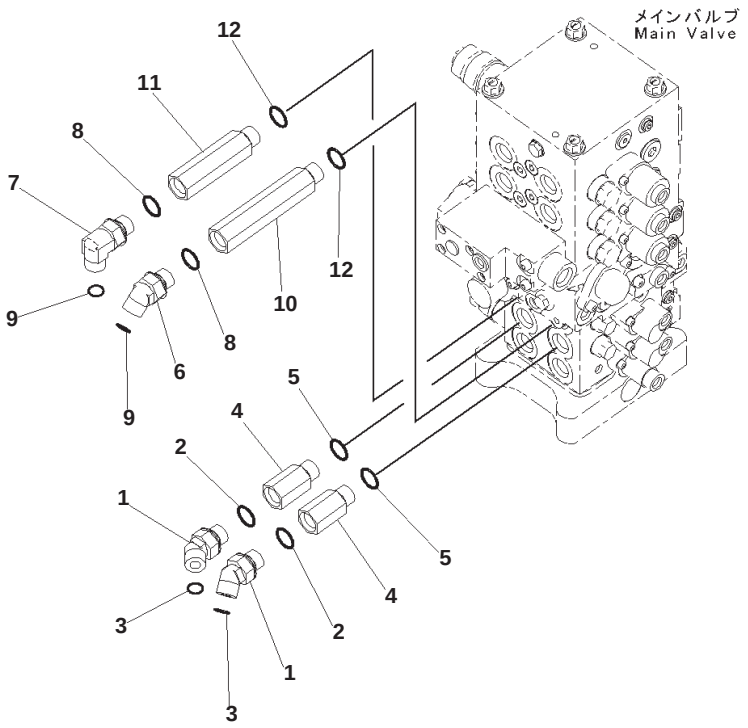

Main Control Valve, Without 1-additional Actuator Piping, Connecting Parts, Travel Piping

Index	Part Number	Description	Qty	Serial No.
1	02783-10522	Elbow	2	B10001-
2	07002-12434	O-ring	2	B10001-
3	02896-11015	O-ring	2	B10001-
4	201-62-71820	Joint	2	B10001-
5	07002-12434	O-ring	2	B10001-
6	02783-10522	Elbow	1	B10001-
7	02782-10522	Elbow	1	B10001-
8	07002-12434	O-ring	2	B10001-
9	02896-11015	O-ring	2	B10001-
10	203-62-63760	Joint	1	B10001-
11	203-62-63770	Joint	1	B10001-
12	07002-12434	O-ring	2	B10001-

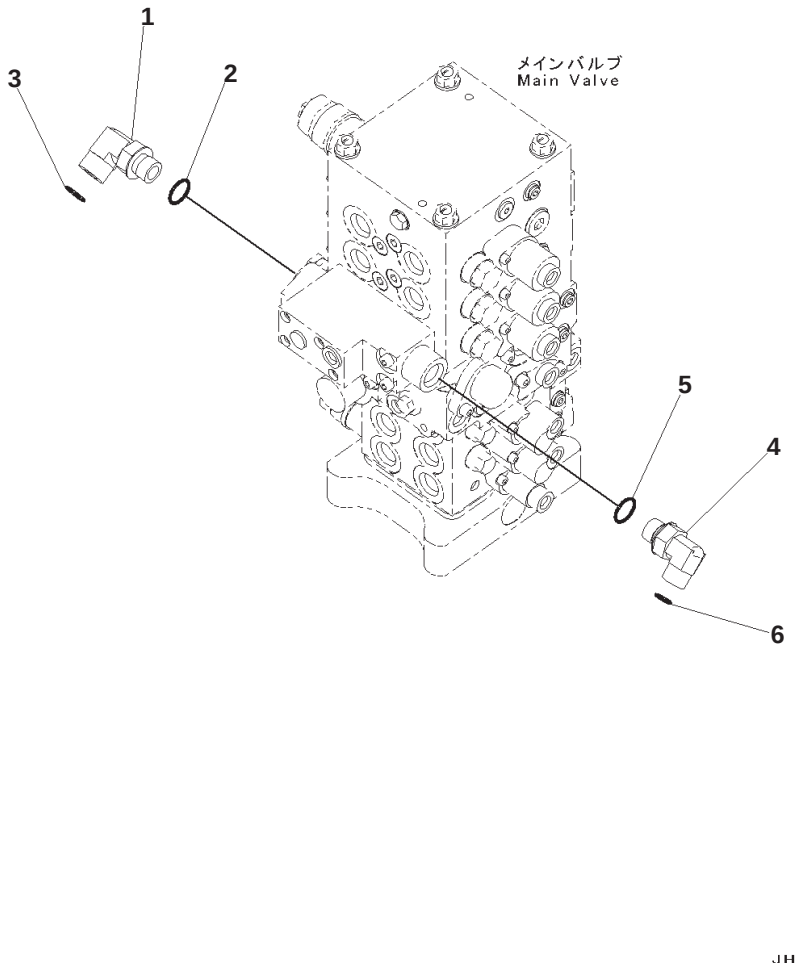

Main Control Valve, Without 1-additional Actuator Piping, Connecting Parts, Boom Piping

Index	Part Number	Description	Qty	Serial No.
1	02782-10628	Elbow	1	B10001-
2	07002-12434	O-ring	1	B10001-
3	02896-11018	O-ring	1	B10001-
4	02782-10522	Elbow	1	B10001-
5	07002-12434	O-ring	1	B10001-
6	02896-11015	O-ring	1	B10001-

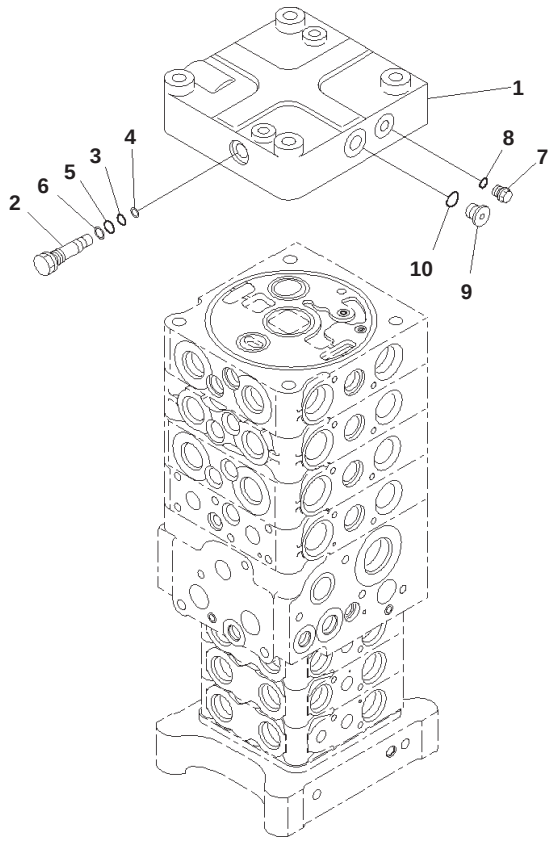

PW5J516

Main Control Valve, 1-actuator, Inner Parts (1/27)

Index	Code	Part Number	Description	Qty	Serial No.
		723-57-12703	Valve, Control	1	B10001-
	C1		・ Cover Group	1	B10001-
1		723-56-11240	・・ Cover	1	B10001-
2		723-26-15190	・・ Plug	1	B10001-
3		07000-11007	・・ O-ring	1	B10001-
4		07001-01007	・・ Ring, Back-up	1	B10001-
5		07000-11009	・・ O-ring	1	B10001-
6		07001-01009	・・ Ring, Back-up	1	B10001-
7		708-8E-16160	・・ Plug	1	B10001-
8		07002-11023	・・ O-ring	1	B10001-
9		702-21-55620	・・ Plug	1	B10001-
10		07002-11423	・・ O-ring	1	B10001-

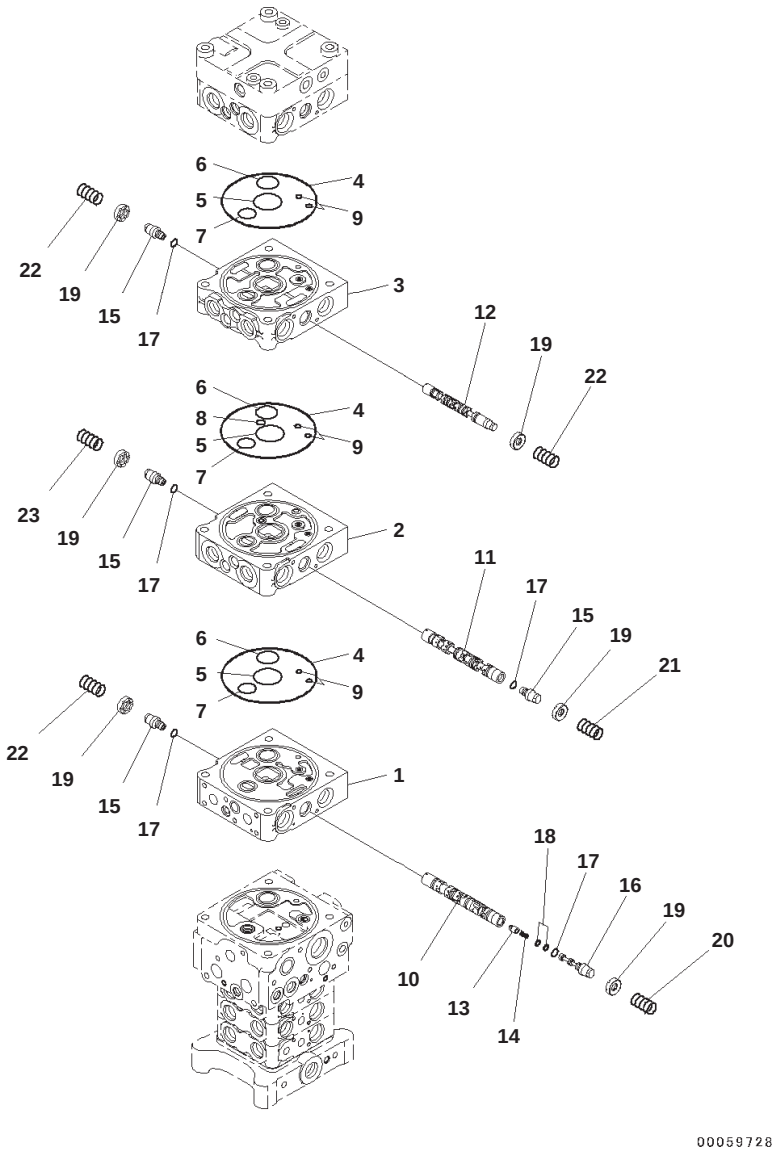

Main Control Valve, 1-actuator, Inner Parts (2/27)

Index	Code	Part Number	Description	Qty	Serial No.
		723-57-12703	Valve, Control	1	B10001-
	C1		・ Body Group	1	B10001-
1	C1		・・ Block	1	B10001-
2	C1		・・ Block	1	B10001-
3	C1		・・ Block	1	B10001-
4		144-14-54610	・・ O-ring	3	B10001-
5		723-56-31720	・・ O-ring	3	B10001-
6		723-56-31730	・・ O-ring	3	B10001-
7		702-75-11520	・・ O-ring	3	B10001-
8		07000-12012	・・ O-ring	1	B10001-
9		07000-11008	・・ O-ring	6	B10001-
10	C1		・・ Spool	1	B10001-
11	C1		・・ Spool	1	B10001-
12	C1		・・ Spool	1	B10001-
13	C1		・・ Valve	1	B10001-
14	C1		・・ Spring	1	B10001-
15	C1		・・ Plug	4	B10001-
16	C1		・・ Plug	1	B10001-
17	C1		・・ O-ring	5	B10001-
18	C1		・・ Seal	2	B10001-
19		723-56-31211	・・ Retainer	6	B10001-
20		723-56-32460	・・ Spring	1	B10001-
21		723-36-14110	・・ Spring	1	B10001-
22		723-36-14120	・・ Spring	3	B10001-
23		723-36-14130	・・ Spring	1	B10001-

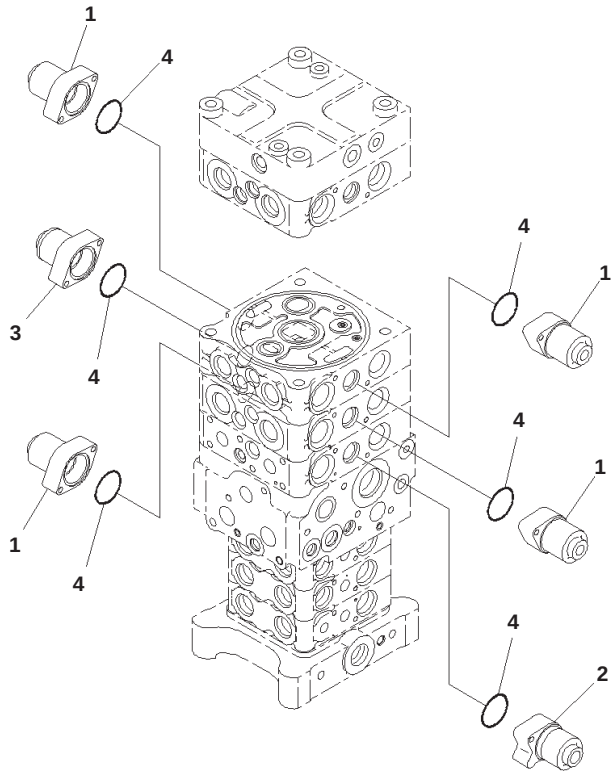

00059729

Main Control Valve, 1-actuator, Inner Parts (3/27)

Index	Code	Part Number	Description	Qty	Serial No.
		723-57-12703	Valve, Control	1	B10001-
	C1		・ Body Group	1	B10001-
1		723-56-31510	・・ Case	4	B10001-
2		723-56-32560	・・ Case	1	B10001-
3		723-56-31580	・・ Case	1	B10001-
4		702-21-55450	・・ O-ring	6	B10001-

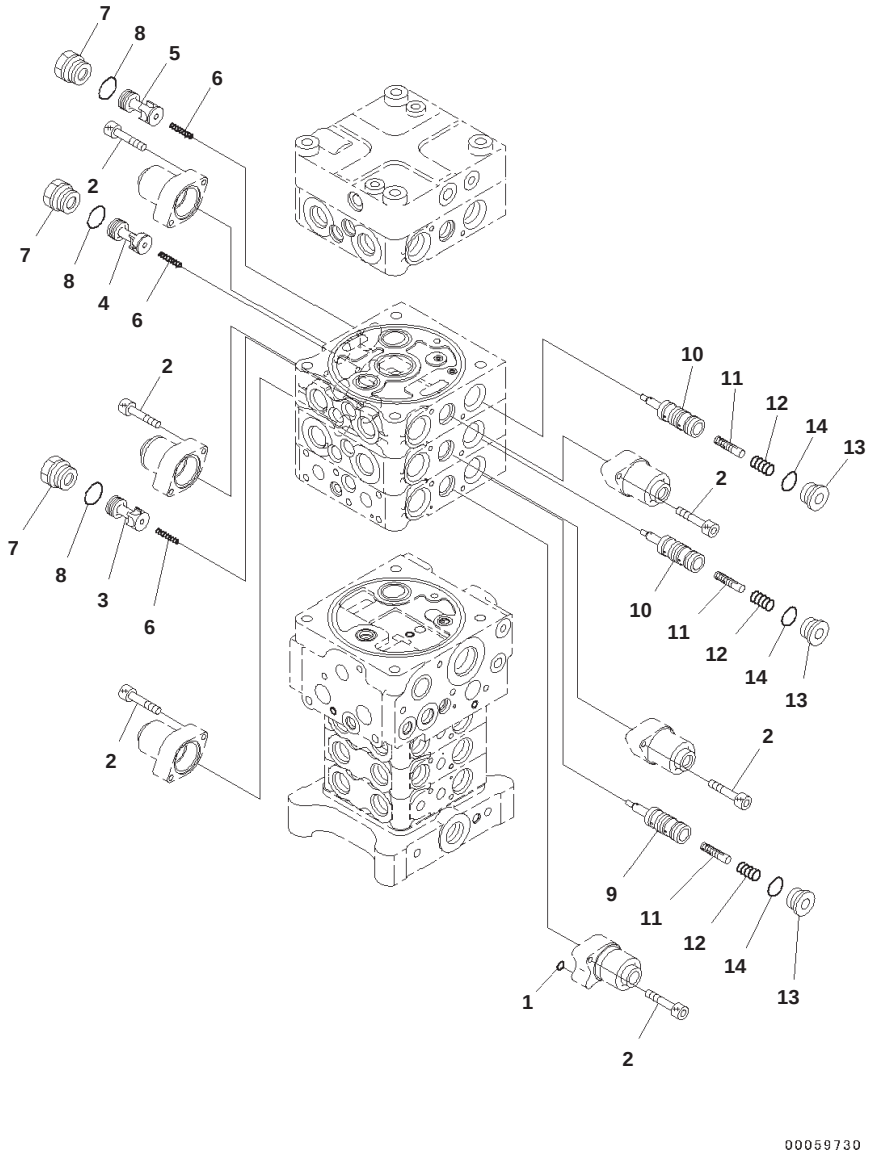

Main Control Valve, 1-actuator, Inner Parts (4/27)

Index	Code	Part Number	Description	Qty	Serial No.
		723-57-12703	Valve, Control	1	B10001-
	C1		・ Body Group	1	B10001-
1		07000-11006	・・ O-ring	1	B10001-
2		01252-60630	・・ Bolt, Hexagon Socket Head	12	B10001-
3	C1		・・ Valve	1	B10001-
4	C1		・・ Valve	1	B10001-
5	C1		・・ Valve	1	B10001-
6		723-56-41710	・・ Spring	3	B10001-
7		723-56-41840	・・ Plug	3	B10001-
8		07000-13024	・・ O-ring	3	B10001-
9	C1		・・ Valve	1	B10001-
10	C1		・・ Valve	2	B10001-
11	C1		・・ Piston	3	B10001-
12		723-56-41730	・・ Spring	3	B10001-
13		723-26-15230	・・ Plug	3	B10001-
14		07002-12434	・・ O-ring	3	B10001-

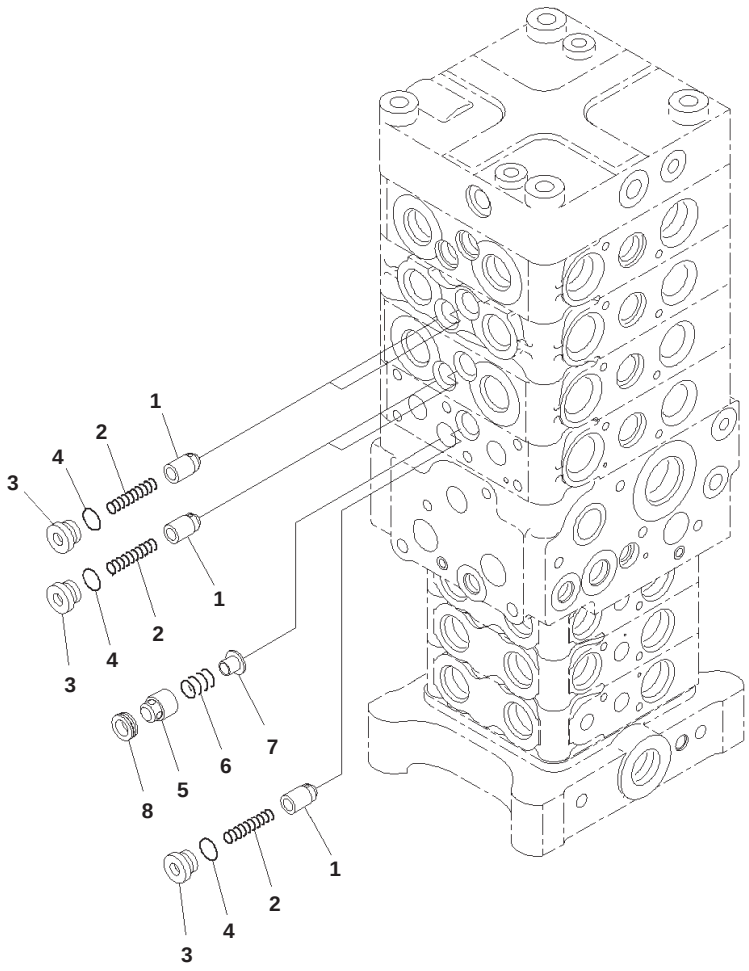

00059731

Main Control Valve, 1-actuator, Inner Parts (5/27)

Index	Code	Part Number	Description	Qty	Serial No.
		723-57-12703	Valve, Control	1	B10001-
	C1		・ Body Group	1	B10001-
1	C1		・・ Valve	5	B10001-
2		723-56-31620	・・ Spring	5	B10001-
3		723-56-31630	・・ Plug	5	B10001-
4		07002-11623	・・ O-ring	5	B10001-
5	C1		・・ Valve	1	B10001-
6		709-70-91420	・・ Spring	1	B10001-
7		723-56-31660	・・ Retainer	1	B10001-
8		723-56-31670	・・ Seat	1	B10001-

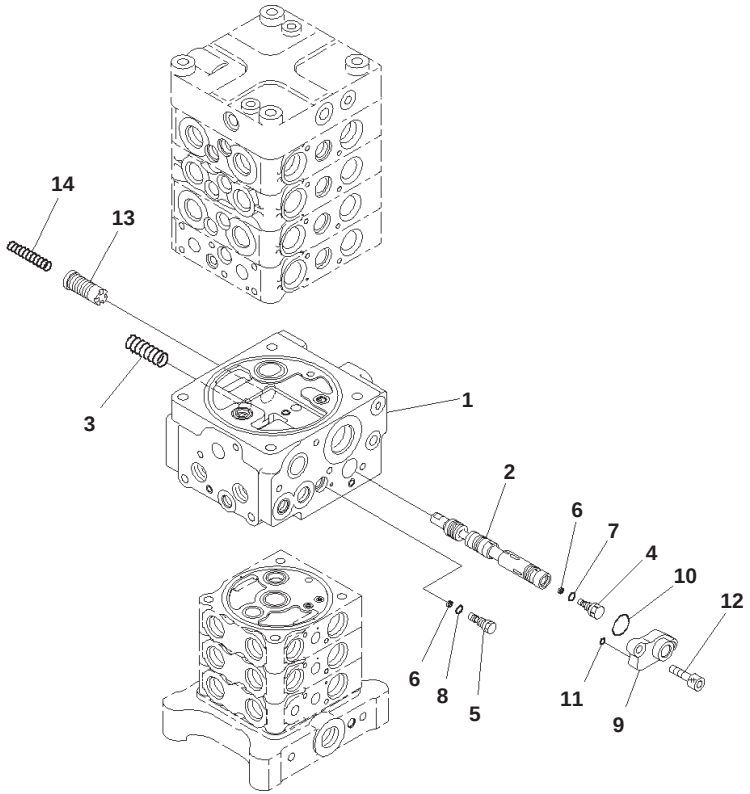

Main Control Valve, 1-actuator, Inner Parts (6/27)

Index	Code	Part Number	Description	Qty	Serial No.
		723-57-12703	Valve, Control	1	B10001-
	C1		・ Body Group	1	B10001-
1	C1		・・ Block	1	B10001-
2	C1		・・ Spool	1	B10001-
3		723-56-31970	・・ Spring	1	B10001-
4	C1		・・ Orifice	1	B10001-
5		723-56-31960	・・ Orifice	1	B10001-
6	C1		・・ Ring	2	B10001-
7	C1		・・ O-ring	1	B10001-
8		07002-11223	・・ O-ring	1	B10001-
9		723-56-31940	・・ Flange	1	B10001-
10		723-11-18430	・・ O-ring	1	B10001-
11		07000-11008	・・ O-ring	1	B10001-
12		01252-60825	・・ Bolt, Hexagon Socket Head	2	B10001-
13	C1		・・ Valve	2	B10001-
14		723-56-31990	・・ Spring	2	B10001-

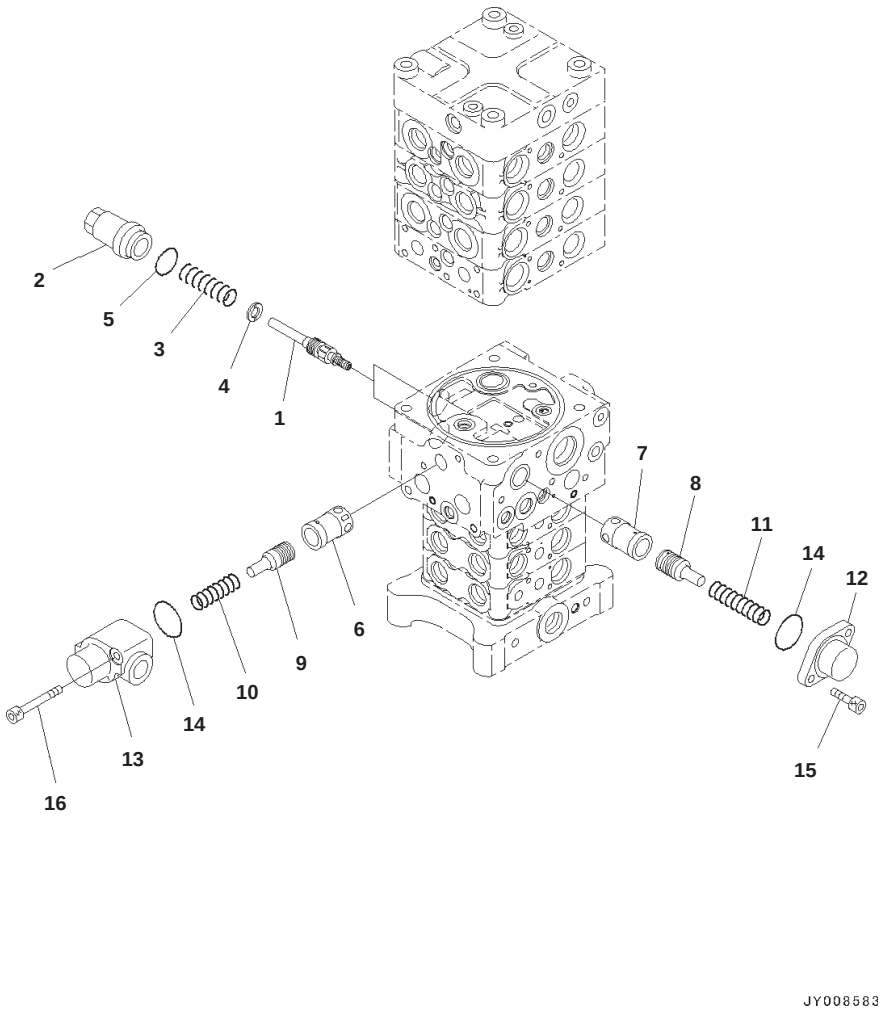

Main Control Valve, 1-actuator, Inner Parts (7/27)

Index	Code	Part Number	Description	Qty	Serial No.
		723-57-12703	Valve, Control	1	B10001-
	C1		・ Body Group	1	B10001-
1	C1		・・ Spool	2	B10001-
2		723-50-55250	・・ Sleeve	2	B10001-
3		723-50-55270	・・ Spring	2	B10001-
4		723-50-55280	・・ Spacer	2	B10001-
5		07002-13334	・・ O-ring	2	B10001-
6	C1		・・ Sleeve	1	B10001-
7	C1		・・ Sleeve	1	B10001-
8	C1		・・ Piston	1	B10001-
9	C1		・・ Piston	1	B10001-
10		723-56-33910	・・ Spring	1	B10001-
11		723-36-15240	・・ Spring	1	B10001-
12		723-36-15250	・・ Case	1	B10001-
13	C1		・・ Case	1	B10001-
14		07000-13042	・・ O-ring	2	B10001-
15		01252-60820	・・ Bolt, Hexagon Socket Head	2	B10001-
16		01252-60860	・・ Bolt, Hexagon Socket Head	2	B10001-

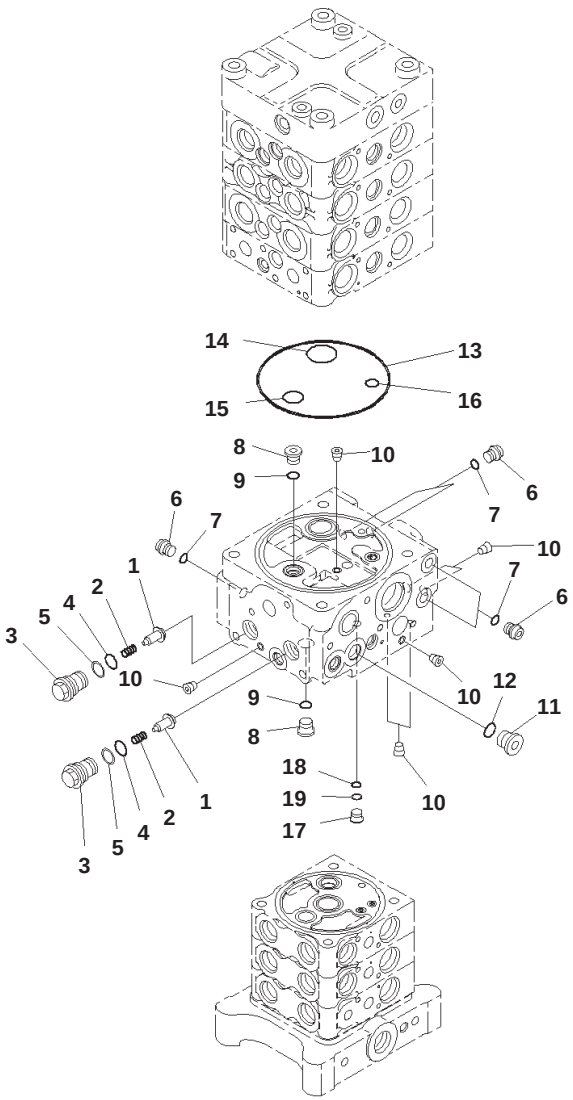

00059734

Main Control Valve, 1-actuator, Inner Parts (8/27)

Index	Code	Part Number	Description	Qty	Serial No.
		723-57-12703	Valve, Control	1	B10001-
	C1		・ Body Group	1	B10001-
1	C1		・・ Valve, Check	2	B10001-
2		709-25-11361	・・ Spring	2	B10001-
3		723-26-15580	・・ Plug	2	B10001-
4		07000-12016	・・ O-ring	2	B10001-
5		723-60-22230	・・ Ring, Back-up	2	B10001-
6		708-8E-16160	・・ Plug	5	B10001-
7		07002-11023	・・ O-ring	5	B10001-
8		702-21-55620	・・ Plug	2	B10001-
9		07002-11423	・・ O-ring	2	B10001-
10	C1		・・ Plug	7	B10001-
11		723-11-28920	・・ Plug	1	B10001-
12		07002-11823	・・ O-ring	1	B10001-
13		144-14-54610	・・ O-ring	1	B10001-
14		723-56-31730	・・ O-ring	1	B10001-
15		702-75-11520	・・ O-ring	1	B10001-
16		07000-12014	・・ O-ring	1	B10001-
17		723-26-16460	・・ Plug	1	B10001-
18		07000-11007	・・ O-ring	1	B10001-
19		07001-01007	・・ Ring, Back-up	1	B10001-

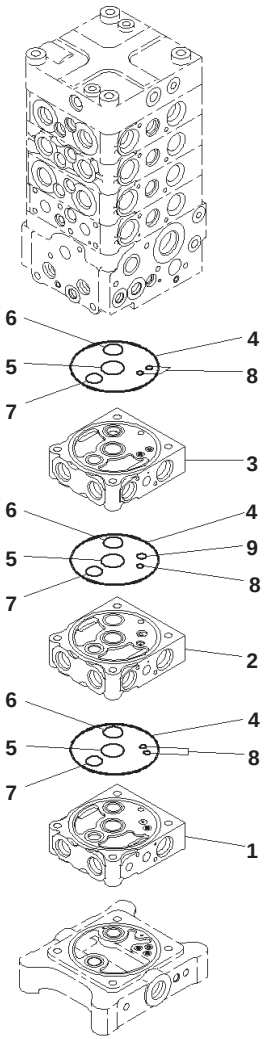

00059735

Main Control Valve, 1-actuator, Inner Parts (9/27)

Index	Code	Part Number	Description	Qty	Serial No.
		723-57-12703	Valve, Control	1	B10001-
	C1		・ Body Group	1	B10001-
1	C1		・・ Block	1	B10001-
2	C1		・・ Block	1	B10001-
3	C1		・・ Block	1	B10001-
4		07000-12120	・・ O-ring	3	B10001-
5		723-26-15830	・・ O-ring	3	B10001-
6		723-26-15840	・・ O-ring	3	B10001-
7		07000-12022	・・ O-ring	3	B10001-
8		07000-11008	・・ O-ring	5	B10001-
9		07000-12010	・・ O-ring	1	B10001-

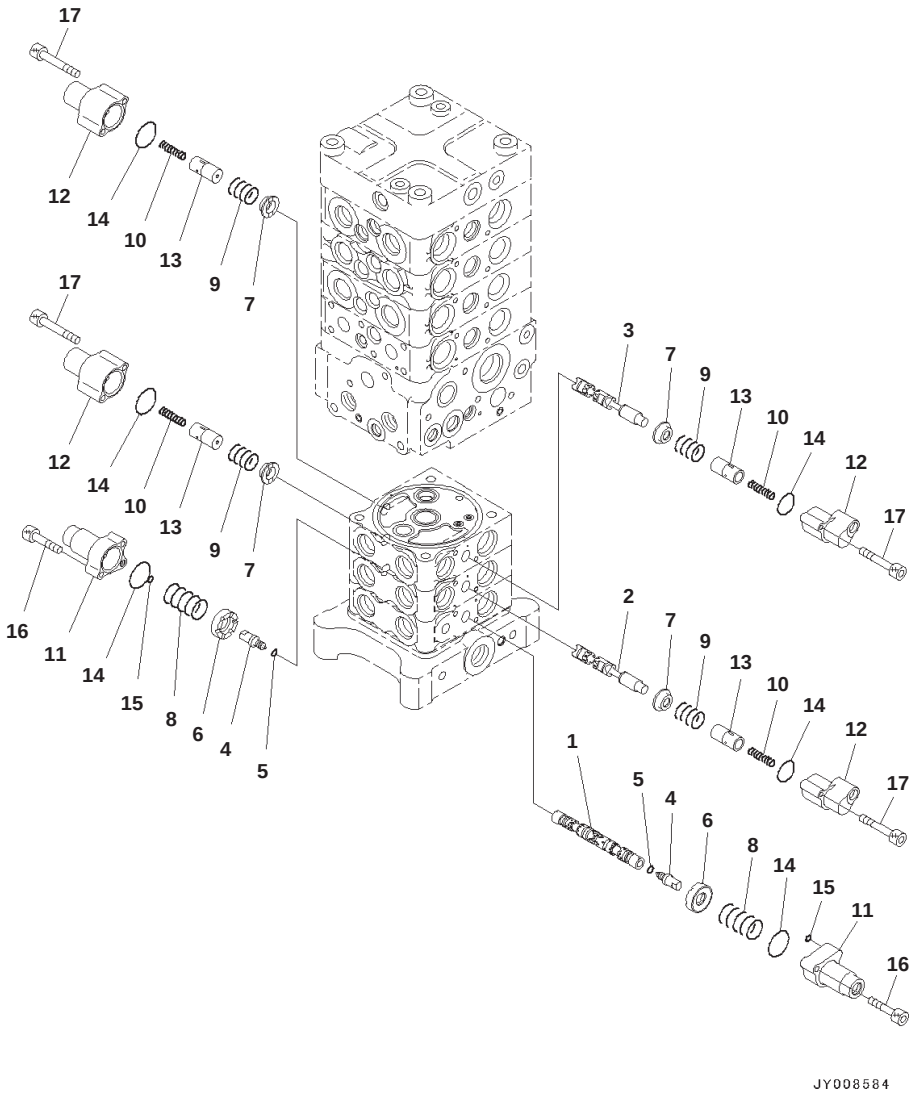

Main Control Valve, 1-actuator, Inner Parts (10/27)

Index	Code	Part Number	Description	Qty	Serial No.
		723-57-12703	Valve, Control	1	B10001-
	C1		・ Body Group	1	B10001-
1	C1		・・ Spool	1	B10001-
2	C1		・・ Spool	1	B10001-
3	C1		・・ Spool	1	B10001-
4	C1		・・ Plug	2	B10001-
5	C1		・・ O-ring	2	B10001-
6		723-26-15121	・・ Retainer	2	B10001-
7		723-26-16740	・・ Retainer	4	B10001-
8		723-26-14520	・・ Spring	2	B10001-
9		723-26-14530	・・ Spring	4	B10001-
10		723-26-14540	・・ Spring	4	B10001-
11		723-26-16710	・・ Case	2	B10001-
12		723-26-16720	・・ Case	4	B10001-
13	C1		・・ Piston	4	B10001-
14		575-41-17420	・・ O-ring	6	B10001-
15		07000-11005	・・ O-ring	2	B10001-
16		01252-60630	・・ Bolt, Hexagon Socket Head	4	B10001-
17		01252-60645	・・ Bolt, Hexagon Socket Head	8	B10001-

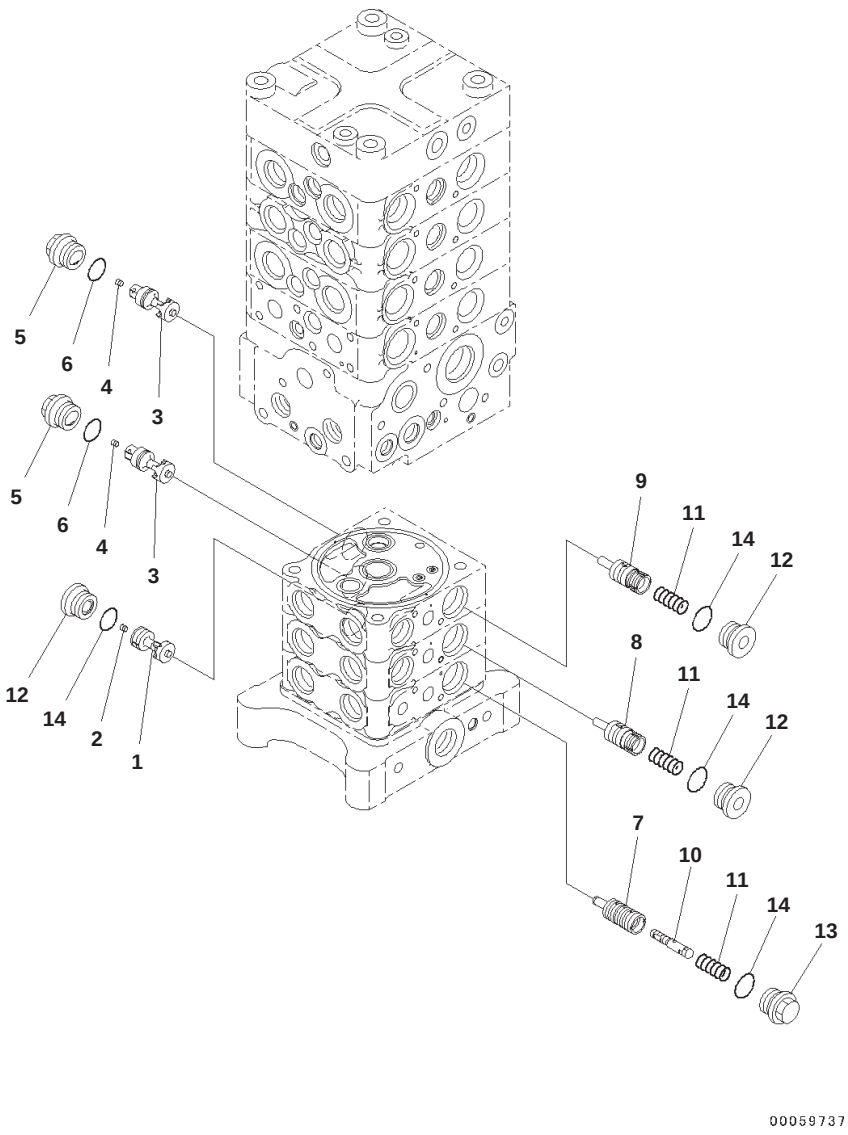

Main Control Valve, 1-actuator, Inner Parts (11/27)

Index	Code	Part Number	Description	Qty	Serial No.
		723-57-12703	Valve, Control	1	B10001-
	C1		・ Body Group	1	B10001-
1	C1		・・ Valve	1	B10001-
2	C1		・・ Screw	1	B10001-
3	C1		・・ Valve	2	B10001-
4	C1		・・ Orifice	2	B10001-
5		723-26-16670	・・ Plug	2	B10001-
6		07002-12434	・・ O-ring	2	B10001-
7	C1		・・ Valve	1	B10001-
8	C1		・・ Valve Subassembly	1	B10001-
9	C1		・・ Valve Subassembly	1	B10001-
10	C1		・・ Valve Subassembly	1	B10001-
11		723-26-14140	・・ Spring	3	B10001-
12		723-26-15230	・・ Plug	3	B10001-
13		723-26-15890	・・ Plug	1	B10001-
14		07002-12434	・・ O-ring	4	B10001-

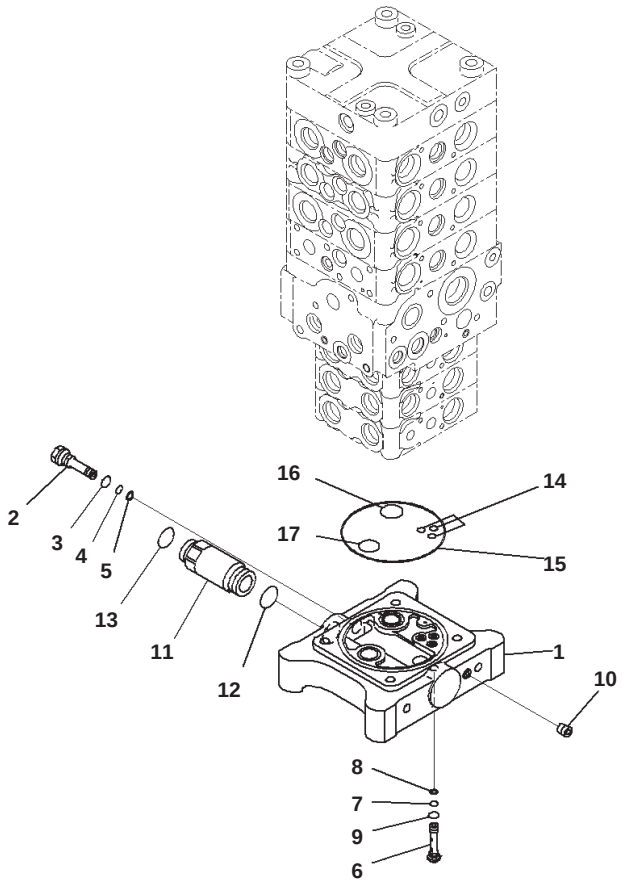

Main Control Valve, 1-actuator, Inner Parts (12/27)

Index	Code	Part Number	Description	Qty	Serial No.
		723-57-12703	Valve, Control	1	B10001-
	C1		・ Body Group	1	B10001-
1	C1		・・ Block	1	B10001-
2		723-26-15170	・・ Plug	1	B10001-
3		07002-11423	・・ O-ring	1	B10001-
4		07000-11007	・・ O-ring	1	B10001-
5		07001-01007	・・ Ring, Back-up	1	B10001-
6		723-60-23301	・・ Valve Assembly, Check	1	B10001-
7		07000-11005	・・・ O-ring	1	B10001-
8		07001-01005	・・・ Ring, Back-up	1	B10001-
9		07002-11023	・・・ O-ring	1	B10001-
10	C1		・・ Plug	1	B10001-
11		723-26-15991	・・ Union	1	B10001-
12		07000-13024	・・ O-ring	1	B10001-
13		02896-11018	・・ O-ring	1	B10001-
14		07000-11008	・・ O-ring	3	B10001-
15		07000-12120	・・ O-ring	1	B10001-
16		723-26-15840	・・ O-ring	1	B10001-
17		07000-12022	・・ O-ring	1	B10001-

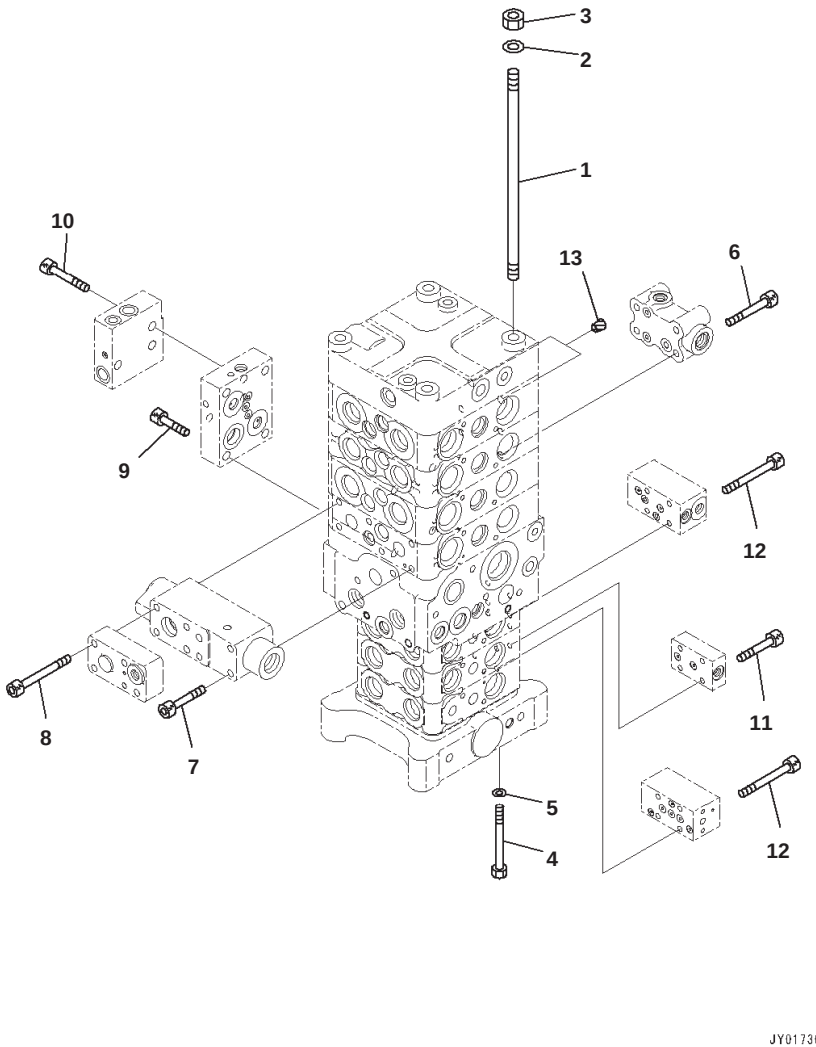

Main Control Valve, 1-actuator, Inner Parts (13/27)

Index	Part Number	Description	Qty	Serial No.
	723-57-12703	Valve, Control	1	B10001-
1	723-50-11140	・ Stud	4	B10001-
2	01643-31232	・ Washer	4	B10001-
3	01580-11210	・ Nut	4	B10001-
4	01011-61085	・ Bolt	4	B10001-
5	01643-51032	・ Washer	4	B10001-
6	01252-60850	・ Bolt, Hexagon Socket Head	4	B10001-
7	01252-60865	・ Bolt, Hexagon Socket Head	2	B10001-
8	708-25-19160	・ Bolt, Hexagon Socket Head	4	B10001-
9	01252-61035	・ Bolt, Hexagon Socket Head	4	B10001-
10	01252-61040	・ Bolt, Hexagon Socket Head	3	B10001-
11	01252-60630	・ Bolt, Hexagon Socket Head	4	B10001-
12	01252-60650	・ Bolt, Hexagon Socket Head	8	B10001-
13	07049-01215	・ Plug	2	B10001-

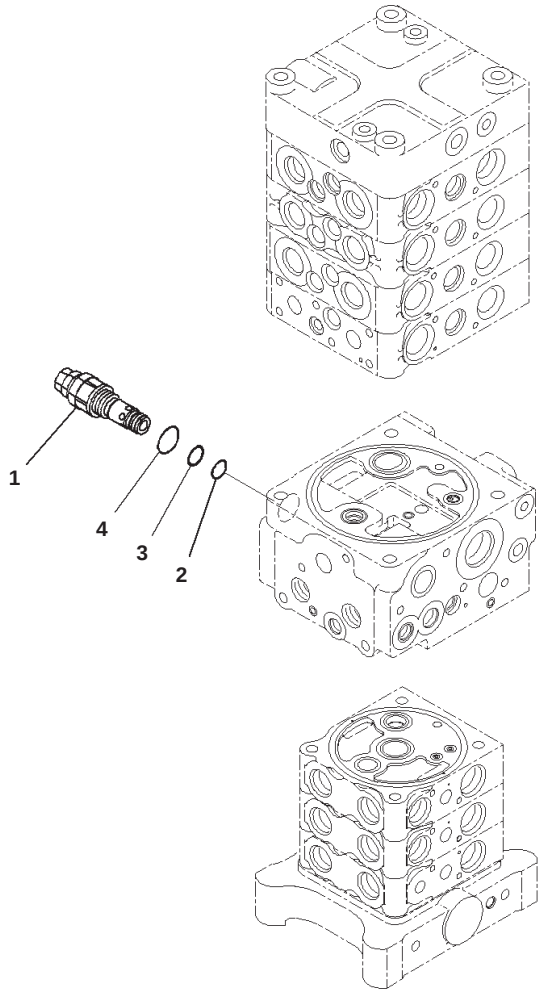

Main Control Valve, 1-actuator, Inner Parts (14/27)

Index	Part Number	Description	Qty	Serial No.
	723-57-12703	Valve, Control	1	B10001-
1	723-40-94200	・ Valve, Relief	1	B10001-
2	700-22-11410	・・ O-ring	1	B10001-
3	700-80-64220	・・ Ring	1	B10001-
4	07002-12434	・・ O-ring	1	B10001-

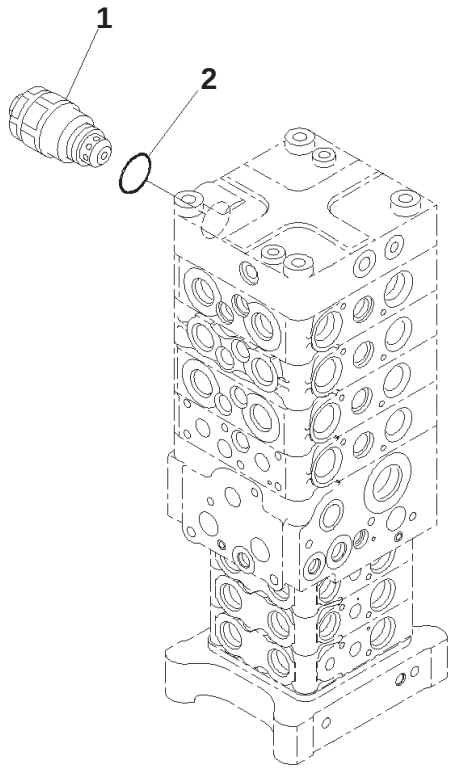

00012059

Main Control Valve, 1-actuator, Inner Parts (15/27)

Index	Part Number	Description	Qty	Serial No.
	723-57-12703	Valve, Control	1	B10001-
1	709-90-75300	・ Valve Assembly	1	B10001-
2	07002-13634	・・ O-ring	1	B10001-

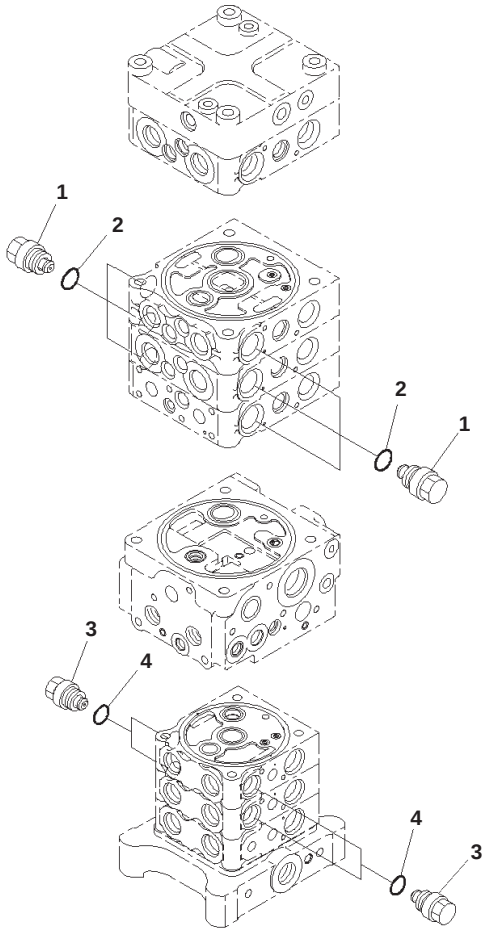

00059741

Main Control Valve, 1-actuator, Inner Parts (16/27)

Index	Part Number	Description	Qty	Serial No.
	723-57-12703	Valve, Control	1	B10001-
1	723-40-85100	・ Valve Assembly, Suction	6	B10001-
2	709-25-11390	・・ O-ring	1	B10001-
3	723-20-80100	・ Valve Assembly, Suction	4	B10001-
4	07002-12034	・・ O-ring	1	B10001-

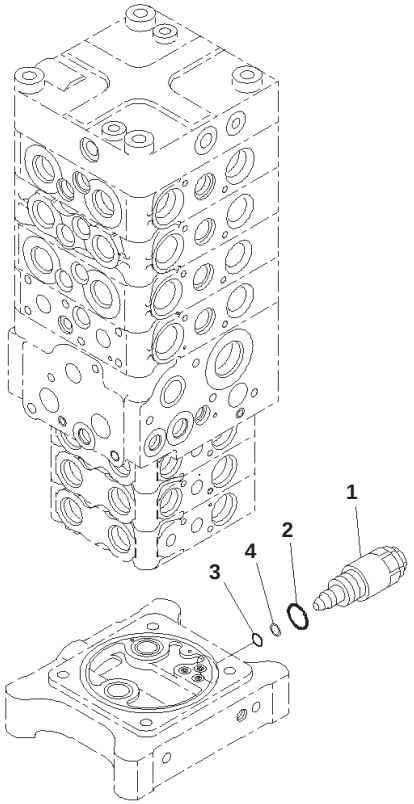

00012062

Main Control Valve, 1-actuator, Inner Parts (17/27)

Index	Part Number	Description	Qty	Serial No.
	723-57-12703	Valve, Control	1	B10001-
1	723-50-60200	・ Valve Assembly	1	B10001-
2	709-25-11390	・・ O-ring	1	B10001-
3	07000-12012	・・ O-ring	1	B10001-
4	07001-02012	・・ Ring, Back-up	1	B10001-

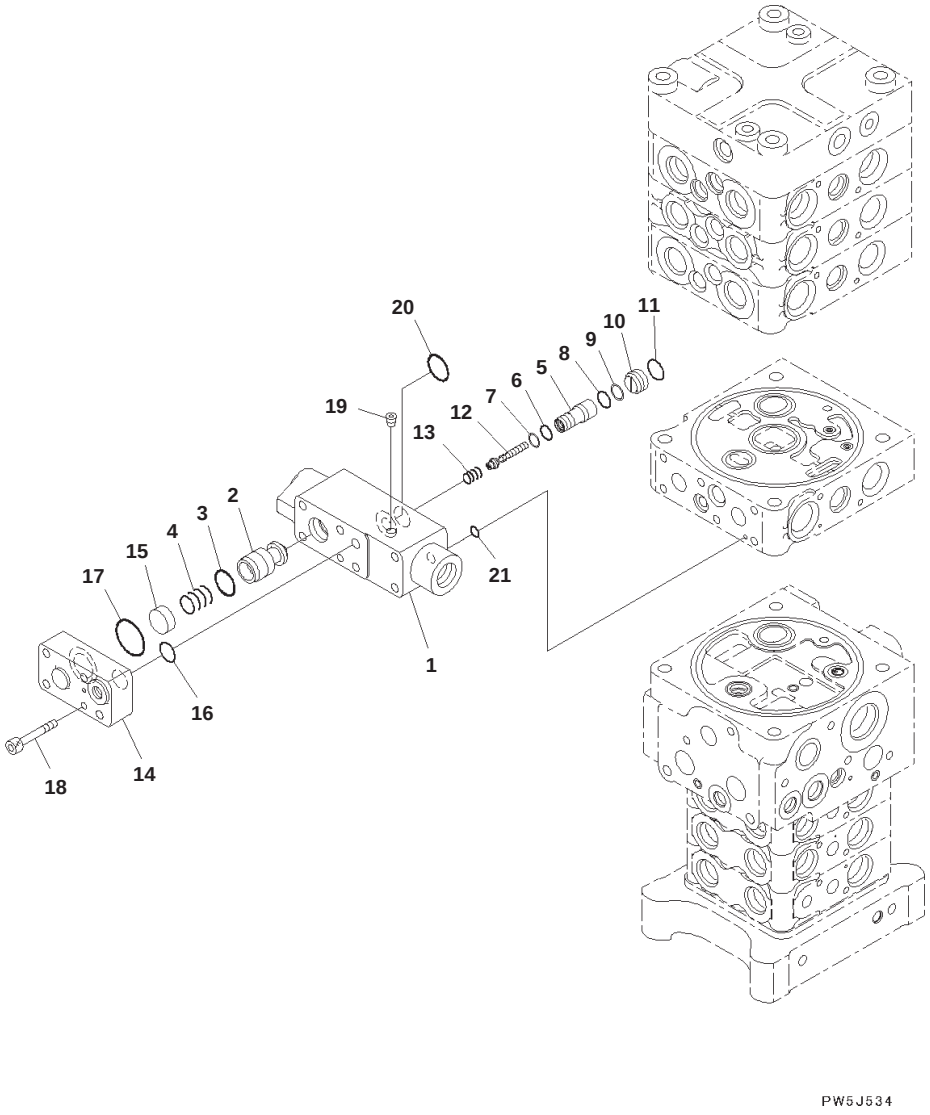

Main Control Valve, 1-actuator, Inner Parts (18/27)

Index	Code	Part Number	Description	Qty	Serial No.
		723-57-12703	Valve, Control	1	B10001-
		723-50-53200	・ Valve Assembly	1	B10001-
1	C1		・・ Block	1	B10001-
2	C1		・・ Valve	1	B10001-
3		702-21-35130	・・ Seal	1	B10001-
4		723-50-53330	・・ Spring	1	B10001-
5	C1		・・ Sleeve	1	B10001-
6		07000-12010	・・ O-ring	1	B10001-
7		07001-02010	・・ Ring	1	B10001-
8		07000-12012	・・ O-ring	1	B10001-
9		07001-02012	・・ Ring, Back-up	1	B10001-
10	C1		・・ Seat	1	B10001-
11		07000-12016	・・ O-ring	1	B10001-
12	C1		・・ Piston	1	B10001-
13		723-50-53350	・・ Spring	1	B10001-
14		723-50-53270	・・ Plate	1	B10001-
15		723-50-53260	・・ Retainer	1	B10001-
16		07000-12015	・・ O-ring	1	B10001-
17		07000-13030	・・ O-ring	1	B10001-
18		01252-60630	・・ Bolt, Hexagon Socket Head	1	B10001-
19	C1		・・ Plug	1	B10001-
20		700-13-31161	・・ O-ring	3	B10001-
21		07000-11007	・・ O-ring	1	B10001-

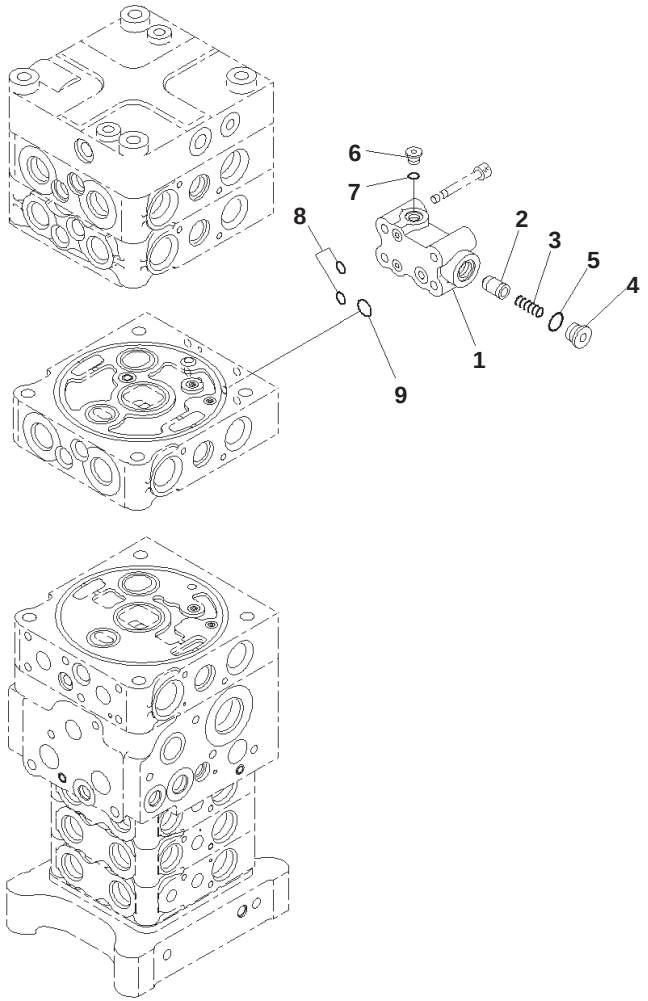

PW5J535

Main Control Valve, 1-actuator, Inner Parts (19/27)

Index	Code	Part Number	Description	Qty	Serial No.
		723-57-12703	Valve, Control	1	B10001-
		723-50-54200	・ Valve Assembly	1	B10001-
1	C1		・・ Block	1	B10001-
2	C1		・・ Valve	1	B10001-
3		723-56-31620	・・ Spring	1	B10001-
4		723-56-31630	・・ Plug	1	B10001-
5		07002-11623	・・ O-ring	1	B10001-
6		723-11-18190	・・ Plug	1	B10001-
7		07002-11023	・・ O-ring	1	B10001-
8		07000-11009	・・ O-ring	2	B10001-
9		708-2L-25490	・・ O-ring	1	B10001-

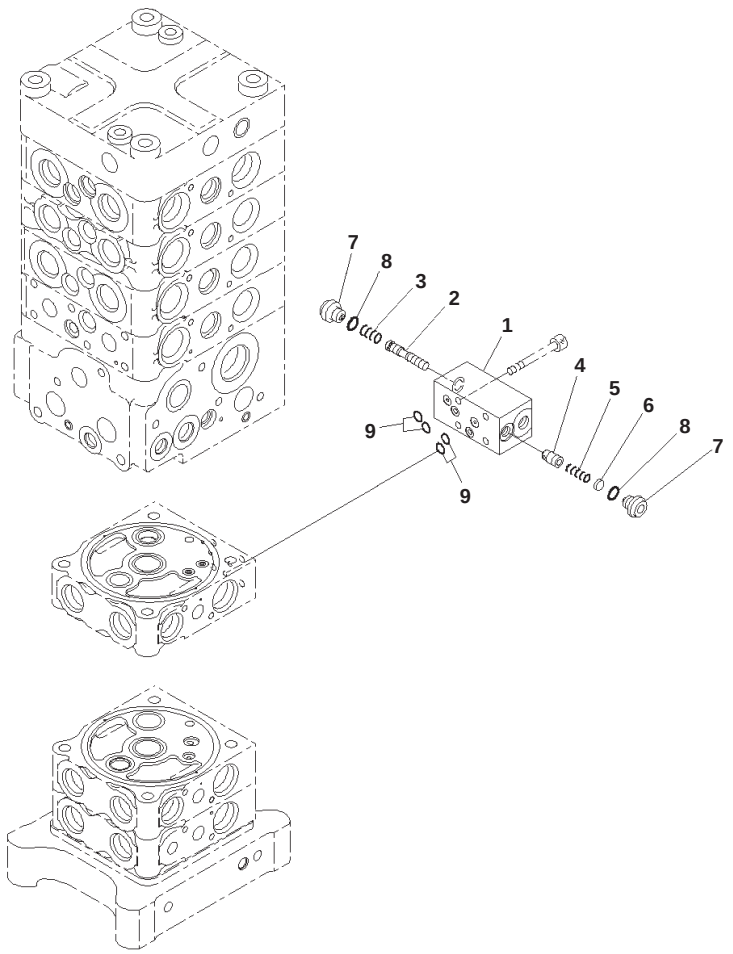

Main Control Valve, 1-actuator, Inner Parts (20/27)

Index	Code	Part Number	Description	Qty	Serial No.
		723-57-12703	Valve, Control	1	B10001-
		723-20-95300	・ Valve Assembly	1	B10001-
1	C1		・・ Block	1	B10001-
2	C1		・・ Spool	1	B10001-
3		723-11-27830	・・ Spring	1	B10001-
4	C1		・・ Valve	1	B10001-
5		723-11-18180	・・ Spring	1	B10001-
6		723-20-95140	・・ Spacer	1	B10001-
7		723-11-27850	・・ Plug	2	B10001-
8		07002-11023	・・ O-ring	2	B10001-
9		07000-11007	・・ O-ring	4	B10001-

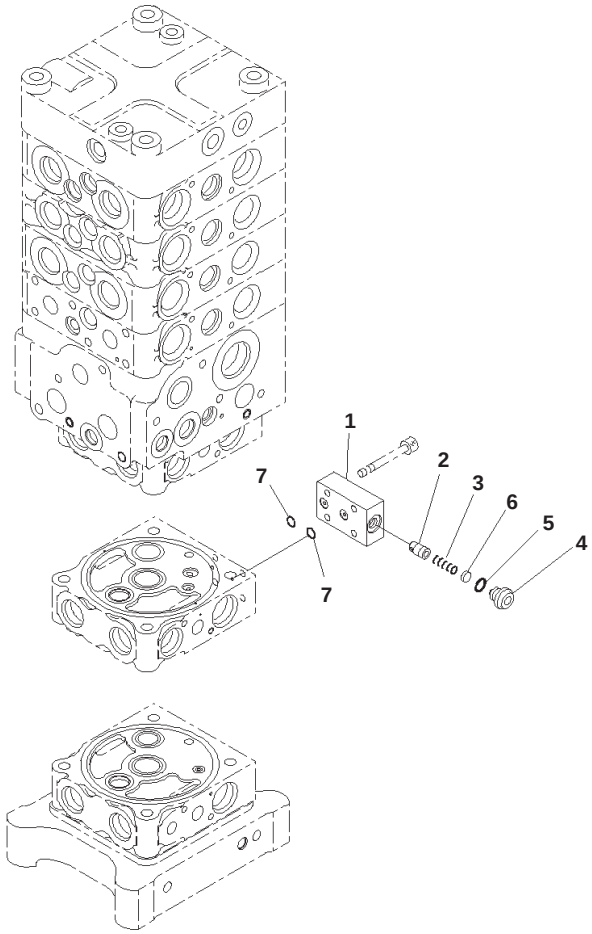

PW5J537

Main Control Valve, 1-actuator, Inner Parts (21/27)

Index	Code	Part Number	Description	Qty	Serial No.
		723-57-12703	Valve, Control	1	B10001-
		723-20-95100	・ Valve Assembly	1	B10001-
1	C1		・・ Block	1	B10001-
2	C1		・・ Valve	1	B10001-
3		723-11-18180	・・ Spring	1	B10001-
4		723-11-27850	・・ Plug	1	B10001-
5		07002-11023	・・ O-ring	1	B10001-
6		723-20-95140	・・ Spacer	1	B10001-
7		07000-11007	・・ O-ring	2	B10001-

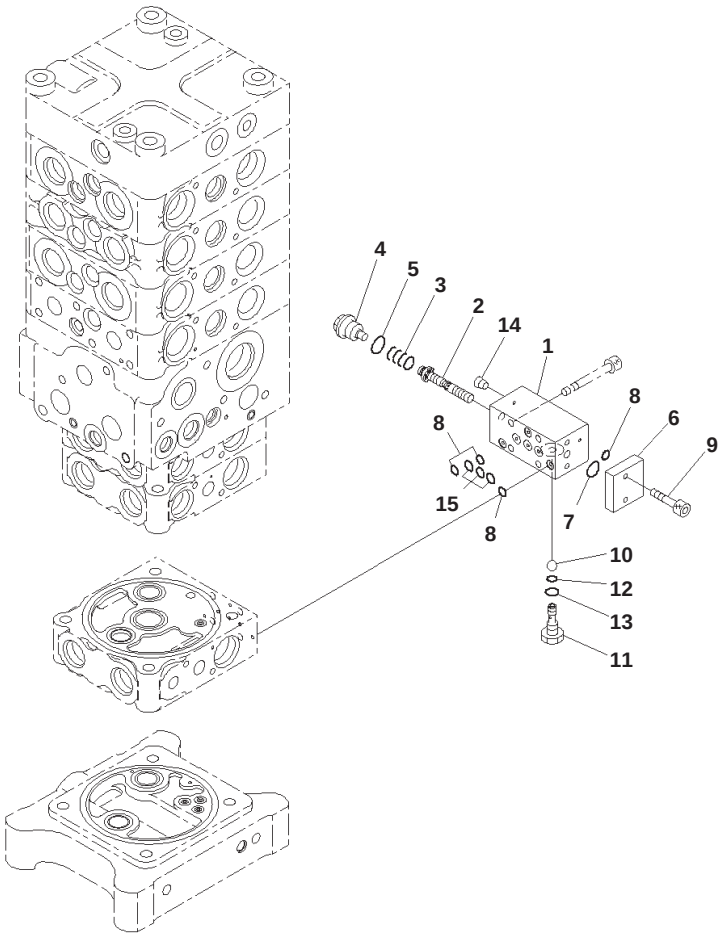

Main Control Valve, 1-actuator, Inner Parts (22/27)

Index	Code	Part Number	Description	Qty	Serial No.
		723-57-12703	Valve, Control	1	B10001-
		723-20-94200	・ Valve Assembly	1	B10001-
1	C1		・・ Block	1	B10001-
2	C1		・・ Spool	1	B10001-
3		723-20-94150	・・ Spring	1	B10001-
4		723-20-94130	・・ Plug	1	B10001-
5		07002-11623	・・ O-ring	1	B10001-
6		723-20-94140	・・ Flange	1	B10001-
7		07000-12011	・・ O-ring	1	B10001-
8		07000-11006	・・ O-ring	4	B10001-
9		01252-60616	・・ Bolt, Hexagon Socket Head	2	B10001-
10	C1		・・ Ball	1	B10001-
11	C1		・・ Plug	1	B10001-
12		07000-11003	・・ O-ring	1	B10001-
13		07002-10823	・・ O-ring	1	B10001-
14	C1		・・ Plug	1	B10001-
15		07000-11007	・・ O-ring	3	B10001-

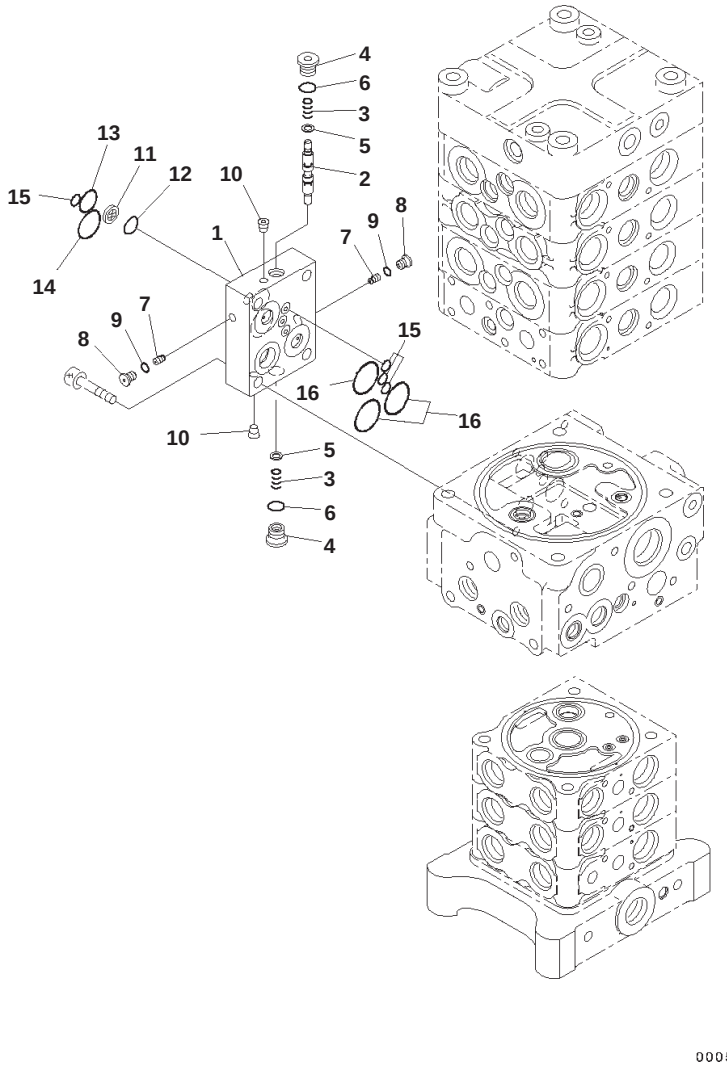

Main Control Valve, 1-actuator, Inner Parts (23/27)

Index	Code	Part Number	Description	Qty	Serial No.
		723-57-12703	Valve, Control	1	B10001-
		723-50-61200	・ Valve Assembly	1	B10001-
1	C1		・・ Block	1	B10001-
2	C1		・・ Spool	1	B10001-
3		723-50-61390	・・ Spring	2	B10001-
4		723-50-61330	・・ Plug	2	B10001-
5		723-50-61350	・・ Spacer	2	B10001-
6		07002-11423	・・ O-ring	2	B10001-
7		723-50-61360	・・ Valve	2	B10001-
8		723-11-27280	・・ Plug	2	B10001-
9		07002-10823	・・ O-ring	2	B10001-
10	C1		・・ Plug	2	B10001-
11		702-21-53120	・・ Filter	1	B10001-
12		702-21-55420	・・ O-ring	1	B10001-
13		702-21-55520	・・ O-ring	1	B10001-
14		702-21-55440	・・ O-ring	1	B10001-
15		07000-11008	・・ O-ring	4	B10001-
16		700-93-11320	・・ O-ring	3	B10001-

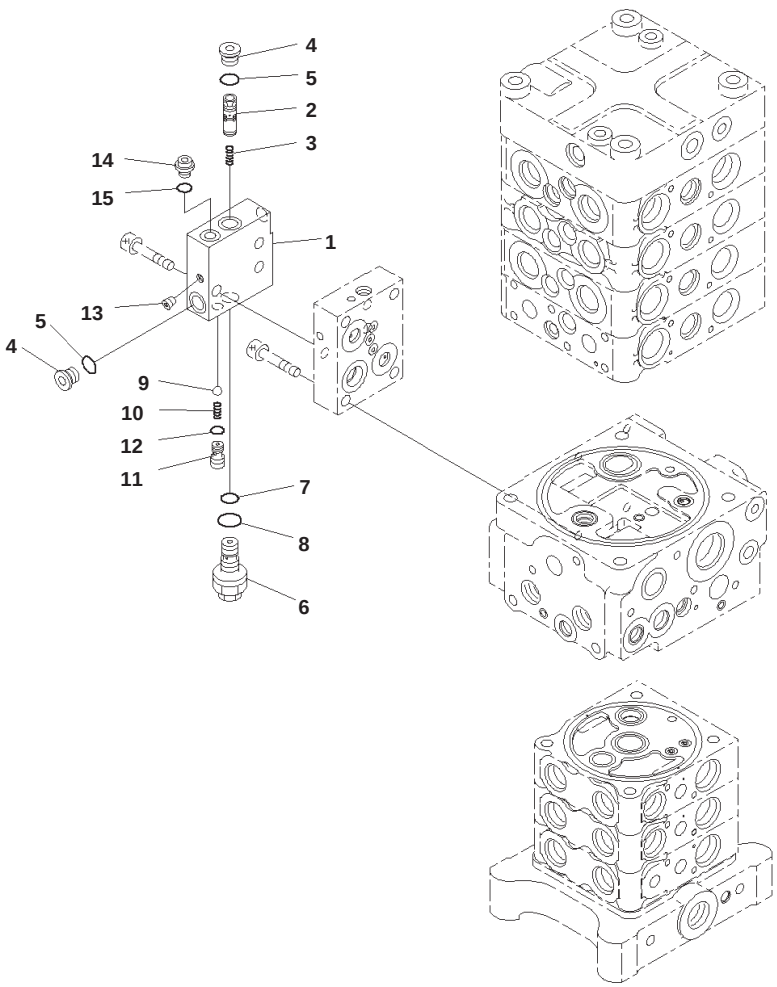

Main Control Valve, 1-actuator, Inner Parts (24/27)

Index	Code	Part Number	Description	Qty	Serial No.
		723-57-12703	Valve, Control	1	B10001-
		723-50-62300	・ Valve Assembly	1	B10001-
1	C1		・・ Block	1	B10001-
2	C1		・・ Spool	1	B10001-
3		702-21-55640	・・ Spring	1	B10001-
4		702-21-55620	・・ Plug	2	B10001-
5		07002-11423	・・ O-ring	2	B10001-
6		723-40-91600	・・ Valve Assembly, Relief	1	B10001-
7		702-16-53920	・・・ O-ring	1	B10001-
8		07002-11623	・・・ O-ring	1	B10001-
9	C1		・・ Ball	1	B10001-
10		702-21-55720	・・ Spring	1	B10001-
11	C1		・・ Seat	1	B10001-
12		07000-11009	・・ O-ring	1	B10001-
13	C1		・・ Plug	1	B10001-
14		708-8E-16160	・・ Plug	1	B10001-
15		07002-11023	・・ O-ring	1	B10001-

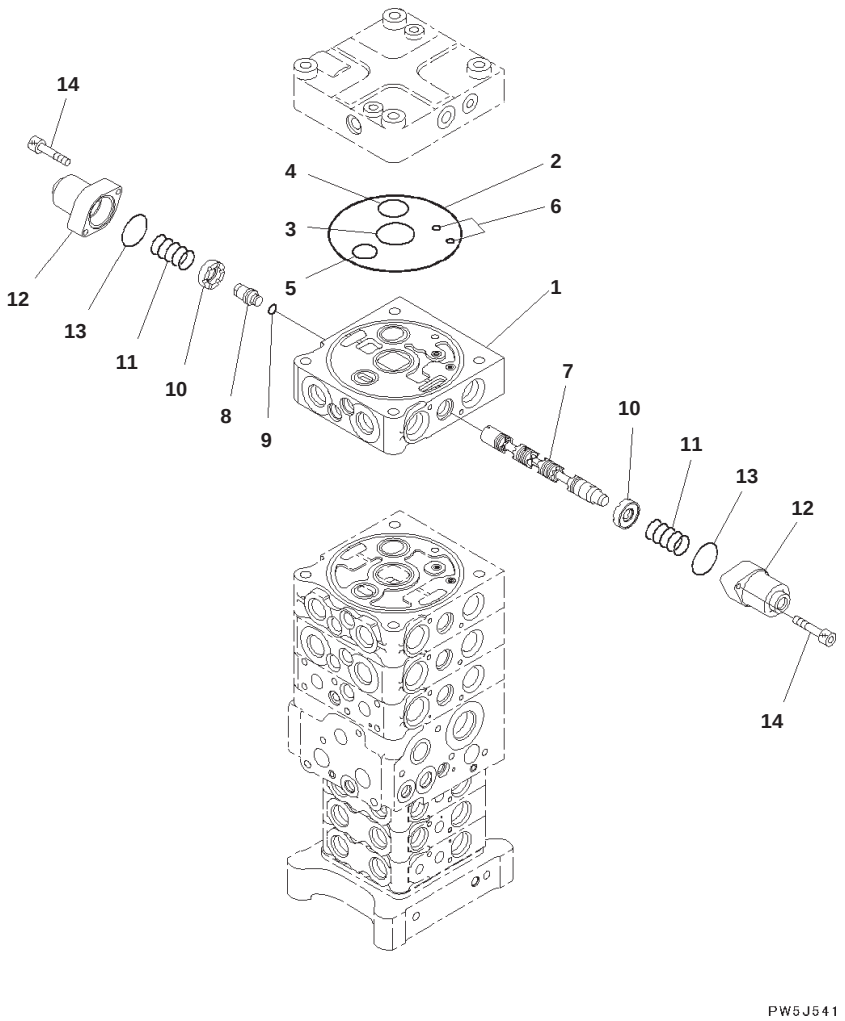

Main Control Valve, 1-actuator, Inner Parts (25/27)

Index	Code	Part Number	Description	Qty	Serial No.
		723-57-12703	Valve, Control	1	B10001-
		723-51-06101	・ Valve Assembly	1	B10001-
1	C1		・・ Block	1	B10001-
2		144-14-54610	・・ O-ring	1	B10001-
3		723-56-31720	・・ O-ring	1	B10001-
4		723-56-31730	・・ O-ring	1	B10001-
5		702-75-11520	・・ O-ring	1	B10001-
6		07000-11008	・・ O-ring	2	B10001-
7	C1		・・ Spool	1	B10001-
8	C1		・・ Plug	1	B10001-
9	C1		・・ O-ring	1	B10001-
10		723-56-31211	・・ Retainer	2	B10001-
11		723-36-14110	・・ Spring	2	B10001-
12		723-56-31510	・・ Case	2	B10001-
13		702-21-55450	・・ O-ring	2	B10001-
14		01252-60630	・・ Bolt, Hexagon Socket Head	4	B10001-

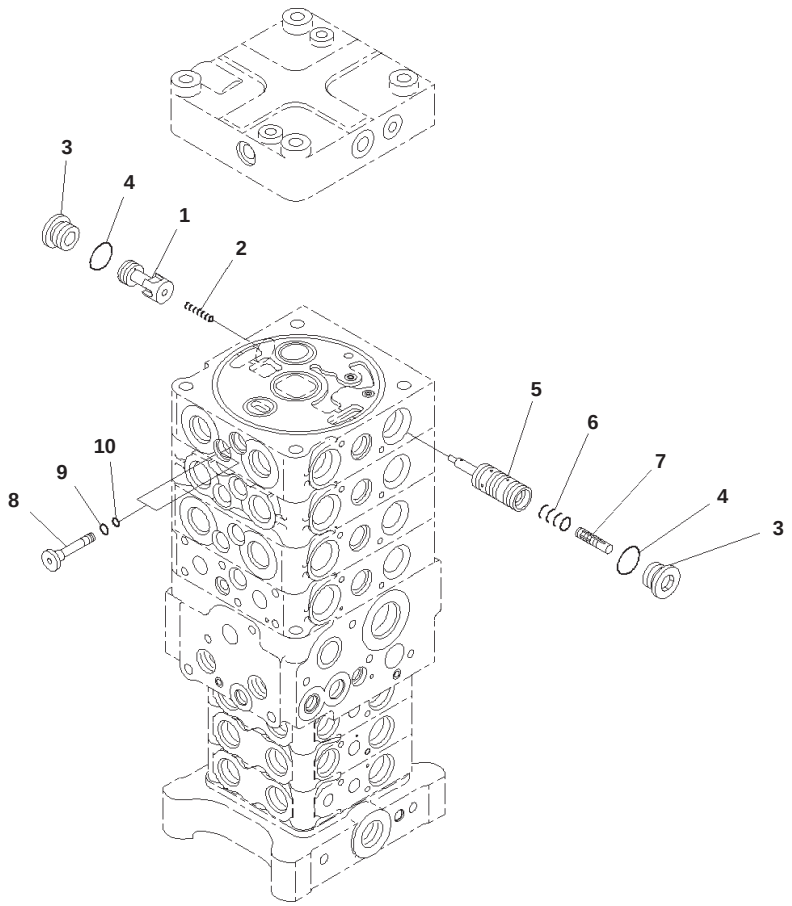

Main Control Valve, 1-actuator, Inner Parts (26/27)

Index	Code	Part Number	Description	Qty	Serial No.
		723-57-12703	Valve, Control	1	B10001-
		723-51-06101	・ Valve Assembly	1	B10001-
1	C1		・・ Valve	1	B10001-
2		723-56-41710	・・ Spring	1	B10001-
3		723-26-15230	・・ Plug	2	B10001-
4		07002-12434	・・ O-ring	2	B10001-
5	C1		・・ Valve	1	B10001-
6		723-56-41730	・・ Spring	1	B10001-
7	C1		・・ Piston	1	B10001-
8		723-56-31640	・・ Plug	2	B10001-
9		07002-11623	・・ O-ring	2	B10001-
10		07000-11008	・・ O-ring	2	B10001-

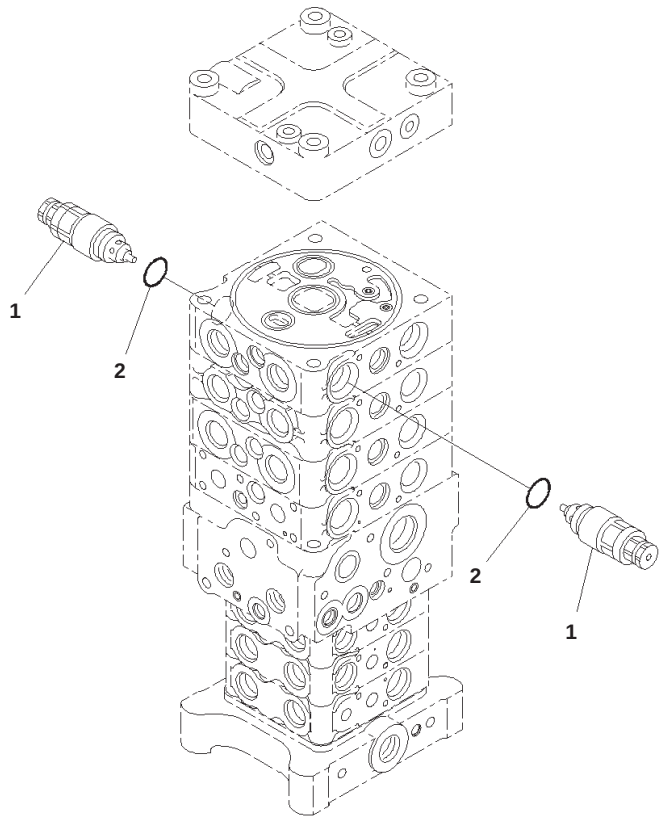

00059745

Main Control Valve, 1-actuator, Inner Parts (27/27)

Index	Part Number	Description	Qty	Serial No.
	723-57-12703	Valve, Control	1	B10001-
	723-51-06101	・ Valve Assembly	1	B10001-
1	723-90-61400	・・ Valve Assembly	2	B10001-
2	07000-13024	・・・ O-ring	1	B10001-

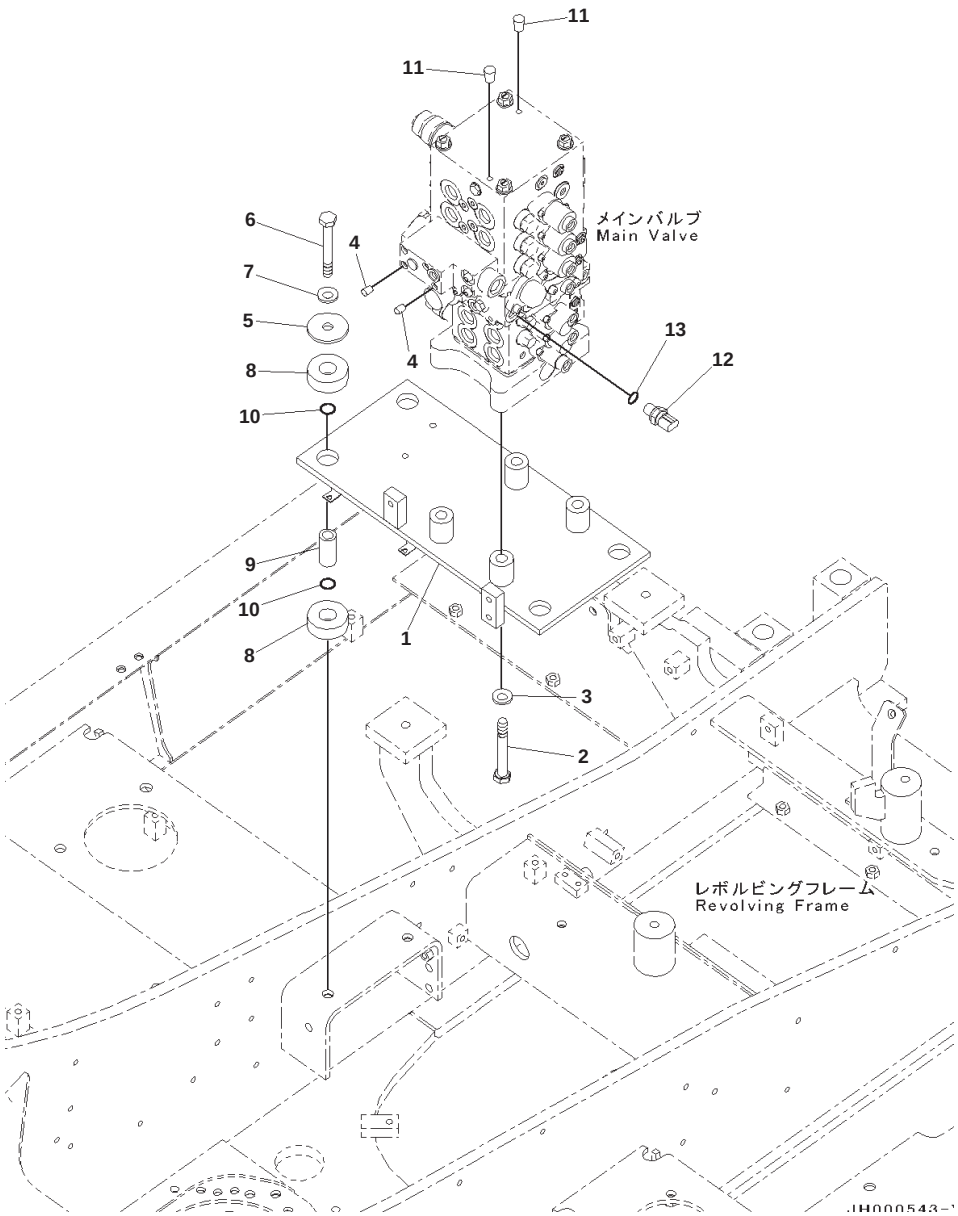

Main Control Valve, 1-actuator, Valve Bracket and Sensor

Index	Part Number	Description	Qty	Serial No.
1	203-62-12831	Bracket	1	B10001-
2	01010-81685	Bolt	4	B10001-
3	01643-31645	Washer	4	B10001-
4	07049-01012	Plug	2	B10001-
5	203-62-61572	Plate	4	B10001-
6	01011-81600	Bolt	4	B10001-
7	01643-31645	Washer	4	B10001-
8	203-54-21110	Cushion	8	B10001-
9	203-62-61581	Spacer	4	B10001-
10	07000-13025	O-ring	8	B10001-
11	07049-01012	Plug	2	B10001-
12	7861-93-1812	Sensor, Pressure	1	B10001-
13	07002-61823	・ O-ring	1	B10001-

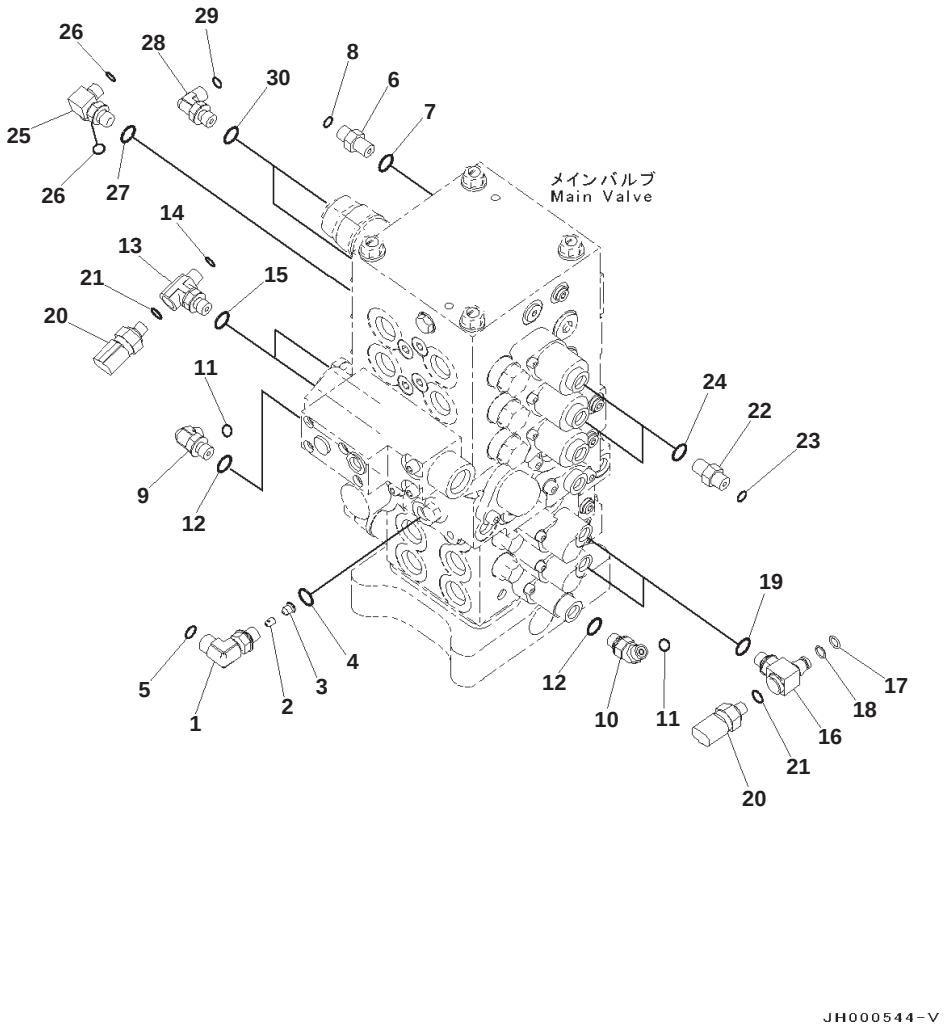

Main Control Valve, 1-actuator, Connecting Parts, Ls. Pilot Piping, (1/2)

Index	Part Number	Description	Qty	Serial No.
	22B-62-22390	Elbow Assembly	1	B10001-
1	21K-62-72730	・ Elbow	1	B10001-
2	21Y-60-11250	・ Poppet	1	B10001-
3	21Y-62-11591	・ Plug	1	B10001-
4	07002-11423	O-ring	1	B10001-
5	02896-11009	O-ring	1	B10001-
6	02781-0021D	Union	1	B10001-
7	07002-11423	O-ring	1	B10001-
8	02896-11008	O-ring	1	B10001-
9	22B-62-21381	Elbow	1	B10001-
10	203-62-13520	Elbow	1	B10001-
11	02896-11008	O-ring	2	B10001-
12	07002-11423	O-ring	2	B10001-
13	22B-62-22690	Tee	2	B10001-
14	02896-11008	O-ring	2	B10001-
15	07002-11423	O-ring	2	B10001-
16	203-62-12811	Tee	2	B10001-
17	201-60-11390	・ O-ring	1	B10001-
18	20Y-62-19560	・ O-ring	1	B10001-
19	07002-11423	O-ring	2	B10001-
20	7861-93-1840	Sensor	4	B10001-
21	07000-12011	・ O-ring	1	B10001-
22	02781-0021D	Union	2	B10001-
23	02896-11008	O-ring	2	B10001-
24	07002-11423	O-ring	2	B10001-
25	207-62-72141	Elbow	1	B10001-
26	02896-11008	O-ring	2	B10001-
27	07002-11423	O-ring	1	B10001-
28	02782-10210	Elbow	2	B10001-
29	02896-11008	O-ring	2	B10001-
30	07002-11423	O-ring	2	B10001-

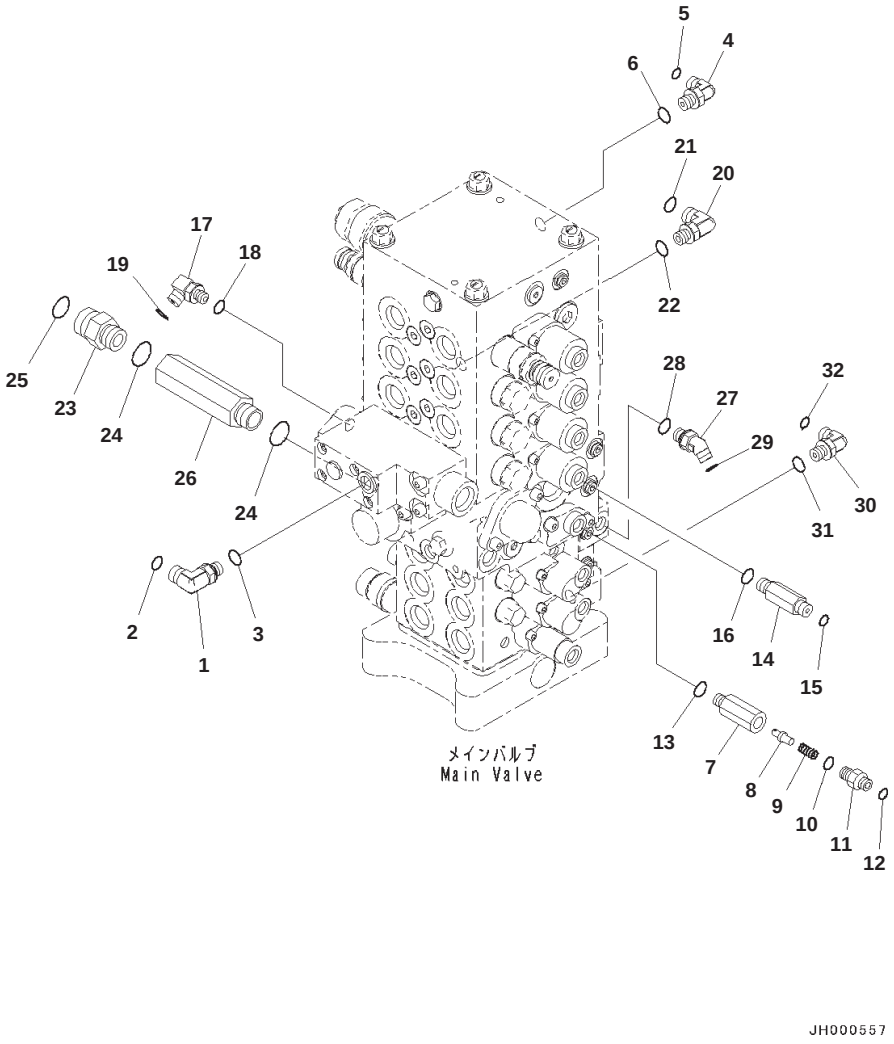

Main Control Valve, 1-actuator, Connecting Parts, Ls, Pilot Piping, (2/2)

Index	Code	Part Number	Description	Qty	Serial No.
1		02782-10311	Elbow	1	B10001-
2		02896-11009	O-ring	1	B10001-
3		07002-11423	O-ring	1	B10001-
4		02782-10210	Elbow	1	B10001-
5		02896-11008	O-ring	1	B10001-
6		07002-11423	O-ring	1	B10001-
		20Y-62-41701	Valve Assembly	1	B10001-
7	C1		・ Body	1	B10001-
8		20Y-60-22270	・ Poppet	1	B10001-
9		701-20-61230	・ Spring	1	B10001-
10		07002-11423	・ O-ring	1	B10001-
11		20Y-62-47630	・ Nipple	1	B10001-
12		02896-11008	O-ring	1	B10001-
13		07002-11423	O-ring	1	B10001-
14		11Y-62-12230	Union	1	B10001-
15		02896-11008	O-ring	1	B10001-
16		07002-11423	O-ring	1	B10001-
17		20Y-62-41920	Elbow	1	B10001-
18		07002-11223	O-ring	1	B10001-
19		02896-11008	O-ring	1	B10001-
20		02782-10311	Elbow	1	B10001-
21		02896-11009	O-ring	1	B10001-
22		07002-11423	O-ring	1	B10001-
23		02781-00628	Union	1	B10001-
24		07002-12434	O-ring	2	B10001-
25		02896-11018	O-ring	1	B10001-
26		203-62-63770	Joint	1	B10001-
27		02783-10210	Elbow	1	B10001-
28		07002-11423	O-ring	1	B10001-
29		02896-11008	O-ring	1	B10001-
30		02782-10210	Elbow	1	B10001-
31		07002-11423	O-ring	1	B10001-
32		02896-11008	O-ring	1	B10001-

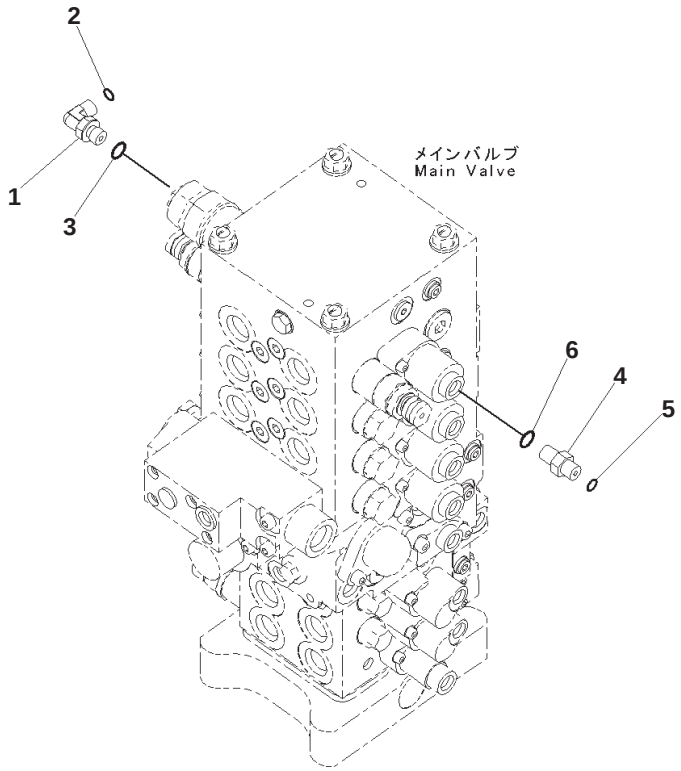

Index	Part Number	Description	Qty	Serial No.
1	02782-10210	Elbow	1	B10001-
2	02896-11008	O-ring	1	B10001-
3	07002-11423	O-ring	1	B10001-
4	02781-0021D	Union	1	B10001-
5	02896-11008	O-ring	1	B10001-
6	07002-11423	O-ring	1	B10001-

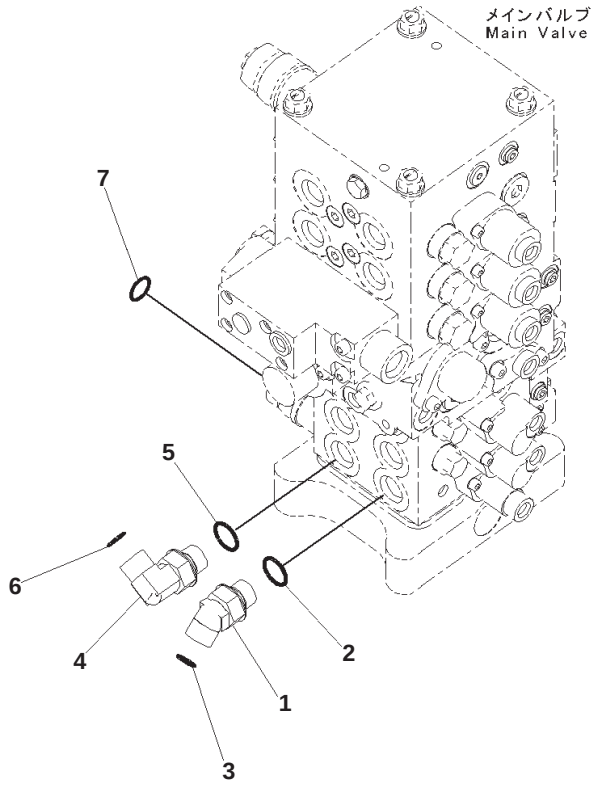

JH000546-V

Main Control Valve, 1-actuator, Connecting Parts, Swing Piping

Index	Part Number	Description	Qty	Serial No.
1	02783-10522	Elbow	1	B10001-
2	07002-12434	O-ring	1	B10001-
3	02896-11015	O-ring	1	B10001-
4	02782-10522	Elbow	1	B10001-
5	07002-12434	O-ring	1	B10001-
6	02896-11015	O-ring	1	B10001-
7	02896-11018	O-ring	1	B10001-

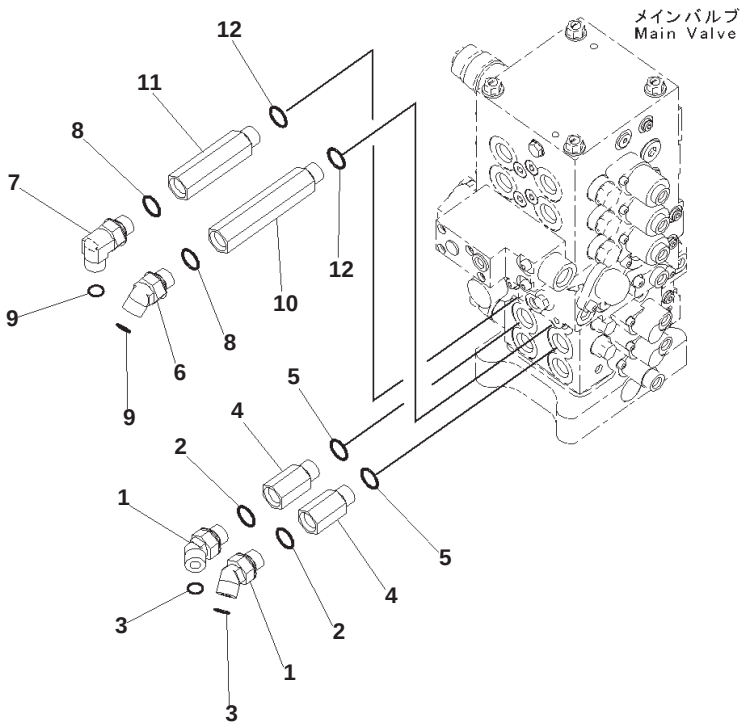

Main Control Valve, 1-actuator, Connecting Parts, Travel Piping

Index	Part Number	Description	Qty	Serial No.
1	02783-10522	Elbow	2	B10001-
2	07002-12434	O-ring	2	B10001-
3	02896-11015	O-ring	2	B10001-
4	201-62-71820	Joint	2	B10001-
5	07002-12434	O-ring	2	B10001-
6	02783-10522	Elbow	1	B10001-
7	02782-10522	Elbow	1	B10001-
8	07002-12434	O-ring	2	B10001-
9	02896-11015	O-ring	2	B10001-
10	203-62-63760	Joint	1	B10001-
11	203-62-63770	Joint	1	B10001-
12	07002-12434	O-ring	2	B10001-

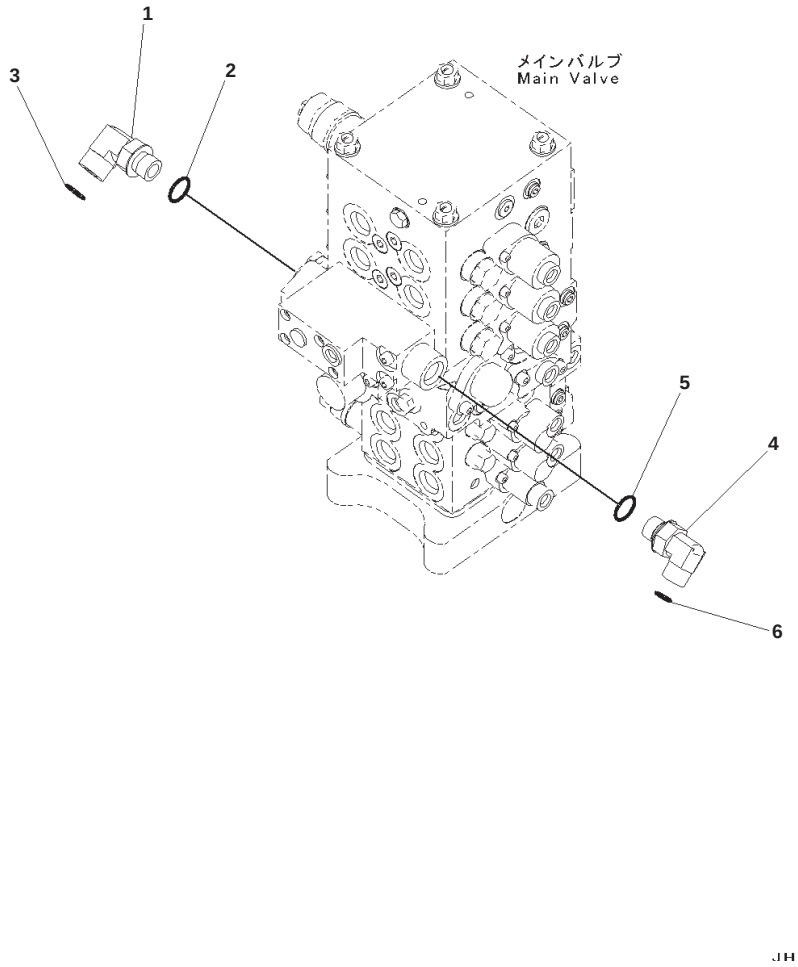

Main Control Valve, 1-actuator, Connecting Parts, Boom Piping

Index	Part Number	Description	Qty	Serial No.
1	02782-10628	Elbow	1	B10001-
2	07002-12434	O-ring	1	B10001-
3	02896-11018	O-ring	1	B10001-
4	02782-10522	Elbow	1	B10001-
5	07002-12434	O-ring	1	B10001-
6	02896-11015	O-ring	1	B10001-

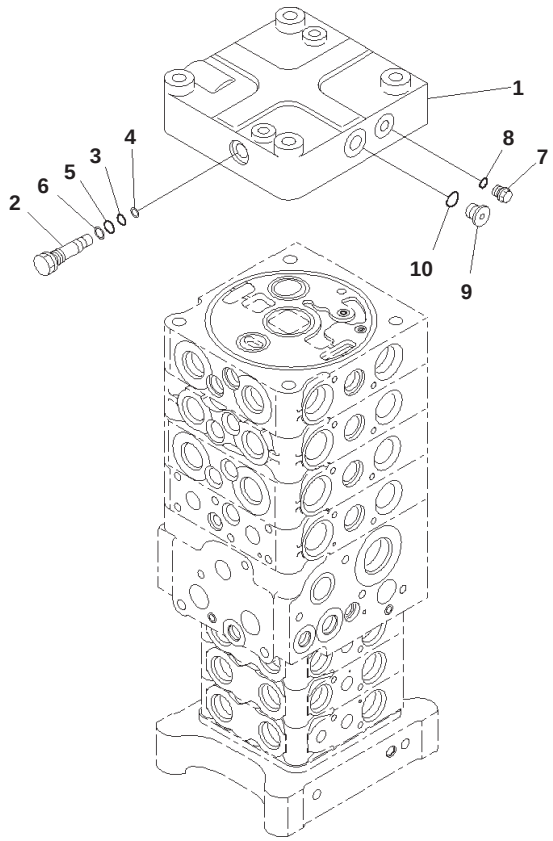

PW5J516

Main Control Valve, With Service Valve, 1-actuator, Inner Parts (1/27)

Index	Code	Part Number	Description	Qty	Serial No.
		723-57-12703	Valve, Control	1	B10001-
	C1		・ Cover Group	1	B10001-
1		723-56-11240	・・ Cover	1	B10001-
2		723-26-15190	・・ Plug	1	B10001-
3		07000-11007	・・ O-ring	1	B10001-
4		07001-01007	・・ Ring, Back-up	1	B10001-
5		07000-11009	・・ O-ring	1	B10001-
6		07001-01009	・・ Ring, Back-up	1	B10001-
7		708-8E-16160	・・ Plug	1	B10001-
8		07002-11023	・・ O-ring	1	B10001-
9		702-21-55620	・・ Plug	1	B10001-
10		07002-11423	・・ O-ring	1	B10001-

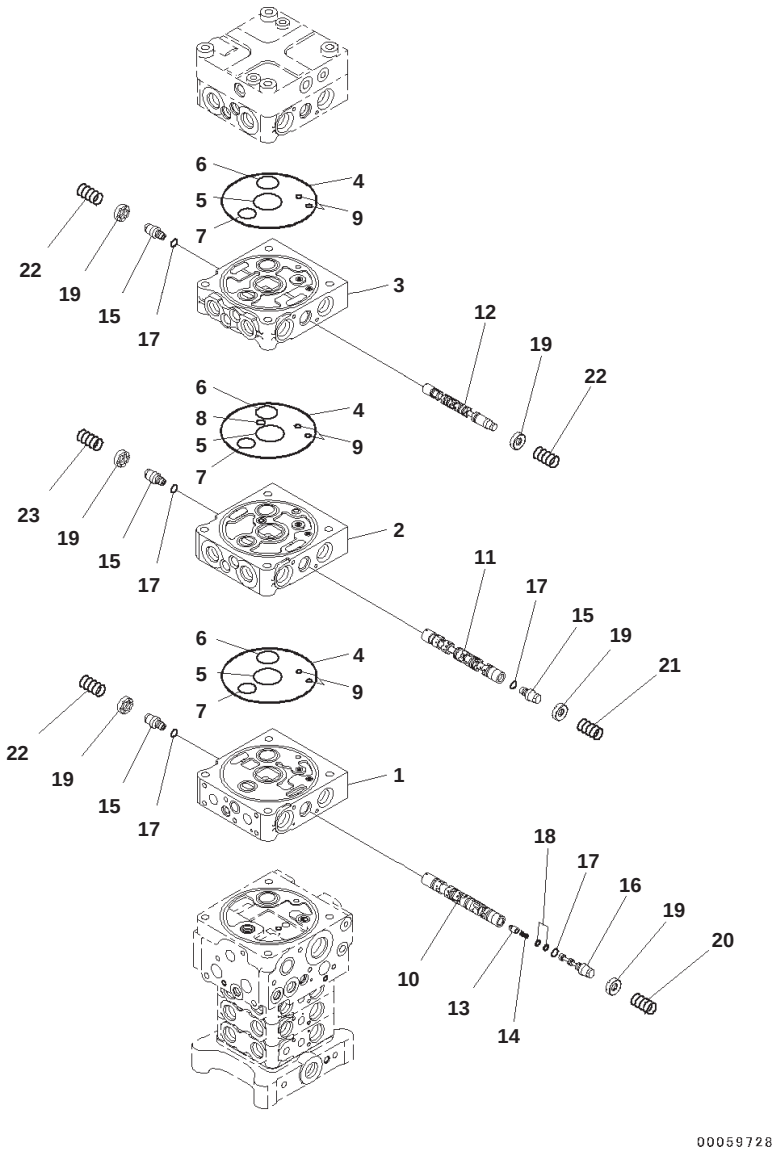

Main Control Valve, With Service Valve, 1-actuator, Inner Parts (2/27)

Index	Code	Part Number	Description	Qty	Serial No.
		723-57-12703	Valve, Control	1	B10001-
	C1		・ Body Group	1	B10001-
1	C1		・・ Block	1	B10001-
2	C1		・・ Block	1	B10001-
3	C1		・・ Block	1	B10001-
4		144-14-54610	・・ O-ring	3	B10001-
5		723-56-31720	・・ O-ring	3	B10001-
6		723-56-31730	・・ O-ring	3	B10001-
7		702-75-11520	・・ O-ring	3	B10001-
8		07000-12012	・・ O-ring	1	B10001-
9		07000-11008	・・ O-ring	6	B10001-
10	C1		・・ Spool	1	B10001-
11	C1		・・ Spool	1	B10001-
12	C1		・・ Spool	1	B10001-
13	C1		・・ Valve	1	B10001-
14	C1		・・ Spring	1	B10001-
15	C1		・・ Plug	4	B10001-
16	C1		・・ Plug	1	B10001-
17	C1		・・ O-ring	5	B10001-
18	C1		・・ Seal	2	B10001-
19		723-56-31211	・・ Retainer	6	B10001-
20		723-56-32460	・・ Spring	1	B10001-
21		723-36-14110	・・ Spring	1	B10001-
22		723-36-14120	・・ Spring	3	B10001-
23		723-36-14130	・・ Spring	1	B10001-

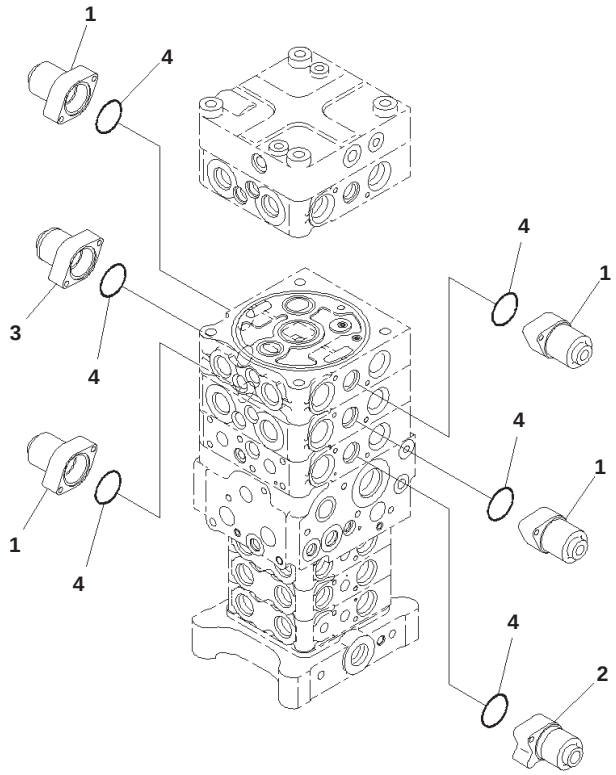

00059729

Main Control Valve, With Service Valve, 1-actuator, Inner Parts (3/27)

Index	Code	Part Number	Description	Qty	Serial No.
		723-57-12703	Valve, Control	1	B10001-
	C1		・ Body Group	1	B10001-
1		723-56-31510	・・ Case	4	B10001-
2		723-56-32560	・・ Case	1	B10001-
3		723-56-31580	・・ Case	1	B10001-
4		702-21-55450	・・ O-ring	6	B10001-

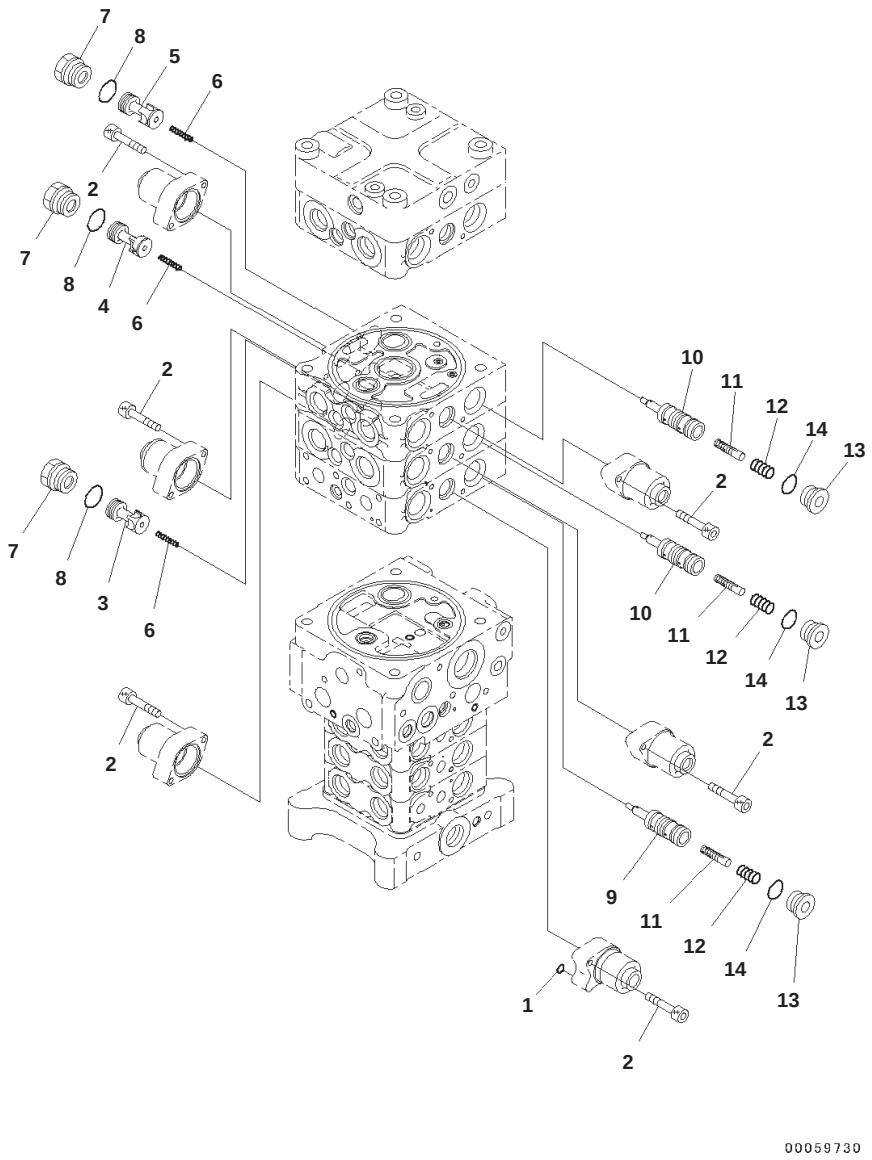

Main Control Valve, With Service Valve, 1-actuator, Inner Parts (4/27)

Index	Code	Part Number	Description	Qty	Serial No.
		723-57-12703	Valve, Control	1	B10001-
	C1		・ Body Group	1	B10001-
1		07000-11006	・・ O-ring	1	B10001-
2		01252-60630	・・ Bolt, Hexagon Socket Head	12	B10001-
3	C1		・・ Valve	1	B10001-
4	C1		・・ Valve	1	B10001-
5	C1		・・ Valve	1	B10001-
6		723-56-41710	・・ Spring	3	B10001-
7		723-56-41840	・・ Plug	3	B10001-
8		07000-13024	・・ O-ring	3	B10001-
9	C1		・・ Valve	1	B10001-
10	C1		・・ Valve	2	B10001-
11	C1		・・ Piston	3	B10001-
12		723-56-41730	・・ Spring	3	B10001-
13		723-26-15230	・・ Plug	3	B10001-
14		07002-12434	・・ O-ring	3	B10001-

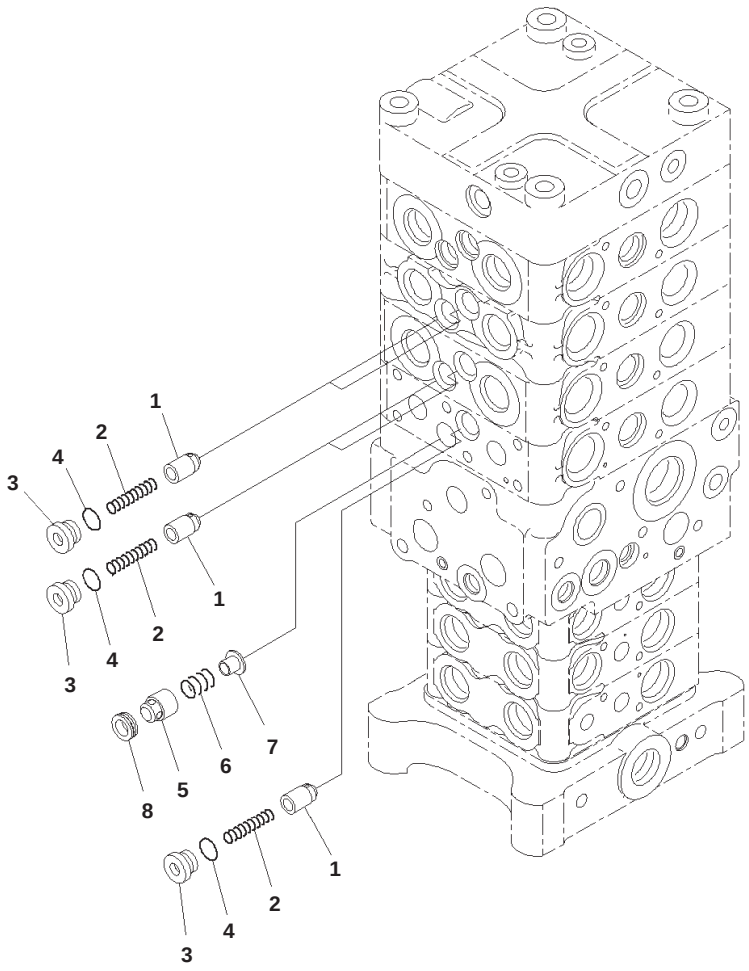

00059731

Main Control Valve, With Service Valve, 1-actuator, Inner Parts (5/27)

Index	Code	Part Number	Description	Qty	Serial No.
		723-57-12703	Valve, Control	1	B10001-
	C1		・ Body Group	1	B10001-
1	C1		・・ Valve	5	B10001-
2		723-56-31620	・・ Spring	5	B10001-
3		723-56-31630	・・ Plug	5	B10001-
4		07002-11623	・・ O-ring	5	B10001-
5	C1		・・ Valve	1	B10001-
6		709-70-91420	・・ Spring	1	B10001-
7		723-56-31660	・・ Retainer	1	B10001-
8		723-56-31670	・・ Seat	1	B10001-

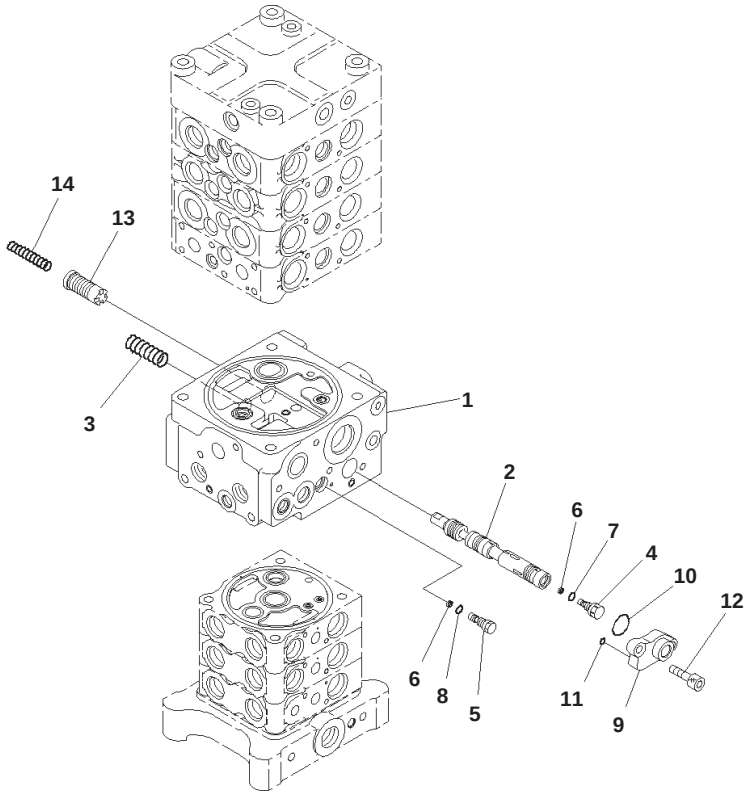

Main Control Valve, With Service Valve, 1-actuator, Inner Parts (6/27)

Index	Code	Part Number	Description	Qty	Serial No.
		723-57-12703	Valve, Control	1	B10001-
	C1		・ Body Group	1	B10001-
1	C1		・・ Block	1	B10001-
2	C1		・・ Spool	1	B10001-
3		723-56-31970	・・ Spring	1	B10001-
4	C1		・・ Orifice	1	B10001-
5		723-56-31960	・・ Orifice	1	B10001-
6	C1		・・ Ring	2	B10001-
7	C1		・・ O-ring	1	B10001-
8		07002-11223	・・ O-ring	1	B10001-
9		723-56-31940	・・ Flange	1	B10001-
10		723-11-18430	・・ O-ring	1	B10001-
11		07000-11008	・・ O-ring	1	B10001-
12		01252-60825	・・ Bolt, Hexagon Socket Head	2	B10001-
13	C1		・・ Valve	2	B10001-
14		723-56-31990	・・ Spring	2	B10001-

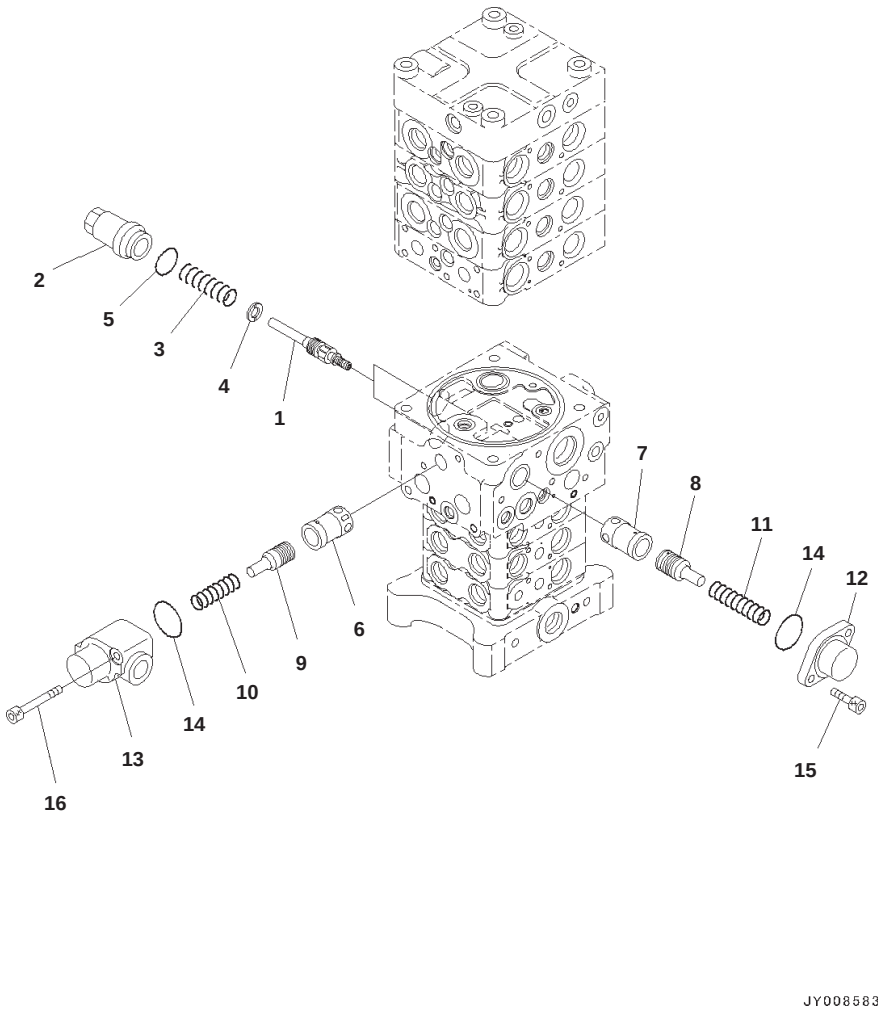

Main Control Valve, With Service Valve, 1-actuator, Inner Parts (7/27)

Index	Code	Part Number	Description	Qty	Serial No.
		723-57-12703	Valve, Control	1	B10001-
	C1		・ Body Group	1	B10001-
1	C1		・・ Spool	2	B10001-
2		723-50-55250	・・ Sleeve	2	B10001-
3		723-50-55270	・・ Spring	2	B10001-
4		723-50-55280	・・ Spacer	2	B10001-
5		07002-13334	・・ O-ring	2	B10001-
6	C1		・・ Sleeve	1	B10001-
7	C1		・・ Sleeve	1	B10001-
8	C1		・・ Piston	1	B10001-
9	C1		・・ Piston	1	B10001-
10		723-56-33910	・・ Spring	1	B10001-
11		723-36-15240	・・ Spring	1	B10001-
12		723-36-15250	・・ Case	1	B10001-
13	C1		・・ Case	1	B10001-
14		07000-13042	・・ O-ring	2	B10001-
15		01252-60820	・・ Bolt, Hexagon Socket Head	2	B10001-
16		01252-60860	・・ Bolt, Hexagon Socket Head	2	B10001-

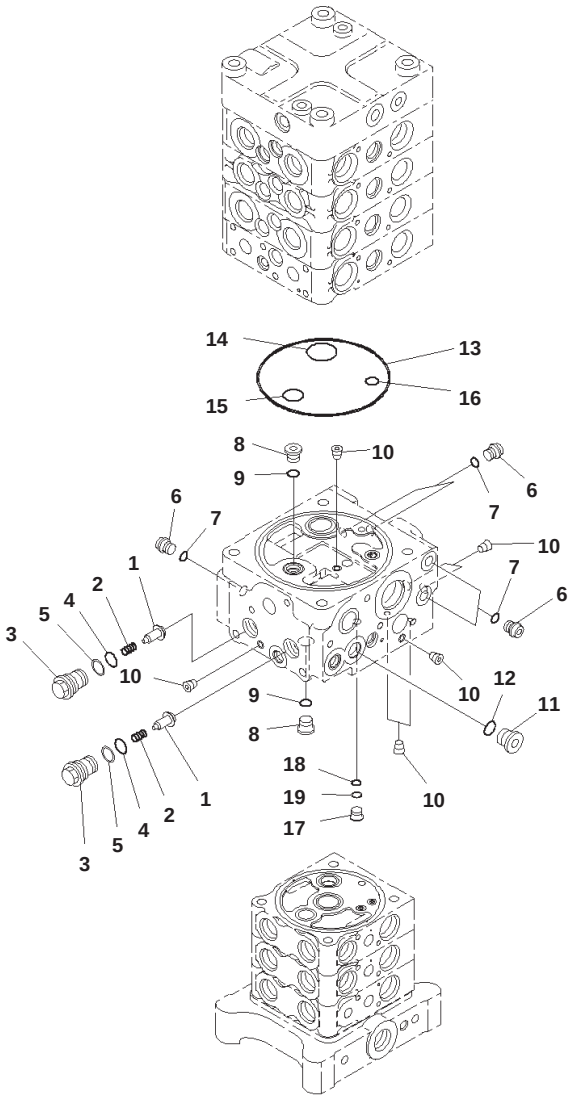

00059734

Main Control Valve, With Service Valve, 1-actuator, Inner Parts (8/27)

Index	Code	Part Number	Description	Qty	Serial No.
		723-57-12703	Valve, Control	1	B10001-
	C1		・ Body Group	1	B10001-
1	C1		・・ Valve, Check	2	B10001-
2		709-25-11361	・・ Spring	2	B10001-
3		723-26-15580	・・ Plug	2	B10001-
4		07000-12016	・・ O-ring	2	B10001-
5		723-60-22230	・・ Ring, Back-up	2	B10001-
6		708-8E-16160	・・ Plug	5	B10001-
7		07002-11023	・・ O-ring	5	B10001-
8		702-21-55620	・・ Plug	2	B10001-
9		07002-11423	・・ O-ring	2	B10001-
10	C1		・・ Plug	7	B10001-
11		723-11-28920	・・ Plug	1	B10001-
12		07002-11823	・・ O-ring	1	B10001-
13		144-14-54610	・・ O-ring	1	B10001-
14		723-56-31730	・・ O-ring	1	B10001-
15		702-75-11520	・・ O-ring	1	B10001-
16		07000-12014	・・ O-ring	1	B10001-
17		723-26-16460	・・ Plug	1	B10001-
18		07000-11007	・・ O-ring	1	B10001-
19		07001-01007	・・ Ring, Back-up	1	B10001-

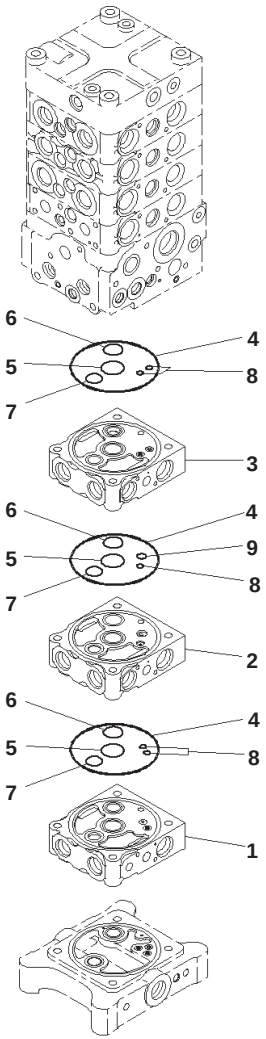

00059735

Main Control Valve, With Service Valve, 1-actuator, Inner Parts (9/27)

Index	Code	Part Number	Description	Qty	Serial No.
		723-57-12703	Valve, Control	1	B10001-
	C1		・ Body Group	1	B10001-
1	C1		・・ Block	1	B10001-
2	C1		・・ Block	1	B10001-
3	C1		・・ Block	1	B10001-
4		07000-12120	・・ O-ring	3	B10001-
5		723-26-15830	・・ O-ring	3	B10001-
6		723-26-15840	・・ O-ring	3	B10001-
7		07000-12022	・・ O-ring	3	B10001-
8		07000-11008	・・ O-ring	5	B10001-
9		07000-12010	・・ O-ring	1	B10001-

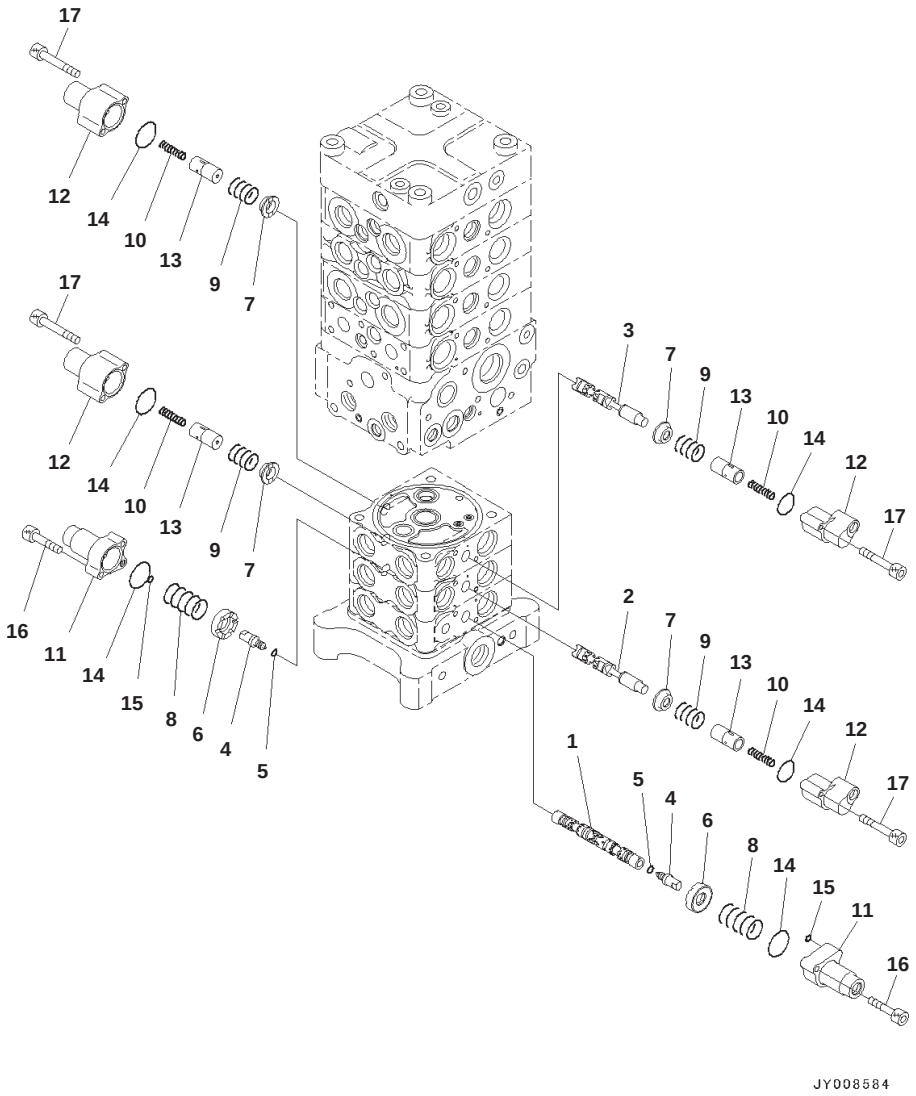

Main Control Valve, With Service Valve, 1-actuator, Inner Parts (10/27)

Index	Code	Part Number	Description	Qty	Serial No.
		723-57-12703	Valve, Control	1	B10001-
	C1		・ Body Group	1	B10001-
1	C1		・・ Spool	1	B10001-
2	C1		・・ Spool	1	B10001-
3	C1		・・ Spool	1	B10001-
4	C1		・・ Plug	2	B10001-
5	C1		・・ O-ring	2	B10001-
6		723-26-15121	・・ Retainer	2	B10001-
7		723-26-16740	・・ Retainer	4	B10001-
8		723-26-14520	・・ Spring	2	B10001-
9		723-26-14530	・・ Spring	4	B10001-
10		723-26-14540	・・ Spring	4	B10001-
11		723-26-16710	・・ Case	2	B10001-
12		723-26-16720	・・ Case	4	B10001-
13	C1		・・ Piston	4	B10001-
14		575-41-17420	・・ O-ring	6	B10001-
15		07000-11005	・・ O-ring	2	B10001-
16		01252-60630	・・ Bolt, Hexagon Socket Head	4	B10001-
17		01252-60645	・・ Bolt, Hexagon Socket Head	8	B10001-

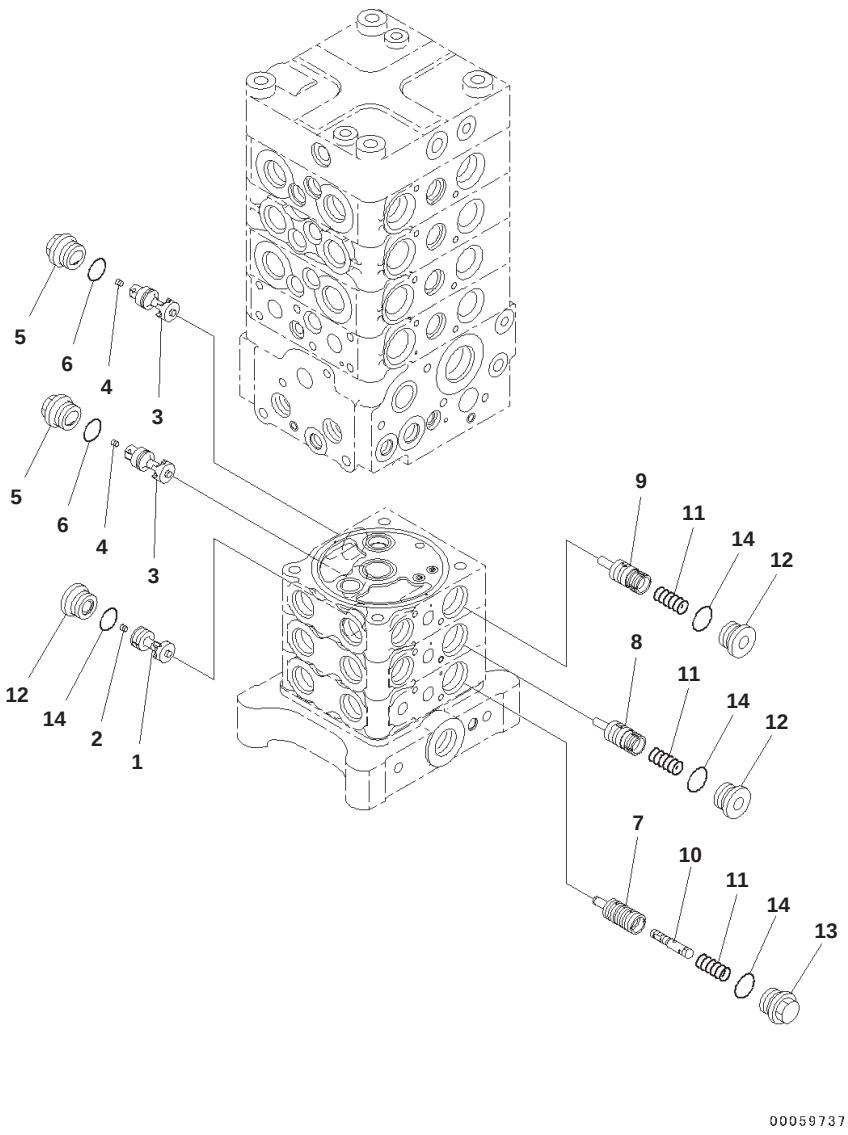

Main Control Valve, With Service Valve, 1-actuator, Inner Parts (11/27)

Index	Code	Part Number	Description	Qty	Serial No.
		723-57-12703	Valve, Control	1	B10001-
	C1		・ Body Group	1	B10001-
1	C1		・・ Valve	1	B10001-
2	C1		・・ Screw	1	B10001-
3	C1		・・ Valve	2	B10001-
4	C1		・・ Orifice	2	B10001-
5		723-26-16670	・・ Plug	2	B10001-
6		07002-12434	・・ O-ring	2	B10001-
7	C1		・・ Valve	1	B10001-
8	C1		・・ Valve Subassembly	1	B10001-
9	C1		・・ Valve Subassembly	1	B10001-
10	C1		・・ Valve Subassembly	1	B10001-
11		723-26-14140	・・ Spring	3	B10001-
12		723-26-15230	・・ Plug	3	B10001-
13		723-26-15890	・・ Plug	1	B10001-
14		07002-12434	・・ O-ring	4	B10001-

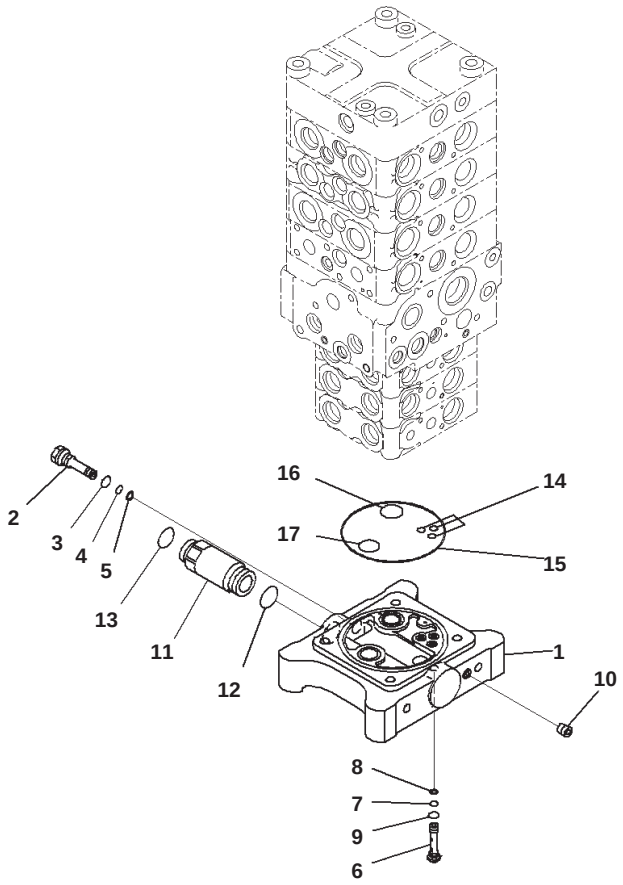

Main Control Valve, With Service Valve, 1-actuator, Inner Parts (12/27)

Index	Code	Part Number	Description	Qty	Serial No.
		723-57-12703	Valve, Control	1	B10001-
	C1		・ Body Group	1	B10001-
1	C1		・・ Block	1	B10001-
2		723-26-15170	・・ Plug	1	B10001-
3		07002-11423	・・ O-ring	1	B10001-
4		07000-11007	・・ O-ring	1	B10001-
5		07001-01007	・・ Ring, Back-up	1	B10001-
6		723-60-23301	・・ Valve Assembly, Check	1	B10001-
7		07000-11005	・・・ O-ring	1	B10001-
8		07001-01005	・・・ Ring, Back-up	1	B10001-
9		07002-11023	・・・ O-ring	1	B10001-
10	C1		・・ Plug	1	B10001-
11		723-26-15991	・・ Union	1	B10001-
12		07000-13024	・・ O-ring	1	B10001-
13		02896-11018	・・ O-ring	1	B10001-
14		07000-11008	・・ O-ring	3	B10001-
15		07000-12120	・・ O-ring	1	B10001-
16		723-26-15840	・・ O-ring	1	B10001-
17		07000-12022	・・ O-ring	1	B10001-

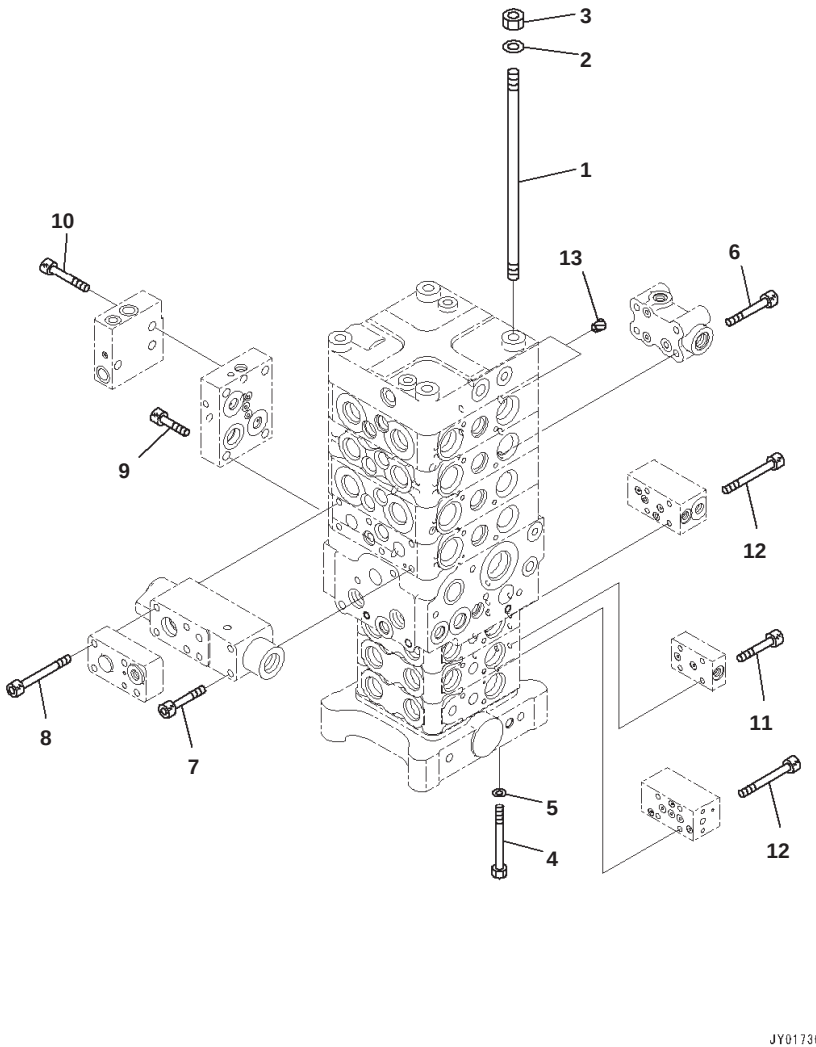

Main Control Valve, With Service Valve, 1-actuator, Inner Parts (13/27)

Index	Part Number	Description	Qty	Serial No.
	723-57-12703	Valve, Control	1	B10001-
1	723-50-11140	・ Stud	4	B10001-
2	01643-31232	・ Washer	4	B10001-
3	01580-11210	・ Nut	4	B10001-
4	01011-61085	・ Bolt	4	B10001-
5	01643-51032	・ Washer	4	B10001-
6	01252-60850	・ Bolt, Hexagon Socket Head	4	B10001-
7	01252-60865	・ Bolt, Hexagon Socket Head	2	B10001-
8	708-25-19160	・ Bolt, Hexagon Socket Head	4	B10001-
9	01252-61035	・ Bolt, Hexagon Socket Head	4	B10001-
10	01252-61040	・ Bolt, Hexagon Socket Head	3	B10001-
11	01252-60630	・ Bolt, Hexagon Socket Head	4	B10001-
12	01252-60650	・ Bolt, Hexagon Socket Head	8	B10001-
13	07049-01215	・ Plug	2	B10001-

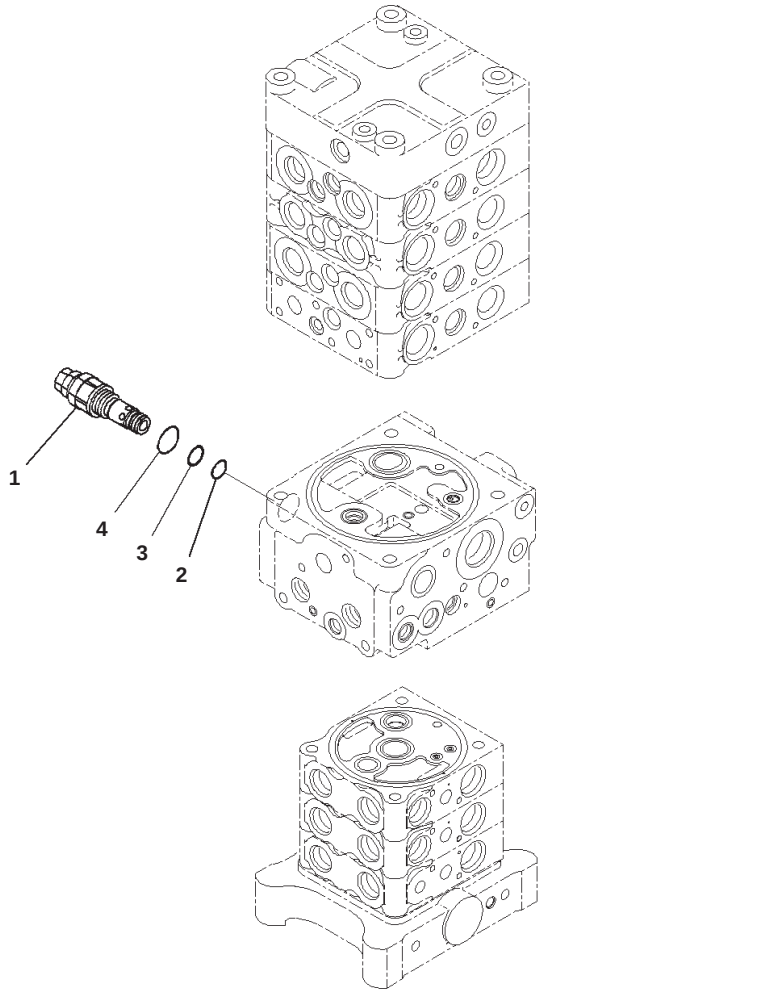

Main Control Valve, With Service Valve, 1-actuator, Inner Parts (14/27)

Index	Part Number	Description	Qty	Serial No.
	723-57-12703	Valve, Control	1	B10001-
1	723-40-94200	・ Valve, Relief	1	B10001-
2	700-22-11410	・・ O-ring	1	B10001-
3	700-80-64220	・・ Ring	1	B10001-
4	07002-12434	・・ O-ring	1	B10001-

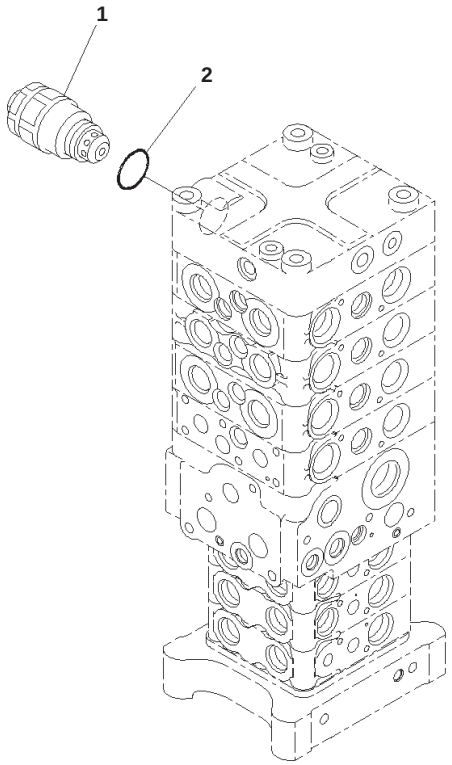

00012059

Main Control Valve, With Service Valve, 1-actuator, Inner Parts (15/27)

Index	Part Number	Description	Qty	Serial No.
	723-57-12703	Valve, Control	1	B10001-
1	709-90-75300	・ Valve Assembly	1	B10001-
2	07002-13634	・・ O-ring	1	B10001-

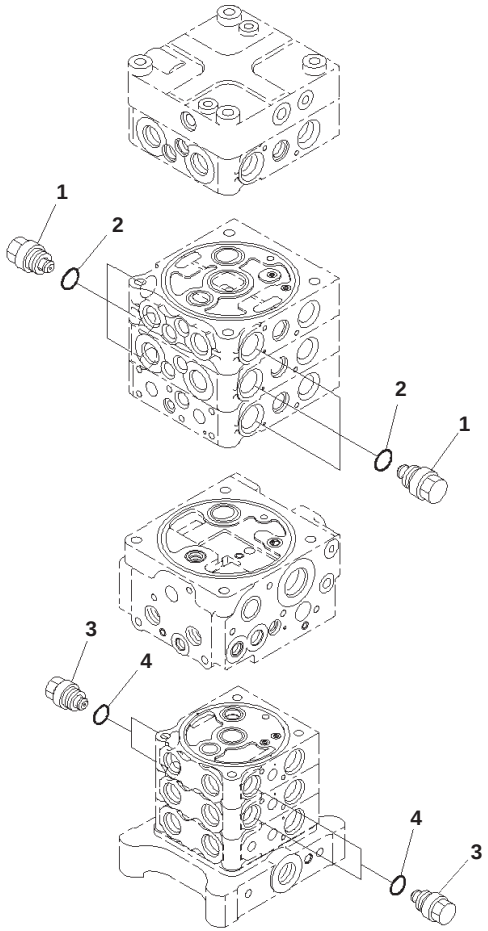

00059741

Main Control Valve, With Service Valve, 1-actuator, Inner Parts (16/27)

Index	Part Number	Description	Qty	Serial No.
	723-57-12703	Valve, Control	1	B10001-
1	723-40-85100	・ Valve Assembly, Suction	6	B10001-
2	709-25-11390	・・ O-ring	1	B10001-
3	723-20-80100	・ Valve Assembly, Suction	4	B10001-
4	07002-12034	・・ O-ring	1	B10001-

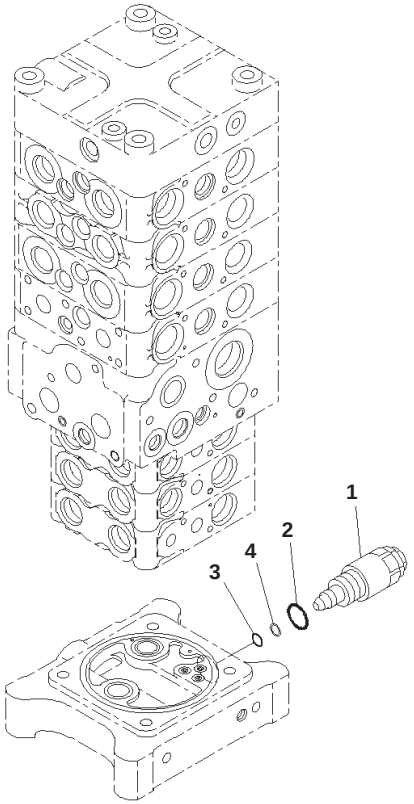

00012062

Main Control Valve, With Service Valve, 1-actuator, Inner Parts (17/27)

Index	Part Number	Description	Qty	Serial No.
	723-57-12703	Valve, Control	1	B10001-
1	723-50-60200	・ Valve Assembly	1	B10001-
2	709-25-11390	・・ O-ring	1	B10001-
3	07000-12012	・・ O-ring	1	B10001-
4	07001-02012	・・ Ring, Back-up	1	B10001-

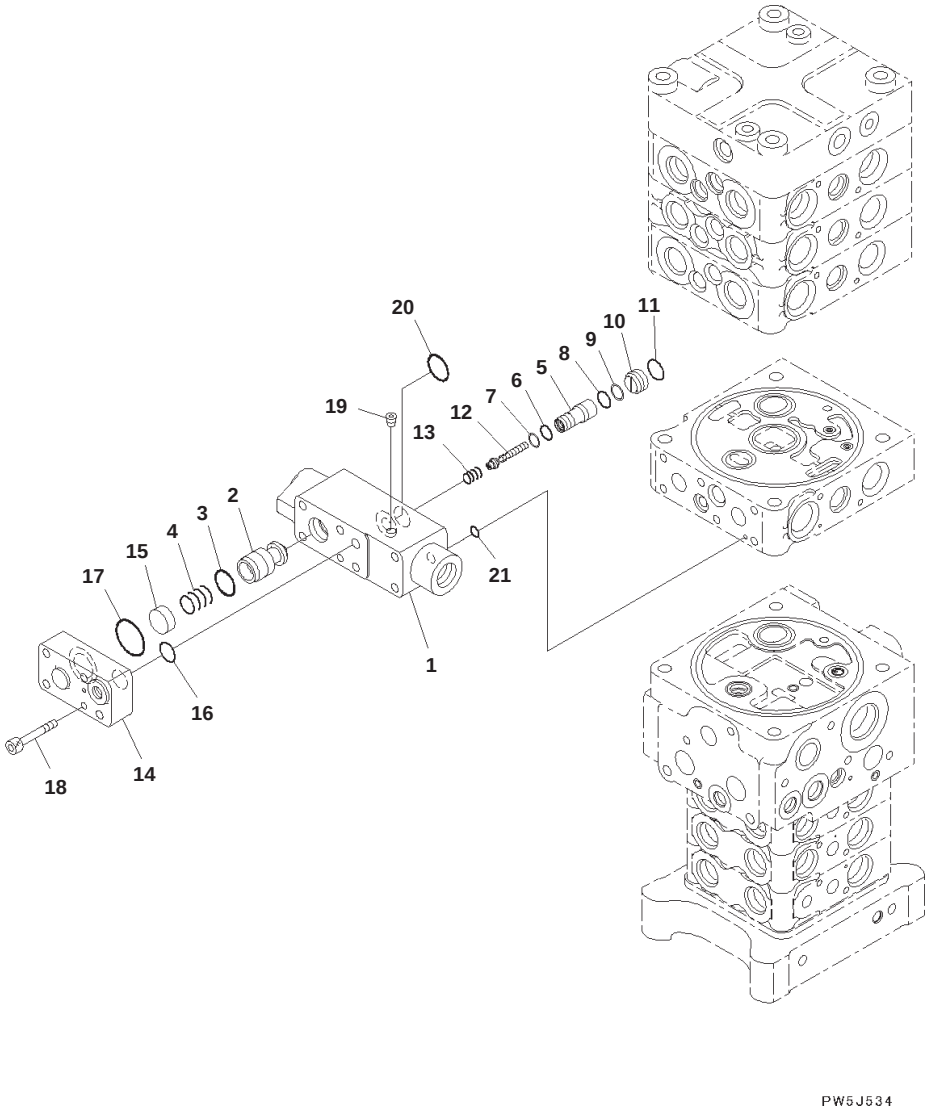

Main Control Valve, With Service Valve, 1-actuator, Inner Parts (18/27)

Index	Code	Part Number	Description	Qty	Serial No.
		723-57-12703	Valve, Control	1	B10001-
		723-50-53200	・ Valve Assembly	1	B10001-
1	C1		・・ Block	1	B10001-
2	C1		・・ Valve	1	B10001-
3		702-21-35130	・・ Seal	1	B10001-
4		723-50-53330	・・ Spring	1	B10001-
5	C1		・・ Sleeve	1	B10001-
6		07000-12010	・・ O-ring	1	B10001-
7		07001-02010	・・ Ring	1	B10001-
8		07000-12012	・・ O-ring	1	B10001-
9		07001-02012	・・ Ring, Back-up	1	B10001-
10	C1		・・ Seat	1	B10001-
11		07000-12016	・・ O-ring	1	B10001-
12	C1		・・ Piston	1	B10001-
13		723-50-53350	・・ Spring	1	B10001-
14		723-50-53270	・・ Plate	1	B10001-
15		723-50-53260	・・ Retainer	1	B10001-
16		07000-12015	・・ O-ring	1	B10001-
17		07000-13030	・・ O-ring	1	B10001-
18		01252-60630	・・ Bolt, Hexagon Socket Head	1	B10001-
19	C1		・・ Plug	1	B10001-
20		700-13-31161	・・ O-ring	3	B10001-
21		07000-11007	・・ O-ring	1	B10001-

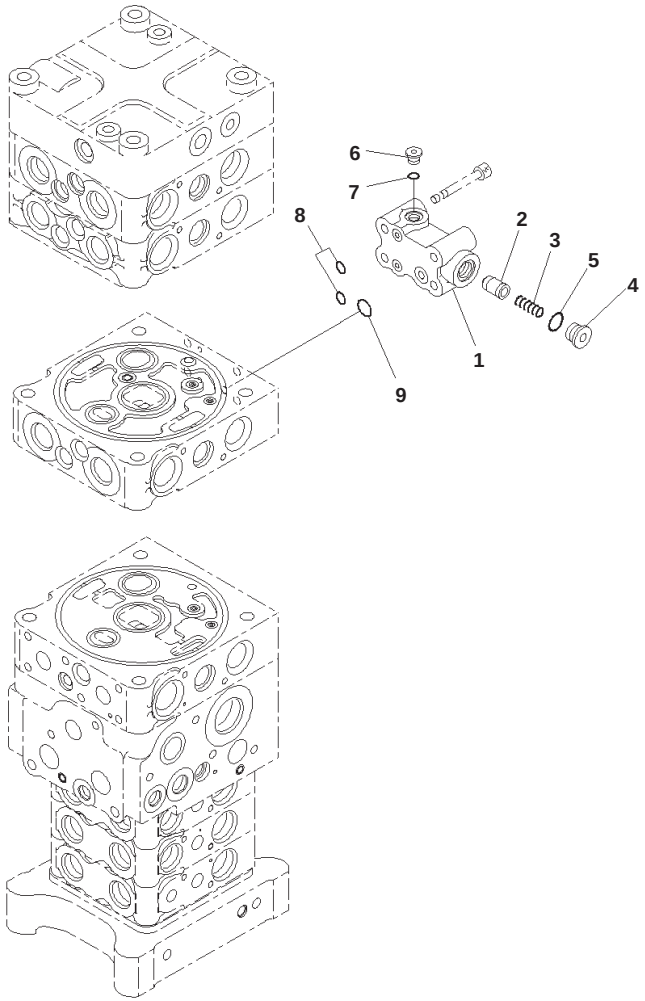

PW5J535

Main Control Valve, With Service Valve, 1-actuator, Inner Parts (19/27)

Index	Code	Part Number	Description	Qty	Serial No.
		723-57-12703	Valve, Control	1	B10001-
		723-50-54200	・ Valve Assembly	1	B10001-
1	C1		・・ Block	1	B10001-
2	C1		・・ Valve	1	B10001-
3		723-56-31620	・・ Spring	1	B10001-
4		723-56-31630	・・ Plug	1	B10001-
5		07002-11623	・・ O-ring	1	B10001-
6		723-11-18190	・・ Plug	1	B10001-
7		07002-11023	・・ O-ring	1	B10001-
8		07000-11009	・・ O-ring	2	B10001-
9		708-2L-25490	・・ O-ring	1	B10001-

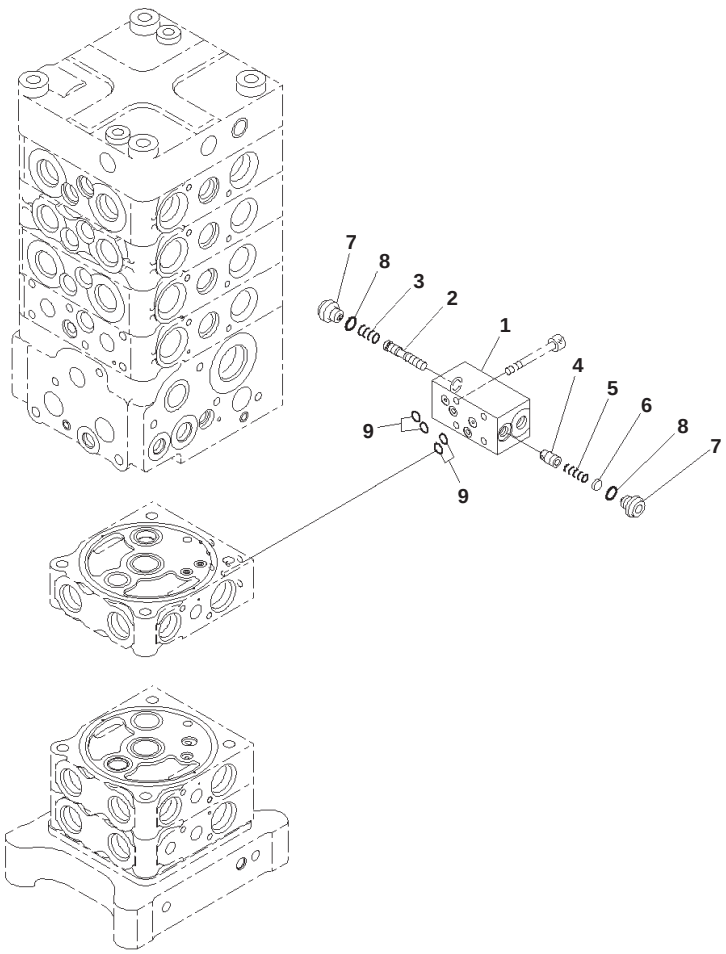

Main Control Valve, With Service Valve, 1-actuator, Inner Parts (20/27)

Index	Code	Part Number	Description	Qty	Serial No.
		723-57-12703	Valve, Control	1	B10001-
		723-20-95300	・ Valve Assembly	1	B10001-
1	C1		・・ Block	1	B10001-
2	C1		・・ Spool	1	B10001-
3		723-11-27830	・・ Spring	1	B10001-
4	C1		・・ Valve	1	B10001-
5		723-11-18180	・・ Spring	1	B10001-
6		723-20-95140	・・ Spacer	1	B10001-
7		723-11-27850	・・ Plug	2	B10001-
8		07002-11023	・・ O-ring	2	B10001-
9		07000-11007	・・ O-ring	4	B10001-

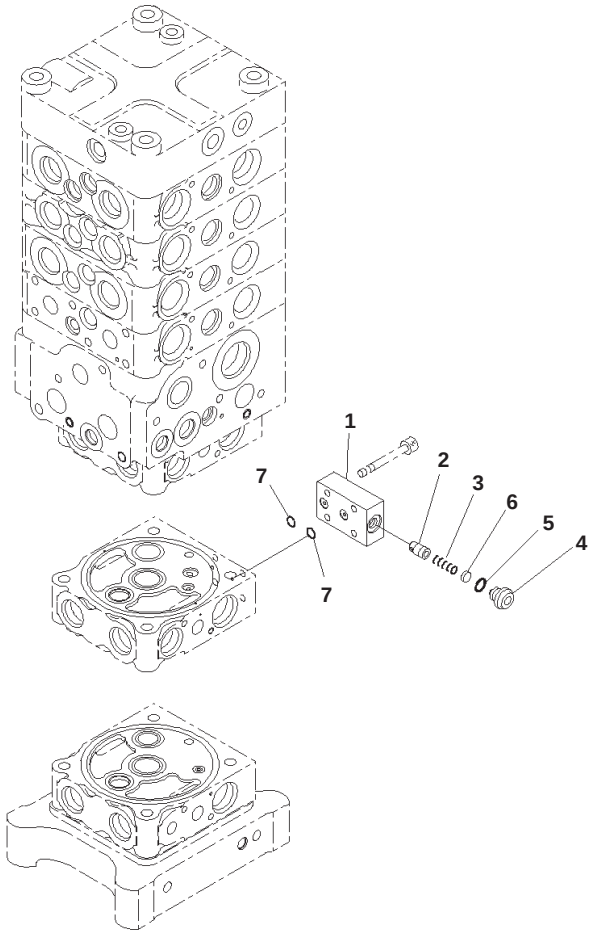

PW5J537

Main Control Valve, With Service Valve, 1-actuator, Inner Parts (21/27)

Index	Code	Part Number	Description	Qty	Serial No.
		723-57-12703	Valve, Control	1	B10001-
		723-20-95100	・ Valve Assembly	1	B10001-
1	C1		・・ Block	1	B10001-
2	C1		・・ Valve	1	B10001-
3		723-11-18180	・・ Spring	1	B10001-
4		723-11-27850	・・ Plug	1	B10001-
5		07002-11023	・・ O-ring	1	B10001-
6		723-20-95140	・・ Spacer	1	B10001-
7		07000-11007	・・ O-ring	2	B10001-

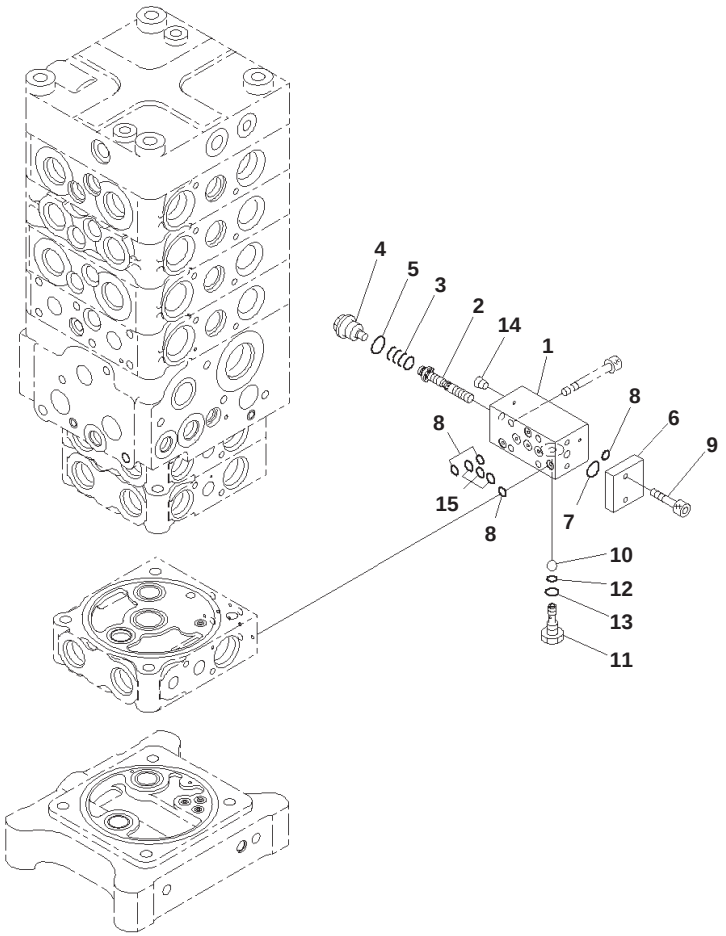

Main Control Valve, With Service Valve, 1-actuator, Inner Parts (22/27)

Index	Code	Part Number	Description	Qty	Serial No.
		723-57-12703	Valve, Control	1	B10001-
		723-20-94200	・ Valve Assembly	1	B10001-
1	C1		・・ Block	1	B10001-
2	C1		・・ Spool	1	B10001-
3		723-20-94150	・・ Spring	1	B10001-
4		723-20-94130	・・ Plug	1	B10001-
5		07002-11623	・・ O-ring	1	B10001-
6		723-20-94140	・・ Flange	1	B10001-
7		07000-12011	・・ O-ring	1	B10001-
8		07000-11006	・・ O-ring	4	B10001-
9		01252-60616	・・ Bolt, Hexagon Socket Head	2	B10001-
10	C1		・・ Ball	1	B10001-
11	C1		・・ Plug	1	B10001-
12		07000-11003	・・ O-ring	1	B10001-
13		07002-10823	・・ O-ring	1	B10001-
14	C1		・・ Plug	1	B10001-
15		07000-11007	・・ O-ring	3	B10001-

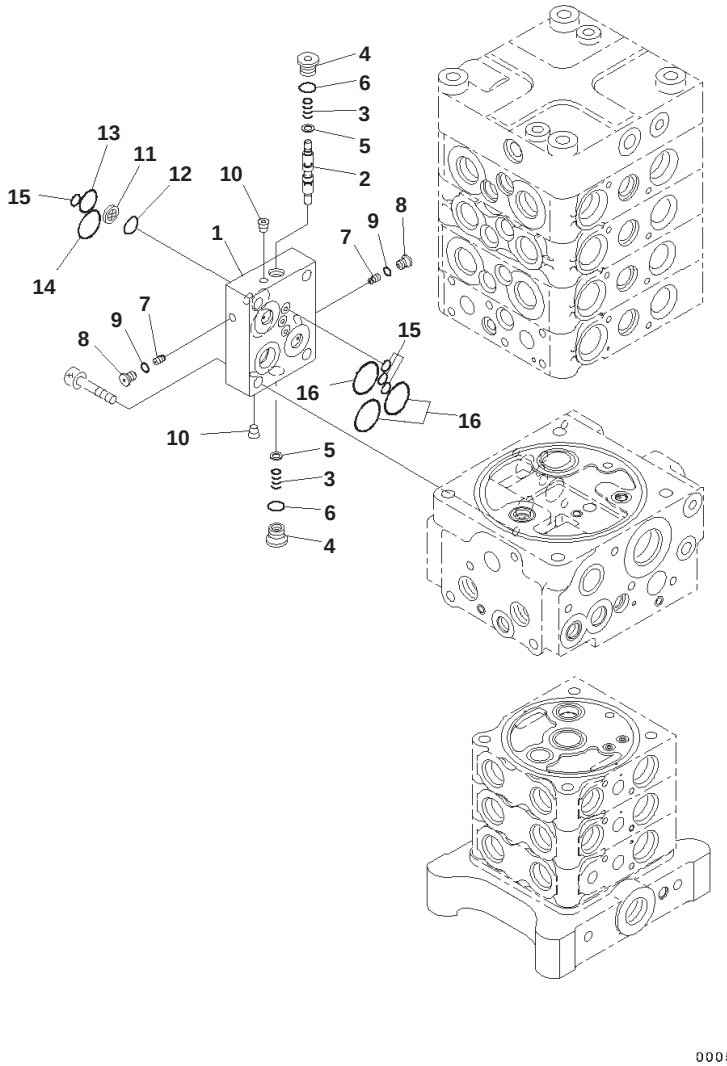

Main Control Valve, With Service Valve, 1-actuator, Inner Parts (23/27)

Index	Code	Part Number	Description	Qty	Serial No.
		723-57-12703	Valve, Control	1	B10001-
		723-50-61200	・ Valve Assembly	1	B10001-
1	C1		・・ Block	1	B10001-
2	C1		・・ Spool	1	B10001-
3		723-50-61390	・・ Spring	2	B10001-
4		723-50-61330	・・ Plug	2	B10001-
5		723-50-61350	・・ Spacer	2	B10001-
6		07002-11423	・・ O-ring	2	B10001-
7		723-50-61360	・・ Valve	2	B10001-
8		723-11-27280	・・ Plug	2	B10001-
9		07002-10823	・・ O-ring	2	B10001-
10	C1		・・ Plug	2	B10001-
11		702-21-53120	・・ Filter	1	B10001-
12		702-21-55420	・・ O-ring	1	B10001-
13		702-21-55520	・・ O-ring	1	B10001-
14		702-21-55440	・・ O-ring	1	B10001-
15		07000-11008	・・ O-ring	4	B10001-
16		700-93-11320	・・ O-ring	3	B10001-

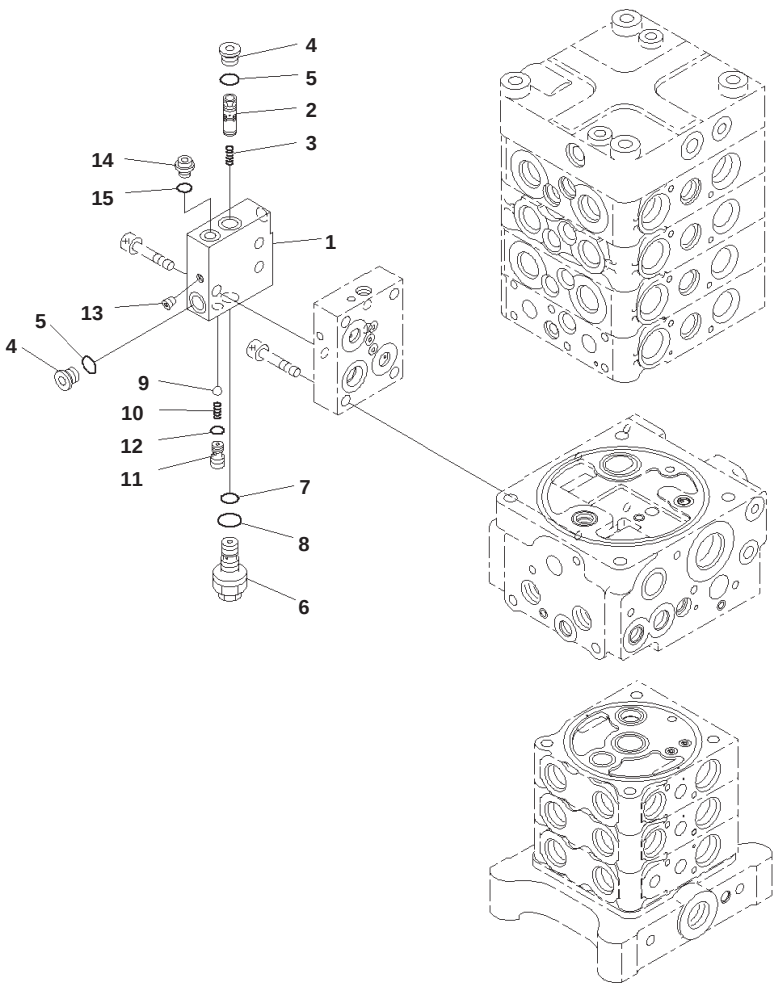

Main Control Valve, With Service Valve, 1-actuator, Inner Parts (24/27)

Index	Code	Part Number	Description	Qty	Serial No.
		723-57-12703	Valve, Control	1	B10001-
		723-50-62300	・ Valve Assembly	1	B10001-
1	C1		・・ Block	1	B10001-
2	C1		・・ Spool	1	B10001-
3		702-21-55640	・・ Spring	1	B10001-
4		702-21-55620	・・ Plug	2	B10001-
5		07002-11423	・・ O-ring	2	B10001-
6		723-40-91600	・・ Valve Assembly, Relief	1	B10001-
7		702-16-53920	・・・ O-ring	1	B10001-
8		07002-11623	・・・ O-ring	1	B10001-
9	C1		・・ Ball	1	B10001-
10		702-21-55720	・・ Spring	1	B10001-
11	C1		・・ Seat	1	B10001-
12		07000-11009	・・ O-ring	1	B10001-
13	C1		・・ Plug	1	B10001-
14		708-8E-16160	・・ Plug	1	B10001-
15		07002-11023	・・ O-ring	1	B10001-

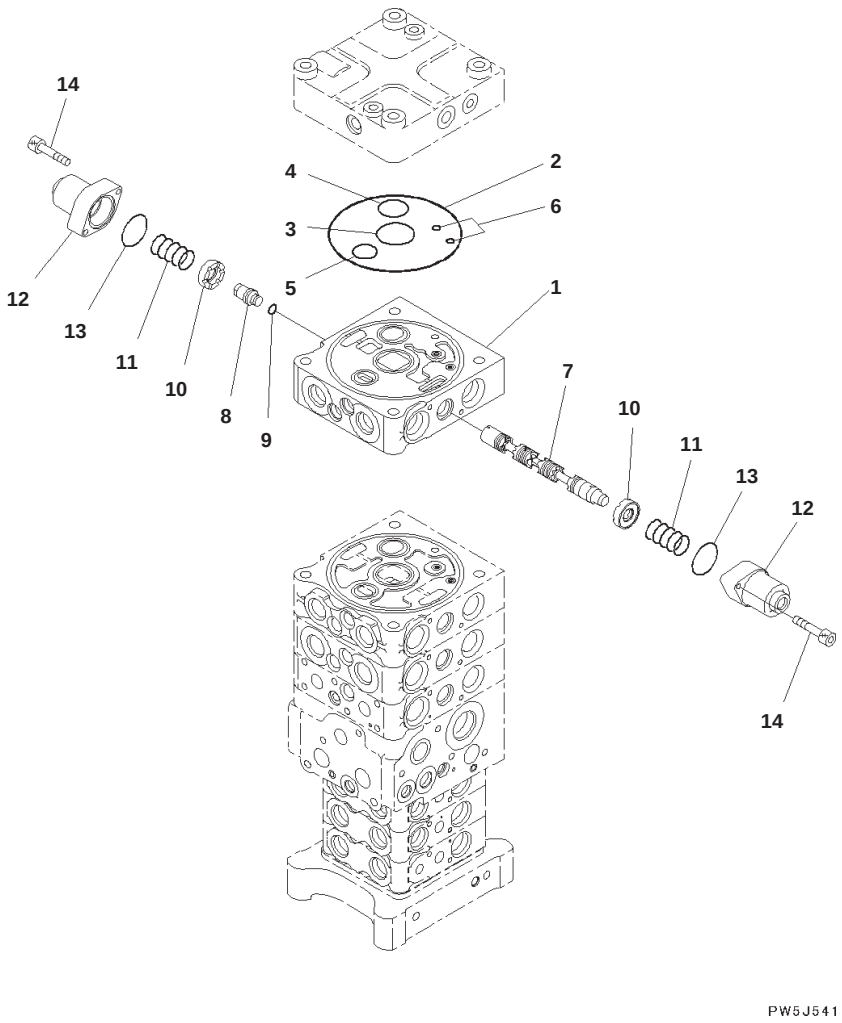

Main Control Valve, With Service Valve, 1-actuator, Inner Parts (25/27)

Index	Code	Part Number	Description	Qty	Serial No.
		723-57-12703	Valve, Control	1	B10001-
		723-51-06101	・ Valve Assembly	1	B10001-
1	C1		・・ Block	1	B10001-
2		144-14-54610	・・ O-ring	1	B10001-
3		723-56-31720	・・ O-ring	1	B10001-
4		723-56-31730	・・ O-ring	1	B10001-
5		702-75-11520	・・ O-ring	1	B10001-
6		07000-11008	・・ O-ring	2	B10001-
7	C1		・・ Spool	1	B10001-
8	C1		・・ Plug	1	B10001-
9	C1		・・ O-ring	1	B10001-
10		723-56-31211	・・ Retainer	2	B10001-
11		723-36-14110	・・ Spring	2	B10001-
12		723-56-31510	・・ Case	2	B10001-
13		702-21-55450	・・ O-ring	2	B10001-
14		01252-60630	・・ Bolt, Hexagon Socket Head	4	B10001-

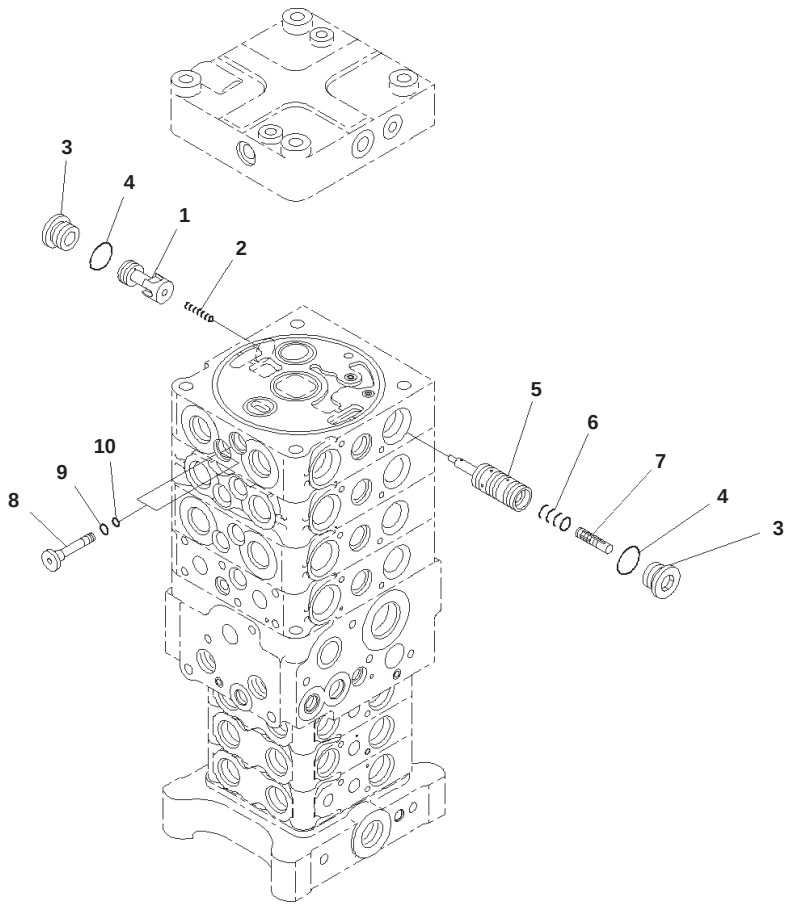

Main Control Valve, With Service Valve, 1-actuator, Inner Parts (26/27)

Index	Code	Part Number	Description	Qty	Serial No.
		723-57-12703	Valve, Control	1	B10001-
		723-51-06101	・ Valve Assembly	1	B10001-
1	C1		・・ Valve	1	B10001-
2		723-56-41710	・・ Spring	1	B10001-
3		723-26-15230	・・ Plug	2	B10001-
4		07002-12434	・・ O-ring	2	B10001-
5	C1		・・ Valve	1	B10001-
6		723-56-41730	・・ Spring	1	B10001-
7	C1		・・ Piston	1	B10001-
8		723-56-31640	・・ Plug	2	B10001-
9		07002-11623	・・ O-ring	2	B10001-
10		07000-11008	・・ O-ring	2	B10001-

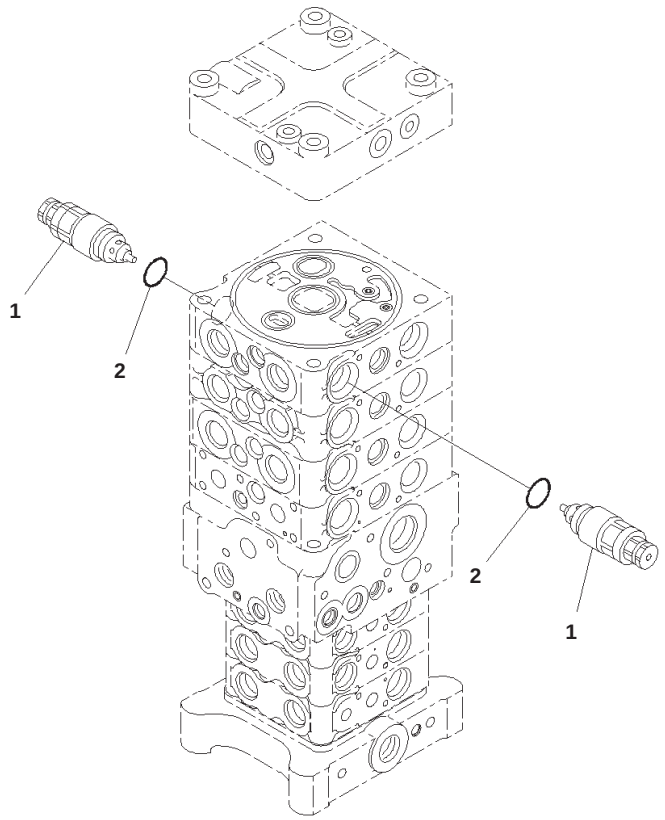

Main Control Valve, With Service Valve, 1-actuator, Inner Parts (27/27)

Index	Part Number	Description	Qty	Serial No.
	723-57-12703	Valve, Control	1	B10001-
	723-51-06101	・ Valve Assembly	1	B10001-
1	723-90-61400	・・ Valve Assembly	2	B10001-
2	07000-13024	・・・ O-ring	1	B10001-

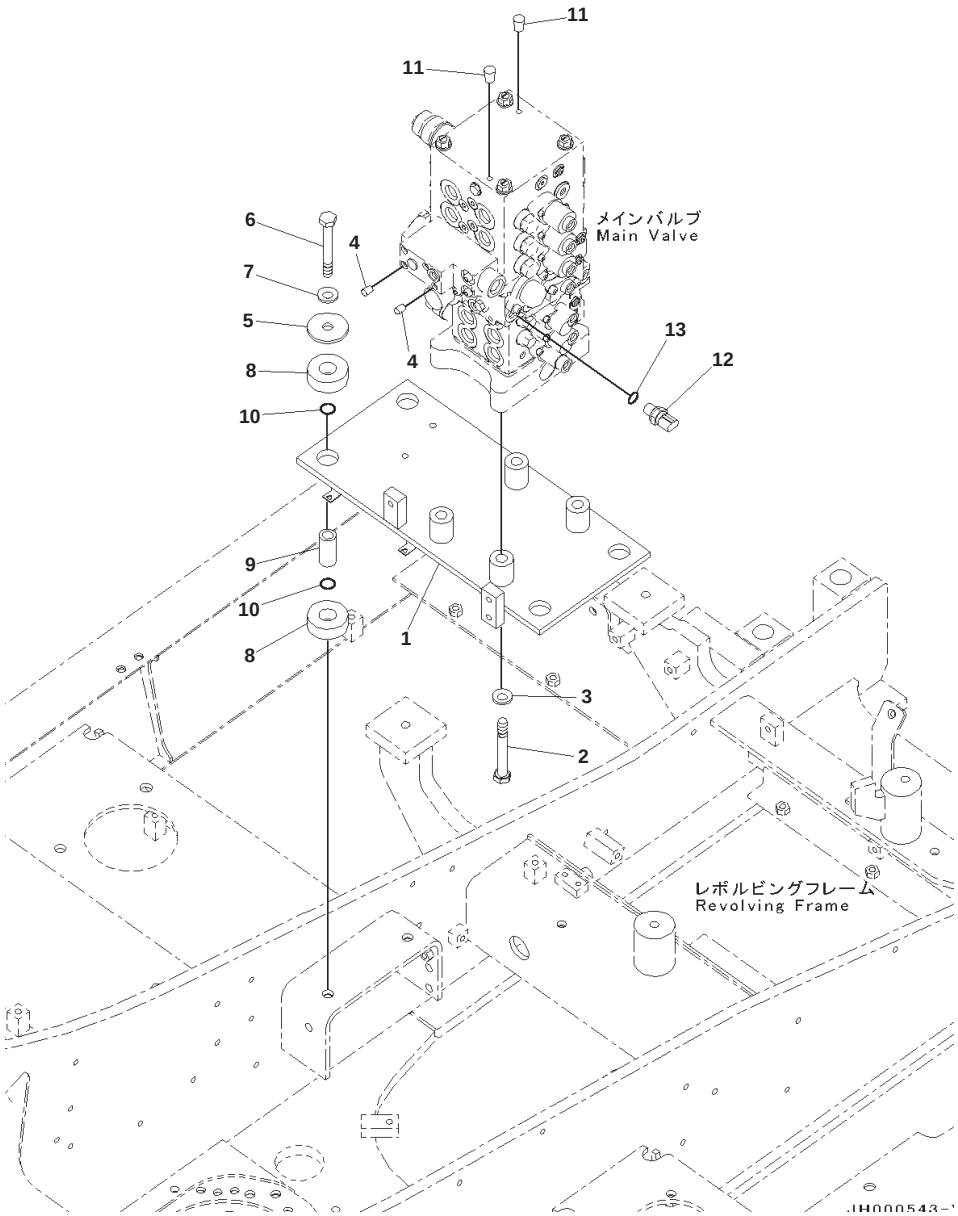

Main Control Valve, With Service Valve, 1-actuator, Valve Bracket and Sensor

Index	Part Number	Description	Qty	Serial No.
1	203-62-12831	Bracket	1	B10001-
2	01010-81685	Bolt	4	B10001-
3	01643-31645	Washer	4	B10001-
4	07049-01012	Plug	2	B10001-
5	203-62-61572	Plate	4	B10001-
6	01011-81600	Bolt	4	B10001-
7	01643-31645	Washer	4	B10001-
8	203-54-21110	Cushion	8	B10001-
9	203-62-61581	Spacer	4	B10001-
10	07000-13025	O-ring	8	B10001-
11	07049-01012	Plug	2	B10001-
12	7861-93-1812	Sensor, Pressure	1	B10001-
13	07002-61823	・ O-ring	1	B10001-

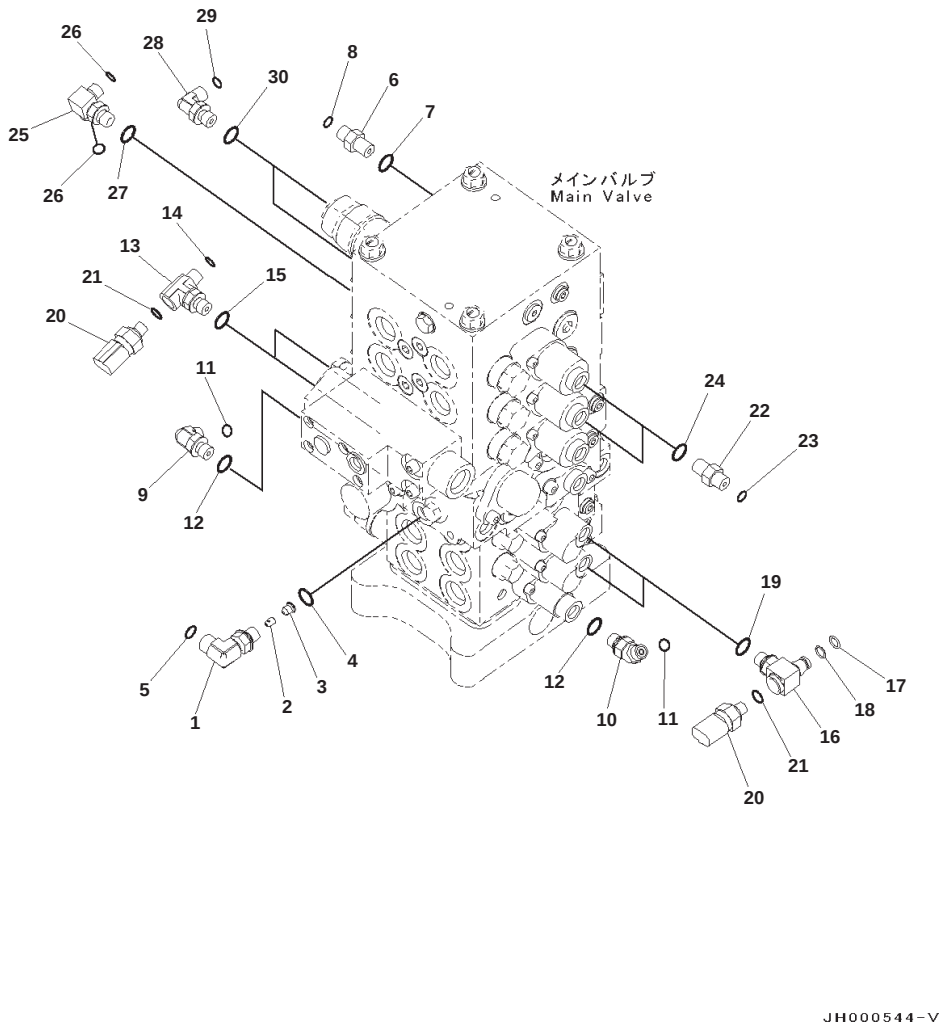

Main Control Valve, With Service Valve, 1-actuator, Connecting Parts, Ls. Pilot Piping, (1/2)

Index	Part Number	Description	Qty	Serial No.
	22B-62-22390	Elbow Assembly	1	B10001-
1	21K-62-72730	・ Elbow	1	B10001-
2	21Y-60-11250	・ Poppet	1	B10001-
3	21Y-62-11591	・ Plug	1	B10001-
4	07002-11423	O-ring	1	B10001-
5	02896-11009	O-ring	1	B10001-
6	02781-0021D	Union	1	B10001-
7	07002-11423	O-ring	1	B10001-
8	02896-11008	O-ring	1	B10001-
9	22B-62-21381	Elbow	1	B10001-
10	203-62-13520	Elbow	1	B10001-
11	02896-11008	O-ring	2	B10001-
12	07002-11423	O-ring	2	B10001-
13	22B-62-22690	Tee	2	B10001-
14	02896-11008	O-ring	2	B10001-
15	07002-11423	O-ring	2	B10001-
16	203-62-12811	Tee	2	B10001-
17	201-60-11390	・ O-ring	1	B10001-
18	20Y-62-19560	・ O-ring	1	B10001-
19	07002-11423	O-ring	2	B10001-
20	7861-93-1840	Sensor	4	B10001-
21	07000-12011	・ O-ring	1	B10001-
22	02781-0021D	Union	2	B10001-
23	02896-11008	O-ring	2	B10001-
24	07002-11423	O-ring	2	B10001-
25	207-62-72141	Elbow	1	B10001-
26	02896-11008	O-ring	2	B10001-
27	07002-11423	O-ring	1	B10001-
28	02782-10210	Elbow	2	B10001-
29	02896-11008	O-ring	2	B10001-
30	07002-11423	O-ring	2	B10001-

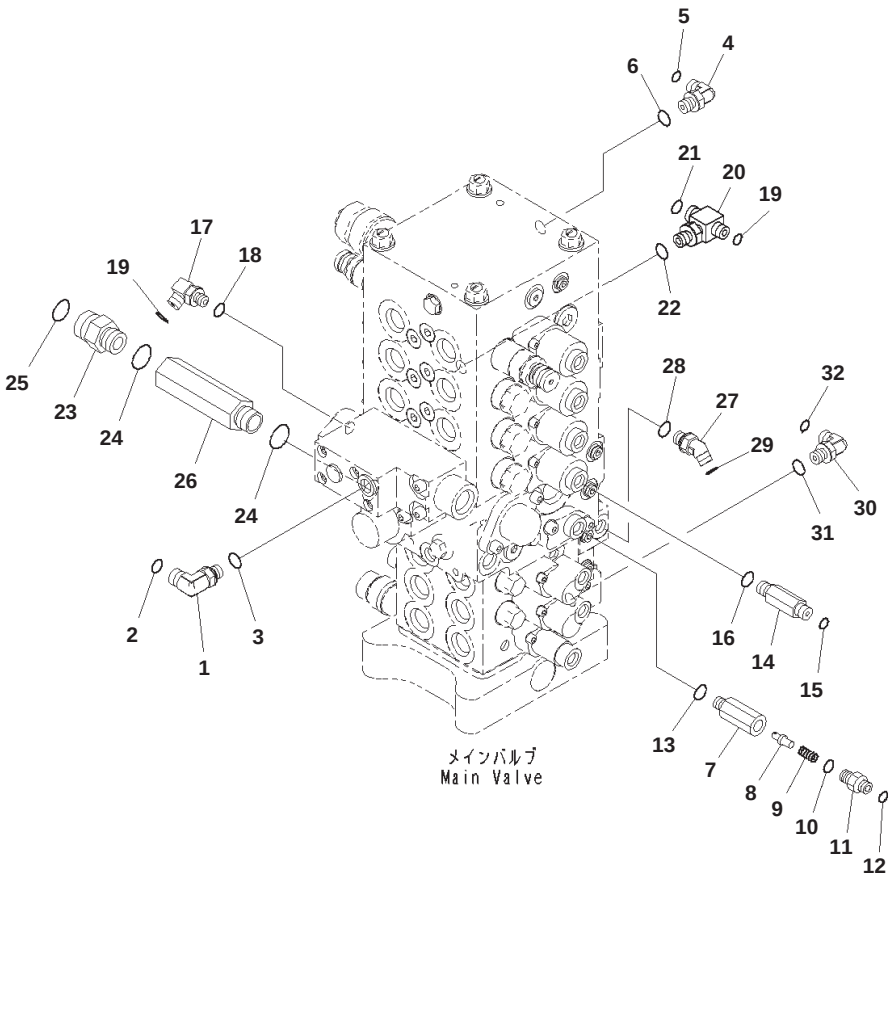

Main Control Valve, With Service Valve, 1-actuator, Connecting Parts, Ls, Pilot Piping, (2/2)

Index	Code	Part Number	Description	Qty	Serial No.
1		02782-10311	Elbow	1	B10001-
2		02896-11009	O-ring	1	B10001-
3		07002-11423	O-ring	1	B10001-
4		02782-10210	Elbow	1	B10001-
5		02896-11008	O-ring	1	B10001-
6		07002-11423	O-ring	1	B10001-
		20Y-62-41701	Valve Assembly	1	B10001-
7	C1		・ Body	1	B10001-
8		20Y-60-22270	・ Poppet	1	B10001-
9		701-20-61230	・ Spring	1	B10001-
10		07002-11423	・ O-ring	1	B10001-
11		20Y-62-47630	・ Nipple	1	B10001-
12		02896-11008	O-ring	1	B10001-
13		07002-11423	O-ring	1	B10001-
14		11Y-62-12230	Union	1	B10001-
15		02896-11008	O-ring	1	B10001-
16		07002-11423	O-ring	1	B10001-
17		20Y-62-41920	Elbow	1	B10001-
18		07002-11223	O-ring	1	B10001-
19		02896-11008	O-ring	2	B10001-
20		11Y-62-12820	Tee	1	B10001-
21		02896-11009	O-ring	1	B10001-
22		07002-11423	O-ring	1	B10001-
23		02781-00628	Union	1	B10001-
24		07002-12434	O-ring	2	B10001-
25		02896-11018	O-ring	1	B10001-
26		203-62-63770	Joint	1	B10001-
27		02783-10210	Elbow	1	B10001-
28		07002-11423	O-ring	1	B10001-
29		02896-11008	O-ring	1	B10001-
30		02782-10210	Elbow	1	B10001-
31		07002-11423	O-ring	1	B10001-
32		02896-11008	O-ring	1	B10001-

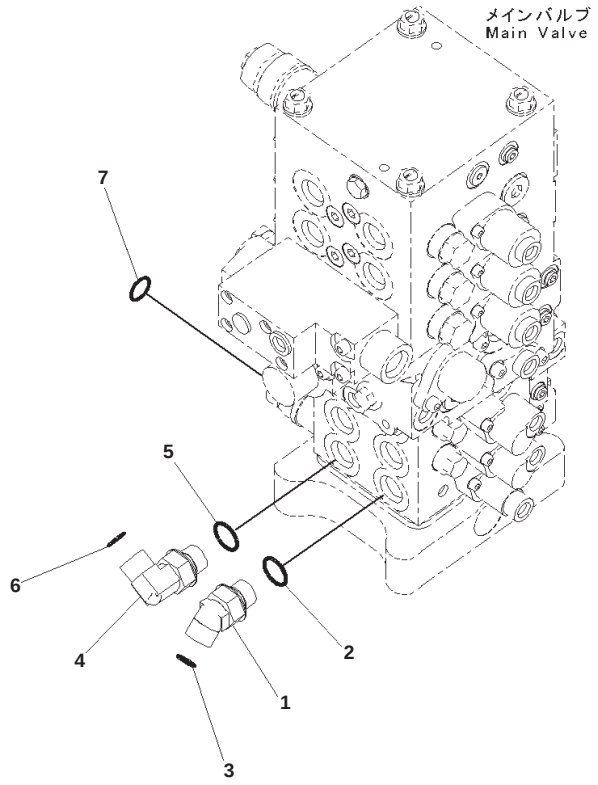

JH000546-V

Main Control Valve, With Service Valve, 1-actuator, Connecting Parts, Swing Piping

Index	Part Number	Description	Qty	Serial No.
1	02783-10522	Elbow	1	B10001-
2	07002-12434	O-ring	1	B10001-
3	02896-11015	O-ring	1	B10001-
4	02782-10522	Elbow	1	B10001-
5	07002-12434	O-ring	1	B10001-
6	02896-11015	O-ring	1	B10001-
7	02896-11018	O-ring	1	B10001-

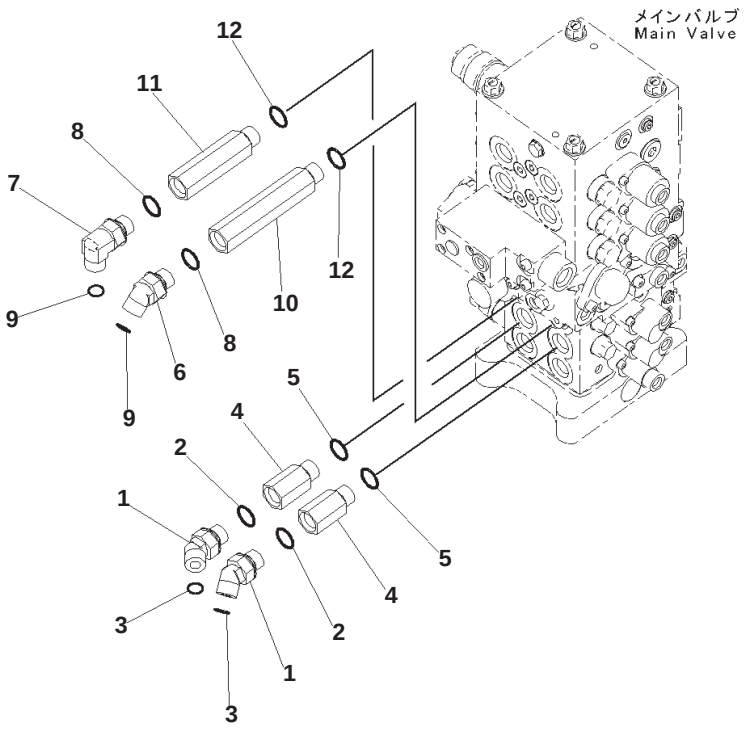

Main Control Valve, With Service Valve, 1-actuator, Connecting Parts, Travel Piping

Index	Part Number	Description	Qty	Serial No.
1	02783-10522	Elbow	2	B10001-
2	07002-12434	O-ring	2	B10001-
3	02896-11015	O-ring	2	B10001-
4	201-62-71820	Joint	2	B10001-
5	07002-12434	O-ring	2	B10001-
6	02783-10522	Elbow	1	B10001-
7	02782-10522	Elbow	1	B10001-
8	07002-12434	O-ring	2	B10001-
9	02896-11015	O-ring	2	B10001-
10	203-62-63760	Joint	1	B10001-
11	203-62-63770	Joint	1	B10001-
12	07002-12434	O-ring	2	B10001-

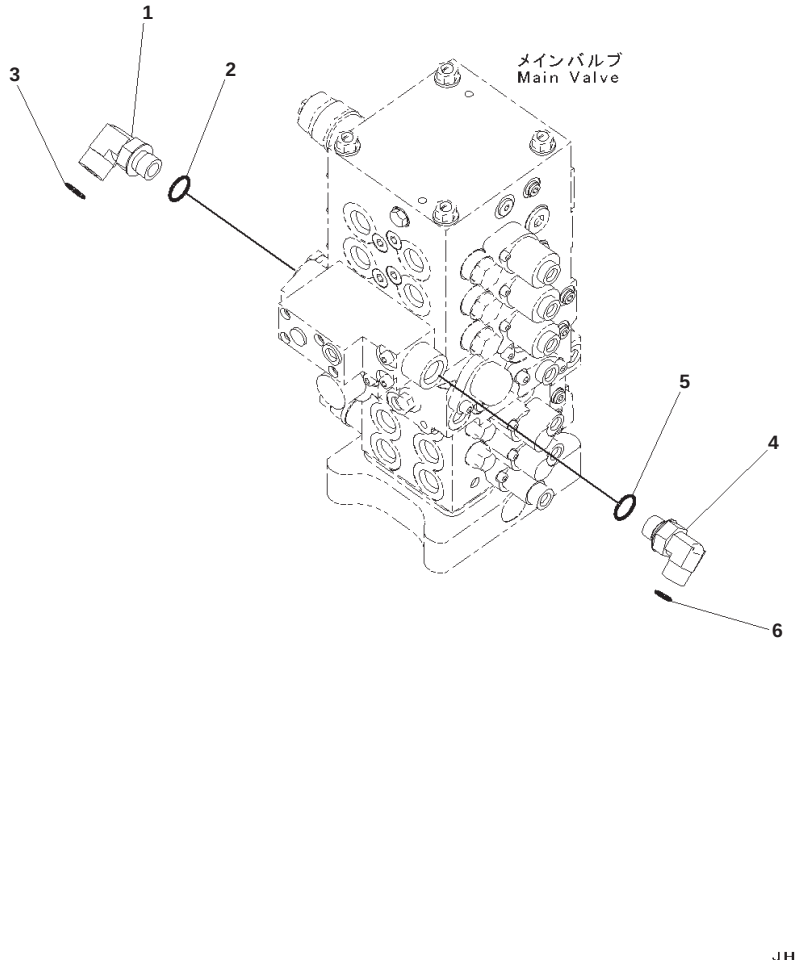

Main Control Valve, With Service Valve, 1-actuator, Connecting Parts, Boom Piping

Index	Part Number	Description	Qty	Serial No.
1	02782-10628	Elbow	1	B10001-
2	07002-12434	O-ring	1	B10001-
3	02896-11018	O-ring	1	B10001-
4	02782-10522	Elbow	1	B10001-
5	07002-12434	O-ring	1	B10001-
6	02896-11015	O-ring	1	B10001-

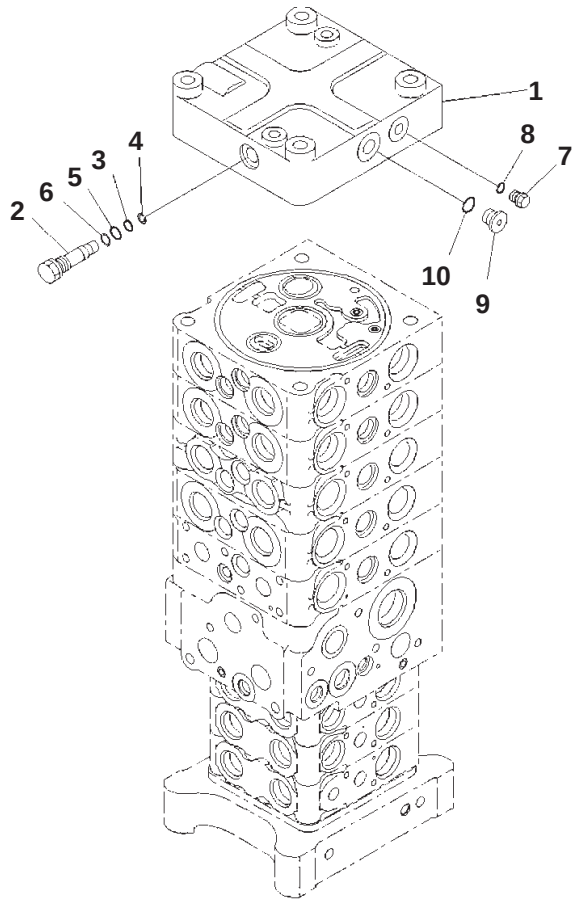

JY009115

Main Control Valve, 2-actuator, Inner Parts (1/27)

Index	Code	Part Number	Description	Qty	Serial No.
		723-58-12703	Valve, Control	1	B10001-
	C1		・ Cover Group	1	B10001-
1		723-56-11240	・・ Cover	1	B10001-
2		723-26-15190	・・ Plug	1	B10001-
3		07000-11007	・・ O-ring	1	B10001-
4		07001-01007	・・ Ring, Back-up	1	B10001-
5		07000-11009	・・ O-ring	1	B10001-
6		07001-01009	・・ Ring, Back-up	1	B10001-
7		708-8E-16160	・・ Plug	1	B10001-
8		07002-11023	・・ O-ring	1	B10001-
9		702-21-55620	・・ Plug	1	B10001-
10		07002-11423	・・ O-ring	1	B10001-

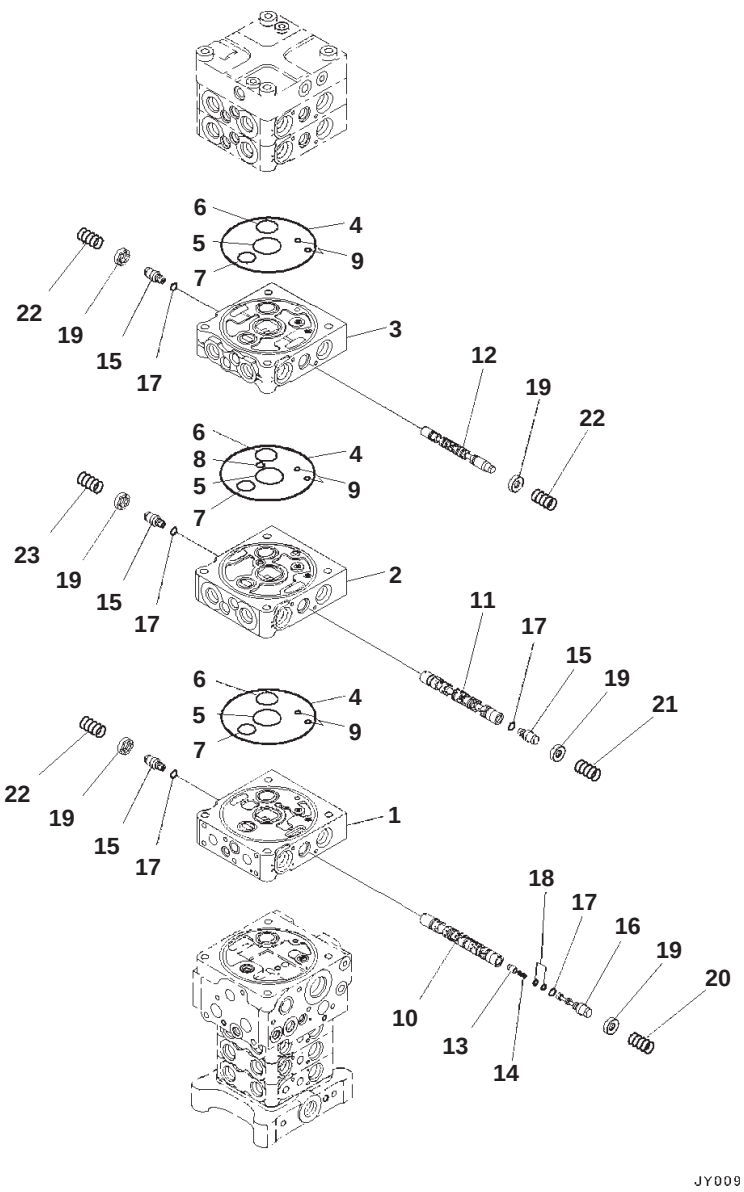

Main Control Valve, 2-actuator, Inner Parts (2/27)

Index	Code	Part Number	Description	Qty	Serial No.
		723-58-12703	Valve, Control	1	B10001-
	C1		・ Body Group	1	B10001-
1	C1		・・ Block	1	B10001-
2	C1		・・ Block	1	B10001-
3	C1		・・ Block	1	B10001-
4		144-14-54610	・・ O-ring	3	B10001-
5		723-56-31720	・・ O-ring	3	B10001-
6		723-56-31730	・・ O-ring	3	B10001-
7		702-75-11520	・・ O-ring	3	B10001-
8		07000-12012	・・ O-ring	1	B10001-
9		07000-11008	・・ O-ring	6	B10001-
10	C1		・・ Spool	1	B10001-
11	C1		・・ Spool	1	B10001-
12	C1		・・ Spool	1	B10001-
13	C1		・・ Valve	1	B10001-
14	C1		・・ Spring	1	B10001-
15	C1		・・ Plug	4	B10001-
16	C1		・・ Plug	1	B10001-
17	C1		・・ O-ring	5	B10001-
18	C1		・・ Seal	2	B10001-
19		723-56-31211	・・ Retainer	6	B10001-
20		723-56-32460	・・ Spring	1	B10001-
21		723-36-14110	・・ Spring	1	B10001-
22		723-36-14120	・・ Spring	3	B10001-
23		723-36-14130	・・ Spring	1	B10001-

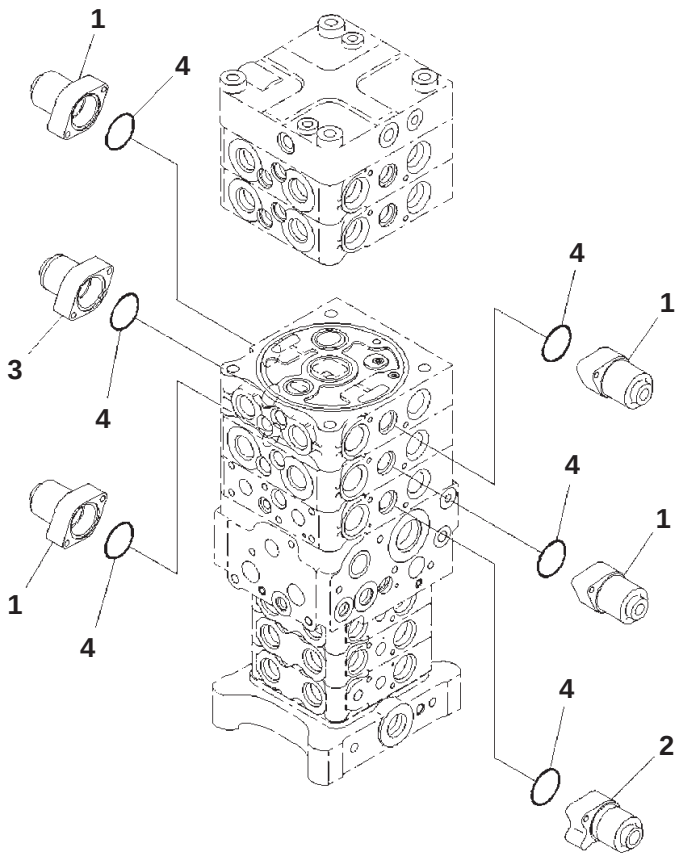

Main Control Valve, 2-actuator, Inner Parts (3/27)

Index	Code	Part Number	Description	Qty	Serial No.
		723-58-12703	Valve, Control	1	B10001-
	C1		・ Body Group	1	B10001-
1		723-56-31510	・・ Case	4	B10001-
2		723-56-32560	・・ Case	1	B10001-
3		723-56-31580	・・ Case	1	B10001-
4		702-21-55450	・・ O-ring	6	B10001-

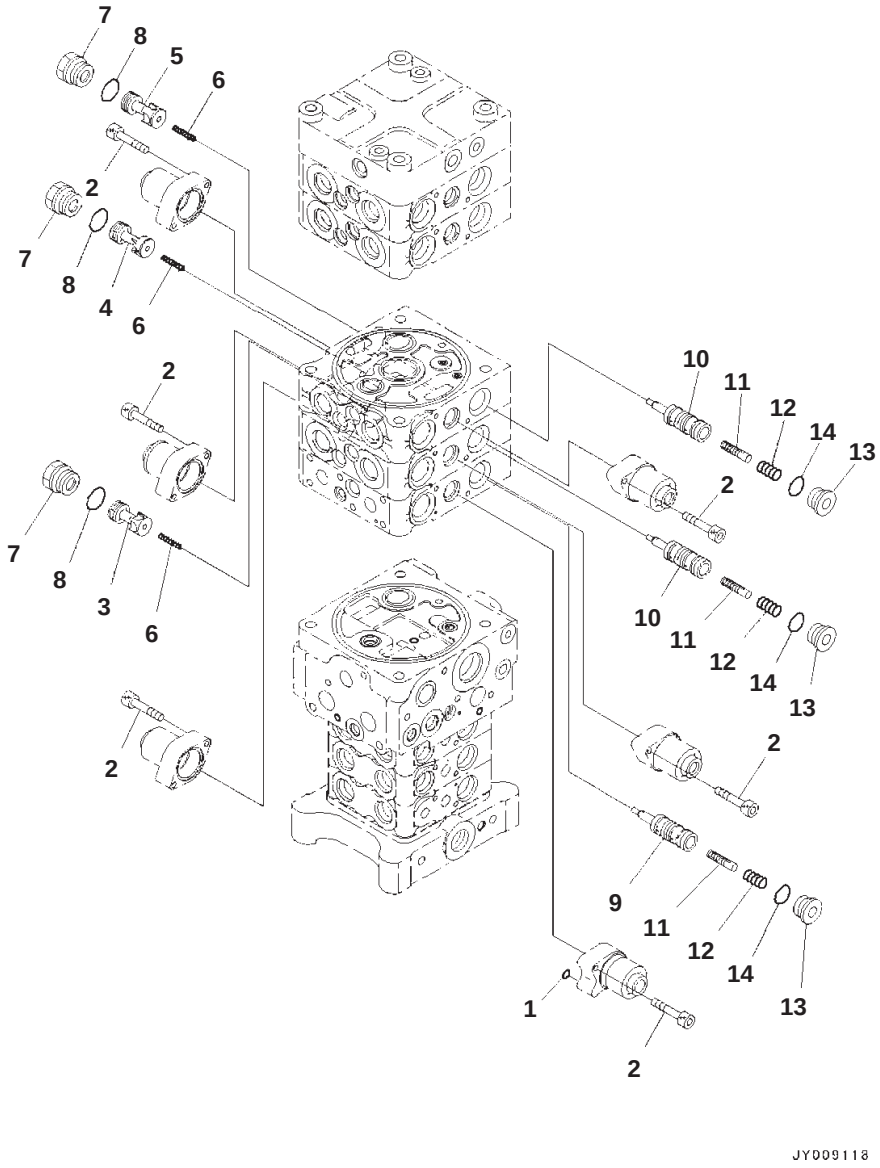

Main Control Valve, 2-actuator, Inner Parts (4/27)

Index	Code	Part Number	Description	Qty	Serial No.
		723-58-12703	Valve, Control	1	B10001-
	C1		・ Body Group	1	B10001-
1		07000-11006	・・ O-ring	1	B10001-
2		01252-60630	・・ Bolt, Hexagon Socket Head	12	B10001-
3	C1		・・ Valve	1	B10001-
4	C1		・・ Valve	1	B10001-
5	C1		・・ Valve	1	B10001-
6		723-56-41710	・・ Spring	3	B10001-
7		723-56-41840	・・ Plug	3	B10001-
8		07000-13024	・・ O-ring	3	B10001-
9	C1		・・ Valve	1	B10001-
10	C1		・・ Valve	2	B10001-
11	C1		・・ Piston	3	B10001-
12		723-56-41730	・・ Spring	3	B10001-
13		723-26-15230	・・ Plug	3	B10001-
14		07002-12434	・・ O-ring	3	B10001-

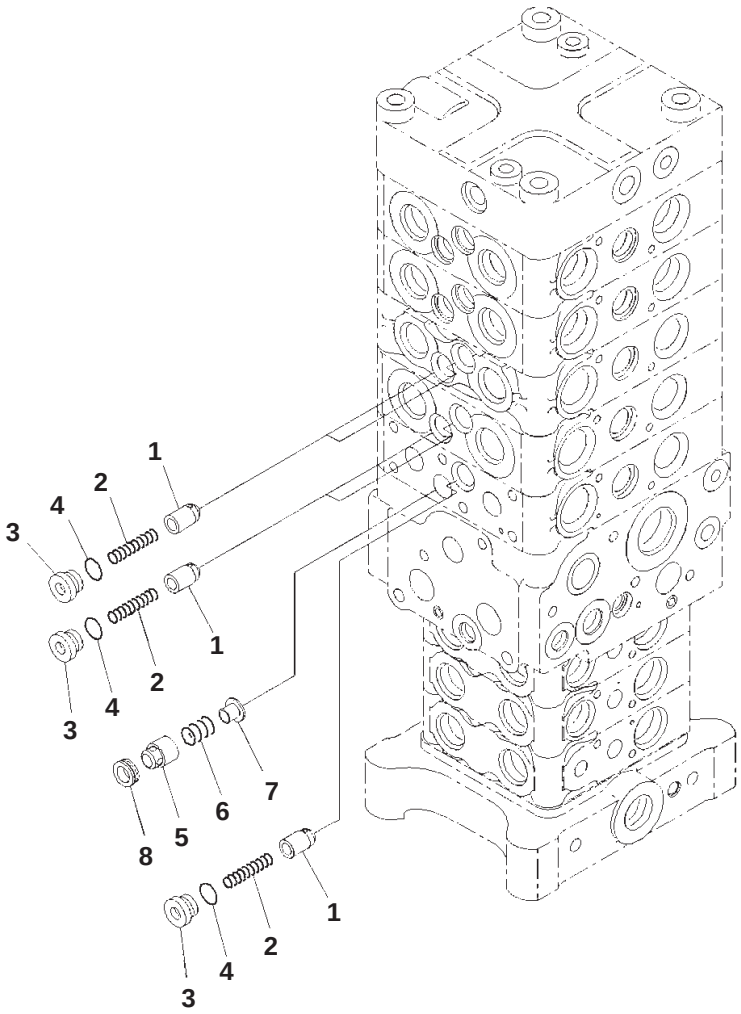

Main Control Valve, 2-actuator, Inner Parts (5/27)

Index	Code	Part Number	Description	Qty	Serial No.
		723-58-12703	Valve, Control	1	B10001-
	C1		・ Body Group	1	B10001-
1	C1		・・ Valve	5	B10001-
2		723-56-31620	・・ Spring	5	B10001-
3		723-56-31630	・・ Plug	5	B10001-
4		07002-11623	・・ O-ring	5	B10001-
5	C1		・・ Valve	1	B10001-
6		709-70-91420	・・ Spring	1	B10001-
7		723-56-31660	・・ Retainer	1	B10001-
8		723-56-31670	・・ Seat	1	B10001-

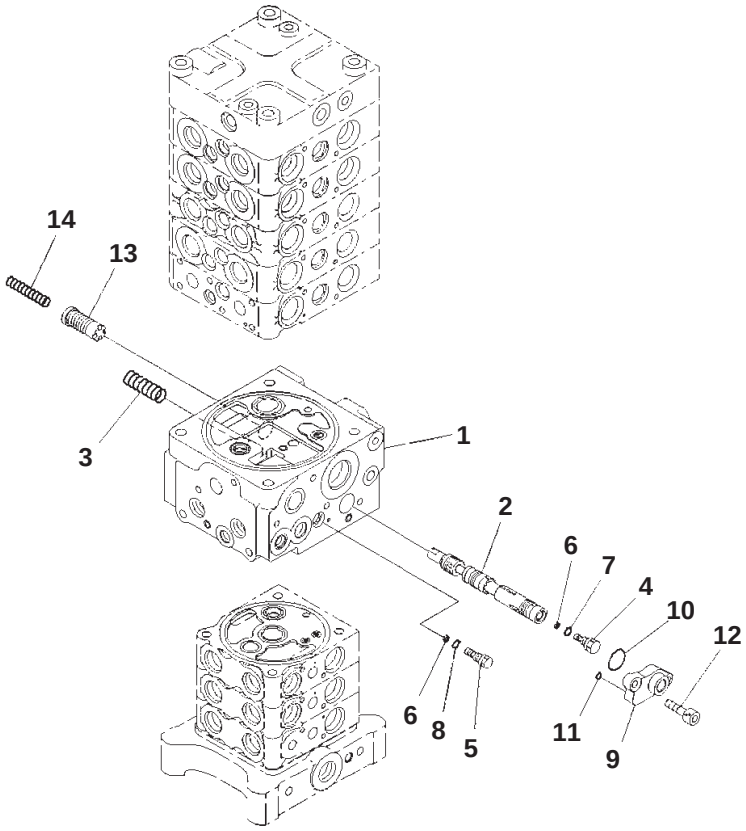

Main Control Valve, 2-actuator, Inner Parts (6/27)

Index	Code	Part Number	Description	Qty	Serial No.
		723-58-12703	Valve, Control	1	B10001-
	C1		・ Body Group	1	B10001-
1	C1		・・ Block	1	B10001-
2	C1		・・ Spool	1	B10001-
3		723-56-31970	・・ Spring	1	B10001-
4	C1		・・ Orifice	1	B10001-
5		723-56-31960	・・ Orifice	1	B10001-
6	C1		・・ Ring	2	B10001-
7	C1		・・ O-ring	1	B10001-
8		07002-11223	・・ O-ring	1	B10001-
9		723-56-31940	・・ Flange	1	B10001-
10		723-11-18430	・・ O-ring	1	B10001-
11		07000-11008	・・ O-ring	1	B10001-
12		01252-60825	・・ Bolt, Hexagon Socket Head	2	B10001-
13	C1		・・ Valve	2	B10001-
14		723-56-31990	・・ Spring	2	B10001-

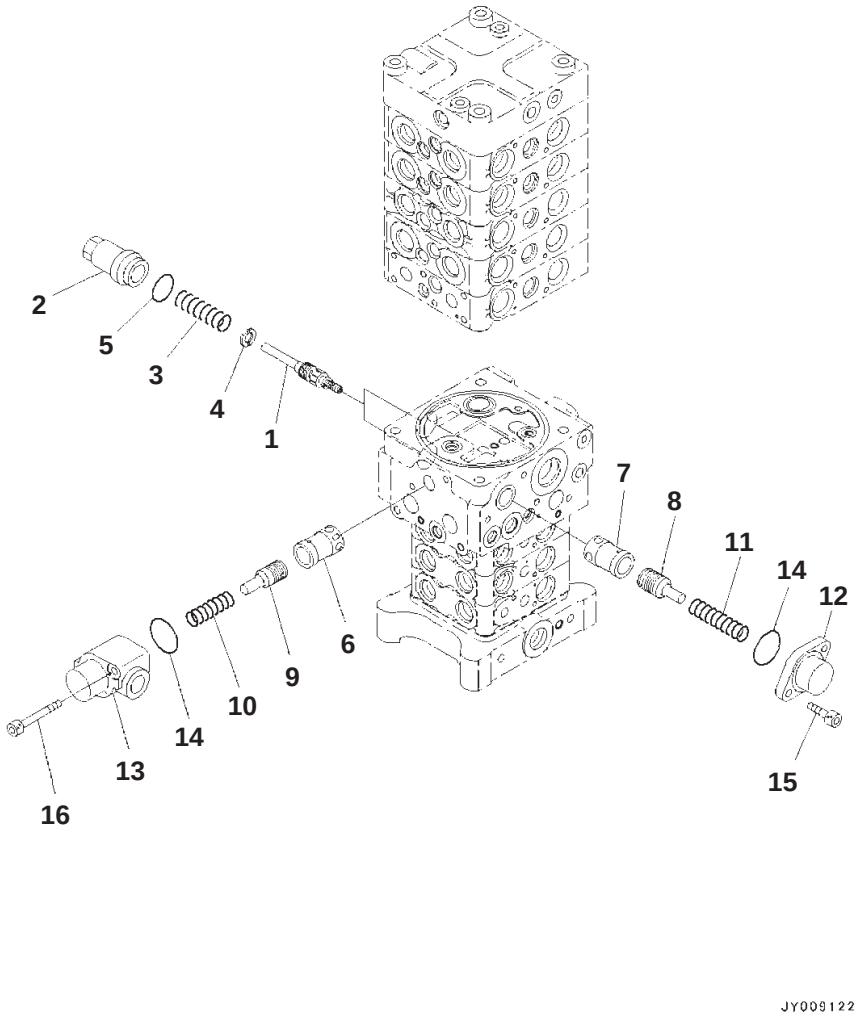

Main Control Valve, 2-actuator, Inner Parts (7/27)

Index	Code	Part Number	Description	Qty	Serial No.
		723-58-12703	Valve, Control	1	B10001-
	C1		・ Body Group	1	B10001-
1	C1		・・ Spool	2	B10001-
2		723-50-55250	・・ Sleeve	2	B10001-
3		723-50-55270	・・ Spring	2	B10001-
4		723-50-55280	・・ Spacer	2	B10001-
5		07002-13334	・・ O-ring	2	B10001-
6	C1		・・ Sleeve	1	B10001-
7	C1		・・ Sleeve	1	B10001-
8	C1		・・ Piston	1	B10001-
9	C1		・・ Piston	1	B10001-
10		723-56-33910	・・ Spring	1	B10001-
11		723-36-15240	・・ Spring	1	B10001-
12		723-36-15250	・・ Case	1	B10001-
13	C1		・・ Case	1	B10001-
14		07000-13042	・・ O-ring	2	B10001-
15		01252-60820	・・ Bolt, Hexagon Socket Head	2	B10001-
16		01252-60860	・・ Bolt, Hexagon Socket Head	2	B10001-

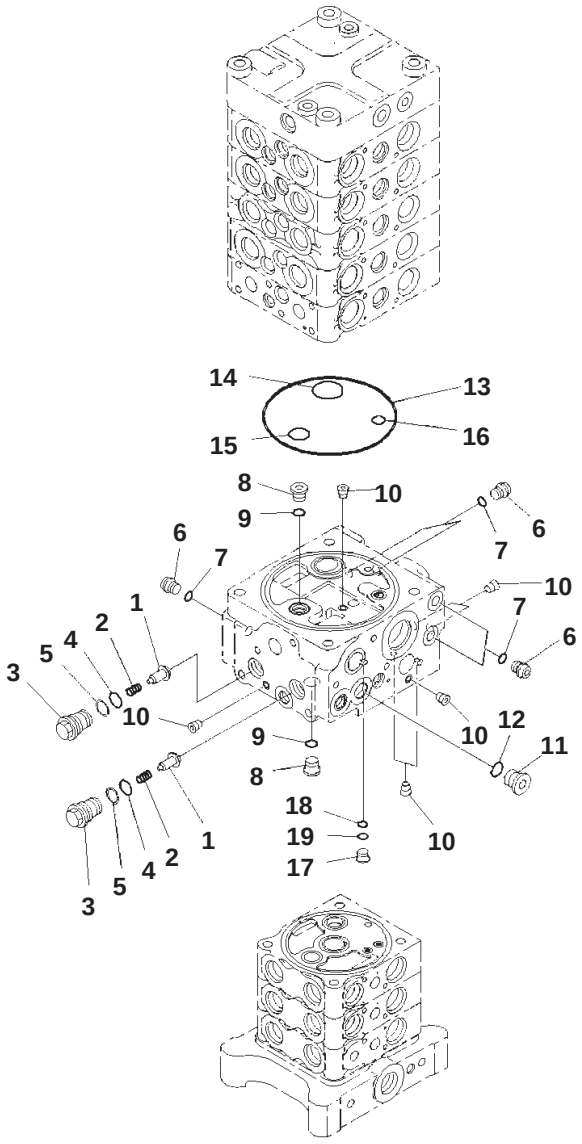

Main Control Valve, 2-actuator, Inner Parts (8/27)

Index	Code	Part Number	Description	Qty	Serial No.
		723-58-12703	Valve, Control	1	B10001-
	C1		・ Body Group	1	B10001-
1	C1		・・ Valve, Check	2	B10001-
2		709-25-11361	・・ Spring	2	B10001-
3		723-26-15580	・・ Plug	2	B10001-
4		07000-12016	・・ O-ring	2	B10001-
5		723-60-22230	・・ Ring, Back-up	2	B10001-
6		708-8E-16160	・・ Plug	5	B10001-
7		07002-11023	・・ O-ring	5	B10001-
8		702-21-55620	・・ Plug	2	B10001-
9		07002-11423	・・ O-ring	2	B10001-
10	C1		・・ Plug	7	B10001-
11		723-11-28920	・・ Plug	1	B10001-
12		07002-11823	・・ O-ring	1	B10001-
13		144-14-54610	・・ O-ring	1	B10001-
14		723-56-31730	・・ O-ring	1	B10001-
15		702-75-11520	・・ O-ring	1	B10001-
16		07000-12014	・・ O-ring	1	B10001-
17		723-26-16460	・・ Plug	1	B10001-
18		07000-11007	・・ O-ring	1	B10001-
19		07001-01007	・・ Ring, Back-up	1	B10001-

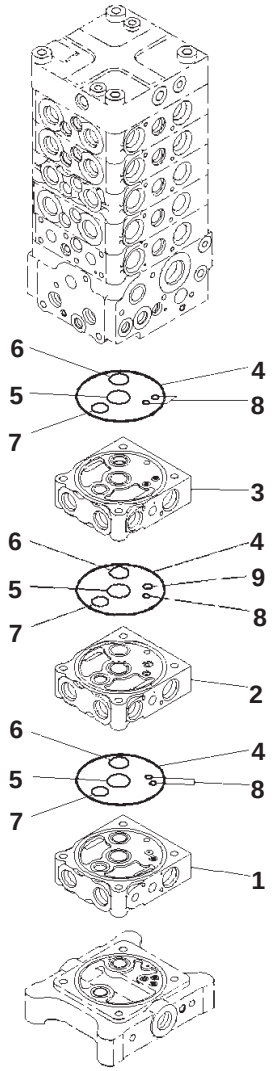

Main Control Valve, 2-actuator, Inner Parts (9/27)

Index	Code	Part Number	Description	Qty	Serial No.
		723-58-12703	Valve, Control	1	B10001-
	C1		・ Body Group	1	B10001-
1	C1		・・ Block	1	B10001-
2	C1		・・ Block	1	B10001-
3	C1		・・ Block	1	B10001-
4		07000-12120	・・ O-ring	3	B10001-
5		723-26-15830	・・ O-ring	3	B10001-
6		723-26-15840	・・ O-ring	3	B10001-
7		07000-12022	・・ O-ring	3	B10001-
8		07000-11008	・・ O-ring	5	B10001-
9		07000-12010	・・ O-ring	1	B10001-

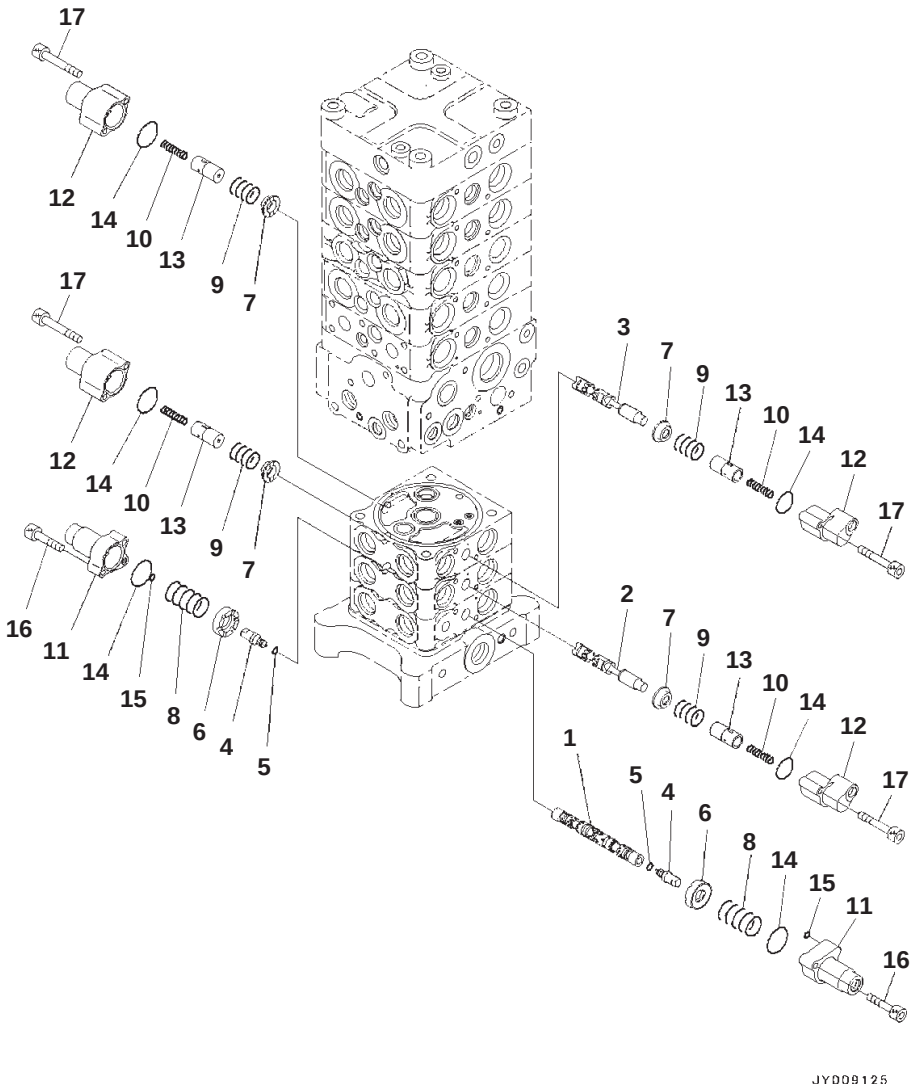

Main Control Valve, 2-actuator, Inner Parts (10/27)

Index	Code	Part Number	Description	Qty	Serial No.
		723-58-12703	Valve, Control	1	B10001-
	C1		・ Body Group	1	B10001-
1	C1		・・ Spool	1	B10001-
2	C1		・・ Spool	1	B10001-
3	C1		・・ Spool	1	B10001-
4	C1		・・ Plug	2	B10001-
5	C1		・・ O-ring	2	B10001-
6		723-26-15121	・・ Retainer	2	B10001-
7		723-26-16740	・・ Retainer	4	B10001-
8		723-26-14520	・・ Spring	2	B10001-
9		723-26-14530	・・ Spring	4	B10001-
10		723-26-14540	・・ Spring	4	B10001-
11		723-26-16710	・・ Case	2	B10001-
12		723-26-16720	・・ Case	4	B10001-
13	C1		・・ Piston	4	B10001-
14		575-41-17420	・・ O-ring	6	B10001-
15		07000-11005	・・ O-ring	2	B10001-
16		01252-60630	・・ Bolt, Hexagon Socket Head	4	B10001-
17		01252-60645	・・ Bolt, Hexagon Socket Head	8	B10001-

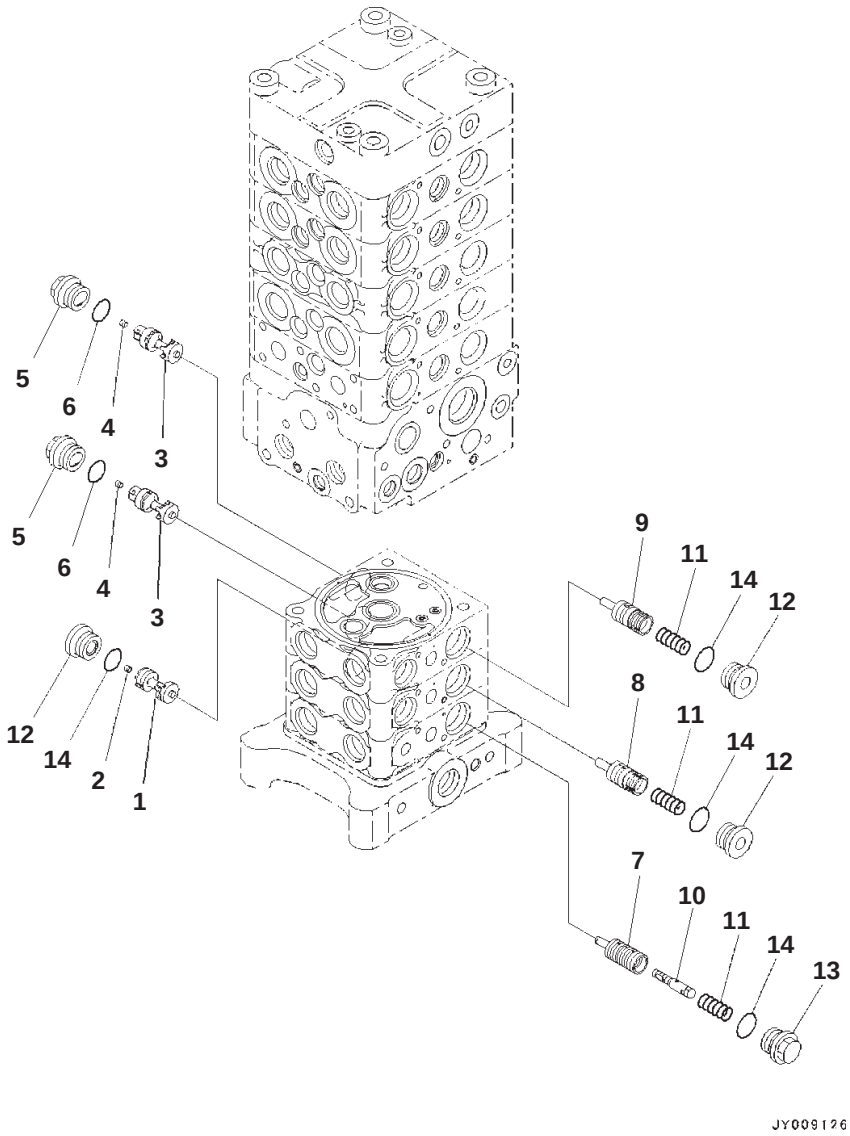

Main Control Valve, 2-actuator, Inner Parts (11/27)

Index	Code	Part Number	Description	Qty	Serial No.
		723-58-12703	Valve, Control	1	B10001-
	C1		・ Body Group	1	B10001-
1	C1		・・ Valve	1	B10001-
2	C1		・・ Screw	1	B10001-
3	C1		・・ Valve	2	B10001-
4	C1		・・ Orifice	2	B10001-
5		723-26-16670	・・ Plug	2	B10001-
6		07002-12434	・・ O-ring	2	B10001-
7	C1		・・ Valve	1	B10001-
8	C1		・・ Valve Subassembly	1	B10001-
9	C1		・・ Valve Subassembly	1	B10001-
10	C1		・・ Valve Subassembly	1	B10001-
11		723-26-14140	・・ Spring	3	B10001-
12		723-26-15230	・・ Plug	3	B10001-
13		723-26-15890	・・ Plug	1	B10001-
14		07002-12434	・・ O-ring	4	B10001-

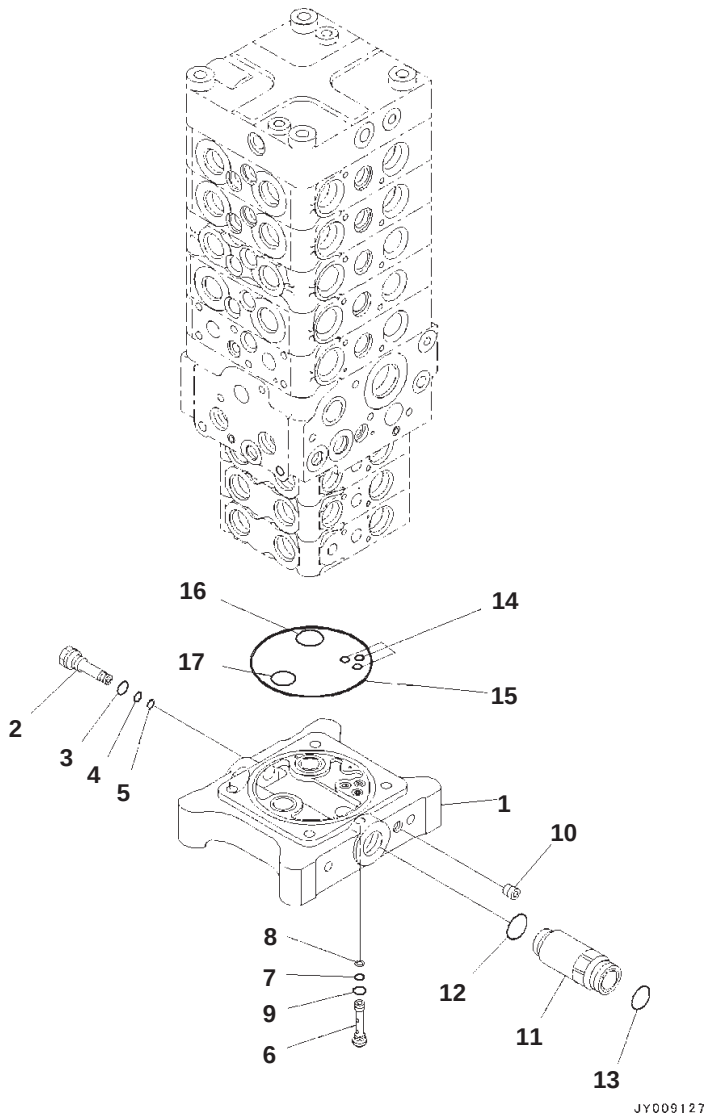

Main Control Valve, 2-actuator, Inner Parts (12/27)

Index	Code	Part Number	Description	Qty	Serial No.
		723-58-12703	Valve, Control	1	B10001-
	C1		・ Body Group	1	B10001-
1	C1		・・ Block	1	B10001-
2		723-26-15170	・・ Plug	1	B10001-
3		07002-11423	・・ O-ring	1	B10001-
4		07000-11007	・・ O-ring	1	B10001-
5		07001-01007	・・ Ring, Back-up	1	B10001-
6		723-60-23301	・・ Valve Assembly, Check	1	B10001-
7		07000-11005	・・・ O-ring	1	B10001-
8		07001-01005	・・・ Ring, Back-up	1	B10001-
9		07002-11023	・・・ O-ring	1	B10001-
10	C1		・・ Plug	1	B10001-
11		723-26-15991	・・ Union	1	B10001-
12		07000-13024	・・ O-ring	1	B10001-
13		02896-11018	・・ O-ring	1	B10001-
14		07000-11008	・・ O-ring	3	B10001-
15		07000-12120	・・ O-ring	1	B10001-
16		723-26-15840	・・ O-ring	1	B10001-
17		07000-12022	・・ O-ring	1	B10001-

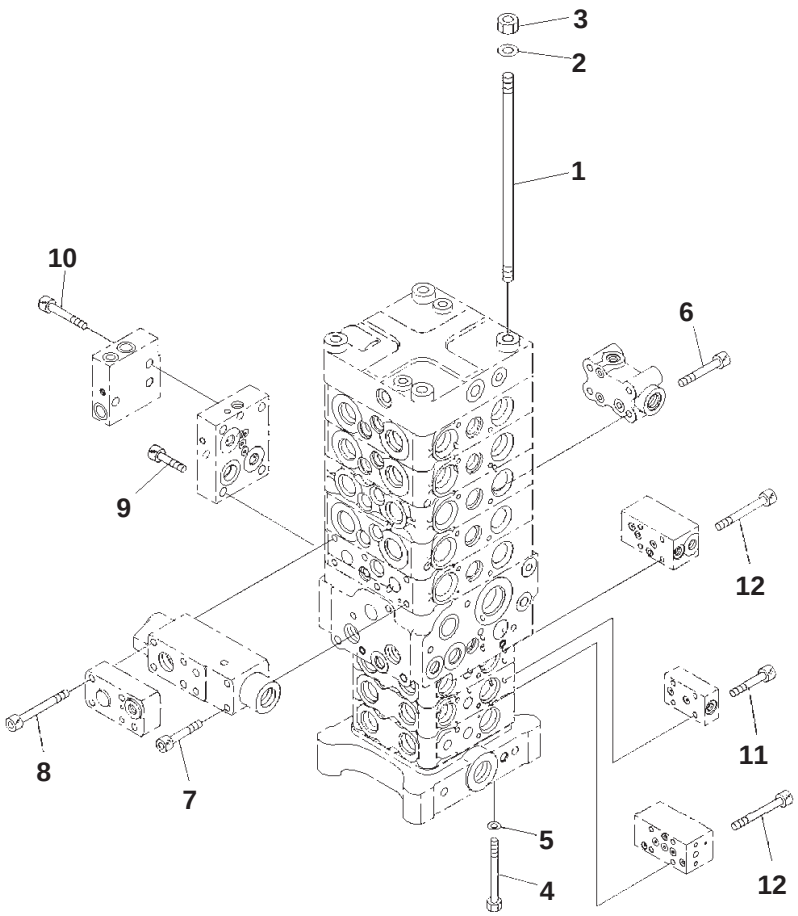

Main Control Valve, 2-actuator, Inner Parts (13/27)

Index	Part Number	Description	Qty	Serial No.
	723-58-12703	Valve, Control	1	B10001-
1	723-50-11150	・ Stud	4	B10001-
2	01643-31232	・ Washer	4	B10001-
3	01580-11210	・ Nut	4	B10001-
4	01011-61085	・ Bolt	4	B10001-
5	01643-51032	・ Washer	4	B10001-
6	01252-60850	・ Bolt, Hexagon Socket Head	4	B10001-
7	01252-60865	・ Bolt, Hexagon Socket Head	2	B10001-
8	708-25-19160	・ Bolt, Hexagon Socket Head	4	B10001-
9	01252-61035	・ Bolt, Hexagon Socket Head	4	B10001-
10	01252-61040	・ Bolt, Hexagon Socket Head	3	B10001-
11	01252-60630	・ Bolt, Hexagon Socket Head	4	B10001-
12	01252-60650	・ Bolt, Hexagon Socket Head	8	B10001-

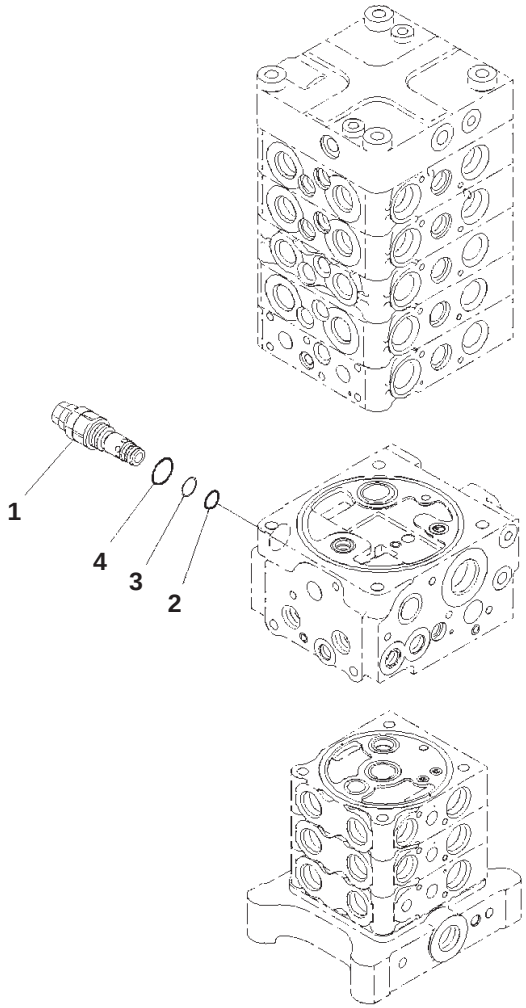

Main Control Valve, 2-actuator, Inner Parts (14/27)

Index	Part Number	Description	Qty	Serial No.
	723-58-12703	Valve, Control	1	B10001-
1	723-40-94201	・ Valve, Relief	1	B10001-
2	700-22-11410	・・ O-ring	1	B10001-
3	700-80-64220	・・ Ring	1	B10001-
4	07002-12434	・・ O-ring	1	B10001-

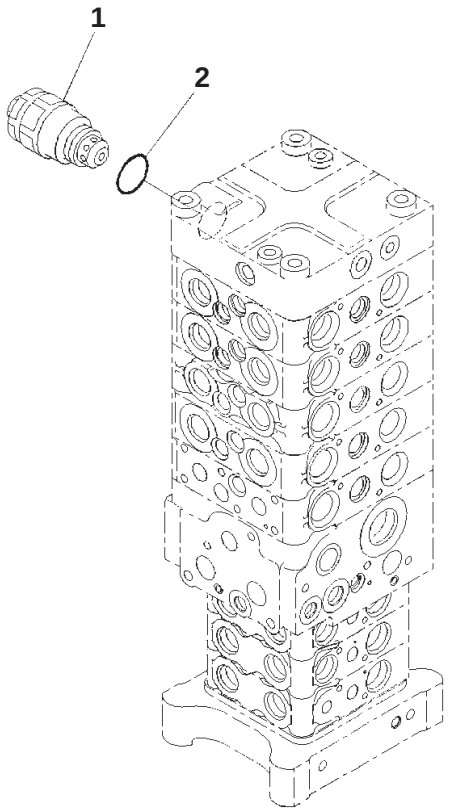

JY009130

Main Control Valve, 2-actuator, Inner Parts (15/27)

Index	Part Number	Description	Qty	Serial No.
	723-58-12703	Valve, Control	1	B10001-
1	709-90-75300	・ Valve Assembly	1	B10001-
2	07002-13634	・・ O-ring	1	B10001-

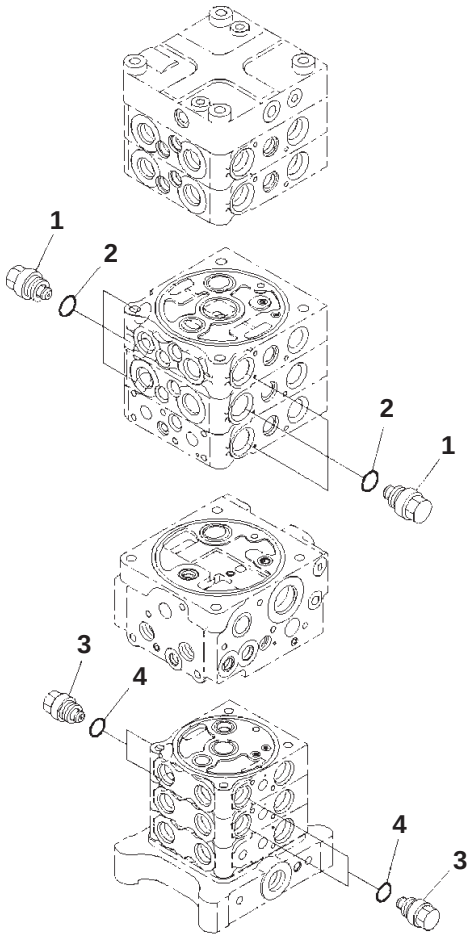

JY009131

Main Control Valve, 2-actuator, Inner Parts (16/27)

Index	Part Number	Description	Qty	Serial No.
	723-58-12703	Valve, Control	1	B10001-
1	723-40-85100	・ Valve Assembly, Suction	6	B10001-
2	709-25-11390	・・ O-ring	1	B10001-
3	723-20-80100	・ Valve Assembly, Suction	4	B10001-
4	07002-12034	・・ O-ring	1	B10001-

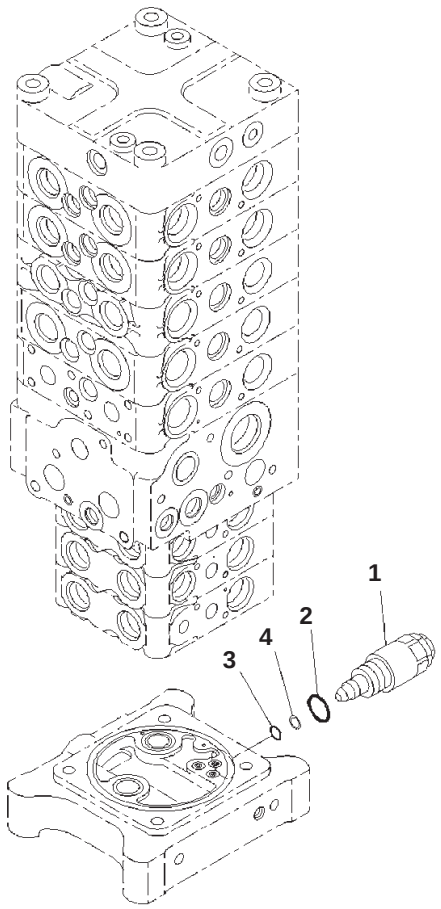

JY009132

Main Control Valve, 2-actuator, Inner Parts (17/27)

Index	Part Number	Description	Qty	Serial No.
	723-58-12703	Valve, Control	1	B10001-
1	723-50-60200	・ Valve Assembly	1	B10001-
2	709-25-11390	・・ O-ring	1	B10001-
3	07000-12012	・・ O-ring	1	B10001-
4	07001-02012	・・ Ring, Back-up	1	B10001-

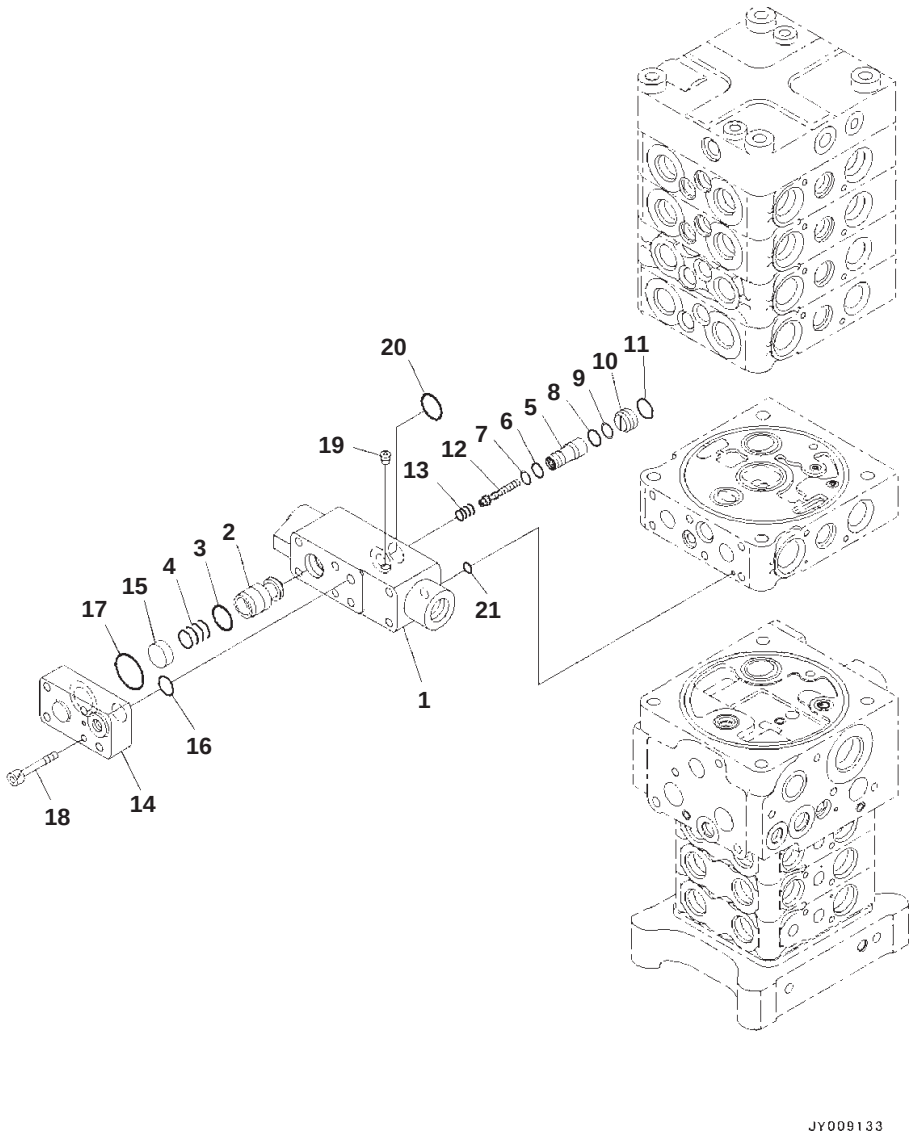

Main Control Valve, 2-actuator, Inner Parts (18/27)

Index	Code	Part Number	Description	Qty	Serial No.
		723-58-12703	Valve, Control	1	B10001-
		723-50-53200	・ Valve Assembly	1	B10001-
1	C1		・・ Block	1	B10001-
2	C1		・・ Valve	1	B10001-
3		702-21-35130	・・ Seal	1	B10001-
4		723-50-53330	・・ Spring	1	B10001-
5	C1		・・ Sleeve	1	B10001-
6		07000-12010	・・ O-ring	1	B10001-
7		07001-02010	・・ Ring	1	B10001-
8		07000-12012	・・ O-ring	1	B10001-
9		07001-02012	・・ Ring, Back-up	1	B10001-
10	C1		・・ Seat	1	B10001-
11		07000-12016	・・ O-ring	1	B10001-
12	C1		・・ Piston	1	B10001-
13		723-50-53350	・・ Spring	1	B10001-
14		723-50-53270	・・ Plate	1	B10001-
15		723-50-53260	・・ Retainer	1	B10001-
16		07000-12015	・・ O-ring	1	B10001-
17		07000-13030	・・ O-ring	1	B10001-
18		01252-60630	・・ Bolt, Hexagon Socket Head	1	B10001-
19	C1		・・ Plug	1	B10001-
20		700-13-31161	・・ O-ring	3	B10001-
21		07000-11007	・・ O-ring	1	B10001-

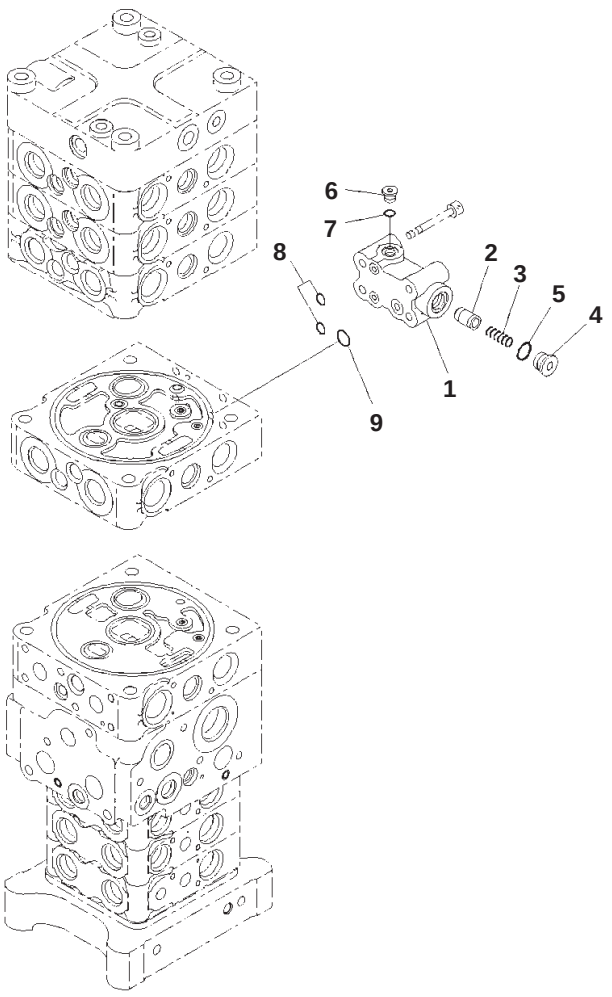

Main Control Valve, 2-actuator, Inner Parts (19/27)

Index	Code	Part Number	Description	Qty	Serial No.
		723-58-12703	Valve, Control	1	B10001-
		723-50-54200	・ Valve Assembly	1	B10001-
1	C1		・・ Block	1	B10001-
2	C1		・・ Valve	1	B10001-
3		723-56-31620	・・ Spring	1	B10001-
4		723-56-31630	・・ Plug	1	B10001-
5		07002-11623	・・ O-ring	1	B10001-
6		723-11-18190	・・ Plug	1	B10001-
7		07002-11023	・・ O-ring	1	B10001-
8		07000-11009	・・ O-ring	2	B10001-
9		708-2L-25490	・・ O-ring	1	B10001-

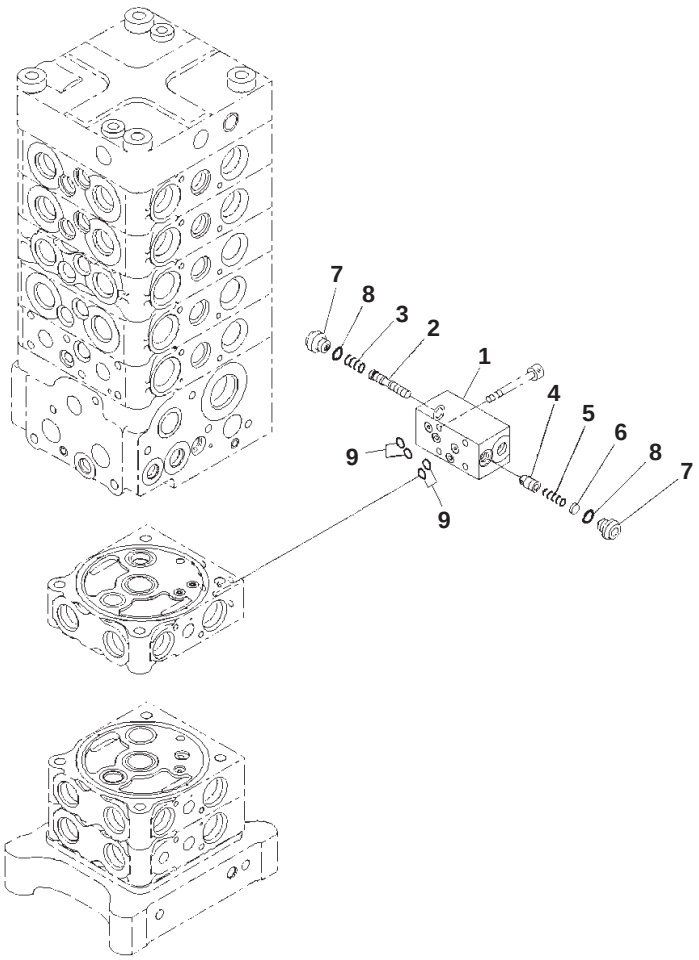

Main Control Valve, 2-actuator, Inner Parts (20/27)

Index	Code	Part Number	Description	Qty	Serial No.
		723-58-12703	Valve, Control	1	B10001-
		723-20-95300	・ Valve Assembly	1	B10001-
1	C1		・・ Block	1	B10001-
2	C1		・・ Spool	1	B10001-
3		723-11-27830	・・ Spring	1	B10001-
4	C1		・・ Valve	1	B10001-
5		723-11-18180	・・ Spring	1	B10001-
6		723-20-95140	・・ Spacer	1	B10001-
7		723-11-27850	・・ Plug	2	B10001-
8		07002-11023	・・ O-ring	2	B10001-
9		07000-11007	・・ O-ring	4	B10001-

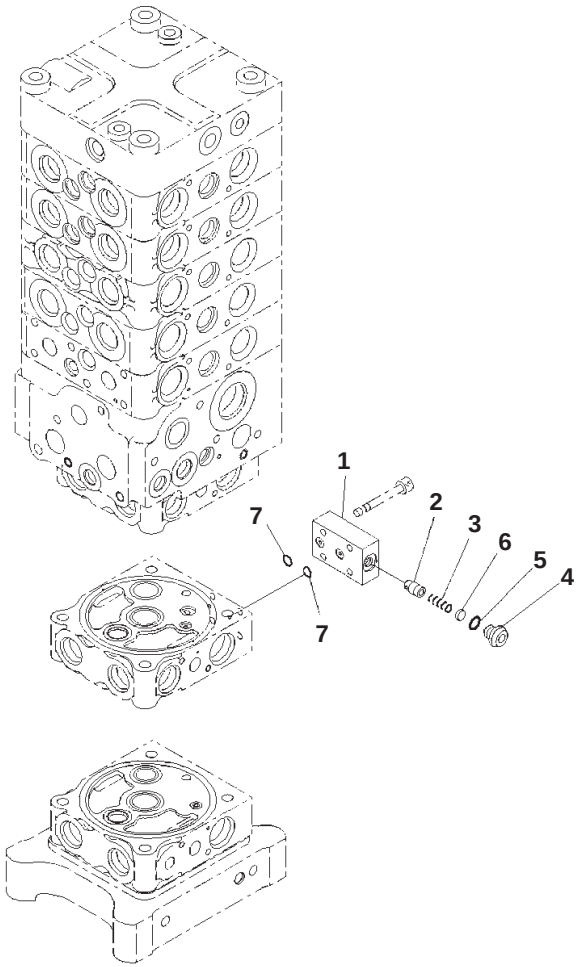

JY009137

Main Control Valve, 2-actuator, Inner Parts (21/27)

Index	Code	Part Number	Description	Qty	Serial No.
		723-58-12703	Valve, Control	1	B10001-
		723-20-95100	・ Valve Assembly	1	B10001-
1	C1		・・ Block	1	B10001-
2	C1		・・ Valve	1	B10001-
3		723-11-18180	・・ Spring	1	B10001-
4		723-11-27850	・・ Plug	1	B10001-
5		07002-11023	・・ O-ring	1	B10001-
6		723-20-95140	・・ Spacer	1	B10001-
7		07000-11007	・・ O-ring	2	B10001-

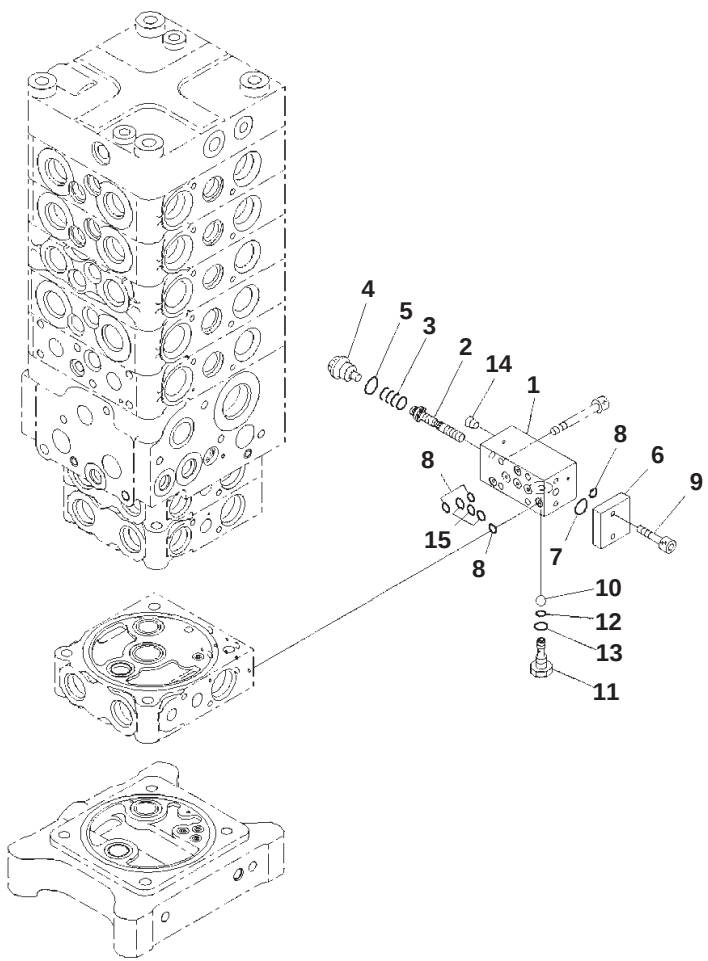

Main Control Valve, 2-actuator, Inner Parts (22/27)

Index	Code	Part Number	Description	Qty	Serial No.
		723-58-12703	Valve, Control	1	B10001-
		723-20-94200	・ Valve Assembly	1	B10001-
1	C1		・・ Block	1	B10001-
2	C1		・・ Spool	1	B10001-
3		723-20-94150	・・ Spring	1	B10001-
4		723-20-94130	・・ Plug	1	B10001-
5		07002-11623	・・ O-ring	1	B10001-
6		723-20-94140	・・ Flange	1	B10001-
7		07000-12011	・・ O-ring	1	B10001-
8		07000-11006	・・ O-ring	4	B10001-
9		01252-60616	・・ Bolt, Hexagon Socket Head	2	B10001-
10	C1		・・ Ball	1	B10001-
11	C1		・・ Plug	1	B10001-
12		07000-11003	・・ O-ring	1	B10001-
13		07002-10823	・・ O-ring	1	B10001-
14	C1		・・ Plug	1	B10001-
15		07000-11007	・・ O-ring	3	B10001-

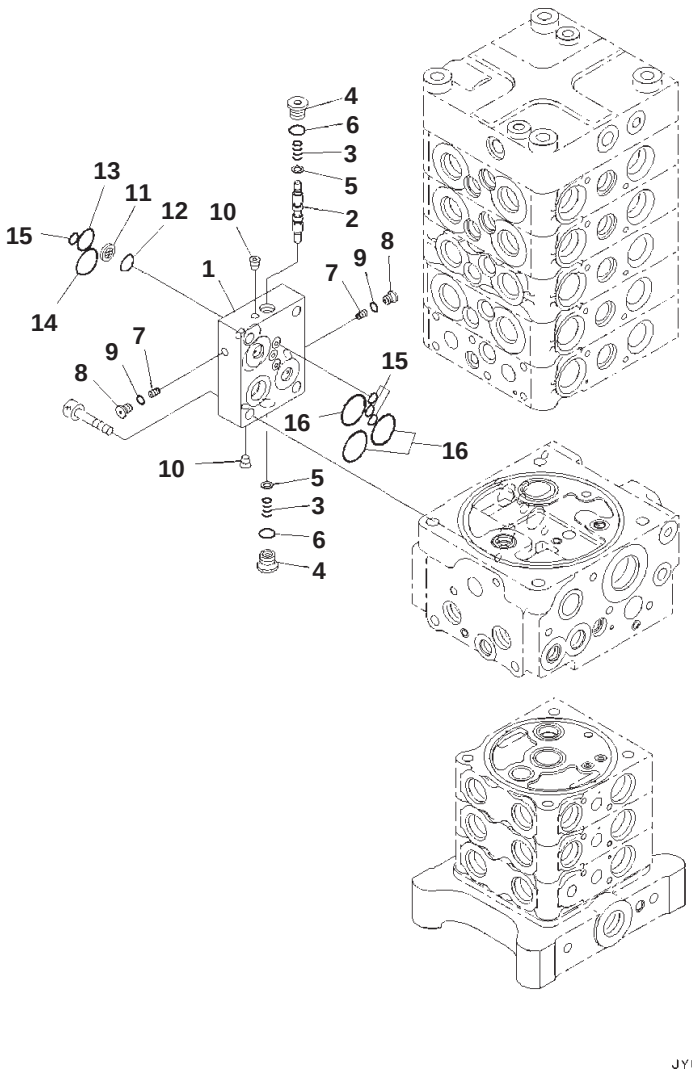

Main Control Valve, 2-actuator, Inner Parts (23/27)

Index	Code	Part Number	Description	Qty	Serial No.
		723-58-12703	Valve, Control	1	B10001-
		723-50-61200	・ Valve Assembly	1	B10001-
1	C1		・・ Block	1	B10001-
2	C1		・・ Spool	1	B10001-
3		723-50-61390	・・ Spring	2	B10001-
4		723-50-61330	・・ Plug	2	B10001-
5		723-50-61350	・・ Spacer	2	B10001-
6		07002-11423	・・ O-ring	2	B10001-
7		723-50-61360	・・ Valve	2	B10001-
8		723-11-27280	・・ Plug	2	B10001-
9		07002-10823	・・ O-ring	2	B10001-
10	C1		・・ Plug	2	B10001-
11		702-21-53120	・・ Filter	1	B10001-
12		702-21-55420	・・ O-ring	1	B10001-
13		702-21-55520	・・ O-ring	1	B10001-
14		702-21-55440	・・ O-ring	1	B10001-
15		07000-11008	・・ O-ring	4	B10001-
16		700-93-11320	・・ O-ring	3	B10001-

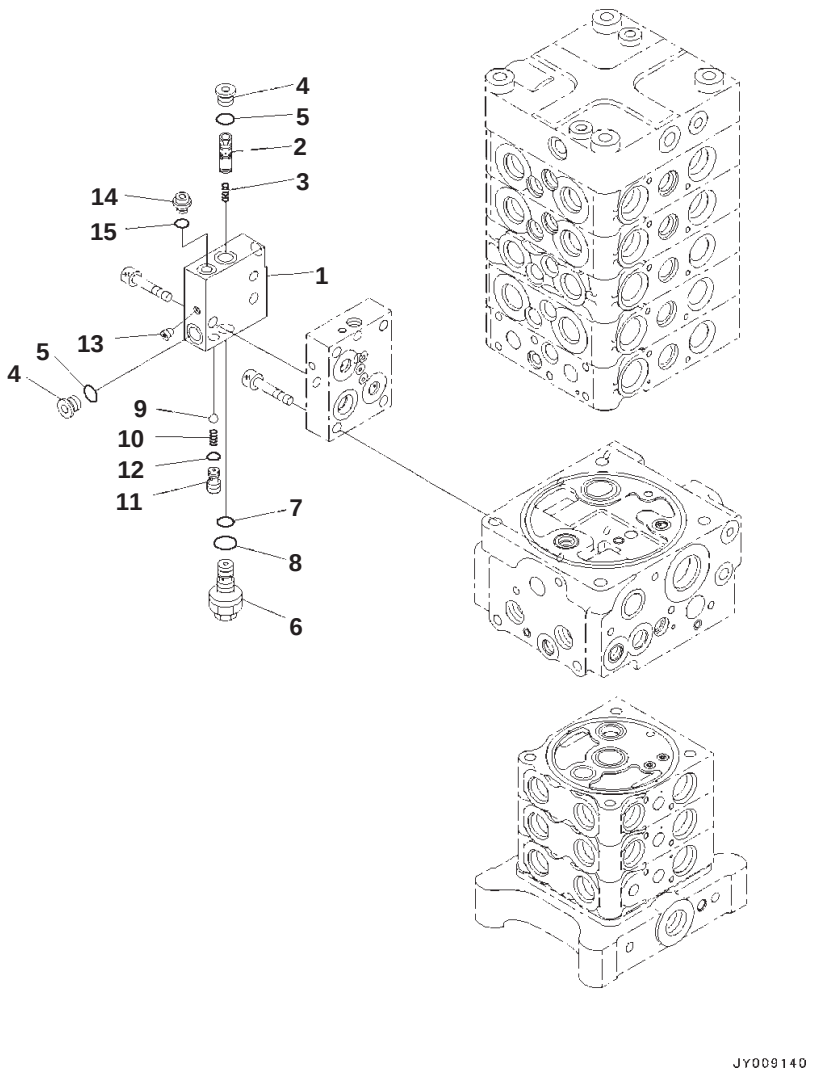

Main Control Valve, 2-actuator, Inner Parts (24/27)

Index	Code	Part Number	Description	Qty	Serial No.
		723-58-12703	Valve, Control	1	B10001-
		723-50-62300	・ Valve Assembly	1	B10001-
1	C1		・・ Block	1	B10001-
2	C1		・・ Spool	1	B10001-
3		702-21-55640	・・ Spring	1	B10001-
4		702-21-55620	・・ Plug	2	B10001-
5		07002-11423	・・ O-ring	2	B10001-
6		723-40-91600	・・ Valve Assembly, Relief	1	B10001-
7		702-16-53920	・・・ O-ring	1	B10001-
8		07002-11623	・・・ O-ring	1	B10001-
9	C1		・・ Ball	1	B10001-
10		702-21-55720	・・ Spring	1	B10001-
11	C1		・・ Seat	1	B10001-
12		07000-11009	・・ O-ring	1	B10001-
13	C1		・・ Plug	1	B10001-
14		708-8E-16160	・・ Plug	1	B10001-
15		07002-11023	・・ O-ring	1	B10001-

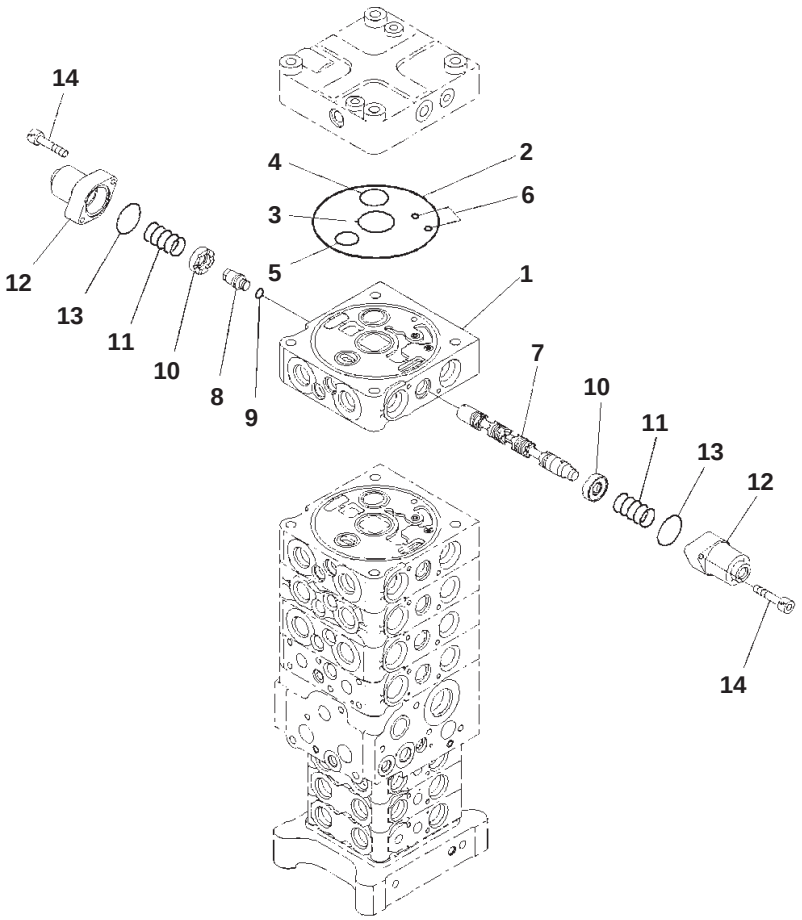

Main Control Valve, 2-actuator, Inner Parts (25/27)

Index	Code	Part Number	Description	Qty	Serial No.
		723-58-12703	Valve, Control	1	B10001-
		723-51-06201	・ Valve Assembly	1	B10001-
1	C1		・・ Block	1	B10001-
2		144-14-54610	・・ O-ring	1	B10001-
3		723-56-31720	・・ O-ring	1	B10001-
4		723-56-31730	・・ O-ring	1	B10001-
5		702-75-11520	・・ O-ring	1	B10001-
6		07000-11008	・・ O-ring	2	B10001-
7	C1		・・ Spool	1	B10001-
8	C1		・・ Plug	1	B10001-
9	C1		・・ O-ring	1	B10001-
10		723-56-31211	・・ Retainer	2	B10001-
11		723-36-14110	・・ Spring	2	B10001-
12		723-56-31510	・・ Case	2	B10001-
13		702-21-55450	・・ O-ring	2	B10001-
14		01252-60630	・・ Bolt, Hexagon Socket Head	4	B10001-

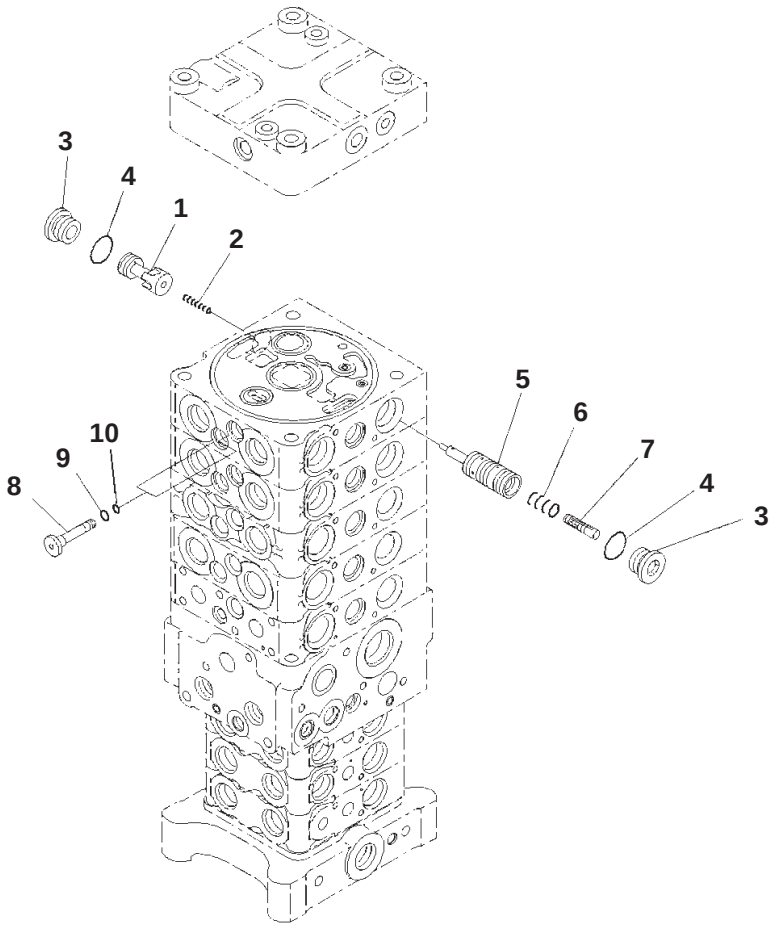

Main Control Valve, 2-actuator, Inner Parts (26/27)

Index	Code	Part Number	Description	Qty	Serial No.
		723-58-12703	Valve, Control	1	B10001-
		723-51-06201	・ Valve Assembly	1	B10001-
1	C1		・・ Valve	1	B10001-
2		723-56-41710	・・ Spring	1	B10001-
3		723-26-15230	・・ Plug	2	B10001-
4		07002-12434	・・ O-ring	2	B10001-
5	C1		・・ Valve	1	B10001-
6		723-56-41730	・・ Spring	1	B10001-
7	C1		・・ Piston	1	B10001-
8		723-56-31640	・・ Plug	2	B10001-
9		07002-11623	・・ O-ring	2	B10001-
10		07000-11008	・・ O-ring	2	B10001-

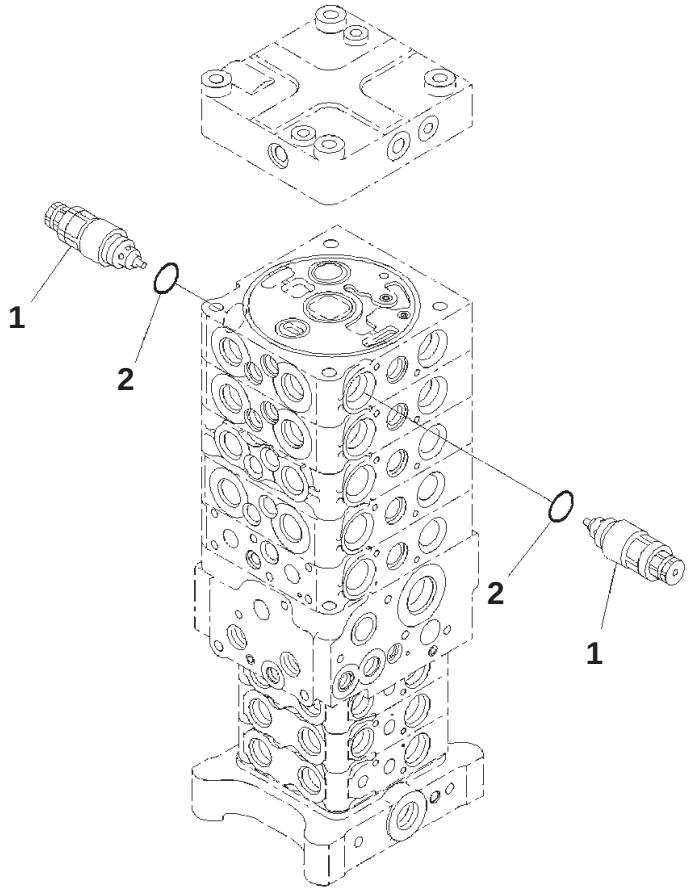

Main Control Valve, 2-actuator, Inner Parts (27/27)

Index	Part Number	Description	Qty	Serial No.
	723-58-12703	Valve, Control	1	B10001-
	723-51-06201	・ Valve Assembly	1	B10001-
1	723-90-61400	・・ Valve Assembly	2	B10001-
2	07000-13024	・・・ O-ring	1	B10001-

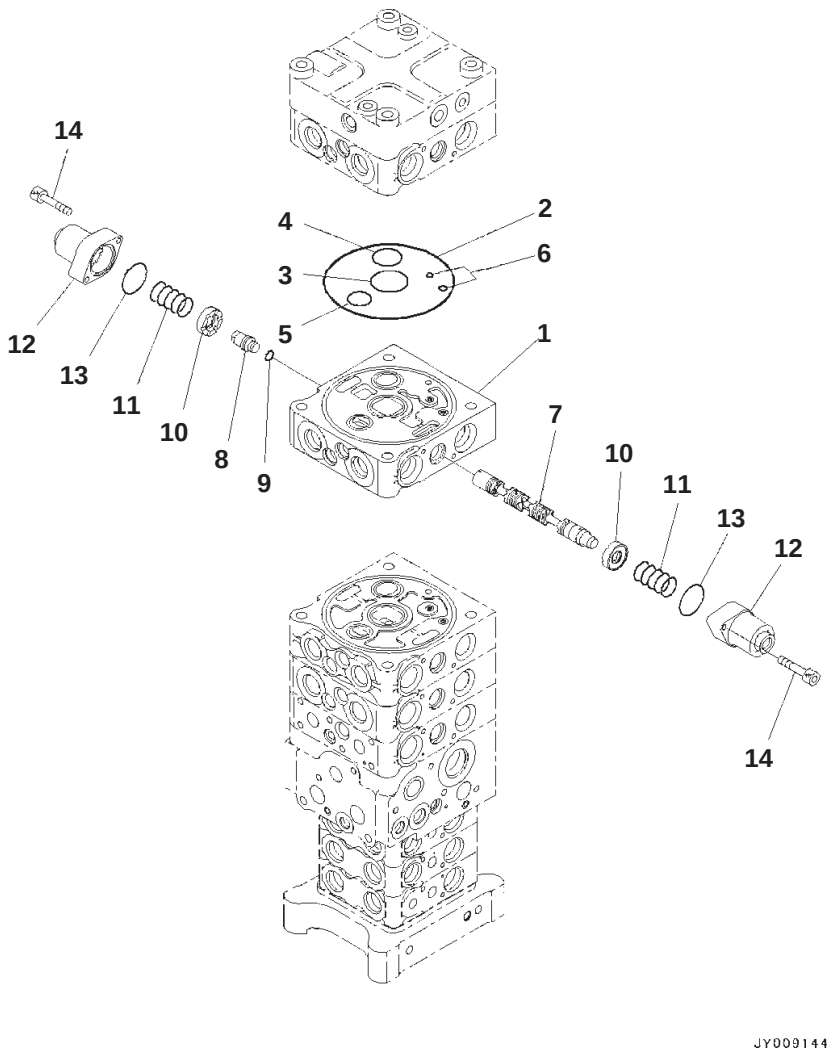

Main Control Valve, 2-actuator, Inner Parts (28/28)

Index	Code	Part Number	Description	Qty	Serial No.
		723-58-12703	Valve, Control	1	B10001-
		723-51-06101	・ Valve Assembly	1	B10001-
1	C1		・・ Block	1	B10001-
2		144-14-54610	・・ O-ring	1	B10001-
3		723-56-31720	・・ O-ring	1	B10001-
4		723-56-31730	・・ O-ring	1	B10001-
5		702-75-11520	・・ O-ring	1	B10001-
6		07000-11008	・・ O-ring	2	B10001-
7	C1		・・ Spool	1	B10001-
8	C1		・・ Plug	1	B10001-
9	C1		・・ O-ring	1	B10001-
10		723-56-31211	・・ Retainer	2	B10001-
11		723-36-14110	・・ Spring	2	B10001-
12		723-56-31510	・・ Case	2	B10001-
13		702-21-55450	・・ O-ring	2	B10001-
14		01252-60630	・・ Bolt, Hexagon Socket Head	4	B10001-

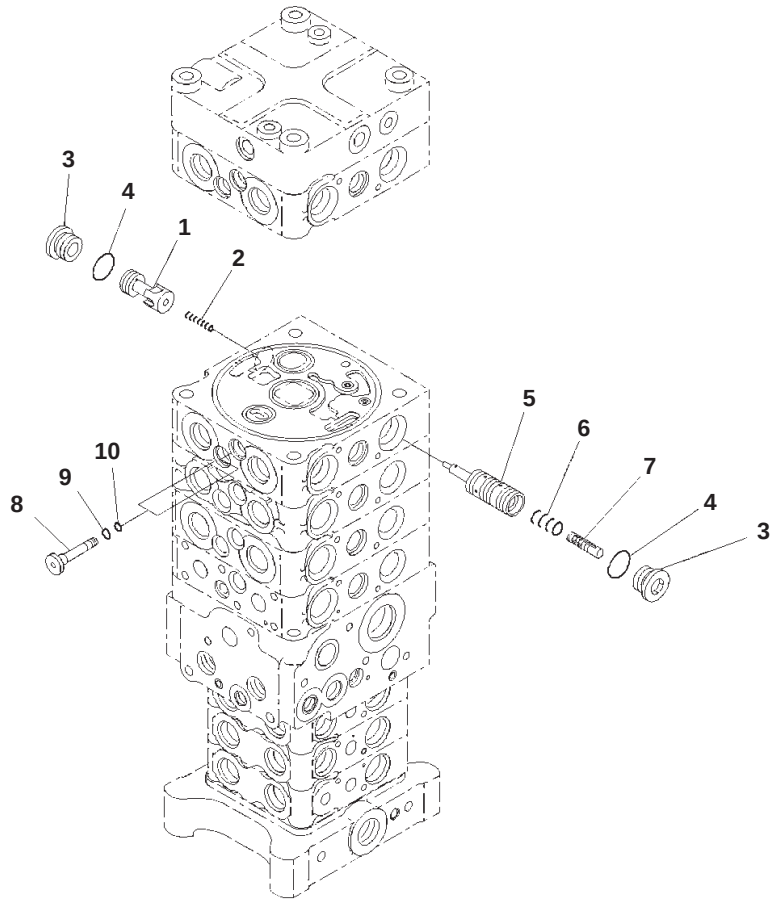

Main Control Valve, 2-actuator, Inner Parts (29/30)

Index	Code	Part Number	Description	Qty	Serial No.
		723-58-12703	Valve, Control	1	B10001-
		723-51-06101	・ Valve Assembly	1	B10001-
1	C1		・・ Valve	1	B10001-
2		723-56-41710	・・ Spring	1	B10001-
3		723-26-15230	・・ Plug	2	B10001-
4		07002-12434	・・ O-ring	2	B10001-
5	C1		・・ Valve	1	B10001-
6		723-56-41730	・・ Spring	1	B10001-
7	C1		・・ Piston	1	B10001-
8		723-56-31640	・・ Plug	2	B10001-
9		07002-11623	・・ O-ring	2	B10001-
10		07000-11008	・・ O-ring	2	B10001-

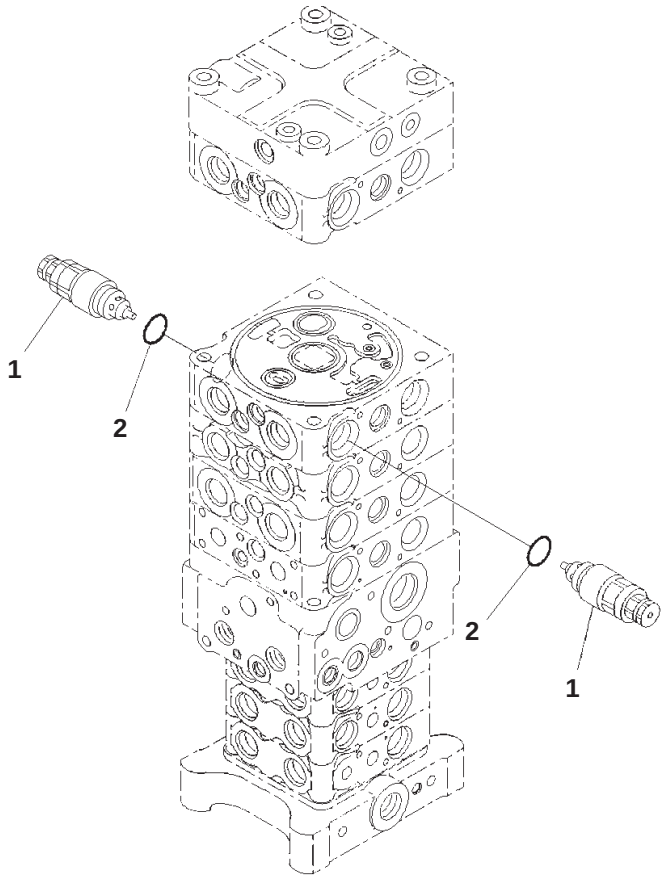

Main Control Valve, 2-actuator, Inner Parts (30/30)

Index	Part Number	Description	Qty	Serial No.
	723-58-12703	Valve, Control	1	B10001-
	723-51-06101	・ Valve Assembly	1	B10001-
1	723-90-61400	・・ Valve Assembly	2	B10001-
2	07000-13024	・・・ O-ring	1	B10001-

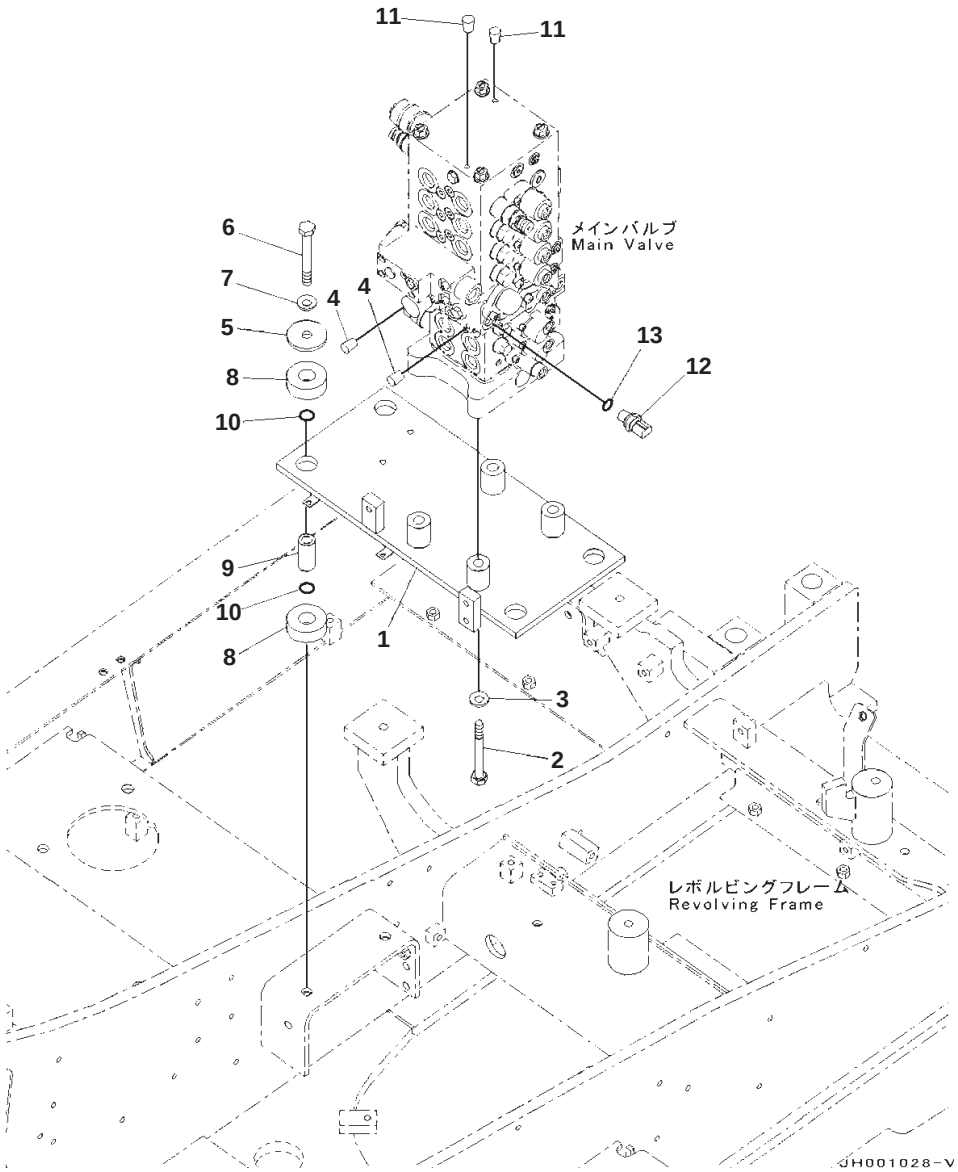

Main Control Valve, 2-actuator, Valve Bracket and Sensor

Index	Part Number	Description	Qty	Serial No.
1	203-62-12831	Bracket	1	B10001-
2	01010-81685	Bolt	4	B10001-
3	01643-31645	Washer	4	B10001-
4	07049-01012	Plug, Cork	2	B10001-
5	203-62-61572	Plate	4	B10001-
6	01011-81600	Bolt	4	B10001-
7	01643-31645	Washer	4	B10001-
8	203-54-21110	Cushion	8	B10001-
9	203-62-61581	Spacer	4	B10001-
10	07000-13025	O-ring	8	B10001-
11	07049-01012	Plug, Cork	2	B10001-
12	7861-93-1812	Sensor, Pressure	1	B10001-
13	07002-61823	・ O-ring	1	B10001-

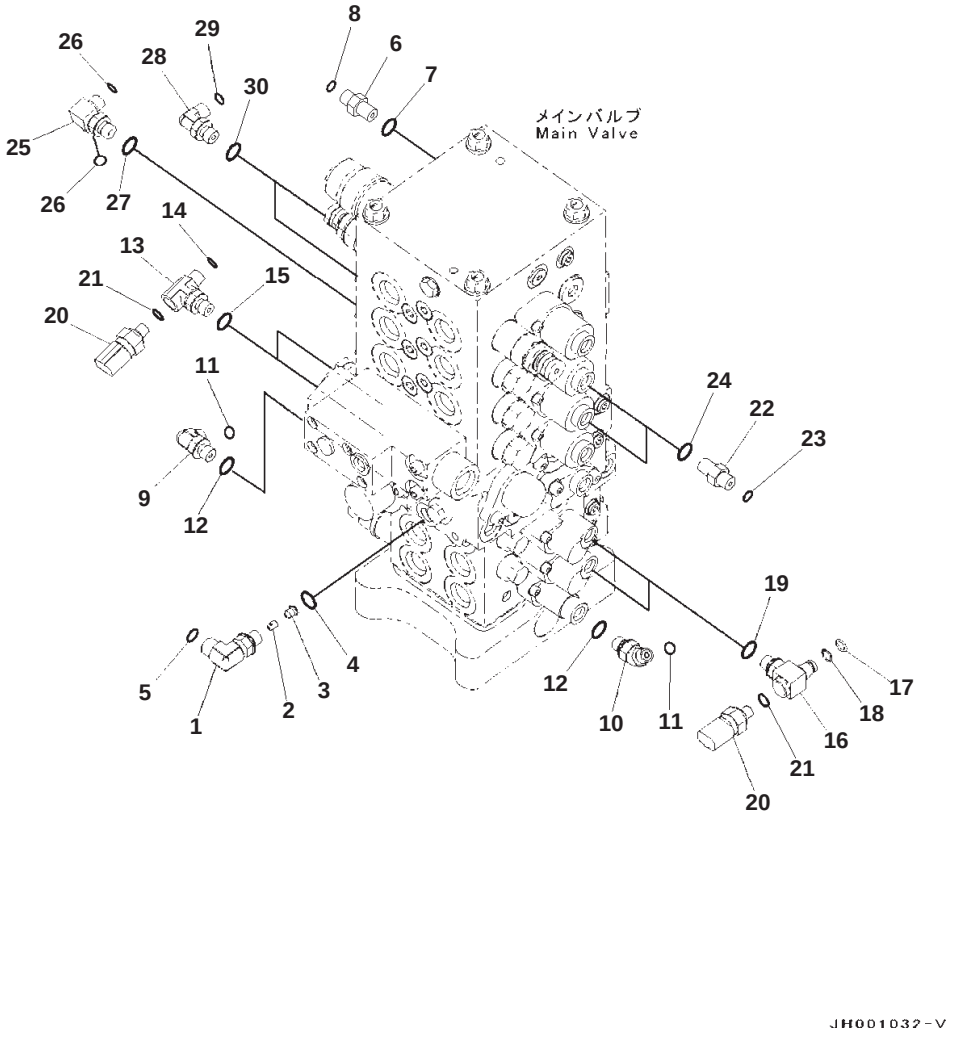

Main Control Valve, 2-actuator, Connecting Parts, Ls. Pilot Piping, (1/2)

Index	Part Number	Description	Qty	Serial No.
	22B-62-22390	Elbow Assembly	1	B10001-
1	21K-62-72730	・ Elbow	1	B10001-
2	21Y-60-11250	・ Poppet	1	B10001-
3	21Y-62-11591	・ Plug	1	B10001-
4	07002-11423	O-ring	1	B10001-
5	02896-11009	O-ring	1	B10001-
6	02781-0021D	Union	1	B10001-
7	07002-11423	O-ring	1	B10001-
8	02896-11008	O-ring	1	B10001-
9	22B-62-21381	Elbow	1	B10001-
10	203-62-13520	Elbow	1	B10001-
11	02896-11008	O-ring	2	B10001-
12	07002-11423	O-ring	2	B10001-
13	22B-62-22690	Tee	2	B10001-
14	02896-11008	O-ring	2	B10001-
15	07002-11423	O-ring	2	B10001-
16	203-62-12811	Tee	2	B10001-
17	201-60-11390	・ O-ring	1	B10001-
18	20Y-62-19560	・ O-ring	1	B10001-
19	07002-11423	O-ring	2	B10001-
20	7861-93-1840	Sensor	4	B10001-
21	07000-12011	・ O-ring	1	B10001-
22	02781-0021D	Union	2	B10001-
23	02896-11008	O-ring	2	B10001-
24	07002-11423	O-ring	2	B10001-
25	207-62-72141	Elbow	1	B10001-
26	02896-11008	O-ring	2	B10001-
27	07002-11423	O-ring	1	B10001-
28	02782-10210	Elbow	2	B10001-
29	02896-11008	O-ring	2	B10001-
30	07002-11423	O-ring	2	B10001-

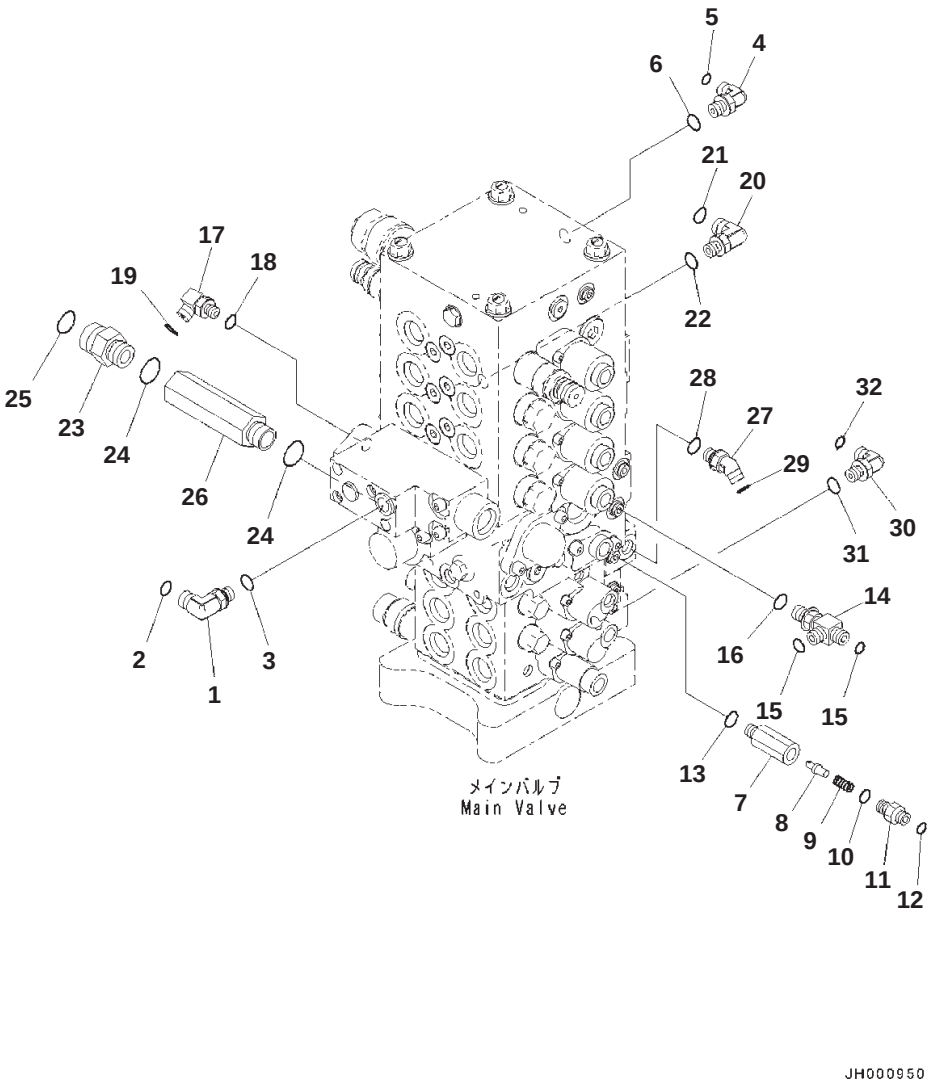

Main Control Valve, 2-actuator, Connecting Parts, Ls, Pilot Piping, (2/2)

Index	Code	Part Number	Description	Qty	Serial No.
1		02782-10311	Elbow	1	B10001-
2		02896-11009	O-ring	1	B10001-
3		07002-11423	O-ring	1	B10001-
4		02782-10210	Elbow	1	B10001-
5		02896-11008	O-ring	1	B10001-
6		07002-11423	O-ring	1	B10001-
		20Y-62-41701	Valve Assembly	1	B10001-
7	C1		・ Body	1	B10001-
8		20Y-60-22270	・ Poppet	1	B10001-
9		701-20-61230	・ Spring	1	B10001-
10		07002-11423	・ O-ring	1	B10001-
11		20Y-62-47630	・ Nipple	1	B10001-
12		02896-11008	O-ring	1	B10001-
13		07002-11423	O-ring	1	B10001-
14		11Y-62-12330	Tee	1	B10001-
15		02896-11008	O-ring	2	B10001-
16		07002-11423	O-ring	1	B10001-
17		20Y-62-41920	Elbow	1	B10001-
18		07002-11223	O-ring	1	B10001-
19		02896-11008	O-ring	1	B10001-
20		02782-10311	Elbow	1	B10001-
21		02896-11009	O-ring	1	B10001-
22		07002-11423	O-ring	1	B10001-
23		02781-00628	Union	1	B10001-
24		07002-12434	O-ring	2	B10001-
25		02896-11018	O-ring	1	B10001-
26		203-62-63770	Joint	1	B10001-
27		02783-10210	Elbow	1	B10001-
28		07002-11423	O-ring	1	B10001-
29		02896-11008	O-ring	1	B10001-
30		02782-10210	Elbow	1	B10001-
31		07002-11423	O-ring	1	B10001-
32		02896-11008	O-ring	1	B10001-

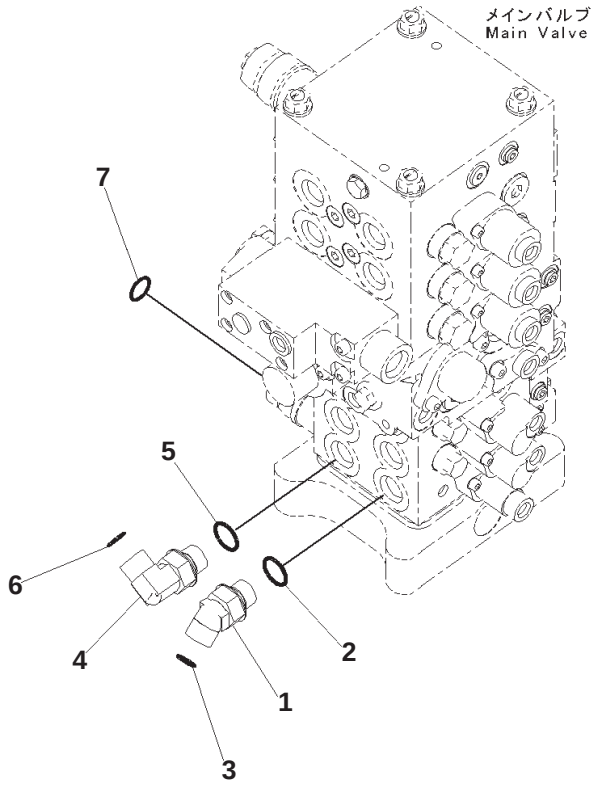

JH000546-V

Main Control Valve, 2-actuator, Connecting Parts, Swing Piping

Index	Part Number	Description	Qty	Serial No.
1	02783-10522	Elbow	1	B10001-
2	07002-12434	O-ring	1	B10001-
3	02896-11015	O-ring	1	B10001-
4	02782-10522	Elbow	1	B10001-
5	07002-12434	O-ring	1	B10001-
6	02896-11015	O-ring	1	B10001-
7	02896-11018	O-ring	1	B10001-

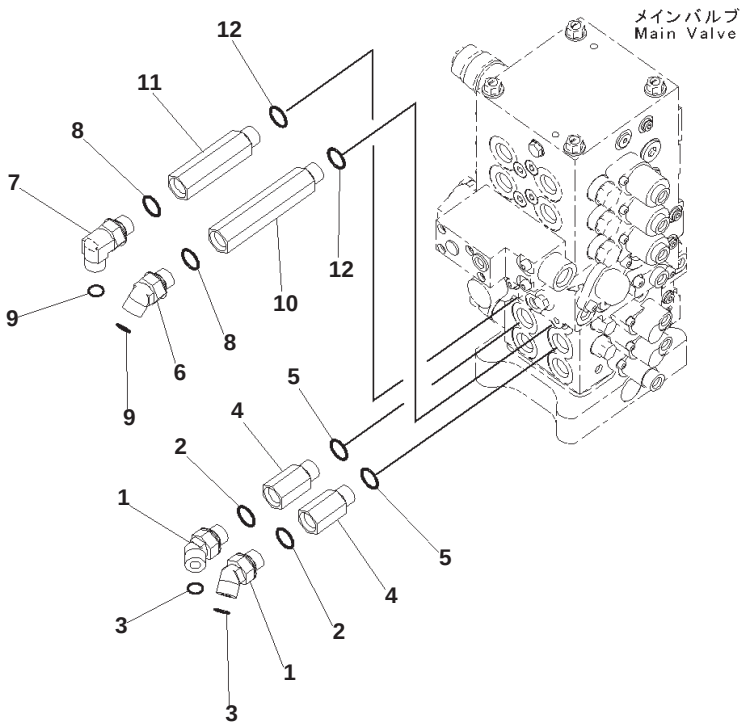

Main Control Valve, 2-actuator, Connecting Parts, Travel Piping

Index	Part Number	Description	Qty	Serial No.
1	02783-10522	Elbow	2	B10001-
2	07002-12434	O-ring	2	B10001-
3	02896-11015	O-ring	2	B10001-
4	201-62-71820	Joint	2	B10001-
5	07002-12434	O-ring	2	B10001-
6	02783-10522	Elbow	1	B10001-
7	02782-10522	Elbow	1	B10001-
8	07002-12434	O-ring	2	B10001-
9	02896-11015	O-ring	2	B10001-
10	203-62-63760	Joint	1	B10001-
11	203-62-63770	Joint	1	B10001-
12	07002-12434	O-ring	2	B10001-

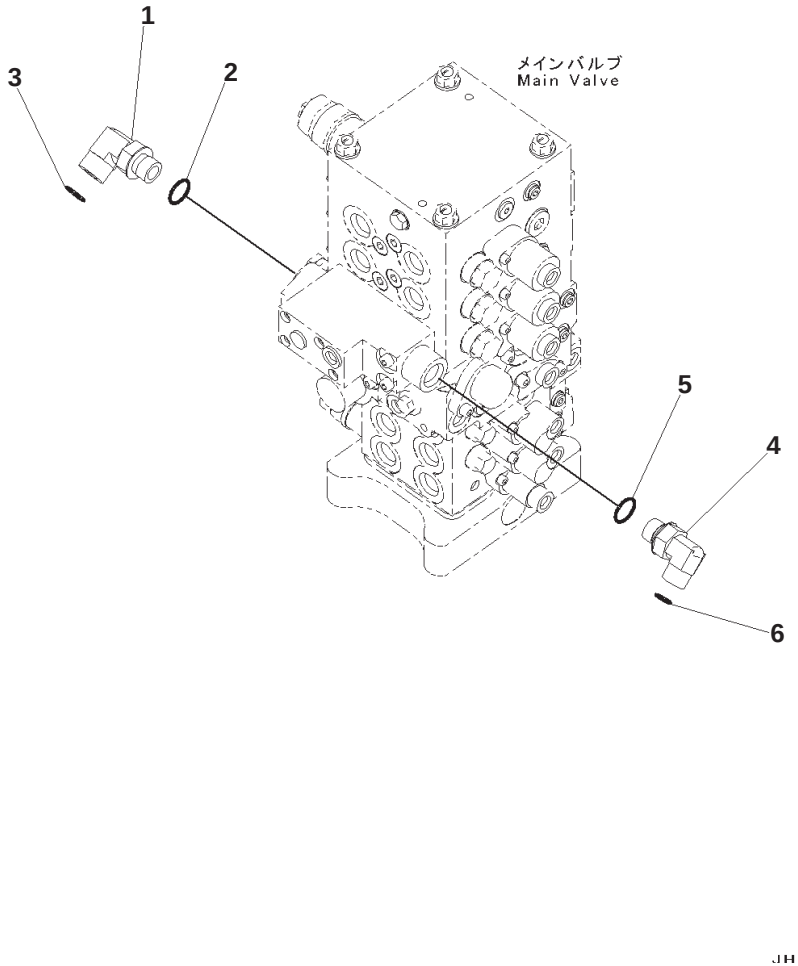

Main Control Valve, 2-actuator, Connecting Parts, Boom Piping

Index	Part Number	Description	Qty	Serial No.
1	02782-10628	Elbow	1	B10001-
2	07002-12434	O-ring	1	B10001-
3	02896-11018	O-ring	1	B10001-
4	02782-10522	Elbow	1	B10001-
5	07002-12434	O-ring	1	B10001-
6	02896-11015	O-ring	1	B10001-

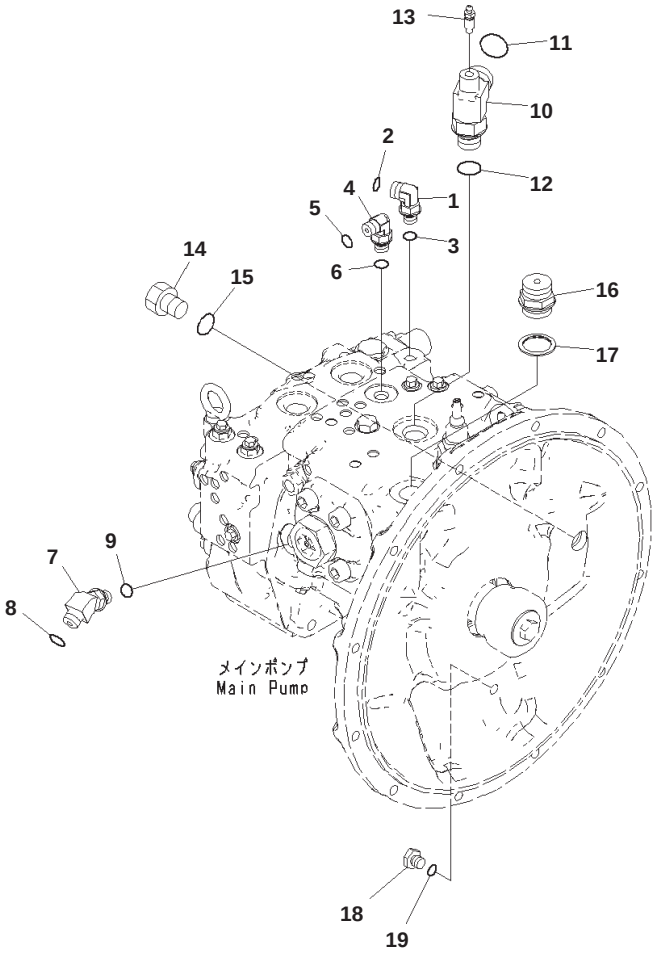

Main Piston Pump

Index	Part Number	Description	Qty	Serial No.
1	21W-62-43960	Elbow	1	B10001-
2	02896-11008	O-ring	1	B10001-
3	07002-11423	O-ring	1	B10001-
4	02782-10210	Elbow	1	B10001-
5	02896-11008	O-ring	1	B10001-
6	07002-11423	O-ring	1	B10001-
7	11Y-62-12510	Elbow	1	B10001-
8	02896-11009	O-ring	1	B10001-
9	07002-11423	O-ring	1	B10001-
10	22B-62-17110	Elbow	1	B10001-
11	02896-11018	O-ring	1	B10001-
12	07002-12434	O-ring	1	B10001-
13	20B-27-11210	Bleeder	1	B10001-
14	07040-12412	Plug	1	B10001-
15	07002-12434	O-ring	1	B10001-
16	07030-03034	Breather	1	B10001-
17	07005-03016	Seal, Washer	1	B10001-
18	07040-11209	Plug	1	B10001-
19	07002-11223	O-ring	1	B10001-

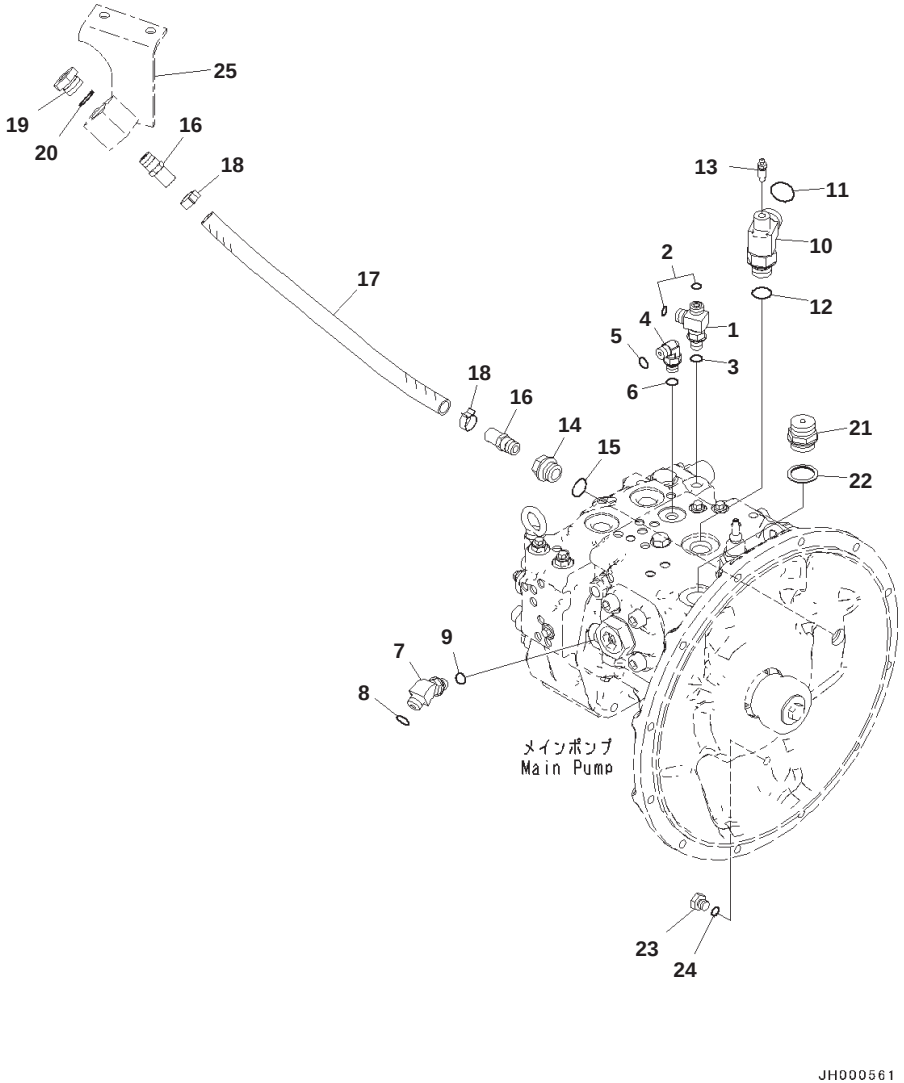

Index	Part Number	Description	Qty	Serial No.
1	21N-64-36680	Tee	1	B10001-
2	02896-11009	O-ring	2	B10001-
3	07002-11423	O-ring	1	B10001-
4	02782-10210	Elbow	1	B10001-
5	02896-11008	O-ring	1	B10001-
6	07002-11423	O-ring	1	B10001-
7	11Y-62-12510	Elbow	1	B10001-
8	02896-11009	O-ring	1	B10001-
9	07002-11423	O-ring	1	B10001-
10	22B-62-17110	Elbow	1	B10001-
11	02896-11018	O-ring	1	B10001-
12	07002-12434	O-ring	1	B10001-
13	20B-27-11210	Bleeder	1	B10001-
14	21T-06-17940	Plug	1	B10001-
15	07002-12434	O-ring	1	B10001-
16	566-07-41540	Connector	2	B10001-
17	07286-01641	Hose	1	B10001-
18	07285-00200	Clip, Hose	2	B10001-
19	07040-12412	Plug	1	B10001-
20	07002-12434	O-ring	1	B10001-
21	07030-03034	Breather	1	B10001-
22	07005-03016	Seal, Washer	1	B10001-
23	07040-11209	Plug	1	B10001-
24	07002-11223	O-ring	1	B10001-
25	(203-62-12570)	Bracket		

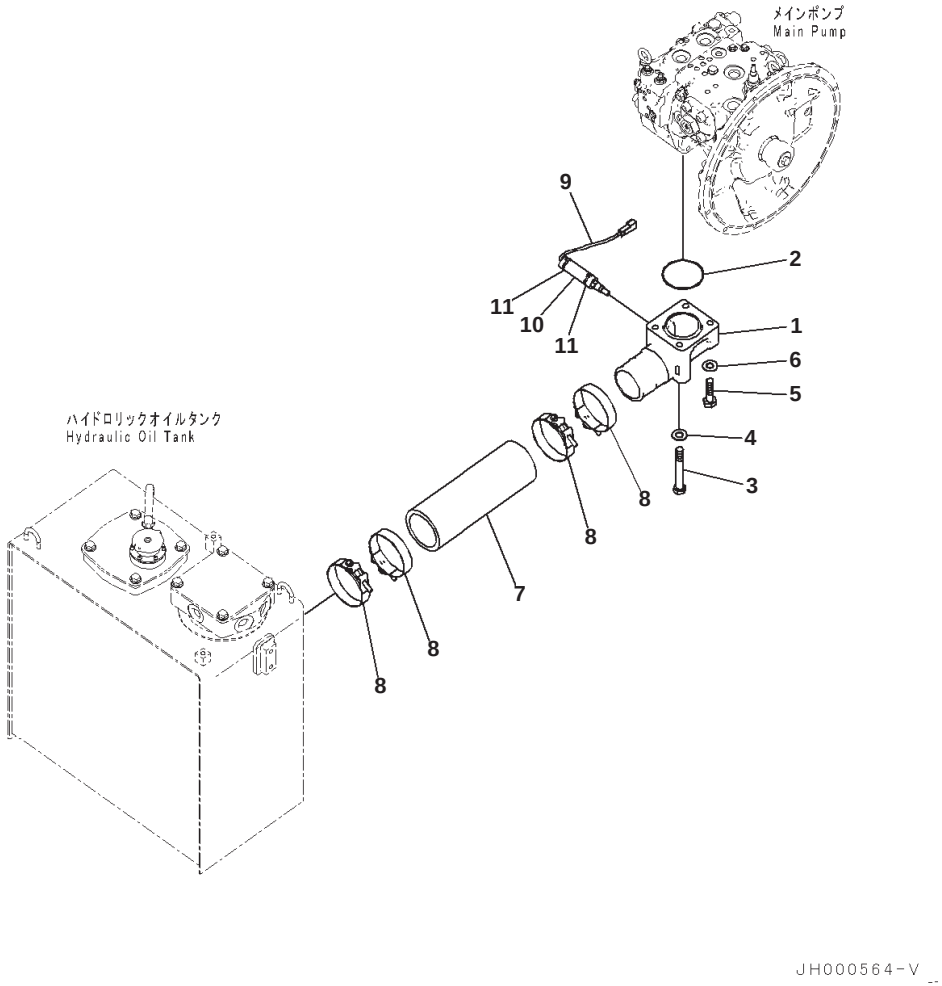

Suction Piping

Index	Part Number	Description	Qty	Serial No.
1	203-62-11111	Elbow	1	B10001-
2	07000-12085	O-ring	1	B10001-
3	01011-81230	Bolt	2	B10001-
4	01643-31232	Washer	2	B10001-
5	01010-81280	Bolt	2	B10001-
6	01643-31232	Washer	2	B10001-
7	07260-08732	Hose	1	B10001-
8	20Y-62-51671	Clamp	4	B10001-
9	7861-93-3320	Sensor, Temperature	1	B10001-
10	205-62-72140	Cover	1	B10001-
11	08034-20519	Band	2	B10001-

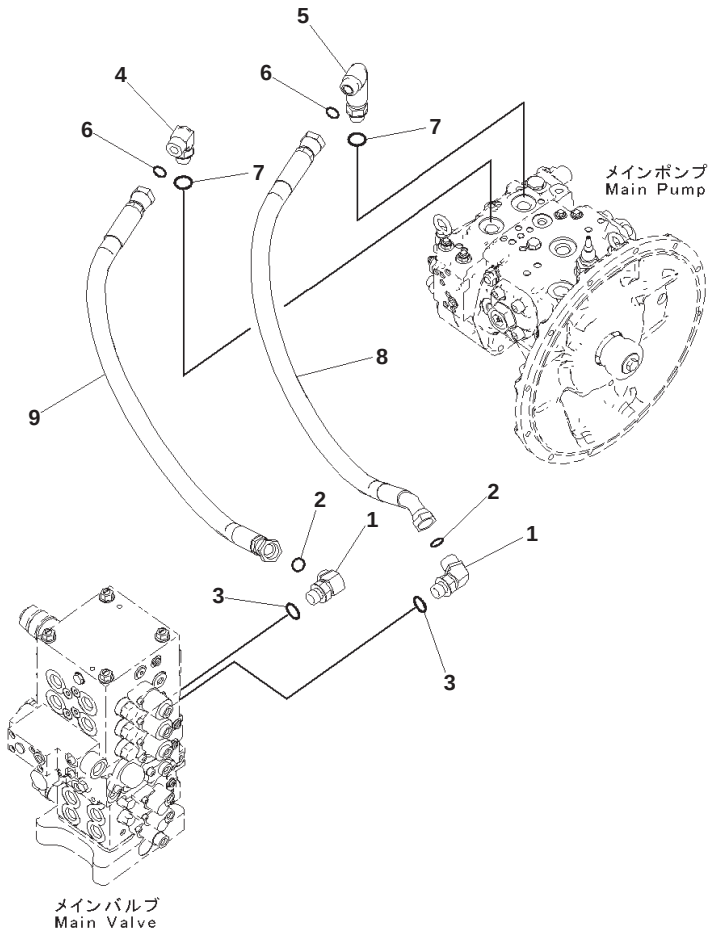

JH000567-V

Delivery Piping

Index	Part Number	Description	Qty	Serial No.
1	203-62-12841	Elbow	2	B10001-
2	02896-11018	O-ring	2	B10001-
3	07002-12434	O-ring	2	B10001-
4	02782-10628	Elbow	1	B10001-
5	203-62-12590	Elbow	1	B10001-
6	02896-11018	O-ring	2	B10001-
7	07002-12434	O-ring	2	B10001-
8	203-62-11141	Hose	1	B10001-
9	203-62-12281	Hose	1	B10001-

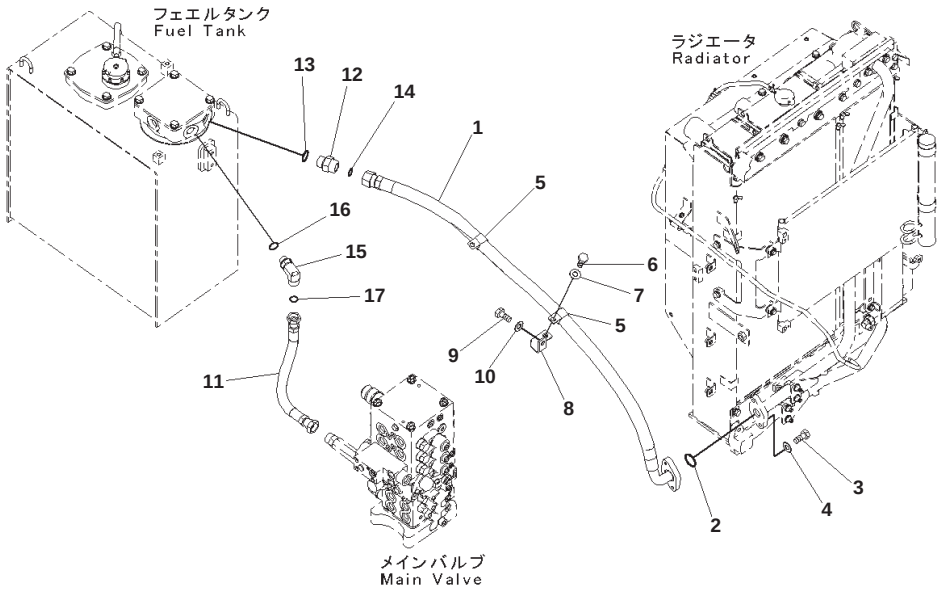

JH000568-V

Index	Part Number	Description	Qty	Serial No.
1	203-62-11151	Hose	1	B10001-
2	07000-13032	O-ring	1	B10001-
3	01010-81040	Bolt	2	B10001-
4	01643-31032	Washer	2	B10001-
5	281-01-13180	Clip	2	B10001-
6	01010-81220	Bolt	2	B10001-
7	01643-31232	Washer	2	B10001-
8	203-62-72110	Bracket	1	B10001-
9	01010-81230	Bolt	1	B10001-
10	01643-31232	Washer	1	B10001-
11	203-62-13480	Hose	1	B10001-
12	207-62-72110	Union	1	B10001-
13	07002-13334	O-ring	1	B10001-
14	207-62-64740	O-ring	1	B10001-
15	02782-1062A	Elbow	1	B10001-
16	07002-12434	O-ring	1	B10001-
17	02896-11018	O-ring	1	B10001-

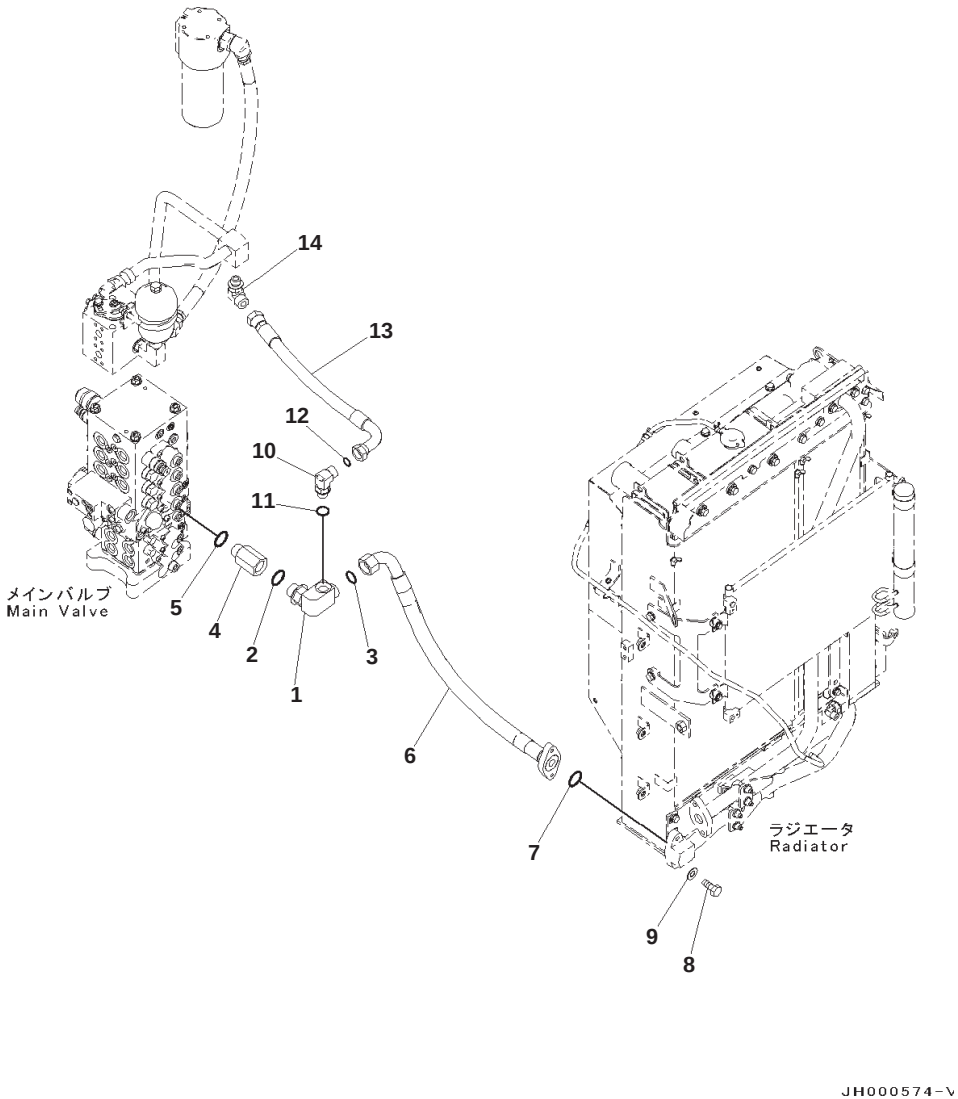

Index	Part Number	Description	Qty	Serial No.
1	203-62-13160	Elbow	1	B10001-
2	07002-13334	O-ring	1	B10001-
3	207-62-64740	O-ring	1	B10001-
4	423-879-4391	Joint	1	B10001-
5	07002-13334	O-ring	1	B10001-
6	203-62-11161	Hose	1	B10001-
7	07000-13032	O-ring	1	B10001-
8	01010-81040	Bolt	2	B10001-
9	01643-31032	Washer	2	B10001-
10	02782-10628	Elbow	1	B10001-
11	07002-12434	O-ring	1	B10001-
12	02896-11018	O-ring	1	B10001-
13	203-62-11171	Hose	1	B10001-
14	(02782-10628)	Elbow		

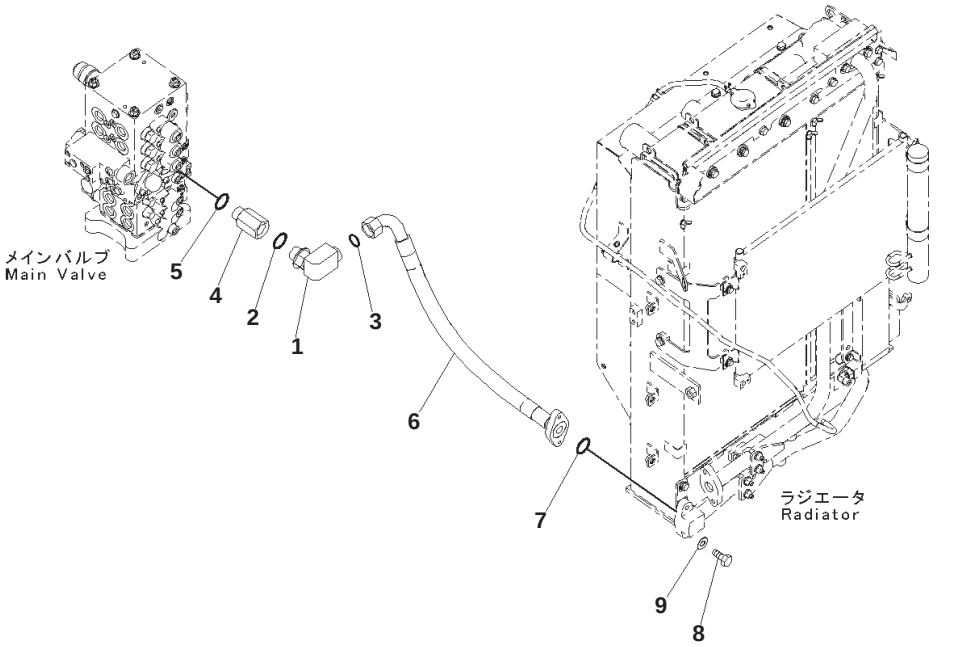

Index	Part Number	Description	Qty	Serial No.
1	203-62-13890	Elbow	1	B10001-
2	07002-13334	O-ring	1	B10001-
3	207-62-64740	O-ring	1	B10001-
4	423-879-4391	Joint	1	B10001-
5	07002-13334	O-ring	1	B10001-
6	203-62-11161	Hose	1	B10001-
7	07000-13032	O-ring	1	B10001-
8	01010-81040	Bolt	2	B10001-
9	01643-31032	Washer	2	B10001-

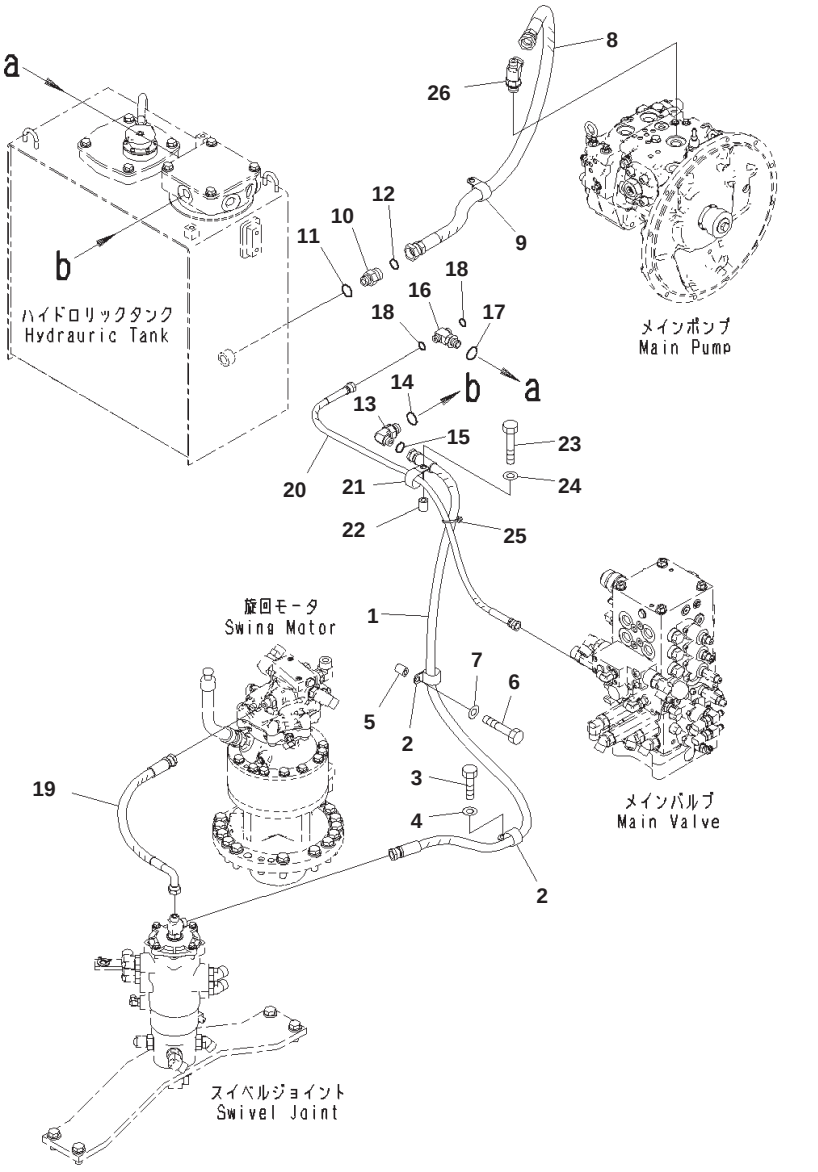

Drain Piping

Index	Part Number	Description	Qty	Serial No.
1	02762-00417	Hose, Face Seal Type	1	B10001-
2	04434-51812	Clip	2	B10001-
3	01010-81220	Bolt	1	B10001-
4	01643-31232	Washer	1	B10001-
5	120-54-42430	Spacer	1	B10001-
6	01010-81250	Bolt	1	B10001-
7	01643-31232	Washer	1	B10001-
8	203-62-11761	Hose	1	B10001-
9	04434-52712	Clip	1	B10001-
10	02781-00628	Union	1	B10001-
11	07002-12434	O-ring	1	B10001-
12	02896-11018	O-ring	1	B10001-
13	02782-10425	Elbow	1	B10001-
14	07002-12434	O-ring	1	B10001-
15	02896-11012	O-ring	1	B10001-
16	209-64-16721	Tee	1	B10001-
17	07002-12034	O-ring	1	B10001-
18	02896-11009	O-ring	2	B10001-
19	203-62-11691	Hose	1	B10001-
20	203-62-11741	Hose	1	B10001-
21	04434-51412	Clip	1	B10001-
22	120-54-42430	Spacer	1	B10001-
23	01010-81250	Bolt	1	B10001-
24	01643-31232	Washer	1	B10001-
25	08034-20536	Band	1	B10001-
26	(22B-62-17110)	Elbow		

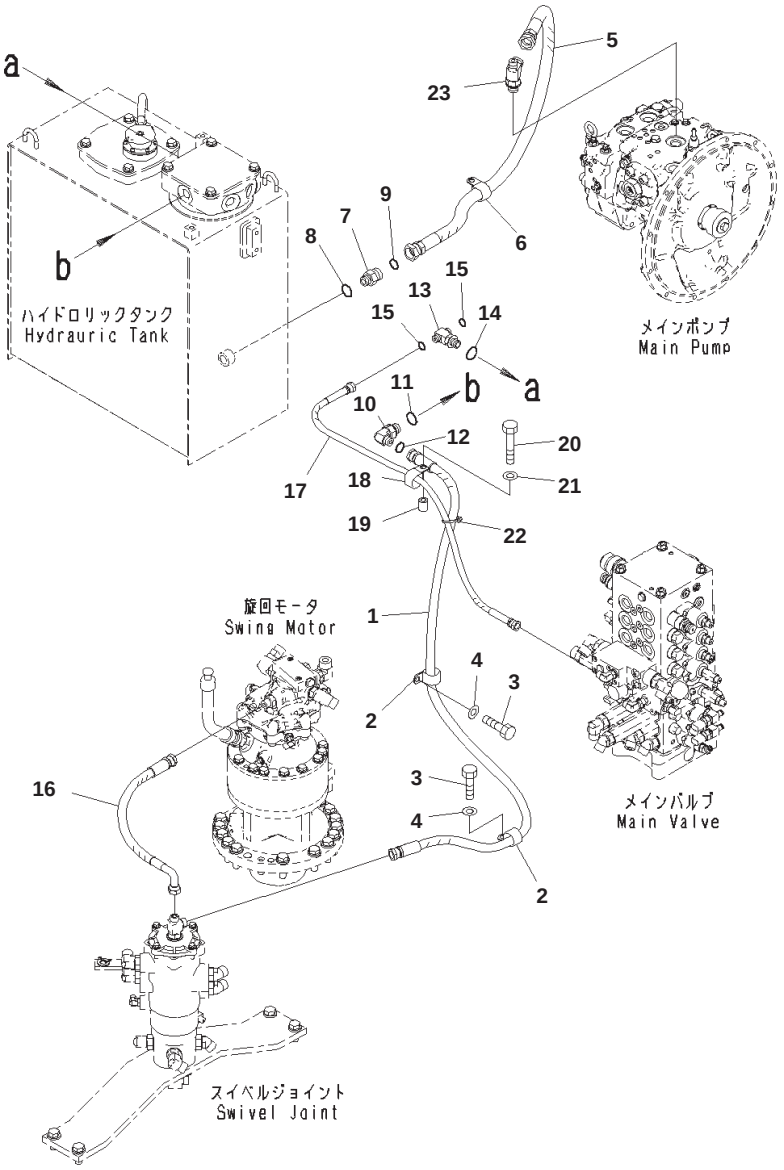

Index	Part Number	Description	Qty	Serial No.
1	02762-00417	Hose, Face Seal Type	1	B10001-
2	04434-51812	Clip	2	B10001-
3	01010-81220	Bolt	2	B10001-
4	01643-31232	Washer	2	B10001-
5	203-62-11761	Hose	1	B10001-
6	04434-52712	Clip	1	B10001-
7	02781-00628	Union	1	B10001-
8	07002-12434	O-ring	1	B10001-
9	02896-11018	O-ring	1	B10001-
10	02782-10425	Elbow	1	B10001-
11	07002-12434	O-ring	1	B10001-
12	02896-11012	O-ring	1	B10001-
13	209-64-16721	Tee	1	B10001-
14	07002-12034	O-ring	1	B10001-
15	02896-11009	O-ring	2	B10001-
16	203-62-11691	Hose	1	B10001-
17	203-62-11741	Hose	1	B10001-
18	04434-51412	Clip	1	B10001-
19	120-54-42430	Spacer	1	B10001-
20	01010-81250	Bolt	1	B10001-
21	01643-31232	Washer	1	B10001-
22	08034-20536	Band	1	B10001-
23	(22B-62-17110)	Elbow		

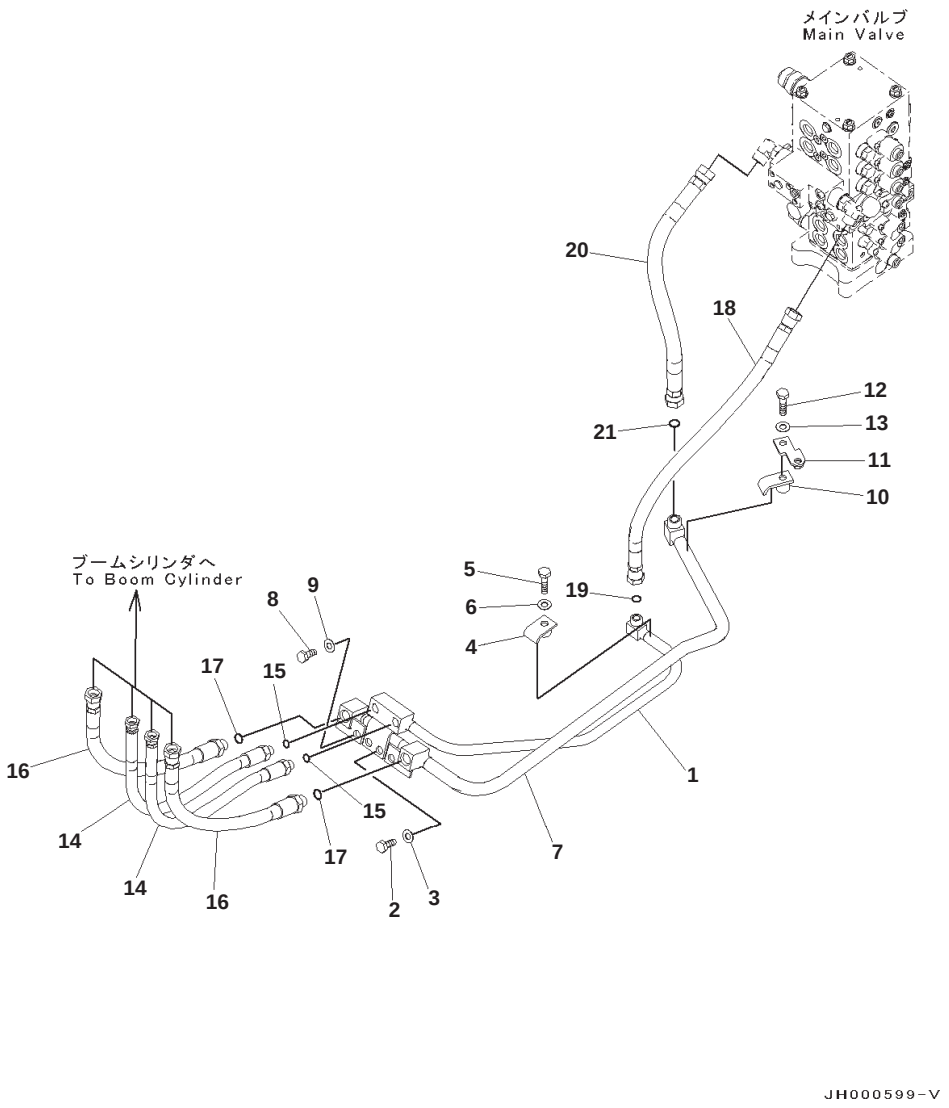

Boom Piping

Index	Part Number	Description	Qty	Serial No.
1	203-62-11231	Tube	1	B10001-
2	01010-81230	Bolt	2	B10001-
3	01643-31232	Washer	2	B10001-
4	203-62-61270	Clamp	1	B10001-
5	01010-81250	Bolt	1	B10001-
6	01643-31232	Washer	1	B10001-
7	203-62-11241	Tube	1	B10001-
8	01010-81230	Bolt	2	B10001-
9	01643-31232	Washer	2	B10001-
10	203-62-63730	Clamp	1	B10001-
11	203-06-71271	Bracket	1	B10001-
12	01010-81260	Bolt	1	B10001-
13	01643-31232	Washer	1	B10001-
14	203-62-11251	Hose	2	B10001-
15	07002-12034	O-ring	2	B10001-
16	203-62-11260	Hose	2	B10001-
17	07002-12434	O-ring	2	B10001-
18	203-62-11270	Hose	1	B10001-
19	02896-11015	O-ring	1	B10001-
20	203-62-11581	Hose	1	B10001-
21	02896-11018	O-ring	1	B10001-

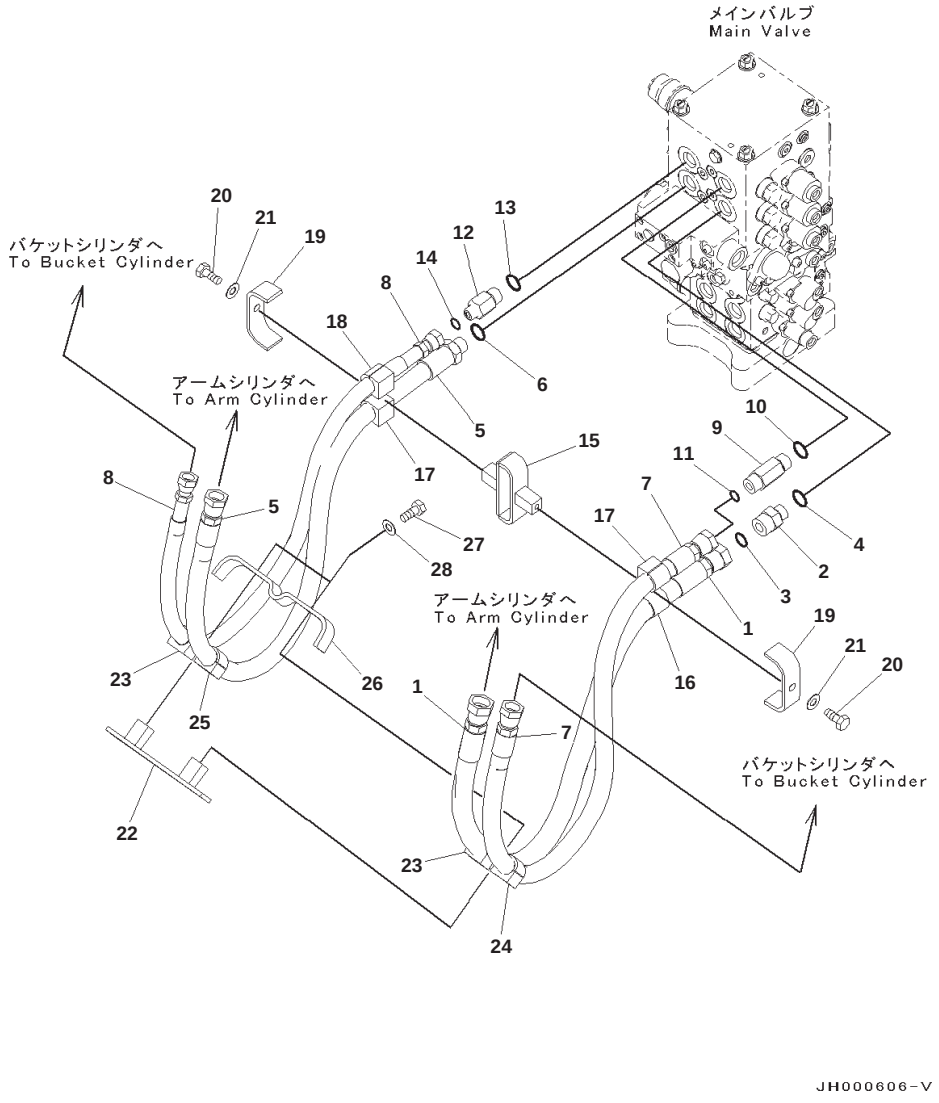

PC130-8 S/N B10001-UP
Arm and Bucket Piping

Index	Part Number	Description	Qty	Serial No.
1	203-62-11471	Hose	1	B10001-
2	02781-00628	Union	1	B10001-
3	02896-11018	O-ring	1	B10001-
4	07002-12434	O-ring	1	B10001-
5	203-62-11221	Hose	1	B10001-
6	07002-12434	O-ring	1	B10001-
7	203-62-13170	Hose	1	B10001-
8	02777-00411	Hose, Face Seal Type	1	B10001-
9	21W-62-42481	Nipple	1	B10001-
10	07002-12434	O-ring	1	B10001-
11	02896-11015	O-ring	1	B10001-
12	21W-62-42450	Nipple	1	B10001-
13	07002-12434	O-ring	1	B10001-
14	02896-11012	O-ring	1	B10001-
15	203-62-13930	Bracket	1	B10001-
16	203-62-13910	・ Cushion	1	B10001-
17	203-62-58310	・ Cushion	2	B10001-
18	203-62-58320	・ Cushion	1	B10001-
19	203-62-61240	Plate	2	B10001-
20	01010-81025	Bolt	2	B10001-
21	01643-31032	Washer	2	B10001-
22	203-62-13920	Bracket	1	B10001-
23	203-62-58310	・ Cushion	2	B10001-
24	203-62-58320	・ Cushion	1	B10001-
25	203-62-13910	・ Cushion	1	B10001-
26	203-62-58280	Plate	1	B10001-
27	01010-81025	Bolt	2	B10001-
28	01643-31032	Washer	2	B10001-

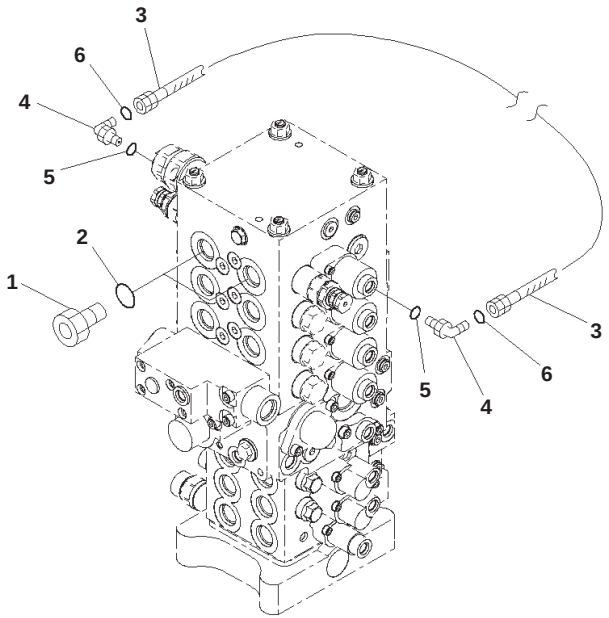

メインバルブ
Main Valve

JH001388

Blind Parts, 1-actuator

Index	Part Number	Description	Qty	Serial No.
1	07040-12412	Plug	2	B10001-
2	07002-12434	O-ring	2	B10001-
3	02760-002A5	Hose, Face Seal Type	1	B10001-
4	02782-10210	Elbow	2	B10001-
5	07002-11423	O-ring	2	B10001-
6	02896-11008	O-ring	2	B10001-

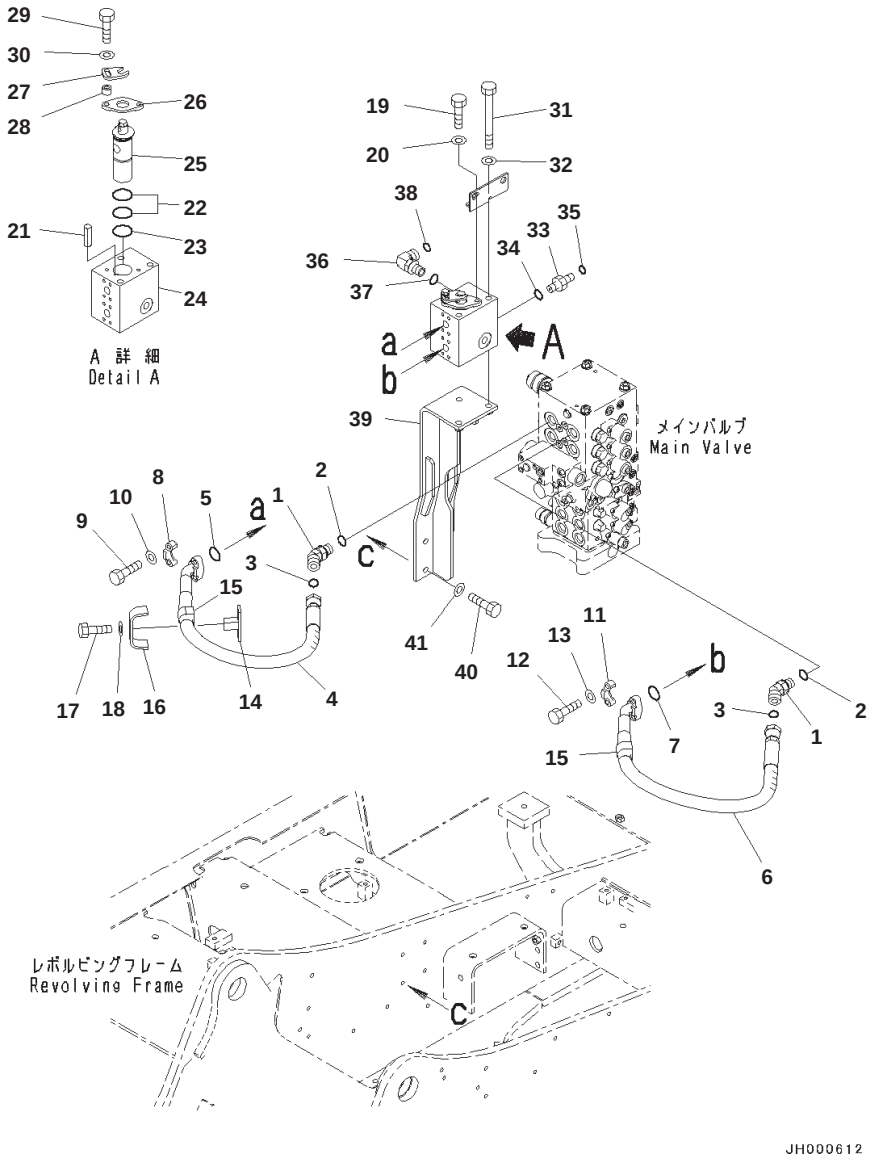

Actuator Piping, 1-actuator, Main Line and Convertible Valve

Index	Code	Part Number	Description	Qty	Serial No.
1		02783-10628	Elbow	2	B10001-
2		07002-12434	O-ring	2	B10001-
3		02896-11018	O-ring	2	B10001-
4		203-62-17630	Hose	1	B10001-
5		07000-13025	O-ring	1	B10001-
6		203-62-17640	Hose	1	B10001-
7		07000-13025	O-ring	1	B10001-
8		07371-30640	Flange, Split	2	B10001-
9		07372-21035	Bolt	4	B10001-
10		01643-51032	Washer	4	B10001-
11		07371-30640	Flange, Split	2	B10001-
12		07372-21035	Bolt	4	B10001-
13		01643-51032	Washer	4	B10001-
14		203-62-65241	Clamp	1	B10001-
15		203-62-43410	・ Cushion	2	B10001-
16		203-62-61240	Plate	1	B10001-
17		01010-81025	Bolt	1	B10001-
18		01643-31032	Washer	1	B10001-
		203-62-65102	Valve Assembly	1	B10001-
19		01010-81025	・ Bolt	2	B10001-
20		01643-31032	・ Washer	2	B10001-
21		04025-00412	・ Pin, Spring	1	B10001-
22		07000-13042	・ O-ring	2	B10001-
23		07000-13048	・ O-ring	1	B10001-
24	C1		・ Block	1	B10001-
25	C1		・ Rotor	1	B10001-
26		20Y-970-3350	・ Flange	1	B10001-
27		203-62-65630	Plate	1	B10001-
28		201-03-29160	Spacer	1	B10001-
29		01010-81050	Bolt	1	B10001-
30		01643-31032	Washer	1	B10001-
31		01011-81275	Bolt	3	B10001-
32		01643-31232	Washer	3	B10001-
33		02781-00628	Union	1	B10001-
34		07002-12434	O-ring	1	B10001-
35		02896-11018	O-ring	1	B10001-
36		02782-10628	Elbow	1	B10001-
37		07002-12434	O-ring	1	B10001-
38		02896-11018	O-ring	1	B10001-
39		203-62-11831	Bracket	1	B10001-
40		01010-81230	Bolt	4	B10001-
41		01643-31232	Washer	4	B10001-

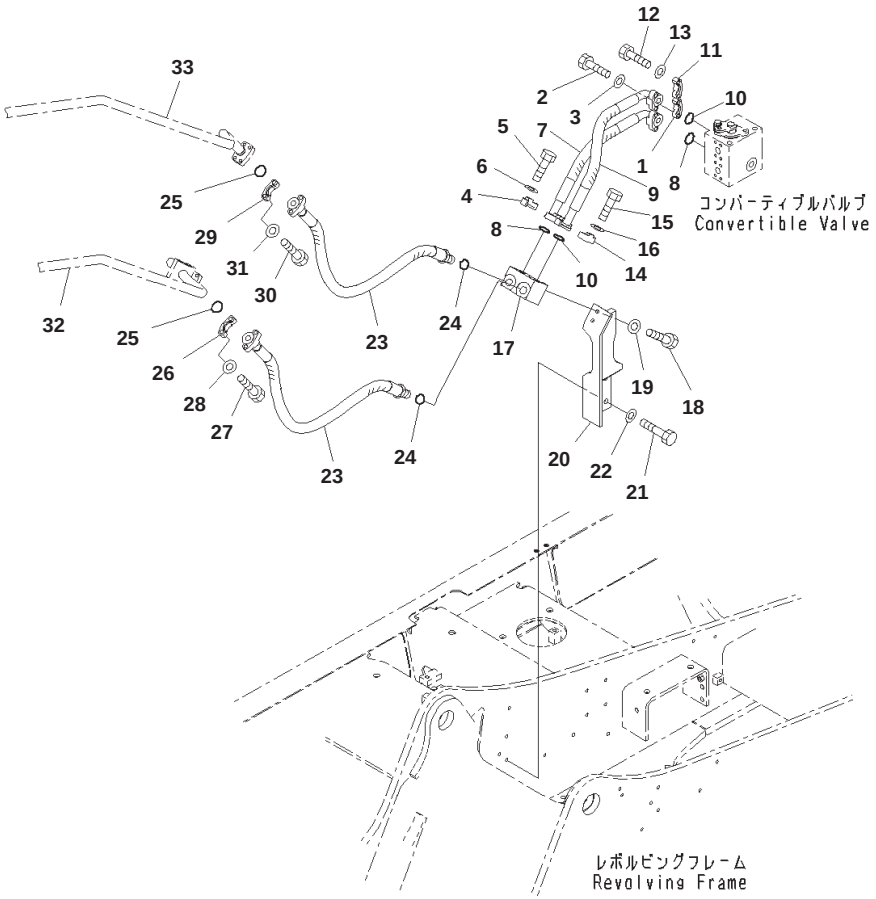

Actuator Piping, 1-actuator, Joint Block Piping

Index	Part Number	Description	Qty	Serial No.
1	07371-30640	Flange, Split	2	B10001-
2	07372-21035	Bolt	4	B10001-
3	01643-51032	Washer	4	B10001-
4	07371-30640	Flange, Split	2	B10001-
5	07372-21035	Bolt	4	B10001-
6	01643-51032	Washer	4	B10001-
7	203-62-12260	Hose	1	B10001-
8	07000-13025	O-ring	2	B10001-
9	203-62-12250	Hose	1	B10001-
10	07000-13025	O-ring	2	B10001-
11	07371-30640	Flange, Split	2	B10001-
12	07372-21035	Bolt	4	B10001-
13	01643-51032	Washer	4	B10001-
14	07371-30640	Flange, Split	2	B10001-
15	07372-21035	Bolt	4	B10001-
16	01643-51032	Washer	4	B10001-
17	203-62-65221	Block	1	B10001-
18	01010-81030	Bolt	2	B10001-
19	01643-31032	Washer	2	B10001-
20	203-62-11791	Bracket	1	B10001-
21	01010-81265	Bolt	3	B10001-
22	01643-31232	Washer	3	B10001-
23	203-62-12220	Hose	2	B10001-
24	07002-12434	O-ring	2	B10001-
25	07000-13025	O-ring	2	B10001-
26	07371-30640	Flange, Split	2	B10001-
27	07372-21035	Bolt	4	B10001-
28	01643-51032	Washer	4	B10001-
29	07371-30640	Flange, Split	2	B10001-
30	07372-21035	Bolt	4	B10001-
31	01643-51032	Washer	4	B10001-
32	(203-62-15151)	Tube		
33	(203-62-15160)	Tube		

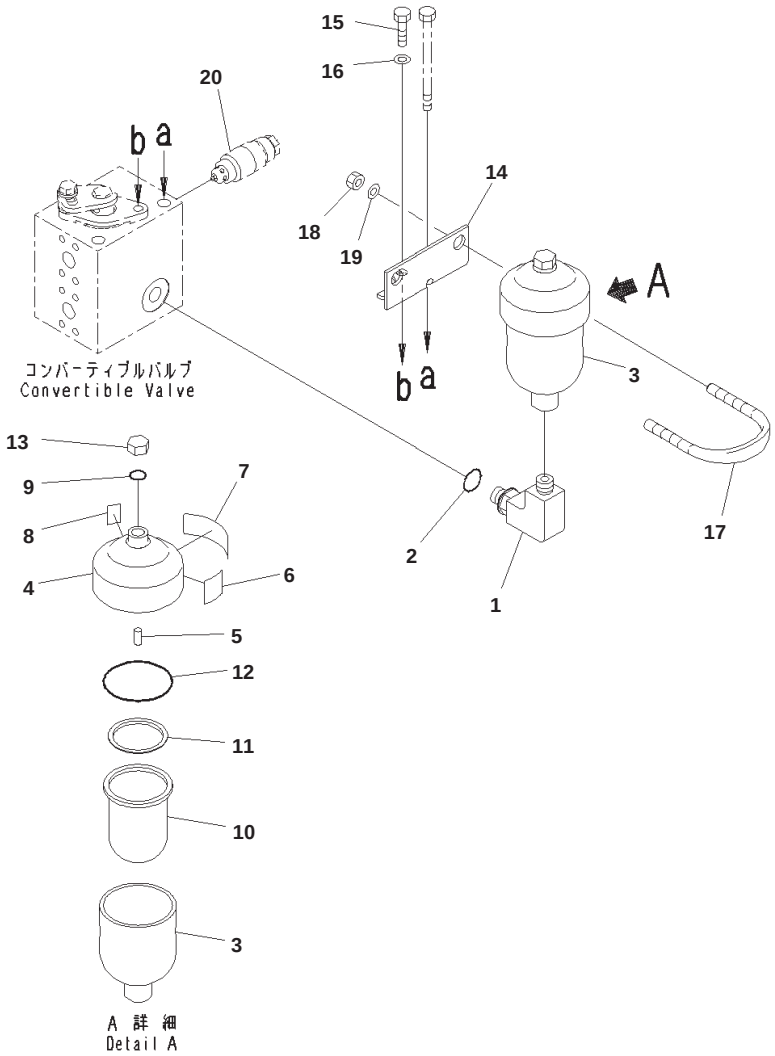

Actuator Piping, 1-actuator, Accumulator, LHS

Index	Code	Part Number	Description	Qty	Serial No.
1		203-62-65281	Elbow	1	B10001-
2		07002-12034	O-ring	2	B10001-
		22B-62-24460	Accumulator	1	B10001-
3	C1		・ Shell	1	B10001-
4	C1		・ Lid	1	B10001-
5	C1		・ Core	1	B10001-
6	C1		・ Plate, Name	1	B10001-
7	C1		・ Plate	1	B10001-
8	C1		・ Plate	1	B10001-
9		07000-01008	・ O-ring	1	B10001-
10		205-60-71340	・ Bladder	1	B10001-
11		205-60-71350	・ Ring	1	B10001-
12		205-60-71360	・ O-ring	1	B10001-
13		22B-62-24470	・ Cap	1	B10001-
14		203-62-65292	Bracket	1	B10001-
15		01010-81030	Bolt	1	B10001-
16		01643-31032	Washer	1	B10001-
17		07283-38973	Clip, Pipe	1	B10001-
18		01597-01211	Nut	2	B10001-
19		01643-31232	Washer	2	B10001-
20		(709-70-74700)	Valve Assembly, Suction and Relief		

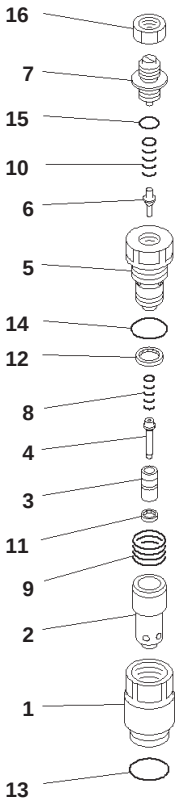

PVB8203

Actuator Piping, 1-actuator, Safety Valve

Index	Code	Part Number	Description	Qty	Serial No.
		709-70-74700	Valve Assembly, Suction and Relief	1	B10001-
1	C1		・ Sleeve	1	B10001-
2	C1		・ Sleeve	1	B10001-
3	C1		・ Poppet	1	B10001-
4	C1		・ Piston	1	B10001-
5	C1		・ Plug	1	B10001-
6	C1		・ Poppet	1	B10001-
7	C1		・ Screw	1	B10001-
8	C1		・ Spring	1	B10001-
9	C1		・ Spring	1	B10001-
10	C1		・ Spring	1	B10001-
11	C1		・ Seal	1	B10001-
12	C1		・ Seal	1	B10001-
13		709-25-11390	・ O-ring	1	B10001-
14	C1		・ O-ring	1	B10001-
15	C1		・ O-ring	1	B10001-
16	C1		・ Nut	1	B10001-

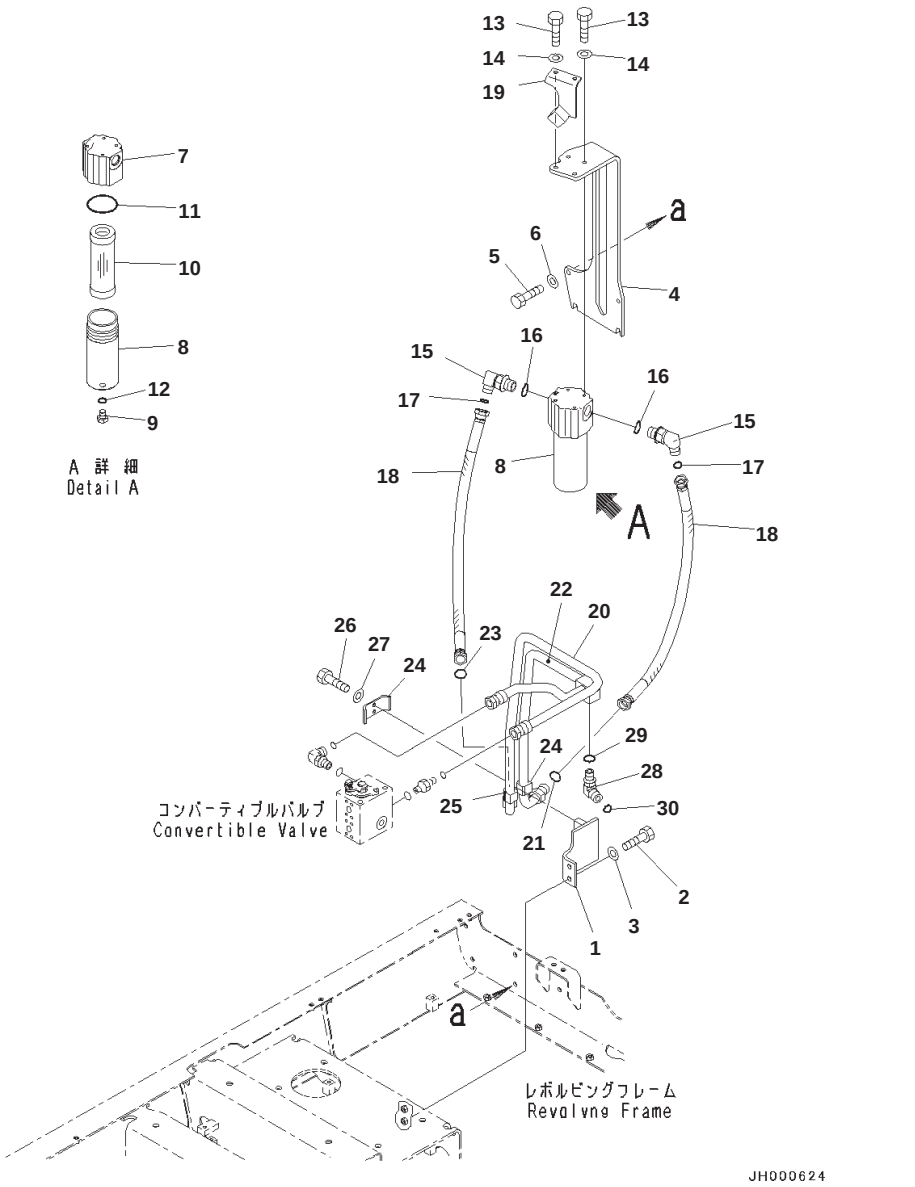

Actuator Piping, 1-actuator, Tube and Bracket

Index	Code	Part Number	Description	Qty	Serial No.
1		203-62-11820	Bracket	1	B10001-
2		01010-81240	Bolt	2	B10001-
3		01643-31232	Washer	2	B10001-
4		203-62-11811	Bracket	1	B10001-
5		01010-81230	Bolt	4	B10001-
6		01643-31232	Washer	4	B10001-
		22B-973-1300	Filter Assembly	3	B10001-
7	C1		・ Head	1	B10001-
8	C1		・ Case	1	B10001-
9	C1		・ Plug	1	B10001-
10		203-973-5820	・ Element Assembly	1	B10001-
11		07000-12090	・ O-ring	1	B10001-
12		07000-12014	・ O-ring	1	B10001-
13		01010-81040	Bolt	4	B10001-
14		01643-31032	Washer	4	B10001-
15		11Y-62-12340	Elbow	2	B10001-
16		07002-13334	O-ring	2	B10001-
17		02896-11018	O-ring	2	B10001-
18		02753-006A8	Hose, Face Seal Type	2	B10001-
19		203-62-12570	Bracket	1	B10001-
20		203-62-11781	Tube	1	B10001-
21		02896-11018	O-ring	1	B10001-
22		203-62-11771	Tube	1	B10001-
23		02896-11018	O-ring	1	B10001-
24		203-70-53381	Plate	1	B10001-
25		21K-62-35270	Cushion	2	B10001-
26		01010-81025	Bolt	2	B10001-
27		01643-31032	Washer	2	B10001-
28		02782-10628	Elbow	1	B10001-
29		07002-12434	O-ring	1	B10001-
30		02896-11018	O-ring	1	B10001-

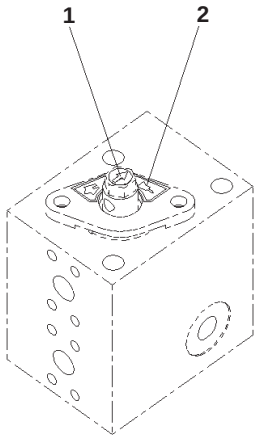

コンバーティブルバルブ
Convertible Valve

JH000627-V

Actuator Piping, 1-actuator, Arrow Mark Plate

Index	Part Number	Description	Qty	Serial No.
1	203-62-65380	Plate, Mark, Mark	1	B10001-
2	203-00-56640	Plate, Mark	1	B10001-

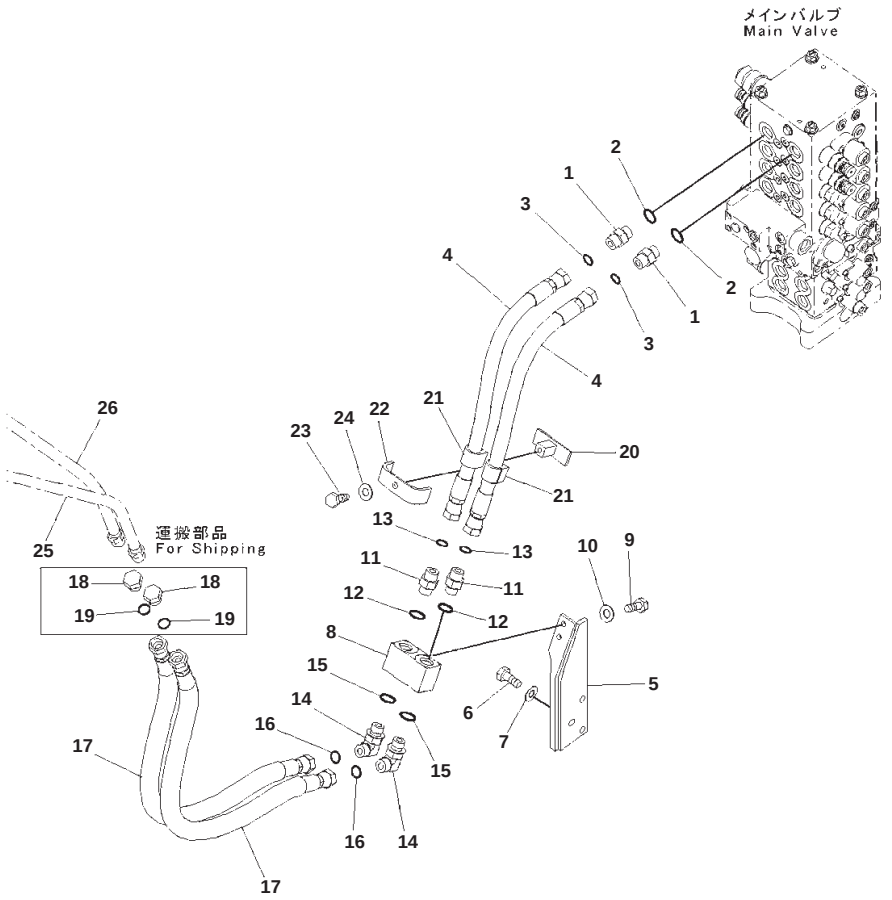

Index	Part Number	Description	Qty	Serial No.
1	02781-00522	Union	2	B10001-
2	07002-12434	O-ring	2	B10001-
3	02896-11015	O-ring	2	B10001-
4	203-62-14820	Hose	2	B10001-
5	203-62-13540	Bracket	1	B10001-
6	01010-81230	Bolt	3	B10001-
7	01643-31232	Washer	3	B10001-
8	203-62-65230	Block	1	B10001-
9	01010-81030	Bolt	2	B10001-
10	01643-31032	Washer	2	B10001-
11	02781-00522	Union	2	B10001-
12	07002-12434	O-ring	2	B10001-
13	02896-11015	O-ring	2	B10001-
14	02782-10522	Elbow	2	B10001-
15	07002-12434	O-ring	2	B10001-
16	02896-11015	O-ring	2	B10001-
17	203-62-13590	Hose	2	B10001-
18	07376-70522	Plug	2	B10001-
19	02896-11015	O-ring	2	B10001-
20	203-62-65250	Clamp	1	B10001-
21	203-62-58310	Cushion	2	B10001-
22	203-62-61240	Plate	1	B10001-
23	01010-81030	Bolt	1	B10001-
24	01643-31032	Washer	1	B10001-
25	(203-62-15230)	Tube		
26	(203-62-15430)	Tube		

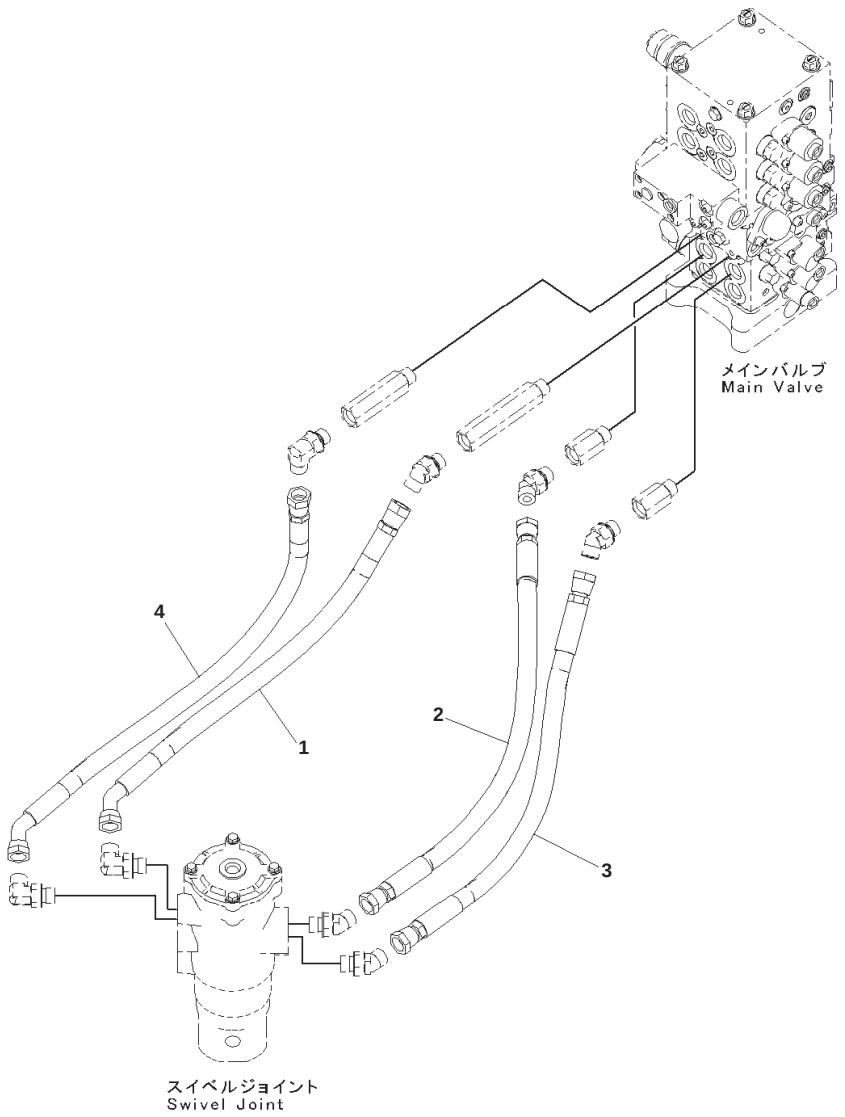

Index	Part Number	Description	Qty	Serial No.
1	203-62-13970	Hose	1	B10001-
2	203-62-11651	Hose	1	B10001-
3	203-62-11662	Hose	1	B10001-
4	203-62-11682	Hose	1	B10001-

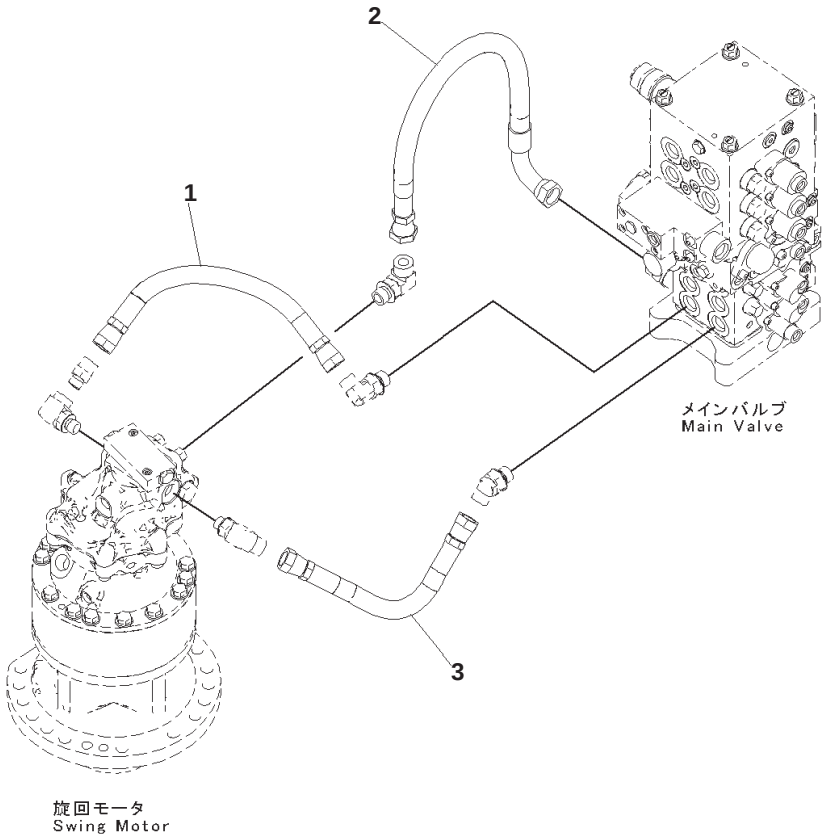

Swing Piping

Index	Part Number	Description	Qty	Serial No.
1	203-62-11381	Hose	1	B10001-
2	203-62-13230	Hose	1	B10001-
3	203-62-13220	Hose	1	B10001-

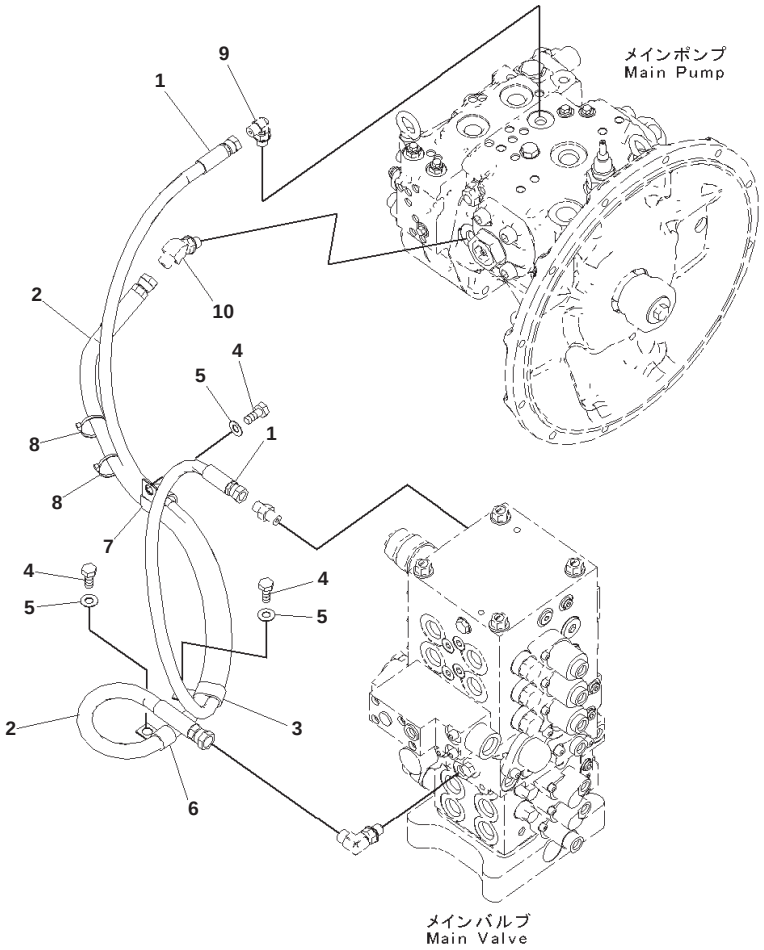

Index	Part Number	Description	Qty	Serial No.
1	203-62-14020	Hose	1	B10001-
2	203-62-12210	Hose	1	B10001-
3	04435-51612	Clip	1	B10001-
4	01010-81220	Bolt	3	B10001-
5	01643-31232	Washer	3	B10001-
6	04434-51712	Clip	1	B10001-
7	04434-53212	Clip	1	B10001-
8	08034-20519	Band	2	B10001-
9	(02782-10210)	Elbow		
10	(11Y-62-12510)	Elbow		

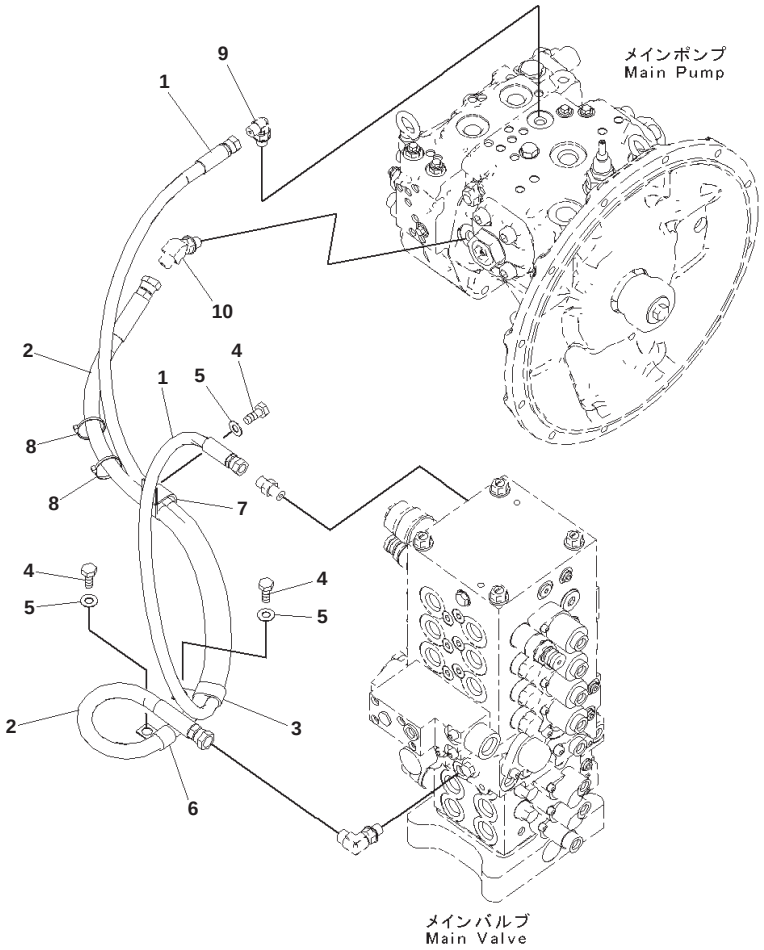

Index	Part Number	Description	Qty	Serial No.
1	02756-00216	Hose, Face Seal Type	1	B10001-
2	203-62-12210	Hose	1	B10001-
3	04435-51612	Clip	1	B10001-
4	01010-81220	Bolt	3	B10001-
5	01643-31232	Washer	3	B10001-
6	04434-51712	Clip	1	B10001-
7	04434-53212	Clip	1	B10001-
8	08034-20519	Band	2	B10001-
9	(02782-10210)	Elbow		
	(02782-10210)	Elbow		
10	(11Y-62-12510)	Elbow		
	(11Y-62-12510)	Elbow		

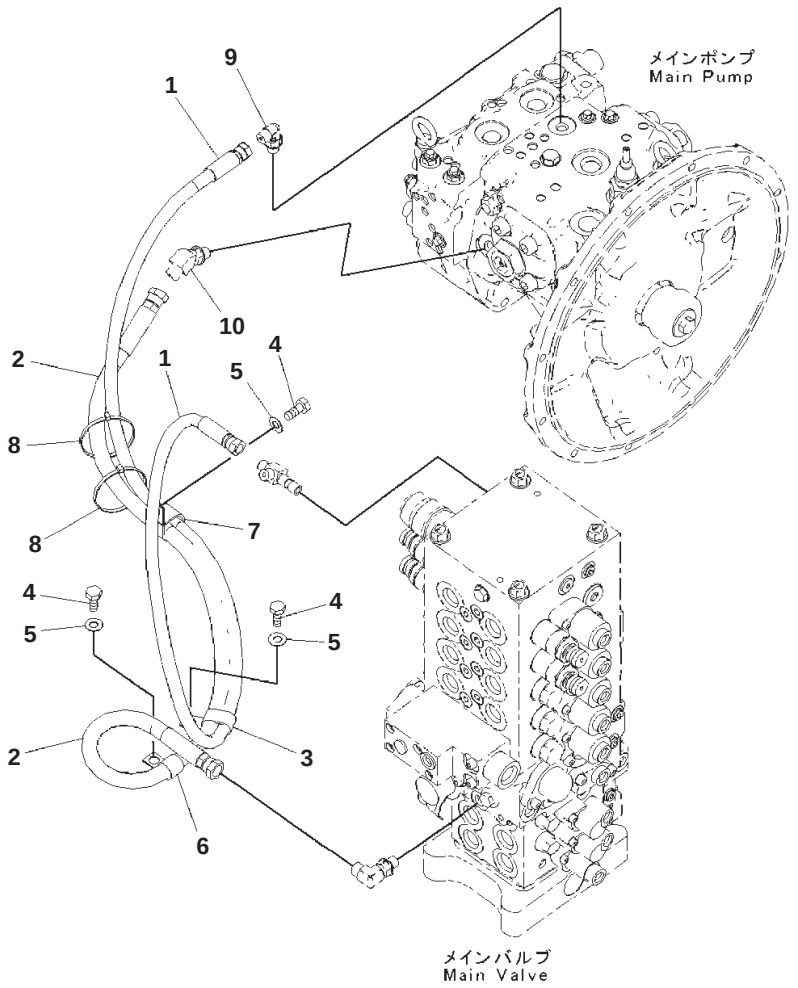

Index	Part Number	Description	Qty	Serial No.
1	203-62-12191	Hose	1	B10001-
2	203-62-12210	Hose	1	B10001-
3	04435-51612	Clip	1	B10001-
4	01010-81220	Bolt	3	B10001-
5	01643-31232	Washer	3	B10001-
6	04434-51712	Clip	1	B10001-
7	04434-53212	Clip	1	B10001-
8	08034-20519	Band	2	B10001-
9	(02782-10210)	Elbow		
10	(11Y-62-12510)	Elbow		

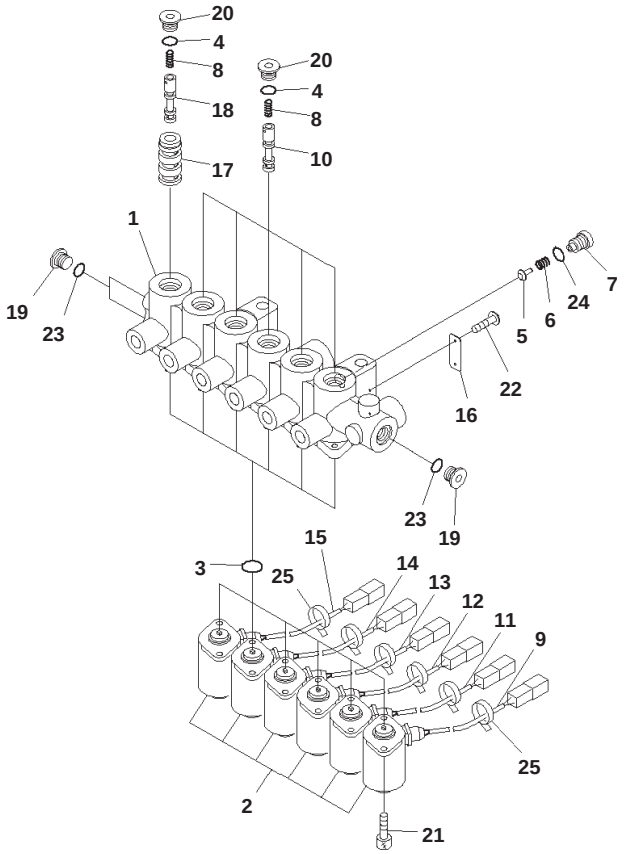

00062909

Solenoid Valve Piping, 1-actuator, Solenoid Valve

Index	Code	Part Number	Description	Qty	Serial No.
		20Y-60-41611	Solenoid Assembly	1	B10001-
1	C1		・ Block	1	B10001-
2		20Y-60-32121	・ Solenoid Assembly	6	B10001-
3		07000-12016	・ O-ring	6	B10001-
4		07000-12011	・ O-ring	6	B10001-
5		NY05062-1170A	・ Plunger	1	B10001-
6		NY05062-11800	・ Spring	1	B10001-
7		NY06277-1320A	・ Plug	1	B10001-
8		NY06339-10200	・ Spring	6	B10001-
9		NY07207-11700	・ Tube	1	B10001-
10		NY07493-10200	・ Spool	5	B10001-
11		NY07529-10200	・ Tube	1	B10001-
12		NY07529-10300	・ Tube	1	B10001-
13		NY07529-10400	・ Tube	1	B10001-
14		NY07529-10500	・ Tube	1	B10001-
15		NY07529-10600	・ Tube	1	B10001-
16		NY09000-11400	・ Plate	1	B10001-
17		NY16207-10200	・ Sleeve	1	B10001-
18		NY16207-10300	・ Spool	1	B10001-
19		NY80000-02100	・ Plug	3	B10001-
20		NY80000-02200	・ Plug	6	B10001-
21		NY81416-05012	・ Bolt, Hexagon Socket Head	12	B10001-
22		NY84110-00248	・ Screw	2	B10001-
23		07000-11008	・ O-ring	3	B10001-
24		07000-11010	・ O-ring	1	B10001-
25		NY89103-00090	・ Band	6	B10001-

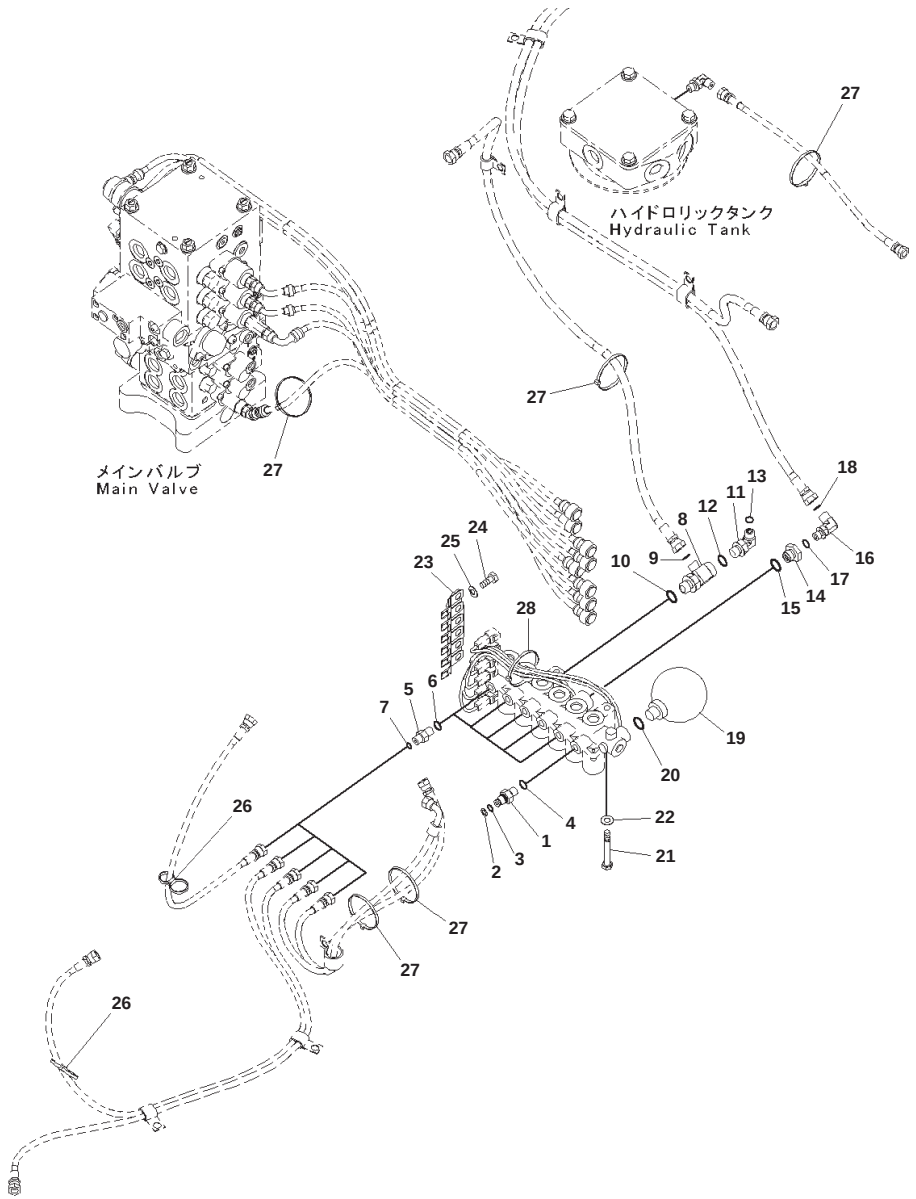

Solenoid Valve Piping, 1-actuator, Connecting Parts

Index	Part Number	Description	Qty	Serial No.
1	20Y-62-16630	Nipple	1	B10001-
2	201-60-11390	・ O-ring	1	B10001-
3	20Y-62-19560	・ O-ring	1	B10001-
4	07002-11423	O-ring	1	B10001-
5	02781-0021D	Union	5	B10001-
6	07002-11423	O-ring	5	B10001-
7	02896-11008	O-ring	5	B10001-
8	203-62-13470	Tee	1	B10001-
9	02896-11009	O-ring	1	B10001-
10	07002-12034	O-ring	1	B10001-
11	02782-10313	Elbow	1	B10001-
12	07002-11823	O-ring	1	B10001-
13	02896-11009	O-ring	1	B10001-
14	20Y-62-21940	Filter Assembly	1	B10001-
15	07002-12034	O-ring	1	B10001-
16	02782-10311	Elbow	1	B10001-
17	07002-11423	O-ring	1	B10001-
18	02896-11009	O-ring	1	B10001-
19	22U-60-21330	Accumulator	1	B10001-
20	07002-12034	O-ring	1	B10001-
21	01010-81085	Bolt	2	B10001-
22	01643-31032	Washer	2	B10001-
23	203-62-13510	Plate	1	B10001-
24	01010-81230	Bolt	2	B10001-
25	01643-31232	Washer	2	B10001-
26	134-03-61410	Band	2	B10001-
27	08034-20519	Band	6	B10001-
28	Band			

Reference:H1831-001002 Page:H030002

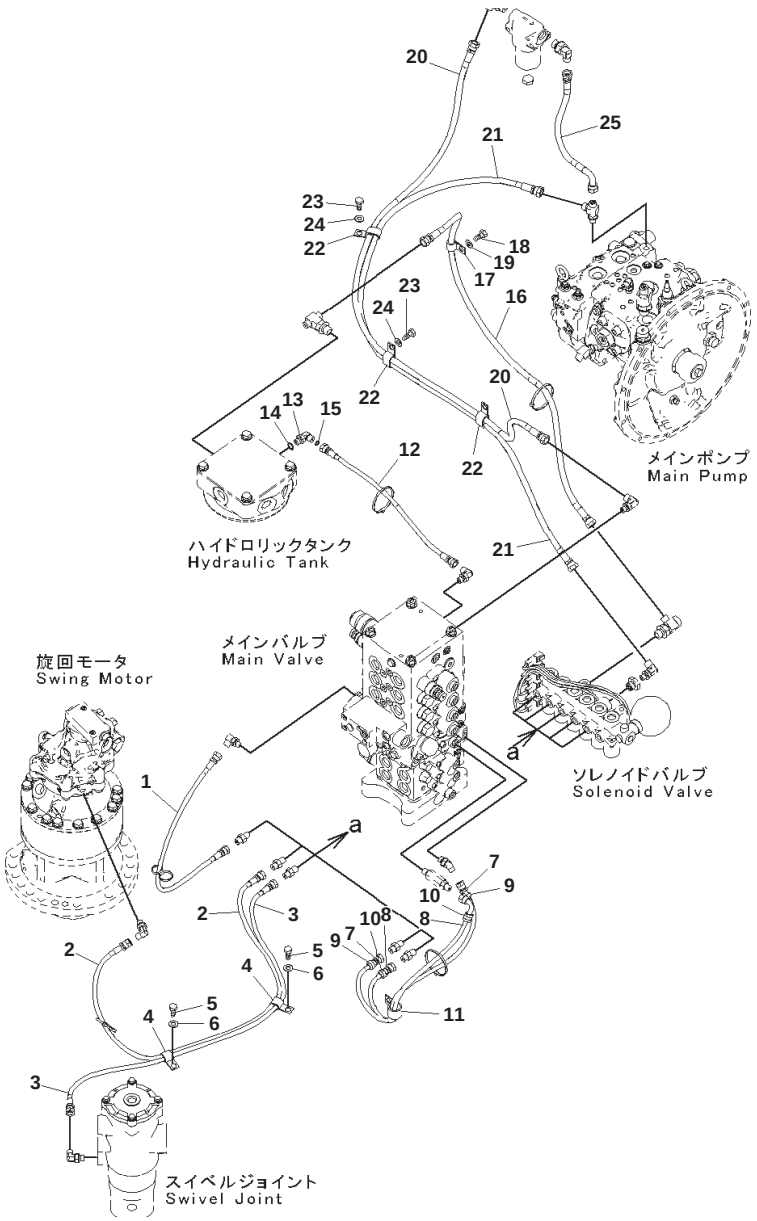

Solenoid Valve Piping, 1-actuator, Solenoid Valve Piping

Index	Part Number	Description	Qty	Serial No.
1	208-62-72160	Hose	1	B10001-
2	203-62-12160	Hose	1	B10001-
3	22U-62-26850	Hose	1	B10001-
4	04435-51212	Clip	2	B10001-
5	01010-81220	Bolt	2	B10001-
6	01643-31232	Washer	2	B10001-
7	203-62-13490	Hose	1	B10001-
8	22U-62-28730	Hose	1	B10001-
9	20Y-62-22790	Band, Red	2	B10001-
10	20Y-62-22820	Band, Blue	2	B10001-
11	04434-52712	Clip	1	B10001-
12	203-62-12130	Hose	1	B10001-
13	02782-10210	Elbow	1	B10001-
14	07002-11423	O-ring	1	B10001-
15	02896-11008	O-ring	1	B10001-
16	203-62-12120	Hose	1	B10001-
17	04434-51412	Clip	1	B10001-
18	01010-81220	Bolt	1	B10001-
19	01643-31232	Washer	1	B10001-
20	203-62-11951	Hose	1	B10001-
21	203-62-12111	Hose	1	B10001-
22	04435-51512	Clip	3	B10001-
23	01010-81220	Bolt	2	B10001-
24	01643-31232	Washer	2	B10001-
25	203-62-11981	Hose	1	B10001-

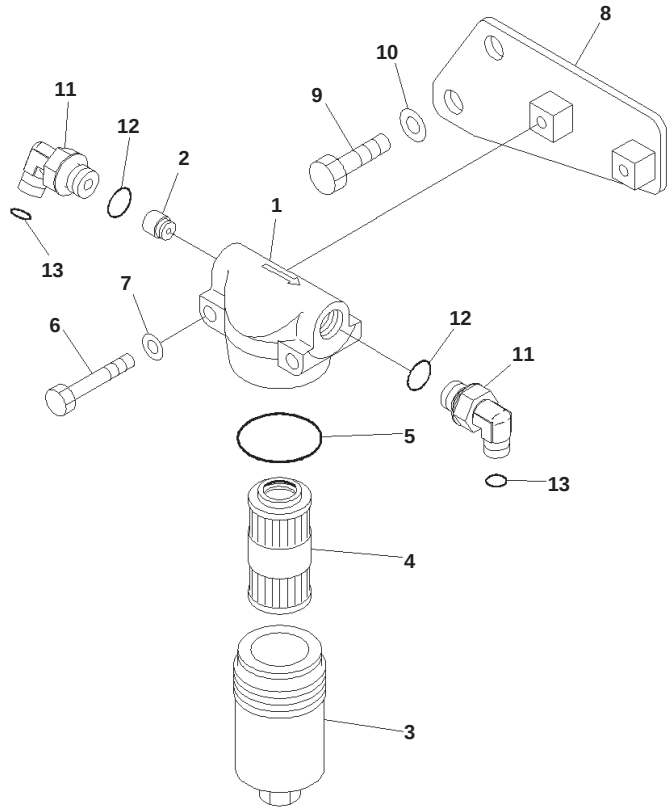

JH000688

Solenoid Valve Piping, 1-actuator, Pilot Filter

Index	Code	Part Number	Description	Qty	Serial No.
		20Y-62-51681	Filter Assembly	1	B10001-
1	C1		・ Head	1	B10001-
2	C1		・ Valve Assembly	1	B10001-
3	C1		・ Case	1	B10001-
4		20Y-62-51691	・ Filter	1	B10001-
5		706-76-71390	・ O-ring	1	B10001-
6		01010-81070	Bolt	2	B10001-
7		01643-31032	Washer	2	B10001-
8		203-62-12431	Plate	1	B10001-
9		01010-81230	Bolt	2	B10001-
10		01643-31232	Washer	2	B10001-
11		02782-10315	Elbow	2	B10001-
12		07002-12034	O-ring	2	B10001-
13		02896-11009	O-ring	2	B10001-

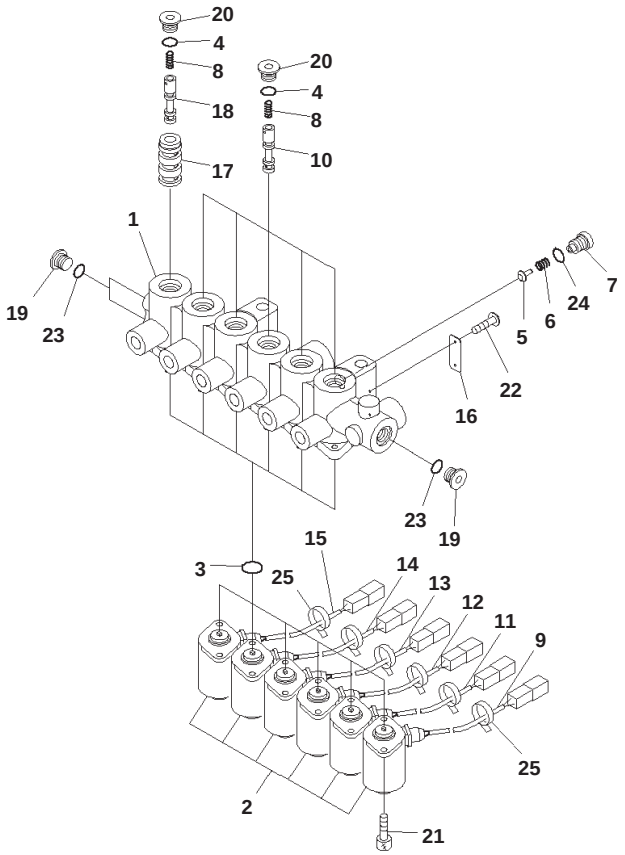

00062909

Solenoid Valve Piping, Solenoid Valve

Index	Code	Part Number	Description	Qty	Serial No.
		20Y-60-41611	Solenoid Assembly	1	B10001-
1	C1		・ Block	1	B10001-
2		20Y-60-32121	・ Solenoid Assembly	6	B10001-
3		07000-12016	・ O-ring	6	B10001-
4		07000-12011	・ O-ring	6	B10001-
5		NY05062-1170A	・ Plunger	1	B10001-
6		NY05062-11800	・ Spring	1	B10001-
7		NY06277-1320A	・ Plug	1	B10001-
8		NY06339-10200	・ Spring	6	B10001-
9		NY07207-11700	・ Tube	1	B10001-
10		NY07493-10200	・ Spool	5	B10001-
11		NY07529-10200	・ Tube	1	B10001-
12		NY07529-10300	・ Tube	1	B10001-
13		NY07529-10400	・ Tube	1	B10001-
14		NY07529-10500	・ Tube	1	B10001-
15		NY07529-10600	・ Tube	1	B10001-
16		NY09000-11400	・ Plate	1	B10001-
17		NY16207-10200	・ Sleeve	1	B10001-
18		NY16207-10300	・ Spool	1	B10001-
19		NY80000-02100	・ Plug	3	B10001-
20		NY80000-02200	・ Plug	6	B10001-
21		NY81416-05012	・ Bolt, Hexagon Socket Head	12	B10001-
22		NY84110-00248	・ Screw	2	B10001-
23		07000-11008	・ O-ring	3	B10001-
24		07000-11010	・ O-ring	1	B10001-
25		NY89103-00090	・ Band	6	B10001-

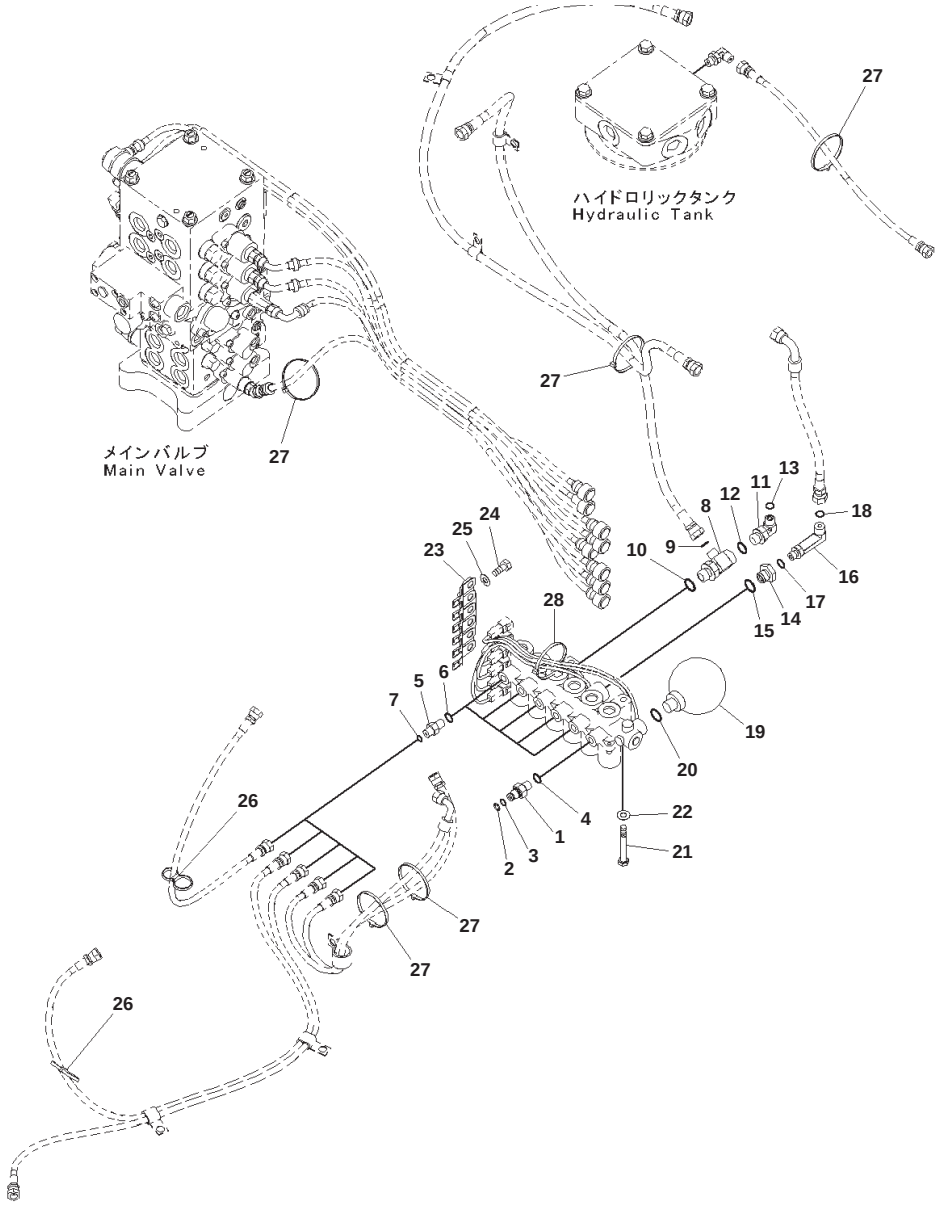

Solenoid Valve Piping, Connecting Parts

Index	Part Number	Description	Qty	Serial No.
1	20Y-62-16630	Nipple	1	B10001-
2	201-60-11390	・ O-ring	1	B10001-
3	20Y-62-19560	・ O-ring	1	B10001-
4	07002-11423	O-ring	1	B10001-
5	02781-0021D	Union	5	B10001-
6	07002-11423	O-ring	5	B10001-
7	02896-11008	O-ring	5	B10001-
8	203-62-13470	Tee	1	B10001-
9	02896-11009	O-ring	1	B10001-
10	07002-12034	O-ring	1	B10001-
11	02782-10313	Elbow	1	B10001-
12	07002-11823	O-ring	1	B10001-
13	02896-11009	O-ring	1	B10001-
14	20Y-62-21940	Filter Assembly	1	B10001-
15	07002-12034	O-ring	1	B10001-
16	02782-10312	Elbow	1	B10001-
17	07002-11423	O-ring	1	B10001-
18	02896-11009	O-ring	1	B10001-
19	22U-60-21330	Accumulator	1	B10001-
20	07002-12034	O-ring	1	B10001-
21	01010-81085	Bolt	2	B10001-
22	01643-31032	Washer	2	B10001-
23	203-62-13510	Plate	1	B10001-
24	01010-81230	Bolt	2	B10001-
25	01643-31232	Washer	2	B10001-
26	134-03-61410	Band	2	B10001-
27	08034-20519	Band	6	B10001-
28	Band			

Reference:H1831-002002 Page:H031002

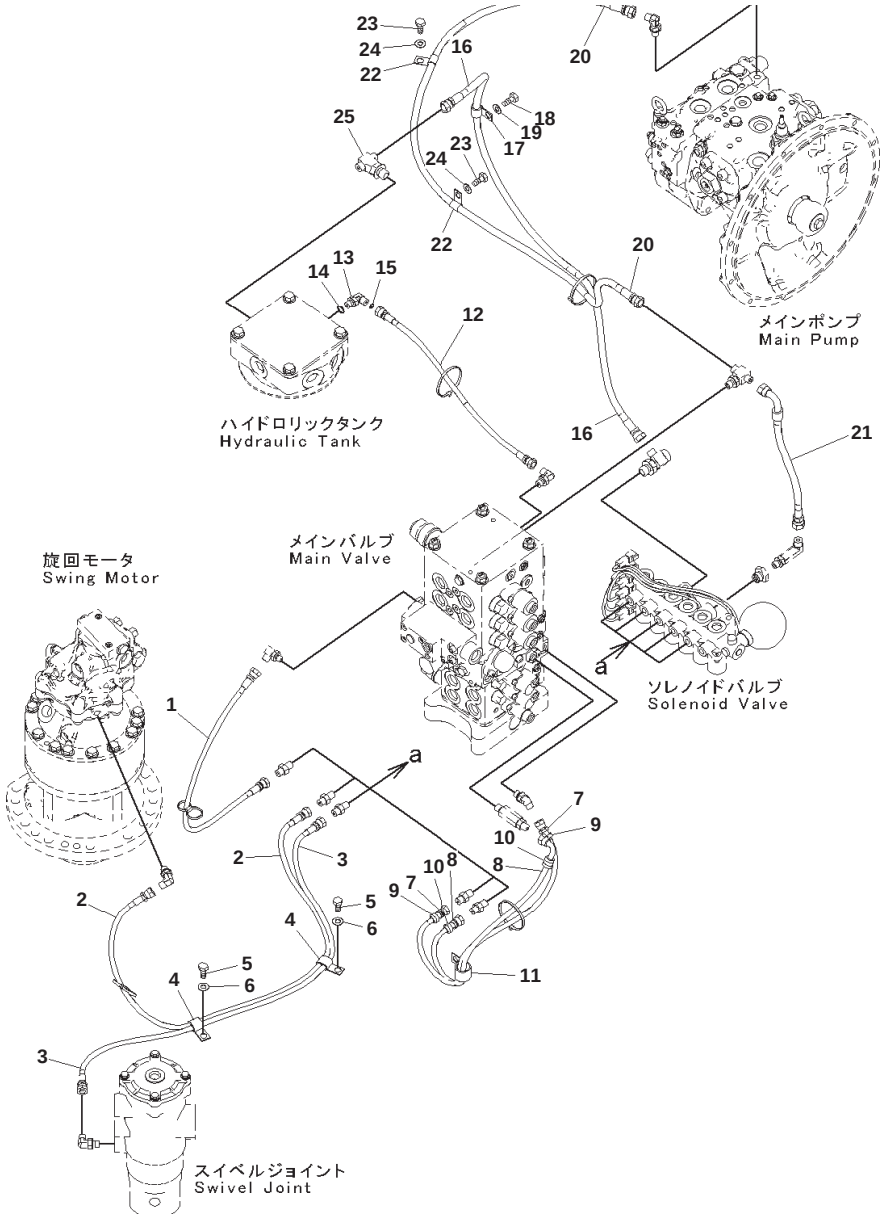

Solenoid Valve Piping, Solenoid Valve Piping

Index	Part Number	Description	Qty	Serial No.
1	208-62-72160	Hose	1	B10001-
2	203-62-12160	Hose	1	B10001-
3	22U-62-26850	Hose	1	B10001-
4	04435-51212	Clip	2	B10001-
5	01010-81220	Bolt	2	B10001-
6	01643-31232	Washer	2	B10001-
7	203-62-13490	Hose	1	B10001-
8	22U-62-28730	Hose	1	B10001-
9	20Y-62-22790	Band, Red	2	B10001-
10	20Y-62-22820	Band, Blue	2	B10001-
11	04434-52712	Clip	1	B10001-
12	203-62-12130	Hose	1	B10001-
13	02782-10210	Elbow	1	B10001-
14	07002-11423	O-ring	1	B10001-
15	02896-11008	O-ring	1	B10001-
16	203-62-12120	Hose	1	B10001-
17	04434-51412	Clip	1	B10001-
18	01010-81220	Bolt	1	B10001-
19	01643-31232	Washer	1	B10001-
20	203-62-11841	Hose	1	B10001-
21	203-62-14030	Hose	1	B10001-
22	04434-51012	Clip	2	B10001-
23	01010-81220	Bolt	2	B10001-
24	01643-31232	Washer	2	B10001-
25	(209-64-16721)	Tee		

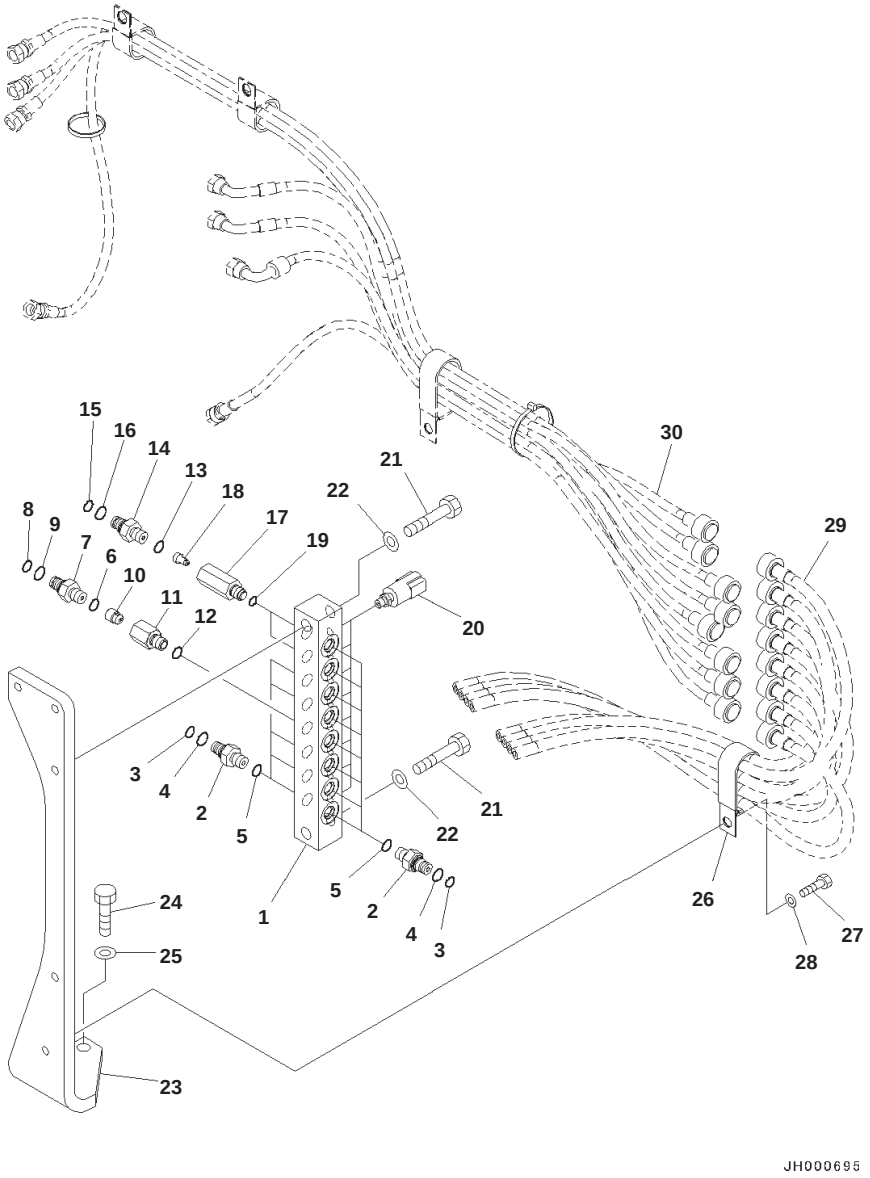

Pressure Switch Block

Index	Code	Part Number	Description	Qty	Serial No.
1		20Y-62-41550	Block	1	B10001-
2		20Y-62-16630	Nipple	13	B10001-
3		201-60-11390	・ O-ring	1	B10001-
4		20Y-62-19560	・ O-ring	1	B10001-
5		07002-11423	O-ring	13	B10001-
		203-60-62300	Valve Assembly	1	B10001-
6		07002-01423	・ O-ring	1	B10001-
7		203-60-62310	・ Nipple	1	B10001-
8		201-60-11390	・・ O-ring	1	B10001-
9		20Y-62-19560	・・ O-ring	1	B10001-
10		203-60-62320	・ Poppet	1	B10001-
11	C1		・ Body	1	B10001-
12		07002-11423	O-ring	1	B10001-
		203-60-62401	Valve Assembly	2	B10001-
13		07002-01423	・ O-ring	1	B10001-
14		20Y-62-22410	・ Nipple	1	B10001-
15		201-60-11390	・・ O-ring	1	B10001-
16		20Y-62-19560	・・ O-ring	1	B10001-
17	C1		・ Body	1	B10001-
18		203-60-62430	・ Poppet	1	B10001-
19		07002-11423	O-ring	2	B10001-
20		206-06-61130	Switch	8	B10001-
21		01010-81260	Bolt	2	B10001-
22		01643-31232	Washer	2	B10001-
23		203-62-12990	Bracket	1	B10001-
24		01010-81240	Bolt	2	B10001-
25		01643-31232	Washer	2	B10001-
26		196-911-3310	Clip	1	B10001-
27		01010-81230	Bolt	1	B10001-
28		01643-31232	Washer	1	B10001-
29		(20Y-62-42251)	Hose		
30		(22U-62-26920)	Hose		

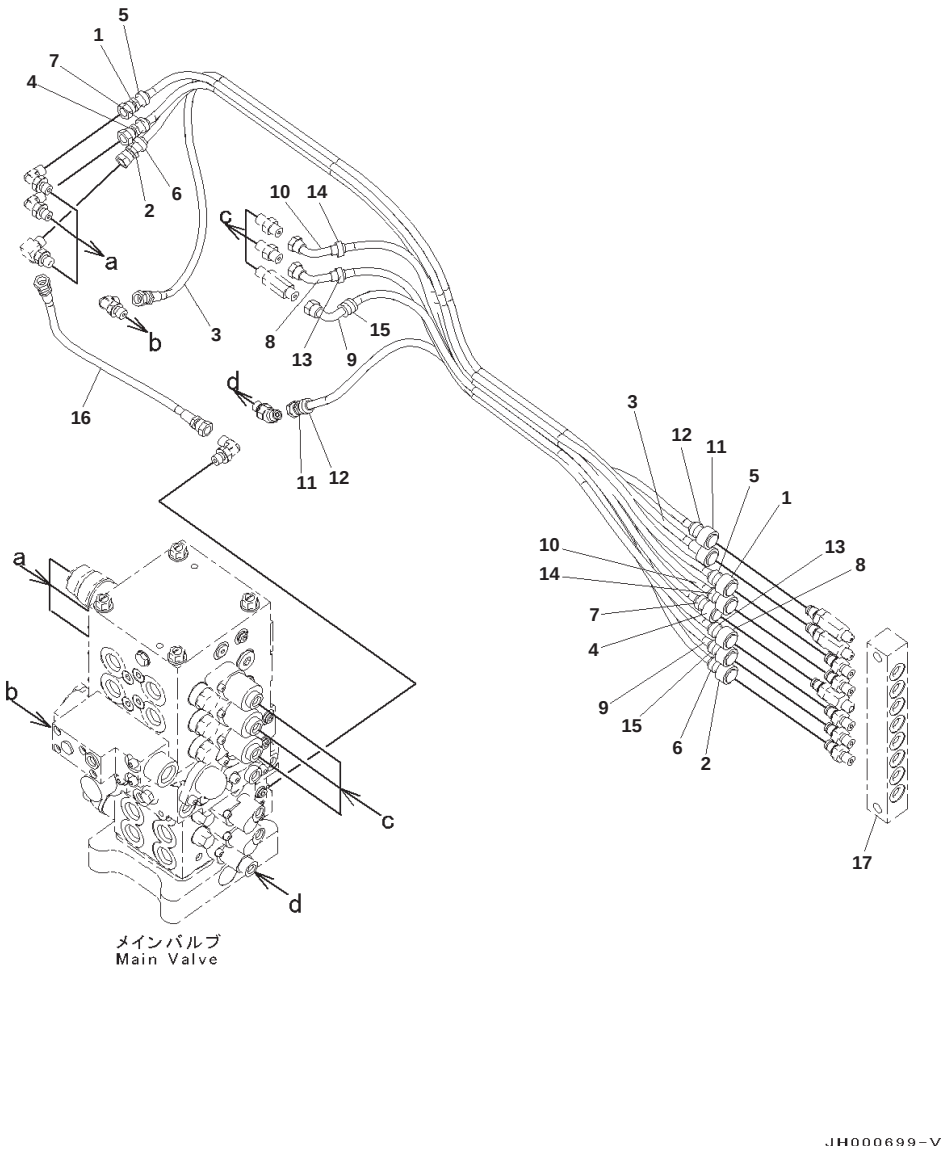

Proportional Pressure Control (PPC) Valve Piping, Without 1-additional Actuator Piping, (1/2)

Index	Part Number	Description	Qty	Serial No.
1	22U-62-26880	Hose	1	B10001-
2	20Y-62-51840	Hose	1	B10001-
3	203-62-12911	Hose	1	B10001-
4	203-62-12890	Hose	1	B10001-
5	20Y-62-22840	Band, Black	2	B10001-
6	20Y-62-22850	Band, Green	2	B10001-
7	20Y-62-22810	Band, Yellow	2	B10001-
8	203-62-12870	Hose	1	B10001-
9	203-62-12881	Hose	1	B10001-
10	203-62-13260	Hose	1	B10001-
11	22U-62-26920	Hose	1	B10001-
12	20Y-62-22790	Band, Red	2	B10001-
13	20Y-62-22820	Band, Blue	2	B10001-
14	20Y-62-22830	Band, White	2	B10001-
15	20Y-62-22860	Band, Brown	2	B10001-
16	02760-002A4	Hose, Face Seal Type	1	B10001-
17	(203-62-12990)	Bracket		

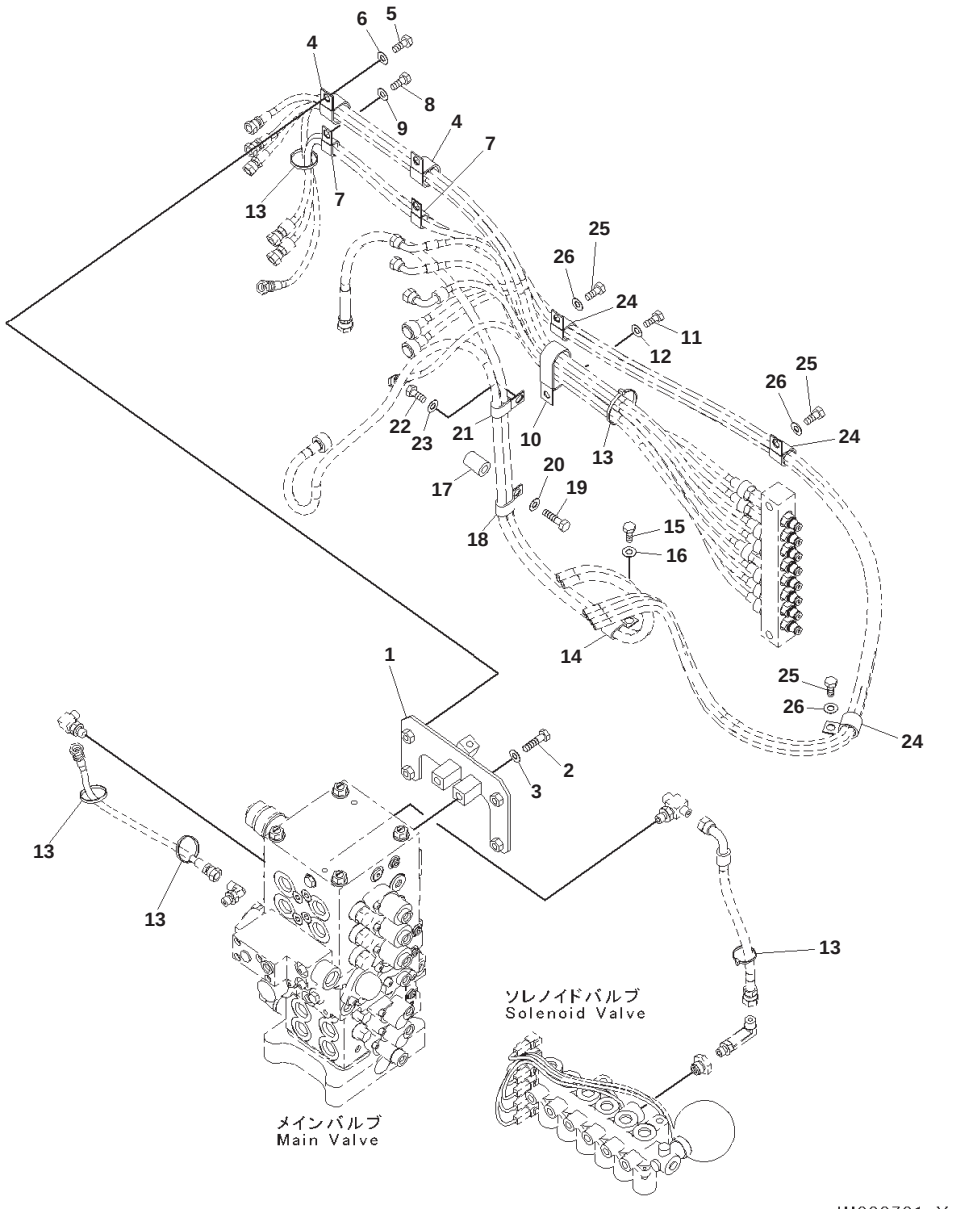

Proportional Pressure Control (PPC) Valve Piping, Without 1-additional Actuator Piping, (2/2)

Index	Part Number	Description	Qty	Serial No.
1	203-62-12821	Bracket	1	B10001-
2	01010-81060	Bolt	2	B10001-
3	01643-31032	Washer	2	B10001-
4	04434-53412	Clip	2	B10001-
5	01010-81230	Bolt	2	B10001-
6	01643-31232	Washer	2	B10001-
7	04435-51212	Clip	2	B10001-
8	01010-81230	Bolt	2	B10001-
9	01643-31232	Washer	2	B10001-
10	196-911-3310	Clip	1	B10001-
11	01010-81220	Bolt	1	B10001-
12	01643-31232	Washer	1	B10001-
13	08034-20536	Band	5	B10001-
14	04435-51812	Clip	1	B10001-
15	01010-81220	Bolt	1	B10001-
16	01643-31232	Washer	1	B10001-
17	20Y-03-11220	Collar	1	B10001-
18	04435-51812	Clip	1	B10001-
19	01010-81260	Bolt	1	B10001-
20	01643-31232	Washer	1	B10001-
21	04435-51812	Clip	1	B10001-
22	01010-81220	Bolt	1	B10001-
23	01643-31232	Washer	1	B10001-
24	04434-52512	Clip	3	B10001-
25	01010-81220	Bolt	3	B10001-
26	01643-31232	Washer	3	B10001-

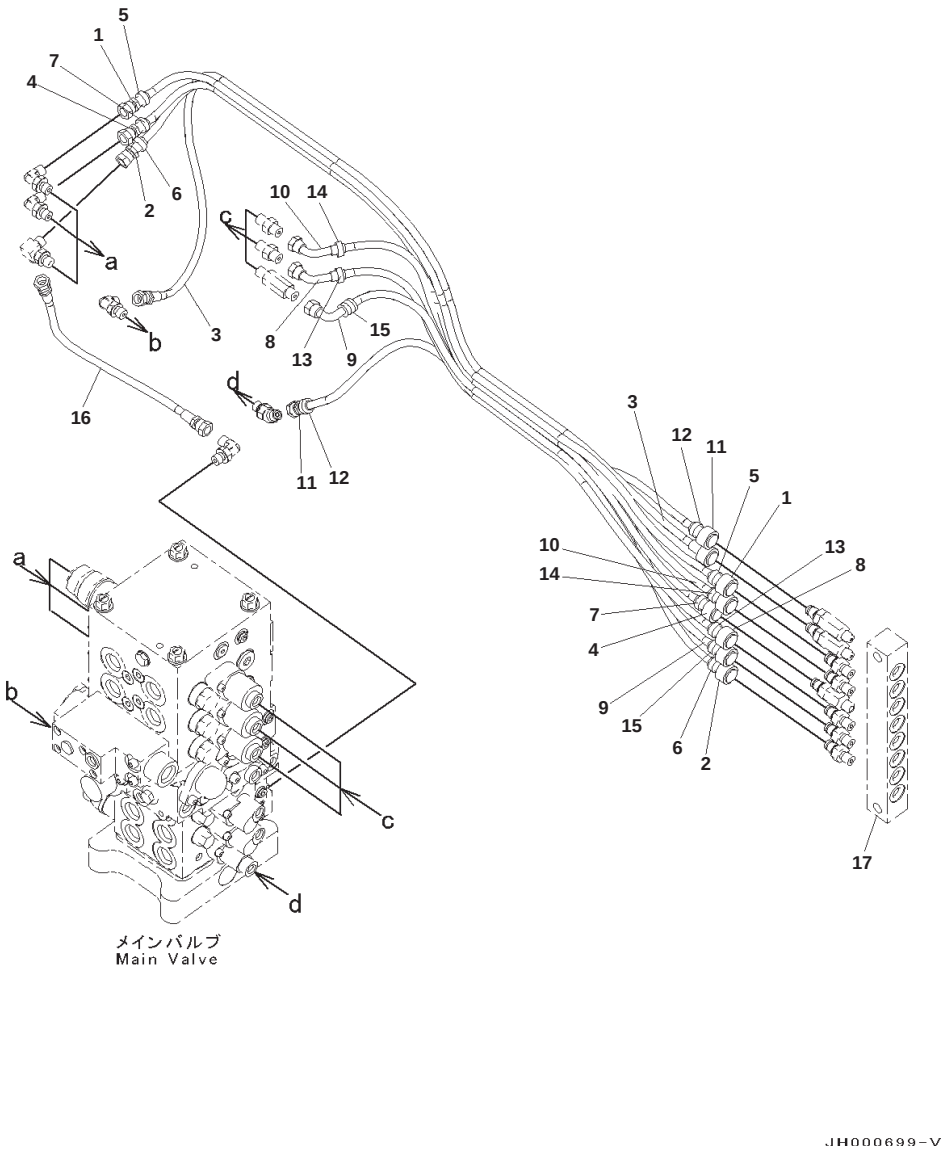

Proportional Pressure Control (PPC) Valve Piping, 1-actuator, (1/2)

Index	Part Number	Description	Qty	Serial No.
1	22U-62-26880	Hose	1	B10001-
2	20Y-62-51840	Hose	1	B10001-
3	203-62-12911	Hose	1	B10001-
4	203-62-12890	Hose	1	B10001-
5	20Y-62-22840	Band, Black	2	B10001-
6	20Y-62-22850	Band, Green	2	B10001-
7	20Y-62-22810	Band, Yellow	2	B10001-
8	203-62-12870	Hose	1	B10001-
9	203-62-12881	Hose	1	B10001-
10	203-62-13260	Hose	1	B10001-
11	22U-62-26920	Hose	1	B10001-
12	20Y-62-22790	Band, Red	2	B10001-
13	20Y-62-22820	Band, Blue	2	B10001-
14	20Y-62-22830	Band, White	2	B10001-
15	20Y-62-22860	Band, Brown	2	B10001-
16	02760-002A4	Hose, Face Seal Type	1	B10001-
17	(203-62-12990)	Bracket		

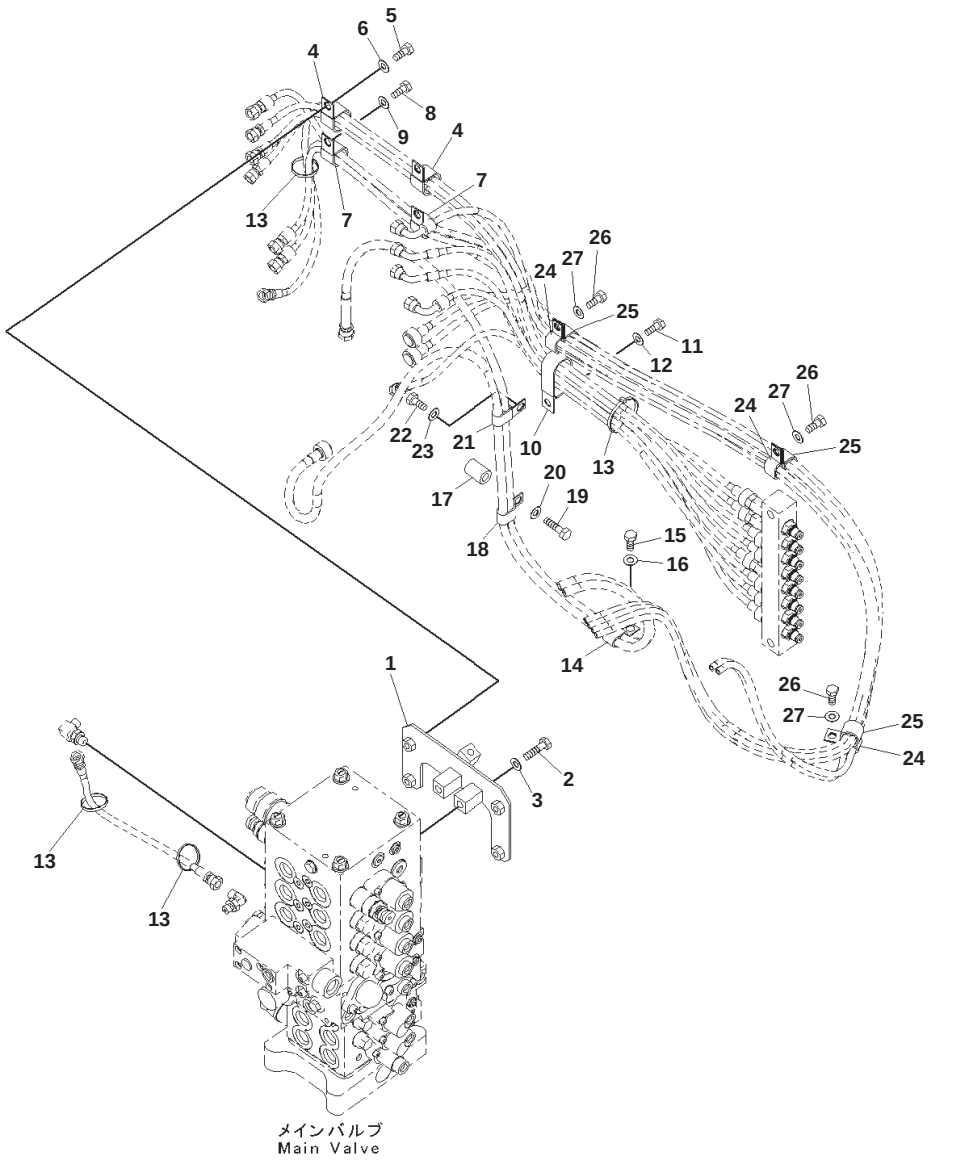

Proportional Pressure Control (PPC) Valve Piping, 1-actuator, (2/2)

Index	Part Number	Description	Qty	Serial No.
1	203-62-12821	Bracket	1	B10001-
2	01010-81060	Bolt	2	B10001-
3	01643-31032	Washer	2	B10001-
4	04434-53412	Clip	2	B10001-
5	01010-81230	Bolt	2	B10001-
6	01643-31232	Washer	2	B10001-
7	04434-52712	Clip	2	B10001-
8	01010-81230	Bolt	2	B10001-
9	01643-31232	Washer	2	B10001-
10	196-911-3310	Clip	1	B10001-
11	01010-81220	Bolt	1	B10001-
12	01643-31232	Washer	1	B10001-
13	08034-20536	Band	4	B10001-
14	04435-51812	Clip	1	B10001-
15	01010-81220	Bolt	1	B10001-
16	01643-31232	Washer	1	B10001-
17	20Y-03-11220	Collar	1	B10001-
18	04435-51812	Clip	1	B10001-
19	01010-81260	Bolt	1	B10001-
20	01643-31232	Washer	1	B10001-
21	04435-51812	Clip	1	B10001-
22	01010-81220	Bolt	1	B10001-
23	01643-31232	Washer	1	B10001-
24	04434-52512	Clip	3	B10001-
25	04435-51212	Clip	3	B10001-
26	01010-81220	Bolt	3	B10001-
27	01643-31232	Washer	3	B10001-

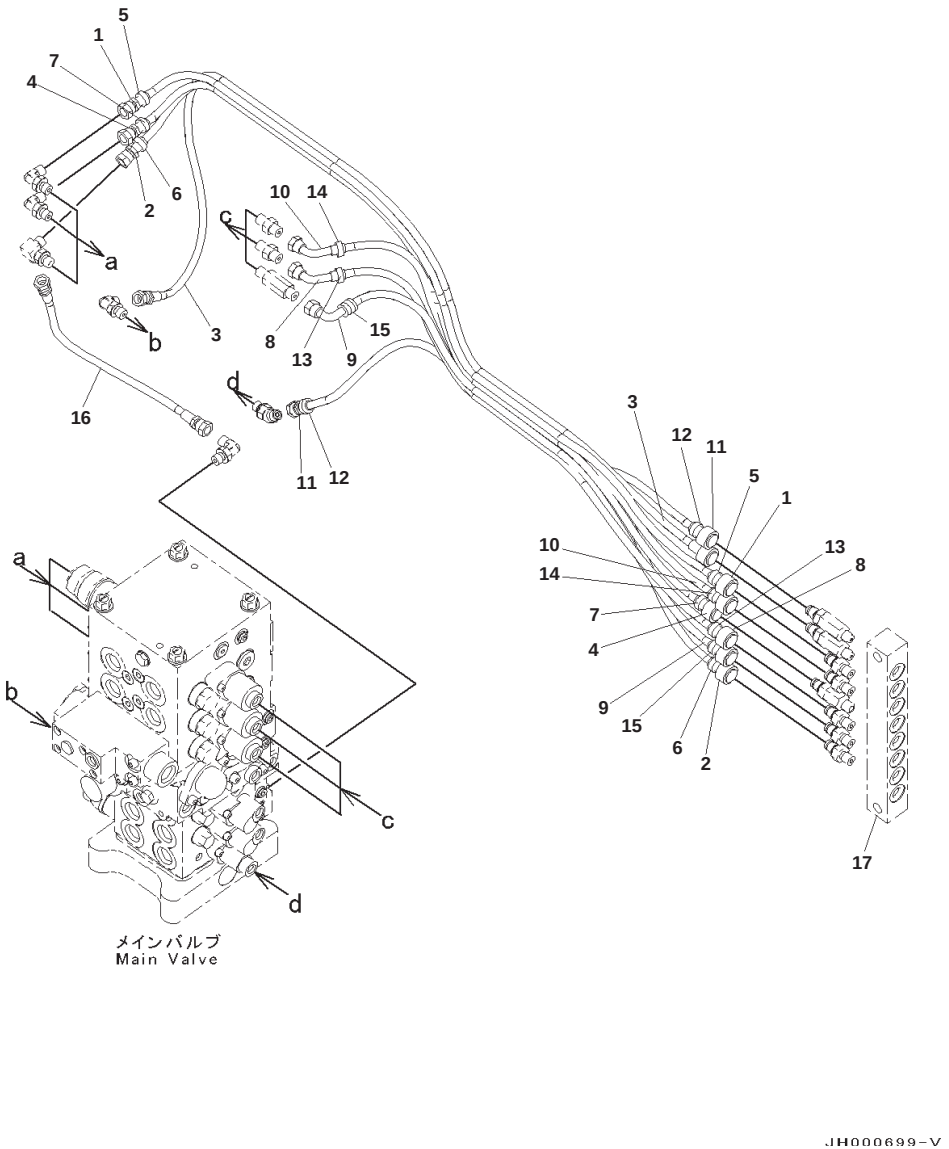

Proportional Pressure Control (PPC) Valve Piping, 2-actuator, (1/2)

Index	Part Number	Description	Qty	Serial No.
1	22U-62-26880	Hose	1	B10001-
2	20Y-62-51840	Hose	1	B10001-
3	203-62-12911	Hose	1	B10001-
4	203-62-12890	Hose	1	B10001-
5	20Y-62-22810	Band, Yellow	2	B10001-
6	20Y-62-22840	Band, Black	2	B10001-
7	20Y-62-22850	Band, Green	2	B10001-
8	203-62-12870	Hose	1	B10001-
9	203-62-12881	Hose	1	B10001-
10	203-62-13260	Hose	1	B10001-
11	22U-62-26920	Hose	1	B10001-
12	20Y-62-22790	Band, Red	2	B10001-
13	20Y-62-22820	Band, Blue	2	B10001-
14	20Y-62-22830	Band, White	2	B10001-
15	20Y-62-22860	Band, Brown	2	B10001-
16	02760-002A4	Hose, Face Seal Type	1	B10001-
17	(20Y-62-41550)	Block		

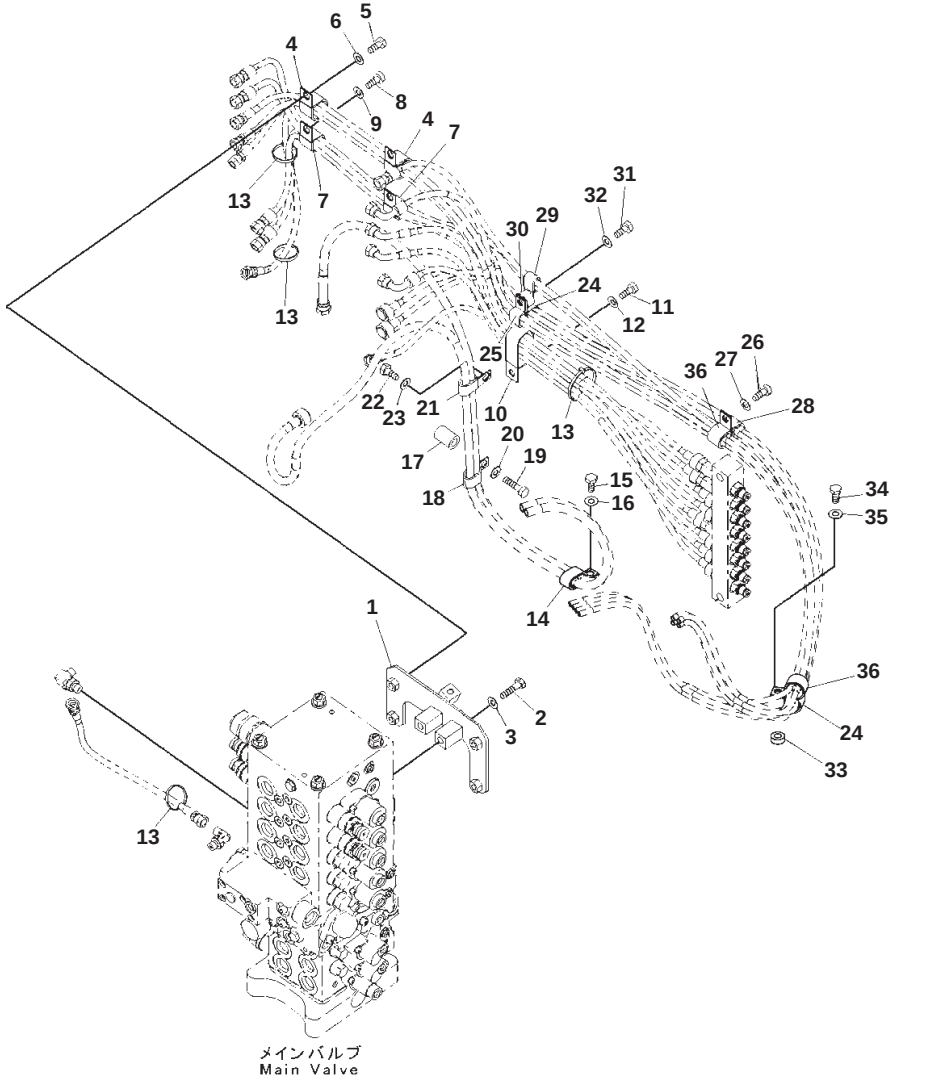

Proportional Pressure Control (PPC) Valve Piping, 2-actuator, (2/2)

Index	Part Number	Description	Qty	Serial No.
1	203-62-12821	Bracket	1	B10001-
2	01010-81060	Bolt	2	B10001-
3	01643-31032	Washer	2	B10001-
4	04434-53412	Clip	2	B10001-
5	01010-81230	Bolt	2	B10001-
6	01643-31232	Washer	2	B10001-
7	04434-52712	Clip	2	B10001-
8	01010-81230	Bolt	2	B10001-
9	01643-31232	Washer	2	B10001-
10	196-911-3310	Clip	1	B10001-
11	01010-81220	Bolt	1	B10001-
12	01643-31232	Washer	1	B10001-
13	08034-20536	Band	4	B10001-
14	04435-51812	Clip	1	B10001-
15	01010-81220	Bolt	1	B10001-
16	01643-31232	Washer	1	B10001-
17	20Y-03-11220	Collar	1	B10001-
18	04435-51812	Clip	1	B10001-
19	01010-81260	Bolt	1	B10001-
20	01643-31232	Washer	1	B10001-
21	04435-51812	Clip	1	B10001-
22	01010-81220	Bolt	1	B10001-
23	01643-31232	Washer	1	B10001-
24	04434-52512	Clip	2	B10001-
25	04435-51212	Clip	1	B10001-
26	01010-81220	Bolt	1	B10001-
27	01643-31232	Washer	1	B10001-
28	04434-52512	Clip	1	B10001-
29	04435-51212	Clip	1	B10001-
30	131-43-41631	Spacer	1	B10001-
31	01010-81240	Bolt	1	B10001-
32	01643-31232	Washer	1	B10001-
33	198-43-15310	Collar	1	B10001-
34	01010-81230	Bolt	1	B10001-
35	01643-31232	Washer	1	B10001-
36	04434-53212	Clip	2	B10001-

MAIN FRAME AND RELATED PARTS

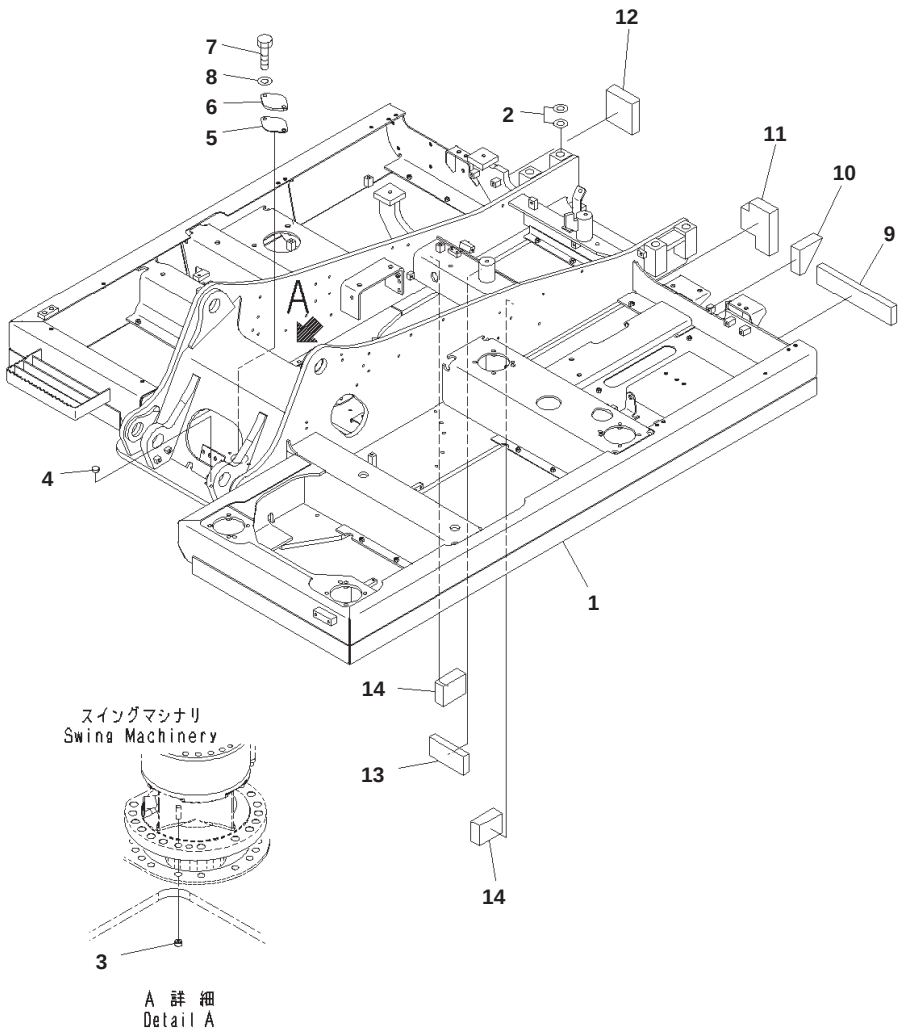

Revolving Frame, Except Japan

Index	Part Number	Description	Qty	Serial No.
1	203-46-11202	Frame	1	B10001-
2	20T-70-81720	Spacer, T=1.0mm	3	B10001-
3	203-46-61910	Plug	1	B10001-
4	203-46-61920	Cap	1	B10001-
5	203-46-61520	Gasket	1	B10001-
6	203-46-56160	Cover	1	B10001-
7	01010-81230	Bolt	2	B10001-
8	01643-31232	Washer	2	B10001-
9	203-46-64420	Sheet	1	B10001-
10	203-03-71821	Sheet	1	B10001-
11	203-46-12441	Sheet	1	B10001-
12	203-46-12450	Sheet	1	B10001-
13	203-46-12460	Sheet	1	B10001-
14	203-46-12470	Sheet	2	B10001-

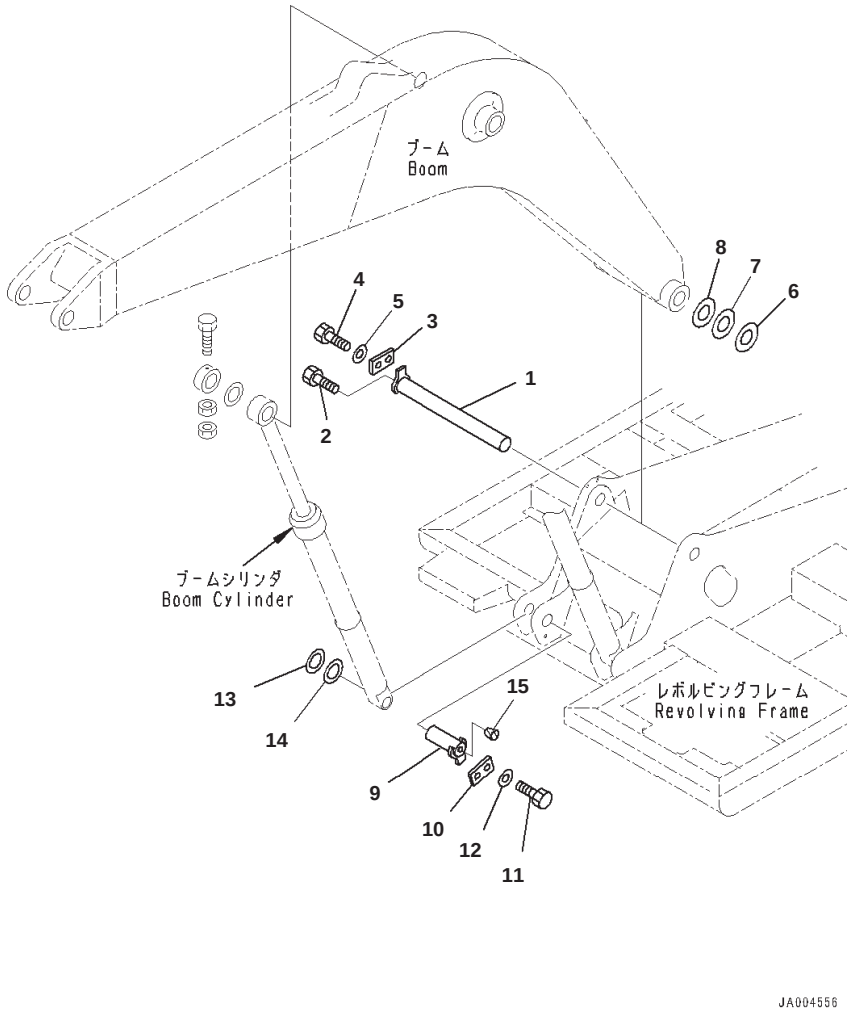

Boom Foot Pin, 100 Hours Greasing Type

Index	Part Number	Description	Qty	Serial No.
1	202-70-61160	Pin	1	B10001-
2	01010-61625	Bolt	1	B10001-
3	205-70-66580	Plate	1	B10001-
4	01010-81230	Bolt	2	B10001-
5	01643-31232	Washer	2	B10001-
6	21Y-70-14760	Spacer, T=2.0mm	1	B10001-
7	20U-70-31340	Spacer, T=1.0mm	1	B10001-
8	20U-70-31330	Spacer, T=0.5mm	1	B10001-
9	203-46-56260	Pin	2	B10001-
10	205-70-66580	Plate	2	B10001-
11	01010-81230	Bolt	4	B10001-
12	01643-31232	Washer	4	B10001-
13	21Y-70-14830	Spacer, T=1.0mm	2	B10001-
14	21Y-70-14840	Spacer, T=2.0mm	2	B10001-
15	07049-01620	Plug	2	B10001-

OPERATOR’S COMPARTMENT AND CONTROL SYSTEM

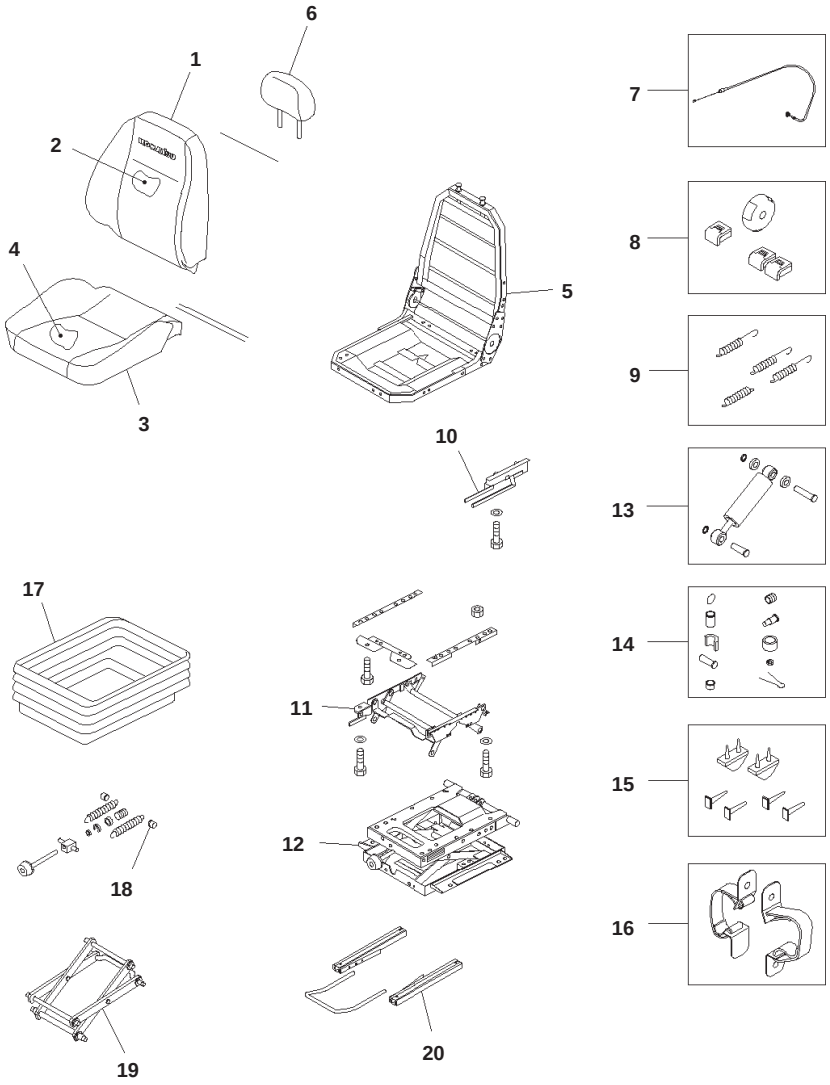

Operator's Seat, Suspension Type, (1/2)

Index	Part Number	Description	Qty	Serial No.
	20Y-57-41103	Seat Assembly	1	B10001-
	AS195381	・ Seat Assembly	1	B10001-
1	AS195367	・・ Back Seat Cover Kit	1	B10001-
2	AS195369	・・ Back Seat Foam Kit	1	B10001-
3	AS195370	・・ Seat Cover Kit	1	B10001-
4	AS195372	・・ Seat Foam Kit	1	B10001-
5	AS195373	・・ Frame Kit	1	B10001-
6	AS195374	・・ Headrest Kit	1	B10001-
7	AS192161	・・ Cable Kit	1	B10001-
8	AS186833	・・ Handle Kit	1	B10001-
9	AS160122	・ Spring Kit	1	B10001-
10	AS195376	・ Latch Kit	1	B10001-
11	AS195377	・ Riser Kit	1	B10001-
12	AS195388	・ Suspension Kit	1	B10001-
13	AS164899	・ Damper Kit	1	B10001-
14	AS166011	・ Bearing Kit	1	B10001-
15	AS195389	・ Up Stop And Bump Stop Kit	1	B10001-
16	AS195390	・ Tether Belt Kit	1	B10001-
17	AS195391	・ Suspension Cover Kit	1	B10001-
18	AS195392	・ Adjuster Kit, Weight	1	B10001-
19	AS165989	・ Lever	1	B10001-
20	AS195393	・ Adjuster Kit	1	B10001-

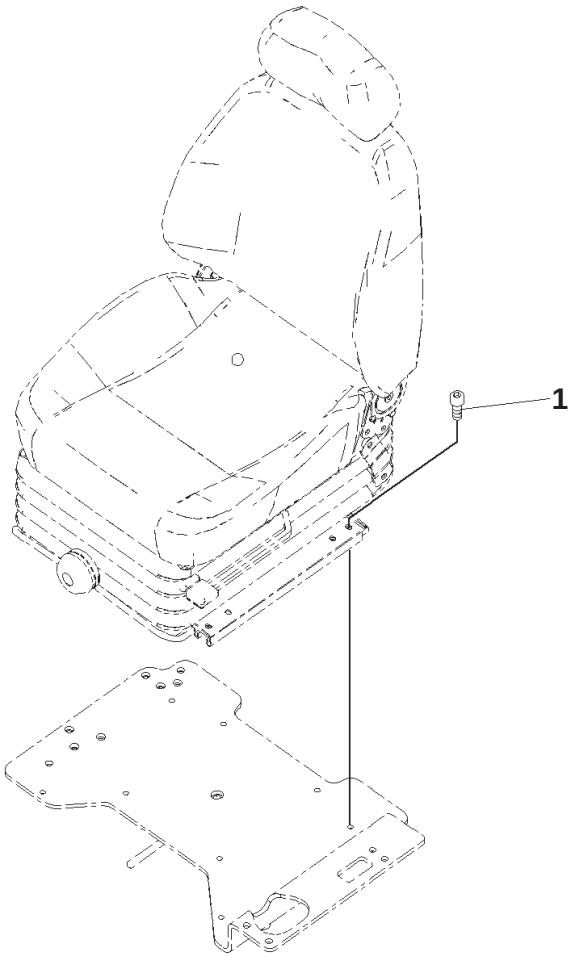

Index	Part Number	Description	Qty	Serial No.
1	01252-80825	Bolt	4	B10001-

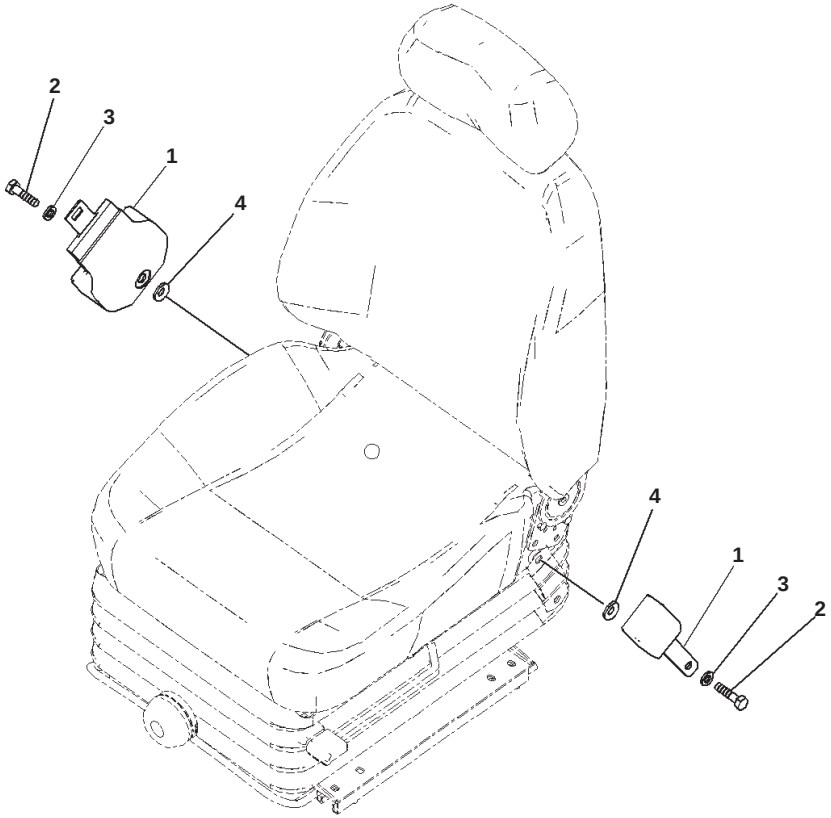

Seat Belt, 78mm Width

Index	Part Number	Description	Qty	Serial No.
1	22B-57-11911	Belt	1	B10001-
2	02030-70757	・ Bolt	2	B10001-
3	09409-00002	・ Washer	2	B10001-
4	01643-11232	Washer	2	B10001-

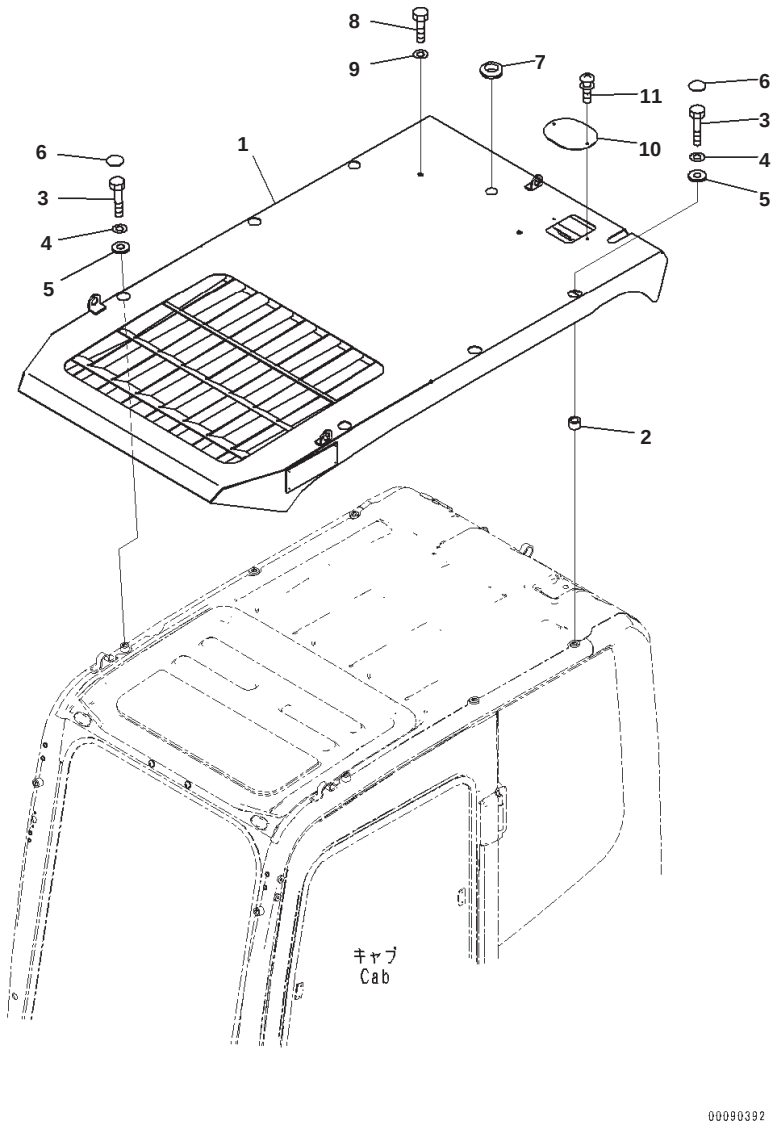

Index	Part Number	Description	Qty	Serial No.
1	20Y-954-6122	Guard	1	B10001-
2	20Y-954-6241	Pipe	4	B10001-
3	01010-81280	Bolt	6	B10001-
4	01643-31232	Washer	6	B10001-
5	130-43-64260	Collar	6	B10001-
6	195-Z11-2970	Cap	6	B10001-
7	08037-02512	Grommet	1	B10001-
8	01010-D1220	Bolt	2	B10001-
9	01643-71232	Washer	2	B10001-
10	20Y-954-6250	Plate	1	B10001-
11	01023-20612	Screw	2	B10001-

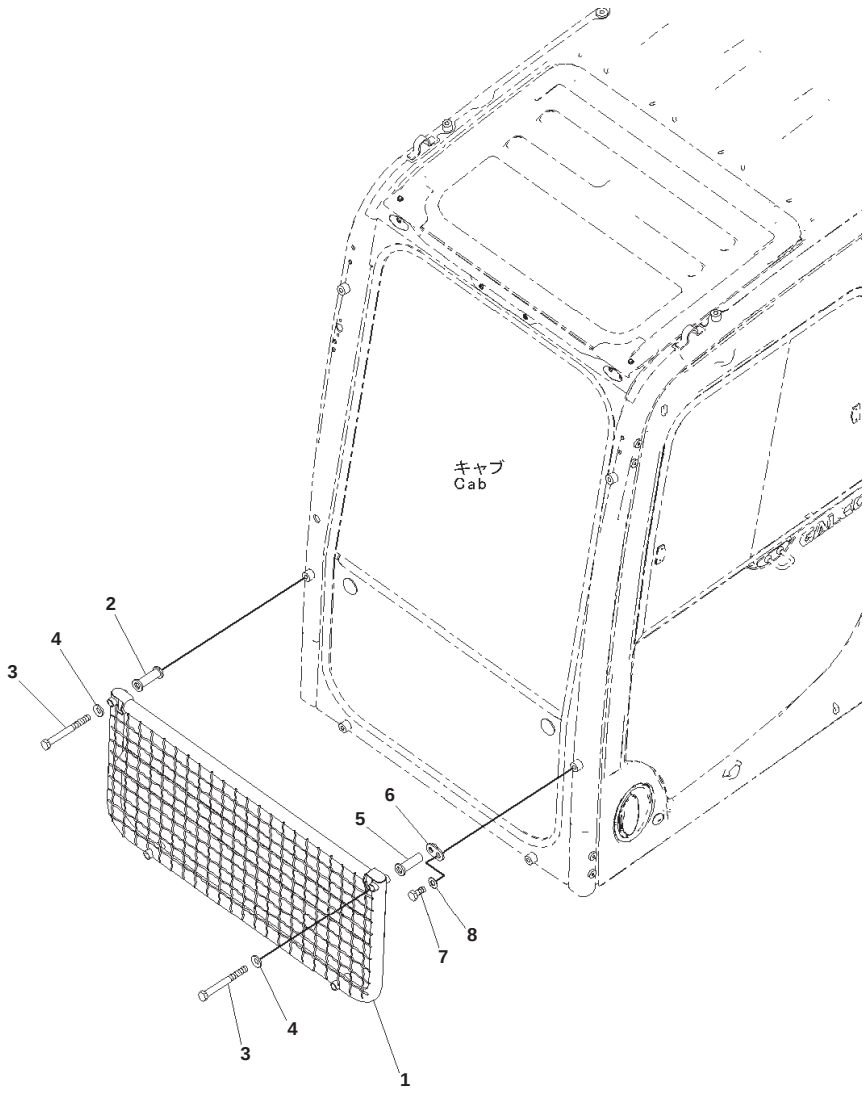

Index	Part Number	Description	Qty	Serial No.
1	203-954-6130	Guard	1	B10001-
2	20Y-954-6192	Spacer	3	B10001-
3	01011-D1245	Bolt	4	B10001-
4	01643-71232	Washer	4	B10001-
5	20Y-954-6470	Spacer	1	B10001-
6	20Y-954-6460	Bracket	1	B10001-
7	01010-D1225	Bolt	1	B10001-
8	01643-71232	Washer	1	B10001-

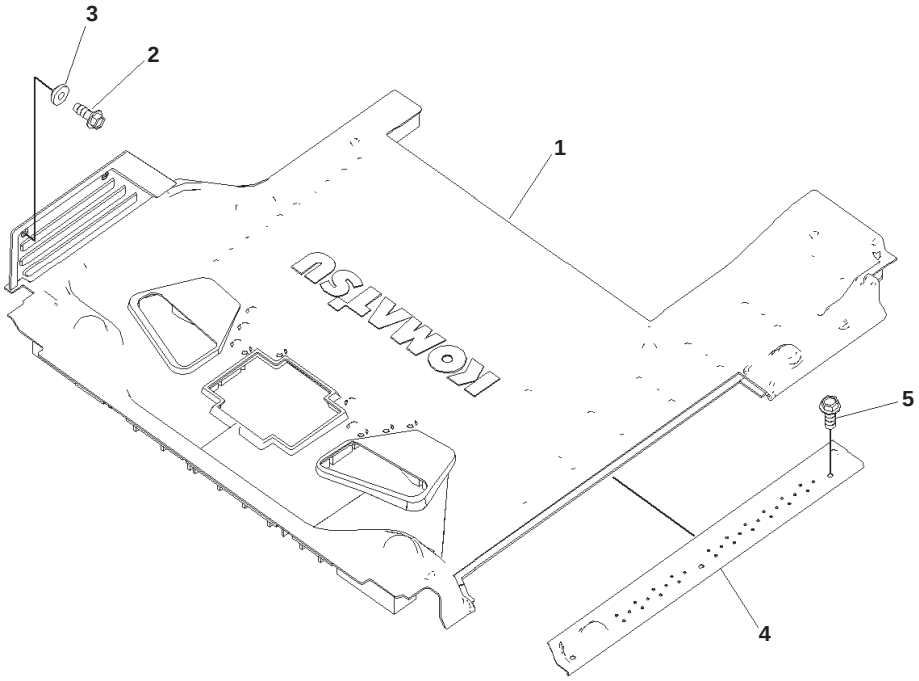

00055416-1

Floor Mat

Index	Part Number	Description	Qty	Serial No.
1	20Y-53-14713	Floor Mat	1	B10001-
2	01435-40616	Bolt	2	B10001-
3	20Y-43-41290	Collar	2	B10001-
4	20Y-53-11953	Cover	1	B10001-
5	01435-40612	Bolt	3	B10001-

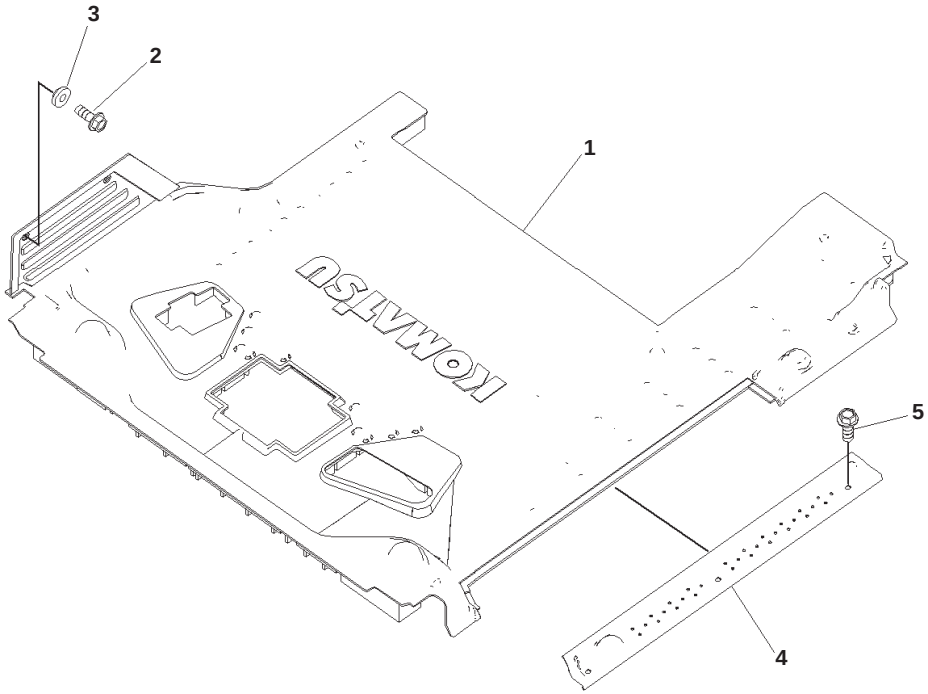

00055417-1

Index	Part Number	Description	Qty	Serial No.
1	20Y-53-14723	Floor Mat	1	B10001-
2	01435-40616	Bolt	2	B10001-
3	20Y-43-41290	Collar	2	B10001-
4	20Y-53-11953	Cover	1	B10001-
5	01435-40612	Bolt	3	B10001-

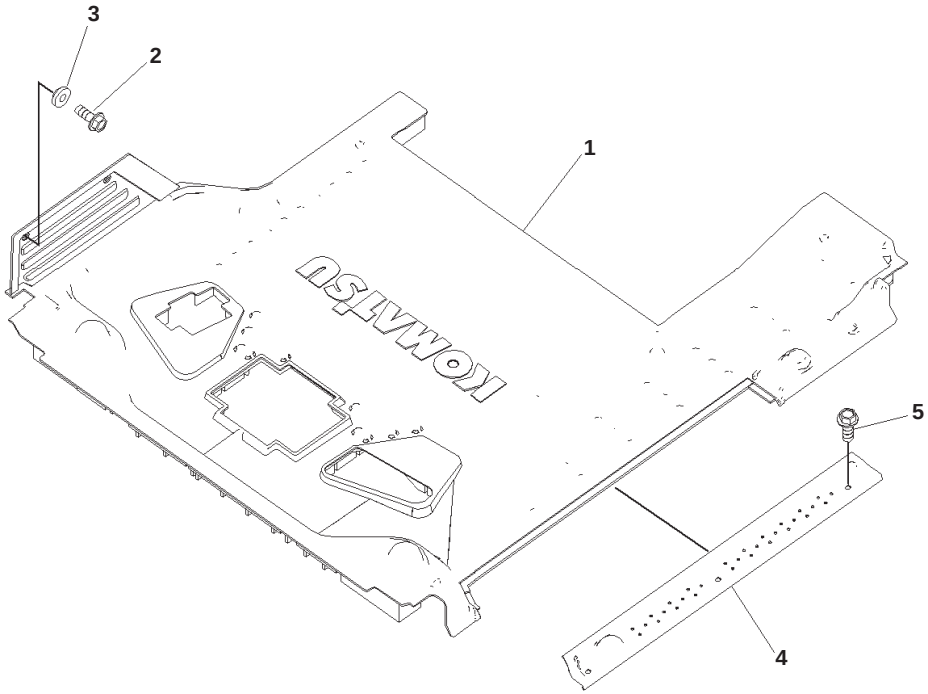

00055417-

Index	Part Number	Description	Qty	Serial No.
1	20Y-53-14733	Floor Mat	1	B10001-
2	01435-40616	Bolt	2	B10001-
3	20Y-43-41290	Collar	2	B10001-
4	20Y-53-11953	Cover	1	B10001-
5	01435-40612	Bolt	3	B10001-

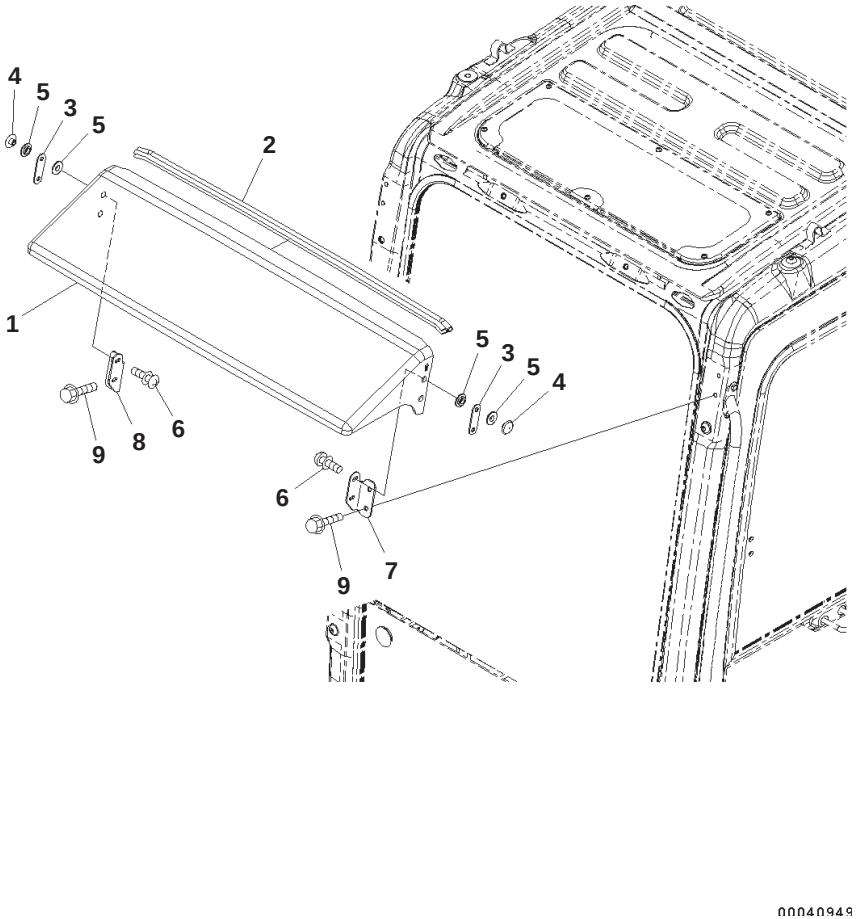

Rain Visor

Index	Part Number	Description	Qty	Serial No.
1	20Y-53-15710	Rain Visor	1	B10001-
2	20Y-53-15750	・ Seal	1	B10001-
3	20Y-54-52530	Plate	2	B10001-
4	205-54-51720	Retainer	4	B10001-
5	205-54-51730	Packing	8	B10001-
6	01023-20612	Screw	4	B10001-
7	20Y-53-15780	Plate	1	B10001-
8	20Y-53-15790	Plate	1	B10001-
9	01435-40620	Bolt	4	B10001-

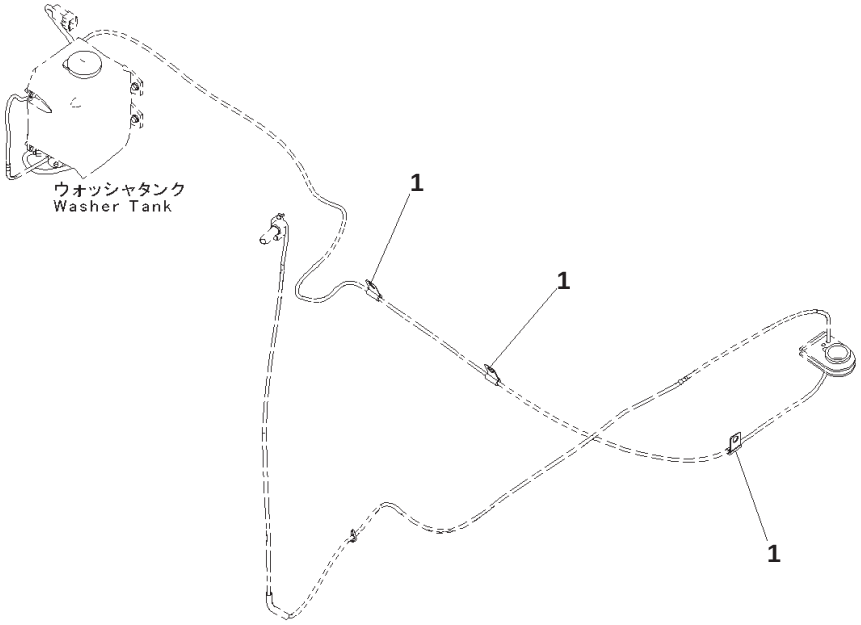

Index	Part Number	Description	Qty	Serial No.
1	21T-38-12270	Clip	2	B10001-

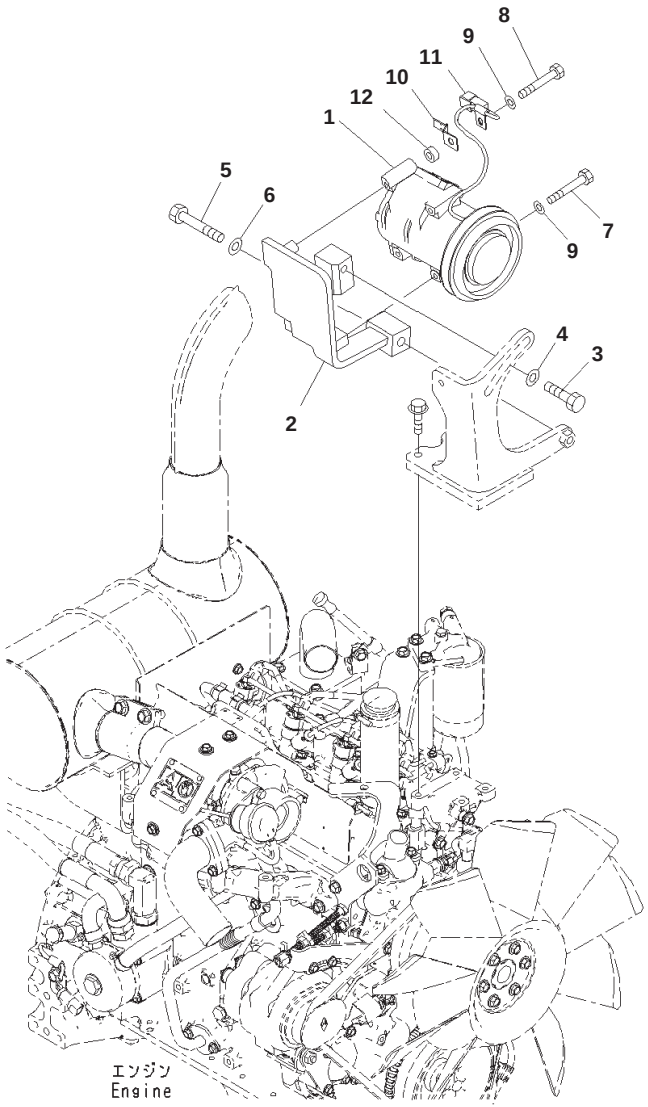

Index	Part Number	Description	Qty	Serial No.
1	20Y-810-1260	Compressor Assembly	1	B10001-
2	203-979-1161	Bracket	1	B10001-
3	01010-81435	Bolt	1	B10001-
4	01643-31445	Washer	1	B10001-
5	01010-81490	Bolt	1	B10001-
6	01643-31445	Washer	1	B10001-
7	01010-80875	Bolt	3	B10001-
8	01010-80885	Bolt	1	B10001-
9	01643-30823	Washer	4	B10001-
10	08053-01510	Clip	1	B10001-
11	04434-50508	Clip	1	B10001-
12	22N-957-1420	Collar	1	B10001-

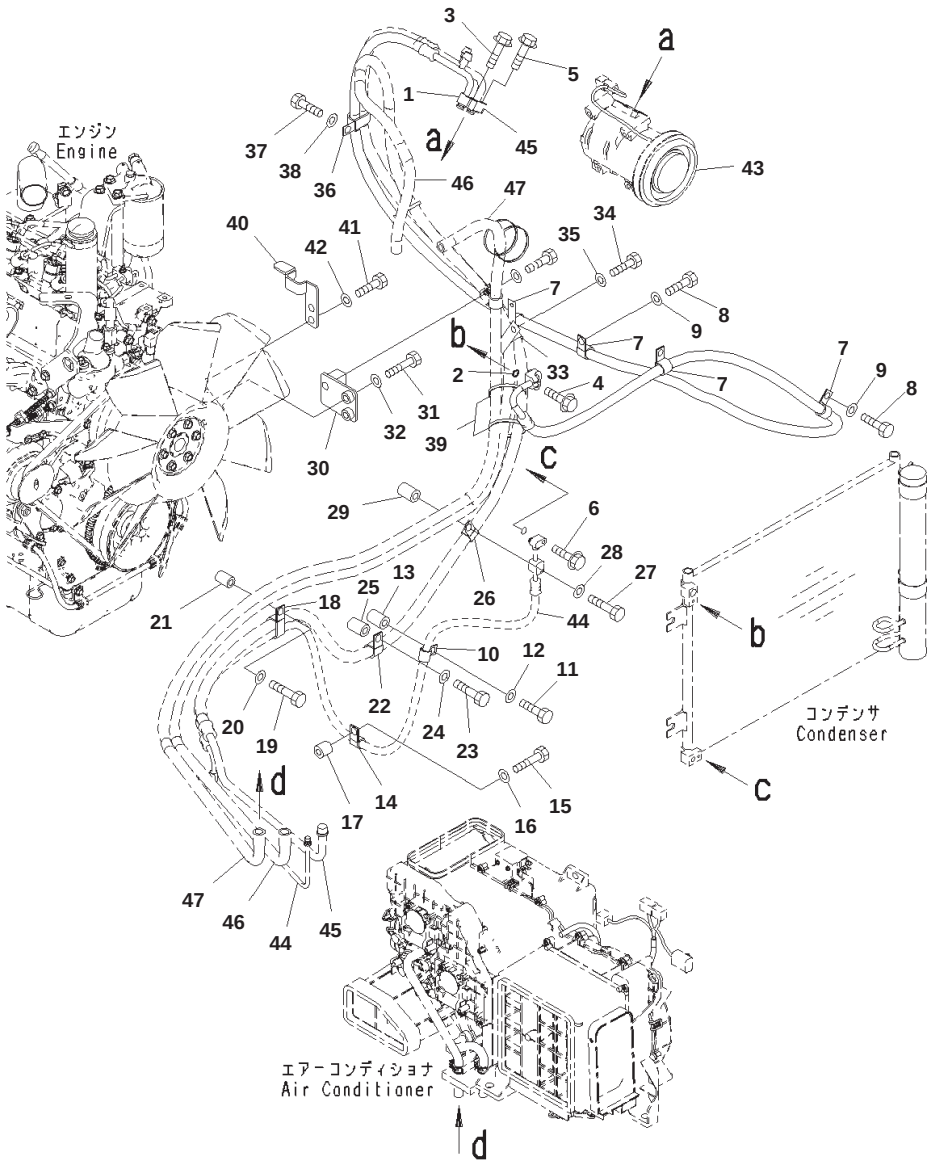

Air Conditioner Unit, Air Conditioner Piping

Index	Part Number	Description	Qty	Serial No.
1	203-979-1152	Hose	1	B10001-
2	20Y-979-3140	・ O-ring	2	B10001-
3	01435-00630	Bolt	1	B10001-
4	01435-00625	Bolt	1	B10001-
5	01435-00630	Bolt	1	B10001-
6	01435-00625	Bolt	1	B10001-
7	04434-51912	Clip	4	B10001-
8	01010-81220	Bolt	4	B10001-
9	01643-31232	Washer	4	B10001-
10	04434-51512	Clip	1	B10001-
11	01010-81250	Bolt	1	B10001-
12	01643-31232	Washer	1	B10001-
13	120-54-42430	Spacer	1	B10001-
14	04434-51512	Clip	1	B10001-
15	01010-81260	Bolt	1	B10001-
16	01643-31232	Washer	1	B10001-
17	195-33-11220	Spacer	1	B10001-
18	20Y-810-1170	Clip	1	B10001-
19	01010-81260	Bolt	1	B10001-
20	01643-31232	Washer	1	B10001-
21	23B-06-61810	Spacer	1	B10001-
22	04434-52112	Clip	1	B10001-
23	01010-81260	Bolt	1	B10001-
24	01643-31232	Washer	1	B10001-
25	20Y-03-11220	Collar	1	B10001-
26	04434-52112	Clip	1	B10001-
27	01010-81260	Bolt	1	B10001-
28	01643-31232	Washer	1	B10001-
29	20Y-03-11220	Collar	1	B10001-
30	203-979-1171	Bracket	1	B10001-
31	01010-81240	Bolt	2	B10001-
32	01643-31232	Washer	2	B10001-
33	04435-52112	Clip	1	B10001-
34	01010-81220	Bolt	1	B10001-
35	01643-31232	Washer	1	B10001-
36	04435-52112	Clip	1	B10001-
37	01010-81220	Bolt	1	B10001-
38	01643-31232	Washer	1	B10001-
39	08034-20823	Band	2	B10001-
40	203-03-12740	Bracket	1	B10001-
41	01010-81225	Bolt	2	B10001-
42	01643-31232	Washer	2	B10001-
43	(20Y-810-1260)	Compressor Assembly		
44	(203-979-1111)	Hose		
45	(203-979-1121)	Hose		
46	(203-979-1132)	Hose Assembly		

PC130-8 S/N B10001-UP
Air Conditioner Unit, Air Conditioner Piping

Index	Part Number	Description	Qty	Serial No.
47	(203-979-1142)	Hose Assembly		

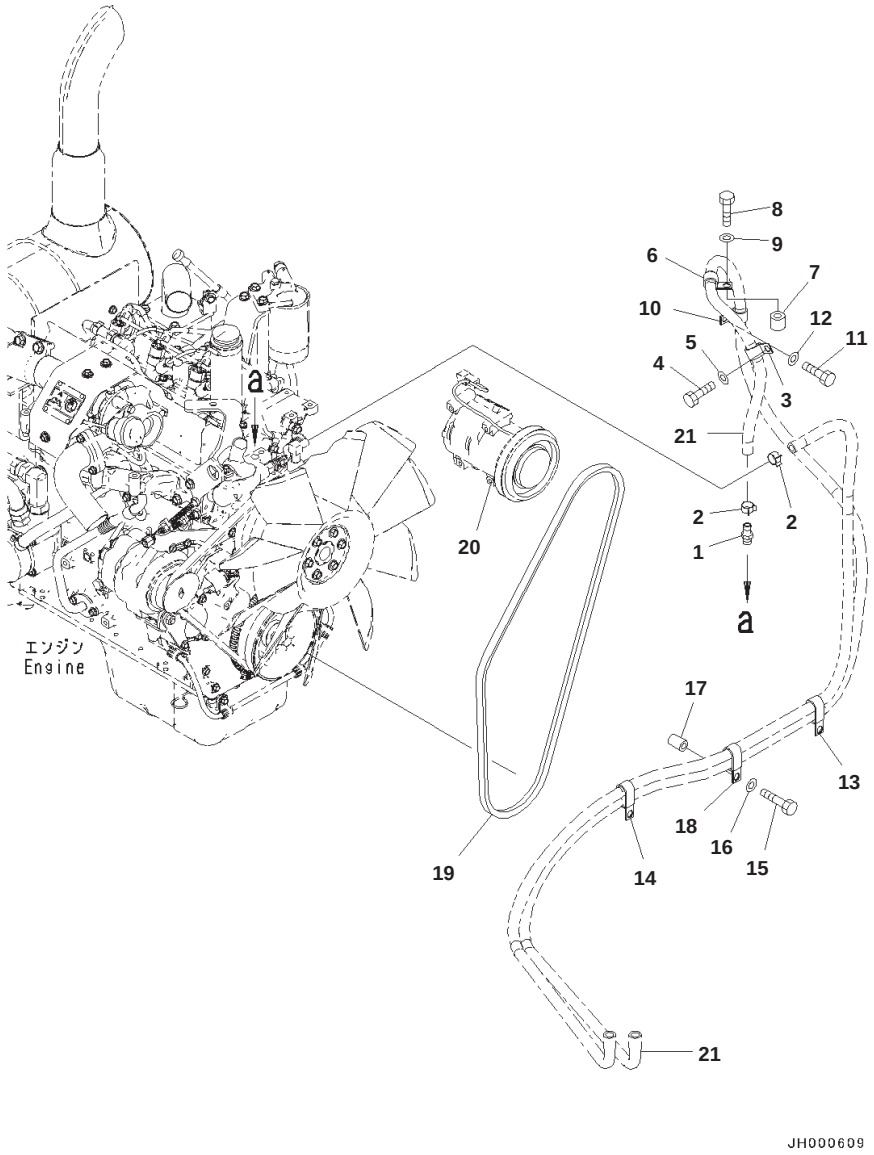

Air Conditioner Unit, Heater Hose

Index	Part Number	Description	Qty	Serial No.
1	20T-54-42510	Nipple	1	B10001-
2	11Y-09-11160	Clip	2	B10001-
3	04434-52112	Clip	1	B10001-
4	01010-81220	Bolt	1	B10001-
5	01643-31232	Washer	1	B10001-
6	04434-52110	Clip	1	B10001-
7	14X-54-26640	Collar	1	B10001-
8	01010-81075	Bolt	1	B10001-
9	01643-31032	Washer	1	B10001-
10	04434-52112	Clip	1	B10001-
11	01010-81220	Bolt	1	B10001-
12	01643-31232	Washer	1	B10001-
13	04435-52112	Clip	1	B10001-
14	04435-52112	Clip	1	B10001-
15	01010-81260	Bolt	1	B10001-
16	01643-31232	Washer	1	B10001-
17	23B-06-61810	Spacer	1	B10001-
18	04435-52112	Clip	1	B10001-
19	04120-21766	V-belt	1	B10001-
20	(20Y-810-1260)	Compressor Assembly		
21	(203-979-1132)	Hose Assembly		

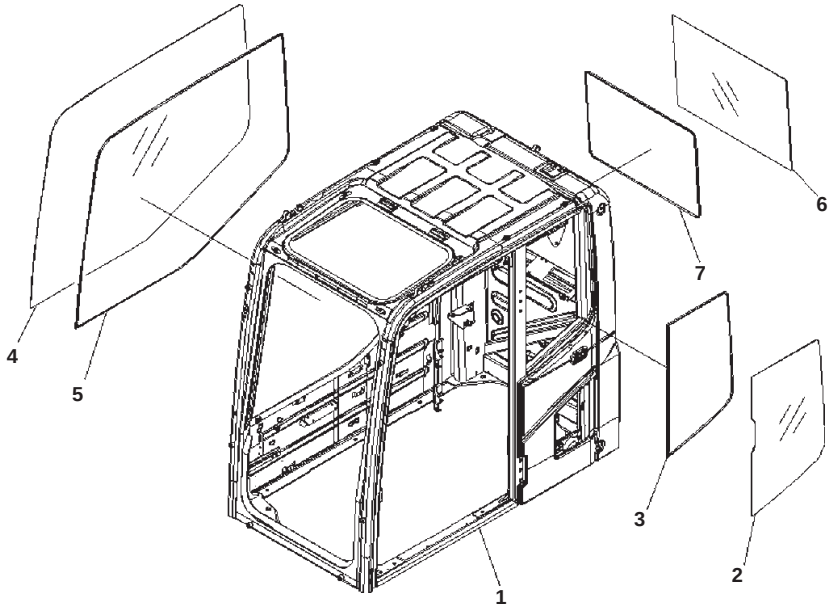

Cab, With Master Key, AM-FM Radio, 12volt Power Supply, Cab Body and Window

Index	Part Number	Description	Qty	Serial No.
		Note: This list covers following specifications: Cab, With Master Key, AM-FM radio, 12volts Power Supply Cab, With Master Key, AM-FM radio, 12volts Power Supply, 1-Actuator Cab, With Master Key, AM-FM radio, 12volts Power Supply, 2-Actuator		
	203-54-00241	Cab Assembly	1	B10001-
1	203-54-19113	・ Cab	1	B10001-
2	20Y-53-11241	・ Glass	1	B10001-
3	20Y-53-11260	・ Seal	1	B10001-
4	20Y-53-11841	・ Glass	1	B10001-
5	20Y-53-11850	・ Seal	1	B10001-
6	20Y-53-11271	・ Glass	1	B10001-
7	20Y-53-11250	・ Seal	1	B10001-

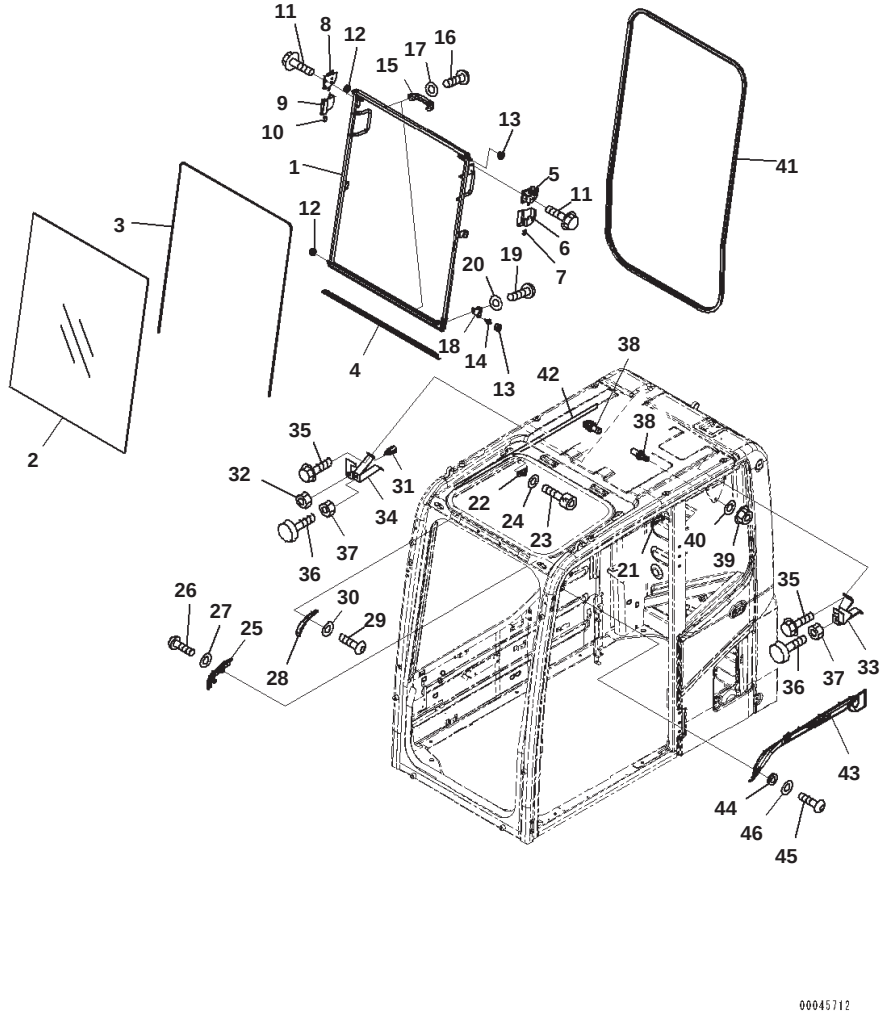

Cab, With Master Key, AM-FM Radio, 12volt Power Supply, Front Window

Index	Part Number	Description	Qty	Serial No.
		Note: This list covers following specifications: Cab, With Master Key, AM-FM radio, 12volts Power Supply Cab, With Master Key, AM-FM radio, 12volts Power Supply, 1-Actuator Cab, With Master Key, AM-FM radio, 12volts Power Supply, 2-Actuator		
	203-54-00241	Cab Assembly	1	B10001-
	20Y-53-00031	・ Window Assembly	1	B10001-
1	20Y-53-11511	・・ Frame	1	B10001-
2	20Y-53-11520	・・ Glass	1	B10001-
3	20Y-54-51531	・・ Seal	1	B10001-
4	20Y-53-11551	・・ Seal	1	B10001-
5	22B-54-15411	・・ Lock Assembly	1	B10001-
6	22B-54-15440	・・ Case	1	B10001-
7	22B-54-15470	・・ Knob	1	B10001-
8	22B-54-15421	・・ Lock Assembly	1	B10001-
9	22B-54-15450	・・ Case	1	B10001-
10	22B-54-15480	・・ Knob	1	B10001-
11	01435-40812	・・ Bolt	4	B10001-
12	20Y-54-52621	・・ Roller	2	B10001-
13	20Y-54-52681	・・ Roller	2	B10001-
14	20Y-53-12330	・・ Pin	1	B10001-
15	20Y-54-14590	・・ Handle	2	B10001-
16	01245-00616	・・ Screw, Hexagon Socket Head	4	B10001-
17	01643-70623	・・ Washer	4	B10001-
18	20Y-53-12830	・・ Bracket	1	B10001-
19	01245-00816	・・ Screw	2	B10001-
20	01643-70823	・・ Washer	2	B10001-
21	20Y-54-51670	・ Stopper	1	B10001-
22	20Y-54-51680	・ Stopper	1	B10001-
23	01252-80616	・ Bolt	4	B10001-
24	01643-70623	・ Washer	4	B10001-
25	20Y-53-11561	・ Block Assembly	1	B10001-
26	01245-00816	・ Screw	2	B10001-
27	01643-70823	・ Washer	2	B10001-
28	20Y-53-11661	・ Bracket	1	B10001-
29	01245-00816	・ Screw	2	B10001-
30	01643-70823	・ Washer	2	B10001-
31	21J-06-12440	・ Switch	1	B10001-
32	01583-11811	・ Nut	1	B10001-
33	20Y-53-11581	・ Bracket	1	B10001-
34	20Y-53-11641	・ Bracket	1	B10001-
35	01435-00612	・ Bolt	4	B10001-
36	20Y-54-11611	・ Stopper	2	B10001-
37	01580-11008	・ Nut	2	B10001-

PC130-8 S/N B10001-UP

Cab, With Master Key, AM-FM Radio, 12volt Power Supply, Front Window

Index	Part Number	Description	Qty	Serial No.
38	20Y-54-51621	・ Striker	2	B10001-
39	01584-31008	・ Nut	2	B10001-
40	01643-71032	・ Washer	2	B10001-
41	20Y-53-11540	・ Seal	1	B10001-
42	20Y-54-51420	・ Seal	1	B10001-
43	20Y-53-12531	・ Cover	1	B10001-
44	20Y-53-12310	・ Collar	3	B10001-
45	01245-00616	・ Screw, Hexagon Socket Head	3	B10001-
46	01643-70623	・ Washer	3	B10001-

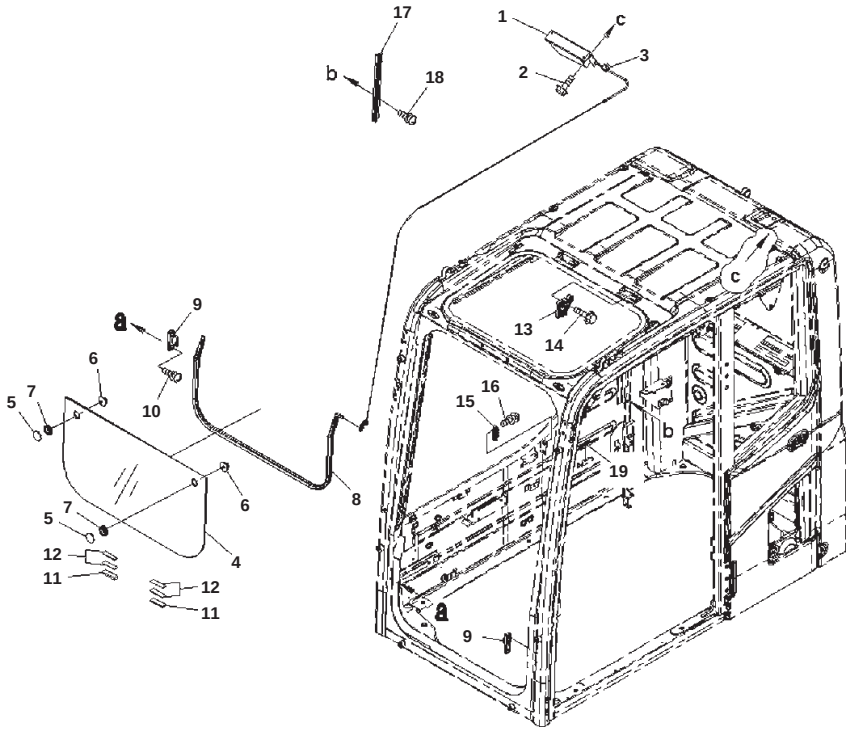

Cab, With Master Key, AM-FM Radio, 12volt Power Supply, Front Lower Window

Index	Part Number	Description	Qty	Serial No.
		Note: This list covers following specifications: Cab, With Master Key, AM-FM radio, 12volts Power Supply Cab, With Master Key, AM-FM radio, 12volts Power Supply, 1-Actuator Cab, With Master Key, AM-FM radio, 12volts Power Supply, 2-Actuator		
	203-54-00241	Cab Assembly	1	B10001-
1	20Y-53-11591	・ Spring Assembly	1	B10001-
2	01435-00616	・ Bolt	2	B10001-
3	20Y-54-51640	・ Holder	1	B10001-
	20Y-53-11601	・ Glass Assembly	1	B10001-
4	20Y-53-11611	・・ Glass	1	B10001-
5	22B-54-15970	・・ Retainer	2	B10001-
6	22B-54-15980	・・ Knob	2	B10001-
7	08037-02512	・・ Grommet	2	B10001-
8	208-53-11860	・ Trim	1	B10001-
9	20Y-53-11940	・ Seat	2	B10001-
10	01023-20612	・ Screw	4	B10001-
11	20Y-53-11973	・ Rubber	2	B10001-
12	20Y-53-12892	・ Rubber	4	B10001-
13	22B-54-15841	・ Lock Assembly	1	B10001-
14	01435-40616	・ Bolt	2	B10001-
15	20Y-53-12611	・ Seat	1	B10001-
16	01023-20616	・ Screw	2	B10001-
17	20Y-53-12631	・ Rail	1	B10001-
18	01023-20616	・ Screw	2	B10001-
19	20U-54-25140	・ Stopper	1	B10001-

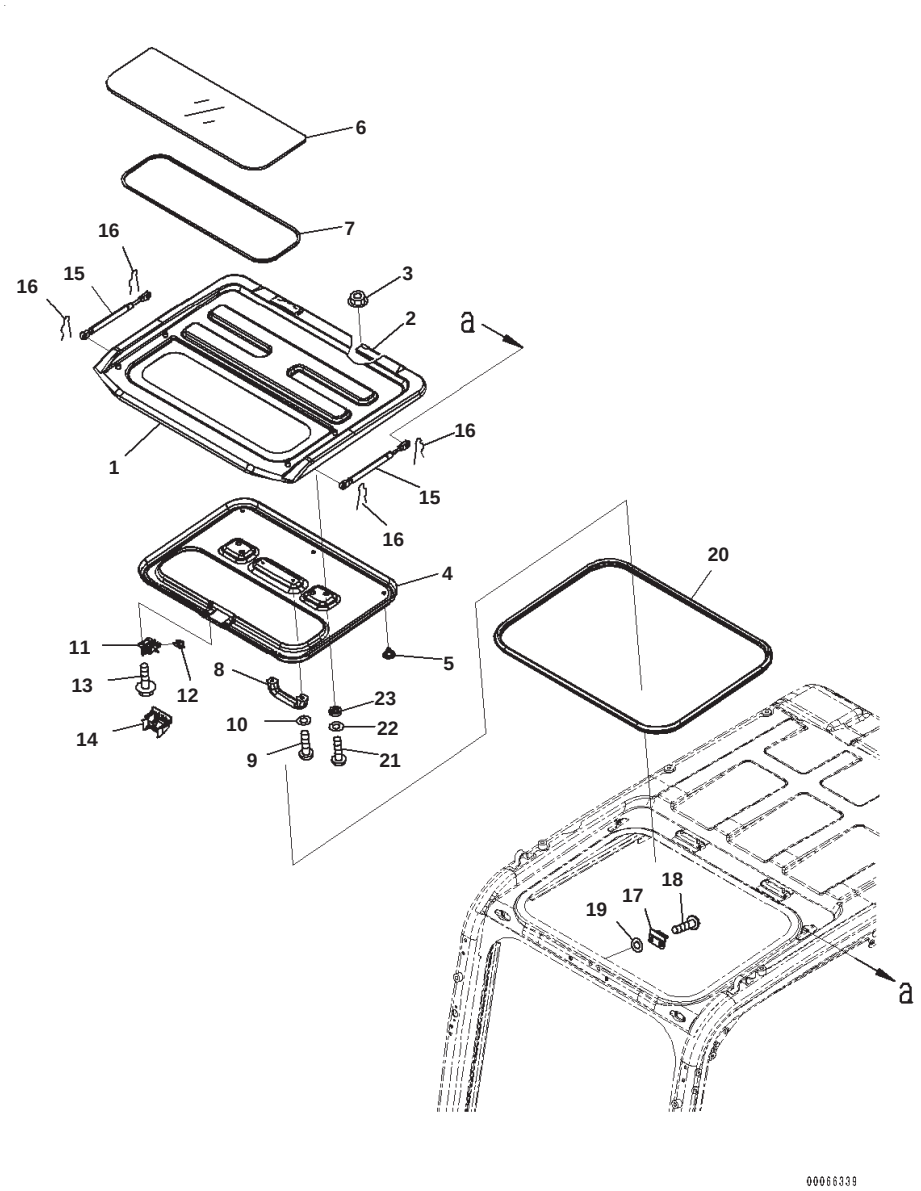

Cab, With Master Key, AM-FM Radio, 12volt Power Supply, Roof Ventilator

Index	Part Number	Description	Qty	Serial No.
		Note: This list covers following specifications: Cab, With Master Key, AM-FM radio, 12volts Power Supply Cab, With Master Key, AM-FM radio, 12volts Power Supply, 1-Actuator Cab, With Master Key, AM-FM radio, 12volts Power Supply, 2-Actuator		
	203-54-00241	Cab Assembly	1	B10001-
1	20Y-53-11712	・ Roof	1	B10001-
2	208-53-22H70	・・ Hinge,Welded	2	B10001-
3	01584-30806	・ Nut	4	B10001-
4	20Y-53-11921	・ Cover	1	B10001-
5	09416-10200	・ Button	5	B10001-
6	20Y-53-11741	・ Plate	1	B10001-
7	20Y-53-11790	・ Seal	1	B10001-
8	20Y-54-14590	・ Handle	1	B10001-
9	01245-00616	・ Screw, Hexagon Socket Head	2	B10001-
10	01643-70623	・ Washer	2	B10001-
11	20Y-53-11721	・ Lock	1	B10001-
12	20Y-53-11781	・ Knob	1	B10001-
13	01435-40610	・ Bolt	3	B10001-
14	20Y-53-11931	・ Cover	1	B10001-
15	20Y-54-36342	・ Gas Spring Assembly	2	B10001-
16	04052-10833	・ Pin, Snap	4	B10001-
17	20Y-53-11771	・ Striker	1	B10001-
18	01245-00820	・ Screw	2	B10001-
19	20Y-54-52651	・ Spacer	2	B10001-
20	20Y-53-11861	・ Seal	1	B10001-
21	01245-00620	・ Screw	4	B10001-
22	01643-70623	・ Washer	4	B10001-
23	20Y-54-52651	・ Spacer	4	B10001-

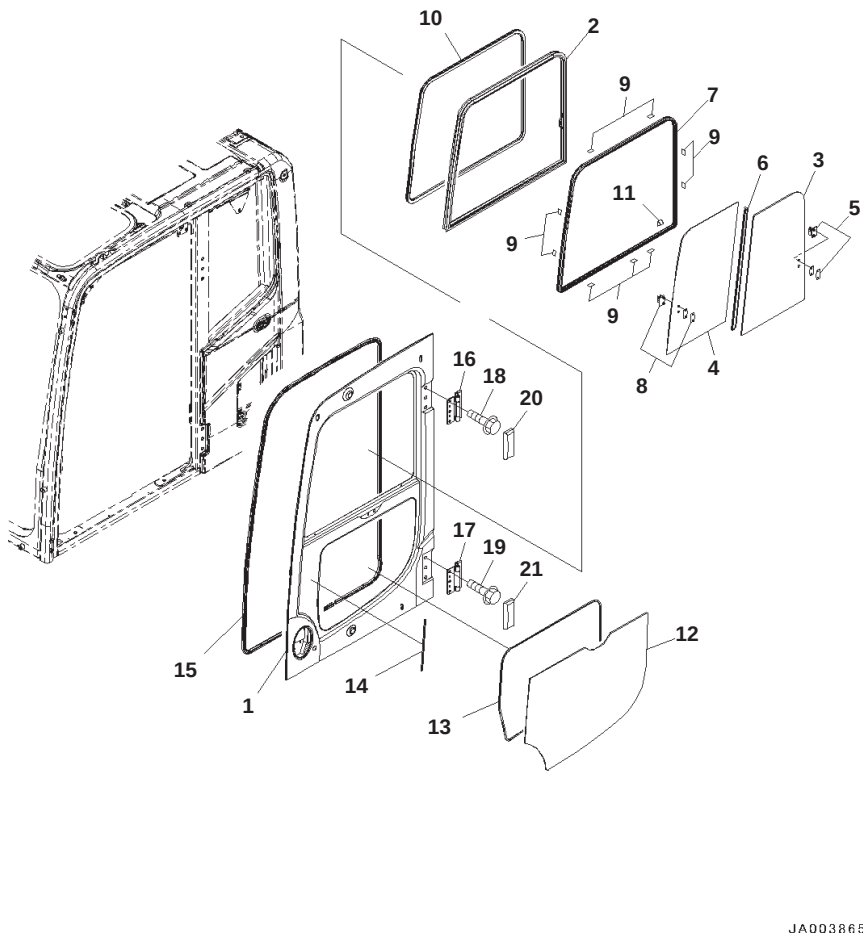

Cab, With Master Key, AM-FM Radio, 12volt Power Supply, Door

Index	Code	Part Number	Description	Qty	Serial No.
			Note: This list covers following specifications: Cab, With Master Key, AM-FM radio, 12volts Power Supply Cab, With Master Key, AM-FM radio, 12volts Power Supply, 1-Actuator Cab, With Master Key, AM-FM radio, 12volts Power Supply, 2-Actuator		
		203-54-00241	Cab Assembly	1	B10001-
		20Y-53-00072	・ Door Assembly	1	B10001-
1	C1		・・ Door	1	B10001-
		20Y-53-11402	・・ Sash Assembly	1	B10001-
2	C1		・・・ Sash	1	B10001-
3		20Y-53-12840	・・・ Glass	1	B10001-
4		20Y-53-12850	・・・ Glass	1	B10001-
5		20Y-54-52860	・・・ Lock Assembly	1	B10001-
6		20Y-53-12870	・・・ Seal	1	B10001-
7		20Y-53-12880	・・・ Seal	1	B10001-
8		20Y-54-13322	・・・ Lock Assembly	1	B10001-
9		20Y-53-12971	・・ Seat	9	B10001-
10		20Y-53-11470	・・ Trim	1	B10001-
11		20Y-53-13910	・・ Cover	1	B10001-
12		20Y-53-11451	・・ Glass	1	B10001-
13		20Y-53-11460	・・ Seal	1	B10001-
14		20Y-53-13880	・・ Seal	1	B10001-
15		20Y-53-11484	・・ Weather Strip	1	B10001-
16		20Y-53-11332	・・ Hinge	1	B10001-
17		20Y-53-11332	・・ Hinge	1	B10001-
18		01435-01220	・・ Bolt	6	B10001-
19		01435-01220	・・ Bolt	6	B10001-
20		20Y-53-11411	・・ Cover	1	B10001-
21		20Y-53-11421	・・ Cover	1	B10001-

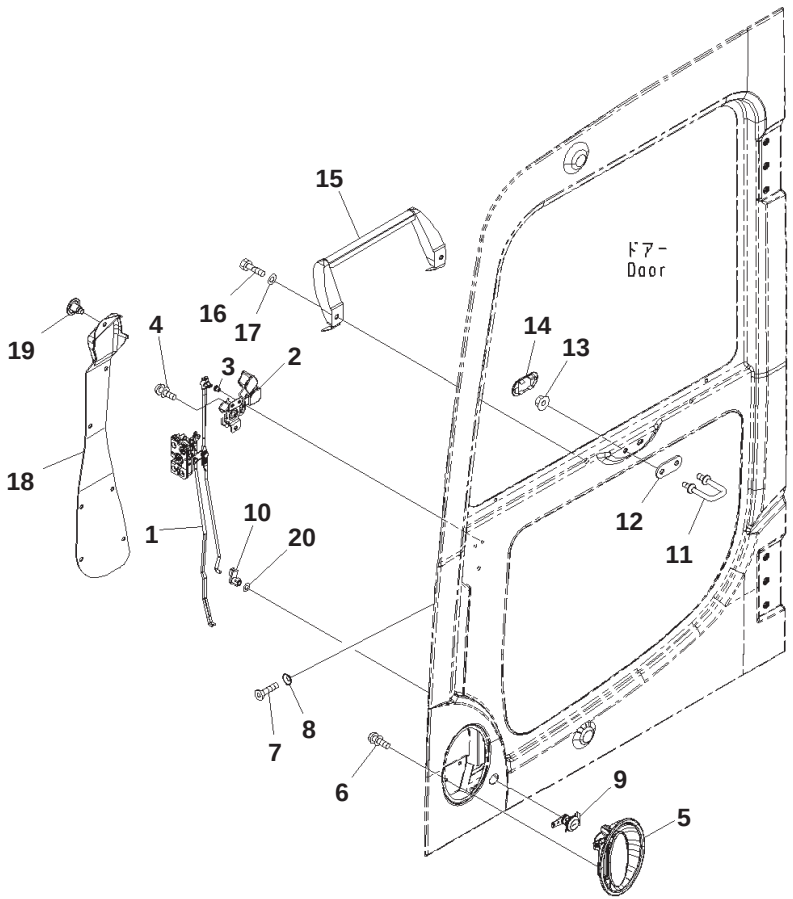

Cab, With Master Key, AM-FM Radio, 12volt Power Supply, Door Lock

Index	Part Number	Description	Qty	Serial No.
		Note: This list covers following specifications: Cab, With Master Key, AM-FM radio, 12volts Power Supply Cab, With Master Key, AM-FM radio, 12volts Power Supply, 1-Actuator Cab, With Master Key, AM-FM radio, 12volts Power Supply, 2-Actuator		
	203-54-00241	Cab Assembly	1	B10001-
	20Y-53-00072	・ Door Assembly	1	B10001-
1	20Y-53-12201	・・ Latch Assembly	1	B10001-
2	20Y-54-52300	・・ Handle Assembly	1	B10001-
3	22B-54-16340	・・・ Snap	1	B10001-
4	01023-10612	・・ Screw	3	B10001-
5	20Y-53-12991	・・ Handle	1	B10001-
6	01023-10612	・・ Screw	3	B10001-
7	01240-00616	・・ Screw	3	B10001-
8	195-Z11-1690	・・ Washer	3	B10001-
9	20Y-54-52820	・・ Lock Assembly	1	B10001-
10	22B-54-16330	・・ Snap	1	B10001-
11	20Y-53-11320	・・ Striker	1	B10001-
12	20Y-53-12940	・・ Plate	1	B10001-
13	01584-01008	・・ Nut	2	B10001-
14	20Y-53-12661	・・ Cover	1	B10001-
15	20Y-54-51393	・・ Grip	1	B10001-
16	01010-80820	・・ Bolt	2	B10001-
17	01643-30823	・・ Washer	2	B10001-
18	20Y-53-11441	・・ Cover	1	B10001-
19	22B-54-16461	・・ Rivet	7	B10001-
20	145-Z79-6270	・・ Washer	1	B10001-

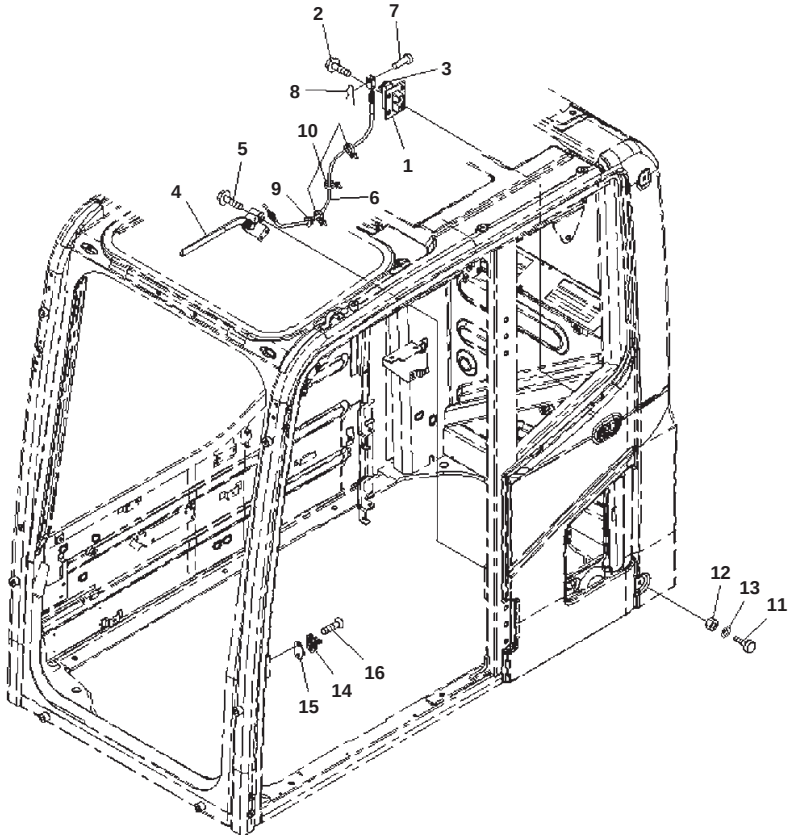

Cab, With Master Key, AM-FM Radio, 12volt Power Supply, Open Lock and Door Catch

Index	Part Number	Description	Qty	Serial No.
		Note: This list covers following specifications: Cab, With Master Key, AM-FM radio, 12volts Power Supply Cab, With Master Key, AM-FM radio, 12volts Power Supply, 1-Actuator Cab, With Master Key, AM-FM radio, 12volts Power Supply, 2-Actuator		
	203-54-00241	Cab Assembly	1	B10001-
1	20Y-53-11981	· Lock	1	B10001-
2	01435-40825	· Bolt	4	B10001-
3	20Y-53-12280	· Cover	1	B10001-
4	208-53-14540	· Lever Assembly	1	B10001-
5	01435-40616	· Bolt	3	B10001-
6	20Y-53-11990	· Cable	1	B10001-
7	04205-10520	· Pin	1	B10001-
8	04052-10530	· Pin	1	B10001-
9	08034-20414	· Band	1	B10001-
10	08059-00413	· Clip	2	B10001-
11	20Y-54-11611	· Stopper	2	B10001-
12	01580-11008	· Nut	2	B10001-
13	01643-31032	· Washer	2	B10001-
14	20Y-53-11810	· Striker	1	B10001-
15	20Y-53-11890	· Plate	1	B10001-
16	01240-01025	· Screw	2	B10001-

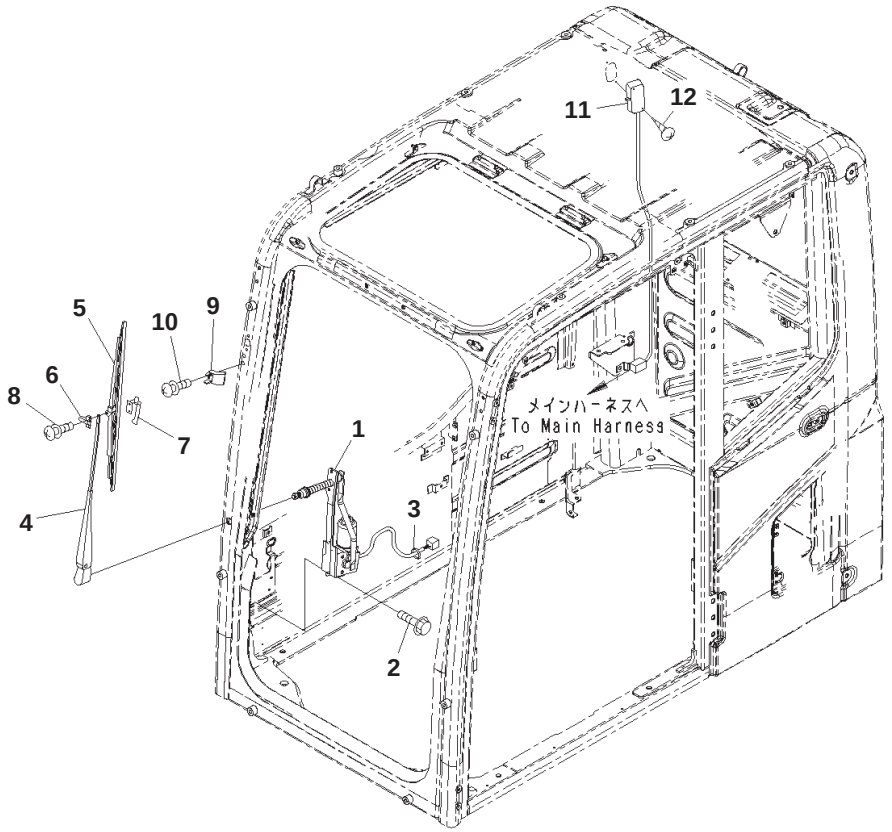

Cab, With Master Key, AM-FM Radio, 12volt Power Supply, Wiper and Room Lamp

Index	Part Number	Description	Qty	Serial No.
		Note: This list covers following specifications: Cab, With Master Key, AM-FM radio, 12volts Power Supply Cab, With Master Key, AM-FM radio, 12volts Power Supply, 1-Actuator Cab, With Master Key, AM-FM radio, 12volts Power Supply, 2-Actuator		
	203-54-00241	Cab Assembly	1	B10001-
1	2A5-53-12721	・ Wiper Motor Assembly	1	B10025-
	20Y-54-52211	・ Wiper Motor Assembly	1	B10001-B10024
2	01435-00616	・ Bolt	6	B10001-
	01643-70623	・ Washer	6	B10025-
3	08034-20414	・ Band	1	B10001-
	20Y-54-52221	・ Wiper Assembly	1	B10001-
4	20Y-54-52350	・・ Arm	1	B10001-
5	20Y-54-39450	・・ Wiper Blade	1	B10001-
6	20Y-54-39460	・・ Slider	1	B10001-
7	20Y-54-39460	・・・ Slider	1	B10001-
8	20Y-54-39480	・・ Plate	1	B10001-
9	20Y-53-12232	・ Stopper	1	B10001-
10	01023-20620	・ Screw	2	B10001-
11	20Y-53-12790	・ Light	1	B10001-
	08116-02410	・・ Bulb, 10watt	1	B10001-
12	01370-00420	・ Screw	2	B10001-

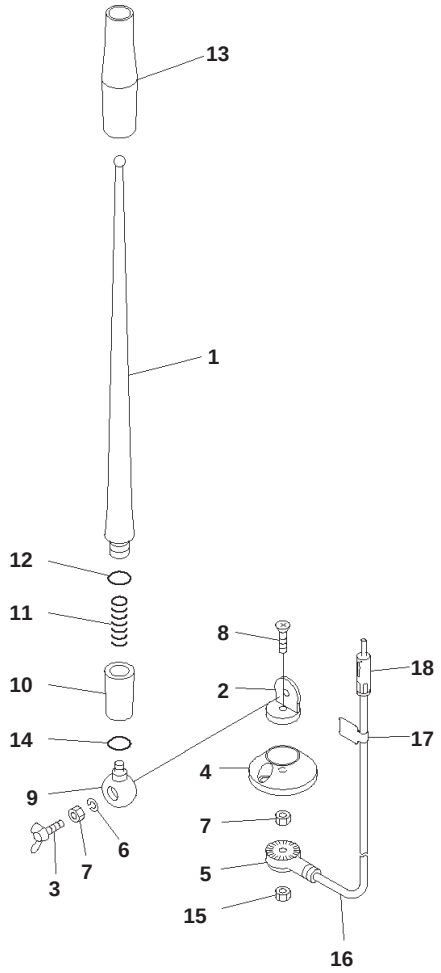

JH002177

Cab, With Master Key, AM-FM Radio, 12volt Power Supply, Rubber Antenna

Index	Code	Part Number	Description	Qty	Serial No.
			Note: This list covers following specifications: Cab, With Master Key, AM-FM radio, 12volts Power Supply Cab, With Master Key, AM-FM radio, 12volts Power Supply, 1-Actuator Cab, With Master Key, AM-FM radio, 12volts Power Supply, 2-Actuator		
		203-54-00241	Cab Assembly	1	B10001-
		20Y-06-41990	・ Antenna	1	B10001-
1		RFU419B-418-A	・・ Rod	1	B10001-
2	C1		・・ Holder	1	B10001-
3		RFU419B-418-D	・・ Bolt, Wing	1	B10001-
4		RFU419B-418-E	・・ Base	1	B10001-
5	C1		・・ Holder	1	B10001-
6		RFU419B-418-B	・・ Washer, Spring	1	B10001-
7		RFU419B-418-C	・・ Nut	2	B10001-
8	C1		・・ Screw	1	B10001-
9	C1		・・ Holder	1	B10001-
10	C1		・・ Holder Assembly	1	B10001-
11	C1		・・ Spring	1	B10001-
12	C1		・・ O-ring	1	B10001-
13	C1		・・ Tube	1	B10001-
14	C1		・・ O-ring	1	B10001-
15		REU419B-418-C	・・ Nut	1	B10001-
16		RFU419B-418-F	・・ Cable	1	B10001-
17	C1		・・ Plate	1	B10001-
18	C1		・・ Plug	1	B10001-

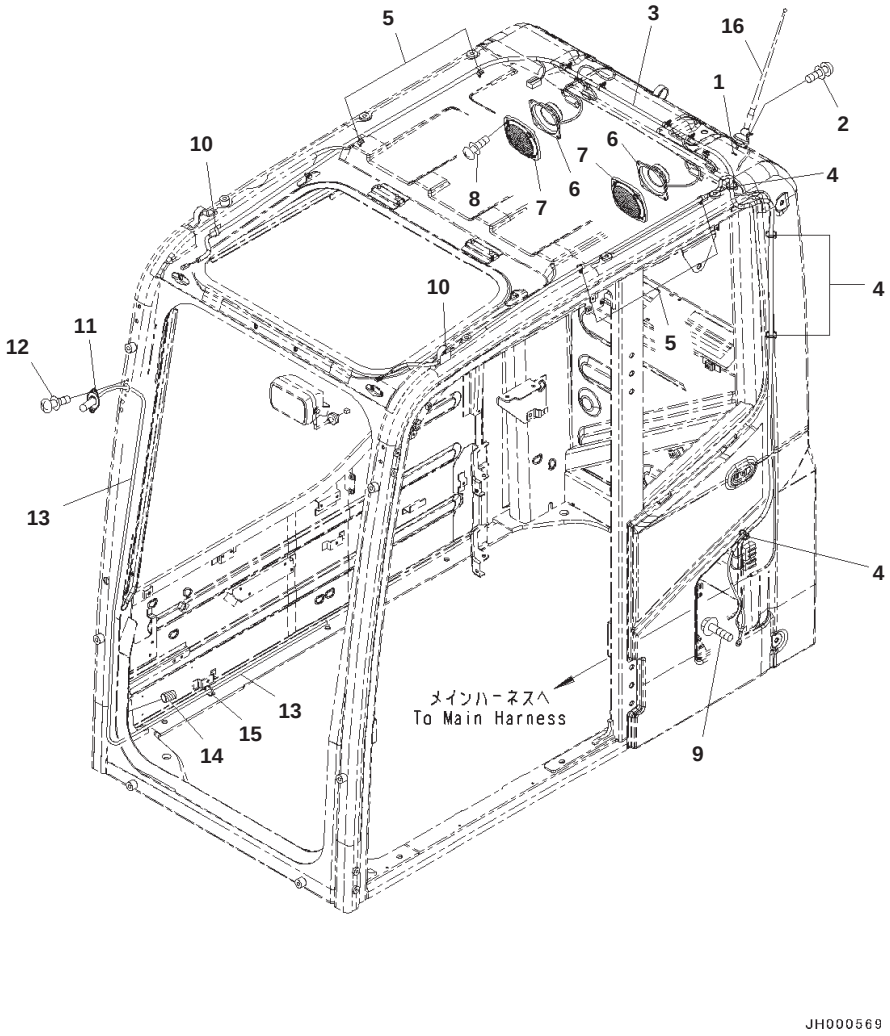

Cab, With Master Key, AM-FM Radio, 12volt Power Supply, Speaker and Window Washer

Index	Part Number	Description	Qty	Serial No.
		Note: This list covers following specifications: Cab, With Master Key, AM-FM radio, 12volts Power Supply Cab, With Master Key, AM-FM radio, 12volts Power Supply, 1-Actuator Cab, With Master Key, AM-FM radio, 12volts Power Supply, 2-Actuator		
	203-54-00241	Cab Assembly	1	B10001-
1	01643-30623	・ Washer	1	B10001-
2	01023-20412	・ Screw	2	B10001-
3	20Y-06-41141	・ Wiring Harness	1	B10001-
4	08034-20414	・ Band	4	B10001-
5	08059-00413	・ Clip	8	B10001-
6	20Y-06-42180	・ Speaker	2	B10001-
7	20Y-53-12221	・ Cover	2	B10001-
8	01023-20416	・ Screw	8	B10001-
9	01435-40812	・ Bolt	1	B10001-
10	08051-00801	・ Clip	2	B10001-
11	20Y-54-39511	・ Nozzle	1	B10001-
12	01023-70412	・ Screw	2	B10001-
13	195-979-7770	・ Hose	1	B10001-
14	08017-B0701	・ Conduit	1	B10001-
15	08034-20414	・ Band	1	B10001-
16	(20Y-06-41990)	Antenna		

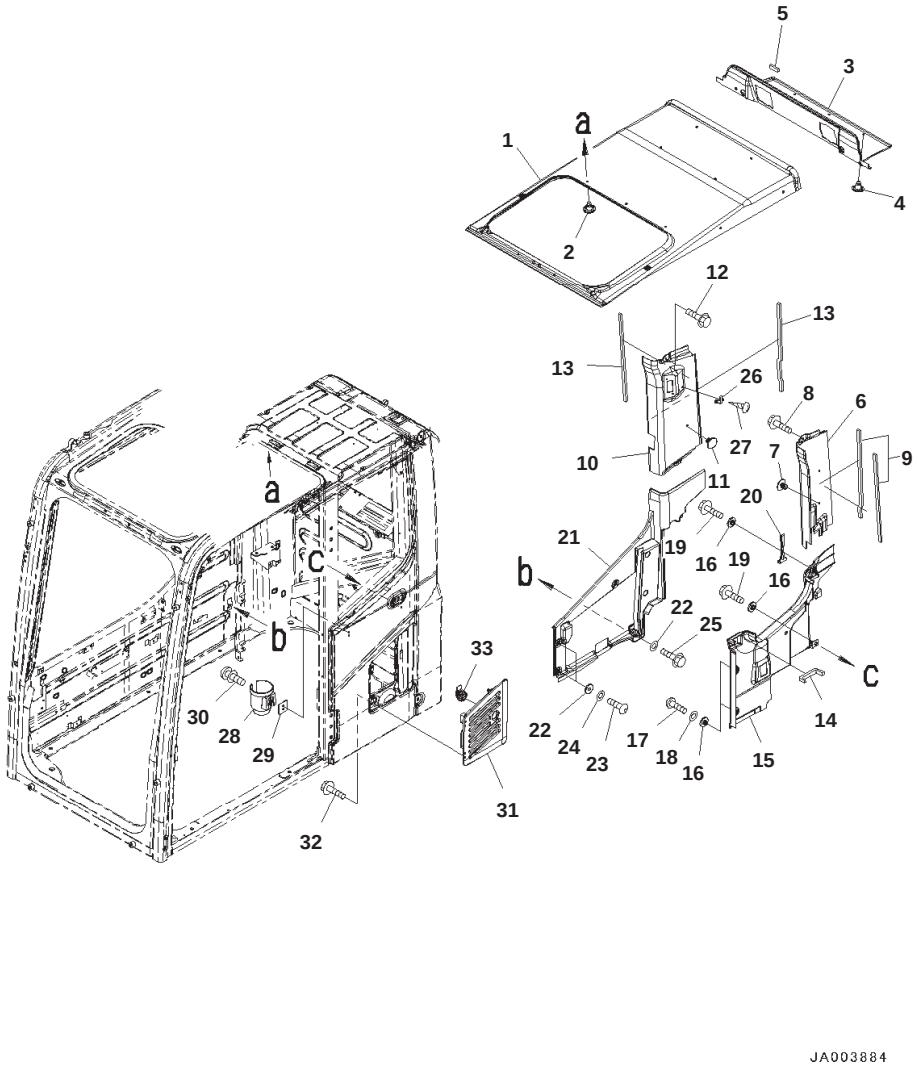

Cab, With Master Key, AM-FM Radio, 12volt Power Supply, Roof Cover and Air Intake

Index	Part Number	Description	Qty	Serial No.
		Note: This list covers following specifications: Cab, With Master Key, AM-FM radio, 12volts Power Supply Cab, With Master Key, AM-FM radio, 12volts Power Supply, 1-Actuator Cab, With Master Key, AM-FM radio, 12volts Power Supply, 2-Actuator		
	203-54-00241	Cab Assembly	1	B10001-
1	20Y-53-12412	・ Cover	1	B10001-
2	09416-10200	・ Button	17	B10001-
3	20Y-53-12421	・ Cover	1	B10001-
4	09416-10200	・ Button	3	B10001-
5	20Y-53-13870	・ Seal	1	B10001-
6	20Y-53-12431	・ Cover	1	B10001-
7	208-53-13270	・ Rivet	2	B10001-
8	01435-00612	・ Bolt	1	B10001-
9	20Y-53-12710	・ Seal	2	B10001-
10	20Y-53-12441	・ Cover	1	B10001-
11	09416-10200	・ Button	1	B10001-
12	01435-00612	・ Bolt	1	B10001-
13	20Y-53-12710	・ Seal	2	B10001-
14	20Y-53-12552	・ Seal	1	B10001-
15	20Y-53-12463	・ Cover	1	B10001-
16	20Y-53-12310	・ Collar	4	B10001-
17	01245-00616	・ Screw, Hexagon Socket Head	2	B10001-
18	01643-70623	・ Washer	2	B10001-
19	01435-00612	・ Bolt	2	B10001-
20	22B-54-17380	・ Hammer	1	B10001-
21	20Y-53-12472	・ Cover	1	B10001-
22	20Y-53-12310	・ Collar	5	B10001-
23	01245-00616	・ Screw, Hexagon Socket Head	3	B10001-
24	01643-70623	・ Washer	3	B10001-
25	01435-00612	・ Bolt	2	B10001-
26	205-54-51250	・ Hanger	1	B10001-
27	01370-30416	・ Screw	2	B10001-
28	208-53-12991	・ Holder	1	B10001-
29	208-53-12980	・ Plate	1	B10001-
30	01023-20616	・ Screw	2	B10001-
31	20Y-53-11752	・ Cover	1	B10001-
32	01435-40610	・ Bolt	4	B10001-
33	20Y-53-11761	・ Lock Assembly	1	B10001-

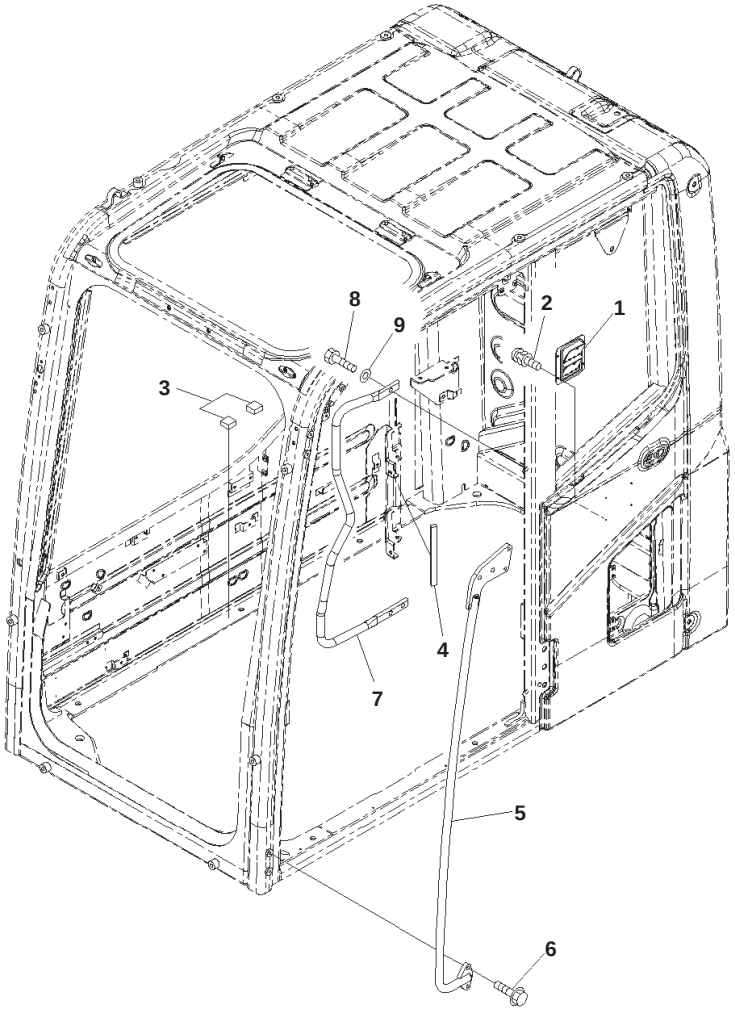

Cab, With Master Key, AM-FM Radio, 12volt Power Supply, Pressure Valve and Grip

Index	Part Number	Description	Qty	Serial No.
		Note: This list covers following specifications: Cab, With Master Key, AM-FM radio, 12volts Power Supply Cab, With Master Key, AM-FM radio, 12volts Power Supply, 1-Actuator Cab, With Master Key, AM-FM radio, 12volts Power Supply, 2-Actuator		
	203-54-00241	Cab Assembly	1	B10001-
1	20Y-53-11961	・ Valve Assembly	1	B10001-
2	01023-60512	・ Screw	4	B10001-
3	20Y-53-13490	・ Rubber	2	B10001-
4	20Y-53-12591	・ Seal	1	B10001-
5	20Y-53-18870	・ Grip	1	B10001-
6	01435-40825	・ Bolt	4	B10001-
7	20Y-53-11831	・ Grip	1	B10001-
8	01010-D1025	・ Bolt	3	B10001-
9	01643-71032	・ Washer	3	B10001-

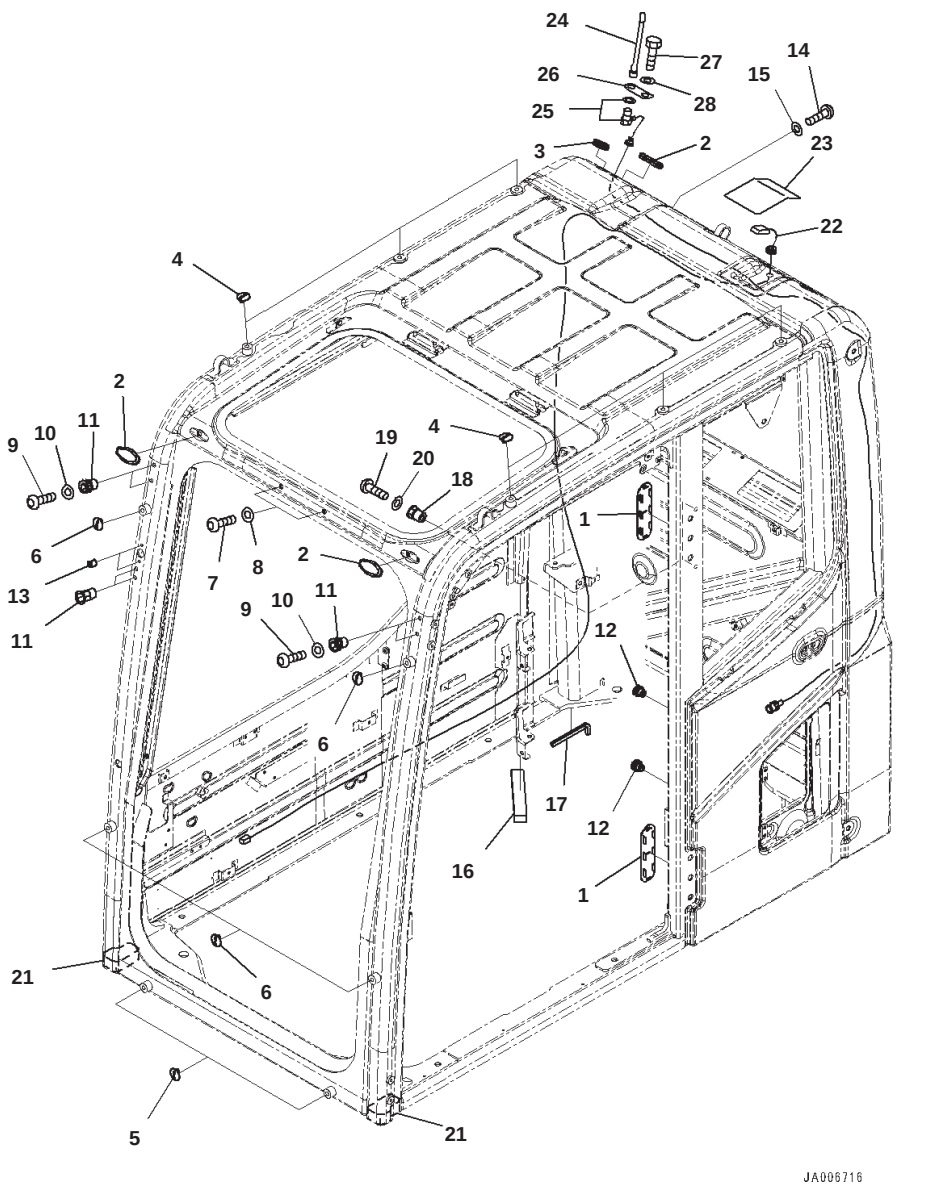

Cab, With Master Key, AM-FM Radio, 12volt Power Supply, KOMTRAX Film Antenna

Index	Part Number	Description	Qty	Serial No.
		Note: This list covers following specifications: Cab, With Master Key, AM-FM radio, 12volts Power Supply Cab, With Master Key, AM-FM radio, 12volts Power Supply, 1-Actuator Cab, With Master Key, AM-FM radio, 12volts Power Supply, 2-Actuator		
	203-54-00241	Cab Assembly	1	B10001-
1	20Y-53-12960	· Cover	2	B10001-
2	22B-54-17282	· Cap	3	B10001-
3	09415-02512	· Cap	1	B10001-
4	20Y-53-11390	· Cap	6	B10001-
5	20Y-53-11390	· Cap	2	B10001-
6	20Y-53-11380	· Cap	4	B10001-
7	01245-01016	· Screw	2	B10001-
8	01643-71032	· Washer	2	B10001-
9	01245-00616	· Screw, Hexagon Socket Head	4	B10001-
10	01643-70623	· Washer	4	B10001-
11	20Y-53-12260	· Nut	6	B10001-
12	20Y-54-35451	· Nut	2	B10001-
13	20Y-53-12320	· Nut	2	B10001-
14	01245-01016	· Screw	1	B10001-
15	01643-71032	· Washer	1	B10001-
16	20Y-53-12580	· Seal	1	B10001-
17	20Y-53-12740	· Trim	1	B10001-
18	20Y-53-12270	· Nut	2	B10001-
19	01245-00816	· Screw	2	B10001-
20	01643-70823	· Washer	2	B10001-
21	20Y-53-18880	· Seal	2	B10001-
22	8A13-10-4320	· Antenna	1	B10001-
23	20Y-53-12951	· Cover	1	B10001-
24	8A13-10-2100	· Antenna	1	B10001-
25	8A13-10-2200	· Cable	1	B10001-
26	20Y-53-15140	· Plate	1	B10001-
27	01010-D1225	· Bolt	1	B10001-
28	01643-71232	· Washer	1	B10001-

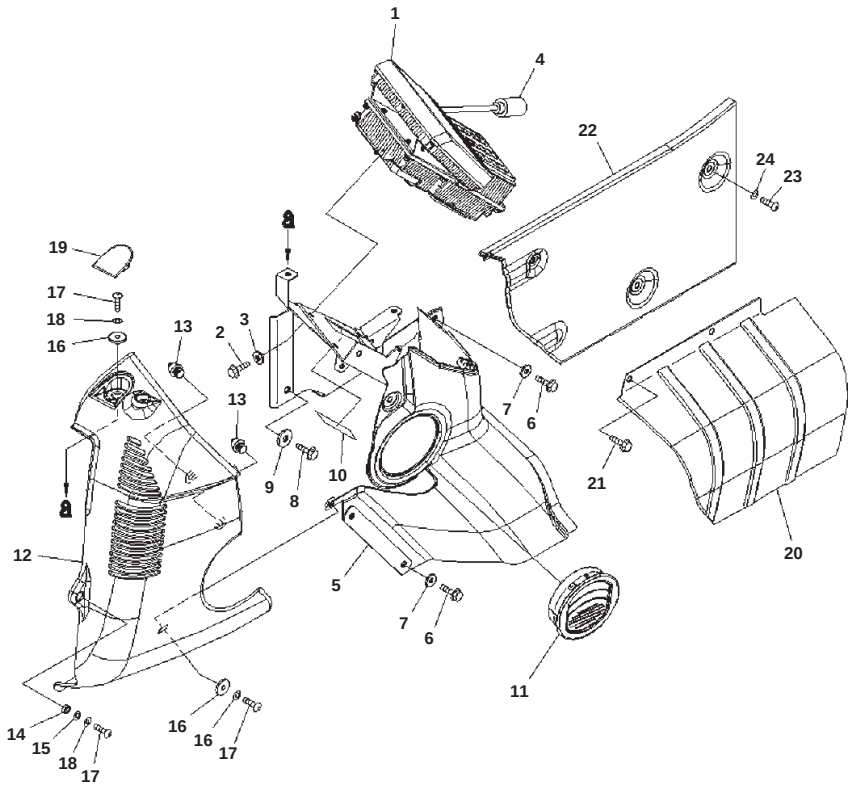

Cab, With Master Key, AM-FM Radio, 12volt Power Supply, Cab In Parts, Monitor and Cover

Index	Part Number	Description	Qty	Serial No.
		Note: This list covers following specifications: Cab, With Master Key, AM-FM radio, 12volts Power Supply Cab, With Master Key, AM-FM radio, 12volts Power Supply, 1-Actuator Cab, With Master Key, AM-FM radio, 12volts Power Supply, 2-Actuator		
1	7835-31-3016	Monitor	1	B10001-
2	01435-00616	Bolt	4	B10001-
3	209-72-12230	Washer	4	B10001-
4	20Y-53-12810	Cover	1	B10001-
5	20Y-53-12154	Cover	1	B10001-
6	01435-00616	Bolt	4	B10001-
7	209-72-12230	Washer	4	B10001-
8	01435-00820	Bolt	1	B10001-
9	208-53-11330	Washer	1	B10001-
10	20Y-00-41330	Plate	1	B10001-
11	20Y-53-12172	Grille	1	B10001-
12	20Y-53-12122	Cover	1	B10001-
13	22U-54-25360	・ Clip	2	B10001-
14	205-54-75240	Collar	1	B10001-
15	01643-70823	Washer	1	B10001-
16	20Y-53-12310	Collar	2	B10001-
17	01245-00616	Screw, Hexagon Socket Head	3	B10001-
18	01643-70623	Washer	3	B10001-
19	20Y-53-12291	Cap	1	B10001-
20	20Y-53-12161	Cover	1	B10001-
21	01435-00616	Bolt	2	B10001-
22	20Y-53-12483	Cover	1	B10001-
23	01245-00612	Screw	3	B10001-
24	01643-70623	Washer	3	B10001-

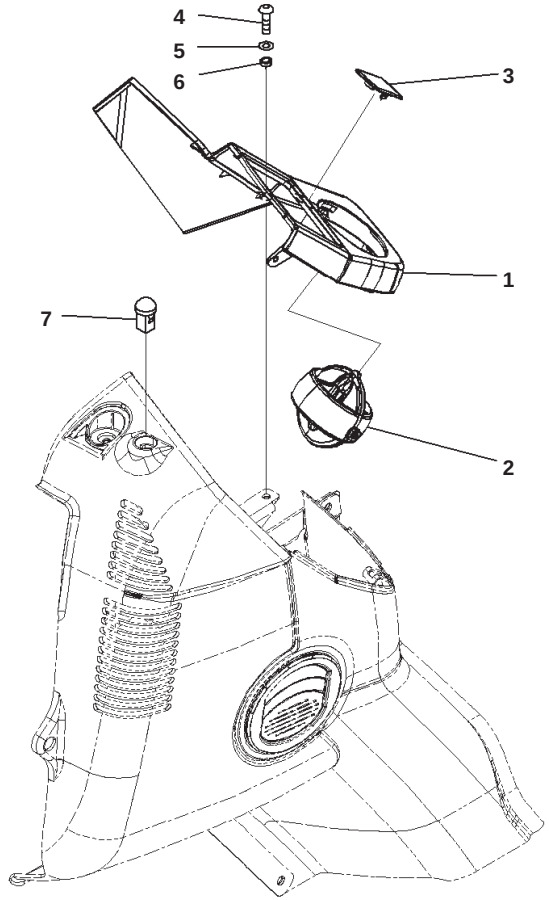

Cab, With Master Key, AM-FM Radio, 12volt Power Supply, Cab In Parts, Monitor Cover

Index	Part Number	Description	Qty	Serial No.
		Note: This list covers following specifications: Cab, With Master Key, AM-FM radio, 12volts Power Supply Cab, With Master Key, AM-FM radio, 12volts Power Supply, 1-Actuator Cab, With Master Key, AM-FM radio, 12volts Power Supply, 2-Actuator		
1	20Y-53-12111	Cover	1	B10001-
2	20Y-53-12240	Louver	1	B10001-
3	20Y-53-14230	Cap	1	B10001-
4	01245-00616	Screw, Hexagon Socket Head	1	B10001-
5	01643-70623	Washer	1	B10001-
6	20Y-43-41290	Collar	1	B10001-
7	20Y-979-6161	Sensor	1	B10001-

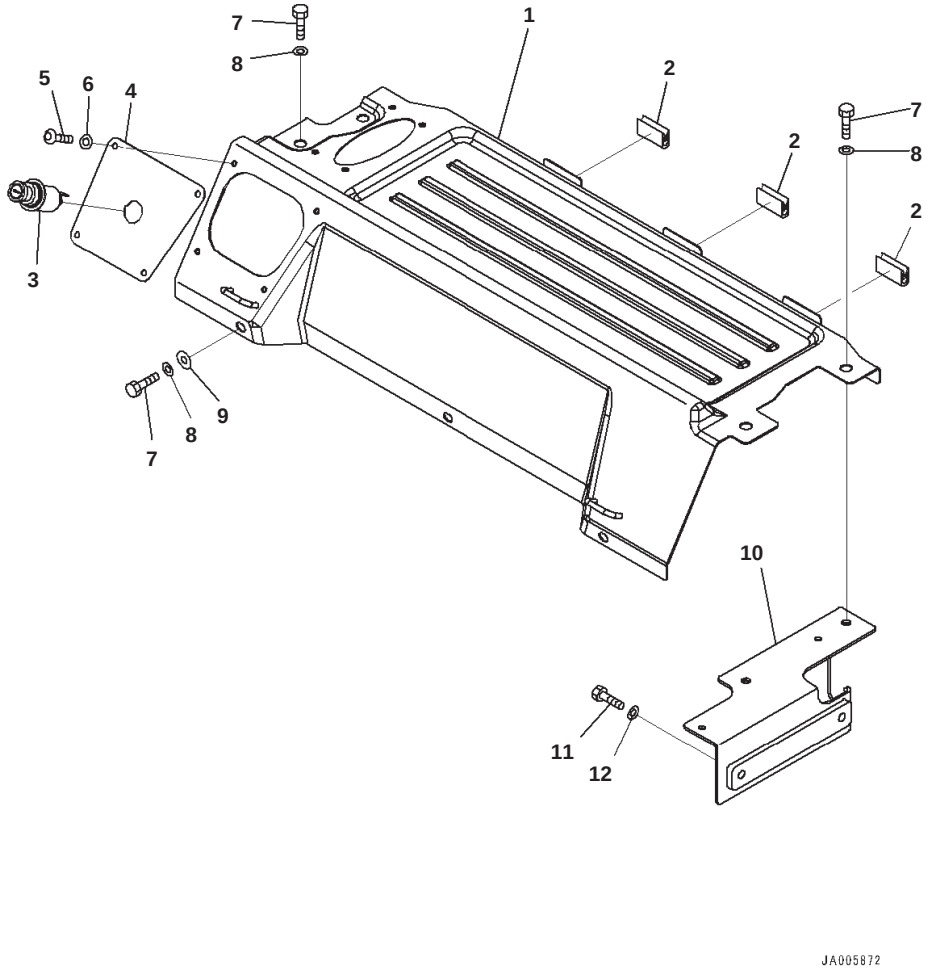

Cab, With Master Key, AM-FM Radio, 12volt Power Supply, Cab In Parts, Luggage Plate, With Air Conditioner

Index	Code	Part Number	Description	Qty	Serial No.
			Note: This list covers following specifications: Cab, With Master Key, AM-FM radio, 12volts Power Supply Cab, With Master Key, AM-FM radio, 12volts Power Supply, 1-Actuator Cab, With Master Key, AM-FM radio, 12volts Power Supply, 2-Actuator		
		20Y-53-13617	Cover Assembly	1	B10001-
1	C1		・ Cover	1	B10001-
2		208-53-12460	・ Seat	3	B10001-
3		20Y-06-23472	Cigarette Lighter	1	B10001-
4		20Y-53-13680	Plate	1	B10001-
5		01245-00616	Screw, Hexagon Socket Head	4	B10001-
6		01643-70623	Washer	4	B10001-
7		01010-D0825	Bolt	7	B10001-
8		01643-70823	Washer	7	B10001-
9		418-54-35450	Washer	3	B10001-
10		20Y-53-12771	Plate	1	B10001-
11		01010-D0825	Bolt	2	B10001-
12		01643-70823	Washer	2	B10001-

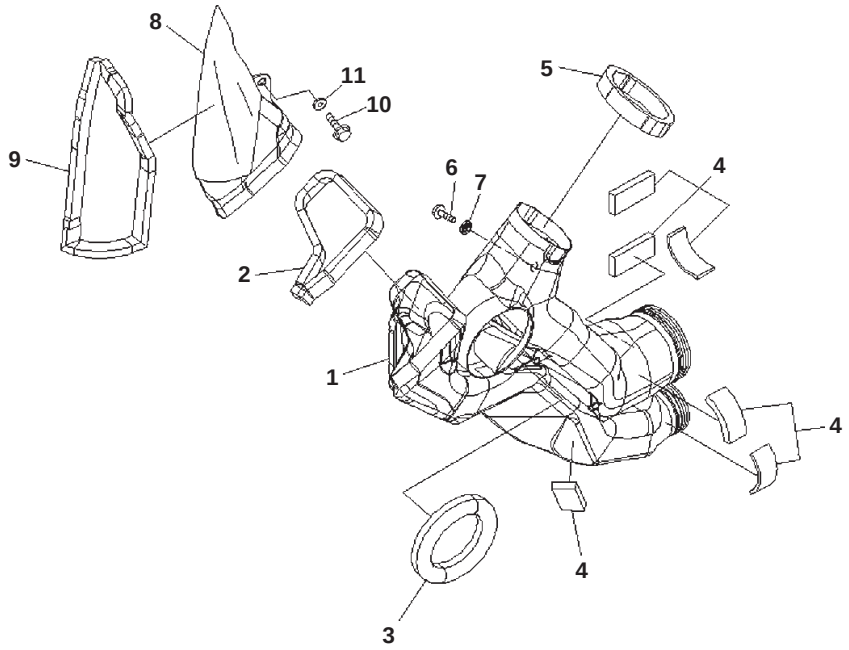

Cab, With Master Key, AM-FM Radio, 12volt Power Supply, Cab In Parts, Monitor Duct

Index	Part Number	Description	Qty	Serial No.
		Note: This list covers following specifications: Cab, With Master Key, AM-FM radio, 12volts Power Supply Cab, With Master Key, AM-FM radio, 12volts Power Supply, 1-Actuator Cab, With Master Key, AM-FM radio, 12volts Power Supply, 2-Actuator		
1	20Y-53-13371	Duct	1	B10001-
2	20Y-53-13480	Seal	1	B10001-
3	20Y-53-13280	Seal	1	B10001-
4	208-53-12440	Seal	6	B10001-
5	208-53-11941	Seal	1	B10001-
6	01435-00612	Bolt	1	B10001-
7	20Y-53-12310	Collar	1	B10001-
8	20Y-53-13421	Duct	1	B10001-
9	208-53-11920	Seal	1	B10001-
10	01435-00612	Bolt	1	B10001-
11	20Y-53-12310	Collar	1	B10001-

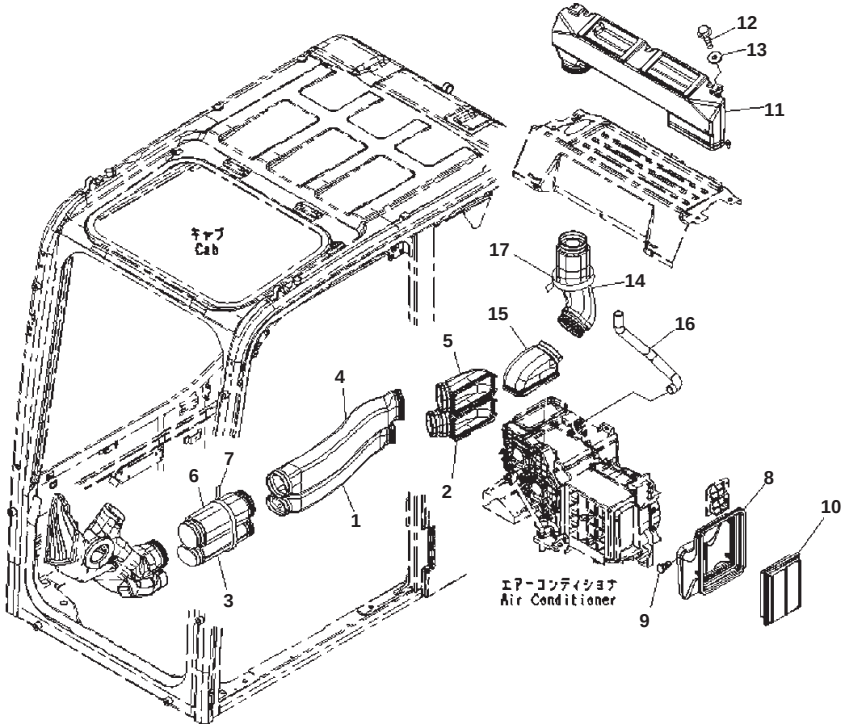

Cab, With Master Key, AM-FM Radio, 12volt Power Supply, Cab In Parts, Air Duct, With Air Conditioner

Index	Part Number	Description	Qty	Serial No.
		Note: This list covers following specifications: Cab, With Master Key, AM-FM radio, 12volts Power Supply Cab, With Master Key, AM-FM radio, 12volts Power Supply, 1-Actuator Cab, With Master Key, AM-FM radio, 12volts Power Supply, 2-Actuator		
1	20Y-53-13311	Duct	1	B10001-
2	20Y-53-13331	Duct	1	B10001-
3	20Y-53-13351	Duct	1	B10001-
4	20Y-53-13321	Duct	1	B10001-
5	20Y-53-13341	Duct	1	B10001-
6	20Y-53-13361	Duct	1	B10001-
7	08034-20876	Band	1	B10001-
8	20Y-53-12522	Duct	1	B10001-
9	208-53-12680	Clip	1	B10001-
10	17M-911-3530	Element	1	B10001-
11	20Y-53-13451	Duct	1	B10001-
12	01435-40616	Bolt	2	B10001-
13	20Y-53-12310	Collar	2	B10001-
14	20Y-53-13461	Duct	1	B10001-
15	208-53-12120	Duct	1	B10001-
16	208-53-12432	Hose	1	B10001-
17	08034-20876	Band	1	B10001-

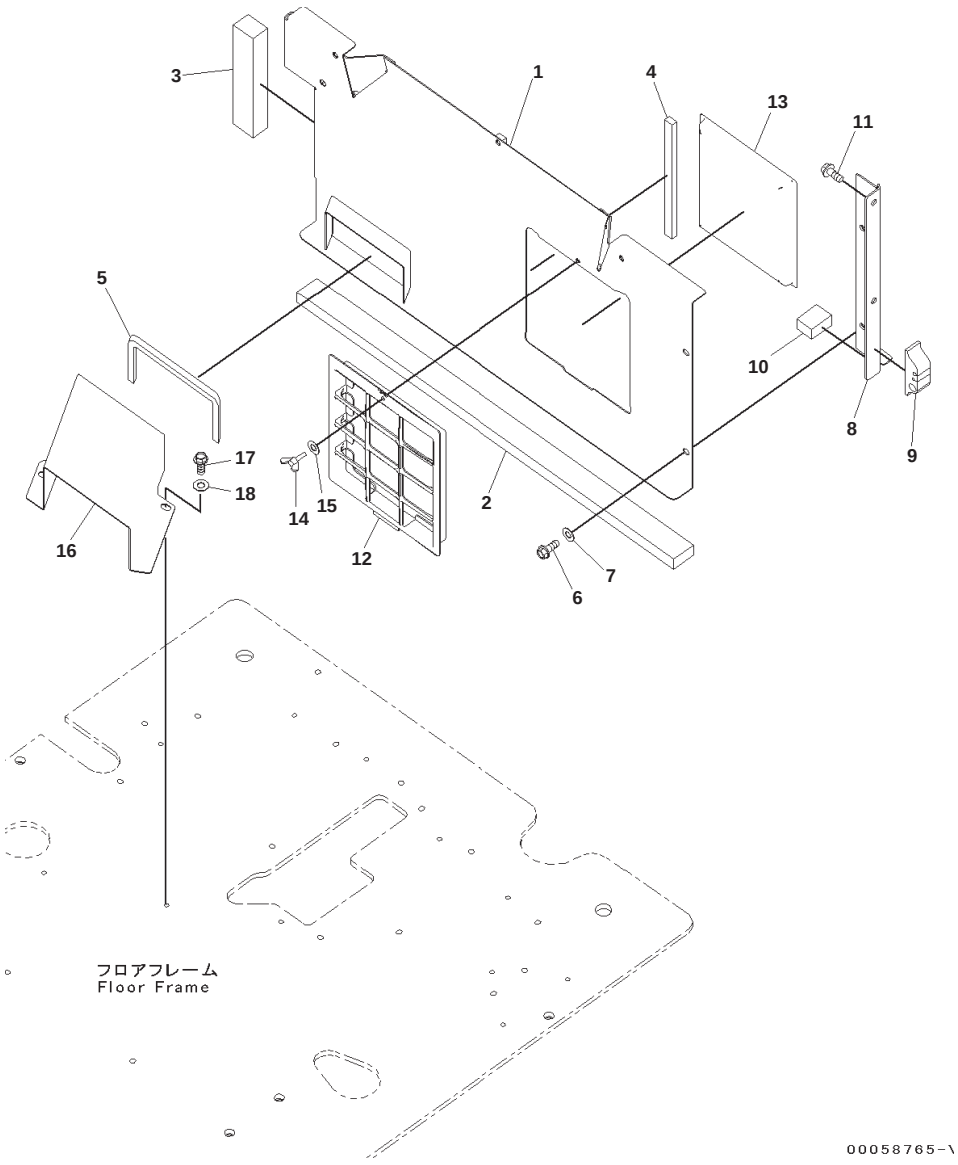

Cab, With Master Key, AM-FM Radio, 12volt Power Supply, Cab In Parts, Partition and Filter, With Air Conditioner

Index	Part Number	Description	Qty	Serial No.
		Note: This list covers following specifications: Cab, With Master Key, AM-FM radio, 12volts Power Supply Cab, With Master Key, AM-FM radio, 12volts Power Supply, 1-Actuator Cab, With Master Key, AM-FM radio, 12volts Power Supply, 2-Actuator		
1	20Y-53-12565	Bracket	1	B10001-
2	20Y-53-11870	Seal	1	B10001-
3	20Y-53-11880	Seal	1	B10001-
4	208-53-11890	Seal	1	B10001-
5	208-53-12230	Seal	1	B10001-
6	01435-40820	Bolt	3	B10001-
7	418-54-35450	Washer	3	B10001-
8	20Y-53-12781	Plate	1	B10001-
9	20Y-53-12751	Seal	1	B10001-
10	20Y-53-12760	Seal	1	B10001-
11	01435-40820	Bolt	2	B10001-
12	208-979-7530	Holder	1	B10001-
13	208-979-7620	Filter	1	B10001-
14	20Y-54-65790	Bolt	1	B10001-
15	20Y-54-65690	Washer	1	B10001-
16	208-53-12551	Duct	1	B10001-
17	01010-D0820	Bolt	2	B10001-
18	01643-70823	Washer	2	B10001-

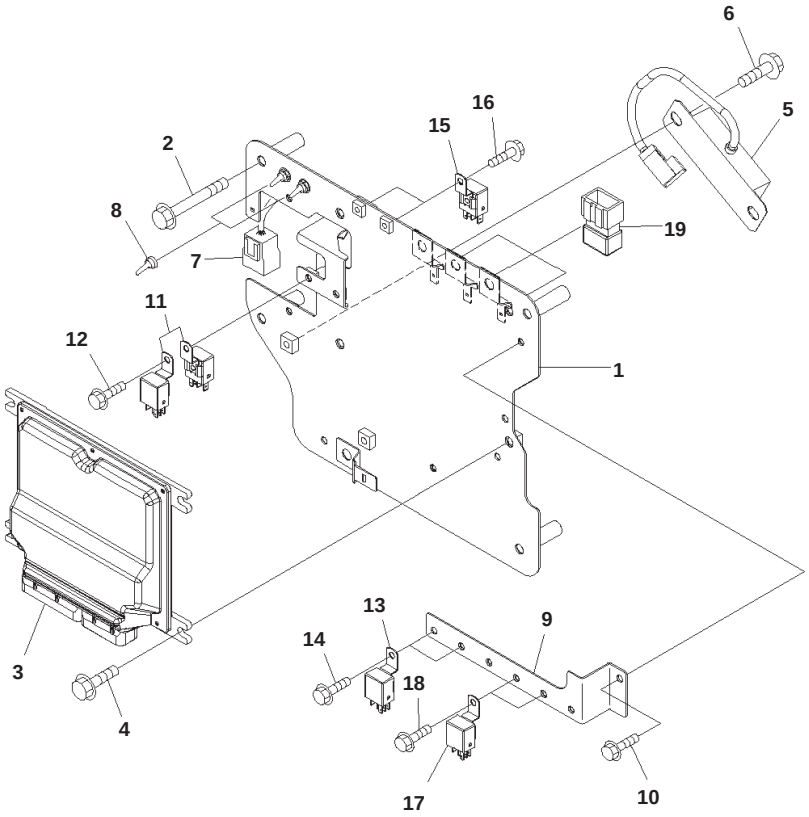

Cab, With Master Key, AM-FM Radio, 12volt Power Supply, Cab In Parts, Sub Plate and Relay

Index	Code	Part Number	Description	Qty	Serial No.
			Note: This list covers following specifications: Cab, With Master Key, AM-FM radio, 12volts Power Supply Cab, With Master Key, AM-FM radio, 12volts Power Supply, 1-Actuator Cab, With Master Key, AM-FM radio, 12volts Power Supply, 2-Actuator		
1		20Y-53-14812	Bracket	1	B10001-
2		01435-00860	Bolt	4	B10001-
3		7835-46-4003	Controller	1	B10001-
4		01435-00820	Bolt	4	B10001-
5		7861-94-2000	Resistor	1	B10001-
6		01435-00820	Bolt	2	B10001-
7		20Y-06-41151	Wiring Harness	1	B10032-
	A2	20Y-06-41150	Wiring Harness	1	B10001-B10031
8		208-43-71420	Cap	2	B10001-
9		20Y-53-18211	Bracket	1	B10001-
10		01435-00610	Bolt	1	B10001-
11		7861-74-5100	Relay	2	B10001-
12		01435-00610	Bolt	1	B10001-
13		7861-74-5100	Relay	2	B10001-
14		01435-00610	Bolt	2	B10001-
15		7861-74-5100	Relay	2	B10001-
16		01435-00610	Bolt	2	B10001-
17		7861-74-5100	Relay	2	B10001-
18		01435-00610	Bolt	2	B10001-
19		8233-06-3350	Diode	3	B10001-

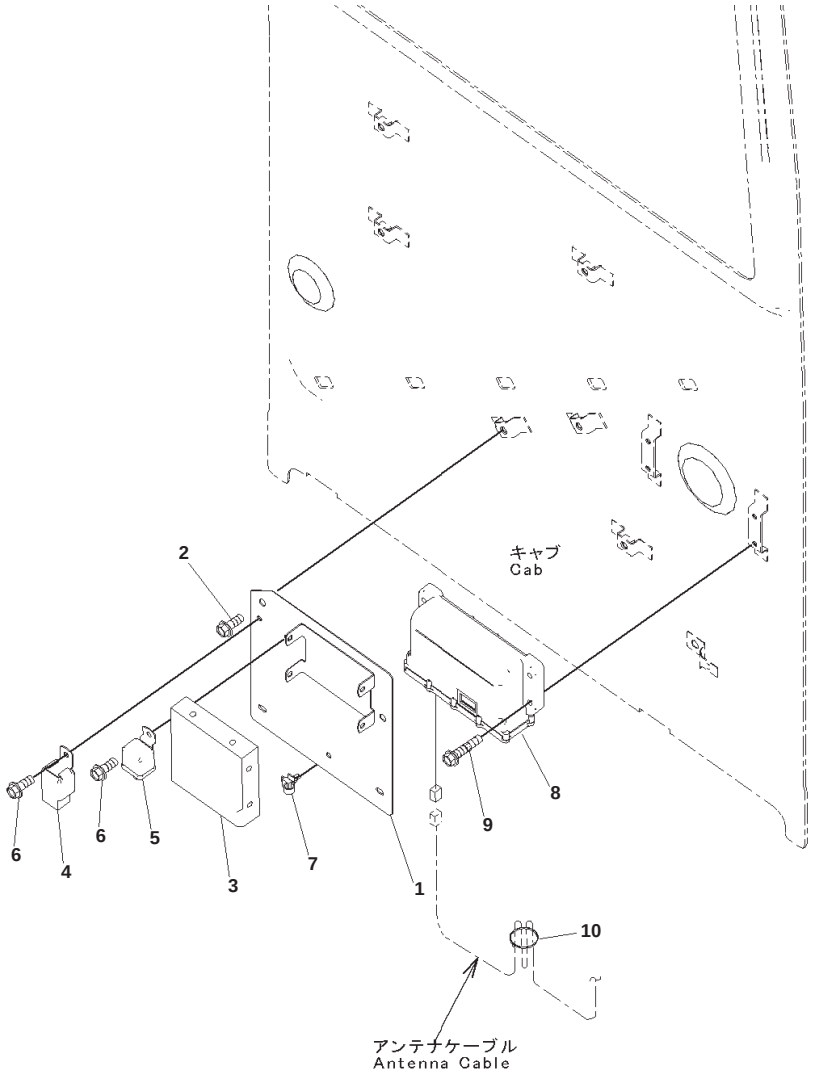

Cab, With Master Key, AM-FM Radio, 12volt Power Supply, Cab In Parts, Air Conditioner and KOMTRAX Controller

Index	Part Number	Description	Qty	Serial No.
		Note: This list covers following specifications: Cab, With Master Key, AM-FM radio, 12volts Power Supply Cab, With Master Key, AM-FM radio, 12volts Power Supply, 1-Actuator Cab, With Master Key, AM-FM radio, 12volts Power Supply, 2-Actuator		
1	20Y-53-14820	Plate	1	B10001-
2	01435-40812	Bolt	2	B10001-
3	17A-979-3180	Controller	1	B10001-
4	421-07-31270	Relay	1	B10001-
5	20Y-979-6771	Relay	1	B10001-
6	01435-00610	Bolt	2	B10001-
7	08059-00515	Clip	1	B10001-
8	7826-23-3012	Controller	1	B10001-
9	01435-00612	Bolt	4	B10001-
10	08034-20414	Band	1	B10001-

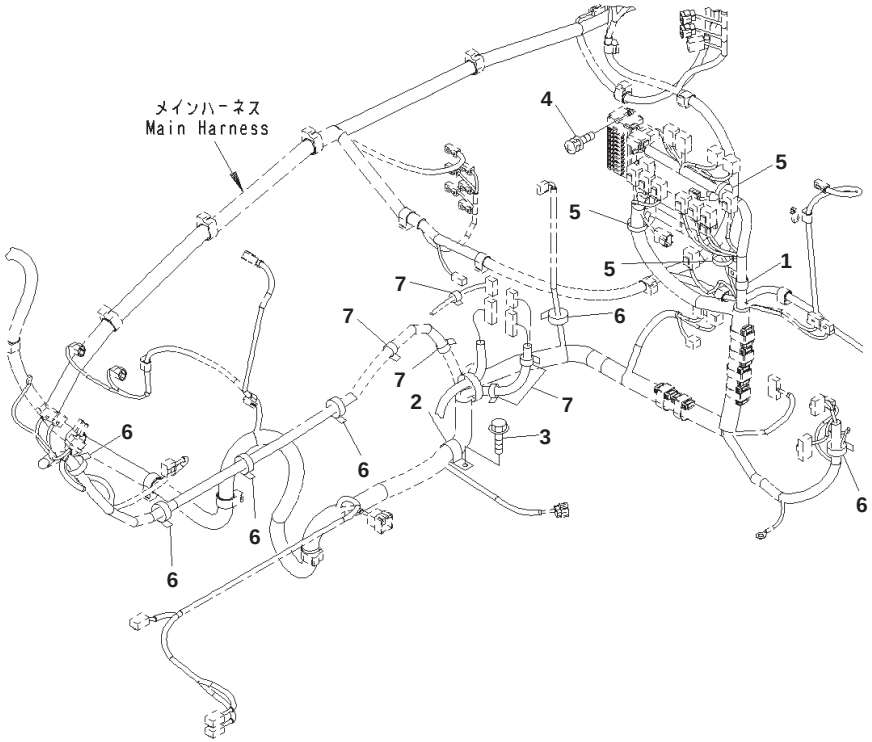

Cab, With Master Key, AM-FM Radio, 12volt Power Supply, Cab In Parts, Main Wiring Harness Clamp

Index	Part Number	Description	Qty	Serial No.
		Note: This list covers following specifications: Cab, With Master Key, AM-FM radio, 12volts Power Supply Cab, With Master Key, AM-FM radio, 12volts Power Supply, 1-Actuator Cab, With Master Key, AM-FM radio, 12volts Power Supply, 2-Actuator		
1	04434-52511	Clip	1	B10001-
2	04434-51708	Clip	1	B10001-
3	01435-00816	Bolt	1	B10001-
4	01023-60620	Screw	2	B10001-
5	08059-00515	Clip	3	B10001-
6	08034-20414	Band	6	B10001-
7	08034-20519	Band	5	B10001-

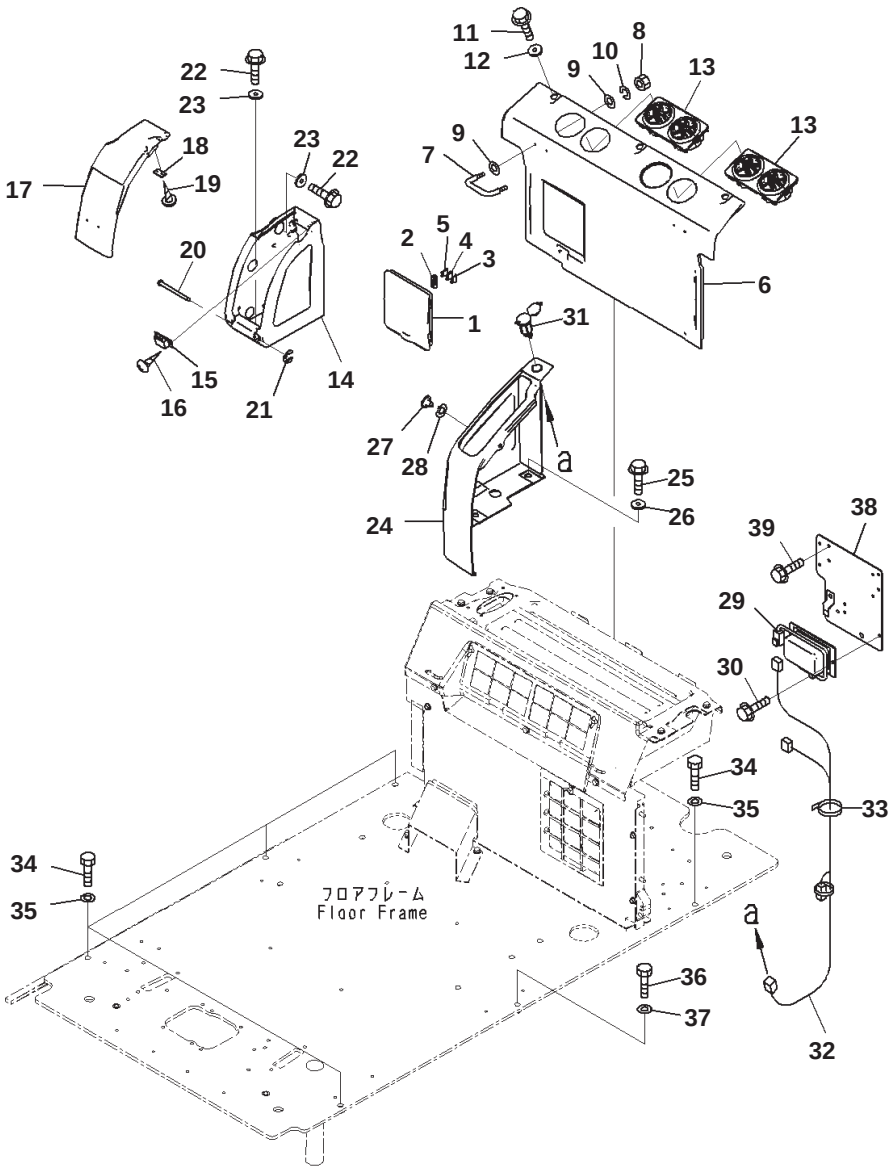

Cab, With Master Key, AM-FM Radio, 12volt Power Supply, Cab In Parts, Rear Cover

Index	Code	Part Number	Description	Qty	Serial No.
			Note: This list covers following specifications: Cab, With Master Key, AM-FM radio, 12volts Power Supply Cab, With Master Key, AM-FM radio, 12volts Power Supply, 1-Actuator Cab, With Master Key, AM-FM radio, 12volts Power Supply, 2-Actuator		
		20Y-53-13631	Cover Assembly	1	B10001-
1	C1		・ Cover	1	B10001-
2		22U-43-22340	・ Puller	1	B10001-
3		08041-01000	・ Fuse, 10Amp.	1	B10001-
4		08041-02000	・ Fuse, 20Amp.	1	B10001-
5		08041-03000	・ Fuse, 30Amp.	1	B10001-
6		20Y-53-12371	Cover	1	B10001-
7		208-53-12290	・ Hook	2	B10001-
8		01580-10403	・ Nut	4	B10001-
9		01640-20408	・ Washer, Flat	8	B10001-
10		01601-20410	・ Washer	4	B10001-
11		01435-40616	Bolt	3	B10001-
12		20Y-53-12310	Collar	3	B10001-
13		208-979-7560	Grille	2	B10001-
14		20Y-53-12381	Cover	1	B10001-
15		09452-14503	Catcher	1	B10001-
16		01370-10308	Screw	2	B10001-
17		20Y-53-12391	Cover	1	B10001-
18		208-53-12410	Plate	1	B10001-
19		01370-20308	Screw	2	B10001-
20		208-53-12320	Pin	1	B10001-
21		208-53-12330	Ring	1	B10001-
22		01435-40616	Bolt	5	B10001-
23		20Y-53-12310	Collar	5	B10001-
24		20Y-53-12731	Cover	1	B10001-
25		01435-40620	Bolt	2	B10001-
26		20Y-53-12310	Collar	2	B10001-
27		23D-950-4450	Button	1	B10001-
28		20Y-53-12860	Spacer	1	B10001-
29		22U-06-22251	Converter	1	B10001-
30		01435-00610	Bolt	2	B10001-
31		198-Z11-2640	Socket Assembly	1	B10001-
32		20Y-06-41270	Wiring Harness	1	B10001-
33		08034-20414	Band	1	B10001-
34		01010-81245	Bolt	5	B10001-
35		01643-31232	Washer	5	B10001-
36		01010-D1650	Bolt	1	B10001-
37		01643-31645	Washer	1	B10001-
38		20Y-53-18221	Bracket	1	B10001-

PC130-8 S/N B10001-UP

Cab, With Master Key, AM-FM Radio, 12volt Power Supply, Cab In Parts, Rear Cover

Index	Code	Part Number	Description	Qty	Serial No.
39		01435-00612	Bolt	4	B10001-

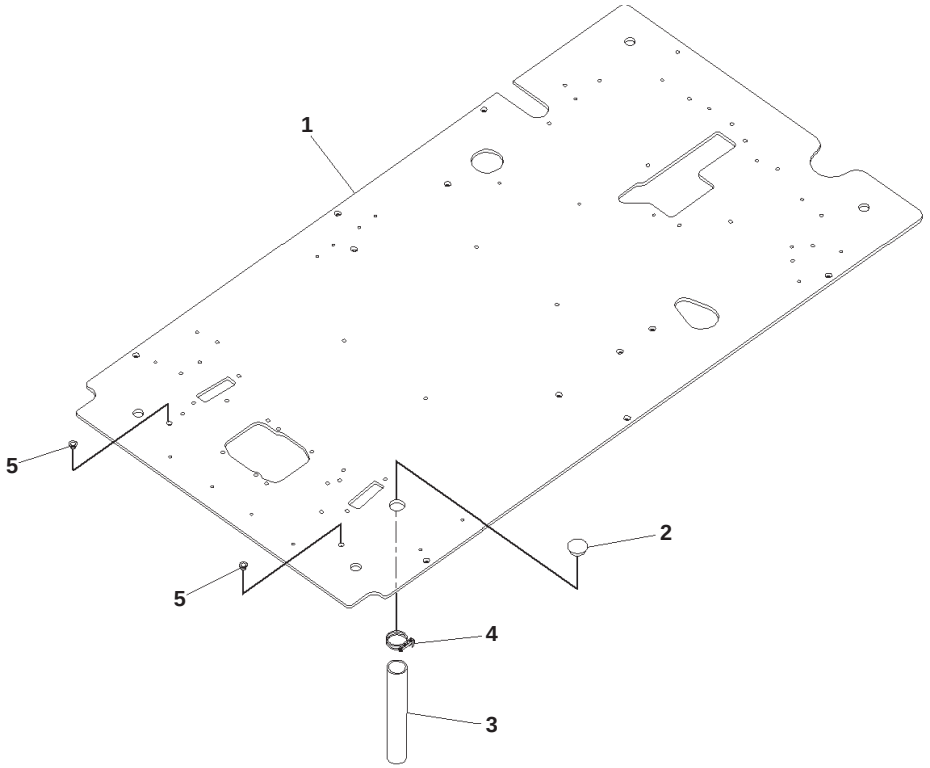

00059781-\

Cab, With Master Key, AM-FM Radio, 12volt Power Supply, Floor, Frame

Index	Part Number	Description	Qty	Serial No.
		Note: This list covers following specifications: Cab, With Master Key, AM-FM radio, 12volts Power Supply Cab, With Master Key, AM-FM radio, 12volts Power Supply, 1-Actuator Cab, With Master Key, AM-FM radio, 12volts Power Supply, 2-Actuator		
1	20Y-53-14116	Floor	1	B10001-
2	22U-54-25581	Grommet	1	B10001-
3	07286-03828	Hose	1	B10001-
4	07280-04726	Clamp	1	B10001-
5	07048-01310	Plug	2	B10001-

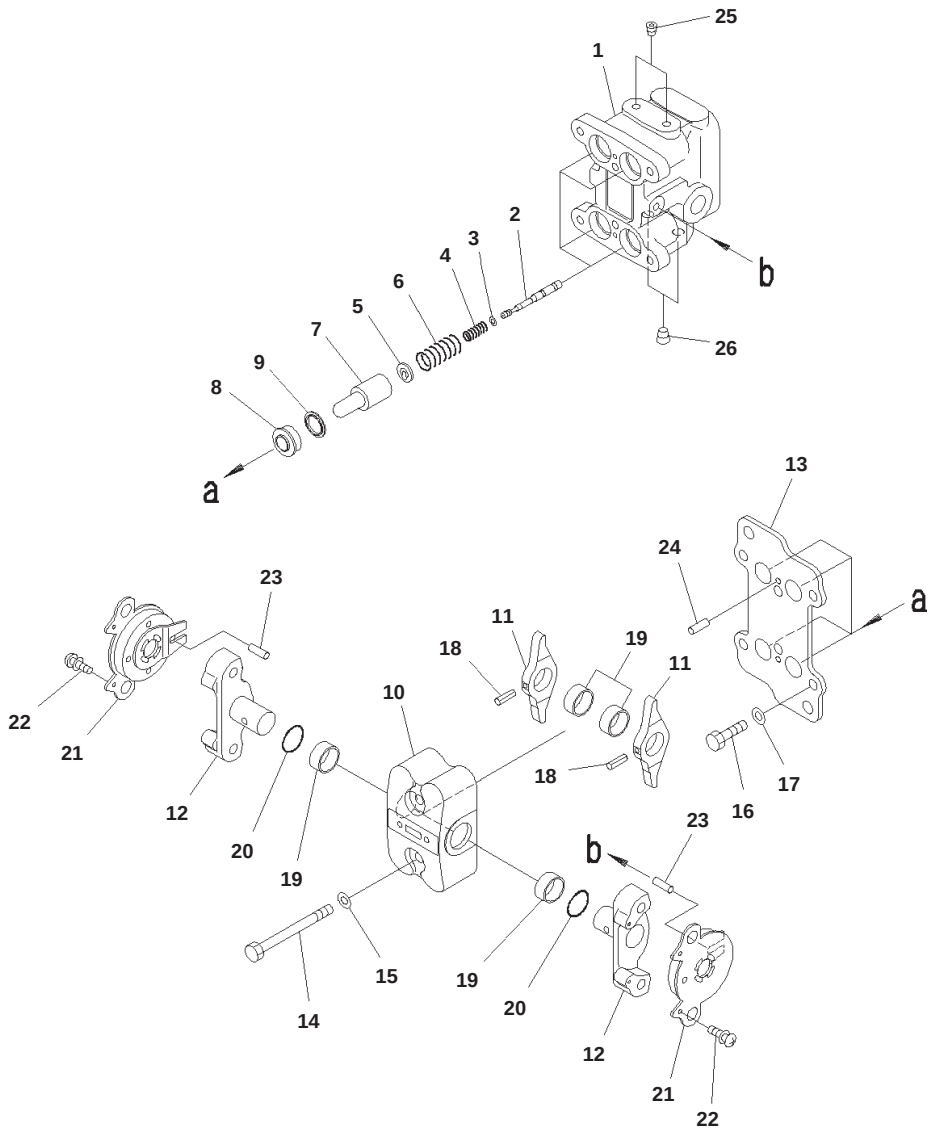

PC130-8 S/N B10001-UP
Cab, With Master Key, AM-FM Radio, 12volt Power Supply, Floor, PPC Valve for Travel

Index	Code	Part Number	Description	Qty	Serial No.
			Note: This list covers following specifications: Cab, With Master Key, AM-FM radio, 12volts Power Supply Cab, With Master Key, AM-FM radio, 12volts Power Supply, 1-Actuator Cab, With Master Key, AM-FM radio, 12volts Power Supply, 2-Actuator		
		702-16-04260	Valve, Pilot	1	B10001-
1	C1		・ Valve Body	1	B10001-
2	C1		・ Valve	4	B10001-
3		702-16-51140	・ Shim, T=0.30mm	4	B10001-
4		702-16-53420	・ Spring	4	B10001-
5		702-16-53140	・ Retainer	4	B10001-
6		702-16-54420	・ Spring	4	B10001-
7		702-16-53170	・ Piston	4	B10001-
8		702-16-71150	・ Seal	4	B10001-
9		702-16-71160	・ Seat	4	B10001-
10		702-16-73630	・ Case	1	B10001-
11	C1		・ Lever	2	B10001-
12	C1		・ Shaft	2	B10001-
13	C1		・ Plate	1	B10001-
14		01010-80855	・ Bolt	2	B10001-
15		01643-30823	・ Washer	2	B10001-
16		01010-80816	・ Bolt	4	B10001-
17		702-16-54331	・ Washer, T=1.60mm	4	B10001-
		702-16-54341	・ Washer, T=1.30mm	4	B10001-
		702-16-54351	・ Washer, T=1.00mm	4	B10001-
		702-16-56380	・ Washer, T=1.90mm	4	B10001-
		702-16-56390	・ Washer, T=2.20mm	4	B10001-
18		04025-00432	・ Pin	2	B10001-
19		702-16-54430	・ Bushing	4	B10001-
20		07000-12018	・ O-ring	2	B10001-
21	C2	702-16-73610	・ Damper Assembly	2	B10001-
22		01023-10306	・ Screw	4	B10001-
23		702-16-73650	・ Pin	2	B10001-
24		04022-04016	・ Pin, Dowel	2	B10001-
25	C1		・ Plug	2	B10001-
26	C1		・ Plug	2	B10001-

Reference:K1110-010025 Page:K011025

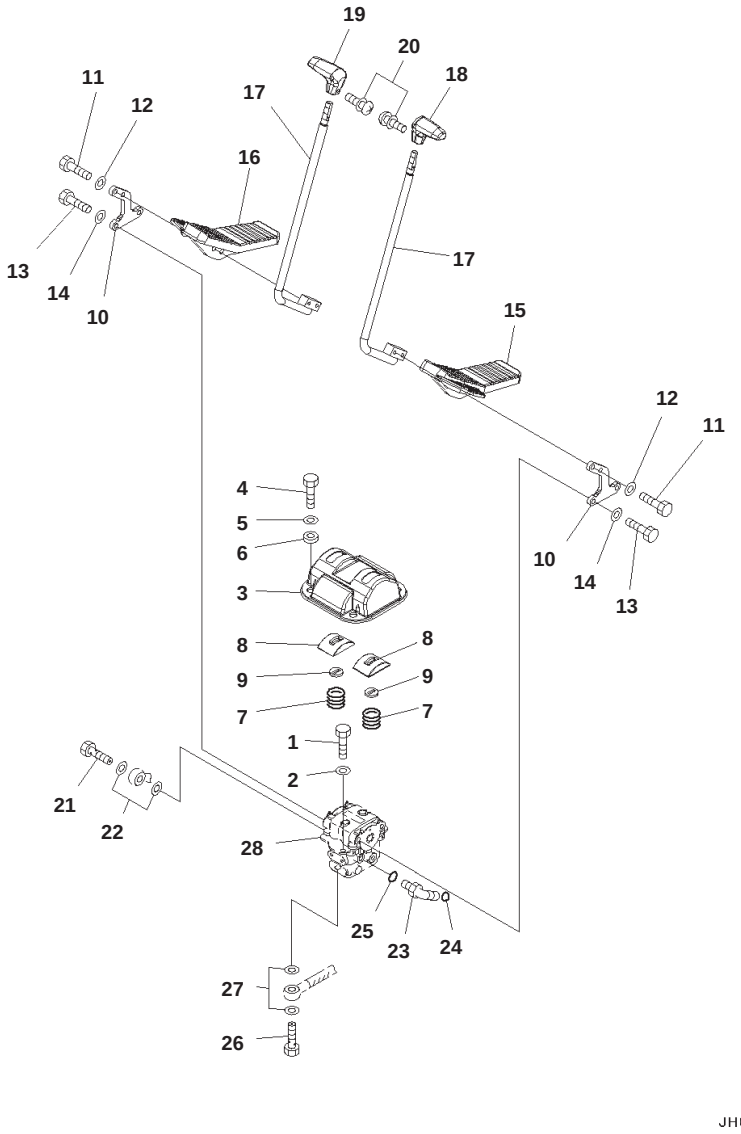

Cab, With Master Key, AM-FM Radio, 12volt Power Supply, Floor, Travel Control

Index	Code	Part Number	Description	Qty	Serial No.
			Note: This list covers following specifications: Cab, With Master Key, AM-FM radio, 12volts Power Supply Cab, With Master Key, AM-FM radio, 12volts Power Supply, 1-Actuator Cab, With Master Key, AM-FM radio, 12volts Power Supply, 2-Actuator		
1		01010-81020	Bolt	2	B10001-
2		01643-31032	Washer	2	B10001-
3		20Y-43-41121	Cover	1	B10001-
4		01010-81020	Bolt	4	B10001-
5		01643-31032	Washer	4	B10001-
6		20Y-43-41361	Collar	4	B10001-
7		203-43-51620	Spring	2	B10001-
		22U-43-21350	Cover Assembly	2	B10001-
8	C1		・ Cover	1	B10001-
9		22U-43-21360	・ Seal	1	B10001-
10		20Y-43-41111	Lever	2	B10001-
11		01010-D1045	Bolt	4	B10001-
12		01643-71032	Washer	4	B10001-
13		01010-81030	Bolt	4	B10001-
14		01643-31032	Washer	4	B10001-
15		22U-43-21111	Pedal	1	B10001-
16		22U-43-21121	Pedal	1	B10001-
17		22U-43-21131	Lever	2	B10001-
18		20Y-43-21231	Knob	1	B10001-
19		20Y-43-21241	Knob	1	B10001-
20		01023-20416	Screw	2	B10001-
21		20Y-62-18910	Bolt	1	B10001-
22		07000-12018	O-ring	2	B10001-
23		11Y-62-12160	Elbow	1	B10001-
24		02896-11008	O-ring	1	B10001-
25		07002-11423	O-ring	1	B10001-
26		20Y-62-18890	Bolt	4	B10001-
27		07000-12015	O-ring	8	B10001-
28		(702-16-04260)	Valve, Pilot		

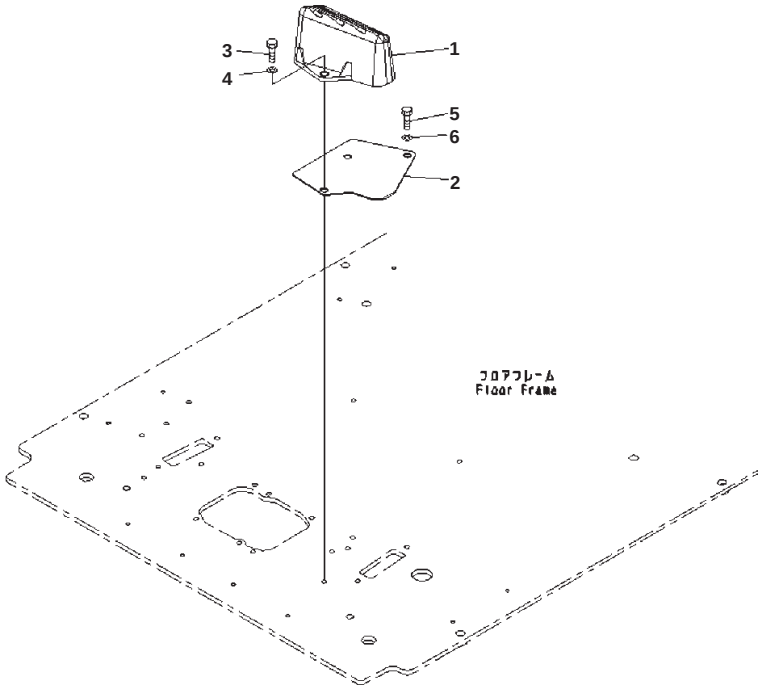

Cab, With Master Key, AM-FM Radio, 12volt Power Supply, Floor, Footrest, LHS

Index	Part Number	Description	Qty	Serial No.
		Note: This list covers following specifications: Cab, With Master Key, AM-FM radio, 12volts Power Supply Cab, With Master Key, AM-FM radio, 12volts Power Supply, 1-Actuator		
1	22U-54-25110	Footrest	1	B10001-
2	22U-54-25521	Plate	1	B10001-
3	01010-81025	Bolt	2	B10001-
4	01643-31032	Washer	2	B10001-
5	01010-81020	Bolt	2	B10001-
6	01643-31032	Washer	2	B10001-

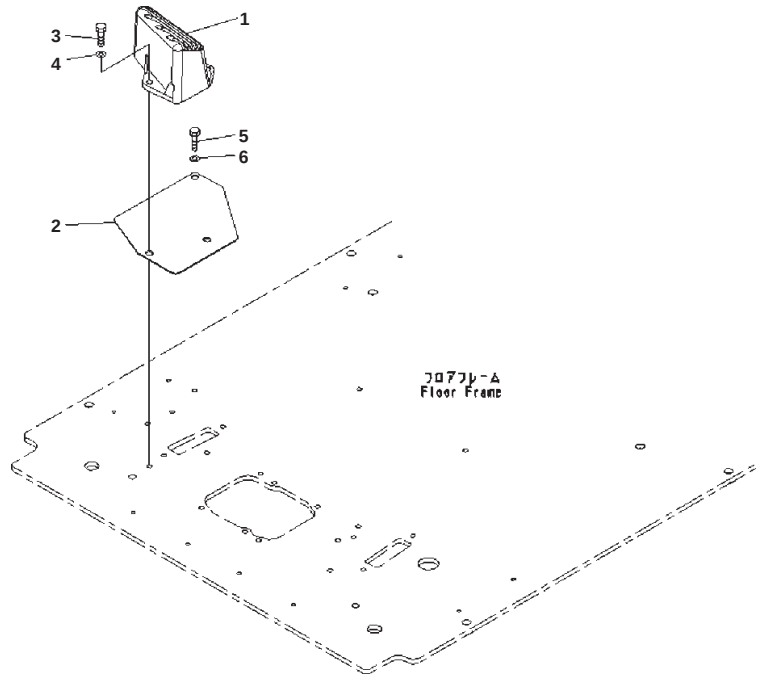

Cab, With Master Key, AM-FM Radio, 12volt Power Supply, Floor, Footrest, RHS

Index	Part Number	Description	Qty	Serial No.
		Note: This list covers following specifications: Cab, With Master Key, AM-FM radio, 12volts Power Supply		
1	22U-54-25120	Footrest	1	B10001-
2	22U-54-25531	Plate	1	B10001-
3	01010-81025	Bolt	2	B10001-
4	01643-31032	Washer	2	B10001-
5	01010-81020	Bolt	1	B10001-
6	01643-31032	Washer	1	B10001-

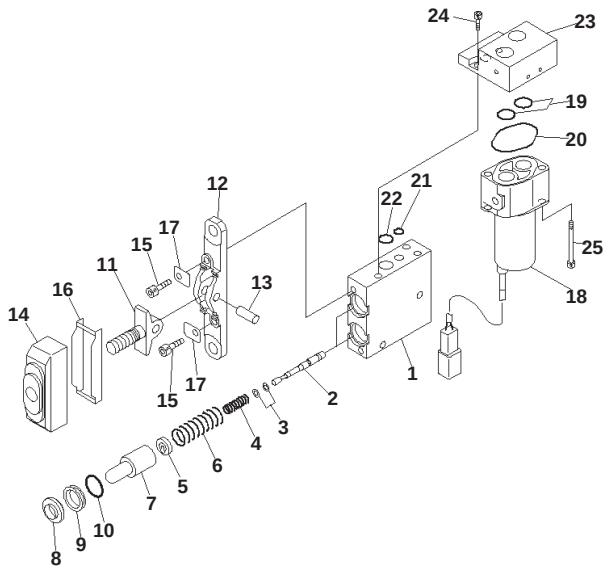

00041433

Cab, With Master Key, AM-FM Radio, 12volt Power Supply, Floor, 1-actuator, PPC Valve for 1-Attachment

Index	Code	Part Number	Description	Qty	Serial No.
			Note: This list covers following specifications: Cab, With Master Key, AM-FM radio, 12volts Power Supply, 1-Actuator, 1-Attachement		
		702-16-04290	Valve, Pilot	1	B10001-
1	C1		・ Valve Body	1	B10001-
2	C1		・ Valve	2	B10001-
3		702-16-51140	・ Shim, T=0.30mm	2	B10001-
		702-16-54670	・ Shim, T=0.20mm	4	B10001-
4		702-16-54550	・ Spring	2	B10001-
5		702-16-54571	・ Retainer	2	B10001-
6		702-16-54560	・ Spring	2	B10001-
7		702-16-53170	・ Piston	2	B10001-
8		702-16-51270	・ Seal	2	B10001-
9		702-16-54580	・ Collar	2	B10001-
10		702-16-54590	・ O-ring	2	B10001-
11	C1		・ Lever	1	B10001-
12	C1		・ Plate	1	B10001-
13	C1		・ Shaft	1	B10001-
14		702-16-54641	・ Boot	1	B10001-
15		01252-30625	・ Bolt	2	B10001-
16		702-16-54660	・ Plate	1	B10001-
17		702-16-54650	・ Plate	2	B10001-
18		702-21-07610	・ Valve, Solenoid	1	B10001-
19		700-22-11410	・ O-ring	2	B10001-
20		702-21-39450	・ O-ring	1	B10001-
21		07000-11008	・ O-ring	1	B10001-
22		07000-12012	・ O-ring	1	B10001-
23	C1		・ Body	1	B10001-
24		01252-60612	・ Bolt, Hexagon Socket Head	3	B10001-
25		203-60-62220	・ Bolt	2	B10001-

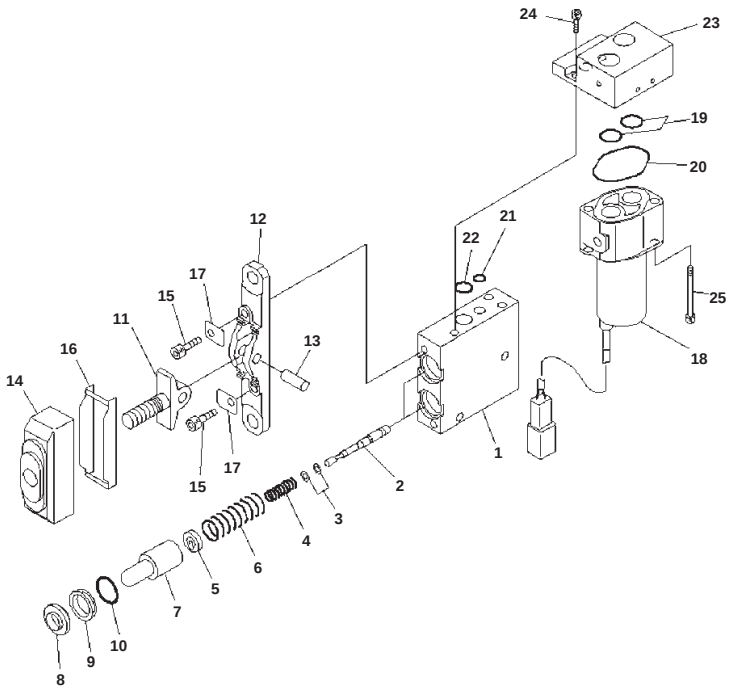

00041433

Cab, With Master Key, AM-FM Radio, 12volt Power Supply, Floor, 2-actuator, PPC Valve for 1-attachment

Index	Code	Part Number	Description	Qty	Serial No.
			Note: This list covers following specifications: Cab, With Master Key, AM-FM radio, 12volts Power Supply, 2-Actuator, 1-Attachment		
		702-16-04290	Valve, Pilot	1	B10001-
1	C1		・ Valve Body	1	B10001-
2	C1		・ Valve	2	B10001-
3		702-16-51140	・ Shim, T=0.30mm	2	B10001-
4		702-16-54550	・ Spring	2	B10001-
5		702-16-54571	・ Retainer	2	B10001-
6		702-16-54560	・ Spring	2	B10001-
7		702-16-53170	・ Piston	2	B10001-
8		702-16-51270	・ Seal	2	B10001-
9		702-16-54580	・ Collar	2	B10001-
10		702-16-54590	・ O-ring	2	B10001-
11	C1		・ Lever	1	B10001-
12	C1		・ Plate	1	B10001-
13	C1		・ Shaft	1	B10001-
14		702-16-54641	・ Boot	1	B10001-
15		01252-30625	・ Bolt, Hexagon Socket Head	2	B10001-
16		702-16-54660	・ Plate	1	B10001-
17		702-16-54650	・ Plate	2	B10001-
18		702-21-07610	・ Valve, Solenoid	1	B10001-
19		700-22-11410	・ O-ring	2	B10001-
20		702-21-39450	・ O-ring	1	B10001-
21		07000-11008	・ O-ring	1	B10001-
22		07000-12012	・ O-ring	1	B10001-
23	C1		・ Body	1	B10001-
24		01252-60612	・ Bolt, Hexagon Socket Head	3	B10001-
25		203-60-62220	・ Bolt	2	B10001-

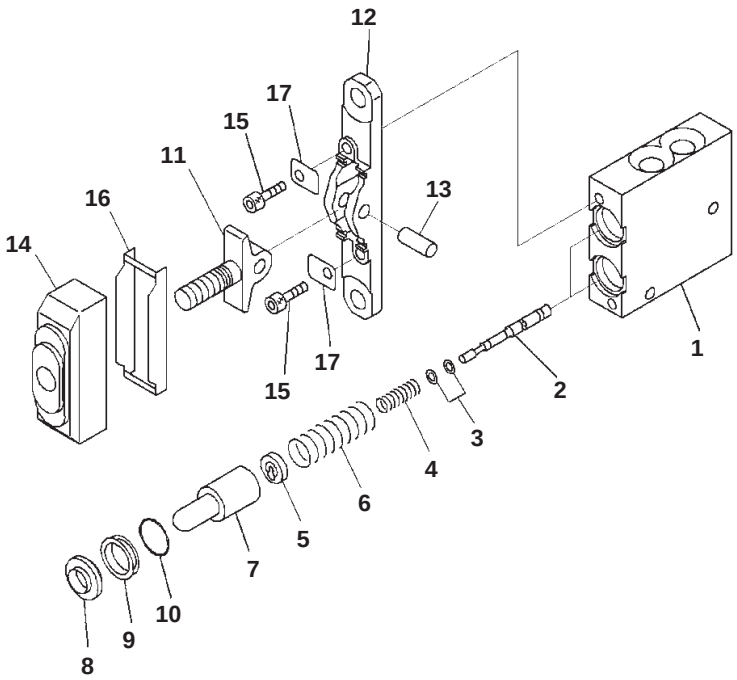

Cab, With Master Key, AM-FM Radio, 12volt Power Supply, Floor, 2-actuator, PPC Valve for 2-Attachment

Index	Code	Part Number	Description	Qty	Serial No.
			Note: This list covers following specifications: Cab, With Master Key, AM-FM radio, 12volts Power Supply, 2-Actuator, 2-Attachment		
		702-16-01230	Valve, Pilot	1	B10001-
1	C1		・ Valve Body	1	B10001-
2	C1		・ Valve	2	B10001-
3		702-16-51140	・ Shim, T=0.30mm	2	B10001-
		702-16-54670	・ Shim, T=0.20mm	4	B10001-
4		702-16-54550	・ Spring	2	B10001-
5		702-16-54571	・ Retainer	2	B10001-
6		702-16-54560	・ Spring	2	B10001-
7		702-16-53170	・ Piston	2	B10001-
8		702-16-51270	・ Seal	2	B10001-
9		702-16-54580	・ Collar	2	B10001-
10		702-16-54590	・ O-ring	2	B10001-
11	C1		・ Lever	1	B10001-
12	C1		・ Plate	1	B10001-
13	C1		・ Shaft	1	B10001-
14		702-16-54641	・ Boot	1	B10001-
15		01252-30625	・ Bolt	2	B10001-
16		702-16-54660	・ Plate	1	B10001-
17		702-16-54650	・ Plate	2	B10001-

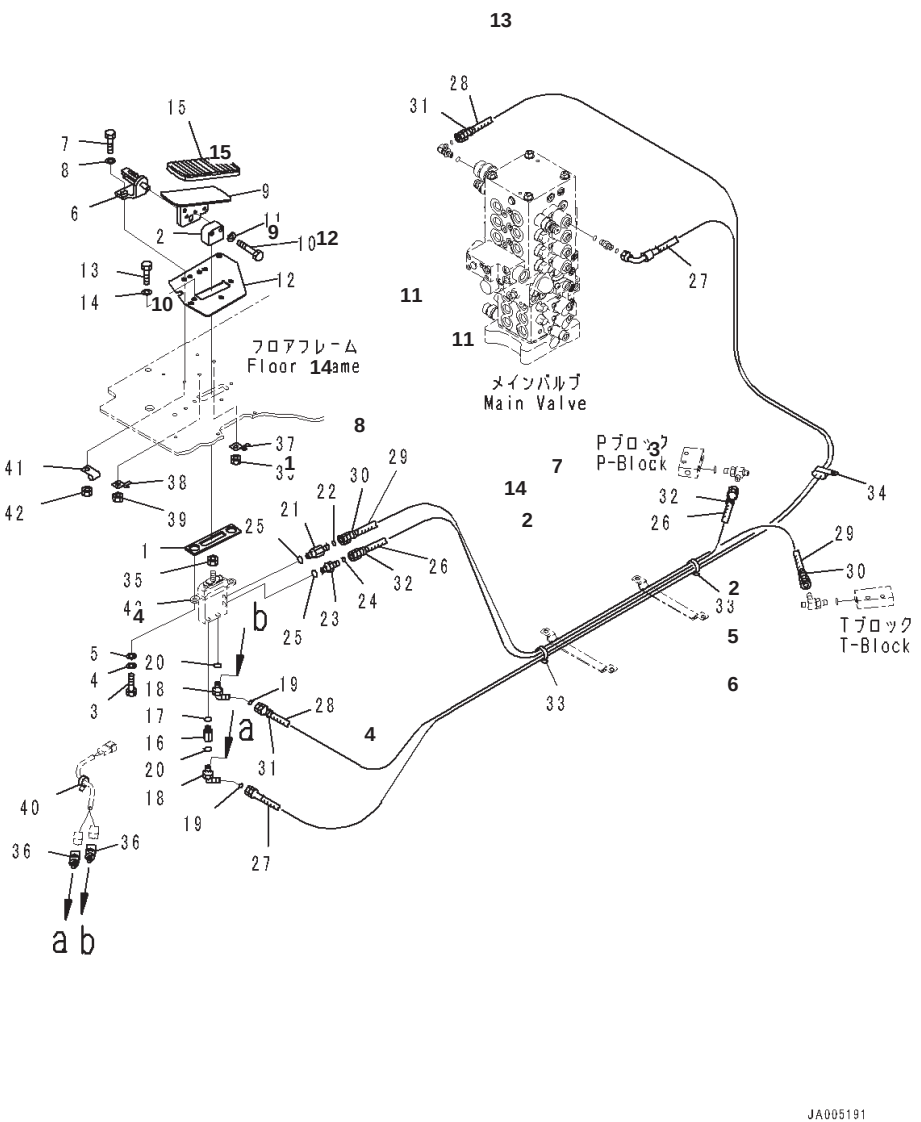

Cab, With Master Key, AM-FM Radio, 12volt Power Supply, Floor, Base

Index	Part Number	Description	Qty	Serial No.
		Note: This list covers following specifications: Cab, With Master Key, AM-FM radio, 12volts Power Supply Cab, With Master Key, AM-FM radio, 12volts Power Supply, 1-Actuator Cab, With Master Key, AM-FM radio, 12volts Power Supply, 2-Actuator		
1	20Y-43-41231	Frame	1	B10001-
2	208-43-71520	・ Seal	2	B10001-
3	208-43-71530	・ Seal	1	B10001-
4	208-43-71590	・ Seal	2	B10001-
5	01010-81230	Bolt	5	B10001-
6	01643-31232	Washer	5	B10001-
7	2A5-43-12351	Adjuster	1	B10001-
8	01245-01025	Screw	4	B10001-
9	2A5-43-12361	Adjuster	1	B10001-
10	01245-01025	Screw	4	B10001-
11	20Y-43-41833	Wire	2	B10001-
12	22U-43-21390	Cap	1	B10001-
13	20Y-43-41253	Frame	1	B10001-
14	2A5-43-12480	Washer	4	B10001-
15	20Y-979-6630	Catcher	1	B10001-

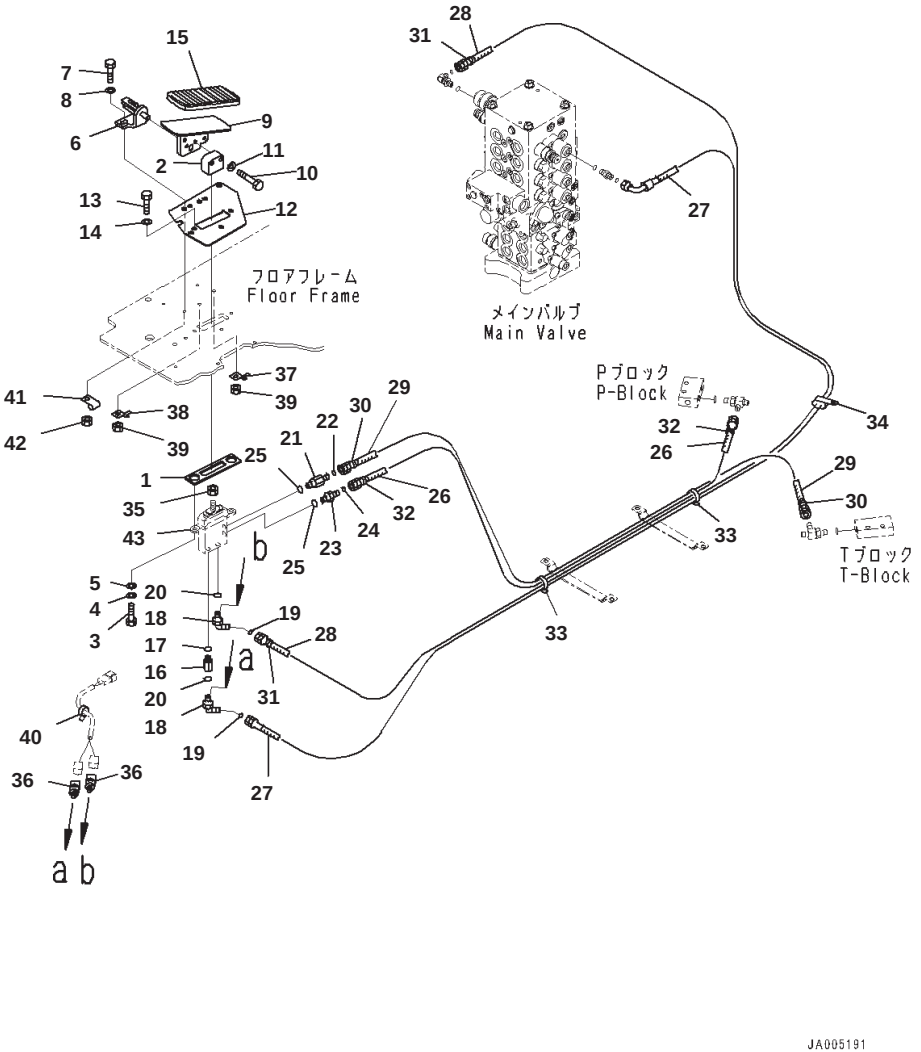

PC130-8 S/N B10001-UP
Cab, With Master Key, AM-FM Radio, 12volt Power Supply, Floor, 1-actuator, 1st Attachment Control

Index	Part Number	Description	Qty	Serial No.
		Note: This list covers following specifications: Cab, With Master Key, AM-FM radio, 12volts Power Supply, 1-Actuator, 1-Attachment Control		
1	22U-54-25660	Seal	1	B10001-
2	20Y-43-41760	Seat	1	B10001-
3	01010-81025	Bolt	2	B10001-
4	01643-31032	Washer	2	B10001-
5	01643-31032	Washer	2	B10001-
6	20Y-62-25360	Bracket	1	B10001-
7	01010-D1035	Bolt	2	B10001-
8	01643-71032	Washer	2	B10001-
9	20Y-53-14220	Pedal	1	B10001-
10	01010-D1045	Bolt	2	B10001-
11	01643-71032	Washer	2	B10001-
12	22U-54-25541	Plate	1	B10001-
13	01010-81025	Bolt	3	B10001-
14	01643-31032	Washer	3	B10001-
15	207-43-81240	Cap	1	B10001-
16	20T-910-8660	Nipple	1	B10001-
17	07000-12011	O-ring	1	B10001-
18	20Y-62-52160	Elbow	2	B10001-
19	02896-11008	O-ring	2	B10001-
20	07000-12011	O-ring	2	B10001-
21	20Y-62-43470	Nipple	1	B10001-
22	02896-11008	O-ring	1	B10001-
23	11Y-62-12140	Nipple	1	B10001-
24	02896-11008	O-ring	1	B10001-
25	07000-12011	O-ring	2	B10001-
26	20Y-62-52330	Hose	1	B10001-
27	203-62-12661	Hose	1	B10001-
28	203-62-12671	Hose	1	B10001-
29	208-62-72480	Hose	1	B10001-
30	20Y-62-22790	Band, Red	2	B10001-
31	20Y-62-22810	Band, Yellow	2	B10001-
32	20Y-62-22820	Band, Blue	2	B10001-
33	08034-20519	Band	2	B10001-
34	04435-51210	Clip	1	B10001-
35	01583-11408	Nut	1	B10001-
36	206-06-61130	Switch	2	B10001-
37	08193-21012	Clip	1	B10001-
38	08053-01510	Clip	1	B10001-
39	01580-01008	Nut	2	B10001-
40	08034-20536	Band	1	B10001-
41	04434-50610	Clip	1	B10001-

PC130-8 S/N B10001-UP

Cab, With Master Key, AM-FM Radio, 12volt Power Supply, Floor, 1-actuator, 1st Attachment Control

Index	Part Number	Description	Qty	Serial No.
42	01580-01008	Nut	1	B10001-
43	(702-16-04290)	Valve, Pilot		

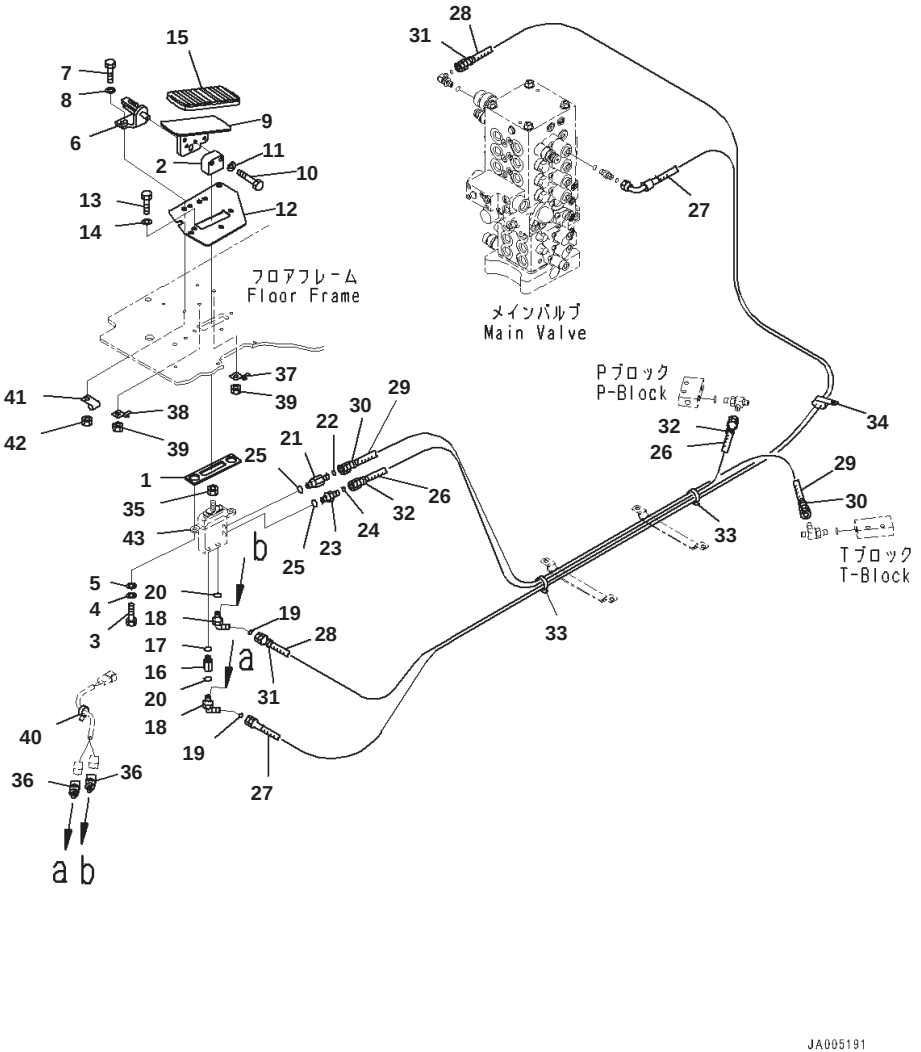

PC130-8 S/N B10001-UP
Cab, With Master Key, AM-FM Radio, 12volt Power Supply, Floor, 2-actuator, 1st Attachment Control

Index	Part Number	Description	Qty	Serial No.
		Note: This list covers following specifications: Cab, With Master Key, AM-FM radio, 12volts Power Supply, 2-Actuator, 1-Attachment Control		
1	22U-54-25660	Seal	1	B10001-
2	20Y-43-41760	Seat	1	B10001-
3	01010-81025	Bolt	2	B10001-
4	01643-31032	Washer	2	B10001-
5	01643-31032	Washer	2	B10001-
6	20Y-62-25360	Bracket	1	B10001-
7	01010-D1035	Bolt	2	B10001-
8	01643-71032	Washer	2	B10001-
9	20Y-53-14220	Pedal	1	B10001-
10	01010-D1045	Bolt	2	B10001-
11	01643-71032	Washer	2	B10001-
12	22U-54-25541	Plate	1	B10001-
13	01010-81025	Bolt	3	B10001-
14	01643-31032	Washer	3	B10001-
15	207-43-81240	Cap	1	B10001-
16	20T-910-8660	Nipple	1	B10001-
17	07000-12011	O-ring	1	B10001-
18	20Y-62-52160	Elbow	2	B10001-
19	02896-11008	O-ring	2	B10001-
20	07000-12011	O-ring	2	B10001-
21	20Y-62-43470	Nipple	1	B10001-
22	02896-11008	O-ring	1	B10001-
23	11Y-62-12140	Nipple	1	B10001-
24	02896-11008	O-ring	1	B10001-
25	07000-12011	O-ring	2	B10001-
26	20Y-62-52330	Hose	1	B10001-
27	203-62-12661	Hose	1	B10001-
28	203-62-12671	Hose	1	B10001-
29	208-62-72480	Hose	1	B10001-
30	20Y-62-22790	Band, Red	2	B10001-
31	20Y-62-22810	Band, Yellow	2	B10001-
32	20Y-62-22820	Band, Blue	2	B10001-
33	08034-20519	Band	2	B10001-
34	04435-51210	Clip	1	B10001-
35	01583-11408	Nut	1	B10001-
36	206-06-61130	Switch	2	B10001-
37	08193-21012	Clip	1	B10001-
38	08053-01510	Clip	1	B10001-
39	01580-01008	Nut	2	B10001-
40	08034-20536	Band	1	B10001-
41	04434-50610	Clip	1	B10001-

PC130-8 S/N B10001-UP

Cab, With Master Key, AM-FM Radio, 12volt Power Supply, Floor, 2-actuator, 1st Attachment Control

Index	Part Number	Description	Qty	Serial No.
42	01580-01008	Nut	1	B10001-
43	(702-16-04290)	Valve, Pilot		

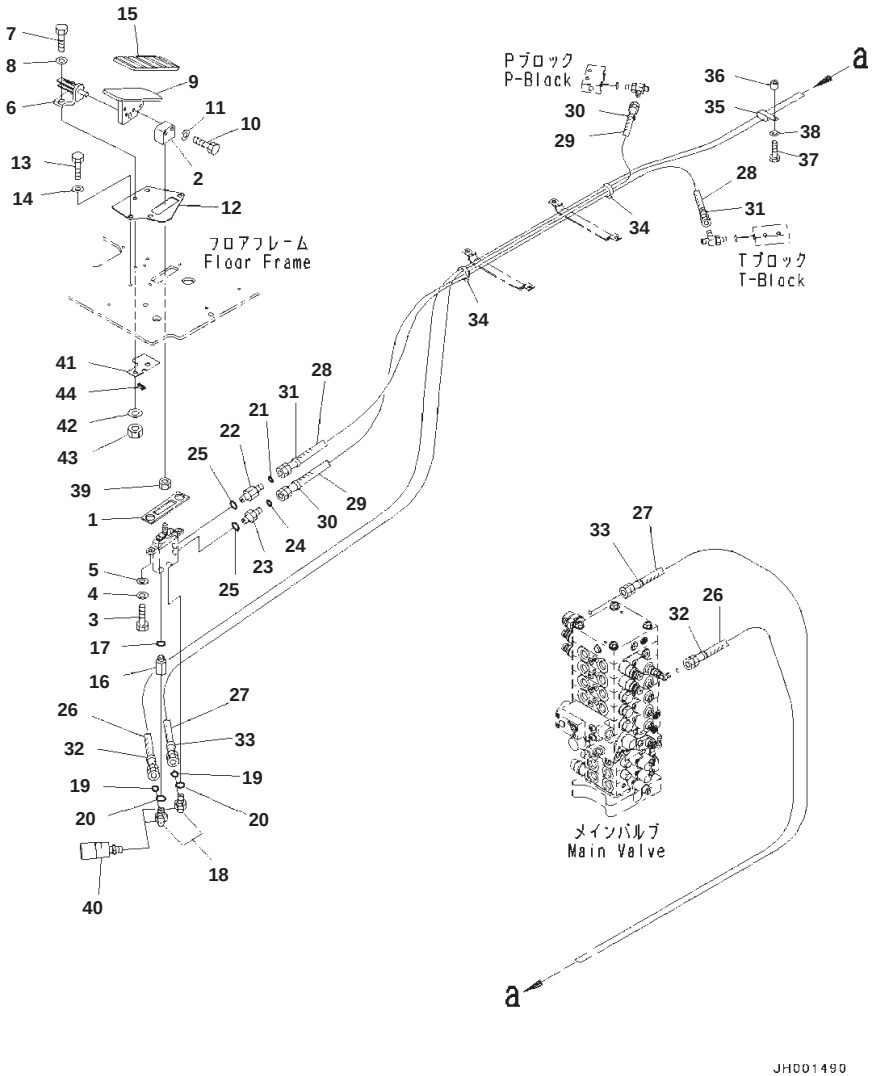

PC130-8 S/N B10001-UP
Cab, With Master Key, AM-FM Radio, 12volt Power Supply, Floor, 2-actuator, 2nd Attachment Control

Index	Part Number	Description	Qty	Serial No.
		Note: This list covers following specifications: Cab, With Master Key, AM-FM radio, 12volts Power Supply, 2-Actuator, 2-Attachment		
1	22U-54-25660	Seal	1	B10001-
2	20Y-43-41760	Seat	1	B10001-
3	01010-81025	Bolt	2	B10001-
4	01643-31032	Washer	2	B10001-
5	01643-31032	Washer	2	B10001-
6	20Y-62-25360	Bracket	1	B10001-
7	01010-D1035	Bolt	2	B10001-
8	01643-71032	Washer	2	B10001-
9	20Y-53-14220	Pedal	1	B10001-
10	01010-D1045	Bolt	2	B10001-
11	01643-71032	Washer	2	B10001-
12	22U-54-25180	Plate	1	B10001-
13	01010-81020	Bolt	1	B10001-
14	01643-31032	Washer	1	B10001-
15	207-43-81240	Cap	1	B10001-
16	20T-910-8660	Nipple	1	B10001-
17	07000-12011	O-ring	1	B10001-
18	20Y-62-52160	Elbow	2	B10001-
19	02896-11008	O-ring	2	B10001-
20	07000-12011	O-ring	2	B10001-
21	20Y-62-43470	Nipple	1	B10001-
22	02896-11008	O-ring	1	B10001-
23	11Y-62-12140	Nipple	1	B10001-
24	02896-11008	O-ring	1	B10001-
25	07000-12011	O-ring	2	B10001-
26	203-62-14311	Hose	1	B10001-
27	203-62-14450	Hose	1	B10001-
28	208-62-72310	Hose, L=950mm	1	B10001-
29	208-62-72650	Hose	1	B10001-
30	20Y-62-22790	Band, Red	2	B10001-
31	20Y-62-22820	Band, Blue	2	B10001-
32	20Y-62-22840	Band, Black	2	B10001-
33	20Y-62-22860	Band, Brown	2	B10001-
34	08034-20519	Band	2	B10001-
35	04435-41210	Clip	1	B10001-
36	195-33-11220	Spacer	1	B10001-
37	01010-81050	Bolt	1	B10001-
38	01643-31032	Washer	1	B10001-
39	01580-11408	Nut	2	B10001-
40	206-06-61130	Switch	2	B10001-
41	20Y-53-14130	Bracket	1	B10001-
42	01643-31032	Washer	2	B10001-

PC130-8 S/N B10001-UP

Cab, With Master Key, AM-FM Radio, 12volt Power Supply, Floor, 2-actuator, 2nd Attachment Control

Index	Part Number	Description	Qty	Serial No.
43	01580-11008	Nut	2	B10001-
44	08034-20519	Band	1	B10001-

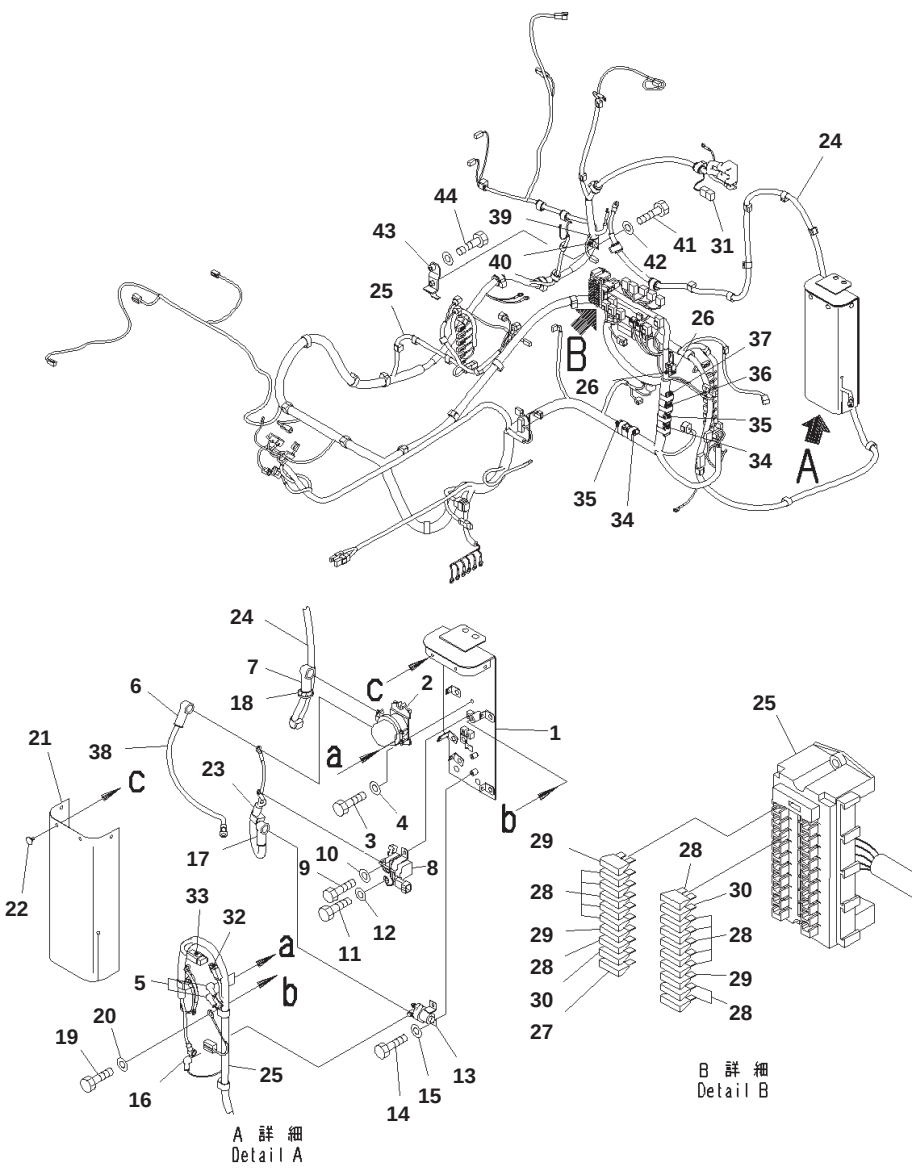

Cab, With Master Key, AM-FM Radio, 12volt Power Supply, Floor, Wiring Harness

Index	Part Number	Description	Qty	Serial No.
		Note: This list covers following specifications: Cab, With Master Key, AM-FM radio, 12volts Power Supply Cab, With Master Key, AM-FM radio, 12volts Power Supply, 1-Actuator Cab, With Master Key, AM-FM radio, 12volts Power Supply, 2-Actuator		
1	203-06-11260	Bracket	1	B10001-
2	08088-30000	Switch, Battery Relay	1	B10001-
3	01010-80830	Bolt	2	B10001-
4	01643-30823	Washer	2	B10001-
5	08038-00519	Cap	2	B10001-
6	08038-06031	Cap	1	B10001-
7	08038-00035	Cap, Terminal	1	B10001-
8	600-815-8941	Relay	1	B10001-
9	01010-80816	Bolt	2	B10001-
10	01643-30823	Washer	2	B10001-
11	01010-80816	Bolt	1	B10001-
12	01643-30823	Washer	1	B10001-
13	600-815-2170	Switch, Heater	1	B10001-
14	01010-80616	Bolt	2	B10001-
15	01643-30623	Washer	2	B10001-
16	08038-00519	Cap	2	B10001-
17	08038-06031	Cap	1	B10001-
18	08034-20536	Band	1	B10001-
19	01010-81020	Bolt	1	B10001-
20	01643-31032	Washer	1	B10001-
21	203-06-11370	Sheet	1	B10001-
22	20T-54-74510	Cap	4	B10001-
23	203-06-11340	Wiring Harness	1	B10001-
24	203-06-11240	Cable	1	B10001-
25	203-06-11730	Wiring Harness	1	B10001-
26	08020-20000	・ Diode	2	B10001-
27	08041-00500	・ Fuse, 5Amp.	1	B10001-
28	08041-01000	・ Fuse, 10Amp.	14	B10001-
29	08041-02000	・ Fuse, 20Amp.	3	B10001-
30	08041-03000	・ Fuse, 30Amp.	2	B10001-
31	19M-06-31720	・ Resistor	1	B10001-
32	20Y-06-31660	・ Fusible Link, 30Amp.	1	B10001-
33	22U-06-11270	・ Fusible Link, 65Amp.	1	B10001-
34	HM6400-0012	・ F-connector, Black	2	B10001-
	HM6409-0071	・ M-Connector, Black	2	B10001-
35	HM6400-0013	・ F-connector, Green	2	B10001-
	HM6409-0072	・ M-Connector, Green	2	B10001-
36	HM6440-0129	・ F-connector, Pink	1	B10001-
	HM6440-0128	・ M-Connector, Pink	1	B10001-

PC130-8 S/N B10001-UP

Cab, With Master Key, AM-FM Radio, 12volt Power Supply, Floor, Wiring Harness

Index	Part Number	Description	Qty	Serial No.
37	HM6400-0016	・ F-connector, Orange	1	B10001-
	HM6409-0075	・ M-Connector, Orange	1	B10001-
38	08028-CB050	Cable, Ground	1	B10001-
39	07095-40523	Cushion	1	B10001-
40	04434-53212	Clip	1	B10001-
41	01010-81230	Bolt	1	B10001-
42	01643-31232	Washer	1	B10001-
43	203-06-11310	Bracket	1	B10001-
44	(01010-81040)	Bolt		

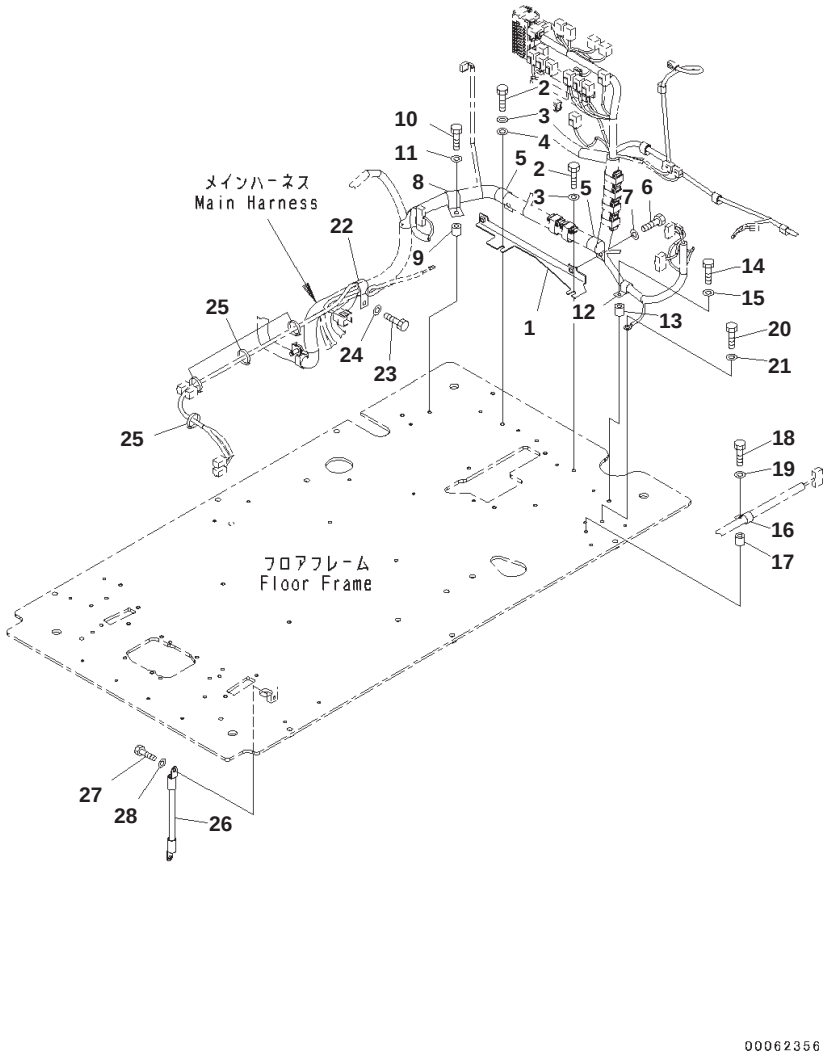

Cab, With Master Key, AM-FM Radio, 12volt Power Supply, Floor, Wiring Harness Clamp and Ground

Index	Part Number	Description	Qty	Serial No.
		Note: This list covers following specifications: Cab, With Master Key, AM-FM radio, 12volts Power Supply Cab, With Master Key, AM-FM radio, 12volts Power Supply, 1-Actuator Cab, With Master Key, AM-FM radio, 12volts Power Supply, 2-Actuator		
1	20Y-53-14121	Bracket	1	B10001-
2	01010-81016	Bolt	2	B10001-
3	01643-31032	Washer	2	B10001-
4	01643-31032	Washer	1	B10001-
5	04434-53411	Clip	2	B10001-
6	01010-81020	Bolt	2	B10001-
7	01643-31032	Washer	2	B10001-
8	04434-53411	Clip	1	B10001-
9	195-33-11220	Spacer	1	B10001-
10	01010-81040	Bolt	1	B10001-
11	01643-31032	Washer	1	B10001-
12	04434-51910	Clip	1	B10001-
13	195-33-11220	Spacer	1	B10001-
14	01010-81040	Bolt	1	B10001-
15	01643-31032	Washer	1	B10001-
16	04434-51410	Clip	1	B10001-
17	195-33-11220	Spacer	1	B10001-
18	01010-81040	Bolt	1	B10001-
19	01643-31032	Washer	1	B10001-
20	01010-81020	Bolt	1	B10001-
21	01643-31032	Washer	1	B10001-
22	04434-53411	Clip	1	B10001-
23	01010-81020	Bolt	1	B10001-
24	01643-31032	Washer	1	B10001-
25	08034-20519	Band	4	B10001-
26	08028-43030	Cable, Ground	1	B10001-
27	01010-81020	Bolt	1	B10001-
28	01643-31032	Washer	1	B10001-

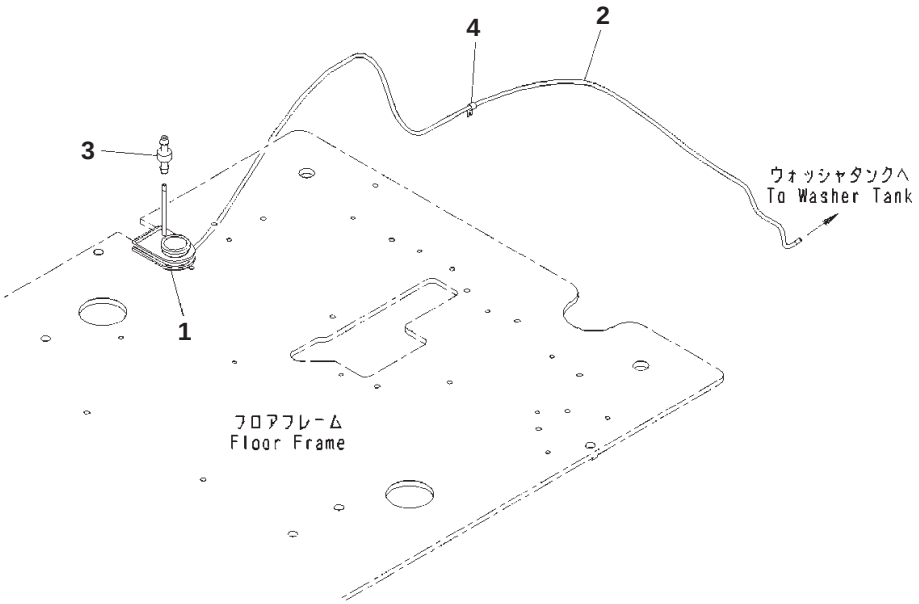

Cab, With Master Key, AM-FM Radio, 12volt Power Supply, Floor, Window Washer Hose

Index	Part Number	Description	Qty	Serial No.
		Note: This list covers following specifications: Cab, With Master Key, AM-FM radio, 12volts Power Supply Cab, With Master Key, AM-FM radio, 12volts Power Supply, 1-Actuator Cab, With Master Key, AM-FM radio, 12volts Power Supply, 2-Actuator		
1	20Y-53-14991	Grommet	1	B10001-
2	203-06-11270	Hose	1	B10001-
3	207-06-61490	Valve	1	B10001-
4	21T-38-12270	Clip	1	B10001-

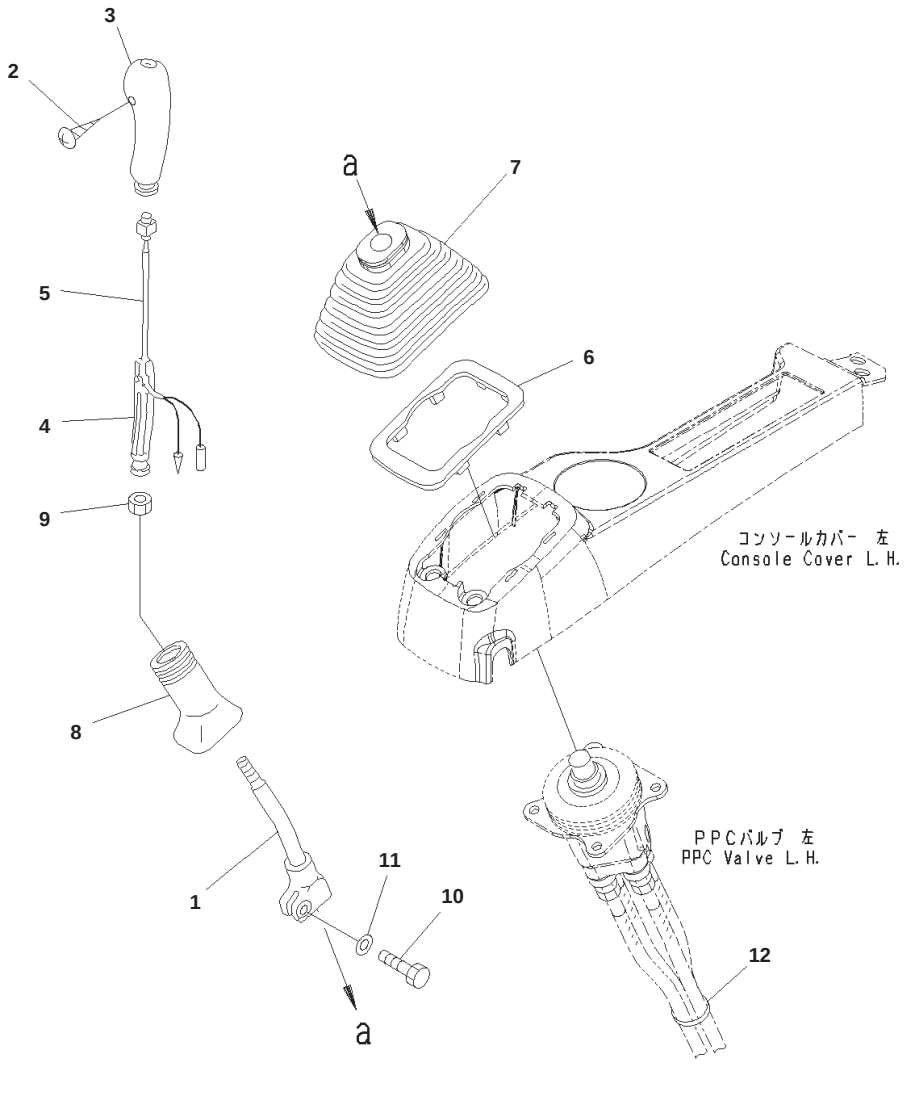

Cab, With Master Key, AM-FM Radio, 12volt Power Supply, Floor, Lever, LHS

Index	Code	Part Number	Description	Qty	Serial No.
			Note: This list covers following specifications: Cab, With Master Key, AM-FM radio, 12volts Power Supply Cab, With Master Key, AM-FM radio, 12volts Power Supply, 1-Actuator Cab, With Master Key, AM-FM radio, 12volts Power Supply, 2-Actuator		
1		20Y-43-22211	Lever	1	B10001-
		22U-43-21182	Knob	1	B10001-
2	C1		・ Knob	1	B10001-
3		20Y-43-22381	・ Knob	1	B10001-
4		20Y-43-22421	・ Insert	1	B10001-
5		22U-43-21211	・ Switch	1	B10001-
6		20Y-43-22250	Plate	1	B10001-
7		20Y-43-22261	Boot	1	B10001-
8		20Y-43-22370	Boot	1	B10001-
9		600-411-1280	Nut	1	B10001-
10		01252-41025	Bolt	1	B10001-
11		01643-51032	Washer	1	B10001-
12		08034-20536	Band	1	B10001-

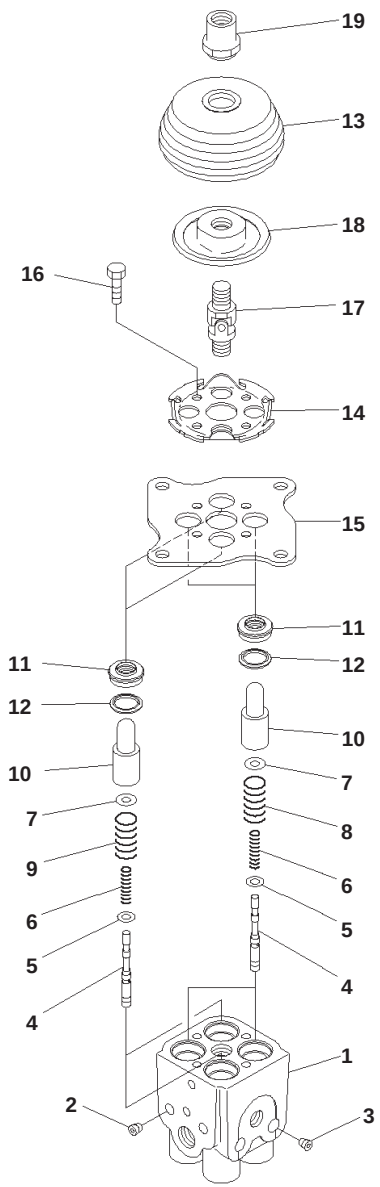

Cab, With Master Key, AM-FM Radio, 12volt Power Supply, Floor, PPC Valve for Work Equipment, LHS

Index	Code	Part Number	Description	Qty	Serial No.
			Note: This list covers following specifications: Cab, With Master Key, AM-FM radio, 12volts Power Supply Cab, With Master Key, AM-FM radio, 12volts Power Supply, 1-Actuator Cab, With Master Key, AM-FM radio, 12volts Power Supply, 2-Actuator		
		702-16-03530	Valve, Pilot	1	B10001-
1	C1		・ Body	1	B10001-
2	C1		・ Plug	2	B10001-
3	C1		・ Plug	2	B10001-
4	C1		・ Valve	4	B10001-
5		702-16-51140	・ Shim, T=0.30mm	4	B10001-
6		702-16-53420	・ Spring	4	B10001-
7		702-16-53140	・ Retainer	4	B10001-
8		702-16-53470	・ Spring	2	B10001-
9		702-16-53590	・ Spring	2	B10001-
10		702-16-53170	・ Piston	4	B10001-
11		702-16-71150	・ Seal	4	B10001-
12		702-16-71160	・ Seat	4	B10001-
13		702-16-71280	・ Boot	1	B10001-
14		702-16-71131	・ Plate	1	B10001-
15		702-16-71141	・ Plate	1	B10001-
16		01010-80620	・ Bolt	4	B10001-
17		702-16-51240	・ Universal Joint	1	B10001-
18		702-16-71361	・ Disc	1	B10001-
19		702-16-71441	・ Nut	1	B10001-

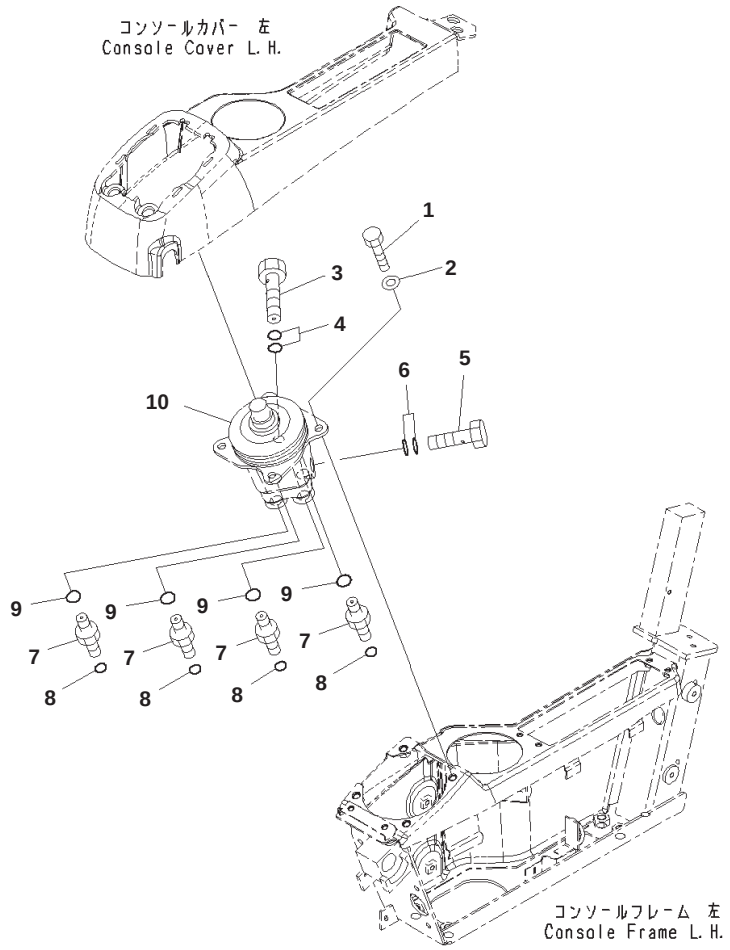

Cab, With Master Key, AM-FM Radio, 12volt Power Supply, Floor, Valve, LHS

Index	Part Number	Description	Qty	Serial No.
		Note: This list covers following specifications: Cab, With Master Key, AM-FM radio, 12volts Power Supply Cab, With Master Key, AM-FM radio, 12volts Power Supply, 1-Actuator Cab, With Master Key, AM-FM radio, 12volts Power Supply, 2-Actuator		
1	01010-80820	Bolt	4	B10001-
2	01643-30823	Washer	4	B10001-
3	20Y-62-18910	Bolt	1	B10001-
4	07000-12018	O-ring	2	B10001-
5	20Y-62-18890	Bolt	1	B10001-
6	07000-12015	O-ring	2	B10001-
7	11Y-62-12130	Nipple	4	B10001-
8	02896-11008	O-ring	4	B10001-
9	07002-11423	O-ring	4	B10001-
10	(702-16-03530)	Valve, Pilot		

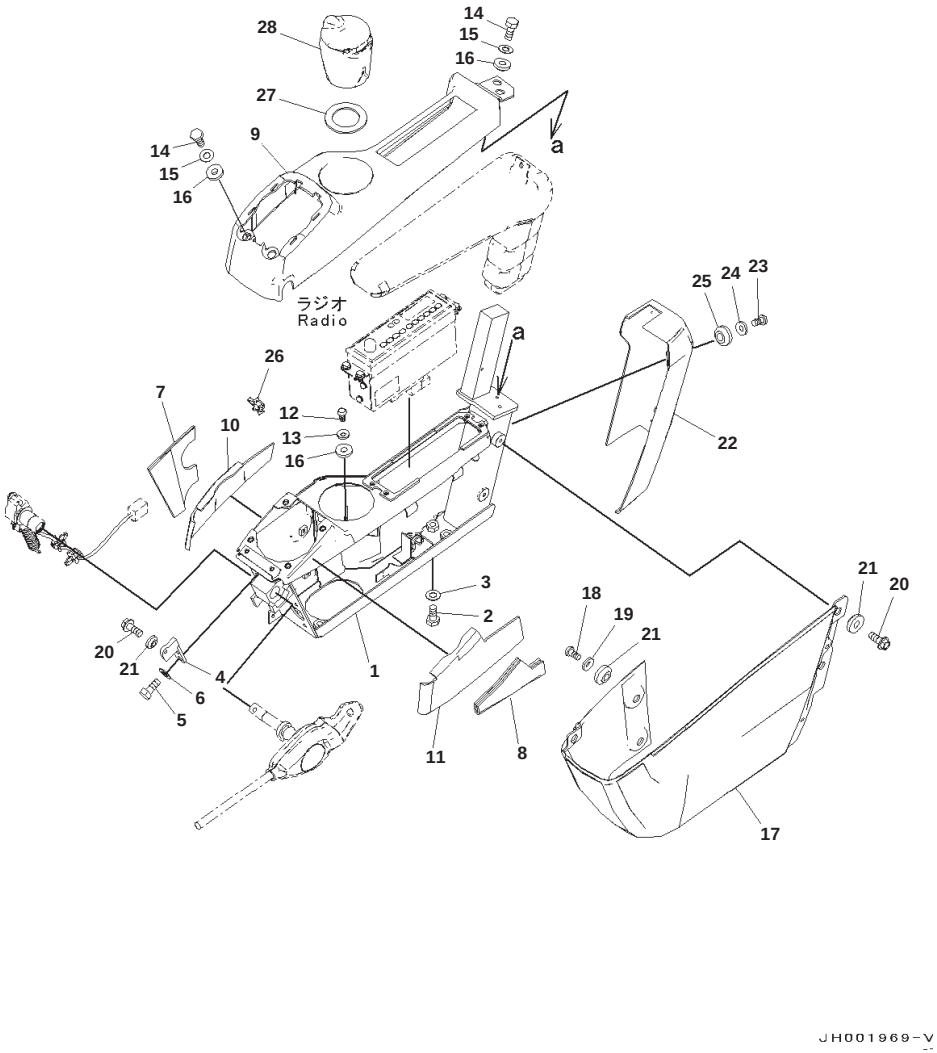

Cab, With Master Key, AM-FM Radio, 12volt Power Supply, Floor, Console, LHS

Index	Code	Part Number	Description	Qty	Serial No.
			Note: This list covers following specifications: Cab, With Master Key, AM-FM radio, 12volts Power Supply Cab, With Master Key, AM-FM radio, 12volts Power Supply, 1-Actuator Cab, With Master Key, AM-FM radio, 12volts Power Supply, 2-Actuator		
1		20Y-43-41416	Frame	1	B10031-
	A2	20Y-43-41415	Frame	1	B10001-B10030
2		01010-81030	Bolt	4	B10001-
3		01643-31032	Washer	4	B10001-
4		20Y-43-41472	Bracket	1	B10001-
5		01010-80616	Bolt	2	B10001-
6		01643-30623	Washer	2	B10001-
7		20Y-43-41621	Sheet	1	B10001-
8		20Y-43-41641	Sheet	1	B10001-
9		20Y-43-41424	Cover	1	B10031-
	A2	20Y-43-41423	Cover	1	B10001-B10030
10		20Y-43-41651	Sheet	1	B10001-
11		20Y-43-41661	Sheet	1	B10001-
12		01245-00616	Screw, Hexagon Socket Head	1	B10001-
13		01643-70623	Washer	1	B10001-
14		01010-80616	Bolt	4	B10001-
15		01643-30623	Washer	4	B10001-
16		20Y-43-41290	Collar	5	B10001-
17		20Y-43-41442	Cover	1	B10001-
18		01245-00616	Screw, Hexagon Socket Head	2	B10001-
19		01643-70623	Washer	2	B10001-
20		01435-00612	Bolt	3	B10001-
21		20Y-43-41290	Collar	5	B10001-
22		20Y-43-41453	Cover	1	B10001-
23		01245-00616	Screw, Hexagon Socket Head	2	B10001-
24		01643-70623	Washer	2	B10001-
25		20Y-43-41290	Collar	2	B10001-
26		22U-43-23260	Clip	1	B10001-
27		20Y-43-41970	Sheet	1	B10001-
28		20Y-43-41491	Ashtray	1	B10001-

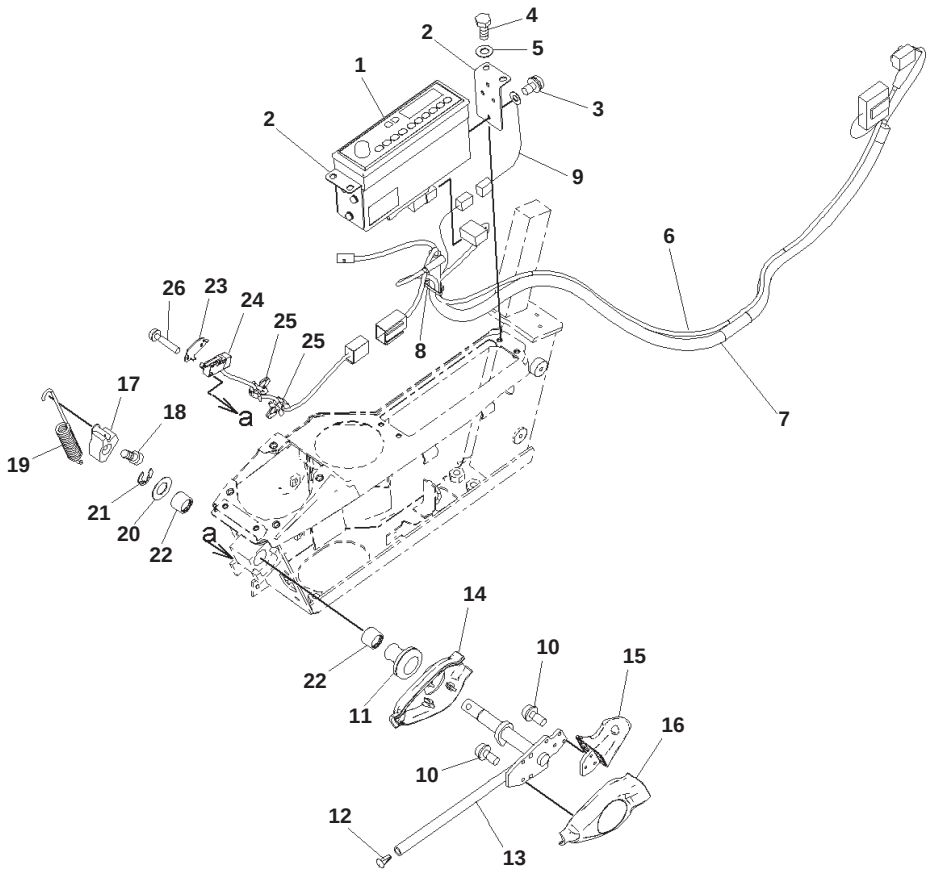

00062547-\

Cab, With Master Key, AM-FM Radio, 12volt Power Supply, Floor, PPC Lock Lever and Radio

Index	Part Number	Description	Qty	Serial No.
		Note: This list covers following specifications: Cab, With Master Key, AM-FM radio, 12volts Power Supply Cab, With Master Key, AM-FM radio, 12volts Power Supply, 1-Actuator Cab, With Master Key, AM-FM radio, 12volts Power Supply, 2-Actuator		
1	20Y-06-42440	Radio	1	B10001-
2	20Y-43-42130	Plate	2	B10001-
3	01023-60510	Screw	6	B10001-
4	01010-80616	Bolt	4	B10001-
5	01643-30623	Washer	4	B10001-
6	08912-51600	Cord	1	B10001-
7	21M-06-31170	Wiring Harness	1	B10001-
8	08034-20414	Band	1	B10001-
9	20Y-06-41830	Wiring Harness	1	B10001-
10	01023-60410	Screw	6	B10001-
11	08037-11425	Grommet	1	B10001-
12	208-53-12280	Cap	1	B10001-
13	20Y-43-31513	Lever	1	B10001-
14	20Y-43-31522	Cover	1	B10001-
15	20Y-43-31611	Knob	1	B10001-
16	20Y-43-31621	Cover	1	B10001-
17	20Y-43-31432	Cam	1	B10001-
18	01252-70816	Bolt	1	B10001-
19	20Y-43-31421	Spring	1	B10001-
20	20Y-43-31440	Ring	1	B10001-
21	20Y-43-31450	Plate	1	B10001-
22	06124-01616	Bearing	2	B10001-
23	22U-06-22490	Plate	1	B10001-
24	22U-06-22360	Switch Assembly	1	B10001-
25	22U-43-23260	Clip	2	B10001-
26	01023-60320	Screw	2	B10001-

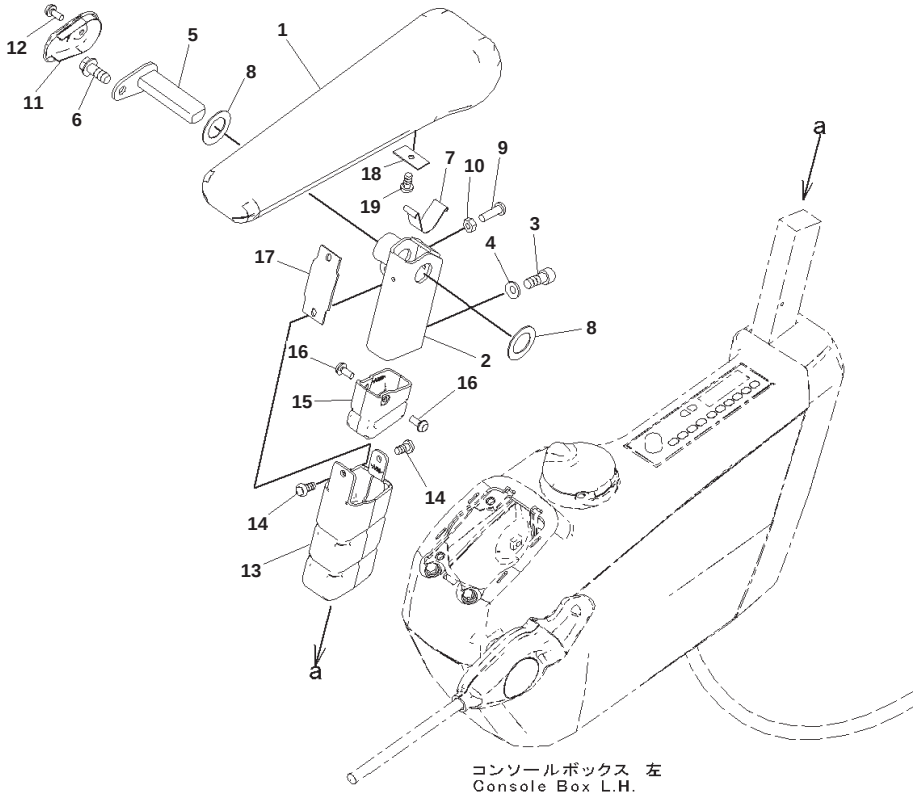

Cab, With Master Key, AM-FM Radio, 12volt Power Supply, Floor, Armrest, LHS

Index	Part Number	Description	Qty	Serial No.
		Note: This list covers following specifications: Cab, With Master Key, AM-FM radio, 12volts Power Supply Cab, With Master Key, AM-FM radio, 12volts Power Supply, 1-Actuator Cab, With Master Key, AM-FM radio, 12volts Power Supply, 2-Actuator		
1	20Y-43-41143	Armrest	1	B10001-
2	20Y-43-41173	Bracket	1	B10001-
3	01252-80820	Bolt	2	B10001-
4	01643-70823	Washer	2	B10001-
5	20Y-43-41162	Pin	1	B10001-
6	01435-40816	Bolt	1	B10001-
7	20Y-43-41152	Spring	1	B10001-
8	437-40-26240	Washer	2	B10001-
9	01245-00620	Screw	1	B10001-
10	01580-40605	Nut	1	B10001-
11	20Y-43-41181	Cap	1	B10001-
12	01023-20512	Screw	1	B10001-
13	20Y-43-41191	Cover	1	B10001-
14	01370-40510	Screw	2	B10001-
15	20Y-43-41591	Cover	1	B10001-
16	01023-20512	Screw	2	B10001-
17	20Y-43-41281	Rubber	1	B10001-
18	20Y-43-41461	Plate	1	B10001-
19	01370-40610	Screw	1	B10001-

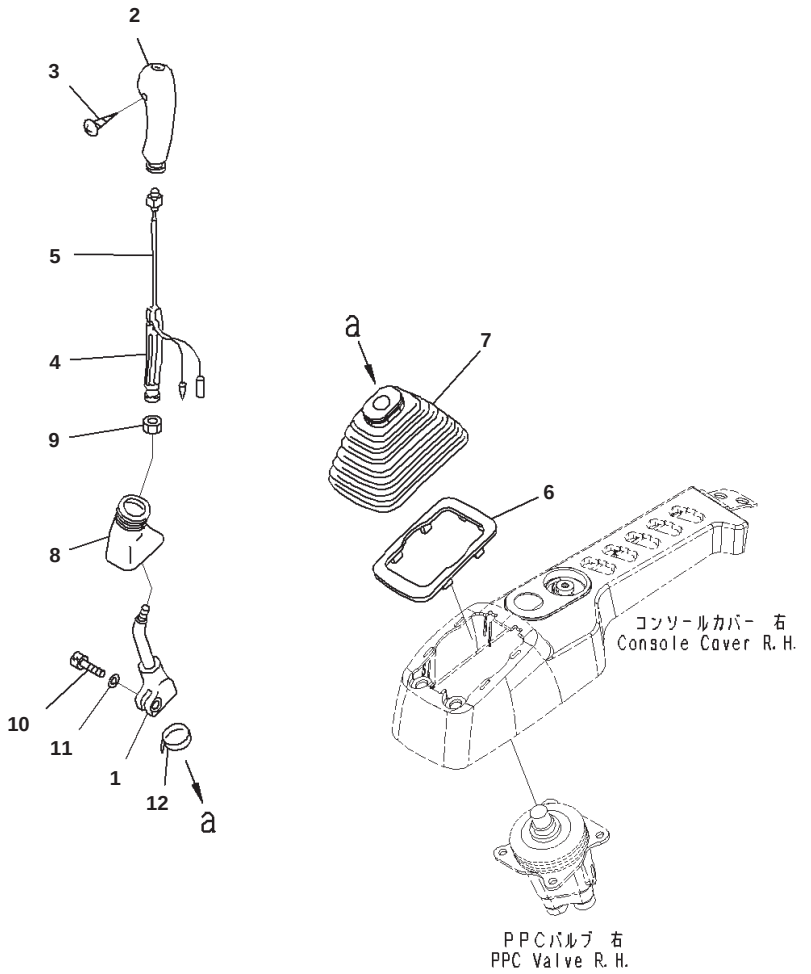

Cab, With Master Key, AM-FM Radio, 12volt Power Supply, Floor, Lever, RHS

Index	Code	Part Number	Description	Qty	Serial No.
			Note: This list covers following specifications: Cab, With Master Key, AM-FM radio, 12volts Power Supply Cab, With Master Key, AM-FM radio, 12volts Power Supply, 1-Actuator Cab, With Master Key, AM-FM radio, 12volts Power Supply, 2-Actuator		
1		20Y-43-22221	Lever	1	B10001-
		22U-43-21192	Knob	1	B10001-
2	C1		・ Knob	1	B10001-
3		20Y-43-22390	・ Screw	1	B10001-
4		20Y-43-22421	・ Insert	1	B10001-
5		22U-43-21211	・ Switch	1	B10001-
6		20Y-43-22250	Plate	1	B10001-
7		20Y-43-22261	Boot	1	B10001-
8		20Y-43-22370	Boot	1	B10001-
9		600-411-1280	Nut	1	B10001-
10		01252-41025	Bolt	1	B10001-
11		01643-51032	Washer	1	B10001-
12		08034-20536	Band	1	B10001-

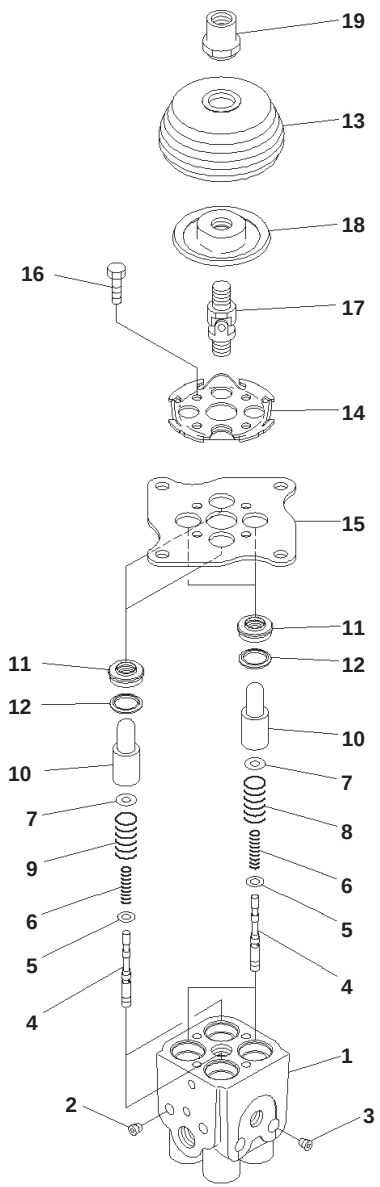

Cab, With Master Key, AM-FM Radio, 12volt Power Supply, Floor, PPC Valve for Work Equipment, RHS

Index	Code	Part Number	Description	Qty	Serial No.
			Note: This list covers following specifications: Cab, With Master Key, AM-FM radio, 12volts Power Supply Cab, With Master Key, AM-FM radio, 12volts Power Supply, 1-Actuator Cab, With Master Key, AM-FM radio, 12volts Power Supply, 2-Actuator		
		702-16-03530	Valve, Pilot	1	B10001-
1	C1		・ Body	1	B10001-
2	C1		・ Plug	2	B10001-
3	C1		・ Plug	2	B10001-
4	C1		・ Valve	4	B10001-
5		702-16-51140	・ Shim, T=0.30mm	4	B10001-
6		702-16-53420	・ Spring	4	B10001-
7		702-16-53140	・ Retainer	4	B10001-
8		702-16-53470	・ Spring	2	B10001-
9		702-16-53590	・ Spring	2	B10001-
10		702-16-53170	・ Piston	4	B10001-
11		702-16-71150	・ Seal	4	B10001-
12		702-16-71160	・ Seat	4	B10001-
13		702-16-71280	・ Boot	1	B10001-
14		702-16-71131	・ Plate	1	B10001-
15		702-16-71141	・ Plate	1	B10001-
16		01010-80620	・ Bolt	4	B10001-
17		702-16-51240	・ Universal Joint	1	B10001-
18		702-16-71361	・ Disc	1	B10001-
19		702-16-71441	・ Nut	1	B10001-

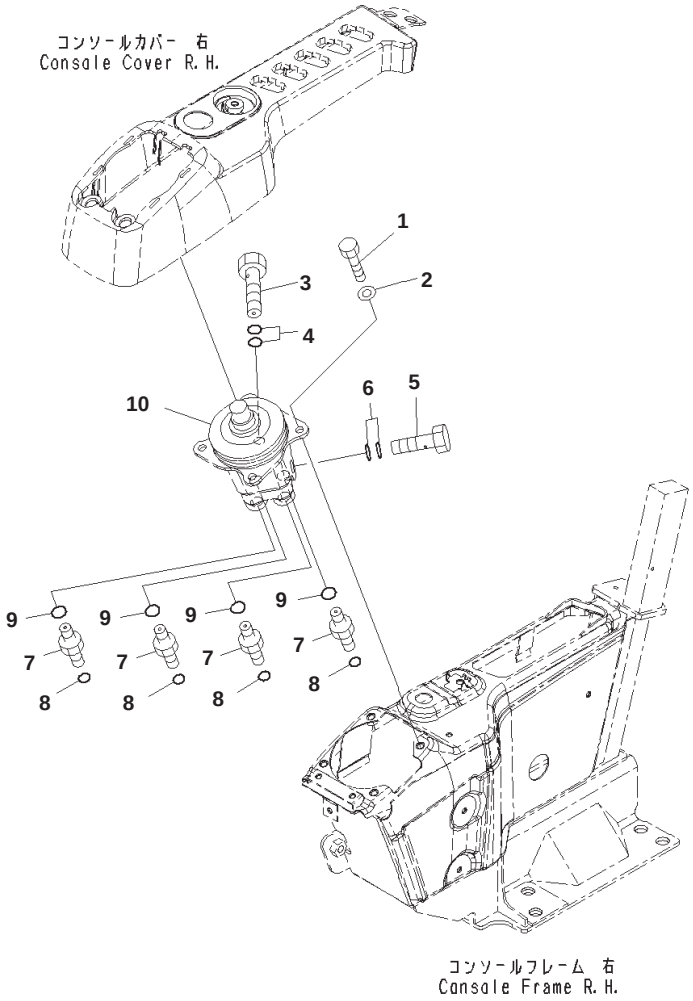

Cab, With Master Key, AM-FM Radio, 12volt Power Supply, Floor, Valve, RHS

Index	Part Number	Description	Qty	Serial No.
		Note: This list covers following specifications: Cab, With Master Key, AM-FM radio, 12volts Power Supply Cab, With Master Key, AM-FM radio, 12volts Power Supply, 1-Actuator Cab, With Master Key, AM-FM radio, 12volts Power Supply, 2-Actuator		
1	01010-80820	Bolt	4	B10001-
2	01643-30823	Washer	4	B10001-
3	20Y-62-18910	Bolt	1	B10001-
4	07000-12018	O-ring	2	B10001-
5	20Y-62-18890	Bolt	1	B10001-
6	07000-12015	O-ring	2	B10001-
7	11Y-62-12130	Nipple	4	B10001-
8	02896-11008	O-ring	4	B10001-
9	07002-11423	O-ring	4	B10001-
10	(702-16-71141)	Plate		

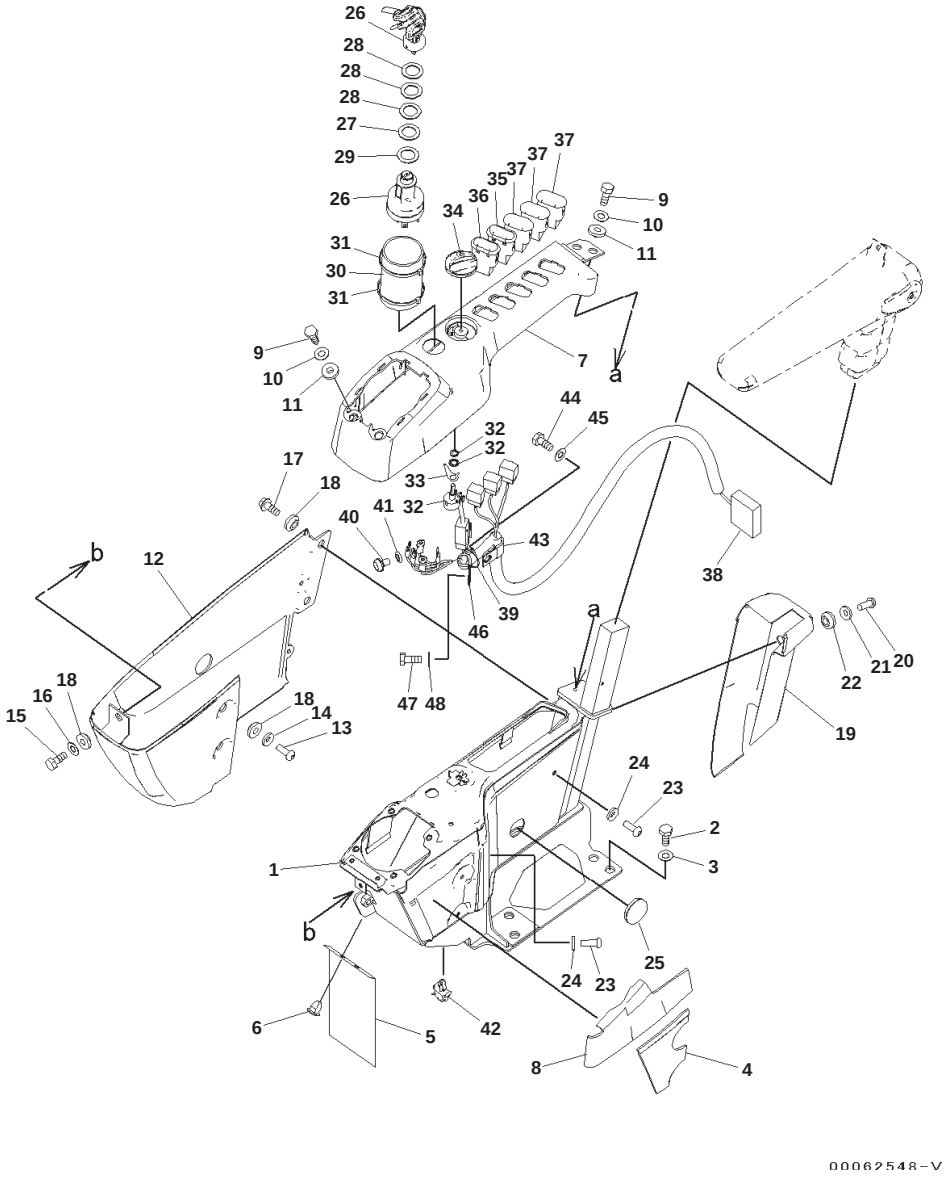

Cab, With Master Key, AM-FM Radio, 12volt Power Supply, Floor, Console, RHS

Index	Code	Part Number	Description	Qty	Serial No.
			Note: This list covers following specifications: Cab, With Master Key, AM-FM radio, 12volts Power Supply Cab, With Master Key, AM-FM radio, 12volts Power Supply, 1-Actuator Cab, With Master Key, AM-FM radio, 12volts Power Supply, 2-Actuator		
1		20Y-43-41314	Frame	1	B10031-
	A2	20Y-43-41313	Frame	1	B10001-B10030
2		01010-D1230	Bolt	4	B10001-
3		01643-71232	Washer	4	B10001-
4		20Y-43-41631	Sheet	1	B10001-
5		22U-43-23251	Sheet	1	B10001-
6		22U-43-23290	Clip	2	B10001-
7		20Y-43-41324		1	B10031-
	A2	20Y-43-41323	Cover	1	B10001-B10030
8		20Y-43-41661	Sheet	1	B10001-
9		01010-80616	Bolt	4	B10001-
10		01643-30623	Washer	4	B10001-
11		20Y-43-41290	Collar	4	B10001-
12		20Y-43-41332	Cover	1	B10001-
13		01245-00616	Screw, Hexagon Socket Head	2	B10001-
14		01643-70623	Washer	2	B10001-
15		01010-80616	Bolt	1	B10001-
16		01643-30623	Washer	1	B10001-
17		01435-00612	Bolt	2	B10001-
18		20Y-43-41290	Collar	5	B10001-
19		20Y-43-41353	Cover	1	B10001-
20		01245-00616	Screw, Hexagon Socket Head	2	B10001-
21		01643-70623	Washer	2	B10001-
22		20Y-43-41290	Collar	2	B10001-
23		01245-00616	Screw, Hexagon Socket Head	3	B10001-
24		01643-70623	Washer	3	B10001-
25		09415-02512	Cap	1	B10001-
26		08086-20000	Switch, Starting	1	B10001-
27		20Y-43-41740	Plate	1	B10001-
28		20Y-43-41750	Washer	3	B10001-
29		20Y-43-41790	Washer	1	B10001-
30		20Y-43-41671	Sheet	1	B10001-
31		08034-20519	Band	2	B10001-
32		22U-06-22380	Potentiometer	1	B10001-
33		22U-06-22460	Spring	1	B10001-
34		20Y-43-41780	Knob	1	B10001-
35		20Y-06-42110	Switch, Swing Lock	1	B10001-
36		20Y-06-42121	Switch, Light	1	B10001-
37		20Y-06-42190	Cover	3	B10001-

PC130-8 S/N B10001-UP

Cab, With Master Key, AM-FM Radio, 12volt Power Supply, Floor, Console, RHS

Index	Code	Part Number	Description	Qty	Serial No.
38		20Y-06-41130	Wiring Harness	1	B10001-
39		08034-20414	Band	1	B10001-
40		01023-10508	Screw	5	B10001-
41		01601-20513	Washer	5	B10001-
42		22U-43-23260	Clip	1	B10001-
43		04434-51710	Clip	1	B10001-
44		01010-81016	Bolt	1	B10001-
45		01643-31032	Washer	1	B10001-
46		04434-51410	Clip	1	B10001-
47		01010-81016	Bolt	1	B10001-
48		01643-31032	Washer	1	B10001-

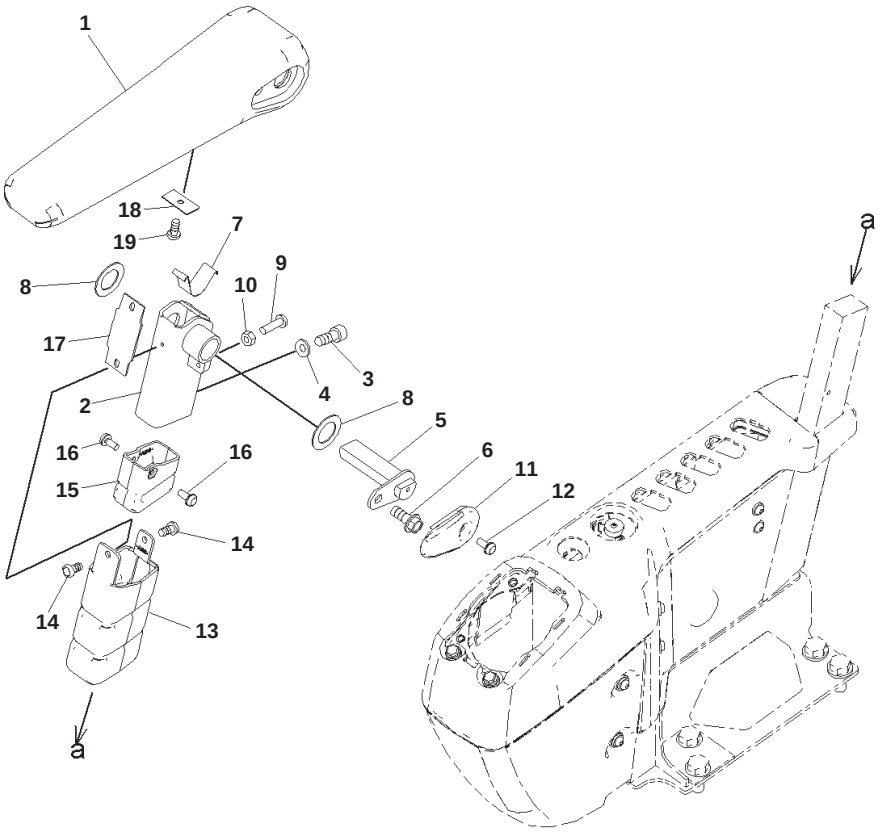

Cab, With Master Key, AM-FM Radio, 12volt Power Supply, Floor, Armrest, RHS

Index	Part Number	Description	Qty	Serial No.
		Note: This list covers following specifications: Cab, With Master Key, AM-FM radio, 12volts Power Supply Cab, With Master Key, AM-FM radio, 12volts Power Supply, 1-Actuator Cab, With Master Key, AM-FM radio, 12volts Power Supply, 2-Actuator		
1	20Y-43-41343	Arm Rest	1	B10001-
2	20Y-43-41533	Bracket	1	B10001-
3	01252-80820	Bolt	2	B10001-
4	01643-70823	Washer	2	B10001-
5	20Y-43-41850	Pin	1	B10001-
6	01435-40816	Bolt	1	B10001-
7	20Y-43-41152	Spring	1	B10001-
8	437-40-26240	Washer	2	B10001-
9	01245-00620	Screw	1	B10001-
10	01580-40605	Nut	1	B10001-
11	20Y-43-41181	Cap	1	B10001-
12	01023-20512	Screw	1	B10001-
13	20Y-43-41191	Cover	1	B10001-
14	01370-40510	Screw	2	B10001-
15	20Y-43-41591	Cover	1	B10001-
16	01023-20512	Screw	2	B10001-
17	20Y-43-41281	Rubber	1	B10001-
18	20Y-43-41461	Plate	1	B10001-
19	01370-40610	Screw	1	B10001-

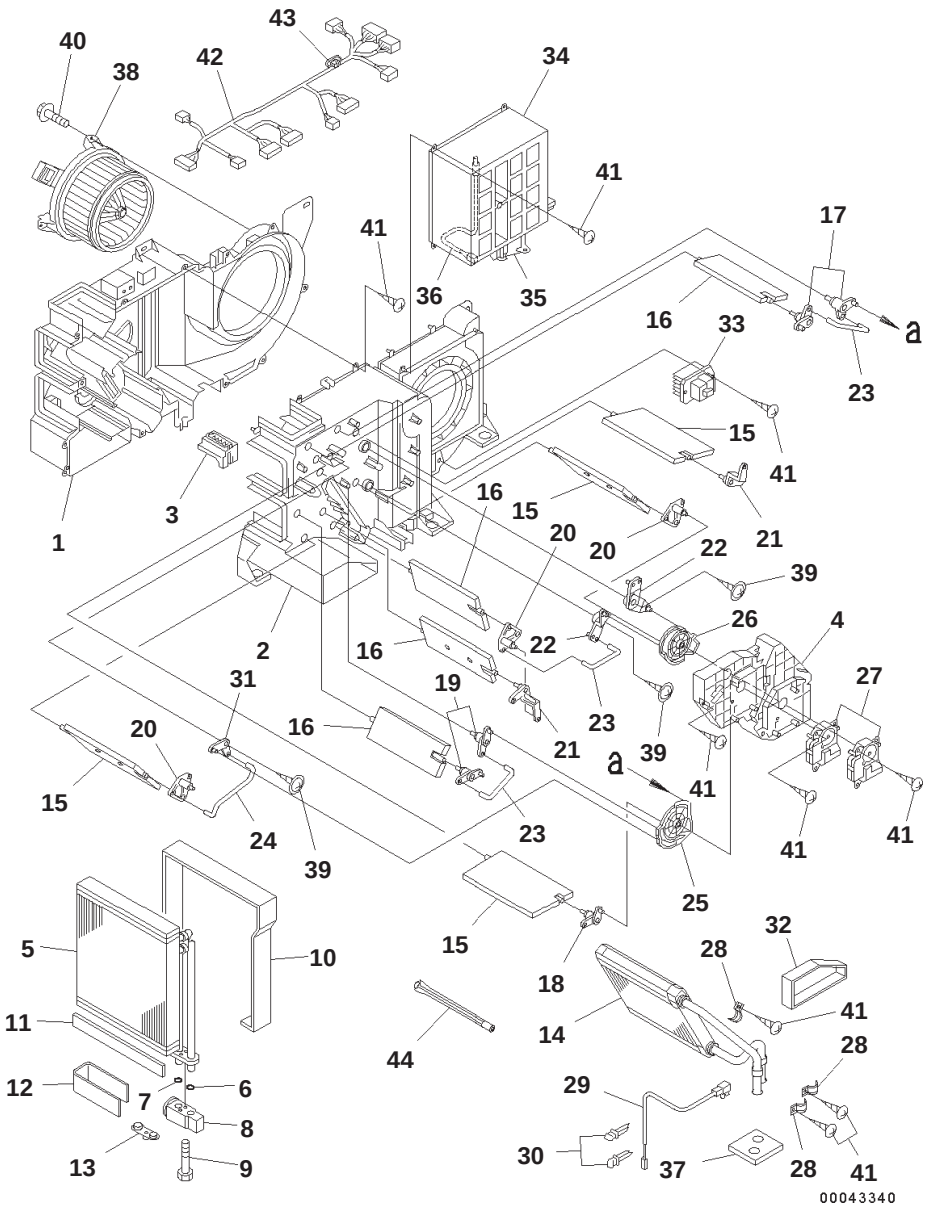

Cab, With Master Key, AM-FM Radio, 12volt Power Supply, Floor, Air Conditioner

Index	Part Number	Description	Qty	Serial No.
		Note: This list covers following specifications: Cab, With Master Key, AM-FM radio, 12volts Power Supply Cab, With Master Key, AM-FM radio, 12volts Power Supply, 1-Actuator Cab, With Master Key, AM-FM radio, 12volts Power Supply, 2-Actuator		
	20Y-810-1211	Air Conditioner Assembly	1	B10001-
1	ND245450-5831	・ Case, Cooling	1	B10001-
2	ND245450-5840	・ Case, Cooling	1	B10001-
3	ND116576-3810	・ Plate	1	B10001-
4	ND116576-3820	・ Plate	1	B10001-
	ND446010-3132	・ Evaporator	1	B10001-
5	ND446600-0991	・・ Evaporator Assembly	1	B10001-
6	ND949142-0020	・・ O-ring	1	B10001-
7	ND949142-0030	・・ O-ring	1	B10001-
8	ND447500-2750	・・ Valve	1	B10001-
9	ND949046-3100	・・ Bolt	2	B10001-
10	ND146657-8841	・・ Packing	1	B10001-
11	ND146657-9811	・・ Packing	3	B10001-
12	ND146657-8850	・・ Packing	1	B10001-
13	ND445021-3941	・・ Plug	1	B10001-
14	ND116140-0050	・ Core Subassembly, Heater	1	B10001-
15	ND116660-7570	・ Door Assembly	4	B10001-
16	ND116650-6850	・ Door Assembly	4	B10001-
17	ND116780-2481	・ Lever Subassembly, Link	2	B10001-
18	ND116780-2491	・ Lever Subassembly, Link	1	B10001-
19	ND116780-2501	・ Lever Subassembly, Link	2	B10001-
20	ND116780-2510	・ Lever Subassembly, Link	3	B10001-
21	ND116781-3000	・ Lever	2	B10001-
22	ND116780-3130	・ Lever Subassembly, Link	2	B10001-
23	ND116662-7670	・ Shaft	3	B10001-
24	ND116662-7681	・ Shaft	1	B10001-
25	ND116576-3852	・ Plate	1	B10001-
26	ND116576-3862	・ Plate	1	B10001-
27	ND063800-0300	・ Servo Motor Assembly	2	B10001-
28	ND017231-0700	・ Clamp	3	B10001-
29	ND077500-5890	・ Thermistor Assembly	1	B10001-
30	ND246790-2060	・ Clamp	2	B10001-
31	ND116780-3920	・ Lever Subassembly, Link	1	B10001-
32	ND146667-0440	・ Packing	1	B10001-
33	ND077800-0750	・ Transistor	1	B10001-
34	ND146340-0560	・ Box Assembly	1	B10001-
35	ND063600-4580	・・ Servo Motor Assembly	1	B10001-
36	ND077500-5650	・・ Thermistor Assembly	1	B10001-
37	ND146657-8860	・ Packing	1	B10001-

PC130-8 S/N B10001-UP

Cab, With Master Key, AM-FM Radio, 12volt Power Supply, Floor, Air Conditioner

Index	Part Number	Description	Qty	Serial No.
38	ND116340-7350	・ Motor Assembly, Fan	1	B10001-
39	ND949008-0460	・ Screw, Tapping	3	B10001-
40	ND949008-0330	・ Screw, Tapping	3	B10001-
41	ND949001-1730	・ Screw, Tapping	32	B10001-
42	ND246470-4311	・ Wiring Harness Assembly	1	B10001-
43	ND93950-05003	・・ Fuse	1	B10001-
44	ND116662-8320	・ Shaft	1	B10001-

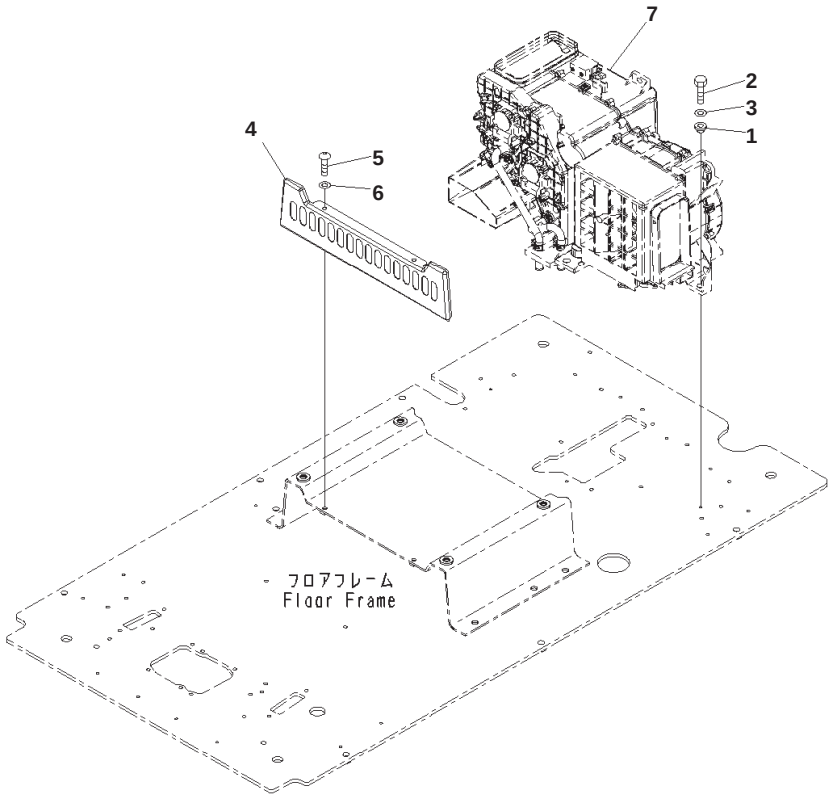

Cab, With Master Key, AM-FM Radio, 12volt Power Supply, Floor, Air Conditioner Unit

Index	Part Number	Description	Qty	Serial No.
		Note: This list covers following specifications: Cab, With Master Key, AM-FM radio, 12volts Power Supply Cab, With Master Key, AM-FM radio, 12volts Power Supply, 1-Actuator Cab, With Master Key, AM-FM radio, 12volts Power Supply, 2-Actuator		
1	208-979-7540	Collar	7	B10001-
2	01010-80825	Bolt	7	B10001-
3	01643-30823	Washer	7	B10001-
4	20Y-43-41240	Cover	1	B10001-
5	01245-00820	Screw	2	B10001-
6	01643-70823	Washer	2	B10001-
7	(20Y-810-1211)	Air Conditioner Assembly		

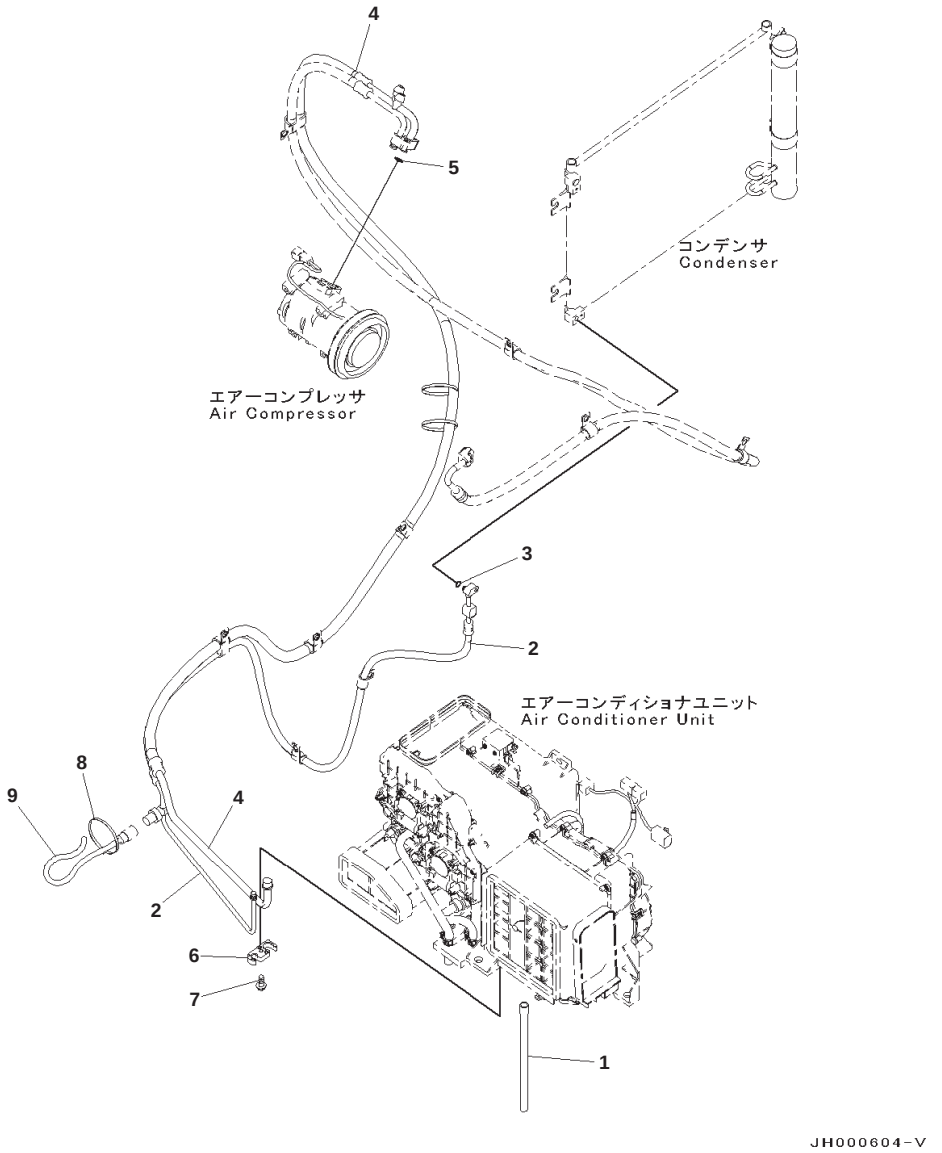

Cab, With Master Key, AM-FM Radio, 12volt Power Supply, Floor, Air Conditioner Piping

Index	Part Number	Description	Qty	Serial No.
		Note: This list covers following specifications: Cab, With Master Key, AM-FM radio, 12volts Power Supply Cab, With Master Key, AM-FM radio, 12volts Power Supply, 1-Actuator Cab, With Master Key, AM-FM radio, 12volts Power Supply, 2-Actuator		
1	208-979-7640	Hose	1	B10001-
2	203-979-1111	Hose	1	B10001-
3	20Y-979-3150	・ O-ring	2	B10001-
4	203-979-1121	Hose	1	B10001-
5	20Y-979-3130	・ O-ring	2	B10001-
6	208-979-7650	Connector	1	B10001-
7	01435-40620	Bolt	1	B10001-
8	08034-20536	Band	1	B10001-
9	(203-06-11730)	Wiring Harness		

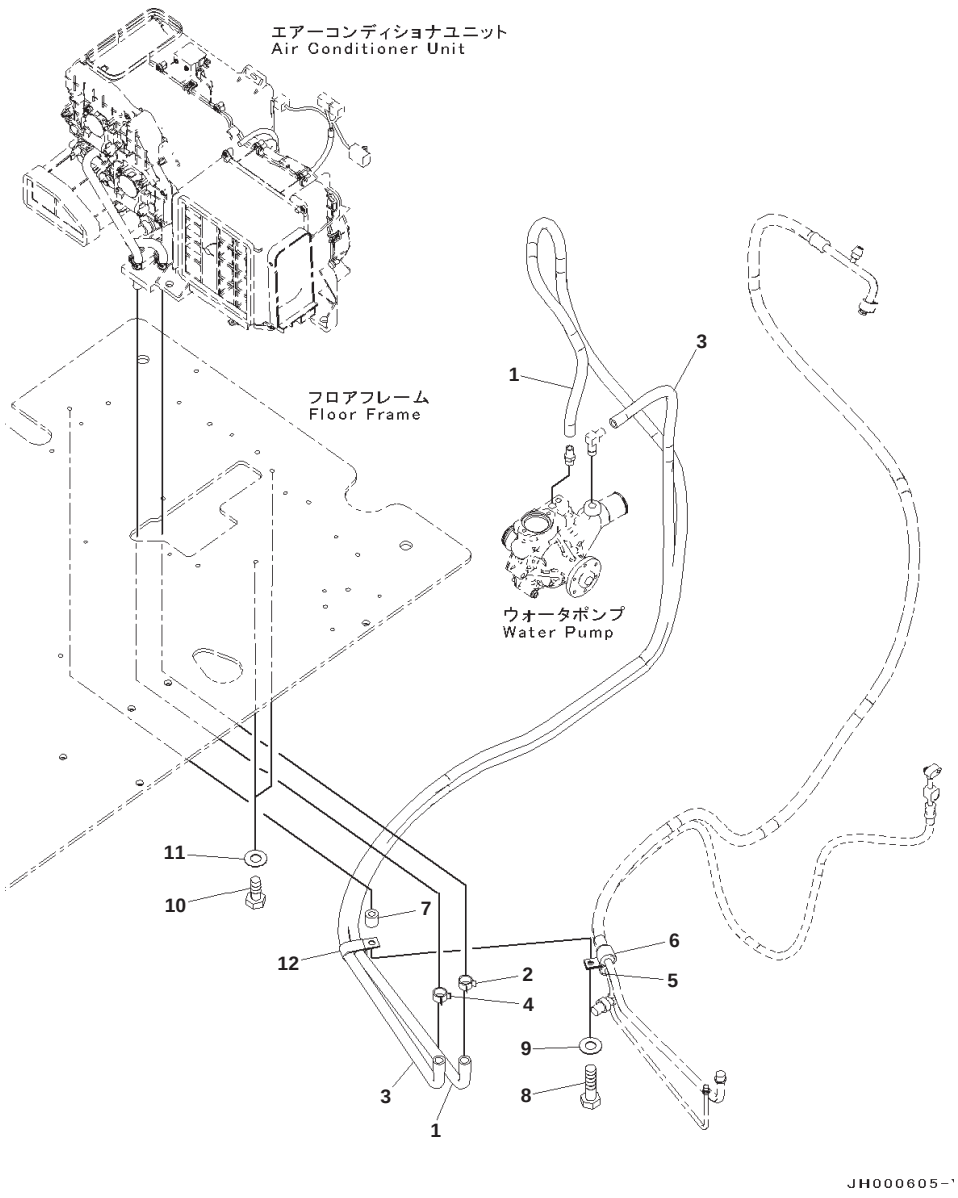

Cab, With Master Key, AM-FM Radio, 12volt Power Supply, Floor, Heater Hose

Index	Part Number	Description	Qty	Serial No.
		Note: This list covers following specifications: Cab, With Master Key, AM-FM radio, 12volts Power Supply Cab, With Master Key, AM-FM radio, 12volts Power Supply, 1-Actuator Cab, With Master Key, AM-FM radio, 12volts Power Supply, 2-Actuator		
1	203-979-1132	Hose Assembly	1	B10001-
2	09479-02400	Clamp	1	B10001-
3	203-979-1142	Hose Assembly	1	B10001-
4	09479-02400	Clamp	1	B10001-
5	04434-52110	Clip	1	B10001-
6	04434-52511	Clip	1	B10001-
7	195-33-11220	Spacer	1	B10001-
8	01010-81045	Bolt	1	B10001-
9	01643-31032	Washer	1	B10001-
10	01010-81016	Bolt	2	B10001-
11	01643-31032	Washer	2	B10001-
12	141-06-11220	Clip	1	B10001-

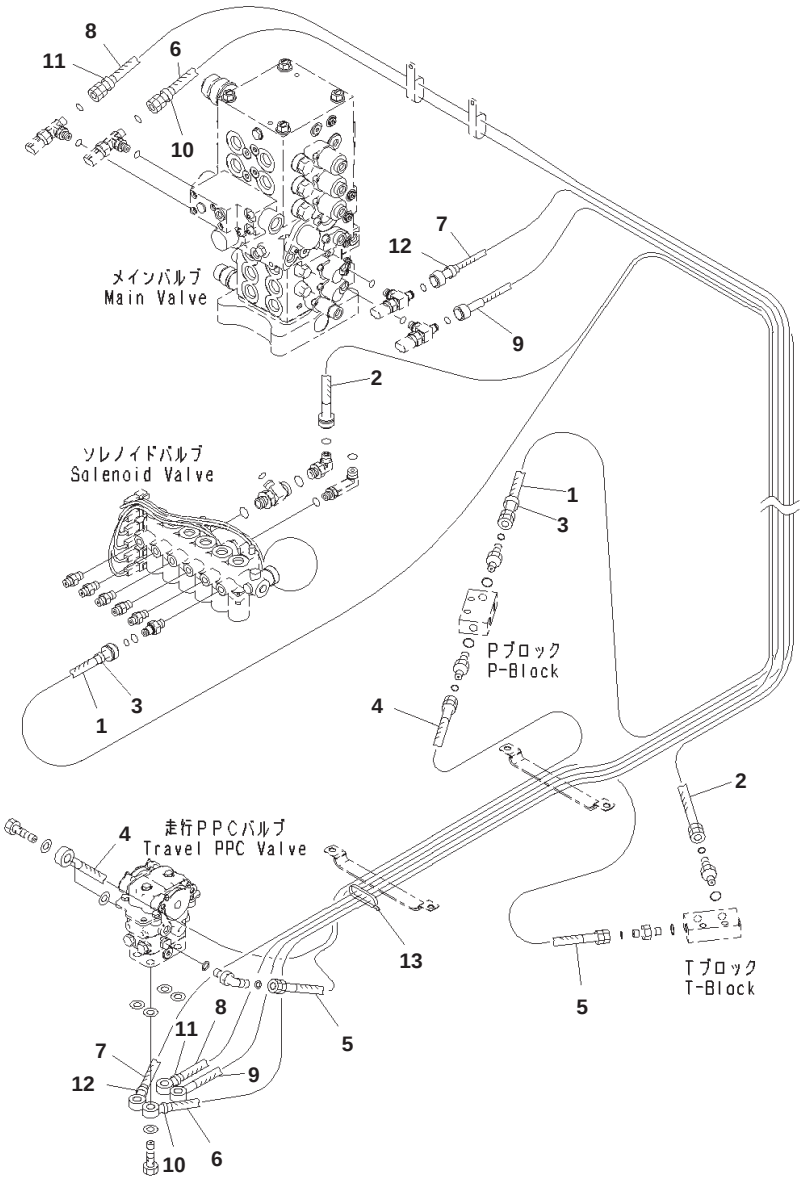

Cab, With Master Key, AM-FM Radio, 12volt Power Supply, Floor, PPC Piping for Travel Valve

Index	Part Number	Description	Qty	Serial No.
		Note: This list covers following specifications: Cab, With Master Key, AM-FM radio, 12volts Power Supply Cab, With Master Key, AM-FM radio, 12volts Power Supply, 1-Actuator Cab, With Master Key, AM-FM radio, 12volts Power Supply, 2-Actuator		
1	203-62-14320	Hose	1	B10001-
2	203-62-12691	Hose	1	B10001-
3	20Y-62-22790	Band, Red	2	B10001-
4	208-62-72290	Hose	1	B10001-
5	208-62-72310	Hose	1	B10001-
6	203-62-12720	Hose	1	B10001-
7	207-62-71960	Hose	1	B10001-
8	203-62-13290	Hose	1	B10001-
9	203-62-13310	Hose	1	B10001-
10	20Y-62-22790	Band, Red	2	B10001-
11	20Y-62-22820	Band, Blue	2	B10001-
12	20Y-62-22850	Band, Green	2	B10001-
13	08034-00536	Band	1	B10001-

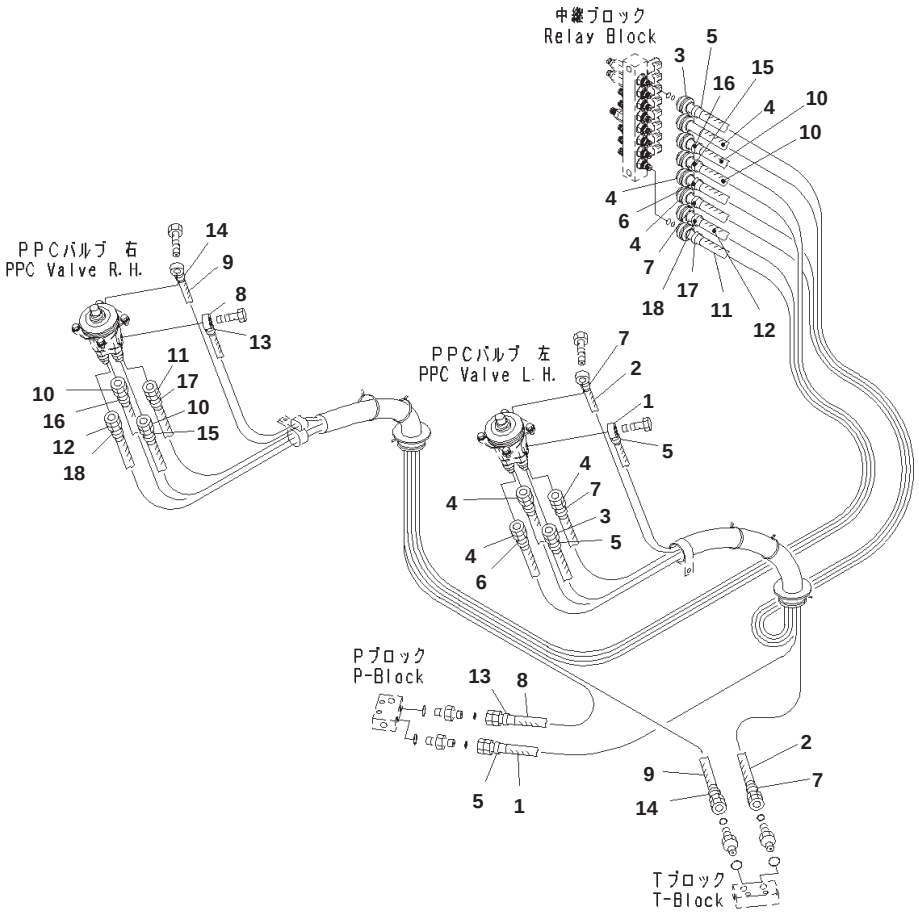

Cab, With Master Key, AM-FM Radio, 12volt Power Supply, Floor, PPC Piping for Pilot Valve

Index	Part Number	Description	Qty	Serial No.
		Note: This list covers following specifications: Cab, With Master Key, AM-FM radio, 12volts Power Supply Cab, With Master Key, AM-FM radio, 12volts Power Supply, 1-Actuator Cab, With Master Key, AM-FM radio, 12volts Power Supply, 2-Actuator		
1	20Y-62-53410	Hose	1	B10001-
2	20Y-62-53420	Hose	1	B10001-
3	203-62-12771	Hose	1	B10001-
4	203-62-12791	Hose	3	B10001-
5	20Y-62-22790	Band, Red	4	B10001-
6	20Y-62-22810	Band, Yellow	2	B10001-
7	20Y-62-22820	Band, Blue	4	B10001-
8	20Y-62-42251	Hose	1	B10001-
9	208-62-72870	Hose	1	B10001-
10	20Y-62-43990	Hose	2	B10001-
11	203-62-13280	Hose	1	B10001-
12	203-62-13270	Hose	1	B10001-
13	20Y-62-22790	Band, Red	2	B10001-
14	20Y-62-22820	Band, Blue	2	B10001-
15	20Y-62-22830	Band, White	2	B10001-
16	20Y-62-22840	Band, Black	2	B10001-
17	20Y-62-22850	Band, Green	2	B10001-
18	20Y-62-22860	Band, Brown	2	B10001-

Reference:K1110-010049 Page:K011049

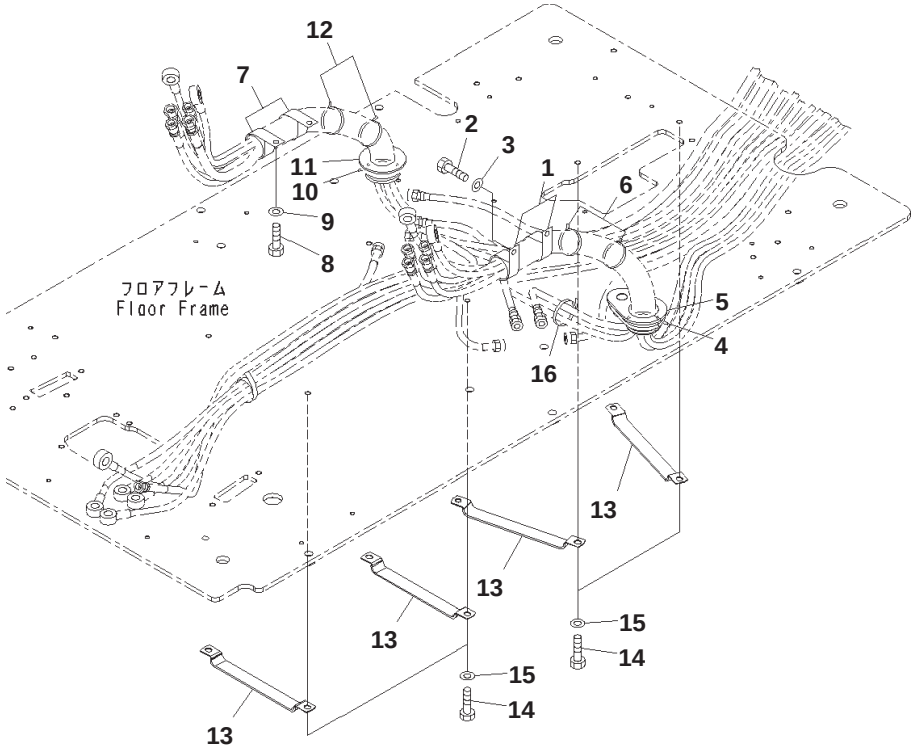

Cab, With Master Key, AM-FM Radio, 12volt Power Supply, Floor Piping

Index	Part Number	Description	Qty	Serial No.
		Note: This list covers following specifications: Cab, With Master Key, AM-FM radio, 12volts Power Supply Cab, With Master Key, AM-FM radio, 12volts Power Supply, 1-Actuator Cab, With Master Key, AM-FM radio, 12volts Power Supply, 2-Actuator		
1	04434-53211	Clip	2	B10001-
2	01010-81020	Bolt	2	B10001-
3	01643-31032	Washer	2	B10001-
4	08034-20536	Band	2	B10001-
5	20Y-53-14140	Grommet	1	B10001-
6	08034-20536	Band	2	B10001-
7	04434-53411	Clip	2	B10001-
8	01010-81020	Bolt	2	B10001-
9	01643-31032	Washer	2	B10001-
10	08034-20536	Band	2	B10001-
11	20Y-54-65121	Grommet	1	B10001-
12	08034-20536	Band	2	B10001-
13	20Y-62-27770	Clamp	4	B10001-
14	01010-81016	Bolt	8	B10001-
15	01643-31032	Washer	8	B10001-
16	08034-20536	Band	1	B10001-

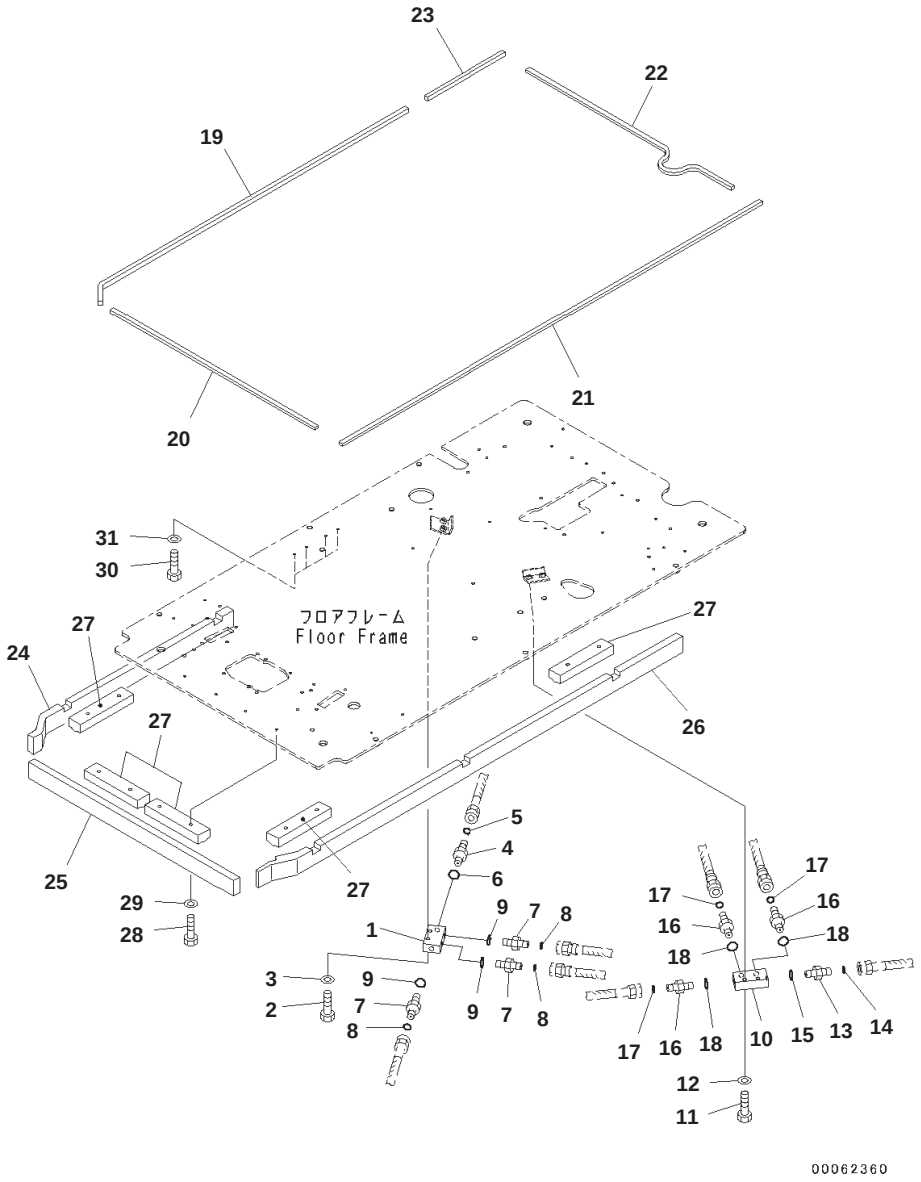

Cab, With Master Key, AM-FM Radio, 12volt Power Supply, Floor, P, T Block and Seal

Index	Part Number	Description	Qty	Serial No.
		Note: This list covers following specifications: Cab, With Master Key, AM-FM radio, 12volts Power Supply		
1	20Y-62-15831	Block	1	B10001-
2	01010-81045	Bolt	2	B10001-
3	01643-31032	Washer	2	B10001-
4	02781-0031D	Union	1	B10001-
5	02896-11009	O-ring	1	B10001-
6	07002-11423	O-ring	1	B10001-
7	02781-0021D	Union	3	B10001-
8	02896-11008	O-ring	3	B10001-
9	07002-11423	O-ring	3	B10001-
10	20Y-62-15831	Block	1	B10001-
11	01010-81045	Bolt	2	B10001-
12	01643-31032	Washer	2	B10001-
13	02781-0031D	Union	1	B10001-
14	02896-11009	O-ring	1	B10001-
15	07002-11423	O-ring	1	B10001-
16	02781-0021D	Union	3	B10001-
17	02896-11008	O-ring	3	B10001-
18	07002-11423	O-ring	3	B10001-
19	20Y-53-14910	Seal	1	B10001-
20	20Y-53-14920	Seal	1	B10001-
21	20Y-53-14930	Seal	1	B10001-
22	20Y-53-14940	Seal	1	B10001-
23	20Y-53-14950	Seal	1	B10001-
24	20Y-53-14963	Sheet	1	B10001-
25	20Y-53-14973	Sheet	1	B10001-
26	20Y-53-14983	Sheet	1	B10001-
27	20Y-53-14831	Sheet	5	B10001-
28	01010-80830	Bolt	10	B10001-
29	01643-30823	Washer	10	B10001-
30	01010-80816	Bolt	4	B10001-
31	01643-30823	Washer	4	B10001-

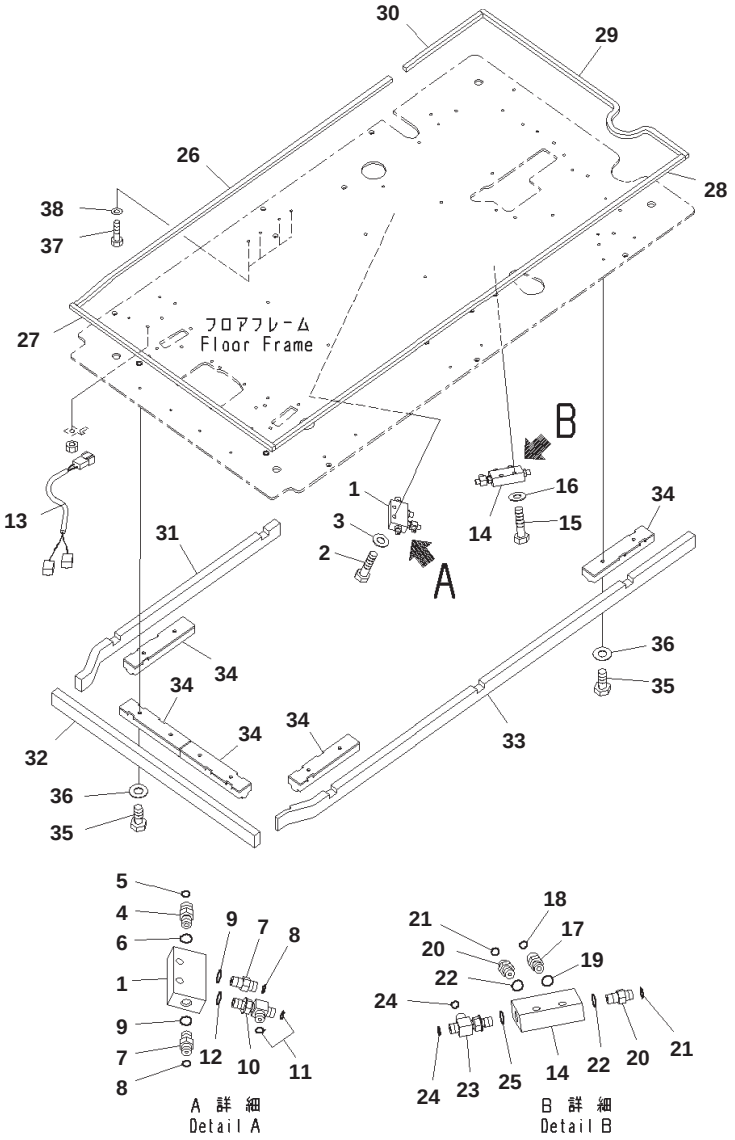

Cab, With Master Key, AM-FM Radio, 12volt Power Supply, Floor, 1-actuator, P, T Block and Seal

Index	Part Number	Description	Qty	Serial No.
		Note: This list covers following specifications: Cab, With Master Key, AM-FM radio, 12volts Power Supply, 1-Actuator		
1	20Y-62-15831	Block	1	B10001-
2	01010-81045	Bolt	2	B10001-
3	01643-31032	Washer	2	B10001-
4	02781-0031D	Union	1	B10001-
5	02896-11009	O-ring	1	B10001-
6	07002-11423	O-ring	1	B10001-
7	02781-0021D	Union	2	B10001-
8	02896-11008	O-ring	2	B10001-
9	07002-11423	O-ring	2	B10001-
10	11Y-62-12330	Tee	1	B10001-
11	02896-11008	O-ring	2	B10001-
12	07002-11423	O-ring	1	B10001-
13	20Y-06-41251	Wiring Harness	1	B10001-
14	20Y-62-15831	Block	1	B10001-
15	01010-81045	Bolt	2	B10001-
16	01643-31032	Washer	2	B10001-
17	02781-0031D	Union	1	B10001-
18	02896-11009	O-ring	1	B10001-
19	07002-11423	O-ring	1	B10001-
20	02781-0021D	Union	2	B10001-
21	02896-11008	O-ring	2	B10001-
22	07002-11423	O-ring	2	B10001-
23	11Y-62-12330	Tee	1	B10001-
24	02896-11008	O-ring	2	B10001-
25	07002-11423	O-ring	1	B10001-
26	20Y-53-14910	Seal	1	B10001-
27	20Y-53-14920	Seal	1	B10001-
28	20Y-53-14930	Seal	1	B10001-
29	20Y-53-14940	Seal	1	B10001-
30	20Y-53-14950	Seal	1	B10001-
31	20Y-53-14963	Sheet	1	B10001-
32	20Y-53-14973	Sheet	1	B10001-
33	20Y-53-14983	Sheet	1	B10001-
34	20Y-53-14831	Sheet	5	B10001-
35	01010-80830	Bolt	10	B10001-
36	01643-30823	Washer	10	B10001-
37	01010-80816	Bolt	4	B10001-
38	01643-30823	Washer	4	B10001-

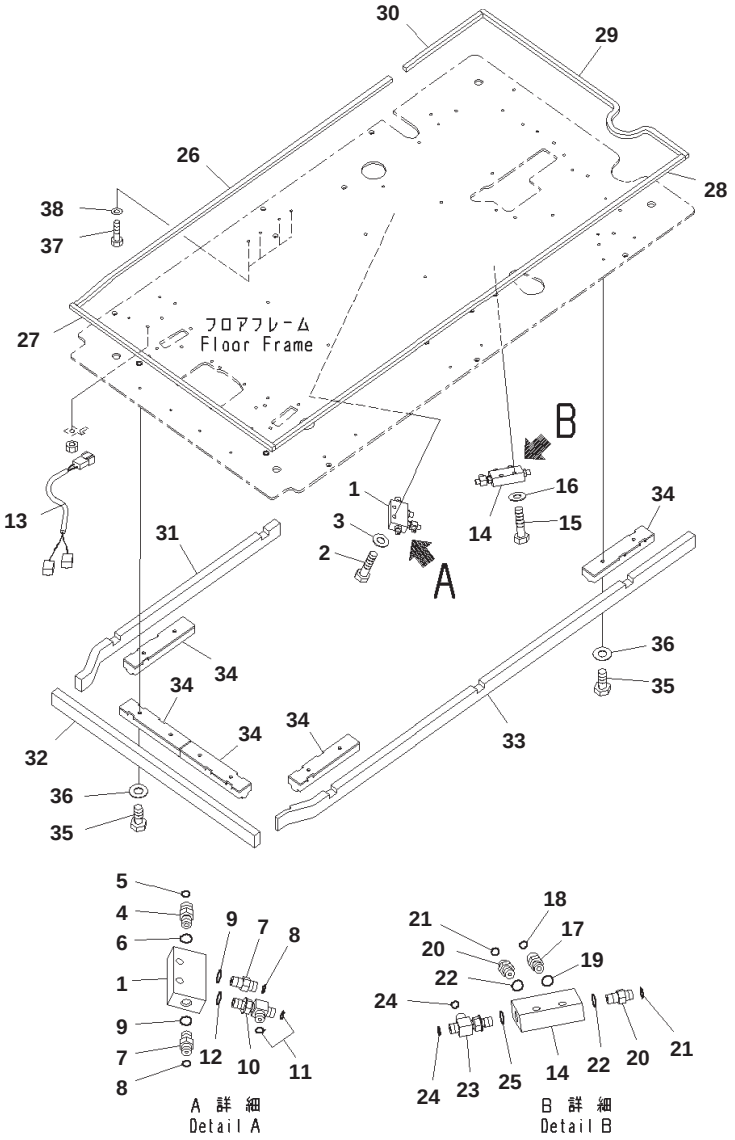

Cab, With Master Key, AM-FM Radio, 12volt Power Supply, Floor, 2-actuator, P, T Block and Seal

Index	Part Number	Description	Qty	Serial No.
		Note: This list covers following specifications: Cab, With Master Key, AM-FM radio, 12volts Power Supply, 2-Actuator		
1	20Y-62-15831	Block	1	B10001-
2	01010-81045	Bolt	2	B10001-
3	01643-31032	Washer	2	B10001-
4	02781-0031D	Union	1	B10001-
5	02896-11009	O-ring	1	B10001-
6	07002-11423	O-ring	1	B10001-
7	02781-0021D	Union	1	B10001-
8	02896-11008	O-ring	1	B10001-
9	07002-11423	O-ring	1	B10001-
10	11Y-62-12330	Tee	2	B10001-
11	02896-11008	O-ring	4	B10001-
12	07002-11423	O-ring	2	B10001-
13	20Y-06-41262	Wiring Harness	1	B10001-
14	20Y-62-15831	Block	1	B10001-
15	01010-81045	Bolt	2	B10001-
16	01643-31032	Washer	2	B10001-
17	02781-0031D	Union	1	B10001-
18	02896-11009	O-ring	1	B10001-
19	07002-11423	O-ring	1	B10001-
20	02781-0021D	Union	1	B10001-
21	02896-11008	O-ring	1	B10001-
22	07002-11423	O-ring	1	B10001-
23	11Y-62-12330	Tee	2	B10001-
24	02896-11008	O-ring	4	B10001-
25	07002-11423	O-ring	2	B10001-
26	20Y-53-14910	Seal	1	B10001-
27	20Y-53-14920	Seal	1	B10001-
28	20Y-53-14930	Seal	1	B10001-
29	20Y-53-14940	Seal	1	B10001-
30	20Y-53-14950	Seal	1	B10001-
31	20Y-53-14963	Sheet	1	B10001-
32	20Y-53-14973	Sheet	1	B10001-
33	20Y-53-14983	Sheet	1	B10001-
34	20Y-53-14831	Sheet	5	B10001-
35	01010-80830	Bolt	10	B10001-
36	01643-30823	Washer	10	B10001-
37	01010-80816	Bolt	4	B10001-
38	01643-30823	Washer	4	B10001-

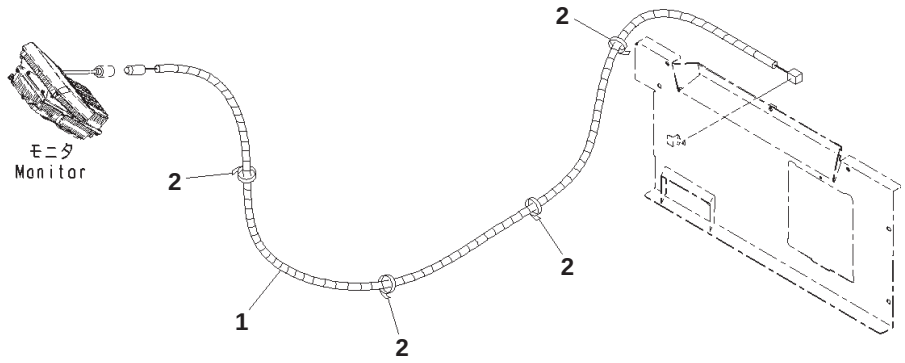

Cab, With Master Key, AM-FM Radio, 12volt Power Supply, Floor, Rear View Camera Cable

Index	Part Number	Description	Qty	Serial No.
		Note: This list covers following specifications: Cab, With Master Key, AM-FM radio, 12volts Power Supply Cab, With Master Key, AM-FM radio, 12volts Power Supply, 1-Actuator Cab, With Master Key, AM-FM radio, 12volts Power Supply, 2-Actuator		
1	20Y-06-42320	Cable	1	B10001-
2	08034-20519	Band	4	B10001-

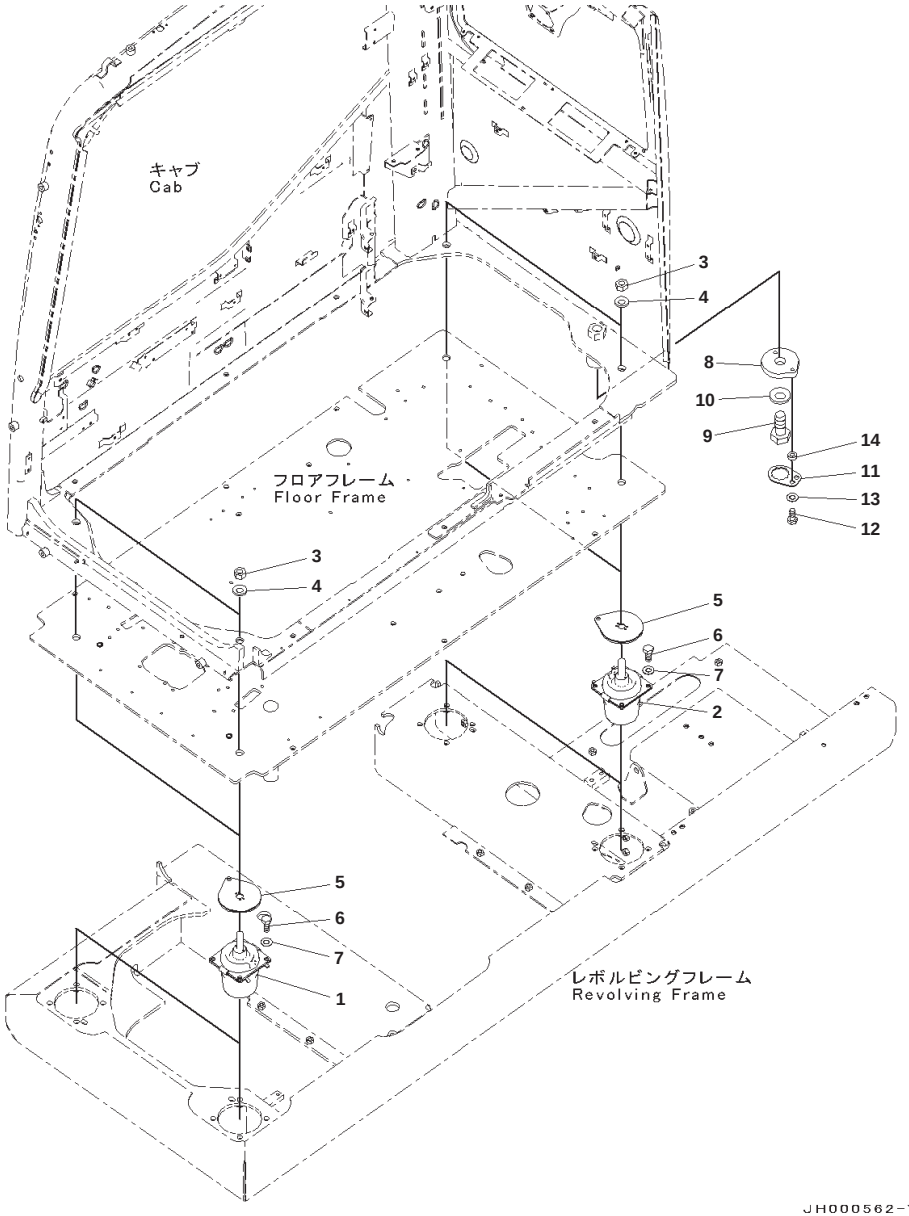

Index	Part Number	Description	Qty	Serial No.
1	20Y-53-13113	Cushion	2	B10001-
2	20Y-53-13121	Cushion	2	B10001-
3	01580-12016	Nut	4	B10001-
4	01643-32060	Washer	4	B10001-
5	20Y-53-13130	Spacer	4	B10001-
6	01010-81235	Bolt	16	B10001-
7	01643-31232	Washer	16	B10001-
8	20Y-53-13141	Plate	1	B10001-
9	01011-83065	Bolt	1	B10001-
10	01643-33080	Washer	1	B10001-
11	20Y-53-13151	Lock	1	B10001-
12	01010-81235	Bolt	1	B10001-
13	01643-31232	Washer	1	B10001-
14	198-43-15310	Collar, T=10mm	1	B10001-

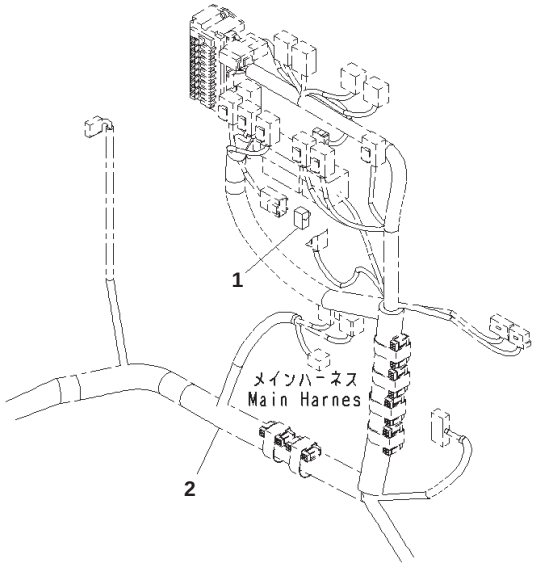

JH000563

Index	Part Number	Description	Qty	Serial No.
1	203-06-61230	Switch	1	B10001-
2	(203-06-11730)	Wiring Harness		

GUARD AND RELATED PARTS

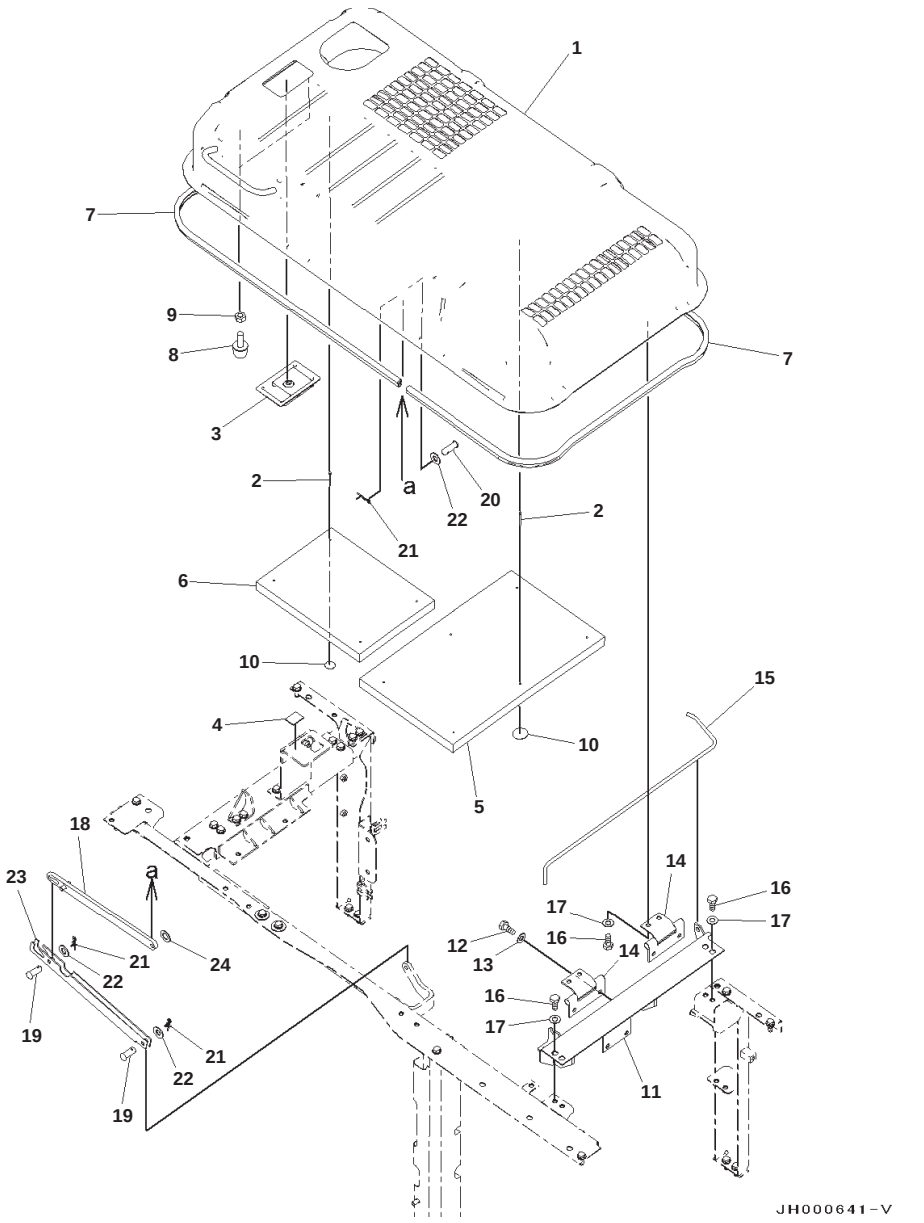

Index	Part Number	Description	Qty	Serial No.
1	203-54-11351	Hood	1	B10001-
2	20Y-54-71460	・ Stud,Welded	10	B10001-
3	20Y-54-71491	・ Lock,Welded	1	B10001-
4	203-54-11520	Sheet	1	B10001-
5	203-54-11660	Sheet	1	B10001-
6	203-54-11670	Sheet	1	B10001-
7	203-54-63293	Seal	2	B10001-
8	21K-54-11310	Stopper	2	B10001-
9	01580-11210	Nut	2	B10001-
10	124-A62-1920	Cap	10	B10001-
11	203-54-11711	Bracket	1	B10001-
12	01010-81230	Bolt	4	B10001-
13	01643-31232	Washer	4	B10001-
14	203-54-62392	Hinge	2	B10001-
15	203-54-11720	Spring	1	B10001-
16	01010-81230	Bolt	8	B10001-
17	01643-31232	Washer	8	B10001-
18	203-54-11370	Stay	1	B10001-
19	04205-31235	Pin	2	B10019-
	04205-31230	Pin	2	B10001-B10018
20	04205-31235	Pin	1	B10001-
21	04052-21253	Pin, Snap	3	B10001-
22	01640-21223	Washer, Flat	3	B10001-
23	203-54-11381	Stay	1	B10001-
24	203-54-12880	Plate	1	B10001-

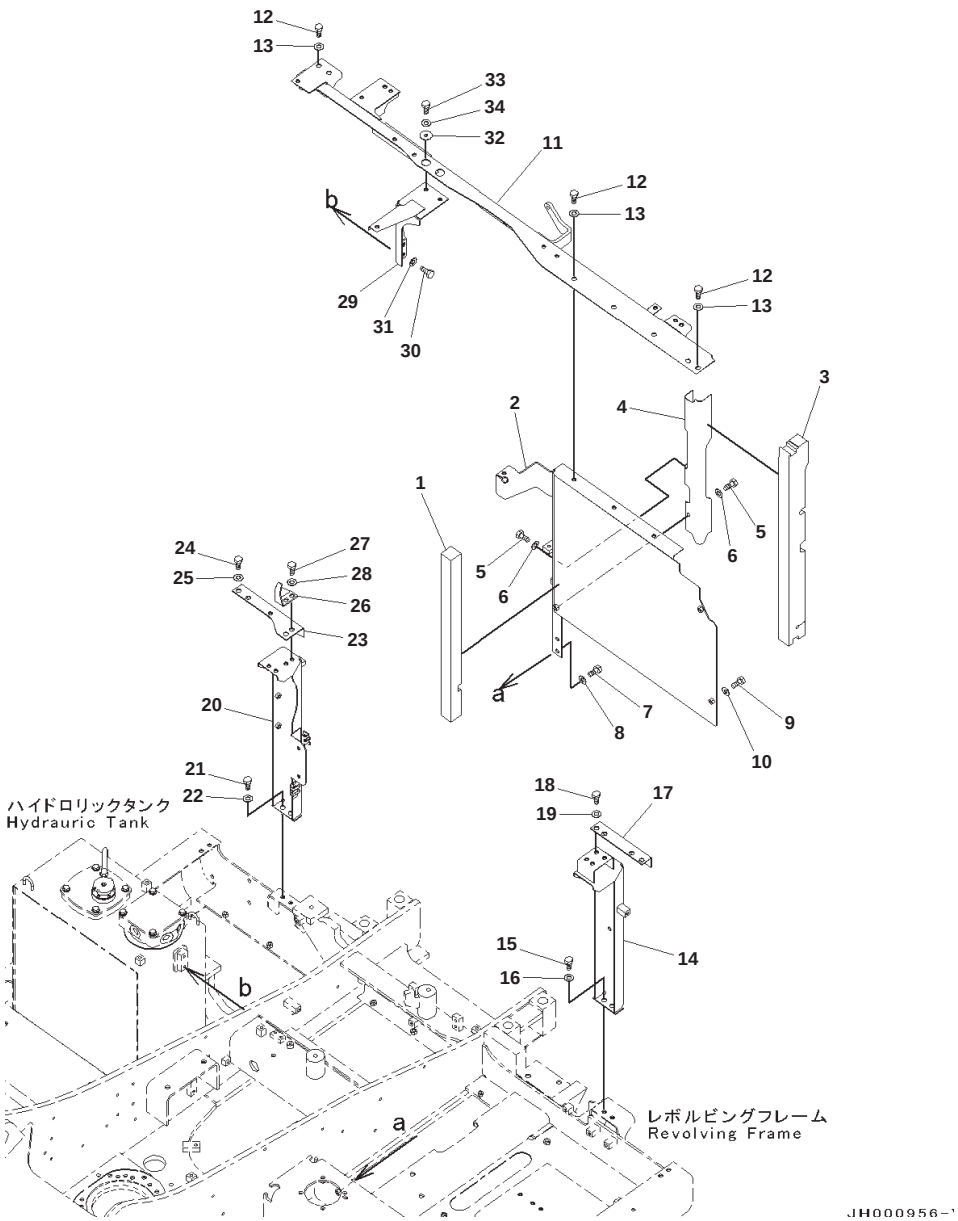

Machine Cab Frame, (1/2)

Index	Code	Part Number	Description	Qty	Serial No.
		203-54-12920	Frame	1	B10001-
1		203-54-11530	・ Sheet	1	B10001-
2	C1		・ Frame	1	B10001-
		203-54-12471	Cover	1	B10001-
3		203-54-12481	・ Sheet	1	B10001-
4	C1		・ Cover	1	B10001-
5		01010-81225	Bolt	3	B10001-
6		01643-31232	Washer	3	B10001-
7		01010-81230	Bolt	2	B10001-
8		01643-31232	Washer	2	B10001-
9		01010-81220	Bolt	2	B10001-
10		01643-31232	Washer	2	B10001-
11		203-54-11421	Frame	1	B10001-
12		01010-81230	Bolt	3	B10001-
13		01643-31232	Washer	3	B10001-
14		203-54-11781	Frame	1	B10001-
15		01010-81230	Bolt	2	B10001-
16		01643-31232	Washer	2	B10001-
17		203-54-11791	Plate	1	B10001-
18		01010-81230	Bolt	2	B10001-
19		01643-31232	Washer	2	B10001-
20		203-54-11931	Frame	1	B10001-
21		01010-81230	Bolt	2	B10001-
22		01643-31232	Washer	2	B10001-
23		203-54-11942	Frame	1	B10001-
24		01010-81230	Bolt	1	B10001-
25		01643-31232	Washer	1	B10001-
26		203-54-73951	Bracket	1	B10001-
27		01010-81230	Bolt	2	B10001-
28		01643-31232	Washer	2	B10001-
29		203-54-11921	Frame	1	B10001-
30		01010-81230	Bolt	2	B10001-
31		01643-31232	Washer	2	B10001-
32		208-54-57180	Collar	2	B10001-
33		01010-81230	Bolt	2	B10001-
34		01643-31232	Washer	2	B10001-

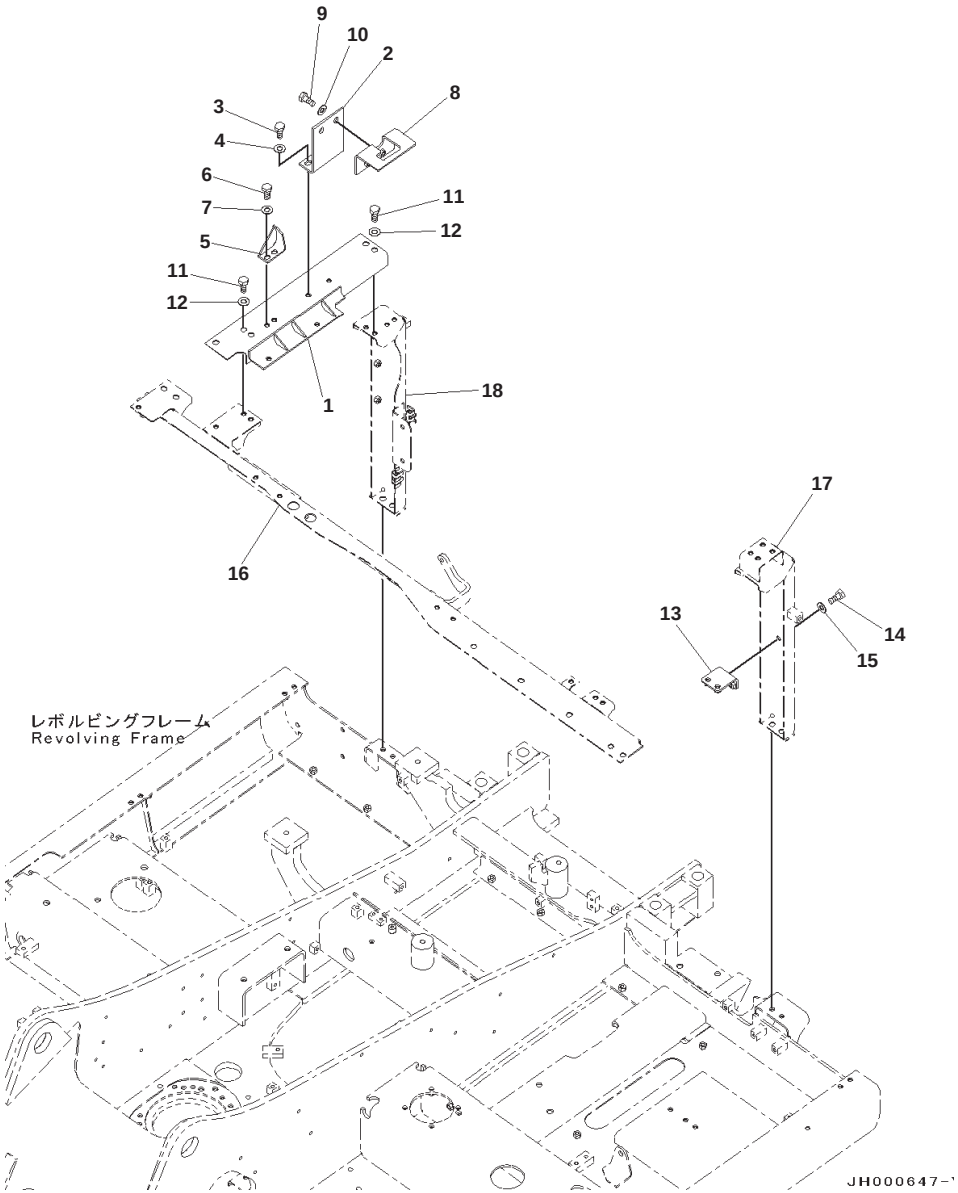

Index	Part Number	Description	Qty	Serial No.
1	203-54-73540	Frame	1	B10001-
2	203-54-11411	Bracket	1	B10001-
3	01010-81230	Bolt	2	B10001-
4	01643-31232	Washer	2	B10001-
5	203-54-73961	Bracket	1	B10001-
6	01010-81230	Bolt	2	B10001-
7	01643-31232	Washer	2	B10001-
8	203-54-11491	Bracket	1	B10001-
9	01010-81230	Bolt	2	B10001-
10	01643-31232	Washer	2	B10001-
11	01010-81230	Bolt	4	B10001-
12	01643-31232	Washer	4	B10001-
13	203-54-12851	Bracket	1	B10001-
14	01010-81230	Bolt	2	B10001-
15	01643-31232	Washer	2	B10001-
16	(203-54-11421)	Frame		
17	(203-54-11781)	Frame		
18	(203-54-11931)	Frame		

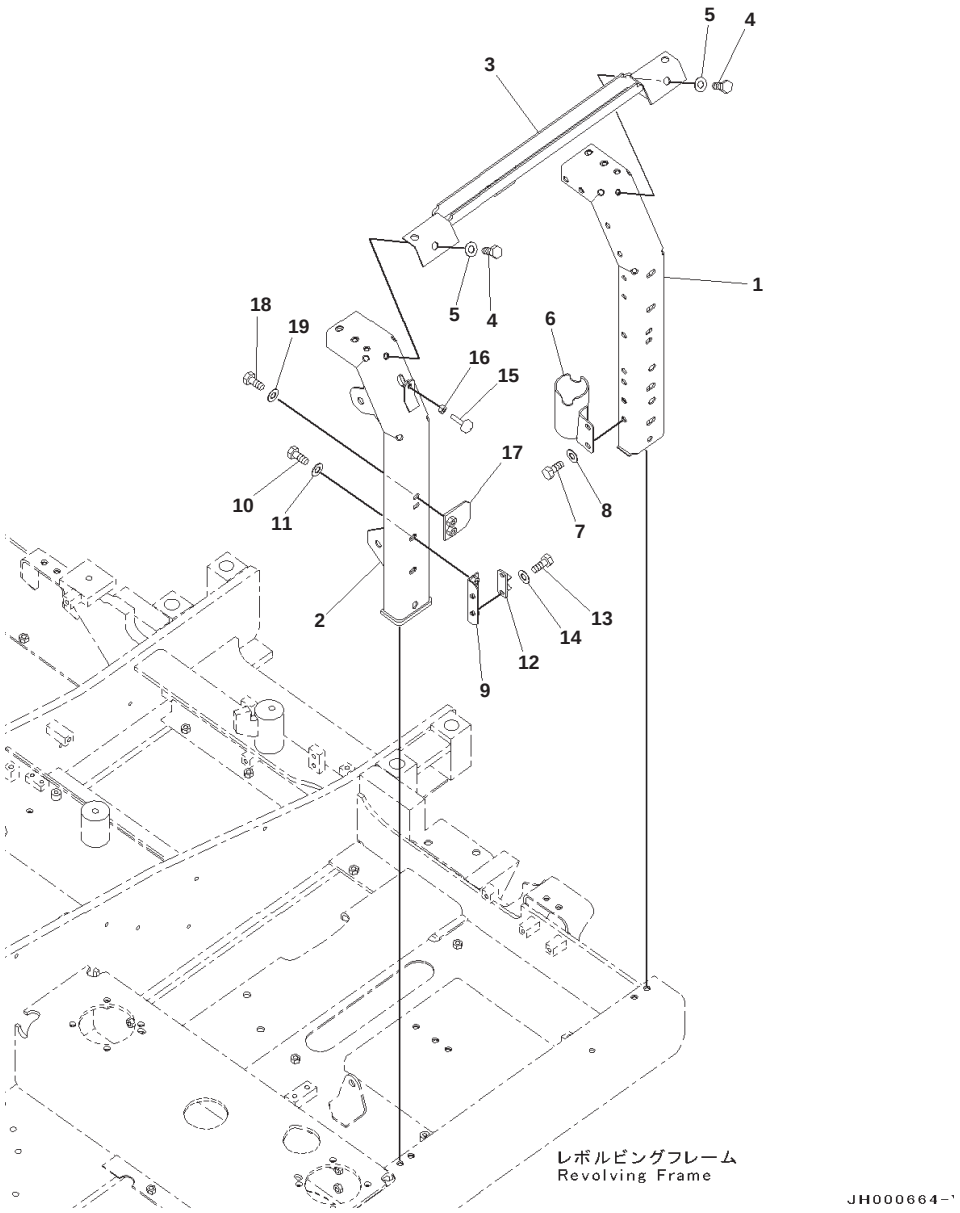

Side Cover and Machine Cab Door, LHS, Frame

Index	Part Number	Description	Qty	Serial No.
1	203-54-11820	Frame	1	B10001-
2	203-54-11831	Frame	1	B10001-
3	203-54-11861	Frame	1	B10001-
4	01010-81230	Bolt	2	B10001-
5	01643-31232	Washer	2	B10001-
6	203-54-12810	Bracket	1	B10001-
7	01010-81230	Bolt	2	B10001-
8	01643-31232	Washer	2	B10001-
9	20Y-54-28170	Bracket	1	B10001-
10	01010-81230	Bolt	2	B10001-
11	01643-31232	Washer	2	B10001-
12	205-54-51970	Dovetail	1	B10001-
13	01010-80616	Bolt	2	B10001-
14	01643-30623	Washer	2	B10001-
15	20Y-54-11611	Stopper	1	B10001-
16	01580-11008	Nut	1	B10001-
17	20Y-54-61470	Plate	1	B10001-
18	01010-81230	Bolt	2	B10001-
19	01643-31232	Washer	2	B10001-

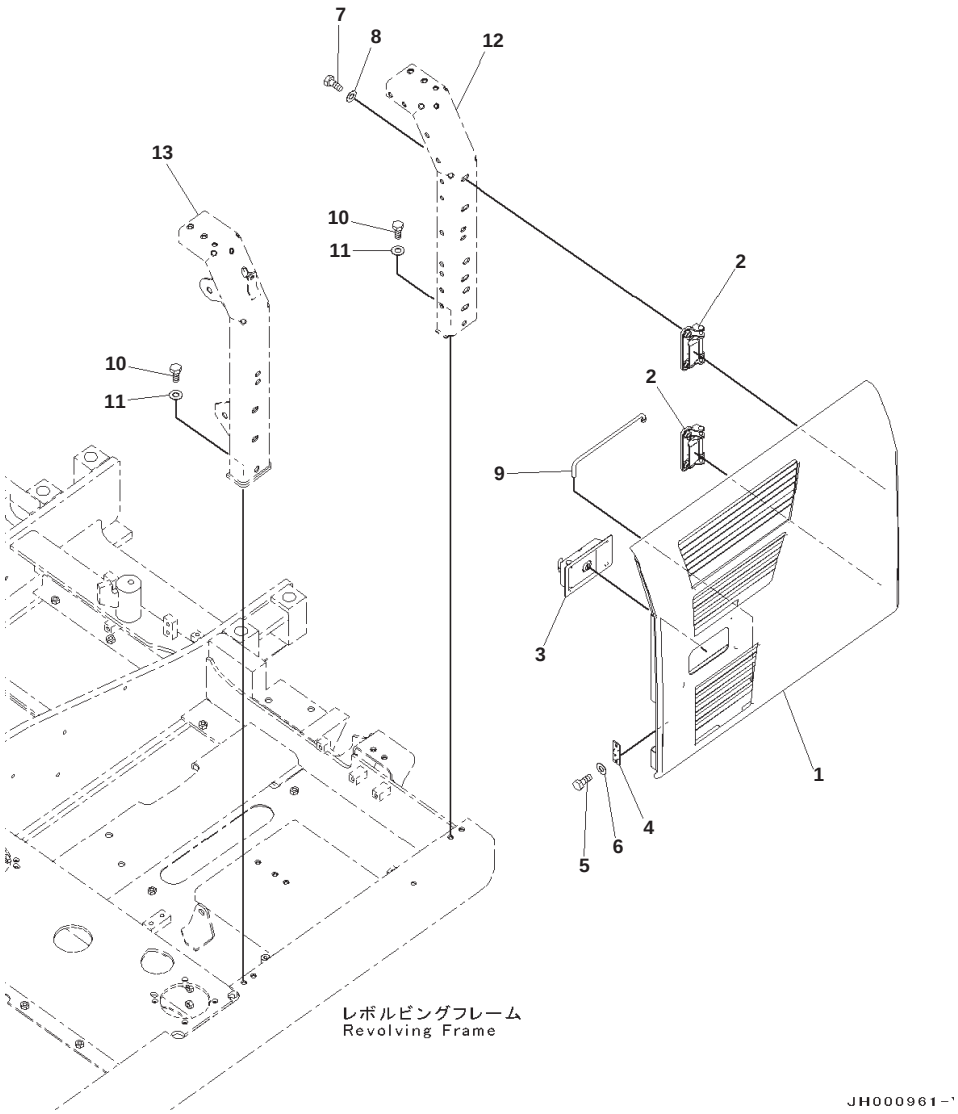

Side Cover and Machine Cab Door, LHS, Door Cover

Index	Part Number	Description	Qty	Serial No.
1	203-54-11890	Cover	1	B10001-
2	20Y-54-63411	・ Hinge,Welded	2	B10001-
3	20Y-54-71372	・ Lock,Welded	1	B10001-
4	205-54-53550	Dovetail	1	B10001-
5	01010-80612	Bolt	2	B10001-
6	01643-30623	Washer	2	B10001-
7	01010-81230	Bolt	4	B10001-
8	01643-31232	Washer	4	B10001-
9	20Y-54-29232	Bar	1	B10001-
10	01010-81240	Bolt	4	B10001-
11	01643-31232	Washer	4	B10001-
12	(203-54-11820)	Frame		
13	(203-54-11831)	Frame		

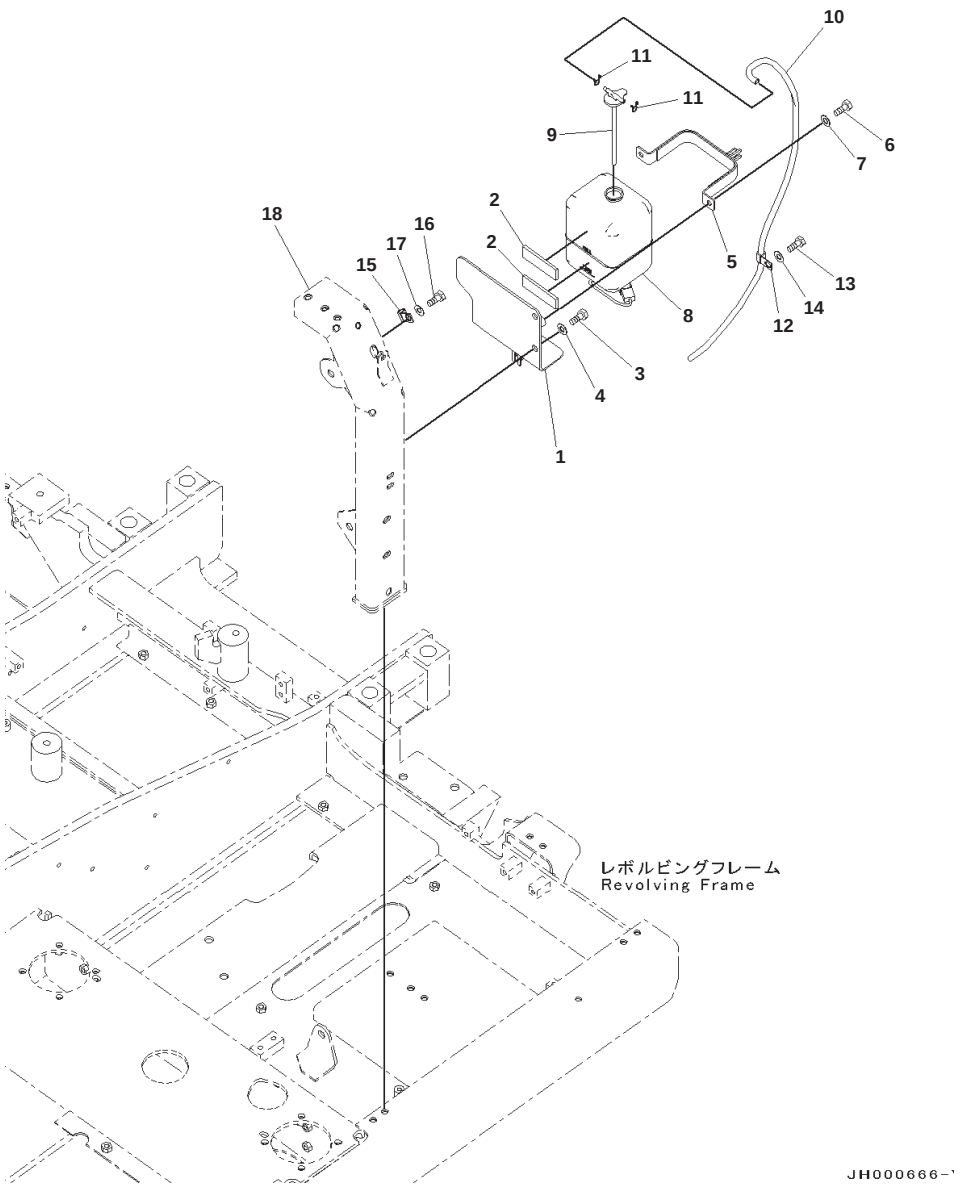

Side Cover and Machine Cab Door, LHS, Reserve Tank

Index	Part Number	Description	Qty	Serial No.
1	203-03-12710	Bracket	1	B10001-
2	205-03-71440	・ Sheet	2	B10001-
3	01010-81230	Bolt	2	B10001-
4	01643-31232	Washer	2	B10001-
5	203-03-71531	Bracket	1	B10001-
6	01010-81020	Bolt	2	B10001-
7	01643-31032	Washer	2	B10001-
8	20Y-06-15240	Tank	1	B10001-
9	205-03-71532	・ Cap	1	B10001-
	205-03-71540	・・ Packing	1	B10001-
10	203-03-71390	Hose	1	B10001-
11	206-03-43340	Clip	2	B10001-
12	04434-51212	Clip	1	B10001-
13	01010-81230	Bolt	1	B10001-
14	01643-31232	Washer	1	B10001-
15	04434-51212	Clip	1	B10001-
16	01010-81230	Bolt	1	B10001-
17	01643-31232	Washer	1	B10001-
18	(203-54-11831)	Frame		

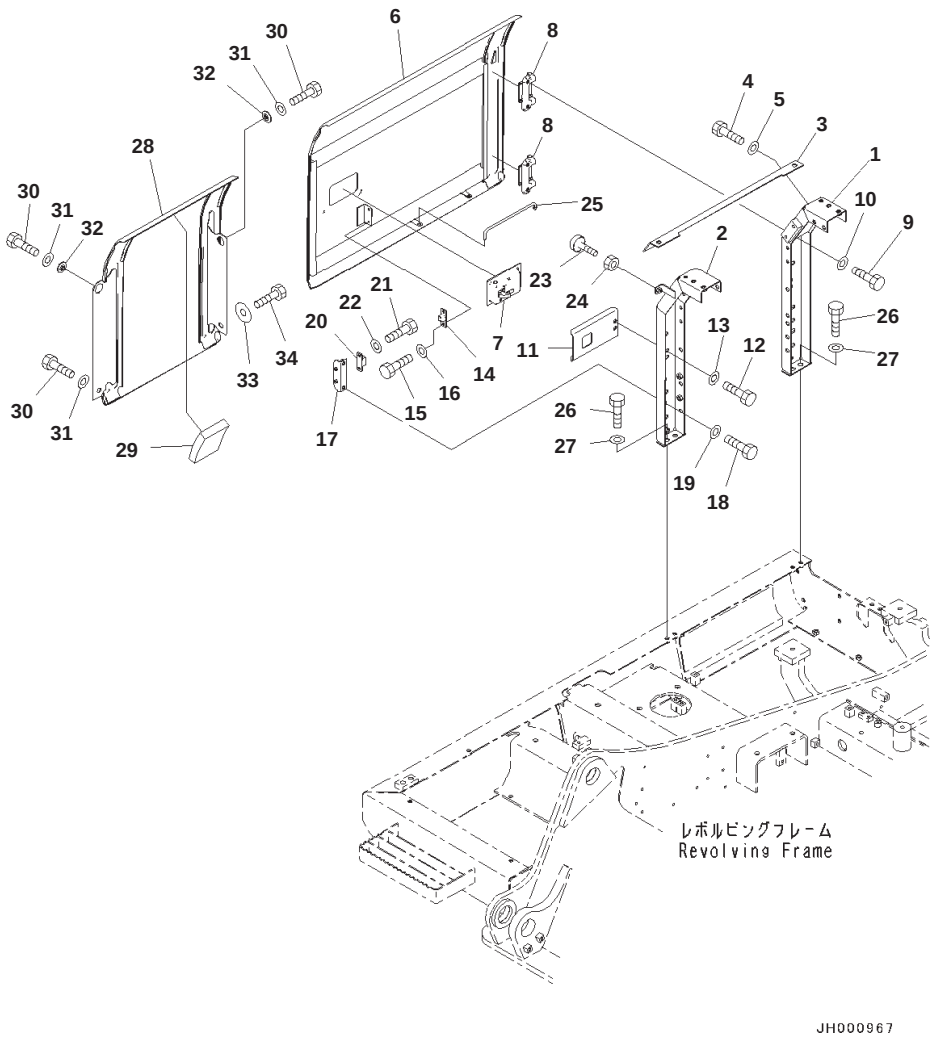

Side Cover and Machine Cab Door, RHS

Index	Part Number	Description	Qty	Serial No.
1	203-54-12381	Frame	1	B10001-
2	203-54-12391	Frame	1	B10001-
3	203-54-12410	Plate	1	B10001-
4	01010-81230	Bolt	2	B10001-
5	01643-31232	Washer	2	B10001-
6	203-54-12371	Cover	1	B10001-
7	20Y-54-71491	・ Lock	1	B10001-
8	20Y-54-63411	・ Hinge	2	B10001-
9	01010-81230	Bolt	4	B10001-
10	01643-31232	Washer	4	B10001-
11	203-54-73991	Plate	1	B10001-
12	01010-81230	Bolt	2	B10001-
13	01643-31232	Washer	2	B10001-
14	205-54-53550	Dovetail	1	B10001-
15	01010-80612	Bolt	2	B10001-
16	01643-30623	Washer	2	B10001-
17	20Y-54-28170	Bracket	1	B10001-
18	01010-81230	Bolt	2	B10001-
19	01643-31232	Washer	2	B10001-
20	205-54-51970	Dovetail	1	B10001-
21	01010-80616	Bolt	2	B10001-
22	01643-30623	Washer	2	B10001-
23	20Y-54-11611	Stopper	1	B10001-
24	01580-11008	Nut	1	B10001-
25	20Y-54-29232	Bar	1	B10001-
26	01010-81230	Bolt	4	B10001-
27	01643-31232	Washer	4	B10001-
28	203-54-12960	Cover	1	B10001-
29	203-54-12970	・ Sheet	1	B10001-
30	01010-81230	Bolt	3	B10001-
31	01643-31232	Washer	3	B10001-
32	203-54-62670	Collar	2	B10001-
33	124-54-26540	Washer	1	B10001-
34	01010-81230	Bolt	1	B10001-

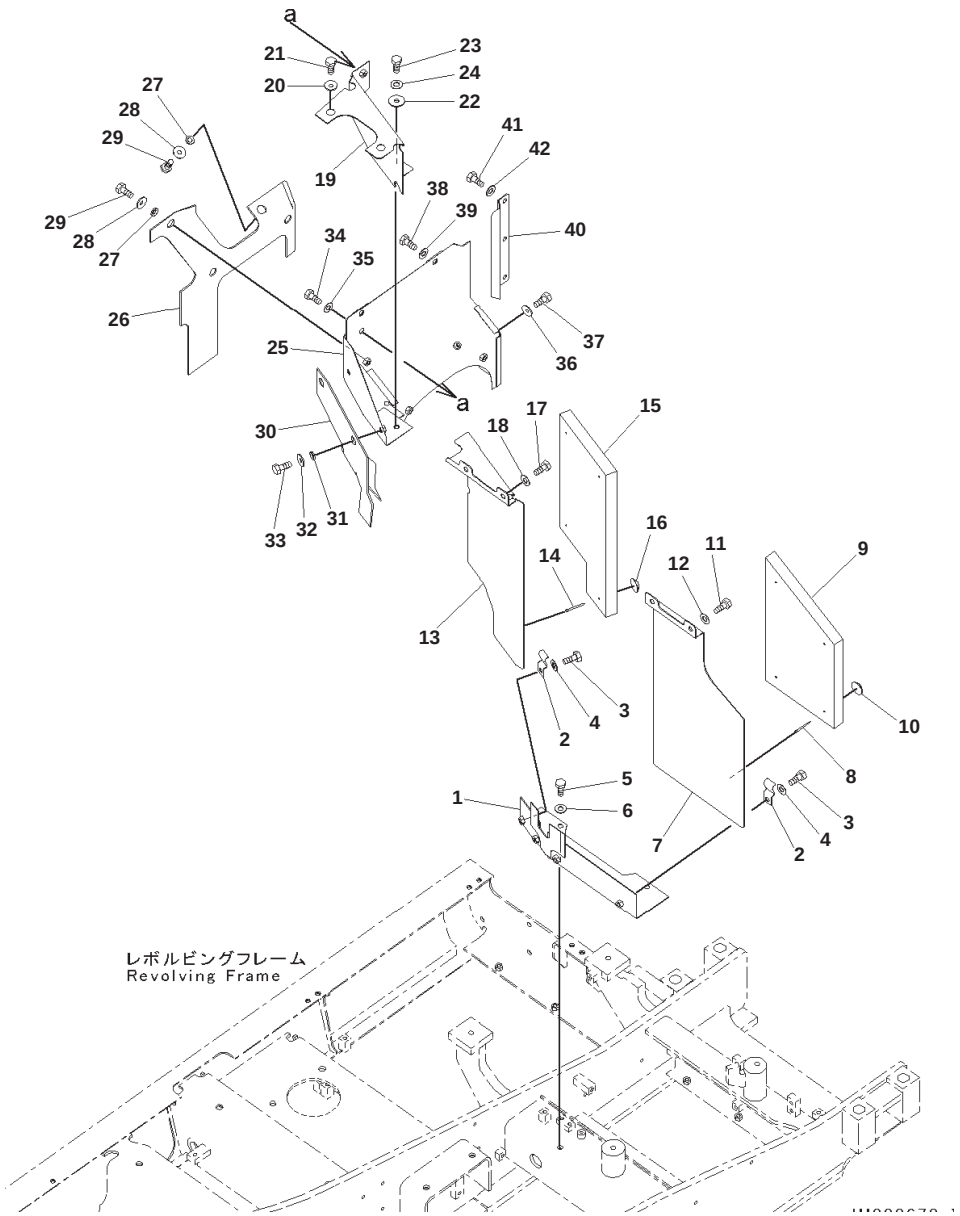

Machine Cab Partition, Cover and Fire Wall

Index	Code	Part Number	Description	Qty	Serial No.
1		203-54-73441	Cover	1	B10001-
2		20Y-54-27761	Catcher	4	B10001-
3		01010-81220	Bolt	4	B10001-
4		01643-31232	Washer	4	B10001-
5		01010-81230	Bolt	2	B10001-
6		01643-31232	Washer	2	B10001-
		203-54-12571	Cover	1	B10001-
7	C1		・Cover	1	B10001-
8		20Y-54-71460	・・Stud,Welded	4	B10001-
9		203-54-12690	・Sheet	1	B10001-
10		124-A62-1920	・Cap	4	B10001-
11		01010-81230	Bolt	2	B10001-
12		01643-31232	Washer	2	B10001-
		203-54-12620	Cover	1	B10001-
13	C1		・Cover	1	B10001-
14		20Y-54-71460	・・Stud,Welded	4	B10001-
15		203-54-12640	・Sheet	1	B10001-
16		124-A62-1920	・Cap	4	B10001-
17		01010-81230	Bolt	2	B10001-
18		01643-31232	Washer	2	B10001-
19		203-54-12651	Cover	1	B10001-
20		124-54-26540	Washer	2	B10001-
21		01010-81230	Bolt	2	B10001-
22		203-54-62670	Collar	1	B10001-
23		01010-81230	Bolt	1	B10001-
24		01643-31232	Washer	1	B10001-
25		203-54-12661	Cover	1	B10001-
26		203-54-12770	Sheet	1	B10001-
27		01643-51232	Washer	4	B10001-
28		124-54-26540	Washer	4	B10001-
29		01010-81220	Bolt	4	B10001-
30		203-54-12671	Sheet	1	B10001-
31		01643-51232	Washer	2	B10001-
32		124-54-26540	Washer	2	B10001-
33		01010-81220	Bolt	2	B10001-
34		01010-81230	Bolt	1	B10001-
35		01643-31232	Washer	1	B10001-
36		124-54-26540	Washer	2	B10001-
37		01010-81230	Bolt	2	B10001-
38		01010-81230	Bolt	2	B10001-
39		01643-31232	Washer	2	B10001-
40		203-54-12681	Cover	1	B10001-
41		01010-81230	Bolt	3	B10001-
42		01643-31232	Washer	3	B10001-

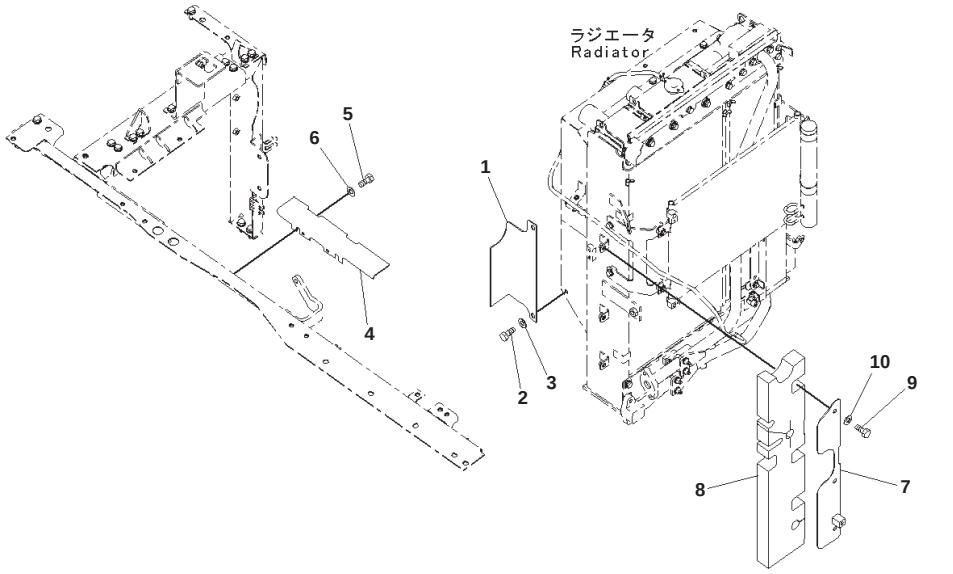

JH000671-V

Machine Cab Partition, Cooling Side

Index	Code	Part Number	Description	Qty	Serial No.
1		203-54-12780	Cover	1	B10001-
2		01010-81020	Bolt	2	B10001-
3		01643-31032	Washer	2	B10001-
4		203-54-12551	Cover	1	B10001-
5		01010-81230	Bolt	2	B10001-
6		01643-31232	Washer	2	B10001-
		203-54-12491	Plate	1	B10001-
7	C1		・ Plate	1	B10001-
8		203-54-12541	・ Sheet,Bonded	1	B10001-
9		01010-81230	Bolt	3	B10001-
10		01643-31232	Washer	3	B10001-

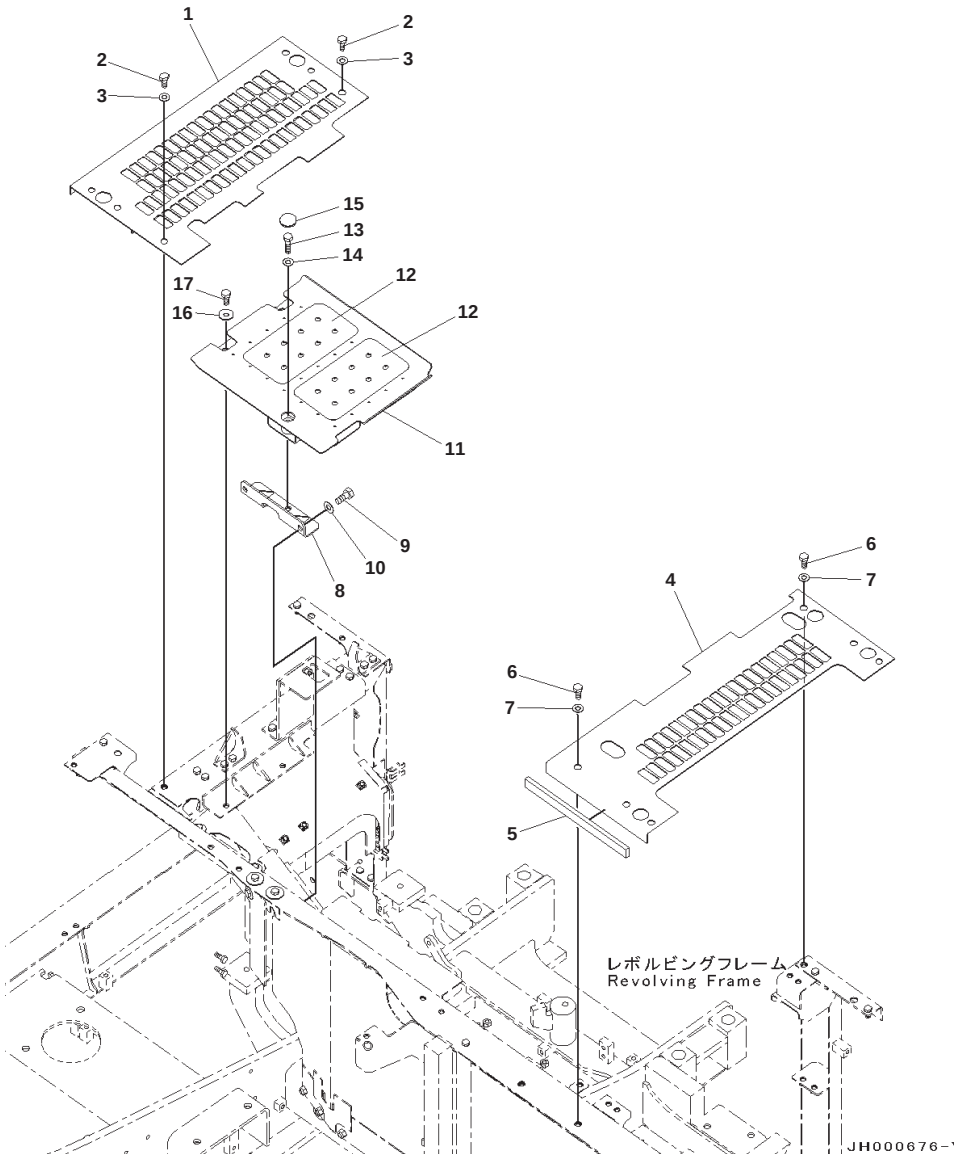

Machine Cab Cover

Index	Code	Part Number	Description	Qty	Serial No.
1		203-54-12311	Cover	1	B10001-
2		01010-81230	Bolt	6	B10001-
3		01643-31232	Washer	6	B10001-
		203-54-11961	Cover	1	B10001-
4	C1		・ Cover	1	B10001-
5		203-54-11981	・ Sheet	1	B10001-
6		01010-81230	Bolt	6	B10001-
7		01643-31232	Washer	6	B10001-
8		203-54-77140	Bracket	1	B10001-
9		01010-81230	Bolt	2	B10001-
10		01643-31232	Washer	2	B10001-
11		203-54-11990	Cover	1	B10001-
12		208-00-76240	Plate	2	B10001-
13		01010-81255	Bolt	1	B10001-
14		01643-31232	Washer	1	B10001-
15		09415-02512	Cap	1	B10001-
16		124-54-26540	Washer	2	B10001-
17		01010-81230	Bolt	2	B10001-

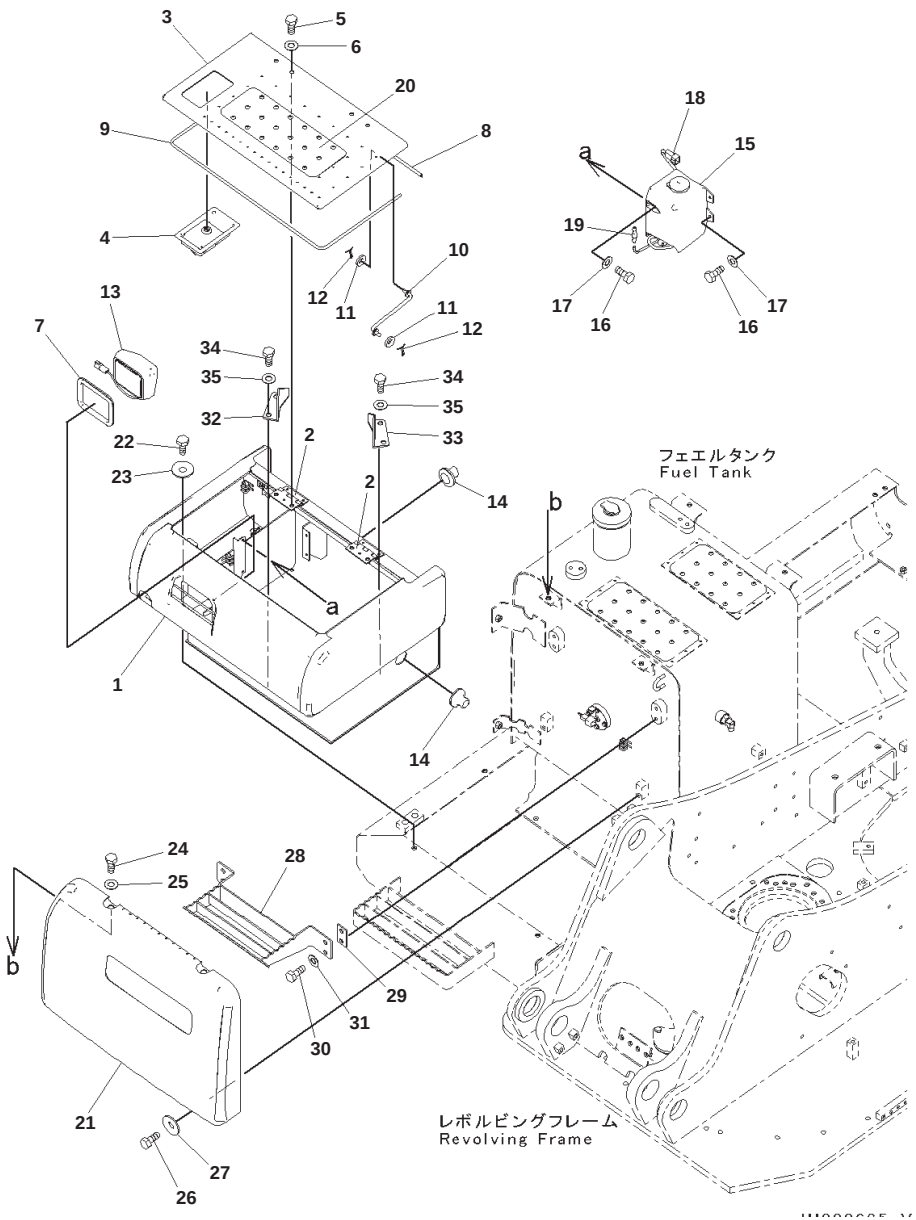

Index	Part Number	Description	Qty	Serial No.
1	203-54-12211	Case	1	B10001-
2	203-54-12291	・ Hinge,Welded	2	B10001-
3	203-54-12131	Cover	1	B10001-
4	20Y-54-74172	・ Lock,Welded	1	B10001-
5	01010-81020	Bolt	4	B10001-
6	01643-31032	Washer	4	B10001-
7	203-54-67760	Seal	1	B10001-
8	203-54-12710	Seal	1	B10001-
9	203-54-12720	Seal	1	B10001-
10	203-54-56630	Rod	1	B10001-
11	01643-30623	Washer	2	B10001-
12	04050-11612	Pin, Cotter	2	B10001-
13	11Y-06-11372	Light Assembly, Working	1	B10001-
	421-06-23330	・ Bulb, 70watt	1	B10001-
14	08037-12536	Grommet	2	B10001-
15	21T-06-11350	Tank Assembly	1	B10001-
16	01010-80616	Bolt	4	B10001-
17	01643-30623	Washer	4	B10001-
18	203-06-61132	Wiring Harness	1	B10001-
19	195-979-8590	Valve	1	B10001-
20	20Y-00-42150	Plate	1	B10001-
21	203-54-12270	Cover	1	B10001-
22	01010-81230	Bolt	4	B10001-
23	124-54-26540	Washer	4	B10001-
24	01010-81230	Bolt	2	B10001-
25	01643-31232	Washer	2	B10001-
26	01010-81225	Bolt	2	B10001-
27	124-54-26540	Washer	2	B10001-
28	203-54-12281	Step	1	B10001-
29	203-54-12861	Plate	2	B10001-
30	01010-81230	Bolt	4	B10001-
31	01643-31232	Washer	4	B10001-
32	20Y-54-61670	Bracket	1	B10001-
33	20Y-54-61680	Bracket	1	B10001-
34	01010-81230	Bolt	4	B10001-
35	01643-31232	Washer	4	B10001-

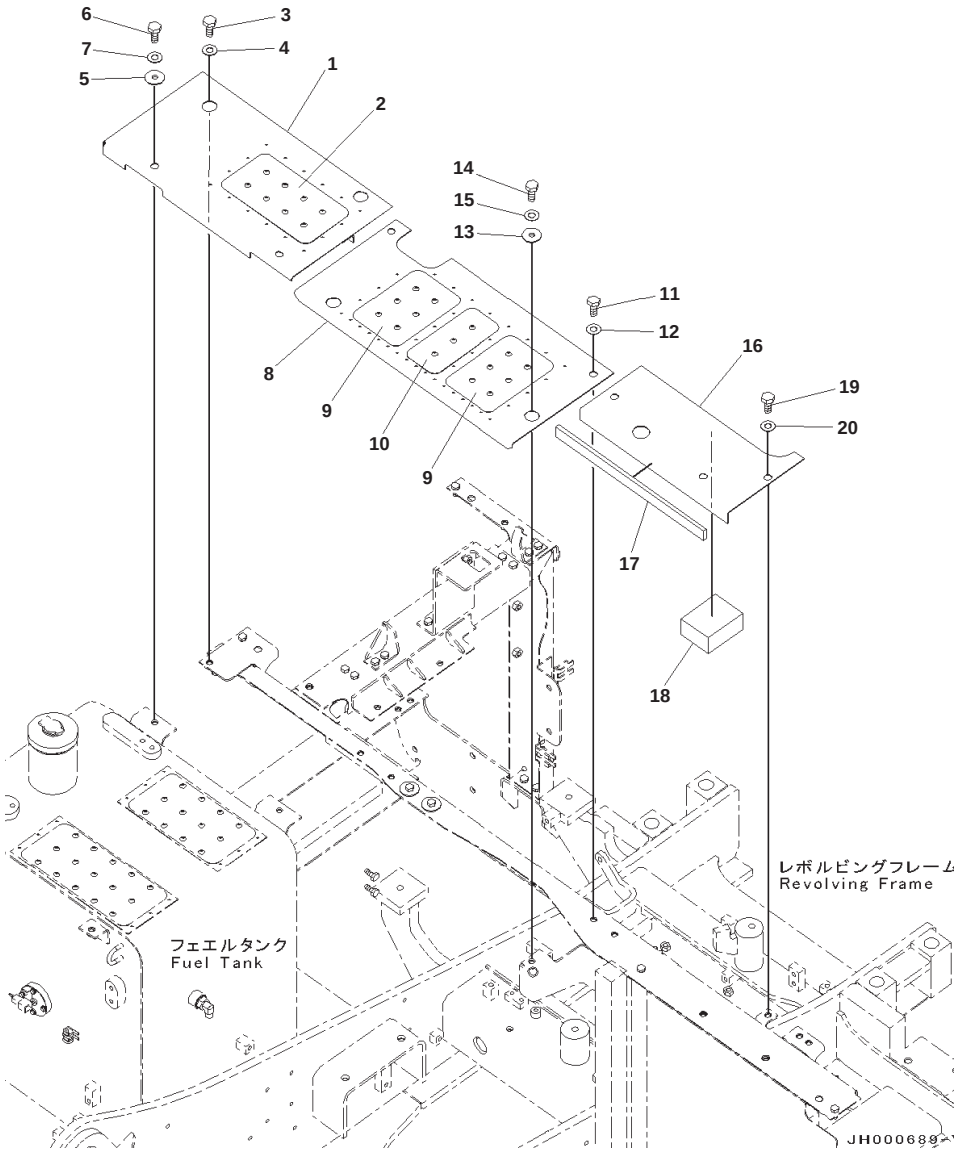

Front Cover

Index	Code	Part Number	Description	Qty	Serial No.
1		203-54-12361	Cover	1	B10001-
2		208-00-76240	Plate	1	B10001-
3		01010-81230	Bolt	2	B10001-
4		01643-31232	Washer	2	B10001-
5		203-54-62670	Collar	2	B10001-
6		01010-81230	Bolt	2	B10001-
7		01643-31232	Washer	2	B10001-
8		203-54-12351	Cover	1	B10001-
9		207-00-76230	Plate	2	B10001-
10		22U-00-28110	Plate	1	B10001-
11		01010-81230	Bolt	2	B10001-
12		01643-31232	Washer	2	B10001-
13		203-54-62670	Collar	2	B10001-
14		01010-81230	Bolt	2	B10001-
15		01643-31232	Washer	2	B10001-
		203-54-12321	Cover	1	B10001-
16	C1		・ Cover	1	B10001-
17		203-54-12340	・ Sheet	1	B10001-
18		203-54-76920	・ Sheet	1	B10001-
19		01010-81230	Bolt	3	B10001-
20		01643-31232	Washer	3	B10001-

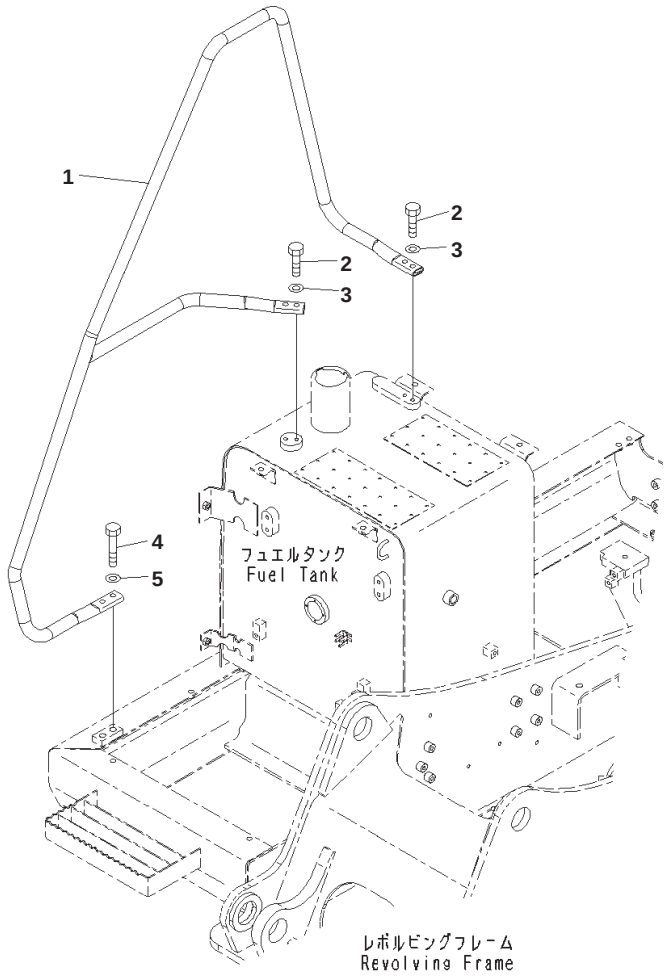

JH000690

Index	Part Number	Description	Qty	Serial No.
1	203-54-73392	Handrail	1	B10001-
2	01010-81240	Bolt	4	B10001-
3	01643-31232	Washer	4	B10001-
4	01010-81260	Bolt	2	B10001-
5	01643-31232	Washer	2	B10001-

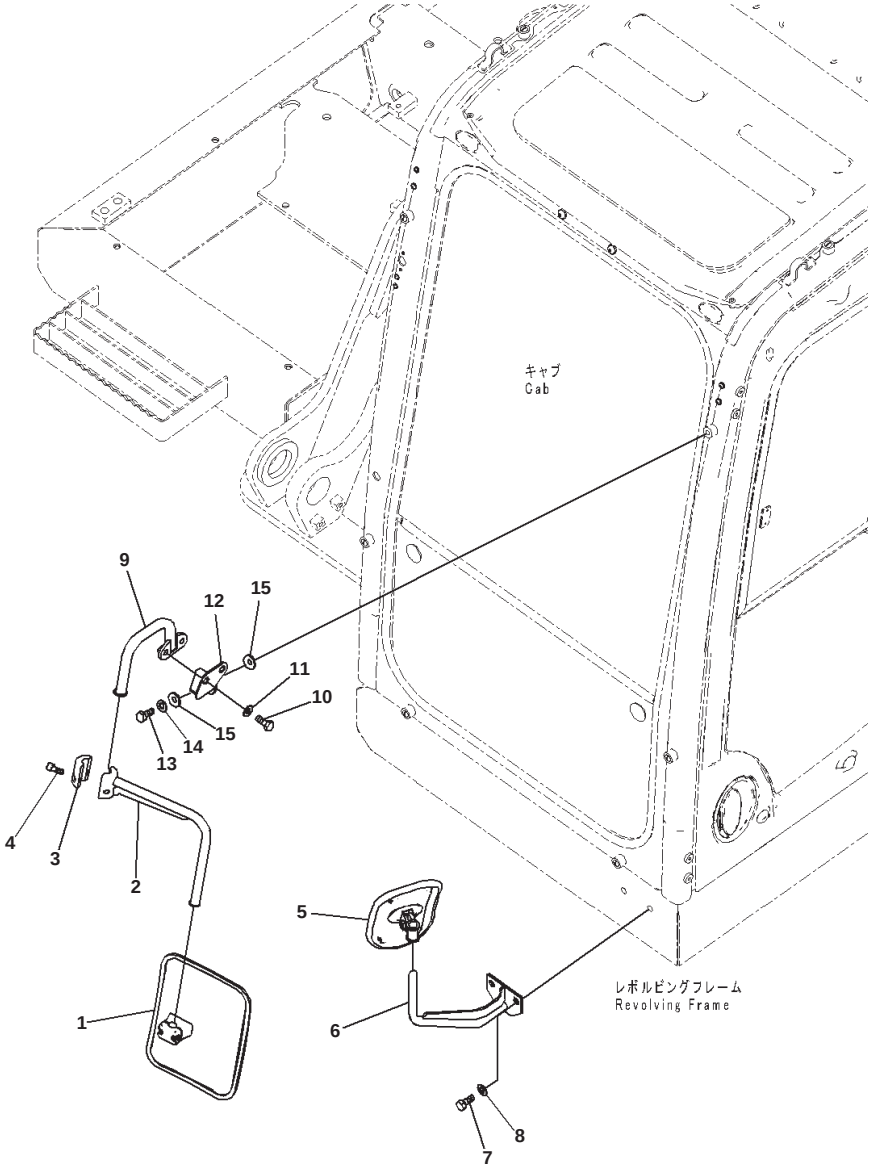

Rearview Mirror, Rearview Mirror, LHS, Except Japan

Index	Part Number	Description	Qty	Serial No.
1	20Y-54-74280	Mirror	1	B10001-
2	203-54-11620	Support	1	B10001-
3	20Y-54-35430	Clamp	1	B10001-
4	01252-71030	Bolt	2	B10001-
5	20Y-54-28911	Mirror, Rearview	1	B10001-
6	203-54-12820	Bracket	1	B10001-
7	01010-D1230	Bolt	2	B10001-
8	01643-71232	Washer	2	B10001-
9	20Y-53-18831	Stay	1	B10001-
10	01010-D1035	Bolt	2	B10001-
11	01643-71032	Washer	2	B10001-
12	20Y-53-18931	Bracket	1	B10001-
13	01010-D1230	Bolt	1	B10001-
14	01643-71232	Washer	1	B10001-
15	130-43-64260	Collar	2	B10001-

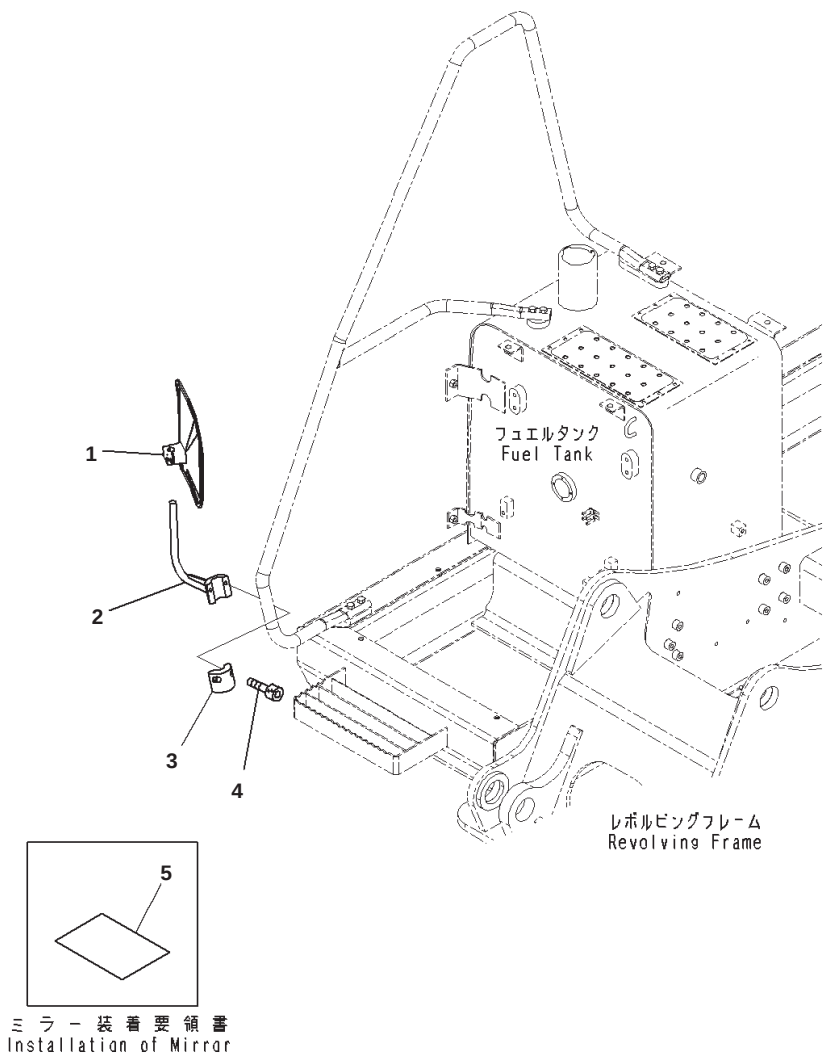

Rearview Mirror, RHS, With Rearview Camera, 1 Set

Index	Part Number	Description	Qty	Serial No.
1	20Y-54-74280	Mirror	1	B10001-
2	20Y-54-74270	Support	1	B10001-
3	20Y-54-61630	Clamp	1	B10001-
4	01252-71030	Bolt	2	B10001-
5	203-98-11140	Plate	1	B10001-

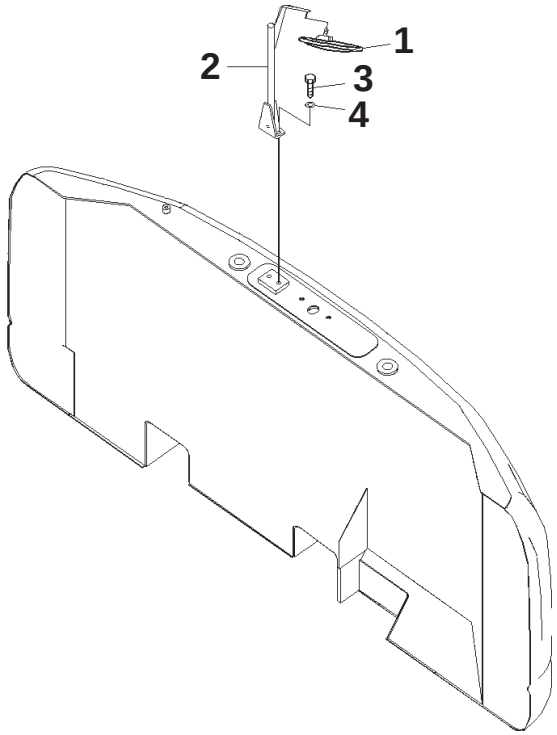

Rearview Mirror, For Counter Weight

Index	Part Number	Description	Qty	Serial No.
1	207-54-75710	Mirror	1	B10001-
2	203-54-74510	Bracket	1	B10001-
3	01010-81230	Bolt	2	B10001-
4	01643-31232	Washer	2	B10001-

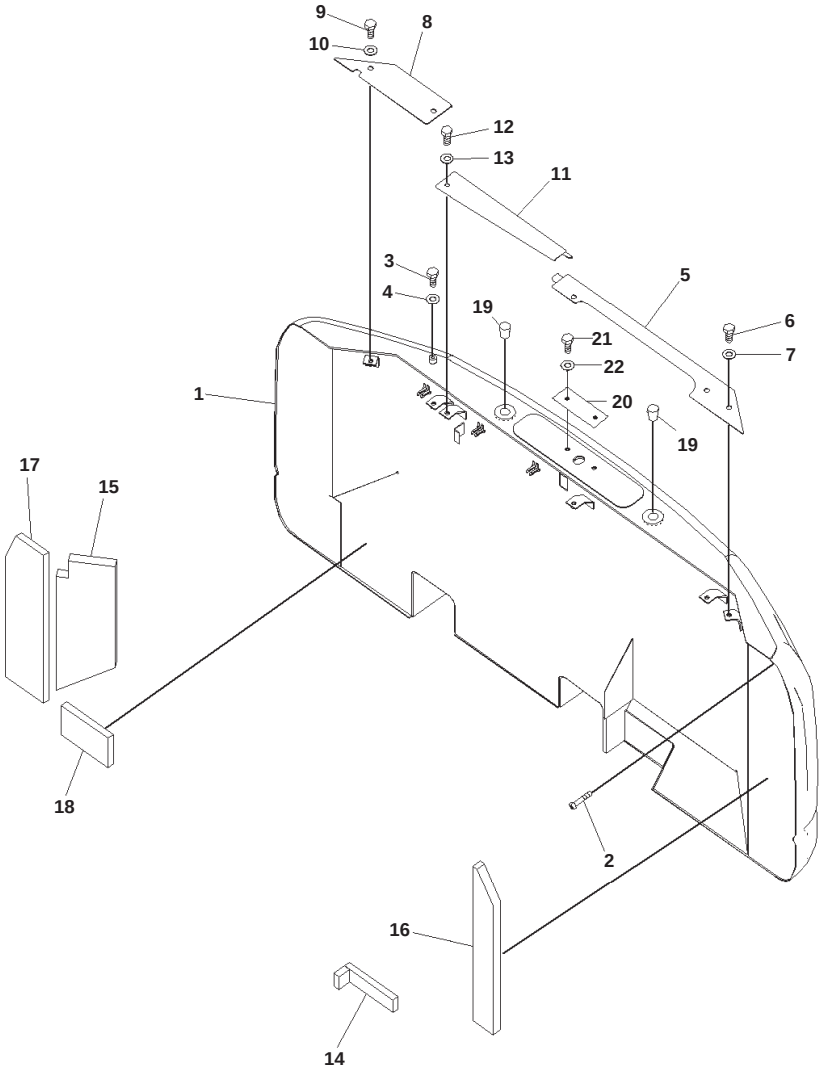

Index	Part Number	Description	Qty	Serial No.
1	203-46-14120	Weight, 2455Kg	1	B10001-
2	01370-00508	Screw	1	B10001-
3	01010-81220	Bolt	1	B10001-
4	01643-31232	Washer	1	B10001-
5	203-54-11851	Cover	1	B10001-
6	01010-81225	Bolt	3	B10001-
7	01643-31232	Washer	3	B10001-
8	203-54-12750	Cover	1	B10001-
9	01010-81225	Bolt	2	B10001-
10	01643-31232	Washer	2	B10001-
11	203-54-12760	Cover	1	B10001-
12	01010-81225	Bolt	1	B10001-
13	01643-31232	Washer	1	B10001-
14	203-03-71910	Sheet	1	B10001-
15	203-46-14220	Sheet	1	B10001-
16	203-46-14290	Sheet	1	B10001-
17	203-46-14311	Sheet	1	B10001-
18	203-46-14331	Sheet	1	B10001-
19	07049-03645	Plug, Cork	2	B10001-
20	207-06-76270	Cover	1	B10001-
21	01010-81220	Bolt	2	B10001-
22	01643-31232	Washer	2	B10001-

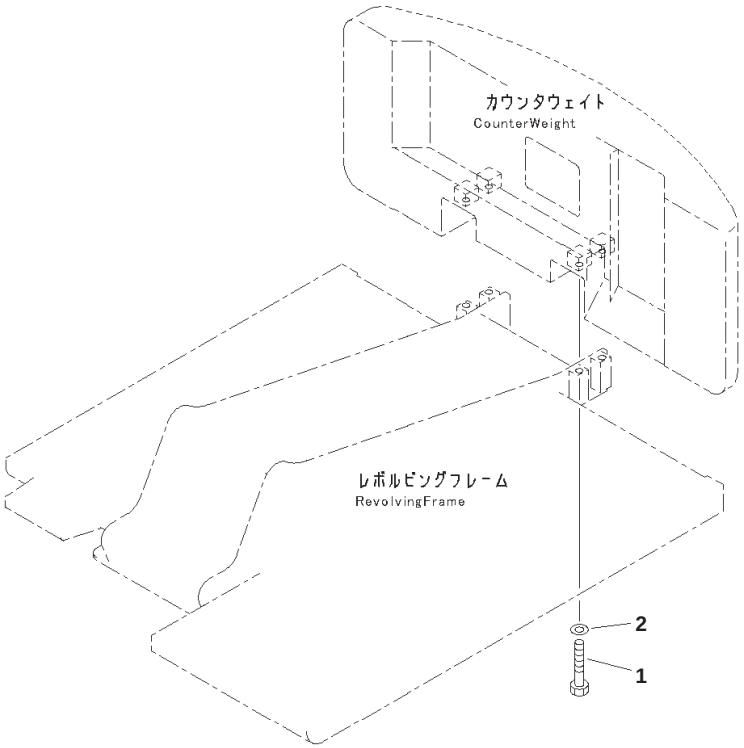

Index	Part Number	Description	Qty	Serial No.
1	01011-62790	Bolt	4	B10001-
2	01643-32780	Washer	4	B10001-

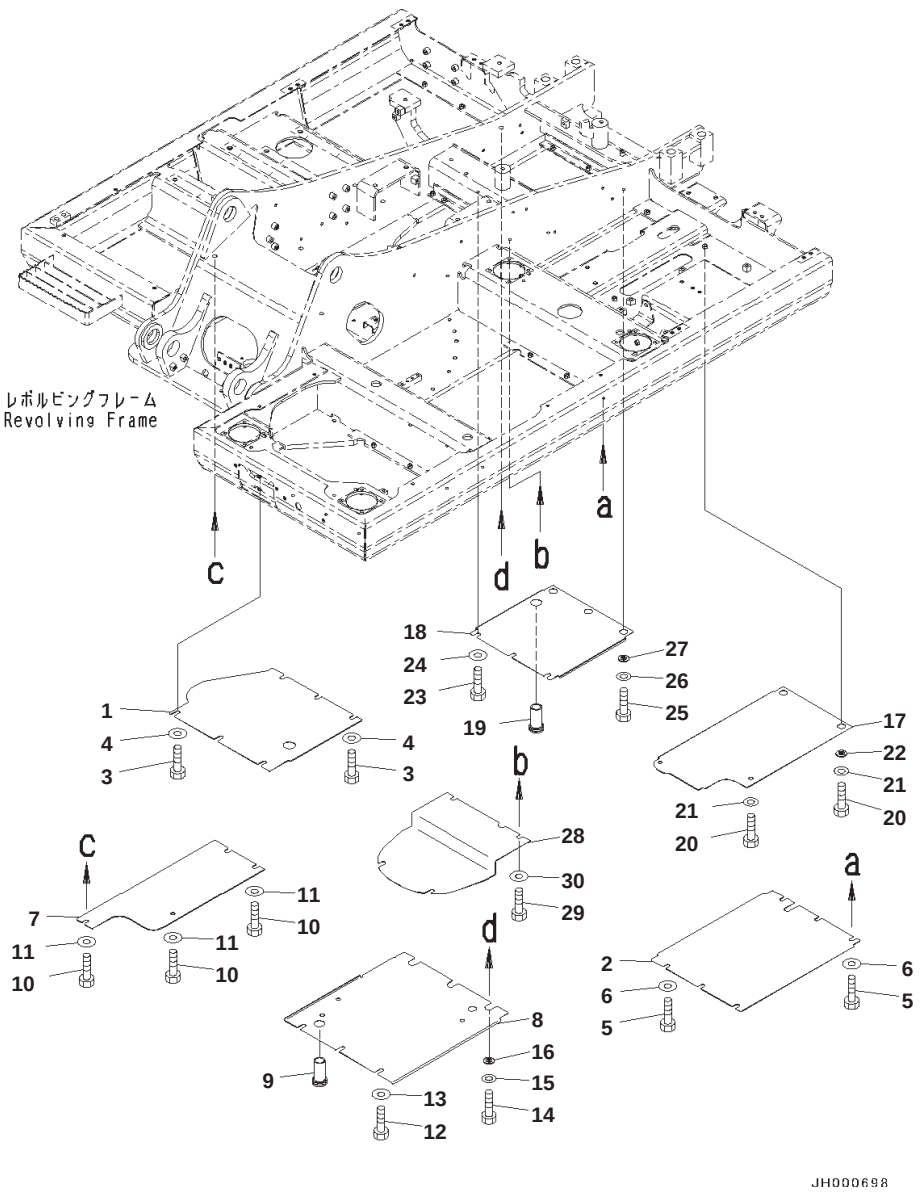

Index	Part Number	Description	Qty	Serial No.
1	203-54-16111	Cover	1	B10001-
2	203-54-16121	Cover	1	B10001-
3	01010-81230	Bolt	6	B10001-
4	175-54-34170	Washer	6	B10001-
5	01010-81230	Bolt	6	B10001-
6	175-54-34170	Washer	6	B10001-
7	203-54-16141	Cover	1	B10001-
8	203-54-16131	Cover	1	B10001-
9	22U-54-24760	Grommet	1	B10001-
10	01010-81230	Bolt	4	B10001-
11	175-54-34170	Washer	4	B10001-
12	01010-81230	Bolt	3	B10001-
13	175-54-34170	Washer	3	B10001-
14	01010-81230	Bolt	3	B10001-
15	01643-31232	Washer	3	B10001-
16	20Y-54-12550	Collar	3	B10001-
17	203-54-75341	Cover	1	B10001-
18	203-54-75361	Plate	1	B10001-
19	22U-54-24760	Grommet	1	B10001-
20	01010-81230	Bolt	4	B10001-
21	01643-31232	Washer	4	B10001-
22	20Y-54-12550	Collar	2	B10001-
23	01010-81230	Bolt	3	B10001-
24	175-54-34170	Washer	3	B10001-
25	01010-81230	Bolt	3	B10001-
26	01643-31232	Washer	3	B10001-
27	20Y-54-12550	Collar	3	B10001-
28	203-54-16150	Cover	1	B10001-
29	01010-81230	Bolt	4	B10001-
30	175-54-34170	Washer	4	B10001-

SWING CIRCLE AND RELATED PARTS

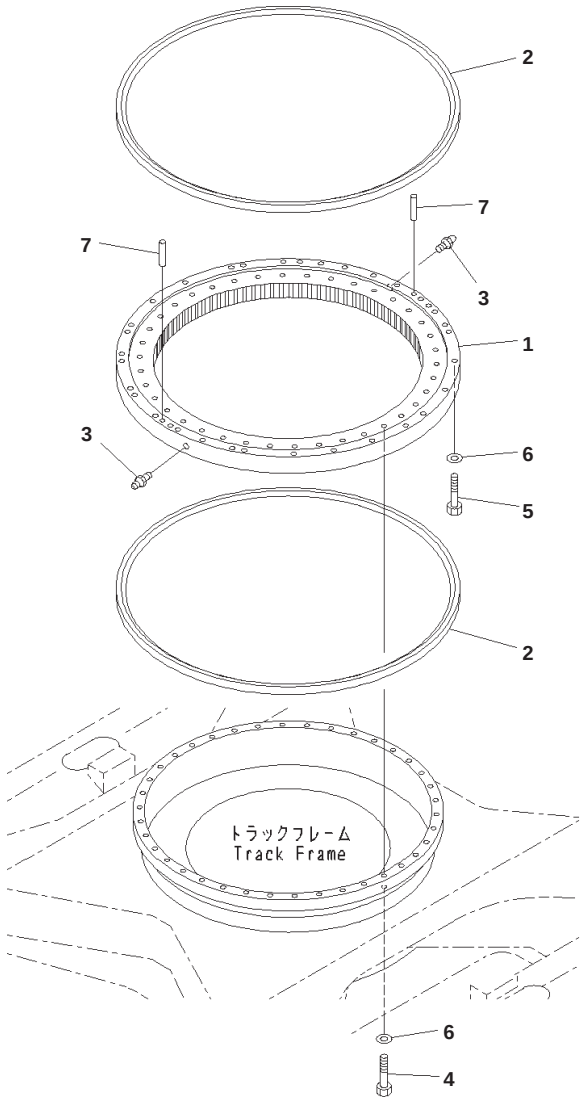

Swing Circle

Index	Part Number	Description	Qty	Serial No.
1	203-25-62200	Swing Circle	1	B10001-
2	203-25-62130	・ Seal Ring	2	B10001-
3	07020-00000	・ Fitting, Grease	2	B10001-
4	01010-D1650	Bolt	38	B10001-
5	01010-D1690	Bolt	35	B10001-
6	01643-71645	Washer	73	B10001-
7	04020-01434	Pin, Dowel	2	B10001-

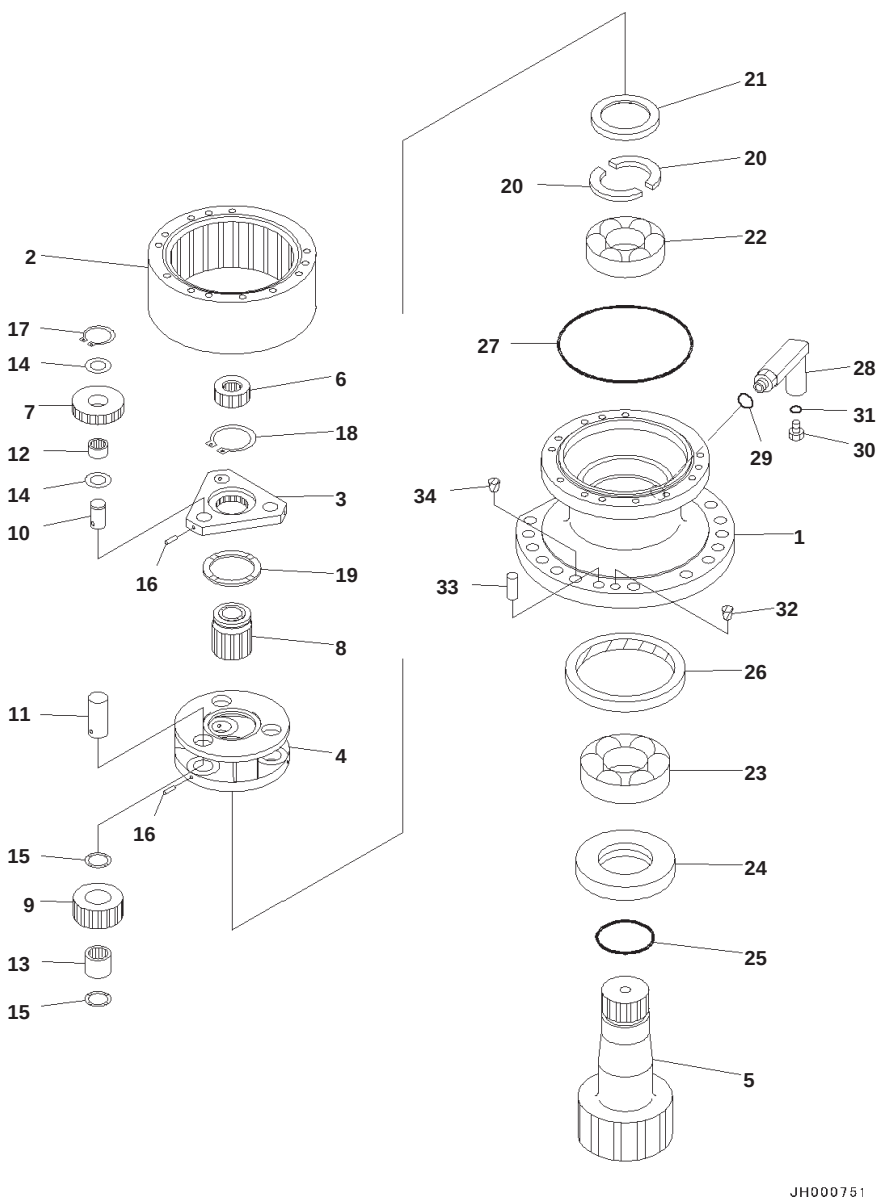

Index	Part Number	Description	Qty	Serial No.
	203-26-81000	Swing Machinery Assembly	1	B10001-
1	203-26-81111	・ Case	1	B10001-
2	22B-26-21130	・ Gear, Ring	1	B10001-
3	203-26-61120	・ Carrier	1	B10001-
4	203-26-61130	・ Carrier	1	B10001-
5	203-26-61220	・ Shaft	1	B10001-
6	203-26-61150	・ Gear	1	B10001-
7	203-26-61160	・ Gear	3	B10001-
8	203-26-61170	・ Gear	1	B10001-
9	203-26-61180	・ Gear	3	B10001-
10	201-26-62240	・ Shaft	3	B10001-
11	203-26-61250	・ Shaft	3	B10001-
12	201-26-62270	・ Bearing	3	B10001-
13	203-26-61270	・ Bearing	3	B10001-
14	20S-26-71160	・ Washer	6	B10001-
15	09233-12920	・ Washer	6	B10001-
16	20S-26-71250	・ Pin	6	B10001-
17	20S-26-71190	・ Ring, Snap	3	B10001-
18	04064-05520	・ Ring, Snap	1	B10001-
19	203-26-61280	・ Spacer	1	B10001-
20	203-26-61391	・ Spacer	2	B10001-
21	203-26-61310	・ Collar	1	B10001-
22	201-26-62330	・ Bearing	1	B10001-
23	203-26-61320	・ Bearing	1	B10001-
24	203-26-61340	・ Collar	1	B10001-
25	07000-12080	・ O-ring	1	B10001-
26	07012-00145	・ Seal, Oil	1	B10001-
27	203-26-61360	・ O-ring	2	B10001-
28	203-26-13111	・ Elbow	1	B10001-
29	07002-12434	・ O-ring	1	B10001-
30	07040-11612	・ Plug	1	B10001-
31	07002-11623	・ O-ring	1	B10001-
32	07049-01620	・ Plug	2	B10001-
33	04020-01638	・ Pin, Dowel	2	B10001-
34	07049-02025	・ Plug	1	B10001-

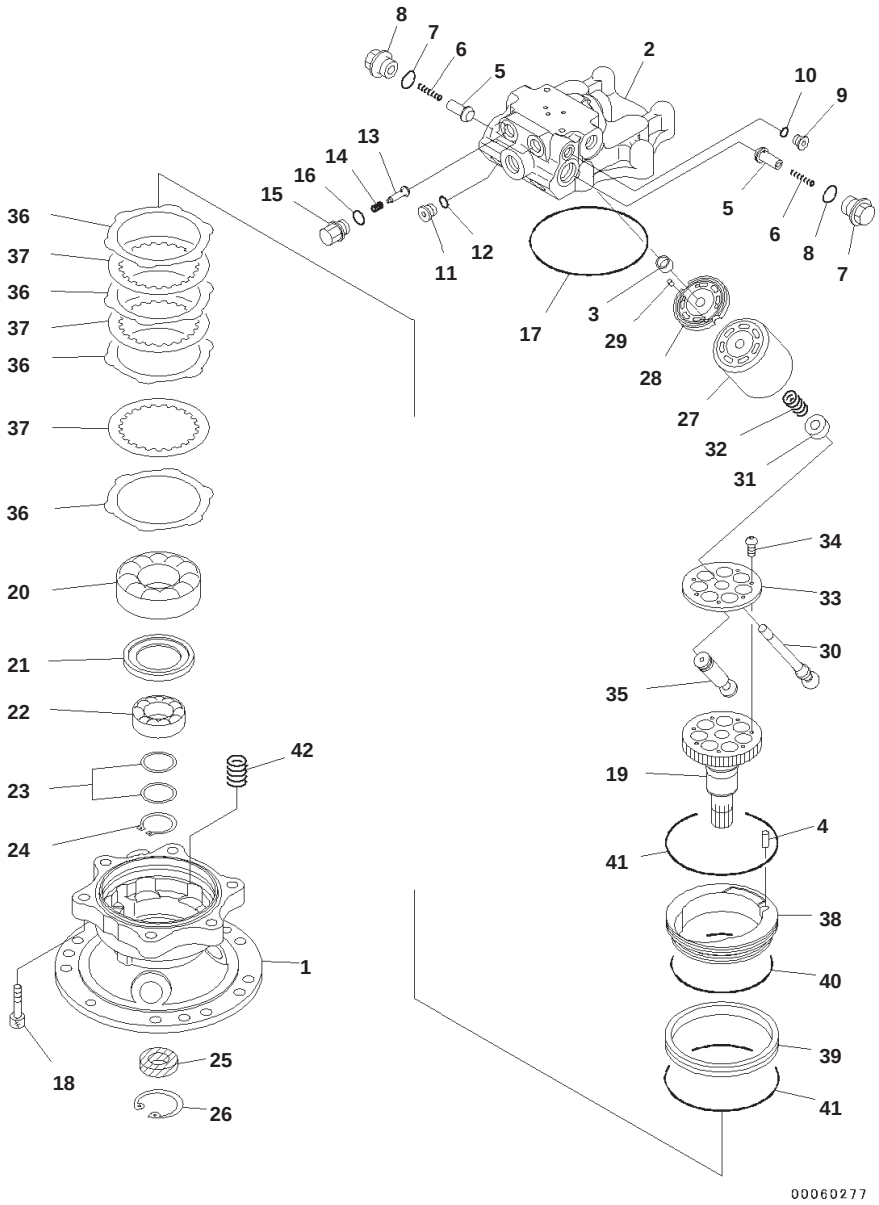

Index	Code	Part Number	Description	Qty	Serial No.
		203-26-81000	Swing Machinery Assembly	1	B10001-
		706-7C-01020	・ Motor Assembly	1	B10001-
		706-7C-03020	・・ Motor Subassembly	1	B10001-
1	C2	706-7C-71120	・・・ Case, Motor	1	B10001-
2	C2	706-7C-71210	・・・ Housing	1	B10001-
3	C2	706-73-40010	・・・ Bearing	1	B10001-
4	C2	706-73-42820	・・・ Pin	1	B10001-
5		706-7C-51110	・・・ Valve	2	B10001-
6		706-7C-51120	・・・ Spring	2	B10001-
7		706-7C-51130	・・・ Plug	2	B10001-
8		07000-13024	・・・ O-ring	2	B10001-
9		708-7R-11220	・・・ Plug	1	B10001-
10		07002-11223	・・・ O-ring	1	B10001-
11		702-21-55620	・・・ Plug	2	B10001-
12		07002-11423	・・・ O-ring	2	B10001-
13		706-7C-51140	・・・ Valve	2	B10001-
14		722-10-91130	・・・ Spring	2	B10001-
15		706-7C-51150	・・・ Plug	2	B10001-
16		07002-11823	・・・ O-ring	2	B10001-
17	C2	07000-12145	・・・ O-ring	1	B10001-
18	C2	01252-61245	・・・ Bolt, Hexagon Socket Head	6	B10001-
19	C2	706-7C-41510	・・・ Shaft, Drive	1	B10001-
20	C2	706-73-43880	・・・ Bearing	1	B10001-
21	C2	706-7C-41610	・・・ Plate	1	B10001-
22	C2	706-73-43890	・・・ Bearing	1	B10001-
23	C2	706-7C-05110	・・・ Spacer Kit	1	B10001-
	C1		・・・・ Spacer, T=1.5mm	1	B10001-
	C1		・・・・ Spacer, T=1.7mm	1	B10001-
	C1		・・・・ Spacer, T=1.9mm	1	B10001-
	C1		・・・・ Spacer, T=2.1mm	1	B10001-
	C1		・・・・ Spacer, T=2.3mm	1	B10001-
24	C2	04064-03515	・・・ Ring	1	B10001-
25		708-7T-12230	・・・ Seal, Oil	1	B10001-
26		04065-04518	・・・ Ring, Snap	1	B10001-
27	C2	706-7C-41110	・・・ Cylinder Block	1	B10001-
28	C2	706-7C-41310	・・・ Plate, Valve	1	B10001-
29	C2	720-68-19610	・・・ Pin	1	B10001-
30	C2	706-7C-41210	・・・ Shaft,Center	1	B10001-
31	C2	706-7C-41410	・・・ Ring,Center	1	B10001-
32	C2	706-7C-41420	・・・ Spring	1	B10001-
33	C2	706-7C-41910	・・・ Retainer	1	B10001-
34	C2	706-73-42270	・・・ Screw	7	B10001-
35	C2	706-7C-41740	・・・ Piston Subassembly	7	B10001-
36	C2	706-7C-91210	・・・ Plate	4	B10001-
37	C2	706-7C-91220	・・・ Disc	3	B10001-
38	C2	706-7C-91110	・・・ Piston, Brake	1	B10001-

PC130-8 S/N B10001-UP

Swing Machinery, Inner Parts (1/2)

Index	Code	Part Number	Description	Qty	Serial No.
39	C2	706-7C-91120	・・・ Ring	1	B10001-
40	C2	07000-12110	・・・ O-ring	1	B10001-
41	C2	07000-12130	・・・ O-ring	2	B10001-
42	C2	706-7C-91310	・・・ Spring	4	B10001-

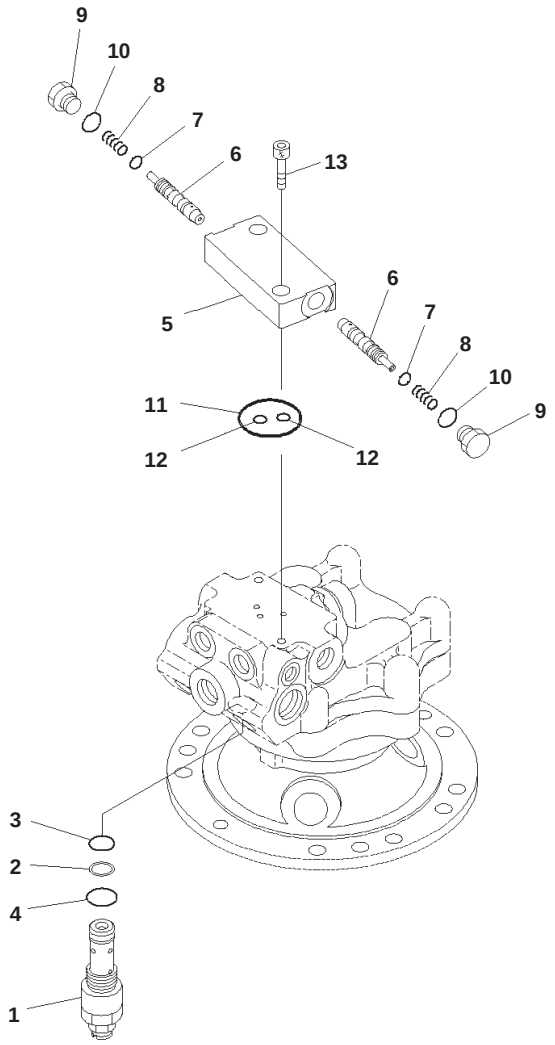

Swing Machinery, Inner Parts (2/2)

Index	Code	Part Number	Description	Qty	Serial No.
		203-26-81000	Swing Machinery Assembly	1	B10001-
		706-7C-01020	・ Motor Assembly	1	B10001-
1		702-73-01410	・・ Valve, Relief	1	B10001-
2		723-60-22230	・・・ Ring, Back-up	1	B10001-
3		07000-F2016	・・・ O-ring	1	B10001-
4		07002-12434	・・・ O-ring	1	B10001-
		702-15-73000	・・ Valve Assembly	1	B10001-
5	C1		・・・ Body	1	B10001-
6	C1		・・・ Spool	2	B10001-
7	C1		・・・ Seal	2	B10001-
8	C1		・・・ Spring	2	B10001-
9	C1		・・・ Plug	2	B10001-
10	C1		・・・ O-ring	2	B10001-
11		07000-13042	・・ O-ring	1	B10001-
12		07000-11007	・・ O-ring	2	B10001-
13		01252-60825	・・ Bolt, Hexagon Socket Head	2	B10001-

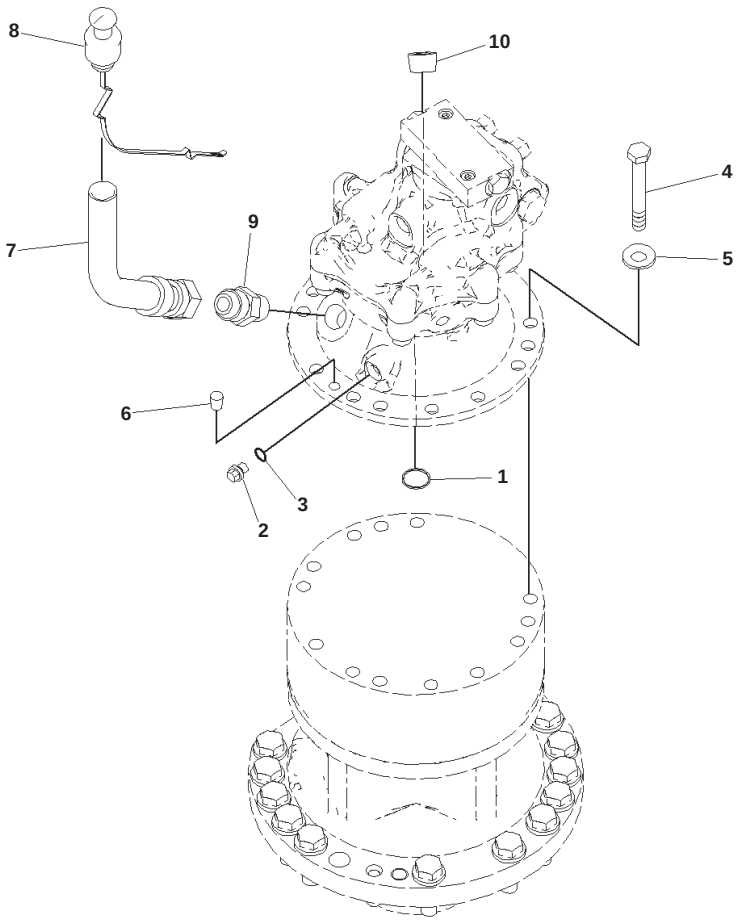

Index	Part Number	Description	Qty	Serial No.
	203-26-81000	Swing Machinery Assembly	1	B10001-
1	201-26-62190	・ Ring	1	B10001-
2	708-8E-16150	・ Plug	1	B10001-
3	07002-11023	・ O-ring	1	B10001-
4	01011-81230	・ Bolt	13	B10001-
5	01643-31232	・ Washer	13	B10001-
6	07049-01215	・ Plug	2	B10001-
7	203-26-13140	・ Tube	1	B10001-
8	203-26-13152	・ Gauge	1	B10001-
9	07238-10630	・ Connector	1	B10001-
10	07043-70617	・ Plug	1	B10001-

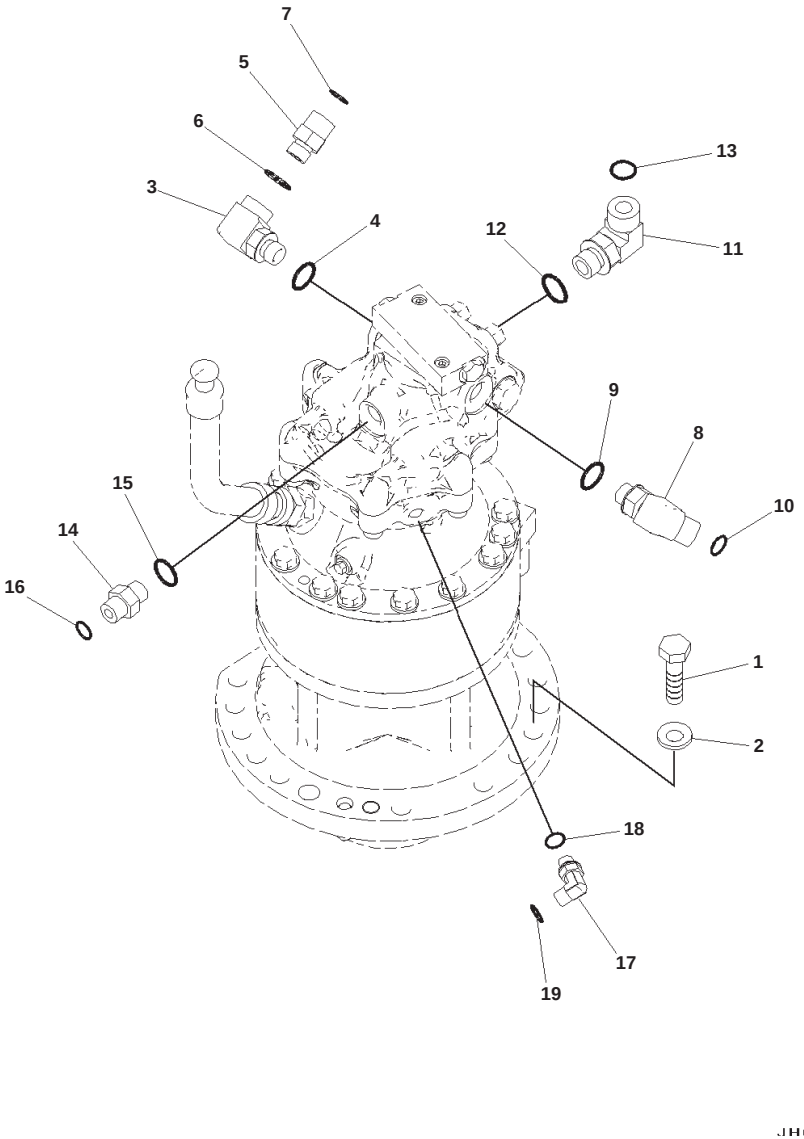

Index	Part Number	Description	Qty	Serial No.
1	203-26-13170	Bolt	14	B10001-
2	01643-31645	Washer	14	B10001-
3	154-03-75811	Elbow	1	B10001-
4	07002-12034	O-ring	1	B10001-
5	02781-00516	Union	1	B10001-
6	07002-12034	O-ring	1	B10001-
7	02896-11015	O-ring	1	B10001-
8	22B-62-21940	Elbow	1	B10001-
9	07002-12034	O-ring	1	B10001-
10	02896-11015	O-ring	1	B10001-
11	02782-10628	Elbow	1	B10001-
12	07002-12434	O-ring	1	B10001-
13	02896-11018	O-ring	1	B10001-
14	02781-00422	Union	1	B10001-
15	07002-12034	O-ring	1	B10001-
16	02896-11012	O-ring	1	B10001-
17	207-62-72120	Elbow	1	B10001-
18	07002-11423	O-ring	1	B10001-
19	02896-11008	O-ring	1	B10001-

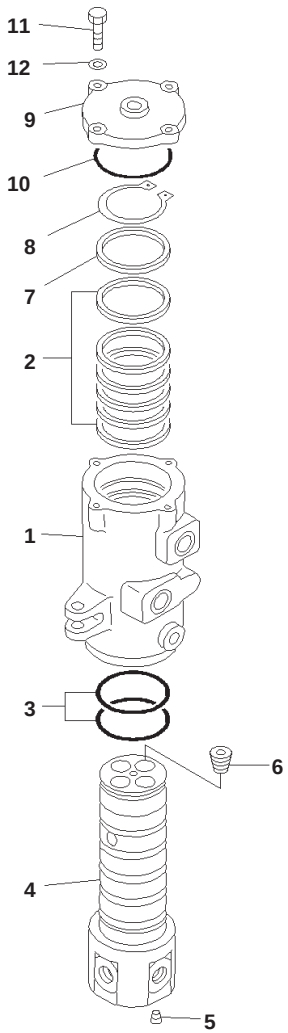

PJA2906

Index	Part Number	Description	Qty	Serial No.
	703-08-00110	Swivel Joint Assembly	1	B10001-
1	703-08-91130	・ Rotor	1	B10001-
2	703-08-95620	・ Seal, Oil	6	B10001-
3	07000-15080	・ O-ring	2	B10001-
4	703-08-92130	・ Shaft	1	B10001-
5	703-09-98710	・ Plug	1	B10001-
6	703-09-98510	・ Plug	4	B10001-
7	703-08-94510	・ Ring	1	B10001-
8	04064-07525	・ Ring, Snap	1	B10001-
9	703-08-93511	・ Cover	1	B10001-
10	07000-02105	・ O-ring	1	B10001-
11	01010-50835	・ Bolt	4	B10001-
12	01643-30823	・ Washer	4	B10001-

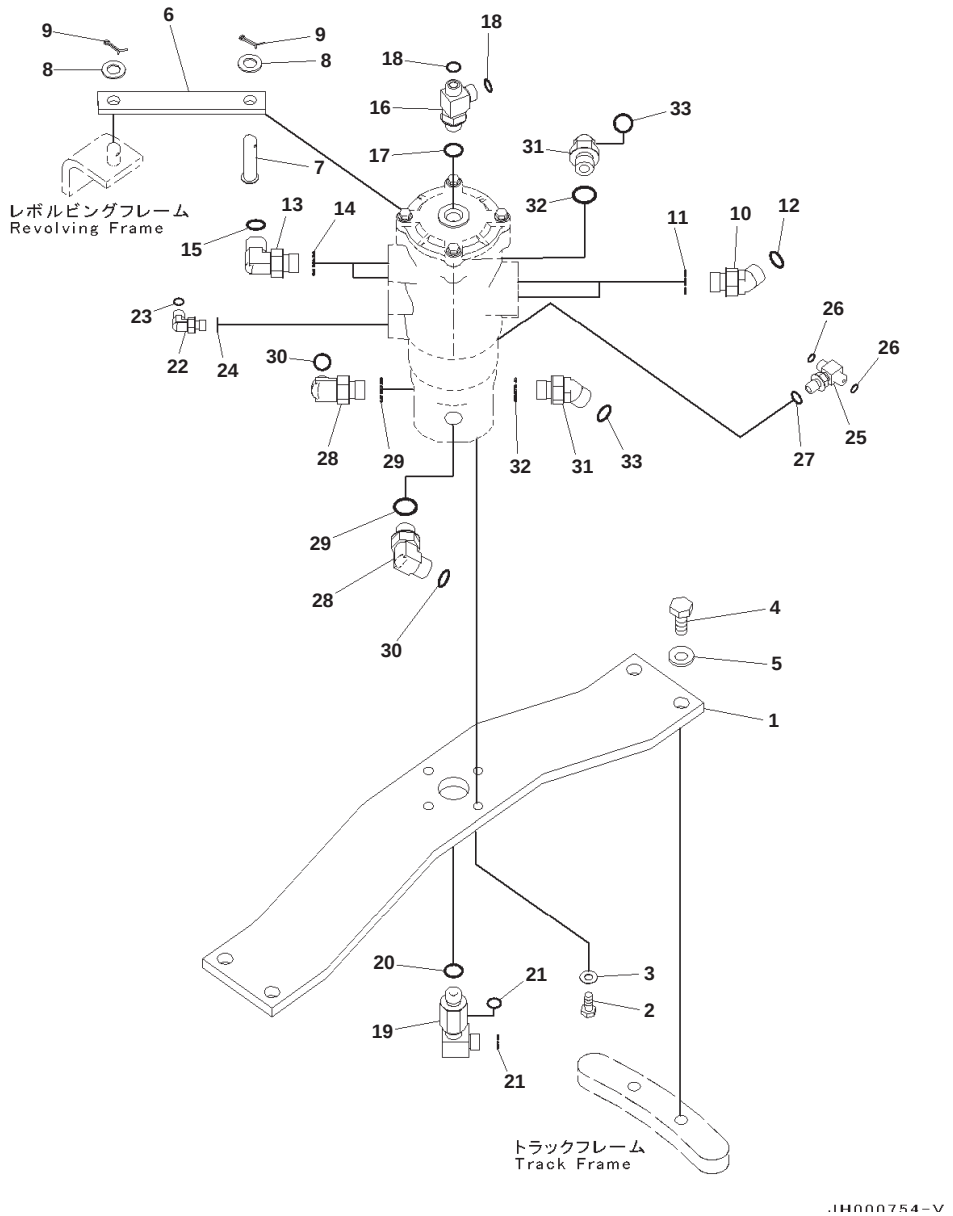

Index	Part Number	Description	Qty	Serial No.
1	203-30-66122	Bracket	1	B10001-
2	01010-81235	Bolt	4	B10001-
3	01643-31232	Washer	4	B10001-
4	01010-81640	Bolt	4	B10001-
5	01643-31645	Washer	4	B10001-
6	203-60-52160	Link	1	B10001-
7	209-62-52560	Pin	1	B10001-
8	01641-21626	Washer	2	B10001-
9	04050-14025	Pin, Cotter	2	B10001-
10	02782-10522	Elbow	2	B10001-
11	07002-12434	O-ring	2	B10001-
12	02896-11015	O-ring	2	B10001-
13	02783-10522	Elbow	2	B10001-
14	07002-12434	O-ring	2	B10001-
15	02896-11015	O-ring	2	B10001-
16	21N-64-36690	Tee	1	B10001-
17	07002-12034	O-ring	1	B10001-
18	02896-11012	O-ring	2	B10001-
19	22B-62-18910	Tee	1	B10001-
20	07002-12034	O-ring	1	B10001-
21	02896-11012	O-ring	2	B10001-
22	02782-10210	Elbow	1	B10001-
23	02896-11008	O-ring	1	B10001-
24	07002-11423	O-ring	1	B10001-
25	11Y-62-12250	Tee	1	B10001-
26	02896-11008	O-ring	2	B10001-
27	07002-11423	O-ring	1	B10001-
28	02782-10522	Elbow	2	B10001-
29	07002-12434	O-ring	2	B10001-
30	02896-11015	O-ring	2	B10001-
31	02783-10522	Elbow	2	B10001-
32	07002-12434	O-ring	2	B10001-
33	02896-11015	O-ring	2	B10001-

TRAVEL AND LOWER PIPING

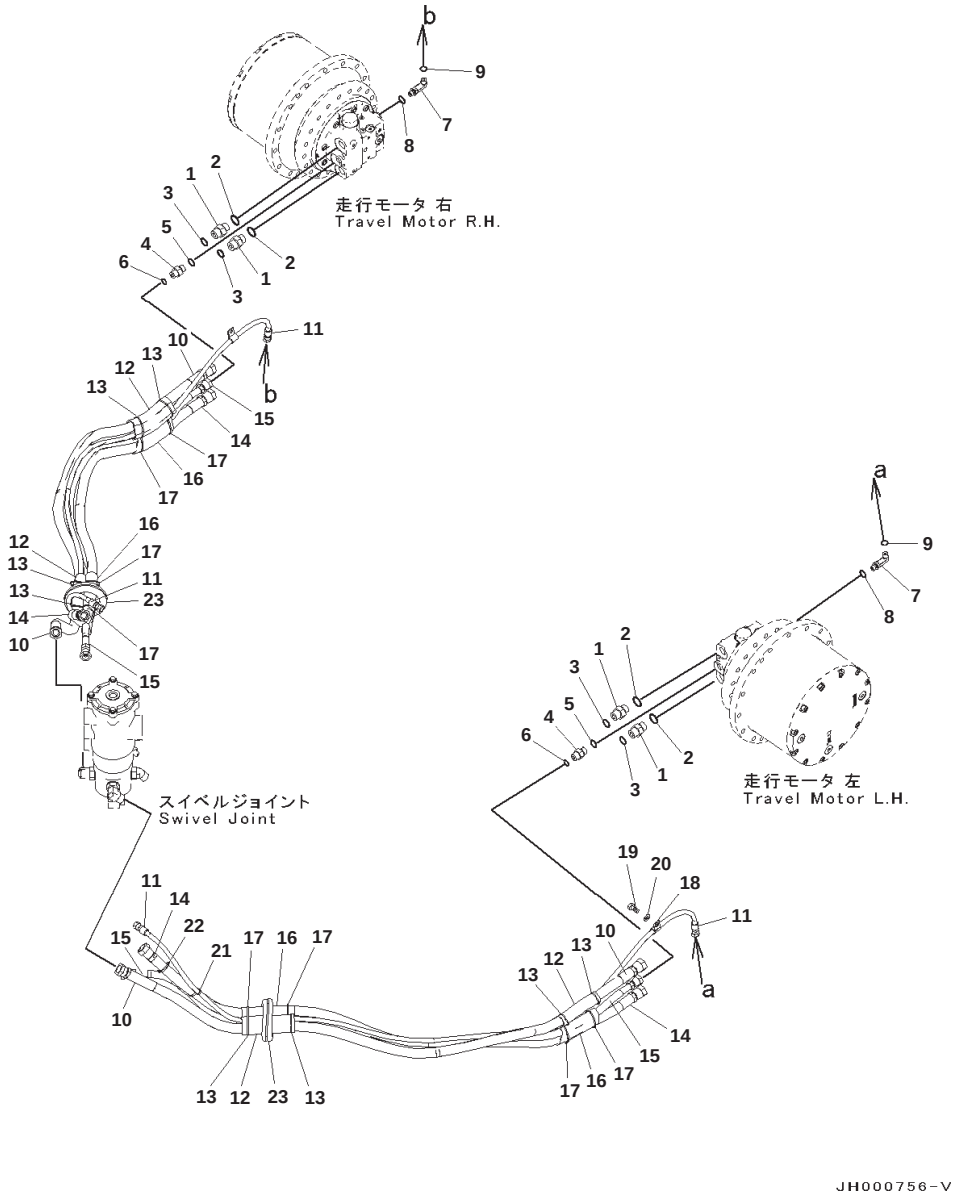

Travel Piping

Index	Part Number	Description	Qty	Serial No.
1	02781-00522	Union	4	B10001-
2	07002-12434	O-ring	4	B10001-
3	02896-11015	O-ring	4	B10001-
4	02781-00422	Union	2	B10001-
5	07002-12034	O-ring	2	B10001-
6	02896-11012	O-ring	2	B10001-
7	02782-1021A	Elbow	2	B10001-
8	07002-11423	O-ring	2	B10001-
9	02896-11008	O-ring	2	B10001-
10	22B-62-22730	Hose	2	B10001-
11	22B-62-22820	Hose	2	B10001-
12	203-62-52210	Rubber	4	B10001-
13	08034-20823	Band	8	B10001-
14	22B-62-22720	Hose	2	B10001-
15	02762-00417	Hose, Face Seal Type	2	B10001-
16	203-62-52210	Rubber	4	B10001-
17	08034-20823	Band	8	B10001-
18	04434-51210	Clip	2	B10001-
19	01010-81025	Bolt	2	B10001-
20	01643-31032	Washer	2	B10001-
21	08034-30521	Band	2	B10001-
22	08034-00823	Band	2	B10001-
23	203-62-67160	Grommet	2	B10001-

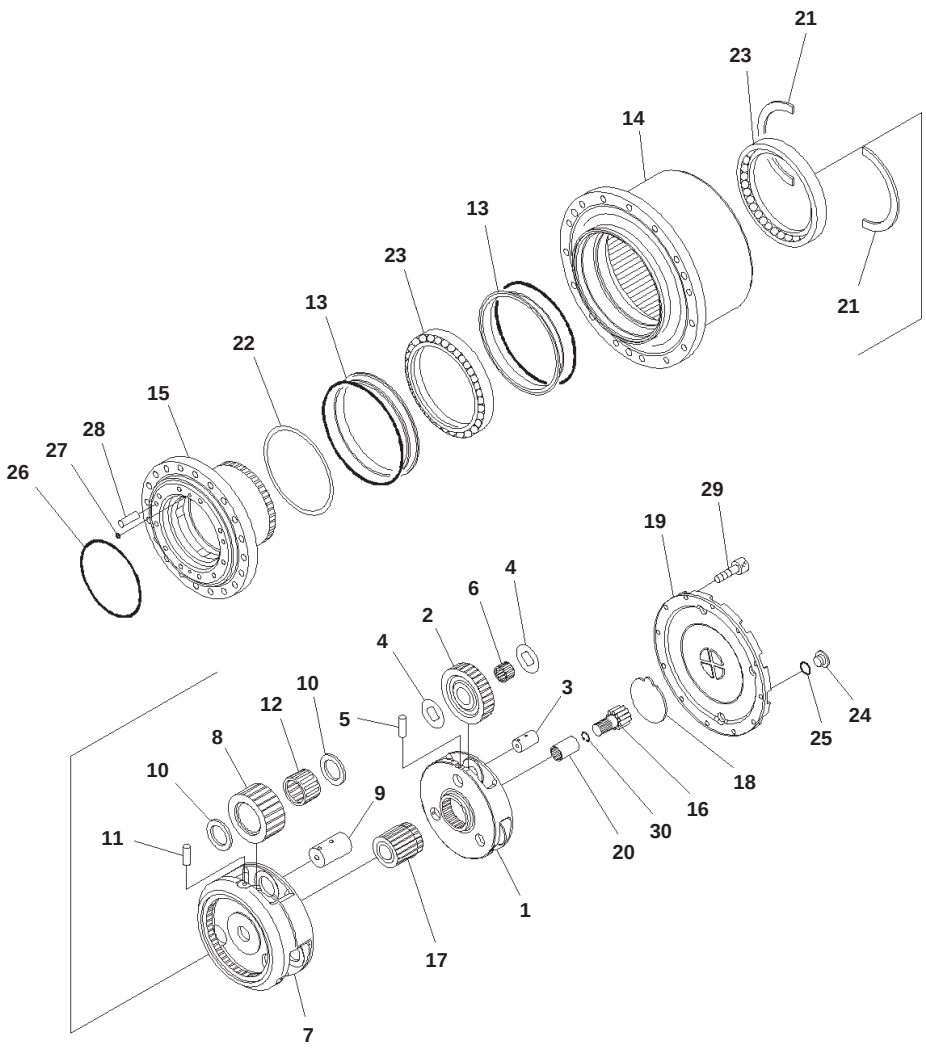

Travel Motor and Final Drive, (1/4)

Index	Code	Part Number	Description	Qty	Serial No.
		22B-60-22111	Motor Assembly	2	B10069-
	A2	22B-60-22110	Motor Assembly	2	B10001-B10068
		TZ600D1000-01	・ Reduction Assembly	1	B10001-
		TZ600D1103-01	・・ Carrier Assembly	1	B10001-
1	C1		・・・ Carrier, 1	1	B10001-
2	C1		・・・ Gear Assembly	3	B10001-
3	C1		・・・ Pin	3	B10001-
4	C1		・・・ Washer, Thrust	6	B10001-
5	C1		・・・ Pin	3	B10001-
6	C1		・・・ Bearing	3	B10001-
		TZ600D1107-01	・・ Carrier Assembly	1	B10001-
7	C1		・・・ Carrier, 2	1	B10001-
8	C1		・・・ Gear Assembly	3	B10001-
9	C1		・・・ Pin	3	B10001-
10	C1		・・・ Washer, Thrust	6	B10001-
11	C1		・・・ Pin	3	B10001-
12	C1		・・・ Bearing	3	B10001-
		TZ209-234-44BA	・・ Seal Ring Kit	1	B10001-
13	C1		・・・ Seal Ring	2	B10001-
14	C2	TZ600D1001-02	・・ Hub	1	B10001-
15	C2	TZ600D1002-00	・・ Spindle	1	B10001-
16		TZ600D1004-02	・・ Gear, Sun	1	B10001-
17		TZ600D1008-00	・・ Gear, Sun	1	B10001-
18		TZ800D1013-00	・・ Plate	1	B10001-
19		TZ600D1014-01	・・ Cover	1	B10001-
20		TZ600D1015-01	・・ Coupling	1	B10001-
21	C2	TZ600D1022-00	・・ Washer, Lock	2	B10001-
22	C2	TZ600D1023-00	・・ Shim Kit, 12 Kind(s)	1	B10001-
23	C2	TZ600D1024-01	・・ Bearing	2	B10001-
24		TZ610B2021-00	・・ Plug	3	B10001-
25		07000-12018	・・ O-ring	3	B10001-
26		TZARP568261-70	・・ O-ring	1	B10001-
27		07000-11007	・・ O-ring	2	B10001-
28		TZ263B2077-01	・・ Pin	2	B10001-
29		01252-31035	・・ Bolt, Hexagon Socket Head	12	B10001-
30		04065-02210	・・ Ring	1	B10001-

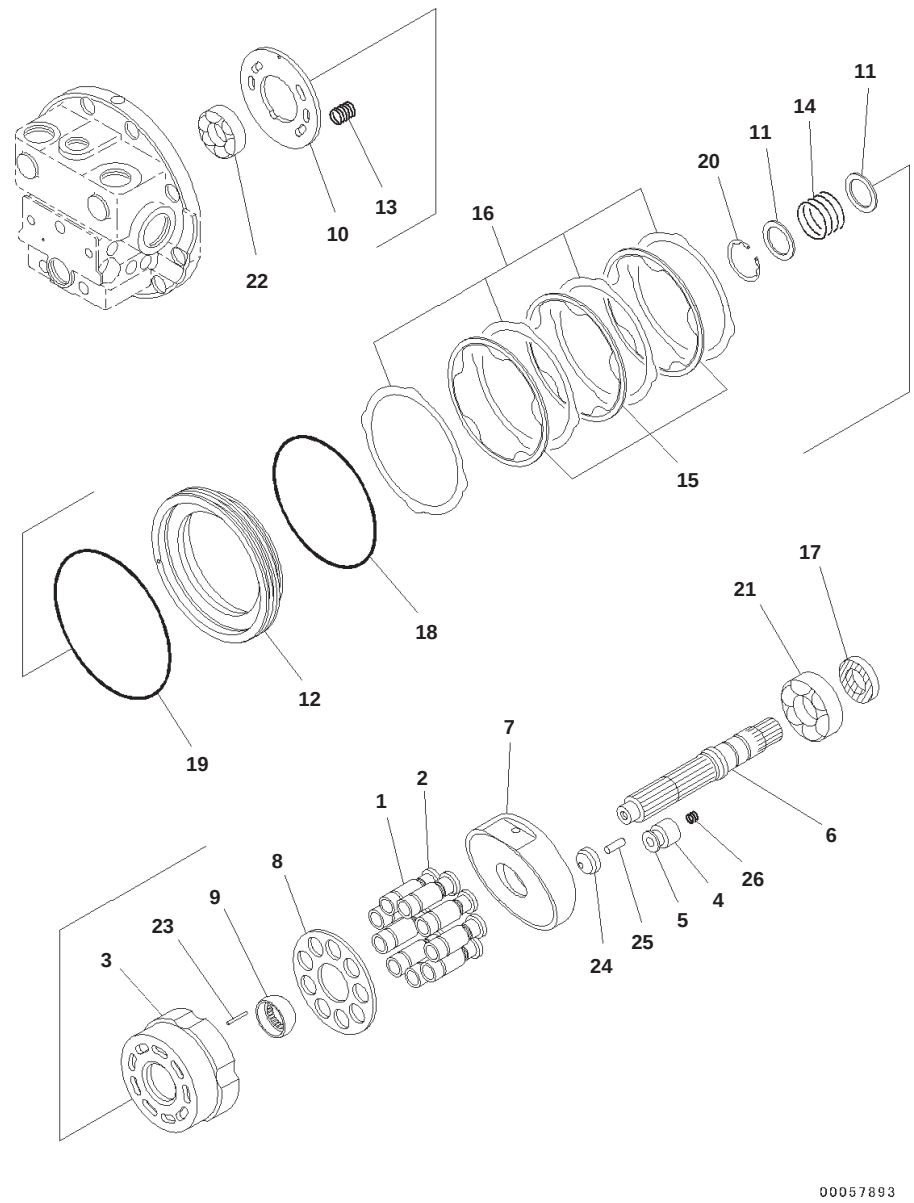

Index	Code	Part Number	Description	Qty	Serial No.
		22B-60-22111	Motor Assembly	2	B10069-
	A2	22B-60-22110	Motor Assembly	2	B10001-B10068
		TZ600D200001-B	・ Motor	1	B10001-
		TZ600D2205-01	・・ Cylinder and Piston Kit, And Piston Kit	1	B10001-
	C1		・・・ Piston Kit	1	B10001-
	C1		・・・・ Piston Assembly	9	B10001-
1	C1		・・・・・ Piston	1	B10001-
2	C1		・・・・・ Shoe	1	B10001-
3	C1		・・・・・ Cylinder Block	1	B10001-
		TZ600D2070-01	・・ Piston Assembly	1	B10001-
4	C1		・・・ Piston	1	B10001-
5	C1		・・・ Shoe	1	B10001-
6		TZ600D2002-01	・・ Shaft	1	B10001-
7		TZ600D200300-B	・・ Swash Plate Assembly	1	B10001-
8		TZ600D2007-01	・・ Retainer Assembly	1	B10001-
9		TZ600D2008-00	・・ Ball	1	B10001-
10		TZ600D2009-01	・・ Timing Plate	1	B10001-
11		TZ880A2010-00	・・ Washer	2	B10001-
12		TZ600D2012-00	・・ Piston	1	B10001-
13		TZ500D2013-00	・・ Spring	10	B10001-
14		TZ600D2014-00	・・ Spring	1	B10001-
15		TZ600D2015-00	・・ Plate	3	B10001-
16		TZ600D2016-00	・・ Plate	4	B10001-
17		TZTCZ284810113	・・ Seal, Oil	1	B10001-
18		TZ500D2039-00	・・ O-ring	1	B10001-
19		TZ600D2039-00	・・ O-ring	1	B10001-
20		TZTH-R-42	・・ Ring, Snap	1	B10001-
21		TZJB1521-63-28	・・ Bearing	1	B10001-
22		06000-06304	・・ Bearing	1	B10001-
23		TZJB15063-258F	・・ Roller	3	B10001-
24		TZ600D2076-01	・・ Pivot	2	B10001-
25		TZ263B2077-01	・・ Pin	2	B10001-
26		TZ600D2090-00	・・ Spring	1	B10001-

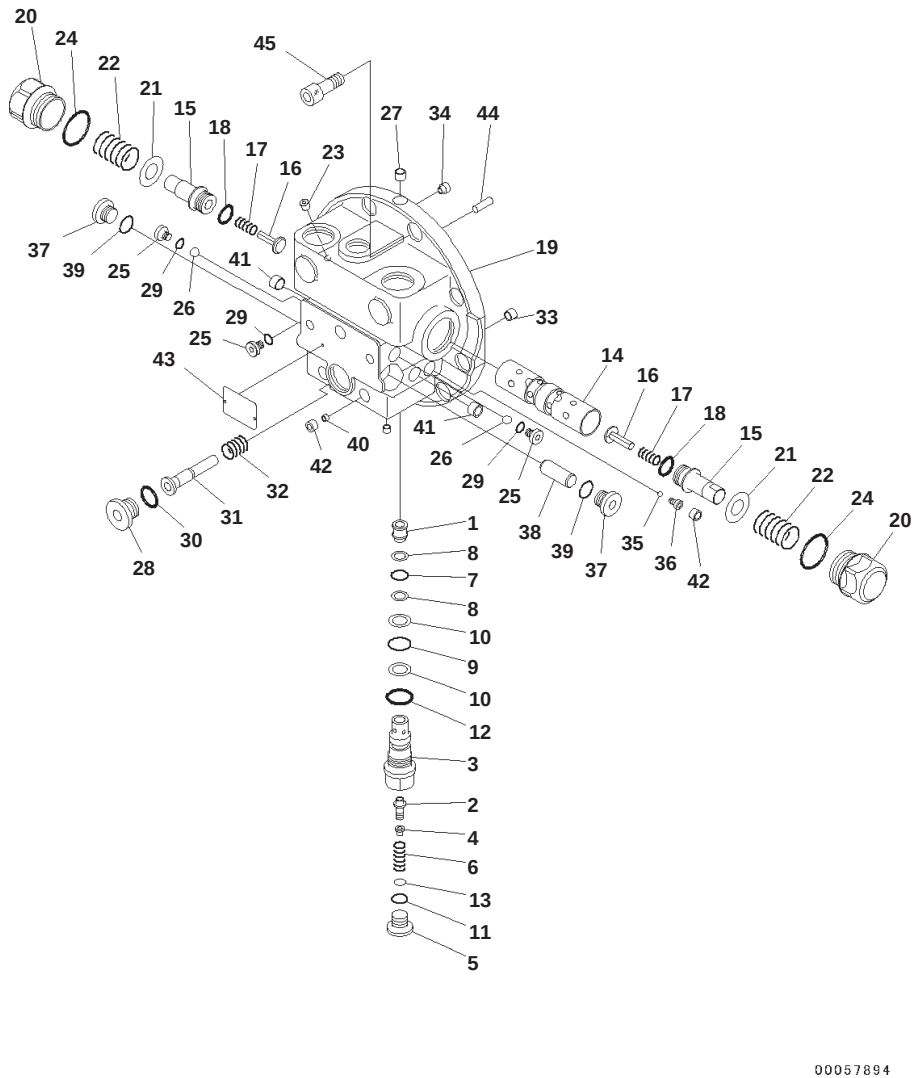

Index	Code	Part Number	Description	Qty	Serial No.
		22B-60-22111	Motor Assembly	2	B10069-
	A2	22B-60-22110	Motor Assembly	2	B10001-B10068
		TZ600D300000-A	· Valve Assembly, Relief	1	B10001-
		TZ600D310000-A	· · Valve Assembly, Relief	1	B10001-
1	C1		· · · Seat, Valve	1	B10001-
2	C1		· · · Valve	1	B10001-
3	C1		· · · Sleeve	1	B10001-
4	C1		· · · Collar	1	B10001-
5	C1		· · · Plug	1	B10001-
6	C1		· · · Spring	1	B10001-
7		TZJB2401-P10A	· · · O-ring	1	B10001-
8		TZJB2407T2P10A	· · · Ring, Back-up	2	B10001-
9		07000-12014	· · · O-ring	1	B10001-
10		TZJB2407T2-P14	· · · Ring	2	B10001-
11		07000-12011	· · · O-ring	1	B10001-
12		07000-12018	· · · O-ring	1	B10001-
13		TZ247B3006-00	· · · Shim	1	B10001-
		TZ600D400001-B	· Valve Assembly, Control	1	B10001-
		TZ600D410001-B	· · Flange Assembly	1	B10001-
		TZ600D410101-B	· · · Flange Kit	1	B10001-
		TZ600D415001-B	· · · · Spool Assembly	1	B10001-
14	C1		· · · · · Spool	1	B10001-
15	C1		· · · · · Plug	2	B10001-
16	C1		· · · · · Valve	2	B10001-
17	C1		· · · · · Spring	2	B10001-
18	C1		· · · · · O-ring	2	B10001-
19	C1		· · · · Flange	1	B10001-
20	C1		· · · Plug	2	B10001-
21		TZ600D4052-01	· · · Washer	2	B10001-
22		TZ100A2055-00	· · · Spring	2	B10001-
23		TZS0506	· · · Orifice	2	B10001-
24		07000-12032	· · · O-ring	2	B10001-
25		TZ200C2021-01	· · · Plug	3	B10001-
26		04260-00793	· · · Ball	2	B10001-
27		TZGDL1-16-S	· · · Plug, Hexagon Head	5	B10001-
28		TZ610B2021-00	· · · Plug	1	B10001-
29		07000-11008	· · · O-ring	3	B10001-
30		07000-12018	· · · O-ring	1	B10001-
31		TZ600D4069-00	· · · Spool	1	B10001-
32		TZ420B2089-01	· · · Spring	1	B10001-
33		TZS0505	· · · Orifice	1	B10001-
34		TZ976B2079-00	· · · Filter	1	B10001-
35		04260-00476	· · · Ball	1	B10001-
36		TZ571B2079-00	· · · Plug	1	B10001-
37		TZ200C2021-00	· · · Plug	2	B10001-
38		TZ600D4081-00	· · · Piston	1	B10001-

PC130-8 S/N B10001-UP
Travel Motor and Final Drive, (3/4)

Index	Code	Part Number	Description	Qty	Serial No.
39		07000-12014	・・・O-ring	2	B10001-
40		TZS0545	・・・Orifice	2	B10001-
41		TZGM1-4-G-S	・・・Plug	2	B10001-
42		TZGM1-8-S	・・・Plug, Hexagon Head	5	B10001-
43		TZ850A0006-00	・・・Plate, Name	1	B10001-
44		TZJB1354-4-10	・Pin	1	B10001-
45		01252-31230	・Bolt	10	B10001-
		TZ600D9000-00	Service Kit	2	B10001-

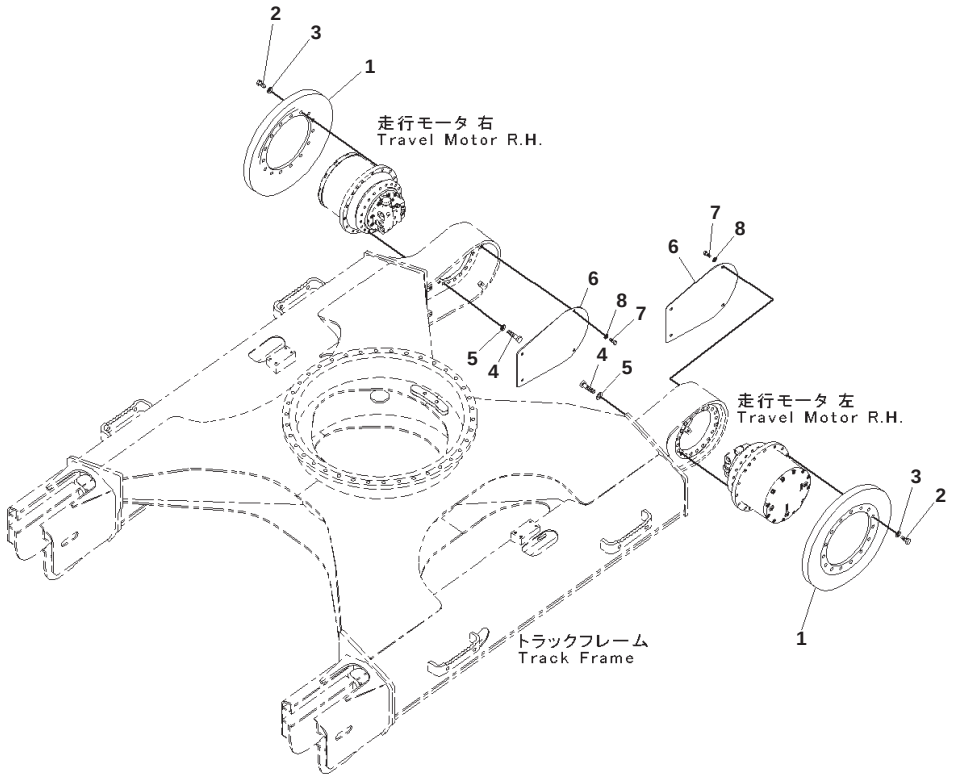

Travel Motor and Final Drive, (4/4)

Index	Part Number	Description	Qty	Serial No.
1	203-27-61310	Sprocket	2	B10001-
2	203-27-51120	Bolt	30	B10001-
3	01643-31645	Washer	30	B10001-
4	01010-61655	Bolt	40	B10001-
5	01643-31645	Washer	40	B10001-
6	22B-30-21610	Cover	2	B10001-
7	01010-81025	Bolt	8	B10001-
8	01643-31032	Washer	8	B10001-

UNDER CARRIAGE

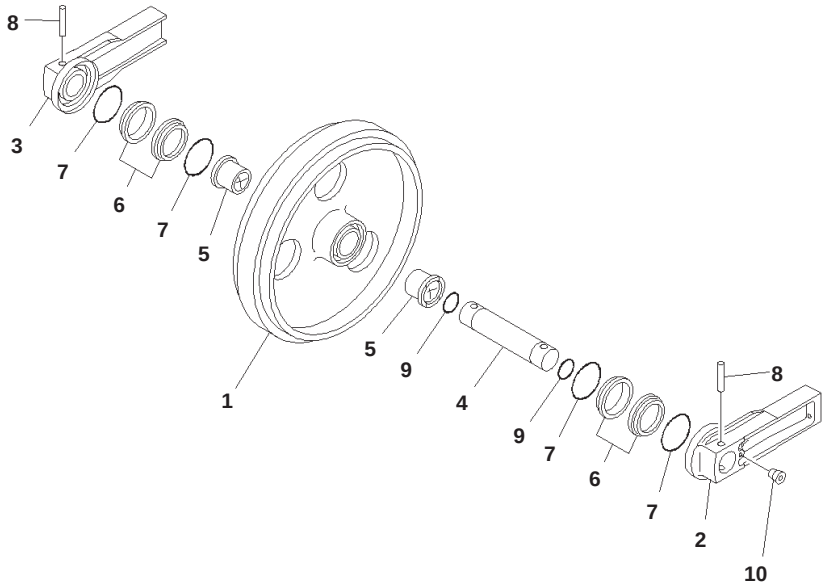

PWA2916

Front Idler and Idler Cushion, Front Idler

Index	Code	Part Number	Description	Qty	Serial No.
		203-30-00210	Idler Assembly	2	B10001-
1		203-30-52112	・ Idler	1	B10001-
2		203-30-52122	・ Support, (L.H.)	1	B10001-
3		203-30-52133	・ Support, (R.H.)	1	B10001-
4		203-30-52141	・ Shaft	1	B10001-
5		203-30-52190	・ Bushing	2	B10001-
		175-30-00702	・ Seal Ring Assembly	2	B10001-
6	C1		・・ Seal	2	B10001-
7	C1		・・ O-ring	2	B10001-
8		20X-30-22180	・ Pin	2	B10001-
9		07000-13048	・ O-ring	2	B10001-
10		20Y-30-16330	・ Plug	1	B10001-

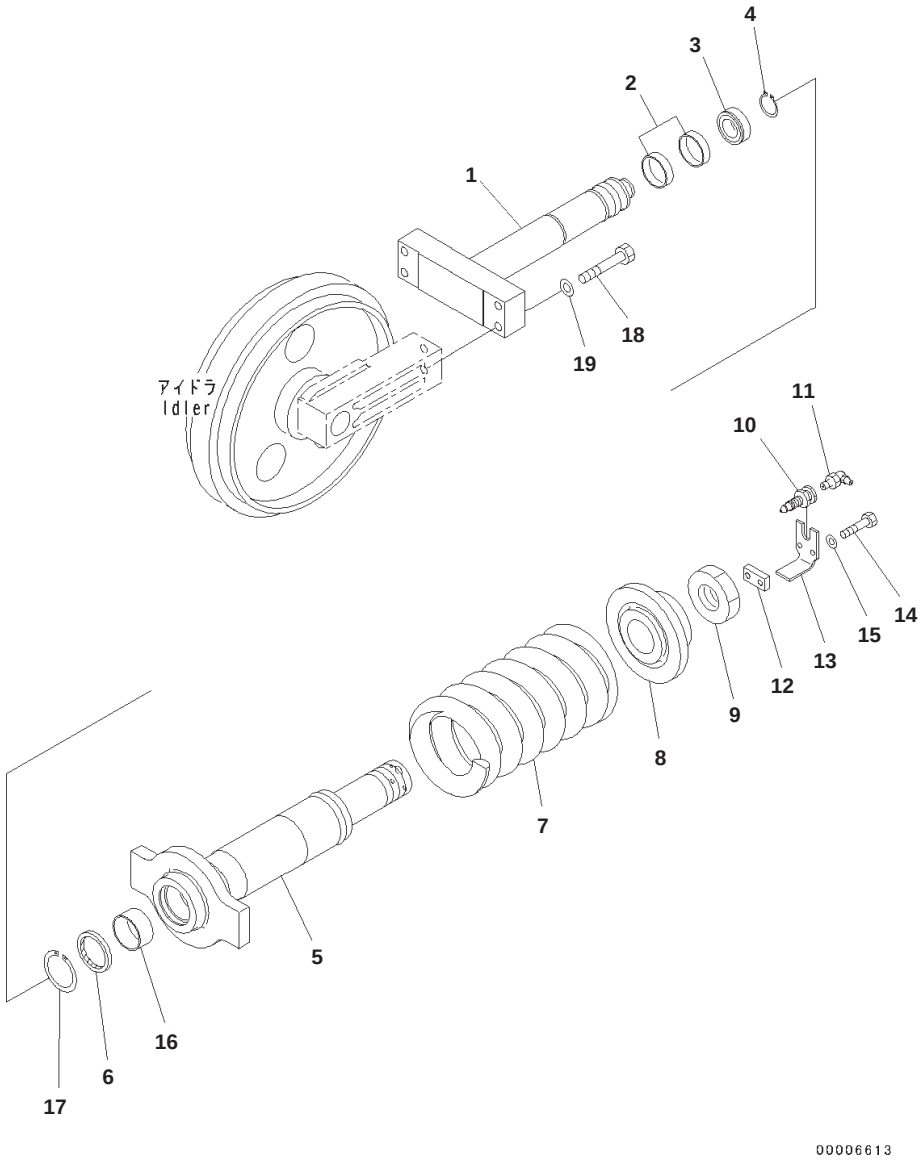

Front Idler and Idler Cushion, Idler Cushion

Index	Part Number	Description	Qty	Serial No.
	22B-30-00510	Cushion Assembly	2	B10001-
1	22B-30-13110	・ Rod	1	B10001-
2	07155-00615	・ Ring, Wear	2	B10001-
3	09370-00060	・ U-packing	1	B10001-
4	04064-03515	・ Ring	1	B10001-
5	22B-30-13120	・ Cylinder	1	B10001-
6	707-56-60540	・ Seal	1	B10001-
7	22B-30-11240	・ Spring	1	B10001-
8	22B-30-12230	・ Pilot	1	B10001-
9	20X-30-22220	・ Nut	1	B10001-
10	203-30-42260	・ Valve	1	B10001-
11	07020-00900	・ Fitting, Grease	1	B10001-
12	201-30-52280	・ Seat	1	B10001-
13	203-30-66260	・ Lock	1	B10001-
14	01010-80830	・ Bolt	2	B10001-
15	01643-30823	・ Washer	2	B10001-
16	07177-06030	・ Bushing	1	B10001-
17	04077-00075	・ Ring, Snap, for Hole Side	1	B10001-
18	01010-81475	Bolt	4	B10001-
19	01643-31445	Washer	4	B10001-

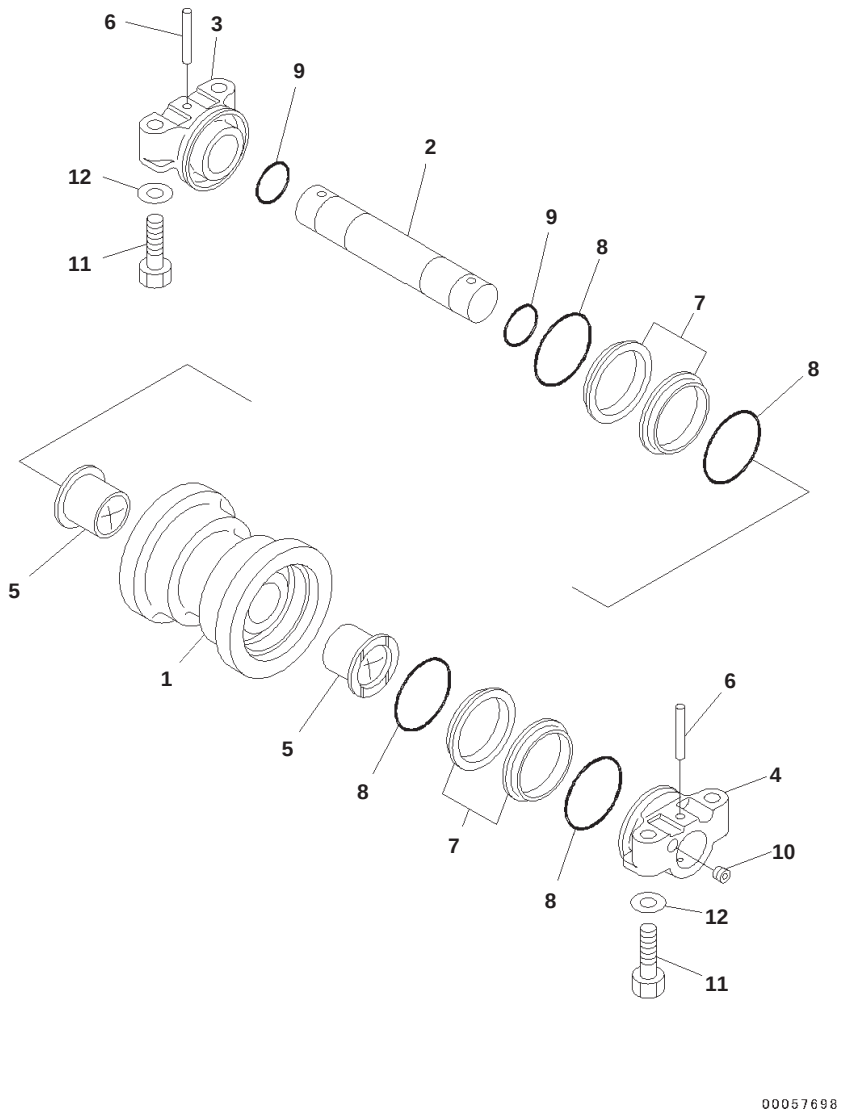

Index	Code	Part Number	Description	Qty	Serial No.
		22B-30-00411	Roller Assembly, Track	14	B10001-
1		22B-30-16511	・ Roller	1	B10001-
		22B-30-17250	・ Shaft Assembly	1	B10001-
2		22B-30-16520	・・ Shaft	1	B10001-
3		22B-30-17240	・・ Collar	1	B10001-
4		22B-30-17230	・ Collar	1	B10001-
5		22B-30-17260	・ Bushing	2	B10001-
6		203-30-44150	・ Pin	1	B10001-
		22B-30-00090	・ Seal Ring Assembly	2	B10001-
7	C1		・・ Seal	2	B10001-
8	C1		・・ O-ring	2	B10001-
9		07000-12045	・ O-ring	1	B10001-
10		20Y-30-16330	・ Plug	1	B10001-
11		01010-81670	Bolt	56	B10001-
12		01643-31645	Washer	56	B10001-

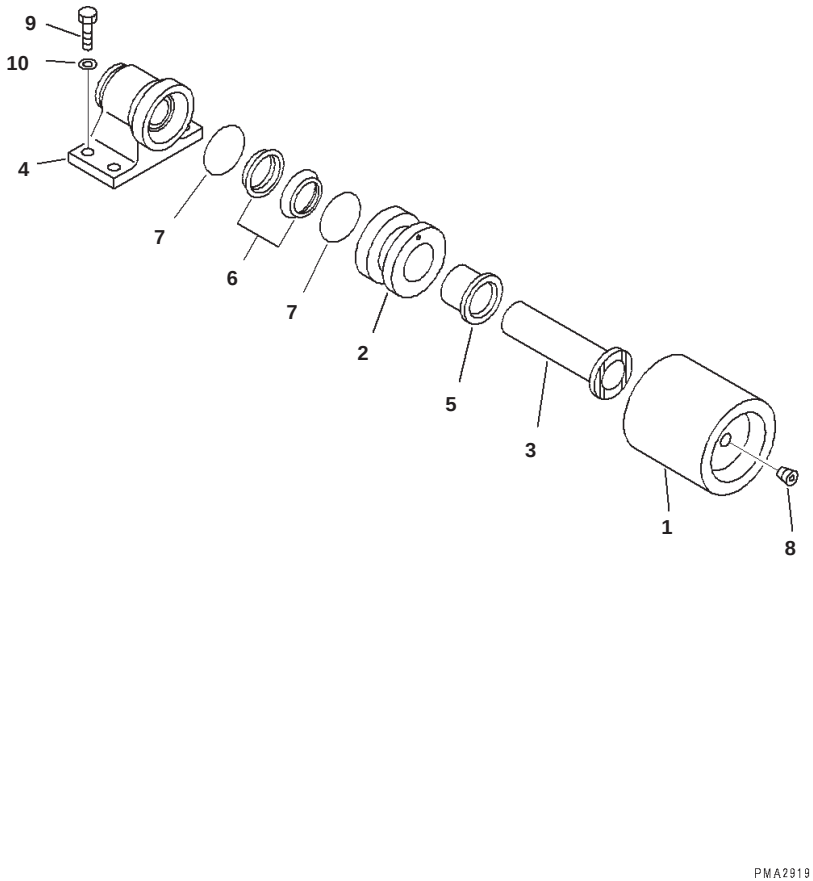

Carrier Roller

Index	Code	Part Number	Description	Qty	Serial No.
		203-30-00231	Roller Assembly	2	B10001-
1		203-30-53111	・ Roller	1	B10001-
2		203-30-53120	・ Collar	1	B10001-
3		203-30-53141	・ Shaft	1	B10001-
4		203-30-53150	・ Collar	1	B10001-
5		203-30-53160	・ Bushing	1	B10001-
		110-30-00086	・ Floating Seal Assembly	1	B10001-
6	C1		・・ Seal	2	B10001-
7	C1		・・ O-ring	2	B10001-
8		20Y-30-16330	・ Plug	1	B10001-
9		01010-81235	Bolt	8	B10001-
10		01643-31232	Washer	8	B10001-

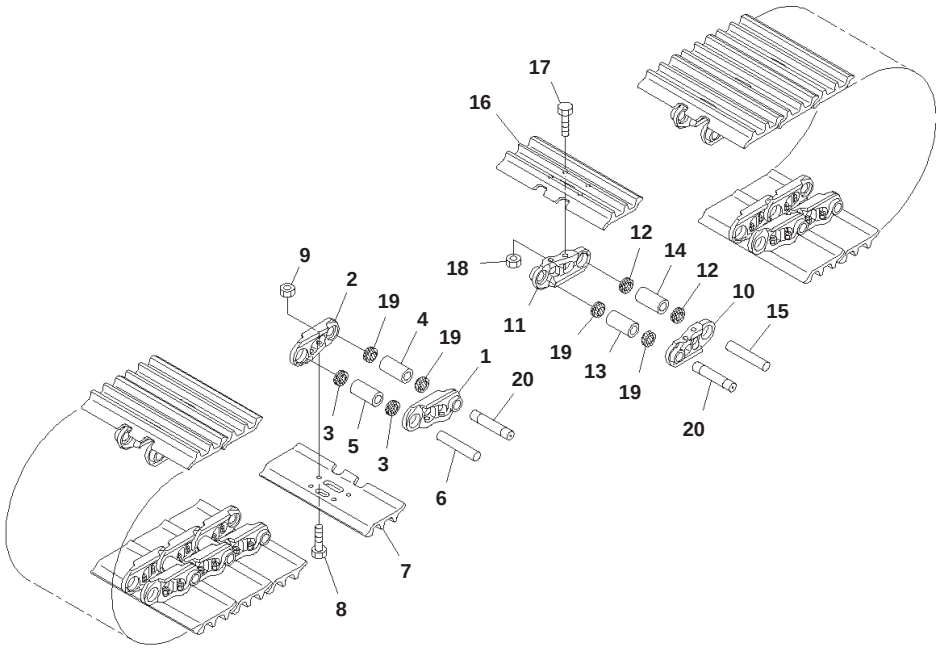

Track Shoe Assembly, With Large Holed, Triple Shoe Grouser, 500mm Width

Index	Part Number	Description	Qty	Serial No.
	203-32-02462	Track Shoe Assembly	1	B10001-
1	203-32-51123	・ Link	42	B10001-
2	203-32-51133	・ Link	42	B10001-
3	203-32-11360	・ Seal	80	B10001-
4	203-32-11372	・ Bushing, Master	2	B10001-
5	203-32-11342	・ Bushing, Regular	40	B10001-
6	203-32-51152	・ Pin, Regular	40	B10001-
7	203-32-51461	・ Shoe, W=500	42	B10001-
8	22B-32-21230	・ Bolt, (Kit : K01)	168	B10001-
9	203-32-61220	・ Nut, (Kit : K01)	168	B10001-
10	203-32-51123	・ Link	44	B10001-
11	203-32-51133	・ Link	44	B10001-
12	203-32-11360	・ Seal	84	B10001-
13	203-32-11372	・ Bushing, Master	2	B10001-
14	203-32-11342	・ Bushing, Regular	42	B10001-
15	203-32-51152	・ Pin, Regular	42	B10001-
16	203-32-51461	・ Shoe, W=500	44	B10001-
17	22B-32-21230	・ Bolt, (Kit : K01)	176	B10001-
18	203-32-61220	・ Nut, (Kit : K01)	176	B10001-
19	203-32-11381	・ Seal	8	B10001-
20	203-32-51192	・ Pin, Master	4	B10001-

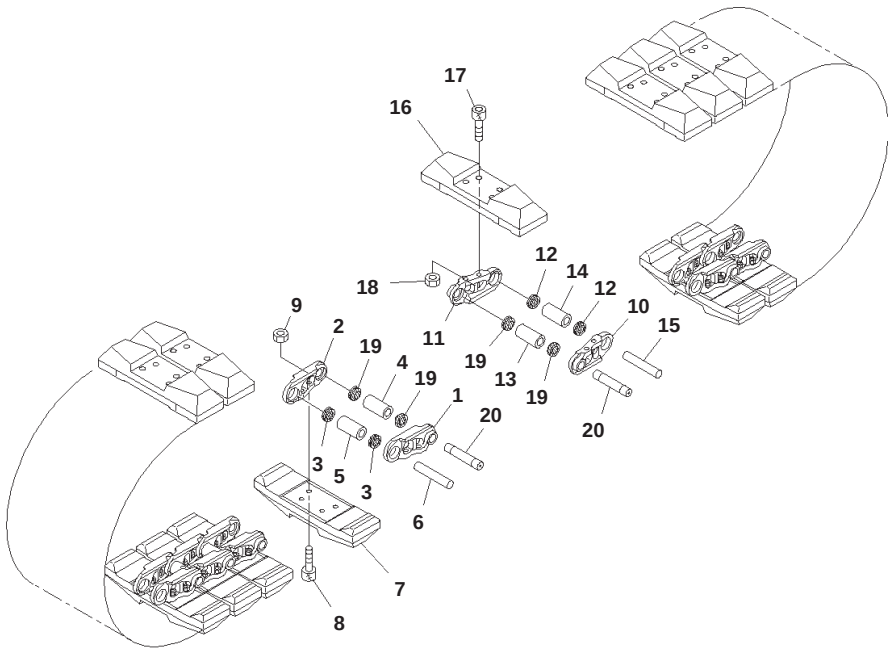

Track Shoe Assembly, Road Liner, 500mm Width

Index	Part Number	Description	Qty	Serial No.
	203-32-02512	Track Shoe Assembly	1	B10001-
1	203-32-51123	・ Link	42	B10001-
2	203-32-51133	・ Link	42	B10001-
3	203-32-11360	・ Seal	80	B10001-
4	203-32-11372	・ Bushing, Master	2	B10001-
5	203-32-11342	・ Bushing, Regular	40	B10001-
6	203-32-51152	・ Pin, Regular	40	B10001-
7	21Y-32-16111	・ Shoe, W=500mm	42	B10001-
8	22B-32-21210	・ Bolt, (Kit : K02)	168	B10001-
9	203-32-61220	・ Nut, (Kit : K02)	168	B10001-
10	203-32-51123	・ Link	44	B10001-
11	203-32-51133	・ Link	44	B10001-
12	203-32-11360	・ Seal	84	B10001-
13	203-32-11372	・ Bushing, Master	2	B10001-
14	203-32-11342	・ Bushing, Regular	42	B10001-
15	203-32-51152	・ Pin, Regular	42	B10001-
16	21Y-32-16111	・ Shoe, W=500mm	44	B10001-
17	22B-32-21210	・ Bolt, (Kit : K02)	176	B10001-
18	203-32-61220	・ Nut, (Kit : K02)	176	B10001-
19	203-32-11381	・ Seal	8	B10001-
20	203-32-51192	・ Pin, Master	4	B10001-

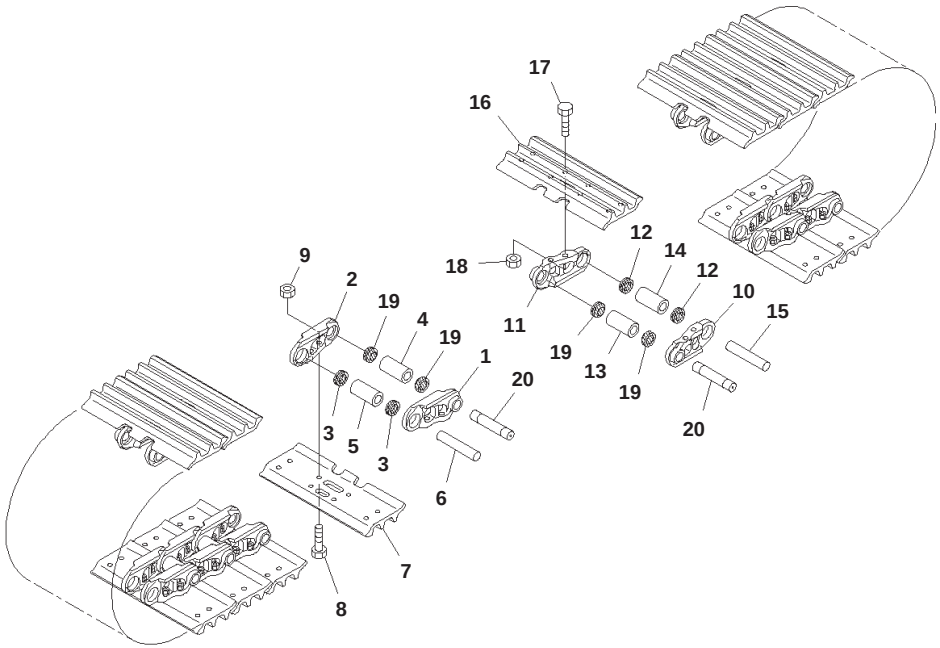

Track Shoe Assembly, Triple Shoe Grouser, City Pad, 500mm Width

Index	Part Number	Description	Qty	Serial No.
	203-32-02492	Track Shoe Assembly	1	B10001-
1	203-32-51123	・ Link	42	B10001-
2	203-32-51133	・ Link	42	B10001-
3	203-32-11360	・ Seal	80	B10001-
4	203-32-11372	・ Bushing, Master	2	B10001-
5	203-32-11342	・ Bushing, Regular	40	B10001-
6	203-32-51152	・ Pin, Regular	40	B10001-
7	203-32-51540	・ Shoe, W=500mm	42	B10001-
8	22B-32-21230	・ Bolt, (Kit : K01)	168	B10001-
9	203-32-61220	・ Nut, (Kit : K01)	168	B10001-
10	203-32-51123	・ Link	44	B10001-
11	203-32-51133	・ Link	44	B10001-
12	203-32-11360	・ Seal	84	B10001-
13	203-32-11372	・ Bushing, Master	2	B10001-
14	203-32-11342	・ Bushing, Regular	42	B10001-
15	203-32-51152	・ Pin, Regular	42	B10001-
16	203-32-51540	・ Shoe, W=500mm	44	B10001-
17	22B-32-21230	・ Bolt, (Kit : K01)	176	B10001-
18	203-32-61220	・ Nut, (Kit : K01)	176	B10001-
19	203-32-11381	・ Seal	8	B10001-
20	203-32-51192	・ Pin, Master	4	B10001-

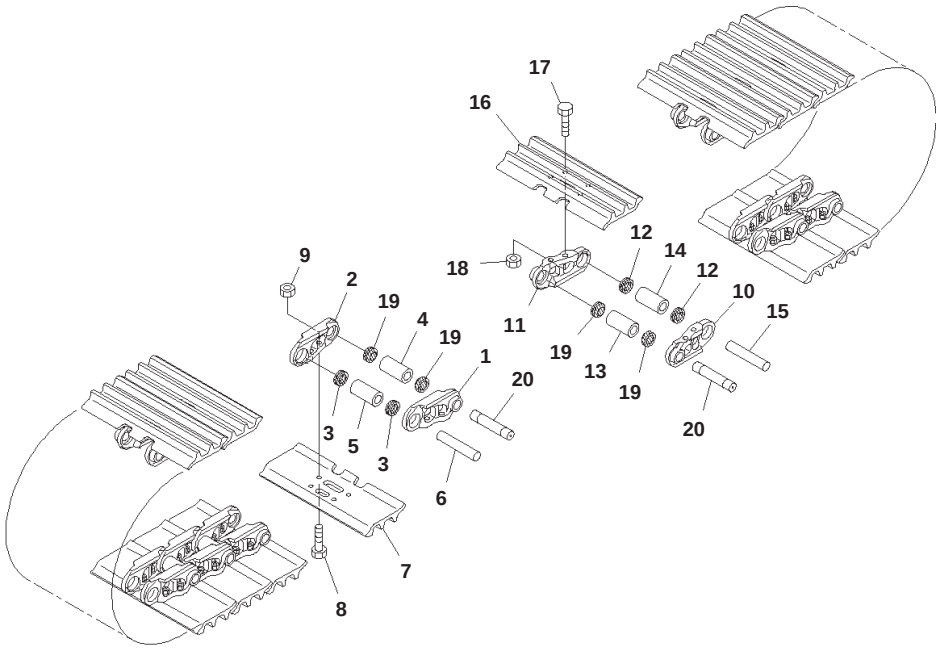

Track Shoe Assembly, With Large Holed, Triple Shoe Grouser, 600mm Width

Index	Part Number	Description	Qty	Serial No.
	203-32-02472	Track Shoe Assembly	1	B10001-
1	203-32-51123	・ Link	42	B10001-
2	203-32-51133	・ Link	42	B10001-
3	203-32-11360	・ Seal	80	B10001-
4	203-32-11372	・ Bushing, Master	2	B10001-
5	203-32-11342	・ Bushing, Regular	40	B10001-
6	203-32-51152	・ Pin, Regular	40	B10001-
7	203-32-51470	・ Shoe, W=600mm	42	B10001-
8	22B-32-21230	・ Bolt, (Kit : K01)	168	B10001-
9	203-32-61220	・ Nut, (Kit : K01)	168	B10001-
10	203-32-51123	・ Link	44	B10001-
11	203-32-51133	・ Link	44	B10001-
12	203-32-11360	・ Seal	84	B10001-
13	203-32-11372	・ Bushing, Master	2	B10001-
14	203-32-11342	・ Bushing, Regular	42	B10001-
15	203-32-51152	・ Pin, Regular	42	B10001-
16	203-32-51470	・ Shoe, W=600mm	44	B10001-
17	22B-32-21230	・ Bolt, (Kit : K01)	176	B10001-
18	203-32-61220	・ Nut, (Kit : K01)	176	B10001-
19	203-32-11381	・ Seal	8	B10001-
20	203-32-51192	・ Pin, Master	4	B10001-

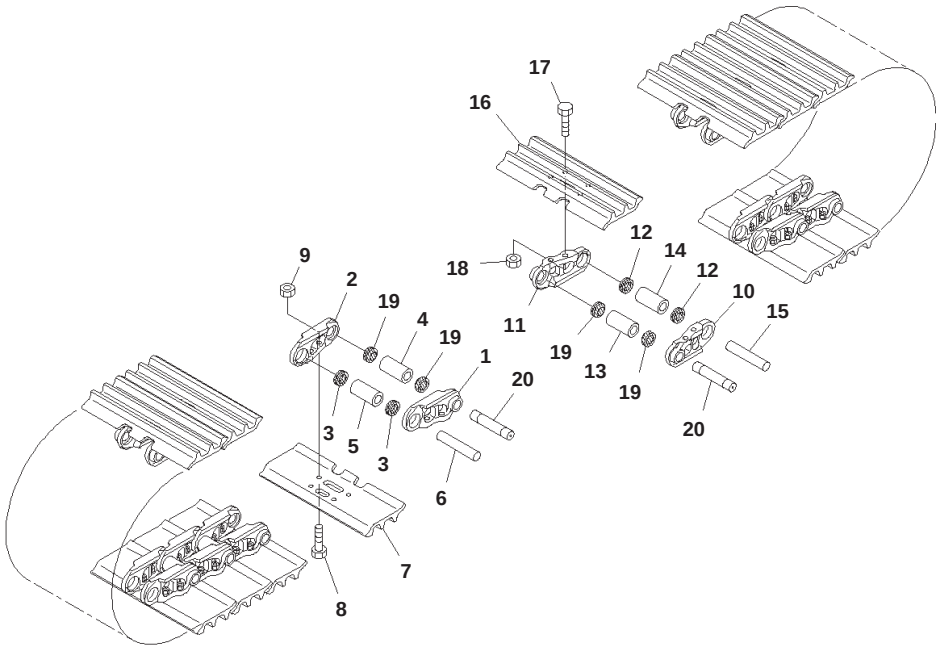

Track Shoe Assembly, With Large Holed, Triple Shoe Grouser, 700mm Width

Index	Part Number	Description	Qty	Serial No.
	203-32-02482	Track Shoe Assembly	1	B10001-
1	203-32-51123	・ Link	42	B10001-
2	203-32-51133	・ Link	42	B10001-
3	203-32-11360	・ Seal	80	B10001-
4	203-32-11372	・ Bushing, Master	2	B10001-
5	203-32-11342	・ Bushing, Regular	40	B10001-
6	203-32-51152	・ Pin, Regular	40	B10001-
7	203-32-51480	・ Shoe, W=700mm	42	B10001-
8	22B-32-21230	・ Bolt, (Kit : K01)	168	B10001-
9	203-32-61220	・ Nut, (Kit : K01)	168	B10001-
10	203-32-51123	・ Link	44	B10001-
11	203-32-51133	・ Link	44	B10001-
12	203-32-11360	・ Seal	84	B10001-
13	203-32-11372	・ Bushing, Master	2	B10001-
14	203-32-11342	・ Bushing, Regular	42	B10001-
15	203-32-51152	・ Pin, Regular	42	B10001-
16	203-32-51480	・ Shoe, W=700mm	44	B10001-
17	22B-32-21230	・ Bolt, (Kit : K01)	176	B10001-
18	203-32-61220	・ Nut, (Kit : K01)	176	B10001-
19	203-32-11381	・ Seal	8	B10001-
20	203-32-51192	・ Pin, Master	4	B10001-

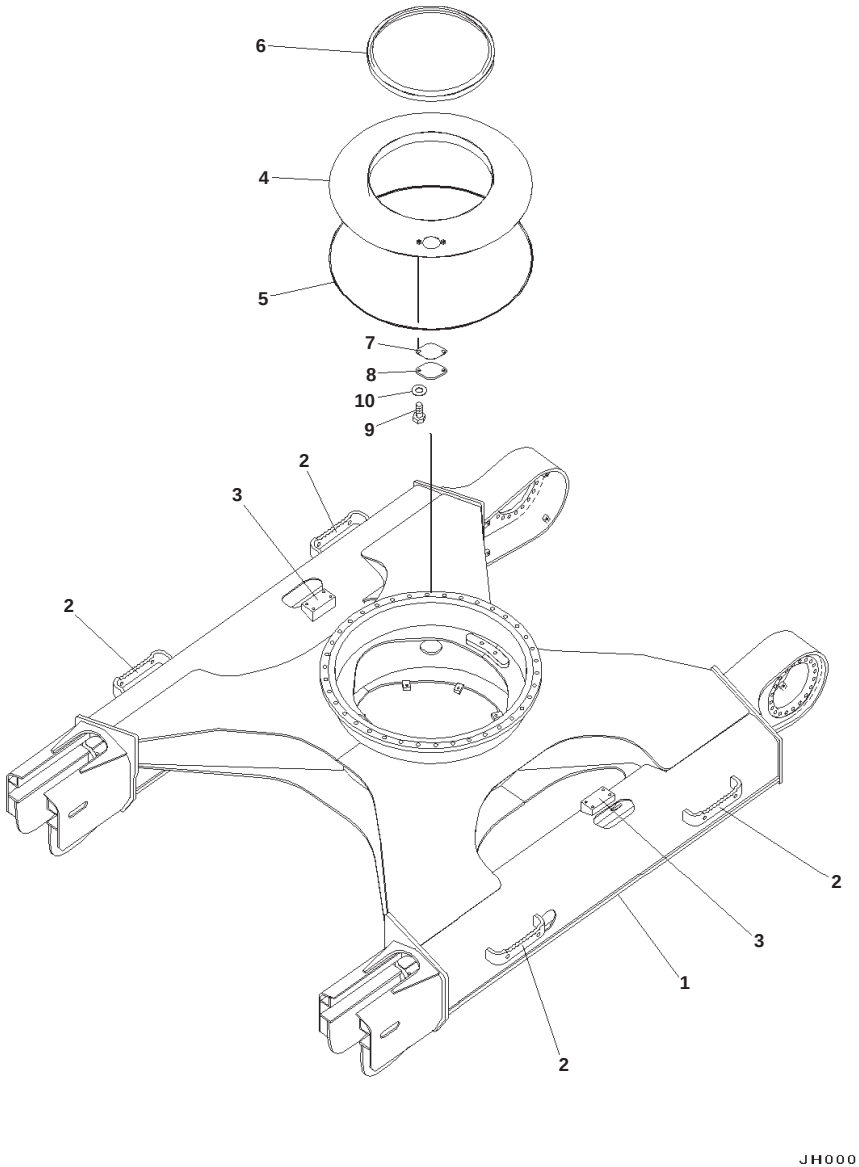

Track Frame, With Track Roller Guard

Index	Code	Part Number	Description	Qty	Serial No.
1		203-30-B1010	Frame	1	B10069-
	A2	22B-30-21311	Frame	1	B10001-B10068
2		22B-30-21D30	・ Plate, Welded	4	B10001-
3		203-30-61D60	・ Plate, Welded	2	B10001-
4		203-30-61152	Cover	1	B10001-
5		203-30-61161	・ Seal	1	B10001-
6		203-30-61172	・ Seal	1	B10001-
7		203-46-31181	Gasket	1	B10001-
8		203-46-56160	Cover	1	B10001-
9		01010-81025	Bolt	2	B10001-
10		01643-31032	Washer	2	B10001-

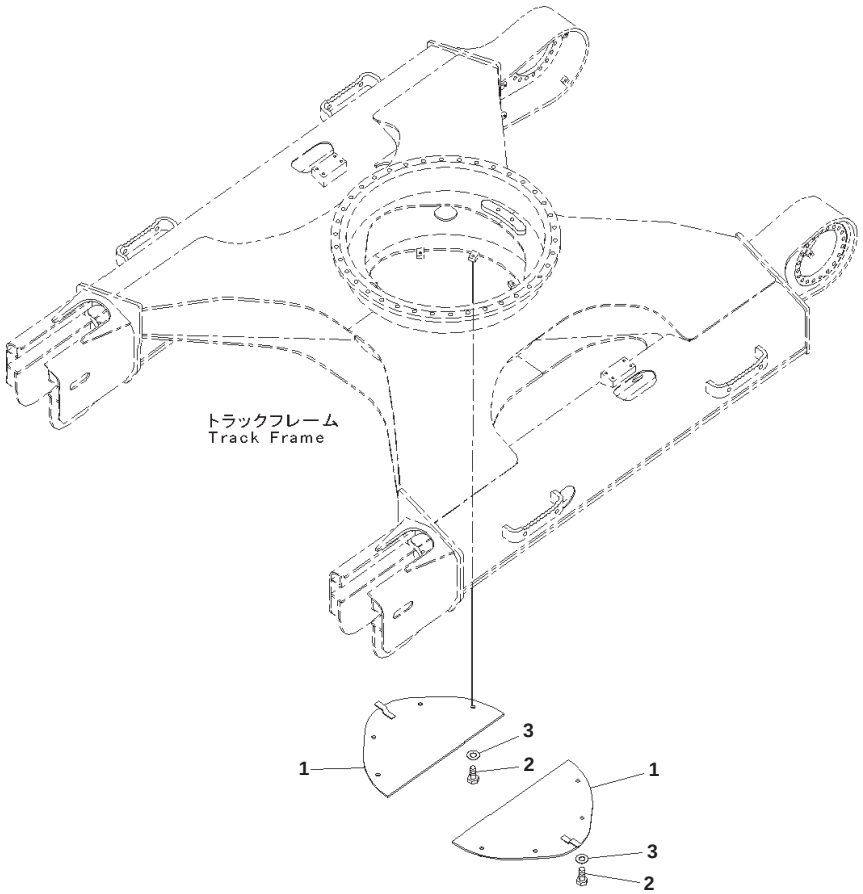

Track Frame Under Cover (#B10001-B10083)

Index	Part Number	Description	Qty	Serial No.
1	203-30-62130	Cover	2	B10001-B10083
2	01010-81230	Bolt	8	B10001-B10083
3	01643-31232	Washer	8	B10001-B10083

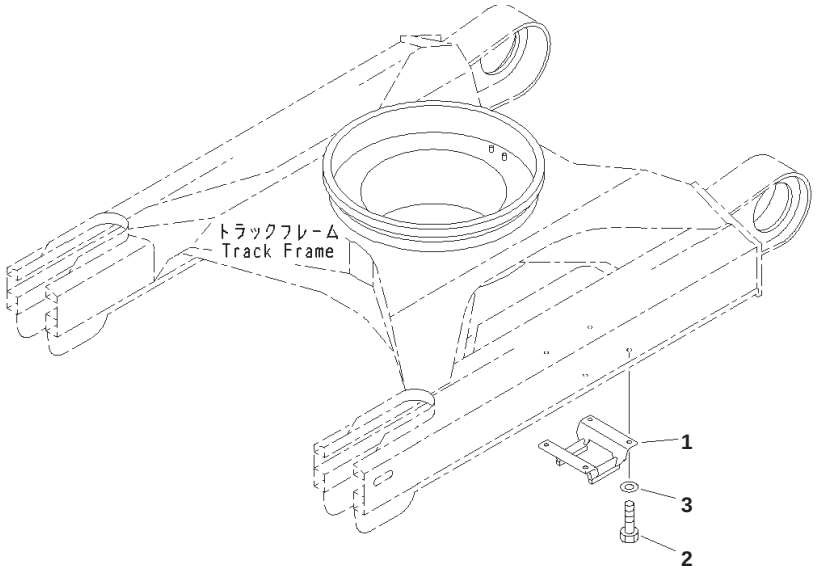

PMA3043

Track Guard

Index	Part Number	Description	Qty	Serial No.
1	203-30-56151	Guard	2	B10001-
2	01010-81640	Bolt	8	B10001-
3	01643-31645	Washer	8	B10001-

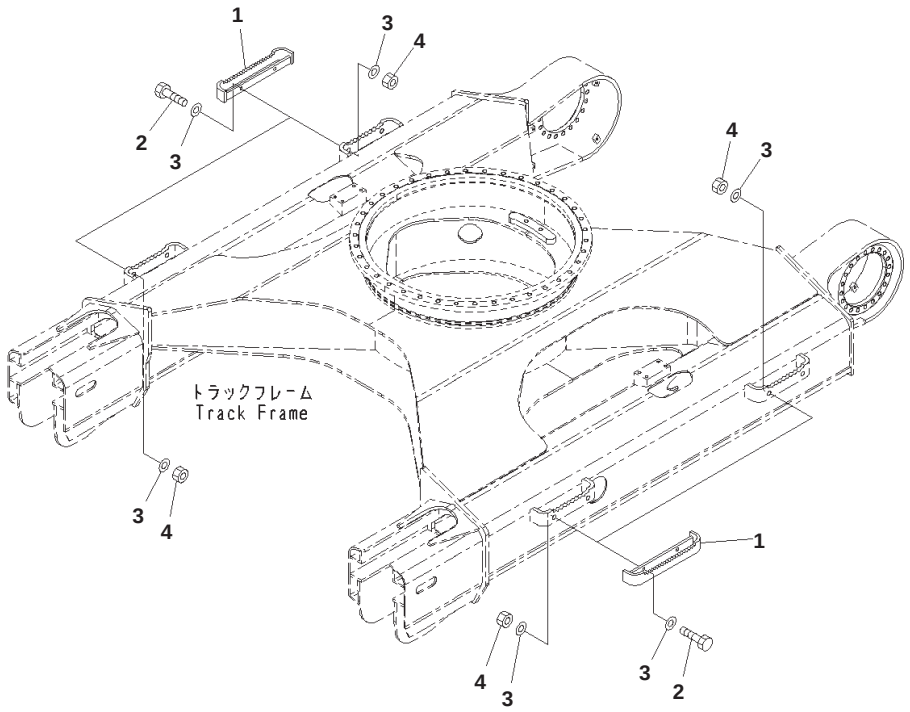

Additional Track Frame Step

Index	Part Number	Description	Qty	Serial No.
1	22B-30-21220	Step	4	B10001-
2	01010-81660	Bolt	8	B10001-
3	01643-31645	Washer	16	B10001-
4	01580-11613	Nut	8	B10001-

WORK EQUIPMENT

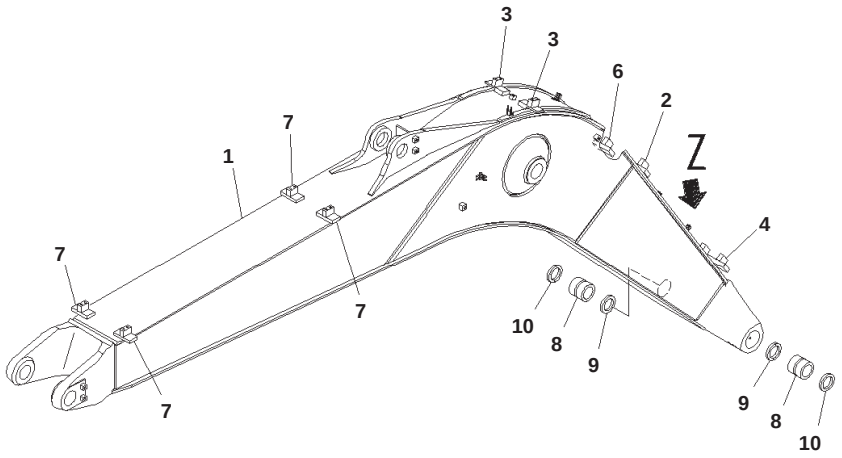

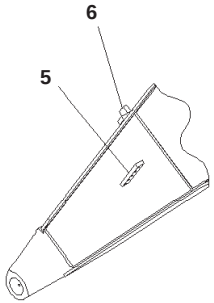

Z 視
View Z

JH000703

Boom, 100 Hours Greasing Type, 4.6m

Index	Part Number	Description	Qty	Serial No.
	203-70-B0010	Boom Assembly	1	B10001-
1	203-70-B1110	・ Boom	1	B10001-
2	203-70-51221	・・ Seat, Welded	1	B10001-
3	203-70-61780	・・ Plate,Welded	2	B10001-
4	203-70-51260	・・ Seat	1	B10001-
5	203-70-61310	・・ Plate,Welded	1	B10001-
6	203-70-51221	・・ Seat, Welded	1	B10001-
7	203-70-61790	・・ Plate,Welded	4	B10001-
8	203-70-66110	・ Bushing	2	B10001-
9	07145-00070	・ Seal, Dust	2	B10001-
10	07145-00070	Seal, Dust	2	B10001-

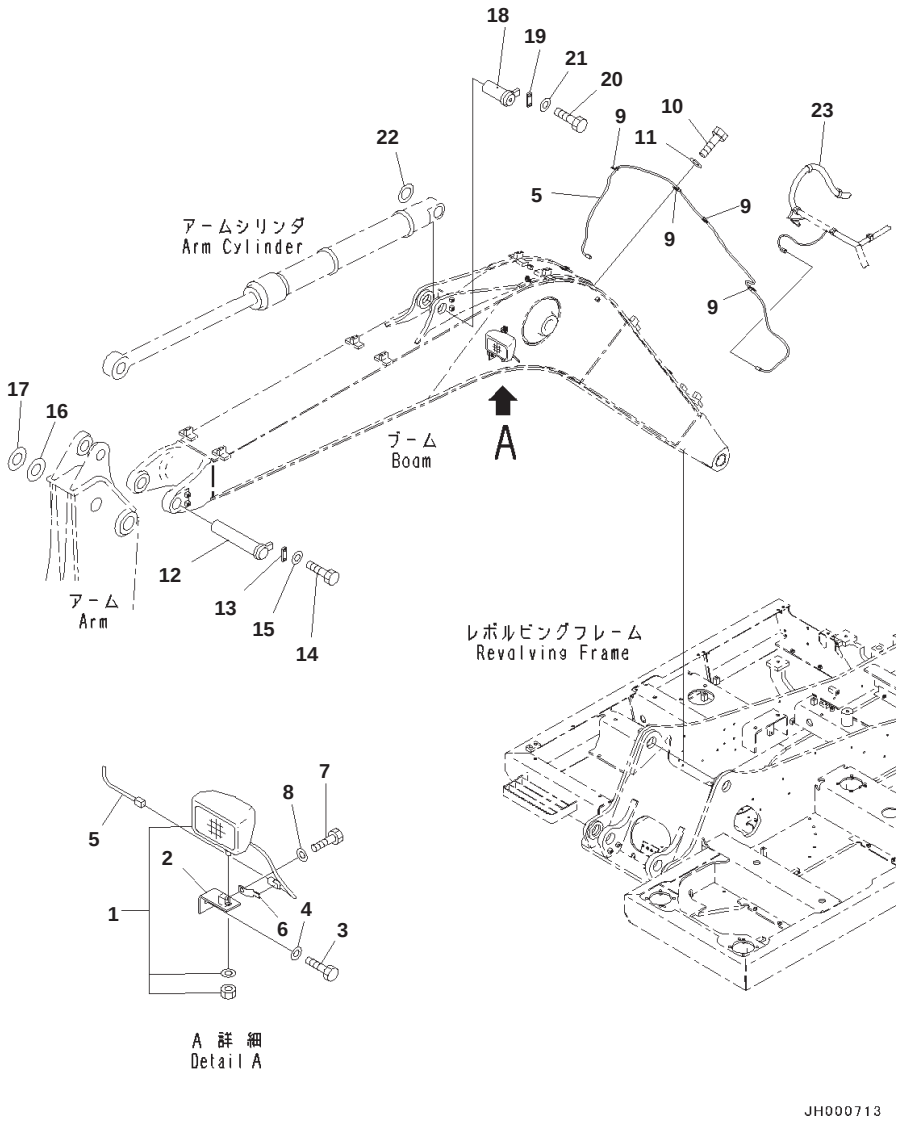

Boom, 100 Hours Greasing Type, Working Lamp

Index	Part Number	Description	Qty	Serial No.
1	21T-06-32810	Working Lamp Assembly, 24volt, 70watt	1	B10001-
	421-06-23330	・ Bulb, 70watt	1	B10001-
2	20Y-06-21551	Bracket	1	B10001-
3	01010-81225	Bolt	1	B10001-
4	01643-31232	Washer	1	B10001-
5	203-06-11140	Wire	1	B10001-
6	08193-21012	Clip	1	B10001-
7	01010-81225	Bolt	1	B10001-
8	01643-31232	Washer	1	B10001-
9	04434-51012	Clip	4	B10001-
10	01010-81020	Bolt	1	B10001-
11	01643-31032	Washer	1	B10001-
12	22B-70-22550	Pin	1	B10001-
13	22B-70-22570	Plate	1	B10001-
14	01010-81235	Bolt	2	B10001-
15	01643-31232	Washer	2	B10001-
16	20U-70-31340	Spacer, T=1.0mm	1	B10001-
17	20U-70-31330	Spacer, T=0.5mm	1	B10001-
18	203-70-42121	Pin	1	B10001-
19	205-70-66580	Plate	1	B10001-
20	01010-81230	Bolt	2	B10001-
21	01643-31232	Washer	2	B10001-
22	21Y-70-14830	Spacer, T=1.0mm	1	B10001-
23	(203-06-11730)	Wiring Harness		

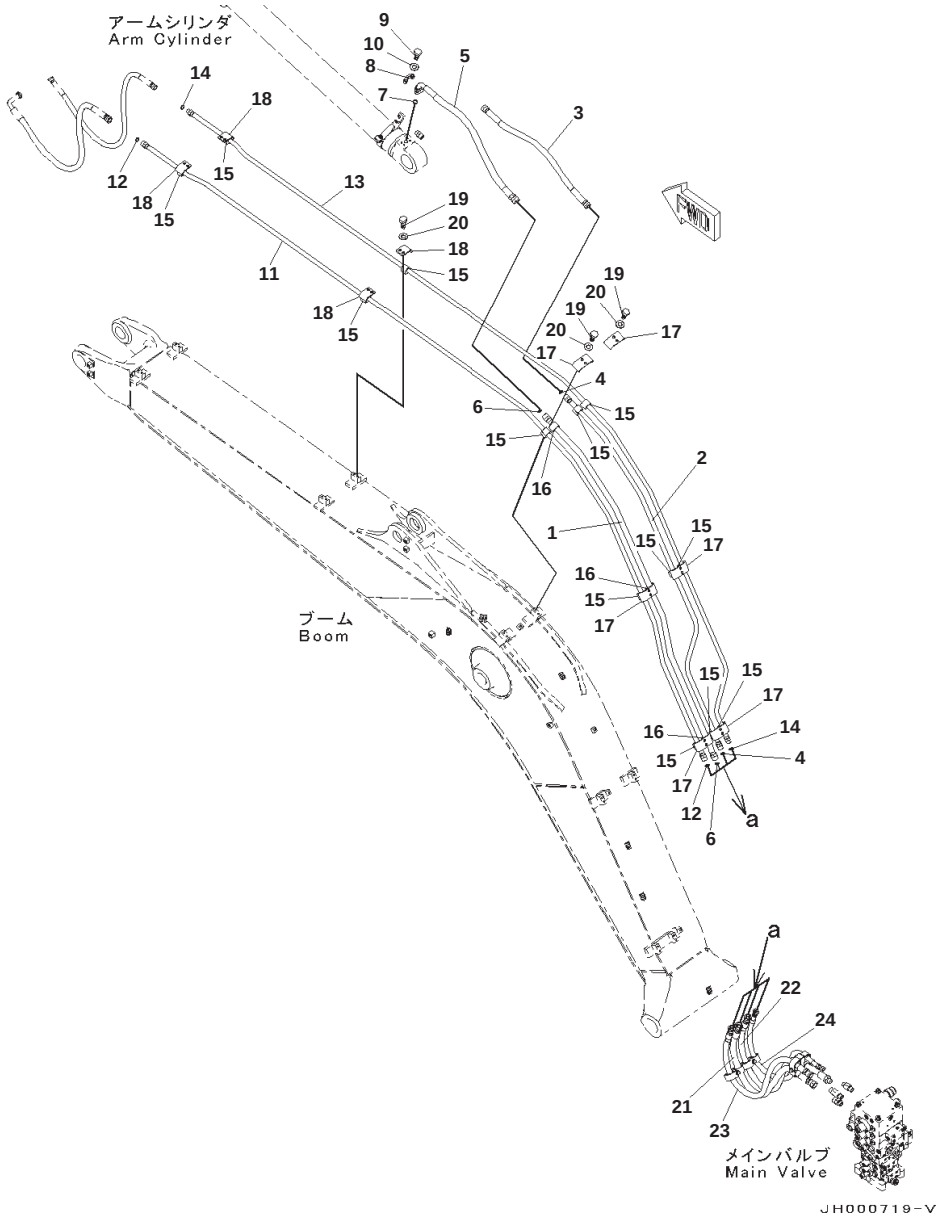

Boom, 100 Hours Greasing Type, Arm and Bucket Cylinder Piping

Index	Part Number	Description	Qty	Serial No.
1	203-62-15120	Tube	1	B10001-
2	203-62-15130	Tube	1	B10001-
3	22B-62-21520	Hose	1	B10001-
4	02896-11015	O-ring	2	B10001-
5	22B-62-21510	Hose	1	B10001-
6	02896-11018	O-ring	2	B10001-
7	07000-13025	O-ring	1	B10001-
8	07371-30640	Flange, Split	2	B10001-
9	07372-21035	Bolt	4	B10001-
10	01643-51032	Washer	4	B10001-
11	203-62-15111	Tube	1	B10001-
12	02896-11015	O-ring	2	B10001-
13	203-62-15140	Tube	1	B10001-
14	02896-11012	O-ring	2	B10001-
15	203-62-58810	Cushion	13	B10001-
16	21K-62-35270	Cushion	3	B10001-
17	203-70-53381	Plate	6	B10001-
18	22B-70-19290	Plate	4	B10001-
19	01010-81025	Bolt	20	B10001-
20	01643-31032	Washer	20	B10001-
21	(203-62-11471)	Hose		
22	(203-62-11221)	Hose		
23	(203-62-13170)	Hose		
24	(02777-00411)	Hose, Face Seal Type		

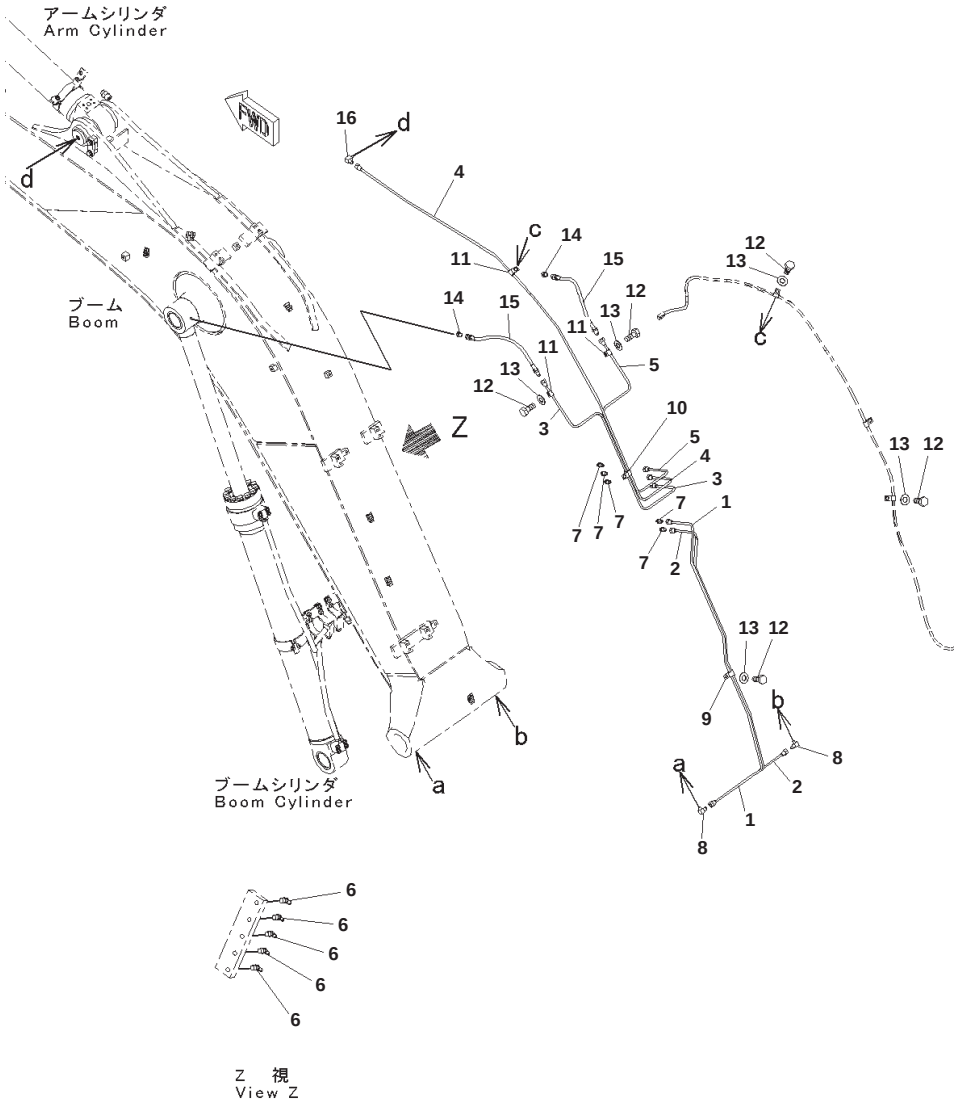

Boom, 100 Hours Greasing Type, Lubrication Piping

Index	Part Number	Description	Qty	Serial No.
1	203-70-61251	Tube	1	B10001-
2	203-70-61261	Tube	1	B10001-
3	203-70-61271	Tube	1	B10001-
4	203-70-15210	Tube	1	B10001-
5	203-70-61291	Tube	1	B10001-
6	07020-00900	Fitting, Grease	5	B10001-
7	20Y-70-11540	Connector	5	B10001-
8	20Y-70-11590	Elbow	2	B10001-
9	04435-50810	Clip	1	B10001-
10	04434-51712	Clip	1	B10001-
11	04434-50812	Clip	3	B10001-
12	01010-81020	Bolt	5	B10001-
13	01643-31032	Washer	5	B10001-
14	205-70-51390	Nipple	2	B10001-
15	20Y-70-11520	Hose	2	B10001-
16	20Y-25-11270	Elbow	1	B10001-

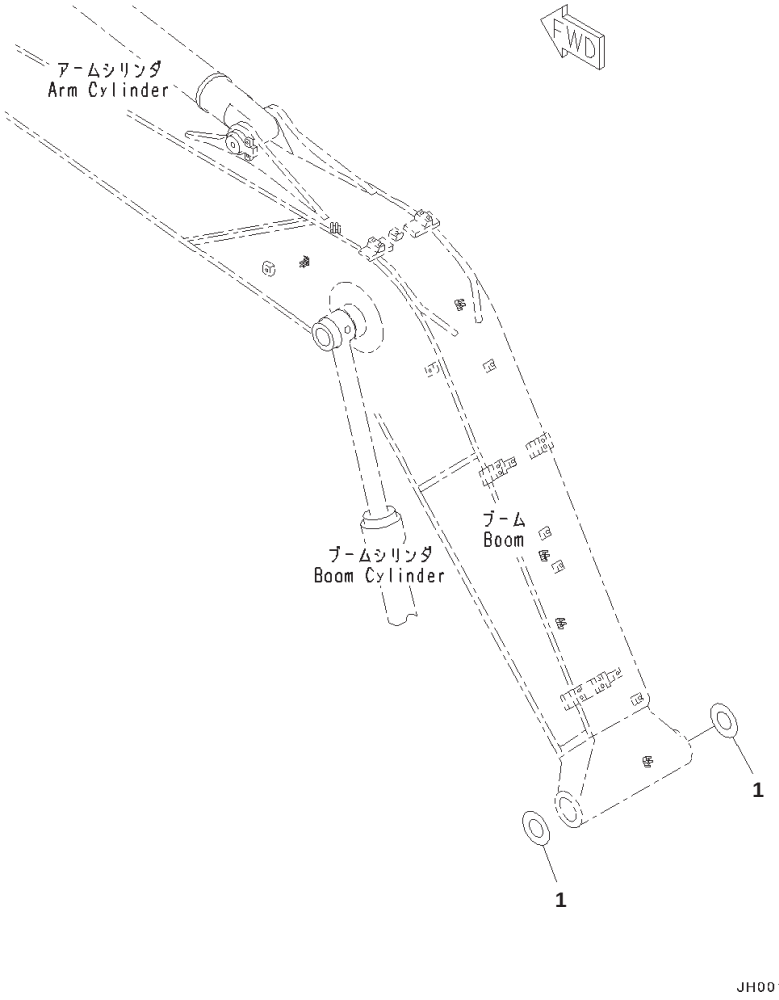

Index	Part Number	Description	Qty	Serial No.
1	21Y-70-14760	Spacer, T=2.0mm	2	B10001-

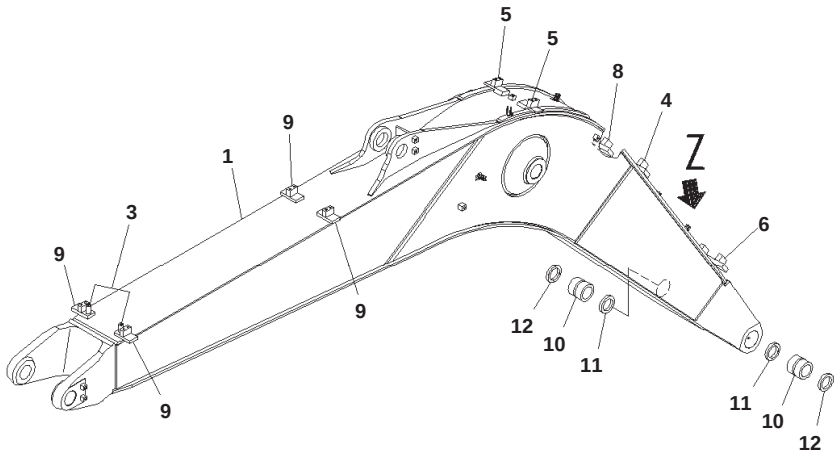

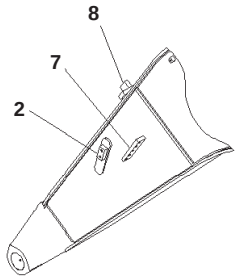

JH000721

Boom, 1-actuator, 100 Hours Greasing Type, 4.6m

Index	Part Number	Description	Qty	Serial No.
	203-70-B0020	Boom Assembly	1	B10001-
1	203-70-B1140	・ Boom	1	B10001-
2	203-62-64322	・・ Bracket,Welded	1	B10001-
3	203-70-15170	・・ Seat,Welded	2	B10001-
4	203-70-51221	・・ Seat, Welded	1	B10001-
5	203-70-61780	・・ Plate,Welded	2	B10001-
6	203-70-51260	・・ Seat	1	B10001-
7	203-70-61310	・・ Plate,Welded	1	B10001-
8	203-70-51221	・・ Seat, Welded	1	B10001-
9	203-70-61790	・・ Plate,Welded	4	B10001-
10	203-70-66110	・ Bushing	2	B10001-
11	07145-00070	・ Seal, Dust	2	B10001-
12	07145-00070	Seal, Dust	2	B10001-

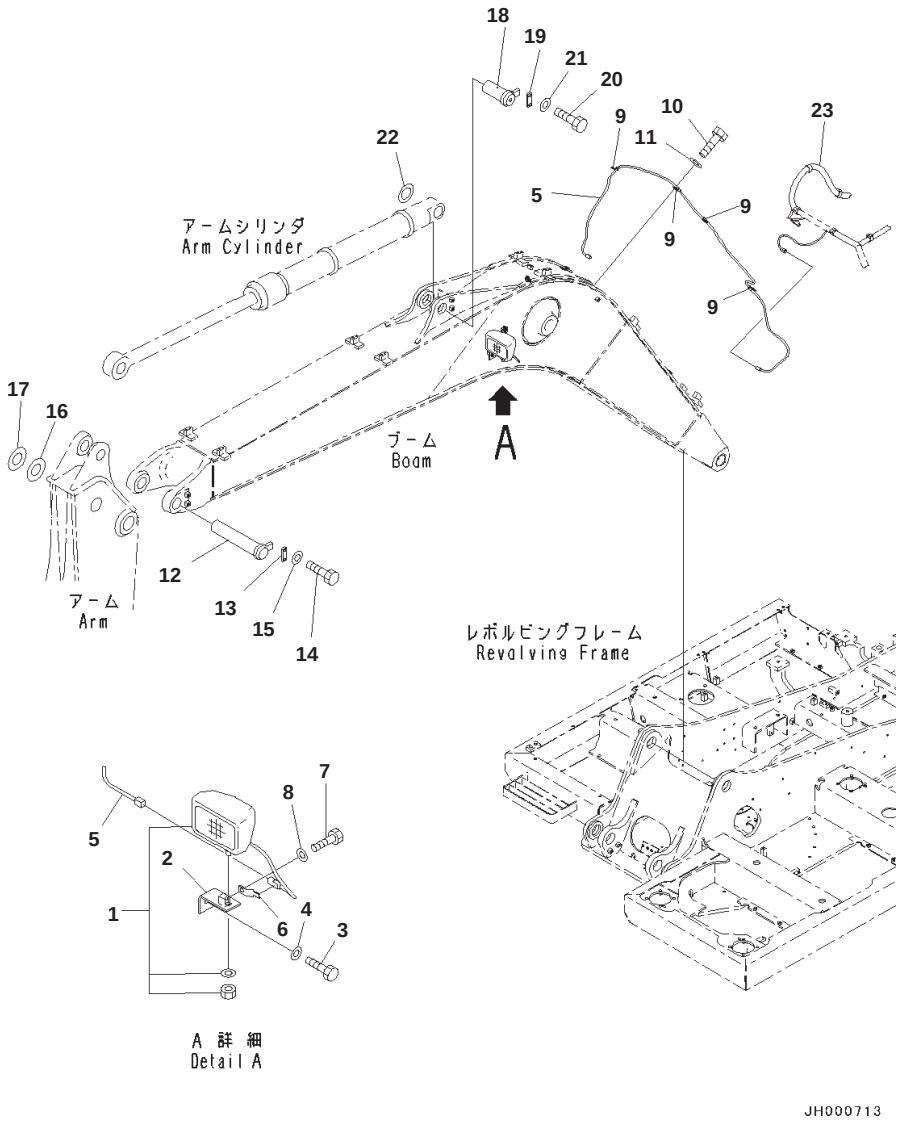

Boom, 1-actuator, 100 Hours Greasing Type, Working Lamp

Index	Part Number	Description	Qty	Serial No.
1	21T-06-32810	Working Lamp Assembly, 24volt, 70watt	1	B10001-
	421-06-23330	・ Bulb, 70watt	1	B10001-
2	20Y-06-21551	Bracket	1	B10001-
3	01010-81225	Bolt	1	B10001-
4	01643-31232	Washer	1	B10001-
5	203-06-11140	Wire	1	B10001-
6	08193-21012	Clip	1	B10001-
7	01010-81225	Bolt	1	B10001-
8	01643-31232	Washer	1	B10001-
9	04434-51012	Clip	4	B10001-
10	01010-81020	Bolt	1	B10001-
11	01643-31032	Washer	1	B10001-
12	22B-70-22550	Pin	1	B10001-
13	22B-70-22570	Plate	1	B10001-
14	01010-81235	Bolt	2	B10001-
15	01643-31232	Washer	2	B10001-
16	20U-70-31340	Spacer, T=1.0mm	1	B10001-
17	20U-70-31330	Spacer, T=0.5mm	1	B10001-
18	203-70-42121	Pin	1	B10001-
19	205-70-66580	Plate	1	B10001-
20	01010-81230	Bolt	2	B10001-
21	01643-31232	Washer	2	B10001-
22	21Y-70-14830	Spacer, T=1.0mm	1	B10001-
23	(203-06-11730)	Wiring Harness		

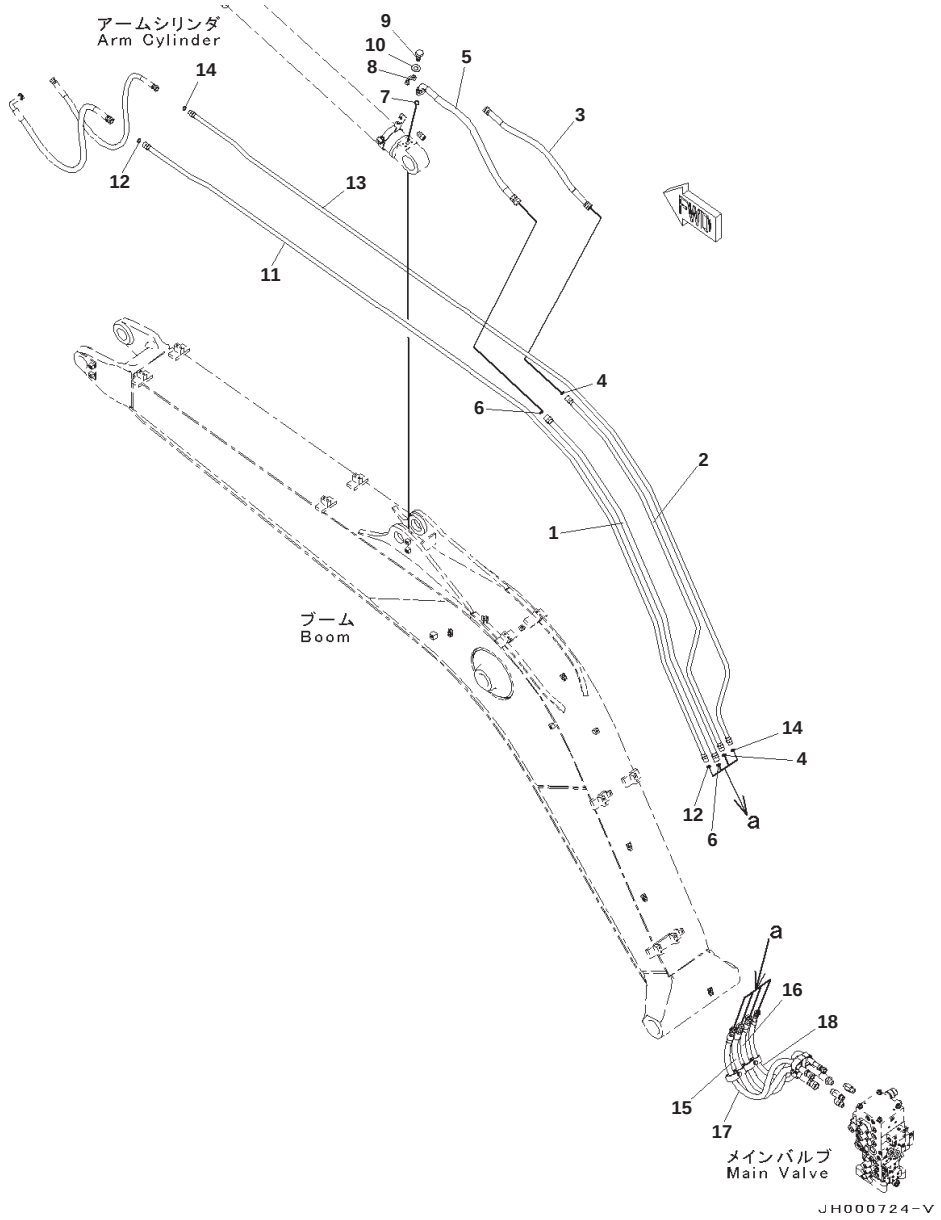

Boom, 1-actuator, 100 Hours Greasing Type, Arm and Bucket Cylinder Piping

Index	Part Number	Description	Qty	Serial No.
1	203-62-15120	Tube	1	B10001-
2	203-62-15130	Tube	1	B10001-
3	22B-62-21520	Hose	1	B10001-
4	02896-11015	O-ring	2	B10001-
5	22B-62-21510	Hose	1	B10001-
6	02896-11018	O-ring	2	B10001-
7	07000-13025	O-ring	1	B10001-
8	07371-30640	Flange, Split	2	B10001-
9	07372-21035	Bolt	4	B10001-
10	01643-51032	Washer	4	B10001-
11	203-62-15111	Tube	1	B10001-
12	02896-11015	O-ring	2	B10001-
13	203-62-15140	Tube	1	B10001-
14	02896-11012	O-ring	2	B10001-
15	(203-62-11471)	Hose		
16	(203-62-11221)	Hose		
17	(203-62-13170)	Hose		
18	(02777-00411)	Hose, Face Seal Type		

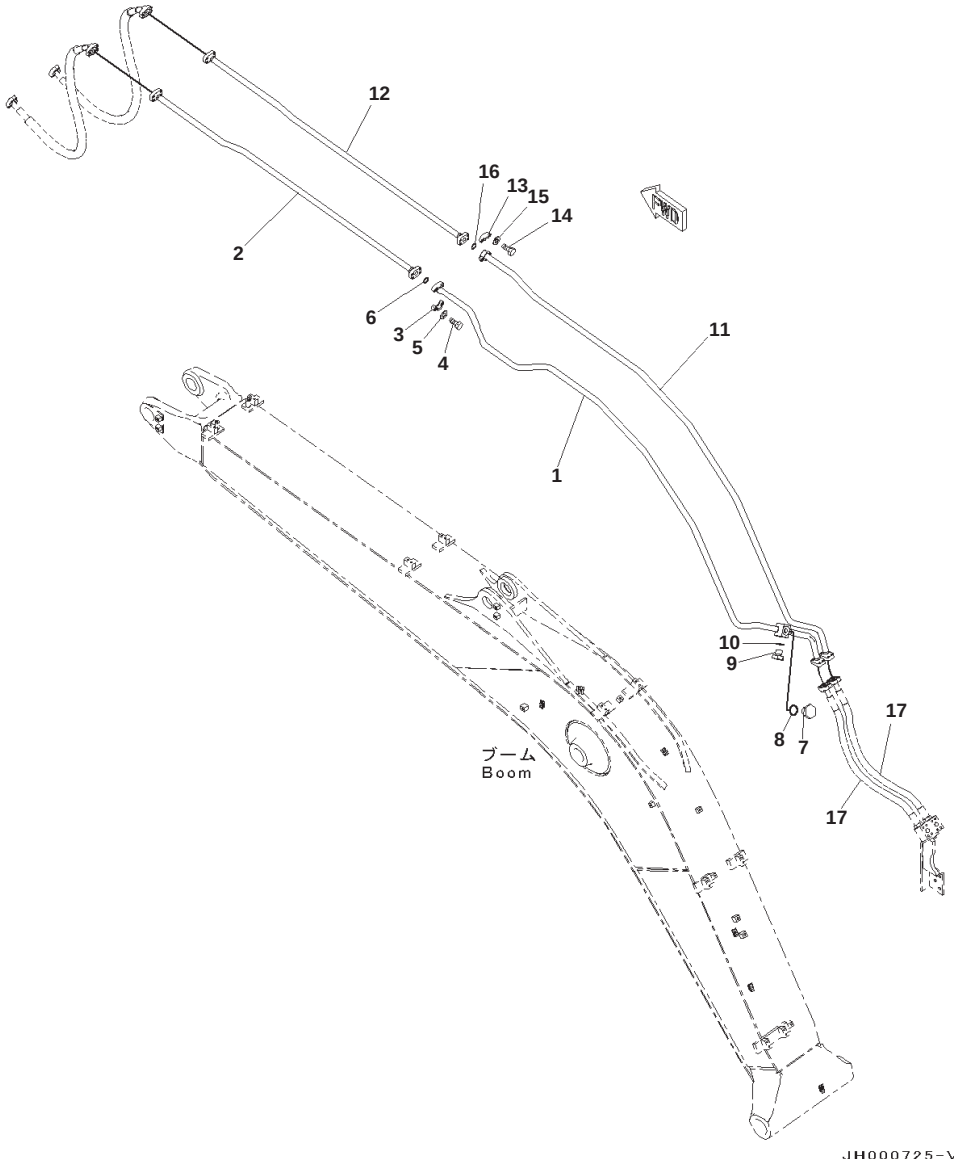

Boom, 1-actuator, 100 Hours Greasing Type, Bucket Cylinder Piping

Index	Part Number	Description	Qty	Serial No.
1	203-62-15151	Tube	1	B10001-
2	203-62-64290	Tube	1	B10001-
3	07371-30640	Flange, Split	2	B10001-
4	07372-21035	Bolt	4	B10001-
5	01643-51032	Washer	4	B10001-
6	07000-13025	O-ring	1	B10001-
7	07040-13016	Plug	1	B10001-
8	07002-13034	O-ring	1	B10001-
9	07040-11007	Plug	1	B10001-
10	07002-11023	O-ring	1	B10001-
11	203-62-15160	Tube	1	B10001-
12	203-62-64171	Tube	1	B10001-
13	07371-30640	Flange, Split	2	B10001-
14	07372-21035	Bolt	4	B10001-
15	01643-51032	Washer	4	B10001-
16	07000-13025	O-ring	1	B10001-
17	(203-62-12220)	Hose		

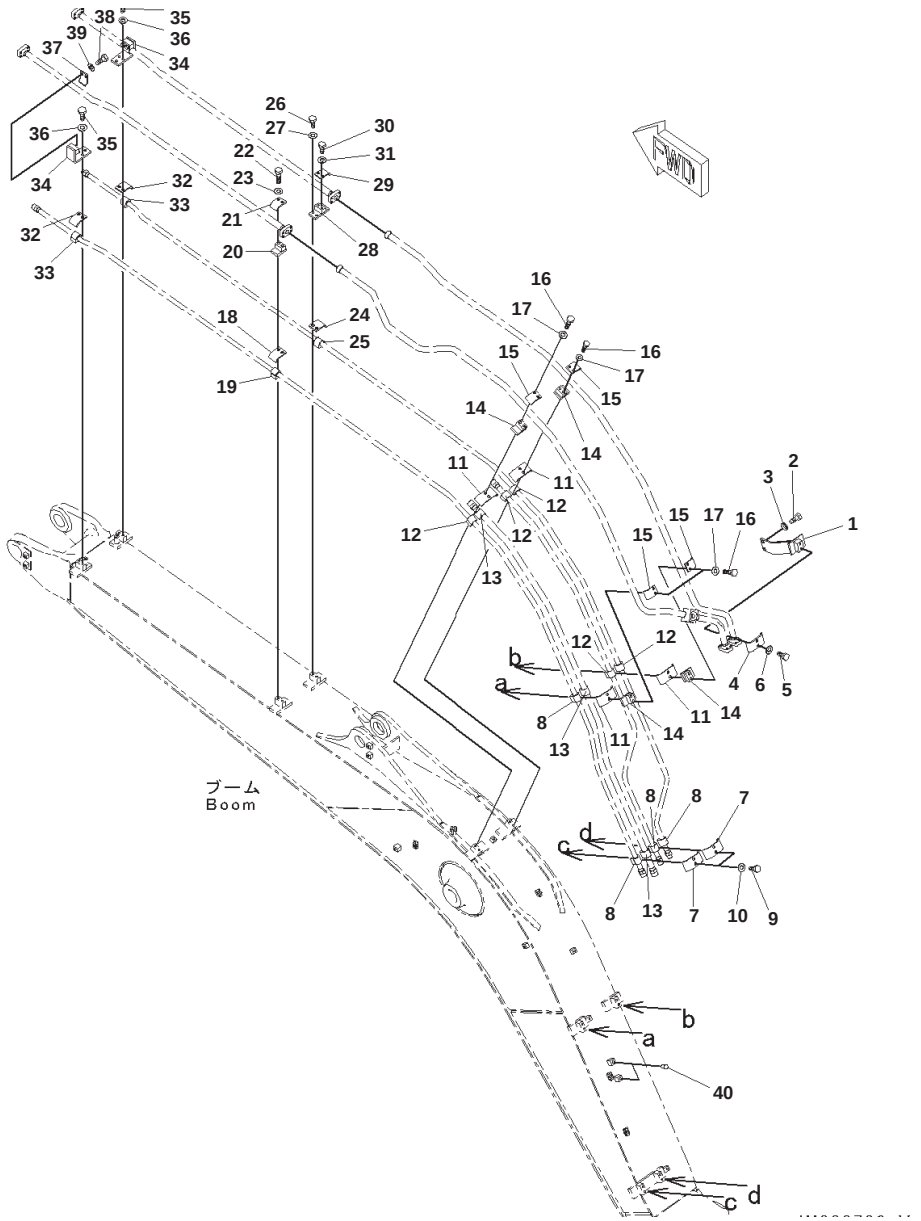

Boom, 1-actuator, 100 Hours Greasing Type, Bucket Cylinder Piping, Clamp

Index	Part Number	Description	Qty	Serial No.
1	203-62-15170	Bracket	1	B10001-
2	01010-81225	Bolt	2	B10001-
3	01643-51232	Washer	2	B10001-
4	203-62-64440	Clamp	1	B10001-
5	01010-81025	Bolt	2	B10001-
6	01643-31032	Washer	2	B10001-
7	203-70-53381	Plate	2	B10001-
8	203-62-58810	Cushion	4	B10001-
9	01010-81025	Bolt	4	B10001-
10	01643-31032	Washer	4	B10001-
11	203-70-53381	Plate	4	B10001-
12	203-62-58810	Cushion	5	B10001-
13	21K-62-35270	Cushion	3	B10001-
14	203-62-64370	Bracket	4	B10001-
15	201-973-6730	Clamp	4	B10001-
16	01010-81070	Bolt	8	B10001-
17	01643-31032	Washer	8	B10001-
18	22B-70-19290	Plate	1	B10001-
19	203-62-58810	Cushion	1	B10001-
20	203-62-64370	Bracket	1	B10001-
21	201-973-6730	Clamp	1	B10001-
22	01010-81070	Bolt	2	B10001-
23	01643-31032	Washer	2	B10001-
24	22B-70-19290	Plate	1	B10001-
25	203-62-58810	Cushion	1	B10001-
26	01010-81035	Bolt	2	B10001-
27	01643-31032	Washer	2	B10001-
28	203-62-64310	Bracket	1	B10001-
29	201-973-6730	Clamp	1	B10001-
30	01010-81025	Bolt	2	B10001-
31	01643-31032	Washer	2	B10001-
32	22B-70-19290	Plate	2	B10001-
33	203-62-58810	Cushion	2	B10001-
34	203-62-64272	Bracket	2	B10001-
35	01010-81035	Bolt	6	B10001-
36	01643-31032	Washer	6	B10001-
37	201-973-6730	Clamp	2	B10001-
38	01010-81025	Bolt	4	B10001-
39	01643-31032	Washer	4	B10001-
40	21X-54-32350	Cap	2	B10001-

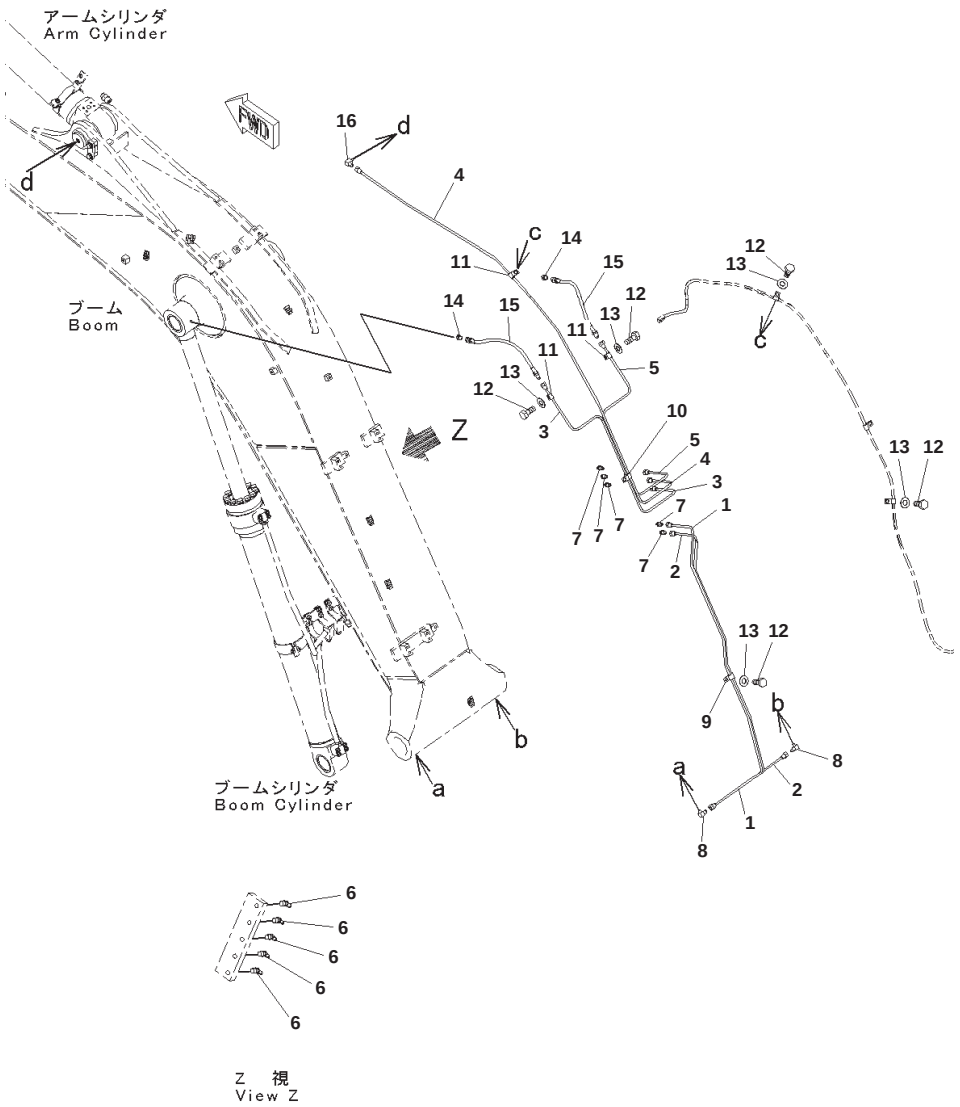

Index	Part Number	Description	Qty	Serial No.
1	203-70-61251	Tube	1	B10001-
2	203-70-61261	Tube	1	B10001-
3	203-70-61271	Tube	1	B10001-
4	203-70-15210	Tube	1	B10001-
5	203-70-61291	Tube	1	B10001-
6	07020-00900	Fitting, Grease	5	B10001-
7	20Y-70-11540	Connector	5	B10001-
8	20Y-70-11590	Elbow	2	B10001-
9	04435-50810	Clip	1	B10001-
10	04434-51712	Clip	1	B10001-
11	04434-50812	Clip	3	B10001-
12	01010-81020	Bolt	5	B10001-
13	01643-31032	Washer	5	B10001-
14	205-70-51390	Nipple	2	B10001-
15	20Y-70-11520	Hose	2	B10001-
16	20Y-25-11270	Elbow	1	B10001-

Reference:T1110-012006 Page:T002006

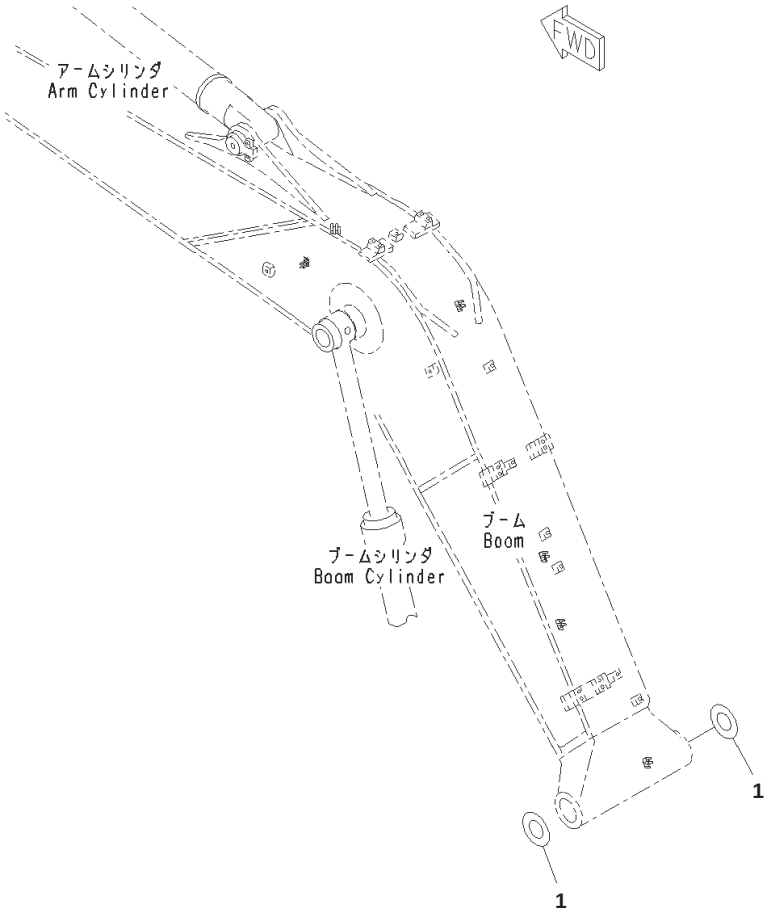

Index	Part Number	Description	Qty	Serial No.
1	21Y-70-14760	Spacer, T=2.0mm	2	B10001-

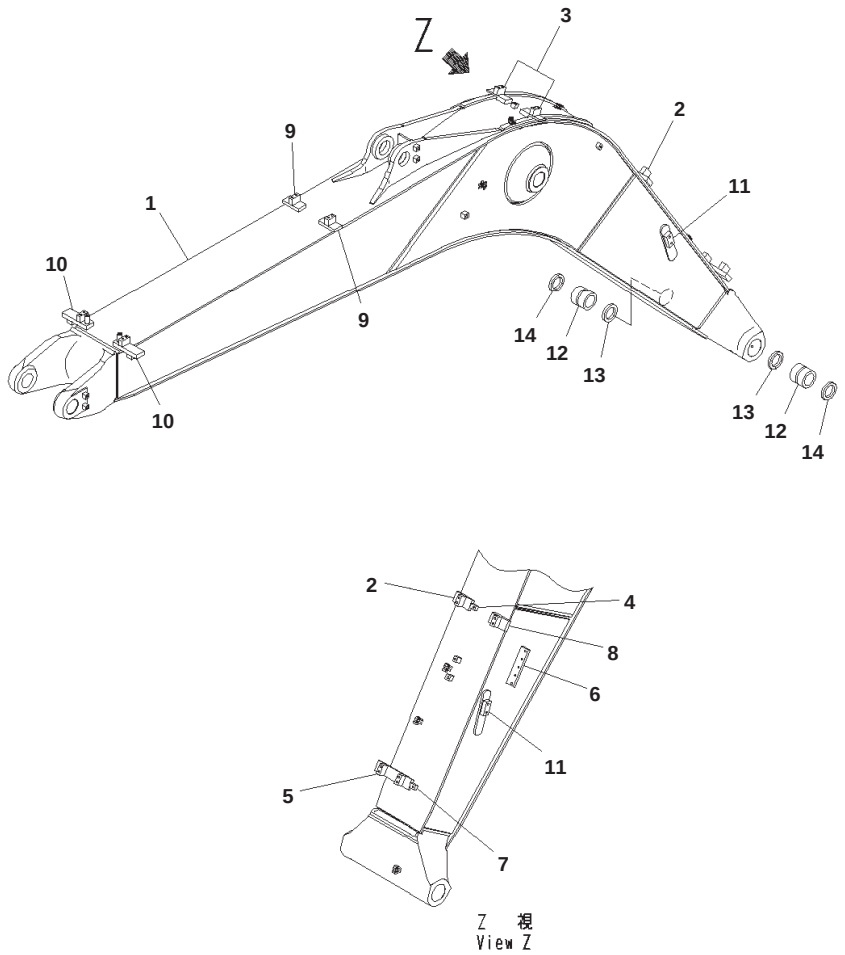

JH001693

Index	Part Number	Description	Qty	Serial No.
1	203-70-15272	Boom	1	B10001-
2	203-70-51221	・ Seat, Welded	1	B10001-
3	203-70-61780	・ Plate,Welded	2	B10001-
4	203-70-61C60	・ Seat,Welded	1	B10001-
5	203-70-51260	・ Seat,Welded	1	B10001-
6	203-70-61310	・ Plate,Welded	1	B10001-
7	203-70-61C60	・ Seat,Welded	1	B10001-
8	203-70-51221	・ Seat, Welded	1	B10001-
9	203-70-61790	・ Plate,Welded	2	B10001-
10	203-70-15261	・ Seat,Welded	2	B10001-
11	203-62-64322	・ Bracket,Welded	2	B10001-
12	203-70-66110	Bushing	2	B10001-
13	07145-00070	Seal, Dust	2	B10001-
14	07145-00070	Seal, Dust	2	B10001-

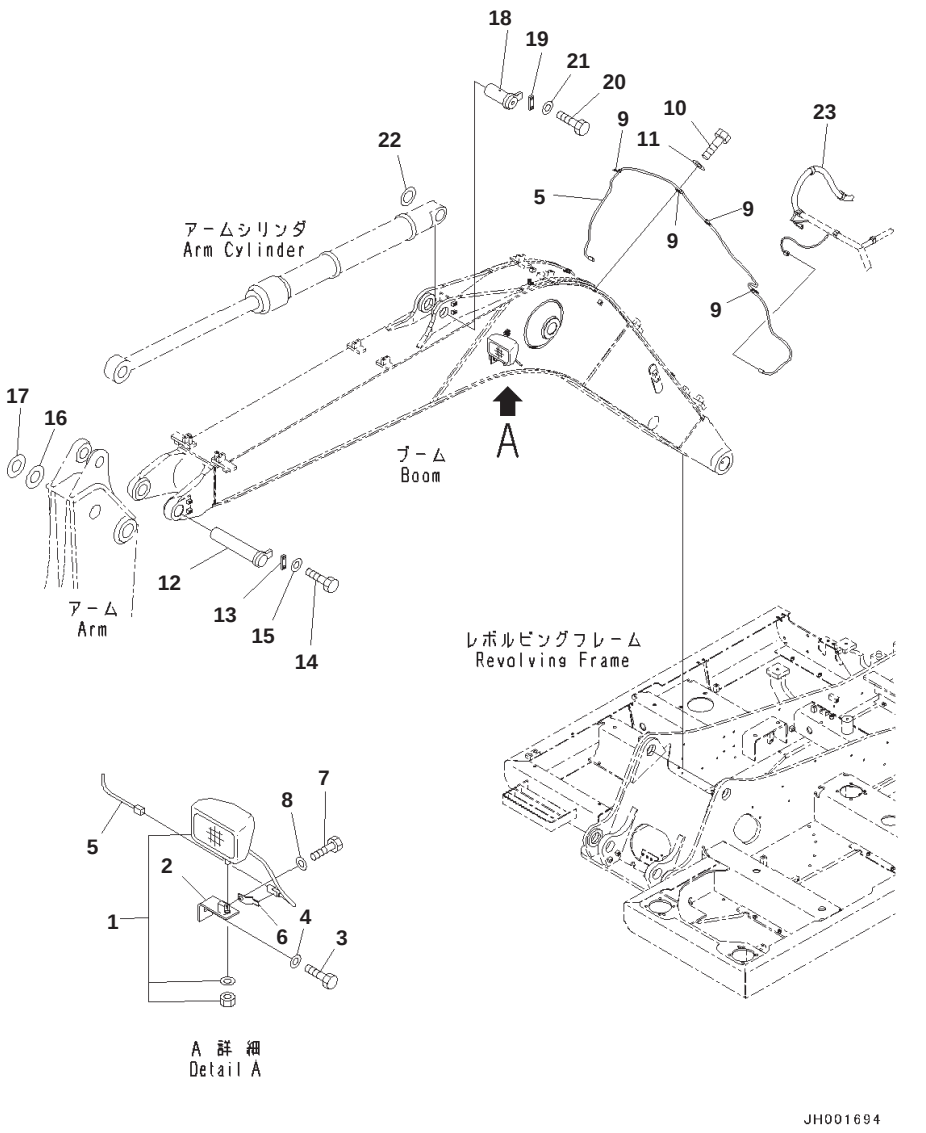

Boom, 2-actuator, Working Lamp

Index	Part Number	Description	Qty	Serial No.
1	21T-06-32810	Working Lamp Assembly, 24volt, 70watt	1	B10001-
	421-06-23330	・ Bulb, 70watt	1	B10001-
2	20Y-06-21551	Bracket	1	B10001-
3	01010-81225	Bolt	1	B10001-
4	01643-31232	Washer	1	B10001-
5	203-06-11140	Wire	1	B10001-
6	08193-21012	Clip	1	B10001-
7	01010-81225	Bolt	1	B10001-
8	01643-31232	Washer	1	B10001-
9	04434-51012	Clip	4	B10001-
10	01010-81020	Bolt	1	B10001-
11	01643-31032	Washer	1	B10001-
12	22B-70-22550	Pin	1	B10001-
13	22B-70-22570	Plate	1	B10001-
14	01010-81235	Bolt	2	B10001-
15	01643-31232	Washer	2	B10001-
16	20U-70-31340	Spacer, T=1.0mm	1	B10001-
17	20U-70-31330	Spacer, T=0.5mm	1	B10001-
18	203-70-42121	Pin	1	B10001-
19	205-70-66580	Plate	1	B10001-
20	01010-81230	Bolt	2	B10001-
21	01643-31232	Washer	2	B10001-
22	21Y-70-14830	Spacer, T=1.0mm	1	B10001-
23	(203-06-11730)	Wiring Harness		

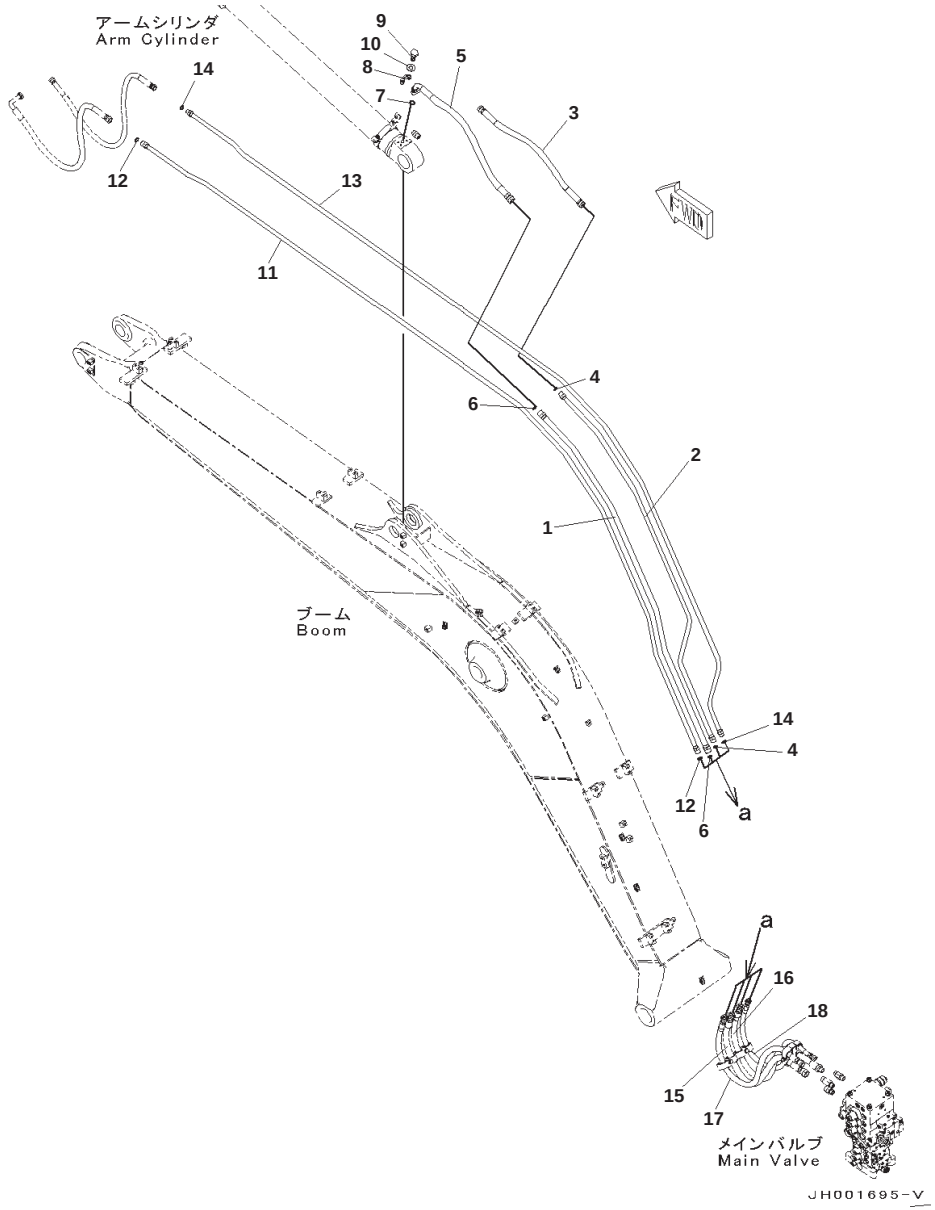

Boom, 2-actuator, Arm and Bucket Cylinder Piping

Index	Part Number	Description	Qty	Serial No.
1	203-62-15120	Tube	1	B10001-
2	203-62-15130	Tube	1	B10001-
3	22B-62-21520	Hose	1	B10001-
4	02896-11015	O-ring	2	B10001-
5	22B-62-21510	Hose	1	B10001-
6	02896-11018	O-ring	2	B10001-
7	07000-13025	O-ring	1	B10001-
8	07371-30640	Flange, Split	2	B10001-
9	07372-21035	Bolt	4	B10001-
10	01643-51032	Washer	4	B10001-
11	203-62-15111	Tube	1	B10001-
12	02896-11015	O-ring	2	B10001-
13	203-62-15140	Tube	1	B10001-
14	02896-11012	O-ring	2	B10001-
15	(203-62-11471)	Hose		
16	(203-62-11221)	Hose		
17	(203-62-13170)	Hose		
18	(02777-00411)	Hose, Face Seal Type		

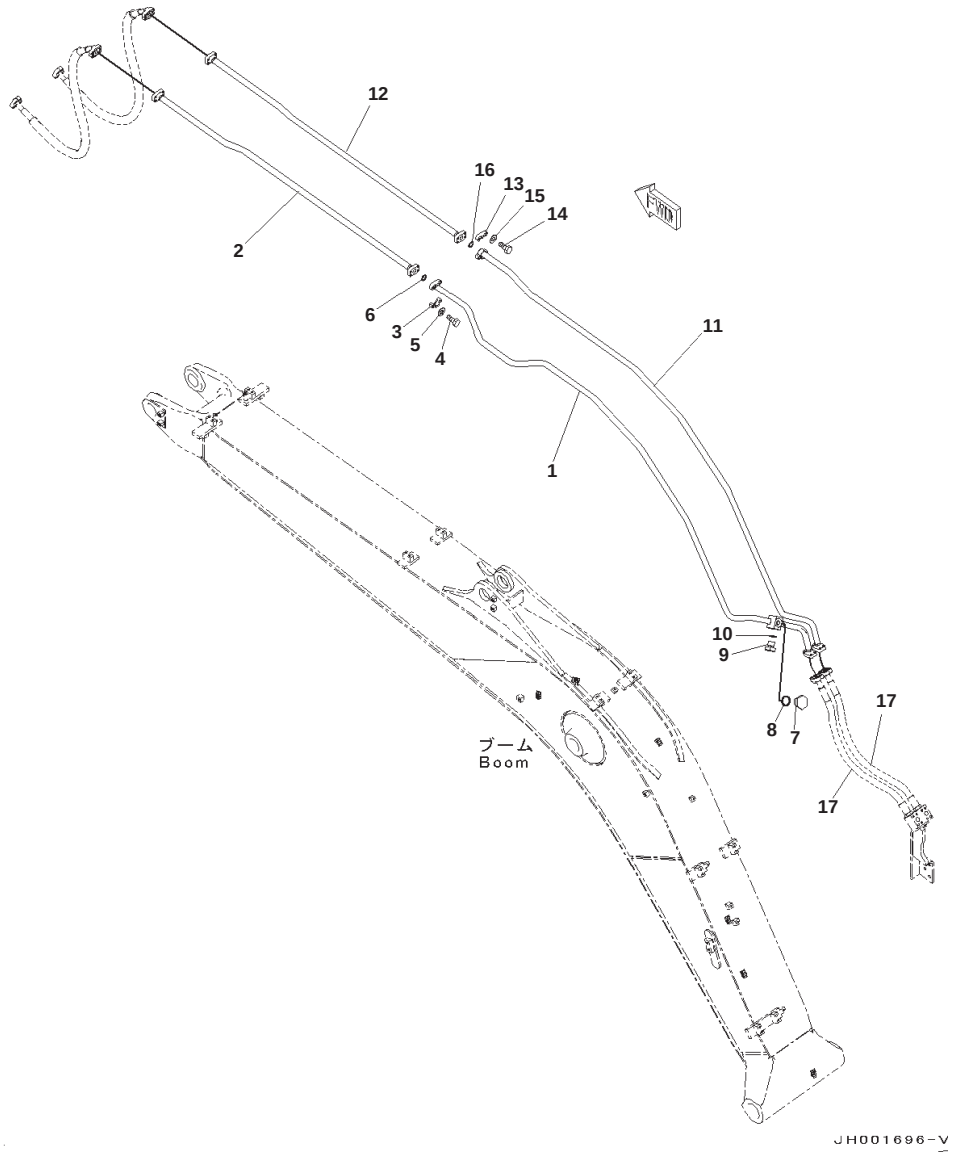

Index	Part Number	Description	Qty	Serial No.
1	203-62-15151	Tube	1	B10001-
2	203-62-64290	Tube	1	B10001-
3	07371-30640	Flange, Split	2	B10001-
4	07372-21035	Bolt	4	B10001-
5	01643-51032	Washer	4	B10001-
6	07000-13025	O-ring	1	B10001-
7	07040-13016	Plug	1	B10001-
8	07002-13034	O-ring	1	B10001-
9	07040-11007	Plug	1	B10001-
10	07002-11023	O-ring	1	B10001-
11	203-62-15160	Tube	1	B10001-
12	203-62-64171	Tube	1	B10001-
13	07371-30640	Flange, Split	2	B10001-
14	07372-21035	Bolt	4	B10001-
15	01643-51032	Washer	4	B10001-
16	07000-13025	O-ring	1	B10001-
17	(203-62-12220)	Hose		

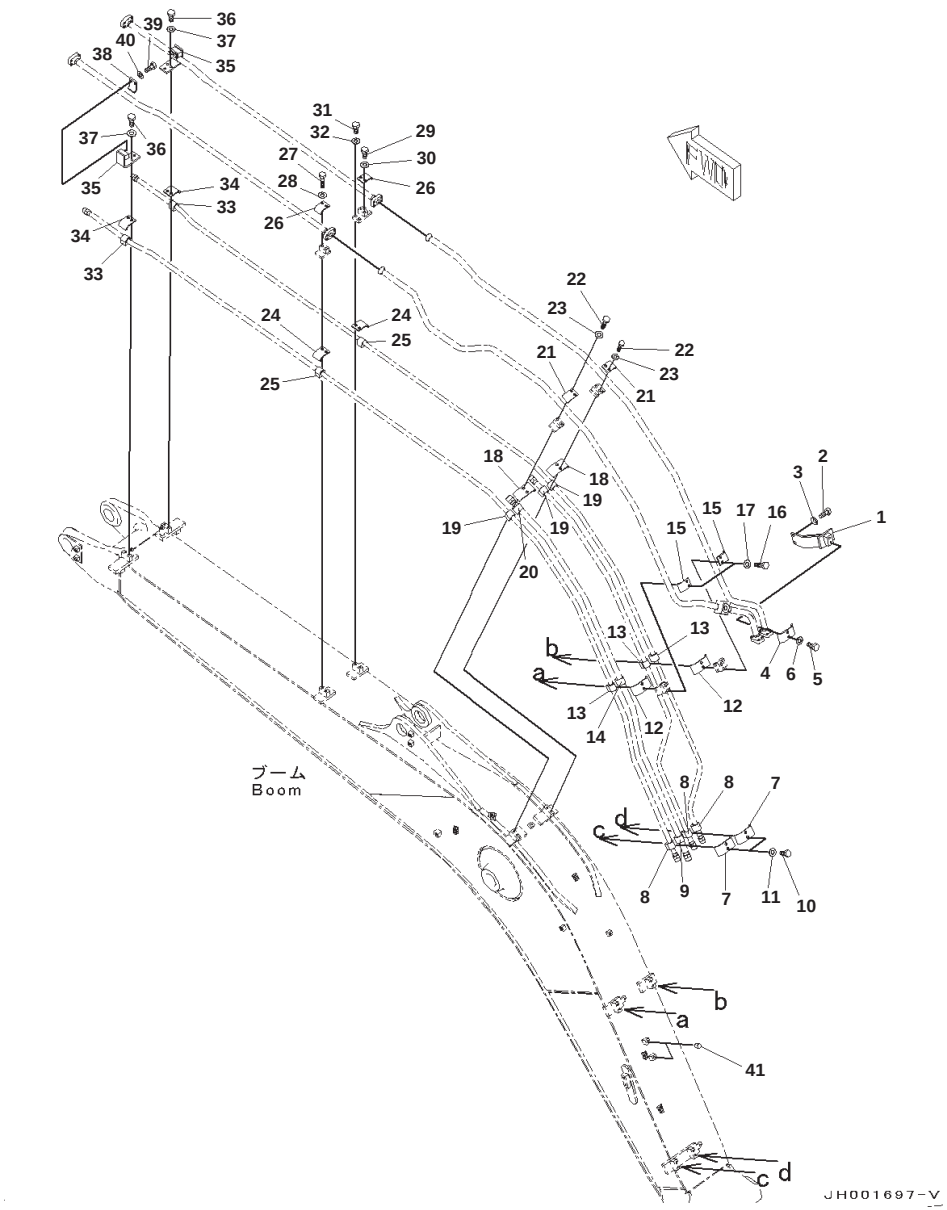

Boom, 2-actuator, Bucket Cylinder Piping, Clamp

Index	Part Number	Description	Qty	Serial No.
1	203-62-15170	Bracket	1	B10001-
2	01010-81225	Bolt	2	B10001-
3	01643-51232	Washer	2	B10001-
4	203-62-64440	Clamp	1	B10001-
5	01010-81025	Bolt	2	B10001-
6	01643-31032	Washer	2	B10001-
7	203-70-53381	Plate	2	B10001-
8	203-62-58810	Cushion	3	B10001-
9	21K-62-35270	Cushion	1	B10001-
10	01010-81025	Bolt	4	B10001-
11	01643-31032	Washer	4	B10001-
12	203-70-53381	Plate	2	B10001-
13	203-62-58810	Cushion	3	B10001-
14	21K-62-35270	Cushion	1	B10001-
15	201-973-6730	Clamp	2	B10001-
16	01010-81070	Bolt	4	B10001-
17	01643-31032	Washer	4	B10001-
18	203-70-53381	Plate	2	B10001-
19	203-62-58810	Cushion	3	B10001-
20	21K-62-35270	Cushion	1	B10001-
21	201-973-6730	Clamp	2	B10001-
22	01010-81070	Bolt	4	B10001-
23	01643-31032	Washer	4	B10001-
24	22B-70-19290	Plate	2	B10001-
25	203-62-58810	Cushion	2	B10001-
26	201-973-6730	Clamp	2	B10001-
27	01010-81070	Bolt	2	B10001-
28	01643-31032	Washer	2	B10001-
29	01010-81025	Bolt	2	B10001-
30	01643-31032	Washer	2	B10001-
31	01010-81035	Bolt	2	B10001-
32	01643-31032	Washer	2	B10001-
33	203-62-58810	Cushion	2	B10001-
34	22B-70-19290	Plate	2	B10001-
35	203-62-64272	Bracket	2	B10001-
36	01010-81035	Bolt	6	B10001-
37	01643-31032	Washer	6	B10001-
38	201-973-6730	Clamp	2	B10001-
39	01010-81025	Bolt	4	B10001-
40	01643-31032	Washer	4	B10001-
41	21X-54-32350	Cap	2	B10001-

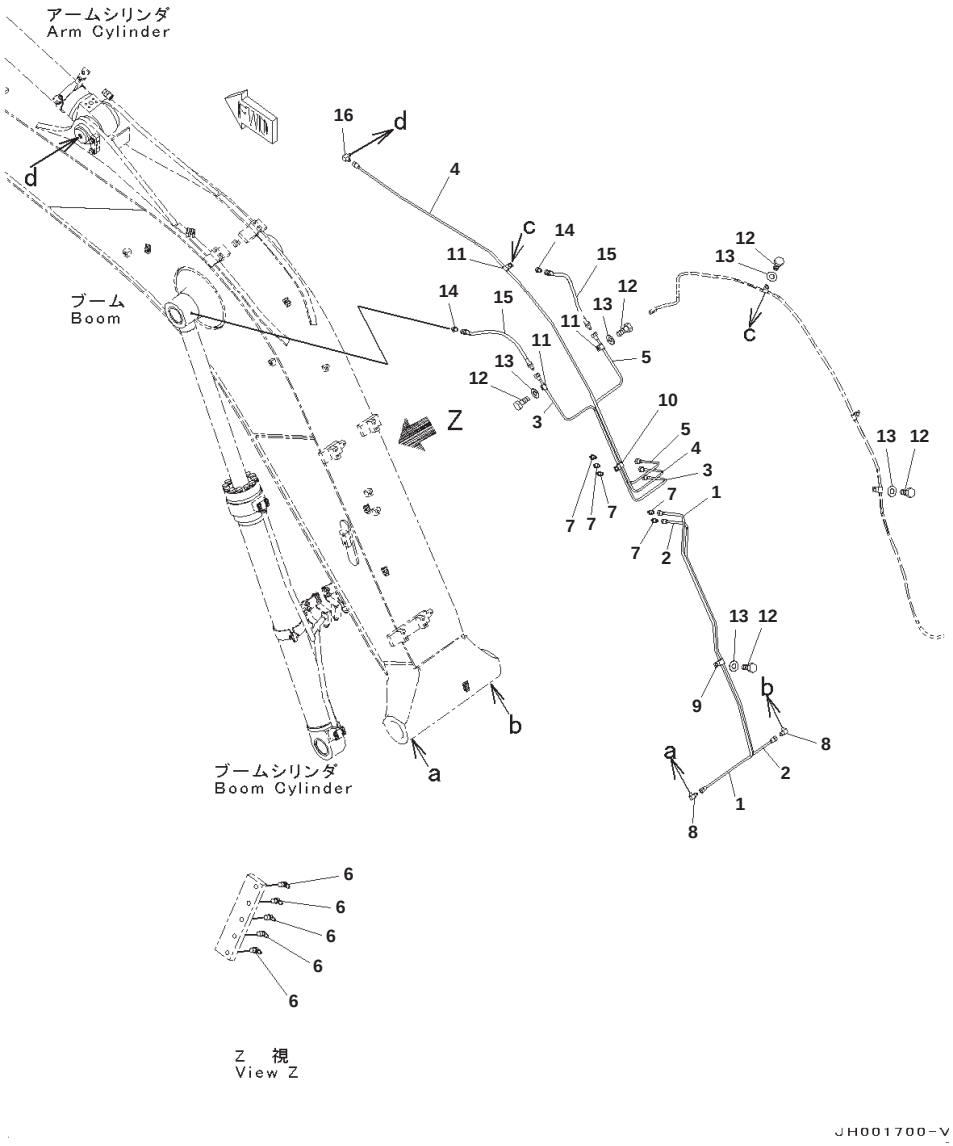

Boom, 2-actuator, Lubrication Piping

Index	Part Number	Description	Qty	Serial No.
1	203-70-61251	Tube	1	B10001-
2	203-70-61261	Tube	1	B10001-
3	203-70-61271	Tube	1	B10001-
4	203-70-15210	Tube	1	B10001-
5	203-70-61291	Tube	1	B10001-
6	07020-00900	Fitting, Grease	5	B10001-
7	20Y-70-11540	Connector	5	B10001-
8	20Y-70-11590	Elbow	2	B10001-
9	04435-50810	Clip	1	B10001-
10	04434-51712	Clip	1	B10001-
11	04434-50812	Clip	3	B10001-
12	01010-81020	Bolt	5	B10001-
13	01643-31032	Washer	5	B10001-
14	205-70-51390	Nipple	2	B10001-
15	20Y-70-11520	Hose	2	B10001-
16	20Y-25-11270	Elbow	1	B10001-

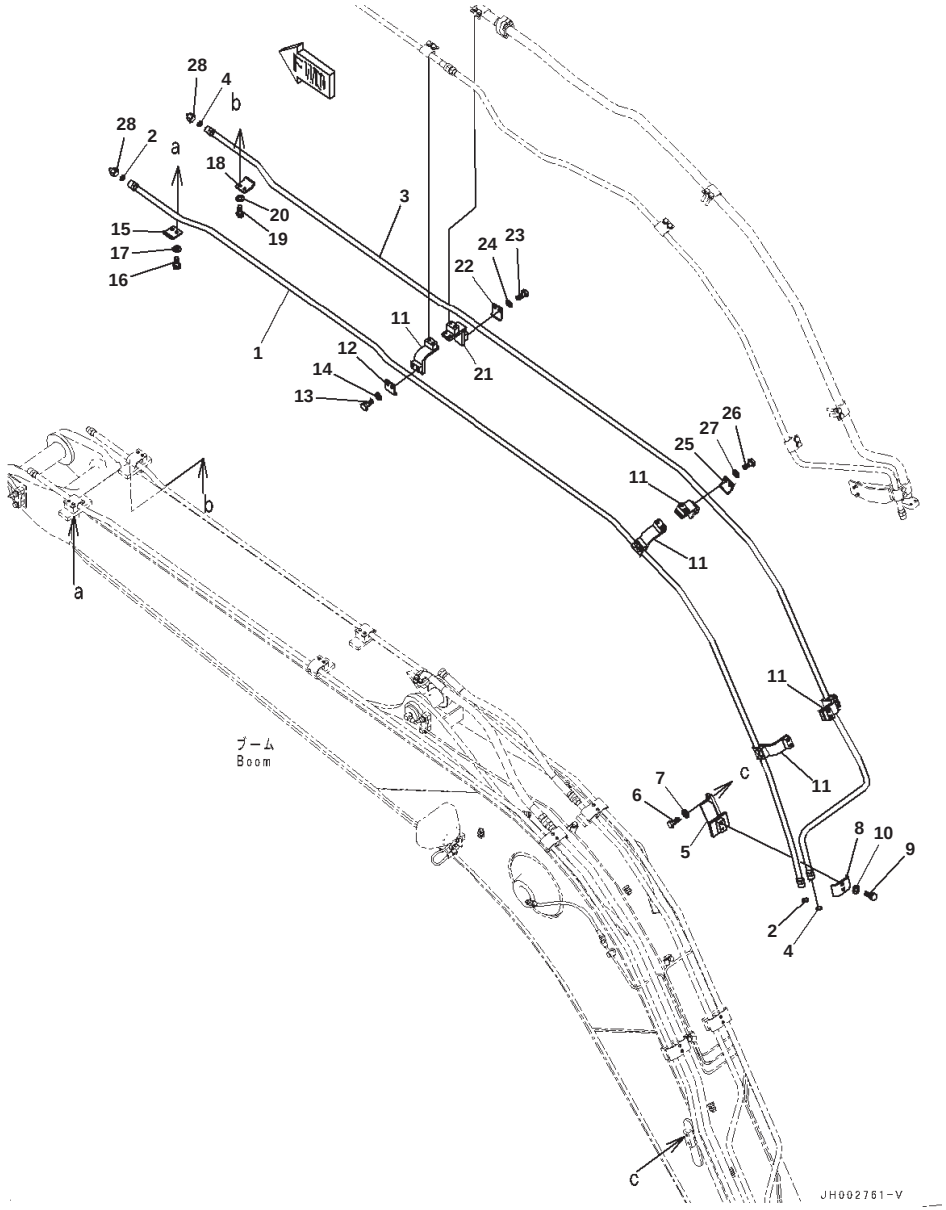

Boom, 2-actuator, 2 Attachment Line

Index	Part Number	Description	Qty	Serial No.
1	203-62-15230	Tube	1	B10001-
2	02896-11015	O-ring	2	B10001-
3	203-62-15430	Tube	1	B10001-
4	02896-11015	O-ring	2	B10001-
5	203-62-15250	Bracket	1	B10001-
6	01010-81225	Bolt	2	B10001-
7	01643-51232	Washer	2	B10001-
8	203-70-53380	Clamp	1	B10001-
9	01010-81025	Bolt	2	B10001-
10	01643-31032	Washer	2	B10001-
11	203-62-15410	Bracket	5	B10001-
12	203-973-5660	Clamp	3	B10001-
13	01010-81025	Bolt	6	B10001-
14	01643-31032	Washer	6	B10001-
15	203-973-5660	Clamp	1	B10001-
16	01010-81025	Bolt	2	B10001-
17	01643-31032	Washer	2	B10001-
18	203-973-5660	Clamp	1	B10001-
19	01010-81025	Bolt	2	B10001-
20	01643-31032	Washer	2	B10001-
21	203-62-15420	Bracket	1	B10001-
22	203-973-5660	Clamp	1	B10001-
23	01010-81025	Bolt	2	B10001-
24	01643-31032	Washer	2	B10001-
25	203-973-5660	Clamp	2	B10001-
26	01010-81025	Bolt	4	B10001-
27	01643-31032	Washer	4	B10001-
28	02789-10522	Plug	2	B10001-

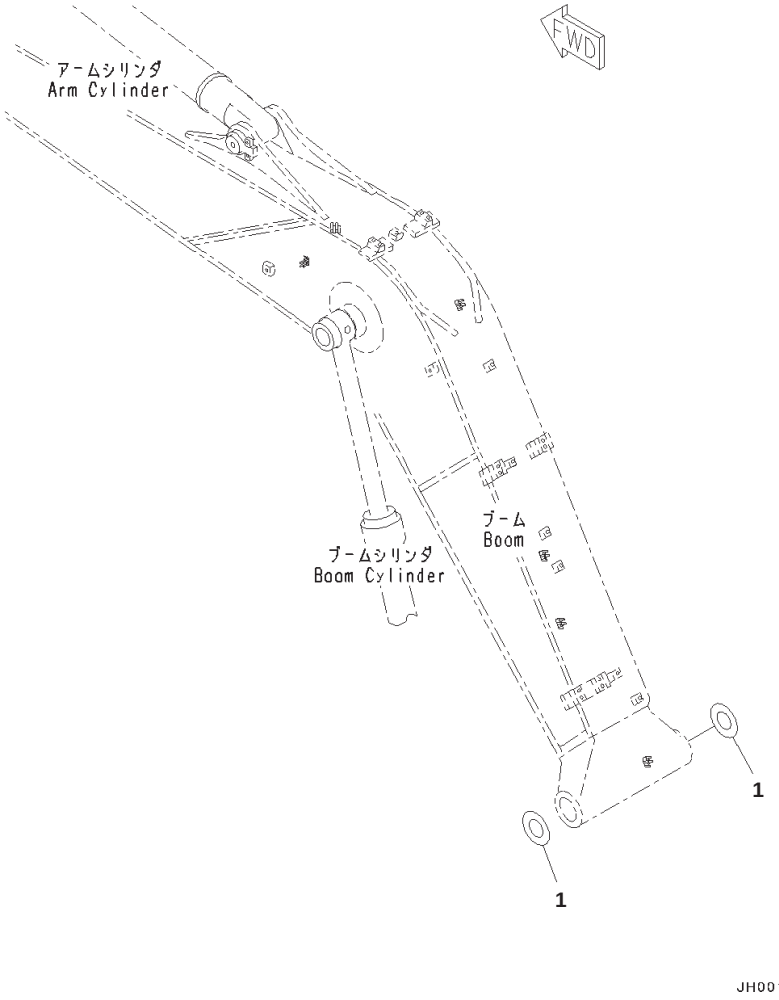

Index	Part Number	Description	Qty	Serial No.
1	21Y-70-14760	Spacer, T=2.0mm	2	B10001-

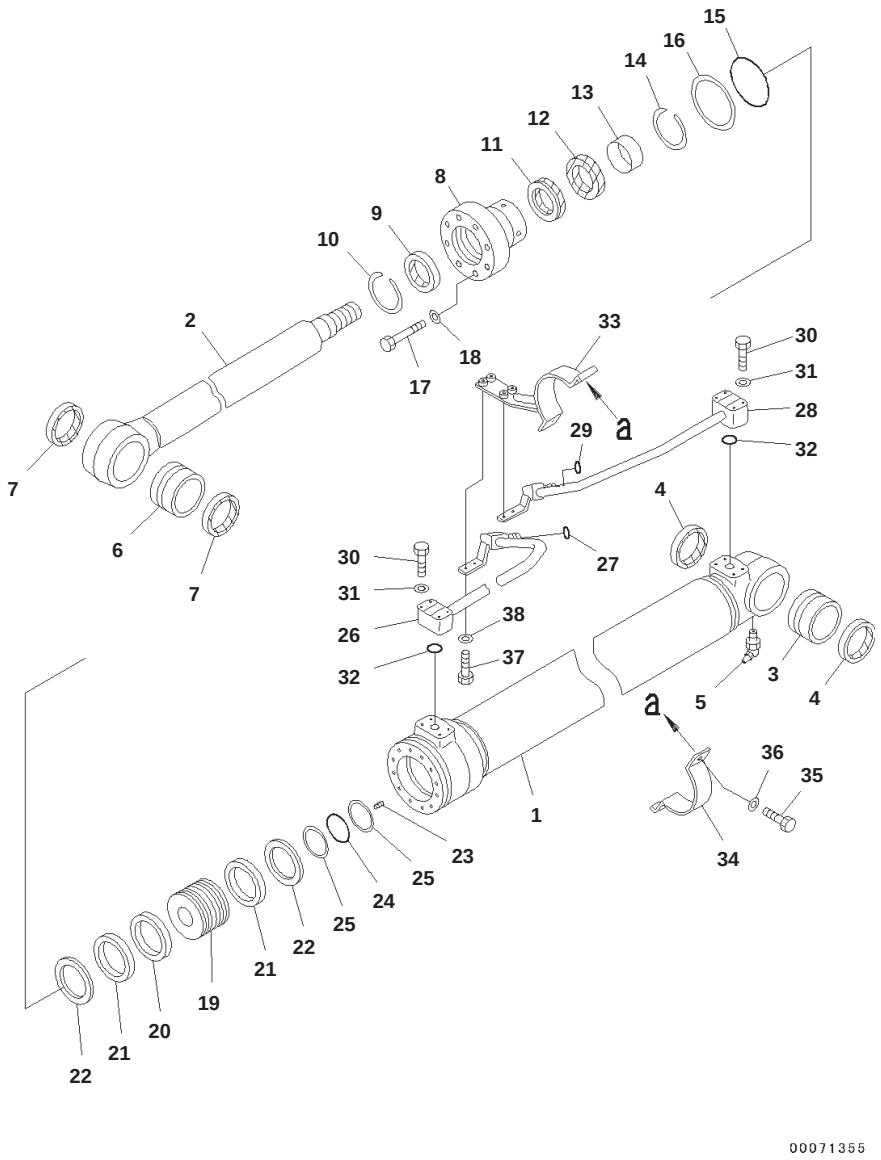

Boom Cylinder, 100 Hours Greasing Type, (1/2)

Index	Part Number	Description	Qty	Serial No.
	707-01-0AJ80	Cylinder Assembly	1	B10001-
1	707-13-10670	・ Cylinder	1	B10001-
2	721-58-70490	・ Rod	1	B10001-
3	707-76-70230	・ Bushing	1	B10001-
4	07145-00070	・ Seal, Dust, (Kit : K03)	2	B10001-
5	07020-00000	・ Fitting, Grease	1	B10001-
6	707-76-70230	・ Bushing	1	B10001-
7	07145-00070	・ Seal, Dust, (Kit : K03)	2	B10001-
8	707-27-10750	・ Head, Cylinder	1	B10001-
9	144-63-95170	・ Seal, Dust, (Kit : K03)	1	B10001-
10	07179-12084	・ Ring, Snap	1	B10001-
11	707-51-70030	・ Packing, Rod, (Kit : K03)	1	B10001-
12	707-51-70650	・ Ring, Buffer, (Kit : K03)	1	B10001-
13	707-52-90471	・ Bushing	1	B10001-
14	707-75-70110	・ Ring, Snap	1	B10001-
15	07000-15095	・ O-ring, (Kit : K03)	1	B10001-
16	707-35-91060	・ Ring, Back-up, (Kit : K03)	1	B10001-
17	01010-81465	・ Bolt	12	B10001-
18	705-17-04980	・ Washer	12	B10001-
19	707-36-10760	・ Piston	1	B10001-
20	707-44-10250	・ Ring, Piston, (Kit : K03)	1	B10001-
21	707-39-10550	・ Ring, Wear, (Kit : K03)	2	B10001-
22	707-44-10911	・ Ring	2	B10001-
23	01310-01216	・ Screw	1	B10001-
24	707-34-60030	・ O-ring, (Kit : K03)	1	B10001-
25	707-35-90730	・ Ring, Back-up, (Kit : K03)	2	B10001-
26	707-86-48490	Tube	1	B10001-
27	02896-11012	O-ring, (Kit : K03)	1	B10001-
28	707-86-55580	Tube	1	B10001-
29	02896-11015	O-ring, (Kit : K03)	1	B10001-
30	01010-80850	Bolt	8	B10001-
31	01643-30823	Washer	8	B10001-
32	07000-13025	O-ring, (Kit : K03)	2	B10001-
33	707-88-25110	Bracket	1	B10001-
34	707-88-21720	Band	1	B10001-
35	07372-21035	Bolt	2	B10001-
36	01643-51032	Washer	2	B10001-
37	01010-81030	Bolt	4	B10001-
38	01643-31032	Washer	4	B10001-

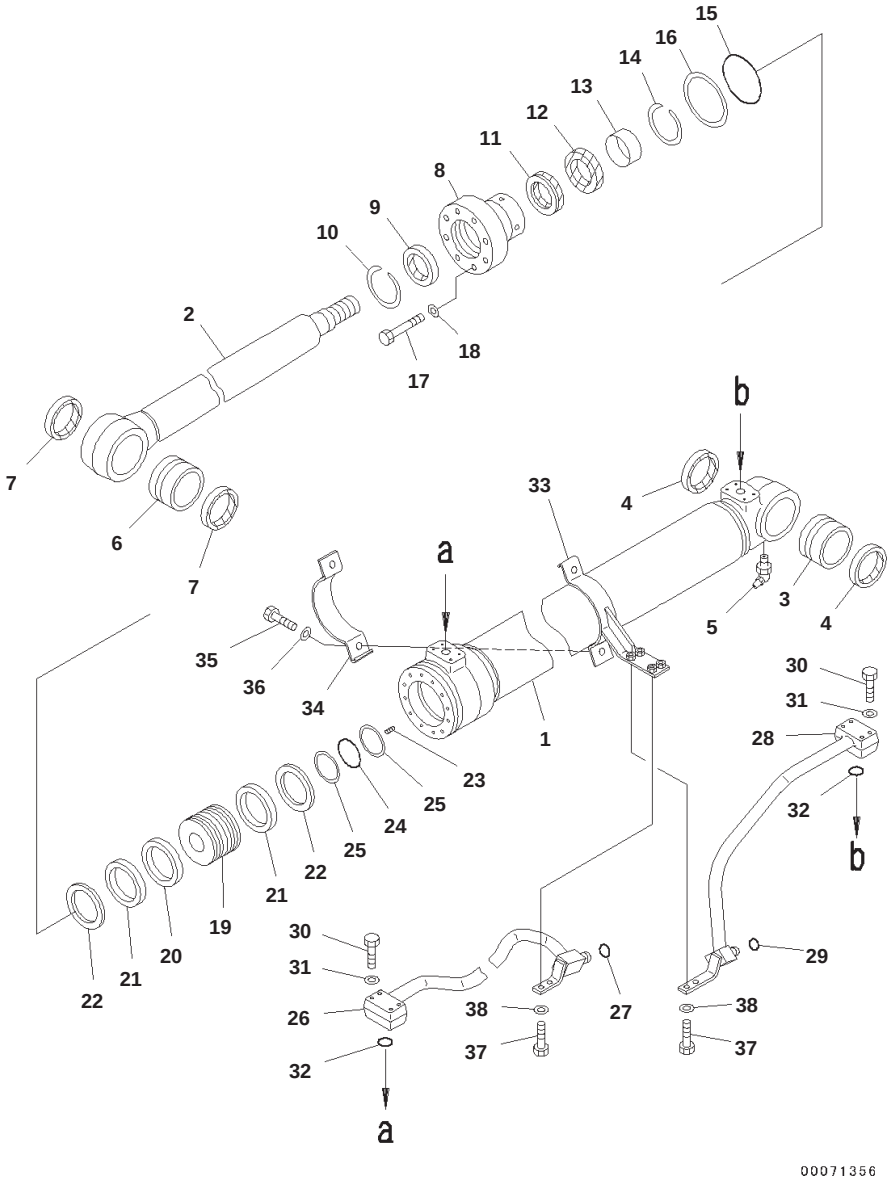

Boom Cylinder, 100 Hours Greasing Type, (2/2)

Index	Part Number	Description	Qty	Serial No.
	707-01-0AJ80	Cylinder Assembly,RHS	1	B10001-
1	707-13-10670	・ Cylinder	1	B10001-
2	721-58-70490	・ Rod	1	B10001-
3	707-76-70230	・ Bushing	1	B10001-
4	07145-00070	・ Seal, Dust, (Kit : K03)	2	B10001-
5	07020-00000	・ Fitting, Grease	1	B10001-
6	707-76-70230	・ Bushing	1	B10001-
7	07145-00070	・ Seal, Dust, (Kit : K03)	2	B10001-
8	707-27-10750	・ Head, Cylinder	1	B10001-
9	144-63-95170	・ Seal, Dust, (Kit : K03)	1	B10001-
10	07179-12084	・ Ring, Snap	1	B10001-
11	707-51-70030	・ Packing, Rod, (Kit : K03)	1	B10001-
12	707-51-70650	・ Ring, Buffer, (Kit : K03)	1	B10001-
13	707-52-90471	・ Bushing	1	B10001-
14	707-75-70110	・ Ring, Snap	1	B10001-
15	07000-15095	・ O-ring, (Kit : K03)	1	B10001-
16	707-35-91060	・ Ring, Back-up, (Kit : K03)	1	B10001-
17	01010-81465	・ Bolt	12	B10001-
18	705-17-04980	・ Washer	12	B10001-
19	707-36-10760	・ Piston	1	B10001-
20	707-44-10250	・ Ring, Piston, (Kit : K03)	1	B10001-
21	707-39-10550	・ Ring, Wear, (Kit : K03)	2	B10001-
22	707-44-10911	・ Ring	2	B10001-
23	01310-01216	・ Screw	1	B10001-
24	707-34-60030	・ O-ring, (Kit : K03)	1	B10001-
25	707-35-90730	・ Ring, Back-up, (Kit : K03)	2	B10001-
26	707-86-48510	Tube	1	B10001-
27	02896-11012	O-ring, (Kit : K03)	1	B10001-
28	707-86-55590	Tube	1	B10001-
29	02896-11015	O-ring, (Kit : K03)	1	B10001-
30	01010-80850	Bolt	8	B10001-
31	01643-30823	Washer	8	B10001-
32	07000-13025	O-ring, (Kit : K03)	2	B10001-
33	707-88-25110	Bracket	1	B10001-
34	707-88-21720	Band	1	B10001-
35	07372-21035	Bolt	2	B10001-
36	01643-51032	Washer	2	B10001-
37	01010-81030	Bolt	4	B10001-
38	01643-31032	Washer	4	B10001-

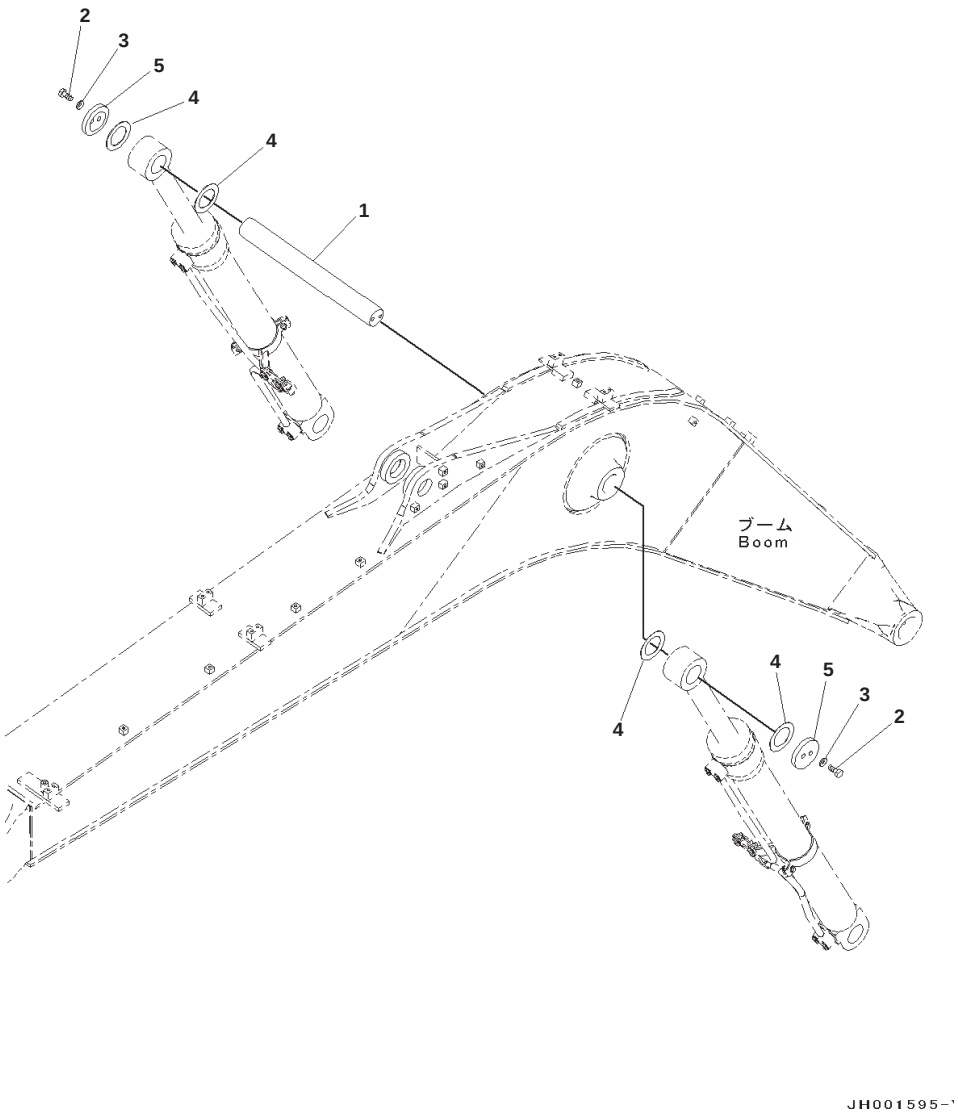

Index	Part Number	Description	Qty	Serial No.
1	22B-70-21910	Pin	1	B10001-
2	01010-81435	Bolt	4	B10001-
3	01643-31445	Washer	4	B10001-
4	21Y-70-14830	Spacer, T=1.0mm	4	B10001-
5	22B-70-21920	Plate	2	B10001-

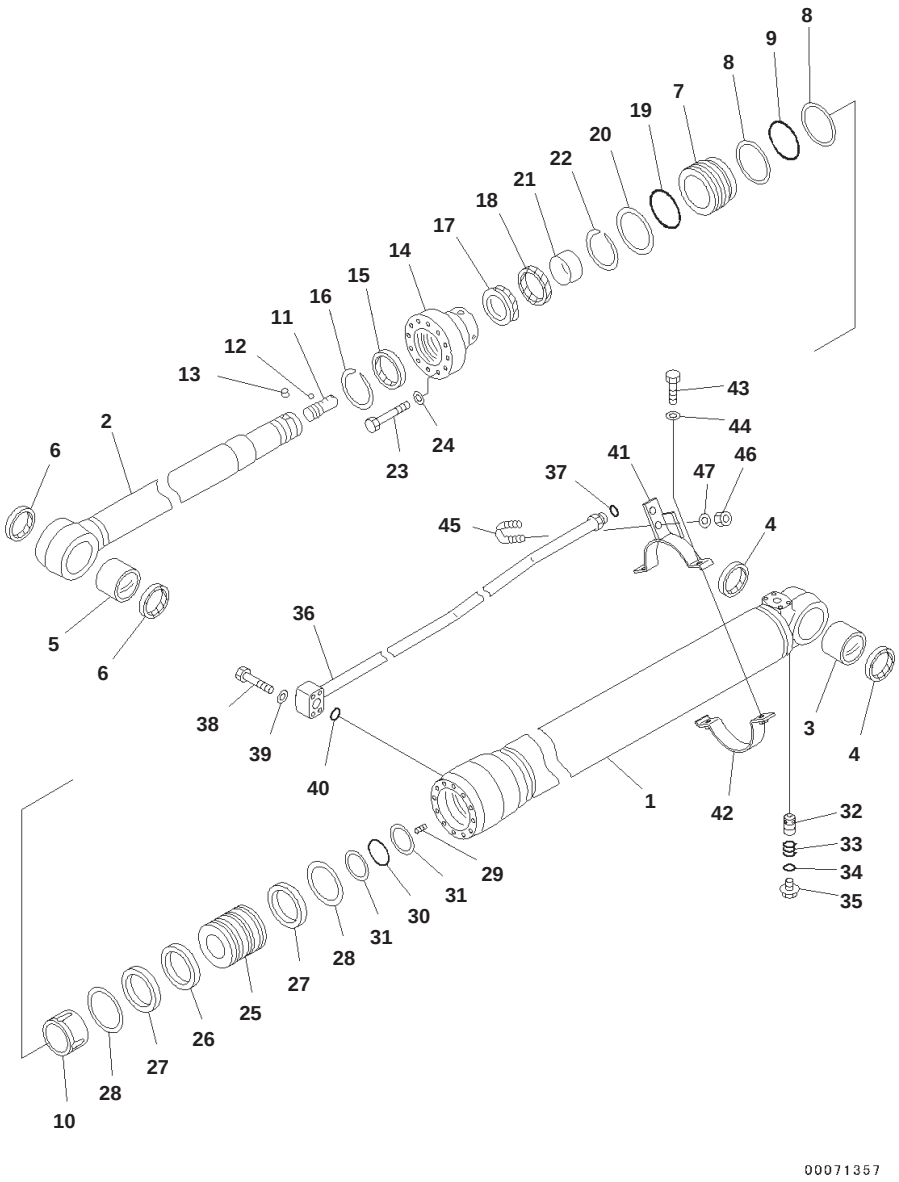

Arm Cylinder, 100 Hours Greasing Type

Index	Part Number	Description	Qty	Serial No.
	707-01-0AK00	Cylinder Assembly	1	B10001-
1	707-13-11830	・ Cylinder	1	B10001-
2	707-58-75840	・ Rod	1	B10001-
3	707-76-70240	・ Bushing	1	B10001-
4	07145-00070	・ Seal, Dust, (Kit : K04)	2	B10001-
5	707-76-70240	・ Bushing	1	B10001-
6	07145-00070	・ Seal, Dust, (Kit : K04)	2	B10001-
7	707-71-32570	・ Collar	1	B10001-
8	707-35-91150	・ Ring, Back-up, (Kit : K04)	2	B10001-
9	07000-15105	・ O-ring, (Kit : K04)	1	B10001-
10	707-71-70810	・ Plunger	1	B10001-
11	707-71-80230	・ Plunger	1	B10001-
12	04260-00635	・ Ball, Steel	11	B10001-
13	707-71-91270	・ Cap	1	B10001-
14	707-27-11750	・ Head	1	B10001-
15	144-63-94170	・ Seal, Dust, (Kit : K04)	1	B10001-
16	07179-13089	・ Ring, Snap	1	B10001-
17	707-51-75030	・ Packing, Rod, (Kit : K04)	1	B10001-
18	707-51-75650	・ Ring, Buffer, (Kit : K04)	1	B10001-
19	07000-15105	・ O-ring, (Kit : K04)	1	B10001-
20	707-35-91150	・ Ring, Back-up, (Kit : K04)	1	B10001-
21	707-52-90501	・ Bushing	1	B10001-
22	707-75-75110	・ Ring, Snap	1	B10001-
23	01010-81670	・ Bolt	12	B10001-
24	01643-51645	・ Washer	12	B10001-
25	707-36-11851	・ Piston	1	B10001-
26	707-44-11250	・ Ring, Piston, (Kit : K04)	1	B10001-
27	707-39-11530	・ Ring, Wear, (Kit : K04)	2	B10001-
28	707-44-11920	・ Ring	2	B10001-
29	01310-01216	・ Screw	1	B10001-
30	07000-15070	・ O-ring, (Kit : K04)	1	B10001-
31	707-35-90360	・ Ring, Back-up, (Kit : K04)	2	B10001-
32	707-83-13010	・ Valve	1	B10001-
33	07750-01628	・ Spring	1	B10001-
34	07002-12034	・ O-ring, (Kit : K04)	1	B10001-
35	707-87-14070	・ Plug	1	B10001-
36	707-86-55540	Tube	1	B10001-
37	02896-11015	O-ring, (Kit : K04)	1	B10001-
38	01010-80850	Bolt	4	B10001-
39	01643-30823	Washer	4	B10001-
40	07000-13025	O-ring, (Kit : K04)	1	B10001-
41	707-88-50490	Bracket	1	B10001-
42	707-88-21680	Band	1	B10001-
43	07372-21035	Bolt	2	B10001-
44	01643-51032	Washer	2	B10001-
45	07283-32236	Clip, Pipe	1	B10001-

PC130-8 S/N B10001-UP

Arm Cylinder, 100 Hours Greasing Type

Index	Part Number	Description	Qty	Serial No.
46	01597-01009	Nut	2	B10001-
47	01643-31032	Washer	2	B10001-

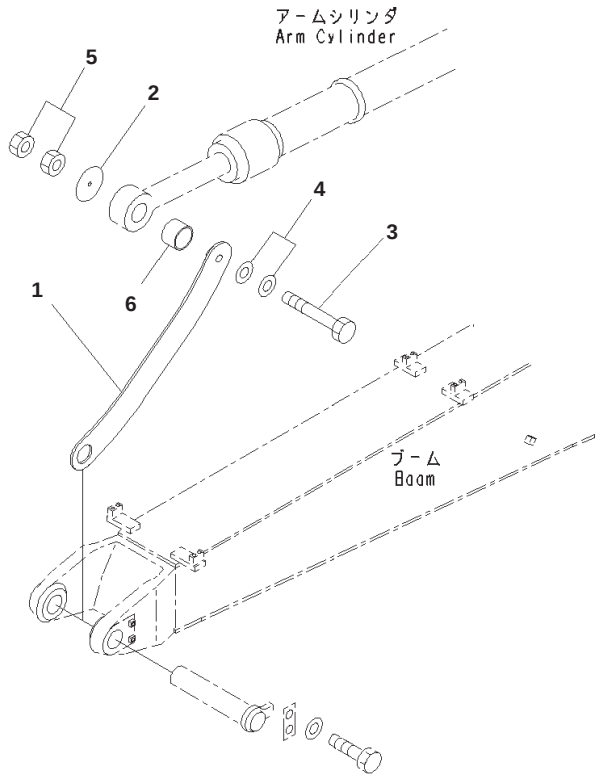

Index	Part Number	Description	Qty	Serial No.
1	203-70-53160	Link	1	B10001-
2	207-70-53170	Plate	1	B10001-
3	01011-81225	Bolt	1	B10001-
4	01643-31232	Washer	2	B10001-
5	01580-11210	Nut	2	B10001-
6	203-70-53250	Collar	3	B10001-

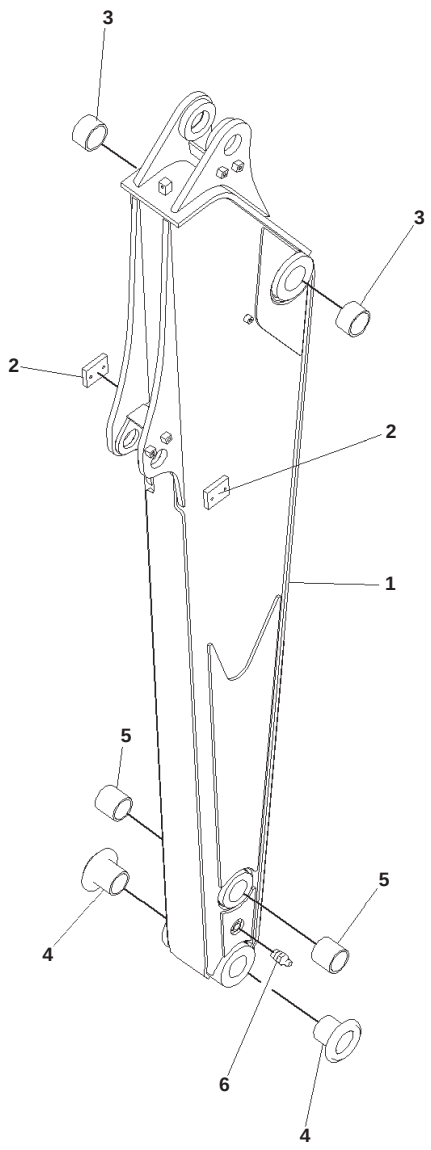

JH001149-Y

Arm, Heavy Duty, 100 Hours Greasing Type, 2.5m

Index	Code	Part Number	Description	Qty	Serial No.
		203-70-01980	Arm Assembly	1	B10001-
1	C1		・Arm	1	B10001-
2		203-70-62D30	・・Plate,Welded	2	B10001-
3		203-70-56130	・Bushing	2	B10001-
4		203-70-42182	・Bushing	2	B10001-
5		203-70-56150	・Bushing	2	B10001-
6		07020-00000	・Fitting, Grease	1	B10001-

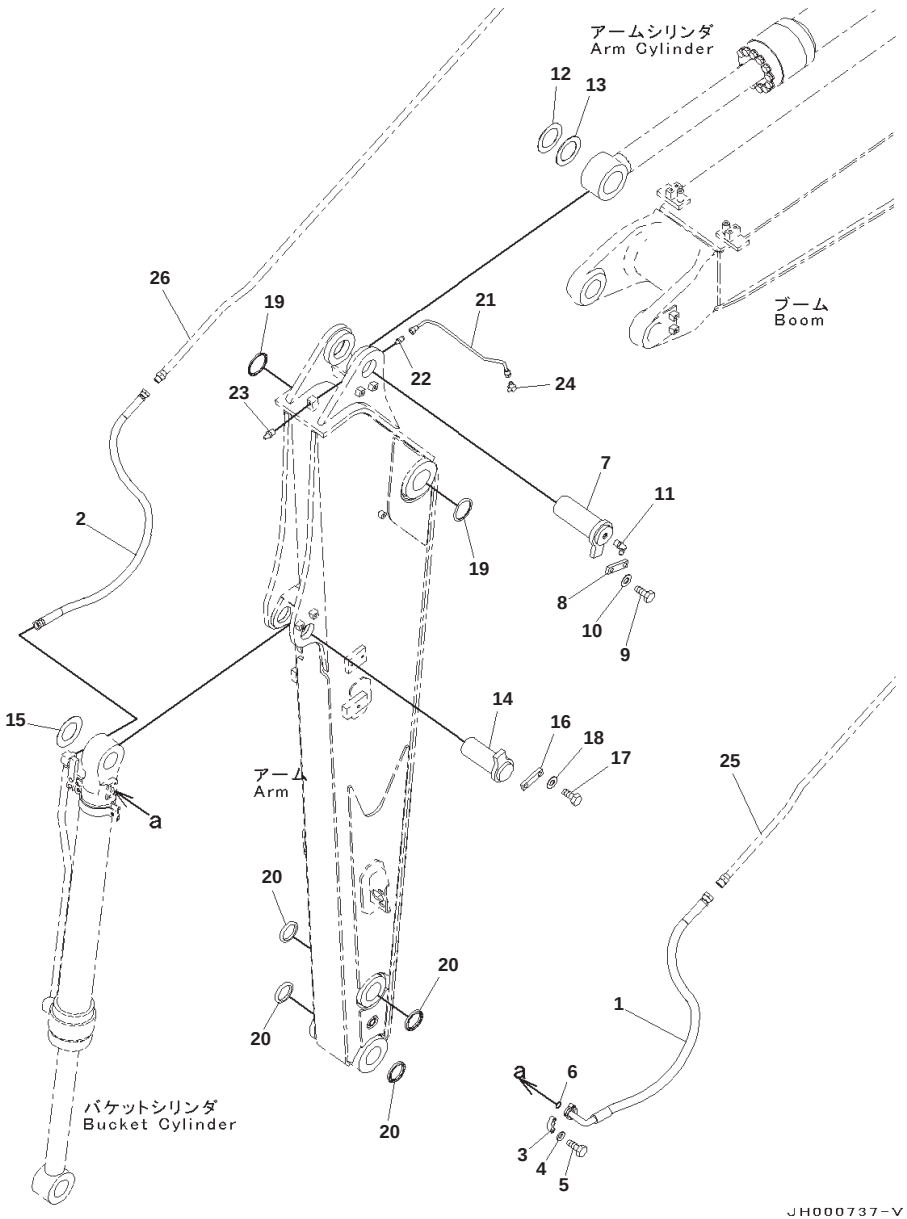

Arm, Heavy Duty, 100 Hours Greasing Type, Bucket Cylinder Hose and Pin

Index	Part Number	Description	Qty	Serial No.
1	22B-62-24140	Hose	1	B10001-
2	02756-20413	Hose, Face Seal Type	1	B10001-
3	07371-30500	Flange, Split	2	B10001-
4	01643-50823	Washer	4	B10001-
5	01010-80830	Bolt	4	B10001-
6	07000-13022	O-ring	1	B10001-
7	203-70-42121	Pin	1	B10001-
8	205-70-66580	Plate	1	B10001-
9	01010-81230	Bolt	2	B10001-
10	01643-31232	Washer	2	B10001-
11	07020-00675	Fitting, Grease	1	B10001-
12	21Y-70-14830	Spacer, T=1.0mm	1	B10001-
13	21Y-70-14840	Spacer, T=2.0mm	1	B10001-
14	202-70-52121	Pin	1	B10001-
15	21Y-70-14710	Spacer, T=1.0mm	1	B10001-
16	205-70-66580	Plate	1	B10001-
17	01010-81230	Bolt	2	B10001-
18	01643-31232	Washer	2	B10001-
19	07145-00070	Seal, Dust	2	B10001-
20	21W-70-41440	Seal, Dust	4	B10001-
21	22B-70-15210	Tube	1	B10001-
22	20Y-70-11540	Connector	1	B10001-
23	07020-00000	Fitting, Grease	1	B10001-
24	20Y-70-11590	Elbow	1	B10001-
25	(203-62-15111)	Tube		
26	(203-62-15140)	Tube		

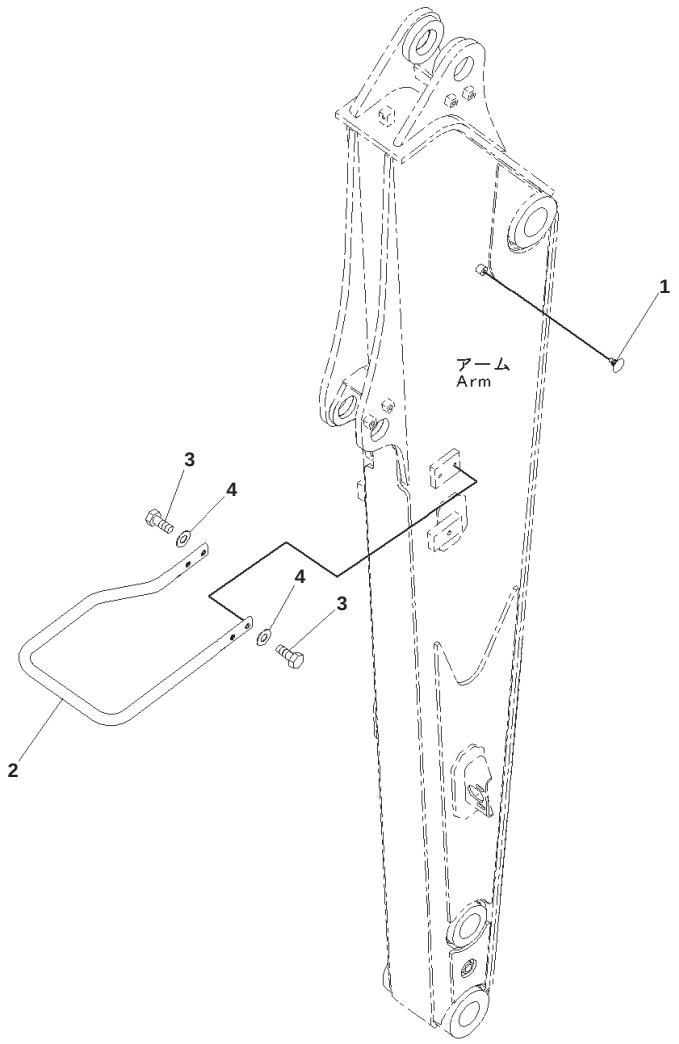

Arm, Heavy Duty, 100 Hours Greasing Type, Cylinder Guard

Index	Part Number	Description	Qty	Serial No.
1	20T-54-74510	Cap	1	B10001-
2	22B-70-21640	Pipe	1	B10001-
3	01010-81025	Bolt	4	B10001-
4	01643-31032	Washer	4	B10001-

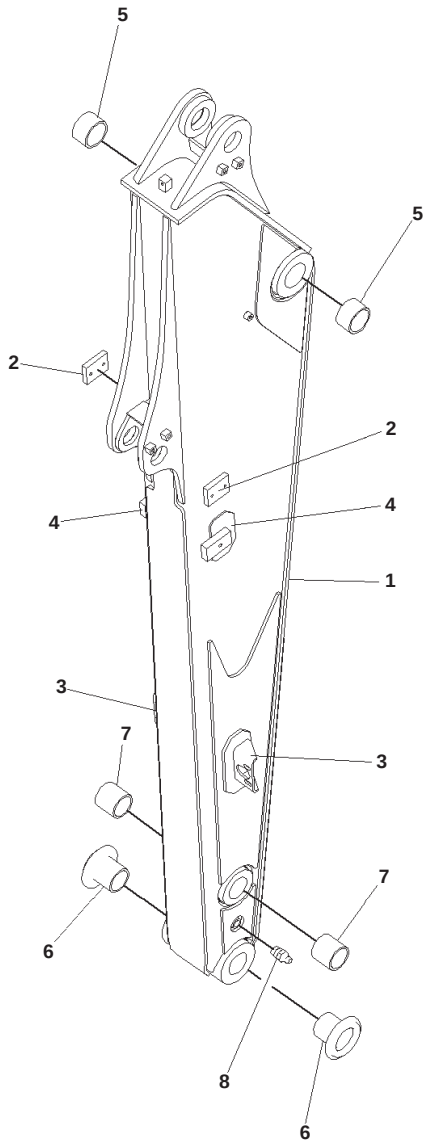

JH001150-Y

Arm, Heavy Duty, 1-actuator, 100 Hours Greasing Type, 2.5m

Index	Code	Part Number	Description	Qty	Serial No.
		203-70-01990	Arm Assembly	1	B10001-
1	C1		・Arm	1	B10001-
2		203-70-62D30	・・Plate,Welded	2	B10001-
3		202-973-6321	・・Bracket,Welded	2	B10001-
4		202-973-6331	・・Bracket,Welded	2	B10001-
5		203-70-56130	・Bushing	2	B10001-
6		203-70-42182	・Bushing	2	B10001-
7		203-70-56150	・Bushing	2	B10001-
8		07020-00000	・Fitting, Grease	1	B10001-

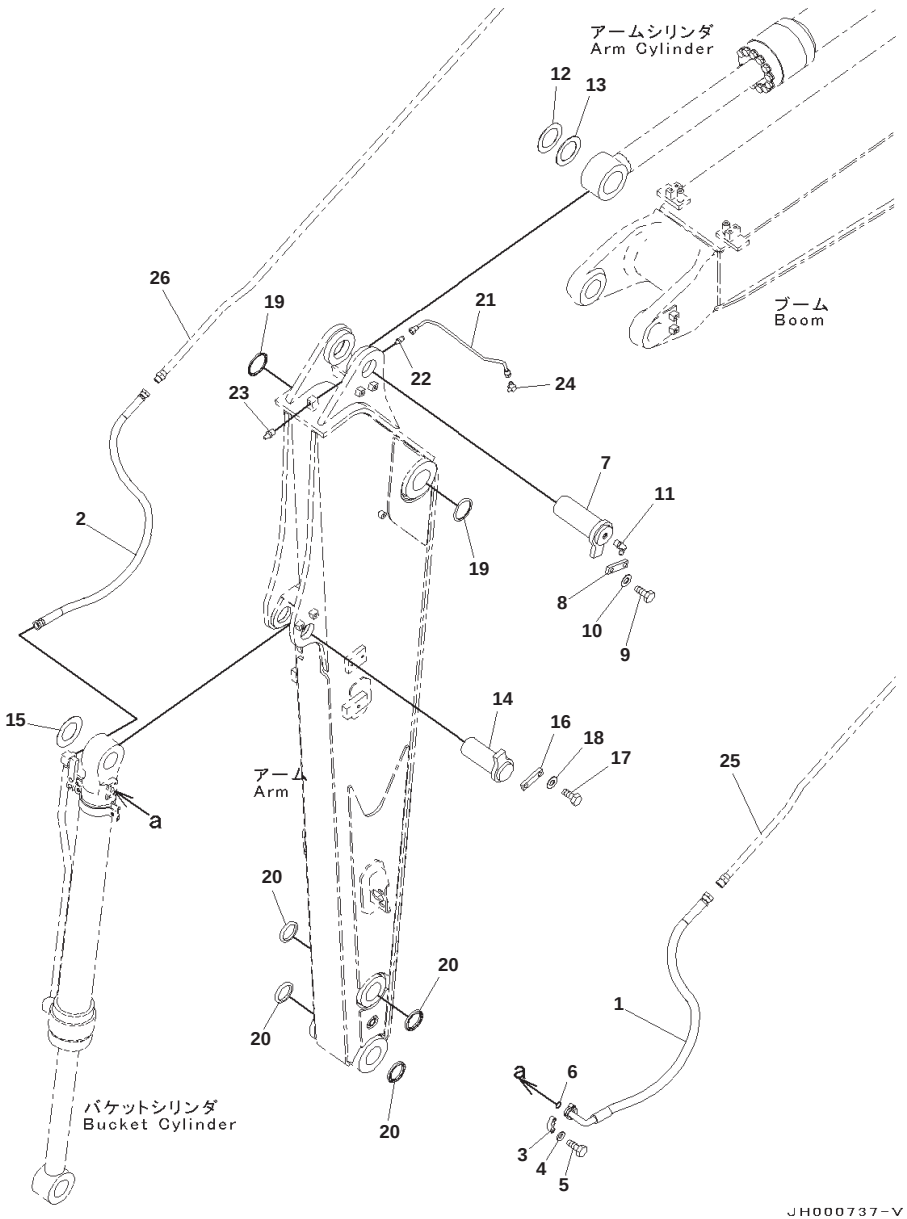

PC130-8 S/N B10001-UP

Arm, Heavy Duty, 1-actuator, 100 Hours Greasing Type, Bucket Cylinder Hose and Pin

Index	Part Number	Description	Qty	Serial No.
1	22B-62-24140	Hose	1	B10001-
2	02756-20413	Hose, Face Seal Type	1	B10001-
3	07371-30500	Flange, Split	2	B10001-
4	01643-50823	Washer	4	B10001-
5	01010-80830	Bolt	4	B10001-
6	07000-13022	O-ring	1	B10001-
7	203-70-42121	Pin	1	B10001-
8	205-70-66580	Plate	1	B10001-
9	01010-81230	Bolt	2	B10001-
10	01643-31232	Washer	2	B10001-
11	07020-00675	Fitting, Grease	1	B10001-
12	21Y-70-14830	Spacer, T=1.0mm	1	B10001-
13	21Y-70-14840	Spacer, T=2.0mm	1	B10001-
14	202-70-52121	Pin	1	B10001-
15	21Y-70-14710	Spacer, T=1.0mm	1	B10001-
16	205-70-66580	Plate	1	B10001-
17	01010-81230	Bolt	2	B10001-
18	01643-31232	Washer	2	B10001-
19	07145-00070	Seal, Dust	2	B10001-
20	21W-70-41440	Seal, Dust	4	B10001-
21	22B-70-15210	Tube	1	B10001-
22	20Y-70-11540	Connector	1	B10001-
23	07020-00000	Fitting, Grease	1	B10001-
24	20Y-70-11590	Elbow	1	B10001-
25	(203-62-15111)	Tube		
26	(203-62-15140)	Tube		

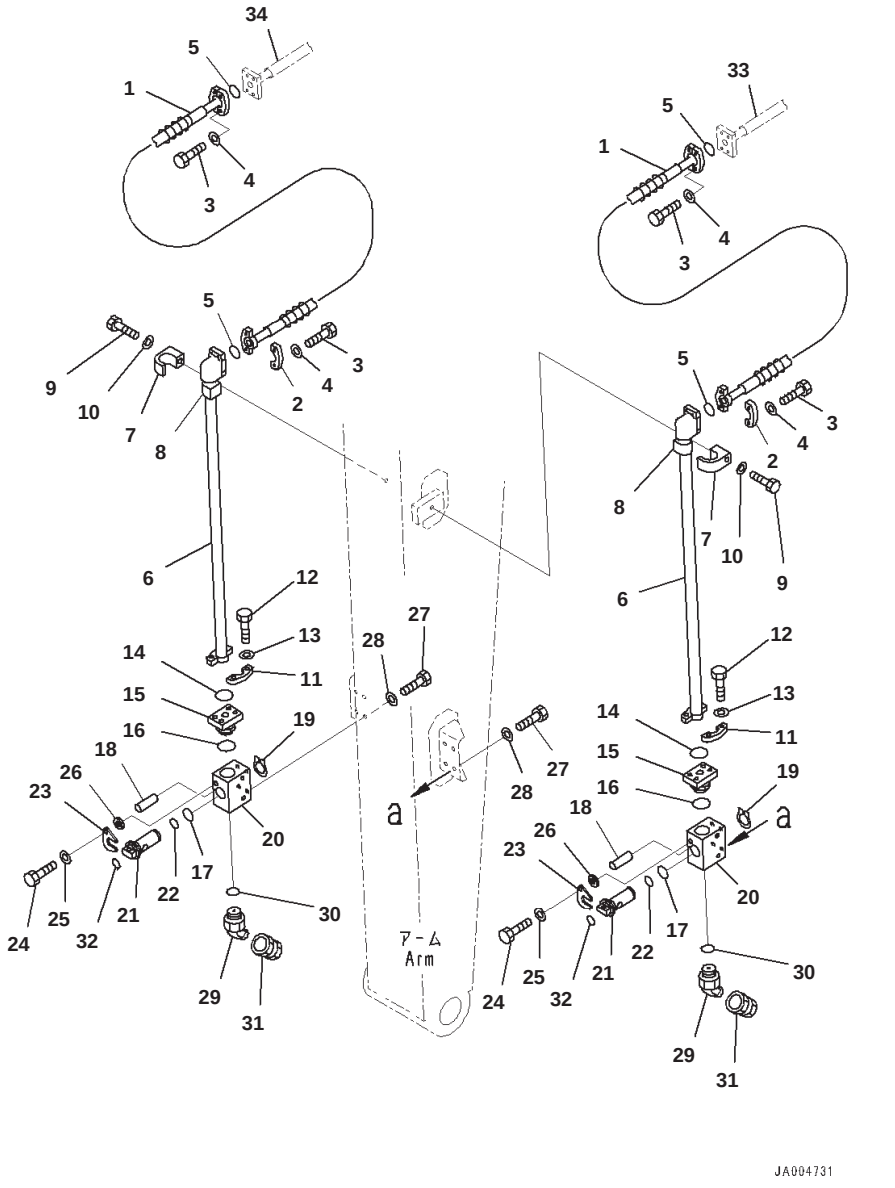

PC130-8 S/N B10001-UP
Arm, Heavy Duty, 1-actuator, 100 Hours Greasing Type, Additional Piping

Index	Code	Part Number	Description	Qty	Serial No.
1		07097-20614	Hose, Flange Type	2	B10001-
2		07371-30640	Flange, Split	8	B10001-
3		07372-21035	Bolt	16	B10001-
4		01643-51032	Washer	16	B10001-
5		07000-13025	O-ring	4	B10001-
6		203-62-64340	Tube	2	B10001-
7		22B-62-19410	Clamp	2	B10001-
8		203-62-43380	Cushion	2	B10001-
9		01010-81270	Bolt	2	B10001-
10		01643-31232	Washer	2	B10001-
11		07371-30640	Flange, Split	4	B10001-
12		07372-21035	Bolt	8	B10001-
13		01643-51032	Washer	8	B10001-
14		07000-13025	O-ring	2	B10001-
15		201-973-6810	Nipple	2	B10001-
16		07002-13334	O-ring	2	B10001-
		203-973-5803	Valve Assembly	2	B10001-
17		07000-13031	・ O-ring	1	B10001-
18		04025-00412	・ Pin, Spring	1	B10001-
19		04064-03015	・ Ring, Snap, for Shaft Side	2	B10001-
20	C1		・ Body	1	B10001-
21	C1		・ Shaft	1	B10001-
22		07000-13025	・ O-ring	1	B10001-
23		203-973-6610	・ Plate	1	B10001-
24		01010-80825	・ Bolt	1	B10001-
25		01643-30823	・ Washer	1	B10001-
26		21T-72-14930	・ Boss	1	B10001-
27		01010-81025	Bolt	4	B10001-
28		01643-31032	Washer	4	B10001-
29		22B-973-2150	Elbow	2	B10001-
30		07002-13334	O-ring	2	B10001-
31		22B-973-2120	Plug	2	B10001-
32		203-00-56640	Plate, Mark	2	B10001-
33		(203-62-64290)	Tube		
34		(203-62-64171)	Tube		

Reference:T1210-014003 Page:T009003

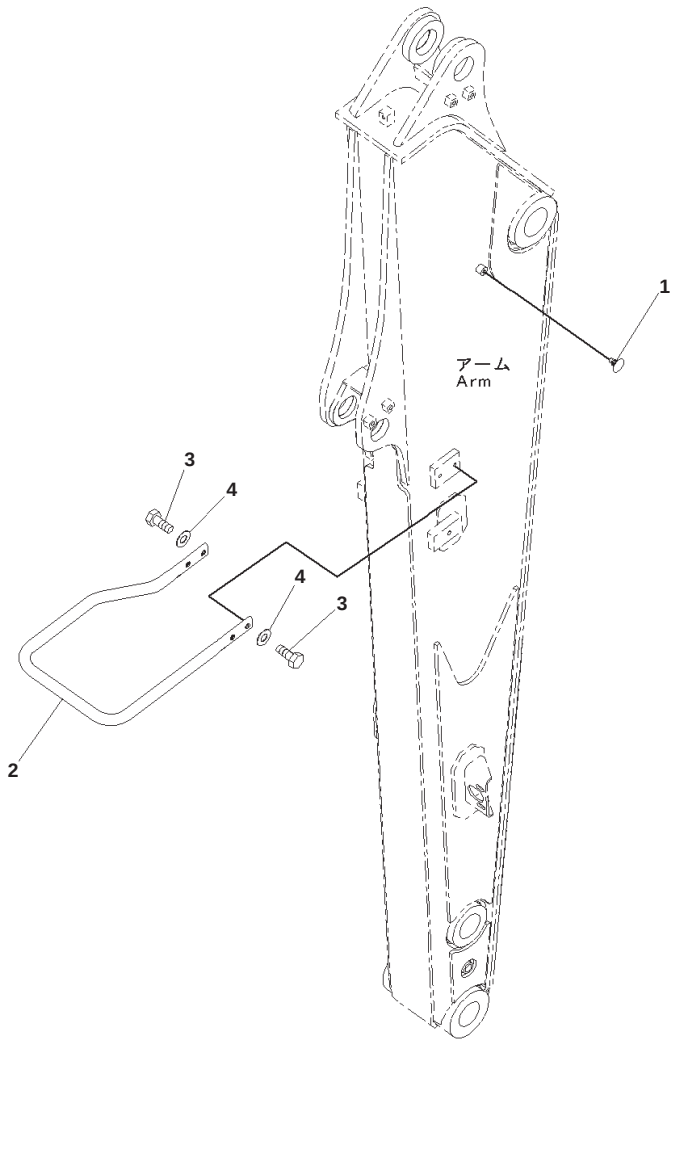

Arm, Heavy Duty, 1-actuator, 100 Hours Greasing Type, Cylinder Guard

Index	Part Number	Description	Qty	Serial No.
1	20T-54-74510	Cap	1	B10001-
2	22B-70-21640	Pipe	1	B10001-
3	01010-81025	Bolt	4	B10001-
4	01643-31032	Washer	4	B10001-

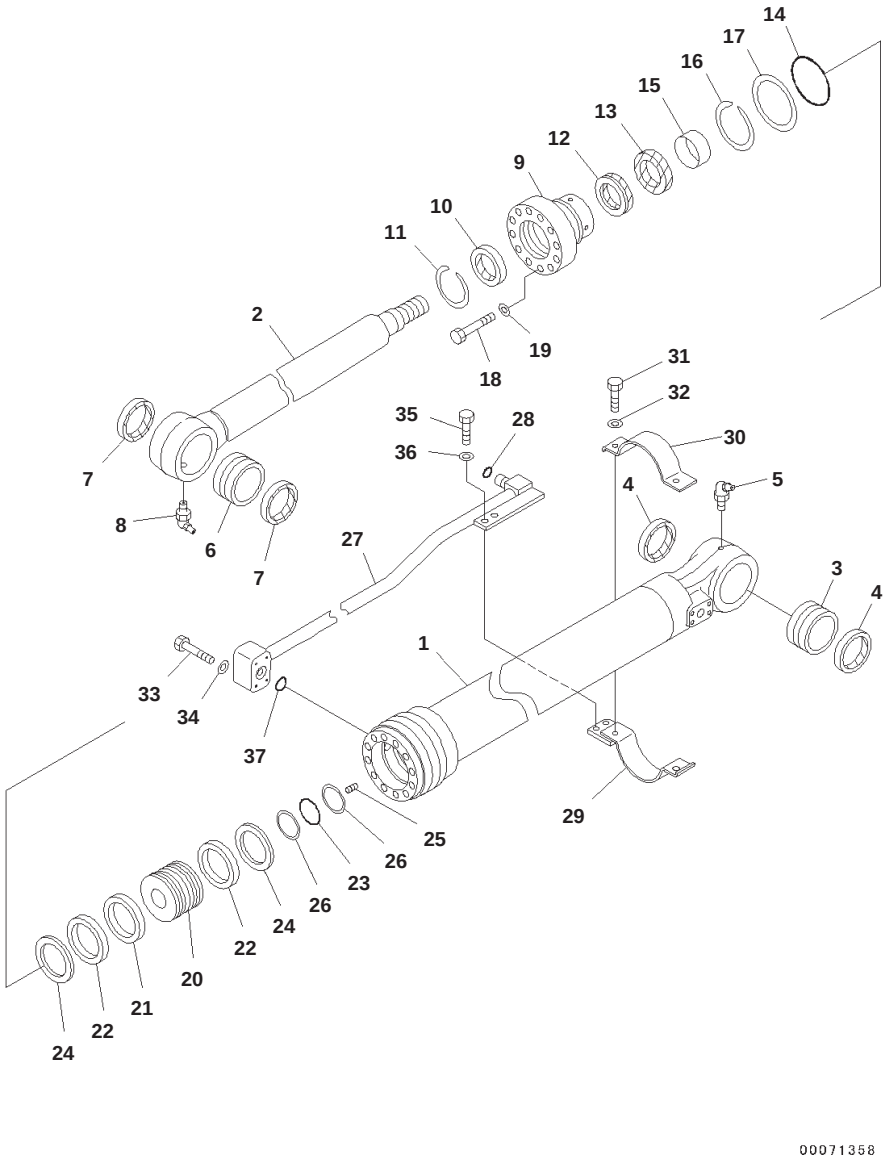

Bucket Cylinder, 100 Hours Greasing Type

Index	Part Number	Description	Qty	Serial No.
	707-01-0AK10	Cylinder Assembly	1	B10001-
1	707-13-95130	・ Cylinder	1	B10001-
2	707-58-65801	・ Rod	1	B10001-
3	707-76-65210	・ Bushing	1	B10001-
4	07145-00065	・ Seal, Dust, (Kit : K05)	2	B10001-
5	07020-00675	・ Fitting, Grease	1	B10001-
6	707-76-65520	・ Bushing	1	B10001-
7	22B-70-12170	・ Seal, Dust, (Kit : K05)	2	B10001-
8	07020-00675	・ Fitting, Grease	1	B10001-
9	707-27-95650	・ Head	1	B10001-
10	144-63-92170	・ Seal, Dust, (Kit : K05)	1	B10001-
11	07179-12079	・ Ring, Snap	1	B10001-
12	707-51-65030	・ Packing, Rod, (Kit : K05)	1	B10001-
13	707-51-65650	・ Ring, Buffer, (Kit : K05)	1	B10001-
14	07000-15085	・ O-ring, (Kit : K05)	1	B10001-
15	707-52-90421	・ Bushing	1	B10001-
16	707-75-65110	・ Ring, Snap	1	B10001-
17	707-35-90970	・ Ring, Back-up, (Kit : K05)	1	B10001-
18	01010-81465	・ Bolt	12	B10001-
19	705-17-04980	・ Washer	12	B10001-
20	707-36-95040	・ Piston	1	B10001-
21	707-44-95150	・ Ring, Piston, (Kit : K05)	1	B10001-
22	707-39-95030	・ Ring, Wear, (Kit : K05)	2	B10001-
23	707-34-55020	・ O-ring, (Kit : K05)	1	B10001-
24	707-44-95911	・ Ring	2	B10001-
25	01310-01016	・ Screw	1	B10001-
26	707-35-90610	・ Ring, Back-up, (Kit : K05)	2	B10001-
27	707-86-55550	Tube	1	B10001-
28	02896-11012	O-ring, (Kit : K05)	1	B10001-
29	707-88-50120	Bracket	1	B10001-
30	707-88-21730	Band	1	B10001-
31	07372-21035	Bolt	2	B10001-
32	01643-51032	Washer	2	B10001-
33	01010-80850	Bolt	4	B10001-
34	01643-30823	Washer	4	B10001-
35	01010-81025	Bolt	2	B10001-
36	01643-31032	Washer	2	B10001-
37	07000-13025	O-ring, (Kit : K05)	1	B10001-

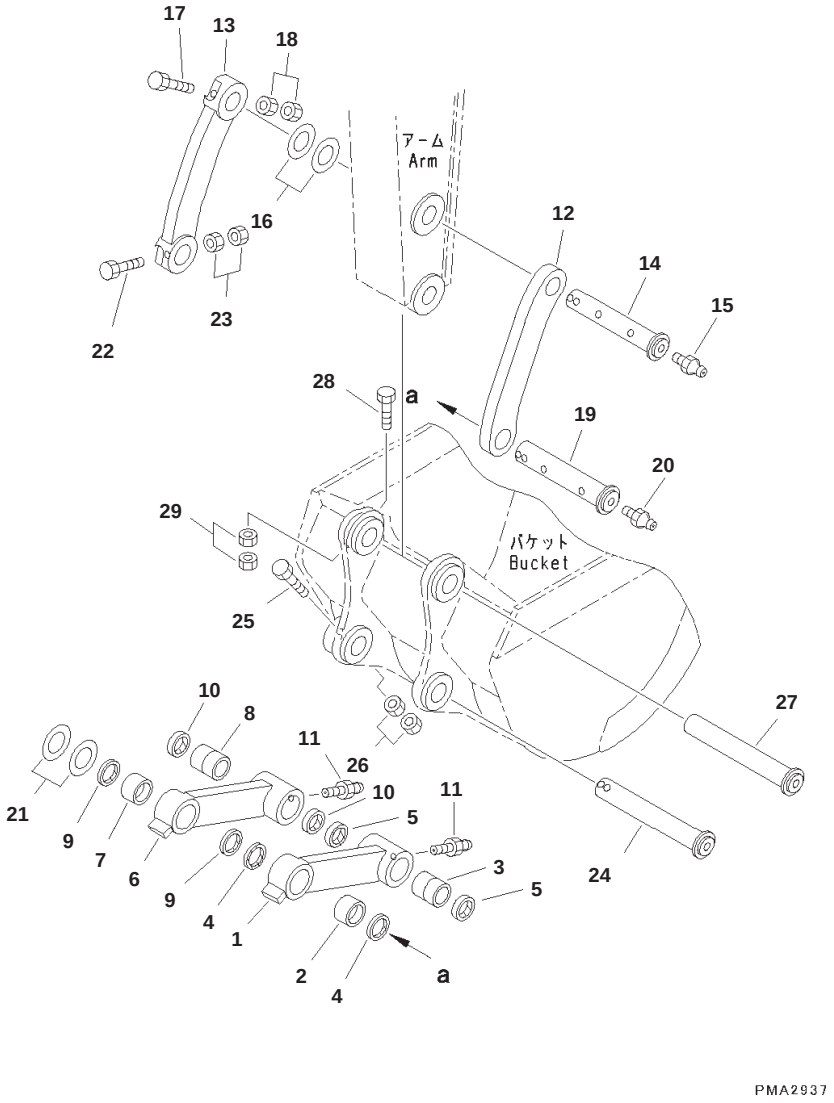

Bucket Linkage

Index	Part Number	Description	Qty	Serial No.
1	203-70-54130	Link	1	B10001-
2	203-70-56140	Bushing	1	B10001-
3	203-70-56160	Bushing	1	B10001-
4	07145-00065	Seal, Dust	2	B10001-
5	07145-00060	Seal, Dust	2	B10001-
6	203-70-54140	Link	1	B10001-
7	203-70-56140	Bushing	1	B10001-
8	203-70-56160	Bushing	1	B10001-
9	07145-00065	Seal, Dust	2	B10001-
10	07145-00060	Seal, Dust	2	B10001-
11	07020-00000	Fitting, Grease	2	B10001-
12	203-70-54110	Link	1	B10001-
13	203-70-54120	Link	1	B10001-
14	202-70-64151	Pin	1	B10001-
15	07020-00000	Fitting, Grease	1	B10001-
16	21Y-70-14770	Spacer, T=1.0mm	1	B10001-
	21Y-70-14780	Spacer, T=2.0mm	2	B10001-
17	01011-81620	Bolt	1	B10001-
18	01580-11613	Nut	2	B10001-
19	202-70-64163	Pin	1	B10001-
20	07020-00000	Fitting, Grease	1	B10001-
21	21Y-70-14710	Spacer, T=1.0mm	3	B10001-
	21Y-70-14850	Spacer, T=0.20mm	4	B10001-
22	01011-81620	Bolt	1	B10001-
23	01580-11613	Nut	2	B10001-
24	203-70-44380	Pin	1	B10001-
25	01011-81640	Bolt	1	B10001-
26	01580-11613	Nut	2	B10001-
27	203-70-44380	Pin	1	B10001-
28	01011-81670	Bolt	1	B10001-
29	01580-11613	Nut	2	B10001-

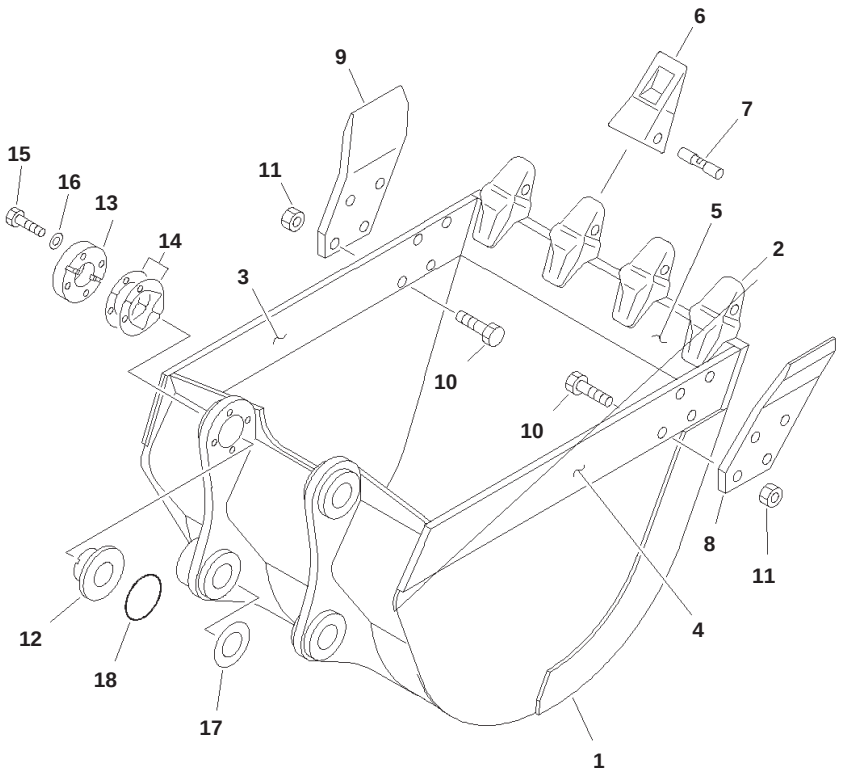

Backhoe Bucket, 0.5m3, 859mm Width, Horizontal Pin Type, With Side Cutter, Width Pin

Index	Part Number	Description	Qty	Serial No.
1	203-70-B1150	Bucket	1	B10001-
2	20Y-70-14520	・ Adapter,Welded	4	B10001-
3	203-70-64141	・ Plate,Welded	1	B10001-
4	203-70-64131	・ Plate,Welded	1	B10001-
5	203-70-B1160	・ Plate,Welded	1	B10001-
6	205-70-19570	Tooth	4	B10001-
7	09244-02496	Pin	4	B10001-
8	202-70-63161	Cutter,LHS	1	B10001-
9	202-70-63171	Cutter,RHS	1	B10001-
10	208-32-11231	Bolt	8	B10001-
11	01803-02228	Nut	8	B10001-
12	202-70-64250	Spacer	1	B10001-
13	202-70-64240	Plate	1	B10001-
14	202-70-64210	Spacer, T=0.5mm	4	B10001-
	202-70-64220	Spacer, T=1.0mm	8	B10001-
15	01010-81470	Bolt	4	B10001-
16	01643-31445	Washer	4	B10001-
17	21Y-70-14770	Spacer, T=1.0mm	1	B10001-
	21Y-70-14780	Spacer, T=2.0mm	1	B10001-
18	203-70-44470	O-ring	2	B10001-

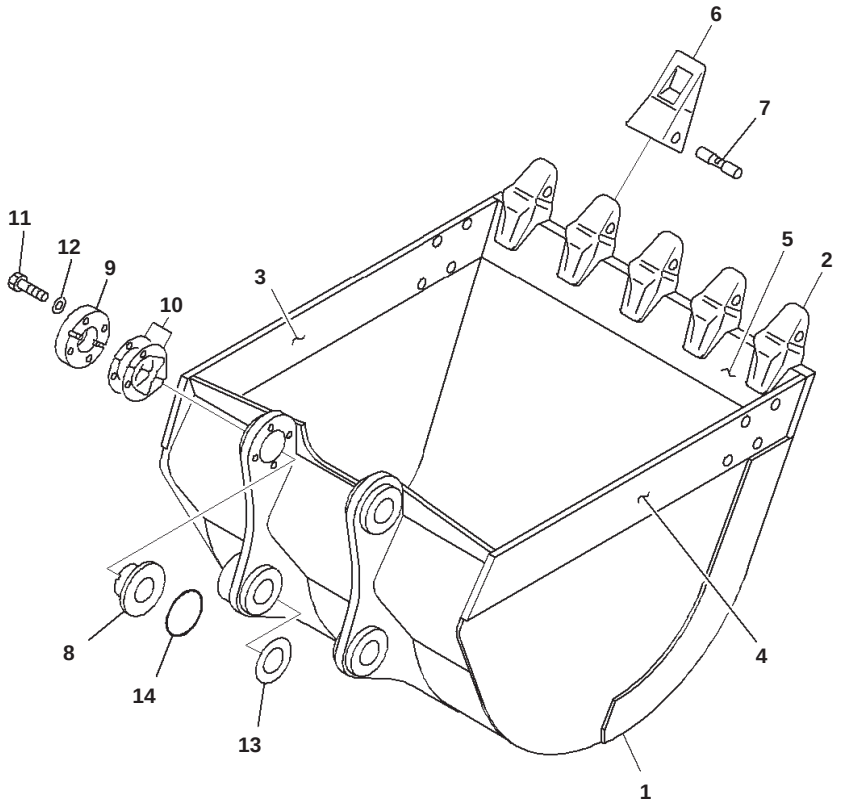

Backhoe Bucket, 0.6m3, 1000mm Width, Horizontal Pin Type, Width Pin

Index	Part Number	Description	Qty	Serial No.
1	203-920-B110	Bucket	1	B10001-
2	20Y-70-14520	・ Adapter,Welded	5	B10001-
3	203-70-64141	・ Plate,Welded	1	B10001-
4	203-70-64131	・ Plate,Welded	1	B10001-
5	203-920-B120	・ Plate,Welded	1	B10001-
6	205-70-19570	Tooth	5	B10001-
7	09244-02496	Pin	5	B10001-
8	202-70-64250	Spacer	1	B10001-
9	202-70-64240	Plate	1	B10001-
10	202-70-64210	Spacer, T=0.5mm	4	B10001-
	202-70-64220	Spacer, T=1.0mm	8	B10001-
11	01010-81470	Bolt	4	B10001-
12	01643-31445	Washer	4	B10001-
13	21Y-70-14770	Spacer, T=1.0mm	1	B10001-
	21Y-70-14780	Spacer, T=2.0mm	1	B10001-
14	203-70-44470	O-ring	2	B10001-

MARKS AND PLATES

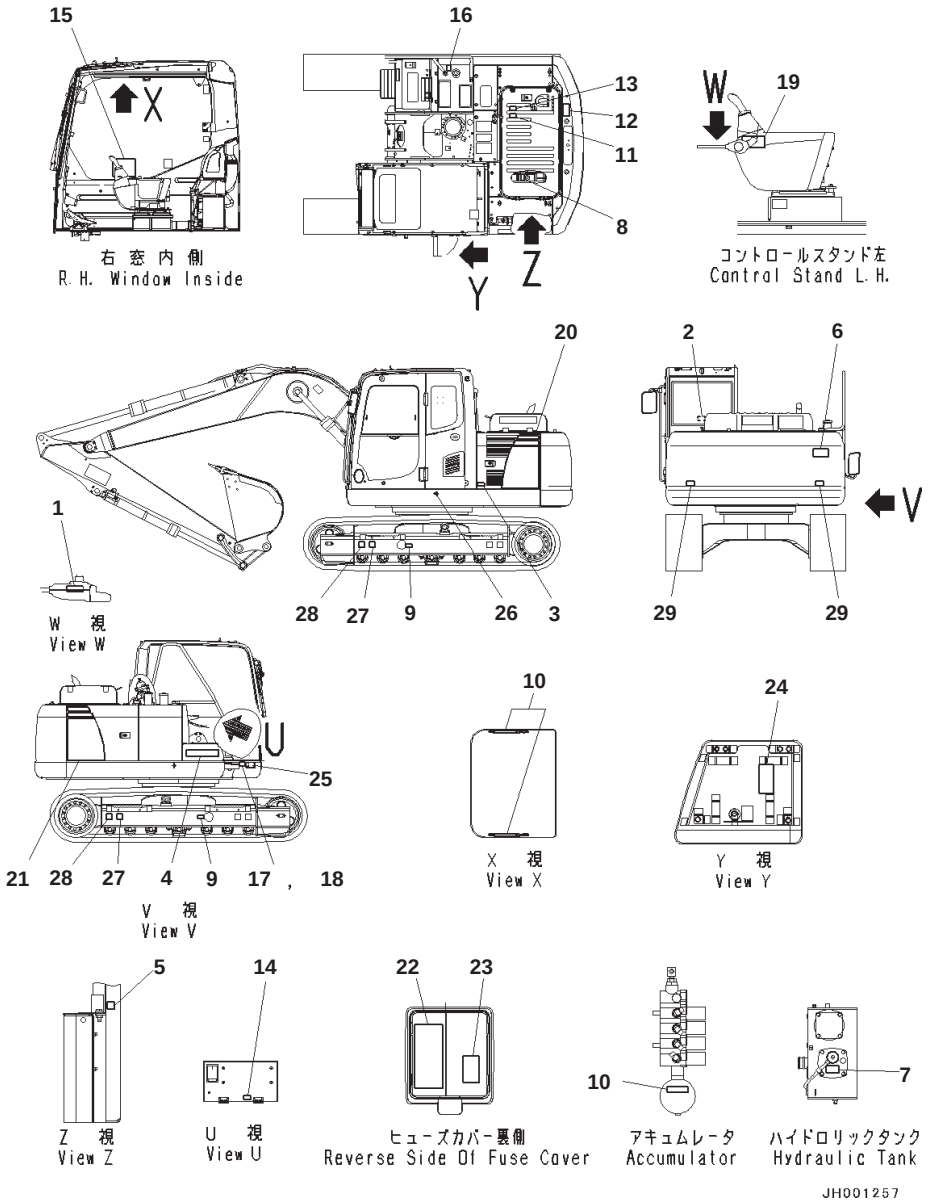

Index	Code	Part Number	Description	Qty	Serial No.
1		09685-00002	Plate, Symbol, Lock	1	B10001-
2		09844-00050	Plate	1	B10001-
3		11Y-98-31130	Plate, Symbol, Ecot3	1	B10001-
4		09690-P0450	Mark, Komatsu Logo	1	B10001-
5		09842-A0481	Plate, Caution, No Jump Start	1	B10001-
6		09133-27000	Plate	1	B10001-
7		09653-07101	Plate, Warning, High Temperature	1	B10001-
8		09668-07101	Plate, Warning, Hot Water	1	B10001-
9		09657-07102	Plate, Warning, Track Adjustment	2	B10001-
10		09659-57100	Plate, Warning, Explosive Hazard	3	B10001-
11		09667-07101	Plate, Caution, Rotating Object	1	B10001-
12		09805-27100	Plate	1	B10001-
13		09805-17100	Plate, Caution, Hood	1	B10001-
14		09808-07100	Plate, Warning, Battery Cables	1	B10001-
15		207-00-71741	Plate, Caution	1	B10001-
16		09669-0000E	Plate, Symbol, Fuel Filler	1	B10001-
17	C2	09601-12051	Plate, Name (Limited Supply)	1	B10001-
18		04418-13060	Screw	4	B10001-
19		09963-07001	Tag, Danger, Do Not Operate	1	B10001-
20		203-00-11160	Plate, Machine Model Mark	1	B10001-
21		203-00-11170	Plate, Machine Model Mark	1	B10001-
22		203-00-11460	Plate, Fuse	1	B10001-
23		22B-00-21920	Plate, Operating	1	B10001-
24		207-00-B1210	Plate	1	B10001-
25		20Y-00-31840	Plate	1	B10001-
26		21U-98-31160	Plate, Mark, Location Of Center Of Gravity	2	B10001-
27		09960-00801	Decal, Lift Point Mark	4	B10001-
28		09960-00802	Decal, Tie Down Point Mark	4	B10001-
29		14X-98-35181	Plate, Reflector	2	B10001-

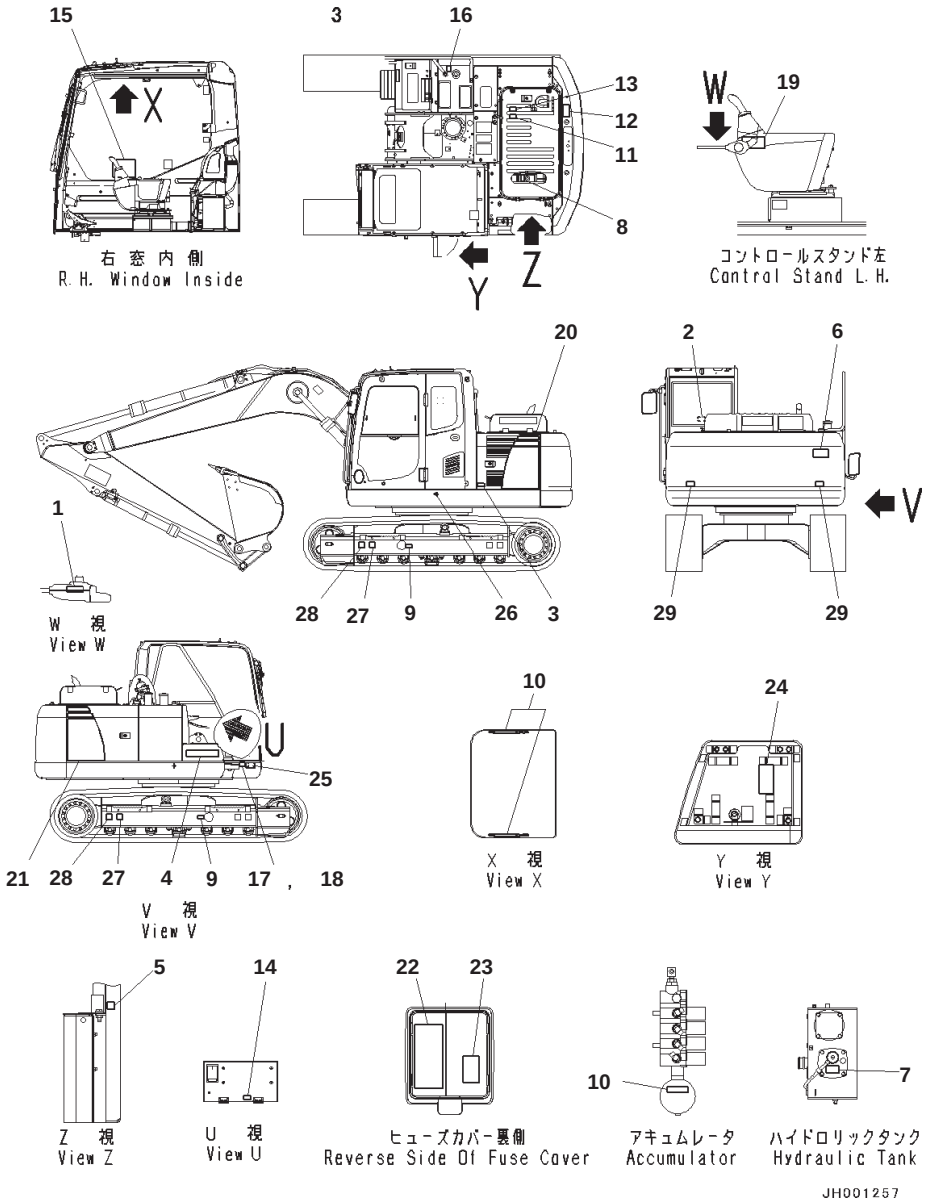

Marks and Plates, Lettering Type, Spanish

Index	Code	Part Number	Description	Qty	Serial No.
1		09685-00002	Plate, Symbol, Lock	1	B10001-
2		09844-00050	Plate	1	B10001-
3		11Y-98-31130	Plate, Symbol, Ecot3	1	B10001-
4		09690-P0450	Mark, Komatsu Logo	1	B10001-
5		09842-A0481	Plate, Caution, No Jump Start	1	B10001-
6		09133-21001	Decal, Danger, Keep Off Swing Area	1	B10001-
7		09653-01001	Plate, Warning, High Temperature	1	B10001-
8		09668-01001	Plate, Warning, Hot Water	1	B10001-
9		09657-01004	Plate	2	B10001-
10		09659-51000	Plate, Warning, Explosive Hazard	3	B10001-
11		09667-01001	Plate, Caution, Rotating Object	1	B10001-
12		09805-21000	Plate	1	B10001-
13		09805-11000	Plate, Caution, Hood	1	B10001-
14		09808-01000	Plate, Warning, Battery Cables	1	B10001-
15		20Y-00-31680	Plate	1	B10001-
16		09669-0000E	Plate, Symbol, Fuel Filler	1	B10001-
17	C2	09601-12051	Plate, Name (Limited Supply)	1	B10001-
18		04418-13060	Screw	4	B10001-
19		09963-01001	Tag, Danger, Do Not Operate	1	B10001-
20		203-00-11160	Plate, Machine Model Mark	1	B10001-
21		203-00-11170	Plate, Machine Model Mark	1	B10001-
22		203-00-11370	Plate	1	B10001-
23		20Y-00-31640	Plate	1	B10001-
24		208-00-71430	Plate	1	B10001-
25		20Y-00-31840	Plate	1	B10001-
26		21U-98-31160	Plate, Mark, Location Of Center Of Gravity	2	B10001-
27		09960-00801	Decal, Lift Point Mark	4	B10001-
28		09960-00802	Decal, Tie Down Point Mark	4	B10001-
29		14X-98-35181	Plate, Reflector	2	B10001-

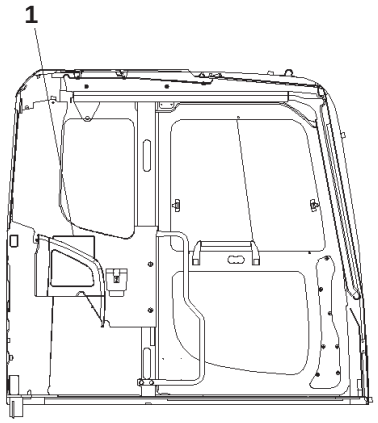

左 ド ア ー 内 側
L. H. Door Inside

00038302

Lubrication Chart, 100 Hours Greasing Type

Index	Part Number	Description	Qty	Serial No.
1	203-00-11320	Decal, Lubrication Chart, Lubrication, 100 Hours	1	B10001-

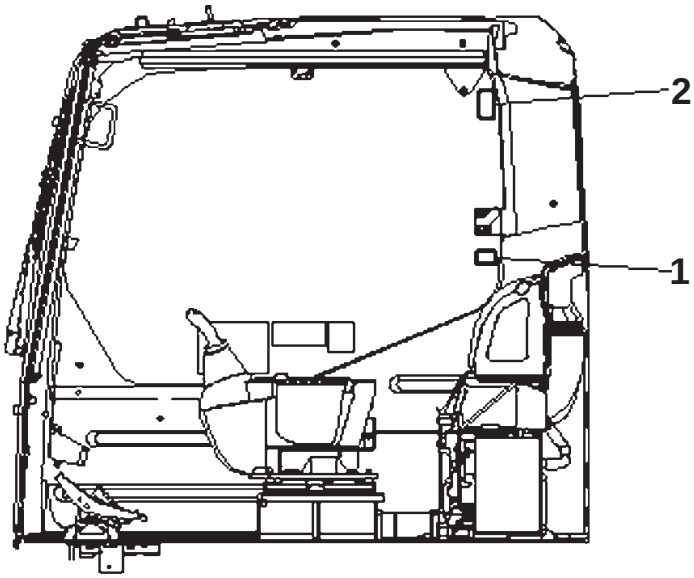

Caution Plates, Portuguese, Lettering Type

Index	Part Number	Description	Qty	Serial No.
1	20Y-00-B1350	Plate	1	B10001-
2	09803-07100	Decal, Warning, Windshield Lock	1	B10001-

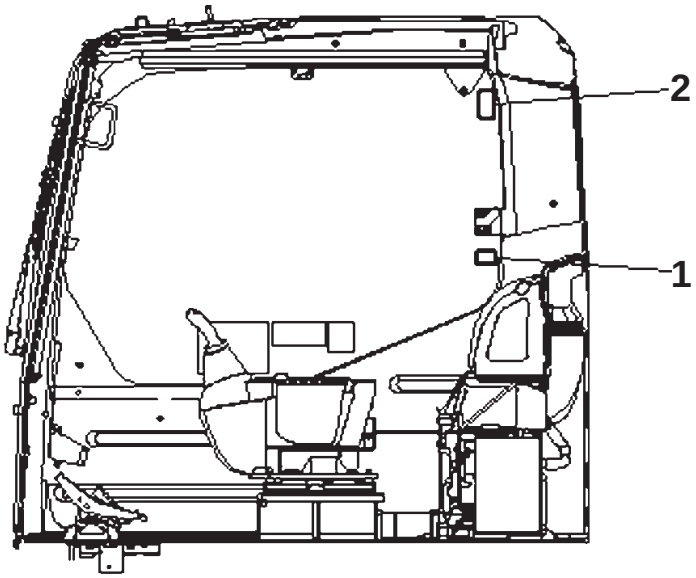

Caution Plates, Spanish, Cab Windshield Lock Operation

Index	Part Number	Description	Qty	Serial No.
1	20Y-00-41690	Plate	1	B10001-
2	09803-01000	Decal, Warning, Windshield Lock	1	B10001-

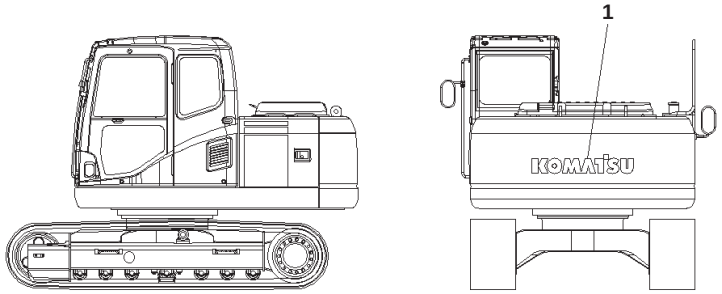

00036060

Index	Part Number	Description	Qty	Serial No.
1	09690-P1120	Plate, Mark	1	B10001-

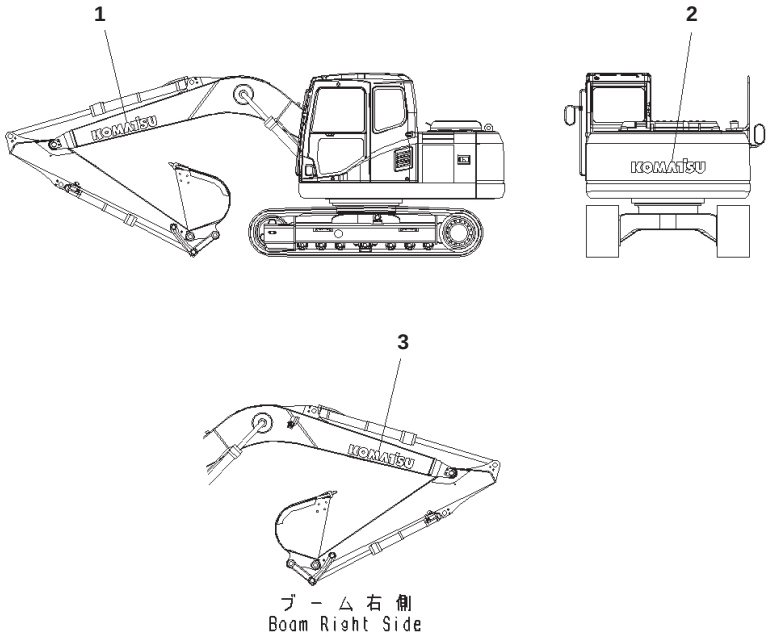

ブ ー ム 右 側
Boom Right Side

00036061

Komatsu Logo, Boom and Counter Weight

Index	Part Number	Description	Qty	Serial No.
1	09690-P1000	Mark, Komatsu Logo	1	B10001-
2	09690-P1120	Plate, Mark	1	B10001-
3	09690-P1000	Mark, Komatsu Logo	1	B10001-

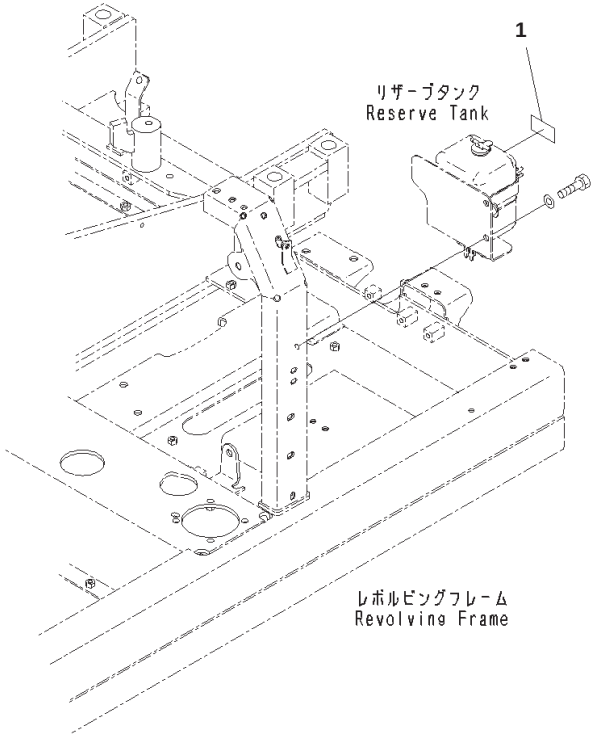

Index	Part Number	Description	Qty	Serial No.
1	09642-17000	Plate, Service Instruction, Engine Coolant AF-NAC	1	B10001-

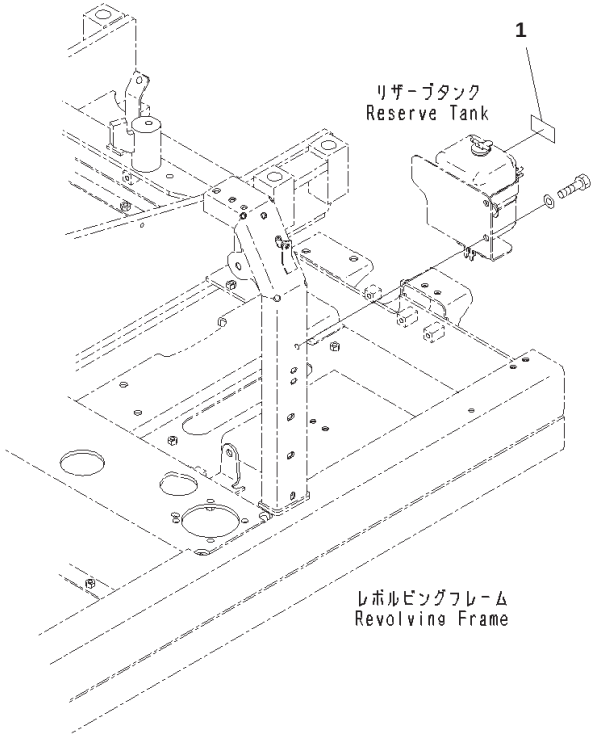

Coolant Decal, Spanish Instruction

Index	Part Number	Description	Qty	Serial No.
1	09642-11000	Plate, Service Instruction, Engine Coolant AF-NAC	1	B10001-

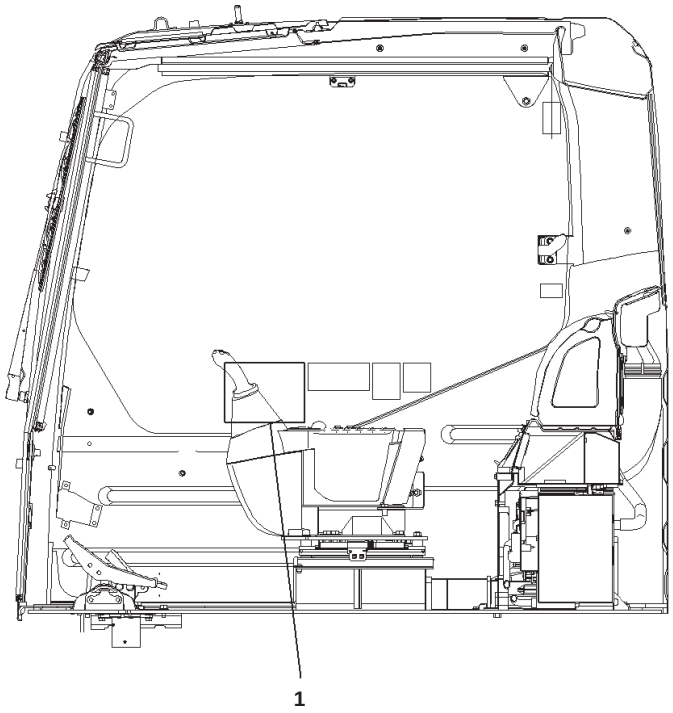

Index	Part Number	Description	Qty	Serial No.
1	203-00-11440	Plate	1	B10001-

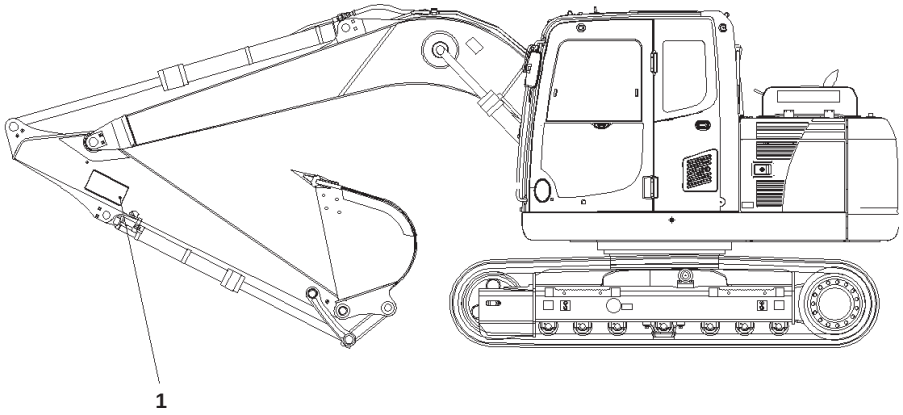

Index	Part Number	Description	Qty	Serial No.
1	09134-A1681	Plate	2	B10001-

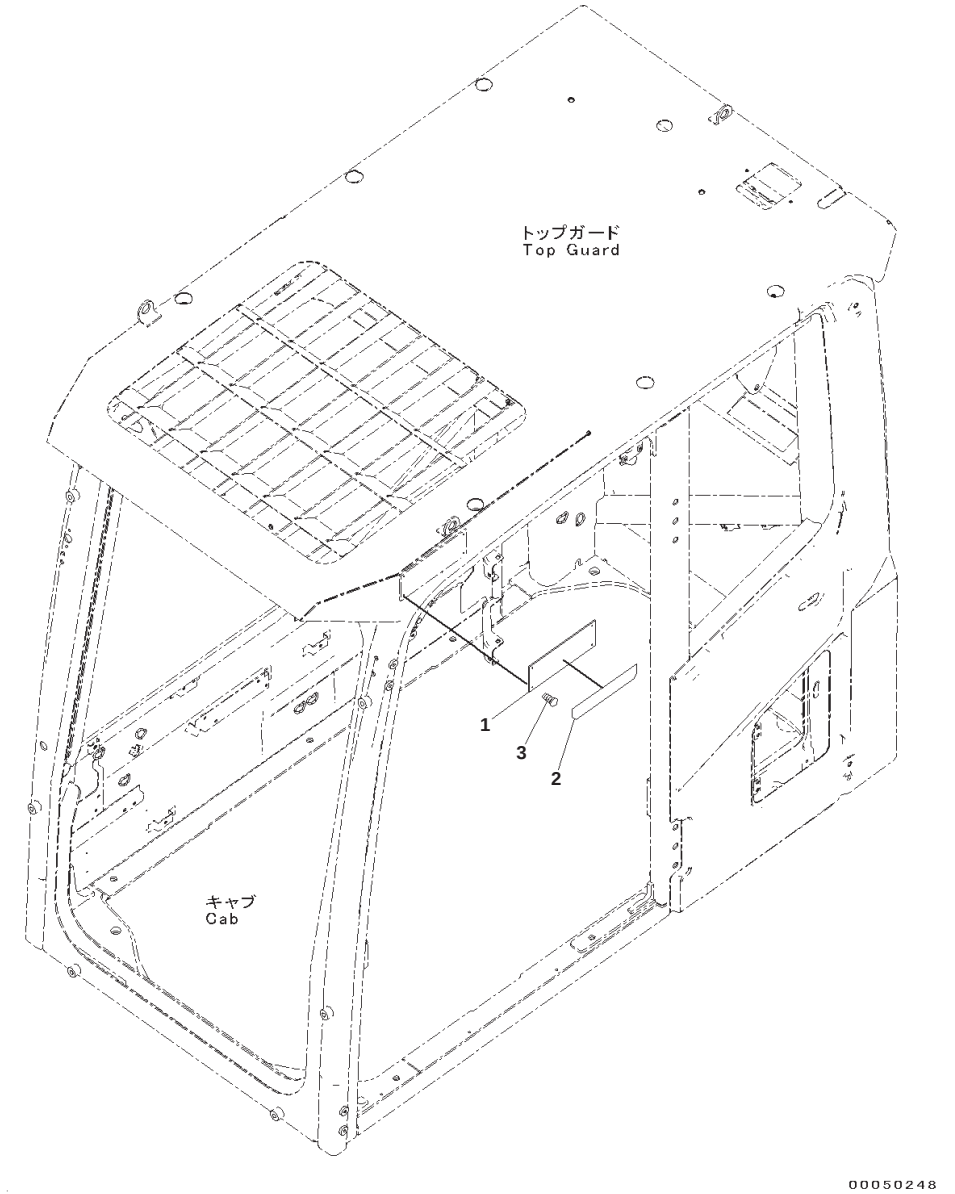

Caution Plates, Top Guard, Portuguese

Index	Code	Part Number	Description	Qty	Serial No.
1	C2	09620-D2000	Plate, Name, Top Guard (Limited Supply)	1	B10001-
2		09620-D2160	Plate, Warning	1	B10001-
3		04418-13060	Screw	4	B10001-

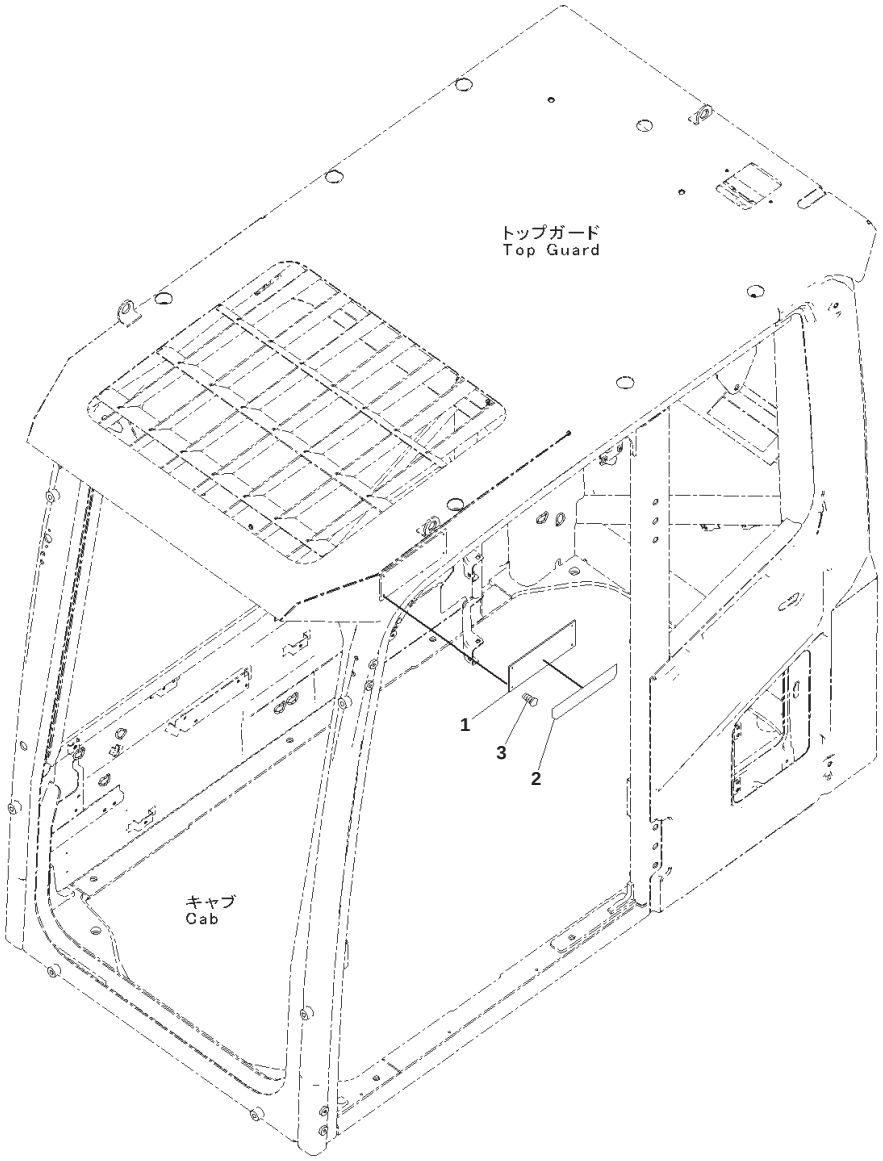

Caution Plates, Top Guard, Spanish

Index	Code	Part Number	Description	Qty	Serial No.
1	C2	09620-D2000	Plate, Name, Top Guard (Limited Supply)	1	B10001-
2		09620-D2070	Plate, Warning	1	B10001-
3		04418-13060	Screw	4	B10001-

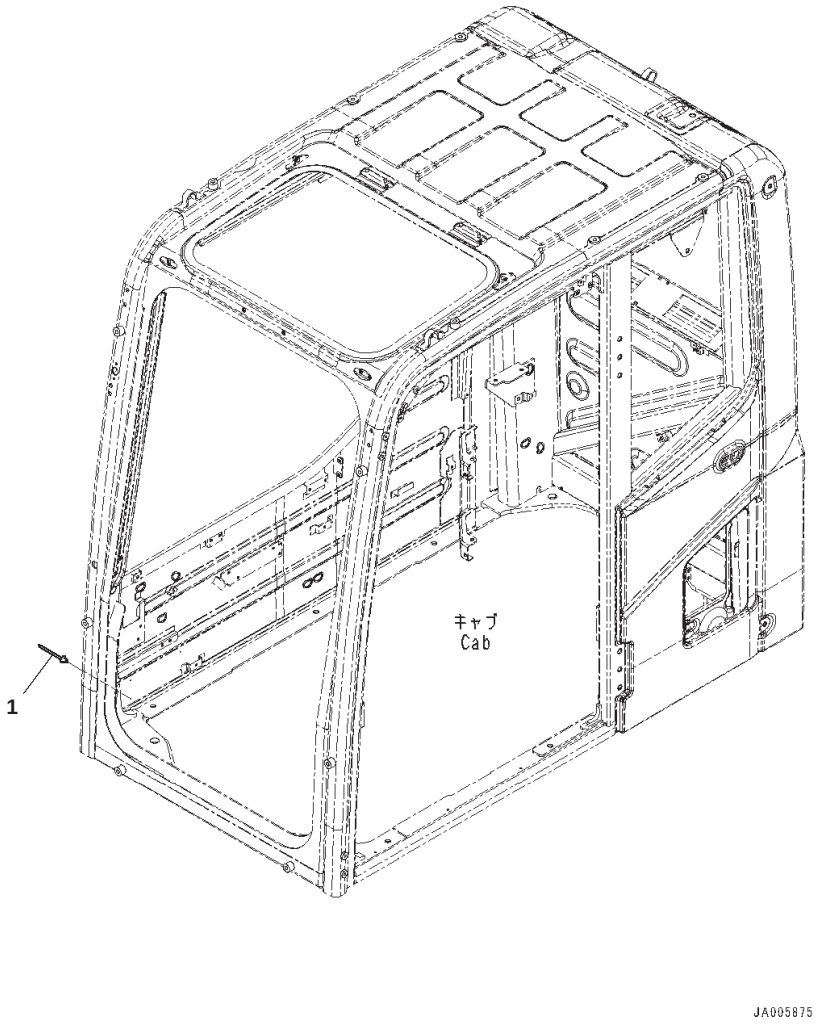

Rivet

Index	Part Number	Description	Qty	Serial No.
1	205-00-72430	Rivet	4	B10001-

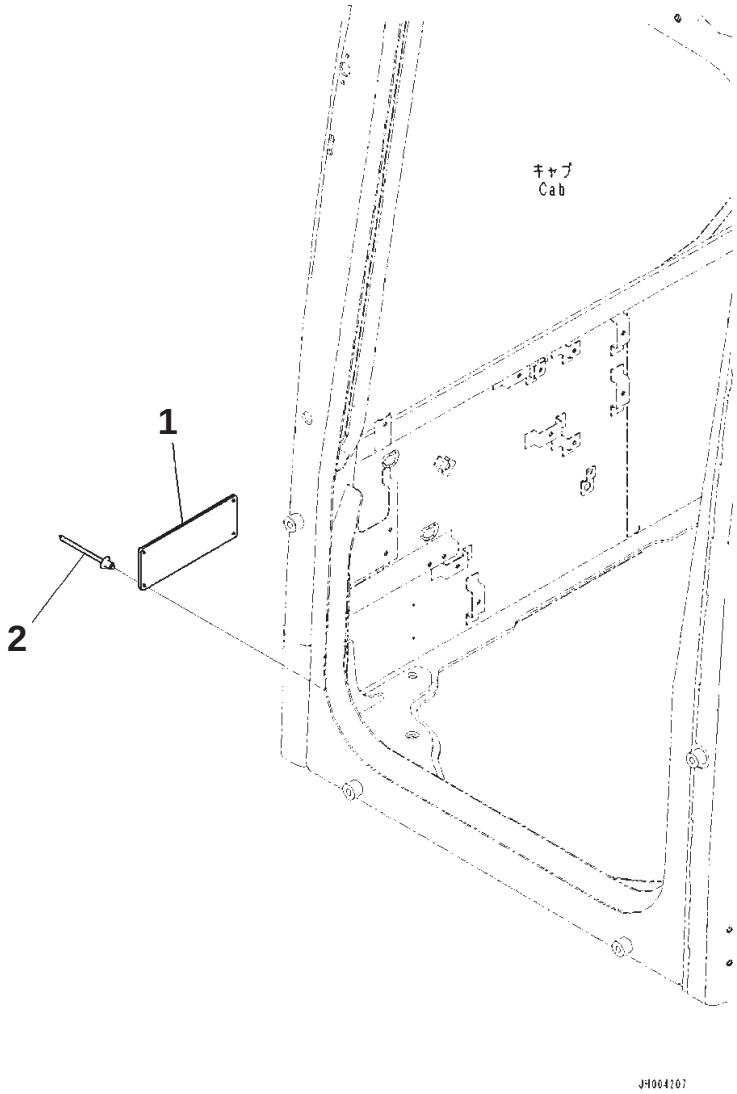

Index	Part Number	Description	Qty	Serial No.
1	20Y-00-B1421	Plate, Certification Mark, ROPS	1	B10001-
2	205-00-72430	Rivet	4	B10001-

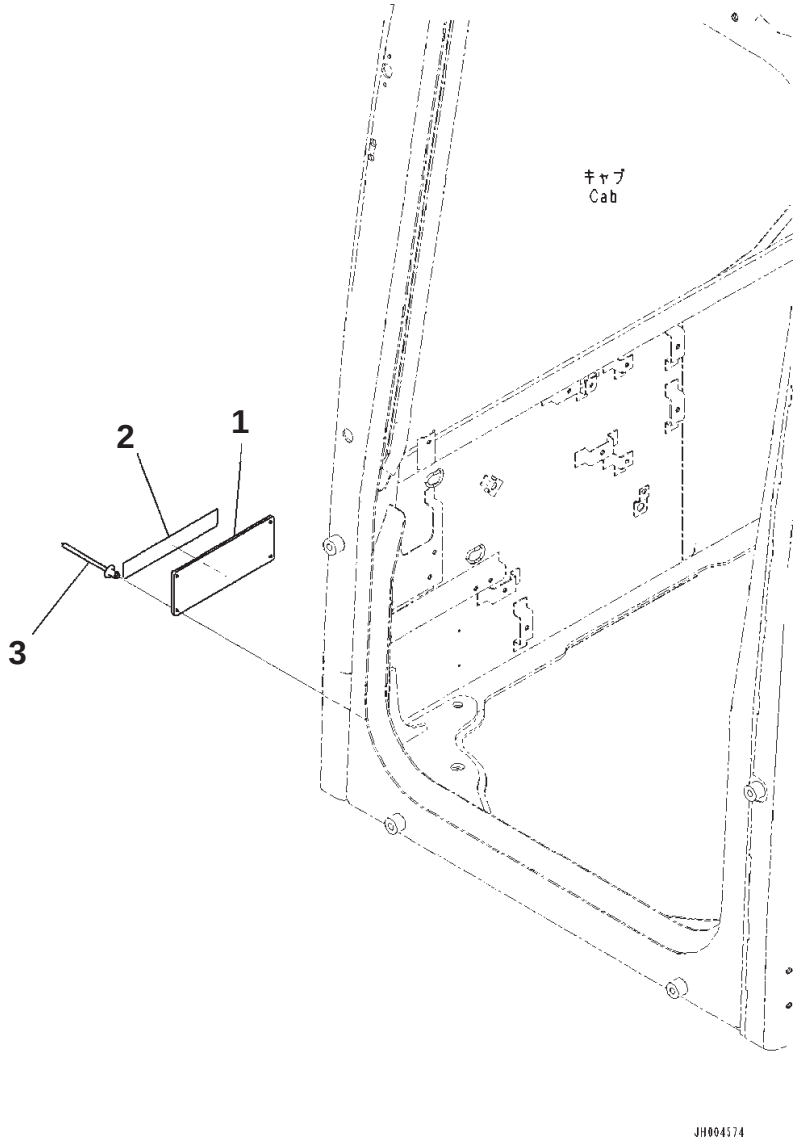

Index	Part Number	Description	Qty	Serial No.
1	20Y-00-B1421	Plate, Certification Mark, ROPS	1	B10001-
2	09620-B2070	Plate, Safety	1	B10001-
3	205-00-72430	Rivet	4	B10001-

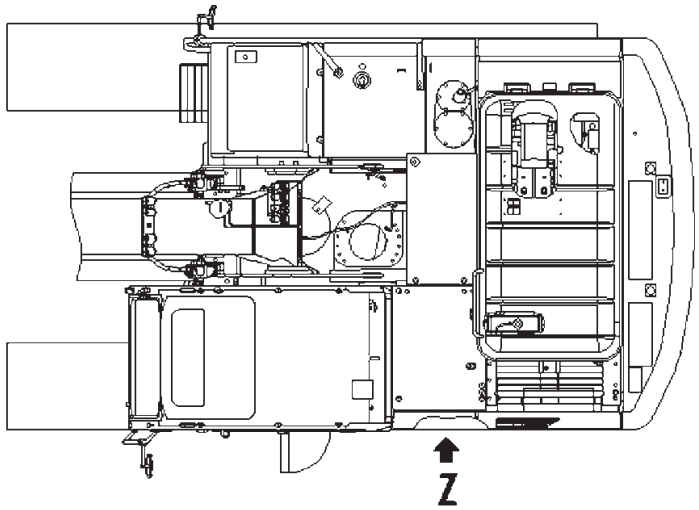

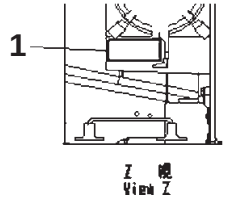

Index	Part Number	Description	Qty	Serial No.
1	09637-51263	Plate, Service Instruction, Air Cleaner	1	B10001-

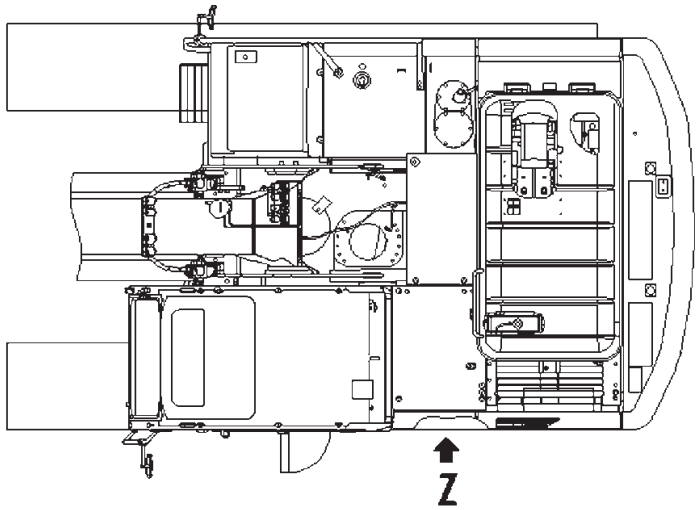

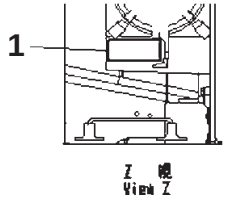

Index	Part Number	Description	Qty	Serial No.
1	09637-70163	Decal, Service Instruction, Air Cleaner	1	B10001-

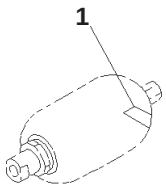

PW1B973

Caution Plates, 1-accumulator, Portuguese

Index	Part Number	Description	Qty	Serial No.
1	09659-57100	Plate, Warning, Explosive Hazard	1	B10001-

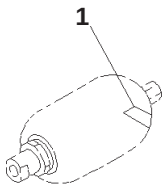

PW1B973

Caution Plates, 1-accumulator, Spanish

Index	Part Number	Description	Qty	Serial No.
1	09659-51000	Plate, Warning, Explosive Hazard	1	B10001-

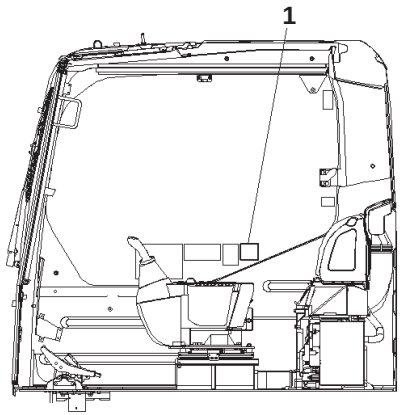

右窓内側
R. H. Window Inside

00063854

Caution Plates, Swing or Back-up Warning, Portuguese

Index	Part Number	Description	Qty	Serial No.
1	207-00-B1240	Plate	1	B10001-

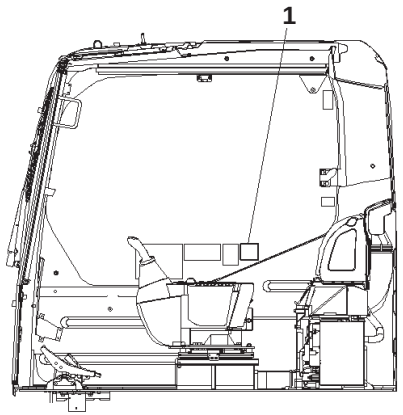

00063854

Caution Plates, Swing or Back-up Warning, Spanish

Index	Part Number	Description	Qty	Serial No.
1	207-00-B1280	Plate	1	B10001-

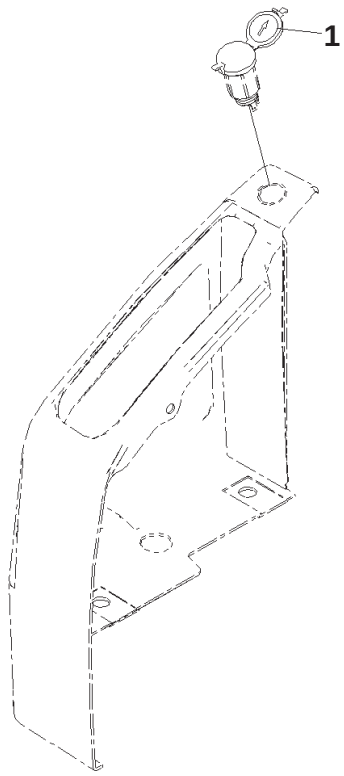

00050329

Caution Plates, 12volt Power Source, Portuguese

Index	Part Number	Description	Qty	Serial No.
1	207-00-B1250	Plate, Caution, 12volt socket	1	B10001-

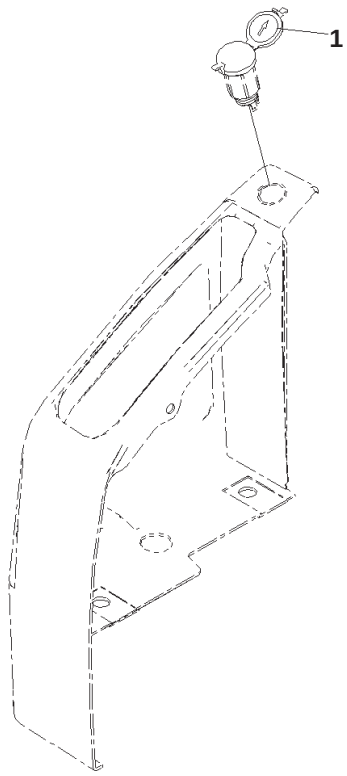

00050329

Caution Plates, 12volt Power Source, Spanish

Index	Part Number	Description	Qty	Serial No.
1	207-00-B1270	Plate, Caution, 12V Socket	1	B10001-

ACCESSORY

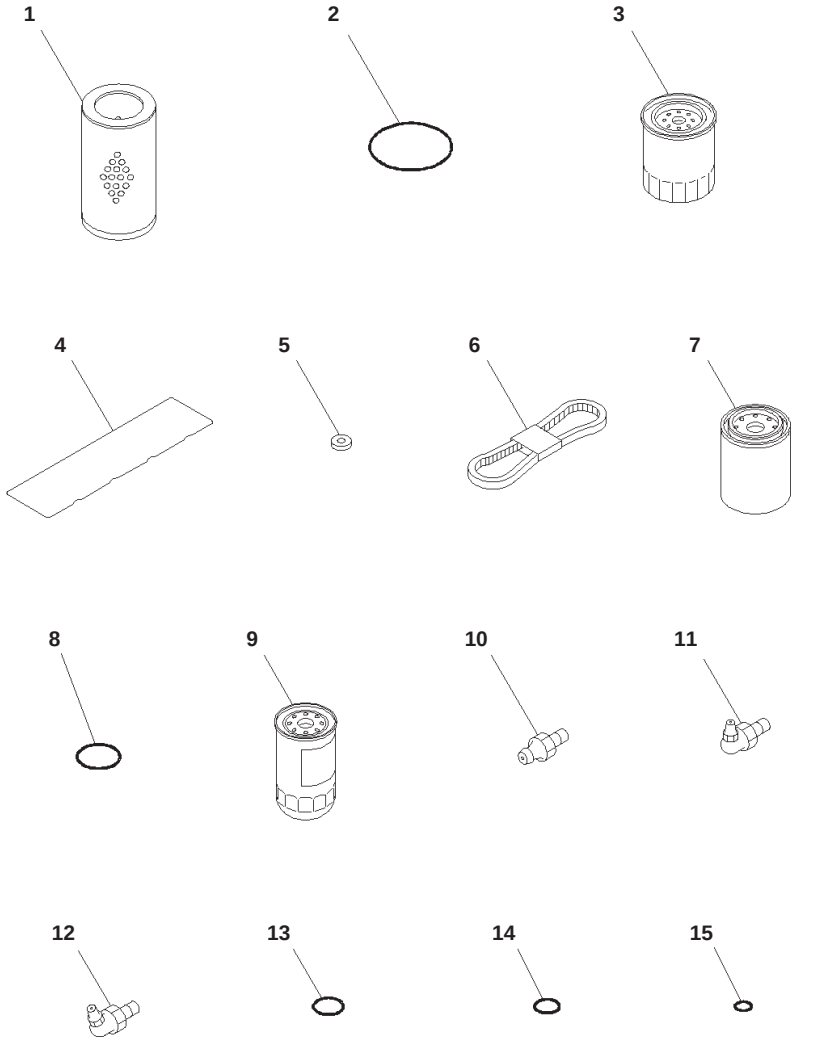

Spare Parts, 35Amp. Alternator

Index	Code	Part Number	Description	Qty	Serial No.
1		14X-60-31150	Element	1	B10001-
2		07000-15155	O-ring	1	B10001-
3		600-211-2110	Cartridge	1	B10001-
4		6204-11-8810	O-ring	1	B10001-
5		6136-11-8142	Packing	3	B10001-
6		6205-61-3580	V-belt	1	B10001-
		600-319-4110	Cartridge Assembly	1	B10001-
7	C1		・ Cartridge	1	B10001-
8		600-311-3630	・ Seal	1	B10001-
9		600-319-3870	Cartridge	1	B10001-
10		07020-00000	Fitting, Grease	4	B10001-
11		07020-00900	Fitting, Grease	4	B10001-
12		07020-00675	Fitting, Grease	4	B10001-
13		07002-12434	O-ring	1	B10001-
14		07000-12018	O-ring	3	B10001-
15		07002-11623	O-ring	1	B10001-

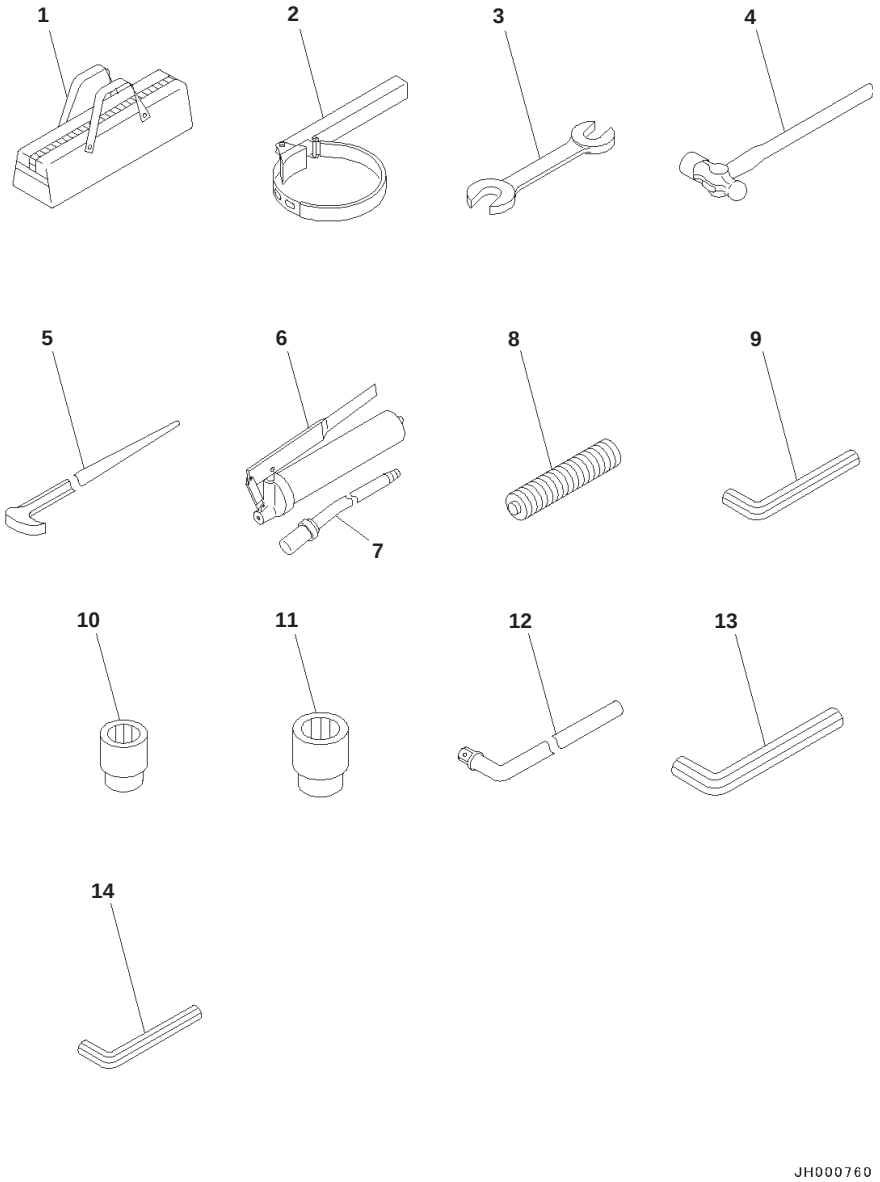

Index	Part Number	Description	Qty	Serial No.
1	09056-04613	Bag	1	B10001-
2	09019-28035	Wrench	1	B10001-
3	09002-01012	Wrench, W=10X12mm	1	B10001-
	09002-01417	Wrench, W=14X17mm	1	B10001-
	09002-01922	Wrench, W=19X22mm	1	B10001-
	09002-02427	Wrench, W=24X27mm	1	B10001-
4	09039-00150	Hammer	1	B10001-
5	09055-10390	Bar	1	B10001-
	07952-70004	Pump Assembly	1	B10001-
6	07950-10450	・ Pump	1	B10001-
7	07951-41017	・ Nozzle	1	B10001-
8	07950-90403	Cartridge	1	B10001-
9	09007-00836	Wrench, W=8mm	1	B10001-
10	09021-02233	Socket, W=22mm	1	B10001-
11	09021-02436	Socket, W=24mm	1	B10001-
12	09023-00300	Handle	1	B10001-
13	09007-01040	Wrench, Hexagon, W=10mm	1	B10001-
14	09007-00528	Wrench, W=5mm	1	B10001-

SERVICE KIT AND COMPONENT PARTS

PC130-8 S/N B10001-UP
Service Kit Parts

Index	Part Number	Description	Qty	Serial No.
K01	203-32-05150	Shoe Bolt and Nut Kit		B10001-
	203-32-61220	・ Nut	50	-
	22B-32-21230	・ Bolt	50	-
K02	203-32-05140	Shoe Bolt and Nut Kit		B10001-
	203-32-61220	・ Nut	50	-
	22B-32-21210	・ Bolt	50	-
K03	707-99-37180	Service Kit, Boom Cylinder		B10001-
	02896-11012	・ O-ring	1	-
	02896-11015	・ O-ring	1	-
	07000-13025	・ O-ring	2	-
	07000-15095	・ O-ring	1	-
	07145-00070	・ Seal, Dust	4	-
	144-63-95170	・ Seal, Dust	1	-
	707-34-60030	・ O-ring	1	-
	707-35-90730	・ Ring, Back-up	2	-
	707-35-91060	・ Ring, Back-up	1	-
	707-39-10550	・ Ring, Wear	2	-
	707-44-10250	・ Ring, Piston	1	-
	707-51-70030	・ Packing, Rod	1	-
	707-51-70650	・ Ring, Buffer	1	-
K04	707-99-45170	Service Kit, Arm Cylinder		B10001-
	02896-11015	・ O-ring	1	-
	07000-13025	・ O-ring	1	-
	07000-15070	・ O-ring	1	-
	07000-15105	・ O-ring	2	-
	07002-12034	・ O-ring	1	-
	07145-00070	・ Seal, Dust	4	-
	144-63-94170	・ Seal, Dust	1	-
	707-35-90360	・ Ring, Back-up	2	-
	707-35-91150	・ Ring, Back-up	3	-
	707-39-11530	・ Ring, Wear	2	-
	707-44-11250	・ Ring, Piston	1	-
	707-51-75030	・ Packing, Rod	1	-
	707-51-75650	・ Ring, Buffer	1	-
K05	707-99-27780	Service Kit, Bucket Cylinder		B10001-
	02896-11012	・ O-ring	1	-
	07000-13025	・ O-ring	1	-
	07000-15085	・ O-ring	1	-
	07145-00065	・ Seal, Dust	2	-
	144-63-92170	・ Seal, Dust	1	-
	22B-70-12170	・ Seal, Dust	2	-
	707-34-55020	・ O-ring	1	-
	707-35-90610	・ Ring, Back-up	2	-
	707-35-90970	・ Ring, Back-up	1	-
	707-39-95030	・ Ring, Wear	2	-
	707-44-95150	・ Ring, Piston	1	-

PC130-8 S/N B10001-UP
Service Kit Parts

Index	Part Number	Description	Qty	Serial No.
	707-51-65030	・ Packing, Rod	1	-
	707-51-65650	・ Ring, Buffer	1	-
K06	707-99-38790	Service Kit, Bucket Cylinder		B10001-
	02896-11012	・ O-ring	2	-
	07000-13025	・ O-ring	2	-
	07000-15070	・ O-ring	1	-
	07000-15100	・ O-ring	1	-
	07145-00070	・ Seal, Dust	4	-
	144-63-94170	・ Seal, Dust	1	-
	707-35-90360	・ Ring, Back-up	2	-
	707-35-91130	・ Ring, Back-up	1	-
	707-39-11150	・ Ring, Wear	2	-
	707-44-11150	・ Ring, Piston	1	-
	707-51-75030	・ Packing, Rod	1	-
	707-51-75650	・ Ring, Buffer	1	-

Reference:KIT Page:Y001001

NUMERICAL INDEX

PARTS Nº	FIG. Nº	INDEX	PAGE
01010-50835	N1310-001001	11	N003001
01010-61625	J1310-002001	2	J003001
01010-61655	P1210-001004	4	P003004
01010-80612	D0100-003001	9	D001001
01010-80612	M1130-001002	5	M003002
01010-80612	M1140-001001	15	M004001
01010-80616	E0450-001001	16	E007001
01010-80616	K1110-010030	14	K011030
01010-80616	K1110-010036	5	K011036
01010-80616	K1110-010036	14	K011036
01010-80616	K1110-010037	4	K011037
01010-80616	K1110-010042	9	K011042
01010-80616	K1110-010042	15	K011042
01010-80616	M1130-001001	13	M003001
01010-80616	M1140-001001	21	M004001
01010-80616	M1220-002001	16	M007001
01010-80620	K1110-010034	16	K011034
01010-80620	K1110-010040	16	K011040
01010-80816	E0200-003001	13	E002001
01010-80816	K1110-010025	16	K011025
01010-80816	K1110-010030	9	K011030
01010-80816	K1110-010030	11	K011030
01010-80816	K1110-010051	30	K011051
01010-80816	K1110-020052	37	K011051a
01010-80816	K1110-050053	37	K011051b
01010-80820	D0200-001003	36	D002003
01010-80820	E0410-001001	2	E005001
01010-80820	K1110-010006	16	K011006
01010-80820	K1110-010035	1	K011035
01010-80820	K1110-010041	1	K011041
01010-80825	C0100-001004	5	C001004
01010-80825	H0110-002001	31	H001001
01010-80825	K1110-010045	2	K011045
01010-80825	T1210-014003	24	T009003
01010-80830	K1110-010030	3	K011030
01010-80830	K1110-010051	28	K011051
01010-80830	K1110-020052	35	K011051a
01010-80830	K1110-050053	35	K011051b
01010-80830	R0110-001002	14	R001002
01010-80830	T1210-013002	5	T008002
01010-80830	T1210-014002	5	T009002
01010-80835	B0200-001002	3	B004002
01010-80835	C0100-001004	11	C001004
01010-80835	E0450-001001	12	E007001
01010-80850	E0200-003001	8	E002001
01010-80850	E0200-003001	11	E002001
01010-80850	T1120-004001	30	T004001
01010-80850	T1120-004002	30	T004002
01010-80850	T1140-004001	38	T006001
01010-80850	T1220-003001	33	T010001
01010-80855	K1110-010025	14	K011025
01010-80875	K0700-001001	7	K010001
01010-80885	K0700-001001	8	K010001
01010-81016	E0200-003002	38	E002002
01010-81016	E0200-003003	38	E002003
01010-81016	K1110-010031	2	K011031
01010-81016	K1110-010042	44	K011042
01010-81016	K1110-010042	47	K011042
01010-81016	K1110-010047	10	K011047
01010-81016	K1110-010050	14	K011050
01010-81020	C0100-001005	29	C001005
01010-81020	C0100-001005	33	C001005
01010-81020	C0100-001005	35	C001005
01010-81020	D0200-001003	33	D002003
01010-81020	E0200-003003	20	E002003
01010-81020	E0200-003003	35	E002003
01010-81020	E0200-003003	42	E002003
01010-81020	E0420-001001	3	E006001
01010-81020	E0450-001001	20	E007001
01010-81020	K1110-010026	1	K011026
01010-81020	K1110-010026	4	K011026
01010-81020	K1110-010027	5	K011027
01010-81020	K1110-010028	5	K011028
01010-81020	K1110-010030	19	K011030
01010-81020	K1110-010031	6	K011031
01010-81020	K1110-010031	20	K011031
01010-81020	K1110-010031	23	K011031
01010-81020	K1110-010031	27	K011031
01010-81020	K1110-010050	2	K011050
01010-81020	K1110-010050	8	K011050
01010-81020	K1110-050028	13	K011029c
01010-81020	M1130-001003	6	M003003
01010-81020	M1150-001002	2	M005002
01010-81020	M1220-002001	5	M007001
01010-81020	T1110-007002	10	T003002
01010-81020	T1110-007006	12	T003006
01010-81020	T1110-011002	10	T001002
01010-81020	T1110-011004	12	T001004
01010-81020	T1110-012002	10	T002002
01010-81020	T1110-012006	12	T002006
01010-81025	C0100-001001	19	C001001
01010-81025	C0100-001002	7	C001002
01010-81025	C0100-001002	15	C001002
01010-81025	C0100-001002	23	C001002
01010-81025	C0100-001002	28	C001002
01010-81025	C0100-001002	32	C001002
01010-81025	C0100-001003	13	C001003
01010-81025	C0100-001003	32	C001003
01010-81025	C0100-001004	2	C001004
01010-81025	C0100-001004	14	C001004
01010-81025	C0100-001004	17	C001004
01010-81025	C0100-001005	11	C001005
01010-81025	C0100-001005	45	C001005
01010-81025	D0200-001002	16	D002002
01010-81025	H1220-002001	20	H018001
01010-81025	H1220-002001	27	H018001
01010-81025	H1270-004001	17	H020001
01010-81025	H1270-004001	19	H020001
01010-81025	H1270-004005	26	H020005
01010-81025	K1110-010027	3	K011027
01010-81025	K1110-010028	3	K011028
01010-81025	K1110-020029	3	K011029a
01010-81025	K1110-020029	13	K011029a
01010-81025	K1110-050028	3	K011029c
01010-81025	K1110-050030	3	K011029b
01010-81025	K1110-050030	13	K011029b
01010-81025	P1120-001001	19	P001001
01010-81025	P1210-001004	7	P003004
01010-81025	R1100-002001	9	R009001
01010-81025	T1110-007005	5	T003005
01010-81025	T1110-007005	10	T003005
01010-81025	T1110-007005	29	T003005
01010-81025	T1110-007005	39	T003005
01010-81025	T1110-007007	9	T003007
01010-81025	T1110-007007	13	T003007
01010-81025	T1110-007007	16	T003007
01010-81025	T1110-007007	19	T003007
01010-81025	T1110-007007	23	T003007
01010-81025	T1110-007007	26	T003007
01010-81025	T1110-011003	19	T001003
01010-81025	T1110-012005	5	T002005
01010-81025	T1110-012005	9	T002005
01010-81025	T1110-012005	30	T002005
01010-81025	T1110-012005	38	T002005
01010-81025	T1210-013003	3	T008003
01010-81025	T1210-014003	27	T009003
01010-81025	T1210-014004	3	T009004
01010-81025	T1220-003001	35	T010001
01010-81030	D0200-001003	30	D002003
01010-81030	H1270-004002	18	H020002
01010-81030	H1270-004003	15	H020003
01010-81030	H1272-001001	9	H021001
01010-81030	H1272-001001	23	H021001
01010-81030	K1110-010026	13	K011026
01010-81030	K1110-010036	2	K011036
01010-81030	T1120-004001	37	T004001
01010-81030	T1120-004002	37	T004002
01010-81035	C0100-001001	12	C001001
01010-81035	C0100-001003	3	C001003
01010-81035	C0100-001003	7	C001003

PARTS Nº	FIG. Nº	INDEX	PAGE
01010-81035	C0100-001003	19	C001003
01010-81035	C0100-001005	8	C001005
01010-81035	C0100-001005	22	C001005
01010-81035	T1110-007005	31	T003005
01010-81035	T1110-007005	36	T003005
01010-81035	T1110-012005	26	T002005
01010-81035	T1110-012005	35	T002005
01010-81040	A9999-003001	7	B002001
01010-81040	E0200-003001	25	E002001
01010-81040	E0200-003001	27	E002001
01010-81040	E0200-003001	30	E002001
01010-81040	E0200-003001	33	E002001
01010-81040	H0320-002001	3	H012001
01010-81040	H0330-001001	8	H013001
01010-81040	H0330-002001	8	H014001
01010-81040	H1270-004005	13	H020005
01010-81040	K1110-010030	44	K011030
01010-81040	K1110-010031	10	K011031
01010-81040	K1110-010031	14	K011031
01010-81040	K1110-010031	18	K011031
01010-81045	K1110-010047	8	K011047
01010-81045	K1110-010051	2	K011051
01010-81045	K1110-010051	11	K011051
01010-81045	K1110-020052	2	K011051a
01010-81045	K1110-020052	15	K011051a
01010-81045	K1110-050053	2	K011051b
01010-81045	K1110-050053	15	K011051b
01010-81050	A9999-003001	9	B002001
01010-81050	H1270-004001	29	H020001
01010-81050	K1110-050028	37	K011029c
01010-81060	B0100-001002	4	B003002
01010-81060	H1840-003002	2	H033002
01010-81060	H1840-004002	2	H034002
01010-81060	H1840-005002	2	H035002
01010-81070	E0200-003002	24	E002002
01010-81070	H1831-001004	6	H030004
01010-81070	T1110-007005	16	T003005
01010-81070	T1110-007005	22	T003005
01010-81070	T1110-007005	27	T003005
01010-81070	T1110-012005	16	T002005
01010-81070	T1110-012005	22	T002005
01010-81075	K0700-001003	8	K010003
01010-81080	C0100-001002	4	C001002
01010-81085	H1831-001002	21	H030002
01010-81085	H1831-002002	21	H031002
01010-81220	D0200-001002	2	D002002
01010-81220	D0200-001002	5	D002002
01010-81220	D0200-001003	2	D002003
01010-81220	D0200-001003	13	D002003
01010-81220	D0200-001003	20	D002003
01010-81220	D0200-001003	23	D002003
01010-81220	D0200-001003	26	D002003
01010-81220	E0200-003001	20	E002001
01010-81220	E0200-003002	7	E002002
01010-81220	E0200-003002	10	E002002
01010-81220	E0200-003002	17	E002002
01010-81220	E0200-003002	27	E002002
01010-81220	E0200-003002	30	E002002
01010-81220	E0200-003002	33	E002002
01010-81220	E0200-003002	36	E002002
01010-81220	E0200-003003	2	E002003
01010-81220	E0200-003003	11	E002003
01010-81220	E0200-003003	14	E002003
01010-81220	E0200-003003	23	E002003
01010-81220	E0200-003003	27	E002003
01010-81220	H0320-002001	6	H012001
01010-81220	H0340-003001	3	H015001
01010-81220	H0340-004001	3	H016001
01010-81220	H1810-002001	4	H027001
01010-81220	H1810-003001	4	H028001
01010-81220	H1810-004001	4	H029001
01010-81220	H1831-001003	5	H030003
01010-81220	H1831-001003	18	H030003
01010-81220	H1831-001003	23	H030003
01010-81220	H1831-002003	5	H031003
01010-81220	H1831-002003	18	H031003
01010-81220	H1831-002003	23	H031003
01010-81220	H1840-003002	11	H033002
01010-81220	H1840-003002	15	H033002
01010-81220	H1840-003002	22	H033002
01010-81220	H1840-003002	25	H033002
01010-81220	H1840-004002	11	H034002
01010-81220	H1840-004002	15	H034002
01010-81220	H1840-004002	22	H034002
01010-81220	H1840-004002	26	H034002
01010-81220	H1840-005002	11	H035002
01010-81220	H1840-005002	15	H035002
01010-81220	H1840-005002	22	H035002
01010-81220	H1840-005002	26	H035002
01010-81220	K0700-001002	8	K010002
01010-81220	K0700-001002	34	K010002
01010-81220	K0700-001002	37	K010002
01010-81220	K0700-001003	4	K010003
01010-81220	K0700-001003	11	K010003
01010-81220	M1120-001001	9	M002001
01010-81220	M1150-001001	3	M005001
01010-81220	M1150-001001	29	M005001
01010-81220	M1150-001001	33	M005001
01010-81220	M1510-001001	3	M012001
01010-81220	M1510-001001	21	M012001
01010-81225	D0200-001003	42	D002003
01010-81225	E0320-002001	2	E004001
01010-81225	E0320-002001	5	E004001
01010-81225	E0200-003001	9	E004001
01010-81225	H0110-002001	10	H001001
01010-81225	H0110-002001	17	H001001
01010-81225	K0700-001002	41	K010002
01010-81225	M1120-001001	5	M002001
01010-81225	M1220-002001	26	M007001
01010-81225	M1510-001001	6	M012001
01010-81225	M1510-001001	9	M012001
01010-81225	M1510-001001	12	M012001
01010-81225	T1110-007002	3	T003002
01010-81225	T1110-007002	7	T003002
01010-81225	T1110-007005	2	T003005
01010-81225	T1110-007007	6	T003007
01010-81225	T1110-011002	3	T001002
01010-81225	T1110-011002	7	T001002
01010-81225	T1110-012002	3	T002002
01010-81225	T1110-012002	7	T002002
01010-81225	T1110-012005	2	T002005
01010-81230	A9999-504007	13	B001007
01010-81230	B0200-001002	8	B004002
01010-81230	B0200-001002	10	B004002
01010-81230	B0200-001002	17	B004002
01010-81230	B0200-001002	19	B004002
01010-81230	B0200-001002	23	B004002
01010-81230	D0200-001002	13	D002002
01010-81230	D0200-001002	20	D002002
01010-81230	D0200-001002	26	D002002
01010-81230	D0200-001002	31	D002002
01010-81230	D0200-001003	5	D002003
01010-81230	D0200-001003	8	D002003
01010-81230	E0200-003001	2	E002001
01010-81230	E0200-003001	5	E002001
01010-81230	E0200-003001	17	E002001
01010-81230	E0200-003001	36	E002001
01010-81230	E0200-003002	2	E002002
01010-81230	E0200-003003	5	E002003
01010-81230	E0200-003003	8	E002003
01010-81230	E0450-001001	14	E007001
01010-81230	H0110-002001	34	H001001
01010-81230	H0320-002001	9	H012001
01010-81230	H1210-002001	2	H017001
01010-81230	H1210-002001	8	H017001
01010-81230	H1270-004001	40	H020001
01010-81230	H1270-004005	5	H020005
01010-81230	H1272-001001	6	H021001
01010-81230	H1831-001002	24	H030002
01010-81230	H1831-001004	9	H030004

PARTS Nº	FIG. Nº	INDEX	PAGE
01010-81230	H1831-002002	24	H031002
01010-81230	H1833-001001	27	H032001
01010-81230	H1840-003002	5	H033002
01010-81230	H1840-003002	8	H033002
01010-81230	H1840-004002	5	H034002
01010-81230	H1840-004002	8	H034002
01010-81230	H1840-005002	5	H035002
01010-81230	H1840-005002	8	H035002
01010-81230	H1840-005002	34	H035002
01010-81230	J1110-006001	7	J001001
01010-81230	J1310-002001	4	J003001
01010-81230	J1310-002001	11	J003001
01010-81230	K1110-010029	5	K011029
01010-81230	K1110-010030	41	K011030
01010-81230	M1110-001001	12	M001001
01010-81230	M1110-001001	16	M001001
01010-81230	M1120-001001	7	M002001
01010-81230	M1120-001001	12	M002001
01010-81230	M1120-001001	15	M002001
01010-81230	M1120-001001	18	M002001
01010-81230	M1120-001001	21	M002001
01010-81230	M1120-001001	24	M002001
01010-81230	M1120-001001	27	M002001
01010-81230	M1120-001001	30	M002001
01010-81230	M1120-001001	33	M002001
01010-81230	M1120-001002	3	M002002
01010-81230	M1120-001002	6	M002002
01010-81230	M1120-001002	9	M002002
01010-81230	M1120-001002	11	M002002
01010-81230	M1120-001002	14	M002002
01010-81230	M1130-001001	4	M003001
01010-81230	M1130-001001	7	M003001
01010-81230	M1130-001001	10	M003001
01010-81230	M1130-001001	18	M003001
01010-81230	M1130-001002	7	M003002
01010-81230	M1130-001003	3	M003003
01010-81230	M1130-001003	13	M003003
01010-81230	M1130-001003	16	M003003
01010-81230	M1140-001001	4	M004001
01010-81230	M1140-001001	9	M004001
01010-81230	M1140-001001	12	M004001
01010-81230	M1140-001001	18	M004001
01010-81230	M1140-001001	26	M004001
01010-81230	M1140-001001	30	M004001
01010-81230	M1140-001001	34	M004001
01010-81230	M1150-001001	5	M005001
01010-81230	M1150-001001	11	M005001
01010-81230	M1150-001001	17	M005001
01010-81230	M1150-001001	21	M005001
01010-81230	M1150-001001	23	M005001
01010-81230	M1150-001001	34	M005001
01010-81230	M1150-001001	37	M005001
01010-81230	M1150-001001	38	M005001
01010-81230	M1150-001001	41	M005001
01010-81230	M1150-001002	5	M005002
01010-81230	M1150-001002	9	M005002
01010-81230	M1210-001001	2	M006001
01010-81230	M1210-001001	6	M006001
01010-81230	M1210-001001	9	M006001
01010-81230	M1210-001001	17	M006001
01010-81230	M1220-002001	22	M007001
01010-81230	M1220-002001	24	M007001
01010-81230	M1220-002001	30	M007001
01010-81230	M1220-002001	34	M007001
01010-81230	M1230-001001	3	M008001
01010-81230	M1230-001001	6	M008001
01010-81230	M1230-001001	11	M008001
01010-81230	M1230-001001	14	M008001
01010-81230	M1230-001001	19	M008001
01010-81230	M1420-003002	3	M011002
01010-81230	M1810-001001	3	M014001
01010-81230	M1810-001001	5	M014001
01010-81230	M1810-001001	10	M014001
01010-81230	M1810-001001	12	M014001
01010-81230	M1810-001001	14	M014001
01010-81230	M1810-001001	20	M014001
01010-81230	M1810-001001	23	M014001
01010-81230	M1810-001001	25	M014001
01010-81230	M1810-001001	29	M014001
01010-81230	R1140-001001	2	R011001
01010-81230	T1110-007002	20	T003002
01010-81230	T1110-011002	20	T001002
01010-81230	T1110-012002	20	T002002
01010-81230	T1210-013002	9	T008002
01010-81230	T1210-013002	17	T008002
01010-81230	T1210-014002	9	T009002
01010-81230	T1210-014002	17	T009002
01010-81235	A9999-504009	18	B001009
01010-81235	C0100-001005	42	C001005
01010-81235	K1120-001001	6	K016001
01010-81235	K1120-001001	12	K016001
01010-81235	N1310-001002	2	N003002
01010-81235	R0300-001001	9	R003001
01010-81235	T1110-007002	14	T003002
01010-81235	T1110-011002	14	T001002
01010-81235	T1110-012002	14	T002002
01010-81240	D0200-001002	29	D002002
01010-81240	D0200-001005	4	D002005
01010-81240	H1270-004005	2	H020005
01010-81240	H1833-001001	24	H032001
01010-81240	H1840-005002	31	H035002
01010-81240	K0700-001002	31	K010002
01010-81240	M1130-001002	10	M003002
01010-81240	M1310-002001	2	M009001
01010-81245	A9999-003001	5	B002001
01010-81245	K1110-010023	34	K011023
01010-81250	H0340-003001	6	H015001
01010-81250	H0340-003001	23	H015001
01010-81250	H0340-004001	20	H016001
01010-81250	H1210-002001	5	H017001
01010-81250	K0700-001002	11	K010002
01010-81255	M1210-001001	13	M006001
01010-81260	D0200-001002	9	D002002
01010-81260	D0200-001003	17	D002003
01010-81260	E0200-003003	31	E002003
01010-81260	H1210-002001	12	H017001
01010-81260	H1833-001001	21	H032001
01010-81260	H1840-003002	19	H033002
01010-81260	H1840-004002	19	H034002
01010-81260	H1840-005002	19	H035002
01010-81260	K0700-001002	15	K010002
01010-81260	K0700-001002	19	K010002
01010-81260	K0700-001002	23	K010002
01010-81260	K0700-001002	27	K010002
01010-81260	K0700-001003	15	K010003
01010-81260	M1310-002001	4	M009001
01010-81265	H1270-004002	21	H020002
01010-81270	E0200-003002	14	E002002
01010-81270	T1210-014003	9	T009003
01010-81280	H0311-001001	5	H010001
01010-81280	K0220-001001	3	K003001
01010-81435	K0700-001001	3	K010001
01010-81435	T1125-002001	2	T005001
01010-81465	T1120-004001	17	T004001
01010-81465	T1120-004002	17	T004002
01010-81465	T1220-003001	18	T010001
01010-81470	T1510-003001	15	T012001
01010-81470	T1510-011001	11	T013001
01010-81475	R0110-001002	18	R001002
01010-81490	K0700-001001	5	K010001
01010-81635	C0100-001005	26	C001005
01010-81635	C0100-001005	40	C001005
01010-81635	D0100-003001	20	D001001
01010-81635	H0110-002001	29	H001001
01010-81640	N1310-001002	4	N003002
01010-81640	R1200-001001	2	R012001
01010-81660	R1300-002001	2	R013001
01010-81670	R0200-002001	11	R002001
01010-81670	T1140-004001	23	T006001
01010-81685	H0120-004028	2	H003028

PC130-8

PARTS Nº	FIG. Nº	INDEX	PAGE
01010-81685	H0120-005025	2	H002025
01010-81685	H0120-009028	2	H004028
01010-81685	H0120-010030	2	H005030
01010-D0820	K1110-010019	17	K011019
01010-D0825	K1110-010016	7	K011016
01010-D0825	K1110-010016	11	K011016
01010-D1025	E0310-003001	2	E003001
01010-D1025	K1110-010012	8	K011012
01010-D1035	K1110-020029	7	K011029a
01010-D1035	K1110-050028	7	K011029c
01010-D1035	K1110-050030	7	K011029b
01010-D1035	M1410-006001	10	M010001
01010-D1045	K1110-010026	11	K011026
01010-D1045	K1110-020029	10	K011029a
01010-D1045	K1110-050028	10	K011029c
01010-D1045	K1110-050030	10	K011029b
01010-D1060	E0310-003001	5	E003001
01010-D1065	E0310-003001	5	E003001
01010-D1220	K0220-001001	8	K003001
01010-D1225	K0230-002001	7	K004001
01010-D1225	K1110-010013	27	K011013
01010-D1230	K1110-010042	2	K011042
01010-D1230	M1410-006001	7	M010001
01010-D1230	M1410-006001	13	M010001
01010-D1650	K1110-010023	36	K011023
01010-D1650	N1110-001001	4	N001001
01010-D1690	N1110-001001	5	N001001
01011-61085	H0120-004013	4	H003013
01011-61085	H0120-005013	4	H002013
01011-61085	H0120-009013	4	H004013
01011-61085	H0120-010013	4	H005013
01011-62790	M1520-001001	1	M013001
01011-81200	E0200-003003	17	E002003
01011-81225	T1190-001001	3	T007001
01011-81230	H0311-001001	3	H010001
01011-81230	N1210-001004	4	N002004
01011-81275	H1270-004001	31	H020001
01011-81600	H0120-004028	6	H003028
01011-81600	H0120-005025	6	H002025
01011-81600	H0120-009028	6	H004028
01011-81600	H0120-010030	6	H005030
01011-81620	T1230-004001	17	T011001
01011-81620	T1230-004001	22	T011001
01011-81630	B0100-001001	5	B003001
01011-81640	T1230-004001	25	T011001
01011-81670	T1230-004001	28	T011001
01011-83065	K1120-001001	9	K016001
01011-D1245	K0230-002001	3	K004001
01018-31095	AEH10-002001	14	F001001
01023-10306	K1110-010025	22	K011025
01023-10508	K1110-010042	40	K011042
01023-10612	K1110-010006	4	K011006
01023-10612	K1110-010006	6	K011006
01023-20412	K1110-010010	2	K011010
01023-20416	K1110-010010	8	K011010
01023-20416	K1110-010026	20	K011026
01023-20512	K1110-010038	12	K011038
01023-20512	K1110-010038	16	K011038
01023-20512	K1110-010043	12	K011043
01023-20512	K1110-010043	16	K011043
01023-20612	K0220-001001	11	K003001
01023-20612	K0320-001001	6	K008001
01023-20612	K1110-010003	10	K011003
01023-20616	K1110-010003	16	K011003
01023-20616	K1110-010003	18	K011003
01023-20616	K1110-010011	30	K011011
01023-20620	K1110-010008	10	K011008
01023-60320	K1110-010037	26	K011037
01023-60410	K1110-010037	10	K011037
01023-60510	K1110-010037	3	K011037
01023-60512	K1110-010012	2	K011012
01023-60620	K1110-010022	4	K011022
01023-70412	K1110-010010	12	K011010
01050-31845	ADA00-001001	3	B016001
01050-61430	AFW10-001001	2	B008001
01124-60825	A1670-001001	4	A015001
01124-60825	APP20-001001	3	A012001
01124-60830	A1670-001001	5	A015001
01164-50840	AFP10-001001	6	D002001
01236-40816	AWP00-001001	8	E006001
01240-00616	K1110-010006	7	K011006
01240-01025	K1110-010007	16	K011007
01245-00612	K1110-010014	23	K011014
01245-00616	K1110-010002	16	K011002
01245-00616	K1110-010002	45	K011002
01245-00616	K1110-010004	9	K011004
01245-00616	K1110-010011	17	K011011
01245-00616	K1110-010011	23	K011011
01245-00616	K1110-010013	9	K011013
01245-00616	K1110-010014	17	K011014
01245-00616	K1110-010015	4	K011015
01245-00616	K1110-010016	5	K011016
01245-00616	K1110-010036	12	K011036
01245-00616	K1110-010036	18	K011036
01245-00616	K1110-010036	23	K011036
01245-00616	K1110-010042	13	K011042
01245-00616	K1110-010042	20	K011042
01245-00616	K1110-010042	23	K011042
01245-00620	K1110-010004	21	K011004
01245-00620	K1110-010038	9	K011038
01245-00620	K1110-010043	9	K011043
01245-00816	K1110-010002	19	K011002
01245-00816	K1110-010002	26	K011002
01245-00816	K1110-010002	29	K011002
01245-00816	K1110-010013	19	K011013
01245-00820	K1110-010004	18	K011004
01245-00820	K1110-010045	5	K011045
01245-01016	K1110-010013	7	K011013
01245-01016	K1110-010013	14	K011013
01245-01025	K1110-010029	8	K011029
01245-01025	K1110-010029	10	K011029
01252-30625	K1110-020028	15	K011028a
01252-30625	K1110-050027	15	K011028c
01252-30625	K1110-050029	15	K011028b
01252-31035	P1210-001001	29	P003001
01252-31230	P1210-001003	45	P003003
01252-41025	K1110-010033	10	K011033
01252-41025	K1110-010039	10	K011039
01252-60516	APH00-001002	2	G002002
01252-60530	A9999-504009	14	B001009
01252-60612	K1110-020028	24	K011028a
01252-60612	K1110-050029	24	K011028b
01252-60616	APH00-001002	9	G002002
01252-60616	H0120-004022	9	H003022
01252-60616	H0120-005022	9	H002022
01252-60616	H0120-009022	9	H004022
01252-60616	H0120-010022	9	H005022
01252-60630	H0120-004004	2	H003004
01252-60630	H0120-004010	16	H003010
01252-60630	H0120-004013	11	H003013
01252-60630	H0120-004018	18	H003018
01252-60630	H0120-004025	14	H003025
01252-60630	H0120-005004	2	H002004
01252-60630	H0120-005010	16	H002010
01252-60630	H0120-005013	11	H002013
01252-60630	H0120-005018	18	H002018
01252-60630	H0120-009004	2	H004004
01252-60630	H0120-009010	16	H004010
01252-60630	H0120-009013	11	H004013
01252-60630	H0120-009018	18	H004018
01252-60630	H0120-009025	14	H004025
01252-60630	H0120-010004	2	H005004
01252-60630	H0120-010010	16	H005010
01252-60630	H0120-010013	11	H005013
01252-60630	H0120-010018	18	H005018
01252-60630	H0120-010025	14	H005025
01252-60630	H0120-010028	14	H005028
01252-60645	H0120-004010	17	H003010
01252-60645	H0120-005010	17	H002010
01252-60645	H0120-009010	17	H004010

PARTS Nº	FIG. Nº	INDEX	PAGE
01252-60645	H0120-010010	17	H005010
01252-60650	H0120-004013	12	H003013
01252-60650	H0120-005013	12	H002013
01252-60650	H0120-009013	12	H004013
01252-60650	H0120-010013	12	H005013
01252-60820	H0120-004007	15	H003007
01252-60820	H0120-005007	15	H002007
01252-60820	H0120-009007	15	H004007
01252-60820	H0120-010007	15	H005007
01252-60825	H0120-004006	12	H003006
01252-60825	H0120-005006	12	H002006
01252-60825	H0120-009006	12	H004006
01252-60825	H0120-010006	12	H005006
01252-60825	N1210-001003	13	N002003
01252-60850	H0120-004013	6	H003013
01252-60850	H0120-005013	6	H002013
01252-60850	H0120-009013	6	H004013
01252-60850	H0120-010013	6	H005013
01252-60860	H0120-004007	16	H003007
01252-60860	H0120-005007	16	H002007
01252-60860	H0120-009007	16	H004007
01252-60860	H0120-010007	16	H005007
01252-60865	H0120-004013	7	H003013
01252-60865	H0120-005013	7	H002013
01252-60865	H0120-009013	7	H004013
01252-60865	H0120-010013	7	H005013
01252-61035	H0120-004013	9	H003013
01252-61035	H0120-005013	9	H002013
01252-61035	H0120-009013	9	H004013
01252-61035	H0120-010013	9	H005013
01252-61040	H0120-004013	10	H003013
01252-61040	H0120-005013	10	H002013
01252-61040	H0120-009013	10	H004013
01252-61040	H0120-010013	10	H005013
01252-61230	A9999-504005	15	B001005
01252-61245	N1210-001002	18	N002002
01252-61440	A9999-504006	28	B001006
01252-61440	A9999-504007	8	B001007
01252-61450	A9999-504002	13	B001002
01252-70516	H0110-002001	21	H001001
01252-70816	K1110-010037	18	K011037
01252-71030	M1410-006001	4	M010001
01252-71030	M1420-003001	4	M011001
01252-80616	K1110-010002	23	K011002
01252-80820	K1110-010038	3	K011038
01252-80820	K1110-010043	3	K011043
01252-80825	K0110-003002	1	K001002
01310-01016	T1220-003001	25	T010001
01310-01216	T1120-004001	23	T004001
01310-01216	T1120-004002	23	T004002
01310-01216	T1140-004001	29	T006001
01370-00420	K1110-010008	12	K011008
01370-00508	M1510-001001	2	M012001
01370-10308	K1110-010023	16	K011023
01370-20308	K1110-010023	19	K011023
01370-30416	K1110-010011	27	K011011
01370-40510	K1110-010038	14	K011038
01370-40510	K1110-010043	14	K011043
01370-40610	K1110-010038	19	K011038
01370-40610	K1110-010043	19	K011043
01434-00820	E0100-001001	11	E001001
01434-10616	C0100-001002	19	C001002
01435-00610	K1110-010020	10	K011020
01435-00610	K1110-010020	12	K011020
01435-00610	K1110-010020	14	K011020
01435-00610	K1110-010020	16	K011020
01435-00610	K1110-010020	18	K011020
01435-00610	K1110-010021	6	K011021
01435-00610	K1110-010023	30	K011023
01435-00612	ASD10-001001	3	B012001
01435-00612	K1110-010002	35	K011002
01435-00612	K1110-010011	8	K011011
01435-00612	K1110-010011	12	K011011
01435-00612	K1110-010011	19	K011011
01435-00612	K1110-010011	25	K011011
01435-00612	K1110-010017	6	K011017
01435-00612	K1110-010017	10	K011017
01435-00612	K1110-010021	9	K011021
01435-00612	K1110-010023	39	K011023
01435-00612	K1110-010036	20	K011036
01435-00612	K1110-010042	17	K011042
01435-00616	ATP00-002001	12	A013001
01435-00616	K1110-010003	2	K011003
01435-00616	K1110-010008	2	K011008
01435-00616	K1110-010014	2	K011014
01435-00616	K1110-010014	6	K011014
01435-00616	K1110-010014	21	K011014
01435-00625	APP10-001004	9	G003004
01435-00625	K0700-001002	4	K010002
01435-00625	K0700-001002	6	K010002
01435-00630	K0700-001002	3	K010002
01435-00630	K0700-001002	5	K010002
01435-00812	ADA00-001001	5	B016001
01435-00814	A1610-001001	8	A014001
01435-00814	ABR00-001001	7	A003001
01435-00814	AOP10-001001	2	B009001
01435-00814	ATP00-002001	17	A013001
01435-00816	AEH10-002001	13	F001001
01435-00816	AFH00-001001	12	B006001
01435-00816	ALP00-001001	11	C001001
01435-00816	AOP10-001001	8	B009001
01435-00816	AWR00-001001	2	F005001
01435-00816	K1110-010022	3	K011022
01435-00820	A1570-001001	4	A016001
01435-00820	A9530-001001	2	E008001
01435-00820	A9530-001001	4	E008001
01435-00820	APH00-001002	11	G002002
01435-00820	APH00-001002	13	G002002
01435-00820	APP10-001002	5	G003002
01435-00820	AWO00-001001	2	E009001
01435-00820	AWR00-001001	8	F005001
01435-00820	AWR00-001001	18	F005001
01435-00820	K1110-010014	8	K011014
01435-00820	K1110-010020	4	K011020
01435-00820	K1110-010020	6	K011020
01435-00825	AIT00-001001	3	A009001
01435-00825	ALP00-001001	12	C001001
01435-00825	AOP10-001001	3	B009001
01435-00825	AWR00-001001	5	F005001
01435-00830	A1570-001001	3	A016001
01435-00830	AFA20-001001	2	E001001
01435-00835	AEH10-002001	4	F001001
01435-00835	AWR00-001001	11	F005001
01435-00840	APP10-001003	5	G003003
01435-00840	ATP00-002001	14	A013001
01435-00840	AWR00-001001	28	F005001
01435-00850	A4710-001001	4	D003001
01435-00855	AGG00-001001	3	B004001
01435-00855	AWP00-001001	11	E006001
01435-00860	AGG00-001001	4	B004001
01435-00860	AWR00-001001	14	F005001
01435-00860	K1110-010020	2	K011020
01435-00865	ARL00-001001	11	B002001
01435-00870	AEH10-002001	2	F001001
01435-00870	AGG00-001001	5	B004001
01435-00875	AEH10-002001	17	F001001
01435-00880	ALC00-001001	6	C003001
01435-01014	AFT00-002001	4	D001001
01435-01020	AFA20-001001	1	E001001
01435-01020	ALA00-001001	2	A017001
01435-01020	ALA00-001001	4	A017001
01435-01020	ALG00-001001	7	B011001
01435-01025	A1610-001001	5	A014001
01435-01025	AFT00-002001	12	D001001
01435-01025	APP10-001002	8	G003002
01435-01030	A4710-002001	2	D004001
01435-01030	A7010-001001	2	G001001
01435-01030	AFF10-002001	5	D006001
01435-01030	AFH00-001001	2	B006001
01435-01035	APP10-001004	2	G003004

PARTS Nº	FIG. Nº	INDEX	PAGE
01435-01035	D0200-001005	13	D002005
01435-01040	AWR00-001001	31	F005001
01435-01045	AFT00-002001	11	D001001
01435-01045	APH00-001002	6	G002002
01435-01045	ATB30-002001	2	A010001
01435-01055	A4710-001001	2	D003001
01435-01055	AWR00-001001	22	F005001
01435-01065	AIM00-001001	3	A004001
01435-01065	AWR00-001001	25	F005001
01435-01070	A2010-001001	3	B014001
01435-01070	AIC20-001001	1	A006001
01435-01075	AIM00-001001	2	A004001
01435-01080	AIC20-001001	2	A006001
01435-01220	K1110-010005	18	K011005
01435-01220	K1110-010005	19	K011005
01435-01235	A1670-001001	8	A015001
01435-01235	ASM00-001001	1	F003001
01435-01270	ABB10-001001	6	B005001
01435-20816	C0100-001002	21	C001002
01435-40610	K1110-010004	13	K011004
01435-40610	K1110-010011	32	K011011
01435-40612	K0310-001001	5	K005001
01435-40612	K0310-002001	5	K006001
01435-40612	K0310-003001	5	K007001
01435-40616	K0310-001001	2	K005001
01435-40616	K0310-002001	2	K006001
01435-40616	K0310-003001	2	K007001
01435-40616	K1110-010003	14	K011003
01435-40616	K1110-010007	5	K011007
01435-40616	K1110-010018	12	K011018
01435-40616	K1110-010023	11	K011023
01435-40616	K1110-010023	22	K011023
01435-40620	K0320-001001	9	K008001
01435-40620	K1110-010023	25	K011023
01435-40620	K1110-010046	7	K011046
01435-40812	K1110-010002	11	K011002
01435-40812	K1110-010010	9	K011010
01435-40812	K1110-010021	2	K011021
01435-40816	K1110-010038	6	K011038
01435-40816	K1110-010043	6	K011043
01435-40820	K1110-010019	6	K011019
01435-40820	K1110-010019	11	K011019
01435-40825	K1110-010007	2	K011007
01435-40825	K1110-010012	6	K011012
01580-01008	K1110-020029	39	K011029a
01580-01008	K1110-020029	42	K011029a
01580-01008	K1110-050030	39	K011029b
01580-01008	K1110-050030	42	K011029b
01580-10403	K1110-010023	8	K011023
01580-10806	A9999-504006	25	B001006
01580-11008	AEH10-002001	10	F001001
01580-11008	K1110-010002	37	K011002
01580-11008	K1110-010007	12	K011007
01580-11008	K1110-050028	43	K011029c
01580-11008	M1130-001001	16	M003001
01580-11008	M1140-001001	24	M004001
01580-11210	H0120-004013	3	H003013
01580-11210	H0120-005013	3	H002013
01580-11210	H0120-009013	3	H004013
01580-11210	H0120-010013	3	H005013
01580-11210	M1110-001001	9	M001001
01580-11210	T1190-001001	5	T007001
01580-11408	K1110-050028	39	K011029c
01580-11613	R1300-002001	4	R013001
01580-11613	T1230-004001	18	T011001
01580-11613	T1230-004001	23	T011001
01580-11613	T1230-004001	26	T011001
01580-11613	T1230-004001	29	T011001
01580-12016	K1120-001001	3	K016001
01580-40605	K1110-010038	10	K011038
01580-40605	K1110-010043	10	K011043
01582-01411	AFP10-001001	3	D002001
01583-11408	A9999-504008	12	B001008
01583-11408	K1110-020029	35	K011029a
01583-11408	K1110-050030	35	K011029b
01583-11811	K1110-010002	32	K011002
01584-00806	A1610-001001	3	A014001
01584-00806	A4710-001001	5	D003001
01584-00806	AFP10-001001	7	D002001
01584-00806	AGG00-001001	6	B004001
01584-00806	AWR00-001001	19	F005001
01584-01008	ALG00-001001	8	B011001
01584-01008	K1110-010006	13	K011006
01584-30806	K1110-010004	3	K011004
01584-31008	K1110-010002	39	K011002
01597-01009	C0100-001003	12	C001003
01597-01009	C0100-001005	15	C001005
01597-01009	T1140-004001	46	T006001
01597-01211	H1270-004003	18	H020003
01601-20410	K1110-010023	10	K011023
01601-20513	H0110-002001	22	H001001
01601-20513	K1110-010042	41	K011042
01640-20408	K1110-010023	9	K011023
01640-20508	APH00-001002	3	G002002
01640-21016	AEH10-002001	15	F001001
01640-21223	M1110-001001	22	M001001
01641-20812	A1670-001001	6	A015001
01641-21626	N1310-001002	8	N003002
01643-11232	K0160-002001	4	K002001
01643-30623	D0100-003001	10	D001001
01643-30623	E0450-001001	17	E007001
01643-30623	K1110-010010	1	K011010
01643-30623	K1110-010030	15	K011030
01643-30623	K1110-010036	6	K011036
01643-30623	K1110-010036	15	K011036
01643-30623	K1110-010037	5	K011037
01643-30623	K1110-010042	10	K011042
01643-30623	K1110-010042	16	K011042
01643-30623	M1130-001001	14	M003001
01643-30623	M1130-001002	6	M003002
01643-30623	M1140-001001	16	M004001
01643-30623	M1140-001001	22	M004001
01643-30623	M1220-002001	11	M007001
01643-30623	M1220-002001	17	M007001
01643-30823	B0200-001002	4	B004002
01643-30823	C0100-001004	6	C001004
01643-30823	C0100-001004	12	C001004
01643-30823	D0200-001003	37	D002003
01643-30823	E0100-001001	12	E001001
01643-30823	E0200-003001	9	E002001
01643-30823	E0200-003001	12	E002001
01643-30823	E0200-003001	14	E002001
01643-30823	E0410-001001	3	E005001
01643-30823	E0450-001001	13	E007001
01643-30823	H0110-002001	32	H001001
01643-30823	K0700-001001	9	K010001
01643-30823	K1110-010006	17	K011006
01643-30823	K1110-010025	15	K011025
01643-30823	K1110-010030	4	K011030
01643-30823	K1110-010030	10	K011030
01643-30823	K1110-010030	12	K011030
01643-30823	K1110-010035	2	K011035
01643-30823	K1110-010041	2	K011041
01643-30823	K1110-010045	3	K011045
01643-30823	K1110-010051	29	K011051
01643-30823	K1110-010051	31	K011051
01643-30823	K1110-020052	36	K011051a
01643-30823	K1110-020052	38	K011051a
01643-30823	K1110-050053	36	K011051b
01643-30823	K1110-050053	38	K011051b
01643-30823	N1310-001001	12	N003001
01643-30823	R0110-001002	15	R001002
01643-30823	T1120-004001	31	T004001
01643-30823	T1120-004002	31	T004002
01643-30823	T1140-004001	39	T006001
01643-30823	T1210-014003	25	T009003
01643-30823	T1220-003001	34	T010001
01643-31032	A9999-003001	8	B002001
01643-31032	A9999-003001	10	B002001
01643-31032	AEH10-002001	7	F001001

PARTS Nº	FIG. Nº	INDEX	PAGE
01643-31032	APH00-001002	7	G002002
01643-31032	B0100-001002	5	B003002
01643-31032	C0100-001001	13	C001001
01643-31032	C0100-001001	20	C001001
01643-31032	C0100-001002	5	C001002
01643-31032	C0100-001002	8	C001002
01643-31032	C0100-001002	16	C001002
01643-31032	C0100-001002	29	C001002
01643-31032	C0100-001002	33	C001002
01643-31032	C0100-001003	4	C001003
01643-31032	C0100-001003	8	C001003
01643-31032	C0100-001003	11	C001003
01643-31032	C0100-001003	14	C001003
01643-31032	C0100-001003	20	C001003
01643-31032	C0100-001003	33	C001003
01643-31032	C0100-001004	3	C001004
01643-31032	C0100-001004	15	C001004
01643-31032	C0100-001004	18	C001004
01643-31032	C0100-001005	9	C001005
01643-31032	C0100-001005	12	C001005
01643-31032	C0100-001005	14	C001005
01643-31032	C0100-001005	23	C001005
01643-31032	C0100-001005	30	C001005
01643-31032	C0100-001005	34	C001005
01643-31032	C0100-001005	36	C001005
01643-31032	C0100-001005	46	C001005
01643-31032	D0200-001002	17	D002002
01643-31032	D0200-001003	31	D002003
01643-31032	D0200-001003	34	D002003
01643-31032	E0200-003001	26	E002001
01643-31032	E0200-003001	28	E002001
01643-31032	E0200-003001	31	E002001
01643-31032	E0200-003001	34	E002001
01643-31032	E0200-003002	25	E002002
01643-31032	E0200-003002	39	E002002
01643-31032	E0200-003003	21	E002003
01643-31032	E0200-003003	36	E002003
01643-31032	E0200-003003	39	E002003
01643-31032	E0200-003003	43	E002003
01643-31032	E0420-001001	4	E006001
01643-31032	E0450-001001	21	E007001
01643-31032	H0320-002001	4	H012001
01643-31032	H0330-001001	9	H013001
01643-31032	H0330-002001	9	H014001
01643-31032	H1220-002001	21	H018001
01643-31032	H1220-002001	28	H018001
01643-31032	H1270-004001	18	H020001
01643-31032	H1270-004001	20	H020001
01643-31032	H1270-004001	30	H020001
01643-31032	H1270-004002	19	H020002
01643-31032	H1270-004003	16	H020003
01643-31032	H1270-004005	14	H020005
01643-31032	H1270-004005	27	H020005
01643-31032	H1272-001001	10	H021001
01643-31032	H1272-001001	24	H021001
01643-31032	H1831-001002	22	H030002
01643-31032	H1831-001004	7	H030004
01643-31032	H1831-002002	22	H031002
01643-31032	H1840-003002	3	H033002
01643-31032	H1840-004002	3	H034002
01643-31032	H1840-005002	3	H035002
01643-31032	K0700-001003	9	K010003
01643-31032	K1110-010007	13	K011007
01643-31032	K1110-010026	2	K011026
01643-31032	K1110-010026	5	K011026
01643-31032	K1110-010026	14	K011026
01643-31032	K1110-010027	4	K011027
01643-31032	K1110-010027	6	K011027
01643-31032	K1110-010028	4	K011028
01643-31032	K1110-010028	6	K011028
01643-31032	K1110-010030	20	K011030
01643-31032	K1110-010031	3	K011031
01643-31032	K1110-010031	4	K011031
01643-31032	K1110-010031	7	K011031
01643-31032	K1110-010031	11	K011031
01643-31032	K1110-010031	15	K011031
01643-31032	K1110-010031	19	K011031
01643-31032	K1110-010031	21	K011031
01643-31032	K1110-010031	24	K011031
01643-31032	K1110-010031	28	K011031
01643-31032	K1110-010036	3	K011036
01643-31032	K1110-010042	45	K011042
01643-31032	K1110-010042	48	K011042
01643-31032	K1110-010047	9	K011047
01643-31032	K1110-010047	11	K011047
01643-31032	K1110-010050	3	K011050
01643-31032	K1110-010050	9	K011050
01643-31032	K1110-010050	15	K011050
01643-31032	K1110-010051	3	K011051
01643-31032	K1110-010051	12	K011051
01643-31032	K1110-020029	4	K011029a
01643-31032	K1110-020029	5	K011029a
01643-31032	K1110-020029	14	K011029a
01643-31032	K1110-020052	3	K011051a
01643-31032	K1110-020052	16	K011051a
01643-31032	K1110-050028	4	K011029c
01643-31032	K1110-050028	5	K011029c
01643-31032	K1110-050028	14	K011029c
01643-31032	K1110-050028	38	K011029c
01643-31032	K1110-050028	42	K011029c
01643-31032	K1110-050030	4	K011029b
01643-31032	K1110-050030	5	K011029b
01643-31032	K1110-050030	14	K011029b
01643-31032	K1110-050053	3	K011051b
01643-31032	K1110-050053	16	K011051b
01643-31032	M1130-001003	7	M003003
01643-31032	M1150-001002	3	M005002
01643-31032	M1220-002001	6	M007001
01643-31032	P1120-001001	20	P001001
01643-31032	P1210-001004	8	P003004
01643-31032	R1100-002001	10	R009001
01643-31032	T1110-007002	11	T003002
01643-31032	T1110-007005	6	T003005
01643-31032	T1110-007005	11	T003005
01643-31032	T1110-007005	17	T003005
01643-31032	T1110-007005	23	T003005
01643-31032	T1110-007005	28	T003005
01643-31032	T1110-007005	30	T003005
01643-31032	T1110-007005	32	T003005
01643-31032	T1110-007005	37	T003005
01643-31032	T1110-007005	40	T003005
01643-31032	T1110-007006	13	T003006
01643-31032	T1110-007007	10	T003007
01643-31032	T1110-007007	14	T003007
01643-31032	T1110-007007	17	T003007
01643-31032	T1110-007007	20	T003007
01643-31032	T1110-007007	24	T003007
01643-31032	T1110-007007	27	T003007
01643-31032	T1110-011002	11	T001002
01643-31032	T1110-011003	20	T001003
01643-31032	T1110-011004	13	T001004
01643-31032	T1110-012002	11	T002002
01643-31032	T1110-012005	6	T002005
01643-31032	T1110-012005	10	T002005
01643-31032	T1110-012005	17	T002005
01643-31032	T1110-012005	23	T002005
01643-31032	T1110-012005	27	T002005
01643-31032	T1110-012005	31	T002005
01643-31032	T1110-012005	36	T002005
01643-31032	T1110-012005	39	T002005
01643-31032	T1110-012006	13	T002006
01643-31032	T1120-004001	38	T004001
01643-31032	T1120-004002	38	T004002
01643-31032	T1140-004001	47	T006001
01643-31032	T1210-013003	4	T008003
01643-31032	T1210-014003	28	T009003
01643-31032	T1210-014004	4	T009004
01643-31032	T1220-003001	36	T010001
01643-31232	A9999-003001	6	B002001
01643-31232	B0100-001002	7	B003002

PARTS Nº	FIG. Nº	INDEX	PAGE
01643-31232	B0200-001002	11	B004002
01643-31232	B0200-001002	18	B004002
01643-31232	B0200-001002	20	B004002
01643-31232	D0200-001002	3	D002002
01643-31232	D0200-001002	6	D002002
01643-31232	D0200-001002	10	D002002
01643-31232	D0200-001002	14	D002002
01643-31232	D0200-001002	21	D002002
01643-31232	D0200-001002	27	D002002
01643-31232	D0200-001002	30	D002002
01643-31232	D0200-001003	3	D002003
01643-31232	D0200-001003	6	D002003
01643-31232	D0200-001003	9	D002003
01643-31232	D0200-001003	14	D002003
01643-31232	D0200-001003	18	D002003
01643-31232	D0200-001003	21	D002003
01643-31232	D0200-001003	24	D002003
01643-31232	D0200-001003	27	D002003
01643-31232	D0200-001003	43	D002003
01643-31232	D0200-001005	5	D002005
01643-31232	E0100-001001	7	E001001
01643-31232	E0200-003001	3	E002001
01643-31232	E0200-003001	6	E002001
01643-31232	E0200-003001	18	E002001
01643-31232	E0200-003001	21	E002001
01643-31232	E0200-003001	37	E002001
01643-31232	E0200-003002	3	E002002
01643-31232	E0200-003002	8	E002002
01643-31232	E0200-003002	11	E002002
01643-31232	E0200-003002	15	E002002
01643-31232	E0200-003002	18	E002002
01643-31232	E0200-003002	28	E002002
01643-31232	E0200-003002	31	E002002
01643-31232	E0200-003002	34	E002002
01643-31232	E0200-003002	37	E002002
01643-31232	E0200-003003	3	E002003
01643-31232	E0200-003003	6	E002003
01643-31232	E0200-003003	9	E002003
01643-31232	E0200-003003	12	E002003
01643-31232	E0200-003003	15	E002003
01643-31232	E0200-003003	18	E002003
01643-31232	E0200-003003	24	E002003
01643-31232	E0200-003003	28	E002003
01643-31232	E0200-003003	32	E002003
01643-31232	E0320-002001	3	E004001
01643-31232	E0320-002001	6	E004001
01643-31232	E0320-002001	10	E004001
01643-31232	E0450-001001	15	E007001
01643-31232	H0110-002001	11	H001001
01643-31232	H0110-002001	18	H001001
01643-31232	H0110-002001	35	H001001
01643-31232	H0120-004013	2	H003013
01643-31232	H0120-005013	2	H002013
01643-31232	H0120-009013	2	H004013
01643-31232	H0120-010013	2	H005013
01643-31232	H0311-001001	4	H010001
01643-31232	H0311-001001	6	H010001
01643-31232	H0320-002001	7	H012001
01643-31232	H0320-002001	10	H012001
01643-31232	H0340-003001	4	H015001
01643-31232	H0340-003001	7	H015001
01643-31232	H0340-003001	24	H015001
01643-31232	H0340-004001	4	H016001
01643-31232	H0340-004001	21	H016001
01643-31232	H1210-002001	3	H017001
01643-31232	H1210-002001	6	H017001
01643-31232	H1210-002001	9	H017001
01643-31232	H1210-002001	13	H017001
01643-31232	H1270-004001	32	H020001
01643-31232	H1270-004001	41	H020001
01643-31232	H1270-004002	22	H020002
01643-31232	H1270-004003	19	H020003
01643-31232	H1270-004005	3	H020005
01643-31232	H1270-004005	6	H020005
01643-31232	H1272-001001	7	H021001
01643-31232	H1810-002001	5	H027001
01643-31232	H1810-003001	5	H028001
01643-31232	H1810-004001	5	H029001
01643-31232	H1831-001002	25	H030002
01643-31232	H1831-001003	6	H030003
01643-31232	H1831-001003	19	H030003
01643-31232	H1831-001003	24	H030003
01643-31232	H1831-001004	10	H030004
01643-31232	H1831-002002	25	H031002
01643-31232	H1831-002003	6	H031003
01643-31232	H1831-002003	19	H031003
01643-31232	H1831-002003	24	H031003
01643-31232	H1833-001001	22	H032001
01643-31232	H1833-001001	25	H032001
01643-31232	H1833-001001	28	H032001
01643-31232	H1840-003002	6	H033002
01643-31232	H1840-003002	9	H033002
01643-31232	H1840-003002	12	H033002
01643-31232	H1840-003002	16	H033002
01643-31232	H1840-003002	20	H033002
01643-31232	H1840-003002	23	H033002
01643-31232	H1840-003002	26	H033002
01643-31232	H1840-004002	6	H034002
01643-31232	H1840-004002	9	H034002
01643-31232	H1840-004002	12	H034002
01643-31232	H1840-004002	16	H034002
01643-31232	H1840-004002	20	H034002
01643-31232	H1840-004002	23	H034002
01643-31232	H1840-004002	27	H034002
01643-31232	H1840-005002	6	H035002
01643-31232	H1840-005002	9	H035002
01643-31232	H1840-005002	12	H035002
01643-31232	H1840-005002	16	H035002
01643-31232	H1840-005002	20	H035002
01643-31232	H1840-005002	23	H035002
01643-31232	H1840-005002	27	H035002
01643-31232	H1840-005002	32	H035002
01643-31232	H1840-005002	35	H035002
01643-31232	J1110-006001	8	J001001
01643-31232	J1310-002001	5	J003001
01643-31232	J1310-002001	12	J003001
01643-31232	K0220-001001	4	K003001
01643-31232	K0700-001002	9	K010002
01643-31232	K0700-001002	12	K010002
01643-31232	K0700-001002	16	K010002
01643-31232	K0700-001002	20	K010002
01643-31232	K0700-001002	24	K010002
01643-31232	K0700-001002	28	K010002
01643-31232	K0700-001002	32	K010002
01643-31232	K0700-001002	35	K010002
01643-31232	K0700-001002	38	K010002
01643-31232	K0700-001002	42	K010002
01643-31232	K0700-001003	5	K010003
01643-31232	K0700-001003	12	K010003
01643-31232	K0700-001003	16	K010003
01643-31232	K1110-010023	35	K011023
01643-31232	K1110-010029	6	K011029
01643-31232	K1110-010030	42	K011030
01643-31232	K1120-001001	7	K016001
01643-31232	K1120-001001	13	K016001
01643-31232	M1110-001001	13	M001001
01643-31232	M1110-001001	17	M001001
01643-31232	M1120-001001	6	M002001
01643-31232	M1120-001001	8	M002001
01643-31232	M1120-001001	10	M002001
01643-31232	M1120-001001	13	M002001
01643-31232	M1120-001001	16	M002001
01643-31232	M1120-001001	19	M002001
01643-31232	M1120-001001	22	M002001
01643-31232	M1120-001001	25	M002001
01643-31232	M1120-001001	28	M002001
01643-31232	M1120-001001	31	M002001
01643-31232	M1120-001001	34	M002001
01643-31232	M1120-001001	4	M002002
01643-31232	M1120-001002	7	M002002

PARTS Nº	FIG. Nº	INDEX	PAGE
01643-31232	M1120-001002	10	M002002
01643-31232	M1120-001002	12	M002002
01643-31232	M1120-001002	15	M002002
01643-31232	M1130-001001	5	M003001
01643-31232	M1130-001001	8	M003001
01643-31232	M1130-001001	11	M003001
01643-31232	M1130-001001	19	M003001
01643-31232	M1130-001002	8	M003002
01643-31232	M1130-001002	11	M003002
01643-31232	M1130-001003	4	M003003
01643-31232	M1130-001003	14	M003003
01643-31232	M1130-001003	17	M003003
01643-31232	M1140-001001	5	M004001
01643-31232	M1140-001001	10	M004001
01643-31232	M1140-001001	13	M004001
01643-31232	M1140-001001	19	M004001
01643-31232	M1140-001001	27	M004001
01643-31232	M1140-001001	31	M004001
01643-31232	M1150-001001	4	M005001
01643-31232	M1150-001001	6	M005001
01643-31232	M1150-001001	12	M005001
01643-31232	M1150-001001	18	M005001
01643-31232	M1150-001001	24	M005001
01643-31232	M1150-001001	35	M005001
01643-31232	M1150-001001	39	M005001
01643-31232	M1150-001001	42	M005001
01643-31232	M1150-001002	6	M005002
01643-31232	M1150-001002	10	M005002
01643-31232	M1210-001001	3	M006001
01643-31232	M1210-001001	7	M006001
01643-31232	M1210-001001	10	M006001
01643-31232	M1210-001001	14	M006001
01643-31232	M1220-002001	25	M007001
01643-31232	M1220-002001	31	M007001
01643-31232	M1220-002001	35	M007001
01643-31232	M1230-001001	4	M008001
01643-31232	M1230-001001	7	M008001
01643-31232	M1230-001001	12	M008001
01643-31232	M1230-001001	15	M008001
01643-31232	M1230-001001	20	M008001
01643-31232	M1310-002001	3	M009001
01643-31232	M1310-002001	5	M009001
01643-31232	M1420-003002	4	M011002
01643-31232	M1510-001001	4	M012001
01643-31232	M1510-001001	7	M012001
01643-31232	M1510-001001	10	M012001
01643-31232	M1510-001001	13	M012001
01643-31232	M1510-001001	22	M012001
01643-31232	M1810-001001	15	M014001
01643-31232	M1810-001001	21	M014001
01643-31232	M1810-001001	26	M014001
01643-31232	N1210-001004	5	N002004
01643-31232	N1310-001002	3	N003002
01643-31232	R0300-001001	10	R003001
01643-31232	R1140-001001	3	R011001
01643-31232	T1110-007002	4	T003002
01643-31232	T1110-007002	8	T003002
01643-31232	T1110-007002	15	T003002
01643-31232	T1110-007002	21	T003002
01643-31232	T1110-011002	4	T001002
01643-31232	T1110-011002	8	T001002
01643-31232	T1110-011002	15	T001002
01643-31232	T1110-011002	21	T001002
01643-31232	T1110-012002	4	T002002
01643-31232	T1110-012002	8	T002002
01643-31232	T1110-012002	15	T002002
01643-31232	T1110-012002	21	T002002
01643-31232	T1190-001001	4	T007001
01643-31232	T1210-013002	10	T008002
01643-31232	T1210-013002	18	T008002
01643-31232	T1210-014002	10	T009002
01643-31232	T1210-014002	18	T009002
01643-31232	T1210-014003	10	T009003
01643-31445	K0700-001001	4	K010001
01643-31445	K0700-001001	6	K010001
01643-31445	R0110-001002	19	R001002
01643-31445	T1125-002001	3	T005001
01643-31445	T1510-003001	16	T012001
01643-31445	T1510-011001	12	T013001
01643-31645	D0100-003001	21	D001001
01643-31645	H0110-002001	30	H001001
01643-31645	H0120-004028	3	H003028
01643-31645	H0120-004028	7	H003028
01643-31645	H0120-005025	3	H002025
01643-31645	H0120-005025	7	H002025
01643-31645	H0120-009028	3	H004028
01643-31645	H0120-009028	7	H004028
01643-31645	H0120-010030	3	H005030
01643-31645	H0120-010030	7	H005030
01643-31645	K1110-010023	37	K011023
01643-31645	N1210-001005	2	N002005
01643-31645	N1310-001002	5	N003002
01643-31645	P1210-001004	3	P003004
01643-31645	P1210-001004	5	P003004
01643-31645	R0200-002001	12	R002001
01643-31645	R1200-001001	3	R012001
01643-31645	R1300-002001	3	R013001
01643-32060	K1120-001001	4	K016001
01643-32780	M1520-001001	2	M013001
01643-33080	K1120-001001	10	K016001
01643-50823	T1210-013002	4	T008002
01643-50823	T1210-014002	4	T009002
01643-51032	H0120-004013	5	H003013
01643-51032	H0120-005013	5	H002013
01643-51032	H0120-009013	5	H004013
01643-51032	H0120-010013	5	H005013
01643-51032	H1270-004001	10	H020001
01643-51032	H1270-004001	13	H020001
01643-51032	H1270-004002	3	H020002
01643-51032	H1270-004002	6	H020002
01643-51032	H1270-004002	13	H020002
01643-51032	H1270-004002	16	H020002
01643-51032	H1270-004002	28	H020002
01643-51032	H1270-004002	31	H020002
01643-51032	K1110-010033	11	K011033
01643-51032	K1110-010039	11	K011039
01643-51032	T1110-007003	10	T003003
01643-51032	T1110-007004	5	T003004
01643-51032	T1110-007004	15	T003004
01643-51032	T1110-011003	10	T001003
01643-51032	T1110-012003	10	T002003
01643-51032	T1110-012004	5	T002004
01643-51032	T1110-012004	15	T002004
01643-51032	T1120-004001	36	T004001
01643-51032	T1120-004002	36	T004002
01643-51032	T1140-004001	44	T006001
01643-51032	T1210-014003	4	T009003
01643-51032	T1210-014003	13	T009003
01643-51032	T1220-003001	32	T010001
01643-51232	B0200-001002	6	B004002
01643-51232	B0200-001002	21	B004002
01643-51232	D0200-001005	2	D002005
01643-51232	M1150-001001	27	M005001
01643-51232	M1150-001001	31	M005001
01643-51232	T1110-007005	3	T003005
01643-51232	T1110-007007	7	T003007
01643-51232	T1110-012005	3	T002005
01643-51645	T1140-004001	24	T006001
01643-70623	K1110-010002	17	K011002
01643-70623	K1110-010002	24	K011002
01643-70623	K1110-010002	46	K011002
01643-70623	K1110-010004	10	K011004
01643-70623	K1110-010004	22	K011004
01643-70623	K1110-010008	2	K011008
01643-70623	K1110-010011	18	K011011
01643-70623	K1110-010011	24	K011011
01643-70623	K1110-010013	10	K011013
01643-70623	K1110-010014	18	K011014
01643-70623	K1110-010014	24	K011014
01643-70623	K1110-010015	5	K011015

PARTS Nº	FIG. Nº	INDEX	PAGE
01643-70623	K1110-010016	6	K011016
01643-70623	K1110-010036	13	K011036
01643-70623	K1110-010036	19	K011036
01643-70623	K1110-010036	24	K011036
01643-70623	K1110-010042	14	K011042
01643-70623	K1110-010042	21	K011042
01643-70623	K1110-010042	24	K011042
01643-70823	K1110-010002	20	K011002
01643-70823	K1110-010002	27	K011002
01643-70823	K1110-010002	30	K011002
01643-70823	K1110-010013	20	K011013
01643-70823	K1110-010014	15	K011014
01643-70823	K1110-010016	8	K011016
01643-70823	K1110-010016	12	K011016
01643-70823	K1110-010019	18	K011019
01643-70823	K1110-010038	4	K011038
01643-70823	K1110-010043	4	K011043
01643-70823	K1110-010045	6	K011045
01643-71032	E0310-003001	3	E003001
01643-71032	E0310-003001	6	E003001
01643-71032	K1110-010002	40	K011002
01643-71032	K1110-010012	9	K011012
01643-71032	K1110-010013	8	K011013
01643-71032	K1110-010013	15	K011013
01643-71032	K1110-010026	12	K011026
01643-71032	K1110-020029	8	K011029a
01643-71032	K1110-020029	11	K011029a
01643-71032	K1110-050028	8	K011029c
01643-71032	K1110-050028	11	K011029c
01643-71032	K1110-050030	8	K011029b
01643-71032	K1110-050030	11	K011029b
01643-71032	M1410-006001	11	M010001
01643-71232	K0220-001001	9	K003001
01643-71232	K0230-002001	4	K004001
01643-71232	K0230-002001	8	K004001
01643-71232	K1110-010013	28	K011013
01643-71232	K1110-010042	3	K011042
01643-71232	M1410-006001	8	M010001
01643-71232	M1410-006001	14	M010001
01643-71645	N1110-001001	6	N001001
01803-02228	T1510-003001	11	T012001
02030-70757	K0160-002001	2	K002001
02720-40104	APP10-001005	9	G003005
02753-006A8	H1270-004005	18	H020005
02756-00216	H1810-003001	1	H028001
02756-20413	T1210-013002	2	T008002
02756-20413	T1210-014002	2	T009002
02760-002A4	H1840-003001	16	H033001
02760-002A4	H1840-004001	16	H034001
02760-002A4	H1840-005001	16	H035001
02760-002A5	H1270-006001	3	H019001
02762-00313	D0200-001001	1	D002001
02762-00417	H0340-003001	1	H015001
02762-00417	H0340-004001	1	H016001
02762-00417	P1120-001001	15	P001001
02777-00411	H1220-002001	8	H018001
02777-00411	T1110-007003	18	T003003
02777-00411	T1110-011003	24	T001003
02777-00411	T1110-012003	18	T002003
02781-0021D	H0120-004029	6	H003029
02781-0021D	H0120-004029	22	H003029
02781-0021D	H0120-004031	4	H003031
02781-0021D	H0120-005026	6	H002026
02781-0021D	H0120-005026	22	H002026
02781-0021D	H0120-009029	6	H004029
02781-0021D	H0120-009029	22	H004029
02781-0021D	H0120-010032	6	H005032
02781-0021D	H0120-010032	22	H005032
02781-0021D	H1831-001002	5	H030002
02781-0021D	H1831-002002	5	H031002
02781-0021D	K1110-010051	7	K011051
02781-0021D	K1110-010051	16	K011051
02781-0021D	K1110-020052	7	K011051a
02781-0021D	K1110-020052	20	K011051a
02781-0021D	K1110-050053	7	K011051b
02781-0021D	K1110-050053	20	K011051b
02781-0031D	K1110-010051	4	K011051
02781-0031D	K1110-010051	13	K011051
02781-0031D	K1110-020052	4	K011051a
02781-0031D	K1110-020052	17	K011051a
02781-0031D	K1110-050053	4	K011051b
02781-0031D	K1110-050053	17	K011051b
02781-00422	N1210-001005	14	N002005
02781-00422	P1120-001001	4	P001001
02781-00516	N1210-001005	5	N002005
02781-00522	H1272-001001	1	H021001
02781-00522	H1272-001001	11	H021001
02781-00522	P1120-001001	1	P001001
02781-00628	ALC00-001001	12	C003001
02781-00628	H0120-004030	23	H003030
02781-00628	H0120-005027	24	H002027
02781-00628	H0120-009030	23	H004030
02781-00628	H0120-010033	23	H005033
02781-00628	H0340-003001	10	H015001
02781-00628	H0340-004001	7	H016001
02781-00628	H1220-002001	2	H018001
02781-00628	H1270-004001	33	H020001
02782-10210	H0120-004029	28	H003029
02782-10210	H0120-004030	4	H003030
02782-10210	H0120-004030	30	H003030
02782-10210	H0120-004031	1	H003031
02782-10210	H0120-005026	28	H002026
02782-10210	H0120-005027	4	H002027
02782-10210	H0120-005027	31	H002027
02782-10210	H0120-009029	28	H004029
02782-10210	H0120-009030	4	H004030
02782-10210	H0120-009030	30	H004030
02782-10210	H0120-010032	28	H005032
02782-10210	H0120-010033	4	H005033
02782-10210	H0120-010033	30	H005033
02782-10210	H0210-002001	4	H008001
02782-10210	H0210-003001	4	H009001
02782-10210	H1270-006001	4	H019001
02782-10210	H1810-002001	9	H027001
02782-10210	H1810-003001	9	H028001
02782-10210	H1810-003001	9	H028001
02782-10210	H1810-004001	9	H029001
02782-10210	H1831-001003	13	H030003
02782-10210	H1831-002003	13	H031003
02782-10210	N1310-001002	22	N003002
02782-1021A	P1120-001001	7	P001001
02782-10311	D0200-001001	8	D002001
02782-10311	H0120-004030	1	H003030
02782-10311	H0120-004030	20	H003030
02782-10311	H0120-005027	1	H002027
02782-10311	H0120-009030	1	H004030
02782-10311	H0120-010033	1	H005033
02782-10311	H0120-010033	20	H005033
02782-10311	H1831-001002	16	H030002
02782-10312	D0200-001001	4	D002001
02782-10312	H1831-002002	16	H031002
02782-10313	H1831-001002	11	H030002
02782-10313	H1831-002002	11	H031002
02782-10315	C0100-001004	7	C001004
02782-10315	D0100-003001	15	D001001
02782-10315	H1831-001004	11	H030004
02782-10425	H0340-003001	13	H015001
02782-10425	H0340-004001	10	H016001
02782-10522	H0120-004032	4	H003032
02782-10522	H0120-004033	7	H003033
02782-10522	H0120-004034	4	H003034
02782-10522	H0120-005028	4	H002028
02782-10522	H0120-005029	7	H002029
02782-10522	H0120-005030	4	H002030
02782-10522	H0120-009031	4	H004031
02782-10522	H0120-009032	7	H004032
02782-10522	H0120-009033	4	H004033
02782-10522	H0120-010034	4	H005034
02782-10522	H0120-010035	7	H005035
02782-10522	H0120-010036	4	H005036

PARTS Nº	FIG. Nº	INDEX	PAGE
02782-10522	H1272-001001	14	H021001
02782-10522	N1310-001002	10	N003002
02782-10522	N1310-001002	28	N003002
02782-10628	H0120-004034	1	H003034
02782-10628	H0120-005030	1	H002030
02782-10628	H0120-009033	1	H004033
02782-10628	H0120-010036	1	H005036
02782-10628	H0312-001001	4	H011001
02782-10628	H0330-001001	10	H013001
02782-10628	H0330-001001	14	H013001
02782-10628	H1270-004001	36	H020001
02782-10628	H1270-004005	28	H020005
02782-10628	N1210-001005	11	N002005
02782-1062A	ALF00-001001	4	C002001
02782-1062A	H0320-002001	15	H012001
02782-10630	ALC00-001001	13	C003001
02783-10210	H0120-004030	27	H003030
02783-10210	H0120-005027	28	H002027
02783-10210	H0120-009030	27	H004030
02783-10210	H0120-010033	27	H005033
02783-10522	H0120-004032	1	H003032
02783-10522	H0120-004033	1	H003033
02783-10522	H0120-004033	6	H003033
02783-10522	H0120-005028	1	H002028
02783-10522	H0120-005029	1	H002029
02783-10522	H0120-005029	6	H002029
02783-10522	H0120-009031	1	H004031
02783-10522	H0120-009032	1	H004032
02783-10522	H0120-009032	6	H004032
02783-10522	H0120-010034	1	H005034
02783-10522	H0120-010035	1	H005035
02783-10522	H0120-010035	6	H005035
02783-10522	N1310-001002	13	N003002
02783-10522	N1310-001002	31	N003002
02783-10628	H1270-004001	1	H020001
02789-10522	T1110-007007	28	T003007
02896-11008	H0120-004029	8	H003029
02896-11008	H0120-004029	11	H003029
02896-11008	H0120-004029	14	H003029
02896-11008	H0120-004029	23	H003029
02896-11008	H0120-004029	26	H003029
02896-11008	H0120-004029	29	H003029
02896-11008	H0120-004030	5	H003030
02896-11008	H0120-004030	12	H003030
02896-11008	H0120-004030	15	H003030
02896-11008	H0120-004030	19	H003030
02896-11008	H0120-004030	29	H003030
02896-11008	H0120-004030	32	H003030
02896-11008	H0120-004031	2	H003031
02896-11008	H0120-004031	5	H003031
02896-11008	H0120-005026	8	H002026
02896-11008	H0120-005026	11	H002026
02896-11008	H0120-005026	14	H002026
02896-11008	H0120-005026	23	H002026
02896-11008	H0120-005026	26	H002026
02896-11008	H0120-005026	29	H002026
02896-11008	H0120-005027	5	H002027
02896-11008	H0120-005027	12	H002027
02896-11008	H0120-005027	15	H002027
02896-11008	H0120-005027	19	H002027
02896-11008	H0120-005027	22	H002027
02896-11008	H0120-005027	30	H002027
02896-11008	H0120-005027	33	H002027
02896-11008	H0120-009029	8	H004029
02896-11008	H0120-009029	11	H004029
02896-11008	H0120-009029	14	H004029
02896-11008	H0120-009029	23	H004029
02896-11008	H0120-009029	26	H004029
02896-11008	H0120-009029	29	H004029
02896-11008	H0120-009030	5	H004030
02896-11008	H0120-009030	12	H004030
02896-11008	H0120-009030	15	H004030
02896-11008	H0120-009030	19	H004030
02896-11008	H0120-009030	29	H004030
02896-11008	H0120-009030	32	H004030
02896-11008	H0120-010032	8	H005032
02896-11008	H0120-010032	11	H005032
02896-11008	H0120-010032	14	H005032
02896-11008	H0120-010032	23	H005032
02896-11008	H0120-010032	26	H005032
02896-11008	H0120-010032	29	H005032
02896-11008	H0120-010033	5	H005033
02896-11008	H0120-010033	12	H005033
02896-11008	H0120-010033	15	H005033
02896-11008	H0120-010033	19	H005033
02896-11008	H0120-010033	29	H005033
02896-11008	H0120-010033	32	H005033
02896-11008	H0210-002001	2	H008001
02896-11008	H0210-002001	5	H008001
02896-11008	H0210-003001	5	H009001
02896-11008	H1270-006001	6	H019001
02896-11008	H1831-001002	7	H030002
02896-11008	H1831-001003	15	H030003
02896-11008	H1831-002002	7	H031002
02896-11008	H1831-002003	15	H031003
02896-11008	K1110-010026	24	K011026
02896-11008	K1110-010035	8	K011035
02896-11008	K1110-010041	8	K011041
02896-11008	K1110-010051	8	K011051
02896-11008	K1110-010051	17	K011051
02896-11008	K1110-020029	19	K011029a
02896-11008	K1110-020029	22	K011029a
02896-11008	K1110-020029	24	K011029a
02896-11008	K1110-020052	8	K011051a
02896-11008	K1110-020052	11	K011051a
02896-11008	K1110-020052	21	K011051a
02896-11008	K1110-020052	24	K011051a
02896-11008	K1110-050028	19	K011029c
02896-11008	K1110-050028	22	K011029c
02896-11008	K1110-050028	24	K011029c
02896-11008	K1110-050030	19	K011029b
02896-11008	K1110-050030	22	K011029b
02896-11008	K1110-050030	24	K011029b
02896-11008	K1110-050053	8	K011051b
02896-11008	K1110-050053	11	K011051b
02896-11008	K1110-050053	21	K011051b
02896-11008	K1110-050053	24	K011051b
02896-11008	N1210-001005	19	N002005
02896-11008	N1310-001002	23	N003002
02896-11008	N1310-001002	26	N003002
02896-11008	P1120-001001	9	P001001
02896-11009	D0100-003001	5	D001001
02896-11009	D0100-003001	17	D001001
02896-11009	D0200-001001	3	D002001
02896-11009	D0200-001001	7	D002001
02896-11009	D0200-001001	19	D002001
02896-11009	D0200-001001	20	D002001
02896-11009	H0120-004029	5	H003029
02896-11009	H0120-004030	2	H003030
02896-11009	H0120-004030	21	H003030
02896-11009	H0120-005026	5	H002026
02896-11009	H0120-005027	2	H002027
02896-11009	H0120-005027	21	H002027
02896-11009	H0120-009029	5	H004029
02896-11009	H0120-009030	2	H004030
02896-11009	H0120-009030	21	H004030
02896-11009	H0120-010032	5	H005032
02896-11009	H0120-010033	2	H005033
02896-11009	H0120-010033	21	H005033
02896-11009	H0210-002001	8	H008001
02896-11009	H0210-003001	2	H009001
02896-11009	H0210-003001	8	H009001
02896-11009	H0340-003001	18	H015001
02896-11009	H0340-004001	15	H016001
02896-11009	H1831-001002	9	H030002
02896-11009	H1831-001002	13	H030002
02896-11009	H1831-001002	18	H030002
02896-11009	H1831-001004	13	H030004
02896-11009	H1831-002002	9	H031002
02896-11009	H1831-002002	13	H031002

PARTS Nº	FIG. Nº	INDEX	PAGE
02896-11009	H1831-002002	18	H031002
02896-11009	K1110-010051	5	K011051
02896-11009	K1110-010051	14	K011051
02896-11009	K1110-020052	5	K011051a
02896-11009	K1110-020052	18	K011051a
02896-11009	K1110-050053	5	K011051b
02896-11009	K1110-050053	18	K011051b
02896-11012	H0340-003001	15	H015001
02896-11012	H0340-004001	12	H016001
02896-11012	H1220-002001	14	H018001
02896-11012	KIT	K03	Y001001
02896-11012	KIT	K05	Y001001
02896-11012	KIT	K06	Y001001
02896-11012	N1210-001005	16	N002005
02896-11012	N1310-001002	18	N003002
02896-11012	N1310-001002	21	N003002
02896-11012	P1120-001001	6	P001001
02896-11012	T1110-007003	14	T003003
02896-11012	T1110-011003	14	T001003
02896-11012	T1110-012003	14	T002003
02896-11012	T1120-004001	27	T004001
02896-11012	T1120-004002	27	T004002
02896-11012	T1220-003001	28	T010001
02896-11015	H0120-004032	3	H003032
02896-11015	H0120-004032	6	H003032
02896-11015	H0120-004033	3	H003033
02896-11015	H0120-004033	9	H003033
02896-11015	H0120-004034	6	H003034
02896-11015	H0120-005028	3	H002028
02896-11015	H0120-005028	6	H002028
02896-11015	H0120-005029	3	H002029
02896-11015	H0120-005029	9	H002029
02896-11015	H0120-005030	6	H002030
02896-11015	H0120-009031	3	H004031
02896-11015	H0120-009031	6	H004031
02896-11015	H0120-009032	3	H004032
02896-11015	H0120-009032	9	H004032
02896-11015	H0120-009033	6	H004033
02896-11015	H0120-010034	3	H005034
02896-11015	H0120-010034	6	H005034
02896-11015	H0120-010035	3	H005035
02896-11015	H0120-010035	9	H005035
02896-11015	H0120-010036	6	H005036
02896-11015	H1210-002001	19	H017001
02896-11015	H1220-002001	11	H018001
02896-11015	H1272-001001	3	H021001
02896-11015	H1272-001001	13	H021001
02896-11015	H1272-001001	16	H021001
02896-11015	H1272-001001	19	H021001
02896-11015	KIT	K03	Y001001
02896-11015	KIT	K04	Y001001
02896-11015	N1210-001005	7	N002005
02896-11015	N1210-001005	10	N002005
02896-11015	N1310-001002	12	N003002
02896-11015	N1310-001002	15	N003002
02896-11015	N1310-001002	30	N003002
02896-11015	N1310-001002	33	N003002
02896-11015	P1120-001001	3	P001001
02896-11015	T1110-007003	4	T003003
02896-11015	T1110-007003	12	T003003
02896-11015	T1110-007007	2	T003007
02896-11015	T1110-007007	4	T003007
02896-11015	T1110-011003	4	T001003
02896-11015	T1110-011003	12	T001003
02896-11015	T1110-012003	4	T002003
02896-11015	T1110-012003	12	T002003
02896-11015	T1120-004001	29	T004001
02896-11015	T1120-004002	29	T004002
02896-11015	T1140-004001	37	T006001
02896-11018	H0120-004012	13	H003012
02896-11018	H0120-004030	25	H003030
02896-11018	H0120-004032	7	H003032
02896-11018	H0120-004034	3	H003034
02896-11018	H0120-005012	13	H002012
02896-11018	H0120-005027	26	H002027
02896-11018	H0120-005028	7	H002028
02896-11018	H0120-005030	3	H002030
02896-11018	H0120-009012	13	H004012
02896-11018	H0120-009030	25	H004030
02896-11018	H0120-009031	7	H004031
02896-11018	H0120-009033	3	H004033
02896-11018	H0120-010012	13	H005012
02896-11018	H0120-010033	25	H005033
02896-11018	H0120-010034	7	H005034
02896-11018	H0120-010036	3	H005036
02896-11018	H0210-002001	11	H008001
02896-11018	H0210-003001	11	H009001
02896-11018	H0312-001001	2	H011001
02896-11018	H0312-001001	6	H011001
02896-11018	H0320-002001	17	H012001
02896-11018	H0330-001001	12	H013001
02896-11018	H0340-003001	12	H015001
02896-11018	H0340-004001	9	H016001
02896-11018	H1210-002001	21	H017001
02896-11018	H1220-002001	3	H018001
02896-11018	H1270-004001	3	H020001
02896-11018	H1270-004001	35	H020001
02896-11018	H1270-004001	38	H020001
02896-11018	H1270-004005	17	H020005
02896-11018	H1270-004005	21	H020005
02896-11018	H1270-004005	23	H020005
02896-11018	H1270-004005	30	H020005
02896-11018	N1210-001005	13	N002005
02896-11018	T1110-007003	6	T003003
02896-11018	T1110-011003	6	T001003
02896-11018	T1110-012003	6	T002003
02896-61018	ALC00-001001	15	C003001
02896-61018	ALF00-001001	7	C002001
04010-00516	APP10-001002	3	G003002
04020-00820	ABB00-001003	17	B013003
04020-01228	A9999-504002	6	B001002
04020-01228	A9999-504005	14	B001005
04020-01228	ABB00-001003	18	B013003
04020-01228	B0100-001002	9	B003002
04020-01434	N1110-001001	7	N001001
04020-01638	N1210-001001	33	N002001
04022-04016	K1110-010025	24	K011025
04025-00312	APP10-001002	7	G003002
04025-00408	ABB00-001003	19	B013003
04025-00412	H1270-004001	21	H020001
04025-00412	T1210-014003	18	T009003
04025-00432	K1110-010025	18	K011025
04025-00512	ABB10-001001	4	B005001
04050-11612	M1220-002001	12	M007001
04050-14025	N1310-001002	9	N003002
04052-10530	K1110-010007	8	K011007
04052-10833	K1110-010004	16	K011004
04052-21253	M1110-001001	21	M001001
04064-03015	T1210-014003	19	T009003
04064-03515	N1210-001002	24	N002002
04064-03515	R0110-001002	4	R001002
04064-05520	N1210-001001	18	N002001
04064-07525	N1310-001001	8	N003001
04065-02210	P1210-001001	30	P003001
04065-03012	APP10-001001	3	G003001
04065-04018	A9999-504009	17	B001009
04065-04518	N1210-001002	26	N002002
04065-04818	A9999-504005	4	B001005
04065-06825	A9999-504004	7	B001004
04077-00075	R0110-001002	17	R001002
04120-21766	K0700-001003	19	K010003
04205-10520	K1110-010007	7	K011007
04205-31230	M1110-001001	19	M001001
04205-31235	M1110-001001	19	M001001
04205-31235	M1110-001001	20	M001001
04260-00476	P1210-001003	35	P003003
04260-00635	T1140-004001	12	T006001
04260-00793	P1210-001003	26	P003003
04418-02550	AVC00-001001	3	A001001
04418-02550	AVC00-001001	9	A001001

PARTS Nº	FIG. Nº	INDEX	PAGE
04418-13060	U0100-006001	18	U001001
04418-13060	U0100-008001	18	U002001
04418-13060	U0520-020001	3	U012001
04418-13060	U0520-030001	3	U013001
04434-50508	K0700-001001	11	K010001
04434-50610	E0420-001001	2	E006001
04434-50610	K1110-020029	41	K011029a
04434-50610	K1110-050030	41	K011029b
04434-50810	E0200-003002	23	E002002
04434-50812	T1110-007006	11	T003006
04434-50812	T1110-011004	11	T001004
04434-50812	T1110-012006	11	T002006
04434-51012	E0320-002001	8	E004001
04434-51012	E0320-002001	13	E004001
04434-51012	H1831-002003	22	H031003
04434-51012	T1110-007002	9	T003002
04434-51012	T1110-011002	9	T001002
04434-51012	T1110-012002	9	T002002
04434-51210	ALG00-001001	6	B011001
04434-51210	P1120-001001	18	P001001
04434-51212	M1130-001003	12	M003003
04434-51212	M1130-001003	15	M003003
04434-51410	K1110-010031	16	K011031
04434-51410	K1110-010042	46	K011042
04434-51412	H0340-003001	21	H015001
04434-51412	H0340-004001	18	H016001
04434-51412	H1831-001003	17	H030003
04434-51412	H1831-002003	17	H031003
04434-51512	D0200-001002	1	D002002
04434-51512	D0200-001002	7	D002002
04434-51512	D0200-001003	7	D002003
04434-51512	D0200-001003	11	D002003
04434-51512	D0200-001003	12	D002003
04434-51512	D0200-001003	15	D002003
04434-51512	D0200-001003	22	D002003
04434-51512	K0700-001002	10	K010002
04434-51512	K0700-001002	14	K010002
04434-51612	D0200-001003	41	D002003
04434-51708	K1110-010022	2	K011022
04434-51710	K1110-010042	43	K011042
04434-51712	D0200-001003	10	D002003
04434-51712	H1810-002001	6	H027001
04434-51712	H1810-003001	6	H028001
04434-51712	H1810-004001	6	H029001
04434-51712	T1110-007006	10	T003006
04434-51712	T1110-011004	10	T001004
04434-51712	T1110-012006	10	T002006
04434-51808	D0200-001003	35	D002003
04434-51810	D0200-001003	32	D002003
04434-51812	H0340-003001	2	H015001
04434-51812	H0340-004001	2	H016001
04434-51910	K1110-010031	12	K011031
04434-51912	K0700-001002	7	K010002
04434-52110	K0700-001003	6	K010003
04434-52110	K1110-010047	5	K011047
04434-52112	K0700-001002	22	K010002
04434-52112	K0700-001002	26	K010002
04434-52112	K0700-001003	3	K010003
04434-52112	K0700-001003	10	K010003
04434-52511	K1110-010022	1	K011022
04434-52511	K1110-010047	6	K011047
04434-52512	D0200-001002	11	D002002
04434-52512	D0200-001002	18	D002002
04434-52512	D0200-001002	22	D002002
04434-52512	D0200-001002	24	D002002
04434-52512	H1840-003002	24	H033002
04434-52512	H1840-004002	24	H034002
04434-52512	H1840-005002	24	H035002
04434-52512	H1840-005002	28	H035002
04434-52712	H0340-003001	9	H015001
04434-52712	H0340-004001	6	H016001
04434-52712	H1831-001003	11	H030003
04434-52712	H1831-002003	11	H031003
04434-52712	H1840-004002	7	H034002
04434-52712	H1840-005002	7	H035002
04434-53211	AWR00-001001	16	F005001
04434-53211	E0450-001001	18	E007001
04434-53211	K1110-010050	1	K011050
04434-53212	E0200-003001	19	E002001
04434-53212	H1810-002001	7	H027001
04434-53212	H1810-003001	7	H028001
04434-53212	H1810-004001	7	H029001
04434-53212	H1840-005002	36	H035002
04434-53212	K1110-010030	40	K011030
04434-53411	K1110-010031	5	K011031
04434-53411	K1110-010031	8	K011031
04434-53411	K1110-010031	22	K011031
04434-53411	K1110-010050	7	K011050
04434-53412	H1840-003002	4	H033002
04434-53412	H1840-004002	4	H034002
04434-53412	H1840-005002	4	H035002
04435-41210	K1110-050028	35	K011029c
04435-50810	T1110-007006	9	T003006
04435-50810	T1110-011004	9	T001004
04435-50810	T1110-012006	9	T002006
04435-51210	K1110-020029	34	K011029a
04435-51210	K1110-050030	34	K011029b
04435-51212	H1831-001003	4	H030003
04435-51212	H1831-002003	4	H031003
04435-51212	H1840-003002	7	H033002
04435-51212	H1840-004002	25	H034002
04435-51212	H1840-005002	25	H035002
04435-51212	H1840-005002	29	H035002
04435-51512	D0200-001002	4	D002002
04435-51512	D0200-001003	4	D002003
04435-51512	H1831-001003	22	H030003
04435-51612	H1810-002001	3	H027001
04435-51612	H1810-003001	3	H028001
04435-51612	H1810-004001	3	H029001
04435-51812	D0200-001003	1	D002003
04435-51812	D0200-001003	25	D002003
04435-51812	H1840-003002	14	H033002
04435-51812	H1840-003002	18	H033002
04435-51812	H1840-003002	21	H033002
04435-51812	H1840-004002	14	H034002
04435-51812	H1840-004002	18	H034002
04435-51812	H1840-004002	21	H034002
04435-51812	H1840-005002	14	H035002
04435-51812	H1840-005002	18	H035002
04435-51812	H1840-005002	21	H035002
04435-52112	K0700-001002	33	K010002
04435-52112	K0700-001002	36	K010002
04435-52112	K0700-001003	13	K010003
04435-52112	K0700-001003	14	K010003
04435-52112	K0700-001003	18	K010003
04530-11018	A9999-504001	10	B001001
04530-11018	A9999-504002	11	B001002
06000-06304	P1210-001002	22	P003002
06124-01616	K1110-010037	22	K011037
07000-01008	H1270-004003	9	H020003
07000-02105	N1310-001001	10	N003001
07000-03040	AWP00-001001	10	E006001
07000-11003	H0120-004022	12	H003022
07000-11003	H0120-005022	12	H002022
07000-11003	H0120-009022	12	H004022
07000-11003	H0120-010022	12	H005022
07000-11005	H0120-004010	15	H003010
07000-11005	H0120-004012	7	H003012
07000-11005	H0120-005010	15	H002010
07000-11005	H0120-005012	7	H002012
07000-11005	H0120-009010	15	H004010
07000-11005	H0120-009012	7	H004012
07000-11005	H0120-010010	15	H005010
07000-11005	H0120-010012	7	H005012
07000-11006	H0120-004004	1	H003004
07000-11006	H0120-004022	8	H003022
07000-11006	H0120-005004	1	H002004
07000-11006	H0120-005022	8	H002022
07000-11006	H0120-009004	1	H004004
07000-11006	H0120-009022	8	H004022

PARTS Nº	FIG. Nº	INDEX	PAGE
07000-11006	H0120-010004	1	H005004
07000-11006	H0120-010022	8	H005022
07000-11007	C0100-001001	7	C001001
07000-11007	H0120-004001	3	H003001
07000-11007	H0120-004008	18	H003008
07000-11007	H0120-004012	4	H003012
07000-11007	H0120-004018	21	H003018
07000-11007	H0120-004020	9	H003020
07000-11007	H0120-004021	7	H003021
07000-11007	H0120-004022	15	H003022
07000-11007	H0120-005001	3	H002001
07000-11007	H0120-005008	18	H002008
07000-11007	H0120-005012	4	H002012
07000-11007	H0120-005018	21	H002018
07000-11007	H0120-005020	9	H002020
07000-11007	H0120-005021	7	H002021
07000-11007	H0120-005022	15	H002022
07000-11007	H0120-009001	3	H004001
07000-11007	H0120-009008	18	H004008
07000-11007	H0120-009012	4	H004012
07000-11007	H0120-009018	21	H004018
07000-11007	H0120-009020	9	H004020
07000-11007	H0120-009021	7	H004021
07000-11007	H0120-009022	15	H004022
07000-11007	H0120-010001	3	H005001
07000-11007	H0120-010008	18	H005008
07000-11007	H0120-010012	4	H005012
07000-11007	H0120-010018	21	H005018
07000-11007	H0120-010020	9	H005020
07000-11007	H0120-010021	7	H005021
07000-11007	H0120-010022	15	H005022
07000-11007	N1210-001003	12	N002003
07000-11007	P1210-001001	27	P003001
07000-11008	A9999-504009	12	B001009
07000-11008	H0120-004002	9	H003002
07000-11008	H0120-004006	11	H003006
07000-11008	H0120-004009	8	H003009
07000-11008	H0120-004012	14	H003012
07000-11008	H0120-004023	15	H003023
07000-11008	H0120-004025	6	H003025
07000-11008	H0120-004026	10	H003026
07000-11008	H0120-005002	9	H002002
07000-11008	H0120-005006	11	H002006
07000-11008	H0120-005009	8	H002009
07000-11008	H0120-005012	14	H002012
07000-11008	H0120-005023	15	H002023
07000-11008	H0120-009002	9	H004002
07000-11008	H0120-009006	11	H004006
07000-11008	H0120-009009	8	H004009
07000-11008	H0120-009012	14	H004012
07000-11008	H0120-009023	15	H004023
07000-11008	H0120-009025	6	H004025
07000-11008	H0120-009026	10	H004026
07000-11008	H0120-010002	9	H005002
07000-11008	H0120-010006	11	H005006
07000-11008	H0120-010009	8	H005009
07000-11008	H0120-010012	14	H005012
07000-11008	H0120-010023	15	H005023
07000-11008	H0120-010025	6	H005025
07000-11008	H0120-010026	10	H005026
07000-11008	H0120-010028	6	H005028
07000-11008	H0120-010029	10	H005029
07000-11008	H1831-001001	23	H030001
07000-11008	H1831-002001	23	H031001
07000-11008	K1110-020028	21	K011028a
07000-11008	K1110-050029	21	K011028b
07000-11008	P1210-001003	29	P003003
07000-11009	H0120-004001	5	H003001
07000-11009	H0120-004019	8	H003019
07000-11009	H0120-004024	12	H003024
07000-11009	H0120-005001	5	H002001
07000-11009	H0120-005019	8	H002019
07000-11009	H0120-005024	12	H002024
07000-11009	H0120-009001	5	H004001
07000-11009	H0120-009019	8	H004019
07000-11009	H0120-009024	12	H004024
07000-11009	H0120-010001	5	H005001
07000-11009	H0120-010019	8	H005019
07000-11009	H0120-010024	12	H005024
07000-11010	H1831-001001	24	H030001
07000-11010	H1831-002001	24	H031001
07000-12010	H0120-004009	9	H003009
07000-12010	H0120-004018	6	H003018
07000-12010	H0120-005009	9	H002009
07000-12010	H0120-005018	6	H002018
07000-12010	H0120-009009	9	H004009
07000-12010	H0120-009018	6	H004018
07000-12010	H0120-010009	9	H005009
07000-12010	H0120-010018	6	H005018
07000-12011	H0120-004022	7	H003022
07000-12011	H0120-004029	21	H003029
07000-12011	H0120-005022	7	H002022
07000-12011	H0120-005026	21	H002026
07000-12011	H0120-009022	7	H004022
07000-12011	H0120-009029	21	H004029
07000-12011	H0120-010022	7	H005022
07000-12011	H0120-010032	21	H005032
07000-12011	H1831-001001	4	H030001
07000-12011	H1831-002001	4	H031001
07000-12011	K1110-020029	17	K011029a
07000-12011	K1110-020029	20	K011029a
07000-12011	K1110-020029	25	K011029a
07000-12011	K1110-050028	17	K011029c
07000-12011	K1110-050028	20	K011029c
07000-12011	K1110-050028	25	K011029c
07000-12011	K1110-050030	17	K011029b
07000-12011	K1110-050030	20	K011029b
07000-12011	K1110-050030	25	K011029b
07000-12011	P1210-001003	11	P003003
07000-12012	H0120-004002	8	H003002
07000-12012	H0120-004017	3	H003017
07000-12012	H0120-004018	8	H003018
07000-12012	H0120-005002	8	H002002
07000-12012	H0120-005017	3	H002017
07000-12012	H0120-005018	8	H002018
07000-12012	H0120-009002	8	H004002
07000-12012	H0120-009017	3	H004017
07000-12012	H0120-009018	8	H004018
07000-12012	H0120-010002	8	H005002
07000-12012	H0120-010017	3	H005017
07000-12012	H0120-010018	8	H005018
07000-12012	K1110-020028	22	K011028a
07000-12012	K1110-050029	22	K011028b
07000-12014	H0120-004008	16	H003008
07000-12014	H0120-005008	16	H002008
07000-12014	H0120-009008	16	H004008
07000-12014	H0120-010008	16	H005008
07000-12014	H1270-004005	12	H020005
07000-12014	P1210-001003	9	P003003
07000-12014	P1210-001003	39	P003003
07000-12015	H0120-004018	16	H003018
07000-12015	H0120-005018	16	H002018
07000-12015	H0120-009018	16	H004018
07000-12015	H0120-010018	16	H005018
07000-12015	K1110-010026	27	K011026
07000-12015	K1110-010035	6	K011035
07000-12015	K1110-010041	6	K011041
07000-12016	H0120-004008	4	H003008
07000-12016	H0120-004018	11	H003018
07000-12016	H0120-005008	4	H002008
07000-12016	H0120-005018	11	H002018
07000-12016	H0120-009008	4	H004008
07000-12016	H0120-009018	11	H004018
07000-12016	H0120-010008	4	H005008
07000-12016	H0120-010018	11	H005018
07000-12016	H1831-001001	3	H030001
07000-12016	H1831-002001	3	H031001
07000-12018	K1110-010025	20	K011025
07000-12018	K1110-010026	22	K011026
07000-12018	K1110-010035	4	K011035

PARTS Nº	FIG. Nº	INDEX	PAGE
07000-12018	K1110-010041	4	K011041
07000-12018	P1210-001001	25	P003001
07000-12018	P1210-001003	12	P003003
07000-12018	P1210-001003	30	P003003
07000-12018	V0100-002001	14	V001001
07000-12022	H0120-004009	7	H003009
07000-12022	H0120-004012	17	H003012
07000-12022	H0120-005009	7	H002009
07000-12022	H0120-005012	17	H002012
07000-12022	H0120-009009	7	H004009
07000-12022	H0120-009012	17	H004012
07000-12022	H0120-010009	7	H005009
07000-12022	H0120-010012	17	H005012
07000-12032	P1210-001003	24	P003003
07000-12045	R0200-002001	9	R002001
07000-12080	N1210-001001	25	N002001
07000-12085	AFP10-001001	8	D002001
07000-12085	H0311-001001	2	H010001
07000-12090	H1270-004005	11	H020005
07000-12110	N1210-001002	40	N002002
07000-12120	H0120-004009	4	H003009
07000-12120	H0120-004012	15	H003012
07000-12120	H0120-005009	4	H002009
07000-12120	H0120-005012	15	H002012
07000-12120	H0120-009009	4	H004009
07000-12120	H0120-009012	15	H004012
07000-12120	H0120-010009	4	H005009
07000-12120	H0120-010012	15	H005012
07000-12130	N1210-001002	41	N002002
07000-12145	N1210-001002	17	N002002
07000-13022	T1210-013002	6	T008002
07000-13022	T1210-014002	6	T009002
07000-13024	H0120-004004	8	H003004
07000-13024	H0120-004012	12	H003012
07000-13024	H0120-004027	2	H003027
07000-13024	H0120-005004	8	H002004
07000-13024	H0120-005012	12	H002012
07000-13024	H0120-009004	8	H004004
07000-13024	H0120-009012	12	H004012
07000-13024	H0120-009027	2	H004027
07000-13024	H0120-010004	8	H005004
07000-13024	H0120-010012	12	H005012
07000-13024	H0120-010027	2	H005027
07000-13024	H0120-010030	2	H005030
07000-13024	N1210-001002	8	N002002
07000-13025	H0120-004028	10	H003028
07000-13025	H0120-005025	10	H002025
07000-13025	H0120-009028	10	H004028
07000-13025	H0120-010030	10	H005030
07000-13025	H1270-004001	5	H020001
07000-13025	H1270-004001	7	H020001
07000-13025	H1270-004002	8	H020002
07000-13025	H1270-004002	10	H020002
07000-13025	H1270-004002	25	H020002
07000-13025	KIT	K03	Y001001
07000-13025	KIT	K04	Y001001
07000-13025	KIT	K05	Y001001
07000-13025	KIT	K06	Y001001
07000-13025	T1110-007003	7	T003003
07000-13025	T1110-007004	6	T003004
07000-13025	T1110-007004	16	T003004
07000-13025	T1110-011003	7	T001003
07000-13025	T1110-012003	7	T002003
07000-13025	T1110-012004	6	T002004
07000-13025	T1110-012004	16	T002004
07000-13025	T1120-004001	32	T004001
07000-13025	T1120-004002	32	T004002
07000-13025	T1140-004001	40	T006001
07000-13025	T1210-014003	5	T009003
07000-13025	T1210-014003	14	T009003
07000-13025	T1210-014003	22	T009003
07000-13025	T1220-003001	37	T010001
07000-13030	H0120-004018	17	H003018
07000-13030	H0120-005018	17	H002018
07000-13030	H0120-009018	17	H004018
07000-13030	H0120-010018	17	H005018
07000-13031	T1210-014003	17	T009003
07000-13032	H0320-002001	2	H012001
07000-13032	H0330-001001	7	H013001
07000-13032	H0330-002001	7	H014001
07000-13035	C0100-001002	3	C001002
07000-13035	C0100-001003	2	C001003
07000-13035	C0100-001003	6	C001003
07000-13042	H0120-004007	14	H003007
07000-13042	H0120-005007	14	H002007
07000-13042	H0120-009007	14	H004007
07000-13042	H0120-010007	14	H005007
07000-13042	H1270-004001	22	H020001
07000-13042	N1210-001003	11	N002003
07000-13048	H1270-004001	23	H020001
07000-13048	R0110-001001	9	R001001
07000-13050	D0100-003001	8	D001001
07000-15070	KIT	K04	Y001001
07000-15070	KIT	K06	Y001001
07000-15070	T1140-004001	30	T006001
07000-15080	N1310-001001	3	N003001
07000-15085	KIT	K05	Y001001
07000-15085	T1220-003001	14	T010001
07000-15095	KIT	K03	Y001001
07000-15095	T1120-004001	15	T004001
07000-15095	T1120-004002	15	T004002
07000-15100	KIT	K06	Y001001
07000-15105	KIT	K04	Y001001
07000-15105	T1140-004001	9	T006001
07000-15105	T1140-004001	19	T006001
07000-15155	H0110-002001	8	H001001
07000-15155	V0100-002001	2	V001001
07000-15180	H0110-002001	15	H001001
07000-72070	ALC00-001001	5	C003001
07000-A2145	A9999-504007	12	B001007
07000-A5165	A9999-504002	5	B001002
07000-B1003	A9999-504003	11	B001003
07000-B1008	A9999-504009	2	B001009
07000-B1009	A9999-504001	4	B001001
07000-B1009	A9999-504008	10	B001008
07000-B2011	A9999-504006	21	B001006
07000-B2012	A9999-504001	9	B001001
07000-B3034	A9999-504006	17	B001006
07000-B3034	A9999-504007	2	B001007
07000-B3045	A9999-504006	22	B001006
07000-B3045	A9999-504007	6	B001007
07000-E2065	C0100-001005	7	C001005
07000-F2016	N1210-001003	3	N002003
07001-01003	A9999-504003	12	B001003
07001-01005	H0120-004012	8	H003012
07001-01005	H0120-005012	8	H002012
07001-01005	H0120-009012	8	H004012
07001-01005	H0120-010012	8	H005012
07001-01007	H0120-004001	4	H003001
07001-01007	H0120-004008	19	H003008
07001-01007	H0120-004012	5	H003012
07001-01007	H0120-005001	4	H002001
07001-01007	H0120-005008	19	H002008
07001-01007	H0120-005012	5	H002012
07001-01007	H0120-009001	4	H004001
07001-01007	H0120-009008	19	H004008
07001-01007	H0120-009012	5	H004012
07001-01007	H0120-010001	4	H005001
07001-01007	H0120-010008	19	H005008
07001-01007	H0120-010012	5	H005012
07001-01008	A9999-504009	3	B001009
07001-01009	A9999-504008	11	B001008
07001-01009	H0120-004001	6	H003001
07001-01009	H0120-005001	6	H002001
07001-01009	H0120-009001	6	H004001
07001-01009	H0120-010001	6	H005001
07001-02010	H0120-004018	7	H003018
07001-02010	H0120-005018	7	H002018
07001-02010	H0120-009018	7	H004018
07001-02010	H0120-010018	7	H005018

PARTS Nº	FIG. Nº	INDEX	PAGE
07001-02012	H0120-004017	4	H003017
07001-02012	H0120-004018	9	H003018
07001-02012	H0120-005017	4	H002017
07001-02012	H0120-005018	9	H002018
07001-02012	H0120-009017	4	H004017
07001-02012	H0120-009018	9	H004018
07001-02012	H0120-010017	4	H005017
07001-02012	H0120-010018	9	H005018
07002-01423	H1833-001001	6	H032001
07002-01423	H1833-001001	13	H032001
07002-10823	H0120-004022	13	H003022
07002-10823	H0120-004023	9	H003023
07002-10823	H0120-005022	13	H002022
07002-10823	H0120-005023	9	H002023
07002-10823	H0120-009022	13	H004022
07002-10823	H0120-009023	9	H004023
07002-10823	H0120-010022	13	H005022
07002-10823	H0120-010023	9	H005023
07002-11023	H0120-004001	8	H003001
07002-11023	H0120-004008	7	H003008
07002-11023	H0120-004012	9	H003012
07002-11023	H0120-004019	7	H003019
07002-11023	H0120-004020	8	H003020
07002-11023	H0120-004021	5	H003021
07002-11023	H0120-004024	15	H003024
07002-11023	H0120-005001	8	H002001
07002-11023	H0120-005008	7	H002008
07002-11023	H0120-005012	9	H002012
07002-11023	H0120-005019	7	H002019
07002-11023	H0120-005020	8	H002020
07002-11023	H0120-005021	5	H002021
07002-11023	H0120-005024	15	H002024
07002-11023	H0120-009001	8	H004001
07002-11023	H0120-009008	7	H004008
07002-11023	H0120-009012	9	H004012
07002-11023	H0120-009019	7	H004019
07002-11023	H0120-009020	8	H004020
07002-11023	H0120-009021	5	H004021
07002-11023	H0120-009024	15	H004024
07002-11023	H0120-010001	8	H005001
07002-11023	H0120-010008	7	H005008
07002-11023	H0120-010012	9	H005012
07002-11023	H0120-010019	7	H005019
07002-11023	H0120-010020	8	H005020
07002-11023	H0120-010021	5	H005021
07002-11023	H0120-010024	15	H005024
07002-11023	N1210-001004	3	N002004
07002-11023	T1110-007004	10	T003004
07002-11023	T1110-012004	10	T002004
07002-11223	H0120-004006	8	H003006
07002-11223	H0120-004030	18	H003030
07002-11223	H0120-005006	8	H002006
07002-11223	H0120-005027	18	H002027
07002-11223	H0120-009006	8	H004006
07002-11223	H0120-009030	18	H004030
07002-11223	H0120-010006	8	H005006
07002-11223	H0120-010033	18	H005033
07002-11223	H0210-002001	19	H008001
07002-11223	H0210-003001	24	H009001
07002-11223	N1210-001002	10	N002002
07002-11423	C0100-001005	37	C001005
07002-11423	D0200-001001	5	D002001
07002-11423	D0200-001001	9	D002001
07002-11423	D0200-001005	9	D002005
07002-11423	H0120-004001	10	H003001
07002-11423	H0120-004008	9	H003008
07002-11423	H0120-004012	3	H003012
07002-11423	H0120-004023	6	H003023
07002-11423	H0120-004024	5	H003024
07002-11423	H0120-004029	4	H003029
07002-11423	H0120-004029	7	H003029
07002-11423	H0120-004029	12	H003029
07002-11423	H0120-004029	15	H003029
07002-11423	H0120-004029	19	H003029
07002-11423	H0120-004029	24	H003029
07002-11423	H0120-004029	27	H003029
07002-11423	H0120-004029	30	H003029
07002-11423	H0120-004030	3	H003030
07002-11423	H0120-004030	6	H003030
07002-11423	H0120-004030	10	H003030
07002-11423	H0120-004030	13	H003030
07002-11423	H0120-004030	16	H003030
07002-11423	H0120-004030	22	H003030
07002-11423	H0120-004030	28	H003030
07002-11423	H0120-004030	31	H003030
07002-11423	H0120-005012	3	H002012
07002-11423	H0120-005023	6	H002023
07002-11423	H0120-005024	5	H002024
07002-11423	H0120-005026	4	H002026
07002-11423	H0120-005026	7	H002026
07002-11423	H0120-005026	12	H002026
07002-11423	H0120-005026	15	H002026
07002-11423	H0120-005026	19	H002026
07002-11423	H0120-005026	24	H002026
07002-11423	H0120-005026	27	H002026
07002-11423	H0120-005026	30	H002026
07002-11423	H0120-005027	3	H002027
07002-11423	H0120-005027	6	H002027
07002-11423	H0120-005027	10	H002027
07002-11423	H0120-005027	13	H002027
07002-11423	H0120-005027	16	H002027
07002-11423	H0120-005027	23	H002027
07002-11423	H0120-005027	29	H002027
07002-11423	H0120-005027	32	H002027
07002-11423	H0120-009001	10	H004001
07002-11423	H0120-009008	9	H004008
07002-11423	H0120-009012	3	H004012
07002-11423	H0120-009023	6	H004023
07002-11423	H0120-009024	5	H004024
07002-11423	H0120-009029	4	H004029
07002-11423	H0120-009029	7	H004029
07002-11423	H0120-009029	12	H004029
07002-11423	H0120-009029	15	H004029
07002-11423	H0120-009029	19	H004029
07002-11423	H0120-009029	24	H004029
07002-11423	H0120-009029	27	H004029
07002-11423	H0120-009029	30	H004029
07002-11423	H0120-009030	3	H004030
07002-11423	H0120-009030	6	H004030
07002-11423	H0120-009030	10	H004030
07002-11423	H0120-009030	13	H004030
07002-11423	H0120-009030	16	H004030
07002-11423	H0120-009030	22	H004030
07002-11423	H0120-009030	28	H004030
07002-11423	H0120-009030	31	H004030
07002-11423	H0120-010001	10	H005001
07002-11423	H0120-010008	9	H005008
07002-11423	H0120-010012	3	H005012
07002-11423	H0120-010023	6	H005023
07002-11423	H0120-010024	5	H005024
07002-11423	H0120-010032	4	H005032
07002-11423	H0120-010032	7	H005032
07002-11423	H0120-010032	12	H005032
07002-11423	H0120-010032	15	H005032
07002-11423	H0120-010032	19	H005032
07002-11423	H0120-010032	24	H005032
07002-11423	H0120-010032	27	H005032
07002-11423	H0120-010032	30	H005032
07002-11423	H0120-010033	3	H005033
07002-11423	H0120-010033	6	H005033
07002-11423	H0120-010033	10	H005033
07002-11423	H0120-010033	13	H005033
07002-11423	H0120-010033	16	H005033
07002-11423	H0120-010033	22	H005033
07002-11423	H0120-010033	28	H005033
07002-11423	H0120-010033	31	H005033

PARTS Nº	FIG. Nº	INDEX	PAGE
07002-11423	H0210-002001	3	H008001
07002-11423	H0210-002001	6	H008001
07002-11423	H0210-002001	9	H008001
07002-11423	H0210-003001	3	H009001
07002-11423	H0210-003001	6	H009001
07002-11423	H0210-003001	9	H009001
07002-11423	H1270-006001	5	H019001
07002-11423	H1831-001002	4	H030002
07002-11423	H1831-001002	6	H030002
07002-11423	H1831-001002	17	H030002
07002-11423	H1831-001003	14	H030003
07002-11423	H1831-002002	4	H031002
07002-11423	H1831-002002	6	H031002
07002-11423	H1831-002002	17	H031002
07002-11423	H1831-002003	14	H031003
07002-11423	H1833-001001	5	H032001
07002-11423	H1833-001001	12	H032001
07002-11423	H1833-001001	19	H032001
07002-11423	K1110-010026	25	K011026
07002-11423	K1110-010035	9	K011035
07002-11423	K1110-010041	9	K011041
07002-11423	K1110-010051	6	K011051
07002-11423	K1110-010051	9	K011051
07002-11423	K1110-010051	15	K011051
07002-11423	K1110-010051	18	K011051
07002-11423	K1110-020052	6	K011051a
07002-11423	K1110-020052	9	K011051a
07002-11423	K1110-020052	12	K011051a
07002-11423	K1110-020052	19	K011051a
07002-11423	K1110-020052	22	K011051a
07002-11423	K1110-020052	25	K011051a
07002-11423	K1110-050053	6	K011051b
07002-11423	K1110-050053	9	K011051b
07002-11423	K1110-050053	12	K011051b
07002-11423	K1110-050053	19	K011051b
07002-11423	K1110-050053	22	K011051b
07002-11423	K1110-050053	25	K011051b
07002-11423	N1210-001002	12	N002002
07002-11423	N1210-001005	18	N002005
07002-11423	N1310-001002	24	N003002
07002-11423	N1310-001002	27	N003002
07002-11423	P1120-001001	8	P001001
07002-11623	H0120-004005	4	H003005
07002-11623	H0120-004019	5	H003019
07002-11623	H0120-004022	5	H003022
07002-11623	H0120-004024	8	H003024
07002-11623	H0120-004026	9	H003026
07002-11623	H0120-005005	4	H002005
07002-11623	H0120-005019	5	H002019
07002-11623	H0120-005022	5	H002022
07002-11623	H0120-005024	8	H002024
07002-11623	H0120-009005	4	H004005
07002-11623	H0120-009019	5	H004019
07002-11623	H0120-009022	5	H004022
07002-11623	H0120-009024	8	H004024
07002-11623	H0120-009026	9	H004026
07002-11623	H0120-010005	4	H005005
07002-11623	H0120-010019	5	H005019
07002-11623	H0120-010022	5	H005022
07002-11623	H0120-010024	8	H005024
07002-11623	H0120-010026	9	H005026
07002-11623	H0120-010029	9	H005029
07002-11623	N1210-001001	31	N002001
07002-11623	V0100-002001	15	V001001
07002-11823	H0120-004008	12	H003008
07002-11823	H0120-005008	12	H002008
07002-11823	H0120-009008	12	H004008
07002-11823	H0120-010008	12	H005008
07002-11823	H1831-001002	12	H030002
07002-11823	H1831-002002	12	H031002
07002-11823	N1210-001002	16	N002002
07002-12034	A9999-504009	11	B001009
07002-12034	C0100-001004	8	C001004
07002-12034	D0100-003001	16	D001001
07002-12034	H0120-004016	4	H003016
07002-12034	H0120-005016	4	H002016
07002-12034	H0120-009016	4	H004016
07002-12034	H0120-010016	4	H005016
07002-12034	H0340-003001	17	H015001
07002-12034	H0340-004001	14	H016001
07002-12034	H1210-002001	15	H017001
07002-12034	H1270-004003	2	H020003
07002-12034	H1831-001002	10	H030002
07002-12034	H1831-001002	15	H030002
07002-12034	H1831-001002	20	H030002
07002-12034	H1831-001004	12	H030004
07002-12034	H1831-002002	10	H031002
07002-12034	H1831-002002	15	H031002
07002-12034	H1831-002002	20	H031002
07002-12034	KIT	K04	Y001001
07002-12034	N1210-001005	4	N002005
07002-12034	N1210-001005	6	N002005
07002-12034	N1210-001005	9	N002005
07002-12034	N1210-001005	15	N002005
07002-12034	N1310-001002	17	N003002
07002-12034	N1310-001002	20	N003002
07002-12034	P1120-001001	5	P001001
07002-12034	T1140-004001	34	T006001
07002-12434	H0110-002001	25	H001001
07002-12434	H0120-004004	14	H003004
07002-12434	H0120-004011	6	H003011
07002-12434	H0120-004011	14	H003011
07002-12434	H0120-004014	4	H003014
07002-12434	H0120-004026	4	H003026
07002-12434	H0120-004030	24	H003030
07002-12434	H0120-004032	2	H003032
07002-12434	H0120-004032	5	H003032
07002-12434	H0120-004033	2	H003033
07002-12434	H0120-004033	5	H003033
07002-12434	H0120-004033	8	H003033
07002-12434	H0120-004033	12	H003033
07002-12434	H0120-004034	2	H003034
07002-12434	H0120-004034	5	H003034
07002-12434	H0120-005004	14	H002004
07002-12434	H0120-005011	6	H002011
07002-12434	H0120-005011	14	H002011
07002-12434	H0120-005014	4	H002014
07002-12434	H0120-005027	25	H002027
07002-12434	H0120-005028	2	H002028
07002-12434	H0120-005028	5	H002028
07002-12434	H0120-005029	2	H002029
07002-12434	H0120-005029	5	H002029
07002-12434	H0120-005029	8	H002029
07002-12434	H0120-005029	12	H002029
07002-12434	H0120-005030	2	H002030
07002-12434	H0120-005030	5	H002030
07002-12434	H0120-009004	14	H004004
07002-12434	H0120-009011	6	H004011
07002-12434	H0120-009011	14	H004011
07002-12434	H0120-009014	4	H004014
07002-12434	H0120-009026	4	H004026
07002-12434	H0120-009030	24	H004030
07002-12434	H0120-009031	2	H004031
07002-12434	H0120-009031	5	H004031
07002-12434	H0120-009032	2	H004032
07002-12434	H0120-009032	5	H004032
07002-12434	H0120-009032	8	H004032
07002-12434	H0120-009032	12	H004032
07002-12434	H0120-009033	2	H004033
07002-12434	H0120-009033	5	H004033
07002-12434	H0120-010004	14	H005004
07002-12434	H0120-010011	6	H005011
07002-12434	H0120-010011	14	H005011
07002-12434	H0120-010014	4	H005014
07002-12434	H0120-010026	4	H005026
07002-12434	H0120-010029	4	H005029
07002-12434	H0120-010033	24	H005033
07002-12434	H0120-010034	2	H005034
07002-12434	H0120-010034	5	H005034
07002-12434	H0120-010035	2	H005035

PARTS Nº	FIG. Nº	INDEX	PAGE
07002-12434	H0120-010035	5	H005035
07002-12434	H0120-010035	8	H005035
07002-12434	H0120-010035	12	H005035
07002-12434	H0120-010036	2	H005036
07002-12434	H0120-010036	5	H005036
07002-12434	H0210-002001	12	H008001
07002-12434	H0210-002001	15	H008001
07002-12434	H0210-003001	12	H009001
07002-12434	H0210-003001	15	H009001
07002-12434	H0210-003001	20	H009001
07002-12434	H0312-001001	3	H011001
07002-12434	H0312-001001	7	H011001
07002-12434	H0320-002001	16	H012001
07002-12434	H0330-001001	11	H013001
07002-12434	H0340-003001	11	H015001
07002-12434	H0340-003001	14	H015001
07002-12434	H0340-004001	8	H016001
07002-12434	H0340-004001	11	H016001
07002-12434	H1210-002001	17	H017001
07002-12434	H1220-002001	4	H018001
07002-12434	H1220-002001	6	H018001
07002-12434	H1220-002001	10	H018001
07002-12434	H1220-002001	13	H018001
07002-12434	H1270-004001	2	H020001
07002-12434	H1270-004001	34	H020001
07002-12434	H1270-004001	37	H020001
07002-12434	H1270-004002	24	H020002
07002-12434	H1270-004005	29	H020005
07002-12434	H1270-006001	2	H019001
07002-12434	H1272-001001	2	H021001
07002-12434	H1272-001001	12	H021001
07002-12434	H1272-001001	15	H021001
07002-12434	N1210-001001	29	N002001
07002-12434	N1210-001003	4	N002003
07002-12434	N1210-001005	12	N002005
07002-12434	N1310-001002	11	N003002
07002-12434	N1310-001002	14	N003002
07002-12434	N1310-001002	29	N003002
07002-12434	N1310-001002	32	N003002
07002-12434	P1120-001001	2	P001001
07002-12434	V0100-002001	13	V001001
07002-13034	T1110-007004	8	T003004
07002-13034	T1110-012004	8	T002004
07002-13334	H0120-004007	5	H003007
07002-13334	H0120-005007	5	H002007
07002-13334	H0120-009007	5	H004007
07002-13334	H0120-010007	5	H005007
07002-13334	H0320-002001	13	H012001
07002-13334	H0330-001001	2	H013001
07002-13334	H0330-001001	5	H013001
07002-13334	H0330-002001	2	H014001
07002-13334	H0330-002001	5	H014001
07002-13334	H1270-004005	16	H020005
07002-13334	T1210-014003	16	T009003
07002-13334	T1210-014003	30	T009003
07002-13634	H0120-004015	2	H003015
07002-13634	H0120-005015	2	H002015
07002-13634	H0120-009015	2	H004015
07002-13634	H0120-010015	2	H005015
07002-22034	AFH00-001001	5	B006001
07002-61023	A9999-504001	8	B001001
07002-61023	A9999-504002	10	B001002
07002-61423	A9999-504009	4	B001009
07002-61823	H0120-004028	13	H003028
07002-61823	H0120-005025	13	H002025
07002-61823	H0120-009028	13	H004028
07002-61823	H0120-010030	13	H005030
07002-62434	A9999-504001	6	B001001
07002-62434	A9999-504001	12	B001001
07002-62434	A9999-504008	13	B001008
07002-62434	ALC00-001001	14	C003001
07002-62434	ALF00-001001	6	C002001
07003-01015	ATP00-002001	6	A013001
07005-00812	AFF10-002001	4	D006001
07005-00812	B9999-512001	4	D007001
07005-01212	AFT00-002001	18	D001001
07005-01412	AFF20-001001	4	D005001
07005-01412	AFT00-002001	16	D001001
07005-01412	ATP00-002001	4	A013001
07005-01412	D0200-001001	11	D002001
07005-01412	D0200-001001	18	D002001
07005-01412	D0200-001005	11	D002005
07005-02216	AFH00-001001	7	B006001
07005-02216	ARD00-001001	4	B010001
07005-02416	AFH00-001001	9	B006001
07005-03016	H0210-002001	17	H008001
07005-03016	H0210-003001	22	H009001
07012-00145	N1210-001001	26	N002001
07020-00000	N1110-001001	3	N001001
07020-00000	T1120-004001	5	T004001
07020-00000	T1120-004002	5	T004002
07020-00000	T1210-013001	6	T008001
07020-00000	T1210-013002	23	T008002
07020-00000	T1210-014001	8	T009001
07020-00000	T1210-014002	23	T009002
07020-00000	T1230-004001	11	T011001
07020-00000	T1230-004001	15	T011001
07020-00000	T1230-004001	20	T011001
07020-00000	V0100-002001	10	V001001
07020-00675	T1210-013002	11	T008002
07020-00675	T1210-014002	11	T009002
07020-00675	T1220-003001	5	T010001
07020-00675	T1220-003001	8	T010001
07020-00675	V0100-002001	12	V001001
07020-00900	R0110-001002	11	R001002
07020-00900	T1110-007006	6	T003006
07020-00900	T1110-011004	6	T001004
07020-00900	T1110-012006	6	T002006
07020-00900	V0100-002001	11	V001001
07030-03034	H0210-002001	16	H008001
07030-03034	H0210-003001	21	H009001
07040-11007	T1110-007004	9	T003004
07040-11007	T1110-012004	9	T002004
07040-11209	H0210-002001	18	H008001
07040-11209	H0210-003001	23	H009001
07040-11409	C0100-001005	38	C001005
07040-11409	D0200-001005	8	D002005
07040-11612	N1210-001001	30	N002001
07040-12012	AFH00-001001	4	B006001
07040-12412	H0210-002001	14	H008001
07040-12412	H0210-003001	19	H009001
07040-12412	H1270-006001	1	H019001
07040-12414	A9999-504001	11	B001001
07040-13016	T1110-007004	7	T003004
07040-13016	T1110-012004	7	T002004
07042-20108	ATB00-002001	2	A011001
07042-70312	ABB00-001003	12	B013003
07043-70108	ABB00-001003	21	B013003
07043-70312	A5010-001001	3	E007001
07043-70617	N1210-001004	10	N002004
07043-A0108	D0100-003001	4	D001001
07044-12412	A9999-504001	5	B001001
07044-12412	H0110-002001	24	H001001
07046-21210	AGL00-001001	9	B011001
07046-23016	AOB10-001001	1	B015001
07046-41008	APP10-001005	5	G003005
07046-41810	ABB00-001003	20	B013003
07046-41810	APP10-001005	6	G003005
07046-42216	ABB00-001003	8	B013003
07046-42216	APP10-001005	7	G003005
07046-42516	ABB00-001003	9	B013003
07046-42516	APP10-001005	8	G003005
07046-43016	ABB00-001003	10	B013003
07046-44016	ABB00-001003	11	B013003
07048-01310	K1110-010024	5	K011024
07049-01012	H0120-004028	4	H003028
07049-01012	H0120-004028	11	H003028
07049-01012	H0120-005025	4	H002025
07049-01012	H0120-005025	11	H002025
07049-01012	H0120-009028	4	H004028

PARTS Nº	FIG. Nº	INDEX	PAGE
07049-01012	H0120-009028	11	H004028
07049-01012	H0120-010030	4	H005030
07049-01012	H0120-010030	11	H005030
07049-01215	H0120-004013	13	H003013
07049-01215	H0120-005013	13	H002013
07049-01215	H0120-009013	13	H004013
07049-01215	N1210-001004	6	N002004
07049-01620	J1310-002001	15	J003001
07049-01620	N1210-001001	32	N002001
07049-02025	N1210-001001	34	N002001
07049-03645	M1510-001001	19	M012001
07056-18425	D0100-003001	14	D001001
07069-23200	H0110-002001	5	H001001
07095-00317	E0450-001001	19	E007001
07095-20318	D0200-001002	12	D002002
07095-20318	D0200-001002	19	D002002
07095-20318	D0200-001002	23	D002002
07095-20318	D0200-001002	25	D002002
07095-20523	AWR00-001001	17	F005001
07095-20523	E0200-003001	22	E002001
07095-40523	K1110-010030	39	K011030
07097-20614	T1210-014003	1	T009003
07145-00060	T1230-004001	5	T011001
07145-00060	T1230-004001	10	T011001
07145-00065	KIT	K05	Y001001
07145-00065	T1220-003001	4	T010001
07145-00065	T1230-004001	4	T011001
07145-00065	T1230-004001	9	T011001
07145-00070	KIT	K03	Y001001
07145-00070	KIT	K04	Y001001
07145-00070	KIT	K06	Y001001
07145-00070	T1110-007001	13	T003001
07145-00070	T1110-007001	14	T003001
07145-00070	T1110-011001	9	T001001
07145-00070	T1110-011001	10	T001001
07145-00070	T1110-012001	11	T002001
07145-00070	T1110-012001	12	T002001
07145-00070	T1120-004001	4	T004001
07145-00070	T1120-004001	7	T004001
07145-00070	T1120-004002	4	T004002
07145-00070	T1120-004002	7	T004002
07145-00070	T1140-004001	4	T006001
07145-00070	T1140-004001	6	T006001
07145-00070	T1210-013002	19	T008002
07145-00070	T1210-014002	19	T009002
07155-00615	R0110-001002	2	R001002
07177-06030	R0110-001002	16	R001002
07179-12079	T1220-003001	11	T010001
07179-12084	T1120-004001	10	T004001
07179-12084	T1120-004002	10	T004002
07179-13089	T1140-004001	16	T006001
07206-30812	AFT00-002001	17	D001001
07206-31014	AFF20-001001	3	D005001
07206-31014	ATP00-002001	5	A013001
07206-31014	D0200-001001	10	D002001
07206-31014	D0200-001001	17	D002001
07206-31014	D0200-001005	12	D002005
07238-10630	N1210-001004	9	N002004
07260-08732	H0311-001001	7	H010001
07260-20936	A9999-003001	2	B002001
07270-00830	D0200-001005	6	D002005
07270-01053	D0200-001003	44	D002003
07270-61410	H0110-002001	26	H001001
07280-04726	K1110-010024	4	K011024
07281-00259	ALC00-001001	11	C003001
07281-00609	A9530-001001	6	E008001
07281-00709	AOB00-001001	3	A002001
07283-32236	T1140-004001	45	T006001
07283-33442	C0100-001003	10	C001003
07283-35150	C0100-001005	13	C001005
07283-38973	H1270-004003	17	H020003
07285-00100	D0200-001005	7	D002005
07285-00115	D0200-001003	45	D002003
07285-00150	A9999-003001	3	B002001
07285-00155	H0110-002001	27	H001001
07285-00180	ABR00-001001	9	A003001
07285-00200	ABR00-001001	5	A003001
07285-00200	H0210-003001	18	H009001
07285-00220	ABR00-001001	4	A003001
07286-01641	H0210-003001	17	H009001
07286-01664	ABR00-001001	8	A003001
07286-03828	K1110-010024	3	K011024
07289-00045	C0100-001005	18	C001005
07289-00055	C0100-001005	17	C001005
07289-00055	C0100-001005	20	C001005
07299-00080	B0200-001002	13	B004002
07299-00095	B0200-001002	14	B004002
07371-30500	T1210-013002	3	T008002
07371-30500	T1210-014002	3	T009002
07371-30640	H1270-004001	8	H020001
07371-30640	H1270-004001	11	H020001
07371-30640	H1270-004002	1	H020002
07371-30640	H1270-004002	4	H020002
07371-30640	H1270-004002	11	H020002
07371-30640	H1270-004002	14	H020002
07371-30640	H1270-004002	26	H020002
07371-30640	H1270-004002	29	H020002
07371-30640	T1110-007003	8	T003003
07371-30640	T1110-007004	3	T003004
07371-30640	T1110-007004	13	T003004
07371-30640	T1110-011003	8	T001003
07371-30640	T1110-012003	8	T002003
07371-30640	T1110-012004	3	T002004
07371-30640	T1110-012004	13	T002004
07371-30640	T1210-014003	2	T009003
07371-30640	T1210-014003	11	T009003
07372-21035	H1270-004001	9	H020001
07372-21035	H1270-004001	12	H020001
07372-21035	H1270-004002	2	H020002
07372-21035	H1270-004002	5	H020002
07372-21035	H1270-004002	15	H020002
07372-21035	H1270-004002	27	H020002
07372-21035	H1270-004002	30	H020002
07372-21035	T1110-007003	9	T003003
07372-21035	T1110-007004	4	T003004
07372-21035	T1110-007004	14	T003004
07372-21035	T1110-011003	9	T001003
07372-21035	T1110-012003	9	T002003
07372-21035	T1110-012004	4	T002004
07372-21035	T1110-012004	14	T002004
07372-21035	T1120-004001	35	T004001
07372-21035	T1120-004002	35	T004002
07372-21035	T1140-004001	43	T006001
07372-21035	T1210-014003	3	T009003
07372-21035	T1210-014003	12	T009003
07372-21035	T1220-003001	31	T010001
07372-21240	D0200-001005	1	D002005
07376-70522	H1272-001001	18	H021001
07700-50240	D0100-003001	2	D001001
07700-50240	D0200-001003	39	D002003
07750-01628	T1140-004001	33	T006001
07950-10450	V0300-001001	6	V002001
07950-90403	V0300-001001	8	V002001
07951-41017	V0300-001001	7	V002001
07952-70004	V0300-001001	6	V002001
08000-00000	E0100-001001	2	E001001
08000-00001	E0100-001001	3	E001001
08017-B0701	K1110-010010	14	K011010
08020-20000	K1110-010030	26	K011030
08028-42030	E0200-003003	37	E002003
08028-42040	E0200-003003	33	E002003
08028-43030	K1110-010031	26	K011031
08028-62035	E0100-001001	9	E001001
08028-CB050	K1110-010030	38	K011030
08034-00536	K1110-010048	13	K011048
08034-00823	P1120-001001	22	P001001
08034-20414	AFT00-002001	3	D001001
08034-20414	K1110-010007	9	K011007
08034-20414	K1110-010008	3	K011008

PARTS Nº	FIG. Nº	INDEX	PAGE
08034-20414	K1110-010010	4	K011010
08034-20414	K1110-010010	15	K011010
08034-20414	K1110-010021	10	K011021
08034-20414	K1110-010022	6	K011022
08034-20414	K1110-010023	33	K011023
08034-20414	K1110-010037	8	K011037
08034-20414	K1110-010042	39	K011042
08034-20519	ALF00-001001	10	C002001
08034-20519	E0200-003003	44	E002003
08034-20519	H0311-001001	11	H010001
08034-20519	H1810-002001	8	H027001
08034-20519	H1810-003001	8	H028001
08034-20519	H1810-004001	8	H029001
08034-20519	H1831-001002	27	H030002
08034-20519	H1831-002002	27	H031002
08034-20519	K1110-010022	7	K011022
08034-20519	K1110-010031	25	K011031
08034-20519	K1110-010042	31	K011042
08034-20519	K1110-010052	2	K011052
08034-20519	K1110-020029	33	K011029a
08034-20519	K1110-050028	34	K011029c
08034-20519	K1110-050028	44	K011029c
08034-20519	K1110-050030	33	K011029b
08034-20536	E0200-003003	40	E002003
08034-20536	H0340-003001	25	H015001
08034-20536	H0340-004001	22	H016001
08034-20536	H1831-001002	28	H030002
08034-20536	H1831-002002	28	H031002
08034-20536	H1840-003002	13	H033002
08034-20536	H1840-004002	13	H034002
08034-20536	H1840-005002	13	H035002
08034-20536	K1110-010030	18	K011030
08034-20536	K1110-010033	12	K011033
08034-20536	K1110-010039	12	K011039
08034-20536	K1110-010046	8	K011046
08034-20536	K1110-010050	4	K011050
08034-20536	K1110-010050	6	K011050
08034-20536	K1110-010050	10	K011050
08034-20536	K1110-010050	12	K011050
08034-20536	K1110-010050	16	K011050
08034-20536	K1110-020029	40	K011029a
08034-20536	K1110-050030	40	K011029b
08034-20823	K0700-001002	39	K010002
08034-20823	P1120-001001	13	P001001
08034-20823	P1120-001001	17	P001001
08034-20876	K1110-010018	7	K011018
08034-20876	K1110-010018	17	K011018
08034-30521	P1120-001001	21	P001001
08034-40521	E0200-003003	45	E002003
08037-02512	K0220-001001	7	K003001
08037-02512	K1110-010003	7	K011003
08037-03620	E0420-001001	5	E006001
08037-11425	K1110-010037	11	K011037
08037-12536	M1220-002001	14	M007001
08038-00035	K1110-010030	7	K011030
08038-00519	K1110-010030	5	K011030
08038-00519	K1110-010030	16	K011030
08038-04030	E0200-003002	5	E002002
08038-06031	K1110-010030	6	K011030
08038-06031	K1110-010030	17	K011030
08038-10525	E0200-003002	20	E002002
08038-12027	E0200-003002	19	E002002
08038-22009	E0200-003003	34	E002003
08038-42009	E0100-001001	8	E001001
08038-42009	E0200-003002	4	E002002
08041-00500	K1110-010030	27	K011030
08041-01000	K1110-010023	3	K011023
08041-01000	K1110-010030	28	K011030
08041-02000	K1110-010023	4	K011023
08041-02000	K1110-010030	29	K011030
08041-03000	K1110-010023	5	K011023
08041-03000	K1110-010030	30	K011030
08051-00801	K1110-010010	10	K011010
08053-01510	K0700-001001	10	K010001
08053-01510	K1110-020029	38	K011029a
08053-01510	K1110-050030	38	K011029b
08057-00812	E0200-003001	15	E002001
08057-00812	E0200-003001	38	E002001
08057-00812	E0200-003002	32	E002002
08057-12010	A2010-001001	2	B014001
08057-12010	E0200-003001	24	E002001
08057-12010	E0200-003002	22	E002002
08057-12010	E0200-003003	25	E002003
08057-12012	E0200-003002	6	E002002
08057-12012	E0200-003002	9	E002002
08057-12012	E0200-003002	13	E002002
08057-12012	E0200-003002	16	E002002
08057-12012	E0200-003002	29	E002002
08057-12012	E0200-003002	35	E002002
08057-12012	E0200-003003	1	E002003
08057-12012	E0200-003003	4	E002003
08057-12012	E0200-003003	7	E002003
08057-12012	E0200-003003	10	E002003
08057-12012	E0200-003003	13	E002003
08057-12012	E0200-003003	16	E002003
08057-12012	E0200-003003	22	E002003
08057-12012	E0200-003003	26	E002003
08057-12012	E0200-003003	30	E002003
08057-12012	E0450-001001	23	E007001
08059-00310	E0450-001001	23	E007001
08059-00413	K1110-010007	10	K011007
08059-00413	K1110-010010	5	K011010
08059-00515	K1110-010021	7	K011021
08059-00515	K1110-010022	5	K011022
08086-20000	K1110-010042	26	K011042
08088-30000	K1110-010030	2	K011030
08116-02410	K1110-010008	11	K011008
08160-72400	E0410-001001	1	E005001
08191-00770	E0320-002001	16	E004001
08192-14400	E0320-002001	15	E004001
08192-24200	E0320-002001	14	E004001
08193-21012	A9999-504007	14	B001007
08193-21012	E0200-003002	26	E002002
08193-21012	E0320-002001	7	E004001
08193-21012	K1110-020029	37	K011029a
08193-21012	K1110-050030	37	K011029b
08193-21012	T1110-007002	6	T003002
08193-21012	T1110-011002	6	T001002
08193-21012	T1110-012002	6	T002002
08912-51600	K1110-010037	6	K011037
09002-01012	V0300-001001	3	V002001
09002-01417	V0300-001001	3	V002001
09002-01922	V0300-001001	3	V002001
09002-02427	V0300-001001	3	V002001
09007-00528	V0300-001001	14	V002001
09007-00836	V0300-001001	9	V002001
09007-01040	V0300-001001	13	V002001
09019-28035	V0300-001001	2	V002001
09021-02233	V0300-001001	10	V002001
09021-02436	V0300-001001	11	V002001
09023-00300	V0300-001001	12	V002001
09039-00150	V0300-001001	4	V002001
09055-10390	V0300-001001	5	V002001
09056-04613	V0300-001001	1	V002001
09133-21001	U0100-008001	6	U002001
09133-27000	U0100-006001	6	U001001
09134-A1681	U0510-002001	1	U011001
09233-12920	N1210-001001	15	N002001
09244-02496	T1510-003001	7	T012001
09244-02496	T1510-011001	7	T013001
09370-00060	R0110-001002	3	R001002
09409-00002	K0160-002001	3	K002001
09415-02512	K1110-010013	3	K011013
09415-02512	K1110-010042	25	K011042
09415-02512	M1210-001001	15	M006001
09416-10200	K1110-010004	5	K011004
09416-10200	K1110-010011	2	K011011
09416-10200	K1110-010011	4	K011011
09416-10200	K1110-010011	11	K011011
09452-14503	K1110-010023	15	K011023
09479-02400	K1110-010047	2	K011047

PARTS Nº	FIG. Nº	INDEX	PAGE
09479-02400	K1110-010047	4	K011047
09601-12051	U0100-006001	17	U001001
09601-12051	U0100-008001	17	U002001
09620-B2070	U0521-003001	2	U016001
09620-D2000	U0520-020001	1	U012001
09620-D2000	U0520-030001	1	U013001
09620-D2070	U0520-030001	2	U013001
09620-D2160	U0520-020001	2	U012001
09637-51263	U0550-003001	1	U017001
09637-70163	U0550-004001	1	U018001
09642-11000	U0202-003001	1	U009001
09642-17000	U0202-002001	1	U008001
09653-01001	U0100-008001	7	U002001
09653-07101	U0100-006001	7	U001001
09657-01004	U0100-008001	9	U002001
09657-07102	U0100-006001	9	U001001
09659-51000	U0100-008001	10	U002001
09659-51000	U0580-007001	1	U020001
09659-57100	U0100-006001	10	U001001
09659-57100	U0580-003001	1	U019001
09667-01001	U0100-008001	11	U002001
09667-07101	U0100-006001	11	U001001
09668-01001	U0100-008001	8	U002001
09668-07101	U0100-006001	8	U001001
09669-0000E	U0100-006001	16	U001001
09669-0000E	U0100-008001	16	U002001
09685-00002	U0100-006001	1	U001001
09685-00002	U0100-008001	1	U002001
09690-P0450	U0100-006001	4	U001001
09690-P0450	U0100-008001	4	U002001
09690-P1000	U0150-004001	1	U007001
09690-P1000	U0150-004001	3	U007001
09690-P1120	U0150-003001	1	U006001
09690-P1120	U0150-004001	2	U007001
09803-01000	U0120-004001	2	U005001
09803-07100	U0120-003001	2	U004001
09805-11000	U0100-008001	13	U002001
09805-17100	U0100-006001	13	U001001
09805-21000	U0100-008001	12	U002001
09805-27100	U0100-006001	12	U001001
09808-01000	U0100-008001	14	U002001
09808-07100	U0100-006001	14	U001001
09842-A0481	U0100-006001	5	U001001
09842-A0481	U0100-008001	5	U002001
09844-00050	U0100-006001	2	U001001
09844-00050	U0100-008001	2	U002001
09920-00150	AFH00-001001	13	B006001
09920-00150	AFP10-001001	10	D002001
09920-00150	AGG00-001001	7	B004001
09920-00150	AIM00-001001	4	A004001
09920-00150	AOP10-001001	10	B009001
09960-00801	U0100-006001	27	U001001
09960-00801	U0100-008001	27	U002001
09960-00802	U0100-006001	28	U001001
09960-00802	U0100-008001	28	U002001
09963-01001	U0100-008001	19	U002001
09963-07001	U0100-006001	19	U001001
110-30-00086	R0300-001001	6	R003001
113-01-21120	B0100-001001	4	B003001
11Y-01-11920	B0200-001002	15	B004002
11Y-06-11372	M1220-002001	13	M007001
11Y-09-11140	D0200-001003	28	D002003
11Y-09-11140	D0200-001003	38	D002003
11Y-09-11160	K0700-001003	2	K010003
11Y-09-11170	D0200-001001	13	D002001
11Y-62-12130	K1110-010035	7	K011035
11Y-62-12130	K1110-010041	7	K011041
11Y-62-12140	K1110-020029	23	K011029a
11Y-62-12140	K1110-050028	23	K011029c
11Y-62-12140	K1110-050030	23	K011029b
11Y-62-12160	K1110-010026	23	K011026
11Y-62-12230	H0120-004030	14	H003030
11Y-62-12230	H0120-005027	14	H002027
11Y-62-12230	H0120-009030	14	H004030
11Y-62-12250	N1310-001002	25	N003002
11Y-62-12330	H0120-010033	14	H005033
11Y-62-12330	K1110-020052	10	K011051a
11Y-62-12330	K1110-020052	23	K011051a
11Y-62-12330	K1110-050053	10	K011051b
11Y-62-12330	K1110-050053	23	K011051b
11Y-62-12340	H1270-004005	15	H020005
11Y-62-12510	H0210-002001	7	H008001
11Y-62-12510	H0210-003001	7	H009001
11Y-62-12510	H1810-002001	10	H027001
11Y-62-12510	H1810-003001	10	H028001
11Y-62-12510	H1810-003001	10	H028001
11Y-62-12510	H1810-004001	10	H029001
11Y-62-12820	H0120-005027	20	H002027
11Y-62-12820	H0120-009030	20	H004030
11Y-98-31130	U0100-006001	3	U001001
11Y-98-31130	U0100-008001	3	U002001
120-54-42430	H0340-003001	5	H015001
120-54-42430	H0340-003001	22	H015001
120-54-42430	H0340-004001	19	H016001
120-54-42430	K0700-001002	13	K010002
124-54-26540	B0200-001002	7	B004002
124-54-26540	B0200-001002	22	B004002
124-54-26540	M1140-001001	33	M004001
124-54-26540	M1150-001001	20	M005001
124-54-26540	M1150-001001	28	M005001
124-54-26540	M1150-001001	32	M005001
124-54-26540	M1150-001001	36	M005001
124-54-26540	M1210-001001	16	M006001
124-54-26540	M1220-002001	23	M007001
124-54-26540	M1220-002001	27	M007001
124-A62-1920	M1110-001001	10	M001001
124-A62-1920	M1150-001001	10	M005001
124-A62-1920	M1150-001001	16	M005001
130-43-64260	K0220-001001	5	K003001
130-43-64260	M1410-006001	15	M010001
131-43-41631	H1840-005002	30	H035002
134-03-61410	E0200-003003	41	E002003
134-03-61410	H1831-001002	26	H030002
134-03-61410	H1831-002002	26	H031002
141-06-11220	K1110-010047	12	K011047
144-14-54610	H0120-004002	4	H003002
144-14-54610	H0120-004008	13	H003008
144-14-54610	H0120-004025	2	H003025
144-14-54610	H0120-005002	4	H002002
144-14-54610	H0120-005008	13	H002008
144-14-54610	H0120-009002	4	H004002
144-14-54610	H0120-009008	13	H004008
144-14-54610	H0120-009025	2	H004025
144-14-54610	H0120-010002	4	H005002
144-14-54610	H0120-010008	13	H005008
144-14-54610	H0120-010025	2	H005025
144-14-54610	H0120-010028	2	H005028
144-63-92170	KIT	K05	Y001001
144-63-92170	T1220-003001	10	T010001
144-63-94170	KIT	K04	Y001001
144-63-94170	KIT	K06	Y001001
144-63-94170	T1140-004001	15	T006001
144-63-95170	KIT	K03	Y001001
144-63-95170	T1120-004001	9	T004001
144-63-95170	T1120-004002	9	T004002
144-874-7470	AWR00-001001	30	F005001
145-Z79-6270	K1110-010006	20	K011006
14X-54-26640	E0200-003002	21	E002002
14X-54-26640	K0700-001003	7	K010003
14X-60-31150	H0110-002001	4	H001001
14X-60-31150	V0100-002001	1	V001001
14X-98-35181	U0100-006001	29	U001001
14X-98-35181	U0100-008001	29	U002001
154-03-75811	N1210-001005	3	N002005
154-61-16570	A1570-001001	5	A016001
154-61-16570	A1610-001001	7	A014001
154-61-16570	AEH10-002001	5	F001001
154-61-16570	AOP10-001001	9	B009001
175-30-00702	R0110-001001	6	R001001

PARTS Nº	FIG. Nº	INDEX	PAGE
175-54-34170	C0100-001005	43	C001005
175-54-34170	D0200-001002	32	D002002
175-54-34170	M1810-001001	4	M014001
175-54-34170	M1810-001001	6	M014001
175-54-34170	M1810-001001	11	M014001
175-54-34170	M1810-001001	13	M014001
175-54-34170	M1810-001001	24	M014001
175-54-34170	M1810-001001	30	M014001
17A-03-41540	C0100-001005	3	C001005
17A-03-41540	C0100-001005	5	C001005
17A-979-3180	K1110-010021	3	K011021
17M-911-3530	K1110-010018	10	K011018
195-03-11570	D0100-003001	23	D001001
195-33-11220	K0700-001002	17	K010002
195-33-11220	K1110-010031	9	K011031
195-33-11220	K1110-010031	13	K011031
195-33-11220	K1110-010031	17	K011031
195-33-11220	K1110-010047	7	K011047
195-33-11220	K1110-050028	36	K011029c
195-979-3510	AWR00-001001	10	F005001
195-979-7770	K1110-010010	13	K011010
195-979-8590	M1220-002001	19	M007001
195-Z11-1690	K1110-010006	8	K011006
195-Z11-2970	K0220-001001	6	K003001
196-911-3310	H1833-001001	26	H032001
196-911-3310	H1840-003002	10	H033002
196-911-3310	H1840-004002	10	H034002
196-911-3310	H1840-005002	10	H035002
198-43-15310	H1840-005002	33	H035002
198-43-15310	K1120-001001	14	K016001
198-Z11-2640	K1110-010023	31	K011023
19M-06-31720	K1110-010030	31	K011030
201-01-71250	B0100-001001	1	B003001
201-03-29160	C0100-001005	24	C001005
201-03-29160	H1270-004001	28	H020001
201-26-62190	N1210-001004	1	N002004
201-26-62240	N1210-001001	10	N002001
201-26-62270	N1210-001001	12	N002001
201-26-62330	N1210-001001	22	N002001
201-30-52280	R0110-001002	12	R001002
201-60-11390	H0120-004029	17	H003029
201-60-11390	H0120-005026	17	H002026
201-60-11390	H0120-009029	17	H004029
201-60-11390	H0120-010032	17	H005032
201-60-11390	H1831-001002	2	H030002
201-60-11390	H1831-002002	2	H031002
201-60-11390	H1833-001001	3	H032001
201-60-11390	H1833-001001	8	H032001
201-60-11390	H1833-001001	15	H032001
201-62-71820	H0120-004033	4	H003033
201-62-71820	H0120-005029	4	H002029
201-62-71820	H0120-009032	4	H004032
201-62-71820	H0120-010035	4	H005035
201-973-6730	T1110-007005	15	T003005
201-973-6730	T1110-007005	21	T003005
201-973-6730	T1110-007005	26	T003005
201-973-6730	T1110-007005	38	T003005
201-973-6730	T1110-012005	15	T002005
201-973-6730	T1110-012005	21	T002005
201-973-6730	T1110-012005	29	T002005
201-973-6730	T1110-012005	37	T002005
201-973-6810	T1210-014003	15	T009003
202-70-52121	T1210-013002	14	T008002
202-70-52121	T1210-014002	14	T009002
202-70-61160	J1310-002001	1	J003001
202-70-63161	T1510-003001	8	T012001
202-70-63171	T1510-003001	9	T012001
202-70-64151	T1230-004001	14	T011001
202-70-64163	T1230-004001	19	T011001
202-70-64210	T1510-003001	14	T012001
202-70-64210	T1510-011001	10	T013001
202-70-64220	T1510-003001	14	T012001
202-70-64220	T1510-011001	10	T013001
202-70-64240	T1510-003001	13	T012001
202-70-64240	T1510-011001	9	T013001
202-70-64250	T1510-003001	12	T012001
202-70-64250	T1510-011001	8	T013001
202-973-6321	T1210-014001	3	T009001
202-973-6331	T1210-014001	4	T009001
203-00-11160	U0100-006001	20	U001001
203-00-11160	U0100-008001	20	U002001
203-00-11170	U0100-006001	21	U001001
203-00-11170	U0100-008001	21	U002001
203-00-11320	U0110-002001	1	U003001
203-00-11370	U0100-008001	22	U002001
203-00-11440	U0205-001001	1	U010001
203-00-11460	U0100-006001	22	U001001
203-00-11910	D0100-003001	18	D001001
203-00-11920	D0100-003001	19	D001001
203-00-11930	C0100-001005	39	C001005
203-00-31120	H0110-002001	28	H001001
203-00-56640	H1270-004006	2	H020006
203-00-56640	T1210-014003	32	T009003
203-01-12111	B0200-001002	12	B004002
203-01-12130	B0200-001002	2	B004002
203-01-61110	B0100-001002	1	B003002
203-01-61120	B0100-001002	2	B003002
203-01-61131	B0100-001002	3	B003002
203-01-61160	B0100-001001	2	B003001
203-01-67540	B0100-001001	3	B003001
203-01-71141	B0200-001002	9	B004002
203-01-71211	B0200-001002	5	B004002
203-01-71321	C0100-001005	10	C001005
203-03-12131	C0100-001002	1	C001002
203-03-12141	C0100-001002	2	C001002
203-03-12151	C0100-001002	6	C001002
203-03-12171	C0100-001001	15	C001001
203-03-12181	C0100-001001	16	C001001
203-03-12191	C0100-001001	17	C001001
203-03-12211	C0100-001001	18	C001001
203-03-12221	C0100-001001	1	C001001
203-03-12231	C0100-001003	15	C001003
203-03-12241	C0100-001002	20	C001002
203-03-12251	C0100-001003	1	C001003
203-03-12261	C0100-001004	16	C001004
203-03-12270	C0100-001005	1	C001005
203-03-12280	C0100-001005	16	C001005
203-03-12291	C0100-001005	47	C001005
203-03-12311	C0100-001005	48	C001005
203-03-12321	A9530-001001	1	E008001
203-03-12331	C0100-001005	19	C001005
203-03-12341	C0100-001005	6	C001005
203-03-12351	C0100-001003	5	C001003
203-03-12371	C0100-001002	25	C001002
203-03-12381	C0100-001003	31	C001003
203-03-12411	C0100-001002	18	C001002
203-03-12420	C0100-001002	17	C001002
203-03-12430	C0100-001004	13	C001004
203-03-12441	C0100-001004	1	C001004
203-03-12451	C0100-001004	19	C001004
203-03-12470	C0100-001002	30	C001002
203-03-12481	C0100-001005	28	C001005
203-03-12491	C0100-001005	31	C001005
203-03-12511	C0100-001005	32	C001005
203-03-12521	C0100-001001	2	C001001
203-03-12531	C0100-001001	3	C001001
203-03-12540	C0100-001002	10	C001002
203-03-12551	C0100-001003	28	C001003
203-03-12560	C0100-001003	16	C001003
203-03-12570	C0100-001003	24	C001003
203-03-12580	C0100-001003	25	C001003
203-03-12591	C0100-001003	26	C001003
203-03-12611	C0100-001004	24	C001004
203-03-12640	C0100-001004	23	C001004
203-03-12651	C0100-001002	22	C001002
203-03-12661	C0100-001002	12	C001002
203-03-12671	C0100-001002	13	C001002
203-03-12681	C0100-001002	14	C001002
203-03-12690	C0100-001003	27	C001003
203-03-12710	M1130-001003	1	M003003

PARTS Nº	FIG. Nº	INDEX	PAGE
203-03-12720	C0100-001001	21	C001001
203-03-12740	K0700-001002	40	K010002
203-03-12750	C0100-001004	21	C001004
203-03-12760	C0100-001003	34	C001003
203-03-12780	C0100-001004	22	C001004
203-03-12790	A9530-001001	3	E008001
203-03-12810	C0100-001004	20	C001004
203-03-12820	C0100-001001	4	C001001
203-03-12830	C0100-001005	4	C001005
203-03-41410	C0100-001001	8	C001001
203-03-71251	C0100-001003	9	C001003
203-03-71270	C0100-001003	22	C001003
203-03-71390	M1130-001003	10	M003003
203-03-71531	M1130-001003	5	M003003
203-03-71690	C0100-001003	29	C001003
203-03-71720	C0100-001002	11	C001002
203-03-71730	C0100-001002	26	C001002
203-03-71740	C0100-001002	27	C001002
203-03-71750	C0100-001002	31	C001002
203-03-71790	C0100-001003	30	C001003
203-03-71821	J1110-006001	10	J001001
203-03-71910	M1510-001001	14	M012001
203-04-11111	D0100-003001	1	D001001
203-04-11161	D0200-001005	3	D002005
203-04-11181	D0200-001003	19	D002003
203-04-11211	D0200-001001	6	D002001
203-04-11221	D0200-001001	14	D002001
203-04-11240	D0200-001002	15	D002002
203-04-11252	D0200-001001	15	D002001
203-04-11261	D0200-001002	28	D002002
203-04-11291	D0200-001001	12	D002001
203-04-11330	D0200-001001	2	D002001
203-04-11610	D0200-001003	29	D002003
203-06-11140	T1110-007002	5	T003002
203-06-11140	T1110-011002	5	T001002
203-06-11140	T1110-012002	5	T002002
203-06-11230	E0200-003002	1	E002002
203-06-11240	K1110-010030	24	K011030
203-06-11260	E0200-003002	41	E002002
203-06-11260	K1110-010030	1	K011030
203-06-11270	K1110-010032	2	K011032
203-06-11290	E0200-003001	23	E002001
203-06-11310	E0200-003001	40	E002001
203-06-11310	K1110-010030	43	K011030
203-06-11320	E0200-003001	4	E002001
203-06-11330	E0200-003001	10	E002001
203-06-11340	K1110-010030	23	K011030
203-06-11360	E0200-003001	32	E002001
203-06-11370	K1110-010030	21	K011030
203-06-11380	E0200-003001	35	E002001

PARTS Nº	FIG. Nº	INDEX	PAGE
203-06-11390	E0200-003001	29	E002001
203-06-11410	E0320-002001	12	E004001
203-06-11430	E0200-003001	1	E002001
203-06-11730	E0200-003001	39	E002001
203-06-11730	E0200-003002	40	E002002
203-06-11730	E0200-003003	46	E002003
203-06-11730	E0320-002001	17	E004001
203-06-11730	K1110-010030	25	K011030
203-06-11730	K1110-010046	9	K011046
203-06-11730	K1730-001001	2	K017001
203-06-11730	T1110-007002	23	T003002
203-06-11730	T1110-011002	23	T001002
203-06-11730	T1110-012002	23	T002002
203-06-61132	M1220-002001	18	M007001
203-06-61230	K1730-001001	1	K017001
203-06-71271	H1210-002001	11	H017001
203-25-62130	N1110-001001	2	N001001
203-25-62200	N1110-001001	1	N001001
203-26-13111	N1210-001001	28	N002001
203-26-13140	N1210-001004	7	N002004
203-26-13152	N1210-001004	8	N002004
203-26-13170	N1210-001005	1	N002005
203-26-61120	N1210-001001	3	N002001
203-26-61130	N1210-001001	4	N002001
203-26-61150	N1210-001001	6	N002001
203-26-61160	N1210-001001	7	N002001
203-26-61170	N1210-001001	8	N002001
203-26-61180	N1210-001001	9	N002001
203-26-61220	N1210-001001	5	N002001
203-26-61250	N1210-001001	11	N002001
203-26-61270	N1210-001001	13	N002001
203-26-61280	N1210-001001	19	N002001
203-26-61310	N1210-001001	21	N002001
203-26-61320	N1210-001001	23	N002001
203-26-61340	N1210-001001	24	N002001
203-26-61360	N1210-001001	27	N002001
203-26-61391	N1210-001001	20	N002001
203-26-81000	N1210-001001	1	N002001
203-26-81000	N1210-001002	1	N002002
203-26-81000	N1210-001003	1	N002003
203-26-81000	N1210-001004	1	N002004
203-26-81111	N1210-001001	1	N002001
203-27-51120	P1210-001004	2	P003004
203-27-61310	P1210-001004	1	P003004
203-30-00210	R0110-001001	1	R001001
203-30-00231	R0300-001001	1	R003001
203-30-42260	R0110-001002	10	R001002
203-30-44150	R0200-002001	6	R002001
203-30-52112	R0110-001001	1	R001001
203-30-52122	R0110-001001	2	R001001

PARTS Nº	FIG. Nº	INDEX	PAGE
203-30-52133	R0110-001001	3	R001001
203-30-52141	R0110-001001	4	R001001
203-30-52190	R0110-001001	5	R001001
203-30-53111	R0300-001001	1	R003001
203-30-53120	R0300-001001	2	R003001
203-30-53141	R0300-001001	3	R003001
203-30-53150	R0300-001001	4	R003001
203-30-53160	R0300-001001	5	R003001
203-30-56151	R1200-001001	1	R012001
203-30-61152	R1100-002001	4	R009001
203-30-61161	R1100-002001	5	R009001
203-30-61172	R1100-002001	6	R009001
203-30-61D60	R1100-002001	3	R009001
203-30-62130	R1140-001001	1	R011001
203-30-66122	N1310-001002	1	N003002
203-30-66260	R0110-001002	13	R001002
203-30-B1010	R1100-002001	1	R009001
203-32-02462	R0500-001001	1	R004001
203-32-02472	R0500-004001	1	R007001
203-32-02482	R0500-005001	1	R008001
203-32-02492	R0500-002001	1	R006001
203-32-02512	R0500-003001	1	R005001
203-32-05140	KIT	K02	Y001001
203-32-05150	KIT	K01	Y001001
203-32-11342	R0500-001001	5	R004001
203-32-11342	R0500-001001	14	R004001
203-32-11342	R0500-002001	5	R006001
203-32-11342	R0500-002001	14	R006001
203-32-11342	R0500-003001	5	R005001
203-32-11342	R0500-003001	14	R005001
203-32-11342	R0500-004001	5	R007001
203-32-11342	R0500-004001	14	R007001
203-32-11342	R0500-005001	5	R008001
203-32-11342	R0500-005001	14	R008001
203-32-11360	R0500-001001	3	R004001
203-32-11360	R0500-001001	12	R004001
203-32-11360	R0500-002001	3	R006001
203-32-11360	R0500-002001	12	R006001
203-32-11360	R0500-003001	3	R005001
203-32-11360	R0500-003001	12	R005001
203-32-11360	R0500-004001	3	R007001
203-32-11360	R0500-004001	12	R007001
203-32-11360	R0500-005001	3	R008001
203-32-11372	R0500-001001	12	R004001
203-32-11372	R0500-002001	12	R006001
203-32-11372	R0500-003001	12	R005001
203-32-11372	R0500-004001	12	R007001
203-32-11372	R0500-005001	12	R008001
203-32-11381	R0500-001001	19	R004001
203-32-11381	R0500-002001	19	R006001
203-32-11381	R0500-003001	19	R005001
203-32-11381	R0500-004001	19	R007001
203-32-11381	R0500-005001	19	R008001

PARTS Nº	FIG. Nº	INDEX	PAGE
203-32-11372	R0500-004001	4	R007001
203-32-11372	R0500-004001	13	R007001
203-32-11372	R0500-005001	4	R008001
203-32-11372	R0500-005001	13	R008001
203-32-11381	R0500-001001	19	R004001
203-32-11381	R0500-002001	19	R006001
203-32-11381	R0500-003001	19	R005001
203-32-11381	R0500-004001	19	R007001
203-32-11381	R0500-005001	19	R008001
203-32-51123	R0500-001001	1	R004001
203-32-51123	R0500-001001	10	R004001
203-32-51123	R0500-002001	1	R006001
203-32-51123	R0500-002001	10	R006001
203-32-51123	R0500-003001	1	R005001
203-32-51123	R0500-003001	10	R005001
203-32-51123	R0500-004001	1	R007001
203-32-51123	R0500-004001	10	R007001
203-32-51123	R0500-005001	1	R008001
203-32-51123	R0500-005001	10	R008001
203-32-51133	R0500-001001	2	R004001
203-32-51133	R0500-001001	11	R004001
203-32-51133	R0500-002001	2	R006001
203-32-51133	R0500-002001	11	R006001
203-32-51133	R0500-003001	2	R005001
203-32-51133	R0500-003001	11	R005001
203-32-51133	R0500-004001	2	R007001
203-32-51133	R0500-004001	11	R007001
203-32-51133	R0500-005001	2	R008001
203-32-51133	R0500-005001	11	R008001
203-32-51152	R0500-001001	6	R004001
203-32-51152	R0500-001001	15	R004001
203-32-51152	R0500-002001	6	R006001
203-32-51152	R0500-002001	15	R006001
203-32-51152	R0500-003001	6	R005001
203-32-51152	R0500-003001	15	R005001
203-32-51152	R0500-004001	6	R007001
203-32-51152	R0500-004001	15	R007001
203-32-51152	R0500-005001	6	R008001
203-32-51152	R0500-005001	15	R008001
203-32-51192	R0500-001001	20	R004001
203-32-51192	R0500-002001	20	R006001
203-32-51192	R0500-003001	20	R005001
203-32-51192	R0500-004001	20	R007001
203-32-51192	R0500-005001	20	R008001
203-32-51461	R0500-001001	7	R004001
203-32-51461	R0500-001001	16	R004001
203-32-51470	R0500-004001	7	R007001
203-32-51470	R0500-004001	16	R007001
203-32-51480	R0500-005001	7	R008001
203-32-51480	R0500-005001	16	R008001

PARTS Nº	FIG. Nº	INDEX	PAGE
203-32-51540	R0500-002001	7	R006001
203-32-51540	R0500-002001	16	R006001
203-32-61220	KIT	K01	Y001001
203-32-61220	KIT	K02	Y001001
203-32-61220	R0500-001001	9	R004001
203-32-61220	R0500-001001	18	R004001
203-32-61220	R0500-002001	9	R006001
203-32-61220	R0500-002001	18	R006001
203-32-61220	R0500-003001	9	R005001
203-32-61220	R0500-003001	18	R005001
203-32-61220	R0500-004001	9	R007001
203-32-61220	R0500-004001	18	R007001
203-32-61220	R0500-005001	9	R008001
203-32-61220	R0500-005001	18	R008001
203-43-51620	K1110-010026	7	K011026
203-46-11202	J1110-006001	1	J001001
203-46-12441	J1110-006001	11	J001001
203-46-12450	J1110-006001	12	J001001
203-46-12460	J1110-006001	13	J001001
203-46-12470	J1110-006001	14	J001001
203-46-14120	M1510-001001	1	M012001
203-46-14220	M1510-001001	15	M012001
203-46-14290	M1510-001001	16	M012001
203-46-14311	M1510-001001	17	M012001
203-46-14331	M1510-001001	18	M012001
203-46-31181	R1100-002001	7	R009001
203-46-56160	J1110-006001	6	J001001
203-46-56160	R1100-002001	8	R009001
203-46-56260	J1310-002001	9	J003001
203-46-61520	J1110-006001	5	J001001
203-46-61910	J1110-006001	3	J001001
203-46-61920	J1110-006001	4	J001001
203-46-64420	J1110-006001	9	J001001
203-54-00241	K1110-010001	1	K011001
203-54-00241	K1110-010002	1	K011002
203-54-00241	K1110-010003	1	K011003
203-54-00241	K1110-010004	1	K011004
203-54-00241	K1110-010005	1	K011005
203-54-00241	K1110-010006	1	K011006
203-54-00241	K1110-010007	1	K011007
203-54-00241	K1110-010008	1	K011008
203-54-00241	K1110-010009	1	K011009
203-54-00241	K1110-010010	1	K011010
203-54-00241	K1110-010011	1	K011011
203-54-00241	K1110-010012	1	K011012
203-54-00241	K1110-010013	1	K011013
203-54-11351	M1110-001001	1	M001001
203-54-11370	M1110-001001	18	M001001
203-54-11381	M1110-001001	23	M001001
203-54-11411	M1120-001002	2	M002002

PARTS Nº	FIG. Nº	INDEX	PAGE
203-54-11421	M1120-001001	11	M002001
203-54-11421	M1120-001002	16	M002002
203-54-11491	M1120-001002	8	M002002
203-54-11520	M1110-001001	4	M001001
203-54-11530	M1120-001001	1	M002001
203-54-11620	M1410-006001	2	M010001
203-54-11660	M1110-001001	5	M001001
203-54-11670	M1110-001001	6	M001001
203-54-11711	M1110-001001	11	M001001
203-54-11720	M1110-001001	15	M001001
203-54-11781	M1120-001001	14	M002001
203-54-11781	M1120-001002	17	M002002
203-54-11791	M1120-001001	17	M002001
203-54-11820	M1130-001001	1	M003001
203-54-11820	M1130-001002	12	M003002
203-54-11831	M1130-001001	2	M003001
203-54-11831	M1130-001002	13	M003002
203-54-11831	M1130-001003	18	M003003
203-54-11851	M1510-001001	5	M012001
203-54-11861	M1130-001001	3	M003001
203-54-11890	M1130-001002	1	M003002
203-54-11921	M1120-001001	29	M002001
203-54-11931	M1120-001001	20	M002001
203-54-11931	M1120-001002	18	M002002
203-54-11942	M1120-001001	23	M002001
203-54-11961	M1210-001001	4	M006001
203-54-11981	M1210-001001	5	M006001
203-54-11990	M1210-001001	11	M006001
203-54-12131	M1220-002001	3	M007001
203-54-12211	M1220-002001	1	M007001
203-54-12270	M1220-002001	21	M007001
203-54-12281	M1220-002001	28	M007001
203-54-12291	M1220-002001	2	M007001
203-54-12311	M1210-001001	1	M006001
203-54-12321	M1230-001001	16	M008001
203-54-12340	M1230-001001	17	M008001
203-54-12351	M1230-001001	8	M008001
203-54-12361	M1230-001001	1	M008001
203-54-12371	M1140-001001	6	M004001
203-54-12381	M1140-001001	1	M004001
203-54-12391	M1140-001001	2	M004001
203-54-12410	M1140-001001	3	M004001
203-54-12471	M1120-001001	3	M002001
203-54-12481	M1120-001001	3	M002001
203-54-12491	M1150-001002	7	M005002
203-54-12541	M1150-001002	8	M005002
203-54-12551	M1150-001002	4	M005002
203-54-12571	M1150-001001	7	M005001
203-54-12620	M1150-001001	13	M005001
203-54-12640	M1150-001001	15	M005001

PARTS Nº	FIG. Nº	INDEX	PAGE
203-54-12651	M1150-001001	19	M005001
203-54-12661	M1150-001001	25	M005001
203-54-12671	M1150-001001	30	M005001
203-54-12681	M1150-001001	40	M005001
203-54-12690	M1150-001001	9	M005001
203-54-12710	M1220-002001	8	M007001
203-54-12720	M1220-002001	9	M007001
203-54-12750	M1510-001001	8	M012001
203-54-12760	M1510-001001	11	M012001
203-54-12770	M1150-001001	26	M005001
203-54-12780	M1150-001002	1	M005002
203-54-12810	M1130-001001	6	M003001
203-54-12820	M1410-006001	6	M010001
203-54-12851	M1120-001002	13	M002002
203-54-12861	M1220-002001	29	M007001
203-54-12880	M1110-001001	24	M001001
203-54-12920	M1120-001001	1	M002001
203-54-12960	M1140-001001	28	M004001
203-54-12970	M1140-001001	29	M004001
203-54-16111	M1810-001001	1	M014001
203-54-16121	M1810-001001	2	M014001
203-54-16131	M1810-001001	8	M014001
203-54-16141	M1810-001001	7	M014001
203-54-16150	M1810-001001	28	M014001
203-54-19113	K1110-010001	1	K011001
203-54-21110	H0120-004028	8	H003028
203-54-21110	H0120-005025	8	H002025
203-54-21110	H0120-009028	8	H004028
203-54-21110	H0120-010030	8	H005030
203-54-56630	M1220-002001	10	M007001
203-54-56970	C0100-001002	24	C001002
203-54-62392	M1110-001001	14	M001001
203-54-62670	M1140-001001	32	M004001
203-54-62670	M1150-001001	22	M005001
203-54-62670	M1230-001001	5	M008001
203-54-62670	M1230-001001	13	M008001
203-54-63293	M1110-001001	7	M001001
203-54-67760	M1220-002001	7	M007001
203-54-73392	M1310-002001	1	M009001
203-54-73441	M1150-001001	1	M005001
203-54-73540	M1120-001002	1	M002002
203-54-73951	M1120-001001	26	M002001
203-54-73961	M1120-001002	5	M002002
203-54-73991	M1140-001001	11	M004001
203-54-74510	M1420-003002	2	M011002
203-54-75341	M1810-001001	17	M014001
203-54-75361	M1810-001001	18	M014001
203-54-76920	M1230-001001	18	M008001
203-54-77140	M1210-001001	8	M006001
203-60-11111	H0110-002001	1	H001001
203-60-11120	H0110-002001	12	H001001
203-60-11130	H0110-002001	12	H001001
203-60-11140	H0110-002001	16	H001001
203-60-31100	H0110-002001	3	H001001
203-60-31160	H0110-002001	2	H001001
203-60-52160	N1310-001002	6	N003002
203-60-61130	H0110-002001	9	H001001
203-60-62220	K1110-020028	25	K011028a
203-60-62220	K1110-050029	25	K011028b
203-60-62300	H1833-001001	6	H032001
203-60-62310	H1833-001001	7	H032001
203-60-62320	H1833-001001	10	H032001
203-60-62401	H1833-001001	13	H032001
203-60-62430	H1833-001001	18	H032001
203-62-11111	H0311-001001	1	H010001
203-62-11141	H0312-001001	8	H011001
203-62-11151	H0320-002001	1	H012001
203-62-11161	H0330-001001	6	H013001
203-62-11161	H0330-002001	6	H014001
203-62-11171	H0330-001001	13	H013001
203-62-11221	H1220-002001	5	H018001
203-62-11221	T1110-007003	16	T003003
203-62-11221	T1110-011003	22	T001003
203-62-11221	T1110-012003	16	T002003
203-62-11231	H1210-002001	1	H017001
203-62-11241	H1210-002001	7	H017001
203-62-11251	H1210-002001	14	H017001
203-62-11260	H1210-002001	16	H017001
203-62-11270	H1210-002001	18	H017001
203-62-11381	H1340-001001	1	H025001
203-62-11471	H1220-002001	1	H018001
203-62-11471	T1110-007003	15	T003003
203-62-11471	T1110-011003	21	T001003
203-62-11471	T1110-012003	15	T002003
203-62-11581	H1210-002001	20	H017001
203-62-11651	H1310-001001	2	H023001
203-62-11662	H1310-001001	3	H023001
203-62-11682	H1310-001001	4	H023001
203-62-11691	H0340-003001	19	H015001
203-62-11691	H0340-004001	16	H016001
203-62-11741	H0340-003001	20	H015001
203-62-11741	H0340-004001	17	H016001
203-62-11761	H0340-003001	8	H015001
203-62-11761	H0340-004001	5	H016001
203-62-11771	H1270-004005	22	H020005
203-62-11781	H1270-004005	20	H020005
203-62-11791	H1270-004002	20	H020002
203-62-11811	H1270-004005	4	H020005
203-62-11820	H1270-004005	1	H020005
203-62-11831	H1270-004001	39	H020001
203-62-11841	H1831-002003	20	H031003
203-62-11951	H1831-001003	20	H030003
203-62-11981	H1831-001003	25	H030003
203-62-12111	H1831-001003	21	H030003
203-62-12120	H1831-001003	16	H030003
203-62-12120	H1831-002003	16	H031003
203-62-12130	H1831-001003	12	H030003
203-62-12130	H1831-002003	12	H031003
203-62-12160	H1831-001003	2	H030003
203-62-12160	H1831-002003	2	H031003
203-62-12191	H1810-004001	1	H029001
203-62-12210	H1810-002001	2	H027001
203-62-12210	H1810-003001	2	H028001
203-62-12210	H1810-004001	2	H029001
203-62-12220	H1270-004002	23	H020002
203-62-12220	T1110-007004	17	T003004
203-62-12220	T1110-012004	17	T002004
203-62-12250	H1270-004002	9	H020002
203-62-12260	H1270-004002	7	H020002
203-62-12281	H0312-001001	9	H011001
203-62-12431	H1831-001004	8	H030004
203-62-12570	H0210-003001	25	H009001
203-62-12570	H1270-004005	19	H020005
203-62-12590	H0312-001001	5	H011001
203-62-12661	K1110-020029	27	K011029a
203-62-12661	K1110-050030	27	K011029b
203-62-12671	K1110-020029	28	K011029a
203-62-12671	K1110-050030	28	K011029b
203-62-12691	K1110-010048	2	K011048
203-62-12720	K1110-010048	6	K011048
203-62-12771	K1110-010049	3	K011049
203-62-12791	K1110-010049	4	K011049
203-62-12811	H0120-004029	16	H003029
203-62-12811	H0120-005026	16	H002026
203-62-12811	H0120-009029	16	H004029
203-62-12811	H0120-010032	16	H005032
203-62-12821	H1840-003002	1	H033002
203-62-12821	H1840-004002	1	H034002
203-62-12821	H1840-005002	1	H035002
203-62-12831	H0120-004028	1	H003028
203-62-12831	H0120-005025	1	H002025
203-62-12831	H0120-009028	1	H004028
203-62-12831	H0120-010030	1	H005030
203-62-12841	H0312-001001	1	H011001
203-62-12870	H1840-003001	8	H033001
203-62-12870	H1840-004001	8	H034001
203-62-12870	H1840-005001	8	H035001
203-62-12881	H1840-003001	9	H033001
203-62-12881	H1840-004001	9	H034001
203-62-12881	H1840-005001	9	H035001

PARTS Nº	FIG. Nº	INDEX	PAGE
203-62-12890	H1840-003001	4	H033001
203-62-12890	H1840-004001	4	H034001
203-62-12890	H1840-005001	4	H035001
203-62-12911	H1840-003001	3	H033001
203-62-12911	H1840-004001	3	H034001
203-62-12911	H1840-005001	3	H035001
203-62-12990	H1833-001001	23	H032001
203-62-12990	H1840-003001	17	H033001
203-62-12990	H1840-004001	17	H034001
203-62-13140	H0110-002001	33	H001001
203-62-13160	H0330-001001	1	H013001
203-62-13170	H1220-002001	7	H018001
203-62-13170	T1110-007003	17	T003003
203-62-13170	T1110-011003	23	T001003
203-62-13170	T1110-012003	17	T002003
203-62-13220	H1340-001001	3	H025001
203-62-13230	H1340-001001	2	H025001
203-62-13260	H1840-003001	10	H033001
203-62-13260	H1840-004001	10	H034001
203-62-13260	H1840-005001	10	H035001
203-62-13270	K1110-010049	12	K011049
203-62-13280	K1110-010049	11	K011049
203-62-13290	K1110-010048	8	K011048
203-62-13310	K1110-010048	9	K011048
203-62-13470	H1831-001002	8	H030002
203-62-13470	H1831-002002	8	H031002
203-62-13480	H0320-002001	11	H012001
203-62-13490	H1831-001003	7	H030003
203-62-13490	H1831-002003	7	H031003
203-62-13510	H1831-001002	23	H030002
203-62-13510	H1831-002002	23	H031002
203-62-13520	H0120-004029	10	H003029
203-62-13520	H0120-005026	10	H002026
203-62-13520	H0120-009029	10	H004029
203-62-13520	H0120-010032	10	H005032
203-62-13540	H1272-001001	5	H021001
203-62-13590	H1272-001001	17	H021001
203-62-13890	H0330-002001	1	H014001
203-62-13910	H1220-002001	16	H018001
203-62-13910	H1220-002001	25	H018001
203-62-13920	H1220-002001	22	H018001
203-62-13930	H1220-002001	15	H018001
203-62-13970	H1310-001001	1	H023001
203-62-14020	H1810-002001	1	H027001
203-62-14030	H1831-002003	21	H031003
203-62-14311	K1110-050028	26	K011029c
203-62-14320	K1110-010048	1	K011048
203-62-14450	K1110-050028	27	K011029c
203-62-14820	H1272-001001	4	H021001
203-62-15111	T1110-007003	11	T003003
203-62-15111	T1110-011003	11	T001003
203-62-15111	T1110-012003	11	T002003
203-62-15111	T1210-013002	25	T008002
203-62-15111	T1210-014002	25	T009002
203-62-15120	T1110-007003	1	T003003
203-62-15120	T1110-011003	1	T001003
203-62-15120	T1110-012003	1	T002003
203-62-15130	T1110-007003	2	T003003
203-62-15130	T1110-011003	2	T001003
203-62-15130	T1110-012003	2	T002003
203-62-15140	T1110-007003	13	T003003
203-62-15140	T1110-011003	13	T001003
203-62-15140	T1110-012003	13	T002003
203-62-15140	T1210-013002	26	T008002
203-62-15140	T1210-014002	26	T009002
203-62-15151	H1270-004002	32	H020002
203-62-15151	T1110-007004	1	T003004
203-62-15151	T1110-012004	1	T002004
203-62-15160	H1270-004002	33	H020002
203-62-15160	T1110-007004	11	T003004
203-62-15160	T1110-012004	11	T002004
203-62-15170	T1110-007005	1	T003005
203-62-15170	T1110-012005	1	T002005
203-62-15230	H1272-001001	25	H021001
203-62-15230	T1110-007007	1	T003007
203-62-15250	T1110-007007	5	T003007
203-62-15410	T1110-007007	11	T003007
203-62-15420	T1110-007007	21	T003007
203-62-15430	H1272-001001	26	H021001
203-62-15430	T1110-007007	3	T003007
203-62-17630	H1270-004001	4	H020001
203-62-17640	H1270-004001	6	H020001
203-62-43380	T1210-014003	8	T009003
203-62-43410	H1270-004001	15	H020001
203-62-52210	P1120-001001	12	P001001
203-62-52210	P1120-001001	16	P001001
203-62-58280	H1220-002001	26	H018001
203-62-58310	H1220-002001	17	H018001
203-62-58310	H1220-002001	23	H018001
203-62-58310	H1272-001001	21	H021001
203-62-58320	H1220-002001	18	H018001
203-62-58320	H1220-002001	24	H018001
203-62-58810	T1110-007005	8	T003005
203-62-58810	T1110-007005	13	T003005
203-62-58810	T1110-007005	19	T003005
203-62-58810	T1110-007005	25	T003005
203-62-58810	T1110-007005	33	T003005
203-62-58810	T1110-011003	15	T001003
203-62-58810	T1110-012005	12	T002005
203-62-58810	T1110-012005	19	T002005
203-62-58810	T1110-012005	25	T002005
203-62-58810	T1110-012005	33	T002005
203-62-61240	H1220-002001	19	H018001
203-62-61240	H1270-004001	16	H020001
203-62-61240	H1272-001001	22	H021001
203-62-61270	H1210-002001	4	H017001
203-62-61572	H0120-004028	5	H003028
203-62-61572	H0120-005025	5	H002025
203-62-61572	H0120-009028	5	H004028
203-62-61572	H0120-010030	5	H005030
203-62-61581	H0120-004028	9	H003028
203-62-61581	H0120-005025	9	H002025
203-62-61581	H0120-009028	9	H004028
203-62-61581	H0120-010030	9	H005030
203-62-63730	H1210-002001	10	H017001
203-62-63760	H0120-004033	10	H003033
203-62-63760	H0120-005029	10	H002029
203-62-63760	H0120-009032	10	H004032
203-62-63760	H0120-010035	10	H005035
203-62-63770	H0120-004030	26	H003030
203-62-63770	H0120-004033	11	H003033
203-62-63770	H0120-005027	27	H002027
203-62-63770	H0120-005029	11	H002029
203-62-63770	H0120-009030	26	H004030
203-62-63770	H0120-009032	11	H004032
203-62-63770	H0120-010033	26	H005033
203-62-63770	H0120-010035	11	H005035
203-62-64171	T1110-007004	12	T003004
203-62-64171	T1110-012004	12	T002004
203-62-64171	T1210-014003	34	T009003
203-62-64272	T1110-007005	35	T003005
203-62-64272	T1110-012005	34	T002005
203-62-64290	T1110-007004	2	T003004
203-62-64290	T1110-012004	2	T002004
203-62-64290	T1210-014003	33	T009003
203-62-64310	T1110-012005	28	T002005
203-62-64322	T1110-007001	11	T003001
203-62-64322	T1110-012001	2	T002001
203-62-64340	T1210-014003	6	T009003
203-62-64370	T1110-012005	14	T002005
203-62-64370	T1110-012005	20	T002005
203-62-64440	T1110-007005	4	T003005
203-62-64440	T1110-012005	4	T002005
203-62-65102	H1270-004001	19	H020001
203-62-65221	H1270-004002	17	H020002
203-62-65230	H1272-001001	8	H021001
203-62-65241	H1270-004001	14	H020001
203-62-65250	H1272-001001	20	H021001
203-62-65281	H1270-004003	1	H020003

PARTS Nº	FIG. Nº	INDEX	PAGE
203-62-65292	H1270-004003	14	H020003
203-62-65380	H1270-004006	1	H020006
203-62-65630	H1270-004001	27	H020001
203-62-67160	P1120-001001	23	P001001
203-62-72110	H0320-002001	8	H012001
203-70-01980	T1210-013001	1	T008001
203-70-01990	T1210-014001	1	T009001
203-70-15170	T1110-012001	3	T002001
203-70-15210	T1110-007006	4	T003006
203-70-15210	T1110-011004	4	T001004
203-70-15210	T1110-012006	4	T002006
203-70-15261	T1110-007001	10	T003001
203-70-15272	T1110-007001	1	T003001
203-70-42121	T1110-007002	18	T003002
203-70-42121	T1110-011002	18	T001002
203-70-42121	T1110-012002	18	T002002
203-70-42121	T1210-013002	7	T008002
203-70-42121	T1210-014002	7	T009002
203-70-42182	T1210-013001	4	T008001
203-70-42182	T1210-014001	6	T009001
203-70-44380	T1230-004001	24	T011001
203-70-44380	T1230-004001	27	T011001
203-70-44470	T1510-003001	18	T012001
203-70-44470	T1510-011001	14	T013001
203-70-51221	T1110-007001	2	T003001
203-70-51221	T1110-007001	8	T003001
203-70-51221	T1110-011001	2	T001001
203-70-51221	T1110-011001	6	T001001
203-70-51221	T1110-012001	4	T002001
203-70-51221	T1110-012001	8	T002001
203-70-51260	T1110-007001	5	T003001
203-70-51260	T1110-011001	4	T001001
203-70-51260	T1110-012001	6	T002001
203-70-53160	T1190-001001	1	T007001
203-70-53250	T1190-001001	6	T007001
203-70-53380	T1110-007007	8	T003007
203-70-53381	H1270-004005	24	H020005
203-70-53381	T1110-007005	7	T003005
203-70-53381	T1110-007005	12	T003005
203-70-53381	T1110-007005	18	T003005
203-70-53381	T1110-011003	17	T001003
203-70-53381	T1110-012005	7	T002005
203-70-53381	T1110-012005	11	T002005
203-70-54110	T1230-004001	12	T011001
203-70-54120	T1230-004001	13	T011001
203-70-54130	T1230-004001	1	T011001
203-70-54140	T1230-004001	6	T011001
203-70-56130	T1210-013001	3	T008001
203-70-56130	T1210-014001	5	T009001
203-70-56140	T1230-004001	2	T011001
203-70-56140	T1230-004001	7	T011001
203-70-56150	T1210-013001	5	T008001
203-70-56150	T1210-014001	7	T009001
203-70-56160	T1230-004001	3	T011001
203-70-56160	T1230-004001	8	T011001
203-70-61251	T1110-007006	1	T003006
203-70-61251	T1110-011004	1	T001004
203-70-61251	T1110-012006	1	T002006
203-70-61261	T1110-007006	2	T003006
203-70-61261	T1110-011004	2	T001004
203-70-61261	T1110-012006	2	T002006
203-70-61271	T1110-007006	3	T003006
203-70-61271	T1110-011004	3	T001004
203-70-61271	T1110-012006	3	T002006
203-70-61291	T1110-007006	5	T003006
203-70-61291	T1110-011004	5	T001004
203-70-61291	T1110-012006	5	T002006
203-70-61310	T1110-007001	6	T003001
203-70-61310	T1110-011001	5	T001001
203-70-61310	T1110-012001	7	T002001
203-70-61780	T1110-007001	3	T003001
203-70-61780	T1110-011001	3	T001001
203-70-61780	T1110-012001	5	T002001
203-70-61790	T1110-007001	9	T003001
203-70-61790	T1110-011001	7	T001001
203-70-61790	T1110-012001	9	T002001
203-70-61C60	T1110-007001	4	T003001
203-70-61C60	T1110-007001	7	T003001
203-70-62D30	T1210-013001	2	T008001
203-70-62D30	T1210-014001	2	T009001
203-70-64131	T1510-003001	4	T012001
203-70-64131	T1510-011001	4	T013001
203-70-64141	T1510-003001	3	T012001
203-70-64141	T1510-011001	3	T013001
203-70-66110	T1110-007001	12	T003001
203-70-66110	T1110-011001	8	T001001
203-70-66110	T1110-012001	10	T002001
203-70-B0010	T1110-011001	1	T001001
203-70-B0020	T1110-012001	1	T002001
203-70-B1110	T1110-011001	1	T001001
203-70-B1140	T1110-012001	1	T002001
203-70-B1150	T1510-003001	1	T012001
203-70-B1160	T1510-003001	5	T012001
203-920-B110	T1510-011001	1	T013001
203-920-B120	T1510-011001	5	T013001
203-954-6130	K0230-002001	1	K004001
203-973-5660	T1110-007007	12	T003007
203-973-5660	T1110-007007	15	T003007
203-973-5660	T1110-007007	18	T003007
203-973-5660	T1110-007007	22	T003007
203-973-5660	T1110-007007	25	T003007
203-973-5803	T1210-014003	17	T009003
203-973-5820	H1270-004005	10	H020005
203-973-6610	T1210-014003	23	T009003
203-979-1111	K0700-001002	44	K010002
203-979-1111	K1110-010046	2	K011046
203-979-1121	K0700-001002	45	K010002
203-979-1121	K1110-010046	4	K011046
203-979-1132	K0700-001002	46	K010002
203-979-1132	K0700-001003	21	K010003
203-979-1132	K1110-010047	1	K011047
203-979-1142	K0700-001002	47	K010002
203-979-1142	K1110-010047	3	K011047
203-979-1152	K0700-001002	1	K010002
203-979-1161	K0700-001001	2	K010001
203-979-1171	K0700-001002	30	K010002
203-979-1211	A7010-001001	1	G001001
203-98-11140	M1420-003001	5	M011001
205-00-72430	U0521-001001	1	U014001
205-00-72430	U0521-002001	2	U015001
205-00-72430	U0521-003001	3	U016001
205-03-62660	C0100-001001	6	C001001
205-03-71331	E0200-003002	12	E002002
205-03-71440	M1130-001003	2	M003003
205-03-71532	M1130-001003	9	M003003
205-03-71540	M1130-001003	9	M003003
205-54-51250	K1110-010011	26	K011011
205-54-51720	K0320-001001	4	K008001
205-54-51730	K0320-001001	5	K008001
205-54-51970	M1130-001001	12	M003001
205-54-51970	M1140-001001	20	M004001
205-54-53550	M1130-001002	4	M003002
205-54-53550	M1140-001001	14	M004001
205-54-75240	K1110-010014	14	K011014
205-60-71340	H1270-004003	10	H020003
205-60-71350	H1270-004003	11	H020003
205-60-71360	H1270-004003	12	H020003
205-62-72140	H0311-001001	10	H010001
205-70-19570	T1510-003001	6	T012001
205-70-19570	T1510-011001	6	T013001
205-70-51390	T1110-007006	14	T003006
205-70-51390	T1110-011004	14	T001004
205-70-51390	T1110-012006	14	T002006
205-70-66580	J1310-002001	3	J003001
205-70-66580	J1310-002001	10	J003001
205-70-66580	T1110-007002	19	T003002
205-70-66580	T1110-011002	19	T001002
205-70-66580	T1110-012002	19	T002002
205-70-66580	T1210-013002	8	T008002
205-70-66580	T1210-013002	16	T008002

PARTS Nº	FIG. Nº	INDEX	PAGE
205-70-66580	T1210-014002	8	T009002
205-70-66580	T1210-014002	16	T009002
205-917-1610	A9999-003001	11	B002001
206-03-43340	C0100-001003	23	C001003
206-03-43340	M1130-001003	11	M003003
206-06-61130	H1833-001001	20	H032001
206-06-61130	K1110-020029	36	K011029a
206-06-61130	K1110-050028	40	K011029c
206-06-61130	K1110-050030	36	K011029b
207-00-71741	U0100-006001	15	U001001
207-00-76230	M1230-001001	9	M008001
207-00-B1210	U0100-006001	24	U001001
207-00-B1240	U0610-002001	1	U021001
207-00-B1250	U0710-001001	1	U023001
207-00-B1270	U0710-002001	1	U024001
207-00-B1280	U0610-003001	1	U022001
207-06-61490	K1110-010032	3	K011032
207-06-76270	M1510-001001	20	M012001
207-06-76310	E0450-001001	24	E007001
207-06-76420	E0450-001001	7	E007001
207-06-76431	E0450-001001	8	E007001
207-06-76440	E0450-001001	9	E007001
207-06-76451	E0450-001001	22	E007001
207-06-76460	E0450-001001	10	E007001
207-43-81240	K1110-020029	15	K011029a
207-43-81240	K1110-050028	15	K011029c
207-43-81240	K1110-050030	15	K011029b
207-54-75710	M1420-003002	1	M011002
207-62-64740	H0320-002001	14	H012001
207-62-64740	H0330-001001	3	H013001
207-62-64740	H0330-002001	3	H014001
207-62-71960	K1110-010048	7	K011048
207-62-72110	H0320-002001	12	H012001
207-62-72120	N1210-001005	17	N002005
207-62-72141	H0120-004029	25	H003029
207-62-72141	H0120-005026	25	H002026
207-62-72141	H0120-009029	25	H004029
207-62-72141	H0120-010032	25	H005032
207-70-53170	T1190-001001	2	T007001
208-00-71430	U0100-008001	24	U002001
208-00-76240	M1210-001001	12	M006001
208-00-76240	M1230-001001	2	M008001
208-03-71161	C0100-001004	4	C001004
208-32-11231	T1510-003001	10	T012001
208-43-71420	K1110-010020	8	K011020
208-43-71520	K1110-010029	2	K011029
208-43-71530	K1110-010029	3	K011029
208-43-71590	K1110-010029	4	K011029
208-53-11330	K1110-010014	9	K011014
208-53-11860	K1110-010003	8	K011003
208-53-11890	K1110-010019	4	K011019
208-53-11920	K1110-010017	9	K011017
208-53-11941	K1110-010017	5	K011017
208-53-12120	K1110-010018	15	K011018
208-53-12230	K1110-010019	5	K011019
208-53-12280	K1110-010037	12	K011037
208-53-12290	K1110-010023	7	K011023
208-53-12320	K1110-010023	20	K011023
208-53-12330	K1110-010023	21	K011023
208-53-12410	K1110-010023	18	K011023
208-53-12432	K1110-010018	16	K011018
208-53-12440	K1110-010017	4	K011017
208-53-12460	K1110-010016	2	K011016
208-53-12551	K1110-010019	16	K011019
208-53-12680	K1110-010018	9	K011018
208-53-12980	K1110-010011	29	K011011
208-53-12991	K1110-010011	28	K011011
208-53-13270	K1110-010011	7	K011011
208-53-14540	K1110-010007	4	K011007
208-53-22H70	K1110-010004	2	K011004
208-54-57180	M1120-001001	32	M002001
208-60-71181	H0110-002001	20	H001001
208-62-38370	C0100-001005	21	C001005
208-62-72160	H1831-001003	1	H030003
208-62-72160	H1831-002003	1	H031003
208-62-72290	K1110-010048	4	K011048
208-62-72310	K1110-010048	5	K011048
208-62-72310	K1110-050028	28	K011029c
208-62-72480	K1110-020029	29	K011029a
208-62-72480	K1110-050030	29	K011029b
208-62-72650	K1110-050028	29	K011029c
208-62-72870	K1110-010049	9	K011049
208-979-7530	K1110-010019	12	K011019
208-979-7540	K1110-010045	1	K011045
208-979-7560	K1110-010023	13	K011023
208-979-7620	K1110-010019	13	K011019
208-979-7640	K1110-010046	1	K011046
208-979-7650	K1110-010046	6	K011046
209-62-52560	N1310-001002	7	N003002
209-64-16721	H0340-003001	16	H015001
209-64-16721	H0340-004001	13	H016001
209-64-16721	H1831-002003	25	H031003
209-72-12230	K1110-010014	3	K011014
209-72-12230	K1110-010014	7	K011014
20B-27-11210	H0210-002001	13	H008001
20B-27-11210	H0210-003001	13	H009001
20D-62-17620	ATP00-002001	13	A013001
20S-26-71160	N1210-001001	14	N002001
20S-26-71190	N1210-001001	17	N002001
20S-26-71250	N1210-001001	16	N002001
20T-54-42510	K0700-001003	1	K010003
20T-54-74510	K1110-010030	22	K011030
20T-54-74510	T1210-013003	1	T008003
20T-54-74510	T1210-014004	1	T009004
20T-70-81720	J1110-006001	2	J001001
20T-910-8660	K1110-020029	16	K011029a
20T-910-8660	K1110-050028	16	K011029c
20T-910-8660	K1110-050030	16	K011029b
20U-54-25140	K1110-010003	19	K011003
20U-70-31330	J1310-002001	8	J003001
20U-70-31330	T1110-007002	17	T003002
20U-70-31330	T1110-011002	17	T001002
20U-70-31330	T1110-012002	17	T002002
20U-70-31340	J1310-002001	7	J003001
20U-70-31340	T1110-007002	16	T003002
20U-70-31340	T1110-011002	16	T001002
20U-70-31340	T1110-012002	16	T002002
20X-30-22180	R0110-001001	8	R001001
20X-30-22220	R0110-001002	9	R001002
20X-60-22140	H0110-002001	7	H001001
20Y-00-31640	U0100-008001	23	U002001
20Y-00-31680	U0100-008001	15	U002001
20Y-00-31840	U0100-006001	25	U001001
20Y-00-31840	U0100-008001	25	U002001
20Y-00-41330	K1110-010014	10	K011014
20Y-00-41690	U0120-004001	1	U005001
20Y-00-42150	M1220-002001	20	M007001
20Y-00-B1350	U0120-003001	1	U004001
20Y-00-B1421	U0521-002001	1	U015001
20Y-00-B1421	U0521-003001	1	U016001
20Y-01-21260	B0100-001002	8	B003002
20Y-03-11220	D0200-001002	8	D002002
20Y-03-11220	D0200-001003	16	D002003
20Y-03-11220	E0200-003003	29	E002003
20Y-03-11220	H1840-003002	17	H033002
20Y-03-11220	H1840-004002	17	H034002
20Y-03-11220	H1840-005002	17	H035002
20Y-03-11220	K0700-001002	25	K010002
20Y-03-11220	K0700-001002	29	K010002
20Y-03-11330	C0100-001001	9	C001001
20Y-03-22110	C0100-001001	5	C001001
20Y-04-11161	D0100-003001	6	D001001
20Y-04-11240	D0100-003001	6	D001001
20Y-04-21580	D0100-003001	12	D001001
20Y-04-31170	D0200-001003	40	D002003
20Y-04-41231	D0100-003001	3	D001001
20Y-06-15240	M1130-001003	8	M003003
20Y-06-21551	E0320-002001	4	E004001
20Y-06-21551	T1110-007002	2	T003002
20Y-06-21551	T1110-011002	2	T001002

PARTS Nº	FIG. Nº	INDEX	PAGE
20Y-06-21551	T1110-012002	2	T002002
20Y-06-21590	E0320-002001	1	E004001
20Y-06-23472	K1110-010016	3	K011016
20Y-06-31660	K1110-010030	32	K011030
20Y-06-41130	K1110-010042	38	K011042
20Y-06-41141	K1110-010010	3	K011010
20Y-06-41150	K1110-010020	7	K011020
20Y-06-41151	K1110-010020	7	K011020
20Y-06-41251	K1110-020052	13	K011051a
20Y-06-41262	K1110-050053	13	K011051b
20Y-06-41270	K1110-010023	32	K011023
20Y-06-41822	E0420-001001	1	E006001
20Y-06-41830	K1110-010037	9	K011037
20Y-06-41990	K1110-010009	1	K011009
20Y-06-41990	K1110-010010	16	K011010
20Y-06-42110	K1110-010042	35	K011042
20Y-06-42121	K1110-010042	36	K011042
20Y-06-42180	K1110-010010	6	K011010
20Y-06-42190	K1110-010042	37	K011042
20Y-06-42320	K1110-010052	1	K011052
20Y-06-42440	K1110-010037	1	K011037
20Y-25-11270	T1110-007006	16	T003006
20Y-25-11270	T1110-011004	16	T001004
20Y-25-11270	T1110-012006	16	T002006
20Y-30-16330	R0110-001001	10	R001001
20Y-30-16330	R0200-002001	10	R002001
20Y-30-16330	R0300-001001	8	R003001
20Y-43-15410	C0100-001001	14	C001001
20Y-43-15410	C0100-001002	9	C001002
20Y-43-15410	C0100-001003	21	C001003
20Y-43-21231	K1110-010026	18	K011026
20Y-43-21241	K1110-010026	19	K011026
20Y-43-22211	K1110-010033	1	K011033
20Y-43-22221	K1110-010039	1	K011039
20Y-43-22250	K1110-010033	6	K011033
20Y-43-22250	K1110-010039	6	K011039
20Y-43-22261	K1110-010033	7	K011033
20Y-43-22261	K1110-010039	7	K011039
20Y-43-22370	K1110-010033	8	K011033
20Y-43-22370	K1110-010039	8	K011039
20Y-43-22381	K1110-010033	3	K011033
20Y-43-22390	K1110-010039	3	K011039
20Y-43-22421	K1110-010033	4	K011033
20Y-43-22421	K1110-010039	4	K011039
20Y-43-31421	K1110-010037	19	K011037
20Y-43-31432	K1110-010037	17	K011037
20Y-43-31440	K1110-010037	20	K011037
20Y-43-31450	K1110-010037	21	K011037
20Y-43-31513	K1110-010037	13	K011037
20Y-43-31522	K1110-010037	14	K011037
20Y-43-31611	K1110-010037	15	K011037
20Y-43-31621	K1110-010037	16	K011037
20Y-43-41111	K1110-010026	10	K011026
20Y-43-41121	K1110-010026	3	K011026
20Y-43-41143	K1110-010038	1	K011038
20Y-43-41152	K1110-010038	7	K011038
20Y-43-41152	K1110-010043	7	K011043
20Y-43-41162	K1110-010038	5	K011038
20Y-43-41173	K1110-010038	2	K011038
20Y-43-41181	K1110-010038	11	K011038
20Y-43-41181	K1110-010043	11	K011043
20Y-43-41191	K1110-010038	13	K011038
20Y-43-41191	K1110-010043	13	K011043
20Y-43-41231	K1110-010029	1	K011029
20Y-43-41240	K1110-010045	4	K011045
20Y-43-41253	K1110-010029	13	K011029
20Y-43-41281	K1110-010038	17	K011038
20Y-43-41281	K1110-010043	17	K011043
20Y-43-41290	K0310-001001	3	K005001
20Y-43-41290	K0310-002001	3	K006001
20Y-43-41290	K0310-003001	3	K007001
20Y-43-41290	K1110-010015	6	K011015
20Y-43-41290	K1110-010036	16	K011036
20Y-43-41290	K1110-010036	21	K011036
20Y-43-41290	K1110-010036	25	K011036
20Y-43-41290	K1110-010042	11	K011042
20Y-43-41290	K1110-010042	18	K011042
20Y-43-41290	K1110-010042	22	K011042
20Y-43-41313	K1110-010042	1	K011042
20Y-43-41314	K1110-010042	1	K011042
20Y-43-41323	K1110-010042	7	K011042
20Y-43-41324	K1110-010042	7	K011042
20Y-43-41332	K1110-010042	12	K011042
20Y-43-41343	K1110-010043	1	K011043
20Y-43-41353	K1110-010042	19	K011042
20Y-43-41361	K1110-010026	6	K011026
20Y-43-41415	K1110-010036	1	K011036
20Y-43-41416	K1110-010036	1	K011036
20Y-43-41423	K1110-010036	9	K011036
20Y-43-41424	K1110-010036	9	K011036
20Y-43-41442	K1110-010036	17	K011036
20Y-43-41453	K1110-010036	22	K011036
20Y-43-41461	K1110-010038	18	K011038
20Y-43-41461	K1110-010043	18	K011043
20Y-43-41472	K1110-010036	4	K011036
20Y-43-41491	K1110-010036	28	K011036
20Y-43-41533	K1110-010043	2	K011043
20Y-43-41591	K1110-010038	15	K011038
20Y-43-41591	K1110-010043	15	K011043
20Y-43-41621	K1110-010036	7	K011036
20Y-43-41631	K1110-010042	4	K011042
20Y-43-41641	K1110-010036	8	K011036
20Y-43-41651	K1110-010036	10	K011036
20Y-43-41661	K1110-010036	11	K011036
20Y-43-41661	K1110-010042	8	K011042
20Y-43-41671	K1110-010042	30	K011042
20Y-43-41740	K1110-010042	27	K011042
20Y-43-41750	K1110-010042	28	K011042
20Y-43-41760	K1110-020029	2	K011029a
20Y-43-41760	K1110-050028	2	K011029c
20Y-43-41760	K1110-050030	2	K011029b
20Y-43-41780	K1110-010042	34	K011042
20Y-43-41790	K1110-010042	29	K011042
20Y-43-41833	K1110-010029	11	K011029
20Y-43-41850	K1110-010043	5	K011043
20Y-43-41970	K1110-010036	27	K011036
20Y-43-42130	K1110-010037	2	K011037
20Y-53-00031	K1110-010002	1	K011002
20Y-53-00072	K1110-010005	1	K011005
20Y-53-00072	K1110-010006	1	K011006
20Y-53-11241	K1110-010001	2	K011001
20Y-53-11250	K1110-010001	7	K011001
20Y-53-11260	K1110-010001	3	K011001
20Y-53-11271	K1110-010001	6	K011001
20Y-53-11320	K1110-010006	11	K011006
20Y-53-11332	K1110-010005	16	K011005
20Y-53-11332	K1110-010005	17	K011005
20Y-53-11380	K1110-010013	6	K011013
20Y-53-11390	K1110-010013	4	K011013
20Y-53-11390	K1110-010013	5	K011013
20Y-53-11402	K1110-010005	2	K011005
20Y-53-11411	K1110-010005	20	K011005
20Y-53-11421	K1110-010005	21	K011005
20Y-53-11441	K1110-010006	18	K011006
20Y-53-11451	K1110-010005	12	K011005
20Y-53-11460	K1110-010005	13	K011005
20Y-53-11470	K1110-010005	10	K011005
20Y-53-11484	K1110-010005	15	K011005
20Y-53-11511	K1110-010002	1	K011002
20Y-53-11520	K1110-010002	2	K011002
20Y-53-11540	K1110-010002	41	K011002
20Y-53-11551	K1110-010002	4	K011002
20Y-53-11561	K1110-010002	25	K011002
20Y-53-11581	K1110-010002	33	K011002
20Y-53-11591	K1110-010003	1	K011003
20Y-53-11601	K1110-010003	4	K011003
20Y-53-11611	K1110-010003	4	K011003
20Y-53-11641	K1110-010002	34	K011002
20Y-53-11661	K1110-010002	28	K011002
20Y-53-11712	K1110-010004	1	K011004

PARTS Nº	FIG. Nº	INDEX	PAGE
20Y-53-11721	K1110-010004	11	K011004
20Y-53-11741	K1110-010004	6	K011004
20Y-53-11752	K1110-010011	31	K011011
20Y-53-11761	K1110-010011	33	K011011
20Y-53-11771	K1110-010004	17	K011004
20Y-53-11781	K1110-010004	12	K011004
20Y-53-11790	K1110-010004	7	K011004
20Y-53-11810	K1110-010007	14	K011007
20Y-53-11831	K1110-010012	7	K011012
20Y-53-11841	K1110-010001	4	K011001
20Y-53-11850	K1110-010001	5	K011001
20Y-53-11861	K1110-010004	20	K011004
20Y-53-11870	K1110-010019	2	K011019
20Y-53-11880	K1110-010019	3	K011019
20Y-53-11890	K1110-010007	15	K011007
20Y-53-11921	K1110-010004	4	K011004
20Y-53-11931	K1110-010004	14	K011004
20Y-53-11940	K1110-010003	9	K011003
20Y-53-11953	K0310-001001	4	K005001
20Y-53-11953	K0310-002001	4	K006001
20Y-53-11953	K0310-003001	4	K007001
20Y-53-11961	K1110-010012	1	K011012
20Y-53-11973	K1110-010003	11	K011003
20Y-53-11981	K1110-010007	1	K011007
20Y-53-11990	K1110-010007	6	K011007
20Y-53-12111	K1110-010015	1	K011015
20Y-53-12122	K1110-010014	12	K011014
20Y-53-12154	K1110-010014	5	K011014
20Y-53-12161	K1110-010014	20	K011014
20Y-53-12172	K1110-010014	11	K011014
20Y-53-12201	K1110-010006	1	K011006
20Y-53-12221	K1110-010010	7	K011010
20Y-53-12232	K1110-010008	9	K011008
20Y-53-12240	K1110-010015	2	K011015
20Y-53-12260	K1110-010013	11	K011013
20Y-53-12270	K1110-010013	18	K011013
20Y-53-12280	K1110-010007	3	K011007
20Y-53-12291	K1110-010014	19	K011014
20Y-53-12310	K1110-010002	44	K011002
20Y-53-12310	K1110-010011	16	K011011
20Y-53-12310	K1110-010011	22	K011011
20Y-53-12310	K1110-010014	16	K011014
20Y-53-12310	K1110-010017	7	K011017
20Y-53-12310	K1110-010017	11	K011017
20Y-53-12310	K1110-010018	13	K011018
20Y-53-12310	K1110-010023	12	K011023
20Y-53-12310	K1110-010023	23	K011023
20Y-53-12310	K1110-010023	26	K011023
20Y-53-12320	K1110-010013	13	K011013
20Y-53-12330	K1110-010002	14	K011002
20Y-53-12371	K1110-010023	6	K011023
20Y-53-12381	K1110-010023	14	K011023
20Y-53-12391	K1110-010023	17	K011023
20Y-53-12412	K1110-010011	1	K011011
20Y-53-12421	K1110-010011	3	K011011
20Y-53-12431	K1110-010011	6	K011011
20Y-53-12441	K1110-010011	10	K011011
20Y-53-12463	K1110-010011	15	K011011
20Y-53-12472	K1110-010011	21	K011011
20Y-53-12483	K1110-010014	22	K011014
20Y-53-12522	K1110-010018	8	K011018
20Y-53-12531	K1110-010002	43	K011002
20Y-53-12552	K1110-010011	14	K011011
20Y-53-12565	K1110-010019	1	K011019
20Y-53-12580	K1110-010013	16	K011013
20Y-53-12591	K1110-010012	4	K011012
20Y-53-12611	K1110-010003	15	K011003
20Y-53-12631	K1110-010003	17	K011003
20Y-53-12661	K1110-010006	14	K011006
20Y-53-12710	K1110-010011	9	K011011
20Y-53-12710	K1110-010011	13	K011011
20Y-53-12731	K1110-010023	24	K011023
20Y-53-12740	K1110-010013	17	K011013
20Y-53-12751	K1110-010019	9	K011019
20Y-53-12760	K1110-010019	10	K011019
20Y-53-12771	K1110-010016	10	K011016
20Y-53-12781	K1110-010019	8	K011019
20Y-53-12790	K1110-010008	11	K011008
20Y-53-12810	K1110-010014	4	K011014
20Y-53-12830	K1110-010002	18	K011002
20Y-53-12840	K1110-010005	3	K011005
20Y-53-12850	K1110-010005	4	K011005
20Y-53-12860	K1110-010023	28	K011023
20Y-53-12870	K1110-010005	6	K011005
20Y-53-12880	K1110-010005	7	K011005
20Y-53-12892	K1110-010003	12	K011003
20Y-53-12940	K1110-010006	12	K011006
20Y-53-12951	K1110-010013	23	K011013
20Y-53-12960	K1110-010013	1	K011013
20Y-53-12971	K1110-010005	9	K011005
20Y-53-12991	K1110-010006	5	K011006
20Y-53-13113	K1120-001001	1	K016001
20Y-53-13121	K1120-001001	2	K016001
20Y-53-13130	K1120-001001	5	K016001
20Y-53-13141	K1120-001001	8	K016001
20Y-53-13151	K1120-001001	11	K016001
20Y-53-13280	K1110-010017	3	K011017
20Y-53-13311	K1110-010018	1	K011018
20Y-53-13321	K1110-010018	4	K011018
20Y-53-13331	K1110-010018	2	K011018
20Y-53-13341	K1110-010018	5	K011018
20Y-53-13351	K1110-010018	3	K011018
20Y-53-13361	K1110-010018	6	K011018
20Y-53-13371	K1110-010017	1	K011017
20Y-53-13421	K1110-010017	8	K011017
20Y-53-13451	K1110-010018	11	K011018
20Y-53-13461	K1110-010018	14	K011018
20Y-53-13480	K1110-010017	2	K011017
20Y-53-13490	K1110-010012	3	K011012
20Y-53-13617	K1110-010016	1	K011016
20Y-53-13631	K1110-010023	1	K011023
20Y-53-13680	K1110-010016	4	K011016
20Y-53-13870	K1110-010011	5	K011011
20Y-53-13880	K1110-010005	14	K011005
20Y-53-13910	K1110-010005	11	K011005
20Y-53-14116	K1110-010024	1	K011024
20Y-53-14121	K1110-010031	1	K011031
20Y-53-14130	K1110-050028	41	K011029c
20Y-53-14140	K1110-010050	5	K011050
20Y-53-14220	K1110-020029	9	K011029a
20Y-53-14220	K1110-050028	9	K011029c
20Y-53-14220	K1110-050030	9	K011029b
20Y-53-14230	K1110-010015	3	K011015
20Y-53-14713	K0310-001001	1	K005001
20Y-53-14723	K0310-002001	1	K006001
20Y-53-14733	K0310-003001	1	K007001
20Y-53-14812	K1110-010020	1	K011020
20Y-53-14820	K1110-010021	1	K011021
20Y-53-14831	K1110-010051	27	K011051
20Y-53-14831	K1110-020052	34	K011051a
20Y-53-14831	K1110-050053	34	K011051b
20Y-53-14910	K1110-010051	19	K011051
20Y-53-14910	K1110-020052	26	K011051a
20Y-53-14910	K1110-050053	26	K011051b
20Y-53-14920	K1110-010051	20	K011051
20Y-53-14920	K1110-020052	27	K011051a
20Y-53-14920	K1110-050053	27	K011051b
20Y-53-14930	K1110-010051	21	K011051
20Y-53-14930	K1110-020052	28	K011051a
20Y-53-14930	K1110-050053	28	K011051b
20Y-53-14940	K1110-010051	22	K011051
20Y-53-14940	K1110-020052	29	K011051a
20Y-53-14940	K1110-050053	29	K011051b
20Y-53-14950	K1110-010051	23	K011051
20Y-53-14950	K1110-020052	30	K011051a
20Y-53-14950	K1110-050053	30	K011051b
20Y-53-14963	K1110-010051	24	K011051
20Y-53-14963	K1110-020052	31	K011051a
20Y-53-14963	K1110-050053	31	K011051b
20Y-53-14973	K1110-010051	25	K011051

PARTS Nº	FIG. Nº	INDEX	PAGE
20Y-53-14973	K1110-020052	32	K011051a
20Y-53-14973	K1110-050053	32	K011051b
20Y-53-14983	K1110-010051	26	K011051
20Y-53-14983	K1110-020052	33	K011051a
20Y-53-14983	K1110-050053	33	K011051b
20Y-53-14991	K1110-010032	1	K011032
20Y-53-15140	K1110-010013	26	K011013
20Y-53-15150	E0310-003001	4	E003001
20Y-53-15210	E0310-003001	1	E003001
20Y-53-15710	K0320-001001	1	K008001
20Y-53-15750	K0320-001001	2	K008001
20Y-53-15780	K0320-001001	7	K008001
20Y-53-15790	K0320-001001	8	K008001
20Y-53-18211	K1110-010020	9	K011020
20Y-53-18221	K1110-010023	38	K011023
20Y-53-18831	M1410-006001	9	M010001
20Y-53-18870	K1110-010012	5	K011012
20Y-53-18880	K1110-010013	21	K011013
20Y-53-18931	M1410-006001	12	M010001
20Y-54-11611	K1110-010002	36	K011002
20Y-54-11611	K1110-010007	11	K011007
20Y-54-11611	M1130-001001	15	M003001
20Y-54-11611	M1140-001001	23	M004001
20Y-54-12550	M1810-001001	16	M014001
20Y-54-12550	M1810-001001	22	M014001
20Y-54-12550	M1810-001001	27	M014001
20Y-54-13322	K1110-010005	8	K011005
20Y-54-14590	K1110-010002	15	K011002
20Y-54-14590	K1110-010004	8	K011004
20Y-54-27761	M1150-001001	2	M005001
20Y-54-28170	M1130-001001	9	M003001
20Y-54-28170	M1140-001001	17	M004001
20Y-54-28911	M1410-006001	5	M010001
20Y-54-29232	M1130-001002	9	M003002
20Y-54-29232	M1140-001001	25	M004001
20Y-54-35430	M1410-006001	3	M010001
20Y-54-35451	K1110-010013	12	K011013
20Y-54-36342	K1110-010004	15	K011004
20Y-54-39450	K1110-010008	5	K011008
20Y-54-39460	K1110-010008	6	K011008
20Y-54-39460	K1110-010008	7	K011008
20Y-54-39480	K1110-010008	8	K011008
20Y-54-39511	K1110-010010	11	K011010
20Y-54-51393	K1110-010006	15	K011006
20Y-54-51420	K1110-010002	42	K011002
20Y-54-51531	K1110-010002	3	K011002
20Y-54-51621	K1110-010002	38	K011002
20Y-54-51640	K1110-010003	3	K011003
20Y-54-51670	K1110-010002	21	K011002
20Y-54-51680	K1110-010002	22	K011002
20Y-54-52211	K1110-010008	1	K011008
20Y-54-52221	K1110-010008	4	K011008
20Y-54-52300	K1110-010006	2	K011006
20Y-54-52350	K1110-010008	4	K011008
20Y-54-52530	K0320-001001	3	K008001
20Y-54-52621	K1110-010002	12	K011002
20Y-54-52651	K1110-010004	19	K011004
20Y-54-52651	K1110-010004	23	K011004
20Y-54-52681	K1110-010002	13	K011002
20Y-54-52820	K1110-010006	9	K011006
20Y-54-52860	K1110-010005	5	K011005
20Y-54-61470	M1130-001001	17	M003001
20Y-54-61630	M1420-003001	3	M011001
20Y-54-61670	M1220-002001	32	M007001
20Y-54-61680	M1220-002001	33	M007001
20Y-54-63411	M1130-001002	2	M003002
20Y-54-63411	M1140-001001	8	M004001
20Y-54-65121	K1110-010050	11	K011050
20Y-54-65690	K1110-010019	15	K011019
20Y-54-65790	K1110-010019	14	K011019
20Y-54-71372	M1130-001002	3	M003002
20Y-54-71460	M1110-001001	2	M001001
20Y-54-71460	M1150-001001	8	M005001
20Y-54-71460	M1150-001001	14	M005001
20Y-54-71491	M1110-001001	3	M001001
20Y-54-71491	M1140-001001	7	M004001
20Y-54-74172	M1220-002001	4	M007001
20Y-54-74270	M1420-003001	2	M011001
20Y-54-74280	M1410-006001	1	M010001
20Y-54-74280	M1420-003001	1	M011001
20Y-57-41103	K0110-003001	1	K001001
20Y-60-21340	H0110-002001	19	H001001
20Y-60-21440	H0110-002001	23	H001001
20Y-60-21470	H0110-002001	23	H001001
20Y-60-22270	H0120-004030	8	H003030
20Y-60-22270	H0120-005027	8	H002027
20Y-60-22270	H0120-009030	8	H004030
20Y-60-22270	H0120-010033	8	H005033
20Y-60-32121	H1831-001001	2	H030001
20Y-60-32121	H1831-002001	2	H031001
20Y-60-41611	H1831-001001	1	H030001
20Y-60-41611	H1831-002001	1	H031001
20Y-62-15831	K1110-010051	1	K011051
20Y-62-15831	K1110-010051	10	K011051
20Y-62-15831	K1110-020052	1	K011051a
20Y-62-15831	K1110-020052	14	K011051a
20Y-62-15831	K1110-050053	1	K011051b
20Y-62-15831	K1110-050053	14	K011051b
20Y-62-16630	H1831-001002	1	H030002
20Y-62-16630	H1831-002002	1	H031002
20Y-62-16630	H1833-001001	2	H032001
20Y-62-18890	K1110-010026	26	K011026
20Y-62-18890	K1110-010035	5	K011035
20Y-62-18890	K1110-010041	5	K011041
20Y-62-18910	K1110-010026	21	K011026
20Y-62-18910	K1110-010035	3	K011035
20Y-62-18910	K1110-010041	3	K011041
20Y-62-19560	H0120-004029	18	H003029
20Y-62-19560	H0120-005026	18	H002026
20Y-62-19560	H0120-009029	18	H004029
20Y-62-19560	H0120-010032	18	H005032
20Y-62-19560	H1831-001002	3	H030002
20Y-62-19560	H1831-002002	3	H031002
20Y-62-19560	H1833-001001	4	H032001
20Y-62-19560	H1833-001001	9	H032001
20Y-62-19560	H1833-001001	16	H032001
20Y-62-21940	H1831-001002	14	H030002
20Y-62-21940	H1831-002002	14	H031002
20Y-62-22410	H1833-001001	14	H032001
20Y-62-22790	H1831-001003	9	H030003
20Y-62-22790	H1831-002003	9	H031003
20Y-62-22790	H1840-003001	12	H033001
20Y-62-22790	H1840-004001	12	H034001
20Y-62-22790	H1840-005001	12	H035001
20Y-62-22790	K1110-010048	3	K011048
20Y-62-22790	K1110-010048	10	K011048
20Y-62-22790	K1110-010049	5	K011049
20Y-62-22790	K1110-010049	13	K011049
20Y-62-22790	K1110-020029	30	K011029a
20Y-62-22790	K1110-050028	30	K011029c
20Y-62-22790	K1110-050030	30	K011029b
20Y-62-22810	H1840-003001	7	H033001
20Y-62-22810	H1840-004001	7	H034001
20Y-62-22810	H1840-005001	5	H035001
20Y-62-22810	K1110-010049	6	K011049
20Y-62-22810	K1110-020029	31	K011029a
20Y-62-22810	K1110-050030	31	K011029b
20Y-62-22820	D0200-001001	16	D002001
20Y-62-22820	H1831-001003	10	H030003
20Y-62-22820	H1831-002003	10	H031003
20Y-62-22820	H1840-003001	13	H033001
20Y-62-22820	H1840-004001	13	H034001
20Y-62-22820	H1840-005001	13	H035001
20Y-62-22820	K1110-010048	11	K011048
20Y-62-22820	K1110-010049	7	K011049
20Y-62-22820	K1110-010049	14	K011049
20Y-62-22820	K1110-020029	32	K011029a
20Y-62-22820	K1110-050028	31	K011029c
20Y-62-22820	K1110-050030	32	K011029b
20Y-62-22830	H1840-003001	14	H033001

PARTS Nº	FIG. Nº	INDEX	PAGE
20Y-62-22830	H1840-004001	14	H034001
20Y-62-22830	H1840-005001	14	H035001
20Y-62-22830	K1110-010049	15	K011049
20Y-62-22840	H1840-003001	5	H033001
20Y-62-22840	H1840-004001	5	H034001
20Y-62-22840	H1840-005001	6	H035001
20Y-62-22840	K1110-010049	16	K011049
20Y-62-22840	K1110-050028	32	K011029c
20Y-62-22850	H1840-003001	6	H033001
20Y-62-22850	H1840-004001	6	H034001
20Y-62-22850	H1840-005001	7	H035001
20Y-62-22850	K1110-010048	12	K011048
20Y-62-22850	K1110-010049	17	K011049
20Y-62-22860	H1840-003001	15	H033001
20Y-62-22860	H1840-004001	15	H034001
20Y-62-22860	H1840-005001	15	H035001
20Y-62-22860	K1110-010049	18	K011049
20Y-62-22860	K1110-050028	33	K011029c
20Y-62-25360	K1110-020029	6	K011029a
20Y-62-25360	K1110-050028	6	K011029c
20Y-62-25360	K1110-050030	6	K011029b
20Y-62-27770	K1110-010050	13	K011050
20Y-62-41550	H1833-001001	1	H032001
20Y-62-41550	H1840-005001	17	H035001
20Y-62-41701	H0120-004030	7	H003030
20Y-62-41701	H0120-005027	7	H002027
20Y-62-41701	H0120-009030	7	H004030
20Y-62-41701	H0120-010033	7	H005033
20Y-62-41920	H0120-004030	17	H003030
20Y-62-41920	H0120-005027	17	H002027
20Y-62-41920	H0120-009030	17	H004030
20Y-62-41920	H0120-010033	17	H005033
20Y-62-42251	H1833-001001	29	H032001
20Y-62-42251	K1110-010049	8	K011049
20Y-62-43470	K1110-020029	21	K011029a
20Y-62-43470	K1110-050028	21	K011029c
20Y-62-43470	K1110-050030	21	K011029b
20Y-62-43990	K1110-010049	10	K011049
20Y-62-47630	H0120-004030	11	H003030
20Y-62-47630	H0120-005027	11	H002027
20Y-62-47630	H0120-009030	11	H004030
20Y-62-47630	H0120-010033	11	H005033
20Y-62-51671	H0311-001001	8	H010001
20Y-62-51681	H1831-001004	1	H030004
20Y-62-51691	H1831-001004	4	H030004
20Y-62-51840	H1840-003001	2	H033001
20Y-62-51840	H1840-004001	2	H034001
20Y-62-51840	H1840-005001	2	H035001
20Y-62-52160	K1110-020029	18	K011029a
20Y-62-52160	K1110-050028	18	K011029c
20Y-62-52160	K1110-050030	18	K011029b
20Y-62-52330	K1110-020029	26	K011029a
20Y-62-52330	K1110-050030	26	K011029b
20Y-62-53410	K1110-010049	1	K011049
20Y-62-53420	K1110-010049	2	K011049
20Y-70-11520	T1110-007006	15	T003006
20Y-70-11520	T1110-011004	15	T001004
20Y-70-11520	T1110-012006	15	T002006
20Y-70-11540	T1110-007006	7	T003006
20Y-70-11540	T1110-011004	7	T001004
20Y-70-11540	T1110-012006	7	T002006
20Y-70-11540	T1210-013002	22	T008002
20Y-70-11540	T1210-014002	22	T009002
20Y-70-11590	T1110-007006	8	T003006
20Y-70-11590	T1110-011004	8	T001004
20Y-70-11590	T1110-012006	8	T002006
20Y-70-11590	T1210-013002	24	T008002
20Y-70-11590	T1210-014002	24	T009002
20Y-70-14520	T1510-003001	2	T012001
20Y-70-14520	T1510-011001	2	T013001
20Y-810-1170	K0700-001002	18	K010002
20Y-810-1211	K1110-010044	1	K011044
20Y-810-1211	K1110-010045	7	K011045
20Y-810-1221	C0100-001004	9	C001004
20Y-810-1240	C0100-001004	10	C001004
20Y-810-1240	E0450-001001	11	E007001
20Y-810-1260	K0700-001001	1	K010001
20Y-810-1260	K0700-001002	43	K010002
20Y-810-1260	K0700-001003	20	K010003
20Y-954-6122	K0220-001001	1	K003001
20Y-954-6192	K0230-002001	2	K004001
20Y-954-6241	K0220-001001	2	K003001
20Y-954-6250	K0220-001001	10	K003001
20Y-954-6460	K0230-002001	6	K004001
20Y-954-6470	K0230-002001	5	K004001
20Y-970-3350	H1270-004001	26	H020001
20Y-979-3130	K1110-010046	5	K011046
20Y-979-3140	K0700-001002	2	K010002
20Y-979-3150	K1110-010046	3	K011046
20Y-979-6161	K1110-010015	7	K011015
20Y-979-6630	K1110-010029	15	K011029
20Y-979-6771	K1110-010021	5	K011021
21J-06-12440	K1110-010002	31	K011002
21K-03-72560	C0100-001005	44	C001005
21K-06-71150	E0100-001001	10	E001001
21K-06-B7110	E0100-001001	4	E001001
21K-06-B7120	E0100-001001	5	E001001
21K-06-B7130	E0100-001001	6	E001001
21K-54-11310	M1110-001001	8	M001001
21K-62-35270	H1270-004005	25	H020005
21K-62-35270	T1110-007005	9	T003005
21K-62-35270	T1110-007005	14	T003005
21K-62-35270	T1110-007005	20	T003005
21K-62-35270	T1110-011003	16	T001003
21K-62-35270	T1110-012005	13	T002005
21K-62-72730	H0120-004029	1	H003029
21K-62-72730	H0120-005026	1	H002026
21K-62-72730	H0120-009029	1	H004029
21K-62-72730	H0120-010032	1	H005032
21M-06-31170	K1110-010037	7	K011037
21N-64-36680	H0210-003001	1	H009001
21N-64-36690	N1310-001002	16	N003002
21T-06-11350	M1220-002001	15	M007001
21T-06-17940	H0210-003001	14	H009001
21T-06-32810	E0320-002001	11	E004001
21T-06-32810	T1110-007002	1	T003002
21T-06-32810	T1110-011002	1	T001002
21T-06-32810	T1110-012002	1	T002002
21T-38-12270	K0350-001001	1	K009001
21T-38-12270	K1110-010032	4	K011032
21T-38-71260	E0200-003001	16	E002001
21T-54-16150	C0100-001005	27	C001005
21T-54-16150	C0100-001005	41	C001005
21T-54-16150	D0100-003001	22	D001001
21T-62-69711	C0100-001005	2	C001005
21T-72-14930	T1210-014003	26	T009003
21U-98-31160	U0100-006001	26	U001001
21U-98-31160	U0100-008001	26	U002001
21W-60-41170	H0110-002001	6	H001001
21W-62-42450	H1220-002001	12	H018001
21W-62-42481	H1220-002001	9	H018001
21W-62-43960	H0210-002001	1	H008001
21W-70-41440	T1210-013002	20	T008002
21W-70-41440	T1210-014002	20	T009002
21X-54-32350	T1110-007005	41	T003005
21X-54-32350	T1110-012005	40	T002005
21Y-32-16111	R0500-003001	7	R005001
21Y-32-16111	R0500-003001	16	R005001
21Y-60-11250	H0120-004029	2	H003029
21Y-60-11250	H0120-005026	2	H002026
21Y-60-11250	H0120-009029	2	H004029
21Y-60-11250	H0120-010032	2	H005032
21Y-62-11591	H0120-004029	3	H003029
21Y-62-11591	H0120-005026	3	H002026
21Y-62-11591	H0120-009029	3	H004029
21Y-62-11591	H0120-010032	3	H005032
21Y-70-14710	T1210-013002	15	T008002
21Y-70-14710	T1210-014002	15	T009002
21Y-70-14710	T1230-004001	21	T011001
21Y-70-14760	J1310-002001	6	J003001

PARTS Nº	FIG. Nº	INDEX	PAGE
21Y-70-14760	T1110-007008	1	T003008
21Y-70-14760	T1110-011005	1	T001005
21Y-70-14760	T1110-012007	1	T002007
21Y-70-14770	T1230-004001	16	T011001
21Y-70-14770	T1510-003001	17	T012001
21Y-70-14770	T1510-011001	13	T013001
21Y-70-14780	T1230-004001	16	T011001
21Y-70-14780	T1510-003001	17	T012001
21Y-70-14780	T1510-011001	13	T013001
21Y-70-14830	J1310-002001	13	J003001
21Y-70-14830	T1110-007002	22	T003002
21Y-70-14830	T1110-011002	22	T001002
21Y-70-14830	T1110-012002	22	T002002
21Y-70-14830	T1125-002001	4	T005001
21Y-70-14830	T1210-013002	12	T008002
21Y-70-14830	T1210-014002	12	T009002
21Y-70-14840	J1310-002001	14	J003001
21Y-70-14840	T1210-013002	13	T008002
21Y-70-14840	T1210-014002	13	T009002
21Y-70-14850	T1230-004001	21	T011001
22B-00-21920	U0100-006001	23	U001001
22B-01-11190	B0100-001002	6	B003002
22B-01-21311	A9999-003001	1	B002001
22B-01-21371	AFT00-002001	19	D001001
22B-03-12590	C0100-001001	22	C001001
22B-26-21130	N1210-001001	2	N002001
22B-30-00090	R0200-002001	7	R002001
22B-30-00411	R0200-002001	1	R002001
22B-30-00510	R0110-001002	1	R001002
22B-30-11240	R0110-001002	7	R001002
22B-30-12230	R0110-001002	8	R001002
22B-30-13110	R0110-001002	1	R001002
22B-30-13120	R0110-001002	5	R001002
22B-30-16511	R0200-002001	1	R002001
22B-30-16520	R0200-002001	2	R002001
22B-30-17230	R0200-002001	4	R002001
22B-30-17240	R0200-002001	3	R002001
22B-30-17250	R0200-002001	2	R002001
22B-30-17260	R0200-002001	5	R002001
22B-30-21220	R1300-002001	1	R013001
22B-30-21311	R1100-002001	1	R009001
22B-30-21610	P1210-001004	6	P003004
22B-30-21D30	R1100-002001	2	R009001
22B-32-21210	KIT	K02	Y001001
22B-32-21210	R0500-003001	8	R005001
22B-32-21210	R0500-003001	17	R005001
22B-32-21230	KIT	K01	Y001001
22B-32-21230	R0500-001001	8	R004001
22B-32-21230	R0500-001001	17	R004001
22B-32-21230	R0500-002001	8	R006001
22B-32-21230	R0500-002001	17	R006001
22B-32-21230	R0500-004001	8	R007001
22B-32-21230	R0500-004001	17	R007001
22B-32-21230	R0500-005001	8	R008001
22B-32-21230	R0500-005001	17	R008001
22B-54-15411	K1110-010002	5	K011002
22B-54-15421	K1110-010002	8	K011002
22B-54-15440	K1110-010002	6	K011002
22B-54-15450	K1110-010002	9	K011002
22B-54-15470	K1110-010002	7	K011002
22B-54-15480	K1110-010002	10	K011002
22B-54-15841	K1110-010003	13	K011003
22B-54-15970	K1110-010003	5	K011003
22B-54-15980	K1110-010003	6	K011003
22B-54-16330	K1110-010006	10	K011006
22B-54-16340	K1110-010006	3	K011006
22B-54-16461	K1110-010006	19	K011006
22B-54-17282	K1110-010013	2	K011013
22B-54-17380	K1110-010011	20	K011011
22B-57-11911	K0160-002001	1	K002001
22B-60-11160	H0110-002001	14	H001001
22B-60-22110	P1210-001001	1	P003001
22B-60-22110	P1210-001002	1	P003002
22B-60-22110	P1210-001003	1	P003003
22B-60-22111	P1210-001001	1	P003001
22B-60-22111	P1210-001002	1	P003002
22B-60-22111	P1210-001003	1	P003003
22B-62-17110	H0210-002001	10	H008001
22B-62-17110	H0210-003001	10	H009001
22B-62-17110	H0340-003001	26	H015001
22B-62-17110	H0340-004001	23	H016001
22B-62-18910	N1310-001002	19	N003002
22B-62-19410	T1210-014003	7	T009003
22B-62-21381	H0120-004029	9	H003029
22B-62-21381	H0120-005026	9	H002026
22B-62-21381	H0120-009029	9	H004029
22B-62-21381	H0120-010032	9	H005032
22B-62-21510	T1110-007003	5	T003003
22B-62-21510	T1110-011003	5	T001003
22B-62-21510	T1110-012003	5	T002003
22B-62-21520	T1110-007003	3	T003003
22B-62-21520	T1110-011003	3	T001003
22B-62-21520	T1110-012003	3	T002003
22B-62-21940	N1210-001005	8	N002005
22B-62-22390	H0120-004029	1	H003029
22B-62-22390	H0120-005026	1	H002026
22B-62-22390	H0120-009029	1	H004029
22B-62-22390	H0120-010032	1	H005032
22B-62-22690	H0120-004029	13	H003029
22B-62-22690	H0120-005026	13	H002026
22B-62-22690	H0120-009029	13	H004029
22B-62-22690	H0120-010032	13	H005032
22B-62-22720	P1120-001001	14	P001001
22B-62-22730	P1120-001001	10	P001001
22B-62-22820	P1120-001001	11	P001001
22B-62-24140	T1210-013002	1	T008002
22B-62-24140	T1210-014002	1	T009002
22B-62-24460	H1270-004003	3	H020003
22B-62-24470	H1270-004003	13	H020003
22B-70-12170	KIT	K05	Y001001
22B-70-12170	T1220-003001	7	T010001
22B-70-15210	T1210-013002	21	T008002
22B-70-15210	T1210-014002	21	T009002
22B-70-19290	T1110-007005	24	T003005
22B-70-19290	T1110-007005	34	T003005
22B-70-19290	T1110-011003	18	T001003
22B-70-19290	T1110-012005	18	T002005
22B-70-19290	T1110-012005	24	T002005
22B-70-19290	T1110-012005	32	T002005
22B-70-21640	T1210-013003	2	T008003
22B-70-21640	T1210-014004	2	T009004
22B-70-21910	T1125-002001	1	T005001
22B-70-21920	T1125-002001	5	T005001
22B-70-22550	T1110-007002	12	T003002
22B-70-22550	T1110-011002	12	T001002
22B-70-22550	T1110-012002	12	T002002
22B-70-22570	T1110-007002	13	T003002
22B-70-22570	T1110-011002	13	T001002
22B-70-22570	T1110-012002	13	T002002
22B-973-1300	H1270-004005	7	H020005
22B-973-2120	T1210-014003	31	T009003
22B-973-2150	T1210-014003	29	T009003
22N-957-1420	K0700-001001	12	K010001
22S-62-26210	E0200-003003	19	E002003
22U-00-28110	M1230-001001	10	M008001
22U-03-22280	C0100-001005	25	C001005
22U-03-22860	C0100-001001	10	C001001
22U-03-22860	C0100-001003	17	C001003
22U-04-21200	D0100-003001	11	D001001
22U-04-21210	D0100-003001	11	D001001
22U-04-21220	D0100-003001	13	D001001
22U-04-21241	D0100-003001	11	D001001
22U-06-11270	K1110-010030	33	K011030
22U-06-22251	K1110-010023	29	K011023
22U-06-22360	K1110-010037	24	K011037
22U-06-22380	K1110-010042	32	K011042
22U-06-22460	K1110-010042	33	K011042
22U-06-22490	K1110-010037	23	K011037
22U-43-21111	K1110-010026	15	K011026
22U-43-21121	K1110-010026	16	K011026

PARTS Nº	FIG. Nº	INDEX	PAGE
22U-43-21131	K1110-010026	17	K011026
22U-43-21182	K1110-010033	2	K011033
22U-43-21192	K1110-010039	2	K011039
22U-43-21211	K1110-010033	5	K011033
22U-43-21211	K1110-010039	5	K011039
22U-43-21350	K1110-010026	8	K011026
22U-43-21360	K1110-010026	9	K011026
22U-43-21390	K1110-010029	12	K011029
22U-43-22340	K1110-010023	2	K011023
22U-43-23251	K1110-010042	5	K011042
22U-43-23260	K1110-010036	26	K011036
22U-43-23260	K1110-010037	25	K011037
22U-43-23260	K1110-010042	42	K011042
22U-43-23290	K1110-010042	6	K011042
22U-54-24760	M1810-001001	9	M014001
22U-54-24760	M1810-001001	19	M014001
22U-54-25110	K1110-010027	1	K011027
22U-54-25120	K1110-010028	1	K011028
22U-54-25180	K1110-050028	12	K011029c
22U-54-25360	K1110-010014	13	K011014
22U-54-25521	K1110-010027	2	K011027
22U-54-25531	K1110-010028	2	K011028
22U-54-25541	K1110-020029	12	K011029a
22U-54-25541	K1110-050030	12	K011029b
22U-54-25581	K1110-010024	2	K011024
22U-54-25660	K1110-020029	1	K011029a
22U-54-25660	K1110-050028	1	K011029c
22U-54-25660	K1110-050030	1	K011029b
22U-60-21330	H1831-001002	19	H030002
22U-60-21330	H1831-002002	19	H031002
22U-62-21480	ALF00-001001	5	C002001
22U-62-26850	H1831-001003	3	H030003
22U-62-26850	H1831-002003	3	H031003
22U-62-26880	H1840-003001	1	H033001
22U-62-26880	H1840-004001	1	H034001
22U-62-26880	H1840-005001	1	H035001
22U-62-26920	H1833-001001	30	H032001
22U-62-26920	H1840-003001	11	H033001
22U-62-26920	H1840-004001	11	H034001
22U-62-26920	H1840-005001	11	H035001
22U-62-28730	H1831-001003	8	H030003
22U-62-28730	H1831-002003	8	H031003
23B-06-61810	K0700-001002	21	K010002
23B-06-61810	K0700-001003	17	K010003
23D-950-4450	K1110-010023	27	K011023
281-01-13180	H0320-002001	5	H012001
2A5-43-12351	K1110-010029	7	K011029
2A5-43-12361	K1110-010029	9	K011029
2A5-43-12480	K1110-010029	14	K011029
2A5-53-12721	K1110-010008	1	K011008
417-06-B1830	E0100-001001	13	E001001
417-06-B1940	E0100-001001	1	E001001
418-54-35450	K1110-010016	9	K011016
418-54-35450	K1110-010019	7	K011019
421-06-23330	E0310-003001	1	E003001
421-06-23330	E0320-002001	11	E004001
421-06-23330	M1220-002001	13	M007001
421-06-23330	T1110-007002	1	T003002
421-06-23330	T1110-011002	1	T001002
421-06-23330	T1110-012002	1	T002002
421-07-31270	K1110-010021	4	K011021
423-879-4391	H0330-001001	4	H013001
423-879-4391	H0330-002001	4	H014001
437-40-26240	K1110-010038	8	K011038
437-40-26240	K1110-010043	8	K011043
566-07-41540	H0210-003001	16	H009001
575-41-17420	H0120-004010	14	H003010
575-41-17420	H0120-005010	14	H002010
575-41-17420	H0120-009010	14	H004010
575-41-17420	H0120-010010	14	H005010
600-051-1100	AWR00-001001	3	F005001
600-051-1100	AWR00-001001	6	F005001
600-051-1140	AWR00-001001	9	F005001
600-051-1140	AWR00-001001	26	F005001
600-051-1180	AWR00-001001	12	F005001
600-051-2100	AWR00-001001	23	F005001
600-051-2180	AWR00-001001	20	F005001
600-051-2180	AWR00-001001	29	F005001
600-051-5160	ATP00-002001	15	A013001
600-181-1930	B0200-001001	7	B004001
600-181-1930	B9999-003001	7	A008001
600-184-1210	B0200-001001	2	B004001
600-184-1210	B9999-003001	1	A008001
600-184-1220	B0200-001001	2	B004001
600-184-1220	B9999-003001	2	A008001
600-184-1250	B0200-001001	3	B004001
600-184-1250	B9999-003001	3	A008001
600-184-1270	B0200-001001	6	B004001
600-184-1270	B9999-003001	6	A008001
600-185-2100	B0200-001001	4	B004001
600-185-2100	B9999-003001	4	A008001
600-185-2110	B0200-001001	4	B004001
600-185-2110	B9999-003001	4	A008001
600-211-2110	ALF00-001001	3	C002001
600-211-2110	B9999-510001	3	B001001
600-211-2110	V0100-002001	3	V001001
600-311-3630	B9999-001001	3	D008001
600-311-3630	B9999-510001	5	B001001
600-311-3630	D0200-001004	3	D002004
600-311-3630	V0100-002001	8	V001001
600-311-3640	B9999-001001	4	D008001
600-311-3640	D0200-001004	4	D002004
600-311-3660	B9999-001001	5	D008001
600-311-3660	D0200-001004	5	D002004
600-311-3670	B9999-001001	6	D008001
600-311-3670	D0200-001004	6	D002004
600-311-3690	B9999-001001	8	D008001
600-311-3690	D0200-001004	8	D002004
600-311-3710	B9999-001001	5	D008001
600-311-3711	D0200-001004	5	D002004
600-311-3870	AFF10-002001	2	D006001
600-311-3870	B9999-512001	2	D007001
600-311-4210	B9999-001001	7	D008001
600-311-4210	D0200-001004	7	D002004
600-311-4220	B9999-001001	7	D008001
600-311-4220	D0200-001004	7	D002004
600-311-6720	AFF10-002001	3	D006001
600-311-6720	B9999-512001	3	D007001
600-319-3870	B9999-510001	3	B001001
600-319-3870	V0100-002001	9	V001001
600-319-4110	B9999-001001	1	D008001
600-319-4110	B9999-510001	4	B001001
600-319-4110	D0200-001004	2	D002004
600-319-4110	V0100-002001	7	V001001
600-319-4200	B9999-001001	1	D008001
600-319-4200	D0200-001004	2	D002004
600-411-1280	K1110-010033	9	K011033
600-411-1280	K1110-010039	9	K011039
600-421-6240	AEC00-001001	1	E010001
600-475-1102	APH00-001001	1	G002001
600-625-7550	AFN00-001001	1	E003001
600-813-4461	AST00-001001	1	F004001
600-813-4461	AST00-001002	1	F004002
600-815-2170	B9999-006001	1	B003001
600-815-2170	K1110-010030	13	K011030
600-815-8941	B9999-004001	1	F006001
600-815-8941	K1110-010030	8	K011030
600-815-9140	AAH00-001001	1	A007001
600-861-3610	AEE00-001001	1	F002001
600-861-3610	AEE00-001002	1	F002002
6127-71-5710	AFT00-002001	15	D001001
6130-12-1961	AOP10-001001	5	B009001
6130-12-4581	AWR00-001001	27	F005001
6130-22-5190	AFH00-001001	8	B006001
6130-22-5290	AOP10-001001	4	B009001
6130-32-1361	AFP10-001001	4	D002001
6130-32-1361	AFW10-001001	1	B008001
6131-12-5920	A4710-002001	1	D004001
6131-12-5920	AFT00-002001	10	D001001
6131-22-3750	B0100-001002	8	B003002

PARTS Nº	FIG. Nº	INDEX	PAGE
6132-21-4630	AIC20-001001	4	A006001
6136-11-8120	AVC00-001001	5	A001001
6136-11-8130	AVC00-001001	6	A001001
6136-11-8142	AVC00-001001	7	A001001
6136-11-8142	B9999-510001	2	B001001
6136-11-8142	V0100-002001	5	V001001
6136-31-1431	ADA00-001001	2	B016001
6136-52-1620	ABB00-001003	22	B013003
6137-11-4360	AFF20-001001	1	D005001
6140-11-6331	AEC00-001001	2	E010001
6140-21-1130	ABB00-001003	16	B013003
6141-21-1332	AFH00-001001	3	B006001
6141-21-1530	ABB00-001003	5	B013003
6141-64-2560	AEH10-002001	3	F001001
6141-64-2560	AWR00-001001	4	F005001
6143-11-4290	AWR00-001001	13	F005001
6150-21-5920	ALG00-001001	4	B011001
6150-21-5930	ALG00-001001	5	B011001
6150-21-6750	ABR00-001001	1	A003001
6150-81-6920	A4710-001001	1	D003001
6150-81-6920	AWR00-001001	21	F005001
6150-81-8980	A4710-001001	3	D003001
6152-51-5520	A2010-001001	1	B014001
6152-51-5520	AWR00-001001	24	F005001
6161-51-8990	AFT00-002001	6	D001001
6162-73-5940	ATP00-002001	8	A013001
6167-11-6640	AWR00-001001	7	F005001
6201-11-5850	A1670-001001	3	A015001
6201-11-5850	APP20-001001	4	A012001
6201-51-5910	ALF00-001001	2	C002001
6202-13-8631	AOB00-001001	4	A002001
6202-21-4151	ASM00-001001	2	F003001
6202-43-5320	ARL00-001001	9	B002001
6204-11-1840	APP10-001005	17	G003005
6204-11-3830	AEH10-002001	9	F001001
6204-11-4850	AAH00-001001	2	A007001
6204-11-4850	AIC00-001001	2	A005001
6204-11-6421	AWO00-001001	1	E009001
6204-11-8610	AOB00-001001	1	A002001
6204-11-8810	AVC00-001001	4	A001001
6204-11-8810	B9999-510001	1	B001001
6204-11-8810	V0100-002001	4	V001001
6204-13-1610	APP10-001005	18	G003005
6204-19-1310	A8110-001001	1	Y001001
6204-19-1310	APP10-001005	2	G003005
6204-21-1610	ABB00-001003	4	B013003
6204-21-3530	AGG00-001001	2	B004001
6204-21-5180	AFH00-001001	6	B006001
6204-21-5510	ALG00-001001	3	B011001
6204-21-6710	AFH00-001001	10	B006001
6204-21-6820	AFH00-001001	11	B006001
6204-21-6820	ATP00-002001	16	A013001
6204-21-8100	ABB00-001001	3	B013001
6204-21-8510	ABB00-001001	6	B013001
6204-21-8600	ABB00-001001	6	B013001
6204-26-8100	A8110-001001	1	Y001001
6204-26-8100	ABB00-001001	3	B013001
6204-26-8600	A8110-001001	1	Y001001
6204-26-8600	ABB00-001001	6	B013001
6204-27-8100	A8110-001001	1	Y001001
6204-27-8100	ABB00-001001	3	B013001
6204-27-8600	A8110-001001	1	Y001001
6204-27-8600	ABB00-001001	6	B013001
6204-28-8100	A8110-001001	1	Y001001
6204-28-8100	ABB00-001001	3	B013001
6204-28-8600	A8110-001001	1	Y001001
6204-28-8600	ABB00-001001	6	B013001
6204-29-1210	ABB00-001003	2	B013003
6204-29-1220	ABB00-001003	3	B013003
6204-29-8100	A8110-001001	1	Y001001
6204-29-8100	ABB00-001001	3	B013001
6204-29-8600	A8110-001001	1	Y001001
6204-29-8600	ABB00-001001	6	B013001
6204-31-3310	APP10-001001	9	G003001
6204-31-6331	ABB10-001001	3	B005001
6204-31-6341	ABB10-001001	2	B005001
6204-31-6350	ABB10-001001	5	B005001
6204-41-1131	APP10-001002	4	G003002
6204-41-2110	ABB00-001002	1	B013002
6204-41-3110	ARL00-001001	13	B002001
6204-41-4410	APP10-001005	14	G003005
6204-41-4510	APP10-001005	12	G003005
6204-41-4520	APP10-001005	13	G003005
6204-41-4541	APP10-001005	15	G003005
6204-41-4550	APP10-001005	16	G003005
6204-41-5110	ARL00-001001	1	B002001
6204-41-5120	ARL00-001001	2	B002001
6204-41-5620	ARL00-001001	10	B002001
6204-41-5710	ARL00-001001	12	B002001
6204-51-1310	ALP00-001001	5	C001001
6204-51-1330	ALP00-001001	7	C001001
6204-51-1340	ALP00-001001	8	C001001
6204-51-1620	ABB00-001003	23	B013003
6204-51-1711	ABB00-001003	15	B013003
6204-51-1910	ALP00-001001	9	C001001
6204-51-6122	AOP10-001001	7	B009001
6204-51-8920	AFT00-002001	5	D001001
6204-61-1630	AWP00-001001	2	E006001
6204-61-1650	AWP00-001001	4	E006001
6204-61-1660	AWP00-001001	7	E006001
6204-81-2563	A9850-004001	2	I001001
6204-81-6321	AEH10-002001	12	F001001
6204-81-6740	AEH10-002001	18	F001001
6205-11-5580	APP20-001001	2	A012001
6205-11-5691	A1670-001001	1	A015001
6205-11-5811	ATB30-002001	1	A010001
6205-21-5142	AOP10-001001	1	B009001
6205-43-5310	ARL00-001001	5	B002001
6205-43-5410	ARL00-001001	6	B002001
6205-43-5500	ARL00-001001	3	B002001
6205-51-6120	AOP10-001001	6	B009001
6205-51-7611	ATP00-002001	11	A013001
6205-51-8251	ATP00-002001	7	A013001
6205-51-8530	ATP00-002001	10	A013001
6205-51-8560	ATP00-002001	9	A013001
6205-61-1202	AWP00-001001	1	E006001
6205-61-1210	AWP00-001001	5	E006001
6205-61-3580	AWP20-004001	1	E005001
6205-61-3580	B9999-510001	6	B001001
6205-61-3580	V0100-002001	6	V001001
6205-61-5251	ALC00-001001	9	C003001
6205-61-5261	ALC00-001001	7	C003001
6206-11-5911	A1670-001001	7	A015001
6206-11-5980	A1610-001001	2	A014001
6206-21-1420	ABB00-001003	7	B013003
6206-21-1430	ABB00-001003	6	B013003
6206-21-3840	ABB10-001001	8	B005001
6206-21-3930	AFP10-001001	9	D002001
6206-31-1530	ABB00-001001	3	B013001
6206-31-4232	AFW00-001001	1	B007001
6206-31-4241	AFW00-001001	1	B007001
6206-31-4792	AFW00-001001	2	B007001
6206-51-1320	ALP00-001001	6	C001001
6206-61-1121	AWP00-001001	6	E006001
6206-61-1731	AWP00-001001	9	E006001
6206-61-3990	ASP00-001001	1	E004001
6206-71-5940	AFF20-001001	2	D005001
6206-71-5940	D0200-001005	10	D002005
6207-11-1431	APP10-001005	3	G003005
6207-11-8140	AVC00-001001	2	A001001
6207-18-1431	A8110-001001	1	Y001001
6207-18-1431	APP10-001005	3	G003005
6207-19-1431	A8110-001001	1	Y001001
6207-19-1431	APP10-001005	3	G003005
6207-21-1190	ABB00-001003	24	B013003
6207-21-2111	A8110-001001	1	Y001001
6207-21-2121	A8110-001001	1	Y001001
6207-31-2420	APP10-001001	2	G003001
6207-31-3130	APP10-001001	8	G003001
6207-31-3800	APP10-001001	7	G003001

PARTS Nº	FIG. Nº	INDEX	PAGE
6207-31-3810	APP10-001001	7	G003001
6207-36-3900	A8110-001001	7	Y001001
6207-36-3900	APP10-001001	9	G003001
6207-37-3900	A8110-001001	5	Y001001
6207-37-3900	APP10-001001	9	G003001
6207-38-3900	A8110-001001	3	Y001001
6207-38-3900	APP10-001001	9	G003001
6207-39-3900	A8110-001001	1	Y001001
6207-39-3900	APP10-001001	9	G003001
6207-41-4130	APP10-001005	10	G003005
6207-51-1400	ALP00-001001	2	C001001
6207-51-1410	ALP00-001001	3	C001001
6207-51-1610	ALP00-001001	10	C001001
6207-61-3280	AFA10-001001	1	E002001
6208-11-1440	APP10-001005	4	G003005
6208-11-1910	ALA00-001001	1	A017001
6208-11-4810	AIT00-001001	1	A009001
6208-11-4850	AIT00-001001	2	A009001
6208-11-5850	A1670-001001	9	A015001
6208-11-8610	AOB00-001001	2	A002001
6208-18-1440	A8110-001001	1	Y001001
6208-18-1440	APP10-001005	4	G003005
6208-19-1440	A8110-001001	1	Y001001
6208-19-1440	APP10-001005	4	G003005
6208-21-5310	ALG00-001001	1	B011001
6208-31-3500	APP10-001001	9	G003001
6208-51-5210	ALF00-001001	1	C002001
6208-51-5410	ALC00-001001	4	C003001
6208-51-5890	ALF00-001001	9	C002001
6208-61-5210	ALC00-001001	8	C003001
6208-61-5220	ALC00-001001	10	C003001
6208-61-5400	ALC00-001001	1	C003001
6208-61-5410	ALC00-001001	2	C003001
6208-61-5420	ALC00-001001	3	C003001
6208-61-6110	A9530-001001	5	E008001
6208-81-6470	AEH10-002001	6	F001001
6208-81-6590	AEH10-002001	8	F001001
6208-81-7100	B0200-001001	1	B004001
6208-81-7100	B0200-001002	24	B004002
6208-81-7100	B9999-003001	1	A008001
6208-81-7110	B0200-001001	1	B004001
6208-81-7110	B9999-003001	1	A008001
6208-81-7720	B0200-001002	1	B004002
6208-81-7720	B9999-003001	8	A008001
6208-81-8810	A1570-001001	1	A016001
6208-81-8820	A1570-001001	2	A016001
6208-81-8830	A1570-001001	6	A016001
6209-11-8210	ABR00-001001	2	A003001
6209-41-4210	APP10-001005	11	G003005
6210-11-5820	APH00-001002	5	G002002
6215-71-5292	APP10-001004	8	G003004
6215-81-9510	ABB00-001003	14	B013003
6215-81-9710	ABB00-001003	13	B013003
6215-81-9720	ATP00-002001	3	A013001
6216-84-9740	APH00-001002	14	G002002
6217-71-5770	APP10-001004	11	G003004
6221-41-5410	ARL00-001001	7	B002001
6221-41-5420	ARL00-001001	8	B002001
6221-41-5540	ARL00-001001	4	B002001
6221-61-1520	AWP00-001001	3	E006001
6240-71-6640	AIC20-001001	3	A006001
6251-81-7210	E0200-003001	7	E002001
6261-81-2600	APH00-001002	1	G002002
6261-81-2902	APH00-001002	12	G002002
6261-81-2911	APH00-001002	12	G002002
6261-81-6901	APH00-001002	14	G002002
6271-11-1100	APP10-001005	1	G003005
6271-11-1920	ALA00-001001	3	A017001
6271-11-3100	APP10-001003	1	G003003
6271-11-3811	APP10-001003	3	G003003
6271-11-3830	APP10-001003	4	G003003
6271-11-3850	APP10-001003	2	G003003
6271-11-3880	APP10-001003	6	G003003
6271-11-4130	AIM00-001001	1	A004001
6271-11-4321	AIC00-001001	1	A005001
6271-11-5140	ATB00-002001	1	A011001
6271-11-5230	A1610-001001	1	A014001
6271-11-5850	A1670-001001	2	A015001
6271-11-8200	AVC00-001001	1	A001001
6271-11-8210	AVC00-001001	1	A001001
6271-11-8910	ABR00-001001	6	A003001
6271-11-8970	ABR00-001001	3	A003001
6271-11-9120	AVC00-001001	8	A001001
6271-11-9131	A1610-001001	6	A014001
6271-21-1000	ABB00-001003	1	B013003
6271-21-3110	AGG00-001001	1	B004001
6271-21-3210	ABB10-001001	7	B005001
6271-21-4110	AFH00-001001	1	B006001
6271-21-5810	ALG00-001001	2	B011001
6271-31-1110	ABB00-001001	1	B013001
6271-31-1220	ABB00-001001	2	B013001
6271-31-1460	ADA00-001001	1	B016001
6271-31-1990	ADA00-001001	4	B016001
6271-31-2100	APP10-001001	4	G003001
6271-31-2110	APP10-001001	1	G003001
6271-31-6300	ABB10-001001	1	B005001
6271-38-2100	A8110-001001	8	Y001001
6271-38-2100	APP10-001001	6	G003001
6271-38-2110	A8110-001001	8	Y001001
6271-38-2110	APP10-001001	1	G003001
6271-39-2100	A8110-001001	8	Y001001
6271-39-2100	APP10-001001	6	G003001
6271-39-2110	A8110-001001	8	Y001001
6271-39-2110	APP10-001001	1	G003001
6271-41-1190	APP10-001002	6	G003002
6271-41-1220	APP10-001002	2	G003002
6271-41-1500	APP10-001002	1	G003002
6271-51-1200	ALP00-001001	1	C001001
6271-51-1410	ALP00-001001	2	C001001
6271-51-8240	ATP00-002001	2	A013001
6271-51-8540	ATP00-002001	1	A013001
6271-51-9910	ALF00-001001	8	C002001
6271-71-1110	AFP10-001001	1	D002001
6271-71-1210	APP10-001004	1	G003004
6271-71-3170	AFP10-001001	2	D002001
6271-71-3310	AFP10-001001	5	D002001
6271-71-5110	APP10-001004	4	G003004
6271-71-5120	APP10-001004	5	G003004
6271-71-5130	APP10-001004	6	G003004
6271-71-5140	APP10-001004	7	G003004
6271-71-5210	APP10-001004	3	G003004
6271-71-5510	AFT00-002001	13	D001001
6271-71-5520	AFT00-002001	9	D001001
6271-71-5530	AFT00-002001	14	D001001
6271-71-5890	APP10-001004	10	G003004
6271-71-6110	B9999-001001	1	D008001
6271-71-6110	D0200-001004	1	D002004
6271-71-6200	B9999-001001	1	D008001
6271-71-6200	D0200-001004	1	D002004
6271-71-6200	D0200-001005	14	D002005
6271-71-6700	AFF10-002001	1	D006001
6271-71-6700	B9999-512001	1	D007001
6271-71-6710	AFF10-002001	1	D006001
6271-71-6710	B9999-512001	1	D007001
6271-71-7211	AFT00-002001	7	D001001
6271-71-7800	AFT00-002001	1	D001001
6271-71-7990	AFT00-002001	8	D001001
6271-71-9890	AFT00-002001	2	D001001
6271-81-1910	APH00-001002	8	G002002
6271-81-1940	APH00-001002	15	G002002
6271-81-2543	A9850-004001	1	I001001
6271-81-2990	APP10-001004	12	G003004
6271-81-6340	AEH10-002001	11	F001001
6271-81-6350	AEH10-002001	1	F001001
6271-81-6380	AEH10-002001	16	F001001
6271-81-6990	A5010-001001	4	E007001
6271-81-8100	APP20-001001	1	A012001
6271-81-8240	AWR00-001001	1	F005001
6271-81-8980	AWR00-001001	15	F005001
6271-81-9190	APH00-001002	4	G002002

PARTS Nº	FIG. Nº	INDEX	PAGE
6271-81-9201	APH00-001002	10	G002002
6271-81-9220	APH00-001002	10	G002002
6271-81-9220	APH00-001002	12	G002002
6691-41-8230	ALP00-001001	13	C001001
6732-11-5420	A1610-001001	4	A014001
6738-21-5610	ARD00-001001	1	B010001
6738-21-5620	ARD00-001001	1	B010001
6738-21-5630	ARD00-001001	2	B010001
6738-21-5640	ARD00-001001	3	B010001
6738-61-4952	C0100-001001	11	C001001
6738-61-4952	C0100-001003	18	C001003
6741-81-9220	ASD10-001001	1	B012001
6754-81-9410	APH00-001002	10	G002002
700-13-31161	H0120-004018	20	H003018
700-13-31161	H0120-005018	20	H002018
700-13-31161	H0120-009018	20	H004018
700-13-31161	H0120-010018	20	H005018
700-22-11410	H0120-004014	2	H003014
700-22-11410	H0120-005014	2	H002014
700-22-11410	H0120-009014	2	H004014
700-22-11410	H0120-010014	2	H005014
700-22-11410	K1110-020028	19	K011028a
700-22-11410	K1110-050029	19	K011028b
700-80-64220	H0120-004014	3	H003014
700-80-64220	H0120-005014	3	H002014
700-80-64220	H0120-009014	3	H004014
700-80-64220	H0120-010014	3	H005014
700-93-11320	H0120-004023	16	H003023
700-93-11320	H0120-005023	16	H002023
700-93-11320	H0120-009023	16	H004023
700-93-11320	H0120-010023	16	H005023
701-20-61230	H0120-004030	9	H003030
701-20-61230	H0120-005027	9	H002027
701-20-61230	H0120-009030	9	H004030
701-20-61230	H0120-010033	9	H005033
702-15-73000	N1210-001003	5	N002003
702-16-01230	K1110-050027	1	K011028c
702-16-03530	K1110-010034	1	K011034
702-16-03530	K1110-010035	10	K011035
702-16-03530	K1110-010040	1	K011040
702-16-04260	K1110-010025	1	K011025
702-16-04260	K1110-010026	28	K011026
702-16-04290	K1110-020028	1	K011028a
702-16-04290	K1110-020029	43	K011029a
702-16-04290	K1110-050029	1	K011028b
702-16-04290	K1110-050030	43	K011029b
702-16-51140	K1110-010025	3	K011025
702-16-51140	K1110-010034	5	K011034
702-16-51140	K1110-010040	5	K011040
702-16-51140	K1110-020028	3	K011028a
702-16-51140	K1110-050027	3	K011028c
702-16-51140	K1110-050029	3	K011028b
702-16-51240	K1110-010034	17	K011034
702-16-51240	K1110-010040	17	K011040
702-16-51270	K1110-020028	8	K011028a
702-16-51270	K1110-050027	8	K011028c
702-16-51270	K1110-050029	8	K011028b
702-16-53140	K1110-010025	5	K011025
702-16-53140	K1110-010034	7	K011034
702-16-53140	K1110-010040	7	K011040
702-16-53170	K1110-010025	7	K011025
702-16-53170	K1110-010034	10	K011034
702-16-53170	K1110-010040	10	K011040
702-16-53170	K1110-020028	7	K011028a
702-16-53170	K1110-050027	7	K011028c
702-16-53170	K1110-050029	7	K011028b
702-16-53420	K1110-010025	4	K011025
702-16-53420	K1110-010034	6	K011034
702-16-53420	K1110-010040	6	K011040
702-16-53470	K1110-010034	8	K011034
702-16-53470	K1110-010040	8	K011040
702-16-53590	K1110-010034	9	K011034
702-16-53590	K1110-010040	9	K011040
702-16-53920	H0120-004024	7	H003024
702-16-53920	H0120-005024	7	H002024
702-16-53920	H0120-009024	7	H004024
702-16-53920	H0120-010024	7	H005024
702-16-54331	K1110-010025	17	K011025
702-16-54341	K1110-010025	17	K011025
702-16-54351	K1110-010025	17	K011025
702-16-54420	K1110-010025	6	K011025
702-16-54430	K1110-010025	19	K011025
702-16-54550	K1110-020028	4	K011028a
702-16-54550	K1110-050027	4	K011028c
702-16-54550	K1110-050029	4	K011028b
702-16-54560	K1110-020028	6	K011028a
702-16-54560	K1110-050027	6	K011028c
702-16-54560	K1110-050029	6	K011028b
702-16-54571	K1110-020028	5	K011028a
702-16-54571	K1110-050027	5	K011028c
702-16-54571	K1110-050029	5	K011028b
702-16-54580	K1110-020028	9	K011028a
702-16-54580	K1110-050027	9	K011028c
702-16-54580	K1110-050029	9	K011028b
702-16-54590	K1110-020028	10	K011028a
702-16-54590	K1110-050027	10	K011028c
702-16-54590	K1110-050029	10	K011028b
702-16-54641	K1110-020028	14	K011028a
702-16-54641	K1110-050027	14	K011028c
702-16-54641	K1110-050029	14	K011028b
702-16-54650	K1110-020028	17	K011028a
702-16-54650	K1110-050027	17	K011028c
702-16-54650	K1110-050029	17	K011028b
702-16-54660	K1110-020028	16	K011028a
702-16-54660	K1110-050027	16	K011028c
702-16-54660	K1110-050029	16	K011028b
702-16-54670	K1110-020028	3	K011028a
702-16-54670	K1110-050027	3	K011028c
702-16-55260	A9999-504009	6	B001009
702-16-56380	K1110-010025	17	K011025
702-16-56390	K1110-010025	17	K011025
702-16-71131	K1110-010034	14	K011034
702-16-71131	K1110-010040	14	K011040
702-16-71141	K1110-010034	15	K011034
702-16-71141	K1110-010040	15	K011040
702-16-71141	K1110-010041	10	K011041
702-16-71150	K1110-010025	8	K011025
702-16-71150	K1110-010034	11	K011034
702-16-71150	K1110-010040	11	K011040
702-16-71160	K1110-010025	9	K011025
702-16-71160	K1110-010034	12	K011034
702-16-71160	K1110-010040	12	K011040
702-16-71280	K1110-010034	13	K011034
702-16-71280	K1110-010040	13	K011040
702-16-71361	K1110-010034	18	K011034
702-16-71361	K1110-010040	18	K011040
702-16-71441	K1110-010034	19	K011034
702-16-71441	K1110-010040	19	K011040
702-16-73610	K1110-010025	21	K011025
702-16-73630	K1110-010025	10	K011025
702-16-73650	K1110-010025	23	K011025
702-21-07610	K1110-020028	18	K011028a
702-21-07610	K1110-050029	18	K011028b
702-21-35130	H0120-004018	3	H003018
702-21-35130	H0120-005018	3	H002018
702-21-35130	H0120-009018	3	H004018
702-21-35130	H0120-010018	3	H005018
702-21-39450	K1110-020028	20	K011028a
702-21-39450	K1110-050029	20	K011028b
702-21-53120	H0120-004023	11	H003023
702-21-53120	H0120-005023	11	H002023
702-21-53120	H0120-009023	11	H004023
702-21-53120	H0120-010023	11	H005023
702-21-55420	H0120-004023	12	H003023
702-21-55420	H0120-005023	12	H002023
702-21-55420	H0120-009023	12	H004023
702-21-55420	H0120-010023	12	H005023
702-21-55440	H0120-004023	14	H003023
702-21-55440	H0120-005023	14	H002023
702-21-55440	H0120-009023	14	H004023

PARTS Nº	FIG. Nº	INDEX	PAGE
702-21-55440	H0120-010023	14	H005023
702-21-55450	H0120-004003	4	H003003
702-21-55450	H0120-004025	13	H003025
702-21-55450	H0120-005003	4	H002003
702-21-55450	H0120-009003	4	H004003
702-21-55450	H0120-009025	13	H004025
702-21-55450	H0120-010003	4	H005003
702-21-55450	H0120-010025	13	H005025
702-21-55450	H0120-010028	13	H005028
702-21-55520	H0120-004023	13	H003023
702-21-55520	H0120-005023	13	H002023
702-21-55520	H0120-009023	13	H004023
702-21-55520	H0120-010023	13	H005023
702-21-55620	H0120-004001	9	H003001
702-21-55620	H0120-004008	8	H003008
702-21-55620	H0120-004024	4	H003024
702-21-55620	H0120-005001	9	H002001
702-21-55620	H0120-005008	8	H002008
702-21-55620	H0120-005024	4	H002024
702-21-55620	H0120-009001	9	H004001
702-21-55620	H0120-009008	8	H004008
702-21-55620	H0120-009024	4	H004024
702-21-55620	H0120-010001	9	H005001
702-21-55620	H0120-010008	8	H005008
702-21-55620	H0120-010024	4	H005024
702-21-55620	N1210-001002	11	N002002
702-21-55640	H0120-004024	3	H003024
702-21-55640	H0120-005024	3	H002024
702-21-55640	H0120-009024	3	H004024
702-21-55640	H0120-010024	3	H005024
702-21-55720	H0120-004024	10	H003024
702-21-55720	H0120-005024	10	H002024
702-21-55720	H0120-009024	10	H004024
702-21-55720	H0120-010024	10	H005024
702-21-55920	A9999-504009	7	B001009
702-21-55930	A9999-504009	8	B001009
702-21-55951	A9999-504009	10	B001009
702-21-56620	A9999-504009	7	B001009
702-21-56630	A9999-504009	9	B001009
702-21-58900	A9999-504009	5	B001009
702-73-01410	N1210-001003	1	N002003
702-75-11520	H0120-004002	7	H003002
702-75-11520	H0120-004008	15	H003008
702-75-11520	H0120-004025	5	H003025
702-75-11520	H0120-005002	7	H002002
702-75-11520	H0120-005008	15	H002008
702-75-11520	H0120-009002	7	H004002
702-75-11520	H0120-009008	15	H004008
702-75-11520	H0120-009025	5	H004025
702-75-11520	H0120-010002	7	H005002
702-75-11520	H0120-010008	15	H005008
702-75-11520	H0120-010025	5	H005025
702-75-11520	H0120-010028	5	H005028
703-08-00110	N1310-001001	1	N003001
703-08-91130	N1310-001001	1	N003001
703-08-92130	N1310-001001	4	N003001
703-08-93511	N1310-001001	9	N003001
703-08-94510	N1310-001001	7	N003001
703-08-95620	N1310-001001	2	N003001
703-09-98510	N1310-001001	6	N003001
703-09-98710	N1310-001001	5	N003001
705-17-04980	T1120-004001	18	T004001
705-17-04980	T1120-004002	18	T004002
705-17-04980	T1220-003001	19	T010001
706-73-40010	N1210-001002	3	N002002
706-73-42270	N1210-001002	34	N002002
706-73-42820	N1210-001002	4	N002002
706-73-43880	N1210-001002	20	N002002
706-73-43890	N1210-001002	22	N002002
706-76-71390	H1831-001004	5	H030004
706-7C-01020	N1210-001002	1	N002002
706-7C-01020	N1210-001003	1	N002003
706-7C-03020	N1210-001002	1	N002002
706-7C-05110	N1210-001002	23	N002002
706-7C-41110	N1210-001002	27	N002002
706-7C-41210	N1210-001002	30	N002002
706-7C-41310	N1210-001002	28	N002002
706-7C-41410	N1210-001002	31	N002002
706-7C-41420	N1210-001002	32	N002002
706-7C-41510	N1210-001002	19	N002002
706-7C-41610	N1210-001002	21	N002002
706-7C-41740	N1210-001002	35	N002002
706-7C-41910	N1210-001002	33	N002002
706-7C-51110	N1210-001002	5	N002002
706-7C-51120	N1210-001002	6	N002002
706-7C-51130	N1210-001002	7	N002002
706-7C-51140	N1210-001002	13	N002002
706-7C-51150	N1210-001002	15	N002002
706-7C-71120	N1210-001002	1	N002002
706-7C-71210	N1210-001002	2	N002002
706-7C-91110	N1210-001002	38	N002002
706-7C-91120	N1210-001002	39	N002002
706-7C-91210	N1210-001002	36	N002002
706-7C-91220	N1210-001002	37	N002002
706-7C-91310	N1210-001002	42	N002002
707-01-0AJ80	T1120-004001	1	T004001
707-01-0AJ80	T1120-004002	1	T004002
707-01-0AK00	T1140-004001	1	T006001
707-01-0AK10	T1220-003001	1	T010001
707-13-10670	T1120-004001	1	T004001
707-13-10670	T1120-004002	1	T004002
707-13-11830	T1140-004001	1	T006001
707-13-95130	T1220-003001	1	T010001
707-27-10750	T1120-004001	8	T004001
707-27-10750	T1120-004002	8	T004002
707-27-11750	T1140-004001	14	T006001
707-27-95650	T1220-003001	9	T010001
707-34-55020	KIT	K05	Y001001
707-34-55020	T1220-003001	23	T010001
707-34-60030	KIT	K03	Y001001
707-34-60030	T1120-004001	24	T004001
707-34-60030	T1120-004002	24	T004002
707-35-90360	KIT	K04	Y001001
707-35-90360	KIT	K06	Y001001
707-35-90360	T1140-004001	31	T006001
707-35-90610	KIT	K05	Y001001
707-35-90610	T1220-003001	26	T010001
707-35-90730	KIT	K03	Y001001
707-35-90730	T1120-004001	25	T004001
707-35-90730	T1120-004002	25	T004002
707-35-90970	KIT	K05	Y001001
707-35-90970	T1220-003001	17	T010001
707-35-91060	KIT	K03	Y001001
707-35-91060	T1120-004001	16	T004001
707-35-91060	T1120-004002	16	T004002
707-35-91130	KIT	K06	Y001001
707-35-91150	KIT	K04	Y001001
707-35-91150	T1140-004001	8	T006001
707-35-91150	T1140-004001	20	T006001
707-36-10760	T1120-004001	19	T004001
707-36-10760	T1120-004002	19	T004002
707-36-11851	T1140-004001	25	T006001
707-36-95040	T1220-003001	20	T010001
707-39-10550	KIT	K03	Y001001
707-39-10550	T1120-004001	21	T004001
707-39-10550	T1120-004002	21	T004002
707-39-11150	KIT	K06	Y001001
707-39-11530	KIT	K04	Y001001
707-39-11530	T1140-004001	27	T006001
707-39-95030	KIT	K05	Y001001
707-39-95030	T1220-003001	22	T010001
707-44-10250	KIT	K03	Y001001
707-44-10250	T1120-004001	20	T004001
707-44-10250	T1120-004002	20	T004002
707-44-10911	T1120-004001	22	T004001
707-44-10911	T1120-004002	22	T004002
707-44-11150	KIT	K06	Y001001
707-44-11250	KIT	K04	Y001001
707-44-11250	T1140-004001	26	T006001
707-44-11920	T1140-004001	28	T006001

PARTS Nº	FIG. Nº	INDEX	PAGE
707-44-95150	KIT	K05	Y001001
707-44-95150	T1220-003001	21	T010001
707-44-95911	T1220-003001	24	T010001
707-51-65030	KIT	K05	Y001001
707-51-65030	T1220-003001	12	T010001
707-51-65650	KIT	K05	Y001001
707-51-65650	T1220-003001	13	T010001
707-51-70030	KIT	K03	Y001001
707-51-70030	T1120-004001	11	T004001
707-51-70030	T1120-004002	11	T004002
707-51-70650	KIT	K03	Y001001
707-51-70650	T1120-004001	12	T004001
707-51-70650	T1120-004002	12	T004002
707-51-75030	KIT	K04	Y001001
707-51-75030	KIT	K06	Y001001
707-51-75030	T1140-004001	17	T006001
707-51-75650	KIT	K04	Y001001
707-51-75650	KIT	K06	Y001001
707-51-75650	T1140-004001	18	T006001
707-52-90421	T1220-003001	15	T010001
707-52-90471	T1120-004001	13	T004001
707-52-90471	T1120-004002	13	T004002
707-52-90501	T1140-004001	21	T006001
707-56-60540	R0110-001002	6	R001002
707-58-65801	T1220-003001	2	T010001
707-58-75840	T1140-004001	2	T006001
707-71-32570	T1140-004001	7	T006001
707-71-70810	T1140-004001	10	T006001
707-71-80230	T1140-004001	11	T006001
707-71-91270	T1140-004001	13	T006001
707-75-65110	T1220-003001	16	T010001
707-75-70110	T1120-004001	14	T004001
707-75-70110	T1120-004002	14	T004002
707-75-75110	T1140-004001	22	T006001
707-76-65210	T1220-003001	3	T010001
707-76-65520	T1220-003001	6	T010001
707-76-70230	T1120-004001	3	T004001
707-76-70230	T1120-004001	6	T004001
707-76-70230	T1120-004002	3	T004002
707-76-70230	T1120-004002	6	T004002
707-76-70240	T1140-004001	3	T006001
707-76-70240	T1140-004001	5	T006001
707-83-13010	T1140-004001	32	T006001
707-86-48490	T1120-004001	26	T004001
707-86-48510	T1120-004002	26	T004002
707-86-55540	T1140-004001	36	T006001
707-86-55550	T1220-003001	27	T010001
707-86-55580	T1120-004001	28	T004001
707-86-55590	T1120-004002	28	T004002
707-87-14070	T1140-004001	35	T006001
707-88-21680	T1140-004001	42	T006001
707-88-21720	T1120-004001	34	T004001
707-88-21720	T1120-004002	34	T004002
707-88-21730	T1220-003001	30	T010001
707-88-25110	T1120-004001	33	T004001
707-88-25110	T1120-004002	33	T004002
707-88-50120	T1220-003001	29	T010001
707-88-50490	T1140-004001	41	T006001
707-99-27780	KIT	K05	Y001001
707-99-37180	KIT	K03	Y001001
707-99-38790	KIT	K06	Y001001
707-99-45170	KIT	K04	Y001001
708-18-13230	A9999-504005	3	B001005
708-1G-15910	A9999-504009	1	B001009
708-1L-04860	A9999-504007	1	B001007
708-1L-29340	A9999-504001	3	B001001
708-1L-29340	A9999-504002	8	B001002
708-25-12790	A9999-504004	4	B001004
708-25-19160	H0120-004013	8	H003013
708-25-19160	H0120-005013	8	H002013
708-25-19160	H0120-009013	8	H004013
708-25-19160	H0120-010013	8	H005013
708-25-52861	A9999-504004	5	B001004
708-2E-05040	A9999-504004	3	B001004
708-2G-15460	A9999-504008	3	B001008
708-2L-06660	A9999-504006	2	B001006
708-2L-22160	A9999-504004	6	B001004
708-2L-23131	A9999-504005	5	B001005
708-2L-23351	A9999-504005	8	B001005
708-2L-23360	A9999-504005	9	B001005
708-2L-24680	A9999-504008	2	B001008
708-2L-25480	A9999-504002	7	B001002
708-2L-25490	H0120-004019	9	H003019
708-2L-25490	H0120-005019	9	H002019
708-2L-25490	H0120-009019	9	H004019
708-2L-25490	H0120-010019	9	H005019
708-2L-28540	A9999-504008	4	B001008
708-2L-32150	A9999-504004	2	B001004
708-2L-32260	A9999-504002	4	B001002
708-2L-32280	A9999-504009	16	B001009
708-2L-33160	A9999-504005	6	B001005
708-2L-34120	A9999-504006	1	B001006
708-2L-34230	A9999-504006	24	B001006
708-2L-34260	A9999-504007	5	B001007
708-2L-34270	A9999-504007	1	B001007
708-2L-34330	A9999-504006	16	B001006
708-2L-35210	A9999-504006	18	B001006
708-2L-35210	A9999-504007	3	B001007
708-2L-35270	A9999-504006	20	B001006
708-2L-35290	A9999-504006	26	B001006
708-2L-35290	A9999-504007	4	B001007
708-2L-35311	A9999-504008	1	B001008
708-2L-35331	A9999-504008	6	B001008
708-2L-35341	A9999-504008	8	B001008
708-2L-35351	A9999-504008	9	B001008
708-2L-35360	A9999-504008	5	B001008
708-2L-35410	A9999-504008	7	B001008
708-2L-35630	A9999-504006	10	B001006
708-2L-35641	A9999-504006	11	B001006
708-2L-35650	A9999-504006	14	B001006
708-2L-35670	A9999-504006	27	B001006
708-2L-35680	A9999-504006	3	B001006
708-2L-35690	A9999-504006	7	B001006
708-2L-35710	A9999-504006	19	B001006
708-2L-35730	A9999-504006	13	B001006
708-2L-35750	A9999-504006	23	B001006
708-2L-35750	A9999-504007	7	B001007
708-2L-35760	A9999-504006	5	B001006
708-2L-35770	A9999-504006	6	B001006
708-2L-35860	A9999-504006	9	B001006
708-3D-00020	A9999-504001	1	B001001
708-3D-00020	A9999-504002	1	B001002
708-3D-00020	A9999-504003	1	B001003
708-3D-00020	A9999-504004	1	B001004
708-3D-00020	A9999-504005	1	B001005
708-3D-00020	A9999-504006	1	B001006
708-3D-00020	A9999-504007	1	B001007
708-3D-00020	A9999-504008	1	B001008
708-3D-00020	A9999-504009	1	B001009
708-3D-01020	A9999-504001	1	B001001
708-3D-01020	A9999-504002	1	B001002
708-3D-01020	A9999-504003	1	B001003
708-3D-01020	A9999-504004	1	B001004
708-3D-01020	A9999-504005	1	B001005
708-3D-01020	A9999-504006	1	B001006
708-3D-01020	A9999-504007	1	B001007
708-3D-04130	A9999-504001	1	B001001
708-3D-04220	A9999-504002	1	B001002
708-3D-04320	A9999-504005	1	B001005
708-3D-04420	A9999-504005	12	B001005
708-3D-04610	A9999-504006	1	B001006
708-3D-04710	A9999-504008	1	B001008
708-3D-11620	A9999-504007	9	B001007
708-3D-11630	A9999-504007	10	B001007
708-3D-11730	A9999-504007	11	B001007
708-3D-11810	A9999-504002	12	B001002
708-3D-12130	A9999-504004	1	B001004
708-3D-12210	A9999-504009	15	B001009
708-3D-12220	A9999-003001	4	B002001
708-3D-13330	A9999-504005	10	B001005
708-3D-13340	A9999-504005	11	B001005
708-3D-15310	A9999-504006	4	B001006
708-3D-15320	A9999-504006	8	B001006
708-3D-15410	A9999-504006	12	B001006
708-3D-15420	A9999-504006	15	B001006
708-3M-05110	A9999-504002	14	B001002
708-3M-05210	A9999-504003	1	B001003
708-3M-15211	A9999-504003	10	B001003
708-3S-15820	A9999-504003	13	B001003
708-7L-13140	A9999-504005	7	B001005
708-7R-11220	N1210-001002	9	N002002
708-7T-12230	N1210-001002	25	N002002
708-8E-16150	A9999-504001	7	B001001
708-8E-16150	A9999-504002	9	B001002
708-8E-16150	N1210-001004	2	N002004
708-8E-16160	H0120-004001	7	H003001
708-8E-16160	H0120-004008	6	H003008
708-8E-16160	H0120-004024	14	H003024
708-8E-16160	H0120-005001	7	H002001
708-8E-16160	H0120-005008	6	H002008
708-8E-16160	H0120-005024	14	H002024
708-8E-16160	H0120-009001	7	H004001
708-8E-16160	H0120-009008	6	H004008
708-8E-16160	H0120-009024	14	H004024
708-8E-16160	H0120-010001	7	H005001
708-8E-16160	H0120-010008	6	H005008
708-8E-16160	H0120-010024	14	H005024
709-25-11361	H0120-004008	2	H003008
709-25-11361	H0120-005008	2	H002008
709-25-11361	H0120-009008	2	H004008
709-25-11361	H0120-010008	2	H005008
709-25-11390	H0120-004016	2	H003016
709-25-11390	H0120-004017	2	H003017
709-25-11390	H0120-005016	2	H002016
709-25-11390	H0120-005017	2	H002017
709-25-11390	H0120-009016	2	H004016
709-25-11390	H0120-009017	2	H004017
709-25-11390	H0120-010016	2	H005016
709-25-11390	H0120-010017	2	H005017
709-25-11390	H1270-004004	13	H020004
709-70-74700	H1270-004003	20	H020003
709-70-74700	H1270-004004	1	H020004
709-70-91420	H0120-004005	6	H003005
709-70-91420	H0120-005005	6	H002005
709-70-91420	H0120-009005	6	H004005
709-70-91420	H0120-010005	6	H005005
709-90-75300	H0120-004015	1	H003015
709-90-75300	H0120-005015	1	H002015
709-90-75300	H0120-009015	1	H004015
709-90-75300	H0120-010015	1	H005015
720-68-19610	N1210-001002	29	N002002
721-58-70490	T1120-004001	2	T004001
721-58-70490	T1120-004002	2	T004002
722-10-91130	N1210-001002	14	N002002
722-12-18240	A9999-504009	13	B001009
723-11-18180	H0120-004020	5	H003020
723-11-18180	H0120-004021	3	H003021
723-11-18180	H0120-005020	5	H002020
723-11-18180	H0120-005021	3	H002021
723-11-18180	H0120-009020	5	H004020
723-11-18180	H0120-009021	3	H004021
723-11-18180	H0120-010020	5	H005020
723-11-18180	H0120-010021	3	H005021
723-11-18190	H0120-004019	6	H003019
723-11-18190	H0120-005019	6	H002019
723-11-18190	H0120-009019	6	H004019
723-11-18190	H0120-010019	6	H005019
723-11-18430	H0120-004006	10	H003006
723-11-18430	H0120-005006	10	H002006
723-11-18430	H0120-009006	10	H004006
723-11-18430	H0120-010006	10	H005006
723-11-27280	H0120-004023	8	H003023
723-11-27280	H0120-005023	8	H002023
723-11-27280	H0120-009023	8	H004023
723-11-27280	H0120-010023	8	H005023
723-11-27830	H0120-004020	3	H003020
723-11-27830	H0120-005020	3	H002020
723-11-27830	H0120-009020	3	H004020
723-11-27830	H0120-010020	3	H005020
723-11-27850	H0120-004020	7	H003020
723-11-27850	H0120-004021	4	H003021
723-11-27850	H0120-005020	7	H002020
723-11-27850	H0120-005021	4	H002021
723-11-27850	H0120-009020	7	H004020
723-11-27850	H0120-009021	4	H004021
723-11-27850	H0120-010020	7	H005020
723-11-27850	H0120-010021	4	H005021
723-11-28920	H0120-004008	11	H003008
723-11-28920	H0120-005008	11	H002008
723-11-28920	H0120-009008	11	H004008
723-11-28920	H0120-010008	11	H005008
723-20-80100	H0120-004016	3	H003016
723-20-80100	H0120-005016	3	H002016
723-20-80100	H0120-009016	3	H004016
723-20-80100	H0120-010016	3	H005016
723-20-94130	H0120-004022	4	H003022
723-20-94130	H0120-005022	4	H002022
723-20-94130	H0120-009022	4	H004022
723-20-94130	H0120-010022	4	H005022
723-20-94140	H0120-004022	6	H003022
723-20-94140	H0120-005022	6	H002022
723-20-94140	H0120-009022	6	H004022
723-20-94140	H0120-010022	6	H005022
723-20-94150	H0120-004022	3	H003022
723-20-94150	H0120-005022	3	H002022
723-20-94150	H0120-009022	3	H004022
723-20-94150	H0120-010022	3	H005022
723-20-94200	H0120-004022	1	H003022
723-20-94200	H0120-005022	1	H002022
723-20-94200	H0120-009022	1	H004022
723-20-94200	H0120-010022	1	H005022
723-20-95100	H0120-004021	1	H003021
723-20-95100	H0120-005021	1	H002021
723-20-95100	H0120-009021	1	H004021
723-20-95100	H0120-010021	1	H005021
723-20-95140	H0120-004020	6	H003020
723-20-95140	H0120-004021	6	H003021
723-20-95140	H0120-005020	6	H002020
723-20-95140	H0120-005021	6	H002021
723-20-95140	H0120-009020	6	H004020
723-20-95140	H0120-009021	6	H004021
723-20-95140	H0120-010020	6	H005020
723-20-95140	H0120-010021	6	H005021
723-20-95300	H0120-004020	1	H003020
723-20-95300	H0120-005020	1	H002020
723-20-95300	H0120-009020	1	H004020
723-20-95300	H0120-010020	1	H005020
723-26-14140	H0120-004011	11	H003011
723-26-14140	H0120-005011	11	H002011
723-26-14140	H0120-009011	11	H004011
723-26-14140	H0120-010011	11	H005011
723-26-14520	H0120-004010	8	H003010
723-26-14520	H0120-005010	8	H002010
723-26-14520	H0120-009010	8	H004010
723-26-14520	H0120-010010	8	H005010
723-26-14530	H0120-004010	9	H003010
723-26-14530	H0120-005010	9	H002010
723-26-14530	H0120-009010	9	H004010
723-26-14530	H0120-010010	9	H005010
723-26-14540	H0120-004010	10	H003010
723-26-14540	H0120-005010	10	H002010
723-26-14540	H0120-009010	10	H004010
723-26-14540	H0120-010010	10	H005010
723-26-15121	H0120-004010	6	H003010
723-26-15121	H0120-005010	6	H002010
723-26-15121	H0120-009010	6	H004010
723-26-15121	H0120-010010	6	H005010
723-26-15170	H0120-004012	2	H003012
723-26-15170	H0120-005012	2	H002012
723-26-15170	H0120-009012	2	H004012

PARTS Nº	FIG. Nº	INDEX	PAGE
723-26-15170	H0120-010012	2	H005012
723-26-15190	H0120-004001	2	H003001
723-26-15190	H0120-005001	2	H002001
723-26-15190	H0120-009001	2	H004001
723-26-15190	H0120-010001	2	H005001
723-26-15230	H0120-004004	13	H003004
723-26-15230	H0120-004011	12	H003011
723-26-15230	H0120-004026	3	H003026
723-26-15230	H0120-005004	13	H002004
723-26-15230	H0120-005011	12	H002011
723-26-15230	H0120-009004	13	H004004
723-26-15230	H0120-009011	12	H004011
723-26-15230	H0120-009026	3	H004026
723-26-15230	H0120-010004	13	H005004
723-26-15230	H0120-010011	12	H005011
723-26-15230	H0120-010026	3	H005026
723-26-15230	H0120-010029	3	H005029
723-26-15580	H0120-004008	3	H003008
723-26-15580	H0120-005008	3	H002008
723-26-15580	H0120-009008	3	H004008
723-26-15580	H0120-010008	3	H005008
723-26-15830	H0120-004009	5	H003009
723-26-15830	H0120-005009	5	H002009
723-26-15830	H0120-009009	5	H004009
723-26-15830	H0120-010009	5	H005009
723-26-15840	H0120-004009	6	H003009
723-26-15840	H0120-004012	16	H003012
723-26-15840	H0120-005009	6	H002009
723-26-15840	H0120-005012	16	H002012
723-26-15840	H0120-009009	6	H004009
723-26-15840	H0120-009012	16	H004012
723-26-15840	H0120-010009	6	H005009
723-26-15840	H0120-010012	16	H005012
723-26-15890	H0120-004011	13	H003011
723-26-15890	H0120-005011	13	H002011
723-26-15890	H0120-009011	13	H004011
723-26-15890	H0120-010011	13	H005011
723-26-15991	H0120-004012	11	H003012
723-26-15991	H0120-005012	11	H002012
723-26-15991	H0120-009012	11	H004012
723-26-15991	H0120-010012	11	H005012
723-26-16460	H0120-004008	17	H003008
723-26-16460	H0120-005008	17	H002008
723-26-16460	H0120-009008	17	H004008
723-26-16460	H0120-010008	17	H005008
723-26-16670	H0120-004011	5	H003011
723-26-16670	H0120-005011	5	H002011
723-26-16670	H0120-009011	5	H004011
723-26-16670	H0120-010011	5	H005011
723-26-16710	H0120-004010	11	H003010
723-26-16710	H0120-005010	11	H002010
723-26-16710	H0120-009010	11	H004010
723-26-16710	H0120-010010	11	H005010
723-26-16720	H0120-004010	12	H003010
723-26-16720	H0120-005010	12	H002010
723-26-16720	H0120-009010	12	H004010
723-26-16720	H0120-010010	12	H005010
723-26-16740	H0120-004010	7	H003010
723-26-16740	H0120-005010	7	H002010
723-26-16740	H0120-009010	7	H004010
723-26-16740	H0120-010010	7	H005010
723-36-14110	H0120-004002	21	H003002
723-36-14110	H0120-004025	11	H003025
723-36-14110	H0120-005002	21	H002002
723-36-14110	H0120-009002	21	H004002
723-36-14110	H0120-009025	11	H004025
723-36-14110	H0120-010002	21	H005002
723-36-14110	H0120-010025	11	H005025
723-36-14110	H0120-010028	11	H005028
723-36-14120	H0120-004002	22	H003002
723-36-14120	H0120-005002	22	H002002
723-36-14120	H0120-009002	22	H004002
723-36-14120	H0120-010002	22	H005002
723-36-14130	H0120-004002	23	H003002
723-36-14130	H0120-005002	23	H002002
723-36-14130	H0120-009002	23	H004002
723-36-14130	H0120-010002	23	H005002
723-36-15240	H0120-004007	11	H003007
723-36-15240	H0120-005007	11	H002007
723-36-15240	H0120-009007	11	H004007
723-36-15240	H0120-010007	11	H005007
723-36-15250	H0120-004007	12	H003007
723-36-15250	H0120-005007	12	H002007
723-36-15250	H0120-009007	12	H004007
723-36-15250	H0120-010007	12	H005007
723-40-85100	H0120-004016	1	H003016
723-40-85100	H0120-005016	1	H002016
723-40-85100	H0120-009016	1	H004016
723-40-85100	H0120-010016	1	H005016
723-40-91600	H0120-004024	6	H003024
723-40-91600	H0120-005024	6	H002024
723-40-91600	H0120-009024	6	H004024
723-40-91600	H0120-010024	6	H005024
723-40-94200	H0120-004014	1	H003014
723-40-94200	H0120-005014	1	H002014
723-40-94200	H0120-009014	1	H004014
723-40-94201	H0120-010014	1	H005014
723-50-11130	H0120-005013	1	H002013
723-50-11140	H0120-004013	1	H003013
723-50-11140	H0120-009013	1	H004013
723-50-11150	H0120-010013	1	H005013
723-50-53200	H0120-004018	1	H003018
723-50-53200	H0120-005018	1	H002018
723-50-53200	H0120-009018	1	H004018
723-50-53200	H0120-010018	1	H005018
723-50-53260	H0120-004018	15	H003018
723-50-53260	H0120-005018	15	H002018
723-50-53260	H0120-009018	15	H004018
723-50-53260	H0120-010018	15	H005018
723-50-53270	H0120-004018	14	H003018
723-50-53270	H0120-005018	14	H002018
723-50-53270	H0120-009018	14	H004018
723-50-53270	H0120-010018	14	H005018
723-50-53330	H0120-004018	4	H003018
723-50-53330	H0120-005018	4	H002018
723-50-53330	H0120-009018	4	H004018
723-50-53330	H0120-010018	4	H005018
723-50-53350	H0120-004018	13	H003018
723-50-53350	H0120-005018	13	H002018
723-50-53350	H0120-009018	13	H004018
723-50-53350	H0120-010018	13	H005018
723-50-54200	H0120-004019	1	H003019
723-50-54200	H0120-005019	1	H002019
723-50-54200	H0120-009019	1	H004019
723-50-54200	H0120-010019	1	H005019
723-50-55250	H0120-004007	2	H003007
723-50-55250	H0120-005007	2	H002007
723-50-55250	H0120-009007	2	H004007
723-50-55250	H0120-010007	2	H005007
723-50-55270	H0120-004007	3	H003007
723-50-55270	H0120-005007	3	H002007
723-50-55270	H0120-009007	3	H004007
723-50-55270	H0120-010007	3	H005007
723-50-55280	H0120-004007	4	H003007
723-50-55280	H0120-005007	4	H002007
723-50-55280	H0120-009007	4	H004007
723-50-55280	H0120-010007	4	H005007
723-50-60200	H0120-004017	1	H003017
723-50-60200	H0120-005017	1	H002017
723-50-60200	H0120-009017	1	H004017
723-50-60200	H0120-010017	1	H005017
723-50-61200	H0120-004023	1	H003023
723-50-61200	H0120-005023	1	H002023
723-50-61200	H0120-009023	1	H004023
723-50-61200	H0120-010023	1	H005023
723-50-61330	H0120-004023	4	H003023
723-50-61330	H0120-005023	4	H002023
723-50-61330	H0120-009023	4	H004023
723-50-61330	H0120-010023	4	H005023
723-50-61350	H0120-004023	5	H003023

PARTS Nº	FIG. Nº	INDEX	PAGE
723-50-61350	H0120-005023	5	H002023
723-50-61350	H0120-009023	5	H004023
723-50-61350	H0120-010023	5	H005023
723-50-61360	H0120-004023	7	H003023
723-50-61360	H0120-005023	7	H002023
723-50-61360	H0120-009023	7	H004023
723-50-61360	H0120-010023	7	H005023
723-50-61390	H0120-004023	3	H003023
723-50-61390	H0120-005023	3	H002023
723-50-61390	H0120-009023	3	H004023
723-50-61390	H0120-010023	3	H005023
723-50-62300	H0120-004024	1	H003024
723-50-62300	H0120-005024	1	H002024
723-50-62300	H0120-009024	1	H004024
723-50-62300	H0120-010024	1	H005024
723-51-06101	H0120-004025	1	H003025
723-51-06101	H0120-004026	1	H003026
723-51-06101	H0120-004027	1	H003027
723-51-06101	H0120-009025	1	H004025
723-51-06101	H0120-009026	1	H004026
723-51-06101	H0120-009027	1	H004027
723-51-06101	H0120-010028	1	H005028
723-51-06101	H0120-010029	1	H005029
723-51-06101	H0120-010030	1	H005030
723-51-06201	H0120-010025	1	H005025
723-51-06201	H0120-010026	1	H005026
723-51-06201	H0120-010027	1	H005027
723-56-11240	H0120-004001	1	H003001
723-56-11240	H0120-005001	1	H002001
723-56-11240	H0120-009001	1	H004001
723-56-11240	H0120-010001	1	H005001
723-56-12703	H0120-005001	1	H002001
723-56-12703	H0120-005002	1	H002002
723-56-12703	H0120-005003	1	H002003
723-56-12703	H0120-005004	1	H002004
723-56-12703	H0120-005005	1	H002005
723-56-12703	H0120-005006	1	H002006
723-56-12703	H0120-005007	1	H002007
723-56-12703	H0120-005008	1	H002008
723-56-12703	H0120-005009	1	H002009
723-56-12703	H0120-005010	1	H002010
723-56-12703	H0120-005011	1	H002011
723-56-12703	H0120-005012	1	H002012
723-56-12703	H0120-005013	1	H002013
723-56-12703	H0120-005014	1	H002014
723-56-12703	H0120-005015	1	H002015
723-56-12703	H0120-005016	1	H002016
723-56-12703	H0120-005017	1	H002017
723-56-12703	H0120-005018	1	H002018
723-56-12703	H0120-005019	1	H002019
723-56-12703	H0120-005020	1	H002020
723-56-12703	H0120-005021	1	H002021
723-56-12703	H0120-005022	1	H002022
723-56-12703	H0120-005023	1	H002023
723-56-12703	H0120-005024	1	H002024
723-56-31211	H0120-004002	19	H003002
723-56-31211	H0120-004025	10	H003025
723-56-31211	H0120-005002	19	H002002
723-56-31211	H0120-009002	19	H004002
723-56-31211	H0120-009025	10	H004025
723-56-31211	H0120-010002	19	H005002
723-56-31211	H0120-010025	10	H005025
723-56-31211	H0120-010028	10	H005028
723-56-31510	H0120-004003	1	H003003
723-56-31510	H0120-004025	12	H003025
723-56-31510	H0120-005003	1	H002003
723-56-31510	H0120-009003	1	H004003
723-56-31510	H0120-009025	12	H004025
723-56-31510	H0120-010003	1	H005003
723-56-31510	H0120-010025	12	H005025
723-56-31510	H0120-010028	12	H005028
723-56-31580	H0120-004003	3	H003003
723-56-31580	H0120-005003	3	H002003
723-56-31580	H0120-009003	3	H004003
723-56-31580	H0120-010003	3	H005003
723-56-31620	H0120-004005	2	H003005
723-56-31620	H0120-004019	3	H003019
723-56-31620	H0120-005005	2	H002005
723-56-31620	H0120-005019	3	H002019
723-56-31620	H0120-009005	2	H004005
723-56-31620	H0120-009019	3	H004019
723-56-31620	H0120-010005	2	H005005
723-56-31620	H0120-010019	3	H005019
723-56-31630	H0120-004005	3	H003005
723-56-31630	H0120-004019	4	H003019
723-56-31630	H0120-005005	3	H002005
723-56-31630	H0120-005019	4	H002019
723-56-31630	H0120-009005	3	H004005
723-56-31630	H0120-009019	4	H004019
723-56-31630	H0120-010005	3	H005005
723-56-31630	H0120-010019	4	H005019
723-56-31640	H0120-004026	8	H003026
723-56-31640	H0120-009026	8	H004026
723-56-31640	H0120-010026	8	H005026
723-56-31640	H0120-010029	8	H005029
723-56-31660	H0120-004005	7	H003005
723-56-31660	H0120-005005	7	H002005
723-56-31660	H0120-009005	7	H004005
723-56-31660	H0120-010005	7	H005005
723-56-31670	H0120-004005	8	H003005
723-56-31670	H0120-005005	8	H002005
723-56-31670	H0120-009005	8	H004005
723-56-31670	H0120-010005	8	H005005
723-56-31720	H0120-004002	5	H003002
723-56-31720	H0120-004025	3	H003025
723-56-31720	H0120-005002	5	H002002
723-56-31720	H0120-009002	5	H004002
723-56-31720	H0120-009025	3	H004025
723-56-31720	H0120-010002	5	H005002
723-56-31720	H0120-010025	3	H005025
723-56-31720	H0120-010028	3	H005028
723-56-31730	H0120-004002	6	H003002
723-56-31730	H0120-004008	14	H003008
723-56-31730	H0120-004025	4	H003025
723-56-31730	H0120-005002	6	H002002
723-56-31730	H0120-005008	14	H002008
723-56-31730	H0120-009002	6	H004002
723-56-31730	H0120-009008	14	H004008
723-56-31730	H0120-009025	4	H004025
723-56-31730	H0120-010002	6	H005002
723-56-31730	H0120-010008	14	H005008
723-56-31730	H0120-010025	4	H005025
723-56-31730	H0120-010028	4	H005028
723-56-31940	H0120-004006	9	H003006
723-56-31940	H0120-005006	9	H002006
723-56-31940	H0120-009006	9	H004006
723-56-31940	H0120-010006	9	H005006
723-56-31960	H0120-004006	5	H003006
723-56-31960	H0120-005006	5	H002006
723-56-31960	H0120-009006	5	H004006
723-56-31960	H0120-010006	5	H005006
723-56-31970	H0120-004006	3	H003006
723-56-31970	H0120-005006	3	H002006
723-56-31970	H0120-009006	3	H004006
723-56-31970	H0120-010006	3	H005006
723-56-31990	H0120-004006	14	H003006
723-56-31990	H0120-005006	14	H002006
723-56-31990	H0120-009006	14	H004006
723-56-31990	H0120-010006	14	H005006
723-56-32460	H0120-004002	20	H003002
723-56-32460	H0120-005002	20	H002002
723-56-32460	H0120-009002	20	H004002
723-56-32460	H0120-010002	20	H005002
723-56-32560	H0120-004003	2	H003003
723-56-32560	H0120-005003	2	H002003
723-56-32560	H0120-009003	2	H004003
723-56-32560	H0120-010003	2	H005003
723-56-33910	H0120-004007	10	H003007
723-56-33910	H0120-005007	10	H002007
723-56-33910	H0120-009007	10	H004007

PARTS Nº	FIG. Nº	INDEX	PAGE
723-56-33910	H0120-010007	10	H005007
723-56-41710	H0120-004004	6	H003004
723-56-41710	H0120-004026	2	H003026
723-56-41710	H0120-005004	6	H002004
723-56-41710	H0120-009004	6	H004004
723-56-41710	H0120-009026	2	H004026
723-56-41710	H0120-010004	6	H005004
723-56-41710	H0120-010026	2	H005026
723-56-41710	H0120-010029	2	H005029
723-56-41730	H0120-004004	12	H003004
723-56-41730	H0120-004026	6	H003026
723-56-41730	H0120-005004	12	H002004
723-56-41730	H0120-009004	12	H004004
723-56-41730	H0120-009026	6	H004026
723-56-41730	H0120-010004	12	H005004
723-56-41730	H0120-010026	6	H005026
723-56-41730	H0120-010029	6	H005029
723-56-41840	H0120-004004	7	H003004
723-56-41840	H0120-005004	7	H002004
723-56-41840	H0120-009004	7	H004004
723-56-41840	H0120-010004	7	H005004
723-57-12703	H0120-004001	1	H003001
723-57-12703	H0120-004002	1	H003002
723-57-12703	H0120-004003	1	H003003
723-57-12703	H0120-004004	1	H003004
723-57-12703	H0120-004005	1	H003005
723-57-12703	H0120-004006	1	H003006
723-57-12703	H0120-004007	1	H003007
723-57-12703	H0120-004008	1	H003008
723-57-12703	H0120-004009	1	H003009
723-57-12703	H0120-004010	1	H003010
723-57-12703	H0120-004011	1	H003011
723-57-12703	H0120-004012	1	H003012
723-57-12703	H0120-004013	1	H003013
723-57-12703	H0120-004014	1	H003014
723-57-12703	H0120-004015	1	H003015
723-57-12703	H0120-004016	1	H003016
723-57-12703	H0120-004017	1	H003017
723-57-12703	H0120-004018	1	H003018
723-57-12703	H0120-004019	1	H003019
723-57-12703	H0120-004020	1	H003020
723-57-12703	H0120-004021	1	H003021
723-57-12703	H0120-004022	1	H003022
723-57-12703	H0120-004023	1	H003023
723-57-12703	H0120-004024	1	H003024
723-57-12703	H0120-004025	1	H003025
723-57-12703	H0120-004026	1	H003026
723-57-12703	H0120-004027	1	H003027
723-57-12703	H0120-009001	1	H004001
723-57-12703	H0120-009002	1	H004002
723-57-12703	H0120-009003	1	H004003
723-57-12703	H0120-009004	1	H004004
723-57-12703	H0120-009005	1	H004005
723-57-12703	H0120-009006	1	H004006
723-57-12703	H0120-009007	1	H004007
723-57-12703	H0120-009008	1	H004008
723-57-12703	H0120-009009	1	H004009
723-57-12703	H0120-009010	1	H004010
723-57-12703	H0120-009011	1	H004011
723-57-12703	H0120-009012	1	H004012
723-57-12703	H0120-009013	1	H004013
723-57-12703	H0120-009014	1	H004014
723-57-12703	H0120-009015	1	H004015
723-57-12703	H0120-009016	1	H004016
723-57-12703	H0120-009017	1	H004017
723-57-12703	H0120-009018	1	H004018
723-57-12703	H0120-009019	1	H004019
723-57-12703	H0120-009020	1	H004020
723-57-12703	H0120-009021	1	H004021
723-57-12703	H0120-009022	1	H004022
723-57-12703	H0120-009023	1	H004023
723-57-12703	H0120-009024	1	H004024
723-57-12703	H0120-009025	1	H004025
723-57-12703	H0120-009026	1	H004026
723-57-12703	H0120-009027	1	H004027
723-58-12703	H0120-010001	1	H005001
723-58-12703	H0120-010002	1	H005002
723-58-12703	H0120-010003	1	H005003
723-58-12703	H0120-010004	1	H005004
723-58-12703	H0120-010005	1	H005005
723-58-12703	H0120-010006	1	H005006
723-58-12703	H0120-010007	1	H005007
723-58-12703	H0120-010008	1	H005008
723-58-12703	H0120-010009	1	H005009
723-58-12703	H0120-010010	1	H005010
723-58-12703	H0120-010011	1	H005011
723-58-12703	H0120-010012	1	H005012
723-58-12703	H0120-010013	1	H005013
723-58-12703	H0120-010014	1	H005014
723-58-12703	H0120-010015	1	H005015
723-58-12703	H0120-010016	1	H005016
723-58-12703	H0120-010017	1	H005017
723-58-12703	H0120-010018	1	H005018
723-58-12703	H0120-010019	1	H005019
723-58-12703	H0120-010020	1	H005020
723-58-12703	H0120-010021	1	H005021
723-58-12703	H0120-010022	1	H005022
723-58-12703	H0120-010023	1	H005023
723-58-12703	H0120-010024	1	H005024
723-58-12703	H0120-010025	1	H005025
723-58-12703	H0120-010026	1	H005026
723-58-12703	H0120-010027	1	H005027
723-58-12703	H0120-010028	1	H005028
723-58-12703	H0120-010029	1	H005029
723-58-12703	H0120-010030	1	H005030
723-60-22230	H0120-004008	5	H003008
723-60-22230	H0120-005008	5	H002008
723-60-22230	H0120-009008	5	H004008
723-60-22230	H0120-010008	5	H005008
723-60-22230	N1210-001003	2	N002003
723-60-23301	H0120-004012	6	H003012
723-60-23301	H0120-005012	6	H002012
723-60-23301	H0120-009012	6	H004012
723-60-23301	H0120-010012	6	H005012
723-90-61400	H0120-004027	1	H003027
723-90-61400	H0120-009027	1	H004027
723-90-61400	H0120-010027	1	H005027
723-90-61400	H0120-010030	1	H005030
7826-23-3012	K1110-010021	8	K011021
7835-31-3016	K1110-010014	1	K011014
7835-33-1001	E0450-001001	1	E007001
7835-46-4003	K1110-010020	3	K011020
7861-74-5100	K1110-010020	11	K011020
7861-74-5100	K1110-010020	13	K011020
7861-74-5100	K1110-010020	15	K011020
7861-74-5100	K1110-010020	17	K011020
7861-91-4220	ASD10-001001	2	B012001
7861-92-5810	D0100-003001	7	D001001
7861-93-1430	B0200-001002	16	B004002
7861-93-1812	H0120-004028	12	H003028
7861-93-1812	H0120-005025	12	H002025
7861-93-1812	H0120-009028	12	H004028
7861-93-1812	H0120-010030	12	H005030
7861-93-1840	H0120-004029	20	H003029
7861-93-1840	H0120-005026	20	H002026
7861-93-1840	H0120-009029	20	H004029
7861-93-1840	H0120-010032	20	H005032
7861-93-3320	H0311-001001	9	H010001
7861-94-2000	K1110-010020	5	K011020
8233-06-3350	K1110-010020	19	K011020
8A13-10-2100	K1110-010013	24	K011013
8A13-10-2200	K1110-010013	25	K011013
8A13-10-4320	K1110-010013	22	K011013
AS160122	K0110-003001	9	K001001
AS164899	K0110-003001	13	K001001
AS165989	K0110-003001	19	K001001
AS166011	K0110-003001	14	K001001
AS186833	K0110-003001	8	K001001
AS192161	K0110-003001	7	K001001
AS195367	K0110-003001	1	K001001

PARTS Nº	FIG. Nº	INDEX	PAGE
AS195369	K0110-003001	2	K001001
AS195370	K0110-003001	3	K001001
AS195372	K0110-003001	4	K001001
AS195373	K0110-003001	5	K001001
AS195374	K0110-003001	6	K001001
AS195376	K0110-003001	10	K001001
AS195377	K0110-003001	11	K001001
AS195381	K0110-003001	1	K001001
AS195388	K0110-003001	12	K001001
AS195389	K0110-003001	15	K001001
AS195390	K0110-003001	16	K001001
AS195391	K0110-003001	17	K001001
AS195392	K0110-003001	18	K001001
AS195393	K0110-003001	20	K001001
HM6400-0012	K1110-010030	34	K011030
HM6400-0013	K1110-010030	35	K011030
HM6400-0016	K1110-010030	37	K011030
HM6409-0071	K1110-010030	34	K011030
HM6409-0072	K1110-010030	35	K011030
HM6409-0075	K1110-010030	37	K011030
HM6440-0128	K1110-010030	36	K011030
HM6440-0129	K1110-010030	36	K011030
ND017231-0700	K1110-010044	28	K011044
ND021045-0530	AEE00-001002	4	F002002
ND021100-5060	AEE00-001002	1	F002002
ND021200-8610	AEE00-001002	19	F002002
ND021401-4900	AEE00-001002	2	F002002
ND021411-0570	AEE00-001002	3	F002002
ND021501-7640	AEE00-001002	8	F002002
ND021506-0070	AEE00-001002	21	F002002
ND021542-0160	AEE00-001002	26	F002002
ND021551-2360	AEE00-001002	12	F002002
ND021580-4670	AEE00-001002	9	F002002
ND021602-5230	AEE00-001002	29	F002002
ND021605-1970	AEE00-001002	13	F002002
ND021605-2950	AEE00-001002	14	F002002
ND021620-2720	AEE00-001002	10	F002002
ND021626-0190	AEE00-001002	24	F002002
ND021626-0250	AEE00-001002	25	F002002
ND028062-0130	AST00-001002	2	F004002
ND028062-5790	AST00-001002	31	F004002
ND028063-0030	AST00-001002	17	F004002
ND028099-3160	AST00-001002	9	F004002
ND028099-3310	AST00-001002	7	F004002
ND028099-3570	AST00-001002	3	F004002
ND028100-2881	AST00-001002	1	F004002
ND028200-1590	AST00-001002	4	F004002
ND028300-5091	AST00-001002	7	F004002
ND028300-6750	AST00-001002	7	F004002
ND028306-0070	AST00-001002	16	F004002
ND028327-0171	AST00-001002	18	F004002
ND028371-1500	AST00-001002	15	F004002
ND028381-0071	AST00-001002	7	F004002
ND028501-7880	AST00-001002	12	F004002
ND028510-5390	AST00-001002	10	F004002
ND028901-5190	AST00-001002	34	F004002
ND053404-0240	AST00-001002	9	F004002
ND053480-7560	AST00-001002	9	F004002
ND053505-0290	AST00-001002	9	F004002
ND053660-0443	AST00-001002	9	F004002
ND063600-4580	K1110-010044	35	K011044
ND063800-0300	K1110-010044	27	K011044
ND077500-5650	K1110-010044	36	K011044
ND077500-5890	K1110-010044	29	K011044
ND077800-0750	K1110-010044	33	K011044
ND116140-0050	K1110-010044	14	K011044
ND116340-7350	K1110-010044	38	K011044
ND116576-3810	K1110-010044	3	K011044
ND116576-3820	K1110-010044	4	K011044
ND116576-3852	K1110-010044	25	K011044
ND116576-3862	K1110-010044	26	K011044
ND116650-6850	K1110-010044	16	K011044
ND116660-7570	K1110-010044	15	K011044
ND116662-7670	K1110-010044	23	K011044
ND116662-7681	K1110-010044	24	K011044
ND116662-8320	K1110-010044	44	K011044
ND116780-2481	K1110-010044	17	K011044
ND116780-2491	K1110-010044	18	K011044
ND116780-2501	K1110-010044	19	K011044
ND116780-2510	K1110-010044	20	K011044
ND116780-3130	K1110-010044	22	K011044
ND116780-3920	K1110-010044	31	K011044
ND116781-3000	K1110-010044	21	K011044
ND121041-0270	AEE00-001002	22	F002002
ND121400-3950	AEE00-001002	1	F002002
ND126000-3730	AEE00-001002	11	F002002
ND128099-5830	AST00-001002	9	F004002
ND128961-0010	AST00-001002	13	F004002
ND146340-0560	K1110-010044	34	K011044
ND146657-8841	K1110-010044	10	K011044
ND146657-8850	K1110-010044	12	K011044
ND146657-8860	K1110-010044	37	K011044
ND146657-9811	K1110-010044	11	K011044
ND146667-0440	K1110-010044	32	K011044
ND153400-2192	AST00-001002	9	F004002
ND228401-1440	AST00-001002	8	F004002
ND245450-5831	K1110-010044	1	K011044
ND245450-5840	K1110-010044	2	K011044
ND246470-4311	K1110-010044	42	K011044
ND246790-2060	K1110-010044	30	K011044
ND445021-3941	K1110-010044	13	K011044
ND446010-3132	K1110-010044	5	K011044
ND446600-0991	K1110-010044	5	K011044
ND447500-2750	K1110-010044	8	K011044
ND90170-10061	AST00-001002	25	F004002
ND90200-06241	AST00-001002	30	F004002
ND90258-06001	AST00-001002	28	F004002
ND90258-10001	AST00-001002	26	F004002
ND90260-00501	AST00-001002	32	F004002
ND90801-10050	AST00-001002	22	F004002
ND90804-10050	AST00-001002	20	F004002
ND91310-04251	AEE00-001002	16	F002002
ND92150-06061	AEE00-001002	30	F002002
ND93950-05003	K1110-010044	43	K011044
ND949001-1730	K1110-010044	41	K011044
ND949006-5460	AEE00-001002	15	F002002
ND949006-5590	AEE00-001002	5	F002002
ND949006-6401	AEE00-001002	27	F002002
ND949006-6910	AST00-001002	29	F004002
ND949007-5110	AEE00-001002	16	F002002
ND949007-6280	AEE00-001002	28	F002002
ND949007-6530	AST00-001002	23	F004002
ND949007-6850	AST00-001002	33	F004002
ND949008-0330	K1110-010044	40	K011044
ND949008-0460	K1110-010044	39	K011044
ND949011-5700	AST00-001002	21	F004002
ND949017-1290	AST00-001002	27	F004002
ND949020-0600	AST00-001002	24	F004002
ND949042-3741	AST00-001002	19	F004002
ND949043-2000	AEE00-001002	7	F002002
ND949046-3100	K1110-010044	9	K011044
ND949056-1001	AEE00-001002	18	F002002
ND949056-2481	AEE00-001002	17	F002002
ND949056-2520	AEE00-001002	23	F002002
ND949056-4480	AST00-001002	35	F004002
ND949100-1750	AST00-001002	6	F004002
ND949100-1920	AST00-001002	7	F004002
ND949100-1930	AST00-001002	5	F004002
ND949100-2790	AEE00-001002	20	F002002
ND949100-3980	AEE00-001002	20	F002002
ND949100-4500	AST00-001002	7	F004002
ND949100-5010	AEE00-001002	6	F002002
ND949142-0020	K1110-010044	6	K011044
ND949142-0030	K1110-010044	7	K011044
ND949170-4040	AST00-001002	7	F004002
ND949170-4070	AST00-001002	14	F004002
ND949173-0571	AST00-001002	11	F004002
NY05062-1170A	H1831-001001	5	H030001
NY05062-1170A	H1831-002001	5	H031001
NY05062-11800	H1831-001001	6	H030001

PARTS Nº	FIG. Nº	INDEX	PAGE
NY05062-11800	H1831-002001	6	H031001
NY06277-1320A	H1831-001001	7	H030001
NY06277-1320A	H1831-002001	7	H031001
NY06339-10200	H1831-001001	8	H030001
NY06339-10200	H1831-002001	8	H031001
NY07207-11700	H1831-001001	9	H030001
NY07207-11700	H1831-002001	9	H031001
NY07493-10200	H1831-001001	10	H030001
NY07493-10200	H1831-002001	10	H031001
NY07529-10200	H1831-001001	11	H030001
NY07529-10200	H1831-002001	11	H031001
NY07529-10300	H1831-001001	12	H030001
NY07529-10300	H1831-002001	12	H031001
NY07529-10400	H1831-001001	13	H030001
NY07529-10400	H1831-002001	13	H031001
NY07529-10500	H1831-001001	14	H030001
NY07529-10500	H1831-002001	14	H031001
NY07529-10600	H1831-001001	15	H030001
NY07529-10600	H1831-002001	15	H031001
NY09000-11400	H1831-001001	16	H030001
NY09000-11400	H1831-002001	16	H031001
NY16207-10200	H1831-001001	17	H030001
NY16207-10200	H1831-002001	17	H031001
NY16207-10300	H1831-001001	18	H030001
NY16207-10300	H1831-002001	18	H031001
NY80000-02100	H1831-001001	19	H030001
NY80000-02100	H1831-002001	19	H031001
NY80000-02200	H1831-001001	20	H030001
NY80000-02200	H1831-002001	20	H031001
NY81416-05012	H1831-001001	21	H030001
NY81416-05012	H1831-002001	21	H031001
NY84110-00248	H1831-001001	22	H030001
NY84110-00248	H1831-002001	22	H031001
NY89103-00090	H1831-001001	25	H030001
NY89103-00090	H1831-002001	25	H031001
REU419B-418-C	K1110-010009	15	K011009
RFU419B-418-A	K1110-010009	1	K011009
RFU419B-418-B	K1110-010009	6	K011009
RFU419B-418-C	K1110-010009	7	K011009
RFU419B-418-D	K1110-010009	3	K011009
RFU419B-418-E	K1110-010009	4	K011009
RFU419B-418-F	K1110-010009	16	K011009
TZ100A2055-00	P1210-001003	22	P003003
TZ200C2021-00	P1210-001003	37	P003003
TZ200C2021-01	P1210-001003	25	P003003
TZ209-234-44BA	P1210-001001	13	P003001
TZ247B3006-00	P1210-001003	13	P003003
TZ263B2077-01	P1210-001001	28	P003001
TZ263B2077-01	P1210-001002	25	P003002
TZ420B2089-01	P1210-001003	32	P003003

PARTS Nº	FIG. Nº	INDEX	PAGE
TZ500D2013-00	P1210-001002	13	P003002
TZ500D2039-00	P1210-001002	18	P003002
TZ571B2079-00	P1210-001003	36	P003003
TZ600D1000-01	P1210-001001	1	P003001
TZ600D1001-02	P1210-001001	14	P003001
TZ600D1002-00	P1210-001001	15	P003001
TZ600D1004-02	P1210-001001	16	P003001
TZ600D1008-00	P1210-001001	17	P003001
TZ600D1014-01	P1210-001001	19	P003001
TZ600D1015-01	P1210-001001	20	P003001
TZ600D1022-00	P1210-001001	21	P003001
TZ600D1023-00	P1210-001001	22	P003001
TZ600D1024-01	P1210-001001	23	P003001
TZ600D1103-01	P1210-001001	1	P003001
TZ600D1107-01	P1210-001001	7	P003001
TZ600D200001-B	P1210-001002	1	P003002
TZ600D2002-01	P1210-001002	6	P003002
TZ600D200300-B	P1210-001002	7	P003002
TZ600D2007-01	P1210-001002	8	P003002
TZ600D2008-00	P1210-001002	9	P003002
TZ600D2009-01	P1210-001002	10	P003002
TZ600D2012-00	P1210-001002	12	P003002
TZ600D2014-00	P1210-001002	14	P003002
TZ600D2015-00	P1210-001002	15	P003002
TZ600D2016-00	P1210-001002	16	P003002
TZ600D2039-00	P1210-001002	19	P003002
TZ600D2070-01	P1210-001002	4	P003002
TZ600D2076-01	P1210-001002	24	P003002
TZ600D2090-00	P1210-001002	26	P003002
TZ600D2205-01	P1210-001002	1	P003002
TZ600D300000-A	P1210-001003	1	P003003
TZ600D310000-A	P1210-001003	1	P003003
TZ600D400001-B	P1210-001003	14	P003003
TZ600D4052-01	P1210-001003	21	P003003
TZ600D4069-00	P1210-001003	31	P003003
TZ600D4081-00	P1210-001003	38	P003003
TZ600D410001-B	P1210-001003	14	P003003
TZ600D410101-B	P1210-001003	14	P003003
TZ600D415001-B	P1210-001003	14	P003003
TZ600D9000-00	P1210-001003	45	P003003
TZ610B2021-00	P1210-001001	24	P003001
TZ610B2021-00	P1210-001003	28	P003003
TZ800D1013-00	P1210-001001	18	P003001
TZ850A0006-00	P1210-001003	43	P003003
TZ880A2010-00	P1210-001002	11	P003002
TZ976B2079-00	P1210-001003	34	P003003
TZARP568261-70	P1210-001001	26	P003001
TZGDL1-16-S	P1210-001003	27	P003003
TZGM1-4-G-S	P1210-001003	41	P003003
TZGM1-8-S	P1210-001003	42	P003003

PARTS Nº	FIG. Nº	INDEX	PAGE
TZJB1354-4-10	P1210-001003	44	P003003
TZJB15063-258F	P1210-001002	23	P003002
TZJB1521-63-28	P1210-001002	21	P003002
TZJB2401-P10A	P1210-001003	7	P003003
TZJB2407T2P10A	P1210-001003	8	P003003
TZJB2407T2-P14	P1210-001003	10	P003003
TZS0505	P1210-001003	33	P003003
TZS0506	P1210-001003	23	P003003
TZS0545	P1210-001003	40	P003003
TZTCZ284810113	P1210-001002	17	P003002
TZTH-R-42	P1210-001002	20	P003002

PC130-8 Hydraulic Excavator (Track Type)
Form No. KEPB171201

©2011 KOMATSU
All Rights Reserved
Printed in Brazil 11-12