LEPBP13700
RUTHZIL TRATOR COMERCIAL DE PEÇAS LTDA 11 97083-6812 ROLANDO CITRANGULO

Parts Book

KOMATSU

HYDRAULIC
EXCAVATOR

PC130F-7

SERIAL NUMBERS: PC130F-7 J10001 and up

KOMATSU

LEPBP13700

PARTS BOOK

PC130F-7

Serial No. J10001 and up

ENGINE SAA4D95LE-3

Engine No. 132823 and up

FOREWORD

When ordering a spare part, specially the part number, part name, and quantity required, and also specify your machine model code, machine serial number, engine serial number and the service meter reading.

This Parts Book describes not only standard items but also optional equipment and attachments. To order a part, please contact your nearest Komatsu distributor.

This Parts Book contains the information and special symbols as follows :

Figure And List	When you open this Parts Book, you will find and illustration on the left page (even-numbered page) for the spare parts group. Each individual part in the group is given an index number. On the right page, the component parts of the group are listed in the order of the index numbers shown on the illustration page. The part number, part name, and applicable machine serial number are given for each part.
Ref.	The Ref. is the number of the illustration shown on the page. It is not the spare part number. The numbers are not always contionous.
item	This the same as the item number in the illustration. The parts are listed in item number order.
Part No.	The number given in the Part No. Column is the part number for the part shown. It is the code used when ordering that part. It is important that there be no mistake in this code number when ordering.
Description	This gives the name of part that has the part number listed. The mark . Is put in front of the part name of an assembly part and the item is entered following the assembly. If a part marked with . Is a sub assembly, its components are marked with .. Example : ELEMENT ASSEMBLY, AIR CLEANER .ELEMENT ASSEMBLY, OUTER ..ELEMENT, OUTER ..NUT, WING ..WASHER
Qty (Quantity)	This specifies the number of pieces used for one machine. However, if a part is included in the assembly and/or component is specified.
Options	Applicable engine serial number is indcated for the engine volume, in the chassis volume, this indicates the machine serial number in which the part is ud.

Symbols and codes

Symbols and codes used in the PART No. and DESCRIPTION columns,and represent the following:

A2	The part specified in the line above can be used instead of this part.
B2	This shows a discontinued part. The part specified in the DESCRIPTION column is supplied instead as a set.
C2	This part cannot be supplied as individual part. It is supplied as an assembly. It, however, is supplied as an individual part by authorized distributors only.
A3	This part can be used instead of the part specified in the line immediately above.
C3	This indicates a part supplied as semi-finished . It requires additional work before installation.
A1	The part and the part specified in the line immediately above are interchangable.
B1	This shows a discontinued part. The part specified in the above line is supplied instead.
C1	This part cannot be supplied as individual part. It is supplied as an assembly.
KIT	This indicates kit parts. For kit parts, refere to the service kit pages provided in this Parts Book.
A4	The part specified in the DESCRIPTION column can be used instead of this part if it is used as a set.

PC130F-7 QF-2

CONTENTS

QF-2 Foreword.....
QC-1 Contents.....

Page Reference Title

[ENGINE.]

030010 A1010-A0G2 CYLINDER HEAD.....
030020 A1030-A0B6 HEAD COVER.....
030030 A1050-A0C5 REAR HANGER.....
030040 A1110-A0F7 HEAD COVER.....
030050 A1111-A0D7 HEAD COVER ACCESSORY.....
030060 A1310-A0M1 AIR INTAKE MANIFOLD.....
030070 A1320-A0A8 AIR INTAKE CONNECTOR.....
030080 A1510-A0G3 EXHAUST MANIFOLD.....
030090 A1530-A0E4 TURBOCHARGER.....
030100 A1570-A0B6 HEAT SHIELD.....
030110 A1610-A0N7 MUFFLER.....
030120 A1670-A0A7 EXHAUST CONNECTION.....
030130 A2010-A0P2 CYLINDER BLOCK.....
030140 A2040-A0E4 FRONT COVER (FOR 25A ALTERNATOR).....
030160 A2050-A0B3 IDLER GEAR.....
030170 A2070-A0C2 BLIND PLUG (OIL FILLER UPPER SPEC.).....
030180 A2110-A0P1 OIL PAN AND SUCTION TUBE.....
030190 A2190-A0B5 OIL LEVEL GAUGE.....
030200 A2210-A0F9 FLYWHEEL HOUSING.....
030210 A2230-A0B4 FLYWHEEL.....
030220 A2310-A0B3A CRANKSHAFT.....

Page Reference Title

030230 A2350-A0F1 PISTON.....
030231 A2350-A0F1 PISTON.....
030240 A2370-A0F4 CRANK PULLEY (NON HARDENING).....
030250 A2410-A0B8 CAMSHAFT AND GEAR.....
030260 A2430-A0A1 TAPPET.....
030270 A2450-A0A1 ROCKER ARM.....
030280 A2650-A0B7 COUPLING (POWER TAKE OFF).....
030290 A2810-A0A5 TACHOMETER DRIVE COVER.....
030300 A3010-A0A2 OIL PUMP.....
030310 A3030-A0A3 TURBOCHARGER LUBRICATING OIL PIPING.....
030320 A3110-A0D6 OIL FILTER.....
030330 A3190-A0A1 OIL PRESSURE SWITCH.....
030340 A4010-A0W8 FUEL INJECTION PUMP.....
030350 A4010-B0W8 FUEL INJECTION PUMP (PUMP) (1/3) (INNER PARTS).....
030360 A4010-C0W8 FUEL INJECTION PUMP (PUMP) (2/3) (INNER PARTS).....
030361 A4010-C0W8 FUEL INJECTION PUMP (PUMP) (3/3) (INNER PARTS).....
030370 A4010-D0W8 FUEL INJECTION PUMP (GOVERNOR) (1/2) (INNER PARTS).....
030371 A4010-D0W8 FUEL INJECTION PUMP (GOVERNOR)(1/2)(INNER PARTS).....
030380 A4010-E0W8 FUEL INJECTION PUMP (GOVERNOR) (2/2) (INNER PARTS).....
030381 A4010-E0W8 FUEL INJECTION PUMP (GOVERNOR) (2/2) (INNER PARTS).....
030390 A4010-F0W8 FUEL INJECTION PUMP (FEED PUMP) (INNER PARTS).....
030400 A4040-A0A6 FUEL INJECTION PUMP MOUNTING.....
030410 A4050-A0C6 FUEL INJECTION PIPING.....
030420 A4060-A0B4 FUEL INJECTION PUMP LUBRICATOR.....
030430 A4070-A0A1 FUEL CONTROL (BOOST COMPENSATE).....
030440 A4110-A0H8 FUEL FILTER.....
030450 A4210-A0F4 INJECTION NOZZLE.....
030460 A4210-B0F4 NOZZLE HOLDER (INNER PARTS).....
030470 A4230-A0F4 FUEL RETURN (CENTER RETURN SPEC.).....
030480 A4510-A0F9 SOLENOID.....
030490 A5010-A0J2 WATER PUMP.....
030500 A5020-A0N4 WATER PUMP PULLEY (WITH NON HARDENING PULLEY).....
030510 A5030-A0F9 COOLING FAN.....

Page	Reference	Title
030520	A5040-A0B1	FAN SPACER
030530	A5070-A0A3	FAN SPACER MOUNTING
030540	A5110-A0A4	WATER CONNECTOR (OUTLET)
030550	A5170-A0A2B	COOLING FAN BOLT
030570	A5180-A0B4	FAN BELT (FOR 25A ALTERNATOR)
030590	A6010-A0S1	ALTERNATOR (FOR 25A ALTERNATOR)(NON HARDENING PULLEY)
030600	A6010-B0S1	ALTERNATOR (FOR 25A ALTERNATOR)(NON HARDENING PULLEY)(INNER PARTS)
030610	A6020-A0A5	ALTERNATOR MOUNTING (FOR 25 ALTERNATOR)
030630	A6210-A0G6	STARTING MOTOR MOUNTING (3.0KW)
030640	A6210-B0G6	STARTING MOTOR (3.0KW) (INNER PARTS)
030650	A7010-A0A6	ACCESSORY BRACKET (FOR COMPRESSOR)
030660	A8116-B0B2	CYLINDER BLOCK GASKET KIT
030661	A8116-B0B2	CYLINDER BLOCK GASKET KIT
030670	A8118-A0B1	CYLINDER HEAD GASKET KIT
030680	A9420-A0A1	TAMPER PROOF KIT
030690	A9530-A0A1	WATER PIPING BRACKET
030700	A9850-A0A8	ENGINE NAME PLATE AND REGULATION PLATE (EXCEPT JAPAN)
030720	B9999-A0R4	SPARE PARTS (FOR 25A ALTERNATOR)
030730	B9999-A3R5	AIR CLEANER

[ENGINE RELATED PARTS]

040010	B0000-01A0	MAIN PUMP MOUNTING
040020	B0000-02A0	ENGINE BRACKET AND MOUNTING
040030	B0100-01A0	ENGINE MOUNT
040040	B0100-02A0	ENGINE MOUNT BRACKET
040050	B0100-03A0	REMOTE FILTER MOUNT
040060	B0200-01A0	AIR CLEANER AND DUCT
040070	B0400-01A0	FUEL CONTROL
040080	B0920-01A0	CORROSION RESISTOR LESS

[COOLING SYSTEM]

060010	C0100-01A0	COOLING (RADIATOR CORE AND FRAME)
060020	C0100-02A0	COOLING (OIL COOLER)
060030	C0100-03A0	COOLING (NET AND SHROUD)
060040	C0100-04A0	COOLING (AFTER COOLER)
060050	C0310-01A0	FAN GUARD

[FUEL TANK AND RELATED PARTS]

090010	D0100-01A1	FUEL TANK
090020	D0200-01A0	FUEL LINE(ARRANGE SPEC)(WITH WATER SEPARATOR FUEL FILTER)
090021	D0200-01A0	FUEL LINE (ARRANGE SPEC)(WITH WATER SEPARATOR FUEL FILTER)
090030	D0200-02A0	FUEL LINE (WATER SEPARATOR) (POOR FUEL ARRANGE SPEC.)
090040	D0200-03A0	FUEL LINE (WATER SEPARATOR)(FUEL FILTER)

[ELECTRICAL SYSTEM]

120010	E0100-01A0	BATTERY
120020	E0200-01A0	WIRING (STARTING HARNESS) (HARNESS AND CLIP)
120030	E0200-02A0	WIRING (STARTING HARNESS) (RELAY AND HARNESS)
120040	E0200-03A2	WIRING (MAIN HARNESS) (HARNESS AND CLIP)
120050	E0200-04A0	WIRING (MAIN HARNESS) (CLIP) (1/3)
120060	E0200-05A0	WIRING (MAIN HARNESS) (CLIP) (2/3)
120070	E0200-06A0	WIRING (MAIN HARNESS) (CLIP) (3/3)
120080	E0200-07A0	WIRING (BATTERY HARNESS AND GROUND)
120090	E0410-01A0	HORN

[HYDRAULIC SYSTEM]

150010	H0110-01A0	HYDRAULIC TANK
150020	H0120-01A5	MAIN VALVE (CONNECTING PARTS)(1/2)
150030	H0120-02A5	MAIN VALVE (CONNECTING PARTS)(2/2)
150040	H0210-01A0	MAIN PUMP (CONNECTING PARTS)
150060	H0312-01A0	DELIVERY LINE
150070	H0320-01A1	OIL COOLER LINE
150080	H0330-01A0	RETURN LINE
150090	H0340-01A2	DRAIN LINE (WITH ARM DRIFT PREVENTIVE)
150100	H1210-01A2	BOOM LINE (WITH DRIFT PREVENTIVE)
150110	H1220-01A0	ARM AND BUCKET LINE
150120	H1270-01A0	ATT LINE U.(F/F)
150130	H1310-01A0	TRAVEL LINE
150140	H1340-01A0	SWING LINE
150150	H1810-01A0	LS LINE
150160	H1831-01A0	SOLENOID VALVE (VALVE)

PC130F-7 QC-2

Page	Reference	Title
150170	H1831-02A0	SOLENOID VALVE (HOSE).....
150180	H1831-03A0	SOLENOID VALVE (CLIP).....
150190	H1833-01A0	PRESSURE SWITCH.....
150200	H1840-01A0	PPC MAIN LINE (HOSE).....

[MAIN FRAME AND RELATED PARTS]

180010	J1110-01A1A	REVOLVING FRAME (FOR CORROSION RESIST0R).....
180015	J1110-01A2A	REVOLVING FRAME (FOR LOGGING).....
180020	J1310-01A0	BOOM FOOT PIN.....

[OPERATOR'S COMPARTMENT AND CONTROL SYSTEM]

210010	K0110-01A1	OPERATORS SEAT(SUSPENSION).....
210020	K0180-01A3	SEAT REAR COVER.....
210025	K0220-01A0	CAB GUARD.....
210030	K0310-01A0	FLOOR MAT.....
210040	K0350-01A0	WINDOW WASHER.....
210050	K0700-01A0	AIR CONDITIONER LESS.....
210110	K1110-06A0	FLOOR FRAME (OPERATOR'S CAB) (DOOR LOCK).....
210120	K1110-07A0	FLOOR FRAME (OPERATOR'S CAB) (OPEN LOCK).....
210130	K1110-08A4	FLOOR FRAME (OPERATOR'S CAB) (ELECTRICAL) (WIPER AND ROOM LAMP).....
210140	K1110-09A4	FLOOR FRAME (OPERATOR'S CAB) (ELECTRICAL) (RADIO).....
210150	K1110-10A4	FLOOR FRAME (OPERATOR'S CAB) (ACCESSORIES).....
210160	K1110-11H2	FLOOR FRAME (OPERATOR'S CAB)(PLUG BOLT AND ANTENNA)(WITH KOMTRAX).....
210170	K1110-12A4	FLOOR FRAME (OPERATOR'S CAB) (CLAMP AND PLATE).....
210180	K1110-13A0	FLOOR FRAME (OPERATOR'S CAB) (MONITOR SYSTEM).....
210190	K1110-14A0	FLOOR FRAME (OPERATOR'S CAB) (PLATE AND DUCT).....
210200	K1110-15A0	FLOOR FRAME (OPERATOR'S CAB) (PARTTION AND FOOT DUCT).....
210210	K1110-16A4	FLOOR FRAME (OPERATOR'S CAB) (SUB PANEL).....
210220	K1110-17A0	FLOOR FRAME (OPERATOR'S CAB) (CLAMP AND BOLT).....
210225	K1110-17D0	FLOOR FRAME (OPERATOR'S CAB)(KOMTRAX).....
210230	K1110-19A0	FLOOR FRAME (OPERATOR'S CAB) (FLOOR FRAME).....
210240	K1110-20A0	FLOOR FRAME (OPERATOR'S CAB) (TRAVEL CONTROL).....
210250	K1110-21A0	FLOOR FRAME (OPERATOR'S CAB) (FOOT REST) (L.H.).....
210260	K1110-22A4	FLOOR FRAME (OPERATOR'S CAB) (FOOT REST) (R.H.).....
210270	K1110-24A0	FLOOR FRAME (OPERATOR'S CAB) (BASE).....
210280	K1110-25A4	FLOOR FRAME (OPERATOR'S CAB) (HARNESS).....
210290	K1110-26A4	FLOOR FRAME (OPERATOR'S CAB) (WINDOW WASHER).....
210300	K1110-27A4	FLOOR FRAME (OPERATOR'S CAB) (LEVER AND VALVE) (L.H.).....
210310	K1110-28A4	FLOOR FRAME (OPERATOR'S CAB) (CONSOLE) (UPPER) (WITH AIR CONDITIONER AND RADIO) (L.H.....
210320	K1110-29A0	FLOOR FRAME (OPERATOR'S CAB) (CONSOLE) (LOWER) (L.H.).....
210330	K1110-30A4	FLOOR FRAME (OPERATOR'S CAB) (LEVER AND VALVE) (R.H.).....
210340	K1110-31A0	FLOOR FRAME (OPERATOR'S CAB) (CONSOLE) (R.H.).....
210350	K1110-32A0	FLOOR FRAME (OPERATOR'S CAB) (AIR CONDITIONER AND FOOT COVER).....
210360	K1110-33A0	FLOOR FRAME (OPERATOR'S CAB) (AIR CONDITIONER HOSE).....
210370	K1110-34A4	FLOOR FRAME (OPERATOR'S CAB) (HEATER HOSE AND CLAMP).....
210380	K1110-34A5	HEATER CLAMP G.....
210390	K1110-35A0	FLOOR FRAME (OPERATOR'S CAB) (PPC HOSE) (1/2).....
210400	K1110-36A0	FLOOR FRAME (OPERATOR'S CAB) (PPC HOSE) (2/2).....
210410	K1110-37A0	FLOOR FRAME (OPERATOR'S CAB) (PPC CLAMP).....
210420	K1110-38A4	FLOOR FRAME (OPERATOR'S CAB) (P.T BLOCK AND SEAL).....
210430	K1120-01A0A	FLOOR MOUNT.....
210440	K1730-01A0	SWITCH (MODEL SELECTION).....

[GUARD]

240010	M1110-01A0A	HOOD.....
240020	M1120-01A0	FRAME (1/2).....
240021	M1120-01A0	FRAME (2/2).....
240030	M1130-01A0	DOOR L.H.....
240031	M1130-01A0	DOOR L.H.....
240035	M1130-01A1	DOOR GUARD LH.....
240040	M1140-01A0	DOOR R.H.....
240045	M1140-01A1	DOOR GUARD RH.....
240050	M1150-01A0	PARTITION (1/2).....
240060	M1150-02A0	PARTITION (2/2).....
240070	M1210-01A0	COVER (UPPER).....
240080	M1220-01A1	TOOL CASE.....

PC130F-7 QC-3

Page	Reference	Title
240090	M1230-01A0	VALVE UPPER COVER
240100	M1310-01A0	HAND RAIL
240110	M1310-01A1	BLIND PARTS (FOR HANDRAIL)
240120	M1420-01A0	REAR VIEW MIRROR. R.H
240125	M1510-01A0	COUNTER WEIGHT (2455KG)
240130	M1510-01A1	COUNTER WEIGHT (1560 KG)
240140	M1520-01A0	C0UNTER WEIGHT MOUNTING
240150	M1810-01A0	UNDER COVER (L.H.)
240155	M1810-01A1	UNDER COVER (L.H.)(LOGGING)
240160	M1810-02A0	UNDER COVER (R.H.)
240165	M1810-02A1	UNDER COVER (R.H)(LOGGING)
[SWING CIRCLE AND RELATED PARTS]		
270010	N1110-01A0	SWING CIRCLE
270020	N1210-01A0	SWING MACHINERY
270030	N1220-01A0	SWING MOTOR (CONNECTING PARTS)
270040	N1310-01A0	SWIVEL JOINT (RELATED PARTS)
[TRAVEL AND LOWER PIPING]		
300010	P1120-01A0	TRAVEL PIPING
300020	P1210-01A0	FINAL DRIVE (SPROCKET AND RELATED PARTS)
[UNDER CARRIAGE]		
330010	R0110-01A0	FRONT IDLER
330020	R0120-01A0	IDLER CUSHION
330030	R0200-01A0	TRACK ROLLER
330040	R0300-01A0	TRACK ROLLER UPPER
330050	R0500-01A0	TRACK SHOE (TRIPLE GROUSER WITH LONG HOLE) (900MM WIDE)
330055	R0500-01A1	TRACK SHOE (SINGLE GROUSER WITH HOLE)(960MM WIDE)(OPTIONAL)
330060	R1100-01A0	TRACK FRAME (WITH TRACK FRAME UNDER COVER AND CENTER ROLLER GUARD)
330070	R1140-01A0	TRACK FRAME UNDER COVER
330075	R1140-01A1	TRACK FRAME UNDER COVER (LOGGING)
330080	R1200-01A0	CENTER ROLLER GUARD
[WORK EQUIPMENT]		

PC130F-7 QC-4

Page	Reference	Title
360010	T1110-01A1	BOOM (BOOM) (100 HOURS LUBRICATING)
360015	T1110-01A3	BOOM (BOOM) (500 HOURS LUBRICATING)
360020	T1110-02A3	BOOM (WORK LAMP AND PIN) (100 HOURS LUBRICATING)
360025	T1110-02A5	BOOM (WORK LAMP AND PIN) (500 HOURS LUBRICATING)
360030	T1110-03A3	BOOM (HYDRAULIC LINE) (100 HOURS LUBRICATING)
360035	T1110-03A5	BOOM (HYDRAULIC LINE) (500 HOURS LUBRICATING)
360040	T1110-04A3	BOOM (CLAMP) (100 HOURS LUBRICATING)
360045	T1110-04A5	BOOM (CLAMP) (500 HOURS LUBRICATING)
360050	T1110-05A3	BOOM (LUBRICATION PIPING) (100 HOURS LUBRICATING)
360055	T1110-05A5	BOOM (LUBRICATION PIPING) (500 HOURS LUBRICATING)
360056	T1110-06A4	BOOM (LUBRICATION PIPING) (500 HOURS LUBRICATING) (WITH ARM LOCK VALVE)
360060	T1120-01A2	BOOM CYLINDER (100 HOURS LUBRICATING)
360065	T1120-01A3	BOOM CYLINDER (500 HOURS) (LONG REACH)
360070	T1125-01A0	BOOM CYLINDER TOP PIN
360080	T1140-01A1	ARM CYLINDER
360081	T1140-01A2	ARM CYLINDER UNIT (LONG REACH)
360085	T1190-01A0	ARM LESS LINK
360090	T1200-01A3	ARM (2.1M) (ARM AND PIN)
360095	T1200-01A5	ARM (3.0 HD) (ARM AND PIN)
360100	T1220-01A0	BUCKET CYLINDER
360105	T1220-01A1	BUCKET CYLINDER (LONG REACH)
360110	T1230-01A0	BUCKET LINK (STRENGTH TYPE)
360120	T1510-01A3	SIDE CUTTER
360130	T1510-01B3	BUCKET 0.50M3
360140	T1510-01B5	BUCKET 0.53M3 (HORIZONTAL PIN TYPE)
360150	T1510-02A0	FIX GRAPPLE
[MARK AND PLATES]		
390010	U0100-01A4	MARK AND PLATES (ENGLISH) (LETTERING TYPE)
390020	U0110-01A1	PLATE (LUBRICATION STANDARD CHART)
390030	U0120-01A0	PLATE (FOR WINDOW) (ENGLISH) (LETTERING TYPE)
390040	U0150-01A1	LOGO (COUNTER WEIGHT)
390050	U0202-01A0	COOLANT DECAL.E
390060	U0510-01A1	LOGO (ARM SIDE)
390070	U0550-01A1	PLATE (AIR CLEANER□DOUBLE ELEMENT) (ENGLISH) (LETTERING TYPE)

Page	Reference	Title
[ACCESSORY]		
420010	V0100-01A0	SPARE PARTS.....
420020	V0200-01A01	CAP & OVERALL U.....
420030	V0300-01A0A	TOOL.....
[SERVICES KIT]		
510010	Y0260-01A0	SWING MACHINERY (INNER PARTS).....
510020	Y0320-01A0	SHOE BOLT AND NUT SERVICE KIT.....
510030	Y0321-01A0	TRACK LINK ASS'Y.....
510040	Y1062-01A0	RUBBER ANTENNA.....
510050	Y1600-01A0	MAIN PUMP (1/8).....
510060	Y1600-02A0	MAIN PUMP (2/8).....
510070	Y1600-03A0	MAIN PUMP (3/8).....
510080	Y1600-04A0	MAIN PUMP (4/8).....
510090	Y1600-05A0	MAIN PUMP (5/8).....
510110	Y1600-06A0	MAIN PUMP (6/8).....
510120	Y1600-07A0	MAIN PUMP (7/8).....
510130	Y1600-08A0	MAIN PUMP (8/8).....
510140	Y1620-01A3	BOOM CYLINDER (INNER PARTS).....
510150	Y1620-11A0	ARM CYLINDER (INNER PARTS).....
510151	Y1620-11A0	ARM CYLINDER (INNER PARTS).....
510160	Y1620-41A0	BUCKET CYLINDER (INNER PARTS).....
510170	Y1627-01A0	SWIVEL JOINT (INNER PARTS).....
510180	Y1627-01A1	SWIVEL JOINT (BLADE SPEC.) (INNER PARTS).....
510190	Y1640-01A0	SWING MOTOR (1/2).....
510191	Y1640-01A0	SWING MOTOR (1/2).....
510200	Y1640-02A0	SWING MOTOR (2/2).....
510210	Y1651-01A0	TRAVEL MOTOR (1/2).....
510220	Y1651-02A0	TRAVEL MOTOR (2/2).....
510240	Y1662-21A0	MAIN VALVE (7-VALVE) (1/10).....
510250	Y1662-22A0	MAIN VALVE (7-VALVE) (2/10).....
510260	Y1662-23A0	MAIN VALVE (7-VALVE) (3/10).....
510270	Y1662-24A0	MAIN VALVE (7-VALVE) (4/10).....
510280	Y1662-25A0	MAIN VALVE (7-VALVE) (5/10).....
510290	Y1662-26A0	MAIN VALVE (7-VALVE) (6/10) (WITH DRIFT PREVENTIVE).....
510300	Y1662-27A0	MAIN VALVE (7-VALVE) (7/10) (WITH DRIFT PREVENTIVE).....
510310	Y1662-28A0	MAIN VALVE (7-VALVE) (8/10) (WITH DRIFT PREVENTIVE).....
510320	Y1662-29A0	MAIN VALVE (7-VALVE) (9/10) (WITH DRIFT PREVENTIVE).....
510321	Y1662-29A0	MAIN VALVE (7-VALVE)(9/10)(WITH DRIFT PREVENTIVE).....
510340	Y1662-31A0	MAIN VALVE (7-VALVE) (10/10) (WITH DRIFT PREVENTIVE).....
510370	Y1670-02A0	PPC VALVE (FOR TRAVEL).....
510380	Y1670-13A0	PPC VALVE (FOR WORK EQUIPMENT).....
510400	Y1679-01A0	PILOT VALVE.....
510410	Y1979-01A0	COMPRESSOR ASS'Y (FOR AIR CONDITIONER).....
510420	Y1979-21A0	UNIT ASS'Y (COOLING)(FOR AIR CONDITIONER).....
510421	Y1979-21A0	UNIT ASS'Y (COOLING)(FOR AIR CONDITIONER).....

PC130F-7 QC-5

ENGINE.

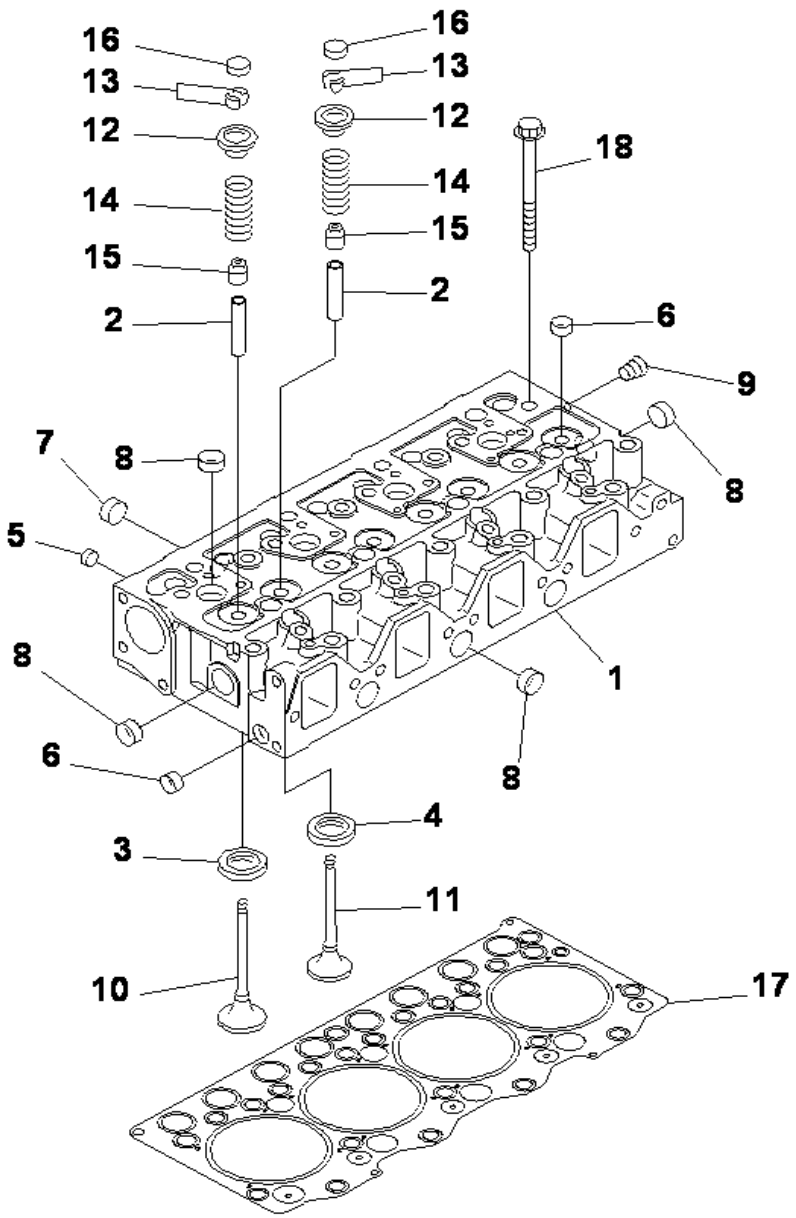

SAA4D95LE-3 S/N 132823-UP

CYLINDER HEAD

INDEX	CD	PART NO.	DESCRIPTION	QTY	SERIAL NO.
		6208-11-1100	CYLINDER HEAD A.,VALVE LESS	1	132823-UP
1	C1		.HEAD,CYLINDER	1	132823-UP
2		6204-19-1310	.GUIDE,VALVE	8	132823-UP
3		6207-11-1431	.SEAT,INTAKE VALVE (STD)	4	132823-UP
		6207-19-1431	.SEAT, 0.25MM,INTAKE VALVE (OS	4	132823-UP
		6207-18-1431	.SEAT, 0.50MM,INTAKE VALVE (OS	4	132823-UP
4		6208-11-1440	.SEAT,EXHAUST VALVE (STD)	4	132823-UP
		6208-19-1440	.SEAT, 0.25MM,EXHAUST VALVE (O	4	132823-UP
		6208-18-1440	.SEAT, 0.50MM,EXHAUST VALVE (O	4	132823-UP
5		07046-41008	.PLUG	4	132823-UP
6		07046-41810	.PLUG	9	132823-UP
7		07046-42216	.PLUG	3	132823-UP
8		07046-42516	.PLUG	11	132823-UP
9		02720-40104	PLUG	1	132823-UP
10		6207-41-4130	VALVE,INTAKE	4	132823-UP
11		6209-41-4210	VALVE,EXHAUST	4	132823-UP
12		6204-41-4510	SEAT	8	132823-UP
13		6204-41-4520	COTTER	16	132823-UP
14		6204-41-4410	SPRING,VALVE	8	132823-UP
15		6204-41-4541	SEAL (K1)	8	132823-UP
16		6204-41-4550	CAP	8	132823-UP
17		6204-11-1840	GASKET (K1)	1	132823-UP
18		6204-13-1610	BOLT	17	132823-UP

Ref :A1010-A0G2 Page :030010

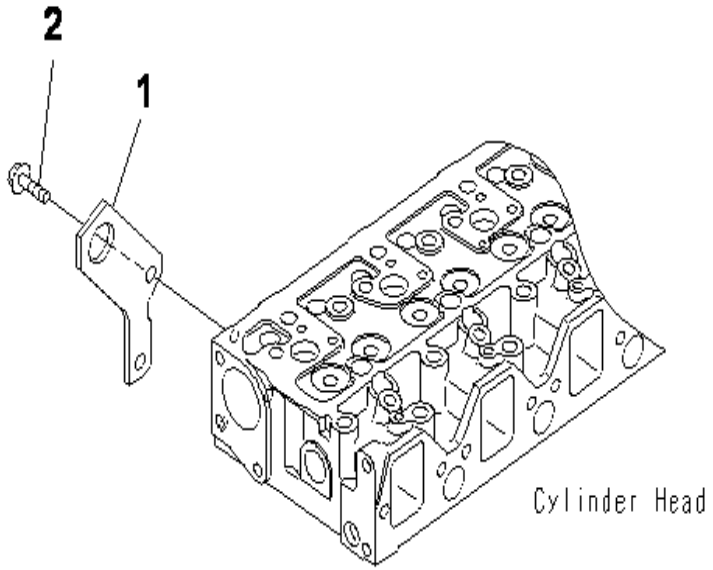

SAA4D95LE-3 S/N 132823-UP

HEAD COVER

INDEX	CD	PART NO.	DESCRIPTION	QTY	SERIAL NO.
1		6208-11-1910	HANGER,FRONT.....	1	132823-UP
2		01435-01020	BOLT.....	2	132823-UP

Ref :A1030-A0B6 Page :030020

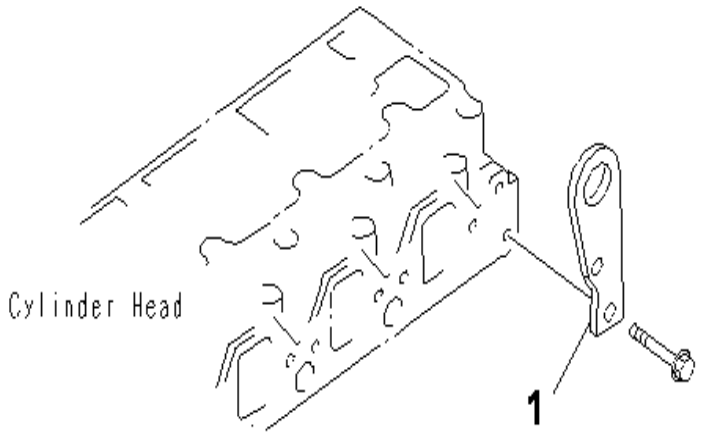

SAA4D95LE-3 S/N 132823-UP

REAR HANGER

INDEX	CD	PART NO.	DESCRIPTION	QTY	SERIAL NO.
1		6206-11-1910	HANGER,REAR.....	1	132823-UP

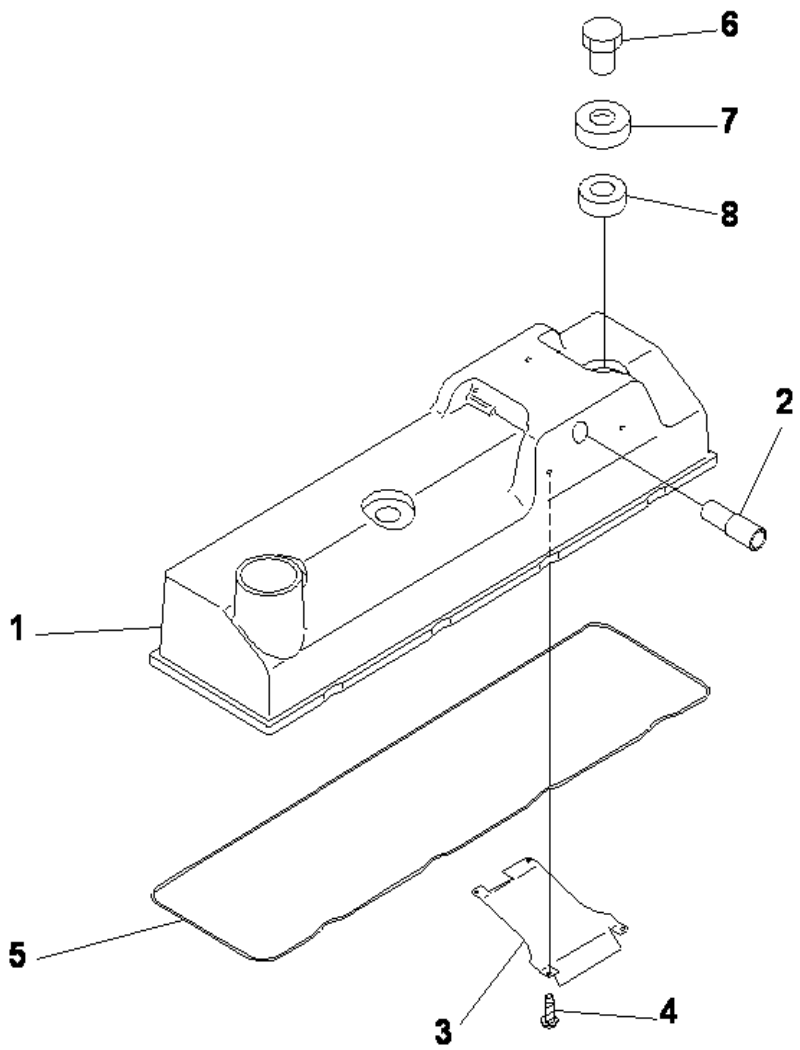

SAA4D95LE-3 S/N 132823-UP

HEAD COVER

INDEX	CD	PART NO.	DESCRIPTION	QTY	SERIAL NO.
		6205-11-8301	HEAD COVER ASS'Y.....	1	132823-UP
1		6205-11-8111	.COVER,HEAD.....	1	132823-UP
2		6207-11-8170	.TUBE.....	1	132823-UP
3		6207-11-8140	.PLATE.....	1	132823-UP
4		04418-02550	.SCREW.....	4	132823-UP
5		6204-11-8810	O-RING (K1).....	1	132823-UP
6		6136-11-8120	NUT.....	3	132823-UP
7		6136-11-8130	WASHER.....	3	132823-UP
8		6136-11-8142	PACKING (K1).....	3	132823-UP

Ref :A1110-A0F7 Page :030040

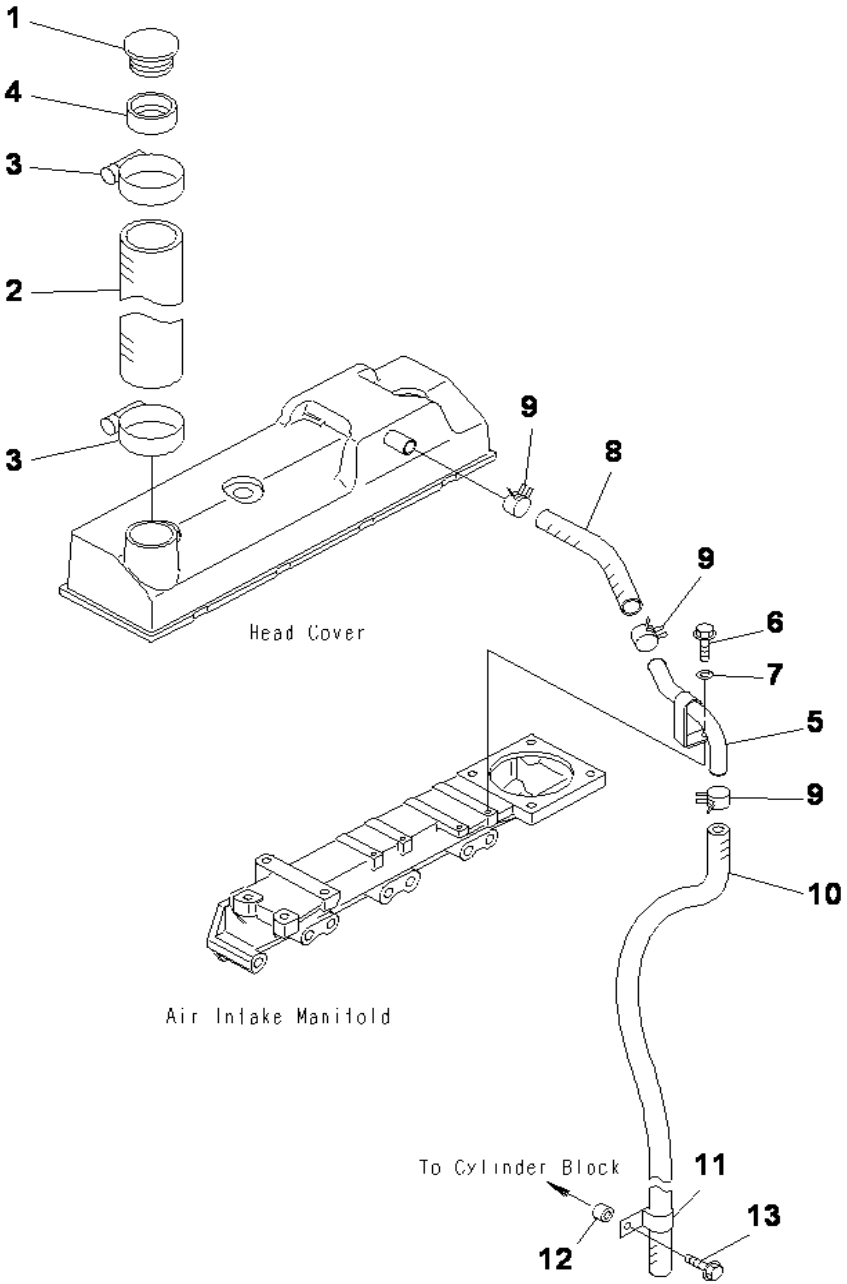

SAA4D95LE-3 S/N 132823-UP

HEAD COVER ACCESSORY

INDEX	CD	PART NO.	DESCRIPTION	QTY	SERIAL NO.
1		6204-11-8610	CAP,OIL FILLER	1	132823-UP
2		6202-13-8620	HOSE	1	132823-UP
3		07281-00709	CLAMP	2	132823-UP
4		6202-13-8631	PIPE	1	132823-UP
		6202-13-8630	PIPE	1	132823-UP
5		6205-11-8930	TUBE,BREATHER	1	132823-UP
6		01435-00614	BOLT	1	132823-UP
7		01643-30623	WASHER	1	132823-UP
8		07286-01616	HOSE	1	132823-UP
9		07285-00180	CLIP	3	132823-UP
10		07286-01685	HOSE	1	132823-UP
11		04434-52110	CLIP	1	132823-UP
12		6131-12-5920	SPACER	1	132823-UP
13		01435-01025	BOLT	1	132823-UP

Ref :A1111-A0D7 Page :030050

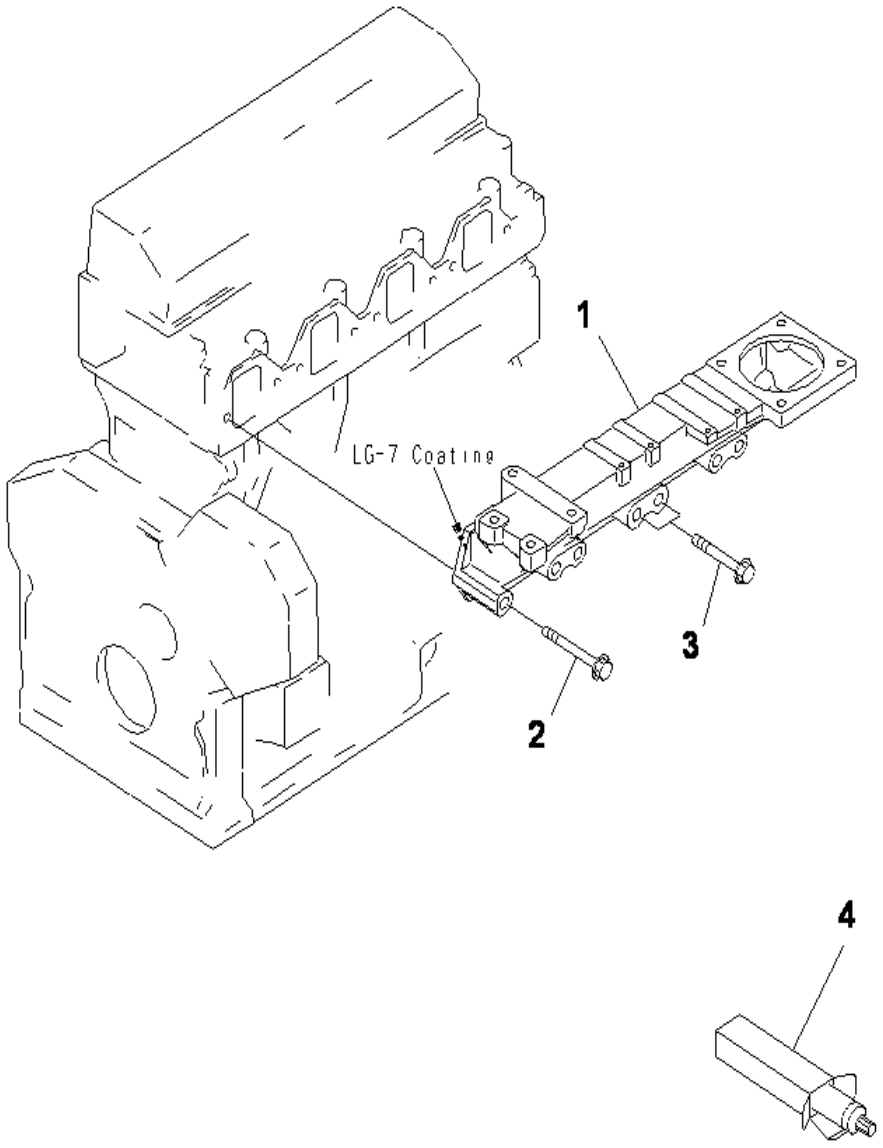

SAA4D95LE-3 S/N 132823-UP

AIR INTAKE MANIFOLD

INDEX	CD	PART NO.	DESCRIPTION	QTY	SERIAL NO.
1		6204-13-4132	MANIFOLD,AIR INTAKE.....	1	132823-UP
2		01435-01075	BOLT.....	6	132823-UP
3		01435-01065	BOLT.....	2	132823-UP
4		09920-00150	LIQUID GASKET,LG-7, 150G.....		132823-UP

Ref :A1310-A0M1 Page :030060

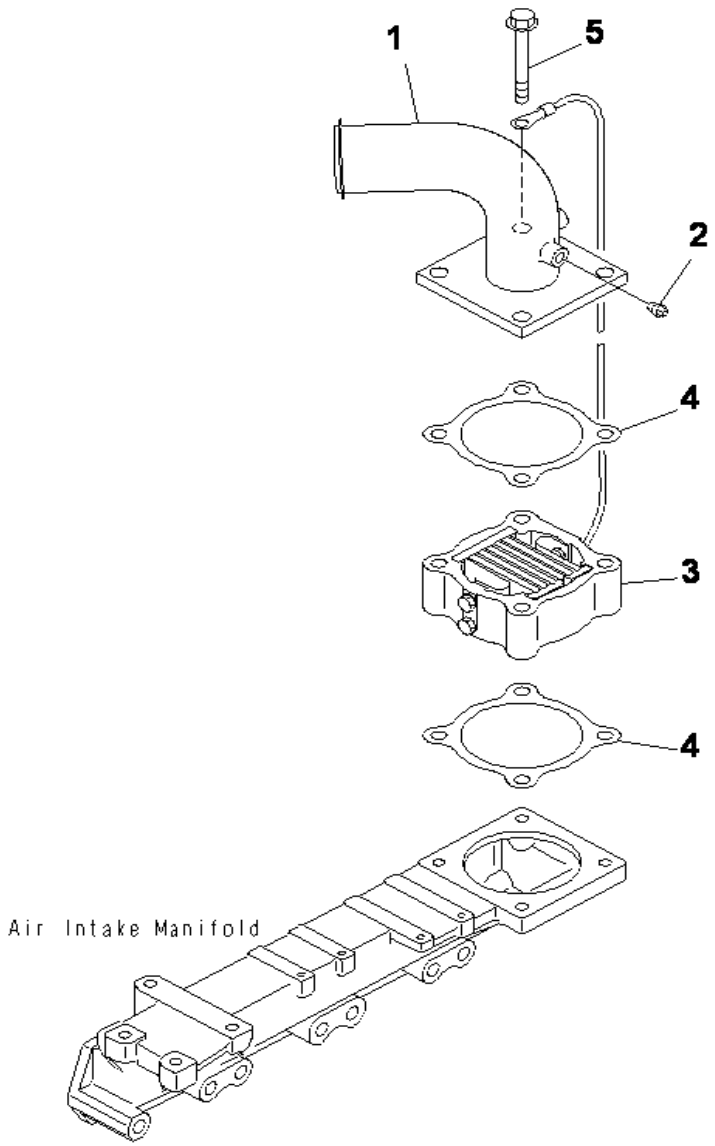

SAA4D95LE-3 S/N 132823-UP

AIR INTAKE CONNECTOR

INDEX	CD	PART NO.	DESCRIPTION	QTY	SERIAL NO.
1		6208-11-4310	CONNECTOR,AIR.....	1	132823-UP
2		07042-70108	PLUG.....	1	132823-UP
3		600-815-2341	HEATER,RIBBON.....	1	132823-UP
4		6204-11-4850	GASKET (K1).....	2	132823-UP
5		01435-01070	BOLT.....	4	132823-UP

Ref :A1320-A0A8 Page :030070

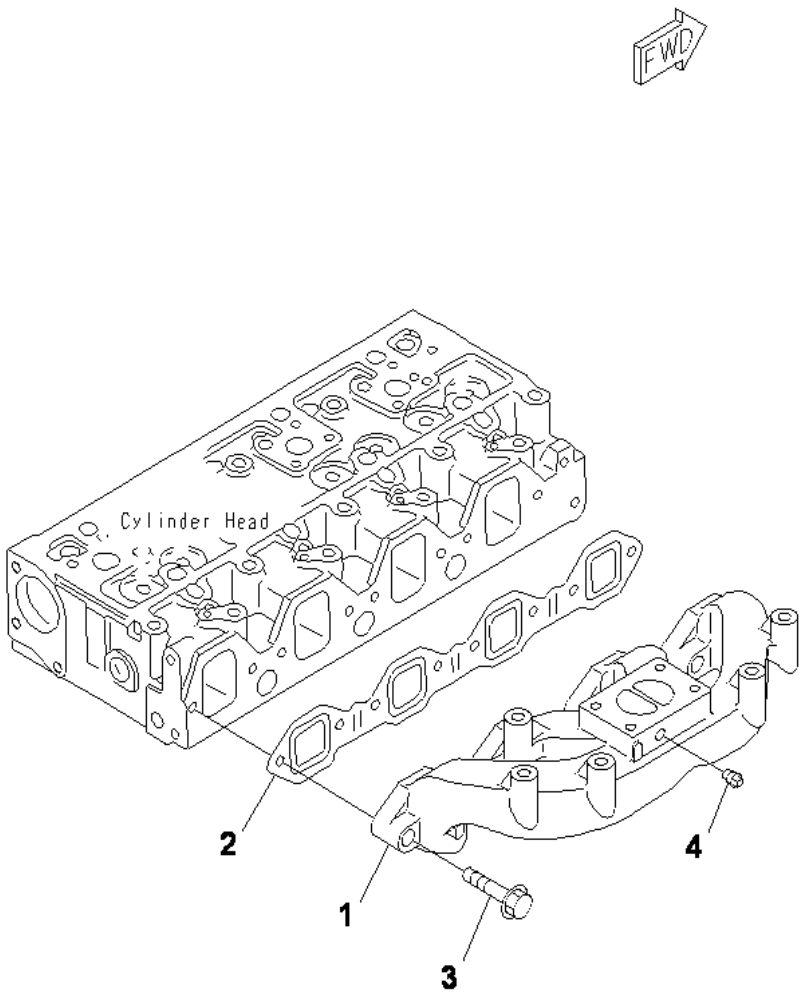

SAA4D95LE-3 S/N 132823-UP

EXHAUST MANIFOLD

INDEX	CD	PART NO.	DESCRIPTION	QTY	SERIAL NO.
1		6205-11-5140	MANIFOLD,EXHAUST.....	1	132823-UP
2		6205-11-5811	GASKET (K1).....	1	132823-UP
3		01435-01045	BOLT.....	8	132823-UP
4		07042-20108	PLUG.....	1	132823-UP

Ref :A1510-A0G3 Page :030080

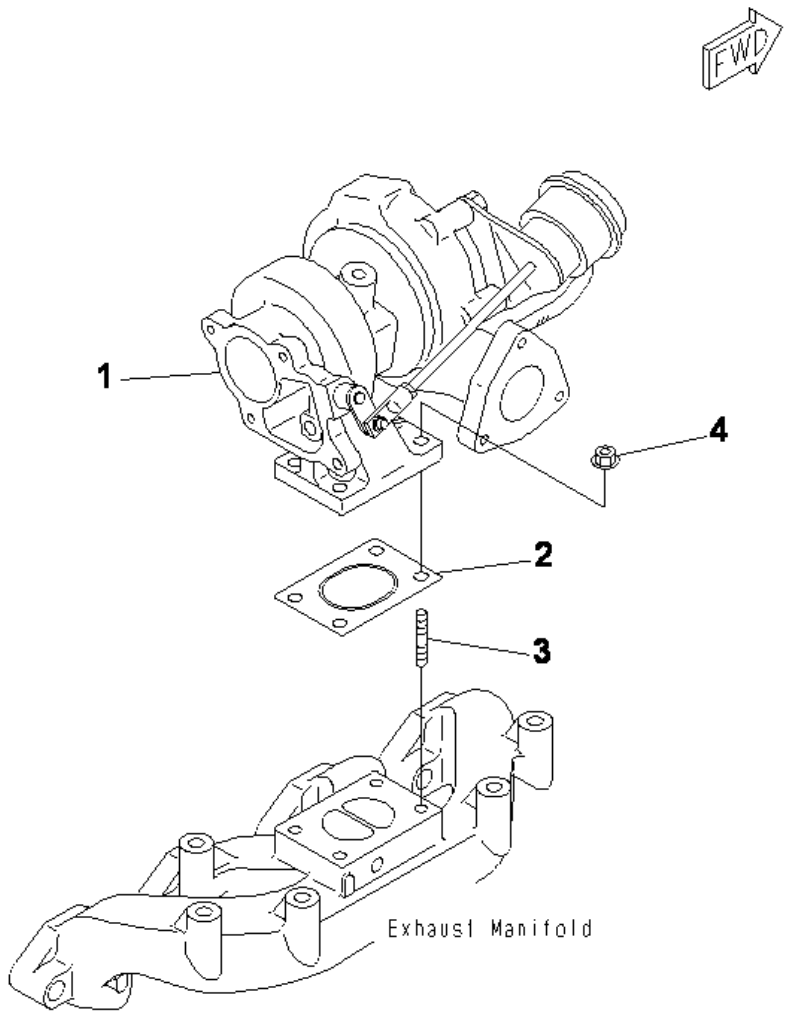

SAA4D95LE-3 S/N 132823-UP

TURBOCHARGER

INDEX	CD	PART NO.	DESCRIPTION	QTY	SERIAL NO.
1		(6208-81-8100)	TURBOCHARGER ASS'Y	1	132823-UP
2		6205-11-5580	GASKET (K1)	1	132823-UP
3		01124-60825	STUD	4	132823-UP
4		6201-11-5850	NUT	4	132823-UP

Ref :A1530-A0E4 Page :030090

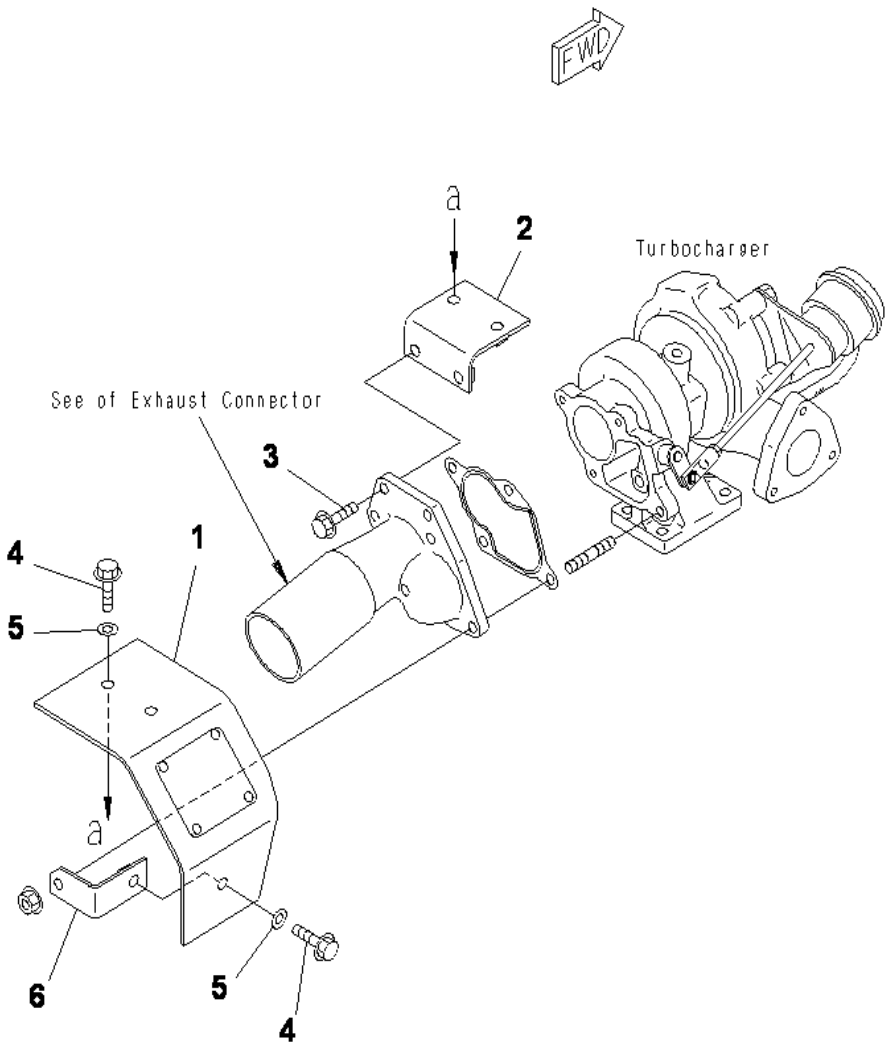

SAA4D95LE-3 S/N 132823-UP

HEAT SHIELD

INDEX	CD	PART NO.	DESCRIPTION	QTY	SERIAL NO.
1		6208-81-8810	COVER,SHIELD	1	132823-UP
2		6208-81-8820	BRACKET	1	132823-UP
3		01435-00830	BOLT	2	132823-UP
4		01435-00820	BOLT	3	132823-UP
5		154-61-16570	WASHER	3	132823-UP
6		6208-81-8830	BRACKET	1	132823-UP

Ref :A1570-A0B6 Page :030100

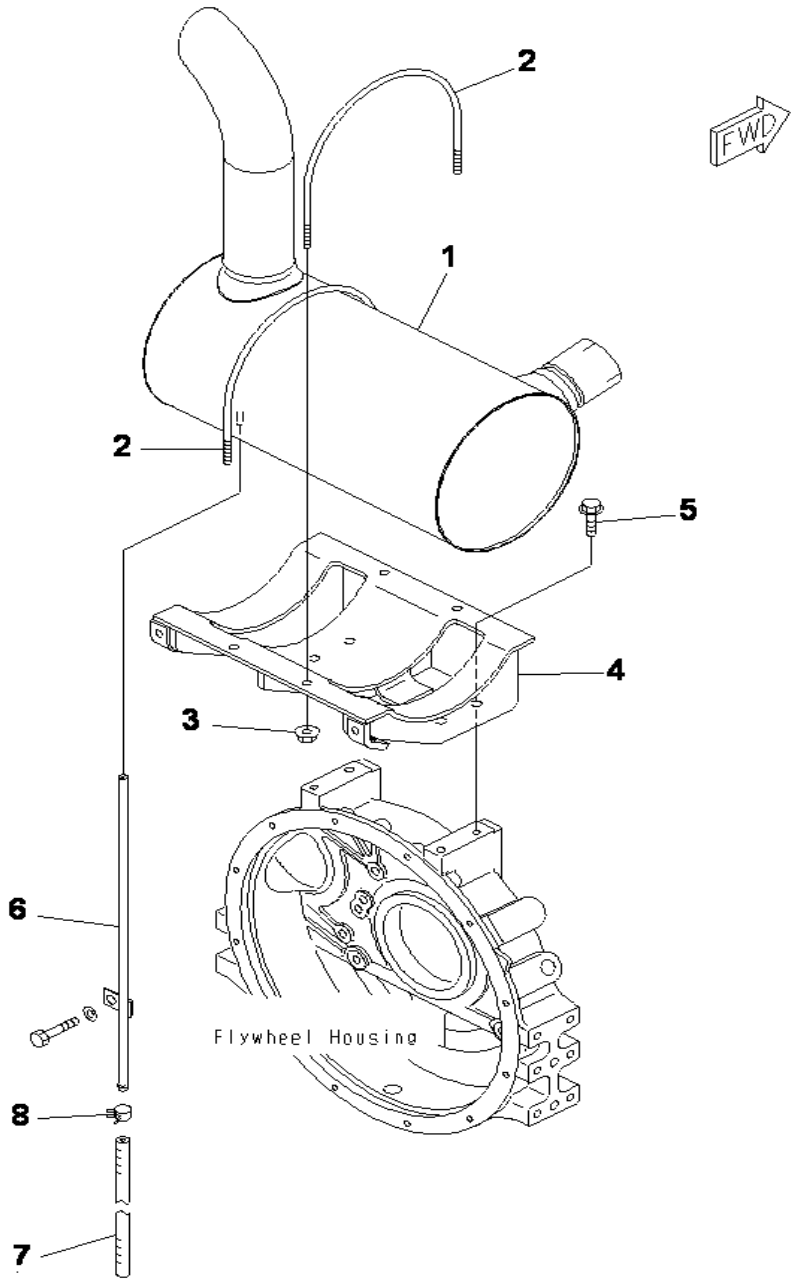

SAA4D95LE-3 S/N 132823-UP

MUFFLER

INDEX	CD	PART NO.	DESCRIPTION	QTY	SERIAL NO.
1		6208-11-5210	MUFFLER	1	132823-UP
2		6206-11-5980	U-BOLT	2	132823-UP
3		01584-00806	NUT	4	132823-UP
4		6732-11-5420	BRACKET	1	132823-UP
5		01435-01025	BOLT	4	132823-UP
6		6205-11-5460	TUBE	1	132823-UP
7		07260-20928	HOSE	1	132823-UP
8		07285-00150	CLIP	1	132823-UP

Ref :A1610-A0N7 Page :030110

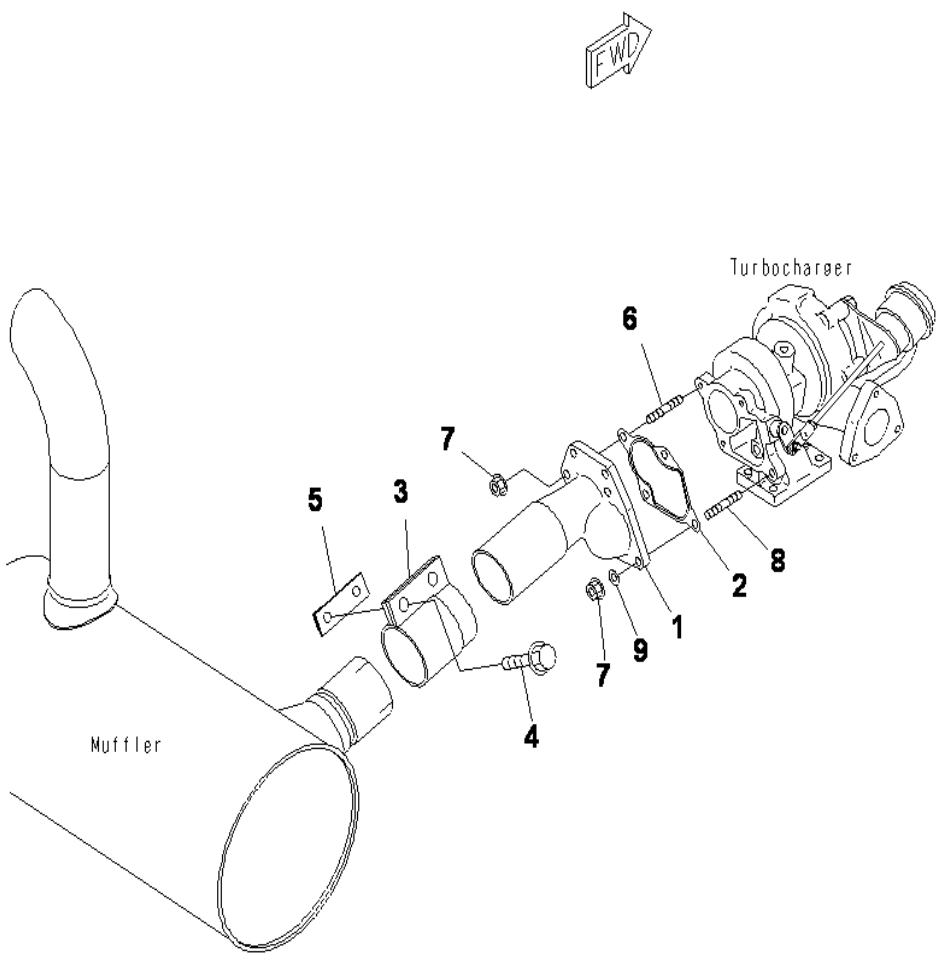

SAA4D95LE-3 S/N 132823-UP

EXHAUST CONNECTION

INDEX	CD	PART NO.	DESCRIPTION	QTY	SERIAL NO.
1		6205-11-5691	CONNECTOR	1	132823-UP
2		6205-11-5850	GASKET (K1)	1	132823-UP
3		6206-11-5911	CLAMP	1	132823-UP
4		01435-01235	BOLT	2	132823-UP
5		6208-11-5850	PLATE	1	132823-UP
6		01124-60825	STUD	3	132823-UP
7		6201-11-5850	NUT	4	132823-UP
8		01124-60830	STUD	1	132823-UP
9		01641-20812	WASHER	1	132823-UP

Ref :A1670-A0A7 Page :030120

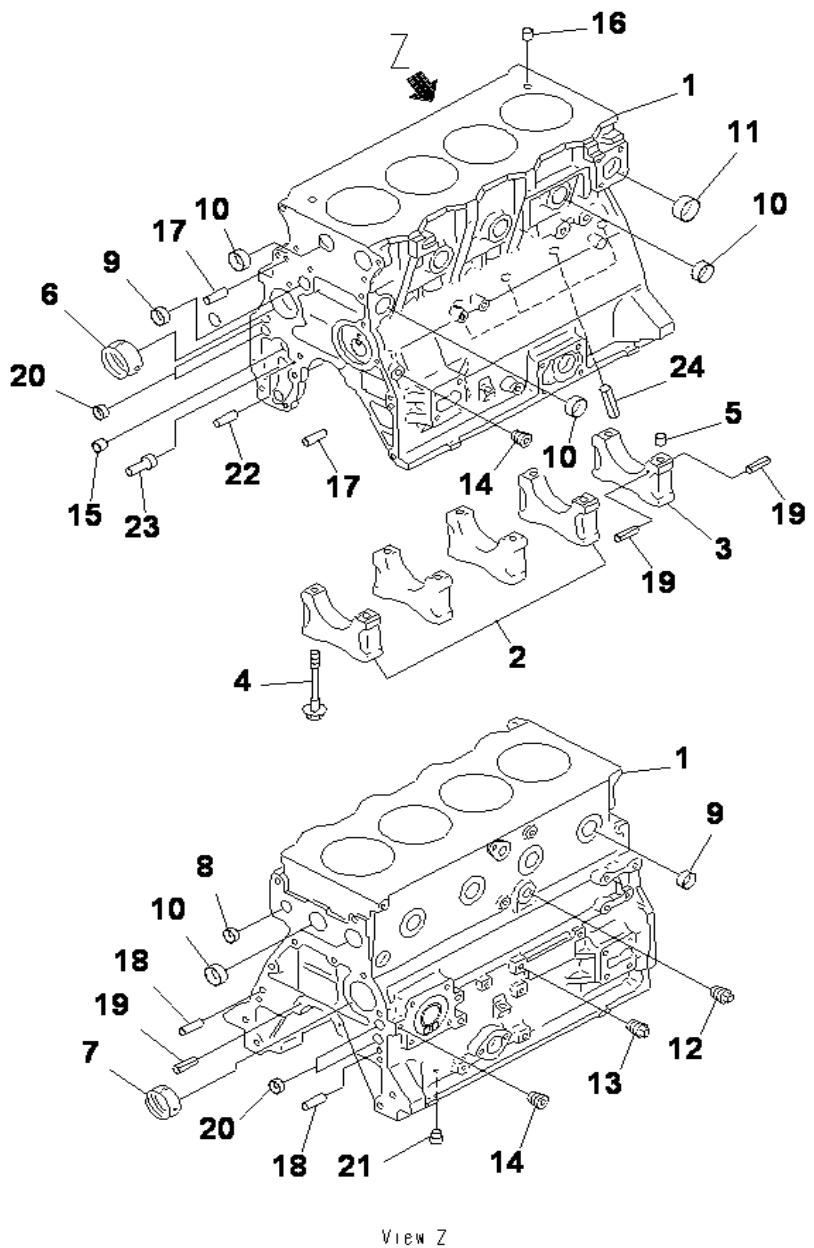

View Z

SAA4D95LE-3 S/N 132823-UP

CYLINDER BLOCK

INDEX	CD	PART NO.	DESCRIPTION	QTY	SERIAL NO.
		6205-21-1504	CYLINDER BLOCK ASS'Y.....	1	132823-UP
1	C1		.BLOCK,CYLINDER.....	1	132823-UP
2	C3	6204-29-1210	.CAP,MAIN METAL, NO.1,2,3,4.....	4	132823-UP
3	C3	6204-29-1220	.CAP,MAIN METAL, NO.5.....	1	132823-UP
4		6204-21-1610	.BOLT,MAIN CAP.....	10	132823-UP
5		6141-21-1530	.RING,DOWEL.....	2	132823-UP
6		6206-21-1430	.BUSHING,CAMSHAFT.....	1	132823-UP
7		6206-21-1420	.BUSHING,CAMSHAFT.....	2	132823-UP
8		07046-42216	.PLUG.....	1	132823-UP
9		07046-42516	.PLUG.....	5	132823-UP
10		07046-43016	.PLUG.....	7	132823-UP
11		07046-44016	.PLUG.....	1	132823-UP
12		07042-70312	.PLUG.....	1	132823-UP
13		07042-70108	.PLUG.....	3	132823-UP
14		07043-70108	.PLUG.....	2	132823-UP
15		6204-51-1711	.BUSHING,OIL PUMP.....	1	132823-UP
16		6140-21-1130	.BUSHING,DOWEL.....	2	132823-UP
17		04020-00820	.PIN,DOWEL.....	2	132823-UP
18		04020-01228	.PIN,DOWEL.....	2	132823-UP
19		04025-00408	.PIN,SPRING.....	6	132823-UP
20		07046-41810	.PLUG.....	4	132823-UP
21		07043-70108	.PLUG.....	1	132823-UP
22		6136-52-1620	.PIN,DOWEL, OIL PUMP.....	1	132823-UP
23		6204-51-1620	.SHAFT,OIL PUMP.....	1	132823-UP
24		6207-21-1190	.PIN.....	4	132823-UP

Ref :A2010-A0P2 Page :030130

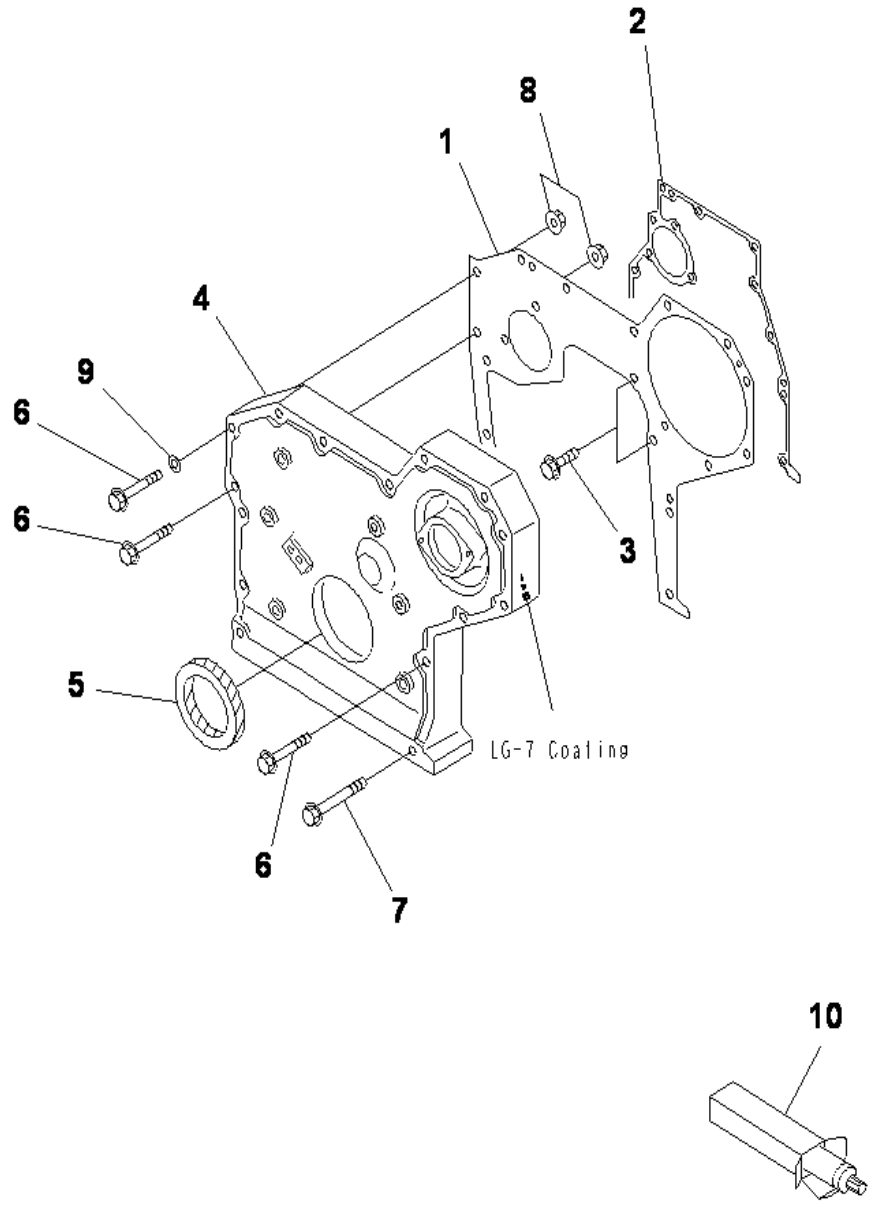

SAA4D95LE-3 S/N 132823-UP

FRONT COVER (FOR 25A ALTERNATOR)

INDEX	CD	PART NO.	DESCRIPTION	QTY	SERIAL NO.
1		6204-21-3230	PLATE,FRONT	1	132823-UP
2		6206-21-3840	GASKET (K2)	1	132823-UP
3		01435-00816	BOLT	2	132823-UP
4		6204-21-3112	COVER,FRONT	1	132823-UP
5		6204-21-3510	SEAL, FRONT (K2)	1	132823-UP
6		01435-00855	BOLT	11	132823-UP
7		01435-00870	BOLT	2	132823-UP
8		01584-00806	NUT	2	132823-UP
9		01641-20812	WASHER	1	132823-UP
10		(09920-00150)	LIQUID GASKET,LG-7, 150G		132823-UP

Ref :A2040-A0E4 Page :030140

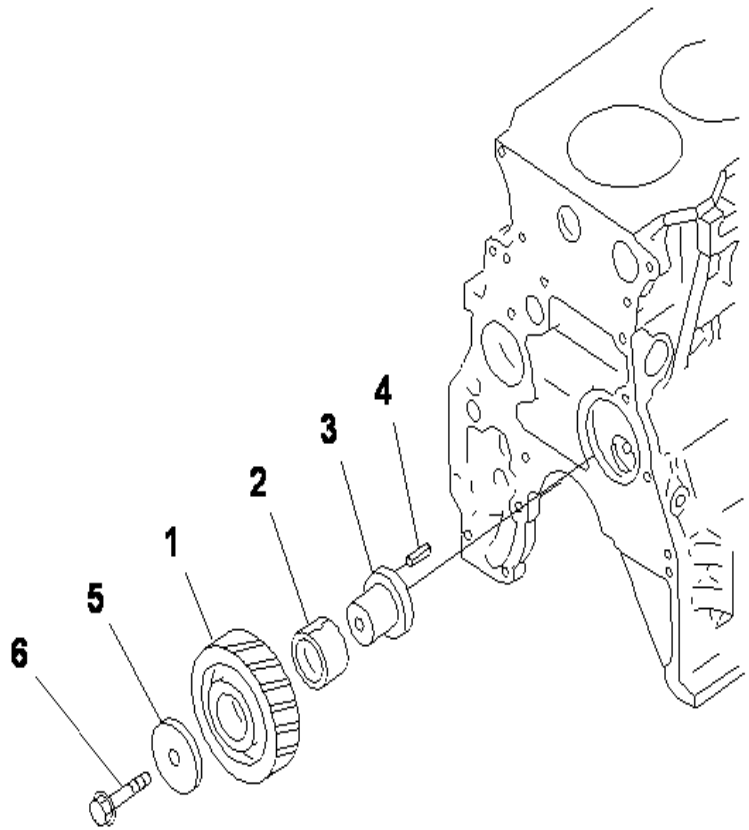

SAA4D95LE-3 S/N 132823-UP

IDLER GEAR

INDEX	CD	PART NO.	DESCRIPTION	QTY	SERIAL NO.
		6206-31-6301	IDLER GEAR ASS'Y.....	1	132823-UP
1	C1		.GEAR,IDLER.....	1	132823-UP
2	A2	6204-31-6341	.BUSHING.....	1	132823-UP
3		6204-31-6331	SHAFT.....	1	132823-UP
4		04025-00512	PIN,SPRING.....	1	132823-UP
5		6204-31-6350	WASHER.....	1	132823-UP
6		01435-01270	BOLT.....	1	132823-UP

Ref :A2050-A0B3 Page :030160

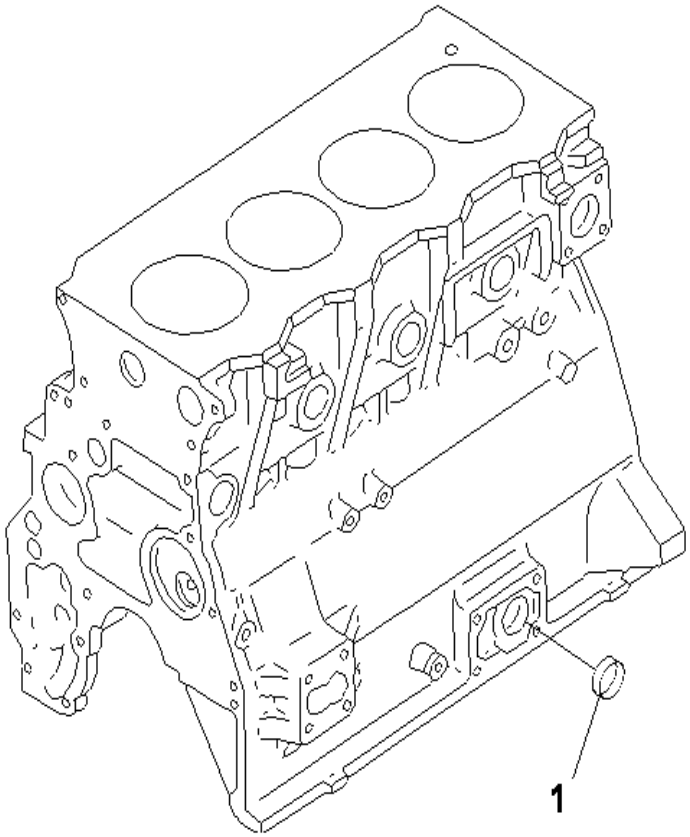

SAA4D95LE-3 S/N 132823-UP

BLIND PLUG (OIL FILLER UPPER SPEC.)

INDEX	CD	PART NO.	DESCRIPTION	QTY	SERIAL NO.
1		07046-23016	PLUG.....	1	132823-UP

Ref :A2070-A0C2 Page :030170

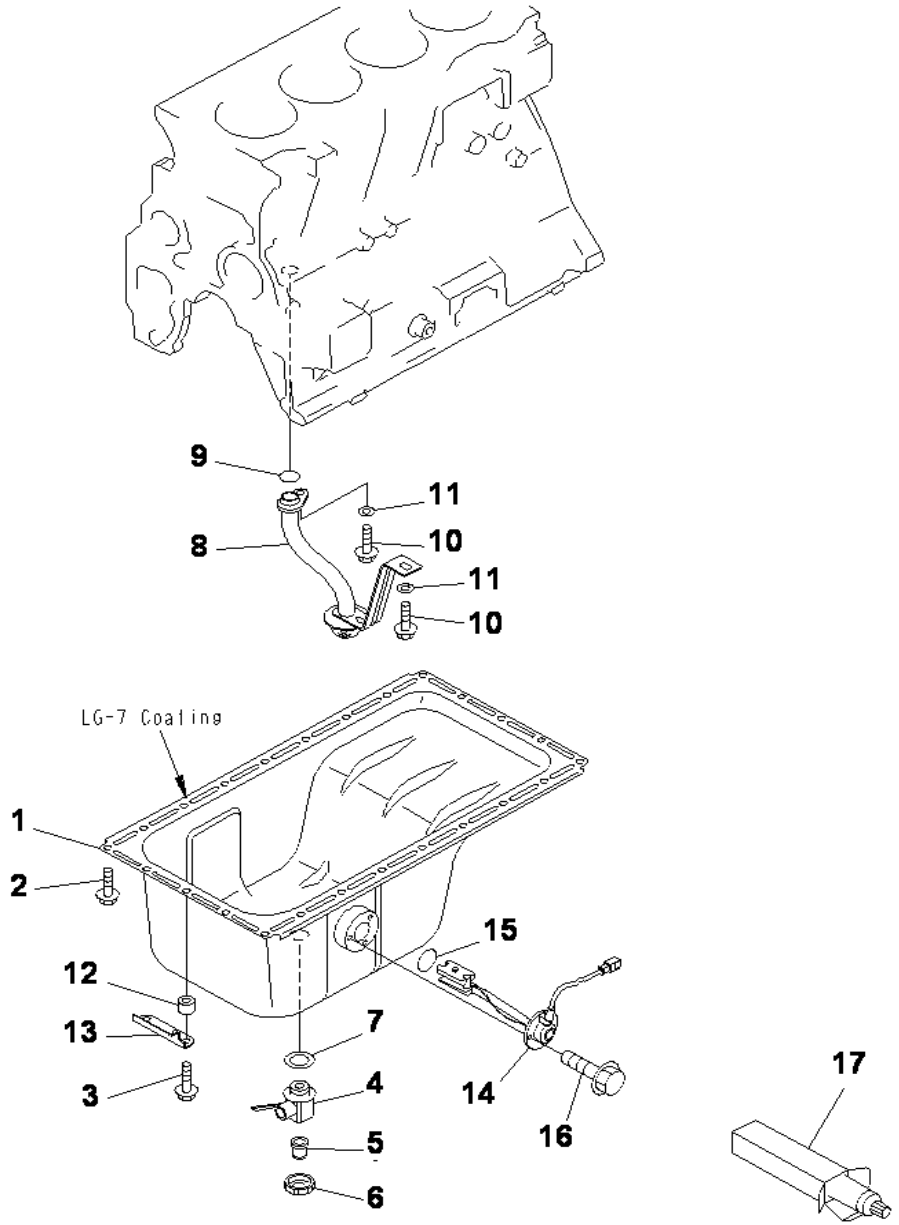

SAA4D95LE-3 S/N 132823-UP

OIL PAN AND SUCTION TUBE

INDEX	CD	PART NO.	DESCRIPTION	QTY	SERIAL NO.
1		6205-21-5142	PAN,OIL	1	132823-UP
2		01435-00814	BOLT	22	132823-UP
3		01435-00835	BOLT	2	132823-UP
		6738-21-5610	COCK ASS'Y	1	132823-UP
4		6738-21-5620	.COCK	1	132823-UP
5		6738-21-5630	.JOINT	1	132823-UP
6		6738-21-5640	.UNION	1	132823-UP
7		07005-02216	GASKET (K2)	1	132823-UP
8		6205-51-6120	TUBE,SUCTION	1	132823-UP
9		6204-51-6122	O-RING (K2)	1	132823-UP
10		01435-00816	BOLT	2	132823-UP
11		01643-30823	WASHER	2	132823-UP
12		6141-64-2560	SPACER	2	132823-UP
13		6204-21-3750	PLATE	1	132823-UP
14		6741-81-9220	SENSOR	1	132823-UP
15		7861-91-4220	O-RING	1	132823-UP
16		01435-00612	BOLT	3	132823-UP
17		(09920-00150)	LIQUID GASKET,LG-7, 150G		132823-UP

Ref :A2110-A0P1 Page :030180

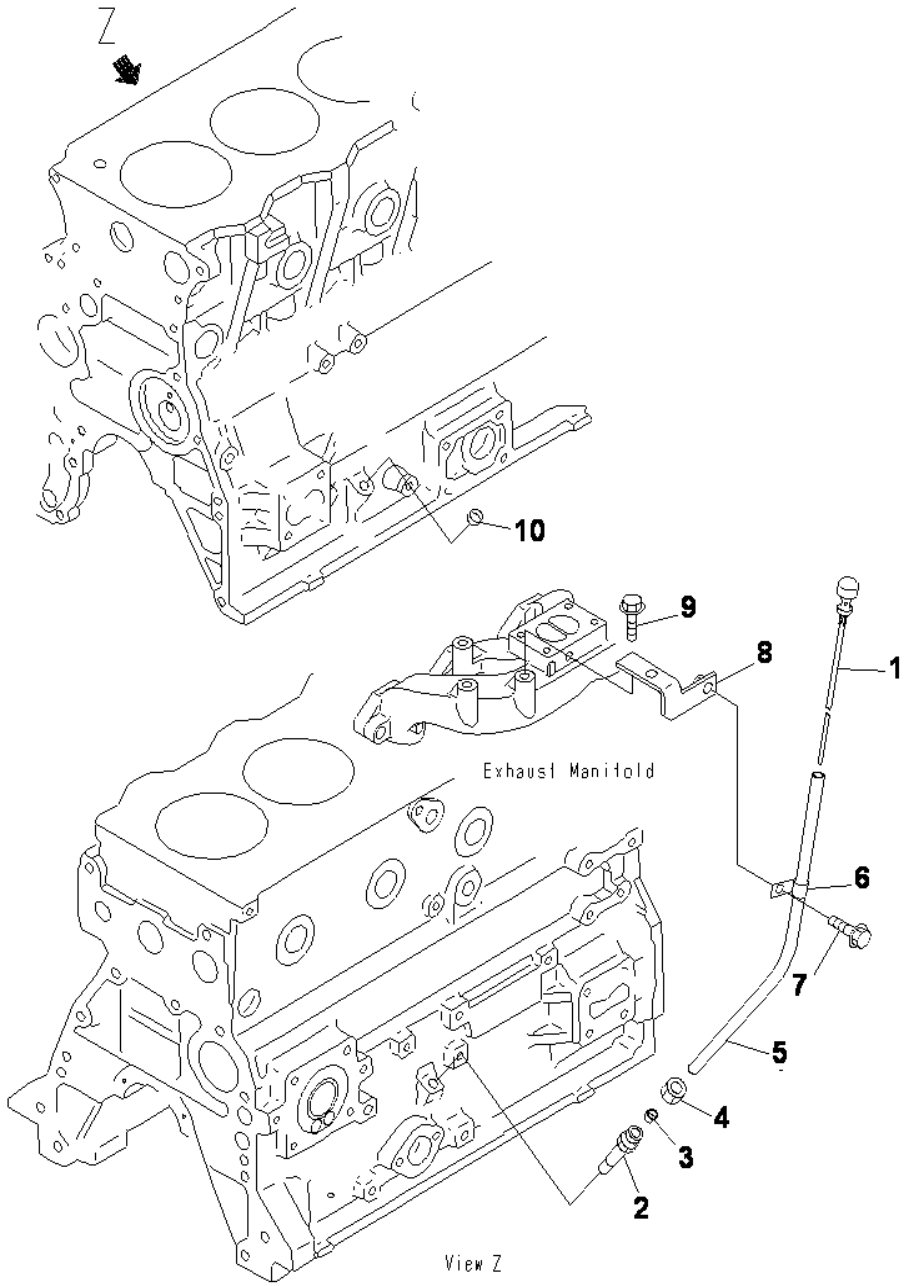

SAA4D95LE-3 S/N 132823-UP

OIL LEVEL GAUGE

INDEX	CD	PART NO.	DESCRIPTION	QTY	SERIAL NO.
1		6205-21-5360	GAUGE,OIL	1	132823-UP
2		6204-21-5510	GUIDE	1	132823-UP
3		6150-21-5920	COLLAR	1	132823-UP
4		6150-21-5930	NUT	1	132823-UP
5		6208-21-5410	GUIDE,OIL GAUGE	1	132823-UP
6		6144-21-5590	CLAMP	1	132823-UP
7		01435-01020	BOLT	1	132823-UP
8		6208-11-8880	BRACKET	1	132823-UP
9		01435-01016	BOLT	1	132823-UP
10		07046-21210	PLUG	1	132823-UP

Ref :A2190-A0B5 Page :030190

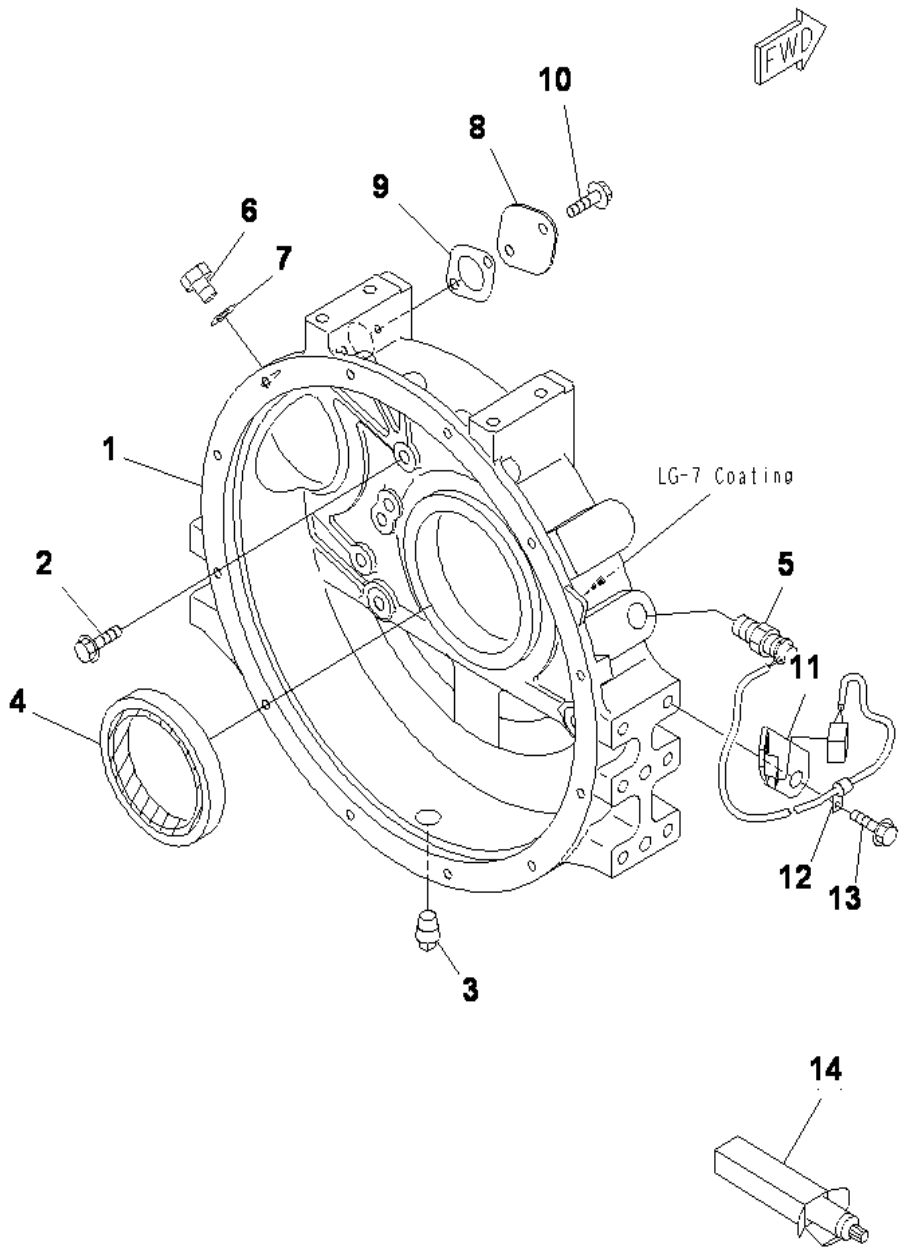

SAA4D95LE-3 S/N 132823-UP

FLYWHEEL HOUSING

INDEX	CD	PART NO.	DESCRIPTION	QTY	SERIAL NO.
1		6208-21-4110	HOUSING,FLYWHEEL	1	132823-UP
2		01435-01030	BOLT	11	132823-UP
3		07042-00415	PLUG	1	132823-UP
4		6141-21-1332	SEAL, REAR (K2)	1	132823-UP
5		7861-93-2330	SENSOR,REVOLUTION	1	132823-UP
6		6130-22-5190	PLUG	1	132823-UP
7		07005-02416	GASKET (K2)	1	132823-UP
8		6204-21-6710	PLATE	1	132823-UP
9		6204-21-6820	GASKET (K2)	1	132823-UP
10		01435-00816	BOLT	2	132823-UP
11		203-06-71251	BRACKET	1	132823-UP
12		04434-50612	CLIP	1	132823-UP
13		01435-01220	BOLT	1	132823-UP
14		(09920-00150)	LIQUID GASKET,LG-7, 150G		132823-UP

Ref :A2210-A0F9 Page :030200

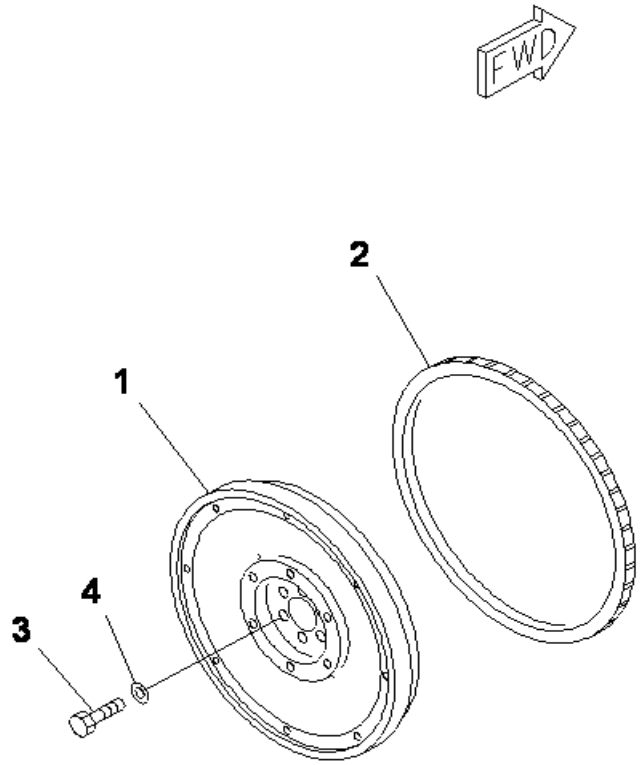

SAA4D95LE-3 S/N 132823-UP

FLYWHEEL

INDEX	CD	PART NO.	DESCRIPTION	QTY	SERIAL NO.
		6206-31-4232	FLYWHEEL ASS'Y.....	1	132823-UP
1		6206-31-4241	.FLYWHEEL.....	1	132823-UP
2		6206-31-4792	.GEAR,RING.....	1	132823-UP
3		01050-31430	BOLT.....	6	132823-UP
4		6130-32-1361	WASHER.....	6	132823-UP

Ref :A2230-A0B4 Page :030210

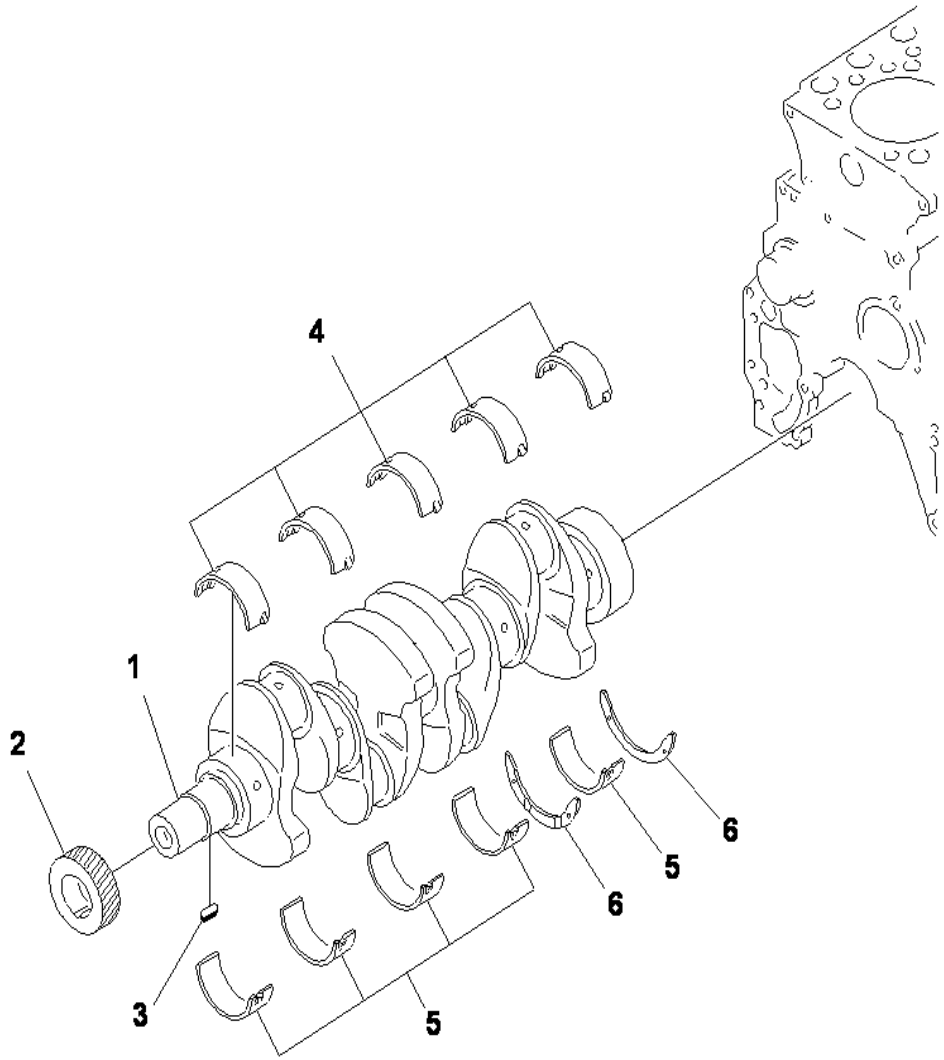

SAA4D95LE-3 S/N 132823-UP

CRANKSHAFT

INDEX	CD	PART NO.	DESCRIPTION	QTY	SERIAL NO.
		6205-31-1202	CRANKSHAFT ASS'Y	1	132823-UP
1	C1		.CRANKSHAFT	1	132823-UP
2		6204-31-1220	.GEAR,CRANKSHAFT	1	132823-UP
3		6206-31-1530	.KEY	1	132823-UP
			STANDARD		132823-UP
		6204-21-8100	MAIN METAL ASS'Y	5	132823-UP
4	C1		.METAL,UPPER	1	132823-UP
5	C1		.METAL,LOWER	1	132823-UP
			UNDERSIZE 0.25MM		132823-UP
4		6204-29-8100	MAIN METAL ASS'Y	5	132823-UP
	C1		.METAL,UPPER	1	132823-UP
5	C1		.METAL,LOWER	1	132823-UP
			UNDERSIZE 0.50MM		132823-UP
4		6204-28-8100	MAIN METAL ASS'Y	5	132823-UP
	C1		.METAL,UPPER	1	132823-UP
5	C1		.METAL,LOWER	1	132823-UP
			UNDERSIZE 0.75MM		132823-UP
4		6204-27-8100	MAIN METAL ASS'Y	5	132823-UP
	C1		.METAL,UPPER	1	132823-UP
5	C1		.METAL,LOWER	1	132823-UP
			UNDERSIZE 1.00MM		132823-UP
4		6204-26-8100	MAIN METAL ASS'Y	5	132823-UP
	C1		.METAL,UPPER	1	132823-UP
5	C1		.METAL,LOWER	1	132823-UP
			STANDARD		132823-UP
6		6204-21-8600	THRUST METAL ASS'Y	1	132823-UP
	C1		.METAL,THRUST	2	132823-UP
			OVERSIZE 0.25MM		132823-UP
6		6204-29-8600	THRUST METAL ASS'Y	1	132823-UP
	C1		.METAL,THRUST	2	132823-UP
			OVERSIZE 0.50MM		132823-UP
6		6204-28-8600	THRUST METAL ASS'Y	1	132823-UP
	C1		.METAL,THRUST	2	132823-UP
			OVERSIZE 0.75MM		132823-UP
6		6204-27-8600	THRUST METAL ASS'Y	1	132823-UP
	C1		.METAL,THRUST	2	132823-UP
			OVERSIZE 1.00MM		132823-UP
6		6204-26-8600	THRUST METAL ASS'Y	1	132823-UP
	C1		.METAL,THRUST	2	132823-UP

Ref :A2310-A0B3A Page :030220

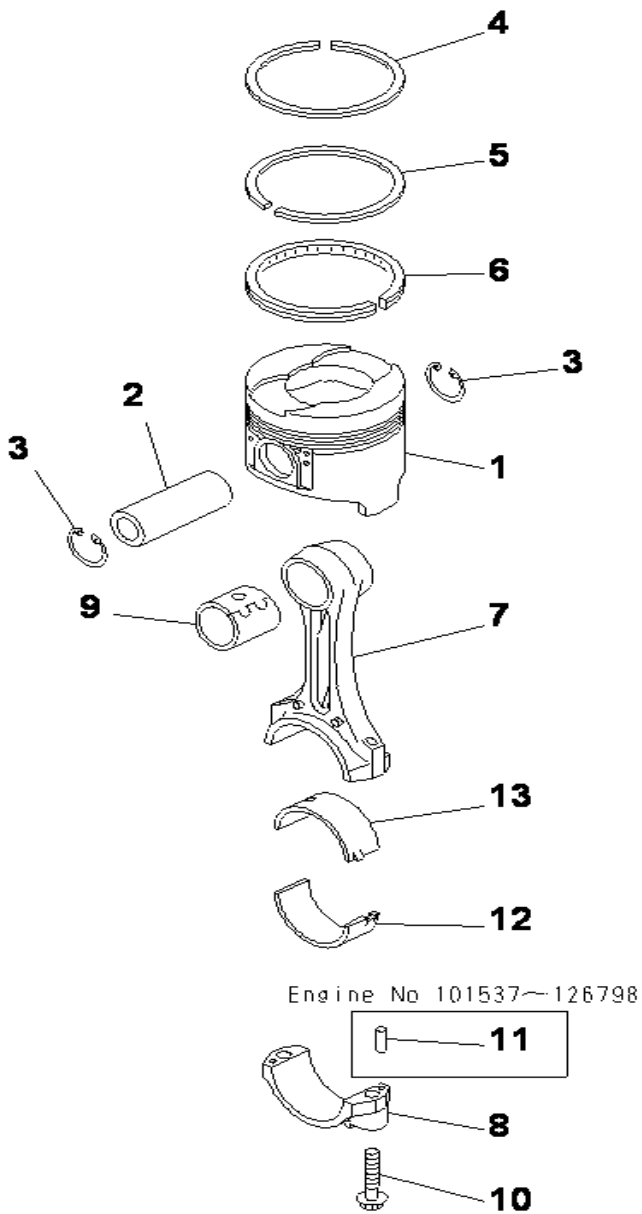

SAA4D95LE-3 S/N 132823-UP

PISTON

INDEX	CD	PART NO.	DESCRIPTION	QTY	SERIAL NO.
			STANDARD		132823-UP
1		6208-31-2110	PISTON (S)		132823-UP
			OVERSIZE 0.25MM		132823-UP
1		6208-39-2110	PISTON (S)		132823-UP
			OVERSIZE 0.50MM		132823-UP
1		6208-38-2110	PISTON (S)		132823-UP
2		6207-31-2420	PIN,PISTON	4	132823-UP
3		04065-03012	RING,SNAP	8	132823-UP
			STANDARD		132823-UP
		6208-31-2100	PISTON RING ASS'Y,PER CYLINDER	4	132823-UP
4	C1		.RING,TOP	1	132823-UP
5	C1		.RING,SECOND	1	132823-UP
6	C1		.RING,OIL	1	132823-UP
			OVERSIZE 0.25MM		132823-UP
4		6208-39-2100	PISTON RING ASS'Y,PER CYLINDER	4	132823-UP
	C1		.RING,TOP	1	132823-UP
5	C1		.RING,SECOND	1	132823-UP
6	C1		.RING,OIL	1	132823-UP
			OVERSIZE 0.50MM		132823-UP
4		6208-38-2100	PISTON RING ASS'Y,PER CYLINDER	4	132823-UP
	C1		.RING,TOP	1	132823-UP
5	C1		.RING,SECOND	1	132823-UP
6	C1		.RING,OIL	1	132823-UP
		6207-31-3800	CONNECTING ROD ASS'Y	4	132823-UP
7	C1		.ROD,CONNECTING	1	132823-UP
8	C1		.CAP	1	132823-UP
9		6207-31-3130	.BUSHING	1	132823-UP
10		6204-31-3310	.BOLT	2	132823-UP
			STANDARD		132823-UP
		6208-31-3500	CRANK PIN METAL A	4	132823-UP
12	C1		.METAL,UPPER	1	132823-UP
13	C1		.METAL,LOWER	1	132823-UP
	C1		UNDERSIZE 0.25MM		132823-UP
12		6207-39-3900	CRANK PIN METAL A	4	132823-UP
	C1		.METAL,UPPER	1	132823-UP
13	C1		.METAL,LOWER	1	132823-UP
	C1		UNDERSIZE 0.50MM		132823-UP
12		6207-38-3900	CRANK PIN METAL A	4	132823-UP
	C1		.METAL,UPPER	1	132823-UP
13	C1		.METAL,LOWER	1	132823-UP
	C1		UNDERSIZE 0.75MM		132823-UP
12		6207-37-3900	CRANK PIN METAL A	4	132823-UP
	C1		.METAL,UPPER	1	132823-UP
13	C1		.METAL,LOWER	1	132823-UP

Ref :A2350-A0F1 Page :030230

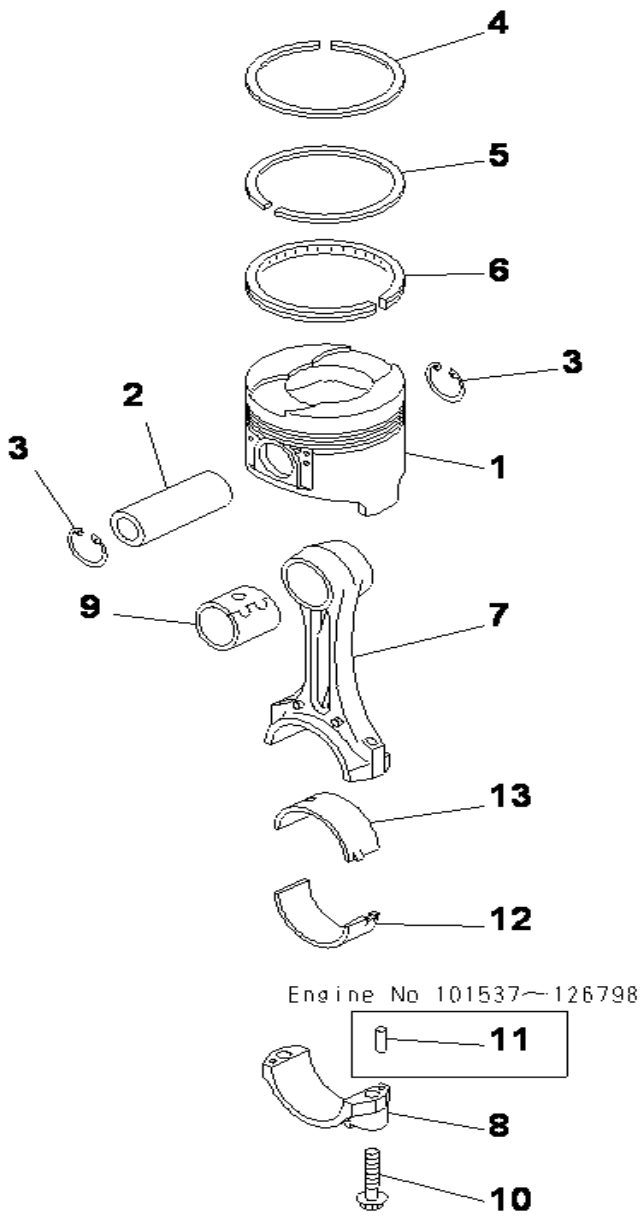

SAA4D95LE-3 S/N 132823-UP

PISTON

INDEX	CD	PART NO.	DESCRIPTION	QTY	SERIAL NO.
	C1		UNDERSIZE 1.00MM.....		132823-UP
12		6207-36-3900	CRANK PIN METAL A.....	4	132823-UP
	C1		.METAL,UPPER.....	1	132823-UP
13	C1		.METAL,LOWER.....	1	132823-UP

Ref :A2350-A0F1 Page :030231

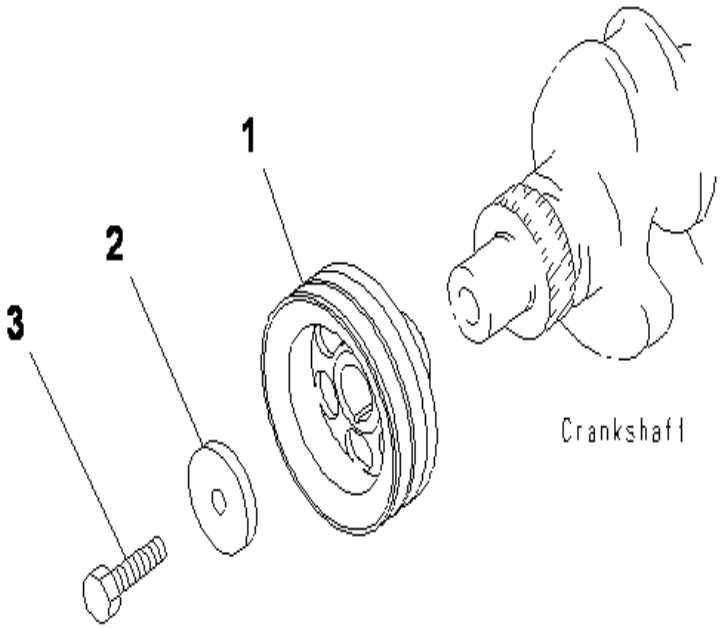

SAA4D95LE-3 S/N 132823-UP

CRANK PULLEY (NON HARDENING)

INDEX	CD	PART NO.	DESCRIPTION	QTY	SERIAL NO.
1		6208-31-1410	PULLEY,NON HARDENING.....	1	132823-UP
2		6136-31-1431	PLATE.....	1	132823-UP
3		01050-31845	BOLT.....	1	132823-UP

Ref :A2370-A0F4 Page :030240

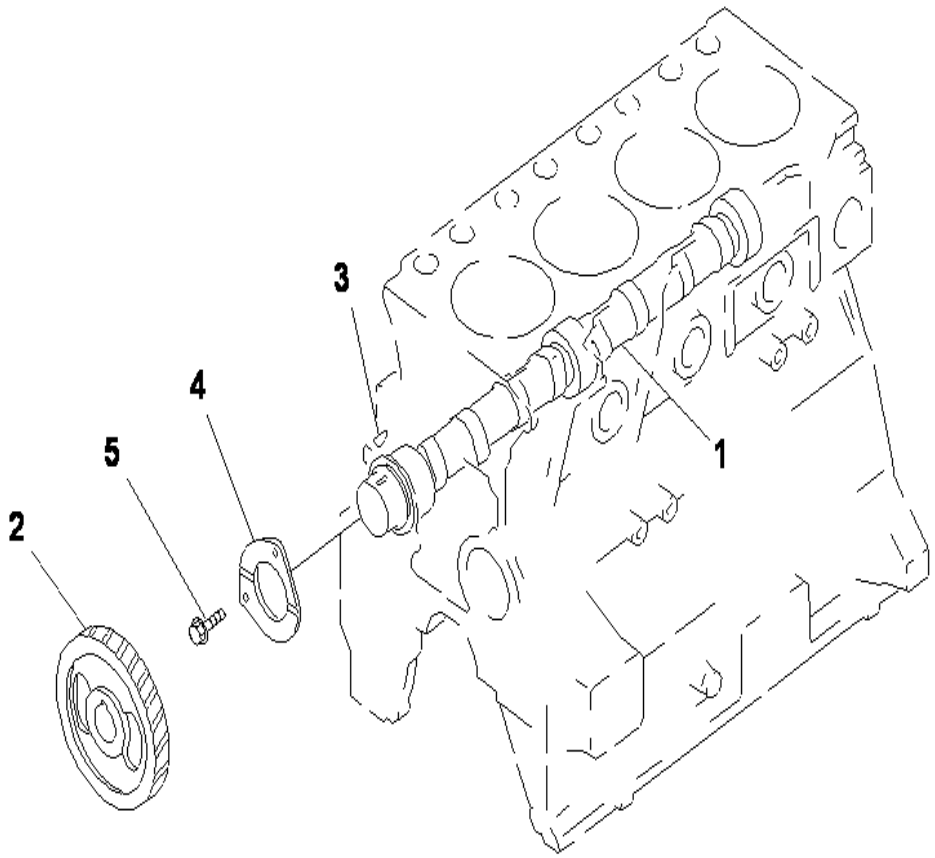

SAA4D95LE-3 S/N 132823-UP

CAMSHAFT AND GEAR

INDEX	CD	PART NO.	DESCRIPTION	QTY	SERIAL NO.
		6205-41-1500	CAMSHAFT ASS'Y.....	1	132823-UP
1	C1		.CAMSHAFT.....	1	132823-UP
2		6204-41-1221	.GEAR,CAMSHAFT.....	1	132823-UP
3		04010-00516	.KEY.....	1	132823-UP
4		6204-41-1131	.PLATE,THRUST.....	1	132823-UP
5		01435-00820	BOLT.....	2	132823-UP

Ref :A2410-A0B8 Page :030250

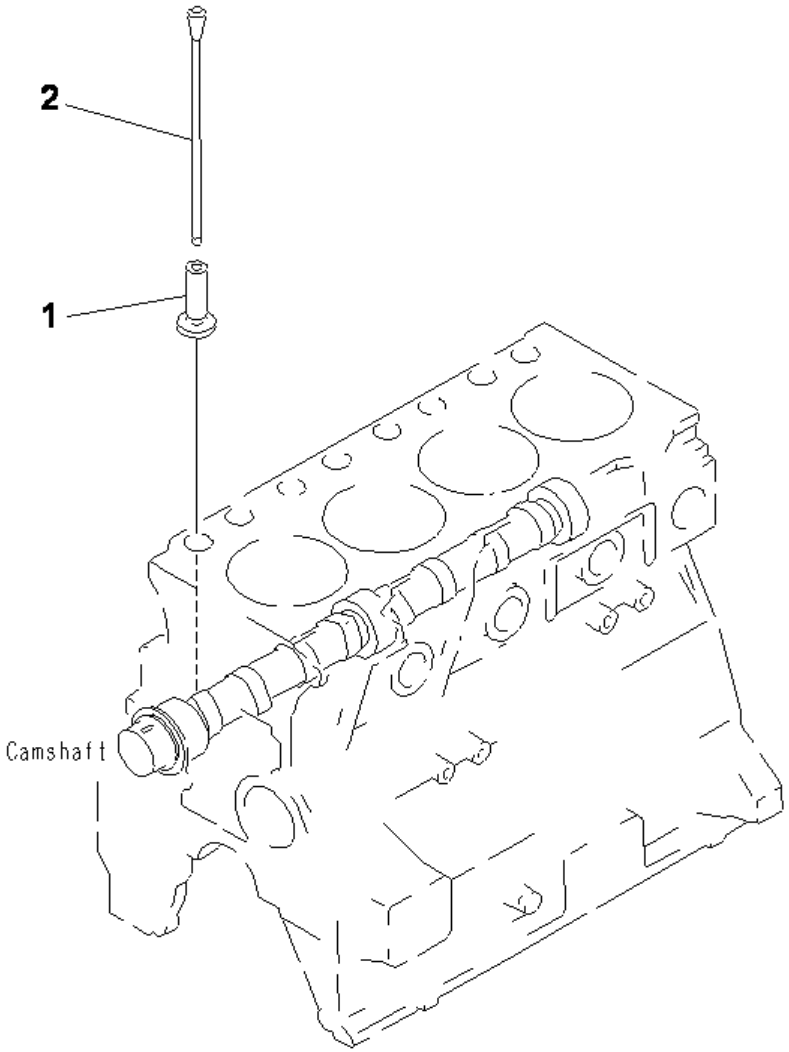

SAA4D95LE-3 S/N 132823-UP

TAPPET

INDEX	CD	PART NO.	DESCRIPTION	QTY	SERIAL NO.
1		6204-41-2110	TAPPET.....	8	132823-UP
2		6204-41-3110	ROD,PUSH.....	8	132823-UP

Ref :A2430-A0A1 Page :030260

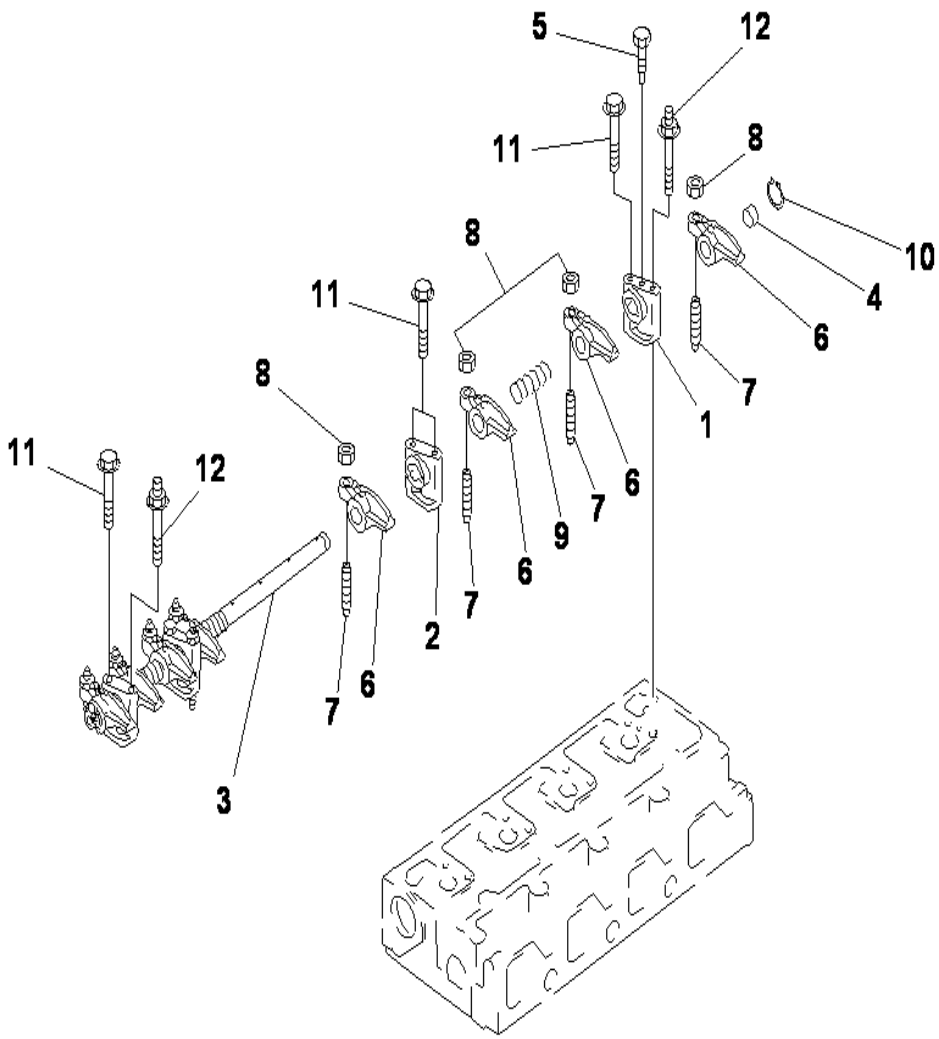

SAA4D95LE-3 S/N 132823-UP

ROCKER ARM

INDEX	CD	PART NO.	DESCRIPTION	QTY	SERIAL NO.
1		6204-41-5110	BRACKET,ROCKER	1	132823-UP
2		6204-41-5120	BRACKET,ROCKER	3	132823-UP
		6205-43-5500	SHAFT ASS'Y	1	132823-UP
3	C1		.SHAFT,ROCKER	1	132823-UP
4		6221-41-5540	.PLUG	2	132823-UP
5		6205-43-5310	BOLT	1	132823-UP
6		6205-43-5410	ARM,ROCKER	8	132823-UP
7		6221-41-5410	SCREW,ADJUST	8	132823-UP
8		6221-41-5420	NUT	8	132823-UP
9		6202-43-5320	SPRING	3	132823-UP
10		6204-41-5620	CLIP	2	132823-UP
11		01435-00865	BOLT	5	132823-UP
12		6204-41-5710	BOLT	3	132823-UP

Ref :A2450-A0A1 Page :030270

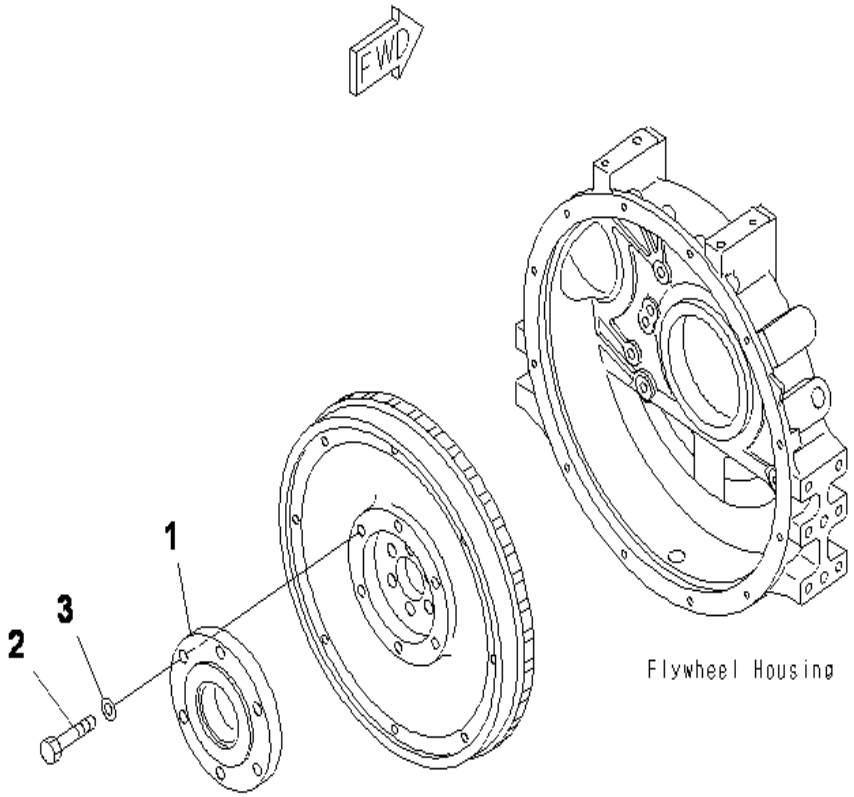

SAA4D95LE-3 S/N 132823-UP

COUPLING (POWER TAKE OFF)

INDEX	CD	PART NO.	DESCRIPTION	QTY	SERIAL NO.
1		203-01-61181	COUPLING.....	1	132823-UP
2		01010-81240	BOLT.....	6	132823-UP
3		01643-31232	WASHER.....	6	132823-UP

Ref :A2650-A0B7 Page :030280

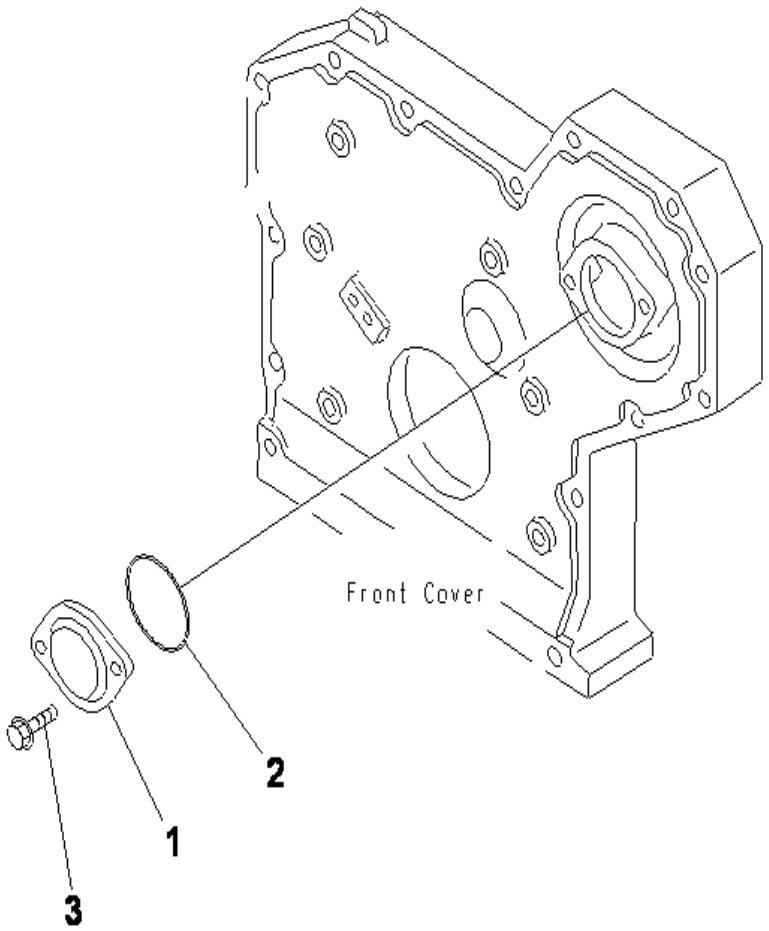

SAA4D95LE-3 S/N 132823-UP

TACHOMETER DRIVE COVER

INDEX	CD	PART NO.	DESCRIPTION	QTY	SERIAL NO.
1		6144-81-5151	COVER.....	1	132823-UP
2		07000-13050	O-RING (K2).....	1	132823-UP
3		01435-00616	BOLT.....	2	132823-UP

Ref :A2810-A0A5 Page :030290

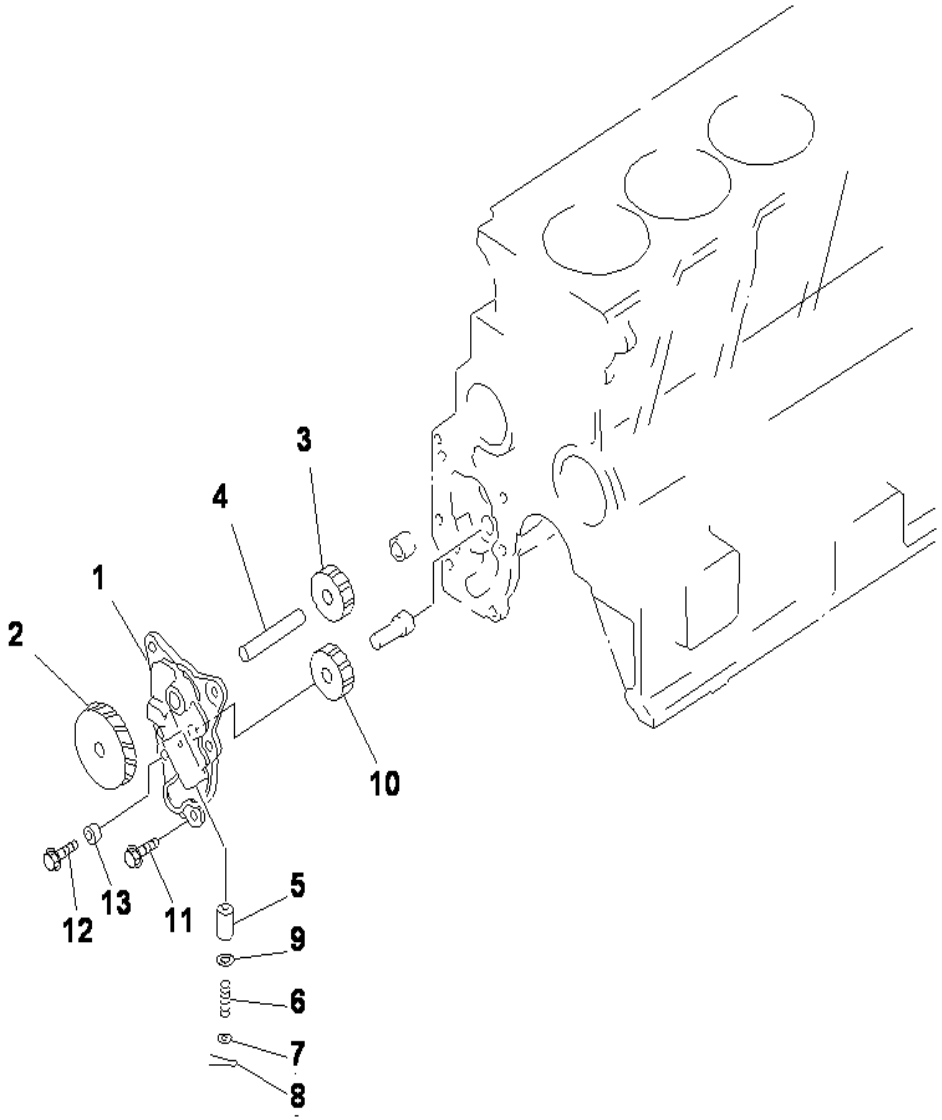

SAA4D95LE-3 S/N 132823-UP

OIL PUMP

INDEX	CD	PART NO.	DESCRIPTION	QTY	SERIAL NO.
		6207-51-1201	COVER ASS'Y	1	132823-UP
1	C1		.COVER	1	132823-UP
2		6204-51-1510	.GEAR	1	132823-UP
		6207-51-1400	.SHAFT ASS'Y	1	132823-UP
3		6207-51-1410	..GEAR,DRIVE	1	132823-UP
4	C1		..SHAFT	1	132823-UP
5		6204-51-1310	.VALVE	1	132823-UP
6		6206-51-1320	.SPRING	1	132823-UP
7		6204-51-1330	.WASHER	1	132823-UP
8		6204-51-1340	.PIN,COTTER	1	132823-UP
9		6204-51-1910	.SHIM	1	132823-UP
10		6207-51-1610	GEAR,DRIVEN	1	132823-UP
11		01435-00816	BOLT	4	132823-UP
12		01435-00825	BOLT	1	132823-UP
13		6691-41-8230	SPACER, 10MM	1	132823-UP

Ref :A3010-A0A2 Page :030300

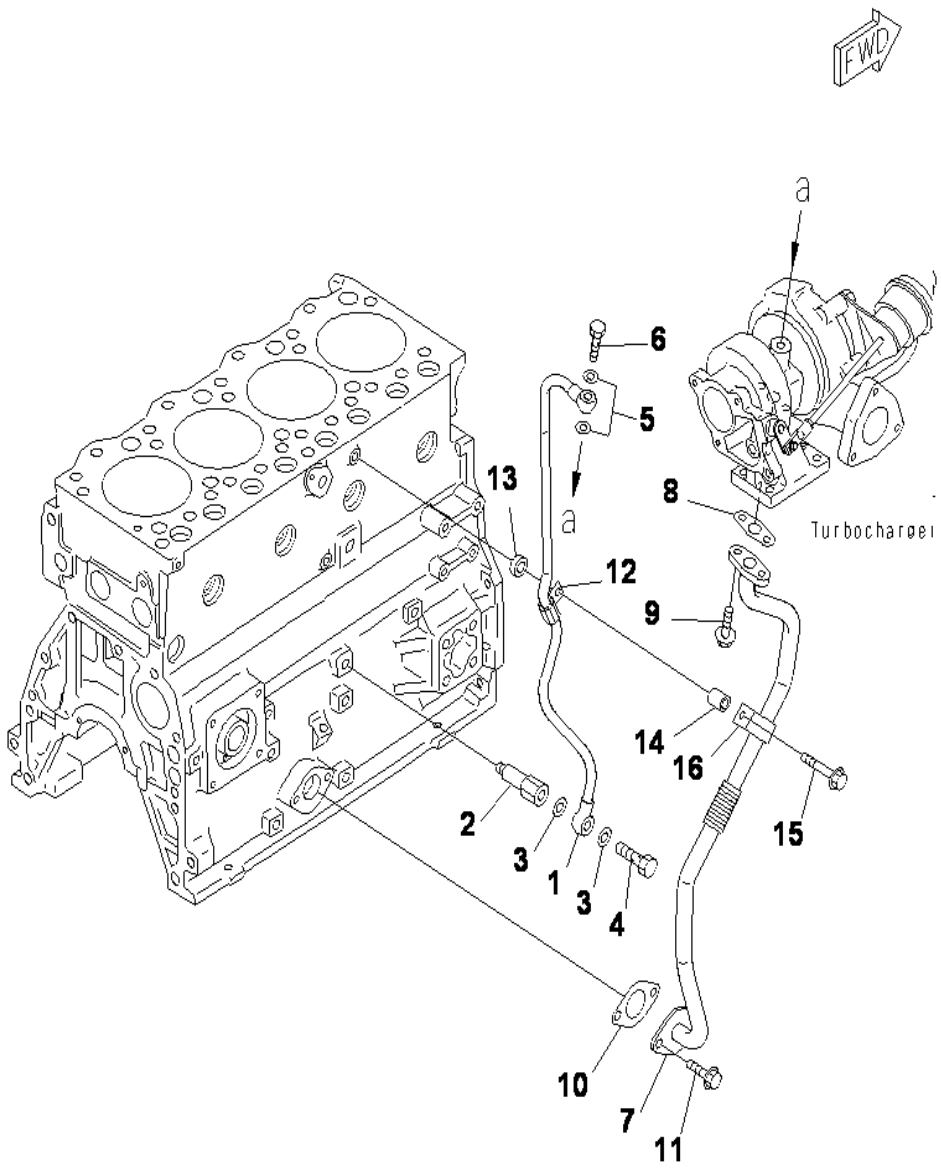

SAA4D95LE-3 S/N 132823-UP

TURBOCHARGER LUBRICATING OIL PIPING

INDEX	CD	PART NO.	DESCRIPTION	QTY	SERIAL NO.
1		6205-51-8540	TUBE,SUPPLY	1	132823-UP
2		6205-51-8240	NIPPLE	1	132823-UP
3		07005-01412	GASKET (K2)	2	132823-UP
4		07206-31014	BOLT,JOINT	1	132823-UP
5		07003-01015	GASKET (K1)	2	132823-UP
6		6205-51-8251	BOLT	1	132823-UP
7		6205-51-8530	TUBE,RETURN	1	132823-UP
8		6205-51-7611	GASKET (K1)	1	132823-UP
9		01435-00616	BOLT	2	132823-UP
10		6204-21-6820	GASKET (K2)	1	132823-UP
11		01435-00814	BOLT	2	132823-UP
12		6205-51-8560	CLIP	1	132823-UP
13		6162-73-5940	SPACER	1	132823-UP
14		20D-62-17620	COLLAR	1	132823-UP
15		01435-00840	BOLT	1	132823-UP
16		6204-51-8950	CLAMP	1	132823-UP

Ref :A3030-A0A3 Page :030310

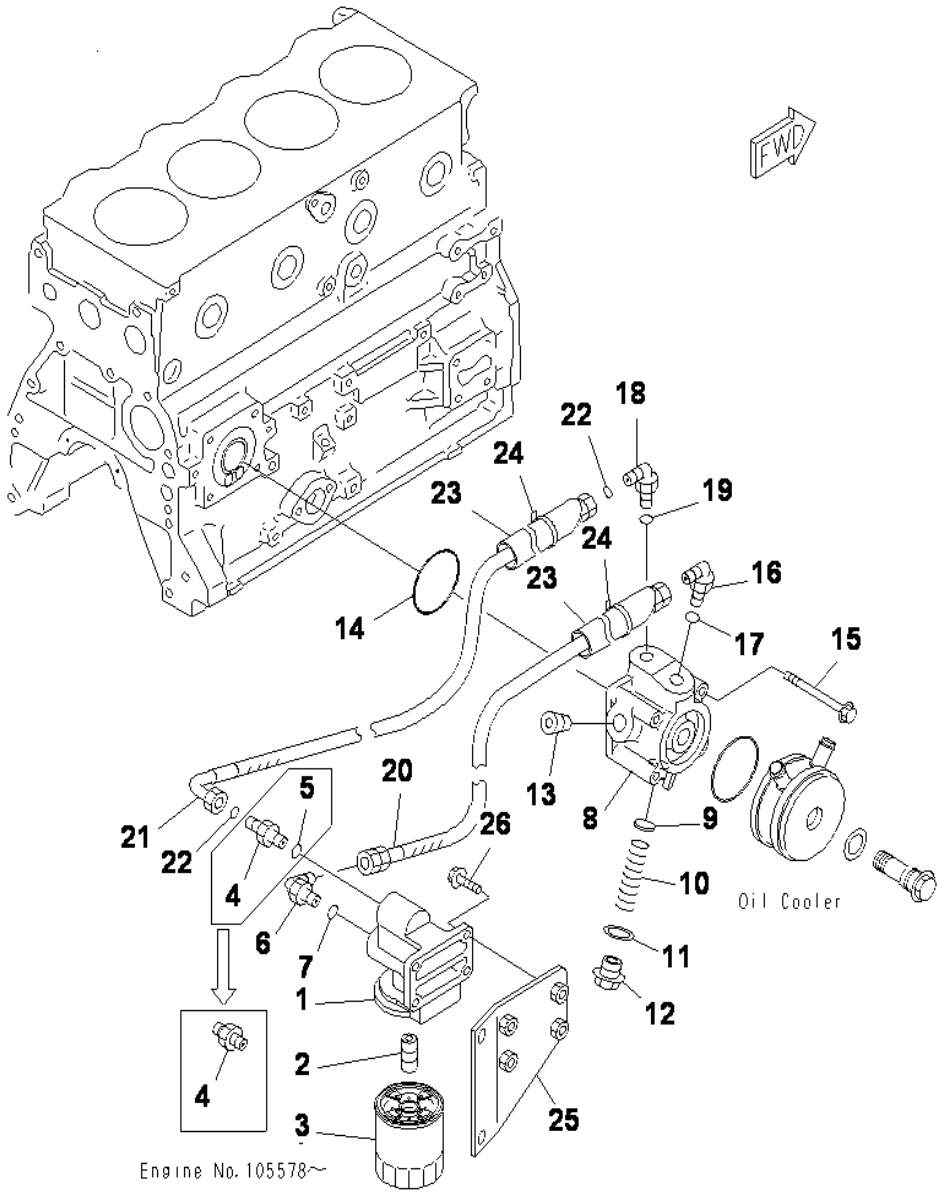

SAA4D95LE-3 S/N 132823-UP

OIL FILTER

INDEX	CD	PART NO.	DESCRIPTION	QTY	SERIAL NO.
1		6208-51-5210	HEAD,OIL FILTER	1	132823-UP
2		6201-51-5910	NIPPLE	1	132823-UP
3		600-211-2110	CARTRIDGE	1	132823-UP
4		6208-51-5250	UNION	1	132823-UP
5		07002-62434	O-RING	1	132823-UP
6		07235-10628	ELBOW	1	132823-UP
7		07002-62434	O-RING (K2)	1	132823-UP
		6208-51-5410	ADAPTER ASS'Y	1	132823-UP
8		6208-51-5420	.ADAPTER	1	132823-UP
9		6162-53-5450	.PACKING	1	132823-UP
10		600-211-1870	.SPRING	1	132823-UP
11		6162-53-5430	.PACKING	1	132823-UP
12		6162-53-5420	.CAP	1	132823-UP
13		07043-70415	.PLUG	1	132823-UP
14		07000-72070	O-RING (K2)	1	132823-UP
15		01435-00880	BOLT	4	132823-UP
16		07235-10630	ELBOW	1	132823-UP
17		07002-62434	O-RING (K2)	1	132823-UP
18		02782-10630	ELBOW	1	132823-UP
19		07002-62434	O-RING (K2)	1	132823-UP
20		07102-206A6	HOSE	1	132823-UP
21		6208-51-5870	HOSE	1	132823-UP
22		02896-61018	O-RING (K2)	2	132823-UP
23		6208-51-5890	COVER	2	132823-UP
24		08034-20519	BAND	2	132823-UP
25		203-01-71290	BRACKET	1	132823-UP
26		01435-00825	BOLT	4	132823-UP

Ref :A3110-A0D6 Page :030320

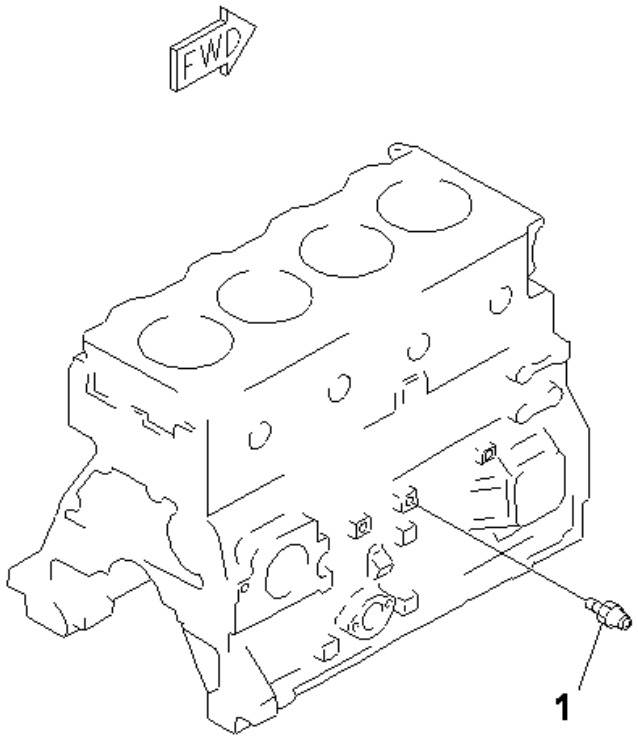

SAA4D95LE-3 S/N 132823-UP

OIL PRESSURE SWITCH

INDEX	CD	PART NO.	DESCRIPTION	QTY	SERIAL NO.
1		08073-20505	SWITCH,OIL PRESSURE.....	1	132823-UP

Ref :A3190-A0A1 Page :030330

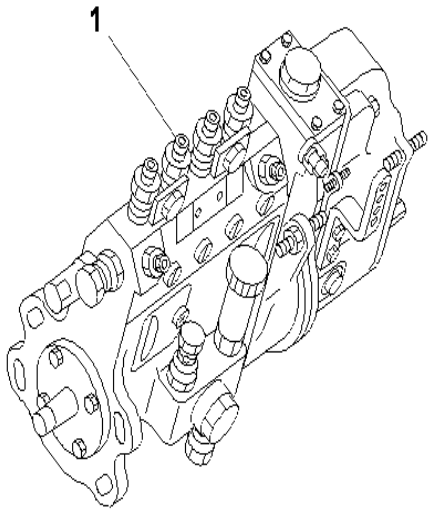

SAA4D95LE-3 S/N 132823-UP

FUEL INJECTION PUMP

INDEX	CD	PART NO.	DESCRIPTION	QTY	SERIAL NO.
1		(6208-71-1210)	INJECTION PUMP,(SEE FIG.A4010-B0W8).....	1	132823-UP

Ref :A4010-A0W8 Page :030340

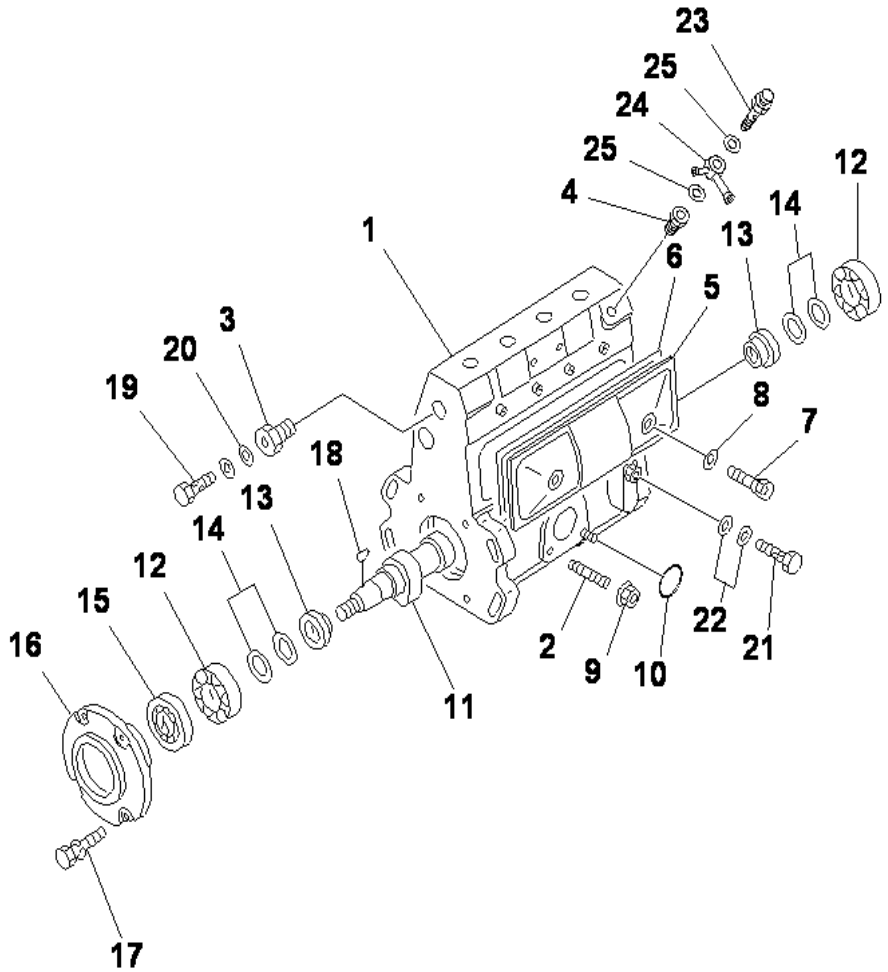

SAA4D95LE-3 S/N 132823-UP

FUEL INJECTION PUMP (PUMP) (1/3) (INNER PARTS)

INDEX	CD	PART NO.	DESCRIPTION	QTY	SERIAL NO.
		6208-71-1210	INJECTION PUMP	1	132823-UP
			THIS ASSEMBLY CONSISTS OF ALL PARTS		
			SHOWN IN FIGS.A4010-B0W8 TO A4010-F0W8		
		DK101049-4120	.PUMP ASS'Y	1	132823-UP
			THIS ASSEMBLY CONSISTS OF ALL PARTS		
			SHOWN IN FIGS.A4010-B0W8 AND A4010-C0W8		
1		DK131063-9920	..HOUSING	1	132823-UP
2		DK029040-6020	..STUD	3	132823-UP
3		DK131400-0100	..ADAPTER	1	132823-UP
4		DK131002-2000	..ADAPTER	1	132823-UP
5		DK131028-6220	..COVER	1	132823-UP
6		DK131011-1900	..GASKET	1	132823-UP
7		DK131017-1000	..SCREW	2	132823-UP
8		DK029340-6020	..GASKET	2	132823-UP
9		DK139206-0400	..NUT	3	132823-UP
10		DK029633-1010	..O-RING	1	132823-UP
11		DK131360-3000	..CAMSHAFT	1	132823-UP
12		DK016630-2030	..BEARING		132823-UP
		DK028201-7020	..BEARING		132823-UP
13		DK131302-0300	..RING	2	132823-UP
14		DK029311-7010	..SHIM, 0.1MM		132823-UP
		DK029311-7020	..SHIM, 0.12MM		132823-UP
		DK029311-7030	..SHIM, 0.14MM		132823-UP
		DK029311-7040	..SHIM, 0.16MM		132823-UP
		DK029311-7050	..SHIM, 0.18MM		132823-UP
		DK029311-7090	..SHIM, 0.3MM		132823-UP
		DK029311-7060	..SHIM, 0.5MM		132823-UP
		DK029311-7210	..SHIM, 0.7MM		132823-UP
		DK029311-7070	..SHIM, 1.0MM		132823-UP
		DK029311-7220	..SHIM, 1.4MM		132823-UP
		DK139417-0000	..SHIM, 2.40MM		132823-UP
15		DK029621-7050	..SEAL,OIL	1	132823-UP
16		DK131330-6200	..COVER	1	132823-UP
17		DK020006-1440	..BOLT	4	132823-UP
18		DK025803-1640	..KEY	1	132823-UP
19		DK131401-0020	..BOLT,EYE	1	132823-UP
20		DK029341-4130	..GASKET	2	132823-UP
21		DK029731-0120	..BOLT,EYE	1	132823-UP
22		DK029341-0110	..GASKET	2	132823-UP
23		DK131425-1420	..VALVE	1	132823-UP
24		DK139814-0500	..EYE	1	132823-UP
25		DK029341-4130	..GASKET	2	132823-UP

Ref :A4010-B0W8 Page :030350

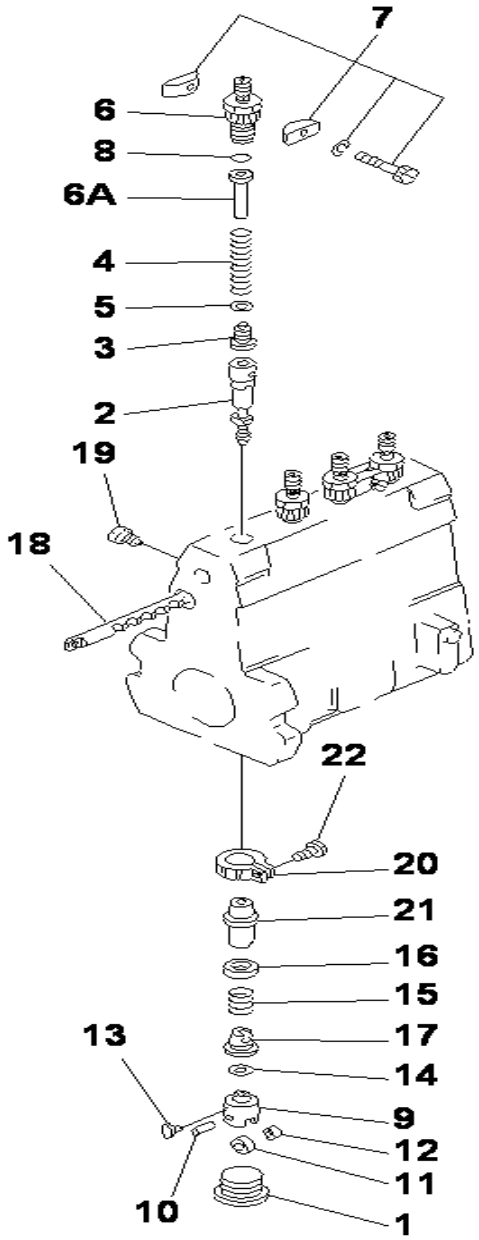

SAA4D95LE-3 S/N 132823-UP

FUEL INJECTION PUMP (PUMP) (2/3) (INNER PARTS)

INDEX	CD	PART NO.	DESCRIPTION	QTY	SERIAL NO.
		(6208-71-1210)	INJECTION PUMP.....	1	132823-UP
			THIS ASSEMBLY CONSISTS OF ALL PARTS.....		
			SHOWN IN FIGS.A4010-B0W8 TO A4010-F0W8.....		
		(DK10104-94120)	.PUMP ASS'Y.....	1	132823-UP
			THIS ASSEMBLY CONSISTS OF ALL PARTS.....		
			SHOWN IN FIGS.A4010-B0W8 AND A4010-C0W8.....		
1		DK131034-1401	..PLUG.....	4	132823-UP
2		DK131154-6920	..PLUNGER ASS'Y.....	4	132823-UP
3		DK131110-6820	..VALVE,DELIVERY.....	4	132823-UP
4		DK131112-4200	..SPRING.....	4	132823-UP
5		DK131115-1600	..GASKET.....	4	132823-UP
6		DK131116-7600	..HOLDER.....	4	132823-UP
6		DK131117-2300	..STOPPER.....	4	132823-UP
7		DK131122-0520	..PLATE ASS'Y.....	2	132823-UP
8		DK029632-0030	..O-RING.....	4	132823-UP
9		DK131200-2820	..TAPPET ASS'Y.....	4	132823-UP
10		DK131203-0800	..PIN.....	1	132823-UP
11		DK131204-1000	..ROLLER.....	1	132823-UP
12		DK131205-0500	..BUSHING.....	1	132823-UP
13		DK131206-0200	..GUIDE.....	1	132823-UP
14		DK029311-0580	..SHIM, 0.2MM.....		132823-UP
		DK029311-0590	..SHIM, 0.25MM.....		132823-UP
		DK029311-0020	..SHIM, 0.30MM.....		132823-UP
		DK029311-0600	..SHIM, 0.35MM.....		132823-UP
		DK029311-0030	..SHIM, 0.40MM.....		132823-UP
		DK029311-0610	..SHIM, 0.45MM.....		132823-UP
		DK029311-0040	..SHIM, 0.50MM.....		132823-UP
		DK029311-0270	..SHIM, 0.55MM.....		132823-UP
		DK029311-0050	..SHIM, 0.6MM.....		132823-UP
		DK029311-0280	..SHIM, 0.65MM.....		132823-UP
		DK029311-0060	..SHIM, 0.7MM.....		132823-UP
		DK029311-0290	..SHIM, 0.75MM.....		132823-UP
		DK029311-0070	..SHIM, 0.8MM.....		132823-UP
		DK029311-0310	..SHIM, 0.85MM.....		132823-UP
		DK029311-0080	..SHIM, 0.9MM.....		132823-UP
		DK029311-0320	..SHIM, 0.95MM.....		132823-UP
		DK029311-0090	..SHIM, 1.0MM.....		132823-UP
		DK029311-0330	..SHIM, 1.05MM.....		132823-UP
		DK029311-0110	..SHIM, 1.1MM.....		132823-UP
		DK029311-0340	..SHIM, 1.15MM.....		132823-UP
		DK029311-0120	..SHIM, 1.2MM.....		132823-UP
		DK029311-0350	..SHIM, 1.25MM.....		132823-UP
		DK029311-0130	..SHIM, 1.3MM.....		132823-UP
		DK029311-0620	..SHIM, 1.35MM.....		132823-UP
		DK029311-0140	..SHIM, 1.4MM.....		132823-UP

Ref :A4010-C0W8 Page :030360

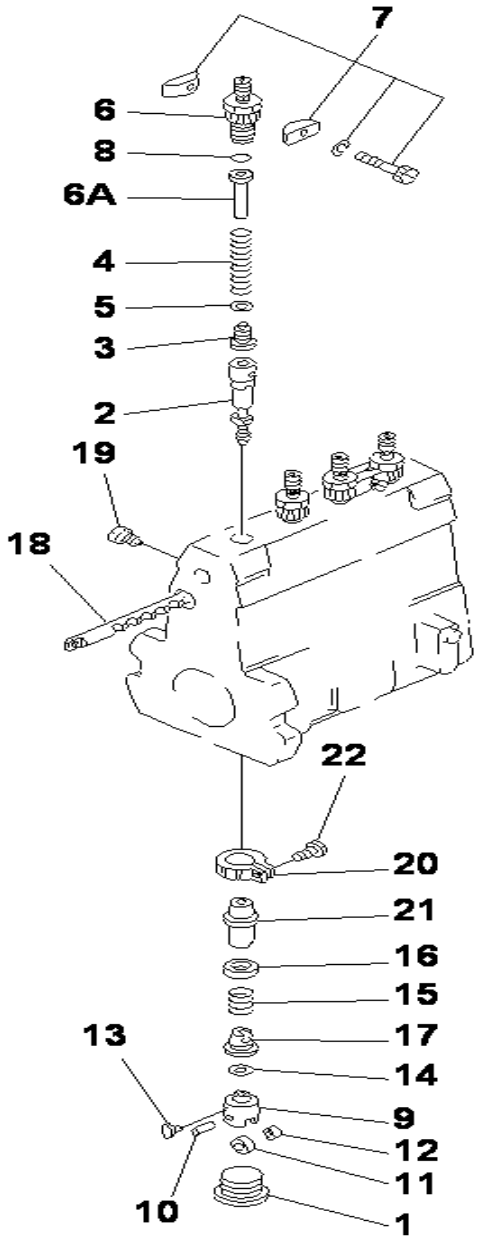

SAA4D95LE-3 S/N 132823-UP

FUEL INJECTION PUMP (PUMP) (3/3) (INNER PARTS)

INDEX	CD	PART NO.	DESCRIPTION	QTY	SERIAL NO.
		DK029311-0630	..SHIM, 1.45MM.....		132823-UP
		DK029311-0490	..SHIM, 1.5MM.....		132823-UP
		DK029311-0710	..SHIM, 1.55MM.....		132823-UP
		DK029311-0500	..SHIM, 1.6MM.....		132823-UP
15		DK131215-2500	..SPRING.....	4	132823-UP
16		DK131216-0100	..SEAT,SPRING.....	4	132823-UP
17		DK131217-0200	..SEAT,SPRING.....	4	132823-UP
18		DK131254-0000	..RACK,CONTROL.....	1	132823-UP
19		DK131226-0300	..SCREW.....	1	132823-UP
20		DK131240-0100	..PINION.....	4	132823-UP
21		DK131241-0100	..SLEEVE,CONTROL.....	4	132823-UP
22		DK131242-0100	..SCREW.....	4	132823-UP

Ref :A4010-C0W8 Page :030361

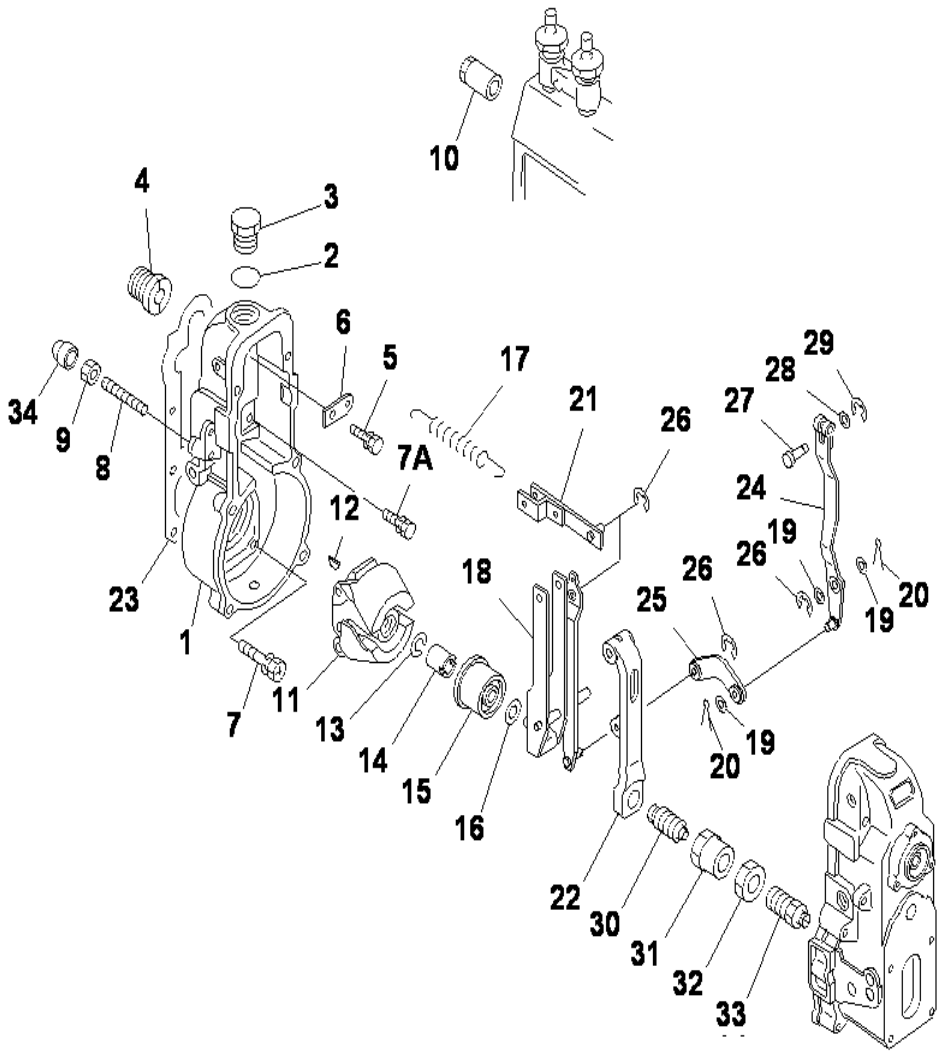

SAA4D95LE-3 S/N 132823-UP

FUEL INJECTION PUMP (GOVERNOR) (1/2) (INNER PARTS)

INDEX	CD	PART NO.	DESCRIPTION	QTY	SERIAL NO.
		(620-87-11210)	INJECTION PUMP	1	132823-UP
			THIS ASSEMBLY CONSISTS OF ALL PARTS		
			SHOWN IN FIGS.A4010-B0W8 TO A4010-F0W8		
		DK105401-1441	.GOVERNOR ASS'Y	1	132823-UP
			THIS ASSEMBLY CONSISTS OF ALL PARTS		
			SHOWN IN FIGS.A4010-D0W8 AND A4010-E0W8		
1		DK154000-6300	..HOUSING	1	132823-UP
2		DK029632-5070	..O-RING	1	132823-UP
3		DK154007-2900	..PLUG	1	132823-UP
4		DK154007-0200	..ADAPTER	1	132823-UP
5		DK020018-1840	..BOLT	1	132823-UP
6		DK154375-9020	..PLATE	1	132823-UP
7		DK029010-6810	..BOLT	5	132823-UP
7		DK020106-1840	..BOLT	1	132823-UP
8		DK154013-5000	..SCREW	1	132823-UP
9		DK154011-4900	..NUT,LOCK	1	132823-UP
10		DK154050-6120	..LIMITER	1	132823-UP
11		DK154101-0520	..FLYWEIGHT ASS'Y	1	132823-UP
12		DK025803-1610	..KEY, 16MM,WOODRUFF	1	132823-UP
13		DK029321-2020	..WASHER,SPRING	1	132823-UP
14		DK029231-2030	..NUT	1	132823-UP
15		DK154123-0120	..SLEEVE	1	132823-UP
16		DK029311-0010	..SHIM, 0.20MM		132823-UP
		DK029311-0180	..SHIM, 0.30MM		132823-UP
		DK029311-0190	..SHIM, 0.40MM		132823-UP
		DK139410-0000	..SHIM, 0.50MM		132823-UP
		DK029311-0210	..SHIM, 1.00MM		132823-UP
		DK139410-0100	..SHIM, 1.50MM		132823-UP
		DK139410-3000	..SHIM, 2.00MM		132823-UP
		DK139410-3100	..SHIM, 3.00MM		132823-UP
		DK139410-3200	..SHIM, 4.00MM		132823-UP
17		DK154154-4000	..SPRING	1	132823-UP
18		DK154217-2920	..GUIDE LEVER ASS'Y	1	132823-UP
19		DK029310-5170	..SHIM	3	132823-UP
20		DK025520-1210	..PIN,SPLIT	2	132823-UP
21		DK154230-3920	..LINK	1	132823-UP
22		DK154236-4100	..LEVER,TENSION	1	132823-UP
23		DK154390-0000	..GASKET	1	132823-UP
24		DK154401-3620	..LEVER	1	132823-UP
25		DK154401-1320	..LINK	1	132823-UP
26		DK016010-0540	..RING,SNAP	3	132823-UP
27		DK154222-6200	..PIN	1	132823-UP
28		DK029300-4010	..WASHER	1	132823-UP
29		DK016010-0440	..RING,SNAP	1	132823-UP
30		DK154185-7120	..CAPSULE	1	132823-UP

Ref :A4010-D0W8 Page :030370

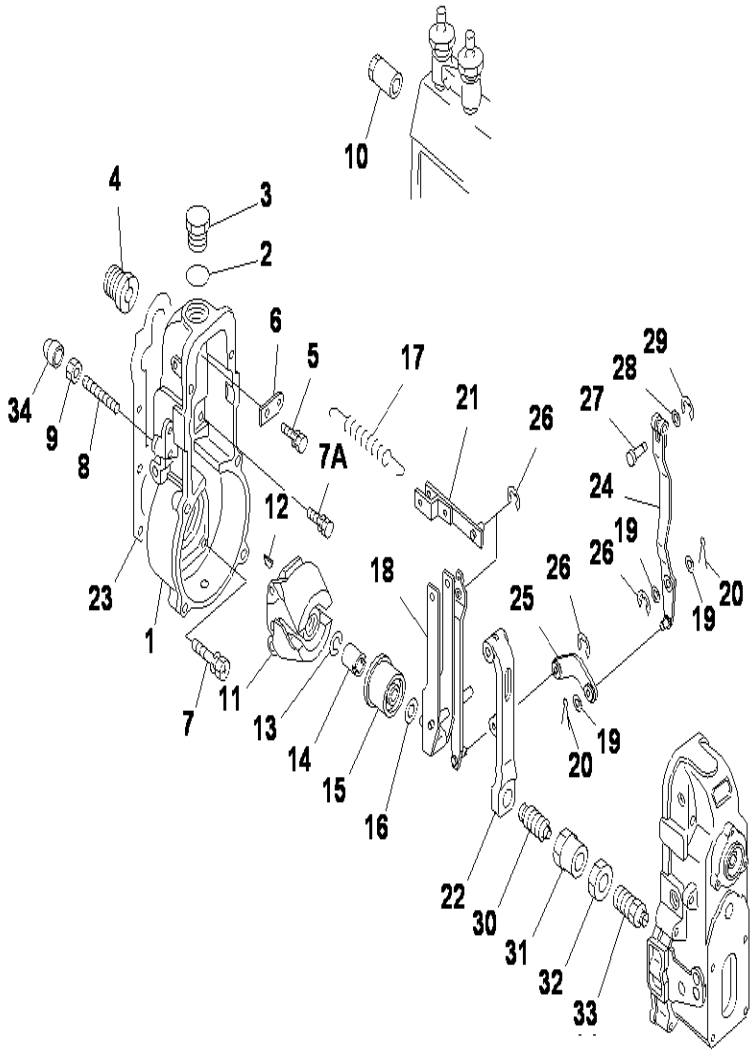

SAA4D95LE-3 S/N 132823-UP

FUEL INJECTION PUMP (GOVERNOR)(1/2)(INNER PARTS)

INDEX	CD	PART NO.	DESCRIPTION	QTY	SERIAL NO.
31		DK029201-6010	..NUT	1	132823-UP
32		DK029201-6080	..NUT	1	132823-UP
33		DK154179-3420	..CAPSULE	1	132823-UP
34		DK154062-3520	..CAP	1	132823-UP

Ref :A4010-D0W8 Page :030371

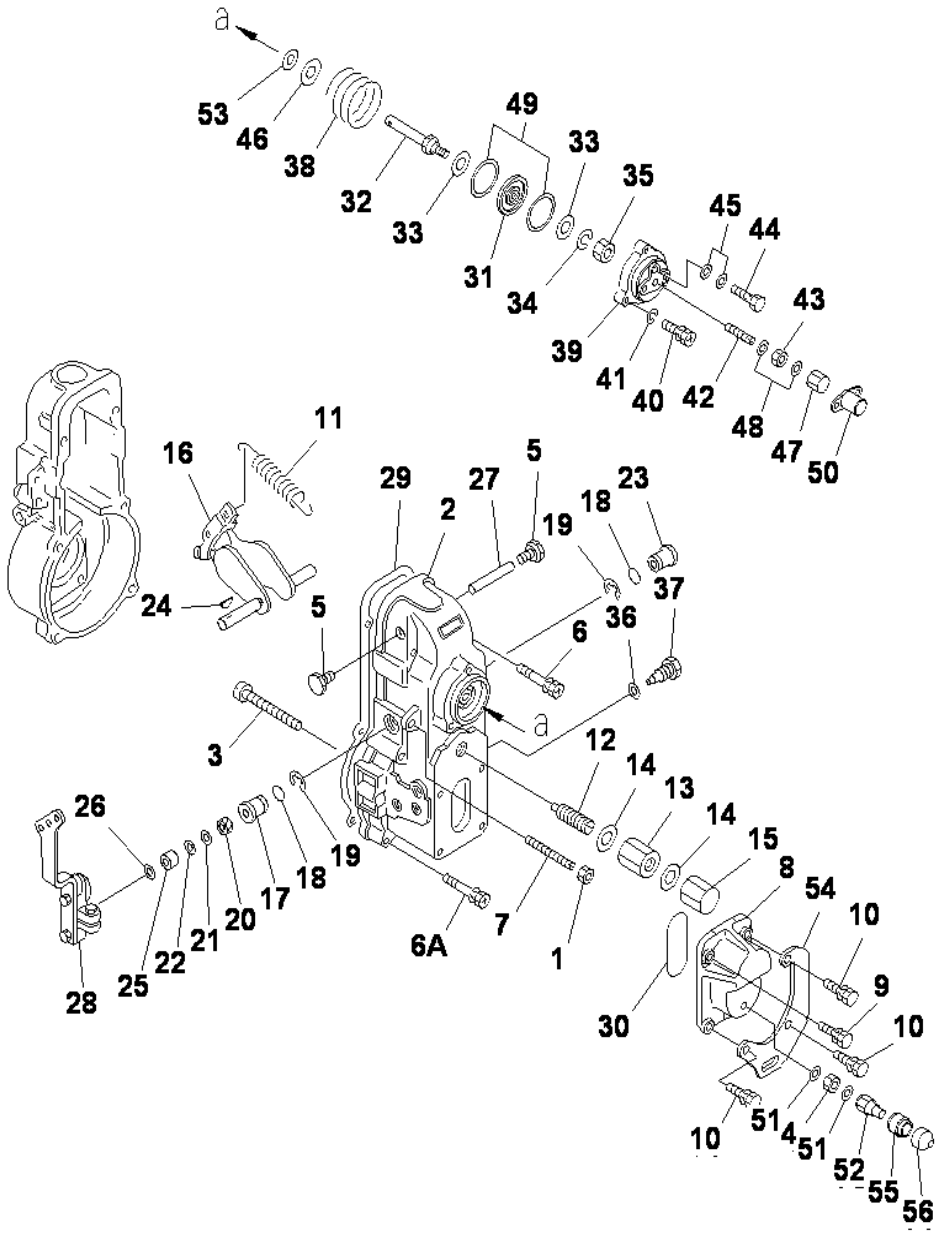

FUEL INJECTION PUMP (GOVERNOR) (2/2) (INNER PARTS)

INDEX	CD	PART NO.	DESCRIPTION	QTY	SERIAL NO.
		(620-87-11210)	INJECTION PUMP	1	132823-UP
			THIS ASSEMBLY CONSISTS OF ALL PARTS		
			SHOWN IN FIGS.A4010-B0W8 TO A4010-F0W8		
		(DK10540-11441)	.GOVERNOR ASS'Y	1	132823-UP
			THIS ASSEMBLY CONSISTS OF ALL PARTS		
			SHOWN IN FIGS.A4010-D0W8 AND A4010-E0W8		
1		DK154011-0100	..NUT,LOCK	1	132823-UP
2		DK154022-7920	..COVER	1	132823-UP
3		DK154031-4400	..SCREW	1	132823-UP
4		DK139206-0600	..NUT	1	132823-UP
5		DK154036-0300	..PLUG	2	132823-UP
6		DK139006-7100	..BOLT	2	132823-UP
6		DK020106-5040	..BOLT	4	132823-UP
7		DK154010-0300	..SCREW	1	132823-UP
8		DK154063-5100	..COVER	1	132823-UP
9		DK020006-2040	..BOLT	3	132823-UP
10		DK020006-1640	..BOLT	1	132823-UP
11		DK154151-1300	..SPRING,GOVERNOR	1	132823-UP
12		DK154158-5720	..CAPSULE,SPRING	1	132823-UP
13		DK154011-3100	..NUT	1	132823-UP
14		DK026512-1540	..GASKET	2	132823-UP
15		DK154159-1200	..NUT,CAP	1	132823-UP
16		DK154200-7020	..LEVER ASS'Y,SWIVEL	1	132823-UP
17		DK154204-4300	..BUSHING	1	132823-UP
18		DK029631-8020	..O-RING	2	132823-UP
19		DK016010-1640	..RING,SNAP	2	132823-UP
20		DK139611-0000	..SEAL,OIL	1	132823-UP
21		DK139411-0000	..SHIM, 0.40MM	1	132823-UP
22		DK029311-1070	..SHIM, 0.50MM		132823-UP
23		DK154204-4400	..BUSHING	1	132823-UP
24		DK025803-1310	..KEY, 13MM	1	132823-UP
25		DK154206-2800	..COLLAR	1	132823-UP
26		DK154206-0200	..WASHER, 1.0MM		132823-UP
27		DK154237-0100	..PIN	1	132823-UP
28		DK154343-9220	..LEVER	1	132823-UP
29		DK154390-0300	..GASKET	1	132823-UP
30		DK029635-2020	..O-RING	1	132823-UP
31		DK154400-7820	..DIAPHRAGM	1	132823-UP
32		DK154400-4800	..ROD,PUSH	1	132823-UP
33		DK029330-8050	..GASKET	2	132823-UP
34		DK139308-0700	..WASHER,SPRING	1	132823-UP
35		DK013030-6040	..NUT	1	132823-UP
36		DK026510-1440	..GASKET	1	132823-UP
37		DK154401-2100	..BOLT	1	132823-UP
38		DK154416-8200	..SPRING	1	132823-UP

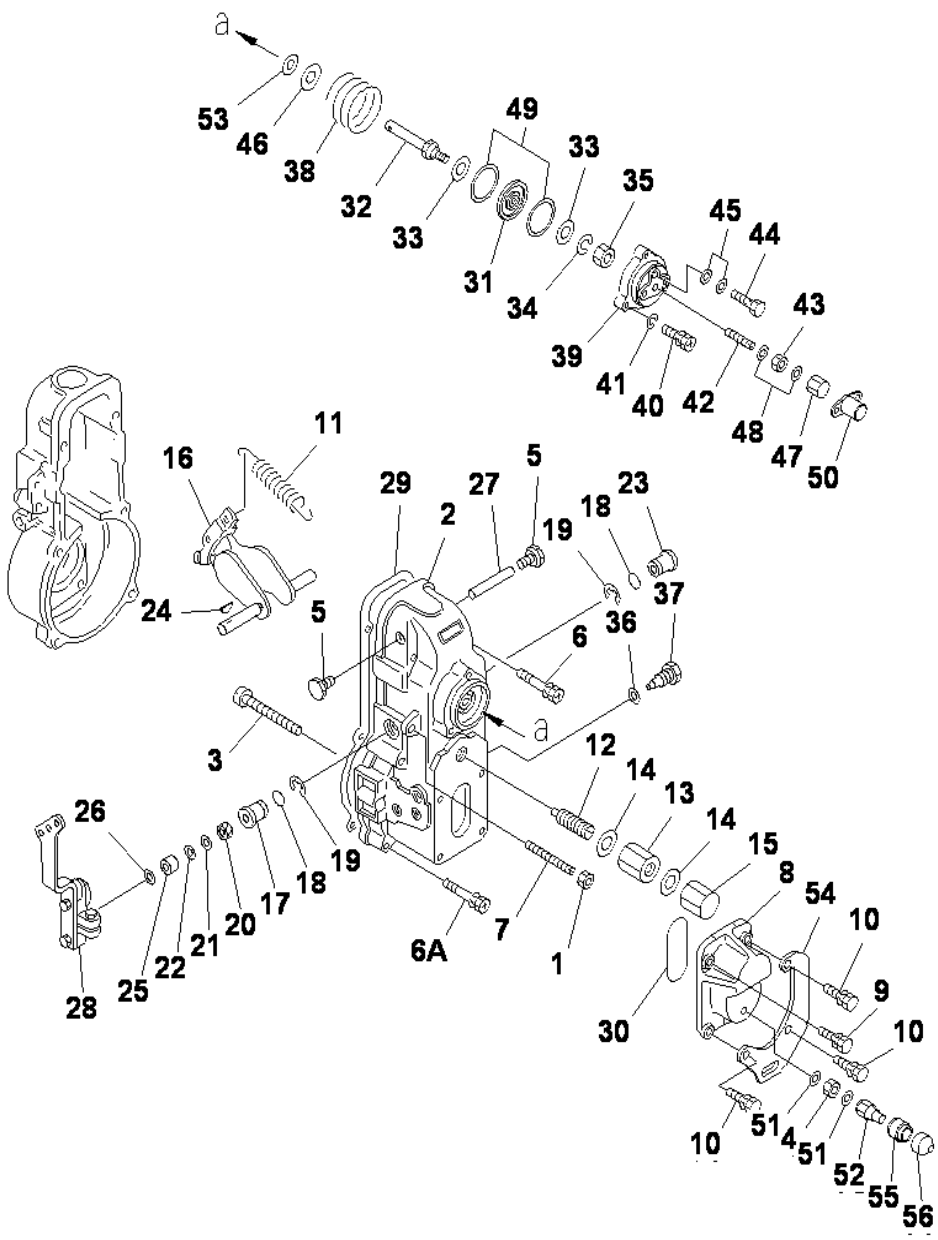

SAA4D95LE-3 S/N 132823-UP

FUEL INJECTION PUMP (GOVERNOR) (2/2) (INNER PARTS)

INDEX	CD	PART NO.	DESCRIPTION	QTY	SERIAL NO.
39		DK154404-5600	..COVER	1	132823-UP
40		DK154062-2900	..BOLT	3	132823-UP
41		DK014110-6440	..WASHER	1	132823-UP
42		DK154034-1900	..SCREW	1	132823-UP
43		DK013030-6040	..NUT	1	132823-UP
44		DK029731-0180	..BOLT,EYE	1	132823-UP
45		DK029341-0110	..GASKET	2	132823-UP
46		DK029312-0180	..SHIM, 0.5MM		132823-UP
		DK0293120210	..SHIM, 0.2MM		132823-UP
47		DK154035-1600	..NUT,CAP	1	132823-UP
48		DK026506-1040	..GASKET,SPRING	2	132823-UP
49		DK154413-2600	..GASKET	2	132823-UP
50		DK154062-2720	..CAP	1	132823-UP
51		DK026506-1040	..GASKET	2	132823-UP
52		DK154035-2800	..NUT,CAP	1	132823-UP
53		DK029310-9080	..SHIM	1	132823-UP
54		DK154358-7200	..BRACKET	1	132823-UP
55		DK154062-3800	..ADAPTER	1	132823-UP
56		DK154062-4020	..CAP	1	132823-UP

Ref :A4010-E0W8 Page :030381

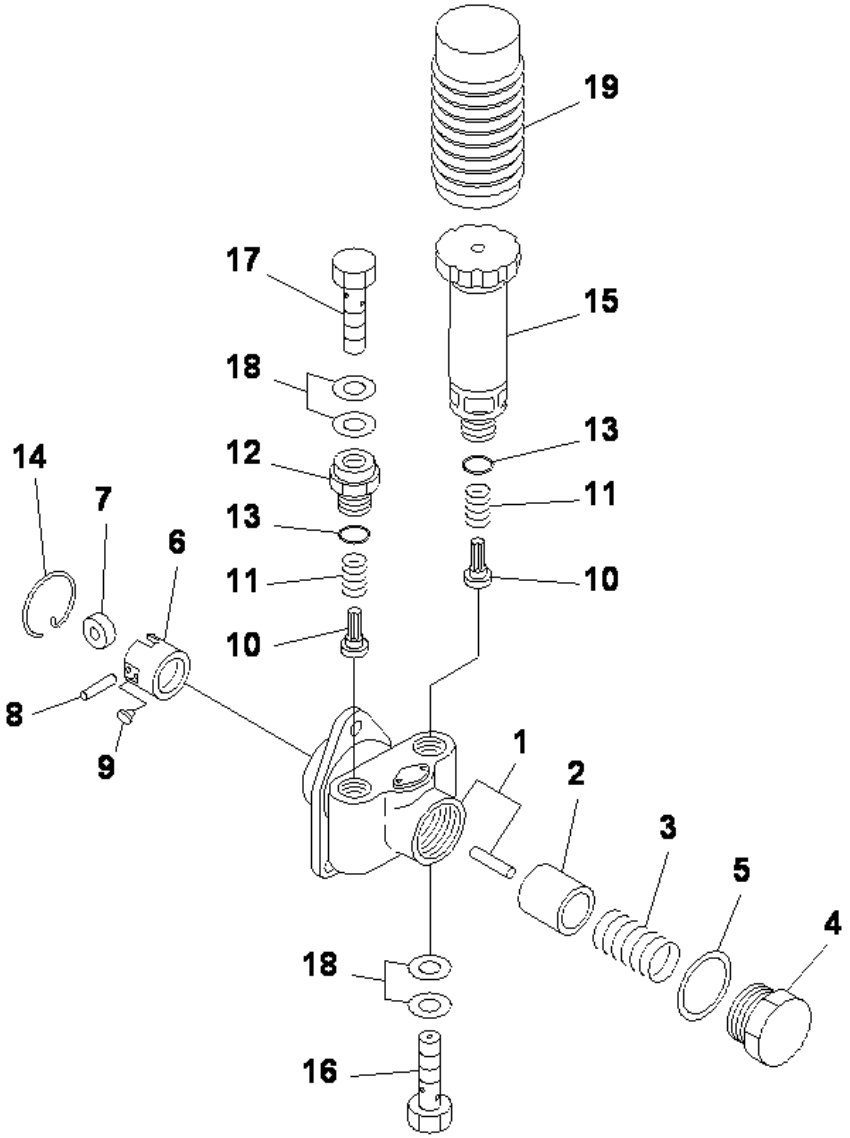

SAA4D95LE-3 S/N 132823-UP

FUEL INJECTION PUMP (FEED PUMP) (INNER PARTS)

INDEX	CD	PART NO.	DESCRIPTION	QTY	SERIAL NO.
		(620-87-11210)	INJECTION PUMP	1	132823-UP
			THIS ASSEMBLY CONSISTS OF ALL PARTS		
			SHOWN IN FIGS.A4010-B0W8 TO A4010-F0W8		
		DK105220-5960	.FEED PUMP ASS'Y	1	132823-UP
1		DK152003-1020	..HOUSING	1	132823-UP
2		DK152100-1120	..PISTON	1	132823-UP
3		DK152102-1600	..SPRING	1	132823-UP
4		DK152105-1600	..PLUG	1	132823-UP
5		DK029332-6030	..GASKET	1	132823-UP
6		DK152111-2820	..TAPPET ASS'Y	1	132823-UP
7		DK152112-0100	..ROLLER	1	132823-UP
8		DK152113-0700	..PIN	1	132823-UP
9		DK152114-0400	..GUIDE	2	132823-UP
10		DK152115-0500	..VALVE	2	132823-UP
11		DK152116-0200	..SPRING	2	132823-UP
12		DK152118-0900	..ADAPTER	1	132823-UP
13		DK029631-6060	..O-RING	2	132823-UP
14		DK152121-0200	..RING,SNAP	1	132823-UP
15		DK152200-5420	..PUMP,PRIMING	1	132823-UP
16		DK152300-5920	..BOLT,JOINT	1	132823-UP
17		DK029731-4680	..BOLT,JOINT	1	132823-UP
18		DK029341-4130	..GASKET	4	132823-UP
19		DK152320-0100	..COVER	1	132823-UP

Ref :A4010-F0W8 Page :030390

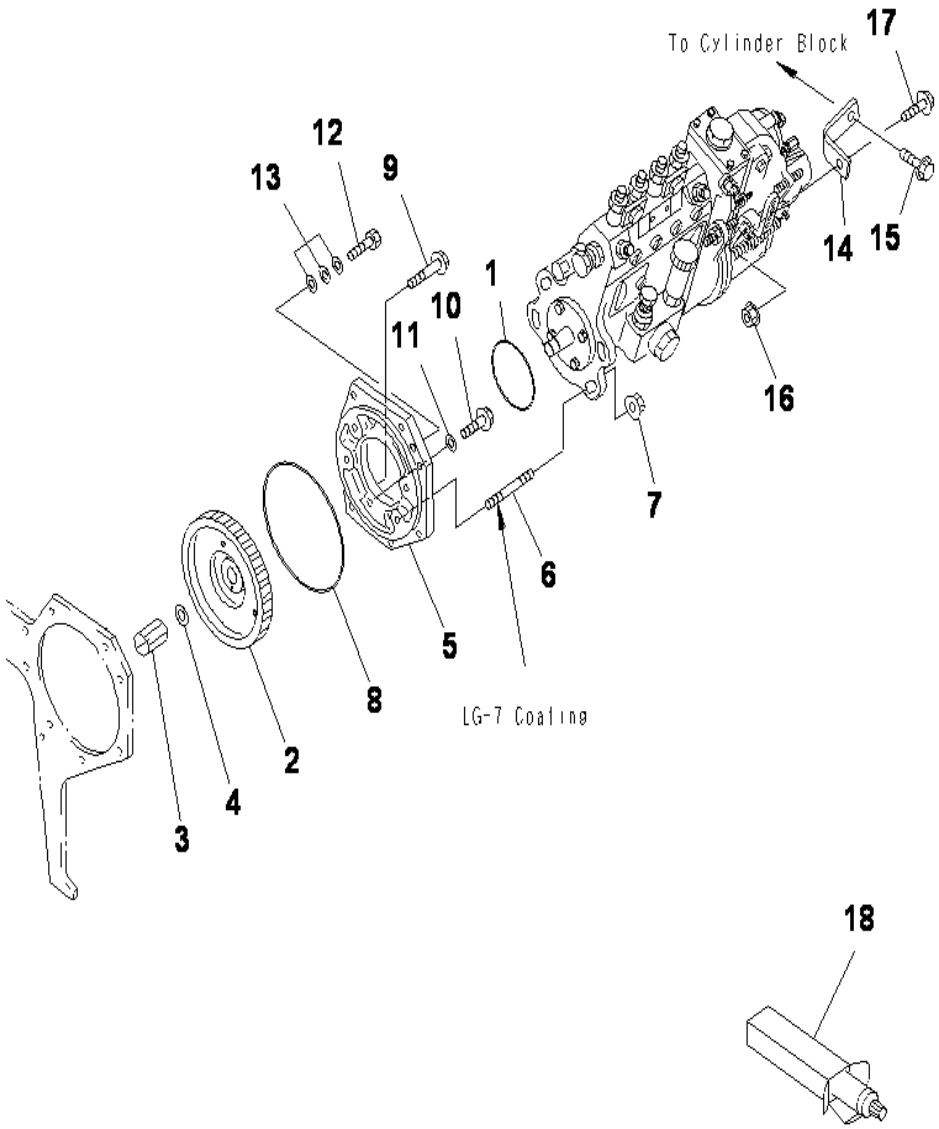

SAA4D95LE-3 S/N 132823-UP

FUEL INJECTION PUMP MOUNTING

INDEX	CD	PART NO.	DESCRIPTION	QTY	SERIAL NO.
1		07000-02065	O-RING (K2).....	1	132823-UP
2		6204-71-3170	GEAR,PUMP DRIVE.....	1	132823-UP
3		6204-71-3630	NUT.....	1	132823-UP
4		6114-31-3330	WASHER (K2).....	1	132823-UP
5		6204-71-3321	HOLDER.....	1	132823-UP
6		01144-51035	STUD.....	4	132823-UP
7		01584-01008	NUT.....	4	132823-UP
8		07000-02135	O-RING (K2).....	1	132823-UP
9		6204-71-3190	BOLT.....	1	132823-UP
10		01435-00812	BOLT.....	1	132823-UP
11		07005-00812	GASKET (K2).....	1	132823-UP
12		01010-B0620	BOLT.....	1	132823-UP
13		01641-20608	WASHER.....	3	132823-UP
14		6208-71-1850	BRACKET.....	1	132823-UP
15		01435-01025	BOLT.....	1	132823-UP
16		01584-01008	NUT.....	1	132823-UP
17		01435-01020	BOLT.....	1	132823-UP
18		(09920-00150)	LIQUID GASKET,LG-7, 150G.....		132823-UP

Ref :A4040-A0A6 Page :030400

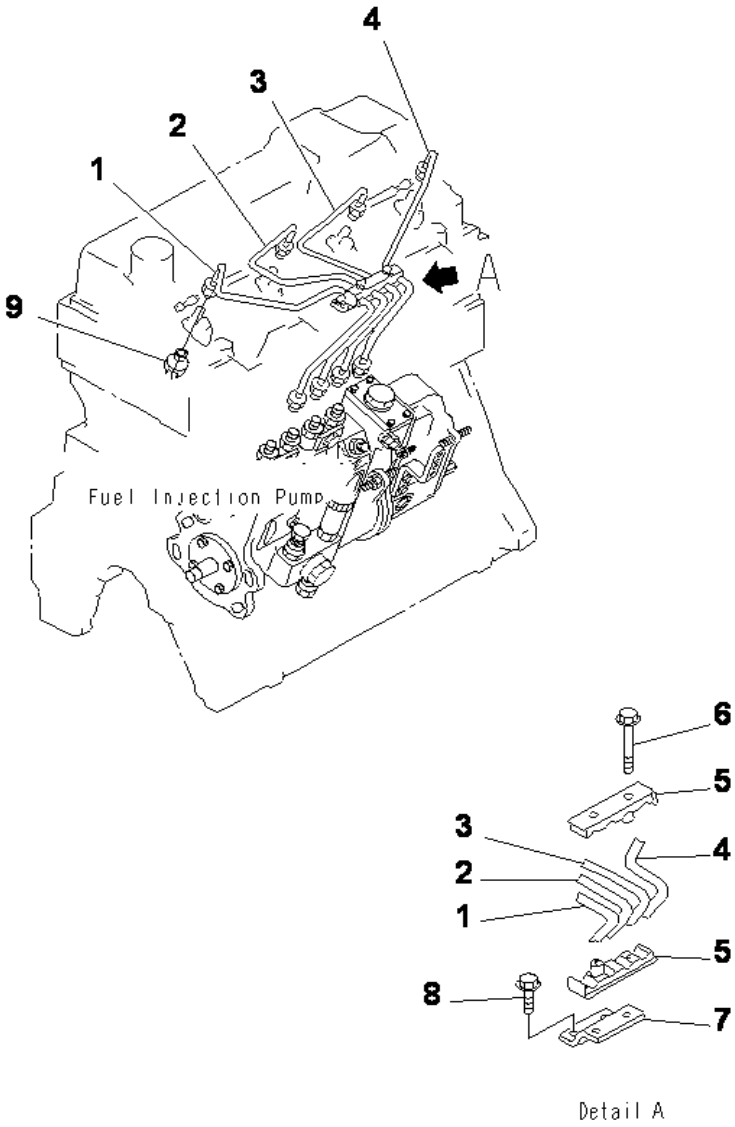

SAA4D95LE-3 S/N 132823-UP

FUEL INJECTION PIPING

INDEX	CD	PART NO.	DESCRIPTION	QTY	SERIAL NO.
1		6204-71-5110	TUBE,INJECTION, NO.1.....	1	132823-UP
2		6204-71-5120	TUBE,INJECTION, NO.2.....	1	132823-UP
3		6204-71-5130	TUBE,INJECTION, NO.3.....	1	132823-UP
4		6204-71-5141	TUBE,INJECTION, NO.4.....	1	132823-UP
5		6204-71-5710	CLAMP.....	2	132823-UP
6		01435-00625	BOLT.....	2	132823-UP
7		6204-71-5810	PLATE.....	1	132823-UP
8		01435-00612	BOLT.....	2	132823-UP
9		6204-71-5890	COVER.....	4	132823-UP

Ref :A4050-A0C6 Page :030410

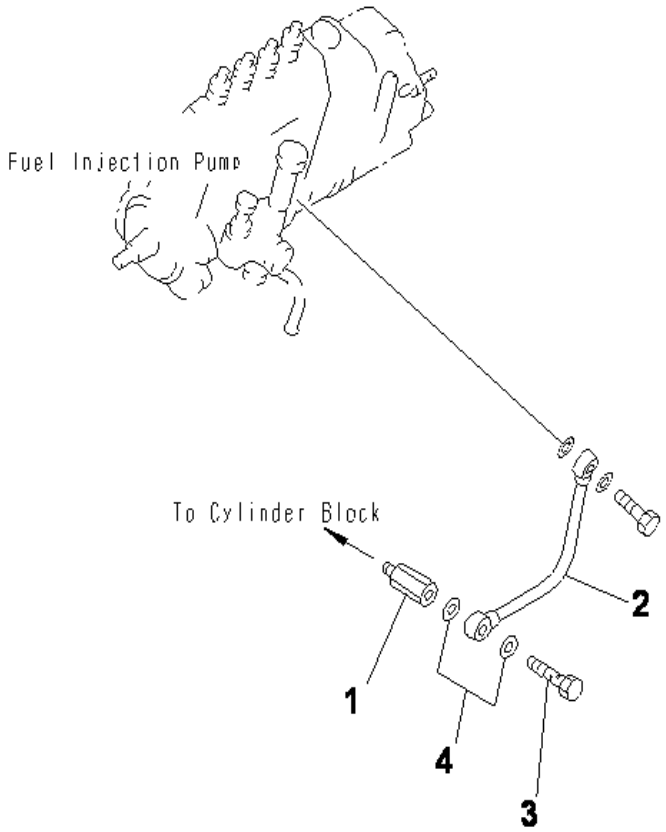

SAA4D95LE-3 S/N 132823-UP

FUEL INJECTION PUMP LUBRICATOR

INDEX	CD	PART NO.	DESCRIPTION	QTY	SERIAL NO.
1		6204-71-4250	CONNECTOR.....	1	132823-UP
2		6204-71-4230	PIPE,OIL.....	1	132823-UP
3		07206-30710	BOLT,JOINT.....	1	132823-UP
4		07005-01012	GASKET (K2).....	2	132823-UP

Ref :A4060-A0B4 Page :030420

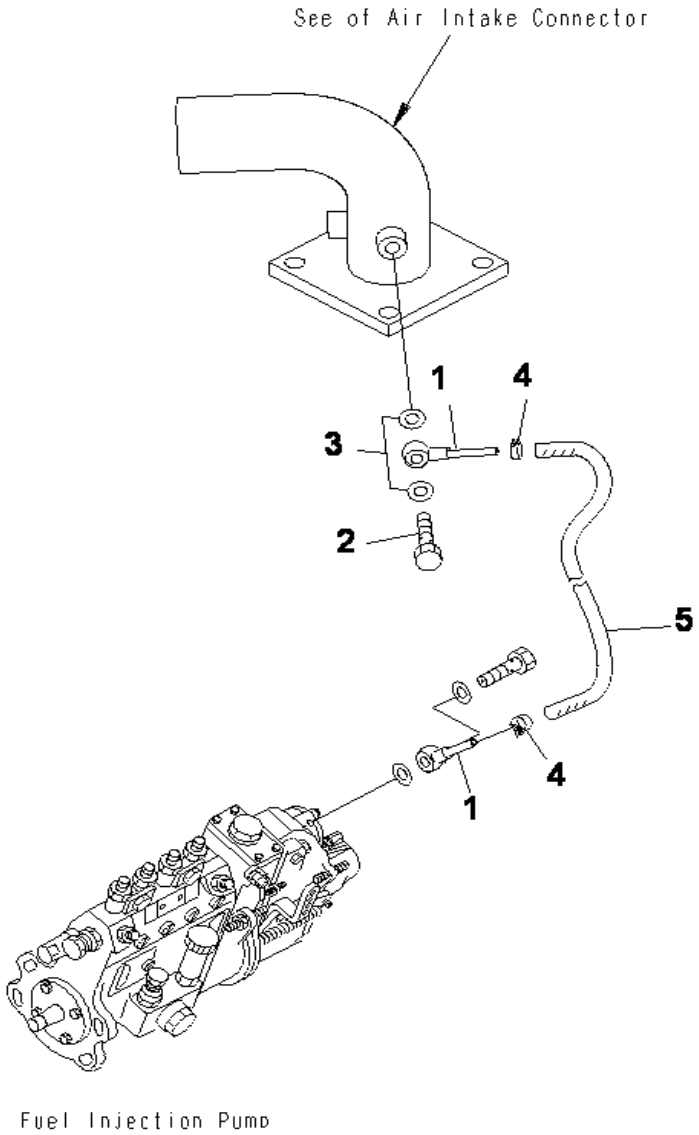

SAA4D95LE-3 S/N 132823-UP

FUEL CONTROL (BOOST COMPENSATE)

INDEX	CD	PART NO.	DESCRIPTION	QTY	SERIAL NO.
1		6737-71-5490	JOINT.....	2	132823-UP
2		07206-30710	BOLT,JOINT.....	1	132823-UP
3		07005-01012	GASKET (K1).....	2	132823-UP
4		07285-00080	CLIP.....	2	132823-UP
5		6205-11-4430	HOSE.....	1	132823-UP

Ref :A4070-A0A1 Page :030430

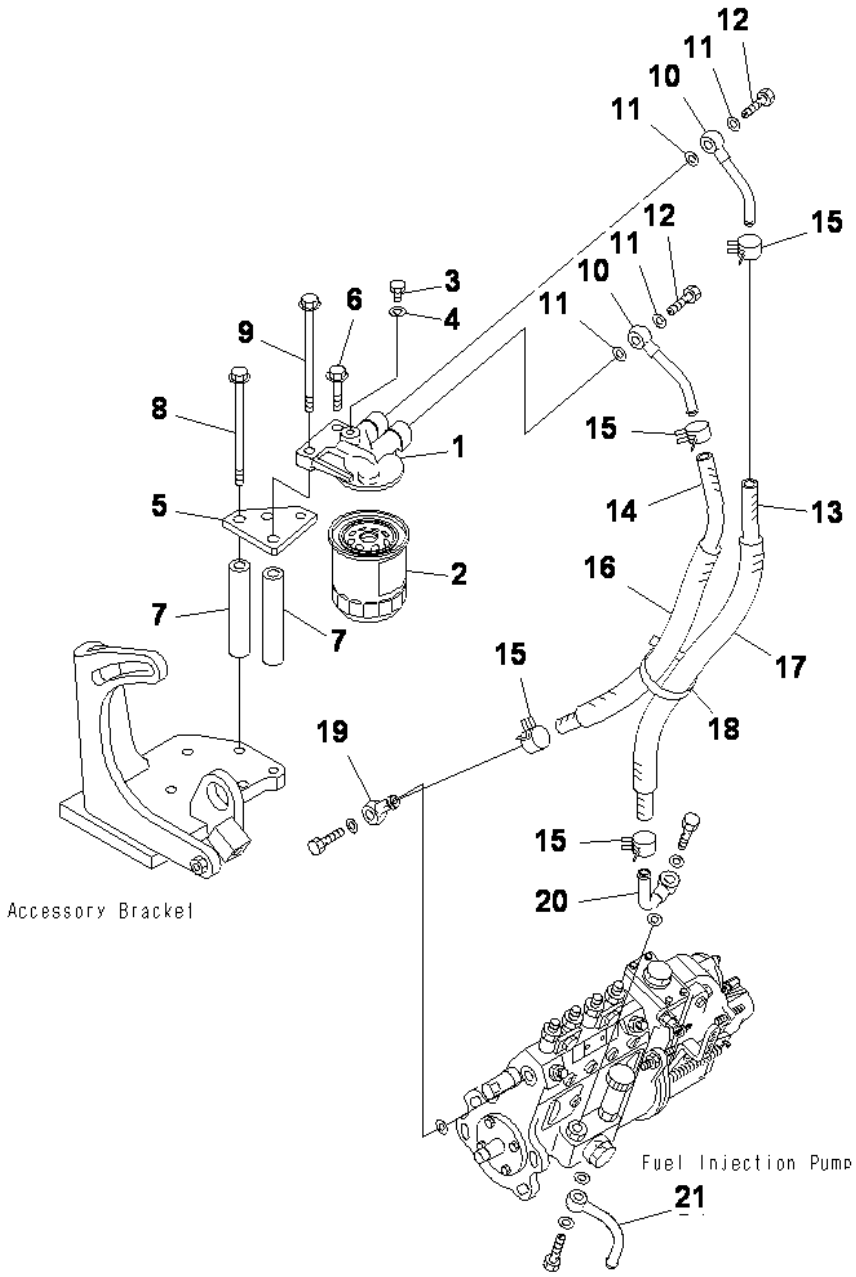

SAA4D95LE-3 S/N 132823-UP

FUEL FILTER

INDEX	CD	PART NO.	DESCRIPTION	QTY	SERIAL NO.
		6204-71-6500	FUEL FILTER ASS'Y	1	132823-UP
1		600-311-9640	.HEAD	1	132823-UP
2		600-311-7460	.CARTRIDGE	1	132823-UP
3		600-311-6720	.PLUG	1	132823-UP
4		07005-00812	.GASKET	1	132823-UP
5		6208-71-6590	PLATE	1	132823-UP
6		01435-01030	BOLT	1	132823-UP
7		6206-81-9870	SPACER	2	132823-UP
8		01436-01030	BOLT	1	132823-UP
9		01436-01045	BOLT	1	132823-UP
10		6204-71-5730	JOINT	2	132823-UP
11		07005-01412	GASKET (K2)	4	132823-UP
12		07206-31014	BOLT,JOINT	2	132823-UP
13		6208-71-9400	HOSE	1	132823-UP
14		6208-71-9500	HOSE	1	132823-UP
15		11Y-09-11140	CLIP	4	132823-UP
16		07286-01923	HOSE	1	132823-UP
17		07286-01933	HOSE	1	132823-UP
18		08034-20519	BAND	1	132823-UP
19		6144-71-5750	JOINT	1	132823-UP
20		6206-71-5850	JOINT	1	132823-UP
21		6144-71-5760	JOINT	1	132823-UP

Ref :A4110-A0H8 Page :030440

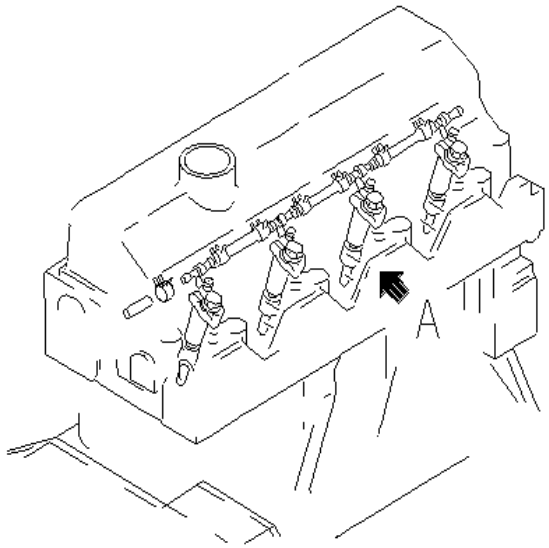

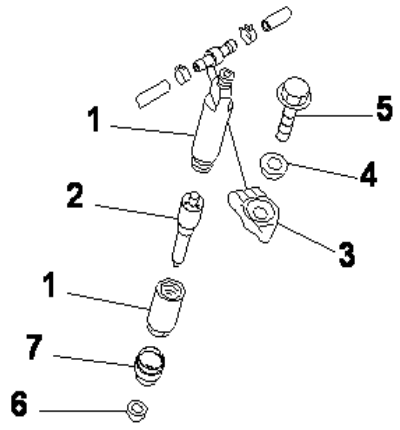

Detail A

SAA4D95LE-3 S/N 132823-UP

INJECTION NOZZLE

INDEX	CD	PART NO.	DESCRIPTION	QTY	SERIAL NO.
		6208-11-3100	NOZZLE HOLDER ASS'Y.....	4	132823-UP
1		(6204-11-3110)	.HOLDER ASS'Y,(SEE FIG.A4210-B0F4).....	1	132823-UP
2		6208-11-3120	.NOZZLE.....	1	132823-UP
3		6204-11-3812	HOLDER.....	4	132823-UP
4		6204-11-3830	WASHER.....	4	132823-UP
5		01435-01035	BOLT.....	4	132823-UP
6		6204-11-3880	GASKET (K1).....	4	132823-UP
7		6204-11-3850	SEAL,DUST (K1).....	4	132823-UP

Ref :A4210-A0F4 Page :030450

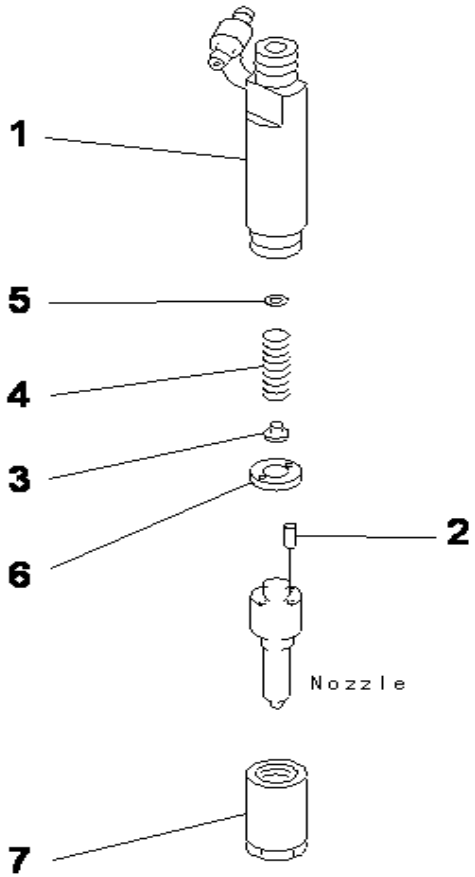

SAA4D95LE-3 S/N 132823-UP

NOZZLE HOLDER (INNER PARTS)

INDEX	CD	PART NO.	DESCRIPTION	QTY	SERIAL NO.
1		6204-11-3110	HOLDER ASS'Y.....	4	132823-UP
2		DK150508-5900	.PIN.....	2	132823-UP
3		DK150560-0400	.SEAT,SPRING.....	1	132823-UP
4		DK150562-4300	.SPRING.....	1	132823-UP
5		DK150591-1000	.SHIM, 0.10MM.....		132823-UP
		DK150591-2000	.SHIM, 0.20MM.....		132823-UP
		DK150591-3000	.SHIM, 0.30MM.....		132823-UP
		DK150591-4000	.SHIM, 0.40MM.....		132823-UP
		DK150591-5000	.SHIM, 0.50MM.....		132823-UP
		DK150591-5100	.SHIM, 0.51MM.....		132823-UP
		DK150591-5200	.SHIM, 0.52MM.....		132823-UP
		DK150591-5300	.SHIM, 0.53MM.....		132823-UP
		DK150591-5400	.SHIM, 0.54MM.....		132823-UP
		DK150591-5500	.SHIM, 0.55MM.....		132823-UP
		DK150591-5600	.SHIM, 0.56MM.....		132823-UP
		DK150591-5700	.SHIM, 0.57MM.....		132823-UP
		DK150591-5800	.SHIM, 0.58MM.....		132823-UP
		DK150591-5900	.SHIM, 0.59MM.....		132823-UP
6		DK150524-4600	.SPACER.....	1	132823-UP
7		DK150655-0000	.NUT,RETAINING.....	1	132823-UP

Ref :A4210-B0F4 Page :030460

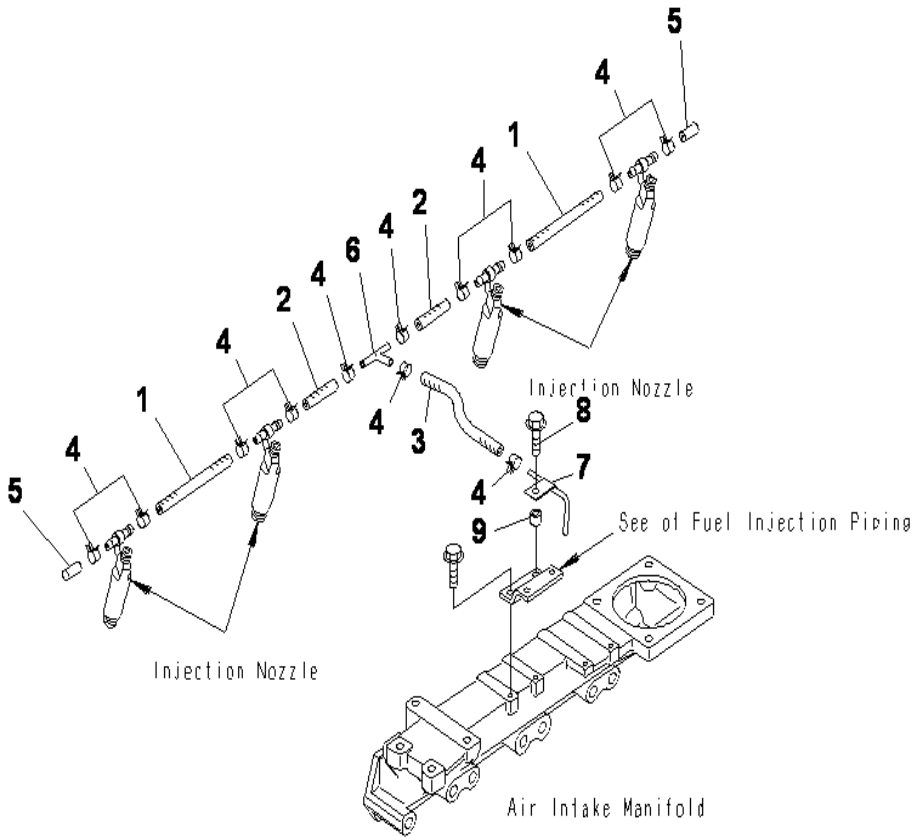

SAA4D95LE-3 S/N 132823-UP

FUEL RETURN (CENTER RETURN SPEC.)

INDEX	CD	PART NO.	DESCRIPTION	QTY	SERIAL NO.
1		6204-71-9100	HOSE,SPILL	2	132823-UP
2		6202-71-9450	HOSE,SPILL	2	132823-UP
3		6204-71-9140	HOSE,SPILL	1	132823-UP
4		07285-00100	CLIP	12	132823-UP
5		6204-71-5581	CAP	2	132823-UP
6		6204-71-5560	CONNECTOR	1	132823-UP
7		6208-71-5570	CONNECTOR	1	132823-UP
8		01435-00625	BOLT	1	132823-UP
9		287-17-11520	SPACER	1	132823-UP

Ref :A4230-A0F4 Page :030470

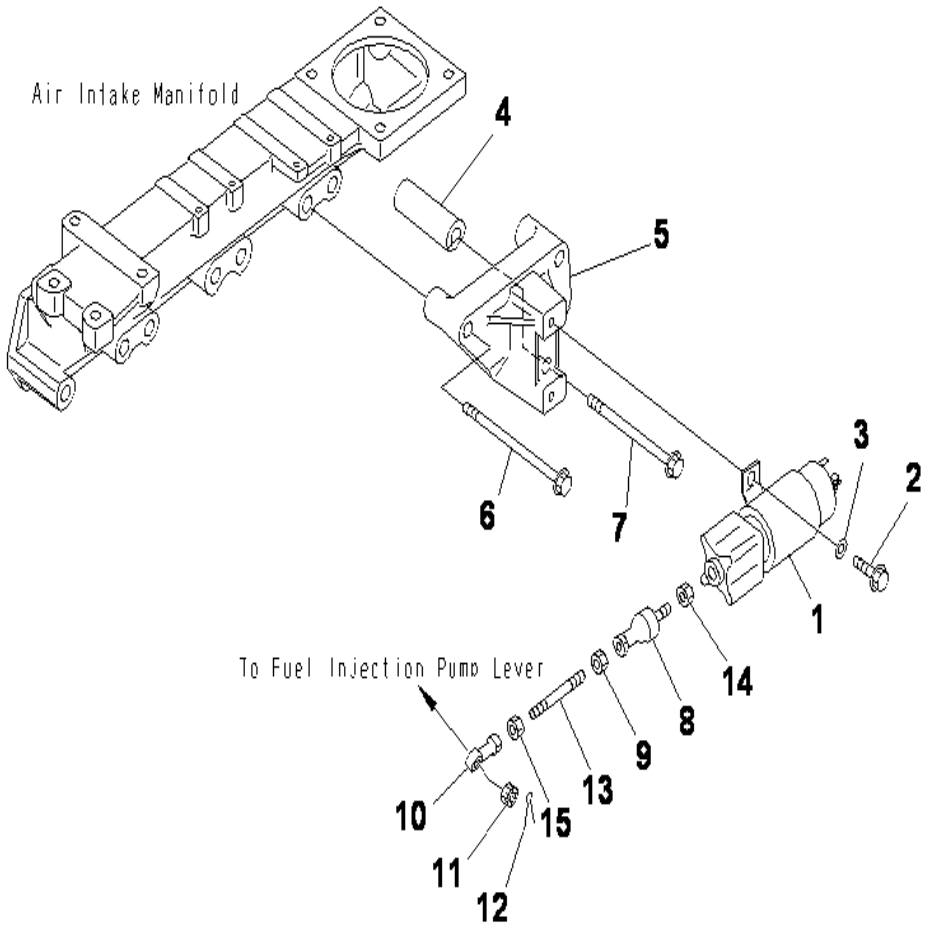

SAA4D95LE-3 S/N 132823-UP

SOLENOID

INDEX	CD	PART NO.	DESCRIPTION	QTY	SERIAL NO.
1		600-815-9260	SOLENOID ASS'Y	1	132823-UP
2		01435-00614	BOLT	2	132823-UP
3		01640-20610	WASHER	2	132823-UP
4		6204-81-9570	SPACER	1	132823-UP
5		6204-81-9551	BRACKET	1	132823-UP
6		01436-01015	BOLT	2	132823-UP
7		01435-01090	BOLT	1	132823-UP
8		6204-81-9640	JOINT	1	132823-UP
9		01580-00605	NUT	1	132823-UP
10		04250-60639	END,ROD	1	132823-UP
11		01590-10607	NUT	1	132823-UP
12		04050-11212	PIN,COTTER	1	132823-UP
13		6204-81-9620	ROD	1	132823-UP
14		01580-00605	NUT	1	132823-UP
15		01508-40603	NUT	1	132823-UP

Ref :A4510-A0F9 Page :030480

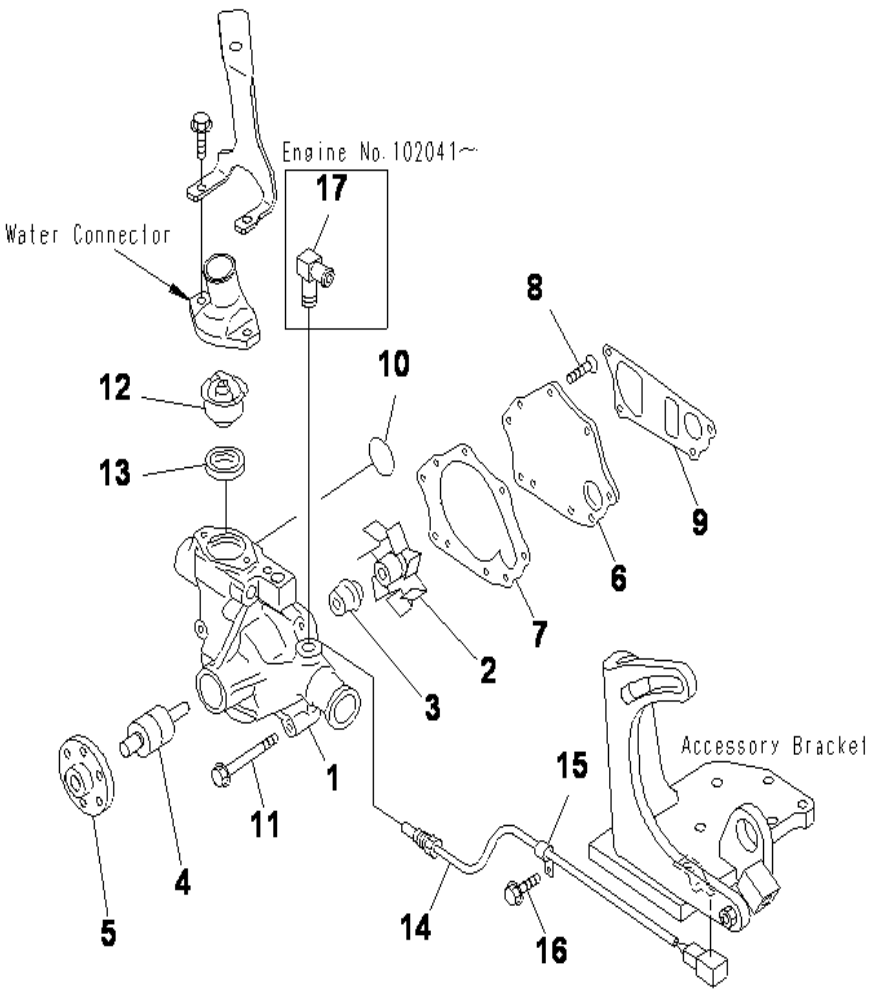

SAA4D95LE-3 S/N 132823-UP

WATER PUMP

INDEX	CD	PART NO.	DESCRIPTION	QTY	SERIAL NO.
		6205-61-1202	WATER PUMP ASS'Y	1	132823-UP
1	C1		.BODY	1	132823-UP
2		6204-61-1630	.IMPELLER	1	132823-UP
3		6221-61-1520	.SEAL, WATER (K2)	1	132823-UP
4		6204-61-1650	.SHAFT	1	132823-UP
5		6205-61-1210	.BOSS	1	132823-UP
6		6206-61-1121	.COVER	1	132823-UP
7		6204-61-1660	.GASKET (K2)	1	132823-UP
8		01236-40816	.SCREW	5	132823-UP
9		6206-61-1731	GASKET (K1, K2)	1	132823-UP
10		07000-03040	O-RING (K1, K2)	1	132823-UP
11		01435-00855	BOLT	3	132823-UP
12		600-421-6230	THERMOSTAT	1	132823-UP
13		6140-11-6331	GASKET (K1, K2)	1	132823-UP
14		7861-93-3320	SENSOR	1	132823-UP
15		08193-20010	CLIP	1	132823-UP
16		01435-01060	BOLT	1	132823-UP
17		20M-977-8130	ELBOW	1	132823-UP

Ref :A5010-A0J2 Page :030490

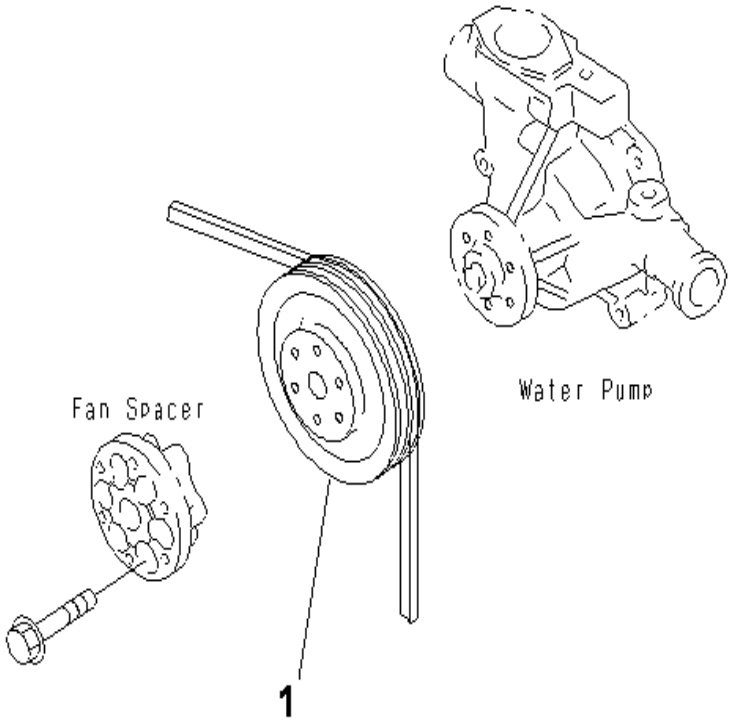

SAA4D95LE-3 S/N 132823-UP

WATER PUMP PULLEY (WITH NON HARDENING PULLEY)

INDEX	CD	PART NO.	DESCRIPTION	QTY	SERIAL NO.
1		6207-61-3280	PULLEY,NON HARDENING.....	1	132823-UP

Ref :A5020-A0N4 Page :030500

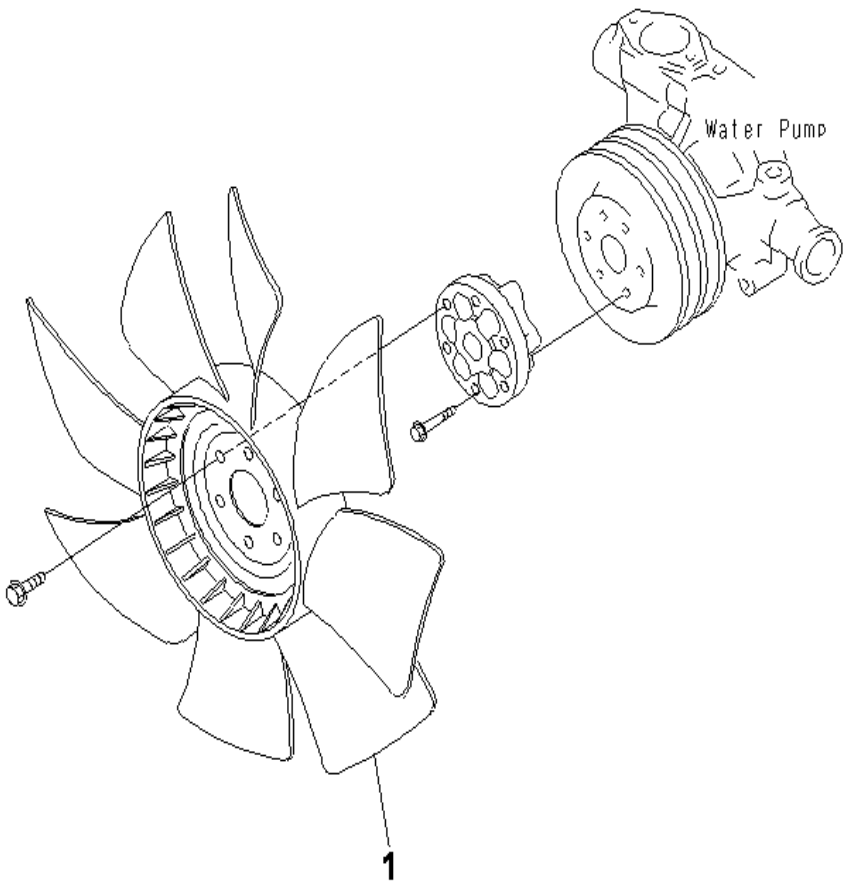

SAA4D95LE-3 S/N 132823-UP

COOLING FAN

INDEX	CD	PART NO.	DESCRIPTION	QTY	SERIAL NO.
1		600-625-7550	FAN,COOLING.....	1	132823-UP

Ref :A5030-A0F9 Page :030510

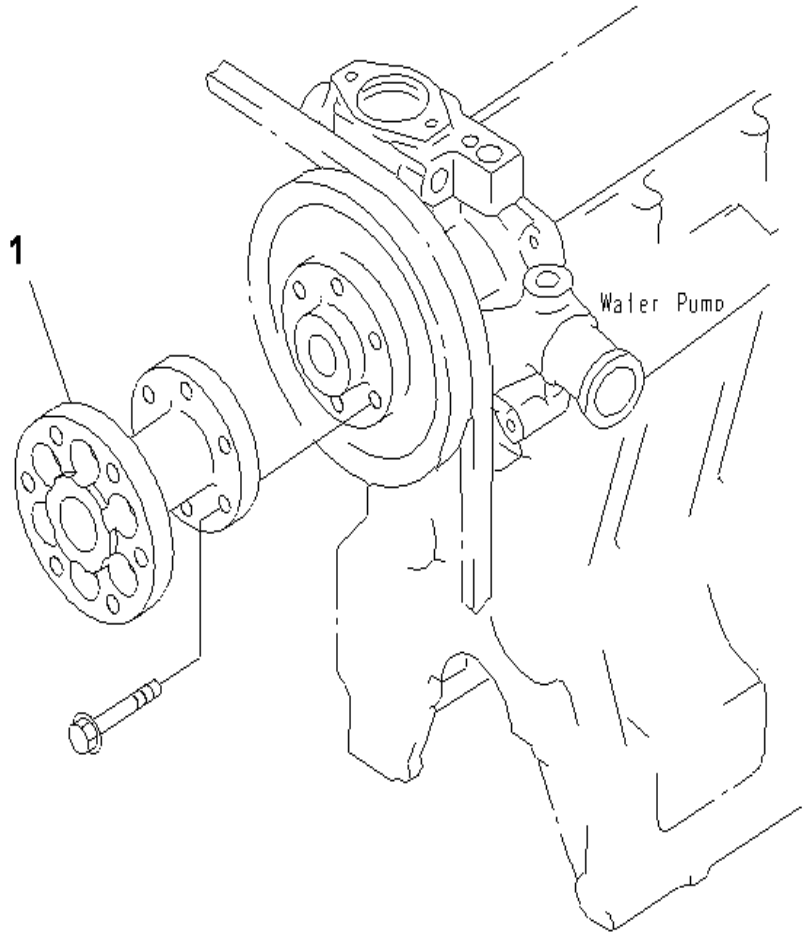

SAA4D95LE-3 S/N 132823-UP

FAN SPACER

INDEX	CD	PART NO.	DESCRIPTION	QTY	SERIAL NO.
1		6206-61-3990	SPACER,FAN.....	1	132823-UP

Ref :A5040-A0B1 Page :030520

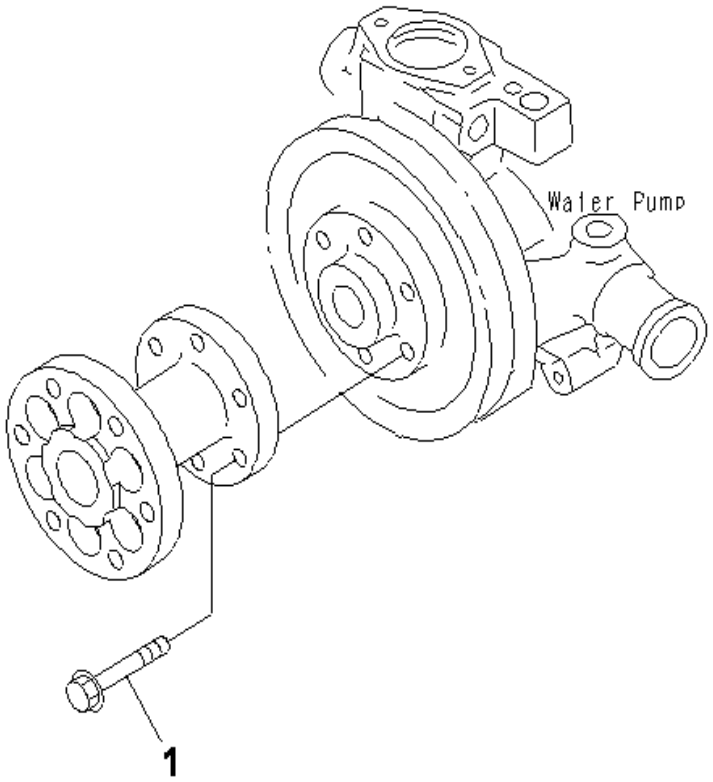

SAA4D95LE-3 S/N 132823-UP

FAN SPACER MOUNTING

INDEX	CD	PART NO.	DESCRIPTION	QTY	SERIAL NO.
1		01435-00830	BOLT.....	6	132823-UP

Ref :A5070-A0A3 Page :030530

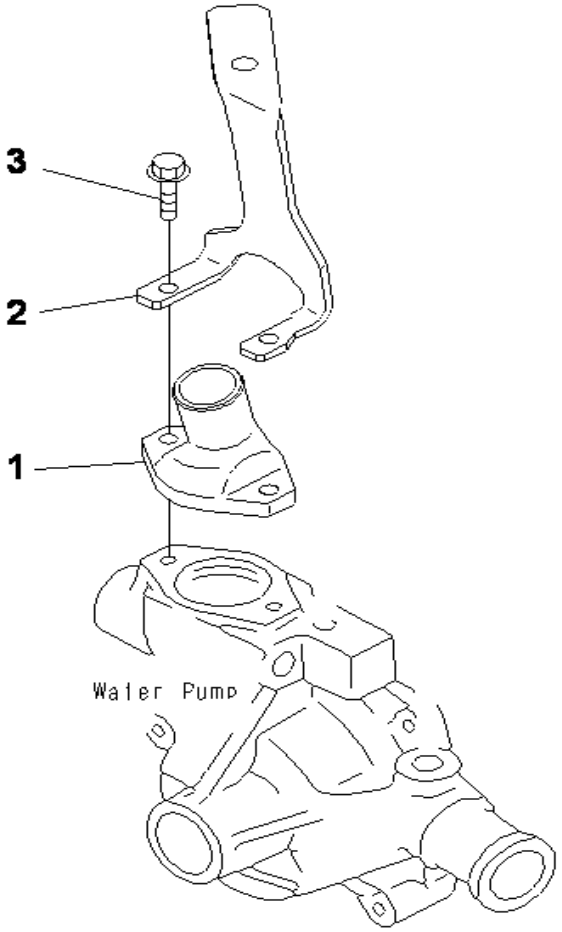

SAA4D95LE-3 S/N 132823-UP

WATER CONNECTOR (OUTLET)

INDEX	CD	PART NO.	DESCRIPTION	QTY	SERIAL NO.
1		6204-11-6421	CONNECTOR	1	132823-UP
2		22B-01-12220	BRACKET	1	132823-UP
3		01435-00825	BOLT	2	132823-UP

Ref :A5110-A0A4 Page :030540

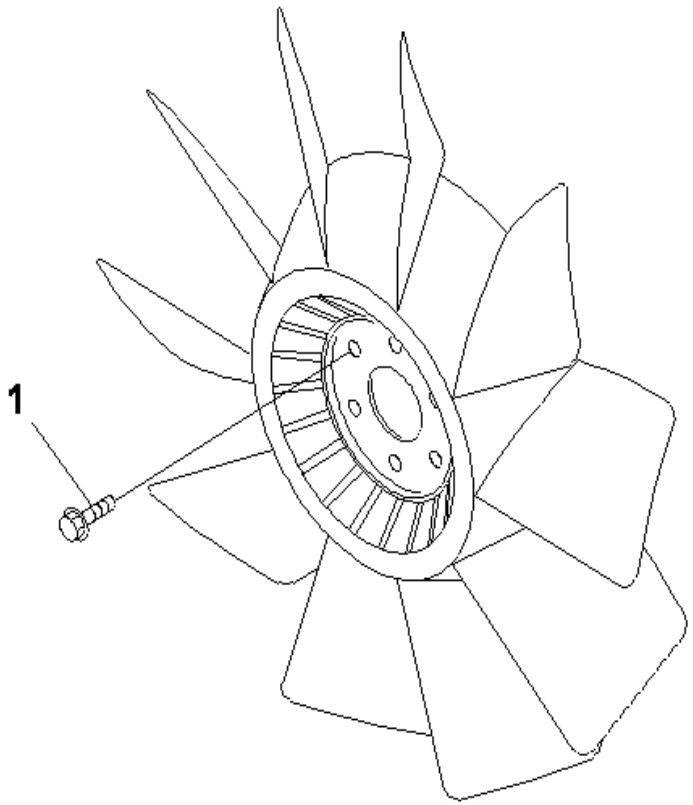

SAA4D95LE-3 S/N 132823-UP

COOLING FAN BOLT

INDEX	CD	PART NO.	DESCRIPTION	QTY	SERIAL NO.
1		01435-01020	BOLT	6	132823-UP

Ref :A5170-A0A2B Page :030550

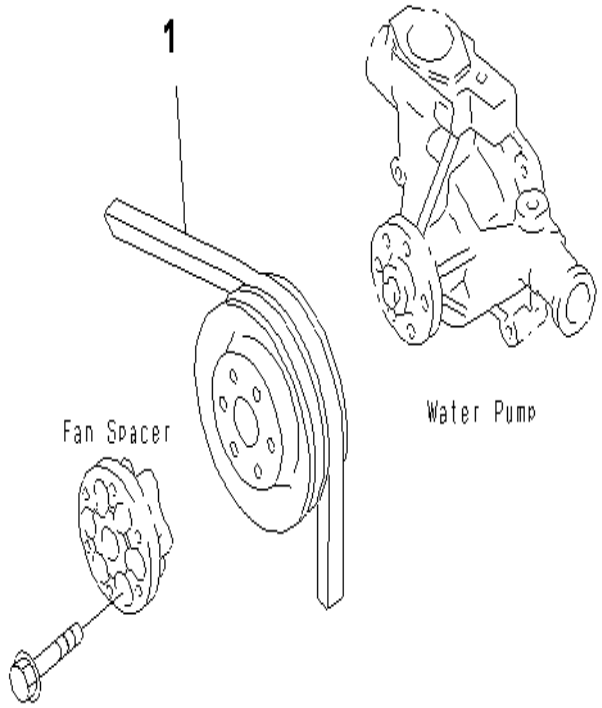

SAA4D95LE-3 S/N 132823-UP

FAN BELT (FOR 25A ALTERNATOR)

INDEX	CD	PART NO.	DESCRIPTION	QTY	SERIAL NO.
1		04120-21748	V-BELT.....	1	132823-UP

Ref :A5180-A0B4 Page :030570

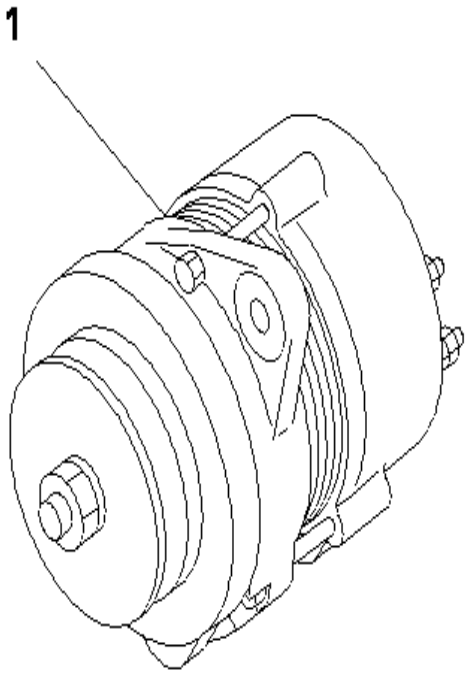

SAA4D95LE-3 S/N 132823-UP

ALTERNATOR (FOR 25A ALTERNATOR)(NON HARDENING PULLEY)

INDEX	CD	PART NO.	DESCRIPTION	QTY	SERIAL NO.
1		600-821-6120	ALTERNATOR A (25A),(SEE FIG.A6010-B0S1).....	1	132823-UP

Ref :A6010-A0S1 Page :030590

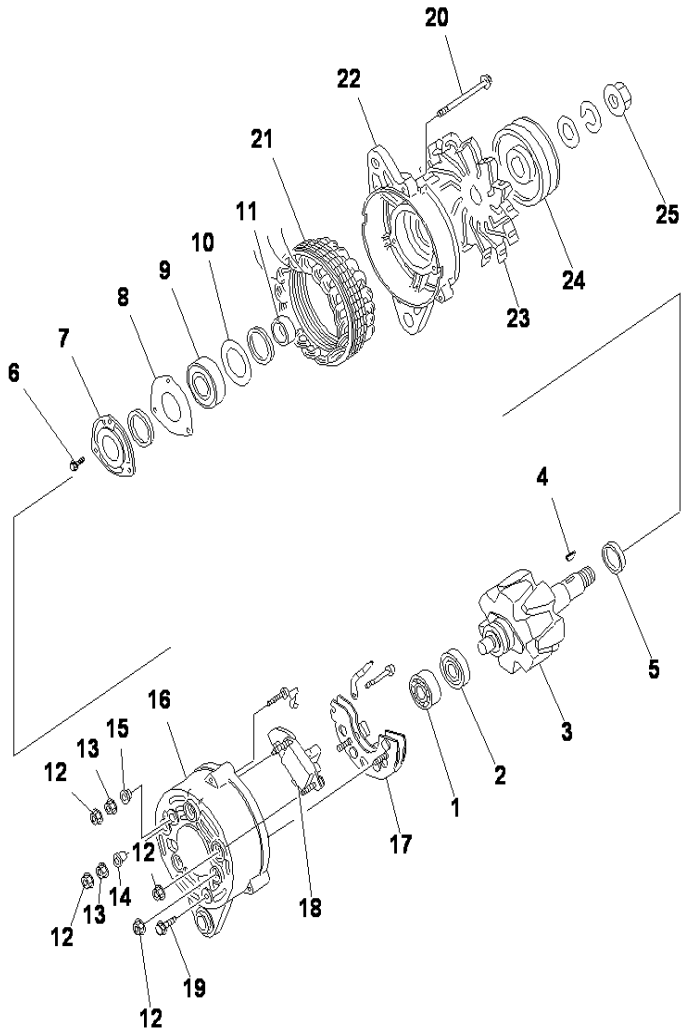

SAA4D95LE-3 S/N 132823-UP

ALTERNATOR (FOR 25A ALTERNATOR)(NON HARDENING PULLEY)(INNER PARTS)

INDEX	CD	PART NO.	DESCRIPTION	QTY	SERIAL NO.
		600-821-6120	ALTERNATOR A. (25A).....	1	132823-UP
1		KD1-09201-0530	.BEARING, BALL, REAR.....	1	132823-UP
2		KD1-33926-0820	.RETAINER.....	1	132823-UP
3		KD0-33100-1450	.ROTOR ASS'Y.....	1	132823-UP
4		KD1-0416-04160	.KEY.....	1	132823-UP
5		KD0-33923-0980	.COLLAR.....	1	132823-UP
6		KD1-0055-06162	.SCREW.....	3	132823-UP
7		KD0-35926-0060	.RETAINER.....	1	132823-UP
8		KD1-33926-0750	.RETAINER.....	1	132823-UP
9		KD1-0456-63057	.BEARING, BALL, FRONT.....	1	132823-UP
10		KD1-33926-0730	.RETAINER.....	1	132823-UP
11		KD1-33923-0920	.COLLAR.....	1	132823-UP
		KD0-33700-2711	.REAR BRACKET ASS'Y.....	1	132823-UP
12		KD0-33902-0080	..NUT.....	6	132823-UP
13		KD0-33902-0090	..NUT.....	2	132823-UP
14		KD1-33943-0980	..BUSHING, INSULATE.....	1	132823-UP
15		KD0-33943-1050	..BUSHING, INSULATE.....	1	132823-UP
16		KD0-33710-3300	..REAR BRACKET ASS'Y.....	1	132823-UP
17		KD0-33730-2560	..RECTIFIER ASS'Y.....	1	132823-UP
18		KD1-33740-0450	...BRUSH.....	2	132823-UP
19		KD0-0274-05102	.BOLT.....	1	132823-UP
20		KD0-0275-06802	.BOLT.....	3	132823-UP
21		KD0-33200-1410	.STATOR ASS'Y.....	1	132823-UP
22		KD0-33311-0510	.BRACKET, FRONT.....	1	132823-UP
23		KD1-33421-0590	.FAN.....	1	132823-UP
24		KD1-35411-0030	.PULLEY, NON HARDENING.....	1	132823-UP
25		KD0-0280-16022	.NUT.....	1	132823-UP
26		KD1-33951-0610	PACKING, (NOT SHOWN).....	2	132823-UP

Ref :A6010-B0S1 Page :030600

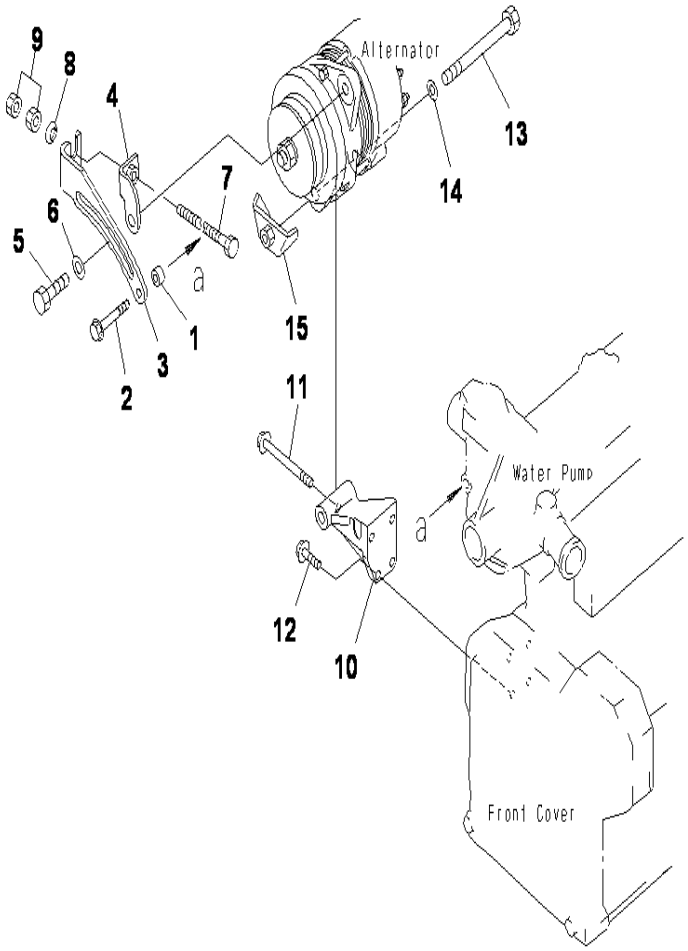

SAA4D95LE-3 S/N 132823-UP

ALTERNATOR MOUNTING (FOR 25 ALTERNATOR)

INDEX	CD	PART NO.	DESCRIPTION	QTY	SERIAL NO.
1		6130-12-1961	SPACER	1	132823-UP
2		01435-00860	BOLT	1	132823-UP
3		6208-81-6430	PLATE, ADJUST	1	132823-UP
4		6208-81-6440	BRACKET, ADJUST	1	132823-UP
5		01050-31235	BOLT	1	132823-UP
6		01643-31232	WASHER	1	132823-UP
7		6208-81-6590	BOLT	1	132823-UP
8		6204-11-3830	WASHER	1	132823-UP
9		01580-11008	NUT	2	132823-UP
10		6207-81-6510	BRACKET	1	132823-UP
11		01435-00895	BOLT	1	132823-UP
12		01435-00825	BOLT	3	132823-UP
13		6112-21-6581	BOLT	1	132823-UP
14		01641-21423	WASHER	1	132823-UP
15		6208-81-6710	BRACKET	1	132823-UP

Ref :A6020-A0A5 Page :030610

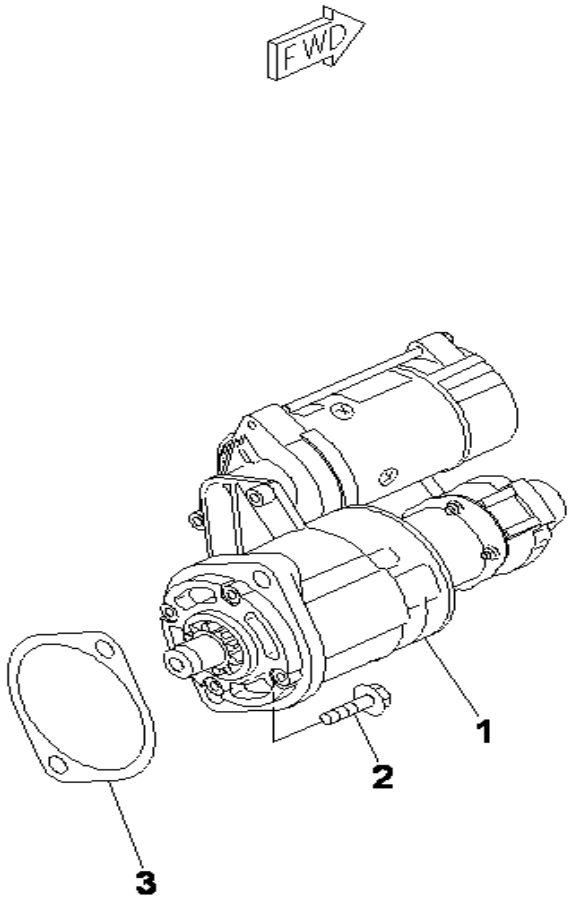

SAA4D95LE-3 S/N 132823-UP

STARTING MOTOR MOUNTING (3.0KW)

INDEX	CD	PART NO.	DESCRIPTION	QTY	SERIAL NO.
1		(600-863-3210)	STARTING MOTOR ASS'Y,(3.0KW)(A6210-B0G6)....	1	132823-UP
2		01435-01235	BOLT.....	2	132823-UP
3		6202-21-4151	GASKET (K2).....	1	132823-UP

Ref :A6210-A0G6 Page :030630

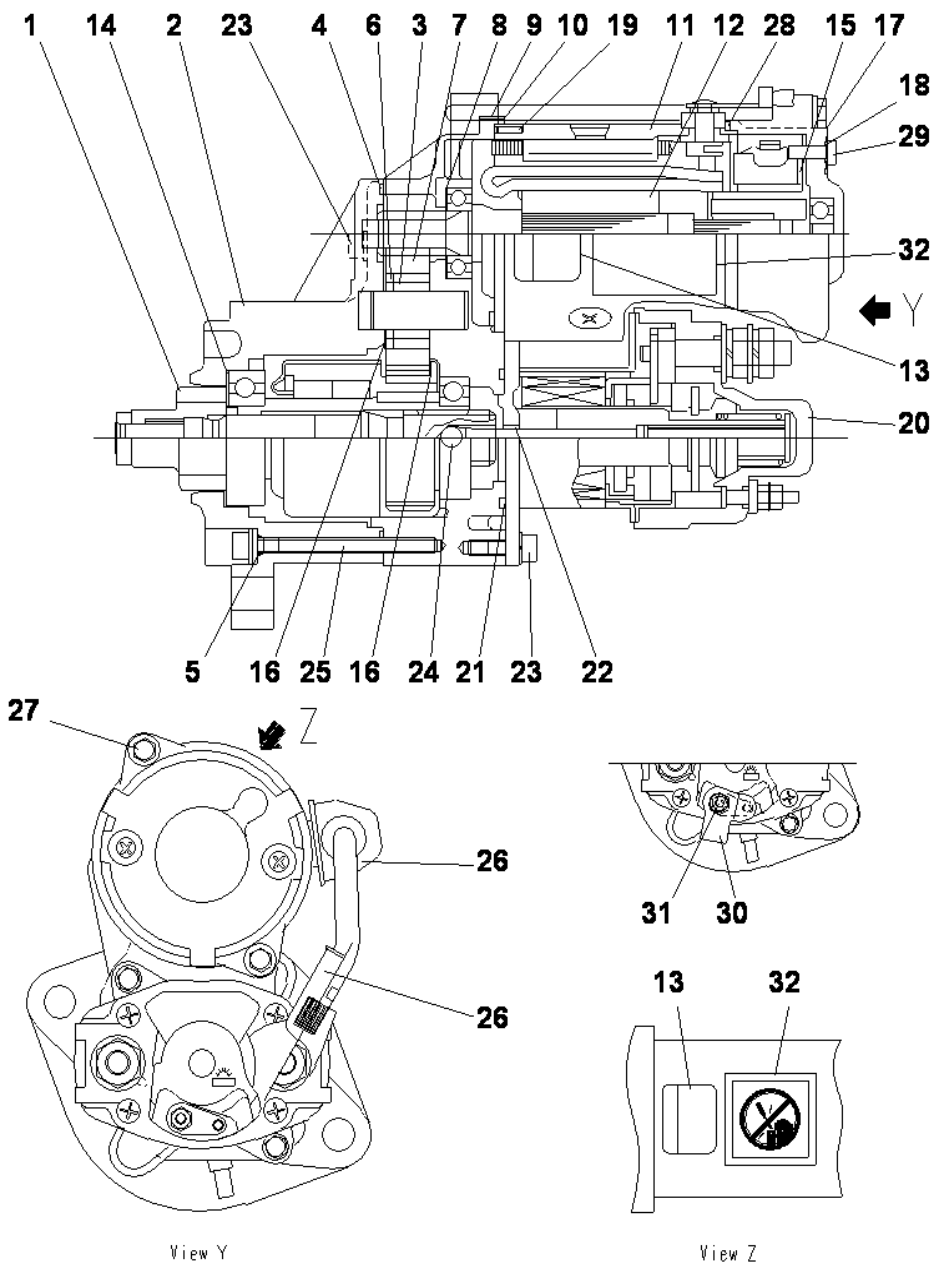

SAA4D95LE-3 S/N 132823-UP

STARTING MOTOR (3.0KW) (INNER PARTS)

INDEX	CD	PART NO.	DESCRIPTION	QTY	SERIAL NO.
		600-863-3210	STARTING MOTOR ASS'Y,(3.0KW).....	1	132823-UP
1		KD024500-0141	.CLUTCH ASS'Y,OVER RUNNING.....	1	132823-UP
2		KD024300-0030	.FRONT BRACKET.....	1	132823-UP
3		KD121904-0230	.PIN.....	5	132823-UP
4		KD024951-0070	.PACKING.....	1	132823-UP
5		KD105050-0501	.O-RING.....	4	132823-UP
6		KD024927-0030	.HOLDER.....	1	132823-UP
7		KD024511-0040	.PINION.....	1	132823-UP
8		KD123921-0150	.WASHER.....	1	132823-UP
9		KD024610-0020	.BRACKET,CENTER.....	1	132823-UP
10		KD024951-0100	.PACKING.....	1	132823-UP
11		KD024200-0110	.YOKE ASS'Y.....	1	132823-UP
12		KD024100-0080	.ARMATURE.....	1	132823-UP
13		KD009271-3620	.NAME PLATE.....	1	132823-UP
14		KD024921-0050	.WASHER.....	1	132823-UP
15		KD024750-0100	.BRUSH,HOLDER.....	1	132823-UP
16		KD024921-0010	.WASHER.....	2	132823-UP
17		KD024711-0130	.BRACKET,REAR.....	1	132823-UP
18		KD109211-0520	.O-RING.....	2	132823-UP
19		KD104002-0100	.PIN,STRAIGHT.....	1	132823-UP
20		KD047100-4810	.MAGNETIC SWITCH A.....	1	132823-UP
21		KD024951-0050	.PACKING.....	1	132823-UP
22		KD047911-1300	.SPRING.....	1	132823-UP
23		KD009001-5190	.BOLT.....	4	132823-UP
24		KD009203-0010	.BALL.....	1	132823-UP
25		KD009001-5370	.BOLT.....	4	132823-UP
26		KD009252-0630	.CAP,GUM.....	2	132823-UP
27		KD009001-5160	.BOLT.....	2	132823-UP
28		KD009211-1440	.O-RING.....	1	132823-UP
29		KD009011-2850	.SCREW.....	2	132823-UP
30		KD047761-2741	.COVER.....	1	132823-UP
31		KD009006-0660	.NUT.....	1	132823-UP
32		KD009275-1430	.PLATE,CAUTION.....	1	132823-UP

Ref :A6210-B0G6 Page :030640

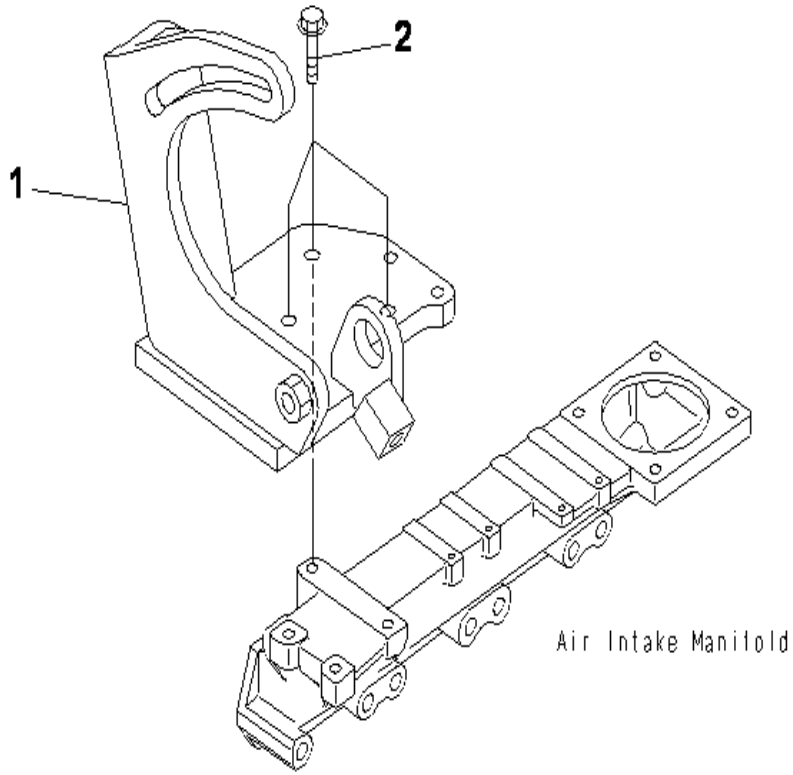

SAA4D95LE-3 S/N 132823-UP

ACCESSORY BRACKET (FOR COMPRESSOR)

INDEX	CD	PART NO.	DESCRIPTION	QTY	SERIAL NO.
1		22B-97-91480	BRACKET	1	132823-UP
2		01435-01030	BOLT	2	132823-UP

Ref :A7010-A0A6 Page :030650

KIT See subsequent pages for details.

K-2 6204-K2-0901 CYLINDER BLOCK GASKET KIT

In addition to the above gasket kit, there are other parts not included in the kit that must be ordered as individual parts.
For details of the part numbers, see the parts list.

SAA4D95LE-3 S/N 132823-UP

CYLINDER BLOCK GASKET KIT

INDEX	CD	PART NO.	DESCRIPTION	QTY	SERIAL NO.
2		6204-K2-0901	GASKET KIT,CYLINDER BLOCK.....	1	132823-UP
		07000-02065	.O-RING.....	1	132823-UP
		07000-02135	.O-RING.....	1	132823-UP
		07000-03040	.O-RING.....	1	132823-UP
		07000-03050	.O-RING.....	1	132823-UP
		07005-00812	.GASKET.....	5	132823-UP
		07005-01012	.GASKET.....	8	132823-UP
		07005-01412	.GASKET.....	10	132823-UP
		07005-02216	.GASKET.....	1	132823-UP
		6114-31-3330	.WASHER.....	1	132823-UP
		6141-21-1332	.SEAL, REAR.....	1	132823-UP
		6204-21-3510	.SEAL, FRONT.....	1	132823-UP
		6204-51-6122	.O-RING.....	1	132823-UP
		6206-21-3840	.GASKET.....	2	132823-UP
			THE FOLLOWING PARTS ARE NOT USED FOR THIS MODEL.....		
2		01653-21212	.WASHER.....	1	132823-UP
		07000-02018	.O-RING.....	1	132823-UP
		07000-02020	.O-RING.....	1	132823-UP
		07000-02085	.O-RING.....	1	132823-UP
		0700002095	.O-RING.....	1	132823-UP
		07000-02135	.O-RING.....	1	132823-UP
		07005-01812	.GASKET.....	2	132823-UP
		07005-03016	.GASKET.....	1	132823-UP
		08034-00414	.BAND.....	1	132823-UP
		08034-00519	.BAND.....	2	132823-UP
		6144-21-2500	.SHIM ASS'Y.....	1	132823-UP
		6204-21-3410	.PACKING.....	1	132823-UP
		6204-21-3451	.GROMMET.....	1	132823-UP
		6204-21-3460	.GROMMET.....	6	132823-UP
		6204-21-5280	.GASKET.....	1	132823-UP
		6204-21-6811	.GASKET.....	1	132823-UP
		6204-61-5181	.GASKET.....	1	132823-UP
		6204-61-5191	.GASKET.....	1	132823-UP
		6204-63-1130	.GASKET.....	1	132823-UP
		6206-61-1131	.GASKET.....	1	132823-UP
		6206-61-1730	.GASKET.....	1	132823-UP
			THE FOLLOWING PARTS ARE THE PARTS.....		
			NOT INCLUDED IN THE GASKET KIT.....		
2		6204-21-6820	GASKET.....	1	132823-UP
		07005-01612	GASKET.....	2	132823-UP
		07000-72070	O-RING.....	2	132823-UP
		07000-73025	O-RING.....	4	132823-UP
		6206-61-1731	GASKET.....	1	132823-UP
		6202-21-4151	GASKET.....	1	132823-UP
		07005-02416	GASKET.....	1	132823-UP

Ref :A8116-B0B2 Page :030660

KIT See subsequent pages for details.

K-2 6204-K2-0901 CYLINDER BLOCK GASKET KIT

In addition to the above gasket kit, there are other parts not included in the kit that must be ordered as individual parts.
For details of the part numbers, see the parts list.

SAA4D95LE-3 S/N 132823-UP

CYLINDER BLOCK GASKET KIT

INDEX	CD	PART NO.	DESCRIPTION	QTY	SERIAL NO.
		07003-01015	GASKET	2	132823-UP
		6205-51-7611	GASKET	1	132823-UP
		07002-62434	O-RING	3	132823-UP
		02896-61018	O-RING	2	132823-UP
		6208-61-5420	GASKET	1	132823-UP
		6221-61-1520	SEAL	1	132823-UP

Ref :A8116-B0B2 Page :030661

KIT See subsequent pages for details.

K-1 6204-K1-0901 CYLINDER HEAD GASKET KIT

In addition to the above gasket kit, there are other parts not included in the kit that must be ordered as individual parts.
For details of the part numbers, see the parts list.

PDY0001

SAA4D95LE-3 S/N 132823-UP

CYLINDER HEAD GASKET KIT

INDEX	CD	PART NO.	DESCRIPTION	QTY	SERIAL NO.
1		6204-K1-0901	GASKET KIT,CYLINDER HEAD	1	132823-UP
		07000-03040	.O-RING	1	132823-UP
		6136-11-8142	.PACKING	3	132823-UP
		6140-11-6331	.GASKET	1	132823-UP
		6204-11-3850	.SEAL	4	132823-UP
		6204-11-3880	.GASKET	4	132823-UP
		6204-11-8810	.O-RING	1	132823-UP
			THE FOLLOWING PARTS ARE NOT USED FOR THIS MODEL		
1		07005-01612	.GASKET	1	132823-UP
		08034-00414	.BAND	1	132823-UP
		08034-00519	.BAND	2	132823-UP
		6110-11-4431	.GASKET	1	132823-UP
		6130-12-5580	.GASKET	1	132823-UP
		6136-11-4850	.GASKET	2	132823-UP
		6144-11-5821	.GASKET	1	132823-UP
		6204-11-1830	.GASKET	1	132823-UP
		6204-21-6811	.GASKET	1	132823-UP
		6204-41-4540	.SEAL	8	132823-UP
		6205-11-5810	.GASKET	1	132823-UP
		6206-61-1730	.GASKET	1	132823-UP
		6691-11-4381	.GASKET	1	132823-UP
			THE FOLLOWING PARTS ARE THE PARTS		
			NOT INCLUDED IN THE GASKET KIT		
1		6204-41-4541	SEAL	8	132823-UP
		6204-11-1840	GASKET	1	132823-UP
		6204-11-4850	GASKET	1	132823-UP
		6205-11-5811	GASKET	1	132823-UP
		6205-11-5580	GASKET	1	132823-UP
		6205-11-5850	GASKET	1	132823-UP
		07003-01015	GASKET	2	132823-UP
		6205-51-7611	GASKET	1	132823-UP
		6208-11-4850	GASKET,(FOR PC128,138US-2)	1	132823-UP
		07005-01012	GASKET,(FOR PC128,138US-2)	2	132823-UP

Ref :A8118-A0B1 Page :030670

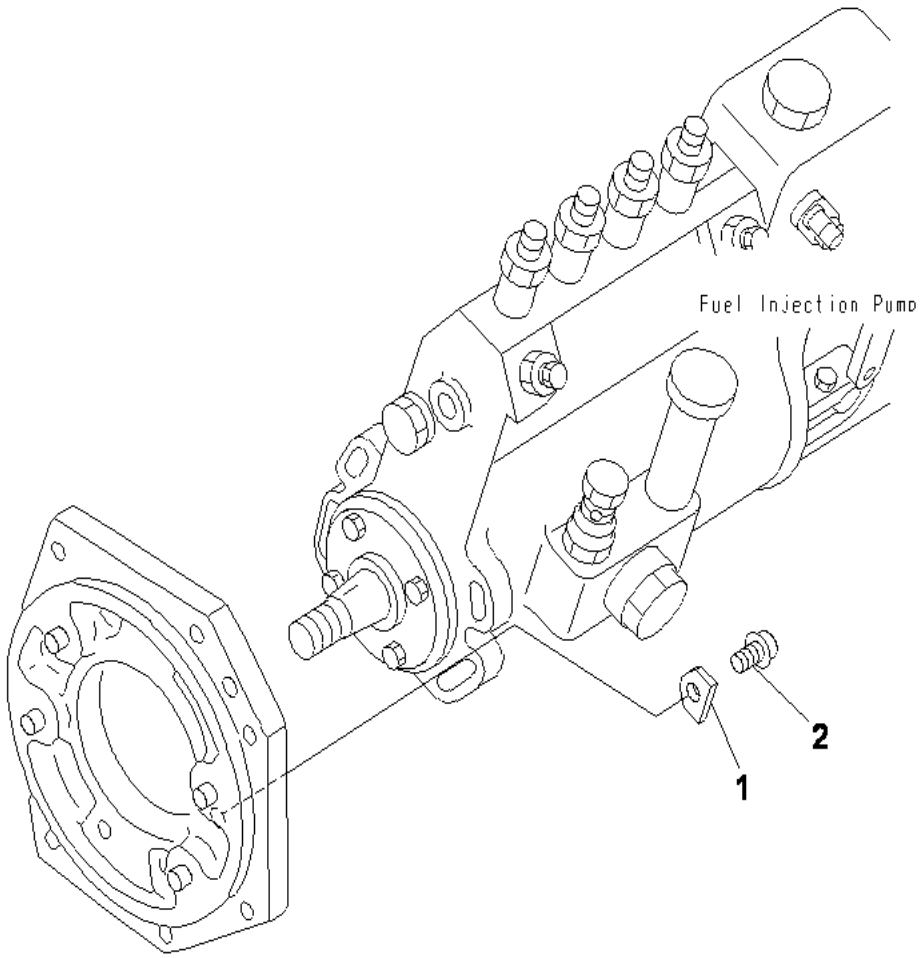

SAA4D95LE-3 S/N 132823-UP

TAMPER PROOF KIT

INDEX	CD	PART NO.	DESCRIPTION	QTY	SERIAL NO.
1		6204-71-3820	PLATE	1	132823-UP
2		600-311-1810	BOLT	1	132823-UP

Ref :A9420-A0A1 Page :030680

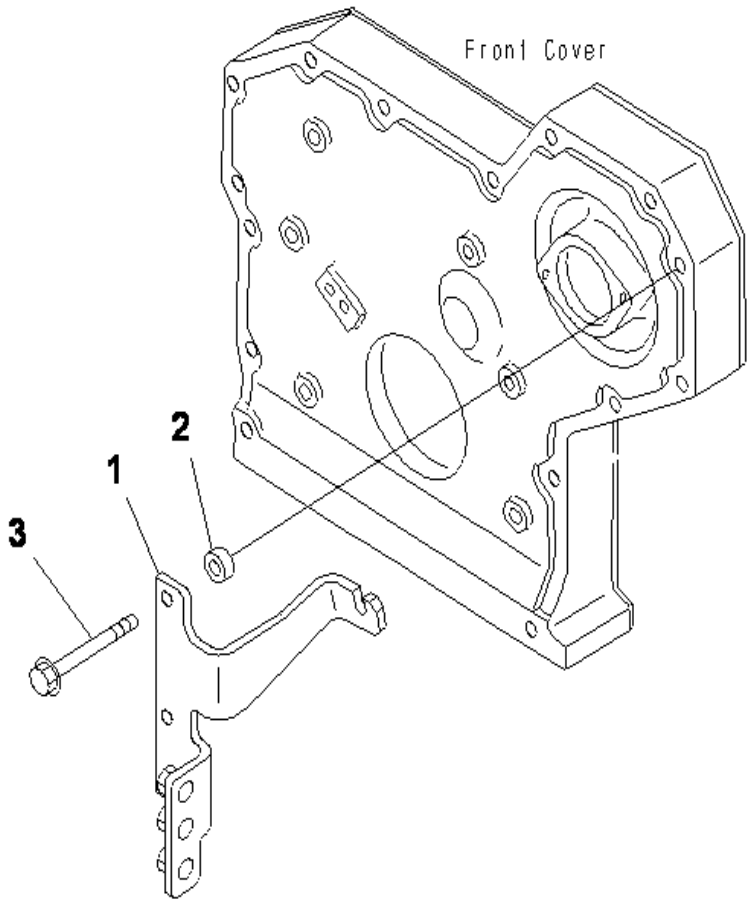

SAA4D95LE-3 S/N 132823-UP

WATER PIPING BRACKET

INDEX	CD	PART NO.	DESCRIPTION	QTY	SERIAL NO.
1		22B-01-12210	BRACKET	1	132823-UP
2		6130-12-1961	SPACER	2	132823-UP
3		01435-00875	BOLT	2	132823-UP

Ref :A9530-A0A1 Page :030690

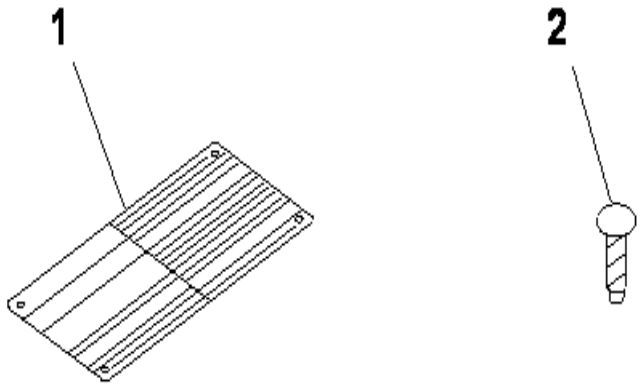

SAA4D95LE-3 S/N 132823-UP

ENGINE NAME PLATE AND REGULATION PLATE (EXCEPT JAPAN)

INDEX	CD	PART NO.	DESCRIPTION	QTY	SERIAL NO.
1		6204-81-2421	PLATE, NAME,(LIMITED SUPPLY).....	1	132823-UP
2		04418-02550	SCREW.....	4	132823-UP

Ref :A9850-A0A8 Page :030700

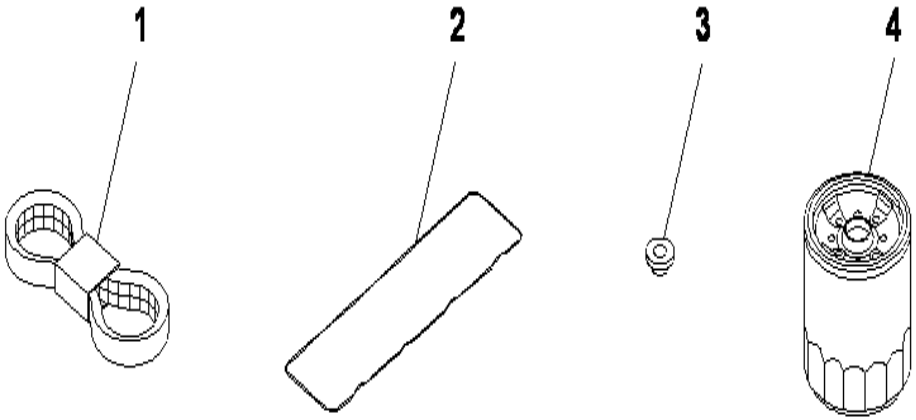

SAA4D95LE-3 S/N 132823-UP

SPARE PARTS (FOR 25A ALTERNATOR)

INDEX	CD	PART NO.	DESCRIPTION	QTY	SERIAL NO.
1		04120-21749	V-BELT.....	1	132823-UP
2		6204-11-8810	O-RING,COVER.....	1	132823-UP
3		6136-11-8142	PACKING.....	3	132823-UP
4		600-211-2110	CARTRIDGE,OIL.....	1	132823-UP

Ref :B9999-A0R4 Page :030720

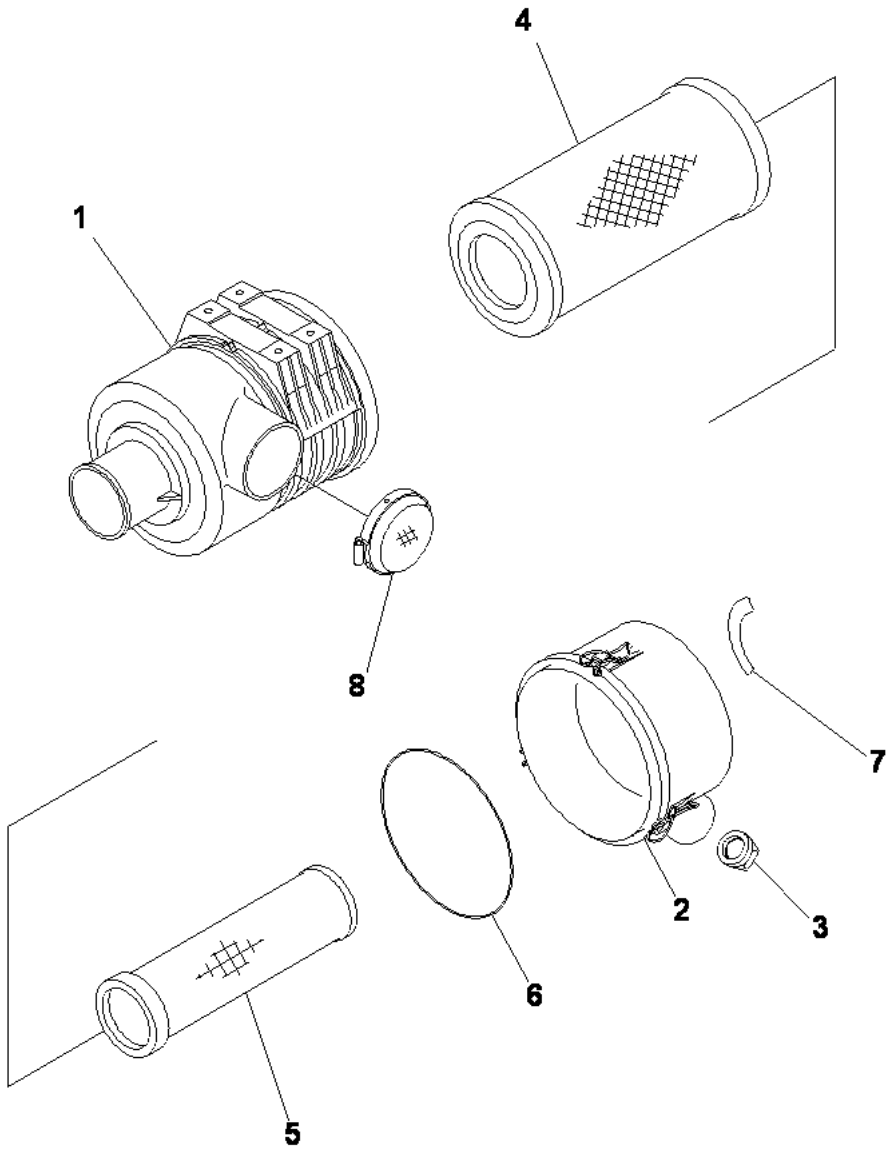

SAA4D95LE-3 S/N 132823-UP

AIR CLEANER

INDEX	CD	PART NO.	DESCRIPTION	QTY	SERIAL NO.
		6732-83-7100	AIR CLEANER.....	1	132823-UP
1		6732-83-7110	.BODY.....	1	132823-UP
		600-184-1210	.COVER ASS'Y.....	1	132823-UP
2		600-184-1220	..COVER.....	1	132823-UP
3		600-184-1250	..VALVE,VACUATOR.....	1	132823-UP
		600-185-2100	.ELEMENT ASS'Y.....	1	132823-UP
4		600-185-2110	..ELEMENT,OUTER.....	1	132823-UP
5	C1		..ELEMENT,INNER.....	1	132823-UP
6		600-184-1270	..O-RING.....	1	132823-UP
7		600-184-2110	.PLATE, NAME.....	1	132823-UP
8		6208-81-7720	CAP.....	1	132823-UP

Ref :B9999-A3R5 Page :030730

ENGINE RELATED PARTS

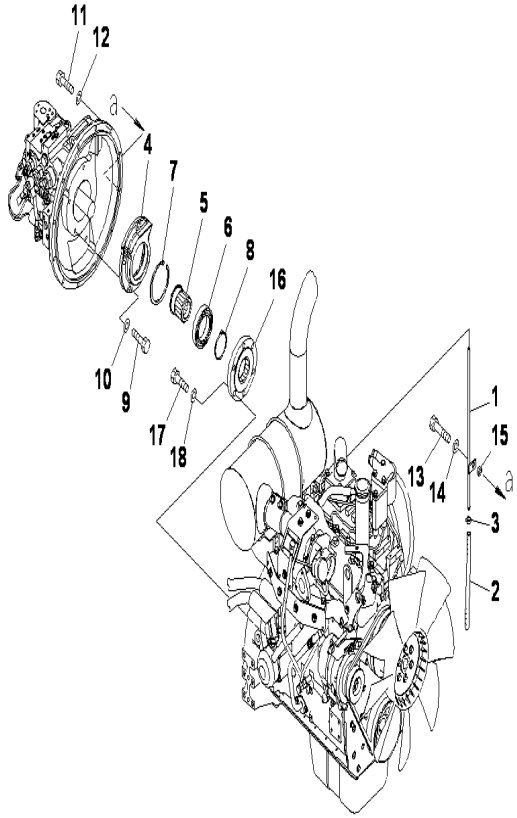

PC130F-7 S/N J10001-UP

MAIN PUMP MOUNTING

INDEX	CD	PART NO.	DESCRIPTION	QTY	SERIAL NO.
1		6205-11-5460	TUBE	1	J10001-UP
2		07260-20928	HOSE	1	J10001-UP
3		07285-00150	CLIP	1	J10001-UP
4		203-01-61170	CAGE	1	J10001-UP
5		203-01-61190	SHAFT	1	J10001-UP
6		06045-06014	BEARING	1	J10001-UP
7		04065-01104	RING	1	J10001-UP
8		04064-07025	RING	1	J10001-UP
9		01010-81235	BOLT	4	J10001-UP
10		01643-31232	WASHER	4	J10001-UP
11		01010-81040	BOLT	11	J10001-UP
12		01643-31032	WASHER	11	J10001-UP
13		01010-81050	BOLT	1	J10001-UP
14		01643-31032	WASHER	1	J10001-UP
15		205-917-1610	COLLAR	1	J10001-UP
16		203-01-61181	COUPLING	1	J10001-UP
17		01010-81240	BOLT	6	J10001-UP
18		01643-31232	WASHER	6	J10001-UP

Ref :B0000-01A0 Page :040010

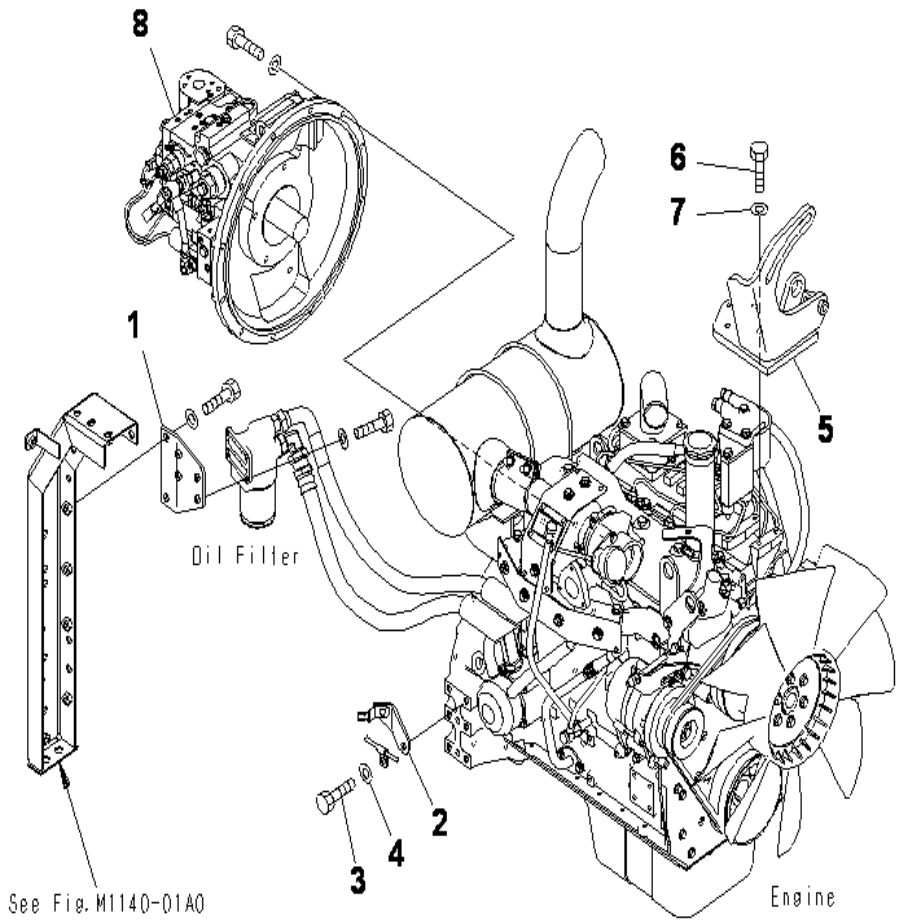

PC130F-7 S/N J10001-UP

ENGINE BRACKET AND MOUNTING

INDEX	CD	PART NO.	DESCRIPTION	QTY	SERIAL NO.
1		203-01-71290	BRACKET	1	J10001-UP
2		203-06-71251	BRACKET	1	J10001-UP
3		01010-81225	BOLT	1	J10001-UP
4		01643-31232	WASHER	1	J10001-UP
5		203-979-7111	BRACKET	1	J10001-UP
6		01010-81035	BOLT	3	J10001-UP
7		01643-31032	WASHER	3	J10001-UP
8		(708-1L-00650)	PUMP ASS'Y	1	J10001-UP

Ref :B0000-02A0 Page :040020

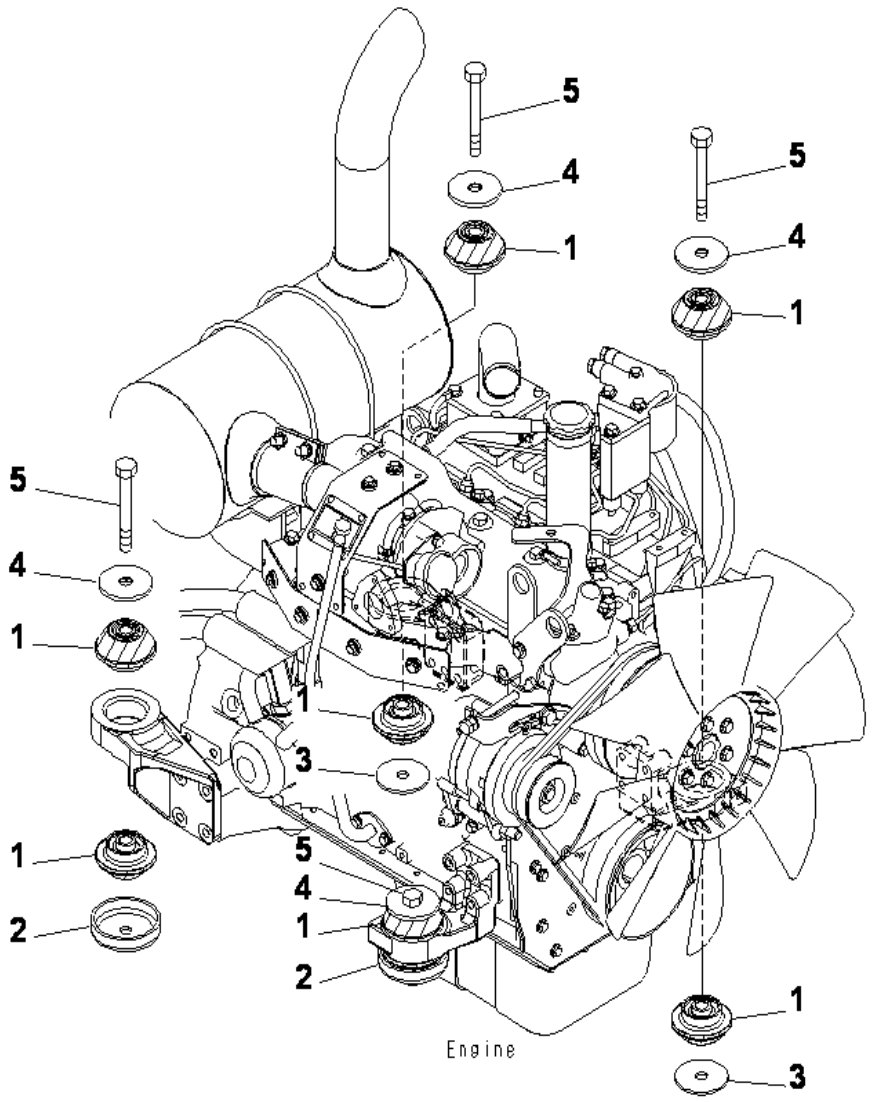

PC130F-7 S/N J10001-UP

ENGINE MOUNT

INDEX	CD	PART NO.	DESCRIPTION	QTY	SERIAL NO.
1		201-01-71250	CUSHION	8	J10001-UP
2		203-01-61160	STOPPER	2	J10001-UP
3		203-01-67540	WASHER	2	J10001-UP
4		113-01-21120	WASHER	4	J10001-UP
5		01011-81630	BOLT	4	J10001-UP

Ref :B0100-01A0 Page :040030

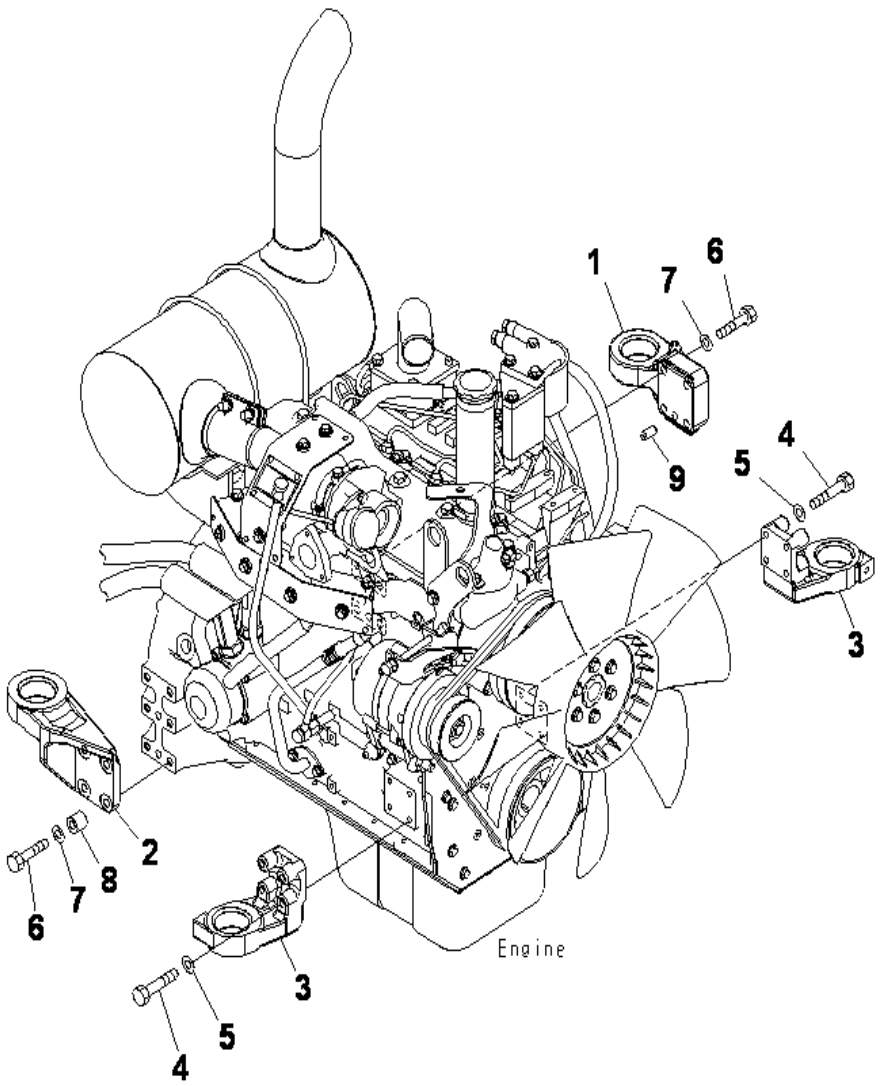

PC130F-7 S/N J10001-UP

ENGINE MOUNT BRACKET

INDEX	CD	PART NO.	DESCRIPTION	QTY	SERIAL NO.
1		203-01-61110	BRACKET	1	J10001-UP
2		203-01-61120	BRACKET	1	J10001-UP
3		203-01-61131	BRACKET	1	J10001-UP
4		01010-81060	BOLT	1	J10001-UP
5		01643-31032	WASHER	1	J10001-UP
6		22B-01-11190	BOLT	8	J10001-UP
7		01643-31232	WASHER	8	J10001-UP
8		6131-22-3750	BOSS	4	J10001-UP
9		04020-01228	PIN	1	J10001-UP

Ref :B0100-02A0 Page :040040

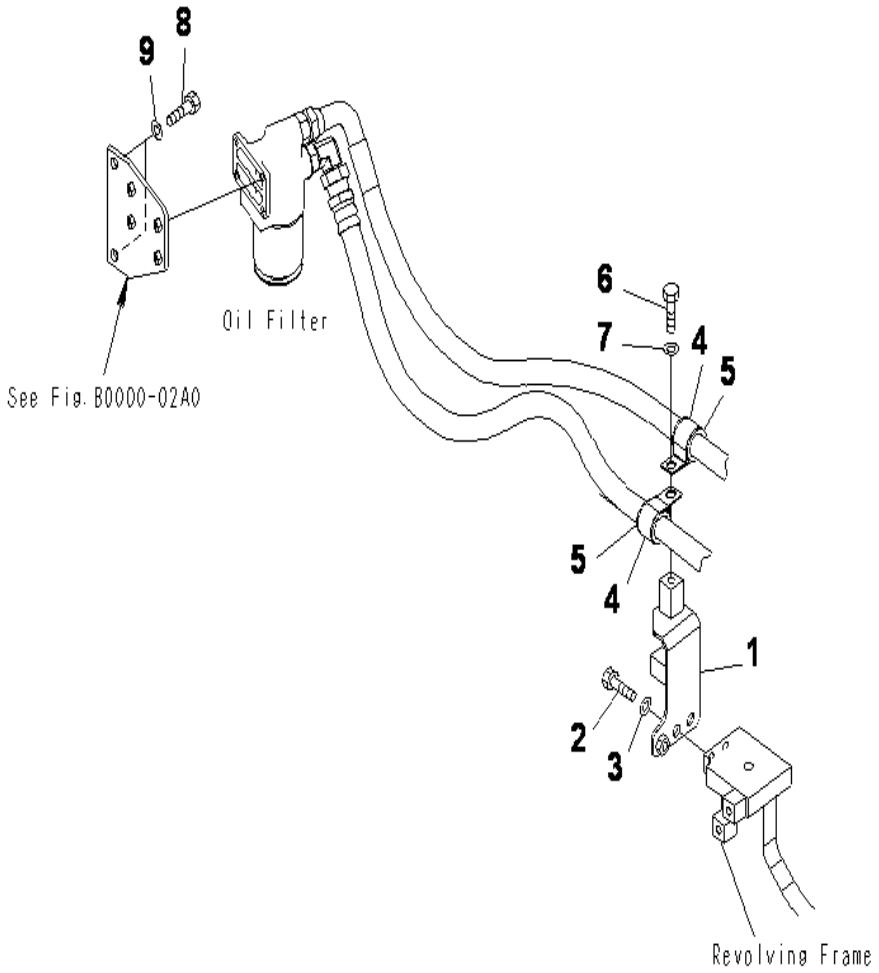

PC130F-7 S/N J10001-UP

REMOTE FILTER MOUNT

INDEX	CD	PART NO.	DESCRIPTION	QTY	SERIAL NO.
1		203-01-71270	BRACKET	1	J10001-UP
2		01010-81225	BOLT	2	J10001-UP
3		01643-31232	WASHER	2	J10001-UP
4		04434-53412	CLIP	2	J10001-UP
5		07095-20627	CUSHION	2	J10001-UP
6		01010-81225	BOLT	1	J10001-UP
7		01643-31232	WASHER	1	J10001-UP
8		01010-81230	BOLT	2	J10001-UP
9		01643-31232	WASHER	2	J10001-UP

Ref :B0100-03A0 Page :040050

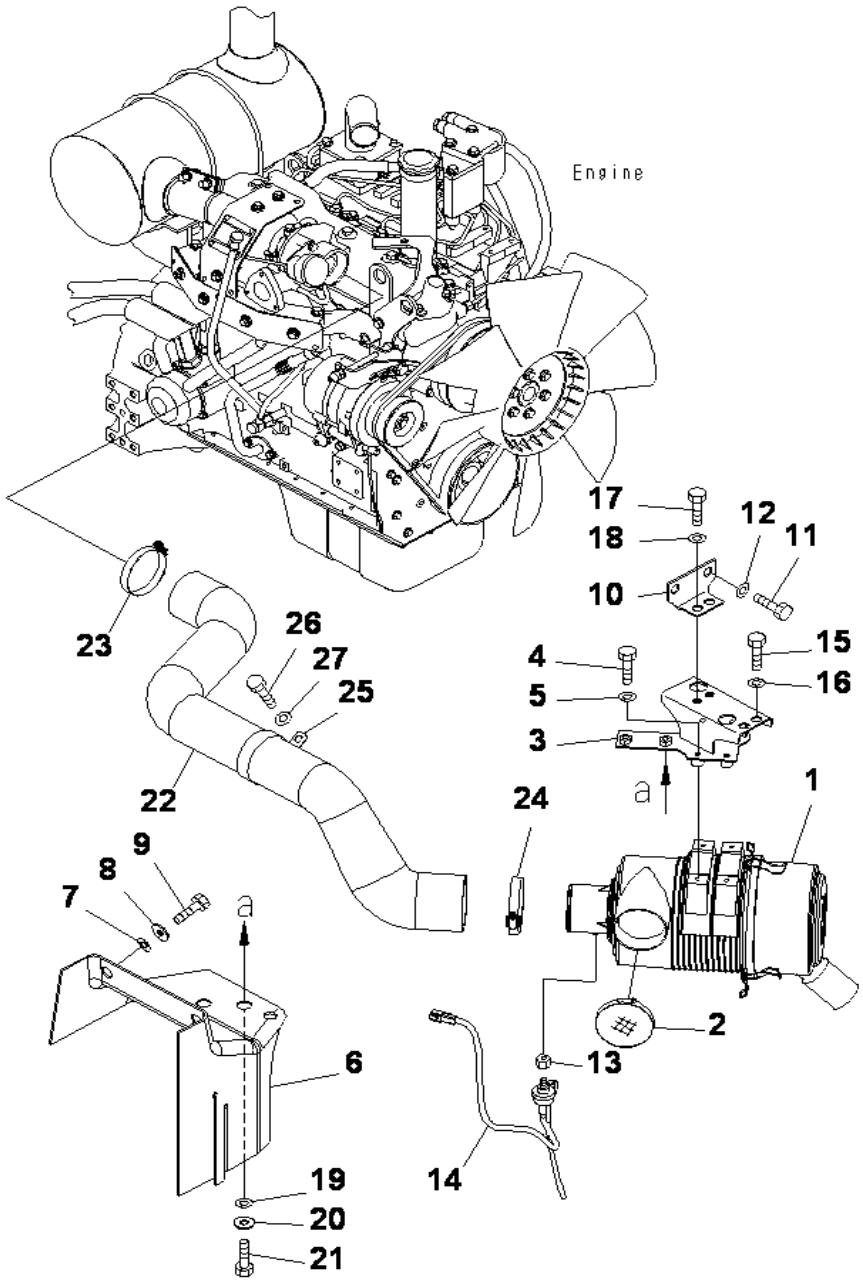

AIR CLEANER AND DUCT

INDEX	CD	PART NO.	DESCRIPTION	QTY	SERIAL NO.
1		6208-81-7100	AIR CLEANER	1	J10001-UP
2		6208-81-7720	CAP	1	J10001-UP
3		203-01-71132	FRAME	1	J10001-UP
4		01010-80835	BOLT	4	J10001-UP
5		01643-30823	WASHER	4	J10001-UP
6		203-01-71211	SHEET	1	J10001-UP
7		01643-51232	WASHER	2	J10001-UP
8		124-54-26540	WASHER	2	J10001-UP
9		01010-81230	BOLT	2	J10001-UP
10		203-01-71141	BRACKET	1	J10001-UP
11		01010-81230	BOLT	2	J10001-UP
12		01643-31232	WASHER	2	J10001-UP
13		11Y-01-11920	JOINT	1	J10001-UP
14		7861931420	SENSOR	1	J10001-UP
15		01010-81230	BOLT	2	J10001-UP
16		01643-31232	WASHER	2	J10001-UP
17		01010-81230	BOLT	2	J10001-UP
18		01643-31232	WASHER	2	J10001-UP
19		01643-51232	WASHER	2	J10001-UP
20		124-54-26540	WASHER	2	J10001-UP
21		01010-81230	BOLT	2	J10001-UP
22		203-01-71121	HOSE	1	J10001-UP
23		07289-00095	CLAMP	1	J10001-UP
24		07289-00105	CLAMP	1	J10001-UP
25		203-01-71220	CLIP	1	J10001-UP
26		01010-81230	BOLT	1	J10001-UP
27		01643-31232	WASHER	1	J10001-UP

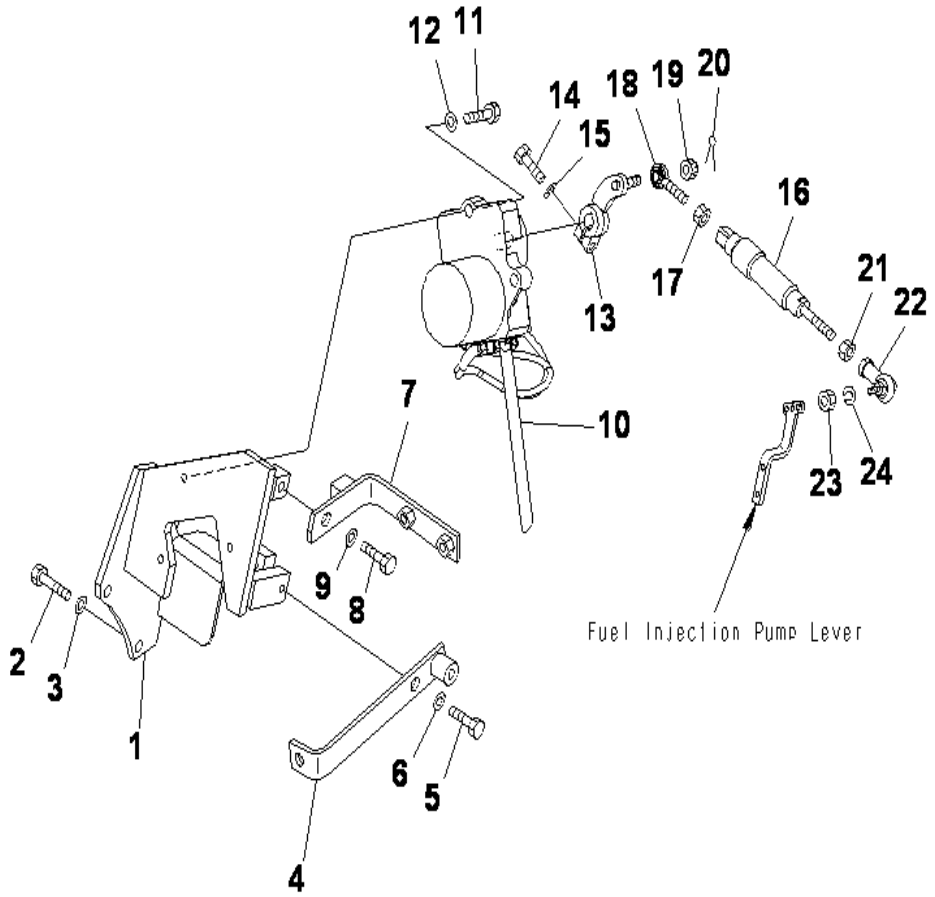

PC130F-7 S/N J10001-UP

FUEL CONTROL

INDEX	CD	PART NO.	DESCRIPTION	QTY	SERIAL NO.
1		203-43-71211	BRACKET	1	J10001-UP
2		01010-81050	BOLT	2	J10001-UP
3		01643-31032	WASHER	2	J10001-UP
4		203-43-71242	BRACKET	1	J10001-UP
5		01010-81025	BOLT	2	J10001-UP
6		01643-31032	WASHER	2	J10001-UP
7		203-43-71222	BRACKET	1	J10001-UP
8		01010-81225	BOLT	1	J10001-UP
9		01643-31232	WASHER	1	J10001-UP
10		783-44-12002	MOTOR A, GOV	1	J10001-UP
11		01010-81040	BOLT	3	J10001-UP
12		01643-31032	WASHER	3	J10001-UP
13		203-43-61120	LEVER	1	J10001-UP
14		01010-81030	BOLT	1	J10001-UP
15		01602-21030	WASHER	1	J10001-UP
16		203-43-62121	SPRING ASS'Y	1	J10001-UP
17		01582-11008	NUT	1	J10001-UP
18		04252-21061	END	1	J10001-UP
19		01593-31008	NUT	1	J10001-UP
20		04050-12018	COTTER PIN	1	J10001-UP
21		01582-11008	NUT	1	J10001-UP
22		20Y-43-12180	JOINT	1	J10001-UP
23		01580-10605	NUT	1	J10001-UP
24		01602-20619	WASHER	1	J10001-UP

Ref :B0400-01A0 Page :040070

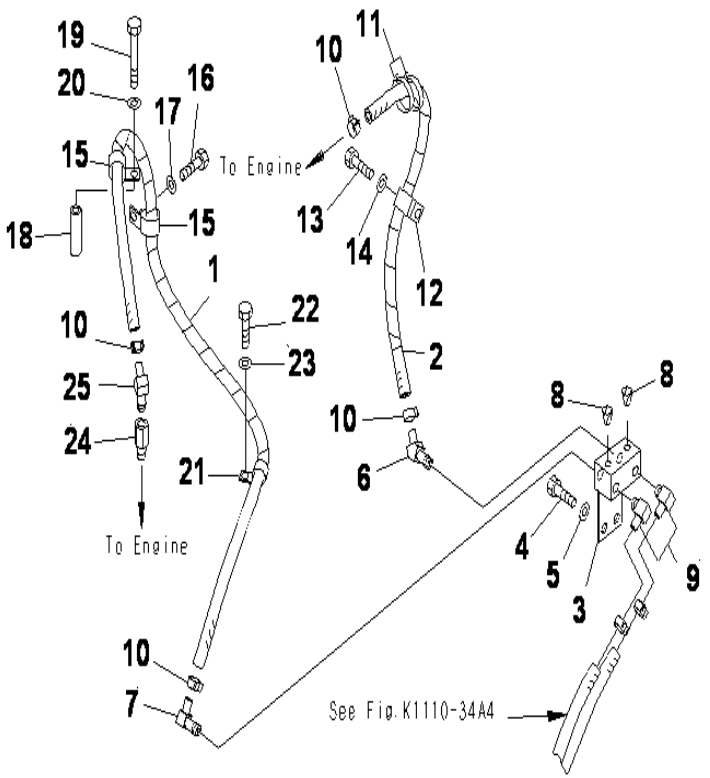

CORROSION RESISTOR LESS

INDEX	CD	PART NO.	DESCRIPTION	QTY	SERIAL NO.
1		203-01-71641	HOSE	1	J10001-UP
2		203-01-71650	HOSE	1	J10001-UP
3		203-01-71610	BLOCK	1	J10001-UP
4		01010-81225	BOLT	2	J10001-UP
5		01643-31232	WASHER	2	J10001-UP
6		203-979-7150	ELBOW	1	J10001-UP
7		20M-977-8130	ELBOW	1	J10001-UP
8		07042-70211	PLUG	2	J10001-UP
9		20S-97-71170	ELBOW	2	J10001-UP
10		11Y-09-11160	CLIP	4	J10001-UP
11		08034-20823	BAND	2	J10001-UP
12		04434-52712	CLIP	1	J10001-UP
13		01010-81225	BOLT	1	J10001-UP
14		01643-31232	WASHER	1	J10001-UP
15		04434-52712	CLIP	2	J10001-UP
16		01010-81225	BOLT	1	J10001-UP
17		01643-31232	WASHER	1	J10001-UP
18		195-97-93570	COLLAR	1	J10001-UP
19		01010-81295	BOLT	1	J10001-UP
20		01643-31232	WASHER	1	J10001-UP
21		04434-52112	CLIP	1	J10001-UP
22		01010-81225	BOLT	1	J10001-UP
23		01643-31232	WASHER	1	J10001-UP
24		21W-97-71120	NIPPLE	1	J10001-UP
25		203-97-97150	ELBOW	1	J10001-UP

COOLING SYSTEM

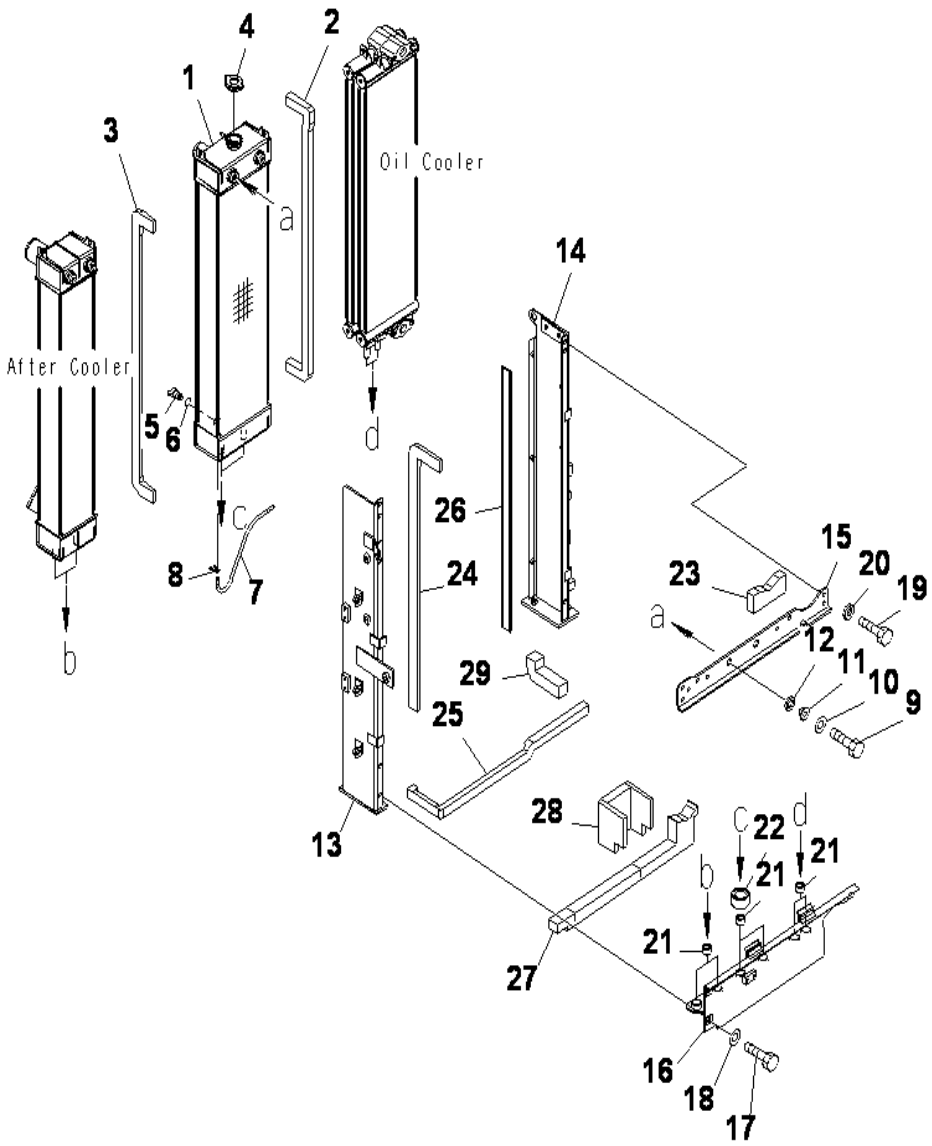

PC130F-7 S/N J10001-UP

COOLING (RADIATOR CORE AND FRAME)

INDEX	CD	PART NO.	DESCRIPTION	QTY	SERIAL NO.
		203-03-71773	RADIATOR	1	J10001-UP
1		203-03-71112	RADIATOR CORE A	1	J10001-UP
2		203-03-71610	SHEET	1	J10001-UP
3		203-03-71621	SHEET	1	J10001-UP
4		20Y-03-22110	CAP	1	J10001-UP
5		205-03-62660	PLUG	1	J10001-UP
6		07000-11007	.O-RING	1	J10001-UP
7		203-03-71920	HOSE	1	J10001-UP
8		20Y-03-11330	CLIP	1	J10001-UP
9		01010-81030	BOLT	2	J10001-UP
10		01643-31032	WASHER	2	J10001-UP
11		6738-61-4952	COLLAR	2	J10001-UP
12		22U-03-22860	CUSHION	2	J10001-UP
13		203-03-71161	FRAME	1	J10001-UP
14		203-03-71171	FRAME	1	J10001-UP
15		203-03-71181	FRAME	1	J10001-UP
16		203-03-71191	FRAME	1	J10001-UP
17		01010-81025	BOLT	3	J10001-UP
18		01643-31032	WASHER	3	J10001-UP
19		01010-81025	BOLT	4	J10001-UP
20		20Y-43-15410	WASHER	4	J10001-UP
21		22B-03-12590	CUSHION	6	J10001-UP
22		22U-03-22870	CUSHION	2	J10001-UP
23		203-03-71630	SHEET	1	J10001-UP
24		203-03-71640	SHEET	1	J10001-UP
25		203-03-71650	SHEET	1	J10001-UP
26		203-03-71660	SHEET	1	J10001-UP
27		203-03-71671	SHEET	1	J10001-UP
28		203-03-71681	SHEET	1	J10001-UP
29		203-03-71690	SHEET	1	J10001-UP

Ref :C0100-01A0 Page :060010

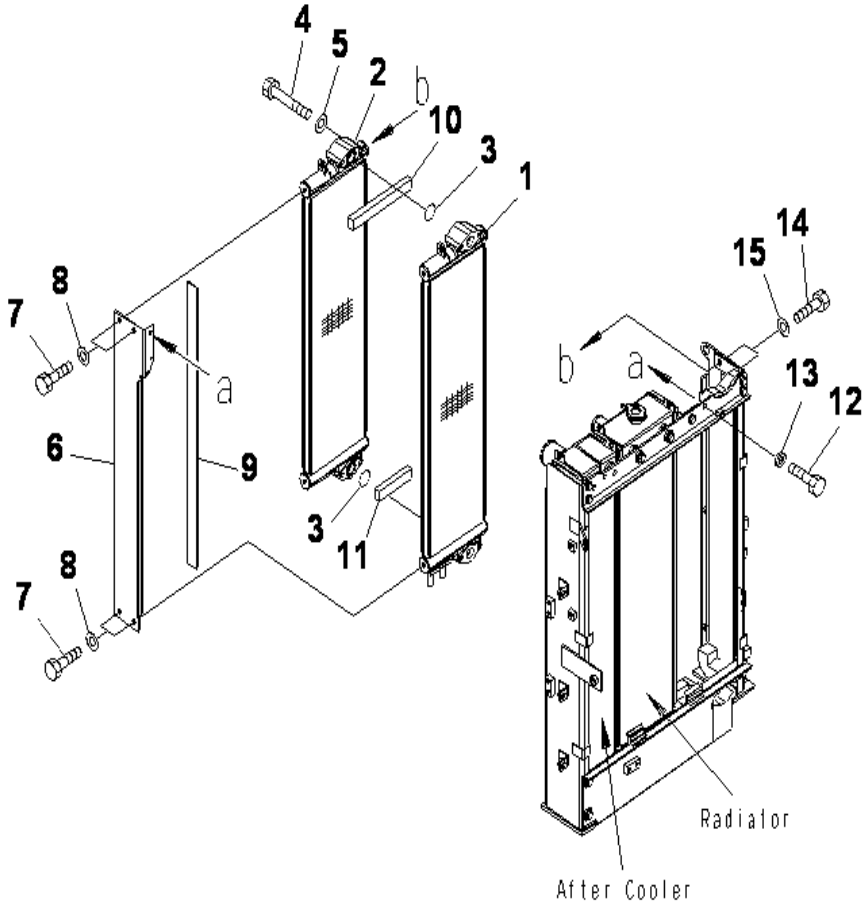

PC130F-7 S/N J10001-UP

COOLING (OIL COOLER)

INDEX	CD	PART NO.	DESCRIPTION	QTY	SERIAL NO.
1		203-03-71130	OIL COOLER	1	J10001-UP
2		203-03-71140	OIL COOLER	1	J10001-UP
3		07000-13035	O-RING	2	J10001-UP
4		01010-81080	BOLT	4	J10001-UP
5		01643-31032	WASHER	4	J10001-UP
6		203-03-71150	BRACKET	1	J10001-UP
7		01010-81020	BOLT	4	J10001-UP
8		01643-31032	WASHER	4	J10001-UP
9		203-03-71710	SHEET	1	J10001-UP
10		203-03-71720	SHEET	1	J10001-UP
11		203-03-71890	SHEET	1	J10001-UP
12		01010-81025	BOLT	1	J10001-UP
13		20Y-43-15410	WASHER	1	J10001-UP
14		01010-81025	BOLT	2	J10001-UP
15		01643-31032	WASHER	2	J10001-UP

Ref :C0100-02A0 Page :060020

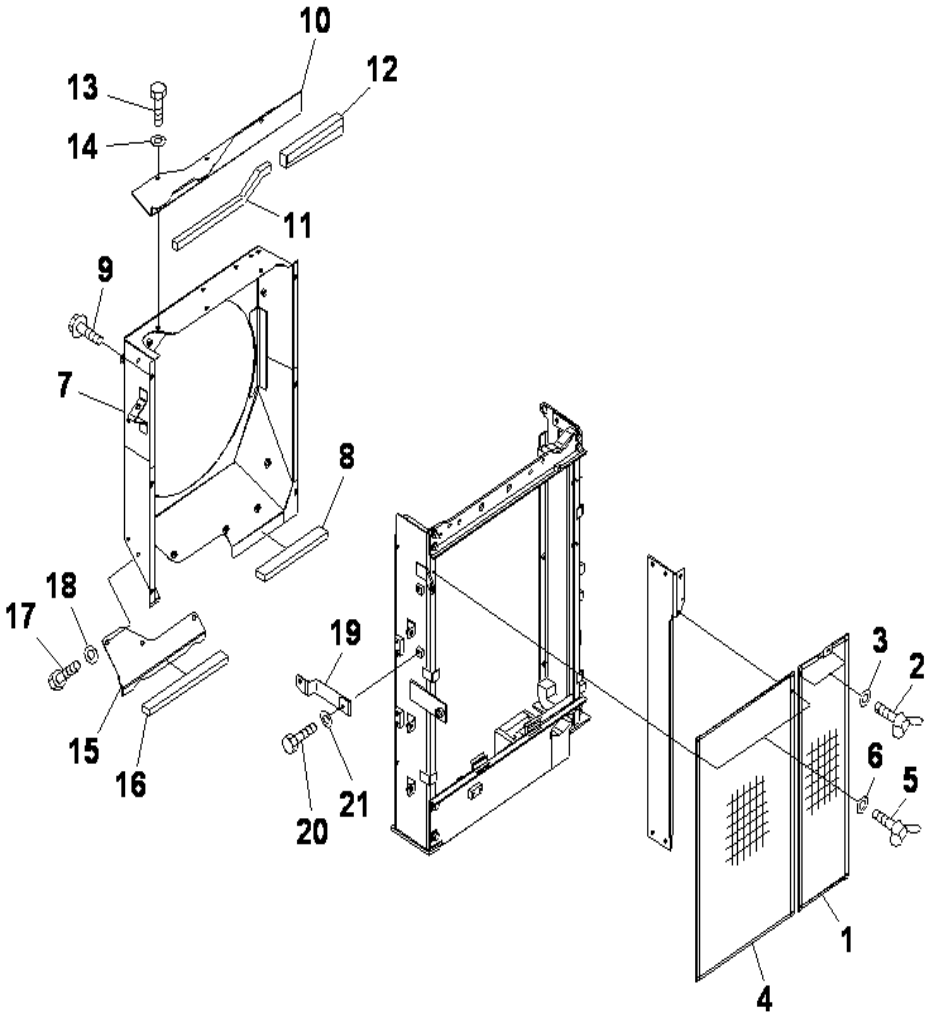

PC130F-7 S/N J10001-UP

COOLING (NET AND SHROUD)

INDEX	CD	PART NO.	DESCRIPTION	QTY	SERIAL NO.
1		203-03-71851	NET	1	J10001-UP
2		01434-10616	BOLT, WING	2	J10001-UP
3		01643-30623	WASHER	2	J10001-UP
4		203-03-71860	NET	1	J10001-UP
5		01434-10616	BOLT, WING	2	J10001-UP
6		01643-30623	WASHER	2	J10001-UP
7		203-03-71411	SHROUD	1	J10001-UP
8		203-03-71790	SHEET	1	J10001-UP
9		01435-20816	BOLT	6	J10001-UP
		203-03-71440	COVER A	1	J10001-UP
10		203-03-71420	.COVER	1	J10001-UP
11		203-03-71730	.SHEET	1	J10001-UP
12		203-03-71740	.SHEET	1	J10001-UP
13		01010-81020	BOLT	3	J10001-UP
14		01643-31032	WASHER	3	J10001-UP
		203-03-71450	COVER A	1	J10001-UP
15		203-03-71430	.COVER	1	J10001-UP
16		203-03-71750	.SHEET	1	J10001-UP
17		01010-81020	BOLT	3	J10001-UP
18		01643-31032	WASHER	3	J10001-UP
19		203-03-71330	BRACKET	1	J10001-UP
20		01010-81020	BOLT	2	J10001-UP
21		01643-31032	WASHER	2	J10001-UP

Ref :C0100-03A0 Page :060030

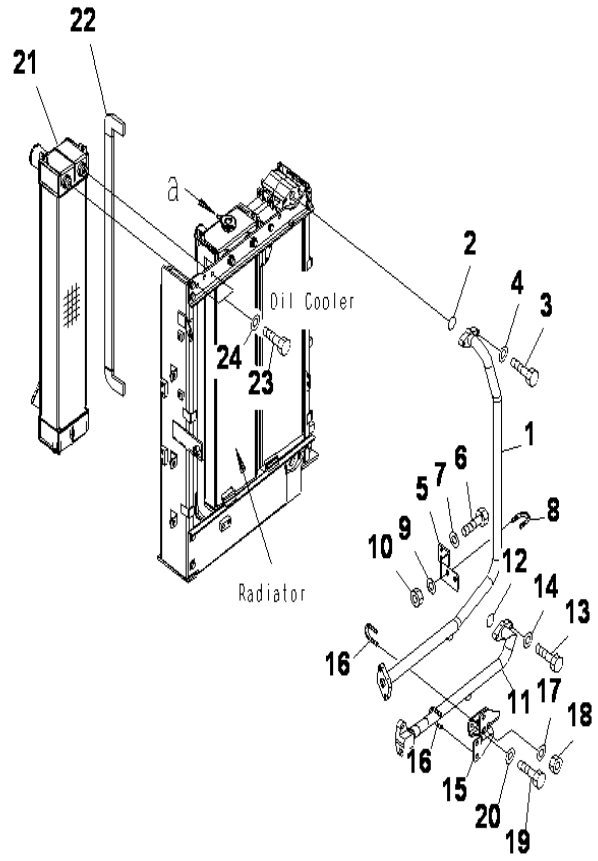

COOLING (AFTER COOLER)

INDEX	CD	PART NO.	DESCRIPTION	QTY	SERIAL NO.
1		203-03-71231	TUBE	1	J10001-UP
2		07000-13035	O-RING	1	J10001-UP
3		01010-81035	BOLT	2	J10001-UP
4		01643-31032	WASHER	2	J10001-UP
5		203-03-71261	BRACKET	1	J10001-UP
6		01010-81020	BOLT	2	J10001-UP
7		01643-31032	WASHER	2	J10001-UP
8		07283-33442	CLIP	1	J10001-UP
9		01643-31032	WASHER	2	J10001-UP
10		01597-01009	NUT	2	J10001-UP
11		203-03-71241	TUBE	1	J10001-UP
12		07000-13035	O-RING	1	J10001-UP
13		01010-81035	BOLT	2	J10001-UP
14		01643-31032	WASHER	2	J10001-UP
15		203-03-71251	BRACKET	1	J10001-UP
16		07283-33442	CLIP	2	J10001-UP
17		01643-31032	WASHER	4	J10001-UP
18		01597-01009	NUT	4	J10001-UP
19		01010-81025	BOLT	2	J10001-UP
20		01643-31032	WASHER	2	J10001-UP
		203-01-71330	AFTER COOLER A	1	J10001-UP
21		203-01-71110	.AFTER COOLER	1	J10001-UP
22		203-01-71340	.SHEET	1	J10001-UP
23		01010-81025	BOLT	2	J10001-UP
24		01643-31032	WASHER	2	J10001-UP

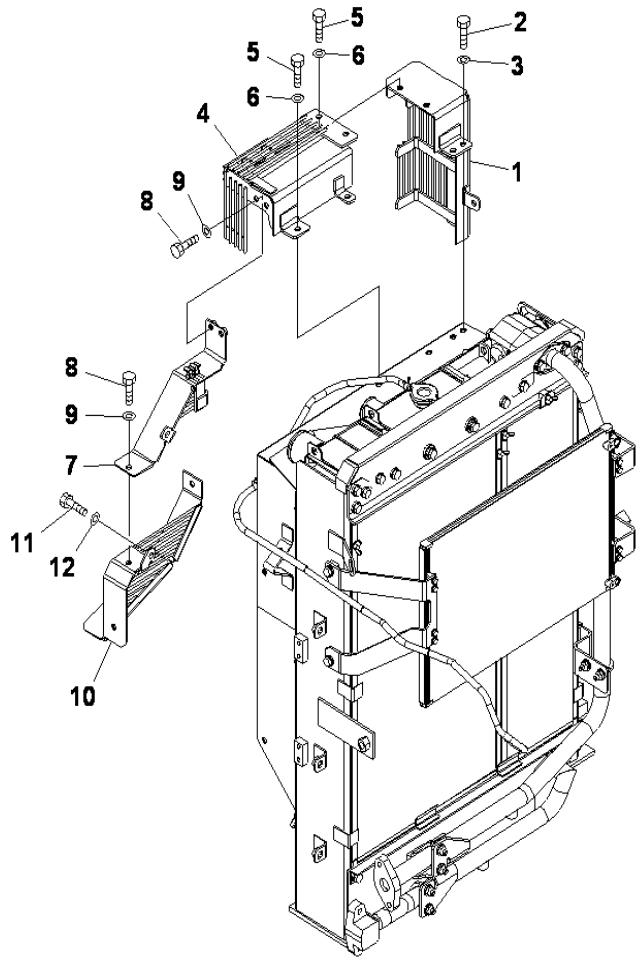

PC130F-7 S/N J10001-UP

FAN GUARD

INDEX	CD	PART NO.	DESCRIPTION	QTY	SERIAL NO.
1		203-03-71461	GUARD	1	J10001-UP
2		01010-81025	BOLT	3	J10001-UP
3		01643-31032	WASHER	3	J10001-UP
4		203-03-71471	GUARD	1	J10001-UP
5		01010-81025	BOLT	4	J10001-UP
6		01643-31032	WASHER	4	J10001-UP
7		203-03-71481	GUARD	1	J10001-UP
8		01010-81025	BOLT	4	J10001-UP
9		01643-31032	WASHER	4	J10001-UP
10		203-03-71492	GUARD	1	J10001-UP
11		01010-81025	BOLT	2	J10001-UP
12		01643-31032	WASHER	2	J10001-UP

Ref :C0310-01A0 Page :060050

FUEL TANK AND RELATED PARTS

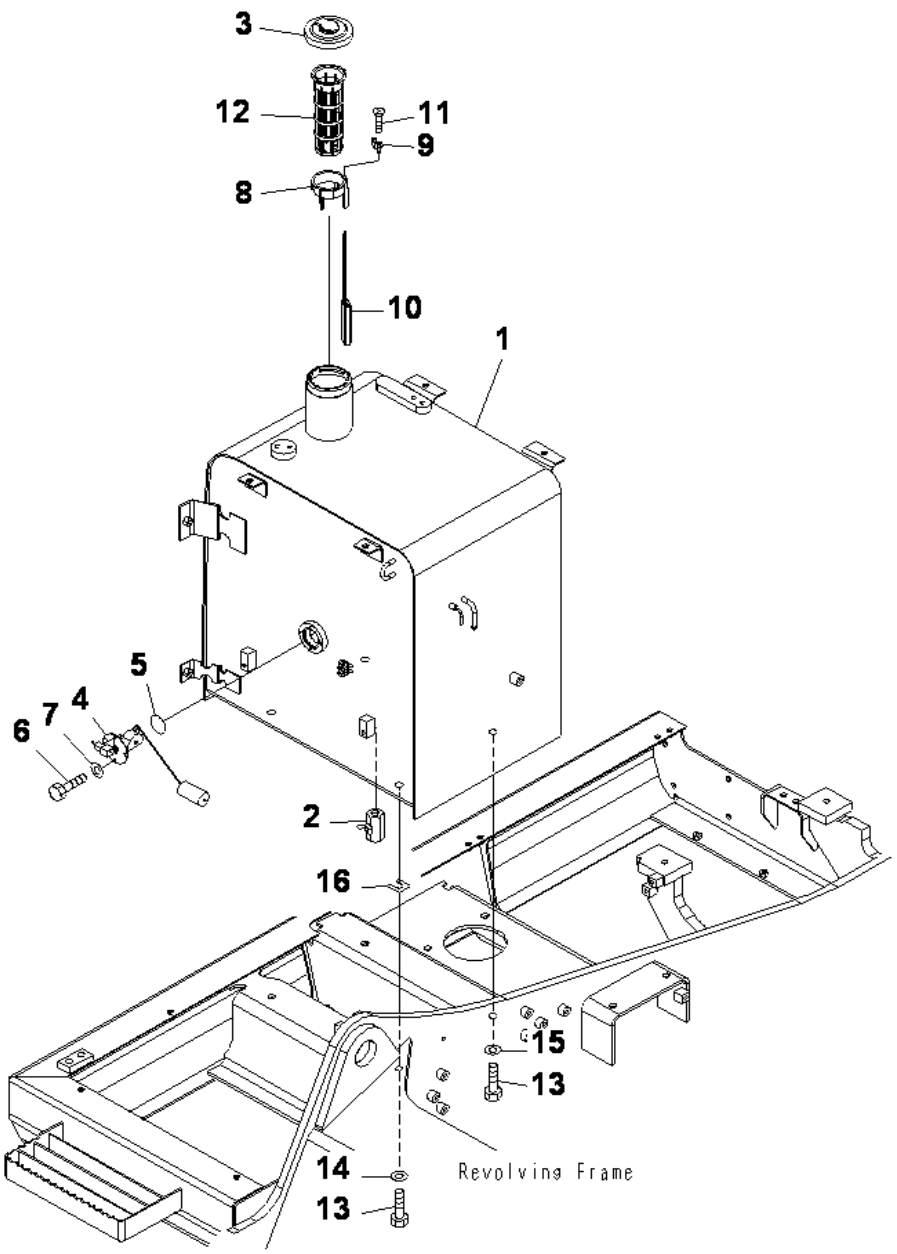

PC130F-7 S/N J10001-UP

FUEL TANK

INDEX	CD	PART NO.	DESCRIPTION	QTY	SERIAL NO.
1		203-04-71120	TANK	1	J10001-UP
2		07700-50240	VALVE	1	J10001-UP
3		20Y-04-11161	CAP	1	J10001-UP
4		786-19-25810	SENSOR	1	J10001-UP
5		07000-13050	O-RING	1	J10001-UP
6		01010-80612	BOLT	4	J10001-UP
7		01643-30623	WASHER	4	J10001-UP
		22U-04-21200	FLOAT ASS'Y	1	J10001-UP
8		22U-04-21210	.GUIDE	1	J10001-UP
9		20Y-04-21580	.CAP	1	J10001-UP
10		22U-04-21220	.FLOAT	1	J10001-UP
11	C1		.SCREW	1	J10001-UP
12		07056-18425	STRAINER	1	J10001-UP
13		01010-81635	BOLT	4	J10001-UP
14		01643-31645	WASHER	2	J10001-UP
15		21T-54-16150	WASHER	2	J10001-UP
16		195-03-11570	SHIM, 1.0MM	4	J10001-UP

Ref :D0100-01A1 Page :090010

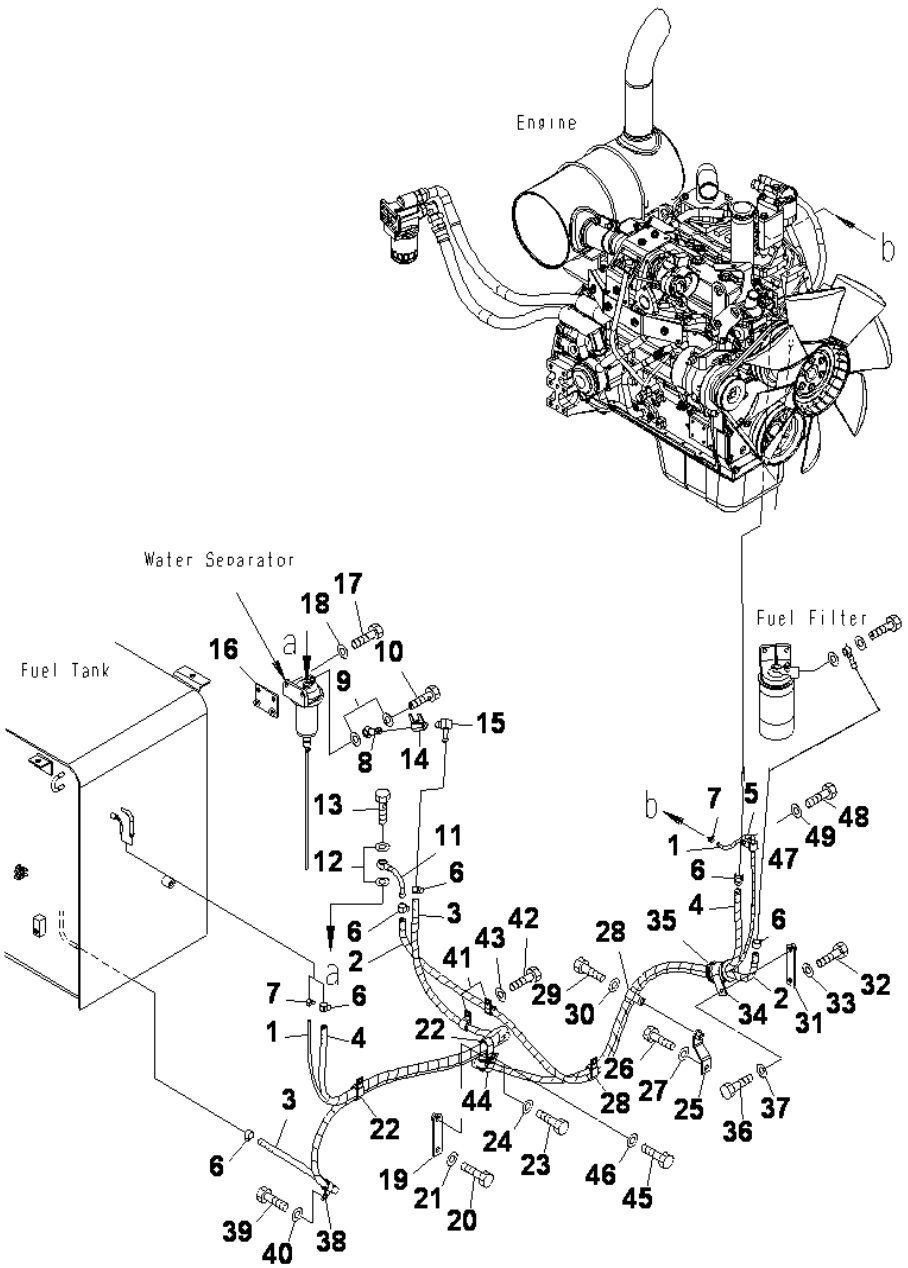

PC130F-7 S/N J10001-UP

FUEL LINE(ARRANGE SPEC)(WITH WATER SEPARATOR FUEL FILTER)

INDEX	CD	PART NO.	DESCRIPTION	QTY	SERIAL NO.
1		07270-50429	TUBE	1	J10001-UP
2		203-04-71330	HOSE	1	J10001-UP
3		07288-01019	HOSE	1	J10001-UP
4		07288-01026	HOSE	1	J10001-UP
5		08017-31005	CONDUIT	1	J10001-UP
6		11Y-09-11140	CLIP	6	J10001-UP
7		07285-00080	CLIP	2	J10001-UP
8		205-04-62140	JOINT	1	J10001-UP
9		07005-01412	GASKET	2	J10001-UP
10		07206-31014	JOINT	1	J10001-UP
11		203-04-56150	JOINT	1	J10001-UP
12		07005-01412	GASKET	2	J10001-UP
13		07206-31014	JOINT	1	J10001-UP
14		07700-50240	VALVE	1	J10001-UP
15		205-04-62130	ELBOW	1	J10001-UP
16		203-04-71160	PLATE	1	J10001-UP
17		01010-81020	BOLT	2	J10001-UP
18		01643-31032	WASHER	2	J10001-UP
19		203-04-71150	PLATE	1	J10001-UP
20		01010-81225	BOLT	1	J10001-UP
21		01643-31232	WASHER	1	J10001-UP
22		04435-51912	CLIP	2	J10001-UP
23		01010-81225	BOLT	2	J10001-UP
24		01643-31232	WASHER	2	J10001-UP
25		203-06-71271	BRACKET	1	J10001-UP
26		01010-81225	BOLT	1	J10001-UP
27		01643-31232	WASHER	1	J10001-UP
28		04435-51912	CLIP	2	J10001-UP
29		01010-81225	BOLT	2	J10001-UP
30		01643-31232	WASHER	2	J10001-UP
31		203-04-71150	PLATE	1	J10001-UP
32		01010-81225	BOLT	1	J10001-UP
33		01643-31232	WASHER	1	J10001-UP
34		21T-62-76850	CLIP	1	J10001-UP
35		07095-01034	CUSHION	1	J10001-UP
36		01010-81225	BOLT	1	J10001-UP
37		01643-31232	WASHER	1	J10001-UP
38		04434-51912	CLIP	1	J10001-UP
39		01010-81225	BOLT	1	J10001-UP
40		01643-31232	WASHER	1	J10001-UP
41		04434-51912	CLIP	2	J10001-UP
42		01010-81225	BOLT	2	J10001-UP
43		01643-31232	WASHER	2	J10001-UP
44		04434-52512	CLIP	1	J10001-UP
45		01010-81225	BOLT	1	J10001-UP

Ref :D0200-01A0 Page :090020

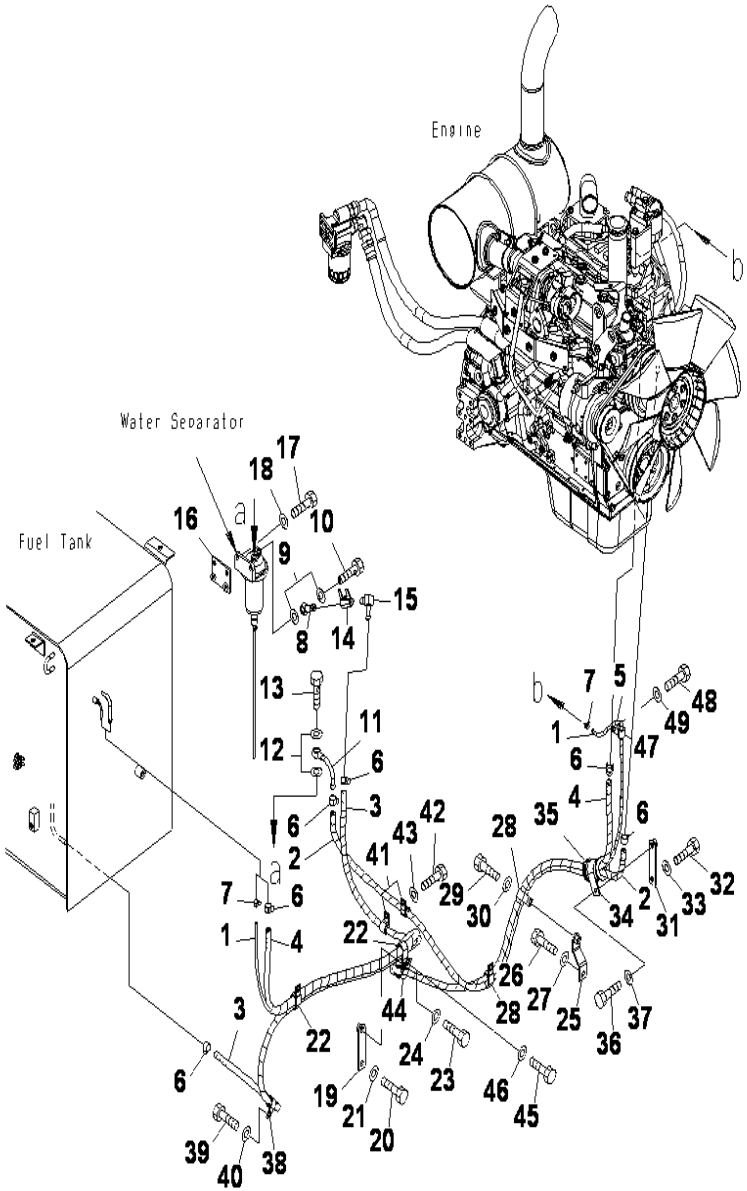

FUEL LINE (ARRANGE SPEC)(WITH WATER SEPARATOR FUEL FILTER)

INDEX	CD	PART NO.	DESCRIPTION	QTY	SERIAL NO.
46		01643-31232	WASHER	1	J10001-UP
47		04434-51412	CLIP	1	J10001-UP
48		01010-81225	BOLT	1	J10001-UP
49		01643-31232	WASHER	1	J10001-UP

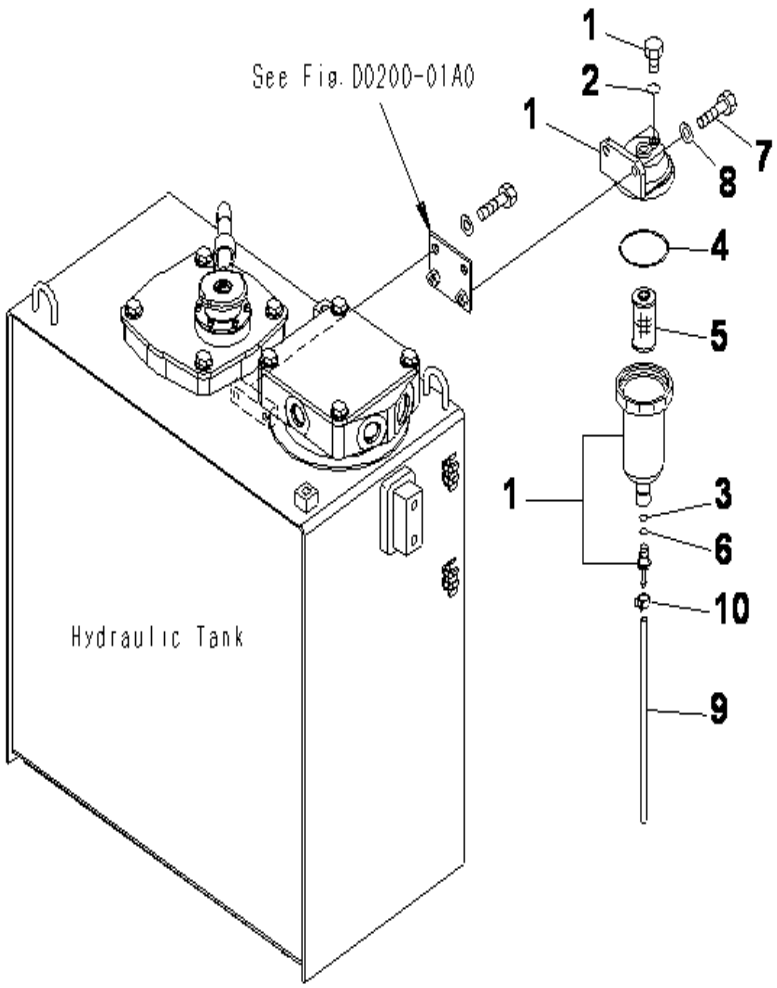

PC130F-7 S/N J10001-UP

FUEL LINE (WATER SEPARATOR) (POOR FUEL ARRANGE SPEC.)

INDEX	CD	PART NO.	DESCRIPTION	QTY	SERIAL NO.
1		22U-04-21131	WATER SEPARATOR.....	1	J10001-UP
2		07000-11006	.O-RING.....	1	J10001-UP
3		07000-11007	.O-RING.....	1	J10001-UP
4		07000-12065	.O-RING.....	1	J10001-UP
5		22U-04-21260	.ELEMENT.....	1	J10001-UP
6		22U-04-21330	.O-RING.....	1	J10001-UP
7		01010-81030	.BOLT.....	1	J10001-UP
8		01643-31032	.WASHER.....	1	J10001-UP
9		07270-00640	TUBE.....	1	J10001-UP
10		07285-00080	CLIP.....	1	J10001-UP

Ref :D0200-02A0 Page :090030

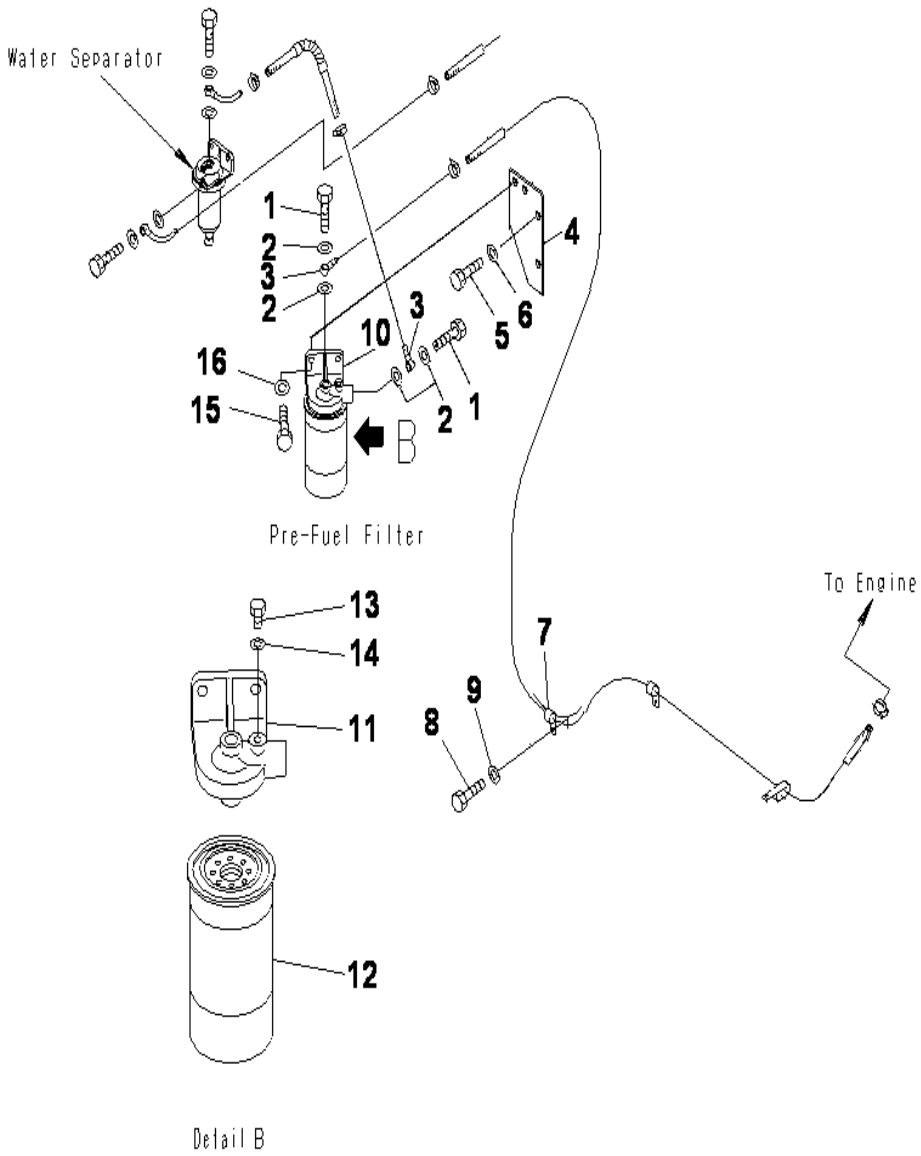

PC130F-7 S/N J10001-UP

FUEL LINE (WATER SEPARATOR)(FUEL FILTER)

INDEX	CD	PART NO.	DESCRIPTION	QTY	SERIAL NO.
1		205-04-62150	JOINT	2	J10001-UP
2		07005-01412	GASKET	4	J10001-UP
3		07206-31014	JOINT	2	J10001-UP
4		203-04-71310	BRACKET	1	J10001-UP
5		01010-81230	BOLT	1	J10001-UP
6		01643-31232	WASHER	1	J10001-UP
7		04435-51912	CLIP	1	J10001-UP
8		01010-81225	BOLT	1	J10001-UP
9		01643-31232	WASHER	1	J10001-UP
10		600-311-9101	FUEL-FILTER	1	J10001-UP
11		613-87-16110	.CAP	1	J10001-UP
12		600-311-9121	.CARTRIDGE	1	J10001-UP
13		6110-73-6231	.PLUG	1	J10001-UP
14		07005-00812	.GASKET	1	J10001-UP
15		01010-81030	BOLT	2	J10001-UP
16		01643-31032	WASHER	2	J10001-UP

Ref :D0200-03A0 Page :090040

ELECTRICAL SYSTEM

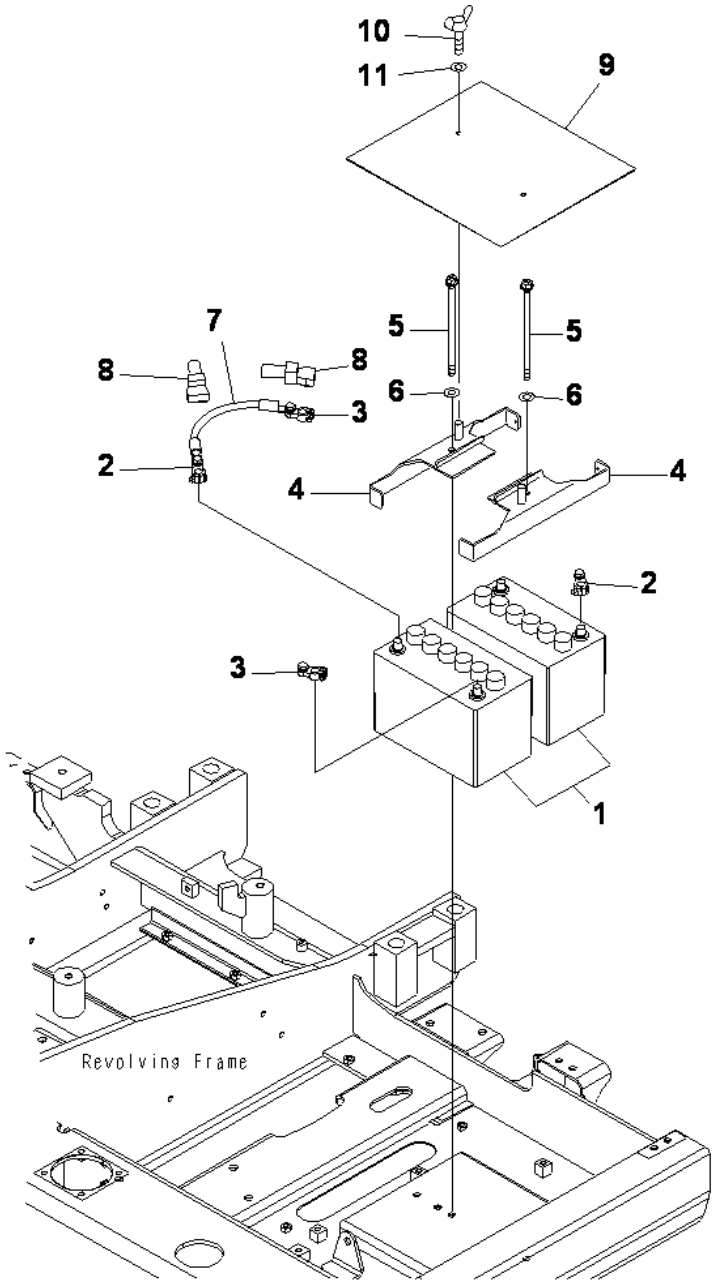

PC130F-7 S/N J10001-UP

BATTERY

INDEX	CD	PART NO.	DESCRIPTION	QTY	SERIAL NO.
1		08001-0095D	BATTERY, WET	2	J10001-UP
2		08000-00000	TERMINAL.(+)	2	J10001-UP
3		08000-00001	TERMINAL.(-)	2	J10001-UP
4		203-06-67510	HOLDER	2	J10001-UP
5		22U-06-21130	BOLT	2	J10001-UP
6		01643-31232	WASHER	2	J10001-UP
7		08028-62035	CABLE	1	J10001-UP
8		08038-42009	CAP	2	J10001-UP
9		203-06-71380	COVER	1	J10001-UP
10		01434-00820	BOLT, WING	2	J10001-UP
11		01643-30823	WASHER	2	J10001-UP

Ref :E0100-01A0 Page :120010

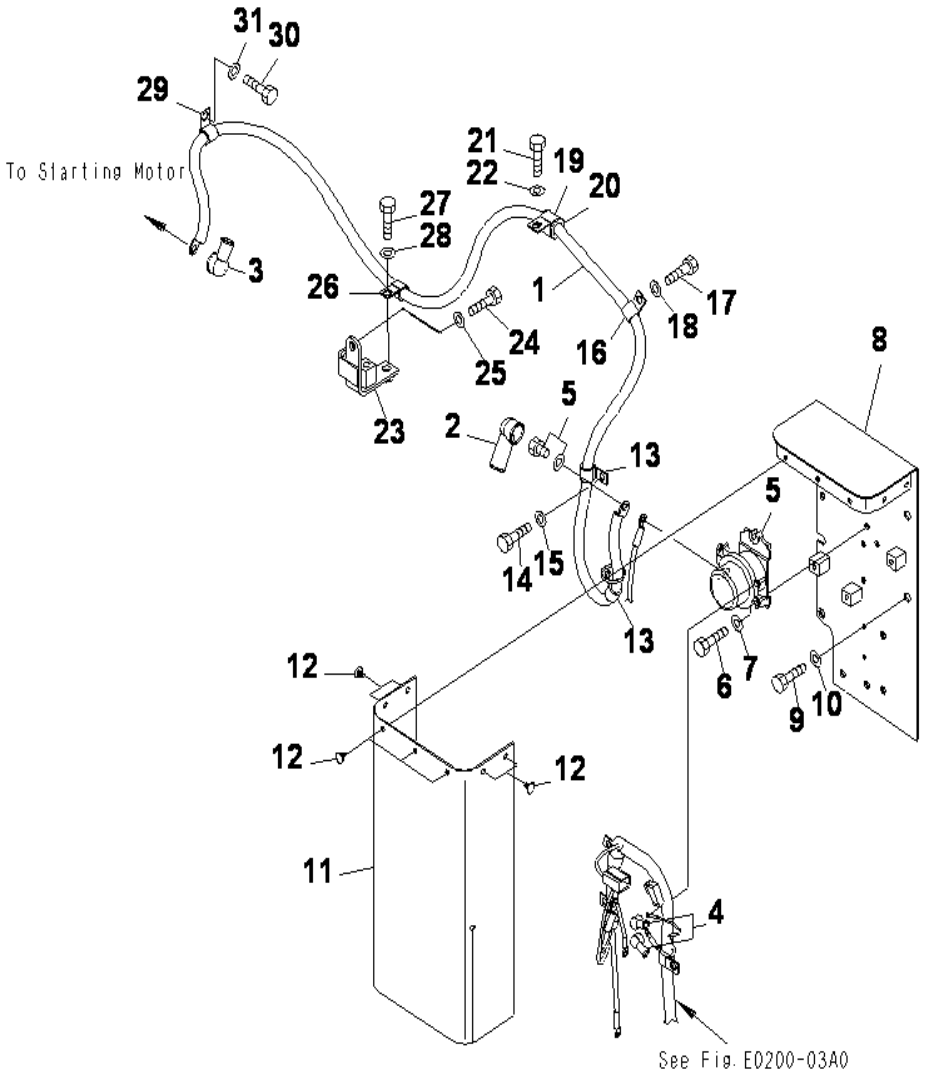

PC130F-7 S/N J10001-UP

WIRING (STARTING HARNESS) (HARNESS AND CLIP)

INDEX	CD	PART NO.	DESCRIPTION	QTY	SERIAL NO.
1		203-06-71120	CABLE	1	J10001-UP
2		08038-00035	CAP	1	J10001-UP
3		203-06-71420	CAP	1	J10001-UP
4		08038-00519	CAP	2	J10001-UP
5		08088-30000	SWITCH	1	J10001-UP
6		01010-80830	BOLT	2	J10001-UP
7		01643-30823	WASHER	2	J10001-UP
8		203-06-71212	BRACKET	1	J10001-UP
9		01010-81230	BOLT	4	J10001-UP
10		01643-31232	WASHER	4	J10001-UP
11		203-06-71281	SHEET	1	J10001-UP
12		20T-54-74510	CAP	7	J10001-UP
13		04434-51710	CLIP	2	J10001-UP
14		01010-81020	BOLT	2	J10001-UP
15		01643-31032	WASHER	2	J10001-UP
16		04434-51712	CLIP	1	J10001-UP
17		01010-81225	BOLT	1	J10001-UP
18		01643-31232	WASHER	1	J10001-UP
19		04434-52712	CLIP	1	J10001-UP
20		07095-20418	CUSHION	1	J10001-UP
21		01010-81225	BOLT	1	J10001-UP
22		01643-31232	WASHER	1	J10001-UP
23		203-979-7142	BRACKET	1	J10001-UP
24		01010-81230	BOLT	1	J10001-UP
25		01643-31232	WASHER	1	J10001-UP
26		04434-51712	CLIP	1	J10001-UP
27		01010-81225	BOLT	1	J10001-UP
28		01643-31232	WASHER	1	J10001-UP
29		04434-51712	CLIP	1	J10001-UP
30		01010-81225	BOLT	1	J10001-UP
31		01643-31232	WASHER	1	J10001-UP

Ref :E0200-01A0 Page :120020

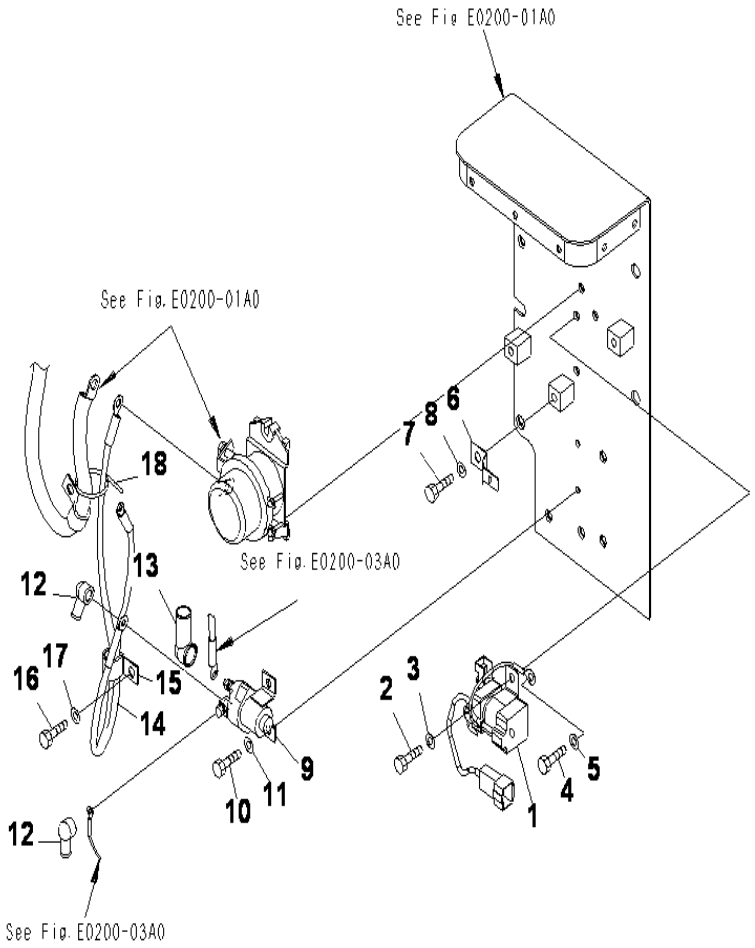

PC130F-7 S/N J10001-UP

WIRING (STARTING HARNESS) (RELAY AND HARNESS)

INDEX	CD	PART NO.	DESCRIPTION	QTY	SERIAL NO.
1		600-815-8941	RELAY	1	J10001-UP
2		01010-80816	BOLT	2	J10001-UP
3		01643-30823	WASHER	2	J10001-UP
4		01010-80816	BOLT	1	J10001-UP
5		01643-30823	WASHER	1	J10001-UP
6		08053-01510	CLIP	1	J10001-UP
7		01010-81220	BOLT	1	J10001-UP
8		01643-31232	WASHER	1	J10001-UP
9		600-815-2170	SWITCH, HEATER	1	J10001-UP
10		01010-80616	BOLT	2	J10001-UP
11		01643-30623	WASHER	2	J10001-UP
12		08038-00519	CAP	2	J10001-UP
13		08038-06031	CAP	1	J10001-UP
14		203-06-71131	CABLE	1	J10001-UP
15		04434-51810	CLIP	1	J10001-UP
16		01010-81020	BOLT	1	J10001-UP
17		01643-31032	WASHER	1	J10001-UP
18		08034-20536	BAND	1	J10001-UP

Ref :E0200-02A0 Page :120030

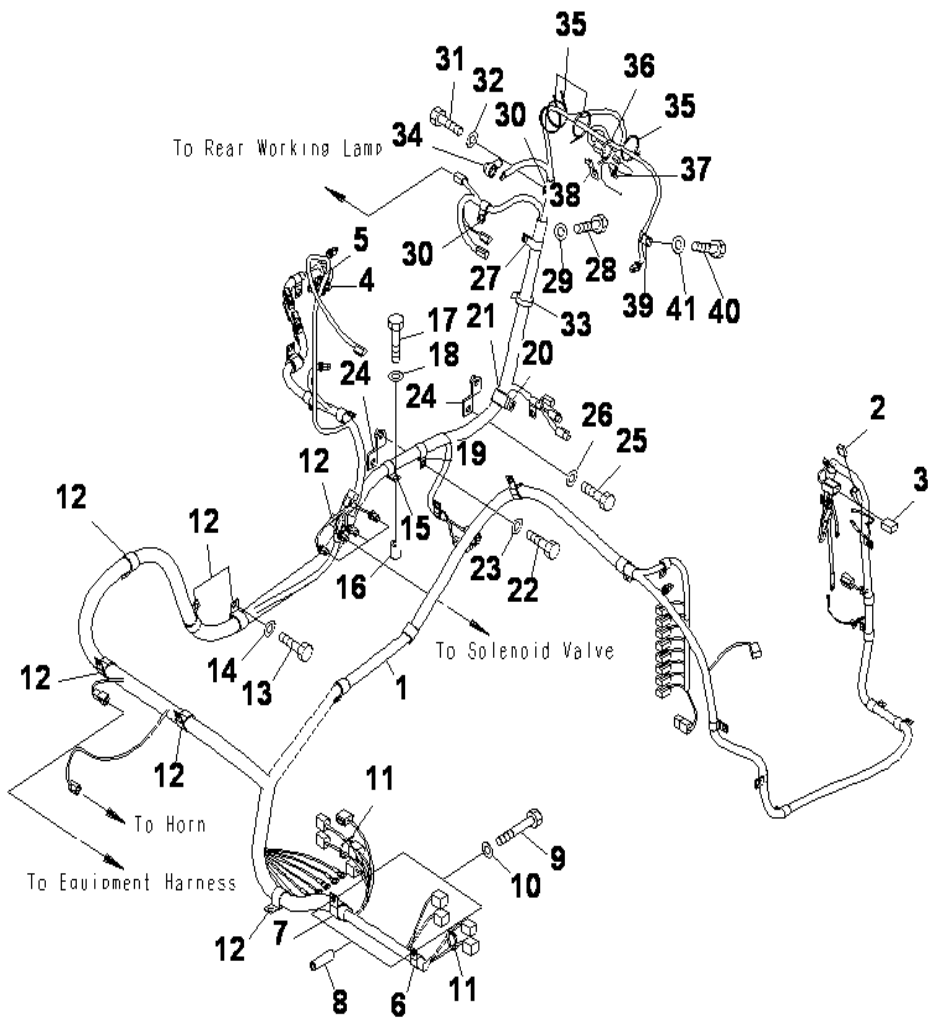

PC130F-7 S/N J10001-UP

WIRING (MAIN HARNESS) (HARNESS AND CLIP)

INDEX	CD	PART NO.	DESCRIPTION	QTY	SERIAL NO.
1		203-06-71712	WIRING HARNESS	1	J10001-UP
2		20Y-06-31660	.FUSIBLE LINK.30A	1	J10001-UP
3		22U-06-11270	.FUSIBLE LINK.65A	1	J10001-UP
4		20Y-62-22790	.BAND.RED	1	J10001-UP
5		20Y-62-22830	.BAND.WHITE	1	J10001-UP
6		04434-52312	CLIP	1	J10001-UP
7		04434-53412	CLIP	1	J10001-UP
8		195-97-93570	COLLAR	2	J10001-UP
9		01010-81290	BOLT	2	J10001-UP
10		01643-31232	WASHER	2	J10001-UP
11		08034-20519	BAND	2	J10001-UP
12		04434-53412	CLIP	7	J10001-UP
13		01010-81225	BOLT	7	J10001-UP
14		01643-31232	WASHER	7	J10001-UP
15		04434-52312	CLIP	1	J10001-UP
16		20Y-03-11220	COLLAR	1	J10001-UP
17		01010-81265	BOLT	1	J10001-UP
18		01643-31232	WASHER	1	J10001-UP
19		04434-52312	CLIP	1	J10001-UP
20		04434-53212	CLIP	1	J10001-UP
21		07095-20523	CUSHION	1	J10001-UP
22		01010-81225	BOLT	2	J10001-UP
23		01643-31232	WASHER	2	J10001-UP
24		203-06-71271	BRACKET	2	J10001-UP
25		01010-81225	BOLT	2	J10001-UP
26		01643-31232	WASHER	2	J10001-UP
27		04434-52312	CLIP	1	J10001-UP
28		01010-81225	BOLT	1	J10001-UP
29		01643-31232	WASHER	1	J10001-UP
30		04434-51412	CLIP	2	J10001-UP
31		01010-81225	BOLT	2	J10001-UP
32		01643-31232	WASHER	2	J10001-UP
33		08034-20536	BAND	1	J10001-UP
34		08038-02027	CAP	1	J10001-UP
35		08034-20536	BAND	4	J10001-UP
36		08034-20536	BAND	1	J10001-UP
37		04434-50508	CLIP	1	J10001-UP
38		08053-01510	CLIP	1	J10001-UP
39		04434-51012	CLIP	1	J10001-UP
40		01010-81225	BOLT	1	J10001-UP
41		01643-31232	WASHER	1	J10001-UP

Ref :E0200-03A2 Page :120040

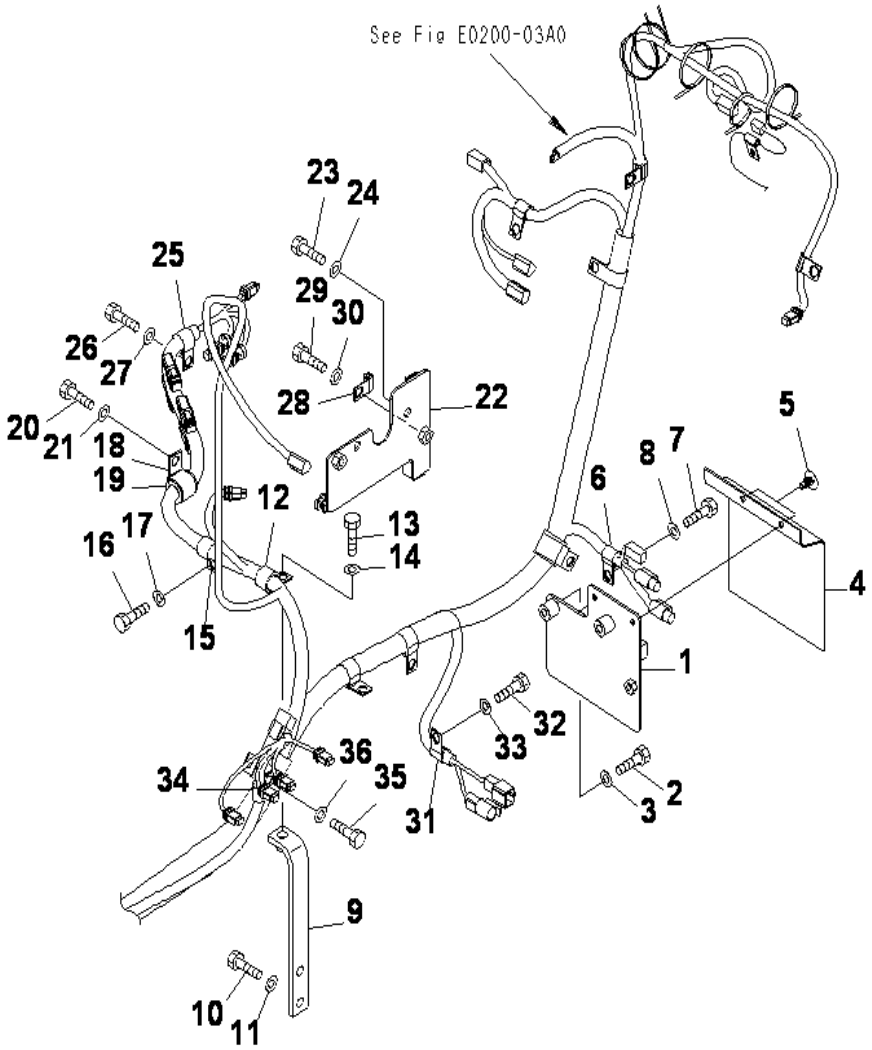

WIRING (MAIN HARNESS) (CLIP) (1/3)

INDEX	CD	PART NO.	DESCRIPTION	QTY	SERIAL NO.
1		203-06-71311	BRACKET	1	J10001-UP
2		01010-81040	BOLT	2	J10001-UP
3		01643-31032	WASHER	2	J10001-UP
4		203-06-71361	SHEET	1	J10001-UP
5		20T-54-74510	CAP	2	J10001-UP
6		04434-51412	CLIP	1	J10001-UP
7		01010-81225	BOLT	1	J10001-UP
8		01643-31232	WASHER	1	J10001-UP
9		203-06-71321	BRACKET	1	J10001-UP
10		01010-81230	BOLT	2	J10001-UP
11		01643-31232	WASHER	2	J10001-UP
12		04434-52312	CLIP	1	J10001-UP
13		01010-81225	BOLT	1	J10001-UP
14		01643-31232	WASHER	1	J10001-UP
15		04434-51912	CLIP	1	J10001-UP
16		01010-81225	BOLT	1	J10001-UP
17		01643-31232	WASHER	1	J10001-UP
18		04434-52712	CLIP	1	J10001-UP
19		07095-20419	CUSHION	1	J10001-UP
20		01010-81225	BOLT	1	J10001-UP
21		01643-31232	WASHER	1	J10001-UP
22		203-06-71231	BRACKET	1	J10001-UP
23		01010-81020	BOLT	2	J10001-UP
24		01643-31032	WASHER	2	J10001-UP
25		04434-51912	CLIP	1	J10001-UP
26		01010-81225	BOLT	1	J10001-UP
27		01643-31232	WASHER	1	J10001-UP
28		04434-50612	CLIP	1	J10001-UP
29		01010-81225	BOLT	1	J10001-UP
30		01643-31232	WASHER	1	J10001-UP
31		04434-51412	CLIP	1	J10001-UP
32		01010-81225	BOLT	1	J10001-UP
33		01643-31232	WASHER	1	J10001-UP
34		04434-51412	CLIP	1	J10001-UP
35		01010-81225	BOLT	1	J10001-UP
36		01643-31232	WASHER	1	J10001-UP

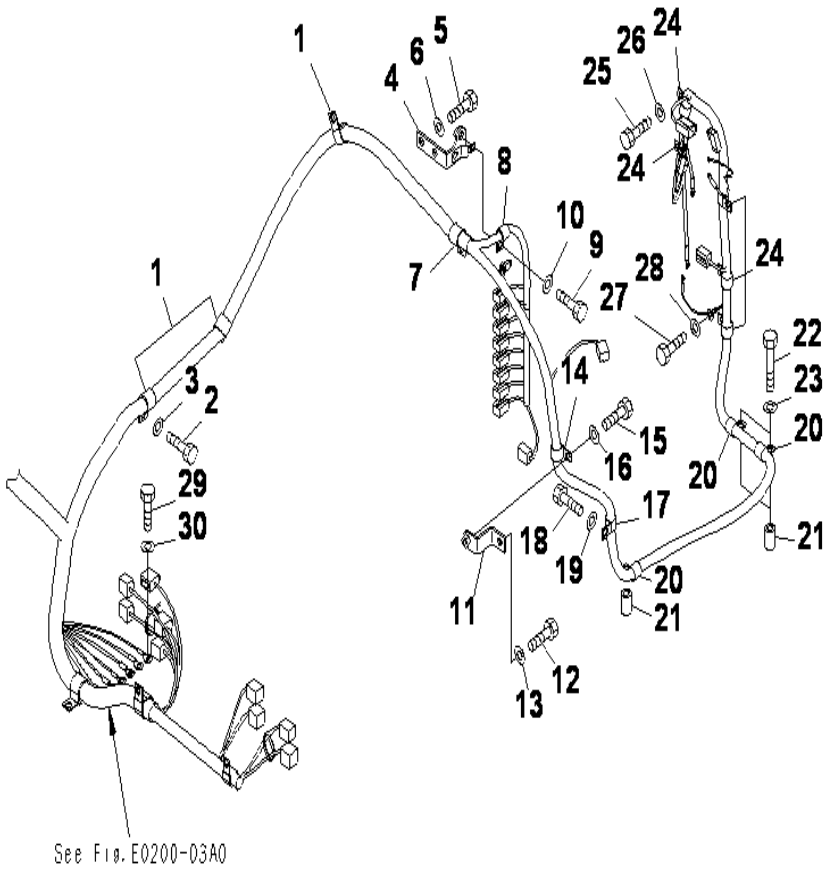

PC130F-7 S/N J10001-UP

WIRING (MAIN HARNESS) (CLIP) (2/3)

INDEX	CD	PART NO.	DESCRIPTION	QTY	SERIAL NO.
1		04434-52712	CLIP	3	J10001-UP
2		01010-81225	BOLT	3	J10001-UP
3		01643-31232	WASHER	3	J10001-UP
4		203-06-71351	BRACKET	1	J10001-UP
5		01010-81230	BOLT	2	J10001-UP
6		01643-31232	WASHER	2	J10001-UP
7		04434-52712	CLIP	1	J10001-UP
8		04434-51712	CLIP	1	J10001-UP
9		01010-81225	BOLT	1	J10001-UP
10		01643-31232	WASHER	1	J10001-UP
11		203-06-71430	BRACKET	1	J10001-UP
12		01010-81230	BOLT	1	J10001-UP
13		01643-31232	WASHER	1	J10001-UP
14		04434-51912	CLIP	1	J10001-UP
15		01010-81230	BOLT	1	J10001-UP
16		01643-31232	WASHER	1	J10001-UP
17		04434-51912	CLIP	1	J10001-UP
18		01010-81225	BOLT	1	J10001-UP
19		01643-31232	WASHER	1	J10001-UP
20		04434-51912	CLIP	3	J10001-UP
21		20Y-03-11220	COLLAR	3	J10001-UP
22		01010-81260	BOLT	3	J10001-UP
23		01643-31232	WASHER	3	J10001-UP
24		04434-51910	CLIP	5	J10001-UP
25		01010-81020	BOLT	5	J10001-UP
26		01643-31032	WASHER	5	J10001-UP
27		01010-81020	BOLT	1	J10001-UP
28		01643-31032	WASHER	1	J10001-UP
29		01010-81020	BOLT	6	J10001-UP
30		01643-31032	WASHER	6	J10001-UP

Ref :E0200-05A0 Page :120060

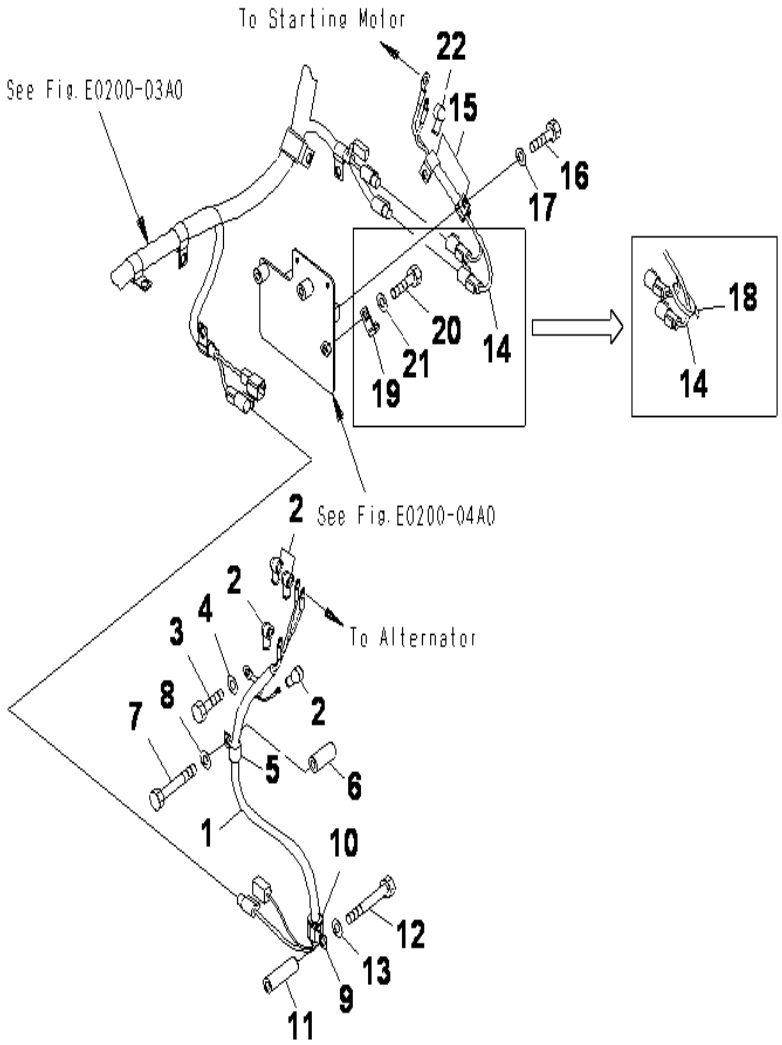

WIRING (MAIN HARNESS) (CLIP) (3/3)

INDEX	CD	PART NO.	DESCRIPTION	QTY	SERIAL NO.
1		203-06-71142	WIRING HARNESS	1	J10001-UP
2		08038-00519	CAP	4	J10001-UP
3		01010-81020	BOLT	1	J10001-UP
4		01643-31032	WASHER	1	J10001-UP
5		04434-51410	CLIP	1	J10001-UP
6		6152-51-5520	SPACER	1	J10001-UP
7		01010-81070	BOLT	1	J10001-UP
8		01643-31032	WASHER	1	J10001-UP
9		04434-52112	CLIP	1	J10001-UP
10		07095-20314	CUSHION	1	J10001-UP
11		195-97-93570	COLLAR	1	J10001-UP
12		01010-81295	BOLT	1	J10001-UP
13		01643-31232	WASHER	1	J10001-UP
14		203-06-71152	CABLE	1	J10001-UP
15		04434-51410	CLIP	2	J10001-UP
16		01010-81020	BOLT	2	J10001-UP
17		01643-31032	WASHER	2	J10001-UP
18		08034-20519	BAND	1	J10001-UP
22		08038-00519	CAP	1	J10001-UP

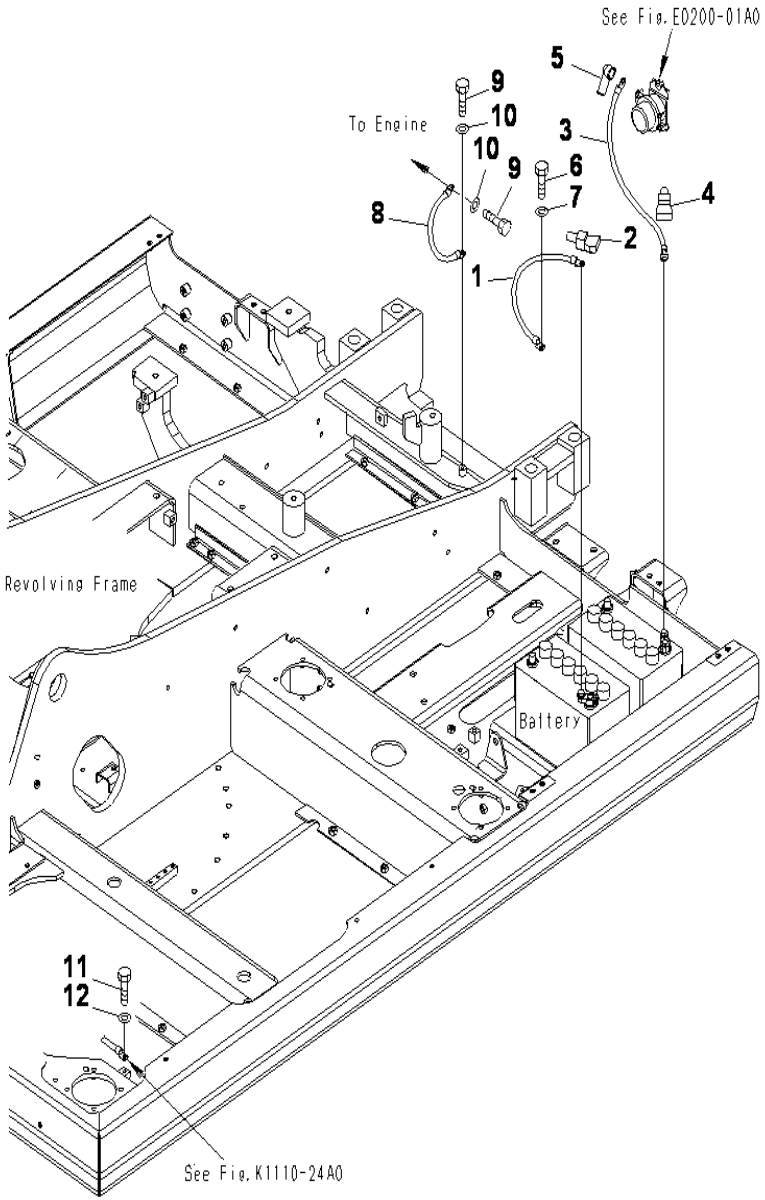

PC130F-7 S/N J10001-UP

WIRING (BATTERY HARNESS AND GROUND)

INDEX	CD	PART NO.	DESCRIPTION	QTY	SERIAL NO.
1		08028-42040	CABLE	1	J10001-UP
2		08038-22009	CAP	1	J10001-UP
3		08028-CB050	CABLE	1	J10001-UP
4		08038-42009	CAP	1	J10001-UP
5		08038-06031	CAP	1	J10001-UP
6		01010-81020	BOLT	1	J10001-UP
7		01643-31032	WASHER	1	J10001-UP
8		08028-42030	ARTH	1	J10001-UP
9		01010-81016	BOLT	2	J10001-UP
10		01643-31032	WASHER	2	J10001-UP
11		01010-81016	BOLT	1	J10001-UP
12		01643-31032	WASHER	1	J10001-UP

Ref :E0200-07A0 Page :120080

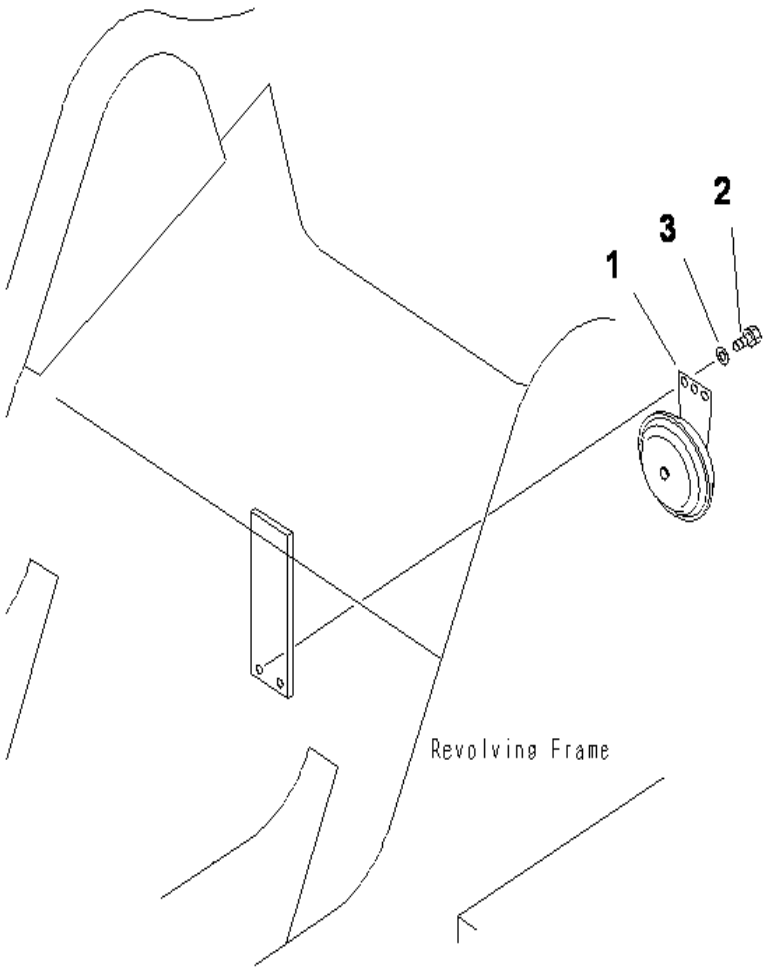

PC130F-7 S/N J10001-UP

HORN

INDEX	CD	PART NO.	DESCRIPTION	QTY	SERIAL NO.
1		08160-72400	HORN	1	J10001-UP
2		01010-80820	BOLT	2	J10001-UP
3		01643-30823	WASHER	2	J10001-UP

HYDRAULIC SYSTEM

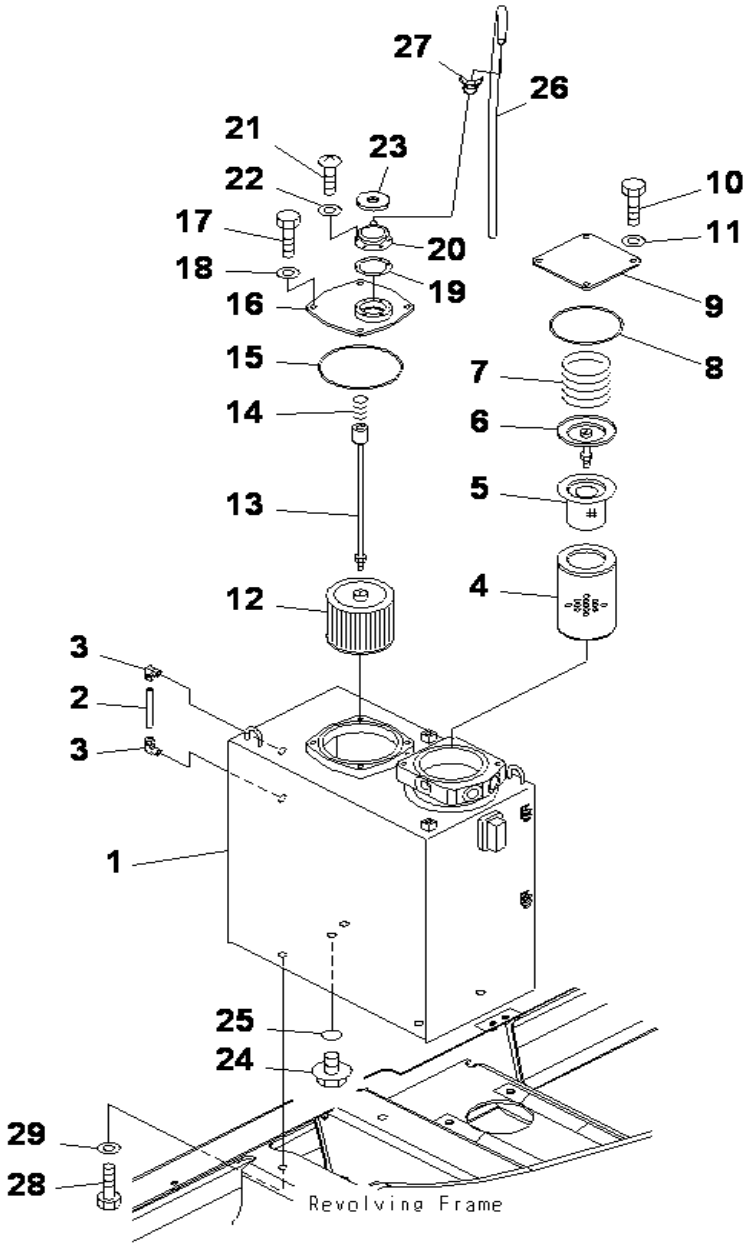

PC130F-7 S/N J10001-UP

HYDRAULIC TANK

INDEX	CD	PART NO.	DESCRIPTION	QTY	SERIAL NO.
1		203-60-71111	TANK	1	J10001-UP
2		203-60-31160	TUBE	1	J10001-UP
3		203-60-31100	ELBOW ASS'Y	2	J10001-UP
4		07063-51100	ELEMENT	1	J10001-UP
5		203-60-52260	STRAINER	1	J10001-UP
6		203-60-52250	VALVE ASS'Y	1	J10001-UP
7		175-60-27340	SPRING	1	J10001-UP
8		07000-15155	O-RING	1	J10001-UP
9		203-60-61130	COVER	1	J10001-UP
10		01010-81225	BOLT	4	J10001-UP
11		01643-31232	WASHER	4	J10001-UP
12		20Y-60-21311	STRAINER	1	J10001-UP
13		203-60-61161	ROD	1	J10001-UP
14		12R-60-11230	SPRING	1	J10001-UP
15		07000-15180	O-RING	1	J10001-UP
16		203-60-61240	COVER	1	J10001-UP
17		01010-81225	BOLT	4	J10001-UP
18		01643-31232	WASHER	4	J10001-UP
19		20Y-60-21340	GASKET	1	J10001-UP
20		208-60-71180	FILLER NECK	1	J10001-UP
21		01252-70516	SCREW	6	J10001-UP
22		01601-20513	WASHER	6	J10001-UP
23		20Y-60-21440	CAP	1	J10001-UP
		20Y-60-21470	.ELEMENT	1	J10001-UP
24		07044-12412	PLUG	1	J10001-UP
25		07002-02434	O-RING	1	J10001-UP
26		07270-61410	TUBE	1	J10001-UP
27		07285-00155	CLIP	1	J10001-UP
28		01010-81635	BOLT	4	J10001-UP
29		01643-31645	WASHER	4	J10001-UP

Ref :H0110-01A0 Page :150010

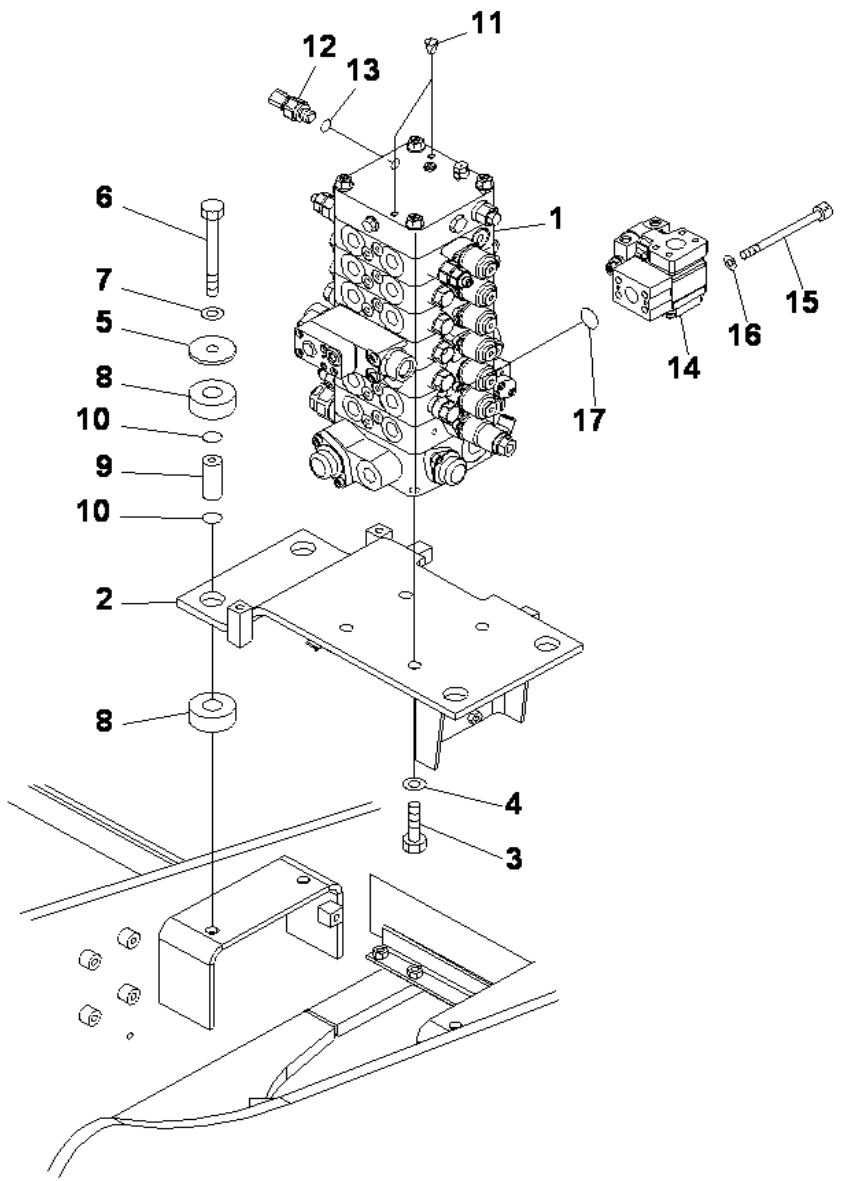

PC130F-7 S/N J10001-UP

MAIN VALVE (CONNECTING PARTS)(1/2)

INDEX	CD	PART NO.	DESCRIPTION	QTY	SERIAL NO.
1		723-56-11501	CONTROL VALVE	1	J10001-UP
2		203-62-71521	BRACKET	1	J10001-UP
3		01010-81640	BOLT	4	J10001-UP
4		01643-31645	WASHER	4	J10001-UP
5		203-62-61572	PLATE	4	J10001-UP
6		01011-81600	BOLT	4	J10001-UP
7		01643-31645	WASHER	4	J10001-UP
8		203-54-21110	CUSHION	8	J10001-UP
9		203-62-61581	SPACER	4	J10001-UP
10		07000-13025	O-RING	8	J10001-UP
11		07049-01012	PLUG	2	J10001-UP
12		786-19-31650	SENSOR	1	J10001-UP
13		07002-11823	O-RING	1	J10001-UP
14		(702-21-09230)	VALVE ASSY	1	J10001-UP
15		702-21-55350	BOLT	4	J10001-UP
16		01643-51032	WASHER	4	J10001-UP
17		07000-13032	O-RING	1	J10001-UP

Ref :H0120-01A5 Page :150020

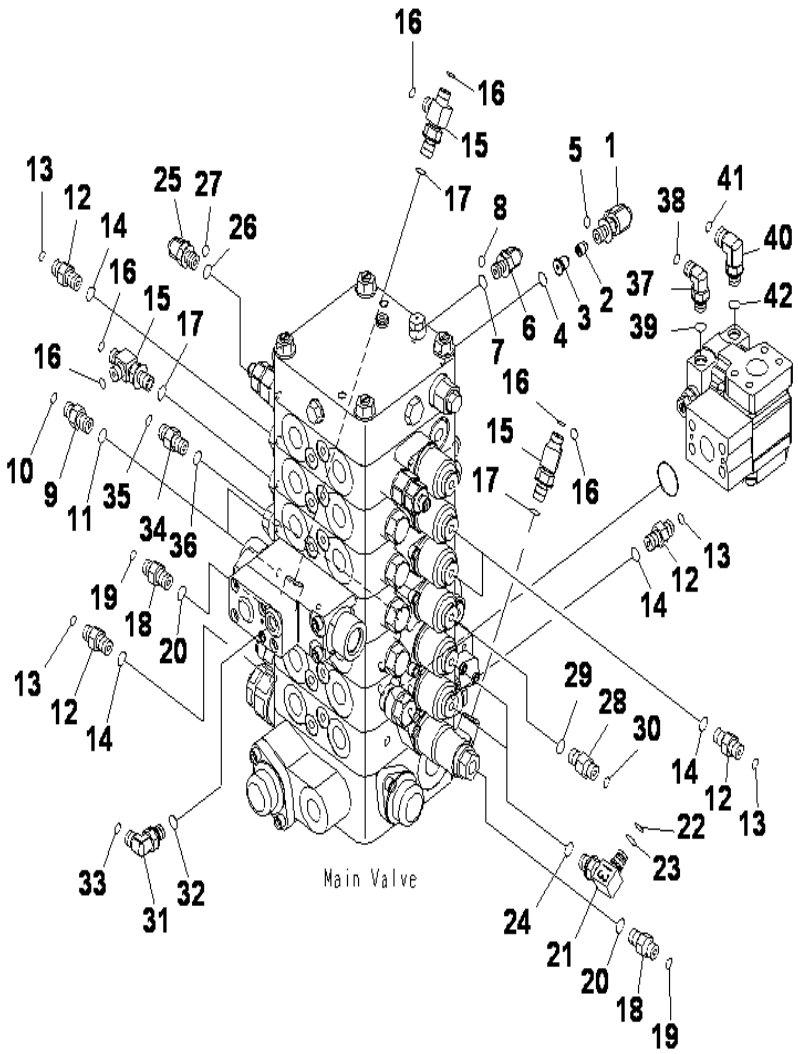

PC130F-7 S/N J10001-UP

MAIN VALVE (CONNECTING PARTS)(2/2)

INDEX	CD	PART NO.	DESCRIPTION	QTY	SERIAL NO.
		21K-60-71230	VALVE ASSY	1	J10001-UP
1		21K-62-72730	.ELBOW	1	J10001-UP
2		21W-97-33420	.POPPET	1	J10001-UP
3		21Y-62-11591	.PLUG	1	J10001-UP
4		07002-11423	O-RING	1	J10001-UP
5		02896-11009	O-RING	1	J10001-UP
6		02782-10210	ELBOW	1	J10001-UP
7		07002-11423	O-RING	1	J10001-UP
8		02896-11008	O-RING	1	J10001-UP
9		20Y-62-45610	NIPPLE	2	J10001-UP
10		02896-11008	O-RING	2	J10001-UP
11		07002-11423	O-RING	2	J10001-UP
12		02781-0021D	UNION	5	J10001-UP
13		02896-11008	O-RING	5	J10001-UP
14		07002-11423	O-RING	5	J10001-UP
15		11Y-62-12330	ELBOW	3	J10001-UP
16		02896-11008	O-RING	6	J10001-UP
17		07002-11423	O-RING	3	J10001-UP
18		203-62-71130	NIPPLE	2	J10001-UP
19		02896-11008	O-RING	2	J10001-UP
20		07002-11423	O-RING	2	J10001-UP
21		22U-62-22480	ELBOW	2	J10001-UP
22		201-60-11390	.O-RING	2	J10001-UP
23		20Y-62-19560	.O-RING	2	J10001-UP
24		07002-11423	O-RING	2	J10001-UP
25		02782-10210	ELBOW	1	J10001-UP
26		07002-11423	O-RING	1	J10001-UP
27		02896-11008	O-RING	1	J10001-UP
28		02781-0021D	UNION	1	J10001-UP
29		07002-11423	O-RING	1	J10001-UP
30		02896-11008	O-RING	1	J10001-UP
31		02782-10311	ELBOW	1	J10001-UP
32		07002-11423	O-RING	1	J10001-UP
33		02896-11009	O-RING	1	J10001-UP
34		02781-0021D	UNION	1	J10001-UP
35		02896-11008	O-RING	1	J10001-UP
36		07002-11423	O-RING	1	J10001-UP
37		02782-10210	ELBOW	1	J10001-UP
38		02896-11008	O-RING	1	J10001-UP
39		07002-11423	O-RING	1	J10001-UP
40		02782-10311	ELBOW	1	J10001-UP
41		02896-11009	O-RING	1	J10001-UP
42		07002-11423	O-RING	1	J10001-UP

Ref :H0120-02A5 Page :150030

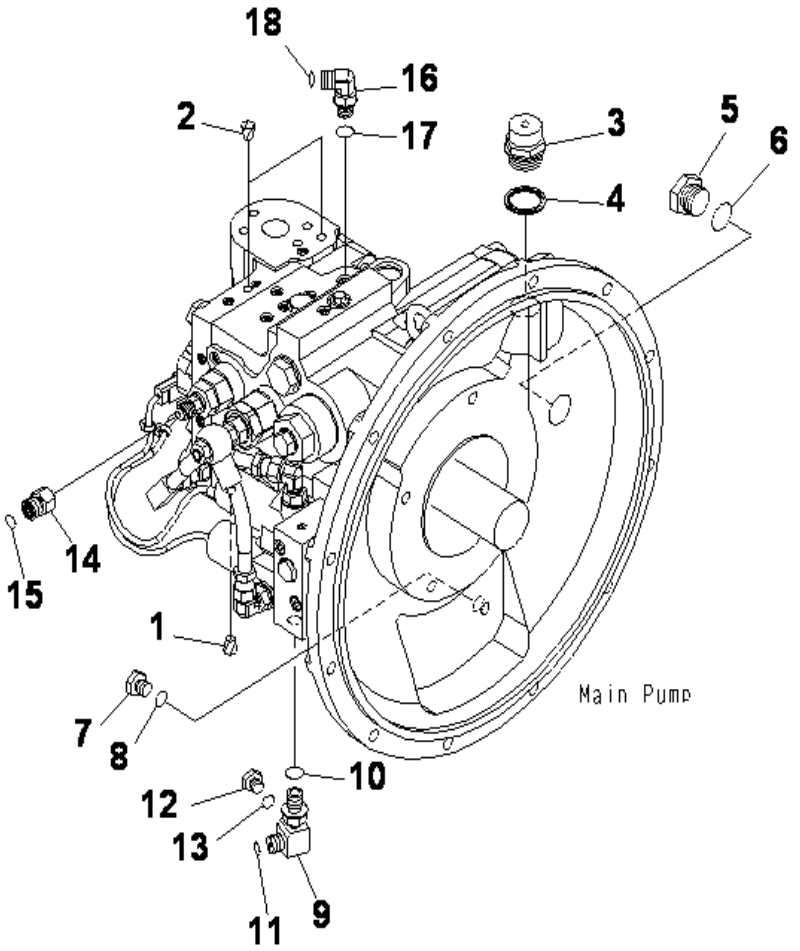

PC130F-7 S/N J10001-UP

MAIN PUMP (CONNECTING PARTS)

INDEX	CD	PART NO.	DESCRIPTION	QTY	SERIAL NO.
1		07049-01215	PLUG	1	J10001-UP
2		07049-01012	PLUG	2	J10001-UP
3		07030-03034	BREATHER	1	J10001-UP
4		07005-03016	GASKET	1	J10001-UP
5		07040-12412	PLUG	1	J10001-UP
6		07002-02434	O-RING	1	J10001-UP
7		07040-11209	PLUG	1	J10001-UP
8		07002-11223	O-RING	1	J10001-UP
9		11Y-62-12220	ELBOW	1	J10001-UP
10		07002-11423	O-RING	1	J10001-UP
11		02896-11008	O-RING	1	J10001-UP
12		07040-11007	PLUG	1	J10001-UP
13		07002-11023	O-RING	1	J10001-UP
14		203-62-71120	JOINT	1	J10001-UP
15		02896-11009	O-RING	1	J10001-UP
16		02782-10210	ELBOW	1	J10001-UP
17		07002-11423	O-RING	1	J10001-UP
18		02896-11008	O-RING	1	J10001-UP

Ref :H0210-01A0 Page :150040

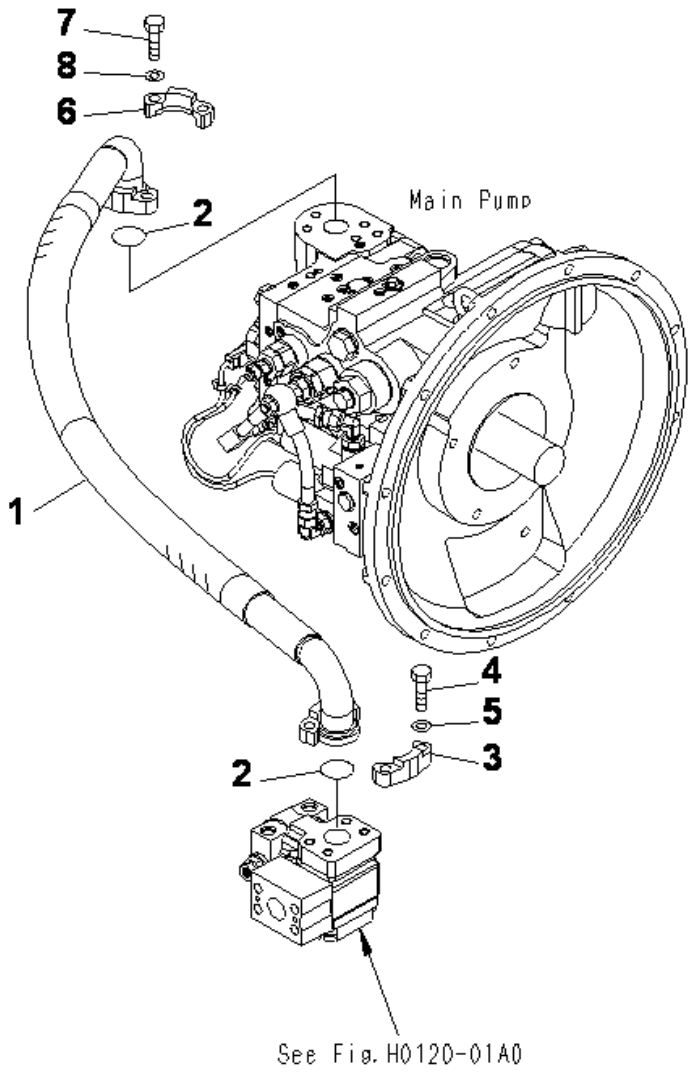

PC130F-7 S/N J10001-UP

DELIVERY LINE

INDEX	CD	PART NO.	DESCRIPTION	QTY	SERIAL NO.
1		203-62-71320	HOSE, 990MM.....	1	J10001-UP
2		07000-13032	O RING.....	2	J10001-UP
3		07371-31049	FLANGE.....	2	J10001-UP
4		07372-21035	BOLT.....	4	J10001-UP
5		01643-51032	WASHER.....	4	J10001-UP
6		07371-31049	FLANGE.....	2	J10001-UP
7		07372-21035	BOLT.....	4	J10001-UP
8		01643-51032	WASHER.....	4	J10001-UP

Ref :H0312-01A0 Page :150060

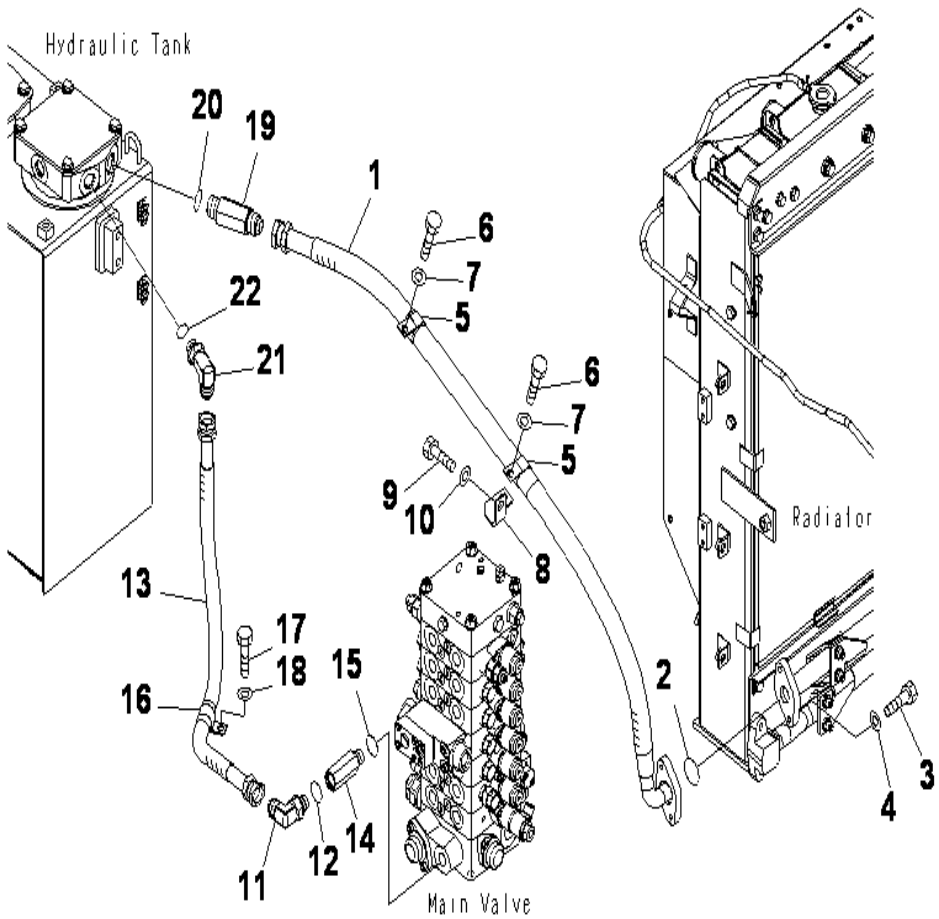

OIL COOLER LINE

INDEX	CD	PART NO.	DESCRIPTION	QTY	SERIAL NO.
1		203-62-71341	HOSE, 1350MM	1	J10001-UP
2		07000-13032	O-RING	1	J10001-UP
3		01010-81040	BOLT	2	J10001-UP
4		01643-31032	WASHER	2	J10001-UP
5		281-01-13180	CLIP	2	J10001-UP
6		01010-81225	BOLT	2	J10001-UP
7		01643-31232	WASHER	2	J10001-UP
8		203-62-72110	BRACKET	1	J10001-UP
9		01010-81225	BOLT	1	J10001-UP
10		01643-31232	WASHER	1	J10001-UP
11		07235-10628	ELBOW	1	J10001-UP
12		07002-12434	O-RING	1	J10001-UP
13		07102-20608	HOSE	1	J10001-UP
14		203-62-61410	JOINT	1	J10001-UP
15		07002-12434	O-RING	1	J10001-UP
16		04434-52712	CLIP	1	J10001-UP
17		01010-81225	BOLT	1	J10001-UP
18		01643-31232	WASHER	1	J10001-UP
19		209-64-11920	UNION	1	J10001-UP
20		07002-13334	O-RING	1	J10001-UP
21		203-62-61230	ELBOW	1	J10001-UP
22		07002-12434	O-RING	1	J10001-UP

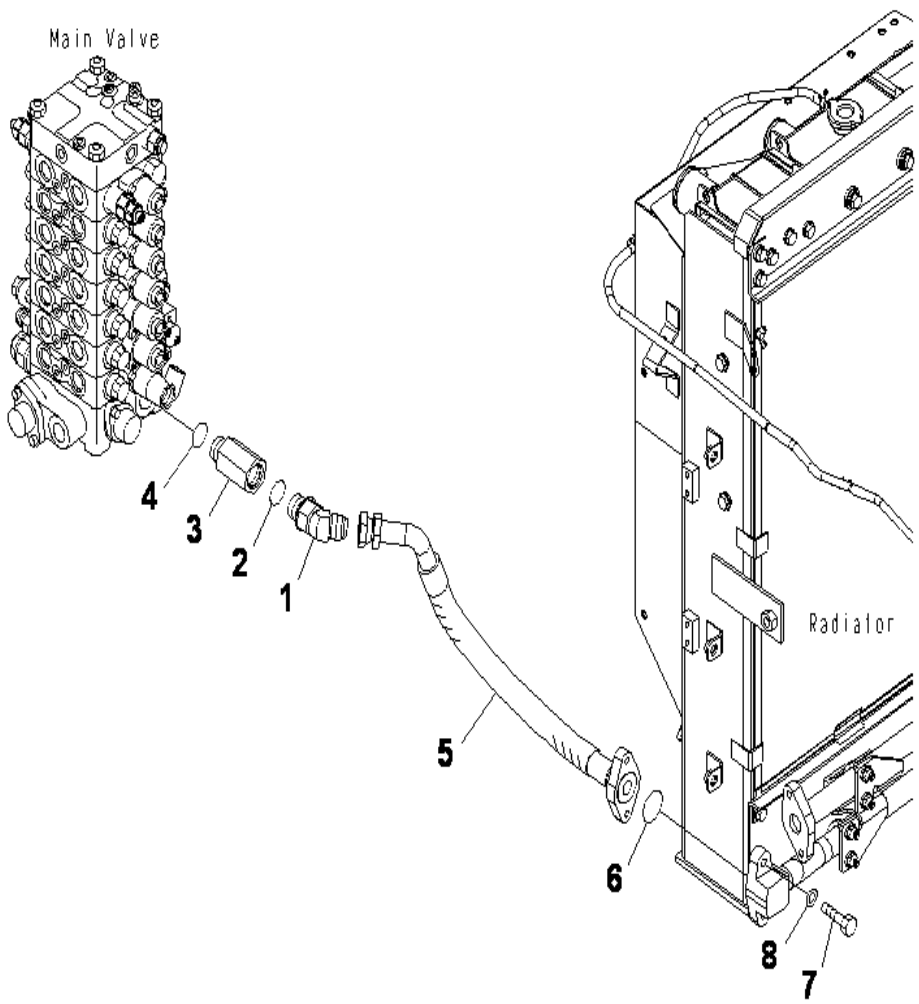

PC130F-7 S/N J10001-UP

RETURN LINE

INDEX	CD	PART NO.	DESCRIPTION	QTY	SERIAL NO.
1		203-62-64540	ELBOW.....	1	J10001-UP
2		07002-13334	O-RING.....	1	J10001-UP
3		203-62-63740	JOINT.....	1	J10001-UP
4		07002-13334	O-RING.....	1	J10001-UP
5		203-62-71331	HOSE, 615MM.....	1	J10001-UP
6		07000-13032	O-RING.....	1	J10001-UP
7		01010-81040	BOLT.....	2	J10001-UP
8		01643-31032	WASHER.....	2	J10001-UP

Ref :H0330-01A0 Page :150080

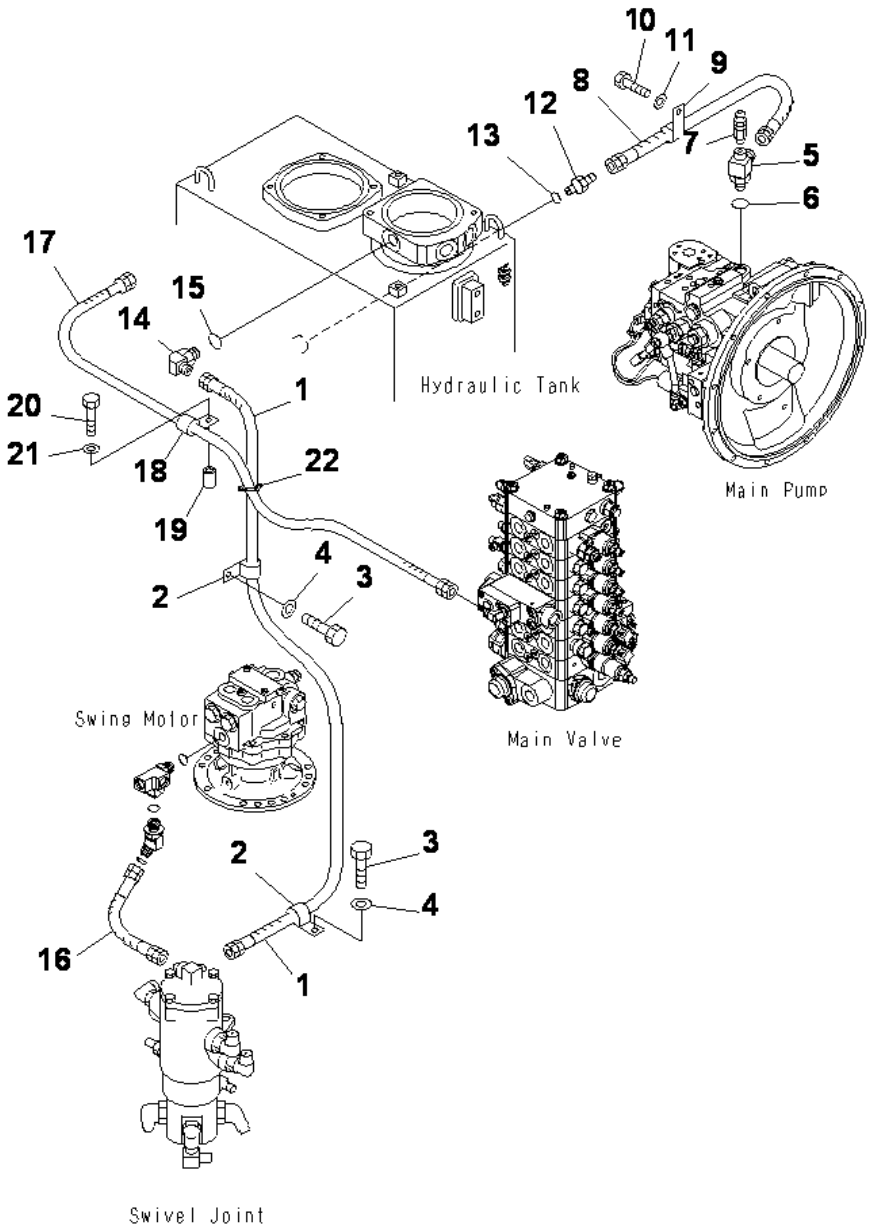

DRAIN LINE (WITH ARM DRIFT PREVENTIVE)

INDEX	CD	PART NO.	DESCRIPTION	QTY	SERIAL NO.
1		209-62-75680	HOSE, 1550MM	1	J10001-UP
2		04434-51812	CLIP	2	J10001-UP
3		01010-81225	BOLT	2	J10001-UP
4		01643-31232	WASHER	2	J10001-UP
5		20Y-62-17710	ELBOW	1	J10001-UP
6		07002-12434	O-RING	1	J10001-UP
7		20B-27-11210	BLEEDER	1	J10001-UP
8		07102-20611	HOSE	1	J10001-UP
9		04434-52712	CLIP	1	J10001-UP
10		01010-81225	BOLT	1	J10001-UP
11		01643-31232	WASHER	1	J10001-UP
12		07230-20628	UNION	1	J10001-UP
13		07002-12434	O-RING	1	J10001-UP
14		07235-10425	ELBOW	1	J10001-UP
15		07002-12434	O-RING	1	J10001-UP
16		07102-20403	HOSE	1	J10001-UP
17		02760-00309	HOSE, 900MM	1	J10001-UP
18		04434-51512	CLIP	1	J10001-UP
19		20Y-03-11220	COLLAR	1	J10001-UP
20		01010-81260	BOLT	1	J10001-UP
21		01643-31232	WASHER	1	J10001-UP
22		08034-20536	BAND	1	J10001-UP

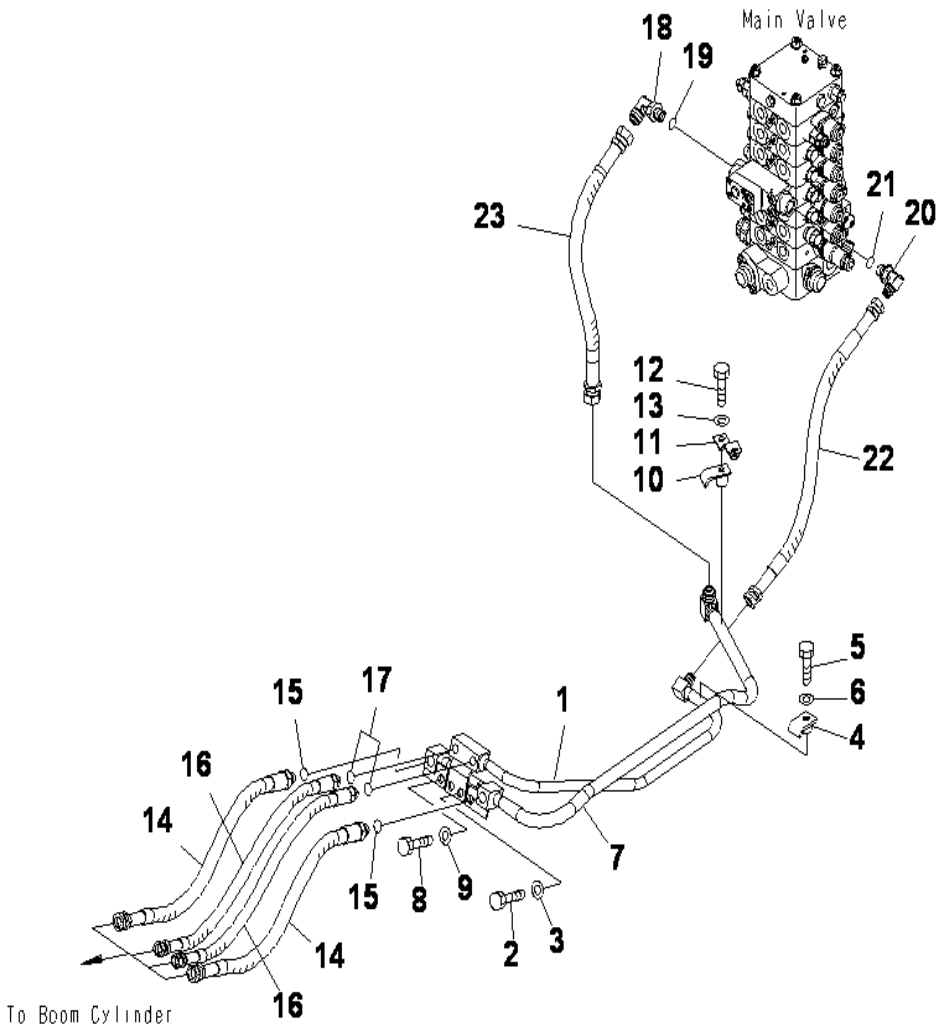

PC130F-7 S/N J10001-UP

BOOM LINE (WITH DRIFT PREVENTIVE)

INDEX	CD	PART NO.	DESCRIPTION	QTY	SERIAL NO.
1		203-62-61960	TUBE	1	J10001-UP
2		01010-81235	BOLT	2	J10001-UP
3		01643-31232	WASHER	2	J10001-UP
4		203-62-61270	CLAMP	1	J10001-UP
5		01010-81250	BOLT	1	J10001-UP
6		01643-31232	WASHER	1	J10001-UP
7		203-62-63720	TUBE	1	J10001-UP
8		01010-81230	BOLT	2	J10001-UP
9		01643-31232	WASHER	2	J10001-UP
10		203-62-63730	CLAMP	1	J10001-UP
11		203-06-71271	BRACKET	1	J10001-UP
12		01010-81260	BOLT	1	J10001-UP
13		01643-31232	WASHER	1	J10001-UP
14		203-62-61290	HOSE, 660MM	2	J10001-UP
15		07002-12434	O-RING	2	J10001-UP
16		203-62-61320	HOSE, 660MM	2	J10001-UP
17		07002-12034	O-RING	2	J10001-UP
18		07235-10628	ELBOW	1	J10001-UP
19		07002-12434	O-RING	1	J10001-UP
20		07235-10522	ELBOW	1	J10001-UP
21		07002-12434	O-RING	1	J10001-UP
22		21Y-62-11530	HOSE	1	J10001-UP
23		203-62-61990	HOSE, 600MM	1	J10001-UP

Ref :H1210-01A2 Page :150100

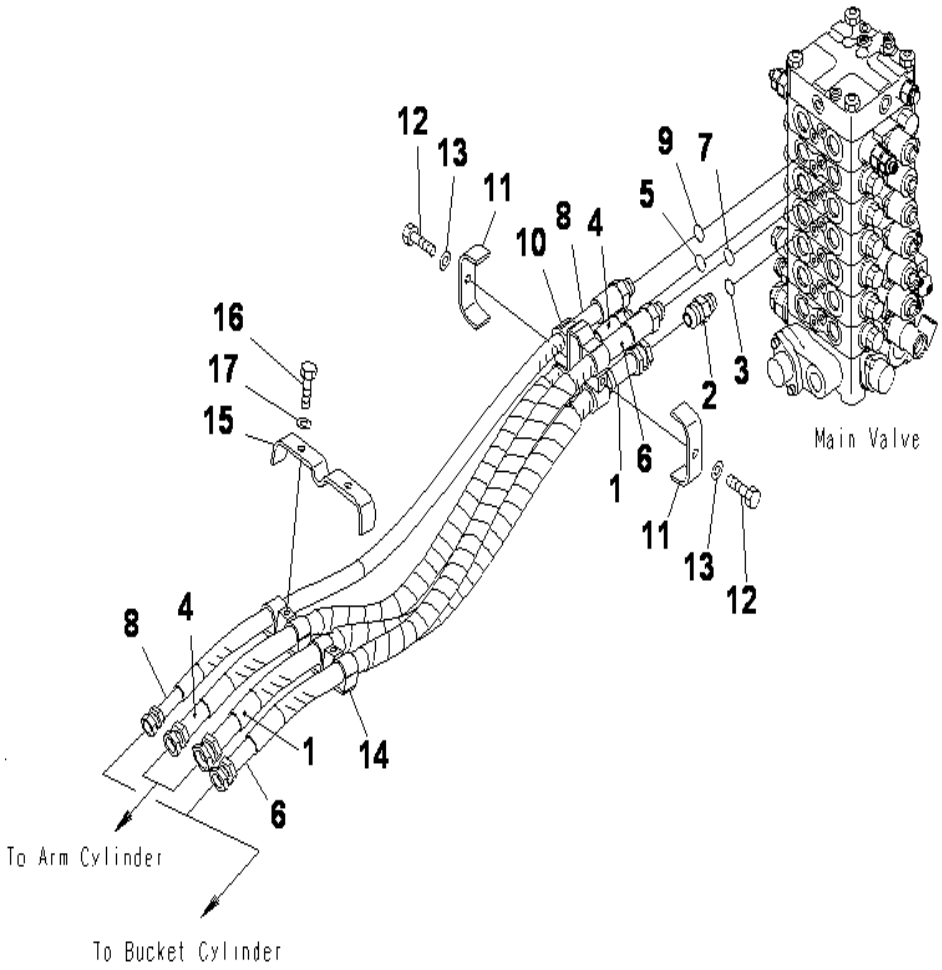

PC130F-7 S/N J10001-UP

ARM AND BUCKET LINE

INDEX	CD	PART NO.	DESCRIPTION	QTY	SERIAL NO.
1		203-62-72150	HOSE, 1100MM	1	J10001-UP
2		203-62-61820	UNION	1	J10001-UP
3		07002-12434	O-RING	1	J10001-UP
4		203-62-72140	HOSE, 1180MM	1	J10001-UP
5		07002-12434	O-RING	1	J10001-UP
6		203-62-72140	HOSE, 1180MM	1	J10001-UP
7		07002-12434	O-RING	1	J10001-UP
8		203-62-61340	HOSE, 1180MM	1	J10001-UP
9		07002-12434	O-RING	1	J10001-UP
10		203-62-63750	BRACKET	1	J10001-UP
11		203-62-61240	PLATE	2	J10001-UP
12		01010-81025	BOLT	2	J10001-UP
13		01643-31032	WASHER	2	J10001-UP
14		203-62-61760	BRACKET	1	J10001-UP
15		203-62-58280	PLATE	1	J10001-UP
16		01010-81025	BOLT	2	J10001-UP
17		01643-31032	WASHER	2	J10001-UP

Ref :H1220-01A0 Page :150110

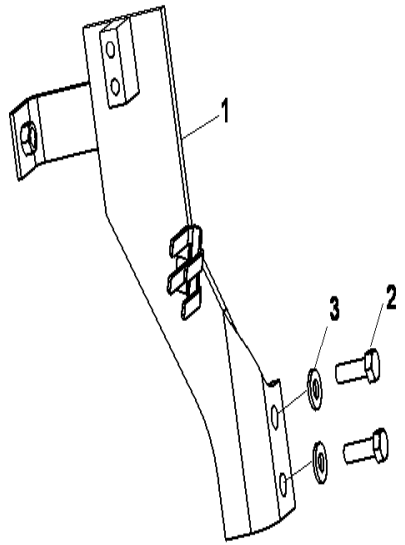

PC130F-7 S/N J10001-UP

ATT LINE U.(F/F)

INDEX	CD	PART NO.	DESCRIPTION	QTY	SERIAL NO.
1		203-62-72860	BRACKET	1	J10001-UP
2		01010-81240	BOLT	2	J10001-UP
3		01643-31232	WASHER	2	J10001-UP

Ref :H1270-01A0 Page :150120

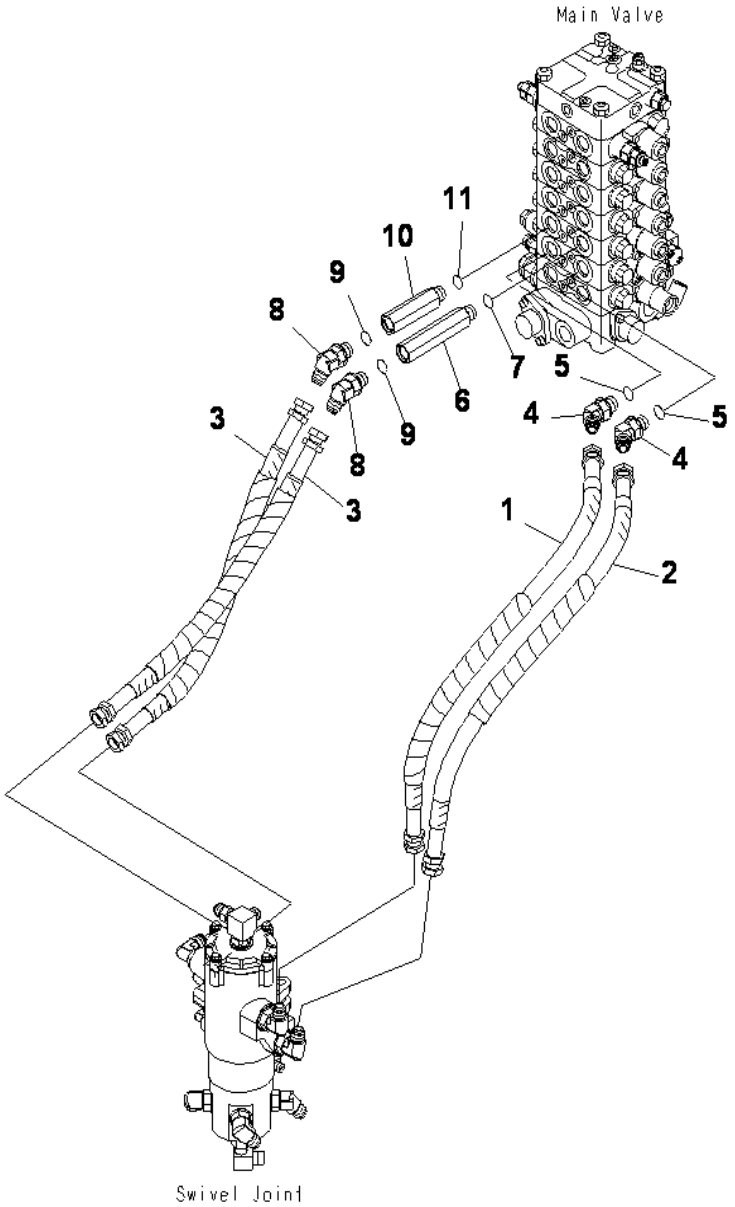

PC130F-7 S/N J10001-UP

TRAVEL LINE

INDEX	CD	PART NO.	DESCRIPTION	QTY	SERIAL NO.
1		203-62-72170	HOSE, 830MM.....	1	J10001-UP
2		203-62-72181	HOSE, 800MM.....	1	J10001-UP
3		203-62-72160	HOSE, 700MM.....	2	J10001-UP
4		203-62-61213	ELBOW.....	2	J10001-UP
5		07002-12434	O-RING.....	2	J10001-UP
6		203-62-63760	JOINT.....	2	J10001-UP
7		07002-12434	O-RING.....	2	J10001-UP
8		07236-10522	ELBOW.....	2	J10001-UP
9		07002-12434	O-RING.....	2	J10001-UP
10		203-62-63760	JOINT.....	2	J10001-UP
11		07002-12434	O-RING.....	2	J10001-UP

Ref :H1310-01A0 Page :150130

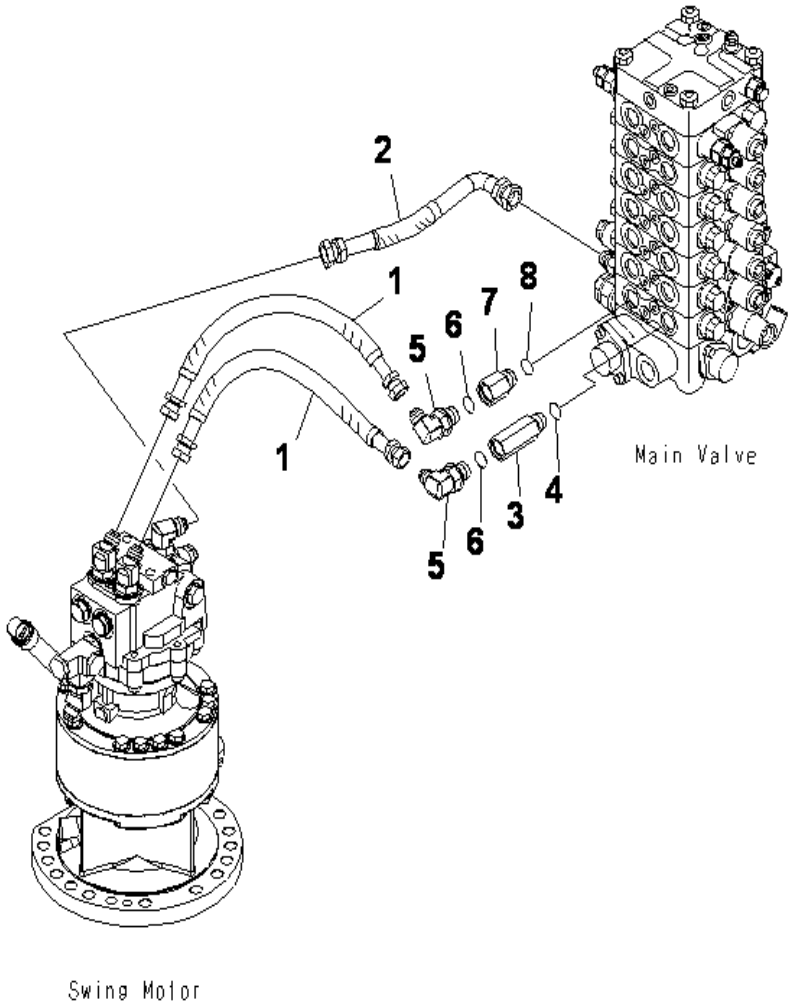

PC130F-7 S/N J10001-UP

SWING LINE

INDEX	CD	PART NO.	DESCRIPTION	QTY	SERIAL NO.
1		07121-004A4	HOSE.....	2	J10001-UP
2		203-62-63910	HOSE, 300MM.....	1	J10001-UP
3		203-62-61410	JOINT.....	1	J10001-UP
4		07002-12434	O-RING.....	1	J10001-UP
5		07235-10425	ELBOW.....	2	J10001-UP
6		07002-12434	O-RING.....	2	J10001-UP
7		201-62-71810	JOINT.....	1	J10001-UP
8		07002-12434	O-RING.....	1	J10001-UP

Ref :H1340-01A0 Page :150140

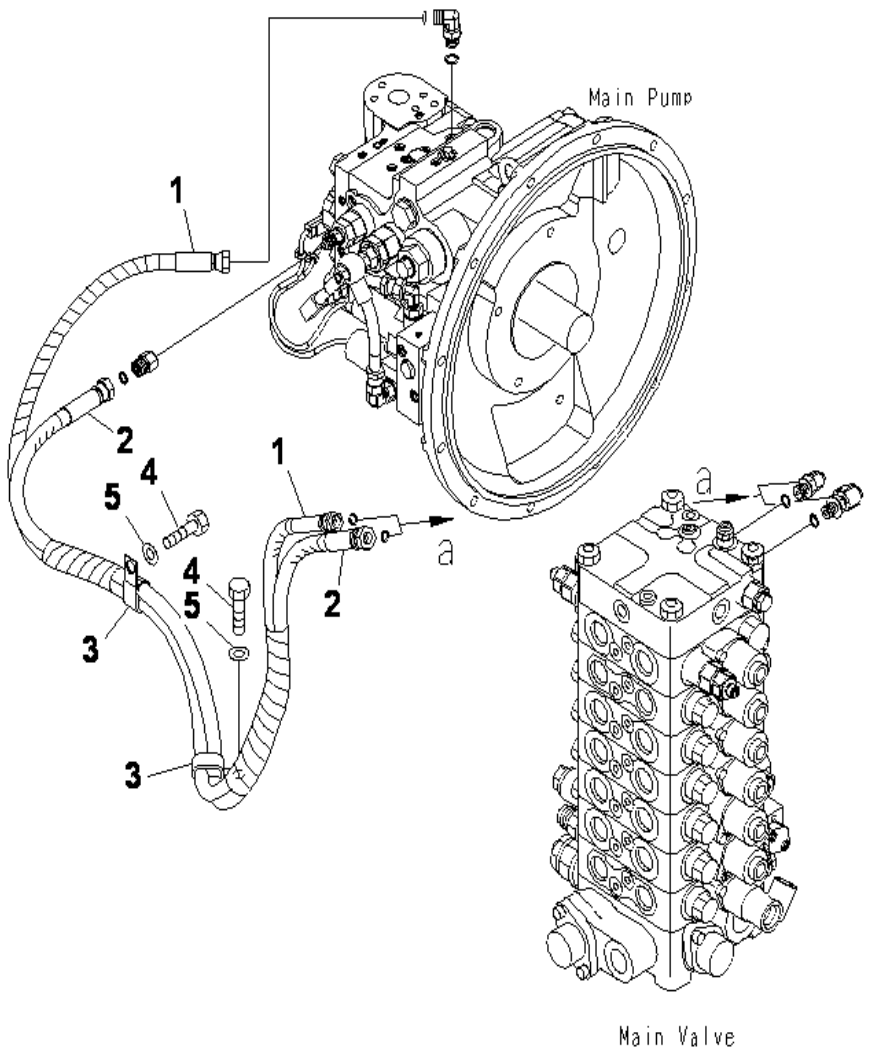

PC130F-7 S/N J10001-UP

LS LINE

INDEX	CD	PART NO.	DESCRIPTION	QTY	SERIAL NO.
1		20Y-62-44420	HOSE	1	J10001-UP
2		203-62-72490	HOSE	1	J10001-UP
3		04435-51612	CLIP	2	J10001-UP
4		01010-81225	BOLT	2	J10001-UP
5		01643-31232	WASHER	2	J10001-UP

Ref :H1810-01A0 Page :150150

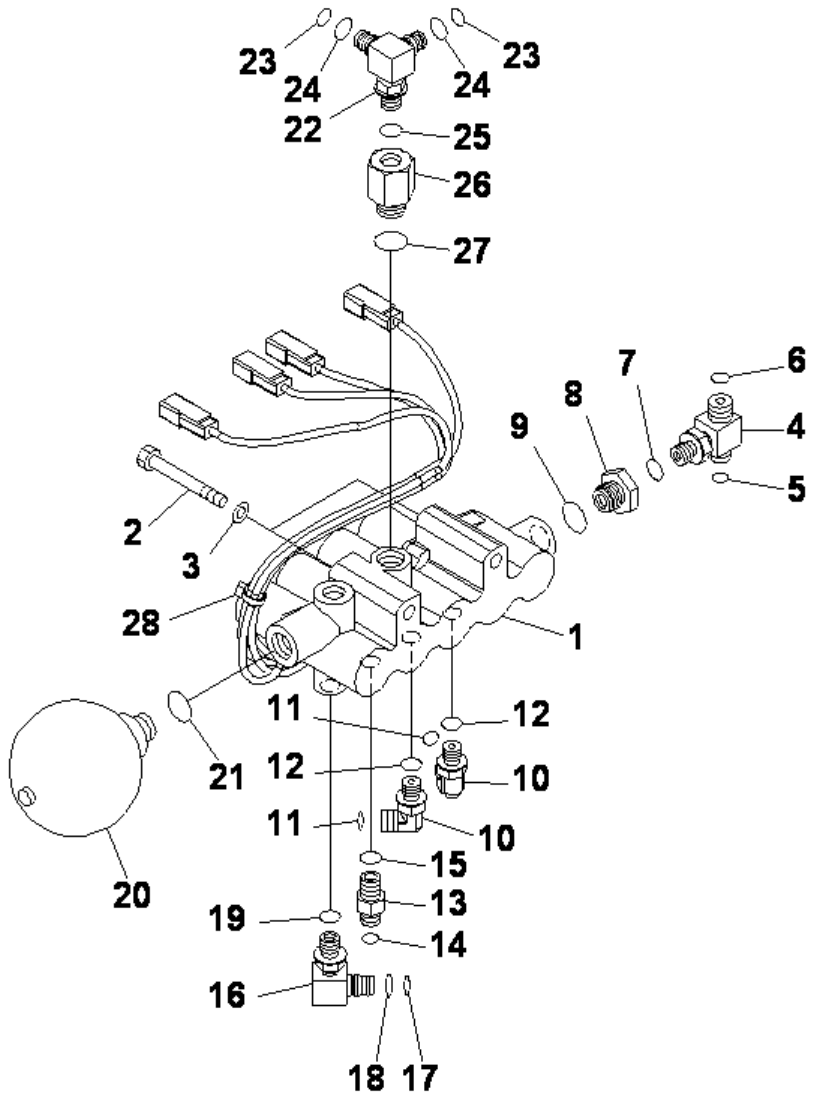

SOLENOID VALVE (VALVE)

INDEX	CD	PART NO.	DESCRIPTION	QTY	SERIAL NO.
1		(203-60-71210)	VALVE ASS'Y, (SEE FIG. Y1860-01A0)	1	J10001-UP
2		01010-81095	BOLT	2	J10001-UP
3		01643-31032	WASHER	2	J10001-UP
4		11Y-62-12820	TEE	1	J10001-UP
5		02896-11008	O-RING	1	J10001-UP
6		02896-11009	O-RING	1	J10001-UP
7		07002-11423	O-RING	1	J10001-UP
8		20Y-62-21940	FILTER ASS'Y	1	J10001-UP
9		07002-12034	O-RING	1	J10001-UP
10		02782-10210	ELBOW	2	J10001-UP
11		02896-11008	O-RING	2	J10001-UP
12		07002-11423	O-RING	2	J10001-UP
13		20Y-62-41970	NIPPLE	1	J10001-UP
14		02896-11008	O-RING	1	J10001-UP
15		07002-11423	O-RING	1	J10001-UP
16		20Y-62-22271	ELBOW	1	J10001-UP
17		201-60-11390	.O-RING	1	J10001-UP
18		20Y-62-19560	.O-RING	1	J10001-UP
19		07002-11423	O-RING	1	J10001-UP
20		22U-60-21330	ACCUMULATOR	1	J10001-UP
21		07002-12034	O-RING	1	J10001-UP
22		21K-62-72360	TEE	1	J10001-UP
23		201-60-11390	.O-RING	2	J10001-UP
24		20Y-62-19560	.O-RING	2	J10001-UP
25		07002-11423	O-RING	1	J10001-UP
26		21M-62-16780	ADAPTER	1	J10001-UP
27		07002-12034	O-RING	1	J10001-UP
28		08034-20519	BAND	1	J10001-UP

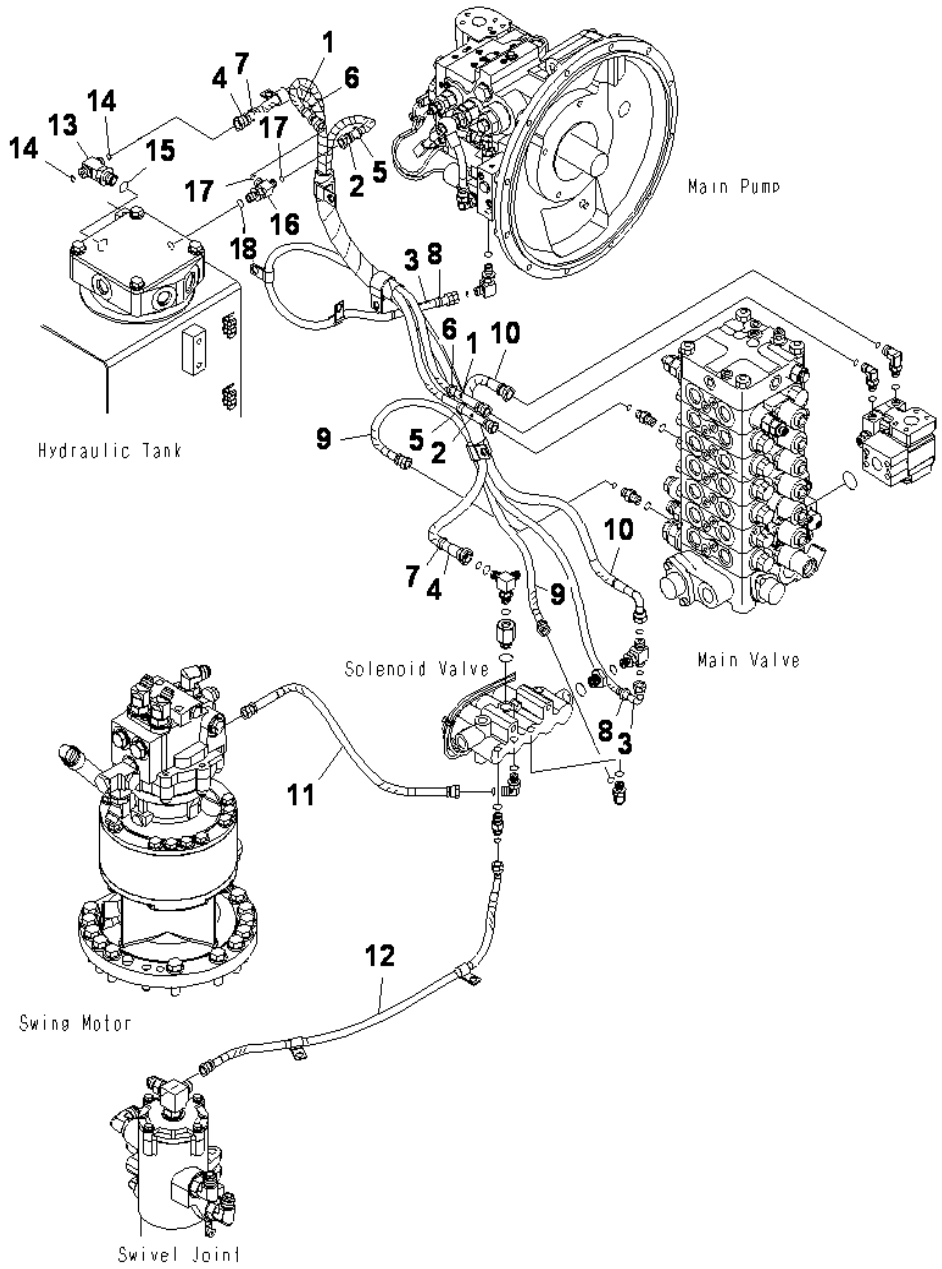

PC130F-7 S/N J10001-UP

SOLENOID VALVE (HOSE)

INDEX	CD	PART NO.	DESCRIPTION	QTY	SERIAL NO.
1		02760-00210	HOSE, 1000MM	1	J10001-UP
2		02760-00211	HOSE	1	J10001-UP
3		02761-00214	HOSE	1	J10001-UP
4		203-62-71280	HOSE, 1300MM	1	J10001-UP
5		20Y-62-22790	BAND, RED	2	J10001-UP
6		20Y-62-22820	BAND, BLUE	2	J10001-UP
7		20Y-62-22840	BAND, BLACK	2	J10001-UP
8		20Y-62-22850	BAND, GREEN	2	J10001-UP
9		02760-002A6	HOSE	1	J10001-UP
10		02761-003A4	HOSE	1	J10001-UP
11		02760-00205	HOSE	1	J10001-UP
12		02764-00208	HOSE	1	J10001-UP
13		209-64-16721	TEE	1	J10001-UP
14		02896-11009	O-RING	2	J10001-UP
15		07002-12034	O-RING	1	J10001-UP
16		11Y-62-12330	ELBOW	1	J10001-UP
17		02896-11008	O-RING	2	J10001-UP
18		07002-11423	O-RING	1	J10001-UP

Ref :H1831-02A0 Page :150170

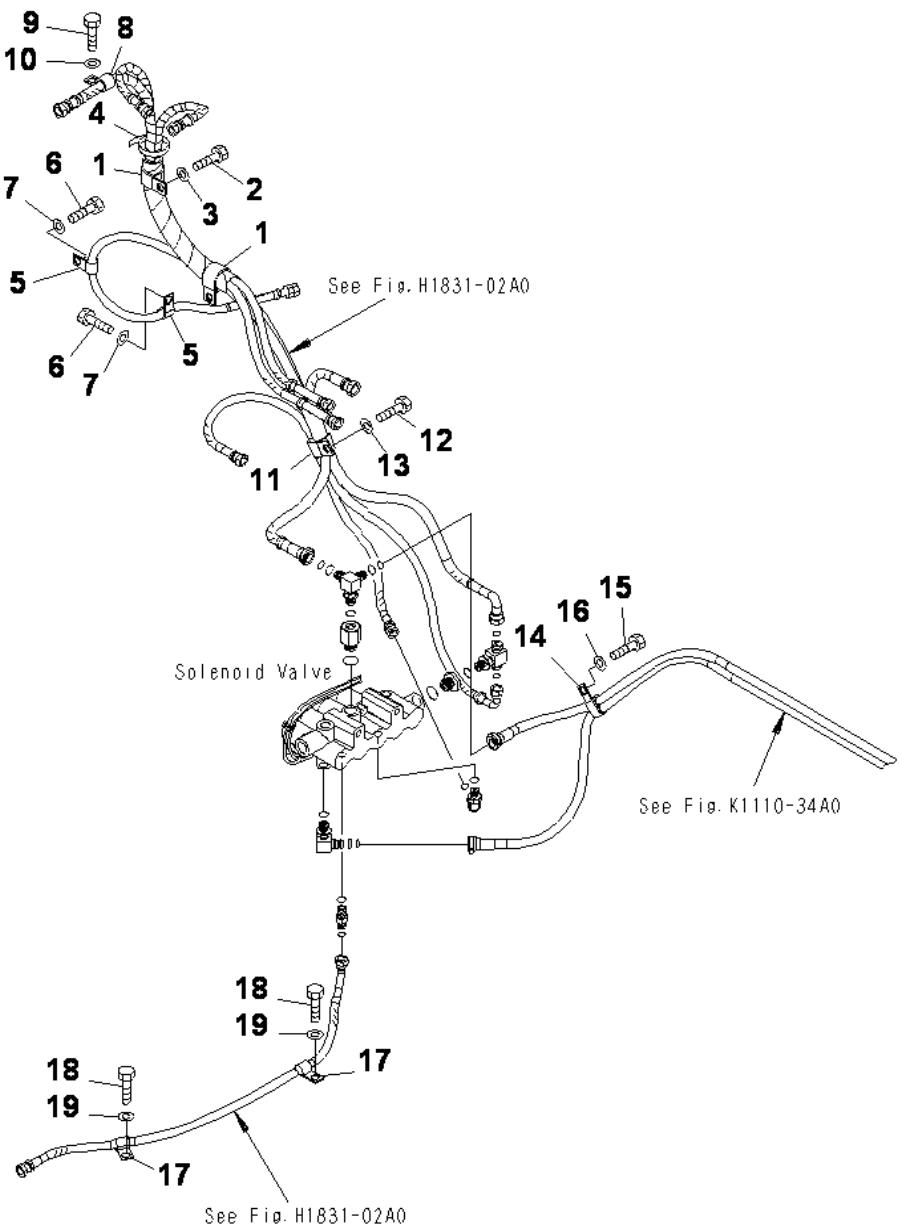

SOLENOID VALVE (CLIP)

INDEX	CD	PART NO.	DESCRIPTION	QTY	SERIAL NO.
1		04434-53212	CLIP	2	J10001-UP
2		01010-81225	BOLT	1	J10001-UP
3		01643-31232	WASHER	1	J10001-UP
4		08034-20536	BAND	1	J10001-UP
5		04434-51212	CLIP	2	J10001-UP
6		01010-81225	BOLT	2	J10001-UP
7		01643-31232	WASHER	2	J10001-UP
8		04434-51812	CLIP	1	J10001-UP
9		01010-81225	BOLT	1	J10001-UP
10		01643-31232	WASHER	1	J10001-UP
11		04434-53212	CLIP	1	J10001-UP
12		01010-81225	BOLT	1	J10001-UP
13		01643-31232	WASHER	1	J10001-UP
14		04435-51412	CLIP	1	J10001-UP
15		01010-81225	BOLT	1	J10001-UP
16		01643-31232	WASHER	1	J10001-UP
17		04434-51212	CLIP	2	J10001-UP
18		01010-81225	BOLT	2	J10001-UP
19		01643-31232	WASHER	2	J10001-UP

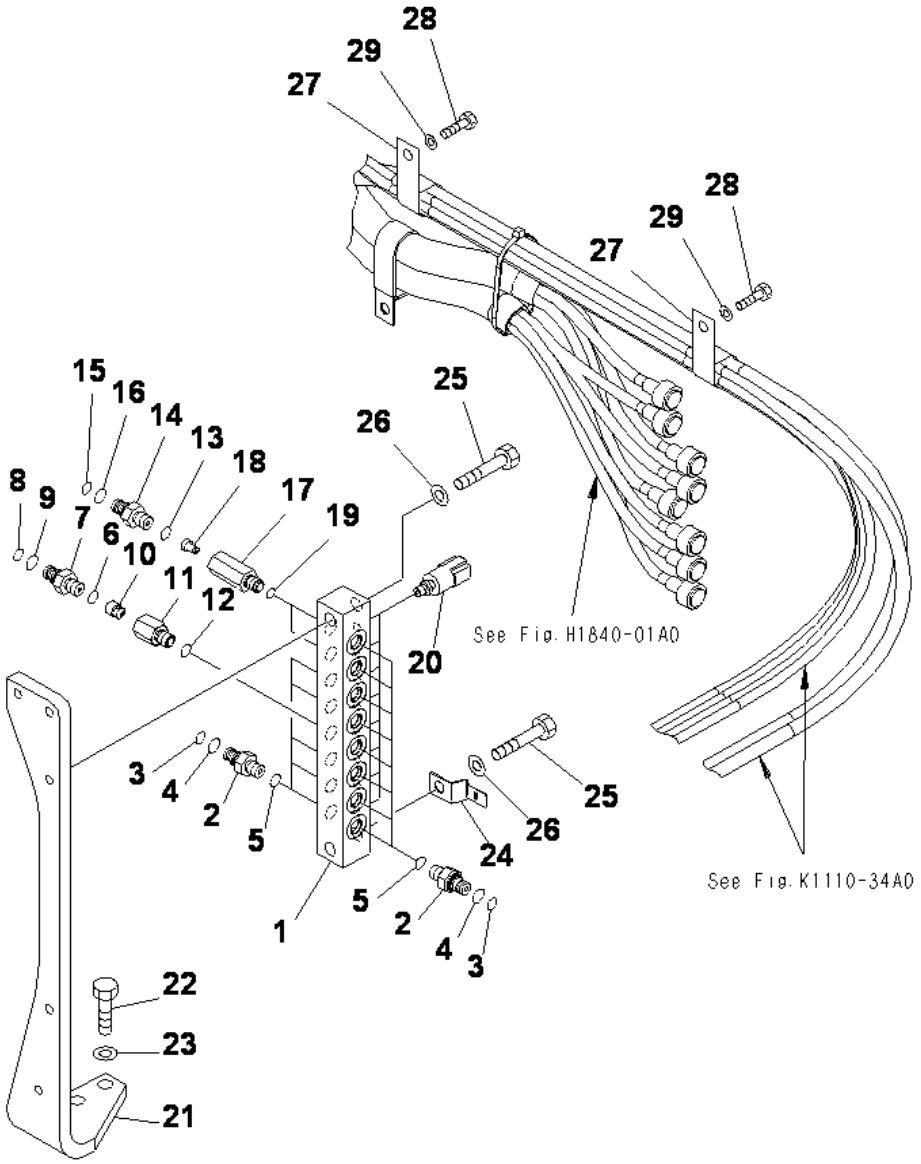

PC130F-7 S/N J10001-UP

PRESSURE SWITCH

INDEX	CD	PART NO.	DESCRIPTION	QTY	SERIAL NO.
1		20Y-62-41550	BLOCK	1	J10001-UP
2		20Y-62-16630	NIPPLE	13	J10001-UP
3		201-60-11390	.O-RING	13	J10001-UP
4		20Y-62-19560	.O-RING	13	J10001-UP
5		07002-11423	O-RING	13	J10001-UP
		203-60-62300	VALVE ASS'Y	1	J10001-UP
6		07002-01423	.O-RING	1	J10001-UP
7		203-60-62310	.NIPPLE	1	J10001-UP
8		201-60-11390	..O-RING	1	J10001-UP
9		20Y-62-19560	..O-RING	1	J10001-UP
10		203-60-62320	.POPPET	1	J10001-UP
11		203-60-62330	.BODY	1	J10001-UP
12		07002-11423	O-RING	1	J10001-UP
		203-60-62401	VALVE ASS'Y	2	J10001-UP
13		07002-01423	.O-RING	2	J10001-UP
14		20Y-62-22410	.NIPPLE	2	J10001-UP
15		201-60-11390	..O-RING	2	J10001-UP
16		20Y-62-19560	..O-RING	2	J10001-UP
17		20Y-60-22350	.BODY	2	J10001-UP
18		203-60-62430	.POPPET	2	J10001-UP
19		07002-11423	O-RING	2	J10001-UP
20		206-06-61130	SWITCH	8	J10001-UP
21		203-62-71541	BRACKET	1	J10001-UP
22		01010-81240	BOLT	2	J10001-UP
23		01643-31232	WASHER	2	J10001-UP
24		08053-01512	CLIP	1	J10001-UP
25		01010-81260	BOLT	2	J10001-UP
26		01643-31232	WASHER	2	J10001-UP
27		04434-53412	CLIP	2	J10001-UP
28		01010-81225	BOLT	1	J10001-UP
29		01643-31232	WASHER	1	J10001-UP

Ref :H1833-01A0 Page :150190

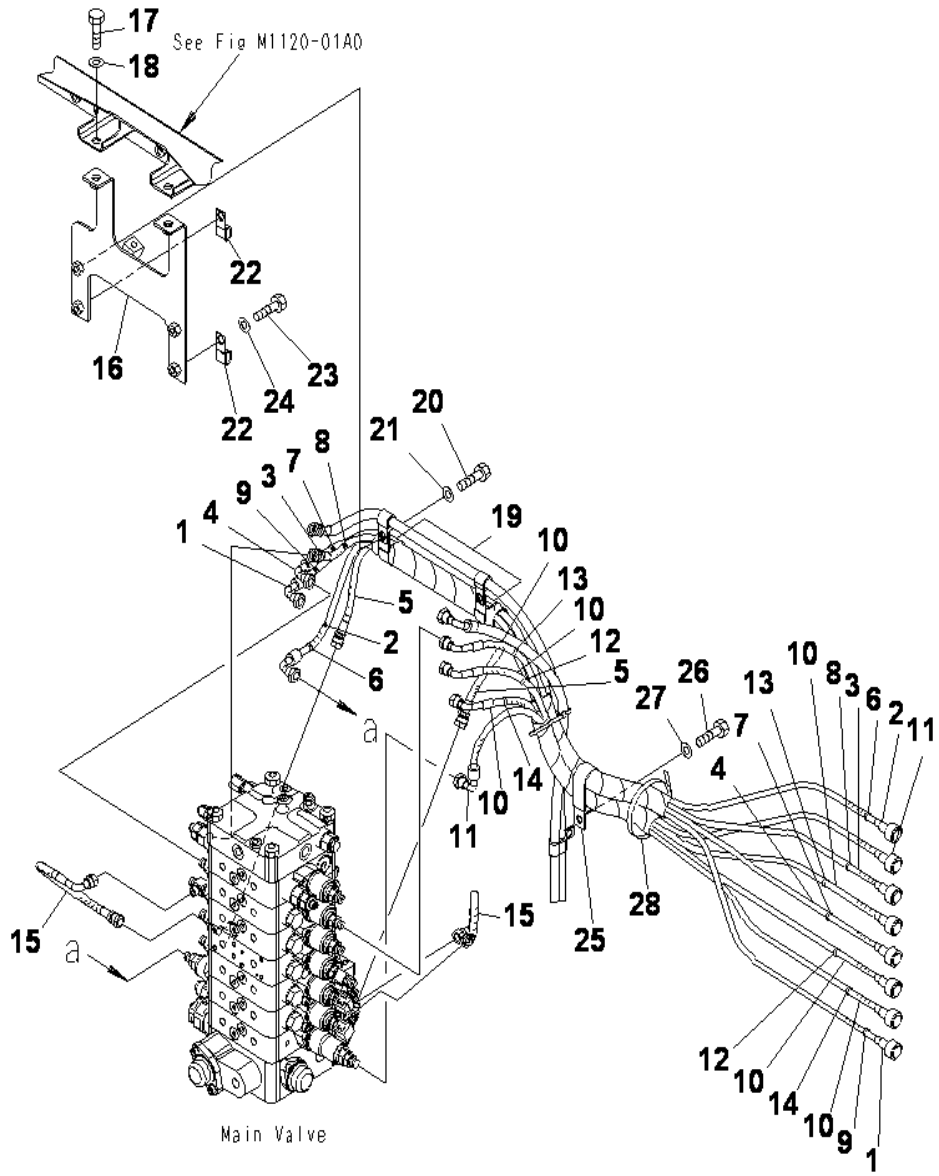

PC130F-7 S/N J10001-UP

PPC MAIN LINE (HOSE)

INDEX	CD	PART NO.	DESCRIPTION	QTY	SERIAL NO.
1		21K-62-71970	HOSE	1	J10001-UP
2		203-62-71391	HOSE	1	J10001-UP
3		207-62-72550	HOSE	1	J10001-UP
4		21K-62-72190	HOSE	1	J10001-UP
5		02760-00207	HOSE	1	J10001-UP
6		20Y-62-22790	BAND (RED)	1	J10001-UP
7		20Y-62-22810	BAND (YELLOW)	2	J10001-UP
8		20Y-62-22840	BAND (BLACK)	2	J10001-UP
9		20Y-62-22850	BAND (GREEN)	2	J10001-UP
10		203-62-71360	HOSE	3	J10001-UP
11		203-62-71451	HOSE	1	J10001-UP
12		20Y-62-22820	BAND (BLUE)	2	J10001-UP
13		20Y-62-22830	BAND (WHITE)	2	J10001-UP
14		20Y-62-22860	BAND (BROWN)	2	J10001-UP
15		02763-00203	HOSE	2	J10001-UP
16		203-62-71511	BRACKET	1	J10001-UP
17		01010-81225	BOLT	2	J10001-UP
18		01643-31232	WASHER	2	J10001-UP
19		281-01-13180	CLIP	2	J10001-UP
20		01010-81225	BOLT	2	J10001-UP
21		01643-31232	WASHER	2	J10001-UP
22		04434-52312	CLIP	1	J10001-UP
23		01010-81225	BOLT	2	J10001-UP
24		01643-31232	WASHER	2	J10001-UP
25		196-91-13310	CLIP	1	J10001-UP
26		01010-81225	BOLT	1	J10001-UP
27		01643-31232	WASHER	1	J10001-UP
28		08034-20536	BAND	3	J10001-UP

Ref :H1840-01A0 Page :150200

MAIN FRAME AND RELATED PARTS

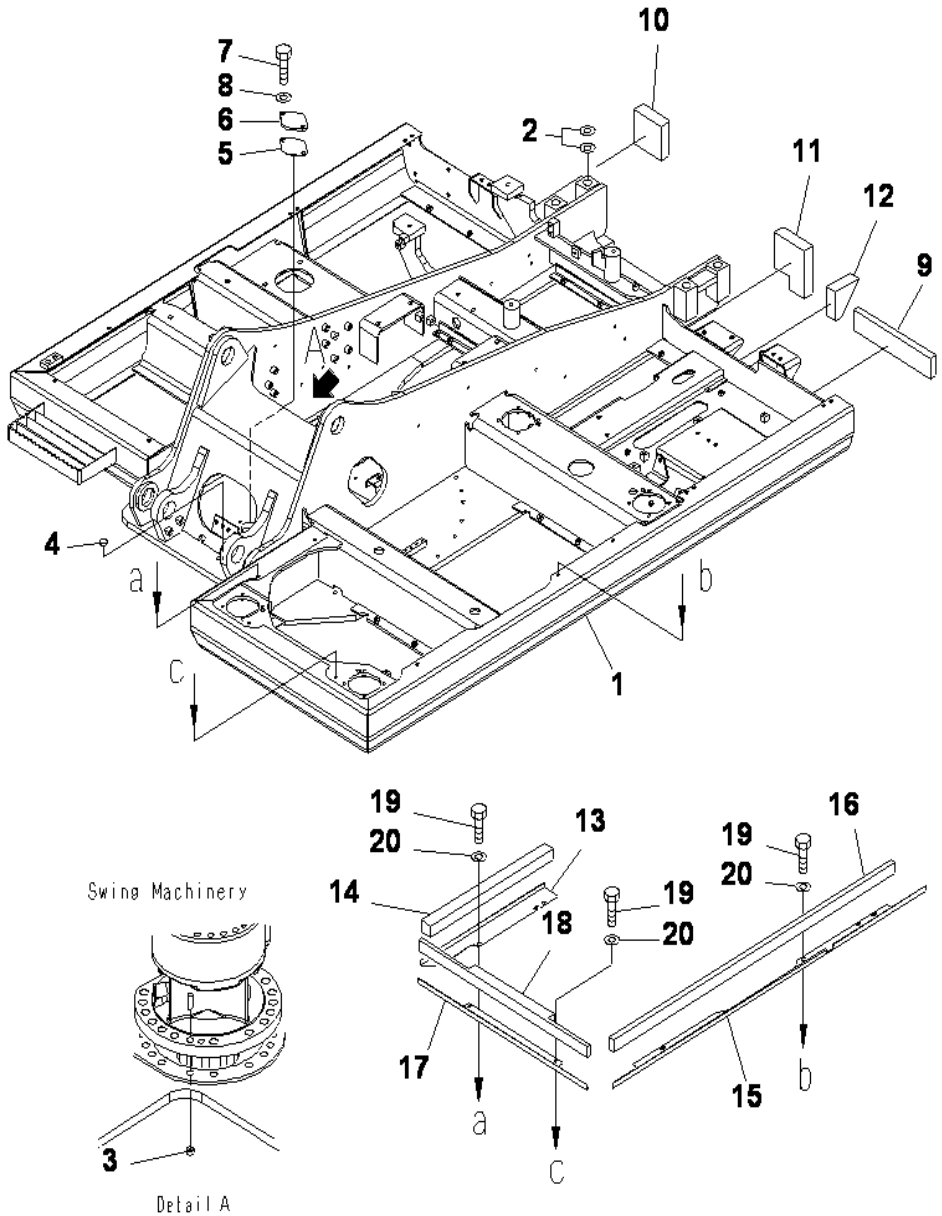

REVOLVING FRAME (FOR CORROSION RESISTOR)

INDEX	CD	PART NO.	DESCRIPTION	QTY	SERIAL NO.
1		203-46-71340	FRAME	1	J10001-UP
2		20T-70-81720	SPACER	3	J10001-UP
3		203-46-61910	PLUG	1	J10001-UP
4		203-46-61920	CAP	1	J10001-UP
5		203-46-61520	GASKET	1	J10001-UP
6		203-46-56160	COVER	1	J10001-UP
7		01010-81230	BOLT	2	J10001-UP
8		01643-31232	WASHER	2	J10001-UP
9		203-46-64420	SHEET	1	J10001-UP
10		203-46-62130	SHEET	1	J10001-UP
11		203-46-71210	SHEET	1	J10001-UP
12		203-03-71821	SHEET	1	J10001-UP
		20Y-46-42412	COVER	1	J10001-UP
13		20Y-46-42271	.COVER	1	J10001-UP
14		20Y-46-42232	.SEAL	1	J10001-UP
		20Y-46-42427	COVER	1	J10001-UP
15		20Y-46-42286	.COVER	1	J10001-UP
16		20Y-46-42253	.SEAL	1	J10001-UP
		207-46-71543	COVER	1	J10001-UP
17		207-46-71553	.COVER	1	J10001-UP
18		207-46-71561	SEAL	1	J10001-UP
19		01010-81035	BOLT	7	J10001-UP
20		01643-31032	WASHER	7	J10001-UP

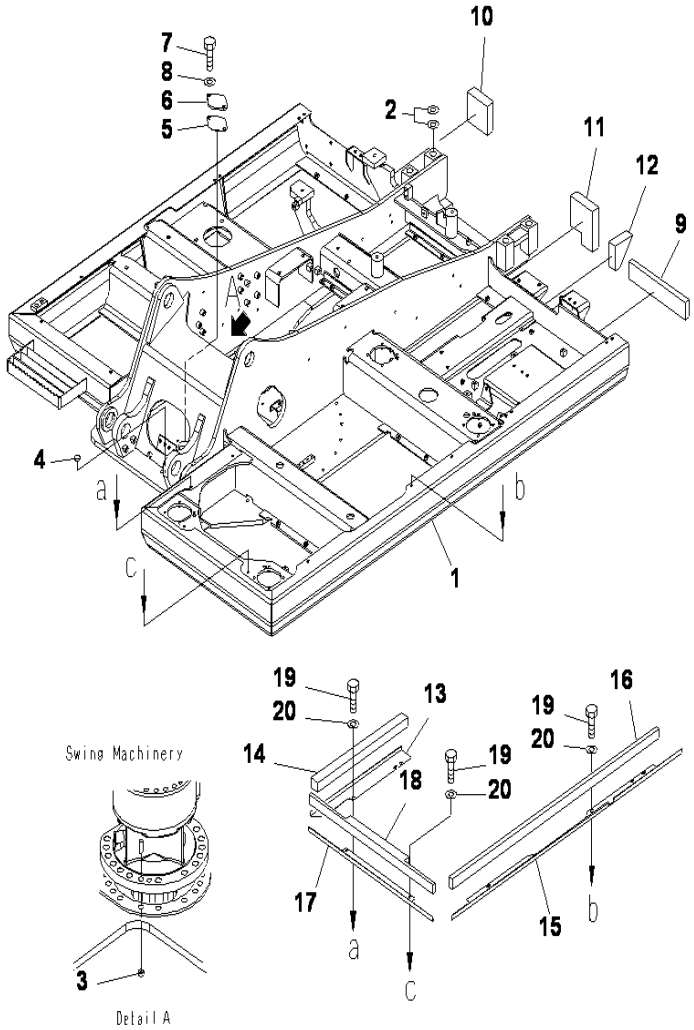

PC130F-7 S/N J10001-UP

REVOLVING FRAME (FOR LOGGING)

INDEX	CD	PART NO.	DESCRIPTION	QTY	SERIAL NO.
1		203-46-71340	FRAME	1	132823-UP
2		20T-70-81720	SPACER	3	132823-UP
3		203-46-61910	PLUG	1	132823-UP
4		203-46-61920	CAP	1	132823-UP
5		203-46-61520	GASKET	1	132823-UP
6		203-46-56160	COVER	1	132823-UP
7		01010-81230	BOLT	2	132823-UP
8		01643-31232	WASHER	2	132823-UP
9		203-46-64420	SHEET	1	132823-UP
10		203-46-62130	SHEET	1	132823-UP
11		203-46-71210	SHEET	1	132823-UP
12		203-03-71821	SHEET	1	132823-UP
		20Y-46-42412	COVER	1	132823-UP
13		20Y-46-42271	.COVER	1	132823-UP
14		20Y-46-42232	.SEAL	1	132823-UP
		20Y-46-42427	COVER	1	132823-UP
15		20Y-46-42286	.COVER	1	132823-UP
16		20Y-46-42253	.SEAL	1	132823-UP
		207-46-71543	COVER	1	132823-UP
17		207-46-71553	.COVER	1	132823-UP
18		207-46-71561	.SEAL	1	132823-UP
19		01010-81035	BOLT	7	132823-UP
20		01643-31032	WASHER	7	132823-UP

Ref :J1110-01A2A Page :180015

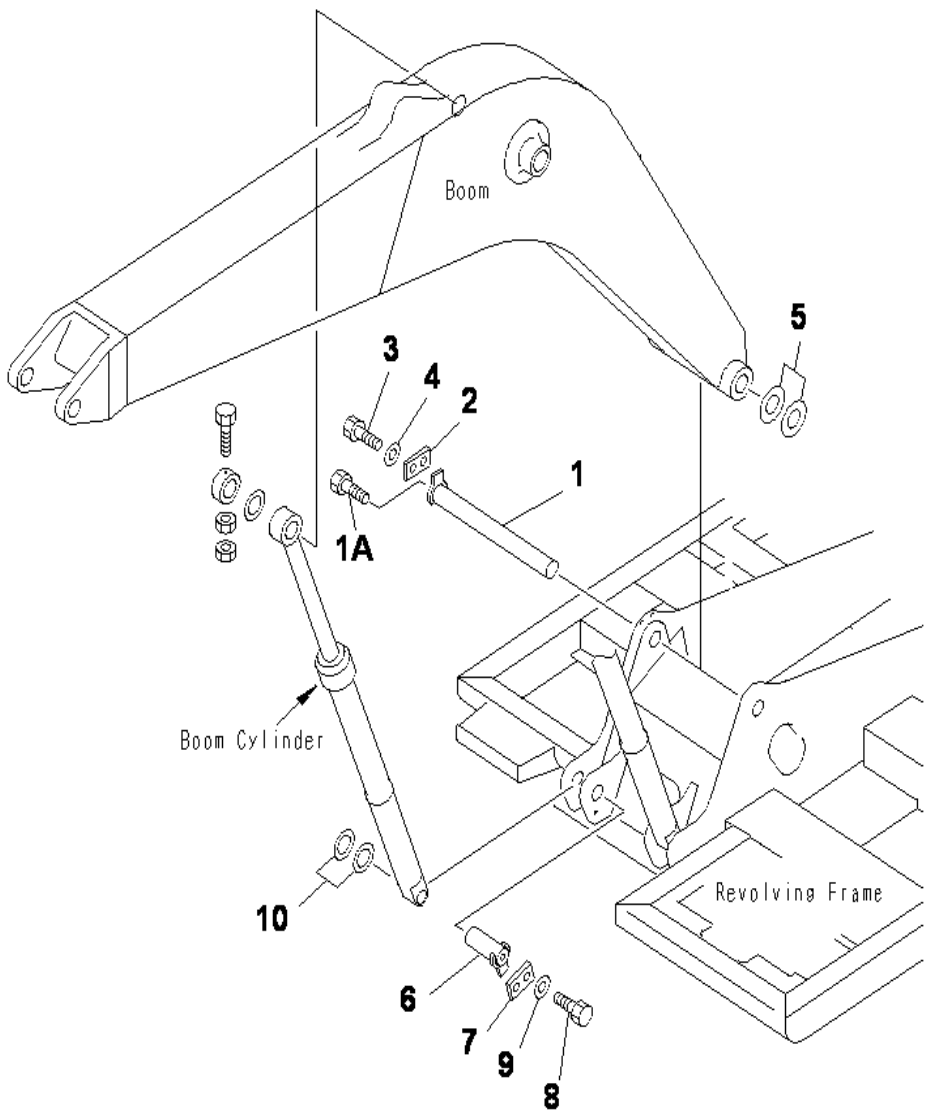

PC130F-7 S/N J10001-UP

BOOM FOOT PIN

INDEX	CD	PART NO.	DESCRIPTION	QTY	SERIAL NO.
1		202-70-61160	PIN	1	J10001-UP
1A		01010-61625	BOLT	1	J10001-UP
2		205-70-66580	PLATE	1	J10001-UP
3		01010-81230	BOLT	2	J10001-UP
4		01643-31232	WASHER	2	J10001-UP
5		21Y-70-14760	SPACER, 2.0MM	1	J10001-UP
		20U-70-31340	SPACER, 1.0MM	1	J10001-UP
		20U-70-31330	SPACER, 0.5MM	1	J10001-UP
6		203-46-56260	PIN	2	J10001-UP
7		205-70-66580	PLATE	2	J10001-UP
8		01010-81230	BOLT	4	J10001-UP
9		01643-31232	WASHER	4	J10001-UP
10		21Y-70-14830	SPACER, 1.0MM	2	J10001-UP
		21Y-70-14840	SPACER, 2.0MM	2	J10001-UP

Ref :J1310-01A0 Page :180020

OPERATOR'S COMPARTMENT AND CONTROL SYSTEM

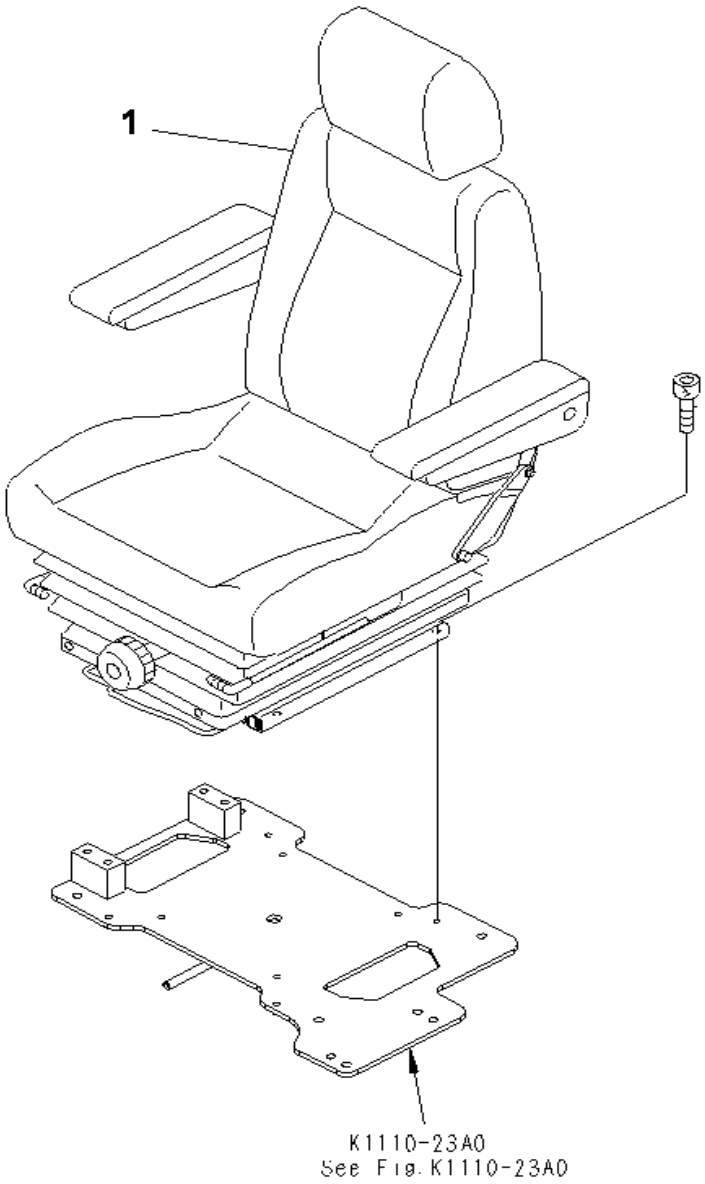

PC130F-7 S/N J10001-UP

OPERATORS SEAT(SUSPENSION)

INDEX	CD	PART NO.	DESCRIPTION	QTY	SERIAL NO.
1		20Y-57-32101	SEAT ASS'Y, SEE FIG Y1570-01A0.....	1	J10001-UP

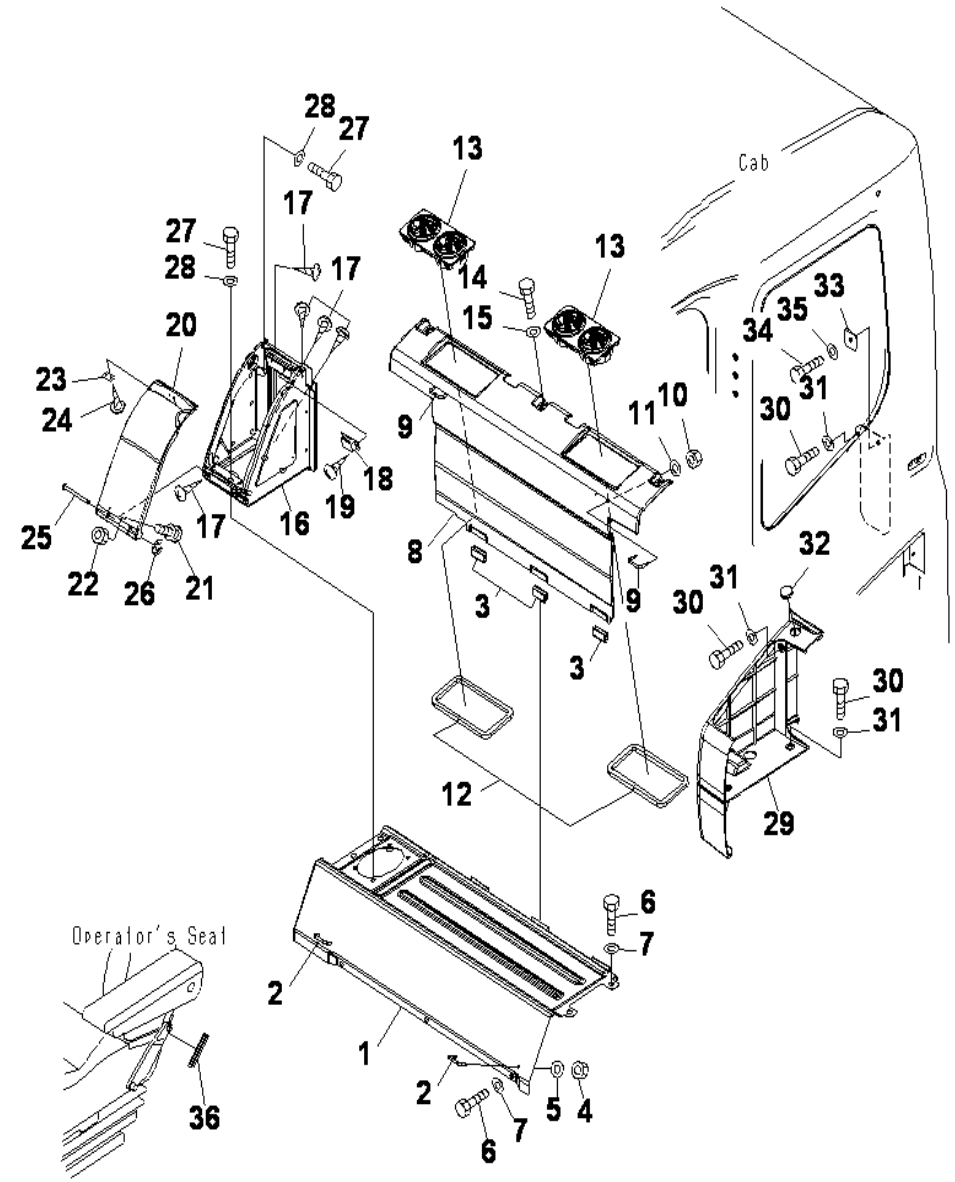

PC130F-7 S/N J10001-UP

SEAT REAR COVER

INDEX	CD	PART NO.	DESCRIPTION	QTY	SERIAL NO.
		208-53-13610	COVER ASS'Y	1	J10001-UP
1		208-53-12250	.COVER	1	J10001-UP
2		208-53-12290	.HOOK	2	J10001-UP
3		208-53-12460	.SEAT	3	J10001-UP
4		01580-10403	.NUT	4	J10001-UP
5		01601-20410	.WASHER	4	J10001-UP
6		01010-D0820	BOLT	7	J10001-UP
7		01643-70823	WASHER	7	J10001-UP
		208-53-13620	COVER	1	J10001-UP
8		208-53-12370	.COVER	1	J10001-UP
9		208-53-12290	..HOOK	2	J10001-UP
10		01580-10403	..NUT	4	J10001-UP
11		01601-20410	..WASHER	4	J10001-UP
12		208-53-13710	.SEAL	2	J10001-UP
13		208-979-7560	GRILLE	2	J10001-UP
14		01010-D0820	BOLT	3	J10001-UP
15		01643-70823	WASHER	3	J10001-UP
		208-53-12350	COVER,ASS'Y	1	J10001-UP
16		208-53-12380	.COVER	1	J10001-UP
17		01370-00408	..SCREW	10	J10001-UP
18		09452-14503	.CATCHER	1	J10001-UP
19		01370-10308	.SCREW	2	J10001-UP
20		208-53-12390	.COVER	1	J10001-UP
21		01023-10406	..SCREW	2	J10001-UP
22		01580-00403	..NUT	2	J10001-UP
23		208-53-12410	.PLATE	1	J10001-UP
24		01370-20308	.SCREW	2	J10001-UP
25		208-53-12320	.PIN	1	J10001-UP
26		208-53-12330	.RING	1	J10001-UP
27		01010-D0820	BOLT	5	J10001-UP
28		208-53-11330	WASHER	5	J10001-UP
29		208-53-12730	COVER	1	J10001-UP
30		01010-D0820	BOLT	3	J10001-UP
31		208-53-11330	WASHER	3	J10001-UP
32		09415-02110	CAP	1	J10001-UP
33		208-53-12750	PLATE	1	J10001-UP
34		01010-D0820	BOLT	1	J10001-UP
35		01643-70823	WASHER	1	J10001-UP
36		208-53-11780	TRIM	2	J10001-UP

Ref :K0180-01A3 Page :210020

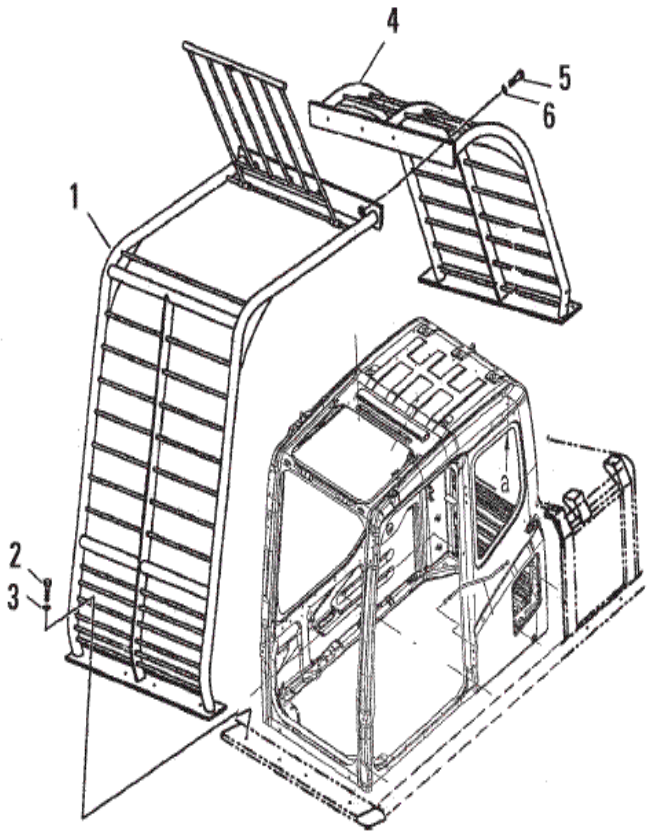

PC130F-7 S/N J10001-UP

CAB GUARD

INDEX	CD	PART NO.	DESCRIPTION	QTY	SERIAL NO.
1		20Y-958-J190	GUARD	1	132823-UP
2		01010-81245	BOLT	4	132823-UP
3		01643-31232	WASHER	4	132823-UP
4		203-56-J1110	GUARD	1	132823-UP
5		01010-81235	BOLT	4	132823-UP
6		01643-31232	WASHER	4	132823-UP

Ref :K0220-01A0 Page :210025

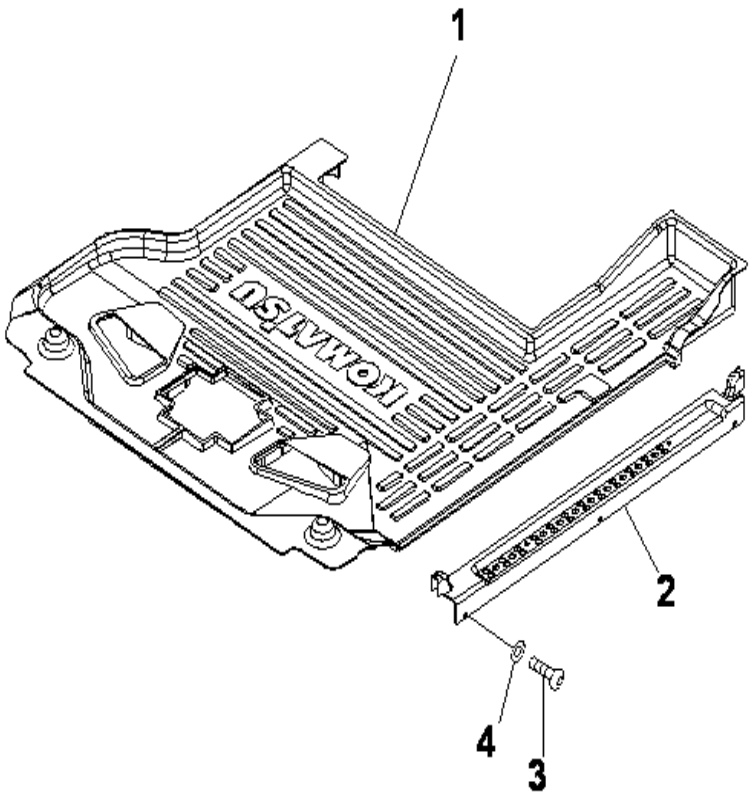

9 4

PC130F-7 S/N J10001-UP

FLOOR MAT

INDEX	CD	PART NO.	DESCRIPTION	QTY	SERIAL NO.
1		208-53-12611	FLOOR MAT	1	J10001-UP
2		20Y-54-51952	COVER	1	J10001-UP
3		01245-00616	SCREW	5	J10001-UP
4		01643-70623	WASHER	5	J10001-UP

Ref :K0310-01A0 Page :210030

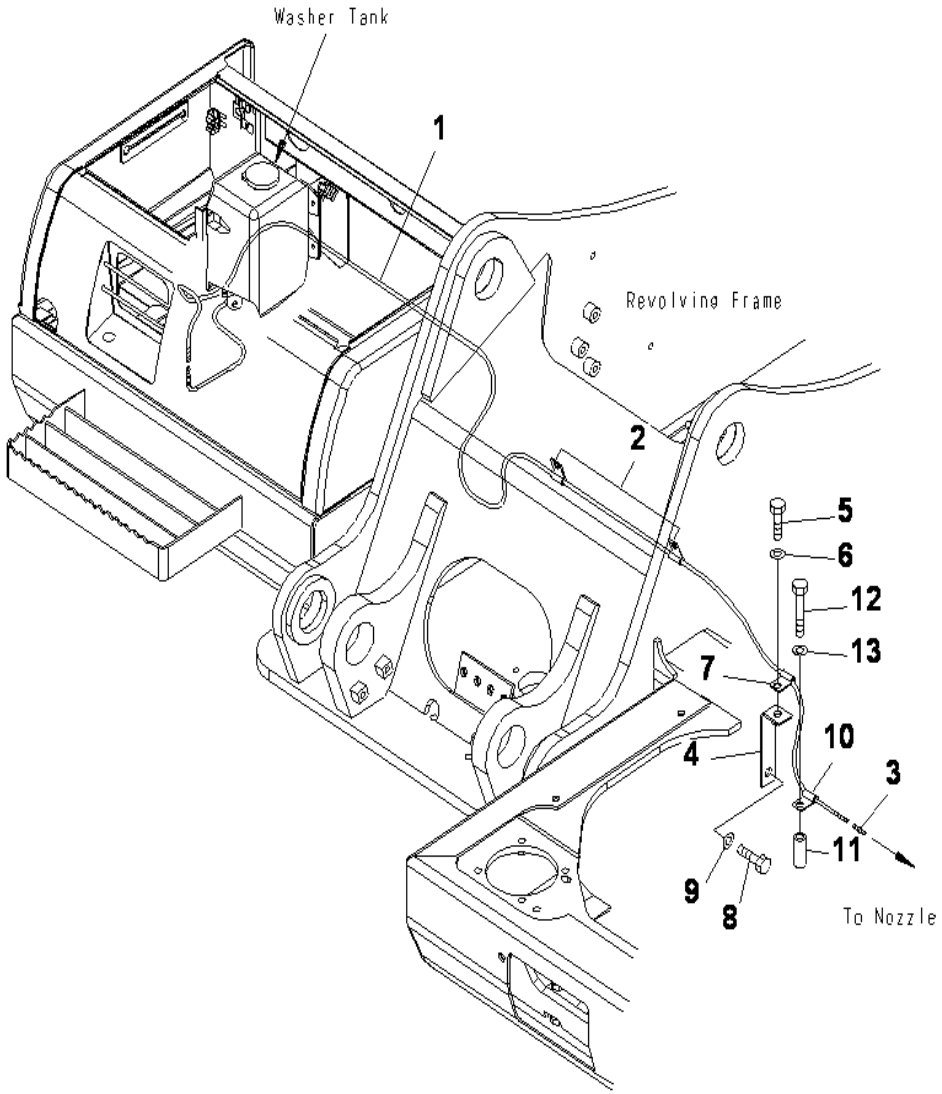

PC130F-7 S/N J10001-UP

WINDOW WASHER

INDEX	CD	PART NO.	DESCRIPTION	QTY	SERIAL NO.
1		203-06-71290	HOSE	1	J10001-UP
2		21T-38-12270	CLIP	2	J10001-UP
3		195-97-98590	VALVE	1	J10001-UP
4		17A-61-13391	BRACKET	1	J10001-UP
5		01010-81225	BOLT	1	J10001-UP
6		01643-31232	WASHER	1	J10001-UP
7		21T-38-12270	CLIP	1	J10001-UP
8		01010-81225	BOLT	1	J10001-UP
9		01643-31232	WASHER	1	J10001-UP
10		21T-38-12270	CLIP	1	J10001-UP
11		195-97-95190	COLLAR	1	J10001-UP
12		01010-81275	BOLT	1	J10001-UP
13		01643-31232	WASHER	1	J10001-UP

Ref :K0350-01A0 Page :210040

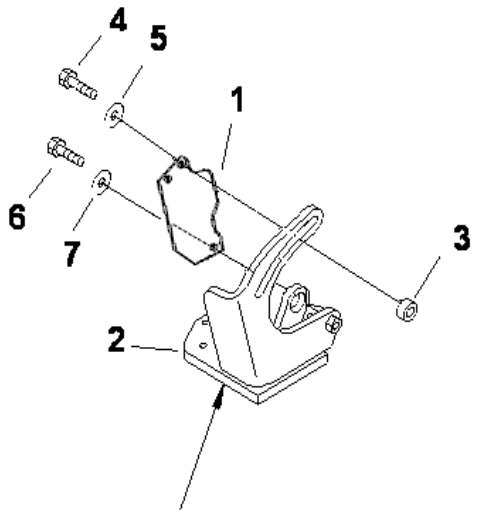

See Fig. B0000-02A0

PC130F-7 S/N J10001-UP

AIR CONDITIONER LESS

INDEX	CD	PART NO.	DESCRIPTION	QTY	SERIAL NO.
1		203-03-71340	COVER	1	J10001-UP
2		20Y-54-74560	PLATE	1	J10001-UP
3		01580-01210	NUT	2	J10001-UP
4		01010-81240	BOLT	2	J10001-UP
5		01643-31232	WASHER	2	J10001-UP
6		01010-81435	BOLT	1	J10001-UP
7		01643-31445	WASHER	1	J10001-UP

Ref :K0700-01A0 Page :210050

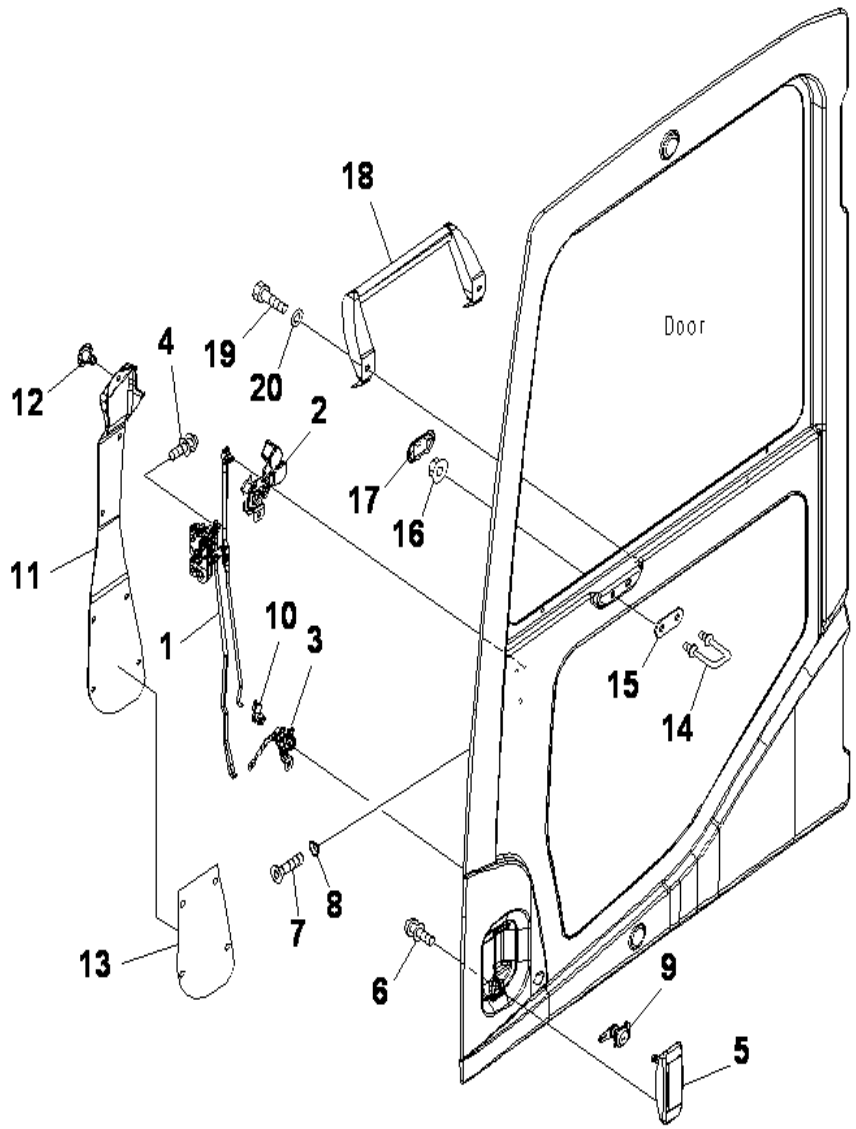

PC130F-7 S/N J10001-UP

FLOOR FRAME (OPERATOR'S CAB) (DOOR LOCK)

INDEX	CD	PART NO.	DESCRIPTION	QTY	SERIAL NO.
		203-54-00200	CAB ASS'Y (KOMTRAX LESS).....	1	J10001-UP
		208-53-00020	.FRONT WINDOW ASS'Y.....	1	J10001-UP
		208-53-00010	.DOOR ASS'Y.....	1	J10001-UP
1		20Y-54-52200	..LATCH ASS'Y.....	1	J10001-UP
2		20Y-54-52300	..HANDLE ASS'Y.....	1	J10001-UP
3		20Y-54-52400	..BELLCRANK ASS'Y.....	1	J10001-UP
4		01023-10612	..SCREW.....	5	J10001-UP
5		20Y-54-52990	..HANDLE.....	1	J10001-UP
6		01023-10612	..SCREW.....	2	J10001-UP
7		01240-00616	..SCREW.....	3	J10001-UP
8		195-Z1-11690	..WASHER.....	3	J10001-UP
9		20Y-54-52820	..LOCK ASS'Y.....	1	J10001-UP
10		22B-54-16330	..SNAP.....	1	J10001-UP
11		20Y-54-51441	..COVER.....	1	J10001-UP
12		22B-54-16461	..RIVET.....	7	J10001-UP
13		208-53-11320	..SEAL.....	1	J10001-UP
14		20Y-54-51321	..STRIKER.....	1	J10001-UP
15		20Y-54-51341	..PLATE.....	1	J10001-UP
16		01584-01008	..NUT.....	2	J10001-UP
17		20Y-54-51490	..COVER.....	1	J10001-UP
18		20Y-54-51393	..GRIP.....	1	J10001-UP
19		01010-80820	..BOLT.....	2	J10001-UP
20		01643-30823	..WASHER.....	2	J10001-UP

Ref :K1110-06A0 Page :210110

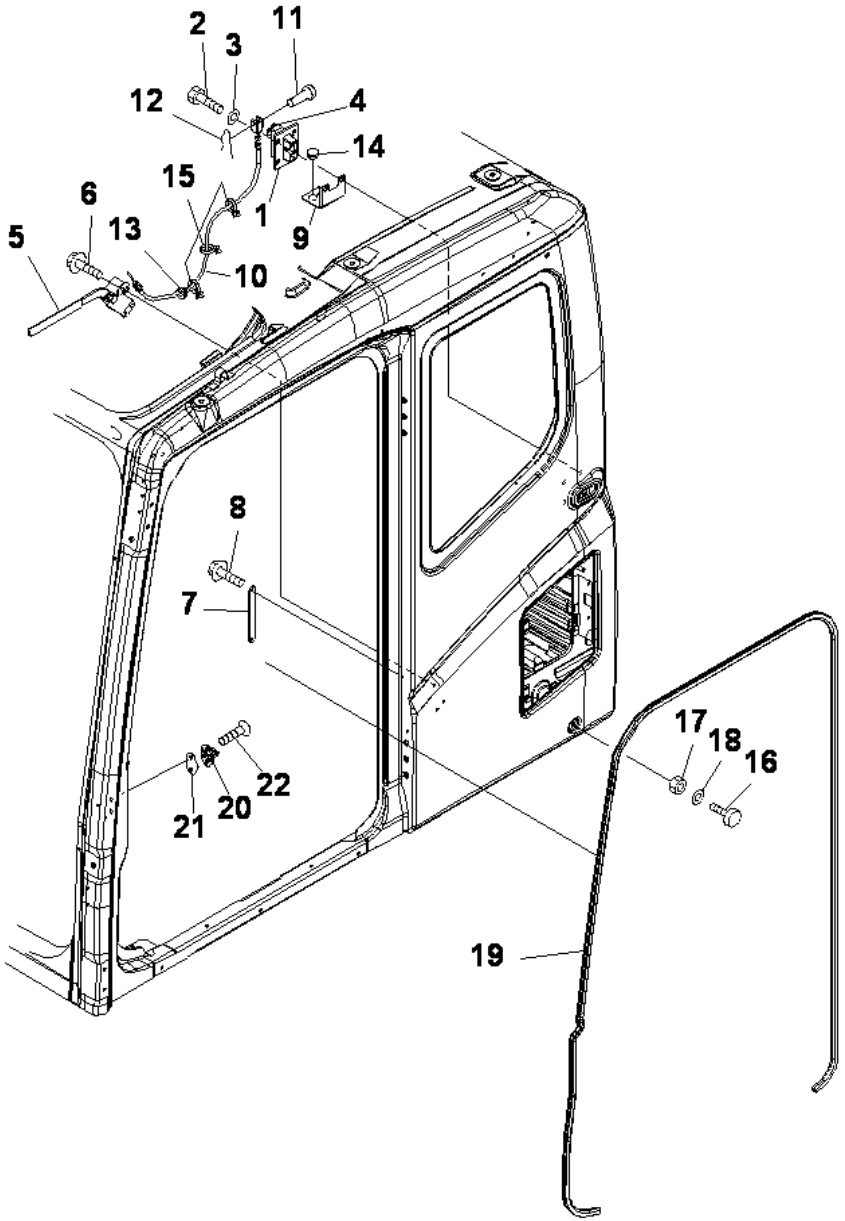

PC130F-7 S/N J10001-UP

FLOOR FRAME (OPERATOR'S CAB) (OPEN LOCK)

INDEX	CD	PART NO.	DESCRIPTION	QTY	SERIAL NO.
		203-54-00200	CAB ASS'Y (KOMTRAX LESS).....	1	J10001-UP
		208-53-00020	FRONT WINDOW ASS'Y.....	1	J10001-UP
1		20Y-54-36380	.LOCK.....	1	J10001-UP
2		01010-D0820	.BOLT.....	4	J10001-UP
3		01643-70823	.WASHER.....	4	J10001-UP
4		20Y-53-12280	.COVER.....	1	J10001-UP
5		208-53-14540	.LEVER ASS'Y.....	1	J10001-UP
6		01435-40616	.BOLT.....	3	J10001-UP
7		208-53-14720	.PLATE.....	1	J10001-UP
8		01435-40616	.BOLT.....	2	J10001-UP
9		208-53-11980	.PLATE.....	1	J10001-UP
10		208-53-11990	.CABLE.....	1	J10001-UP
11		04205-10520	.PIN.....	1	J10001-UP
12		04052-10530	.PIN.....	1	J10001-UP
13		08037-01610	.GROMMET.....	1	J10001-UP
14		09415-01610	.CAP.....	1	J10001-UP
15		08059-00413	.CLIP.....	3	J10001-UP
16		20Y-54-11611	.STOPPER.....	2	J10001-UP
17		01580-11008	.NUT.....	2	J10001-UP
18		01643-31032	.WASHER.....	2	J10001-UP
19		20Y-54-51910	.TRIM.....	1	J10001-UP
20		20Y-54-35470	.STRIKER.....	1	J10001-UP
21		20Y-54-35480	.SHIM.....	1	J10001-UP
22		01240-01025	.SCREW.....	2	J10001-UP

Ref :K1110-07A0 Page :210120

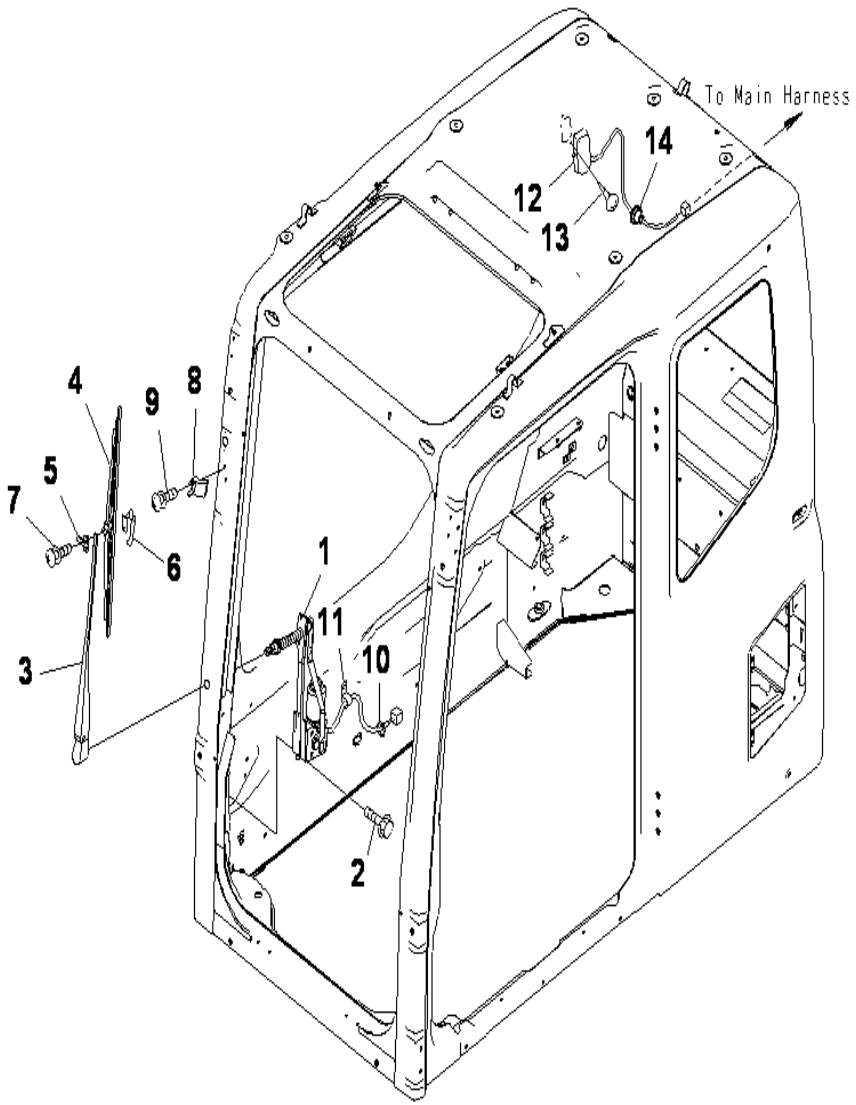

PC130F-7 S/N J10001-UP

FLOOR FRAME (OPERATOR'S CAB) (ELECTRICAL) (WIPER AND ROOM LAMP)

INDEX	CD	PART NO.	DESCRIPTION	QTY	SERIAL NO.
		203-54-00200	CAB ASS'Y (KOMTRAX LESS).....	1	J10001-UP
1		208-53-12780	.WIPER MOTOR ASS'Y.....	1	J10001-UP
2		01435-40616	.BOLT.....	6	J10001-UP
		20Y-54-52221	.WIPER ASS'Y.....	1	J10001-UP
3		20Y-54-52350	..ARM.....	1	J10001-UP
4		20Y-54-39450	..BLADE.....	1	J10001-UP
5		20Y-54-39460	..SLIDER.....	1	J10001-UP
6		20Y-54-39480	..PLATE.....	1	J10001-UP
7	C1		..SCREW AND WASHER.....	2	J10001-UP
8		20Y-54-52231	.STOPPER.....	1	J10001-UP
9		01023-20620	.SCREW.....	1	J10001-UP
10		08034-20414	.BAND.....	1	J10001-UP
11		08059-00310	.CLAMP.....	1	J10001-UP
12		208-53-12790	.ROOM LAMP.....	1	J10001-UP
		08116-02410	.BULB, 10W.....	1	J10001-UP
13		01370-00420	.SCREW.....	2	J10001-UP
14		08037-11025	.GROMMET.....	1	J10001-UP

Ref :K1110-08A4 Page :210130

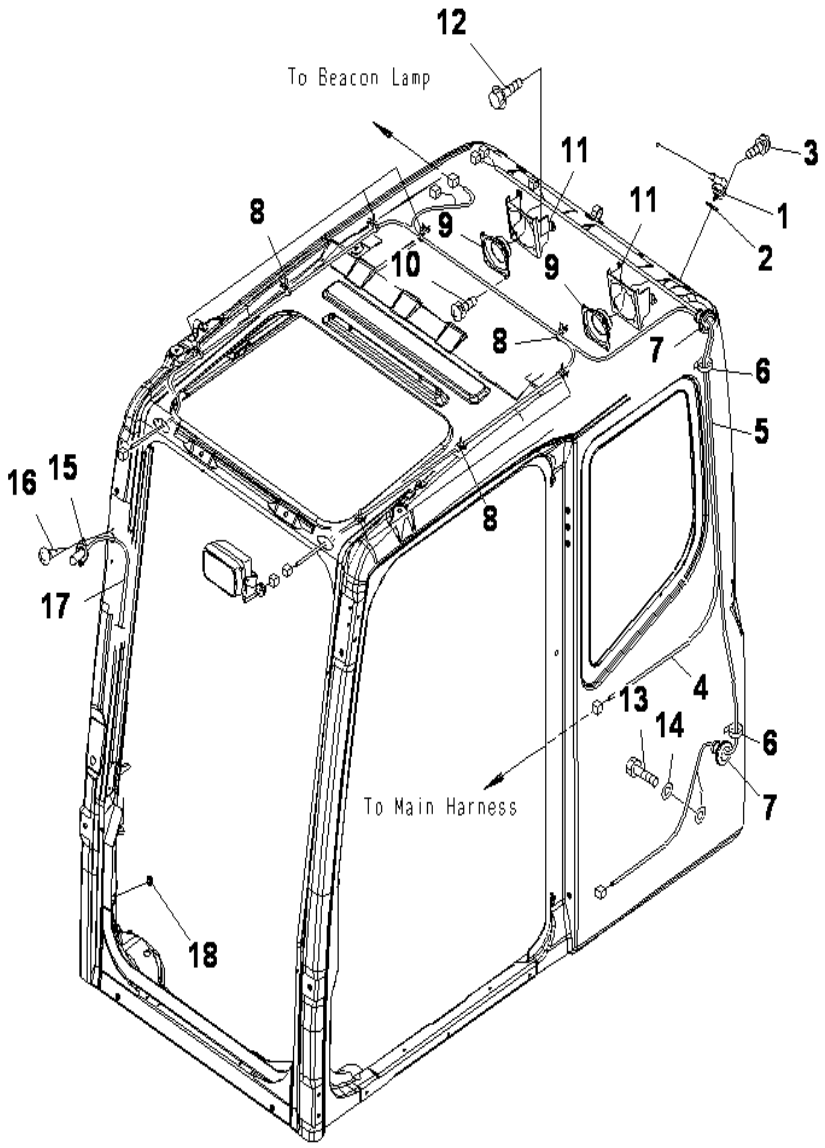

FLOOR FRAME (OPERATOR'S CAB) (ELECTRICAL) (RADIO)

INDEX	CD	PART NO.	DESCRIPTION	QTY	SERIAL NO.
		203-54-00200	CAB ASS'Y (KOMTRAX LESS).....	1	J10001-UP
1		20Y-06-41990	.RUBBER ANTENNA.....	1	J10001-UP
2		01643-30623	.WASHER.....	1	J10001-UP
3		01023-20412	.SCREW.....	2	J10001-UP
4		20Y-54-55311	.WIRING HARNESS.....	1	J10001-UP
5		203-54-71412	.WIRING HARNESS.....	1	J10001-UP
6		08034-20414	.BAND.....	2	J10001-UP
7		08037-12536	.GROMMET.....	2	J10001-UP
8		08059-00413	.CLIP.....	8	J10001-UP
9		08910-10000	.SPEAKER.....	2	J10001-UP
10		01023-20412	.SCREW.....	8	J10001-UP
11		208-53-11480	.PLATE.....	2	J10001-UP
12		01435-40616	.BOLT.....	6	J10001-UP
13		01010-81020	.BOLT.....	1	J10001-UP
14		01643-31032	.WASHER.....	1	J10001-UP
15		20Y-54-39511	.NOZZLE.....	1	J10001-UP
16		01370-40412	.SCREW.....	2	J10001-UP
17		17M-91-12670	.HOSE.....	1	J10001-UP
18		08037-01610	.GROMMET.....	1	J10001-UP

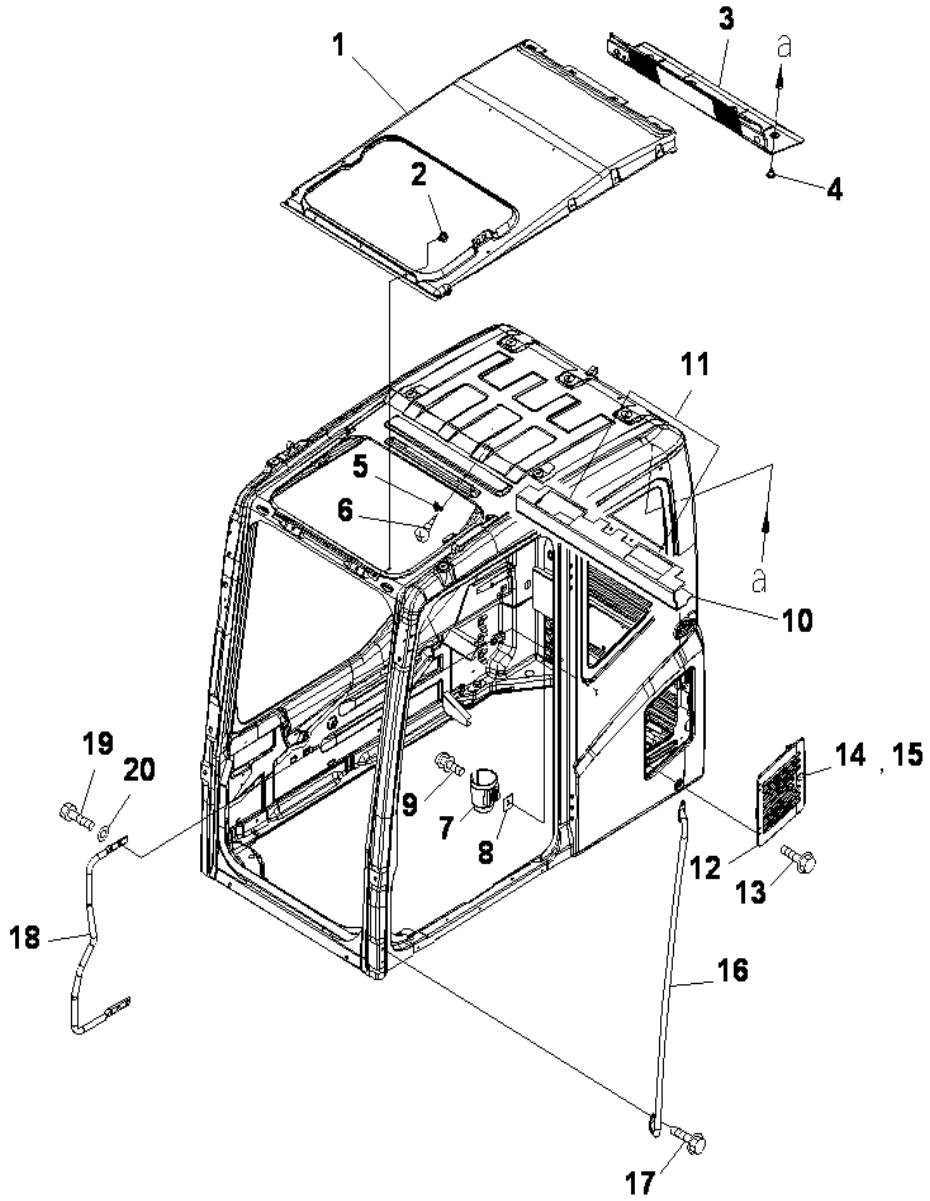

PC130F-7 S/N J10001-UP

FLOOR FRAME (OPERATOR'S CAB) (ACCESSORIES)

INDEX	CD	PART NO.	DESCRIPTION	QTY	SERIAL NO.
		203-54-00200	CAB ASS'Y (KOMTRAX LESS).....	1	J10001-UP
1		20Y-54-52412	.COVER.....	1	J10001-UP
2		20Y-54-18690	.RIVET.....	15	J10001-UP
3		20Y-54-52423	.LINING.....	1	J10001-UP
4		20Y-54-18690	.RIVET.....	8	J10001-UP
5		205-54-51250	.HANGER.....	1	J10001-UP
6		01370-30412	.SCREW.....	2	J10001-UP
7		208-53-12991	.HOLDER.....	1	J10001-UP
8		208-53-12980	.PLATE.....	1	J10001-UP
9		01023-20616	.SCREW.....	2	J10001-UP
10		208-53-12470	.SEAL.....	1	J10001-UP
11		208-53-12810	.SEAT.....	2	J10001-UP
12		208-53-11750	.COVER.....	1	J10001-UP
13		01435-40610	.BOLT.....	4	J10001-UP
14		208-53-11760	.LOCK ASS'Y.....	1	J10001-UP
15		205-54-76280	..ROTOR ASS'Y.....	1	J10001-UP
16		20Y-54-51820	.GRIP.....	1	J10001-UP
17		01435-40820	.BOLT.....	4	J10001-UP
18		20Y-54-51832	.GRIP.....	1	J10001-UP
19		01010-D1025	.BOLT.....	3	J10001-UP
20		01643-71032	.WASHER.....	3	J10001-UP

Ref :K1110-10A4 Page :210150

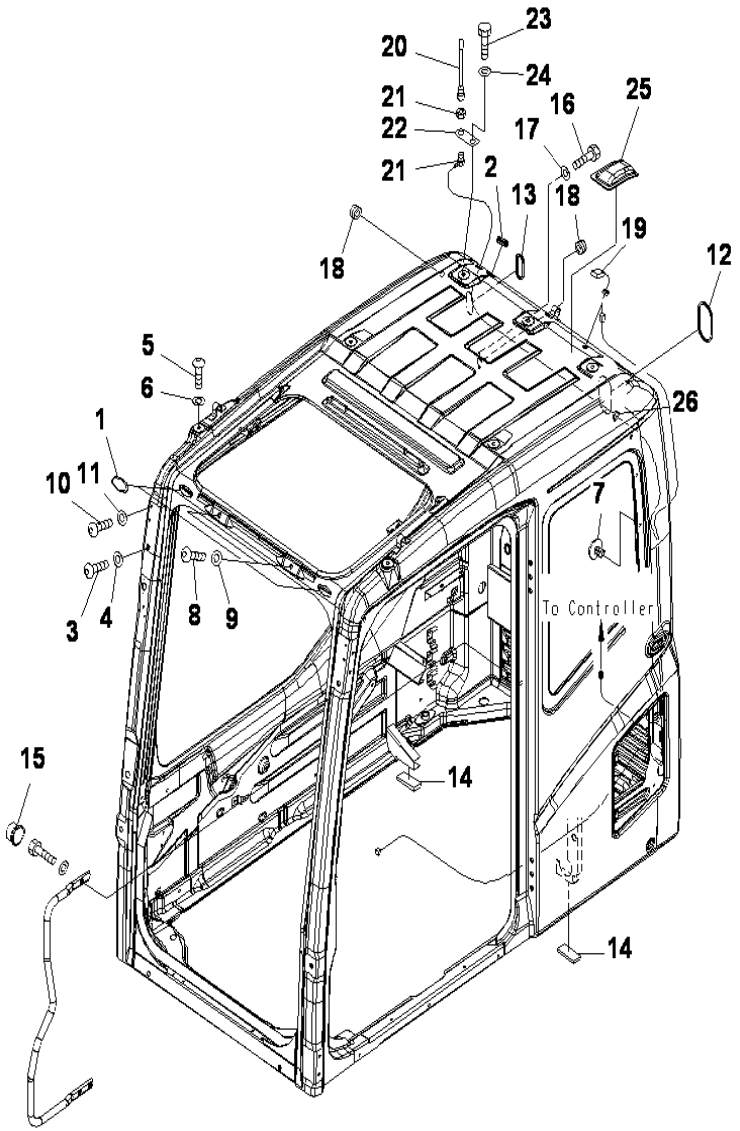

PC130F-7 S/N J10001-UP

FLOOR FRAME (OPERATOR'S CAB)(PLUG BOLT AND ANTENNA)(WITH KOMTRAX)

INDEX	CD	PART NO.	DESCRIPTION	QTY	SERIAL NO.
		203-54-00630	CAB ASS'Y(WITH KOMTRAX).....	1	J10001-UP
1		22B-54-17282	.CAP.....	2	J10001-UP
2		09415-02512	.CAP.....	1	J10001-UP
3		01245-01220	.SCREW.....	6	J10001-UP
4		01643-71232	.WASHER.....	6	J10001-UP
5		01245-01220	.SCREW.....	7	J10001-UP
6		01643-71232	.WASHER.....	7	J10001-UP
7		208-53-13270	.RIVET.....	2	J10001-UP
8		01245-01016	.SCREW.....	2	J10001-UP
9		01643-71032	.WASHER.....	2	J10001-UP
10		01245-00612	.SCREW.....	4	J10001-UP
11		01643-70623	.WASHER.....	4	J10001-UP
12		20Y-54-52470	.GROMMET.....	1	J10001-UP
13		20Y-54-36150	.GROMMET.....	1	J10001-UP
14		208-53-12580	.SEAL.....	2	J10001-UP
15		20Y-54-52440	.CAP.....	1	J10001-UP
16		01641-50608	.WASHER.....	2	J10001-UP
17		01245-00616	.SCREW.....	2	J10001-UP
18		09415-01008	.CAP.....	2	J10001-UP
19		8A13-10-1310	.ANTENNA.....	1	J10001-UP
20		8A13-10-2100	.ANTENNA.....	1	J10001-UP
21		8A13-10-2200	.CABLE.....	1	J10001-UP
22		20Y-53-15140	.PLATE.....	1	J10001-UP
23		01010-D1225	.BOLT.....	1	J10001-UP
24		01643-71232	.WASHER.....	1	J10001-UP
25		20Y-54-53610	.COVER.....	1	J10001-UP
26		08034-20519	.BAND.....	1	J10001-UP

Ref :K1110-11H2 Page :210160

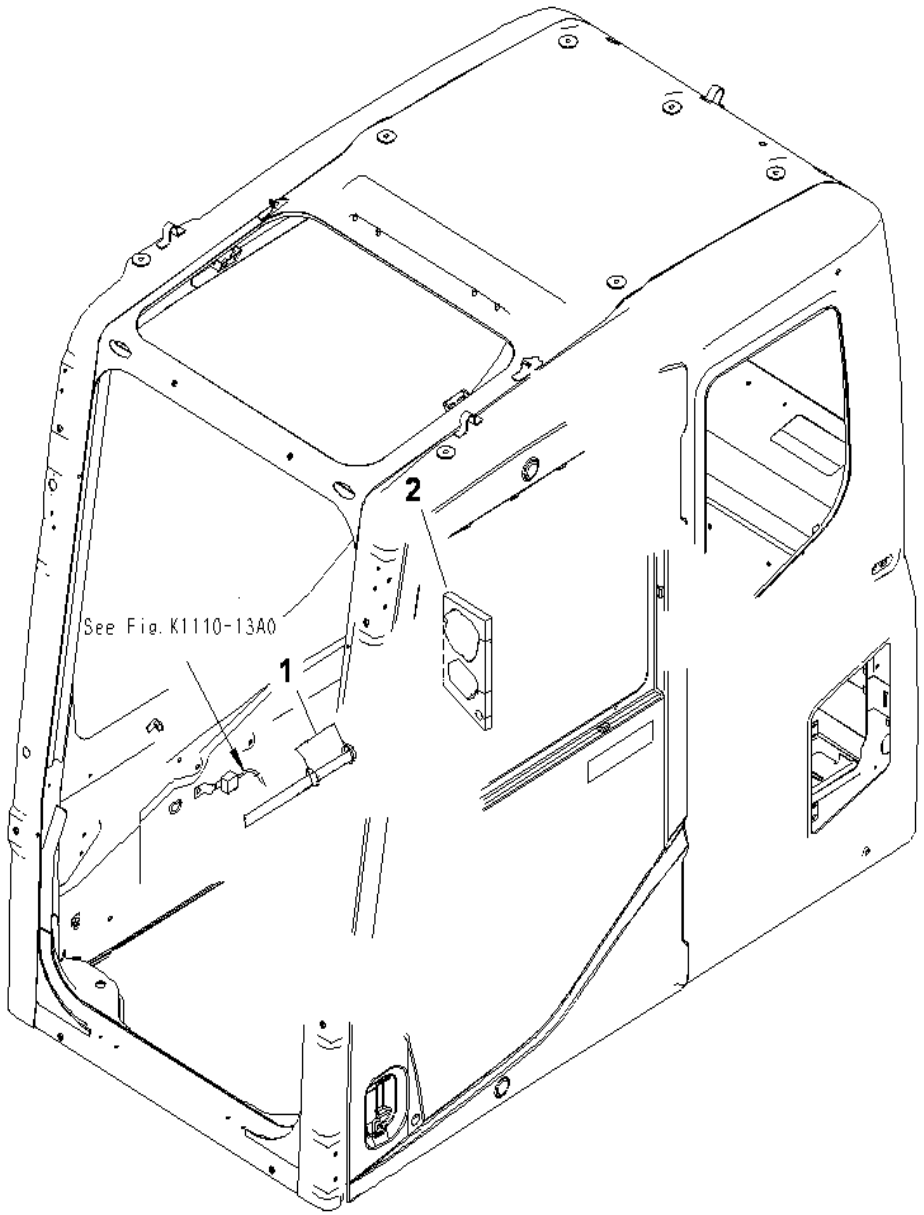

PC130F-7 S/N J10001-UP

FLOOR FRAME (OPERATOR'S CAB) (CLAMP AND PLATE)

INDEX	CD	PART NO.	DESCRIPTION	QTY	SERIAL NO.
		203-54-00200	CAB ASS'Y (KOMTRAX LESS).....	1	J10001-UP
1		08034-20414	.BAND.....	2	J10001-UP
2		208-53-15620	.SEAL.....	1	J10001-UP

Ref :K1110-12A4 Page :210170

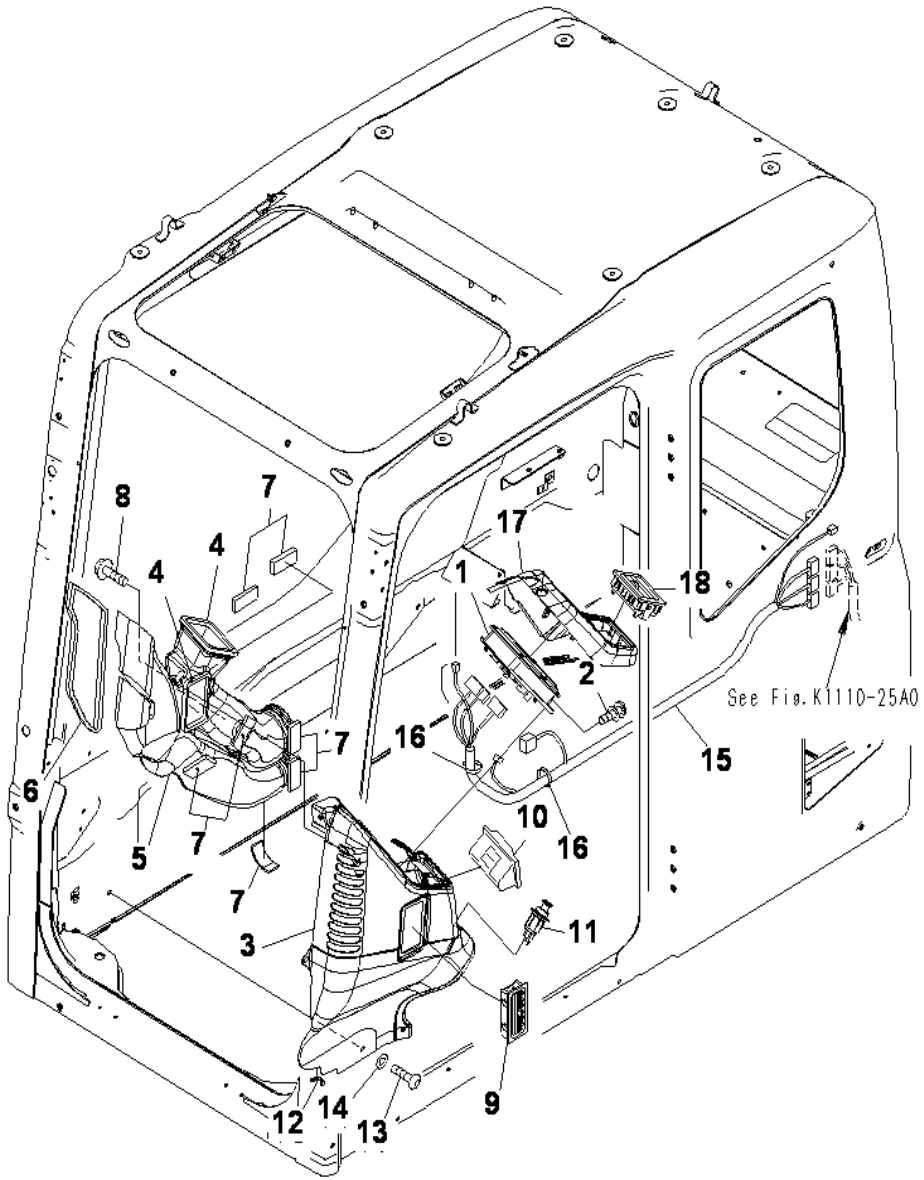

PC130F-7 S/N J10001-UP

FLOOR FRAME (OPERATOR'S CAB) (MONITOR SYSTEM)

INDEX	CD	PART NO.	DESCRIPTION	QTY	SERIAL NO.
1		7835-10-5000	MONITOR	1	J10001-UP
2		01023-10616	SCREW	3	J10001-UP
3		208-53-12152	COVER	1	J10001-UP
4		208-53-11941	SEAL	2	J10001-UP
5		208-53-13670	DUCT	1	J10001-UP
6		208-53-11920	SEAL	1	J10001-UP
7		208-53-12440	SEAL	7	J10001-UP
8		01435-00612	BOLT	2	J10001-UP
9		421-07-33870	GRILLE ASS'Y	1	J10001-UP
10		22U-54-25371	ASHTRAY	1	J10001-UP
11		20Y-06-23472	CIGARETTE LIGHT	1	J10001-UP
12		208-53-11850	GROMMET	1	J10001-UP
13		01245-00816	SCREW	5	J10001-UP
14		01643-70823	WASHER	5	J10001-UP
15		208-53-12920	WIRING HARNESS	1	J10001-UP
		19M-06-31720	.RESISTOR	1	J10001-UP
16		08034-20876	BAND	2	J10001-UP
17		22U-54-25910	COVER (STD)	1	J10001-UP
18		201-979-7820	GRILLE	1	J10001-UP

Ref :K1110-13A0 Page :210180

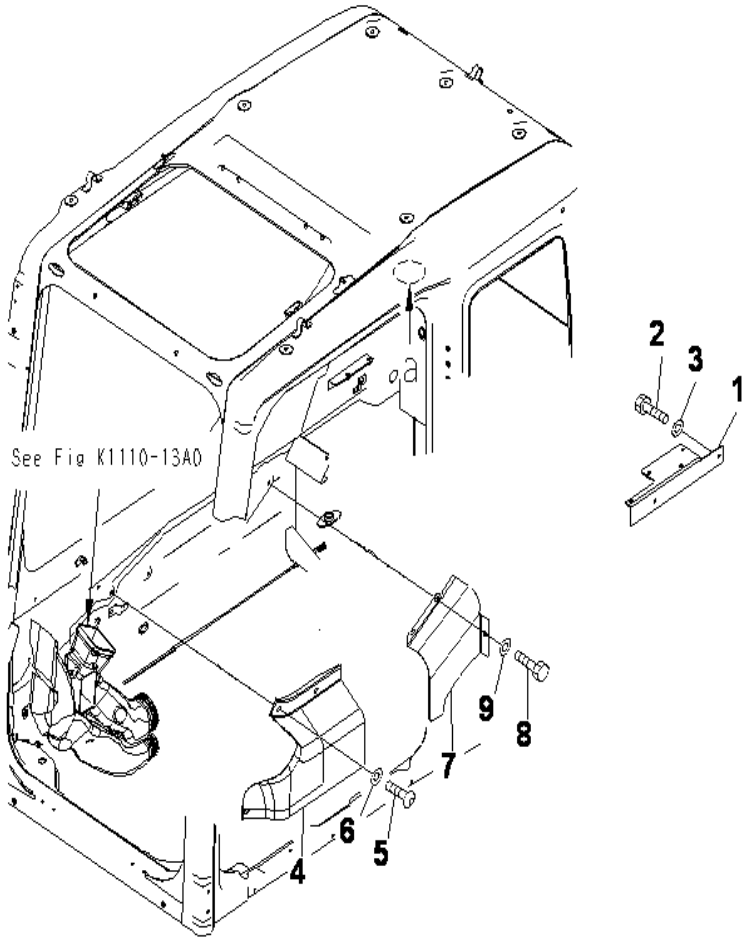

PC130F-7 S/N J10001-UP

FLOOR FRAME (OPERATOR'S CAB) (PLATE AND DUCT)

INDEX	CD	PART NO.	DESCRIPTION	QTY	SERIAL NO.
1		208-53-15770	PLATE	1	J10001-UP
2		01010-D0820	BOLT	2	J10001-UP
3		01643-70823	WASHER	2	J10001-UP
4		208-53-12180	COVER	1	J10001-UP
5		01245-00816	SCREW	3	J10001-UP
6		01643-70823	WASHER	3	J10001-UP
7		208-53-12190	COVER	1	J10001-UP
8		01010-D0820	BOLT	3	J10001-UP
9		01643-70823	WASHER	3	J10001-UP

Ref :K1110-14A0 Page :210190

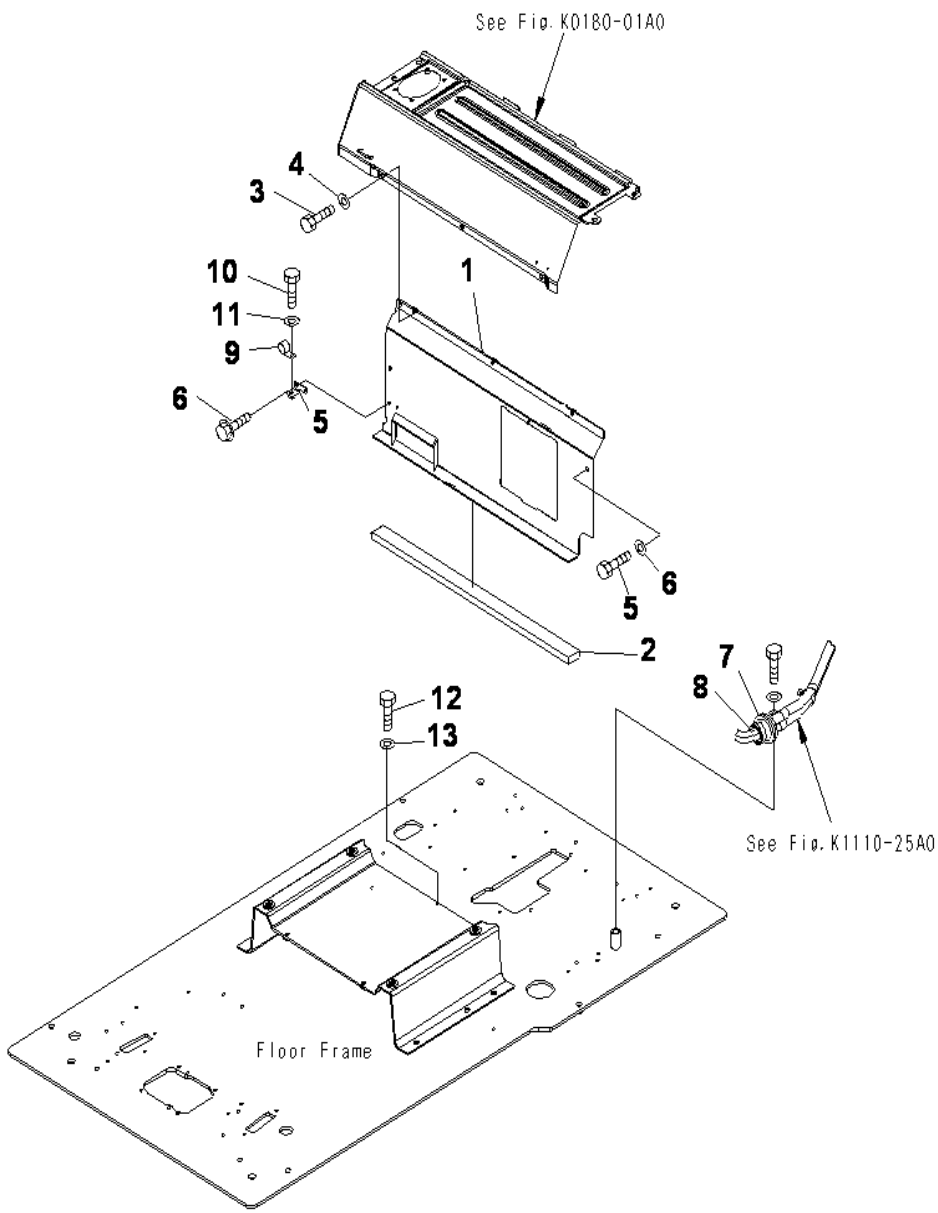

PC130F-7 S/N J10001-UP

FLOOR FRAME (OPERATOR'S CAB) (PARTTION AND FOOT DUCT)

INDEX	CD	PART NO.	DESCRIPTION	QTY	SERIAL NO.
		208-53-15650	BRACKET ASS'Y	1	J10001-UP
1		208-53-15560	.BRACKET	1	J10001-UP
2		208-53-11871	.SEAL	1	J10001-UP
3		01010-D0820	BOLT	2	J10001-UP
4		01643-70823	WASHER	2	J10001-UP
5		208-53-11790	PLATE	1	J10001-UP
6		01435-40616	BOLT	2	J10001-UP
7		21T-06-71870	GROMMET	1	J10001-UP
8		08034-20519	BAND	1	J10001-UP
9		04434-51908	CLIP	1	J10001-UP
10		01010-D0820	BOLT	1	J10001-UP
11		01643-70823	WASHER	1	J10001-UP
12		01010-D0820	BOLT	2	J10001-UP
13		01643-70823	WASHER	2	J10001-UP

Ref :K1110-15A0 Page :210200

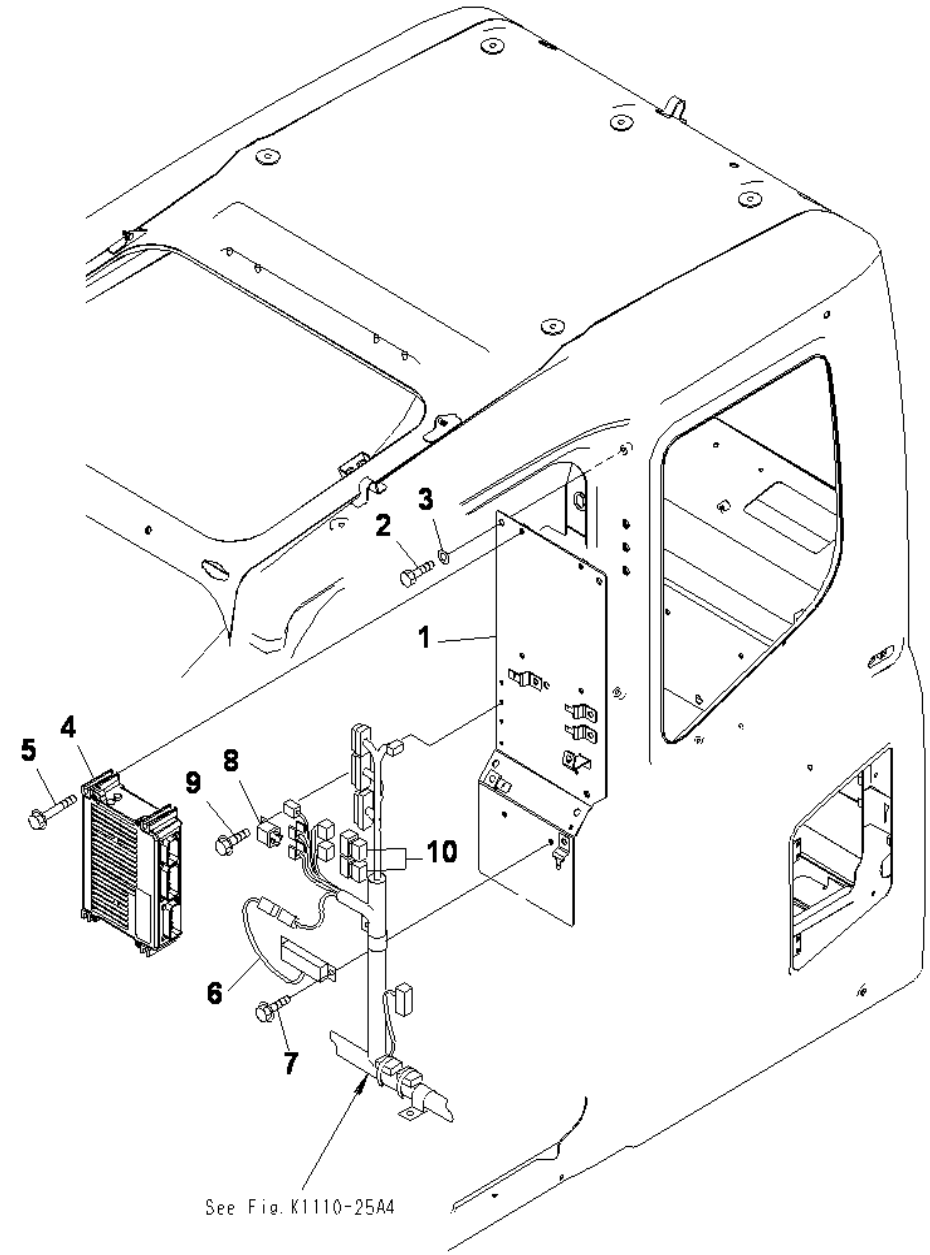

PC130F-7 S/N J10001-UP

FLOOR FRAME (OPERATOR'S CAB) (SUB PANEL)

INDEX	CD	PART NO.	DESCRIPTION	QTY	SERIAL NO.
1		208-53-12860	PLATE	1	J10001-UP
2		01010-80816	BOLT	5	J10001-UP
3		01643-30823	WASHER	5	J10001-UP
4		7835-26-5002	CONTROLLER	1	J10001-UP
5		01435-00885	BOLT	4	J10001-UP
6		7861-94-3000	RESISTOR	1	J10001-UP
7		01435-00816	BOLT	2	J10001-UP
8		569-06-61960	RELAY	1	J10001-UP
9		01435-00610	BOLT	1	J10001-UP
10		8233-06-3350	DIODE	2	J10001-UP

Ref :K1110-16A4 Page :210210

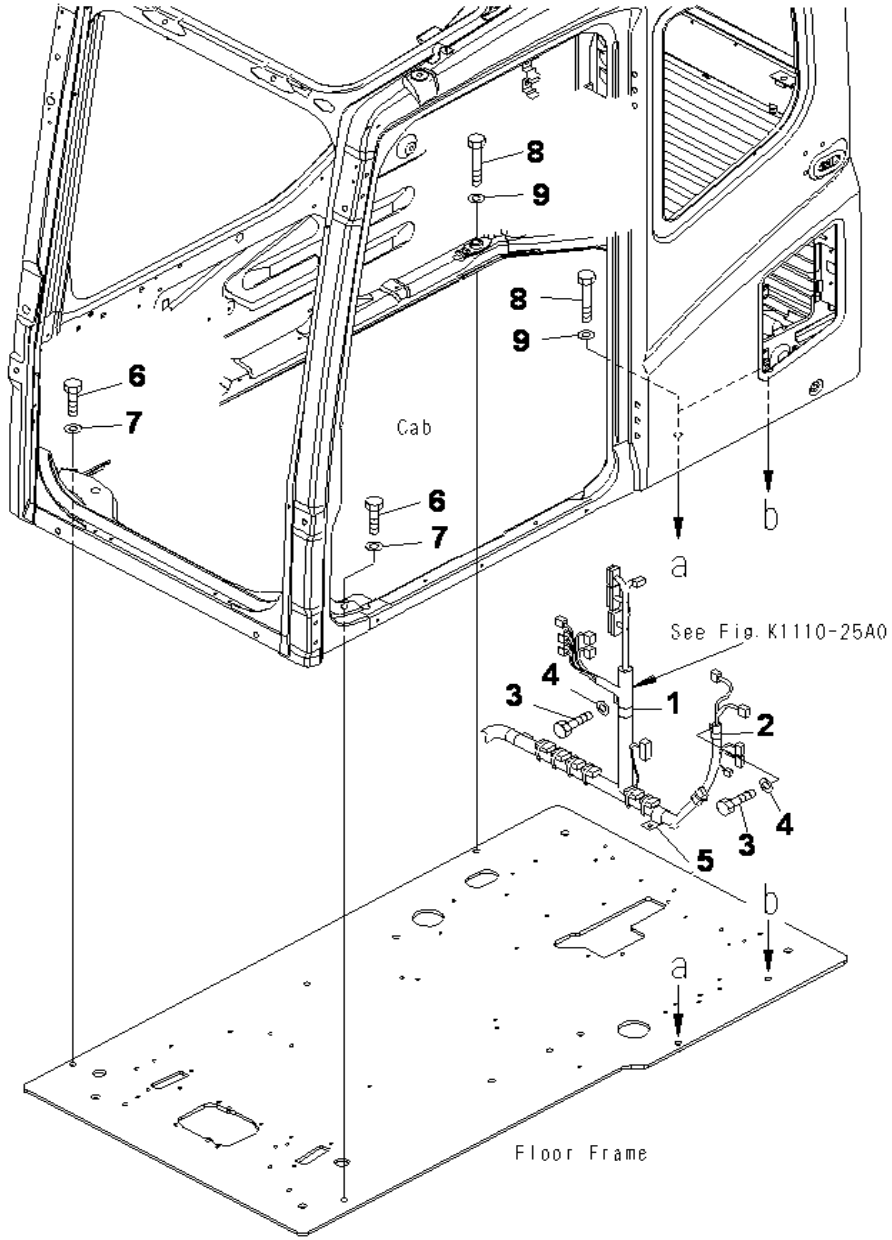

PC130F-7 S/N J10001-UP

FLOOR FRAME (OPERATOR'S CAB) (CLAMP AND BOLT)

INDEX	CD	PART NO.	DESCRIPTION	QTY	SERIAL NO.
1		04434-53411	CLIP	1	J10001-UP
2		04434-52208	CLIP	1	J10001-UP
3		01010-81020	BOLT	2	J10001-UP
4		01643-31032	WASHER	2	J10001-UP
5		08059-00413	CLIP	1	J10001-UP
6		01010-81240	BOLT	2	J10001-UP
7		01643-31232	WASHER	2	J10001-UP
8		01010-81285	BOLT	3	J10001-UP
9		01643-31232	WASHER	3	J10001-UP

Ref :K1110-17A0 Page :210220

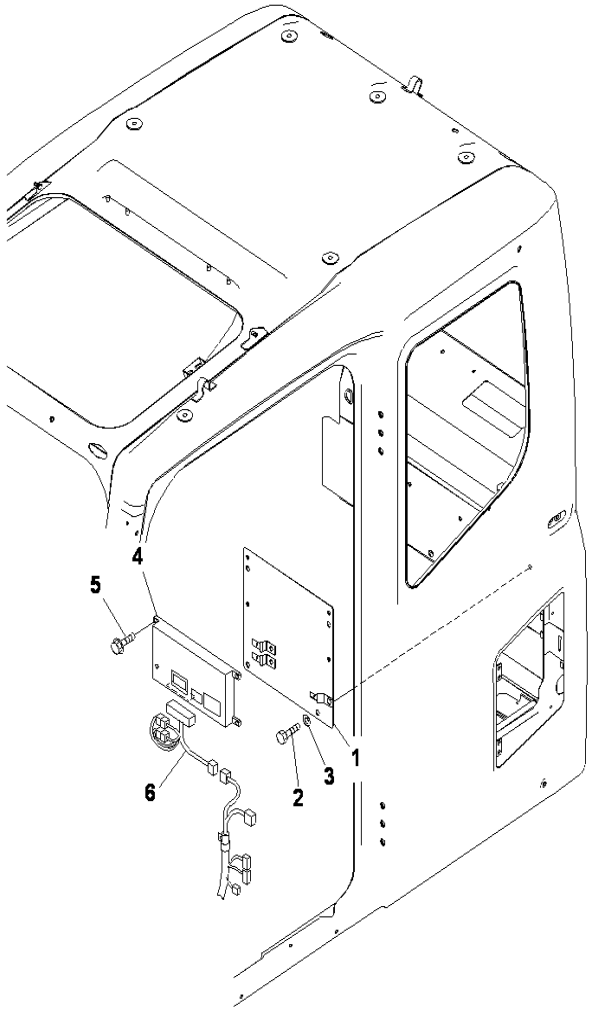

PC130F-7 S/N J10001-UP

FLOOR FRAME (OPERATOR'S CAB)(KOMTRAX)

INDEX	CD	PART NO.	DESCRIPTION	QTY	SERIAL NO.
1		208-53-12870	PLATE	1	J10001-UP
2		01010-80816	BOLT	4	J10001-UP
3		01643-30823	WASHER	4	J10001-UP
4		7826-20-7036	CONTROLLER	1	J10001-UP
5		01435-00825	BOLT	4	J10001-UP
6		203-06-71720	WIRING HARNESS	1	J10001-UP

Ref :K1110-17D0 Page :210225

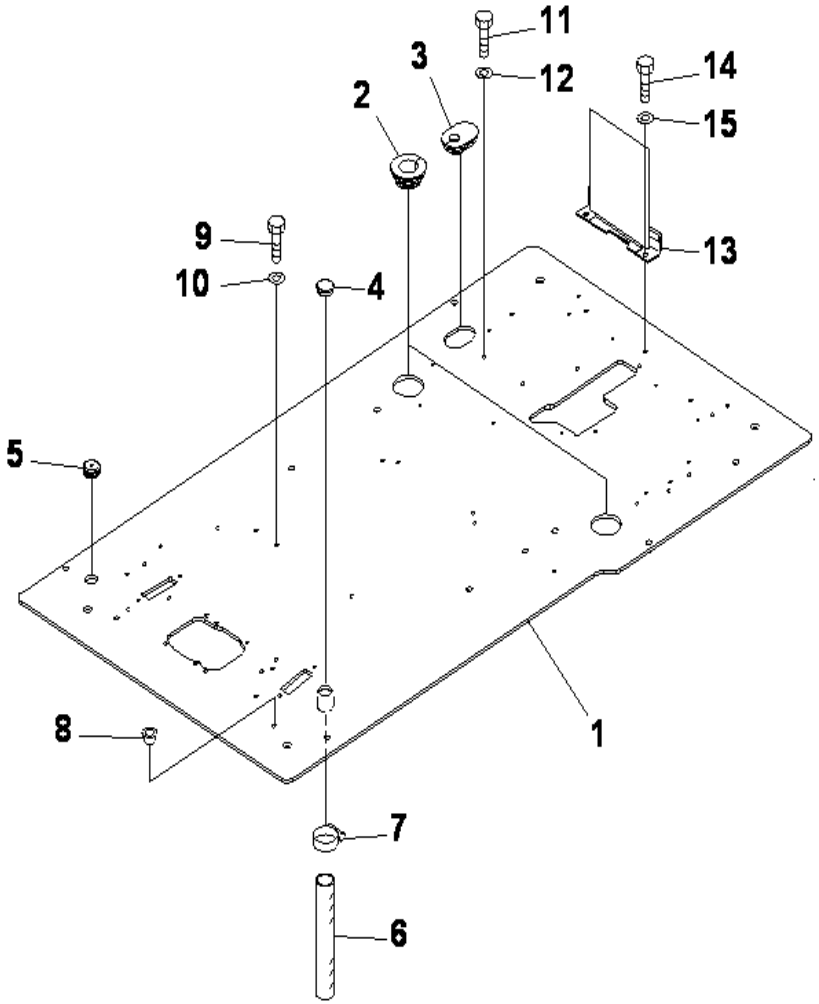

PC130F-7 S/N J10001-UP

FLOOR FRAME (OPERATOR'S CAB) (FLOOR FRAME)

INDEX	CD	PART NO.	DESCRIPTION	QTY	SERIAL NO.
1		208-53-14810	FLOOR FRAME	1	J10001-UP
2		20Y-54-65121	GROMMET	2	J10001-UP
3		208-53-12970	GROMMET	1	J10001-UP
4		22U-54-25581	GROMMET	1	J10001-UP
5		22U-54-25590	GROMMET	1	J10001-UP
6		07286-03828	HOSE	1	J10001-UP
7		07280-04726	CLAMP	1	J10001-UP
8		07048-01310	PLUG	2	J10001-UP
9		01010-81030	BOLT	2	J10001-UP
10		01643-31032	WASHER	2	J10001-UP
11		01010-81016	BOLT	1	J10001-UP
12		01643-31032	WASHER	1	J10001-UP
13		208-53-12891	BRACKET	1	J10001-UP
		22U-06-22261	.SHEET	1	J10001-UP
14		01010-81020	BOLT	2	J10001-UP
15		01643-31032	WASHER	2	J10001-UP

Ref :K1110-19A0 Page :210230

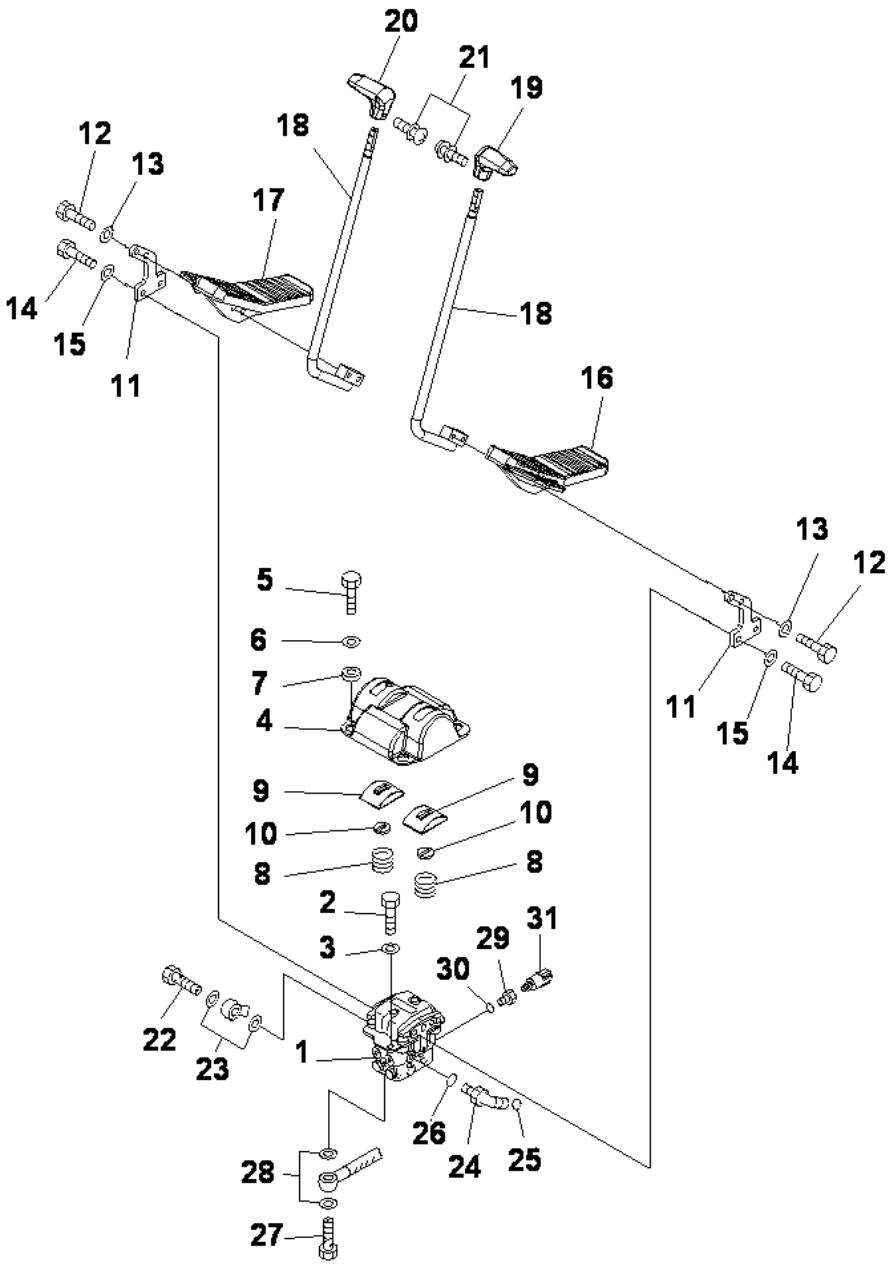

FLOOR FRAME (OPERATOR'S CAB) (TRAVEL CONTROL)

INDEX	CD	PART NO.	DESCRIPTION	QTY	SERIAL NO.
1		702-16-04270	PILOT VALVE	1	J10001-UP
2		01010-81020	BOLT	2	J10001-UP
3		01643-31032	WASHER	2	J10001-UP
4		20Y-43-41121	COVER	1	J10001-UP
5		01010-81020	BOLT	4	J10001-UP
6		01643-31032	WASHER	4	J10001-UP
7		20Y-43-41361	COLLAR	4	J10001-UP
8		203-43-51620	SPRING	2	J10001-UP
		22U-43-21350	COVER ASS'Y	2	J10001-UP
9		20Y-43-21140	.COVER	1	J10001-UP
10		22U-43-21360	.SEAL	1	J10001-UP
11		20Y-43-41111	LEVER	2	J10001-UP
12		01010-D1045	BOLT	4	J10001-UP
13		01643-71032	WASHER	4	J10001-UP
14		01010-81030	BOLT	4	J10001-UP
15		01643-31032	WASHER	4	J10001-UP
16		22U-43-21111	PEDAL	1	J10001-UP
17		22U-43-21121	PEDAL	1	J10001-UP
18		22U-43-21131	LEVER	2	J10001-UP
19		20Y-43-21231	KNOB	1	J10001-UP
20		20Y-43-21241	KNOB	1	J10001-UP
21		01023-20416	SCREW	2	J10001-UP
22		20Y-62-18910	BOLT	1	J10001-UP
23		07000-12018	O-RING	2	J10001-UP
24		11Y-62-12160	ELBOW	1	J10001-UP
25		02896-11008	O-RING	1	J10001-UP
26		07002-11423	O-RING	1	J10001-UP
27		20Y-62-18890	BOLT	4	J10001-UP
28		07000-12015	O-RING	8	J10001-UP
29		20Y-62-41390	ADAPTER	1	J10001-UP
30		07002-11423	O-RING	1	J10001-UP
31		20Y-06-21710	SWITCH	1	J10001-UP

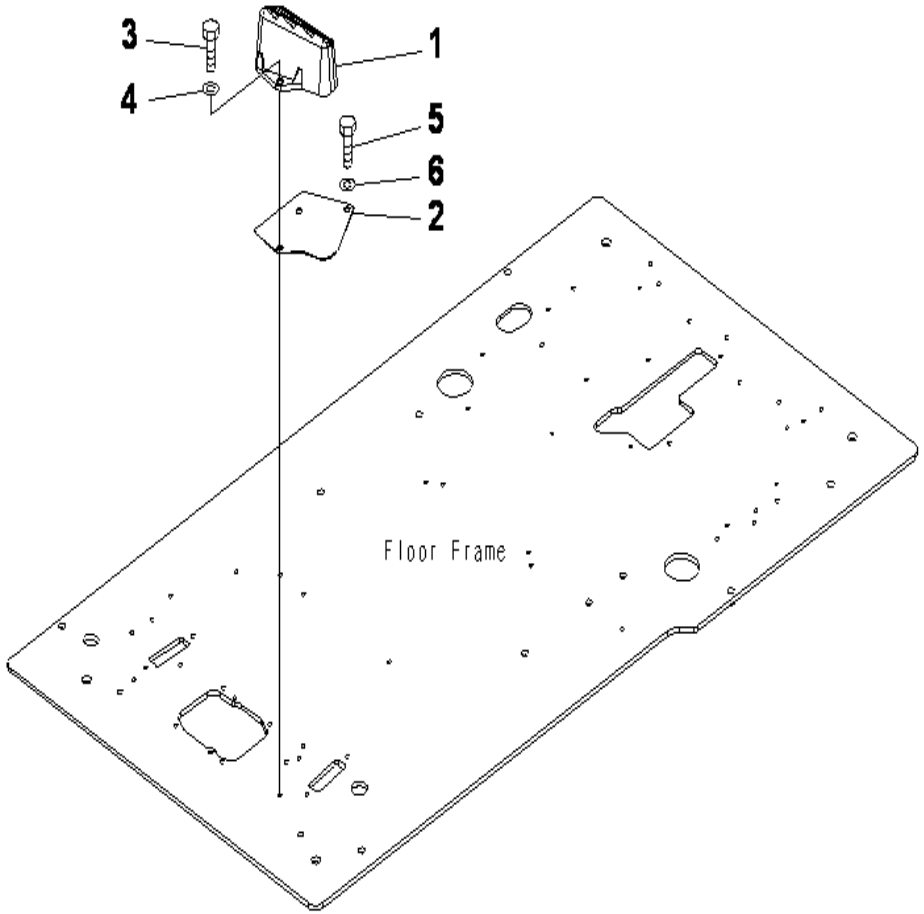

PC130F-7 S/N J10001-UP

FLOOR FRAME (OPERATOR'S CAB) (FOOT REST) (L.H.)

INDEX	CD	PART NO.	DESCRIPTION	QTY	SERIAL NO.
1		22U-54-25110	FOOT REST	1	J10001-UP
2		22U-54-25521	PLATE	1	J10001-UP
3		01010-81025	BOLT	2	J10001-UP
4		01643-31032	WASHER	2	J10001-UP
5		01010-81020	BOLT	1	J10001-UP
6		01643-31032	WASHER	1	J10001-UP

Ref :K1110-21A0 Page :210250

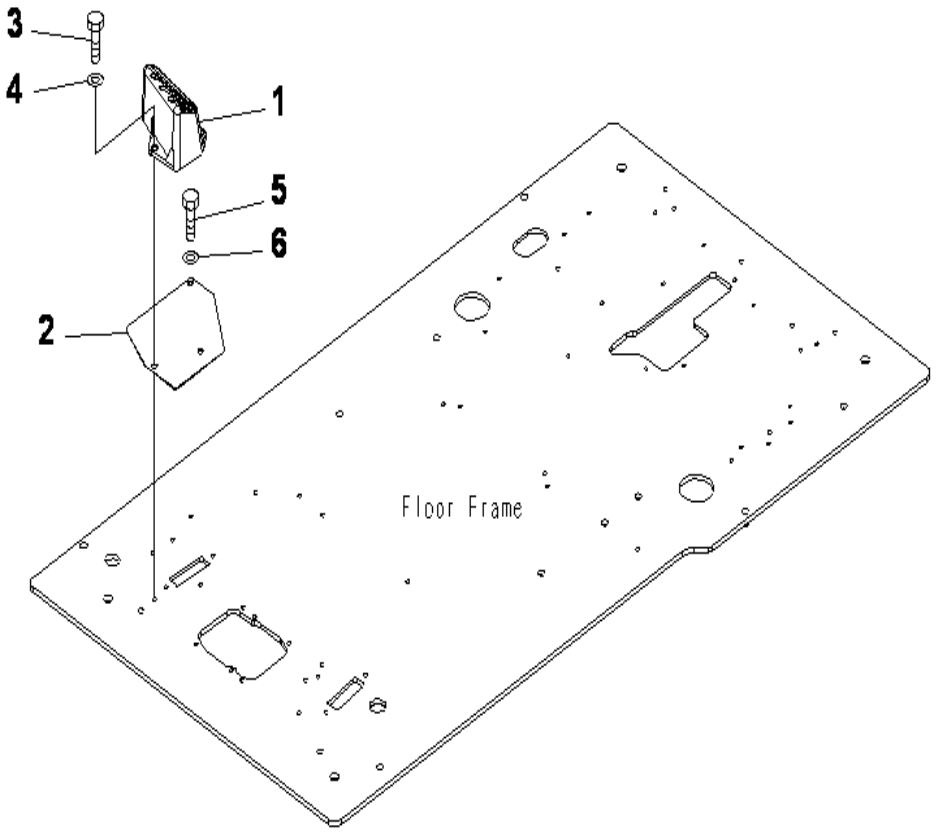

PC130F-7 S/N J10001-UP

FLOOR FRAME (OPERATOR'S CAB) (FOOT REST) (R.H.)

INDEX	CD	PART NO.	DESCRIPTION	QTY	SERIAL NO.
1		22U-54-25120	FOOT REST	1	J10001-UP
2		22U-54-25531	PLATE	1	J10001-UP
3		01010-81025	BOLT	2	J10001-UP
4		01643-31032	WASHER	2	J10001-UP
5		01010-81020	BOLT	1	J10001-UP
6		01643-31032	WASHER	1	J10001-UP

Ref :K1110-22A4 Page :210260

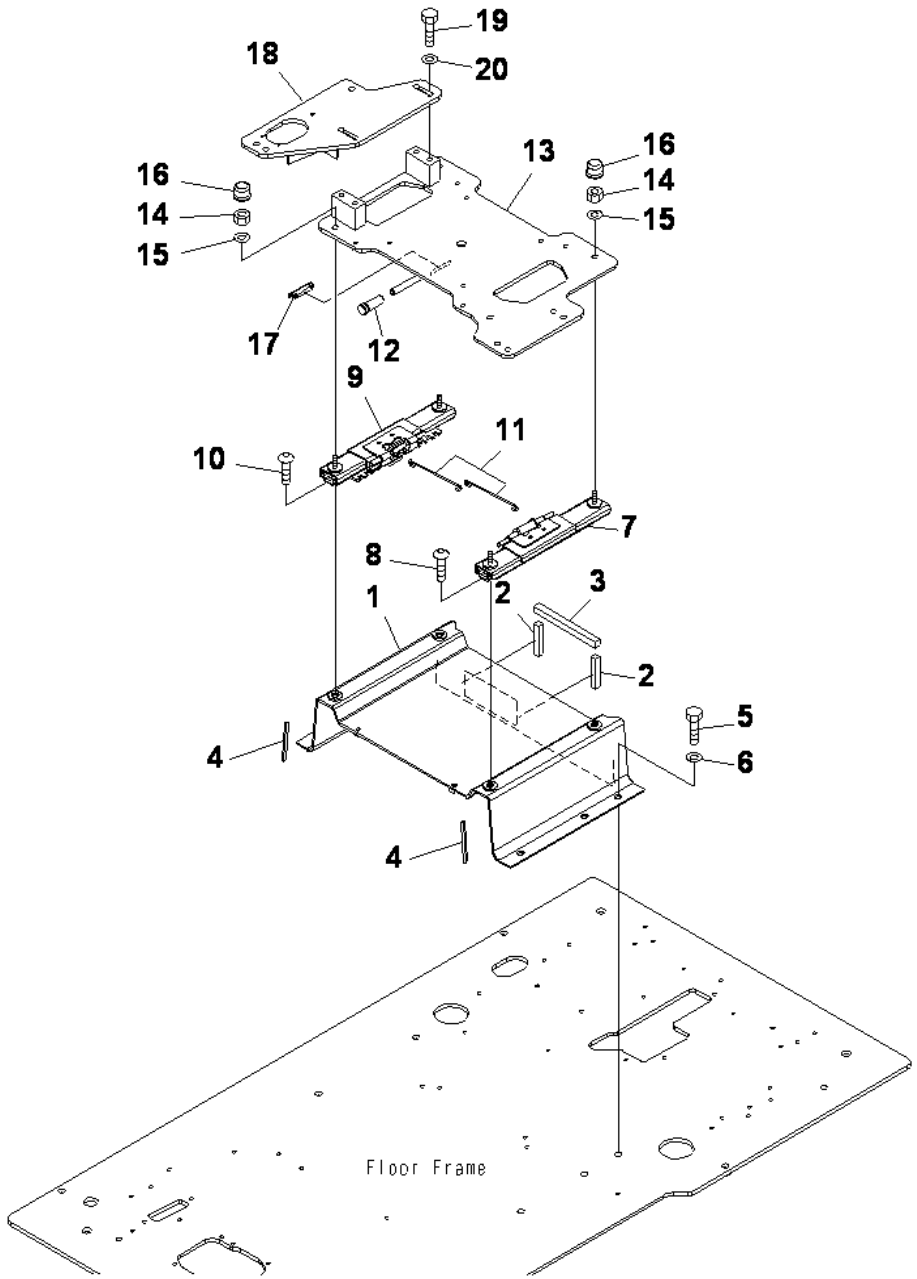

PC130F-7 S/N J10001-UP

FLOOR FRAME (OPERATOR'S CAB) (BASE)

INDEX	CD	PART NO.	DESCRIPTION	QTY	SERIAL NO.
1		208-43-71511	FRAME	1	J10001-UP
2		208-43-71520	.SEAL	2	J10001-UP
3		208-43-71530	.SEAL	1	J10001-UP
4		208-43-71590	.SEAL	2	J10001-UP
5		01010-81230	BOLT	5	J10001-UP
6		01643-31232	WASHER	5	J10001-UP
7		208-43-71541	ADJUSTER	1	J10001-UP
8		01245-01025	SCREW	2	J10001-UP
9		208-43-71551	ADJUSTER	1	J10001-UP
10		01245-01025	SCREW	2	J10001-UP
11		22U-43-21260	WIRE	2	J10001-UP
12		22U-43-21390	CAP	1	J10001-UP
13		208-43-71560	FRAME	1	J10001-UP
14		20Y-54-65340	NUT	4	J10001-UP
15		01643-71032	WASHER	4	J10001-UP
16		20Y-54-65540	CAP	2	J10001-UP
17		20Y-979-6630	CATCHER	1	J10001-UP
18		208-43-71570	FRAME	1	J10001-UP
19		01010-D1230	BOLT	4	J10001-UP
20		22U-54-25170	WASHER	4	J10001-UP

Ref :K1110-24A0 Page :210270

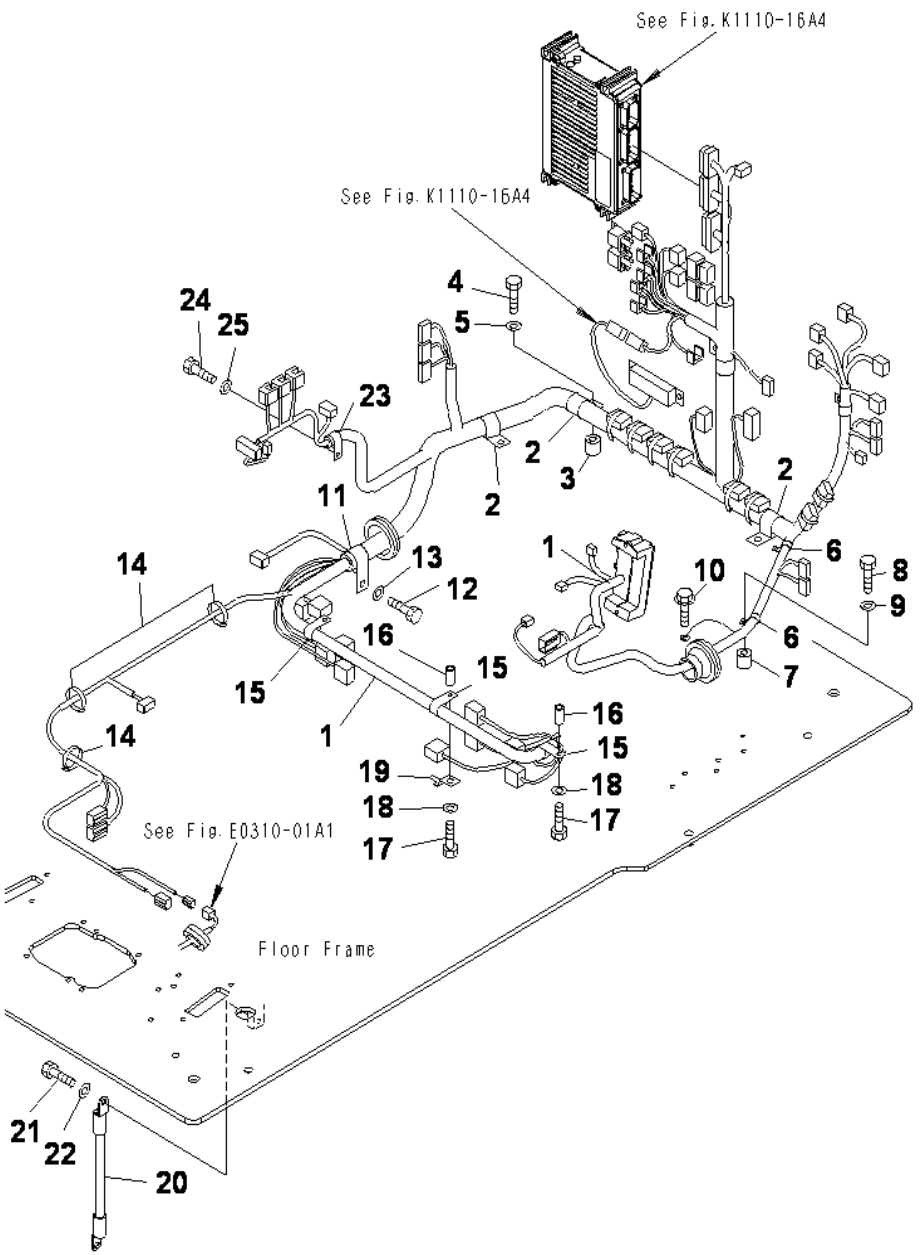

PC130F-7 S/N J10001-UP

FLOOR FRAME (OPERATOR'S CAB) (HARNESS)

INDEX	CD	PART NO.	DESCRIPTION	QTY	SERIAL NO.
1		203-06-71731	WIRING HARNESS	1	J10001-UP
2		04434-53411	CLIP	3	J10001-UP
3		195-33-11220	SPACER	3	J10001-UP
4		01010-81040	BOLT	3	J10001-UP
5		01643-31032	WASHER	3	J10001-UP
6		04434-51710	CLIP	2	J10001-UP
7		195-33-11220	SPACER	2	J10001-UP
8		01010-81040	BOLT	2	J10001-UP
9		01643-31032	WASHER	2	J10001-UP
10		01024-81016	BOLT,SEMS	1	J10001-UP
11		04434-53411	CLIP	1	J10001-UP
12		01010-81020	BOLT	1	J10001-UP
13		01643-31032	WASHER	1	J10001-UP
14		08034-20519	BAND	4	J10001-UP
15		04434-52310	CLIP	3	J10001-UP
16		195-33-11220	SPACER	3	J10001-UP
17		01010-81040	BOLT	3	J10001-UP
18		01643-31032	WASHER	3	J10001-UP
19		08193-30010	CLIP	1	J10001-UP
20		08028-43030	CABLE	1	J10001-UP
21		01010-81020	BOLT	1	J10001-UP
22		01643-31032	WASHER	1	J10001-UP
23		04434-51910	CLIP	1	J10001-UP
24		01010-81020	BOLT	1	J10001-UP
25		01643-31032	WASHER	1	J10001-UP

Ref :K1110-25A4 Page :210280

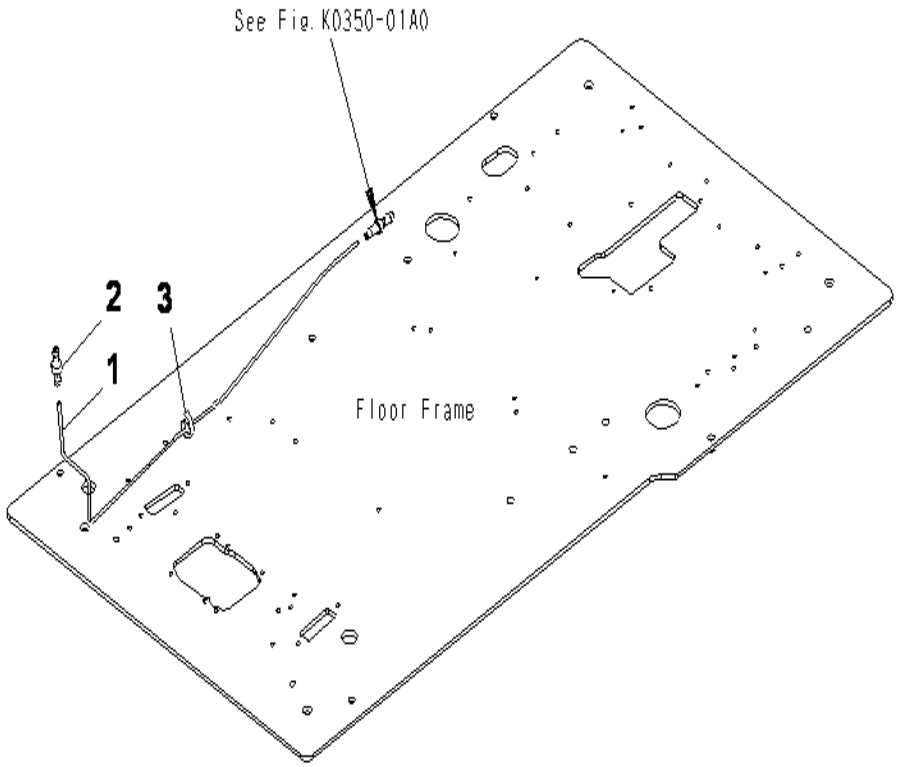

PC130F-7 S/N J10001-UP

FLOOR FRAME (OPERATOR'S CAB) (WINDOW WASHER)

INDEX	CD	PART NO.	DESCRIPTION	QTY	SERIAL NO.
1		21T-06-71250	HOSE	1	J10001-UP
2		207-06-61490	VALVE	1	J10001-UP
3		08034-20519	BAND	1	J10001-UP

Ref :K1110-26A4 Page :210290

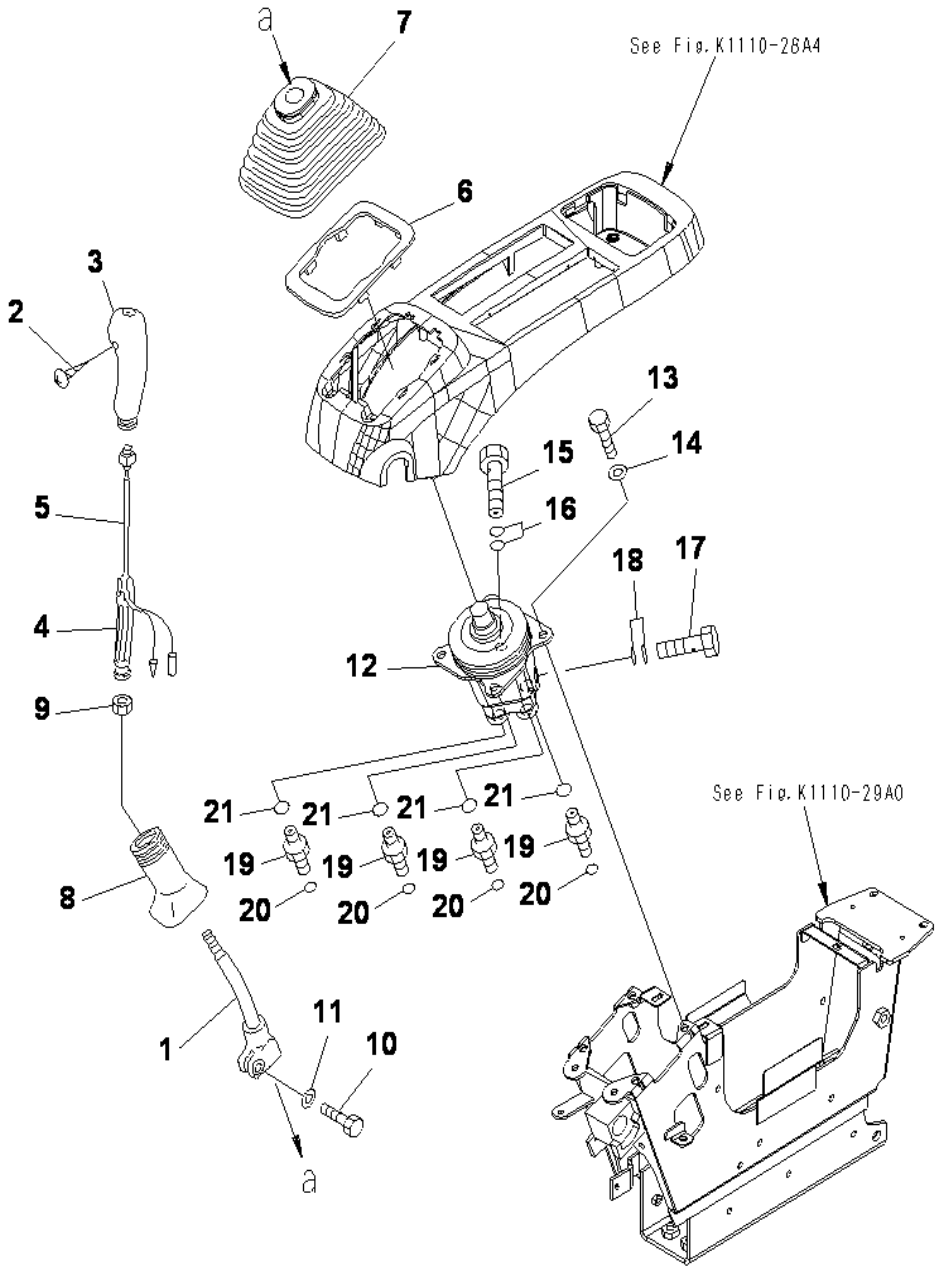

PC130F-7 S/N J10001-UP

FLOOR FRAME (OPERATOR'S CAB) (LEVER AND VALVE) (L.H.)

INDEX	CD	PART NO.	DESCRIPTION	QTY	SERIAL NO.
1		20Y-43-22211	LEVER	1	J10001-UP
		22U-43-21181	KNOB	1	J10001-UP
2		01370-10308	.SCREW	1	J10001-UP
3		20Y-43-22381	.KNOB	1	J10001-UP
4		20Y-43-22421	.INSERT	1	J10001-UP
5		22U-43-21211	.SWITCH	1	J10001-UP
6		20Y-43-22250	PLATE	1	J10001-UP
7		20Y-43-22261	BOOT	1	J10001-UP
8		20Y-43-22370	BOOT	1	J10001-UP
9		600-411-1280	NUT	1	J10001-UP
10		01252-41025	BOLT	1	J10001-UP
11		01643-51032	WASHER	1	J10001-UP
12		702-16-03910	VALVE A	1	J10001-UP
13		01010-80820	BOLT	4	J10001-UP
14		01643-30823	WASHER	4	J10001-UP
15		20Y-62-18910	EYE BOLT	1	J10001-UP
16		07000-12018	O-RING	2	J10001-UP
17		20Y-62-18890	JOINT BOLT	1	J10001-UP
18		07000-12015	O-RING	2	J10001-UP
19		11Y-62-12130	NIPPLE	4	J10001-UP
20		02896-11008	O-RING	4	J10001-UP
21		07002-11423	O-RING	4	J10001-UP

Ref :K1110-27A4 Page :210300

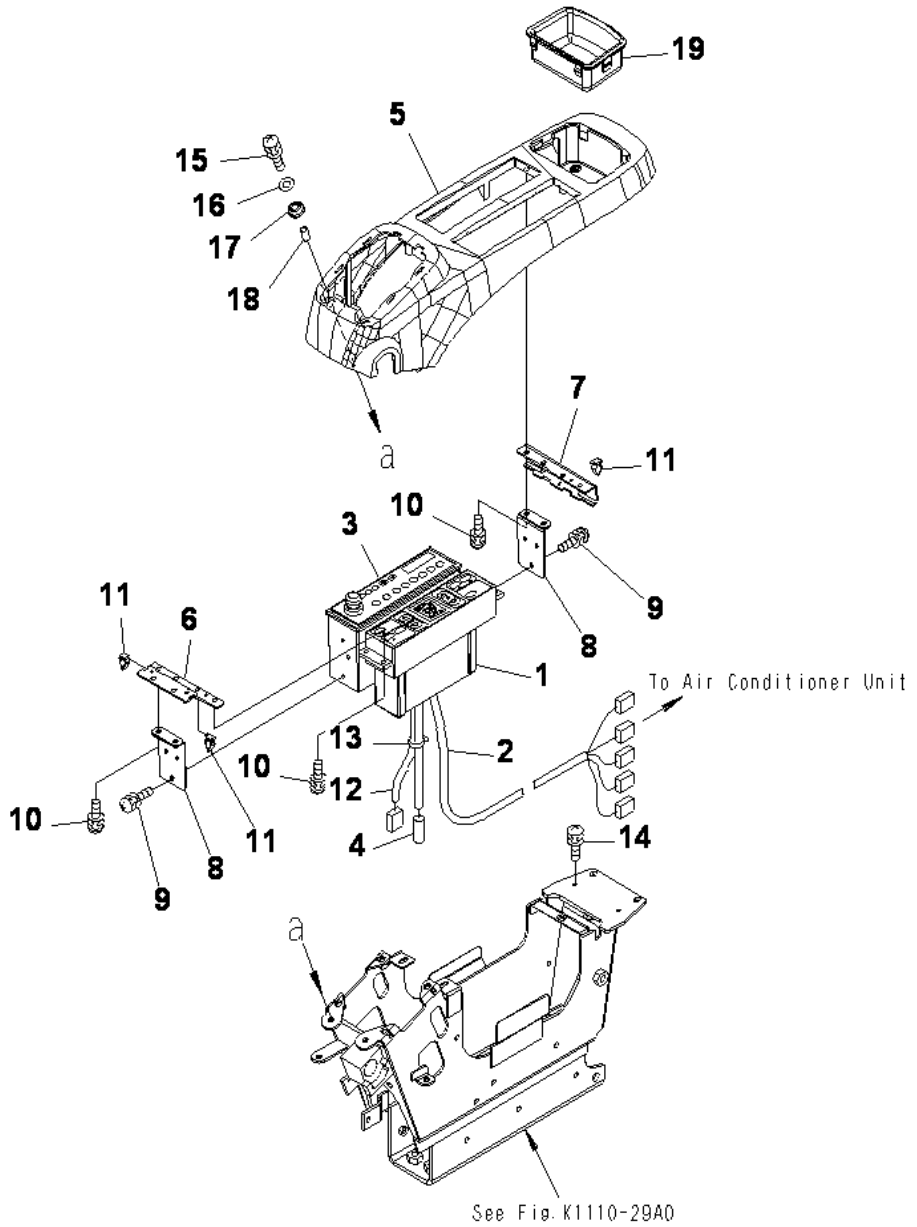

PC130F-7 S/N J10001-UP

FLOOR FRAME (OPERATOR'S CAB) (CONSOLE) (UPPER) (WITH AIR CONDITIONER AND

INDEX	CD	PART NO.	DESCRIPTION	QTY	SERIAL NO.
1		208-979-7630	PANEL ASS'Y	1	J10001-UP
2		208-979-7550	WIRING HARNESS	1	J10001-UP
3		20Y-06-41238	RADIO	1	J10001-UP
4		08912-51600	ANTENNA	1	J10001-UP
5		208-43-71680	COVER	1	J10001-UP
6		22U-43-22220	PLATE	1	J10001-UP
7		22U-43-22230	STAY	1	J10001-UP
8		22U-06-22510	BRACKET	2	J10001-UP
9		01023-60510	BOLT	4	J10001-UP
10		01023-60516	SCREW	10	J10001-UP
11		20Y-06-23770	CLIP	3	J10001-UP
12		22U-06-22350	HARNESS	1	J10001-UP
13		08034-00310	BAND	1	J10001-UP
14		01023-60620	SCREW	4	J10001-UP
15		01023-60630	SCREW	2	J10001-UP
16		01640-20610	WASHER	2	J10001-UP
17		208-43-71610	CUSHION	2	J10001-UP
18		208-43-71620	PIPE	2	J10001-UP
19		22U-43-22110	TRAY	1	J10001-UP

Ref :K1110-28A4 Page :210310

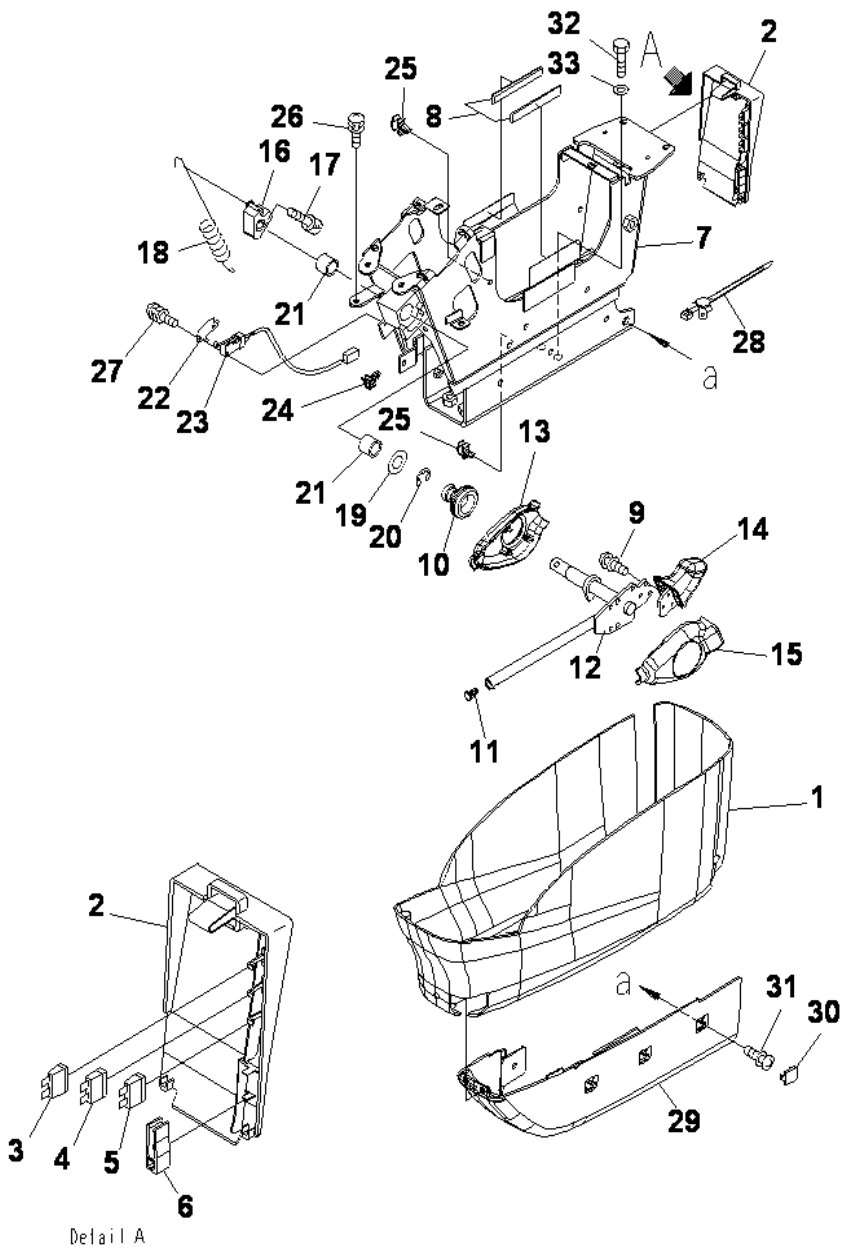

FLOOR FRAME (OPERATOR'S CAB) (CONSOLE) (LOWER) (L.H.)

INDEX	CD	PART NO.	DESCRIPTION	QTY	SERIAL NO.
1		22U-43-22310	COVER	1	J10001-UP
		22U-43-22320	COVER ASS'Y	1	J10001-UP
2		22U-43-22330	.COVER	1	J10001-UP
3		08041-01000	.FUSE, 10A	1	J10001-UP
4		08041-02000	.FUSE, 20A	1	J10001-UP
5		08041-02500	.FUSE, 25A	1	J10001-UP
6		22U-43-22340	.PULLER	1	J10001-UP
7		20Y-43-31412	FRAME	1	J10001-UP
8		208-43-71410	.SHEET	2	J10001-UP
		20Y-43-31504	LEVER A	1	J10001-UP
9		01023-60410	.SCREW	6	J10001-UP
10		08037-11425	.GROMMET	1	J10001-UP
11		208-53-12280	.CAP	1	J10001-UP
12		20Y-43-31513	.LEVER	1	J10001-UP
13		20Y-43-31522	.COVER	1	J10001-UP
14		20Y-43-31611	.KNOB	1	J10001-UP
15		20Y-43-31621	.COVER	1	J10001-UP
16		20Y-43-31432	CUM	1	J10001-UP
17		01252-70816	BOLT	1	J10001-UP
18		20Y-43-31421	SPRING	1	J10001-UP
19		20Y-43-31440	RING	1	J10001-UP
20		20Y-43-31450	RING	1	J10001-UP
21		06124-01616	BEARING	2	J10001-UP
22		22U-06-22490	PLATE	1	J10001-UP
23		22U-06-22360	SWITCH ASS'Y	1	J10001-UP
24		22U-43-22410	CLIP	1	J10001-UP
25		22U-43-23260	CLIP	2	J10001-UP
26		01023-60616	SCREW	4	J10001-UP
27		01023-60316	SCREW	2	J10001-UP
28		22U-43-22430	BAND	1	J10001-UP
29		20Y-43-31690	COVER	1	J10001-UP
30		22U-43-22830	CAP	3	J10001-UP
31		01023-20614	SCREW	4	J10001-UP
32		01010-81030	BOLT	4	J10001-UP
33		01643-31032	WASHER	4	J10001-UP

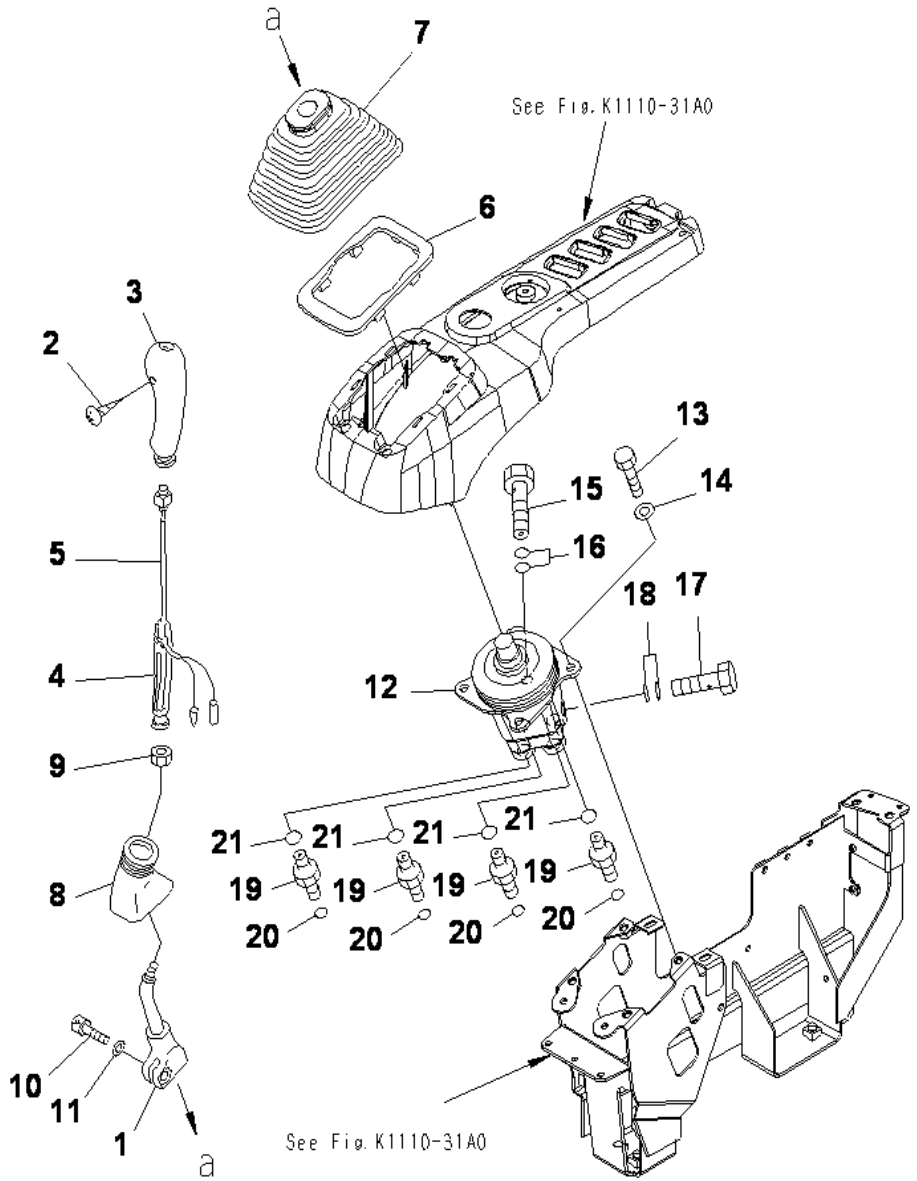

FLOOR FRAME (OPERATOR'S CAB) (LEVER AND VALVE) (R.H.)

INDEX	CD	PART NO.	DESCRIPTION	QTY	SERIAL NO.
1		20Y-43-22221	LEVER	1	J10001-UP
		22U-43-21191	KNOB	1	J10001-UP
2		01370-10308	.SCREW	1	J10001-UP
3		20Y-43-22390	.KNOB	1	J10001-UP
4		20Y-43-22421	.INSERT	1	J10001-UP
5		22U-43-21211	.SWITCH	1	J10001-UP
6		20Y-43-22250	PLATE	1	J10001-UP
7		20Y-43-22261	BOOT	1	J10001-UP
8		20Y-43-22370	BOOT	1	J10001-UP
9		600-411-1280	NUT	1	J10001-UP
10		01252-41025	BOLT	1	J10001-UP
11		01643-51032	WASHER	1	J10001-UP
12		702-16-03910	VALVE A	1	J10001-UP
13		01010-80820	BOLT	4	J10001-UP
14		01643-30823	WASHER	4	J10001-UP
15		20Y-62-18910	EYE BOLT	1	J10001-UP
16		07000-12018	O-RING	2	J10001-UP
17		20Y-62-18890	JOINT BOLT	1	J10001-UP
18		07000-12015	O-RING	2	J10001-UP
19		11Y-62-12130	NIPPLE	4	J10001-UP
20		02896-11008	O-RING	4	J10001-UP
21		07002-11423	O-RING	4	J10001-UP

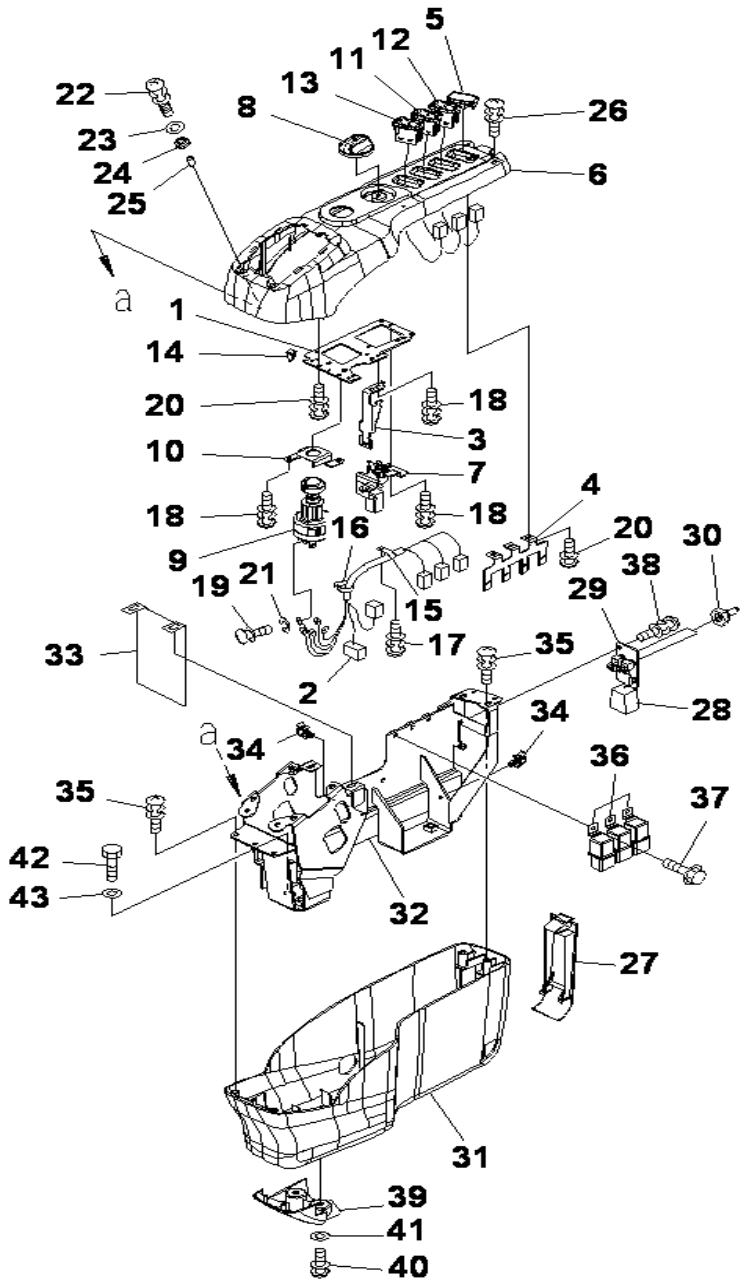

FLOOR FRAME (OPERATOR'S CAB) (CONSOLE) (R.H.)

INDEX	CD	PART NO.	DESCRIPTION	QTY	SERIAL NO.
1		22U-43-23111	PLATE	1	J10001-UP
2		22U-06-22330	WIRING HARNESS	1	J10001-UP
3		22U-43-23120	BRACKET	1	J10001-UP
4		22U-43-23130	BRACKET	1	J10001-UP
5		22U-06-22320	COVER	1	J10001-UP
6		208-43-71690	COVER	1	J10001-UP
7		22U-06-22420	POTENTIOMETER ASS'Y	1	J10001-UP
8		22U-06-22470	KNOB	1	J10001-UP
9		08086-20000	SWITCH	1	J10001-UP
10		22U-06-22480	PLATE	1	J10001-UP
11		22U-06-22190	SWITCH	1	J10001-UP
12		22U-06-22290	SWITCH	1	J10001-UP
13		22U-06-22390	SWITCH	1	J10001-UP
14		20Y-06-23770	CLIP	2	J10001-UP
15		20Y-06-23920	CLAMP	1	J10001-UP
16		08034-10414	BAND	2	J10001-UP
17		01023-60408	SCREW	1	J10001-UP
18		01023-60512	SCREW	6	J10001-UP
19		01023-10508	SCREW	5	J10001-UP
20		01023-10512	SCREW	6	J10001-UP
21		01601-20513	WASHER	5	J10001-UP
22		01023-60630	SCREW	2	J10001-UP
23		01640-20610	WASHER	2	J10001-UP
24		208-43-71610	CUSHION	2	J10001-UP
25		208-43-71620	PIPE	2	J10001-UP
26		01023-70514	SCREW	2	J10001-UP
27		22U-43-23210	COVER	1	J10001-UP
		20Y-06-31320	SWITCH ASS'Y	1	J10001-UP
28		20Y-06-31330	.WIRING HARNESS	1	J10001-UP
29		22U-06-22430	.PLATE	1	J10001-UP
30		208-43-71420	.CAP	2	J10001-UP
31		22U-43-23230	COVER	1	J10001-UP
32		208-43-71670	FRAME	1	J10001-UP
33		22U-43-23250	SEAT	1	J10001-UP
34		22U-43-23260	CLIP	2	J10001-UP
35		01023-60616	SCREW	4	J10001-UP
36		569-06-61960	RELAY	3	J10001-UP
37		01435-00612	BOLT	3	J10001-UP
38		01023-60410	SCREW	2	J10001-UP
39		22U-43-23711	COVER	1	J10001-UP
40		01023-10614	SCREW	2	J10001-UP
41		01643-30623	WASHER	2	J10001-UP
42		01010-81030	BOLT	4	J10001-UP
43		01643-31032	WASHER	4	J10001-UP

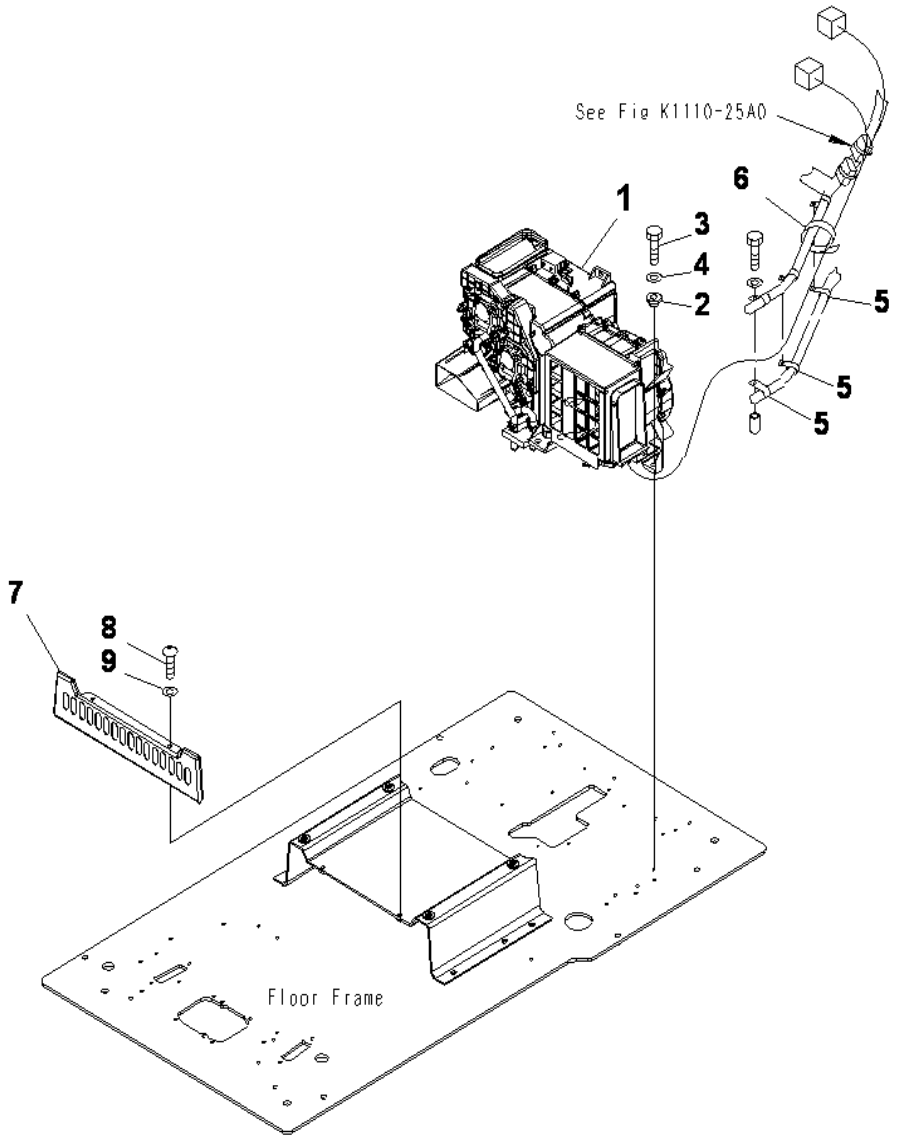

PC130F-7 S/N J10001-UP

FLOOR FRAME (OPERATOR'S CAB) (AIR CONDITIONER AND FOOT COVER)

INDEX	CD	PART NO.	DESCRIPTION	QTY	SERIAL NO.
1		(208-979-7610)	AIRCONDITIONER, (SEE FIG Y1979-21A0).....	1	J10001-UP
2		208-979-7540	COLLAR.....	7	J10001-UP
3		01010-80825	BOLT.....	7	J10001-UP
4		01643-30823	WASHER.....	7	J10001-UP
5		04434-51410	CLIP.....	2	J10001-UP
6		08034-20536	BAND.....	1	J10001-UP
7		208-43-71580	COVER.....	1	J10001-UP
8		01245-00820	SCREW.....	2	J10001-UP
9		01643-70823	WASHER.....	2	J10001-UP

Ref :K1110-32A0 Page :210350

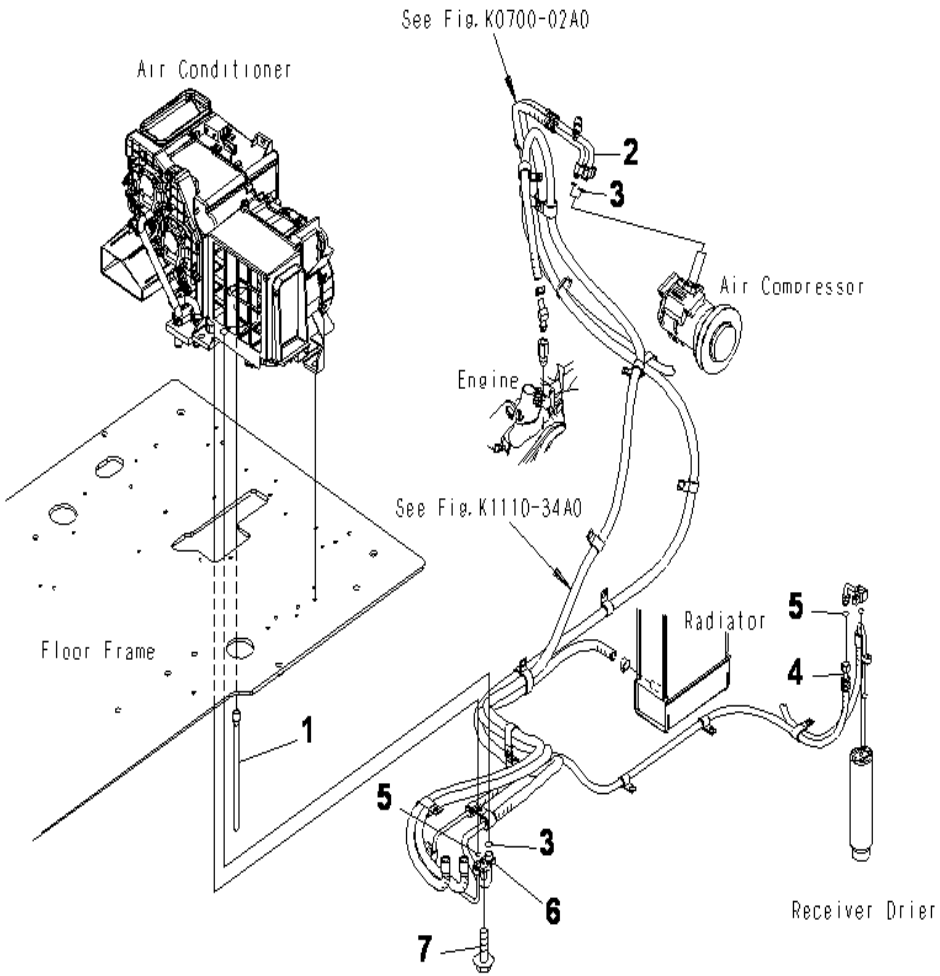

PC130F-7 S/N J10001-UP

FLOOR FRAME (OPERATOR'S CAB) (AIR CONDITIONER HOSE)

INDEX	CD	PART NO.	DESCRIPTION	QTY	SERIAL NO.
1		208-979-7640	HOSE, 300MM.....	1	J10001-UP
2		203-979-7241	HOSE.....	1	J10001-UP
3		20Y-979-3130	.O-RING.....	2	J10001-UP
4		203-979-7231	HOSE.....	1	J10001-UP
5		20Y-979-3150	.O-RING.....	2	J10001-UP
6		208-979-7650	CONNECTOR.....	1	J10001-UP
7		01435-40620	BOLT.....	1	J10001-UP

Ref :K1110-33A0 Page :210360

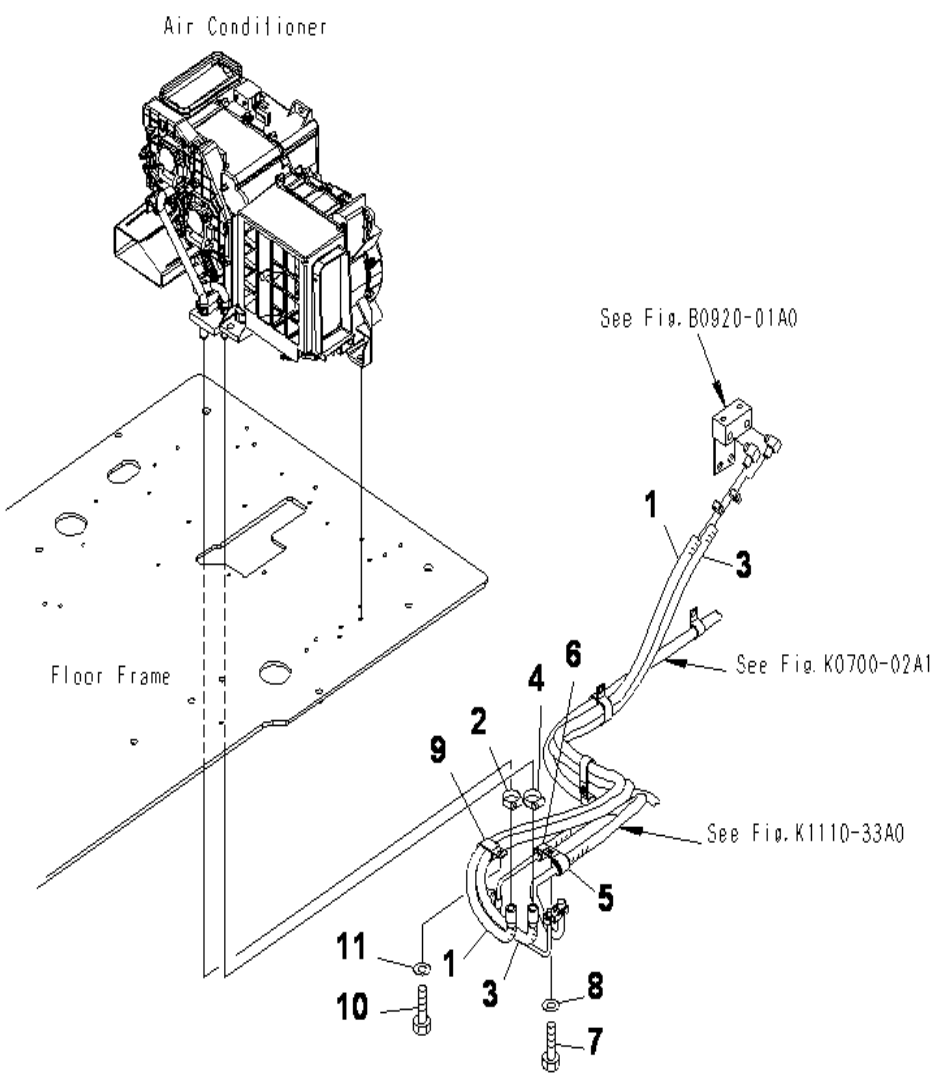

PC130F-7 S/N J10001-UP

FLOOR FRAME (OPERATOR'S CAB) (HEATER HOSE AND CLAMP)

INDEX	CD	PART NO.	DESCRIPTION	QTY	SERIAL NO.
1		203-979-7311	HOSE ASS'Y	1	J10001-UP
2		09479-02400	CLAMP	1	J10001-UP
3		203-979-7321	HOSE ASS'Y	1	J10001-UP
4		09479-02400	CLAMP	1	J10001-UP
5		04434-52511	CLIP	1	J10001-UP
6		04434-51810	CLIP	1	J10001-UP
7		01010-81020	BOLT	1	J10001-UP
8		01643-31032	WASHER	1	J10001-UP
9		141-06-11220	CLIP	1	J10001-UP
10		01010-81016	BOLT	1	J10001-UP
11		01643-31032	WASHER	1	J10001-UP

Ref :K1110-34A4 Page :210370

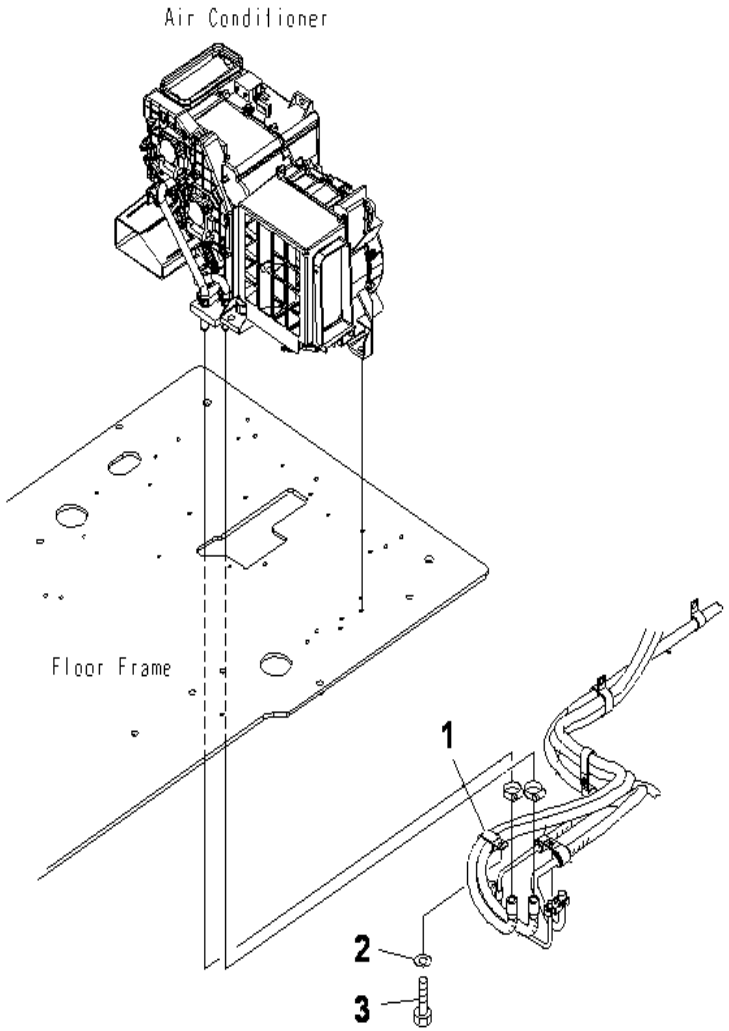

PC130F-7 S/N J10001-UP

HEATER CLAMP G.

INDEX	CD	PART NO.	DESCRIPTION	QTY	SERIAL NO.
1		141-06-11220	CLIP.....	1	J10001-UP
2		01010-81016	BOLT.....	1	J10001-UP
3		01643-31032	WASHER.....	1	J10001-UP

Ref :K1110-34A5 Page :210380

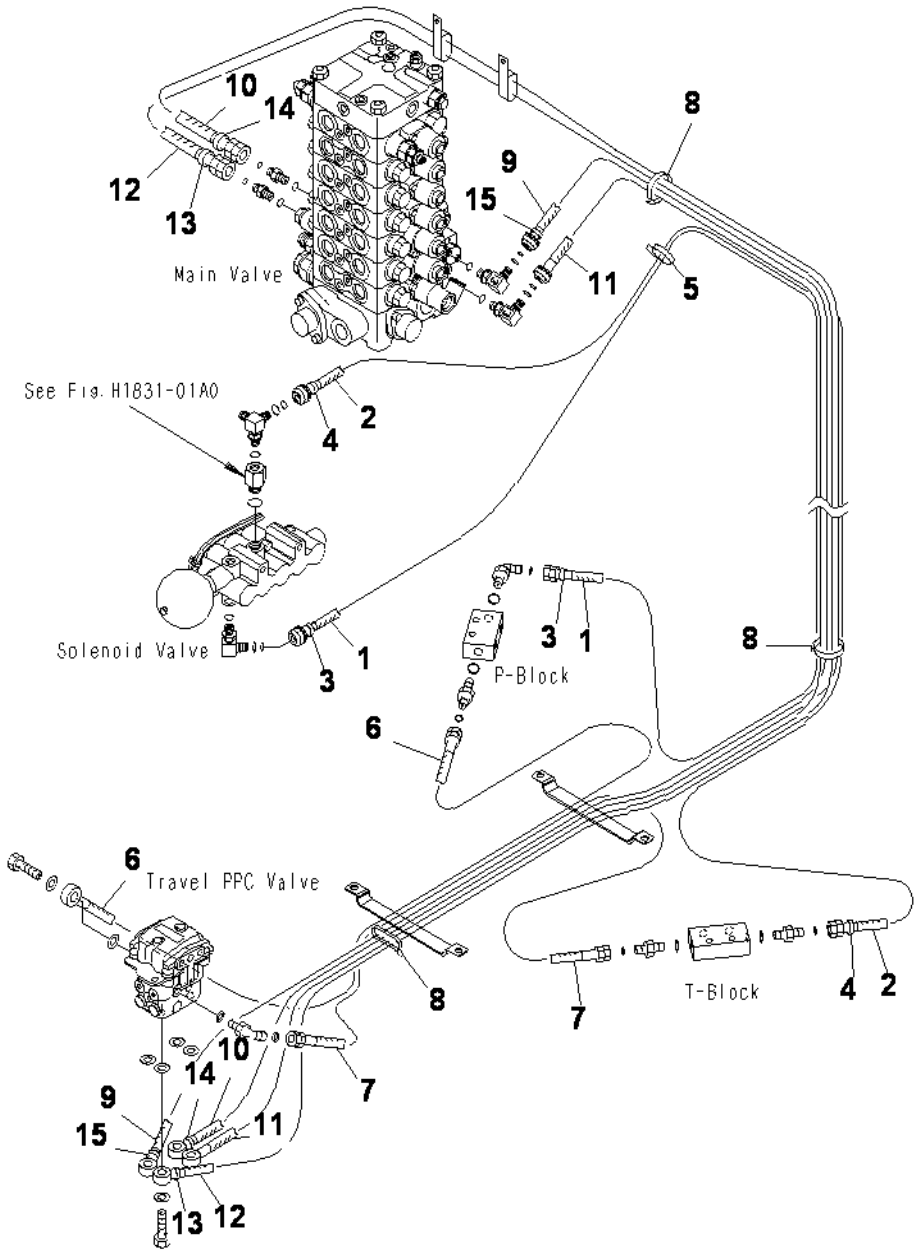

FLOOR FRAME (OPERATOR'S CAB) (PPC HOSE) (1/2)

INDEX	CD	PART NO.	DESCRIPTION	QTY	SERIAL NO.
1		203-62-71741	HOSE, 2830MM.....	1	J10001-UP
2		203-62-71751	HOSE, 2250MM.....	1	J10001-UP
3		20Y-62-22790	BAND, RED.....	2	J10001-UP
4		20Y-62-22820	BAND, BLUE.....	2	J10001-UP
5		08034-20519	BAND.....	1	J10001-UP
6		208-62-72290	HOSE, 980MM.....	1	J10001-UP
7		208-62-72310	HOSE, 950MM.....	1	J10001-UP
8		08034-20536	BAND.....	3	J10001-UP
9		203-62-71761	HOSE, 2980MM.....	1	J10001-UP
10		203-62-71771	HOSE, 3450MM.....	1	J10001-UP
11		203-62-71781	HOSE, 2910MM.....	1	J10001-UP
12		203-62-71791	HOSE, 3530MM.....	1	J10001-UP
13		20Y-62-22790	BAND, RED.....	2	J10001-UP
14		20Y-62-22820	BAND, BLUE.....	2	J10001-UP
15		20Y-62-22850	BAND, GREEN.....	2	J10001-UP

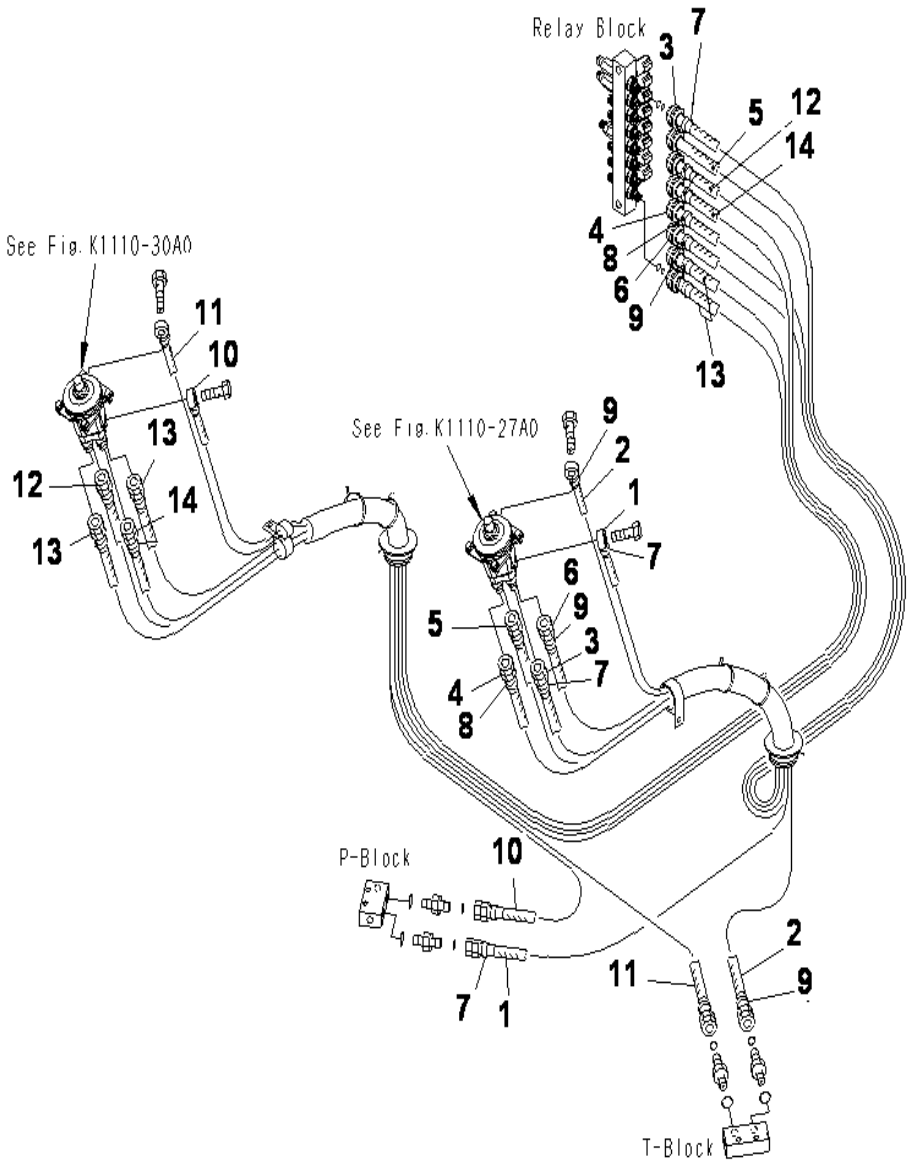

PC130F-7 S/N J10001-UP

FLOOR FRAME (OPERATOR'S CAB) (PPC HOSE) (2/2)

INDEX	CD	PART NO.	DESCRIPTION	QTY	SERIAL NO.
1		208-62-72770	HOSE, 1450MM.....	1	J10001-UP
2		208-62-72780	HOSE, 1400MM.....	1	J10001-UP
3		20Y-62-43520	HOSE, 2100MM.....	1	J10001-UP
4		21K-62-71810	HOSE, 1950MM.....	1	J10001-UP
5		21K-62-71830	HOSE, 2050MM.....	1	J10001-UP
6		21K-62-72580	HOSE, 1900MM.....	1	J10001-UP
7		20Y-62-22790	BAND, RED.....	4	J10001-UP
8		20Y-62-22810	BAND, YELLOW.....	2	J10001-UP
9		20Y-62-22820	BAND, BLUE.....	4	J10001-UP
10		208-62-72860	HOSE, 1400MM.....	1	J10001-UP
11		208-62-72870	HOSE, 1500MM.....	1	J10001-UP
12		20Y-62-43510	HOSE, 2350MM.....	1	J10001-UP
13		20Y-62-43990	HOSE, 2150MM.....	2	J10001-UP
14		20Y-62-85250	TAPE.....	1	J10001-UP

Ref :K1110-36A0 Page :210400

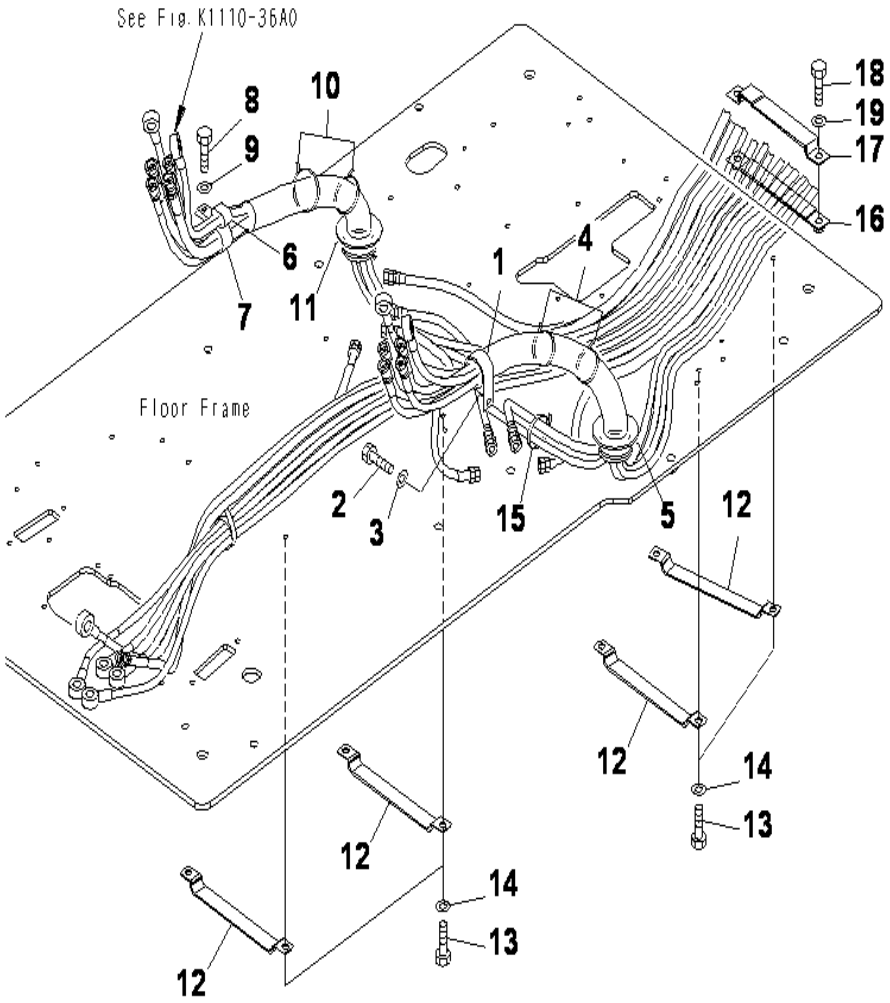

PC130F-7 S/N J10001-UP

FLOOR FRAME (OPERATOR'S CAB) (PPC CLAMP)

INDEX	CD	PART NO.	DESCRIPTION	QTY	SERIAL NO.
1		04434-53211	CLIP	1	J10001-UP
2		01010-81020	BOLT	1	J10001-UP
3		01643-31032	WASHER	1	J10001-UP
4		08034-20536	BAND	2	J10001-UP
5		08034-20536	BAND	1	J10001-UP
6		04435-51310	CLIP	1	J10001-UP
7		04434-53211	CLIP	1	J10001-UP
8		01010-81020	BOLT	1	J10001-UP
9		01643-31032	WASHER	1	J10001-UP
10		08034-20536	BAND	2	J10001-UP
11		08034-20536	BAND	1	J10001-UP
12		20Y-62-27770	CLAMP	4	J10001-UP
13		01010-81016	BOLT	8	J10001-UP
14		01643-31032	WASHER	8	J10001-UP
15		08034-20536	BAND	2	J10001-UP
16		203-62-71560	PLATE	1	J10001-UP
17		203-62-71570	CLAMP	1	J10001-UP
18		01010-81020	BOLT	2	J10001-UP
19		01643-31032	WASHER	2	J10001-UP

Ref :K1110-37A0 Page :210410

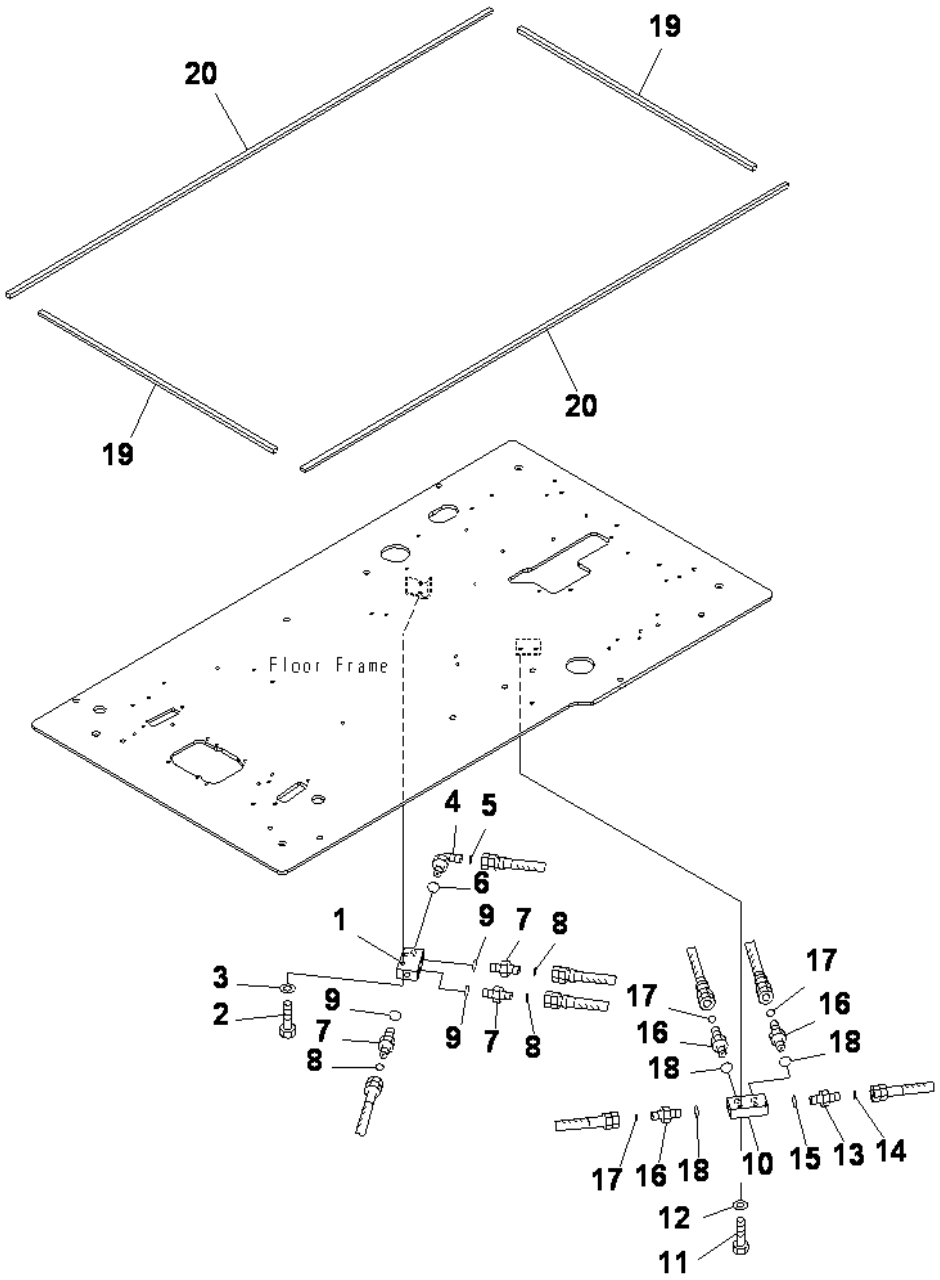

PC130F-7 S/N J10001-UP

FLOOR FRAME (OPERATOR'S CAB) (P.T BLOCK AND SEAL)

INDEX	CD	PART NO.	DESCRIPTION	QTY	SERIAL NO.
1		20Y-62-15831	BLOCK	1	J10001-UP
2		01010-81045	BOLT	2	J10001-UP
3		01643-31032	WASHER	2	J10001-UP
4		02782-10311	ELBOW	1	J10001-UP
5		02896-11009	O-RING	1	J10001-UP
6		07002-11423	O-RING	1	J10001-UP
7		02781-0021D	UNION	3	J10001-UP
8		02896-11008	O-RING	3	J10001-UP
9		07002-11423	O-RING	3	J10001-UP
10		20Y-62-15831	BLOCK	1	J10001-UP
11		01010-81045	BOLT	2	J10001-UP
12		01643-31032	WASHER	2	J10001-UP
13		02781-0031D	NIPPLE	1	J10001-UP
14		02896-11009	O-RING	1	J10001-UP
15		07002-11423	O-RING	1	J10001-UP
16		02781-0021D	UNION	3	J10001-UP
17		02896-11008	O-RING	3	J10001-UP
18		07002-11423	O-RING	3	J10001-UP
19		208-53-11810	SEAL	2	J10001-UP
20		208-53-11820	SEAL	2	J10001-UP

Ref :K1110-38A4 Page :210420

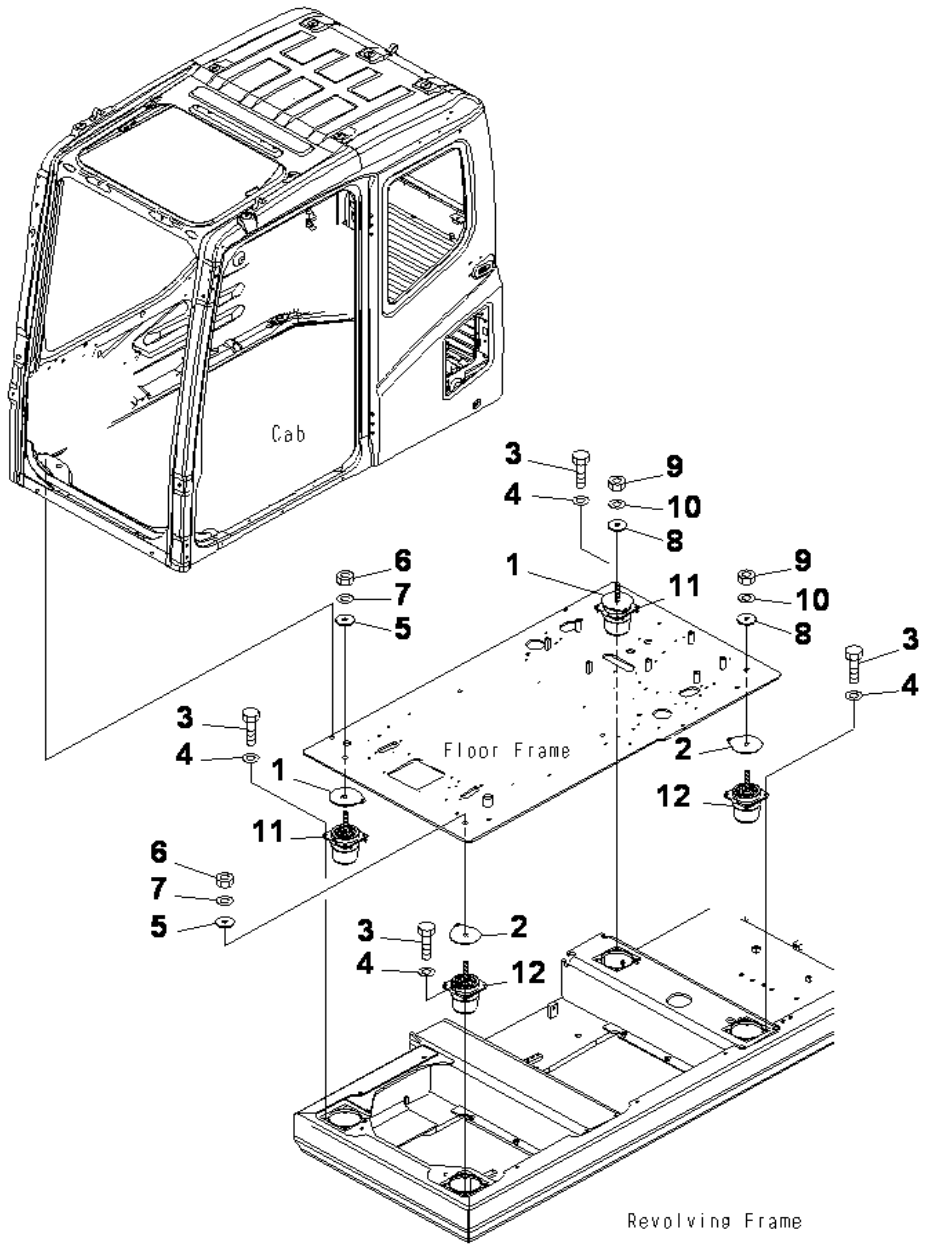

PC130F-7 S/N J10001-UP

FLOOR MOUNT

INDEX	CD	PART NO.	DESCRIPTION	QTY	SERIAL NO.
1		207-54-65132	SPACER	2	J10001-UP
2		207-54-65260	SPACER	2	J10001-UP
3		01010-81035	BOLT	16	J10001-UP
4		01643-31032	WASHER	16	J10001-UP
5		113-01-21120	WASHER	2	J10001-UP
6		01580-11613	NUT	2	J10001-UP
7		01643-31645	WASHER	2	J10001-UP
8		21T-27-71220	HOLDER	2	J10001-UP
9		01580-11613	NUT	2	J10001-UP
10		01643-31645	WASHER	2	J10001-UP
11		20Y-54-65811	CUSHION	2	J10001-UP
12		20Y-54-65821	CUSHION	2	J10001-UP

Ref :K1120-01A0A Page :210430

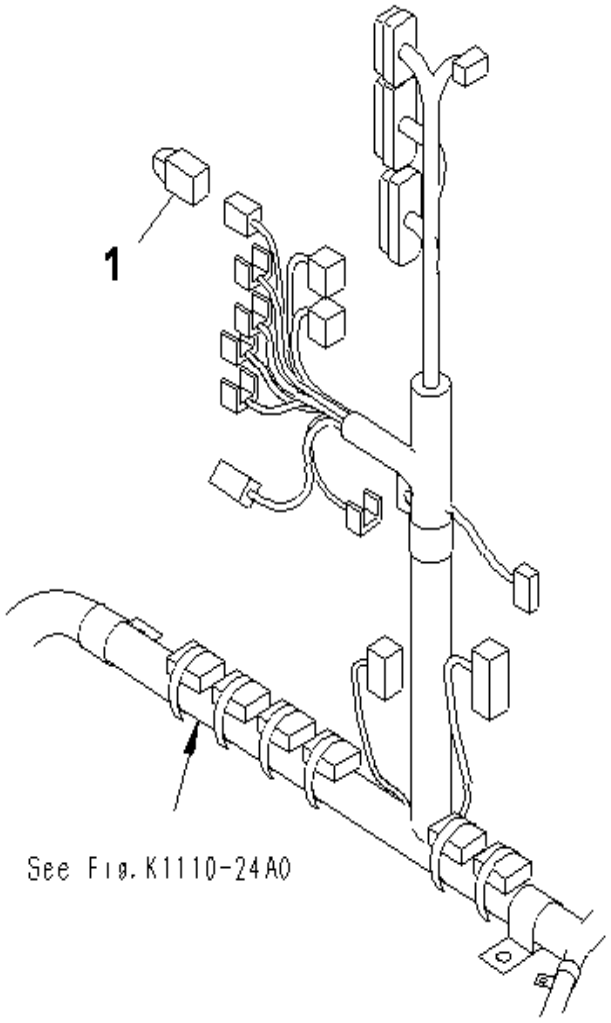

PC130F-7 S/N J10001-UP

SWITCH (MODEL SELECTION)

INDEX	CD	PART NO.	DESCRIPTION	QTY	SERIAL NO.
1		202-06-71310	SWITCH.....	1	J10001-UP

Ref :K1730-01A0 Page :210440

GUARD

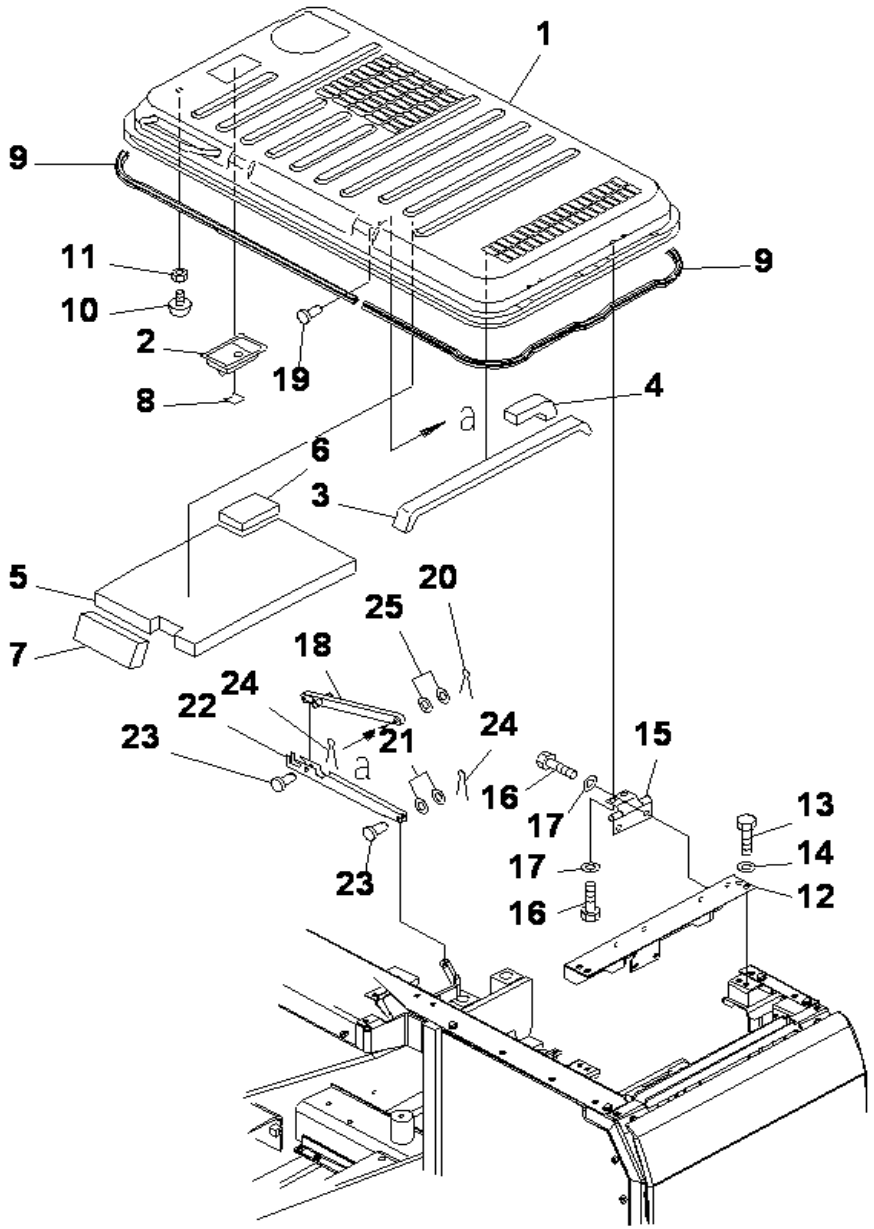

HOOD

INDEX	CD	PART NO.	DESCRIPTION	QTY	SERIAL NO.
		203-54-76112	HOOD ASS'Y	1	J10001-UP
1		203-54-73111	HOOD	1	J10001-UP
2		198-54-41982	.LOCK ASS'Y	1	J10001-UP
3		203-54-74130	.SHEET	1	J10001-UP
4		203-54-74141	.SHEET	1	J10001-UP
5		203-54-76341	.SHEET	1	J10001-UP
6		203-54-76190	.SHEET	1	J10001-UP
7		203-54-74260	.SHEET	1	J10001-UP
8		203-54-62980	.SHEET	1	J10001-UP
9		203-54-63293	.SEAL	2	J10001-UP
10		21K-54-11310	.STOPPER	2	J10001-UP
11		01580-11210	.NUT	2	J10001-UP
12		203-54-73511	BRACKET	1	J10001-UP
13		01010-81230	BOLT	4	J10001-UP
14		01643-31232	WASHER	4	J10001-UP
15		203-54-62392	HINGE	2	J10001-UP
16		01010-81230	BOLT	8	J10001-UP
17		01643-31232	WASHER	8	J10001-UP
18		203-54-66990	STAY	1	J10001-UP
19		04205-11230	PIN	1	J10001-UP
20		04050-13022	PIN	1	J10001-UP
21		01643-31232	WASHER	2	J10001-UP
22		203-54-73921	STAY	1	J10001-UP
23		04205-11230	PIN	2	J10001-UP
24		04050-13022	PIN	2	J10001-UP
25		01640-21223	WASHER	2	J10001-UP

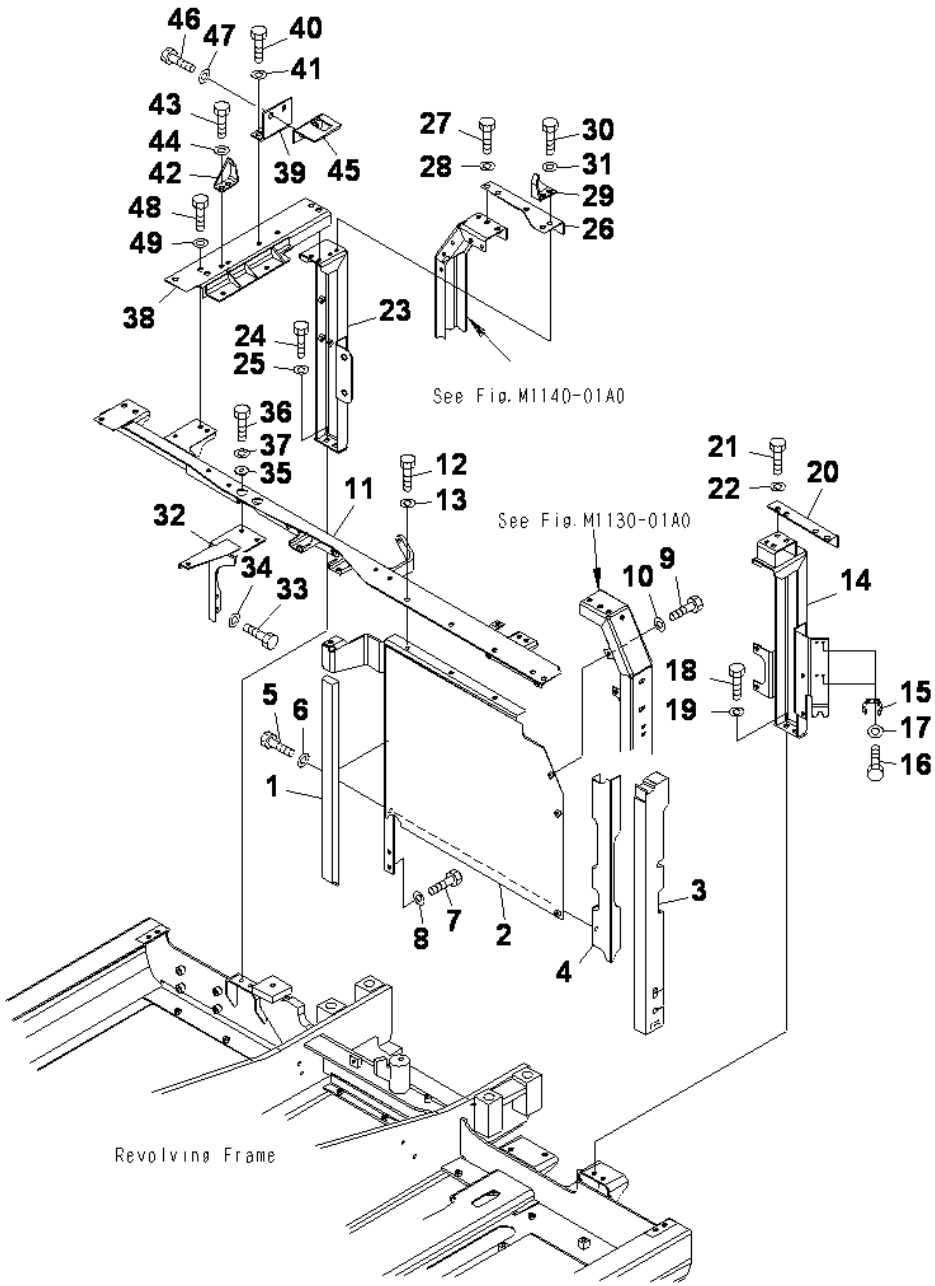

PC130F-7 S/N J10001-UP

FRAME (1/2)

INDEX	CD	PART NO.	DESCRIPTION	QTY	SERIAL NO.
		203-54-73412	FRAME	1	J10001-UP
1		203-03-71540	.SHEET	1	J10001-UP
2		203-54-73422	.FRAME	1	J10001-UP
		203-03-71560	COVER	1	J10001-UP
3		203-03-71521	.SHEET	1	J10001-UP
4		203-03-71550	.COVER	1	J10001-UP
5		01010-81225	BOLT	3	J10001-UP
6		01643-31232	WASHER	3	J10001-UP
7		01010-81230	BOLT	2	J10001-UP
8		01643-31232	WASHER	2	J10001-UP
9		01010-81220	BOLT	3	J10001-UP
10		01643-31232	WASHER	3	J10001-UP
11		203-54-73432	FRAME	1	J10001-UP
12		01010-81230	BOLT	3	J10001-UP
13		01643-31232	WASHER	3	J10001-UP
14		203-54-73521	FRAME	1	J10001-UP
15		203-54-63230	CLAMP	2	J10001-UP
16		01010-80616	BOLT	4	J10001-UP
17		01643-30623	WASHER	4	J10001-UP
18		01010-81230	BOLT	2	J10001-UP
19		01643-31232	WASHER	2	J10001-UP
20		203-54-73810	PLATE	1	J10001-UP
21		01010-81230	BOLT	2	J10001-UP
22		01643-31232	WASHER	2	J10001-UP
23		203-54-73532	FRAME	1	J10001-UP
24		01010-81230	BOLT	2	J10001-UP
25		01643-31232	WASHER	2	J10001-UP
26		203-54-73822	FRAME	1	J10001-UP
27		01010-81230	BOLT	1	J10001-UP
28		01643-31232	WASHER	1	J10001-UP
29		203-54-73951	BRACKET	1	J10001-UP
30		01010-81230	BOLT	2	J10001-UP
31		01643-31232	WASHER	2	J10001-UP
32		203-54-73590	FRAME	1	J10001-UP
33		01010-81230	BOLT	2	J10001-UP
34		01643-31232	WASHER	2	J10001-UP
35		208-54-57180	COLLAR	2	J10001-UP
36		01010-81230	BOLT	2	J10001-UP
37		01643-31232	WASHER	2	J10001-UP
38		203-54-73540	FRAME	1	J10001-UP
39		203-54-73940	BRACKET	1	J10001-UP
40		01010-81230	BOLT	2	J10001-UP
41		01643-31232	WASHER	2	J10001-UP
42		203-54-73961	BRACKET	1	J10001-UP
43		01010-81230	BOLT	2	J10001-UP

Ref :M1120-01A0 Page :240020

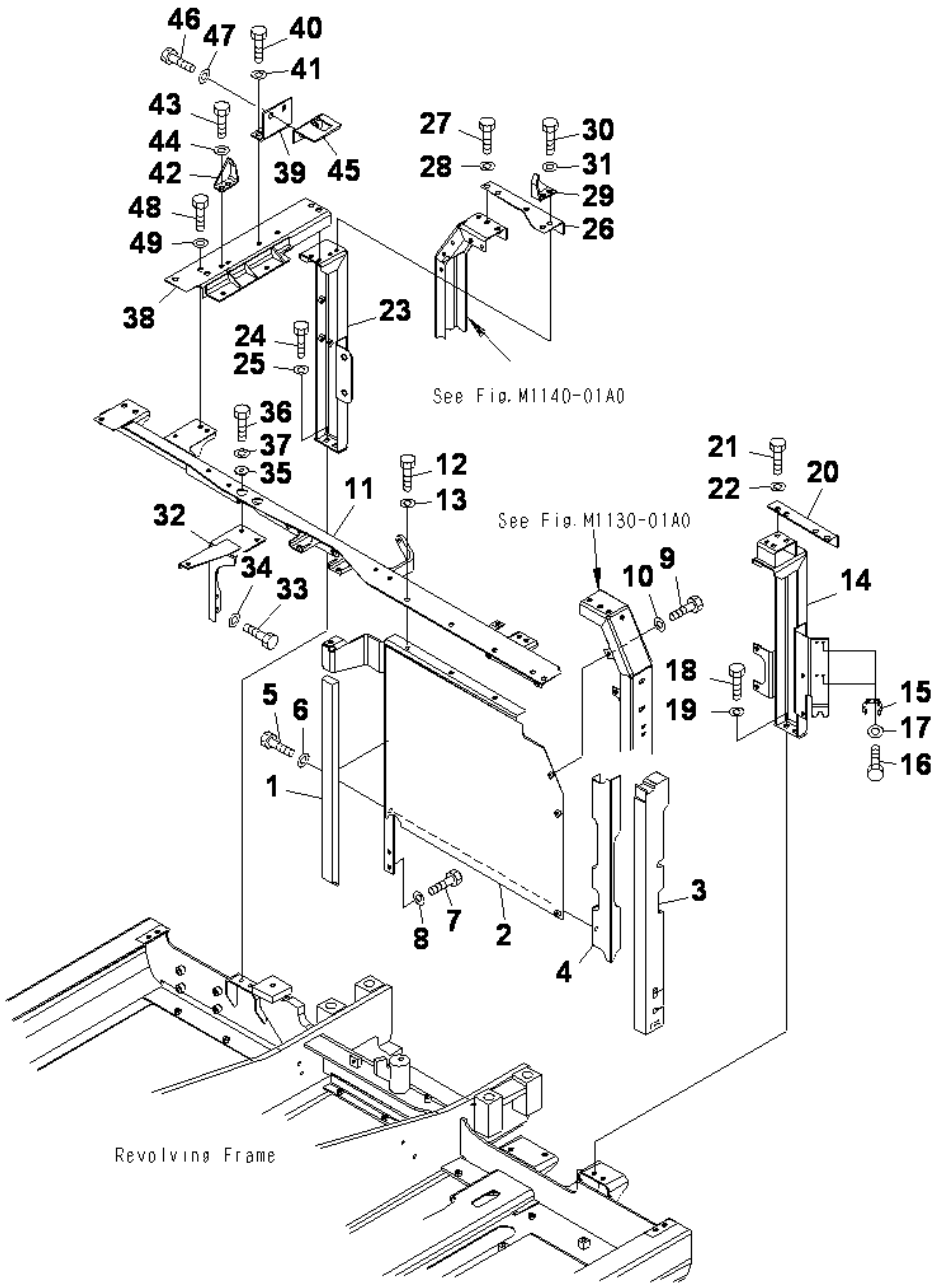

FRAME (2/2)

INDEX	CD	PART NO.	DESCRIPTION	QTY	SERIAL NO.
44		01643-31232	WASHER	2	J10001-UP
45		203-54-63262	BRACKET	1	J10001-UP
46		01010-81230	BOLT	2	J10001-UP
47		01643-31232	WASHER	2	J10001-UP
48		01010-81230	BOLT	4	J10001-UP
49		01643-31232	WASHER	4	J10001-UP

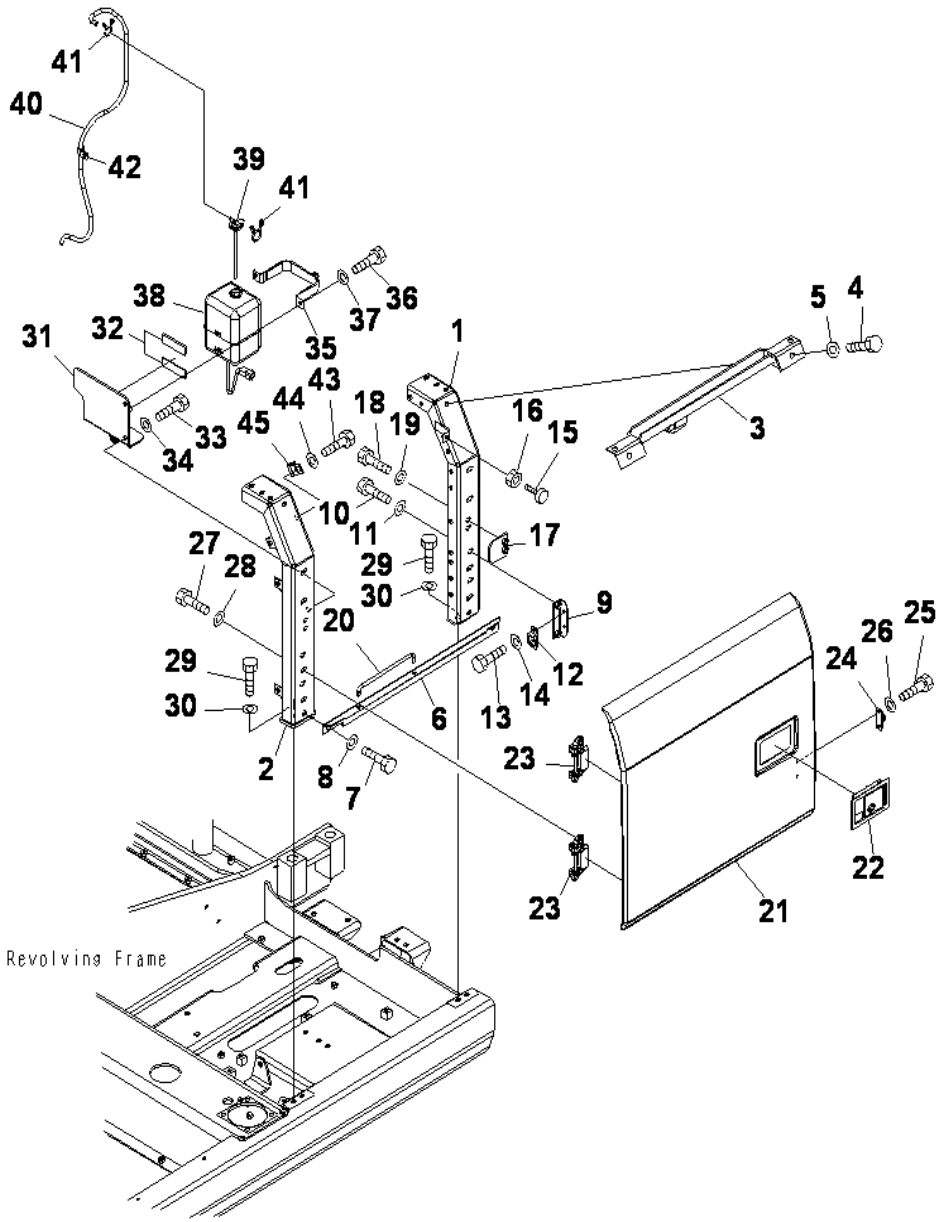

PC130F-7 S/N J10001-UP

DOOR L.H.

INDEX	CD	PART NO.	DESCRIPTION	QTY	SERIAL NO.
1		203-54-73221	FRAME	1	J10001-UP
2		203-54-73231	FRAME	1	J10001-UP
3		203-54-73240	FRAME	1	J10001-UP
4		01010-81230	BOLT	2	J10001-UP
5		01643-31232	WASHER	2	J10001-UP
6		203-54-73251	PLATE	1	J10001-UP
7		01010-81230	BOLT	2	J10001-UP
8		01643-31232	WASHER	2	J10001-UP
9		20Y-54-28170	BRACKET	1	J10001-UP
10		01010-81230	BOLT	2	J10001-UP
11		01643-31232	WASHER	2	J10001-UP
12		205-54-51970	DOVE TAIL	1	J10001-UP
13		01010-80616	BOLT	2	J10001-UP
14		01643-30623	WASHER	2	J10001-UP
15		20Y-54-11611	STOPPER	1	J10001-UP
16		01580-11008	NUT	1	J10001-UP
17		20Y-54-61470	PLATE	1	J10001-UP
18		01010-81230	BOLT	2	J10001-UP
19		01643-31232	WASHER	2	J10001-UP
20		20Y-54-29231	BAR	1	J10001-UP
21		203-54-73211	COVER	1	J10001-UP
22		198-54-41982	.LOCK	1	J10001-UP
23		20Y-54-63411	.HINGE (WELDED)	2	J10001-UP
24		205-54-53550	DOVE TAIL	1	J10001-UP
25		01010-80612	BOLT	2	J10001-UP
26		01643-30623	WASHER	2	J10001-UP
27		01010-81230	BOLT	4	J10001-UP
28		01643-31232	WASHER	4	J10001-UP
29		01010-81240	BOLT	4	J10001-UP
30		01643-31232	WASHER	4	J10001-UP
31		203-03-71511	BRACKET	1	J10001-UP
32		205-03-71440	.SHEET	2	J10001-UP
33		01010-81230	BOLT	2	J10001-UP
34		01643-31232	WASHER	2	J10001-UP
35		203-03-71531	BRACKET	1	J10001-UP
36		01010-81020	BOLT	2	J10001-UP
37		01643-31032	WASHER	2	J10001-UP
38		20Y-06-15240	TANK	1	J10001-UP
		205-03-71271	.TANK	1	J10001-UP
39		205-03-71532	..CAP	1	J10001-UP
		205-03-71540	...PACKING	1	J10001-UP
40		203-03-71390	HOSE	1	J10001-UP
41		206-03-43340	CLIP	2	J10001-UP
42		04434-51212	CLIP	1	J10001-UP
43		01010-81230	BOLT	1	J10001-UP

Ref :M1130-01A0 Page :240030

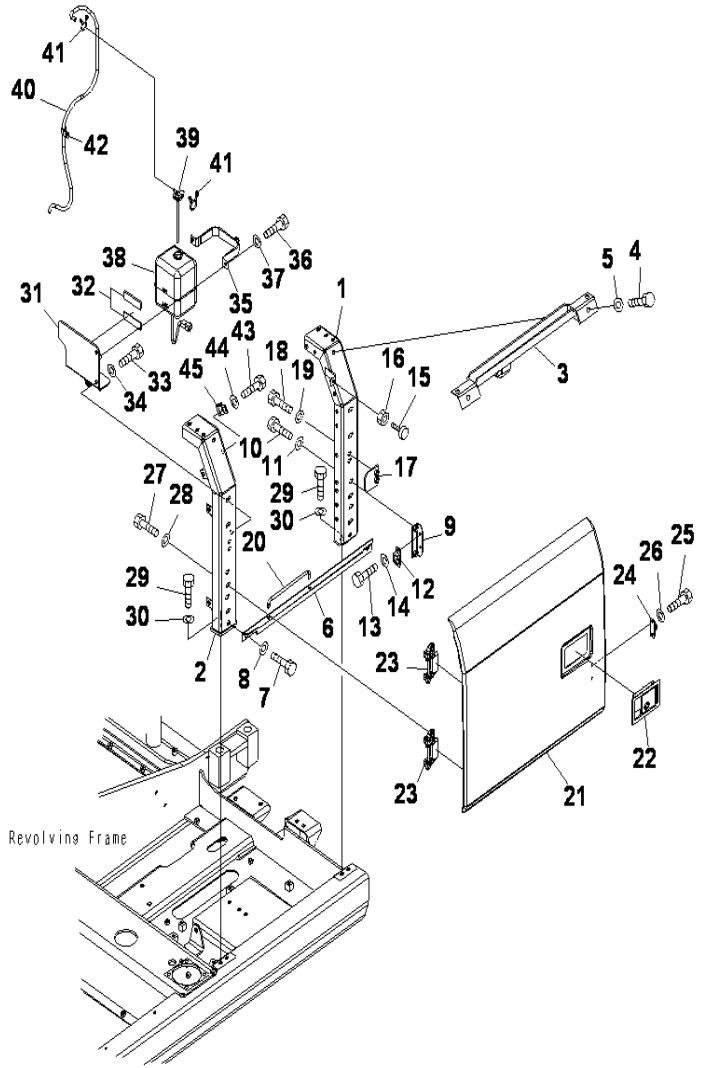

PC130F-7 S/N J10001-UP

DOOR L.H.

INDEX	CD	PART NO.	DESCRIPTION	QTY	SERIAL NO.
44		01643-31232	WASHER.....	1	J10001-UP
45		04434-51212	CLIP.....	1	J10001-UP

Ref :M1130-01A0 Page :240031

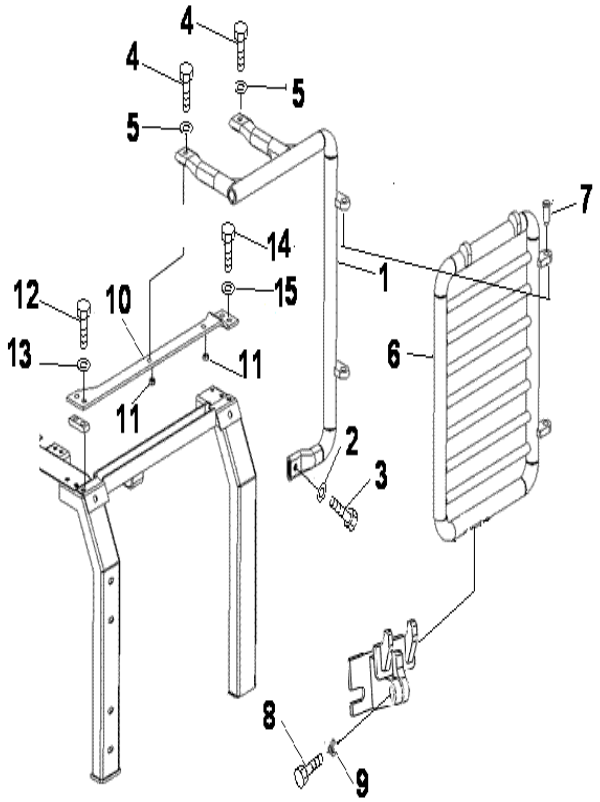

PC130F-7 S/N J10001-UP

DOOR GUARD LH

INDEX	CD	PART NO.	DESCRIPTION	QTY	SERIAL NO.
1		203-56-J1120	GUARD LH.....	1	J10001-UP
2		01010-81260	BOLT.....	1	J10001-UP
3		01643-31232	WASHER.....	1	J10001-UP
4		01010-81255	BOLT.....	2	J10001-UP
5		01643-31232	WASHER.....	2	J10001-UP
6		203-56-J1130	GUARD LH.....	1	J10001-UP
7		144-54-11940	PIN.....	2	J10001-UP
8		01435-01265	BOLT.....	1	J10001-UP
9		01541-21260	NUT(WING).....	1	J10001-UP
10		203-56-J1140	BRACKET LH.....	1	J10001-UP
11		01580-11210	NUT.....	2	J10001-UP
12		01010-81240	BOLT.....	2	J10001-UP
13		01643-31232	WASHER.....	2	J10001-UP
14		01010-81260	BOLT.....	2	J10001-UP
15		01643-31232	WASHER.....	2	J10001-UP

Ref :M1130-01A1 Page :240035

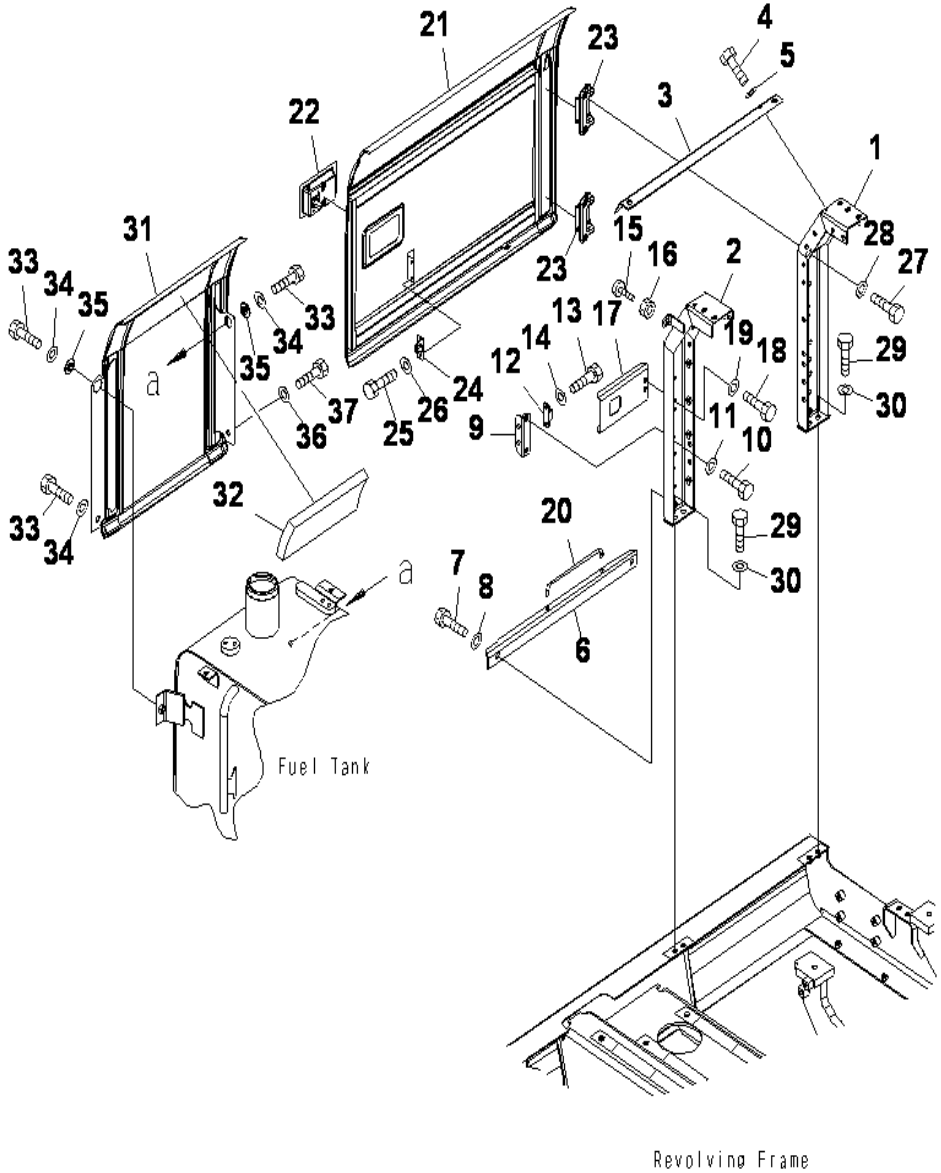

PC130F-7 S/N J10001-UP

DOOR R.H.

INDEX	CD	PART NO.	DESCRIPTION	QTY	SERIAL NO.
1		203-54-73321	FRAME	1	J10001-UP
2		203-54-73331	FRAME	1	J10001-UP
3		203-54-73340	PLATE	1	J10001-UP
4		01010-81230	BOLT	2	J10001-UP
5		01643-31232	WASHER	2	J10001-UP
6		203-54-73350	PLATE	1	J10001-UP
7		01010-81230	BOLT	2	J10001-UP
8		01643-31232	WASHER	2	J10001-UP
9		20Y-54-28170	BRACKET	1	J10001-UP
10		01010-81230	BOLT	2	J10001-UP
11		01643-31232	WASHER	2	J10001-UP
12		205-54-51970	DOVE TAIL	1	J10001-UP
13		01010-80616	BOLT	2	J10001-UP
14		01643-30623	WASHER	2	J10001-UP
15		20Y-54-11611	STOPPER	1	J10001-UP
16		01580-11008	NUT	1	J10001-UP
17		203-54-73991	PLATE	1	J10001-UP
18		01010-81230	BOLT	2	J10001-UP
19		01643-31232	WASHER	2	J10001-UP
20		20Y-54-29231	BAR	1	J10001-UP
21		203-54-73311	COVER	1	J10001-UP
22		198-54-41982	.LOCK ASS'Y	1	J10001-UP
23		20Y-54-63411	.HINGE (WELDED)	2	J10001-UP
24		205-54-53550	DOVE TAIL	1	J10001-UP
25		01010-80612	BOLT	2	J10001-UP
26		01643-30623	WASHER	2	J10001-UP
27		01010-81230	BOLT	4	J10001-UP
28		01643-31232	WASHER	4	J10001-UP
29		01010-81230	BOLT	4	J10001-UP
30		01643-31232	WASHER	4	J10001-UP
		203-54-73711	COVER	1	J10001-UP
31		203-54-73721	.COVER	1	J10001-UP
32		203-54-74191	.SHEET	1	J10001-UP
33		01010-81230	BOLT	3	J10001-UP
34		01643-31232	WASHER	3	J10001-UP
35		203-54-62670	COLLAR	2	J10001-UP
36		124-54-26540	WASHER	1	J10001-UP
37		01010-81230	BOLT	1	J10001-UP

Ref :M1140-01A0 Page :240040

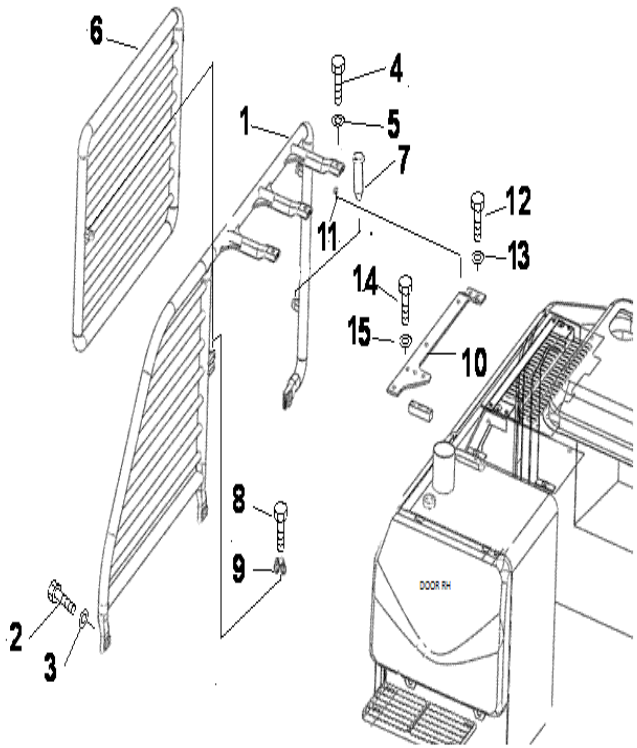

PC130F-7 S/N J10001-UP

DOOR GUARD RH

INDEX	CD	PART NO.	DESCRIPTION	QTY	SERIAL NO.
1		203-56-J1150	GUARD RH	1	J10001-UP
2		01010-81260	BOLT	3	J10001-UP
3		01643-31232	WASHER	3	J10001-UP
4		01010-81255	BOLT	3	J10001-UP
5		01643-31232	WASHER	3	J10001-UP
6		203-56-J1160	GUARD RH	1	J10001-UP
7		144-54-11940	PIN	2	J10001-UP
8		01435-01265	BOLT	1	J10001-UP
9		01541-21260	NUT(WING)	1	J10001-UP
10		20356J1170	BRACKET RH	1	J10001-UP
11		01580-11210	NUT	3	J10001-UP
12		01010-81255	BOLT	2	J10001-UP
13		01643-31232	WASHER	2	J10001-UP
14		01010-81260	BOLT	3	J10001-UP
15		01643-31232	WASHER	3	J10001-UP

Ref :M1140-01A1 Page :240045

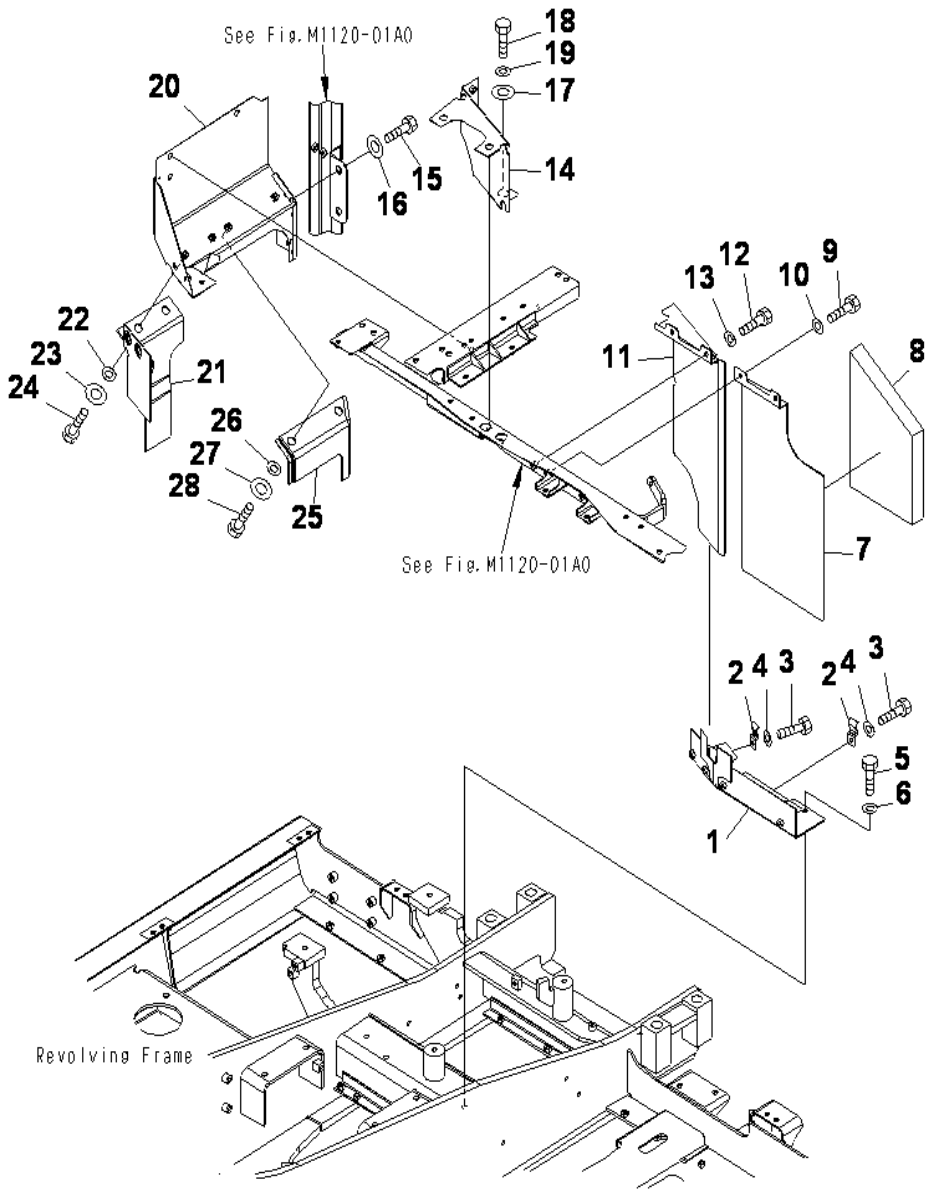

PC130F-7 S/N J10001-UP

PARTITION (1/2)

INDEX	CD	PART NO.	DESCRIPTION	QTY	SERIAL NO.
1		203-54-73441	COVER	1	J10001-UP
2		20Y-54-27761	CATCH	4	J10001-UP
3		01010-81220	BOLT	4	J10001-UP
4		01643-31232	WASHER	4	J10001-UP
5		01010-81230	BOLT	2	J10001-UP
6		01643-31232	WASHER	2	J10001-UP
		203-54-76150	COVER	1	J10001-UP
7		203-54-73451	.COVER	1	J10001-UP
8		203-54-74230	.SHEET	1	J10001-UP
9		01010-81230	BOLT	2	J10001-UP
10		01643-31232	WASHER	2	J10001-UP
11		203-54-73461	COVER	1	J10001-UP
12		01010-81230	BOLT	2	J10001-UP
13		01643-31232	WASHER	2	J10001-UP
14		203-54-73471	COVER	1	J10001-UP
15		124-54-26540	WASHER	2	J10001-UP
16		01010-81230	BOLT	2	J10001-UP
17		203-54-62670	COLLAR	1	J10001-UP
18		01010-81230	BOLT	1	J10001-UP
19		01643-31232	WASHER	1	J10001-UP
20		203-54-73481	COVER	1	J10001-UP
21		203-62-71490	SHEET	1	J10001-UP
22		01643-51232	WASHER	4	J10001-UP
23		124-54-26540	WASHER	4	J10001-UP
24		01010-81220	BOLT	4	J10001-UP
25		203-62-71890	SHEET	1	J10001-UP
26		01643-51232	WASHER	2	J10001-UP
27		124-54-26540	WASHER	2	J10001-UP
28		01010-81220	BOLT	2	J10001-UP

Ref :M1150-01A0 Page :240050

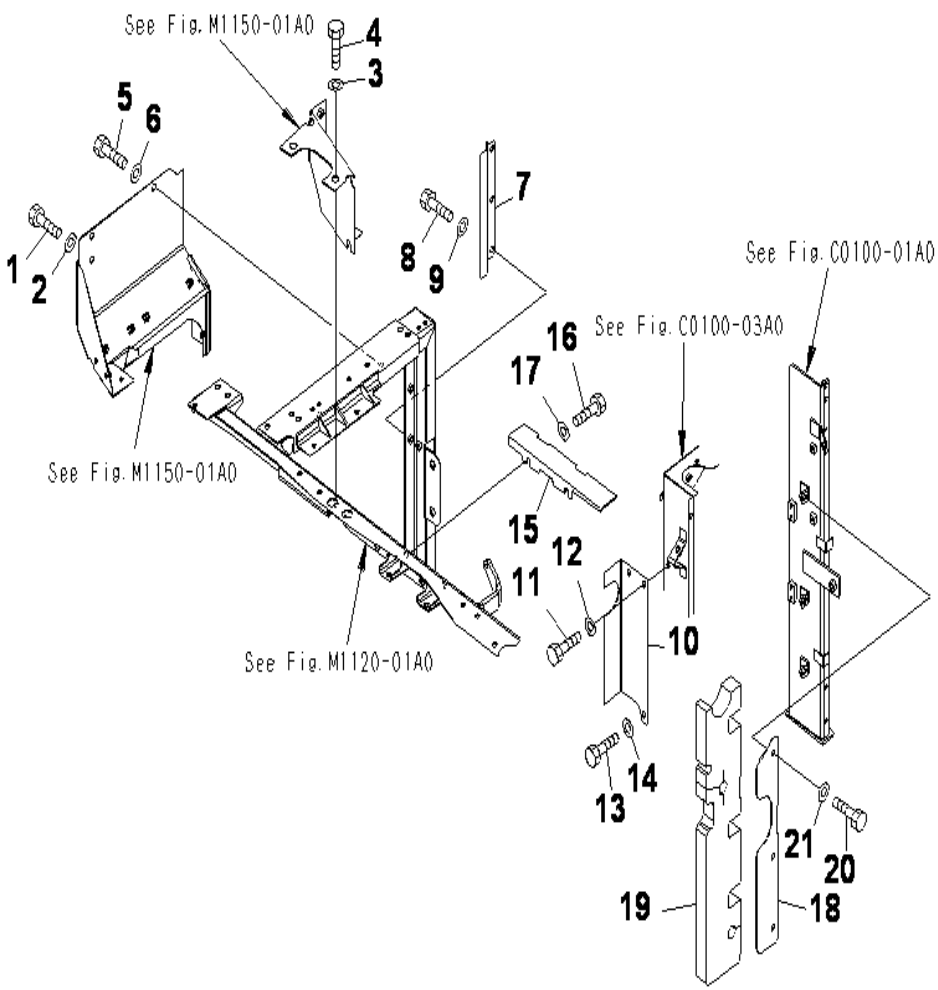

PARTITION (2/2)

INDEX	CD	PART NO.	DESCRIPTION	QTY	SERIAL NO.
1		01010-81230	BOLT	1	J10001-UP
2		01643-31232	WASHER	1	J10001-UP
3		124-54-26540	WASHER	2	J10001-UP
4		01010-81230	BOLT	2	J10001-UP
5		01010-81230	BOLT	2	J10001-UP
6		01643-31232	WASHER	2	J10001-UP
7		203-62-71990	COVER	1	J10001-UP
8		01010-81230	BOLT	3	J10001-UP
9		01643-31232	WASHER	3	J10001-UP
10		203-54-73491	COVER	1	J10001-UP
11		01010-81020	BOLT	2	J10001-UP
12		01643-31032	WASHER	2	J10001-UP
13		01010-81020	BOLT	1	J10001-UP
14		01643-31032	WASHER	1	J10001-UP
15		203-54-74430	COVER	1	J10001-UP
16		01010-81230	BOLT	2	J10001-UP
17		01643-31232	WASHER	2	J10001-UP
		203-03-71590	PLATE	1	J10001-UP
18		203-03-71570	.PLATE	1	J10001-UP
19		203-03-71580	.SHEET	1	J10001-UP
20		01010-81230	BOLT	3	J10001-UP
21		01643-31232	WASHER	3	J10001-UP

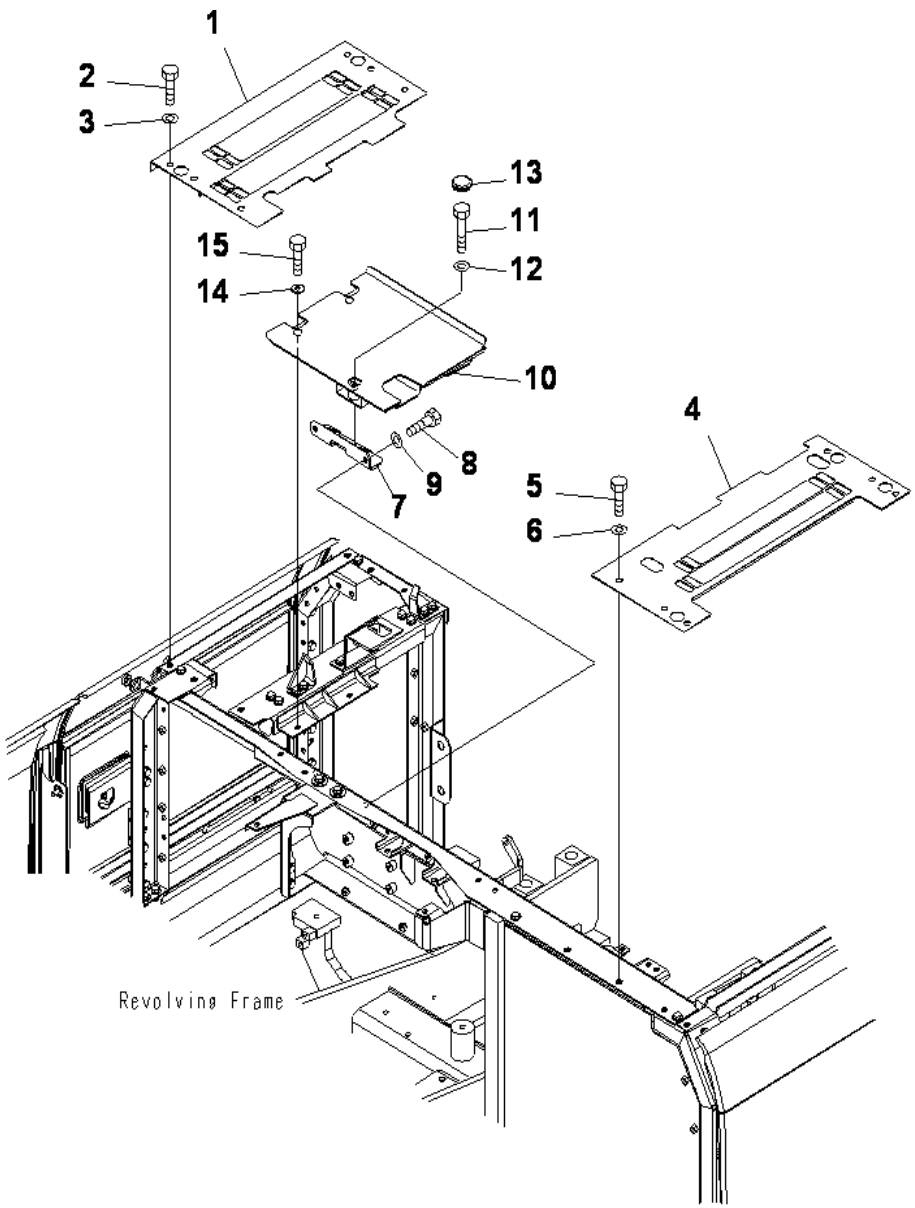

PC130F-7 S/N J10001-UP

COVER (UPPER)

INDEX	CD	PART NO.	DESCRIPTION	QTY	SERIAL NO.
1		203-54-73151	COVER	1	J10001-UP
2		01010-81230	BOLT	6	J10001-UP
3		01643-31232	WASHER	6	J10001-UP
4		203-54-73121	COVER	1	J10001-UP
5		01010-81230	BOLT	6	J10001-UP
6		01643-31232	WASHER	6	J10001-UP
7		203-54-77140	BRACKET	1	J10001-UP
8		01010-81230	BOLT	2	J10001-UP
9		01643-31232	WASHER	2	J10001-UP
10		203-54-77130	COVER	1	J10001-UP
11		01010-81255	BOLT	1	J10001-UP
12		01643-31232	WASHER	1	J10001-UP
13		09415-02512	CAP	1	J10001-UP
14		124-54-26540	WASHER	2	J10001-UP
15		01010-81230	BOLT	2	J10001-UP

Ref :M1210-01A0 Page :240070

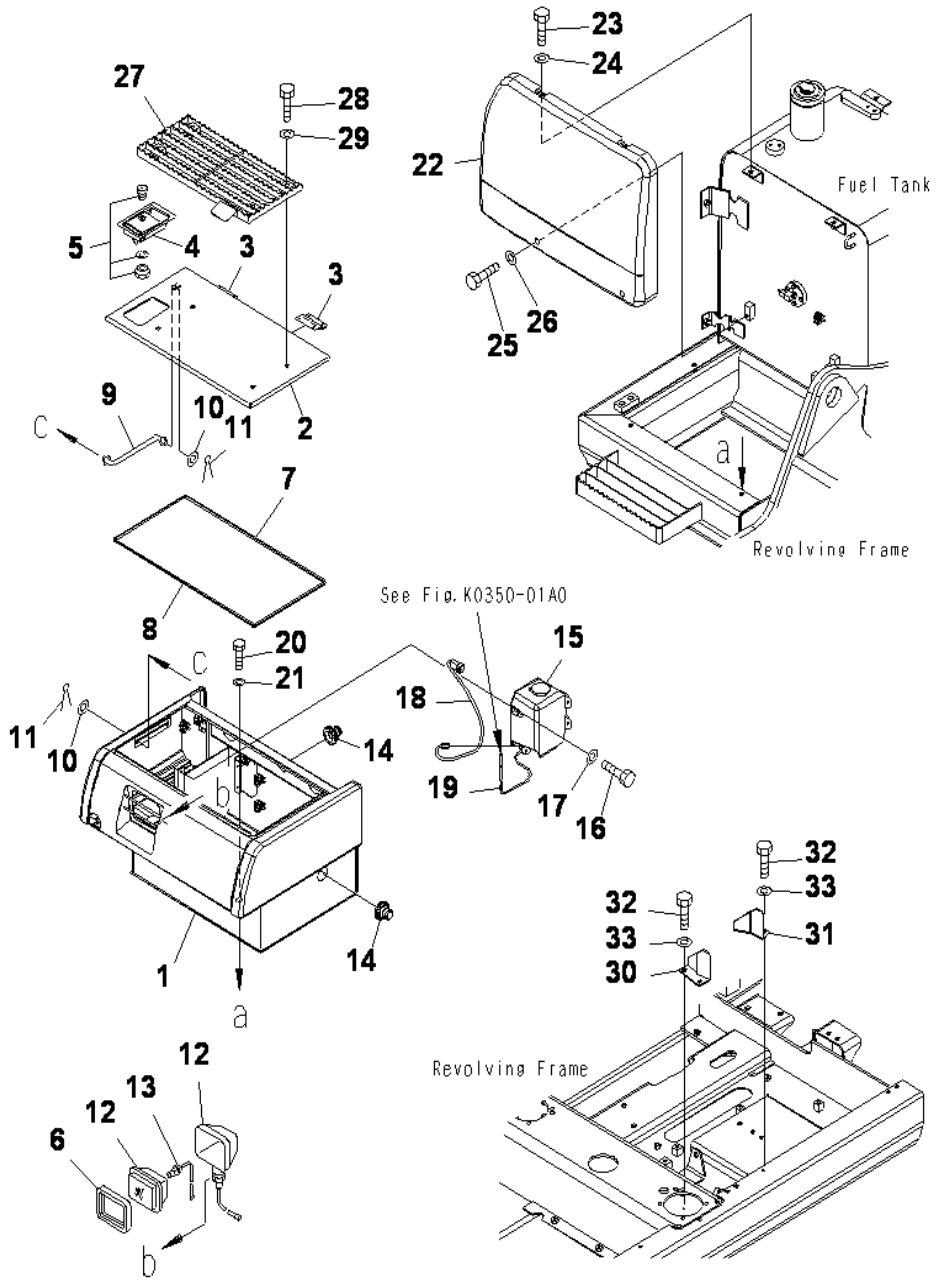

PC130F-7 S/N J10001-UP

TOOL CASE

INDEX	CD	PART NO.	DESCRIPTION	QTY	SERIAL NO.
1		203-54-73610	CASE	1	J10001-UP
2		203-54-76711	.COVER (WELDED)	1	J10001-UP
3		203-54-67741	..HINGE (WELDED)	2	J10001-UP
4		421-54-11372	..LOCK ASS'Y (WELDED)	1	J10001-UP
5		421-54-11381	...LOCK	1	J10001-UP
6		203-54-67760	.SEAL	1	J10001-UP
7		203-54-76720	.SEAL	1	J10001-UP
8		203-54-76730	.SEAL	1	J10001-UP
9		203-54-56630	ROD	1	J10001-UP
10		01643-30623	WASHER	2	J10001-UP
11		04050-11612	COTTER PIN	2	J10001-UP
12		21W-06-22120	WORK LAMP ASS'Y	1	J10001-UP
13		21W-06-22130	.BULB, 60W	1	J10001-UP
14		08037-12536	GROMMET	2	J10001-UP
15		21T-06-11350	WASHER ASS'Y	1	J10001-UP
16		01010-80616	BOLT	4	J10001-UP
17		01643-30623	WASHER	4	J10001-UP
18		203-06-61132	WIRING HARNESS	1	J10001-UP
19		(195-97-98590)	VALVE. (SEE FIG. K0350-01A0)	1	J10001-UP
20		01010-81230	BOLT	4	J10001-UP
21		124-54-26540	WASHER	4	J10001-UP
22		203-54-73171	COVER	1	J10001-UP
23		01010-81230	BOLT	2	J10001-UP
24		01643-31232	WASHER	2	J10001-UP
25		01010-81225	BOLT	2	J10001-UP
26		124-54-26540	WASHER	2	J10001-UP
27		203-54-76811	STEP	1	J10001-UP
28		01010-81245	BOLT	4	J10001-UP
29		01643-31232	WASHER	4	J10001-UP
30		20Y-54-61670	BRACKET	1	J10001-UP
31		20Y-54-61680	BRACKET	1	J10001-UP
32		01010-81230	BOLT	4	J10001-UP
33		01643-31232	WASHER	4	J10001-UP

Ref :M1220-01A1 Page :240080

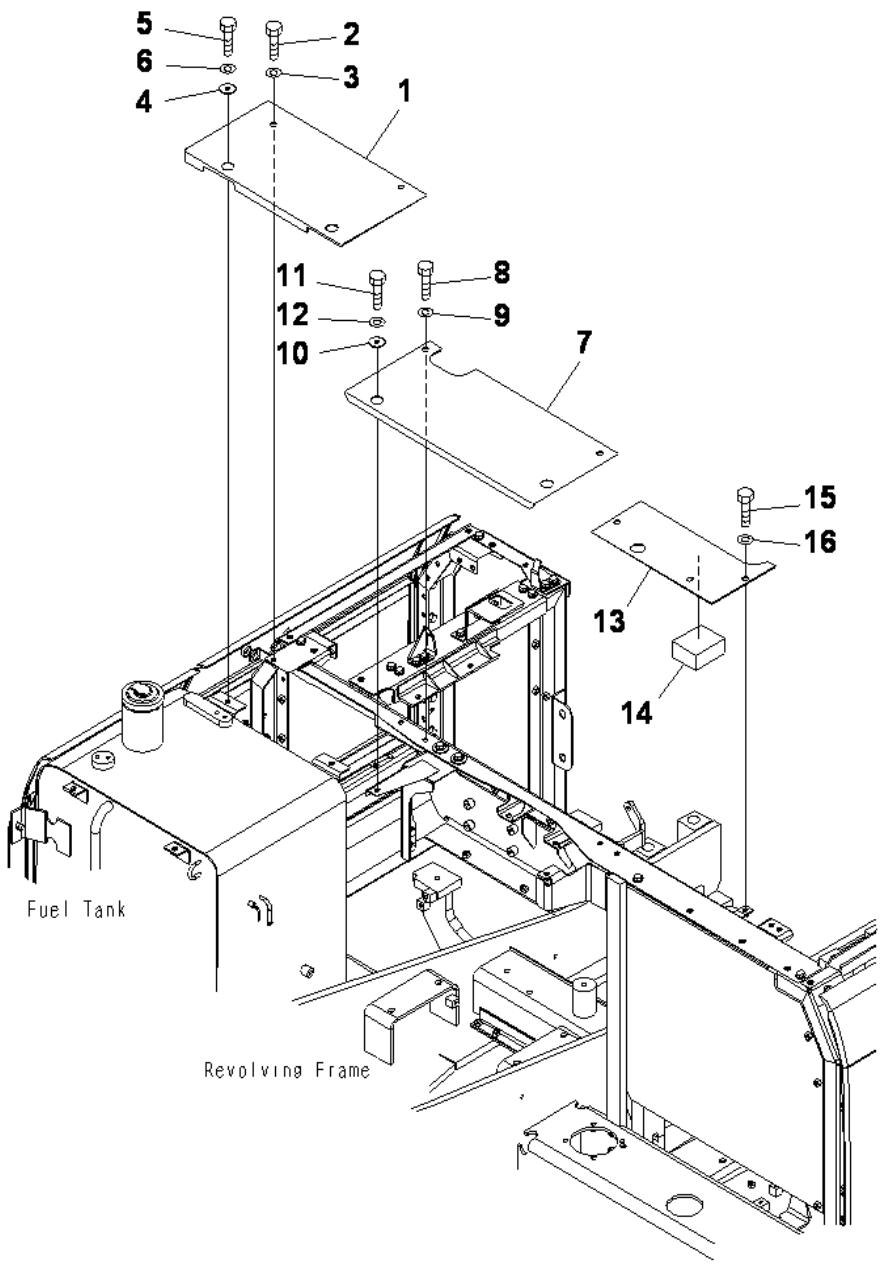

PC130F-7 S/N J10001-UP

VALVE UPPER COVER

INDEX	CD	PART NO.	DESCRIPTION	QTY	SERIAL NO.
1		203-54-73142	COVER	1	J10001-UP
2		01010-81230	BOLT	2	J10001-UP
3		01643-31232	WASHER	2	J10001-UP
4		203-54-62670	COLLAR	2	J10001-UP
5		01010-81230	BOLT	2	J10001-UP
6		01643-31232	WASHER	2	J10001-UP
7		203-54-73770	COVER	1	J10001-UP
8		01010-81230	BOLT	2	J10001-UP
9		01643-31232	WASHER	2	J10001-UP
10		203-54-62670	COLLAR	2	J10001-UP
11		01010-81230	BOLT	2	J10001-UP
12		01643-31232	WASHER	2	J10001-UP
		203-54-73181	COVER	1	J10001-UP
13		203-54-73190	.COVER	1	J10001-UP
14		203-54-76920	.SHEET	1	J10001-UP
15		01010-81230	BOLT	3	J10001-UP
16		01643-31232	WASHER	3	J10001-UP

Ref :M1230-01A0 Page :240090

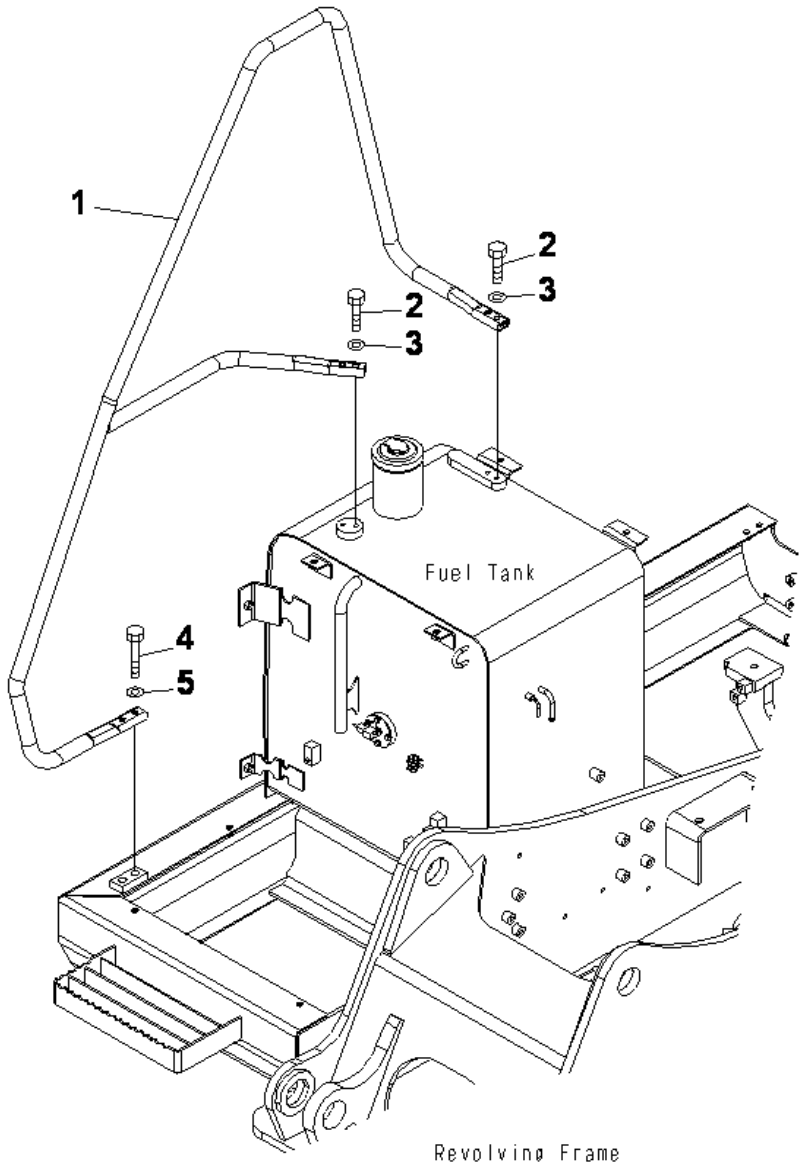

PC130F-7 S/N J10001-UP

HAND RAIL

INDEX	CD	PART NO.	DESCRIPTION	QTY	SERIAL NO.
1		203-54-73392	HAND RAIL.....	1	J10001-UP
2		01010-81240	BOLT.....	4	J10001-UP
3		01643-31232	WASHER.....	4	J10001-UP
4		01010-81260	BOLT.....	2	J10001-UP
5		01643-31232	WASHER.....	2	J10001-UP

Ref :M1310-01A0 Page :240100

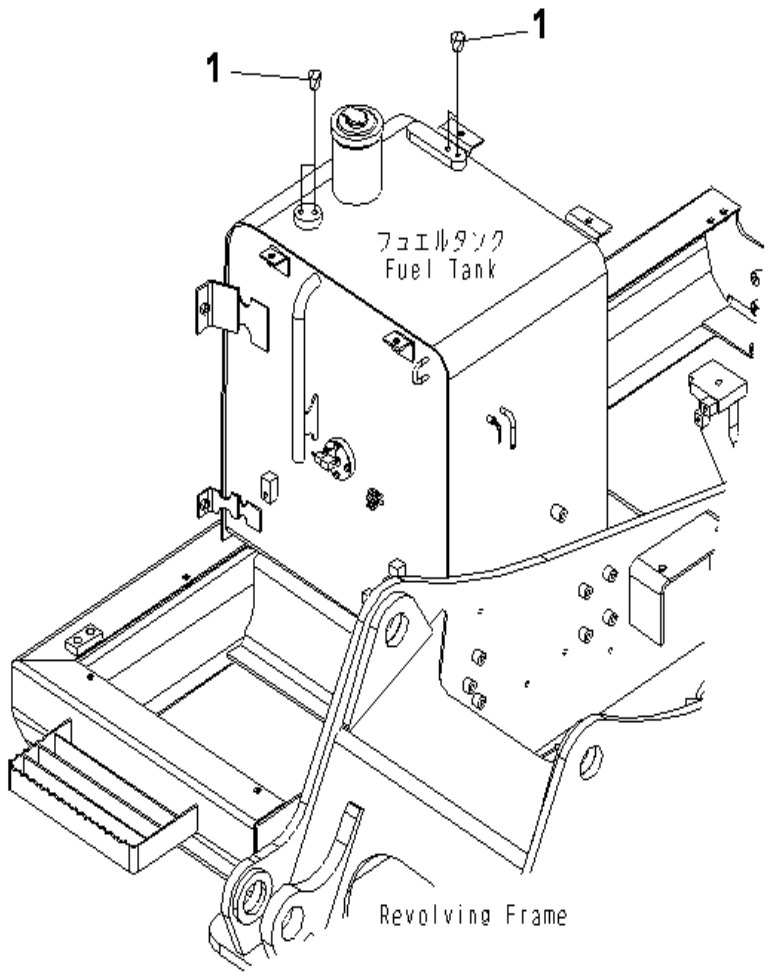

PC130F-7 S/N J10001-UP

BLIND PARTS (FOR HANDRAIL)

INDEX	CD	PART NO.	DESCRIPTION	QTY	SERIAL NO.
1		07049-01215	PLUG.....	2	J10001-UP

Ref :M1310-01A1 Page :240110

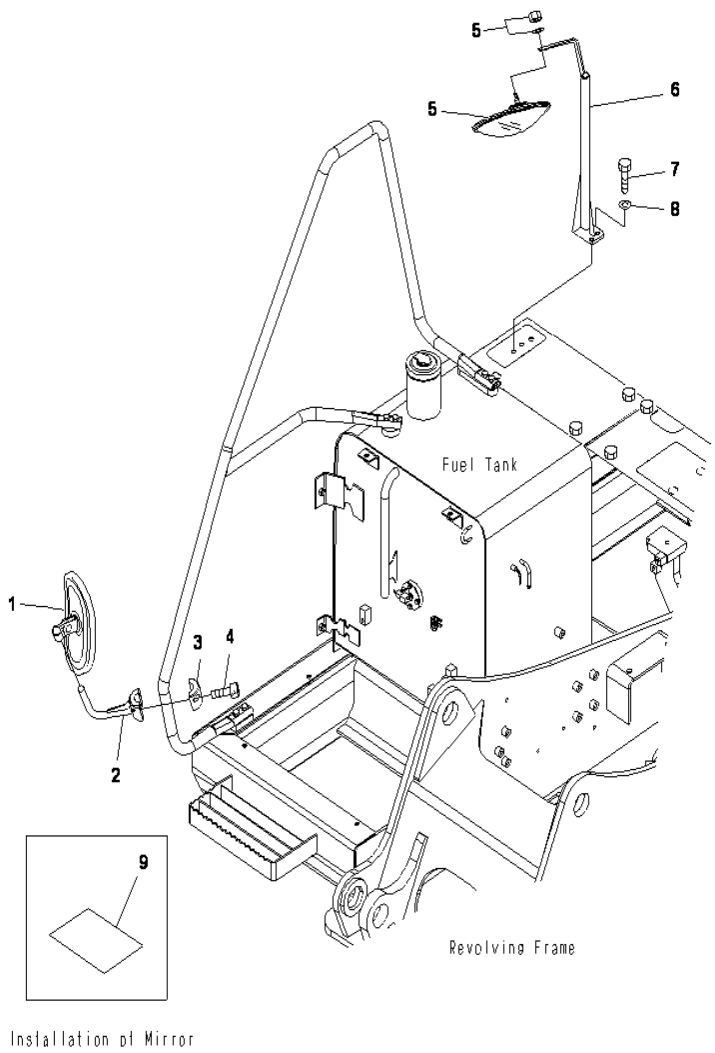

Installation of Mirror

REAR VIEW MIRROR. R.H.

INDEX	CD	PART NO.	DESCRIPTION	QTY	SERIAL NO.
1		20Y-54-74280	MIRROR	1	J10001-UP
2		20Y-54-74270	SUPPORT	1	J10001-UP
3		20Y-54-61630	CLAMP	1	J10001-UP
4		01252-71030	BOLT	2	J10001-UP
5		207-54-75710	MIRROR	1	J10001-UP
6		20Y-54-74240	BRACKET	1	J10001-UP
7		01010-81235	BOLT	2	J10001-UP
8		01643-31232	WASHER	1	J10001-UP
9		203-987-1120	PLATE	1	J10001-UP

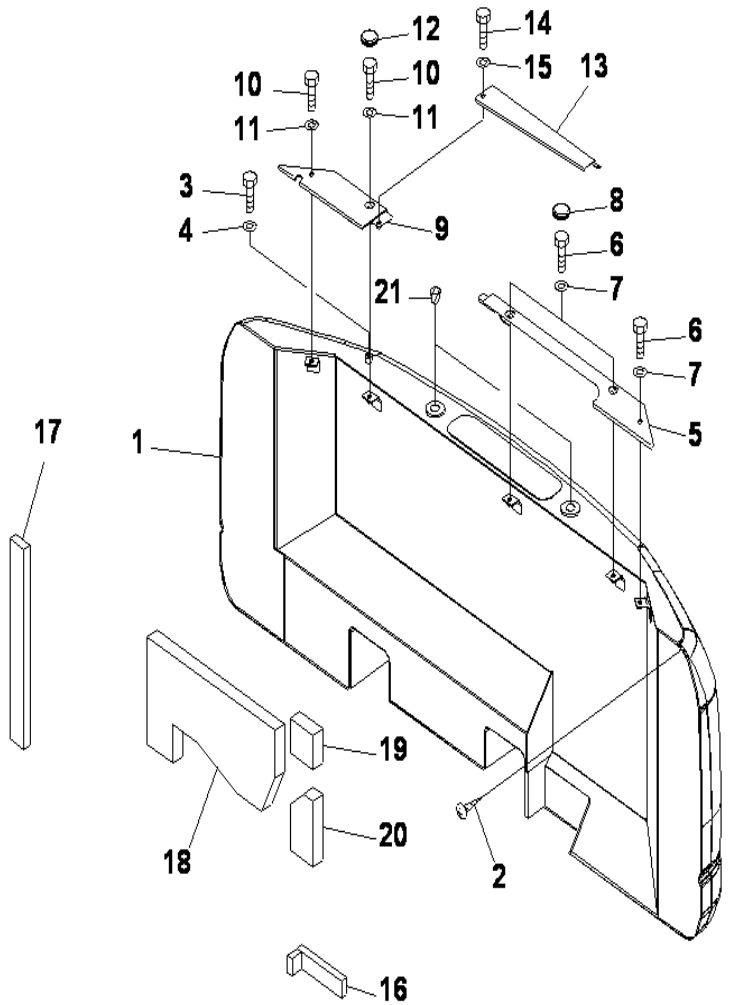

PC130F-7 S/N J10001-UP

COUNTER WEIGHT (2455KG)

INDEX	CD	PART NO.	DESCRIPTION	QTY	SERIAL NO.
1		203-46-75121	WEIGHT	1	J10001-UP
2		01370-00508	SCREW	1	J10001-UP
3		01010-81220	BOLT	1	J10001-UP
4		01643-31232	WASHER	1	J10001-UP
5		203-54-73161	COVER	1	J10001-UP
6		01010-81225	BOLT	3	J10001-UP
7		01643-31232	WASHER	3	J10001-UP
8		09415-02512	CAP	2	J10001-UP
9		203-54-77110	COVER	1	J10001-UP
10		01010-81230	BOLT	2	J10001-UP
11		01643-31232	WASHER	2	J10001-UP
12		09415-02512	CAP	1	J10001-UP
13		203-54-77120	COVER	1	J10001-UP
14		01010-81225	BOLT	1	J10001-UP
15		01643-31232	WASHER	1	J10001-UP
16		203-03-71910	SHEET	1	J10001-UP
17		203-46-76170	SHEET	1	J10001-UP
18		203-46-76120	SHEET	1	J10001-UP
19		203-46-76130	SHEET	1	J10001-UP
20		203-46-76140	SHEET	1	J10001-UP
21		07049-03645	PLUG	2	J10001-UP

Ref :M1510-01A0 Page :240125

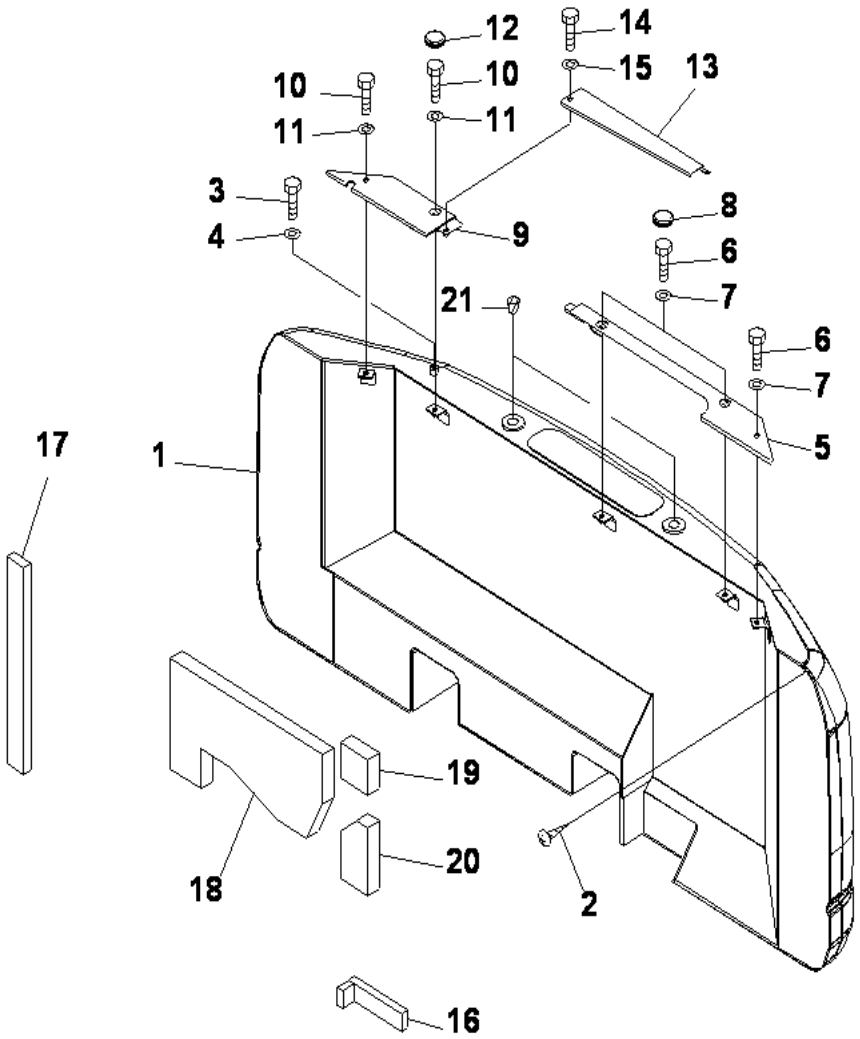

PC130F-7 S/N J10001-UP

COUNTER WEIGHT (1560 KG)

INDEX	CD	PART NO.	DESCRIPTION	QTY	SERIAL NO.
1		202-46-72511	WEIGHT	1	J10001-UP
2		01370-00508	SCREW	1	J10001-UP
3		01010-81220	BOLT	1	J10001-UP
4		01643-31232	WASHER	1	J10001-UP
5		203-54-73161	COVER	1	J10001-UP
6		01010-81225	BOLT	3	J10001-UP
7		01643-31232	WASHER	3	J10001-UP
8		09415-02512	CAP	2	J10001-UP
9		203-54-77110	COVER	1	J10001-UP
10		01010-81230	BOLT	2	J10001-UP
11		01643-31232	WASHER	2	J10001-UP
12		09415-02512	CAP	1	J10001-UP
13		203-54-77120	COVER	1	J10001-UP
14		01010-81225	BOLT	1	J10001-UP
15		01643-31232	WASHER	1	J10001-UP
16		203-03-71910	SHEET	1	J10001-UP
17		203-46-76170	SHEET	1	J10001-UP
18		203-46-76120	SHEET	1	J10001-UP
19		203-46-76130	SHEET	1	J10001-UP
20		203-46-76140	SHEET	1	J10001-UP
21		07049-03645	PLUG	2	J10001-UP

Ref :M1510-01A1 Page :240130

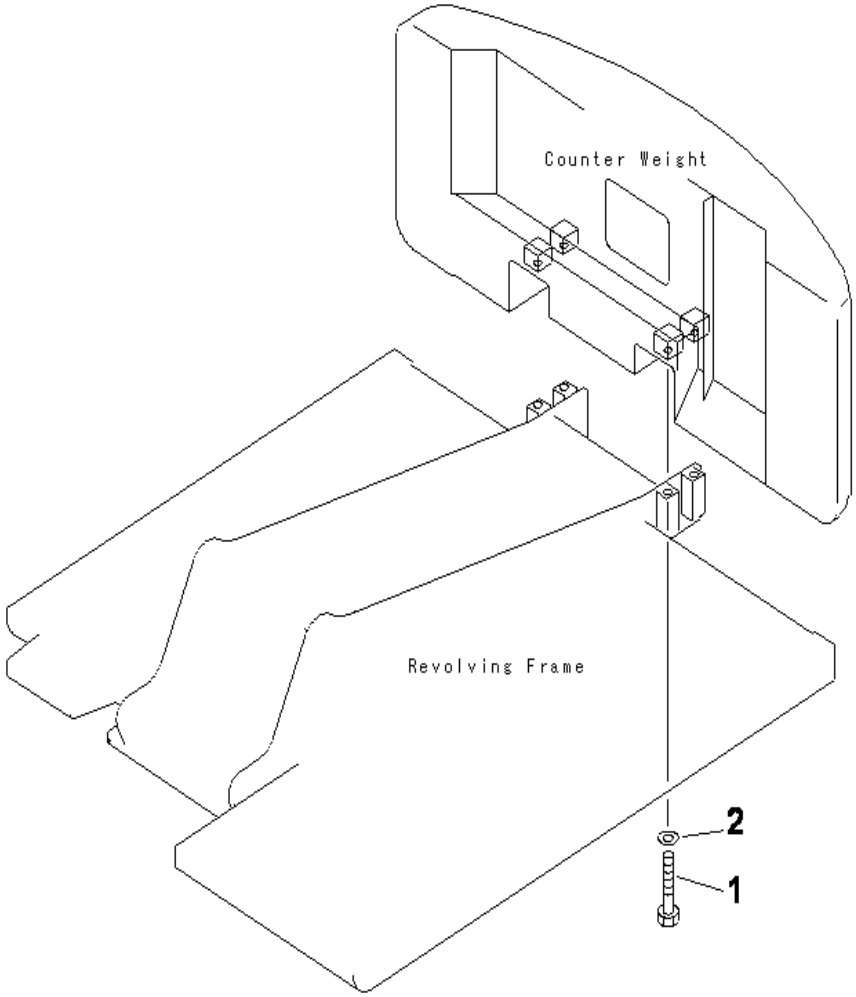

PC130F-7 S/N J10001-UP

COUNTER WEIGHT MOUNTING

INDEX	CD	PART NO.	DESCRIPTION	QTY	SERIAL NO.
1		01011-62790	BOLT	4	J10001-UP
2		01643-32780	WASHER	4	J10001-UP

Ref :M1520-01A0 Page :240140

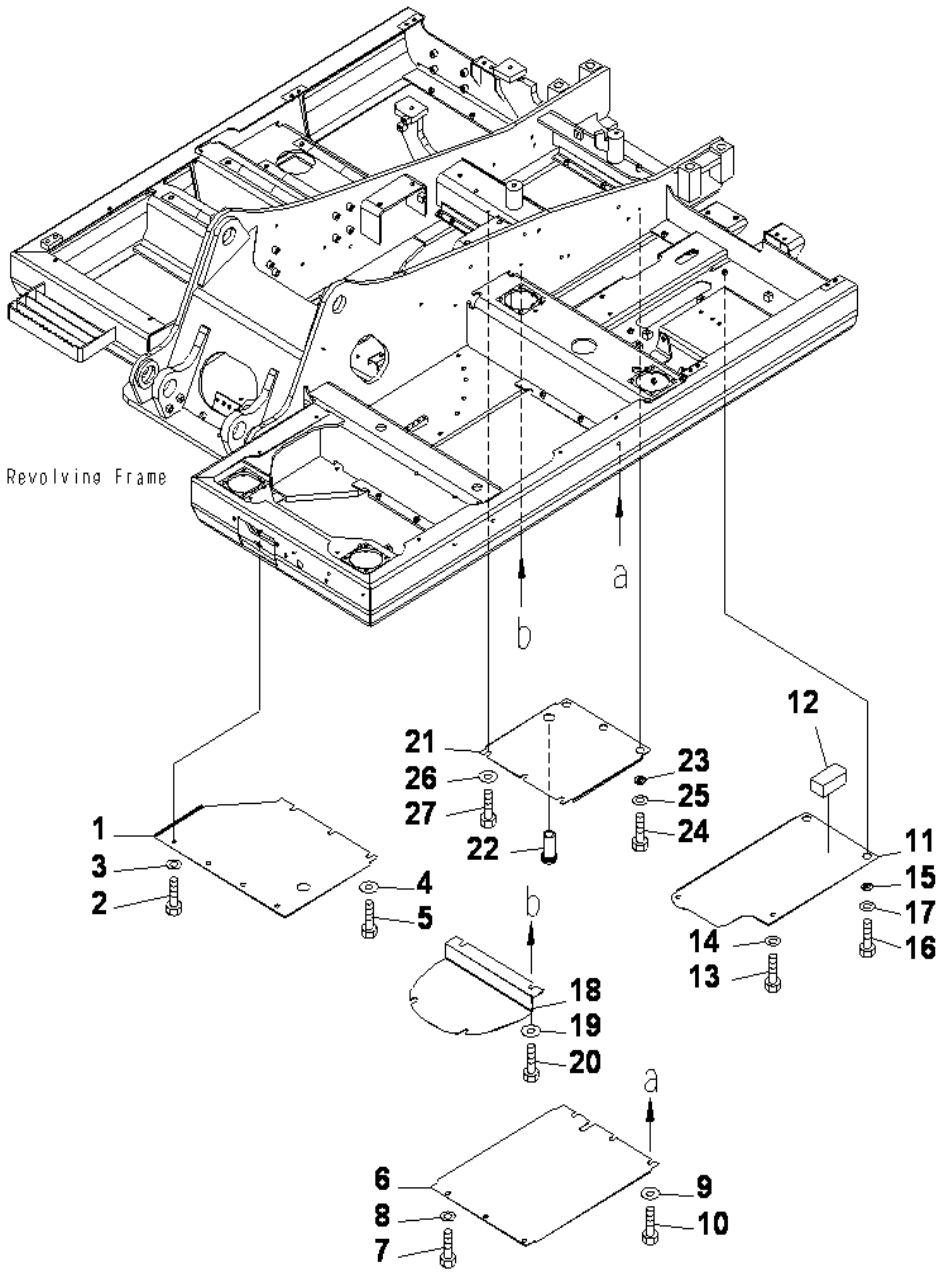

UNDER COVER (L.H.)

INDEX	CD	PART NO.	DESCRIPTION	QTY	SERIAL NO.
1		203-54-75310	COVER	1	J10001-UP
2		01010-81230	BOLT	4	J10001-UP
3		01643-31232	WASHER	4	J10001-UP
4		124-54-26540	WASHER	3	J10001-UP
5		01010-81230	BOLT	3	J10001-UP
6		203-54-75330	COVER	1	J10001-UP
7		01010-81230	BOLT	3	J10001-UP
8		01643-31232	WASHER	3	J10001-UP
9		124-54-26540	WASHER	3	J10001-UP
10		01010-81230	BOLT	3	J10001-UP
		203-54-75141	COVER	1	J10001-UP
11		203-54-75341	.COVER	1	J10001-UP
12		203-54-76910	.SHEET	1	J10001-UP
13		01010-81230	BOLT	2	J10001-UP
14		01643-31232	WASHER	2	J10001-UP
15		20Y-54-12550	COLLAR	2	J10001-UP
16		01010-81230	BOLT	2	J10001-UP
17		01643-31232	WASHER	2	J10001-UP
18		203-54-75350	COVER	1	J10001-UP
19		124-54-26540	WASHER	4	J10001-UP
20		01010-81230	BOLT	4	J10001-UP
21		203-54-75361	PLATE	1	J10001-UP
22		22U-54-24760	GROMMET	1	J10001-UP
23		20Y-54-12550	COLLAR	3	J10001-UP
24		01010-81230	BOLT	3	J10001-UP
25		01643-31232	WASHER	3	J10001-UP
26		124-54-26540	WASHER	3	J10001-UP
27		01010-81230	BOLT	3	J10001-UP

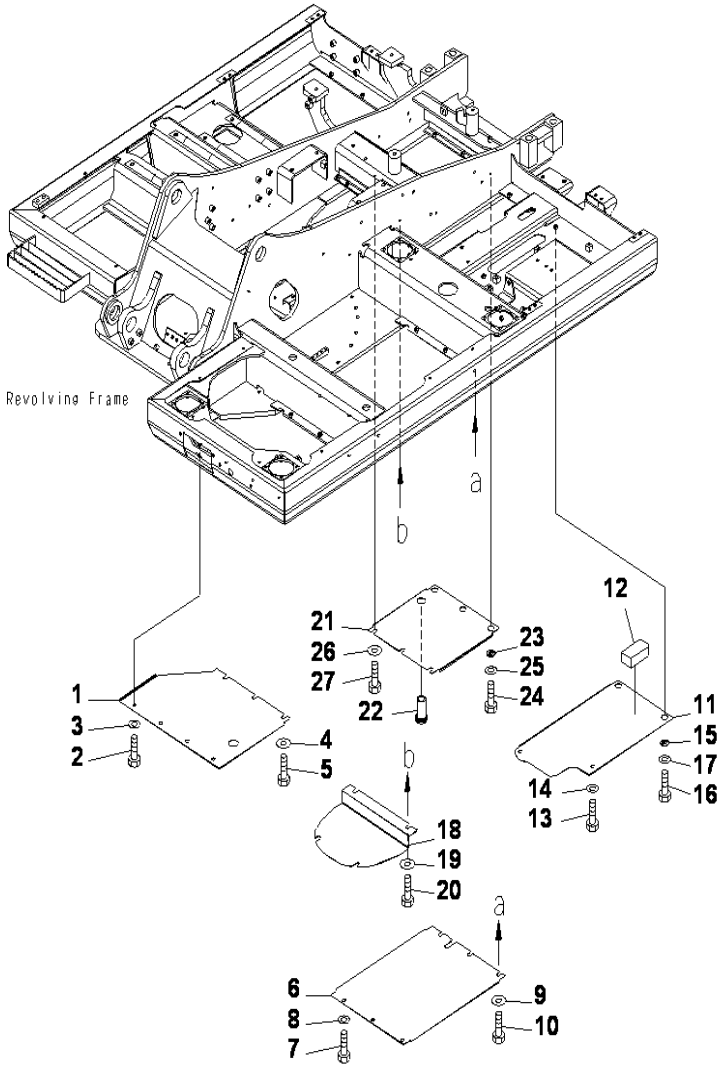

UNDER COVER (L.H.)(LOGGING)

INDEX	CD	PART NO.	DESCRIPTION	QTY	SERIAL NO.
1		203-54-J1930	COVER	1	J10001-UP
2		01010-81235	BOLT	4	J10001-UP
3		01643-31232	WASHER	4	J10001-UP
4		124-54-26540	WASHER	3	J10001-UP
5		01010-81235	BOLT	3	J10001-UP
6		203-54-J1940	COVER	1	J10001-UP
7		01010-81235	BOLT	3	J10001-UP
8		01643-31232	WASHER	3	J10001-UP
9		124-54-26540	WASHER	3	J10001-UP
10		01010-81235	BOLT	3	J10001-UP
		203-54-J1950	COVER	1	J10001-UP
11		203-54-J1960	.COVER	1	J10001-UP
12		203-54-76910	.SHEET	1	J10001-UP
13		01010-81235	BOLT	2	J10001-UP
14		01643-31232	WASHER	2	J10001-UP
15		20Y-54-12550	COLLAR	2	J10001-UP
16		01010-81235	BOLT	2	J10001-UP
17		01643-31232	WASHER	2	J10001-UP
18		203-54-J1970	COVER	1	J10001-UP
19		124-54-26540	WASHER	4	J10001-UP
20		01010-81235	BOLT	4	J10001-UP
21		203-54-J1980	COVER	1	J10001-UP
22		22U-54-24760	GROMMET	1	J10001-UP
23		20Y-54-12550	COLLAR	3	J10001-UP
24		01010-81235	BOLT	3	J10001-UP
25		01643-31232	WASHER	3	J10001-UP
26		124-54-26540	WASHER	3	J10001-UP
27		01010-81235	BOLT	3	J10001-UP

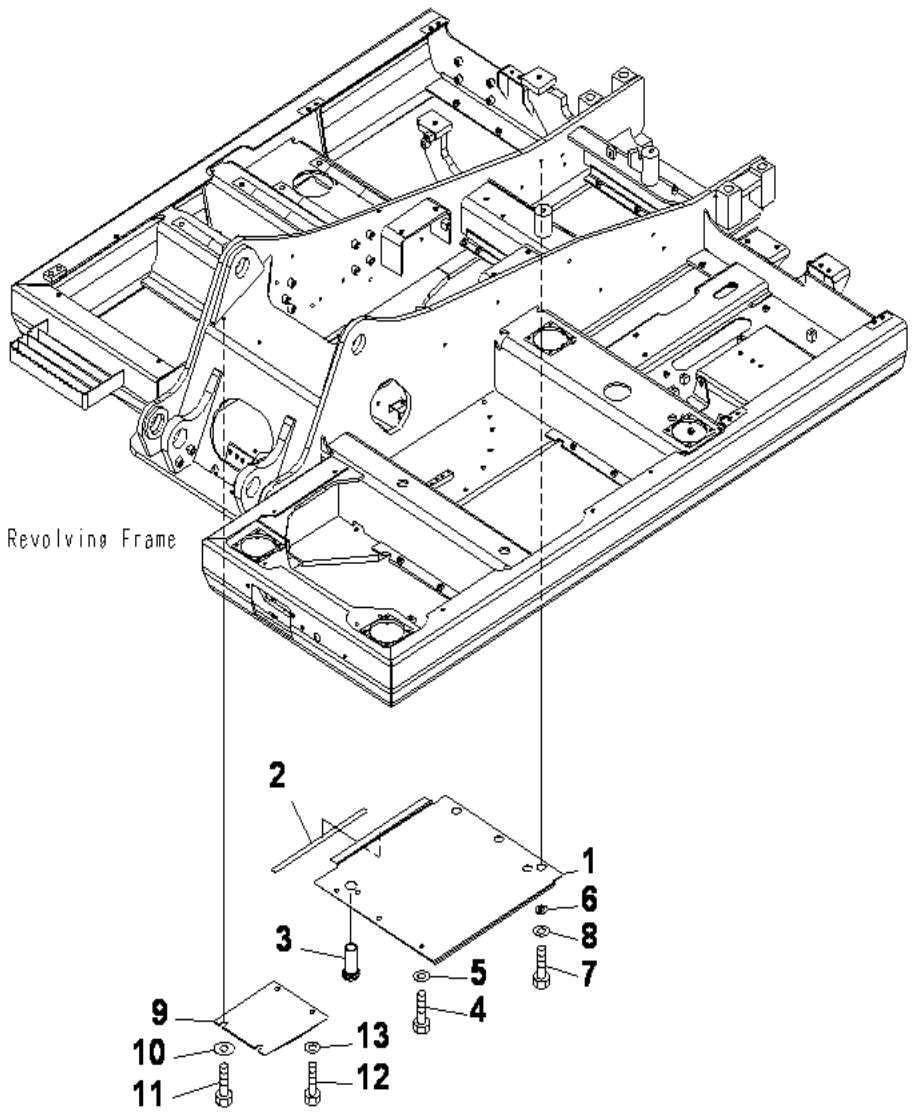

PC130F-7 S/N J10001-UP

UNDER COVER (R.H.)

INDEX	CD	PART NO.	DESCRIPTION	QTY	SERIAL NO.
1		203-54-75380	COVER	1	J10001-UP
2		203-54-62630	.SHEET	1	J10001-UP
3		22U-54-24760	GROMMET	1	J10001-UP
4		01010-81230	BOLT	3	J10001-UP
5		01643-31232	WASHER	3	J10001-UP
6		20Y-54-12550	COLLAR	3	J10001-UP
7		01010-81230	BOLT	3	J10001-UP
8		01643-31232	WASHER	3	J10001-UP
9		203-54-75421	COVER	1	J10001-UP
10		124-54-26540	WASHER	2	J10001-UP
11		01010-81230	BOLT	2	J10001-UP
12		01010-81230	BOLT	2	J10001-UP
13		01643-31232	WASHER	2	J10001-UP

Ref :M1810-02A0 Page :240160

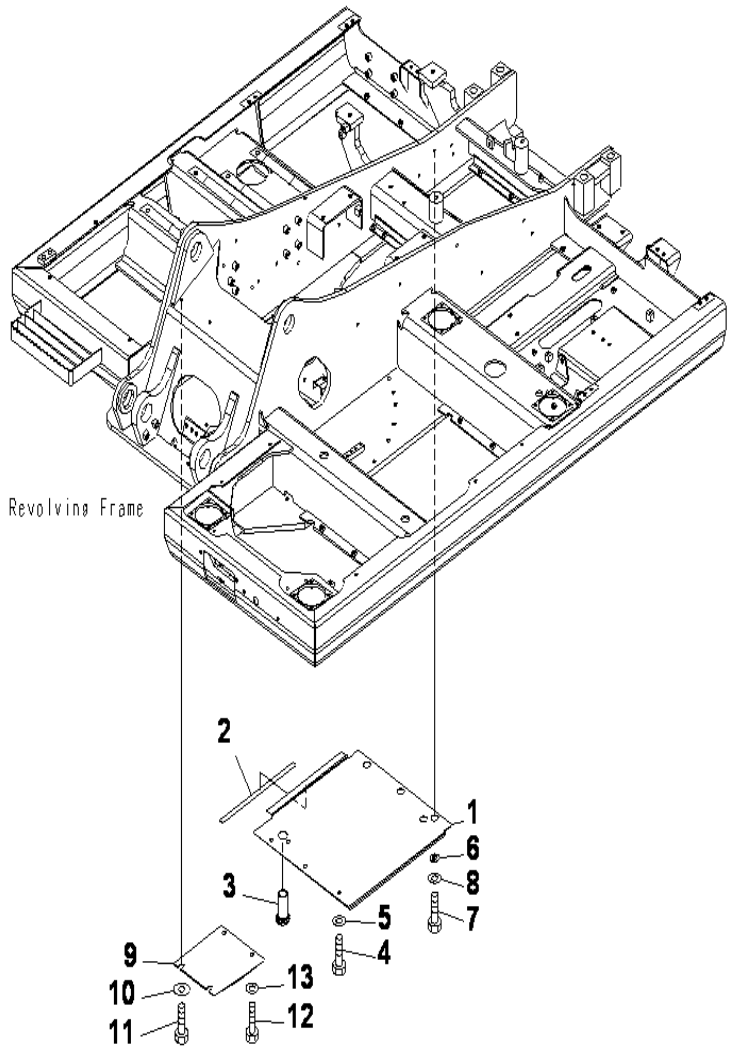

PC130F-7 S/N J10001-UP

UNDER COVER (R.H)(LOGGING)

INDEX	CD	PART NO.	DESCRIPTION	QTY	SERIAL NO.
1		203-54-J1990	COVER	1	J10001-UP
2		203-54-62630	.SHEET	1	J10001-UP
3		22U-54-24760	GROMMET	1	J10001-UP
4		01010-81235	BOLT	3	J10001-UP
5		01643-31232	WASHER	3	J10001-UP
6		20Y-54-12550	COLLAR	3	J10001-UP
7		01010-81235	BOLT	3	J10001-UP
8		01643-31232	WASHER	3	J10001-UP
9		203-54-J2010	COVER	1	J10001-UP
10		124-54-26540	WASHER	2	J10001-UP
11		01010-81235	BOLT	2	J10001-UP
12		01010-81230	BOLT	2	J10001-UP
13		01643-31232	WASHER	2	J10001-UP

Ref :M1810-02A1 Page :240165

SWING CIRCLE AND RELATED PARTS

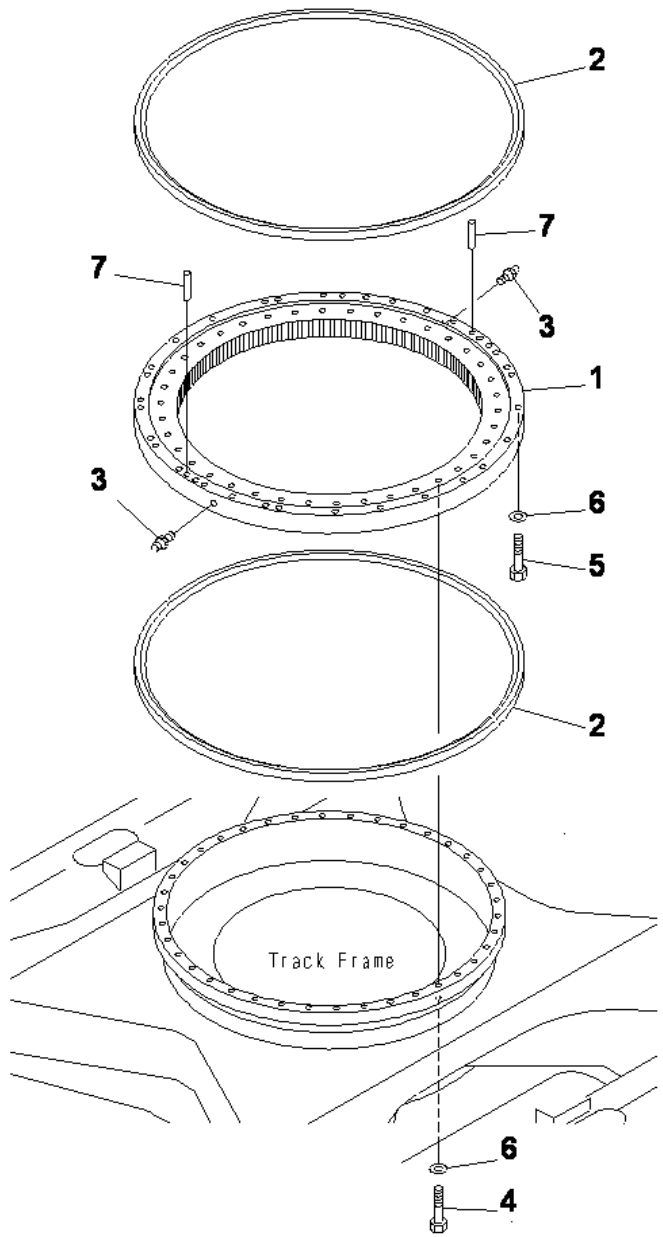

PC130F-7 S/N J10001-UP

SWING CIRCLE

INDEX	CD	PART NO.	DESCRIPTION	QTY	SERIAL NO.
1		203-25-62100	CIRCLE.....	1	J10001-UP
2		203-25-62130	.SEAL.....	2	J10001-UP
3		07020-00000	.FITTING.....	2	J10001-UP
4		01010-81660	BOLT.....	38	J10001-UP
5		01010-81690	BOLT.....	34	J10001-UP
6		01643-31645	WASHER.....	72	J10001-UP
7		04020-01434	PIN.....	2	J10001-UP

Ref :N1110-01A0 Page :270010

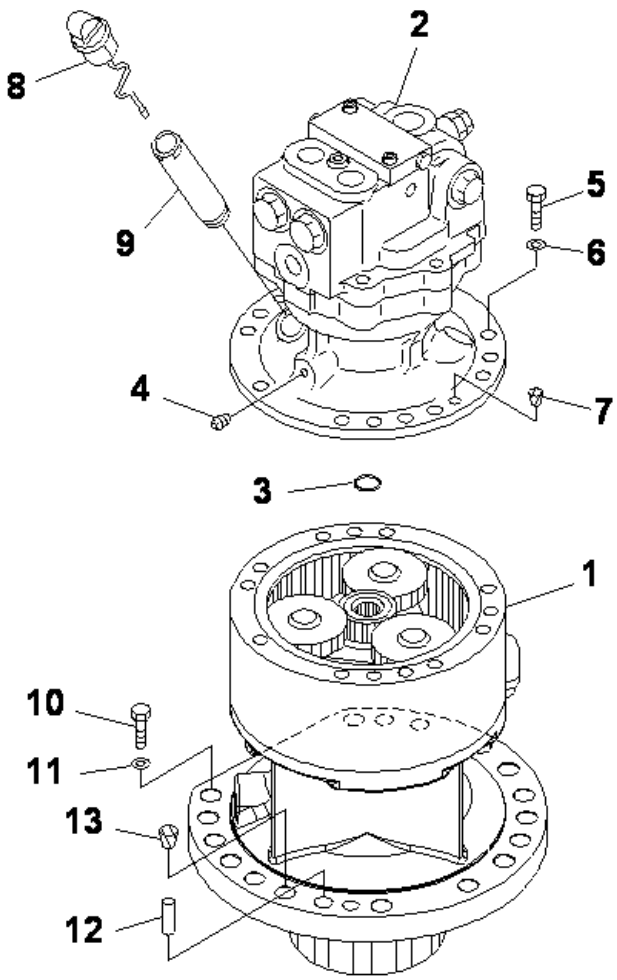

PC130F-7 S/N J10001-UP

SWING MACHINERY

INDEX	CD	PART NO.	DESCRIPTION	QTY	SERIAL NO.
1		203-26-00123	SWING MACHINERY A.....	1	J10001-UP
2		706-73-01400	MOTOR A.AB-3,PC.....	1	J10001-UP
3		201-26-62190	RING.....	1	J10001-UP
4		07042-30108	PLUG.....	1	J10001-UP
5		01011-81230	BOLT.....	13	J10001-UP
6		01643-31232	WASHER.....	13	J10001-UP
7		07049-01215	PLUG.....	2	J10001-UP
8		203-26-61480	GAUGE.....	1	J10001-UP
9		203-26-61470	FILLER.....	1	J10001-UP
10		01010-81655	BOLT.....	14	J10001-UP
11		01643-31645	WASHER.....	14	J10001-UP
12		04020-01638	PIN.....	2	J10001-UP
13		07049-02025	PLUG.....	1	J10001-UP

Ref :N1210-01A0 Page :270020

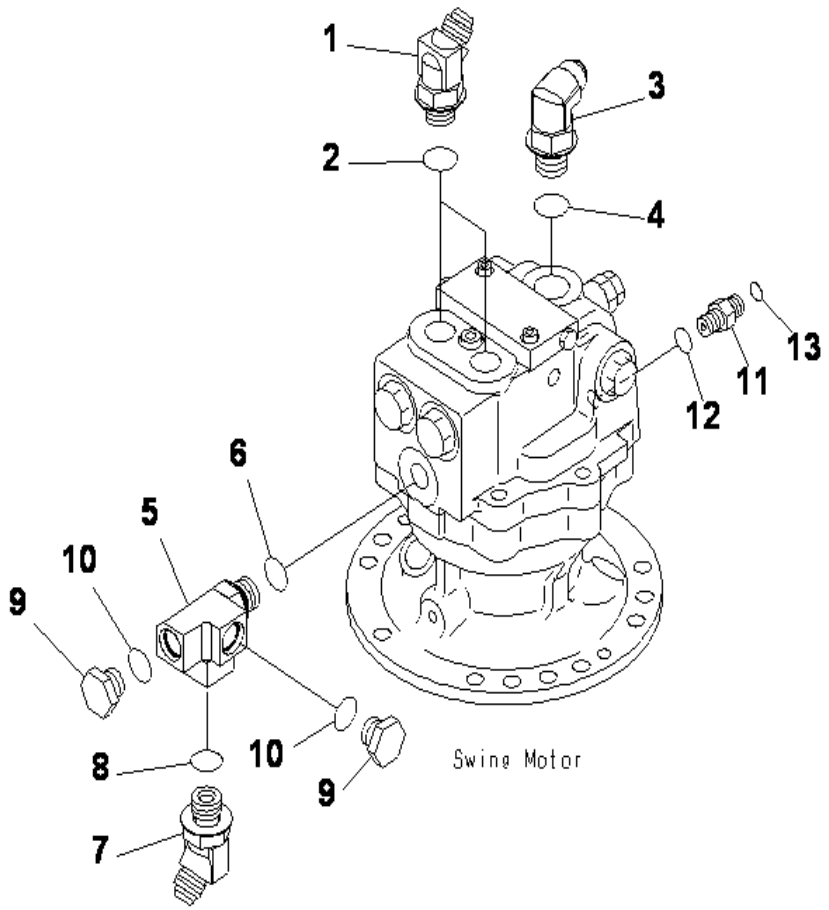

PC130F-7 S/N J10001-UP

SWING MOTOR (CONNECTING PARTS)

INDEX	CD	PART NO.	DESCRIPTION	QTY	SERIAL NO.
1		07236-10422	ELBOW	2	J10001-UP
2		07002-12034	O-RING	2	J10001-UP
3		07235-10522	ELBOW	1	J10001-UP
4		07002-12434	O-RING	1	J10001-UP
5		20Y-62-15660	ADAPTER	1	J10001-UP
6		07002-12034	O-RING	1	J10001-UP
7		07236-10422	ELBOW	1	J10001-UP
8		07002-12034	O-RING	1	J10001-UP
9		07040-12012	PLUG	2	J10001-UP
10		07002-12034	O-RING	2	J10001-UP
11		22B-26-11320	UNION	1	J10001-UP
12		07002-11423	O-RING	1	J10001-UP
13		02896-11008	O-RING	1	J10001-UP

Ref :N1220-01A0 Page :270030

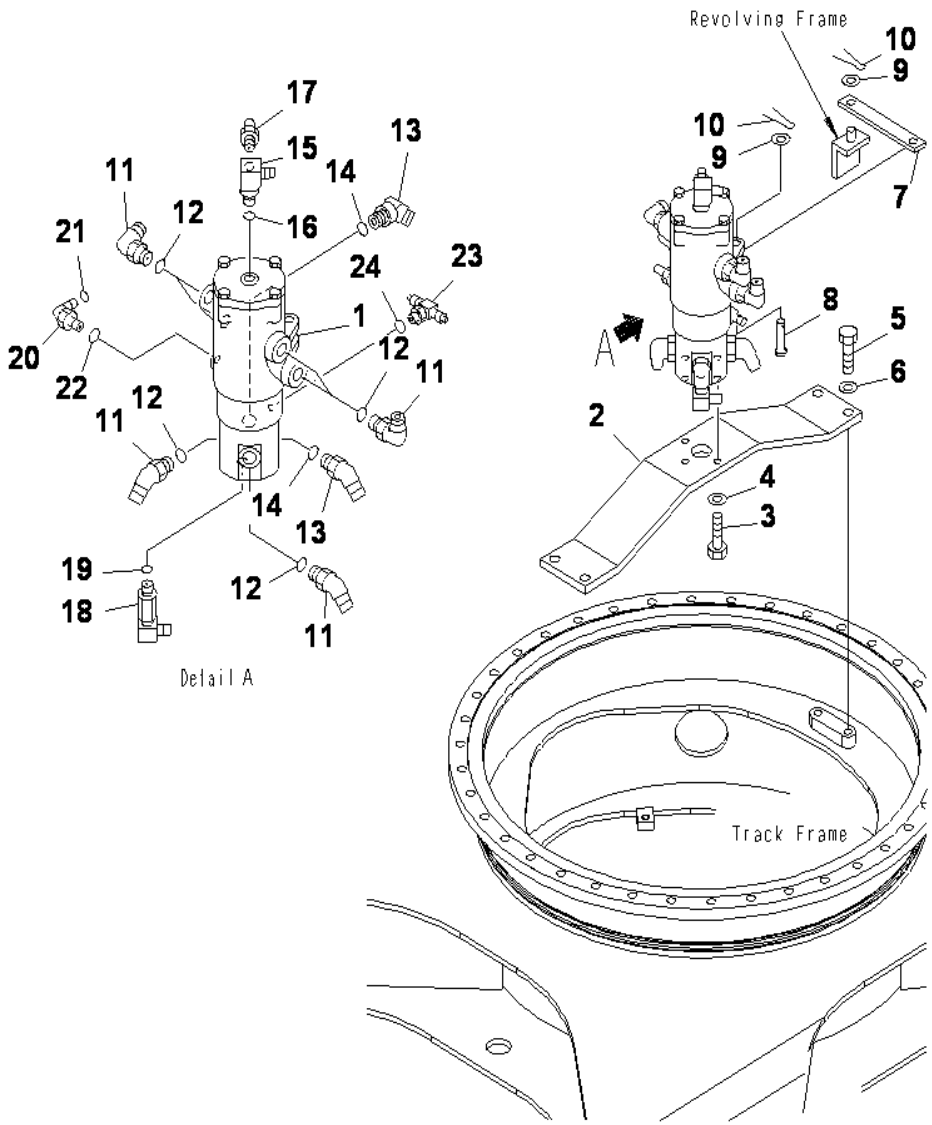

PC130F-7 S/N J10001-UP

SWIVEL JOINT (RELATED PARTS)

INDEX	CD	PART NO.	DESCRIPTION	QTY	SERIAL NO.
1		(703-08-00110)	SWIVEL JOINT ASS'Y	1	J10001-UP
2		203-30-J1260	BRACKET	1	J10001-UP
3		01010-81235	BOLT	4	J10001-UP
4		01643-31232	WASHER	4	J10001-UP
5		01010-81235	BOLT	4	J10001-UP
6		01643-31232	WASHER	4	J10001-UP
7		203-60-52160	LINK	1	J10001-UP
8		209-62-52560	PIN	1	J10001-UP
9		01641-21626	WASHER	2	J10001-UP
10		04050-14025	PIN	1	J10001-UP
11		07235-10522	ELBOW	4	J10001-UP
12		07002-12434	O-RING	4	J10001-UP
13		203-62-56990	ELBOW	4	J10001-UP
14		07002-12434	O-RING	4	J10001-UP
15		203-62-56710	ELBOW	1	J10001-UP
16		07002-02034	O-RING	1	J10001-UP
17		07238-10422	CONNECTOR	1	J10001-UP
18		203-62-57891	ELBOW	1	J10001-UP
19		07002-02034	O-RING	1	J10001-UP
20		02782-10210	ELBOW	1	J10001-UP
21		07002-01423	O-RING	1	J10001-UP
22		02896-11008	O-RING	1	J10001-UP
23		208-26-11611	TEE	1	J10001-UP
24		07002-01423	O-RING	1	J10001-UP

Ref :N1310-01A0 Page :270040

TRAVEL AND LOWER PIPING

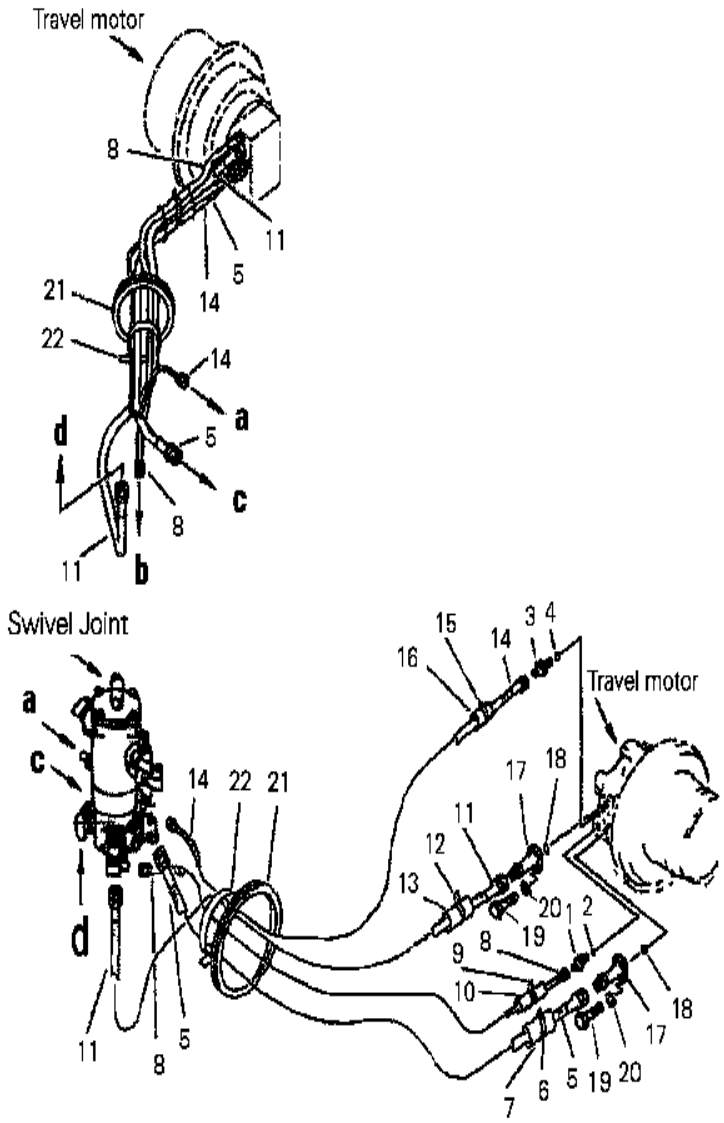

TRAVEL PIPING

INDEX	CD	PART NO.	DESCRIPTION	QTY	SERIAL NO.
1		07230-20422	UNION	2	J10001-UP
2		07002-02034	O-RING	2	J10001-UP
3		07230-20210	UNION	2	J10001-UP
4		07002-01423	O-RING	2	J10001-UP
5		07096-00519	HOSE	2	J10001-UP
6		205-62-72240	COVER	2	J10001-UP
7		08034-00823	BAND	2	J10001-UP
8		07096-00518	HOSE	2	J10001-UP
9		205-62-72240	COVER	2	J10001-UP
10		08034-00536	BAND	2	J10001-UP
11		07102-20418	HOSE	2	J10001-UP
12		205-62-72240	COVER	2	J10001-UP
13		08034-00536	BAND	2	J10001-UP
14		07102-20220	HOSE	2	J10001-UP
15		205-62-72140	COVER	2	J10001-UP
16		08034-00536	BAND	2	J10001-UP
17		204-62-51120	FLANGE	4	J10001-UP
18		07000-13030	O-RING	4	J10001-UP
19		07372-21035	BOLT	16	J10001-UP
20		01643-51032	WASHER	16	J10001-UP
21		20Y-62-12590	GROMMET	2	J10001-UP
22		08034-00536	BAND T50L	2	J10001-UP

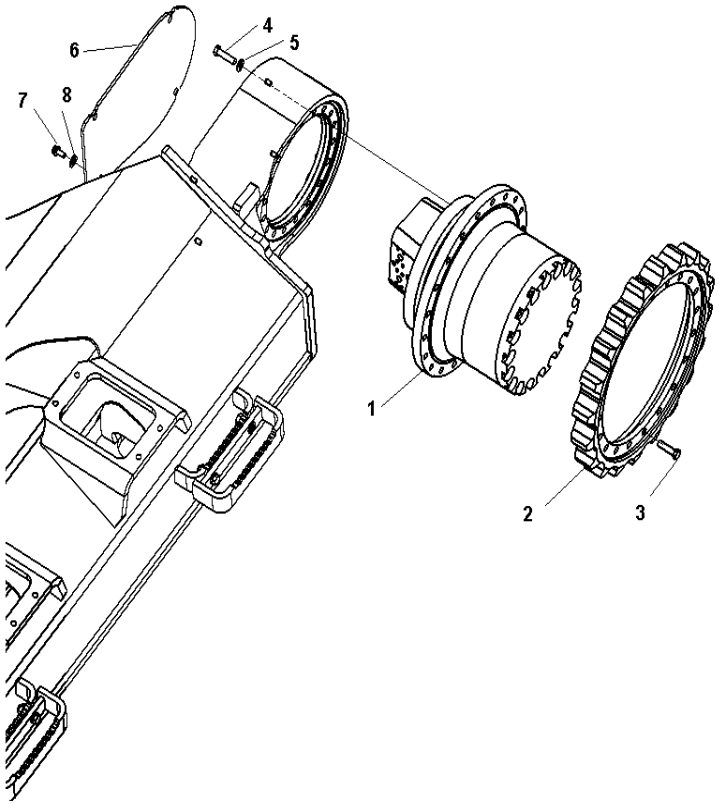

PC130F-7 S/N J10001-UP

FINAL DRIVE (SPROCKET AND RELATED PARTS)

INDEX	CD	PART NO.	DESCRIPTION	QTY	SERIAL NO.
1		708-8F-00270	TRAVEL MOTOR ASS'Y, (SEE FIG Y1651-01A0)....	2	J10001-UP
2		20Y-27-11582	SPROCKET.....	2	J10001-UP
3		20Y-27-11561	BOLT.....	40	J10001-UP
4		01010-61660	BOLT.....	36	J10001-UP
5		01643-31645	WASHER.....	36	J10001-UP
6		20Y-30-21191	COVER.....	2	J10001-UP
7		01010-81230	BOLT.....	8	J10001-UP
8		01643-31232	WASHER.....	8	J10001-UP

Ref :P1210-01A0 Page :300020

UNDER CARRIAGE

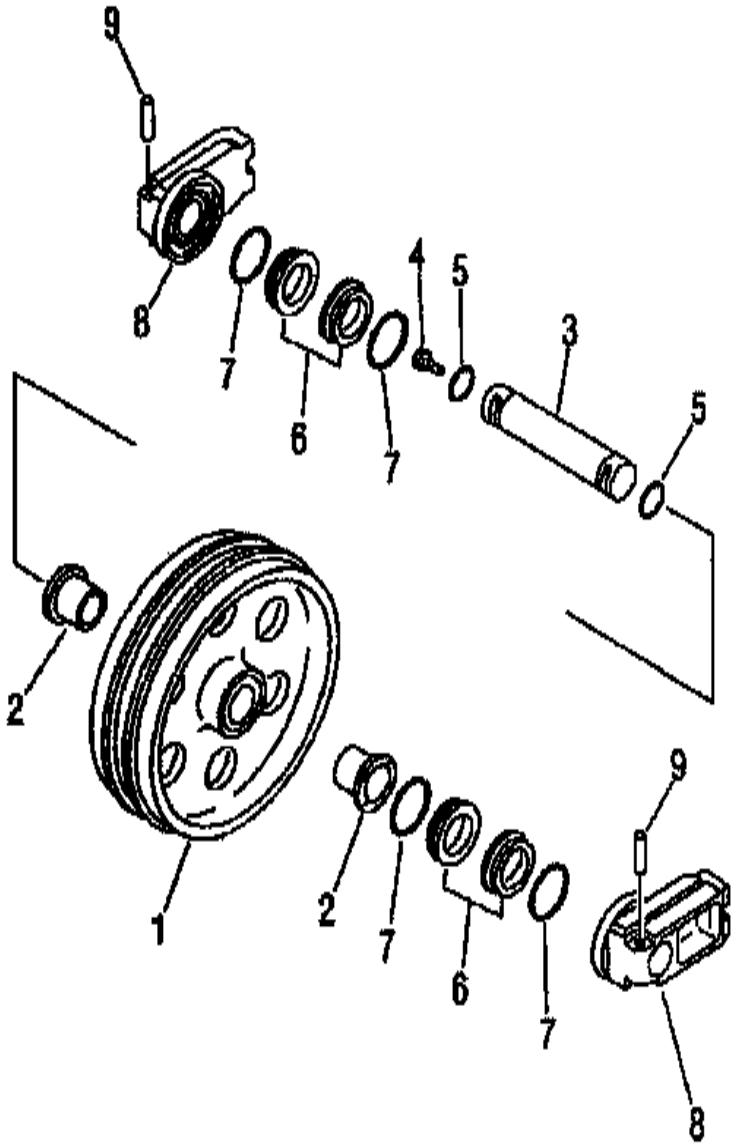

PC130F-7 S/N J10001-UP

FRONT IDLER

INDEX	CD	PART NO.	DESCRIPTION	QTY	SERIAL NO.
		20Y-30-00322	IDLER ASS'Y.....	2	J10001-UP
1		20Y-30-43310	.IDLER.....	1	J10001-UP
2		20Y-30-43340	.BUSHING.....	4	J10001-UP
3		20Y-30-13131	.SHAFT.....	2	J10001-UP
4		07052-31624	.PLUG.....	2	J10001-UP
5		07000-12060	.O-RING.....	4	J10001-UP
		195-30-00302	.FLOATING SEAL A.....	4	J10001-UP
6		195-30-00291	..SEAL A.....	4	J10001-UP
7		195-30-00161	..O-RING A.....	4	J10001-UP
8		20Y-30-31750	.SUPPORT.....	4	J10001-UP
9		205-30-76190	.PIN.....	4	J10001-UP

Ref :R0110-01A0 Page :330010

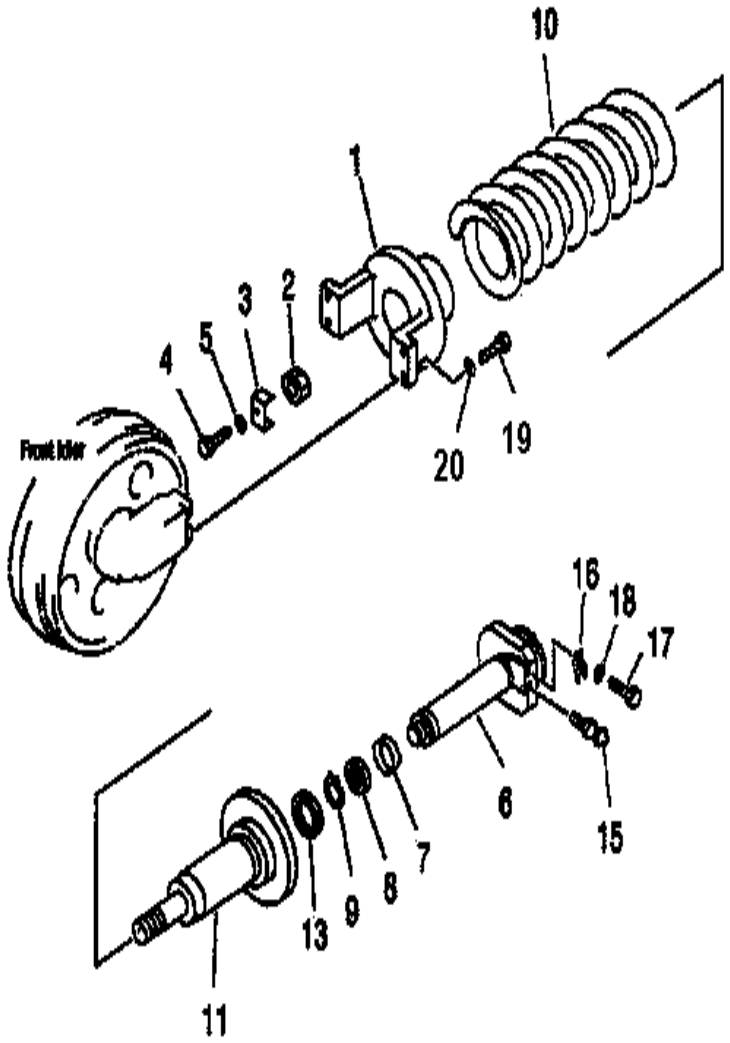

PC130F-7 S/N J10001-UP

IDLER CUSHION

INDEX	CD	PART NO.	DESCRIPTION	QTY	SERIAL NO.
1		20Y-30-32110	YOKE	2	J10001-UP
2		206-30-45381	NUT	2	J10001-UP
3		206-30-45262	LOCK	2	J10001-UP
4		01010-81225	BOLT	2	J10001-UP
5		01643-31232	WASHER	2	J10001-UP
6		206-30-72140	SHAFT	2	J10001-UP
7		07155-00720	RING	4	J10001-UP
8		09370-00070	PACKING	2	J10001-UP
9		04064-04518	RING	2	J10001-UP
10		206-30-72111	SPRING	2	J10001-UP
11		206-30-72130	CYLINDER	2	J10001-UP
15		07959-20001	VALVE	2	J10001-UP
16		205-30-72170	PLATE	2	J10001-UP
17		01010-81225	BOLT	2	J10001-UP
18		01643-31232	WASHER	2	J10001-UP
19		01010-61655	BOLT	8	J10001-UP
20		01643-31645	WASHER	8	J10001-UP

Ref :R0120-01A0 Page :330020

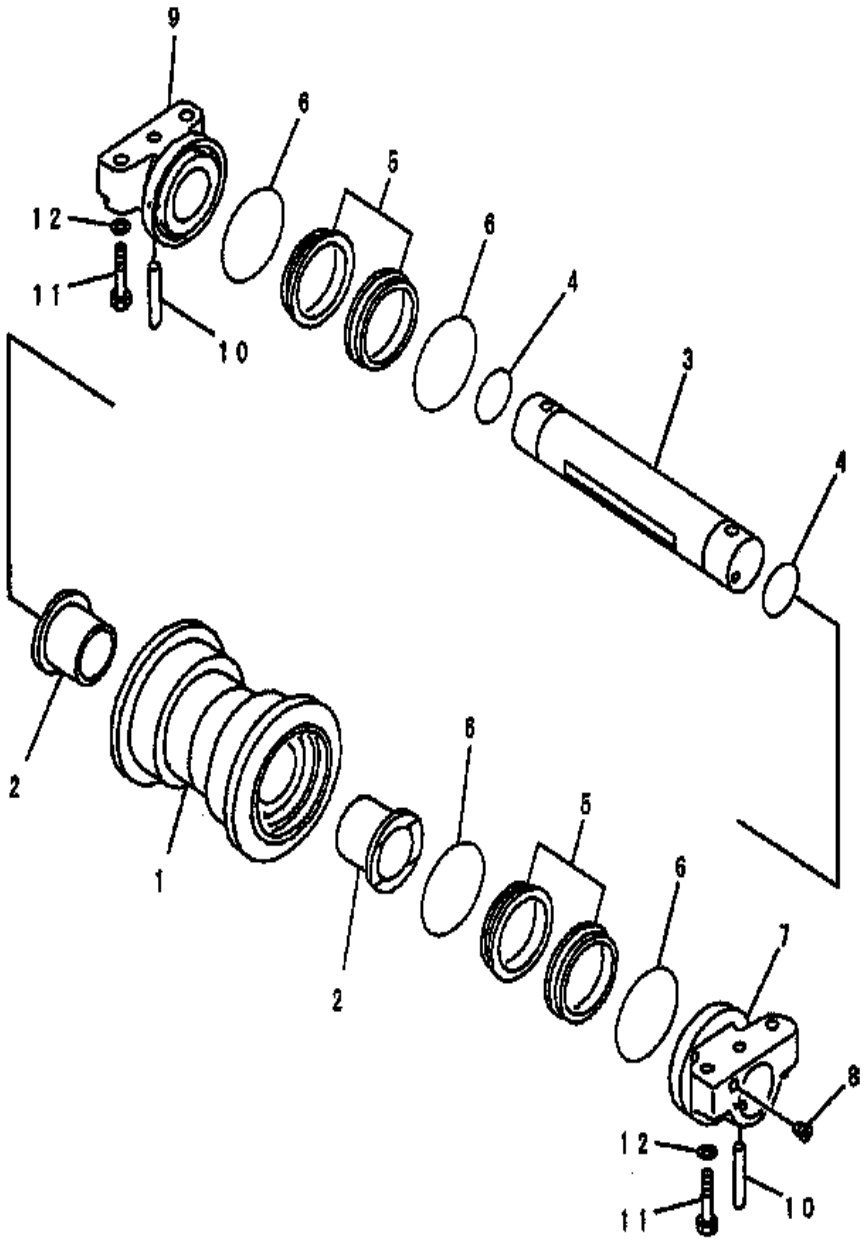

PC130F-7 S/N J10001-UP

TRACK ROLLER

INDEX	CD	PART NO.	DESCRIPTION	QTY	SERIAL NO.
		20Y-30-08021	TRACK ROLLER ASS'Y.....	12	J10001-UP
1		20Y-30-28281	.ROLLER.....	12	J10001-UP
2		22U-30-11450	.BUSHING.....	24	J10001-UP
3		20Y-30-28292	.SHAFT.....	12	J10001-UP
4		20Y-30-28330	.O-RING.....	24	J10001-UP
		20Y-30-00410	.FLOATING SEAL A.....	24	J10001-UP
5		20Y-30-28430	..SEAL.....	48	J10001-UP
6		154-32-61170	..O-RING.....	48	J10001-UP
7		20Y-30-28302	..COLLAR.....	12	J10001-UP
8		20Y-30-28340	.PLUG.....	12	J10001-UP
9		20Y-30-28312	COLLAR.....	12	J10001-UP
10		20Y-30-28321	PIN.....	24	J10001-UP
11		20Y-30-11340	BOLT.....	48	J10001-UP
12		01643-31845	WASHER.....	48	J10001-UP

Ref :R0200-01A0 Page :330030

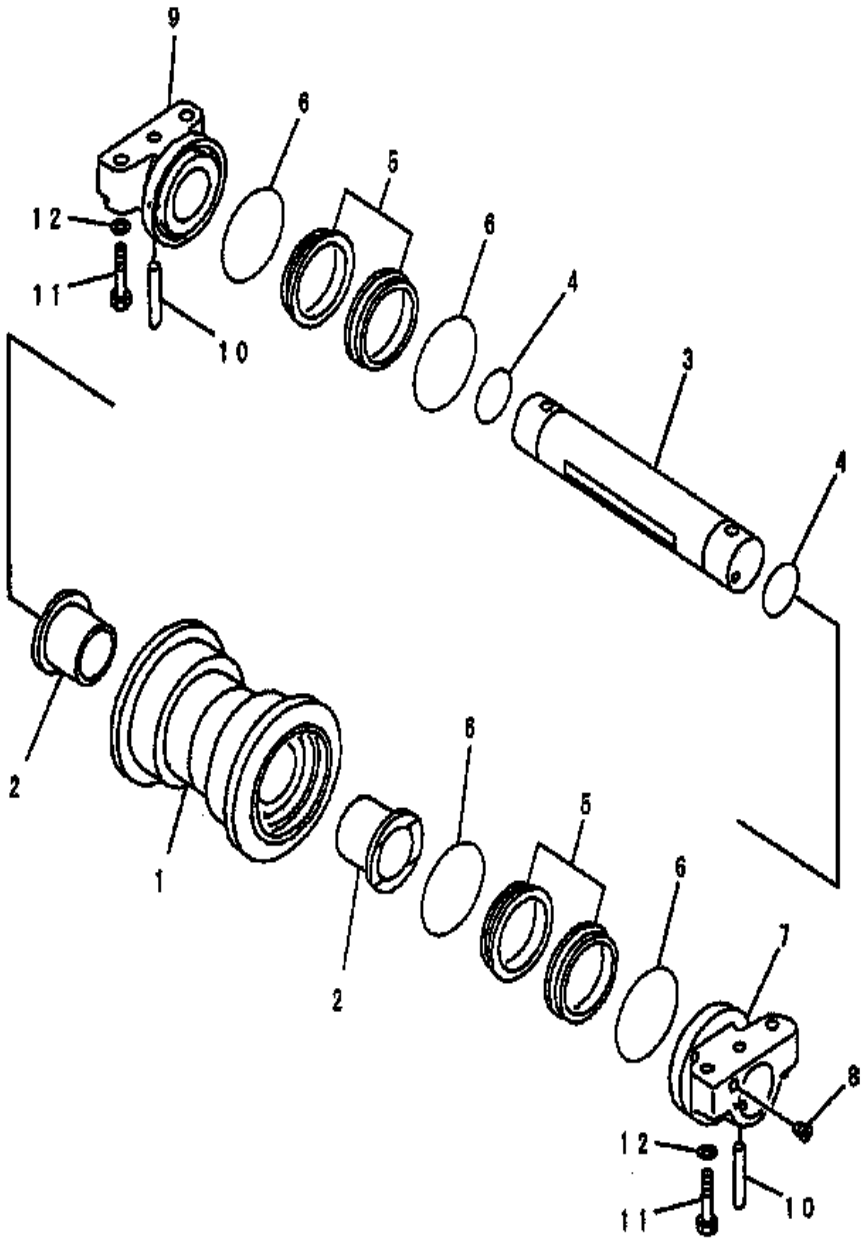

PC130F-7 S/N J10001-UP

TRACK ROLLER UPPER

INDEX	CD	PART NO.	DESCRIPTION	QTY	SERIAL NO.
		20Y-30-08021	CARRIER ROLLER	4	J10001-UP
1		20Y-30-28281	.ROLLER	4	J10001-UP
2		22U-30-11450	.BUSHING	8	J10001-UP
3		20Y-30-28292	.SHAFT	4	J10001-UP
4		20Y-30-28330	.O-RING	8	J10001-UP
		20Y-30-00410	.FLOATING SEAL A	8	J10001-UP
5		20Y-30-28430	..SEAL	16	J10001-UP
6		154-32-61170	..O-RING	16	J10001-UP
7		20Y-30-28302	COLLAR	4	J10001-UP
8		20Y-30-28340	PLUG	4	J10001-UP
9		20Y-30-28312	COLLAR	4	J10001-UP
10		20Y-30-28321	PIN	8	J10001-UP
11		20Y-30-11340	BOLT	16	J10001-UP
12		01643-31845	WASHER	16	J10001-UP

Ref :R0300-01A0 Page :330040

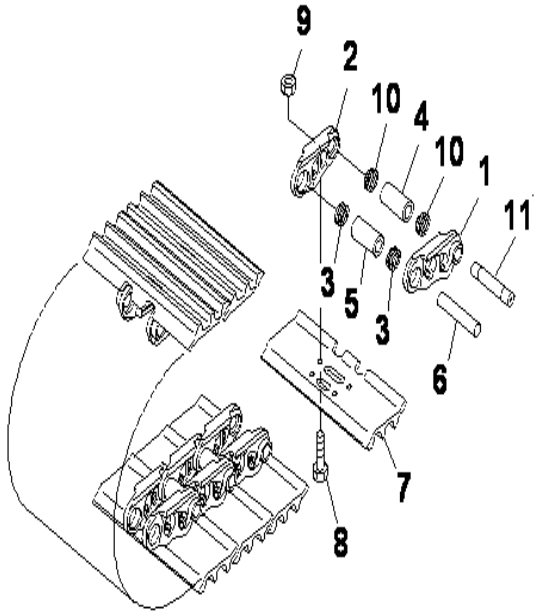

PC130F-7 S/N J10001-UP

TRACK SHOE (TRIPLE GROUSER WITH LONG HOLE) (900MM WIDE)

INDEX	CD	PART NO.	DESCRIPTION	QTY	SERIAL NO.
		203-32-0J080	TRACK LINK.....	2	J10001-UP
1		20Y-32-11123	.LINK LH.....	82	J10001-UP
2		20Y-32-11133	.LINK RH.....	82	J10001-UP
3		20Y-32-11240	.SEAL.....	160	J10001-UP
4		20Y-32-11170	.BUSHING.....	2	J10001-UP
5		20Y-32-11140	.BUSHING.....	80	J10001-UP
6		20Y-32-11150	.PIN.....	80	J10001-UP
7		20Y-32-11331	.SHOE (900T).....	82	J10001-UP
8		20Y-32-11210	.BOLT.....	328	J10001-UP
9		154-32-31220	.NUT.....	328	J10001-UP
10		20Y-32-11260	.SEAL.....	4	J10001-UP
11		20Y-32-11190	.PIN.....	2	J10001-UP

Ref :R0500-01A0 Page :330050

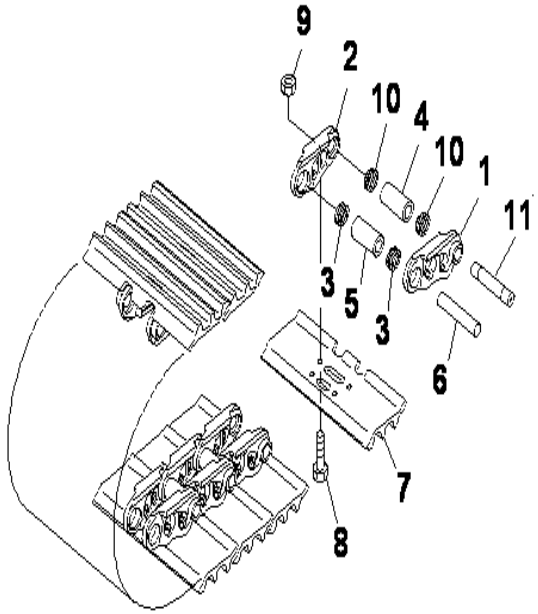

PC130F-7 S/N J10001-UP

TRACK SHOE (SINGLE GROUSER WITH HOLE)(960MM WIDE)(OPTIONAL)

INDEX	CD	PART NO.	DESCRIPTION	QTY	SERIAL NO.
		203-32-0J180	TRACK SHOE.....	2	J10001-UP
1		20Y-32-11123	.LINK LH.....	82	J10001-UP
2		20Y-32-11133	.LINK RH.....	82	J10001-UP
3		20Y-32-11240	.SEAL.....	160	J10001-UP
4		20Y-32-11170	.BUSHING.....	2	J10001-UP
5		20Y-32-11140	.BUSHING.....	80	J10001-UP
6		20Y-32-11150	.PIN.....	80	J10001-UP
7		203-32-J1110	.SHOE (960 SINGLE).....	82	J10001-UP
8		14X-32-11210	.BOLT.....	328	J10001-UP
9		154-32-31220	.NUT.....	328	J10001-UP
10		20Y-32-11260	.SEAL.....	4	J10001-UP
11		20Y-32-11190	.PIN.....	2	J10001-UP

Ref :R0500-01A1 Page :330055

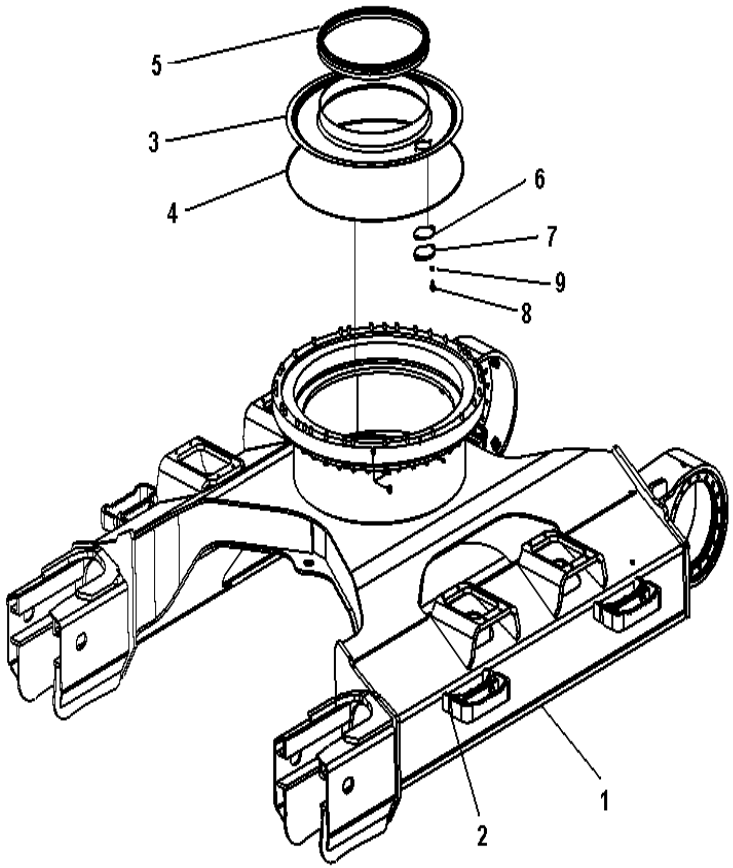

PC130F-7 S/N J10001-UP

TRACK FRAME (WITH TRACK FRAME UNDER COVER AND CENTER ROLLER GUARD)

INDEX	CD	PART NO.	DESCRIPTION	QTY	SERIAL NO.
1		203-30-J1710	TRACK FRAME.....	1	J10001-UP
2		20Y-30-41A10	.PLATE (WELDED).....	4	J10001-UP
3		203-30-61212	COVER.....	1	J10001-UP
4		203-30-61161	.SEAL.....	1	J10001-UP
5		203-30-61172	.SEAL.....	1	J10001-UP
6		203-46-31181	GASKET.....	1	J10001-UP
7		203-46-56160	COVER.....	1	J10001-UP
8		01010-81025	BOLT.....	2	J10001-UP
9		01643-31032	WASHER.....	2	J10001-UP

Ref :R1100-01A0 Page :330060

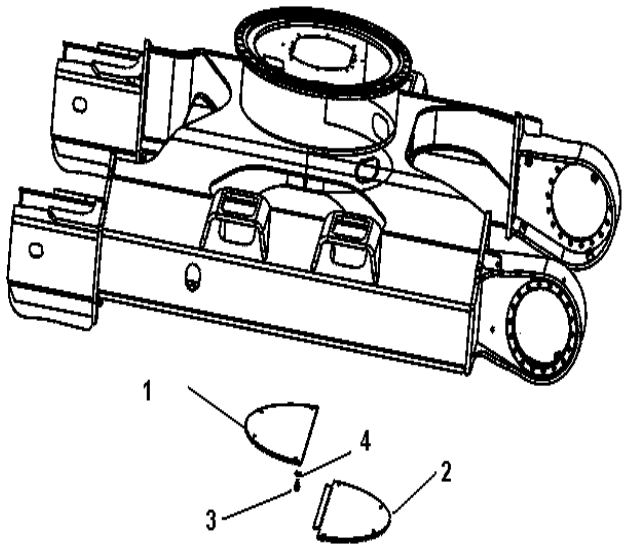

PC130F-7 S/N J10001-UP

TRACK FRAME UNDER COVER

INDEX	CD	PART NO.	DESCRIPTION	QTY	SERIAL NO.
1		203-54-J1151	COVER	1	J10001-UP
2		203-54-J1141	COVER	1	J10001-UP
3		01010-81230	BOLT	8	J10001-UP
4		01643-31232	WASHER	8	J10001-UP

Ref :R1140-01A0 Page :330070

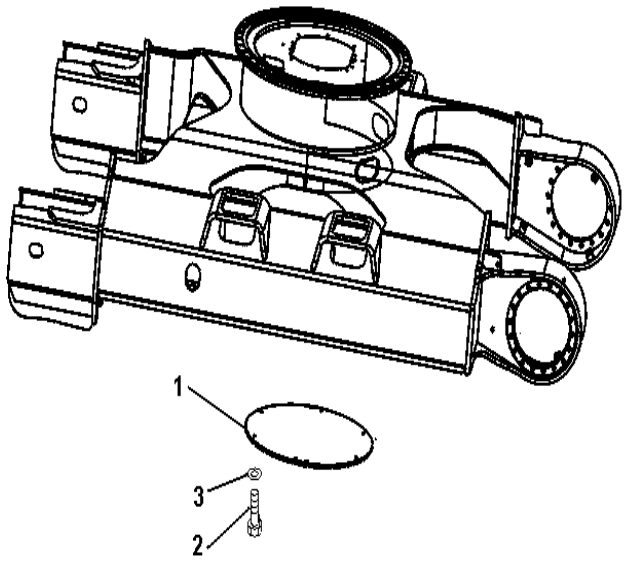

PC130F-7 S/N J10001-UP

TRACK FRAME UNDER COVER (LOGGING)

INDEX	CD	PART NO.	DESCRIPTION	QTY	SERIAL NO.
1		203-54-J1920	COVER	1	J10001-UP
2		01010-81230	BOLT	8	J10001-UP
3		01643-31232	WASHER	8	J10001-UP

Ref :R1140-01A1 Page :330075

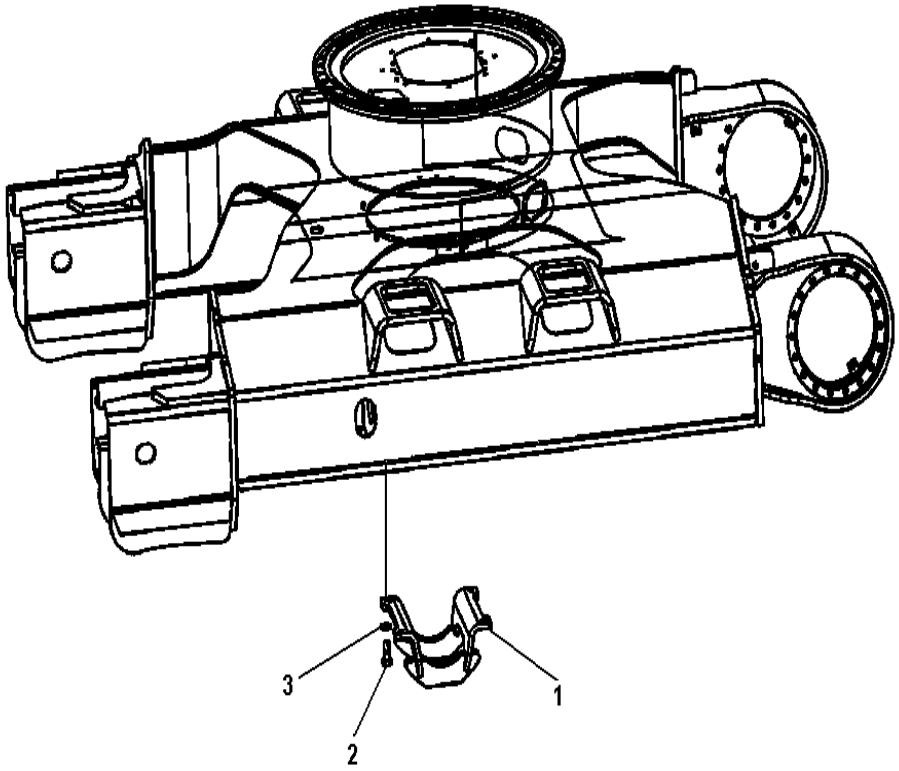

PC130F-7 S/N J10001-UP

CENTER ROLLER GUARD

INDEX	CD	PART NO.	DESCRIPTION	QTY	SERIAL NO.
1		20Y-30-11312	GUARD	2	J10001-UP
2		01010-82050	BOLT	8	J10001-UP
3		01643-32060	WASHER	8	J10001-UP

Ref :R1200-01A0 Page :330080

WORK EQUIPMENT

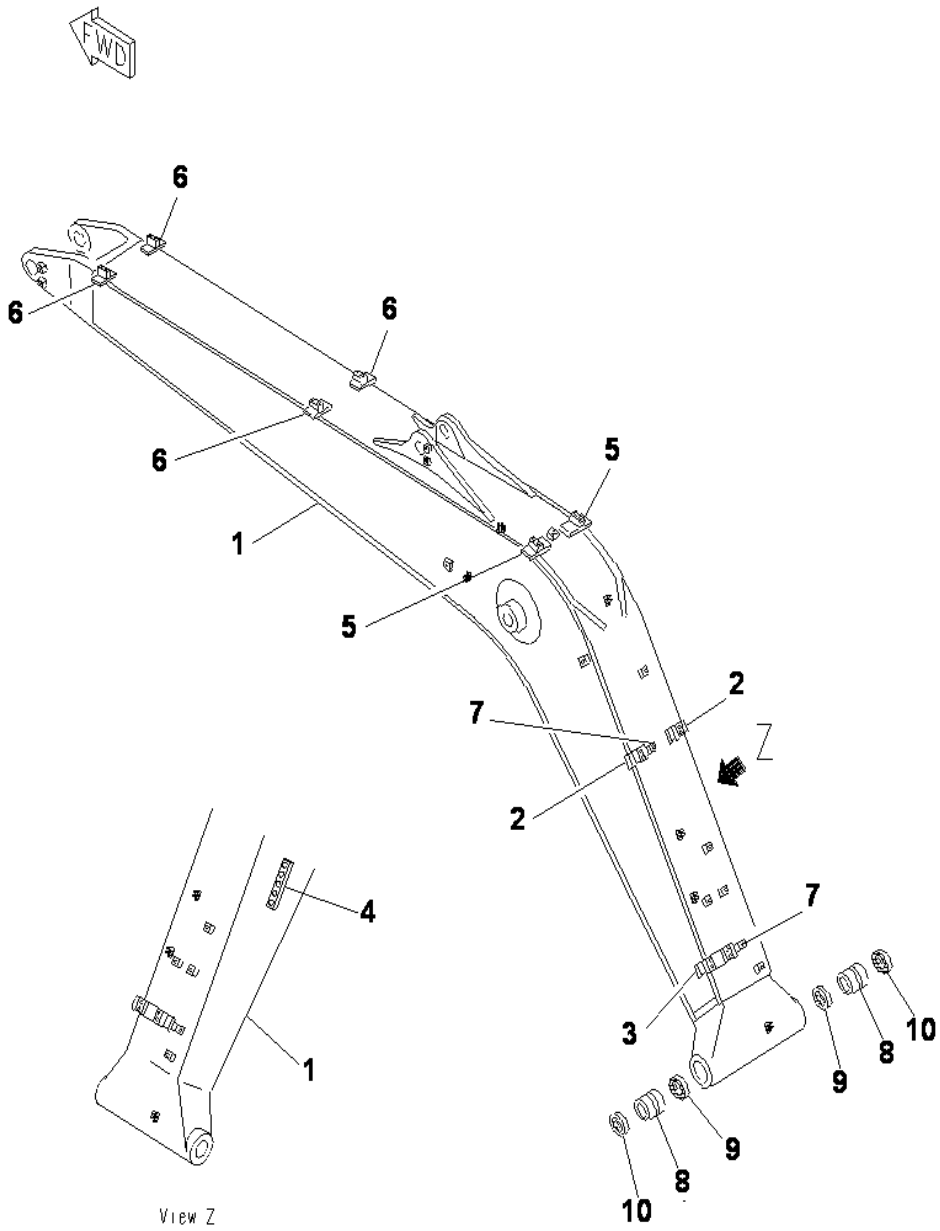

PC130F-7 S/N J10001-UP

BOOM (BOOM) (100 HOURS LUBRICATING)

INDEX	CD	PART NO.	DESCRIPTION	QTY	SERIAL NO.
		202-70-J1170	BOOM ASS'Y.....	1	J10001-UP
1		202-70-71421	.BOOM.....	1	J10001-UP
2		203-70-51221	..SEAT (WELDED).....	1	J10001-UP
3		203-70-51260	..SEAT (WELDED).....	1	J10001-UP
4		203-70-61310	..PLATE (WELDED).....	1	J10001-UP
5		203-70-61780	..PLATE (WELDED).....	2	J10001-UP
6		203-70-61790	..PLATE (WELDED).....	4	J10001-UP
7		203-70-61C60	..SEAT (WELDED).....	2	J10001-UP
8		203-70-66110	.BUSHING.....	2	J10001-UP
9		07145-00070	.SEAL.....	2	J10001-UP
10		07145-00070	SEAL.....	2	J10001-UP

Ref :T1110-01A1 Page :360010

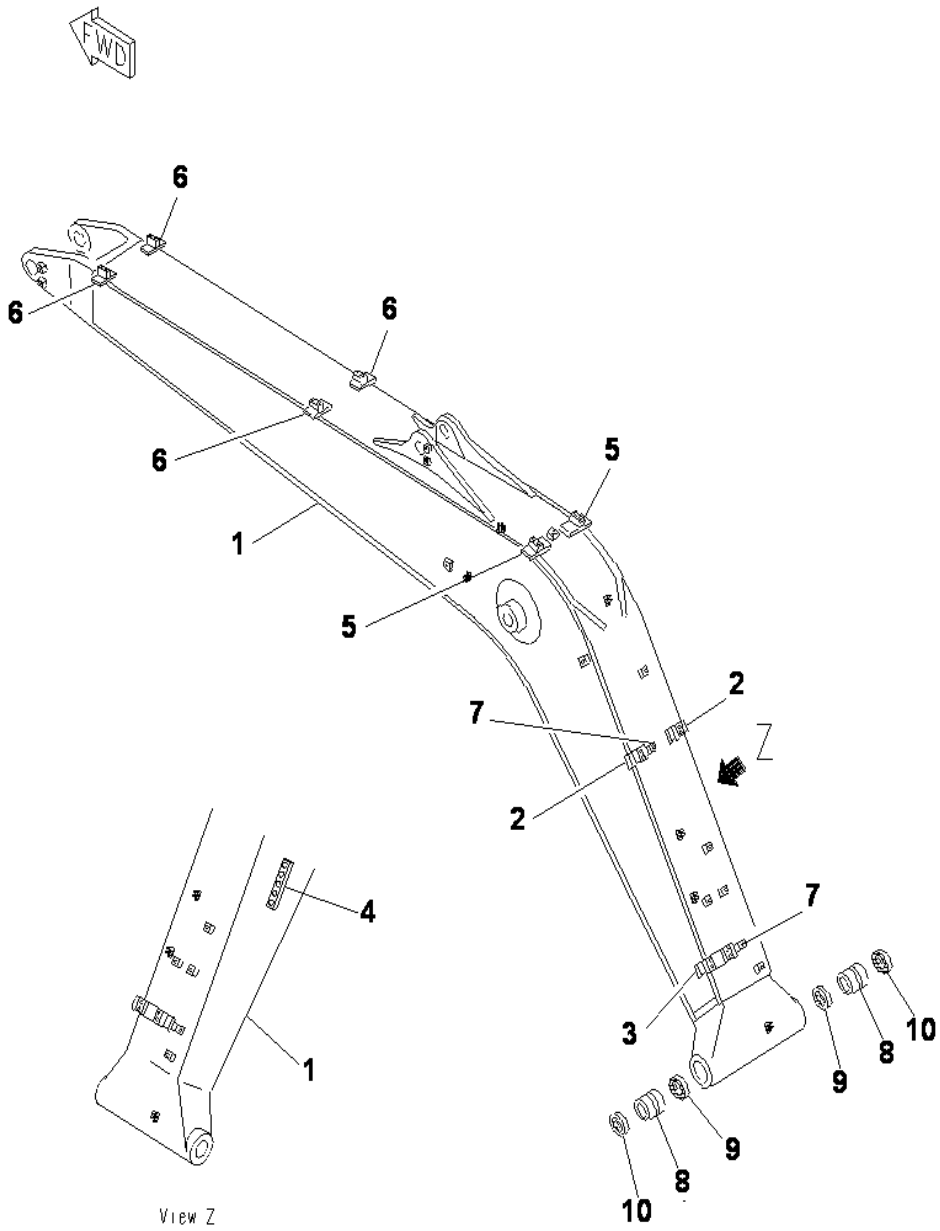

PC130F-7 S/N J10001-UP

BOOM (BOOM) (500 HOURS LUBRICATING)

INDEX	CD	PART NO.	DESCRIPTION	QTY	SERIAL NO.
		203-70-71220	BOOM.....	1	J10001-UP
1		203-70-71210	.BOOM.....	1	J10001-UP
2		203-70-51221	..SEAT.....	2	J10001-UP
3		203-70-51260	..SEAT.....	1	J10001-UP
4		203-70-61310	..PLATE.....	1	J10001-UP
5		203-70-61780	..PLATE.....	2	J10001-UP
6		203-70-61790	..PLATE.....	4	J10001-UP
7		203-70-61C60	..SEAT.....	2	J10001-UP
8		21J-70-21310	.BUSHING.....	2	J10001-UP
9		22B-70-12230	.SEAL.....	2	J10001-UP
10		22B-70-12230	SEAL.....	2	J10001-UP

Ref :T1110-01A3 Page :360015

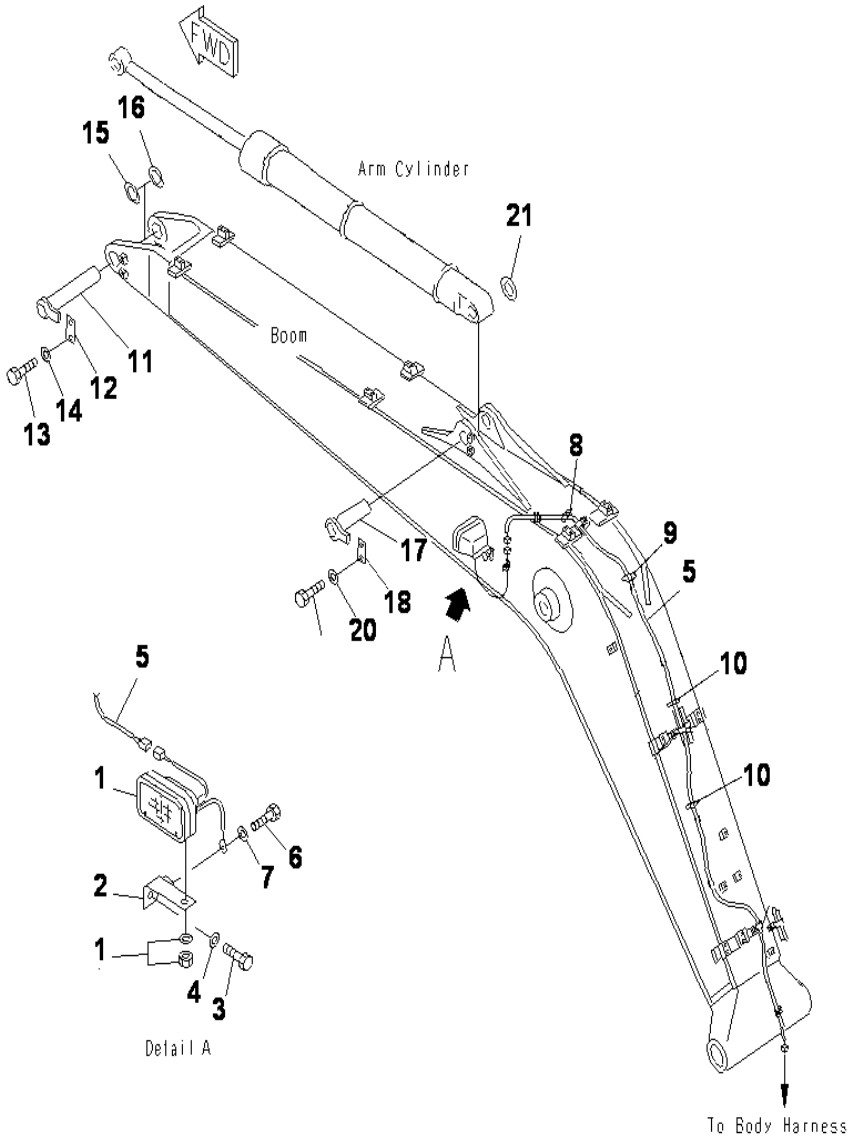

BOOM (WORK LAMP AND PIN) (100 HOURS LUBRICATING)

INDEX	CD	PART NO.	DESCRIPTION	QTY	SERIAL NO.
1		20Y-06-25310	WORK LAMP ASS'Y	1	J10001-UP
		421-06-23330	.BULB	1	J10001-UP
2		20Y-06-21551	BRACKET	1	J10001-UP
3		01010-81225	BOLT	1	J10001-UP
4		01643-31232	WASHER	1	J10001-UP
5		203-06-57230	WIRING HARNESS	1	J10001-UP
6		01010-81230	BOLT	1	J10001-UP
7		01643-31232	WASHER	1	J10001-UP
8		203-06-56570	BAND	2	J10001-UP
9		08034-40521	BAND	2	J10001-UP
10		08034-20414	BAND	9	J10001-UP
11		202-70-J2140	PIN	1	J10001-UP
12		205-70-66580	PLATE	1	J10001-UP
13		01010-81230	BOLT	2	J10001-UP
14		01643-31232	WASHER	2	J10001-UP
15		20U-70-31340	SPACER, 1.0MM	1	J10001-UP
16		20U-70-31330	SPACER, 0.5MM	1	J10001-UP
17		203-70-42121	PIN	1	J10001-UP
18		205-70-66580	PLATE	1	J10001-UP
19		01010-81230	BOLT	2	J10001-UP
20		01643-31232	WASHER	2	J10001-UP
21		203-70-41461	SPACER	1	J10001-UP

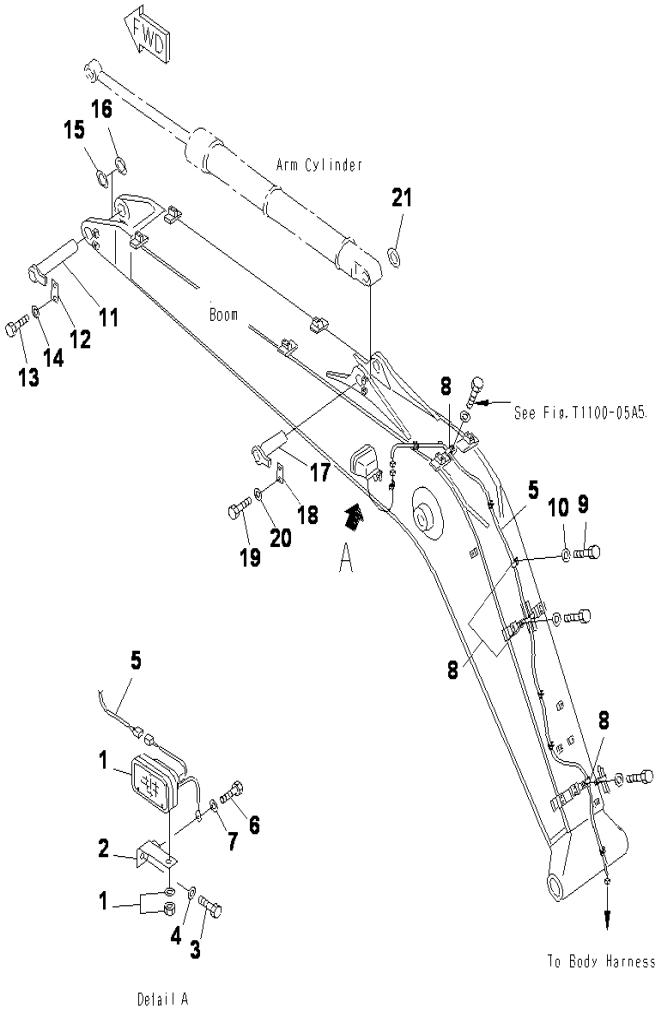

PC130F-7 S/N J10001-UP

BOOM (WORK LAMP AND PIN) (500 HOURS LUBRICATING)

INDEX	CD	PART NO.	DESCRIPTION	QTY	SERIAL NO.
1		20Y-06-25310	WORK LAMP ASS'Y	1	J10001-UP
		421-06-23330	.BULB	1	J10001-UP
2		20Y-06-21551	BRACKET	1	J10001-UP
3		01010-81225	BOLT	1	J10001-UP
4		01643-31232	WASHER	1	J10001-UP
5		203-06-71171	WIRING HARNESS	1	J10001-UP
6		01010-81230	BOLT	1	J10001-UP
7		01643-31232	WASHER	1	J10001-UP
8		04434-51012	CLIP	4	J10001-UP
9		01010-81020	BOLT	1	J10001-UP
10		01643-31032	WASHER	1	J10001-UP
11		202-70-61210	PIN	1	J10001-UP
12		205-70-66580	PLATE	1	J10001-UP
13		01010-81230	BOLT	2	J10001-UP
14		01643-31232	WASHER	2	J10001-UP
15		20U-70-31340	SPACER, 1.0MM	1	J10001-UP
16		20U-70-31330	SPACER, 0.5MM	1	J10001-UP
17		203-70-42121	PIN	1	J10001-UP
18		205-70-66580	PLATE	1	J10001-UP
19		01010-81230	BOLT	2	J10001-UP
20		01643-31232	WASHER	2	J10001-UP
21		203-70-41461	SPACER	1	J10001-UP

Ref :T1110-02A5 Page :360025

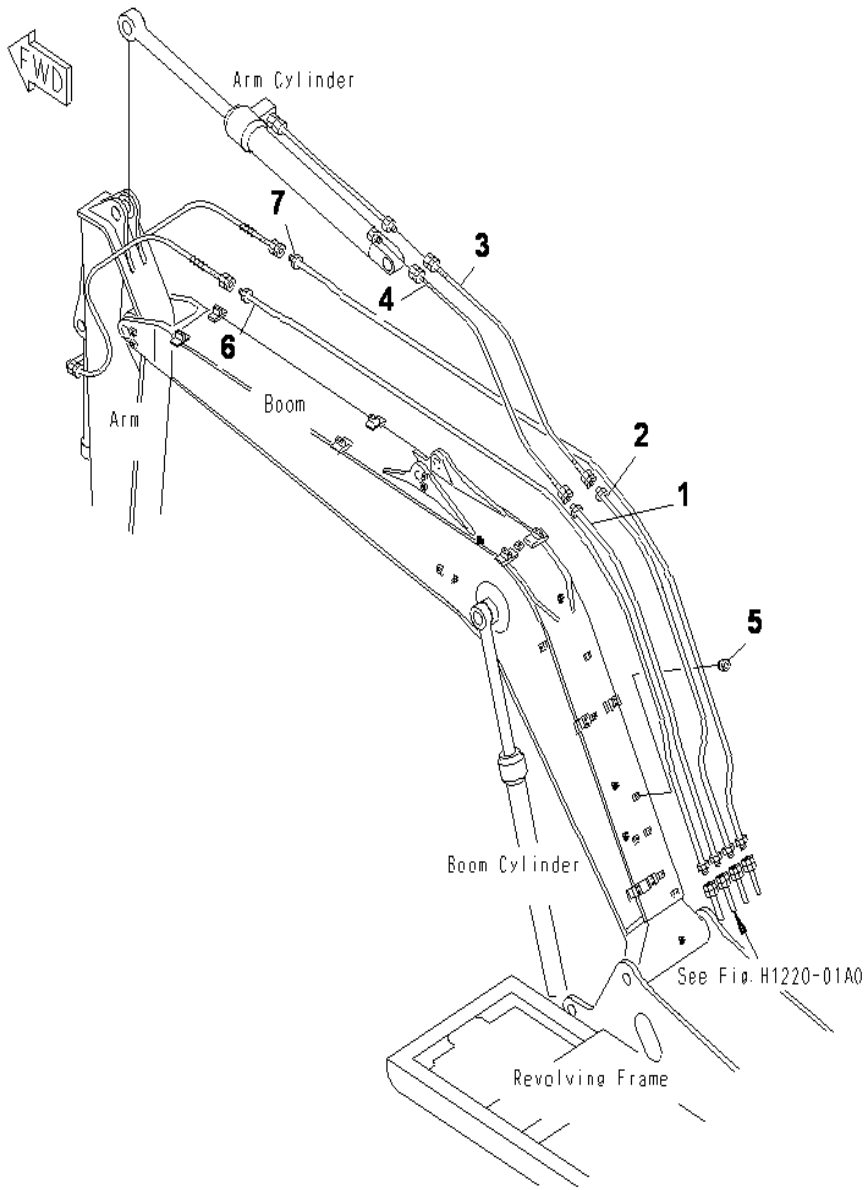

PC130F-7 S/N J10001-UP

BOOM (HYDRAULIC LINE) (100 HOURS LUBRICATING)

INDEX	CD	PART NO.	DESCRIPTION	QTY	SERIAL NO.
1		202-62-74160	TUBE	1	J10001-UP
2		202-62-74131	TUBE	1	J10001-UP
3		07096-00507	HOSE	1	J10001-UP
4		203-62-61750	HOSE	1	J10001-UP
5		07049-01012	PLUG	4	J10001-UP
6		202-62-74111	TUBE	1	J10001-UP
7		202-62-74141	TUBE	1	J10001-UP

Ref :T1110-03A3 Page :360030

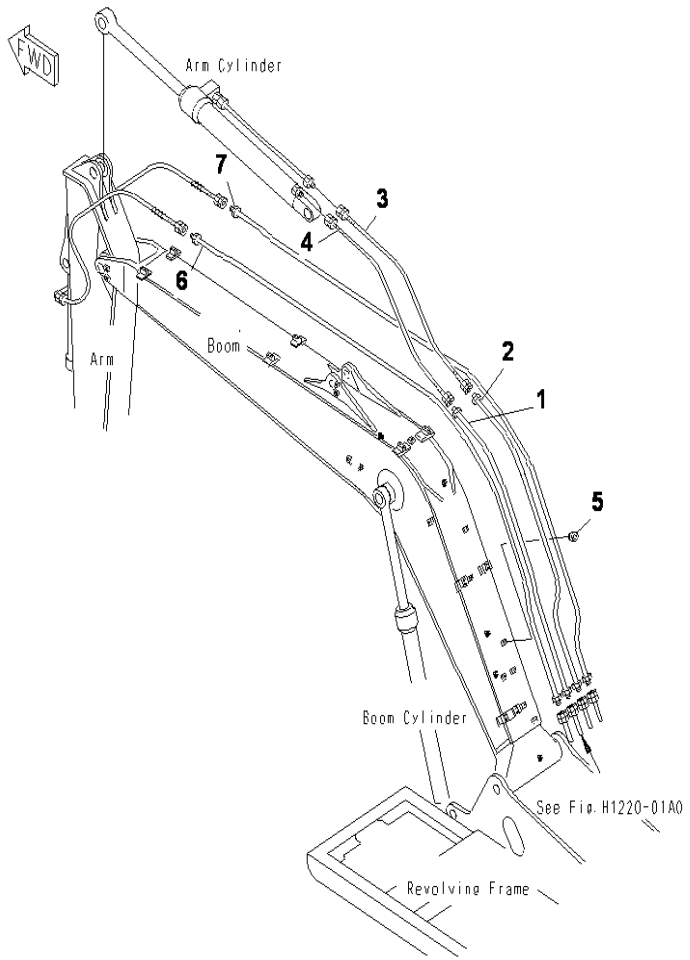

PC130F-7 S/N J10001-UP

BOOM (HYDRAULIC LINE) (500 HOURS LUBRICATING)

INDEX	CD	PART NO.	DESCRIPTION	QTY	SERIAL NO.
1		203-62-61850	TUBE	1	J10001-UP
2		203-62-64131	TUBE	1	J10001-UP
3		07096-00507	HOSE	1	J10001-UP
4		203-62-61750	HOSE	1	J10001-UP
5		07049-01012	PLUG	4	J10001-UP
6		203-62-64111	TUBE	1	J10001-UP
7		203-62-64141	TUBE	1	J10001-UP

Ref :T1110-03A5 Page :360035

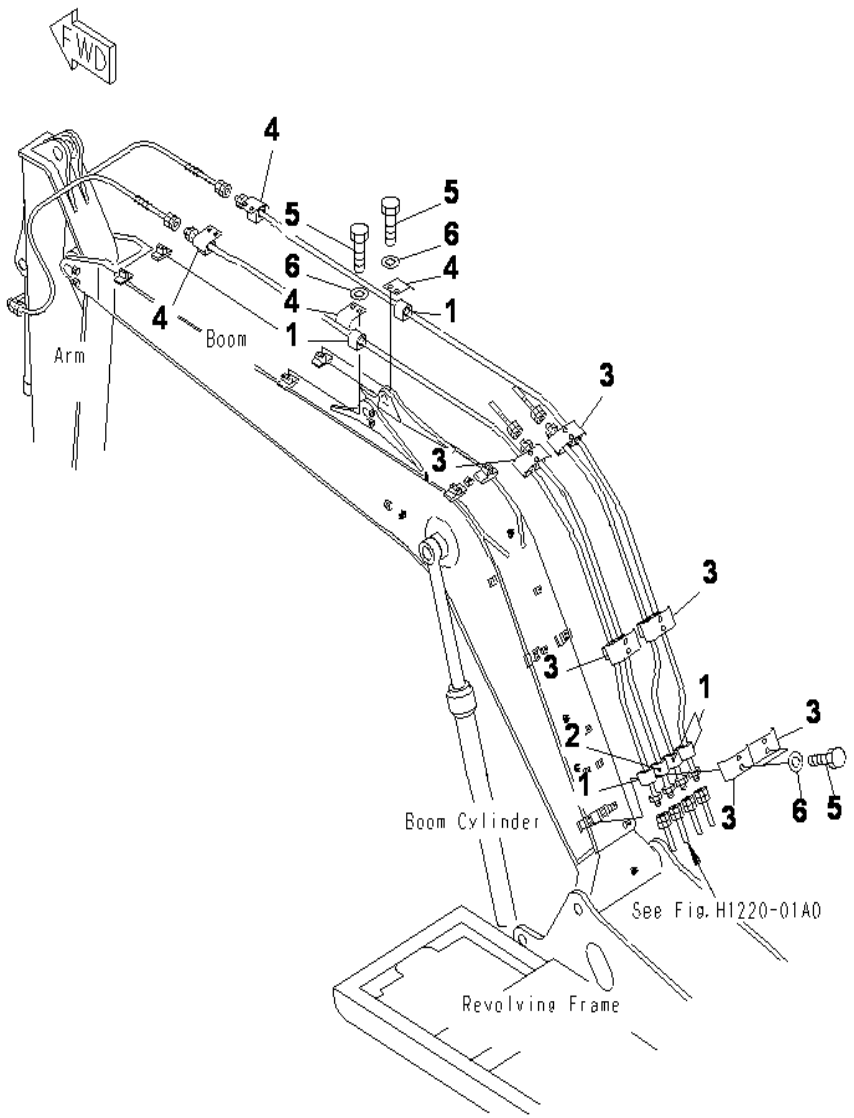

PC130F-7 S/N J10001-UP

BOOM (CLAMP) (100 HOURS LUBRICATING)

INDEX	CD	PART NO.	DESCRIPTION	QTY	SERIAL NO.
1		203-62-58810	CUSHION	13	J10001-UP
2		21K-62-35270	CUSHION	3	J10001-UP
3		203-70-53381	PLATE	6	J10001-UP
4		203-70-53391	PLATE	4	J10001-UP
5		01010-81025	BOLT	20	J10001-UP
6		01643-31032	WASHER	20	J10001-UP

Ref :T1110-04A3 Page :360040

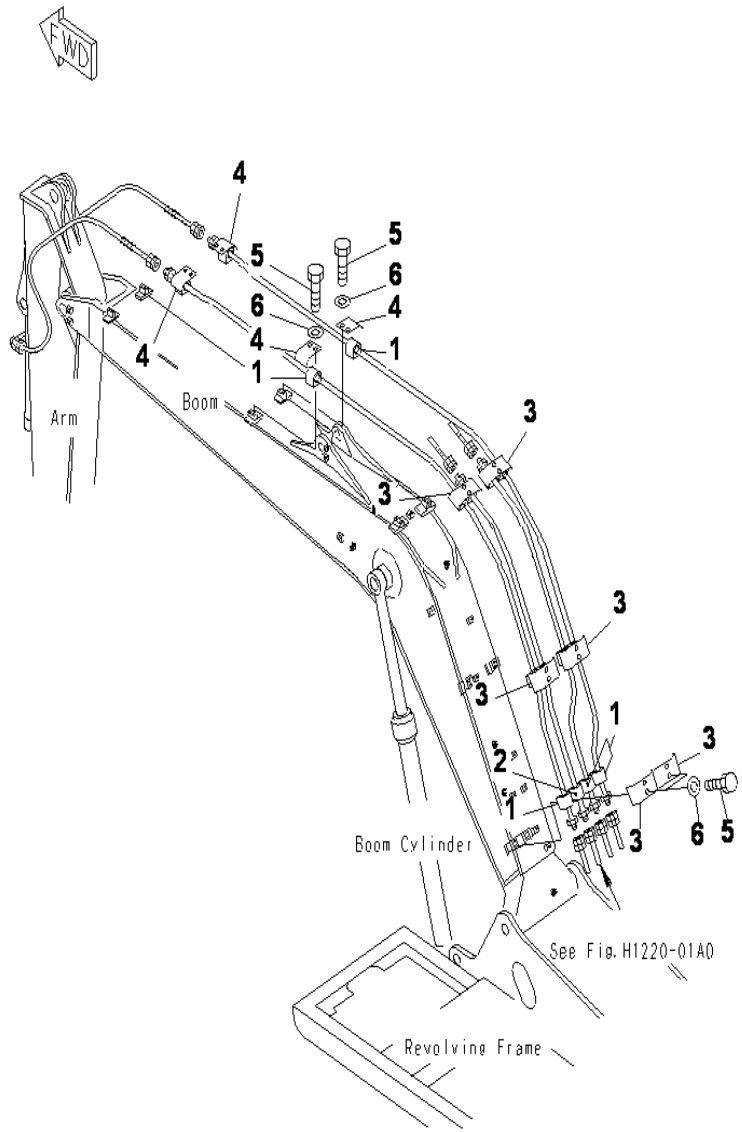

PC130F-7 S/N J10001-UP

BOOM (CLAMP) (500 HOURS LUBRICATING)

INDEX	CD	PART NO.	DESCRIPTION	QTY	SERIAL NO.
1		203-62-58810	CUSHION	13	J10001-UP
2		21K-62-35270	CUSHION	3	J10001-UP
3		203-70-53381	PLATE	6	J10001-UP
4		203-70-53391	PLATE	4	J10001-UP
5		01010-81025	BOLT	20	J10001-UP
6		01643-31032	WASHER	20	J10001-UP

Ref :T1110-04A5 Page :360045

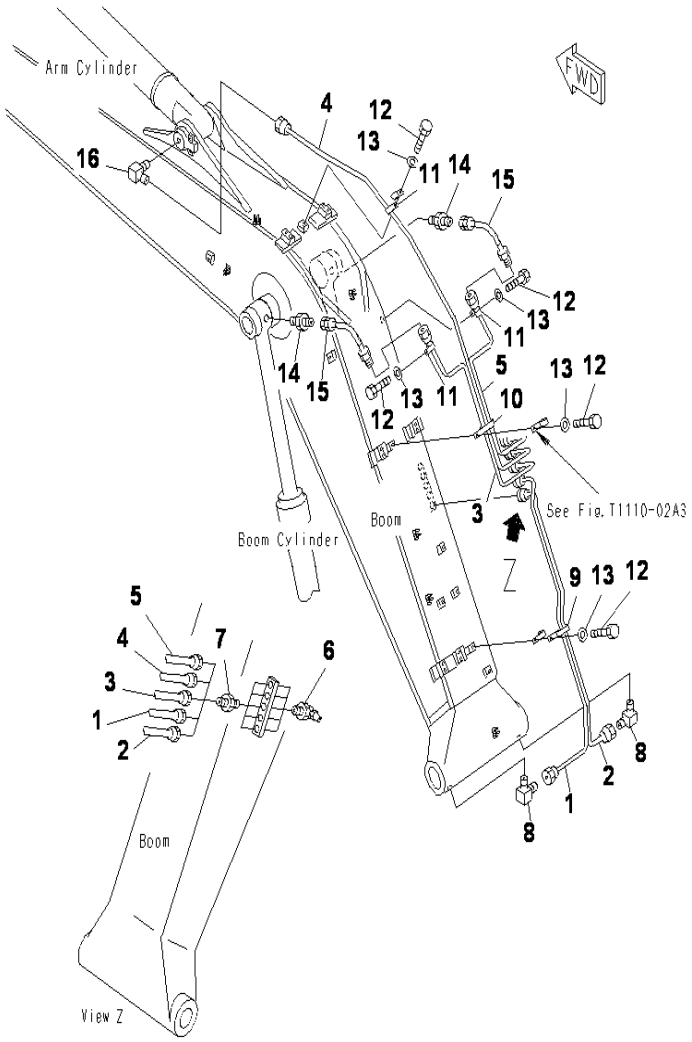

PC130F-7 S/N J10001-UP

BOOM (LUBRICATION PIPING) (100 HOURS LUBRICATING)

INDEX	CD	PART NO.	DESCRIPTION	QTY	SERIAL NO.
1		203-70-61251	TUBE	1	J10001-UP
2		203-70-61261	TUBE	1	J10001-UP
3		203-70-61271	TUBE	1	J10001-UP
4		202-70-71231	TUBE	1	J10001-UP
5		203-70-61291	TUBE	1	J10001-UP
6		07020-00900	FITTING	5	J10001-UP
7		20Y-70-11540	CONNECTOR	5	J10001-UP
8		20Y-70-11590	ELBOW	2	J10001-UP
9		04435-50810	CLIP	1	J10001-UP
10		04434-51712	CLIP	1	J10001-UP
11		08036-00814	CLIP	3	J10001-UP
12		01010-81020	BOLT	5	J10001-UP
13		01643-31032	WASHER	5	J10001-UP
14		205-70-51390	NIPPLE	2	J10001-UP
15		20Y-70-11520	HOSE, 440MM	2	J10001-UP
16		20Y-25-11270	ELBOW	1	J10001-UP

Ref :T1110-05A3 Page :360050

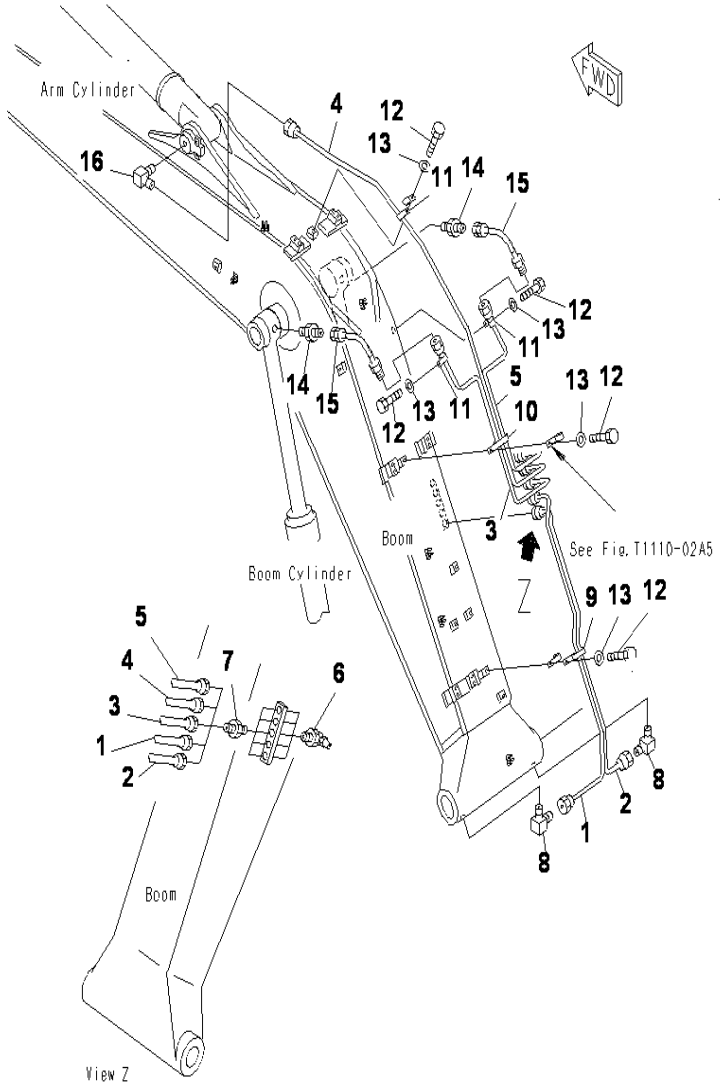

PC130F-7 S/N J10001-UP

BOOM (LUBRICATION PIPING) (500 HOURS LUBRICATING)

INDEX	CD	PART NO.	DESCRIPTION	QTY	SERIAL NO.
1		203-70-61251	TUBE	1	J10001-UP
2		203-70-61261	TUBE	1	J10001-UP
3		203-70-61271	TUBE	1	J10001-UP
4		203-70-61281	TUBE	1	J10001-UP
5		203-70-61291	TUBE	1	J10001-UP
6		07020-00900	FITTING	5	J10001-UP
7		20Y-70-11540	CONNECTOR	5	J10001-UP
8		20Y-70-11590	ELBOW	2	J10001-UP
9		04435-50810	CLIP	1	J10001-UP
10		04434-51712	CLIP	1	J10001-UP
11		04434-50812	CLIP	3	J10001-UP
12		01010-81020	BOLT	1	J10001-UP
13		01643-31032	WASHER	1	J10001-UP
14		205-70-51390	NIPPLE	2	J10001-UP
15		20Y-70-11520	HOSE	2	J10001-UP
16		20Y-25-11270	ELBOW	1	J10001-UP

Ref :T1110-05A5 Page :360055

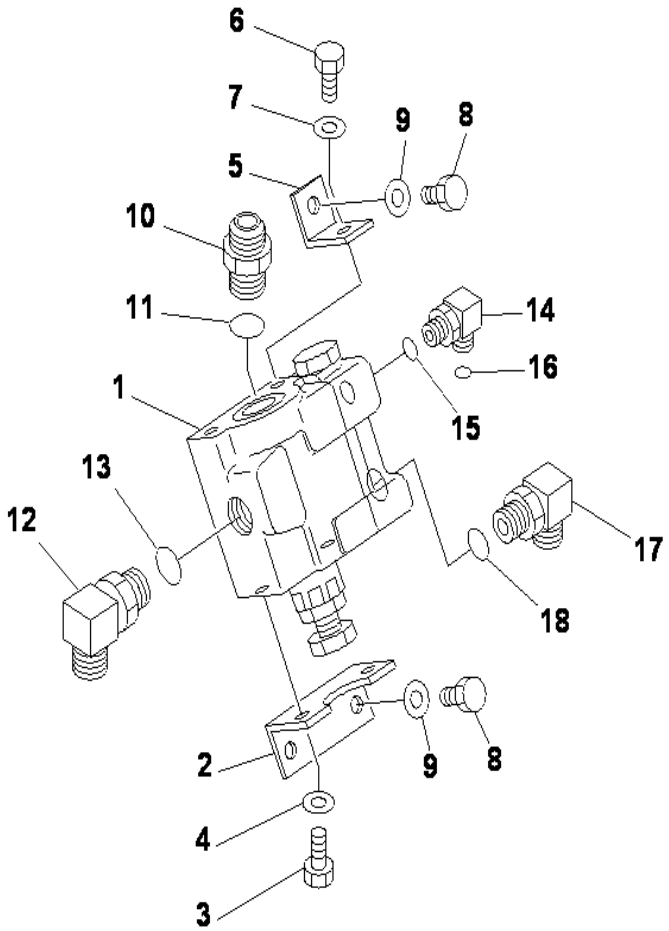

PC130F-7 S/N J10001-UP

BOOM (LUBRICATION PIPING) (500 HOURS LUBRICATING) (WITH ARM LOCK VALVE)

INDEX	CD	PART NO.	DESCRIPTION	QTY	SERIAL NO.
1		(702-21-04210)	VALVE ASSY,(SEE FIG.1675-01A0).....	1	J10001-UP
2		203-62-61251	BRACKET.....	1	J10001-UP
3		01010-81020	BOLT.....	2	J10001-UP
4		01643-31032	WASHER.....	2	J10001-UP
5		203-62-61261	BRACKET.....	1	J10001-UP
6		01010-81020	BOLT.....	1	J10001-UP
7		01643-31032	WASHER.....	1	J10001-UP
8		01010-81025	BOLT.....	3	J10001-UP
9		01643-31032	WASHER.....	3	J10001-UP
10		07230-20522	UNION.....	1	J10001-UP
11		07002-12434	O-RING.....	1	J10001-UP
12		07235-10522	ELBOW.....	1	J10001-UP
13		07002-12434	O-RING.....	1	J10001-UP
14		02782-10210	ELBOW.....	1	J10001-UP
15		07002-11423	O-RING.....	1	J10001-UP
16		02896-11008	O-RING.....	1	J10001-UP
17		07235-10422	ELBOW.....	1	J10001-UP
18		07002-12034	O-RING.....	1	J10001-UP

Ref :T1110-06A4 Page :360056

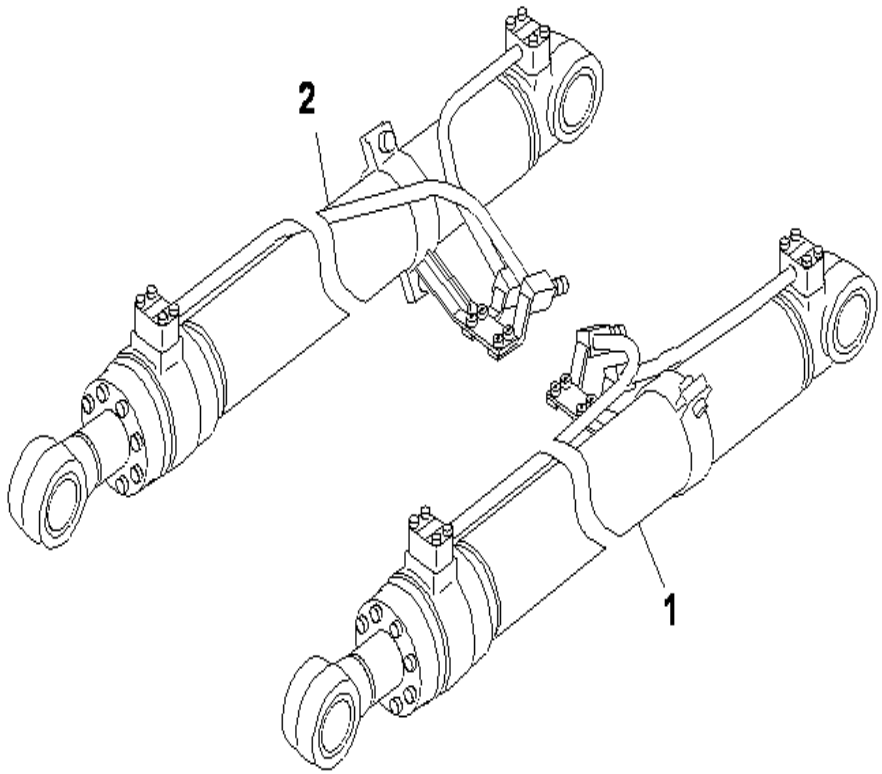

PC130F-7 S/N J10001-UP

BOOM CYLINDER (100 HOURS LUBRICATING)

INDEX	CD	PART NO.	DESCRIPTION	QTY	SERIAL NO.
1		(707-01-XAP30)	CYLINDER GROUP.....	1	J10001-UP
2		(707-01-XAP40)	CYLINDER GROUP.....	1	J10001-UP

Ref :T1120-01A2 Page :360060

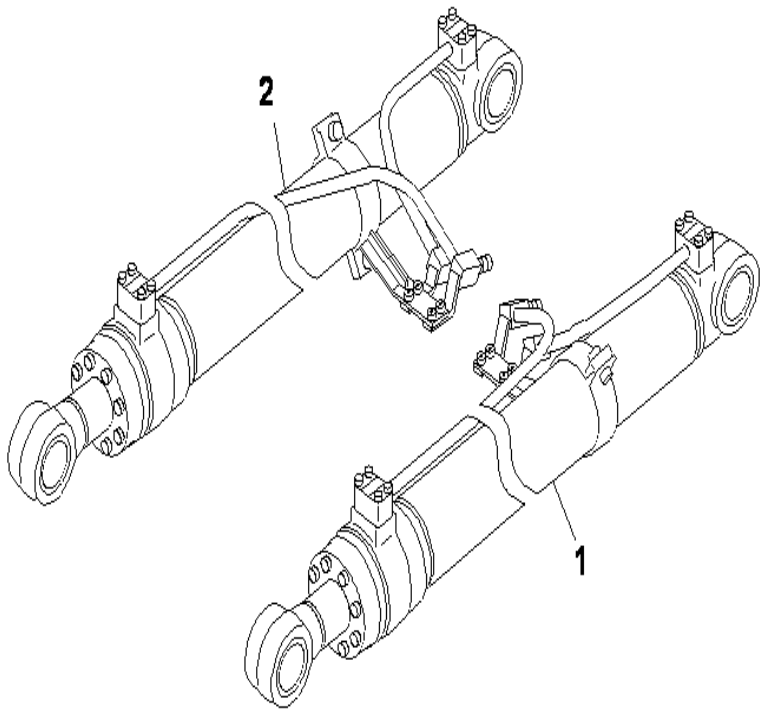

PC130F-7 S/N J10001-UP

BOOM CYLINDER (500 HOURS) (LONG REACH)

INDEX	CD	PART NO.	DESCRIPTION	QTY	SERIAL NO.
1		(707-01-XT600)	CYLINDER GROUP.....	1	J10001-UP
2		(707-01-XT610)	CYLINDER GROUP.....	1	J10001-UP

Ref :T1120-01A3 Page :360065

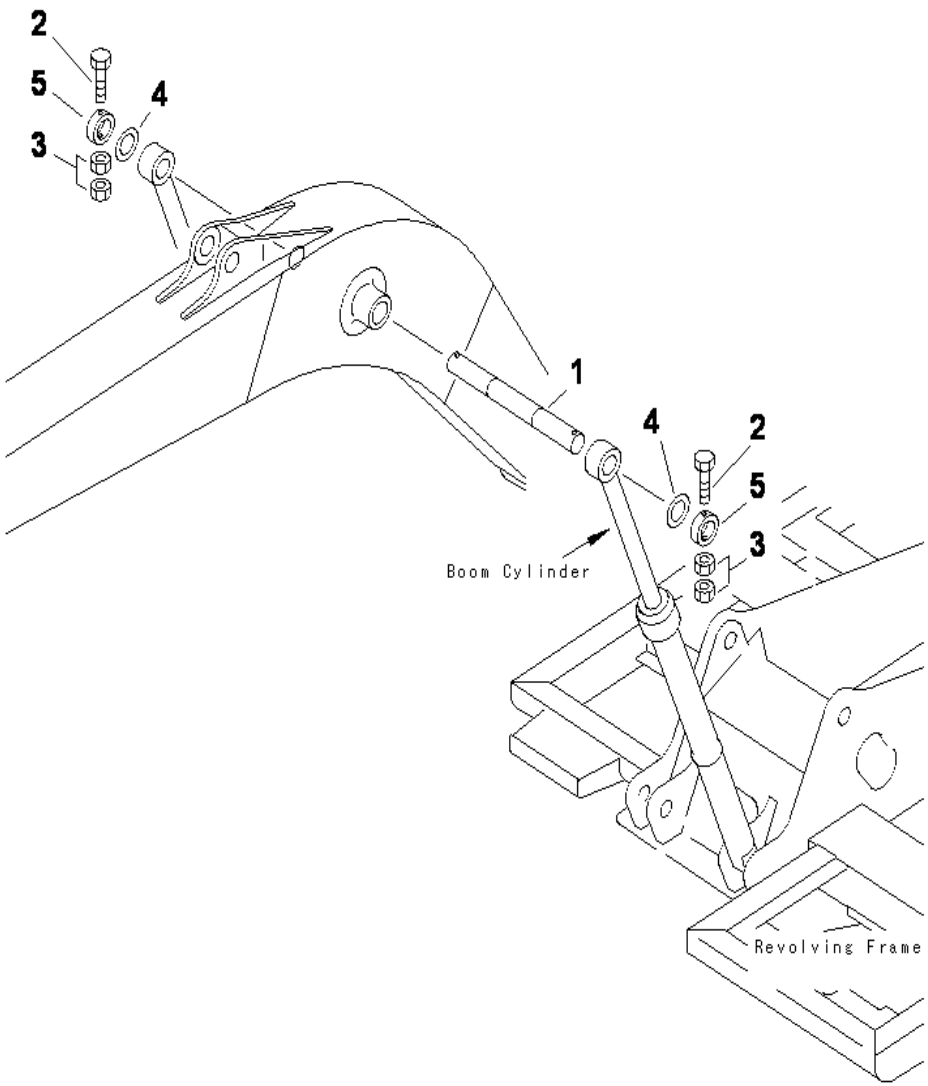

PC130F-7 S/N J10001-UP

BOOM CYLINDER TOP PIN

INDEX	CD	PART NO.	DESCRIPTION	QTY	SERIAL NO.
1		202-70-61180	PIN	1	J10001-UP
2		01019-11640	BOLT	2	J10001-UP
3		01580-11613	NUT	4	J10001-UP
4		21Y-70-14830	SPACER, 1.0MM	2	J10001-UP
5		21K-70-11410	PLATE	2	J10001-UP

Ref :T1125-01A0 Page :360070

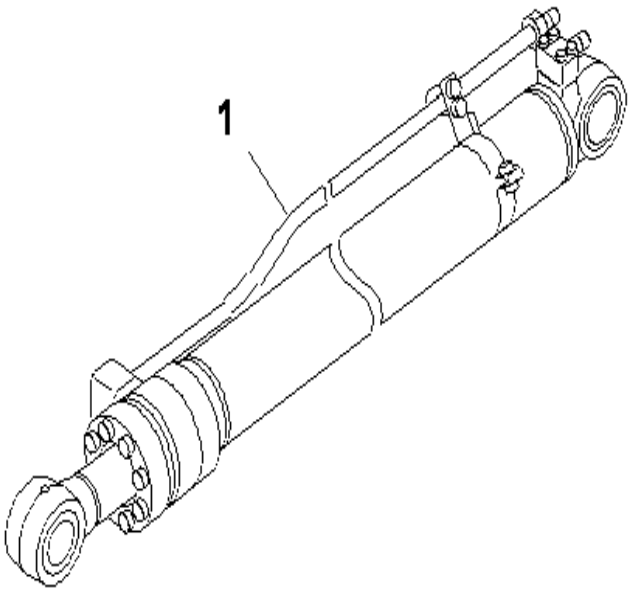

PC130F-7 S/N J10001-UP

ARM CYLINDER

INDEX	CD	PART NO.	DESCRIPTION	QTY	SERIAL NO.
1		707-01-XAP50	CYLINDER GROUP,(SEE FIG. Y1620-11A0).....	1	J10001-UP

Ref :T1140-01A1 Page :360080

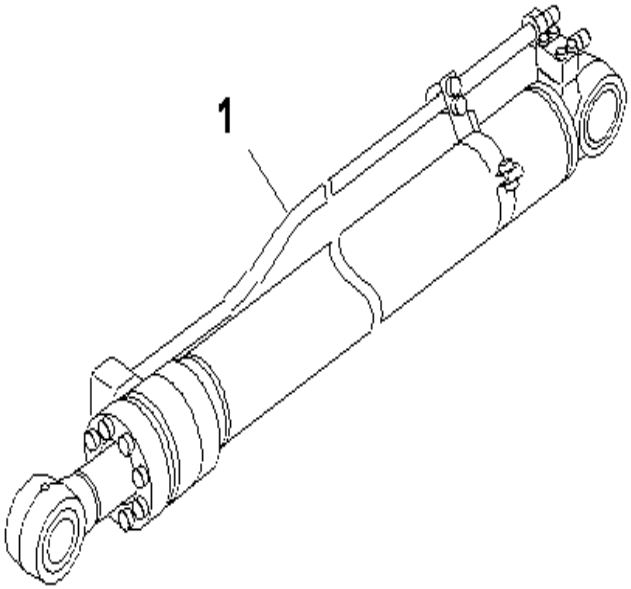

PC130F-7 S/N J10001-UP

ARM CYLINDER UNIT (LONG REACH)

INDEX	CD	PART NO.	DESCRIPTION	QTY	SERIAL NO.
1		(707-01-XF030)	CYLINDER GROUP.....	1	J10001-UP

Ref :T1140-01A2 Page :360081

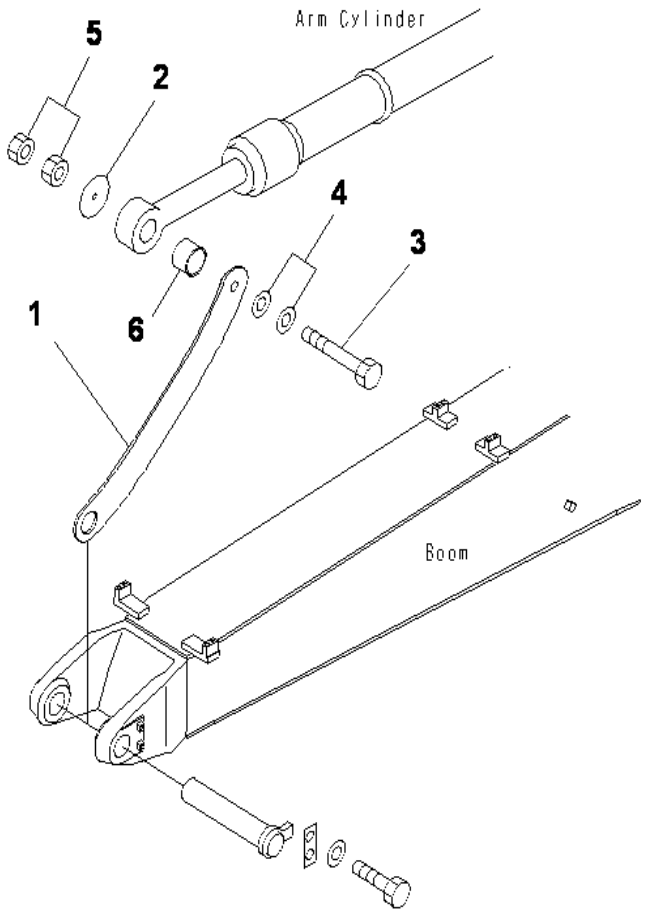

PC130F-7 S/N J10001-UP

ARM LESS LINK

INDEX	CD	PART NO.	DESCRIPTION	QTY	SERIAL NO.
1		203-70-53160	LINK	1	J10001-UP
2		207-70-53170	PLATE	1	J10001-UP
3		01011-81225	BOLT	1	J10001-UP
4		01643-31232	WASHER	2	J10001-UP
5		01580-11210	NUT	2	J10001-UP
6		203-70-53250	COLLAR	3	J10001-UP

Ref :T1190-01A0 Page :360085

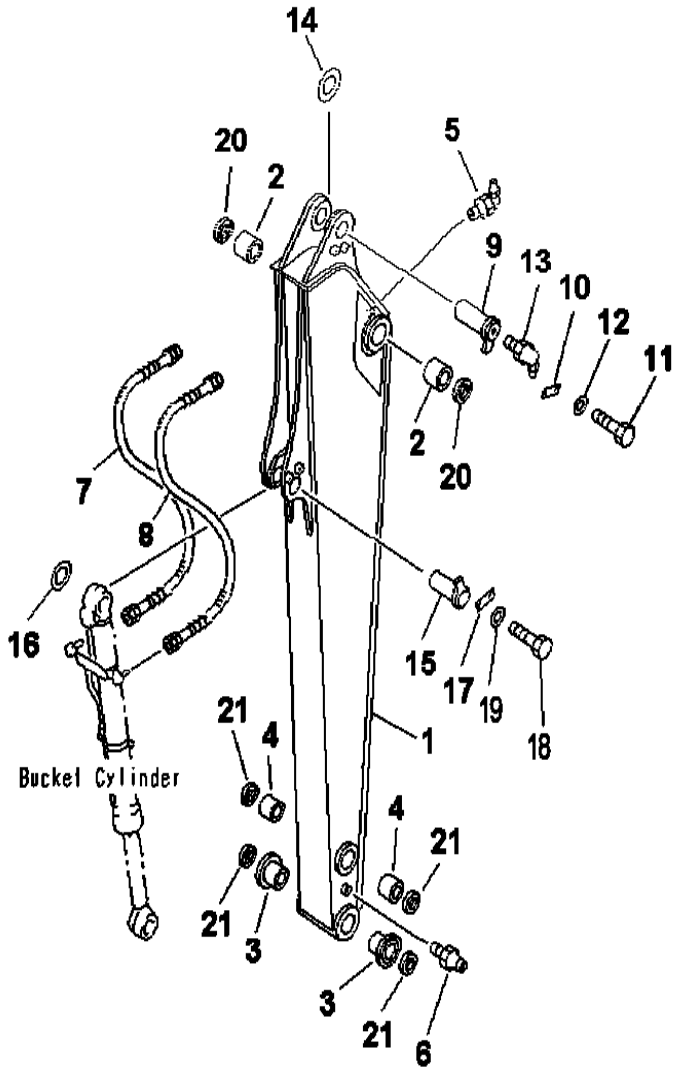

ARM (2.1M) (ARM AND PIN)

INDEX	CD	PART NO.	DESCRIPTION	QTY	SERIAL NO.
		202-70-0J010	ARM GROUP	1	J10001-UP
1		202-70-J2120	.ARM	1	J10001-UP
2		203-70-56130	.BUSHING	2	J10001-UP
3		203-70-42182	.BUSHING	2	J10001-UP
4		203-70-56150	.BUSHING	2	J10001-UP
5		07020-00900	FITTING	1	J10001-UP
6		07020-00000	FITTING	1	J10001-UP
7		07096-20412	HOSE	1	J10001-UP
8		07096-20512	HOSE	1	J10001-UP
9		203-70-42121	PIN	1	J10001-UP
10		205-70-66580	PLATE	1	J10001-UP
11		01010-81230	BOLT	2	J10001-UP
12		01643-31232	WASHER	2	J10001-UP
13		07020-00675	FITTING	1	J10001-UP
14		21Y-70-14830	SPACER, 1.0MM	1	J10001-UP
		21Y-70-14840	SPACER, 2.0MM	1	J10001-UP
15		202-70-52121	PIN	1	J10001-UP
16		21Y-70-14710	SPACER, 1.0MM	1	J10001-UP
17		205-70-66580	PLATE	1	J10001-UP
18		01010-81230	BOLT	2	J10001-UP
19		01643-31232	WASHER	2	J10001-UP
20		07145-00070	SEAL	2	J10001-UP
21		203-70-33210	SEAL	4	J10001-UP

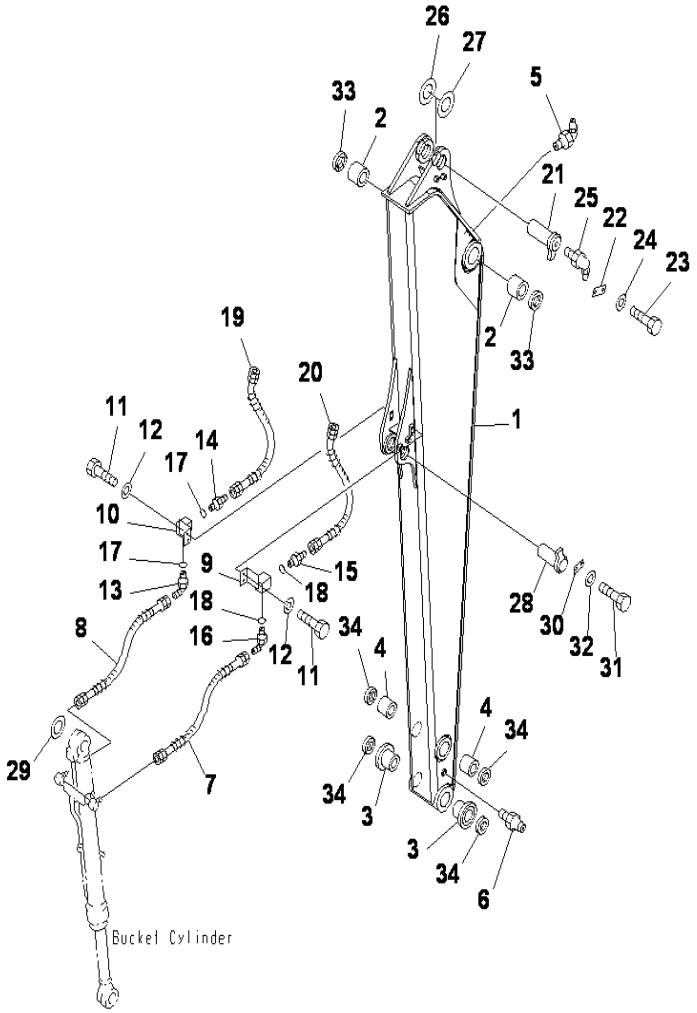

PC130F-7 S/N J10001-UP

ARM (3.0 HD) (ARM AND PIN)

INDEX	CD	PART NO.	DESCRIPTION	QTY	SERIAL NO.
		203-943-7221	ARM GROUP	1	J10001-UP
1		203-94-37111	.ARM	1	J10001-UP
2		203-70-56130	.BUSHING	2	J10001-UP
3		203-70-42182	.BUSHING	2	J10001-UP
4		203-70-56150	.BUSHING	2	J10001-UP
5		07020-00900	.FITTING	1	J10001-UP
6		07020-00000	.FITTING	1	J10001-UP
7		07096-20508	HOSE	1	J10001-UP
8		07096-20408	HOSE	1	J10001-UP
9		2039435620	ELBOW LH	1	J10001-UP
10		2039435130	ELBOW RH	1	J10001-UP
11		01010-81020	BOLT	4	J10001-UP
12		01643-31032	WASHER	4	J10001-UP
13		07235-10422	ELBOW	1	J10001-UP
14		07230-20422	UNION	1	J10001-UP
15		07230-20522	UNION	1	J10001-UP
16		07235-10522	ELBOW	1	J10001-UP
17		07002-22034	O-RING	1	J10001-UP
18		07002-22434	O-RING	1	J10001-UP
19		0709620414	HOSE	1	J10001-UP
20		0709620514	HOSE	1	J10001-UP
21		203-70-42121	PIN	1	J10001-UP
22		205-70-66580	PLATE	1	J10001-UP
23		01010-81230	BOLT	2	J10001-UP
24		01643-31232	WASHER	2	J10001-UP
25		07020-00675	FITTING	1	J10001-UP
26		21Y-70-14830	SPACER, 1.0MM	1	J10001-UP
27		21Y-70-14840	SPACER, 2.0MM	1	J10001-UP
28		202-70-52121	PIN	1	J10001-UP
29		21Y-70-14710	SPACER, 1.0MM	1	J10001-UP
30		205-70-66580	PLATE	1	J10001-UP
31		01010-81230	BOLT	2	J10001-UP
32		01643-31232	WASHER	2	J10001-UP
33		07145-00070	SEAL	2	J10001-UP
34		21W-70-41440	SEAL DUST	4	J10001-UP

Ref :T1200-01A5 Page :360095

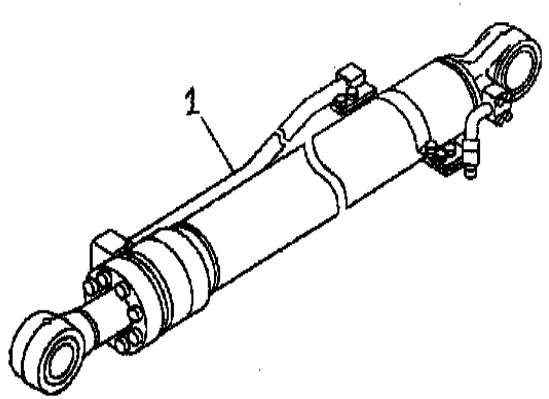

PC130F-7 S/N J10001-UP

BUCKET CYLINDER

INDEX	CD	PART NO.	DESCRIPTION	QTY	SERIAL NO.
1	C1	(707-01-XAP60)	CYLINDER GROUP, (SEE FIG. Y1620-41A0).....	1	J10001-UP

Ref :T1220-01A0 Page :360100

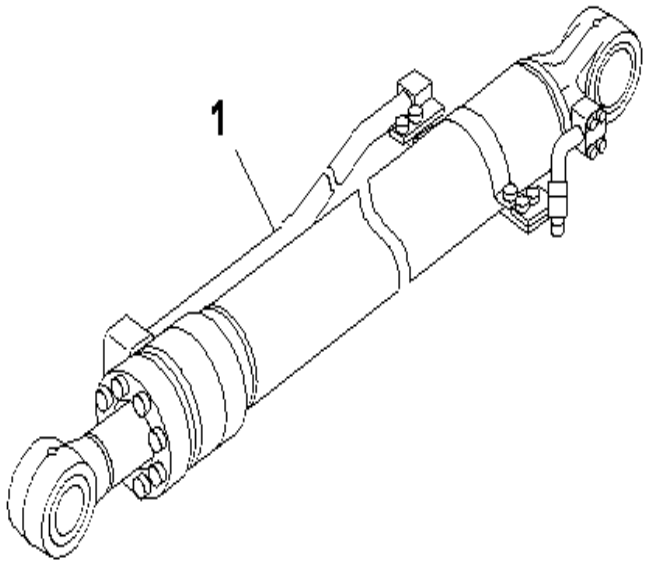

PC130F-7 S/N J10001-UP

BUCKET CYLINDER (LONG REACH)

INDEX	CD	PART NO.	DESCRIPTION	QTY	SERIAL NO.
1		(707-01-XF040)	CYLINDER GROUP.....	1	J10001-UP

Ref :T1220-01A1 Page :360105

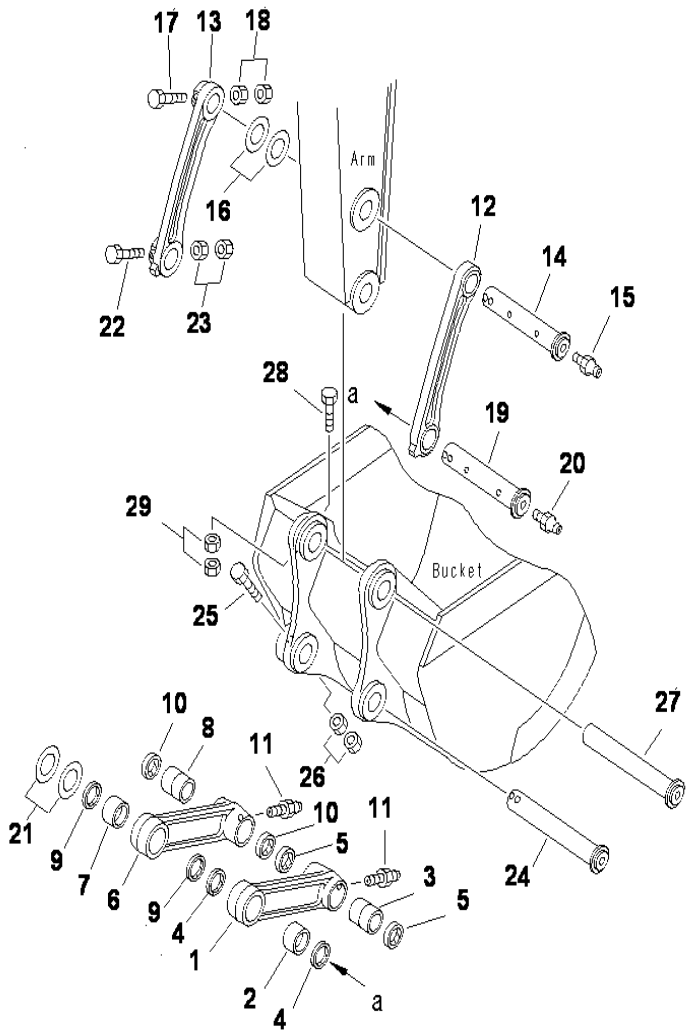

PC130F-7 S/N J10001-UP

BUCKET LINK (STRENGTH TYPE)

INDEX	CD	PART NO.	DESCRIPTION	QTY	SERIAL NO.
		203-70-00880	LINK ASS'Y	1	J10001-UP
1		203-70-54130	.LINK L.H	1	J10001-UP
2		203-70-56140	.BUSHING	1	J10001-UP
3		203-70-56160	.BUSHING	1	J10001-UP
4		07145-00065	.SEAL	2	J10001-UP
5		07145-00060	.SEAL	2	J10001-UP
		203-70-00890	LINK ASS'Y	1	J10001-UP
6		203-70-54140	.LINK R.H	1	J10001-UP
7		203-70-56140	.BUSHING	1	J10001-UP
8		203-70-56160	.BUSHING	1	J10001-UP
9		07145-00065	SEAL	2	J10001-UP
10		07145-00060	SEAL	2	J10001-UP
11		07020-00000	FITTING	2	J10001-UP
12		203-70-54110	LINK L.H	1	J10001-UP
13		203-70-J1150	LINK R.H	1	J10001-UP
14		202-70-64151	PIN	1	J10001-UP
15		07020-00000	FITTING	1	J10001-UP
16		21Y-70-14770	SPACER, 1.0MM	3	J10001-UP
		21Y-70-14780	SPACER, 2.0MM	3	J10001-UP
17		01011-81620	BOLT	1	J10001-UP
18		01580-11613	NUT	2	J10001-UP
19		202-70-64163	PIN	1	J10001-UP
20		07020-00000	FITTING	1	J10001-UP
21		21Y-70-14710	SPACER, 1.0MM	1	J10001-UP
		21Y-70-14850	SPACER, 2.0MM	1	J10001-UP
22		01011-81620	BOLT	1	J10001-UP
23		01580-11613	NUT	2	J10001-UP
24		203-70-44380	PIN	1	J10001-UP
25		01011-81640	BOLT	1	J10001-UP
26		01580-11613	NUT	2	J10001-UP
27		203-70-44380	PIN	1	J10001-UP
28		01011-81670	BOLT	1	J10001-UP
29		01580-11613	NUT	2	J10001-UP

Ref :T1230-01A0 Page :360110

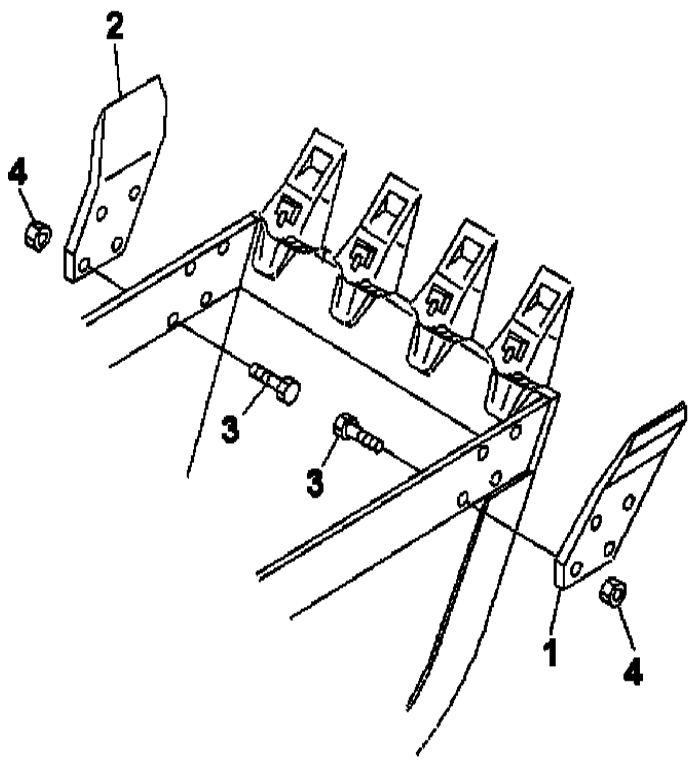

PC130F-7 S/N J10001-UP

SIDE CUTTER

INDEX	CD	PART NO.	DESCRIPTION	QTY	SERIAL NO.
1		202-70-63161	CUTTER , L.H.....	1	J10001-UP
2		202-70-63171	CUTTER ,R.H.....	1	J10001-UP
3		208-32-11231	BOLT SHOE.....	8	J10001-UP
4		01803-02228	NUT.....	8	J10001-UP

Ref :T1510-01A3 Page :360120

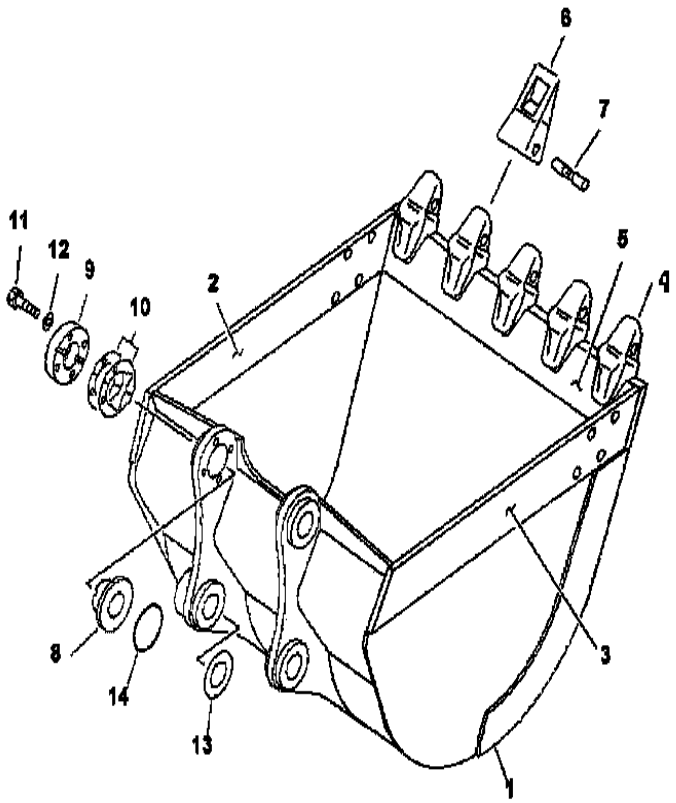

PC130F-7 S/N J10001-UP

BUCKET 0.50M3

INDEX	CD	PART NO.	DESCRIPTION	QTY	SERIAL NO.
		202-920-0101	BUCKET A 0.50 W.....	1	J10001-UP
1		202-920-7131	.BUCKET.....	1	J10001-UP
2		202-70-74130	..PLATE (L.H) (WELDED).....	1	J10001-UP
3		202-70-74140	..LATE (R.H) (WELDED).....	1	J10001-UP
4		205-939-7120	..ADAPTER (WELDED).....	5	J10001-UP
5		202-920-7141	..PLATE (WELDED).....	1	J10001-UP
6		205-70-19570	.TOOTH.....	5	J10001-UP
7		09244-02496	.PIN.....	5	J10001-UP
8		202-70-64250	SPACER.....	1	J10001-UP
9		202-70-64240	SPACER.....	1	J10001-UP
10		202-70-64210	SPACER.....	4	J10001-UP
		202-70-64220	SPACER.....	8	J10001-UP
11		01010-81470	BOLT.....	4	J10001-UP
12		01643-31445	WASHER.....	4	J10001-UP
13		21Y-70-14770	SPACER.....	1	J10001-UP
		21Y-70-14780	SPACER.....	1	J10001-UP
14		203-70-44470	O-RING.....	2	J10001-UP

Ref :T1510-01B3 Page :360130

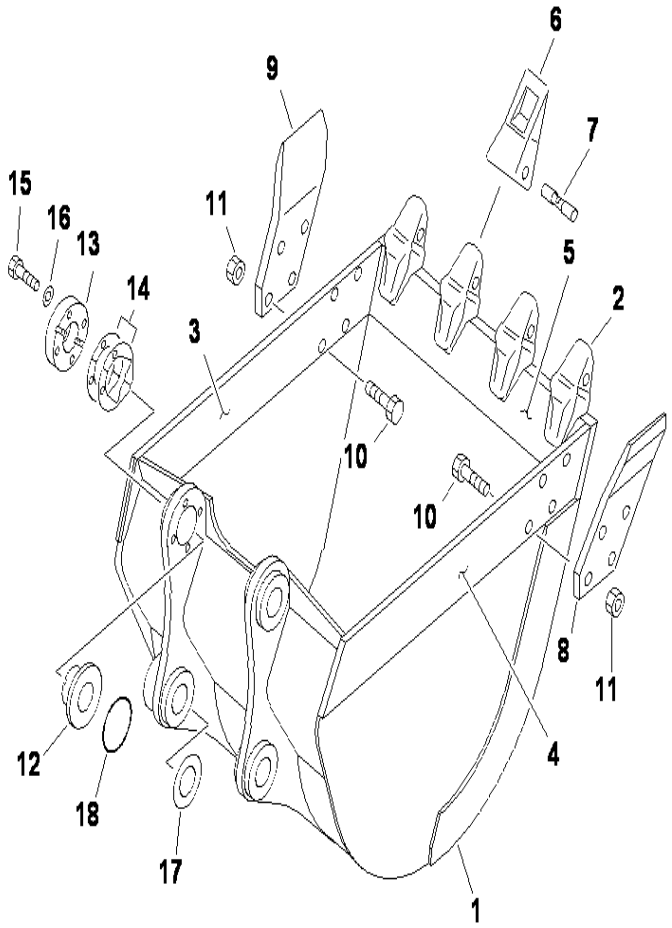

PC130F-7 S/N J10001-UP

BUCKET 0.53M3 (HORIZONTAL PIN TYPE)

INDEX	CD	PART NO.	DESCRIPTION	QTY	SERIAL NO.
		203-70-01610	BUCKET ASS'Y	1	J10001-UP
1		203-70-73110	.BUCKET	1	J10001-UP
2		205-939-7120	..ADAPTER (WELDED)	4	J10001-UP
3		203-70-73140	..PLATE, R.H. (WELDED)	1	J10001-UP
4		203-70-73130	..PLATE, L.H. (WELDED)	1	J10001-UP
5		203-70-73120	..PLATE (WELDED)	1	J10001-UP
6		205-70-19570	.TOOTH	4	J10001-UP
7		09244-02496	.PIN	4	J10001-UP
8		202-70-63161	CUTTER, L.H	1	J10001-UP
9		202-70-63171	CUTTER, R.H	1	J10001-UP
10		208-32-11231	BOLT	8	J10001-UP
11		01803-02228	NUT	8	J10001-UP
12		202-70-64250	SPACER	1	J10001-UP
13		202-70-64240	PLATE	1	J10001-UP
14		202-70-64210	SPACER, 0.5MM	4	J10001-UP
		202-70-64220	SPACER, 1.0MM	10	J10001-UP
15		01010-81470	BOLT	4	J10001-UP
16		01643-31445	WASHER	4	J10001-UP
17		21Y-70-14770	SPACER, 1.0MM	1	J10001-UP
		21Y-70-14780	SPACER, 2.0MM	1	J10001-UP
18		203-70-44470	O-RING	2	J10001-UP

Ref :T1510-01B5 Page :360140

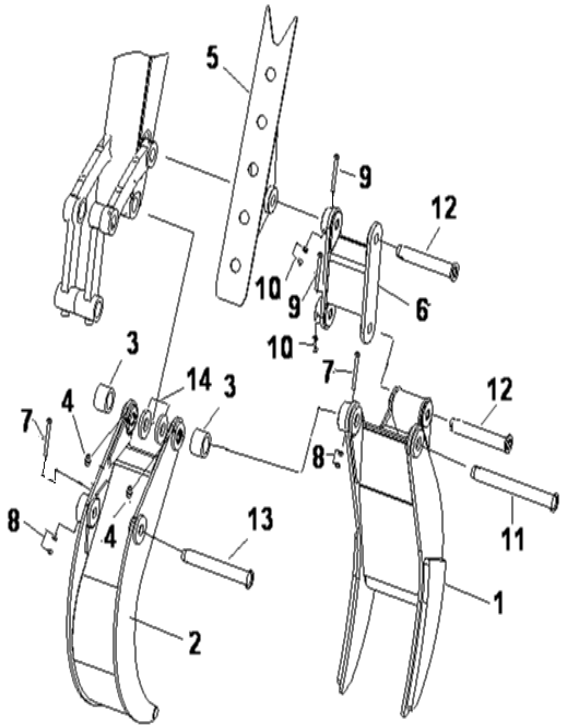

PC130F-7 S/N J10001-UP

FIX GRAPPLE

INDEX	CD	PART NO.	DESCRIPTION	QTY	SERIAL NO.
		203-70-J1301	FIX GRAPPLE ASS'Y	1	J10001-UP
1		203-70-J1400	LOWER CLAW	1	J10001-UP
2		203-70-J1201	UPPER CLAW	1	J10001-UP
3		203-70-J1331	BUSHING	2	J10001-UP
4		07020-00001	FITTING GREASE	2	J10001-UP
5		203-70-J1431	BRACKET (WELDED)	1	J10001-UP
6		203-70-J1441	LINK	1	J10001-UP
7		01011-81650	BOLT	2	J10001-UP
8		01580-11613	NUT	8	J10001-UP
9		01011-81660	BOLT	2	J10001-UP
10		01580-11613	NUT	8	J10001-UP
11		203-70-J1120	PIN	1	J10001-UP
12		203-70-J1230	PIN	2	J10001-UP
13		203-70-J1420	PIN	1	J10001-UP
14		203-70-44470	O-RING	2	J10001-UP

Ref :T1510-02A0 Page :360150

MARK AND PLATES

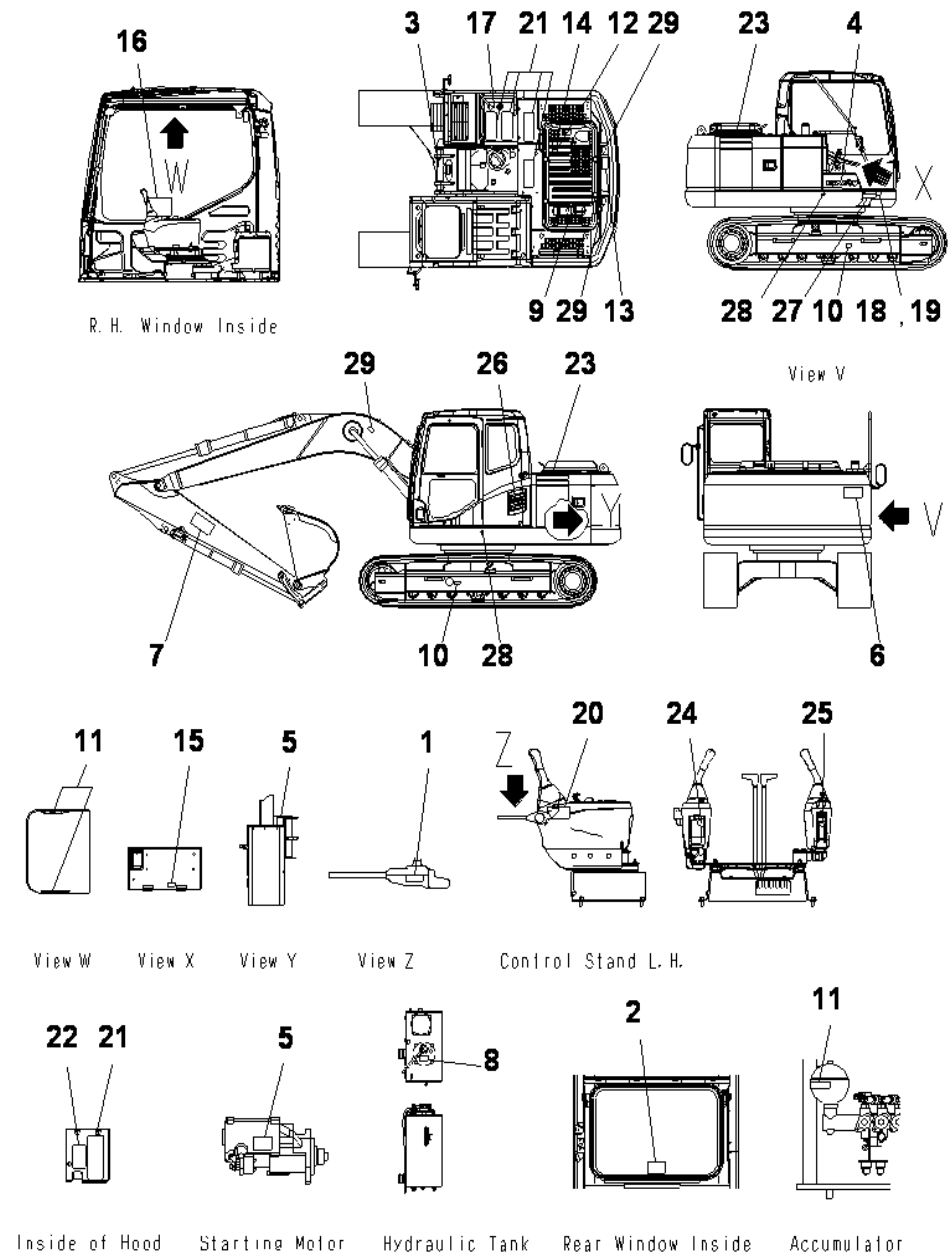

MARK AND PLATES (ENGLISH) (LETTERING TYPE)

INDEX	CD	PART NO.	DESCRIPTION	QTY	SERIAL NO.
1		09685-00002	PLATE, OPERATING	1	J10001-UP
2		20Y-00-31170	PLATE	1	J10001-UP
3		09690-M0063	PLATE, MARK	1	J10001-UP
4		09690-P0450	PLATE, MARK	1	J10001-UP
5		09842-A0481	PLATE, CAUTION	2	J10001-UP
6		09133-A3281	PLATE	1	J10001-UP
7		09653-A0481	PLATE,SAFETY	2	J10001-UP
8		09657-A0881	PLATE	2	J10001-UP
9		09659-A057B	PLATE	3	J10001-UP
10		09667-A0481	PLATE,SAFETY	1	J10001-UP
11		09805-A0881	PLATE	1	J10001-UP
12		09805-C0481	PLATE,SAFETY	1	J10001-UP
13		203-00-71130	PLATE,SAFETY	1	J10001-UP
14		22U-00-21440	PLATE	1	J10001-UP
15		09669-0000E	PLATE, CAUTION	1	J10001-UP
16		20Y-00-J1150	PLATE, NAME	1	J10001-UP
17		04418-13060	SCREW	4	J10001-UP
18		09963-A1640	PLATE	1	J10001-UP
19		154-54-23260	SEAT	5	J10001-UP
20		206-00-71290	SEAT	1	J10001-UP
21		202-00-72110	PLATE,MARK	2	J10001-UP
22		203-00-71191	PLATE	1	J10001-UP
23		20Y-00-31330	PLATE	1	J10001-UP
24		208-00-71260	PLATE	1	J10001-UP
25		20Y-00-31840	PLATE	1	J10001-UP
26		21U-98-31160	PLATE, MARK	2	J10001-UP
27		09960-00801	MARK	4	J10001-UP
28		09960-00802	MARK	4	J10001-UP
29		203-00-31120	PLATE, INSTRUCTION	1	J10001-UP

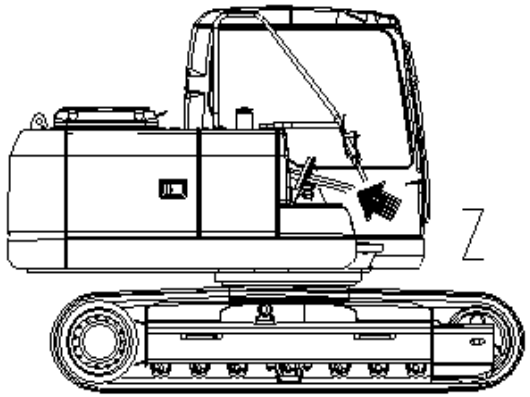

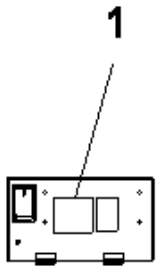

View 7

PC130F-7 S/N J10001-UP

PLATE (LUBRICATION STANDARD CHART)

INDEX	CD	PART NO.	DESCRIPTION	QTY	SERIAL NO.
1		202-00-72120	PLATE	1	J10001-UP

Ref :U0110-01A1 Page :390020

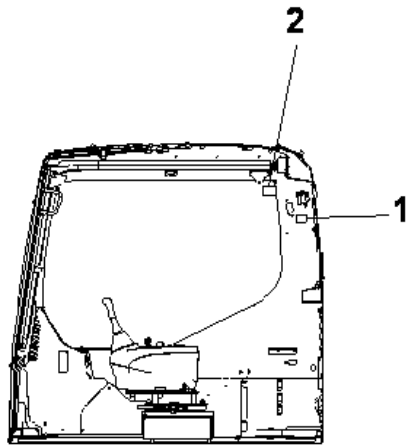

R.H. Window Inside

PC130F-7 S/N J10001-UP

PLATE (FOR WINDOW) (ENGLISH) (LETTERING TYPE)

INDEX	CD	PART NO.	DESCRIPTION	QTY	SERIAL NO.
1		20Y-00-31350	PLATE	1	J10001-UP
2		09803-A0481	PLATE	1	J10001-UP

Ref :U0120-01A0 Page :390030

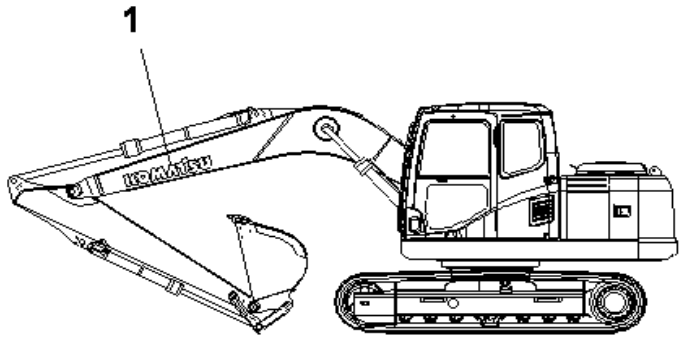

PC130F-7 S/N J10001-UP

LOGO

INDEX	CD	PART NO.	DESCRIPTION	QTY	SERIAL NO.
1		09690-P1000	PLATE, MARK.....	1	J10001-UP

Ref :U0150-01A0 Page :390035

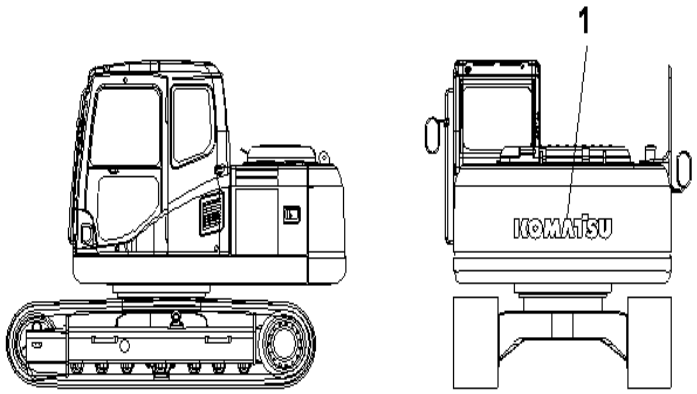

PC130F-7 S/N J10001-UP

LOGO (COUNTER WEIGHT)

INDEX	CD	PART NO.	DESCRIPTION	QTY	SERIAL NO.
1		09690-P1120	PLATE, MARK.....	1	J10001-UP

Ref :U0150-01A1 Page :390040

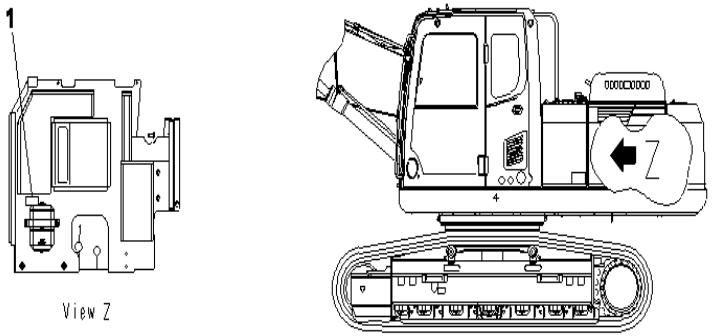

PC130F-7 S/N J10001-UP

COOLANT DECAL.E

INDEX	CD	PART NO.	DESCRIPTION	QTY	SERIAL NO.
1		09642-13000	PLATE.....	1	J10001-UP

Ref :U0202-01A0 Page :390050

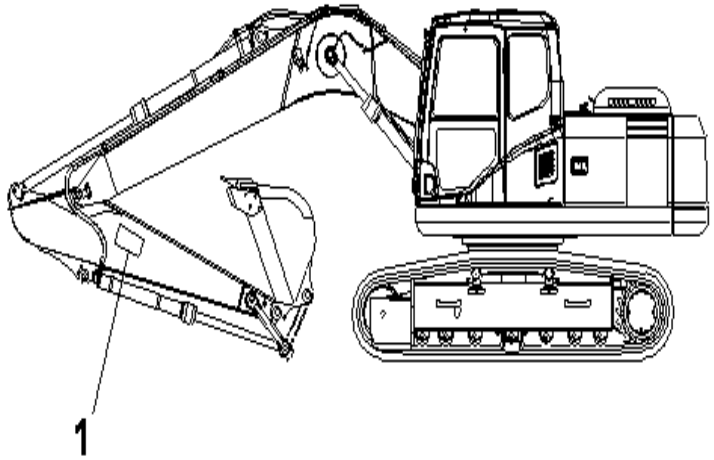

PC130F-7 S/N J10001-UP

LOGO (ARM SIDE)

INDEX	CD	PART NO.	DESCRIPTION	QTY	SERIAL NO.
1		09134-A1681	PLATE, CAUTION.....	2	J10001-UP

Ref :U0510-01A1 Page :390060

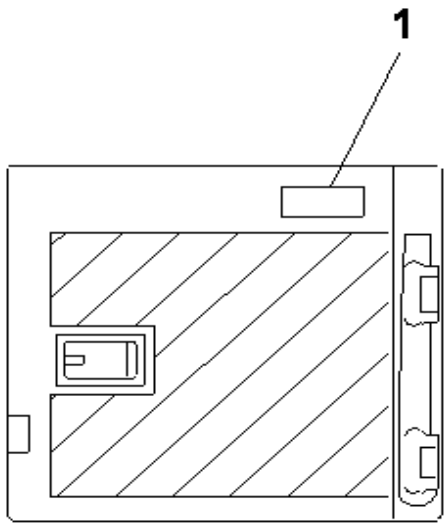

L. H. Door Inside

PC130F-7 S/N J10001-UP

PLATE (AIR CLEANER DOUBLE ELEMENT) (ENGLISH) (LETTERING TYPE)

INDEX	CD	PART NO.	DESCRIPTION	QTY	SERIAL NO.
1		09637-30163	PLATE, INSTRUCTION.....	1	J10001-UP

Ref :U0550-01A1 Page :390070

ACCESSORY

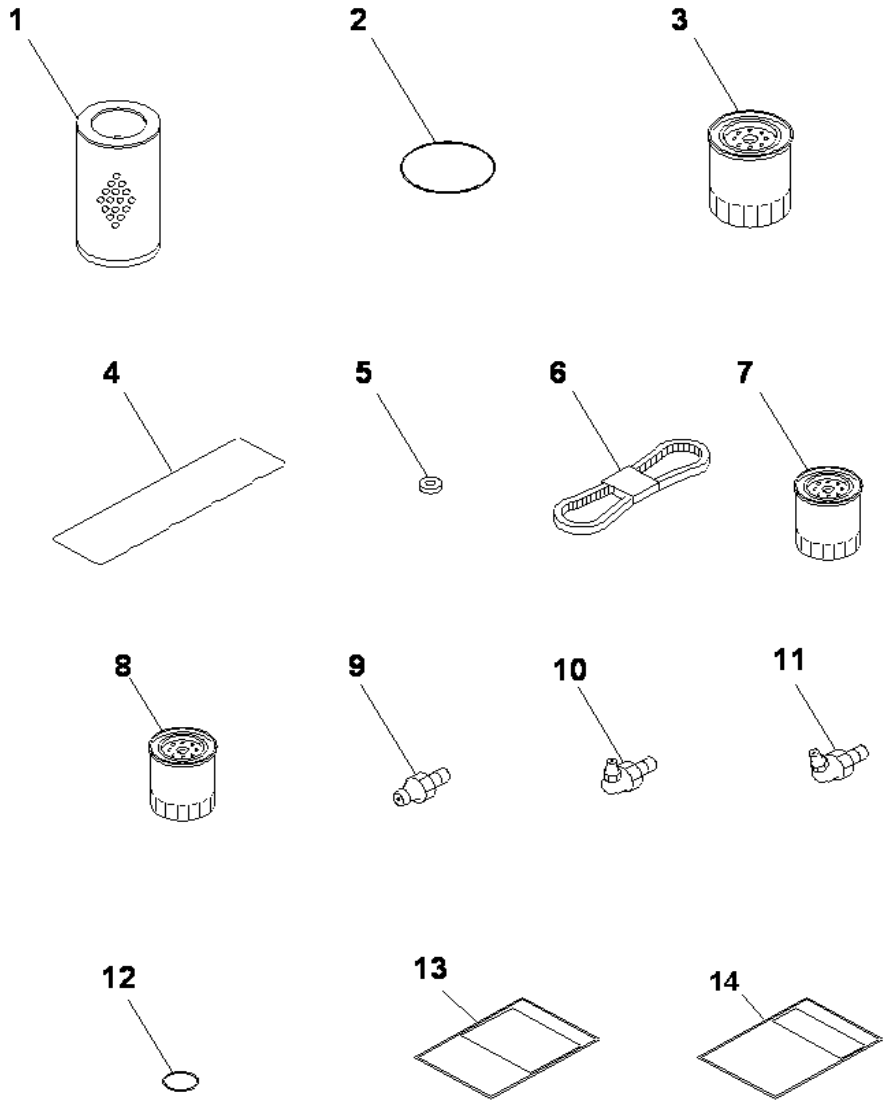

PC130F-7 S/N J10001-UP

SPARE PARTS

INDEX	CD	PART NO.	DESCRIPTION	QTY	SERIAL NO.
1		07063-51100	ELEMENT	1	J10001-UP
2		07000-15155	O-RING	1	J10001-UP
3		600-211-2110	CARTRIDGE	1	J10001-UP
4		6204-11-8810	O-RING	1	J10001-UP
5		6136-11-8142	PACKING	3	J10001-UP
6		04120-21748	V-BELT	1	J10001-UP
7		600-311-7460	CARTRIDGE, FUEL	1	J10001-UP
8		600-311-9121	CARTRIDGE	1	J10001-UP
9		07020-00000	FITTING	4	J10001-UP
10		07020-00900	FITTING	4	J10001-UP
11		07020-00675	FITTING	4	J10001-UP
12		07002-12434	O-RING	1	J10001-UP
13		202-987-1210	TABLE,SPARE PART	1	J10001-UP
14		202-987-1220	TABLE,ACCESSORY	1	J10001-UP

Ref :V0100-01A0 Page :420010

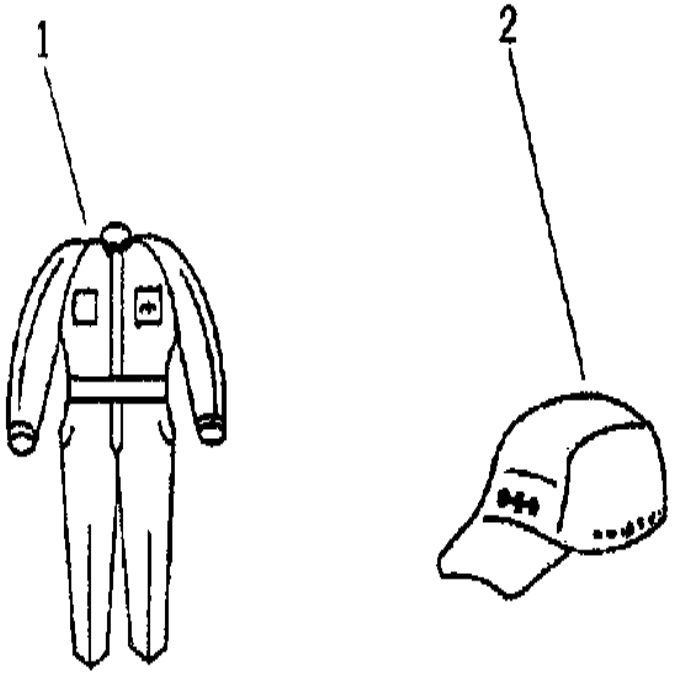

PC130F-7 S/N J10001-UP

CAP & OVERALL U

INDEX	CD	PART NO.	DESCRIPTION	QTY	SERIAL NO.
		09980-92550	CAP & OVERALL.....	1	J10001-UP
1		09980-10550	.OVERALL.....	1	J10001-UP
2		09982-20057	..CAP.....	1	J10001-UP

Ref :V0200-01A01 Page :420020

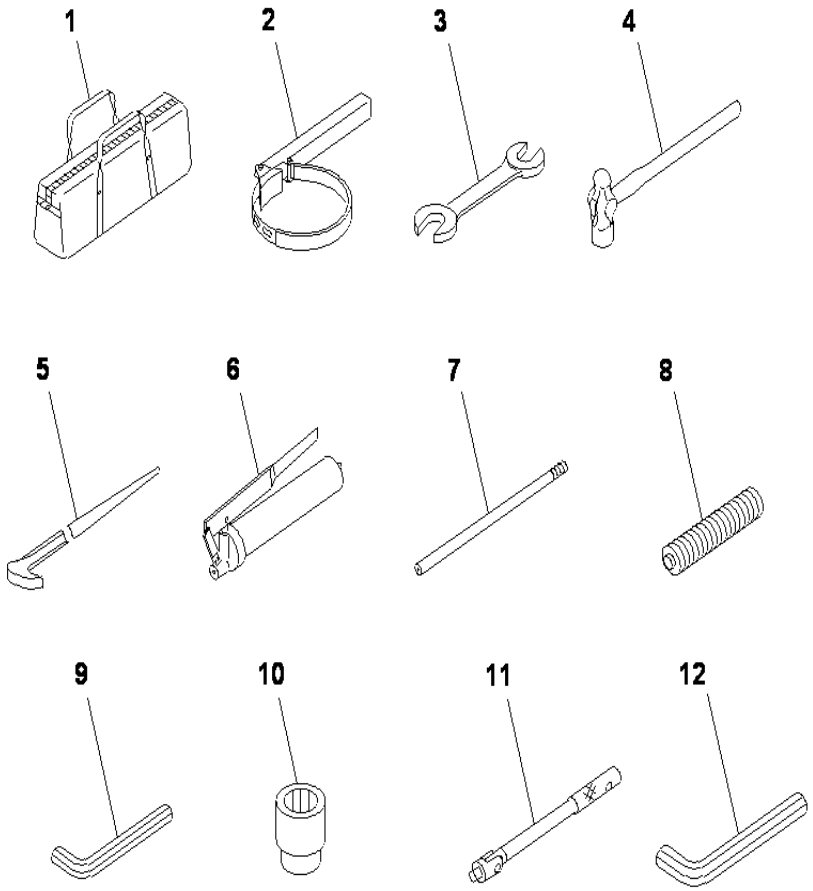

PC130F-7 S/N J10001-UP

TOOL

INDEX	CD	PART NO.	DESCRIPTION	QTY	SERIAL NO.
1		09056-04613	BAG	1	J10001-UP
2		09019-28035	WRENCH	1	J10001-UP
3		09002-01012	WRENCH, 10X12	1	J10001-UP
		09002-01417	WRENCH, 14X17	1	J10001-UP
		09002-01922	WRENCH, 19X22	1	J10001-UP
		09002-02427	WRENCH, 24X27	1	J10001-UP
4		09039-00150	HAMMER	1	J10001-UP
5		09055-10390	BAR PINCH	1	J10001-UP
		07952-70004	GREASE PUMP ASS'Y	1	J10001-UP
6		07950-10450	.PUMP	1	J10001-UP
7		07951-41017	.NOZZLE	1	J10001-UP
8		07950-90403	CARTRIDGE	1	J10001-UP
9		09007-00836	WRENCH, 8	1	J10001-UP
		09007-00425	WRENCH, 4	1	J10001-UP
10		09021-02436	SOCKET, 24	1	J10001-UP
11		09023-00300	HANDLE	1	J10001-UP
12		09007-01040	WRENCH, 10	1	J10001-UP
		09007-00528	WRENCH, 5	1	J10001-UP

Ref :V0300-01A0A Page :420030

SERVICES KIT

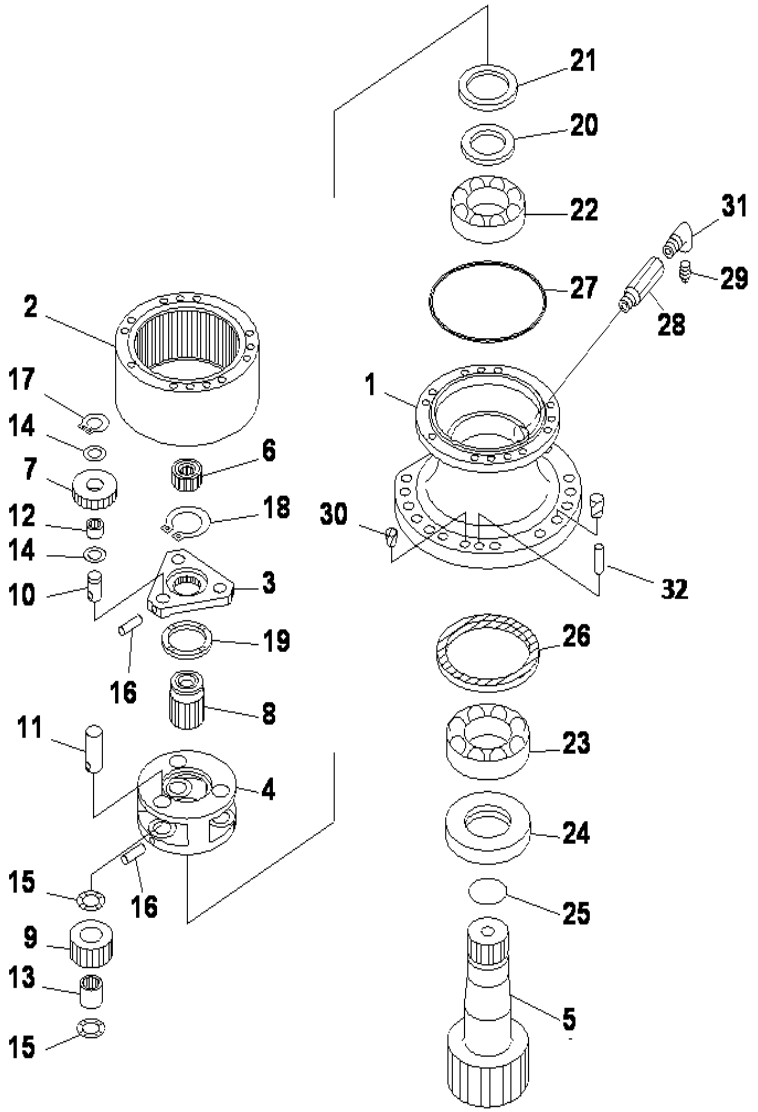

PC130F-7 S/N J10001-UP

SWING MACHINERY (INNER PARTS)

INDEX	CD	PART NO.	DESCRIPTION	QTY	SERIAL NO.
		203-26-00123	SWING MACHINERY ASS'Y	1	J10001-UP
1		203-26-61143	.CASE	1	J10001-UP
2		203-26-61110	.RING GEAR	1	J10001-UP
3		203-26-61120	.CARRIER	1	J10001-UP
4		203-26-61130	.CARRIER	1	J10001-UP
5		203-26-61220	.SHAFT	1	J10001-UP
6		203-26-61150	.GEAR	1	J10001-UP
7		203-26-61160	.GEAR	3	J10001-UP
8		203-26-61170	.GEAR	1	J10001-UP
9		203-26-61180	.GEAR	3	J10001-UP
10		201-26-62240	.SHAFT	3	J10001-UP
11		203-26-61250	.SHAFT	3	J10001-UP
12		201-26-62270	.BEARING	3	J10001-UP
13		203-26-61270	.BEARING	3	J10001-UP
14		20S-26-71160	.WASHER	6	J10001-UP
15		09233-312920	.WASHER	6	J10001-UP
16		20S-26-71250	.PIN	6	J10001-UP
17		20S-26-71190	.SNAP RING	3	J10001-UP
18		04064-05520	.RING	1	J10001-UP
19		203-26-61280	.SPACER	1	J10001-UP
20		203-26-61391	.SPACER	2	J10001-UP
21		203-26-61310	.COLLER	1	J10001-UP
22		201-26-62330	.BEARING	1	J10001-UP
23		203-26-61320	.BEARING	1	J10001-UP
24		203-26-61340	.COLLER	1	J10001-UP
25		07000-02080	.O-RING	1	J10001-UP
26		07012-00145	.SEAL	1	J10001-UP
27		203-26-61360	.O-RING	2	J10001-UP
28		203-26-61370	.JOINT	1	J10001-UP
29		07042-30415	.PLUG	1	J10001-UP
30		07049-01620	.PLUG	2	J10001-UP
31		07323-30400	.ELBOW	1	J10001-UP
32		04020-01638	.PIN DOWEL	2	J10001-UP

Ref :Y0260-01A0 Page :510010

KIT See subsequent pages for details.

K1 203-32-05000 SHOE BOLT AND NUT SERVICE KIT

PC130F-7 S/N J10001-UP

SHOE BOLT AND NUT SERVICE KIT

INDEX	CD	PART NO.	DESCRIPTION	QTY	SERIAL NO.
K1		203-32-05000	SHOE BOLT AND NUT K.....	1	J10001-UP
		20Y-32-11210	.BOLT.....	328	J10001-UP
		154-32-31220	.NUT.....	328	J10001-UP

Ref :Y0320-01A0 Page :510020

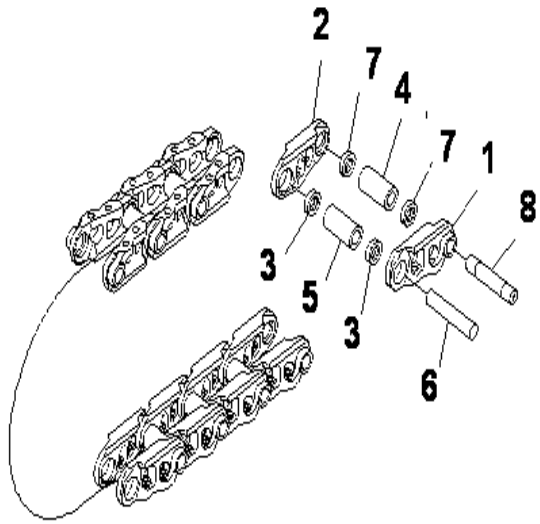

PC130F-7 S/N J10001-UP

TRACK LINK ASS'Y

INDEX	CD	PART NO.	DESCRIPTION	QTY	SERIAL NO.
		203-32-0J080	T.L.SUB A,G-41P.....	2	J10001-UP
1		20Y-32-11123	.LINK LH.....	82	J10001-UP
2		20Y-32-11133	.LINK RH.....	82	J10001-UP
3		20Y-32-11240	.SEAL.....	160	J10001-UP
4		20Y-32-11170	.BUSHING.....	2	J10001-UP
5		20Y-32-11140	.BUSHING.....	80	J10001-UP
6		20Y-32-11150	.PIN.....	80	J10001-UP
7		20Y-32-11260	.SEAL.....	4	J10001-UP
8		20Y-32-11190	.PIN.....	2	J10001-UP

Ref :Y0321-01A0 Page :510030

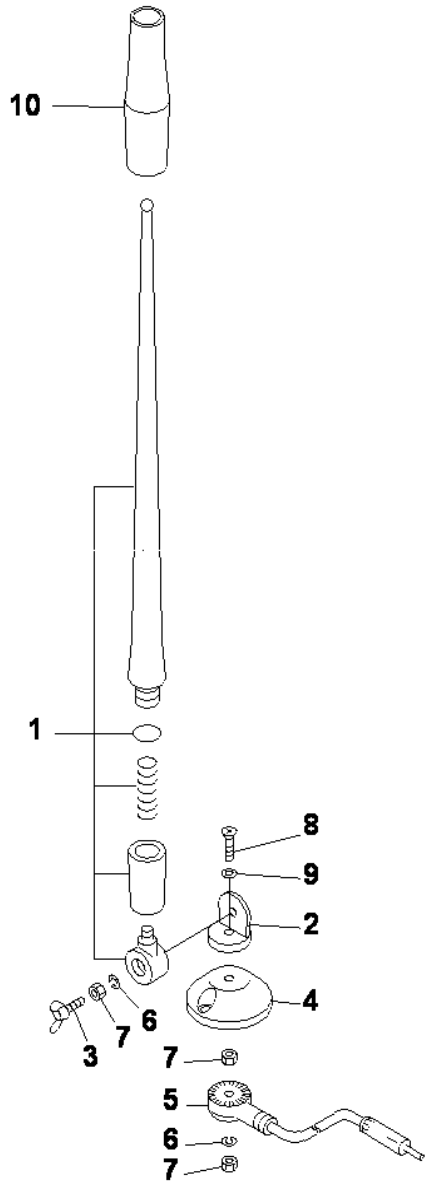

PC130F-7 S/N J10001-UP

RUBBER ANTENNA

INDEX	CD	PART NO.	DESCRIPTION	QTY	SERIAL NO.
		198-Z1-14610	RUBBER ANTENNA.....	1	J10001-UP
1		EP72-540-901	.RUBBER ELEMENT ASS'Y.....	1	J10001-UP
2	C1		.HOLDER.....	1	J10001-UP
3		EP23-141-001	.WING BOLT.....	1	J10001-UP
4	C1		.BASE.....	1	J10001-UP
5	C1		.CODE ASS'Y.....	1	J10001-UP
6		EP23-141-003	.SPRING WASHER.....	2	J10001-UP
7		EP23-141-004	.NUT.....	3	J10001-UP
8	C1		.SCREW.....	1	J10001-UP
9	C1		.WASHER.....	1	J10001-UP
10	C1		.TUBE.....	1	J10001-UP

Ref :Y1062-01A0 Page :510040

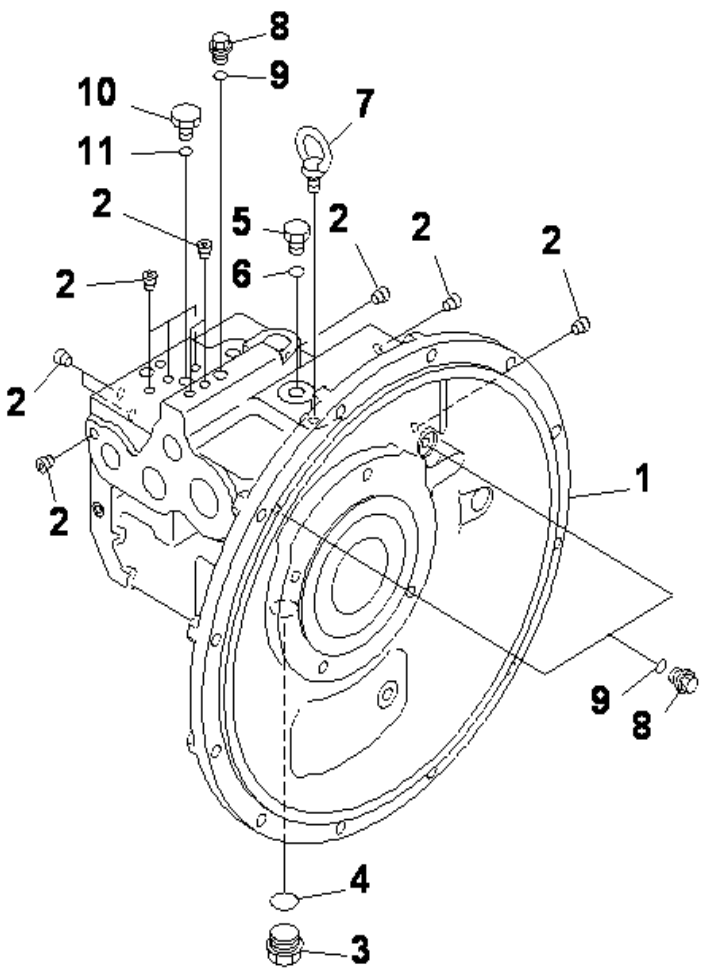

PC130F-7 S/N J10001-UP

MAIN PUMP (1/8)

INDEX	CD	PART NO.	DESCRIPTION	QTY	SERIAL NO.
		708-1L-00650	PUMP ASS'Y.....	1	J10001-UP
			THIS ASSEMBLY CONSISTS OF ALL PARTS.....		
			SHOWN IN FIGS.Y1600-01A0 T0 Y1600-08A0.....		
		708-1L-01650	.PUMP SUB ASS'Y.....	1	J10001-UP
	C2	(708-2L-04240)	..CASE ASS'Y, FRONT.....	1	J10001-UP
1		708-2L-21470	...CASE,FRONT.....	1	J10001-UP
2		708-21-12541	...PLUG.....	16	J10001-UP
3		07044-12412	..PLUG.....	1	J10001-UP
4		07002-62434	..O-RING.....	1	J10001-UP
5		720-68-19870	..PLUG.....	1	J10001-UP
6		07002-61223	..O-RING.....	1	J10001-UP
7		04530-11018	..BOLT, EYE.....	1	J10001-UP
8		708-8E-16150	..PLUG.....	3	J10001-UP
9		07002-61023	..O-RING.....	3	J10001-UP
10		708-8H-11530	..PLUG.....	1	J10001-UP
11		07002-61423	..O-RING.....	1	J10001-UP

Ref :Y1600-01A0 Page :510050

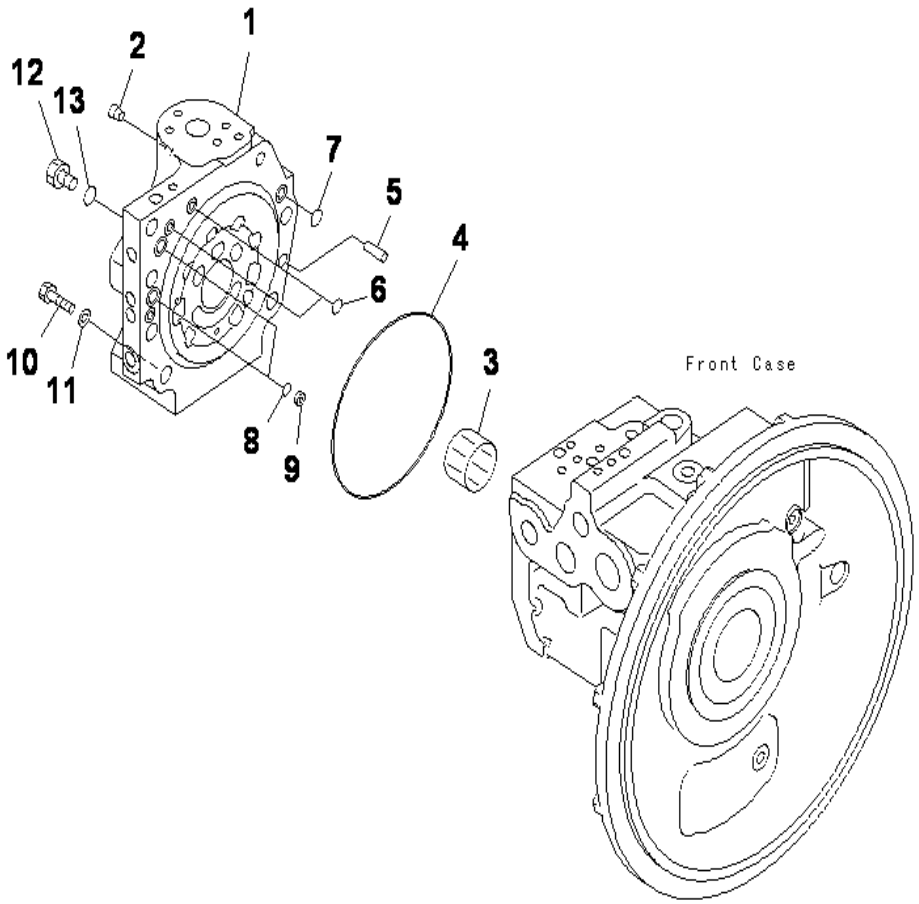

PC130F-7 S/N J10001-UP

MAIN PUMP (2/8)

INDEX	CD	PART NO.	DESCRIPTION	QTY	SERIAL NO.
		(708-1L-00650)	PUMP ASS'Y	1	J10001-UP
			THIS ASSEMBLY CONSISTS OF ALL PARTS		
			SHOWN IN FIGS.Y1600-01A0 T0 Y1600-08A0		
		(708-1L-01650)	.PUMP SUB ASS'Y	1	J10001-UP
	C2	(708-1L-04150)	..CAP ASS'Y.END	1	J10001-UP
1	C1		...CAP,END	1	J10001-UP
2	C1		...PLUG	7	J10001-UP
3	C2	(708-2L-32260)	..BEARING	1	J10001-UP
4	C2	(07000-B5165)	..O-RING	1	J10001-UP
5	C2	(04020-01228)	..PIN	1	J10001-UP
6	C2	(07000-B2010)	..O-RING	3	J10001-UP
7	C2	(07000-B2012)	..O-RING	1	J10001-UP
8	C2	(07000-B2014)	..O-RING	2	J10001-UP
9	C2	(708-2L-25480)	..FILTER	2	J10001-UP
10	C2	(01010-61450)	..BOLT	7	J10001-UP
11	C2	(01643-31445)	..WASHER	7	J10001-UP
12	C2	(07040-12414)	..PLUG	1	J10001-UP
13	C2	(07002-62434)	..O-RING	1	J10001-UP

Ref :Y1600-02A0 Page :510060

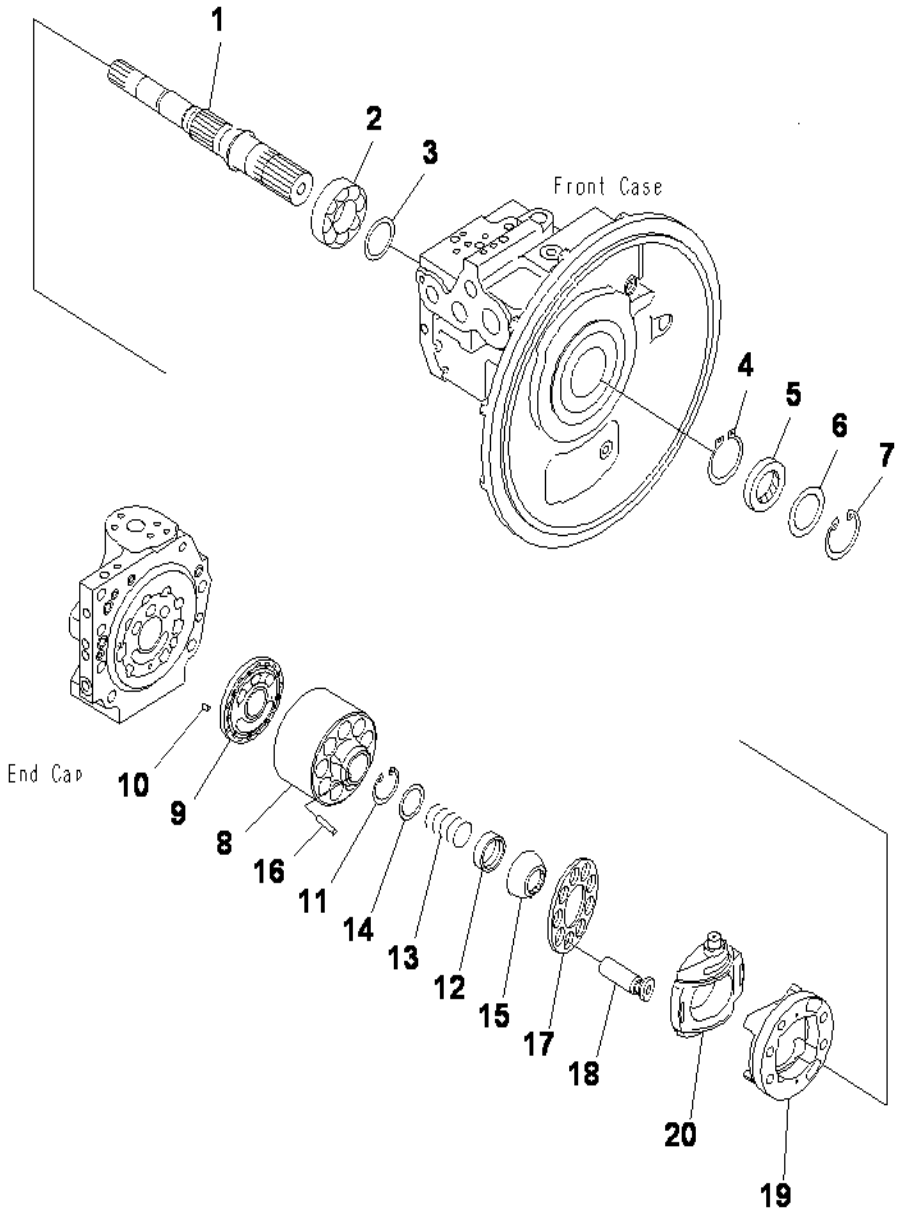

PC130F-7 S/N J10001-UP

MAIN PUMP (3/8)

INDEX	CD	PART NO.	DESCRIPTION	QTY	SERIAL NO.
		(708-1L-00650)	PUMP ASS'Y	1	J10001-UP
			THIS ASSEMBLY CONSISTS OF ALL PARTS		
			SHOWN IN FIGS.Y1600-01A0 T0 Y1600-08A0		
		(708-1L-01650)	.PUMP SUB ASS'Y	1	J10001-UP
1	C2	(708-2L-32110)	..SHAFT,FRONT	1	J10001-UP
2	C2	(708-2L-32150)	..BEARING	1	J10001-UP
3	C2	(708-2E-05040)	..WASHER KIT	1	J10001-UP
	C1		...WASHER, 3.1MM	1	J10001-UP
	C1		...WASHER,3.0MM	1	J10001-UP
	C1		...WASHER, 2.9MM	1	J10001-UP
	C1		...WASHER, 2.8MM	1	J10001-UP
4	C2	(708-25-12790)	..RING, SNAP	1	J10001-UP
5		708-25-52861	..SEAL,OIL	1	J10001-UP
6		708-2L-22160	..SPACER	1	J10001-UP
7		04065-06825	..RING	1	J10001-UP
	C2	(708-2L-06170)	..BLOCK ASS'Y, FRONT	1	J10001-UP
8	C1		...BLOCK,CYLINDER	1	J10001-UP
9	C1		...PLATE,VALVE	1	J10001-UP
10	C2	(720-68-19610)	..PIN	1	J10001-UP
11	C2	(04065-04818)	..RING	1	J10001-UP
12	C2	(708-2L-23131)	..SEAT	1	J10001-UP
13	C2	(708-2L-33160)	..SPRING	1	J10001-UP
14	C2	(708-7L-13140)	..SEAT	1	J10001-UP
15	C2	(708-2L-23351)	..GUIDE, RETAINER	1	J10001-UP
16	C2	(708-2L-23360)	..PIN	3	J10001-UP
17	C2	(708-2L-33350)	..RETAINER,SHOE	1	J10001-UP
18	C2	(708-2L-33310)	..PISTON SUB ASS'Y	9	J10001-UP
	C2	(708-2L-04361)	..CRADLE ASS'Y	1	J10001-UP
19	C1		...CRADLE	1	J10001-UP
20	C1		...CAM,ROCKER	1	J10001-UP

Ref :Y1600-03A0 Page :510070

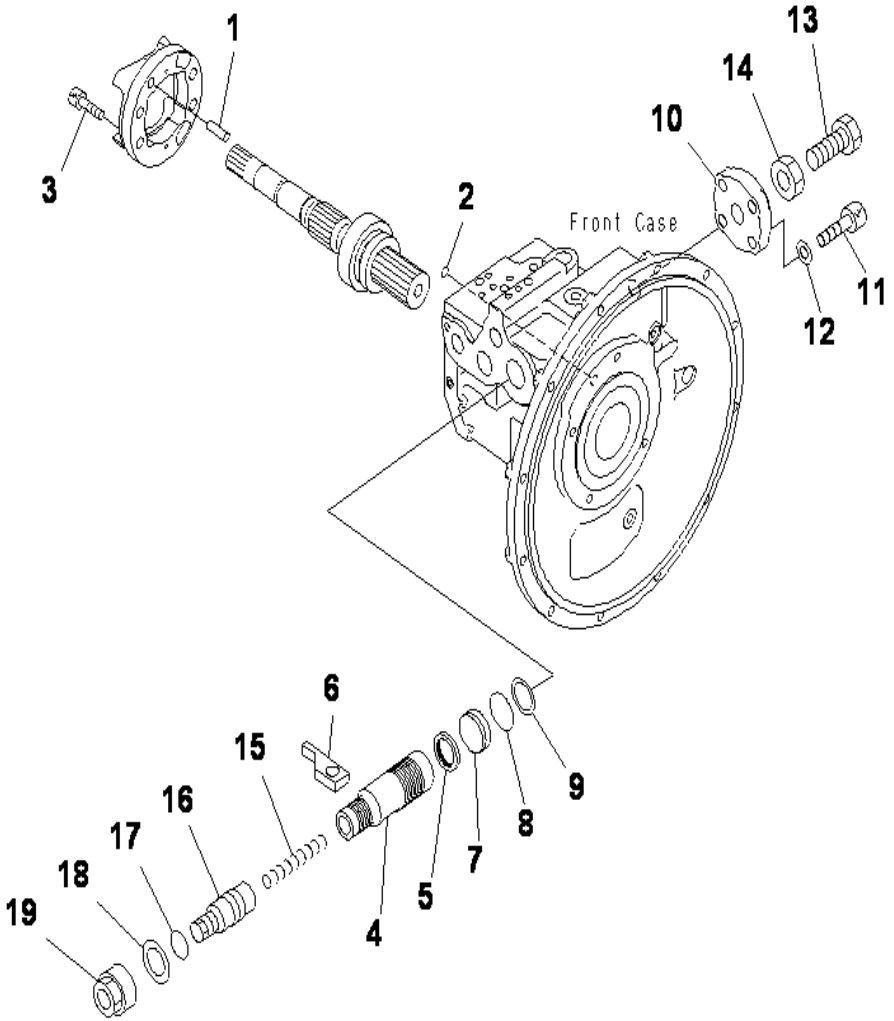

PC130F-7 S/N J10001-UP

MAIN PUMP (4/8)

INDEX	CD	PART NO.	DESCRIPTION	QTY	SERIAL NO.
		(708-1L-00650)	PUMP ASS'Y	1	J10001-UP
			THIS ASSEMBLY CONSISTS OF ALL PARTS		
			SHOWN IN FIGS.Y1600-01A0 T0 Y1600-08A0		
		(708-1L-01650)	.PUMP SUB ASS'Y	1	J10001-UP
1	C2	(04020-01228)	..PIN	1	J10001-UP
2	C2	(07000-B1009)	..O-RING	1	J10001-UP
3	C2	(01252-61230)	..BOLT	4	J10001-UP
4	C2	(708-2L-24514)	..PISTON,SERVO	1	J10001-UP
5	C2	(708-2L-24670)	..SEAL	1	J10001-UP
6	C2	(708-2L-24570)	..SLIDER	1	J10001-UP
7	C2	(708-2L-24560)	..STOPPER	1	J10001-UP
8	C2	(07000-B3040)	..O-RING	1	J10001-UP
9	C2	(07001-03040)	..RING, BACK UP	1	J10001-UP
10	C2	(708-2L-24522)	..COVER	1	J10001-UP
11	C2	(01252-61445)	..BOLT	4	J10001-UP
12	C2	(113-43-31380)	..WASHER	4	J10001-UP
13	C2	(708-2L-24640)	..BOLT	1	J10001-UP
14	C2	(708-2L-24650)	..NUT	1	J10001-UP
15	C2	(708-2L-24630)	..SPRING	1	J10001-UP
16	C2	(708-2L-24531)	..SCREW	1	J10001-UP
17	C2	(07002-63634)	..O-RING	1	J10001-UP
18	C2	(708-2L-24661)	..WASHER	1	J10001-UP
19	C2	(708-2L-24590)	..NUT	1	J10001-UP

Ref :Y1600-04A0 Page :510080

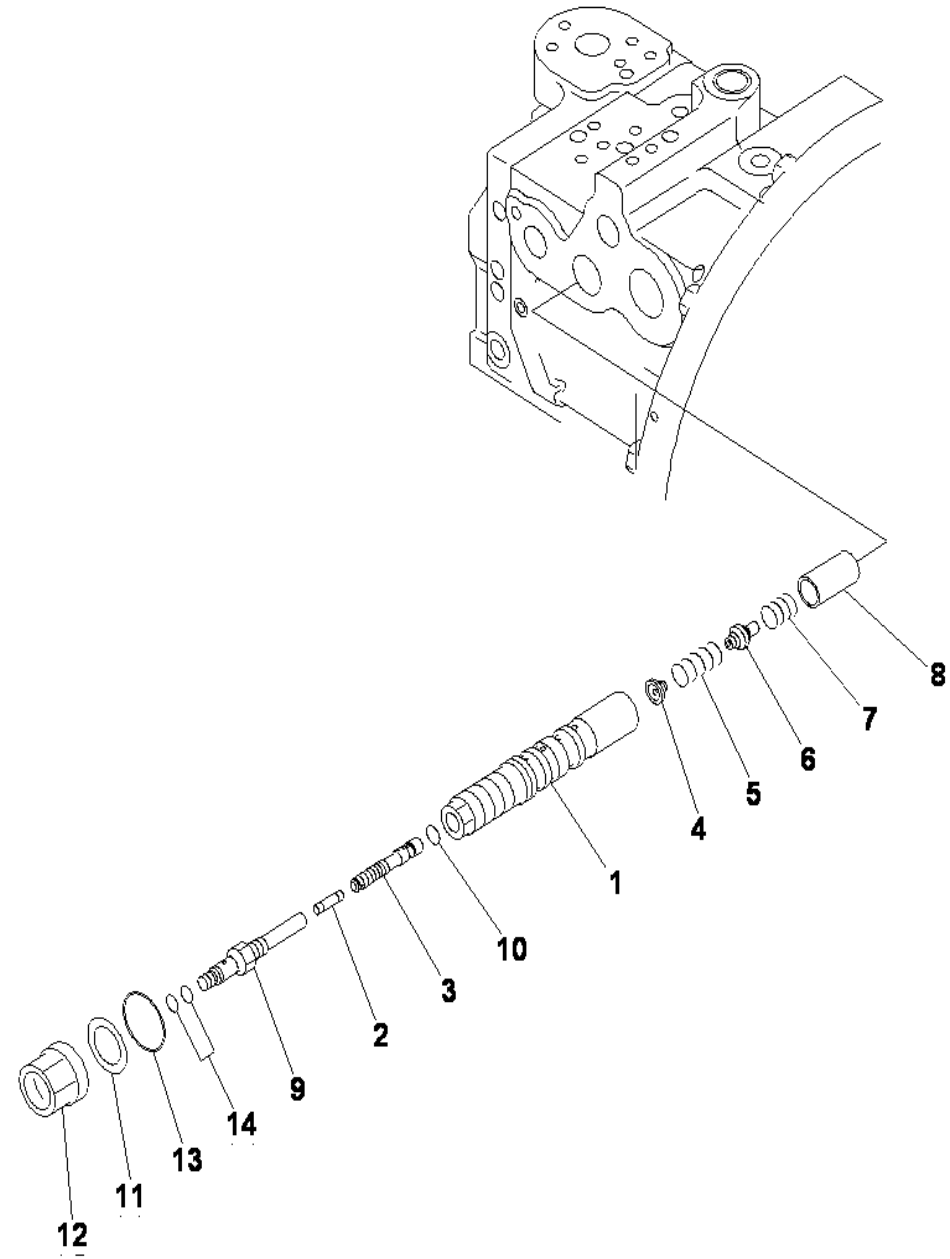

PC130F-7 S/N J10001-UP

MAIN PUMP (5/8)

INDEX	CD	PART NO.	DESCRIPTION	QTY	SERIAL NO.
		(708-1L-00650)	PUMP ASS'Y.....	1	J10001-UP
			THIS ASSEMBLY CONSISTS OF ALL PARTS.....		
			SHOWN IN FIGS.Y1600-01A0 T0 Y1600-08A0.....		
		708-1L-04615	VALVE ASS'Y, PC.....	1	J10001-UP
1	C1		..SLEEVE.....	1	J10001-UP
2	C1		..PIN.....	1	J10001-UP
3	C1		..SPOOL.....	1	J10001-UP
4	C1		..SEAT.....	1	J10001-UP
5	C1		..SPRING.....	1	J10001-UP
6	C1		..SEAT.....	1	J10001-UP
7	C1		..SPRING.....	1	J10001-UP
8	C1		..PISTON.....	1	J10001-UP
9	C1		..PLUG.....	1	J10001-UP
10	C1		..O-RING.....	1	J10001-UP
11	C1		..WASHER.....	1	J10001-UP
12	C1		..NUT.....	1	J10001-UP
13		07002-63034	..O-RING.....	1	J10001-UP
14		07000-B1009	..O-RING.....	2	J10001-UP

Ref :Y1600-05A0 Page :510090

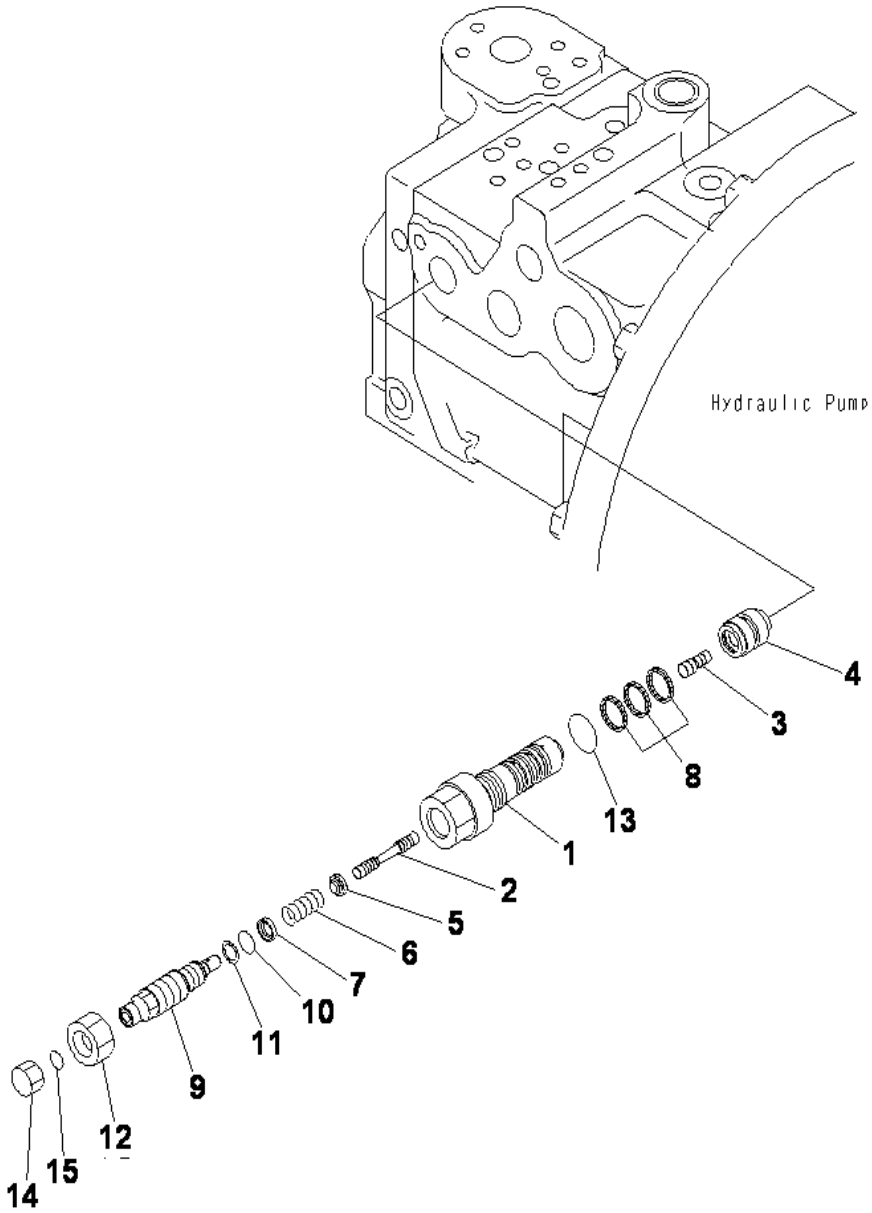

PC130F-7 S/N J10001-UP

MAIN PUMP (6/8)

INDEX	CD	PART NO.	DESCRIPTION	QTY	SERIAL NO.
		(708-1L-00650)	PUMP ASS'Y	1	J10001-UP
			THIS ASSEMBLY CONSISTS OF ALL PARTS		
			SHOWN IN FIGS.Y1600-01A0 T0 Y1600-08A0		
		708-1L-04750	.VALVE ASS'Y, LS	1	J10001-UP
1	C1		..SLEEVE	1	J10001-UP
2	C1		..SPOOL	1	J10001-UP
3	C1		..PISTON	1	J10001-UP
4	C1		..SLEEVE	1	J10001-UP
5	C1		..SEAT	1	J10001-UP
6	C1		..SPRING	1	J10001-UP
7	C1		..SEAT	1	J10001-UP
8		708-2L-24680	..SEAL	3	J10001-UP
9	C1		..PLUG	1	J10001-UP
10	C1		..O-RING	1	J10001-UP
11	C1		..RING	1	J10001-UP
12	C1		..NUT	1	J10001-UP
13		07002-62434	..O-RING	1	J10001-UP
14		02789-00210	..PLUG	1	J10001-UP
15		02896-61008	..O-RING	1	J10001-UP

Ref :Y1600-06A0 Page :510110

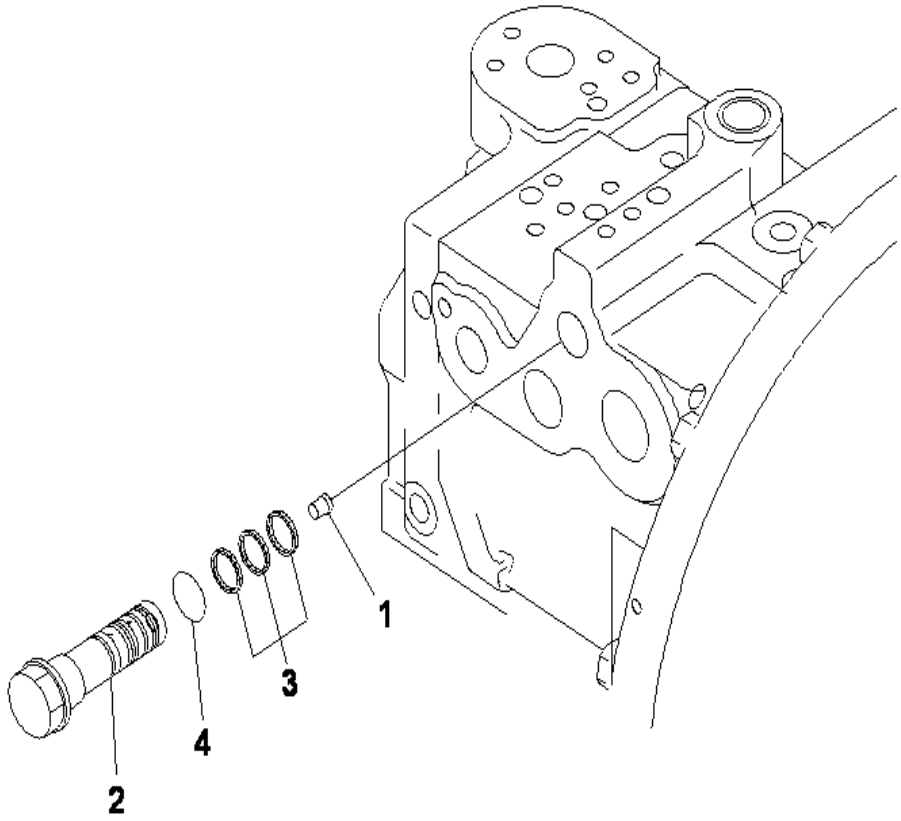

PC130F-7 S/N J10001-UP

MAIN PUMP (7/8)

INDEX	CD	PART NO.	DESCRIPTION	QTY	SERIAL NO.
		(708-1L-00650)	PUMP ASS'Y.....	1	J10001-UP
			THIS ASSEMBLY CONSISTS OF ALL PARTS.....		
			SHOWN IN FIGS.Y1600-01A0 T0 Y1600-08A0.....		
		708-1L-04913	PLUG SUB ASS'Y.....	1	J10001-UP
1	C1		..PLUG.....	1	J10001-UP
2	C1		..PLUG.....	1	J10001-UP
3		708-2L-24680	..SEAL.....	3	J10001-UP
4		07002-62434	..O-RING.....	1	J10001-UP

Ref :Y1600-07A0 Page :510120

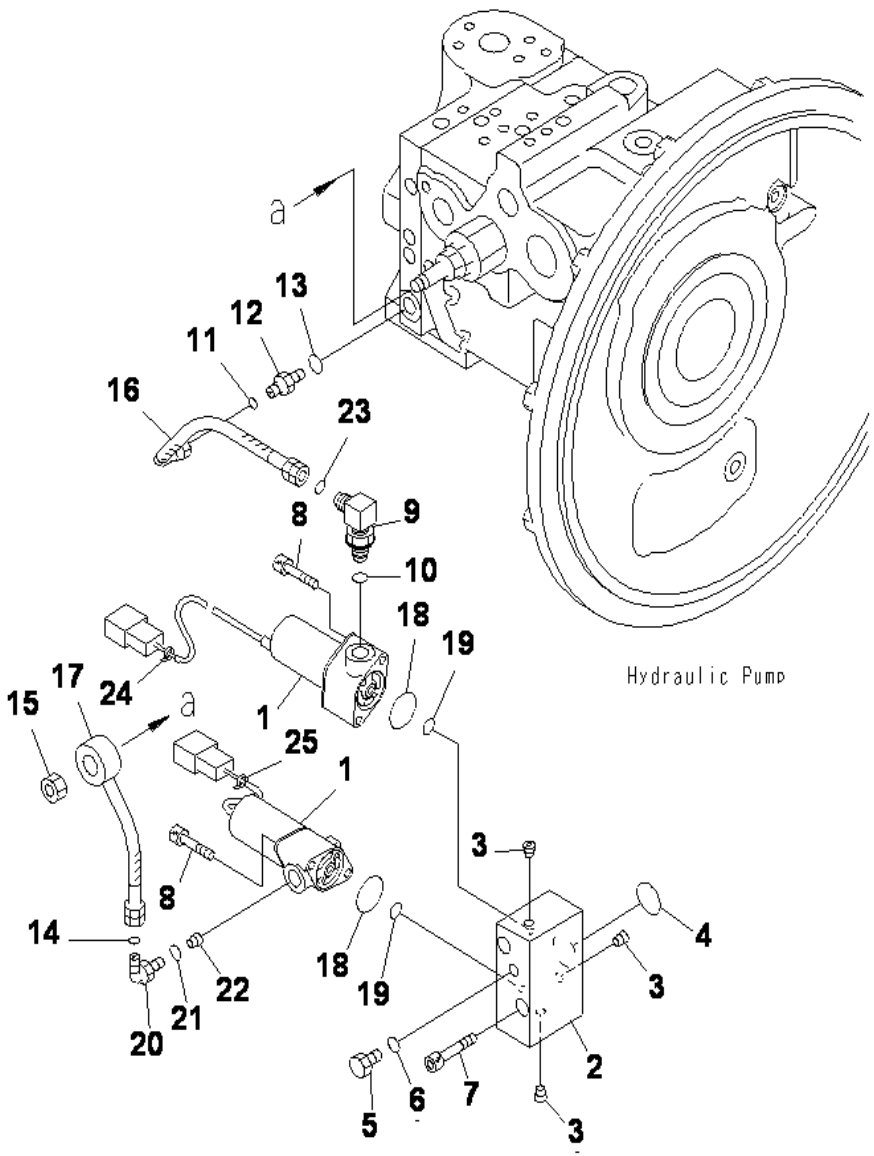

MAIN PUMP (8/8)

INDEX	CD	PART NO.	DESCRIPTION	QTY	SERIAL NO.
		(708-1L-00650)	PUMP ASS'Y	1	J10001-UP
			THIS ASSEMBLY CONSISTS OF ALL PARTS		
			SHOWN IN FIGS.Y1600-01A0 T0 Y1600-08A0		
1		702-21-07311	.VALVE ASS'Y, EPC	2	J10001-UP
	C2	(708-2L-04291)	.BLOCK ASS'Y	1	J10001-UP
2	C1		..BLOCK	1	J10001-UP
3	C1		..PLUG	3	J10001-UP
4		708-2L-23970	..O-RING	1	J10001-UP
5		07040-11007	.PLUG	1	J10001-UP
6		07002-61023	.O-RING	1	J10001-UP
7		01252-60865	.BOLT	2	J10001-UP
8		203-60-62220	.BOLT	4	J10001-UP
9		21W-62-43960	.ELBOW	1	J10001-UP
10		07002-61423	.O-RING	1	J10001-UP
11		02896-61008	.O-RING	1	J10001-UP
12		02781-0021D	.UNION	1	J10001-UP
13		07002-61423	.O-RING	1	J10001-UP
14		02896-61008	.O-RING	1	J10001-UP
15		01582-11008	.NUT	1	J10001-UP
16		708-1L-29361	.HOSE	1	J10001-UP
17		708-1L-29350	.HOSE	1	J10001-UP
18		708-2L-23960	.O-RING	2	J10001-UP
19		07000-B2011	.O-RING	2	J10001-UP
20		825-56-24360	.ELBOW	1	J10001-UP
21		07002-61423	.O-RING	1	J10001-UP
22		708-1L-29340	.ORIFICE	1	J10001-UP
23		02896-61008	.O-RING	1	J10001-UP
24		20Y-62-22790	.BAND, RED	1	J10001-UP
25		20Y-62-22830	.BAND, WHITE	1	J10001-UP

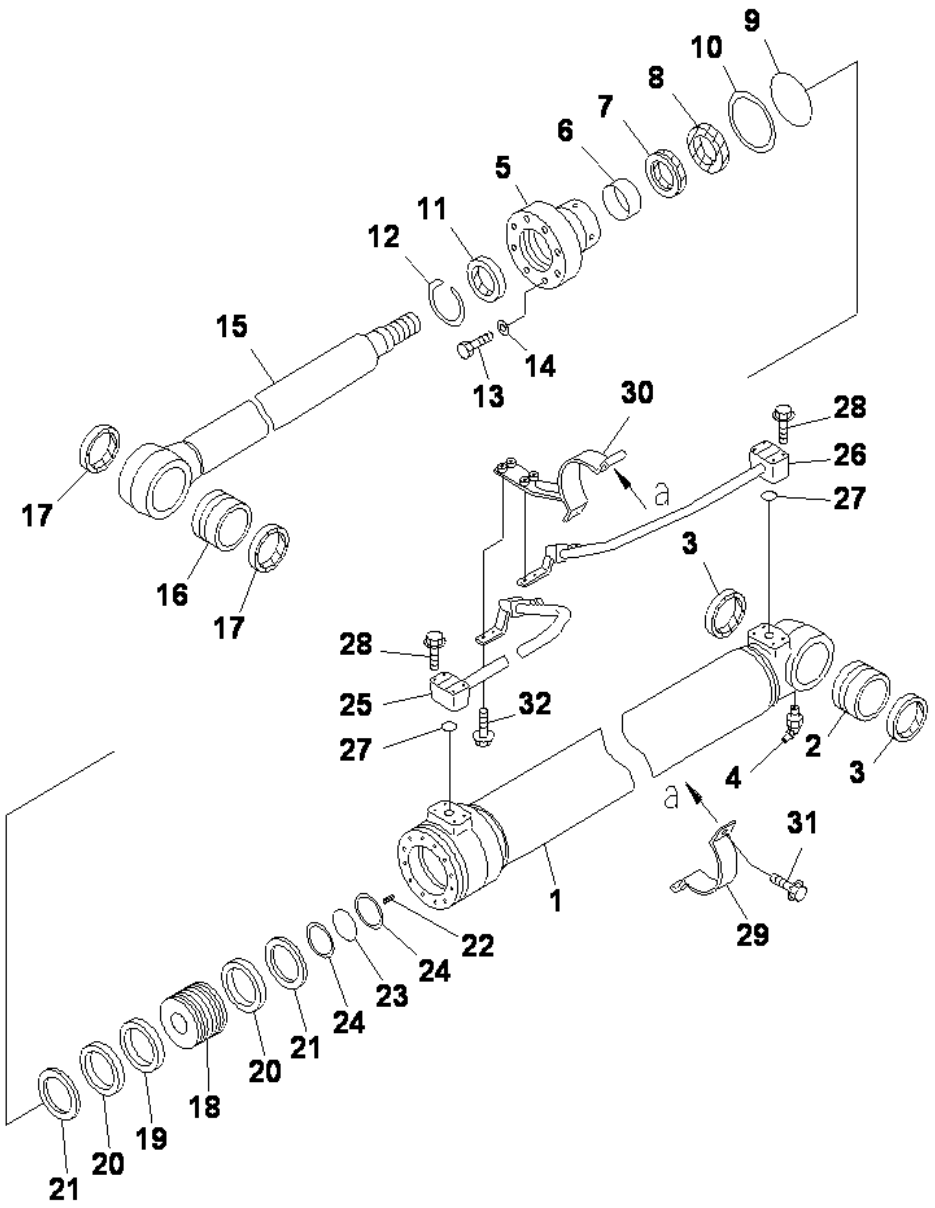

PC130F-7 S/N J10001-UP

BOOM CYLINDER (INNER PARTS)

INDEX	CD	PART NO.	DESCRIPTION	QTY	SERIAL NO.
		(707-01-XAP30)	CYLINDER GROUP, (L.H.)	1	J10001-UP
		(707-01-XAP40)	CYLINDER GROUP,(R.H.)	1	J10001-UP
			==========		
		707-01-0AP30	CYLINDER ASS'Y,BOOM	2	J10001-UP
1		707-13-95070	.CYLINDER	1	J10001-UP
2		21K-70-71320	.BUSHING	1	J10001-UP
3		07145-00070	.SEAL,DUST (KIT)	2	J10001-UP
4		07020-00675	.FITTING,GREASE	1	J10001-UP
5		707-27-95921	.HEAD,CYLINDER	1	J10001-UP
6		707-52-90420	.BUSHING	1	J10001-UP
7		707-51-65030	.PACKING,ROD (KIT)	1	J10001-UP
8		707-51-65650	.RING,BUFFER (KIT)	1	J10001-UP
9		07000-15085	.O-RING (KIT)	1	J10001-UP
10		707-35-90970	.RING,BACK-UP (KIT)	1	J10001-UP
11		144-63-92170	.SEAL,DUST (KIT)	1	J10001-UP
12		07179-12079	.RING,SNAP	1	J10001-UP
13		01010-81465	.BOLT	12	J10001-UP
14		705-17-04980	.WASHER	12	J10001-UP
15		202-63-55120	.ROD	1	J10001-UP
16		21K-70-71320	BUSHING	1	J10001-UP
17		07145-00070	.SEAL,DUST (KIT)	2	J10001-UP
18		707-36-95040	.PISTON	1	J10001-UP
19		707-44-95150	.RING,PISTON (KIT)	1	J10001-UP
20		707-39-95030	.RING,WEAR (KIT)	2	J10001-UP
21		707-44-95911	.RING	2	J10001-UP
22		01310-01016	.SCREW	1	J10001-UP
23		707-34-55030	.O-RING (KIT)	1	J10001-UP
24		707-35-90610	.RING,BACK-UP (KIT)	2	J10001-UP
25		707-86-47420	TUBE,L.H	1	J10001-UP
		707-86-47430	TUBE,R.H	1	J10001-UP
26		202-63-54380	TUBE,L.H	1	J10001-UP
		202-63-54480	TUBE,R.H	1	J10001-UP
27		07000-13025	O-RING (KIT)	2	J10001-UP
28		01024-80850	BOLT	8	J10001-UP
29		707-88-21670	BAND	1	J10001-UP
30		707-88-25070	BRACKET	1	J10001-UP
31		07375-21035	BOLT	2	J10001-UP
32		01024-81030	BOLT	4	J10001-UP
			==========		
		707-99-27520	SERVICE KIT	2	J10001-UP

Ref :Y1620-01A3 Page :510140

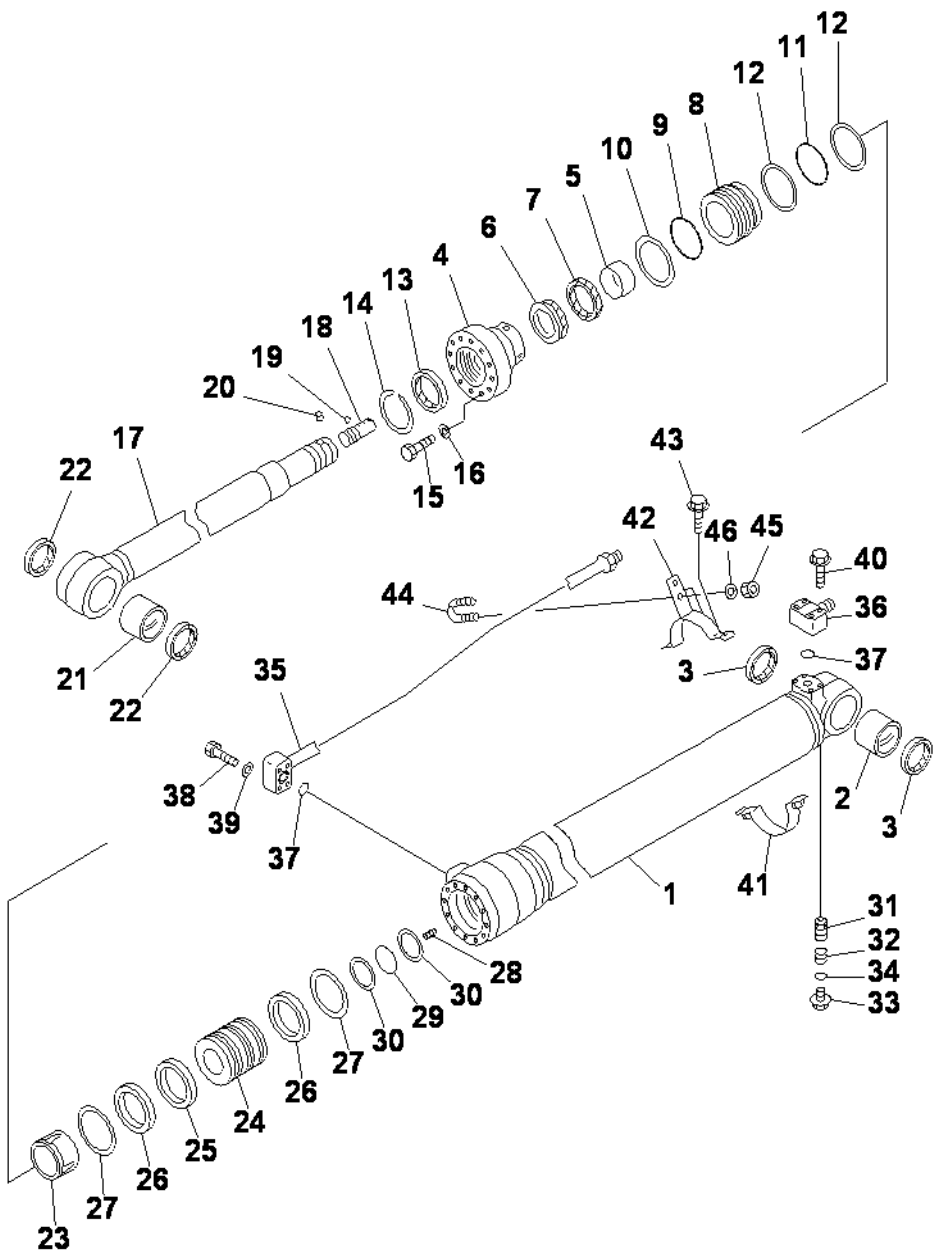

ARM CYLINDER (INNER PARTS)

INDEX	CD	PART NO.	DESCRIPTION	QTY	SERIAL NO.
		(707-01-XAP50)	CYLINDER GROUP,ARM (FINAL COATING).....	1	J10001-UP
			==========.....		
		707-01-0AP50	CYLINDER ASSY.....	1	J10001-UP
1		707-13-11840	.CYLINDER,ARM.....	1	J10001-UP
2		707-76-70240	.BUSHING.....	1	J10001-UP
3		07145-00070	.SEAL,DUST (KIT).....	2	J10001-UP
4		707-27-11750	.HEAD,CYLINDER.....	1	J10001-UP
5		707-52-90501	.BUSHING.....	1	J10001-UP
6		707-51-75030	.PACKING,ROD (KIT).....	1	J10001-UP
7		707-51-75650	.RING,BUFFER (KIT).....	1	J10001-UP
8		707-71-32530	.COLLAR.....	1	J10001-UP
9		07000-15105	.O-RING (KIT).....	1	J10001-UP
10		707-35-91150	.RING,BACK-UP (KIT).....	1	J10001-UP
11		07000-15105	.O-RING (KIT).....	1	J10001-UP
12		707-35-91150	.RING,BACK-UP (KIT).....	2	J10001-UP
13		144-63-94170	.SEAL,DUST (KIT).....	1	J10001-UP
14		07179-13089	.RING,SNAP.....	1	J10001-UP
15		01010-81070	.BOLT.....	12	J10001-UP
16		01643-31032	.WASHER.....	12	J10001-UP
17		707-58-75660	.ROD.....	1	J10001-UP
18		707-71-80230	.PLUNGER.....	1	J10001-UP
19		04260-00635	.BALL.....	11	J10001-UP
20		707-71-91270	.CAP.....	1	J10001-UP
21		707-76-70240	.BUSHING.....	1	J10001-UP
22		07145-00070	.SEAL,DUST (KIT).....	2	J10001-UP
23		707-71-60870	.PLUNGER.....	1	J10001-UP
24		707-36-11851	.PISTON.....	1	J10001-UP
25		707-44-11250	.RING,PISTON (KIT).....	1	J10001-UP
26		707-39-11530	.RING,WEAR (KIT).....	2	J10001-UP
27		707-44-11920	.RING.....	2	J10001-UP
28		01310-01216	.SCREW.....	1	J10001-UP
29		07000-B5070	.O-RING (KIT).....	1	J10001-UP
30		707-35-90360	.RING,BACK-UP (KIT).....	2	J10001-UP
31		707-83-13010	.VALVE.....	1	J10001-UP
32		07750-01628	.SPRING.....	1	J10001-UP
33		707-87-14070	.PLUG.....	1	J10001-UP
34		07002-12034	.O-RING (KIT).....	1	J10001-UP
35		707-86-55700	TUBE.....	1	J10001-UP
36		707-87-11700	ELBOW.....	1	J10001-UP
37		07000-13025	O-RING (KIT).....	2	J10001-UP
38		01010-80850	BOLT.....	4	J10001-UP
39		01643-30823	WASHER.....	4	J10001-UP
40		01435-00855	BOLT.....	4	J10001-UP
41		707-88-21680	BAND.....	1	J10001-UP
42		707-88-25080	BRACKET.....	1	J10001-UP

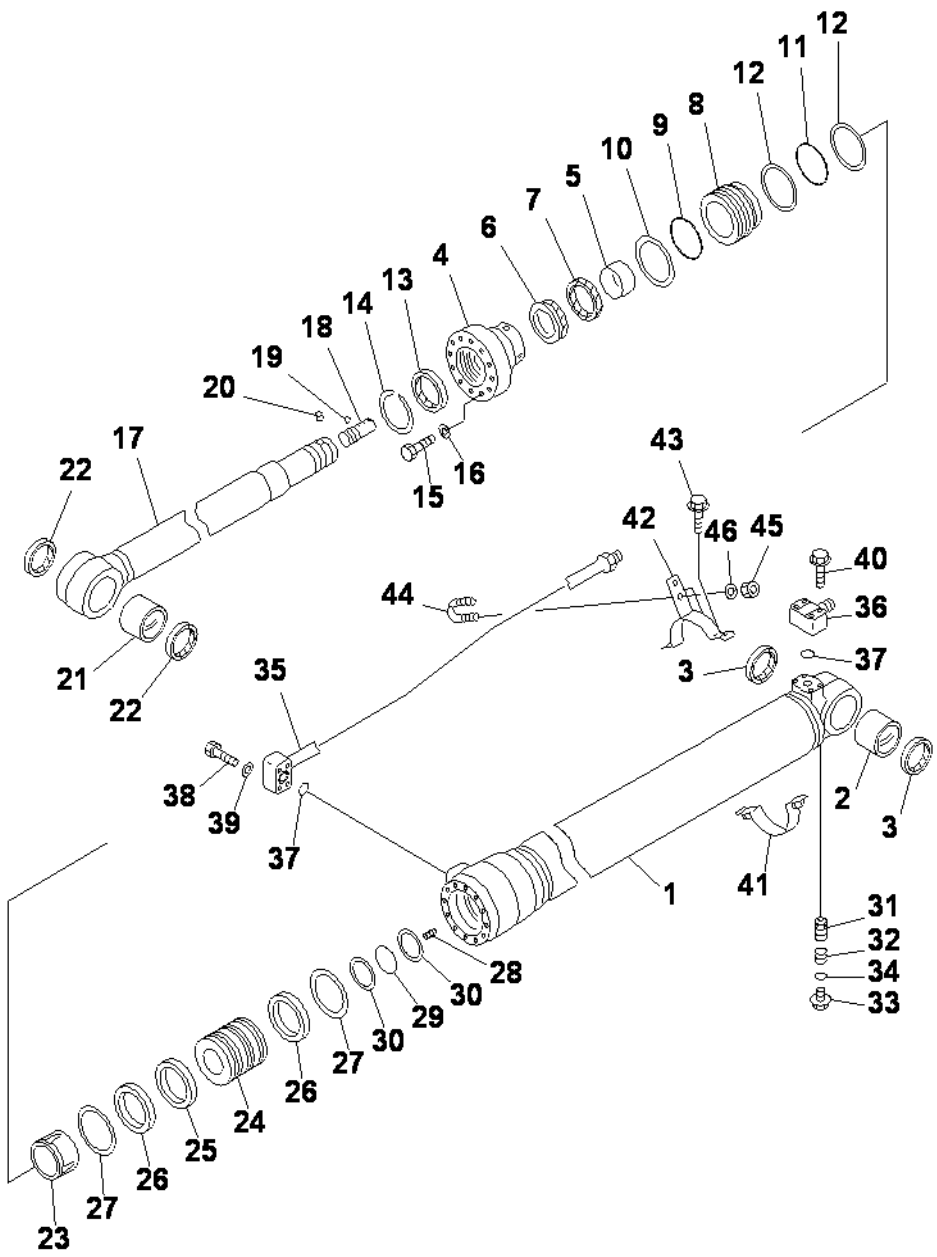

PC130F-7 S/N J10001-UP

ARM CYLINDER (INNER PARTS)

INDEX	CD	PART NO.	DESCRIPTION	QTY	SERIAL NO.
43		07375-21035	BOLT	2	J10001-UP
44		07283-32236	CLIP	1	J10001-UP
45		01597-01009	NUT	2	J10001-UP
46		01643-31032	WASHER	2	J10001-UP
			==========		
		707-99-45180	SERVICE KIT	1	J10001-UP

Ref :Y1620-11A0 Page :510151

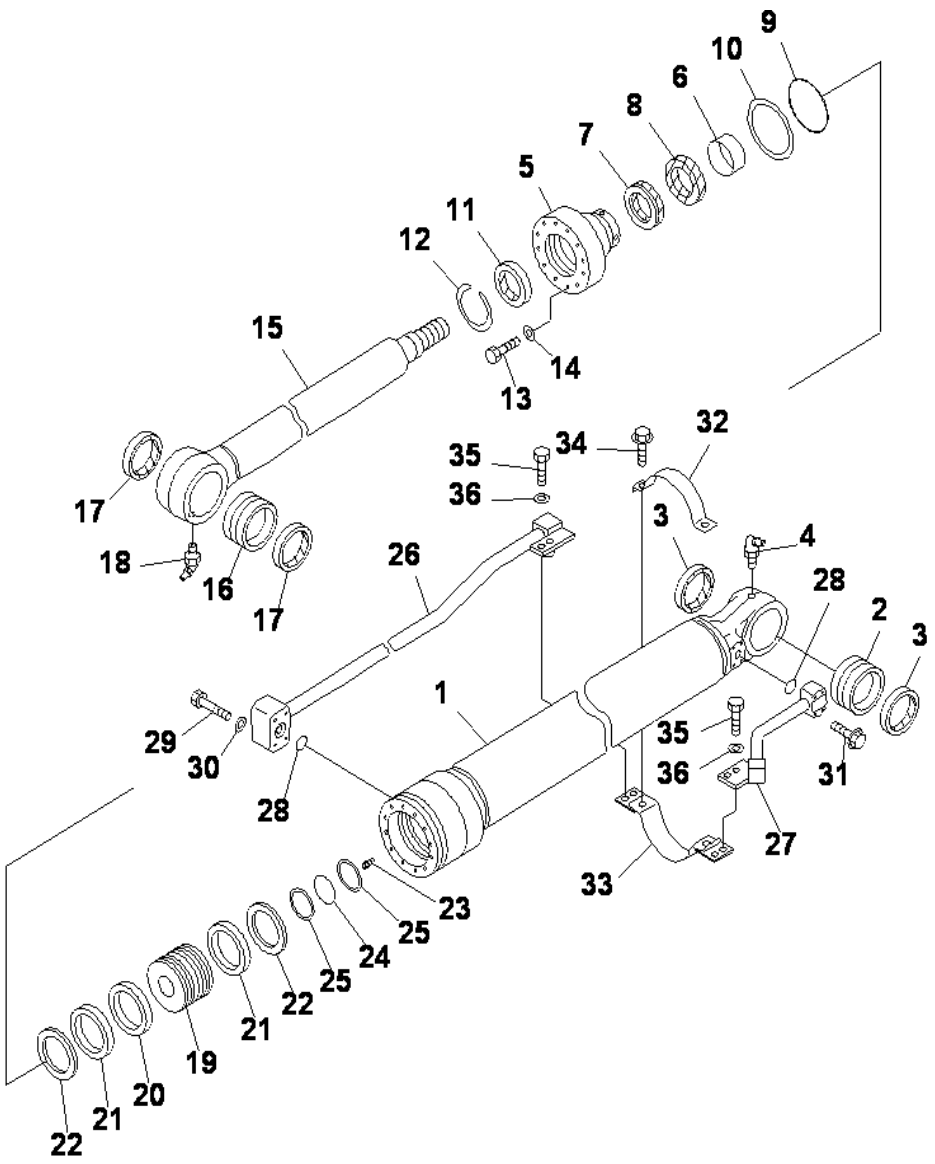

BUCKET CYLINDER (INNER PARTS)

INDEX	CD	PART NO.	DESCRIPTION	QTY	SERIAL NO.
		(707-01-XAP60)	CYLINDER GROUP,(FINAL COATING).....	1	J10001-UP
			==========.....		
		707-01-0AP60	CYLINDER ASS'Y,BUCKET.....	1	J10001-UP
1		707-13-90260	.CYLINDER,BUCKET.....	1	J10001-UP
2		707-76-65210	.BUSHING.....	1	J10001-UP
3		07145-00065	.SEAL,DUST (KIT).....	2	J10001-UP
4		07020-00675	.FITTING,GREASE.....	1	J10001-UP
5		707-27-90920	.HEAD,CYLINDER.....	1	J10001-UP
6		707-52-90360	.BUSHING.....	1	J10001-UP
7		707-51-60030	.PACKING,ROD (KIT).....	1	J10001-UP
8		707-51-60650	.RING,BUFFER (KIT).....	1	J10001-UP
9		07000-15080	.O-RING (KIT).....	1	J10001-UP
10		707-35-90980	.RING,BACK-UP (KIT).....	1	J10001-UP
11		141-63-93270	.SEAL,DUST (KIT).....	1	J10001-UP
12		07179-12074	.RING,SNAP.....	1	J10001-UP
13		01010-81465	.BOLT.....	8	J10001-UP
14		705-17-04980	.WASHER.....	8	J10001-UP
15		202-63-75120	.ROD.....	1	J10001-UP
16		707-76-65220	.BUSHING.....	1	J10001-UP
17		707-77-65110	.SEAL,DUST (KIT).....	2	J10001-UP
18		07020-00675	.FITTING,GREASE.....	1	J10001-UP
19		707-36-90170	.PISTON.....	1	J10001-UP
20		707-44-90150	.RING,PISTON (KIT).....	1	J10001-UP
21		707-39-90050	.RING,WEAR (KIT).....	2	J10001-UP
22		707-44-95911	.RING.....	2	J10001-UP
23		01310-01016	.SCREW.....	1	J10001-UP
24		07000-B5055	.O-RING (KIT).....	1	J10001-UP
25		707-35-90920	.RING,BACK-UP (KIT).....	2	J10001-UP
26		707-86-47450	TUBE.....	1	J10001-UP
27		202-63-74580	TUBE.....	1	J10001-UP
28		07000-13025	O-RING (KIT).....	2	J10001-UP
29		01010-80850	BOLT.....	4	J10001-UP
30		01643-30823	WASHER.....	4	J10001-UP
31		01024-80850	BOLT.....	4	J10001-UP
32		707-88-21710	BAND.....	1	J10001-UP
33		707-88-25090	BRACKET.....	1	J10001-UP
34		07375-21035	BOLT.....	2	J10001-UP
35		01010-81025	BOLT.....	4	J10001-UP
36		01643-31032	WASHER.....	4	J10001-UP
			==========.....		
		707-99-27500	SERVICE KIT.....	1	J10001-UP

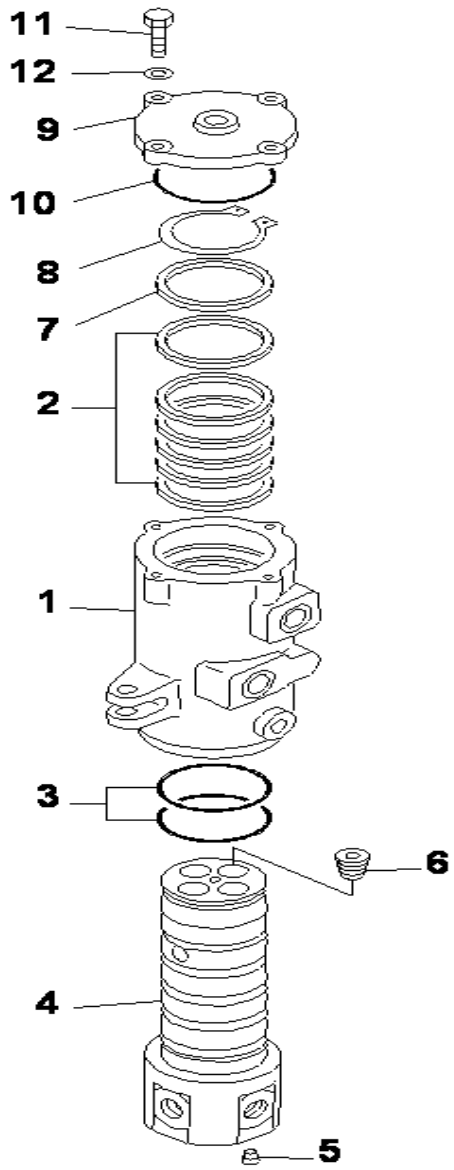

PC130F-7 S/N J10001-UP

SWIVEL JOINT (INNER PARTS)

INDEX	CD	PART NO.	DESCRIPTION	QTY	SERIAL NO.
		703-08-33232	SWIVEL JOINT ASS'Y.....	1	J10001-UP
1		703-08-91130	.ROTOR.....	1	J10001-UP
2		703-08-95620	.SEAL,OIL.....	6	J10001-UP
3		07000-15080	.O-RING.....	2	J10001-UP
4		703-08-92130	.SHAFT.....	1	J10001-UP
5		703-09-98710	.PLUG.....	1	J10001-UP
6		703-09-98510	.PLUG.....	4	J10001-UP
7		703-08-94510	.RING.....	1	J10001-UP
8		04064-07525	.RING,SNAP.....	1	J10001-UP
9		703-08-93511	.COVER.....	1	J10001-UP
10		07000-02105	.O-RING.....	1	J10001-UP
11		01010-50835	.BOLT.....	4	J10001-UP
12		01643-30823	.WASHER.....	4	J10001-UP

Ref :Y1627-01A0 Page :510170

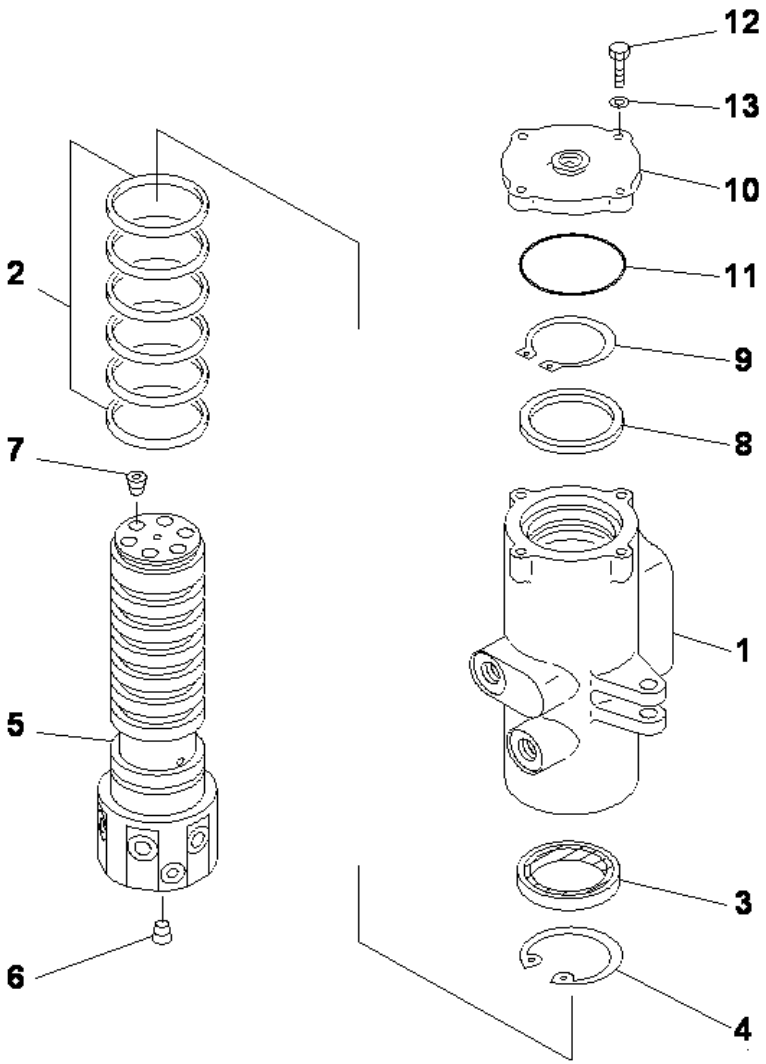

PC130F-7 S/N J10001-UP

SWIVEL JOINT (BLADE SPEC.) (INNER PARTS)

INDEX	CD	PART NO.	DESCRIPTION	QTY	SERIAL NO.
		703-09-00110	SWIVEL JOINT ASS'Y	1	J10001-UP
1		703-09-91740	.ROTOR	1	J10001-UP
2		703-09-95610	.SEAL	6	J10001-UP
3		703-09-96310	.SEAL,OIL	1	J10001-UP
4		04077-00100	.RING,SNAP	1	J10001-UP
5		703-09-92740	.SHAFT	1	J10001-UP
6		703-09-98710	.PLUG	1	J10001-UP
7		703-09-98510	.PLUG	6	J10001-UP
8		703-09-94210	.RING,SNAP	1	J10001-UP
9		04064-08530	.RING	1	J10001-UP
10		703-09-93520	.COVER	1	J10001-UP
11		07000-02115	.O-RING	1	J10001-UP
12		01010-50835	.BOLT	4	J10001-UP
13		01643-30823	.WASHER	4	J10001-UP

Ref :Y1627-01A1 Page :510180

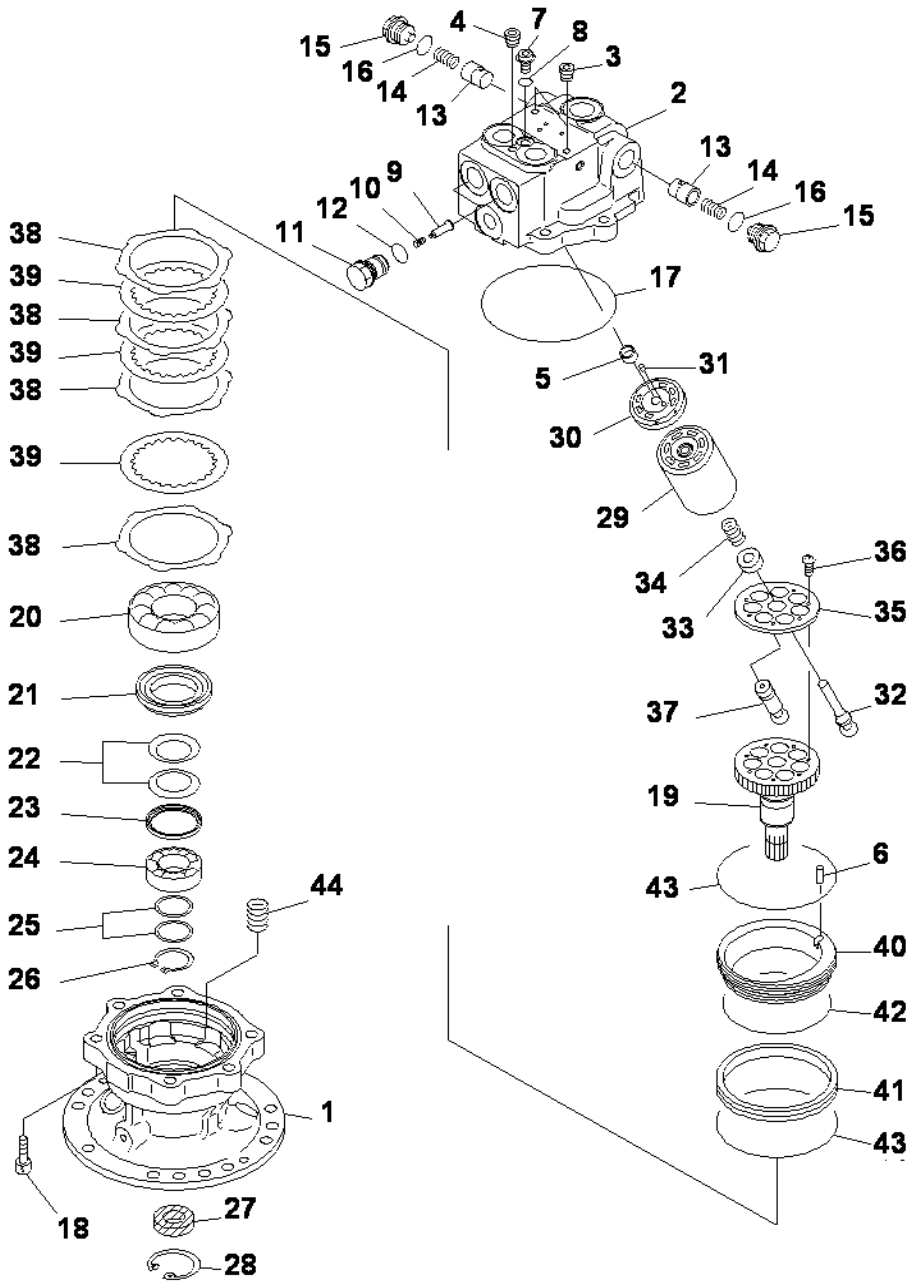

SWING MOTOR (1/2)

INDEX	CD	PART NO.	DESCRIPTION	QTY	SERIAL NO.
		706-73-01400	MOTOR ASS'Y	1	J10001-UP
			THIS ASSEMBLY CONSISTS OF ALL PARTS		
			SHOWN IN FIGS.Y1640-01A0 AND Y1640-02A0		
		706-73-03580	.MOTOR SUB ASS'Y	1	J10001-UP
1	C2	(706-73-43150)	..CASE,MOTOR	1	J10001-UP
	C2	(706-73-00020)	..HOUSING SUB ASS'Y	1	J10001-UP
2	C1		...HOUSING	1	J10001-UP
3	C1		...PLUG	2	J10001-UP
4	C1		...PLUG	1	J10001-UP
5	C2	(706-73-40010)	..BEARING	1	J10001-UP
6	C2	(706-73-42820)	..PIN	1	J10001-UP
7		706-73-72680	..PLUG	1	J10001-UP
8		07002-11223	..O-RING	1	J10001-UP
9		709-25-11650	..VALVE,CHECK	2	J10001-UP
10		709-25-11361	..SPRING	2	J10001-UP
11		709-25-11640	..PLUG	2	J10001-UP
12		07000-12020	..O-RING	2	J10001-UP
13		706-73-72420	..VALVE	2	J10001-UP
14		706-73-72440	..SPRING	2	J10001-UP
15		706-73-72430	..PLUG	2	J10001-UP
16		07002-12434	..O-RING	2	J10001-UP
17	C2	(07000-02145)	..O-RING	1	J10001-UP
18	C2	(01252-61240)	..BOLT,SEMS	6	J10001-UP
19	C2	(706-73-43960)	..SHAFT,DRIVE	1	J10001-UP
20	C2	(706-73-43880)	..BEARING	1	J10001-UP
21	C2	(706-73-43810)	..SPACER	1	J10001-UP
22	C2	(706-73-43610)	..SPRING	2	J10001-UP
23	C2	(706-73-43620)	..SEAT	1	J10001-UP
24	C2	(706-73-43890)	..BEARING	1	J10001-UP
25	C2	(706-73-05030)	..SPACER KIT	1	J10001-UP
	C1		..SPACER, 2.1MM	1	J10001-UP
	C1		..SPACER, 2.4MM	1	J10001-UP
	C1		..SPACER, 2.7MM	1	J10001-UP
26	C2	(04064-03515)	..RING,SNAP	1	J10001-UP
27		708-7T-12330	..SEAL,OIL	1	J10001-UP
28		04065-04518	..RING,SNAP	1	J10001-UP
29	C2	(706-73-43190)	..BLOCK,CYLINDER	1	J10001-UP
30	C2	(706-73-43742)	..PLATE,VALVE	1	J10001-UP
31	C2	(720-68-19610)	..PIN	1	J10001-UP
32	C2	(706-73-43120)	..SHAFT,CENTER	1	J10001-UP
33	C2	(706-73-43130)	..RING,CENTER	1	J10001-UP
34	C2	(706-73-41110)	..SPRING	1	J10001-UP
	C2	(706-73-05020)	..RITAINER KIT	1	J10001-UP
35	C1		...RETAINER	1	J10001-UP
36	C1		...SCREW	7	J10001-UP

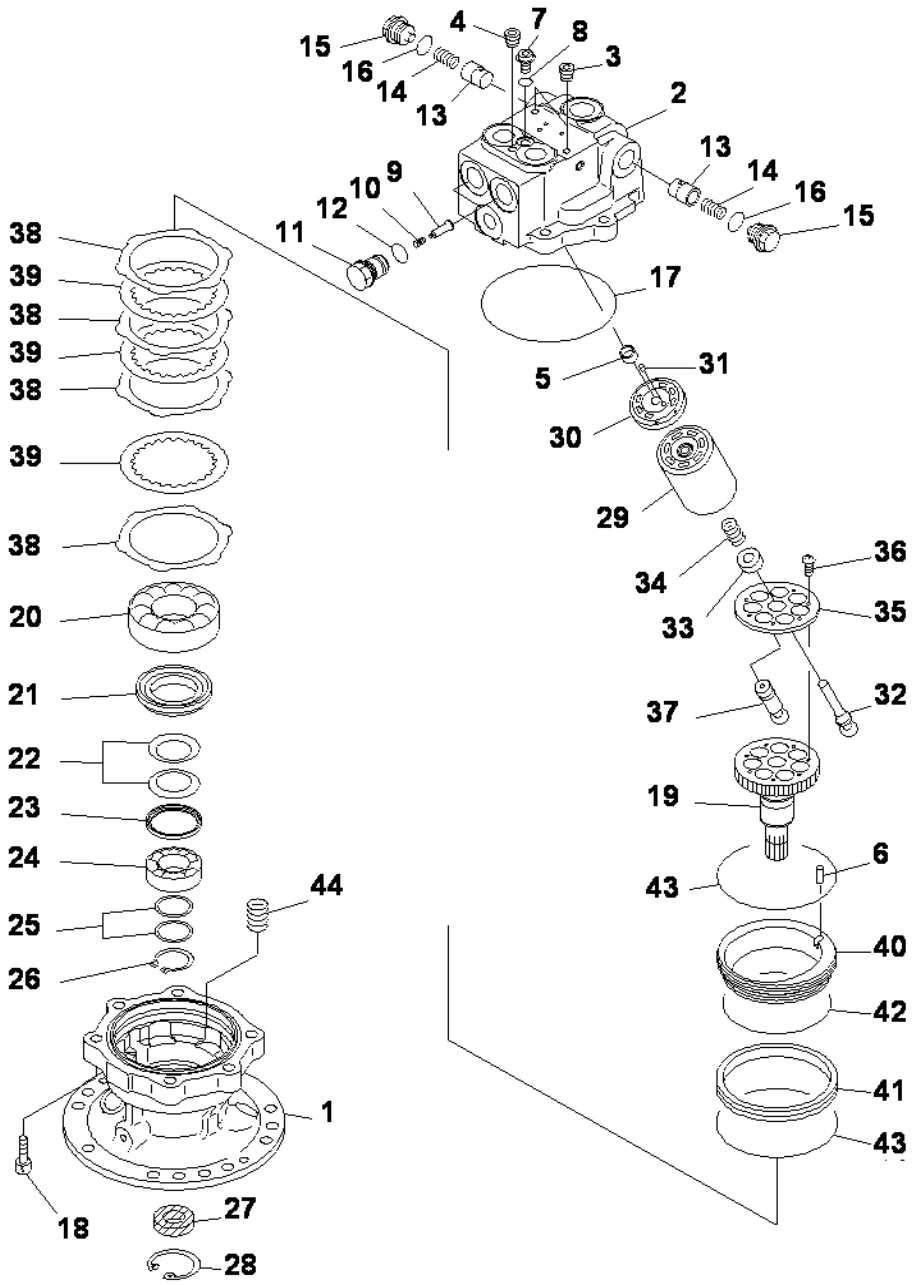

PC130F-7 S/N J10001-UP

SWING MOTOR (1/2)

INDEX	CD	PART NO.	DESCRIPTION	QTY	SERIAL NO.
37	C2	(706-73-43160)	..PISTON SUB ASS'Y.....	7	J10001-UP
38	C2	(706-73-92340)	..PLATE.....	4	J10001-UP
39	C2	(706-73-92350)	..DISK.....	3	J10001-UP
40	C2	(706-73-92380)	..PISTON,BRAKE.....	1	J10001-UP
41	C2	(706-73-92390)	..RING,BRAKE.....	1	J10001-UP
42	C2	07000-12115	..O-RING.....	1	J10001-UP
43	C2	07000-12130	..O-RING.....	2	J10001-UP
44	C2	708-7T-15150	..SPRING.....	4	J10001-UP

Ref :Y1640-01A0 Page :510191

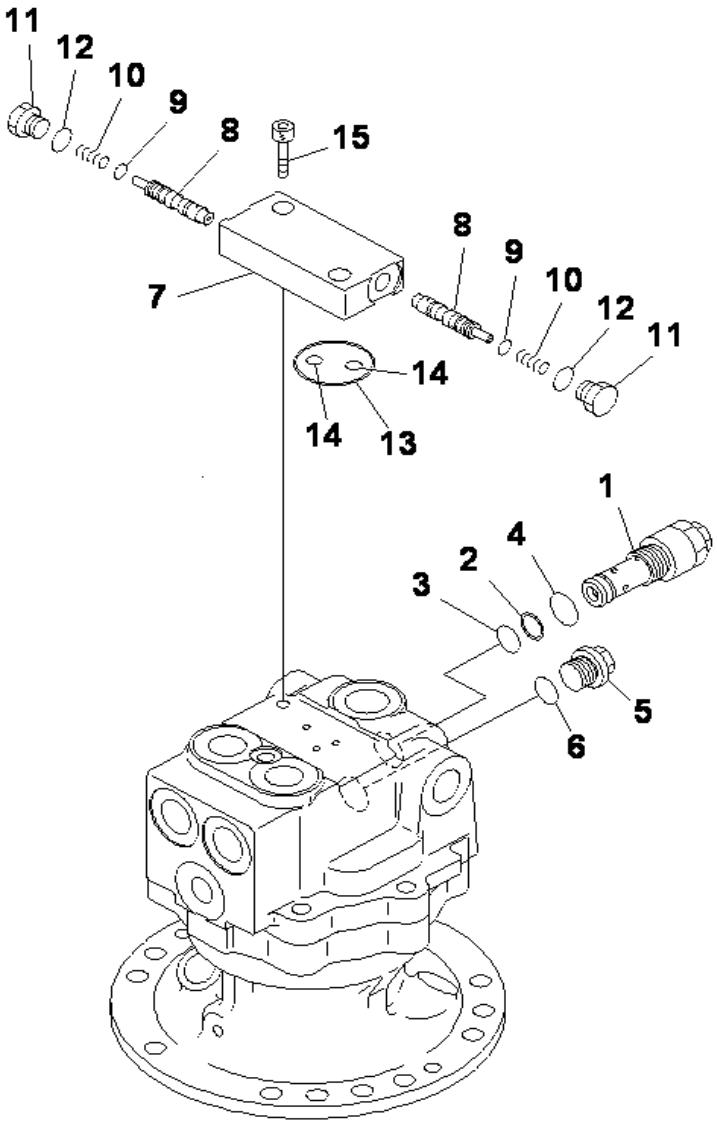

00017750

PC130F-7 S/N J10001-UP

SWING MOTOR (2/2)

INDEX	CD	PART NO.	DESCRIPTION	QTY	SERIAL NO.
		(706-73-01400)	MOTOR ASS'Y	1	J10001-UP
			THIS ASSEMBLY CONSISTS OF ALL PARTS		
			SHOWN IN FIGS.Y1640-01A0 AND Y1640-02A0		
1		702-73-01520	.VALVE ASS'Y,RELIEF	1	J10001-UP
2		723-60-22230	..RING,BACK UP	1	J10001-UP
3		07000-F2016	..O-RING	1	J10001-UP
4		07002-12434	..O-RING	1	J10001-UP
5		706-77-72280	.PLUG	1	J10001-UP
6		07002-12034	.O-RING	1	J10001-UP
		702-15-73000	.VALVE ASS'Y	1	J10001-UP
7			..BODY	1	J10001-UP
8			..SPOOL	2	J10001-UP
9	C1		..SEAL	2	J10001-UP
10	C1		..SPRING	2	J10001-UP
11	C1		..PLUG	2	J10001-UP
12	C1		..O-RING	2	J10001-UP
13		0700003042	.O-RING	1	J10001-UP
14		07000-11007	.O-RING	2	J10001-UP
15		01252-60825	.BOLT	2	J10001-UP

Ref :Y1640-02A0 Page :510200

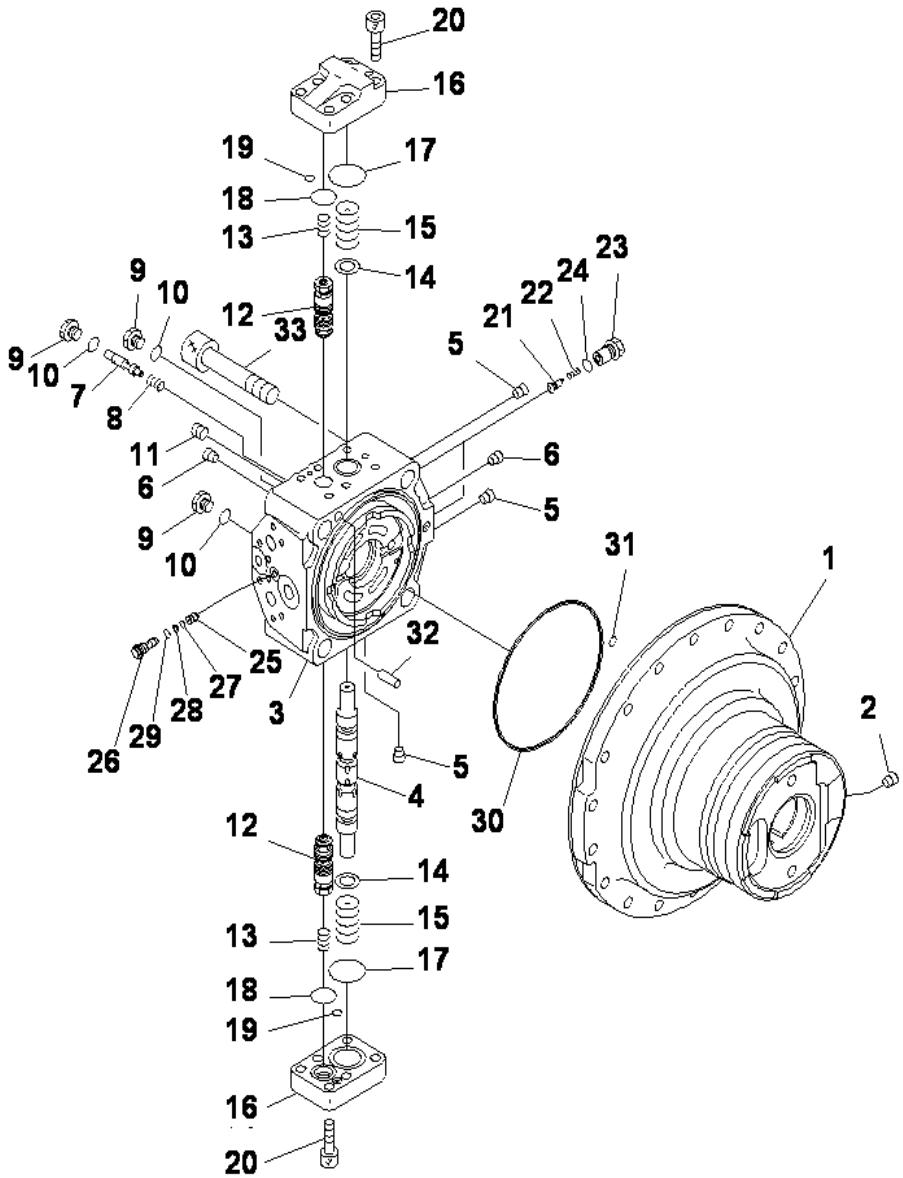

TRAVEL MOTOR (1/2)

INDEX	CD	PART NO.	DESCRIPTION	QTY	SERIAL NO.
		708-8F-00270	TRAVEL MOTOR.....	1	J10001-UP
			THIS ASSEMBLY CONSISTS OF ALL PARTS.....		
			SHOWN IN FIG. Y1651-01A0 AND Y1651-02A0.....		
	C2	708-8F-04681	.CASE SUB ASSY.....	1	J10001-UP
1	C1		..CASE, MOTOR.....	1	J10001-UP
2	C1		..PLUG.....	1	J10001-UP
0	C2	708-8F-04280	.END COVER SUB ASSY.....	1	J10001-UP
3	C1		..COVER, END.....	1	J10001-UP
4	C1		..SPOOL.....	1	J10001-UP
5	C1		..PLUG.....	3	J10001-UP
6	C1		..PLUG.....	2	J10001-UP
7	C1		..SPOOL.....	1	J10001-UP
8	C2	708-8F-34220	..SPRING.....	1	J10001-UP
9		708-8H-11530	.PLUG.....	3	J10001-UP
10		07002-11423	.O-RING.....	3	J10001-UP
11		20B-27-11210	.BLEEDER.....	1	J10001-UP
12		702-73-02190	.VALVE ASSY, RELIEF.....	2	J10001-UP
13		708-8F-36611	.SPRING.....	2	J10001-UP
14	C1		..RING.....	2	J10001-UP
15		708-8H-36121	.SPRING.....	2	J10001-UP
16		708-8F-36311	.COVER, END.....	2	J10001-UP
17		07000-13040	.O-RING.....	2	J10001-UP
18		700-93-11320	.O-RING.....	2	J10001-UP
19		07000-11009	.O-RING.....	2	J10001-UP
20		01252-61235	.BOLT.....	12	J10001-UP
21		708-8F-34120	.VALVE.....	2	J10001-UP
22		722-10-91130	.SPRING.....	2	J10001-UP
23		708-8F-34110	.PLUG.....	2	J10001-UP
24		07002-11823	.O-RING.....	2	J10001-UP
25		708-8E-16180	.VALVE.....	1	J10001-UP
26		708-8F-31650	.PLUG.....	1	J10001-UP
27		07000-11006	.O-RING.....	1	J10001-UP
28		07001-01006	.RING,BACK-UP.....	1	J10001-UP
29		07002-11223	.O-RING.....	1	J10001-UP
30		708-8F-31610	.O-RING.....	1	J10001-UP
31		07000-11009	.O-RING.....	1	J10001-UP
32	C2	04020-01228	.PIN,DOWEL.....	1	J10001-UP
33		708-8F-31210	.BOLT.....	4	J10001-UP

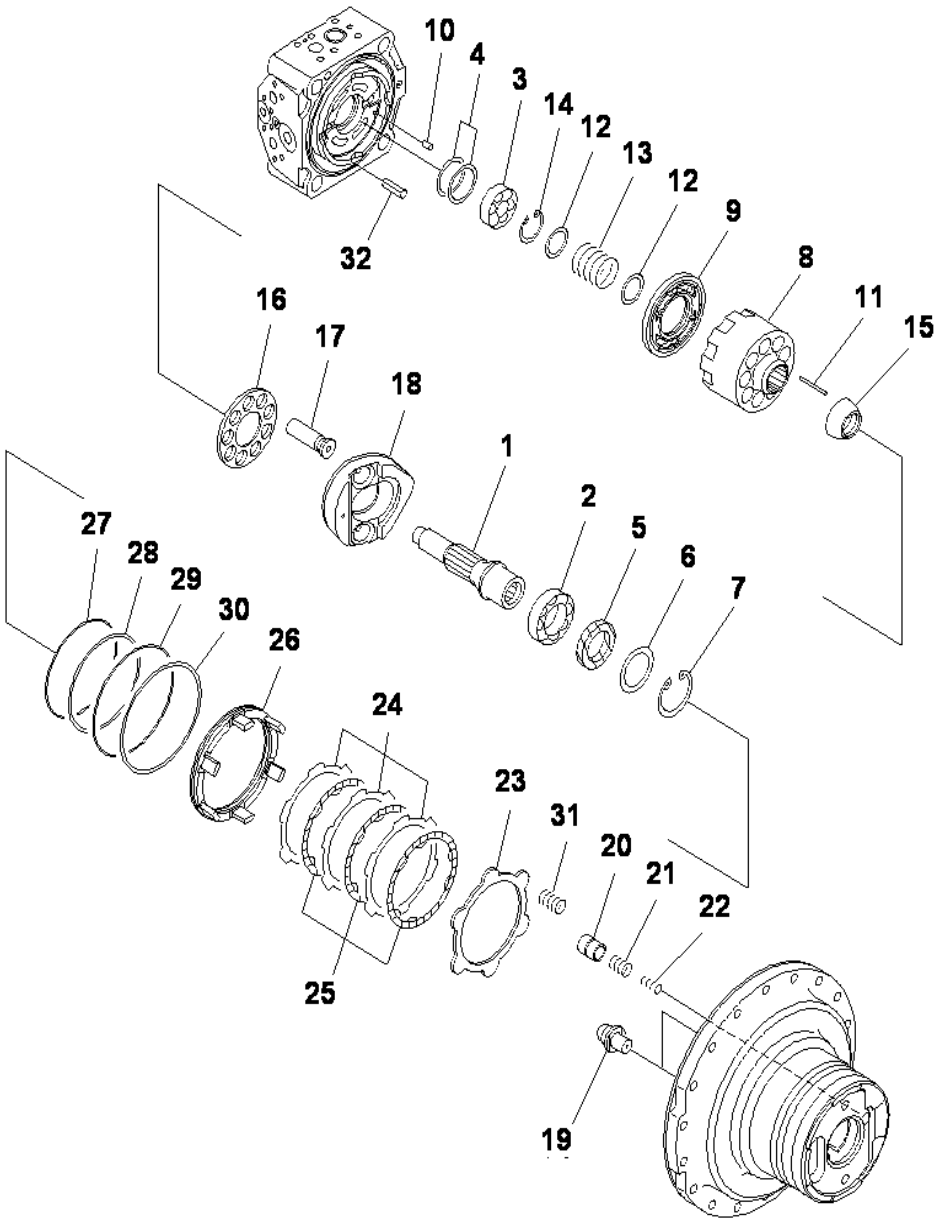

TRAVEL MOTOR (2/2)

INDEX	CD	PART NO.	DESCRIPTION	QTY	SERIAL NO.
		708-8F-00270	TRAVEL MOTOR.....	1	J10001-UP
			THIS ASSEMBLY CONSISTS OF ALL PARTS.....		
			SHOWN IN FIG. Y1651-01A0 AND Y1651-02A0.....		
1	C2	708-8F-32121	.SHAFT.....	1	J10001-UP
2	C2	708-8F-12151	.BEARING.....	1	J10001-UP
3	C2	708-7L-12140	.BEARING.....	1	J10001-UP
4	C2	708-7L-05010	.SPACER KIT.....	1	J10001-UP
	C1		..SPACER,1.5MM.....	1	J10001-UP
	C1		..SPACER,1.6MM.....	1	J10001-UP
	C1		..SPACER,1.7MM.....	1	J10001-UP
	C1		..SPACER,1.8MM.....	1	J10001-UP
	C1		..SPACER,1.9MM.....	1	J10001-UP
	C1		..SPACER,2.0MM.....	1	J10001-UP
5		706-7G-11291	.SEAL,OIL.....	1	J10001-UP
6		708-8F-12230	.SPACER,3.2MM.....	1	J10001-UP
7		04065-07225	.RING,SNAP.....	1	J10001-UP
8	C1		.BLOCK,CYLINDER.....	1	J10001-UP
9	C1		.PLATE,VALVE.....	1	J10001-UP
10	C1		.PIN.....	1	J10001-UP
11	C2	708-8F-33360	.PIN.....	3	J10001-UP
12	C2	708-7L-13140	.SEAT.....	2	J10001-UP
13	C2	708-8F-33160	.SPRING.....	1	J10001-UP
14	C2	04065-04818	.RING,SNAP.....	1	J10001-UP
15	C2	708-8F-33350	.GUIDE,RETAINER.....	1	J10001-UP
16	C2	708-2L-33350	.RETAINER,SHOE.....	1	J10001-UP
17	C2	708-8F-33310	.PISTON SUB ASSY.....	9	J10001-UP
18	C2	708-8F-33490	.CAM,ROCKER.....	1	J10001-UP
19	C2	708-8F-33710	.BALL,RETAINER.....	2	J10001-UP
20	C2	708-8F-34141	.PISTON.....	1	J10001-UP
21	C2	708-8F-34240	.SPRING.....	1	J10001-UP
22	C2	708-8F-34250	.SPRING.....	1	J10001-UP
23	C2	708-8F-35220	.PLATE.....	1	J10001-UP
24	C2	708-8F-35230	.PLATE.....	3	J10001-UP
25	C2	708-8F-35120	.DISC.....	3	J10001-UP
26	C2	708-8F-35140	.PISTON,BRAKE.....	1	J10001-UP
27	C2	708-8F-35160	.O-RING.....	1	J10001-UP
28	C2	708-8F-35170	.RING,BACK-UP.....	1	J10001-UP
29	C2	708-8F-35180	.O-RING.....	1	J10001-UP
30	C2	708-8F-35190	.RING,BACK-UP.....	1	J10001-UP
31	C2	708-8F-35150	.SPRING.....	6	J10001-UP
32	C2	04025-00324	.PIN,SPRING.....	1	J10001-UP

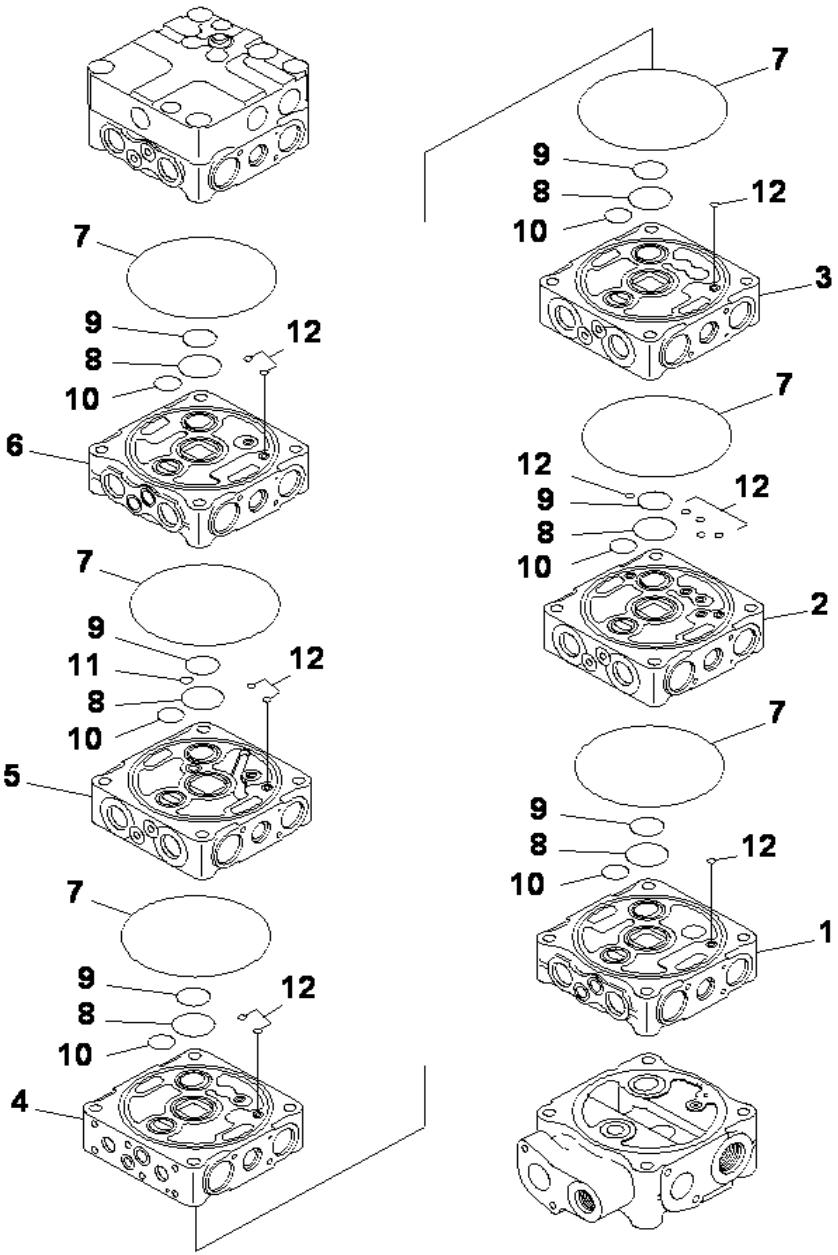

MAIN VALVE (7-VALVE) (1/10)

INDEX	CD	PART NO.	DESCRIPTION	QTY	SERIAL NO.
		723-56-11501	CONTROL VALVE.....	1	J10001-UP
			THESE ASSEMBLIES CONSIST OF ALL PARTS.....		
			SHOWN IN FIGS.Y1662-21A0 TO Y1662-31A0.....		
	C1		.BODY GROUP.....	1	J10001-UP
1	C1		..BLOCK,VALVE.....	1	J10001-UP
2	C1		..BLOCK,VALVE.....	1	J10001-UP
3	C1		..BLOCK,VALVE.....	1	J10001-UP
4	C1		..BLOCK,VALVE.....	1	J10001-UP
5	C1		..BLOCK,VALVE.....	1	J10001-UP
6	C1		..BLOCK,VALVE.....	1	J10001-UP
7		144-14-54610	..O-RING.....	6	J10001-UP
8		723-56-31720	..O-RING.....	6	J10001-UP
9		723-56-31730	..O-RING.....	6	J10001-UP
10		702-75-11520	..O-RING.....	6	J10001-UP
11		07000-12012	..O-RING.....	1	J10001-UP
12		07000-11008	..O-RING.....	13	J10001-UP

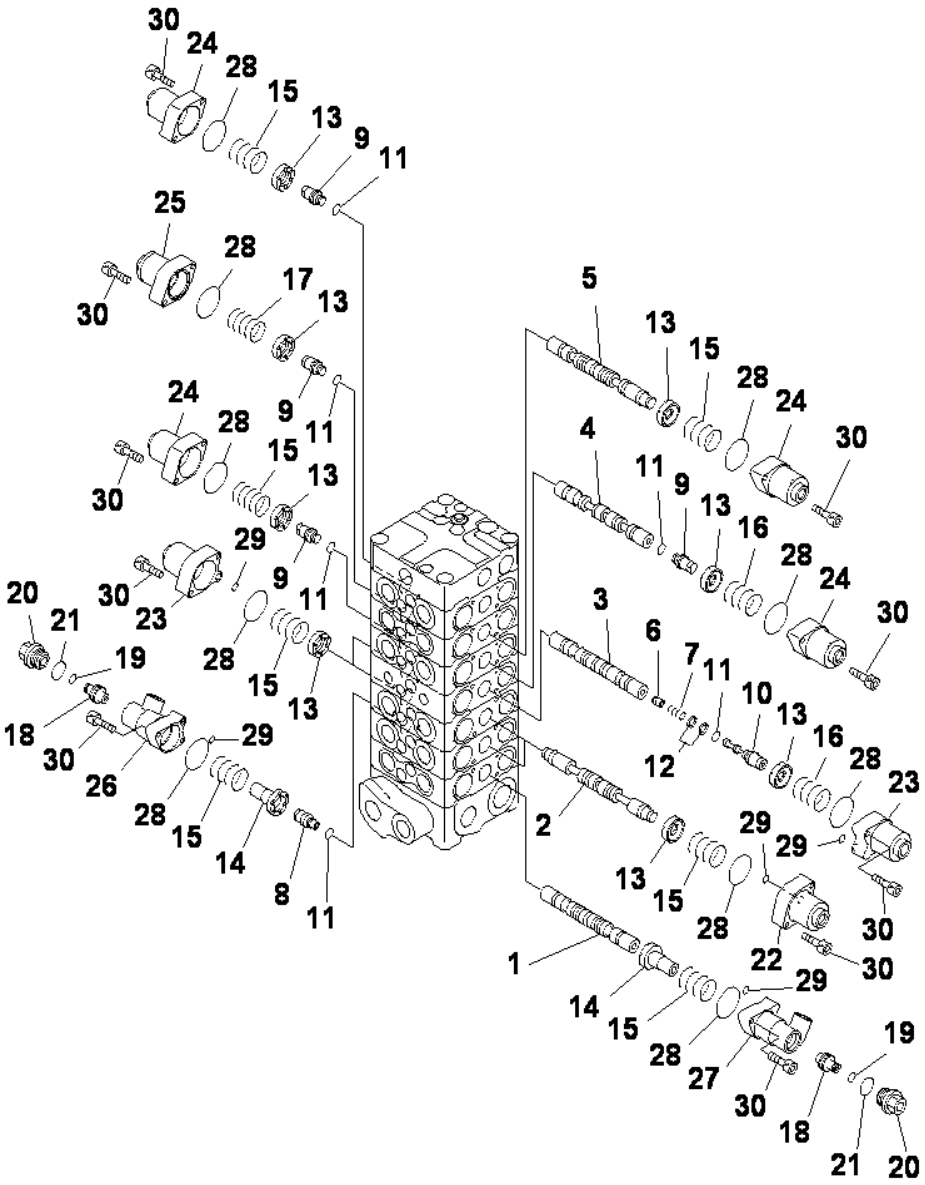

MAIN VALVE (7-VALVE) (2/10)

INDEX	CD	PART NO.	DESCRIPTION	QTY	SERIAL NO.
		(723-56-11501)	CONTROL VALVE.....	1	J10001-UP
			THESE ASSEMBLIES CONSIST OF ALL PARTS.....		
			SHOWN IN FIGS.Y1662-21A0 TO Y1662-31A0.....		
	C1		.BODY GROUP.....	1	J10001-UP
1	C1		..SPOOL.....	1	J10001-UP
2	C1		..SPOOL.....	2	J10001-UP
3	C1		..SPOOL.....	1	J10001-UP
4	C1		..SPOOL.....	1	J10001-UP
5	C1		..SPOOL.....	1	J10001-UP
6	C1		..VALVE.....	1	J10001-UP
7	C1		..SPRING.....	1	J10001-UP
8	C1		..PLUG.....	1	J10001-UP
9	C1		..PLUG.....	4	J10001-UP
10	C1		..PLUG.....	1	J10001-UP
11		07002-11223	..O-RING.....	6	J10001-UP
12	C1		..SEAL.....	2	J10001-UP
13		723-56-31211	..RETAINER.....	10	J10001-UP
14		723-56-31221	..RETAINER.....	2	J10001-UP
15		723-36-14120	..SPRING.....	9	J10001-UP
16		723-36-14110	..SPRING.....	2	J10001-UP
17		723-36-14130	..SPRING.....	1	J10001-UP
18		723-56-31260	..PISTON.....	2	J10001-UP
19	C1		..SEAL.....	2	J10001-UP
20		723-36-15450	..PLUG.....	2	J10001-UP
21		07002-12434	..O-RING.....	2	J10001-UP
22		723-56-31520	..CASE.....	2	J10001-UP
23		723-56-31530	..CASE.....	3	J10001-UP
24		723-56-31510	..CASE.....	4	J10001-UP
25		723-56-31580	..CASE.....	1	J10001-UP
26		723-56-31550	..CASE.....	1	J10001-UP
27		723-56-31560	..CASE.....	1	J10001-UP
28		702-21-55450	..O-RING.....	12	J10001-UP
29		07000-11006	..O-RING.....	7	J10001-UP
30		01252-60630	..BOLT.....	24	J10001-UP

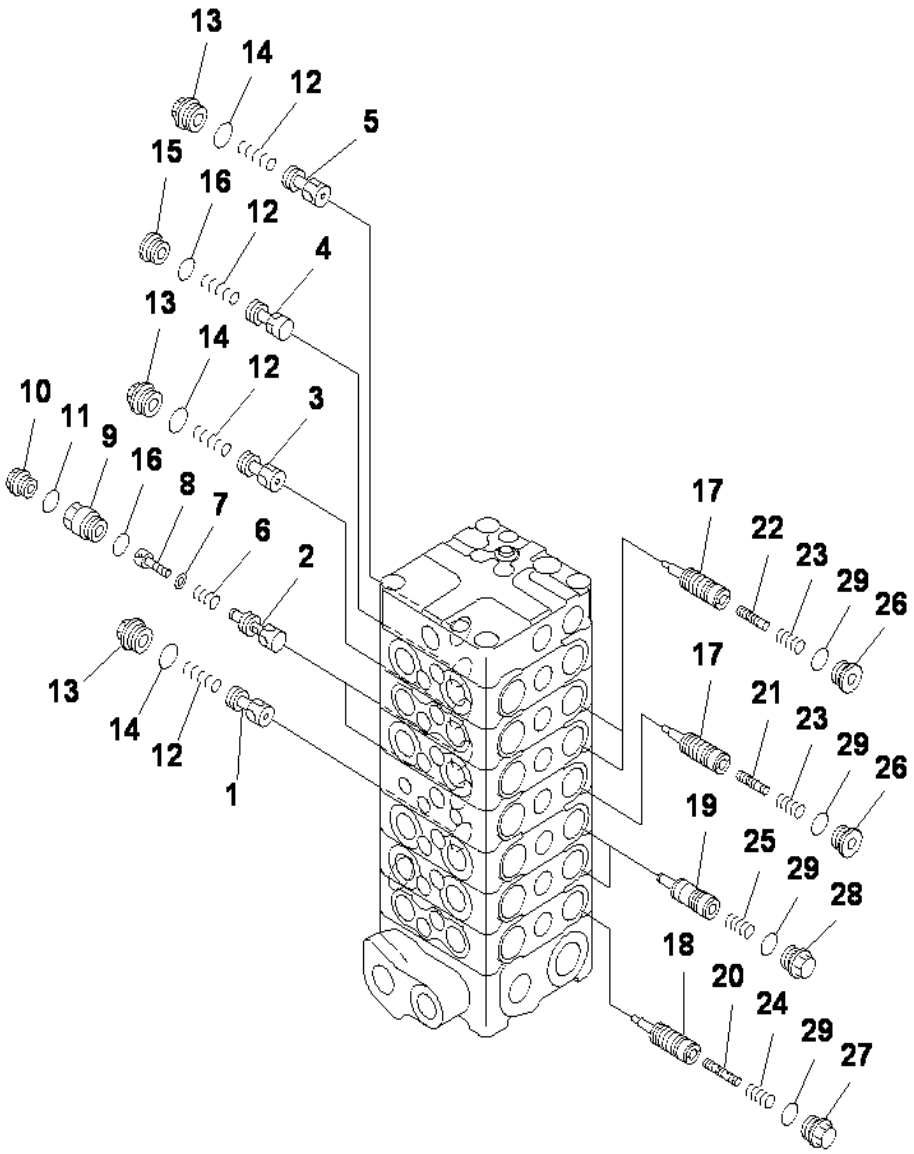

MAIN VALVE (7-VALVE) (3/10)

INDEX	CD	PART NO.	DESCRIPTION	QTY	SERIAL NO.
		(723-56-11501)	CONTROL VALVE	1	J10001-UP
			THESE ASSEMBLIES CONSIST OF ALL PARTS		
			SHOWN IN FIGS.Y1662-21A0 TO Y1662-31A0		
	C1		.BODY GROUP	1	J10001-UP
1	C1		..VALVE	1	J10001-UP
2	C1		..VALVE	2	J10001-UP
3	C1		..VALVE	1	J10001-UP
4	C1		..VALVE	1	J10001-UP
5	C1		..VALVE	1	J10001-UP
6		723-56-41721	..SPRING	2	J10001-UP
7		01643-30623	..WASHER	2	J10001-UP
8		01252-60610	..BOLT	2	J10001-UP
9		723-56-41821	..PLUG	2	J10001-UP
10		723-56-41830	..PLUG	2	J10001-UP
11		07002-12034	..O-RING	2	J10001-UP
12		723-56-41710	..SPRING	4	J10001-UP
13		723-56-41840	..PLUG	3	J10001-UP
14		07000-13024	..O-RING	3	J10001-UP
15		723-26-15230	..PLUG	1	J10001-UP
16		07002-12434	..O-RING	3	J10001-UP
17	C1		..VALVE	3	J10001-UP
18	C1		..VALVE	1	J10001-UP
19	C1		..VALVE SUB ASS'Y	2	J10001-UP
20	C1		..VALVE SUB ASS'Y	1	J10001-UP
21	C1		..PISTON	1	J10001-UP
22	C1		..PISTON	2	J10001-UP
23		723-56-41730	..SPRING	3	J10001-UP
24		723-56-41760	..SPRING	1	J10001-UP
25		723-56-41740	..SPRING	2	J10001-UP
26		723-26-15230	..PLUG	3	J10001-UP
27		723-56-41880	..PLUG	1	J10001-UP
28		723-56-41850	..PLUG	2	J10001-UP
29		07002-12434	..O-RING	6	J10001-UP

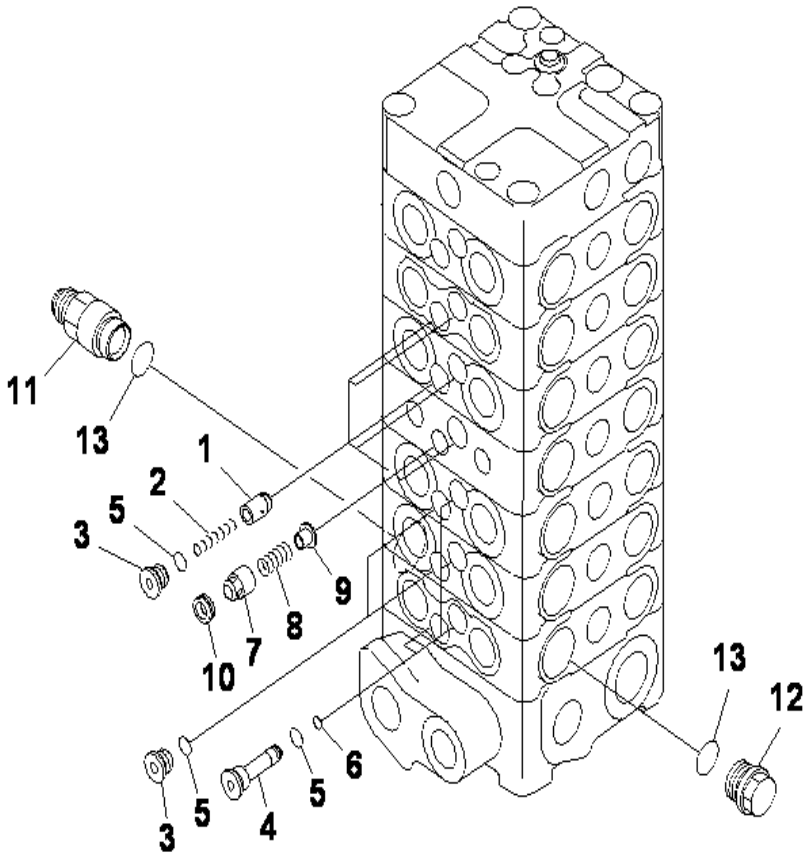

PC130F-7 S/N J10001-UP

MAIN VALVE (7-VALVE) (4/10)

INDEX	CD	PART NO.	DESCRIPTION	QTY	SERIAL NO.
		(723-56-11501)	CONTROL VALVE.....	1	J10001-UP
			THESE ASSEMBLIES CONSIST OF ALL PARTS.....		
			SHOWN IN FIGS.Y1662-21A0 TO Y1662-31A0.....		
	C1		.BODY GROUP.....	1	J10001-UP
1		723-56-31610	..VALVE.....	5	J10001-UP
2		723-56-31620	..SPRING.....	5	J10001-UP
3		723-56-31630	..PLUG.....	7	J10001-UP
4		723-56-31640	..PLUG.....	4	J10001-UP
5		07002-11623	..O-RING.....	11	J10001-UP
6		07000-11008	..O-RING.....	4	J10001-UP
7		723-56-31651	..VALVE.....	1	J10001-UP
		723-56-31650	..VALVE.....	1	J10001-UP
8		709-70-91420	..SPRING.....	1	J10001-UP
9		723-56-31660	..RETAINER.....	1	J10001-UP
10		723-56-31670	..SEAT.....	1	J10001-UP
11		723-56-31830	..UNION.....	1	J10001-UP
12		709-74-91520	..PLUG.....	1	J10001-UP
13		709-25-11390	..O-RING.....	2	J10001-UP

Ref :Y1662-24A0 Page :510270

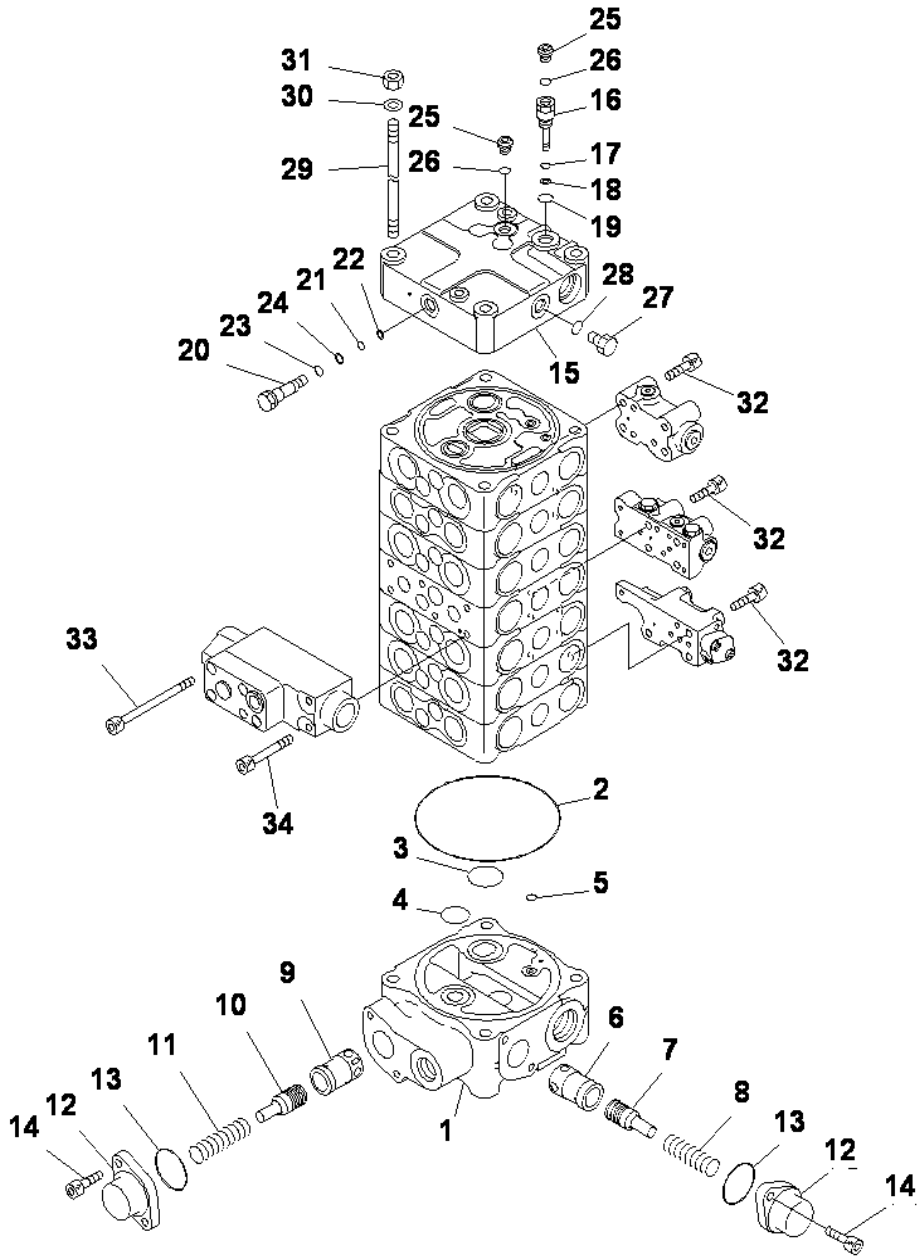

MAIN VALVE (7-VALVE) (5/10)

INDEX	CD	PART NO.	DESCRIPTION	QTY	SERIAL NO.
		(723-56-11501)	CONTROL VALVE	1	J10001-UP
			THESE ASSEMBLIES CONSIST OF ALL PARTS		
			SHOWN IN FIGS.Y1662-21A0 TO Y1662-31A0		
	C1		.BODY GROUP	1	J10001-UP
1	C1		..BLOCK	1	J10001-UP
2		144-14-54610	..O-RING	1	J10001-UP
3		723-56-31730	..O-RING	1	J10001-UP
4		702-75-11520	..O-RING	1	J10001-UP
5		07000-11008	..O-RING	1	J10001-UP
6	C1		..SLEEVE	1	J10001-UP
7	C1		..PISTON	1	J10001-UP
8		723-36-15340	..SPRING	1	J10001-UP
9		723-56-31890	..SLEEVE	1	J10001-UP
10	C1		..PISTON	1	J10001-UP
11		723-36-15240	..SPRING	1	J10001-UP
12		723-36-15250	..CASE	2	J10001-UP
13		07000-13042	..O-RING	2	J10001-UP
14		01252-60820	..BOLT	4	J10001-UP
	C1		.COVER GROUP	1	J10001-UP
15	C1		..COVER	1	J10001-UP
16		723-50-11311	..PLUG	1	J10001-UP
17		07000-11004	..O-RING	1	J10001-UP
18		07001-01004	..RING	1	J10001-UP
19		07002-11423	..O-RING	1	J10001-UP
20		723-26-15190	..PLUG	1	J10001-UP
21		07000-11007	..O-RING	1	J10001-UP
22		07001-01007	..RING,BACK-UP	1	J10001-UP
23		07000-11009	..O-RING	1	J10001-UP
24		07001-01009	..RING,BACK-UP	1	J10001-UP
25		708-8E-16160	..PLUG	2	J10001-UP
26		07002-11023	..O-RING	2	J10001-UP
27		07040-11409	..PLUG	1	J10001-UP
28		07002-11423	..O-RING	1	J10001-UP
29		723-50-11160	.STUD	4	J10001-UP
30		01643-31232	.WASHER	4	J10001-UP
31		01580-11210	.NUT	4	J10001-UP
32		01252-60850	.BOLT	11	J10001-UP
33		708-25-19160	.BOLT	4	J10001-UP
34		01252-60865	.BOLT	2	J10001-UP

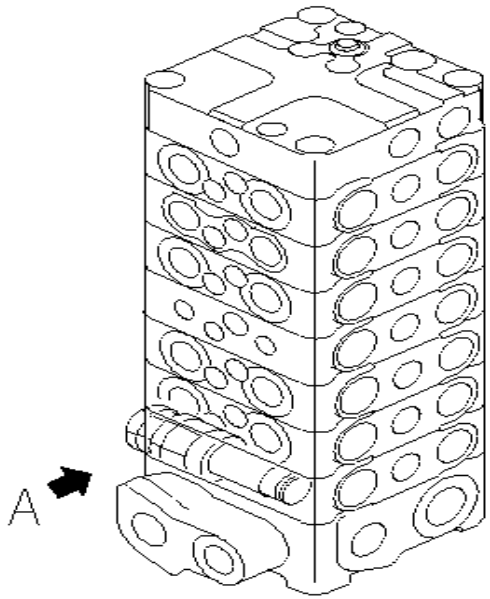

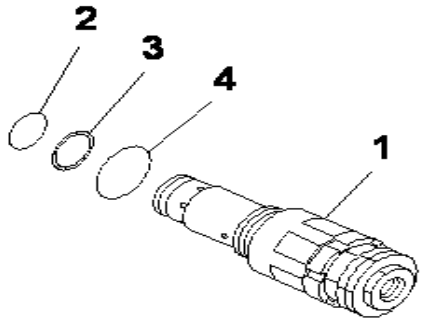

Detail A

PC130F-7 S/N J10001-UP

MAIN VALVE (7-VALVE) (6/10) (WITH DRIFT PREVENTIVE)

INDEX	CD	PART NO.	DESCRIPTION	QTY	SERIAL NO.
		(723-56-11501)	CONTROL VALVE.....	1	J10001-UP
			THESE ASSEMBLIES CONSIST OF ALL PARTS.....		
			SHOWN IN FIGS.Y1662-21A0 TO Y1662-31A0.....		
1		723-30-90101	.VALVE ASS'Y,RELIEF.....	1	J10001-UP
2		700-13-31161	..O-RING.....	1	J10001-UP
3		700-80-51190	..RING.....	1	J10001-UP
4		07002-03334	..O-RING.....	1	J10001-UP

Ref :Y1662-26A0 Page :510290

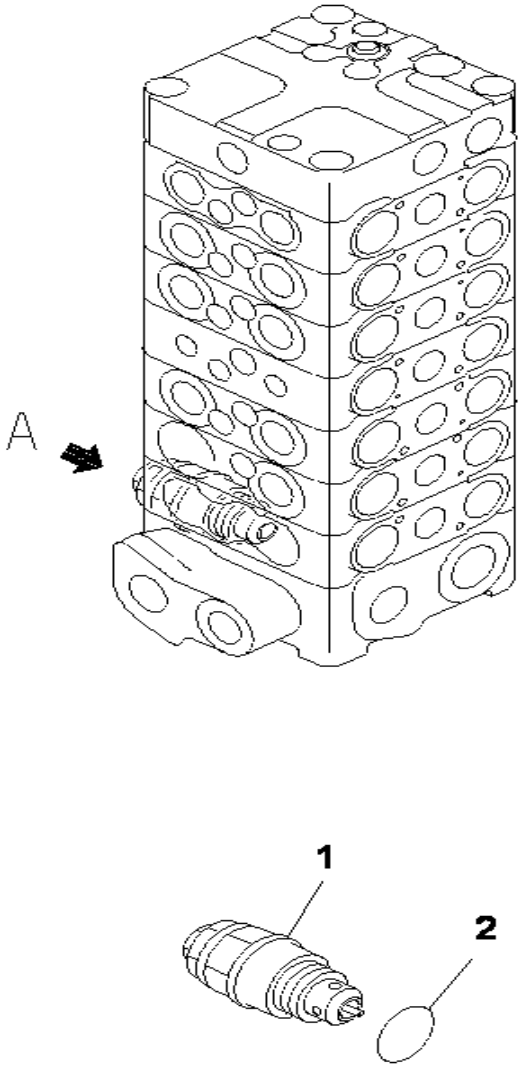

Detail A

PC130F-7 S/N J10001-UP

MAIN VALVE (7-VALVE) (7/10) (WITH DRIFT PREVENTIVE)

INDEX	CD	PART NO.	DESCRIPTION	QTY	SERIAL NO.
		(723-56-11501)	CONTROL VALVE.....	1	J10001-UP
			THESE ASSEMBLIES CONSIST OF ALL PARTS.....		
			SHOWN IN FIGS.Y1662-21A0 TO Y1662-31A0.....		
1		709-90-73100	.VALVE ASS'Y, SUCTION & SAFETY.....	1	J10001-UP
2		07002-03634	..O-RING.....	1	J10001-UP

Ref :Y1662-27A0 Page :510300

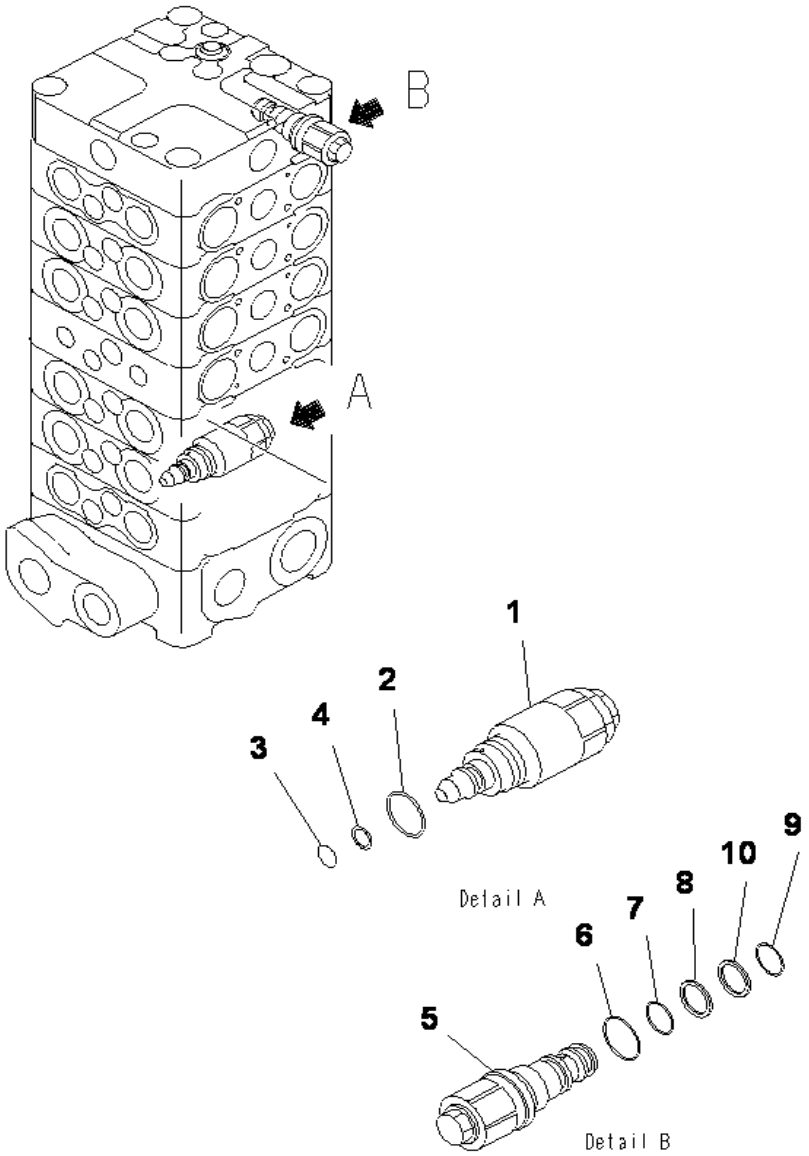

PC130F-7 S/N J10001-UP

MAIN VALVE (7-VALVE) (8/10) (WITH DRIFT PREVENTIVE)

INDEX	CD	PART NO.	DESCRIPTION	QTY	SERIAL NO.
		(723-56-11501)	CONTROL VALVE.....	1	J10001-UP
			THESE ASSEMBLIES CONSIST OF ALL PARTS.....		
			SHOWN IN FIGS.Y1662-21A0 TO Y1662-31A0.....		
1		723-50-60200	.VALVE ASS'Y.....	1	J10001-UP
2		709-25-11390	..O-RING.....	1	J10001-UP
3		07000-12012	..O-RING.....	1	J10001-UP
4		07001-02012	..RING,BACK UP.....	1	J10001-UP
5		723-50-55300	.VALVE ASS'Y.....	1	J10001-UP
6		07002-12434	..O-RING.....	1	J10001-UP
7		07000-12016	..O-RING.....	1	J10001-UP
8		07001-02016	..RING, BACK-UP.....	1	J10001-UP
9		07000-12014	..O-RING.....	1	J10001-UP
10		07001-02014	..RING.....	1	J10001-UP

Ref :Y1662-28A0 Page :510310

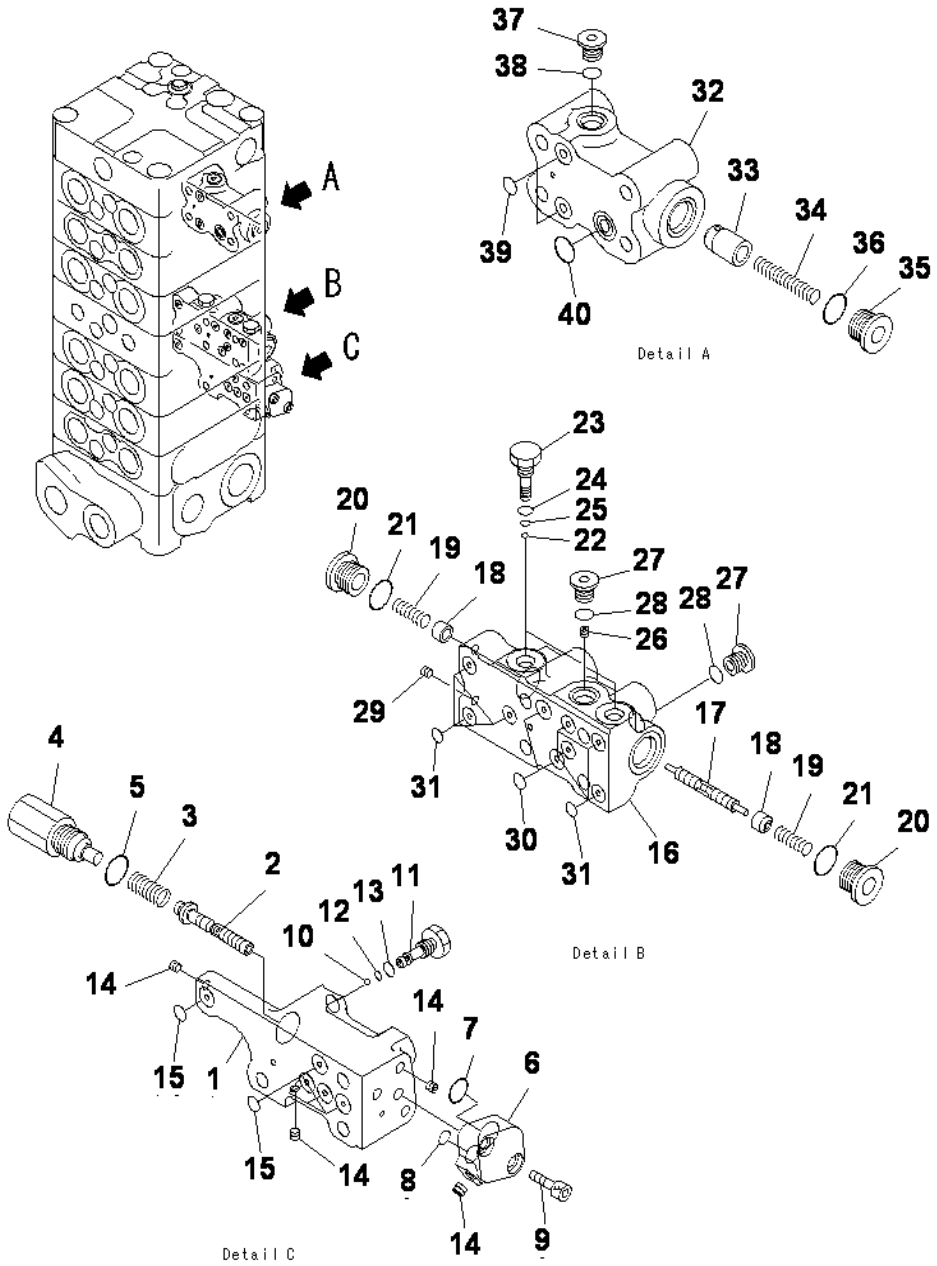

PC130F-7 S/N J10001-UP

MAIN VALVE (7-VALVE) (9/10) (WITH DRIFT PREVENTIVE)

INDEX	CD	PART NO.	DESCRIPTION	QTY	SERIAL NO.
		(723-56-11501)	CONTROL VALVE	1	J10001-UP
			THESE ASSEMBLIES CONSIST OF ALL PARTS		
			SHOWN IN FIGS.Y1662-21A0 TO Y1662-31A0		
		723-50-51400	.VALVE ASS'Y	1	J10001-UP
1	C1		..BLOCK	1	J10001-UP
2	C1		..SPOOL	1	J10001-UP
3		723-50-51230	..SPRING	1	J10001-UP
4		723-50-51140	..PLUG	1	J10001-UP
5		07002-11623	..O-RING	1	J10001-UP
6		723-50-51150	..FLANGE	1	J10001-UP
7		07000-12011	..O-RING	1	J10001-UP
8		07000-11007	..O-RING	1	J10001-UP
9		01252-60620	..BOLT	2	J10001-UP
10	C1		..BALL	1	J10001-UP
11		723-50-51160	..PLUG	1	J10001-UP
12		07000-11003	..O-RING	1	J10001-UP
13		07002-10823	..O-RING	1	J10001-UP
14	C1		..SCREW	4	J10001-UP
15		07000-11008	..O-RING	5	J10001-UP
		723-50-52200	.VALVE ASS'Y	1	J10001-UP
16	C1		..BLOCK	1	J10001-UP
17	C1		..SPOOL	1	J10001-UP
18		723-50-52130	..RETAINER	2	J10001-UP
19		723-50-52150	..SPRING	2	J10001-UP
20		723-56-31630	..PLUG	2	J10001-UP
21		07002-11623	..O-RING	2	J10001-UP
22	C1		..BALL	2	J10001-UP
23		723-50-51160	..PLUG	2	J10001-UP
24		07000-11003	..O-RING	2	J10001-UP
25		07002-10823	..O-RING	2	J10001-UP
26		723-56-41620	..ORIFICE	1	J10001-UP
27		723-11-18190	..PLUG	2	J10001-UP
28		07002-11023	..O-RING	2	J10001-UP
29	C1		..SCREW	2	J10001-UP
30		07000-11008	..O-RING	2	J10001-UP
31		07000-11007	..O-RING	7	J10001-UP
		723-50-54100	.VALVE ASS'Y	1	J10001-UP
32		723-50-54110	..BLOCK	1	J10001-UP
33		723-56-31610	..VALVE	1	J10001-UP
34		723-56-31620	..SPRING	1	J10001-UP
35		723-56-31630	..PLUG	1	J10001-UP
36		07002-11623	..O-RING	1	J10001-UP
37		723-11-18190	..PLUG	1	J10001-UP
38		07002-11023	..O-RING	1	J10001-UP

Ref :Y1662-29A0 Page :510320

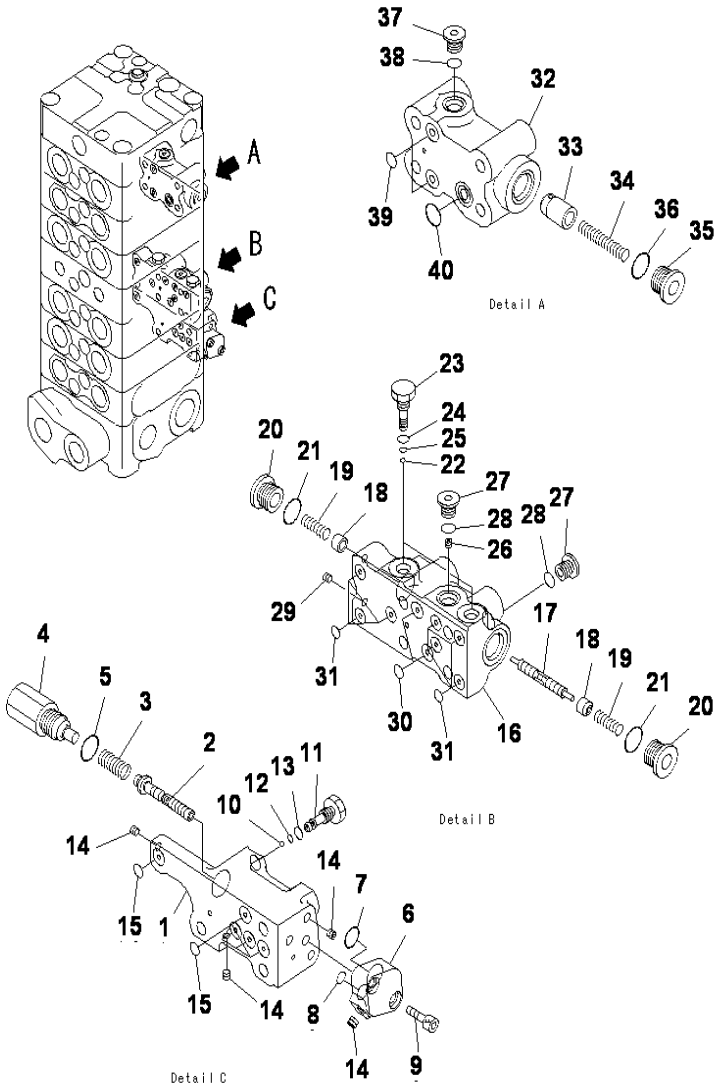

MAIN VALVE (7-VALVE)(9/10)(WITH DRIFT PREVENTIVE)

INDEX	CD	PART NO.	DESCRIPTION	QTY	SERIAL NO.
39		07000-11009	..O-RING.....	2	J10001-UP
40		708-2L-25490	..O-RING.....	1	J10001-UP

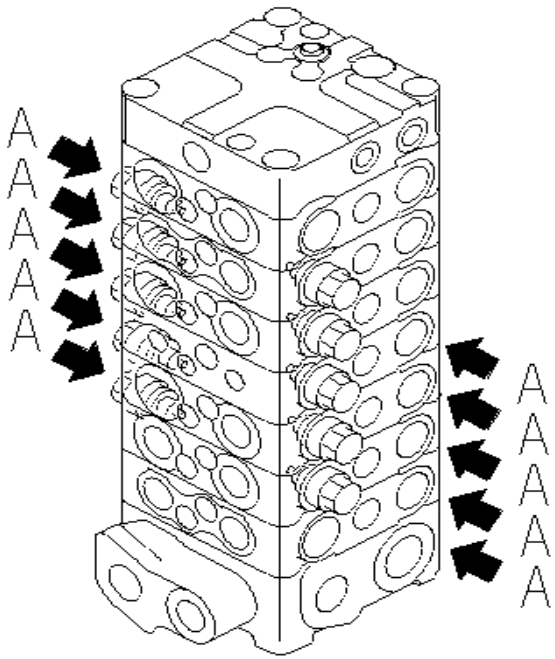

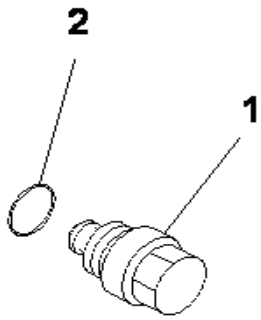

Detail A

PC130F-7 S/N J10001-UP

MAIN VALVE (7-VALVE) (10/10) (WITH DRIFT PREVENTIVE)

INDEX	CD	PART NO.	DESCRIPTION	QTY	SERIAL NO.
		(723-56-11501)	CONTROL VALVE.....	1	J10001-UP
			THESE ASSEMBLIES CONSIST OF ALL PARTS.....		
			SHOWN IN FIGS.Y1662-21A0 TO Y1662-31A0.....		
1		723-40-85100	.VALVE ASS'Y,SUCTION.....	10	J10001-UP
2		709-25-11390	..O-RING.....	1	J10001-UP

Ref :Y1662-31A0 Page :510340

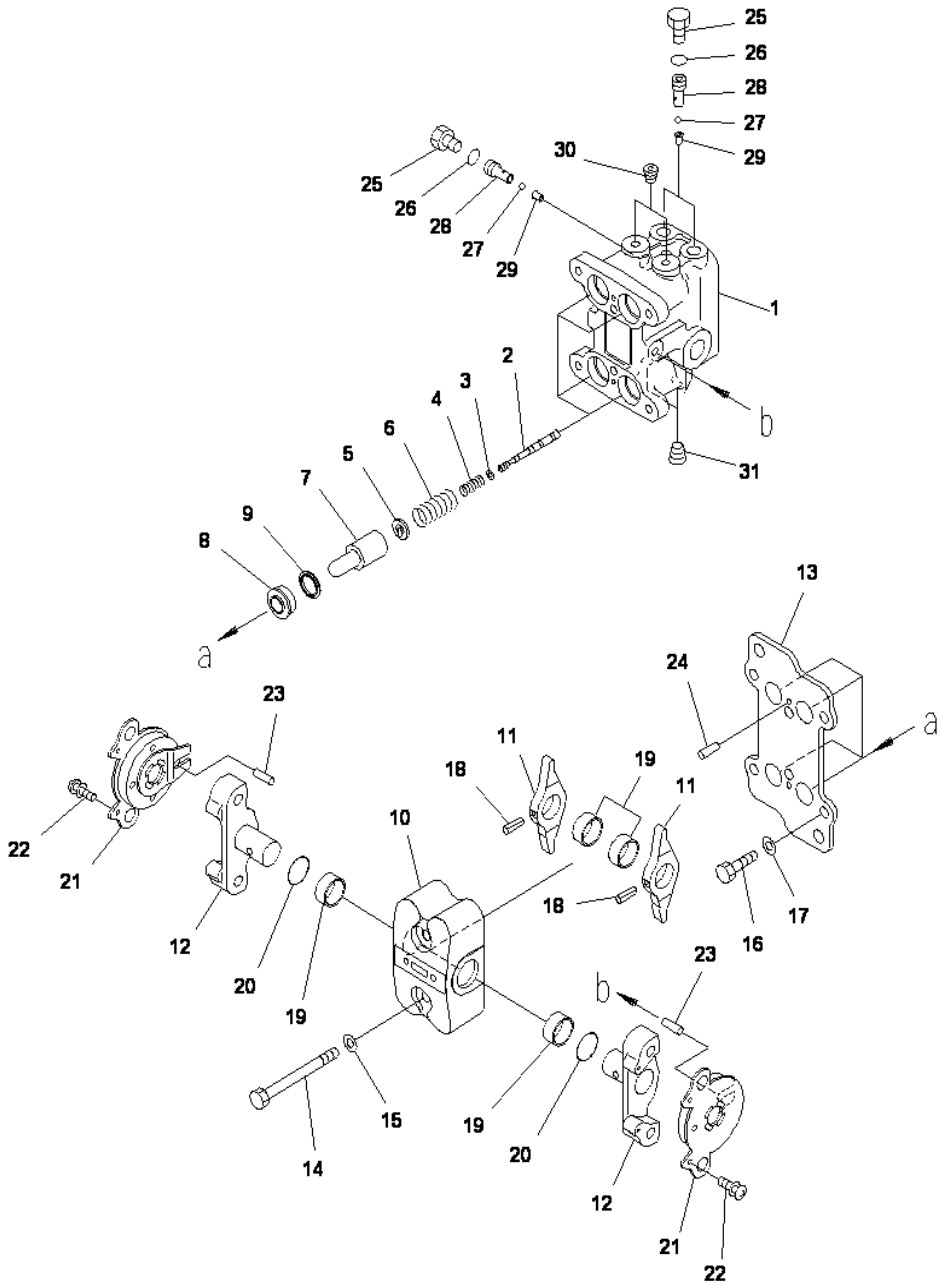

PPC VALVE (FOR TRAVEL)

INDEX	CD	PART NO.	DESCRIPTION	QTY	SERIAL NO.
		702-16-04270	PILOT VALVE	1	J10001-UP
1	C1		.BODY	1	J10001-UP
2	C1		.VALVE	4	J10001-UP
3		702-16-51140	.SHIM, 0.30MM	4	J10001-UP
4		702-16-53420	.SPRING	4	J10001-UP
5		702-16-53140	.RETAINER	4	J10001-UP
6		702-16-54420	.SPRING	4	J10001-UP
7		702-16-53170	.PISTON	4	J10001-UP
8		702-16-71150	.SEAL	4	J10001-UP
9		702-16-71160	.SEAT	4	J10001-UP
10		702-16-73630	.CASE	1	J10001-UP
11	C1		.LEVER	2	J10001-UP
12	C1		.SHAFT	2	J10001-UP
13	C1		.PLATE	1	J10001-UP
14		01010-80855	.BOLT	2	J10001-UP
15		01643-30823	.WASHER	2	J10001-UP
16		01010-80816	.BOLT	4	J10001-UP
17		702-16-54331	.WASHER,1.60MM	4	J10001-UP
		702-16-54341	.WASHER, 1.30MM	4	J10001-UP
		702-16-54351	.WASHER, 1.00MM	4	J10001-UP
		702-16-56380	.WASHER, 1.90MM	4	J10001-UP
		702-16-56390	.WASHER, 2.20MM	4	J10001-UP
18		04025-00432	.PIN,SPRING	2	J10001-UP
19		702-16-54430	.BUSHING	4	J10001-UP
20		07000-12018	.O-RING	2	J10001-UP
21		702-16-73610	.DAMPER ASSY	2	J10001-UP
22		01023-10306	.SCREW	4	J10001-UP
23		702-16-73650	.PIN	2	J10001-UP
24		04022-04016	.PIN,DOWEL	2	J10001-UP
25		07040-11209	.PLUG	3	J10001-UP
26		07002-11223	.O-RING	3	J10001-UP
27	C1		.BALL	3	J10001-UP
28		702-16-55940	.PLUG	3	J10001-UP
29		702-16-55950	.SEAT	3	J10001-UP
30	C1		.PLUG	2	J10001-UP
31	C1		.PLUG	2	J10001-UP

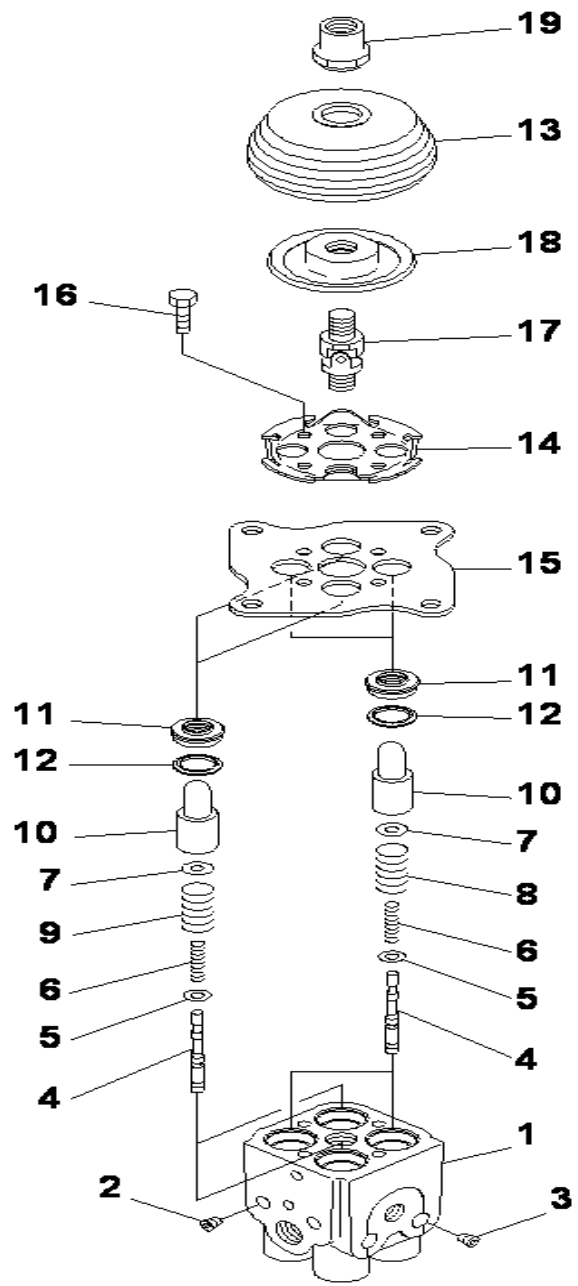

PPC VALVE (FOR WORK EQUIPMENT)

INDEX	CD	PART NO.	DESCRIPTION	QTY	SERIAL NO.
	C1	702-16-03910	PILOT VALVE.....	1	J10001-UP
1	C1		.BODY,VALVE.....	1	J10001-UP
2	C1		.PLUG.....	2	J10001-UP
3	C1		.PLUG.....	2	J10001-UP
4	C1		.VALVE.....	4	J10001-UP
5		702-16-51140	.SHIM, 0.30MM.....	4	J10001-UP
6		702-16-53420	.SPRING.....	4	J10001-UP
7		702-16-53140	.RETAINER.....	4	J10001-UP
8		702-16-53470	.SPRING.....	2	J10001-UP
9		702-16-53590	.SPRING.....	2	J10001-UP
10		702-16-53170	.PISTON.....	4	J10001-UP
11		702-16-71210	.SEAL.....	4	J10001-UP
12		702-16-71160	.SEAT.....	4	J10001-UP
13		702-16-71280	.BOOT.....	1	J10001-UP
14		702-16-71131	.PLATE.....	1	J10001-UP
15		702-16-71141	.PLATE.....	1	J10001-UP
16		01010-80620	.BOLT.....	4	J10001-UP
17		702-16-51240	.JOINT,UNIVERSAL.....	1	J10001-UP
18		702-16-71361	.DISC.....	1	J10001-UP
19		702-16-71441	.NUT.....	1	J10001-UP

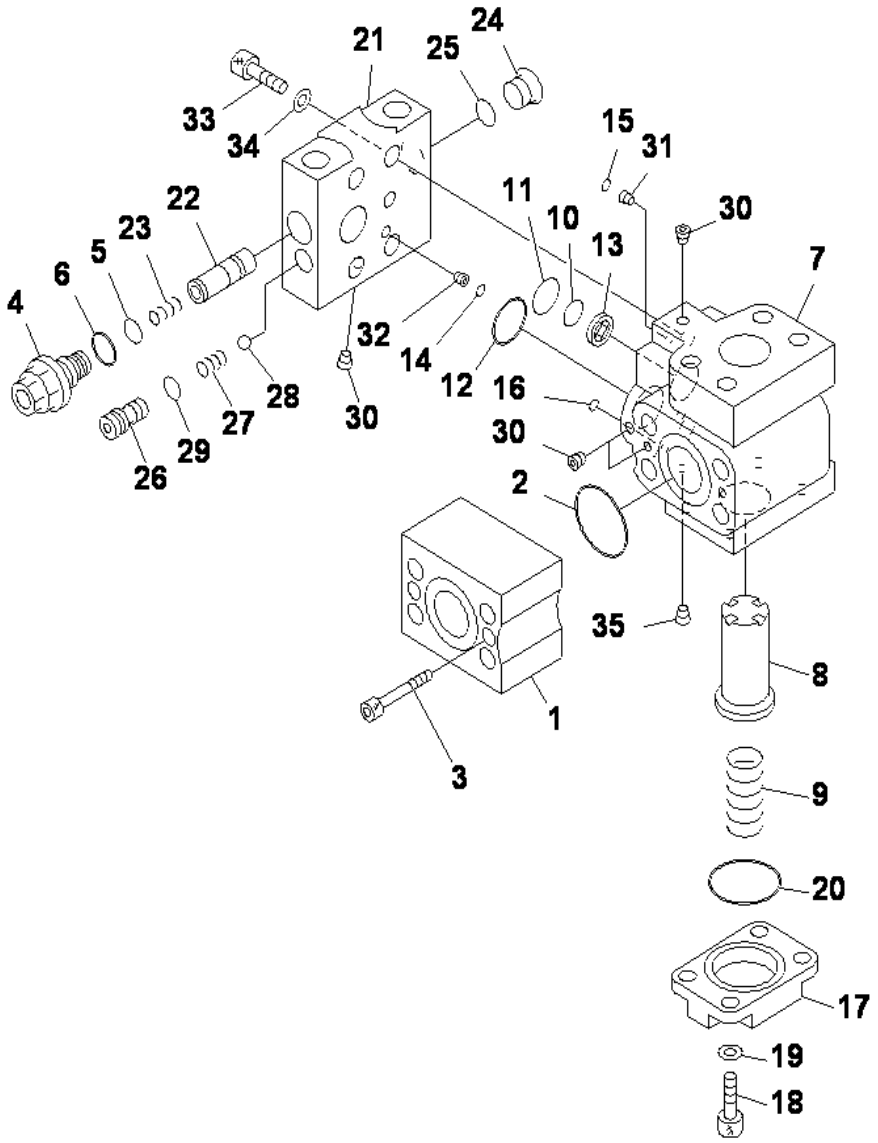

PILOT VALVE

INDEX	CD	PART NO.	DESCRIPTION	QTY	SERIAL NO.
		702-21-09230	VALVE ASSY	1	J10001-UP
1		702-21-55360	.BLOCK	1	J10001-UP
2		07000-13032	.O-RING	1	J10001-UP
3		01252-60545	.BOLT	2	J10001-UP
		702-21-09240	.PILOT VALVE	1	J10001-UP
4		702-21-55100	..VALVE ASS'Y,RELIEF	1	J10001-UP
5		702-16-53920	...O-RING	1	J10001-UP
6		07002-11623	...O-RING	1	J10001-UP
7	C1		..BLOCK	1	J10001-UP
8		702-21-55310	..VALVE	1	J10001-UP
9		702-21-55460	..SPRING	1	J10001-UP
10		702-21-55420	..O-RING	1	J10001-UP
11		702-21-55520	..O-RING	1	J10001-UP
12		702-21-55440	..O-RING	1	J10001-UP
13		702-21-53120	..FILTER	1	J10001-UP
14		07000-11009	..O-RING	1	J10001-UP
15		07000-11010	..O-RING	1	J10001-UP
16		07000-11006	..O-RING	1	J10001-UP
17		702-21-55410	..PLATE	1	J10001-UP
18		01252-60820	..BOLT	4	J10001-UP
19		01643-50823	..WASHER	4	J10001-UP
20		702-21-55530	..O-RING	1	J10001-UP
21	C1		..BLOCK	1	J10001-UP
22	C1		..SPOOL	1	J10001-UP
23		702-21-55640	..SPRING	1	J10001-UP
24		702-21-55620	..PLUG	1	J10001-UP
25		07002-11423	..O-RING	1	J10001-UP
26		702-21-55710	..SEAT	1	J10001-UP
27		702-21-55720	..SPRING	1	J10001-UP
28		04260-00793	..BALL	1	J10001-UP
29		07000-11009	..O-RING	1	J10001-UP
30	C1		..PLUG	4	J10001-UP
31		702-21-55470	..ORIFICE	1	J10001-UP
32		702-21-55670	..ORIFICE	1	J10001-UP
33		01252-61040	..BOLT	4	J10001-UP
34		01643-51032	..WASHER	4	J10001-UP
35	C1		..SCREW	1	J10001-UP

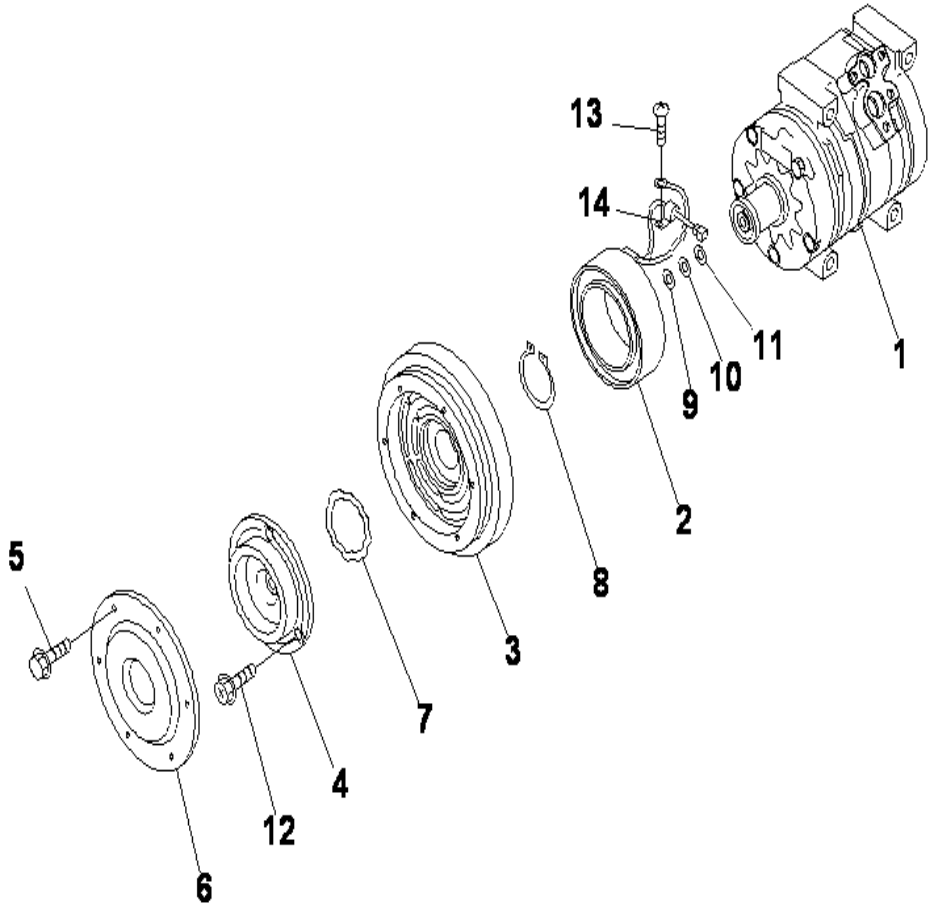

PC130F-7 S/N J10001-UP

COMPRESSOR ASS'Y (FOR AIR CONDITIONER)

INDEX	CD	PART NO.	DESCRIPTION	QTY	SERIAL NO.
		20Y-979-6121	COMPRESSOR ASS'Y	1	J10001-UP
1		ND447220-4051	.COMPRESSOR ASS'Y	1	J10001-UP
		ND247300-0510	.CLUTCH ASS'Y,MAGNET	1	J10001-UP
2		ND047310-7240	..STATOR,MAGNET CLUTCH	1	J10001-UP
3	C1		..ROTOR,MAGNET CLUTCH	1	J10001-UP
4		ND047410-1570	HUB,CLUTCH	1	J10001-UP
		ND047410-1580	HUB,CLUTCH	1	J10001-UP
5		ND949047-2950	BOLT,WASHER	6	J10001-UP
6		ND047372-0660	COVER,DUST	1	J10001-UP
7		ND949070-1360	RING, SNAP	1	J10001-UP
		ND949070-0640	RING, SNAP	1	J10001-UP
8		ND949070-1390	RING, SNAP	1	J10001-UP
9		ND949013-7480	WASHER, 0.1MM,PLATE	1	J10001-UP
10		ND949013-7500	WASHER, 0.3MM,PLATE	1	J10001-UP
11		ND949013-7510	WASHER, 0.5MM,PLATE	1	J10001-UP
12		ND949048--0430	BOLT,WASHER HEAD	1	J10001-UP
13		ND91310-05081	SCREW,WASHER	1	J10001-UP
14		ND146691-4470	CLAMP	1	J10001-UP

Ref :Y1979-01A0 Page :510410

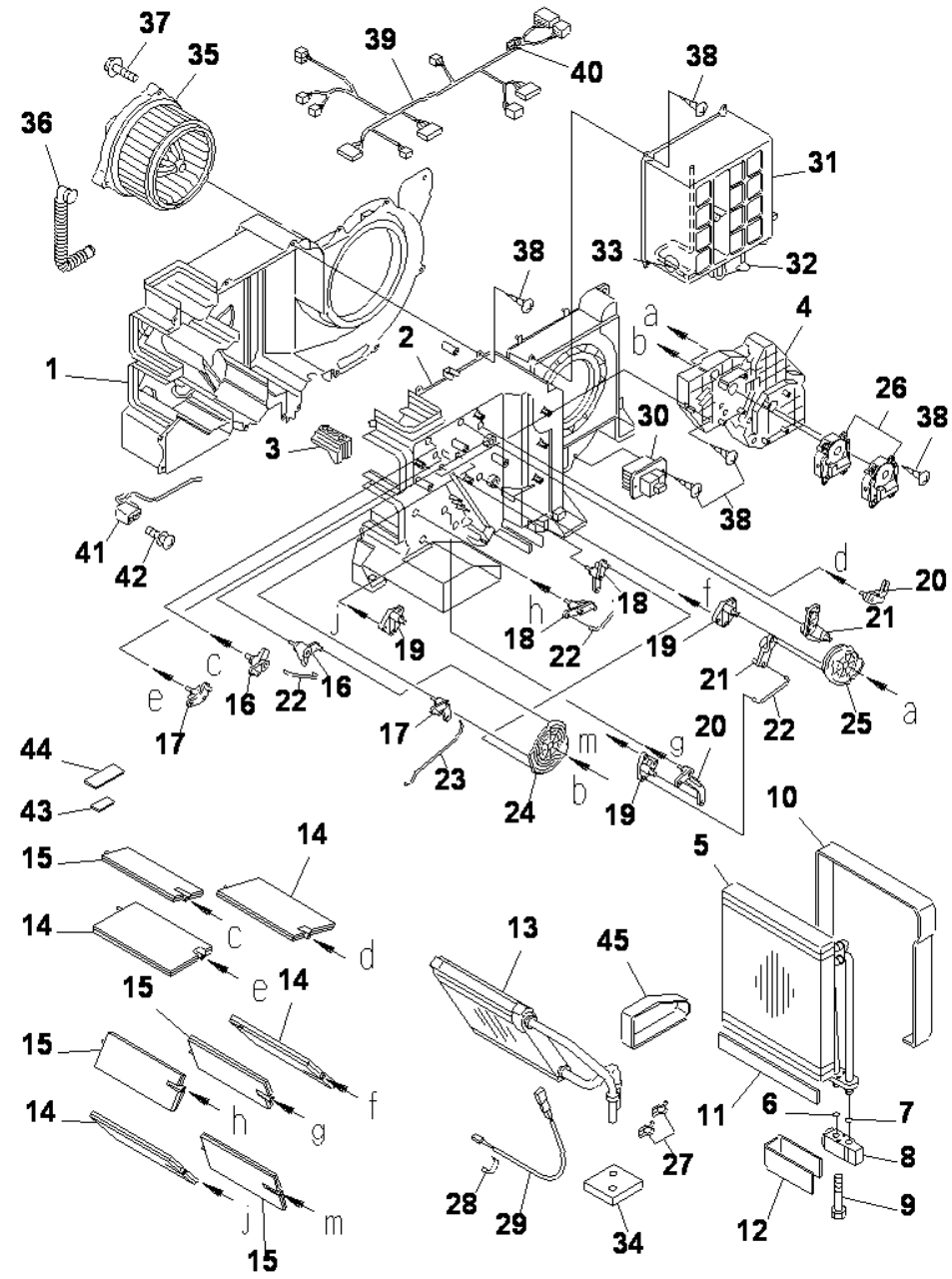

UNIT ASS'Y (COOLING)(FOR AIR CONDITIONER)

INDEX	CD	PART NO.	DESCRIPTION	QTY	SERIAL NO.
		208-979-7610	AIR CONDITIONER	1	J10001-UP
1		ND245450-5112	CASE,COOLING	1	J10001-UP
2		ND245450-5121	CASE,COOLING	1	J10001-UP
3		ND116576-3810	PLATE	1	J10001-UP
4		ND116576-3820	PLATE	1	J10001-UP
		ND446010-3131	EVAPORATOR ASS'Y,PARTS	1	J10001-UP
5		ND446600-0990	EVAPORATOR ASS'Y	1	J10001-UP
6		ND949142-0020	O-RING	1	J10001-UP
7		ND949142-0030	O-RING	1	J10001-UP
8		ND447500-1482	VALVE,EXPANSION	1	J10001-UP
9		ND949046-3100	BOLT	2	J10001-UP
10		ND146657-8841	PACKING	1	J10001-UP
11		ND146657-9811	PACKING	1	J10001-UP
12		ND146657-8850	PACKING	1	J10001-UP
13		ND116140-0050	CORE SUB ASS'Y,HEATER	1	J10001-UP
14		ND116660-7570	DOOR SUB ASS'Y	4	J10001-UP
15		ND116650-6850	DOOR SUB ASS'Y	4	J10001-UP
16		ND116780-2481	LEVER SUB ASS'Y,LINK	2	J10001-UP
17		ND116780-2491	LEVER SUB ASS'Y,LINK	2	J10001-UP
18		ND116780-2501	LEVER SUB ASS'Y,LINK	2	J10001-UP
19		ND116780-2510	LEVER SUB ASS'Y,LINK	3	J10001-UP
20		ND116781-3000	LEVER	2	J10001-UP
21		ND116780-2521	LEVER SUB ASS'Y,LINK	2	J10001-UP
22		ND116662-7670	SHAFT	3	J10001-UP
23		ND116662-7681	SHAFT	1	J10001-UP
24		ND116576-3851	PLATE	1	J10001-UP
25		ND116576-3861	PLATE	1	J10001-UP
26		ND063800-0300	SERVO MOTOR ASS'Y	2	J10001-UP
27		ND017231-0700	CLAMP	2	J10001-UP
28		ND170400-4670	SENSOR ASS'Y,THERMO	1	J10001-UP
29		ND145511-0040	HOLDER,REMOTE VALVE	1	J10001-UP
30		ND077800-0750	POWER TRANSISTOR	1	J10001-UP
31		ND146340-0531	BOX SUB ASS'Y	1	J10001-UP
32		ND063600-4580	SERVO MOTOR ASS'Y	1	J10001-UP
33		ND077500-5650	THERMISTOR ASS'Y	1	J10001-UP
34		ND146657-8860	PACKING	1	J10001-UP
35		ND116340-7030	MOTOR ASS'Y,FAN	1	J10001-UP
36		205-97-97260	PIPE	1	J10001-UP
37		ND949008-0330	SCREW,TAPPING	3	J10001-UP
38		ND949001-1730	SCREW,TAPPING	31	J10001-UP
39		ND246470-2451	HARNESS SUB ASS'Y,WIRE	1	J10001-UP
40		ND939500-5003	FUSE	1	J10001-UP
41		ND113550-0780	THERMOSTAT ASS'Y	1	J10001-UP
42		ND913700-4101	SCREW,WASHER	2	J10001-UP

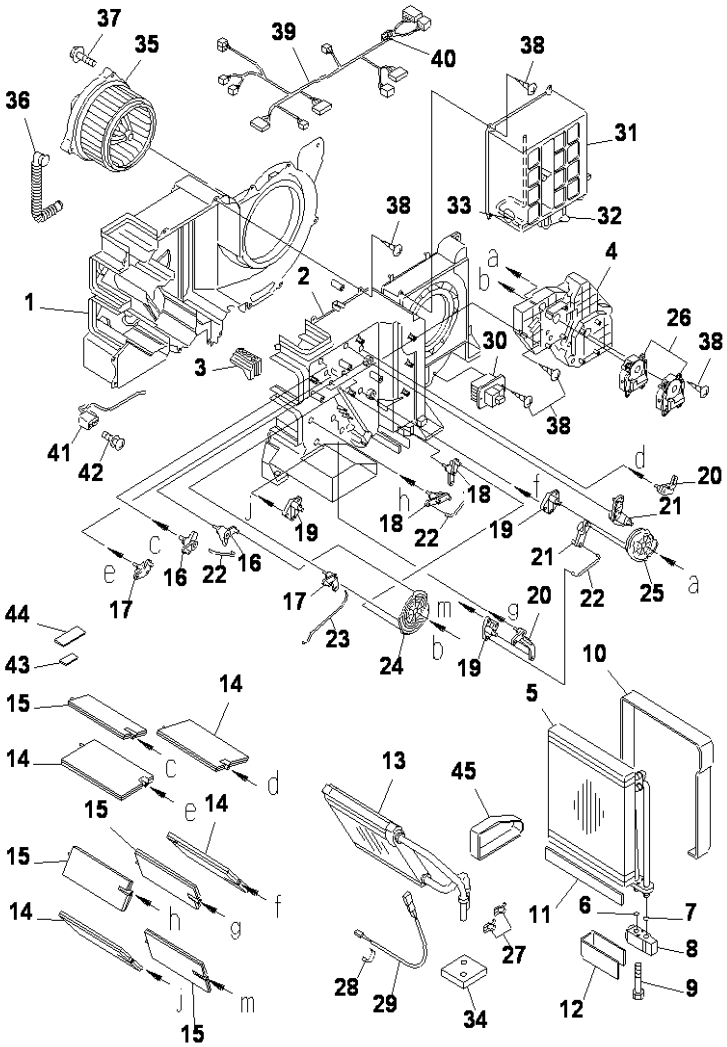

UNIT ASS'Y (COOLING)(FOR AIR CONDITIONER)

INDEX	CD	PART NO.	DESCRIPTION	QTY	SERIAL NO.
43		ND146667-0300	PACKING.....	1	J10001-UP
44		ND146667-0380	PACKING.....	1	J10001-UP
45		ND146667-0440	PACKING.....	1	J10001-UP

INDEX

PART NO.	FIG.NO.	INDEX	PAGE
(01010-61450)	Y1600-02A0	10	510060
(01252-61230)	Y1600-04A0	3	510080
(01252-61240)	Y1640-01A0	18	510190
(01252-61445)	Y1600-04A0	11	510080
(01643-31445)	Y1600-02A0	11	510060
(04020-01228)	Y1600-02A0	5	510060
(04020-01228)	Y1600-04A0	1	510080
(04064-03515)	Y1640-01A0	26	510190
(04065-04818)	Y1600-03A0	11	510070
(07000-02145)	Y1640-01A0	17	510190
(07000-B1009)	Y1600-04A0	2	510080
(07000-B2010)	Y1600-02A0	6	510060
(07000-B2012)	Y1600-02A0	7	510060
(07000-B2014)	Y1600-02A0	8	510060
(07000-B3040)	Y1600-04A0	8	510080
(07000-B5165)	Y1600-02A0	4	510060
(07001-03040)	Y1600-04A0	9	510080
(07002-62434)	Y1600-02A0	13	510060
(07002-63634)	Y1600-04A0	17	510080
(07040-12414)	Y1600-02A0	12	510060
(09920-00150)	A2040-A0E4	10	030140
(09920-00150)	A2110-A0P1	17	030180
(09920-00150)	A2210-A0F9	14	030200
(09920-00150)	A4040-A0A6	18	030400
(113-43-31380)	Y1600-04A0	12	510080
(195-97-98590)	M1220-01A1	19	240080
(203-60-71210)	H1831-01A0	1	150160
(208-979-7610)	K1110-32A0	1	210350
(600-863-3210)	A6210-A0G6	1	030630
(620-87-11210)	A4010-D0W8		030370
(620-87-11210)	A4010-E0W8		030380
(620-87-11210)	A4010-F0W8		030390
(6204-11-3110)	A4210-A0F4	1	030450
(6208-71-1210)	A4010-A0W8	1	030340
(6208-71-1210)	A4010-C0W8		030360
(6208-81-8100)	A1530-A0E4	1	030090
(702-21-04210)	T1110-06A4	1	360056
(702-21-09230)	H0120-01A5	14	150020
(703-08-00110)	N1310-01A0	1	270040
(706-73-00020)	Y1640-01A0		510190
(706-73-01400)	Y1640-02A0		510200
(706-73-05020)	Y1640-01A0		510190
(706-73-05030)	Y1640-01A0	25	510190
(706-73-40010)	Y1640-01A0	5	510190
(706-73-41110)	Y1640-01A0	34	510190
(706-73-42820)	Y1640-01A0	6	510190
(706-73-43120)	Y1640-01A0	32	510190
(706-73-43130)	Y1640-01A0	33	510190
(706-73-43150)	Y1640-01A0	1	510190
(706-73-43190)	Y1640-01A0	29	510190

PART NO.	FIG.NO.	INDEX	PAGE
(706-73-43610)	Y1640-01A0	22	510190
(706-73-43620)	Y1640-01A0	23	510190
(706-73-43742)	Y1640-01A0	30	510190
(706-73-43810)	Y1640-01A0	21	510190
(706-73-43880)	Y1640-01A0	20	510190
(706-73-43890)	Y1640-01A0	24	510190
(706-73-43960)	Y1640-01A0	19	510190
(707-01-XAP30)	T1120-01A2	1	360060
(707-01-XAP30)	Y1620-01A3		510140
(707-01-XAP40)	T1120-01A2	2	360060
(707-01-XAP40)	Y1620-01A3		510140
(707-01-XAP50)	Y1620-11A0		510150
(707-01-XAP60)	T1220-01A0	1	360100
(707-01-XAP60)	Y1620-41A0		510160
(707-01-XF030)	T1140-01A2	1	360081
(707-01-XF040)	T1220-01A1	1	360105
(707-01-XT600)	T1120-01A3	1	360065
(707-01-XT610)	T1120-01A3	2	360065
(708-1L-00650)	B0000-02A0	8	040020
(708-1L-00650)	Y1600-02A0		510060
(708-1L-00650)	Y1600-03A0		510070
(708-1L-00650)	Y1600-04A0		510080
(708-1L-00650)	Y1600-05A0		510090
(708-1L-00650)	Y1600-06A0		510110
(708-1L-00650)	Y1600-07A0		510120
(708-1L-00650)	Y1600-08A0		510130
(708-1L-01650)	Y1600-02A0		510060
(708-1L-01650)	Y1600-03A0		510070
(708-1L-01650)	Y1600-04A0		510080
(708-1L-04150)	Y1600-02A0		510060
(708-25-12790)	Y1600-03A0	4	510070
(708-2E-05040)	Y1600-03A0	3	510070
(708-2L-04240)	Y1600-01A0		510050
(708-2L-04291)	Y1600-08A0		510130
(708-2L-04361)	Y1600-03A0		510070
(708-2L-06170)	Y1600-03A0		510070
(708-2L-23131)	Y1600-03A0	12	510070
(708-2L-23351)	Y1600-03A0	15	510070
(708-2L-23360)	Y1600-03A0	16	510070
(708-2L-24514)	Y1600-04A0	4	510080
(708-2L-24522)	Y1600-04A0	10	510080
(708-2L-24531)	Y1600-04A0	16	510080
(708-2L-24560)	Y1600-04A0	7	510080
(708-2L-24570)	Y1600-04A0	6	510080
(708-2L-24590)	Y1600-04A0	19	510080
(708-2L-24630)	Y1600-04A0	15	510080
(708-2L-24640)	Y1600-04A0	13	510080
(708-2L-24650)	Y1600-04A0	14	510080
(708-2L-24661)	Y1600-04A0	18	510080
(708-2L-24670)	Y1600-04A0	5	510080

PART NO.	FIG.NO.	INDEX	PAGE
(708-2L-25480)	Y1600-02A0	9	510060
(708-2L-32110)	Y1600-03A0	1	510070
(708-2L-32150)	Y1600-03A0	2	510070
(708-2L-32260)	Y1600-02A0	3	510060
(708-2L-33160)	Y1600-03A0	13	510070
(708-2L-33310)	Y1600-03A0	18	510070
(708-2L-33350)	Y1600-03A0	17	510070
(708-7L-13140)	Y1600-03A0	14	510070
(720-68-19610)	Y1600-03A0	10	510070
(720-68-19610)	Y1640-01A0	31	510190
(723-56-11501)	Y1662-22A0		510250
(723-56-11501)	Y1662-23A0		510260
(723-56-11501)	Y1662-24A0		510270
(723-56-11501)	Y1662-25A0		510280
(723-56-11501)	Y1662-26A0		510290
(723-56-11501)	Y1662-27A0		510300
(723-56-11501)	Y1662-28A0		510310
(723-56-11501)	Y1662-29A0		510320
(723-56-11501)	Y1662-31A0		510340
(DK10104-94120)	A4010-C0W8		030360
(DK10540-11441)	A4010-E0W8		030380
01010-50835	Y1627-01A0	11	510170
01010-50835	Y1627-01A1	12	510180
01010-61625	J1310-01A0	1A	180020
01010-61655	R0120-01A0	19	330020
01010-61660	P1210-01A0	4	300020
01010-80612	D0100-01A1	6	090010
01010-80612	M1130-01A0	25	240030
01010-80612	M1140-01A0	25	240040
01010-80616	E0200-02A0	10	120030
01010-80616	M1120-01A0	16	240020
01010-80616	M1130-01A0	13	240030
01010-80616	M1140-01A0	13	240040
01010-80616	M1220-01A1	16	240080
01010-80620	Y1670-13A0	16	510380
01010-80816	E0200-02A0	2	120030
01010-80816	E0200-02A0	4	120030
01010-80816	K1110-16A4	2	210210
01010-80816	K1110-17D0	2	210225
01010-80816	Y1670-02A0	16	510370
01010-80820	E0410-01A0	2	120090
01010-80820	K1110-06A0	19	210110
01010-80820	K1110-27A4	13	210300
01010-80820	K1110-30A4	13	210330
01010-80825	K1110-32A0	3	210350
01010-80830	E0200-01A0	6	120020
01010-80835	B0200-01A0	4	040060
01010-80850	Y1620-11A0	38	510150
01010-80850	Y1620-41A0	29	510160
01010-80855	Y1670-02A0	14	510370

PART NO.	FIG.NO.	INDEX	PAGE
01010-81016	E0200-07A0	11	120080
01010-81016	E0200-07A0	9	120080
01010-81016	K1110-19A0	11	210230
01010-81016	K1110-34A4	10	210370
01010-81016	K1110-34A5	2	210380
01010-81016	K1110-37A0	13	210410
01010-81020	C0100-02A0	7	060020
01010-81020	C0100-03A0	13	060030
01010-81020	C0100-03A0	17	060030
01010-81020	C0100-03A0	20	060030
01010-81020	C0100-04A0	6	060040
01010-81020	D0200-01A0	17	090020
01010-81020	E0200-01A0	14	120020
01010-81020	E0200-02A0	16	120030
01010-81020	E0200-04A0	23	120050
01010-81020	E0200-05A0	25	120060
01010-81020	E0200-05A0	27	120060
01010-81020	E0200-05A0	29	120060
01010-81020	E0200-06A0	16	120070
01010-81020	E0200-06A0	3	120070
01010-81020	E0200-07A0	6	120080
01010-81020	K1110-09A4	13	210140
01010-81020	K1110-17A0	3	210220
01010-81020	K1110-19A0	14	210230
01010-81020	K1110-20A0	2	210240
01010-81020	K1110-20A0	5	210240
01010-81020	K1110-21A0	5	210250
01010-81020	K1110-22A4	5	210260
01010-81020	K1110-25A4	12	210280
01010-81020	K1110-25A4	21	210280
01010-81020	K1110-25A4	24	210280
01010-81020	K1110-34A4	7	210370
01010-81020	K1110-37A0	18	210410
01010-81020	K1110-37A0	2	210410
01010-81020	K1110-37A0	8	210410
01010-81020	M1130-01A0	36	240030
01010-81020	M1150-02A0	11	240060
01010-81020	M1150-02A0	13	240060
01010-81020	T1110-02A5	9	360025
01010-81020	T1110-05A3	12	360050
01010-81020	T1110-05A5	12	360055
01010-81020	T1110-06A4	3	360056
01010-81020	T1110-06A4	6	360056
01010-81020	T1200-01A5	11	360095
01010-81025	B0400-01A0	5	040070
01010-81025	C0100-01A0	17	060010
01010-81025	C0100-01A0	19	060010
01010-81025	C0100-02A0	12	060020
01010-81025	C0100-02A0	14	060020
01010-81025	C0100-04A0	19	060040

PART NO.	FIG.NO.	INDEX	PAGE
01010-81025	C0100-04A0	23	060040
01010-81025	C0310-01A0	11	060050
01010-81025	C0310-01A0	2	060050
01010-81025	C0310-01A0	5	060050
01010-81025	C0310-01A0	8	060050
01010-81025	H1220-01A0	12	150110
01010-81025	H1220-01A0	16	150110
01010-81025	K1110-21A0	3	210250
01010-81025	K1110-22A4	3	210260
01010-81025	R1100-01A0	8	330060
01010-81025	T1110-04A3	5	360040
01010-81025	T1110-04A5	5	360045
01010-81025	T1110-06A4	8	360056
01010-81025	Y1620-41A0	35	510160
01010-81030	B0400-01A0	14	040070
01010-81030	C0100-01A0	9	060010
01010-81030	D0200-02A0	7	090030
01010-81030	D0200-03A0	15	090040
01010-81030	K1110-19A0	9	210230
01010-81030	K1110-20A0	14	210240
01010-81030	K1110-29A0	32	210320
01010-81030	K1110-31A0	42	210340
01010-81035	B0000-02A0	6	040020
01010-81035	C0100-04A0	13	060040
01010-81035	C0100-04A0	3	060040
01010-81035	J1110-01A1A	19	180010
01010-81035	J1110-01A2A	19	180015
01010-81035	K1120-01A0A	3	210430
01010-81040	B0000-01A0	11	040010
01010-81040	B0400-01A0	11	040070
01010-81040	E0200-04A0	2	120050
01010-81040	H0320-01A1	3	150070
01010-81040	H0330-01A0	7	150080
01010-81040	K1110-25A4	17	210280
01010-81040	K1110-25A4	4	210280
01010-81040	K1110-25A4	8	210280
01010-81045	K1110-38A4	11	210420
01010-81045	K1110-38A4	2	210420
01010-81050	B0000-01A0	13	040010
01010-81050	B0400-01A0	2	040070
01010-81060	B0100-02A0	4	040040
01010-81070	E0200-06A0	7	120070
01010-81070	Y1620-11A0	15	510150
01010-81080	C0100-02A0	4	060020
01010-81095	H1831-01A0	2	150160
01010-81220	E0200-02A0	7	120030
01010-81220	M1120-01A0	9	240020
01010-81220	M1150-01A0	24	240050
01010-81220	M1150-01A0	28	240050
01010-81220	M1150-01A0	3	240050

PART NO.	FIG.NO.	INDEX	PAGE
01010-81220	M1510-01A0	3	240125
01010-81220	M1510-01A1	3	240130
01010-81225	B0000-02A0	3	040020
01010-81225	B0100-03A0	2	040050
01010-81225	B0100-03A0	6	040050
01010-81225	B0400-01A0	8	040070
01010-81225	B0920-01A0	13	040080
01010-81225	B0920-01A0	16	040080
01010-81225	B0920-01A0	22	040080
01010-81225	B0920-01A0	4	040080
01010-81225	D0200-01A0	20	090020
01010-81225	D0200-01A0	23	090020
01010-81225	D0200-01A0	26	090020
01010-81225	D0200-01A0	29	090020
01010-81225	D0200-01A0	32	090020
01010-81225	D0200-01A0	36	090020
01010-81225	D0200-01A0	39	090020
01010-81225	D0200-01A0	42	090020
01010-81225	D0200-01A0	45	090020
01010-81225	D0200-03A0	8	090040
01010-81225	E0200-01A0	17	120020
01010-81225	E0200-01A0	21	120020
01010-81225	E0200-01A0	27	120020
01010-81225	E0200-01A0	30	120020
01010-81225	E0200-03A2	13	120040
01010-81225	E0200-03A2	22	120040
01010-81225	E0200-03A2	25	120040
01010-81225	E0200-03A2	28	120040
01010-81225	E0200-03A2	31	120040
01010-81225	E0200-03A2	40	120040
01010-81225	E0200-04A0	13	120050
01010-81225	E0200-04A0	16	120050
01010-81225	E0200-04A0	20	120050
01010-81225	E0200-04A0	26	120050
01010-81225	E0200-04A0	29	120050
01010-81225	E0200-04A0	32	120050
01010-81225	E0200-04A0	35	120050
01010-81225	E0200-04A0	7	120050
01010-81225	E0200-05A0	18	120060
01010-81225	E0200-05A0	2	120060
01010-81225	E0200-05A0	9	120060
01010-81225	H0110-01A0	10	150010
01010-81225	H0110-01A0	17	150010
01010-81225	H0320-01A1	17	150070
01010-81225	H0320-01A1	6	150070
01010-81225	H0320-01A1	9	150070
01010-81225	H0340-01A2	10	150090
01010-81225	H0340-01A2	3	150090
01010-81225	H1810-01A0	4	150150
01010-81225	H1831-03A0	12	150180

PART NO.	FIG.NO.	INDEX	PAGE
01010-81225	H1831-03A0	15	150180
01010-81225	H1831-03A0	18	150180
01010-81225	H1831-03A0	2	150180
01010-81225	H1831-03A0	6	150180
01010-81225	H1831-03A0	9	150180
01010-81225	H1833-01A0	28	150190
01010-81225	H1840-01A0	17	150200
01010-81225	H1840-01A0	20	150200
01010-81225	H1840-01A0	23	150200
01010-81225	H1840-01A0	26	150200
01010-81225	K0350-01A0	5	210040
01010-81225	K0350-01A0	8	210040
01010-81225	M1120-01A0	5	240020
01010-81225	M1220-01A1	25	240080
01010-81225	M1510-01A0	14	240125
01010-81225	M1510-01A0	6	240125
01010-81225	M1510-01A1	14	240130
01010-81225	M1510-01A1	6	240130
01010-81225	R0120-01A0	17	330020
01010-81225	R0120-01A0	4	330020
01010-81225	T1110-02A3	3	360020
01010-81225	T1110-02A5	3	360025
01010-81230	B0100-03A0	8	040050
01010-81230	B0200-01A0	11	040060
01010-81230	B0200-01A0	15	040060
01010-81230	B0200-01A0	17	040060
01010-81230	B0200-01A0	21	040060
01010-81230	B0200-01A0	26	040060
01010-81230	B0200-01A0	9	040060
01010-81230	D0200-03A0	5	090040
01010-81230	E0200-01A0	24	120020
01010-81230	E0200-01A0	9	120020
01010-81230	E0200-04A0	10	120050
01010-81230	E0200-05A0	12	120060
01010-81230	E0200-05A0	15	120060
01010-81230	E0200-05A0	5	120060
01010-81230	H1210-01A2	8	150100
01010-81230	J1110-01A1A	7	180010
01010-81230	J1110-01A2A	7	180015
01010-81230	J1310-01A0	3	180020
01010-81230	J1310-01A0	8	180020
01010-81230	K1110-24A0	5	210270
01010-81230	M1110-01A0A	13	240010
01010-81230	M1110-01A0A	16	240010
01010-81230	M1120-01A0	12	240020
01010-81230	M1120-01A0	18	240020
01010-81230	M1120-01A0	21	240020
01010-81230	M1120-01A0	24	240020
01010-81230	M1120-01A0	27	240020
01010-81230	M1120-01A0	30	240020

PART NO.	FIG.NO.	INDEX	PAGE
01010-81230	M1120-01A0	33	240020
01010-81230	M1120-01A0	36	240020
01010-81230	M1120-01A0	40	240020
01010-81230	M1120-01A0	43	240020
01010-81230	M1120-01A0	7	240020
01010-81230	M1120-01A0	48	240021
01010-81230	M1130-01A0	10	240030
01010-81230	M1130-01A0	18	240030
01010-81230	M1130-01A0	27	240030
01010-81230	M1130-01A0	33	240030
01010-81230	M1130-01A0	4	240030
01010-81230	M1130-01A0	7	240030
01010-81230	M1140-01A0	10	240040
01010-81230	M1140-01A0	18	240040
01010-81230	M1140-01A0	27	240040
01010-81230	M1140-01A0	29	240040
01010-81230	M1140-01A0	33	240040
01010-81230	M1140-01A0	37	240040
01010-81230	M1140-01A0	4	240040
01010-81230	M1140-01A0	7	240040
01010-81230	M1150-01A0	12	240050
01010-81230	M1150-01A0	16	240050
01010-81230	M1150-01A0	18	240050
01010-81230	M1150-01A0	5	240050
01010-81230	M1150-01A0	9	240050
01010-81230	M1150-02A0	1	240060
01010-81230	M1150-02A0	16	240060
01010-81230	M1150-02A0	20	240060
01010-81230	M1150-02A0	4	240060
01010-81230	M1150-02A0	5	240060
01010-81230	M1150-02A0	8	240060
01010-81230	M1210-01A0	15	240070
01010-81230	M1210-01A0	2	240070
01010-81230	M1210-01A0	5	240070
01010-81230	M1210-01A0	8	240070
01010-81230	M1220-01A1	20	240080
01010-81230	M1220-01A1	23	240080
01010-81230	M1220-01A1	32	240080
01010-81230	M1230-01A0	11	240090
01010-81230	M1230-01A0	15	240090
01010-81230	M1230-01A0	2	240090
01010-81230	M1230-01A0	5	240090
01010-81230	M1230-01A0	8	240090
01010-81230	M1510-01A0	10	240125
01010-81230	M1510-01A1	10	240130
01010-81230	M1810-01A0	10	240150
01010-81230	M1810-01A0	13	240150
01010-81230	M1810-01A0	16	240150
01010-81230	M1810-01A0	2	240150
01010-81230	M1810-01A0	20	240150

PART NO.	FIG.NO.	INDEX	PAGE
01010-81230	M1810-01A0	24	240150
01010-81230	M1810-01A0	27	240150
01010-81230	M1810-01A0	5	240150
01010-81230	M1810-01A0	7	240150
01010-81230	M1810-02A0	11	240160
01010-81230	M1810-02A0	12	240160
01010-81230	M1810-02A0	4	240160
01010-81230	M1810-02A0	7	240160
01010-81230	M1810-02A1	12	240165
01010-81230	P1210-01A0	7	300020
01010-81230	R1140-01A0	3	330070
01010-81230	R1140-01A1	2	330075
01010-81230	T1110-02A3	13	360020
01010-81230	T1110-02A3	19	360020
01010-81230	T1110-02A3	6	360020
01010-81230	T1110-02A5	13	360025
01010-81230	T1110-02A5	19	360025
01010-81230	T1110-02A5	6	360025
01010-81230	T1200-01A3	11	360090
01010-81230	T1200-01A3	18	360090
01010-81230	T1200-01A5	23	360095
01010-81230	T1200-01A5	31	360095
01010-81235	B0000-01A0	9	040010
01010-81235	H1210-01A2	2	150100
01010-81235	K0220-01A0	5	210025
01010-81235	M1420-01A0	7	240120
01010-81235	M1810-01A1	10	240155
01010-81235	M1810-01A1	13	240155
01010-81235	M1810-01A1	16	240155
01010-81235	M1810-01A1	2	240155
01010-81235	M1810-01A1	20	240155
01010-81235	M1810-01A1	24	240155
01010-81235	M1810-01A1	27	240155
01010-81235	M1810-01A1	5	240155
01010-81235	M1810-01A1	7	240155
01010-81235	M1810-02A1	11	240165
01010-81235	M1810-02A1	4	240165
01010-81235	M1810-02A1	7	240165
01010-81235	N1310-01A0	3	270040
01010-81235	N1310-01A0	5	270040
01010-81240	A2650-A0B7	2	030280
01010-81240	B0000-01A0	17	040010
01010-81240	H1270-01A0	2	150120
01010-81240	H1833-01A0	22	150190
01010-81240	K0700-01A0	4	210050
01010-81240	K1110-17A0	6	210220
01010-81240	M1130-01A0	29	240030
01010-81240	M1130-01A1	12	240035
01010-81240	M1310-01A0	2	240100
01010-81245	K0220-01A0	2	210025

PART NO.	FIG.NO.	INDEX	PAGE
01010-81245	M1220-01A1	28	240080
01010-81250	H1210-01A2	5	150100
01010-81255	M1130-01A1	4	240035
01010-81255	M1140-01A1	12	240045
01010-81255	M1140-01A1	4	240045
01010-81255	M1210-01A0	11	240070
01010-81260	E0200-05A0	22	120060
01010-81260	H0340-01A2	20	150090
01010-81260	H1210-01A2	12	150100
01010-81260	H1833-01A0	25	150190
01010-81260	M1130-01A1	14	240035
01010-81260	M1130-01A1	2	240035
01010-81260	M1140-01A1	14	240045
01010-81260	M1140-01A1	2	240045
01010-81260	M1310-01A0	4	240100
01010-81265	E0200-03A2	17	120040
01010-81275	K0350-01A0	12	210040
01010-81285	K1110-17A0	8	210220
01010-81290	E0200-03A2	9	120040
01010-81295	B0920-01A0	19	040080
01010-81295	E0200-06A0	12	120070
01010-81435	K0700-01A0	6	210050
01010-81465	Y1620-01A3	13	510140
01010-81465	Y1620-41A0	13	510160
01010-81470	T1510-01B3	11	360130
01010-81470	T1510-01B5	15	360140
01010-81635	D0100-01A1	13	090010
01010-81635	H0110-01A0	28	150010
01010-81640	H0120-01A5	3	150020
01010-81655	N1210-01A0	10	270020
01010-81660	N1110-01A0	4	270010
01010-81690	N1110-01A0	5	270010
01010-82050	R1200-01A0	2	330080
01010-B0620	A4040-A0A6	12	030400
01010-D0820	K0180-01A3	14	210020
01010-D0820	K0180-01A3	27	210020
01010-D0820	K0180-01A3	30	210020
01010-D0820	K0180-01A3	34	210020
01010-D0820	K0180-01A3	6	210020
01010-D0820	K1110-07A0	2	210120
01010-D0820	K1110-14A0	2	210190
01010-D0820	K1110-14A0	8	210190
01010-D0820	K1110-15A0	10	210200
01010-D0820	K1110-15A0	12	210200
01010-D0820	K1110-15A0	3	210200
01010-D1025	K1110-10A4	19	210150
01010-D1045	K1110-20A0	12	210240
01010-D1225	K1110-11H2	23	210160
01010-D1230	K1110-24A0	19	210270
01011-62790	M1520-01A0	1	240140

PART NO.	FIG.NO.	INDEX	PAGE
01011-81225	T1190-01A0	3	360085
01011-81230	N1210-01A0	5	270020
01011-81600	H0120-01A5	6	150020
01011-81620	T1230-01A0	17	360110
01011-81620	T1230-01A0	22	360110
01011-81630	B0100-01A0	5	040030
01011-81640	T1230-01A0	25	360110
01011-81670	T1230-01A0	28	360110
01019-11640	T1125-01A0	2	360070
01023-10306	Y1670-02A0	22	510370
01023-10406	K0180-01A3	21	210020
01023-10508	K1110-31A0	19	210340
01023-10512	K1110-31A0	20	210340
01023-10612	K1110-06A0	4	210110
01023-10612	K1110-06A0	6	210110
01023-10614	K1110-31A0	40	210340
01023-10616	K1110-13A0	2	210180
01023-20412	K1110-09A4	10	210140
01023-20412	K1110-09A4	3	210140
01023-20416	K1110-20A0	21	210240
01023-20614	K1110-29A0	31	210320
01023-20616	K1110-10A4	9	210150
01023-20620	K1110-08A4	9	210130
01023-60316	K1110-29A0	27	210320
01023-60408	K1110-31A0	17	210340
01023-60410	K1110-29A0	9	210320
01023-60410	K1110-31A0	38	210340
01023-60510	K1110-28A4	9	210310
01023-60512	K1110-31A0	18	210340
01023-60516	K1110-28A4	10	210310
01023-60616	K1110-29A0	26	210320
01023-60616	K1110-31A0	35	210340
01023-60620	K1110-28A4	14	210310
01023-60630	K1110-28A4	15	210310
01023-60630	K1110-31A0	22	210340
01023-70514	K1110-31A0	26	210340
01024-80850	Y1620-01A3	28	510140
01024-80850	Y1620-41A0	31	510160
01024-81016	K1110-25A4	10	210280
01024-81030	Y1620-01A3	32	510140
01050-31430	A2230-A0B4	3	030210
01050-31845	A2370-A0F4	3	030240
01124-60825	A1530-A0E4	3	030090
01124-60825	A1670-A0A7	6	030120
01124-60830	A1670-A0A7	8	030120
01144-51035	A4040-A0A6	6	030400
01236-40816	A5010-A0J2	8	030490
01240-00616	K1110-06A0	7	210110
01240-01025	K1110-07A0	22	210120
01245-00612	K1110-11H2	10	210160

PART NO.	FIG.NO.	INDEX	PAGE
01245-00616	K0310-01A0	3	210030
01245-00616	K1110-11H2	17	210160
01245-00816	K1110-13A0	13	210180
01245-00816	K1110-14A0	5	210190
01245-00820	K1110-32A0	8	210350
01245-01016	K1110-11H2	8	210160
01245-01025	K1110-24A0	10	210270
01245-01025	K1110-24A0	8	210270
01245-01220	K1110-11H2	3	210160
01245-01220	K1110-11H2	5	210160
01252-41025	K1110-27A4	10	210300
01252-41025	K1110-30A4	10	210330
01252-60545	Y1679-01A0	3	510400
01252-60610	Y1662-23A0	8	510260
01252-60620	Y1662-29A0	9	510320
01252-60630	Y1662-22A0	30	510250
01252-60820	Y1662-25A0	14	510280
01252-60820	Y1679-01A0	18	510400
01252-60825	Y1640-02A0	15	510200
01252-60850	Y1662-25A0	32	510280
01252-60865	Y1600-08A0	7	510130
01252-60865	Y1662-25A0	34	510280
01252-61040	Y1679-01A0	33	510400
01252-61235	Y1651-01A0	20	510210
01252-70516	H0110-01A0	21	150010
01252-70816	K1110-29A0	17	210320
01252-71030	M1420-01A0	4	240120
01310-01016	Y1620-01A3	22	510140
01310-01016	Y1620-41A0	23	510160
01310-01216	Y1620-11A0	28	510150
01370-00408	K0180-01A3	17	210020
01370-00420	K1110-08A4	13	210130
01370-00508	M1510-01A0	2	240125
01370-00508	M1510-01A1	2	240130
01370-10308	K0180-01A3	19	210020
01370-10308	K1110-27A4	2	210300
01370-10308	K1110-30A4	2	210330
01370-20308	K0180-01A3	24	210020
01370-30412	K1110-10A4	6	210150
01370-40412	K1110-09A4	16	210140
01434-00820	E0100-01A0	10	120010
01434-10616	C0100-03A0	2	060030
01434-10616	C0100-03A0	5	060030
01435-00610	K1110-16A4	9	210210
01435-00612	A2110-A0P1	16	030180
01435-00612	A4050-A0C6	8	030410
01435-00612	K1110-13A0	8	210180
01435-00612	K1110-31A0	37	210340
01435-00614	A1111-A0D7	6	030050
01435-00614	A4510-A0F9	2	030480

PART NO.	FIG.NO.	INDEX	PAGE
01435-00616	A2810-A0A5	3	030290
01435-00616	A3030-A0A3	9	030310
01435-00625	A4050-A0C6	6	030410
01435-00625	A4230-A0F4	8	030470
01435-00812	A4040-A0A6	10	030400
01435-00814	A2110-A0P1	2	030180
01435-00814	A3030-A0A3	11	030310
01435-00816	A2040-A0E4	3	030140
01435-00816	A2110-A0P1	10	030180
01435-00816	A2210-A0F9	10	030200
01435-00816	A3010-A0A2	11	030300
01435-00816	K1110-16A4	7	210210
01435-00820	A1570-A0B6	4	030100
01435-00820	A2410-A0B8	5	030250
01435-00825	A3010-A0A2	12	030300
01435-00825	A3110-A0D6	26	030320
01435-00825	A5110-A0A4	3	030540
01435-00825	K1110-17D0	5	210225
01435-00830	A1570-A0B6	3	030100
01435-00830	A5070-A0A3	1	030530
01435-00835	A2110-A0P1	3	030180
01435-00840	A3030-A0A3	15	030310
01435-00855	A2040-A0E4	6	030140
01435-00855	A5010-A0J2	11	030490
01435-00855	Y1620-11A0	40	510150
01435-00865	A2450-A0A1	11	030270
01435-00870	A2040-A0E4	7	030140
01435-00875	A9530-A0A1	3	030690
01435-00880	A3110-A0D6	15	030320
01435-00885	K1110-16A4	5	210210
01435-01016	A2190-A0B5	9	030190
01435-01020	A1030-A0B6	2	030020
01435-01020	A2190-A0B5	7	030190
01435-01020	A4040-A0A6	17	030400
01435-01020	A5170-A0A2B	1	030550
01435-01025	A1111-A0D7	13	030050
01435-01025	A1610-A0N7	5	030110
01435-01025	A4040-A0A6	15	030400
01435-01030	A2210-A0F9	2	030200
01435-01030	A4110-A0H8	6	030440
01435-01030	A7010-A0A6	2	030650
01435-01035	A4210-A0F4	5	030450
01435-01045	A1510-A0G3	3	030080
01435-01060	A5010-A0J2	16	030490
01435-01065	A1310-A0M1	3	030060
01435-01070	A1320-A0A8	5	030070
01435-01075	A1310-A0M1	2	030060
01435-01090	A4510-A0F9	7	030480
01435-01220	A2210-A0F9	13	030200
01435-01235	A1670-A0A7	4	030120

PART NO.	FIG.NO.	INDEX	PAGE
01435-01235	A6210-A0G6	2	030630
01435-01265	M1130-01A1	8	240035
01435-01265	M1140-01A1	8	240045
01435-01270	A2050-A0B3	6	030160
01435-20816	C0100-03A0	9	060030
01435-40610	K1110-10A4	13	210150
01435-40616	K1110-07A0	6	210120
01435-40616	K1110-07A0	8	210120
01435-40616	K1110-08A4	2	210130
01435-40616	K1110-09A4	12	210140
01435-40616	K1110-15A0	6	210200
01435-40620	K1110-33A0	7	210360
01435-40820	K1110-10A4	17	210150
01436-01015	A4510-A0F9	6	030480
01436-01030	A4110-A0H8	8	030440
01436-01045	A4110-A0H8	9	030440
01508-40603	A4510-A0F9	15	030480
01541-21260	M1130-01A1	9	240035
01541-21260	M1140-01A1	9	240045
01580-00403	K0180-01A3	22	210020
01580-00605	A4510-A0F9	14	030480
01580-00605	A4510-A0F9	9	030480
01580-01210	K0700-01A0	3	210050
01580-10403	K0180-01A3	10	210020
01580-10403	K0180-01A3	4	210020
01580-10605	B0400-01A0	23	040070
01580-11008	K1110-07A0	17	210120
01580-11008	M1130-01A0	16	240030
01580-11008	M1140-01A0	16	240040
01580-11210	M1110-01A0A	11	240010
01580-11210	M1130-01A1	11	240035
01580-11210	M1140-01A1	11	240045
01580-11210	T1190-01A0	5	360085
01580-11210	Y1662-25A0	31	510280
01580-11613	K1120-01A0A	6	210430
01580-11613	K1120-01A0A	9	210430
01580-11613	T1125-01A0	3	360070
01580-11613	T1230-01A0	18	360110
01580-11613	T1230-01A0	23	360110
01580-11613	T1230-01A0	26	360110
01580-11613	T1230-01A0	29	360110
01582-11008	B0400-01A0	17	040070
01582-11008	B0400-01A0	21	040070
01582-11008	Y1600-08A0	15	510130
01584-00806	A1610-A0N7	3	030110
01584-00806	A2040-A0E4	8	030140
01584-01008	A4040-A0A6	16	030400
01584-01008	A4040-A0A6	7	030400
01584-01008	K1110-06A0	16	210110
01590-10607	A4510-A0F9	11	030480

PART NO.	FIG.NO.	INDEX	PAGE
01593-31008	B0400-01A0	19	040070
01597-01009	C0100-04A0	10	060040
01597-01009	C0100-04A0	18	060040
01601-20410	K0180-01A3	11	210020
01601-20410	K0180-01A3	5	210020
01601-20513	H0110-01A0	22	150010
01601-20513	K1110-31A0	21	210340
01602-20619	B0400-01A0	24	040070
01602-21030	B0400-01A0	15	040070
01640-20610	A4510-A0F9	3	030480
01640-20610	K1110-28A4	16	210310
01640-20610	K1110-31A0	23	210340
01640-21223	M1110-01A0A	25	240010
01641-20608	A4040-A0A6	13	030400
01641-20812	A1670-A0A7	9	030120
01641-20812	A2040-A0E4	9	030140
01641-21626	N1310-01A0	9	270040
01641-50608	K1110-11H2	16	210160
01643-30623	A1111-A0D7	7	030050
01643-30623	C0100-03A0	3	060030
01643-30623	C0100-03A0	6	060030
01643-30623	D0100-01A1	7	090010
01643-30623	E0200-02A0	11	120030
01643-30623	K1110-09A4	2	210140
01643-30623	K1110-31A0	41	210340
01643-30623	M1120-01A0	17	240020
01643-30623	M1130-01A0	14	240030
01643-30623	M1130-01A0	26	240030
01643-30623	M1140-01A0	14	240040
01643-30623	M1140-01A0	26	240040
01643-30623	M1220-01A1	10	240080
01643-30623	M1220-01A1	17	240080
01643-30623	Y1662-23A0	7	510260
01643-30823	A2110-A0P1	11	030180
01643-30823	B0200-01A0	5	040060
01643-30823	E0100-01A0	11	120010
01643-30823	E0200-01A0	7	120020
01643-30823	E0200-02A0	3	120030
01643-30823	E0200-02A0	5	120030
01643-30823	E0410-01A0	3	120090
01643-30823	K1110-06A0	20	210110
01643-30823	K1110-16A4	3	210210
01643-30823	K1110-17D0	3	210225
01643-30823	K1110-27A4	14	210300
01643-30823	K1110-30A4	14	210330
01643-30823	K1110-32A0	4	210350
01643-30823	Y1620-11A0	39	510150
01643-30823	Y1620-41A0	30	510160
01643-30823	Y1627-01A0	12	510170
01643-30823	Y1627-01A1	13	510180

PART NO.	FIG.NO.	INDEX	PAGE
01643-30823	Y1670-02A0	15	510370
01643-31032	B0000-01A0	12	040010
01643-31032	B0000-01A0	14	040010
01643-31032	B0000-02A0	7	040020
01643-31032	B0100-02A0	5	040040
01643-31032	B0400-01A0	12	040070
01643-31032	B0400-01A0	3	040070
01643-31032	B0400-01A0	6	040070
01643-31032	C0100-01A0	10	060010
01643-31032	C0100-01A0	18	060010
01643-31032	C0100-02A0	15	060020
01643-31032	C0100-02A0	5	060020
01643-31032	C0100-02A0	8	060020
01643-31032	C0100-03A0	14	060030
01643-31032	C0100-03A0	18	060030
01643-31032	C0100-03A0	21	060030
01643-31032	C0100-04A0	14	060040
01643-31032	C0100-04A0	17	060040
01643-31032	C0100-04A0	20	060040
01643-31032	C0100-04A0	24	060040
01643-31032	C0100-04A0	4	060040
01643-31032	C0100-04A0	7	060040
01643-31032	C0100-04A0	9	060040
01643-31032	C0310-01A0	12	060050
01643-31032	C0310-01A0	3	060050
01643-31032	C0310-01A0	6	060050
01643-31032	C0310-01A0	9	060050
01643-31032	D0200-01A0	18	090020
01643-31032	D0200-02A0	8	090030
01643-31032	D0200-03A0	16	090040
01643-31032	E0200-01A0	15	120020
01643-31032	E0200-02A0	17	120030
01643-31032	E0200-04A0	24	120050
01643-31032	E0200-04A0	3	120050
01643-31032	E0200-05A0	26	120060
01643-31032	E0200-05A0	28	120060
01643-31032	E0200-05A0	30	120060
01643-31032	E0200-06A0	17	120070
01643-31032	E0200-06A0	4	120070
01643-31032	E0200-06A0	8	120070
01643-31032	E0200-07A0	10	120080
01643-31032	E0200-07A0	12	120080
01643-31032	E0200-07A0	7	120080
01643-31032	H0320-01A1	4	150070
01643-31032	H0330-01A0	8	150080
01643-31032	H1220-01A0	13	150110
01643-31032	H1220-01A0	17	150110
01643-31032	H1831-01A0	3	150160
01643-31032	J1110-01A1A	20	180010
01643-31032	J1110-01A2A	20	180015

PART NO.	FIG.NO.	INDEX	PAGE
01643-31032	K1110-07A0	18	210120
01643-31032	K1110-09A4	14	210140
01643-31032	K1110-17A0	4	210220
01643-31032	K1110-19A0	10	210230
01643-31032	K1110-19A0	12	210230
01643-31032	K1110-19A0	15	210230
01643-31032	K1110-20A0	15	210240
01643-31032	K1110-20A0	3	210240
01643-31032	K1110-20A0	6	210240
01643-31032	K1110-21A0	4	210250
01643-31032	K1110-21A0	6	210250
01643-31032	K1110-22A4	4	210260
01643-31032	K1110-22A4	6	210260
01643-31032	K1110-25A4	13	210280
01643-31032	K1110-25A4	18	210280
01643-31032	K1110-25A4	22	210280
01643-31032	K1110-25A4	25	210280
01643-31032	K1110-25A4	5	210280
01643-31032	K1110-25A4	9	210280
01643-31032	K1110-29A0	33	210320
01643-31032	K1110-31A0	43	210340
01643-31032	K1110-34A4	11	210370
01643-31032	K1110-34A4	8	210370
01643-31032	K1110-34A5	3	210380
01643-31032	K1110-37A0	14	210410
01643-31032	K1110-37A0	19	210410
01643-31032	K1110-37A0	3	210410
01643-31032	K1110-37A0	9	210410
01643-31032	K1110-38A4	12	210420
01643-31032	K1110-38A4	3	210420
01643-31032	K1120-01A0A	4	210430
01643-31032	M1130-01A0	37	240030
01643-31032	M1150-02A0	12	240060
01643-31032	M1150-02A0	14	240060
01643-31032	R1100-01A0	9	330060
01643-31032	T1110-02A5	10	360025
01643-31032	T1110-04A3	6	360040
01643-31032	T1110-04A5	6	360045
01643-31032	T1110-05A3	13	360050
01643-31032	T1110-05A5	13	360055
01643-31032	T1110-06A4	4	360056
01643-31032	T1110-06A4	7	360056
01643-31032	T1110-06A4	9	360056
01643-31032	T1200-01A5	12	360095
01643-31032	Y1620-11A0	16	510150
01643-31032	Y1620-41A0	36	510160
01643-31232	A2650-A0B7	3	030280
01643-31232	B0000-01A0	10	040010
01643-31232	B0000-01A0	18	040010
01643-31232	B0000-02A0	4	040020

PART NO.	FIG.NO.	INDEX	PAGE
01643-31232	B0100-02A0	7	040040
01643-31232	B0100-03A0	3	040050
01643-31232	B0100-03A0	7	040050
01643-31232	B0100-03A0	9	040050
01643-31232	B0200-01A0	12	040060
01643-31232	B0200-01A0	16	040060
01643-31232	B0200-01A0	18	040060
01643-31232	B0200-01A0	27	040060
01643-31232	B0400-01A0	9	040070
01643-31232	B0920-01A0	14	040080
01643-31232	B0920-01A0	17	040080
01643-31232	B0920-01A0	20	040080
01643-31232	B0920-01A0	23	040080
01643-31232	B0920-01A0	5	040080
01643-31232	D0200-01A0	21	090020
01643-31232	D0200-01A0	24	090020
01643-31232	D0200-01A0	27	090020
01643-31232	D0200-01A0	30	090020
01643-31232	D0200-01A0	33	090020
01643-31232	D0200-01A0	37	090020
01643-31232	D0200-01A0	40	090020
01643-31232	D0200-01A0	43	090020
01643-31232	D0200-03A0	6	090040
01643-31232	D0200-03A0	9	090040
01643-31232	E0100-01A0	6	120010
01643-31232	E0200-01A0	10	120020
01643-31232	E0200-01A0	18	120020
01643-31232	E0200-01A0	22	120020
01643-31232	E0200-01A0	25	120020
01643-31232	E0200-01A0	28	120020
01643-31232	E0200-01A0	31	120020
01643-31232	E0200-02A0	8	120030
01643-31232	E0200-03A2	10	120040
01643-31232	E0200-03A2	14	120040
01643-31232	E0200-03A2	18	120040
01643-31232	E0200-03A2	23	120040
01643-31232	E0200-03A2	26	120040
01643-31232	E0200-03A2	29	120040
01643-31232	E0200-03A2	32	120040
01643-31232	E0200-03A2	41	120040
01643-31232	E0200-04A0	11	120050
01643-31232	E0200-04A0	14	120050
01643-31232	E0200-04A0	17	120050
01643-31232	E0200-04A0	21	120050
01643-31232	E0200-04A0	27	120050
01643-31232	E0200-04A0	30	120050
01643-31232	E0200-04A0	33	120050
01643-31232	E0200-04A0	36	120050
01643-31232	E0200-04A0	8	120050
01643-31232	E0200-05A0	10	120060

PART NO.	FIG.NO.	INDEX	PAGE
01643-31232	E0200-05A0	13	120060
01643-31232	E0200-05A0	16	120060
01643-31232	E0200-05A0	19	120060
01643-31232	E0200-05A0	23	120060
01643-31232	E0200-05A0	3	120060
01643-31232	E0200-05A0	6	120060
01643-31232	E0200-06A0	13	120070
01643-31232	H0110-01A0	11	150010
01643-31232	H0110-01A0	18	150010
01643-31232	H0320-01A1	10	150070
01643-31232	H0320-01A1	18	150070
01643-31232	H0320-01A1	7	150070
01643-31232	H0340-01A2	11	150090
01643-31232	H0340-01A2	21	150090
01643-31232	H0340-01A2	4	150090
01643-31232	H1210-01A2	13	150100
01643-31232	H1210-01A2	3	150100
01643-31232	H1210-01A2	6	150100
01643-31232	H1210-01A2	9	150100
01643-31232	H1270-01A0	3	150120
01643-31232	H1810-01A0	5	150150
01643-31232	H1831-03A0	10	150180
01643-31232	H1831-03A0	13	150180
01643-31232	H1831-03A0	16	150180
01643-31232	H1831-03A0	19	150180
01643-31232	H1831-03A0	3	150180
01643-31232	H1831-03A0	7	150180
01643-31232	H1833-01A0	23	150190
01643-31232	H1833-01A0	26	150190
01643-31232	H1833-01A0	29	150190
01643-31232	H1840-01A0	18	150200
01643-31232	H1840-01A0	21	150200
01643-31232	H1840-01A0	24	150200
01643-31232	H1840-01A0	27	150200
01643-31232	J1110-01A1A	8	180010
01643-31232	J1110-01A2A	8	180015
01643-31232	J1310-01A0	4	180020
01643-31232	J1310-01A0	9	180020
01643-31232	K0220-01A0	3	210025
01643-31232	K0220-01A0	6	210025
01643-31232	K0350-01A0	13	210040
01643-31232	K0350-01A0	6	210040
01643-31232	K0350-01A0	9	210040
01643-31232	K0700-01A0	5	210050
01643-31232	K1110-17A0	7	210220
01643-31232	K1110-17A0	9	210220
01643-31232	K1110-24A0	6	210270
01643-31232	M1110-01A0A	14	240010
01643-31232	M1110-01A0A	17	240010
01643-31232	M1110-01A0A	21	240010

PART NO.	FIG.NO.	INDEX	PAGE
01643-31232	M1120-01A0	10	240020
01643-31232	M1120-01A0	13	240020
01643-31232	M1120-01A0	19	240020
01643-31232	M1120-01A0	22	240020
01643-31232	M1120-01A0	25	240020
01643-31232	M1120-01A0	28	240020
01643-31232	M1120-01A0	31	240020
01643-31232	M1120-01A0	34	240020
01643-31232	M1120-01A0	37	240020
01643-31232	M1120-01A0	41	240020
01643-31232	M1120-01A0	6	240020
01643-31232	M1120-01A0	8	240020
01643-31232	M1120-01A0	49	240021
01643-31232	M1130-01A0	11	240030
01643-31232	M1130-01A0	19	240030
01643-31232	M1130-01A0	28	240030
01643-31232	M1130-01A0	30	240030
01643-31232	M1130-01A0	34	240030
01643-31232	M1130-01A0	5	240030
01643-31232	M1130-01A0	8	240030
01643-31232	M1130-01A1	13	240035
01643-31232	M1130-01A1	15	240035
01643-31232	M1130-01A1	3	240035
01643-31232	M1130-01A1	5	240035
01643-31232	M1140-01A0	11	240040
01643-31232	M1140-01A0	19	240040
01643-31232	M1140-01A0	28	240040
01643-31232	M1140-01A0	30	240040
01643-31232	M1140-01A0	34	240040
01643-31232	M1140-01A0	5	240040
01643-31232	M1140-01A0	8	240040
01643-31232	M1140-01A1	13	240045
01643-31232	M1140-01A1	15	240045
01643-31232	M1140-01A1	3	240045
01643-31232	M1140-01A1	5	240045
01643-31232	M1150-01A0	10	240050
01643-31232	M1150-01A0	13	240050
01643-31232	M1150-01A0	19	240050
01643-31232	M1150-01A0	4	240050
01643-31232	M1150-01A0	6	240050
01643-31232	M1150-02A0	17	240060
01643-31232	M1150-02A0	2	240060
01643-31232	M1150-02A0	21	240060
01643-31232	M1150-02A0	6	240060
01643-31232	M1150-02A0	9	240060
01643-31232	M1210-01A0	12	240070
01643-31232	M1210-01A0	3	240070
01643-31232	M1210-01A0	6	240070
01643-31232	M1210-01A0	9	240070
01643-31232	M1220-01A1	24	240080

PART NO.	FIG.NO.	INDEX	PAGE
01643-31232	M1220-01A1	29	240080
01643-31232	M1220-01A1	33	240080
01643-31232	M1230-01A0	12	240090
01643-31232	M1230-01A0	16	240090
01643-31232	M1230-01A0	3	240090
01643-31232	M1230-01A0	6	240090
01643-31232	M1230-01A0	9	240090
01643-31232	M1310-01A0	3	240100
01643-31232	M1310-01A0	5	240100
01643-31232	M1420-01A0	8	240120
01643-31232	M1510-01A0	11	240125
01643-31232	M1510-01A0	15	240125
01643-31232	M1510-01A0	4	240125
01643-31232	M1510-01A0	7	240125
01643-31232	M1510-01A1	11	240130
01643-31232	M1510-01A1	15	240130
01643-31232	M1510-01A1	4	240130
01643-31232	M1510-01A1	7	240130
01643-31232	M1810-01A0	14	240150
01643-31232	M1810-01A0	17	240150
01643-31232	M1810-01A0	25	240150
01643-31232	M1810-01A0	3	240150
01643-31232	M1810-01A0	8	240150
01643-31232	M1810-01A1	14	240155
01643-31232	M1810-01A1	17	240155
01643-31232	M1810-01A1	25	240155
01643-31232	M1810-01A1	3	240155
01643-31232	M1810-01A1	8	240155
01643-31232	M1810-02A0	13	240160
01643-31232	M1810-02A0	5	240160
01643-31232	M1810-02A0	8	240160
01643-31232	M1810-02A1	13	240165
01643-31232	M1810-02A1	5	240165
01643-31232	M1810-02A1	8	240165
01643-31232	N1210-01A0	6	270020
01643-31232	N1310-01A0	4	270040
01643-31232	N1310-01A0	6	270040
01643-31232	P1210-01A0	8	300020
01643-31232	R0120-01A0	18	330020
01643-31232	R0120-01A0	5	330020
01643-31232	R1140-01A0	4	330070
01643-31232	R1140-01A1	3	330075
01643-31232	T1110-02A3	14	360020
01643-31232	T1110-02A3	20	360020
01643-31232	T1110-02A3	4	360020
01643-31232	T1110-02A3	7	360020
01643-31232	T1110-02A5	14	360025
01643-31232	T1110-02A5	20	360025
01643-31232	T1110-02A5	4	360025
01643-31232	T1110-02A5	7	360025

PART NO.	FIG.NO.	INDEX	PAGE
01643-31232	T1190-01A0	4	360085
01643-31232	T1200-01A3	12	360090
01643-31232	T1200-01A3	19	360090
01643-31232	T1200-01A5	24	360095
01643-31232	T1200-01A5	32	360095
01643-31232	Y1662-25A0	30	510280
01643-31445	K0700-01A0	7	210050
01643-31445	T1510-01B3	12	360130
01643-31445	T1510-01B5	16	360140
01643-31645	D0100-01A1	14	090010
01643-31645	H0110-01A0	29	150010
01643-31645	H0120-01A5	4	150020
01643-31645	H0120-01A5	7	150020
01643-31645	K1120-01A0A	10	210430
01643-31645	K1120-01A0A	7	210430
01643-31645	N1110-01A0	6	270010
01643-31645	N1210-01A0	11	270020
01643-31645	P1210-01A0	5	300020
01643-31645	R0120-01A0	20	330020
01643-31845	R0200-01A0	12	330030
01643-31845	R0300-01A0	12	330040
01643-32060	R1200-01A0	3	330080
01643-32780	M1520-01A0	2	240140
01643-50823	Y1679-01A0	19	510400
01643-51032	H0120-01A5	16	150020
01643-51032	H0312-01A0	5	150060
01643-51032	H0312-01A0	8	150060
01643-51032	K1110-27A4	11	210300
01643-51032	K1110-30A4	11	210330
01643-51032	P1120-01A0	20	300010
01643-51032	Y1679-01A0	34	510400
01643-51232	B0200-01A0	19	040060
01643-51232	B0200-01A0	7	040060
01643-51232	M1150-01A0	22	240050
01643-51232	M1150-01A0	26	240050
01643-70623	K0310-01A0	4	210030
01643-70623	K1110-11H2	11	210160
01643-70823	K0180-01A3	15	210020
01643-70823	K0180-01A3	35	210020
01643-70823	K0180-01A3	7	210020
01643-70823	K1110-07A0	3	210120
01643-70823	K1110-13A0	14	210180
01643-70823	K1110-14A0	3	210190
01643-70823	K1110-14A0	6	210190
01643-70823	K1110-14A0	9	210190
01643-70823	K1110-15A0	11	210200
01643-70823	K1110-15A0	13	210200
01643-70823	K1110-15A0	4	210200
01643-70823	K1110-32A0	9	210350
01643-71032	K1110-10A4	20	210150

PART NO.	FIG.NO.	INDEX	PAGE
01643-71032	K1110-11H2	9	210160
01643-71032	K1110-20A0	13	210240
01643-71032	K1110-24A0	15	210270
01643-71232	K1110-11H2	24	210160
01643-71232	K1110-11H2	4	210160
01643-71232	K1110-11H2	6	210160
01653-21212	A8116-B0B2	2	030660
01803-02228	T1510-01A3	4	360120
01803-02228	T1510-01B5	11	360140
02720-40104	A1010-A0G2	9	030010
02760-00205	H1831-02A0	11	150170
02760-00207	H1840-01A0	5	150200
02760-00210	H1831-02A0	1	150170
02760-00211	H1831-02A0	2	150170
02760-002A6	H1831-02A0	9	150170
02760-00309	H0340-01A2	17	150090
02761-00214	H1831-02A0	3	150170
02761-003A4	H1831-02A0	10	150170
02763-00203	H1840-01A0	15	150200
02764-00208	H1831-02A0	12	150170
02781-0021D	H0120-02A5	12	150030
02781-0021D	H0120-02A5	28	150030
02781-0021D	H0120-02A5	34	150030
02781-0021D	K1110-38A4	16	210420
02781-0021D	K1110-38A4	7	210420
02781-0021D	Y1600-08A0	12	510130
02781-0031D	K1110-38A4	13	210420
02782-10210	H0120-02A5	25	150030
02782-10210	H0120-02A5	37	150030
02782-10210	H0120-02A5	6	150030
02782-10210	H0210-01A0	16	150040
02782-10210	H1831-01A0	10	150160
02782-10210	N1310-01A0	20	270040
02782-10210	T1110-06A4	14	360056
02782-10311	H0120-02A5	31	150030
02782-10311	H0120-02A5	40	150030
02782-10311	K1110-38A4	4	210420
02782-10630	A3110-A0D6	18	030320
02789-00210	Y1600-06A0	14	510110
02896-11008	H0120-02A5	10	150030
02896-11008	H0120-02A5	13	150030
02896-11008	H0120-02A5	16	150030
02896-11008	H0120-02A5	19	150030
02896-11008	H0120-02A5	27	150030
02896-11008	H0120-02A5	30	150030
02896-11008	H0120-02A5	35	150030
02896-11008	H0120-02A5	38	150030
02896-11008	H0120-02A5	8	150030
02896-11008	H0210-01A0	11	150040
02896-11008	H0210-01A0	18	150040

PART NO.	FIG.NO.	INDEX	PAGE
02896-11008	H1831-01A0	11	150160
02896-11008	H1831-01A0	14	150160
02896-11008	H1831-01A0	5	150160
02896-11008	H1831-02A0	17	150170
02896-11008	K1110-20A0	25	210240
02896-11008	K1110-27A4	20	210300
02896-11008	K1110-30A4	20	210330
02896-11008	K1110-38A4	17	210420
02896-11008	K1110-38A4	8	210420
02896-11008	N1220-01A0	13	270030
02896-11008	N1310-01A0	22	270040
02896-11008	T1110-06A4	16	360056
02896-11009	H0120-02A5	33	150030
02896-11009	H0120-02A5	41	150030
02896-11009	H0120-02A5	5	150030
02896-11009	H0210-01A0	15	150040
02896-11009	H1831-01A0	6	150160
02896-11009	H1831-02A0	14	150170
02896-11009	K1110-38A4	14	210420
02896-11009	K1110-38A4	5	210420
02896-61008	Y1600-06A0	15	510110
02896-61008	Y1600-08A0	11	510130
02896-61008	Y1600-08A0	14	510130
02896-61008	Y1600-08A0	23	510130
02896-61018	A3110-A0D6	22	030320
04010-00516	A2410-A0B8	3	030250
04020-00820	A2010-A0P2	17	030130
04020-01228	A2010-A0P2	18	030130
04020-01228	B0100-02A0	9	040040
04020-01228	Y1651-01A0	32	510210
04020-01434	N1110-01A0	7	270010
04020-01638	N1210-01A0	12	270020
04020-01638	Y0260-01A0	32	510010
04022-04016	Y1670-02A0	24	510370
04025-00324	Y1651-02A0	32	510220
04025-00408	A2010-A0P2	19	030130
04025-00432	Y1670-02A0	18	510370
04025-00512	A2050-A0B3	4	030160
04050-11212	A4510-A0F9	12	030480
04050-11612	M1220-01A1	11	240080
04050-12018	B0400-01A0	20	040070
04050-13022	M1110-01A0A	20	240010
04050-13022	M1110-01A0A	24	240010
04050-14025	N1310-01A0	10	270040
04052-10530	K1110-07A0	12	210120
04064-04518	R0120-01A0	9	330020
04064-05520	Y0260-01A0	18	510010
04064-07025	B0000-01A0	8	040010
04064-07525	Y1627-01A0	8	510170
04064-08530	Y1627-01A1	9	510180

PART NO.	FIG.NO.	INDEX	PAGE
04065-01104	B0000-01A0	7	040010
04065-03012	A2350-A0F1	3	030230
04065-04518	Y1640-01A0	28	510190
04065-04818	Y1651-02A0	14	510220
04065-06825	Y1600-03A0	7	510070
04065-07225	Y1651-02A0	7	510220
04077-00100	Y1627-01A1	4	510180
04120-21748	A5180-A0B4	1	030570
04120-21748	V0100-01A0	6	420010
04120-21749	B9999-A0R4	1	030720
04205-10520	K1110-07A0	11	210120
04205-11230	M1110-01A0A	19	240010
04205-11230	M1110-01A0A	23	240010
04250-60639	A4510-A0F9	10	030480
04252-21061	B0400-01A0	18	040070
04260-00635	Y1620-11A0	19	510150
04260-00793	Y1679-01A0	28	510400
04418-02550	A1110-A0F7	4	030040
04418-02550	A9850-A0A8	2	030700
04418-13060	U0100-01A4	17	390010
04434-50508	E0200-03A2	37	120040
04434-50612	A2210-A0F9	12	030200
04434-50612	E0200-04A0	28	120050
04434-50812	T1110-05A5	11	360055
04434-51012	E0200-03A2	39	120040
04434-51012	T1110-02A5	8	360025
04434-51212	H1831-03A0	17	150180
04434-51212	H1831-03A0	5	150180
04434-51212	M1130-01A0	42	240030
04434-51410	E0200-06A0	15	120070
04434-51410	E0200-06A0	5	120070
04434-51410	K1110-32A0	5	210350
04434-51412	E0200-03A2	30	120040
04434-51412	E0200-04A0	31	120050
04434-51412	E0200-04A0	34	120050
04434-51412	E0200-04A0	6	120050
04434-51512	H0340-01A2	18	150090
04434-51710	E0200-01A0	13	120020
04434-51710	K1110-25A4	6	210280
04434-51712	E0200-01A0	16	120020
04434-51712	E0200-01A0	26	120020
04434-51712	E0200-01A0	29	120020
04434-51712	E0200-05A0	8	120060
04434-51712	T1110-05A3	10	360050
04434-51712	T1110-05A5	10	360055
04434-51810	E0200-02A0	15	120030
04434-51810	K1110-34A4	6	210370
04434-51812	H0340-01A2	2	150090
04434-51812	H1831-03A0	8	150180
04434-51908	K1110-15A0	9	210200

PART NO.	FIG.NO.	INDEX	PAGE
04434-51910	E0200-05A0	24	120060
04434-51910	K1110-25A4	23	210280
04434-51912	D0200-01A0	38	090020
04434-51912	D0200-01A0	41	090020
04434-51912	E0200-04A0	15	120050
04434-51912	E0200-04A0	25	120050
04434-51912	E0200-05A0	14	120060
04434-51912	E0200-05A0	17	120060
04434-51912	E0200-05A0	20	120060
04434-52110	A1111-A0D7	11	030050
04434-52112	B0920-01A0	21	040080
04434-52112	E0200-06A0	9	120070
04434-52208	K1110-17A0	2	210220
04434-52310	K1110-25A4	15	210280
04434-52312	E0200-03A2	15	120040
04434-52312	E0200-03A2	19	120040
04434-52312	E0200-03A2	27	120040
04434-52312	E0200-03A2	6	120040
04434-52312	E0200-04A0	12	120050
04434-52312	H1840-01A0	22	150200
04434-52511	K1110-34A4	5	210370
04434-52512	D0200-01A0	44	090020
04434-52712	B0920-01A0	12	040080
04434-52712	B0920-01A0	15	040080
04434-52712	E0200-01A0	19	120020
04434-52712	E0200-04A0	18	120050
04434-52712	E0200-05A0	1	120060
04434-52712	E0200-05A0	7	120060
04434-52712	H0320-01A1	16	150070
04434-52712	H0340-01A2	9	150090
04434-53211	K1110-37A0	1	210410
04434-53211	K1110-37A0	7	210410
04434-53212	E0200-03A2	20	120040
04434-53212	H1831-03A0	1	150180
04434-53212	H1831-03A0	11	150180
04434-53411	K1110-17A0	1	210220
04434-53411	K1110-25A4	11	210280
04434-53411	K1110-25A4	2	210280
04434-53412	B0100-03A0	4	040050
04434-53412	E0200-03A2	12	120040
04434-53412	E0200-03A2	7	120040
04434-53412	H1833-01A0	27	150190
04435-50810	T1110-05A3	9	360050
04435-50810	T1110-05A5	9	360055
04435-51310	K1110-37A0	6	210410
04435-51412	H1831-03A0	14	150180
04435-51612	H1810-01A0	3	150150
04435-51912	D0200-01A0	22	090020
04435-51912	D0200-01A0	28	090020
04435-51912	D0200-03A0	7	090040

PART NO.	FIG.NO.	INDEX	PAGE
04530-11018	Y1600-01A0	7	510050
06045-06014	B0000-01A0	6	040010
06124-01616	K1110-29A0	21	210320
07000-02018	A8116-B0B2		030660
07000-02020	A8116-B0B2		030660
07000-02065	A4040-A0A6	1	030400
07000-02065	A8116-B0B2		030660
07000-02080	Y0260-01A0	25	510010
07000-02085	A8116-B0B2		030660
07000-02105	Y1627-01A0	10	510170
07000-02115	Y1627-01A1	11	510180
07000-02135	A4040-A0A6	8	030400
07000-02135	A8116-B0B2		030660
07000-03040	A5010-A0J2	10	030490
07000-03040	A8116-B0B2		030660
07000-03040	A8118-A0B1		030670
07000-03050	A8116-B0B2		030660
07000-11003	Y1662-29A0	12	510320
07000-11003	Y1662-29A0	24	510320
07000-11004	Y1662-25A0	17	510280
07000-11006	D0200-02A0	2	090030
07000-11006	Y1651-01A0	27	510210
07000-11006	Y1662-22A0	29	510250
07000-11006	Y1679-01A0	16	510400
07000-11007	C0100-01A0	6	060010
07000-11007	D0200-02A0	3	090030
07000-11007	Y1640-02A0	14	510200
07000-11007	Y1662-25A0	21	510280
07000-11007	Y1662-29A0	31	510320
07000-11007	Y1662-29A0	8	510320
07000-11008	Y1662-21A0	12	510240
07000-11008	Y1662-24A0	6	510270
07000-11008	Y1662-25A0	5	510280
07000-11008	Y1662-29A0	15	510320
07000-11008	Y1662-29A0	30	510320
07000-11009	Y1651-01A0	19	510210
07000-11009	Y1651-01A0	31	510210
07000-11009	Y1662-25A0	23	510280
07000-11009	Y1679-01A0	14	510400
07000-11009	Y1679-01A0	29	510400
07000-11010	Y1679-01A0	15	510400
07000-12011	Y1662-29A0	7	510320
07000-12012	Y1662-21A0	11	510240
07000-12012	Y1662-28A0	3	510310
07000-12014	Y1662-28A0	9	510310
07000-12015	K1110-20A0	28	210240
07000-12015	K1110-27A4	18	210300
07000-12015	K1110-30A4	18	210330
07000-12016	Y1662-28A0	7	510310
07000-12018	K1110-20A0	23	210240

PART NO.	FIG.NO.	INDEX	PAGE
07000-12018	K1110-27A4	16	210300
07000-12018	K1110-30A4	16	210330
07000-12018	Y1670-02A0	20	510370
07000-12020	Y1640-01A0	12	510190
07000-12060	R0110-01A0	5	330010
07000-12065	D0200-02A0	4	090030
07000-12115	Y1640-01A0	42	510191
07000-12130	Y1640-01A0	43	510191
07000-13024	Y1662-23A0	14	510260
07000-13025	H0120-01A5	10	150020
07000-13025	Y1620-01A3	27	510140
07000-13025	Y1620-11A0	37	510150
07000-13025	Y1620-41A0	28	510160
07000-13030	P1120-01A0	18	300010
07000-13032	H0120-01A5	17	150020
07000-13032	H0312-01A0	2	150060
07000-13032	H0320-01A1	2	150070
07000-13032	H0330-01A0	6	150080
07000-13032	Y1679-01A0	2	510400
07000-13035	C0100-02A0	3	060020
07000-13035	C0100-04A0	12	060040
07000-13035	C0100-04A0	2	060040
07000-13040	Y1651-01A0	17	510210
07000-13042	Y1662-25A0	13	510280
07000-13050	A2810-A0A5	2	030290
07000-13050	D0100-01A1	5	090010
07000-15080	Y1620-41A0	9	510160
07000-15080	Y1627-01A0	3	510170
07000-15085	Y1620-01A3	9	510140
07000-15105	Y1620-11A0	11	510150
07000-15105	Y1620-11A0	9	510150
07000-15155	H0110-01A0	8	150010
07000-15155	V0100-01A0	2	420010
07000-15180	H0110-01A0	15	150010
07000-72070	A3110-A0D6	14	030320
07000-72070	A8116-B0B2		030660
07000-73025	A8116-B0B2		030660
07000-B1009	Y1600-05A0	14	510090
07000-B2011	Y1600-08A0	19	510130
07000-B5055	Y1620-41A0	24	510160
07000-B5070	Y1620-11A0	29	510150
07000-F2016	Y1640-02A0	3	510200
07001-01004	Y1662-25A0	18	510280
07001-01006	Y1651-01A0	28	510210
07001-01007	Y1662-25A0	22	510280
07001-01009	Y1662-25A0	24	510280
07001-02012	Y1662-28A0	4	510310
07001-02014	Y1662-28A0	10	510310
07001-02016	Y1662-28A0	8	510310
07002-01423	H1833-01A0	13	150190

PART NO.	FIG.NO.	INDEX	PAGE
07002-01423	H1833-01A0	6	150190
07002-01423	N1310-01A0	21	270040
07002-01423	N1310-01A0	24	270040
07002-01423	P1120-01A0	4	300010
07002-02034	N1310-01A0	16	270040
07002-02034	N1310-01A0	19	270040
07002-02034	P1120-01A0	2	300010
07002-02434	H0110-01A0	25	150010
07002-02434	H0210-01A0	6	150040
07002-03334	Y1662-26A0	4	510290
07002-03634	Y1662-27A0	2	510300
07002-10823	Y1662-29A0	13	510320
07002-10823	Y1662-29A0	25	510320
07002-11023	H0210-01A0	13	150040
07002-11023	Y1662-25A0	26	510280
07002-11023	Y1662-29A0	28	510320
07002-11023	Y1662-29A0	38	510320
07002-11223	H0210-01A0	8	150040
07002-11223	Y1640-01A0	8	510190
07002-11223	Y1651-01A0	29	510210
07002-11223	Y1662-22A0	11	510250
07002-11223	Y1670-02A0	26	510370
07002-11423	H0120-02A5	11	150030
07002-11423	H0120-02A5	14	150030
07002-11423	H0120-02A5	17	150030
07002-11423	H0120-02A5	20	150030
07002-11423	H0120-02A5	24	150030
07002-11423	H0120-02A5	26	150030
07002-11423	H0120-02A5	29	150030
07002-11423	H0120-02A5	32	150030
07002-11423	H0120-02A5	36	150030
07002-11423	H0120-02A5	39	150030
07002-11423	H0120-02A5	4	150030
07002-11423	H0120-02A5	42	150030
07002-11423	H0120-02A5	7	150030
07002-11423	H0210-01A0	10	150040
07002-11423	H0210-01A0	17	150040
07002-11423	H1831-01A0	12	150160
07002-11423	H1831-01A0	15	150160
07002-11423	H1831-01A0	19	150160
07002-11423	H1831-01A0	25	150160
07002-11423	H1831-01A0	7	150160
07002-11423	H1831-02A0	18	150170
07002-11423	H1833-01A0	12	150190
07002-11423	H1833-01A0	19	150190
07002-11423	H1833-01A0	5	150190
07002-11423	K1110-20A0	26	210240
07002-11423	K1110-20A0	30	210240
07002-11423	K1110-27A4	21	210300
07002-11423	K1110-30A4	21	210330

PART NO.	FIG.NO.	INDEX	PAGE
07002-11423	K1110-38A4	15	210420
07002-11423	K1110-38A4	18	210420
07002-11423	K1110-38A4	6	210420
07002-11423	K1110-38A4	9	210420
07002-11423	N1220-01A0	12	270030
07002-11423	T1110-06A4	15	360056
07002-11423	Y1651-01A0	10	510210
07002-11423	Y1662-25A0	19	510280
07002-11423	Y1662-25A0	28	510280
07002-11423	Y1679-01A0	25	510400
07002-11623	Y1662-24A0	5	510270
07002-11623	Y1662-29A0	21	510320
07002-11623	Y1662-29A0	36	510320
07002-11623	Y1662-29A0	5	510320
07002-11623	Y1679-01A0	6	510400
07002-11823	H0120-01A5	13	150020
07002-11823	Y1651-01A0	24	510210
07002-12034	H1210-01A2	17	150100
07002-12034	H1831-01A0	21	150160
07002-12034	H1831-01A0	27	150160
07002-12034	H1831-01A0	9	150160
07002-12034	H1831-02A0	15	150170
07002-12034	N1220-01A0	10	270030
07002-12034	N1220-01A0	2	270030
07002-12034	N1220-01A0	6	270030
07002-12034	N1220-01A0	8	270030
07002-12034	T1110-06A4	18	360056
07002-12034	Y1620-11A0	34	510150
07002-12034	Y1640-02A0	6	510200
07002-12034	Y1662-23A0	11	510260
07002-12434	H0320-01A1	12	150070
07002-12434	H0320-01A1	15	150070
07002-12434	H0320-01A1	22	150070
07002-12434	H0340-01A2	13	150090
07002-12434	H0340-01A2	15	150090
07002-12434	H0340-01A2	6	150090
07002-12434	H1210-01A2	15	150100
07002-12434	H1210-01A2	19	150100
07002-12434	H1210-01A2	21	150100
07002-12434	H1220-01A0	3	150110
07002-12434	H1220-01A0	5	150110
07002-12434	H1220-01A0	7	150110
07002-12434	H1220-01A0	9	150110
07002-12434	H1310-01A0	11	150130
07002-12434	H1310-01A0	5	150130
07002-12434	H1310-01A0	7	150130
07002-12434	H1310-01A0	9	150130
07002-12434	H1340-01A0	4	150140
07002-12434	H1340-01A0	6	150140
07002-12434	H1340-01A0	8	150140

PART NO.	FIG.NO.	INDEX	PAGE
07002-12434	N1220-01A0	4	270030
07002-12434	N1310-01A0	12	270040
07002-12434	N1310-01A0	14	270040
07002-12434	T1110-06A4	11	360056
07002-12434	T1110-06A4	13	360056
07002-12434	V0100-01A0	12	420010
07002-12434	Y1640-01A0	16	510190
07002-12434	Y1640-02A0	4	510200
07002-12434	Y1662-22A0	21	510250
07002-12434	Y1662-23A0	16	510260
07002-12434	Y1662-23A0	29	510260
07002-12434	Y1662-28A0	6	510310
07002-13334	H0320-01A1	20	150070
07002-13334	H0330-01A0	2	150080
07002-13334	H0330-01A0	4	150080
07002-22034	T1200-01A5	17	360095
07002-22434	T1200-01A5	18	360095
07002-61023	Y1600-01A0	9	510050
07002-61023	Y1600-08A0	6	510130
07002-61223	Y1600-01A0	6	510050
07002-61423	Y1600-01A0	11	510050
07002-61423	Y1600-08A0	10	510130
07002-61423	Y1600-08A0	13	510130
07002-61423	Y1600-08A0	21	510130
07002-62434	A3110-A0D6	17	030320
07002-62434	A3110-A0D6	19	030320
07002-62434	A3110-A0D6	5	030320
07002-62434	A3110-A0D6	7	030320
07002-62434	Y1600-01A0	4	510050
07002-62434	Y1600-06A0	13	510110
07002-62434	Y1600-07A0	4	510120
07002-63034	Y1600-05A0	13	510090
07003-01015	A3030-A0A3	5	030310
07003-01015	A8118-A0B1		030670
07005-00812	A4040-A0A6	11	030400
07005-00812	A4110-A0H8	4	030440
07005-00812	A8116-B0B2		030660
07005-00812	D0200-03A0	14	090040
07005-01012	A4060-A0B4	4	030420
07005-01012	A4070-A0A1	3	030430
07005-01012	A8116-B0B2		030660
07005-01012	A8118-A0B1		030670
07005-01412	A3030-A0A3	3	030310
07005-01412	A4110-A0H8	11	030440
07005-01412	A8116-B0B2		030660
07005-01412	D0200-01A0	12	090020
07005-01412	D0200-01A0	9	090020
07005-01412	D0200-03A0	2	090040
07005-01612	A8116-B0B2		030660
07005-01612	A8118-A0B1	1	030670

PART NO.	FIG.NO.	INDEX	PAGE
07005-01812	A8116-B0B2		030660
07005-02216	A2110-A0P1	7	030180
07005-02216	A8116-B0B2		030660
07005-02416	A2210-A0F9	7	030200
07005-02416	A8116-B0B2		030660
07005-03016	A8116-B0B2		030660
07005-03016	H0210-01A0	4	150040
07012-00145	Y0260-01A0	26	510010
07020-00000	N1110-01A0	3	270010
07020-00000	T1200-01A3	6	360090
07020-00000	T1200-01A5	6	360095
07020-00000	T1230-01A0	11	360110
07020-00000	T1230-01A0	15	360110
07020-00000	T1230-01A0	20	360110
07020-00000	V0100-01A0	9	420010
07020-00675	T1200-01A3	13	360090
07020-00675	T1200-01A5	25	360095
07020-00675	V0100-01A0	11	420010
07020-00675	Y1620-01A3	4	510140
07020-00675	Y1620-41A0	18	510160
07020-00675	Y1620-41A0	4	510160
07020-00900	T1110-05A3	6	360050
07020-00900	T1110-05A5	6	360055
07020-00900	T1200-01A3	5	360090
07020-00900	T1200-01A5	5	360095
07020-00900	V0100-01A0	10	420010
07030-03034	H0210-01A0	3	150040
07040-11007	H0210-01A0	12	150040
07040-11007	Y1600-08A0	5	510130
07040-11209	H0210-01A0	7	150040
07040-11209	Y1670-02A0	25	510370
07040-11409	Y1662-25A0	27	510280
07040-12012	N1220-01A0	9	270030
07040-12412	H0210-01A0	5	150040
07042-00415	A2210-A0F9	3	030200
07042-20108	A1510-A0G3	4	030080
07042-30108	N1210-01A0	4	270020
07042-30415	Y0260-01A0	29	510010
07042-70108	A1320-A0A8	2	030070
07042-70108	A2010-A0P2	13	030130
07042-70211	B0920-01A0	8	040080
07042-70312	A2010-A0P2	12	030130
07043-70108	A2010-A0P2	14	030130
07043-70108	A2010-A0P2	21	030130
07043-70415	A3110-A0D6	13	030320
07044-12412	H0110-01A0	24	150010
07044-12412	Y1600-01A0	3	510050
07046-21210	A2190-A0B5	10	030190
07046-23016	A2070-A0C2	1	030170
07046-41008	A1010-A0G2	5	030010

PART NO.	FIG.NO.	INDEX	PAGE
07046-41810	A1010-A0G2	6	030010
07046-41810	A2010-A0P2	20	030130
07046-42216	A1010-A0G2	7	030010
07046-42216	A2010-A0P2	8	030130
07046-42516	A1010-A0G2	8	030010
07046-42516	A2010-A0P2	9	030130
07046-43016	A2010-A0P2	10	030130
07046-44016	A2010-A0P2	11	030130
07048-01310	K1110-19A0	8	210230
07049-01012	H0120-01A5	11	150020
07049-01012	H0210-01A0	2	150040
07049-01012	T1110-03A3	5	360030
07049-01012	T1110-03A5	5	360035
07049-01215	H0210-01A0	1	150040
07049-01215	N1210-01A0	7	270020
07049-01620	Y0260-01A0	30	510010
07049-02025	N1210-01A0	13	270020
07049-03645	M1510-01A0	21	240125
07049-03645	M1510-01A1	21	240130
07052-31624	R0110-01A0	4	330010
07056-18425	D0100-01A1	12	090010
07063-51100	H0110-01A0	4	150010
07063-51100	V0100-01A0	1	420010
07095-01034	D0200-01A0	35	090020
07095-20314	E0200-06A0	10	120070
07095-20418	E0200-01A0	20	120020
07095-20419	E0200-04A0	19	120050
07095-20523	E0200-03A2	21	120040
07095-20627	B0100-03A0	5	040050
07096-00507	T1110-03A3	3	360030
07096-00507	T1110-03A5	3	360035
07096-00518	P1120-01A0	8	300010
07096-00519	P1120-01A0	5	300010
07096-20408	T1200-01A5	8	360095
07096-20412	T1200-01A3	7	360090
07096-20508	T1200-01A5	7	360095
07096-20512	T1200-01A3	8	360090
07102-20220	P1120-01A0	14	300010
07102-20403	H0340-01A2	16	150090
07102-20418	P1120-01A0	11	300010
07102-20608	H0320-01A1	13	150070
07102-20611	H0340-01A2	8	150090
07102-206A6	A3110-A0D6	20	030320
07121-004A4	H1340-01A0	1	150140
07145-00060	T1230-01A0	10	360110
07145-00060	T1230-01A0	5	360110
07145-00065	T1230-01A0	4	360110
07145-00065	T1230-01A0	9	360110
07145-00065	Y1620-41A0	3	510160
07145-00070	T1110-01A1	10	360010

PART NO.	FIG.NO.	INDEX	PAGE
07145-00070	T1110-01A1	9	360010
07145-00070	T1200-01A3	20	360090
07145-00070	T1200-01A5	33	360095
07145-00070	Y1620-01A3	17	510140
07145-00070	Y1620-01A3	3	510140
07145-00070	Y1620-11A0	22	510150
07145-00070	Y1620-11A0	3	510150
07155-00720	R0120-01A0	7	330020
07179-12074	Y1620-41A0	12	510160
07179-12079	Y1620-01A3	12	510140
07179-13089	Y1620-11A0	14	510150
07206-30710	A4060-A0B4	3	030420
07206-30710	A4070-A0A1	2	030430
07206-31014	A3030-A0A3	4	030310
07206-31014	A4110-A0H8	12	030440
07206-31014	D0200-01A0	10	090020
07206-31014	D0200-01A0	13	090020
07206-31014	D0200-03A0	3	090040
07230-20210	P1120-01A0	3	300010
07230-20422	P1120-01A0	1	300010
07230-20422	T1200-01A5	14	360095
07230-20522	T1110-06A4	10	360056
07230-20522	T1200-01A5	15	360095
07230-20628	H0340-01A2	12	150090
07235-10422	T1110-06A4	17	360056
07235-10422	T1200-01A5	13	360095
07235-10425	H0340-01A2	14	150090
07235-10425	H1340-01A0	5	150140
07235-10522	H1210-01A2	20	150100
07235-10522	N1220-01A0	3	270030
07235-10522	N1310-01A0	11	270040
07235-10522	T1110-06A4	12	360056
07235-10522	T1200-01A5	16	360095
07235-10628	A3110-A0D6	6	030320
07235-10628	H0320-01A1	11	150070
07235-10628	H1210-01A2	18	150100
07235-10630	A3110-A0D6	16	030320
07236-10422	N1220-01A0	1	270030
07236-10422	N1220-01A0	7	270030
07236-10522	H1310-01A0	8	150130
07238-10422	N1310-01A0	17	270040
07260-20928	A1610-A0N7	7	030110
07260-20928	B0000-01A0	2	040010
07270-00640	D0200-02A0	9	090030
07270-50429	D0200-01A0	1	090020
07270-61410	H0110-01A0	26	150010
07280-04726	K1110-19A0	7	210230
07281-00709	A1111-A0D7	3	030050
07283-33442	C0100-04A0	16	060040
07283-33442	C0100-04A0	8	060040

PART NO.	FIG.NO.	INDEX	PAGE
07285-00080	A4070-A0A1	4	030430
07285-00080	D0200-01A0	7	090020
07285-00080	D0200-02A0	10	090030
07285-00100	A4230-A0F4	4	030470
07285-00150	A1610-A0N7	8	030110
07285-00150	B0000-01A0	3	040010
07285-00155	H0110-01A0	27	150010
07285-00180	A1111-A0D7	9	030050
07286-01616	A1111-A0D7	8	030050
07286-01685	A1111-A0D7	10	030050
07286-01923	A4110-A0H8	16	030440
07286-01933	A4110-A0H8	17	030440
07286-03828	K1110-19A0	6	210230
07288-01019	D0200-01A0	3	090020
07288-01026	D0200-01A0	4	090020
07289-00095	B0200-01A0	23	040060
07289-00105	B0200-01A0	24	040060
07323-30400	Y0260-01A0	31	510010
07371-31049	H0312-01A0	3	150060
07371-31049	H0312-01A0	6	150060
07372-21035	H0312-01A0	4	150060
07372-21035	H0312-01A0	7	150060
07372-21035	P1120-01A0	19	300010
07375-21035	Y1620-01A3	31	510140
07375-21035	Y1620-41A0	34	510160
07700-50240	D0100-01A1	2	090010
07700-50240	D0200-01A0	14	090020
07750-01628	Y1620-11A0	32	510150
07950-10450	V0300-01A0A	6	420030
07950-90403	V0300-01A0A	8	420030
07951-41017	V0300-01A0A	7	420030
07952-70004	V0300-01A0A		420030
07959-20001	R0120-01A0	15	330020
08000-00000	E0100-01A0	2	120010
08000-00001	E0100-01A0	3	120010
08001-0095D	E0100-01A0	1	120010
08017-31005	D0200-01A0	5	090020
08028-42030	E0200-07A0	8	120080
08028-42040	E0200-07A0	1	120080
08028-43030	K1110-25A4	20	210280
08028-62035	E0100-01A0	7	120010
08028-CB050	E0200-07A0	3	120080
08034-00310	K1110-28A4	13	210310
08034-00414	A8116-B0B2		030660
08034-00414	A8118-A0B1		030670
08034-00519	A8116-B0B2		030660
08034-00519	A8118-A0B1		030670
08034-00536	P1120-01A0	10	300010
08034-00536	P1120-01A0	13	300010
08034-00536	P1120-01A0	16	300010

PART NO.	FIG.NO.	INDEX	PAGE
08034-00536	P1120-01A0	22	300010
08034-00823	P1120-01A0	7	300010
08034-10414	K1110-31A0	16	210340
08034-20414	K1110-08A4	10	210130
08034-20414	K1110-09A4	6	210140
08034-20414	K1110-12A4	1	210170
08034-20414	T1110-02A3	10	360020
08034-20519	A3110-A0D6	24	030320
08034-20519	A4110-A0H8	18	030440
08034-20519	E0200-03A2	11	120040
08034-20519	E0200-06A0	18	120070
08034-20519	H1831-01A0	28	150160
08034-20519	K1110-11H2	26	210160
08034-20519	K1110-15A0	8	210200
08034-20519	K1110-25A4	14	210280
08034-20519	K1110-26A4	3	210290
08034-20519	K1110-35A0	5	210390
08034-20536	E0200-02A0	18	120030
08034-20536	E0200-03A2	33	120040
08034-20536	E0200-03A2	35	120040
08034-20536	E0200-03A2	36	120040
08034-20536	H0340-01A2	22	150090
08034-20536	H1831-03A0	4	150180
08034-20536	H1840-01A0	28	150200
08034-20536	K1110-32A0	6	210350
08034-20536	K1110-35A0	8	210390
08034-20536	K1110-37A0	10	210410
08034-20536	K1110-37A0	11	210410
08034-20536	K1110-37A0	15	210410
08034-20536	K1110-37A0	4	210410
08034-20536	K1110-37A0	5	210410
08034-20823	B0920-01A0	11	040080
08034-20876	K1110-13A0	16	210180
08034-40521	T1110-02A3	9	360020
08036-00814	T1110-05A3	11	360050
08037-01610	K1110-07A0	13	210120
08037-01610	K1110-09A4	18	210140
08037-11025	K1110-08A4	14	210130
08037-11425	K1110-29A0	10	210320
08037-12536	K1110-09A4	7	210140
08037-12536	M1220-01A1	14	240080
08038-00035	E0200-01A0	2	120020
08038-00519	E0200-01A0	4	120020
08038-00519	E0200-02A0	12	120030
08038-00519	E0200-06A0	2	120070
08038-00519	E0200-06A0	22	120070
08038-02027	E0200-03A2	34	120040
08038-06031	E0200-02A0	13	120030
08038-06031	E0200-07A0	5	120080
08038-22009	E0200-07A0	2	120080

PART NO.	FIG.NO.	INDEX	PAGE
08038-42009	E0100-01A0	8	120010
08038-42009	E0200-07A0	4	120080
08041-01000	K1110-29A0	3	210320
08041-02000	K1110-29A0	4	210320
08041-02500	K1110-29A0	5	210320
08053-01510	E0200-02A0	6	120030
08053-01510	E0200-03A2	38	120040
08053-01512	H1833-01A0	24	150190
08059-00310	K1110-08A4	11	210130
08059-00413	K1110-07A0	15	210120
08059-00413	K1110-09A4	8	210140
08059-00413	K1110-17A0	5	210220
08073-20505	A3190-A0A1	1	030330
08086-20000	K1110-31A0	9	210340
08088-30000	E0200-01A0	5	120020
08116-02410	K1110-08A4		210130
08160-72400	E0410-01A0	1	120090
08193-20010	A5010-A0J2	15	030490
08193-30010	K1110-25A4	19	210280
08910-10000	K1110-09A4	9	210140
08912-51600	K1110-28A4	4	210310
09002-01012	V0300-01A0A	3	420030
09002-01417	V0300-01A0A		420030
09002-01922	V0300-01A0A		420030
09002-02427	V0300-01A0A		420030
09007-00425	V0300-01A0A		420030
09007-00528	V0300-01A0A		420030
09007-00836	V0300-01A0A	9	420030
09007-01040	V0300-01A0A	12	420030
09019-28035	V0300-01A0A	2	420030
09021-02436	V0300-01A0A	10	420030
09023-00300	V0300-01A0A	11	420030
09039-00150	V0300-01A0A	4	420030
09055-10390	V0300-01A0A	5	420030
09056-04613	V0300-01A0A	1	420030
09133-A3281	U0100-01A4	6	390010
09134-A1681	U0510-01A1	1	390060
09233-312920	Y0260-01A0	15	510010
09244-02496	T1510-01B3	7	360130
09244-02496	T1510-01B5	7	360140
09370-00070	R0120-01A0	8	330020
09415-01008	K1110-11H2	18	210160
09415-01610	K1110-07A0	14	210120
09415-02110	K0180-01A3	32	210020
09415-02512	K1110-11H2	2	210160
09415-02512	M1210-01A0	13	240070
09415-02512	M1510-01A0	12	240125
09415-02512	M1510-01A0	8	240125
09415-02512	M1510-01A1	12	240130
09415-02512	M1510-01A1	8	240130

PART NO.	FIG.NO.	INDEX	PAGE
09452-14503	K0180-01A3	18	210020
09479-02400	K1110-34A4	2	210370
09479-02400	K1110-34A4	4	210370
09637-30163	U0550-01A1	1	390070
09642-13000	U0202-01A0	1	390050
09653-A0481	U0100-01A4	7	390010
09657-A0881	U0100-01A4	8	390010
09659-A057B	U0100-01A4	9	390010
09667-A0481	U0100-01A4	10	390010
09669-0000E	U0100-01A4	15	390010
09685-00002	U0100-01A4	1	390010
09690-M0063	U0100-01A4	3	390010
09690-P0450	U0100-01A4	4	390010
09690-P1120	U0150-01A1	1	390040
09803-A0481	U0120-01A0	2	390030
09805-A0881	U0100-01A4	11	390010
09805-C0481	U0100-01A4	12	390010
09842-A0481	U0100-01A4	5	390010
09920-00150	A1310-A0M1	4	030060
09960-00801	U0100-01A4	27	390010
09960-00802	U0100-01A4	28	390010
09963-A1640	U0100-01A4	18	390010
09980-10550	V0200-01A01	1	420020
09980-92550	V0200-01A01		420020
09982-20057	V0200-01A01	2	420020
113-01-21120	B0100-01A0	4	040030
113-01-21120	K1120-01A0A	5	210430
11Y-01-11920	B0200-01A0	13	040060
11Y-09-11140	A4110-A0H8	15	030440
11Y-09-11140	D0200-01A0	6	090020
11Y-09-11160	B0920-01A0	10	040080
11Y-62-12130	K1110-27A4	19	210300
11Y-62-12130	K1110-30A4	19	210330
11Y-62-12160	K1110-20A0	24	210240
11Y-62-12220	H0210-01A0	9	150040
11Y-62-12330	H0120-02A5	15	150030
11Y-62-12330	H1831-02A0	16	150170
11Y-62-12820	H1831-01A0	4	150160
124-54-26540	B0200-01A0	20	040060
124-54-26540	B0200-01A0	8	040060
124-54-26540	M1140-01A0	36	240040
124-54-26540	M1150-01A0	15	240050
124-54-26540	M1150-01A0	23	240050
124-54-26540	M1150-01A0	27	240050
124-54-26540	M1150-02A0	3	240060
124-54-26540	M1210-01A0	14	240070
124-54-26540	M1220-01A1	21	240080
124-54-26540	M1220-01A1	26	240080
124-54-26540	M1810-01A0	19	240150
124-54-26540	M1810-01A0	26	240150

PART NO.	FIG.NO.	INDEX	PAGE
124-54-26540	M1810-01A0	4	240150
124-54-26540	M1810-01A0	9	240150
124-54-26540	M1810-01A1	19	240155
124-54-26540	M1810-01A1	26	240155
124-54-26540	M1810-01A1	4	240155
124-54-26540	M1810-01A1	9	240155
124-54-26540	M1810-02A0	10	240160
124-54-26540	M1810-02A1	10	240165
12R-60-11230	H0110-01A0	14	150010
141-06-11220	K1110-34A4	9	210370
141-06-11220	K1110-34A5	1	210380
141-63-93270	Y1620-41A0	11	510160
144-14-54610	Y1662-21A0	7	510240
144-14-54610	Y1662-25A0	2	510280
144-54-11940	M1130-01A1	7	240035
144-54-11940	M1140-01A1	7	240045
144-63-92170	Y1620-01A3	11	510140
144-63-94170	Y1620-11A0	13	510150
14X-32-11210	R0500-01A1	8	330055
154-32-31220	R0500-01A0	9	330050
154-32-31220	R0500-01A1	9	330055
154-32-31220	Y0320-01A0		510020
154-32-61170	R0200-01A0	6	330030
154-32-61170	R0300-01A0	6	330040
154-54-23260	U0100-01A4	19	390010
154-61-16570	A1570-A0B6	5	030100
175-60-27340	H0110-01A0	7	150010
17A-61-13391	K0350-01A0	4	210040
17M-91-12670	K1110-09A4	17	210140
195-03-11570	D0100-01A1	16	090010
195-30-00161	R0110-01A0	7	330010
195-30-00291	R0110-01A0	6	330010
195-30-00302	R0110-01A0		330010
195-33-11220	K1110-25A4	16	210280
195-33-11220	K1110-25A4	3	210280
195-33-11220	K1110-25A4	7	210280
195-97-93570	B0920-01A0	18	040080
195-97-93570	E0200-03A2	8	120040
195-97-93570	E0200-06A0	11	120070
195-97-95190	K0350-01A0	11	210040
195-97-98590	K0350-01A0	3	210040
195-Z1-11690	K1110-06A0	8	210110
196-91-13310	H1840-01A0	25	150200
198-54-41982	M1110-01A0A	2	240010
198-54-41982	M1130-01A0	22	240030
198-54-41982	M1140-01A0	22	240040
198-Z1-14610	Y1062-01A0		510040
19M-06-31720	K1110-13A0		210180
201-01-71250	B0100-01A0	1	040030
201-26-62190	N1210-01A0	3	270020

PART NO.	FIG.NO.	INDEX	PAGE
201-26-62240	Y0260-01A0	10	510010
201-26-62270	Y0260-01A0	12	510010
201-26-62330	Y0260-01A0	22	510010
201-60-11390	H0120-02A5	22	150030
201-60-11390	H1831-01A0	17	150160
201-60-11390	H1831-01A0	23	150160
201-60-11390	H1833-01A0	15	150190
201-60-11390	H1833-01A0	3	150190
201-60-11390	H1833-01A0	8	150190
201-62-71810	H1340-01A0	7	150140
201-979-7820	K1110-13A0	18	210180
202-00-72110	U0100-01A4	21	390010
202-00-72120	U0110-01A1	1	390020
202-06-71310	K1730-01A0	1	210440
202-46-72511	M1510-01A1	1	240130
202-62-74111	T1110-03A3	6	360030
202-62-74131	T1110-03A3	2	360030
202-62-74141	T1110-03A3	7	360030
202-62-74160	T1110-03A3	1	360030
202-63-54380	Y1620-01A3	26	510140
202-63-54480	Y1620-01A3		510140
202-63-55120	Y1620-01A3	15	510140
202-63-74580	Y1620-41A0	27	510160
202-63-75120	Y1620-41A0	15	510160
202-70-0J010	T1200-01A3		360090
202-70-52121	T1200-01A3	15	360090
202-70-52121	T1200-01A5	28	360095
202-70-61160	J1310-01A0	1	180020
202-70-61180	T1125-01A0	1	360070
202-70-61210	T1110-02A5	11	360025
202-70-63161	T1510-01A3	1	360120
202-70-63161	T1510-01B5	8	360140
202-70-63171	T1510-01A3	2	360120
202-70-63171	T1510-01B5	9	360140
202-70-64151	T1230-01A0	14	360110
202-70-64163	T1230-01A0	19	360110
202-70-64210	T1510-01B3	10	360130
202-70-64210	T1510-01B5	14	360140
202-70-64220	T1510-01B3		360130
202-70-64220	T1510-01B5		360140
202-70-64240	T1510-01B3	9	360130
202-70-64240	T1510-01B5	13	360140
202-70-64250	T1510-01B3	8	360130
202-70-64250	T1510-01B5	12	360140
202-70-71231	T1110-05A3	4	360050
202-70-71421	T1110-01A1	1	360010
202-70-74130	T1510-01B3	2	360130
202-70-74140	T1510-01B3	3	360130
202-70-J1170	T1110-01A1		360010
202-70-J2120	T1200-01A3	1	360090

PART NO.	FIG.NO.	INDEX	PAGE
202-70-J2140	T1110-02A3	11	360020
202-920-0101	T1510-01B3		360130
202-920-7131	T1510-01B3	1	360130
202-920-7141	T1510-01B3	5	360130
202-987-1210	V0100-01A0	13	420010
202-987-1220	V0100-01A0	14	420010
203-00-31120	U0100-01A4	29	390010
203-00-71130	U0100-01A4	13	390010
203-00-71191	U0100-01A4	22	390010
203-01-61110	B0100-02A0	1	040040
203-01-61120	B0100-02A0	2	040040
203-01-61131	B0100-02A0	3	040040
203-01-61160	B0100-01A0	2	040030
203-01-61170	B0000-01A0	4	040010
203-01-61181	A2650-A0B7	1	030280
203-01-61181	B0000-01A0	16	040010
203-01-61190	B0000-01A0	5	040010
203-01-67540	B0100-01A0	3	040030
203-01-71110	C0100-04A0	21	060040
203-01-71121	B0200-01A0	22	040060
203-01-71132	B0200-01A0	3	040060
203-01-71141	B0200-01A0	10	040060
203-01-71211	B0200-01A0	6	040060
203-01-71220	B0200-01A0	25	040060
203-01-71270	B0100-03A0	1	040050
203-01-71290	A3110-A0D6	25	030320
203-01-71290	B0000-02A0	1	040020
203-01-71330	C0100-04A0		060040
203-01-71340	C0100-04A0	22	060040
203-01-71610	B0920-01A0	3	040080
203-01-71641	B0920-01A0	1	040080
203-01-71650	B0920-01A0	2	040080
203-03-71112	C0100-01A0	1	060010
203-03-71130	C0100-02A0	1	060020
203-03-71140	C0100-02A0	2	060020
203-03-71150	C0100-02A0	6	060020
203-03-71161	C0100-01A0	13	060010
203-03-71171	C0100-01A0	14	060010
203-03-71181	C0100-01A0	15	060010
203-03-71191	C0100-01A0	16	060010
203-03-71231	C0100-04A0	1	060040
203-03-71241	C0100-04A0	11	060040
203-03-71251	C0100-04A0	15	060040
203-03-71261	C0100-04A0	5	060040
203-03-71330	C0100-03A0	19	060030
203-03-71340	K0700-01A0	1	210050
203-03-71390	M1130-01A0	40	240030
203-03-71411	C0100-03A0	7	060030
203-03-71420	C0100-03A0	10	060030
203-03-71430	C0100-03A0	15	060030

PART NO.	FIG.NO.	INDEX	PAGE
203-03-71440	C0100-03A0		060030
203-03-71450	C0100-03A0		060030
203-03-71461	C0310-01A0	1	060050
203-03-71471	C0310-01A0	4	060050
203-03-71481	C0310-01A0	7	060050
203-03-71492	C0310-01A0	10	060050
203-03-71511	M1130-01A0	31	240030
203-03-71521	M1120-01A0	3	240020
203-03-71531	M1130-01A0	35	240030
203-03-71540	M1120-01A0	1	240020
203-03-71550	M1120-01A0	4	240020
203-03-71560	M1120-01A0		240020
203-03-71570	M1150-02A0	18	240060
203-03-71580	M1150-02A0	19	240060
203-03-71590	M1150-02A0		240060
203-03-71610	C0100-01A0	2	060010
203-03-71621	C0100-01A0	3	060010
203-03-71630	C0100-01A0	23	060010
203-03-71640	C0100-01A0	24	060010
203-03-71650	C0100-01A0	25	060010
203-03-71660	C0100-01A0	26	060010
203-03-71671	C0100-01A0	27	060010
203-03-71681	C0100-01A0	28	060010
203-03-71690	C0100-01A0	29	060010
203-03-71710	C0100-02A0	9	060020
203-03-71720	C0100-02A0	10	060020
203-03-71730	C0100-03A0	11	060030
203-03-71740	C0100-03A0	12	060030
203-03-71750	C0100-03A0	16	060030
203-03-71773	C0100-01A0		060010
203-03-71790	C0100-03A0	8	060030
203-03-71821	J1110-01A1A	12	180010
203-03-71821	J1110-01A2A	12	180015
203-03-71851	C0100-03A0	1	060030
203-03-71860	C0100-03A0	4	060030
203-03-71890	C0100-02A0	11	060020
203-03-71910	M1510-01A0	16	240125
203-03-71910	M1510-01A1	16	240130
203-03-71920	C0100-01A0	7	060010
203-04-56150	D0200-01A0	11	090020
203-04-71120	D0100-01A1	1	090010
203-04-71150	D0200-01A0	19	090020
203-04-71150	D0200-01A0	31	090020
203-04-71160	D0200-01A0	16	090020
203-04-71310	D0200-03A0	4	090040
203-04-71330	D0200-01A0	2	090020
203-06-56570	T1110-02A3	8	360020
203-06-57230	T1110-02A3	5	360020
203-06-61132	M1220-01A1	18	240080
203-06-67510	E0100-01A0	4	120010

PART NO.	FIG.NO.	INDEX	PAGE
203-06-71120	E0200-01A0	1	120020
203-06-71131	E0200-02A0	14	120030
203-06-71142	E0200-06A0	1	120070
203-06-71152	E0200-06A0	14	120070
203-06-71171	T1110-02A5	5	360025
203-06-71212	E0200-01A0	8	120020
203-06-71231	E0200-04A0	22	120050
203-06-71251	A2210-A0F9	11	030200
203-06-71251	B0000-02A0	2	040020
203-06-71271	D0200-01A0	25	090020
203-06-71271	E0200-03A2	24	120040
203-06-71271	H1210-01A2	11	150100
203-06-71281	E0200-01A0	11	120020
203-06-71290	K0350-01A0	1	210040
203-06-71311	E0200-04A0	1	120050
203-06-71321	E0200-04A0	9	120050
203-06-71351	E0200-05A0	4	120060
203-06-71361	E0200-04A0	4	120050
203-06-71380	E0100-01A0	9	120010
203-06-71420	E0200-01A0	3	120020
203-06-71430	E0200-05A0	11	120060
203-06-71712	E0200-03A2	1	120040
203-06-71720	K1110-17D0	6	210225
203-06-71731	K1110-25A4	1	210280
203-25-62100	N1110-01A0	1	270010
203-25-62130	N1110-01A0	2	270010
203-26-00123	N1210-01A0	1	270020
203-26-00123	Y0260-01A0		510010
203-26-61110	Y0260-01A0	2	510010
203-26-61120	Y0260-01A0	3	510010
203-26-61130	Y0260-01A0	4	510010
203-26-61143	Y0260-01A0	1	510010
203-26-61150	Y0260-01A0	6	510010
203-26-61160	Y0260-01A0	7	510010
203-26-61170	Y0260-01A0	8	510010
203-26-61180	Y0260-01A0	9	510010
203-26-61220	Y0260-01A0	5	510010
203-26-61250	Y0260-01A0	11	510010
203-26-61270	Y0260-01A0	13	510010
203-26-61280	Y0260-01A0	19	510010
203-26-61310	Y0260-01A0	21	510010
203-26-61320	Y0260-01A0	23	510010
203-26-61340	Y0260-01A0	24	510010
203-26-61360	Y0260-01A0	27	510010
203-26-61370	Y0260-01A0	28	510010
203-26-61391	Y0260-01A0	20	510010
203-26-61470	N1210-01A0	9	270020
203-26-61480	N1210-01A0	8	270020
203-30-61161	R1100-01A0	4	330060
203-30-61172	R1100-01A0	5	330060

PART NO.	FIG.NO.	INDEX	PAGE
203-30-61212	R1100-01A0	3	330060
203-30-J1260	N1310-01A0	2	270040
203-30-J1710	R1100-01A0	1	330060
203-32-05000	Y0320-01A0	K1	510020
203-32-0J080	R0500-01A0		330050
203-32-0J080	Y0321-01A0		510030
203-32-0J180	R0500-01A1		330055
203-32-J1110	R0500-01A1	7	330055
203-43-51620	K1110-20A0	8	210240
203-43-61120	B0400-01A0	13	040070
203-43-62121	B0400-01A0	16	040070
203-43-71211	B0400-01A0	1	040070
203-43-71222	B0400-01A0	7	040070
203-43-71242	B0400-01A0	4	040070
203-46-31181	R1100-01A0	6	330060
203-46-56160	J1110-01A1A	6	180010
203-46-56160	J1110-01A2A	6	180015
203-46-56160	R1100-01A0	7	330060
203-46-56260	J1310-01A0	6	180020
203-46-61520	J1110-01A1A	5	180010
203-46-61520	J1110-01A2A	5	180015
203-46-61910	J1110-01A1A	3	180010
203-46-61910	J1110-01A2A	3	180015
203-46-61920	J1110-01A1A	4	180010
203-46-61920	J1110-01A2A	4	180015
203-46-62130	J1110-01A1A	10	180010
203-46-62130	J1110-01A2A	10	180015
203-46-64420	J1110-01A1A	9	180010
203-46-64420	J1110-01A2A	9	180015
203-46-71210	J1110-01A1A	11	180010
203-46-71210	J1110-01A2A	11	180015
203-46-71340	J1110-01A1A	1	180010
203-46-71340	J1110-01A2A	1	180015
203-46-75121	M1510-01A0	1	240125
203-46-76120	M1510-01A0	18	240125
203-46-76120	M1510-01A1	18	240130
203-46-76130	M1510-01A0	19	240125
203-46-76130	M1510-01A1	19	240130
203-46-76140	M1510-01A0	20	240125
203-46-76140	M1510-01A1	20	240130
203-46-76170	M1510-01A0	17	240125
203-46-76170	M1510-01A1	17	240130
203-54-00200	K1110-06A0		210110
203-54-00200	K1110-07A0		210120
203-54-00200	K1110-08A4		210130
203-54-00200	K1110-09A4		210140
203-54-00200	K1110-10A4		210150
203-54-00200	K1110-12A4		210170
203-54-00630	K1110-11H2		210160
203-54-21110	H0120-01A5	8	150020

PART NO.	FIG.NO.	INDEX	PAGE
203-54-56630	M1220-01A1	9	240080
203-54-62392	M1110-01A0A	15	240010
203-54-62630	M1810-02A0	2	240160
203-54-62630	M1810-02A1	2	240165
203-54-62670	M1140-01A0	35	240040
203-54-62670	M1150-01A0	17	240050
203-54-62670	M1230-01A0	10	240090
203-54-62670	M1230-01A0	4	240090
203-54-62980	M1110-01A0A	8	240010
203-54-63230	M1120-01A0	15	240020
203-54-63293	M1110-01A0A	9	240010
203-54-66990	M1110-01A0A	18	240010
203-54-67741	M1220-01A1	3	240080
203-54-67760	M1220-01A1	6	240080
203-54-71412	K1110-09A4	5	210140
203-54-73111	M1110-01A0A	1	240010
203-54-73121	M1210-01A0	4	240070
203-54-73142	M1230-01A0	1	240090
203-54-73151	M1210-01A0	1	240070
203-54-73161	M1510-01A0	5	240125
203-54-73161	M1510-01A1	5	240130
203-54-73171	M1220-01A1	22	240080
203-54-73181	M1230-01A0		240090
203-54-73190	M1230-01A0	13	240090
203-54-73211	M1130-01A0	21	240030
203-54-73221	M1130-01A0	1	240030
203-54-73231	M1130-01A0	2	240030
203-54-73240	M1130-01A0	3	240030
203-54-73251	M1130-01A0	6	240030
203-54-73311	M1140-01A0	21	240040
203-54-73321	M1140-01A0	1	240040
203-54-73331	M1140-01A0	2	240040
203-54-73340	M1140-01A0	3	240040
203-54-73350	M1140-01A0	6	240040
203-54-73392	M1310-01A0	1	240100
203-54-73412	M1120-01A0		240020
203-54-73422	M1120-01A0	2	240020
203-54-73432	M1120-01A0	11	240020
203-54-73441	M1150-01A0	1	240050
203-54-73451	M1150-01A0	7	240050
203-54-73461	M1150-01A0	11	240050
203-54-73471	M1150-01A0	14	240050
203-54-73481	M1150-01A0	20	240050
203-54-73491	M1150-02A0	10	240060
203-54-73511	M1110-01A0A	12	240010
203-54-73521	M1120-01A0	14	240020
203-54-73532	M1120-01A0	23	240020
203-54-73540	M1120-01A0	38	240020
203-54-73590	M1120-01A0	32	240020
203-54-73610	M1220-01A1	1	240080

PART NO.	FIG.NO.	INDEX	PAGE
203-54-73711	M1140-01A0		240040
203-54-73721	M1140-01A0	31	240040
203-54-73770	M1230-01A0	7	240090
203-54-73810	M1120-01A0	20	240020
203-54-73822	M1120-01A0	26	240020
203-54-73921	M1110-01A0A	22	240010
203-54-73940	M1120-01A0	39	240020
203-54-73951	M1120-01A0	29	240020
203-54-73961	M1120-01A0	42	240020
203-54-73991	M1140-01A0	17	240040
203-54-74130	M1110-01A0A	3	240010
203-54-74141	M1110-01A0A	4	240010
203-54-74191	M1140-01A0	32	240040
203-54-74230	M1150-01A0	8	240050
203-54-74260	M1110-01A0A	7	240010
203-54-74430	M1150-02A0	15	240060
203-54-75141	M1810-01A0		240150
203-54-75310	M1810-01A0	1	240150
203-54-75330	M1810-01A0	6	240150
203-54-75341	M1810-01A0	11	240150
203-54-75350	M1810-01A0	18	240150
203-54-75361	M1810-01A0	21	240150
203-54-75380	M1810-02A0	1	240160
203-54-75421	M1810-02A0	9	240160
203-54-76112	M1110-01A0A		240010
203-54-76150	M1150-01A0		240050
203-54-76190	M1110-01A0A	6	240010
203-54-76341	M1110-01A0A	5	240010
203-54-76711	M1220-01A1	2	240080
203-54-76720	M1220-01A1	7	240080
203-54-76730	M1220-01A1	8	240080
203-54-76811	M1220-01A1	27	240080
203-54-76910	M1810-01A0	12	240150
203-54-76910	M1810-01A1	12	240155
203-54-76920	M1230-01A0	14	240090
203-54-77110	M1510-01A0	9	240125
203-54-77110	M1510-01A1	9	240130
203-54-77120	M1510-01A0	13	240125
203-54-77120	M1510-01A1	13	240130
203-54-77130	M1210-01A0	10	240070
203-54-77140	M1210-01A0	7	240070
203-54-J1141	R1140-01A0	2	330070
203-54-J1151	R1140-01A0	1	330070
203-54-J1920	R1140-01A1	1	330075
203-54-J1930	M1810-01A1	1	240155
203-54-J1940	M1810-01A1	6	240155
203-54-J1950	M1810-01A1		240155
203-54-J1960	M1810-01A1	11	240155
203-54-J1970	M1810-01A1	18	240155
203-54-J1980	M1810-01A1	21	240155

PART NO.	FIG.NO.	INDEX	PAGE
203-54-J1990	M1810-02A1	1	240165
203-54-J2010	M1810-02A1	9	240165
203-56-J1110	K0220-01A0	4	210025
203-56-J1120	M1130-01A1	1	240035
203-56-J1130	M1130-01A1	6	240035
203-56-J1140	M1130-01A1	10	240035
203-56-J1150	M1140-01A1	1	240045
203-56-J1160	M1140-01A1	6	240045
203-60-31100	H0110-01A0	3	150010
203-60-31160	H0110-01A0	2	150010
203-60-52160	N1310-01A0	7	270040
203-60-52250	H0110-01A0	6	150010
203-60-52260	H0110-01A0	5	150010
203-60-61130	H0110-01A0	9	150010
203-60-61161	H0110-01A0	13	150010
203-60-61240	H0110-01A0	16	150010
203-60-62220	Y1600-08A0	8	510130
203-60-62300	H1833-01A0		150190
203-60-62310	H1833-01A0	7	150190
203-60-62320	H1833-01A0	10	150190
203-60-62330	H1833-01A0	11	150190
203-60-62401	H1833-01A0		150190
203-60-62430	H1833-01A0	18	150190
203-60-71111	H0110-01A0	1	150010
203-62-56710	N1310-01A0	15	270040
203-62-56990	N1310-01A0	13	270040
203-62-57891	N1310-01A0	18	270040
203-62-58280	H1220-01A0	15	150110
203-62-58810	T1110-04A3	1	360040
203-62-58810	T1110-04A5	1	360045
203-62-61213	H1310-01A0	4	150130
203-62-61230	H0320-01A1	21	150070
203-62-61240	H1220-01A0	11	150110
203-62-61251	T1110-06A4	2	360056
203-62-61261	T1110-06A4	5	360056
203-62-61270	H1210-01A2	4	150100
203-62-61290	H1210-01A2	14	150100
203-62-61320	H1210-01A2	16	150100
203-62-61340	H1220-01A0	8	150110
203-62-61410	H0320-01A1	14	150070
203-62-61410	H1340-01A0	3	150140
203-62-61572	H0120-01A5	5	150020
203-62-61581	H0120-01A5	9	150020
203-62-61750	T1110-03A3	4	360030
203-62-61750	T1110-03A5	4	360035
203-62-61760	H1220-01A0	14	150110
203-62-61820	H1220-01A0	2	150110
203-62-61850	T1110-03A5	1	360035
203-62-61960	H1210-01A2	1	150100
203-62-61990	H1210-01A2	23	150100

PART NO.	FIG.NO.	INDEX	PAGE
203-62-63720	H1210-01A2	7	150100
203-62-63730	H1210-01A2	10	150100
203-62-63740	H0330-01A0	3	150080
203-62-63750	H1220-01A0	10	150110
203-62-63760	H1310-01A0	10	150130
203-62-63760	H1310-01A0	6	150130
203-62-63910	H1340-01A0	2	150140
203-62-64111	T1110-03A5	6	360035
203-62-64131	T1110-03A5	2	360035
203-62-64141	T1110-03A5	7	360035
203-62-64540	H0330-01A0	1	150080
203-62-71120	H0210-01A0	14	150040
203-62-71130	H0120-02A5	18	150030
203-62-71280	H1831-02A0	4	150170
203-62-71320	H0312-01A0	1	150060
203-62-71331	H0330-01A0	5	150080
203-62-71341	H0320-01A1	1	150070
203-62-71360	H1840-01A0	10	150200
203-62-71391	H1840-01A0	2	150200
203-62-71451	H1840-01A0	11	150200
203-62-71490	M1150-01A0	21	240050
203-62-71511	H1840-01A0	16	150200
203-62-71521	H0120-01A5	2	150020
203-62-71541	H1833-01A0	21	150190
203-62-71560	K1110-37A0	16	210410
203-62-71570	K1110-37A0	17	210410
203-62-71741	K1110-35A0	1	210390
203-62-71751	K1110-35A0	2	210390
203-62-71761	K1110-35A0	9	210390
203-62-71771	K1110-35A0	10	210390
203-62-71781	K1110-35A0	11	210390
203-62-71791	K1110-35A0	12	210390
203-62-71890	M1150-01A0	25	240050
203-62-71990	M1150-02A0	7	240060
203-62-72110	H0320-01A1	8	150070
203-62-72140	H1220-01A0	4	150110
203-62-72140	H1220-01A0	6	150110
203-62-72150	H1220-01A0	1	150110
203-62-72160	H1310-01A0	3	150130
203-62-72170	H1310-01A0	1	150130
203-62-72181	H1310-01A0	2	150130
203-62-72490	H1810-01A0	2	150150
203-62-72860	H1270-01A0	1	150120
203-70-00880	T1230-01A0		360110
203-70-00890	T1230-01A0		360110
203-70-01610	T1510-01B5		360140
203-70-33210	T1200-01A3	21	360090
203-70-41461	T1110-02A3	21	360020
203-70-41461	T1110-02A5	21	360025
203-70-42121	T1110-02A3	17	360020

PART NO.	FIG.NO.	INDEX	PAGE
203-70-42121	T1110-02A5	17	360025
203-70-42121	T1200-01A3	9	360090
203-70-42121	T1200-01A5	21	360095
203-70-42182	T1200-01A3	3	360090
203-70-42182	T1200-01A5	3	360095
203-70-44380	T1230-01A0	24	360110
203-70-44380	T1230-01A0	27	360110
203-70-44470	T1510-01B3	14	360130
203-70-44470	T1510-01B5	18	360140
203-70-51221	T1110-01A1	2	360010
203-70-51221	T1110-01A3	2	360015
203-70-51260	T1110-01A1	3	360010
203-70-51260	T1110-01A3	3	360015
203-70-53160	T1190-01A0	1	360085
203-70-53250	T1190-01A0	6	360085
203-70-53381	T1110-04A3	3	360040
203-70-53381	T1110-04A5	3	360045
203-70-53391	T1110-04A3	4	360040
203-70-53391	T1110-04A5	4	360045
203-70-54110	T1230-01A0	12	360110
203-70-54130	T1230-01A0	1	360110
203-70-54140	T1230-01A0	6	360110
203-70-56130	T1200-01A3	2	360090
203-70-56130	T1200-01A5	2	360095
203-70-56140	T1230-01A0	2	360110
203-70-56140	T1230-01A0	7	360110
203-70-56150	T1200-01A3	4	360090
203-70-56150	T1200-01A5	4	360095
203-70-56160	T1230-01A0	3	360110
203-70-56160	T1230-01A0	8	360110
203-70-61251	T1110-05A3	1	360050
203-70-61251	T1110-05A5	1	360055
203-70-61261	T1110-05A3	2	360050
203-70-61261	T1110-05A5	2	360055
203-70-61271	T1110-05A3	3	360050
203-70-61271	T1110-05A5	3	360055
203-70-61281	T1110-05A5	4	360055
203-70-61291	T1110-05A3	5	360050
203-70-61291	T1110-05A5	5	360055
203-70-61310	T1110-01A1	4	360010
203-70-61310	T1110-01A3	4	360015
203-70-61780	T1110-01A1	5	360010
203-70-61780	T1110-01A3	5	360015
203-70-61790	T1110-01A1	6	360010
203-70-61790	T1110-01A3	6	360015
203-70-61C60	T1110-01A1	7	360010
203-70-61C60	T1110-01A3	7	360015
203-70-66110	T1110-01A1	8	360010
203-70-71210	T1110-01A3	1	360015
203-70-71220	T1110-01A3		360015

PART NO.	FIG.NO.	INDEX	PAGE
203-70-73110	T1510-01B5	1	360140
203-70-73120	T1510-01B5	5	360140
203-70-73130	T1510-01B5	4	360140
203-70-73140	T1510-01B5	3	360140
203-70-J1120	T1510-02A0	11	360150
203-70-J1150	T1230-01A0	13	360110
203-70-J1230	T1510-02A0	12	360150
203-94-37111	T1200-01A5	1	360095
203-943-7221	T1200-01A5		360095
203-97-97150	B0920-01A0	25	040080
203-979-7111	B0000-02A0	5	040020
203-979-7142	E0200-01A0	23	120020
203-979-7150	B0920-01A0	6	040080
203-979-7231	K1110-33A0	4	210360
203-979-7241	K1110-33A0	2	210360
203-979-7311	K1110-34A4	1	210370
203-979-7321	K1110-34A4	3	210370
203-987-1120	M1420-01A0	9	240120
204-62-51120	P1120-01A0	17	300010
205-03-62660	C0100-01A0	5	060010
205-03-71271	M1130-01A0		240030
205-03-71440	M1130-01A0	32	240030
205-03-71532	M1130-01A0	39	240030
205-03-71540	M1130-01A0		240030
205-04-62130	D0200-01A0	15	090020
205-04-62140	D0200-01A0	8	090020
205-04-62150	D0200-03A0	1	090040
205-30-72170	R0120-01A0	16	330020
205-30-76190	R0110-01A0	9	330010
205-54-51250	K1110-10A4	5	210150
205-54-51970	M1130-01A0	12	240030
205-54-51970	M1140-01A0	12	240040
205-54-53550	M1130-01A0	24	240030
205-54-53550	M1140-01A0	24	240040
205-54-76280	K1110-10A4	15	210150
205-62-72140	P1120-01A0	15	300010
205-62-72240	P1120-01A0	12	300010
205-62-72240	P1120-01A0	6	300010
205-62-72240	P1120-01A0	9	300010
205-70-19570	T1510-01B3	6	360130
205-70-19570	T1510-01B5	6	360140
205-70-51390	T1110-05A3	14	360050
205-70-51390	T1110-05A5	14	360055
205-70-66580	J1310-01A0	2	180020
205-70-66580	J1310-01A0	7	180020
205-70-66580	T1110-02A3	12	360020
205-70-66580	T1110-02A3	18	360020
205-70-66580	T1110-02A5	12	360025
205-70-66580	T1110-02A5	18	360025
205-70-66580	T1200-01A3	10	360090

PART NO.	FIG.NO.	INDEX	PAGE
205-70-66580	T1200-01A3	17	360090
205-70-66580	T1200-01A5	22	360095
205-70-66580	T1200-01A5	30	360095
205-917-1610	B0000-01A0	15	040010
205-939-7120	T1510-01B3	4	360130
205-939-7120	T1510-01B5	2	360140
205-97-97260	Y1979-21A0	36	510420
206-00-71290	U0100-01A4	20	390010
206-03-43340	M1130-01A0	41	240030
206-06-61130	H1833-01A0	20	150190
206-30-45262	R0120-01A0	3	330020
206-30-45381	R0120-01A0	2	330020
206-30-72111	R0120-01A0	10	330020
206-30-72130	R0120-01A0	11	330020
206-30-72140	R0120-01A0	6	330020
207-06-61490	K1110-26A4	2	210290
207-46-71543	J1110-01A1A		180010
207-46-71543	J1110-01A2A		180015
207-46-71553	J1110-01A1A	17	180010
207-46-71553	J1110-01A2A	17	180015
207-46-71561	J1110-01A1A	18	180010
207-46-71561	J1110-01A2A	18	180015
207-54-65132	K1120-01A0A	1	210430
207-54-65260	K1120-01A0A	2	210430
207-54-75710	M1420-01A0	5	240120
207-62-72550	H1840-01A0	3	150200
207-70-53170	T1190-01A0	2	360085
208-00-71260	U0100-01A4	24	390010
208-26-11611	N1310-01A0	23	270040
208-32-11231	T1510-01A3	3	360120
208-32-11231	T1510-01B5	10	360140
208-43-71410	K1110-29A0	8	210320
208-43-71420	K1110-31A0	30	210340
208-43-71511	K1110-24A0	1	210270
208-43-71520	K1110-24A0	2	210270
208-43-71530	K1110-24A0	3	210270
208-43-71541	K1110-24A0	7	210270
208-43-71551	K1110-24A0	9	210270
208-43-71560	K1110-24A0	13	210270
208-43-71570	K1110-24A0	18	210270
208-43-71580	K1110-32A0	7	210350
208-43-71590	K1110-24A0	4	210270
208-43-71610	K1110-28A4	17	210310
208-43-71610	K1110-31A0	24	210340
208-43-71620	K1110-28A4	18	210310
208-43-71620	K1110-31A0	25	210340
208-43-71670	K1110-31A0	32	210340
208-43-71680	K1110-28A4	5	210310
208-43-71690	K1110-31A0	6	210340
208-53-00010	K1110-06A0		210110

PART NO.	FIG.NO.	INDEX	PAGE
208-53-00020	K1110-06A0		210110
208-53-00020	K1110-07A0		210120
208-53-11320	K1110-06A0	13	210110
208-53-11330	K0180-01A3	28	210020
208-53-11330	K0180-01A3	31	210020
208-53-11480	K1110-09A4	11	210140
208-53-11750	K1110-10A4	12	210150
208-53-11760	K1110-10A4	14	210150
208-53-11780	K0180-01A3	36	210020
208-53-11790	K1110-15A0	5	210200
208-53-11810	K1110-38A4	19	210420
208-53-11820	K1110-38A4	20	210420
208-53-11850	K1110-13A0	12	210180
208-53-11871	K1110-15A0	2	210200
208-53-11920	K1110-13A0	6	210180
208-53-11941	K1110-13A0	4	210180
208-53-11980	K1110-07A0	9	210120
208-53-11990	K1110-07A0	10	210120
208-53-12152	K1110-13A0	3	210180
208-53-12180	K1110-14A0	4	210190
208-53-12190	K1110-14A0	7	210190
208-53-12250	K0180-01A3	1	210020
208-53-12280	K1110-29A0	11	210320
208-53-12290	K0180-01A3	2	210020
208-53-12290	K0180-01A3	9	210020
208-53-12320	K0180-01A3	25	210020
208-53-12330	K0180-01A3	26	210020
208-53-12350	K0180-01A3		210020
208-53-12370	K0180-01A3	8	210020
208-53-12380	K0180-01A3	16	210020
208-53-12390	K0180-01A3	20	210020
208-53-12410	K0180-01A3	23	210020
208-53-12440	K1110-13A0	7	210180
208-53-12460	K0180-01A3	3	210020
208-53-12470	K1110-10A4	10	210150
208-53-12580	K1110-11H2	14	210160
208-53-12611	K0310-01A0	1	210030
208-53-12730	K0180-01A3	29	210020
208-53-12750	K0180-01A3	33	210020
208-53-12780	K1110-08A4	1	210130
208-53-12790	K1110-08A4	12	210130
208-53-12810	K1110-10A4	11	210150
208-53-12860	K1110-16A4	1	210210
208-53-12870	K1110-17D0	1	210225
208-53-12891	K1110-19A0	13	210230
208-53-12920	K1110-13A0	15	210180
208-53-12970	K1110-19A0	3	210230
208-53-12980	K1110-10A4	8	210150
208-53-12991	K1110-10A4	7	210150
208-53-13270	K1110-11H2	7	210160

PART NO.	FIG.NO.	INDEX	PAGE
208-53-13610	K0180-01A3		210020
208-53-13620	K0180-01A3		210020
208-53-13670	K1110-13A0	5	210180
208-53-13710	K0180-01A3	12	210020
208-53-14540	K1110-07A0	5	210120
208-53-14720	K1110-07A0	7	210120
208-53-14810	K1110-19A0	1	210230
208-53-15560	K1110-15A0	1	210200
208-53-15620	K1110-12A4	2	210170
208-53-15650	K1110-15A0		210200
208-53-15770	K1110-14A0	1	210190
208-54-57180	M1120-01A0	35	240020
208-60-71180	H0110-01A0	20	150010
208-62-72290	K1110-35A0	6	210390
208-62-72310	K1110-35A0	7	210390
208-62-72770	K1110-36A0	1	210400
208-62-72780	K1110-36A0	2	210400
208-62-72860	K1110-36A0	10	210400
208-62-72870	K1110-36A0	11	210400
208-979-7540	K1110-32A0	2	210350
208-979-7550	K1110-28A4	2	210310
208-979-7560	K0180-01A3	13	210020
208-979-7610	Y1979-21A0		510420
208-979-7630	K1110-28A4	1	210310
208-979-7640	K1110-33A0	1	210360
208-979-7650	K1110-33A0	6	210360
209-62-52560	N1310-01A0	8	270040
209-62-75680	H0340-01A2	1	150090
209-64-11920	H0320-01A1	19	150070
209-64-16721	H1831-02A0	13	150170
20B-27-11210	H0340-01A2	7	150090
20B-27-11210	Y1651-01A0	11	510210
20D-62-17620	A3030-A0A3	14	030310
20M-977-8130	A5010-A0J2	17	030490
20M-977-8130	B0920-01A0	7	040080
20S-26-71160	Y0260-01A0	14	510010
20S-26-71190	Y0260-01A0	17	510010
20S-26-71250	Y0260-01A0	16	510010
20S-97-71170	B0920-01A0	9	040080
20T-54-74510	E0200-01A0	12	120020
20T-54-74510	E0200-04A0	5	120050
20T-70-81720	J1110-01A1A	2	180010
20T-70-81720	J1110-01A2A	2	180015
20U-70-31330	J1310-01A0		180020
20U-70-31330	T1110-02A3	16	360020
20U-70-31330	T1110-02A5	16	360025
20U-70-31340	J1310-01A0		180020
20U-70-31340	T1110-02A3	15	360020
20U-70-31340	T1110-02A5	15	360025
20Y-00-31170	U0100-01A4	2	390010

PART NO.	FIG.NO.	INDEX	PAGE
20Y-00-31330	U0100-01A4	23	390010
20Y-00-31350	U0120-01A0	1	390030
20Y-00-31840	U0100-01A4	25	390010
20Y-00-J1150	U0100-01A4	16	390010
20Y-03-11220	E0200-03A2	16	120040
20Y-03-11220	E0200-05A0	21	120060
20Y-03-11220	H0340-01A2	19	150090
20Y-03-11330	C0100-01A0	8	060010
20Y-03-22110	C0100-01A0	4	060010
20Y-04-11161	D0100-01A1	3	090010
20Y-04-21580	D0100-01A1	9	090010
20Y-06-15240	M1130-01A0	38	240030
20Y-06-21551	T1110-02A3	2	360020
20Y-06-21551	T1110-02A5	2	360025
20Y-06-21710	K1110-20A0	31	210240
20Y-06-23472	K1110-13A0	11	210180
20Y-06-23770	K1110-28A4	11	210310
20Y-06-23770	K1110-31A0	14	210340
20Y-06-23920	K1110-31A0	15	210340
20Y-06-25310	T1110-02A3	1	360020
20Y-06-25310	T1110-02A5	1	360025
20Y-06-31320	K1110-31A0		210340
20Y-06-31330	K1110-31A0	28	210340
20Y-06-31660	E0200-03A2	2	120040
20Y-06-41238	K1110-28A4	3	210310
20Y-06-41990	K1110-09A4	1	210140
20Y-25-11270	T1110-05A3	16	360050
20Y-25-11270	T1110-05A5	16	360055
20Y-27-11561	P1210-01A0	3	300020
20Y-27-11582	P1210-01A0	2	300020
20Y-30-00322	R0110-01A0		330010
20Y-30-00410	R0200-01A0		330030
20Y-30-00410	R0300-01A0		330040
20Y-30-08021	R0200-01A0		330030
20Y-30-08021	R0300-01A0		330040
20Y-30-11312	R1200-01A0	1	330080
20Y-30-11340	R0200-01A0	11	330030
20Y-30-11340	R0300-01A0	11	330040
20Y-30-13131	R0110-01A0	3	330010
20Y-30-21191	P1210-01A0	6	300020
20Y-30-28281	R0200-01A0	1	330030
20Y-30-28281	R0300-01A0	1	330040
20Y-30-28292	R0200-01A0	3	330030
20Y-30-28292	R0300-01A0	3	330040
20Y-30-28302	R0200-01A0	7	330030
20Y-30-28302	R0300-01A0	7	330040
20Y-30-28312	R0200-01A0	9	330030
20Y-30-28312	R0300-01A0	9	330040
20Y-30-28321	R0200-01A0	10	330030
20Y-30-28321	R0300-01A0	10	330040

PART NO.	FIG.NO.	INDEX	PAGE
20Y-30-28330	R0200-01A0	4	330030
20Y-30-28330	R0300-01A0	4	330040
20Y-30-28340	R0200-01A0	8	330030
20Y-30-28340	R0300-01A0	8	330040
20Y-30-28430	R0200-01A0	5	330030
20Y-30-28430	R0300-01A0	5	330040
20Y-30-31750	R0110-01A0	8	330010
20Y-30-32110	R0120-01A0	1	330020
20Y-30-41A10	R1100-01A0	2	330060
20Y-30-43310	R0110-01A0	1	330010
20Y-30-43340	R0110-01A0	2	330010
20Y-32-11123	R0500-01A0	1	330050
20Y-32-11123	R0500-01A1	1	330055
20Y-32-11123	Y0321-01A0	1	510030
20Y-32-11133	R0500-01A0	2	330050
20Y-32-11133	R0500-01A1	2	330055
20Y-32-11133	Y0321-01A0	2	510030
20Y-32-11140	R0500-01A0	5	330050
20Y-32-11140	R0500-01A1	5	330055
20Y-32-11140	Y0321-01A0	5	510030
20Y-32-11150	R0500-01A0	6	330050
20Y-32-11150	R0500-01A1	6	330055
20Y-32-11150	Y0321-01A0	6	510030
20Y-32-11170	R0500-01A0	4	330050
20Y-32-11170	R0500-01A1	4	330055
20Y-32-11170	Y0321-01A0	4	510030
20Y-32-11190	R0500-01A0	11	330050
20Y-32-11190	R0500-01A1	11	330055
20Y-32-11190	Y0321-01A0	8	510030
20Y-32-11210	R0500-01A0	8	330050
20Y-32-11210	Y0320-01A0		510020
20Y-32-11240	R0500-01A0	3	330050
20Y-32-11240	R0500-01A1	3	330055
20Y-32-11240	Y0321-01A0	3	510030
20Y-32-11260	R0500-01A0	10	330050
20Y-32-11260	R0500-01A1	10	330055
20Y-32-11260	Y0321-01A0	7	510030
20Y-32-11331	R0500-01A0	7	330050
20Y-43-12180	B0400-01A0	22	040070
20Y-43-15410	C0100-01A0	20	060010
20Y-43-15410	C0100-02A0	13	060020
20Y-43-21140	K1110-20A0	9	210240
20Y-43-21231	K1110-20A0	19	210240
20Y-43-21241	K1110-20A0	20	210240
20Y-43-22211	K1110-27A4	1	210300
20Y-43-22221	K1110-30A4	1	210330
20Y-43-22250	K1110-27A4	6	210300
20Y-43-22250	K1110-30A4	6	210330
20Y-43-22261	K1110-27A4	7	210300
20Y-43-22261	K1110-30A4	7	210330

PART NO.	FIG.NO.	INDEX	PAGE
20Y-43-22370	K1110-27A4	8	210300
20Y-43-22370	K1110-30A4	8	210330
20Y-43-22381	K1110-27A4	3	210300
20Y-43-22390	K1110-30A4	3	210330
20Y-43-22421	K1110-27A4	4	210300
20Y-43-22421	K1110-30A4	4	210330
20Y-43-31412	K1110-29A0	7	210320
20Y-43-31421	K1110-29A0	18	210320
20Y-43-31432	K1110-29A0	16	210320
20Y-43-31440	K1110-29A0	19	210320
20Y-43-31450	K1110-29A0	20	210320
20Y-43-31504	K1110-29A0		210320
20Y-43-31513	K1110-29A0	12	210320
20Y-43-31522	K1110-29A0	13	210320
20Y-43-31611	K1110-29A0	14	210320
20Y-43-31621	K1110-29A0	15	210320
20Y-43-31690	K1110-29A0	29	210320
20Y-43-41111	K1110-20A0	11	210240
20Y-43-41121	K1110-20A0	4	210240
20Y-43-41361	K1110-20A0	7	210240
20Y-46-42232	J1110-01A1A	14	180010
20Y-46-42232	J1110-01A2A	14	180015
20Y-46-42253	J1110-01A1A	16	180010
20Y-46-42253	J1110-01A2A	16	180015
20Y-46-42271	J1110-01A1A	13	180010
20Y-46-42271	J1110-01A2A	13	180015
20Y-46-42286	J1110-01A1A	15	180010
20Y-46-42286	J1110-01A2A	15	180015
20Y-46-42412	J1110-01A1A		180010
20Y-46-42412	J1110-01A2A		180015
20Y-46-42427	J1110-01A1A		180010
20Y-46-42427	J1110-01A2A		180015
20Y-53-12280	K1110-07A0	4	210120
20Y-53-15140	K1110-11H2	22	210160
20Y-54-11611	K1110-07A0	16	210120
20Y-54-11611	M1130-01A0	15	240030
20Y-54-11611	M1140-01A0	15	240040
20Y-54-12550	M1810-01A0	15	240150
20Y-54-12550	M1810-01A0	23	240150
20Y-54-12550	M1810-01A1	15	240155
20Y-54-12550	M1810-01A1	23	240155
20Y-54-12550	M1810-02A0	6	240160
20Y-54-12550	M1810-02A1	6	240165
20Y-54-18690	K1110-10A4	2	210150
20Y-54-18690	K1110-10A4	4	210150
20Y-54-27761	M1150-01A0	2	240050
20Y-54-28170	M1130-01A0	9	240030
20Y-54-28170	M1140-01A0	9	240040
20Y-54-29231	M1130-01A0	20	240030
20Y-54-29231	M1140-01A0	20	240040

PART NO.	FIG.NO.	INDEX	PAGE
20Y-54-35470	K1110-07A0	20	210120
20Y-54-35480	K1110-07A0	21	210120
20Y-54-36150	K1110-11H2	13	210160
20Y-54-36380	K1110-07A0	1	210120
20Y-54-39450	K1110-08A4	4	210130
20Y-54-39460	K1110-08A4	5	210130
20Y-54-39480	K1110-08A4	6	210130
20Y-54-39511	K1110-09A4	15	210140
20Y-54-51321	K1110-06A0	14	210110
20Y-54-51341	K1110-06A0	15	210110
20Y-54-51393	K1110-06A0	18	210110
20Y-54-51441	K1110-06A0	11	210110
20Y-54-51490	K1110-06A0	17	210110
20Y-54-51820	K1110-10A4	16	210150
20Y-54-51832	K1110-10A4	18	210150
20Y-54-51910	K1110-07A0	19	210120
20Y-54-51952	K0310-01A0	2	210030
20Y-54-52200	K1110-06A0	1	210110
20Y-54-52221	K1110-08A4		210130
20Y-54-52231	K1110-08A4	8	210130
20Y-54-52300	K1110-06A0	2	210110
20Y-54-52350	K1110-08A4	3	210130
20Y-54-52400	K1110-06A0	3	210110
20Y-54-52412	K1110-10A4	1	210150
20Y-54-52423	K1110-10A4	3	210150
20Y-54-52440	K1110-11H2	15	210160
20Y-54-52470	K1110-11H2	12	210160
20Y-54-52820	K1110-06A0	9	210110
20Y-54-52990	K1110-06A0	5	210110
20Y-54-53610	K1110-11H2	25	210160
20Y-54-55311	K1110-09A4	4	210140
20Y-54-61470	M1130-01A0	17	240030
20Y-54-61630	M1420-01A0	3	240120
20Y-54-61670	M1220-01A1	30	240080
20Y-54-61680	M1220-01A1	31	240080
20Y-54-63411	M1130-01A0	23	240030
20Y-54-63411	M1140-01A0	23	240040
20Y-54-65121	K1110-19A0	2	210230
20Y-54-65340	K1110-24A0	14	210270
20Y-54-65540	K1110-24A0	16	210270
20Y-54-65811	K1120-01A0A	11	210430
20Y-54-65821	K1120-01A0A	12	210430
20Y-54-74240	M1420-01A0	6	240120
20Y-54-74270	M1420-01A0	2	240120
20Y-54-74280	M1420-01A0	1	240120
20Y-54-74560	K0700-01A0	2	210050
20Y-57-32101	K0110-01A1	1	210010
20Y-60-21311	H0110-01A0	12	150010
20Y-60-21340	H0110-01A0	19	150010
20Y-60-21440	H0110-01A0	23	150010
20Y-60-21470	H0110-01A0		150010
20Y-60-22350	H1833-01A0	17	150190
20Y-62-12590	P1120-01A0	21	300010
20Y-62-15660	N1220-01A0	5	270030
20Y-62-15831	K1110-38A4	1	210420
20Y-62-15831	K1110-38A4	10	210420
20Y-62-16630	H1833-01A0	2	150190
20Y-62-17710	H0340-01A2	5	150090
20Y-62-18890	K1110-20A0	27	210240
20Y-62-18890	K1110-27A4	17	210300
20Y-62-18890	K1110-30A4	17	210330
20Y-62-18910	K1110-20A0	22	210240
20Y-62-18910	K1110-27A4	15	210300
20Y-62-18910	K1110-30A4	15	210330
20Y-62-19560	H0120-02A5	23	150030
20Y-62-19560	H1831-01A0	18	150160
20Y-62-19560	H1831-01A0	24	150160
20Y-62-19560	H1833-01A0	16	150190
20Y-62-19560	H1833-01A0	4	150190
20Y-62-19560	H1833-01A0	9	150190
20Y-62-21940	H1831-01A0	8	150160
20Y-62-22271	H1831-01A0	16	150160
20Y-62-22410	H1833-01A0	14	150190
20Y-62-22790	E0200-03A2	4	120040
20Y-62-22790	H1831-02A0	5	150170
20Y-62-22790	H1840-01A0	6	150200
20Y-62-22790	K1110-35A0	13	210390
20Y-62-22790	K1110-35A0	3	210390
20Y-62-22790	K1110-36A0	7	210400
20Y-62-22790	Y1600-08A0	24	510130
20Y-62-22810	H1840-01A0	7	150200
20Y-62-22810	K1110-36A0	8	210400
20Y-62-22820	H1831-02A0	6	150170
20Y-62-22820	H1840-01A0	12	150200
20Y-62-22820	K1110-35A0	14	210390
20Y-62-22820	K1110-35A0	4	210390
20Y-62-22820	K1110-36A0	9	210400
20Y-62-22830	E0200-03A2	5	120040
20Y-62-22830	H1840-01A0	13	150200
20Y-62-22830	Y1600-08A0	25	510130
20Y-62-22840	H1831-02A0	7	150170
20Y-62-22840	H1840-01A0	8	150200
20Y-62-22850	H1831-02A0	8	150170
20Y-62-22850	H1840-01A0	9	150200
20Y-62-22850	K1110-35A0	15	210390
20Y-62-22860	H1840-01A0	14	150200
20Y-62-27770	K1110-37A0	12	210410
20Y-62-41390	K1110-20A0	29	210240
20Y-62-41550	H1833-01A0	1	150190
20Y-62-41970	H1831-01A0	13	150160
20Y-62-43510	K1110-36A0	12	210400
20Y-62-43520	K1110-36A0	3	210400
20Y-62-43990	K1110-36A0	13	210400
20Y-62-44420	H1810-01A0	1	150150
20Y-62-45610	H0120-02A5	9	150030
20Y-62-85250	K1110-36A0	14	210400
20Y-70-11520	T1110-05A3	15	360050
20Y-70-11520	T1110-05A5	15	360055
20Y-70-11540	T1110-05A3	7	360050
20Y-70-11540	T1110-05A5	7	360055
20Y-70-11590	T1110-05A3	8	360050
20Y-70-11590	T1110-05A5	8	360055
20Y-958-J190	K0220-01A0	1	210025
20Y-979-3130	K1110-33A0	3	210360
20Y-979-3150	K1110-33A0	5	210360
20Y-979-6121	Y1979-01A0		510410
20Y-979-6630	K1110-24A0	17	210270
21J-70-21310	T1110-01A3	8	360015
21K-54-11310	M1110-01A0A	10	240010
21K-60-71230	H0120-02A5		150030
21K-62-35270	T1110-04A3	2	360040
21K-62-35270	T1110-04A5	2	360045
21K-62-71810	K1110-36A0	4	210400
21K-62-71830	K1110-36A0	5	210400
21K-62-71970	H1840-01A0	1	150200
21K-62-72190	H1840-01A0	4	150200
21K-62-72360	H1831-01A0	22	150160
21K-62-72580	K1110-36A0	6	210400
21K-62-72730	H0120-02A5	1	150030
21K-70-11410	T1125-01A0	5	360070
21K-70-71320	Y1620-01A3	16	510140
21K-70-71320	Y1620-01A3	2	510140
21M-62-16780	H1831-01A0	26	150160
21T-06-11350	M1220-01A1	15	240080
21T-06-71250	K1110-26A4	1	210290
21T-06-71870	K1110-15A0	7	210200
21T-27-71220	K1120-01A0A	8	210430
21T-38-12270	K0350-01A0	10	210040
21T-38-12270	K0350-01A0	2	210040
21T-38-12270	K0350-01A0	7	210040
21T-54-16150	D0100-01A1	15	090010
21T-62-76850	D0200-01A0	34	090020
21U-98-31160	U0100-01A4	26	390010
21W-06-22120	M1220-01A1	12	240080
21W-06-22130	M1220-01A1	13	240080
21W-62-43960	Y1600-08A0	9	510130
21W-70-41440	T1200-01A5	34	360095
21W-97-33420	H0120-02A5	2	150030
21W-97-71120	B0920-01A0	24	040080
21Y-62-11530	H1210-01A2	22	150100
21Y-62-11591	H0120-02A5	3	150030
21Y-70-14710	T1200-01A3	16	360090
21Y-70-14710	T1200-01A5	29	360095
21Y-70-14710	T1230-01A0	21	360110
21Y-70-14760	J1310-01A0	5	180020
21Y-70-14770	T1230-01A0	16	360110
21Y-70-14770	T1510-01B3	13	360130
21Y-70-14770	T1510-01B5	17	360140
21Y-70-14780	T1230-01A0		360110
21Y-70-14780	T1510-01B3		360130
21Y-70-14780	T1510-01B5		360140
21Y-70-14830	J1310-01A0	10	180020
21Y-70-14830	T1125-01A0	4	360070
21Y-70-14830	T1200-01A3	14	360090
21Y-70-14830	T1200-01A5	26	360095
21Y-70-14840	J1310-01A0		180020
21Y-70-14840	T1200-01A3		360090
21Y-70-14840	T1200-01A5	27	360095
21Y-70-14850	T1230-01A0		360110
22B-01-11190	B0100-02A0	6	040040
22B-01-12210	A9530-A0A1	1	030690
22B-01-12220	A5110-A0A4	2	030540
22B-03-12590	C0100-01A0	21	060010
22B-26-11320	N1220-01A0	11	270030
22B-54-16330	K1110-06A0	10	210110
22B-54-16461	K1110-06A0	12	210110
22B-54-17282	K1110-11H2	1	210160
22B-70-12230	T1110-01A3	10	360015
22B-70-12230	T1110-01A3	9	360015
22B-97-91480	A7010-A0A6	1	030650
22U-00-21440	U0100-01A4	14	390010
22U-03-22860	C0100-01A0	12	060010
22U-03-22870	C0100-01A0	22	060010
22U-04-21131	D0200-02A0	1	090030
22U-04-21200	D0100-01A1		090010
22U-04-21210	D0100-01A1	8	090010
22U-04-21220	D0100-01A1	10	090010
22U-04-21260	D0200-02A0	5	090030
22U-04-21330	D0200-02A0	6	090030
22U-06-11270	E0200-03A2	3	120040
22U-06-21130	E0100-01A0	5	120010
22U-06-22190	K1110-31A0	11	210340
22U-06-22261	K1110-19A0		210230
22U-06-22290	K1110-31A0	12	210340
22U-06-22320	K1110-31A0	5	210340
22U-06-22330	K1110-31A0	2	210340
22U-06-22350	K1110-28A4	12	210310
22U-06-22360	K1110-29A0	23	210320
22U-06-22390	K1110-31A0	13	210340
22U-06-22420	K1110-31A0	7	210340

PART NO.	FIG.NO.	INDEX	PAGE
22U-06-22430	K1110-31A0	29	210340
22U-06-22470	K1110-31A0	8	210340
22U-06-22480	K1110-31A0	10	210340
22U-06-22490	K1110-29A0	22	210320
22U-06-22510	K1110-28A4	8	210310
22U-30-11450	R0200-01A0	2	330030
22U-30-11450	R0300-01A0	2	330040
22U-43-21111	K1110-20A0	16	210240
22U-43-21121	K1110-20A0	17	210240
22U-43-21131	K1110-20A0	18	210240
22U-43-21181	K1110-27A4		210300
22U-43-21191	K1110-30A4		210330
22U-43-21211	K1110-27A4	5	210300
22U-43-21211	K1110-30A4	5	210330
22U-43-21260	K1110-24A0	11	210270
22U-43-21350	K1110-20A0		210240
22U-43-21360	K1110-20A0	10	210240
22U-43-21390	K1110-24A0	12	210270
22U-43-22110	K1110-28A4	19	210310
22U-43-22220	K1110-28A4	6	210310
22U-43-22230	K1110-28A4	7	210310
22U-43-22310	K1110-29A0	1	210320
22U-43-22320	K1110-29A0		210320
22U-43-22330	K1110-29A0	2	210320
22U-43-22340	K1110-29A0	6	210320
22U-43-22410	K1110-29A0	24	210320
22U-43-22430	K1110-29A0	28	210320
22U-43-22830	K1110-29A0	30	210320
22U-43-23111	K1110-31A0	1	210340
22U-43-23120	K1110-31A0	3	210340
22U-43-23130	K1110-31A0	4	210340
22U-43-23210	K1110-31A0	27	210340
22U-43-23230	K1110-31A0	31	210340
22U-43-23250	K1110-31A0	33	210340
22U-43-23260	K1110-29A0	25	210320
22U-43-23260	K1110-31A0	34	210340
22U-43-23711	K1110-31A0	39	210340
22U-54-24760	M1810-01A0	22	240150
22U-54-24760	M1810-01A1	22	240155
22U-54-24760	M1810-02A0	3	240160
22U-54-24760	M1810-02A1	3	240165
22U-54-25110	K1110-21A0	1	210250
22U-54-25120	K1110-22A4	1	210260
22U-54-25170	K1110-24A0	20	210270
22U-54-25371	K1110-13A0	10	210180
22U-54-25521	K1110-21A0	2	210250
22U-54-25531	K1110-22A4	2	210260
22U-54-25581	K1110-19A0	4	210230
22U-54-25590	K1110-19A0	5	210230
22U-54-25910	K1110-13A0	17	210180

PART NO.	FIG.NO.	INDEX	PAGE
22U-60-21330	H1831-01A0	20	150160
22U-62-22480	H0120-02A5	21	150030
281-01-13180	H0320-01A1	5	150070
281-01-13180	H1840-01A0	19	150200
287-17-11520	A4230-A0F4	9	030470
421-06-23330	T1110-02A3		360020
421-06-23330	T1110-02A5		360025
421-07-33870	K1110-13A0	9	210180
421-54-11372	M1220-01A1	4	240080
421-54-11381	M1220-01A1	5	240080
569-06-61960	K1110-16A4	8	210210
569-06-61960	K1110-31A0	36	210340
600-184-1210	B9999-A3R5		030730
600-184-1220	B9999-A3R5	2	030730
600-184-1250	B9999-A3R5	3	030730
600-184-1270	B9999-A3R5	6	030730
600-184-2110	B9999-A3R5	7	030730
600-185-2100	B9999-A3R5		030730
600-185-2110	B9999-A3R5	4	030730
600-211-1870	A3110-A0D6	10	030320
600-211-2110	A3110-A0D6	3	030320
600-211-2110	B9999-A0R4	4	030720
600-211-2110	V0100-01A0	3	420010
600-311-1810	A9420-A0A1	2	030680
600-311-6720	A4110-A0H8	3	030440
600-311-7460	A4110-A0H8	2	030440
600-311-7460	V0100-01A0	7	420010
600-311-9101	D0200-03A0	10	090040
600-311-9121	D0200-03A0	12	090040
600-311-9121	V0100-01A0	8	420010
600-311-9640	A4110-A0H8	1	030440
600-411-1280	K1110-27A4	9	210300
600-411-1280	K1110-30A4	9	210330
600-421-6230	A5010-A0J2	12	030490
600-625-7550	A5030-A0F9	1	030510
600-815-2170	E0200-02A0	9	120030
600-815-2341	A1320-A0A8	3	030070
600-815-8941	E0200-02A0	1	120030
600-815-9260	A4510-A0F9	1	030480
600-863-3210	A6210-B0G6		030640
6110-11-4431	A8118-A0B1		030670
6110-73-6231	D0200-03A0	13	090040
6114-31-3330	A4040-A0A6	4	030400
6114-31-3330	A8116-B0B2		030660
613-87-16110	D0200-03A0	11	090040
6130-12-1961	A9530-A0A1	2	030690
6130-12-5580	A8118-A0B1		030670
6130-22-5190	A2210-A0F9	6	030200
6130-32-1361	A2230-A0B4	4	030210
6131-12-5920	A1111-A0D7	12	030050

PART NO.	FIG.NO.	INDEX	PAGE
6131-22-3750	B0100-02A0	8	040040
6136-11-4850	A8118-A0B1		030670
6136-11-8120	A1110-A0F7	6	030040
6136-11-8130	A1110-A0F7	7	030040
6136-11-8142	A1110-A0F7	8	030040
6136-11-8142	A8118-A0B1		030670
6136-11-8142	B9999-A0R4	3	030720
6136-11-8142	V0100-01A0	5	420010
6136-31-1431	A2370-A0F4	2	030240
6136-52-1620	A2010-A0P2	22	030130
6140-11-6331	A5010-A0J2	13	030490
6140-11-6331	A8118-A0B1		030670
6140-21-1130	A2010-A0P2	16	030130
6141-21-1332	A2210-A0F9	4	030200
6141-21-1332	A8116-B0B2		030660
6141-21-1530	A2010-A0P2	5	030130
6141-64-2560	A2110-A0P1	12	030180
6144-11-5821	A8118-A0B1		030670
6144-21-2500	A8116-B0B2		030660
6144-21-5590	A2190-A0B5	6	030190
6144-71-5750	A4110-A0H8	19	030440
6144-71-5760	A4110-A0H8	21	030440
6144-81-5151	A2810-A0A5	1	030290
6150-21-5920	A2190-A0B5	3	030190
6150-21-5930	A2190-A0B5	4	030190
6152-51-5520	E0200-06A0	6	120070
6162-53-5420	A3110-A0D6	12	030320
6162-53-5430	A3110-A0D6	11	030320
6162-53-5450	A3110-A0D6	9	030320
6162-73-5940	A3030-A0A3	13	030310
6201-11-5850	A1530-A0E4	4	030090
6201-11-5850	A1670-A0A7	7	030120
6201-51-5910	A3110-A0D6	2	030320
6202-13-8620	A1111-A0D7	2	030050
6202-13-8630	A1111-A0D7		030050
6202-13-8631	A1111-A0D7	4	030050
6202-21-4151	A6210-A0G6	3	030630
6202-21-4151	A8116-B0B2		030660
6202-43-5320	A2450-A0A1	9	030270
6202-71-9450	A4230-A0F4	2	030470
6204-11-1830	A8118-A0B1		030670
6204-11-1840	A1010-A0G2	17	030010
6204-11-1840	A8118-A0B1		030670
6204-11-3110	A4210-B0F4	1	030460
6204-11-3812	A4210-A0F4	3	030450
6204-11-3830	A4210-A0F4	4	030450
6204-11-3850	A4210-A0F4	7	030450
6204-11-3850	A8118-A0B1		030670
6204-11-3880	A4210-A0F4	6	030450
6204-11-3880	A8118-A0B1		030670

PART NO.	FIG.NO.	INDEX	PAGE
6204-11-4850	A1320-A0A8	4	030070
6204-11-4850	A8118-A0B1		030670
6204-11-6421	A5110-A0A4	1	030540
6204-11-8610	A1111-A0D7	1	030050
6204-11-8810	A1110-A0F7	5	030040
6204-11-8810	A8118-A0B1		030670
6204-11-8810	B9999-A0R4	2	030720
6204-11-8810	V0100-01A0	4	420010
6204-13-1610	A1010-A0G2	18	030010
6204-13-4132	A1310-A0M1	1	030060
6204-19-1310	A1010-A0G2	2	030010
6204-21-1610	A2010-A0P2	4	030130
6204-21-3112	A2040-A0E4	4	030140
6204-21-3230	A2040-A0E4	1	030140
6204-21-3410	A8116-B0B2		030660
6204-21-3451	A8116-B0B2		030660
6204-21-3460	A8116-B0B2		030660
6204-21-3510	A2040-A0E4	5	030140
6204-21-3510	A8116-B0B2		030660
6204-21-3750	A2110-A0P1	13	030180
6204-21-5280	A8116-B0B2		030660
6204-21-5510	A2190-A0B5	2	030190
6204-21-6710	A2210-A0F9	8	030200
6204-21-6811	A8116-B0B2		030660
6204-21-6811	A8118-A0B1		030670
6204-21-6820	A2210-A0F9	9	030200
6204-21-6820	A3030-A0A3	10	030310
6204-21-6820	A8116-B0B2	2	030660
6204-21-8100	A2310-A0B3A		030220
6204-21-8600	A2310-A0B3A	6	030220
6204-26-8100	A2310-A0B3A	4	030220
6204-26-8600	A2310-A0B3A	6	030220
6204-27-8100	A2310-A0B3A	4	030220
6204-27-8600	A2310-A0B3A	6	030220
6204-28-8100	A2310-A0B3A	4	030220
6204-28-8600	A2310-A0B3A	6	030220
6204-29-1210	A2010-A0P2	2	030130
6204-29-1220	A2010-A0P2	3	030130
6204-29-8100	A2310-A0B3A	4	030220
6204-29-8600	A2310-A0B3A	6	030220
6204-31-1220	A2310-A0B3A	2	030220
6204-31-3310	A2350-A0F1	10	030230
6204-31-6331	A2050-A0B3	3	030160
6204-31-6341	A2050-A0B3	2	030160
6204-31-6350	A2050-A0B3	5	030160
6204-41-1131	A2410-A0B8	4	030250
6204-41-1221	A2410-A0B8	2	030250
6204-41-2110	A2430-A0A1	1	030260
6204-41-3110	A2430-A0A1	2	030260
6204-41-4410	A1010-A0G2	14	030010

PART NO.	FIG.NO.	INDEX	PAGE
6204-41-4510	A1010-A0G2	12	030010
6204-41-4520	A1010-A0G2	13	030010
6204-41-4540	A8118-A0B1		030670
6204-41-4541	A1010-A0G2	15	030010
6204-41-4541	A8118-A0B1	1	030670
6204-41-4550	A1010-A0G2	16	030010
6204-41-5110	A2450-A0A1	1	030270
6204-41-5120	A2450-A0A1	2	030270
6204-41-5620	A2450-A0A1	10	030270
6204-41-5710	A2450-A0A1	12	030270
6204-51-1310	A3010-A0A2	5	030300
6204-51-1330	A3010-A0A2	7	030300
6204-51-1340	A3010-A0A2	8	030300
6204-51-1510	A3010-A0A2	2	030300
6204-51-1620	A2010-A0P2	23	030130
6204-51-1711	A2010-A0P2	15	030130
6204-51-1910	A3010-A0A2	9	030300
6204-51-6122	A2110-A0P1	9	030180
6204-51-6122	A8116-B0B2		030660
6204-51-8950	A3030-A0A3	16	030310
6204-61-1630	A5010-A0J2	2	030490
6204-61-1650	A5010-A0J2	4	030490
6204-61-1660	A5010-A0J2	7	030490
6204-61-5181	A8116-B0B2		030660
6204-61-5191	A8116-B0B2		030660
6204-63-1130	A8116-B0B2		030660
6204-71-3170	A4040-A0A6	2	030400
6204-71-3190	A4040-A0A6	9	030400
6204-71-3321	A4040-A0A6	5	030400
6204-71-3630	A4040-A0A6	3	030400
6204-71-3820	A9420-A0A1	1	030680
6204-71-4230	A4060-A0B4	2	030420
6204-71-4250	A4060-A0B4	1	030420
6204-71-5110	A4050-A0C6	1	030410
6204-71-5120	A4050-A0C6	2	030410
6204-71-5130	A4050-A0C6	3	030410
6204-71-5141	A4050-A0C6	4	030410
6204-71-5560	A4230-A0F4	6	030470
6204-71-5581	A4230-A0F4	5	030470
6204-71-5710	A4050-A0C6	5	030410
6204-71-5730	A4110-A0H8	10	030440
6204-71-5810	A4050-A0C6	7	030410
6204-71-5890	A4050-A0C6	9	030410
6204-71-6500	A4110-A0H8		030440
6204-71-9100	A4230-A0F4	1	030470
6204-71-9140	A4230-A0F4	3	030470
6204-81-2421	A9850-A0A8	1	030700
6204-81-9551	A4510-A0F9	5	030480
6204-81-9570	A4510-A0F9	4	030480
6204-81-9620	A4510-A0F9	13	030480

PART NO.	FIG.NO.	INDEX	PAGE
6204-81-9640	A4510-A0F9	8	030480
6204-K1-0901	A8118-A0B1	1	030670
6204-K2-0901	A8116-B0B2	2	030660
6205-11-4430	A4070-A0A1	5	030430
6205-11-5140	A1510-A0G3	1	030080
6205-11-5460	A1610-A0N7	6	030110
6205-11-5460	B0000-01A0	1	040010
6205-11-5580	A1530-A0E4	2	030090
6205-11-5580	A8118-A0B1		030670
6205-11-5691	A1670-A0A7	1	030120
6205-11-5810	A8118-A0B1		030670
6205-11-5811	A1510-A0G3	2	030080
6205-11-5811	A8118-A0B1		030670
6205-11-5850	A1670-A0A7	2	030120
6205-11-5850	A8118-A0B1		030670
6205-11-8111	A1110-A0F7	1	030040
6205-11-8301	A1110-A0F7		030040
6205-11-8930	A1111-A0D7	5	030050
6205-21-1504	A2010-A0P2		030130
6205-21-5142	A2110-A0P1	1	030180
6205-21-5360	A2190-A0B5	1	030190
6205-31-1202	A2310-A0B3A		030220
6205-41-1500	A2410-A0B8		030250
6205-43-5310	A2450-A0A1	5	030270
6205-43-5410	A2450-A0A1	6	030270
6205-43-5500	A2450-A0A1		030270
6205-51-6120	A2110-A0P1	8	030180
6205-51-7611	A3030-A0A3	8	030310
6205-51-7611	A8118-A0B1		030670
6205-51-8240	A3030-A0A3	2	030310
6205-51-8251	A3030-A0A3	6	030310
6205-51-8530	A3030-A0A3	7	030310
6205-51-8540	A3030-A0A3	1	030310
6205-51-8560	A3030-A0A3	12	030310
6205-61-1202	A5010-A0J2		030490
6205-61-1210	A5010-A0J2	5	030490
6206-11-1910	A1050-A0C5	1	030030
6206-11-5911	A1670-A0A7	3	030120
6206-11-5980	A1610-A0N7	2	030110
6206-21-1420	A2010-A0P2	7	030130
6206-21-1430	A2010-A0P2	6	030130
6206-21-3840	A2040-A0E4	2	030140
6206-21-3840	A8116-B0B2		030660
6206-31-1530	A2310-A0B3A	3	030220
6206-31-4232	A2230-A0B4		030210
6206-31-4241	A2230-A0B4	1	030210
6206-31-4792	A2230-A0B4	2	030210
6206-31-6301	A2050-A0B3		030160
6206-51-1320	A3010-A0A2	6	030300
6206-61-1121	A5010-A0J2	6	030490

PART NO.	FIG.NO.	INDEX	PAGE
6206-61-1131	A8116-B0B2		030660
6206-61-1730	A8116-B0B2		030660
6206-61-1730	A8118-A0B1		030670
6206-61-1731	A5010-A0J2	9	030490
6206-61-1731	A8116-B0B2		030660
6206-61-3990	A5040-A0B1	1	030520
6206-71-5850	A4110-A0H8	20	030440
6206-81-9870	A4110-A0H8	7	030440
6207-11-1431	A1010-A0G2	3	030010
6207-11-8140	A1110-A0F7	3	030040
6207-11-8170	A1110-A0F7	2	030040
6207-18-1431	A1010-A0G2		030010
6207-19-1431	A1010-A0G2		030010
6207-21-1190	A2010-A0P2	24	030130
6207-31-2420	A2350-A0F1	2	030230
6207-31-3130	A2350-A0F1	9	030230
6207-31-3800	A2350-A0F1		030230
6207-37-3900	A2350-A0F1	12	030230
6207-38-3900	A2350-A0F1	12	030230
6207-39-3900	A2350-A0F1	12	030230
6207-41-4130	A1010-A0G2	10	030010
6207-51-1201	A3010-A0A2		030300
6207-51-1400	A3010-A0A2		030300
6207-51-1410	A3010-A0A2	3	030300
6207-51-1610	A3010-A0A2	10	030300
6207-61-3280	A5020-A0N4	1	030500
6208-11-1100	A1010-A0G2		030010
6208-11-1440	A1010-A0G2	4	030010
6208-11-1910	A1030-A0B6	1	030020
6208-11-3100	A4210-A0F4		030450
6208-11-3120	A4210-A0F4	2	030450
6208-11-4310	A1320-A0A8	1	030070
6208-11-4850	A8118-A0B1		030670
6208-11-5210	A1610-A0N7	1	030110
6208-11-5850	A1670-A0A7	5	030120
6208-11-8880	A2190-A0B5	8	030190
6208-18-1440	A1010-A0G2		030010
6208-19-1440	A1010-A0G2		030010
6208-21-4110	A2210-A0F9	1	030200
6208-21-5410	A2190-A0B5	5	030190
6208-31-1410	A2370-A0F4	1	030240
6208-31-2100	A2350-A0F1		030230
6208-31-2110	A2350-A0F1	1	030230
6208-31-3500	A2350-A0F1		030230
6208-38-2100	A2350-A0F1	4	030230
6208-38-2110	A2350-A0F1	1	030230
6208-39-2100	A2350-A0F1	4	030230
6208-39-2110	A2350-A0F1	1	030230
6208-51-5210	A3110-A0D6	1	030320
6208-51-5250	A3110-A0D6	4	030320

PART NO.	FIG.NO.	INDEX	PAGE
6208-51-5410	A3110-A0D6		030320
6208-51-5420	A3110-A0D6	8	030320
6208-51-5870	A3110-A0D6	21	030320
6208-51-5890	A3110-A0D6	23	030320
6208-61-5420	A8116-B0B2		030661
6208-71-1210	A4010-B0W8		030350
6208-71-1850	A4040-A0A6	14	030400
6208-71-5570	A4230-A0F4	7	030470
6208-71-6590	A4110-A0H8	5	030440
6208-71-9400	A4110-A0H8	13	030440
6208-71-9500	A4110-A0H8	14	030440
6208-81-7100	B0200-01A0	1	040060
6208-81-7720	B0200-01A0	2	040060
6208-81-7720	B9999-A3R5	8	030730
6208-81-8810	A1570-A0B6	1	030100
6208-81-8820	A1570-A0B6	2	030100
6208-81-8830	A1570-A0B6	6	030100
6209-41-4210	A1010-A0G2	11	030010
6221-41-5410	A2450-A0A1	7	030270
6221-41-5420	A2450-A0A1	8	030270
6221-41-5540	A2450-A0A1	4	030270
6221-61-1520	A5010-A0J2	3	030490
6221-61-1520	A8116-B0B2		030661
6691-11-4381	A8118-A0B1		030670
6691-41-8230	A3010-A0A2	13	030300
6732-11-5420	A1610-A0N7	4	030110
6732-83-7100	B9999-A3R5		030730
6732-83-7110	B9999-A3R5	1	030730
6737-71-5490	A4070-A0A1	1	030430
6738-21-5610	A2110-A0P1		030180
6738-21-5620	A2110-A0P1	4	030180
6738-21-5630	A2110-A0P1	5	030180
6738-21-5640	A2110-A0P1	6	030180
6738-61-4952	C0100-01A0	11	060010
6741-81-9220	A2110-A0P1	14	030180
700-13-31161	Y1662-26A0	2	510290
700-80-51190	Y1662-26A0	3	510290
700-93-11320	Y1651-01A0	18	510210
702-15-73000	Y1640-02A0		510200
702-16-03910	K1110-27A4	12	210300
702-16-03910	K1110-30A4	12	210330
702-16-03910	Y1670-13A0		510380
702-16-04270	K1110-20A0	1	210240
702-16-04270	Y1670-02A0		510370
702-16-51140	Y1670-02A0	3	510370
702-16-51140	Y1670-13A0	5	510380
702-16-51240	Y1670-13A0	17	510380
702-16-53140	Y1670-02A0	5	510370
702-16-53140	Y1670-13A0	7	510380
702-16-53170	Y1670-02A0	7	510370

PART NO.	FIG.NO.	INDEX	PAGE
702-16-53170	Y1670-13A0	10	510380
702-16-53420	Y1670-02A0	4	510370
702-16-53420	Y1670-13A0	6	510380
702-16-53470	Y1670-13A0	8	510380
702-16-53590	Y1670-13A0	9	510380
702-16-53920	Y1679-01A0	5	510400
702-16-54331	Y1670-02A0	17	510370
702-16-54341	Y1670-02A0		510370
702-16-54351	Y1670-02A0		510370
702-16-54420	Y1670-02A0	6	510370
702-16-54430	Y1670-02A0	19	510370
702-16-55940	Y1670-02A0	28	510370
702-16-55950	Y1670-02A0	29	510370
702-16-56380	Y1670-02A0		510370
702-16-56390	Y1670-02A0		510370
702-16-71131	Y1670-13A0	14	510380
702-16-71141	Y1670-13A0	15	510380
702-16-71150	Y1670-02A0	8	510370
702-16-71160	Y1670-02A0	9	510370
702-16-71160	Y1670-13A0	12	510380
702-16-71210	Y1670-13A0	11	510380
702-16-71280	Y1670-13A0	13	510380
702-16-71361	Y1670-13A0	18	510380
702-16-71441	Y1670-13A0	19	510380
702-16-73610	Y1670-02A0	21	510370
702-16-73630	Y1670-02A0	10	510370
702-16-73650	Y1670-02A0	23	510370
702-21-07311	Y1600-08A0	1	510130
702-21-09230	Y1679-01A0		510400
702-21-09240	Y1679-01A0		510400
702-21-53120	Y1679-01A0	13	510400
702-21-55100	Y1679-01A0	4	510400
702-21-55310	Y1679-01A0	8	510400
702-21-55350	H0120-01A5	15	150020
702-21-55360	Y1679-01A0	1	510400
702-21-55410	Y1679-01A0	17	510400
702-21-55420	Y1679-01A0	10	510400
702-21-55440	Y1679-01A0	12	510400
702-21-55450	Y1662-22A0	28	510250
702-21-55460	Y1679-01A0	9	510400
702-21-55470	Y1679-01A0	31	510400
702-21-55520	Y1679-01A0	11	510400
702-21-55530	Y1679-01A0	20	510400
702-21-55620	Y1679-01A0	24	510400
702-21-55640	Y1679-01A0	23	510400
702-21-55670	Y1679-01A0	32	510400
702-21-55710	Y1679-01A0	26	510400
702-21-55720	Y1679-01A0	27	510400
702-73-01520	Y1640-02A0	1	510200
702-73-02190	Y1651-01A0	12	510210

PART NO.	FIG.NO.	INDEX	PAGE
702-75-11520	Y1662-21A0	10	510240
702-75-11520	Y1662-25A0	4	510280
703-08-33232	Y1627-01A0		510170
703-08-91130	Y1627-01A0	1	510170
703-08-92130	Y1627-01A0	4	510170
703-08-93511	Y1627-01A0	9	510170
703-08-94510	Y1627-01A0	7	510170
703-08-95620	Y1627-01A0	2	510170
703-09-00110	Y1627-01A1		510180
703-09-91740	Y1627-01A1	1	510180
703-09-92740	Y1627-01A1	5	510180
703-09-93520	Y1627-01A1	10	510180
703-09-94210	Y1627-01A1	8	510180
703-09-95610	Y1627-01A1	2	510180
703-09-96310	Y1627-01A1	3	510180
703-09-98510	Y1627-01A0	6	510170
703-09-98510	Y1627-01A1	7	510180
703-09-98710	Y1627-01A0	5	510170
703-09-98710	Y1627-01A1	6	510180
705-17-04980	Y1620-01A3	14	510140
705-17-04980	Y1620-41A0	14	510160
706-73-01400	N1210-01A0	2	270020
706-73-01400	Y1640-01A0		510190
706-73-03580	Y1640-01A0		510190
706-73-72420	Y1640-01A0	13	510190
706-73-72430	Y1640-01A0	15	510190
706-73-72440	Y1640-01A0	14	510190
706-73-72680	Y1640-01A0	7	510190
706-77-72280	Y1640-02A0	5	510200
706-7G-11291	Y1651-02A0	5	510220
707-01-0AP30	Y1620-01A3		510140
707-01-0AP50	Y1620-11A0		510150
707-01-0AP60	Y1620-41A0		510160
707-01-XAP50	T1140-01A1	1	360080
707-13-11840	Y1620-11A0	1	510150
707-13-90260	Y1620-41A0	1	510160
707-13-95070	Y1620-01A3	1	510140
707-27-11750	Y1620-11A0	4	510150
707-27-90920	Y1620-41A0	5	510160
707-27-95921	Y1620-01A3	5	510140
707-34-55030	Y1620-01A3	23	510140
707-35-90360	Y1620-11A0	30	510150
707-35-90610	Y1620-01A3	24	510140
707-35-90920	Y1620-41A0	25	510160
707-35-90970	Y1620-01A3	10	510140
707-35-90980	Y1620-41A0	10	510160
707-35-91150	Y1620-11A0	10	510150
707-35-91150	Y1620-11A0	12	510150
707-36-11851	Y1620-11A0	24	510150
707-36-90170	Y1620-41A0	19	510160

PART NO.	FIG.NO.	INDEX	PAGE
707-36-95040	Y1620-01A3	18	510140
707-39-11530	Y1620-11A0	26	510150
707-39-90050	Y1620-41A0	21	510160
707-39-95030	Y1620-01A3	20	510140
707-44-11250	Y1620-11A0	25	510150
707-44-11920	Y1620-11A0	27	510150
707-44-90150	Y1620-41A0	20	510160
707-44-95150	Y1620-01A3	19	510140
707-44-95911	Y1620-01A3	21	510140
707-44-95911	Y1620-41A0	22	510160
707-51-60030	Y1620-41A0	7	510160
707-51-60650	Y1620-41A0	8	510160
707-51-65030	Y1620-01A3	7	510140
707-51-65650	Y1620-01A3	8	510140
707-51-75030	Y1620-11A0	6	510150
707-51-75650	Y1620-11A0	7	510150
707-52-90360	Y1620-41A0	6	510160
707-52-90420	Y1620-01A3	6	510140
707-52-90501	Y1620-11A0	5	510150
707-58-75660	Y1620-11A0	17	510150
707-71-32530	Y1620-11A0	8	510150
707-71-60870	Y1620-11A0	23	510150
707-71-80230	Y1620-11A0	18	510150
707-71-91270	Y1620-11A0	20	510150
707-76-65210	Y1620-41A0	2	510160
707-76-65220	Y1620-41A0	16	510160
707-76-70240	Y1620-11A0	2	510150
707-76-70240	Y1620-11A0	21	510150
707-77-65110	Y1620-41A0	17	510160
707-83-13010	Y1620-11A0	31	510150
707-86-47420	Y1620-01A3	25	510140
707-86-47430	Y1620-01A3		510140
707-86-47450	Y1620-41A0	26	510160
707-86-55700	Y1620-11A0	35	510150
707-87-11700	Y1620-11A0	36	510150
707-87-14070	Y1620-11A0	33	510150
707-88-21670	Y1620-01A3	29	510140
707-88-21680	Y1620-11A0	41	510150
707-88-21710	Y1620-41A0	32	510160
707-88-25070	Y1620-01A3	30	510140
707-88-25080	Y1620-11A0	42	510150
707-88-25090	Y1620-41A0	33	510160
707-99-27500	Y1620-41A0		510160
707-99-27520	Y1620-01A3		510140
707-99-45180	Y1620-11A0		510151
708-1L-00650	Y1600-01A0		510050
708-1L-01650	Y1600-01A0		510050
708-1L-04615	Y1600-05A0		510090
708-1L-04750	Y1600-06A0		510110
708-1L-04913	Y1600-07A0		510120

PART NO.	FIG.NO.	INDEX	PAGE
708-1L-29340	Y1600-08A0	22	510130
708-1L-29350	Y1600-08A0	17	510130
708-1L-29361	Y1600-08A0	16	510130
708-21-12541	Y1600-01A0	2	510050
708-25-19160	Y1662-25A0	33	510280
708-25-52861	Y1600-03A0	5	510070
708-2L-21470	Y1600-01A0	1	510050
708-2L-22160	Y1600-03A0	6	510070
708-2L-23960	Y1600-08A0	18	510130
708-2L-23970	Y1600-08A0	4	510130
708-2L-24680	Y1600-06A0	8	510110
708-2L-24680	Y1600-07A0	3	510120
708-2L-33350	Y1651-02A0	16	510220
708-7L-05010	Y1651-02A0	4	510220
708-7L-12140	Y1651-02A0	3	510220
708-7L-13140	Y1651-02A0	12	510220
708-7T-12330	Y1640-01A0	27	510190
708-7T-15150	Y1640-01A0	44	510191
708-8E-16150	Y1600-01A0	8	510050
708-8E-16160	Y1662-25A0	25	510280
708-8E-16180	Y1651-01A0	25	510210
708-8F-00270	P1210-01A0	1	300020
708-8F-00270	Y1651-01A0		510210
708-8F-00270	Y1651-02A0		510220
708-8F-04280	Y1651-01A0	0	510210
708-8F-04681	Y1651-01A0		510210
708-8F-12151	Y1651-02A0	2	510220
708-8F-12230	Y1651-02A0	6	510220
708-8F-31210	Y1651-01A0	33	510210
708-8F-31610	Y1651-01A0	30	510210
708-8F-31650	Y1651-01A0	26	510210
708-8F-32121	Y1651-02A0	1	510220
708-8F-33160	Y1651-02A0	13	510220
708-8F-33310	Y1651-02A0	17	510220
708-8F-33350	Y1651-02A0	15	510220
708-8F-33360	Y1651-02A0	11	510220
708-8F-33490	Y1651-02A0	18	510220
708-8F-33710	Y1651-02A0	19	510220
708-8F-34110	Y1651-01A0	23	510210
708-8F-34120	Y1651-01A0	21	510210
708-8F-34141	Y1651-02A0	20	510220
708-8F-34220	Y1651-01A0	8	510210
708-8F-34240	Y1651-02A0	21	510220
708-8F-34250	Y1651-02A0	22	510220
708-8F-35120	Y1651-02A0	25	510220
708-8F-35140	Y1651-02A0	26	510220
708-8F-35150	Y1651-02A0	31	510220
708-8F-35160	Y1651-02A0	27	510220
708-8F-35170	Y1651-02A0	28	510220
708-8F-35180	Y1651-02A0	29	510220

PART NO.	FIG.NO.	INDEX	PAGE
708-8F-35190	Y1651-02A0	30	510220
708-8F-35220	Y1651-02A0	23	510220
708-8F-35230	Y1651-02A0	24	510220
708-8F-36311	Y1651-01A0	16	510210
708-8F-36611	Y1651-01A0	13	510210
708-8H-11530	Y1600-01A0	10	510050
708-8H-11530	Y1651-01A0	9	510210
708-8H-36121	Y1651-01A0	15	510210
709-25-11361	Y1640-01A0	10	510190
709-25-11390	Y1662-24A0	13	510270
709-25-11390	Y1662-28A0	2	510310
709-25-11390	Y1662-31A0	2	510340
709-25-11640	Y1640-01A0	11	510190
709-25-11650	Y1640-01A0	9	510190
709-70-91420	Y1662-24A0	8	510270
709-74-91520	Y1662-24A0	12	510270
709-90-73100	Y1662-27A0	1	510300
720-68-19870	Y1600-01A0	5	510050
722-10-91130	Y1651-01A0	22	510210
723-11-18190	Y1662-29A0	27	510320
723-11-18190	Y1662-29A0	37	510320
723-26-15190	Y1662-25A0	20	510280
723-26-15230	Y1662-23A0	15	510260
723-26-15230	Y1662-23A0	26	510260
723-30-90101	Y1662-26A0	1	510290
723-36-14110	Y1662-22A0	16	510250
723-36-14120	Y1662-22A0	15	510250
723-36-14130	Y1662-22A0	17	510250
723-36-15240	Y1662-25A0	11	510280
723-36-15250	Y1662-25A0	12	510280
723-36-15340	Y1662-25A0	8	510280
723-36-15450	Y1662-22A0	20	510250
723-40-85100	Y1662-31A0	1	510340
723-50-11160	Y1662-25A0	29	510280
723-50-11311	Y1662-25A0	16	510280
723-50-51140	Y1662-29A0	4	510320
723-50-51150	Y1662-29A0	6	510320
723-50-51160	Y1662-29A0	11	510320
723-50-51160	Y1662-29A0	23	510320
723-50-51230	Y1662-29A0	3	510320
723-50-51400	Y1662-29A0		510320
723-50-52130	Y1662-29A0	18	510320
723-50-52150	Y1662-29A0	19	510320
723-50-52200	Y1662-29A0		510320
723-50-54100	Y1662-29A0		510320
723-50-54110	Y1662-29A0	32	510320
723-50-55300	Y1662-28A0	5	510310
723-50-60200	Y1662-28A0	1	510310
723-56-11501	H0120-01A5	1	150020
723-56-11501	Y1662-21A0		510240

PART NO.	FIG.NO.	INDEX	PAGE
723-56-31211	Y1662-22A0	13	510250
723-56-31221	Y1662-22A0	14	510250
723-56-31260	Y1662-22A0	18	510250
723-56-31510	Y1662-22A0	24	510250
723-56-31520	Y1662-22A0	22	510250
723-56-31530	Y1662-22A0	23	510250
723-56-31550	Y1662-22A0	26	510250
723-56-31560	Y1662-22A0	27	510250
723-56-31580	Y1662-22A0	25	510250
723-56-31610	Y1662-24A0	1	510270
723-56-31610	Y1662-29A0	33	510320
723-56-31620	Y1662-24A0	2	510270
723-56-31620	Y1662-29A0	34	510320
723-56-31630	Y1662-24A0	3	510270
723-56-31630	Y1662-29A0	20	510320
723-56-31630	Y1662-29A0	35	510320
723-56-31640	Y1662-24A0	4	510270
723-56-31650	Y1662-24A0		510270
723-56-31651	Y1662-24A0	7	510270
723-56-31660	Y1662-24A0	9	510270
723-56-31670	Y1662-24A0	10	510270
723-56-31720	Y1662-21A0	8	510240
723-56-31730	Y1662-21A0	9	510240
723-56-31730	Y1662-25A0	3	510280
723-56-31830	Y1662-24A0	11	510270
723-56-31890	Y1662-25A0	9	510280
723-56-41620	Y1662-29A0	26	510320
723-56-41710	Y1662-23A0	12	510260
723-56-41721	Y1662-23A0	6	510260
723-56-41730	Y1662-23A0	23	510260
723-56-41740	Y1662-23A0	25	510260
723-56-41760	Y1662-23A0	24	510260
723-56-41821	Y1662-23A0	9	510260
723-56-41830	Y1662-23A0	10	510260
723-56-41840	Y1662-23A0	13	510260
723-56-41850	Y1662-23A0	28	510260
723-56-41880	Y1662-23A0	27	510260
723-60-22230	Y1640-02A0	2	510200
7826-20-7036	K1110-17D0	4	210225
783-44-12002	B0400-01A0	10	040070
7835-10-5000	K1110-13A0	1	210180
7835-26-5002	K1110-16A4	4	210210
786-19-25810	D0100-01A1	4	090010
786-19-31650	H0120-01A5	12	150020
7861-91-4220	A2110-A0P1	15	030180
7861-93-2330	A2210-A0F9	5	030200
7861-93-3320	A5010-A0J2	14	030490
7861-94-3000	K1110-16A4	6	210210
8233-06-3350	K1110-16A4	10	210210
825-56-24360	Y1600-08A0	20	510130

PART NO.	FIG.NO.	INDEX	PAGE
8A13-10-1310	K1110-11H2	19	210160
8A13-10-2100	K1110-11H2	20	210160
8A13-10-2200	K1110-11H2	21	210160
DK013030-6040	A4010-E0W8	35	030380
DK016010-0440	A4010-D0W8	29	030370
DK016010-0540	A4010-D0W8	26	030370
DK016010-1640	A4010-E0W8	19	030380
DK016630-2030	A4010-B0W8	12	030350
DK020006-1440	A4010-B0W8	17	030350
DK020006-1640	A4010-E0W8	10	030380
DK020006-2040	A4010-E0W8	9	030380
DK020018-1840	A4010-D0W8	5	030370
DK020106-1840	A4010-D0W8	7	030370
DK020106-5040	A4010-E0W8	6	030380
DK025520-1210	A4010-D0W8	20	030370
DK025803-1310	A4010-E0W8	24	030380
DK025803-1610	A4010-D0W8	12	030370
DK025803-1640	A4010-B0W8	18	030350
DK026506-1040	A4010-E0W8	48	030381
DK026506-1040	A4010-E0W8	51	030381
DK026510-1440	A4010-E0W8	36	030380
DK026512-1540	A4010-E0W8	14	030380
DK028201-7020	A4010-B0W8		030350
DK029010-6810	A4010-D0W8	7	030370
DK029040-6020	A4010-B0W8	2	030350
DK029231-2030	A4010-D0W8	14	030370
DK029300-4010	A4010-D0W8	28	030370
DK029310-5170	A4010-D0W8	19	030370
DK029310-9080	A4010-E0W8	53	030381
DK029311-0010	A4010-D0W8	16	030370
DK029311-0020	A4010-C0W8		030360
DK029311-0030	A4010-C0W8		030360
DK029311-0040	A4010-C0W8		030360
DK029311-0050	A4010-C0W8		030360
DK029311-0060	A4010-C0W8		030360
DK029311-0070	A4010-C0W8		030360
DK029311-0080	A4010-C0W8		030360
DK029311-0090	A4010-C0W8		030360
DK029311-0110	A4010-C0W8		030360
DK029311-0120	A4010-C0W8		030360
DK029311-0130	A4010-C0W8		030360
DK029311-0140	A4010-C0W8		030360
DK029311-0180	A4010-D0W8		030370
DK029311-0190	A4010-D0W8		030370
DK029311-0210	A4010-D0W8		030370
DK029311-0270	A4010-C0W8		030360
DK029311-0280	A4010-C0W8		030360
DK029311-0290	A4010-C0W8		030360
DK029311-0310	A4010-C0W8		030360
DK029311-0320	A4010-C0W8		030360

PART NO.	FIG.NO.	INDEX	PAGE
DK029311-0330	A4010-C0W8		030360
DK029311-0340	A4010-C0W8		030360
DK029311-0350	A4010-C0W8		030360
DK029311-0580	A4010-C0W8	14	030360
DK029311-0590	A4010-C0W8		030360
DK029311-0600	A4010-C0W8		030360
DK029311-0610	A4010-C0W8		030360
DK029311-0620	A4010-C0W8		030360
DK029311-1070	A4010-E0W8	22	030380
DK029311-7010	A4010-B0W8	14	030350
DK029311-7020	A4010-B0W8		030350
DK029311-7030	A4010-B0W8		030350
DK029311-7040	A4010-B0W8		030350
DK029311-7050	A4010-B0W8		030350
DK029311-7060	A4010-B0W8		030350
DK029311-7070	A4010-B0W8		030350
DK029311-7090	A4010-B0W8		030350
DK029311-7210	A4010-B0W8		030350
DK029311-7220	A4010-B0W8		030350
DK029312-0180	A4010-E0W8	46	030381
DK029321-2020	A4010-D0W8	13	030370
DK029330-8050	A4010-E0W8	33	030380
DK029332-6030	A4010-F0W8	5	030390
DK029340-6020	A4010-B0W8	8	030350
DK029341-0110	A4010-B0W8	22	030350
DK029341-0110	A4010-E0W8	45	030381
DK029341-4130	A4010-B0W8	20	030350
DK029341-4130	A4010-B0W8	25	030350
DK029341-4130	A4010-F0W8	18	030390
DK029621-7050	A4010-B0W8	15	030350
DK029631-6060	A4010-F0W8	13	030390
DK029631-8020	A4010-E0W8	18	030380
DK029632-0030	A4010-C0W8	8	030360
DK029632-5070	A4010-D0W8	2	030370
DK029633-1010	A4010-B0W8	10	030350
DK029635-2020	A4010-E0W8	30	030380
DK029731-0120	A4010-B0W8	21	030350
DK029731-0180	A4010-E0W8	44	030381
DK029731-4680	A4010-F0W8	17	030390
DK101049-4120	A4010-B0W8		030350
DK105220-5960	A4010-F0W8		030390
DK105401-1441	A4010-D0W8		030370
DK131002-2000	A4010-B0W8	4	030350
DK131011-1900	A4010-B0W8	6	030350
DK131017-1000	A4010-B0W8	7	030350
DK131028-6220	A4010-B0W8	5	030350
DK131034-1401	A4010-C0W8	1	030360
DK131063-9920	A4010-B0W8	1	030350
DK131110-6820	A4010-C0W8	3	030360
DK131112-4200	A4010-C0W8	4	030360

PART NO.	FIG.NO.	INDEX	PAGE
DK131115-1600	A4010-C0W8	5	030360
DK131116-7600	A4010-C0W8	6	030360
DK131117-2300	A4010-C0W8	6	030360
DK131122-0520	A4010-C0W8	7	030360
DK131154-6920	A4010-C0W8	2	030360
DK131200-2820	A4010-C0W8	9	030360
DK131203-0800	A4010-C0W8	10	030360
DK131204-1000	A4010-C0W8	11	030360
DK131205-0500	A4010-C0W8	12	030360
DK131206-0200	A4010-C0W8	13	030360
DK131215-2500	A4010-C0W8	15	030361
DK131216-0100	A4010-C0W8	16	030361
DK131217-0200	A4010-C0W8	17	030361
DK131226-0300	A4010-C0W8	19	030361
DK131240-0100	A4010-C0W8	20	030361
DK131241-0100	A4010-C0W8	21	030361
DK131242-0100	A4010-C0W8	22	030361
DK131254-0000	A4010-C0W8	18	030361
DK131302-0300	A4010-B0W8	13	030350
DK131330-6200	A4010-B0W8	16	030350
DK131360-3000	A4010-B0W8	11	030350
DK131400-0100	A4010-B0W8	3	030350
DK131401-0020	A4010-B0W8	19	030350
DK131425-1420	A4010-B0W8	23	030350
DK139006-7100	A4010-E0W8	6	030380
DK139206-0400	A4010-B0W8	9	030350
DK139206-0600	A4010-E0W8	4	030380
DK139308-0700	A4010-E0W8	34	030380
DK139410-0000	A4010-D0W8		030370
DK139410-0100	A4010-D0W8		030370
DK139410-3000	A4010-D0W8		030370
DK139410-3100	A4010-D0W8		030370
DK139410-3200	A4010-D0W8		030370
DK139411-0000	A4010-E0W8	21	030380
DK139417-0000	A4010-B0W8		030350
DK139611-0000	A4010-E0W8	20	030380
DK139814-0500	A4010-B0W8	24	030350
DK150508-5900	A4210-B0F4	2	030460
DK150524-4600	A4210-B0F4	6	030460
DK150560-0400	A4210-B0F4	3	030460
DK150562-4300	A4210-B0F4	4	030460
DK150591-1000	A4210-B0F4	5	030460
DK150591-2000	A4210-B0F4		030460
DK150591-3000	A4210-B0F4		030460
DK150591-4000	A4210-B0F4		030460
DK150591-5000	A4210-B0F4		030460
DK150591-5100	A4210-B0F4		030460
DK150591-5200	A4210-B0F4		030460
DK150591-5300	A4210-B0F4		030460
DK150591-5400	A4210-B0F4		030460

PART NO.	FIG.NO.	INDEX	PAGE
DK150591-5500	A4210-B0F4		030460
DK150591-5600	A4210-B0F4		030460
DK150591-5700	A4210-B0F4		030460
DK150591-5800	A4210-B0F4		030460
DK150591-5900	A4210-B0F4		030460
DK150655-0000	A4210-B0F4	7	030460
DK152003-1020	A4010-F0W8	1	030390
DK152100-1120	A4010-F0W8	2	030390
DK152102-1600	A4010-F0W8	3	030390
DK152105-1600	A4010-F0W8	4	030390
DK152111-2820	A4010-F0W8	6	030390
DK152112-0100	A4010-F0W8	7	030390
DK152113-0700	A4010-F0W8	8	030390
DK152114-0400	A4010-F0W8	9	030390
DK152115-0500	A4010-F0W8	10	030390
DK152116-0200	A4010-F0W8	11	030390
DK152118-0900	A4010-F0W8	12	030390
DK152121-0200	A4010-F0W8	14	030390
DK152200-5420	A4010-F0W8	15	030390
DK152300-5920	A4010-F0W8	16	030390
DK152320-0100	A4010-F0W8	19	030390
DK154000-6300	A4010-D0W8	1	030370
DK154007-0200	A4010-D0W8	4	030370
DK154007-2900	A4010-D0W8	3	030370
DK154010-0300	A4010-E0W8	7	030380
DK154011-0100	A4010-E0W8	1	030380
DK154011-3100	A4010-E0W8	13	030380
DK154011-4900	A4010-D0W8	9	030370
DK154013-5000	A4010-D0W8	8	030370
DK154022-7920	A4010-E0W8	2	030380
DK154031-4400	A4010-E0W8	3	030380
DK154035-1600	A4010-E0W8	47	030381
DK154035-2800	A4010-E0W8	52	030381
DK154036-0300	A4010-E0W8	5	030380
DK154050-6120	A4010-D0W8	10	030370
DK154062-2720	A4010-E0W8	50	030381
DK154062-3800	A4010-E0W8	55	030381
DK154062-4020	A4010-E0W8	56	030381
DK154063-5100	A4010-E0W8	8	030380
DK154101-0520	A4010-D0W8	11	030370
DK154123-0120	A4010-D0W8	15	030370
DK154151-1300	A4010-E0W8	11	030380
DK154154-4000	A4010-D0W8	17	030370
DK154158-5720	A4010-E0W8	12	030380
DK154159-1200	A4010-E0W8	15	030380
DK154185-7120	A4010-D0W8	30	030370
DK154200-7020	A4010-E0W8	16	030380
DK154204-4300	A4010-E0W8	17	030380
DK154204-4400	A4010-E0W8	23	030380
DK154206-0200	A4010-E0W8	26	030380

PART NO.	FIG.NO.	INDEX	PAGE
DK154206-2800	A4010-E0W8	25	030380
DK154217-2920	A4010-D0W8	18	030370
DK154222-6200	A4010-D0W8	27	030370
DK154230-3920	A4010-D0W8	21	030370
DK154236-4100	A4010-D0W8	22	030370
DK154237-0100	A4010-E0W8	27	030380
DK154343-9220	A4010-E0W8	28	030380
DK154358-7200	A4010-E0W8	54	030381
DK154375-9020	A4010-D0W8	6	030370
DK154390-0000	A4010-D0W8	23	030370
DK154390-0300	A4010-E0W8	29	030380
DK154400-4800	A4010-E0W8	32	030380
DK154400-7820	A4010-E0W8	31	030380
DK154401-1320	A4010-D0W8	25	030370
DK154401-2100	A4010-E0W8	37	030380
DK154401-3620	A4010-D0W8	24	030370
DK154413-2600	A4010-E0W8	49	030381
DK154416-8200	A4010-E0W8	38	030380
EP23-141-001	Y1062-01A0	3	510040
EP23-141-003	Y1062-01A0	6	510040
EP23-141-004	Y1062-01A0	7	510040
EP72-540-901	Y1062-01A0	1	510040
KD009001-5160	A6210-B0G6	27	030640
KD009001-5190	A6210-B0G6	23	030640
KD009001-5370	A6210-B0G6	25	030640
KD009006-0660	A6210-B0G6	31	030640
KD009011-2850	A6210-B0G6	29	030640
KD009203-0010	A6210-B0G6	24	030640
KD009211-1440	A6210-B0G6	28	030640
KD009252-0630	A6210-B0G6	26	030640
KD009271-3620	A6210-B0G6	13	030640
KD009275-1430	A6210-B0G6	32	030640
KD024100-0080	A6210-B0G6	12	030640
KD024200-0110	A6210-B0G6	11	030640
KD024300-0030	A6210-B0G6	2	030640
KD024500-0141	A6210-B0G6	1	030640
KD024511-0040	A6210-B0G6	7	030640
KD024610-0020	A6210-B0G6	9	030640
KD024711-0130	A6210-B0G6	17	030640
KD024750-0100	A6210-B0G6	15	030640
KD024921-0010	A6210-B0G6	16	030640
KD024921-0050	A6210-B0G6	14	030640
KD024927-0030	A6210-B0G6	6	030640
KD024951-0050	A6210-B0G6	21	030640
KD024951-0070	A6210-B0G6	4	030640
KD024951-0100	A6210-B0G6	10	030640
KD047100-4810	A6210-B0G6	20	030640
KD047761-2741	A6210-B0G6	30	030640
KD047911-1300	A6210-B0G6	22	030640
KD104002-0100	A6210-B0G6	19	030640

PART NO.	FIG.NO.	INDEX	PAGE
KD105050-0501	A6210-B0G6	5	030640
KD109211-0520	A6210-B0G6	18	030640
KD121904-0230	A6210-B0G6	3	030640
KD123921-0150	A6210-B0G6	8	030640
ND017231-0700	Y1979-21A0	27	510420
ND047310-7240	Y1979-01A0	2	510410
ND047372-0660	Y1979-01A0	6	510410
ND047410-1570	Y1979-01A0	4	510410
ND047410-1580	Y1979-01A0		510410
ND063600-4580	Y1979-21A0	32	510420
ND063800-0300	Y1979-21A0	26	510420
ND077500-5650	Y1979-21A0	33	510420
ND077800-0750	Y1979-21A0	30	510420
ND113550-0780	Y1979-21A0	41	510420
ND116140-0050	Y1979-21A0	13	510420
ND116340-7030	Y1979-21A0	35	510420
ND116576-3810	Y1979-21A0	3	510420
ND116576-3820	Y1979-21A0	4	510420
ND116576-3851	Y1979-21A0	24	510420
ND116576-3861	Y1979-21A0	25	510420
ND116650-6850	Y1979-21A0	15	510420
ND116660-7570	Y1979-21A0	14	510420
ND116662-7670	Y1979-21A0	22	510420
ND116662-7681	Y1979-21A0	23	510420
ND116780-2481	Y1979-21A0	16	510420
ND116780-2491	Y1979-21A0	17	510420
ND116780-2501	Y1979-21A0	18	510420
ND116780-2510	Y1979-21A0	19	510420
ND116780-2521	Y1979-21A0	21	510420
ND116781-3000	Y1979-21A0	20	510420
ND145511-0040	Y1979-21A0	29	510420
ND146340-0531	Y1979-21A0	31	510420
ND146657-8841	Y1979-21A0	10	510420
ND146657-8850	Y1979-21A0	12	510420
ND146657-8860	Y1979-21A0	34	510420
ND146657-9811	Y1979-21A0	11	510420
ND170400-4670	Y1979-21A0	28	510420
ND245450-5112	Y1979-21A0	1	510420
ND245450-5121	Y1979-21A0	2	510420
ND246470-2451	Y1979-21A0	39	510420
ND247300-0510	Y1979-01A0		510410
ND446010-3131	Y1979-21A0		510420
ND446600-0990	Y1979-21A0	5	510420
ND447220-4051	Y1979-01A0	1	510410
ND447500-1482	Y1979-21A0	8	510420
ND913700-4101	Y1979-21A0	42	510420
ND939500-5003	Y1979-21A0	40	510420
ND949001-1730	Y1979-21A0	38	510420
ND949008-0330	Y1979-21A0	37	510420
ND949046-3100	Y1979-21A0	9	510420

PART NO.	FIG.NO.	INDEX	PAGE
ND949047-2950	Y1979-01A0	5	510410
ND949048--0430	Y1979-01A0	12	510410
ND949142-0020	Y1979-21A0	6	510420
ND949142-0030	Y1979-21A0	7	510420

PART NO. FIG.NO. INDEX PAGE

PC130F-7

PART NO. FIG.NO. INDEX PAGE

LEPBP13700



Published 15-Dec-2009
(c) 2009 KOMATSU