KEPB003406

KOMATSU

PARTS BOOK

PC160LC-7B

Serial Nº B20001 and up

ENGINE SAA4D102-2E

Engine Nº 30204043 and up

PC160LC-7B

RUTHZIL TRATOR COMERCIAL DE PEÇAS LTDA 11 97083-6812 ROLANDO

FOREWORD

When ordering a spare part, specify the part number, part name, and quantity required, and also specify your machine model code, machine serial number, engine serial number and the service meter reading.

This Parts Book describes not only standard items but also optional equipment and attachments. To order a part, please contact your nearest Komatsu distributor.

This Parts Book contains the information and special symbols as follows:

Figure and list

When you open this Parts Book, you will find an illustration on the left page (even-numbered page) for the spare parts group. Each individual part in the group is given an index number.
On the right page, the component parts of the group are listed in the order of the index numbers shown on the illustration page. The part number, part name, and applicable machine serial number are given for each part.

FIG. No.

The FIG. No. is the number of the illustration shown on the page. It is not the spare part number. The numbers are not always continuous.

INDEX

This is the same as the index number in the illustration. The parts are listed in index number order.

PART No.

The number given in the PART No. column is the part number for the part shown. It is the code used when ordering that part. It is important that there be no mistake in this code number when ordering.

DESCRIPTION

This gives the name of part that has the part number listed. The mark "." is put in front of the part name of an assembly part and the item is entered following the assembly. If a part marked with "." is a sub assembly, its components are marked with "..".

Example:
```
ELEMENT ASSEMBLY, AIR CLEANER
.ELEMENT ASSEMBLY, OUTER
..ELEMENT, OUTER
..NUT, WING
..WASHER
```

Q'TY (Quantity)

This specifies the number of pieces used for one machine. However, if a part is included in the assembly and/or component, the quantity per such assembly and/or component is specified.

SERIAL No.

Applicable engine serial number is indicated for the engine volume. In the chassis volume, this indicates the machine serial number in which the part is used.

Symbols and codes

Symbols and codes are used in the PART No. and DESCRIPTION columns, and represent the following:

□	The part specified in the line above can be used instead of this part.

Symbols and codes (Cont'd)

⊡	This part can be used instead of the part specified in the line immediately above.
◆	This part and the part specified in the line immediately above are interchangeable.
■	The part specified in the DESCRIPTION column can be used instead of this part if it is used as a set.
☒	This shows discontinued part. The part specified in the above line is supplied instead.
▼	This shows a discontinued part. The part specified in the DESCRIPTION column is supplied instead as a set.
☆	This part cannot be supplied as an individual part. It is supplied as an assembly.
★	This part cannot be supplied as an individual part. It is supplied as an assembly. However, it is supplied as an individual part by authorized distributors only.
⊙	This indicates a part group. The part marked with this symbol is not considered a supply part.
====	The parts surrounded by this line are components of the part group specified in the above line.
G-1,G-2	These indicate categories of part groups.
KIT	This indicates kit parts. For kit parts, refer to the service kit tables provided in this Parts Book.
△	This indicates a part supplied as semi-finished. It requires additional work before installation.
PAINT(1)	This indicates parts shipped painted with undercoat.
PAINT(2)	This indicates parts supplied with different colors from the original color of your machine.
(A)	This code indicates special parts for cold weather "A" specification (-30ºC) machines.
(B)	This indicates special parts for cold weather "B" specification (-50ºC) machines.

Note: Codes in ( ) following the Figure No. indicate the figure for the specific machine model shown below. If there is no code indicated, parts in the illustration are common for all applicable machine models.

Detail Code	Machine Model
WMNA	PC160LC-7-NA
WSTD	PC160LC-7-W1

AVANT-PROPOS

Lorsque vous passez une commande d'une ou plusieurs pièces détachées, vous êtes prié de spécifier, outre le ou les numéro(s), désignation(s) et quantité(s) des pièces commandée(s), le numéro de carrosserie, le numéro de série du moteur et la lecture du compteur de service du véhicule.
Sur le présent catalogue des pièces figurent non seulement les équipements standard, mais également les équipements et accessoires en option. Si vous désirez un équipement ou une pièce quelconque, vous êtes prié de prendre contact avec le concessionnaire Komatsu le plus proche.

Ce catalogue des pièces se présente de la manière suivante:

Figures et listes	Lorsque vous ouvrez le présent catalogue, vous trouvez: sur la page de gauche (numéro de page pair), les illustrations de toutes les pièces composant l'équipement en question avec les numéros de référence pour chacune des pièces, sur la page de droite (numéro de page impair), la liste des pièces dans l'ordre des numéro de référence des pièces avec indication du numéro des pièces, de la désignation des pièces, de la quantité utilisée et des numéros de série.
FIG. No. (Figure et liste)	Le numéro de figure (FIG. XX) correspond au numéro de la figure représentée sur cette page, mais ne correspond pas au numéro de la pièce détachée. Veuillez noter que les numéros de figure ne se suivent pas systématiquement.
INDEX (Numéros de référence)	Les numéros de référence correspondent aux numéros de référence notés sur la figure et sont énumérés dans l'ordre des numéros de référence.
PART No. (Numéros de pièce)	Les numéros indiqués dans cette colonne correspondent aux numéros des pièces représentées et constituent les codes à spécifier pour toute commande de pièce. Il est important de ne pas faire d'erreur avec ce code au moment de la commande.
DESCRIP-TION (Descript-ion)	Dans cette colonne est indiquée la désignation des différentes pièces. Dans le cas d'un ensemble constitué de pièces, la désignation de chacune de ces pièces est précédée d'un point "." et dans le cas d'un ensemble constitué de sous-ensembles eux-mêmes constitués de pièces, la désignation de chacune de ces pièces est précédée de deux points "..". Exemple: ELEMENT ASSEMBLY, AIR CLEANER .ELEMENT ASSEMBLY, OUTER ..ELEMENT, OUTER ..NUT, WING ..WASHER
Q'TY (Quantité)	Dans cette colonne est indiqué le nombre de pièces nécessaires pour l'équipement en question. S'il s'agit de pièces comprises dans un ensemble et/ou composant, et la quantité indiquée est le nombre de pièces nécessaires pour l'ensemble et/ou le composant en question.
SERIAL No. (Numéros de série)	S'il s'agit d'un élément du moteur, ces numéros sont les numéros de série des moteurs sur lesquels cette pièce est utilisée. S'il s'agit d'un élément de la carrosserie, ces numéros sont les numéros des carrosseries sur lesquelles la pièce en question est utilisée.

Codification	Les codes indiqués dans les colonnes "N° de pièce" et "Description" ont les significations suivantes:
□	Au lieu de la pièce affectée de ce code, il est possible d'utiliser la pièce qui figure juste au-dessus.
⊡	La pièce affectée de ce code peut être utilisée à la place de la pièce figurant juste au-dessus.
◆	La pièce affectée de ce code et la pièce figurant dans la ligne justeau-dessus sont interchangeables
☒	Au lieu de la pièce affectée de ce code, il est possible d'utiliser la combinaison des pièces indiquées dans la colonne "Description".
■	Les pièces affectées de ce code ne sont plus fournies. Au lieu de cette pièce, c'est la pièce figurant dans la ligne justeau-dessus qui sera fournie.
▼	Les pièces affectées de ce code ne sont plus fournies. Au lieu de cette pièce, c'est la combinaison de pièces figurant dans la colonne "Description" qui sera fournie.
☆	Les pièces affectées de ce code ne seront pas fournies à l'unité mais par jeu de pièces.
★	Les pièces affectées de ce code ne seront pas fournies à l'unité mais par jeu de pièces, sauf dans le cas de certains concessionnaires Komatsu.
⊙	Ce code indique qu'il s'agit d'un groupe de pièces. Les pièces affectées de ce code ne sont pas fournies en tant que pièces détachées.
= = = =	Les pièces ainsi encadrées sont les pièces composantes du groupe de pièces indiqué dans la ligne d'au-dessus.
G-1, G-2	Indique le numéro du groupe de pièces
KIT	Indique qu'il s'agit d'un kit de pièces. Pour les pièces composantes des kits, veuillez vous reporter à la liste des kits de service.
△	Indique qu'il s'agit de pièces fournies à l'état semi-fini. Ces pièces devront être usinées avant l'installation.
PAINT(1)	Indique que sur les pièces fournies est appliquée uniquement une couche primaire.
PAINT(2)	Indique que la couleur de la peinture est différente de celle d'origine.
(A)	Indique qu'il s'agit de pièces pour spécifications artiques A (−30°C)
(B)	Indique qu'il s'agit de pièces pour spécifications artiques B (−50°C)

Nota: Les numéros de modèles indiqués entre parenthèses à la suite du titre de chaque figure sont les numéros des modèles dont l'équipement correspond à celui représenté sur la figure en question. Lorsque les figures ne sont pas suivies de numéros de modèle, c'est qu'elles conviennent pour tous les modèles.

Detail Code	Machine Model
WMNA	PC160LC-7-NA
WSTD	PC160LC-7-W1

VORWORT

Bei der Bestellung von Teilen bitte die Teilenummer, die Teilebezeichnung und die Menge des jeweiligen Teils sowie die Modellnummer, die Seriennummer der Maschine, die Seriennummer des Motors und den Stand des Betriebsstundenzählers angeben.

In dieser Ersatzteilliste ist nicht nur das Standardzubehör aufgeführt, sondern auch als Sonderausstattung erhältliche Teile und Einrichtungen.

Bestellungen nimmt Ihr zuständiger Komatsu-Händler entgegen.

Die folgenden Angaben sind in der Ersatzteilliste aufgeführt.

Bild und Liste

Beim Aufschlagen des Ersatzteilkatalogs ist auf der linken Seite (d.h. der Seite mit der geraden Zahl) eine Darstellung der Bauteile der betreffenden Baugruppe zu finden. Jedes Einzelteil der Baugruppe ist mit einer Kennzahl versehen.
Auf der rechten Seite (d.h. der Seite mit der ungeraden Zahl) sind die Bauteile der Baugruppe, geordnet nach den auf der linken Seite angegebenen Kennzahlen, aufgeführt. Jedes Einzelteil wird mit Teilenummer, Teilebezeichnung und entsprechender Seriennummer angegeben.

FIG. No. (Bildnummer)

Die Bildnummer entspricht der Nummer des auf der betreffenden Seite stehenden Bilds. Es handelt sich dabei nicht um die Nummer des Lieferteils. Es sei ferner erwähnt, daß die Bilder nicht fortlaufend numeriert sind.

INDEX (Kennzahl)

Dabei handelt es sich um die gleiche Zahl wie die Kennzahl im Bild. Die Teile sind geordnet nach der Kennzahl aufgeführt.

PART No. (Teilenummer)

Die in der Spalte "Teilenummer" aufgeführte Nummer entspricht der Teilenummer für das betreffende Teil. Diese Nummer dient zur Bestellung des Teils. Deshalb bei der Bestellung stets auf die genaue Angabe der Teilenummer achten.

DESCRIPTION (Beschreibung)

Hierunter wird die Bezeichnung des Teils mit der aufgeführten Teilenummer angegeben.
Jedes Baugruppen-Bauteil ist mit dem vorangestellten Symbol "." gekennzeichnet und wird hinter der entsprechenden Baugruppe aufgeführt. Handelt es sich bei dem mit "." gekennzeichneten Bauteil um eine Baugruppe, sind die Bauteile dieser Baugruppe mit ".." gekennzeichnet.

Beispiel: Element assembly, air cleaner
. Element assembly, outer
.. Element, outer
.. Nut, wing
.. Washer

Q'TY (Menge)

Hierunter wird die Anzahl der Bauteile für eine Maschine angegeben.
Im Falle einer Baugruppe oder eines Aggregats wird allerdings die Anzahl der Teile pro Baugruppe angegeben.

SERIAL No. (Serienummer)

Im Ersatzteilkatalog für den Motor versteht man hierunter die Seriennummer des Motors, in den das betreffende Teil eingebaut ist.
Im Ersatzteilkatalog für die Maschine versteht man hierunter die Seriennummer der Maschine, in die das entsprechende Teil eingebaut ist.

Kodes

Die in den Spalten "Teile-Nr." und "Beschreibung" verwendeten Kodes haben folgende Bedeutung:

□	Anstelle dieses Teils kann das in der vorangegangenen Zeile aufgeführte Teil verwendet werden.
⊡	Dieses Teil kann anstelle des in der vorangegangenen Zeile aufgeführten Teils verwendet werden.
◆	Dieses Teil ist mit dem in der vorangegangenen Zeile aufgeführten Teil austauschbar.
■	Anstelle dieses Teils kann das in der Spalte "Beschreibung" aufgeführte Teil verwendet werden, wenn das Teil zusammen mit anderen Teilen als ein Bauteilsatz verwendet wird.
☒	Dieses Teil kann nicht mehr geliefert werden. Statt dessen wird das in der vorangegangenen Zeile aufgeführte Teil geliefert.
▼	Dieses Teil kann nicht mehr geliefert werden. Statt dessen wird das in der Spalte "Beschreibung" aufgeführte Teil als ein Bauteilsatz geliefert.
☆	Dieses Teil kann nicht als Einzelteil, sondern nur als Baugruppe geliefert werden.
★	Dieses Teil kann nicht als Einzelteil, sondern nur als Baugruppe geliefert werden. Nur bei bestimmten Händlern kann es als Einzelteil bezogen werden.
⊙	Hierdurch wird ein Aggregat gekennzeichnet. Es wird nicht zu den Lieferteilen gerechnet.
====	Die Teile innerhalb dieser Markierung gehören zu dem oben aufgeführten Aggregat.
G-1, G-2	Hiermit wird die Kategorie eines Aggregats angegeben.
KIT	Hiermit werden Teile gekennzeichnet, die nur als Satz erhältlich sind. Siehe dazu die Tabelle der als Satz gelieferten Ersatzteile.
△	Hiermit werden Teile gekennzeichnet, die in vorbearbeitetem Zustand geliefert werden und für den Einbau nachbearbeitet werden müssen.
PAINT(1)	Hiermit werden Teile gekennzeichnet, die mit Grundierung geliefert werden.
PAINT(2)	Hiermit werden Teile gekennzeichnet, die in unterschiedlichen Farben geliefert werden.
(A)	Hiermit werden Teile gekennzeichnet, die speziell für kalte Witterung (A) (-30°C) ausgelegt sind.
(B)	Hiermit werden Teile gekennzeichnet, die speziell für kalte Witterung (B) (-50°C) ausgelegt sind.

Hinweis:
Die Angabe ( ) hinter dem Bildnamen dient zur Angabe des Bilds für das nächste Modell.
Wenn keine Angabe aufgeführt ist, ist das Bauteil bei allen Modellen gleich.

Detail Code	Machine Model
WMNA	PC160LC-7-NA
WSTD	PC160LC-7-W1

PROLOGO

Cuando tenga que efectuar un pedido de repuestos, se ruega especificar el número, el nombre y la cantidad de piezas requeridas, indicando asimismo el número de modelo, el número de serie del motor y la lectura del contador de servicio.

Esta lista de piezas especifica no solamente accesorios estándar sino también piezas y accesorios opcionales. Para realizar un pedido, sírvase ponerse en contacto con su distribuidor Komatsu más cercano.

La lista de repuestos se compone de los elementos siguientes.

Figura y lista	Al abrir esta lista de repuestos, encontrará en la página izquierda (página de número impar) una ilustración de los componentes del conjunto. La figura de cada componente individual va provista de un número de índice. En la página derecha (página de número par), los componentes del conjunto están listados siguiendo el orden de los números de índice de la página izquierda.
FIG. NO. (Número de figura)	El número de figura es el número indicado en cada una de las respectivas figuras, y no es el número de la pieza. Los números de figura no son siempre continuos.
INDEX (Número de índice)	Coincide con el número de índice de cada figura, y aparecen en la lista en orden numérico.
PART NO. (Número de pieza)	El número indicado en la columna de "Número de piezas" es el número de pieza que aparece en la figura. Es sumamente importante debido a que se utiliza como código al efectuar el pedido de piezas.
DESCRIP-TION (Nombre de las piezas)	Indica la descripción correspondiente a cada número de pieza. Los componentes de un conjunto llevan la marca "." antes del nombre. Por otra parte, cuando se tratan de piezas armadas, llevan la marca ".." antes del nombre Ejemplo: ELEMENT ASSEMBLY, AIR CLEANER .ELEMENT ASSEMBLY, OUTER ..ELEMENT, OUTER ..NUT, WING ..WASHER
Q'ty (Cantidad)	Especifica el número de piezas utilizadas en cada máquina. Sin embargo, para un conjunto o componentes de un grupo de piezas, se especifica el número de piezas por conjunto.
SERIAL NO. (Número de serie)	En el manual de piezas del motor, indica el número de serie del motor en que se utiliza la pieza. En el manual de piezas de la máquina, indica el número de serie del vehículo en que se utiliza esa pieza.

Códigos	Los códigos y números de piezas especificados en las columnas "N°. de pieza" y "Nombre de la pieza" representan lo siguiente:
□	En lugar de esta pieza es posible utilizar la pieza indicada en el renglón de arriba.
⊡	Es posible utilizar esta pieza en lugar de la indicada en el renglón inmediatamente anterior.
◆	Esta pieza y la indicada en el renglón inmediatamente anterior son intercambiables.
■	Es posible utilizar la pieza especificada en la columna "Nombre de las piezas" si se utiliza como un conjunto.
⊠	Esta pieza se ha dejado de suministrar. En su lugar, se suministra la pieza indicada en el renglón anterior.
▼	Esta pieza se ha dejado de suministrar. En su lugar, se suministra la pieza especificada en la columna "Nombre de las piezas" como un conjunto.
☆	Esta pieza no se suministra como pieza individual. Se suministra como un conjunto.
★	Esta pieza no se suministra como pieza individual. Se suministra como un conjunto. Sin embargo, es suministrada como pieza individual por ciertos distribuidores.
⊙	Indica grupo de piezas. Las piezas que llevan este código no son suministrables.
====	Las piezas rodeadas por esta línea son componentes del grupo de piezas especificado arriba.
G-1, G-2	Indica la clasificación del grupo de piezas.
KIT	Indica componentes de un juego. Para los componentes de un juego, refiérase a la tabla de los juegos de servicio.
Δ	Indica pieza suministrada como semiterminada. Debe ser reelaborada antes del uso.
PAINT(1)	Indica piezas despachadas con una primera mano de pintura.
PAINT(2)	Indica piezas despachadas con colores diferentes.
(A)	Indica piezas especiales (A) especificadas para climas fríos (-30°C).
(B)	Indica piezas especiales (B) especificadas para climas fríos (-50°C)

Nota: El código que aparece ( ) después del nombre de la figura indica la figura para el modelo siguiente. Si no hay código, significa que es un componente común para todos los modelos.

Detail Code	Machine Model
WMNA	PC160LC-7-NA
WSTD	PC160LC-7-W1

INTRODUÇÃO

Ao solicitar uma peça, informe o número, nome e quantidade da peça necessária, bem como o número da carroçaria, número do motor, e leitura do medidor de serviço.

Esta lista de peças não somente especifica os acessórios padrões mas também as peças opcionais e aditamentos. Para pedir uma peça, entre em contato com o revendedor Komatsu mais próximo.

Este livro de peças consiste nos seguintes itens.

Figura e lista

Ao abrir este livro de peças, você encontrará na página esquerda (a página com número par), uma ilustração das peças componentes do conjunto. Cada peça individual no conjunto tem um número de índice.
Na página direita (a página com número ímpar), as peças componentes do conjunto são relacionadas na ordem dos números de índice mostrados na página esquerda. Cada peça é designada com um número, nome, e número de série aplicável.

FIG. NO. (Número da figura)

O número da figura é o número da figura mostrada em tal página. Ele não é um número para fornecimento da peça. Do mesmo modo, os números das figuras nem sempre são contínuos.

INDEX (Número de índice)

Este número é igual ao número de índice na figura. As peças são relacionadas na ordem dos números de índice.

PART NO. (Número de peça)

O número designado na coluna "Número da peça" é o número para a peça mostrada. Ele é o código usado para o pedido da peça. É importante que não haja equívoco com respeito a este número ao pedir uma peça.

DESCRIPTION (Descrição)

Este item descreve o nome da peça que tem o número de peça relacionado. É colocado um "." na frente do nome de um componente de conjunto e o item é introduzido após o conjunto. Se uma peça marcada com "." é um conjunto, seus componentes são marcados com "..".

Exemplo:
ELEMENT ASSEMBLY, AIR CLEANER
.ELEMENT ASSEMBLY, OUTER
..ELEMENT, OUTER
..NUT, WING
..WASHER

Q'ty (Quantidade)

Este item especifica o número de peças usadas para 1 máquina. No entanto, para o conjunto ou componentes de um grupo de peças, o número de peças por conjunto é especificado.

SERIAL NO. (Número de série)

No livro de peças do motor, esse número indica o número de série do motor no qual a peça é usada. No livro de peças da máquina, esse número indica o número de série da máquina na qual a peça é usada.

Códigos

Os códigos e número de peça especificados nas colunas "N.º de peça" e "Descrição" representam o seguinte:

□	A peça especificada na linha acima pode ser usada no lugar desta peça.
⊡	Esta peça pode ser usada no lugar da peça especificada na linha imediatamente acima.
◆	Esta peça e a peça especificada na linha imediatamente acima são intercambiáveis.
■	A peça especificada na coluna "Descrição" pode ser usada no lugar desta peça se ela for usada como um jogo.
⊠	Esta peça não é mais fornecida. A peça especificada na linha acima é fornecida em seu lugar.
▼	Esta peça não é mais fornecida. A peça especificada na coluna "Descrição" é fornecida em seu lugar como um jogo.
☆	Esta peça não pode ser fornecida como uma peça individual. Ela é fornecida como um conjunto.
★	Esta peça não pode ser fornecida como uma peça individual. Ela é fornecida como um conjunto. No entanto, ela é fornecida como uma peça individual somente por revendedores específicos.
⊙	Isso indica um grupo de peças. Esta peça não é considerada uma peça de fornecimento.
====	As peças envolvidas por esta linha são componentes do grupo de peças especificado acima.
G-1, G-2	Isso indica a categoria do grupo de peças.
KIT	Isso indica componentes de um kit. Para os componentes de um kit, refira-se à tabela de kits de serviço.
Δ	Isso indica uma peça fornecida como produto semi-acabado. Ela deve ser reformada antes do uso.
PAINT(1)	Isso indica peças embarcadas pintadas com uma primeira mão de fundo.
PAINT(2)	Isso indica peças embarcadas com cores diferentes.
(A)	Isso indica peças especiais para especificação (A) de tempo frio (-30°C).
(B)	Isso indica peças especiais para especificação (B) de tempo frio (-50°C).

Nota: O código dentro de ( ) após o nome da figura indica a figura para o próximo modelo. Se não houver um código, o componente é comum para todos os modelos.

Detail Code	Machine Model
WMNA	PC160LC-7-NA
WSTD	PC160LC-7-W1

مقدمة

عند طلب القطع، يرجى تحديد رقم القطعة واسم القطعة والكمية المطلوبة من القطعة، مع تحديد رقم الموديل والرقم التسلسلي للمحرك وقراءة عداد الخدمة.

قائمة القطع هذه لا تقتصر على الكماليات القياسية فقط بل تشمل ايضاً القطع والملحقات الاختيارية. لطلب القطع، يرجى الاتصال بأقرب موزع لمنتجات كوماتسو.

قائمة القطع تتضمن البنود التالية.

الشكل والقائمة
عندما تفتح كتاب القطع، ستجد على الصفحة اليسرى (الصفحة ذات الرقم الزوجي) شكلاً توضيحياً للقطع المكونة للمجموعة. كل قطعة في مجموعة المكونات لها رقم فهرس.
على الصفحة اليمنى (الصفحة ذات الرقم الفردي) تم إدراج قائمة بالقطع التي تتكون منها المجموعة مرتبة حسب ارقام الفهرس المبيّنة في الصفحة اليسرى. وقد اعطيت كل قطعة من القطع رقم قطعة واسم قطعة ورقم تسلسلي ينطبق عليها.

FIG. No. (رقم الشكل)
رقم الشكل هو الرقم الخاص بالشكل التوضيحي الذي يظهر في تلك الصفحة. وهو ليس رقم القطعة التي يتم توريدها. كما ان ارقام الاشكال ليست دائماً متتابعة.

INDEX (رقم الفهرس)
هذا الرقم هو نفس رقم الفهرس الوارد في الشكل التوضيحي. تدرج القطع في القائمة مرتبة تبعاً لارقام الفهرس.

PART No. (رقم القطعة)
الرقم الوارد في عمود « رقم القطعة » هو رقم القطعة الخاص بالقطعة المبيّنة. وهو الرمز المستخدم لطلب تلك القطعة. ومن الضروري عدم ارتكاب اي خطأ في تحديد هذا الرقم عند طلب القطع.

DESCRIPTION (الوصف)
يعطي اسم القطعة المدرج رقمها في القائمة.
توضع العلامة " . " امام اسماء القطع المكونة للمجموعة ويدرج البند بعد المجموعة. اذا كانت القطعة المشار اليها بالعلامة " . " هي نفسها عبارة عن مجموعة مكونات فان كلاً من مكوناتها يشار اليها بالعلامة " .. ".
مثال : ELEMENT ASSEMBLY, AIR CLEANER
.ELEMENT ASSEMBLY, OUTER
.. ELEMENT, OUTER
..NUT, WING
..WASHER

Q'ty (الكمية)
هذا هو عدد القطع المستخدمة لآلية واحدة. أما بالنسبة لمجموعات المكونات ومجموعات القطع فانه يتم تحديد عدد القطع لكل مجموعة.

SERIAL No. (الرقم التسلسلي)
في كتاب قطع المحرك، يشير هذا الرقم الى الرقم التسلسلي للمحرك الذي تستخدم فيه القطعة. في كتاب قطع الآلية، يشير هذا الرقم الى الرقم التسلسلي للآلية التي تستخدم فيها القطعة.

الرموز
الرموز وارقام القطع المذكورة في عمود « رقم القطعة » وعمود « الوصف » تمثل كما يلي:

□ القطعة المذكورة في السطر السابق يمكن استعمالها بدلاً من هذه القطعة.

⊡ هذه القطعة يمكن استعمالها بدلاً من القطعة المذكورة في السطر السابق مباشرة.

◆ هذه القطعة والقطعة المذكورة في السطر السابق مباشرة يمكن لكل منهما ان تحل محل الاخرى.

■ القطعة المذكورة في عمود « الوصف » يمكن استعمالها بدلاً من هذه القطعة اذا استخدمت كطقم.

⊠ هذه القطعة توقف توريدها. يتم توريد القطعة المذكورة في السطر السابق بدلاً منها.

▼ هذه القطعة توقف توريدها. يتم توريد القطعة المذكورة في عمود « الوصف » بدلاً منها كطقم.

☆ هذه القطعة لا يمكن توريدها كقطعة منفردة. يتم توريدها كمجموعة.

★ هذه القطعة لا يمكن توريدها كقطعة منفردة. يتم توريدها كمجموعة. على انه يتم توريدها كقطعة منفردة من قبل موزعين معيّنين فقط.

⊙ هذا يشير الى مجموعة قطع.
هذه القطعة لا تعتبر قطعة للتوريد.

==== القطع المحاطة بهذا الخط هي مكونات لمجموعة القطع المذكورة اعلاه.

G-1,G-2 هذا يشير الى فئة مجموعة القطع.
KIT هذا يشير الى مكونات الاطقم التركيبية. بخصوص الاطقم التركيبية، يرجى مراجعة جدول الاطقم التركيبية للخدمة.

△ هذا يشير الى قطعة مورّدة شبه مكتملة التصنيع. تتطلب استكمال تصنيعها قبل الاستعمال.

PAINT(1) هذا يشير الى القطع المشحونة بعد طلائها بطبقة سفلية.
PAINT(2) هذا يشير الى القطع المشحونة بألوان مختلفة.

(A) هذا يشير الى قطع خاصة بمواصفات الطقس البارد من الفئة (A) (-٣٠°م).
(B) هذا يشير الى قطع خاصة بمواصفات الطقس البارد من الفئة (B) (-٥٠°م).

ملاحظة : الرمز الوارد ضمن الاقواس ( ) بعد اسم الشكل يشير الى الشكل الخاص بالموديل اللاحق. اذا لم يكن هناك رمز فان المكونة تكون مشتركة لجميع الموديلات.

Detail Code	Machine Model
WMNA	PC160LC-7-NA
WSTD	PC160LC-7-W1

ПРЕДИСЛОВИЕ

При формировании заказа на детали, узлы и агрегаты, кроме их номера детали, наименования и количества, завод-изготовитель просит заказчиков информировать о серийном номере машины и двигателя, для которых делается заказ, а также показании счетчика мото-часов.

В Каталоге приведены не только стандартные агрегаты, но и дополнительные устройства и принадлежности, поставляемые по специальному заказу.
При необходимости приобретении их обратиться к местному дилеру фирмы "Комацу".

Каталог деталей составлен, как ниже изложено:

Рисунки и таблицы деталей

При открытии Каталога на левой странице (чётной) приведен рисунок деталей устройства или агрегата. Каждая деталь обозначена номером позиции.
На правой странице (нечётной) приведена таблица деталей, нарисованных на левой странице, с соответствующим номером детали, наименованием, количеством и серийными номерами машины, для которых предназначена данная деталь, в порядке возрастания номеров позиции.

FIG No. (№ рисунка)

Номер рисунка (фиг.) является собственным для данного рисунка и не является номером показанной детали. Номера рисунков (фиг.) могут быть непорядковыми.

INDEX (Указатель)

В указателе приведены номера позиции деталей на рисунке в порядке возрастания цифр.

PART No. (Номер детали)

При заказе на деталь, установленную на рисунке, следует указать номер, приведенный в данной колонне. Именно этот номер определяет каждую деталь.

DESCRIPTION (Наименование детали)

Приведено наименование детали, соответствующей выбранному номеру детали. Точка "." поставлена перед наименованием каждой составной части устройства. Если составная часть состоит из множества деталей, то эти детали обозначаются двумя точками "..".
Например:
ELEMENT ASSEMBLY, AIR CLEANER
. ELEMENT ASSEMBLY, OUTER
.. ELEMENT, OUTER
.. NUT, WING
.. WASHER

Q'TY (Количество)

Указано количество деталей, необходимое на единицу данного устройства. Для деталей составной части устройства, а также для группы деталей указано их количество на единицу составной части или на группу.

SERIAL No. (Серийные номера)

В части двигателя приведены серийные номера двигателей, а в части шасси — серийные номера машин, в которых применена данная деталь.

Условные обозначения

Условные обозначения, применяемые в колоннах "Номер детали" и "Наименование детали", характеризуют следующее:

- □ Вышеприведенная деталь может заменить настоящую деталь.

Условные обозначения (Продолжение)

- ◉ Настоящая деталь может заменить деталь, приведенную на одну строчку выше.
- ◆ Настоящая деталь и деталь, приведенную на одну строчку выше, имеют взаимозаменяемость.
- ■ Взамен настоящей детали возможно использовать детали, приведенные в колонне "Наименование детали", в комплекте.
- □ Поставка этой детали прекращена. Взамен этой детали поставляется деталь, приведенная на одну строчку выше.
- ▼ Поставка этой детали прекращена. Взамен этой детали поставляются детали, приведенные в колонне "Наименование детали", в комплекте.
- ☆ Настоящая деталь поставляется только в комплекте, а не в отдельности.
- ★ Настоящая деталь поставляется, как правило, только в комплекте, а не в отдельности. Ее можно достать только у отдельных дилеров фирмы "Комацу".
- ◉ Группа деталей.
  Детали не подлежат дополнительной поставке.
- ====== Детали, ограниченные этой линией, составляют вышеприведенную группу деталей.
- G-1, G-2 Обозначения, характеризующие отдельные группы деталей.
- KIT Составляющая комплекта.
  См. таблицы ремонтных комплектов.
- △ Деталь, поставляемая в неготовом виде.
  Перед употреблением необходимо дополнительно обработать.
- PAINT(1) Детали, отгружаемые в загрунтованном виде.
- PAINT(2) Детали, отгружаемые в окрашенном в другой цвет виде.
- (A) Детали, рассчитанные на холодные районы (-30° C)
- (B) Детали, рассчитанные на особо холодные районы (-50° C)

Примечание:
Обозначение в скобках после наименования рисунка указывает отдельные модели машин. Рисунки, не имеющие особого обозначения, рассчитаны на все модели.

Detail Code	Machine Model
WMNA	PC160LC-7-NA
WSTD	PC160LC-7-W1

前　言

订购零件时，请注明需要零件的货号、品名、数量以及使用机器的车辆编号、发动机型号和系列号、工作时数。

此零件明细表上不仅记载有标准装备零件，还记载有选购零件、附件零件。如果您需要订货，请与最近的小松代理店联系。

为了清楚明了，零件手册中有如下规定:

图　　表	打开此零件清单后， 在左侧的页上（偶数页）用图示表示按安装的装置上的零件。在图示上标有各种零件的索引号码。 在右侧的页上（奇数页）按照左侧图示上表示的零件索引号码以表格的形式 表示货号、品名、数量、适用机型。
FIG. No.	图号（FIG.）表示该页图的号码，它不时补充零件用的货号。同时，此号码不一定是连续号码。
INDEX	与图的索引号码一致，按索引号码顺序编制为表格形式。
PART No.	此栏所示的货号是图示零件的货号，它是在订货时需要的标明的特定代号，是非常重要的。
DESCRIP-TION	它表示相当于货号的零件名称。 构成组装品的零件，在品名的前面有标记，记载在组装品之后。 另外，如果标记的零件是组装品，在该构成零件的品名前标有 .. 标记。 例如: ELEMENT ASSEMBLY, AIR CLEANER .ELEMENT ASSEMBLY, OUTER ..ELEMENT, OUTER ..NUT, WING ..WASHER
Q'TY	表示 1 台机器中需要使用的该零件数量。 但是，如果是组装零件和零件组的构成零件时，表示其组装件的件数。
SERIAL No.	发动机篇中表示该使用零件的发动机型号，在机体篇中表示该使用零件的车辆号码。
代　　号	货号栏和零件品名栏里的代号如下所示: □　　上一行的零件可取代此行零件来使用。

代　　号（续）	
⊡	此行零件可代替紧接着的上一行零件使用。
◆	此行零件可与紧挨着的上一行零件互换使用。
■	如果将此行零件说明栏内的零件配套后，可取代此零件来使用。
⊠	该行零件已停止供应，用上一行的零件代替使用。
▼	此行零件已停止供应，将此行零件说明栏内的零件配套后代替此零件供应。
☆	此行零件拟成套供应，不以单一零件供应。
★	此行零件拟成套供应，不以单一零件供应，但特定代理除外。
⊙	成组零件，一般不考虑成组供应。
====	用这种符号包括的零件是符号上一行指明成组件的零部件。
G-1,G-2	成组零件编号。
KIT	修理包，关于修理包构件详情，请参考技术服务修理包资料。
△	此行零件以半成品的形式供应，使用前必须再加工。
PAINT(1)	只涂底漆装船。
PAINT(2)	和本体不同颜色装船。
(A)	适用寒冷地区。（－30℃）
(B)	适用极寒冷地区。（－50℃）

注: 图名称后的（）中的记号表示如下机种的图。没有记号的图是所有机种通用图。

Detail Code	Machine Model
WMNA	PC160LC-7-NA
WSTD	PC160LC-7-W1

CONTENTS

CONTENTS

FOREWORD OF-2

CONTENTS OC-2

	FIG. NO	PAGE
[AA] ENGINE		
CYLINDER HEAD	A1009-01A0	030010
REAR HANGER	A105P-01A0	030020
HEAD COVER	A111P-01B8	030030
AIR CONNECTOR	A131P-01A7	030040
AIR INTAKE HEATER	A131R-01A0	030050
AIR INTAKE COVER	A131V-01A1	030060
EXHAUST CONNECTOR CLAMP	A151R-01A0	030070
EXHAUST MANIFOLD	A153S-01B8	030080
TURBOCHARGER OIL PIPING	A153T-01B9	030090
TURBOCHARGER MOUNTING	A1539-01B7	030100
HEAT SHIELD	A1570-01E1	030110
THERMOSTAT HOUSING	A173P-01B2	030120
THERMOSTAT	A173R-01A0	030130
WATER TEMPERATURE SENSOR	A201Y-01A1	030140
CYLINDER BLOCK	A2019-01A0A	030150
FRONT COVER	A2049-01A1	030160
CAMFOLLOWER COVER	A206P-01A8	030170
BREATHER HOSE	A2060-01B4	030180
CYLINDER BLOCK BLIND PLUG	A207P-01A0	030190
OIL PAN BOLT	A211R-01A4	030200
OIL LEVEL SENSOR	A211V-01A3	030210
OIL PAN AND SUCTION TUBE	A2119-01B5	030220
OIL LEVEL GAUGE	A219P-01A5	030230
REVOLUTION SENSOR	A221V-01A1	030240
FLYWHEEL HOUSING	A2219-01B2	030250
FLYWHEEL	A223P-01B9	030260
CRANKSHAFT	A2319-01A1	030270
PISTON	A2359-01A3	030280
CRANK PULLEY	A237P-01A3	030290
ROCKER ARM	A241P-01A1	030300
TAPPET	A241R-01A1	030310
CAMSHAFT	A2419-01A1	030320
FRONT GEAR TRAIN COVER	A261P-01A1	030330
FAN PULLEY	A267P-01A1	030340
TACHOMETER DRIVE COVER	A281P-01A0	030350
UNDER PLATE	A283P-01A1	030360
OIL PUMP	A301P-01A6	030370
OIL FILTER AND PIPING	A311P-01A2	030380
OIL FILTER BRACKET	A3110-01A7	030390
OIL COOLER COVER	A331P-01B1	030400
FUEL INJECTION PUMP	A401P-01H1	030410
FUEL INJECTION PUMP (PUMP) (1/2) (INNER PARTS)	A401P-02H1	030420
FUEL INJECTION PUMP (PUMP) (2/2) (INNER PARTS)	A401P-03H1	030430
FUEL INJECTION PUMP (GOVERNOR) (1/3) (INNER PARTS)	A401P-04H1	030440
FUEL INJECTION PUMP (GOVERNOR) (2/3) (INNER PARTS)	A401P-05H1	030450
FUEL INJECTION PUMP (GOVERNOR) (3/3) (INNER PARTS)	A401P-06H1	030460
FUEL INJECTION PUMP (FEED PUMP) (INNER PARTS)	A401P-07H1	030470
BOOST TUBE	A401R-01B4	030480
FUEL INLET AND OUTLET JOINT CAP	A4010-01B0	030490
FUEL INJECTION PUMP MOUNTING	A408P-01B7	030500
FUEL FILTER PIPING	A411P-01A8	030510
FUEL PIPING	A411S-01B9	030520
CYLINDER BLOCK BLIND COVER	A417P-01A3	030530
INJECTION NOZZLE	A4219-01A8	030540
FUEL JOINT	A423V-01A0	030550
WATER PUMP	A501P-01A3	030560
WATER CONNECTOR	A501R-01A0	030570
WATER CONNECTOR PLUG	A501S-01A0	030580
FAN DRIVE PULLEY	A502P-01D1	030590
FAN PILOT SPACER	A504P-01A1	030600
BELT TENSIONER (FOR 60A ALTERNATOR)	A601S-01F2	030610

	FIG. NO	PAGE
ALTERNATOR MOUNTING	A601T-01B4	030620
STARTING MOTOR MOUNTING (4.5KW)	A621S-01A7	030630
REPAIR PARTS (CYLINDER HEAD)	A8110-01B0	030640
CYLINDER HEAD GASKET KIT	A8124-01A0	030650
CYLINDER BLOCK GASKET KIT	A8124-02A0	030660
B0 [ENGINE RELATED PARTS]		
DAMPER¤ PUMP AND SENSOR	B0000-01A0	030010
BRACKET & COVER FOR HEAT SHIELD	B0000-02A0	030020
MUFFLER AND MOUNTING	B0000-03A0	030030
FRONT COVER POINTER	B0000-04A0	030040
COOLING FAN	B0000-05A0	030050
ALTERNATOR (60A)	B0000-06A0	030060
ALTERNATOR (60A) (INNER PARTS)	B0000-07A0	030070
STARTING MOTOR (4.5KW) (WITH PROTECT COVER)	B0000-08A0	030080
STARTING MOTOR (4.5KW) (WITH PROTECT COVER) (INNER PARTS)	B0000-09A0	030090
HEATER SWITCH	B0000-10A0	030091
ENGINE MOUNT	B0100-01A0	030100
AIR INTAKE	B0200-01A0	030110
AIR CLEANER	B0200-02A0	030120
FUEL CONTROL	B0400-01A0	030130
C0 [COOLING SYSTEM]		
COOLING (RADIATOR AND OIL COOLER)(#B20001-B20030)	C0100-01A0	060010
COOLING (RADIATOR AND OIL COOLER)(#B20031-)	C0100-01A0A	060020
COOLING (NET AND SHROUD)(#B20001-B20199)	C0100-02A0	060030
COOLING (NET AND SHROUD)(#B20200-)	C0100-02A0A	060040
COOLING (SHEET AND RADIATOR PIPING)(#B20001-B20199)	C0100-03A0	060050
COOLING (SHEET AND RADIATOR PIPING)(#B20200-)	C0100-03A0A	060060
COOLING (SUB TANK AND RADIATOR MOUNT)(#B20001-B20199)	C0100-04A0	060070
COOLING (SUB TANK AND RADIATOR MOUNT)(#B20200-)	C0100-04A0A	060080
COOLING (AFTER COOLER PIPING AND OIL COOLER DRAIN HOSE)(#B20001-B20199)	C0100-05A0	060090
COOLING (AFTER COOLER PIPING AND OIL COOLER DRAIN HOSE)(#B20200-)	C0100-05A0A	060100
FAN GUARD	C0310-01A0	060110
D0 [FUEL TANK AND RELATED PARTS]		
FUEL TANK	D0100-01A0	090010
FUEL LINE (FUEL HOSE) (WITH WATER SEPARATOR)(#B20001-B20199)	D0200-01A1	090020
FUEL LINE (FUEL HOSE) (WITH WATER SEPARATOR)(#B20200-)	D0200-01A1A	090030
FUEL LINE (WATER SEPARATOR AND REMOTE DRAIN)	D0200-02A1	090040
E0 [ELECTRICAL SYSTEM]		
BATTERY (WET)	E0100-01A1	120010
WIRING (STARTING HARNESS)(#B20001-B20194)	E0200-01A0	120020
WIRING (STARTING HARNESS)(#B20195-)	E0200-01A0A	120030
WIRING (MAIN HARNESS) (HARNESS)(#B20001-B20194)	E0200-02A0	120040
WIRING (MAIN HARNESS) (HARNESS)(#B20195-)	E0200-02A0A	120050
WIRING (MAIN HARNESS) (CLIP)(#B20001-B20194)	E0200-03A0	120060
WIRING (MAIN HARNESS) (CLIP)(#B20195-)	E0200-03A0A	120070
WIRING (BATTERY HARNESS AND GROUND)(#B20001-B20194)	E0200-04A0	120080
WIRING (BATTERY HARNESS AND GROUND)(#B20195-)	E0200-04A0A	120090
KOMTRAX WIRING (CONTROLLER & ANTENNA)	E0201-01A0	120091
HORN	E0410-01A0	120100
TRAVEL ALARM	E0420-01A0	120110
H0 [HYDRAULIC SYSTEM]		
HYDRAULIC TANK (1 ACTUATOR)	H0110-01A1	150010
MAIN VALVE (FOR 7-SPOOL VALVE)	H0120-01A1	150020
MAIN VALVE (BRACKET AND SENSOR)	H0120-02A0	150030
MAIN PUMP (CONNECTING PARTS)	H0210-01A0	150040
SUCTION LINE	H0311-01A0	150050
DELIVERY LINE	H0312-01A0	150060
OIL COOLER LINE	H0320-01A0	150070
RETURN LINE	H0330-01A0	150080
DRAIN LINE	H0340-01A0	150090
BOOM LINE	H1210-01A0	150100

	FIG. NO	PAGE
ARM AND BUCKET LINE	H1220-01A0	150110
ATTACHMENT LINE LESS (BLIND PARTS)	H1270-01A0	150120
TRAVEL LINE	H1310-01A0	150130
SWING LINE	H1340-01A0	150140
LS LINE	H1810-01A0	150150
SOLENOID VALVE (VALVE AND CONNECTING PARTS)	H1831-01A0	150160
SOLENOID VALVE (SOLENOID VALVE LINE)	H1831-02A0	150170
PRESSURE SWITCH BLOCK	H1833-01A0	150180
MAIN VALVE PPC LINE (1 ACTUATOR)	H1840-01A1	150190
J0 [MAIN/REVOLVING FRAME AND RELATED PARTS]		
REVOLVING FRAME(#B20001-B20199)	J1110-01A0	180010
REVOLVING FRAME(#B20200-)	J1110-01A0A	180020
BOOM FOOT PIN	J1310-01A0	180030
K0 [OPERATOR'S COMPARTMENT AND CONTROL SYSTEM]		
OPERATOR'S SEAT (SUSPENSION)	K0110-01A1	210010
SEAT REAR COVER (WITH AIR CONDITIONER)(#B20001-B20199)	K0180-01A0	210020
SEAT REAR COVER (WITH AIR CONDITIONER)(#B20200-)	K0180-01A0A	210030
OPERATOR'S CAB (CAB) (#B20001-B20199)	K0210-01A1	210040
OPERATOR'S CAB (FRONT WINDOW)(#B20001-B20199)	K0210-02A0A	210050
OPERATOR'S CAB (FRONT LOWER WINDOW)(#B20001-B20199)	K0210-03A0	210060
OPERATOR'S CAB (ROOF WINDOW)(#B20001-B20199)	K0210-04A0	210070
OPERATOR'S CAB (DOOR) (#B20001-B20199)	K0210-05A1	210080
OPERATOR'S CAB (DOOR LOCK)(#B20001-B20199)	K0210-06A0	210090
OPERATOR'S CAB (OPEN LOCK)(#B20001-B20199)	K0210-07A0	210100
OPERATOR'S CAB (WIPER AND ROOM LAMP)(#B20001-B20199)	K0210-08A0	210110
OPERATOR'S CAB (RADIO)(#B20001-B20199)	K0210-09A0	210120
OPERATOR'S CAB (ACCESSORIES)(#B20001-B20199)	K0210-10A0	210130
OPERATOR'S CAB (BOLT) (KOMTRAX LESS)(#B20001-B20199)	K0210-11A0	210140
OPERATOR'S CAB (WIRING)(#B20001-B20199)	K0210-12A0	210150
OPERATOR'S CAB (MONITOR SYSTEM) (MULTI MONITOR (WITH AIR CONDITIONER)(#B20001-B20199)	K0210-13A0	210160
OPERATOR'S CAB (COVER)(#B20001-B20199)	K0210-14A0	210170
OPERATOR'S CAB (DUCT) (#B20001-B20199)	K0210-15A0	210180
FLOOR MAT(#B20001-B20199)	K0310-01A0	210190
FLOOR MAT(#B20200-)	K0310-01A0A	210200
WINDOW WASHER	K0350-01A0	210210
AIR CONDITIONER (DUCT¤ COMPRESSOR AND RECEIVER DRYER)(#B20001-B20199)	K0700-01A1	210220
AIR CONDITIONER (DUCT¤ COMPRESSOR AND RECEIVER DRYER)(#B20200-)	K0700-01A1A	210230
AIR CONDITIONER (HOSE)(#B20001-B20199)	K0700-02A1A	210240
AIR CONDITIONER (HOSE)(#B20200-)	K0700-02A1B	210250
AIR CONDITIONER (REAR DUCT)(#B20001-B20199)	K0700-03A1	210260
FLOOR FRAME (FRAME)(#B20001-B20199)	K1110-01A0	210270
FLOOR FRAME (OPERATOR'S CAB) (CAB) (#B20200-)	K1110-01D0	210280
FLOOR FRAME (TRAVEL CONTROL)(#B20001-B20199)	K1110-02A0	210290
FLOOR FRAME (OPERATOR'S CAB) (FRONT WINDOW)(#B20200-)	K1110-02D0	210300
FLOOR FRAME (FOOT REST) (L.H.)(#B20001-B20199)	K1110-03A0	210310
FLOOR FRAME (OPERATOR'S CAB) (FRONT LOWER WINDOW)(#B20200-)	K1110-03D0	210320
FLOOR FRAME (FOOT REST) (R.H.) (#B20001-B20199)	K1110-04A0	210330
FLOOR FRAME (OPERATOR'S CAB) (ROOF WINDOW)(#B20200-)	K1110-04D0	210340
FLOOR FRAME (OPERATOR'S CAB) (DOOR)(#B20200-)	K1110-05D0	210350
FLOOR FRAME (BASE) (#B20001-B20199)	K1110-06A0	210360
FLOOR FRAME (OPERATOR'S CAB) (DOOR LOCK)(#B20200-)	K1110-06D0	210370
FLOOR FRAME (ELECTRICAL) (#B20001-B20199)	K1110-07A0	210380
FLOOR FRAME (OPERATOR'S CAB) (OPEN LOCK)(#B20200-)	K1110-07D0	210390
FLOOR FRAME (CLIP)(#B20001-B20199)	K1110-08A0	210400
FLOOR FRAME (OPERATOR'S CAB) (ELECTRICAL) (WIPER AND ROOM LAMP)(#B20200-)	K1110-08D0	210410
FLOOR FRAME (REAR FRAME AND WINDOW WASHER)(#B20001-B20199)	K1110-09A0	210420
FLOOR FRAME (OPERATOR'S CAB) (ELECTRICAL) (RADIO)(#B20200-)	K1110-09D0	210430
FLOOR FRAME (LEVER AND VALVE) (L.H.)(#B20001-B20199)	K1110-10A0	210440
FLOOR FRAME (OPERATOR'S CAB) (ACCESSORIES)(#B20200-)	K1110-10D0	210450
FLOOR FRAME (CONSOLE) (UPPER) (L.H.) (WITH AIR CONDITIONER AND RADIO) (FOR NORTH AMERICA)(#B20001-B20199)	K1110-11A1	210460

	FIG. NO	PAGE
FLOOR FRAME (OPERATOR'S CAB) (PLUG BOLT)(#B20200-)	K1110-11D2	210470
FLOOR FRAME (CONSOLE) (LOWER) (L.H.)(#B20001-B20199)	K1110-12A0	210480
FLOOR FRAME (OPERATOR'S CAB) (CLAMP AND PLATE)(#B20200-)	K1110-12D0	210490
FLOOR FRAME (CONSOLE) (UNDER) (L.H.)(#B20001-B20199)	K1110-13A0	210500
FLOOR FRAME (OPERATOR'S CAB) (MONITOR SYSTEM) (WITH MULTI MONITOR)(#B20200-)	K1110-13D0	210510
FLOOR FRAME (LEVER AND VALVE) (R.H.)(#B20001-B20199)	K1110-14A0	210520
FLOOR FRAME (OPERATOR'S CAB) (PLATE AND DUCT)(#B20200-)	K1110-14D0	210530
FLOOR FRAME (CONSOLE) (MASTER KEY) (R.H.)(#B20001-B20199)	K1110-15A1	210540
FLOOR FRAME (OPERATOR'S CAB) (PARTITION AND FOOT DUCT)(#B20200-)	K1110-15D0	210550
FLOOR FRAME (AIR CONDITIONER UNIT AND FOOT COVER)(#B20001-B20199)	K1110-16A0	210560
FLOOR FRAME (OPERATOR'S CAB) (SUB PANEL)(#B20200-)	K1110-16D0	210570
FLOOR FRAME (AIR CONDITIONER HOSE)(#B20001-B20199)	K1110-17A0	210580
FLOOR FRAME (HEATER HOSE AND CLAMP FOR AIR CONDITIONER)(#B20001-B20199)	K1110-18A0	210590
FLOOR FRAME (OPERATOR'S CAB) (CLAMP AND BOLT)(#B20200-)	K1110-18D0	210600
FLOOR FRAME (PPC LINE) (TRAVEL)(#B20001-B20199)	K1110-19A0	210610
FLOOR FRAME (OPERATOR'S CAB) (FLOOR FRAME)(#B20200-)	K1110-19D0	210620
FLOOR FRAME (PPC LINE) (WORK)(#B20001-B20199)	K1110-20A0	210630
FLOOR FRAME (OPERATOR'S CAB) (TRAVEL CONTROL)(#B20200-)	K1110-20D0	210640
FLOOR FRAME (CLAMP FOR PPC LINE) (WITH AIR CONDITIONER)(#B20001-B20199)	K1110-21A0	210650
FLOOR FRAME (OPERATOR'S CAB) (FOOT REST) (L.H.)(#B20200-)	K1110-21D0	210660
FLOOR FRAME (P¤T BLOCK AND SEAL)(#B20001-B20199)	K1110-22A0	210670
FLOOR FRAME (OPERATOR'S CAB) (FOOT REST) (R.H.)(#B20200-)	K1110-22D0	210680
FLOOR FRAME (OPERATOR'S CAB) (BASE)(#B20200-)	K1110-23D0	210690
FLOOR FRAME (KOMTRAX LESS)	K1110-24A1	210700
FLOOR FRAME (OPERATOR'S CAB) (HARNESS)(#B20200-)	K1110-24D0	210710
FLOOR FRAME (LEVER KNOB)(#B20001-B20199)	K1110-25A0	210720
FLOOR FRAME (OPERATOR'S CAB) (WINDOW WASHER)(#B20200-)	K1110-25D0	210730
FLOOR FRAME (OPERATOR'S CAB) (LEVER AND VALVE) (L.H.)(#B20200-)	K1110-26D0	210740

	FIG. NO	PAGE
FLOOR FRAME (OPERATOR'S CAB) (CONSOLE) (UPPER) (WITH AIR CONDITIONER AND RADIO) (L.H.)(#B20200-)	K1110-27D2	210750
FLOOR FRAME (OPERATOR'S CAB) (CONSOLE¤ L.H.) (LOWER)(#B20200-)	K1110-28D0	210760
FLOOR FRAME (OPERATOR'S CAB) (LEVER AND VALVE) (R.H.)(#B20200-)	K1110-29D0	210770
FLOOR FRAME (OPERATOR'S CAB) (CONSOLE) (MASTER KEY) (R.H.)(#B20200-)	K1110-30D2	210780
FLOOR FRAME (OPERATOR'S CAB) (AIR CONDITIONER AND FOOT COVER)(#B20200-)	K1110-31D0	210790
FLOOR FRAME (OPERATOR'S CAB) (AIR CONDITIONER HOSE)(#B20200-)	K1110-32D0	210800
FLOOR FRAME (OPERATOR'S CAB) (HEATER HOSE AND CLAMP) (WITH AIR CONDITIONER)(#B20200-)	K1110-33D0	210810
FLOOR FRAME (OPERATOR'S CAB) (PPC HOSE) (1/2)(#B20200-)	K1110-34D0	210820
FLOOR FRAME (OPERATOR'S CAB) (PPC HOSE) (2/2)(#B20200-)	K1110-35D0	210830
FLOOR FRAME (OPERATOR'S CAB) (PPC CLAMP)(#B20200-)	K1110-36D0	210840
FLOOR FRAME (OPERATOR'S CAB) (P¤ T BLOCK AND SEAL)(#B20200-)	K1110-37D0	210850
FLOOR MOUNT(#B20001-B20199)	K1120-01A0	210860
FLOOR MOUNT(#B20200-)	K1120-01A0A	210870
SWITCH	K1730-01A0	210880
COVER	K1740-01A0	210890

M0 [GUARD]

HOOD	M1110-01A0	240010
FRAME (MACHINE CAB)	M1120-01A0	240020
LEFT SIDE DOOR (MACHINE CAB)	M1130-01A0	240030
RIGHT SIDE DOOR (MACHINE CAB)	M1140-01A0	240040
PARTITION (MACHINE CAB) (1/2)(#B20001-B20199)	M1150-01A0	240050
PARTITION (MACHINE CAB) (1/2)(#B20200-)	M1150-01A0A	240060
PARTITION (MACHINE CAB) (2/2)(#B20001-B20199)	M1150-02A0	240070
PARTITION (MACHINE CAB) (2/2)(#B20200-)	M1150-02A0A	240080
PARTITION	M1160-01A0	240090
COVER (MACHINE CAB) (UPPER)	M1210-01A0	240100
RIGHT SIDE CASE	M1220-01A0	240110

	FIG. NO	PAGE
HANDRAIL	M1310-01A0	240120
REAR VIEW MIRROR¤ R.H.	M1420-01A0	240130
COUNTER WEIGHT	M1510-01A0	240140
COUNTER WEIGHT MOUNTING	M1520-01A0	240150
UNDER COVER (REVOLVING FRAME) (1/2)	M1810-01A0	240160
UNDER COVER (REVOLVING FRAME) (2/2)	M1810-02A0	240170
N0 [SWING CIRCLE AND RELATED PARTS]		
SWING CIRCLE	N1110-01A0	270010
SWING MACHINERY	N1210-01A0	270020
SWING MOTOR (CONNECTING PARTS)	N1220-01A0	270030
SWIVEL JOINT (CONNECTING PARTS)	N1310-01A0	270040
P0 [TRAVEL AND LOWER PIPING]		
TRAVEL PIPING	P1120-01A0	300010
FINAL DRIVE	P1210-01A0	300020
R0 [UNDER CARRIAGE]		
FRONT IDLER	R0110-01A0	330010
IDLER CUSHION	R0110-02A0A	330020
TRACK ROLLER	R0200-01A0	330030
CARRIER ROLLER (#B20001-B20694)	R0300-01A0	330040
CARRIER ROLLER (#B20695-)	R0300-01H1	330040a
TRACK SHOE (TRIPLE GROUSER WITH HOLE) (500MM WIDE)	R0500-01A1	330050
TRACK SHOE (TRIPLE GROUSER WITH HOLE) (700MM WIDE)(#B20001-B20173)	R0500-01A2	330060
TRACK SHOE (TRIPLE GROUSER WITH HOLE) (700MM WIDE)	R0500-01A3	330070
TRACK SHOE (TRIPLE GROUSER WITH HOLE) (700MM WIDE)(#B20500-)	R0500-01A4	330075
TRACK FRAME	R1100-01A0	330080
UNDER COVER (FOR TRACK FRAME)	R1140-01A0	330090
TRACK ROLLER GUARD	R1200-01A0	330100

	FIG. NO	PAGE
T0 [WORK EQUIPMENT]		
BOOM	T1110-01A0	360010
BOOM (TOP PIN AND BOTTOM PIN)	T1110-02A0	360020
BOOM (ARM CYLINDER LINE AND BUCKET CYLINDER LINE)	T1110-03A0	360030
BOOM (LUBRICATING LINE)	T1110-04A0	360040
BOOM (FOOT LUBRICATING AND WORKING LAMP)	T1110-06A0	360050
BOOM CYLINDER	T1120-01A0	360060
BOOM CYLINDER TOP PIN	T1125-01A0	360070
ARM CYLINDER	T1140-01A0	360080
ARM (2.6M)	T1200-01A0	360090
ARM (2.9M)	T1200-01A1	360100
ARM (2.25M)	T1200-01A3	360110
ARM (BUCKET LINK)	T1200-02A0	360120
ARM (2.6M) (BUCKET CYLINDER HOSE AND O-RING)	T1200-03A0	360130
ARM (2.9M) (BUCKET CYLINDER HOSE AND O-RING)	T1200-03A1	360140
ARM (2.25M) (BUCKET CYLINDER HOSE AND O-RING)	T1200-03A3	360150
BUCKET, 0.6M3 (CECE 0.55M3), 966MM (HORIZONTAL PIN TYPE) (WITH ADJUSTER)	T1510-01A0	360160
BUCKET, 0.6M3 (CECE 0.55M3), 966MM (HORIZONTAL PIN TYPE) (WITH ADJUSTER) (WITH HOOK)	T1510-02A0	360170
BUCKET, 0.8M3 (CECE 0.70M3), 1186MM (HORIZONTAL PIN TYPE) (WITH ADJUSTER)	T1510-03A0	360180
BUCKET, 0.8M3 (CECE 0.70M3), 1186MM (HORIZONTAL PIN TYPE) (WITH ADJUSTER) (WITH HOOK)	T1510-04A0	360190
BUCKET, 1.05M3 (CECE 0.90M3), 1481MM (HORIZONTAL PIN TYPE) (WITH ADJUSTER)	T1510-05A0	360200
BUCKET, 1.05M3 (CECE 0.90M3), 1481MM (HORIZONTAL PIN TYPE) (WITH ADJUSTER) (WITH HOOK)	T1510-06A0	360210
U0 [MARKS AND PLATES]		
DECAL AND PLATES	U0100-01A2	390010
DECAL AND PLATES (FOR LATIN AMERICA)	U0100-01A3	390011
LOGO (KOMATSU) (SMALL) (GENERAL)	U0150-01A0	390020

	FIG. NO	PAGE
LOGO (BOOM SIDE)	U0510-01A0	390030
PLATE (AIR CLEANER¤ DOUBLE ELEMENT)	U0550-01A0	390040
V0 [ACCESSORY]		
SPARE PARTS (FOR LATIN AMERICA)	V0100-01A0	420010
SPARE PARTS - PC160LC-7B	V0100-01A1	420010A
TOOL KIT	V0300-01A0	420020
Y0 [SERVICE KIT AND COMPONENT PARTS]		
SHOE BOLT AND NUT SERVICE KIT		
(FOR TRIPLE GROUSER TYPE) (B20001-B20173)	Y0320-01A0	450010
TRACK LINK ASS'Y (88 SET) (SUPPLY PARTS) (B20001-B20173)	Y0321-01A0	450020
RUBBER ANTENNA (#B20001-BB20644)	Y1062-01A0	450030
RUBBER ANTENNA (#B20645-)	Y1062-01A0A	450031
SWING MACHINERY	Y1260-04A0	450040
HYDRAULIC MOTOR	Y1260-05A0	450050
RELIEF VALVE (A) (FOR SWING MOTOR)	Y1260-11A0	450060
RELIEF VALVE (B) (FOR SWING MOTOR)	Y1260-12A0	450070
VALVE (FOR SWING MOTOR)	Y1260-13A0	450080
TOOL (FOR SWING MOTOR AND MACHINERY)	Y1260-31A0	450090
MAIN PUMP (1/9)	Y1600-01A0	450100
MAIN PUMP (2/9)	Y1600-02A0	450110
MAIN PUMP (3/9)	Y1600-03A0	450120
MAIN PUMP (4/9)	Y1600-04A0	450130
MAIN PUMP (5/9)	Y1600-05A0	450140
MAIN PUMP (6/9)	Y1600-06A0	450150
MAIN PUMP (7/9)	Y1600-07A0	450160
MAIN PUMP (8/9)	Y1600-08A0	450170
MAIN PUMP (9/9)	Y1600-09A0	450180
BOOM CYLINDER	Y1620-01A0	450190
ARM CYLINDER	Y1620-11A0	450200
BUCKET CYLINDER	Y1620-41A0	450210
BUCKET CYLINDER (100 HOURS LUBRICATING)	Y1620-41A1	450220
SWIVEL JOINT	Y1627-01A0A	450230
TRAVEL MOTOR (1/3)	Y1641-01A0	450240
TRAVEL MOTOR (2/3)	Y1641-02A0	450250
TRAVEL MOTOR (3/3)	Y1641-03A0	450260
MAIN VALVE (7-VALVE) (1/28)	Y1662-01A0	450270
MAIN VALVE (7-VALVE) (2/28)	Y1662-02A0	450280
MAIN VALVE (7-VALVE) (3/28)	Y1662-03A0	450290
MAIN VALVE (7-VALVE) (4/28)	Y1662-04A0	450300
MAIN VALVE (7-VALVE) (5/28)	Y1662-05A0	450310
MAIN VALVE (7-VALVE) (6/28)	Y1662-06A0	450320
MAIN VALVE (7-VALVE) (7/28)	Y1662-07A0	450330
MAIN VALVE (7-VALVE) (8/28)	Y1662-08A0	450340
MAIN VALVE (7-VALVE) (9/28)	Y1662-09A0	450350
MAIN VALVE (7-VALVE) (10/28)	Y1662-10A0	450360
MAIN VALVE (7-VALVE) (11/28)	Y1662-11A0	450370
MAIN VALVE (7-VALVE) (12/28)	Y1662-12A0	450380
MAIN VALVE (7-VALVE) (13/28)	Y1662-13A0	450390
MAIN VALVE (7-VALVE) (14/28)	Y1662-14A0	450400
MAIN VALVE (7-VALVE) (15/28)	Y1662-15A0	450410
MAIN VALVE (7-VALVE) (16/28)	Y1662-16A0	450420
MAIN VALVE (7-VALVE) (17/28)	Y1662-17A0	450430
MAIN VALVE (7-VALVE) (18/28)	Y1662-18A0	450440
MAIN VALVE (7-VALVE) (19/28)	Y1662-19A0	450450
MAIN VALVE (7-VALVE) (20/28)	Y1662-20A0	450460
MAIN VALVE (7-VALVE) (21/28)	Y1662-21A0	450470
MAIN VALVE (7-VALVE) (22/28)	Y1662-22A0	450480
MAIN VALVE (7-VALVE) (23/28)	Y1662-23A0	450490
MAIN VALVE (7-VALVE) (24/28)	Y1662-24A0	450500
MAIN VALVE (7-VALVE) (25/28)	Y1662-25A0	450510
MAIN VALVE (7-VALVE) (26/28)	Y1662-26A0	450520
MAIN VALVE (7-VALVE) (27/28)	Y1662-27A0	450530
MAIN VALVE (7-VALVE) (28/28)	Y1662-28A0	450540
MAIN VALVE (7-VALVE) (1/29) (WITH ARM LOCK VALVE)	Y1662-31A0	450550
MAIN VALVE (7-VALVE) (2/29) (WITH ARM LOCK VALVE)	Y1662-32A0	450560
MAIN VALVE (7-VALVE) (3/29) (WITH ARM LOCK VALVE)	Y1662-33A0	450570

	FIG. NO	PAGE
MAIN VALVE (7-VALVE) (4/29) (WITH ARM LOCK VALVE)	Y1662-34A0	450580
MAIN VALVE (7-VALVE) (5/29) (WITH ARM LOCK VALVE)	Y1662-35A0	450590
MAIN VALVE (7-VALVE) (6/29) (WITH ARM LOCK VALVE)	Y1662-36A0	450600
MAIN VALVE (7-VALVE) (7/29) (WITH ARM LOCK VALVE)	Y1662-37A0	450610
MAIN VALVE (7-VALVE) (8/29) (WITH ARM LOCK VALVE)	Y1662-38A0	450620
MAIN VALVE (7-VALVE) (9/29) (WITH ARM LOCK VALVE)	Y1662-39A0	450630
MAIN VALVE (7-VALVE) (10/29) (WITH ARM LOCK VALVE)	Y1662-40A0	450640
MAIN VALVE (7-VALVE) (11/29) (WITH ARM LOCK VALVE)	Y1662-41A0	450650
MAIN VALVE (7-VALVE) (12/29) (WITH ARM LOCK VALVE)	Y1662-42A0	450660
MAIN VALVE (7-VALVE) (13/29) (WITH ARM LOCK VALVE)	Y1662-43A0	450670
MAIN VALVE (7-VALVE) (14/29) (WITH ARM LOCK VALVE)	Y1662-44A0	450680
MAIN VALVE (7-VALVE) (15/29) (WITH ARM LOCK VALVE)	Y1662-45A0	450690
MAIN VALVE (7-VALVE) (16/29) (WITH ARM LOCK VALVE)	Y1662-46A0	450700
MAIN VALVE (7-VALVE) (17/29) (WITH ARM LOCK VALVE)	Y1662-47A0	450710
MAIN VALVE (7-VALVE) (18/29) (WITH ARM LOCK VALVE)	Y1662-48A0	450720
MAIN VALVE (7-VALVE) (19/29) (WITH ARM LOCK VALVE)	Y1662-49A0	450730
MAIN VALVE (7-VALVE) (20/29) (WITH ARM LOCK VALVE)	Y1662-50A0	450740
MAIN VALVE (7-VALVE) (21/29) (WITH ARM LOCK VALVE)	Y1662-51A0	450750
MAIN VALVE (7-VALVE) (22/29) (WITH ARM LOCK VALVE)	Y1662-52A0	450760
MAIN VALVE (7-VALVE) (23/29) (WITH ARM LOCK VALVE)	Y1662-53A0	450770
MAIN VALVE (7-VALVE) (24/29) (WITH ARM LOCK VALVE)	Y1662-54A0	450780
MAIN VALVE (7-VALVE) (25/29) (WITH ARM LOCK VALVE)	Y1662-55A0	450790
MAIN VALVE (7-VALVE) (26/29) (WITH ARM LOCK VALVE)	Y1662-56A0	450800
MAIN VALVE (7-VALVE) (27/29) (WITH ARM LOCK VALVE)	Y1662-57A0	450810
MAIN VALVE (7-VALVE) (28/29) (WITH ARM LOCK VALVE)	Y1662-58A0	450820
MAIN VALVE (7-VALVE) (29/29) (WITH ARM LOCK VALVE)	Y1662-59A0	450830
PPC VALVE (FOR TRAVEL) (1/2) (#B20001-B20199)	Y1670-01A0	450840
PPC VALVE (FOR TRAVEL) (OPERATOR'S CAB) (1/2)(#B20200-)	Y1670-01A1	450850
PPC VALVE (FOR TRAVEL) (2/2) (#B20001-B20199)	Y1670-02A0	450860
PPC VALVE (FOR TRAVEL) (OPERATOR'S CAB) (2/2)(#B20200-)	Y1670-02A1	450870
PPC VALVE (FOR WORK EQUIPMENT) (#B20001-B20199)	Y1670-11A0	450880
PPC VALVE (FOR WORK EQUIPMENT) (#B20200-)	Y1670-11A1	450890
PPC VALVE (FOR ATTACHMENT)	Y1670-21A0	450900

	FIG. NO	PAGE
SOLENOID VALVE (INNER PARTS)	Y1860-01A0	450910
UNIT ASS'Y (FOR AIR CONDITIONER)	Y1979-11A0	450920
UNIT ASS'Y (COOLING) (FOR AIR CONDITIONER)(#B20001-B20199)	Y1979-21A0	450930
UNIT ASS'Y (COOLING) (FOR AIR CONDITIONER)(#B20200-)	Y1979-21A0A	450940
BLOWER ASS'Y (FOR AIR CONDITIONER)	Y1979-31A0	450950

ZZ [NUMERICAL INDEX]

NUMERICAL INDEX	ZZ	1

ENGINE

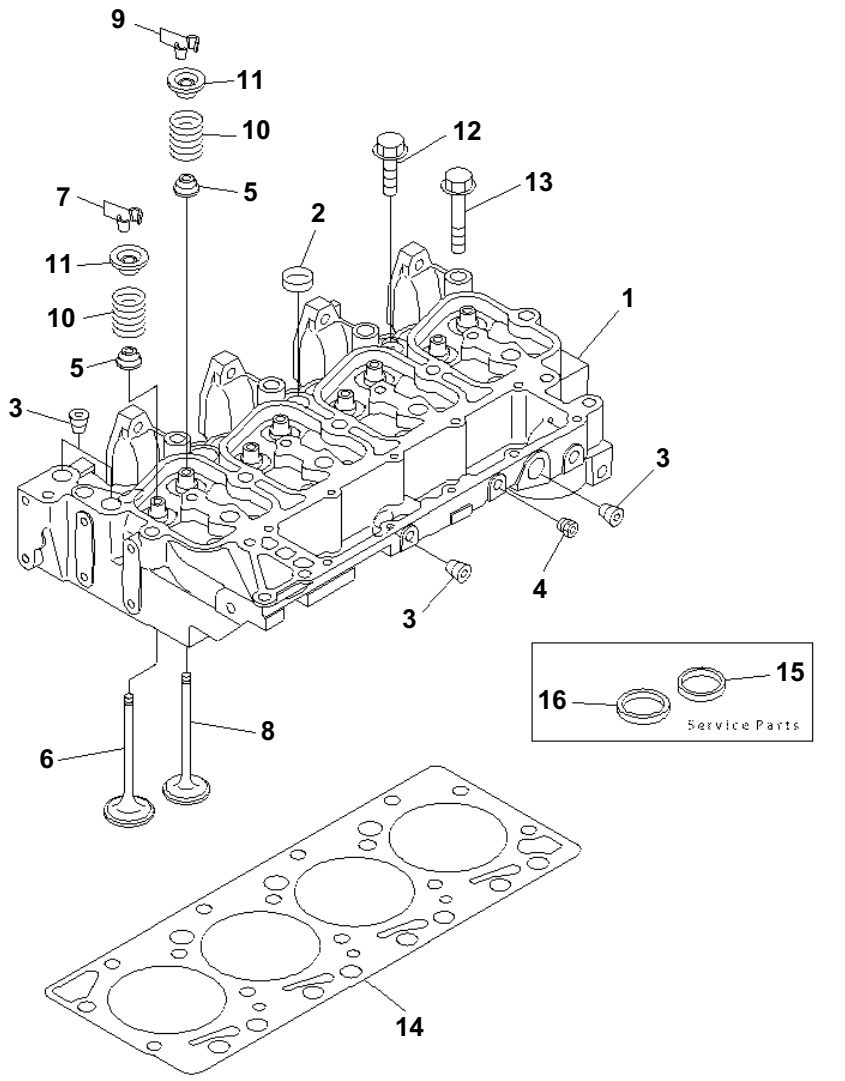

CYLINDER HEAD

Item	Part No.	Description	Qty	Options
	6731-11-1411	HEAD ASS'Y	1	SN:30204043--
1	☆	· HEAD	1	SN:30204043--
2	6736-11-1150	· PLUG	3	SN:30204043--
3	6732-11-1910	· PLUG	5	SN:30204043--
4	6732-11-1930	· PLUG	2	SN:30204043--
5	6732-41-4541	· SEAL, INTAKE (K1)	8	SN:30204043--
	6736-41-4110	· INTAKE VALVE ASS'Y	4	SN:30204043--
6	☆	· · VALVE	1	SN:30204043--
7	6732-41-4520	· · COTTER	2	SN:30204043--
	6736-41-4210	· EXHAUST VALVE ASS'Y	4	SN:30204043--
8	☆	· · VALVE	1	SN:30204043--
9	6732-41-4520	· · COTTER	2	SN:30204043--
10	6732-41-4430	· SPRING	8	SN:30204043--
11	6731-41-4511	· RETAINER	8	SN:30204043--
12	6732-11-1610	BOLT	4	SN:30204043--
13	6732-11-1620	BOLT	10	SN:30204043--
14	6732-11-1151	GASKET (K1)	1	SN:30204043--
		REFER TO FIG. NOS. OF REPAIR PARTS FOR O.S.¤ U.S.¤ AND SERVICE PARTS.		
		SERVICE PARTS		
15	6732-11-1170	INSERT, EXHAUST	4	SN:30204043--
16	6732-11-1180	INSERT, INTAKE	4	SN:30204043--

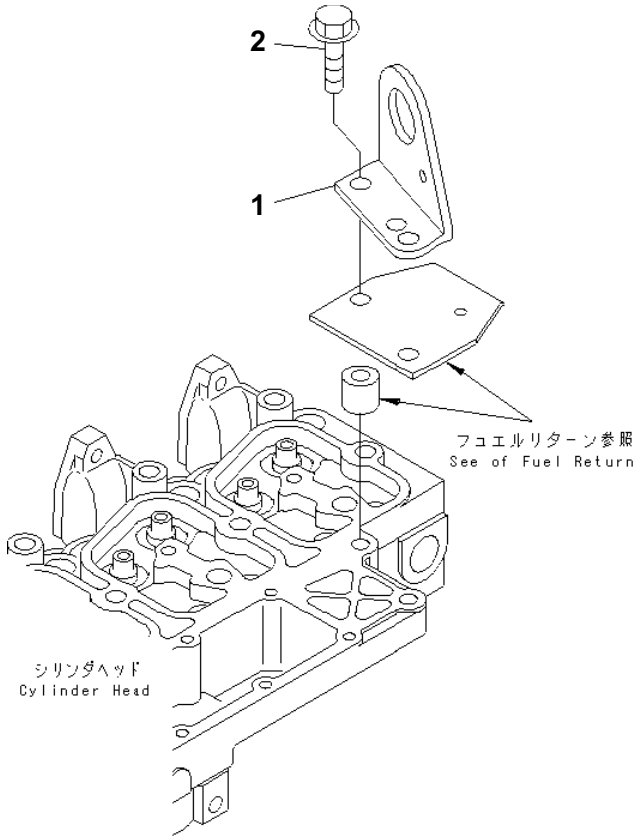

REAR HANGER

Item	Part No.	Description	Qty	Options
1	6736-11-1910	BRACKET, LIFTING	1	SN:30204043--
2	6732-11-1720	BOLT	2	SN:30204043--

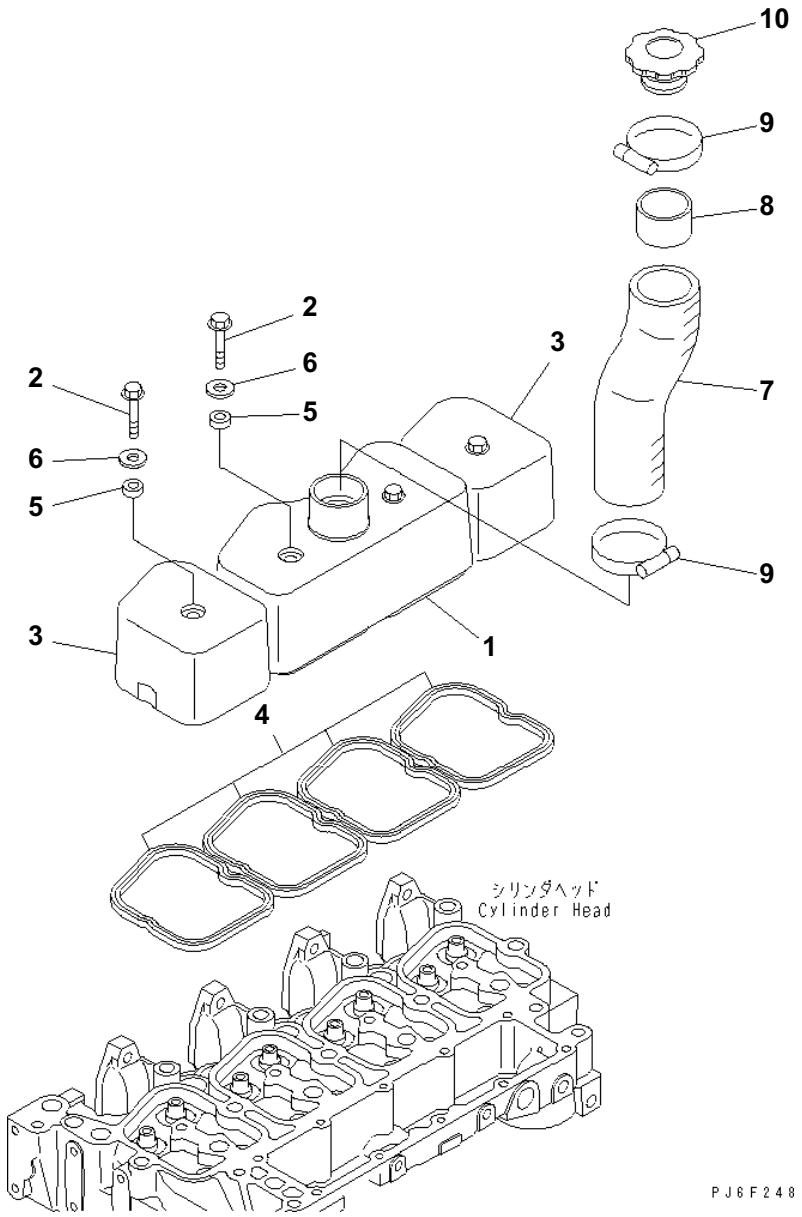

HEAD COVER

Item	Part No.	Description	Qty	Options
1	6737-11-8110	COVER	1	SN:30204043--
2	6732-11-8130	BOLT	4	SN:30204043--
3	6735-11-8120	COVER	2	SN:30204043--
4	6732-11-8181	GASKET (K1)	4	SN:30204043--
5	6732-11-8210	GASKET (K1)	4	SN:30204043--
6	6732-11-8150	WASHER	4	SN:30204043--
7	6737-11-8710	HOSE	1	SN:30204043--
8	6130-12-8630	PIPE	1	SN:30204043--
9	07281-00709	CLAMP	2	SN:30204043--
10	6130-12-8610	CAP	1	SN:30204043--

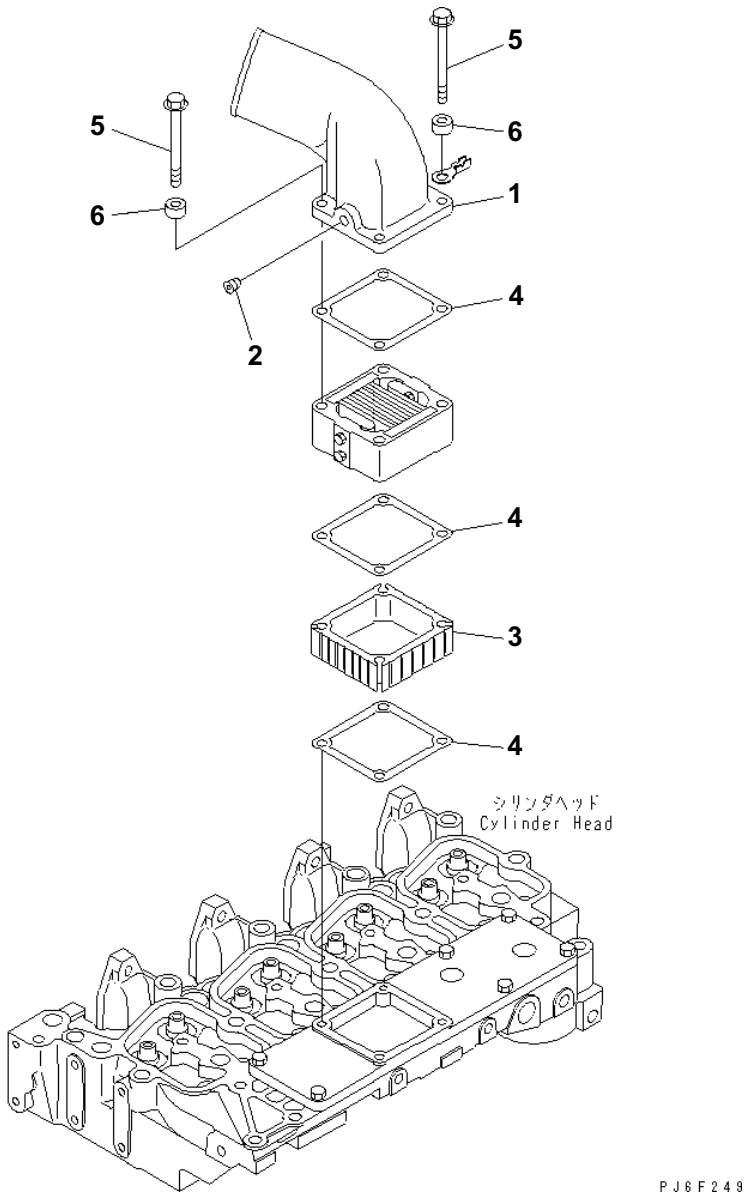

AIR CONNECTOR

Item	Part No.	Description	Qty	Options
1	6738-11-4410	CONNECTOR	1	SN:30204043--
2	07043-70108	PLUG	1	SN:30204043--
3	6737-11-4480	SPACER	1	SN:30204043--
4	6732-11-4812	GASKET (K1)	2	SN:30204043--
5	6222-11-4910	BOLT	4	SN:30204043--
6	6691-41-8230	SPACER¤ 10MM	4	SN:30204043--30204043

@@6B301@

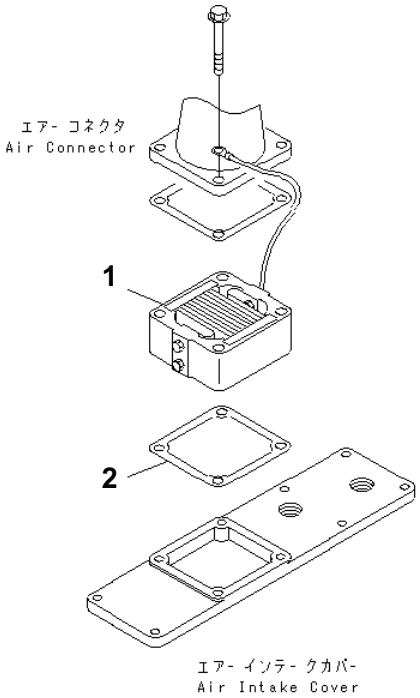

SAA4D102E-2E S/N 30204043 AND UP

AIR INTAKE HEATER

Item	Part No.	Description	Qty	Options
1	6754-81-5110	HEATER ASS'Y	1	SN:30225787--
	6743-82-4110	HEATER ASS'Y	1	SN:30204043--30225786
	6743-82-4110	HEATER ASS'Y	1	SN:30681588--30699999
2	6754-11-4120	GASKET (K1)	1	SN:30209841--
	□6732-11-4811	GASKET (K1)	1	SN:30204043--30209840

Ref. A131R-01A0 Page 030050

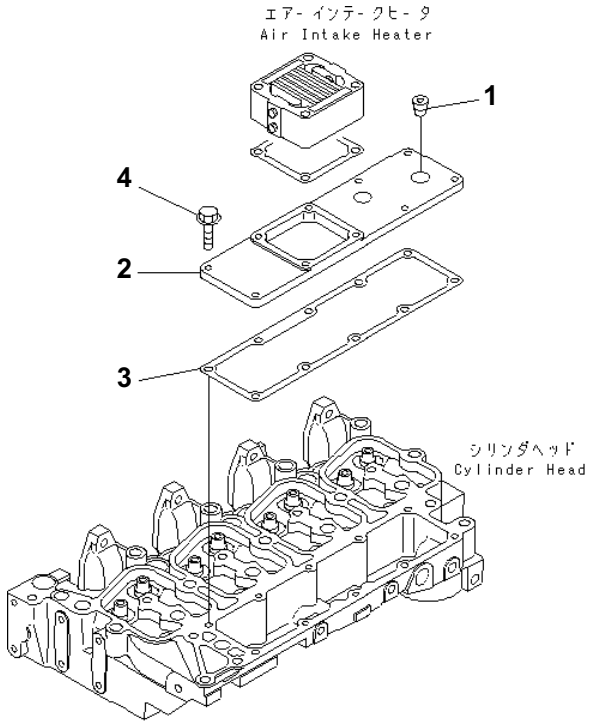

SAA4D102E-2E S/N 30204043 AND UP

AIR INTAKE COVER

Item	Part No.	Description	Qty	Options
1	6732-11-1910	PLUG	2	SN:30204043--
2	6732-11-4530	COVER	1	SN:30204043--
3	6733-11-4861	GASKET (K1)	1	SN:30204043--
4	6732-11-4160	BOLT	6	SN:30204043--

Ref. A131V-01A1 Page 030060

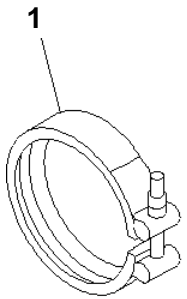

PMD1036

EXHAUST CONNECTOR CLAMP

Item	Part No.	Description	Qty	Options
1	6732-81-8220	CLAMP (K1)	1	SN:30204043--

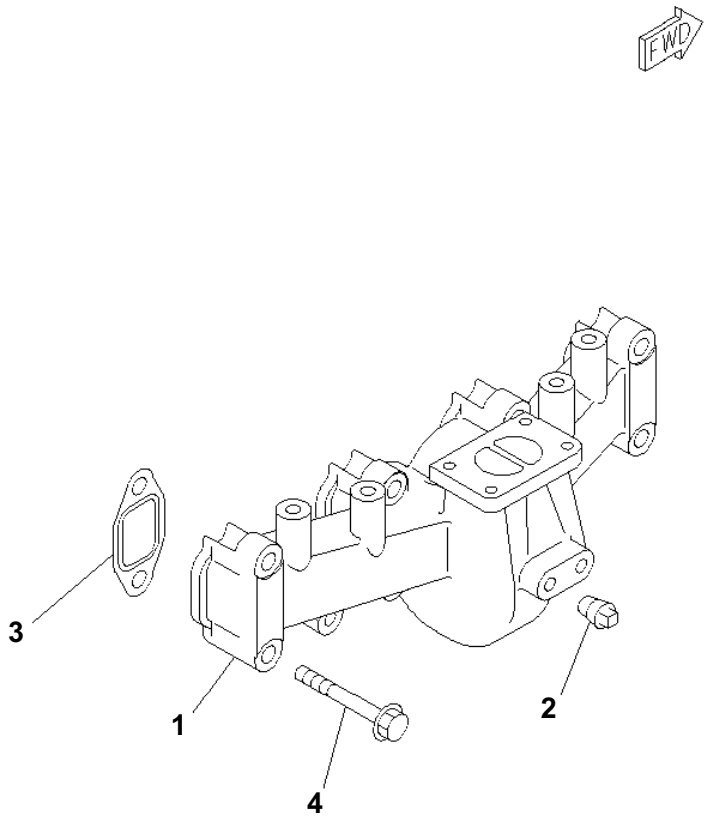

SAA4D102E-2E S/N 30204043 AND UP

EXHAUST MANIFOLD

Item	Part No.	Description	Qty	Options
1	6732-11-5230	MANIFOLD, EXHAUST	1	SN:30204043--
2	07042-00108	PLUG	1	SN:30204043--
3	6736-11-5820	GASKET (K1)	4	SN:30204043--
4	6735-11-4150	BOLT	8	SN:30204043--

Ref. A153S-01B8 Page 030080

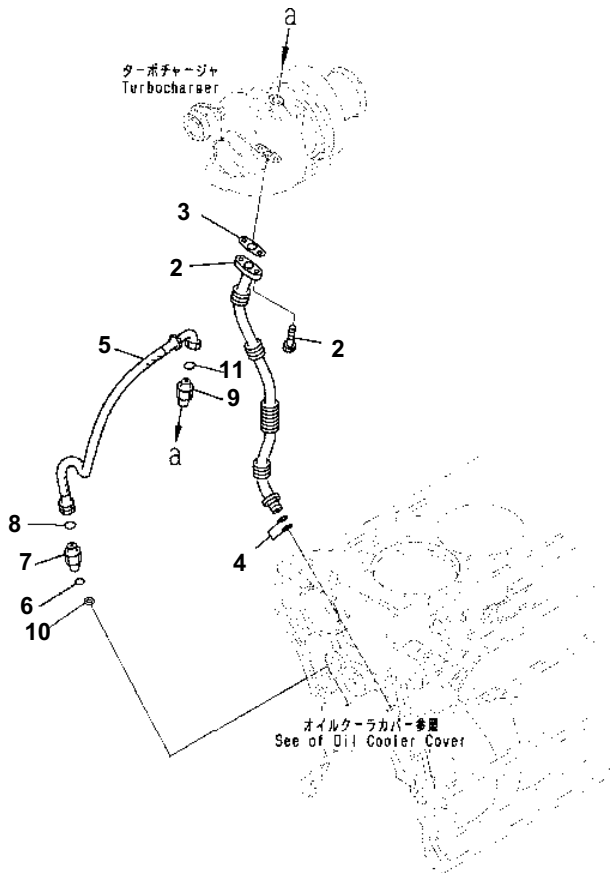

TURBOCHARGER OIL PIPING

Item	Part No.	Description	Qty	Options
1	6732-51-8340	TUBE, OIL	1	SN:30204043--
2	6735-71-5190	BOLT	2	SN:30204043--
3	6732-51-8350	GASKET (K1)	1	SN:30204043--
4	6732-51-8330	O-RING (K2)	2	SN:30204043--
5	6737-51-8750	TUBE	1	SN:30204043--
	6732-51-8180	CONNECTOR ASS'Y	1	SN:30204043--
6	6737-51-8770	· O-RING	1	SN:30204043--
7	6732-81-8850	· CONNECTOR	1	SN:30204043--
8	6732-81-8860	· O-RING	1	SN:30204043--
	6751-51-8180	CONNECTOR ASS'Y	1	SN:30204043--
9	6732-51-8280	· CONNECTOR	1	SN:30204043--
10	6737-51-8760	· WASHER	1	SN:30204043--
11	6732-81-8860	· O-RING	1	SN:30204043--

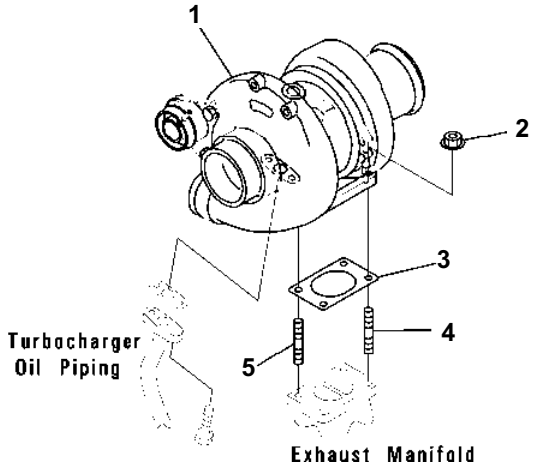

TURBOCHARGER MOUNTING

Item	Part No.	Description	Qty	Options
1	6737-81-8021	TURBOCHARGER	1	SN:30204043--
2	6737-11-5850	NUT	4	SN:30204043--
3	6737-11-5580	GASKET	1	SN:30204043--
4	6737-11-5870	STUD	2	SN:30204043--
5	6737-11-5860	STUD	2	SN:30204043--

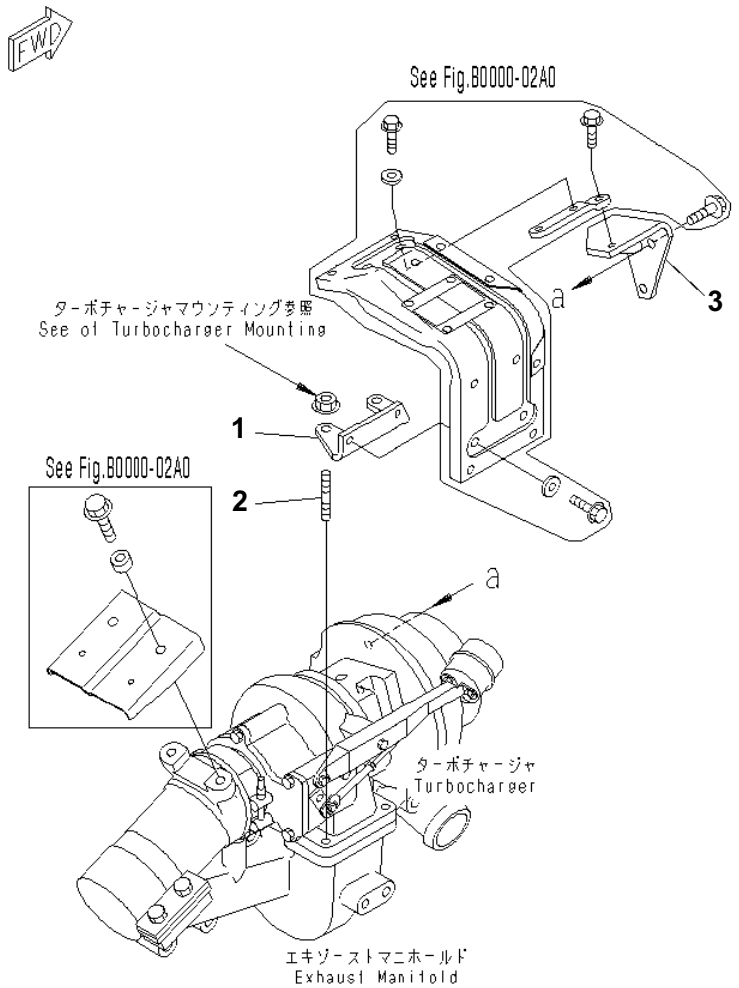

SAA4D102E-2E S/N 30204043 AND UP

HEAT SHIELD

Item	Part No.	Description	Qty	Options
1	6732-81-8480	BRACKET	1	SN:30204043--
2	6736-21-5310	BOLT	2	SN:30204043--
3	6737-81-8410	BRACKET	1	SN:30204043--

Ref. A1570-01E1 Page 030110

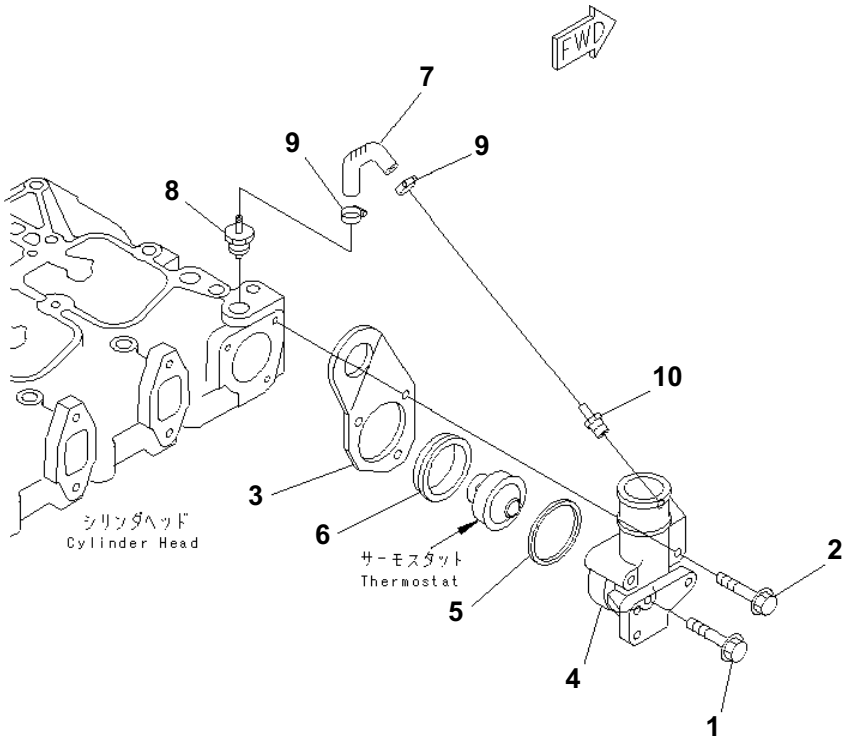

THERMOSTAT HOUSING

Item	Part No.	Description	Qty	Options
1	6732-61-6140	BOLT	1	SN:30204043--
2	6732-61-6180	BOLT	2	SN:30204043--
3	6735-11-1910	BRACKET, LIFTING	1	SN:30204043--
4	6732-61-6231	HOUSING	1	SN:30204043--
5	6732-61-6250	SEAL,RING (K1)	1	SN:30204043--
6	6732-61-6240	GASKET (K1)	1	SN:30204043--
7	6732-61-6280	HOSE	1	SN:30204043--
8	6737-61-6270	VALVE,CHECK	1	SN:30204043--
9	6732-61-6380	CLIP	2	SN:30204043--
10	6732-61-6171	COUPLING	1	SN:30204043--

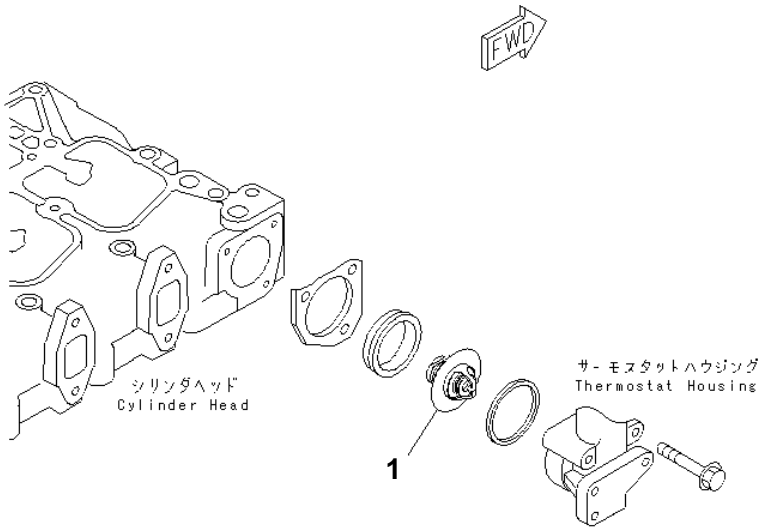

SAA4D102E-2E S/N 30204043 AND UP

THERMOSTAT

Item	Part No.	Description	Qty	Options
1	6735-61-6471	THERMOSTAT	1	SN:30204043--

Ref. A173R-01A0 Page 030130

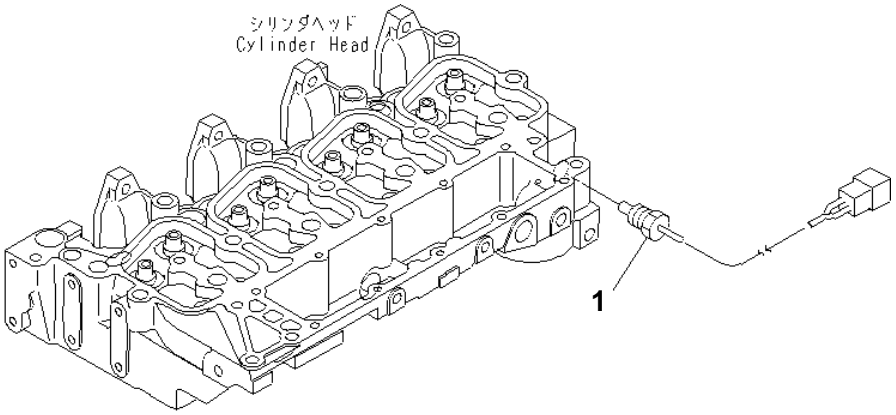

PJ6F253

WATER TEMPERATURE SENSOR

Item	Part No.	Description	Qty	Options
1	7861-93-3380	SENSOR, WATER TEMPERATURE	1	SN:30204043--

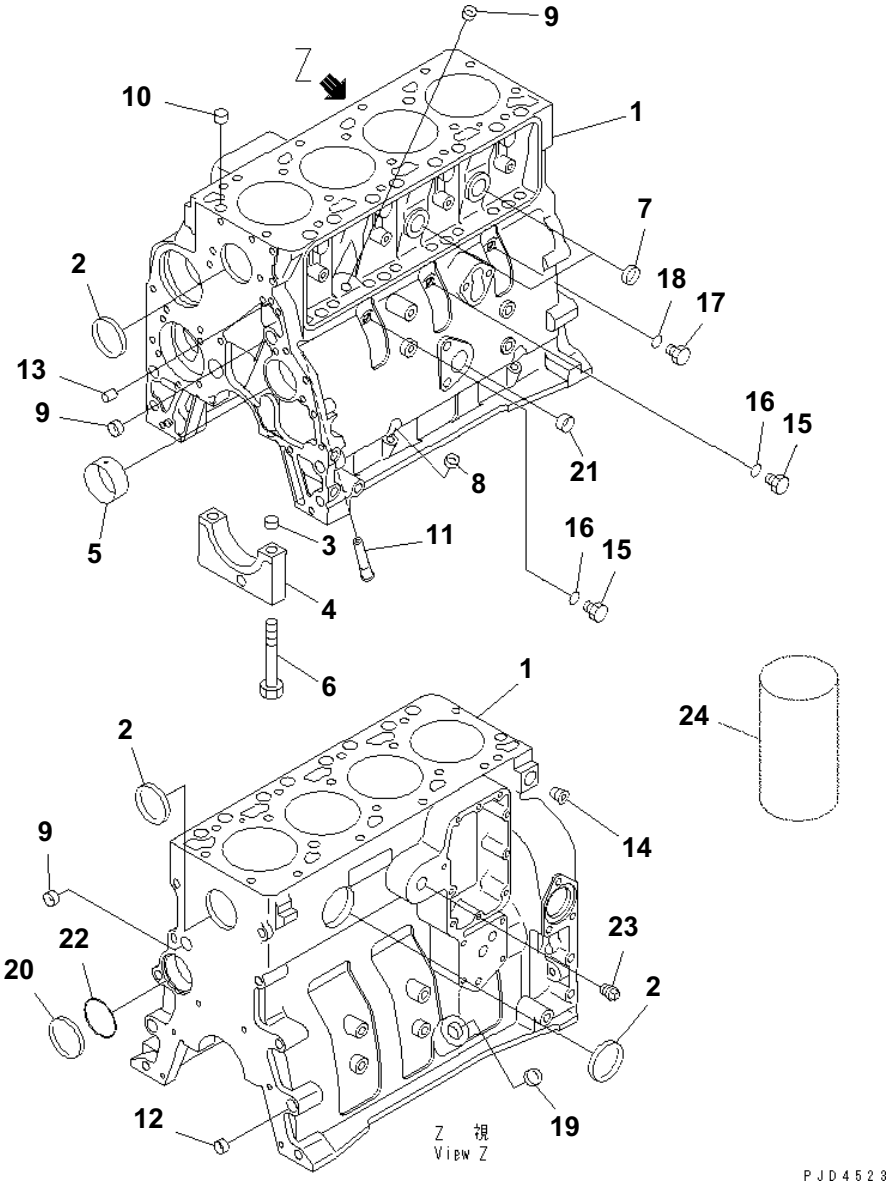

CYLINDER BLOCK

Item	Part No.	Description	Qty	Options
	6731-22-1110	CYLINDER BLOCK ASS'Y	1	SN:30204043--
1	☆	· BLOCK	1	SN:30204043--
	☆	· · BLOCK	1	SN:30204043--
2	6731-22-7140	· · PLUG	3	SN:30225796--
	6736-21-1810	· · PLUG	3	SN:30204043--30225795
3	6732-21-1910	· · · RING	2	SN:30204043--
4	△6732-21-1210	· · · CAP	5	SN:30204043--
5	6732-21-1411	· · BUSHING	1	SN:30204043--
6	6732-21-1611	· · BOLT	10	SN:30204043--
7	☆	· · PLUG	3	SN:30204043--
8	6732-21-5530	· · PLUG	2	SN:30204043--
9	6732-21-1810	· · PLUG	3	SN:30204043--
	6731-21-1220	· BLOCK SERVICE KIT	1	SN:30204043--
10	6732-21-6140	· · RING	2	SN:30204043--
11	6731-21-1190	· · NOZZLE, PISTON COOLING (K2)	4	SN:30204043--
12	6732-21-1910	· · RING	2	SN:30204043--
13	6732-21-6120	· · PIN	2	SN:30204043--
14	6732-11-1910	· · PLUG	1	SN:30204043--
	6732-21-1960	· · PLUG ASS'Y	2	SN:30204043--
15	6215-81-9510	· · · PLUG	1	SN:30204043--
16	6215-81-9710	· · · O-RING (K2)	1	SN:30204043--
17	6215-81-9510	· · PLUG	1	SN:30204043--
18	6215-81-9710	· · O-RING (K2)	1	SN:30204043--
19	6735-21-5530	· · PLUG	1	SN:30204043--
20	6732-21-6130	· · PLUG	1	SN:30204043--
21	6732-21-6160	· · PLUG	1	SN:30204043--
22	6732-21-1930	· · O-RING	1	SN:30204043--
23	6732-11-1920	· · PLUG	1	SN:30204043--
		SERVICE PARTS		
24	6736-29-2110	LINER, SALVAGE	4	SN:30204043--

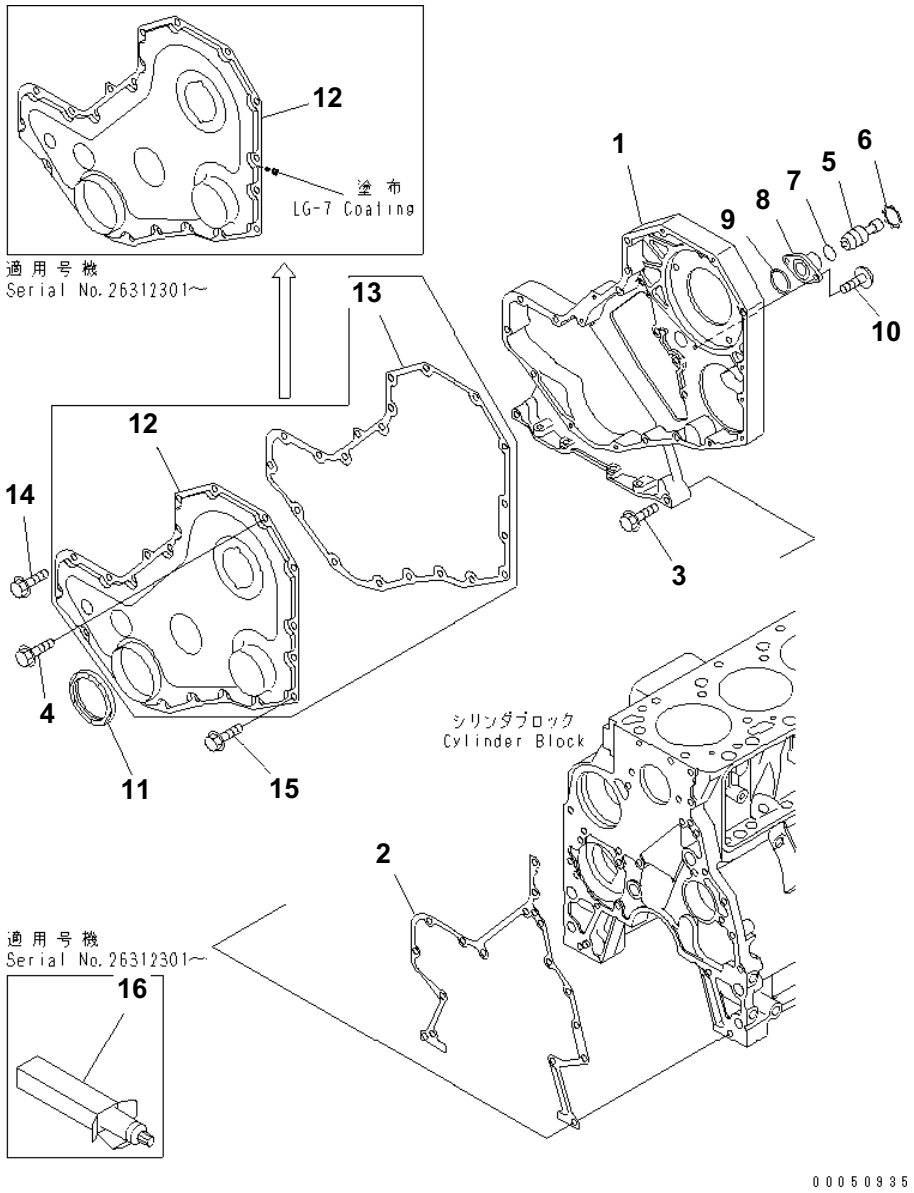

SAA4D102E-2E S/N 30204043 AND UP

FRONT COVER

Item	Part No.	Description	Qty	Options
1	6738-21-3110	HOUSING, GEAR	1	SN:30204043--
2	6732-21-3812	GASKET (K2)	1	SN:30204043--
3	6736-21-3210	BOLT	2	SN:30204043--
4	6736-21-5310	BOLT	5	SN:30204043--
5	6732-21-3140	PIN	1	SN:30204043--
6	6732-21-3150	RING	1	SN:30204043--
7	6732-21-3870	O-RING (K2)	1	SN:30204043--
8	6732-21-3180	HOUSING	1	SN:30204043--
9	6732-21-3880	GASKET (K2)	1	SN:30204043--
10	6732-21-3160	BOLT	2	SN:30204043--
11	6735-21-3511	SEAL	1	SN:30204043--
12	6736-21-3310	COVER, GEAR	1	SN:30204043--
13	6736-21-3450	GASKET (K2)	1	SN:30204043--30250372
14	6736-21-3210	BOLT	9	SN:30204043--
15	6736-21-5310	BOLT	11	SN:30204043--
16	09920-00150	LIQUID GASKET, LG-7¤ 150G	AR	SN:30204043--

Ref. A2049-01A1 Page 030160

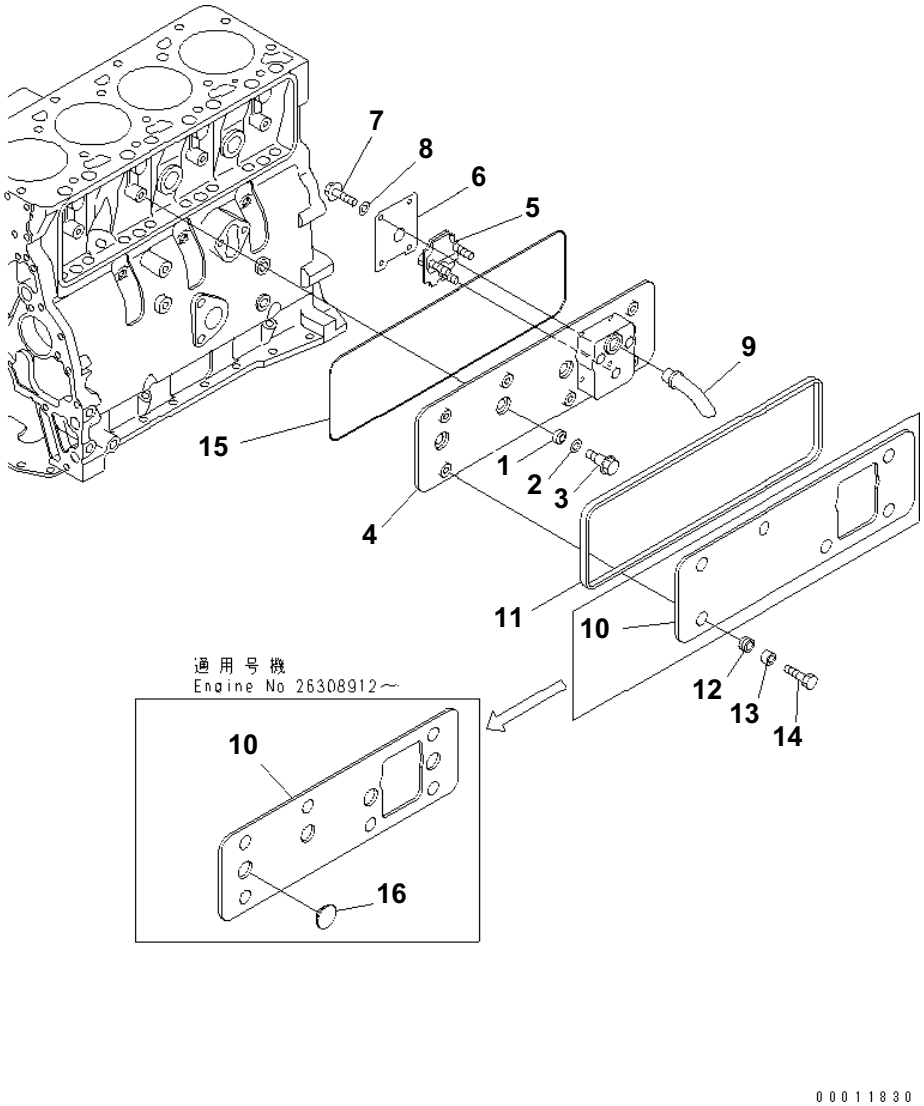

CAMFOLLOWER COVER

Item	Part No.	Description	Qty	Options
1	6732-11-8210	GASKET,SEAL (K2)	4	SN:30204043--
2	6732-11-8150	WASHER	4	SN:30204043--
3	6738-21-6280	BOLT	4	SN:30204043--
	6737-21-6100	COVER ASS'Y	1	SN:30204043--
4	☆	· COVER	1	SN:30204043--
5	6738-21-7710	· BREATHER	1	SN:30204043--
6	6738-21-7780	· COVER	1	SN:30204043--
7	01435-00616	· BOLT	4	SN:30204043--
8	01640-20610	· WASHER	4	SN:30204043--
9	6738-21-7810	· TUBE	1	SN:30204043--
10	6737-21-6620	PANEL	1	SN:30204043--
11	6737-21-6650	GROMMET (K2)	1	SN:30204043--
12	6738-21-6660	GASKET (K2)	6	SN:30204043--
13	6738-21-6670	SPACER	6	SN:30204043--
14	6732-71-3220	BOLT	6	SN:30204043--
15	6737-21-6180	O-RING (K2)	1	SN:30204043--
16	6738-21-6680	GROMMET	4	SN:30204043--

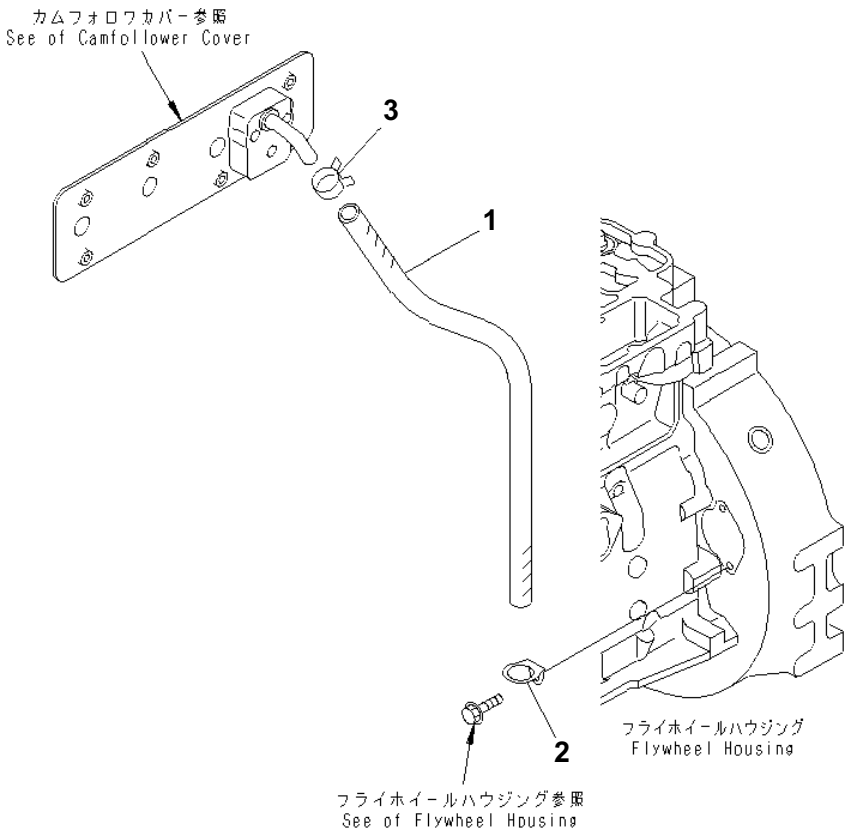

BREATHER HOSE

Item	Part No.	Description	Qty	Options
1	6754-21-6170	HOSE	1	SN:30204043--
2	6735-21-4250	CLIP	1	SN:30204043--
3	6735-21-6130	CLIP	1	SN:30204043--

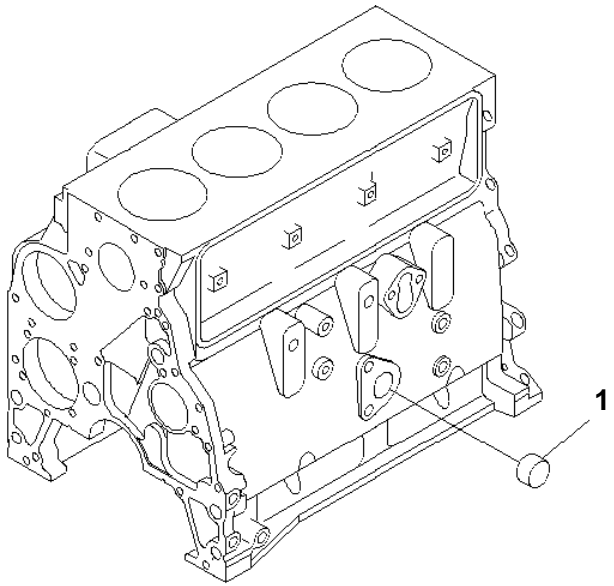

SAA4D102E-2E S/N 30204043 AND UP

CYLINDER BLOCK BLIND PLUG

Item	Part No.	Description	Qty	Options
1	6732-21-6160	PLUG	1	SN:30204043--

Ref. A207P-01A0 Page 030190

@@D0828@

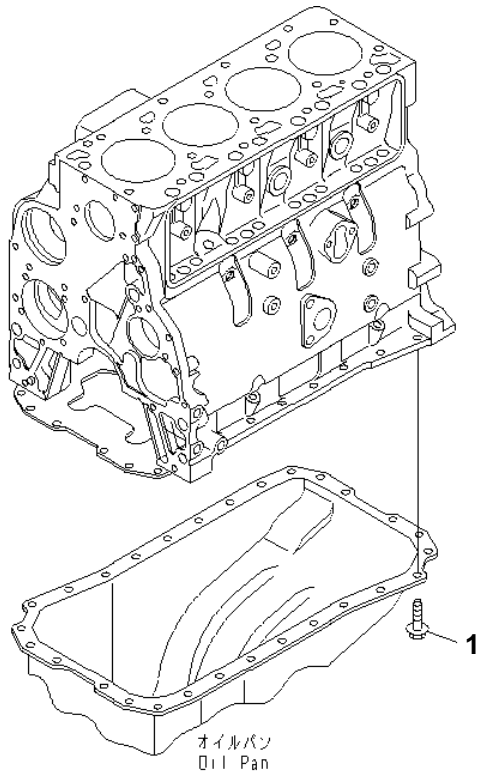

SAA4D102E-2E S/N 30204043 AND UP

OIL PAN BOLT

Item	Part No.	Description	Qty	Options
1	6732-21-6610	BOLT	28	SN:30204043--

Ref. A211R-01A4 Page 030200

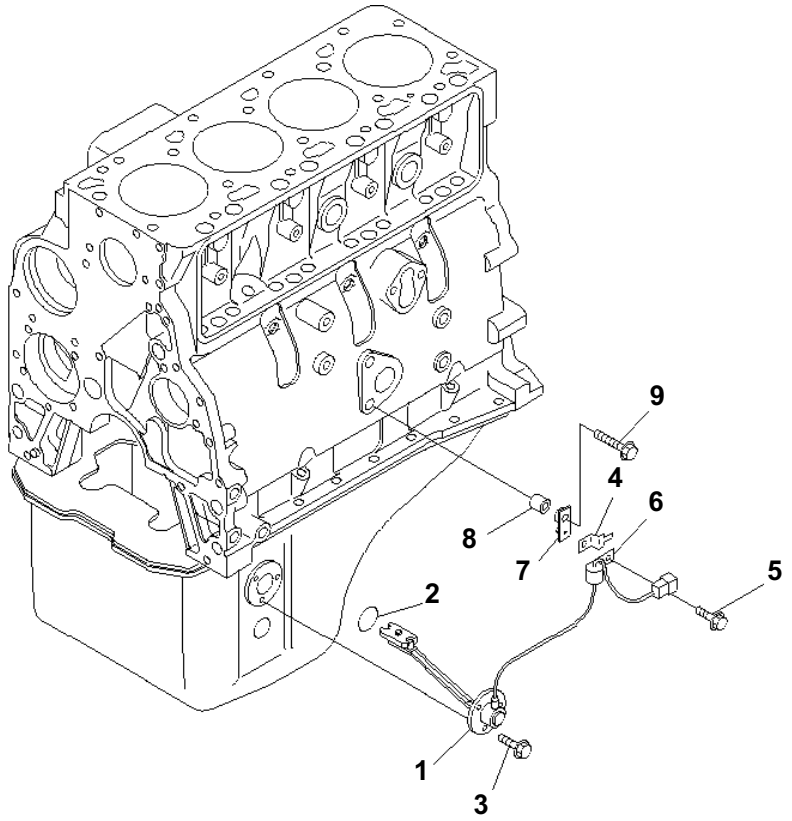

SAA4D102E-2E S/N 30204043 AND UP

OIL LEVEL SENSOR

Item	Part No.	Description	Qty	Options
1	6741-81-9220	SENSOR	1	SN:30204043--
2	7861-91-4220	O-RING	1	SN:30204043--
3	6733-71-5680	BOLT	3	SN:30204043--
4	08193-20010	CLIP	1	SN:30204043--
5	6734-71-5610	BOLT	1	SN:30204043--
6	6738-82-5810	CLIP	1	SN:30204043--
7	423-01-31150	BRACKET	1	SN:30204043--
8	6144-85-6680	SPACER	1	SN:30204043--
9	6742-01-3780	BOLT	1	SN:30204043--

Ref. A211V-01A3 Page 030210

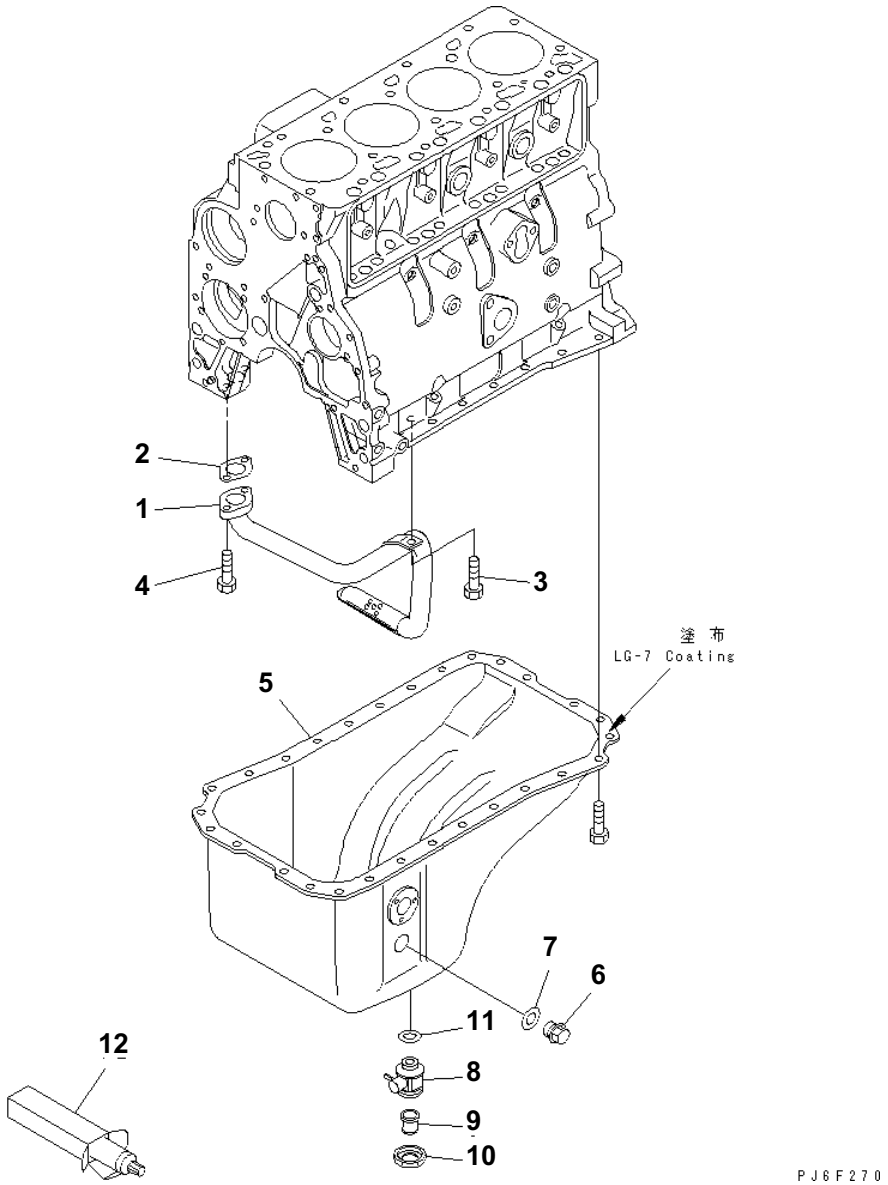

SAA4D102E-2E S/N 30204043 AND UP

OIL PAN AND SUCTION TUBE

Item	Part No.	Description	Qty	Options
1	6735-51-5531	TUBE, SUCTION	1	SN:30204043--
2	6733-21-5521	GASKET (K2)	1	SN:30204043--
3	6732-71-3220	BOLT	2	SN:30204043--
4	6732-21-6630	BOLT	2	SN:30204043--
5	6732-21-5110	PAN,OIL	1	SN:30204043--
6	6736-21-5320	PLUG	1	SN:30204043--
7	07005-02216	GASKET (K2)	1	SN:30204043--
	6738-21-5610	COCK ASS'Y	1	SN:30204043--
8	6738-21-5620	· COCK	1	SN:30204043--
9	6738-21-5630	· JOINT	1	SN:30204043--
10	6738-21-5640	· UNION	1	SN:30204043--
11	07005-02216	GASKET (K2)	1	SN:30204043--
12	(09920-00150)	LIQUID GASKET,LG-7¤ 150G	AR	SN:30204043--

Ref. A2119-01B5 Page 030220

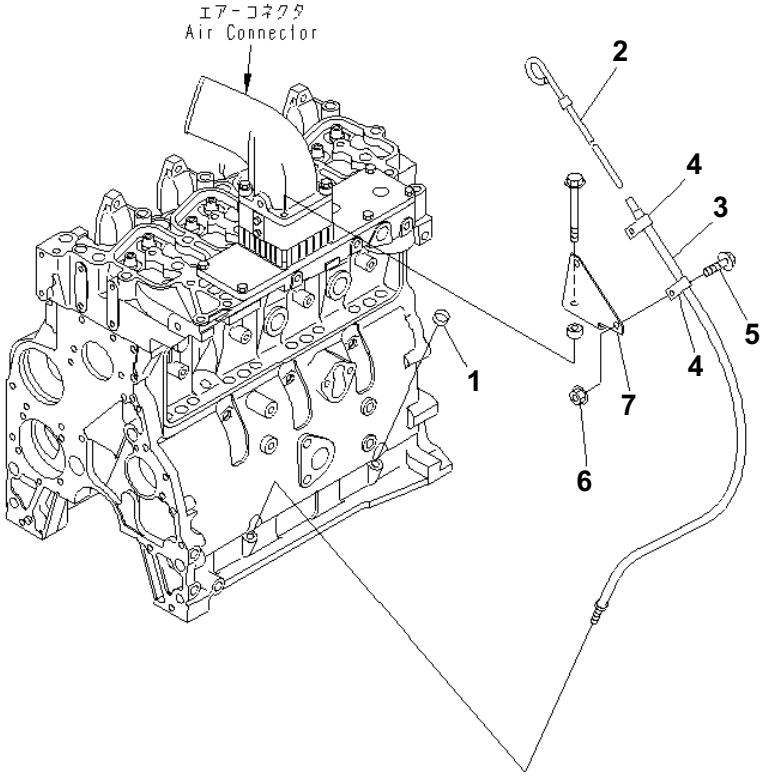

OIL LEVEL GAUGE

Item	Part No.	Description	Qty	Options
1	6732-21-5530	PLUG	1	SN:30204043--
2	6732-21-5591	GAUGE	1	SN:30204043--
3	6732-21-5491	GUIDE	1	SN:30212678--
	□6732-21-5490	GUIDE	1	SN:30204043--30212677
4	04434-51208	CLIP	2	SN:30204043--
5	6732-21-3120	BOLT	2	SN:30204043--
6	6732-71-3210	NUT	2	SN:30204043--
7	6737-21-5710	BRACKET	1	SN:30204043--

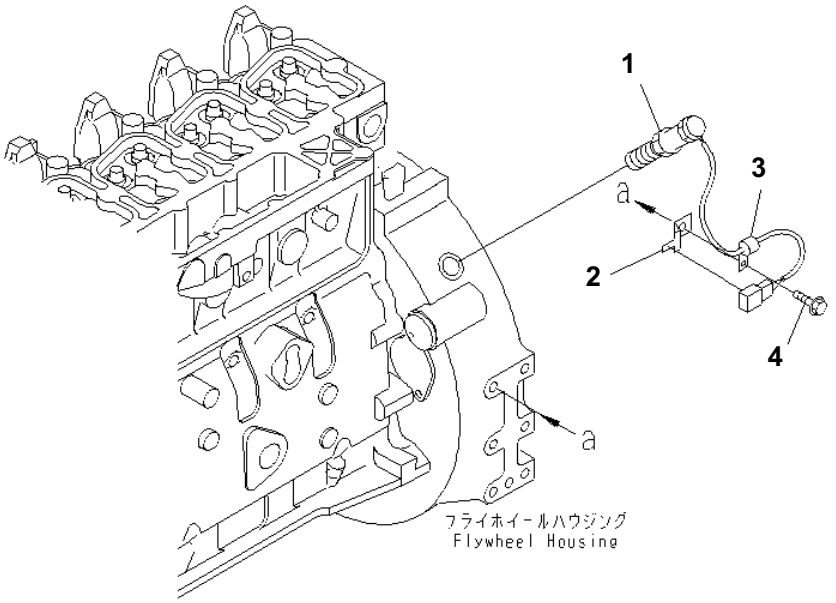

REVOLUTION SENSOR

Item	Part No.	Description	Qty	Options
1	7861-93-2310	SENSOR,REVOLUTION	1	SN:30204043--
2	08193-20012	CLIP	1	SN:30204043--
3	04434-50612	CLIP	1	SN:30204043--
4	6731-21-4120	BOLT	1	SN:30204043--

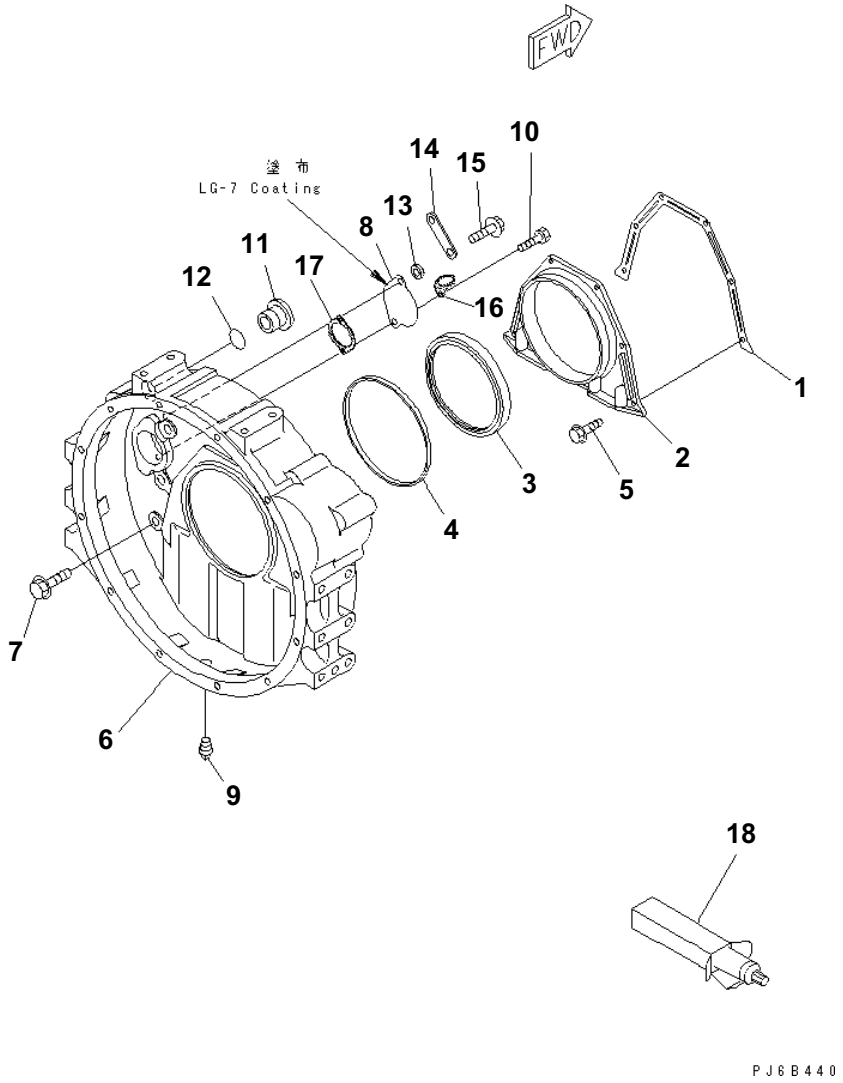

FLYWHEEL HOUSING

Item	Part No.	Description	Qty	Options
1	6735-21-4191	GASKET (K2)	1	SN:30204043--
2	6731-21-6231	COVER, REAR	1	SN:30204043--
	6731-21-4240	COVER, REAR	1	SN:30681588--30696423
3	6732-21-1311	SEAL (K2)	1	SN:30218162--
	6732-21-1311	SEAL (K2)	1	SN:30204043--30218161
	6736-21-4220	SEAL (K2)	1	SN:30681588--30699999
4	6732-21-4170	GASKET (K2)	1	SN:30204043--
5	6738-22-4110	BOLT	6	SN:30204043--
6	6732-21-4111	HOUSING,FLYWHEEL	1	SN:30204043--
7	6732-21-4220	BOLT	8	SN:30204043--
8	6732-21-4130	PLATE	1	SN:30204043--
9	6732-11-1910	PLUG	1	SN:30204043--
10	6732-21-4120	BOLT	2	SN:30204043--
11	6732-21-4150	PLUG	1	SN:30204043--
12	6732-21-4161	O-RING (K2)	1	SN:30204043--
13	6110-23-6490	SPACER	1	SN:30204043--
14	6738-22-5110	PLATE	1	SN:30204043--
15	6732-21-5160	BOLT	1	SN:30204043--
16	6735-21-4250	CLIP	1	SN:30204043--
17	6742-01-5158	GASKET	1	SN:30204043--
18	(09920-00150)	LIQUID GASKET,LG-7¤ 150G	AR	SN:30204043--

@@D1070@

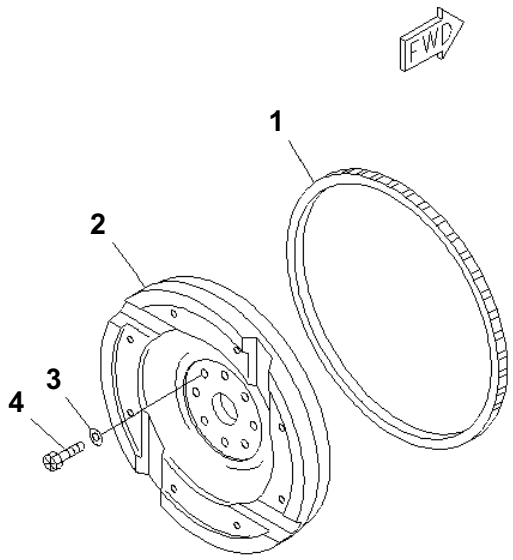

PMD1070

SAA4D102E-2E S/N 30204043 AND UP

FLYWHEEL

Item	Part No.	Description	Qty	Options
	6737-31-4200	FLYWHEEL ASS'Y	1	SN:30204043--
1	6732-31-4180	· GEAR,RING	1	SN:30204043--
2	☆	· FLYWHEEL	1	SN:30204043--
3	6732-31-4120	WASHER	8	SN:30204043--
4	6732-31-4130	BOLT	8	SN:30204043--

Ref. A223P-01B9 Page 030260

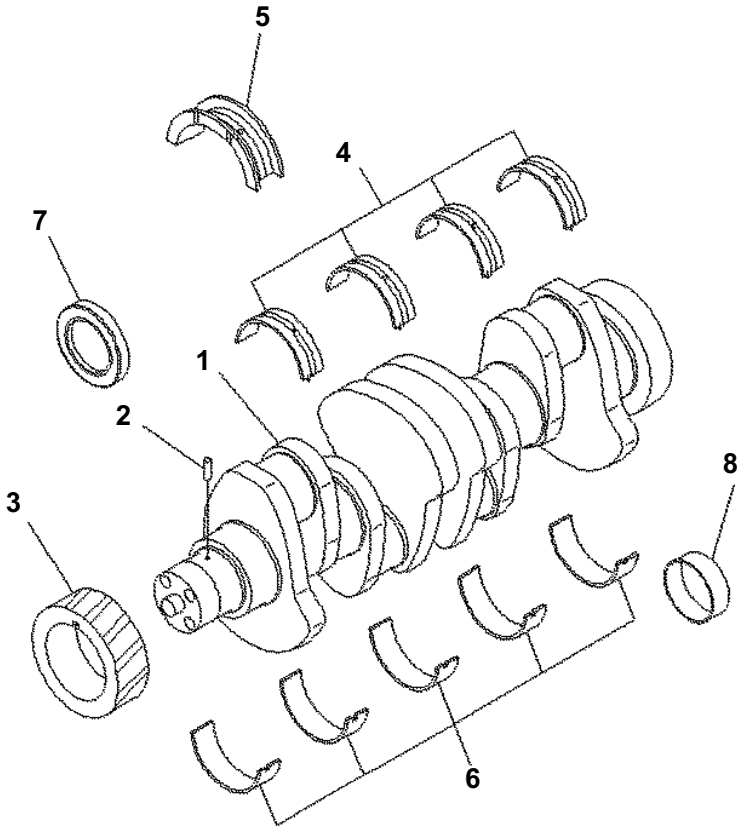

SAA4D102E-2E S/N 30204043 AND UP

CRANKSHAFT

Item	Part No.	Description	Qty	Options
	6732-31-1100	CRANKSHAFT ASS'Y	1	SN:30204043--
1	☆	· CRANKSHAFT	1	SN:30204043--
2	6732-21-6150	· PIN, DOWEL	1	SN:30204043--
3	6732-31-1211	· GEAR	1	SN:30204043--
		STANDARD		
	6732-29-8110	MAIN BEARING ASS'Y	1	SN:30204043--
4	☆	· METAL	4	SN:30204043--
5	☆	· METAL	1	SN:30204043--
6	☆	· METAL	5	SN:30204043--
		OVERSIZE 0.25MM		
	6732-28-8100	MAIN BEARING ASS'Y	1	SN:30204043--
4	☆	· METAL	4	SN:30204043--
5	☆	· METAL	1	SN:30204043--
6	☆	· METAL	1	SN:30204043--
		OVERSIZE 0.50MM		
	6732-27-8100	MAIN BEARING ASS'Y	1	SN:30204043--
4	☆	· METAL	4	SN:30204043--
5	☆	· METAL	1	SN:30204043--
6	☆	· METAL	5	SN:30204043--
		OVERSIZE 0.75MM		
	6732-26-8100	MAIN BEARING ASS'Y	1	SN:30204043--
4	☆	· METAL	4	SN:30204043--
5	☆	· METAL	1	SN:30204043--
6	☆	· METAL	5	SN:30204043--
		OVERSIZE 1.00MM		
	6732-25-8100	MAIN BEARING ASS'Y	1	SN:30204043--
4	☆	· METAL	4	SN:30204043--
5	☆	· METAL	1	SN:30204043--
6	☆	· METAL	5	SN:30204043--
		OVERSIZE 0.50MM		
	6731-21-8610	THRUST METAL ASS'Y	1	SN:30204043--
5	☆	· METAL	1	SN:30204043--
6	☆	· METAL	1	SN:30204043--
		OVERSIZE 1.00MM		
	6731-21-8620	THRUST METAL ASS'Y	1	SN:30204043--
5	☆	· METAL	1	SN:30204043--
6	☆	· METAL	1	SN:30204043--
		SERVICE PARTS		
7	6736-39-1221	SLEEVE, FRONT	AR	SN:30204043--
8	6736-39-1140	SLEEVE, REAR	AR	SN:30204043--

Ref. A2319-01A1 Page 030270

@@D0835@

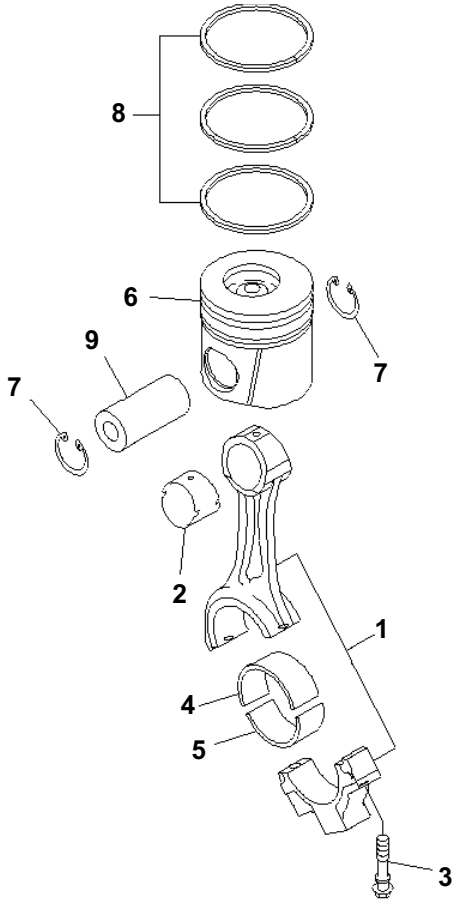

PMD0835

SAA4D102E-2E S/N 30204043 AND UP

PISTON

Item	Part No.	Description	Qty	Options
1	6754-31-3111	ROD, ENGINE CONNECTING	4	SN:30247635--
	6754-31-3110	ROD, ENGINE CONNECTING	4	SN:30204043--30247634
	6754-31-3110	ROD, ENGINE CONNECTING	4	SN:30684242--30699999
	6737-32-3110	ROD, ENGINE CONNECTING	4	SN:30681588--30684241
2	6732-31-3232	BUSHING	4	SN:30204043--
3	6732-31-3320	SCREW, CONNECTING ROD	8	SN:30204043--
4	6732-31-3411	BEARING UPPER	4	SN:30204043--
5	6732-31-3420	BEARING LOWER	4	SN:30204043--
	6738-32-2010	KIT, ENGINE PISTON	4	SN:30204043--
6	☆	· PISTON	1	SN:30204043--
7	6732-31-2420	· RING, RETAINING	8	SN:30204043--
8	6738-31-2030	· RING, SET	1	SN:30204043--
9	6731-31-2410	PIN	4	SN:30204043--
		OVERSIZE PARTS		
4	6736-39-3400	METAL¤ 0.25MM	AR	SN:30204043--
	6736-38-3400	METAL¤ 0.50MM	AR	SN:30204043--
	6736-37-3400	METAL¤ 0.75MM	AR	SN:30204043--
	6736-36-3400	METAL¤ 1.00MM	AR	SN:30204043--
		OVERSIZE PARTS		
5	6738-39-3400	METAL¤ 0.25MM	AR	SN:30204043--
	6738-38-3400	METAL¤ 0.50MM	AR	SN:30204043--
	6738-37-3400	METAL¤ 0.75MM	AR	SN:30204043--
	6738-36-3400	METAL¤ 1.00MM	AR	SN:30204043--

Ref. A2359-01A3 Page 030280

@@D3865@

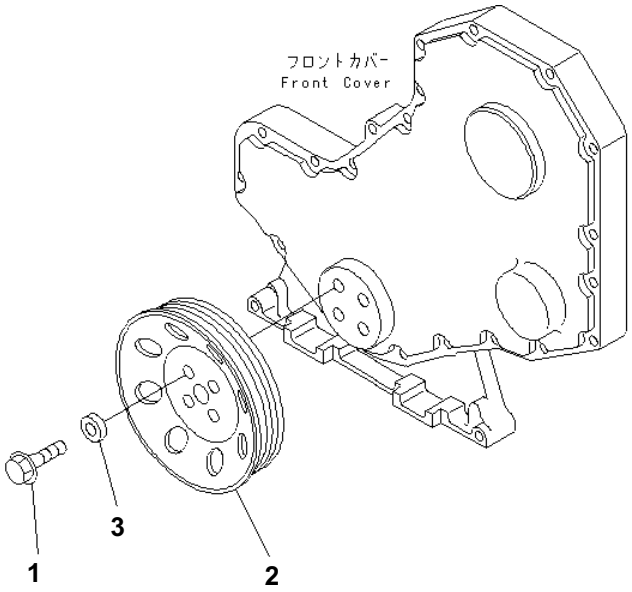

PQD3865

SAA4D102E-2E S/N 30204043 AND UP

CRANK PULLEY

Item	Part No.	Description	Qty	Options
1	6732-31-8120	BOLT	4	SN:30204043--
2	6732-31-1410	PULLEY	1	SN:30204043--
3	6131-22-3760	BOSS	4	SN:30204043--

Ref. A237P-01A3 Page 030290

00061016

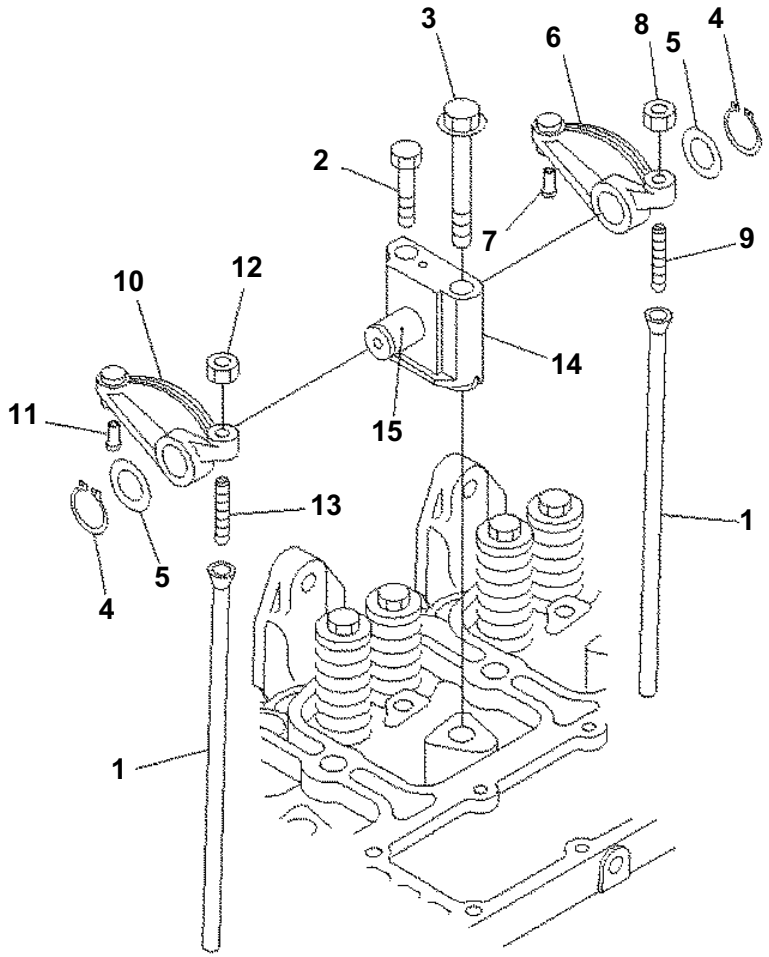

SAA4D102E-2E S/N 30204043 AND UP

ROCKER ARM

Item	Part No.	Description	Qty	Options
1	6732-41-3111	ROD, PUSH	8	SN:30204043--
2	6732-41-5180	BOLT	4	SN:30204043--
3	6732-11-1640	BOLT	4	SN:30204043--
	6732-41-5101	ROCKER ARM ASS'Y	4	SN:30204043--
4	6732-41-5170	RING	2	SN:30204043--
5	6732-41-5160	WASHER	2	SN:30204043--
	6732-41-5400	ARM ASS'Y	1	SN:30204043--
6	☆	ARM	1	SN:30204043--
7	6732-41-5440	INSERT	1	SN:30204043--
8	6735-41-5550	NUT	1	SN:30204043--
9	☆	SCREW	1	SN:30204043--
	6732-41-5200	ARM ASS'Y	1	SN:30204043--
10	☆	ARM	1	SN:30204043--
11	6732-41-5440	INSERT	1	SN:30204043--
12	6735-41-5550	NUT	1	SN:30204043--
13	☆	SCREW	1	SN:30204043--
	6736-41-5110	BRACKET ASS'Y	1	SN:30204043--
14	☆	BRACKET	1	SN:30204043--
15	☆	SHAFT ASS'Y	1	SN:30204043--

Ref. A241P-01A1 Page 030300

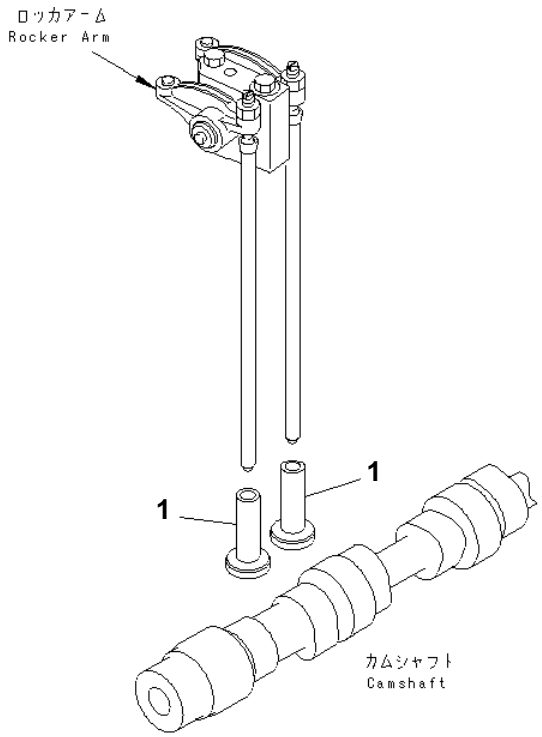

TAPPET

Item	Part No.	Description	Qty	Options
1	6732-41-2112	TAPPET	8	SN:30204043--

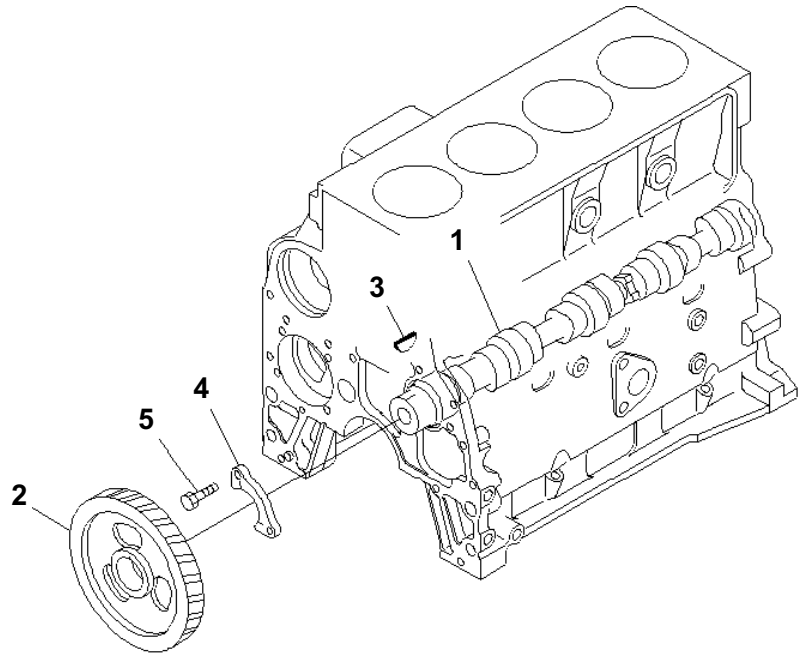

SAA4D102E-2E S/N 30204043 AND UP

CAMSHAFT

Item	Part No.	Description	Qty	Options
1	6732-41-1111	CAMSHAFT	1	SN:30204043--
2	6732-41-1231	GEAR	1	SN:30204043--
3	6732-41-1280	KEY	1	SN:30204043--
4	6732-41-1220	SUPPORT,THRUST	1	SN:30204043--
5	6732-41-1260	BOLT	2	SN:30204043--

Ref. A2419-01A1 Page 030320

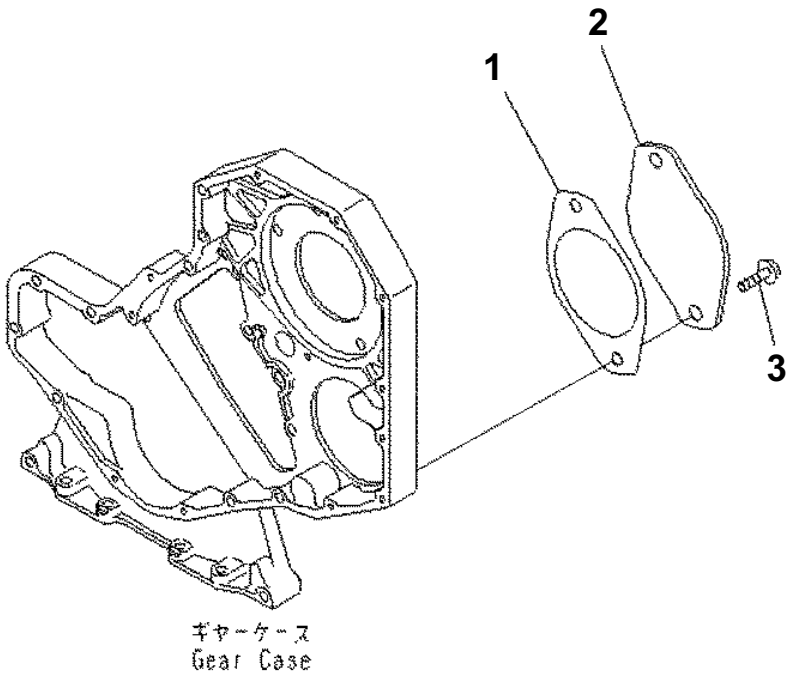

FRONT GEAR TRAIN COVER

Item	Part No.	Description	Qty	Options
1	6732-21-3380	GASKET (K2)	1	SN:30204043--
2	6732-21-9310	PLATE	1	SN:30204043--
3	6732-51-5130	BOLT	2	SN:30204043--

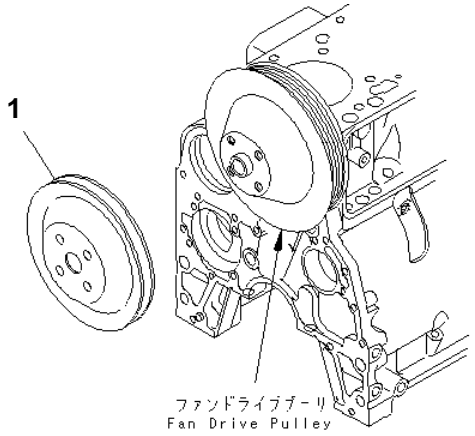

FAN PULLEY

Item	Part No.	Description	Qty	Options
1	6738-91-1510	PULLEY	1	SN:30204043--

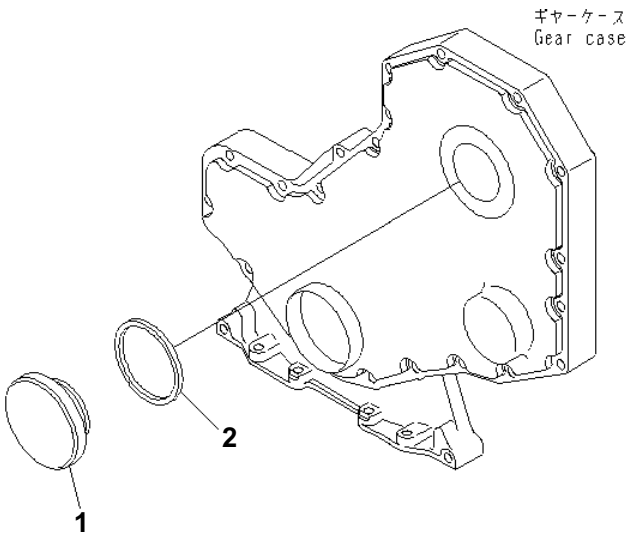

SAA4D102E-2E S/N 30204043 AND UP

TACHOMETER DRIVE COVER

Item	Part No.	Description	Qty	Options
1	6732-21-3190	COVER	1	SN:30204043--
2	6732-21-3220	SEAL (K2)	1	SN:30204043--

Ref. A281P-01A0 Page 030350

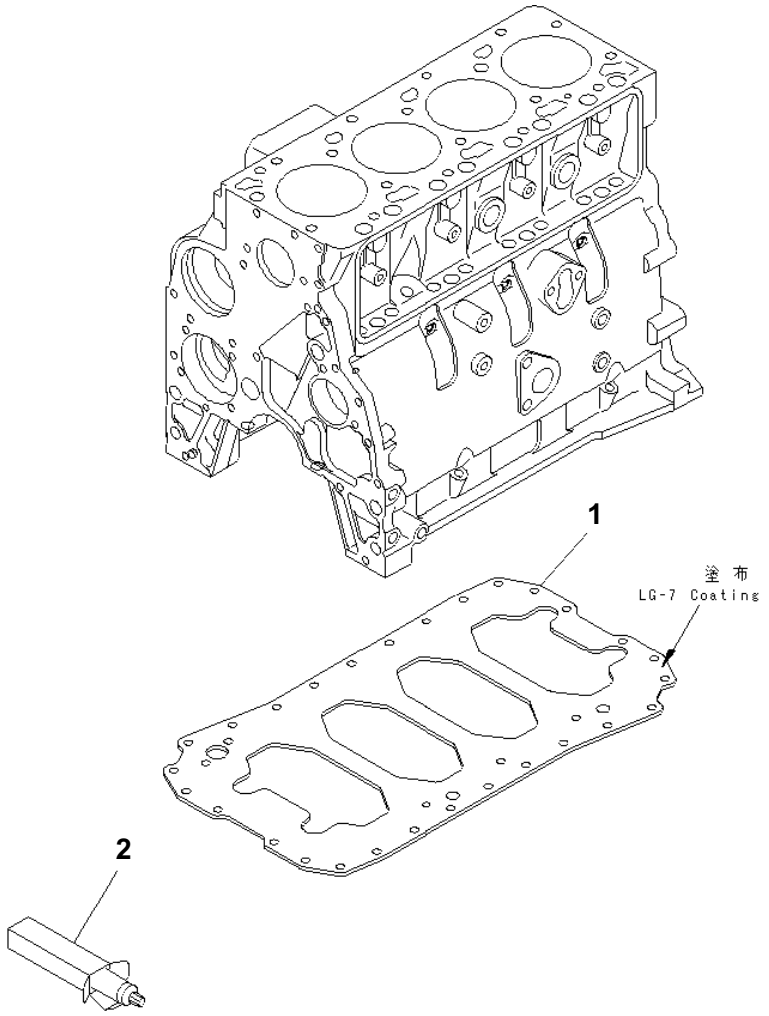

UNDER PLATE

Item	Part No.	Description	Qty	Options
1	6732-21-5150	PLATE	1	SN:30204043--
2	(09920-00150)	LIQUID GASKET,LG-7¤ 150G	AR	SN:30204043--

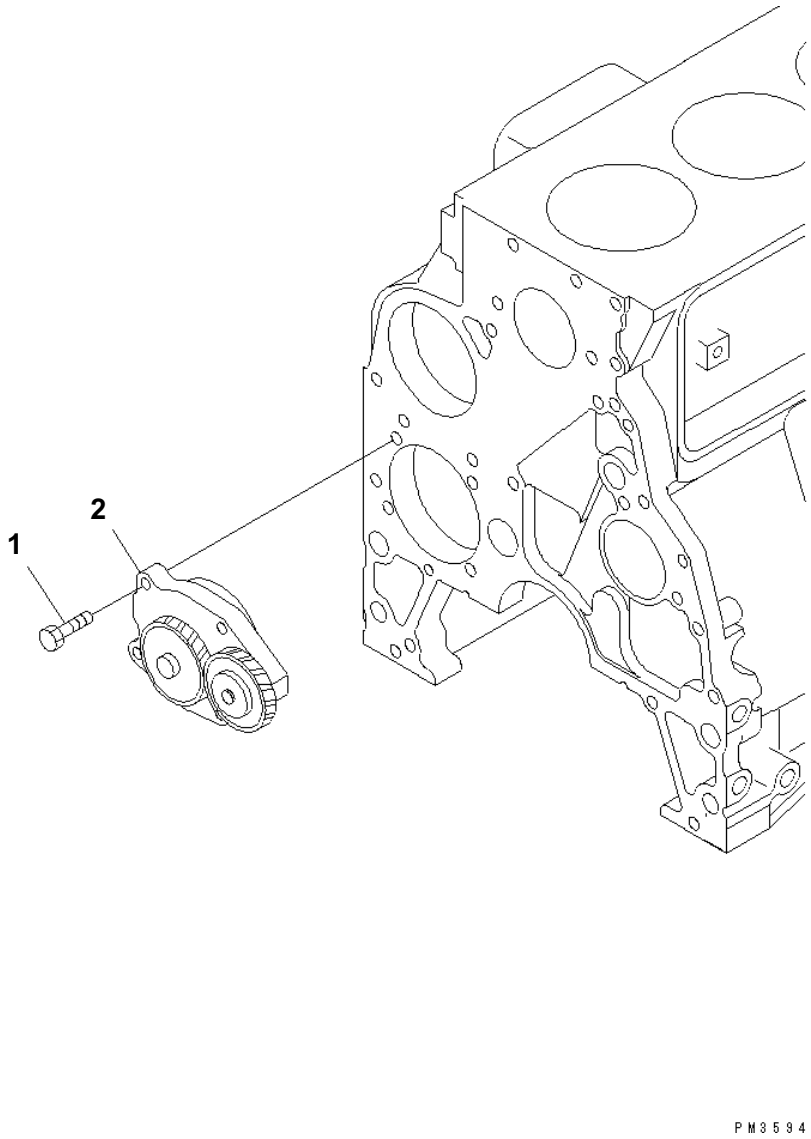

SAA4D102E-2E S/N 30204043 AND UP

OIL PUMP

Item	Part No.	Description	Qty	Options
1	6735-51-1120	BOLT	4	SN:30204043--
2	6732-51-1112	OIL PUMP ASS'Y	1	SN:30204043--

Ref. A301P-01A6 Page 030370

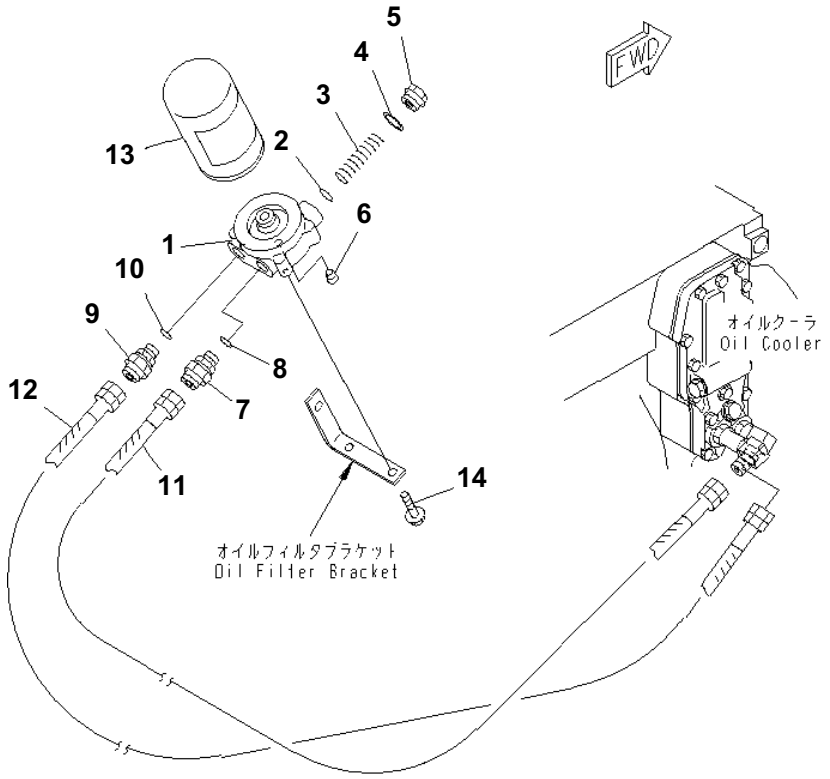

OIL FILTER AND PIPING

Item	Part No.	Description	Qty	Options
	6731-51-5201	HEAD ASS'Y	1	SN:30204043--
1	6731-51-5211	· HEAD	1	SN:30204043--
2	6162-53-5450	· PACKING (K2)	1	SN:30204043--
3	600-211-1870	· SPRING	1	SN:30204043--
4	6162-53-5430	· PACKING (K2)	1	SN:30204043--
5	6162-53-5420	· CAP	1	SN:30204043--
6	07043-A0108	· PLUG	1	SN:30204043--
7	6731-51-5260	NIPPLE	1	SN:30204043--
8	6731-51-5290	O-RING (K2)	1	SN:30204043--
9	6738-51-5260	NIPPLE	1	SN:30204043--
10	6731-51-5290	O-RING (K2)	1	SN:30204043--
11	6737-51-9910	HOSE	1	SN:30204043--
12	6737-51-9810	HOSE	1	SN:30204043--
13	6733-51-5142	CARTRIDGE	1	SN:30204043--
14	6732-71-3220	BOLT	2	SN:30204043--

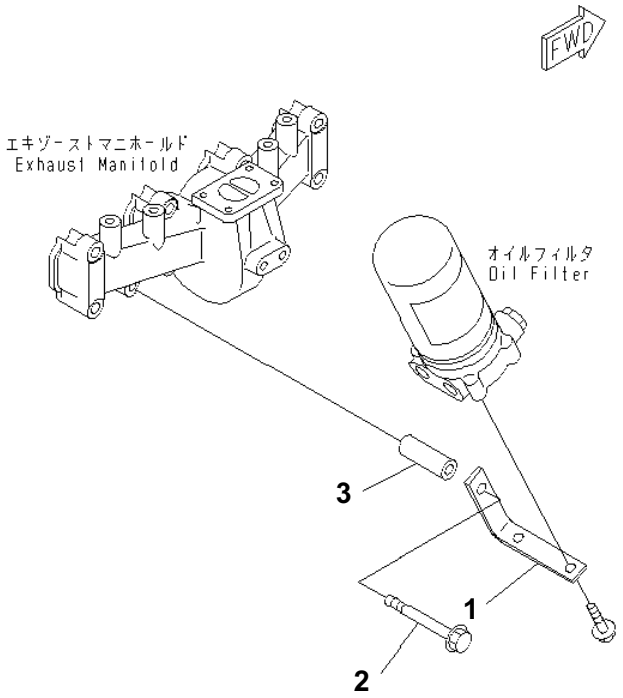

OIL FILTER BRACKET

Item	Part No.	Description	Qty	Options
1	6738-51-9950	BRACKET	1	SN:30204043--
2	6734-21-8610	SCREW	1	SN:30204043--
3	6211-11-9790	SPACER	1	SN:30204043--

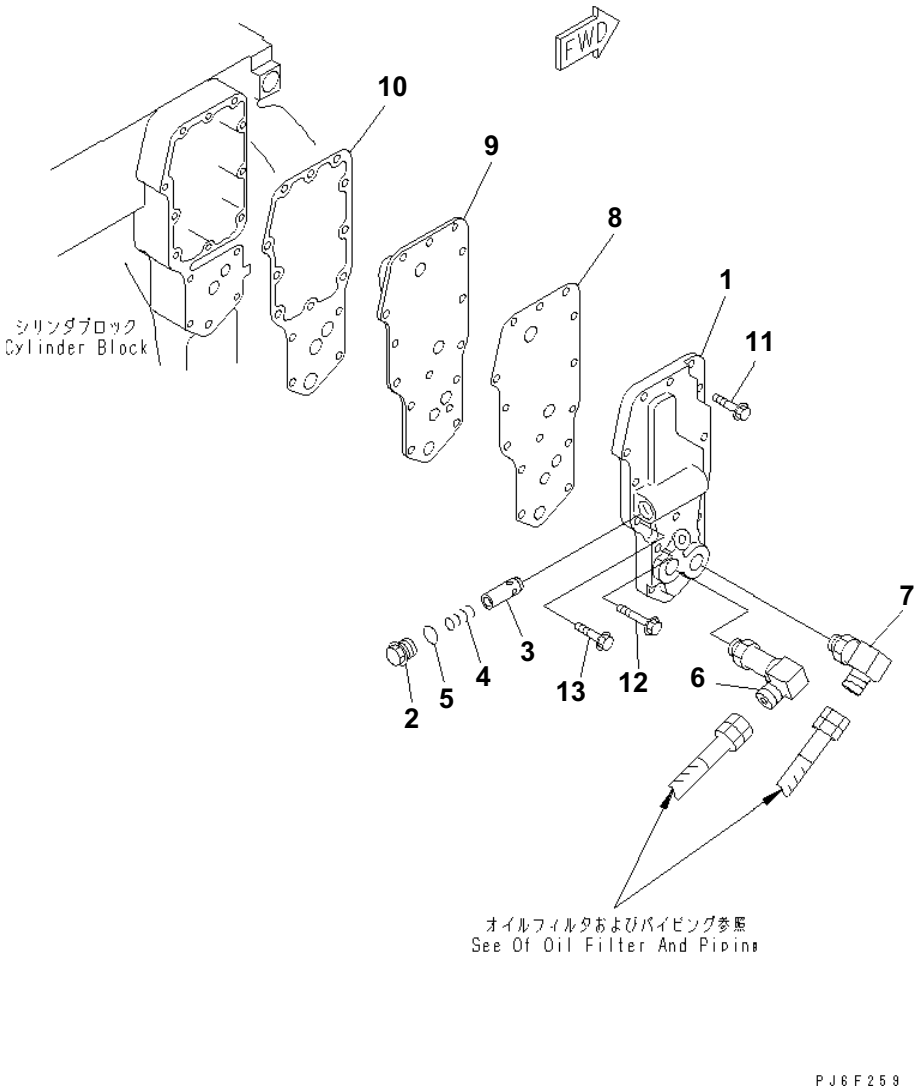

OIL COOLER COVER

Item	Part No.	Description	Qty	Options
1	6735-61-2221	COVER	1	SN:30204043--
2	6735-61-2140	PLUG	1	SN:30204043--
3	6735-61-2160	PLUNGER	1	SN:30204043--
4	6735-61-2190	SPRING	1	SN:30204043--
5	6732-51-4420	O-RING (K2)	1	SN:30204043--
6	6731-51-5250	ELBOW	1	SN:30204043--
	6731-51-5290	O-RING	1	SN:30204043--
7	6738-51-5240	ELBOW	1	SN:30204043--
	6731-51-5290	O-RING	1	SN:30204043--
8	6732-51-4432	GASKET (K2)	1	SN:30204043--
9	6732-62-2110	CORE	1	SN:30204043--
10	6732-61-2312	GASKET (K2)	1	SN:30223355--
	□6732-61-2311	GASKET (K2)	1	SN:30204043--30223354
11	6732-61-6140	BOLT	12	SN:30204043--
12	6735-61-2120	BOLT	1	SN:30204043--
13	6735-71-6550	BOLT	1	SN:30204043--

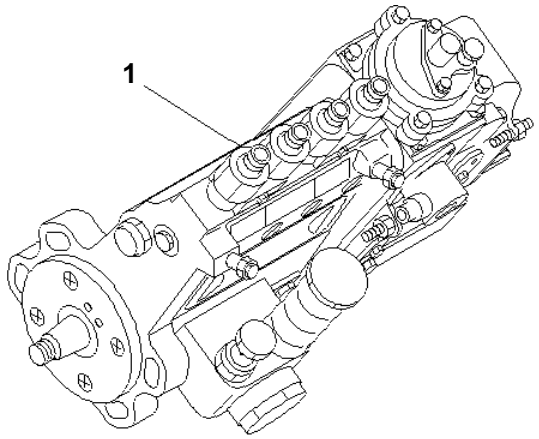

PJ6C389

FUEL INJECTION PUMP

Item	Part No.	Description	Qty	Options
1	(6737-71-1211)	INJECTION PUMP ASS'Y, (SEE FIG.A401P-02H1)	1	SN:30204043--

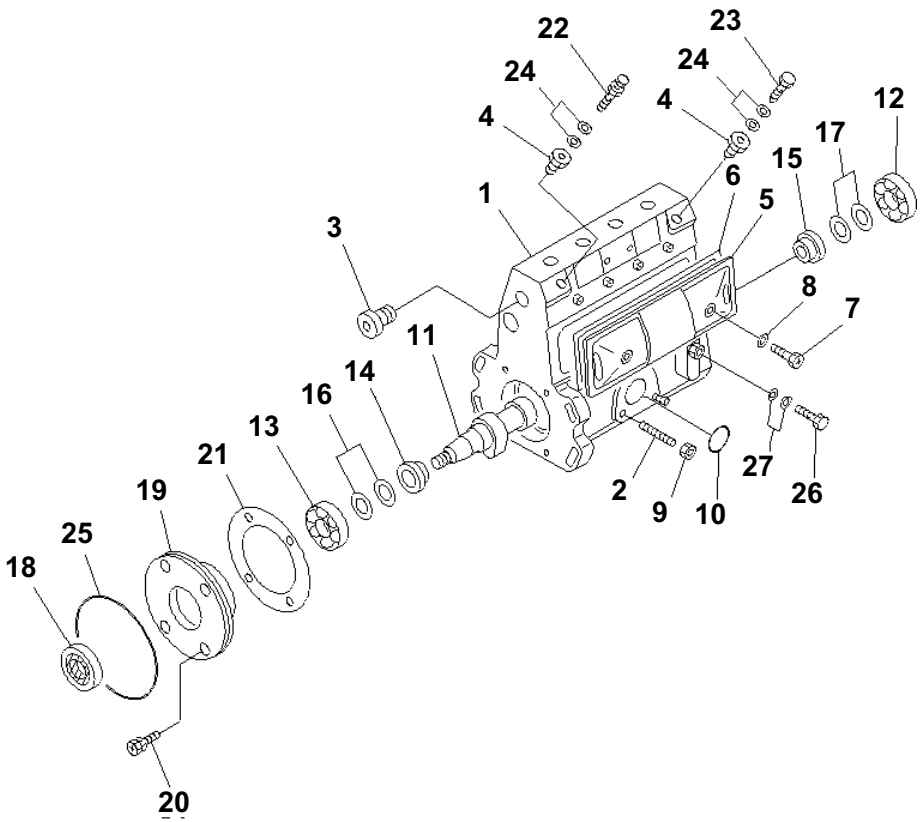

FUEL INJECTION PUMP (PUMP) (1/2) (INNER PARTS)

Item	Part No.	Description	Qty	Options
	6737-71-1211	INJECTION PUMP ASS'Y THIS ASSEMBLY CONSISTS OF ALL PARTS SHOWN IN FIGS.A401P-02H1 TO A401P-07H1.	1	SN:30204043--
	DK101041-9260	· PUMP ASS'Y THIS ASSEMBLY CONSISTS OF ALL PARTS SHOWN IN FIGS.A401P-02H1 AND A401P-03H1.	1	SN:30204043--
1	DK131067-5620	· · HOUSING	1	SN:30204043--
2	DK029040-6020	· · · STUD	3	SN:30204043--
3	DK134026-0000	· · · PLUG	1	SN:30204043--
4	DK131002-2000	· · · ADAPTER	2	SN:30204043--
5	DK131028-6220	· · COVER	1	SN:30204043--
6	DK131011-1900	· · · GASKET	1	SN:30204043--
7	DK131017-1000	· · SCREW	2	SN:30204043--
8	DK029340-6020	· · GASKET	2	SN:30204043--
9	DK139206-0400	· · NUT	3	SN:30204043--
10	DK029633-1010	· · O-RING	1	SN:30204043--
11	DK131361-2700	· · CAMSHAFT	1	SN:30204043--
12	DK016630-2030	· · BEARING	AR	SN:30204043--
	DK028201-7020	· · BEARING	AR	SN:30204043--
13	DK016640-2030	· · BEARING	AR	SN:30204043--
	DK028202-0020	· · BEARING	AR	SN:30204043--
14	DK131302-1300	· · RING	1	SN:30204043--
15	DK131302-0300	· · RING	1	SN:30204043--
16	DK029312-0310	· · SHIM¤ 0.10MM	AR	SN:30204043--
	DK029312-0320	· · SHIM¤ 0.12MM	AR	SN:30204043--
	DK029312-0330	· · SHIM¤ 0.14MM	AR	SN:30204043--
	DK029312-0340	· · SHIM¤ 0.16MM	AR	SN:30204043--
	DK029312-0350	· · SHIM¤ 0.18MM	AR	SN:30204043--
	DK029312-0360	· · SHIM¤ 0.3MM	AR	SN:30204043--
	DK029312-0370	· · SHIM¤ 0.5MM	AR	SN:30204043--
	DK029312-0380	· · SHIM¤ 1.0MM	AR	SN:30204043--
17	DK029311-7010	· · SHIM¤ 0.1MM	AR	SN:30204043--
	DK029311-7020	· · SHIM¤ 0.12MM	AR	SN:30204043--
	DK029311-7030	· · SHIM¤ 0.14MM	AR	SN:30204043--
	DK029311-7040	· · SHIM¤ 0.16MM	AR	SN:30204043--
	DK029311-7050	· · SHIM¤ 0.18MM	AR	SN:30204043--
	DK029311-7090	· · SHIM¤ 0.3MM	AR	SN:30204043--

SAA4D102E-2E S/N 30204043 AND UP

FUEL INJECTION PUMP (PUMP) (1/2) (INNER PARTS)

Item	Part No.	Description	Qty	Options
	DK029311-7060	・・ SHIM¤ 0.5MM	AR	SN:30204043--
	DK029311-7210	・・ SHIM¤ 0.7MM	AR	SN:30204043--
	DK029311-7070	・・ SHIM¤ 1.0MM	AR	SN:30204043--
	DK029311-7220	・・ SHIM¤ 1.4MM	AR	SN:30204043--
	DK139417-0000	・・ SHIM¤ 2.40MM	AR	SN:30204043--
18	DK029622-0190	・・ SEAL,OIL	1	SN:30204043--
19	DK131330-6400	・・ COVER	1	SN:30204043--
20	DK029010-6810	・・ BOLT	4	SN:30204043--
21	DK131321-1900	・・ GASKET	1	SN:30204043--
22	DK131424-3420	・・ VALVE,OVER FLOW	1	SN:30204043--
23	DK131401-0020	・・ BOLT,EYE	1	SN:30204043--
24	DK029341-4130	・・ GASKET	4	SN:30204043--
25	DK029637-5030	・・ O-RING	1	SN:30204043--
26	DK029731-0120	・・ BOLT,EYE	1	SN:30204043--
27	DK029341-0110	・・ GASKET	2	SN:30204043--

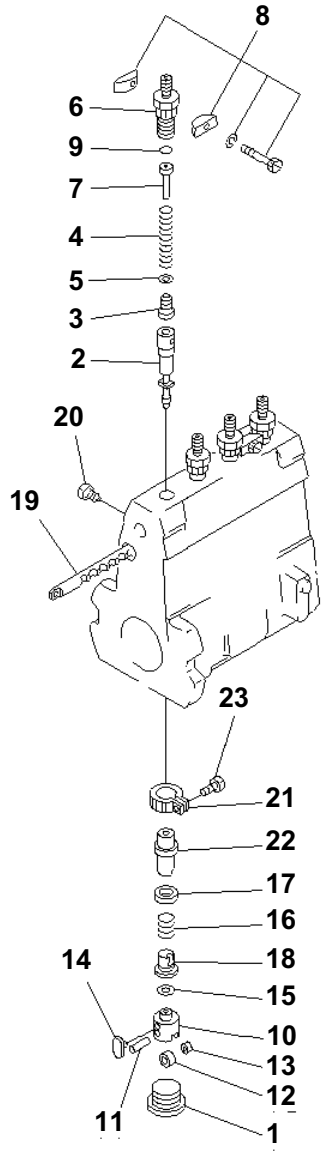

PG3P815

FUEL INJECTION PUMP (PUMP) (2/2) (INNER PARTS)

Item	Part No.	Description	Qty	Options
	(6737-71-1211)	INJECTION PUMP ASS'Y THIS ASSEMBLY CONSISTS OF ALL PARTS SHOWN IN FIGS.A401P-02H1 TO A401P-07H1.	1	SN:30204043--
	(DK101041-9260)	· PUMP ASS'Y THIS ASSEMBLY CONSISTS OF ALL PARTS SHOWN IN FIGS.A401P-02H1 AND A401P-03H1.	1	SN:30204043--
1	DK131034-1401	· · PLUG	4	SN:30204043--
2	DK131154-3920	· · PLUNGER ASS'Y	4	SN:30204043--
3	DK131110-7720	· · VALVE,DELIVERY	4	SN:30204043--
4	DK131112-5600	· · SPRING	4	SN:30204043--
5	DK131115-1600	· · GASKET	4	SN:30204043--
6	DK131116-8420	· · HOLDER	4	SN:30204043--
7	DK131117-3100	· · STOPPER	4	SN:30204043--
8	DK131122-0520	· · PLATE ASS'Y	2	SN:30204043--
9	DK029632-0030	· · O-RING	4	SN:30204043--
10	DK131200-2820	· · TAPPET ASS'Y	4	SN:30204043--
11	DK131203-0800	· · · PIN	1	SN:30204043--
12	DK131204-1000	· · · ROLLER	1	SN:30204043--
13	DK131205-0500	· · · BUSHING	1	SN:30204043--
14	DK131206-0200	· · · GUIDE	1	SN:30204043--
15	DK029311-0580	· · SHIM¤ 0.2MM	AR	SN:30204043--
	DK029311-0590	· · SHIM¤ 0.25MM	AR	SN:30204043--
	DK029311-0020	· · SHIM¤ 0.30MM	AR	SN:30204043--
	DK029311-0600	· · SHIM¤ 0.35MM	AR	SN:30204043--
	DK029311-0030	· · SHIM¤ 0.40MM	AR	SN:30204043--
	DK029311-0610	· · SHIM¤ 0.45MM	AR	SN:30204043--
	DK029311-0040	· · SHIM¤ 0.50MM	AR	SN:30204043--
	DK029311-0270	· · SHIM¤ 0.55MM	AR	SN:30204043--
	DK029311-0050	· · SHIM¤ 0.6MM	AR	SN:30204043--
	DK029311-0280	· · SHIM¤ 0.65MM	AR	SN:30204043--
	DK029311-0060	· · SHIM¤ 0.7MM	AR	SN:30204043--
	DK029311-0290	· · SHIM¤ 0.75MM	AR	SN:30204043--
	DK029311-0070	· · SHIM¤ 0.8MM	AR	SN:30204043--
	DK029311-0310	· · SHIM¤ 0.85MM	AR	SN:30204043--
	DK029311-0080	· · SHIM¤ 0.9MM	AR	SN:30204043--
	DK029311-0320	· · SHIM¤ 0.95MM	AR	SN:30204043--
	DK029311-0090	· · SHIM¤ 1.0MM	AR	SN:30204043--

SAA4D102E-2E S/N 30204043 AND UP

FUEL INJECTION PUMP (PUMP) (2/2) (INNER PARTS)

Item	Part No.	Description	Qty	Options
	DK029311-0330	・・SHIM¤ 1.05MM	AR	SN:30204043--
	DK029311-0110	・・SHIM¤ 1.1MM	AR	SN:30204043--
	DK029311-0340	・・SHIM¤ 1.15MM	AR	SN:30204043--
	DK029311-0120	・・SHIM¤ 1.2MM	AR	SN:30204043--
	DK029311-0350	・・SHIM¤ 1.25MM	AR	SN:30204043--
	DK029311-0130	・・SHIM¤ 1.3MM	AR	SN:30204043--
	DK029311-0620	・・SHIM¤ 1.35MM	AR	SN:30204043--
	DK029311-0140	・・SHIM¤ 1.4MM	AR	SN:30204043--
	DK029311-0630	・・SHIM¤ 1.45MM	AR	SN:30204043--
	DK029311-0490	・・SHIM¤ 1.5MM	AR	SN:30204043--
	DK029311-0710	・・SHIM¤ 1.55MM	AR	SN:30204043--
	DK029311-0500	・・SHIM¤ 1.6MM	AR	SN:30204043--
16	DK131215-2500	・・SPRING	4	SN:30204043--
17	DK131216-0100	・・SEAT,SPRING	4	SN:30204043--
18	DK131217-0200	・・SEAT,SPRING	4	SN:30204043--
19	DK131254-0600	・・RACK,CONTROL	1	SN:30204043--
20	DK131226-0300	・・SCREW	1	SN:30204043--
21	DK131240-0100	・・PINION	4	SN:30204043--
22	DK131241-0100	・・SLEEVE, CONTROL	4	SN:30204043--
23	DK131242-0100	・・SCREW	4	SN:30204043--

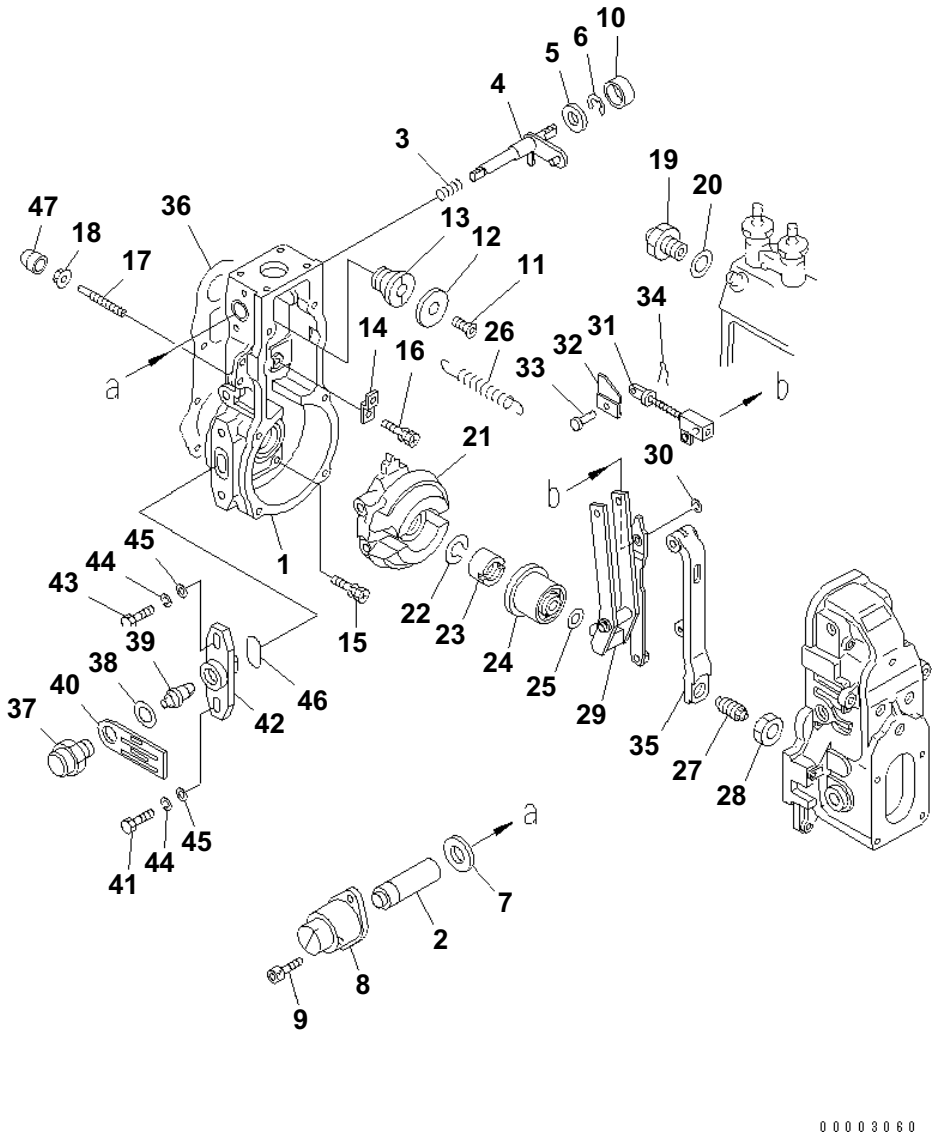

FUEL INJECTION PUMP (GOVERNOR) (1/3) (INNER PARTS)

Item	Part No.	Description	Qty	Options
	(6737-71-1211)	INJECTION PUMP ASS'Y THIS ASSEMBLY CONSISTS OF ALL PARTS SHOWN IN FIGS.A401P-02H1 TO A401P-07H1.	1	SN:30204043--
	DK105404-6040	· GOVERNOR ASS'Y THIS ASSEMBLY CONSISTS OF ALL PARTS SHOWN IN FIGS.A401P-04H1 TO A401P-06H1.	1	SN:30204043--
	DK154620-9621	· · HOUSING ASS'Y	1	SN:30204043--
1	DK154620-9721	· · · HOUSING	1	SN:30204043--
2	DK154621-5200	· · · SHAFT	1	SN:30204043--
3	DK154621-1200	· · · SPRING	1	SN:30204043--
4	DK154621-4720	· · · LEVER	1	SN:30204043--
5	DK139406-1400	· · · SHIM	1	SN:30204043--
6	DK016010-0540	· · · RING,SNAP	1	SN:30204043--
7	DK154621-4900	· · · GASKET	1	SN:30204043--
8	DK154410-4720	· · · SOLENOID	1	SN:30204043--
9	DK010235-1040	· · · BOLT,SOCKET	2	SN:30204043--
10	DK154621-3600	· · · CAP	1	SN:30204043--
11	DK154621-4300	· · BOLT	1	SN:30204043--
12	DK154621-4100	· · WASHER	1	SN:30204043--
13	DK154620-7900	· · ADAPTER	1	SN:30204043--
14	DK154375-9020	· · PLATE	1	SN:30204043--
15	DK029010-6810	· · BOLT	5	SN:30204043--
16	DK020106-1840	· · BOLT	1	SN:30204043--
17	DK154013-6000	· · SCREW	1	SN:30204043--
18	DK154011-4900	· · NUT,LOCK	1	SN:30204043--
19	DK155404-5120	· · LIMITER	1	SN:30204043--
20	DK026518-2240	· · GASKET	1	SN:30204043--
21	DK154621-2520	· · FLYWEIGHT ASS'Y	1	SN:30204043--
22	DK029321-2020	· · WASHER,SPRING	1	SN:30204043--
23	DK029231-2030	· · NUT	1	SN:30204043--
24	DK154123-2320	· · SLEEVE	1	SN:30204043--
25	DK029311-0010	· · SHIM¤ 0.20MM	AR	SN:30204043--
	DK029311-0180	· · SHIM¤ 0.30MM	AR	SN:30204043--
	DK029311-0190	· · SHIM¤ 0.40MM	AR	SN:30204043--
	DK139410-0000	· · SHIM¤ 0.50MM	AR	SN:30204043--
	DK029311-0210	· · SHIM¤ 1.00MM	AR	SN:30204043--

SAA4D102E-2E S/N 30204043 AND UP

FUEL INJECTION PUMP (GOVERNOR) (1/3)
(INNER PARTS)

Item	Part No.	Description	Qty	Options
	DK139410-0100	・・ SHIM¤ 1.50MM	AR	SN:30204043--
	DK139410-3000	・・ SHIM¤ 2.00MM	AR	SN:30204043--
	DK139410-3100	・・ SHIM¤ 3.00MM	AR	SN:30204043--
	DK139410-3200	・・ SHIM¤ 4.00MM	AR	SN:30204043--
26	DK154154-5200	・・ SPRING	1	SN:30204043--
27	DK154177-0420	・・ CAPSULE,SPRING	1	SN:30204043--
28	DK029201-6010	・・ NUT	1	SN:30204043--
29	DK154218-7320	・・ GUIDE LEVER ASS'Y	1	SN:30204043--
30	DK016010-0540	・・ RING,SNAP	1	SN:30204043--
31	DK154235-5220	・・ LINK	1	SN:30204043--
32	DK154232-3300	・・ CONNECTOR	1	SN:30204043--
33	DK154222-5800	・・ PIN	1	SN:30204043--
34	DK155402-3800	・・ PIN	1	SN:30204043--
35	DK154239-5120	・・ TENSION PULLEY ASS'Y	1	SN:30204043--
36	DK154390-0000	・・ GASKET	1	SN:30204043--
37	DK154621-3000	・・ PLUG	1	SN:30204043--
38	DK026518-2240	・・ GASKET	1	SN:30204043--
39	DK154620-8800	・・ PIN	1	SN:30204043--
40	DK154620-8901	・・ PLATE	1	SN:30204043--
41	DK010038-1840	・・ BOLT	1	SN:30204043--
42	DK154620-1500	・・ FLANGE	1	SN:30204043--
43	DK154620-4700	・・ BOLT	1	SN:30204043--
44	DK014110-8440	・・ WASHER,SPRING	2	SN:30204043--
45	DK014010-8140	・・ WASHER	2	SN:30204043--
46	DK154621-3200	・・ O-RING	1	SN:30204043--
47	DK154062-3520	・・ CAP	1	SN:30204043--

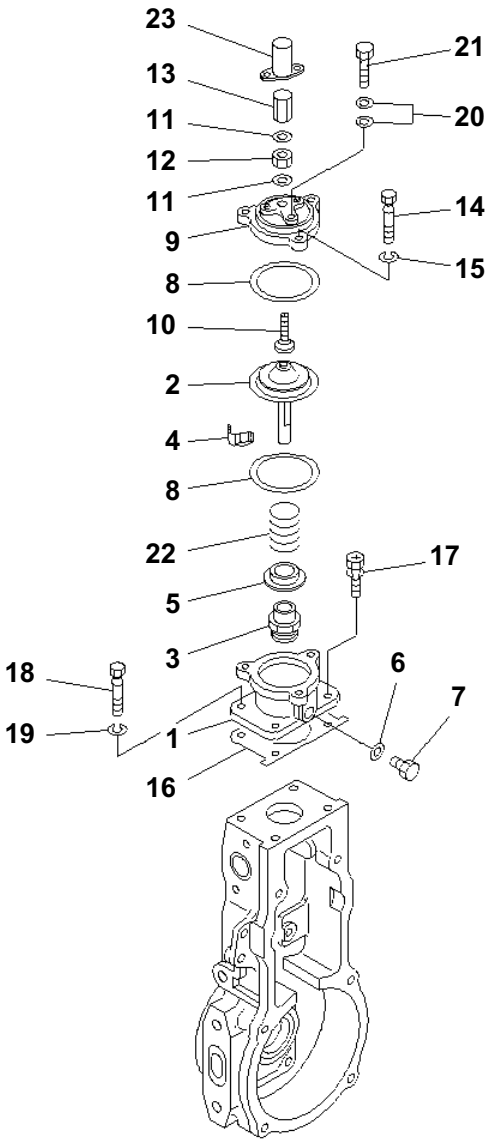

FUEL INJECTION PUMP (GOVERNOR) (2/3) (INNER PARTS)

Item	Part No.	Description	Qty	Options
	(6737-71-1211)	INJECTION PUMP ASS'Y THIS ASSEMBLY CONSISTS OF ALL PARTS SHOWN IN FIGS.A401P-02H1 TO A401P-07H1.	1	SN:30204043--
	(DK105404-6040)	・ GOVERNOR ASS'Y THIS ASSEMBLY CONSISTS OF ALL PARTS SHOWN IN FIGS.A401P-04H1 TO A401P-06H1.	1	SN:30204043--
	DK154423-1220	・・ BOOST COMPENSATOR	1	SN:30204043--
1	DK154422-7101	・・・ HOUSING	1	SN:30204043--
2	DK154400-9820	・・・ DIAGRAM	1	SN:30204043--
3	DK154415-4600	・・・ BUSHING	1	SN:30204043--
4	DK146711-0000	・・・ PLATE	1	SN:30204043--
5	DK154415-1300	・・・ NUT	1	SN:30204043--
6	DK029331-2130	・・・ GASKET	1	SN:30204043--
7	DK029111-2090	・・・ PLUG	1	SN:30204043--
8	DK154413-2600	・・・ GASKET	2	SN:30204043--
9	DK154404-5600	・・・ COVER	1	SN:30204043--
10	DK154415-1800	・・・ SCREW	1	SN:30204043--
11	DK026506-1040	・・・ GASKET	2	SN:30204043--
12	DK013030-6040	・・・ NUT	1	SN:30204043--
13	DK154035-1600	・・・ NUT	1	SN:30204043--
14	DK154062-2900	・・・ BOLT	3	SN:30204043--
15	DK014110-6440	・・・ WASHER,SPRING	3	SN:30204043--
16	DK154620-3200	・・・ GASKET	1	SN:30204043--
17	DK020106-1640	・・・ BOLT	3	SN:30204043--
18	DK154062-5001	・・・ BOLT	1	SN:30204043--
19	DK014110-6440	・・・ WASHER,SPRING	1	SN:30204043--
20	DK029341-0110	・・・ GASKET	2	SN:30204043--
21	DK029731-0120	・・・ BOLT,EYE	1	SN:30204043--
22	DK154402-3000	・・ SPRING	1	SN:30204043--
23	DK154062-2720	・・ CAP	1	SN:30204043--

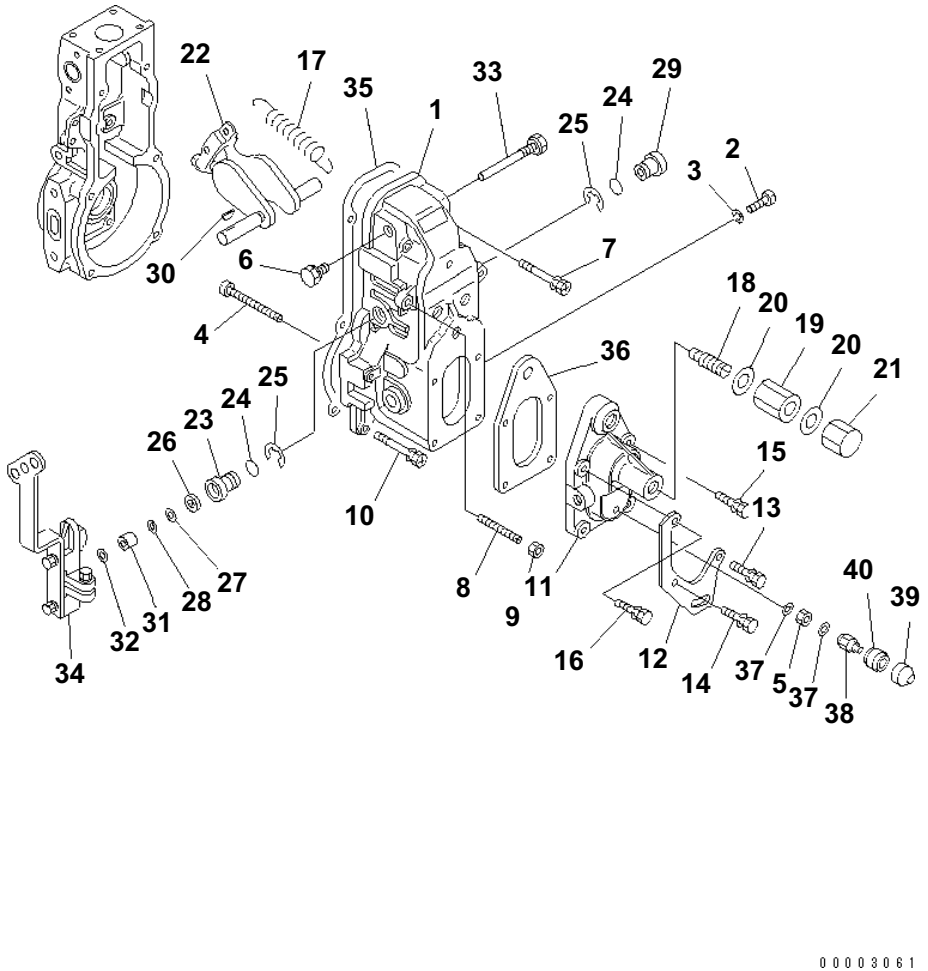

FUEL INJECTION PUMP (GOVERNOR) (3/3) (INNER PARTS)

Item	Part No.	Description	Qty	Options
	(6737-71-1211)	INJECTION PUMP ASS'Y THIS ASSEMBLY CONSISTS OF ALL PARTS SHOWN IN FIGS.A401P-02H1 TO A401P-07H1.	1	SN:30204043--
	(DK105404-6040)	· GOVERNOR ASS'Y THIS ASSEMBLY CONSISTS OF ALL PARTS SHOWN IN FIGS.A401P-04H1 TO A401P-06H1.	1	SN:30204043--
1	DK154022-8720	· · COVER	1	SN:30204043--
2	DK154222-2700	· · SCREW	1	SN:30204043--
3	DK014110-3440	· · · WASHER,SPRING	1	SN:30204043--
4	DK154031-4700	· · SCREW	1	SN:30204043--
5	DK139208-0400	· · NUT	1	SN:30204043--
6	DK154036-0300	· · PLUG	1	SN:30204043--
7	DK139006-7100	· · BOLT	2	SN:30204043--
8	DK154010-0200	· · SCREW	1	SN:30204043--
9	DK154011-0100	· · NUT,LOCK	1	SN:30204043--
10	DK020106-3840	· · BOLT	4	SN:30204043--
11	DK154064-4900	· · COVER	1	SN:30204043--
12	DK154376-3000	· · BRACKET	1	SN:30204043--
13	DK020006-2040	· · BOLT	1	SN:30204043--
14	DK020006-2040	· · BOLT	1	SN:30204043--
15	DK020006-1640	· · BOLT	1	SN:30204043--
16	DK020006-2040	· · BOLT	1	SN:30204043--
17	DK154150-0400	· · SPRING,GOVERNOR	1	SN:30204043--
18	DK154158-5820	· · CAPSULE,SPRING	1	SN:30204043--
19	DK029201-2290	· · NUT	1	SN:30204043--
20	DK026512-1540	· · GASKET	2	SN:30204043--
21	DK154159-1200	· · NUT,CAP	1	SN:30204043--
22	DK154200-7020	· · LEVER ASS'Y,SWIVEL	1	SN:30204043--
23	DK154204-4300	· · BUSHING	1	SN:30204043--
24	DK029631-8020	· · O-RING	2	SN:30204043--
25	DK016010-1640	· · RING,SNAP	2	SN:30204043--
26	DK139611-0000	· · SEAL, OIL	1	SN:30204043--
27	DK139411-0000	· · SHIM¤ 0.40MM	1	SN:30204043--
28	DK029311-1070	· · SHIM¤ 0.50MM	AR	SN:30204043--
29	DK154204-4400	· · BUSHING	1	SN:30204043--
30	DK025803-1310	· · KEY¤ 13MM, WOODRUFF	1	SN:30204043--

SAA4D102E-2E S/N 30204043 AND UP

FUEL INJECTION PUMP (GOVERNOR) (3/3)
(INNER PARTS)

Item	Part No.	Description	Qty	Options
31	DK154206-2800	・・ COLLAR	1	SN:30204043--
32	DK154206-0200	・・ WASHER¤ 1.0MM	AR	SN:30204043--
33	DK154237-1100	・・ PIN	1	SN:30204043--
34	DK154343-9220	・・ LEVER	1	SN:30204043--
35	DK154390-0300	・・ GASKET	1	SN:30204043--
36	DK154390-5000	・・ GASKET	1	SN:30204043--
37	DK026508-1140	・・ GASKET	2	SN:30204043--
38	DK154035-2900	・・ NUT, CAP	1	SN:30204043--
39	DK154062-4020	・・ CAP	1	SN:30204043--
40	DK154062-3900	・・ ADAPTER	1	SN:30204043--

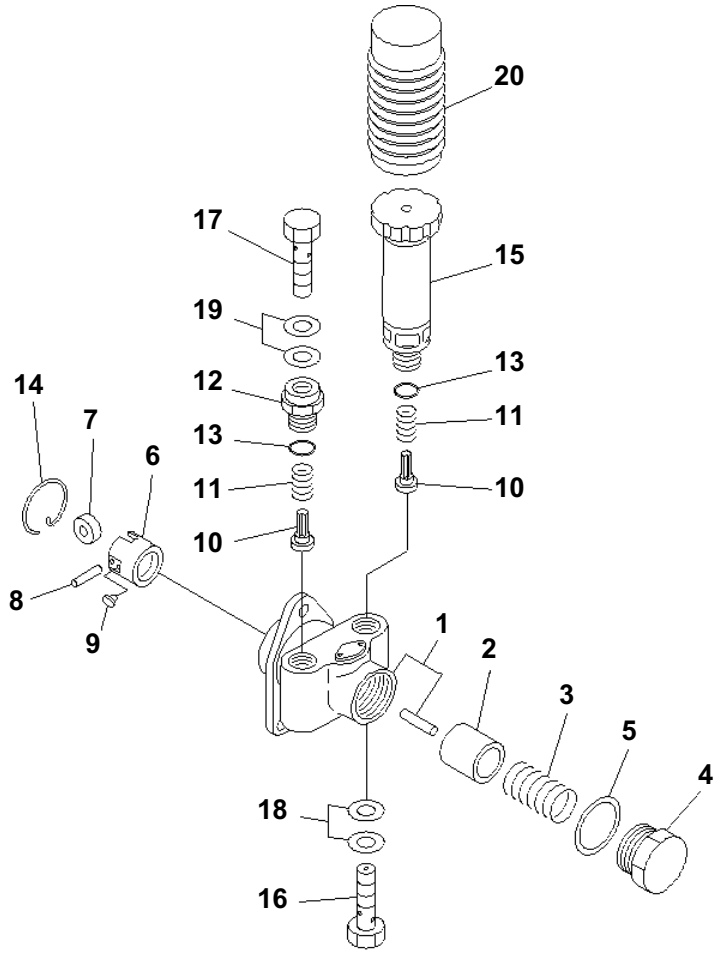

FUEL INJECTION PUMP (FEED PUMP) (INNER PARTS)

Item	Part No.	Description	Qty	Options
	(6737-71-1211)	INJECTION PUMP ASS'Y THIS ASSEMBLY CONSISTS OF ALL PARTS SHOWN IN FIGS.A401P-02H1 TO A401P-07H1.	1	SN:30204043--
	DK105220-5960	· FEED PUMP ASS'Y	1	SN:30204043--
1	DK152003-1020	· · HOUSING	1	SN:30204043--
2	DK152100-1120	· · PISTON	1	SN:30204043--
3	DK152102-1600	· · SPRING	1	SN:30204043--
4	DK152105-1600	· · PLUG	1	SN:30204043--
5	DK029332-6030	· · GASKET	1	SN:30204043--
6	DK152111-2820	· · TAPPET ASS'Y	1	SN:30204043--
7	DK152112-0100	· · · ROLLER	1	SN:30204043--
8	DK152113-0700	· · · PIN	1	SN:30204043--
9	DK152114-0400	· · · GUIDE	2	SN:30204043--
10	DK152115-0500	· · VALVE	2	SN:30204043--
11	DK152116-0200	· · SPRING	2	SN:30204043--
12	DK152118-0900	· · ADAPTER	1	SN:30204043--
13	DK029631-6060	· · O-RING	2	SN:30204043--
14	DK152121-0200	· · RING,SNAP	1	SN:30204043--
15	DK152200-5420	· · PUMP, PRIMING	1	SN:30204043--
16	DK152300-5920	· · BOLT,JOINT	1	SN:30204043--
17	DK029731-4680	· · BOLT, JOINT	1	SN:30204043--
18	DK029341-4130	· · GASKET	2	SN:30204043--
19	DK029341-4130	· · GASKET	2	SN:30204043--
20	DK152320-0100	· · COVER	1	SN:30204043--

@@6F260@

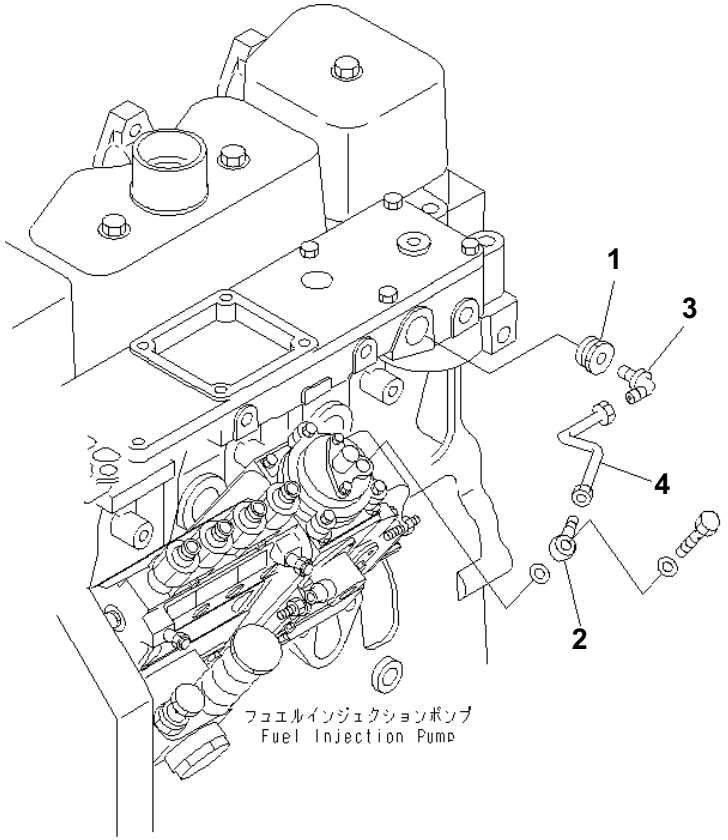

SAA4D102E-2E S/N 30204043 AND UP

BOOST TUBE

Item	Part No.	Description	Qty	Options
1	6733-81-8910	PLUG	1	SN:30204043--
2	6738-81-8220	JOINT	1	SN:30204043--
3	6732-81-8150	ELBOW	1	SN:30204043--
4	6742-11-4360	TUBE	1	SN:30204043--

Ref. A401R-01B4 Page 030480

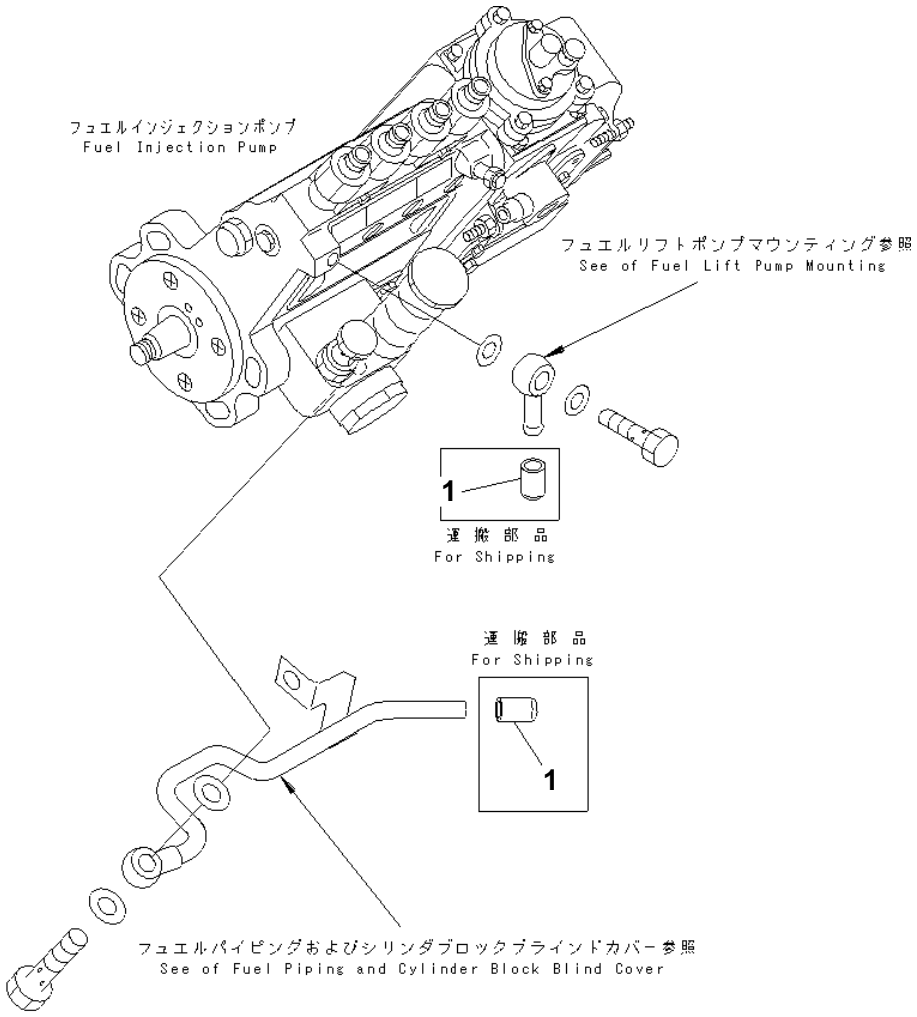

FUEL INLET AND OUTLET JOINT CAP

Item	Part No.	Description	Qty	Options
1	6732-71-5740	CAP, (FOR SHIPPING)	2	SN:30204043--

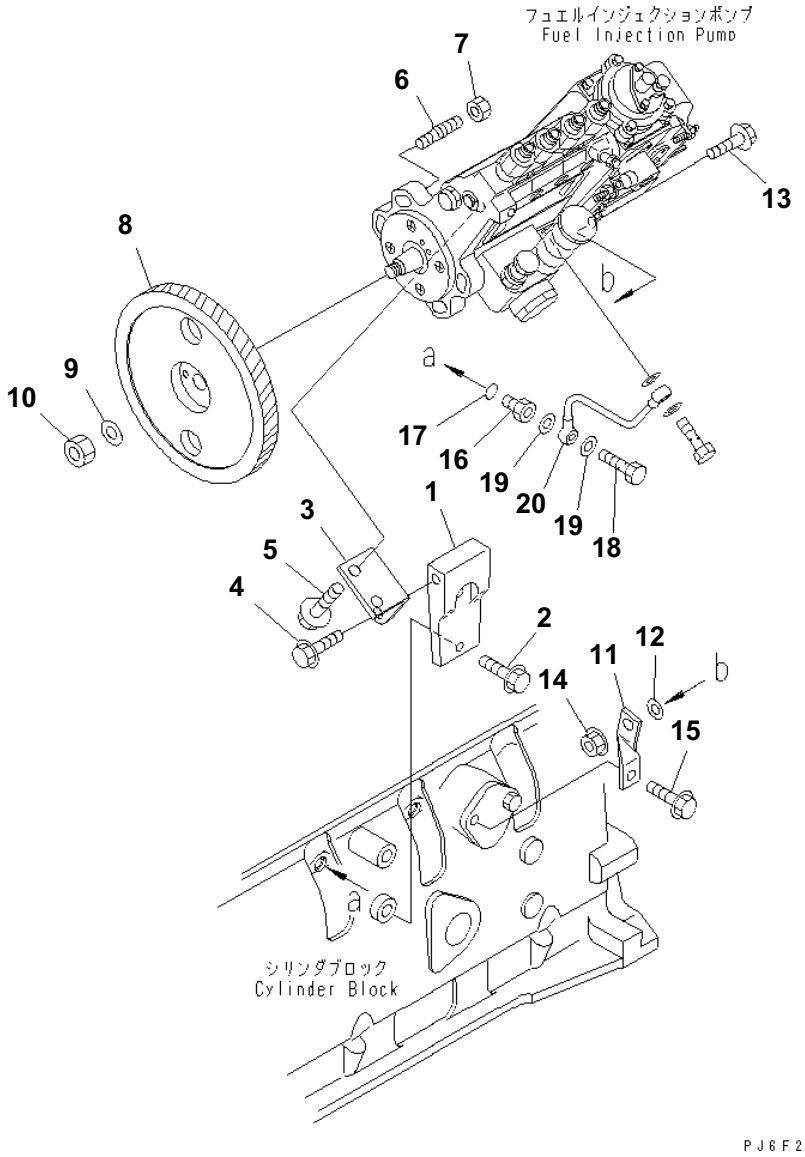

FUEL INJECTION PUMP MOUNTING

Item	Part No.	Description	Qty	Options
1	6732-71-3681	BRACKET	1	SN:30204043--
2	6732-21-5160	BOLT	2	SN:30204043--
3	6732-71-3611	BRACKET	1	SN:30204043--
4	6735-61-3810	BOLT	1	SN:30204043--
5	01435-01014	BOLT	2	SN:30204043--
6	6738-71-3120	STUD	4	SN:30204043--
7	6736-81-6170	NUT	5	SN:30204043--
8	6738-71-3100	GEAR ASS'Y	1	SN:30204043--
9	6130-32-1361	WASHER	1	SN:30204043--
10	01582-01411	NUT	1	SN:30204043--
11	6732-71-3630	BRACKET	1	SN:30204043--
12	01643-31032	WASHER	1	SN:30204043--
13	6735-71-3220	BOLT	1	SN:30204043--
14	6736-81-6170	NUT	1	SN:30204043--
15	6732-21-5160	BOLT	1	SN:30204043--
16	6732-71-5450	NIPPLE	1	SN:30204043--
17	6215-81-9710	O-RING	1	SN:30204043--
18	07206-30710	BOLT	1	SN:30204043--
19	07005-01012	GASKET (K2)	2	SN:30204043--
20	6735-71-5411	TUBE	1	SN:30204043--

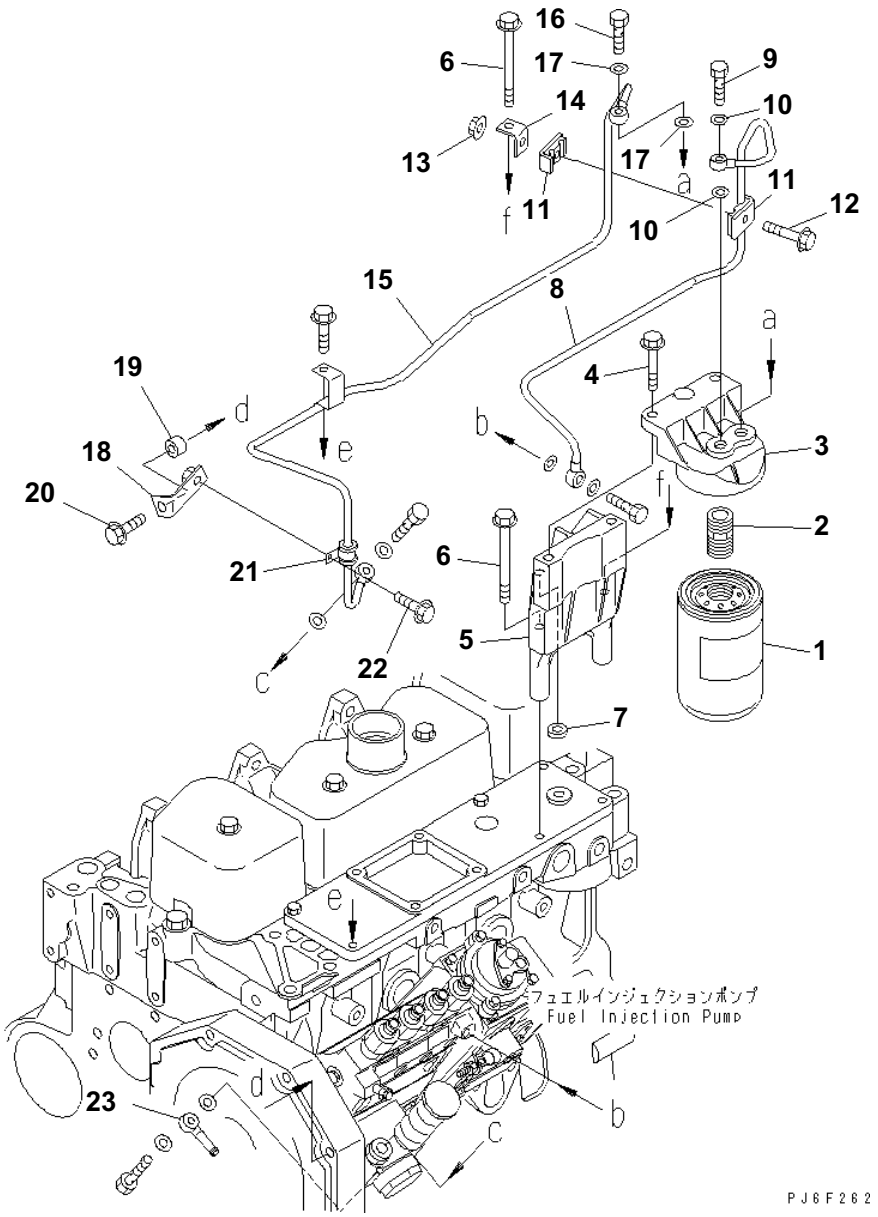

FUEL FILTER PIPING

Item	Part No.	Description	Qty	Options
1	6732-71-6112	CARTRIDGE, FUEL	1	SN:30204043--
2	6732-71-6650	ADAPTER	1	SN:30204043--
3	6735-71-6230	HEAD	1	SN:30204043--
4	6732-21-5160	BOLT	2	SN:30204043--
5	6738-71-6710	BRACKET	1	SN:30204043--
6	6742-01-4460	BOLT	3	SN:30204043--
7	6144-21-5880	SPACER	1	SN:30204043--
8	6737-71-5640	TUBE	1	SN:30204043--
9	6732-71-6510	BOLT, JOINT	1	SN:30204043--
10	07005-01212	GASKET (K1)	2	SN:30204043--
11	6162-75-5820	CLAMP	2	SN:30204043--
12	6742-01-2630	BOLT	1	SN:30204043--
13	6742-01-2660	NUT	1	SN:30204043--
14	6211-21-5490	BRACKET	1	SN:30204043--
15	6737-71-5630	TUBE	1	SN:30204043--
16	6732-71-6510	BOLT, JOINT	1	SN:30204043--
17	07005-01212	GASKET (K1)	2	SN:30204043--
18	6738-71-5590	BRACKET	1	SN:30214140--
	6736-71-5530	BRACKET	1	SN:30204043--30214139
19	6354-81-6310	SPACER	1	SN:30204043--
20	6732-21-6630	BOLT	1	SN:30204043--
21	6736-71-5540	CLAMP	1	SN:30204043--
22	6731-71-6270	SCREW	1	SN:30204043--
23	6141-71-1710	JOINT	1	SN:30204043--

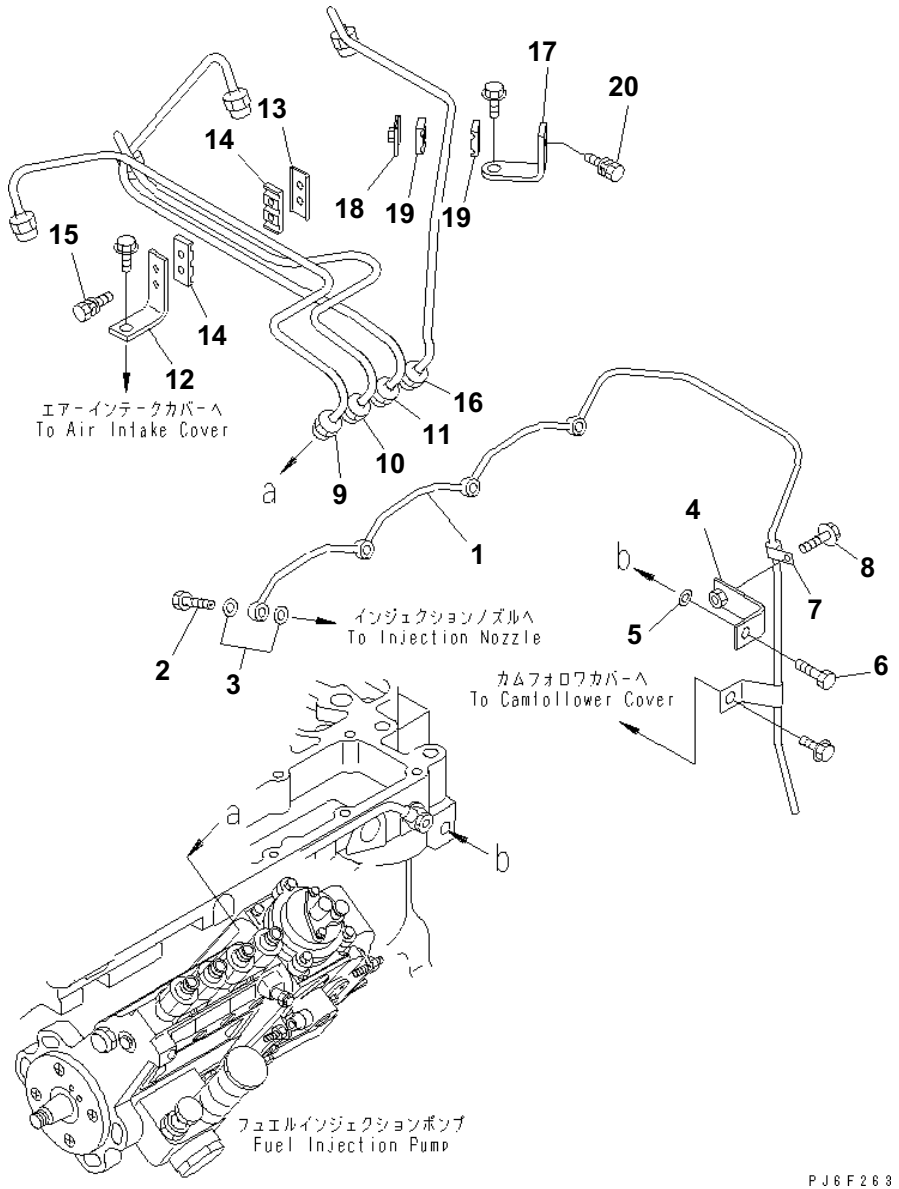

FUEL PIPING

Item	Part No.	Description	Qty	Options
1	6737-71-5510	TUBE	1	SN:30204043--
2	6732-71-6240	BOLT	4	SN:30204043--
3	6732-71-6260	GASKET (K1)	8	SN:30204043--
4	6737-71-5580	BRACKET	1	SN:30204043--
5	01643-31232	WASHER	1	SN:30204043--
6	01050-31216	BOLT	1	SN:30204043--
7	04434-50508	CLIP	1	SN:30204043--
8	6732-21-3120	BOLT	1	SN:30204043--
9	6732-71-5210	TUBE, INJECTION¤ NO.1	1	SN:30204043--
10	6732-71-5220	TUBE, INJECTION¤ NO.2	1	SN:30204043--
11	6732-71-5230	TUBE, INJECTION¤ NO.3	1	SN:30204043--
12	6732-71-5750	BRACKET	1	SN:30204043--
13	6735-71-5830	BRACKET	1	SN:30204043--
14	6734-71-5720	ISOLATOR	2	SN:30204043--
15	6734-71-5520	BOLT	2	SN:30204043--
16	6732-71-5240	TUBE, INJECTION¤ NO.4	1	SN:30204043--
17	6732-71-5760	BRACKET	1	SN:30204043--
18	6735-71-5840	BRACKET	1	SN:30204043--
19	6735-71-5860	ISOLATOR	2	SN:30204043--
20	6734-71-5520	BOLT	1	SN:30204043--

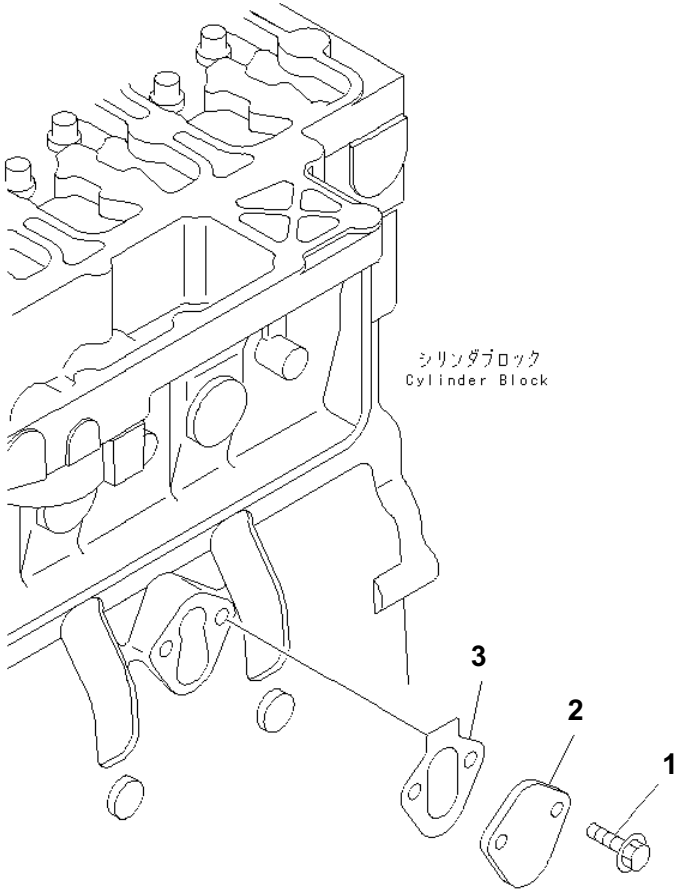

CYLINDER BLOCK BLIND COVER

Item	Part No.	Description	Qty	Options
1	6732-71-3220	BOLT	2	SN:30204043--
2	6736-71-5811	PLATE	1	SN:30204043--
3	6735-61-6411	GASKET	1	SN:30204043--

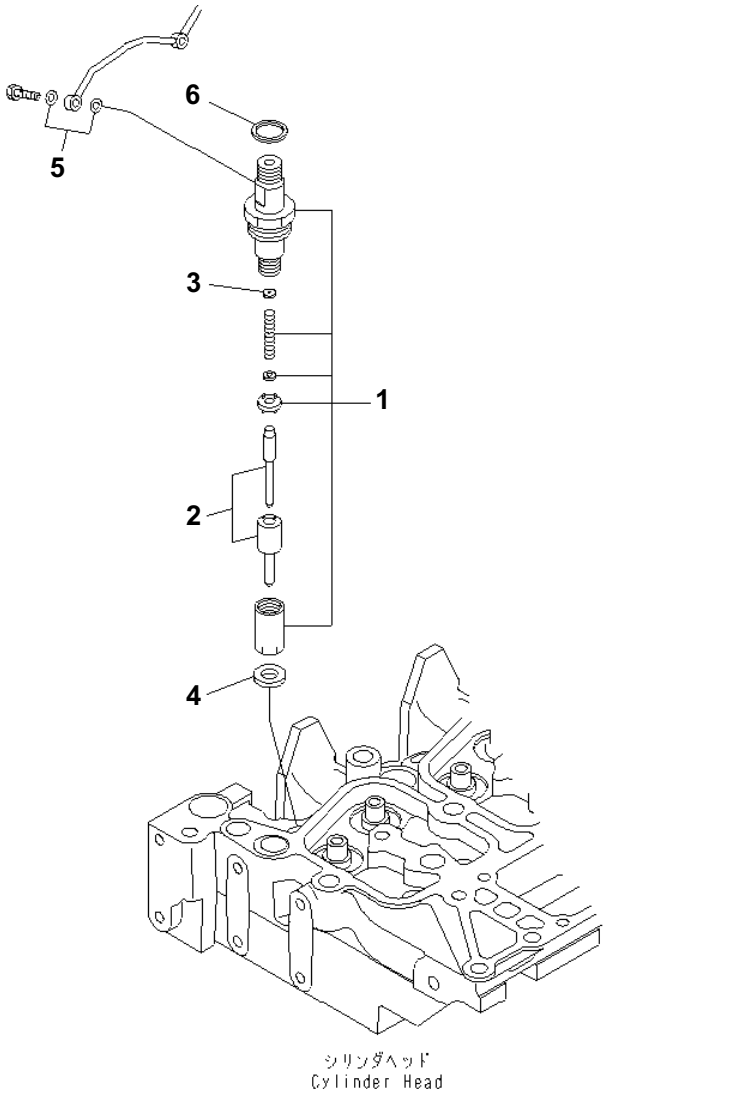

SAA4D102E-2E S/N 30204043 AND UP

INJECTION NOZZLE

Item	Part No.	Description	Qty	Options
	6738-11-3090	KIT, NOZZLE HOLDER	4	SN:30204043--
1	6738-11-3100	・ NOZZLE HOLDER ASS'Y	1	SN:30204043--
2	6738-11-3120	・・ NOZZLE	1	SN:30204043--
3	6734-11-3610	・・ SHIM¤ 1.00MM	1	SN:30204043--
	6734-11-3620	・・ SHIM¤ 1.04MM	1	SN:30204043--
	6734-11-3630	・・ SHIM¤ 1.08MM	1	SN:30204043--
	6734-11-3640	・・ SHIM¤ 1.10MM	1	SN:30204043--
	6734-11-3650	・・ SHIM¤ 1.14MM	1	SN:30204043--
	6734-11-3660	・・ SHIM¤ 1.18MM	1	SN:30204043--
	6734-11-3670	・・ SHIM¤ 1.20MM	1	SN:30204043--
	6734-11-3680	・・ SHIM¤ 1.24MM	1	SN:30204043--
	6734-11-3690	・・ SHIM¤ 1.28MM	1	SN:30204043--
	6734-11-3710	・・ SHIM¤ 1.30MM	1	SN:30204043--
	6734-11-3720	・・ SHIM¤ 1.34MM	1	SN:30204043--
	6734-11-3730	・・ SHIM¤ 1.38MM	1	SN:30204043--
	6734-11-3740	・・ SHIM¤ 1.40MM	1	SN:30204043--
	6734-11-3750	・・ SHIM¤ 1.44MM	1	SN:30204043--
	6734-11-3760	・・ SHIM¤ 1.48MM	1	SN:30204043--
	6734-11-3770	・・ SHIM¤ 1.50MM	1	SN:30204043--
	6734-11-3780	・・ SHIM¤ 1.54MM	1	SN:30204043--
	6734-11-3790	・・ SHIM¤ 1.58MM	1	SN:30204043--
	6734-11-3810	・・ SHIM¤ 1.60MM	1	SN:30204043--
	6734-11-3820	・・ SHIM¤ 1.64MM	1	SN:30204043--
	6734-11-3830	・・ SHIM¤ 1.68MM	1	SN:30204043--
	6734-11-3840	・・ SHIM¤ 1.70MM	1	SN:30204043--
	6734-11-3850	・・ SHIM¤ 1.74MM	1	SN:30204043--
	6734-11-3860	・・ SHIM¤ 1.78MM	1	SN:30204043--
	6734-11-3870	・・ SHIM¤ 1.80MM	1	SN:30204043--
	6734-11-3880	・・ SHIM¤ 1.84MM	1	SN:30204043--
	6734-11-3890	・・ SHIM¤ 1.88MM	1	SN:30204043--
	6734-11-3910	・・ SHIM¤ 1.90MM	1	SN:30204043--
	6734-11-3920	・・ SHIM¤ 1.94MM	1	SN:30204043--
	6734-11-3930	・・ SHIM¤ 1.98MM	1	SN:30204043--
4	6736-11-3430	・・ GASKET (K1)	1	SN:30204043--
5	6732-71-6260	・ GASKET (K1)	2	SN:30204043--
6	6732-11-3850	・ SEAL (K1)	1	SN:30204043--

Ref. A4219-01A8 Page 030540

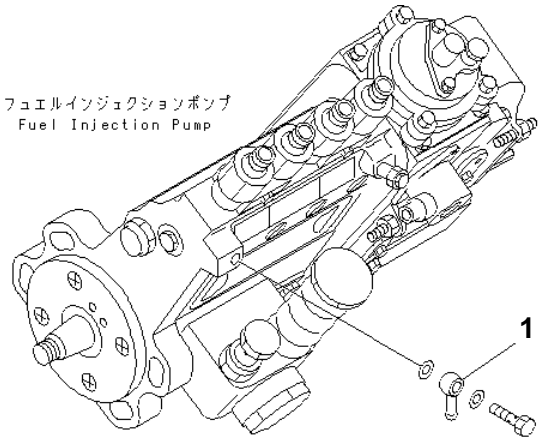

PJ6C392

FUEL JOINT

Item	Part No.	Description	Qty	Options
1	6144-71-5750	JOINT	1	SN:30204043--

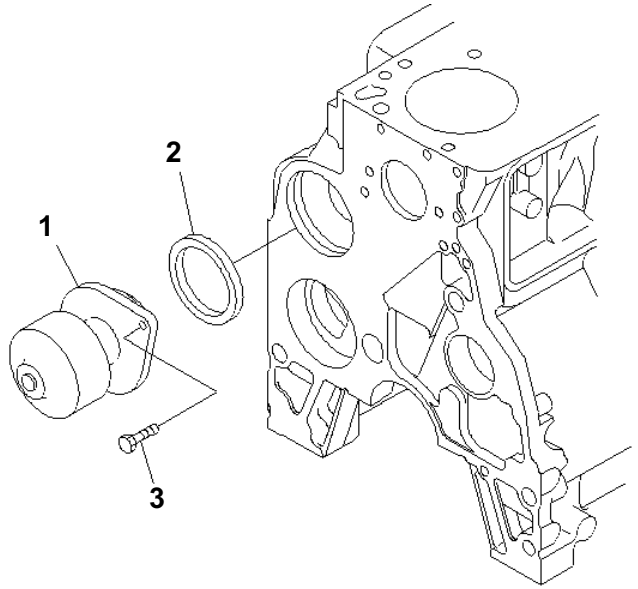

PJ6B451

WATER PUMP

Item	Part No.	Description	Qty	Options
	6736-61-1402	KIT, WATER PUMP	1	SN:30204043--
1	☆6735-61-1502	WATER PUMP	1	SN:30204043--
2	6736-61-1520	SEAL (K2)	1	SN:30204043--
3	6731-61-1370	BOLT	2	SN:30204043--

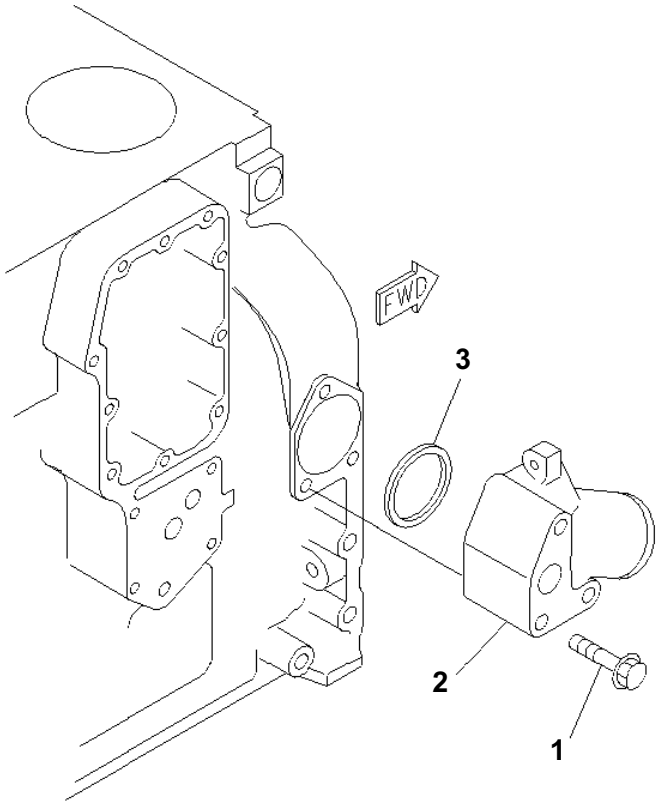

SAA4D102E-2E S/N 30204043 AND UP

WATER CONNECTOR

Item	Part No.	Description	Qty	Options
1	6732-61-6120	BOLT	3	SN:30204043--
2	6731-61-6260	CONNECTOR	1	SN:30204043--
3	6732-61-6130	SEAL (K2)	1	SN:30204043--

Ref. A501R-01A0 Page 030570

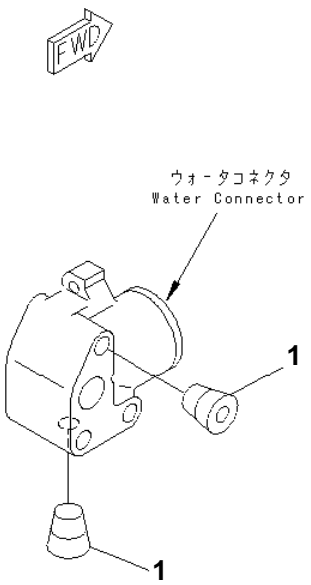

WATER CONNECTOR PLUG

Item	Part No.	Description	Qty	Options
1	6732-11-1910	PLUG	2	SN:30204043--

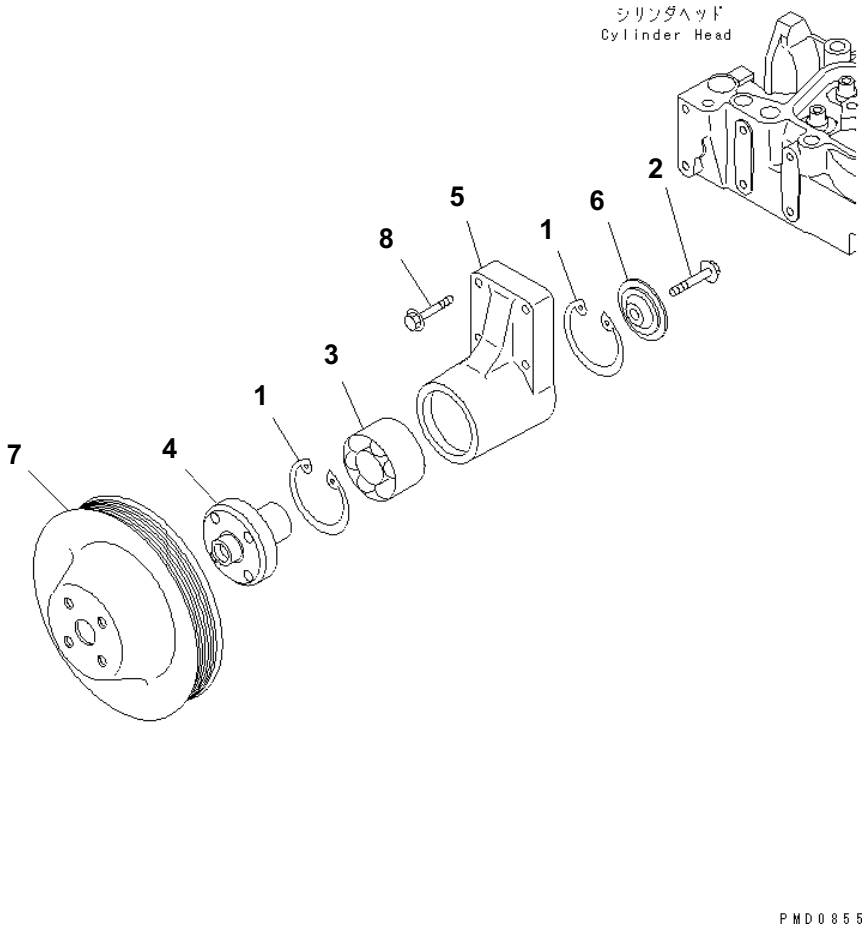

SAA4D102E-2E S/N 30204043 AND UP

FAN DRIVE PULLEY

Item	Part No.	Description	Qty	Options
	6732-61-3120	SUPPORT ASS'Y	1	SN:30204043--
1	6732-61-3450	· RING, SNAP	2	SN:30204043--
2	6732-61-3440	· BOLT	1	SN:30204043--
3	6732-61-3420	· BEARING, BALL	1	SN:30204043--
4	6732-61-3410	· HUB	1	SN:30204043--
5	☆	· SUPPORT	1	SN:30204043--
6	6732-61-3430	· RETAINER	1	SN:30204043--
7	6738-61-3140	PULLEY	1	SN:30204043--
8	6732-61-3170	BOLT	4	SN:30204043--

Ref. A502P-01D1 Page 030590

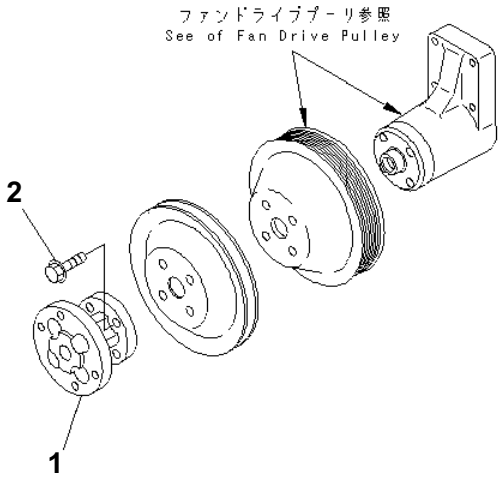

PJ6B422

FAN PILOT SPACER

Item	Part No.	Description	Qty	Options
1	6732-61-3610	SPACER	1	SN:30204043--
2	6216-74-6190	BOLT	4	SN:30204043--

@@6F272@

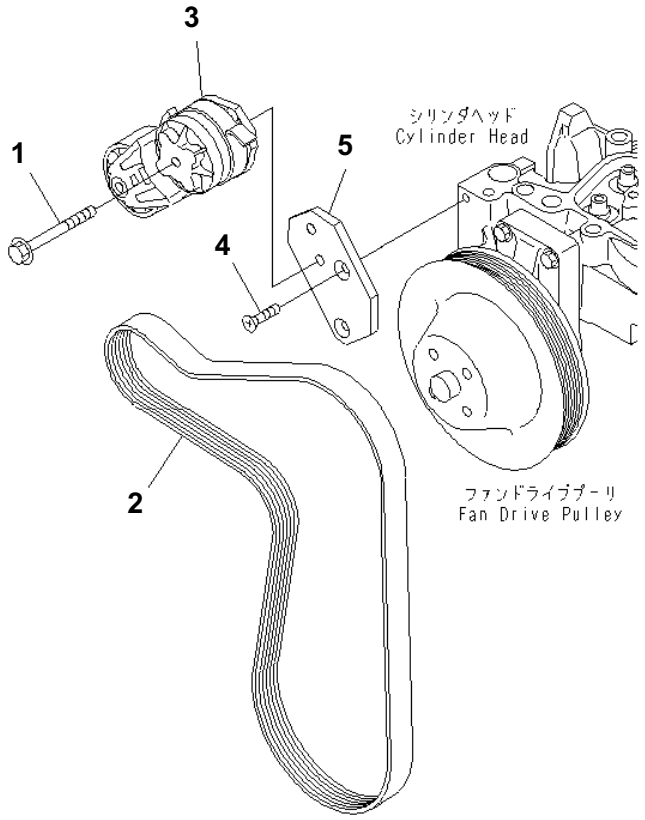

SAA4D102E-2E S/N 30204043 AND UP

BELT TENSIONER (FOR 60A ALTERNATOR)

Item	Part No.	Description	Qty	Options
1	6732-61-4120	BOLT	1	SN:30204043--
2	6732-82-3480	BELT	1	SN:30204043--
3	6736-61-4120	TENSIONER, BELT	1	SN:30204043--
4	6732-61-4220	SCREW	2	SN:30204043--
5	6738-61-3990	PLATE	1	SN:30204043--

Ref. A601S-01F2 Page 030610

00055410

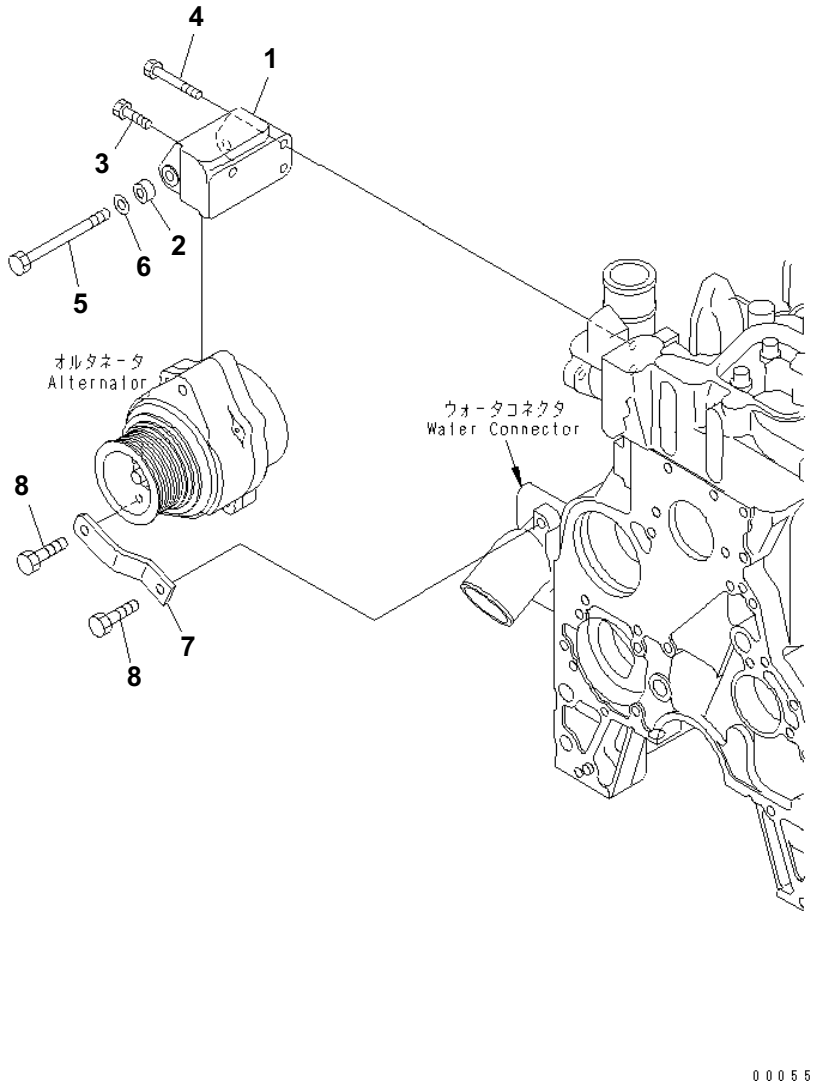

SAA4D102E-2E S/N 30204043 AND UP

ALTERNATOR MOUNTING

Item	Part No.	Description	Qty	Options
	6754-81-6110	SUPPORT ASS'Y	1	SN:30232080--
	□6732-81-6611	SUPPORT ASS'Y	1	SN:30204043--30232079
1	6754-81-6120	・ SUPPORT	1	SN:30232080--
	6732-81-6641	・ SUPPORT	1	SN:30204043--30232079
2	6732-81-6630	・ SPACER	1	SN:30204043--
3	6732-21-5160	BOLT	1	SN:30204043--
4	6736-21-3210	BOLT	2	SN:30204043--
5	01435-01090	BOLT	1	SN:30204043--
6	01640-01016	WASHER	1	SN:30204043--
7	6737-81-6580	PLATE	1	SN:30204043--
8	6732-21-5160	BOLT	2	SN:30204043--

Ref. A601T-01B4 Page 030620

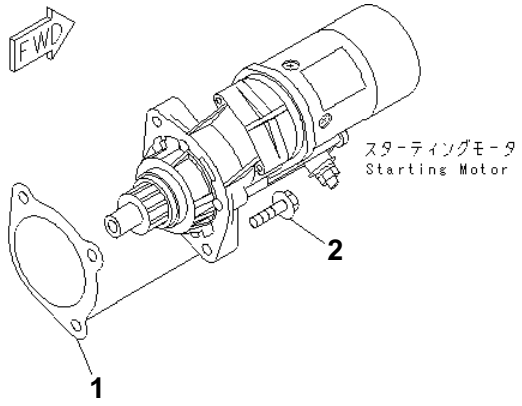

PMD1104

STARTING MOTOR MOUNTING (4.5KW)

Item	Part No.	Description	Qty	Options
1	6732-81-6811	GASKET (K2)	1	SN:30204043--
2	6732-22-3110	BOLT	2	SN:30204043--

リペア　パーツ
REPAIR PARTS

詳細については次のページを参照して下さい。
See subsequent pages for details.

PMD0861

REPAIR PARTS (CYLINDER HEAD)

Item	Part No.	Description	Qty	Options
1	6736-19-1310	GUIDE¤ 60.50MM, INTAKE	4	SN:30204043--
2	6736-19-1410	GUIDE¤ 51.75MM, EXHAUST	4	SN:30204043--
3	6736-18-1310	GUIDE, THIN WALL¤INTAKE AND EXHAUST OVERSIZE PARTS	8	SN:30204043--
4	6732-19-1151	GASKET¤ 0.15MM	1	SN:30204043--
5	6732-18-1151	GASKET¤ 0.50MM	1	SN:30204043--

KIT 詳細については次のページを参照して下さい。
See subsequent pages for details.

K-1 6737-K1-1200 シリンダ ヘッド ガスケット キット
CYLINDER HEAD GASKET KIT

このガスケットキットは、キット区分ごとの基本セットです。
部品明細書中、キットの記号が付いていない消耗部品は、お手数ですが単品にて手配下さい。

This kit basis to the gasket kit.
Thers not kit mark parts articles of consumption single order.

00000210

SAA4D102E-2E S/N 30204043 AND UP

CYLINDER HEAD GASKET KIT

Item	Part No.	Description	Qty	Options
1	6737-K1-1200	GASKET KIT,CYLINDER HEAD	1	SN:30204043--
	6732-11-4811	・ GASKET,AIR INTAKE HEATER	3	SN:30204043--
	07005-01212	・ GASKET,AIR TUBE	2	SN:30204043--
	07005-01012	・ GASKET,AIR TUBE	2	SN:30204043--
	07005-01212	・ GASKET,FUEL TUBE (FILTER)	4	SN:30204043--
	07005-01412	・ GASKET,FUEL TUBE (INJECTION PUMP)	8	SN:30204043--
	6732-71-6260	・ GASKET,INJECTOR - SPILL	8	SN:30204043--
	6733-11-4861	・ GASKET,INTAKE MANIFOLD COVER	1	SN:30204043--
	6732-11-3850	・ SEAL,INJECTOR	4	SN:30204043--
	6736-11-3430	・ GASKET,INJECTOR SHIM	4	SN:30204043--
	6205-11-5580	・ GASKET,TURBOCHARGER GASKET	1	SN:30204043--
	6732-41-4541	・ SEAL,VALVE STEM	8	SN:30204043--
	6732-11-1151	・ GASKET,CYLINDER HEAD	1	SN:30204043--
	6736-11-5820	・ GASKET,EXHAUST MANIFOLD	4	SN:30204043--
	6732-61-6250	・ SEAL,THERMOSTAT	1	SN:30204043--
	6732-61-6240	・ GASKET,THERMOSTAT	1	SN:30204043--
	6732-51-8350	・ GASKET,TURBOCHARGER OIL DRAIN	1	SN:30204043--
	07003-01015	・ GASKET,TURBOCHARGER OIL SUPPLY	2	SN:30204043--
	07005-01412	・ GASKET,TURBOCHARGER OIL SUPPLY	2	SN:30204043--
	6736-51-8710	・ O-RING,TURBOCHARGER OIL SUPPLY NIPPLE	1	SN:30204043--
	6732-11-8181	・ GASKET,HEAD COVER	4	SN:30204043--
	6732-11-8210	・ GASKET,CAMFOLLOWER COVER BOLT	4	SN:30204043--
	6732-81-8220	・ CLAMP,TURBOCHARGER OUTLET PIPE	1	SN:30204043--

Ref. A8124-01A0 Page 030650

KIT 詳細については次のページを参照して下さい。
See subsequent pages for details.

K-2 6737-K2-1200 シリンダ ブロック ガスケット キット
CYLINDER BLOCK GASKET KIT

このガスケットキットは、キット区分ごとの基本セットです。
部品明細書中、キットの記号が付いていない消耗部品は、お手数ですが単品にて手配下さい。

This kit basis to the gasket kit.
Thers not kit mark parts articles of consumption single order.

00000211

SAA4D102E-2E S/N 30204043 AND UP

CYLINDER BLOCK GASKET KIT

Item	Part No.	Description	Qty	Options
2	6737-K2-1200	GASKET KIT,CYLINDER BLOCK	1	SN:30204043--
	6215-81-9710	・ O-RING,M10 PLUG	2	SN:30204043--
	6731-21-1190	・ NOZZLE,COOLING NOZZLE	4	SN:30204043--
	6732-21-3811	・ GASKET,GEAR CASE	1	SN:30204043--
	6732-21-3870	・ O-RING,GEAR CASE	1	SN:30204043--
	6732-21-3880	・ GASKET,GEAR HOUSING	1	SN:30204043--
	6731-21-4220	・ SEAL,FRONT SEAL KIT	1	SN:30204043--
	6736-21-3450	・ GASKET,FRONT COVER	1	SN:30204043--
	6732-11-8210	・ GASKET,PUSH ROD COVER BOLT	4	SN:30204043--
	6737-21-6180	・ O-RING,PUSH ROD COVER	1	SN:30204043--
	6737-21-6650	・ GROMMET,PUSH ROD COVER	1	SN:30204043--
	6738-21-6660	・ GASKET,PUSH ROD COVER BOLT	6	SN:30204043--
	07000-72110	・ O-RING,PTO COVER	1	SN:30204043--
	6732-21-3220	・ SEAL,FRONT COVER	1	SN:30204043--
	6735-21-4191	・ GASKET,REAR COVER	1	SN:30204043--
	6736-21-4220	・ SEAL,REAR SEAL KIT (DOUBLE)	1	SN:30204043--
	6732-21-4171	・ GASKET,REAR COVER	1	SN:30204043--
	6732-21-4161	・ O-RING,BEARING CAP	1	SN:30204043--
	07005-01012	・ GASKET,INJECTION PUMP OIL PIPING	7	SN:30204043--
	6735-61-6411	・ GASKET	1	SN:30204043--
	6732-51-4420	・ O-RING,OIL PRESSURE PLUG	1	SN:30204043--
	6732-51-4432	・ GASKET,OIL COOLER COVER	1	SN:30204043--
	6732-61-2312	・ GASKET,OIL COOLER CORE	1	SN:30223355--
	6732-61-2311	・ GASKET,OIL COOLER CORE	1	SN:30204043--30223354
	6162-53-5450	・ PACKING,OIL FILLER	1	SN:30204043--
	6162-53-5430	・ PACKING,OIL FILLER	1	SN:30204043--
	6731-51-5290	・ O-RING,OIL FILLER	1	SN:30204043--
	6733-21-5520	・ GASKET,SUCTION TUBE	1	SN:30204043--
	07005-02216	・ GASKET,OIL PAN DRAIN	1	SN:30204043--
	6732-81-6811	・ GASKET,STARTER	1	SN:30204043--
	6732-51-8330	・ O-RING,TURBOCHARGER DRAIN	2	SN:30204043--
	6732-61-6130	・ SEAL,WATER INLET CONNECTION	1	SN:30204043--
	6736-61-1520	・ SEAL,WATER PUMP	1	SN:30204043--

Ref. A8124-02A0 Page 030660

SAA4D102E-2E S/N 30204043 AND UP

CYLINDER BLOCK GASKET KIT

Item	Part No.	Description	Qty	Options
	6736-21-3360	· SEAL,SIDE OIL FILLER	1	SN:30204043--
	6136-21-5870	· GASKET,OIL LEVEL SENSOR PLATE	1	SN:30204043--
	6732-21-7140	· SEAL,FRONT OIL FILLER	1	SN:30204043--
	6732-11-8620	· SEAL,FRONT OIL FILLER	1	SN:30204043--

ENGINE RELATED PARTS

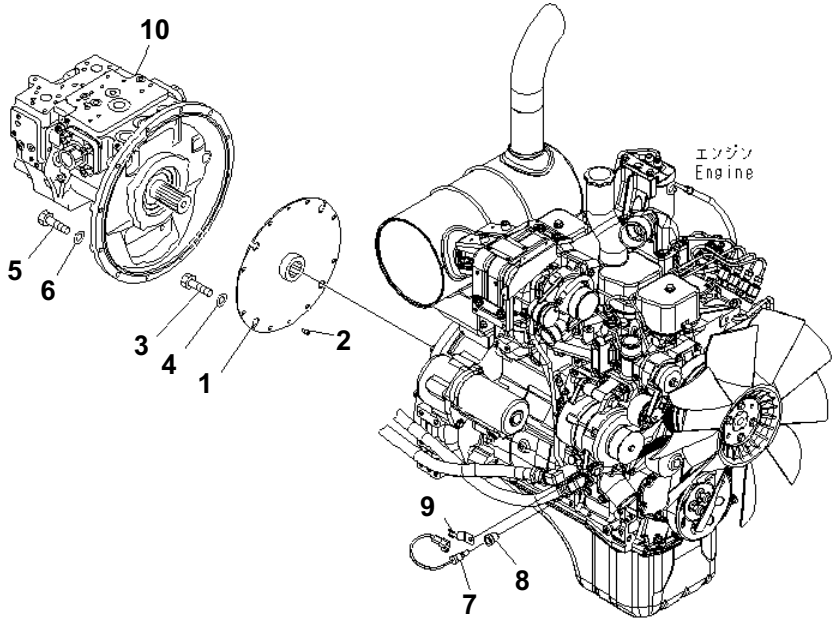

DAMPER¤ PUMP AND SENSOR

Item	Part No.	Description	Qty	Options
1	22U-01-21310	DISK DAMPER	1	SN:B20001--
2	203-01-51120	PIN	2	SN:B20001--
3	01010-81020	BOLT	8	SN:B20001--
4	01643-31032	WASHER	8	SN:B20001--
5	01010-81045	BOLT	12	SN:B20025--
	01010-81040	BOLT	12	SN:B20001--B20024
6	01643-31032	WASHER	12	SN:B20001--
7	7861-93-3520	SENSOR	1	SN:B20001--
8	565-06-13212	ADAPTER	1	SN:B20001--
9	08193-20010	CLIP	1	SN:B20001--
10	(708-3M-00020)	PUMP ASS'Y	1	SN:B20025--
	(708-3M-00011)	PUMP ASS'Y	1	SN:B20001--B20024

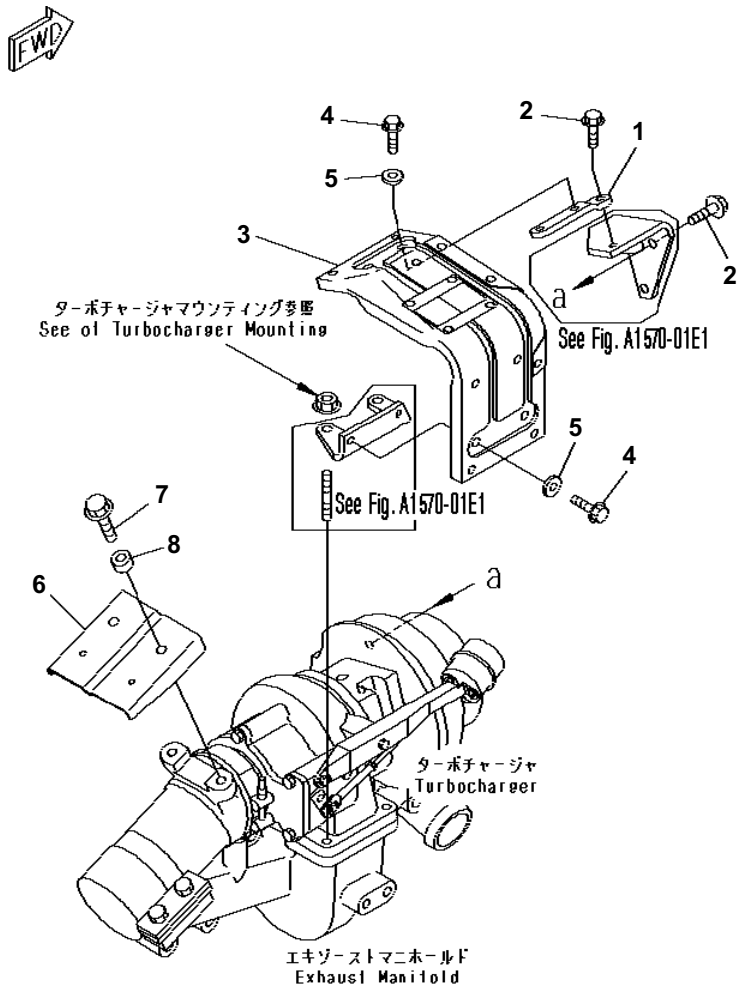

BRACKET & COVER FOR HEAT SHIELD

Item	Part No.	Description	Qty	Options
1	6732-81-8430	BRACKET	1	SN:B20001--
2	01435-00816	BOLT	3	SN:B20001--
3	6737-81-8510	COVER	1	SN:B20001--
4	01435-00816	BOLT	4	SN:B20001--
5	154-61-16570	WASHER	4	SN:B20001--
6	6732-81-8451	COVER	1	SN:B20522--
	6732-81-8450	COVER	1	SN:B20001--B20521
7	01435-00820	BOLT	2	SN:B20001--
8	6131-12-4570	SPACER	2	SN:B20001--

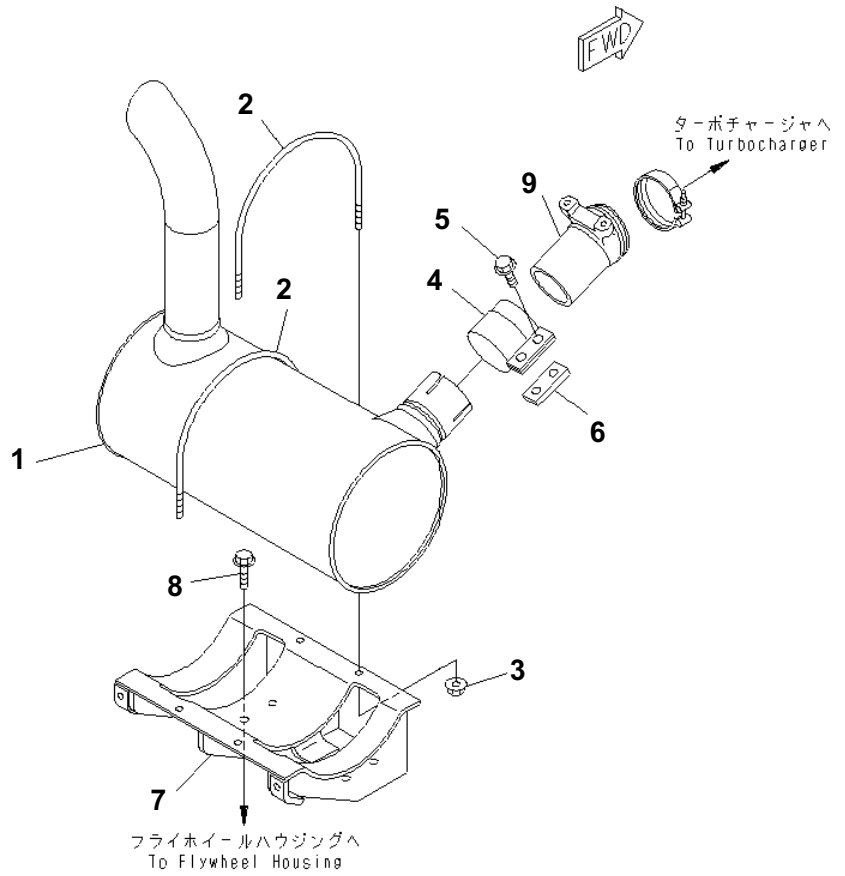

MUFFLER AND MOUNTING

Item	Part No.	Description	Qty	Options
1	6737-11-5540	MUFFLER	1	SN:B20001--
2	6206-11-5980	U-BOLT	2	SN:B20001--
3	01584-00806	NUT	4	SN:B20001--
4	6207-11-5921	CLAMP	1	SN:B20001--
5	01435-01235	BOLT	2	SN:B20001--
6	6207-11-5850	PLATE	1	SN:B20001--
7	6732-11-5420	BRACKET	1	SN:B20001--
8	01435-01025	BOLT	4	SN:B20001--
9	6732-11-5722	TUBE	1	SN:B20001--

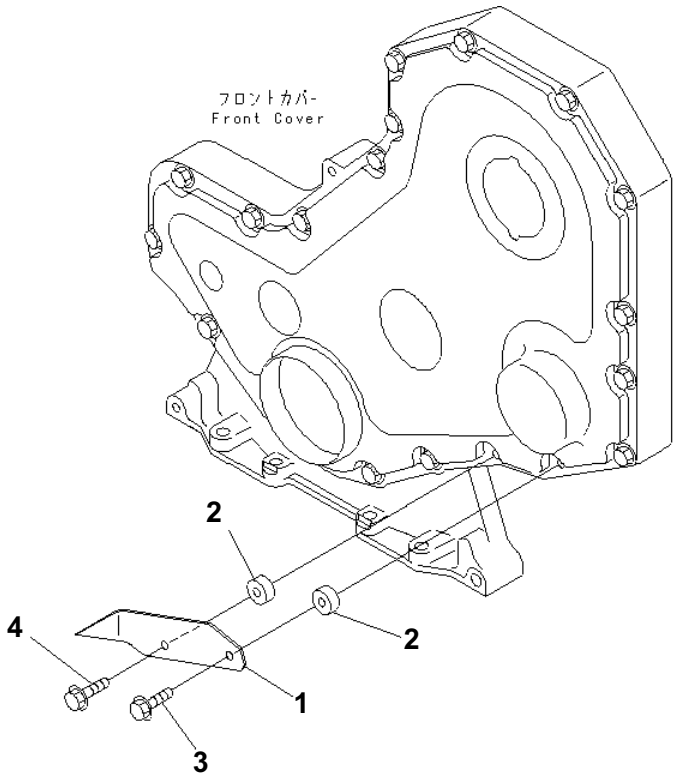

FRONT COVER POINTER

Item	Part No.	Description	Qty	Options
1	6738-21-3910	POINTER	1	SN:B20001--
2	6130-12-1961	SPACER	2	SN:B20001--
3	6732-21-5160	BOLT	1	SN:B20001--
4	6736-21-3230	BOLT	1	SN:B20001--

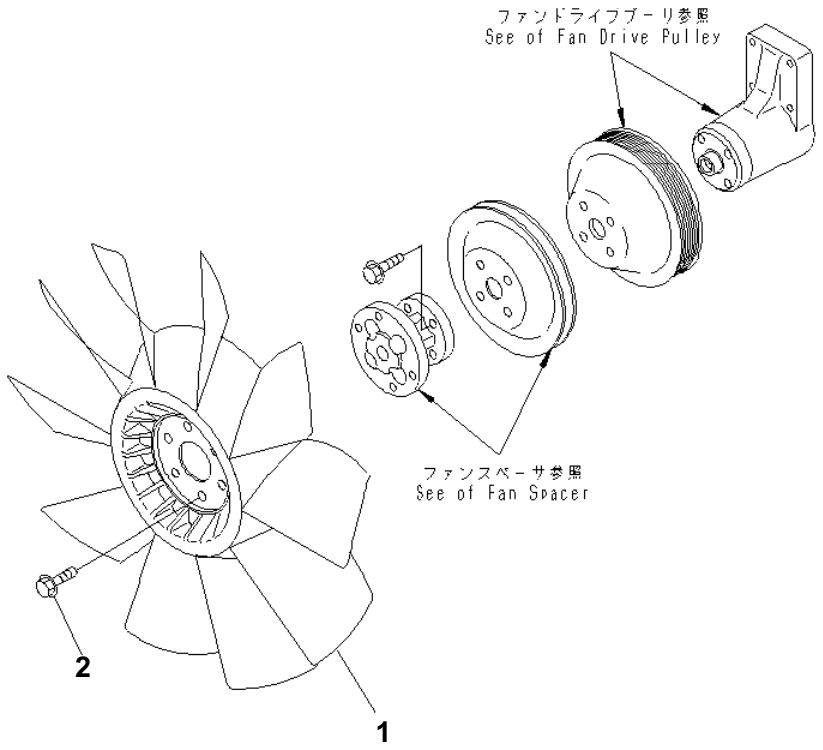

COOLING FAN

Item	Part No.	Description	Qty	Options
1	600-625-7550	FAN,COOLING	1	SN:B20001--
2	01435-01020	BOLT	4	SN:B20001--

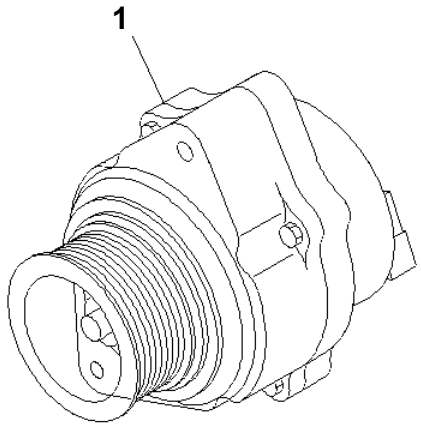

PMD1097

ALTERNATOR (60A)

Item	Part No.	Description	Qty	Options
1	(600-861-6420)	ALTERNATOR A. (60A),(SEE FIG.A601P-02B1)	1	SN:B20001--

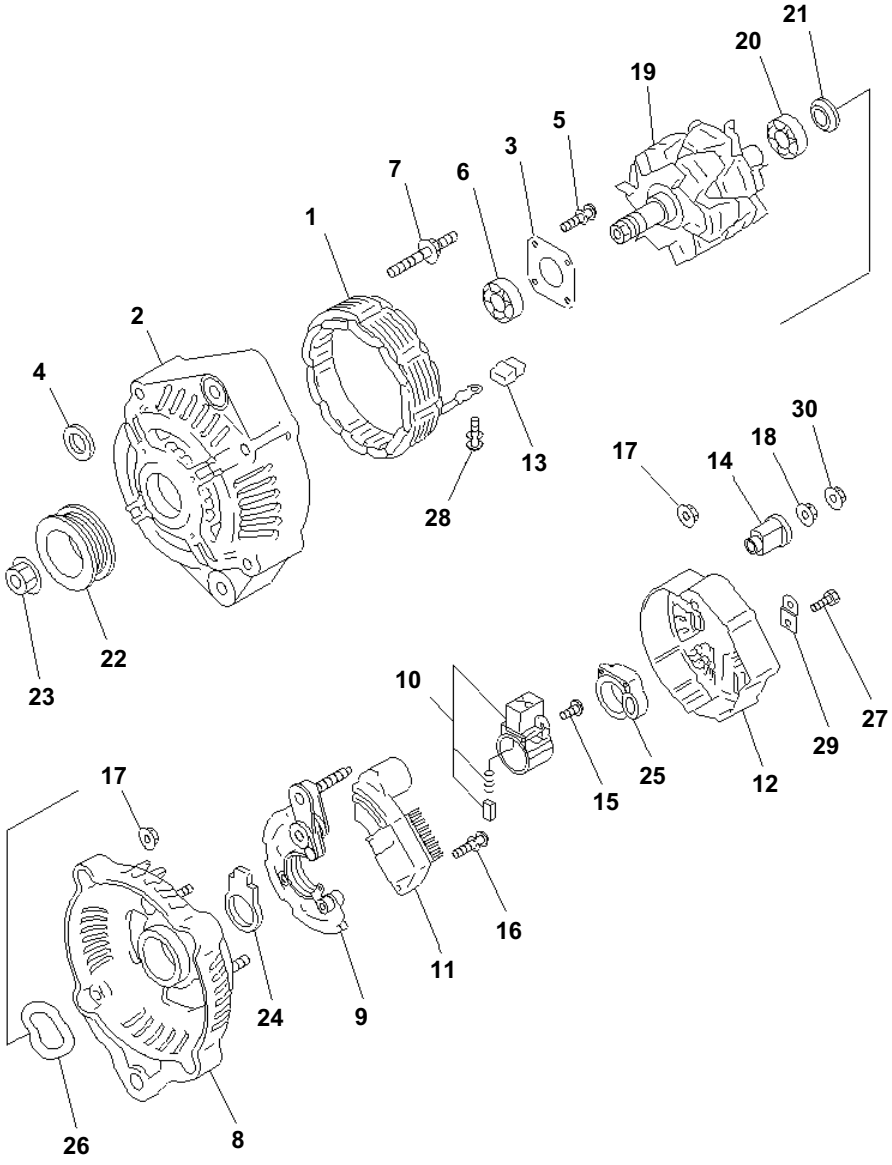

ALTERNATOR (60A) (INNER PARTS)

Item	Part No.	Description	Qty	Options
	600-861-6420	ALTERNATOR A. (60A)	1	SN:B20001--
	ND121400-0800	· FRAME ASS'Y	1	SN:B20001--
1	ND021100-4210	· · STATOR ASS'Y	1	SN:B20001--
2	ND021401-4980	· · FRAME	1	SN:B20001--
3	ND021411-0570	· · PLATE	1	SN:B20001--
4	ND021045-0530	· · COLLAR	1	SN:B20001--
5	ND949006-5590	· · SCREW	4	SN:B20001--
6	ND949100-5010	· · BEARING,BALL	1	SN:B20001--
7	ND949043-2000	· · BOLT,STUD	4	SN:B20001--
8	ND021501-8050	· FRAME,REAR	1	SN:B20001--
9	ND021580-4820	· HOLDER	1	SN:B20001--
10	ND021620-2720	· BRUSH HOLDER ASS'Y	1	SN:B20001--
11	ND126000-2320	· REGULATOR ASS'Y	1	SN:B20001--
12	ND021551-2480	· COVER	1	SN:B20001--
13	ND021605-1970	· BUSHING	4	SN:B20001--
14	ND021605-2481	· BUSHING	1	SN:B20001--
15	ND949006-5460	· SCREW	3	SN:B20001--
16	ND91310-04251	· SCREW	2	SN:B20001--
	ND949007-5110	· SCREW	2	SN:B20001--
17	ND949056-2481	· NUT	7	SN:B20001--
18	ND949056-3080	· NUT	1	SN:B20001--
19	ND021200-8380	· ROTOR ASS'Y	1	SN:B20001--
20	ND949100-2790	· · BEARING,BALL	1	SN:B20001--
21	ND021506-0070	· · COVER	1	SN:B20001--
22	ND021041-8620	· PULLEY	1	SN:B20001--
23	ND949056-2520	· NUT	1	SN:B20001--
24	ND021626-0190	· SEAL	1	SN:B20001--
25	ND021626-0250	· SEAL	1	SN:B20001--
26	ND021542-0160	· WASHER	1	SN:B20001--
27	ND949006-6401	· SCREW	1	SN:B20001--
28	ND949007-6280	· SCREW	4	SN:B20001--
29	ND021602-5230	· PLATE	1	SN:B20001--
30	ND92150-06061	· NUT	1	SN:B20001--

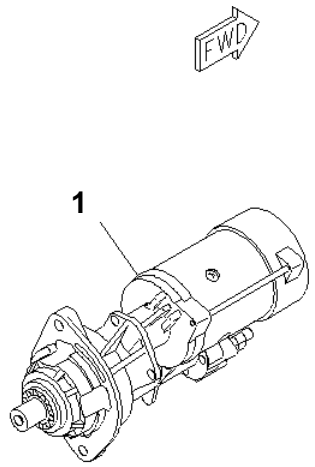

PMD0858

STARTING MOTOR (4.5KW) (WITH PROTECT COVER)

Item	Part No.	Description	Qty	Options
1	(600-863-4210)	STARTING MOTOR ASS'Y,(4.5KW) (SEE FIG.B0000-09A0)	1	SN:B20001--

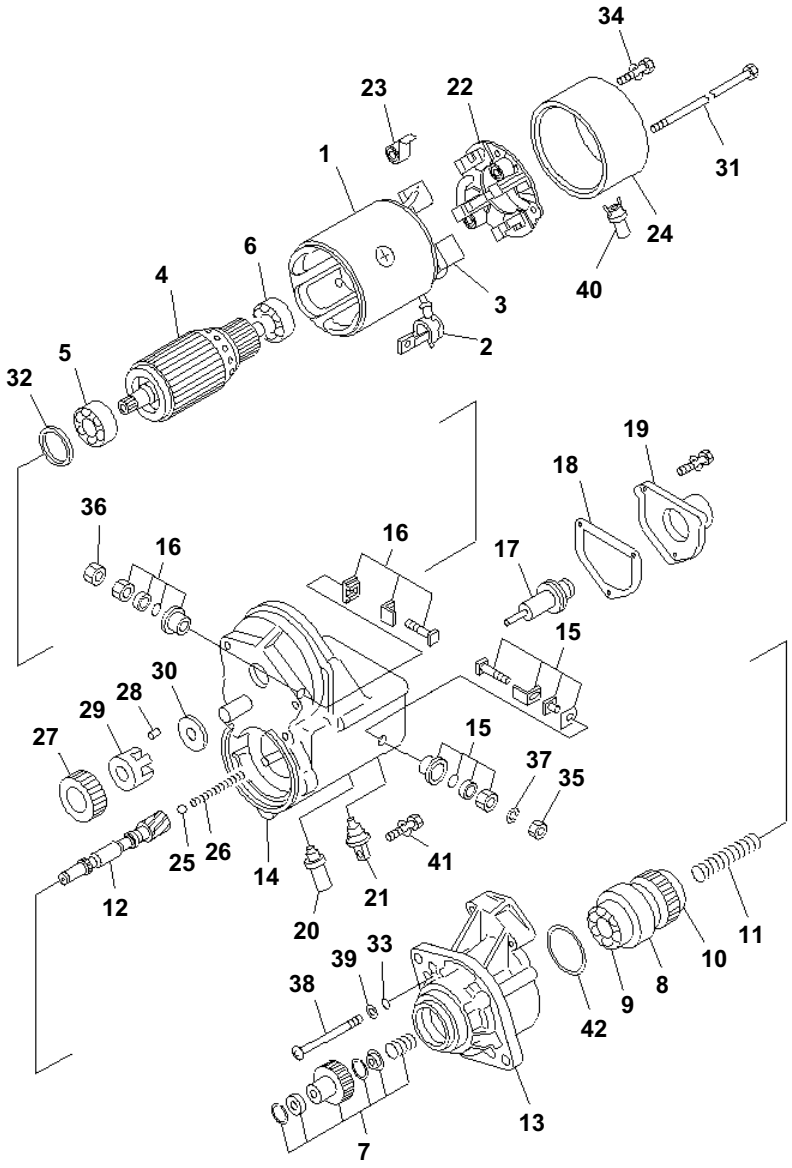

STARTING MOTOR (4.5KW) (WITH PROTECT COVER) (INNER PARTS)

Item	Part No.	Description	Qty	Options
	600-863-4210	STARTING MOTOR ASS'Y,(4.5KW)	1	SN:B20001--
1	ND028100-2882	· YOKE ASS'Y	1	SN:B20001--
2	ND028062-0130	· · COVER	1	SN:B20001--
3	ND028099-3570	· · STARTER KIT	2	SN:B20001--
4	ND028200-1590	· ARMATURE ASS'Y	1	SN:B20001--
5	ND949100-1930	· · BEARING,BALL	1	SN:B20001--
6	ND949100-1750	· · BEARING,BALL	1	SN:B20001--
	ND028300-6551	· CLUTCH ASS'Y	1	SN:B20001--
7	ND028099-3270	· · STARTER KIT	1	SN:B20001--
8	ND028300-6751	· · CLUTCH ASS'Y	1	SN:B20001--
9	ND949100-4500	· · · BEARING,BALL¤ FRONT	1	SN:B20001--
10	ND949100-1920	· · · BEARING,BALL¤ REAR	1	SN:B20001--
11	ND949170-4040	· · SPRING	1	SN:B20001--
12	ND028381-0071	· · SHAFT	1	SN:B20001--
13	ND228401-0633	· HOUSING ASS'Y	1	SN:B20001--
14	ND153400-8530	· MAGNETIC SWITCH A.	1	SN:B20001--
15	ND028099-5620	· · STARTER KIT	1	SN:B20001--
16	ND028099-3160	· · STARTER KIT	1	SN:B20001--
17	ND053660-7170	· · PLUNGER	1	SN:B20001--
18	ND053404-0240	· · GASKET	1	SN:B20001--
19	ND053505-0290	· · COVER	1	SN:B20001--
20	ND053480-7560	· · BOLT ASS'Y	1	SN:B20001--
21	ND028065-0250	· · BUSHING	1	SN:B20001--
22	ND028510-5390	· BRUSH HOLDER ASS'Y	1	SN:B20001--
23	ND949173-0571	· · SPRING	4	SN:B20001--
24	ND028501-8091	· FRAME	1	SN:B20001--
25	ND128961-0010	· BALL	1	SN:B20001--
26	ND949170-4070	· SPRING	1	SN:B20001--
27	ND028371-1500	· PINION	1	SN:B20001--
28	ND028306-0070	· ROLLER	5	SN:B20001--
29	ND028063-0030	· RETAINER	1	SN:B20001--
30	ND028327-0171	· RETAINER	1	SN:B20001--
31	ND128950-0520	· BOLT	2	SN:B20001--
32	ND949020-0600	· WASHER,FELT	1	SN:B20001--
33	ND90801-10050	· O-RING	3	SN:B20001--
34	ND949007-6530	· SCREW	2	SN:B20001--
35	ND90170-10061	· NUT	1	SN:B20001--
36	ND949056-4480	· NUT	1	SN:B20001--
37	ND90258-10001	· WASHER	1	SN:B20001--

PC160LC-7B S/N B20001 AND UP

STARTING MOTOR (4.5KW) (WITH PROTECT COVER) (INNER PARTS)

Item	Part No.	Description	Qty	Options
38	ND949006-4720	· SCREW	3	SN:B20001--
39	ND90200-06241	· WASHER	3	SN:B20001--
40	ND028062-5790	· COVER	1	SN:B20001--
41	ND949007-6850	· SCREW	1	SN:B20001--
42	ND028901-5190	· SEAL	1	SN:B20001--

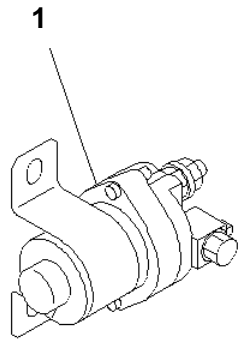

PJ6F064

HEATER SWITCH

Item	Part No.	Description	Qty	Options
1	600-815-2170	SWITCH	1	SN:B20001--

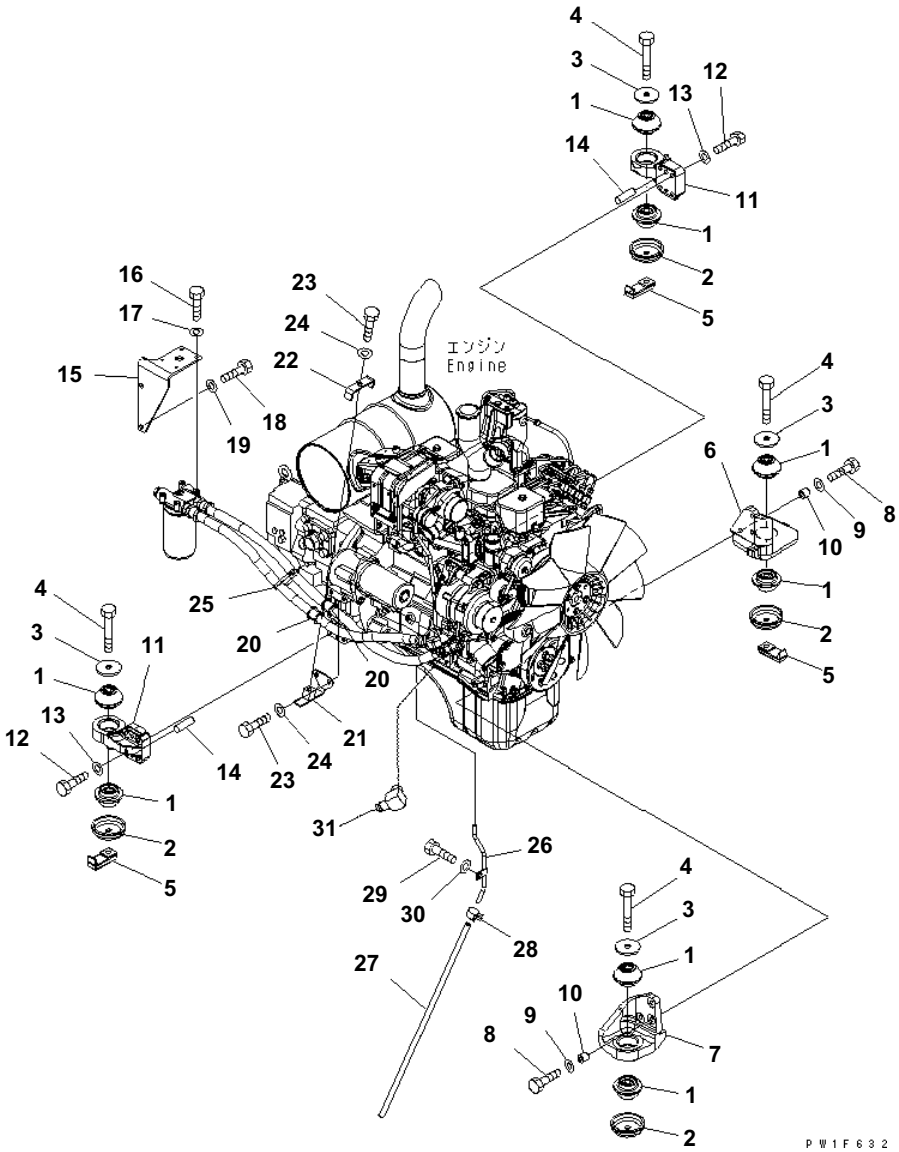

ENGINE MOUNT

Item	Part No.	Description	Qty	Options
1	21K-01-71270	CUSHION	8	SN:B20001--
2	22U-01-21330	STOPPER	4	SN:B20001--
3	113-01-21120	WASHER	4	SN:B20001--
4	01011-81640	BOLT	4	SN:B20001--
5	20Y-01-22111	NUT	3	SN:B20001--
6	21K-01-71110	BRACKET	1	SN:B20001--
7	21K-01-71120	BRACKET	1	SN:B20001--
8	01010-81265	BOLT	6	SN:B20001--
9	01643-31232	WASHER	6	SN:B20001--
10	20Y-01-21260	BOSS	6	SN:B20001--
11	21K-01-71131	BRACKET	2	SN:B20001--
12	22B-01-11190	BOLT	8	SN:B20001--
13	01643-31232	WASHER	8	SN:B20001--
14	04020-01228	PIN	2	SN:B20001--
15	21K-01-71181	BRACKET	1	SN:B20001--
16	01010-80825	BOLT	4	SN:B20001--
17	01643-30823	WASHER	4	SN:B20001--
18	01010-81230	BOLT	2	SN:B20001--
19	01643-31232	WASHER	2	SN:B20001--
20	07095-20627	CUSHION	2	SN:B20001--
21	21K-01-71250	BRACKET	1	SN:B20001--
22	21K-01-71260	BRACKET	1	SN:B20001--
23	01010-81225	BOLT	3	SN:B20001--
24	01643-31232	WASHER	3	SN:B20001--
25	08034-20834	BAND	2	SN:B20025--
26	21K-01-71190	TUBE	1	SN:B20001--
27	07260-20956	HOSE	1	SN:B20001--
28	07285-00155	CLIP	1	SN:B20001--
29	01010-81016	BOLT	1	SN:B20001--
30	01643-31032	WASHER	1	SN:B20001--
31	124-Z11-1170	NIPPLE	1	SN:B20058--

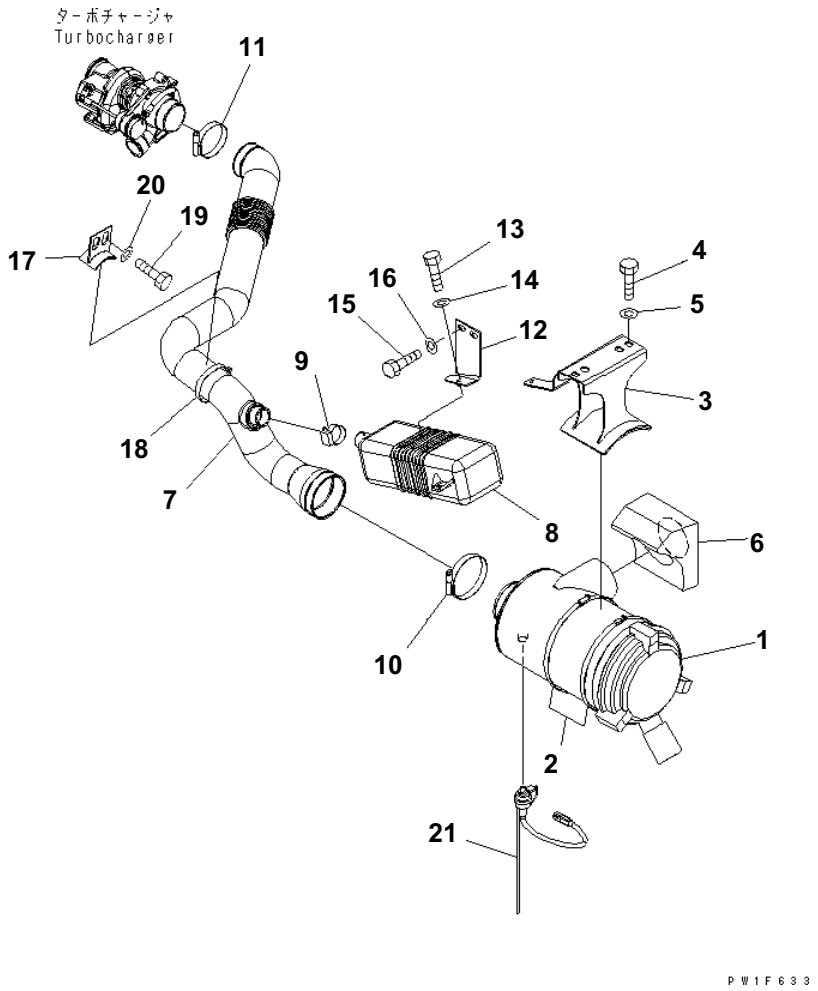

AIR INTAKE

Item	Part No.	Description	Qty	Options
1	(6737-81-7401)	AIR CLEANER ASS'Y	1	SN:B20001--
2	07281-02429	CLAMP	2	SN:B20001--
3	21K-01-71141	FRAME	1	SN:B20001--
4	01010-81230	BOLT	4	SN:B20001--
5	01643-31232	WASHER	4	SN:B20001--
6	21K-01-71230	SEAL	1	SN:B20001--
7	21K-01-71151	HOSE	1	SN:B20101--
	21K-01-71150	HOSE	1	SN:B20001--B20100
8	22B-01-11110	RESONATER	1	SN:B20001--
9	07289-00045	CLAMP	1	SN:B20001--
10	07299-00105	CLAMP	1	SN:B20001--
11	07299-00080	CLAMP	1	SN:B20001--
12	21K-01-71211	BRACKET	1	SN:B20001--
13	01010-80825	BOLT	2	SN:B20001--
14	01643-30823	WASHER	2	SN:B20001--
15	01010-81225	BOLT	2	SN:B20001--
16	01643-31232	WASHER	2	SN:B20001--
17	21K-01-71240	BRACKET	1	SN:B20001--
18	07281-01029	CLAMP	1	SN:B20001--
19	01010-81225	BOLT	2	SN:B20001--
20	01643-31232	WASHER	2	SN:B20001--
21	7861-93-1420	SENSOR	1	SN:B20001--

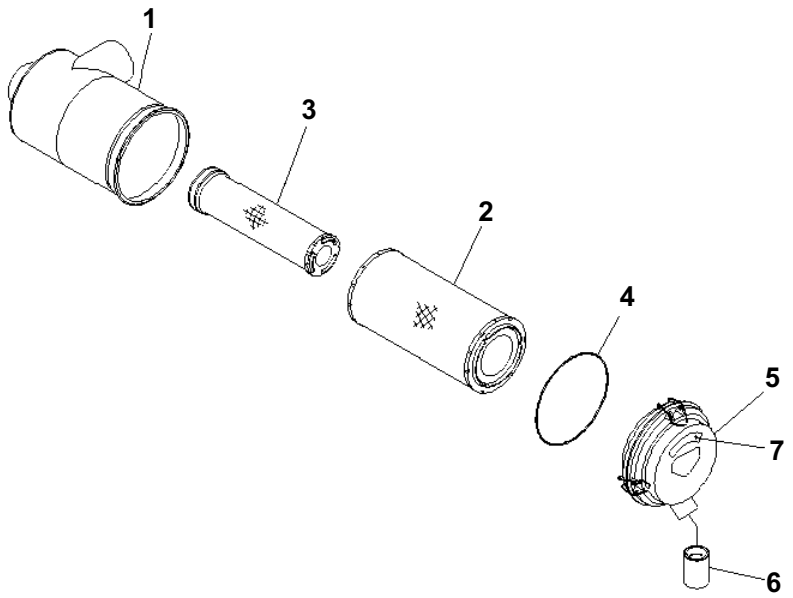

PC160LC-7B S/N B20001 AND UP

AIR CLEANER

Item	Part No.	Description	Qty	Options
	6737-81-7401	AIR CLEANER ASS'Y	1	SN:B20001--
1	6737-81-7410	· BODY	1	SN:B20001--
	600-185-2500	· ELEMENT ASS'Y	1	SN:B20001--
2	600-185-2510	· · ELEMENT,OUTER	1	SN:B20001--
3	☆	· · ELEMENT,INNER	1	SN:B20001--
4	600-184-1280	· · O-RING	1	SN:B20001--
5	600-184-1240	· COVER ASS'Y	1	SN:B20001--
6	600-184-1250	· · VALVE	1	SN:B20001--
7	600-181-1930	· PLATE¤ INSTRUCTION	1	SN:B20001--

Ref. B0200-02A0 Page 030120

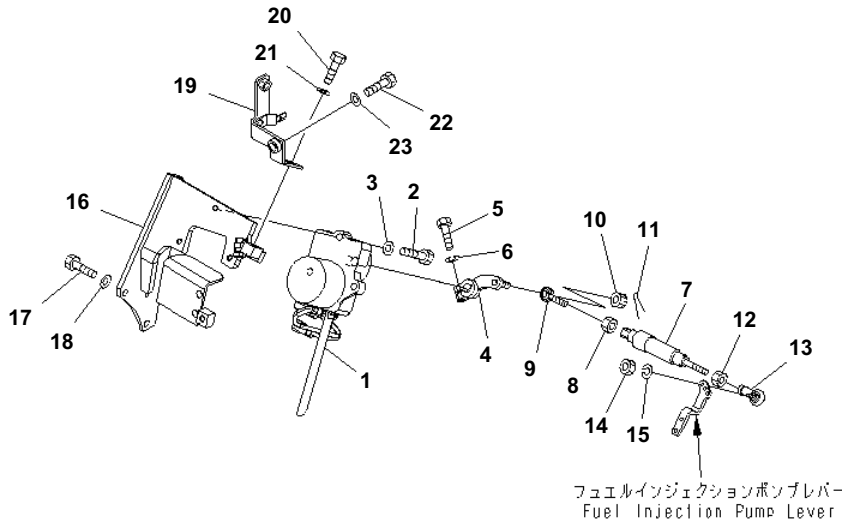

FUEL CONTROL

Item	Part No.	Description	Qty	Options
1	7834-41-2002	MOTOR ASS'Y	1	SN:B20031--
	7834-41-2001	MOTOR ASS'Y	1	SN:B20001--B20030
2	01010-81040	BOLT	3	SN:B20001--
3	01643-31032	WASHER	3	SN:B20001--
4	203-43-61120	LEVER	1	SN:B20001--
5	01010-81030	BOLT	1	SN:B20001--
6	01602-51032	WASHER	1	SN:B20298--
	01602-21030	WASHER	1	SN:B20001--B20297
7	203-43-62121	SPRING ASS'Y	1	SN:B20001--
8	01582-11008	NUT	1	SN:B20001--
9	04252-21061	END,ROD	1	SN:B20001--
10	01593-31008	NUT	1	SN:B20001--
11	04050-12018	PIN	1	SN:B20001--
12	01582-11008	NUT	1	SN:B20001--
13	20Y-43-12180	JOINT	1	SN:B20001--
14	01580-10605	NUT	1	SN:B20001--
15	01602-20619	WASHER	1	SN:B20001--
16	21K-43-71110	BRACKET	1	SN:B20001--
17	01010-81050	BOLT	2	SN:B20001--
18	01643-31032	WASHER	2	SN:B20001--
19	21K-43-71121	BRACKET	1	SN:B20001--
20	01010-81225	BOLT	1	SN:B20001--
21	01643-31232	WASHER	1	SN:B20001--
22	01050-81230	BOLT	1	SN:B20001--
23	01643-31232	WASHER	1	SN:B20001--

COOLING SYSTEM

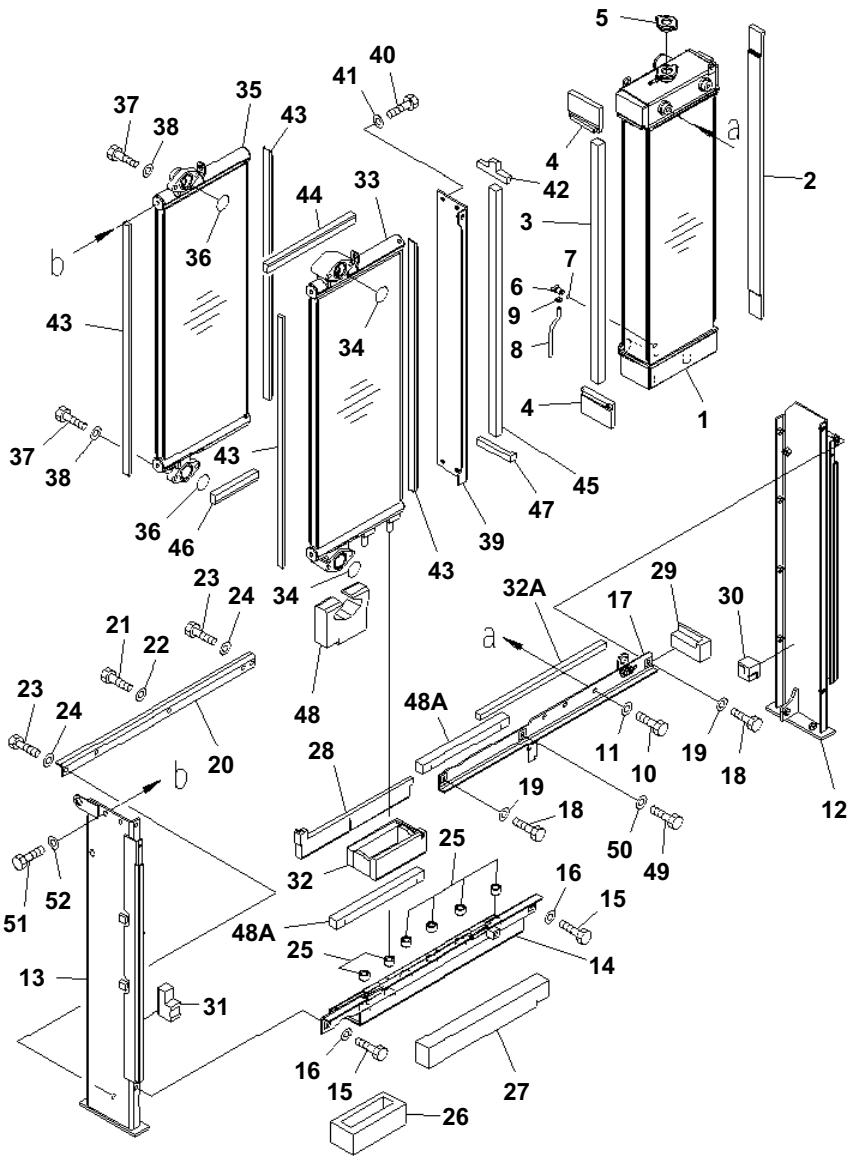

COOLING (RADIATOR AND OIL COOLER)(#B20001-B20030)

Item	Part No.	Description	Qty	Options
1	21K-03-71114	RADIATOR CORE A.	1	SN:B20031--@
	21K-03-71113	CORE ASS'Y	1	SN:B20001--B20030
2	21K-03-71621	SHEET	1	SN:B20001--@
3	21K-03-71671	SHEET	1	SN:B20001--@
4	21K-03-71681	SHEET	2	SN:B20001--@
5	20Y-03-22110	CAP	1	SN:B20001--@
6	205-03-62660	PLUG	1	SN:B20001--@
7	07000-11007	O-RING	1	SN:B20001--@
8	203-03-41410	HOSE	1	SN:B20001--@
9	20Y-03-11330	CLIP	1	SN:B20001--@
10	01010-81020	BOLT	2	SN:B20001--@
11	01643-31032	WASHER	2	SN:B20001--@
12	21K-03-71161	FRAME	1	SN:B20001--@
13	21K-03-71171	FRAME	1	SN:B20001--@
14	21K-03-71182	FRAME	1	SN:B20031--@
	21K-03-71181	FRAME	1	SN:B20001--B20030
15	01010-81025	BOLT	2	SN:B20001--@
16	01643-31032	WASHER	2	SN:B20001--@
17	21K-03-71192	FRAME	1	SN:B20031--@
	21K-03-71191	FRAME	1	SN:B20001--B20030
18	01010-81025	BOLT	2	SN:B20001--@
19	01643-31032	WASHER	2	SN:B20001--@
20	21K-03-71441	FRAME	1	SN:B20001--@
21	01010-81025	BOLT	3	SN:B20001--@
22	01643-31032	WASHER	3	SN:B20001--@
23	01010-81030	BOLT	2	SN:B20001--@
24	01643-31032	WASHER	2	SN:B20001--
25	22B-03-12590	CUSHION	6	SN:B20001--
26	21K-03-71281	SHEET	1	SN:B20001--
27	21K-03-71321	SHEET	1	SN:B20001--
28	21K-03-71631	SHEET	1	SN:B20001--
29	21K-03-71650	SHEET	1	SN:B20001--
30	21K-03-71690	SHEET	1	SN:B20001--
31	21K-03-71710	SHEET	1	SN:B20001--
32	21K-03-71721	SHEET	1	SN:B20001--
32A	21K-03-71920	SHEET	1	SN:B20001--
33	21K-03-71121	OIL COOLER	1	SN:B20001--
34	07000-13045	O-RING	2	SN:B20001--@
35	21K-03-71471	OIL COOLER	1	SN:B20001--@

PC160LC-7B S/N B20001 AND UP

COOLING (RADIATOR AND OIL COOLER)(#B20001-B20030)

Item	Part No.	Description	Qty	Options
36	07000-13045	O-RING	2	SN:B20001--@
37	01010-81240	BOLT	4	SN:B20001--@
38	01643-31232	WASHER	4	SN:B20001--@
39	21K-03-71141	BRACKET	1	SN:B20001--@
40	01010-81020	BOLT	4	SN:B20001--@
41	01643-31032	WASHER	4	SN:B20001--@
42	21K-03-71581	SHEET	1	SN:B20001--@
43	21K-03-71590	SHEET	4	SN:B20001--@
44	21K-03-71611	SHEET	1	SN:B20001--@
45	21K-03-71641	SHEET	1	SN:B20001--@
46	21K-03-71730	SHEET	1	SN:B20001--@
47	21K-03-71741	SHEET	1	SN:B20001--@
48	21K-03-71750	SHEET	1	SN:B20001--@
48A	21K-03-71930	SHEET	2	SN:B20001--@
49	01010-81025	BOLT	1	SN:B20001--@
50	01643-31032	WASHER	1	SN:B20001--@
51	01010-81020	BOLT	2	SN:B20001--@
52	01643-31032	WASHER	2	SN:B20001--@

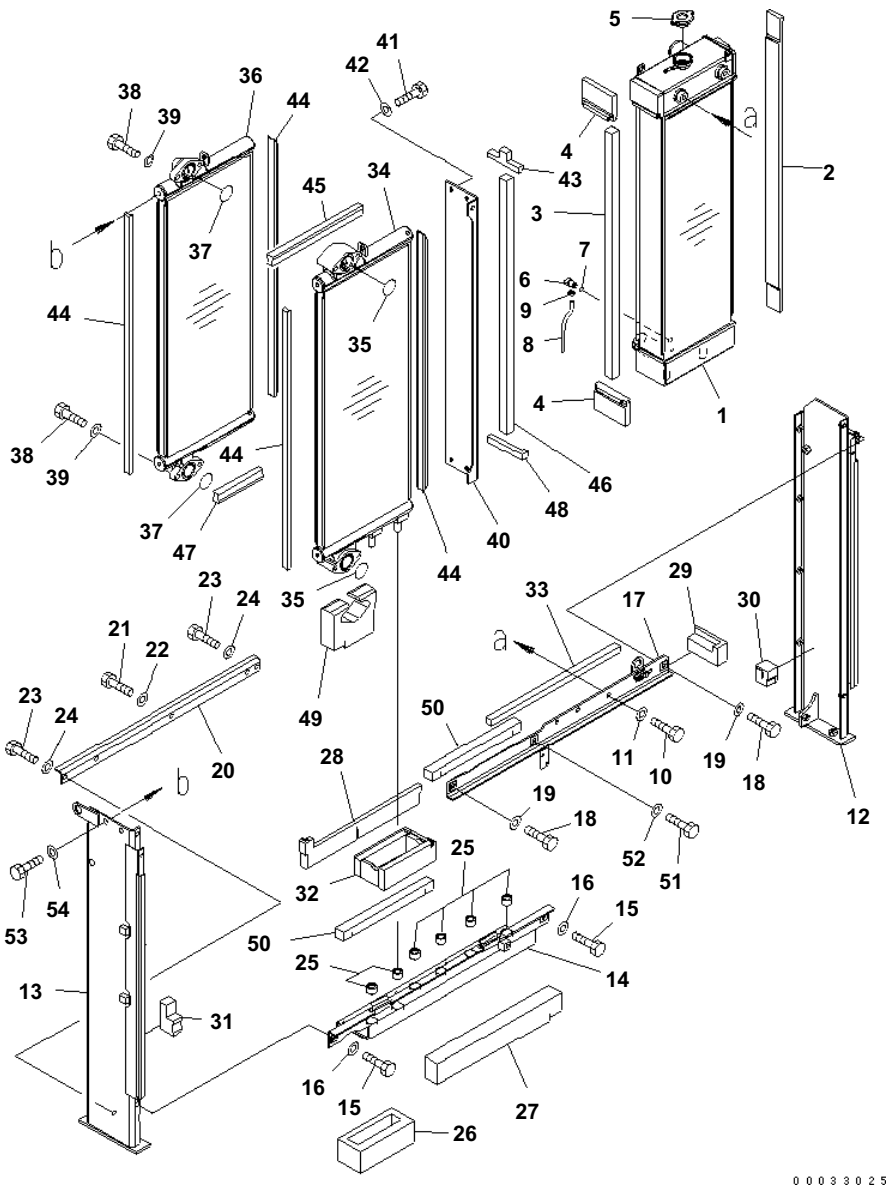

COOLING (RADIATOR AND OIL COOLER)(#B20031-)

Item	Part No.	Description	Qty	Options
1	21K-03-71114	RADIATOR CORE A.	1	SN:B20031--
2	21K-03-71621	SHEET	1	SN:B20001--
3	21K-03-71671	SHEET	1	SN:B20001--
4	21K-03-71681	SHEET	2	SN:B20001--
5	20Y-03-22110	CAP	1	SN:B20001--
6	205-03-62660	PLUG	1	SN:B20001--
7	07000-11007	· O-RING	1	SN:B20001--
8	203-03-41410	HOSE	1	SN:B20001--
9	20Y-03-11330	CLIP	1	SN:B20001--
10	01010-81020	BOLT	2	SN:B20001--
11	01643-31032	WASHER	2	SN:B20001--
12	21K-03-71161	FRAME	1	SN:B20001--
13	21K-03-71171	FRAME	1	SN:B20001--
14	21K-03-71182	FRAME	1	SN:B20031--
15	01010-81025	BOLT	2	SN:B20001--
16	01643-31032	WASHER	2	SN:B20001--
17	21K-03-71192	FRAME	1	SN:B20031--
18	01010-81025	BOLT	2	SN:B20001--
19	01643-31032	WASHER	2	SN:B20001--
20	21K-03-71441	FRAME	1	SN:B20001--
21	01010-81025	BOLT	3	SN:B20001--
22	01643-31032	WASHER	3	SN:B20001--
23	01010-81030	BOLT	2	SN:B20001--
24	01643-31032	WASHER	2	SN:B20001--
25	22B-03-12590	CUSHION	6	SN:B20001--
26	21K-03-71281	SHEET	1	SN:B20001--
27	21K-03-71321	SHEET	1	SN:B20001--
28	21K-03-71631	SHEET	1	SN:B20001--
29	21K-03-71650	SHEET	1	SN:B20001--
30	21K-03-71690	SHEET	1	SN:B20001--
31	21K-03-71710	SHEET	1	SN:B20001--
32	21K-03-71721	SHEET	1	SN:B20001--
33	21K-03-71920	SHEET	1	SN:B20001--
34	21K-03-71121	OIL COOLER	1	SN:B20001--
35	07000-13045	O-RING	2	SN:B20001--
36	21K-03-71471	OIL COOLER	1	SN:B20001--
37	07000-13045	O-RING	2	SN:B20001--
38	01010-81240	BOLT	4	SN:B20001--
39	01643-31232	WASHER	4	SN:B20001--
40	21K-03-71141	BRACKET	1	SN:B20001--

PC160LC-7B S/N B20001 AND UP

COOLING (RADIATOR AND OIL COOLER)(#B20031-)

Item	Part No.	Description	Qty	Options
41	01010-81020	BOLT	4	SN:B20001--
42	01643-31032	WASHER	4	SN:B20001--
43	21K-03-71581	SHEET	1	SN:B20001--
44	21K-03-71590	SHEET	4	SN:B20001--
45	21K-03-71611	SHEET	1	SN:B20001--
46	21K-03-71641	SHEET	1	SN:B20001--
47	21K-03-71730	SHEET	1	SN:B20001--
48	21K-03-71741	SHEET	1	SN:B20001--
49	21K-03-71750	SHEET	1	SN:B20001--
50	21K-03-71930	SHEET	2	SN:B20001--
51	01010-81025	BOLT	1	SN:B20001--
52	01643-31032	WASHER	1	SN:B20001--
53	01010-81020	BOLT	2	SN:B20001--
54	01643-31032	WASHER	2	SN:B20001--

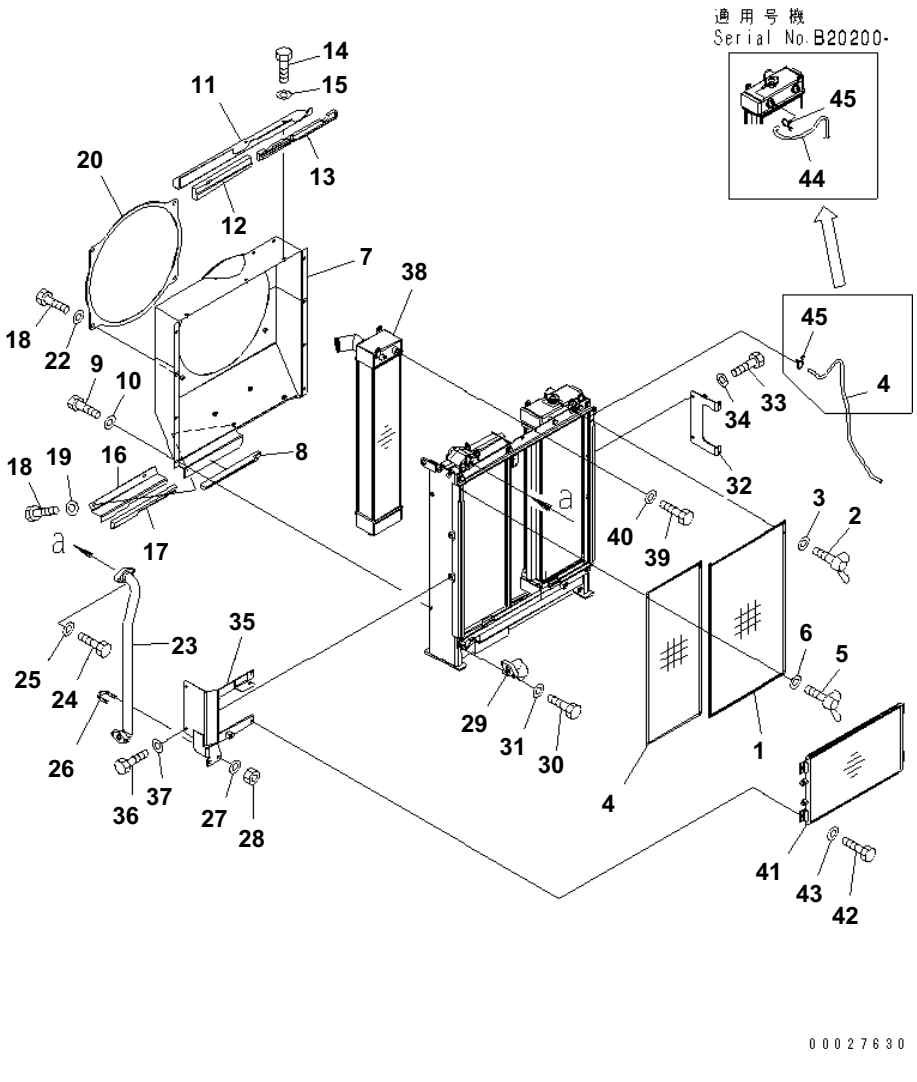

COOLING (NET AND SHROUD)(#B20001-B20199)

Item	Part No.	Description	Qty	Options
1	21K-03-71421	NET	1	SN:B20001--@
2	01434-10616	BOLT¤ WING	2	SN:B20001--@
3	01643-30623	WASHER	2	SN:B20001--@
4	21K-03-71431	NET	1	SN:B20001--@
5	01434-10616	BOLT¤ WING	2	SN:B20001--@
6	01643-30623	WASHER	2	SN:B20001--@
7	21K-03-71371	SHROUD	1	SN:B20001--@
8	21K-03-71541	SHEET	1	SN:B20001--@
9	01010-81020	BOLT	8	SN:B20001--@
10	01643-31032	WASHER	8	SN:B20001--@
	21K-03-71830	COVER	1	SN:B20001--@
11	☆	・ COVER	1	SN:B20001--@
12	21K-03-71511	・ SHEET	1	SN:B20001--@
13	21K-03-71521	・ SHEET	1	SN:B20001--@
14	01010-81020	BOLT	3	SN:B20001--@
15	01643-31032	WASHER	3	SN:B20001--@
	21K-03-71840	COVER	1	SN:B20001--@
16	☆	・ COVER	1	SN:B20001--@
17	21K-03-71561	・ SHEET	1	SN:B20001--@
18	01010-81020	BOLT	2	SN:B20001--@
19	01643-31032	WASHER	2	SN:B20001--@
20	21K-03-71380	PLATE	1	SN:B20001--@
21	01010-81020	BOLT	4	SN:B20001--@
22	01643-31032	WASHER	4	SN:B20001--@
23	21K-03-71331	TUBE	1	SN:B20001--@
24	01010-81245	BOLT	2	SN:B20001--@
25	01643-31232	WASHER	2	SN:B20001--@
26	07283-34346	CLIP	1	SN:B20001--@
27	01643-31032	WASHER	2	SN:B20001--@
28	01597-01009	NUT	2	SN:B20001--@
29	21K-03-71341	TUBE	1	SN:B20001--@
30	01010-81245	BOLT	2	SN:B20001--@
31	01643-31232	WASHER	2	SN:B20001--@
32	21K-03-71351	BRACKET	1	SN:B20001--B20199
33	01010-81020	BOLT	2	SN:B20001--@
34	01643-31032	WASHER	2	SN:B20001--@
35	21K-03-71361	BRACKET	1	SN:B20001--B20199
36	01010-81020	BOLT	2	SN:B20001--@
37	01643-31032	WASHER	2	SN:B20001--@
38	21K-03-71152	AFTER COOLER	1	SN:B20200--@

PC160LC-7B S/N B20001 AND UP

COOLING (NET AND SHROUD)(#B20001-B20199)

Item	Part No.	Description	Qty	Options
	21K-03-71151	AFTER COOLER	1	SN:B20001--B20199
39	01010-81020	BOLT	2	SN:B20001--@
40	01643-31032	WASHER	2	SN:B20001--@
41	20Y-979-6131	CONDENSER ASS'Y	1	SN:B20001--B20199
42	01010-80820	BOLT	4	SN:B20001--B20199
43	01643-30823	WASHER	4	SN:B20001--B20199
44	20Y-03-21390	HOSE	1	SN:B20200--@
	20Y-03-12220	HOSE	1	SN:B20001--B20199
45	206-03-43340	CLIP	1	SN:B20001--@

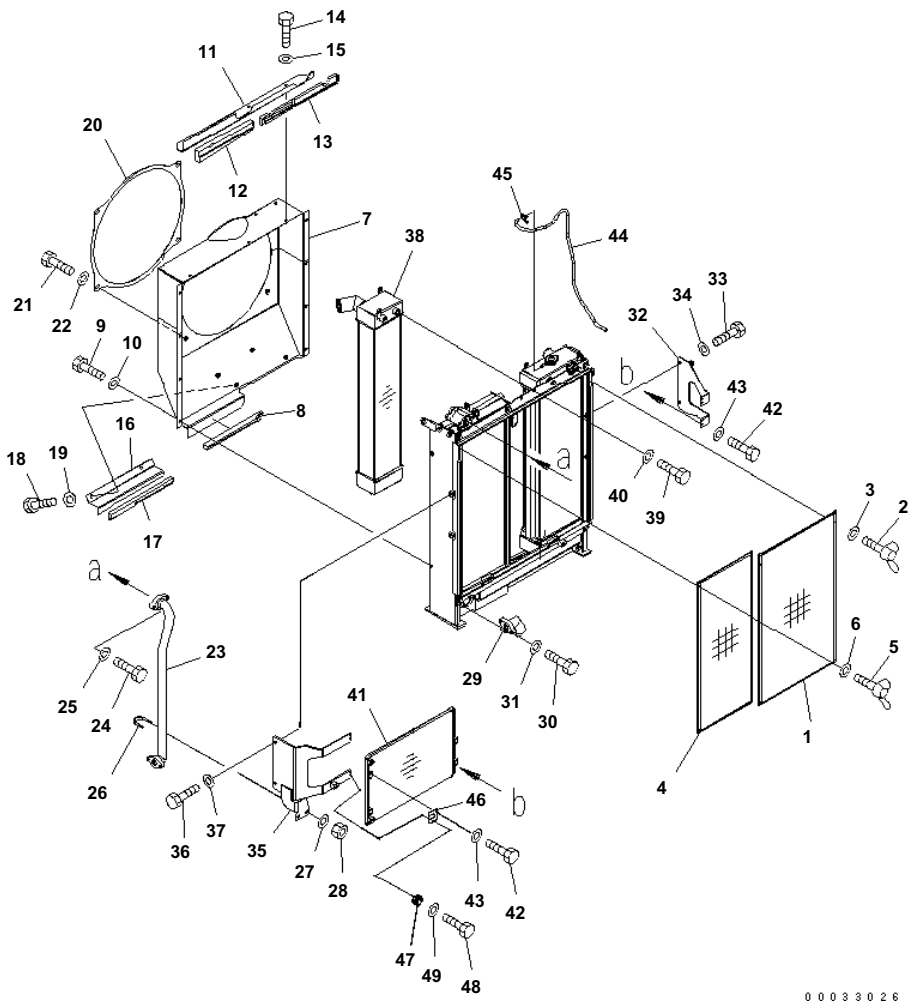

COOLING (NET AND SHROUD)(#B20200-)

Item	Part No.	Description	Qty	Options
1	21K-03-71421	NET	1	SN:B20001--
2	01434-10616	BOLT¤ WING	2	SN:B20001--
3	01643-30623	WASHER	2	SN:B20001--
4	21K-03-71431	NET	1	SN:B20001--
5	01434-10616	BOLT¤ WING	2	SN:B20001--
6	01643-30623	WASHER	2	SN:B20001--
7	21K-03-71371	SHROUD	1	SN:B20001--
8	21K-03-71541	SHEET	1	SN:B20001--
9	01010-81020	BOLT	8	SN:B20001--
10	01643-31032	WASHER	8	SN:B20001--
	21K-03-71830	COVER	1	SN:B20001--
11	☆	･ COVER	1	SN:B20001--
12	21K-03-71511	･ SHEET	1	SN:B20001--
13	21K-03-71521	･ SHEET	1	SN:B20001--
14	01010-81020	BOLT	3	SN:B20001--
15	01643-31032	WASHER	3	SN:B20001--
	21K-03-71840	COVER	1	SN:B20001--
16	☆	･ COVER	1	SN:B20001--
17	21K-03-71561	･ SHEET	1	SN:B20001--
18	01010-81020	BOLT	2	SN:B20001--
19	01643-31032	WASHER	2	SN:B20001--
20	21K-03-71380	PLATE	1	SN:B20001--
21	01010-81020	BOLT	4	SN:B20001--
22	01643-31032	WASHER	4	SN:B20001--
23	21K-03-71331	TUBE	1	SN:B20001--
24	01010-81245	BOLT	2	SN:B20001--
25	01643-31232	WASHER	2	SN:B20001--
26	07283-34346	CLIP	1	SN:B20001--
27	01643-31032	WASHER	2	SN:B20001--
28	01597-01009	NUT	2	SN:B20001--
29	21K-03-71341	TUBE	1	SN:B20001--
30	01010-81245	BOLT	2	SN:B20001--
31	01643-31232	WASHER	2	SN:B20001--
32	21K-03-B3120	BRACKET	1	SN:B20470--
	21K-03-71352	BRACKET	1	SN:B20001--B20469
33	01010-81020	BOLT	2	SN:B20001--
34	01643-31032	WASHER	2	SN:B20001--
35	21K-03-B2190	BRACKET	1	SN:B20470--
	21K-03-71362	BRACKET	1	SN:B20001--B20469
36	01010-81020	BOLT	2	SN:B20001--

PC160LC-7B S/N B20001 AND UP

COOLING (NET AND SHROUD)(#B20200-)

Item	Part No.	Description	Qty	Options
37	01643-31032	WASHER	2	SN:B20001--
38	21K-03-71152	AFTER COOLER	1	SN:B20200--
39	01010-81020	BOLT	2	SN:B20001--
40	01643-31032	WASHER	2	SN:B20001--
41	208-979-7520	CONDENSER ASS'Y	1	SN:B20200--
42	01010-80616	BOLT	8	SN:B20200--
43	01643-30623	WASHER	8	SN:B20200--
44	20Y-03-21390	HOSE	1	SN:B20200--
45	206-03-43340	CLIP	1	SN:B20001--
46	21K-03-B3110	PLATE	4	SN:B20470--
47	20Y-810-1240	CUSHION	4	SN:B20470--
48	01010-80835	BOLT	4	SN:B20470--
49	01643-30823	WASHER	4	SN:B20470--

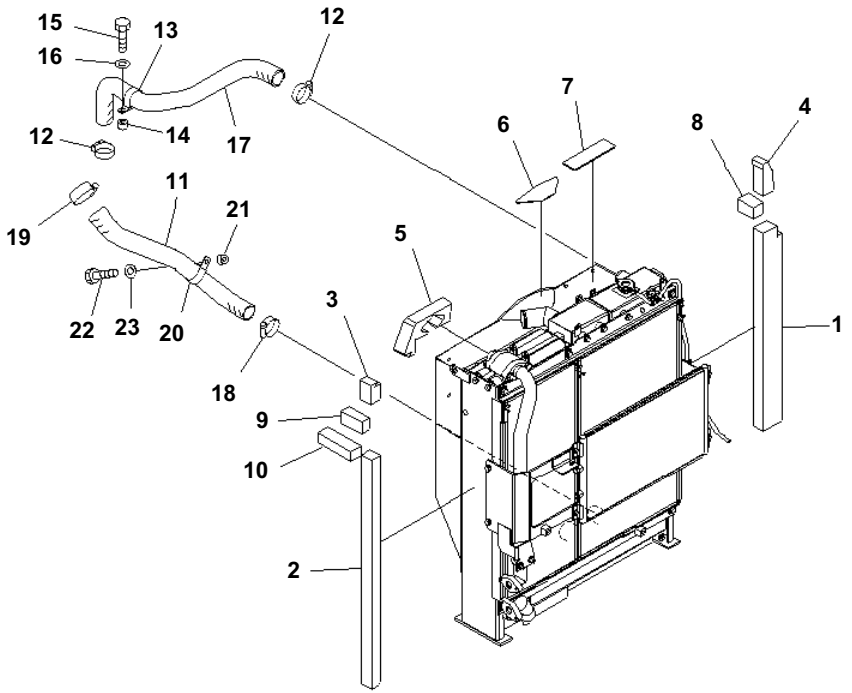

COOLING (SHEET AND RADIATOR PIPING)(#B20001-B20199)

Item	Part No.	Description	Qty	Options
1	21K-03-71261	SHEET	1	SN:B20001--@
2	21K-03-71270	SHEET	1	SN:B20001--@
3	21K-03-71292	SHEET	1	SN:B20001--@
4	21K-03-71311	SHEET	1	SN:B20001--@
5	21K-03-71772	SHEET	1	SN:B20001--@
6	21K-03-71780	SHEET	1	SN:B20001--@
7	21K-03-71790	SHEET	1	SN:B20001--@
8	21K-03-71850	SHEET	1	SN:B20001--@
9	21K-03-71860	SHEET	1	SN:B20001--@
10	21K-03-71870	SHEET	1	SN:B20001--@
11	21K-03-71211	HOSE	1	SN:B20001--@
12	07289-00055	CLAMP	2	SN:B20001--@
13	208-62-38370	CLIP	1	SN:B20001--@
14	201-03-29160	SPACER	1	SN:B20001--@
15	01010-81040	BOLT	1	SN:B20001--@
16	01643-31032	WASHER	1	SN:B20001--@
17	21K-03-71221	HOSE	1	SN:B20001--@
18	07289-00055	CLAMP	1	SN:B20001--@
19	07289-00070	CLAMP	1	SN:B20001--@
20	208-62-38370	CLIP	1	SN:B20001--@
21	201-03-29160	SPACER	1	SN:B20001--@
22	01010-81035	BOLT	1	SN:B20001--@
23	01643-31032	WASHER	1	SN:B20001--@

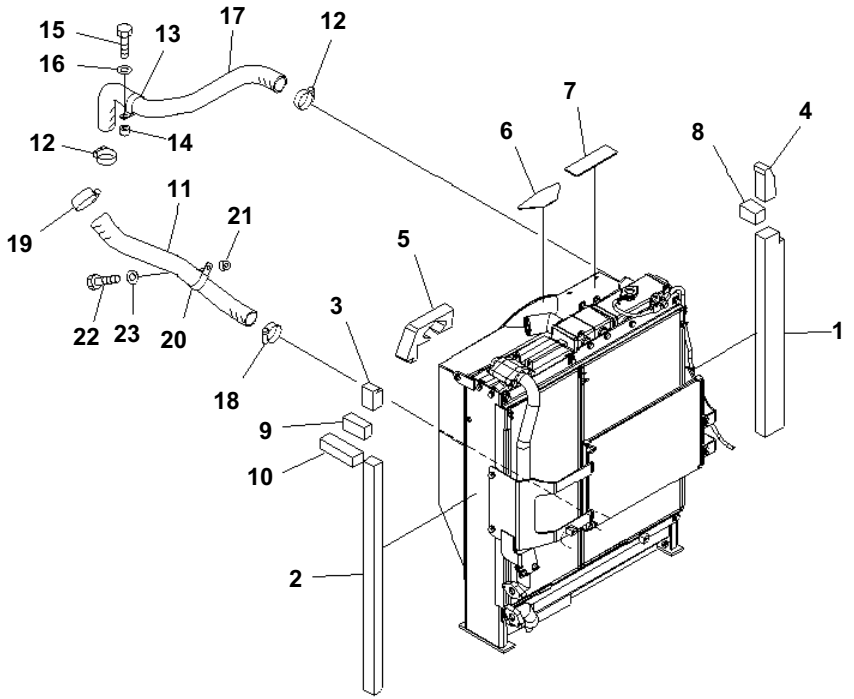

COOLING (SHEET AND RADIATOR PIPING)(#B20200-)

Item	Part No.	Description	Qty	Options
1	21K-03-71261	SHEET	1	SN:B20001--
2	21K-03-71270	SHEET	1	SN:B20001--
3	21K-03-71292	SHEET	1	SN:B20001--
4	21K-03-71311	SHEET	1	SN:B20001--
5	21K-03-71772	SHEET	1	SN:B20001--
6	21K-03-71780	SHEET	1	SN:B20001--
7	21K-03-71790	SHEET	1	SN:B20001--
8	21K-03-71850	SHEET	1	SN:B20001--
9	21K-03-71860	SHEET	1	SN:B20001--
10	21K-03-71870	SHEET	1	SN:B20001--
11	21K-03-71211	HOSE	1	SN:B20001--
12	07289-00055	CLAMP	2	SN:B20001--
13	208-62-38370	CLIP	1	SN:B20001--
14	201-03-29160	SPACER	1	SN:B20001--
15	01010-81040	BOLT	1	SN:B20001--
16	01643-31032	WASHER	1	SN:B20001--
17	21K-03-71221	HOSE	1	SN:B20001--
18	07289-00055	CLAMP	1	SN:B20001--
19	07289-00070	CLAMP	1	SN:B20001--
20	208-62-38370	CLIP	1	SN:B20001--
21	201-03-29160	SPACER	1	SN:B20001--
22	01010-81035	BOLT	1	SN:B20001--
23	01643-31032	WASHER	1	SN:B20001--

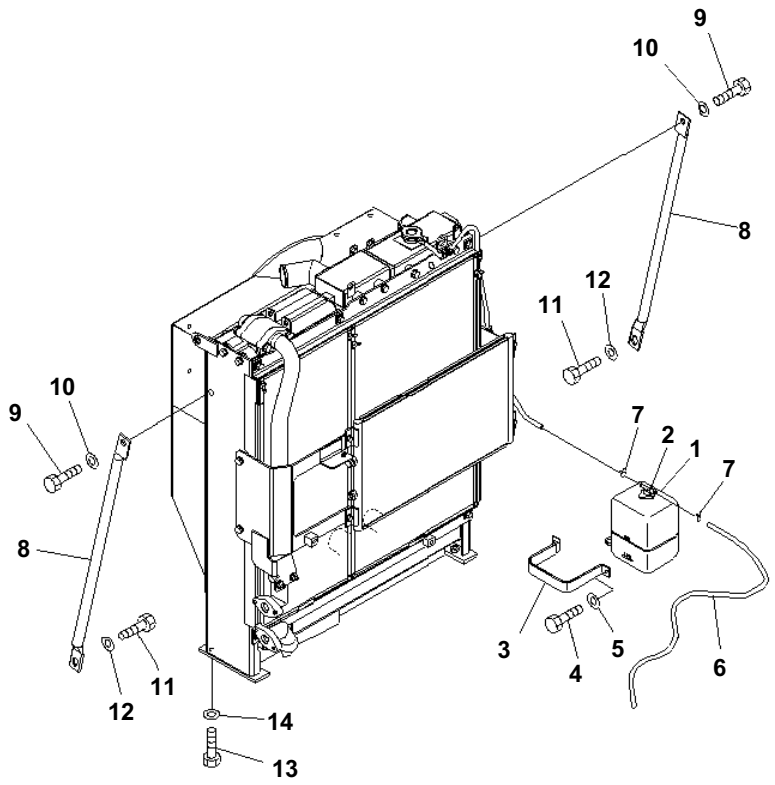

COOLING (SUB TANK AND RADIATOR MOUNT)(#B20001-B20199)

Item	Part No.	Description	Qty	Options
1	20Y-06-15240	TANK ASS'Y	1	SN:B20001--@
2	205-03-71532	・ CAP	1	SN:B20001--@
	205-03-71540	・・ PACKING	1	SN:B20001--@
3	203-03-56650	BRACKET	1	SN:B20001--@
4	01010-80820	BOLT	2	SN:B20001--@
5	01643-30823	WASHER	2	SN:B20001--@
6	20Y-03-21390	HOSE	1	SN:B20001--@
7	206-03-43340	CLIP	2	SN:B20001--@
8	20Y-03-31210	STAY	2	SN:B20001--@
9	01010-81635	BOLT	2	SN:B20001--@
10	01643-31645	WASHER	2	SN:B20001--@
11	01010-81635	BOLT	2	SN:B20001--@
12	21T-54-16150	WASHER	2	SN:B20001--@
13	01016-51250	BOLT	4	SN:B20001--@
14	01643-31232	WASHER	4	SN:B20001--@

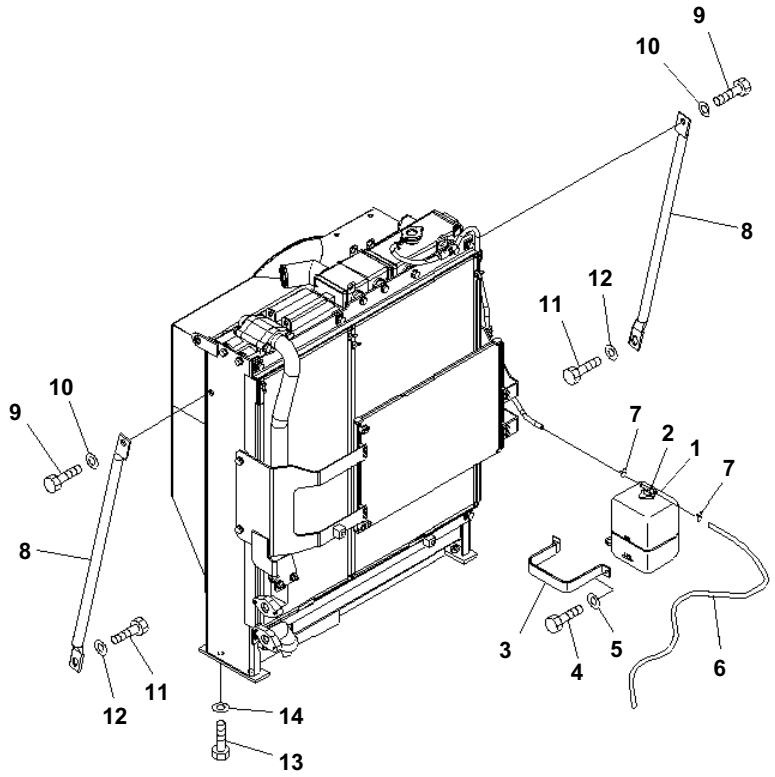

00033028

COOLING (SUB TANK AND RADIATOR MOUNT)(#B20200-)

Item	Part No.	Description	Qty	Options
1	20Y-06-15240	TANK ASS'Y	1	SN:B20200--
2	205-03-71532	· CAP	1	SN:B20200--
	205-03-71540	· · PACKING	1	SN:B20200--
3	203-03-56650	BRACKET	1	SN:B20200--
4	01010-80820	BOLT	2	SN:B20200--
5	01643-30823	WASHER	2	SN:B20200--
6	20Y-03-21390	HOSE	1	SN:B20200--
7	206-03-43340	CLIP	2	SN:B20200--
8	20Y-03-31210	STAY	2	SN:B20200--
9	01010-81635	BOLT	2	SN:B20200--
10	01643-31645	WASHER	2	SN:B20200--
11	01010-81635	BOLT	2	SN:B20200--
12	21T-54-16150	WASHER	2	SN:B20200--
13	01016-51250	BOLT	4	SN:B20200--
14	01643-31232	WASHER	4	SN:B20200--

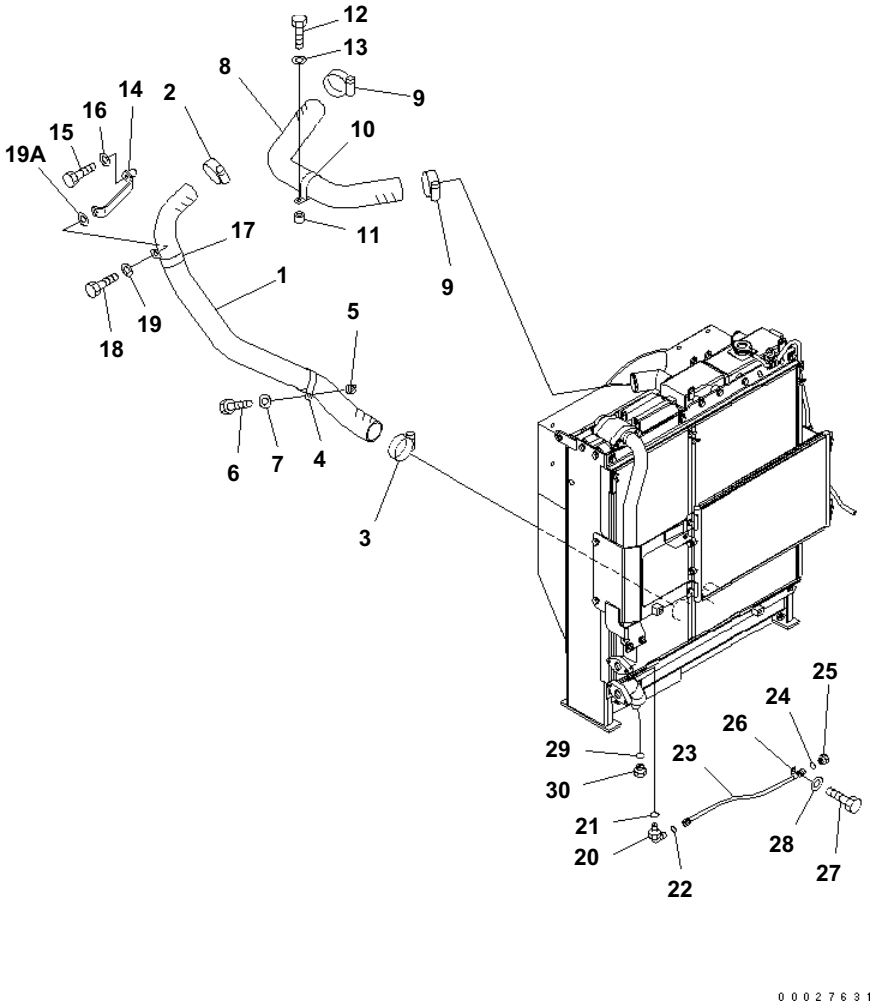

PC160LC-7B S/N B20001 AND UP

COOLING (AFTER COOLER PIPING AND OIL COOLER DRAIN HOSE)(#B20001-B20199)

Item	Part No.	Description	Qty	Options
1	21K-01-71161	HOSE	1	SN:B20001--@
2	07299-00055	CLAMP	1	SN:B20001--@
3	07299-00070	CLAMP	1	SN:B20001--@
4	21M-62-15440	CLIP	1	SN:B20001--@
5	560-43-15220	WASHER	1	SN:B20001--@
6	01010-81035	BOLT	1	SN:B20001--@
7	01643-31032	WASHER	1	SN:B20001--@
8	21K-01-71171	HOSE	1	SN:B20001--@
9	07299-00070	CLAMP	2	SN:B20001--@
10	21M-62-15440	CLIP	1	SN:B20001--@
11	201-03-29160	SPACER	1	SN:B20001--@
12	01010-81040	BOLT	1	SN:B20001--@
13	01643-31032	WASHER	1	SN:B20001--@
14	21K-03-71461	BRACKET	1	SN:B20001--@
15	01010-81055	BOLT	1	SN:B20001--@
16	01643-31032	WASHER	1	SN:B20001--@
17	21M-62-15440	CLIP	1	SN:B20001--@
18	01010-81230	BOLT	1	SN:B20001--@
19	01643-31232	WASHER	1	SN:B20001--@
19A	20Y-54-12670	WASHER	1	SN:B20001--@
20	02782-10210	ELBOW	1	SN:B20001--@
21	07002-11423	O-RING	1	SN:B20001--@
22	02896-11008	O-RING	1	SN:B20001--@
23	02762-00207	HOSE	1	SN:B20001--@
24	02896-11008	O-RING	1	SN:B20001--@
25	07376-70210	PLUG	1	SN:B20001--@
26	04434-51412	CLIP	1	SN:B20001--@
27	01010-81225	BOLT	1	SN:B20001--@
28	01643-31232	WASHER	1	SN:B20001--@
29	07002-11423	O-RING	1	SN:B20001--@
30	07040-11409	PLUG	1	SN:B20001--@

Ref. C0100-05A0 Page 060090

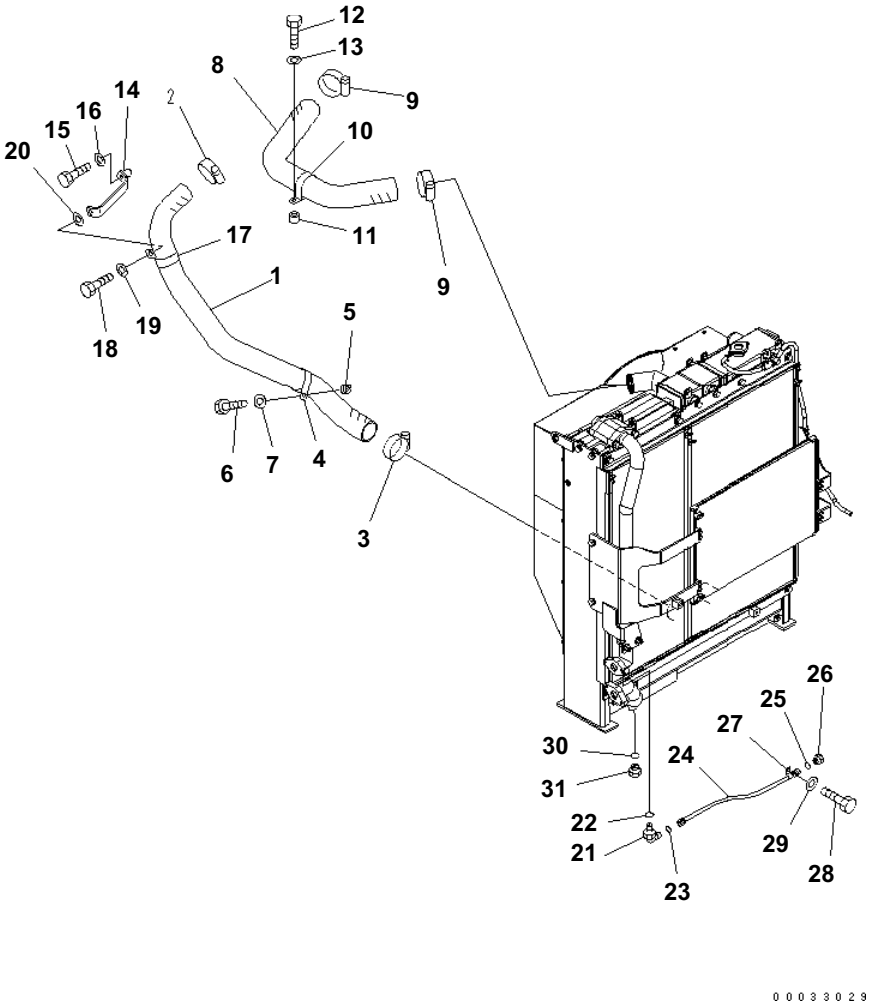

COOLING (AFTER COOLER PIPING AND OIL COOLER DRAIN HOSE)(#B20200-)

Item	Part No.	Description	Qty	Options
1	21K-01-71161	HOSE	1	SN:B20001--
2	07299-00055	CLAMP	1	SN:B20001--
3	07299-00070	CLAMP	1	SN:B20001--
4	21M-62-15440	CLIP	1	SN:B20001--
5	560-43-15220	WASHER	1	SN:B20001--
6	01010-81035	BOLT	1	SN:B20001--
7	01643-31032	WASHER	1	SN:B20001--
8	21K-01-71171	HOSE	1	SN:B20001--
9	07299-00070	CLAMP	2	SN:B20001--
10	21M-62-15440	CLIP	1	SN:B20001--
11	201-03-29160	SPACER	1	SN:B20001--
12	01010-81040	BOLT	1	SN:B20001--
13	01643-31032	WASHER	1	SN:B20001--
14	21K-03-71461	BRACKET	1	SN:B20001--
15	01010-81055	BOLT	1	SN:B20001--
16	01643-31032	WASHER	1	SN:B20001--
17	21M-62-15440	CLIP	1	SN:B20001--
18	01010-81230	BOLT	1	SN:B20001--
19	01643-31232	WASHER	1	SN:B20001--
20	20Y-54-12670	WASHER	1	SN:B20001--
21	02782-10210	ELBOW	1	SN:B20001--
22	07002-11423	O-RING	1	SN:B20001--
23	02896-11008	O-RING	1	SN:B20001--
24	02762-00207	HOSE	1	SN:B20001--
25	02896-11008	O-RING	1	SN:B20001--
26	07376-70210	PLUG	1	SN:B20001--
27	04434-51412	CLIP	1	SN:B20001--
28	01010-81225	BOLT	1	SN:B20001--
29	01643-31232	WASHER	1	SN:B20001--
30	07002-11423	O-RING	1	SN:B20001--
31	07040-11409	PLUG	1	SN:B20001--

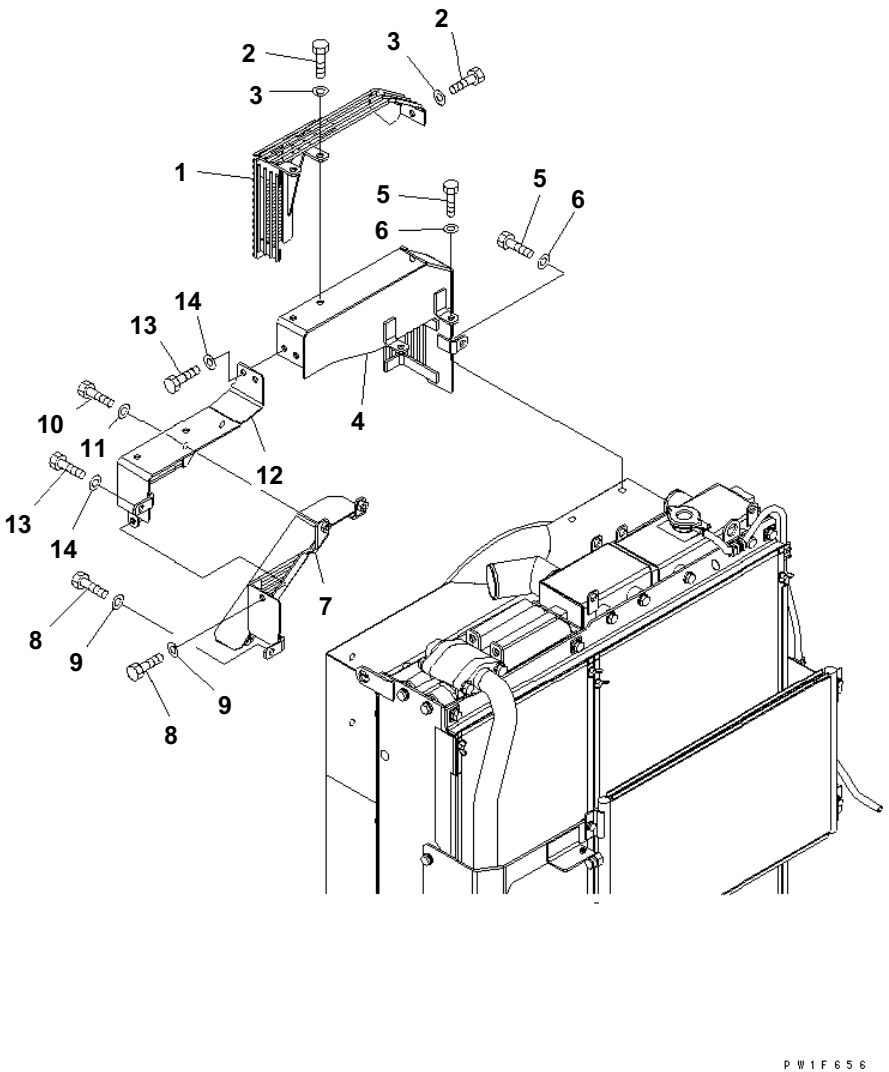

FAN GUARD

Item	Part No.	Description	Qty	Options
1	21K-03-71230	GUARD	1	SN:B20001--
2	01010-81025	BOLT	3	SN:B20001--
3	01643-31032	WASHER	3	SN:B20001--
4	21K-03-71240	GUARD	1	SN:B20001--
5	01010-81025	BOLT	3	SN:B20001--
6	01643-31032	WASHER	3	SN:B20001--
7	21K-03-71480	GUARD	1	SN:B20001--
8	01010-81025	BOLT	2	SN:B20001--
9	01643-31032	WASHER	2	SN:B20001--
10	01010-81035	BOLT	2	SN:B20001--
11	01643-31032	WASHER	2	SN:B20001--
12	21K-03-71490	GUARD	1	SN:B20001--
13	01010-81025	BOLT	3	SN:B20001--
14	01643-31032	WASHER	3	SN:B20001--

FUEL TANK AND RELATED PARTS

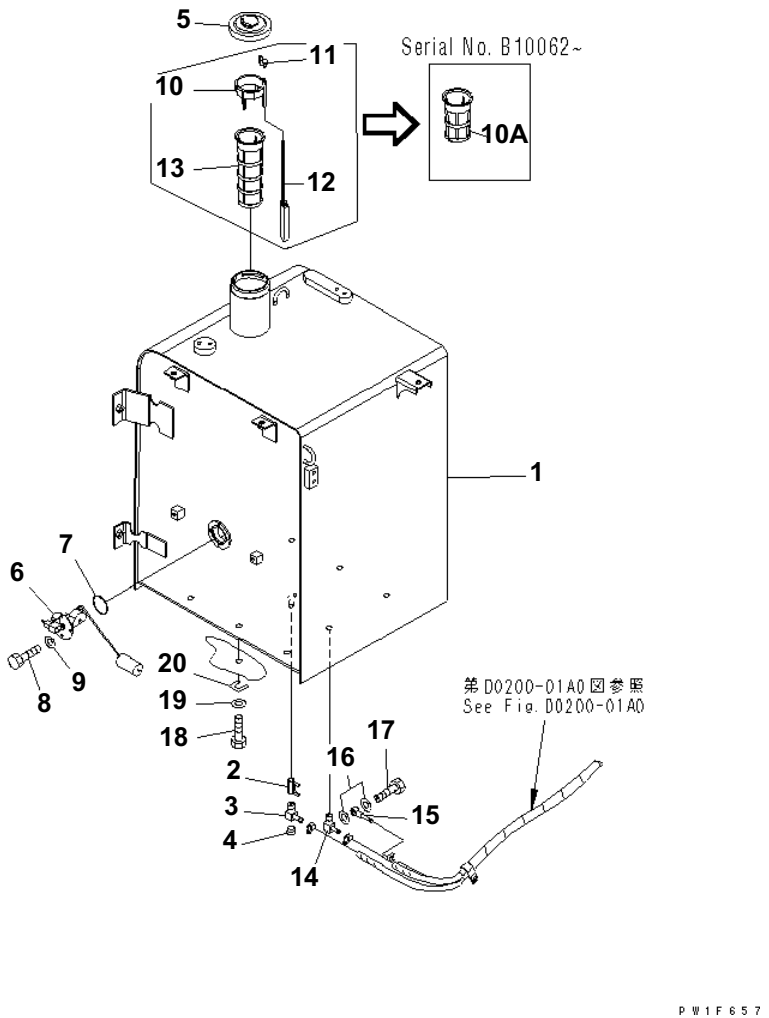

FUEL TANK

Item	Part No.	Description	Qty	Options
1	21K-04-B7110	TANK	1	SN:B20062--
	21K-04-71111	TANK	1	SN:B20001--B20061
2	07700-50240	VALVE	1	SN:B20001--
3	22U-04-21120	TEE	1	SN:B20001--
4	07043-A0108	PLUG	1	SN:B20001--
5	134-04-71180	CAP	1	SN:B20383--
	20Y-04-11160	CAP	1	SN:B20001--B20382
	20Y-04-11240	・ PACKING	1	SN:B20001--
6	7861-92-5810	SENSOR	1	SN:B20001--
7	07000-13050	O-RING	1	SN:B20001--
8	01010-80612	BOLT	4	SN:B20001--
9	01643-30623	WASHER	4	SN:B20001--
10A	205-04-71141	STRAINER ASS'Y	1	SN:B20062--
	22U-04-21241	STRAINER ASS'Y	1	SN:B20001--B20061
	22U-04-21200	・ FLOAT ASS'Y	1	SN:B20001--B20061
10	22U-04-21210	・・ GUIDE	1	SN:B20001--B20061
11	20Y-04-21580	・・ CAP	1	SN:B20001--B20061
12	22U-04-21220	・・ FLOAT	1	SN:B20001--B20061
13	07056-18425	・ STRAINER	1	SN:B20001--B20061
14	20Y-04-21131	ELBOW	1	SN:B20001--
15	20Y-04-21141	TUBE	1	SN:B20001--
16	07005-00812	GASKET	2	SN:B20001--
17	07206-30508	BOLT	1	SN:B20001--
18	01010-81635	BOLT	6	SN:B20001--
19	01643-31645	WASHER	6	SN:B20001--
20	195-03-11570	SHIM¤ 1.0MM	6	SN:B20001--

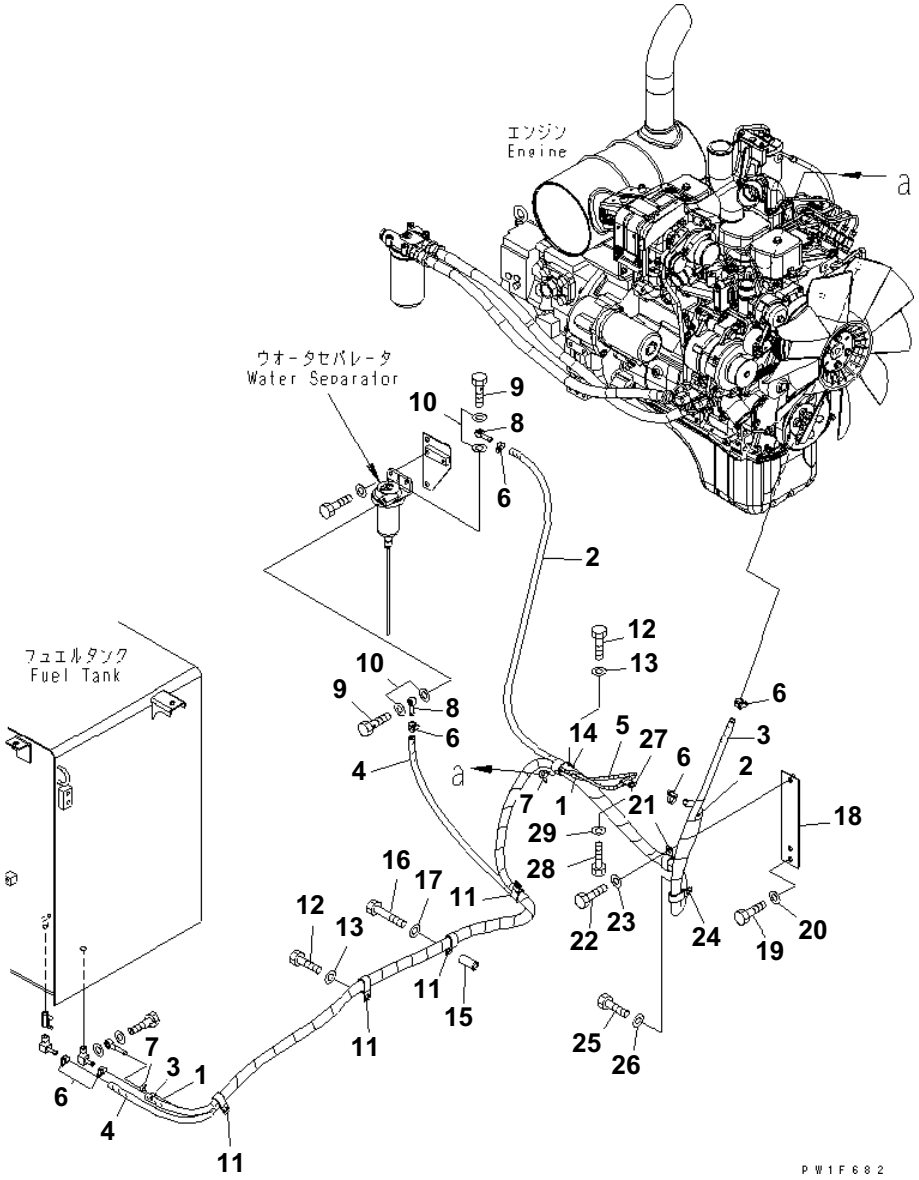

FUEL LINE (FUEL HOSE) (WITH WATER SEPARATOR)(#B20001-B20199)

Item	Part No.	Description	Qty	Options
1	07270-50429	TUBE	1	SN:B20001--@
2	07288-01016	HOSE	1	SN:B20001--@
3	07288-01034	HOSE	1	SN:B20001--@
4	07288-01025	HOSE	1	SN:B20001--@
5	08017-31005	CONDUIT	1	SN:B20001--@
6	07281-00197	CLAMP	6	SN:B20001--@
7	07285-00080	CLIP	2	SN:B20001--@
8	205-04-62150	JOINT	2	SN:B20001--@
9	07206-31014	BOLT	2	SN:B20001--@
10	07005-01412	GASKET	4	SN:B20001--@
11	04435-51912	CLIP	4	SN:B20001--@
12	01010-81225	BOLT	3	SN:B20001--@
13	01643-31232	WASHER	3	SN:B20001--@
14	04434-53212	CLIP	1	SN:B20001--@
15	154-979-1480	COLLAR	1	SN:B20001--@
16	01010-81275	BOLT	1	SN:B20001--@
17	01643-31232	WASHER	1	SN:B20001--@
18	20Y-04-31160	BRACKET	1	SN:B20001--@
19	01010-81225	BOLT	2	SN:B20001--@
20	01643-31232	WASHER	2	SN:B20001--@
21	04435-51912	CLIP	1	SN:B20001--B20199
22	01010-81225	BOLT	1	SN:B20001--B20199
23	01643-31232	WASHER	1	SN:B20001--@
24	04435-51910	CLIP	1	SN:B20001--B20199
25	01010-81016	BOLT	1	SN:B20001--B20199
26	01643-31032	WASHER	1	SN:B20001--@
27	04434-51412	CLIP	1	SN:B20001--@
28	01010-81225	BOLT	1	SN:B20001--@
29	01643-31232	WASHER	1	SN:B20001--@

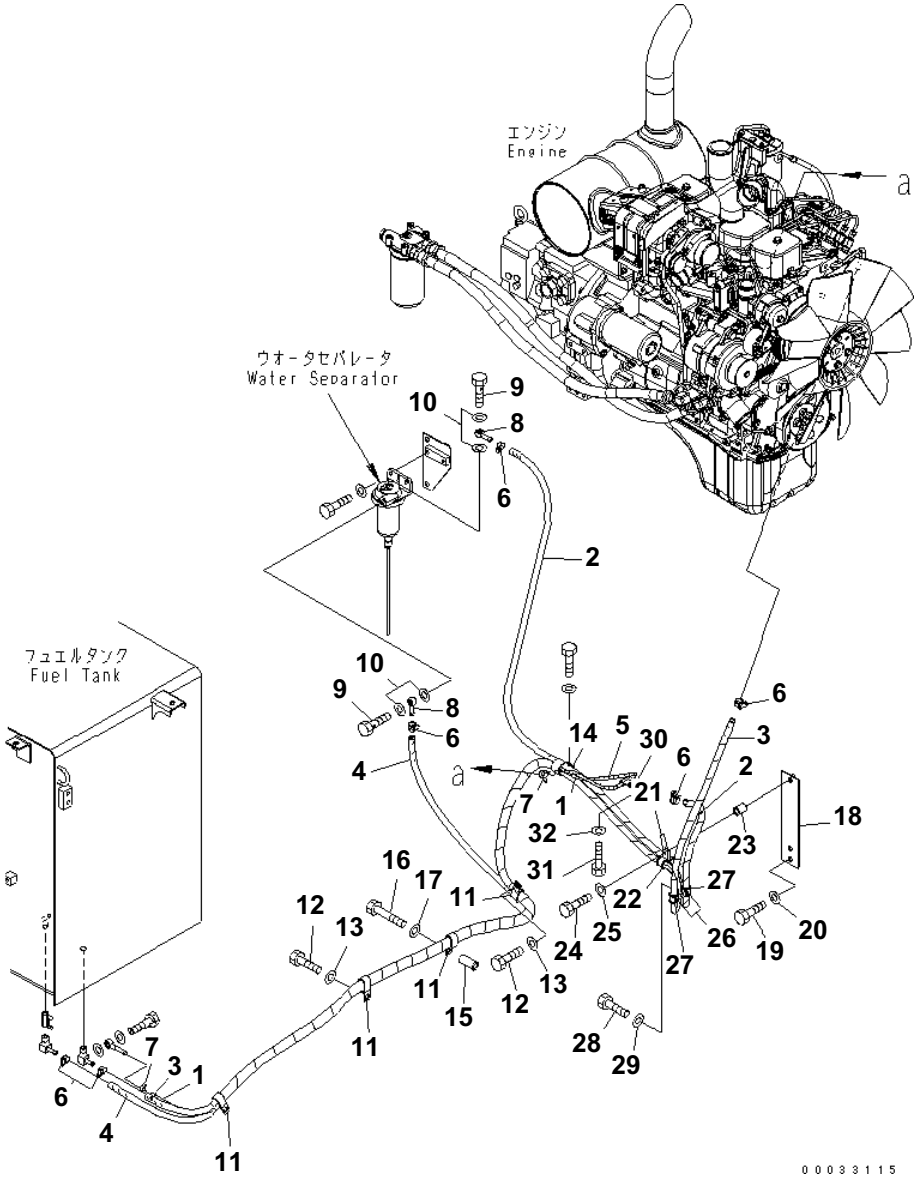

FUEL LINE (FUEL HOSE) (WITH WATER SEPARATOR)(#B20200-)

Item	Part No.	Description	Qty	Options
1	07270-50429	TUBE	1	SN:B20001--
2	07288-01016	HOSE	1	SN:B20001--
3	07288-01034	HOSE	1	SN:B20001--
4	07288-01025	HOSE	1	SN:B20001--
5	08017-31005	CONDUIT	1	SN:B20001--
6	07281-00197	CLAMP	6	SN:B20001--
7	07285-00080	CLIP	2	SN:B20001--
8	205-04-62150	JOINT	2	SN:B20001--
9	07206-31014	BOLT	2	SN:B20001--
10	07005-01412	GASKET	4	SN:B20001--
11	04435-51912	CLIP	4	SN:B20001--
12	01010-81225	BOLT	3	SN:B20001--
13	01643-31232	WASHER	3	SN:B20001--
14	04434-53212	CLIP	1	SN:B20001--
15	154-979-1480	COLLAR	1	SN:B20001--
16	01010-81275	BOLT	1	SN:B20001--
17	01643-31232	WASHER	1	SN:B20001--
18	20Y-04-31160	BRACKET	1	SN:B20001--
19	01010-81225	BOLT	2	SN:B20001--
20	01643-31232	WASHER	2	SN:B20001--
21	04434-52512	CLIP	2	SN:B20001--
22	07095-20318	CUSHION	2	SN:B20200--
23	11T-27-11180	SPACER	1	SN:B20200--
24	01010-81255	BOLT	1	SN:B20001--
25	01643-31232	WASHER	1	SN:B20001--
26	04434-52511	CLIP	2	SN:B20200--
27	07095-20318	CUSHION	2	SN:B20200--
28	01010-81020	BOLT	1	SN:B20200--
29	01643-31032	WASHER	1	SN:B20001--
30	04434-51412	CLIP	1	SN:B20001--
31	01010-81225	BOLT	1	SN:B20001--
32	01643-31232	WASHER	1	SN:B20001--

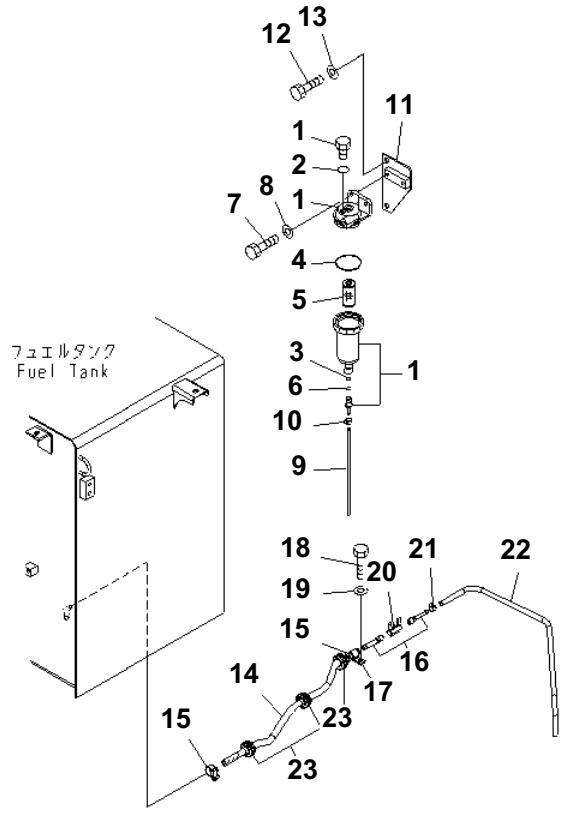

FUEL LINE (WATER SEPARATOR AND REMOTE DRAIN)

Item	Part No.	Description	Qty	Options
1	22U-04-21131	WATER SEPARATOR	1	SN:B20001--
2	07000-11006	· O-RING	1	SN:B20001--
3	07000-11007	· O-RING	1	SN:B20001--
4	07000-12065	· O-RING	1	SN:B20001--
5	22U-04-21260	· ELEMENT	1	SN:B20001--
6	22U-04-21330	· O-RING	1	SN:B20001--
7	01010-81025	BOLT	2	SN:B20001--
8	01643-31032	WASHER	2	SN:B20001--
9	07270-00630	TUBE	1	SN:B20001--
10	07285-00080	CLIP	1	SN:B20001--
11	20Y-04-31131	BRACKET	1	SN:B20001--
12	01010-81225	BOLT	2	SN:B20001--
13	01643-31232	WASHER	2	SN:B20001--
14	07288-01007	HOSE	1	SN:B20001--
15	07281-00197	CLAMP	2	SN:B20001--
16	20Y-04-31170	NIPPLE	2	SN:B20001--
17	04434-51612	CLIP	1	SN:B20001--
18	01010-81225	BOLT	1	SN:B20001--
19	01643-31232	WASHER	1	SN:B20001--
20	07700-50240	VALVE	1	SN:B20001--
21	07285-00115	CLIP	1	SN:B20001--
22	07270-01080	TUBE	1	SN:B20001--
23	21K-04-71170	GROMMET	3	SN:B20001--

ELECTRICAL SYSTEM

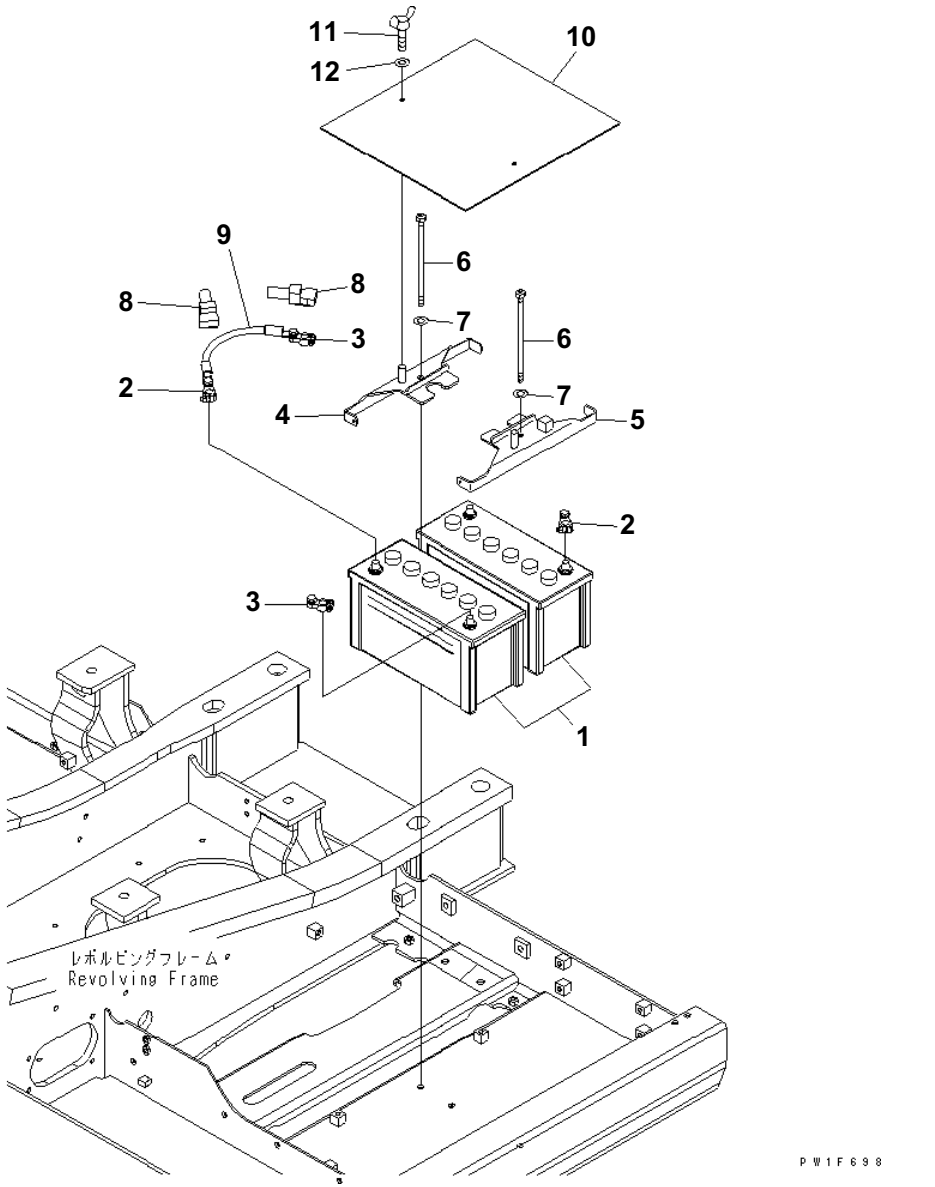

BATTERY (WET)

Item	Part No.	Description	Qty	Options
	417-06-B1940	BATTERY¤ WET	2	SN:B20252--
1	417-06-B1840	BATTERY¤ WET	2	SN:B20001--B20251
2	08000-00000	TERMINAL¤ (+)	2	SN:B20001--
3	08000-00001	TERMINAL¤ (-)	2	SN:B20001--
4	21K-06-B7110	HOLDER	1	SN:B20001--
5	21K-06-B7120	HOLDER	1	SN:B20001--
6	21K-06-B7130	BOLT	2	SN:B20001--
7	01643-31232	WASHER	2	SN:B20001--
8	08038-42009	CAP	2	SN:B20001--
9	08028-62035	CABLE	1	SN:B20001--
10	21K-06-71150	COVER	1	SN:B20001--
11	01434-00820	BOLT¤ WING	2	SN:B20001--
12	01643-30823	WASHER	2	SN:B20001--

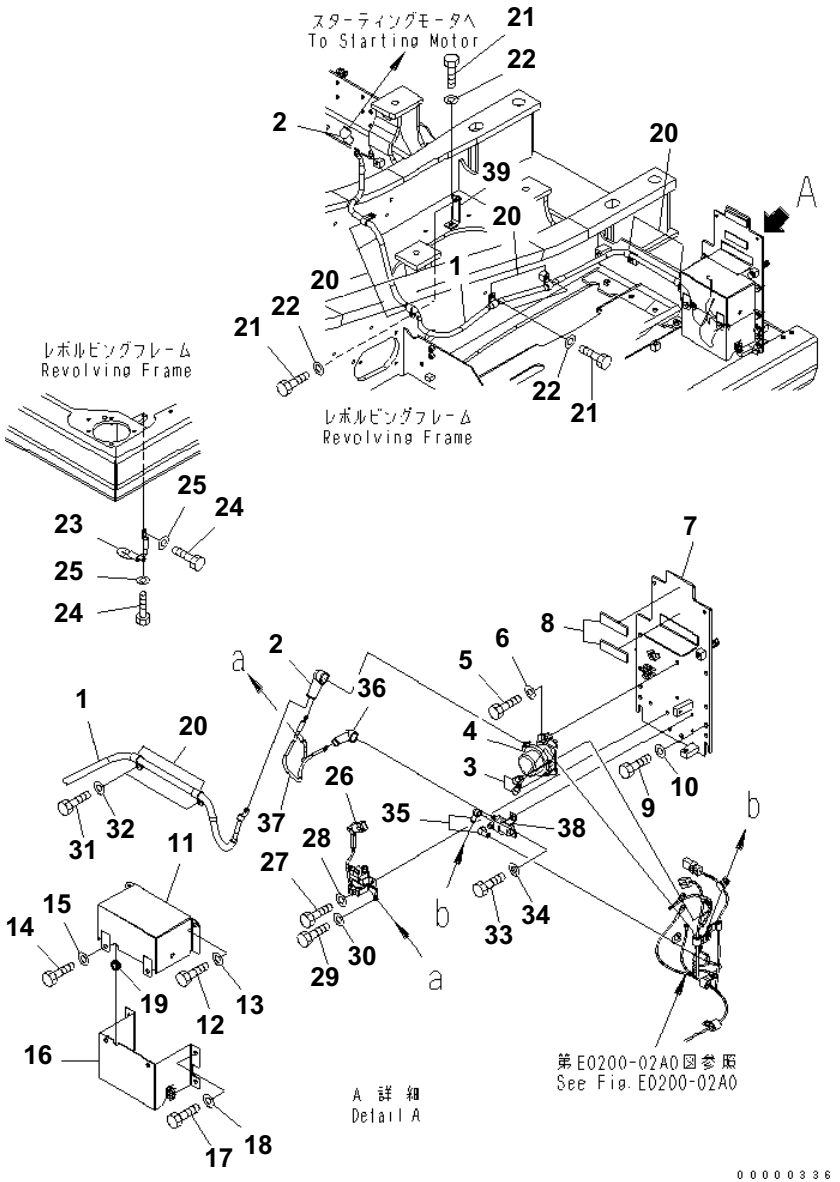

WIRING (STARTING HARNESS)(#B20001-B20194)

Item	Part No.	Description	Qty	Options
1	21K-06-71171	CABLE	1	SN:B20001--@
2	08038-00035	CAP	2	SN:B20001--@
3	08038-00519	CAP	2	SN:B20001--@
4	08088-30000	SWITCH	1	SN:B20001--@
5	01010-80830	BOLT	2	SN:B20001--@
6	01643-30823	WASHER	2	SN:B20001--@
7	21K-06-71181	BRACKET	1	SN:B20001--@
8	205-03-71440	・ SHEET	2	SN:B20001--@
9	01010-81225	BOLT	4	SN:B20001--@
10	01643-31232	WASHER	4	SN:B20001--@
11	21K-06-71281	BRACKET	1	SN:B20001--@
12	01010-81025	BOLT	2	SN:B20001--@
13	01643-31032	WASHER	2	SN:B20001--@
14	01010-81020	BOLT	2	SN:B20001--@
15	01643-31032	WASHER	2	SN:B20001--@
16	21K-06-71291	BRACKET	1	SN:B20001--@
17	01010-81025	BOLT	4	SN:B20001--@
18	01643-31032	WASHER	4	SN:B20001--@
19	201-54-13210	GROMMET	1	SN:B20001--@
20	04434-51712	CLIP	6	SN:B20001--@
21	01010-81225	BOLT	5	SN:B20001--@
22	01643-31232	WASHER	5	SN:B20001--@
23	08028-43030	CABLE	1	SN:B20001--@
24	01010-81020	BOLT	2	SN:B20001--@
25	01643-31032	WASHER	2	SN:B20001--@
26	600-815-8941	RELAY	1	SN:B20001--@
27	01010-80820	BOLT	2	SN:B20001--@
28	01643-30823	WASHER	2	SN:B20001--@
29	01010-80820	BOLT	1	SN:B20001--@
30	01643-30823	WASHER	1	SN:B20001--@
31	01010-81240	BOLT	2	SN:B20001--@
32	01643-31232	WASHER	2	SN:B20001--@
33	01010-80620	BOLT	2	SN:B20001--@
34	01643-30623	WASHER	2	SN:B20001--@
35	08038-00519	CAP	2	SN:B20001--@
36	08038-06031	CAP	1	SN:B20001--@
37	21K-06-71251	CABLE	1	SN:B20001--@
38	600-815-2170	SWITCH,HEATER	1	SN:B20001--@
39	203-06-61730	BRACKET	1	SN:B20001--@

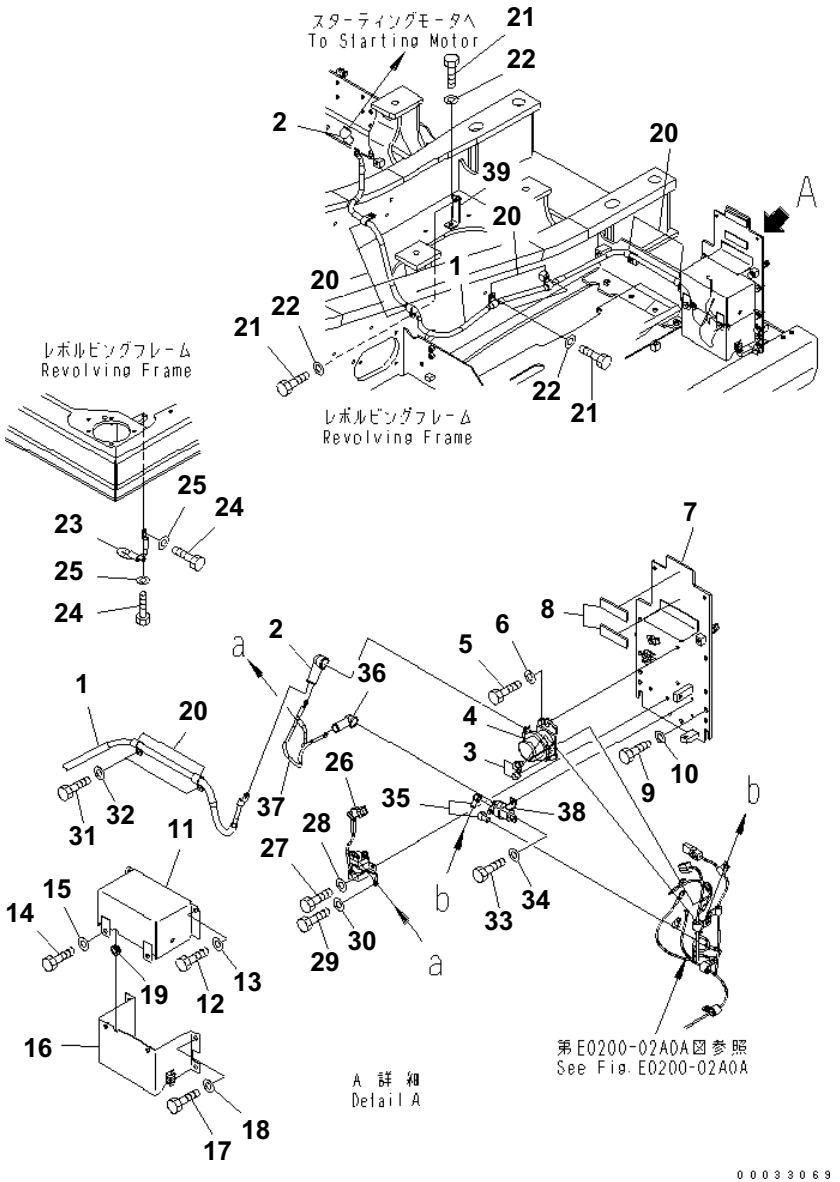

WIRING (STARTING HARNESS)(#B20195-)

Item	Part No.	Description	Qty	Options
1	21K-06-71171	CABLE	1	SN:B20001--
2	08038-00035	CAP	2	SN:B20001--
3	08038-00519	CAP	2	SN:B20001--
4	08088-30000	SWITCH	1	SN:B20001--
5	01010-80830	BOLT	2	SN:B20001--
6	01643-30823	WASHER	2	SN:B20001--
7	21K-06-71181	BRACKET	1	SN:B20001--
8	205-03-71440	・ SHEET	2	SN:B20001--
9	01010-81225	BOLT	4	SN:B20001--
10	01643-31232	WASHER	4	SN:B20001--
11	21K-06-71281	BRACKET	1	SN:B20001--
12	01010-81025	BOLT	2	SN:B20001--
13	01643-31032	WASHER	2	SN:B20001--
14	01010-81020	BOLT	2	SN:B20001--
15	01643-31032	WASHER	2	SN:B20001--
16	21K-06-71291	BRACKET	1	SN:B20001--
17	01010-81025	BOLT	4	SN:B20001--
18	01643-31032	WASHER	4	SN:B20001--
19	201-54-13210	GROMMET	1	SN:B20001--
20	04434-51712	CLIP	6	SN:B20001--
21	01010-81225	BOLT	5	SN:B20001--
22	01643-31232	WASHER	5	SN:B20001--
23	08028-43030	CABLE	1	SN:B20001--
24	01010-81020	BOLT	2	SN:B20001--
25	01643-31032	WASHER	2	SN:B20001--
26	600-815-8941	RELAY	1	SN:B20001--
27	01010-80820	BOLT	2	SN:B20001--
28	01643-30823	WASHER	2	SN:B20001--
29	01010-80820	BOLT	1	SN:B20001--
30	01643-30823	WASHER	1	SN:B20001--
31	01010-81240	BOLT	2	SN:B20001--
32	01643-31232	WASHER	2	SN:B20001--
33	01010-80620	BOLT	2	SN:B20001--
34	01643-30623	WASHER	2	SN:B20001--
35	08038-00519	CAP	2	SN:B20001--
36	08038-06031	CAP	1	SN:B20001--
37	21K-06-71251	CABLE	1	SN:B20001--
38	600-815-2170	SWITCH	1	SN:B20001--
39	203-06-61730	BRACKET	1	SN:B20001--

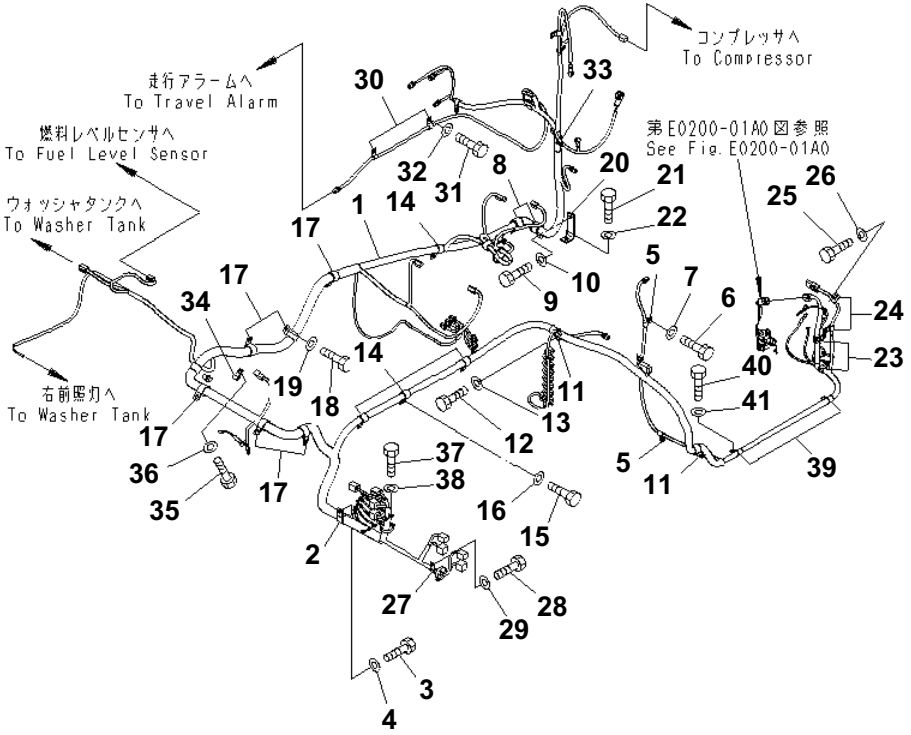

WIRING (MAIN HARNESS) (HARNESS)(#B20001-B20194)

Item	Part No.	Description	Qty	Options
1	21K-06-71192	WIRING HARNESS	1	SN:B20001--B20194
	22U-06-11270	・ FUSIBLE LINK¤ 65A,(CN-A34)	1	SN:B20001--@
	20Y-06-31660	・ FUSIBLE LINK¤ 30A,(CN-A35)	1	SN:B20001--@
2	04434-53412	CLIP	1	SN:B20001--@
3	01010-81225	BOLT	1	SN:B20001--@
4	01643-31232	WASHER	1	SN:B20001--@
5	04434-51012	CLIP	2	SN:B20001--@
6	01010-81225	BOLT	2	SN:B20001--@
7	01643-31232	WASHER	2	SN:B20001--@
8	04434-53412	CLIP	2	SN:B20001--@
9	01010-81225	BOLT	2	SN:B20001--@
10	01643-31232	WASHER	2	SN:B20001--@
11	04434-52712	CLIP	2	SN:B20001--@
12	01010-81220	BOLT	1	SN:B20001--@
13	01643-31232	WASHER	1	SN:B20001--@
14	04434-52712	CLIP	4	SN:B20001--@
15	01010-81225	BOLT	4	SN:B20001--@
16	01643-31232	WASHER	4	SN:B20001--@
17	04434-53412	CLIP	7	SN:B20001--@
18	01010-81225	BOLT	7	SN:B20001--@
19	01643-31232	WASHER	7	SN:B20001--@
20	203-06-61730	BRACKET	2	SN:B20001--@
21	01010-81225	BOLT	2	SN:B20001--@
22	01643-31232	WASHER	2	SN:B20001--@
23	04434-51710	CLIP	2	SN:B20001--@
24	04434-51012	CLIP	2	SN:B20001--@
25	01010-81020	BOLT	4	SN:B20001--@
26	01643-31032	WASHER	4	SN:B20001--@
27	04434-51412	CLIP	1	SN:B20001--@
28	01010-81225	BOLT	1	SN:B20001--@
29	01643-31232	WASHER	1	SN:B20001--@
30	04434-51012	CLIP	2	SN:B20001--B20194
31	01010-81225	BOLT	2	SN:B20001--B20194
32	01643-31232	WASHER	2	SN:B20001--B20194
33	04434-52312	CLIP	1	SN:B20001--B20194
34	04434-51012	CLIP	1	SN:B20001--@
35	01010-81225	BOLT	1	SN:B20001--@
36	01643-31232	WASHER	1	SN:B20001--@
37	01010-81020	BOLT	6	SN:B20001--@
38	01643-31032	WASHER	6	SN:B20001--@

PC160LC-7B S/N B20001 AND UP
WIRING (MAIN HARNESS)
(HARNESS)(#B20001-B20194)

Item	Part No.	Description	Qty	Options
39	04434-51912	CLIP	2	SN:B20001--B20194
40	01010-81225	BOLT	3	SN:B20001--B20194
41	01643-31232	WASHER	3	SN:B20001--B20194

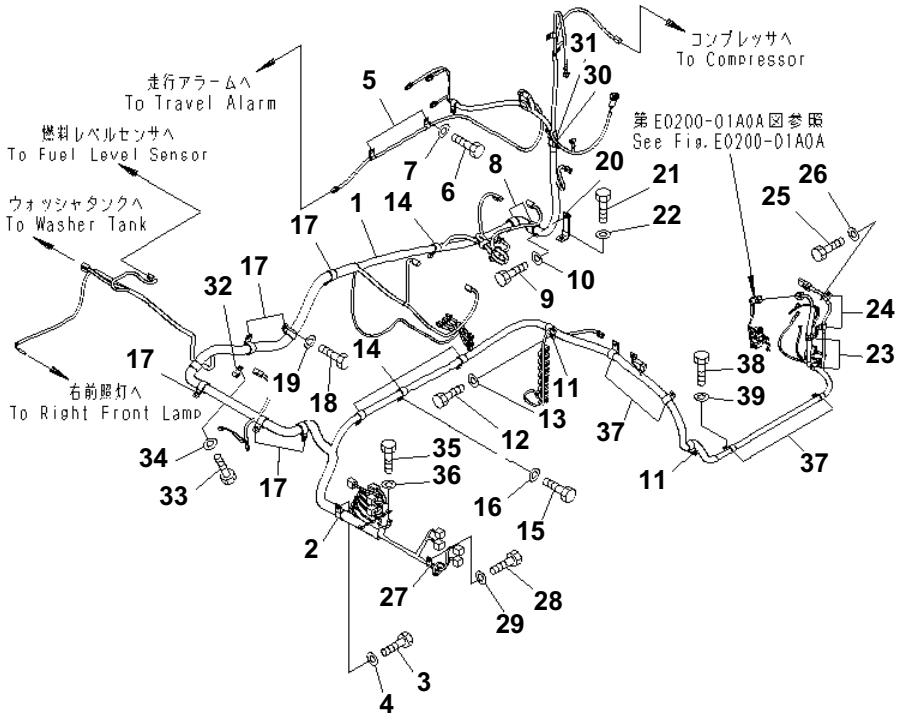

WIRING (MAIN HARNESS) (HARNESS)(#B20195-)

Item	Part No.	Description	Qty	Options
1	21K-06-B7140	WIRING HARNESS	1	SN:B20195--
	22U-06-11270	・ FUSIBLE LINK¤ 65A	1	SN:B20001--
	20Y-06-31660	・ FUSIBLE LINK¤ 30A	1	SN:B20001--
2	04434-53412	CLIP	1	SN:B20001--
3	01010-81225	BOLT	1	SN:B20001--
4	01643-31232	WASHER	1	SN:B20001--
5	04434-51012	CLIP	2	SN:B20001--
6	01010-81225	BOLT	2	SN:B20001--
7	01643-31232	WASHER	2	SN:B20001--
8	04434-53412	CLIP	2	SN:B20001--
9	01010-81225	BOLT	2	SN:B20001--
10	01643-31232	WASHER	2	SN:B20001--
11	04434-52712	CLIP	2	SN:B20001--
12	01010-81220	BOLT	1	SN:B20001--
13	01643-31232	WASHER	1	SN:B20001--
14	04434-52712	CLIP	4	SN:B20001--
15	01010-81225	BOLT	4	SN:B20001--
16	01643-31232	WASHER	4	SN:B20001--
17	04434-53412	CLIP	7	SN:B20001--
18	01010-81225	BOLT	7	SN:B20001--
19	01643-31232	WASHER	7	SN:B20001--
20	203-06-61730	BRACKET	2	SN:B20001--
21	01010-81225	BOLT	2	SN:B20001--
22	01643-31232	WASHER	2	SN:B20001--
23	04434-51710	CLIP	2	SN:B20001--
24	04434-51012	CLIP	2	SN:B20001--
25	01010-81020	BOLT	4	SN:B20001--
26	01643-31032	WASHER	4	SN:B20001--
27	04434-51412	CLIP	1	SN:B20001--
28	01010-81225	BOLT	1	SN:B20001--
29	01643-31232	WASHER	1	SN:B20001--
30	04434-53212	CLIP	1	SN:B20001--
31	07095-20523	CUSHION	1	SN:B20001--
32	04434-51012	CLIP	1	SN:B20001--
33	01010-81225	BOLT	1	SN:B20001--
34	01643-31232	WASHER	1	SN:B20001--
35	01010-81020	BOLT	6	SN:B20001--
36	01643-31032	WASHER	6	SN:B20001--
37	04434-51912	CLIP	4	SN:B20001--
38	01010-81225	BOLT	5	SN:B20001--

WIRING (MAIN HARNESS) (HARNESS)(#B20195-)

Item	Part No.	Description	Qty	Options
39	01643-31232	WASHER	5	SN:B20001--

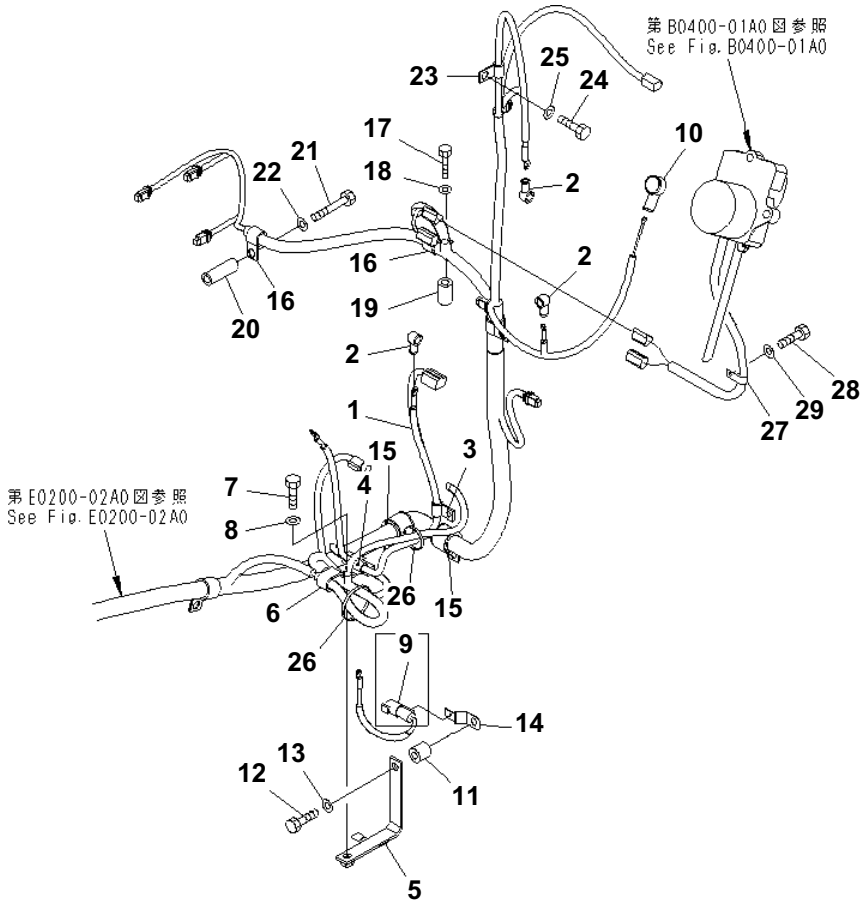

WIRING (MAIN HARNESS) (CLIP)(#B20001-B20194)

Item	Part No.	Description	Qty	Options
1	21K-06-71261	WIRING HARNESS	1	SN:B20001--@
2	08038-00519	CAP	3	SN:B20001--@
3	04434-51910	CLIP	1	SN:B20001--@
4	04434-51012	CLIP	1	SN:B20001--B20001
5	21K-06-71231	BRACKET	1	SN:B20001--@
6	04435-52112	CLIP	1	SN:B20001--@
7	01010-81230	BOLT	1	SN:B20001--@
8	01643-31232	WASHER	1	SN:B20001--@
9	20Y-06-31630	CABLE	1	SN:B20001--@
10	08038-12027	CAP	1	SN:B20001--@
11	195-33-11220	SPACER	1	SN:B20001--@
12	01010-81250	BOLT	1	SN:B20001--@
13	01643-31232	WASHER	1	SN:B20001--@
14	08193-21012	CLIP	1	SN:B20001--@
15	07095-20627	CUSHION	2	SN:B20001--@
16	04434-51712	CLIP	2	SN:B20001--B20194
17	01010-81280	BOLT	1	SN:B20001--@
18	01643-31232	WASHER	1	SN:B20001--@
19	154-979-1480	COLLAR	1	SN:B20001--@
20	175-61-17240	COLLAR	1	SN:B20001--@
21	01010-81285	BOLT	1	SN:B20001--@
22	01643-31232	WASHER	1	SN:B20001--@
23	04434-51012	CLIP	1	SN:B20001--@
24	01010-81225	BOLT	1	SN:B20001--@
25	01643-31232	WASHER	1	SN:B20001--@
26	08034-20536	BAND	2	SN:B20001--@
27	04434-51412	CLIP	1	SN:B20001--@
28	01010-81225	BOLT	1	SN:B20001--@
29	01643-31232	WASHER	1	SN:B20001--@

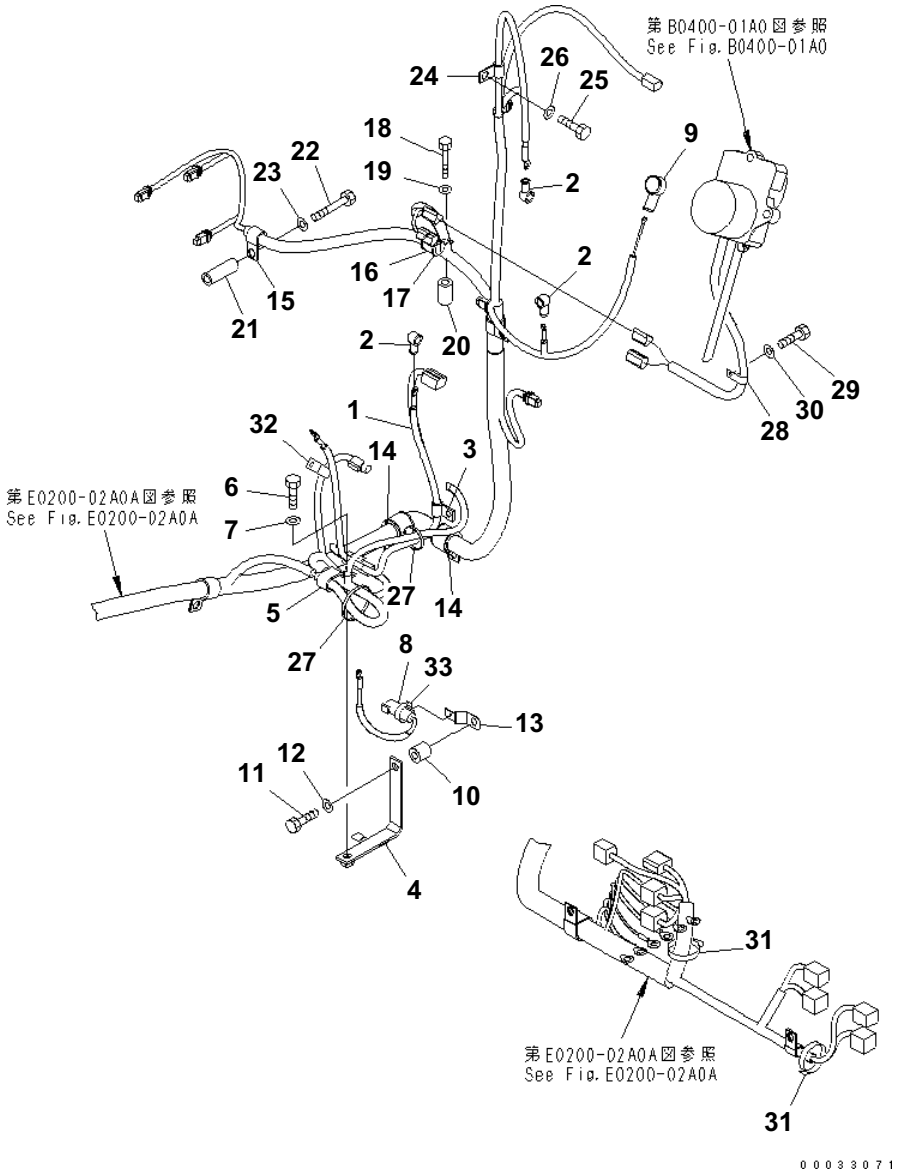

WIRING (MAIN HARNESS) (CLIP)(#B20195-)

Item	Part No.	Description	Qty	Options
1	21K-06-71261	WIRING HARNESS	1	SN:B20001--
2	08038-00519	CAP	3	SN:B20001--
3	04434-51910	CLIP	1	SN:B20001--
4	21K-06-71231	BRACKET	1	SN:B20001--
5	04435-52112	CLIP	1	SN:B20001--
6	01010-81230	BOLT	1	SN:B20001--
7	01643-31232	WASHER	1	SN:B20001--
8	20Y-06-31630	CABLE	1	SN:B20001--
9	08038-12027	CAP	1	SN:B20001--
10	195-33-11220	SPACER	1	SN:B20001--
11	01010-81250	BOLT	1	SN:B20001--
12	01643-31232	WASHER	1	SN:B20001--
13	08193-21012	CLIP	1	SN:B20001--
14	07095-20627	CUSHION	2	SN:B20001--
15	04434-51712	CLIP	1	SN:B20195--
16	04434-52712	CLIP	1	SN:B20195--
17	07095-20418	CUSHION	1	SN:B20195--
18	01010-81280	BOLT	1	SN:B20001--
19	01643-31232	WASHER	1	SN:B20001--
20	154-979-1480	COLLAR	1	SN:B20001--
21	175-61-17240	COLLAR	1	SN:B20001--
22	01010-81285	BOLT	1	SN:B20001--
23	01643-31232	WASHER	1	SN:B20001--
24	04434-51012	CLIP	1	SN:B20001--
25	01010-81225	BOLT	1	SN:B20001--
26	01643-31232	WASHER	1	SN:B20001--
27	08034-20536	BAND	2	SN:B20001--
28	04434-51412	CLIP	1	SN:B20001--
29	01010-81225	BOLT	1	SN:B20001--
30	01643-31232	WASHER	1	SN:B20001--
31	08034-20536	BAND	2	SN:B20195--
32	04434-50608	CLIP	1	SN:B20195--
33	08034-20519	BAND	1	SN:B20195--

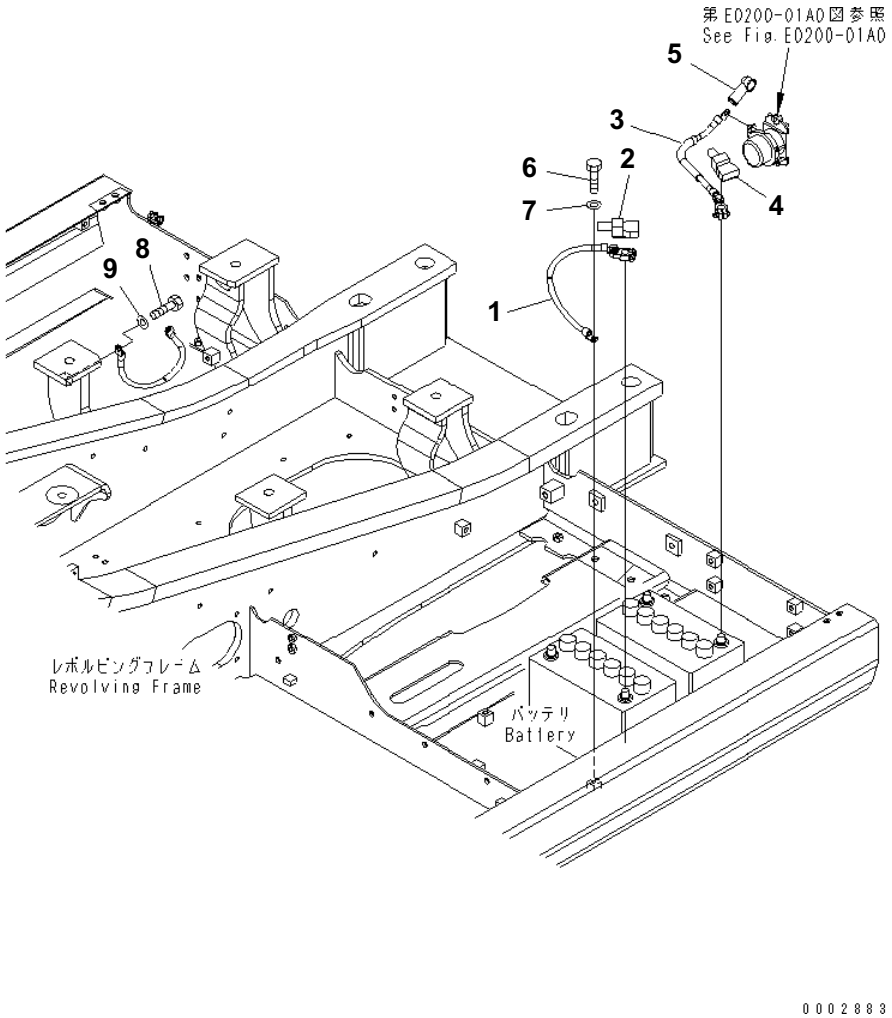

WIRING (BATTERY HARNESS AND GROUND)(#B20001-B20194)

Item	Part No.	Description	Qty	Options
1	08028-42040	CABLE	1	SN:B20001--@
2	08038-22009	CAP	1	SN:B20001--@
3	08028-CB040	CABLE	1	SN:B20001--@
4	08038-42009	CAP	1	SN:B20001--@
5	08038-06031	CAP	1	SN:B20001--@
6	01010-81020	BOLT	2	SN:B20001--@
7	01643-31032	WASHER	2	SN:B20001--@
8	01010-81016	BOLT	1	SN:B20001--@
9	01643-31032	WASHER	1	SN:B20001--@

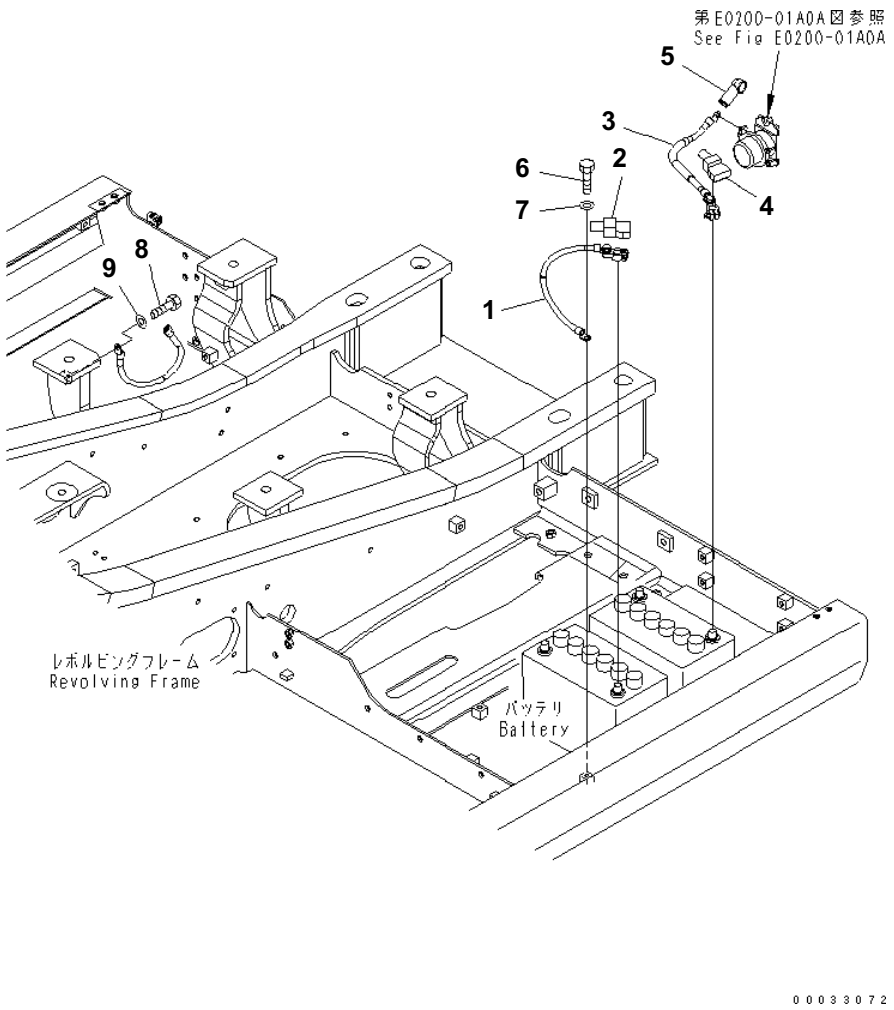

WIRING (BATTERY HARNESS AND GROUND)(#B20195-)

Item	Part No.	Description	Qty	Options
1	08028-42040	CABLE	1	SN:B20001--
2	08038-22009	CAP	1	SN:B20001--
3	08028-CB040	CABLE	1	SN:B20001--
4	08038-42009	CAP	1	SN:B20001--
5	08038-06031	CAP	1	SN:B20001--
6	01010-81020	BOLT	2	SN:B20001--
7	01643-31032	WASHER	2	SN:B20001--
8	01010-81016	BOLT	1	SN:B20001--
9	01643-31032	WASHER	1	SN:B20001--

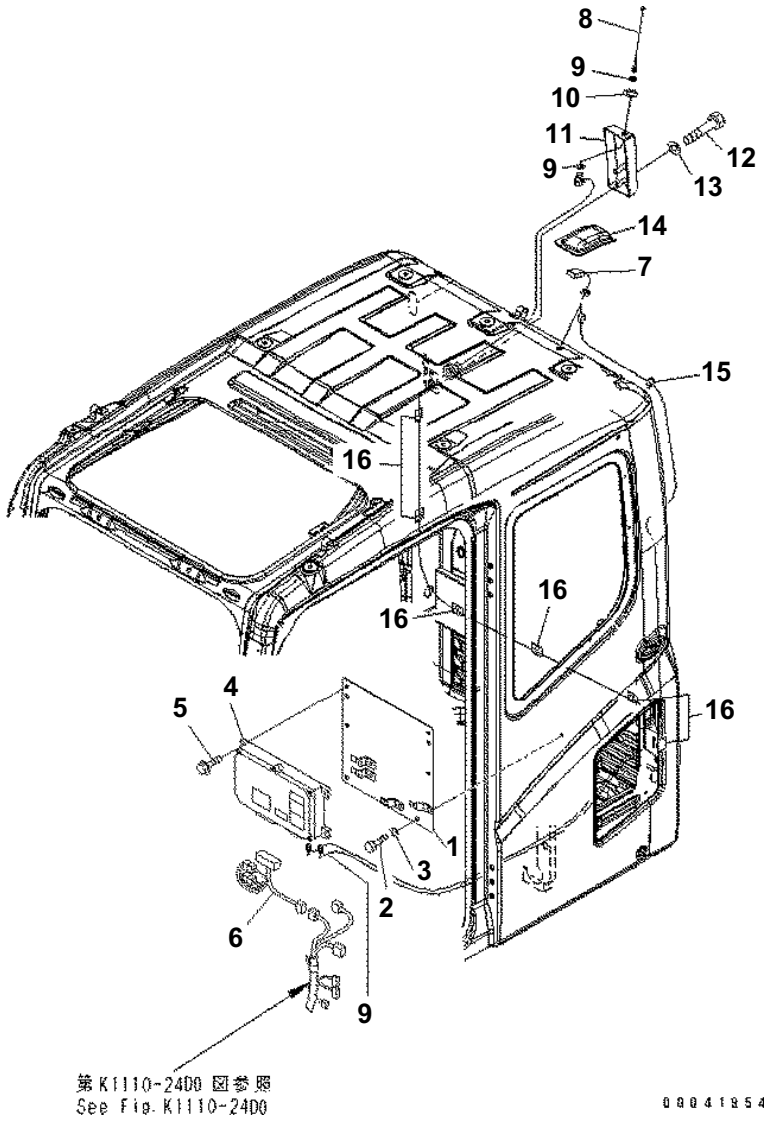

KOMTRAX WIRING (CONTROLLER & ANTENNA)

Item	Part No.	Description	Qty	Options
1	208-53-12870	PLATE	1	SN:B20340--
2	01010-80816	BOLT	4	SN:B20340--
3	01643-30823	WASHER	4	SN:B20340--
4	7826-20-7034	CONTROLLER	1	SN:B20476--
	□7826-20-7033	CONTROLLER	1	SN:B20340--B20475
5	01435-00825	BOLT	4	SN:B20340--
6	208-06-71530	WIRING HARNESS	1	SN:B20340--
7	8A13-10-1310	ANTENNA	1	SN:B20340--
8	7826-20-9200	ANTENNA	1	SN:B20340--
9	8A13-10-2200	CABLE	1	SN:B20340--
10	01640-21626	WASHER	1	SN:B20340--
11	209-53-14411	BRACKET	1	SN:B20340--
12	01010-D0650	BOLT	2	SN:B20340--
13	01643-30623	WASHER	2	SN:B20340--
14	20Y-54-53610	COVER	1	SN:B20340--
15	08034-20519	BAND	1	SN:B20340--
16	08051-00801	CLIP	11	SN:B20340--

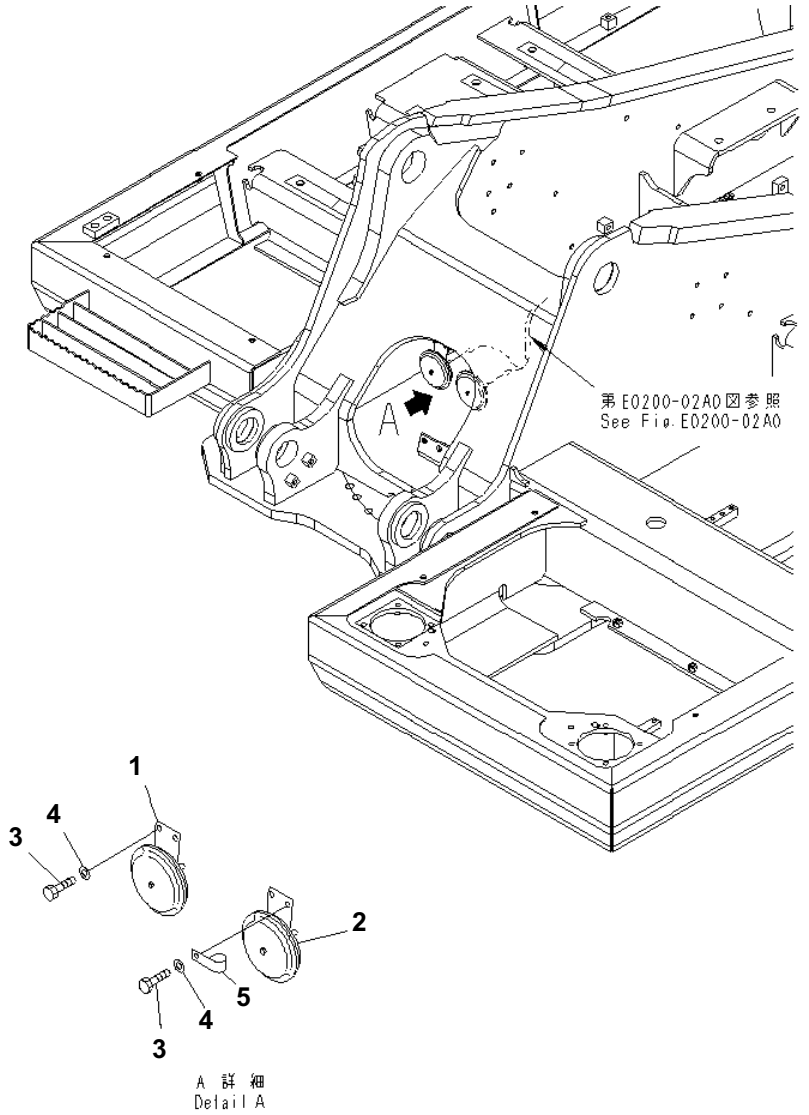

HORN

Item	Part No.	Description	Qty	Options
1	08160-62420	HORN	1	SN:B20001--
2	08160-62430	HORN	1	SN:B20001--
3	01010-80825	BOLT	4	SN:B20001--
4	01643-30823	WASHER	4	SN:B20001--
5	08036-01014	CLIP	1	SN:B20001--

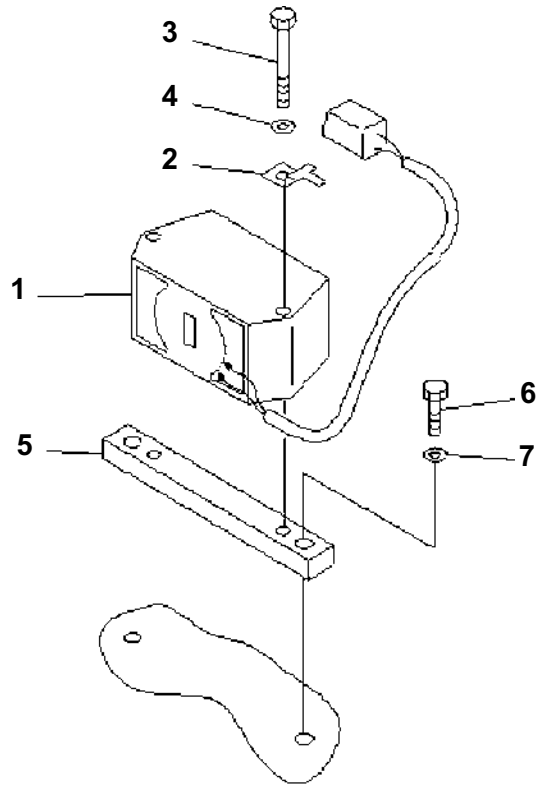

TRAVEL ALARM

Item	Part No.	Description	Qty	Options
1	08164-C1100	BUZZER	1	SN:B20470--
2	08193-20010	CLIP	1	SN:B20470--
3	01011-81000	BOLT	2	SN:B20470--
4	01643-31032	WASHER	2	SN:B20470--
5	21K-06-71320	PLATE	1	SN:B20470--
6	01010-81225	BOLT	2	SN:B20470--
7	01643-31232	WASHER	2	SN:B20470--

HYDRAULIC SYSTEM

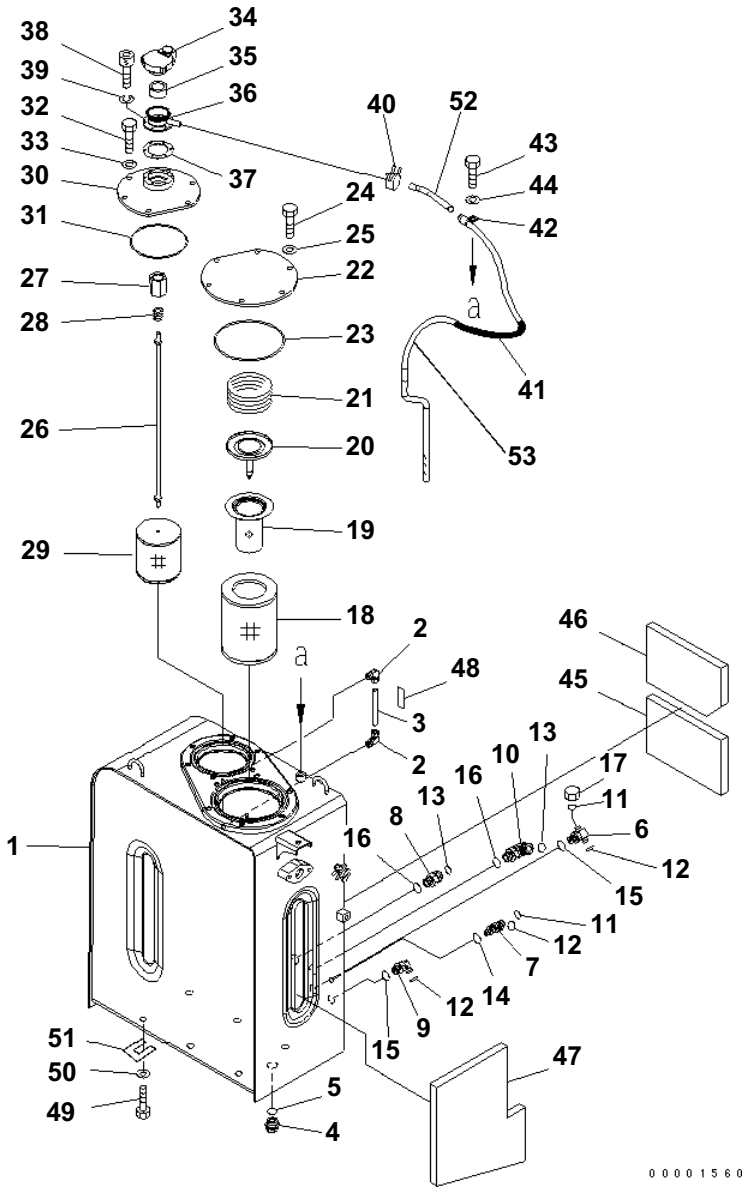

HYDRAULIC TANK (1 ACTUATOR)

Item	Part No.	Description	Qty	Options
1	21K-60-B7011	TANK	1	SN:B20568--
	21K-60-B7010	TANK	1	SN:B20062--B20567
	21K-60-71111	TANK	1	SN:B20001--B20061
2	203-60-31100	ELBOW ASS'Y	2	SN:B20001--
3	203-60-31160	TUBE	1	SN:B20001--
4	07044-12412	PLUG	1	SN:B20001--
5	07002-02434	O-RING	1	SN:B20001--
6	11Y-62-12810	ELBOW	1	SN:B20001--
7	20U-62-41820	TEE	1	SN:B20001--
8	02781-00628	UNION	1	SN:B20001--
9	02782-10315	ELBOW	1	SN:B20001--
10	02782-10628	ELBOW	1	SN:B20001--
11	02896-11008	O-RING	2	SN:B20001--
12	02896-11009	O-RING	3	SN:B20001--
13	02896-11018	O-RING	2	SN:B20001--
14	07002-11423	O-RING	1	SN:B20001--
15	07002-12034	O-RING	2	SN:B20001--
16	07002-12434	O-RING	2	SN:B20001--
17	02789-00210	NUT	1	SN:B20001--
18	207-60-71182	ELEMENT	1	SN:B20470--
	□20Y-60-31121	ELEMENT	1	SN:B20001--B20469
19	20Y-60-31140	STRAINER	1	SN:B20001--
20	20Y-60-31131	VALVE ASS'Y	1	SN:B20001--
21	07069-34075	SPRING	1	SN:B20500--
	20Y-60-21240	SPRING	1	SN:B20001--B20499
22	22U-60-21323	COVER	1	SN:B20645--
	22U-60-21231	COVER	1	SN:B20001--B20644
23	07000-15195	O-RING	1	SN:B20001--
24	01010-81230	BOLT	6	SN:B20001--
25	01643-31232	WASHER	6	SN:B20001--
	20Y-60-31171	STRAINER ASS'Y	1	SN:B20001--
26	207-60-61150	· ROD ASS'Y	1	SN:B20001--
27	20Y-60-21320	· · HOLDER	1	SN:B20001--
28	12R-60-11230	· · SPRING	1	SN:B20001--
29	22B-60-11160	· STRAINER	1	SN:B20001--
30	21K-60-71120	COVER	1	SN:B20001--
31	07000-15160	O-RING	1	SN:B20001--
32	01010-81230	BOLT	6	SN:B20001--
33	01643-31232	WASHER	6	SN:B20001--
34	17A-60-11310	CAP ASS'Y	1	SN:B20001--

PC160LC-7B S/N B20001 AND UP

HYDRAULIC TANK (1 ACTUATOR)

Item	Part No.	Description	Qty	Options
35	20Y-60-21470	· ELEMENT	1	SN:B20001--
36	208-60-71180	FILLER NECK	1	SN:B20001--
37	20Y-60-21340	GASKET	1	SN:B20001--
38	01252-70516	BOLT	6	SN:B20001--
39	01601-20513	WASHER	6	SN:B20001--
40	07285-00155	CLIP	3	SN:B20568--
	07285-00155	CLIP	1	SN:B20062--B20567
41	21K-60-B2010	TUBE	1	SN:B20568--
	07270-61417	TUBE	1	SN:B20062--B20567
42	04434-51410	CLIP	2	SN:B20568--
	04434-51512	CLIP	1	SN:B20062--B20567
43	01010-81016	BOLT	2	SN:B20568--
	01010-81220	BOLT	1	SN:B20062--B20567
44	01643-31232	WASHER	1	SN:B20001--
45	21K-60-71140	SHEET	1	SN:B20001--
46	21K-60-71150	SHEET	1	SN:B20001--
47	21K-60-71160	SHEET	1	SN:B20001--
48	205-00-73360	PLATE¤ OPERATING	1	SN:B20001--
49	01010-81635	BOLT	6	SN:B20001--
50	01643-31645	WASHER	6	SN:B20001--
51	195-03-11570	SPACER	6	SN:B20001--
52	07270-01420	TUBE	1	SN:B20645--
	07270-01020	TUBE	1	SN:B20568--B20644
53	07270-61411	HOSE	1	SN:B20645--
	07270-61414	HOSE	1	SN:B20568--B20644
	07270-60514	HOSE	1	SN:B20062--B20567

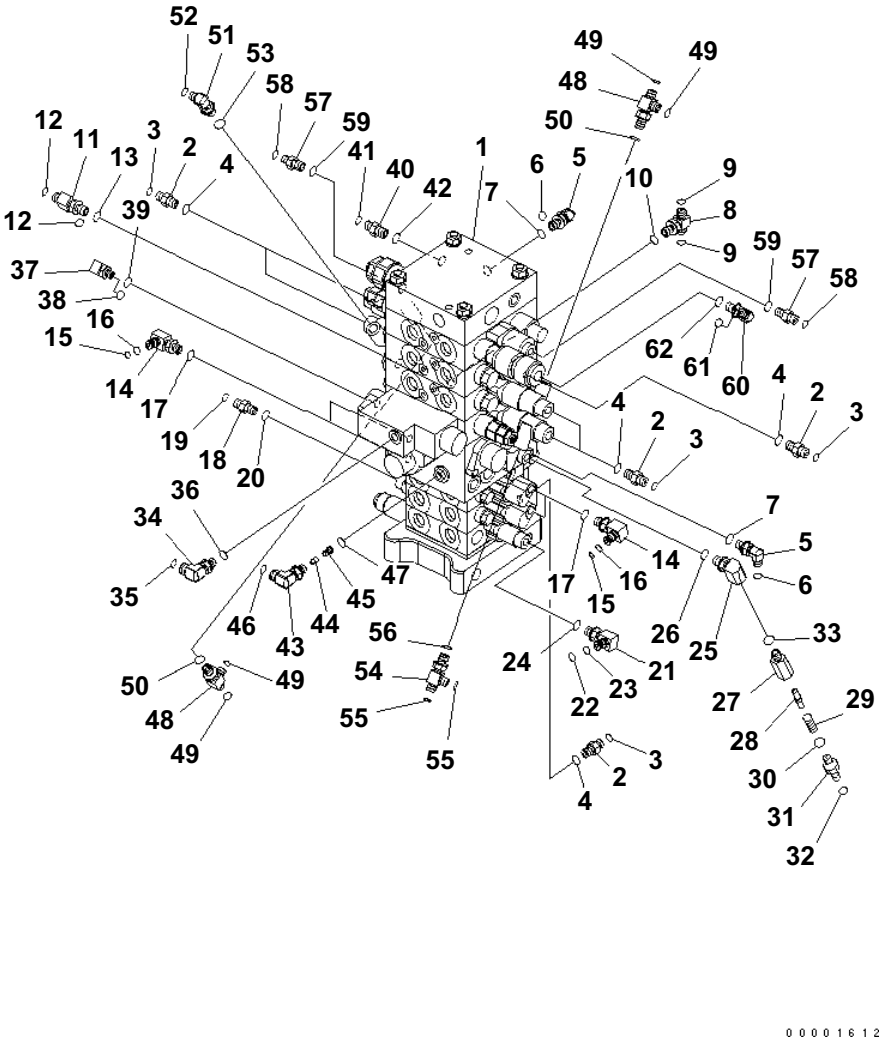

MAIN VALVE (FOR 7-SPOOL VALVE)

Item	Part No.	Description	Qty	Options
	(723-57-16104)	CONTROL VALVE	1	SN:B20645--
	(723-57-16103)	CONTROL VALVE	1	SN:B20566--B20644
	(723-57-16101)	CONTROL VALVE	1	SN:B20091--B20555
	(723-57-16100)	CONTROL VALVE	1	SN:B20001--B20090
2	11Y-62-12130	NIPPLE	6	SN:B20001--
3	02896-11008	O-RING	6	SN:B20001--
4	07002-11423	O-RING	6	SN:B20001--
5	11Y-62-12160	ELBOW	2	SN:B20001--
6	02896-11008	O-RING	2	SN:B20001--
7	07002-11423	O-RING	2	SN:B20001--
8	11Y-62-12250	TEE	1	SN:B20001--
9	02896-11008	O-RING	2	SN:B20001--
10	07002-11423	O-RING	1	SN:B20001--
11	11Y-62-12330	TEE	1	SN:B20001--
12	02896-11008	O-RING	2	SN:B20001--
13	07002-11423	O-RING	1	SN:B20001--
14	21K-62-72830	ELBOW	4	SN:B20001--
15	201-60-11390	· O-RING	1	SN:B20001--
16	20Y-62-19560	· O-RING	1	SN:B20001--
17	07002-11423	O-RING	4	SN:B20001--
18	20Y-62-41970	NIPPLE	1	SN:B20001--
19	02896-11008	O-RING	1	SN:B20001--
20	07002-11423	O-RING	1	SN:B20001--
21	21K-62-72860	ELBOW	1	SN:B20001--
22	201-60-11390	· O-RING	1	SN:B20001--
23	20Y-62-19560	· O-RING	1	SN:B20001--
24	07002-11423	O-RING	1	SN:B20001--
25	20F-61-12460	ELBOW	1	SN:B20001--
26	07002-11423	O-RING	1	SN:B20001--
	20Y-62-41701	VALVE ASS'Y	2	SN:B20101--
	20Y-62-41700	VALVE ASS'Y	2	SN:B20001--B20100
27	☆	· BODY	1	SN:B20001--
28	20Y-60-22270	· POPPET	1	SN:B20001--
29	701-20-61230	· SPRING	1	SN:B20001--
30	07002-11423	· O-RING	1	SN:B20001--
31	20Y-62-47630	· NIPPLE	1	SN:B20101--
	11Y-62-12130	· NIPPLE	1	SN:B20001--B20100
32	02896-11008	O-RING	1	SN:B20001--
33	07002-11423	O-RING	1	SN:B20001--
34	21W-62-42490	ELBOW	1	SN:B20001--

PC160LC-7B S/N B20001 AND UP

MAIN VALVE (FOR 7-SPOOL VALVE)

Item	Part No.	Description	Qty	Options
35	02896-11009	O-RING	1	SN:B20001--
36	07002-11423	O-RING	1	SN:B20001--
37	20Y-62-41920	ELBOW	1	SN:B20001--
38	02896-11008	O-RING	1	SN:B20001--
39	07002-11223	O-RING	1	SN:B20001--
40	11Y-62-12130	· NIPPLE	1	SN:B20001--
41	02896-11008	O-RING	1	SN:B20001--
42	07002-11423	O-RING	1	SN:B20001--
	21K-60-71230	VALVE ASS'Y	1	SN:B20001--
43	☆	· ELBOW	1	SN:B20001--
44	21W-973-3420	· POPPET	1	SN:B20001--
45	21Y-62-11591	· PLUG	1	SN:B20001--
46	02896-61009	O-RING	1	SN:B20001--
47	07002-11423	O-RING	1	SN:B20001--
48	11Y-62-12330	TEE	2	SN:B20001--
49	02896-11008	O-RING	4	SN:B20001--
50	07002-11423	O-RING	2	SN:B20001--
51	11Y-62-12160	ELBOW	1	SN:B20001--
52	02896-11008	O-RING	1	SN:B20001--
53	07002-11423	O-RING	1	SN:B20001--
54	21K-62-72880	TEE	1	SN:B20001--
55	02896-11008	O-RING	2	SN:B20001--
56	07002-11423	O-RING	1	SN:B20001--
57	11Y-62-12130	NIPPLE	2	SN:B20001--
58	02896-11008	O-RING	2	SN:B20001--
59	07002-11423	O-RING	2	SN:B20001--
60	11Y-62-12160	ELBOW	1	SN:B20001--
61	02896-11008	O-RING	1	SN:B20001--
62	07002-11423	O-RING	1	SN:B20001--

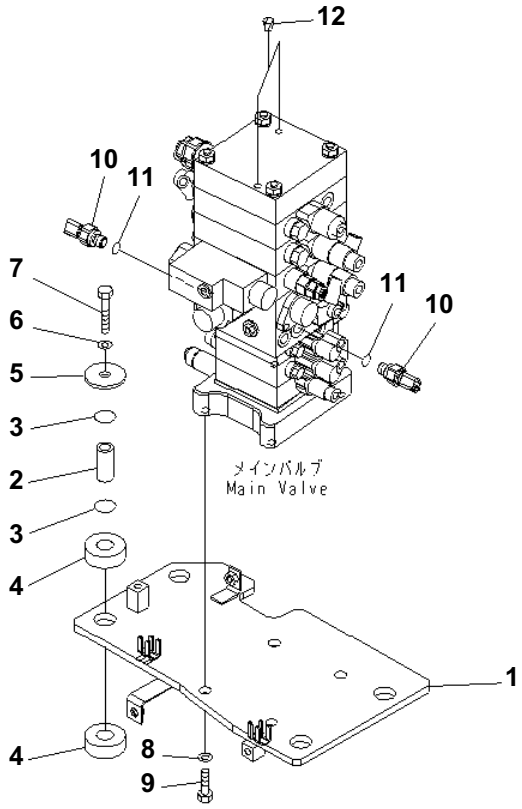

00015808

MAIN VALVE (BRACKET AND SENSOR)

Item	Part No.	Description	Qty	Options
1	21K-62-71121	BRACKET	1	SN:B20001--
2	203-62-61581	SPACER	4	SN:B20001--
3	07000-13025	O-RING	8	SN:B20001--
4	203-54-21110	CUSHION	8	SN:B20001--
5	203-62-61572	PLATE	4	SN:B20001--
6	01643-31645	WASHER	4	SN:B20001--
7	01011-81600	BOLT	4	SN:B20001--
8	01643-31645	WASHER	4	SN:B20001--
9	01010-81640	BOLT	4	SN:B20001--
10	7861-93-1650	SENSOR	2	SN:B20001--
11	07002-11823	・ O-RING	1	SN:B20001--
12	07049-01012	PLUG	4	SN:B20001--

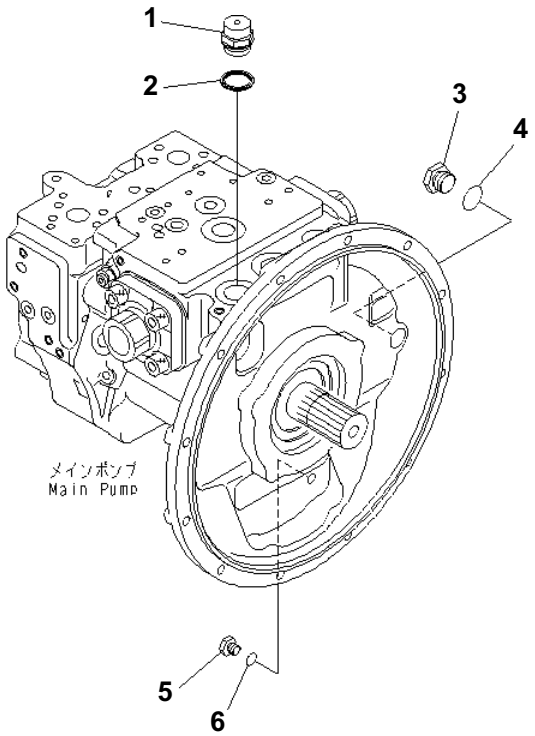

MAIN PUMP (CONNECTING PARTS)

Item	Part No.	Description	Qty	Options
1	07030-03034	BREATHER	1	SN:B20001--
2	07005-03016	GASKET	1	SN:B20001--
3	07040-12412	PLUG	1	SN:B20001--
4	07002-12434	O-RING	1	SN:B20001--
5	07040-11209	PLUG	1	SN:B20001--
6	07002-11223	O-RING	1	SN:B20001--

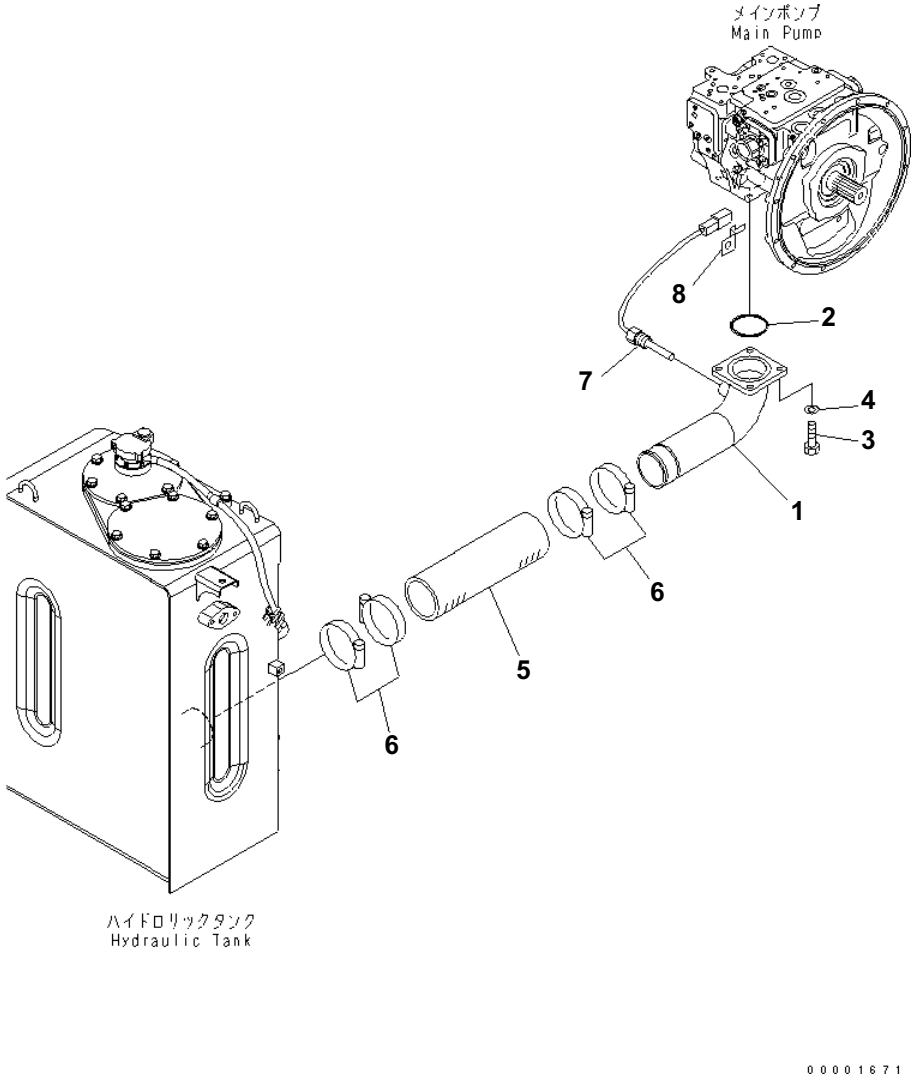

SUCTION LINE

Item	Part No.	Description	Qty	Options
1	21K-62-71111	TUBE	1	SN:B20001--
2	07000-12100	O-RING	1	SN:B20001--
3	01010-81235	BOLT	4	SN:B20001--
4	01643-31232	WASHER	4	SN:B20001--
5	07260-08732	HOSE	1	SN:B20001--
6	20Y-62-51671	CLAMP	4	SN:B20671--
	07289-00105	CLAMP	4	SN:B20001--B20670
7	7861-93-3320	SENSOR	1	SN:B20001--
8	(08193-21012)	CLIP	1	SN:B20001--

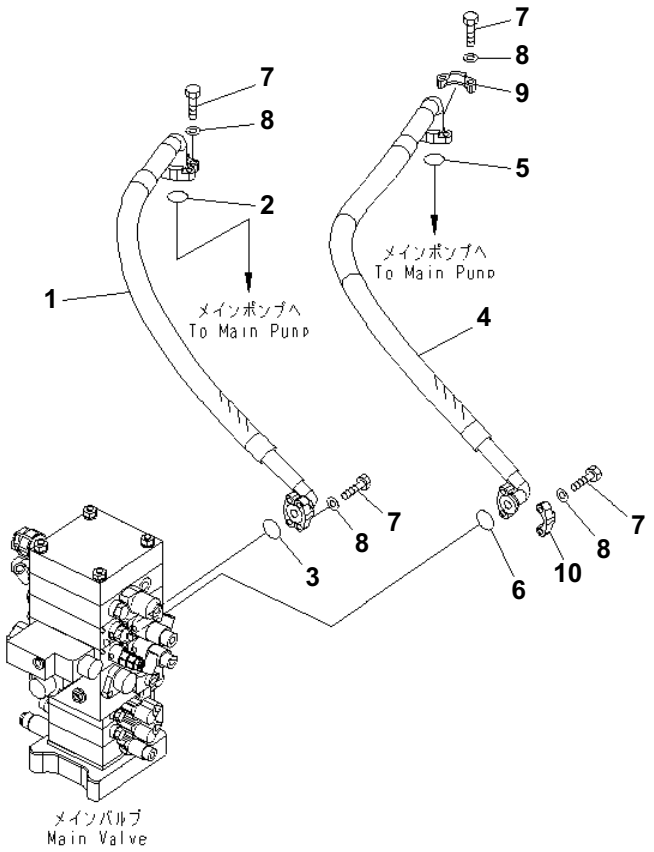

DELIVERY LINE

Item	Part No.	Description	Qty	Options
1	21K-62-71130	HOSE¤ 1000MM	1	SN:B20001--
2	21T-09-11460	O-RING	1	SN:B20001--
3	21T-09-11430	O-RING	1	SN:B20001--
4	21K-62-71140	HOSE¤ 1200MM	1	SN:B20001--
5	21T-09-11460	O-RING	1	SN:B20001--
6	21T-09-11430	O-RING	1	SN:B20001--
7	07372-21035	BOLT	16	SN:B20001--
8	01643-51032	WASHER	16	SN:B20001--
9	07371-31049	FLANGE	4	SN:B20001--
10	07371-30640	FLANGE	4	SN:B20001--

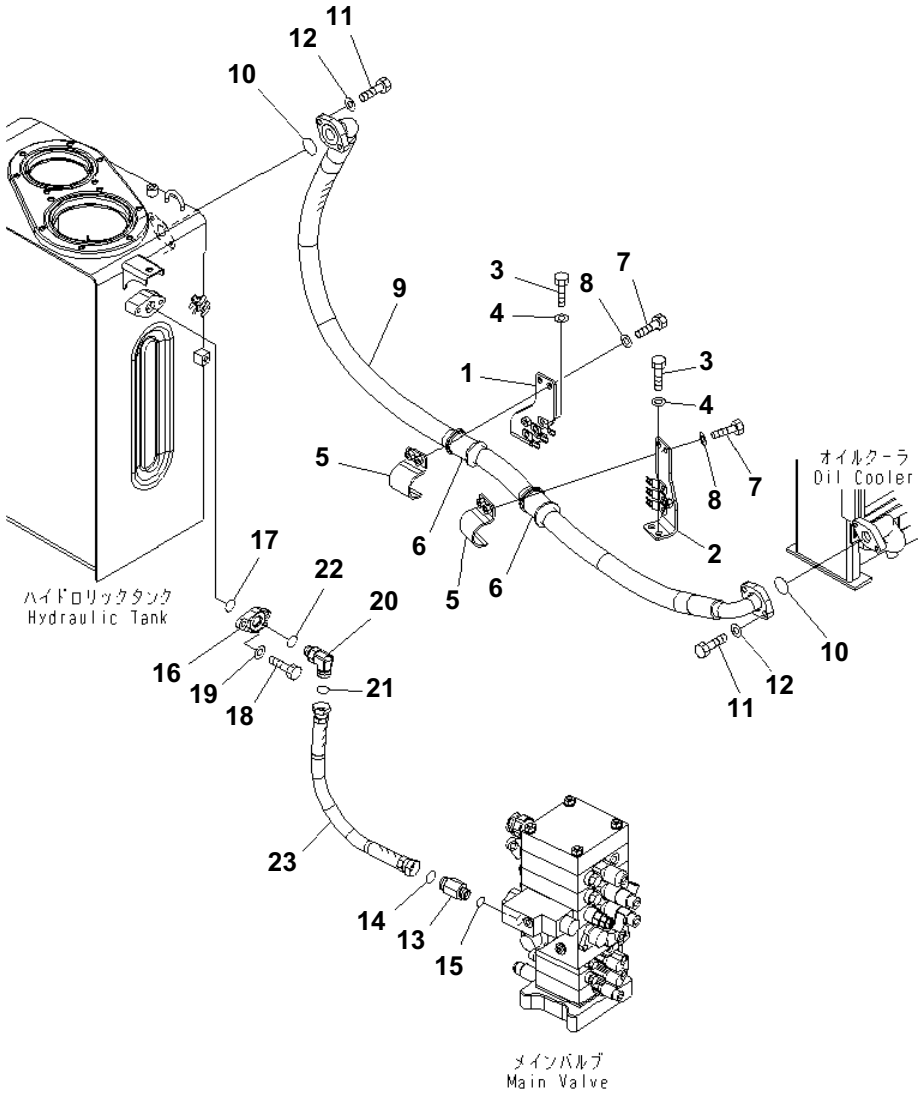

OIL COOLER LINE

Item	Part No.	Description	Qty	Options
1	21K-62-71281	BRACKET	1	SN:B20001--
2	21K-62-71271	BRACKET	1	SN:B20001--
3	01010-81225	BOLT	4	SN:B20001--
4	01643-31232	WASHER	4	SN:B20001--
5	21K-62-72810	CLAMP	2	SN:B20001--
6	07095-01241	CUSHION	2	SN:B20001--
7	01010-81230	BOLT	4	SN:B20001--
8	01643-31232	WASHER	4	SN:B20001--
9	21K-62-71221	HOSE¤ 2150MM	1	SN:B20001--
10	07000-13038	O-RING	2	SN:B20001--
11	01010-81035	BOLT	4	SN:B20001--
12	01643-31032	WASHER	4	SN:B20001--
13	22U-62-21480	NIPPLE	1	SN:B20001--
14	02896-11018	O-RING	1	SN:B20001--
15	07002-12434	O-RING	1	SN:B20001--
16	21K-62-71340	PLATE	1	SN:B20001--
17	07000-13035	O-RING	1	SN:B20001--
18	01010-81030	BOLT	2	SN:B20001--
19	01643-31032	WASHER	2	SN:B20001--
20	02782-10628	ELBOW	1	SN:B20001--
21	02896-11018	O-RING	1	SN:B20001--
22	07002-12434	O-RING	1	SN:B20001--
23	02762-00605	HOSE	1	SN:B20001--

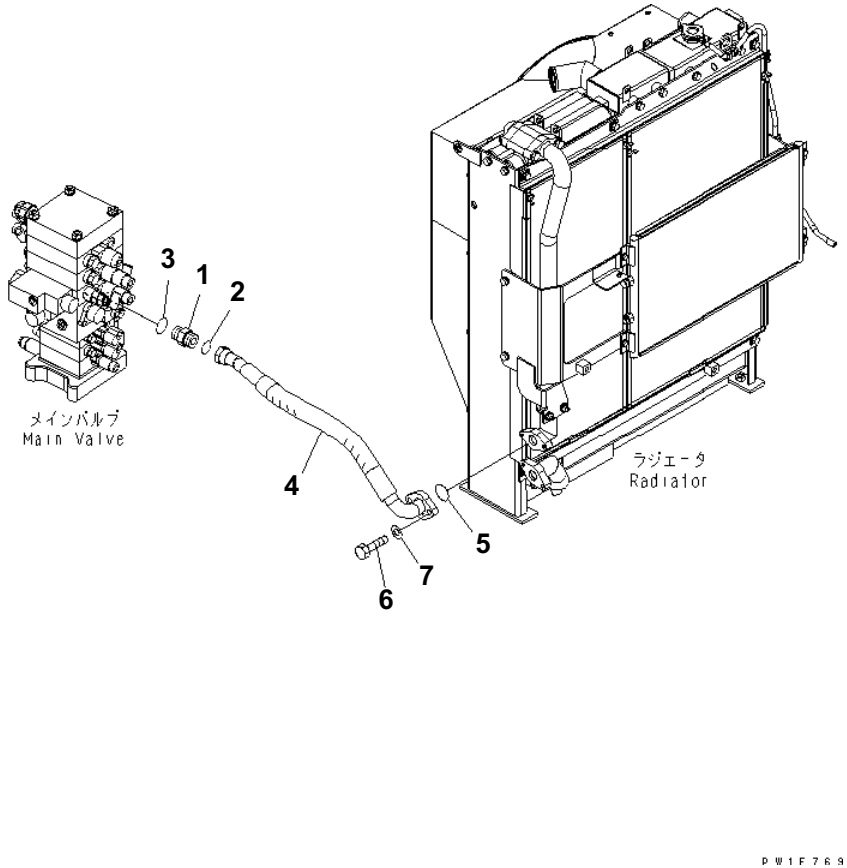

RETURN LINE

Item	Part No.	Description	Qty	Options
1	207-62-72110	UNION	1	SN:B20001--
2	207-62-64740	O-RING	1	SN:B20001--
3	07002-13334	O-RING	1	SN:B20001--
4	21K-62-71210	HOSE¤ 680MM	1	SN:B20001--
5	07000-13038	O-RING	1	SN:B20001--
6	01010-81035	BOLT	2	SN:B20001--
7	01643-31032	WASHER	2	SN:B20001--

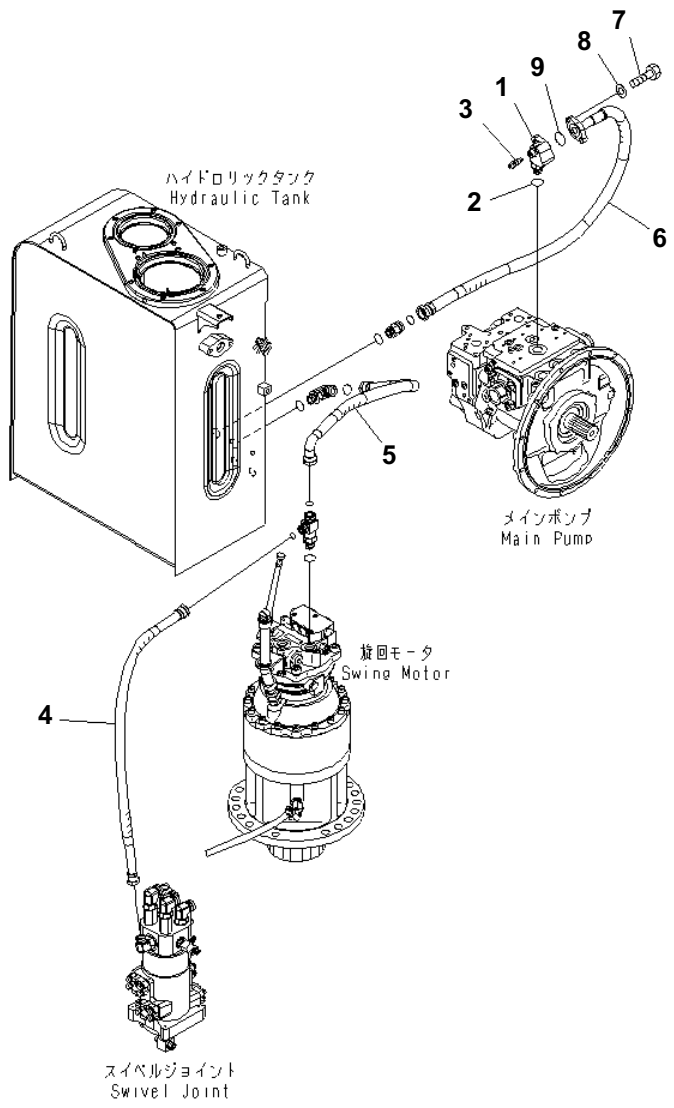

DRAIN LINE

Item	Part No.	Description	Qty	Options
1	21K-62-71240	ELBOW	1	SN:B20001--
2	07002-12434	O-RING	1	SN:B20001--
3	20B-27-11210	BLEEDER	1	SN:B20001--
4	02762-005A8	HOSE	1	SN:B20001--
5	02763-00610	HOSE	1	SN:B20001--
6	21K-62-71231	HOSE¤ 1200MM	1	SN:B20001--
7	01010-81035	BOLT	2	SN:B20001--
8	01643-31032	WASHER	2	SN:B20001--
9	07000-13025	O-RING	1	SN:B20001--

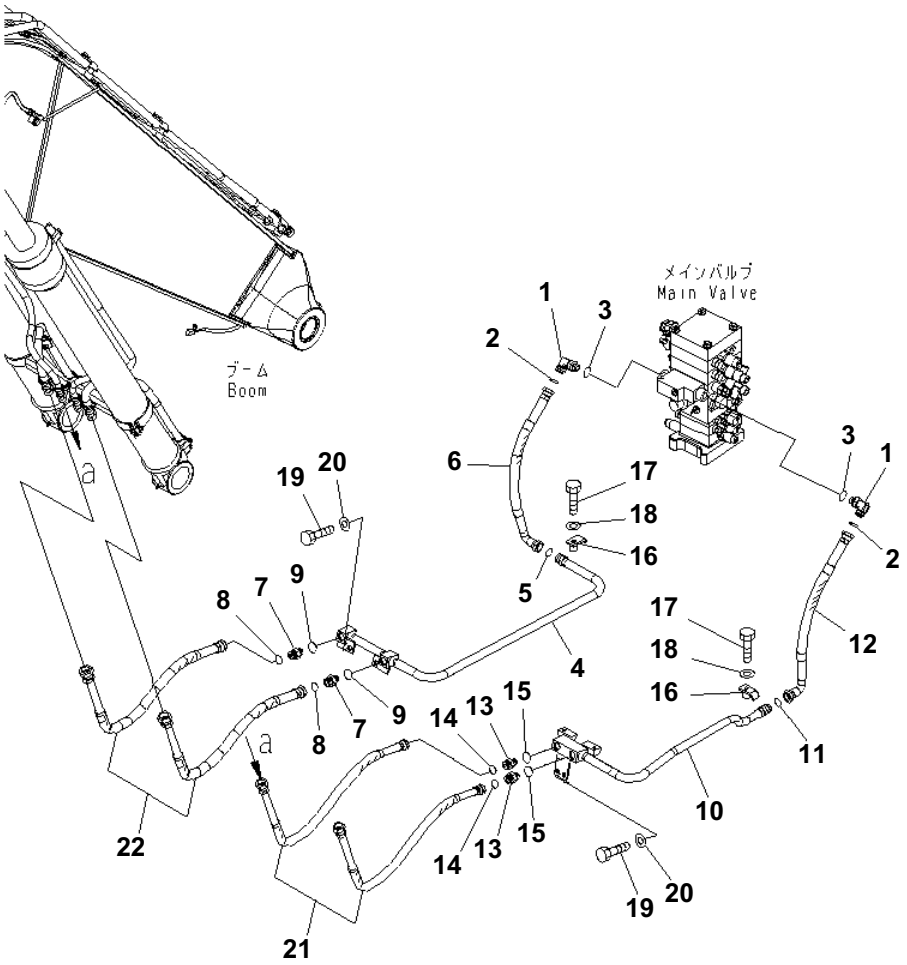

BOOM LINE

Item	Part No.	Description	Qty	Options
1	02782-10628	ELBOW	2	SN:B20001--
2	02896-61018	O-RING	2	SN:B20001--
3	07002-62434	O-RING	2	SN:B20001--
4	21K-62-71251	TUBE	1	SN:B20001--
5	02896-61018	O-RING	1	SN:B20001--
6	02778-00606	HOSE	1	SN:B20001--
7	02781-00628	UNION	2	SN:B20001--
8	02896-61018	O-RING	2	SN:B20001--
9	07002-62434	O-RING	2	SN:B20001--
10	21K-62-72851	TUBE	1	SN:B20001--
11	02896-61018	O-RING	1	SN:B20001--
12	02778-00606	HOSE	1	SN:B20001--
13	02781-00522	UNION	2	SN:B20001--
14	02896-61015	O-RING	2	SN:B20001--
15	07002-62434	O-RING	2	SN:B20001--
16	203-62-63730	CLAMP	2	SN:B20001--
17	01010-81255	BOLT	2	SN:B20001--
18	01643-31232	WASHER	2	SN:B20001--
19	01010-81230	BOLT	4	SN:B20001--
20	01643-31232	WASHER	4	SN:B20001--
21	21K-62-72980	HOSE¤ 680MM	2	SN:B20001--
22	02777-006A6	HOSE	2	SN:B20001--

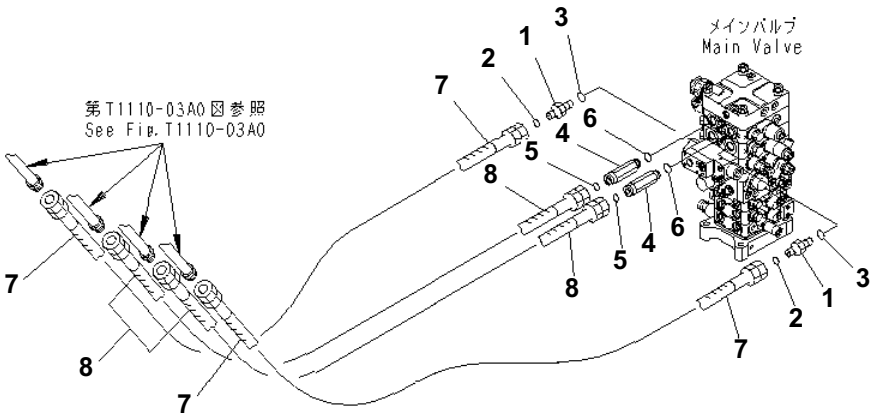

ARM AND BUCKET LINE

Item	Part No.	Description	Qty	Options
1	02781-00628	UNION	2	SN:B20001--
2	02896-61018	O-RING	2	SN:B20001--
3	07002-62434	O-RING	2	SN:B20001--
4	21K-62-71290	NIPPLE	2	SN:B20001--
5	02896-61018	O-RING	2	SN:B20001--
6	07002-62434	O-RING	2	SN:B20001--
7	21K-62-71320	HOSE¤ 1250MM	2	SN:B20001--
8	02777-00612	HOSE	2	SN:B20001--

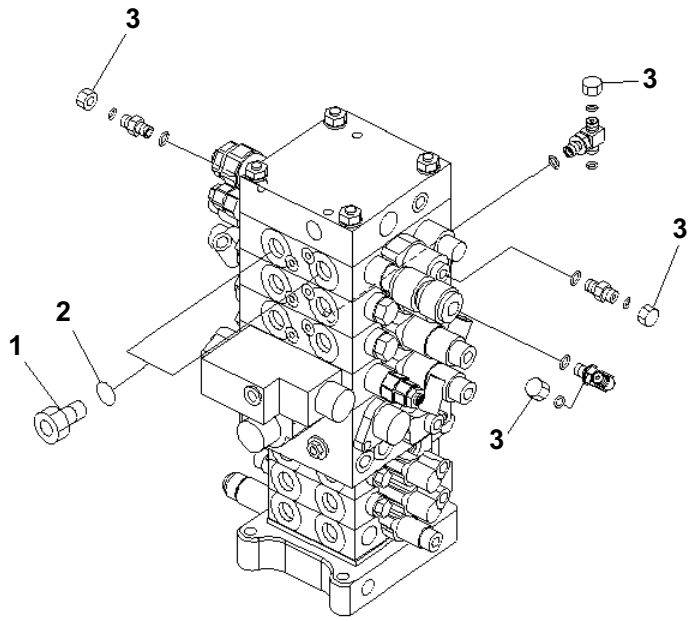

ATTACHMENT LINE LESS (BLIND PARTS)

Item	Part No.	Description	Qty	Options
1	07040-12412	PLUG	2	SN:B20001--
2	07002-12434	O-RING	2	SN:B20001--
3	02789-00210	NUT	4	SN:B20001--

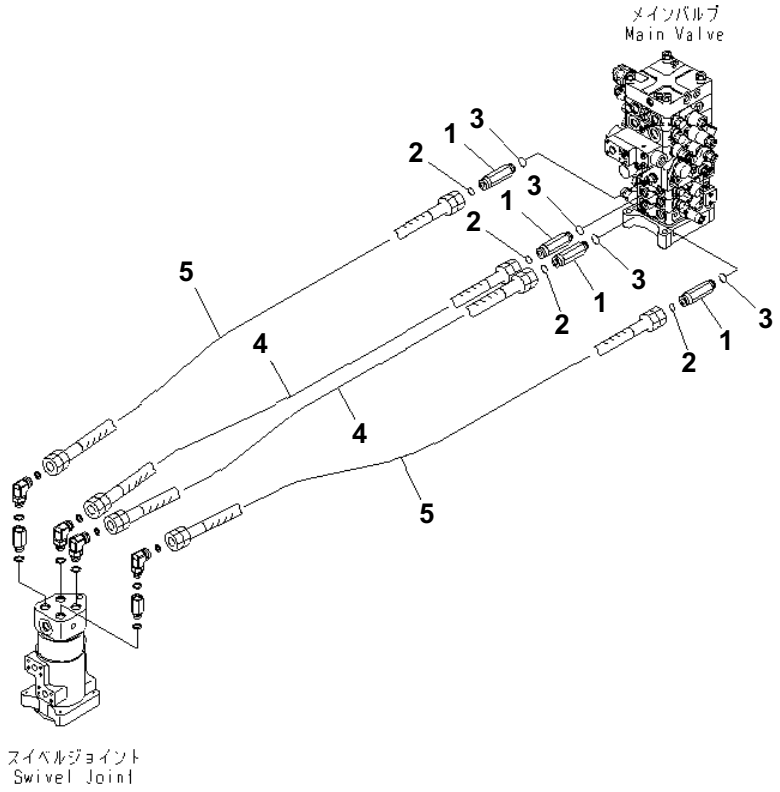

TRAVEL LINE

Item	Part No.	Description	Qty	Options
1	21K-62-71290	NIPPLE	4	SN:B20001--
2	02896-61018	O-RING	4	SN:B20001--
3	07002-62434	O-RING	4	SN:B20001--
4	02756-006A7	HOSE	2	SN:B20001--
5	02756-00608	HOSE	2	SN:B20001--

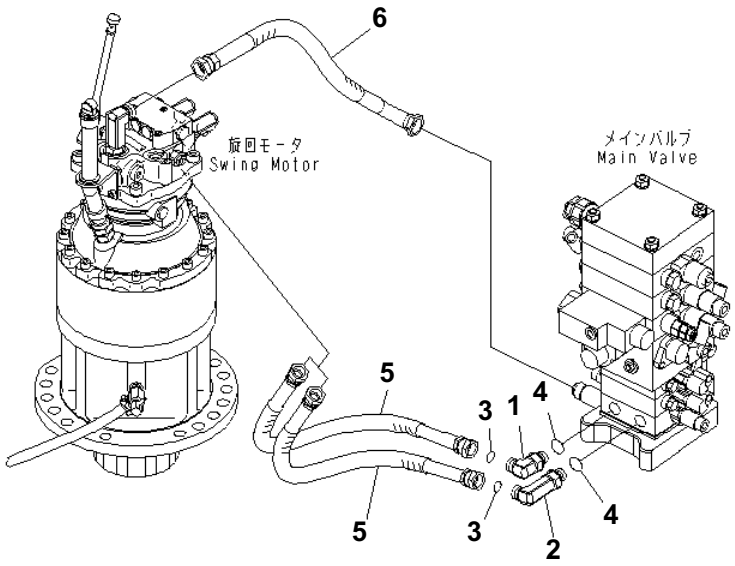

SWING LINE

Item	Part No.	Description	Qty	Options
1	02782-10522	ELBOW	1	SN:B20001--
2	02782-10524	ELBOW	1	SN:B20001--
3	02896-61015	O-RING	2	SN:B20001--
4	07002-62434	O-RING	2	SN:B20001--
5	02756-00507	HOSE	2	SN:B20001--
6	21K-62-72970	HOSE¤ 670MM	1	SN:B20001--

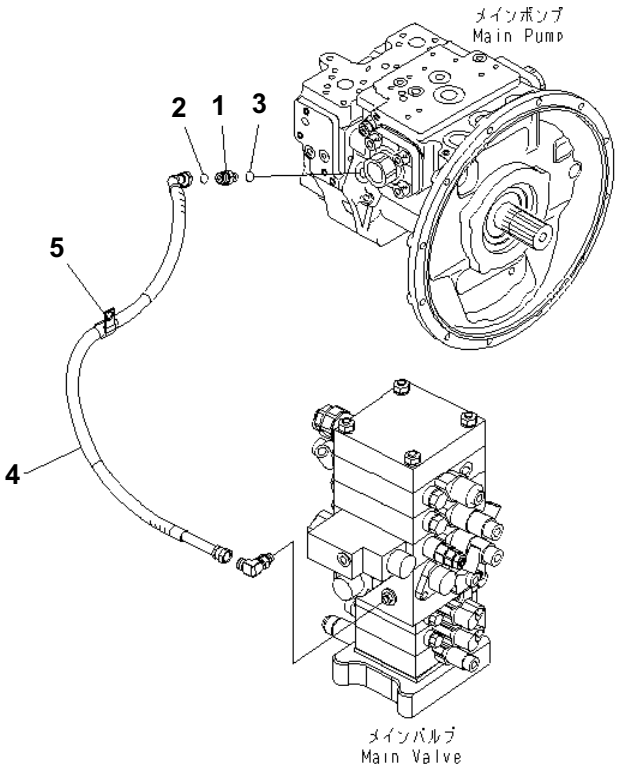

LS LINE

Item	Part No.	Description	Qty	Options
1	11Y-62-12520	NIPPLE	1	SN:B20001--
2	02896-61009	O-RING	1	SN:B20001--
3	07002-11423	O-RING	1	SN:B20001--
4	02779-00311	HOSE	1	SN:B20001--
5	04434-51912	CLIP	1	SN:B20001--

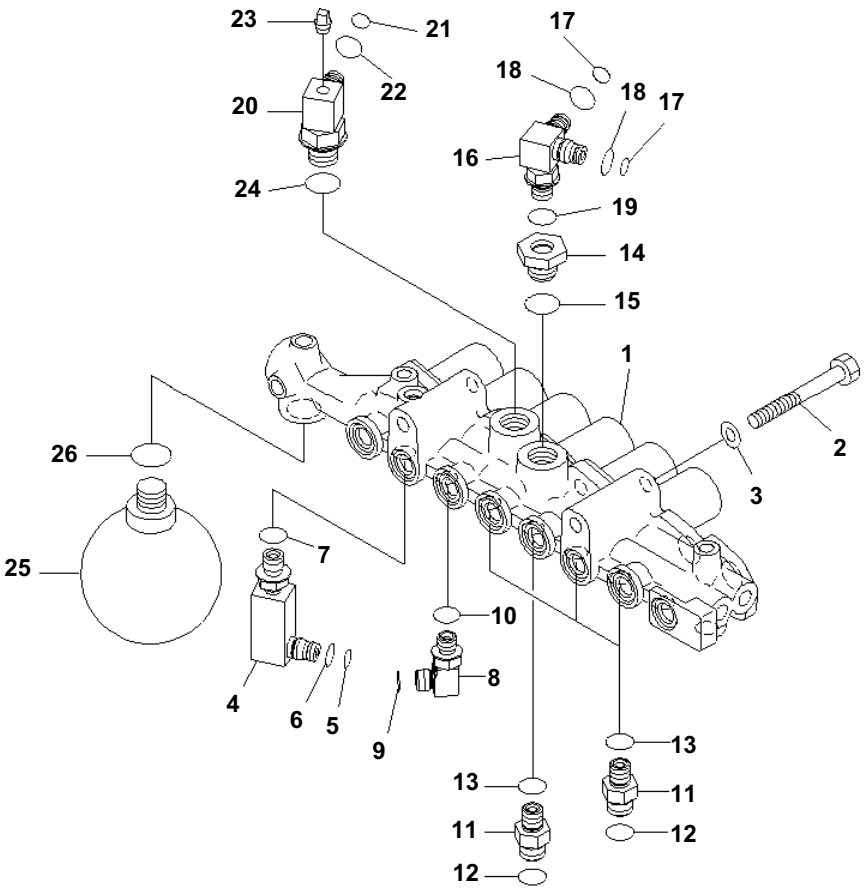

SOLENOID VALVE (VALVE AND CONNECTING PARTS)

Item	Part No.	Description	Qty	Options
1	(21K-60-71211)	VALVE A.	1	SN:B20001--
2	01010-81090	BOLT	2	SN:B20001--
3	01643-31032	WASHER	2	SN:B20001--
4	14X-43-14840	ELBOW	1	SN:B20001--
5	201-60-11390	· O-RING	1	SN:B20001--
6	20Y-62-19560	· O-RING	1	SN:B20001--
7	07002-11423	O-RING	1	SN:B20001--
8	207-62-72120	ELBOW	1	SN:B20001--
9	02896-11008	O-RING	1	SN:B20001--
10	07002-11423	O-RING	1	SN:B20001--
11	11Y-62-12130	NIPPLE	4	SN:B20001--
12	02896-11008	O-RING	4	SN:B20001--
13	07002-11423	O-RING	1	SN:B20001--
14	20Y-62-21940	FILTER ASS'Y	1	SN:B20001--
15	07002-12034	O-RING	1	SN:B20001--
16	21K-62-72360	TEE	1	SN:B20001--
17	201-60-11390	· O-RING	2	SN:B20001--
18	20Y-62-19560	· O-RING	2	SN:B20001--
19	07002-11423	O-RING	1	SN:B20001--
20	14X-43-14830	ELBOW	1	SN:B20001--
21	201-60-11390	· O-RING	1	SN:B20001--
22	20Y-62-19560	· O-RING	1	SN:B20001--
23	07042-70108	PLUG	1	SN:B20001--
24	07002-12034	O-RING	1	SN:B20001--
25	22U-60-21330	ACCUMULATOR	1	SN:B20001--
26	07002-12034	O-RING	1	SN:B20001--

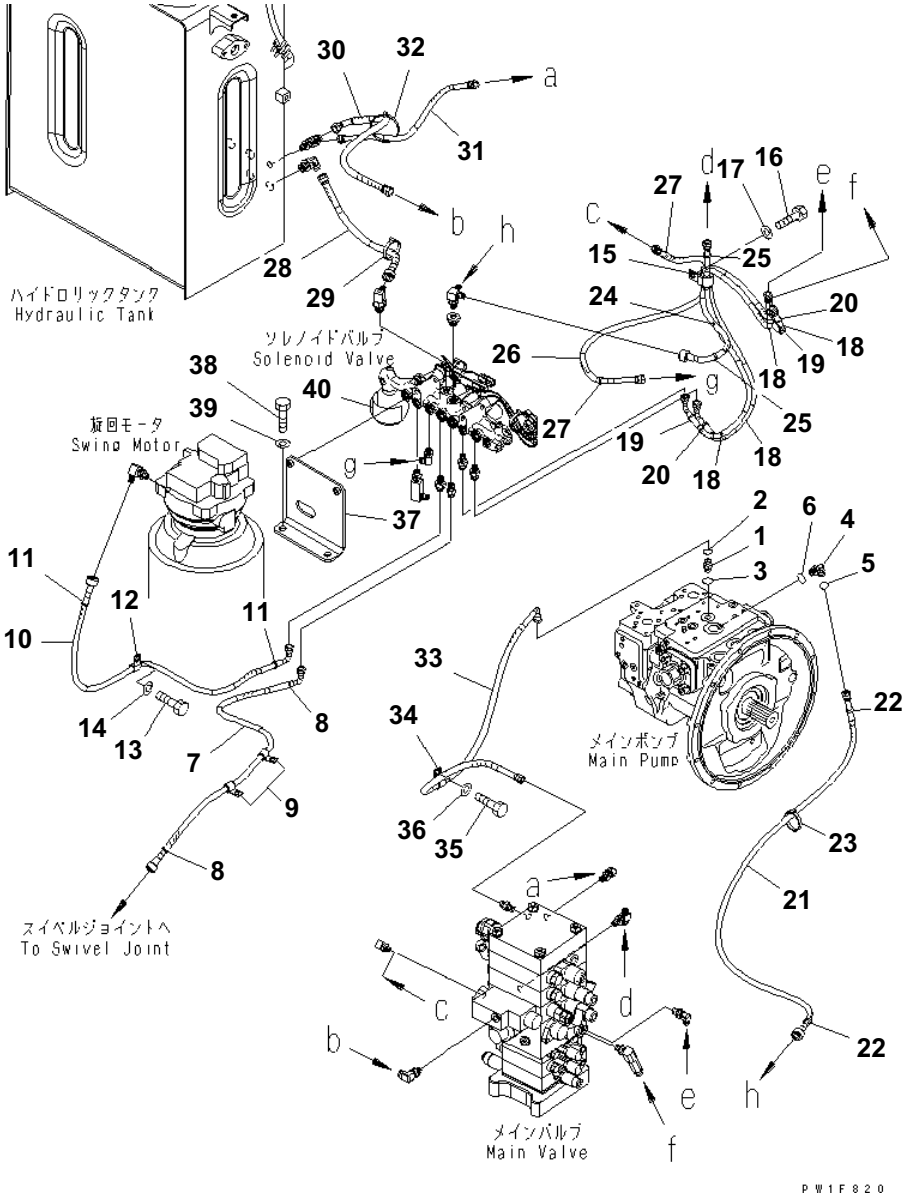

SOLENOID VALVE (SOLENOID VALVE LINE)

Item	Part No.	Description	Qty	Options
1	02781-00210	UNION	1	SN:B20001--
2	02896-11008	O-RING	1	SN:B20001--
3	07002-11423	O-RING	1	SN:B20001--
4	02782-10210	ELBOW	1	SN:B20001--
5	02896-11008	O-RING	1	SN:B20001--
6	07002-11423	O-RING	1	SN:B20001--
7	21K-62-71921	HOSE¤ 1100MM	1	SN:B20001--
8	20Y-62-22810	・ BAND¤ YELLOW	2	SN:B20001--
9	04434-51312	CLIP	2	SN:B20001--
10	21K-62-71981	HOSE¤ 1000MM	1	SN:B20001--
11	20Y-62-22820	・ BAND¤ BLUE	2	SN:B20001--
12	04434-51312	CLIP	1	SN:B20001--
13	01010-81225	BOLT	1	SN:B20001--
14	01643-31232	WASHER	1	SN:B20001--
15	04434-53212	CLIP	1	SN:B20001--
16	01010-81225	BOLT	1	SN:B20001--
17	01643-31232	WASHER	1	SN:B20001--
	21K-62-72141	HOSE ASS'Y	1	SN:B20001--
18	02761-00211	・ HOSE¤ 1100MM	2	SN:B20001--
19	20Y-62-22850	・ BAND¤ GREEN	2	SN:B20001--
20	20Y-62-22860	・ BAND¤ BROWN	2	SN:B20001--
	21K-62-72151	HOSE ASS'Y	1	SN:B20001--
21	207-62-72720	・ HOSE¤ 1400MM	1	SN:B20001--
22	20Y-62-22790	・ BAND¤ RED	2	SN:B20001--
23	08034-20834	BAND	1	SN:B20001--
	21K-62-72260	HOSE ASS'Y	1	SN:B20001--
24	21K-62-72250	・ HOSE¤ 550MM	1	SN:B20001--
25	20Y-62-22790	・ BAND¤ RED	2	SN:B20001--
	21K-62-72711	HOSE ASS'Y	1	SN:B20001--
26	02760-002A9	・ HOSE	1	SN:B20001--
27	20Y-62-22830	・ BAND¤ WHITE	2	SN:B20001--
28	207-62-72620	HOSE¤ 600MM	1	SN:B20001--
29	08034-20834	BAND	1	SN:B20001--
30	02761-00308	HOSE	1	SN:B20001--
31	02760-00207	HOSE	1	SN:B20001--
32	08034-20834	BAND	1	SN:B20001--
33	02778-00212	HOSE	1	SN:B20001--
34	04434-51612	CLIP	1	SN:B20001--
35	01010-81230	BOLT	1	SN:B20001--
36	01643-31232	WASHER	1	SN:B20001--

PC160LC-7B S/N B20001 AND UP

SOLENOID VALVE (SOLENOID VALVE LINE)

Item	Part No.	Description	Qty	Options
37	21K-62-72111	BRACKET	1	SN:B20001--
38	01010-81225	BOLT	2	SN:B20001--
39	01643-31232	WASHER	2	SN:B20001--
40	09659-A057A	PLATE¤ SAFETY, (JAPANESE)	1	SN:B20001--
	09659-A057B	PLATE¤ SAFETY, (ENGLISH¤ PICTORIAL)	1	SN:B20001--
	09659-53000	PLATE¤ SAFETY, (ENGLISH¤ LETTERING)	1	SN:B20001--B20250

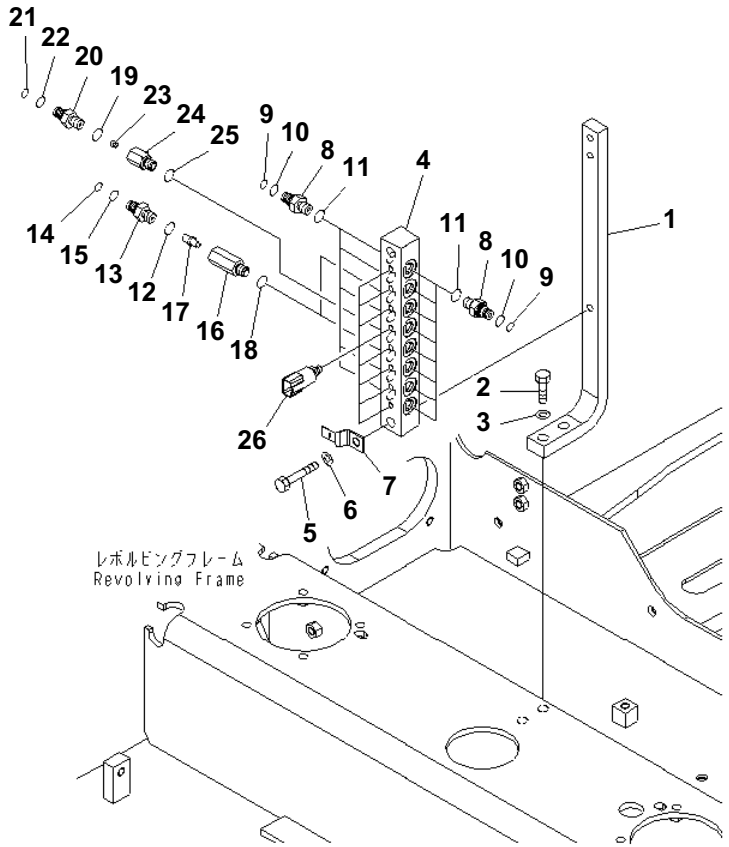

PRESSURE SWITCH BLOCK

Item	Part No.	Description	Qty	Options
1	21K-62-72120	PLATE	1	SN:B20001--
2	01010-81240	BOLT	2	SN:B20001--
3	01643-31232	WASHER	2	SN:B20001--
4	20Y-62-41550	BLOCK	1	SN:B20001--
5	01010-81260	BOLT	2	SN:B20001--
6	01643-31232	WASHER	2	SN:B20001--
7	08053-01512	CLIP	1	SN:B20001--
8	20Y-62-16630	NIPPLE	13	SN:B20001--
9	201-60-11390	・ O-RING	1	SN:B20001--
10	20Y-62-19560	・ O-RING	1	SN:B20001--
11	07002-11423	O-RING	13	SN:B20001--
	203-60-62401	VALVE ASS'Y	2	SN:B20001--
12	07002-11423	・ O-RING	1	SN:B20001--
13	20Y-62-22410	・ NIPPLE	1	SN:B20001--
14	201-60-11390	・・ O-RING	1	SN:B20001--
15	20Y-62-19560	・・ O-RING	1	SN:B20001--
16	☆	・ BODY	1	SN:B20001--
17	203-60-62430	・ POPPET	1	SN:B20001--
18	07002-11423	O-RING	2	SN:B20001--
	203-60-62300	VALVE ASS'Y	1	SN:B20001--
19	07002-11423	・ O-RING	1	SN:B20001--
20	203-60-62310	・ NIPPLE	1	SN:B20001--
21	201-60-11390	・・ O-RING	1	SN:B20001--
22	20Y-62-19560	・・ O-RING	1	SN:B20001--
23	203-60-62320	・ POPPET	1	SN:B20001--
24	☆	・ BODY	1	SN:B20001--
25	07002-11423	O-RING	1	SN:B20001--
26	206-06-61130	SWITCH	8	SN:B20001--

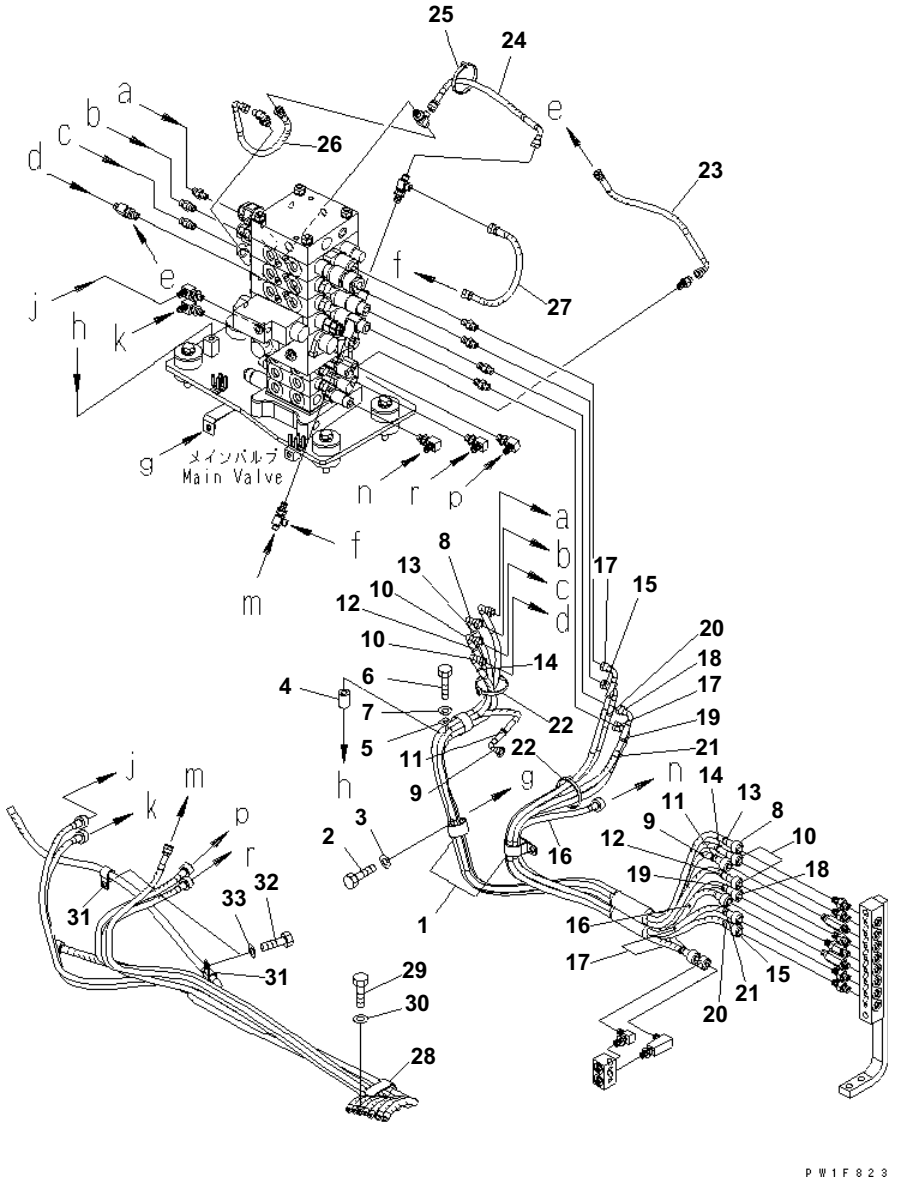

MAIN VALVE PPC LINE (1 ACTUATOR)

Item	Part No.	Description	Qty	Options
1	20Y-62-15951	CLIP	2	SN:B20001--
2	01010-81225	BOLT	2	SN:B20001--
3	01643-31232	WASHER	2	SN:B20001--
4	20Y-03-11220	COLLAR	1	SN:B20001--
5	04434-53412	CLIP	1	SN:B20001--
6	01010-81260	BOLT	1	SN:B20001--
7	01643-31232	WASHER	1	SN:B20001--
8	21K-62-71961	HOSE¤ 1750MM	1	SN:B20001--
9	21K-62-71970	HOSE¤ 1450MM	1	SN:B20001--
10	21K-62-72740	HOSE¤ 1600MM	2	SN:B20001--
11	20Y-62-22790	BAND¤ RED,RED	2	SN:B20001--
12	20Y-62-22810	BAND¤ YELLOW,YELLOW	2	SN:B20001--
13	20Y-62-22840	BAND¤ BLACK,BLACK	2	SN:B20001--
14	20Y-62-22850	BAND¤ GREEN,GREEN	2	SN:B20001--
15	21K-62-71911	HOSE¤ 1250MM	1	SN:B20001--
16	21K-62-71931	HOSE¤ 1000MM	1	SN:B20001--
17	21K-62-71940	HOSE¤ 1200MM	2	SN:B20001--
18	21K-62-72190	HOSE¤ 1300MM	1	SN:B20001--
19	20Y-62-22820	BAND¤ BLUE,BLUE	2	SN:B20001--
20	20Y-62-22830	BAND¤ WHITE,WHITE	2	SN:B20001--
21	20Y-62-22860	BAND¤ BROWN,BROWN	2	SN:B20001--
22	08034-20834	BAND	2	SN:B20001--
23	02761-002A4	HOSE	1	SN:B20001--
24	02761-002A4	HOSE	1	SN:B20001--
25	08034-20834	BAND	1	SN:B20001--
26	02761-00204	HOSE	1	SN:B20001--
27	02760-00203	HOSE	1	SN:B20001--
28	195-911-4350	CLIP	1	SN:B20001--
29	01010-81225	BOLT	1	SN:B20001--
30	01643-31232	WASHER	1	SN:B20001--
31	04434-51612	CLIP	2	SN:B20001--
32	01010-81225	BOLT	2	SN:B20001--
33	01643-31232	WASHER	2	SN:B20001--

MAIN FRAME AND RELATED PARTS

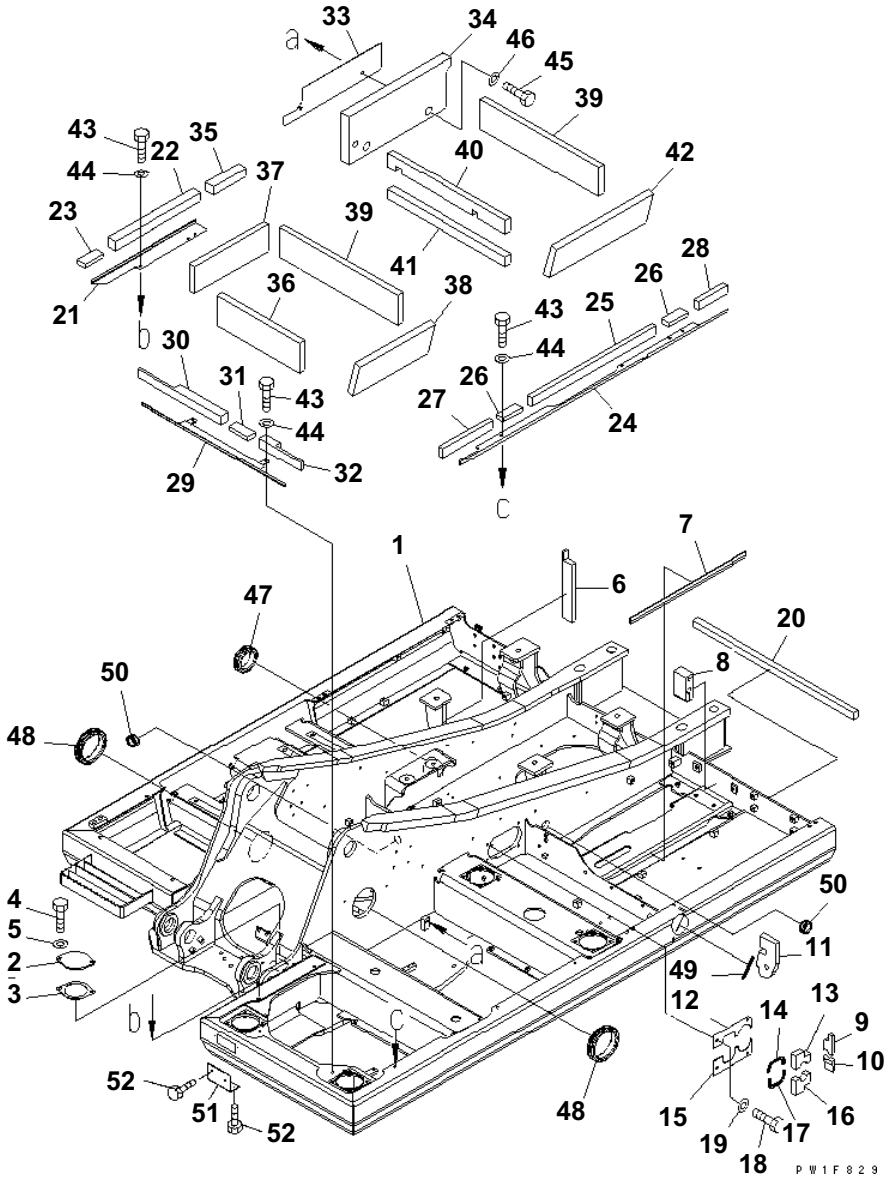

REVOLVING FRAME(#B20001-B20199)

Item	Part No.	Description	Qty	Options
1	21K-46-B7100	FRAME	1	SN:B20037--
	21K-46-71102	FRAME	1	SN:B20001--B20036
2	205-30-71181	COVER	1	SN:B20001--@
3	205-30-71191	GASKET	1	SN:B20001--@
4	01010-81230	BOLT	2	SN:B20001--@
5	01643-31232	WASHER	2	SN:B20001--@
6	21K-46-71160	SHEET	1	SN:B20001--@
7	21K-46-71210	SHEET	1	SN:B20001--@
8	21K-46-71220	SHEET	1	SN:B20001--@
9	21K-46-71230	SHEET	1	SN:B20001--@
10	21K-46-71241	SHEET	1	SN:B20001--@
11	21K-46-B7190	SHEET	1	SN:B20105--
	21K-46-71291	SHEET	1	SN:B20001--B20104
12	21K-46-71310	COVER	1	SN:B20001--@
13	21K-46-71260	· SHEET	1	SN:B20001--@
14	21K-46-71330	· SEAL	1	SN:B20001--@
15	21K-46-71320	COVER	1	SN:B20001--@
16	21K-46-71280	· SHEET	1	SN:B20001--@
17	21K-46-71340	· SEAL	1	SN:B20001--@
18	01010-81230	BOLT	4	SN:B20001--@
19	01643-31232	WASHER	4	SN:B20001--@
20	21K-46-71350	SHEET	1	SN:B20001--@
21	20Y-46-42411	COVER	1	SN:B20001--B20199
22	20Y-46-42231	· SEAL	1	SN:B20001--B20199
23	20Y-46-42460	· SHEET	1	SN:B20001--B20199
24	20Y-46-42422	COVER	1	SN:B20001--B20199
25	20Y-46-42251	· SEAL	1	SN:B20001--B20199
26	20Y-46-42460	· SHEET	2	SN:B20001--B20199
27	20Y-46-42470	· SEAL	1	SN:B20001--B20199
28	20Y-46-42480	· SEAL	1	SN:B20001--B20199
29	20Y-46-42431	COVER	1	SN:B20001--B20199
30	20Y-46-42241	· SEAL	1	SN:B20001--B20199
31	20Y-46-42460	· SHEET	1	SN:B20001--B20199
32	20Y-46-42490	· SEAL	1	SN:B20001--B20199
33	20Y-46-42440	COVER	1	SN:B20001--@
34	20Y-46-42260	· SHEET	1	SN:B20001--@
35	20Y-46-42210	SEAL	1	SN:B20001--@
36	20Y-46-42310	SHEET	1	SN:B20001--@
37	20Y-46-42320	SHEET	1	SN:B20001--@
38	20Y-46-42330	SHEET	1	SN:B20001--@

PC160LC-7B S/N B20001 AND UP

REVOLVING FRAME(#B20001-B20199)

Item	Part No.	Description	Qty	Options
39	20Y-46-42340	SHEET	2	SN:B20001--@
40	20Y-46-42350	SHEET	1	SN:B20001--@
41	20Y-46-42360	SHEET	1	SN:B20001--@
42	20Y-46-42370	SHEET	1	SN:B20001--@
43	01010-81035	BOLT	7	SN:B20001--@
44	01643-31032	WASHER	7	SN:B20001--@
45	01010-81225	BOLT	2	SN:B20001--@
46	01643-31232	WASHER	2	SN:B20001--@
47	21K-46-71180	GROMMET	1	SN:B20001--@
48	206-46-71180	GROMMET	2	SN:B20001--@
49	20Y-43-11281	GROMMET	1	SN:B20001--@
50	20X-06-31130	GROMMET	2	SN:B20001--@
51	21K-46-B7120	PLATE	1	SN:B20001--B20036
52	01435-41225	BOLT	4	SN:B20001--B20036

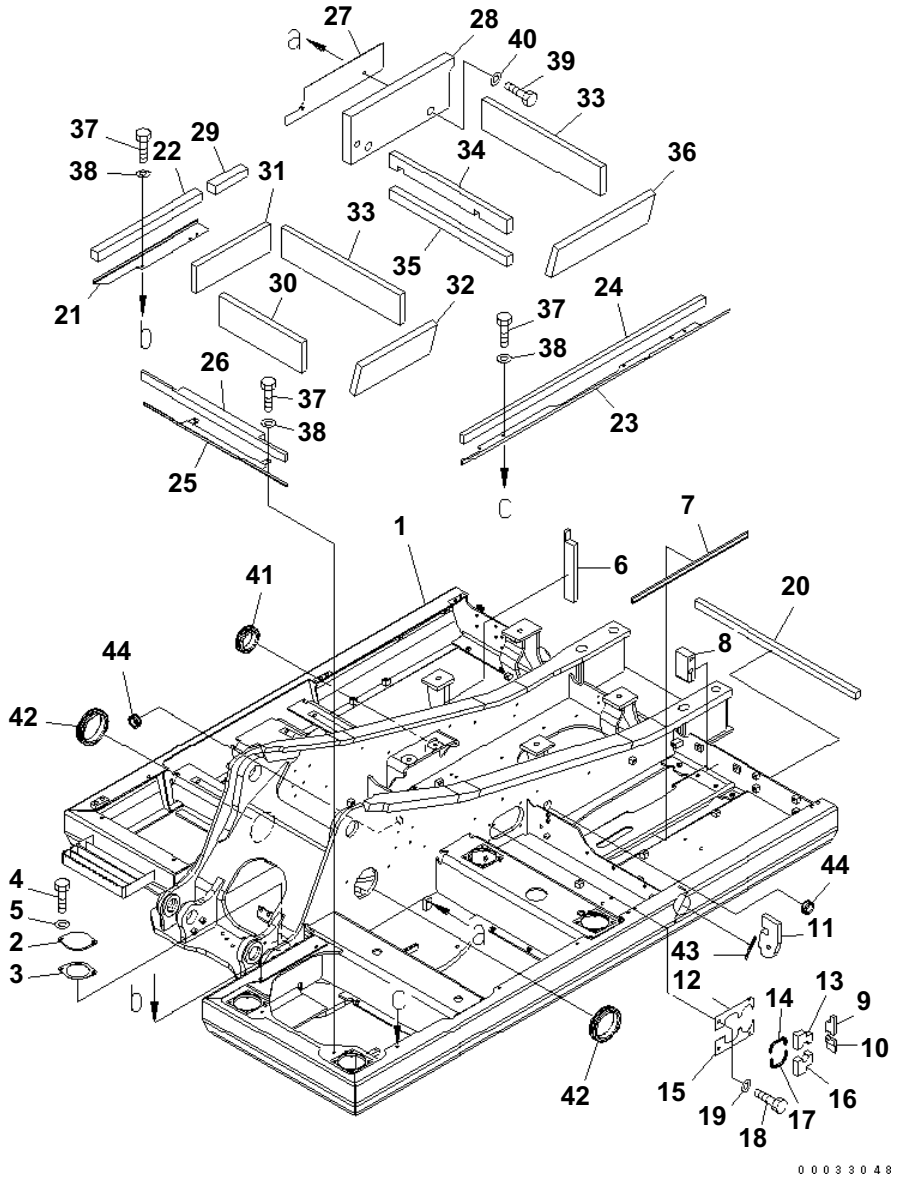

REVOLVING FRAME(#B20200-)

Item	Part No.	Description	Qty	Options
1	21K-46-B7100	FRAME	1	SN:B20037--
2	205-30-71181	COVER	1	SN:B20001--
3	205-30-71191	GASKET	1	SN:B20001--
4	01010-81230	BOLT	2	SN:B20001--
5	01643-31232	WASHER	2	SN:B20001--
6	21K-46-71160	SHEET	1	SN:B20001--
7	21K-46-71210	SHEET	1	SN:B20001--
8	21K-46-71220	SHEET	1	SN:B20001--
9	21K-46-71230	SHEET	1	SN:B20001--
10	21K-46-71241	SHEET	1	SN:B20001--
11	21K-46-B7190	SHEET	1	SN:B20105--
12	21K-46-71310	COVER	1	SN:B20001--
13	21K-46-71260	· SHEET	1	SN:B20001--
14	21K-46-71330	· SEAL	1	SN:B20001--
15	21K-46-71320	COVER	1	SN:B20001--
16	21K-46-71280	· SHEET	1	SN:B20001--
17	21K-46-71340	· SEAL	1	SN:B20001--
18	01010-81230	BOLT	4	SN:B20001--
19	01643-31232	WASHER	4	SN:B20001--
20	21K-46-71350	SHEET	1	SN:B20001--
21	20Y-46-42412	COVER	1	SN:B20200--
22	20Y-46-42232	· SEAL	1	SN:B20200--
23	20Y-46-42423	COVER	1	SN:B20200--
24	20Y-46-42252	· SEAL	1	SN:B20200--
25	20Y-46-42432	COVER	1	SN:B20200--
26	20Y-46-42242	SEAL	1	SN:B20200--
27	20Y-46-42440	COVER	1	SN:B20001--
28	20Y-46-42260	· SHEET	1	SN:B20001--
29	20Y-46-42210	SEAL	1	SN:B20001--
30	20Y-46-42310	SHEET	1	SN:B20001--
31	20Y-46-42320	SHEET	1	SN:B20001--
32	20Y-46-42330	SHEET	1	SN:B20001--
33	20Y-46-42340	SHEET	2	SN:B20001--
34	20Y-46-42350	SHEET	1	SN:B20001--
35	20Y-46-42360	SHEET	1	SN:B20001--
36	20Y-46-42370	SHEET	1	SN:B20001--
37	01010-81035	BOLT	7	SN:B20001--
38	01643-31032	WASHER	7	SN:B20001--
39	01010-81225	BOLT	2	SN:B20001--
40	01643-31232	WASHER	2	SN:B20001--

PC160LC-7B S/N B20001 AND UP
REVOLVING FRAME(#B20200-)

Item	Part No.	Description	Qty	Options
41	21K-46-71180	GROMMET	1	SN:B20001--
42	206-46-71180	GROMMET	2	SN:B20001--
43	20Y-43-11281	GROMMET	1	SN:B20001--
44	20X-06-31130	GROMMET	2	SN:B20001--

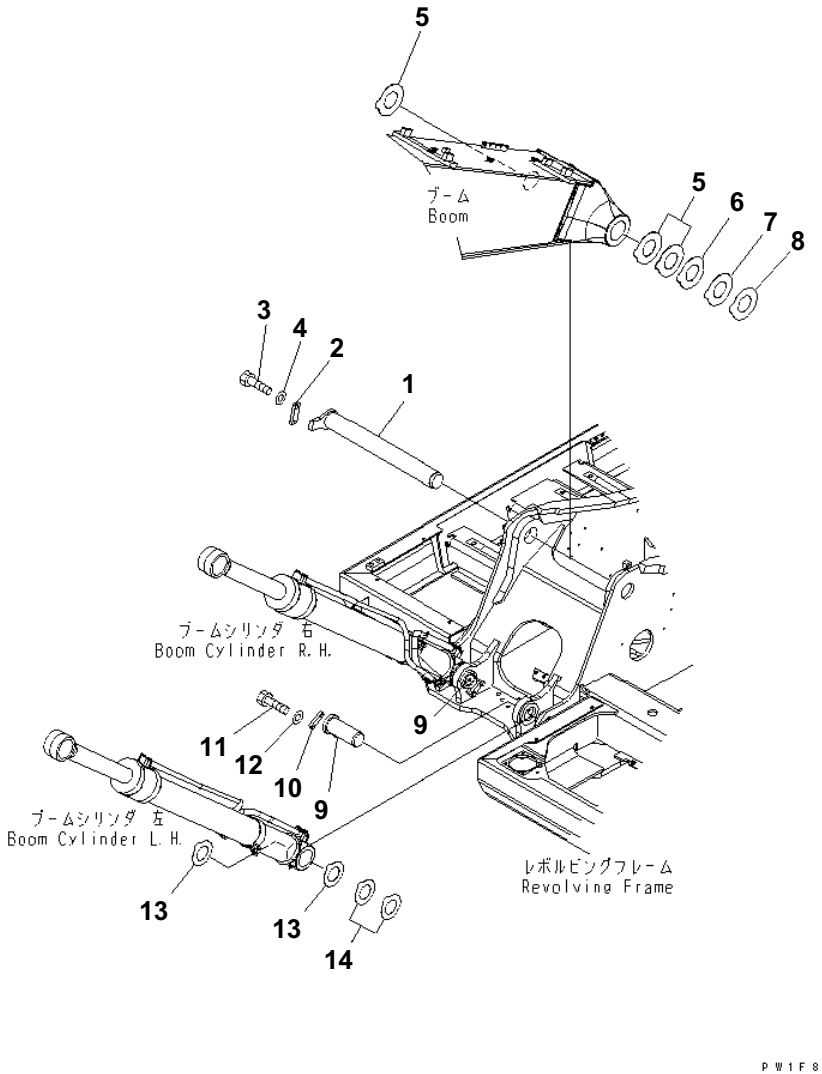

BOOM FOOT PIN

Item	Part No.	Description	Qty	Options
1	21K-70-71160	PIN	1	SN:B20001--
2	205-70-71310	PLATE	1	SN:B20001--
3	01010-81235	BOLT	2	SN:B20001--
4	01643-31232	WASHER	2	SN:B20001--
5	21K-70-71451	SPACER	3	SN:B20439--
	21K-70-71450	SPACER	3	SN:B20001--B20438
6	21K-70-71461	SPACER	1	SN:B20362--
	21K-70-71460	SPACER	1	SN:B20001--B20361
7	21K-70-71471	SPACER	1	SN:B20371--
	21K-70-71470	SPACER	1	SN:B20001--B20370
8	21K-70-71481	SPACER	1	SN:B20291--
	21K-70-71480	SPACER	1	SN:B20001--B20290
9	21K-70-71170	PIN	2	SN:B20001--
10	205-70-66580	PLATE	2	SN:B20001--
11	01010-81230	BOLT	4	SN:B20001--
12	01643-31232	WASHER	4	SN:B20001--
13	20Y-70-31380	SPACER¤ 1.0MM	4	SN:B20001--
14	20Y-70-31390	SPACER¤ 2.0MM	4	SN:B20001--

OPERATOR'S COMPARTMENT AND CONTROL SYSTEM

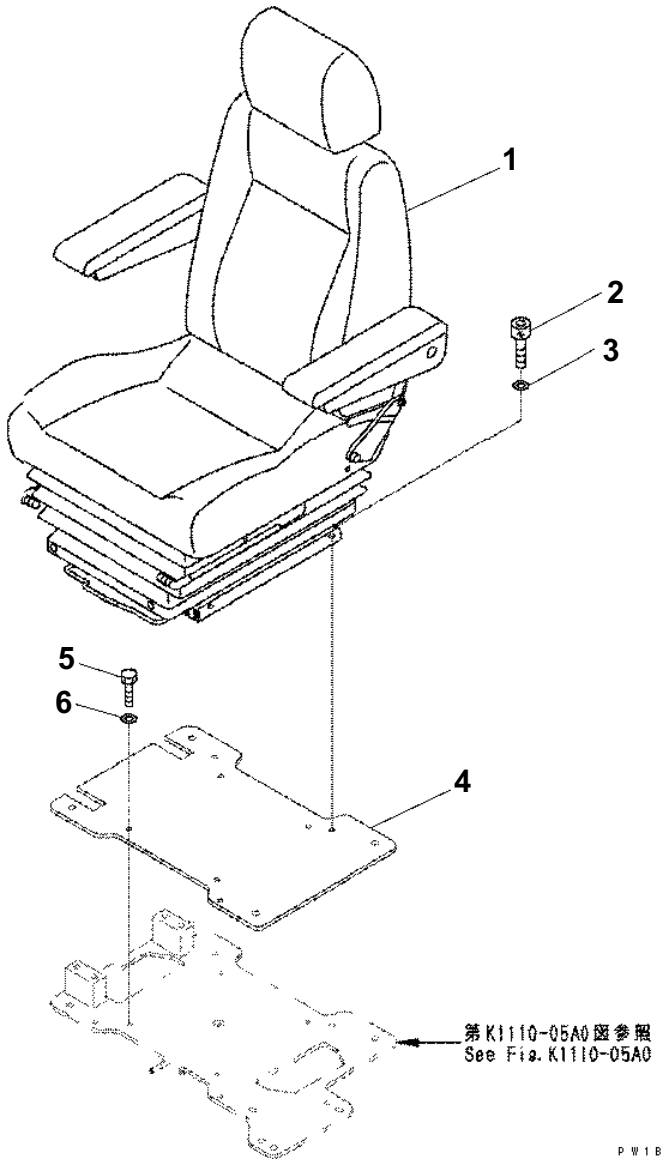

OPERATOR'S SEAT (SUSPENSION)

Item	Part No.	Description	Qty	Options
1	20Y-57-B1110	SEAT ASS'Y	1	SN:B20001--
2	01252-70816	BOLT	4	SN:B20001--
3	01643-30823	WASHER	4	SN:B20001--
4	21K-57-B7120	BRACKET	1	SN:B20099--
	21K-57-B1110	BRACKET	1	SN:B20001--B20098
5	01010-80830	BOLT	4	SN:B20099--
	01010-D0825	BOLT	4	SN:B20001--B20098
6	01643-70823	WASHER	4	SN:B20001--

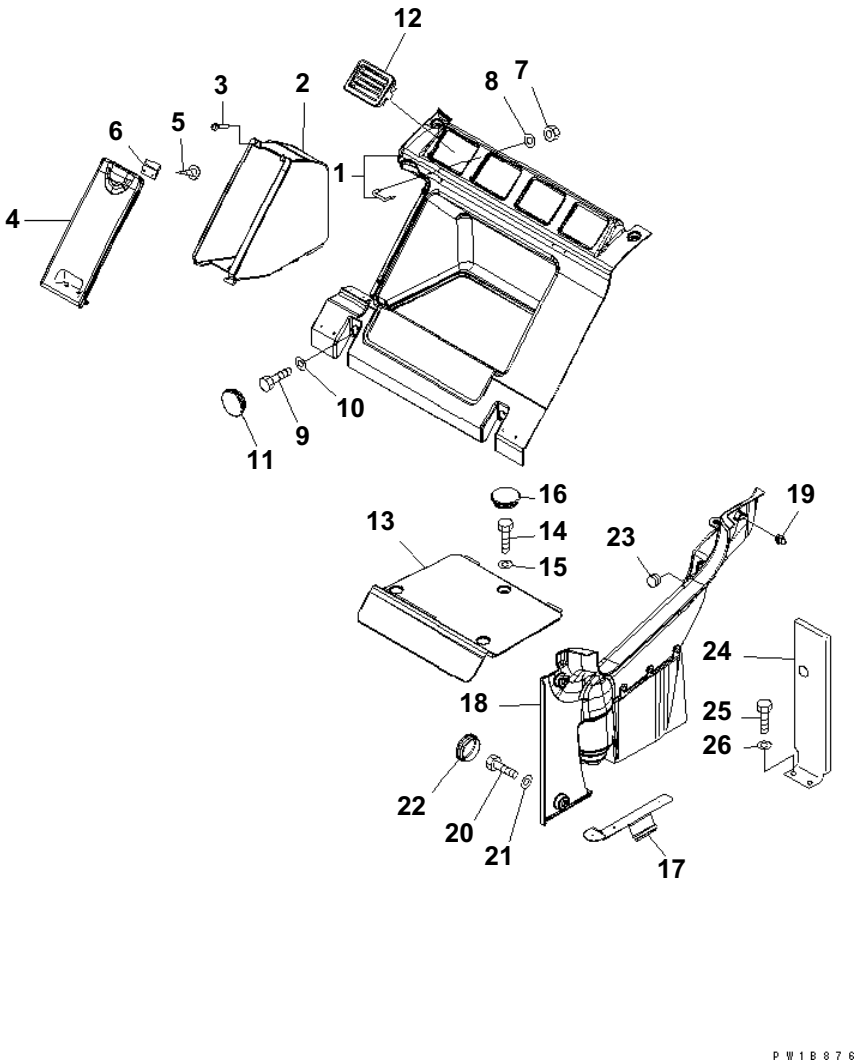

SEAT REAR COVER (WITH AIR CONDITIONER)(#B20001-B20199)

Item	Part No.	Description	Qty	Options
	20Y-54-65250	COVER ASS'Y	1	SN:B20001--B20199
1	☆	· COVER	1	SN:B20001--B20199
2	20Y-54-65370	· BOX	1	SN:B20001--B20199
3	14X-54-18450	· · CUSHION	2	SN:B20001--B20199
4	20Y-54-65350	· COVER	1	SN:B20001--B20199
5	01370-00512	· · SCREW	2	SN:B20001--B20199
6	14X-54-18540	· · LOCK ASS'Y	1	SN:B20001--B20199
7	01580-10403	· NUT	8	SN:B20001--B20199
8	01601-20410	· WASHER	8	SN:B20001--B20199
9	01010-80825	BOLT	4	SN:B20001--B20199
10	01643-30823	WASHER	4	SN:B20001--B20199
11	22U-54-25331	CAP	4	SN:B20001--B20199
12	201-979-7820	GRILLE	4	SN:B20001--B20199
13	20Y-54-65380	COVER	1	SN:B20001--B20199
14	01010-80820	BOLT	3	SN:B20001--B20199
15	01643-30823	WASHER	3	SN:B20001--B20199
16	22U-54-25331	CAP	3	SN:B20001--B20199
	20Y-54-65260	COVER ASS'Y, L.H.	1	SN:B20001--B20199
17	20Y-54-65270	· BRACKET	1	SN:B20001--B20199
18	☆	· COVER	1	SN:B20001--B20199
19	22U-54-25360	· · CLIP	1	SN:B20001--B20199
20	01010-80820	BOLT	2	SN:B20001--B20199
21	01643-30823	WASHER	2	SN:B20001--B20199
22	22U-54-25331	CAP	2	SN:B20001--B20199
23	09415-02110	CAP	1	SN:B20001--B20199
24	20Y-54-65440	COVER	1	SN:B20001--B20199
25	01010-D0816	BOLT	3	SN:B20001--B20199
26	01643-70823	WASHER	3	SN:B20001--B20199

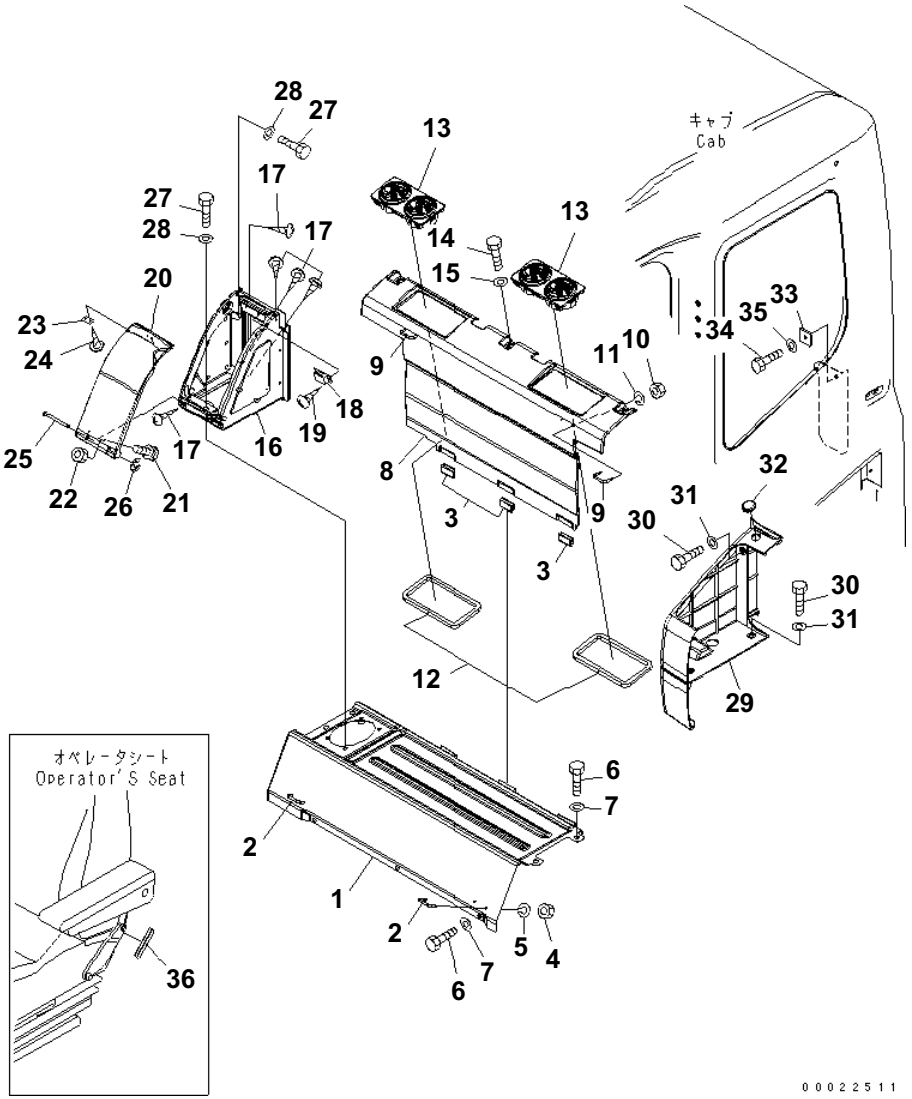

SEAT REAR COVER (WITH AIR CONDITIONER)(#B20200-)

Item	Part No.	Description	Qty	Options
	208-53-13610	COVER ASS'Y	1	SN:B20200--
1	☆	· COVER	1	SN:B20200--
2	208-53-12290	· HOOK	2	SN:B20200--
3	208-53-12460	· SEAT	3	SN:B20200--
4	01580-10403	· NUT	4	SN:B20200--
5	01601-20410	· WASHER	4	SN:B20200--
6	01010-D0820	BOLT	7	SN:B20200--
7	01643-70823	WASHER	7	SN:B20200--
	208-53-13620	COVER	1	SN:B20200--
8	☆	· COVER	1	SN:B20200--
9	208-53-12290	· · HOOK	2	SN:B20200--
10	01580-10403	· · NUT	4	SN:B20200--
11	01601-20410	· · WASHER	4	SN:B20200--
12	208-53-13710	· SEAL	2	SN:B20200--
13	208-979-7560	GRILLE	2	SN:B20200--
14	01010-D0820	BOLT	3	SN:B20200--
15	01643-70823	WASHER	3	SN:B20200--
	208-53-12350	COVER ASS'Y	1	SN:B20200--
16	☆	· COVER	1	SN:B20200--
17	01370-00408	· · SCREW	10	SN:B20200--
18	09452-14503	· CATCHER	1	SN:B20200--
19	01370-10308	· SCREW	2	SN:B20200--
20	208-53-12390	· COVER	1	SN:B20200--
21	01023-10406	· · SCREW	2	SN:B20200--
22	01580-00403	· · NUT	2	SN:B20200--
23	208-53-12410	· PLATE	1	SN:B20200--
24	01370-20308	· SCREW	2	SN:B20200--
25	208-53-12320	· PIN	1	SN:B20200--
26	208-53-12330	· RING	1	SN:B20200--
27	01010-D0820	BOLT	5	SN:B20200--
28	208-53-11330	WASHER	5	SN:B20200--
29	208-53-12730	COVER	1	SN:B20200--
30	01010-D0820	BOLT	3	SN:B20200--
31	208-53-11330	WASHER	3	SN:B20200--
32	09415-02110	CAP	1	SN:B20200--
33	208-53-12750	PLATE	1	SN:B20200--
34	01010-D0820	BOLT	1	SN:B20200--
35	01643-70823	WASHER	1	SN:B20200--
36	208-53-11780	TRIM	2	SN:B20200--

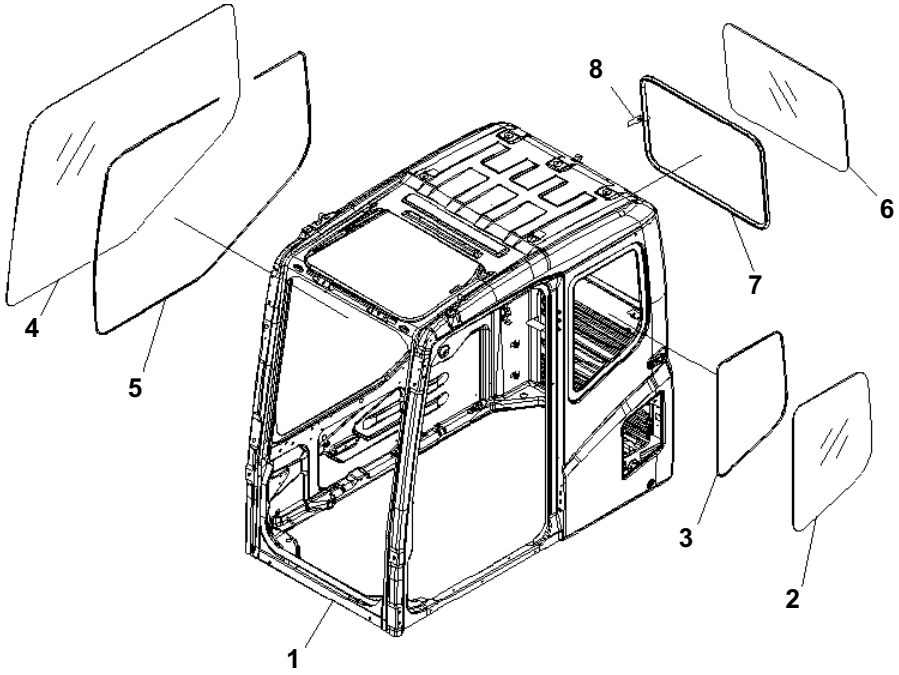

PC160LC-7B S/N B20001 AND UP

OPERATOR'S CAB (CAB) (#B20001-B20199)

Item	Part No.	Description	Qty	Options
	20Y-54-01141	CAB ASS'Y	1	SN:B20001--B20199
1	☆	· CAB	1	SN:B20001--B20199
2	20Y-54-51241	· GLASS,REAR¤ L.H.	1	SN:B20001--@
3	20Y-54-51261	· SEAL,REAR¤ L.H.	1	SN:B20001--@
4	20Y-54-51842	· GLASS,R.H.	1	SN:B20001--@
5	20Y-54-51851	· DAM,R.H.	1	SN:B20001--@
6	20Y-54-51272	· GLASS,REAR	1	SN:B20001--B20199
7	20Y-54-51251	· WEATHER STRIP,REAR	1	SN:B20001--@
8	20T-54-75250	· TAG	1	SN:B20001--@

Ref. K0210-01A1 Page 210040

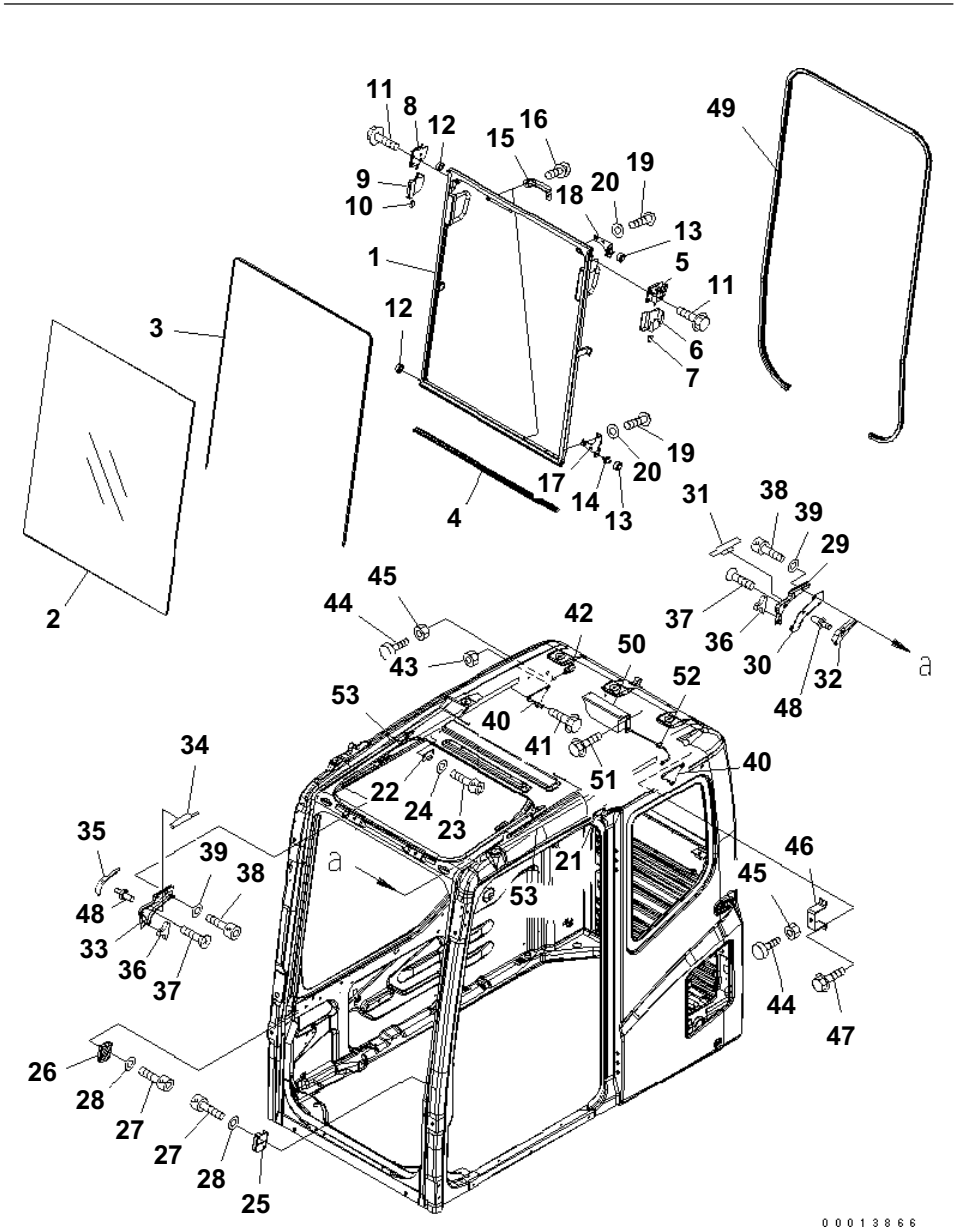

OPERATOR'S CAB (FRONT WINDOW)(#B20001-B20199)

Item	Part No.	Description	Qty	Options
	(20Y-54-01141)	CAB ASS'Y	1	SN:B20001--B20199
	20Y-54-01132	WINDOW ASS'Y	1	SN:B20001--B20199
1	☆	・FRAME¤ FRONT	1	SN:B20001--B20199
2	20Y-54-51522	・GLASS	1	SN:B20001--@
3	20Y-54-51531	・SEAL	1	SN:B20001--@
4	20Y-54-51551	・SEAL	1	SN:B20001--@
5	22B-54-15411	・LOCK ASS'Y,L.H.	1	SN:B20001--@
6	22B-54-15440	・CASE,L.H.	1	SN:B20001--@
7	22B-54-15470	・KNOB,L.H.	1	SN:B20001--@
8	22B-54-15421	・LOCK ASS'Y,R.H.	1	SN:B20001--@
9	22B-54-15450	・CASE,R.H.	1	SN:B20001--@
10	22B-54-15480	・KNOB,R.H.	1	SN:B20001--@
11	01435-40812	・BOLT	4	SN:B20001--@
12	20Y-54-52621	・ROLLER	2	SN:B20001--@
13	20Y-54-52681	・ROLLER	2	SN:B20001--@
14	20Y-54-52691	・PIN,UNDER¤ L.H.	1	SN:B20001--@
15	20Y-54-14590	・HANDLE	2	SN:B20001--@
16	01023-10616	・SCREW	4	SN:B20001--@
17	20Y-54-52632	・BRACKET	1	SN:B20001--B20199
18	20Y-54-52643	・BRACKET	1	SN:B20001--B20199
19	01245-00616	・SCREW	6	SN:B20001--B20199
20	01643-70623	・WASHER	6	SN:B20001--B20199
21	20Y-54-51670	STOPPER	1	SN:B20001--@
22	20Y-54-51680	STOPPER	1	SN:B20001--@
23	01252-80616	BOLT	4	SN:B20001--@
24	01643-70623	WASHER	4	SN:B20001--@
25	20Y-54-51633	BLOCK,UNDER¤ L.H.	1	SN:B20001--@
26	20Y-54-52192	BLOCK,UNDER¤ R.H.	1	SN:B20001--@
27	01252-80620	BOLT	4	SN:B20001--B20199
28	01641-50608	WASHER	4	SN:B20001--@
29	20Y-54-51652	BLOCK,L.H.	1	SN:B20001--B20199
30	20Y-54-52282	BLOCK,L.H.	1	SN:B20001--B20199
31	20Y-54-53570	PLATE	1	SN:B20001--B20199
32	20Y-54-53531	COVER,L.H.	1	SN:B20001--B20199
33	20Y-54-51663	BLOCK,CORNER¤ R.H.	1	SN:B20001--B20199
34	20Y-54-52940	PLATE	1	SN:B20001--B20199
35	20Y-54-53541	COVER	1	SN:B20001--B20199
36	22B-54-15621	STOPPER	2	SN:B20001--@
37	01224-70612	SCREW	3	SN:B20001--B20199
38	01252-80616	BOLT	4	SN:B20001--B20199

PC160LC-7B S/N B20001 AND UP

OPERATOR'S CAB (FRONT WINDOW)(#B20001-B20199)

Item	Part No.	Description	Qty	Options
39	01641-50608	WASHER	4	SN:B20001--B20199
40	22B-54-15432	STRIKER,SASH	2	SN:B20001--@
41	01435-40616	BOLT	4	SN:B20001--@
42	21J-06-12440	SWITCH	1	SN:B20001--@
43	01583-11811	NUT	1	SN:B20001--@
44	20Y-54-11611	STOPPER	2	SN:B20001--@
45	01580-11008	NUT	2	SN:B20001--@
46	20Y-54-52491	PLATE	1	SN:B20001--@
47	01435-40612	BOLT	2	SN:B20001--B20199
48	20Y-54-51622	STRIKER	2	SN:B20001--B20199
49	20Y-54-51541	TRIM,FRONT	1	SN:B20001--B20199
50	20Y-54-51591	SPRING ASS'Y	1	SN:B20001--@
51	01435-00616	BOLT	2	SN:B20001--@
52	20Y-54-51640	HOLDER	1	SN:B20001--@
53	20Y-54-51420	SEAL	2	SN:B20001--@

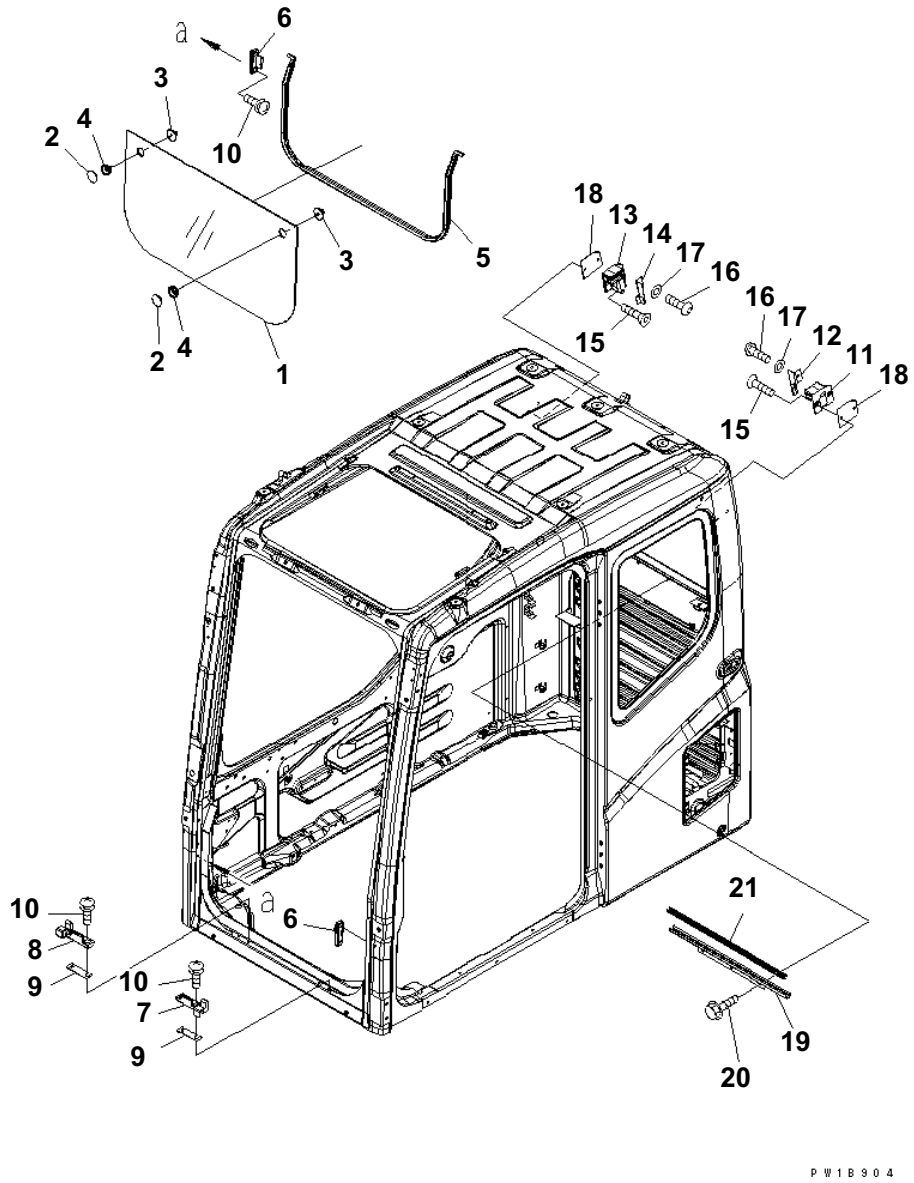

OPERATOR'S CAB (FRONT LOWER WINDOW)(#B20001-B20199)

Item	Part No.	Description	Qty	Options
	(20Y-54-01141)	CAB ASS'Y	1	SN:B20001--B20199
	20Y-54-51601	· GLASS,FRONT¤ LOWER	1	SN:B20001--@
1	20Y-54-51812	· · GLASS,FRONT¤ LOWER	1	SN:B20001--@
2	22B-54-15970	· · RETAINER	2	SN:B20001--@
3	22B-54-15980	· · KNOB	2	SN:B20001--@
4	08037-02512	· · GROMMET	2	SN:B20001--@
5	20Y-54-51862	· SEAL,FRONT¤ LOWER	1	SN:B20001--B20199
6	22B-54-15832	· SEAT,GLASS	2	SN:B20001--B20199
7	22B-54-15781	· SEAT,L.H.	1	SN:B20001--@
8	22B-54-15791	· SEAT,R.H.	1	SN:B20001--@
9	22B-54-15580	· PLATE	2	SN:B20001--@
10	01023-20616	· SCREW	8	SN:B20001--@
11	20Y-54-52161	· LOCK,L.H.	1	SN:B20001--@
12	20Y-54-52361	· BRACKET	1	SN:B20001--@
13	20Y-54-52171	· LOCK,R.H.	1	SN:B20001--@
14	20Y-54-52371	· BRACKET	1	SN:B20001--@
15	01240-00620	· SCREW	2	SN:B20001--@
16	01245-00625	· SCREW	2	SN:B20001--@
17	01641-50608	· WASHER	2	SN:B20001--@
18	20Y-54-52380	· PLATE	2	SN:B20001--@
19	20Y-54-52122	· PLATE,FRONT¤ LOWER	1	SN:B20001--B20199
20	01435-00616	· BOLT	3	SN:B20001--B20199
21	20Y-54-52131	· SEAL	1	SN:B20001--B20199

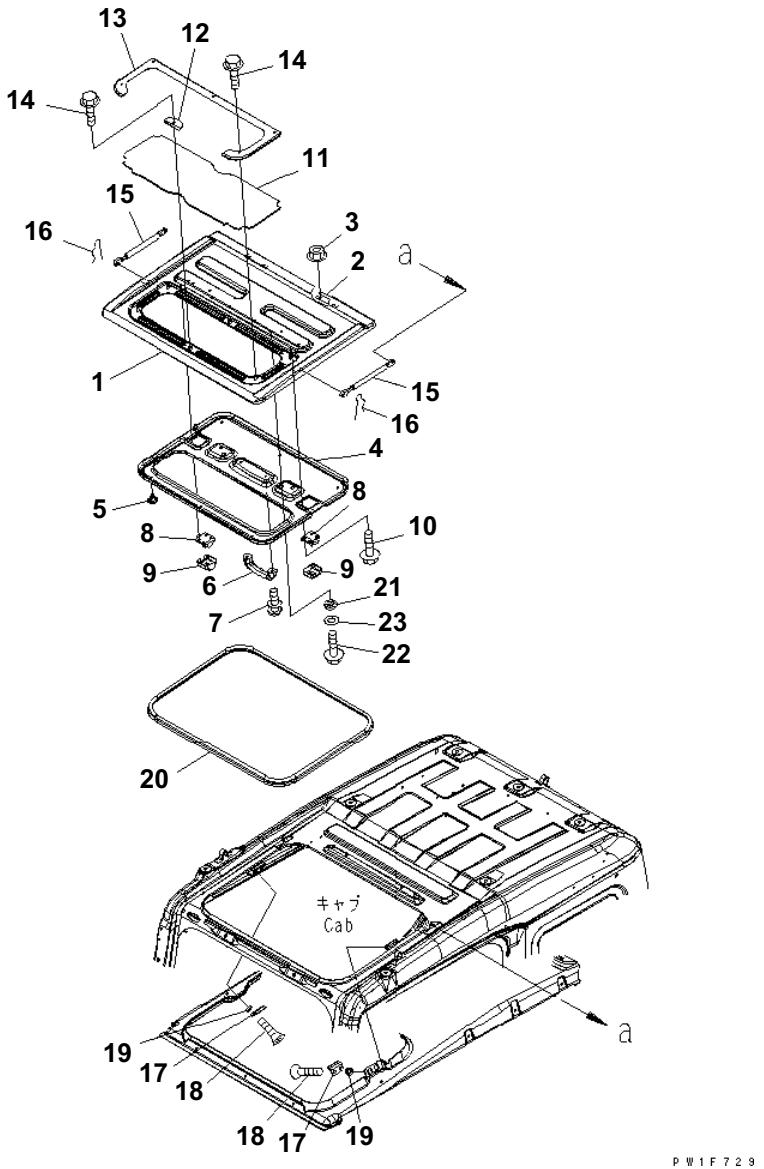

OPERATOR'S CAB (ROOF WINDOW)(#B20001-B20199)

Item	Part No.	Description	Qty	Options
	(20Y-54-01141)	CAB ASS'Y	1	SN:B20001--B20199
1	20Y-54-51713	・ ROOF	1	SN:B20001--B20199
2	22B-54-15M50	・・ HINGE (WELDED)	2	SN:B20001--B20199
3	01584-30806	・ NUT	4	SN:B20001--@
4	20Y-54-51922	・ COVER	1	SN:B20001--@
5	20Y-54-18690	・ RIVET	6	SN:B20001--@
6	20Y-54-14590	・ HANDLE	1	SN:B20001--@
7	01023-10616	・ SCREW	2	SN:B20001--@
8	22B-54-15990	・ LOCK ASS'Y	2	SN:B20001--@
9	20Y-54-36360	・ COVER	2	SN:B20001--@
10	01435-40610	・ BOLT	8	SN:B20001--B20199
11	20Y-54-51744	・ CLEAR PLATE	1	SN:B20001--@
12	20Y-54-51720	・ PLATE	1	SN:B20001--@
13	20Y-54-51733	・ PLATE	1	SN:B20001--@
14	01435-40612	・ BOLT	6	SN:B20001--B20199
15	20Y-54-36342	・ GAS SPRING ASS'Y	2	SN:B20001--@
16	04052-10833	・ PIN	4	SN:B20001--@
17	22B-54-15921	・ STRIKER	2	SN:B20001--B20199
18	01240-00816	・ SCREW	4	SN:B20001--B20199
19	20Y-54-52651	・ SPACER	4	SN:B20001--@
20	20Y-54-51760	・ SEAL,ROOF	1	SN:B20001--@
21	20Y-54-52651	・ SPACER	4	SN:B20001--@
22	01245-00620	・ SCREW	4	SN:B20001--@
23	01643-70623	・ WASHER	4	SN:B20001--@

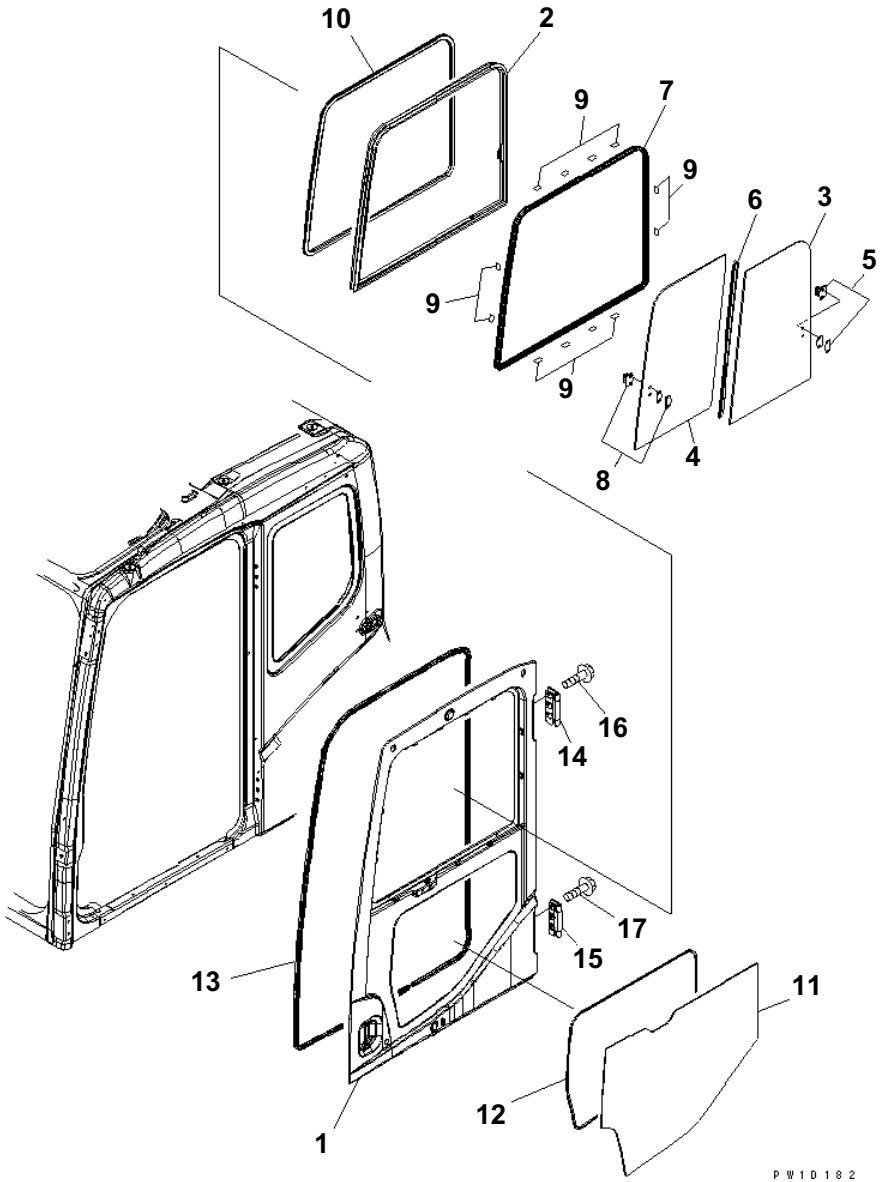

OPERATOR'S CAB (DOOR) (#B20001-B20199)

Item	Part No.	Description	Qty	Options
	(20Y-54-01141)	CAB ASS'Y	1	SN:B20001--B20199
	20Y-54-01122	・ DOOR ASS'Y	1	SN:B20001--@
1	☆	・・ DOOR	1	SN:B20001--@
	20Y-54-51401	・・ SASH ASS'Y	1	SN:B20001--@
2	☆	・・・ SASH FRAME	1	SN:B20001--@
3	20Y-54-52840	・・・ GLASS	1	SN:B20001--@
4	20Y-54-52850	・・・ GLASS	1	SN:B20001--@
5	20Y-54-52860	・・・ LOCK ASS'Y	1	SN:B20001--@
6	20Y-54-52870	・・・ SEAL	1	SN:B20001--@
7	20Y-54-52880	・・・ SEAL	1	SN:B20001--@
8	20Y-54-13322	・・・ LOCK	1	SN:B20001--@
9	20Y-54-13180	・・ SEAT	9	SN:B20001--@
10	20Y-54-51470	・・ TRIM	1	SN:B20001--@
11	20Y-54-51451	・・ GLASS	1	SN:B20001--@
12	20Y-54-51461	・・ SEAL,DOOR¤ LOWER	1	SN:B20001--@
13	20Y-54-51482	・・ SEAL,DOOR¤ WITH CLIP (36)	1	SN:B20001--@
14	20Y-54-51330	・・ HINGE	1	SN:B20001--@
15	14X-911-1330	・・ HINGE	1	SN:B20001--@
16	01435-41225	・・ BOLT	6	SN:B20001--@
17	01435-01225	・・ BOLT	6	SN:B20001--@

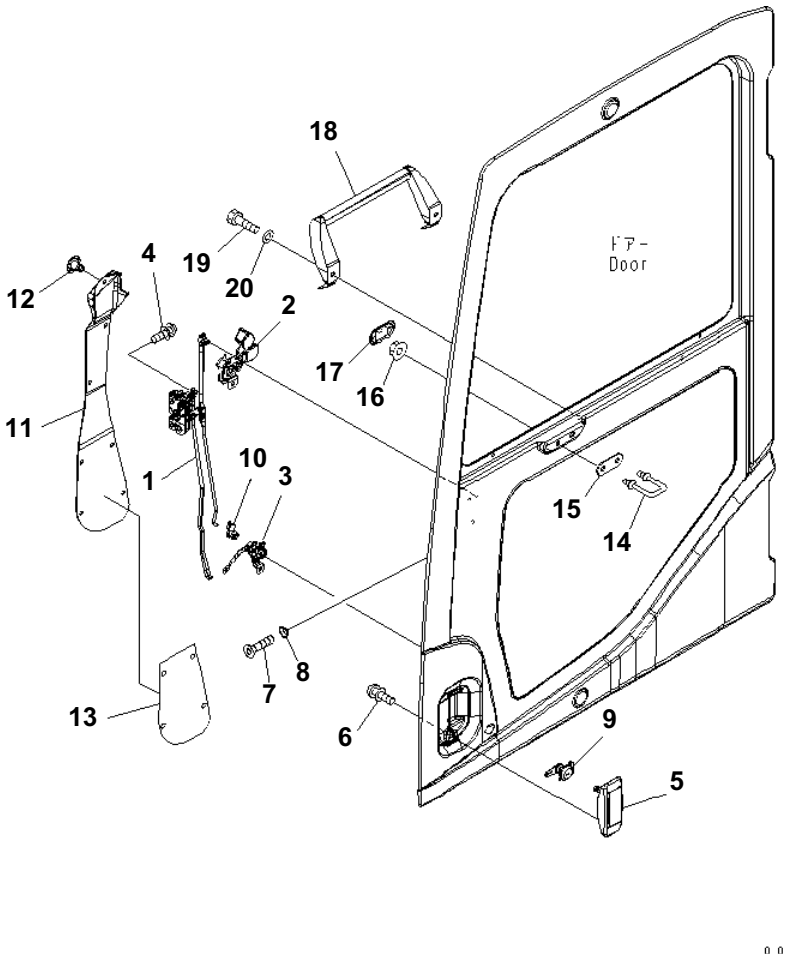

OPERATOR'S CAB (DOOR LOCK)(#B20001-B20199)

Item	Part No.	Description	Qty	Options
	(20Y-54-01141)	CAB ASS'Y	1	SN:B20001--B20199
	(20Y-54-01122)	· DOOR ASS'Y	1	SN:B20001--B20199
1	20Y-54-52200	· · LATCH ASS'Y	1	SN:B20001--@
2	20Y-54-52300	· · HANDLE ASS'Y	1	SN:B20001--@
3	20Y-54-52400	· · BELLCRANK ASS'Y	1	SN:B20001--@
4	01023-10612	· · SCREW	5	SN:B20200--@
	01023-10612	· · SCREW	8	SN:B20001--B20199
5	20Y-54-52990	· · HANDLE	1	SN:B20001--@
6	01023-10612	· · SCREW	2	SN:B20001--@
7	01240-00616	· · SCREW	3	SN:B20001--@
8	195-Z11-1690	· · WASHER	3	SN:B20001--@
9	20Y-54-52820	· · LOCK ASS'Y	1	SN:B20001--@
10	22B-54-16330	· · SNAP	1	SN:B20001--@
11	20Y-54-51441	· · COVER	1	SN:B20001--@
12	22B-54-16461	· · RIVET	7	SN:B20001--@
13	208-53-11320	· · SEAL	1	SN:B20200--@
14	20Y-54-51321	· · STRIKER	1	SN:B20001--@
15	20Y-54-51341	· · PLATE	1	SN:B20001--@
16	01584-01008	· · NUT	2	SN:B20001--@
17	20Y-54-51490	· · COVER,STRIKER	1	SN:B20001--@
18	20Y-54-51393	· · GRIP	1	SN:B20001--@
19	01010-80820	· · BOLT	2	SN:B20001--@
20	01643-30823	· · WASHER	2	SN:B20001--@

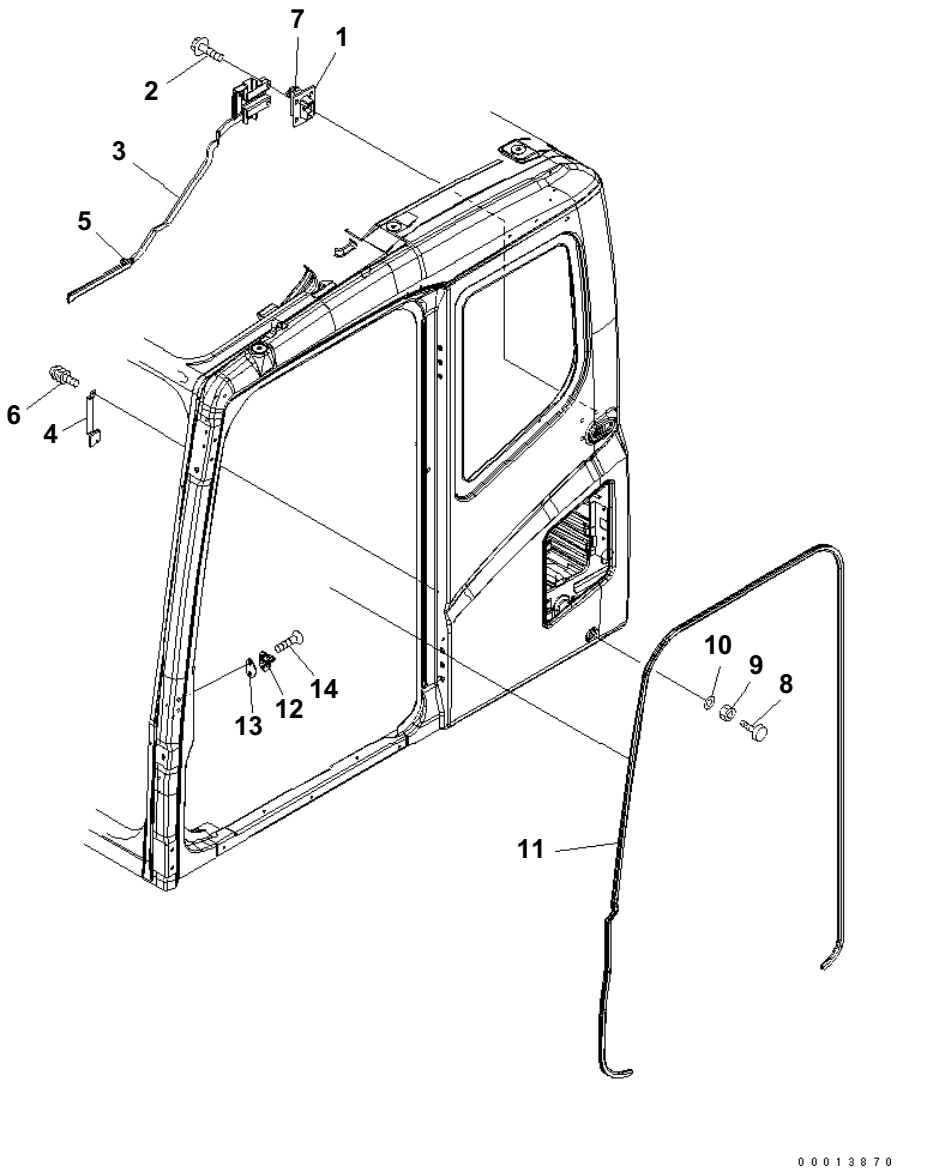

OPERATOR'S CAB (OPEN LOCK)(#B20001-B20199)

Item	Part No.	Description	Qty	Options
	(20Y-54-01141)	CAB ASS'Y	1	SN:B20001--B20199
1	20Y-54-36380	· LOCK	1	SN:B20001--@
2	01435-30820	· BOLT	4	SN:B20001--B20199
3	20Y-54-51801	· LEVER,HANDLE	1	SN:B20001--B20199
4	20Y-54-51972	· PLATE	1	SN:B20001--B20199
5	20Y-54-51941	· STOPPER	1	SN:B20001--B20199
6	01023-70616	· SCREW	2	SN:B20001--B20199
7	20Y-54-51930	· COVER,LOCK	1	SN:B20001--B20199
8	20Y-54-11611	· STOPPER	2	SN:B20001--@
9	01580-11008	· NUT	2	SN:B20001--@
10	01643-31032	· WASHER	2	SN:B20001--@
11	20Y-54-51910	· TRIM	1	SN:B20001--@
12	20Y-54-35470	· STRIKER	1	SN:B20001--@
13	20Y-54-35480	· SHIM	1	SN:B20001--@
14	01240-01025	· SCREW	2	SN:B20001--@

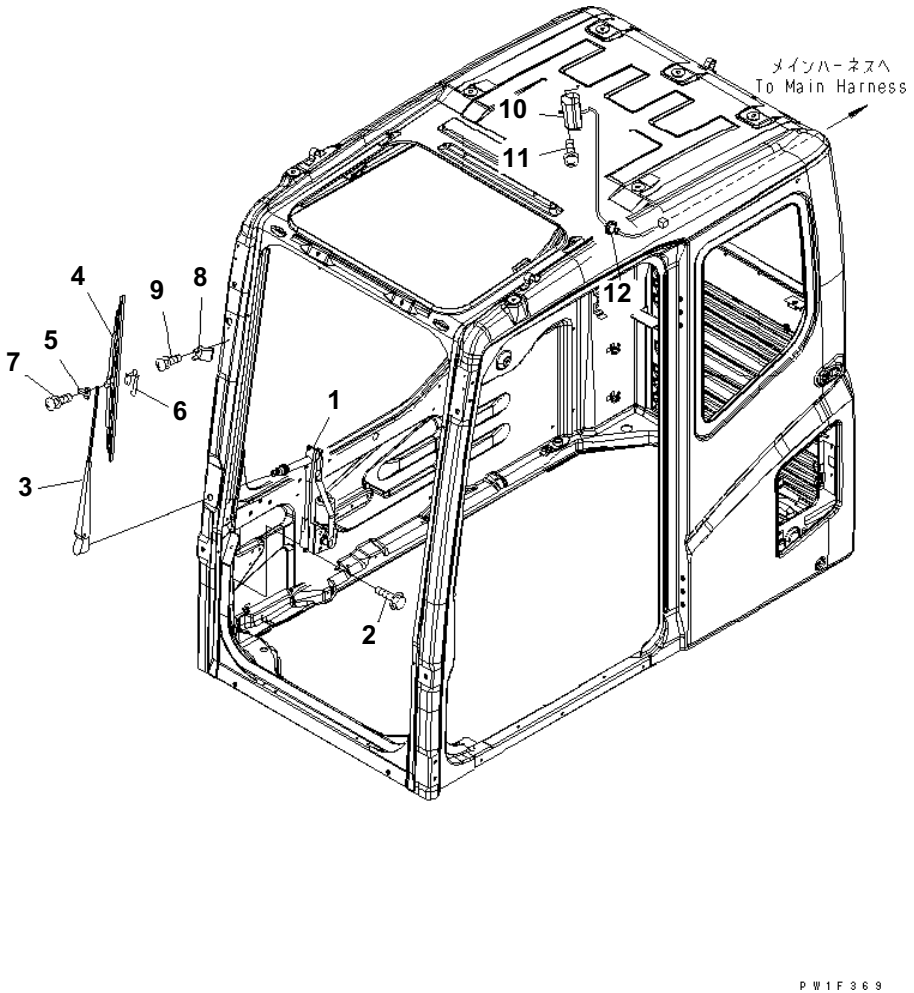

OPERATOR'S CAB (WIPER AND ROOM LAMP)(#B20001-B20199)

Item	Part No.	Description	Qty	Options
	(20Y-54-01141)	CAB ASS'Y	1	SN:B20001--B20199
1	20Y-54-52211	・ WIPER MOTOR ASS'Y	1	SN:B20001--B20199
2	01435-00616	・ BOLT	6	SN:B20001--B20199
	20Y-54-52221	・ WIPER ASS'Y	1	SN:B20001--@
3	20Y-54-52350	・・ ARM	1	SN:B20001--@
4	20Y-54-39450	・・ BLADE	1	SN:B20001--@
5	20Y-54-39460	・・ SLIDER	1	SN:B20001--@
6	20Y-54-39480	・・ PLATE	1	SN:B20001--@
7	ND949007-2350	・・ SCREW AND WASHER	2	SN:B20001--@
8	20Y-54-52231	・ STOPPER	1	SN:B20001--@
9	01023-20620	・ SCREW	1	SN:B20001--@
10	20Y-54-53520	・ LAMP	1	SN:B20001--B20199
	08116-02410	・・ BULB¤ 10W	1	SN:B20001--B20199
11	01370-00420	・ SCREW	2	SN:B20001--@
	01023-10410	・ SCREW	2	SN:B20001--@
12	08037-11025	・ GROMMET	1	SN:B20001--@

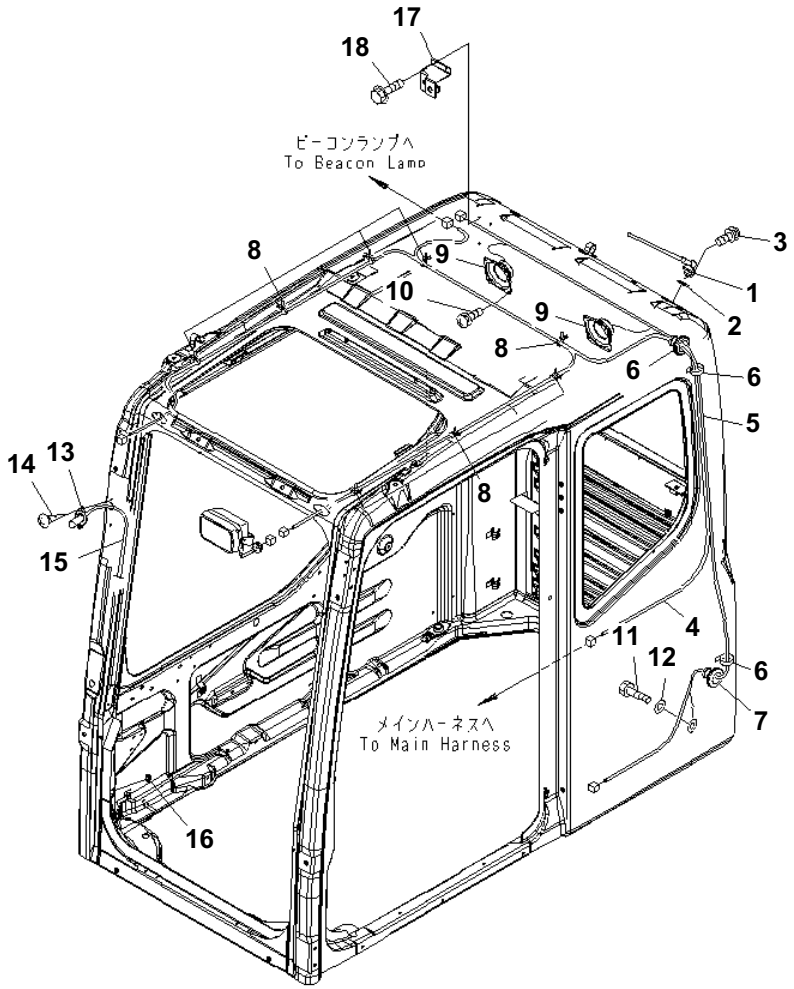

OPERATOR'S CAB (RADIO)(#B20001-B20199)

Item	Part No.	Description	Qty	Options
	(20Y-54-01141)	CAB ASS'Y	1	SN:B20001--B20199
1	(198-Z11-4610)	・ RUBBER ANTENNA,(SEE FIG. Y1062-01A0)	1	SN:B20001--@
2	01643-30623	・ WASHER	1	SN:B20001--@
3	01023-20412	・ SCREW	2	SN:B20001--@
4	20Y-54-52310	・ WIRING HARNESS,LAMP	1	SN:B20001--@
5	20Y-54-52320	・ WIRING HARNESS,SPEAKER	1	SN:B20001--@
6	08034-00414	・ BAND	2	SN:B20001--B20199
7	08037-12536	・ GROMMET	2	SN:B20001--@
8	08059-00413	・ CLIP	8	SN:B20001--@
9	08910-10000	・ SPEAKER	2	SN:B20001--@
10	01023-10412	・ SCREW	8	SN:B20001--@
11	01010-81020	・ BOLT	1	SN:B20001--@
12	01643-31032	・ WASHER	1	SN:B20001--@
13	20Y-54-39511	・ NOZZLE	1	SN:B20001--@
14	01370-40412	・ SCREW	2	SN:B20001--@
15	17M-911-2670	・ HOSE	1	SN:B20001--@
16	08037-01008	・ GROMMET	1	SN:B20001--B20199
17	20Y-54-51880	・ BRACKET	1	SN:B20001--B20199
18	01435-40612	・ BOLT	3	SN:B20001--B20199

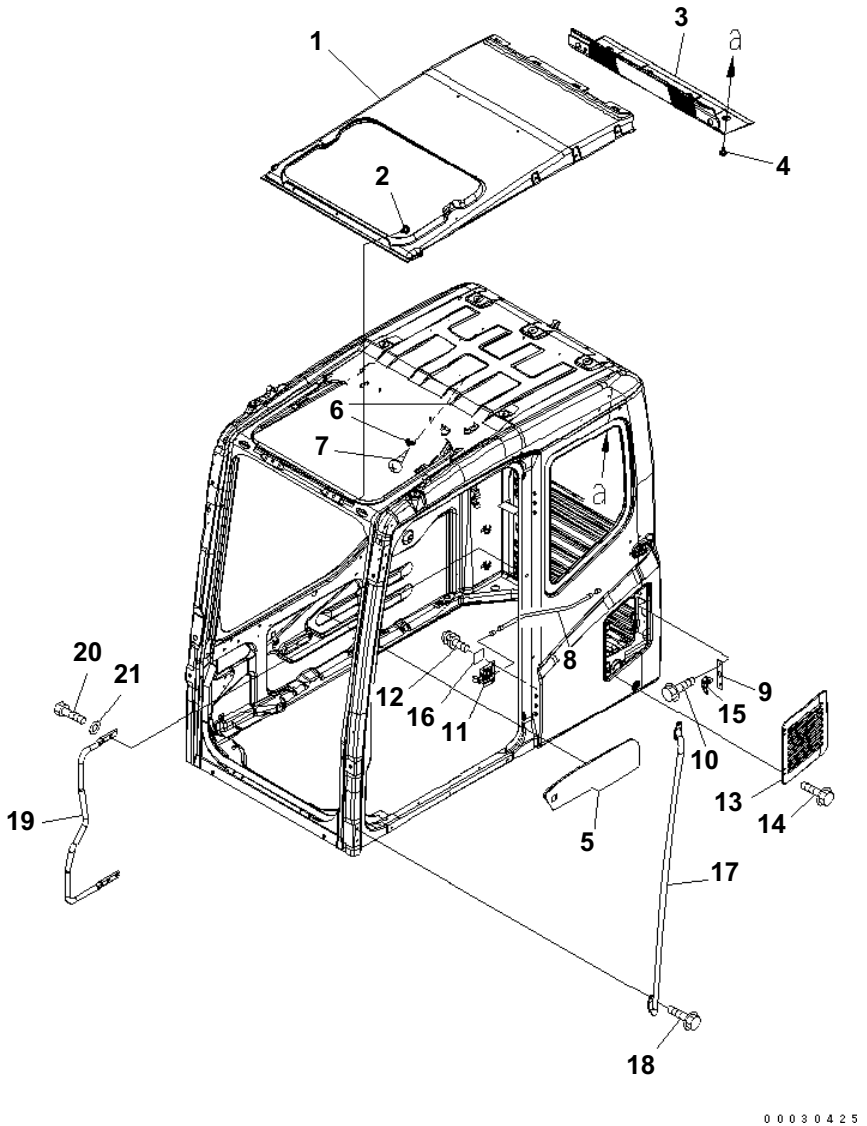

OPERATOR'S CAB (ACCESSORIES)(#B20001-B20199)

Item	Part No.	Description	Qty	Options
	(20Y-54-01141)	CAB ASS'Y	1	SN:B20001--B20199
1	20Y-54-52412	· COVER,ROOF	1	SN:B20001--@
2	20Y-54-18690	· RIVET	13	SN:B20001--B20199
3	20Y-54-52423	· LINING	1	SN:B20001--@
4	20Y-54-18690	· RIVET	8	SN:B20001--@
5	20Y-54-52432	· LINING,R.H.	1	SN:B20001--B20199
6	205-54-51250	· HANGER	1	SN:B20001--@
7	01370-30412	· SCREW	2	SN:B20001--@
8	20Y-54-52740	· CABLE	1	SN:B20001--B20199
9	20Y-54-52781	· PLATE	1	SN:B20001--B20199
10	01435-40610	· BOLT	2	SN:B20001--B20199
11	20Y-54-52731	· LEVER ASS'Y	1	SN:B20001--B20199
12	01023-70616	· SCREW	1	SN:B20001--B20199
13	20Y-54-52751	· COVER	1	SN:B20001--B20199
14	01435-40610	· BOLT	4	SN:B20001--@
15	20Y-54-52720	· LOCK ASS'Y	1	SN:B20001--B20199
16	20Y-54-52910	· DECAL	1	SN:B20001--B20199
17	20Y-54-51820	· GRIP	1	SN:B20001--@
18	01435-40820	· BOLT	4	SN:B20001--@
19	20Y-54-51832	· GRIP	1	SN:B20001--@
20	01010-D1025	· BOLT	3	SN:B20001--@
21	01643-71032	· WASHER	3	SN:B20001--@

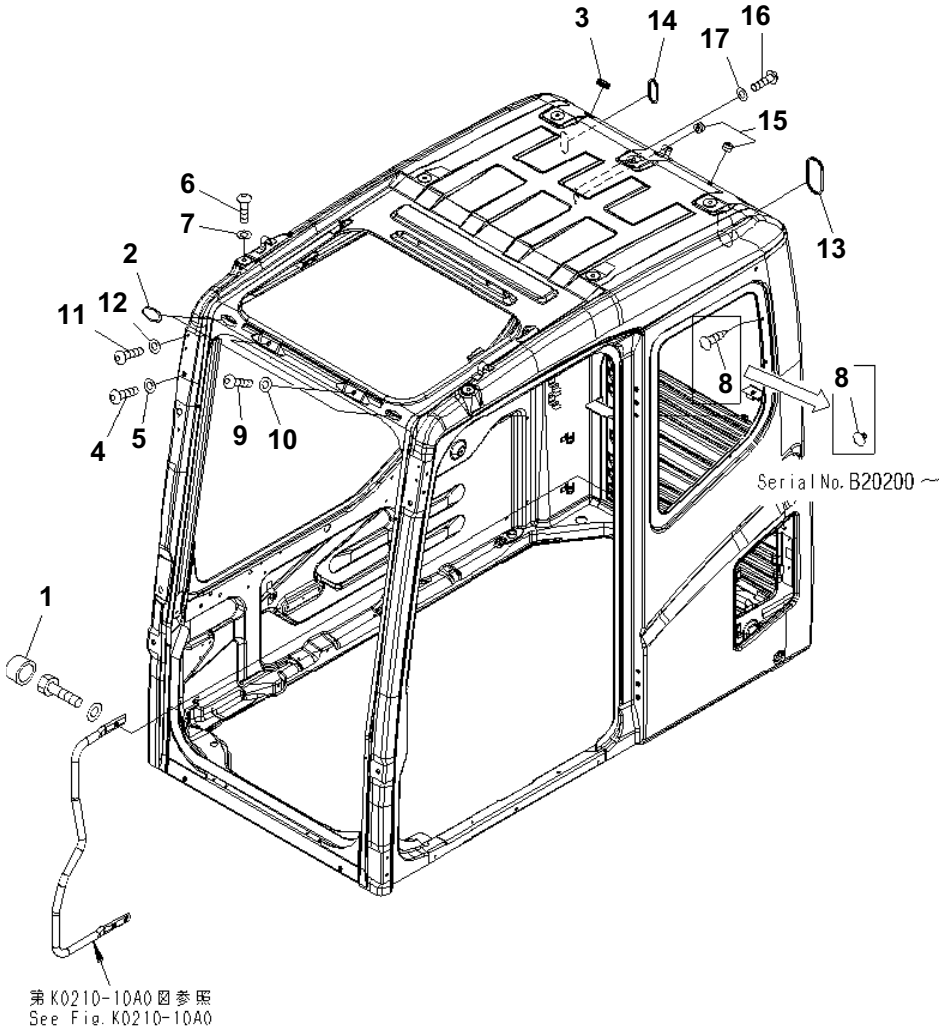

OPERATOR'S CAB (BOLT) (KOMTRAX LESS)(#B20001-B20199)

Item	Part No.	Description	Qty	Options
	(20Y-54-01141)	CAB ASS'Y	1	SN:B20001--B20199
1	20Y-54-52440	・ CAP	1	SN:B20001--@
2	22B-54-17282	・ CAP	2	SN:B20001--@
3	09415-02512	・ CAP	1	SN:B20001--@
4	01245-01220	・ SCREW	6	SN:B20001--@
5	01643-71232	・ WASHER	6	SN:B20001--@
6	01245-01220	・ SCREW	7	SN:B20001--@
7	01643-71232	・ WASHER	7	SN:B20001--@
8	208-53-13270	・ RIVET	2	SN:B20200--@
	124-911-5750	・ RIVET	2	SN:B20001--B20199
9	01245-01016	・ SCREW	2	SN:B20001--@
10	01643-71032	・ WASHER	2	SN:B20001--@
11	01245-00612	・ SCREW	4	SN:B20001--@
12	01643-70623	・ WASHER	4	SN:B20001--@
13	20Y-54-52470	・ GROMMET	1	SN:B20001--@
14	20Y-54-36150	・ GROMMET	1	SN:B20001--@
15	09415-01008	・ CAP	2	SN:B20001--@
16	01245-00616	・ SCREW	2	SN:B20001--@
17	01641-50608	・ WASHER	2	SN:B20001--@

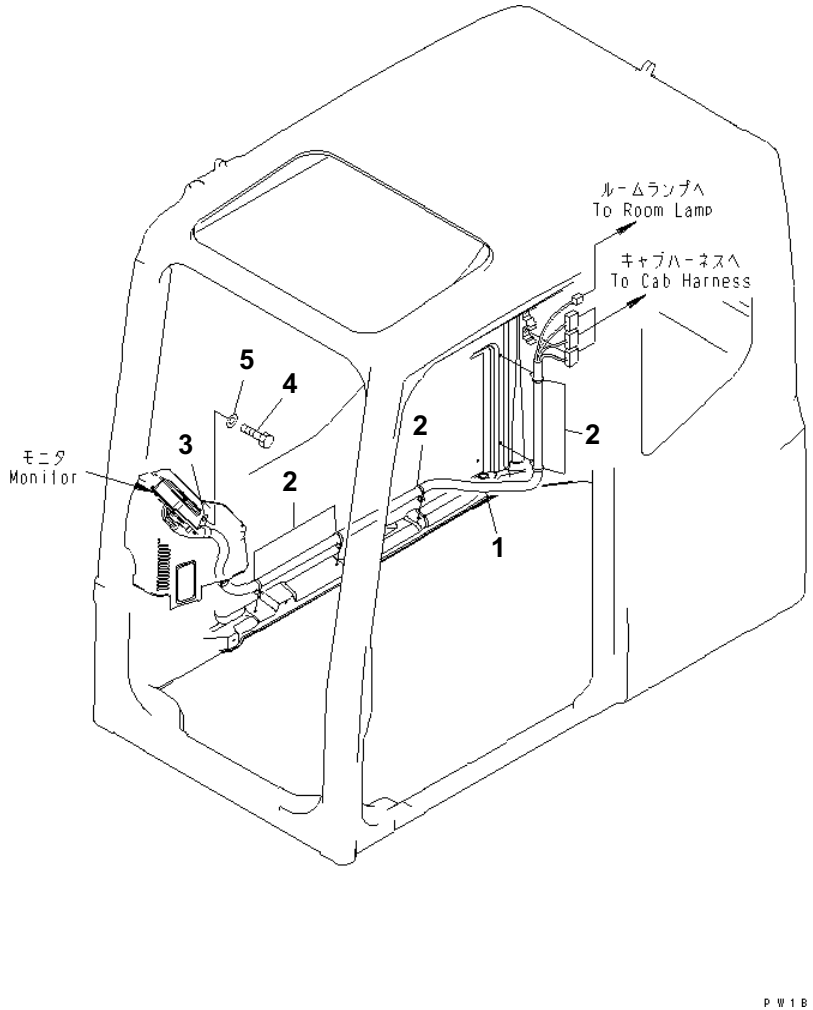

OPERATOR'S CAB (WIRING)(#B20001-B20199)

Item	Part No.	Description	Qty	Options
1	20Y-06-31120	WIRING HARNESS	1	SN:B20001--B20199
2	08059-00413	CLIP	5	SN:B20001--B20199
3	04434-51910	CLIP	1	SN:B20001--B20199
4	01010-81020	BOLT	1	SN:B20001--B20199
5	01643-31032	WASHER	1	SN:B20001--B20199

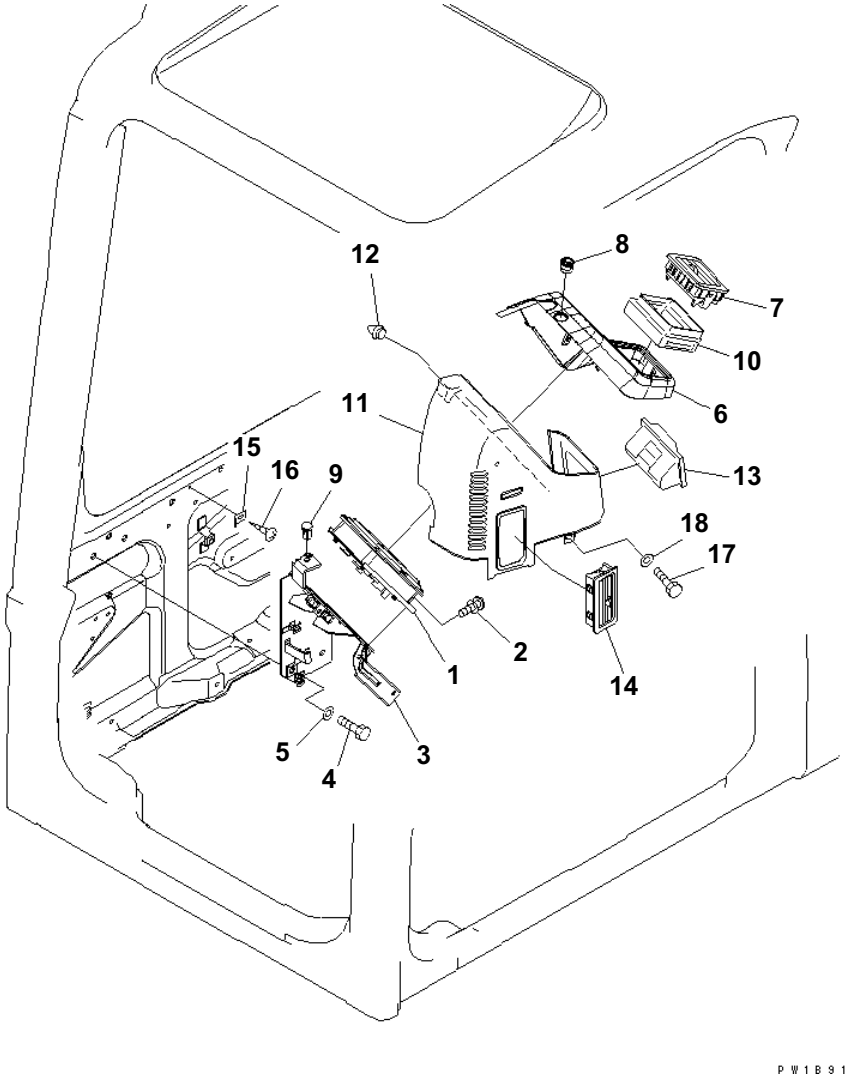

OPERATOR'S CAB (MONITOR SYSTEM) (MULTI MONITOR) (WITH AIR CONDITIONER)(#B20001-B20199)

Item	Part No.	Description	Qty	Options
1	7835-12-1007	MONITOR	1	SN:B20001--B20199
2	01023-10616	SCREW	3	SN:B20001--@
3	22U-06-22151	BRACKET	1	SN:B20001--B20199
4	01010-81020	BOLT	3	SN:B20001--B20199
5	01643-31032	WASHER	3	SN:B20001--B20199
6	20Y-54-65580	COVER ASS'Y,A/C	1	SN:B20001--@
	20K-54-31590	· CLIP	2	SN:B20001--@
7	201-979-7820	GRILLE	1	SN:B20001--@
8	20Y-54-65310	ADAPTER	1	SN:B20001--@
9	20Y-979-6161	SENSOR	1	SN:B20001--@
10	20Y-979-6420	DUCT	1	SN:B20001--B20199
11	22U-54-25221	COVER	1	SN:B20001--B20199
12	22U-54-25340	· CLIP	2	SN:B20001--B20199
13	22U-54-25371	· ASHTRAY	1	SN:B20001--B20199
14	22U-979-2381	GRILLE	1	SN:B20001--B20199
15	22U-06-22590	BRACKET	1	SN:B20001--B20199
16	01370-00508	SCREW	1	SN:B20001--B20199
17	01010-80616	BOLT	1	SN:B20001--B20199
18	01643-30623	WASHER	1	SN:B20001--B20199

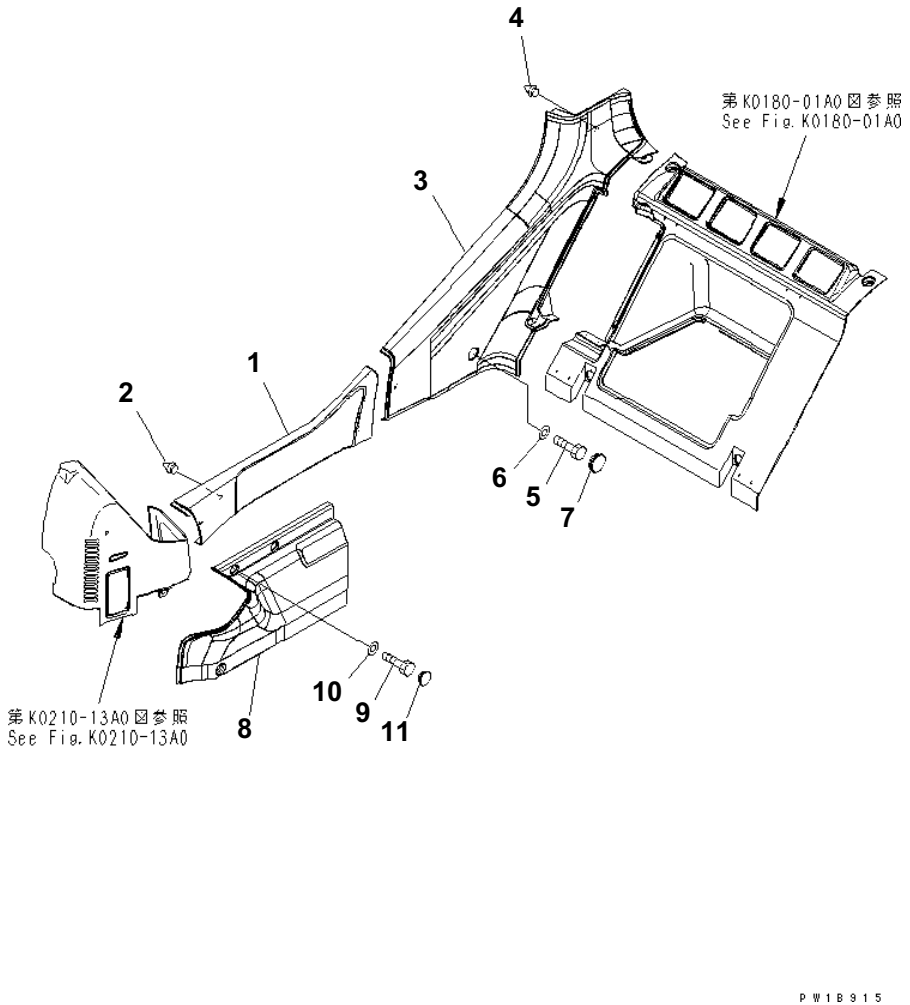

OPERATOR'S CAB (COVER)(#B20001-B20199)

Item	Part No.	Description	Qty	Options
1	20Y-54-65230	COVER	1	SN:B20001--B20199
2	22U-54-25360	・CLIP	4	SN:B20001--B20199
3	20Y-54-65240	COVER	1	SN:B20001--B20199
4	22U-54-25360	・CLIP	2	SN:B20001--B20199
5	01010-80820	BOLT	1	SN:B20001--B20199
6	01643-30823	WASHER	1	SN:B20001--B20199
7	22U-54-25331	CAP	1	SN:B20001--B20199
8	20Y-54-65220	COVER	1	SN:B20001--B20199
9	01010-80616	BOLT	3	SN:B20001--B20199
10	01643-30623	WASHER	3	SN:B20001--B20199
11	22U-54-25351	CAP	2	SN:B20001--B20199

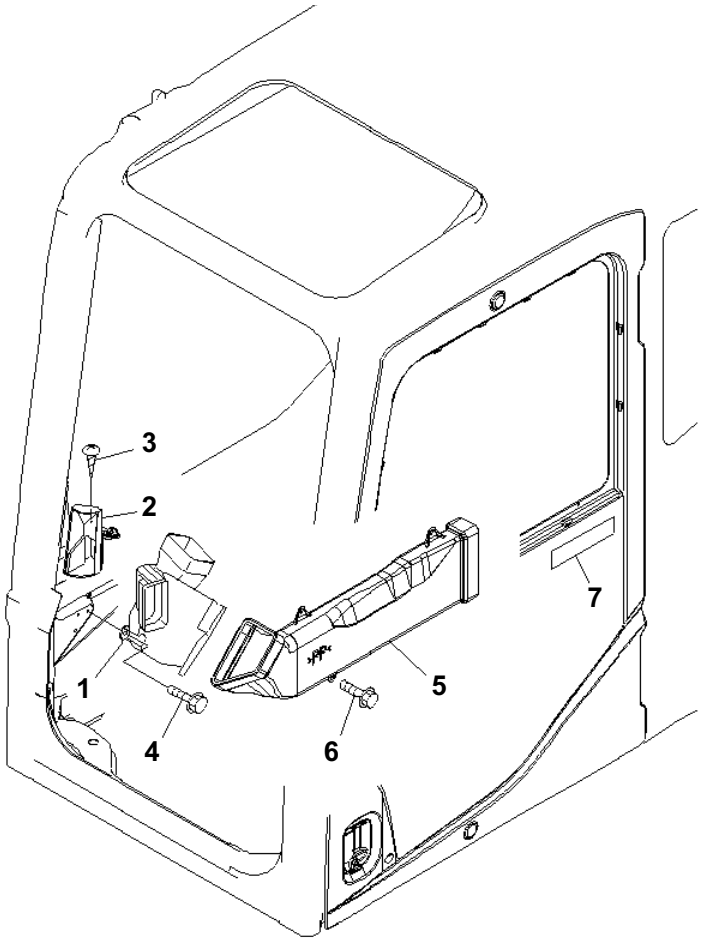

PC160LC-7B S/N B20001 AND UP

OPERATOR'S CAB (DUCT) (#B20001-B20199)

Item	Part No.	Description	Qty	Options
	22U-979-2300	DUCT ASS'Y	1	SN:B20001--B20199
1	☆	· DUCT	1	SN:B20001--B20199
2	22U-979-2351	· DEFROSTER ASS'Y	1	SN:B20001--B20199
3	01370-40408	· SCREW	4	SN:B20001--B20199
4	01435-00612	BOLT	2	SN:B20001--B20199
5	20Y-979-6222	DUCT	1	SN:B20001--B20199
6	01435-40612	BOLT	3	SN:B20001--B20199
7	09970-00230	PLATE	1	SN:B20001--@

Ref. K0210-15A0 Page 210180

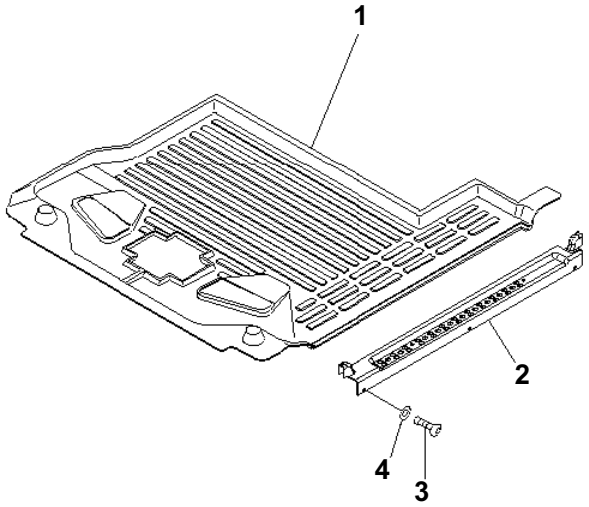

PW1B866

FLOOR MAT(#B20001-B20199)

Item	Part No.	Description	Qty	Options
1	20Y-54-65610	FLOOR MAT	1	SN:B20001--B20199
2	20Y-54-51952	COVER	1	SN:B20001--@
3	01245-00612	SCREW	5	SN:B20001--B20199
4	01643-70623	WASHER	5	SN:B20001--@

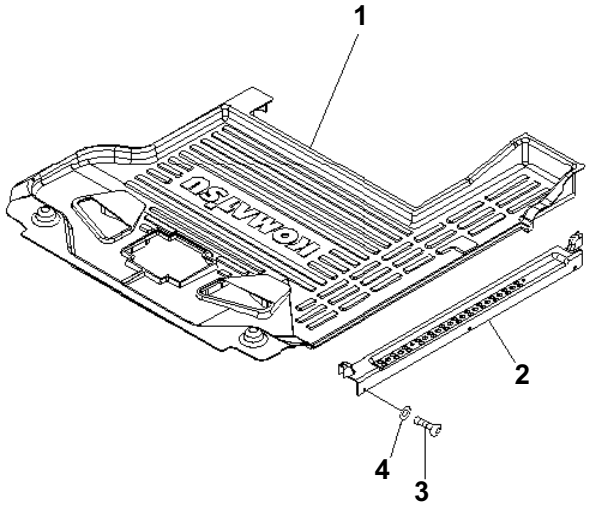

00033116

FLOOR MAT(#B20200-)

Item	Part No.	Description	Qty	Options
1	208-53-12611	FLOOR MAT	1	SN:B20200--
2	20Y-54-51952	COVER	1	SN:B20001--
3	01245-00616	SCREW	5	SN:B20200--
4	01643-70623	WASHER	5	SN:B20001--

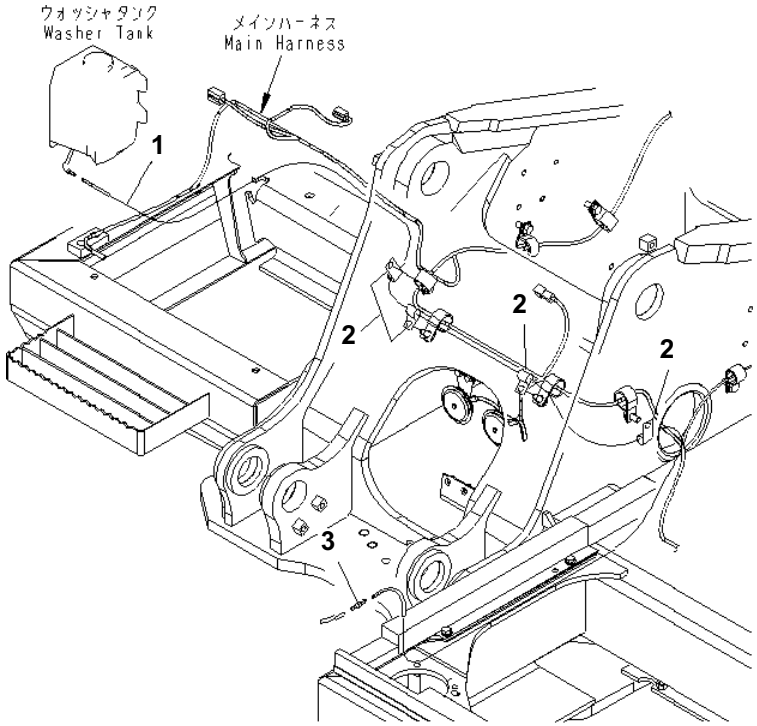

WINDOW WASHER

Item	Part No.	Description	Qty	Options
1	21K-06-71340	HOSE	1	SN:B20001--
2	21T-38-12270	CLIP	4	SN:B20001--
3	195-979-8590	VALVE	1	SN:B20001--

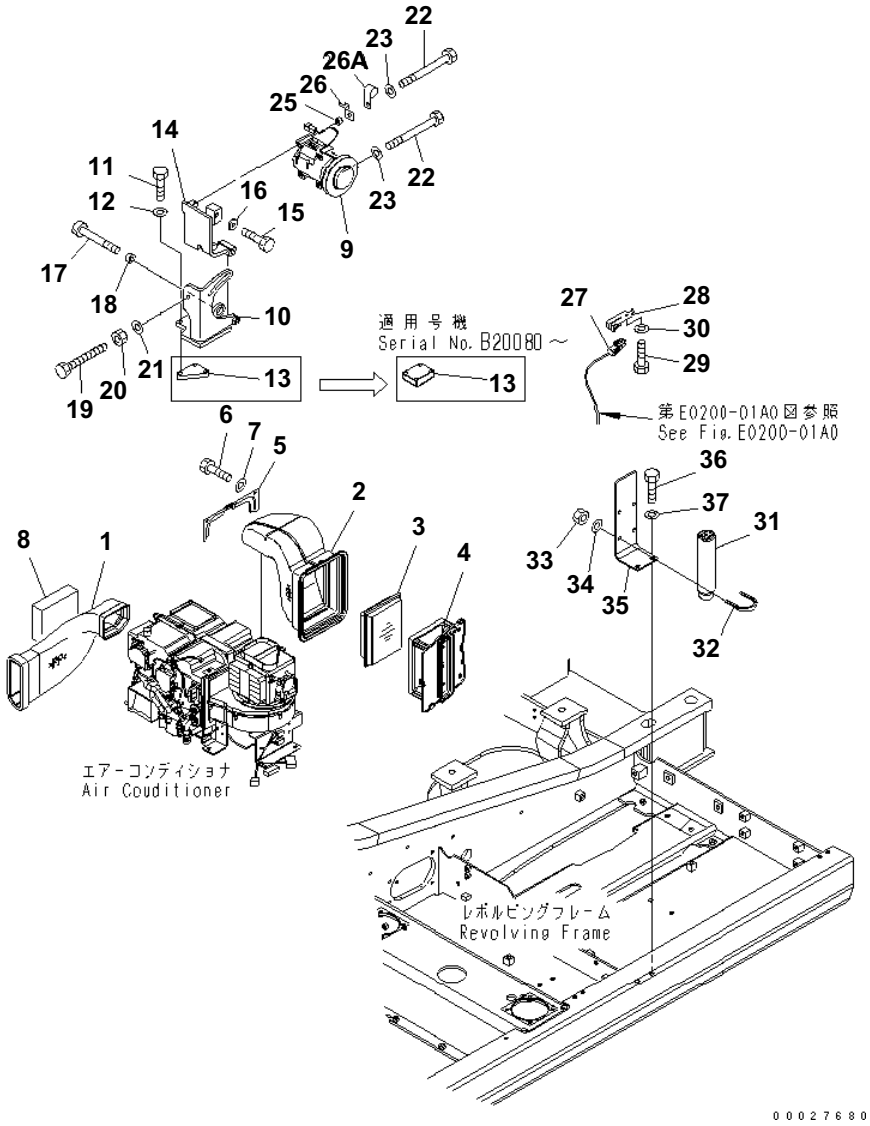

AIR CONDITIONER (DUCT¤ COMPRESSOR AND RECEIVER DRYER)(#B20001-B20199)

Item	Part No.	Description	Qty	Options
1	20Y-979-6212	DUCT	1	SN:B20001--B20199
2	20Y-979-6252	DUCT	1	SN:B20001--B20199
3	17M-911-3530	ELEMENT	1	SN:B20001--B20199
4	20Y-54-52761	HOLDER	1	SN:B20001--B20199
5	20Y-54-52771	PLATE	1	SN:B20001--B20199
6	01010-80816	BOLT	2	SN:B20001--B20199
7	01643-30823	WASHER	2	SN:B20001--B20199
8	20Y-979-7250	SEAL	1	SN:B20001--@
9	20Y-979-6121	COMPRESSOR ASS'Y	1	SN:B20001--@
10	21K-979-B780	BRACKET	1	SN:B20080--@
	21K-979-7280	BRACKET	1	SN:B20001--B20079
11	01010-81055	BOLT	3	SN:B20001--@
12	01643-31032	WASHER	3	SN:B20001--@
13	21K-979-B720	SPACER	1	SN:B20080--@
	21K-979-7121	SPACER	1	SN:B20001--B20079
14	21K-979-7290	BRACKET	1	SN:B20001--@
15	01010-81440	BOLT	1	SN:B20001--@
16	195-71-32220	WASHER	1	SN:B20001--@
17	01019-31400	BOLT	1	SN:B20001--@
18	198-38-12460	SPACER	1	SN:B20001--@
19	01017-51420	BOLT	1	SN:B20001--@
20	01580-11411	NUT	1	SN:B20001--@
21	01643-31445	WASHER	1	SN:B20001--@
22	01010-80875	BOLT	4	SN:B20001--@
23	01643-30823	WASHER	4	SN:B20001--@
25	6204-81-6740	SPACER	1	SN:B20001--@
26	08053-01510	CLIP	1	SN:B20001--@
26A	04434-50508	CLIP	1	SN:B20001--@
27	20Y-979-6191	SENSOR	1	SN:B20001--B20199
28	20Y-979-6271	BRACKET	1	SN:B20001--B20199
29	01010-80620	BOLT	1	SN:B20001--B20199
30	01643-30623	WASHER	1	SN:B20001--B20199
31	20Y-979-3120	TANK	1	SN:B20001--@
32	07283-36155	CLIP	2	SN:B20001--@
33	01597-01009	NUT	4	SN:B20001--@
34	01643-31032	WASHER	4	SN:B20001--@
35	20Y-979-6621	PLATE	1	SN:B20001--@
36	01010-81230	BOLT	2	SN:B20001--@
37	01643-31232	WASHER	2	SN:B20001--@

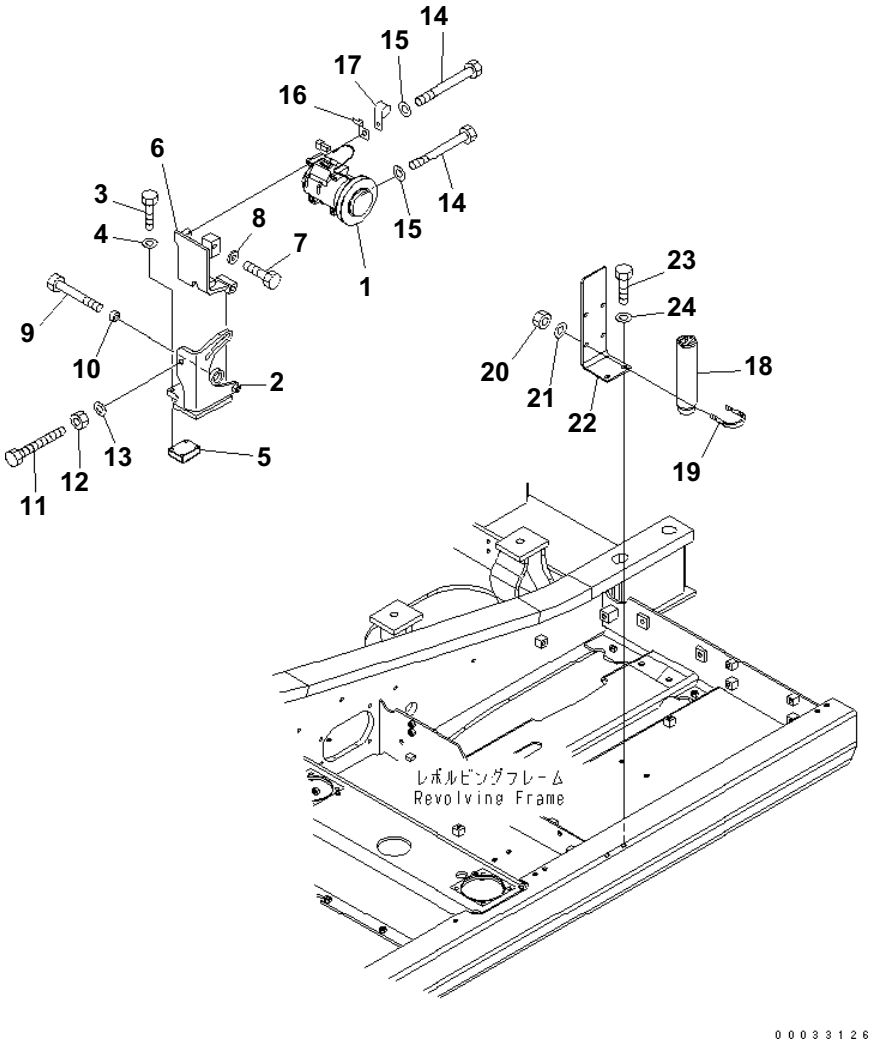

AIR CONDITIONER (DUCT¤ COMPRESSOR AND RECEIVER DRYER)(#B20200-)

Item	Part No.	Description	Qty	Options
1	20Y-979-6121	COMPRESSOR ASS'Y	1	SN:B20001--
2	21K-979-7281	BRACKET	1	SN:B20316--
	21K-979-B780	BRACKET	1	SN:B20080--B20315
3	01010-81040	BOLT	3	SN:B20316--
	01010-81055	BOLT	3	SN:B20001--B20315
4	20Y-43-15410	WASHER	3	SN:B20316--
	01643-31032	WASHER	3	SN:B20200--B20315
5	21K-979-B720	SPACER	1	SN:B20080--B20315
6	21K-979-7290	BRACKET	1	SN:B20001--
7	01010-81440	BOLT	1	SN:B20001--
8	195-71-32220	WASHER	1	SN:B20001--
9	01019-31400	BOLT	1	SN:B20001--
10	198-38-12460	SPACER	1	SN:B20001--
11	01017-51420	BOLT	1	SN:B20001--B20315
12	01580-11411	NUT	1	SN:B20001--B20315
13	01643-31445	WASHER	1	SN:B20001--B20315
14	01010-80875	BOLT	4	SN:B20001--
15	01643-30823	WASHER	4	SN:B20001--
16	08053-01510	CLIP	1	SN:B20001--
17	04434-50508	CLIP	1	SN:B20001--
18	20Y-979-3120	TANK	1	SN:B20001--
19	07283-36155	CLIP	2	SN:B20001--
20	01597-01009	NUT	4	SN:B20001--
21	01643-31032	WASHER	4	SN:B20001--
22	20Y-979-6621	PLATE	1	SN:B20001--
23	01010-81230	BOLT	2	SN:B20001--
24	01643-31232	WASHER	2	SN:B20001--

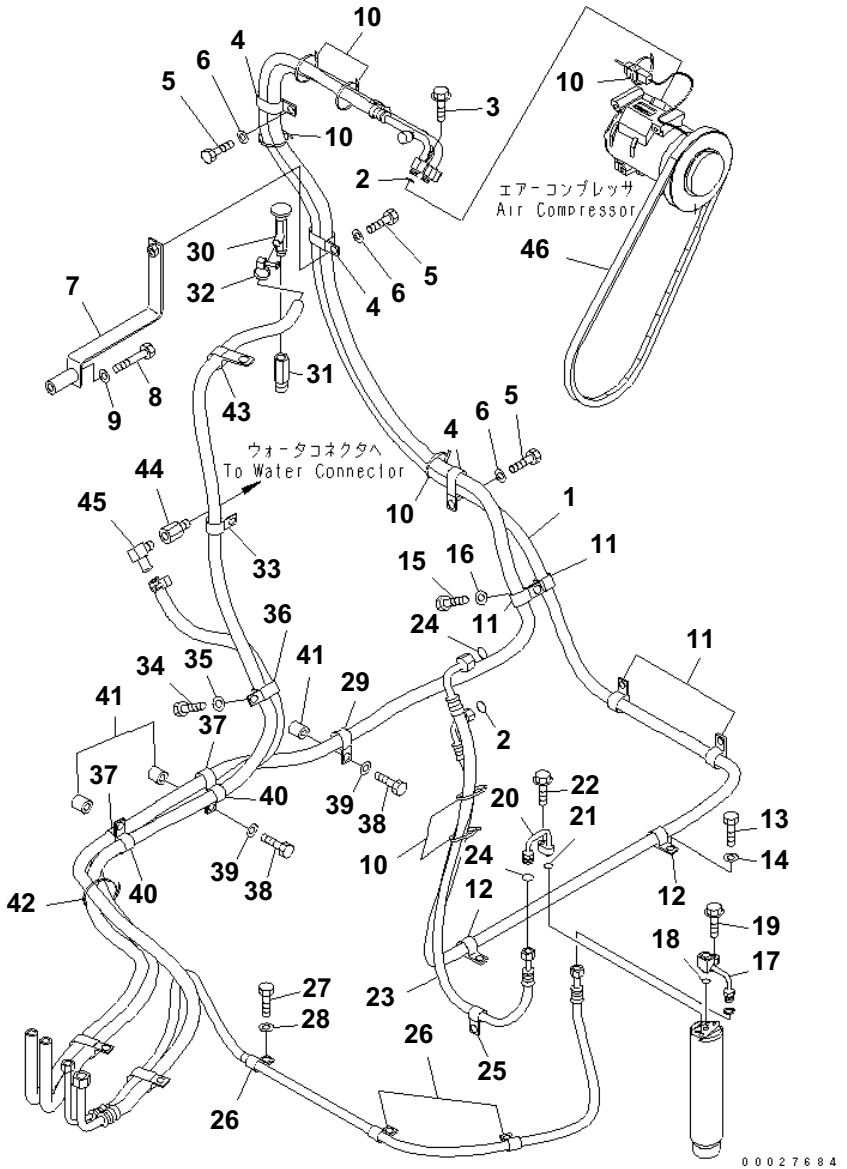

AIR CONDITIONER (HOSE)(#B20001-B20199)

Item	Part No.	Description	Qty	Options
1	21K-979-7131	HOSE	1	SN:B20001--B20199
2	20Y-979-3140	· O-RING	2	SN:B20001--@
3	01435-00630	BOLT	2	SN:B20001--B20199
4	04435-52112	CLIP	3	SN:B20001--@
5	01010-81225	BOLT	3	SN:B20001--@
6	01643-31232	WASHER	3	SN:B20001--@
7	21K-979-7111	BRACKET	1	SN:B20001--@
8	01010-81280	BOLT	1	SN:B20001--@
9	01643-31232	WASHER	1	SN:B20001--@
10	08034-20519	BAND	7	SN:B20001--@
11	04434-52312	CLIP	4	SN:B20001--@
12	04434-52112	CLIP	2	SN:B20001--B20199
13	01010-81225	BOLT	2	SN:B20001--@
14	01643-31232	WASHER	2	SN:B20001--@
15	01010-81220	BOLT	2	SN:B20001--@
16	01643-31232	WASHER	2	SN:B20001--@
17	20Y-979-6650	TUBE	1	SN:B20001--@
18	20Y-979-3150	· O-RING	1	SN:B20001--@
19	01435-00625	BOLT	1	SN:B20001--@
20	20Y-979-6542	TUBE	1	SN:B20001--B20199
21	20Y-979-3150	· O-RING	1	SN:B20001--@
22	01435-00625	BOLT	1	SN:B20001--B20199
23	21K-979-7141	HOSE	1	SN:B20001--B20199
24	20Y-979-3150	· O-RING	2	SN:B20001--@
25	04434-51612	CLIP	1	SN:B20001--B20199
26	04434-51612	CLIP	3	SN:B20001--@
27	01010-81225	BOLT	3	SN:B20001--@
28	01643-31232	WASHER	3	SN:B20001--@
29	04434-52312	CLIP	1	SN:B20001--@
30	09482-50000	VALVE	1	SN:B20001--@
31	6732-11-6130	ADAPTER	1	SN:B20001--@
32	11Y-09-11160	CLIP	2	SN:B20001--@
33	04434-52110	CLIP	1	SN:B20001--@
34	01010-81020	BOLT	2	SN:B20001--@
35	01643-31032	WASHER	2	SN:B20001--@
36	04435-52110	CLIP	1	SN:B20001--@
37	04435-52112	CLIP	2	SN:B20001--@
38	01010-81250	BOLT	3	SN:B20001--@
39	01643-31232	WASHER	3	SN:B20001--@
40	04434-52112	CLIP	2	SN:B20001--@

PC160LC-7B S/N B20001 AND UP

AIR CONDITIONER (HOSE)(#B20001-B20199)

Item	Part No.	Description	Qty	Options
41	195-33-11220	SPACER	3	SN:B20001--@
42	08034-20536	BAND	1	SN:B20001--@
43	195-06-25940	CLIP	1	SN:B20001--@
44	391-40-13220	NIPPLE	1	SN:B20001--@
45	20S-977-1170	ELBOW	1	SN:B20001--@
46	04120-21749	V-BELT	1	SN:B20001--@

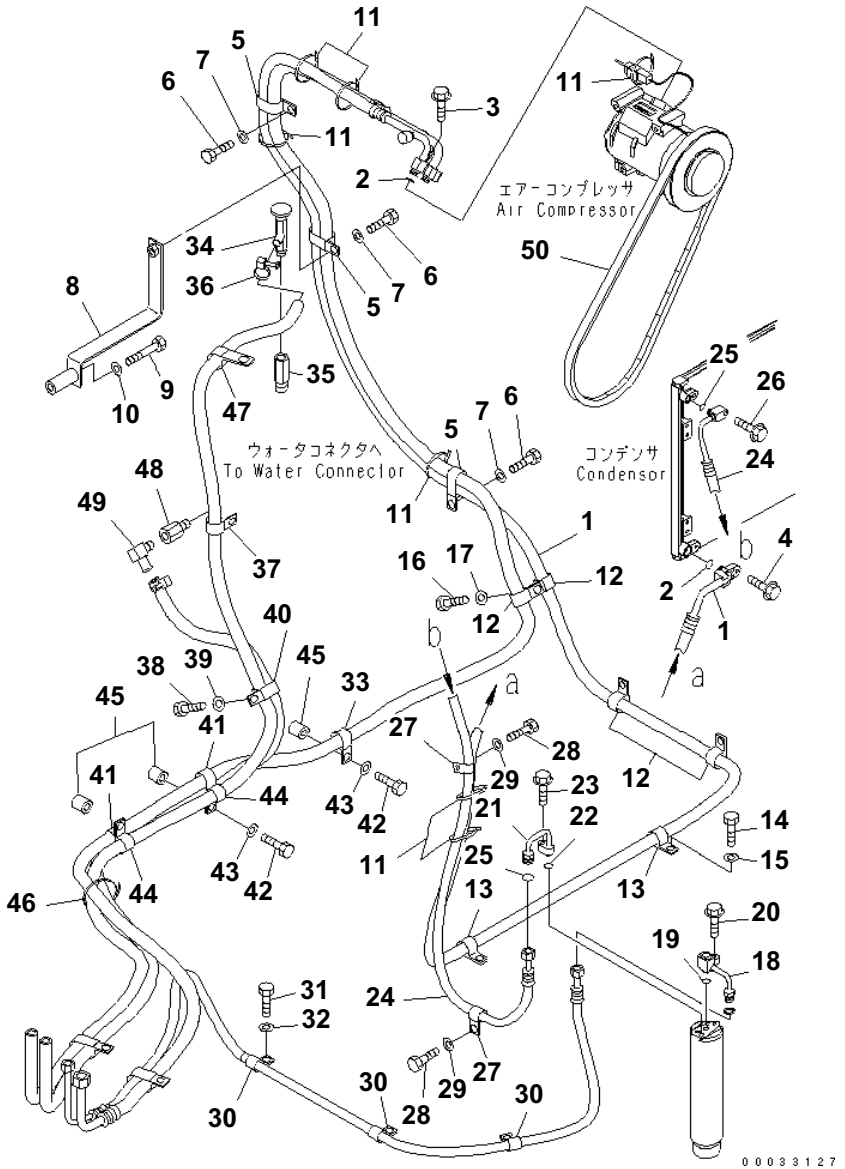

AIR CONDITIONER (HOSE)(#B20200-)

Item	Part No.	Description	Qty	Options
1	21K-979-7132	HOSE	1	SN:B20200--
2	20Y-979-3140	· O-RING	2	SN:B20001--
3	01435-00630	BOLT	1	SN:B20200--
4	01435-00625	BOLT	1	SN:B20200--
5	04435-52112	CLIP	3	SN:B20001--
6	01010-81225	BOLT	3	SN:B20001--
7	01643-31232	WASHER	3	SN:B20001--
8	21K-979-7111	BRACKET	1	SN:B20001--
9	01010-81280	BOLT	1	SN:B20001--
10	01643-31232	WASHER	1	SN:B20001--
11	08034-20519	BAND	7	SN:B20001--
12	04434-52312	CLIP	4	SN:B20001--
13	04434-51912	CLIP	2	SN:B20200--
14	01010-81225	BOLT	2	SN:B20001--
15	01643-31232	WASHER	2	SN:B20001--
16	01010-81220	BOLT	2	SN:B20001--
17	01643-31232	WASHER	2	SN:B20001--
18	20Y-979-6650	TUBE	1	SN:B20001--
19	20Y-979-3150	· O-RING	1	SN:B20001--
20	01435-00625	BOLT	1	SN:B20001--
21	20Y-979-6542	TUBE	1	SN:B20001--
22	20Y-979-3150	· O-RING	1	SN:B20001--
23	01435-00625	BOLT	1	SN:B20001--
24	21K-979-7142	HOSE	1	SN:B20200--
25	20Y-979-3150	· O-RING	2	SN:B20001--
26	01435-00625	BOLT	1	SN:B20200--
27	04434-51512	CLIP	2	SN:B20200--
28	01010-81225	BOLT	2	SN:B20200--
29	01643-31232	WASHER	2	SN:B20200--
30	04434-51612	CLIP	3	SN:B20001--
31	01010-81225	BOLT	3	SN:B20001--
32	01643-31232	WASHER	3	SN:B20001--
33	04434-52312	CLIP	1	SN:B20001--
34	09482-50000	VALVE	1	SN:B20001--
35	6732-11-6130	ADAPTER	1	SN:B20001--
36	11Y-09-11160	CLIP	2	SN:B20001--
37	04434-52110	CLIP	1	SN:B20001--
38	01010-81020	BOLT	2	SN:B20001--
39	01643-31032	WASHER	2	SN:B20001--
40	04435-52110	CLIP	1	SN:B20001--

PC160LC-7B S/N B20001 AND UP

AIR CONDITIONER (HOSE)(#B20200-)

Item	Part No.	Description	Qty	Options
41	04435-52112	CLIP	2	SN:B20001--
42	01010-81250	BOLT	3	SN:B20001--
43	01643-31232	WASHER	3	SN:B20001--
44	04434-52112	CLIP	2	SN:B20001--
45	195-33-11220	SPACER	3	SN:B20001--
46	08034-20536	BAND	1	SN:B20001--
47	195-06-25940	CLIP	1	SN:B20001--
48	391-40-13220	NIPPLE	1	SN:B20001--
49	20S-977-1170	ELBOW	1	SN:B20001--
50	04120-21749	V-BELT	1	SN:B20001--

@@1B798A

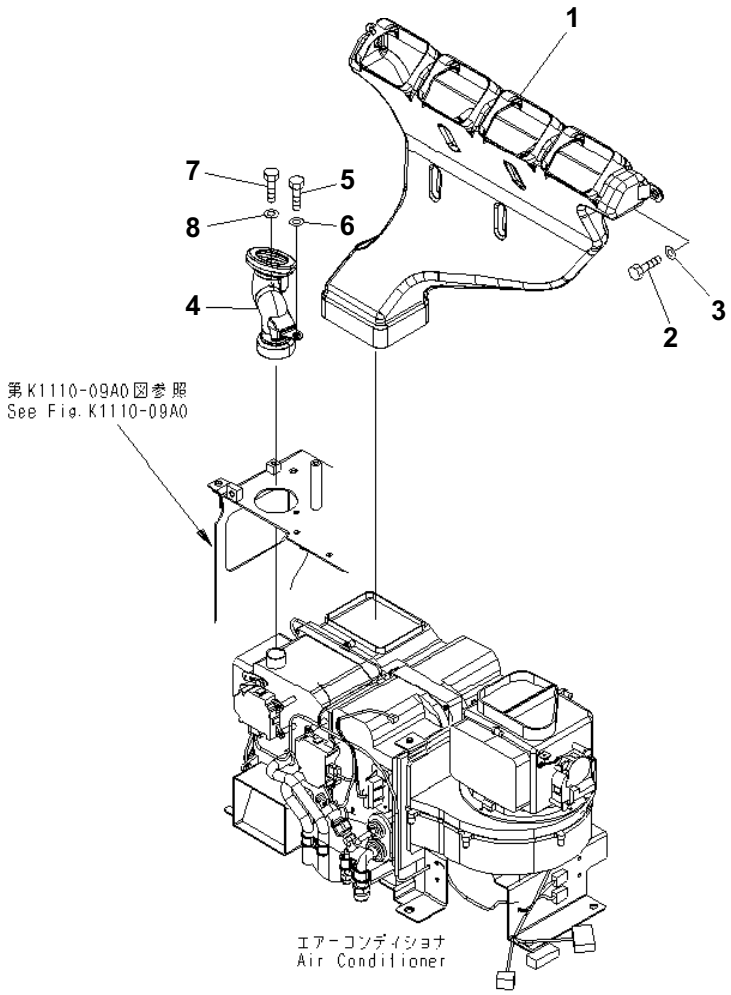

PC160LC-7B S/N B20001 AND UP

AIR CONDITIONER (REAR DUCT)(#B20001-B20199)

Item	Part No.	Description	Qty	Options
1	20Y-979-6410	DUCT	1	SN:B20001--B20199
2	01010-80820	BOLT	2	SN:B20001--B20199
3	01643-30823	WASHER	2	SN:B20001--B20199
4	20Y-979-6430	DUCT	1	SN:B20001--B20199
5	01010-80820	BOLT	1	SN:B20001--B20199
6	01643-30823	WASHER	1	SN:B20001--B20199
7	01016-50845	BOLT	1	SN:B20001--B20199
8	01643-30823	WASHER	1	SN:B20001--B20199

Ref. K0700-03A1 Page 210260

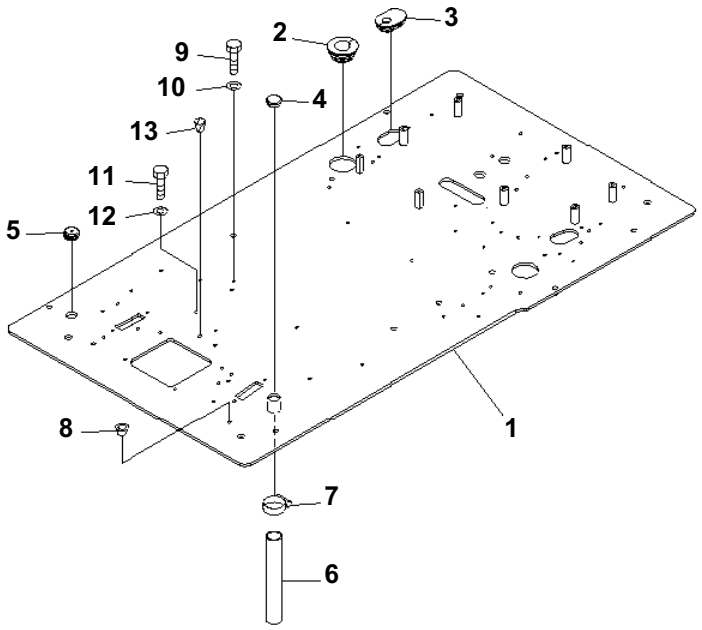

PC160LC-7B S/N B20001 AND UP

FLOOR FRAME (FRAME)(#B20001-B20199)

Item	Part No.	Description	Qty	Options
1	21K-54-72510	FLOOR FRAME	1	SN:B20001--B20199
2	20Y-54-65121	GROMMET	2	SN:B20001--@
3	20Y-54-65170	GROMMET	2	SN:B20001--B20199
4	22U-54-25581	GROMMET	1	SN:B20001--@
5	22U-54-25590	GROMMET	1	SN:B20001--@
6	07286-03828	HOSE	1	SN:B20001--@
7	07280-04726	CLAMP	1	SN:B20001--@
8	07048-01310	PLUG	2	SN:B20001--@
9	01010-81030	BOLT	2	SN:B20001--@
10	01643-31032	WASHER	2	SN:B20001--@
11	01010-81020	BOLT	1	SN:B20001--B20199
12	01643-31032	WASHER	1	SN:B20001--B20199
13	07049-01012	PLUG	2	SN:B20001--B20199

Ref. K1110-01A0 Page 210270

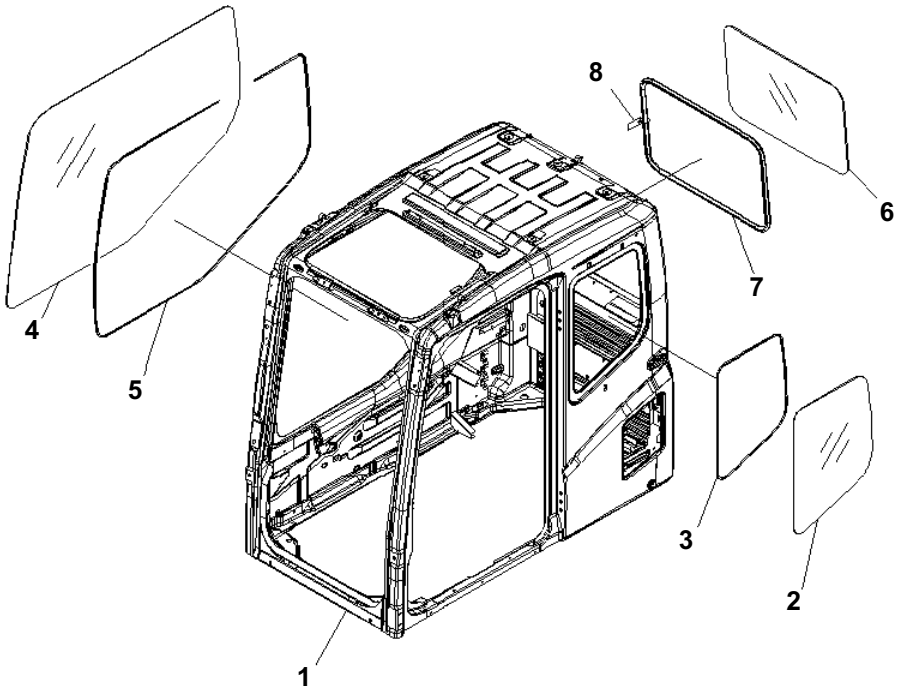

PC160LC-7B S/N B20001 AND UP

FLOOR FRAME (OPERATOR'S CAB) (CAB) (#B20200-)

Item	Part No.	Description	Qty	Options
	208-53-00122	CAB ASS'Y	1	SN:B20200--
1	☆	· CAB	1	SN:B20200--
2	20Y-54-51241	· GLASS	1	SN:B20200--
3	20Y-54-51261	· SEAL	1	SN:B20200--
4	20Y-54-51842	· GLASS	1	SN:B20200--
5	20Y-54-51851	· DAM	1	SN:B20200--
6	208-53-11270	· GLASS	1	SN:B20200--
7	20Y-54-51251	· WEATHER STRIP	1	SN:B20200--
8	20T-54-75250	· TAG	1	SN:B20200--

Ref. K1110-01D0 Page 210280

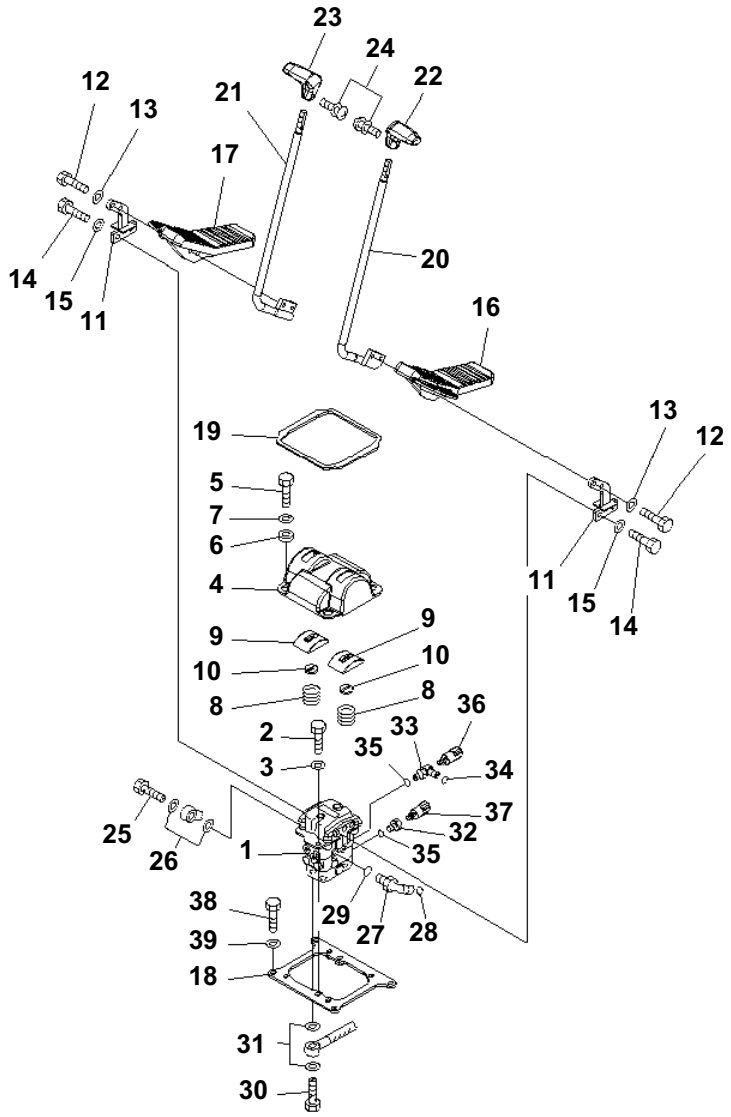

FLOOR FRAME (TRAVEL CONTROL)(#B20001-B20199)

Item	Part No.	Description	Qty	Options
1	(702-16-03730)	PILOT VALVE	1	SN:B20001--B20199
2	01010-81025	BOLT	2	SN:B20001--B20199
3	01643-31032	WASHER	2	SN:B20001--B20199
4	20Y-43-21151	COVER	1	SN:B20001--B20199
5	01010-81025	BOLT	4	SN:B20001--B20199
6	20Y-43-21260	COLLAR	4	SN:B20001--B20199
7	203-54-56970	WASHER	4	SN:B20001--B20199
8	203-43-51620	SPRING	2	SN:B20001--@
	22U-43-21350	COVER ASS'Y	2	SN:B20001--@
9	☆	・COVER	1	SN:B20001--@
10	22U-43-21360	・SEAL	1	SN:B20001--@
11	22U-43-21150	LEVER	2	SN:B20001--B20199
12	01010-D1045	BOLT	4	SN:B20001--@
13	01643-71032	WASHER	4	SN:B20001--@
14	01010-81030	BOLT	4	SN:B20001--@
15	01643-31032	WASHER	4	SN:B20001--@
16	22U-43-21111	PEDAL,L.H.	1	SN:B20001--@
17	22U-43-21121	PEDAL,R.H.	1	SN:B20001--@
18	20Y-43-21161	PLATE	1	SN:B20001--B20199
19	22U-43-21380	SEAL	1	SN:B20001--B20199
20	22U-43-21130	LEVER,L.H.	1	SN:B20001--B20199
21	22U-43-21140	LEVER,R.H.	1	SN:B20001--B20199
22	20Y-43-21231	KNOB,L.H.	1	SN:B20001--@
23	20Y-43-21241	KNOB,R.H.	1	SN:B20001--@
24	01023-20416	SCREW	2	SN:B20001--@
25	20Y-62-18910	BOLT	1	SN:B20001--@
26	07000-12018	O-RING	2	SN:B20001--@
27	11Y-62-12160	ELBOW	1	SN:B20001--@
28	02896-11008	O-RING	1	SN:B20001--@
29	07002-11423	O-RING	1	SN:B20001--@
30	20Y-62-18890	BOLT	4	SN:B20001--@
31	07000-12015	O-RING	8	SN:B20001--@
32	20Y-62-41390	ADAPTER	1	SN:B20001--B20199
33	21W-62-43910	ELBOW	1	SN:B20001--B20199
34	02896-11008	O-RING	1	SN:B20001--B20199
35	07002-11423	O-RING	2	SN:B20001--@
36	20Y-06-21710	SWITCH	1	SN:B20001--@
37	206-06-61130	SWITCH	1	SN:B20001--@
38	01010-81025	BOLT	4	SN:B20001--B20199
39	01643-31032	WASHER	4	SN:B20001--B20199

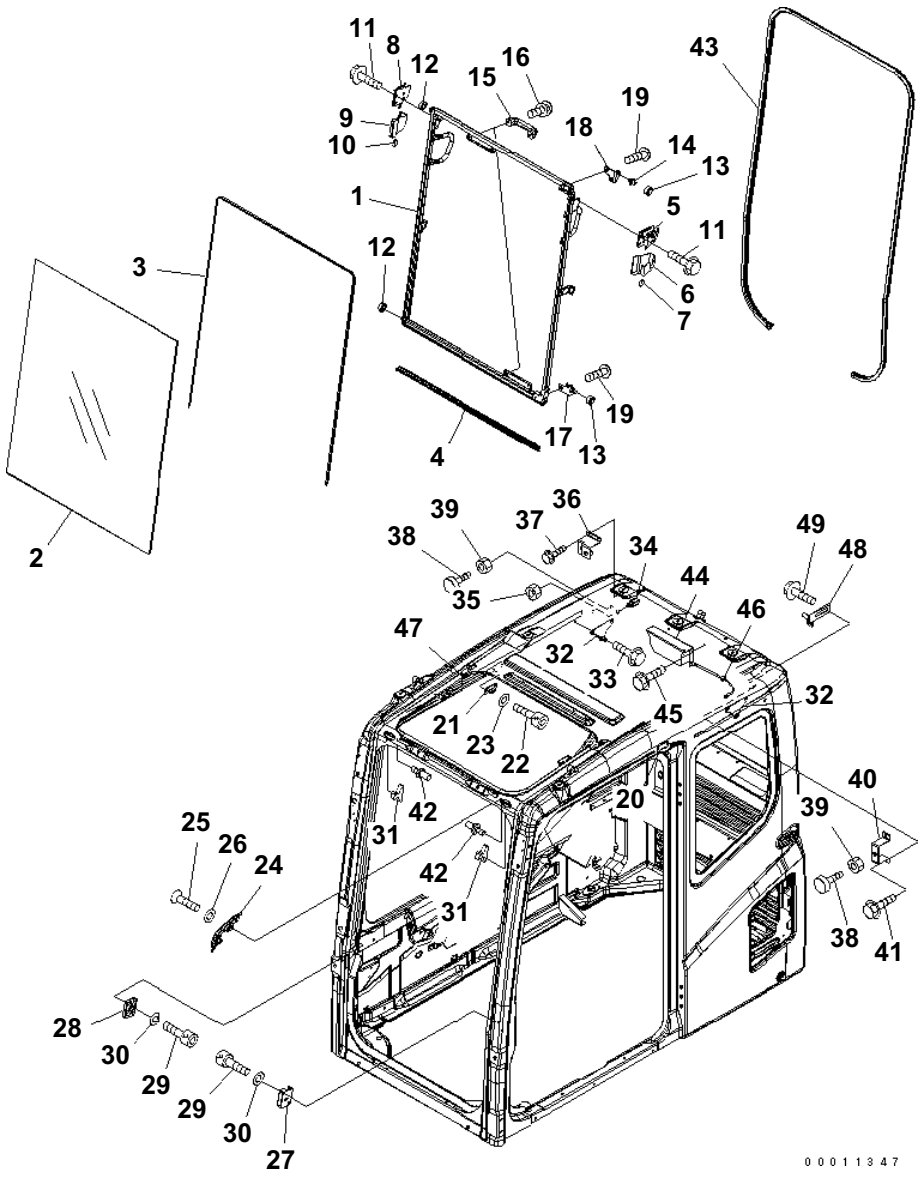

FLOOR FRAME (OPERATOR'S CAB) (FRONT WINDOW)(#B20200-)

Item	Part No.	Description	Qty	Options
	(208-53-00122)	CAB ASS'Y	1	SN:B20200--
	208-53-00020	FRONT WINDOW ASS'Y	1	SN:B20200--
1	☆	· FRAME	1	SN:B20200--
2	20Y-54-51522	· GLASS	1	SN:B20001--
3	20Y-54-51531	· SEAL	1	SN:B20001--
4	20Y-54-51551	· SEAL	1	SN:B20001--
5	22B-54-15411	· LOCK ASS'Y	1	SN:B20001--
6	22B-54-15440	· CASE	1	SN:B20001--
7	22B-54-15470	· KNOB	1	SN:B20001--
8	22B-54-15421	· LOCK ASS'Y	1	SN:B20001--
9	22B-54-15450	· CASE	1	SN:B20001--
10	22B-54-15480	· KNOB	1	SN:B20001--
11	01435-40812	· BOLT	4	SN:B20001--
12	20Y-54-52621	· ROLLER	2	SN:B20001--
13	20Y-54-52681	· ROLLER	2	SN:B20001--
14	208-53-12690	· PIN	1	SN:B20200--
15	20Y-54-14590	· HANDLE	2	SN:B20001--
16	01023-10616	· SCREW	4	SN:B20001--
17	208-53-12630	· BRACKET	1	SN:B20200--
18	208-53-12830	· BRACKET	1	SN:B20200--
19	01245-00816	· SCREW	4	SN:B20200--
20	20Y-54-51670	STOPPER	1	SN:B20001--
21	20Y-54-51680	STOPPER	1	SN:B20001--
22	01252-80616	BOLT	4	SN:B20001--
23	01643-70623	WASHER	4	SN:B20001--
24	208-53-11560	BLOCK	1	SN:B20200--
25	01245-00816	SCREW	2	SN:B20200--
26	01643-70823	WASHER	2	SN:B20200--
27	20Y-54-51633	BLOCK	1	SN:B20001--
28	20Y-54-52192	BLOCK	1	SN:B20001--
29	01252-80616	BOLT	4	SN:B20200--
30	01641-50608	WASHER	4	SN:B20001--
31	22B-54-15621	STOPPER	2	SN:B20001--
32	22B-54-15432	STRIKER	2	SN:B20001--
33	01435-40616	BOLT	4	SN:B20001--
34	21J-06-12440	SWITCH	1	SN:B20001--
35	01583-11811	NUT	1	SN:B20001--
36	20Y-54-51880	BRACKET	1	SN:B20200--
37	01435-40616	BOLT	3	SN:B20200--

PC160LC-7B S/N B20001 AND UP

FLOOR FRAME (OPERATOR'S CAB) (FRONT WINDOW)(#B20200-)

Item	Part No.	Description	Qty	Options
38	20Y-54-11611	STOPPER	2	SN:B20001--
39	01580-11008	NUT	2	SN:B20001--
40	20Y-54-52491	PLATE	1	SN:B20001--
41	01435-40616	BOLT	2	SN:B20200--
42	20Y-54-51621	STRIKER	2	SN:B20200--
43	208-53-11540	SEAL	1	SN:B20200--
44	20Y-54-51591	SPRING ASS'Y	1	SN:B20001--
45	01435-00616	BOLT	2	SN:B20001--
46	20Y-54-51640	HOLDER	1	SN:B20001--
47	20Y-54-51420	SEAL	1	SN:B20001--
48	208-53-11470	BRACKET	1	SN:B20200--
49	01435-40616	BOLT	2	SN:B20200--

@@1B834@

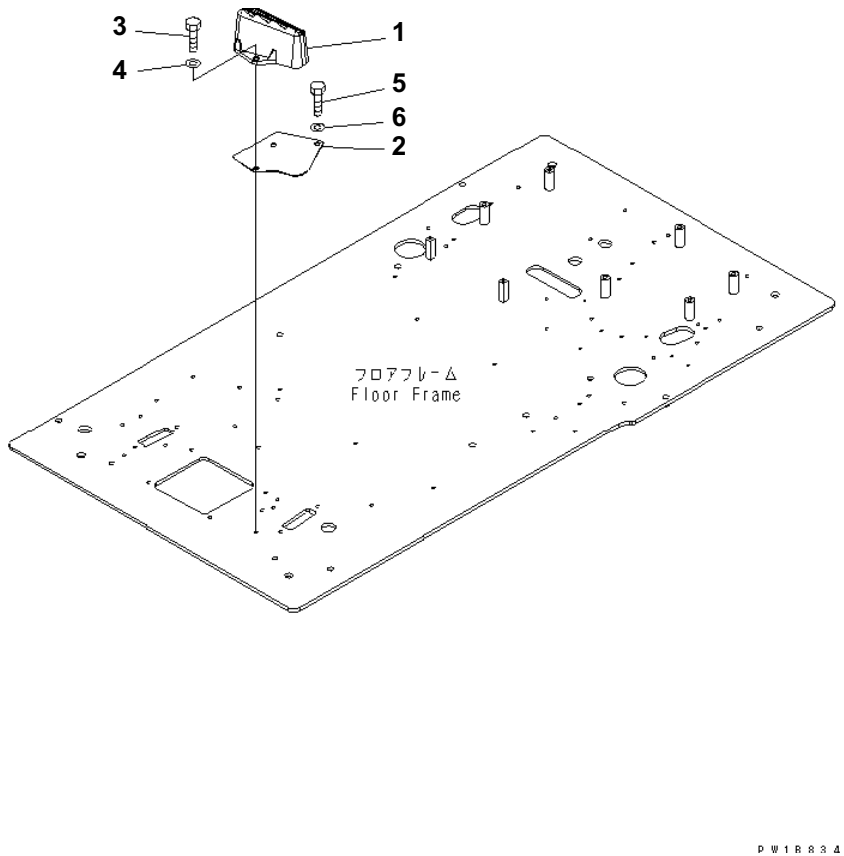

PC160LC-7B S/N B20001 AND UP

FLOOR FRAME (FOOT REST) (L.H.)(#B20001-B20199)

Item	Part No.	Description	Qty	Options
1	22U-54-25110	FOOT REST,FOOT¤ L.H.	1	SN:B20001--@
2	22U-54-25521	PLATE	1	SN:B20001--@
3	01010-81025	BOLT	2	SN:B20001--@
4	01643-31032	WASHER	2	SN:B20001--@
5	01010-81020	BOLT	1	SN:B20001--@
6	01643-31032	WASHER	1	SN:B20001--@

Ref. K1110-03A0 Page 210310

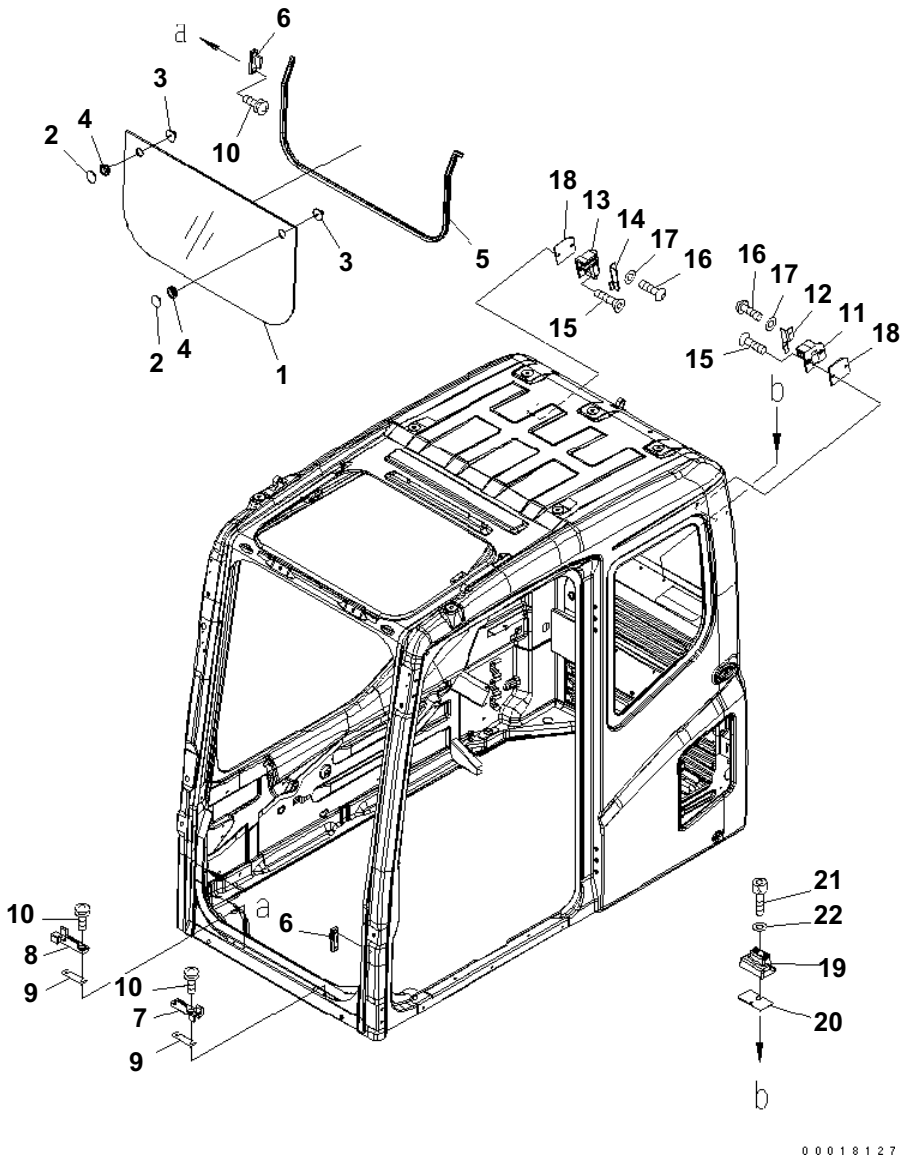

FLOOR FRAME (OPERATOR'S CAB) (FRONT LOWER WINDOW)(#B20200-)

Item	Part No.	Description	Qty	Options
	(208-53-00122)	CAB ASS'Y	1	SN:B20200--
	20Y-54-51601	· GLASS	1	SN:B20001--
1	20Y-54-51812	· · GLASS	1	SN:B20001--
2	22B-54-15970	· · RETAINER	2	SN:B20001--
3	22B-54-15980	· · KNOB	2	SN:B20001--
4	08037-02512	· · GROMMET	2	SN:B20001--
5	208-53-11860	· TRIM	1	SN:B20200--
6	208-53-11830	· SEAT	2	SN:B20200--
7	22B-54-15781	· SEAT	1	SN:B20001--
8	22B-54-15791	· SEAT	1	SN:B20001--
9	22B-54-15580	· PLATE	2	SN:B20001--
10	01023-20616	· SCREW	8	SN:B20001--
11	20Y-54-52161	· LOCK	1	SN:B20001--
12	20Y-54-52361	· BRACKET	1	SN:B20001--
13	20Y-54-52171	· LOCK	1	SN:B20001--
14	20Y-54-52371	· BRACKET	1	SN:B20001--
15	01240-00620	· SCREW	2	SN:B20001--
16	01245-00625	· SCREW	2	SN:B20001--
17	01641-50608	· WASHER	2	SN:B20001--
18	20Y-54-52380	· PLATE	2	SN:B20001--
19	208-53-12110	· SEAT	2	SN:B20200--
20	208-53-12160	· SHIM¤ 1.2MM	2	SN:B20200--
21	01252-80620	· BOLT	2	SN:B20200--
22	01643-70623	· WASHER	2	SN:B20200--

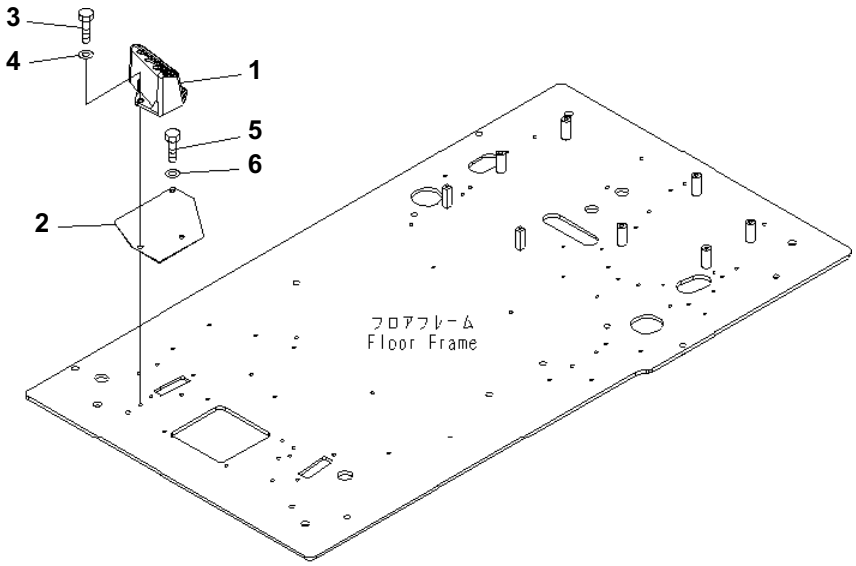

FLOOR FRAME (FOOT REST) (R.H.) (#B20001-B20199)

Item	Part No.	Description	Qty	Options
1	22U-54-25120	FOOT REST,FOOT¤ R.H.	1	SN:B20001--@
2	22U-54-25531	PLATE	1	SN:B20001--@
3	01010-81025	BOLT	2	SN:B20001--@
4	01643-31032	WASHER	2	SN:B20001--@
5	01010-81020	BOLT	1	SN:B20001--@
6	01643-31032	WASHER	1	SN:B20001--@

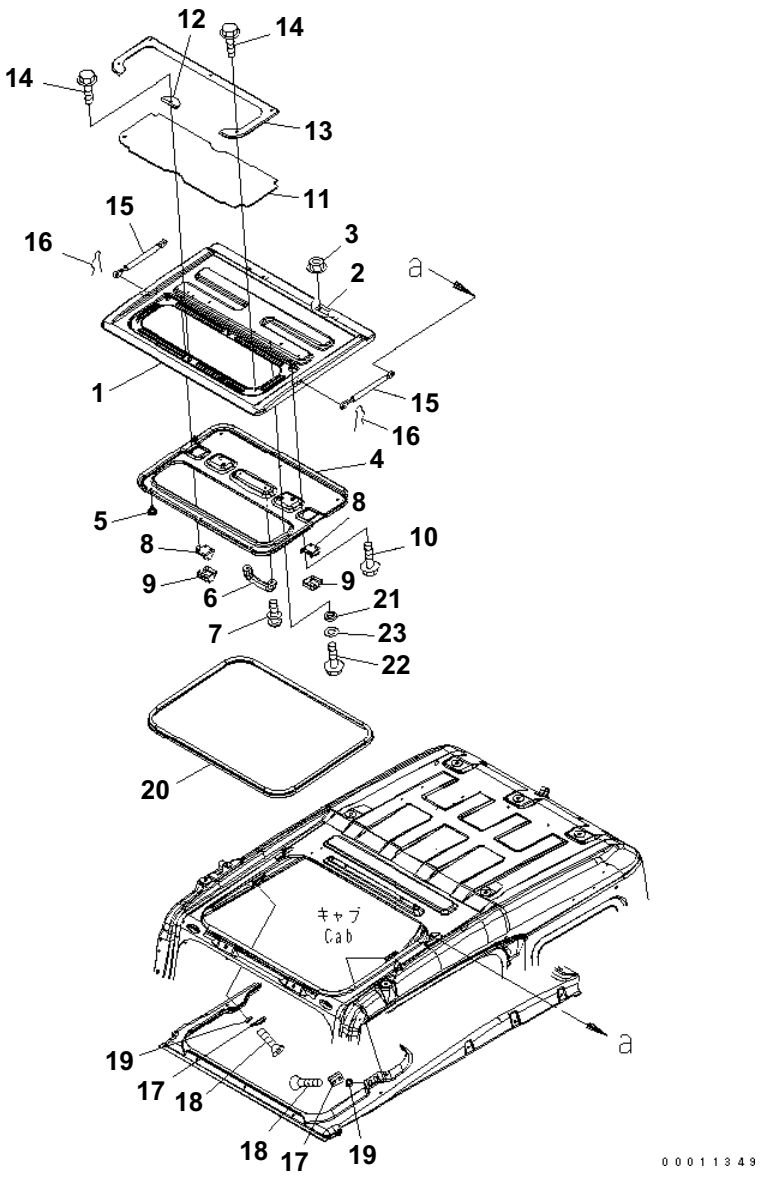

FLOOR FRAME (OPERATOR'S CAB) (ROOF WINDOW)(#B20200-)

Item	Part No.	Description	Qty	Options
	(208-53-00122)	CAB ASS'Y	1	SN:B20200--
1	208-53-11710	・ ROOF	1	SN:B20200--
2	208-53-11M50	・・ HINGE (WELDED)	1	SN:B20200--
3	01584-30806	・ NUT	4	SN:B20001--
4	20Y-54-51922	・ COVER	1	SN:B20001--
5	20Y-54-18690	・ RIVET	6	SN:B20001--
6	20Y-54-14590	・ HANDLE	1	SN:B20001--
7	01023-10616	・ SCREW	2	SN:B20001--
8	22B-54-15990	・ LOCK ASS'Y	2	SN:B20001--
9	20Y-54-36360	・ COVER	2	SN:B20001--
10	01435-40616	・ BOLT	8	SN:B20200--
11	20Y-54-51744	・ CLEAR PLATE	1	SN:B20001--
12	20Y-54-51720	・ PLATE	1	SN:B20001--
13	20Y-54-51733	・ PLATE	1	SN:B20001--
14	01435-40610	・ BOLT	6	SN:B20200--
15	20Y-54-36342	・ GAS SPRING ASS'Y	2	SN:B20001--
16	04052-10833	・ PIN	4	SN:B20001--
17	22U-54-28920	・ STRIKER	2	SN:B20200--
18	01245-00820	・ SCREW	4	SN:B20200--
19	20Y-54-52651	・ SPACER	4	SN:B20001--
20	20Y-54-51760	・ SEAL	1	SN:B20001--
21	20Y-54-52651	・ SPACER	4	SN:B20001--
22	01245-00620	・ SCREW	4	SN:B20001--
23	01643-70623	・ WASHER	4	SN:B20001--

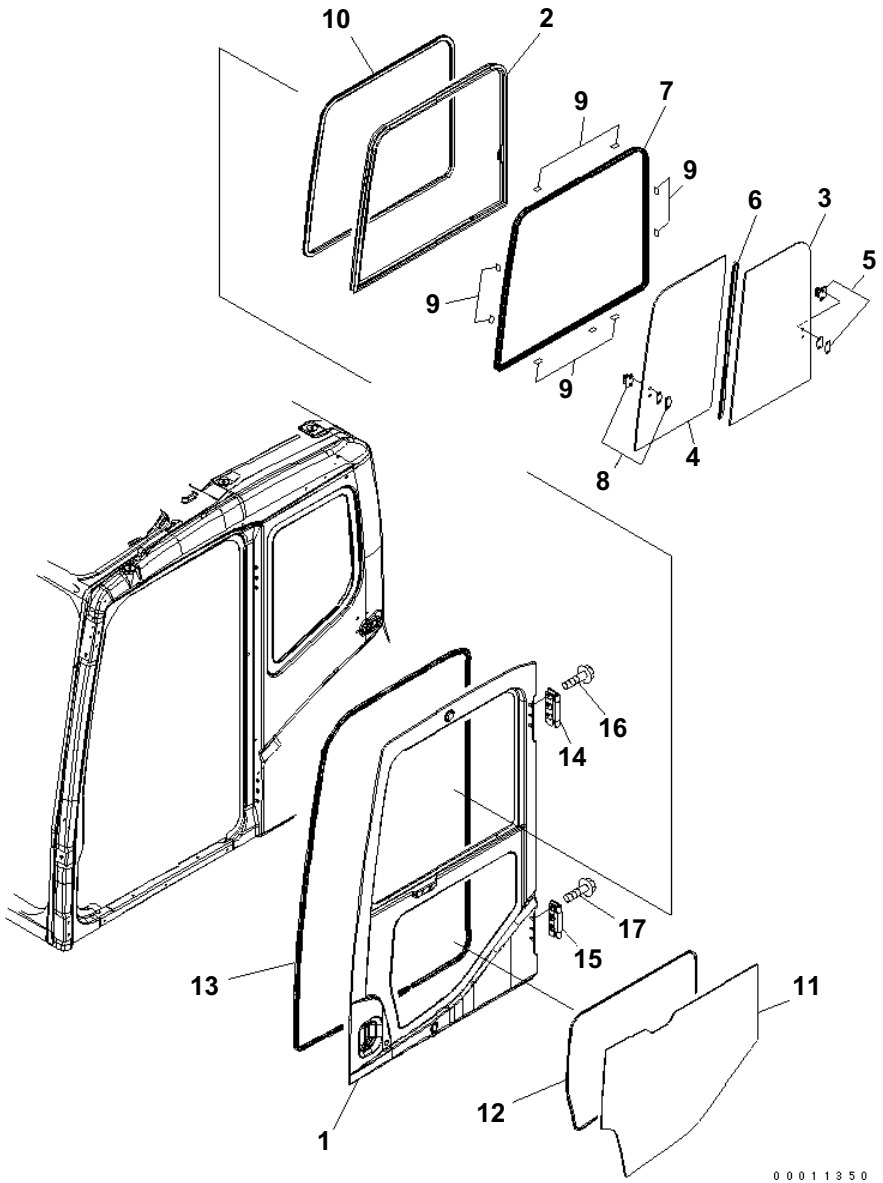

FLOOR FRAME (OPERATOR'S CAB) (DOOR)(#B20200-)

Item	Part No.	Description	Qty	Options
	(208-53-00122)	CAB ASS'Y	1	SN:B20200--
	208-53-00010	・ DOOR ASS'Y	1	SN:B20200--
1	☆	・・ DOOR	1	SN:B20200--
	20Y-54-51401	・・ SASH ASS'Y	1	SN:B20001--
2	☆	・・・ SASH FRAME	1	SN:B20001--
3	20Y-54-52840	・・・ GLASS	1	SN:B20001--
4	20Y-54-52850	・・・ GLASS	1	SN:B20001--
5	20Y-54-52860	・・・ LOCK ASS'Y	1	SN:B20001--
6	20Y-54-52870	・・・ SEAL	1	SN:B20001--
7	20Y-54-52880	・・・ SEAL	1	SN:B20001--
8	20Y-54-13322	・・・ LOCK	1	SN:B20001--
9	20Y-54-13180	・・ SEAT	9	SN:B20001--
10	20Y-54-51470	・・ TRIM	1	SN:B20001--
11	20Y-54-51451	・・ GLASS	1	SN:B20001--
12	20Y-54-51461	・・ SEAL	1	SN:B20001--
13	20Y-54-51482	・・ SEAL	1	SN:B20001--
14	20Y-54-51330	・・ HINGE	1	SN:B20001--
15	14X-911-1330	・・ HINGE	1	SN:B20001--
16	01435-41225	・・ BOLT	6	SN:B20001--
17	01435-01225	・・ BOLT	6	SN:B20001--

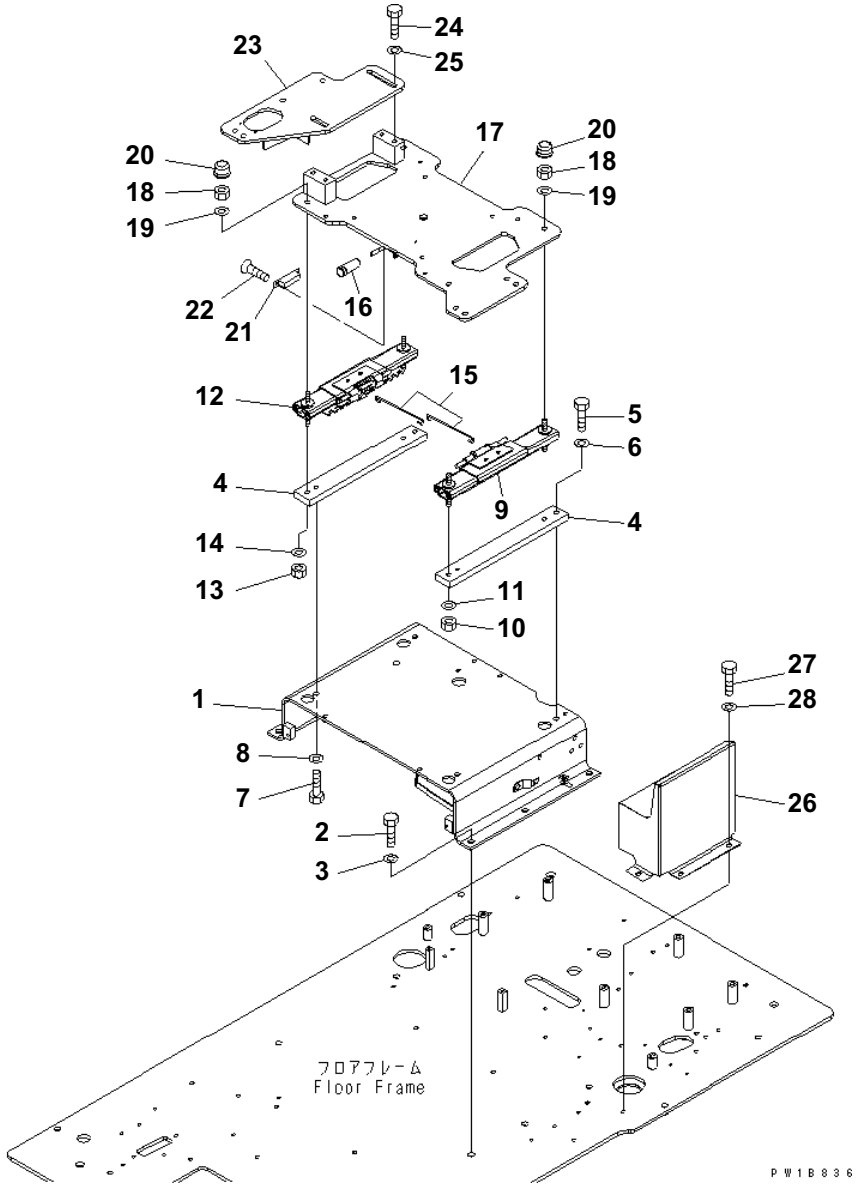

FLOOR FRAME (BASE) (#B20001-B20199)

Item	Part No.	Description	Qty	Options
1	20Y-43-31121	BRACKET	1	SN:B20001--B20199
2	01010-D1235	BOLT	5	SN:B20001--B20199
3	01643-71232	WASHER	5	SN:B20001--B20199
4	20Y-43-31260	PLATE	2	SN:B20001--B20199
5	01010-D1035	BOLT	2	SN:B20001--B20199
6	01643-71032	WASHER	2	SN:B20001--B20199
7	01010-81025	BOLT	2	SN:B20001--B20199
8	01643-31032	WASHER	2	SN:B20001--B20199
9	20Y-43-31140	ADJUSTER,L.H.	1	SN:B20001--B20199
10	20Y-54-65340	NUT	2	SN:B20001--B20199
11	01643-71032	WASHER	2	SN:B20001--B20199
12	20Y-43-31150	ADJUSTER,R.H.	1	SN:B20001--B20199
13	20Y-54-65340	NUT	2	SN:B20001--B20199
14	01643-71032	WASHER	2	SN:B20001--B20199
15	22U-43-21260	WIRE	2	SN:B20001--@
16	20Y-54-43150	KNOB	1	SN:B20001--B20199
17	20Y-43-31181	FRAME	1	SN:B20001--B20199
18	20Y-54-65340	NUT	4	SN:B20001--@
19	01643-71032	WASHER	4	SN:B20001--@
20	20Y-54-65540	CAP	2	SN:B20001--@
21	09452-06506	CATCHER	1	SN:B20001--B20199
22	01224-40410	SCREW	2	SN:B20001--B20199
23	20Y-43-31191	FRAME	1	SN:B20001--B20199
24	01010-D1230	BOLT	4	SN:B20001--@
25	22U-54-25170	WASHER	4	SN:B20001--@
26	20Y-43-31231	COVER	1	SN:B20001--B20199
27	01010-D1016	BOLT	3	SN:B20001--B20199
28	01643-71032	WASHER	3	SN:B20001--B20199

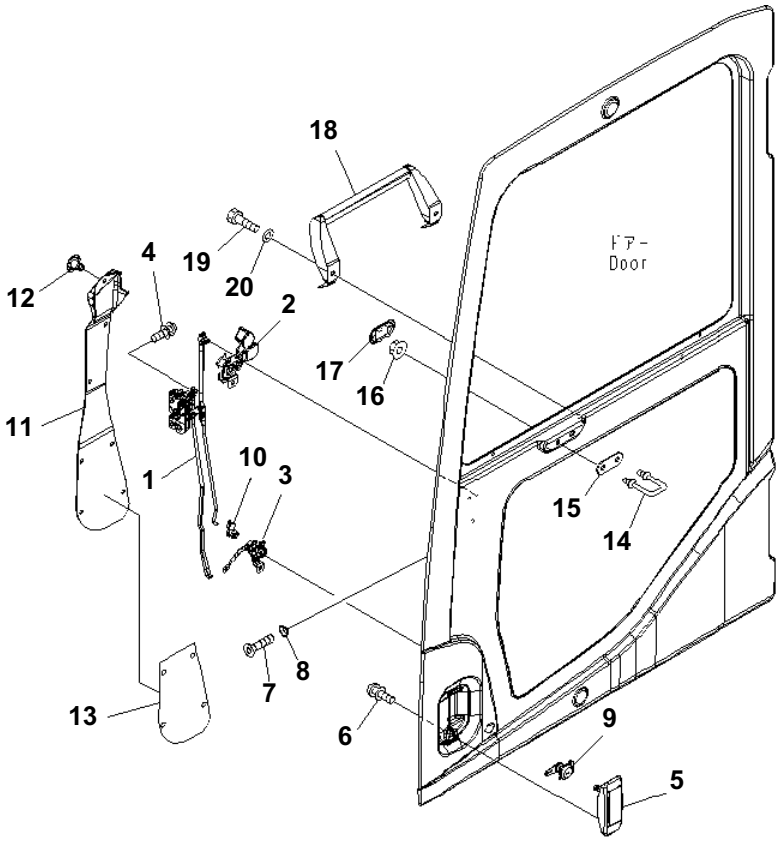

FLOOR FRAME (OPERATOR'S CAB) (DOOR LOCK)(#B20200-)

Item	Part No.	Description	Qty	Options
	(208-53-00122)	CAB ASS'Y	1	SN:B20200--
	(208-53-00010)	・ DOOR ASS'Y	1	SN:B20200--
1	20Y-54-52200	・・ LATCH ASS'Y	1	SN:B20001--
2	20Y-54-52300	・・ HANDLE ASS'Y	1	SN:B20001--
3	20Y-54-52400	・・ BELLCRANK ASS'Y	1	SN:B20001--
4	01023-10612	・・ SCREW	5	SN:B20200--
5	20Y-54-52990	・・ HANDLE	1	SN:B20001--
6	01023-10612	・・ SCREW	2	SN:B20001--
7	01240-00616	・・ SCREW	3	SN:B20001--
8	195-Z11-1690	・・ WASHER	3	SN:B20001--
9	20Y-54-52820	・・ LOCK ASS'Y	1	SN:B20001--
10	22B-54-16330	・・ SNAP	1	SN:B20001--
11	20Y-54-51441	・・ COVER	1	SN:B20001--
12	22B-54-16461	・・ RIVET	7	SN:B20001--
13	208-53-11320	・・ SEAL	1	SN:B20200--
14	20Y-54-51321	・・ STRIKER	1	SN:B20001--
15	20Y-54-51341	・・ PLATE	1	SN:B20001--
16	01584-01008	・・ NUT	2	SN:B20001--
17	20Y-54-51490	・・ COVER	1	SN:B20001--
18	20Y-54-51393	・・ GRIP	1	SN:B20001--
19	01010-80820	・・ BOLT	2	SN:B20001--
20	01643-30823	・・ WASHER	2	SN:B20001--

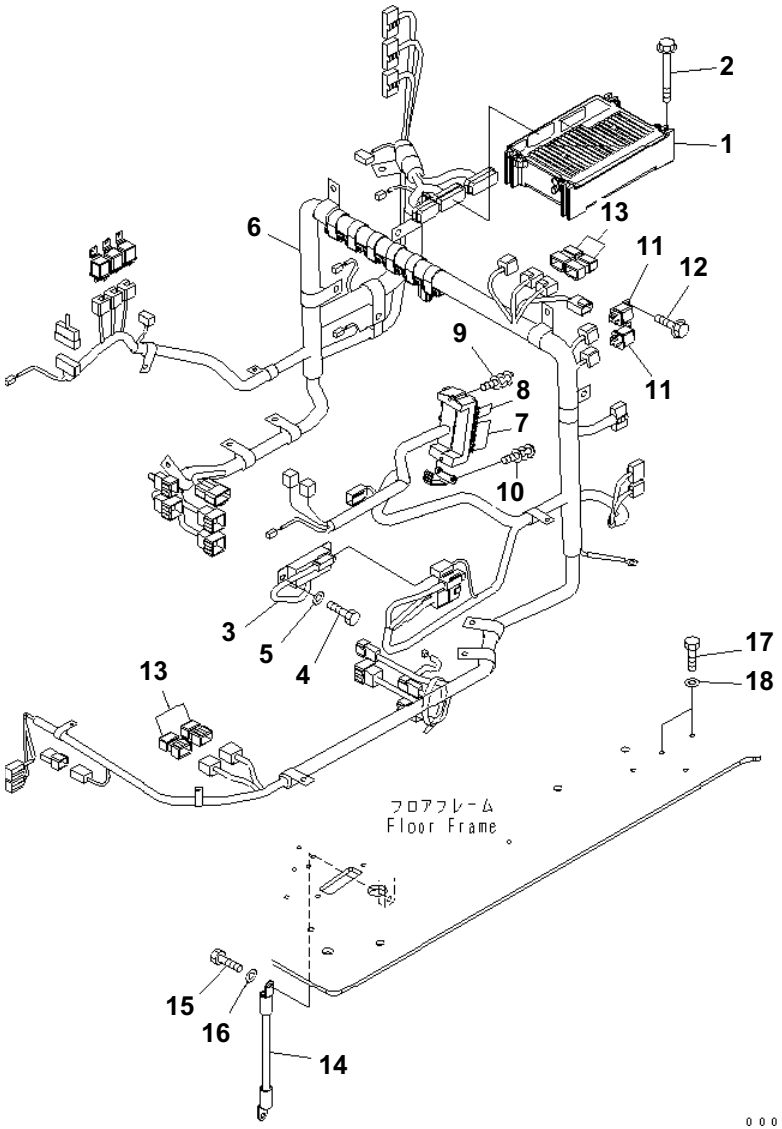

FLOOR FRAME (ELECTRICAL) (#B20001-B20199)

Item	Part No.	Description	Qty	Options
1	7835-26-3004	CONTROLLER	1	SN:B20001--@
2	01435-00880	BOLT	4	SN:B20001--B20199
3	7861-94-3000	RESISTOR	1	SN:B20001--@
4	01010-80820	BOLT	2	SN:B20001--B20199
5	01643-30823	WASHER	2	SN:B20001--B20199
6	21K-06-71112	WIRING HARNESS	1	SN:B20001--B20199
7	08041-01000	FUSE¤ 10A	16	SN:B20001--@
8	08041-02000	FUSE¤ 20A	4	SN:B20001--@
9	01023-60620	SCREW	2	SN:B20001--B20199
10	01023-60620	SCREW	2	SN:B20001--B20199
11	569-06-61960	RELAY	2	SN:B20001--B20199
12	01435-00612	BOLT	2	SN:B20001--B20199
13	8233-06-3350	DIODE	4	SN:B20001--B20199
14	08028-43030	CABLE	1	SN:B20001--@
15	01010-81020	BOLT	1	SN:B20001--@
16	01643-31032	WASHER	1	SN:B20001--@
17	01010-81020	BOLT	2	SN:B20001--B20199
18	01643-31032	WASHER	2	SN:B20001--B20199

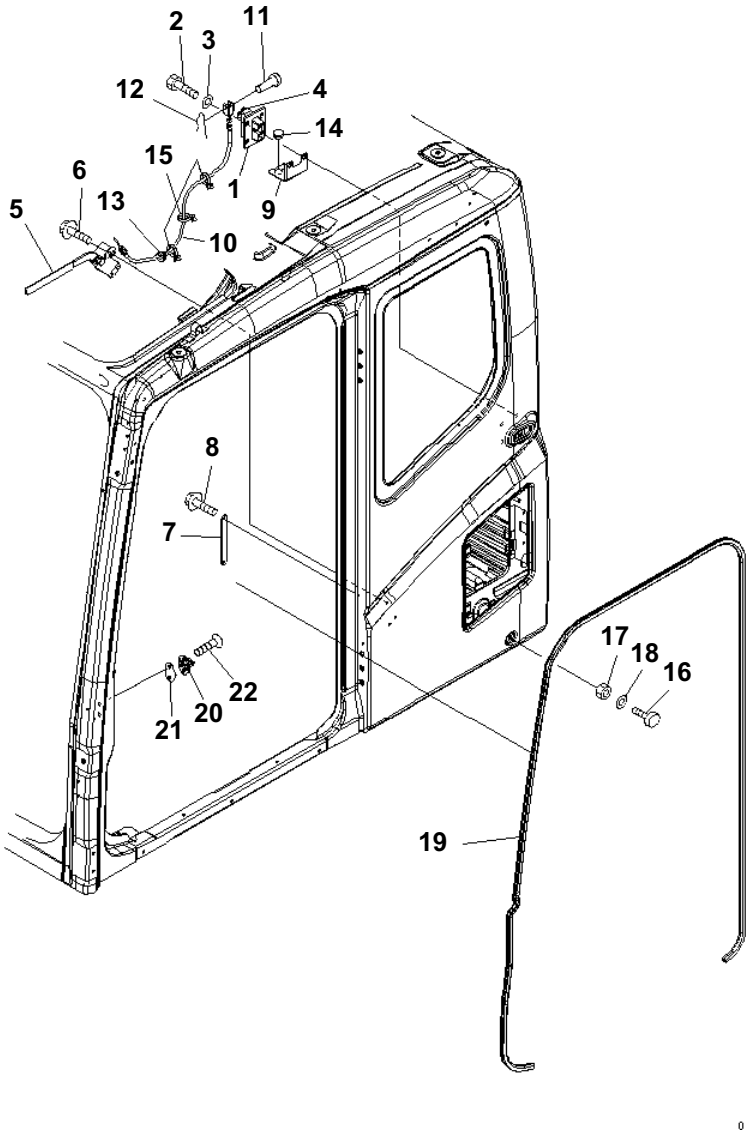

FLOOR FRAME (OPERATOR'S CAB) (OPEN LOCK)(#B20200-)

Item	Part No.	Description	Qty	Options
	(208-53-00122)	CAB ASS'Y	1	SN:B20200--
1	20Y-54-36380	· LOCK	1	SN:B20001--
2	01010-D0820	· BOLT	4	SN:B20200--
3	01643-70823	· WASHER	4	SN:B20200--
4	20Y-53-12280	· COVER	1	SN:B20200--
5	208-53-14540	· LEVER ASS'Y	1	SN:B20200--
6	01435-40616	· BOLT	3	SN:B20200--
7	208-53-14720	· BRACKET	1	SN:B20200--
8	01435-40616	· BOLT	2	SN:B20200--
9	208-53-11980	· PLATE	1	SN:B20200--
10	208-53-11990	· CABLE	1	SN:B20200--
11	04205-10520	· PIN	1	SN:B20200--
12	04052-10530	· PIN	1	SN:B20200--
13	08037-01610	· GROMMET	1	SN:B20200--
14	09415-01610	· CAP	1	SN:B20200--
15	08059-00413	· CLIP	3	SN:B20200--
16	20Y-54-11611	· STOPPER	2	SN:B20001--
17	01580-11008	· NUT	2	SN:B20001--
18	01643-31032	· WASHER	2	SN:B20001--
19	20Y-54-51910	· TRIM	1	SN:B20001--
20	20Y-54-35470	· STRIKER	1	SN:B20001--
21	20Y-54-35480	· SHIM	1	SN:B20001--
22	01240-01025	· SCREW	2	SN:B20001--

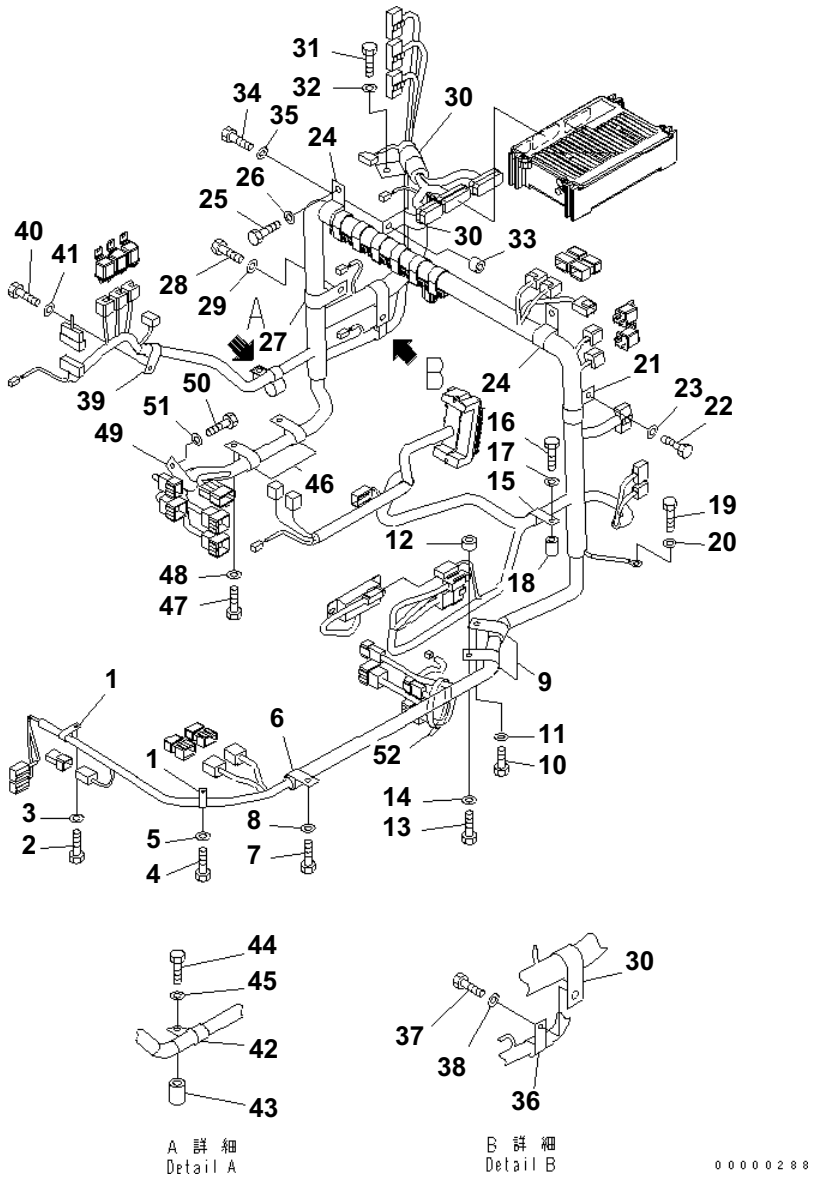

FLOOR FRAME (CLIP)(#B20001-B20199)

Item	Part No.	Description	Qty	Options
1	04434-51410	CLIP	2	SN:B20001--B20199
2	01010-81020	BOLT	1	SN:B20001--B20199
3	01643-31032	WASHER	1	SN:B20001--B20199
4	01010-81016	BOLT	1	SN:B20001--B20199
5	01643-31032	WASHER	1	SN:B20001--B20199
6	04434-51710	CLIP	1	SN:B20001--B20199
7	01010-81016	BOLT	1	SN:B20001--B20199
8	01643-31032	WASHER	1	SN:B20001--B20199
9	04434-52310	CLIP	2	SN:B20001--B20199
10	01010-81016	BOLT	1	SN:B20001--B20199
11	01643-31032	WASHER	1	SN:B20001--B20199
12	103-21-21260	BOSS	1	SN:B20001--B20199
13	01010-81030	BOLT	1	SN:B20001--B20199
14	01643-31032	WASHER	1	SN:B20001--B20199
15	04434-52310	CLIP	1	SN:B20001--B20199
16	01010-D1050	BOLT	1	SN:B20001--B20199
17	01643-71032	WASHER	1	SN:B20001--B20199
18	6202-83-6760	SPACER	1	SN:B20001--B20199
19	01010-81020	BOLT	1	SN:B20001--B20199
20	01643-31032	WASHER	1	SN:B20001--B20199
21	04434-53211	CLIP	1	SN:B20001--B20199
22	01010-81020	BOLT	1	SN:B20001--B20199
23	01643-31032	WASHER	1	SN:B20001--B20199
24	04434-53411	CLIP	2	SN:B20001--B20199
25	01010-81020	BOLT	2	SN:B20001--B20199
26	01643-31032	WASHER	2	SN:B20001--B20199
27	04434-53411	CLIP	1	SN:B20001--B20199
28	01010-81020	BOLT	1	SN:B20001--B20199
29	01643-31032	WASHER	1	SN:B20001--B20199
30	04434-53411	CLIP	3	SN:B20001--B20199
31	01010-81020	BOLT	1	SN:B20001--B20199
32	01643-31032	WASHER	1	SN:B20001--B20199
33	103-21-21260	BOSS	1	SN:B20001--B20199
34	01010-81030	BOLT	1	SN:B20001--B20199
35	01643-31032	WASHER	1	SN:B20001--B20199
36	04434-51910	CLIP	1	SN:B20001--B20199
37	01010-81030	BOLT	1	SN:B20001--B20199
38	01643-31032	WASHER	1	SN:B20001--B20199
39	04434-51910	CLIP	1	SN:B20001--@
40	01010-81020	BOLT	1	SN:B20001--@

PC160LC-7B S/N B20001 AND UP

FLOOR FRAME (CLIP)(#B20001-B20199)

Item	Part No.	Description	Qty	Options
41	01643-31032	WASHER	1	SN:B20001--@
42	04434-51910	CLIP	1	SN:B20001--B20199
43	6202-83-6760	SPACER	1	SN:B20001--B20199
44	01010-D1050	BOLT	1	SN:B20001--B20199
45	01643-71032	WASHER	1	SN:B20001--B20199
46	04434-52310	CLIP	2	SN:B20001--B20199
47	01010-81016	BOLT	2	SN:B20001--B20199
48	01643-31032	WASHER	2	SN:B20001--B20199
49	04434-52310	CLIP	1	SN:B20001--B20199
50	01010-81016	BOLT	1	SN:B20001--B20199
51	01643-31032	WASHER	1	SN:B20001--B20199
52	08034-20519	BAND	1	SN:B20001--B20199

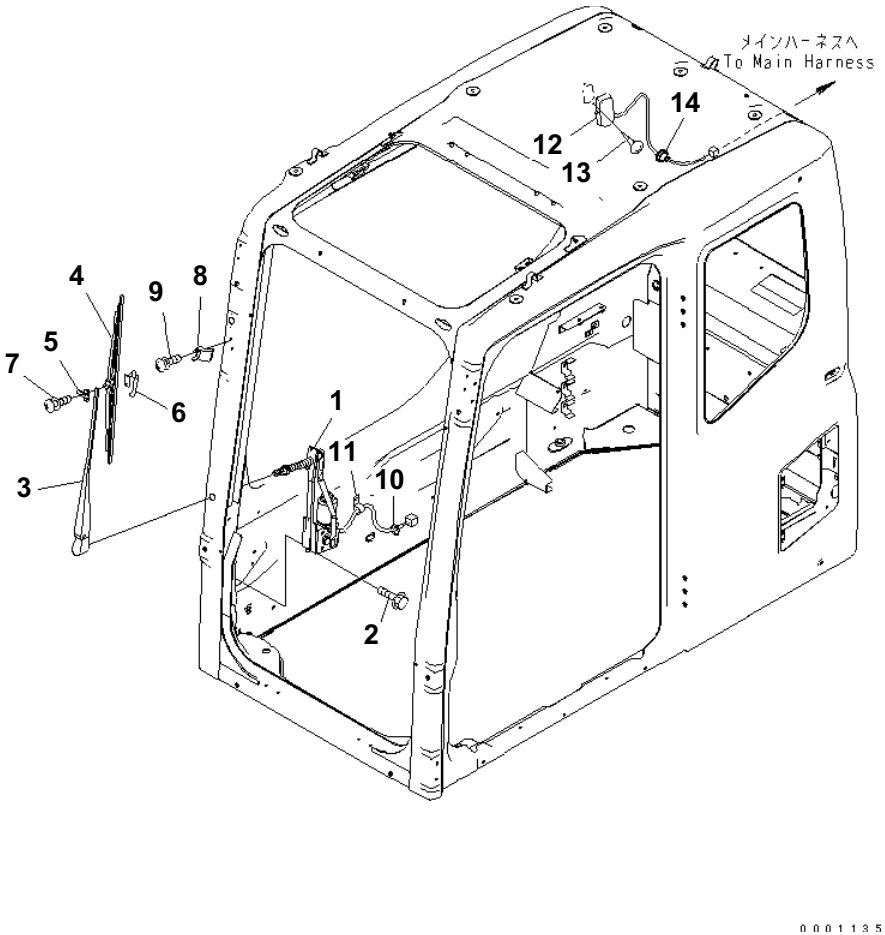

FLOOR FRAME (OPERATOR'S CAB) (ELECTRICAL) (WIPER AND ROOM LAMP)(#B20200-)

Item	Part No.	Description	Qty	Options
	(208-53-00122)	CAB ASS'Y	1	SN:B20200--
1	208-53-12780	・ WIPER MOTOR ASS'Y	1	SN:B20200--
2	01435-40616	・ BOLT	6	SN:B20200--
	20Y-54-52221	・ WIPER ASS'Y	1	SN:B20001--
3	20Y-54-52350	・・ ARM	1	SN:B20001--
4	20Y-54-39450	・・ BLADE	1	SN:B20001--
5	20Y-54-39460	・・ SLIDER	1	SN:B20001--
6	20Y-54-39480	・・ PLATE	1	SN:B20001--
7	ND949007-2350	・・ SCREW AND WASHER	1	SN:B20001--
8	20Y-54-52231	・ STOPPER	1	SN:B20001--
9	01023-20620	・ SCREW	1	SN:B20001--
10	08034-20414	・ BAND	1	SN:B20200--
11	08059-00310	・ CLIP	1	SN:B20200--
12	208-53-12790	・ ROOM LAMP	1	SN:B20200--
	08116-02410	・・ BULB¤ 10W	1	SN:B20001--
13	01370-00420	・ SCREW	2	SN:B20001--
14	08037-11025	・ GROMMET	1	SN:B20001--

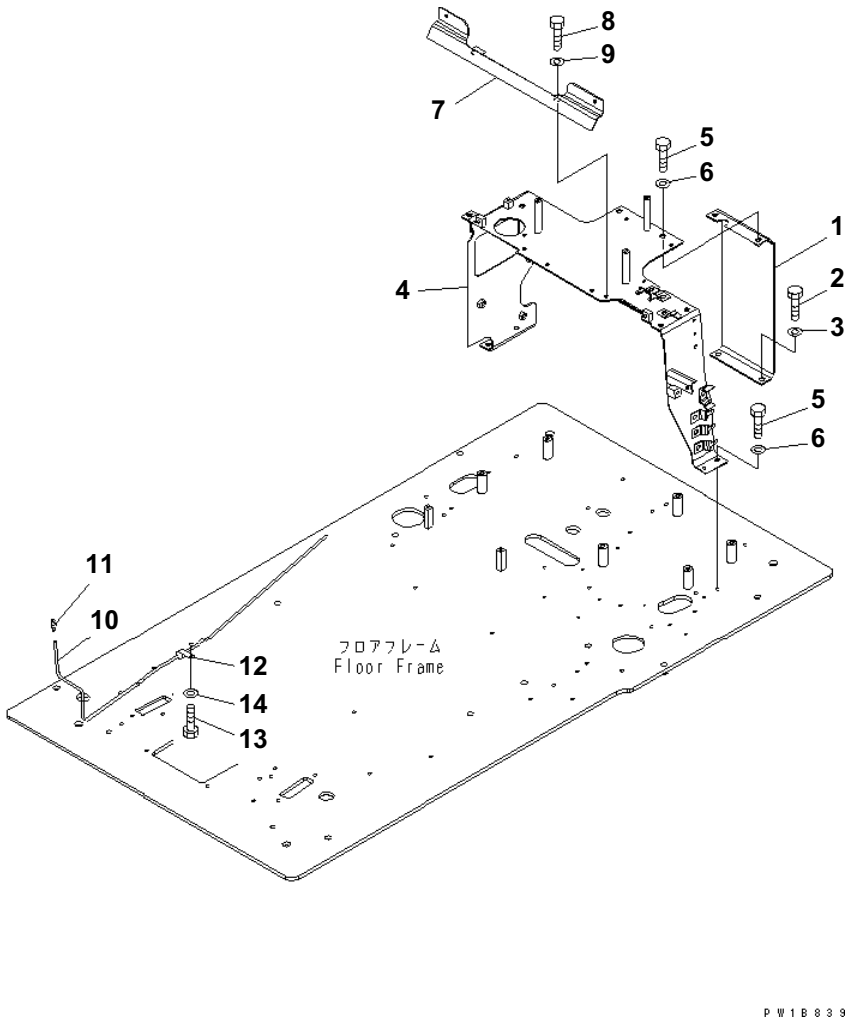

FLOOR FRAME (REAR FRAME AND WINDOW WASHER)(#B20001-B20199)

Item	Part No.	Description	Qty	Options
1	20Y-54-65141	BRACKET	1	SN:B20001--B20199
2	01010-81016	BOLT	2	SN:B20001--B20199
3	01643-31032	WASHER	2	SN:B20001--B20199
4	20Y-54-65161	BRACKET	1	SN:B20001--B20199
5	01010-81025	BOLT	6	SN:B20001--B20199
6	01643-31032	WASHER	6	SN:B20001--B20199
7	20Y-54-65151	BRACKET	1	SN:B20001--B20199
8	01010-80820	BOLT	2	SN:B20001--B20199
9	113-43-23230	WASHER	2	SN:B20001--B20199
10	21T-06-71250	HOSE	1	SN:B20001--@
11	207-06-61490	VALVE	1	SN:B20001--@
12	21T-38-12270	CLIP	1	SN:B20001--B20199
13	01010-81016	BOLT	1	SN:B20001--B20199
14	01643-31032	WASHER	1	SN:B20001--B20199

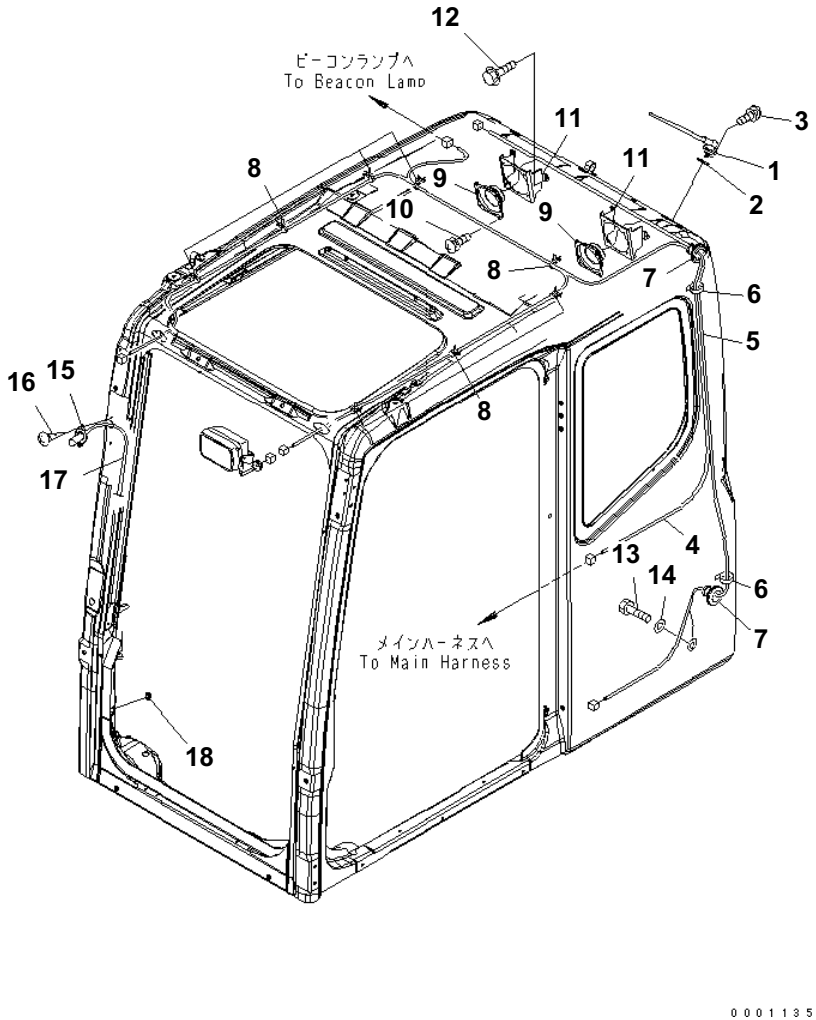

FLOOR FRAME (OPERATOR'S CAB) (ELECTRICAL) (RADIO)(#B20200-)

Item	Part No.	Description	Qty	Options
	(208-53-00122)	CAB ASS'Y	1	SN:B20200--
1	(20Y-06-41990)	· RUBBER ANTENNA	1	SN:B20645--
	◆(198-Z11-4610)	· RUBBER ANTENNA	1	SN:B20001--B20644
2	01643-30623	· WASHER	1	SN:B20001--
3	01023-20412	· SCREW	2	SN:B20001--
4	20Y-54-52310	· WIRING HARNESS	1	SN:B20001--
5	20Y-54-52320	· WIRING HARNESS	1	SN:B20001--
6	08034-20414	· BAND	2	SN:B20200--
7	08037-12536	· GROMMET	2	SN:B20001--
8	08059-00413	· CLIP	8	SN:B20001--
9	08910-10000	· SPEAKER	2	SN:B20001--
10	01023-20412	· SCREW	8	SN:B20200--
11	208-53-11480	· PLATE	2	SN:B20200--
12	01435-40616	· BOLT	6	SN:B20200--
13	01010-81020	· BOLT	1	SN:B20001--
14	01643-31032	· WASHER	1	SN:B20001--
15	20Y-54-39511	· NOZZLE	1	SN:B20001--
16	01370-40412	· SCREW	2	SN:B20001--
17	17M-911-2670	· HOSE	1	SN:B20001--
18	08037-01610	· GROMMET	1	SN:B20200--

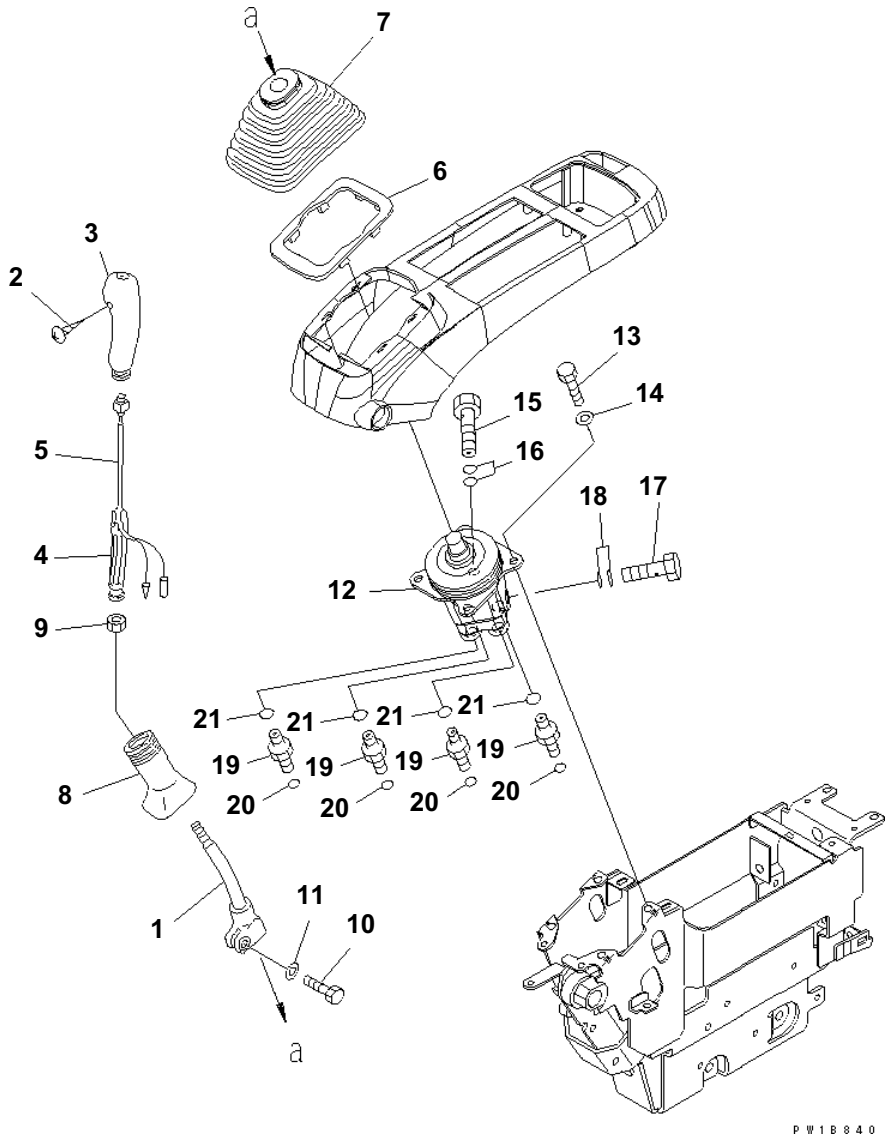

FLOOR FRAME (LEVER AND VALVE) (L.H.)(#B20001-B20199)

Item	Part No.	Description	Qty	Options
1	20Y-43-22211	LEVER	1	SN:B20001--@
	22U-43-21181	KNOB	1	SN:B20001--@
2	01370-10308	· SCREW	1	SN:B20001--@
3	20Y-43-22381	· KNOB	1	SN:B20001--@
4	20Y-43-22421	· INSERT	1	SN:B20001--@
5	22U-43-21211	· SWITCH	1	SN:B20001--@
6	20Y-43-22250	PLATE	1	SN:B20001--@
7	20Y-43-22261	BOOT	1	SN:B20001--@
8	20Y-43-22370	BOOT	1	SN:B20001--@
9	600-411-1280	NUT	1	SN:B20001--@
10	01252-41025	BOLT	1	SN:B20001--@
11	01643-51032	WASHER	1	SN:B20001--@
12	(702-16-03530)	PILOT VALVE	1	SN:B20001--@
13	01010-80820	BOLT	4	SN:B20001--@
14	01643-30823	WASHER	4	SN:B20001--@
15	20Y-62-18910	BOLT	1	SN:B20001--@
16	07000-12018	O-RING	2	SN:B20001--@
17	20Y-62-18890	BOLT	1	SN:B20001--@
18	07000-12015	O-RING	2	SN:B20001--@
19	11Y-62-12130	NIPPLE	4	SN:B20001--@
20	02896-11008	O-RING	4	SN:B20001--@
21	07002-11423	O-RING	4	SN:B20001--@

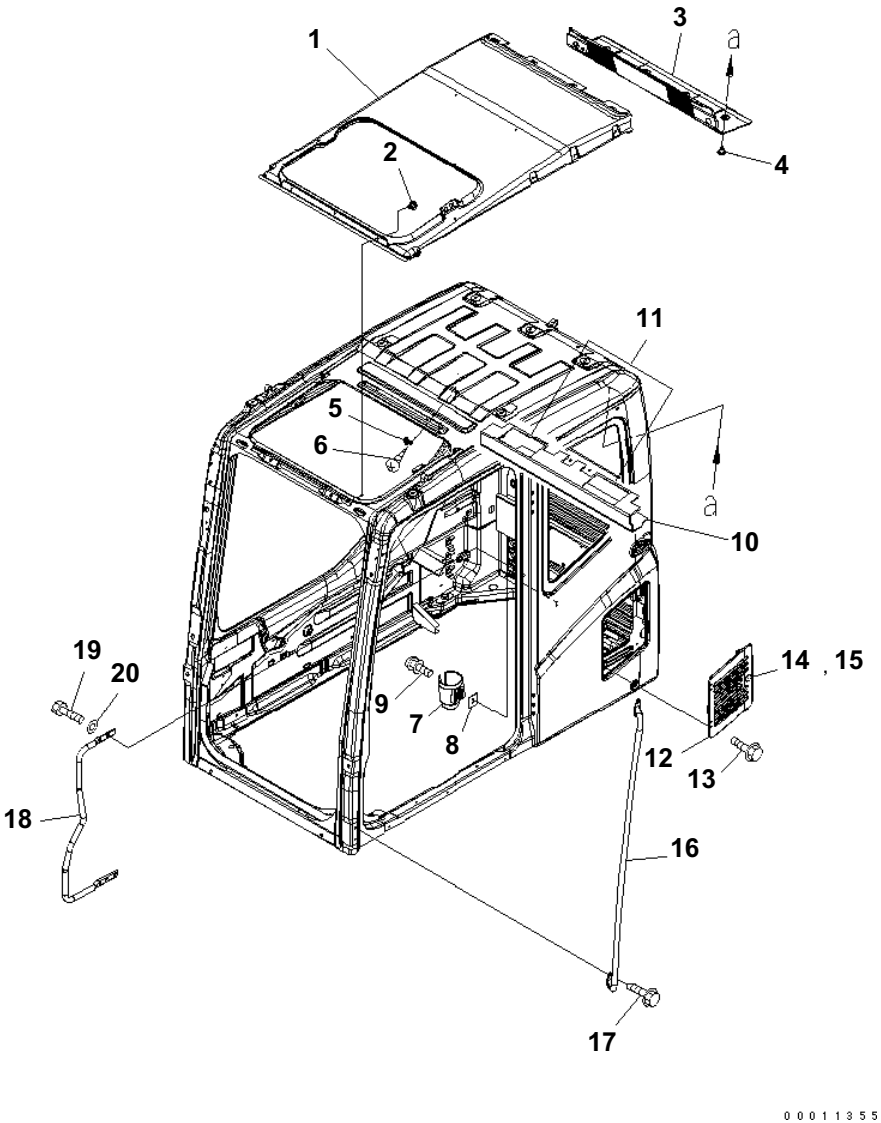

FLOOR FRAME (OPERATOR'S CAB) (ACCESSORIES)(#B20200-)

Item	Part No.	Description	Qty	Options
	(208-53-00122)	CAB ASS'Y	1	SN:B20200--
1	20Y-54-52412	· COVER	1	SN:B20001--
2	20Y-54-18690	· RIVET	15	SN:B20200--
3	20Y-54-52423	· LINING	1	SN:B20001--
4	20Y-54-18690	· RIVET	8	SN:B20001--
5	205-54-51250	· HANGER	1	SN:B20001--
6	01370-30412	· SCREW	2	SN:B20001--
7	208-53-12991	· HOLDER	1	SN:B20200--
8	208-53-12980	· PLATE	1	SN:B20200--
9	01023-20616	· SCREW	2	SN:B20200--
10	208-53-12470	· SEAL	1	SN:B20200--
11	208-53-12810	· SEAT	2	SN:B20200--
12	208-53-11750	· COVER	1	SN:B20200--
13	01435-40610	· BOLT	4	SN:B20001--
14	208-53-11760	· LOCK ASS'Y	1	SN:B20200--
15	205-54-76280	· · ROTOR ASS'Y	1	SN:B20200--
16	20Y-54-51820	· GRIP	1	SN:B20001--
17	01435-40820	· BOLT	4	SN:B20001--
18	20Y-54-51832	· GRIP	1	SN:B20001--
19	01010-D1025	· BOLT	3	SN:B20001--
20	01643-71032	· WASHER	3	SN:B20001--

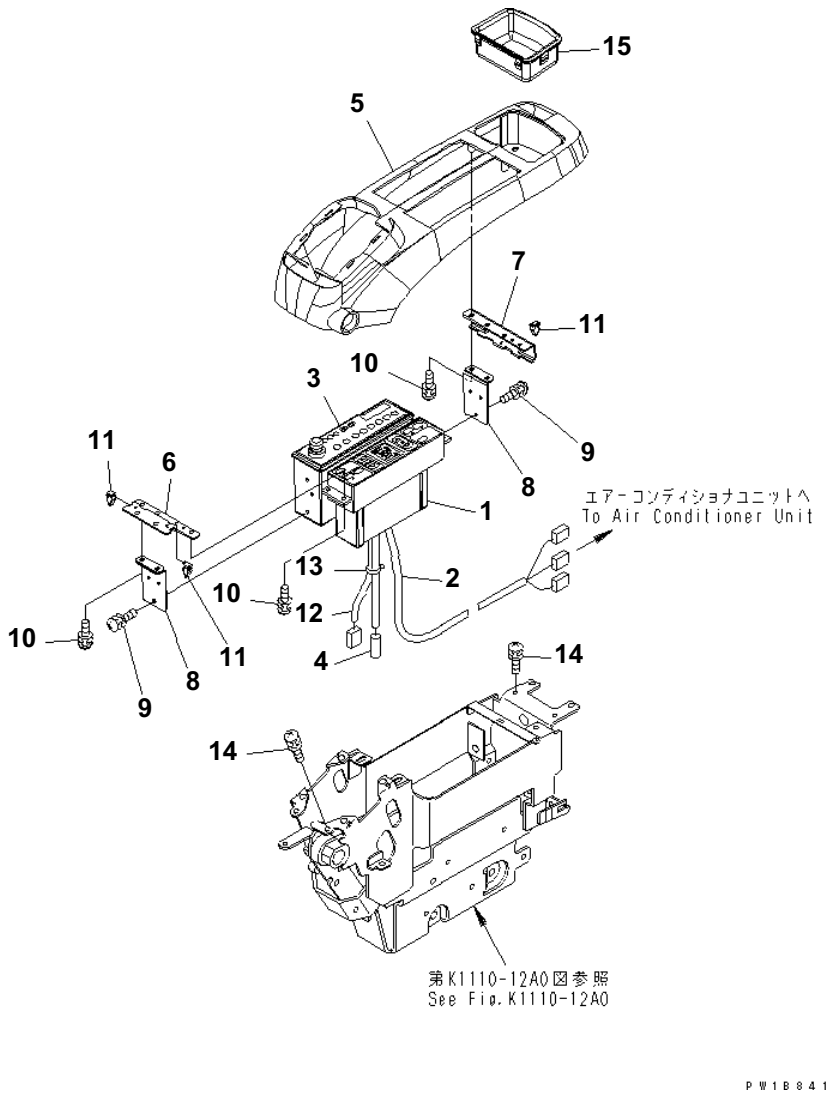

FLOOR FRAME (CONSOLE) (UPPER) (L.H.) (WITH AIR CONDITIONER AND RADIO) (FOR NORTH AMERICA)(#B20001-B20199)

Item	Part No.	Description	Qty	Options
1	20Y-979-6141	CONTROL PANEL ASS'Y	1	SN:B20001--B20199
2	20Y-979-6151	WIRING HARNESS	1	SN:B20001--B20199
3	20Y-06-22741	RADIO	1	SN:B20001--B20199
4	08912-51600	CORD	1	SN:B20001--@
5	22U-43-22210	COVER	1	SN:B20001--B20199
6	22U-43-22220	PLATE	1	SN:B20001--@
7	22U-43-22230	STAY	1	SN:B20001--@
8	22U-06-22510	BRACKET	2	SN:B20001--@
9	01023-60512	SCREW	4	SN:B20001--@
10	01023-60516	SCREW	10	SN:B20001--@
11	20Y-06-23770	CLIP	3	SN:B20001--@
12	22U-06-22350	WIRING HARNESS	1	SN:B20001--@
13	08034-00310	BAND	1	SN:B20001--@
14	01023-60620	SCREW	4	SN:B20001--B20199
15	22U-43-22110	TRAY	1	SN:B20001--B20199

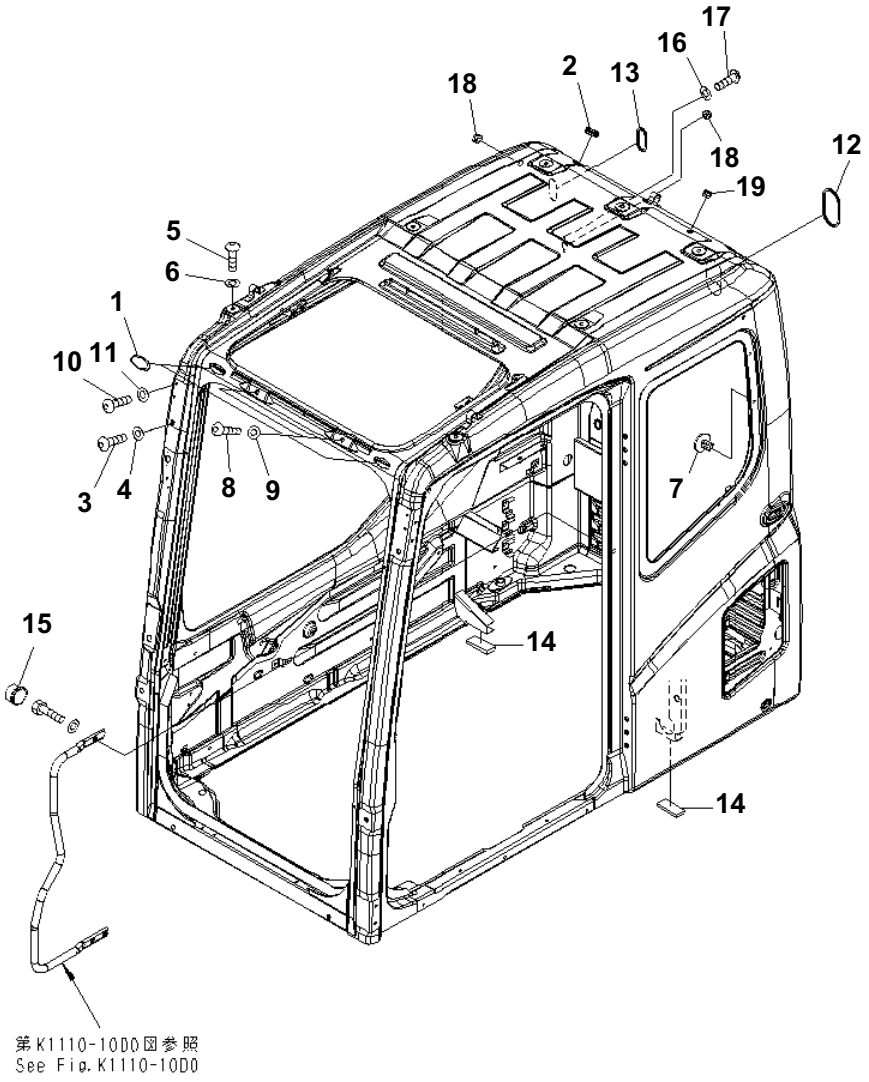

FLOOR FRAME (OPERATOR'S CAB) (PLUG BOLT)(#B20200-)

Item	Part No.	Description	Qty	Options
	(208-53-00122)	CAB ASS'Y	1	SN:B20200--
1	22B-54-17282	· CAP	2	SN:B20001--
2	09415-02512	· CAP	1	SN:B20001--
3	01245-01220	· SCREW	6	SN:B20001--
4	01643-71232	· WASHER	6	SN:B20001--
5	01245-01220	· SCREW	7	SN:B20001--
6	01643-71232	· WASHER	7	SN:B20001--
7	208-53-13270	· RIVET	2	SN:B20001--
8	01245-01016	· SCREW	2	SN:B20001--
9	01643-71032	· WASHER	2	SN:B20001--
10	01245-00612	· SCREW	4	SN:B20001--
11	01643-70623	· WASHER	4	SN:B20001--
12	20Y-54-52470	· GROMMET	1	SN:B20001--
13	20Y-54-36150	· GROMMET	1	SN:B20001--
14	208-53-12580	· SEAL	2	SN:B20200--
15	20Y-54-52440	· CAP	1	SN:B20001--
16	01641-50608	· WASHER	2	SN:B20001--
17	01245-00616	· SCREW	2	SN:B20001--
18	09415-01008	· CAP	2	SN:B20001--
19	09415-01008	· CAP	1	SN:B20200--

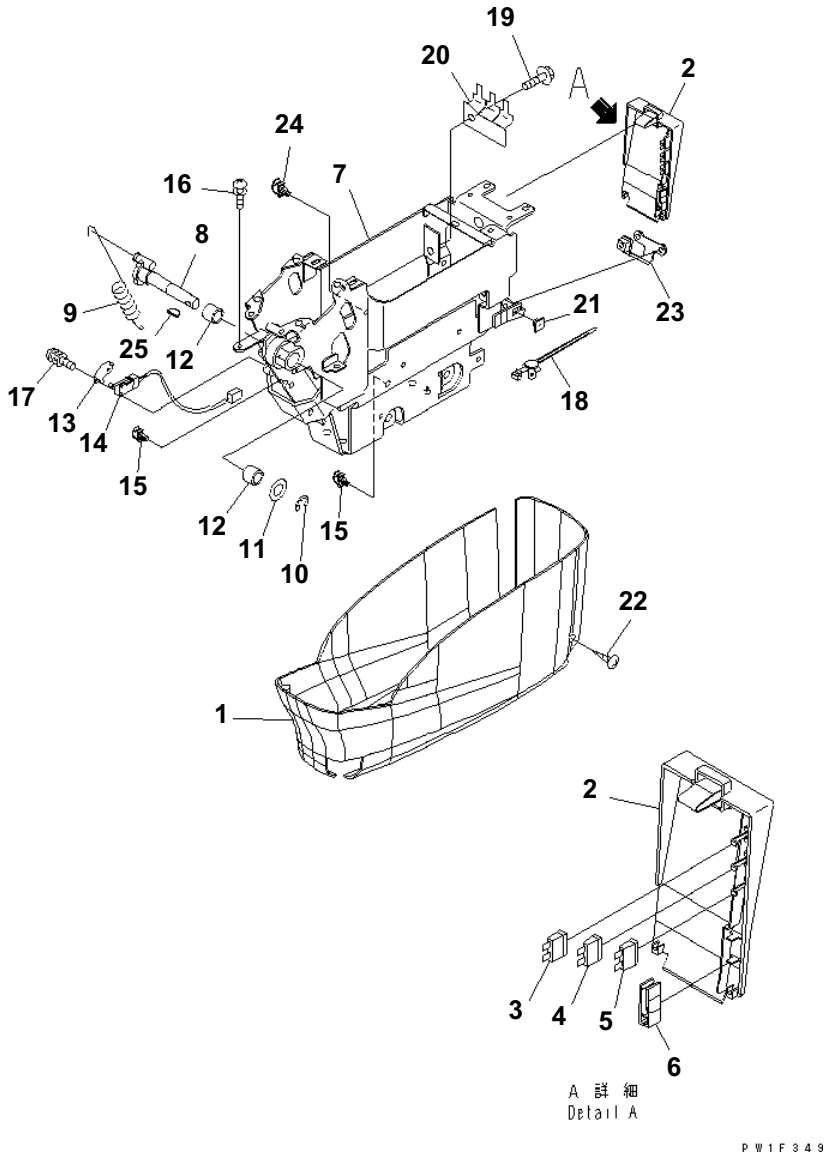

FLOOR FRAME (CONSOLE) (LOWER) (L.H.)(#B20001-B20199)

Item	Part No.	Description	Qty	Options
1	22U-43-22310	COVER	1	SN:B20001--@
	22U-43-22320	COVER ASS'Y	1	SN:B20001--@
2	☆	· COVER	1	SN:B20001--@
3	08041-01000	· FUSE¤ 10A	1	SN:B20001--@
4	08041-02000	· FUSE¤ 20A	1	SN:B20001--@
5	08041-02500	· FUSE¤ 25A	1	SN:B20001--@
6	22U-43-22340	· PULLER	1	SN:B20001--@
7	20Y-43-31410	FRAME	1	SN:B20001--B20199
8	20Y-43-31431	SHAFT	1	SN:B20001--B20199
9	20Y-43-31420	SPRING	1	SN:B20001--B20199
10	20Y-43-31440	RING	1	SN:B20001--@
11	20Y-43-31450	RING	1	SN:B20001--@
12	06124-01616	BEARING	2	SN:B20001--@
13	22U-06-22490	PLATE	1	SN:B20001--@
14	22U-06-22360	SWITCH ASS'Y	1	SN:B20001--@
15	22U-43-22410	CLIP	4	SN:B20001--@
16	01023-60616	SCREW	4	SN:B20001--@
17	01023-60320	SCREW	2	SN:B20001--B20199
18	22U-43-22430	CLIP	1	SN:B20001--@
19	01435-01020	BOLT	1	SN:B20001--B20199
20	22U-43-22450	BRACKET	1	SN:B20001--B20199
21	22U-43-23270	GROMMET	2	SN:B20001--B20199
22	01370-00512	SCREW	2	SN:B20001--B20199
23	22U-06-22440	BRACKET	1	SN:B20001--B20199
24	22U-43-23260	CLIP	1	SN:B20001--B20199
25	04010-00519	KEY	1	SN:B20001--B20199

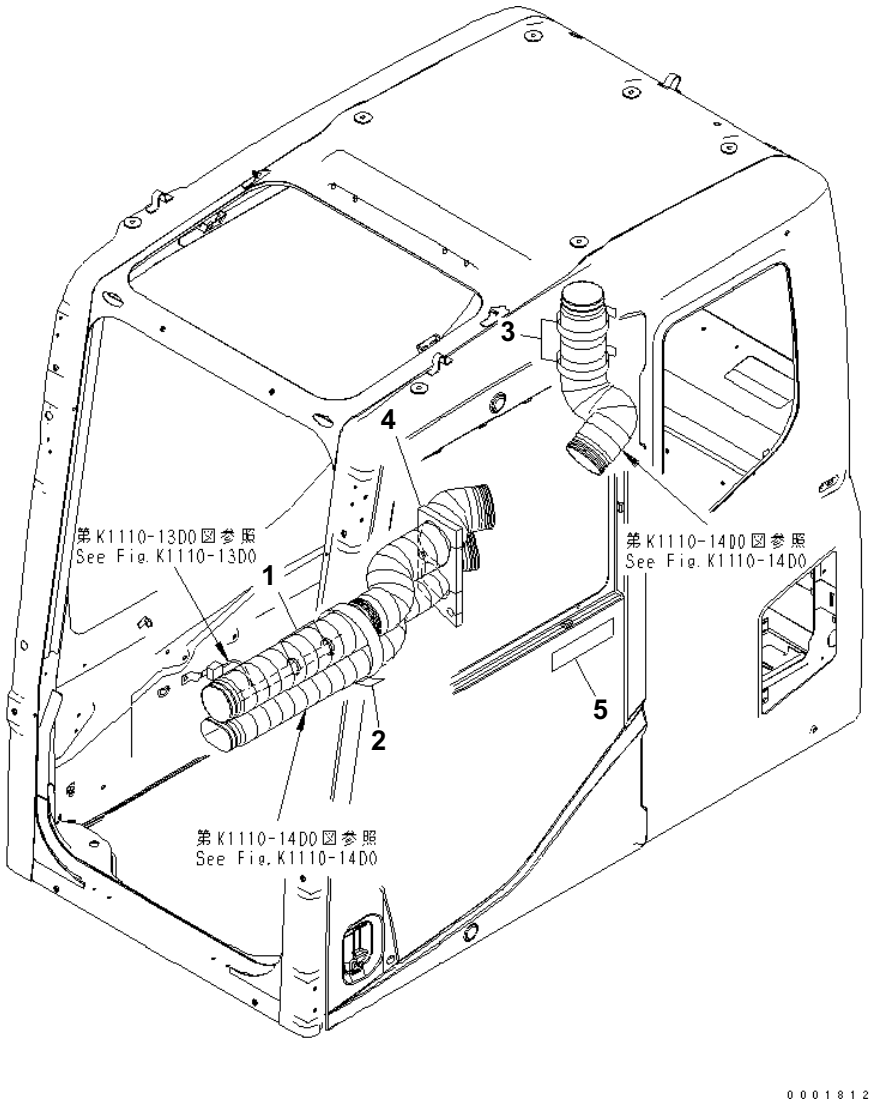

FLOOR FRAME (OPERATOR'S CAB) (CLAMP AND PLATE)(#B20200-)

Item	Part No.	Description	Qty	Options
	(208-53-00122)	CAB ASS'Y	1	SN:B20200--
1	08034-20414	· BAND	2	SN:B20200--
2	08034-20876	· BAND	1	SN:B20200--
3	08034-20876	· BAND	2	SN:B20200--
4	208-53-12620	· SEAL	1	SN:B20200--
5	09970-00230	· PLATE	1	SN:B20001--B20568

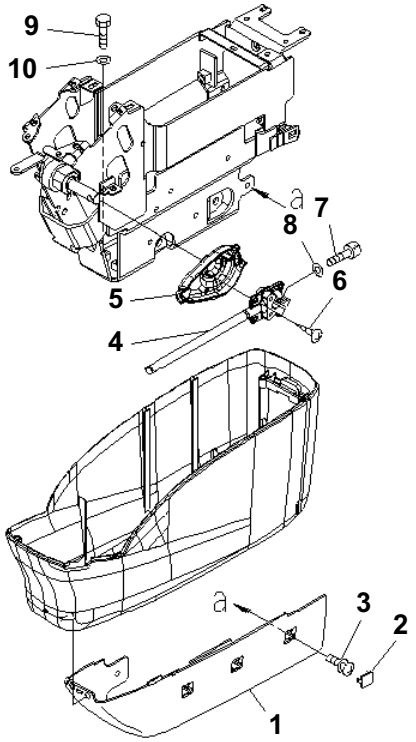

00000289

FLOOR FRAME (CONSOLE) (UNDER) (L.H.)(#B20001-B20199)

Item	Part No.	Description	Qty	Options
1	20Y-43-31690	COVER	1	SN:B20001--@
2	22U-43-22830	CAP	3	SN:B20001--@
3	01023-20614	SCREW	4	SN:B20001--@
4	20Y-43-31511	LEVER	1	SN:B20001--B20199
5	20Y-43-31521	COVER	1	SN:B20001--B20199
6	01370-00410	SCREW	3	SN:B20001--B20199
7	01252-70830	BOLT	1	SN:B20001--B20199
8	01643-30823	WASHER	1	SN:B20001--B20199
9	01010-81030	BOLT	4	SN:B20001--@
10	01643-31032	WASHER	4	SN:B20001--@

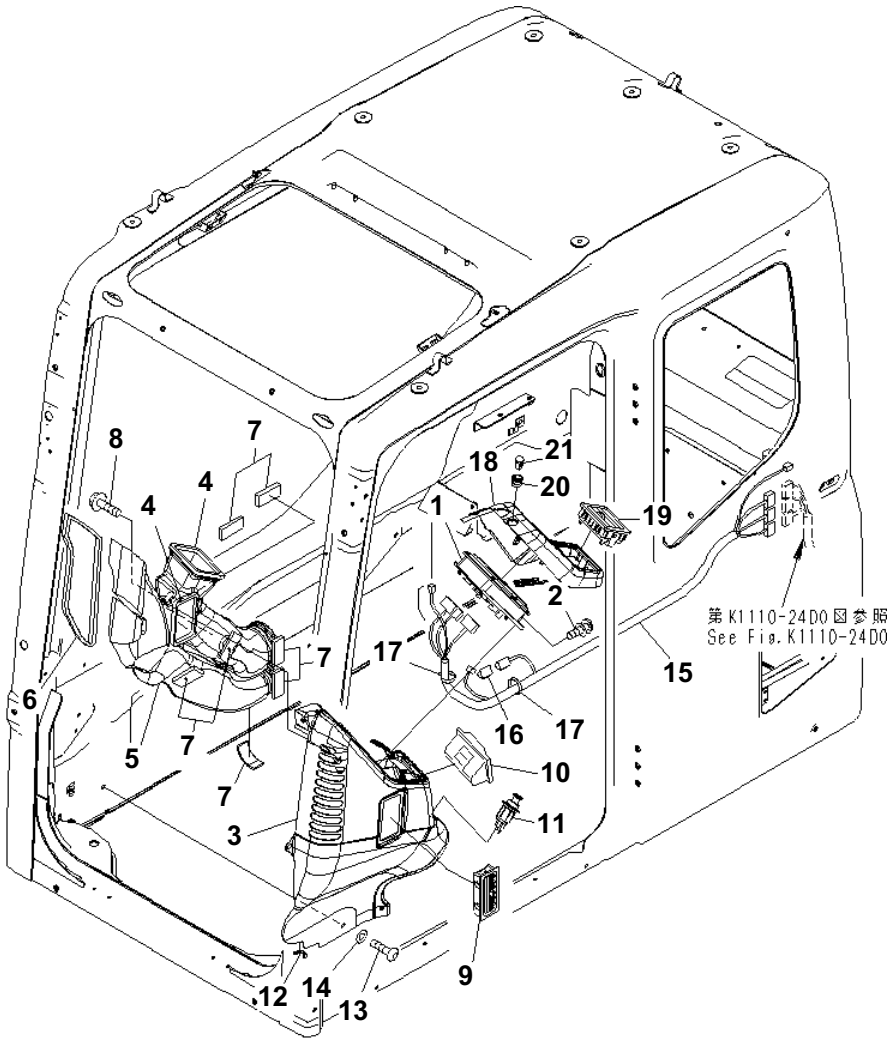

FLOOR FRAME (OPERATOR'S CAB) (MONITOR SYSTEM) (WITH MULTI MONITOR)(#B20200-)

Item	Part No.	Description	Qty	Options
1	(7835-12-1012)	MONITOR	1	SN:B20200--
2	01023-10616	SCREW	3	SN:B20001--
3	208-53-12152	COVER	1	SN:B20200--
4	208-53-11941	SEAL	2	SN:B20200--
5	208-53-12310	DUCT	1	SN:B20200--
6	208-53-11920	SEAL	1	SN:B20200--
7	208-53-12440	SEAL	7	SN:B20200--
8	01435-00612	BOLT	2	SN:B20200--
9	421-07-33870	GRILLE ASS'Y	1	SN:B20200--
10	22U-54-25371	ASHTRAY	1	SN:B20200--
11	20Y-06-23472	LIGHTER	1	SN:B20200--
12	208-53-11850	GROMMET	1	SN:B20200--
13	01245-00816	SCREW	5	SN:B20200--
14	01643-70823	WASHER	5	SN:B20200--
15	208-53-12920	WIRING HARNESS	1	SN:B20200--
16	19M-06-31720	・ RESISTOR	1	SN:B20200--
17	08034-20876	BAND	2	SN:B20200--
18	20Y-54-65580	COVER ASS'Y	1	SN:B20001--
19	201-979-7820	GRILLE	1	SN:B20001--
20	20Y-54-65310	ADAPTER	1	SN:B20001--
21	20Y-979-6161	SENSOR	1	SN:B20001--

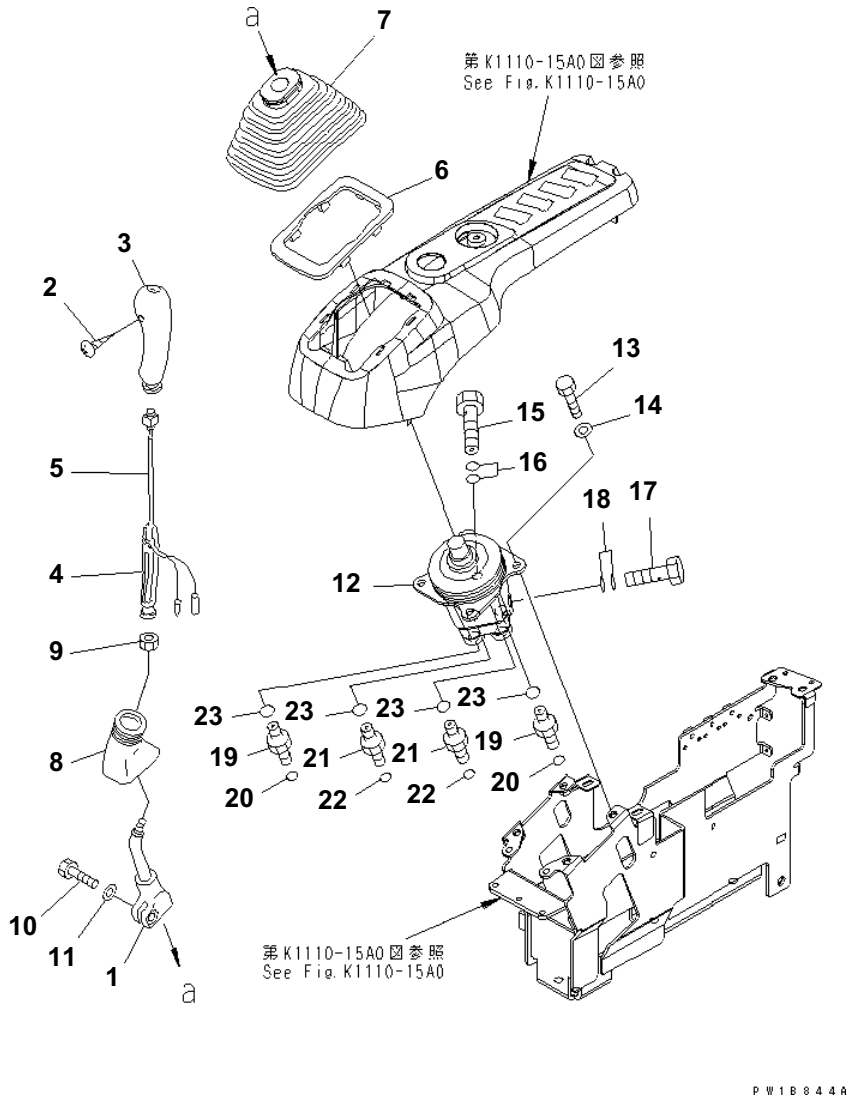

FLOOR FRAME (LEVER AND VALVE) (R.H.)(#B20001-B20199)

Item	Part No.	Description	Qty	Options
1	20Y-43-22221	LEVER	1	SN:B20001--@
	22U-43-21191	KNOB	1	SN:B20001--@
2	01370-10308	・ SCREW	1	SN:B20001--@
3	20Y-43-22390	・ KNOB	1	SN:B20001--@
4	20Y-43-22421	・ INSERT	1	SN:B20001--@
5	22U-43-21211	・ SWITCH	1	SN:B20001--@
6	20Y-43-22250	PLATE	1	SN:B20001--@
7	20Y-43-22261	BOOT	1	SN:B20001--@
8	20Y-43-22370	BOOT	1	SN:B20001--@
9	600-411-1280	NUT	1	SN:B20001--@
10	01252-41025	BOLT	1	SN:B20001--@
11	01643-51032	WASHER	1	SN:B20001--@
12	(702-16-03530)	PILOT VALVE	1	SN:B20001--@
13	01010-80820	BOLT	4	SN:B20001--@
14	01643-30823	WASHER	4	SN:B20001--@
15	20Y-62-18910	BOLT	1	SN:B20001--@
16	07000-12018	O-RING	2	SN:B20001--@
17	20Y-62-18890	BOLT	1	SN:B20001--@
18	07000-12015	O-RING	2	SN:B20001--@
19	11Y-62-12130	NIPPLE	2	SN:B20001--@
20	02896-11008	O-RING	2	SN:B20001--@
21	11Y-62-12520	NIPPLE	2	SN:B20001--@
22	02896-11009	O-RING	2	SN:B20001--@
23	07002-11423	O-RING	4	SN:B20001--@

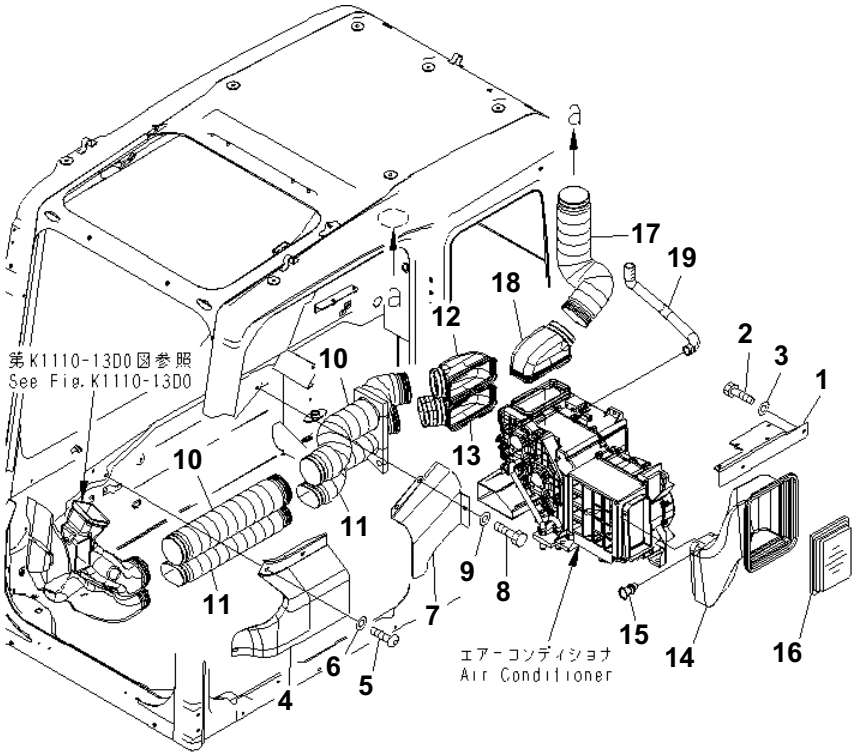

00031428

FLOOR FRAME (OPERATOR'S CAB) (PLATE AND DUCT)(#B20200-)

Item	Part No.	Description	Qty	Options
1	208-53-12770	PLATE	1	SN:B20200--
2	01010-D0820	BOLT	2	SN:B20200--
3	01643-70823	WASHER	2	SN:B20200--
4	208-53-12180	COVER	1	SN:B20200--
5	01245-00816	SCREW	3	SN:B20200--
6	01643-70823	WASHER	3	SN:B20200--
7	208-53-12190	COVER	1	SN:B20200--
8	01010-D0820	BOLT	3	SN:B20200--
9	01643-70823	WASHER	3	SN:B20200--
10	208-53-12220	DUCT	2	SN:B20200--
11	208-53-12260	DUCT	2	SN:B20200--
12	208-53-12120	DUCT	1	SN:B20200--
13	208-53-12170	DUCT	1	SN:B20200--
14	208-53-12520	DUCT	1	SN:B20200--
15	208-53-12680	CLIP	1	SN:B20200--
16	17M-911-3530	ELEMENT	1	SN:B20200--
17	208-53-12220	DUCT	1	SN:B20200--
18	208-53-12120	DUCT	1	SN:B20200--
19	208-53-12432	HOSE	1	SN:B20200--

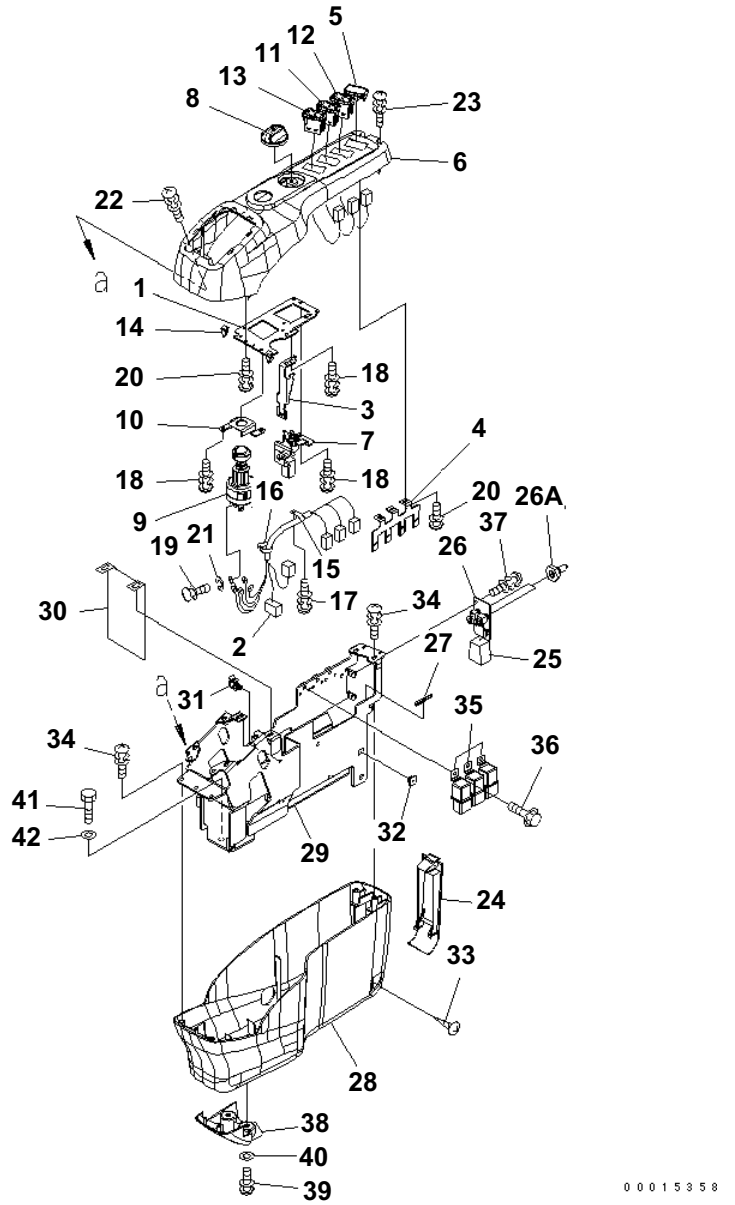

FLOOR FRAME (CONSOLE) (MASTER KEY) (R.H.)(#B20001-B20199)

Item	Part No.	Description	Qty	Options
1	22U-43-23110	PLATE	1	SN:B20001--B20199
2	22U-06-22330	WIRING HARNESS	1	SN:B20001--@
3	22U-43-23120	BRACKET	1	SN:B20001--@
4	22U-43-23130	STAY	1	SN:B20001--@
5	22U-06-22320	COVER	1	SN:B20001--@
6	22U-43-23140	COVER	1	SN:B20001--B20199
7	22U-06-22420	POTENTIOMETER ASS'Y	1	SN:B20001--@
8	22U-06-22470	KNOB	1	SN:B20001--@
9	08086-20000	SWITCH	1	SN:B20001--@
10	22U-06-22480	PLATE	1	SN:B20001--@
11	22U-06-22190	SWITCH	1	SN:B20001--@
12	22U-06-22290	SWITCH	1	SN:B20001--@
13	22U-06-22390	SWITCH	1	SN:B20001--@
14	20Y-06-23770	CLIP	2	SN:B20001--@
15	20Y-06-23920	CLAMP	1	SN:B20001--@
16	08034-10414	BAND	2	SN:B20001--@
17	01023-60408	SCREW	1	SN:B20001--B20199
18	01023-60512	SCREW	6	SN:B20001--@
19	01023-10508	SCREW	5	SN:B20001--@
20	01023-10512	SCREW	6	SN:B20001--@
21	01601-20513	WASHER	5	SN:B20001--@
22	01023-60620	SCREW	2	SN:B20001--B20199
23	01023-70514	SCREW	2	SN:B20001--@
24	22U-43-23210	COVER	1	SN:B20001--@
	20Y-06-31320	SWITCH ASS'Y	1	SN:B20001--@
25	20Y-06-31330	· WIRING HARNESS	1	SN:B20001--@
26	☆	· PLATE	1	SN:B20001--@
26A	208-43-71420	· CAP	2	SN:B20001--@
27	22U-43-23220	TRIM	1	SN:B20001--B20199
28	22U-43-23230	COVER	1	SN:B20001--@
29	22U-43-23240	FRAME	1	SN:B20001--B20199
30	22U-43-23250	SHEET	1	SN:B20001--@
31	22U-43-23260	CLIP	1	SN:B20001--B20199
32	22U-43-23270	GROMMET	2	SN:B20001--B20199
33	01370-00512	SCREW	2	SN:B20001--B20199
34	01023-60616	SCREW	4	SN:B20001--@
35	569-06-61960	RELAY	3	SN:B20001--@
36	01435-00612	BOLT	3	SN:B20001--@
37	01023-60410	SCREW	3	SN:B20001--B20199

PC160LC-7B S/N B20001 AND UP

FLOOR FRAME (CONSOLE) (MASTER KEY) (R.H.)(#B20001-B20199)

Item	Part No.	Description	Qty	Options
38	22U-43-23711	COVER	1	SN:B20001--@
39	01023-10614	SCREW	2	SN:B20001--@
40	01643-30623	WASHER	2	SN:B20001--@
41	01010-81030	BOLT	4	SN:B20001--@
42	01643-31032	WASHER	4	SN:B20001--@

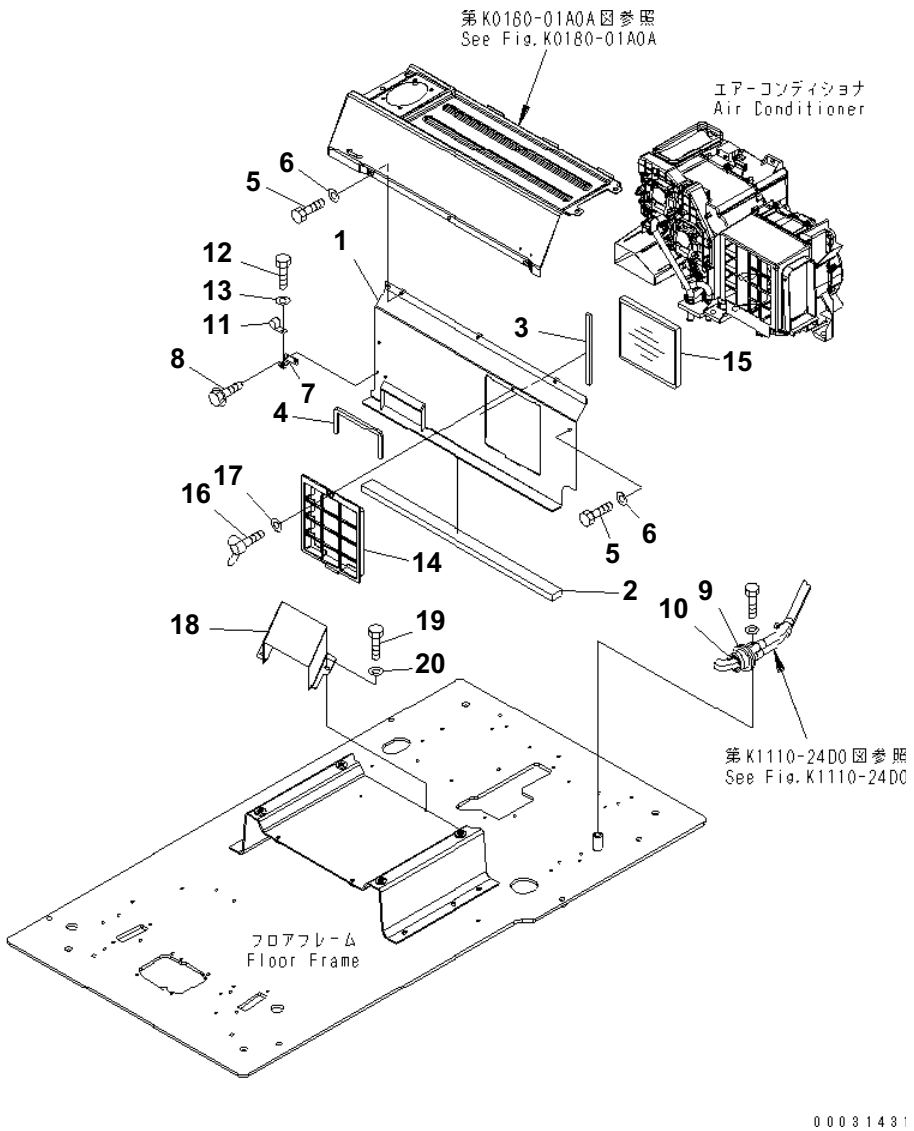

FLOOR FRAME (OPERATOR'S CAB) (PARTITION AND FOOT DUCT)(#B20200-)

Item	Part No.	Description	Qty	Options
	208-53-13650	BRACKET ASS'Y	1	SN:B20200--
1	208-53-12561	・ BRACKET	1	SN:B20200--
2	208-53-11871	・ SEAL	1	SN:B20200--
3	208-53-11890	・ SEAL	1	SN:B20200--
4	208-53-12230	・ SEAL	1	SN:B20200--
5	01010-D0820	BOLT	2	SN:B20200--
6	01643-70823	WASHER	2	SN:B20200--
7	208-53-11790	PLATE	1	SN:B20200--
8	01435-40616	BOLT	2	SN:B20200--
9	21T-06-71870	GROMMET	1	SN:B20200--
10	08034-20519	BAND	1	SN:B20200--
11	04434-51908	CLIP	1	SN:B20200--
12	01010-D0820	BOLT	1	SN:B20200--
13	01643-70823	WASHER	1	SN:B20200--
14	208-979-7530	HOLDER	1	SN:B20200--
15	208-979-7620	FILTER	1	SN:B20200--
16	20Y-54-65790	BOLT	1	SN:B20200--
17	20Y-54-65690	WASHER	1	SN:B20200--
18	208-53-12551	DUCT	1	SN:B20200--
19	01010-D0820	BOLT	2	SN:B20200--
20	01643-70823	WASHER	2	SN:B20200--

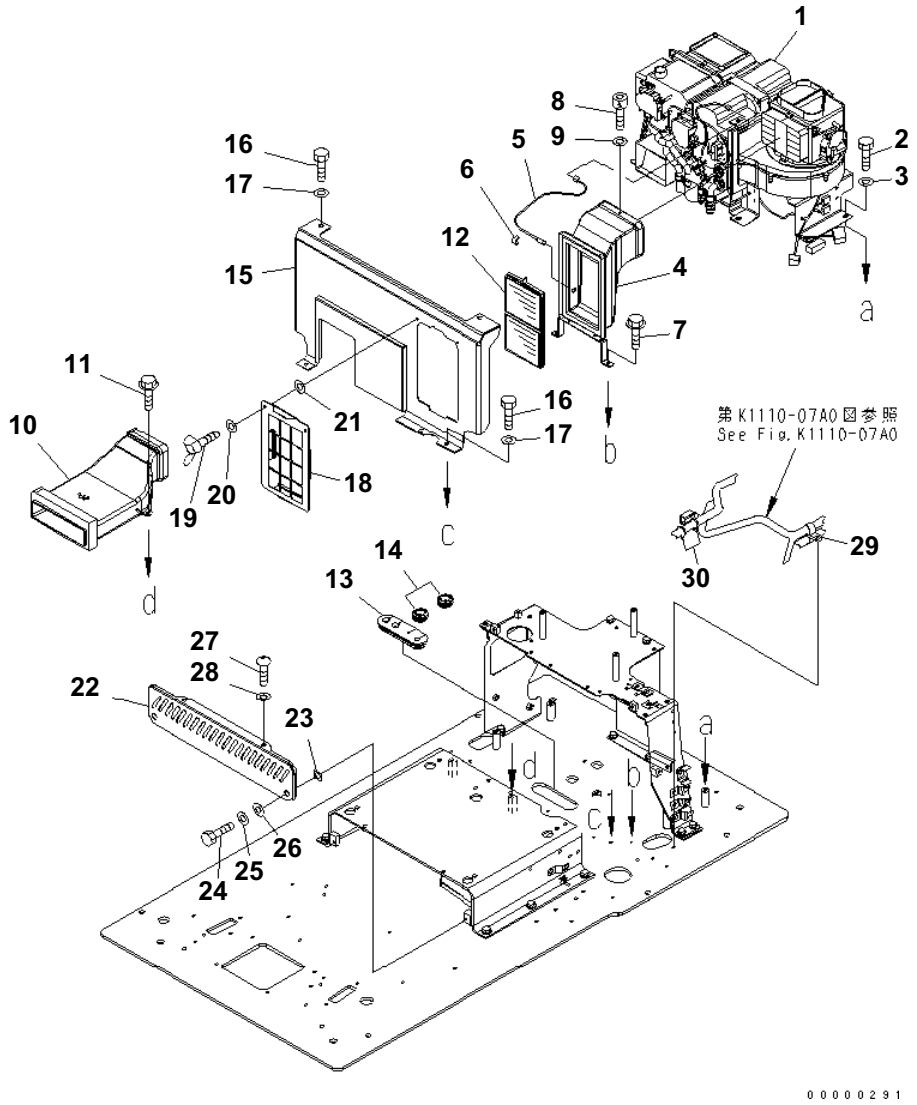

FLOOR FRAME (AIR CONDITIONER UNIT AND FOOT COVER)(#B20001-B20199)

Item	Part No.	Description	Qty	Options
1	(20Y-979-6111)	UNIT ASS'Y	1	SN:B20001--B20199
2	01010-81020	BOLT	6	SN:B20001--B20199
3	01643-31032	WASHER	6	SN:B20001--B20199
4	20Y-979-6241	DUCT ASS'Y	1	SN:B20001--B20199
5	20Y-979-6341	・ SENSOR	1	SN:B20001--B20199
6	20Y-979-6351	・ CLAMP	1	SN:B20001--B20199
7	01435-00612	BOLT	2	SN:B20001--B20199
8	01252-70516	BOLT	1	SN:B20001--B20199
9	01640-20508	WASHER	1	SN:B20001--B20199
10	20Y-979-6231	DUCT	1	SN:B20001--B20199
11	01435-40612	BOLT	2	SN:B20001--B20199
12	20Y-979-6261	FILTER	1	SN:B20001--B20199
13	20Y-54-65130	GROMMET	1	SN:B20001--B20199
14	20Y-54-65180	GROMMET	2	SN:B20001--B20199
15	20Y-54-65190	COVER	1	SN:B20001--B20199
16	01010-D1016	BOLT	5	SN:B20001--B20199
17	01643-71032	WASHER	5	SN:B20001--B20199
18	20Y-979-6481	COVER	1	SN:B20001--B20199
19	20Y-54-65790	BOLT	2	SN:B20001--B20199
20	01643-70623	WASHER	2	SN:B20001--B20199
21	20Y-54-65690	WASHER	2	SN:B20001--B20199
22	20Y-979-6591	COVER	1	SN:B20001--B20199
23	22U-43-21340	SHEET	2	SN:B20001--B20199
24	01010-80820	BOLT	2	SN:B20001--B20199
25	01643-30823	WASHER	2	SN:B20001--B20199
26	102-60-15240	SEAT	2	SN:B20001--B20199
27	01245-00820	SCREW	2	SN:B20001--@
28	01643-70823	WASHER	2	SN:B20001--@
29	04434-51910	CLIP	1	SN:B20001--B20199
30	08034-00519	BAND	2	SN:B20001--B20199

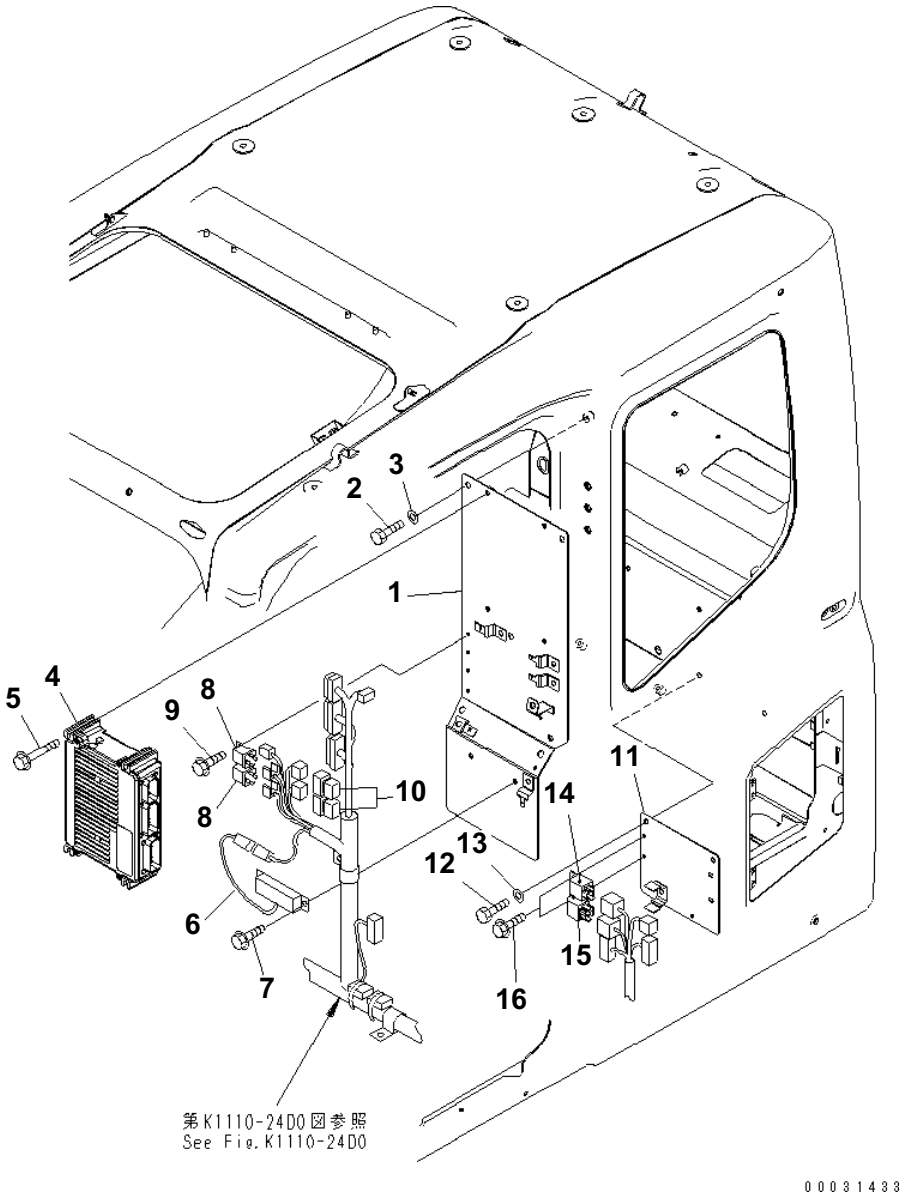

FLOOR FRAME (OPERATOR'S CAB) (SUB PANEL)(#B20200-)

Item	Part No.	Description	Qty	Options
1	208-53-12860	PLATE	1	SN:B20200--
2	01010-80816	BOLT	5	SN:B20200--
3	01643-30823	WASHER	5	SN:B20200--
4	7835-26-3004	CONTROLLER	1	SN:B20001--
5	01435-00885	BOLT	4	SN:B20200--
6	7861-94-3000	RESISTOR	1	SN:B20001--
7	01435-00816	BOLT	2	SN:B20200--
8	569-06-61960	RELAY	2	SN:B20200--
9	01435-00610	BOLT	2	SN:B20200--
10	8233-06-3350	DIODE	2	SN:B20200--
11	208-53-12880	BRACKET	1	SN:B20200--
12	01010-80816	BOLT	2	SN:B20200--
13	01643-30823	WASHER	2	SN:B20200--
14	198-911-9240	RELAY¤ 4-TERMINAL	1	SN:B20200--
15	20Y-979-6771	RELAY	1	SN:B20200--
16	01435-00610	BOLT	2	SN:B20200--

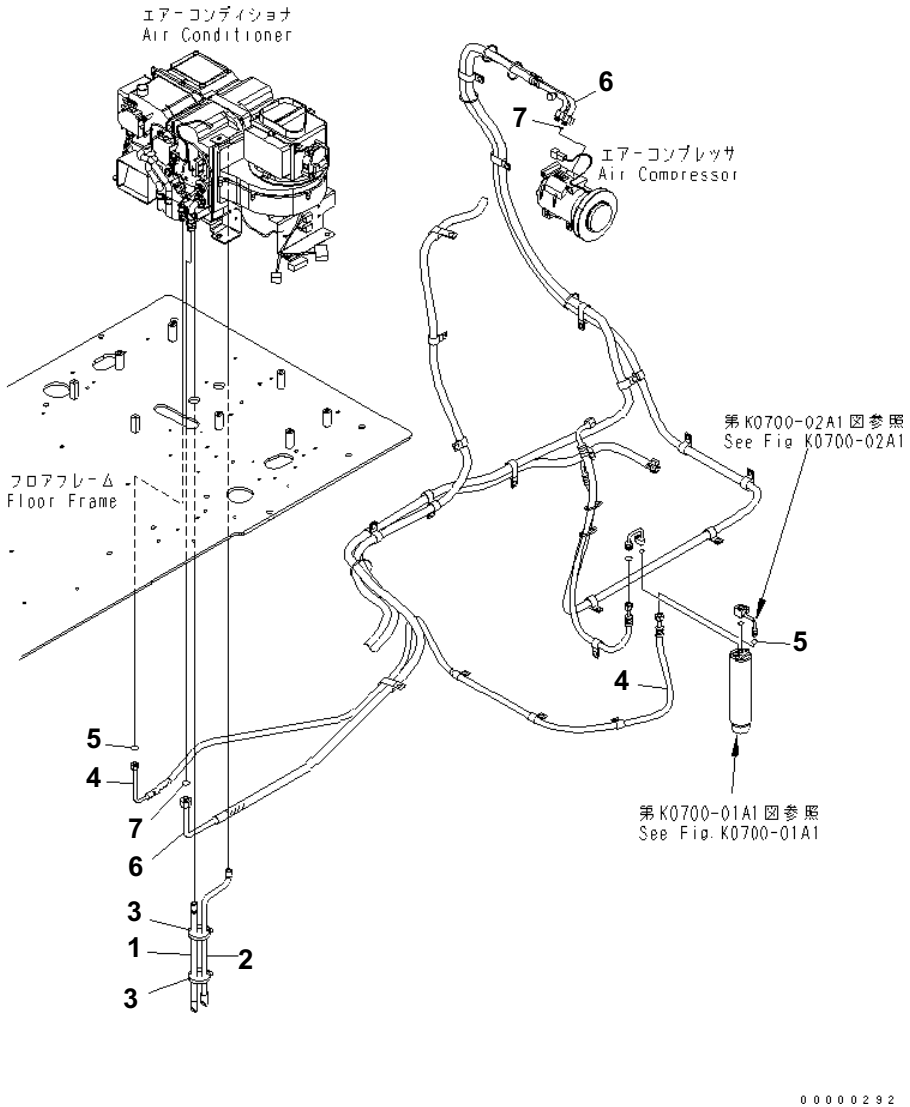

FLOOR FRAME (AIR CONDITIONER HOSE)(#B20001-B20199)

Item	Part No.	Description	Qty	Options
1	20Y-979-6281	HOSE	1	SN:B20001--B20199
2	20Y-979-6291	HOSE	1	SN:B20001--B20199
3	08034-00519	BAND	2	SN:B20001--B20199
4	21K-979-7181	HOSE	1	SN:B20001--B20199
5	20Y-979-3150	・ O-RING	2	SN:B20001--@
6	21K-979-7172	HOSE	1	SN:B20001--B20199
7	20Y-979-3130	O-RING	2	SN:B20001--@

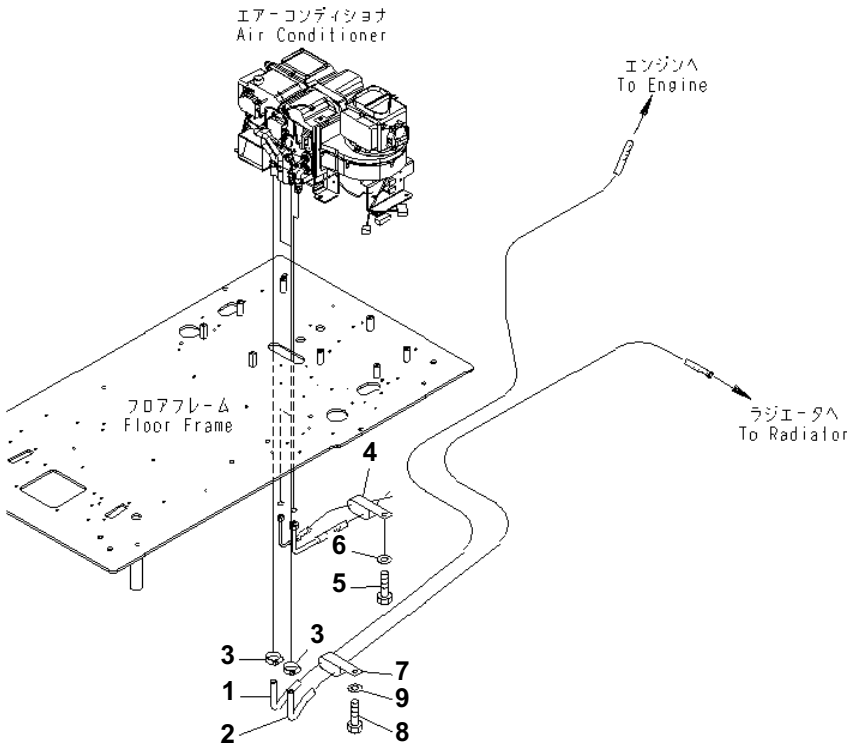

PC160LC-7B S/N B20001 AND UP

FLOOR FRAME (HEATER HOSE AND CLAMP FOR AIR CONDITIONER)(#B20001-B20199)

Item	Part No.	Description	Qty	Options
1	21K-979-7162	HOSE	1	SN:B20001--@
2	21K-979-7152	HOSE	1	SN:B20001--B20199
3	11Y-09-11160	CLIP	2	SN:B20001--@
4	141-06-11220	CLIP	1	SN:B20001--@
5	01010-81016	BOLT	1	SN:B20001--@
6	01643-31032	WASHER	1	SN:B20001--@
7	141-06-11220	CLIP	1	SN:B20001--@
8	01010-81016	BOLT	1	SN:B20001--@
9	01643-31032	WASHER	1	SN:B20001--@

Ref. K1110-18A0 Page 210590

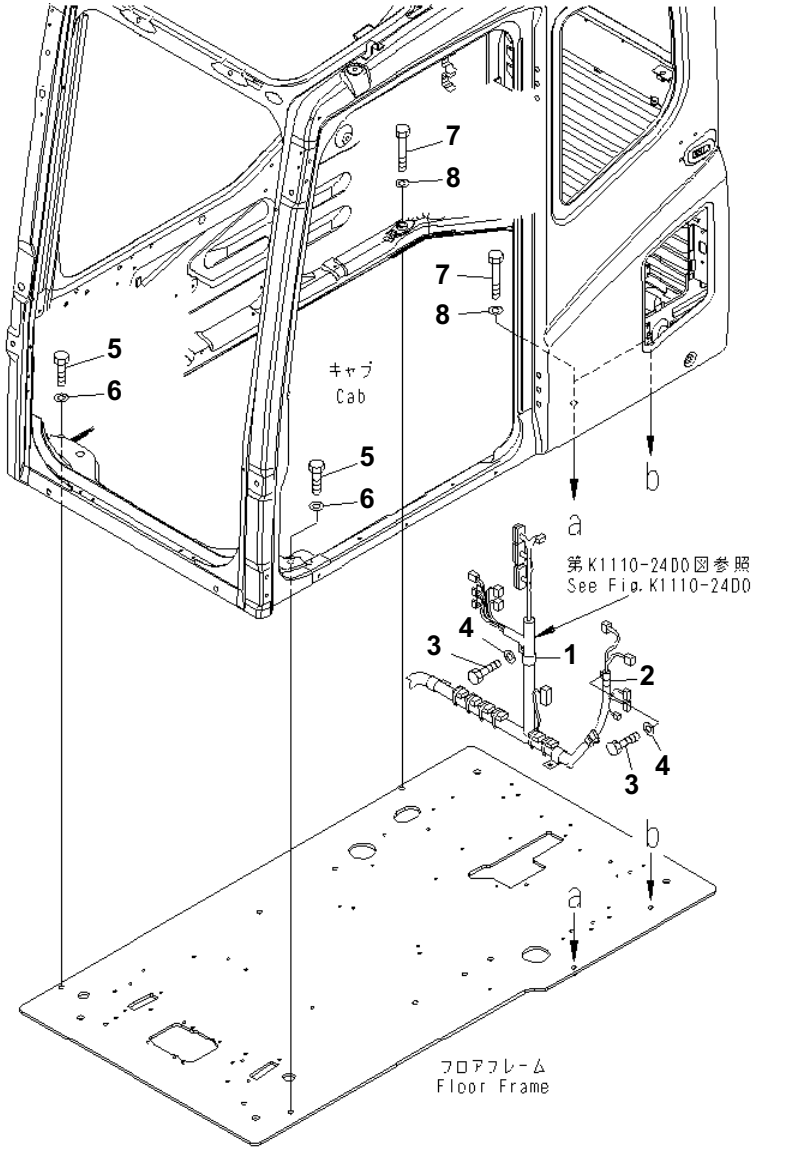

FLOOR FRAME (OPERATOR'S CAB) (CLAMP AND BOLT)(#B20200-)

Item	Part No.	Description	Qty	Options
1	04434-53411	CLIP	1	SN:B20200--
2	04434-52208	CLIP	1	SN:B20200--
3	01010-81020	BOLT	2	SN:B20200--
4	01643-31032	WASHER	2	SN:B20200--
5	01010-81240	BOLT	2	SN:B20001--
6	01643-31232	WASHER	2	SN:B20001--
7	01010-81285	BOLT	3	SN:B20001--
8	01643-31232	WASHER	3	SN:B20001--

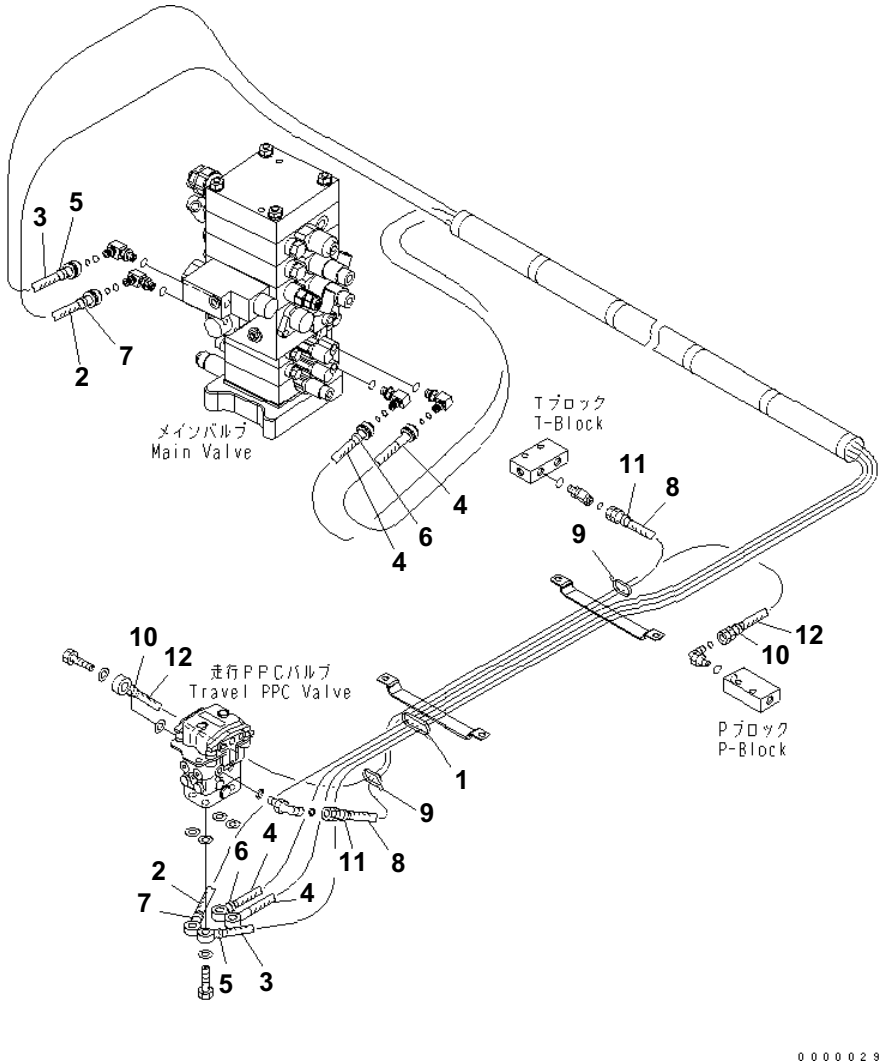

FLOOR FRAME (PPC LINE) (TRAVEL)(#B20001-B20199)

Item	Part No.	Description	Qty	Options
1	08034-20834	BAND	2	SN:B20001--@
2	21K-62-71860	HOSE¤ 3300MM	1	SN:B20001--@
3	21K-62-71870	HOSE¤ 3350MM	1	SN:B20001--@
4	21K-62-72160	HOSE¤ 3100MM	2	SN:B20001--@
5	20Y-62-22790	BAND¤ RED,RED	2	SN:B20001--@
6	20Y-62-22820	BAND¤ BLUE,BLUE	2	SN:B20001--@
7	20Y-62-22850	BAND¤ GREEN,GREEN	2	SN:B20001--@
8	02760-00211	HOSE	1	SN:B20001--B20199
9	08034-00519	BAND	2	SN:B20001--B20199
10	20Y-62-22790	BAND¤ RED,RED	2	SN:B20001--B20199
11	20Y-62-22820	BAND¤ BLUE,BLUE	2	SN:B20001--B20199
12	20Y-62-42251	HOSE¤ 1250MM	1	SN:B20001--B20199

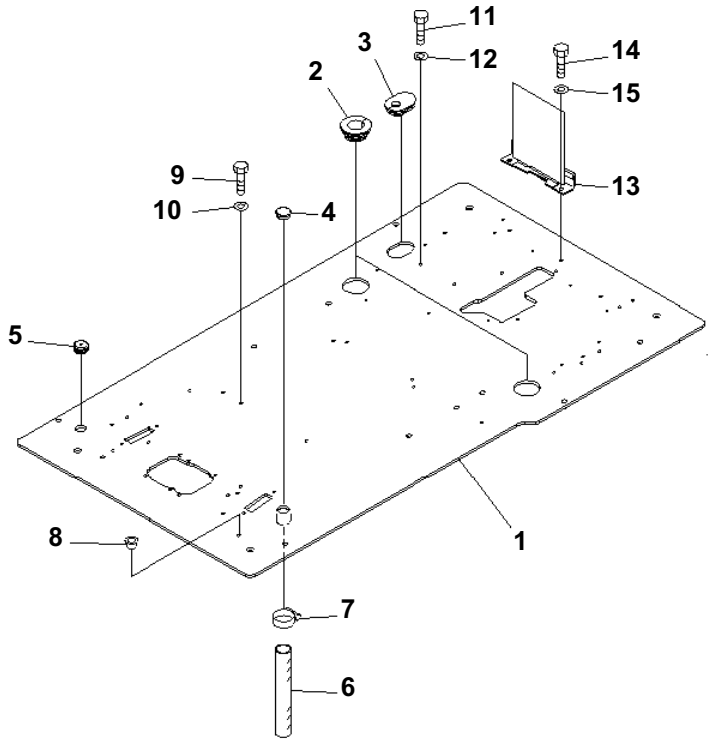

FLOOR FRAME (OPERATOR'S CAB) (FLOOR FRAME)(#B20200-)

Item	Part No.	Description	Qty	Options
1	208-53-14810	FLOOR FRAME	1	SN:B20200--
2	20Y-54-65121	GROMMET	2	SN:B20001--
3	208-53-12970	GROMMET	1	SN:B20200--
4	22U-54-25581	GROMMET	1	SN:B20001--
5	22U-54-25590	GROMMET	1	SN:B20001--
6	07286-03828	HOSE	1	SN:B20001--
7	07280-04726	CLAMP	1	SN:B20001--
8	07048-01310	PLUG	2	SN:B20001--
9	01010-81030	BOLT	2	SN:B20001--
10	01643-31032	WASHER	2	SN:B20001--
11	01010-81016	BOLT	1	SN:B20200--
12	01643-31032	WASHER	1	SN:B20200--
13	208-53-12891	BRACKET	1	SN:B20200--
	22U-06-22661	･ SHEET	1	SN:B20200--
14	01010-81020	BOLT	2	SN:B20200--
15	01643-31032	WASHER	2	SN:B20200--

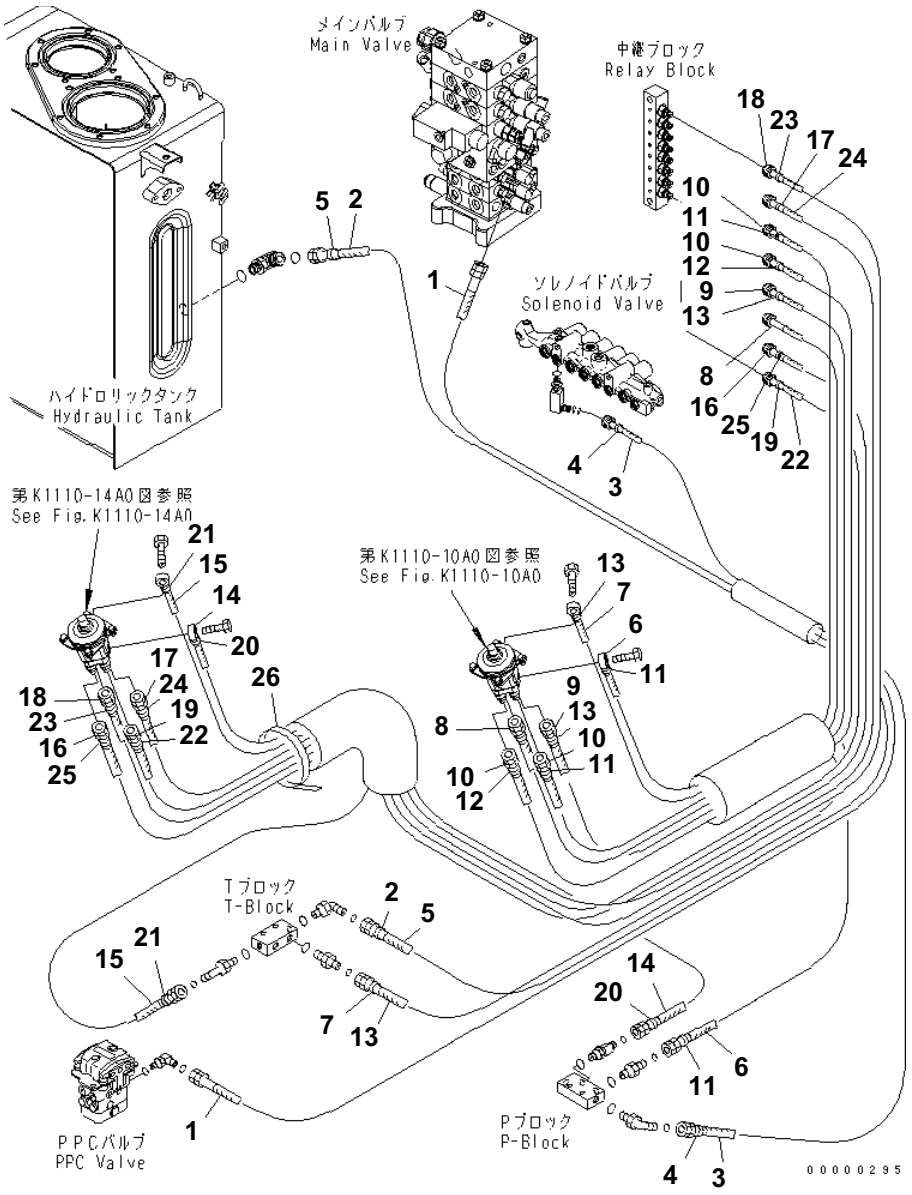

FLOOR FRAME (PPC LINE) (WORK)(#B20001-B20199)

Item	Part No.	Description	Qty	Options
1	02760-00235	HOSE	1	SN:B20001--@
2	02760-00329	HOSE	1	SN:B20001--B20199
3	20Y-62-42320	HOSE¤ 2300MM	1	SN:B20001--B20199
4	20Y-62-22790	BAND¤ RED,RED	2	SN:B20001--@
5	20Y-62-22820	BAND¤ BLUE,BLUE	2	SN:B20001--@
6	20Y-62-42230	HOSE¤ 1350MM	1	SN:B20001--B20199
7	20Y-62-42240	HOSE¤ 1450MM	1	SN:B20001--B20199
8	21K-62-71810	HOSE¤ 1950MM	1	SN:B20001--@
9	21K-62-71820	HOSE¤ 2000MM	1	SN:B20001--@
10	21K-62-71830	HOSE¤ 2050MM	2	SN:B20001--@
11	20Y-62-22790	BAND¤ RED,RED	4	SN:B20001--@
12	20Y-62-22810	BAND¤ YELLOW,YELLOW	2	SN:B20001--@
13	20Y-62-22820	BAND¤ BLUE,BLUE	4	SN:B20001--@
14	20Y-62-42210	HOSE¤ 1600MM	1	SN:B20001--B20199
15	20Y-62-42220	HOSE¤ 1300MM	1	SN:B20001--B20199
16	20Y-62-43490	HOSE¤ 2400MM	1	SN:B20001--@
17	20Y-62-43510	HOSE¤ 2350MM	1	SN:B20001--@
18	21K-62-71840	HOSE¤ 2350MM	1	SN:B20001--@
19	21K-62-71850	HOSE¤ 2250MM	1	SN:B20001--@
20	20Y-62-22790	BAND¤ RED,RED	2	SN:B20001--@
21	20Y-62-22820	BAND¤ BLUE,BLUE	2	SN:B20001--@
22	20Y-62-22830	BAND¤ WHITE,WHITE	2	SN:B20001--@
23	20Y-62-22840	BAND¤ BLACK,BLACK	2	SN:B20001--@
24	20Y-62-22850	BAND¤ GREEN,GREEN	2	SN:B20001--@
25	20Y-62-22860	BAND¤ BROWN,BROWN	2	SN:B20001--@
26	08034-00519	BAND	1	SN:B20001--B20199

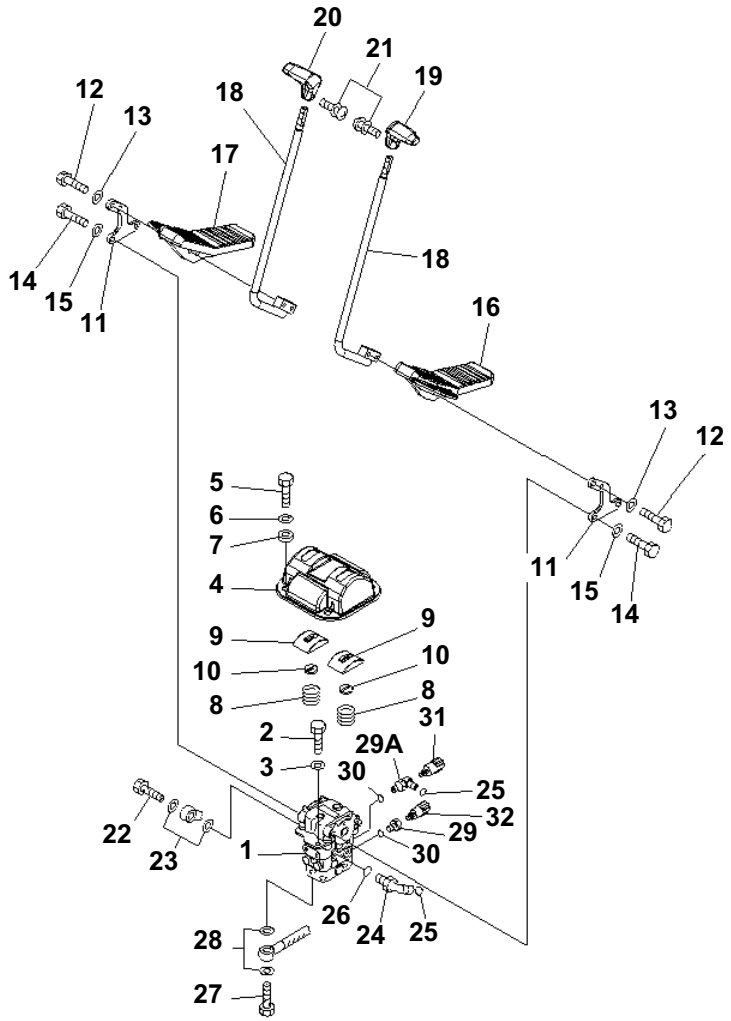

FLOOR FRAME (OPERATOR'S CAB) (TRAVEL CONTROL)(#B20200-)

Item	Part No.	Description	Qty	Options
1	(702-16-04250)	PILOT VALVE	1	SN:B20200--
2	01010-81020	BOLT	2	SN:B20200--
3	01643-31032	WASHER	2	SN:B20001--
4	20Y-43-41121	COVER	1	SN:B20200--
5	01010-81020	BOLT	4	SN:B20200--
6	01643-31032	WASHER	4	SN:B20200--
7	20Y-43-41361	COLLAR	4	SN:B20200--
8	203-43-51620	SPRING	2	SN:B20001--
	22U-43-21350	COVER ASS'Y	1	SN:B20001--
9	☆	· COVER	1	SN:B20001--
10	22U-43-21360	· SEAL	1	SN:B20001--
11	20Y-43-41111	LEVER	2	SN:B20200--
12	01010-D1045	BOLT	4	SN:B20001--
13	01643-71032	WASHER	4	SN:B20001--
14	01010-81030	BOLT	4	SN:B20001--
15	01643-31032	WASHER	4	SN:B20001--
16	22U-43-21111	PEDAL	1	SN:B20001--
17	22U-43-21121	PEDAL	1	SN:B20001--
18	22U-43-21131	LEVER	2	SN:B20200--
19	20Y-43-21231	KNOB	1	SN:B20001--
20	20Y-43-21241	KNOB	1	SN:B20001--
21	01023-20416	SCREW	2	SN:B20001--
22	20Y-62-18910	BOLT	1	SN:B20001--
23	07000-12018	O-RING	2	SN:B20001--
24	11Y-62-12160	ELBOW	1	SN:B20001--
25	02896-11008	O-RING	2	SN:B20200--
26	07002-11423	O-RING	1	SN:B20001--
27	20Y-62-18890	BOLT	4	SN:B20001--
28	07000-12015	O-RING	8	SN:B20001--
29	20Y-62-41390	ADAPTER	1	SN:B20200--
29A	21W-62-43910	ELBOW	1	SN:B20200--
30	07002-11423	O-RING	2	SN:B20001--
31	20Y-06-21710	SWITCH	1	SN:B20001--
32	206-06-61130	SWITCH	1	SN:B20001--

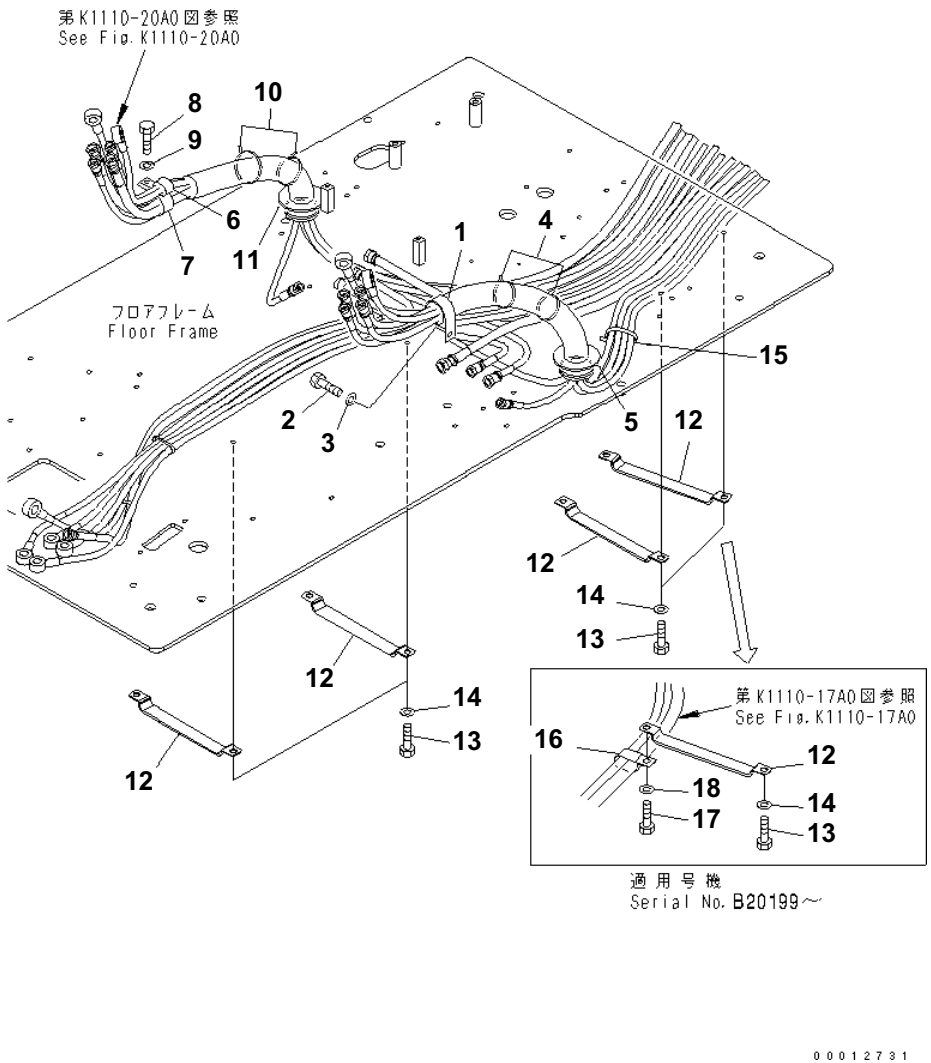

FLOOR FRAME (CLAMP FOR PPC LINE) (WITH AIR CONDITIONER)(#B20001-B20199)

Item	Part No.	Description	Qty	Options
1	04434-53211	CLIP	1	SN:B20001--@
2	01010-81020	BOLT	1	SN:B20001--@
3	01643-31032	WASHER	1	SN:B20001--@
4	08034-20536	BAND	2	SN:B20001--@
5	08034-20536	BAND	1	SN:B20001--@
6	04435-51310	CLIP	1	SN:B20001--@
7	04434-53411	CLIP	1	SN:B20001--@
8	01010-81020	BOLT	1	SN:B20001--@
9	01643-31032	WASHER	1	SN:B20001--@
10	08034-20536	BAND	2	SN:B20001--@
11	08034-20536	BAND	1	SN:B20001--@
12	20Y-62-27770	CLAMP	4	SN:B20001--@
13	01010-81016	BOLT	7	SN:B20001--B20199
14	01643-31032	WASHER	7	SN:B20001--B20199
15	08034-00519	BAND	1	SN:B20001--B20199
16	141-06-11220	CLIP	1	SN:B20001--B20199
17	01010-81020	BOLT	1	SN:B20001--B20199
18	01643-31032	WASHER	1	SN:B20001--B20199

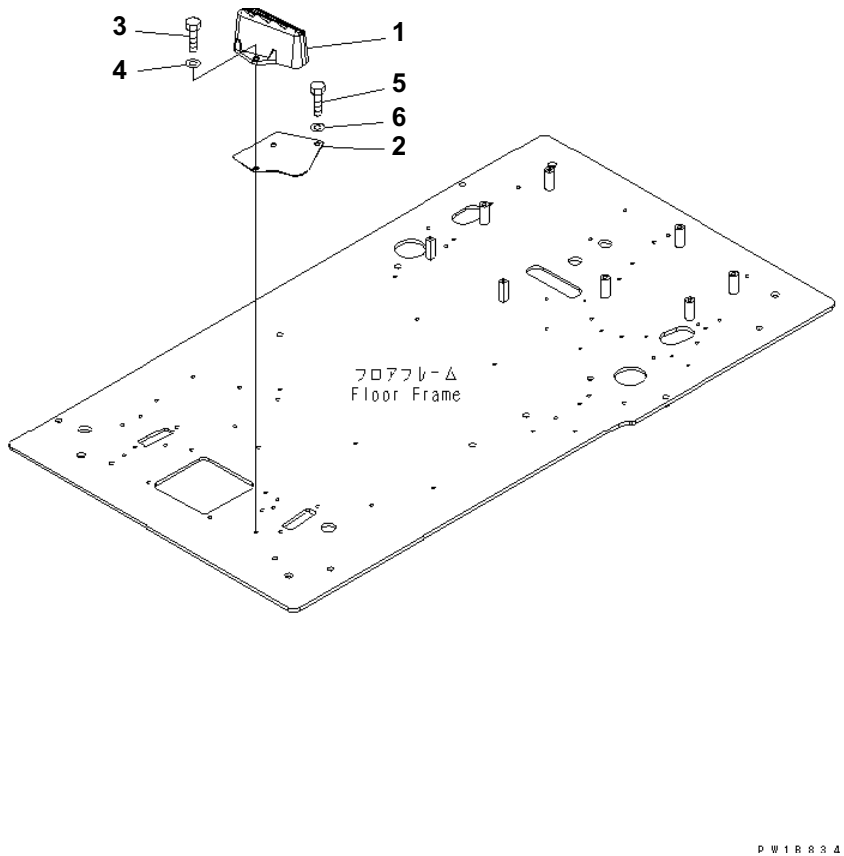

FLOOR FRAME (OPERATOR'S CAB) (FOOT REST) (L.H.)(#B20200-)

Item	Part No.	Description	Qty	Options
1	22U-54-25110	FOOT REST	1	SN:B20200--
2	22U-54-25521	PLATE	1	SN:B20200--
3	01010-81025	BOLT	2	SN:B20200--
4	01643-31032	WASHER	2	SN:B20200--
5	01010-81020	BOLT	1	SN:B20200--
6	01643-31032	WASHER	1	SN:B20200--

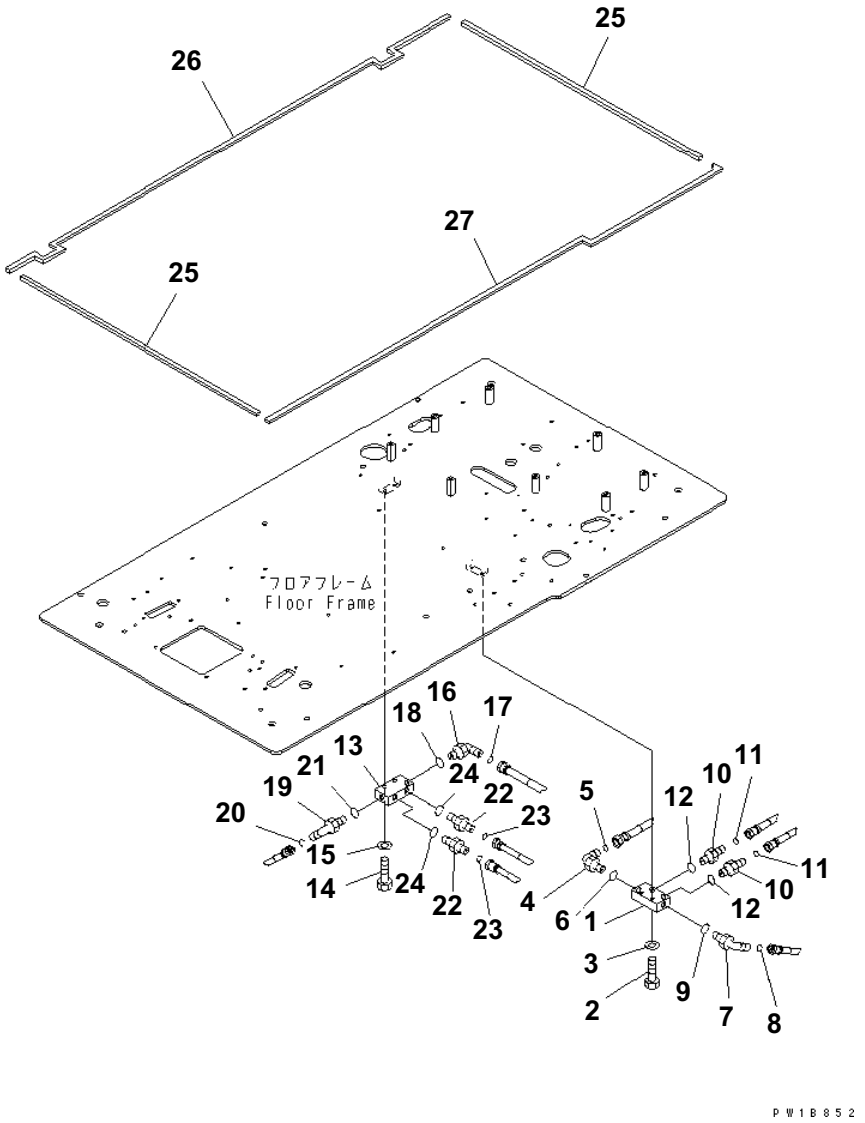

FLOOR FRAME (P¤T BLOCK AND SEAL)(#B20001-B20199)

Item	Part No.	Description	Qty	Options
1	20Y-62-15831	BLOCK	1	SN:B20001--@
2	01010-81045	BOLT	2	SN:B20001--@
3	01643-31032	WASHER	2	SN:B20001--@
4	21W-62-42490	ELBOW	1	SN:B20001--B20199
5	02896-11009	O-RING	1	SN:B20001--@
6	07002-11423	O-RING	1	SN:B20001--@
7	11Y-62-12160	ELBOW	1	SN:B20001--B20199
8	02896-11008	O-RING	1	SN:B20001--@
9	07002-11423	O-RING	1	SN:B20001--@
10	11Y-62-12130	NIPPLE	2	SN:B20001--B20199
11	02896-11008	O-RING	2	SN:B20001--@
12	07002-11423	O-RING	2	SN:B20001--@
13	20Y-62-15831	BLOCK	1	SN:B20001--@
14	01010-81045	BOLT	2	SN:B20001--@
15	01643-31032	WASHER	2	SN:B20001--@
16	21W-62-42490	ELBOW	1	SN:B20001--B20199
17	02896-11009	O-RING	1	SN:B20001--@
18	07002-11423	O-RING	1	SN:B20001--@
19	11Y-62-12160	ELBOW	1	SN:B20001--B20199
20	02896-11008	O-RING	1	SN:B20001--@
21	07002-11423	O-RING	1	SN:B20001--@
22	11Y-62-12130	NIPPLE	2	SN:B20001--B20199
23	02896-11008	O-RING	2	SN:B20001--@
24	07002-11423	O-RING	2	SN:B20001--@
25	20Y-54-65750	SEAL	2	SN:B20001--B20199
26	20Y-54-65760	SEAL	1	SN:B20001--B20199
27	20Y-54-65770	SEAL	1	SN:B20001--B20199

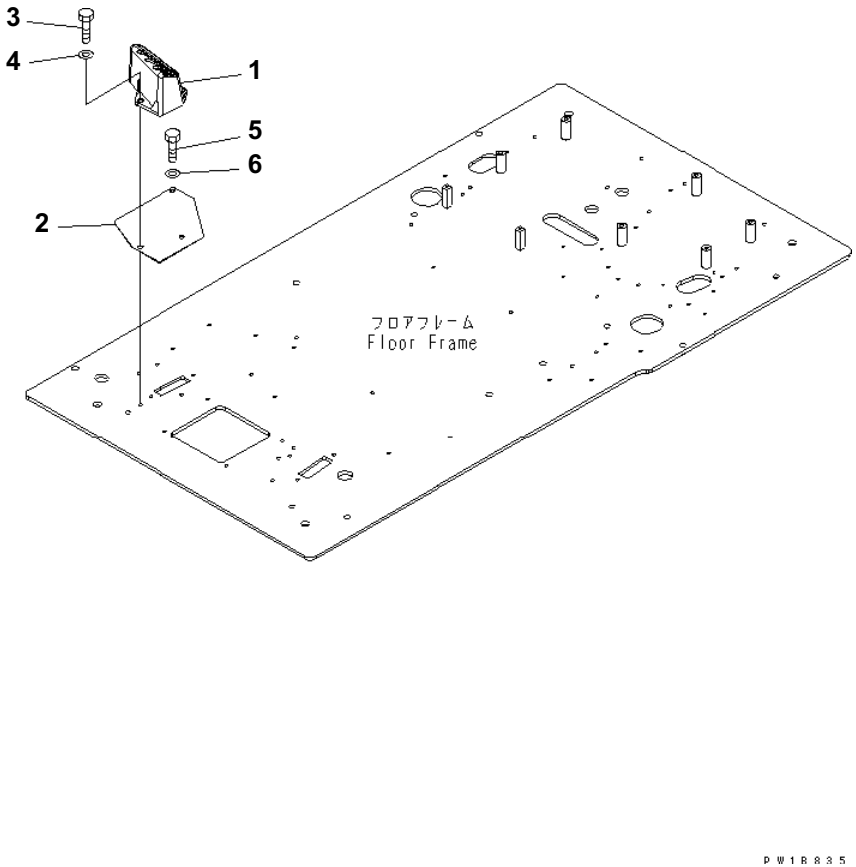

FLOOR FRAME (OPERATOR'S CAB) (FOOT REST) (R.H.)(#B20200-)

Item	Part No.	Description	Qty	Options
1	22U-54-25120	FOOT REST	1	SN:B20200--
2	22U-54-25531	PLATE	1	SN:B20200--
3	01010-81025	BOLT	2	SN:B20200--
4	01643-31032	WASHER	2	SN:B20200--
5	01010-81020	BOLT	1	SN:B20200--
6	01643-31032	WASHER	1	SN:B20200--

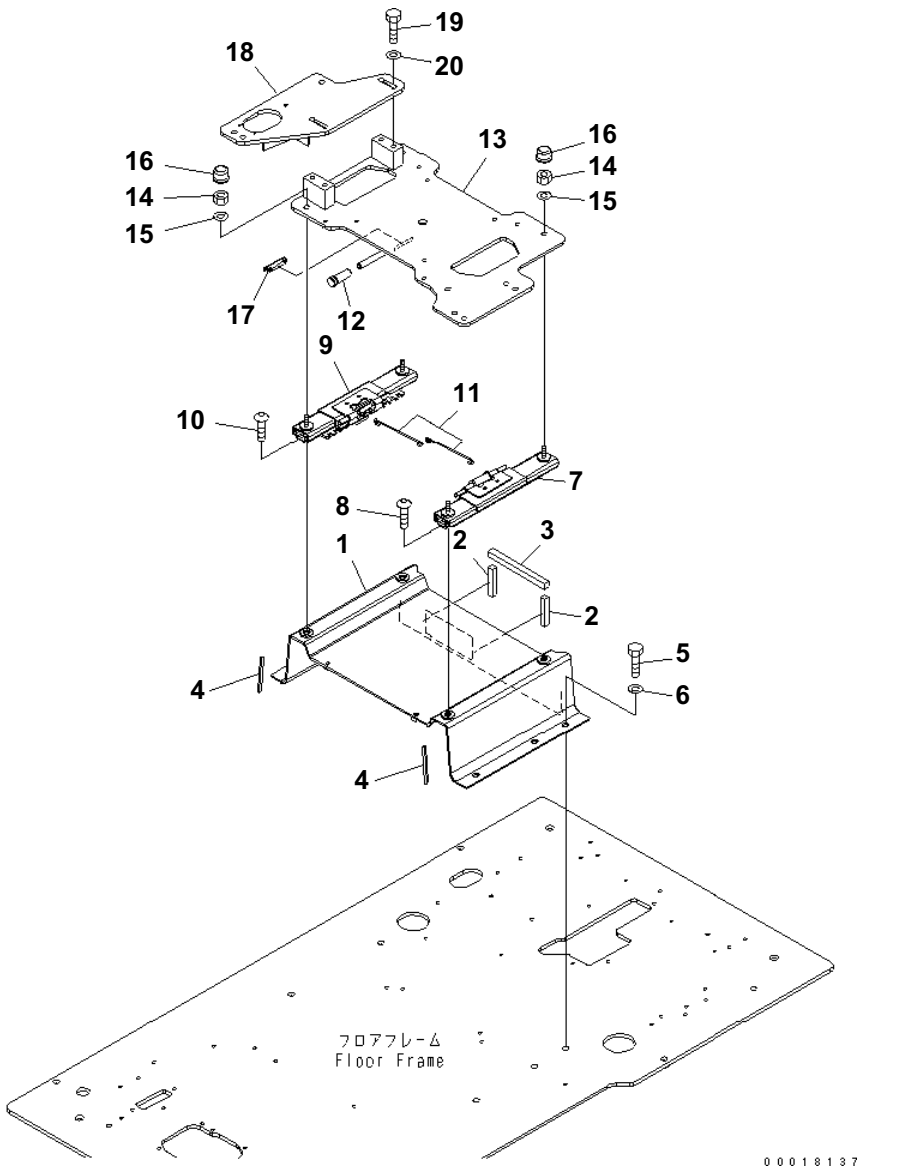

FLOOR FRAME (OPERATOR'S CAB) (BASE)(#B20200-)

Item	Part No.	Description	Qty	Options
1	208-43-71511	FRAME	1	SN:B20200--
2	208-43-71520	・ SEAL	2	SN:B20200--
3	208-43-71530	・ SEAL	1	SN:B20200--
4	208-43-71590	・ SEAL	2	SN:B20200--
5	01010-81230	BOLT	5	SN:B20200--
6	01643-31232	WASHER	5	SN:B20200--
7	208-43-71541	ADJUSTER	1	SN:B20200--
8	01245-01025	SCREW	2	SN:B20200--
9	208-43-71551	ADJUSTER	1	SN:B20200--
10	01245-01025	SCREW	2	SN:B20200--
11	22U-43-21260	WIRE	2	SN:B20001--
12	22U-43-21390	CAP	1	SN:B20200--
13	208-43-71560	FRAME	1	SN:B20200--
14	20Y-54-65340	NUT	4	SN:B20001--
15	01643-71032	WASHER	4	SN:B20001--
16	20Y-54-65540	CAP	2	SN:B20001--
17	20Y-979-6630	CATCHER	1	SN:B20200--
18	208-43-71570	FRAME	1	SN:B20200--
19	01010-D1230	BOLT	4	SN:B20001--
20	22U-54-25170	WASHER	4	SN:B20001--

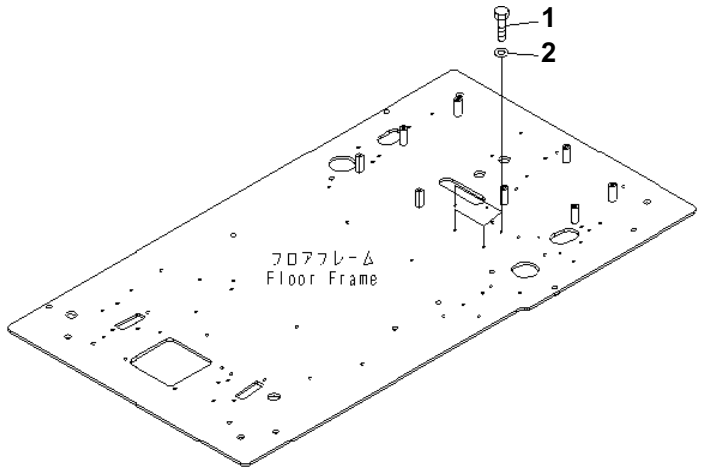

FLOOR FRAME (KOMTRAX LESS)

Item	Part No.	Description	Qty	Options
1	01010-D0816	BOLT	4	SN:B20001--
2	01643-70823	WASHER	4	SN:B20001--

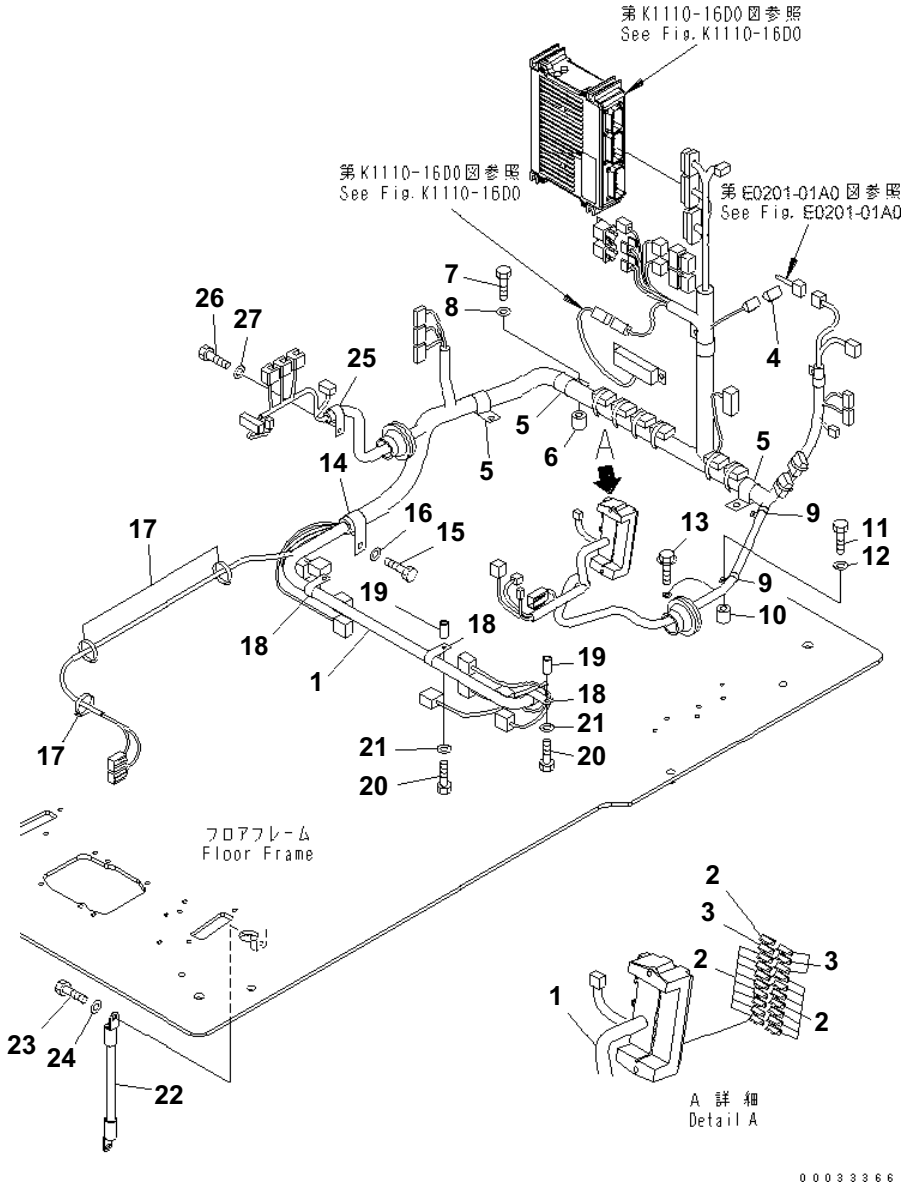

FLOOR FRAME (OPERATOR'S CAB) (HARNESS)(#B20200-)

Item	Part No.	Description	Qty	Options
1	21K-06-71511	WIRING HARNESS	1	SN:B20200--
2	08041-01000	· FUSE¤ 10A	16	SN:B20001--
3	08041-02000	· FUSE¤ 20A	4	SN:B20001--
4	19M-06-31720	· RESISTOR	1	SN:B20200--
5	04434-53411	CLIP	3	SN:B20200--
6	195-33-11220	SPACER	3	SN:B20200--
7	01010-81040	BOLT	3	SN:B20200--
8	01643-31032	WASHER	3	SN:B20200--
9	04434-51710	CLIP	2	SN:B20200--
10	195-33-11220	SPACER	2	SN:B20200--
11	01010-81040	BOLT	2	SN:B20200--
12	01643-31032	WASHER	2	SN:B20200--
13	01435-01016	BOLT	1	SN:B20200--
14	04434-53411	CLIP	1	SN:B20200--
15	01010-81020	BOLT	1	SN:B20200--
16	01643-31032	WASHER	1	SN:B20200--
17	08034-20519	BAND	3	SN:B20200--
18	04434-52310	CLIP	3	SN:B20200--
19	195-33-11220	SPACER	3	SN:B20200--
20	01010-81040	BOLT	3	SN:B20200--
21	01643-31032	WASHER	3	SN:B20200--
22	08028-43030	CABLE	1	SN:B20001--
23	01010-81020	BOLT	1	SN:B20001--
24	01643-31032	WASHER	1	SN:B20001--
25	04434-51910	CLIP	1	SN:B20001--
26	01010-81020	BOLT	1	SN:B20001--
27	01643-31032	WASHER	1	SN:B20001--

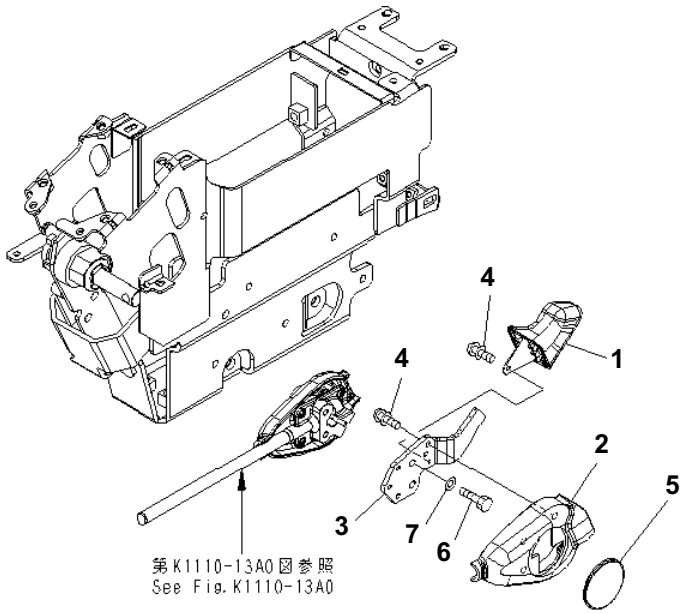

PW1F357

FLOOR FRAME (LEVER KNOB)(#B20001-B20199)

Item	Part No.	Description	Qty	Options
	20Y-43-31602	KNOB ASS'Y	1	SN:B20037--B20199
	20Y-43-31601	KNOB ASS'Y	1	SN:B20001--B20036
1	20Y-43-31611	· KNOB	1	SN:B20037--B20199
	20Y-43-31610	· KNOB	1	SN:B20001--B20036
2	20Y-43-31620	· COVER	1	SN:B20001--B20036
3	20Y-43-31632	· PLATE	1	SN:B20037--B20199
	20Y-43-31631	· PLATE	1	SN:B20001--B20036
4	01023-60412	· SCREW	4	SN:B20001--B20199
5	20Y-43-31640	CAP	1	SN:B20001--B20199
6	01010-80616	BOLT	2	SN:B20001--B20199
7	01643-30623	WASHER	2	SN:B20001--B20199

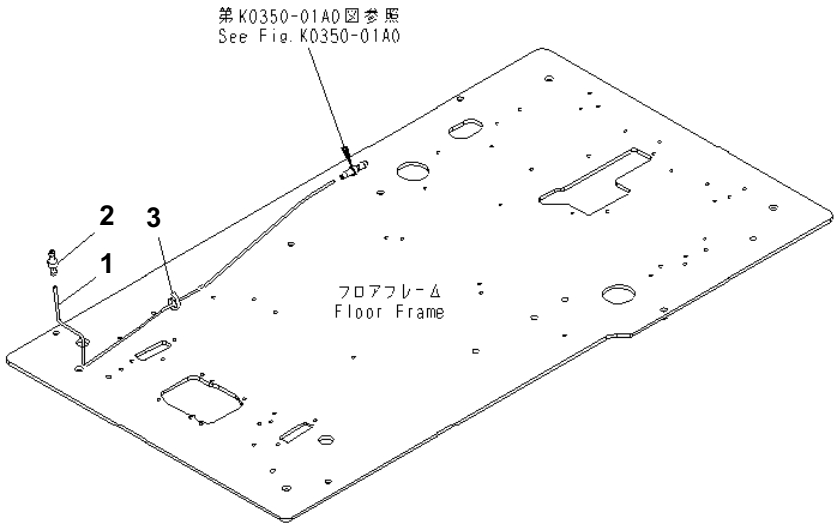

PC160LC-7B S/N B20001 AND UP

FLOOR FRAME (OPERATOR'S CAB) (WINDOW WASHER)(#B20200-)

Item	Part No.	Description	Qty	Options
1	21T-06-71250	HOSE	1	SN:B20001--
2	207-06-61490	VALVE	1	SN:B20001--
3	08034-20519	BAND	1	SN:B20200--

Ref. K1110-25D0 Page 210730

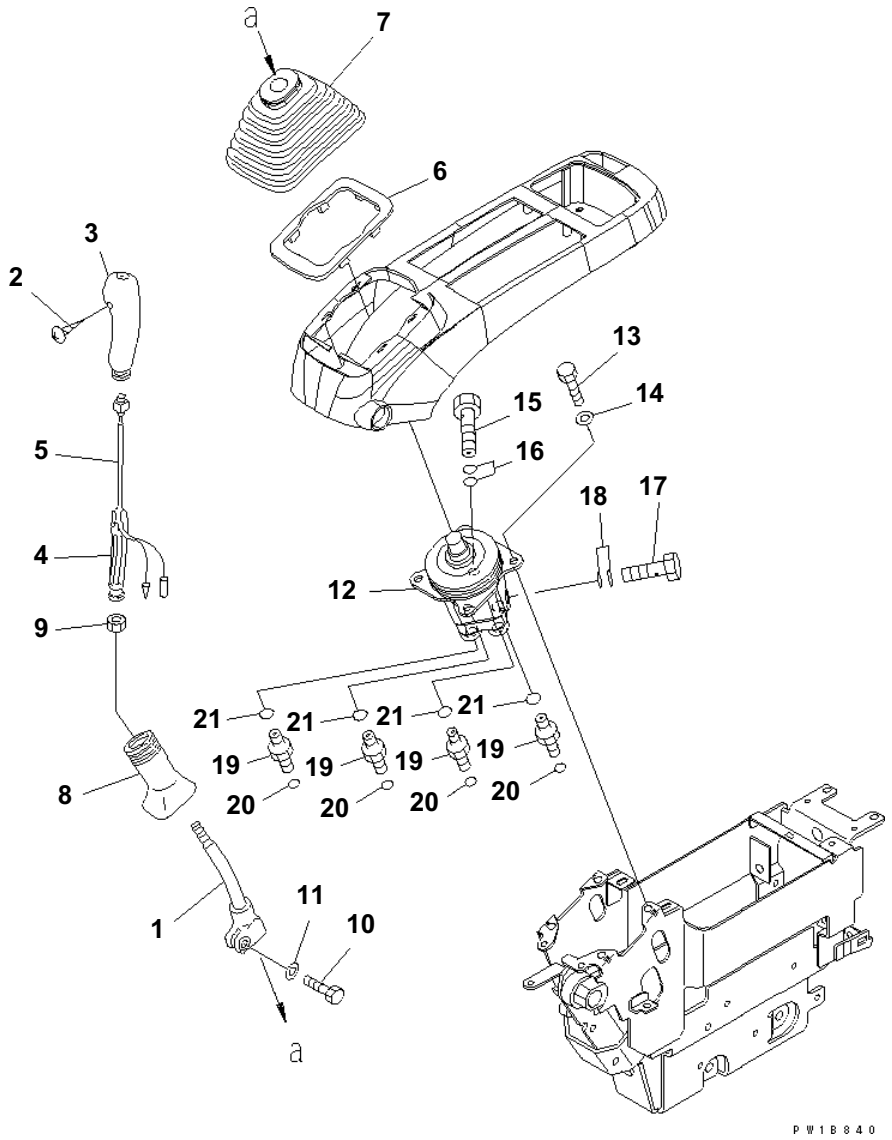

FLOOR FRAME (OPERATOR'S CAB) (LEVER AND VALVE) (L.H.)(#B20200-)

Item	Part No.	Description	Qty	Options
1	20Y-43-22211	LEVER	1	SN:B20001--
	22U-43-21181	KNOB	1	SN:B20001--
2	01370-10308	· SCREW	1	SN:B20001--
3	20Y-43-22381	· KNOB	1	SN:B20001--
4	20Y-43-22421	· INSERT	1	SN:B20001--
5	22U-43-21211	· SWITCH	1	SN:B20001--
6	20Y-43-22250	PLATE	1	SN:B20001--
7	20Y-43-22261	BOOT	1	SN:B20001--
8	20Y-43-22370	BOOT	1	SN:B20001--
9	600-411-1280	NUT	1	SN:B20001--
10	01252-41025	BOLT	1	SN:B20001--
11	01643-51032	WASHER	1	SN:B20001--
12	(702-16-03910)	PILOT VALVE	1	SN:B20001--
13	01010-80820	BOLT	4	SN:B20001--
14	01643-30823	WASHER	4	SN:B20001--
15	20Y-62-18910	BOLT	1	SN:B20001--
16	07000-12018	O-RING	2	SN:B20001--
17	20Y-62-18890	BOLT	1	SN:B20001--
18	07000-12015	O-RING	2	SN:B20001--
19	11Y-62-12130	NIPPLE	4	SN:B20001--
20	02896-11008	O-RING	4	SN:B20001--
21	07002-11423	O-RING	4	SN:B20001--

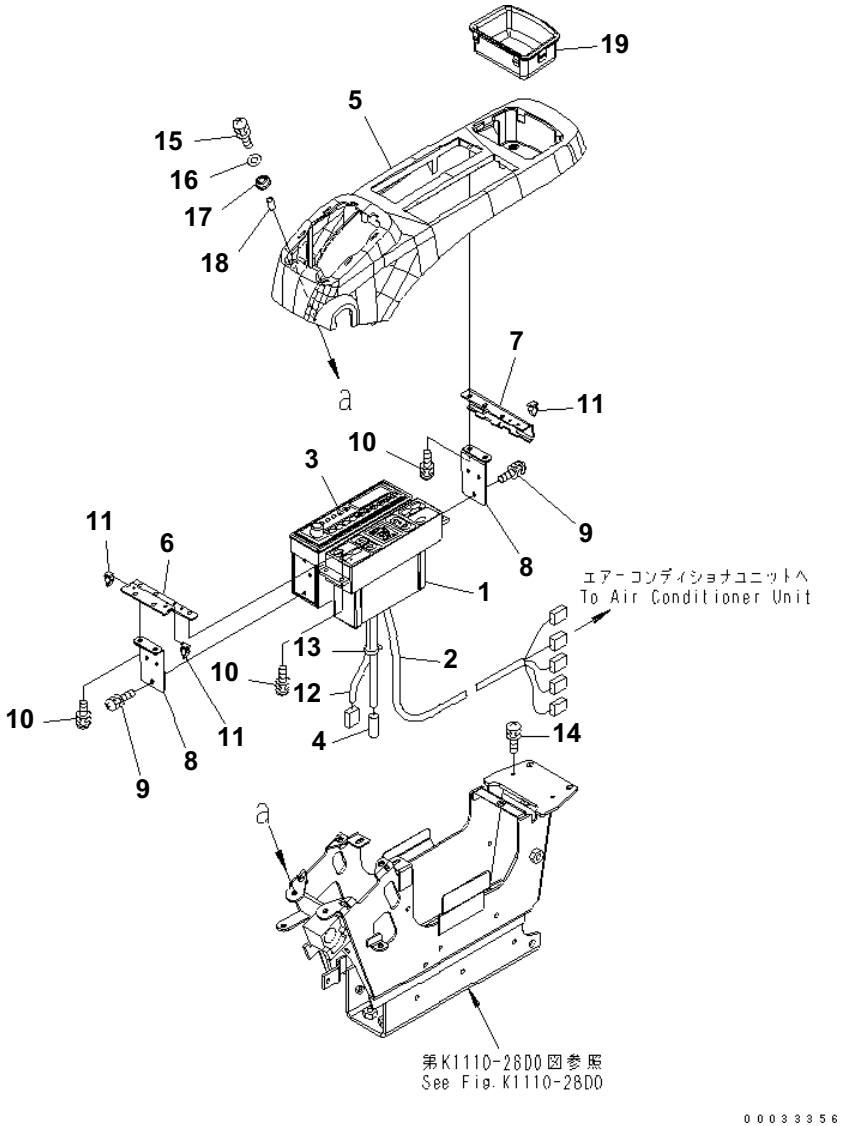

FLOOR FRAME (OPERATOR'S CAB) (CONSOLE) (UPPER) (WITH AIR CONDITIONER AND RADIO) (L.H.)(#B20200-)

Item	Part No.	Description	Qty	Options
1	208-979-7630	PANEL ASS'Y	1	SN:B20200--
2	208-979-7550	WIRING HARNESS	1	SN:B20200--
3	20Y-06-41248	RADIO	1	SN:.--
	□20Y-06-41240	RADIO	1	SN:B20200--.
4	08912-51600	CORD	1	SN:B20001--
5	208-43-71680	COVER	1	SN:B20200--
6	22U-43-22220	PLATE	1	SN:B20001--
7	22U-43-22230	STAY	1	SN:B20001--
8	22U-06-22510	BRACKET	2	SN:B20001--
9	01023-60510	SCREW	4	SN:B20001--
10	01023-60516	SCREW	10	SN:B20001--
11	20Y-06-23770	CLIP	3	SN:B20001--
12	22U-06-22350	WIRING HARNESS	1	SN:B20001--
13	08034-00310	BAND	1	SN:B20001--
14	01023-60620	SCREW	2	SN:B20200--
15	01023-60630	SCREW	2	SN:B20200--
16	01640-20610	WASHER	2	SN:B20200--
17	208-43-71610	CUSHION	2	SN:B20200--
18	208-43-71620	PIPE	2	SN:B20200--
19	22U-43-22110	TRAY	1	SN:B20001--

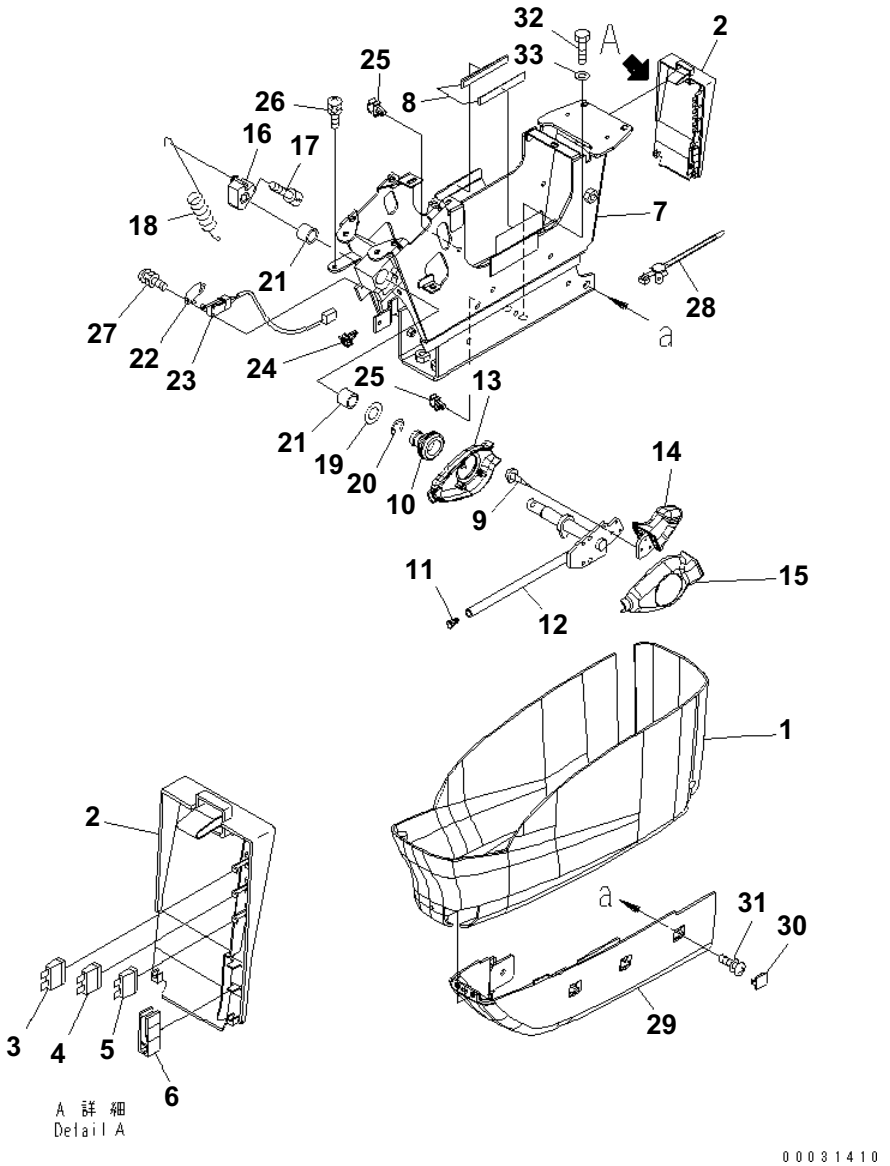

FLOOR FRAME (OPERATOR'S CAB) (CONSOLE¤ L.H.) (LOWER)(#B20200-)

Item	Part No.	Description	Qty	Options
1	22U-43-22310	COVER	1	SN:B20001--
	22U-43-22320	COVER ASS'Y	1	SN:B20001--
2	☆	· COVER	1	SN:B20001--
3	08041-01000	· FUSE¤ 10A	1	SN:B20001--
4	08041-02000	· FUSE¤ 20A	1	SN:B20001--
5	08041-02500	· FUSE¤ 25A	1	SN:B20001--
6	22U-43-22340	· PULLER	1	SN:B20001--
7	20Y-43-31412	FRAME	1	SN:B20200--
8	208-43-71410	· SHEET	2	SN:B20200--
	20Y-43-31504	LEVER ASS'Y	1	SN:.--
	□20Y-43-31503	LEVER ASS'Y	1	SN:B20200--.
9	01023-60410	· SCREW	6	SN:B20200--
10	08037-11425	· GROMMET	1	SN:B20200--
11	208-53-12280	· CAP	1	SN:B20200--
12	20Y-43-31513	· LEVER	1	SN:B20200--
13	20Y-43-31522	· COVER	1	SN:B20200--
14	20Y-43-31611	· KNOB	1	SN:B20200--
15	20Y-43-31621	· COVER	1	SN:B20200--
16	20Y-43-31432	CAM	1	SN:B20200--
17	01252-70816	BOLT	1	SN:B20200--
18	20Y-43-31421	SPRING	1	SN:B20200--
19	20Y-43-31440	RING	1	SN:B20001--
20	20Y-43-31450	RING	1	SN:B20001--
21	06124-01616	BEARING	2	SN:B20001--
22	22U-06-22490	PLATE	1	SN:B20001--
23	22U-06-22360	SWITCH ASS'Y	1	SN:B20001--
24	22U-43-22410	CLIP	1	SN:B20001--
25	22U-43-23260	CLIP	2	SN:B20200--
26	01023-60616	SCREW	4	SN:B20001--
27	01023-60316	SCREW	2	SN:B20200--
28	22U-43-22430	CLIP	1	SN:B20001--
29	20Y-43-31690	COVER	1	SN:B20001--
30	22U-43-22830	CAP	3	SN:B20001--
31	01023-20614	SCREW	4	SN:B20001--
32	01010-81030	BOLT	4	SN:B20001--
33	01643-31032	WASHER	4	SN:B20001--

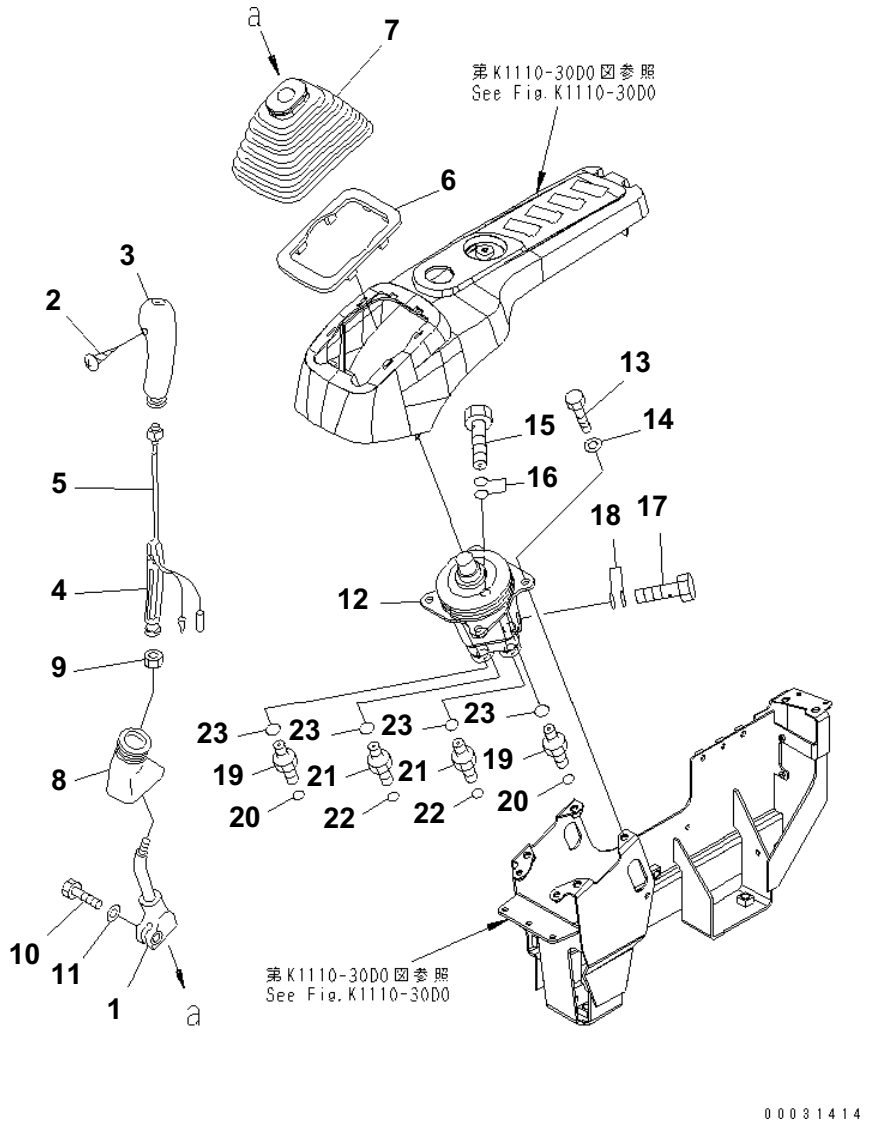

FLOOR FRAME (OPERATOR'S CAB) (LEVER AND VALVE) (R.H.)(#B20200-)

Item	Part No.	Description	Qty	Options
1	20Y-43-22221	LEVER	1	SN:B20001--
	22U-43-21191	KNOB	1	SN:B20001--
2	01370-10308	· SCREW	1	SN:B20001--
3	20Y-43-22390	· KNOB	1	SN:B20001--
4	20Y-43-22421	· INSERT	1	SN:B20001--
5	22U-43-21211	· SWITCH	1	SN:B20001--
6	20Y-43-22250	PLATE	1	SN:B20001--
7	20Y-43-22261	BOOT	1	SN:B20001--
8	20Y-43-22370	BOOT	1	SN:B20001--
9	600-411-1280	NUT	1	SN:B20001--
10	01252-41025	BOLT	1	SN:B20001--
11	01643-51032	WASHER	1	SN:B20001--
12	(702-16-03910)	PILOT VALVE	1	SN:B20001--
13	01010-80820	BOLT	4	SN:B20001--
14	01643-30823	WASHER	4	SN:B20001--
15	20Y-62-18910	BOLT	1	SN:B20001--
16	07000-12018	O-RING	2	SN:B20001--
17	20Y-62-18890	BOLT	1	SN:B20001--
18	07000-12015	O-RING	2	SN:B20001--
19	11Y-62-12130	NIPPLE	2	SN:B20001--
20	02896-11008	O-RING	2	SN:B20001--
21	11Y-62-12520	NIPPLE	2	SN:B20001--
22	02896-11009	O-RING	2	SN:B20001--
23	07002-11423	O-RING	4	SN:B20001--

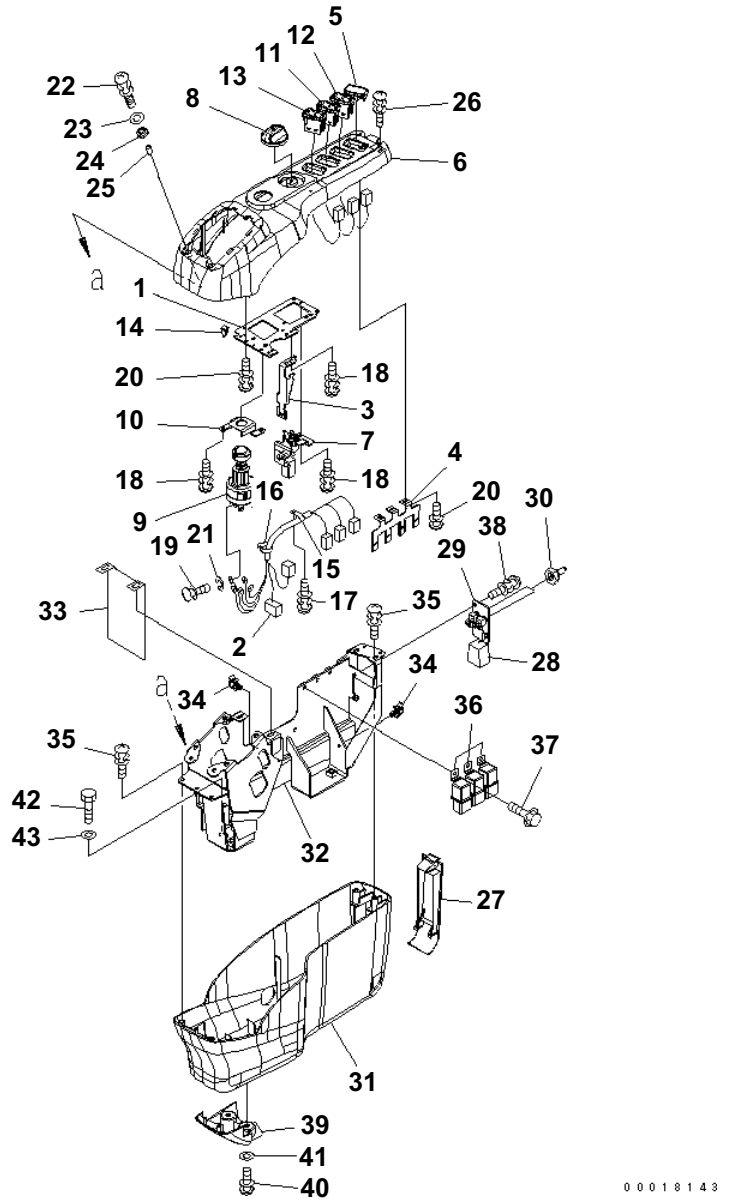

FLOOR FRAME (OPERATOR'S CAB) (CONSOLE) (MASTER KEY) (R.H.)(#B20200-)

Item	Part No.	Description	Qty	Options
1	22U-43-23111	PLATE	1	SN:B20200--
2	22U-06-22330	WIRING HARNESS	1	SN:B20001--
3	22U-43-23120	BRACKET	1	SN:B20001--
4	22U-43-23130	STAY	1	SN:B20001--
5	22U-06-22320	COVER	1	SN:B20001--
6	208-43-71690	COVER	1	SN:B20200--
7	22U-06-22420	POTENTIOMETER ASS'Y	1	SN:B20001--
8	22U-06-22470	KNOB	1	SN:B20001--
9	08086-20000	SWITCH	1	SN:B20001--
10	22U-06-22480	PLATE	1	SN:B20001--
11	22U-06-22190	SWITCH	1	SN:B20001--
12	22U-06-22290	SWITCH	1	SN:B20001--
13	22U-06-22390	SWITCH	1	SN:B20001--
14	20Y-06-23770	CLIP	2	SN:B20001--
15	20Y-06-23920	CLAMP	1	SN:B20001--
16	08034-10414	BAND	2	SN:B20001--
17	01023-60408	SCREW	1	SN:B20200--
18	01023-60512	SCREW	6	SN:B20001--
19	01023-10508	SCREW	5	SN:B20001--
20	01023-10512	SCREW	6	SN:B20001--
21	01601-20513	WASHER	5	SN:B20001--
22	01023-60630	SCREW	2	SN:B20200--
23	01640-20610	WASHER	2	SN:B20200--
24	208-43-71610	CUSHION	2	SN:B20200--
25	208-43-71620	PIPE	2	SN:B20200--
26	01023-70514	SCREW	2	SN:B20001--
27	22U-43-23210	COVER	1	SN:B20001--
	20Y-06-31320	SWITCH ASS'Y	1	SN:B20001--
28	20Y-06-31330	· WIRING HARNESS	1	SN:B20001--
29	☆	· PLATE	1	SN:B20001--
30	208-43-71420	· CAP	2	SN:B20001--
31	22U-43-23230	COVER	1	SN:B20001--
32	208-43-71670	FRAME	1	SN:B20200--
33	22U-43-23250	SHEET	1	SN:B20001--
34	22U-43-23260	CLIP	2	SN:B20001--
35	01023-60616	SCREW	4	SN:B20001--
36	569-06-61960	RELAY	3	SN:B20001--
37	01435-00612	BOLT	3	SN:B20001--
38	01023-60410	SCREW	2	SN:B20200--

PC160LC-7B S/N B20001 AND UP

FLOOR FRAME (OPERATOR'S CAB) (CONSOLE) (MASTER KEY) (R.H.)(#B20200-)

Item	Part No.	Description	Qty	Options
39	22U-43-23711	COVER	1	SN:B20001--
40	01023-10614	SCREW	2	SN:B20001--
41	01643-30623	WASHER	2	SN:B20001--
42	01010-81030	BOLT	4	SN:B20001--
43	01643-31032	WASHER	4	SN:B20001--

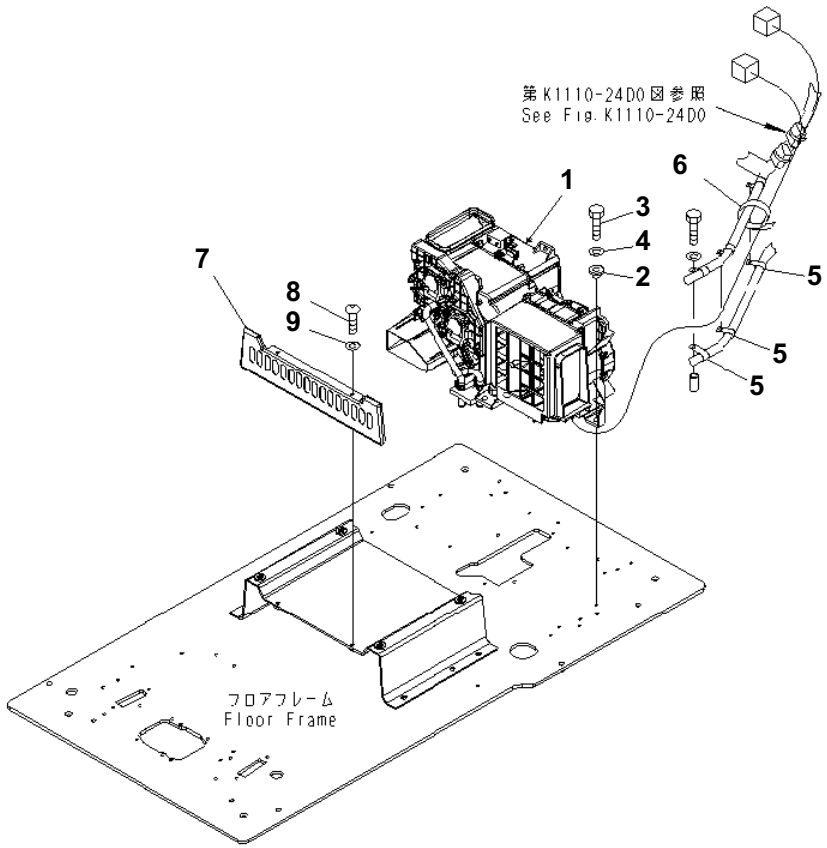

FLOOR FRAME (OPERATOR'S CAB) (AIR CONDITIONER AND FOOT COVER)(#B20200-)

Item	Part No.	Description	Qty	Options
1	208-979-7610	AIR CONDITIONER	1	SN:B20200--
2	208-979-7540	COLLAR	7	SN:B20200--
3	01010-80825	BOLT	7	SN:B20200--
4	01643-30823	WASHER	7	SN:B20200--
5	04434-51410	CLIP	2	SN:B20200--
6	08034-20536	BAND	1	SN:B20200--
7	208-43-71580	COVER	1	SN:B20200--
8	01245-00820	SCREW	2	SN:B20001--
9	01643-70823	WASHER	2	SN:B20001--

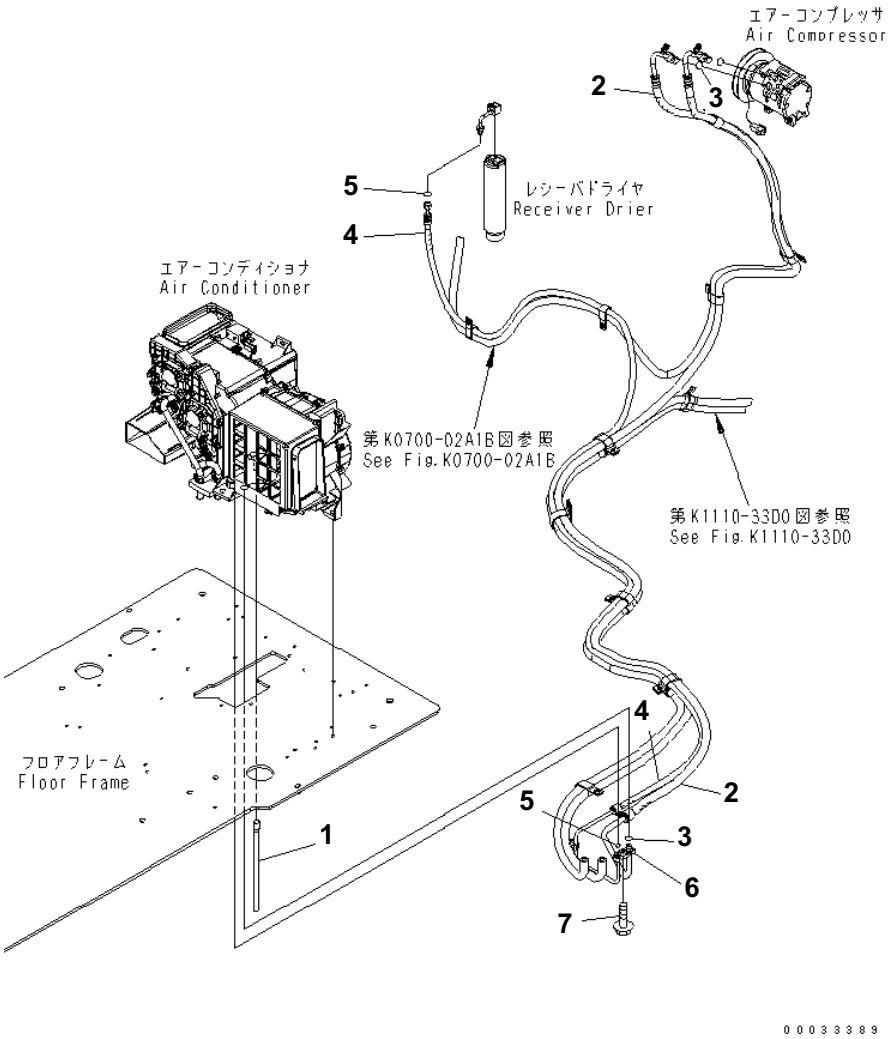

FLOOR FRAME (OPERATOR'S CAB) (AIR CONDITIONER HOSE)(#B20200-)

Item	Part No.	Description	Qty	Options
1	208-979-7640	HOSE	1	SN:B20200--
2	21K-979-7350	HOSE	1	SN:B20200--
3	20Y-979-3130	・ O-RING	2	SN:B20001--
4	21K-979-7341	HOSE	1	SN:B20200--
5	20Y-979-3150	・ O-RING	2	SN:B20001--
6	208-979-7650	CONNECTOR	1	SN:B20200--
7	01435-40620	BOLT	1	SN:B20200--

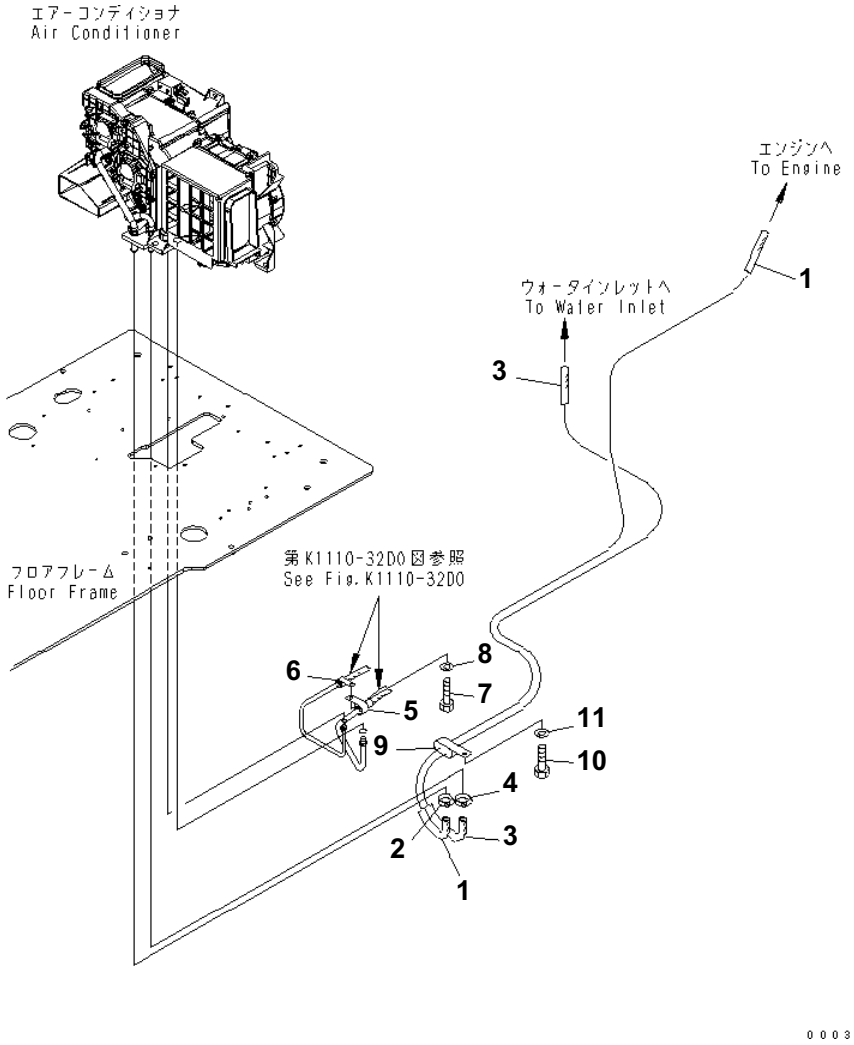

FLOOR FRAME (OPERATOR'S CAB) (HEATER HOSE AND CLAMP) (WITH AIR CONDITIONER)(#B20200-)

Item	Part No.	Description	Qty	Options
1	21K-979-7371	HOSE ASS'Y	1	SN:B20200--
2	09479-02400	CLAMP	1	SN:B20200--
3	21K-979-7361	HOSE ASS'Y	1	SN:B20200--
4	09479-02400	CLAMP	1	SN:B20200--
5	04434-52511	CLIP	1	SN:B20200--
6	04434-51810	CLIP	1	SN:B20200--
7	01010-81020	BOLT	1	SN:B20200--
8	01643-31032	WASHER	1	SN:B20200--
9	141-06-11220	CLIP	1	SN:B20001--
10	01010-81016	BOLT	1	SN:B20001--
11	01643-31032	WASHER	1	SN:B20001--

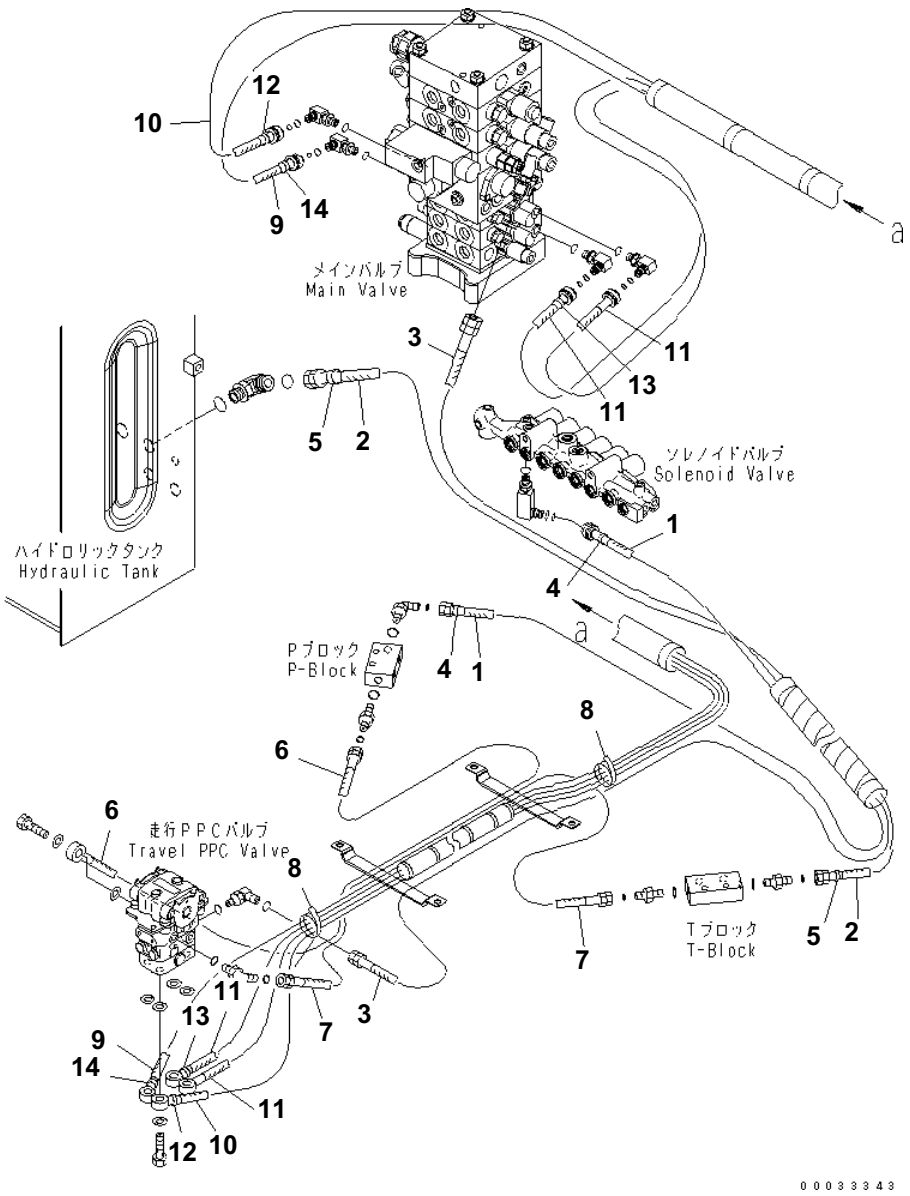

FLOOR FRAME (OPERATOR'S CAB) (PPC HOSE) (1/2)(#B20200-)

Item	Part No.	Description	Qty	Options
1	20Y-62-44620	HOSE	1	SN:B20200--
2	02760-00327	HOSE	1	SN:B20200--
3	02760-00235	HOSE	1	SN:B20001--
4	20Y-62-22790	BAND¤ RED	2	SN:B20001--
5	20Y-62-22820	BAND¤ BLUE	2	SN:B20001--
6	20Y-62-44630	HOSE	1	SN:B20200--
7	02760-002A9	HOSE	1	SN:B20200--
8	08034-20834	BAND	2	SN:B20001--
9	21K-62-71860	HOSE¤ 3300MM	1	SN:B20001--
10	21K-62-71870	HOSE¤ 3350MM	1	SN:B20001--
11	21K-62-72160	HOSE¤ 3100MM	2	SN:B20001--
12	20Y-62-22790	BAND¤ RED	2	SN:B20001--
13	20Y-62-22820	BAND¤ BLUE	2	SN:B20001--
14	20Y-62-22850	BAND¤ GREEN	2	SN:B20001--

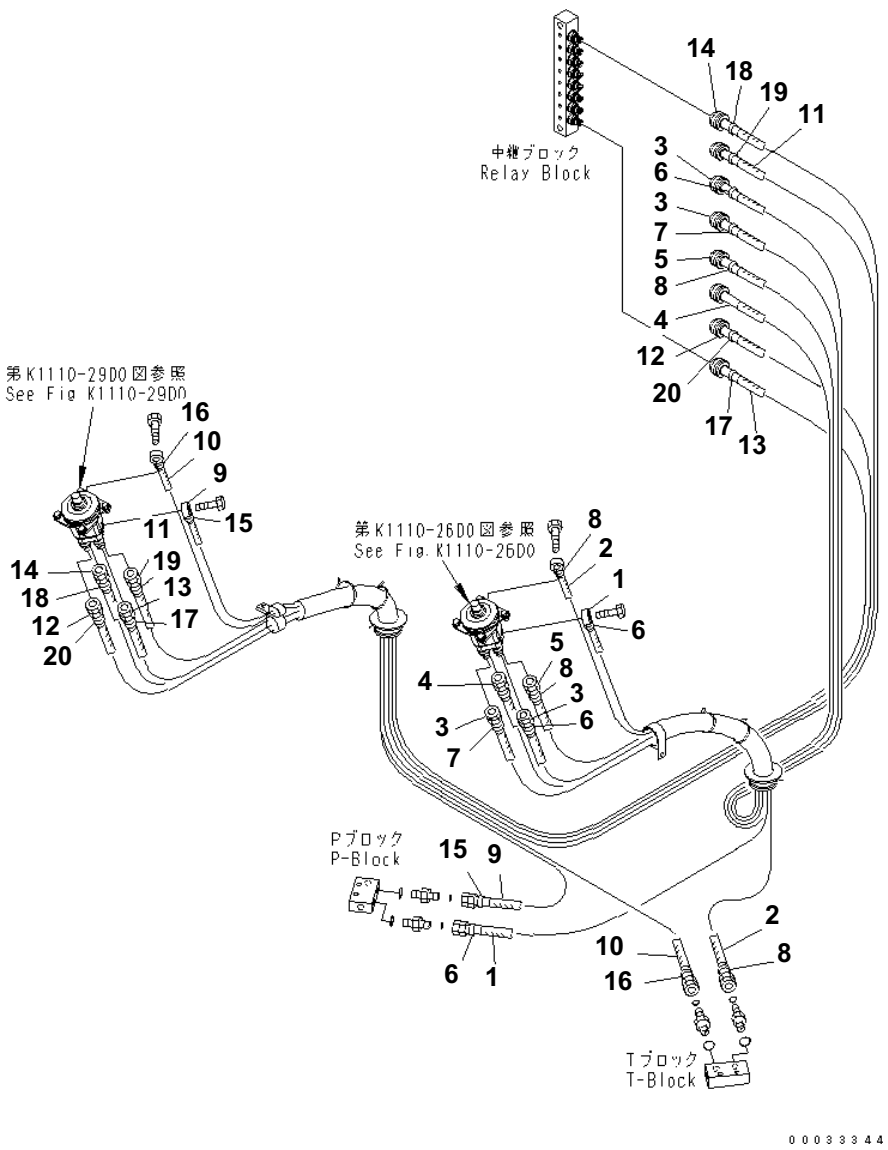

FLOOR FRAME (OPERATOR'S CAB) (PPC HOSE) (2/2)(#B20200-)

Item	Part No.	Description	Qty	Options
1	208-62-72770	HOSE¤ 1450MM	1	SN:B20200--
2	208-62-72780	HOSE¤ 1400MM	1	SN:B20200--
3	21K-62-71830	HOSE¤ 2050MM	2	SN:B20001--
4	21K-62-71810	HOSE¤ 1950MM	1	SN:B20001--
5	21K-62-71820	HOSE¤ 2000MM	1	SN:B20001--
6	20Y-62-22790	BAND¤ RED	4	SN:B20001--
7	20Y-62-22810	BAND¤ YELLOW	2	SN:B20001--
8	20Y-62-22820	BAND¤ BLUE	4	SN:B20001--
9	208-62-72860	HOSE¤ 1400MM	1	SN:B20200--
10	208-62-72870	HOSE¤ 1500MM	1	SN:B20200--
11	20Y-62-43510	HOSE¤ 2350MM	1	SN:B20001--
12	20Y-62-43490	HOSE¤ 2400MM	1	SN:B20001--
13	21K-62-71850	HOSE¤ 2250MM	1	SN:B20001--
14	21K-62-71840	HOSE¤ 2350MM	1	SN:B20001--
15	20Y-62-22790	BAND¤ RED	2	SN:B20001--
16	20Y-62-22820	BAND¤ BLUE	2	SN:B20001--
17	20Y-62-22830	BAND¤ WHITE	2	SN:B20001--
18	20Y-62-22840	BAND¤ BLACK	2	SN:B20001--
19	20Y-62-22850	BAND¤ GREEN	2	SN:B20001--
20	20Y-62-22860	BAND¤ BROWN	2	SN:B20001--

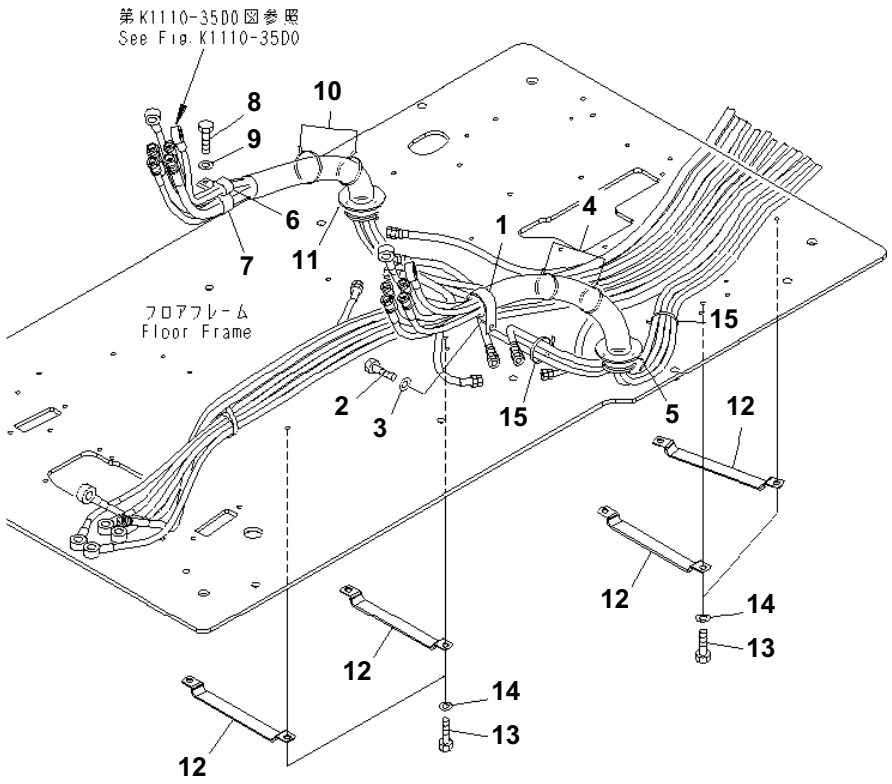

FLOOR FRAME (OPERATOR'S CAB) (PPC CLAMP)(#B20200-)

Item	Part No.	Description	Qty	Options
1	04434-53211	CLIP	1	SN:B20001--
2	01010-81020	BOLT	1	SN:B20001--
3	01643-31032	WASHER	1	SN:B20001--
4	08034-20536	BAND	2	SN:B20001--
5	08034-20536	BAND	1	SN:B20001--
6	04435-51310	CLIP	1	SN:B20001--
7	04434-53411	CLIP	1	SN:B20001--
8	01010-81020	BOLT	1	SN:B20001--
9	01643-31032	WASHER	1	SN:B20001--
10	08034-20536	BAND	2	SN:B20001--
11	08034-20536	BAND	1	SN:B20001--
12	20Y-62-27770	CLAMP	4	SN:B20001--
13	01010-81016	BOLT	8	SN:B20200--
14	01643-31032	WASHER	8	SN:B20200--
15	08034-20536	BAND	2	SN:B20200--

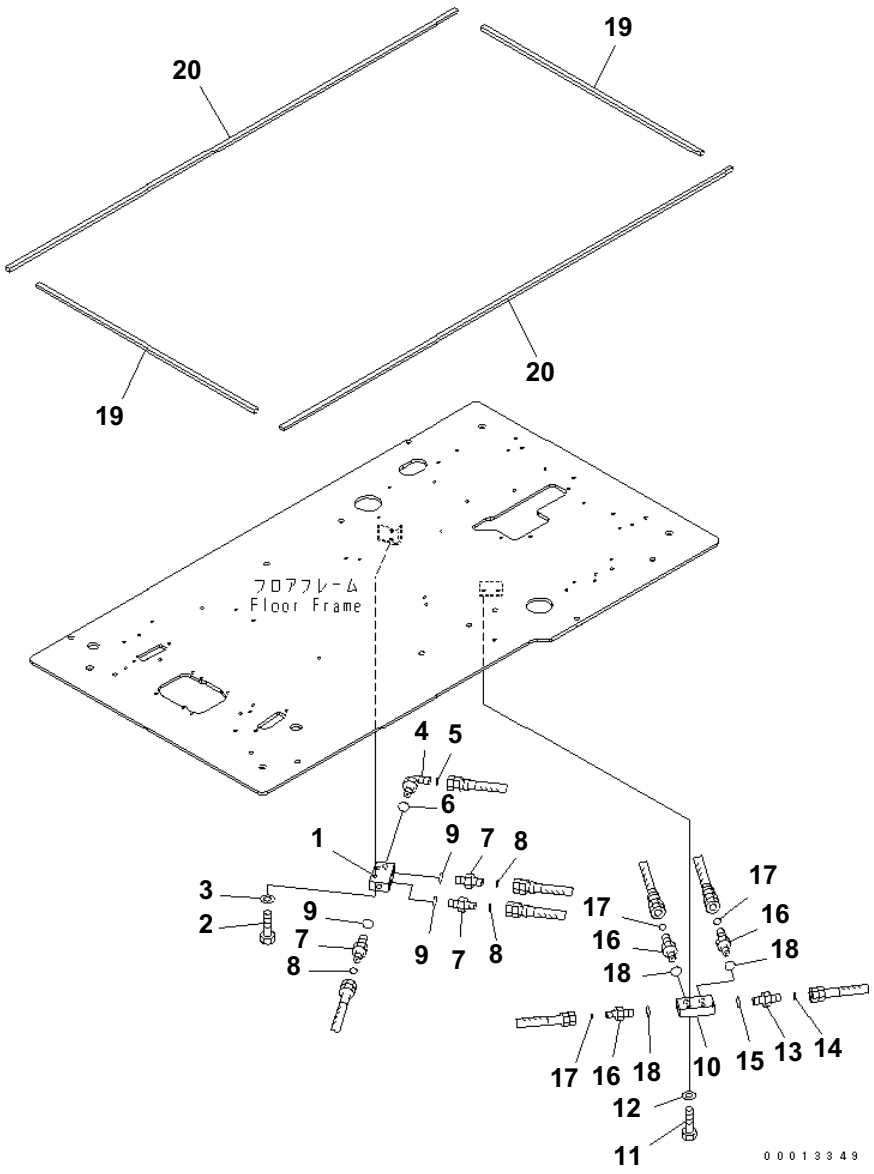

FLOOR FRAME (OPERATOR'S CAB) (P¤ T BLOCK AND SEAL)(#B20200-)

Item	Part No.	Description	Qty	Options
1	20Y-62-15831	BLOCK	1	SN:B20001--
2	01010-81045	BOLT	2	SN:B20001--
3	01643-31032	WASHER	2	SN:B20001--
4	02782-10311	ELBOW	1	SN:B20200--
5	02896-11009	O-RING	1	SN:B20001--
6	07002-11423	O-RING	1	SN:B20001--
7	02781-0021D	UNION	3	SN:B20200--
8	02896-11008	O-RING	3	SN:B20001--
9	07002-11423	O-RING	3	SN:B20001--
10	20Y-62-15831	BLOCK	1	SN:B20001--
11	01010-81045	BOLT	2	SN:B20001--
12	01643-31032	WASHER	2	SN:B20001--
13	02781-0031D	UNION	1	SN:B20200--
14	02896-11009	O-RING	1	SN:B20001--
15	07002-11423	O-RING	1	SN:B20001--
16	02781-0021D	UNION	3	SN:B20200--
17	02896-11008	O-RING	3	SN:B20001--
18	07002-11423	O-RING	3	SN:B20001--
19	208-53-11810	SEAL	2	SN:B20200--
20	208-53-11820	SEAL	2	SN:B20200--

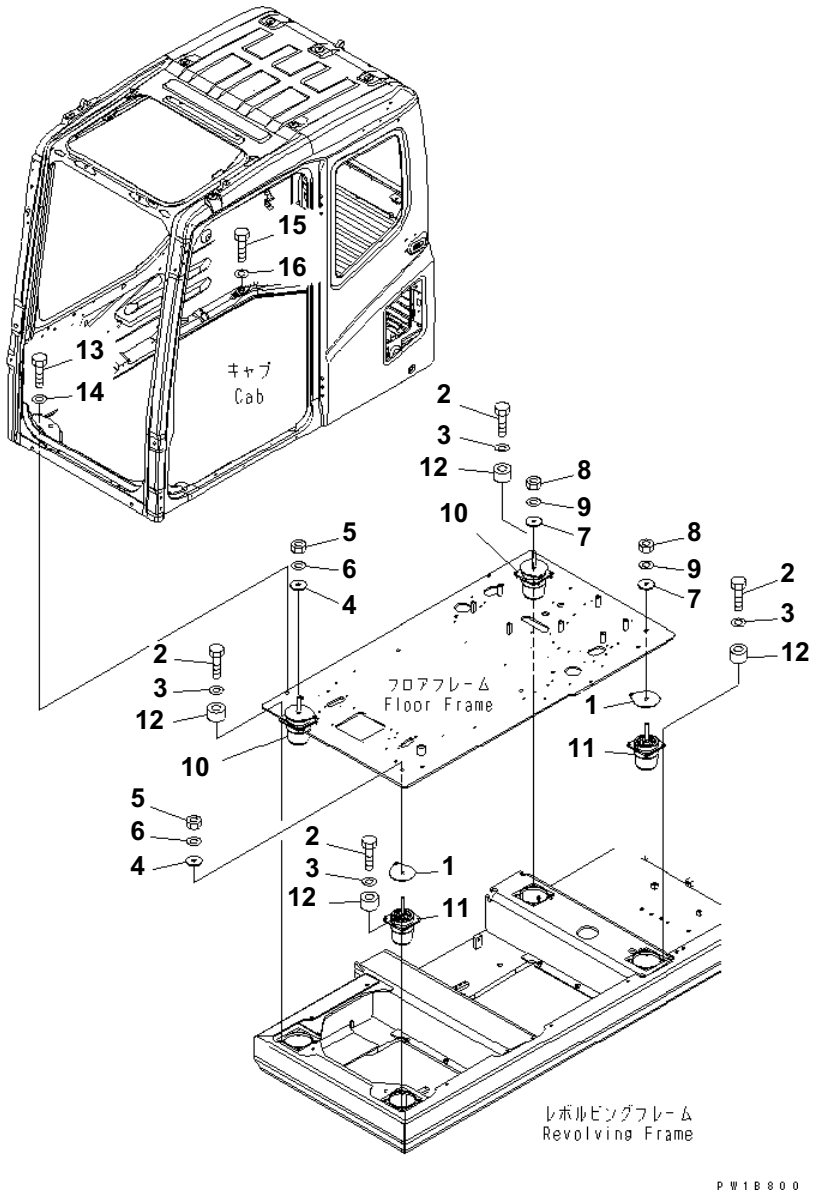

FLOOR MOUNT(#B20001-B20199)

Item	Part No.	Description	Qty	Options
1	207-54-65130	SPACER	4	SN:B20001--B20199
2	01010-81035	BOLT	16	SN:B20001--@
3	01643-31032	WASHER	16	SN:B20001--@
4	113-01-21120	WASHER	2	SN:B20001--@
5	01580-11613	NUT	2	SN:B20001--@
6	01643-31645	WASHER	2	SN:B20001--@
7	21T-27-71220	HOLDER	2	SN:B20001--@
8	01580-11613	NUT	2	SN:B20001--@
9	01643-31645	WASHER	2	SN:B20001--@
10	20Y-54-65810	CUSHION	2	SN:B20001--B20199
11	20Y-54-65820	CUSHION	2	SN:B20001--B20199
12	20Y-54-65860	SPACER	4	SN:B20001--B20001
13	01010-81240	BOLT	2	SN:B20001--@
14	01643-31232	WASHER	2	SN:B20001--@
15	01010-81285	BOLT	3	SN:B20001--@
16	01643-31232	WASHER	3	SN:B20001--@

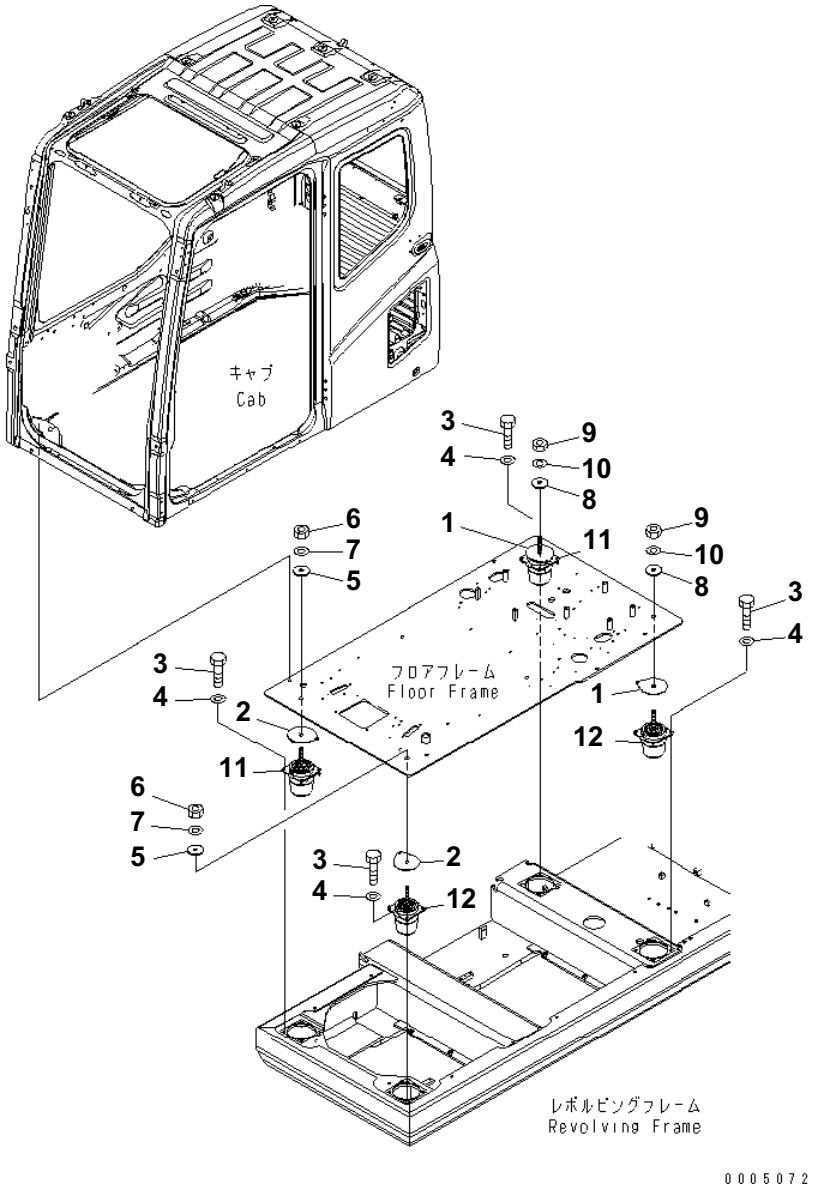

FLOOR MOUNT(#B20200-)

Item	Part No.	Description	Qty	Options
1	207-54-65132	SPACER	2	SN:B20200--
2	207-54-65260	SPACER	2	SN:B20200--
3	01010-81035	BOLT	16	SN:B20001--
4	01643-31032	WASHER	16	SN:B20001--
5	113-01-21120	WASHER	2	SN:B20001--
6	01580-11613	NUT	2	SN:B20001--
7	01643-31645	WASHER	2	SN:B20001--
8	21T-27-71220	HOLDER	2	SN:B20001--
9	01580-11613	NUT	2	SN:B20001--
10	01643-31645	WASHER	2	SN:B20001--
11	20Y-54-65811	CUSHION	2	SN:B20200--
12	20Y-54-65821	CUSHION	2	SN:B20200--

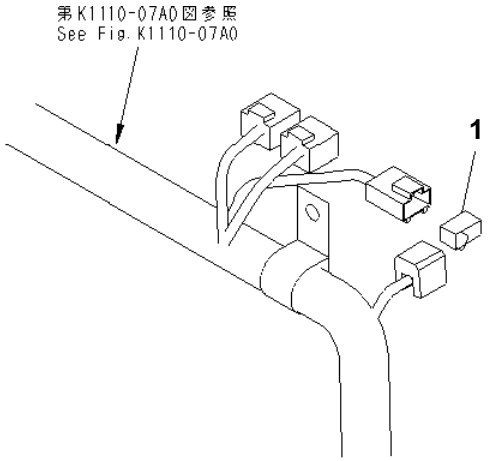

PW1B801

SWITCH

Item	Part No.	Description	Qty	Options
1	21P-06-K2340	SWITCH	1	SN:B20001--

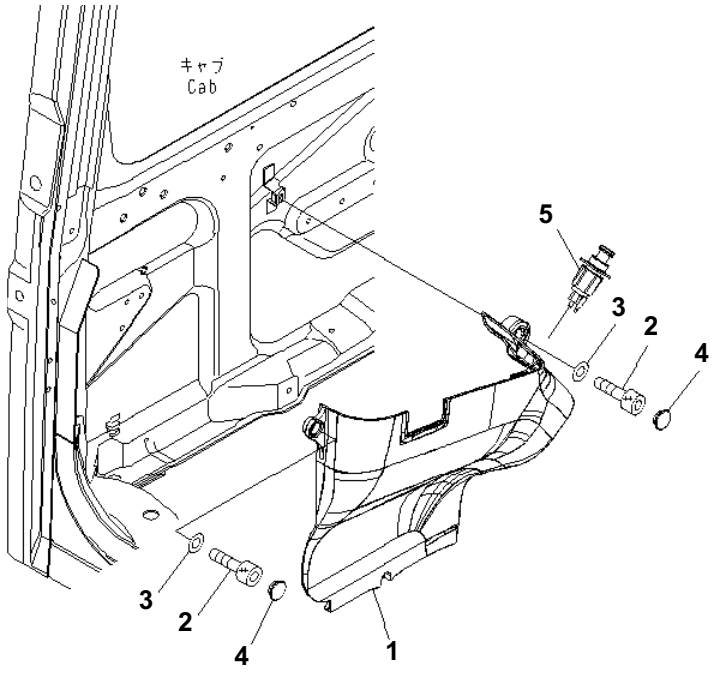

COVER

Item	Part No.	Description	Qty	Options
1	22U-54-25231	COVER	1	SN:B20001--B20526
2	01252-70616	BOLT	3	SN:B20001--B20526
3	01643-30623	WASHER	3	SN:B20001--B20526
4	22U-54-25351	CAP	2	SN:B20001--B20526
5	20Y-06-23472	LIGHTER	1	SN:B20001--B20526

GUARD

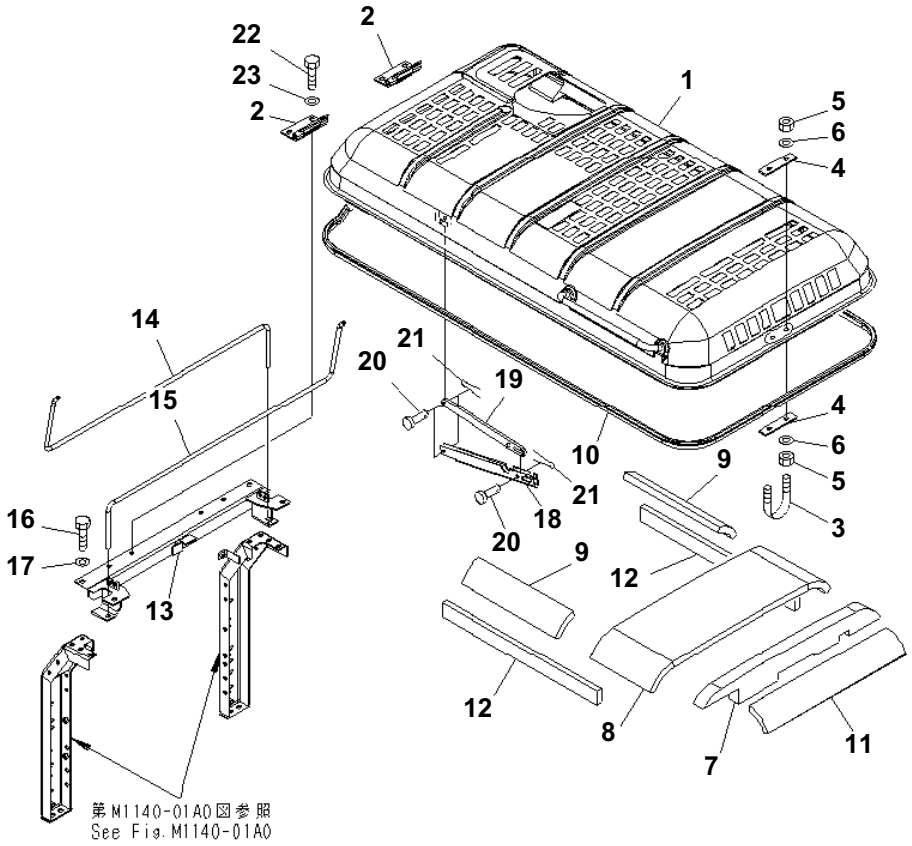

HOOD

Item	Part No.	Description	Qty	Options
1	21K-54-B7110	HOOD	1	SN:B20338--
	21K-54-71112	HOOD	1	SN:B20001--B20337
2	20Y-54-27123	HINGE (WELDED)	2	SN:B20001--
3	20Y-54-27172	U-BOLT	1	SN:B20001--
4	20Y-54-27330	PLATE	2	SN:B20001--
5	01580-11210	NUT	4	SN:B20001--
6	01643-31232	WASHER	4	SN:B20001--
7	21K-54-B7120	SHEET	1	SN:B20338--
	21K-54-71122	SHEET	1	SN:B20001--B20337
8	21K-54-71131	SHEET	1	SN:B20001--
9	20Y-54-25681	SHEET	2	SN:B20001--
10	20Y-54-29291	SEAL	1	SN:B20001--
11	21K-54-71140	SHEET	1	SN:B20001--
12	21K-54-71150	SHEET	2	SN:B20001--
13	20Y-54-61240	FRAME	1	SN:B20001--
14	20Y-54-27141	SPRING	1	SN:B20001--
15	20Y-54-27131	SPRING	1	SN:B20001--
16	01010-81230	BOLT	2	SN:B20001--
17	01643-31232	WASHER	2	SN:B20001--
18	20Y-54-27370	STAY	1	SN:B20001--
19	20Y-54-27290	STAY	1	SN:B20001--
20	04205-11230	PIN	3	SN:B20001--
21	04050-13022	PIN	3	SN:B20001--
22	01010-81230	BOLT	4	SN:B20001--
23	01643-31232	WASHER	4	SN:B20001--

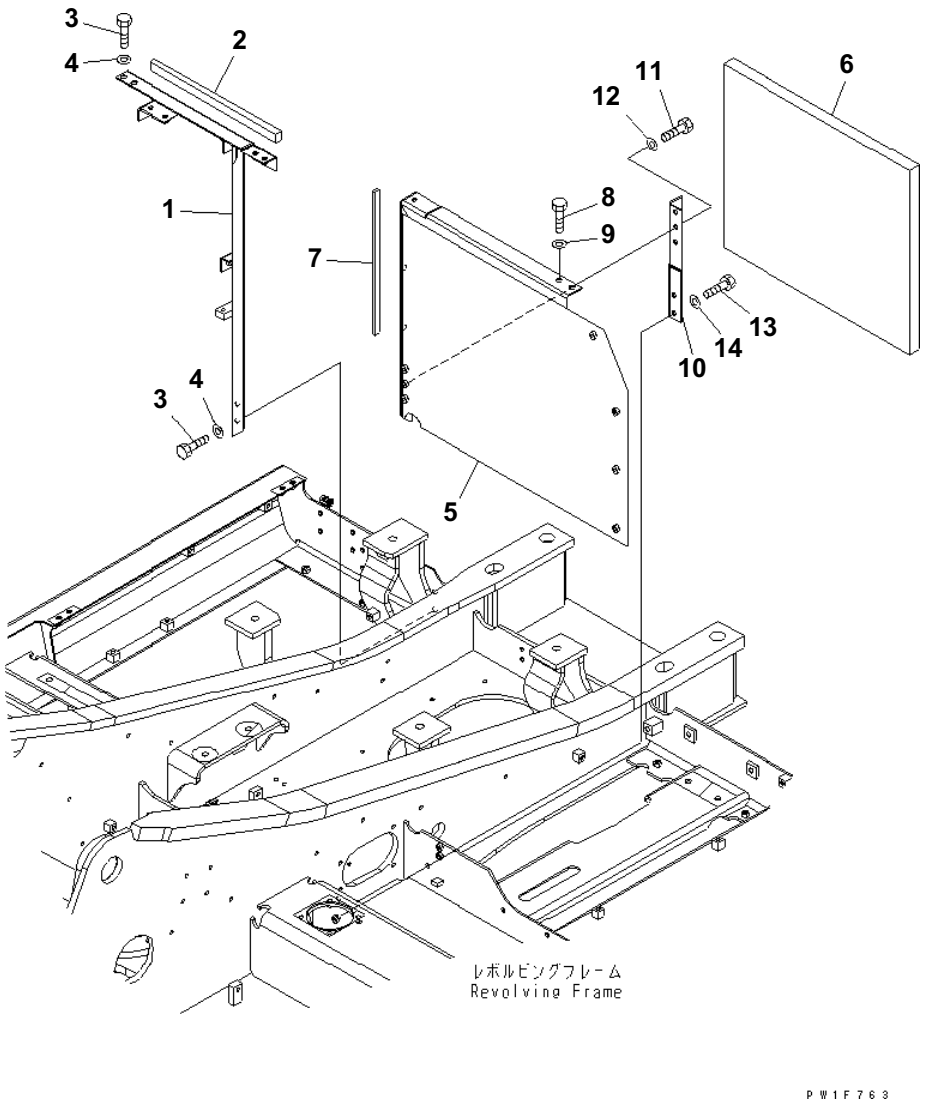

FRAME (MACHINE CAB)

Item	Part No.	Description	Qty	Options
	21K-54-71211	FRAME	1	SN:B20001--
1	☆	・FRAME	1	SN:B20001--
2	21K-54-71231	SHEET	1	SN:B20001--
3	01010-81230	BOLT	4	SN:B20001--
4	01643-31232	WASHER	4	SN:B20001--
	21K-54-71241	FRAME	1	SN:B20001--
5	☆	・FRAME	1	SN:B20001--
6	21K-54-71280	・SHEET	1	SN:B20001--
7	21K-54-71290	・SHEET	1	SN:B20001--
8	01010-81230	BOLT	2	SN:B20001--
9	01643-31232	WASHER	2	SN:B20001--
10	21K-54-71270	FRAME	1	SN:B20001--
11	01010-81225	BOLT	3	SN:B20001--
12	01643-31232	WASHER	3	SN:B20001--
13	01010-81230	BOLT	2	SN:B20001--
14	01643-31232	WASHER	2	SN:B20001--

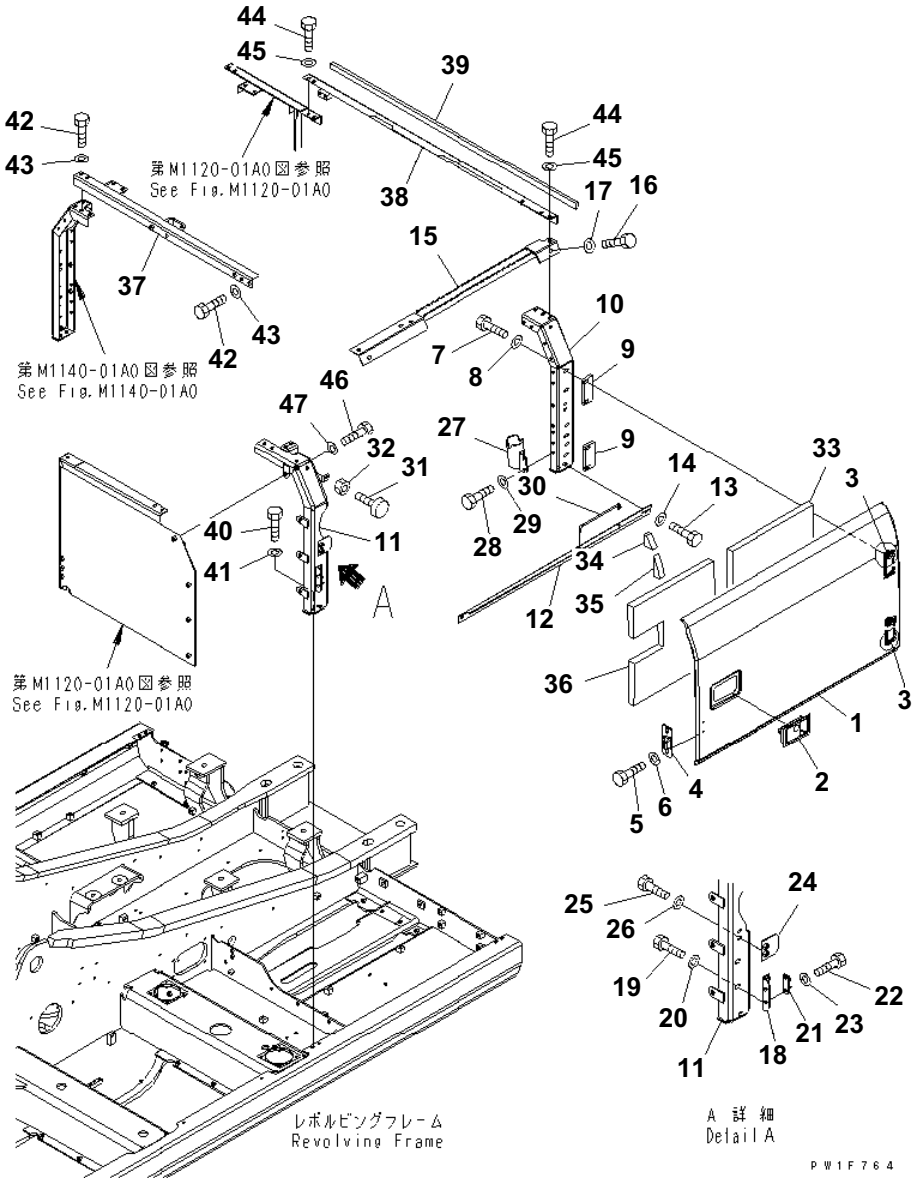

LEFT SIDE DOOR (MACHINE CAB)

Item	Part No.	Description	Qty	Options
1	21K-54-71371	COVER	1	SN:B20001--
2	198-54-41982	· LOCK ASS'Y	1	SN:B20001--
3	203-54-62180	· HINGE (WELDED)	2	SN:B20001--
4	205-54-53550	DOVE TAIL	1	SN:B20001--
5	01010-80612	BOLT	2	SN:B20001--
6	01643-30623	WASHER	2	SN:B20001--
7	01010-81235	BOLT	4	SN:B20001--
8	01643-31232	WASHER	4	SN:B20001--
9	20Y-54-28291	PLATE	2	SN:B20001--
10	20Y-54-61411	FRAME	1	SN:B20001--
11	21K-54-71411	FRAME	1	SN:B20001--
12	21K-54-71420	PLATE	1	SN:B20001--
13	01010-81225	BOLT	2	SN:B20001--
14	01643-31232	WASHER	2	SN:B20001--
15	21K-54-71431	FRAME	1	SN:B20001--
16	01010-81230	BOLT	2	SN:B20001--
17	01643-31232	WASHER	2	SN:B20001--
18	20Y-54-28170	BRACKET	1	SN:B20001--
19	01010-81230	BOLT	2	SN:B20001--
20	01643-31232	WASHER	2	SN:B20001--
21	205-54-51970	DOVE TAIL	1	SN:B20001--
22	01010-80616	BOLT	2	SN:B20001--
23	01643-30623	WASHER	2	SN:B20001--
24	20Y-54-61470	PLATE	1	SN:B20001--
25	01010-81230	BOLT	2	SN:B20001--
26	01643-31232	WASHER	2	SN:B20001--
27	20Y-54-61371	BRACKET	1	SN:B20001--
28	01010-81230	BOLT	2	SN:B20001--
29	01643-31232	WASHER	2	SN:B20001--
30	20Y-54-29231	BAR	1	SN:B20001--
31	20Y-54-11611	STOPPER	1	SN:B20001--
32	01580-11008	NUT	1	SN:B20001--
33	20Y-54-61451	SHEET	1	SN:B20001--
34	21K-54-72240	SHEET	1	SN:B20001--
35	21K-54-72250	SHEET	1	SN:B20001--
36	21K-54-71380	SHEET	1	SN:B20001--
37	21K-54-71461	FRAME	1	SN:B20001--
	21K-54-71471	FRAME	1	SN:B20001--
38	☆	· FRAME	1	SN:B20001--
39	21K-54-71491	· SHEET	1	SN:B20001--

PC160LC-7B S/N B20001 AND UP

LEFT SIDE DOOR (MACHINE CAB)

Item	Part No.	Description	Qty	Options
40	01010-81230	BOLT	4	SN:B20001--
41	01643-31232	WASHER	4	SN:B20001--
42	01010-81230	BOLT	6	SN:B20001--
43	01643-31232	WASHER	6	SN:B20001--
44	01010-81230	BOLT	3	SN:B20001--
45	01643-31232	WASHER	3	SN:B20001--
46	01010-81225	BOLT	4	SN:B20001--
47	01643-31232	WASHER	4	SN:B20001--

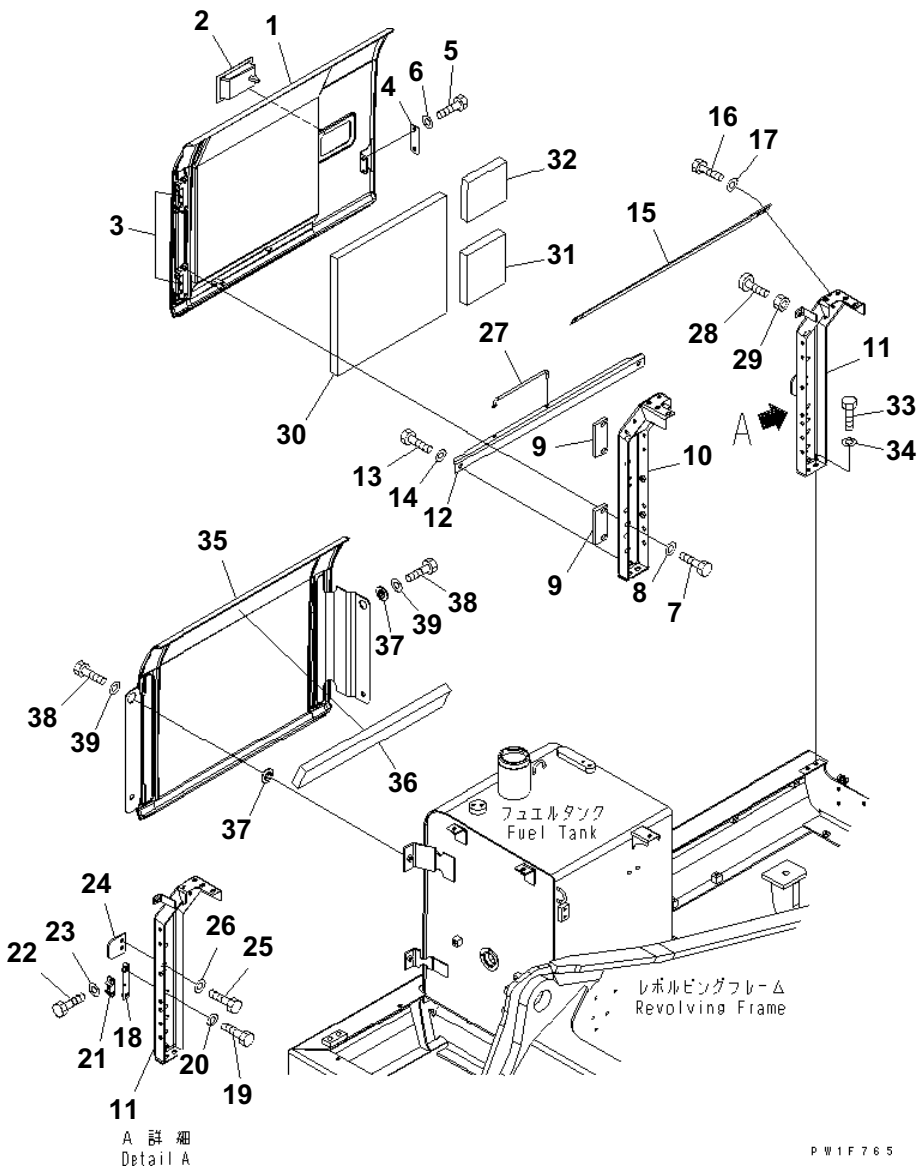

RIGHT SIDE DOOR (MACHINE CAB)

Item	Part No.	Description	Qty	Options
1	21K-54-71390	COVER	1	SN:B20001--
2	198-54-41982	· LOCK ASS'Y	1	SN:B20001--
3	203-54-62180	· HINGE (WELDED)	2	SN:B20001--
4	205-54-53550	DOVE TAIL	1	SN:B20001--
5	01010-80612	BOLT	2	SN:B20001--
6	01643-30623	WASHER	2	SN:B20001--
7	01010-81235	BOLT	4	SN:B20001--
8	01643-31232	WASHER	4	SN:B20001--
9	20Y-54-28291	PLATE	2	SN:B20001--
10	21K-54-71340	FRAME	1	SN:B20001--
11	21K-54-71350	FRAME	1	SN:B20001--
12	20Y-54-61431	PLATE	1	SN:B20001--
13	01010-81225	BOLT	2	SN:B20001--
14	01643-31232	WASHER	2	SN:B20001--
15	21K-54-71360	PLATE	1	SN:B20001--
16	01010-81230	BOLT	4	SN:B20001--
17	01643-31232	WASHER	4	SN:B20001--
18	20Y-54-28170	BRACKET	1	SN:B20001--
19	01010-81230	BOLT	2	SN:B20001--
20	01643-31232	WASHER	2	SN:B20001--
21	205-54-51970	DOVE TAIL	1	SN:B20001--
22	01010-80616	BOLT	2	SN:B20001--
23	01643-30623	WASHER	2	SN:B20001--
24	20Y-54-61470	PLATE	1	SN:B20001--
25	01010-81230	BOLT	2	SN:B20001--
26	01643-31232	WASHER	2	SN:B20001--
27	20Y-54-29231	BAR	1	SN:B20001--
28	20Y-54-11611	STOPPER	1	SN:B20001--
29	01580-11008	NUT	1	SN:B20001--
30	20Y-54-61451	SHEET	1	SN:B20001--
31	20Y-54-63360	SHEET	1	SN:B20001--
32	20Y-54-63370	SHEET	1	SN:B20001--
33	01010-81230	BOLT	4	SN:B20001--
34	01643-31232	WASHER	4	SN:B20001--
	21K-54-71312	COVER	1	SN:B20001--
35	☆	COVER	1	SN:B20001--
	☆	COVER	1	SN:B20001--
36	21K-54-71330	SHEET	1	SN:B20001--
37	208-54-57180	COLLAR	2	SN:B20001--
38	01010-81230	BOLT	4	SN:B20001--

PC160LC-7B S/N B20001 AND UP
RIGHT SIDE DOOR (MACHINE CAB)

Item	Part No.	Description	Qty	Options
39	01643-31232	WASHER	4	SN:B20001--

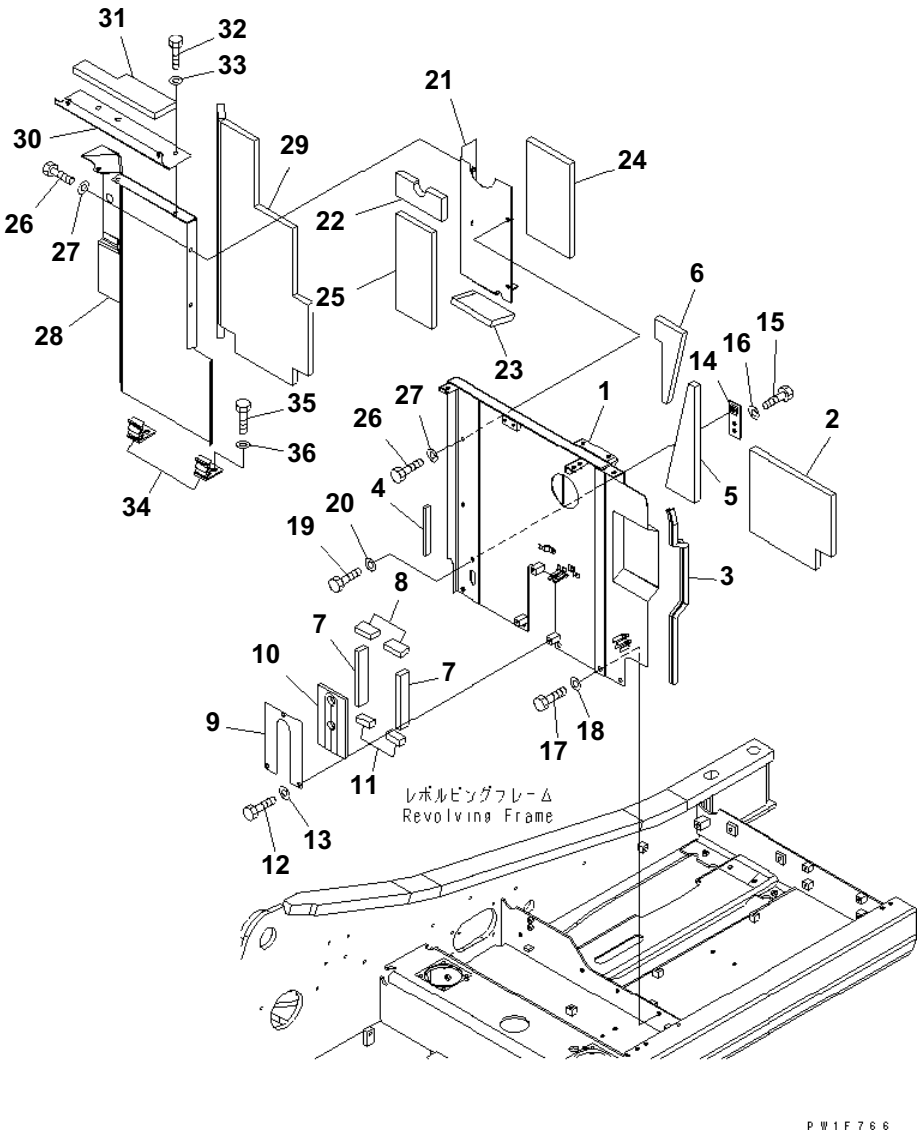

PARTITION (MACHINE CAB) (1/2)(#B20001-B20199)

Item	Part No.	Description	Qty	Options
	21K-54-71790	COVER	1	SN:B20001--B20199
1	☆	· COVER	1	SN:B20001--B20199
2	21K-54-71991	· SHEET	1	SN:B20001--@
3	21K-54-72230	· SHEET	1	SN:B20001--@
4	21K-54-72320	· SHEET	1	SN:B20001--@
5	21K-54-72420	· SHEET	1	SN:B20001--@
6	21K-54-72430	· SHEET	1	SN:B20001--@
7	21K-54-72460	· SHEET	2	SN:B20001--@
8	21K-54-72470	· SHEET	2	SN:B20001--@
	21K-54-72340	COVER	1	SN:B20001--@
9	☆	· COVER	1	SN:B20001--@
10	21K-54-72220	· SHEET	1	SN:B20001--@
11	21K-54-72350	· SHEET	2	SN:B20001--@
12	01010-81230	BOLT	3	SN:B20001--@
13	01643-31232	WASHER	3	SN:B20001--@
14	21K-54-71780	BRACKET	1	SN:B20001--@
15	01010-81230	BOLT	2	SN:B20001--@
16	01643-31232	WASHER	2	SN:B20001--@
17	01010-81230	BOLT	5	SN:B20001--@
18	01643-31232	WASHER	5	SN:B20001--@
19	01010-81240	BOLT	1	SN:B20001--@
20	01643-31232	WASHER	1	SN:B20001--@
	21K-54-71920	COVER	1	SN:B20001--@
21	☆	· COVER	1	SN:B20001--@
22	21K-54-71680	· SHEET	1	SN:B20001--@
23	21K-54-71690	· SHEET	1	SN:B20001--@
24	21K-54-71970	· SHEET	1	SN:B20001--@
25	21K-54-72330	· SHEET	1	SN:B20001--@
26	01010-81230	BOLT	4	SN:B20001--@
27	01643-31232	WASHER	4	SN:B20001--@
	21K-54-71930	COVER	1	SN:B20001--@
28	☆	· COVER	1	SN:B20001--@
29	21K-54-71670	· SHEET	1	SN:B20001--@
	21K-54-71940	COVER	1	SN:B20001--@
30	☆	· COVER	1	SN:B20001--@
31	21K-54-71660	· SHEET	1	SN:B20001--@
32	01010-81230	BOLT	3	SN:B20001--@
33	01643-31232	WASHER	3	SN:B20001--@
34	20Y-54-12320	CATCH	2	SN:B20001--@
35	01010-81225	BOLT	2	SN:B20001--@

PARTITION (MACHINE CAB) (1/2)(#B20001-B20199)

Item	Part No.	Description	Qty	Options
36	01643-31232	WASHER	2	SN:B20001--@

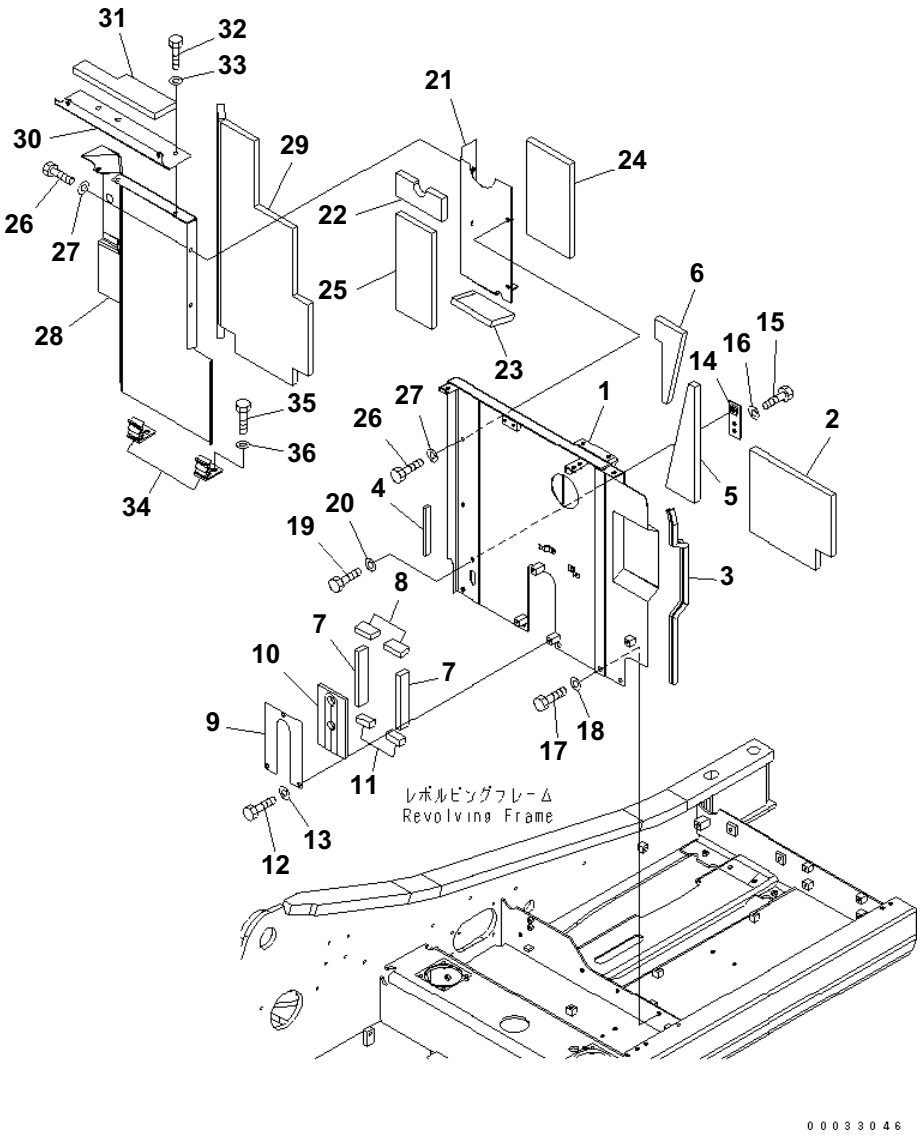

PC160LC-7B S/N B20001 AND UP

PARTITION (MACHINE CAB) (1/2)(#B20200-)

Item	Part No.	Description	Qty	Options
	21K-54-71791	COVER	1	SN:B20200--
1	☆	・ COVER	1	SN:B20200--
2	21K-54-71991	・ SHEET	1	SN:B20001--
3	21K-54-72230	・ SHEET	1	SN:B20001--
4	21K-54-72320	・ SHEET	1	SN:B20001--
5	21K-54-72420	・ SHEET	1	SN:B20001--
6	21K-54-72430	・ SHEET	1	SN:B20001--
7	21K-54-72460	・ SHEET	2	SN:B20001--
8	21K-54-72470	・ SHEET	2	SN:B20001--
	21K-54-72340	COVER	1	SN:B20001--
9	☆	・ COVER	1	SN:B20001--
10	21K-54-72220	・ SHEET	1	SN:B20001--
11	21K-54-72350	・ SHEET	2	SN:B20001--
12	01010-81230	BOLT	3	SN:B20001--
13	01643-31232	WASHER	3	SN:B20001--
14	21K-54-71780	BRACKET	1	SN:B20001--
15	01010-81230	BOLT	2	SN:B20001--
16	01643-31232	WASHER	2	SN:B20001--
17	01010-81230	BOLT	5	SN:B20001--
18	01643-31232	WASHER	5	SN:B20001--
19	01010-81240	BOLT	1	SN:B20001--
20	01643-31232	WASHER	1	SN:B20001--
	21K-54-71920	COVER	1	SN:B20001--
21	☆	・ COVER	1	SN:B20001--
22	21K-54-71680	・ SHEET	1	SN:B20001--
23	21K-54-71690	・ SHEET	1	SN:B20001--
24	21K-54-71970	・ SHEET	1	SN:B20001--
25	21K-54-72330	・ SHEET	1	SN:B20001--
26	01010-81230	BOLT	4	SN:B20001--
27	01643-31232	WASHER	4	SN:B20001--
	21K-54-71930	COVER	1	SN:B20001--
28	☆	・ COVER	1	SN:B20001--
29	21K-54-71670	・ SHEET	1	SN:B20001--
	21K-54-71940	COVER	1	SN:B20001--
30	☆	・ COVER	1	SN:B20001--
31	21K-54-71660	・ SHEET	1	SN:B20001--
32	01010-81230	BOLT	3	SN:B20001--
33	01643-31232	WASHER	3	SN:B20001--
34	20Y-54-12320	CATCH	2	SN:B20001--
35	01010-81225	BOLT	2	SN:B20001--

Ref. M1150-01A0A Page 240060

PC160LC-7B S/N B20001 AND UP

PARTITION (MACHINE CAB) (1/2)(#B20200-)

Item	Part No.	Description	Qty	Options
36	01643-31232	WASHER	2	SN:B20001--

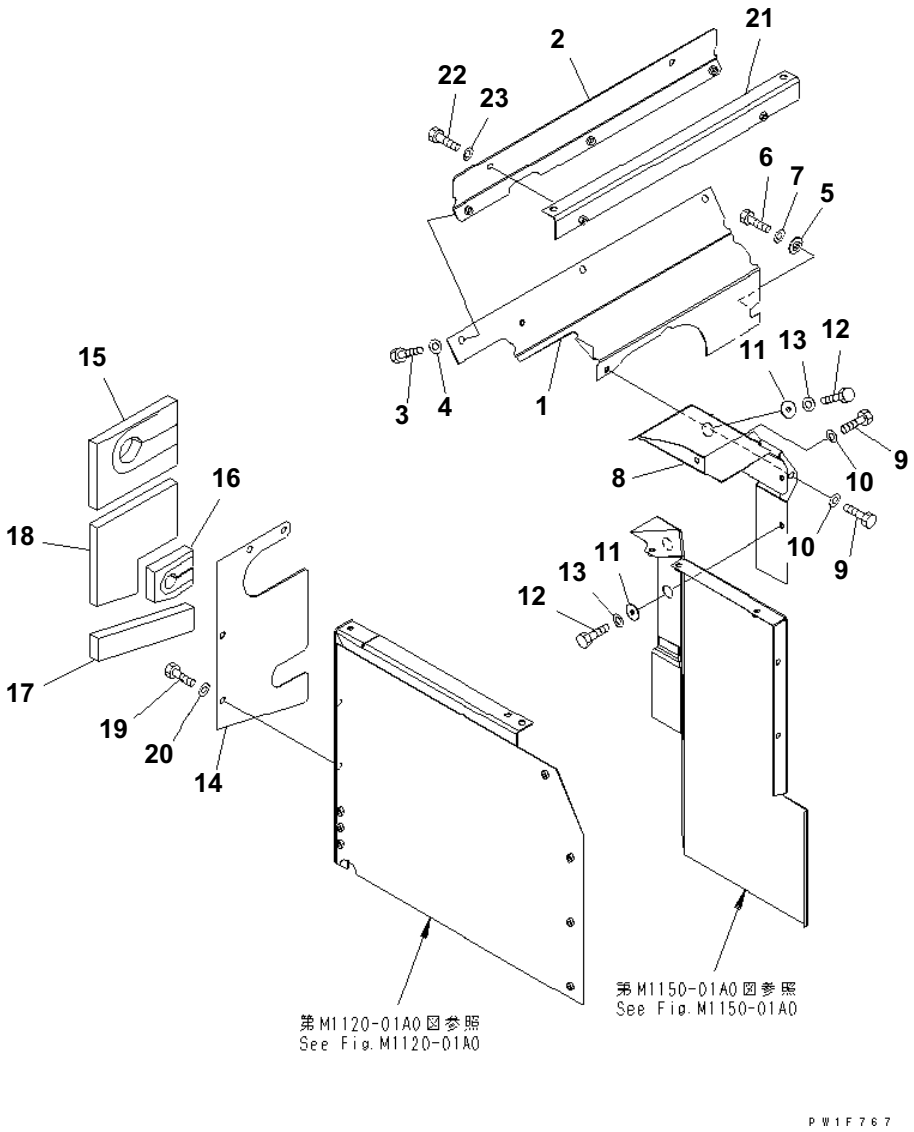

PARTITION (MACHINE CAB) (2/2)(#B20001-B20199)

Item	Part No.	Description	Qty	Options
1	21K-54-71551	COVER	1	SN:B20001--@
2	21K-54-71561	COVER	1	SN:B20001--@
3	01010-81230	BOLT	3	SN:B20001--@
4	01643-31232	WASHER	3	SN:B20001--@
5	20Y-54-12550	COLLAR	1	SN:B20001--@
6	01010-81230	BOLT	1	SN:B20001--@
7	01643-31232	WASHER	1	SN:B20001--@
8	21K-54-71541	COVER	1	SN:B20001--@
9	01010-81225	BOLT	2	SN:B20001--@
10	01643-31232	WASHER	2	SN:B20001--@
11	203-54-62670	COLLAR	3	SN:B20001--@
12	01010-81225	BOLT	3	SN:B20001--@
13	01643-31232	WASHER	3	SN:B20001--@
	21K-54-71951	COVER	1	SN:B20001--@
14	☆	・COVER	1	SN:B20001--@
15	21K-54-71631	・SHEET	1	SN:B20001--@
16	21K-54-71640	・SHEET	1	SN:B20001--@
17	21K-54-71650	・SHEET	1	SN:B20001--@
18	21K-54-72310	・SHEET	1	SN:B20001--@
19	01010-81230	BOLT	4	SN:B20001--@
20	01643-31232	WASHER	4	SN:B20001--@
21	21K-54-71260	PLATE	1	SN:B20001--@
22	01010-81230	BOLT	2	SN:B20001--@
23	01643-31232	WASHER	2	SN:B20001--@

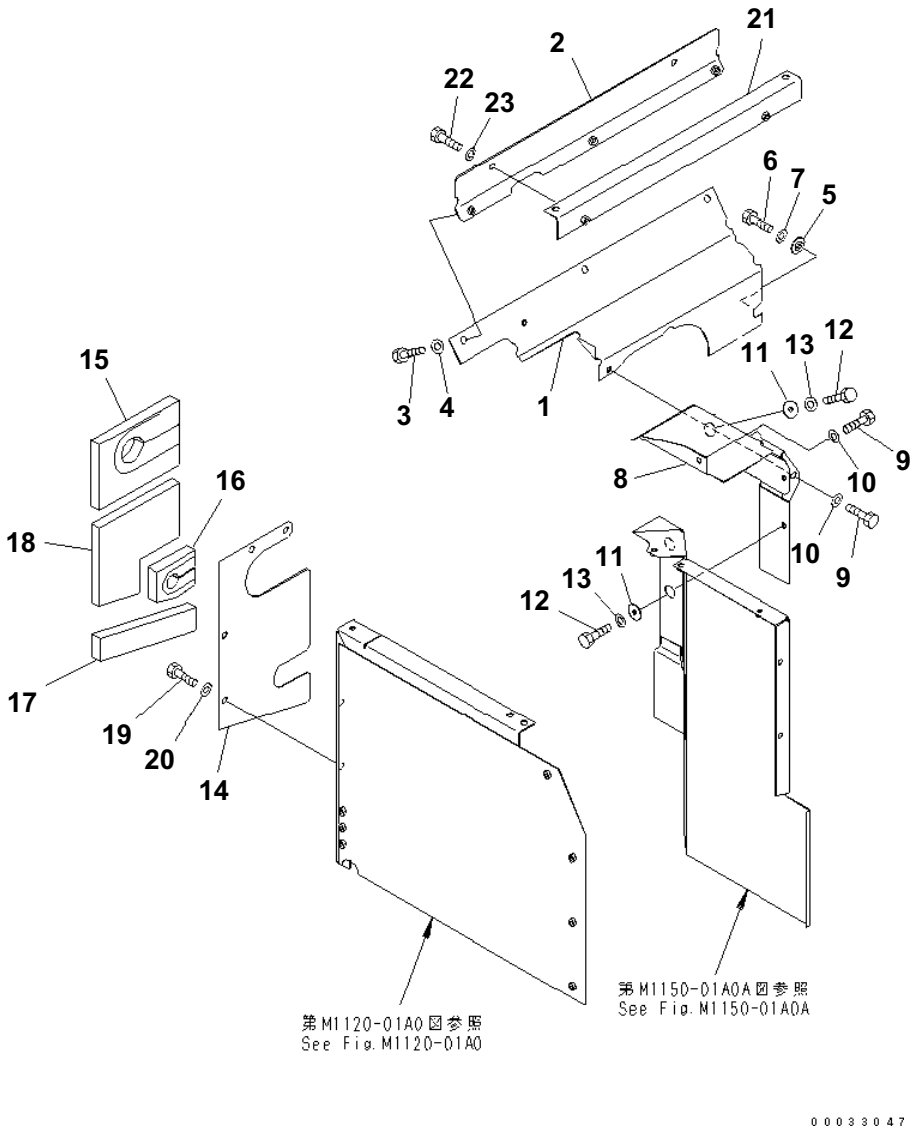

PARTITION (MACHINE CAB) (2/2)(#B20200-)

Item	Part No.	Description	Qty	Options
1	21K-54-71551	COVER	1	SN:B20001--
2	21K-54-71561	COVER	1	SN:B20001--
3	01010-81230	BOLT	3	SN:B20001--
4	01643-31232	WASHER	3	SN:B20001--
5	20Y-54-12550	COLLAR	1	SN:B20001--
6	01010-81230	BOLT	1	SN:B20001--
7	01643-31232	WASHER	1	SN:B20001--
8	21K-54-71541	COVER	1	SN:B20001--
9	01010-81225	BOLT	2	SN:B20001--
10	01643-31232	WASHER	2	SN:B20001--
11	203-54-62670	COLLAR	3	SN:B20001--
12	01010-81225	BOLT	3	SN:B20001--
13	01643-31232	WASHER	3	SN:B20001--
	21K-54-71951	COVER	1	SN:B20001--
14	☆	・COVER	1	SN:B20001--
15	21K-54-71631	・SHEET	1	SN:B20001--
16	21K-54-71640	・SHEET	1	SN:B20001--
17	21K-54-71650	・SHEET	1	SN:B20001--
18	21K-54-72310	・SHEET	1	SN:B20001--
19	01010-81230	BOLT	4	SN:B20001--
20	01643-31232	WASHER	4	SN:B20001--
21	21K-54-71260	PLATE	1	SN:B20001--
22	01010-81230	BOLT	2	SN:B20001--
23	01643-31232	WASHER	2	SN:B20001--

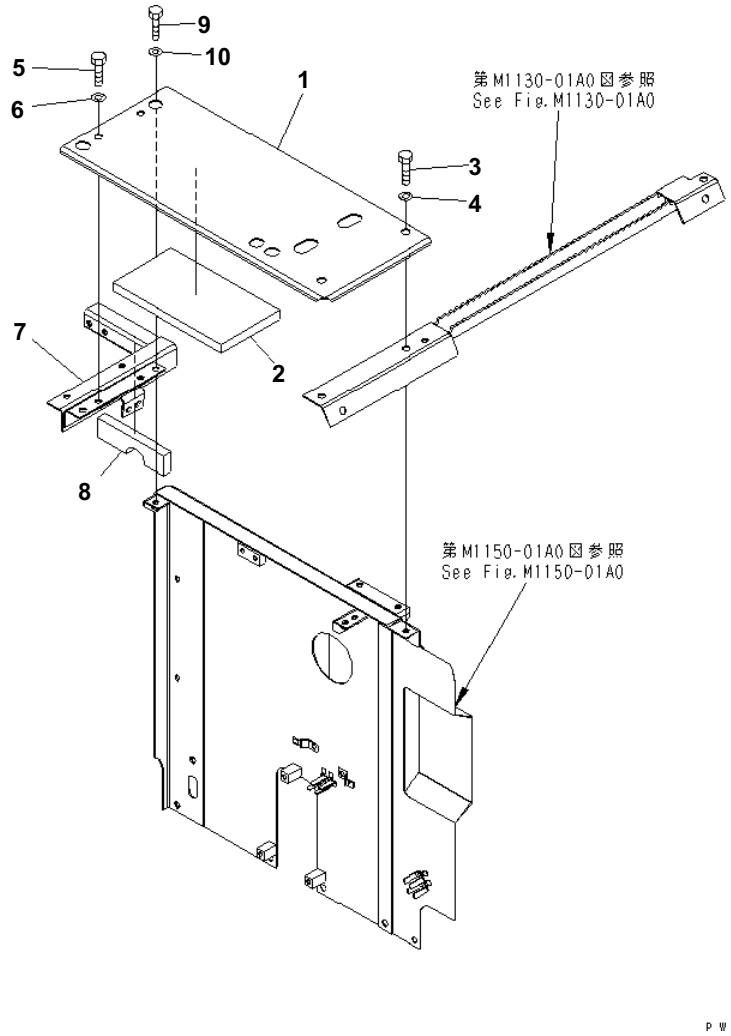

PARTITION

Item	Part No.	Description	Qty	Options
	21K-54-72410	COVER	1	SN:B20001--
1	☆	・COVER	1	SN:B20001--
2	21K-54-72390	・SHEET	1	SN:B20001--
3	01010-81230	BOLT	2	SN:B20001--
4	175-54-34170	WASHER	2	SN:B20001--
5	01010-81230	BOLT	2	SN:B20001--
6	01643-31232	WASHER	2	SN:B20001--
	21K-54-71741	FRAME	1	SN:B20001--
7	☆	・FRAME	1	SN:B20001--
8	21K-54-71760	・SHEET	1	SN:B20001--
9	01010-81230	BOLT	2	SN:B20001--
10	01643-31232	WASHER	2	SN:B20001--

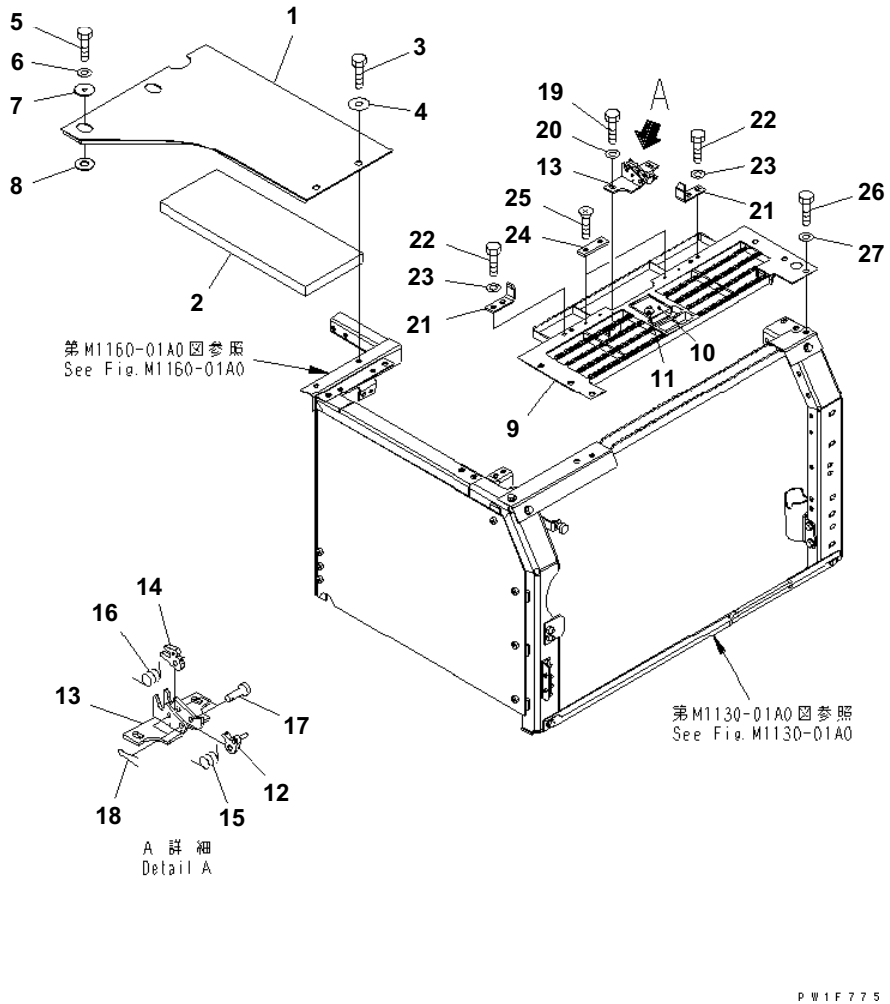

COVER (MACHINE CAB) (UPPER)

Item	Part No.	Description	Qty	Options
	21K-54-72440	COVER	1	SN:B20001--
1	☆	・ COVER	1	SN:B20001--
2	21K-54-71980	・ SHEET	1	SN:B20001--
3	01010-81230	BOLT	2	SN:B20001--
4	175-54-34170	WASHER	2	SN:B20001--
5	01010-81230	BOLT	2	SN:B20001--
6	01643-31232	WASHER	2	SN:B20001--
7	20Y-54-61990	COLLAR	2	SN:B20001--
8	20Y-54-61790	PLATE	2	SN:B20001--
9	21K-54-71711	COVER	1	SN:B20001--
10	20Y-54-25850	・ LOCK	1	SN:B20001--
11	20Y-54-27540	・・ LOCK ASS'Y	1	SN:B20001--
12	20Y-54-27511	PLATE	1	SN:B20001--
13	20Y-54-27523	BRACKET	1	SN:B20001--
14	21K-54-26341	LEVER	1	SN:B20001--
15	21K-54-26351	SPRING	1	SN:B20001--
16	20X-54-21460	SPRING	1	SN:B20001--
17	04205-11038	PIN	2	SN:B20001--
18	04050-13020	PIN	2	SN:B20001--
19	01010-81025	BOLT	2	SN:B20001--
20	01643-31032	WASHER	2	SN:B20001--
21	20Y-54-27182	BRACKET	2	SN:B20001--
22	01010-81025	BOLT	4	SN:B20001--
23	01643-31032	WASHER	4	SN:B20001--
24	205-54-68440	PLATE	2	SN:B20001--
25	01224-40616	SCREW	4	SN:B20001--
26	01010-81230	BOLT	6	SN:B20001--
27	01643-31232	WASHER	6	SN:B20001--

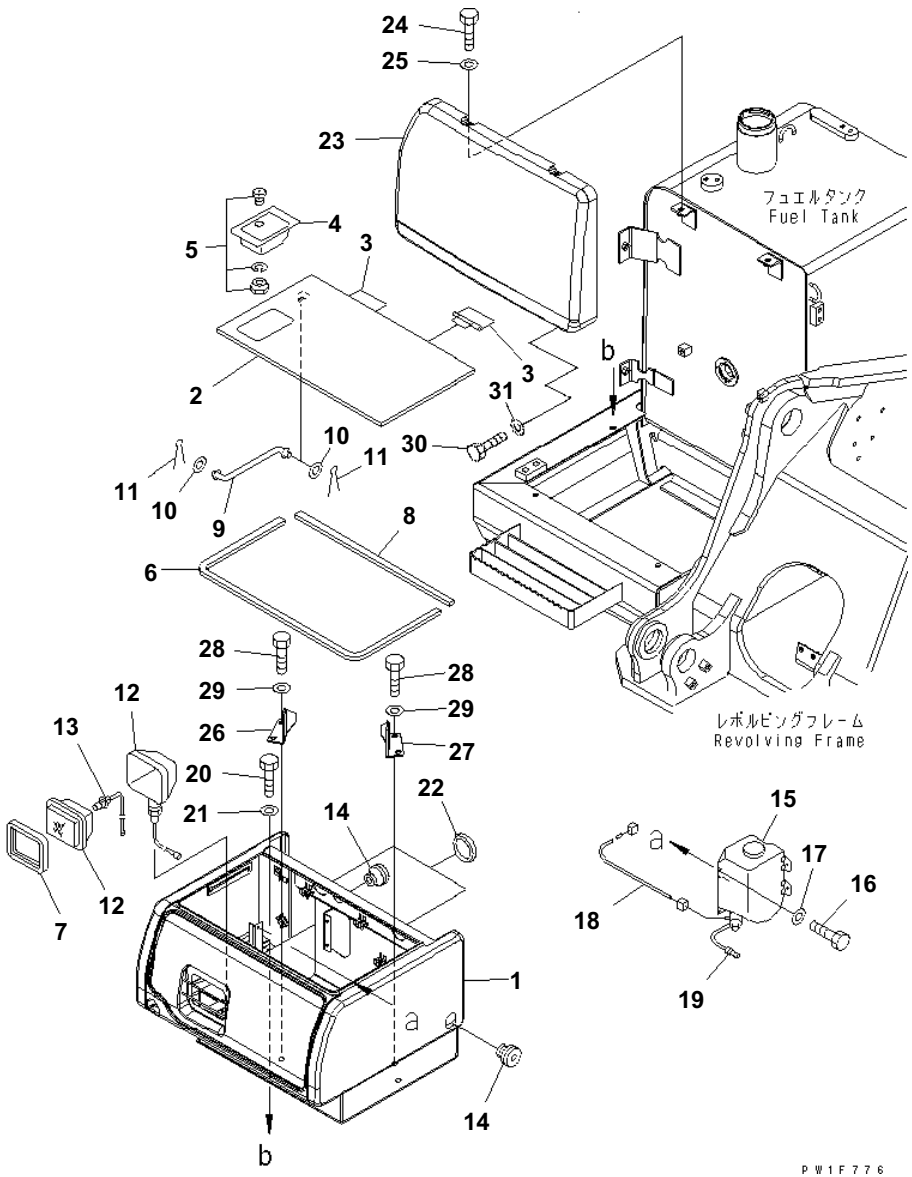

RIGHT SIDE CASE

Item	Part No.	Description	Qty	Options
1	21K-54-71811	CASE ASS'Y	1	SN:B20001--
2	203-54-67730	・ COVER	1	SN:B20001--
3	203-54-67741	・・ HINGE (WELDED)	2	SN:B20001--
4	421-54-11372	・・ LOCK ASS'Y (WELDED)	1	SN:B20001--
5	421-54-11381	・・・ LOCK	1	SN:B20001--
6	203-54-67750	SEAL	1	SN:B20001--
7	203-54-67760	SEAL	1	SN:B20001--
8	203-54-67780	SEAL	1	SN:B20001--
9	203-54-56630	ROD	1	SN:B20001--
10	01643-30623	WASHER	2	SN:B20001--
11	04050-11612	PIN	2	SN:B20001--
12	21W-06-22120	LAMP ASS'Y	1	SN:B20001--
13	21W-06-22130	・ BULB¤ 60W	1	SN:B20001--
14	08037-12536	GROMMET	2	SN:B20001--
15	21T-06-11350	TANK ASS'Y	1	SN:B20001--
16	01010-80616	BOLT	4	SN:B20001--
17	01643-30623	WASHER	4	SN:B20001--
18	203-06-61132	WIRING HARNESS	1	SN:B20001--
19	195-979-8590	VALVE	1	SN:B20001--
20	01010-81230	BOLT	4	SN:B20001--
21	124-54-26540	WASHER	4	SN:B20001--
22	14X-54-12590	CAP	2	SN:B20001--
23	21K-54-71830	COVER	1	SN:B20001--
24	01010-81230	BOLT	2	SN:B20568--
	01010-81230	BOLT	4	SN:B20001--B20567
25	01643-31232	WASHER	2	SN:B20568--
	01643-31232	WASHER	4	SN:B20001--B20567
26	20Y-54-61670	BRACKET	1	SN:B20001--
27	20Y-54-61680	BRACKET	1	SN:B20001--
28	01010-81230	BOLT	4	SN:B20001--
29	01643-31232	WASHER	4	SN:B20001--
30	01010-81230	BOLT	2	SN:B20568--
31	124-54-26540	WASHER	2	SN:B20568--

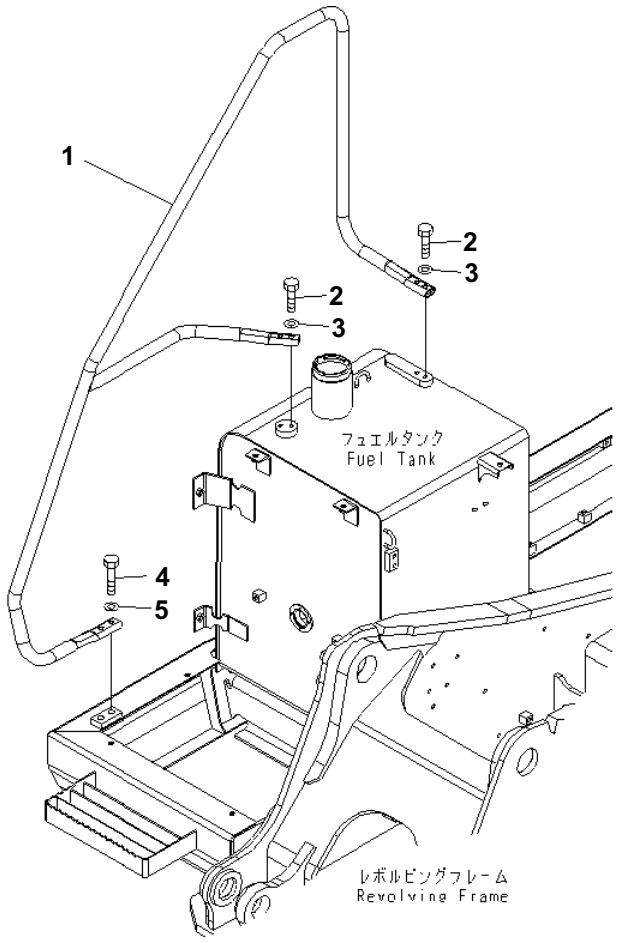

HANDRAIL

Item	Part No.	Description	Qty	Options
1	21K-54-B7190	HAND RAIL	1	SN:B20164--
	21K-54-71910	HAND RAIL	1	SN:B20001--B20163
2	01010-81235	BOLT	4	SN:B20001--
3	01643-31232	WASHER	4	SN:B20001--
4	01010-81260	BOLT	2	SN:B20001--
5	01643-31232	WASHER	2	SN:B20001--

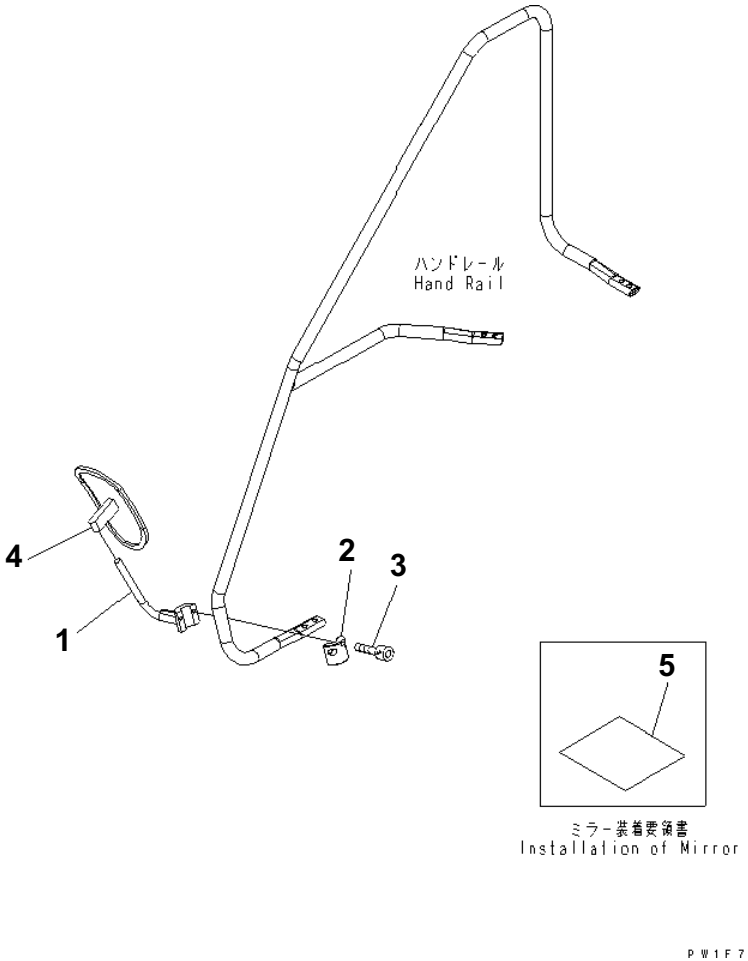

REAR VIEW MIRROR¤ R.H.

Item	Part No.	Description	Qty	Options
1	20Y-54-27963	SUPPORT	1	SN:B20164--
	20Y-54-61621	SUPPORT	1	SN:B20001--B20163
2	20Y-54-27991	CLAMP	1	SN:B20164--
	20Y-54-61630	CLAMP	1	SN:B20001--B20163
3	01252-41025	BOLT	2	SN:B20164--
	01252-71030	BOLT	2	SN:B20001--B20163
4	20Y-54-28911	MIRROR	1	SN:B20001--
5	20Y-00-B1240	PLATE	1	SN:B20164--
	20Y-98-21181	PLATE	1	SN:B20001--B20163

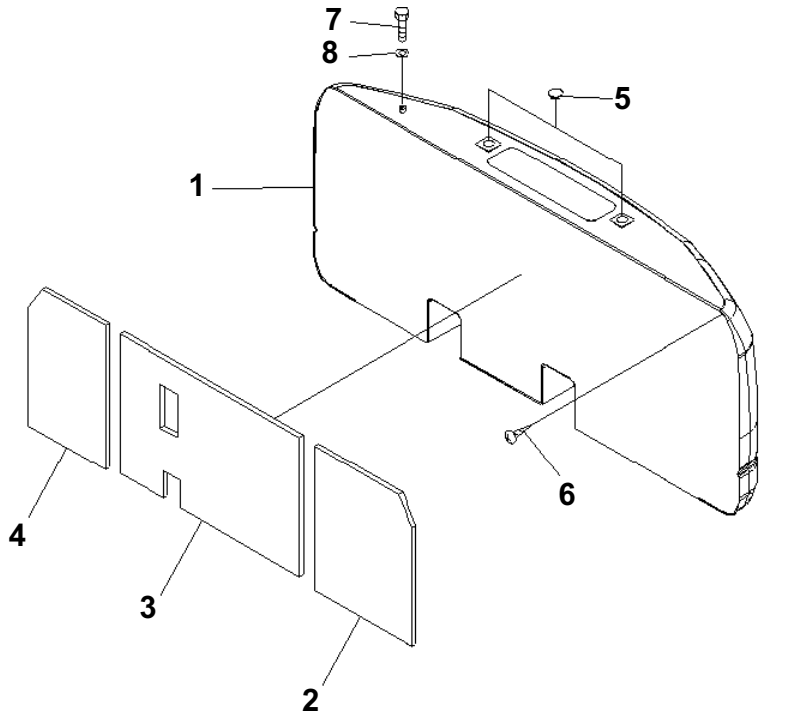

COUNTER WEIGHT

Item	Part No.	Description	Qty	Options
	21K-46-74322	WEIGHT	1	SN:B20001--
1	☆	· WEIGHT	1	SN:B20001--
2	21K-46-74130	· SHEET	1	SN:B20001--
3	21K-46-74151	· SHEET	1	SN:B20001--
4	21K-46-74160	· SHEET	1	SN:B20001--
5	20Y-46-11270	CAP	2	SN:B20001--
6	01370-00508	SCREW	1	SN:B20001--
7	01010-81220	BOLT	1	SN:B20001--
8	01643-31232	WASHER	1	SN:B20001--

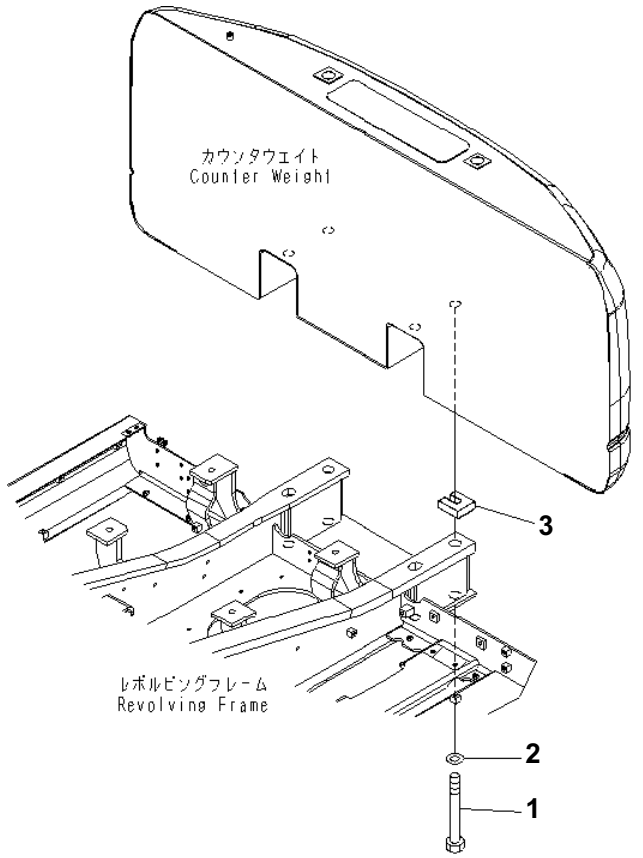

COUNTER WEIGHT MOUNTING

Item	Part No.	Description	Qty	Options
1	21K-46-74170	BOLT	4	SN:B20001--
2	21K-46-74140	WASHER	4	SN:B20001--
3	21K-46-11410	PLATE	4	SN:B20001--

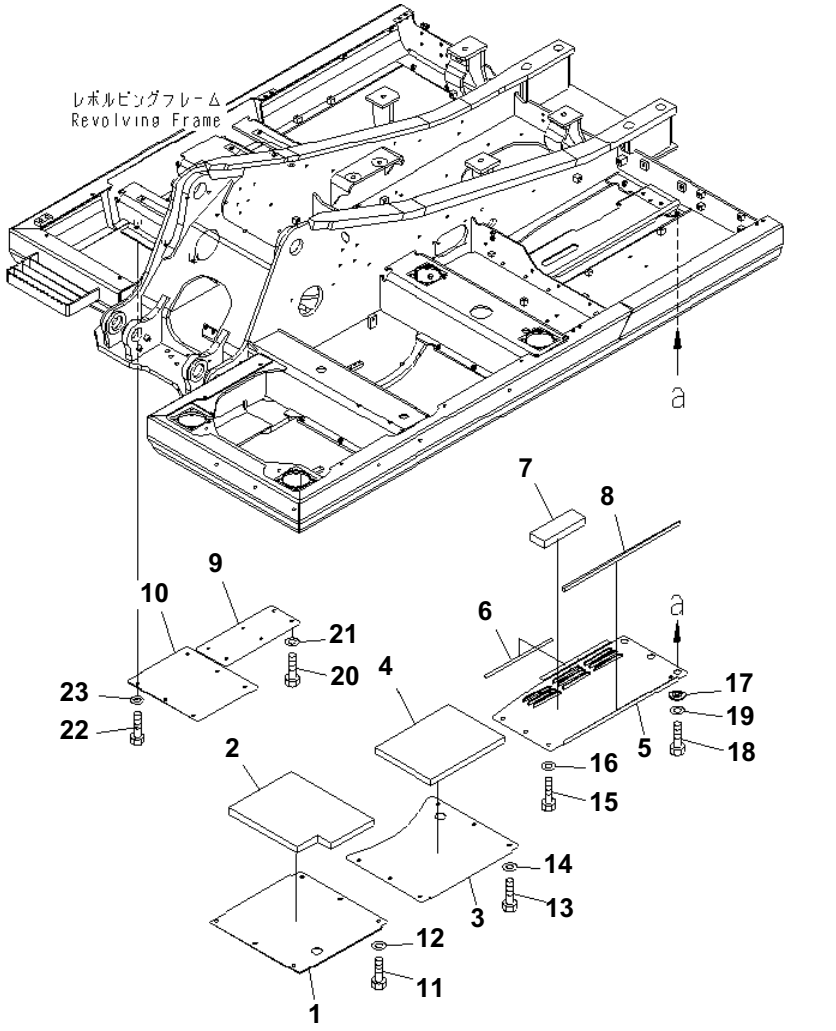

UNDER COVER (REVOLVING FRAME) (1/2)

Item	Part No.	Description	Qty	Options
	20Y-54-62110	COVER	1	SN:B20001--
1	☆	・COVER	1	SN:B20001--
2	20Y-54-61770	・SHEET	1	SN:B20001--
	21K-54-72110	COVER	1	SN:B20001--
3	☆	・COVER	1	SN:B20001--
4	20Y-54-68850	・SHEET	1	SN:B20001--
5	21K-54-72152	COVER	1	SN:B20001--
6	21K-54-72160	SHEET	1	SN:B20001--
7	21K-54-72180	SHEET	1	SN:B20001--
8	21K-54-72190	SHEET	1	SN:B20001--
9	21K-54-72270	COVER	1	SN:B20001--
10	21K-54-72280	COVER	1	SN:B20001--
11	01010-81230	BOLT	6	SN:B20001--
12	01643-31232	WASHER	6	SN:B20001--
13	01010-81230	BOLT	6	SN:B20001--
14	01643-31232	WASHER	6	SN:B20001--
15	01010-81230	BOLT	3	SN:B20001--
16	01643-31232	WASHER	3	SN:B20001--
17	20Y-54-12550	COLLAR	3	SN:B20001--
18	01010-81230	BOLT	3	SN:B20001--
19	01643-31232	WASHER	3	SN:B20001--
20	01010-81230	BOLT	6	SN:B20001--
21	01643-31232	WASHER	6	SN:B20001--
22	01010-81230	BOLT	6	SN:B20001--
23	01643-31232	WASHER	6	SN:B20001--

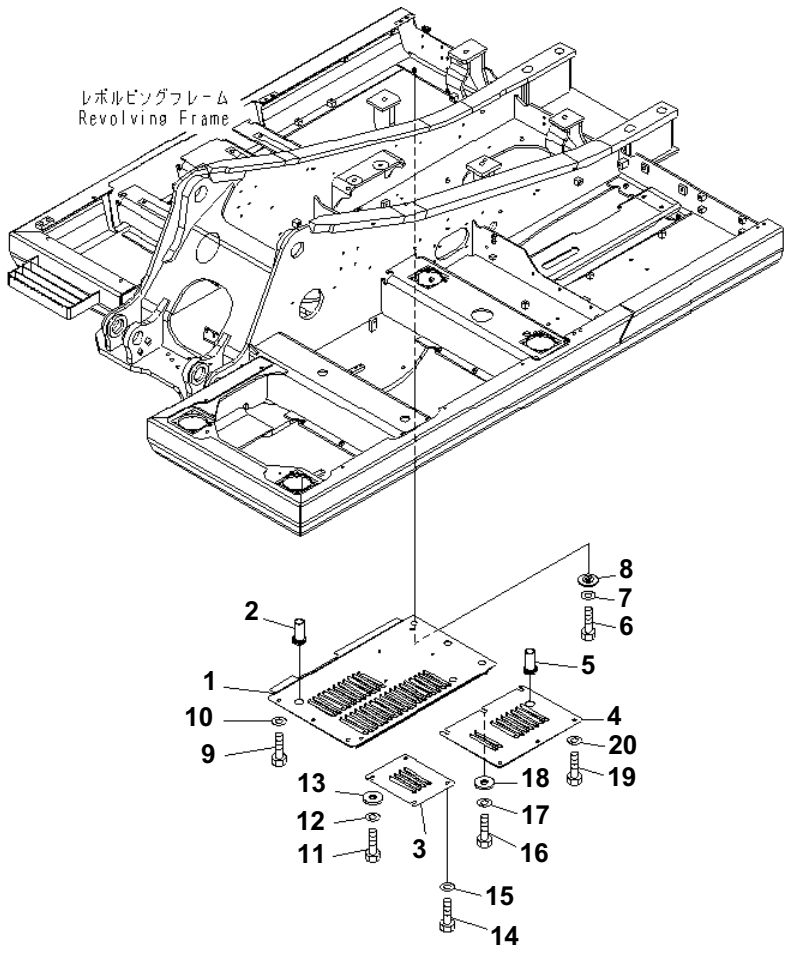

UNDER COVER (REVOLVING FRAME) (2/2)

Item	Part No.	Description	Qty	Options
	21K-54-B7290	COVER	1	SN:B20099--
	21K-54-72290	COVER	1	SN:B20001--B20098
1	☆	・ COVER	1	SN:B20099--
	☆	・ COVER	1	SN:B20001--B20098
2	22U-54-24760	・ GROMMET	1	SN:B20001--
3	21K-54-B7230	COVER		SN:B20099--
	21K-54-72130	COVER	1	SN:B20001--B20098
4	21K-54-B7350	COVER	1	SN:B20099--
	21K-54-72450	COVER	1	SN:B20001--B20098
	☆	・ COVER		SN:B20099--
	☆	・ COVER	1	SN:B20001--B20098
5	22U-54-24760	・ GROMMET	1	SN:B20001--
6	01010-81230	BOLT	3	SN:B20001--
7	01643-31232	WASHER	3	SN:B20001--
8	20Y-54-12550	COLLAR	3	SN:B20001--
9	01010-81230	BOLT	3	SN:B20001--
10	01643-31232	WASHER	3	SN:B20001--
11	01010-81230	BOLT	2	SN:B20001--
12	01643-31232	WASHER	2	SN:B20001--
13	175-54-34170	WASHER	2	SN:B20001--
14	01010-81230	BOLT	2	SN:B20001--
15	01643-31232	WASHER	2	SN:B20001--
16	01010-81230	BOLT	3	SN:B20001--
17	01643-31232	WASHER	3	SN:B20001--
18	175-54-34170	WASHER	3	SN:B20001--
19	01010-81230	BOLT	3	SN:B20001--
20	01643-31232	WASHER	3	SN:B20001--

SWING CIRCLE AND RELATED PARTS

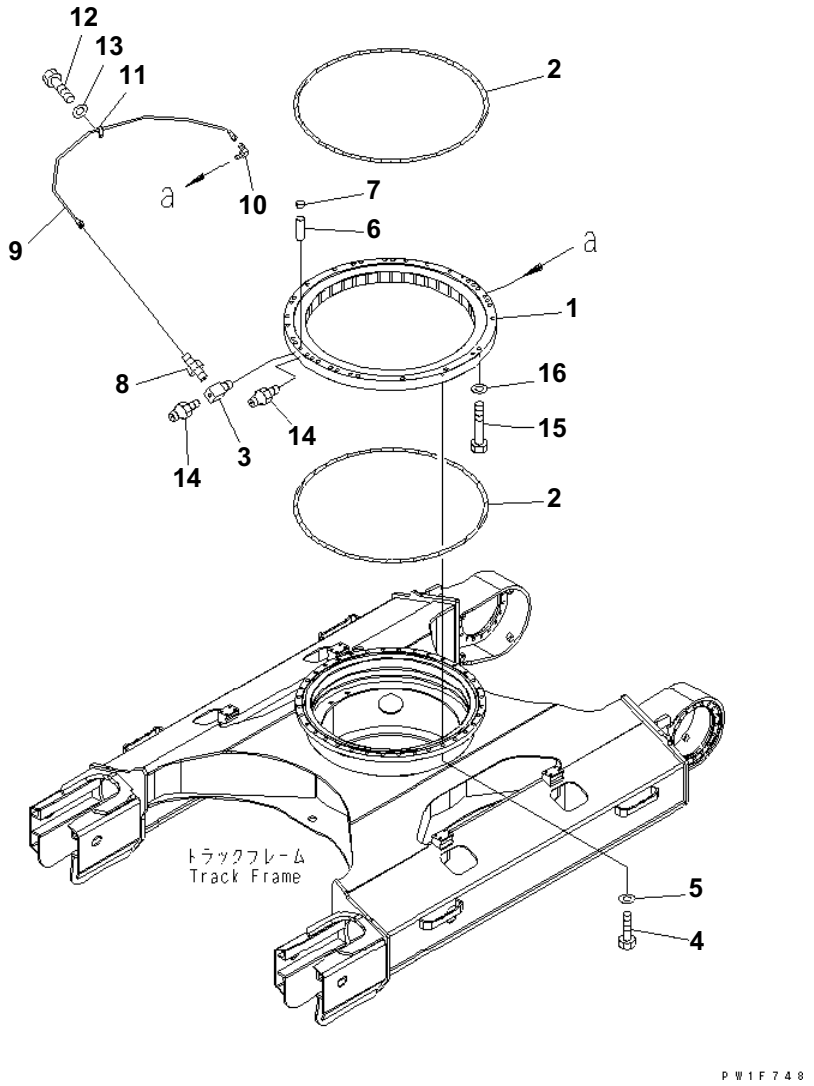

SWING CIRCLE

Item	Part No.	Description	Qty	Options
1	21K-25-00101	SWING CIRCLE ASS'Y	1	SN:B20001--
2	21K-25-41150	· SEAL	2	SN:B20001--
3	205-25-71280	· NIPPLE	1	SN:B20001--
4	20Y-25-11290	BOLT	36	SN:B20001--
5	01643-72060	WASHER	36	SN:B20001--
6	04020-01842	PIN	2	SN:B20001--
7	20Y-46-21520	CAP	1	SN:B20001--
8	07214-50813	CONNECTOR	1	SN:B20001--
9	21K-25-41190	TUBE	1	SN:B20001--
10	20Y-25-11270	ELBOW	1	SN:B20001--
11	08036-00814	CLIP	1	SN:B20001--
12	01010-81016	BOLT	1	SN:B20001--
13	01643-31032	WASHER	1	SN:B20001--
14	07020-00000	FITTING	2	SN:B20001--
15	21K-25-41170	BOLT	32	SN:B20001--
16	01643-72060	WASHER	32	SN:B20001--

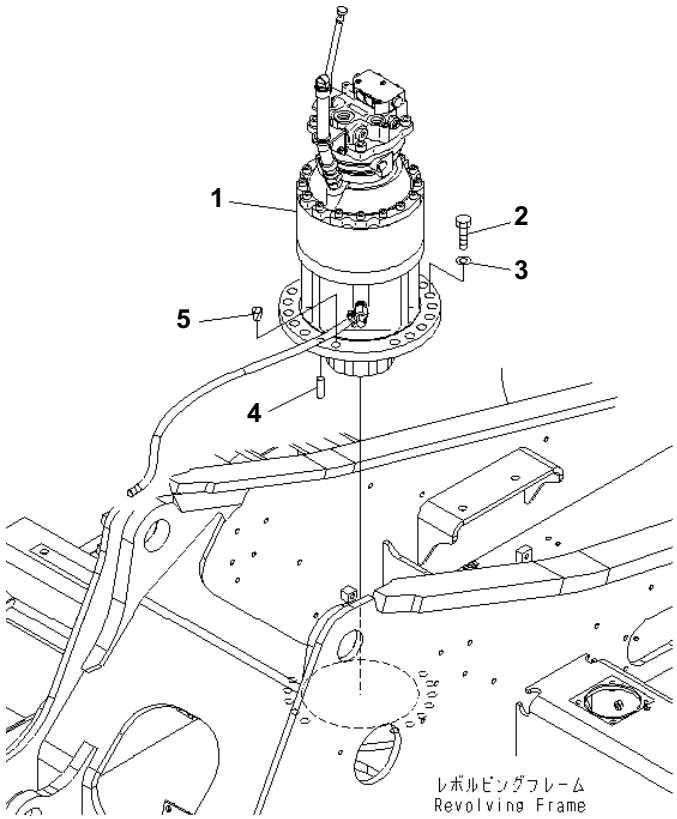

SWING MACHINERY

Item	Part No.	Description	Qty	Options
1	21K-26-B7100	SWING MACHINERY A.	1	SN:B20001--
2	01010-82060	BOLT	13	SN:B20001--
3	01643-32060	WASHER	13	SN:B20001--
4	04020-01638	PIN	2	SN:B20001--
5	07049-02025	PLUG	2	SN:B20001--

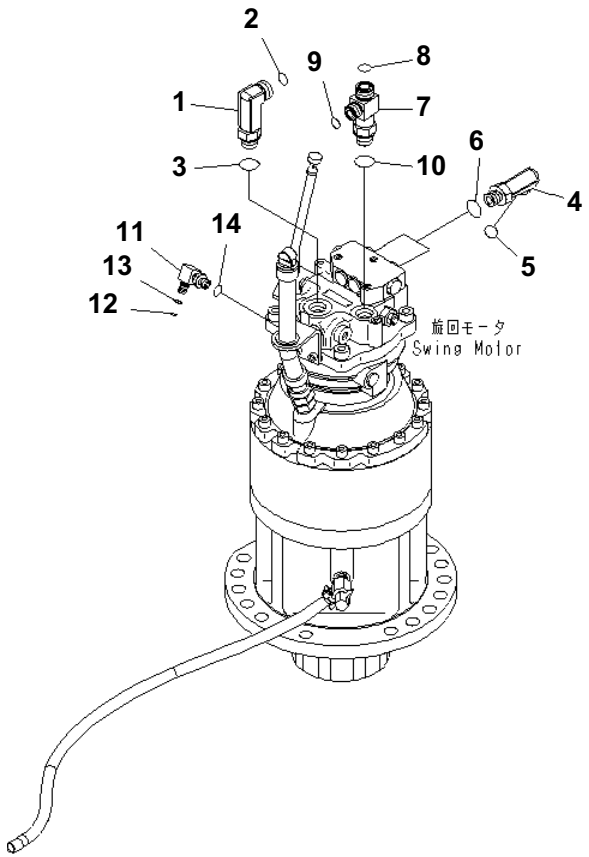

SWING MOTOR (CONNECTING PARTS)

Item	Part No.	Description	Qty	Options
1	02782-10630	ELBOW	1	SN:B20001--
2	02896-11018	O-RING	1	SN:B20001--
3	07002-12434	O-RING	1	SN:B20001--
4	02782-10524	ELBOW	2	SN:B20001--
5	02896-61015	O-RING	2	SN:B20001--
6	07002-62434	O-RING	2	SN:B20001--
7	21K-62-71351	TEE	1	SN:B20001--
8	02896-11018	O-RING	1	SN:B20001--
9	02896-11015	O-RING	1	SN:B20001--
10	07002-12434	O-RING	1	SN:B20001--
11	20Y-62-22271	ELBOW	1	SN:B20001--
12	201-60-11390	・ O-RING	1	SN:B20001--
13	20Y-62-19560	・ O-RING	1	SN:B20001--
14	07002-11423	O-RING	1	SN:B20001--

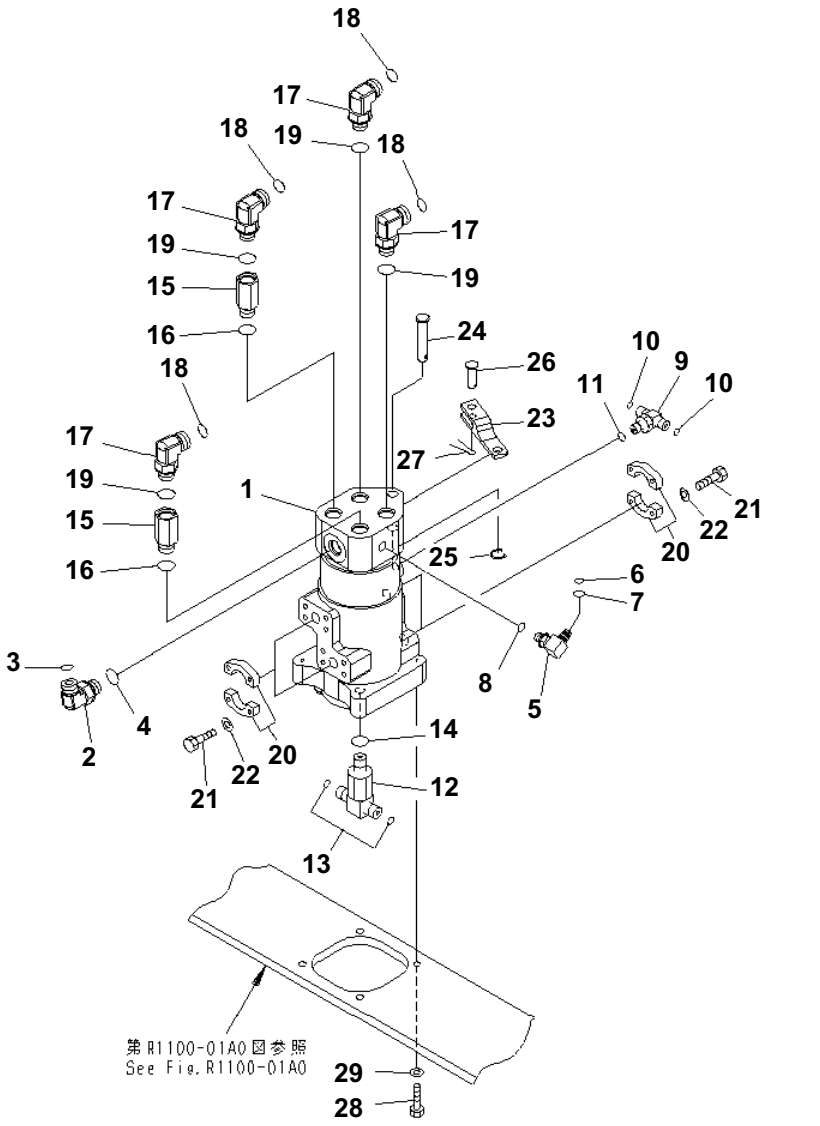

SWIVEL JOINT (CONNECTING PARTS)

Item	Part No.	Description	Qty	Options
1	(703-08-33631)	SWIVEL JOINT ASS'Y	1	SN:B20500--
	(703-08-33630)	SWIVEL JOINT ASS'Y	1	SN:B20001--B20499
2	02782-10522	ELBOW	1	SN:B20001--
3	02896-11015	O-RING	1	SN:B20001--
4	07002-12434	O-RING	1	SN:B20001--
5	20Y-62-22271	ELBOW	1	SN:B20001--
6	201-60-11390	・ O-RING	1	SN:B20001--
7	20Y-62-19560	・ O-RING	1	SN:B20001--
8	07002-11423	O-RING	1	SN:B20001--
9	11Y-62-12250	TEE	1	SN:B20001--
10	02896-11008	O-RING	2	SN:B20001--
11	07002-11423	O-RING	1	SN:B20001--
12	20Y-62-41930	TEE	1	SN:B20001--
13	02896-11012	O-RING	2	SN:B20001--
14	07002-12434	O-RING	1	SN:B20001--
15	201-62-71820	JOINT	2	SN:B20001--
16	07002-12434	O-RING	2	SN:B20001--
17	02782-10628	ELBOW	4	SN:B20001--
18	02896-61018	O-RING	4	SN:B20001--
19	07002-12434	O-RING	4	SN:B20001--
20	07371-30640	FLANGE	8	SN:B20001--
21	07372-21035	BOLT	16	SN:B20001--
22	01643-51032	WASHER	16	SN:B20001--
23	21K-62-72840	BRACKET	1	SN:B20001--
24	22U-62-21870	PIN	1	SN:B20001--
25	22U-62-24420	PIN	1	SN:B20001--
26	04205-11648	PIN	1	SN:B20001--
27	04050-14030	PIN	1	SN:B20252--
	04050-14028	PIN	1	SN:B20001--B20251
28	01010-81235	BOLT	4	SN:B20001--
29	01643-31232	WASHER	4	SN:B20001--

TRAVEL AND LOWER PIPING

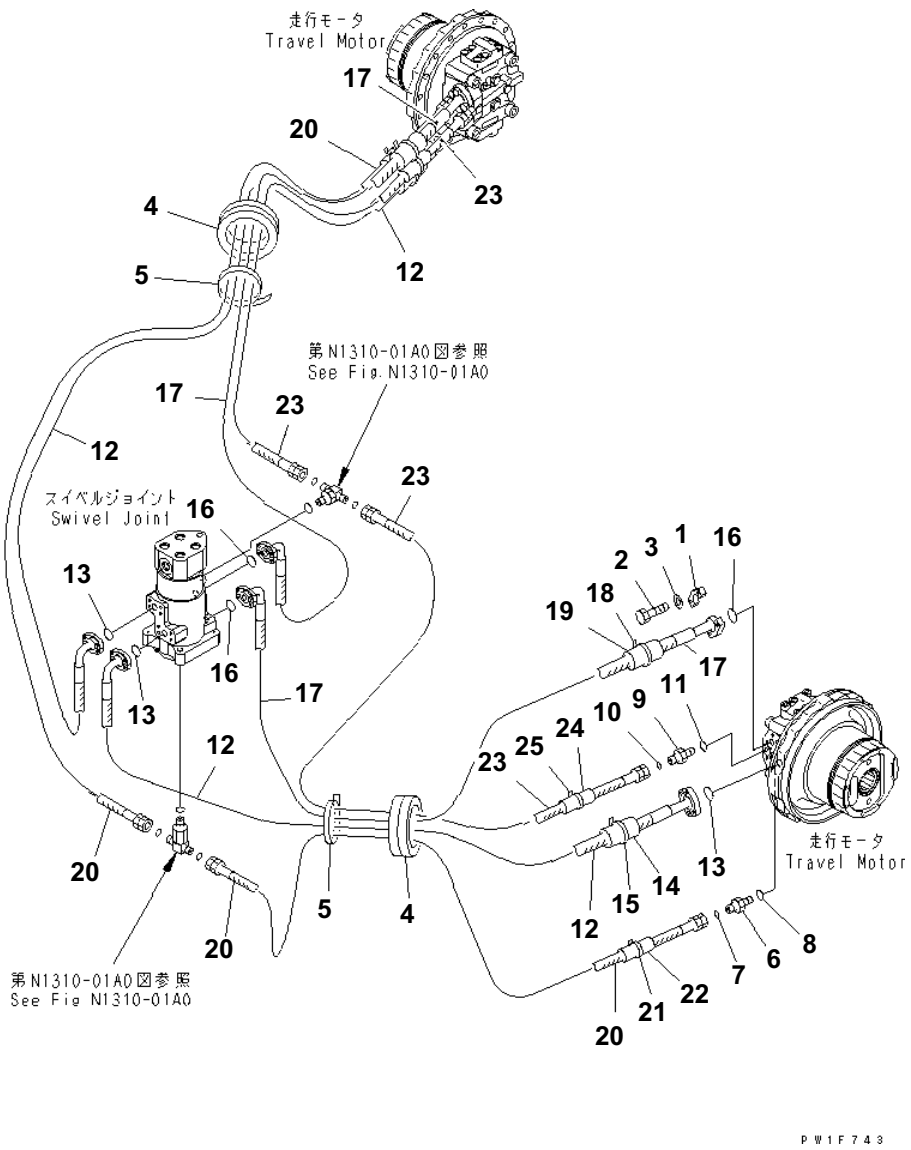

TRAVEL PIPING

Item	Part No.	Description	Qty	Options
1	07371-30640	FLANGE	8	SN:B20001--
2	07372-21035	BOLT	16	SN:B20001--
3	01643-51032	WASHER	16	SN:B20001--
4	20Y-62-12590	GROMMET	2	SN:B20001--
5	08034-20536	BAND	2	SN:B20001--
6	02781-00422	UNION	2	SN:B20001--
7	02896-11012	O-RING	2	SN:B20001--
8	07002-12034	O-RING	2	SN:B20001--
9	11Y-62-12130	NIPPLE	2	SN:B20001--
10	02896-11008	O-RING	2	SN:B20001--
11	07002-11423	O-RING	2	SN:B20001--
12	20Y-62-12540	・ HOSE	2	SN:B20001--
13	07000-13025	・ O-RING	4	SN:B20001--
14	205-62-72240	・ COVER	2	SN:B20001--
15	08034-00536	・ BAND	2	SN:B20001--
16	07000-13025	・ O-RING	4	SN:B20001--
17	07098-00618	・ HOSE	2	SN:B20001--
18	08034-00536	・ BAND	2	SN:B20001--
19	205-62-72240	・ COVER	2	SN:B20001--
20	02762-00418	・ HOSE	2	SN:B20001--
21	08034-00536	・ BAND	2	SN:B20001--
22	205-62-72240	・ COVER	2	SN:B20001--
23	02760-00219	・ HOSE¤ 1900MM	2	SN:B20001--
24	205-62-72140	・ COVER	2	SN:B20001--
25	08034-00536	・ BAND	2	SN:B20001--

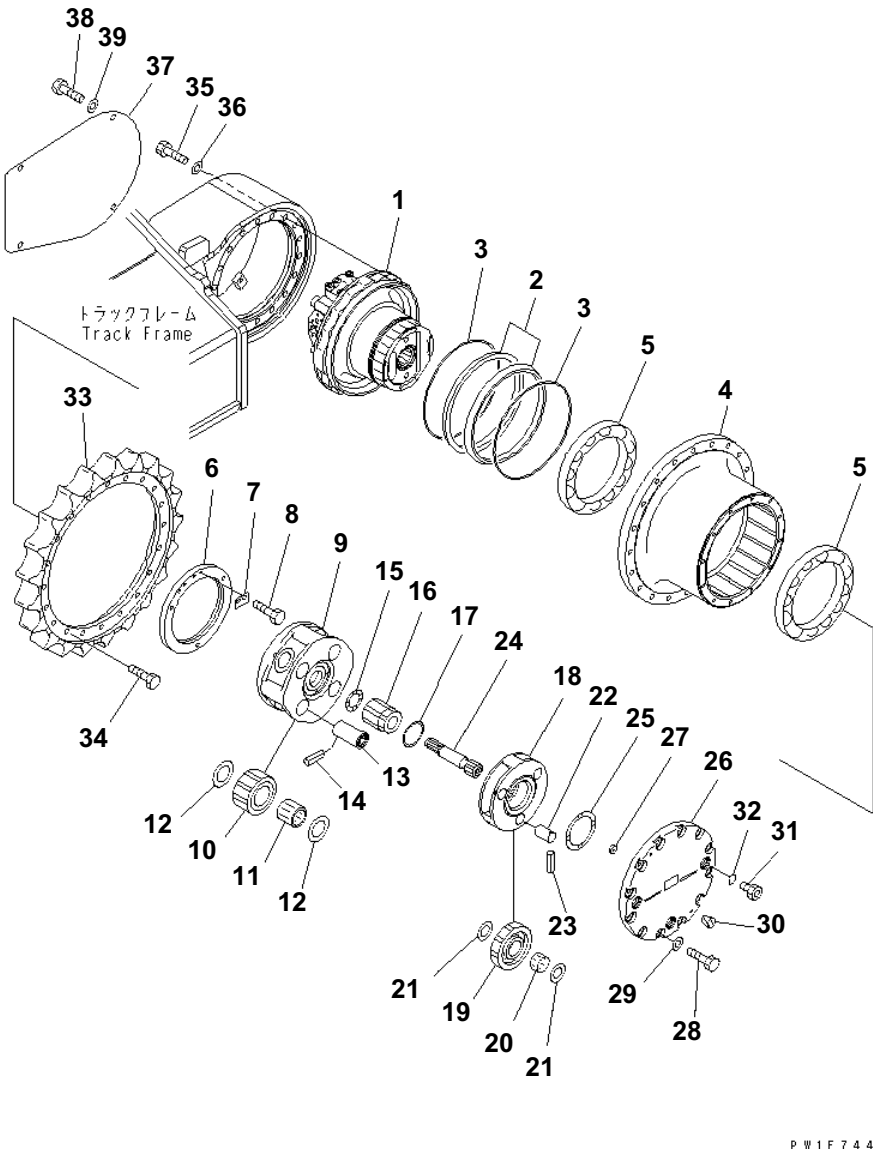

PC160LC-7B S/N B20001 AND UP

FINAL DRIVE

Item	Part No.	Description	Qty	Options
	21K-27-00101	FINAL DRIVE ASS'Y	2	SN:B20001--
1	(708-8F-00230)	· MOTOR ASS'Y,P	1	SN:B20001--
	150-27-00330	· FLOATING SEAL ASS'Y	1	SN:B20001--
2	☆	· · RING	2	SN:B20001--
3	☆	· · O-RING	2	SN:B20001--
4	20Y-27-31120	· HUB,HUB	1	SN:B20001--
5	20Y-27-31130	· BEARING	2	SN:B20001--
6	20Y-27-22261	· LOCK	1	SN:B20001--
7	20Y-27-31180	· LOCK	1	SN:B20001--
8	01010-81020	· BOLT	2	SN:B20001--
9	20Y-27-22170	· CARRIER	1	SN:B20001--
10	20Y-27-22140	· GEAR	4	SN:B20001--
11	20Y-27-22220	· BEARING	4	SN:B20001--
12	20Y-27-21250	· WASHER	8	SN:B20001--
13	20Y-27-31160	· PIN	4	SN:B20001--
14	20Y-27-21290	· PIN	4	SN:B20001--
15	20Y-27-13310	· WASHER	1	SN:B20001--
16	20Y-27-22130	· GEAR	1	SN:B20001--
17	20Y-27-22240	· WASHER	1	SN:B20001--
18	20Y-27-31110	· CARRIER	1	SN:B20001--
19	20Y-27-22120	· GEAR	3	SN:B20001--
20	20Y-27-22210	· BEARING	3	SN:B20001--
21	20Y-27-21240	· WASHER	6	SN:B20001--
22	20Y-27-21220	· PIN	3	SN:B20001--
23	20Y-27-21280	· PIN	3	SN:B20001--
24	20Y-27-31140	· SHAFT	1	SN:B20001--
25	20Y-27-21310	· WASHER	1	SN:B20001--
26	20Y-27-31150	· COVER	1	SN:B20001--
27	20Y-27-22250	· BUTTON	1	SN:B20001--
28	01010-61230	· BOLT	12	SN:B20001--
29	01643-31232	· WASHER	12	SN:B20001--
30	07049-01012	· PLUG	2	SN:B20001--
31	20Y-27-31190	· PLUG	3	SN:B20001--
32	07002-12434	· O-RING	3	SN:B20001--
33	20Y-27-11582	· SPROCKET	1	SN:B20001--
34	20Y-27-11561	· BOLT	20	SN:B20001--
35	01010-61660	BOLT	36	SN:B20001--
36	01643-31645	WASHER	36	SN:B20001--
37	20Y-30-21191	COVER	2	SN:B20695--
	20Y-30-11420	COVER	2	SN:B20001--B20694

Ref. P1210-01A0 Page 300020

PC160LC-7B S/N B20001 AND UP

FINAL DRIVE

Item	Part No.	Description	Qty	Options
38	01010-81230	BOLT	12	SN:B20001--
39	01643-31232	WASHER	12	SN:B20001--

UNDER CARRIAGE

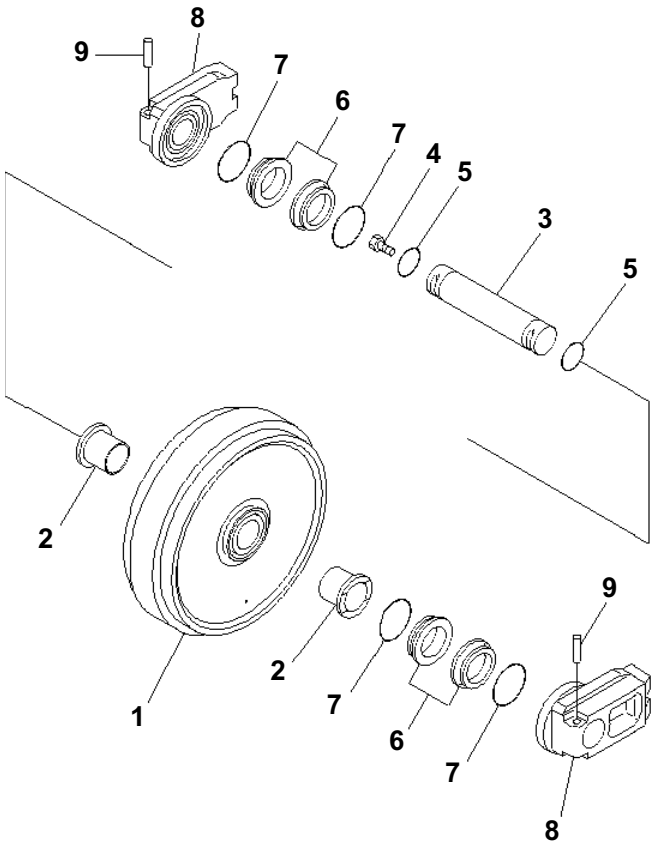

PC160LC-7B S/N B20001 AND UP

FRONT IDLER

Item	Part No.	Description	Qty	Options
	20Y-30-00322	FRONT IDLER ASS'Y	2	SN:B20150--
	20Y-30-00321	FRONT IDLER ASS'Y	2	SN:B20001--B20149
1	20Y-30-43310	· IDLER	1	SN:B20150--
	20Y-30-33211	· IDLER	1	SN:B20001--B20149
2	20Y-30-43340	· BUSHING	2	SN:B20150--
	□207-30-56140	· BUSHING	2	SN:B20001--B20149
3	20Y-30-13131	· SHAFT	1	SN:B20150--
	□20Y-30-13130	· SHAFT	1	SN:B20001--B20149
4	07052-31624	· PLUG	1	SN:B20001--
5	07000-12060	· O-RING	2	SN:B20001--
	195-30-00302	· FLOATING SEAL ASS'Y	2	SN:B20150--
	20Y-30-00100	· FLOATING SEAL ASS'Y	2	SN:B20001--B20149
6	☆	· · RING	2	SN:B20150--
	☆	· · RING	2	SN:B20001--B20149
7	☆	· · O-RING	2	SN:B20150--
	☆	· · O-RING	2	SN:B20001--B20149
8	20Y-30-31750	· SUPPORT	2	SN:B20150--
	20Y-30-13150	· SUPPORT	2	SN:B20001--B20149
9	205-30-76190	· PIN	2	SN:B20001--

Ref. R0110-01A0 Page 330010

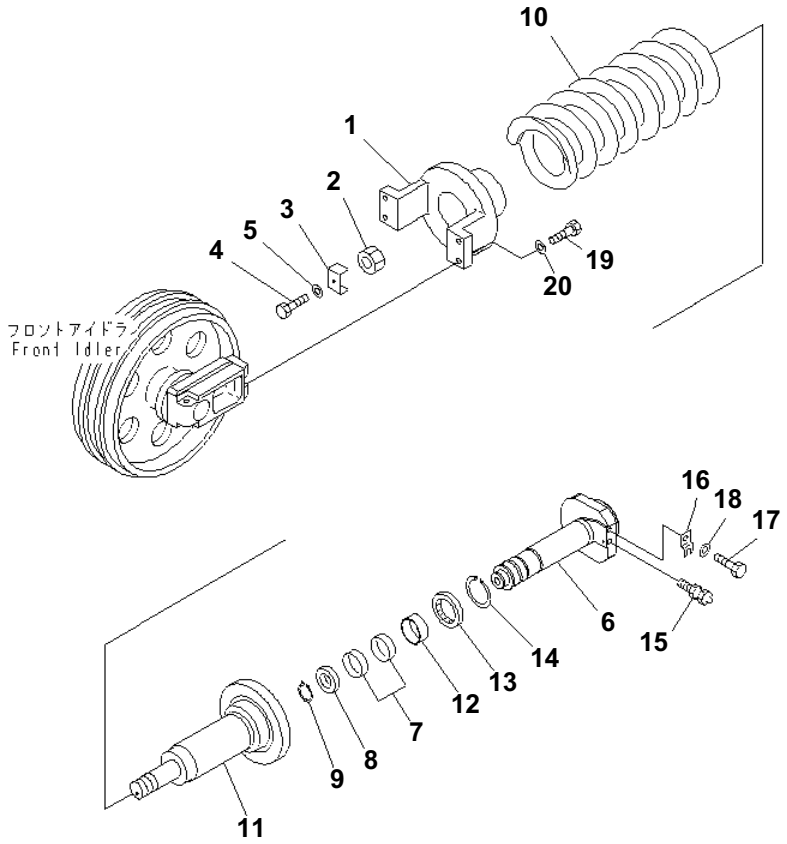

IDLER CUSHION

Item	Part No.	Description	Qty	Options
1	20Y-30-42110	YOKE	2	SN:B20512--
	20Y-30-32110	YOKE	2	SN:B20001--B20511
2	206-30-45381	NUT	2	SN:B20001--
3	20Y-30-42160	LOCK	2	SN:B20512--
	206-30-45262	LOCK	2	SN:B20001--B20511
4	01010-81225	BOLT	2	SN:B20001--
5	01643-31232	WASHER	2	SN:B20001--
6	206-30-72140	SHAFT	2	SN:B20001--
7	07155-00720	RING	4	SN:B20001--
8	09370-00070	U-PACKING	2	SN:B20001--
9	04064-04518	RING	2	SN:B20001--
10	20Y-30-42130	SPRING	2	SN:B20512--
	20Y-30-12112	SPRING	2	SN:B20001--B20511
11	20Y-30-42120	CYLINDER	2	SN:B20512--
	20Y-30-32130	CYLINDER	2	SN:B20001--B20511
12	07177-07030	BUSHING	2	SN:B20001--
13	707-56-70540	SEAL	2	SN:B20001--
14	04077-00085	RING	2	SN:B20001--
15	07959-20001	VALVE	2	SN:B20001--
16	205-30-72170	PLATE	2	SN:B20001--
17	01010-81225	BOLT	2	SN:B20001--
18	01643-31232	WASHER	2	SN:B20001--
19	01010-61655	BOLT	8	SN:B20001--
20	01643-31645	WASHER	8	SN:B20001--

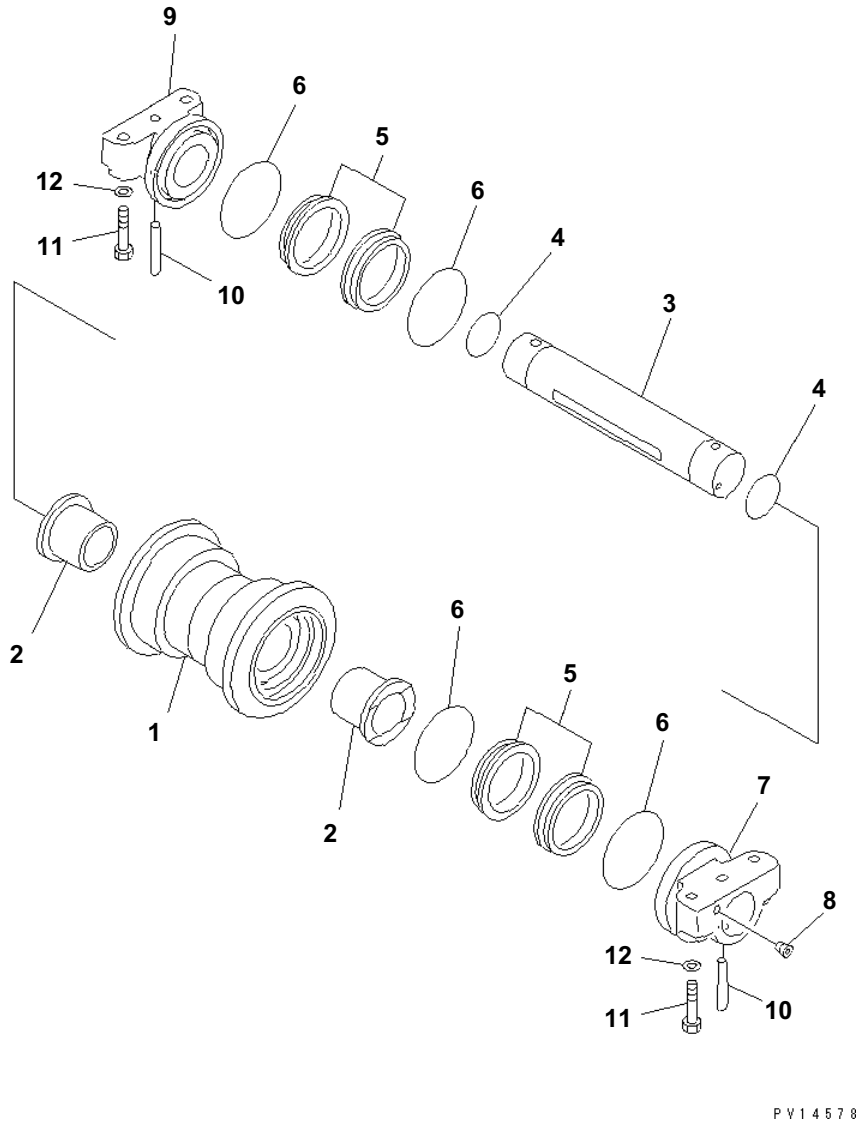

TRACK ROLLER

Item	Part No.	Description	Qty	Options
	20Y-30-00016	TRACK ROLLER ASS'Y	14	SN:B20001--
1	20Y-30-16411	・ ROLLER	1	SN:B20001--
2	22U-30-11450	・ BUSHING	2	SN:B20001--
3	22U-30-11420	・ SHAFT	1	SN:B20001--
4	205-30-76260	・ O-RING	2	SN:B20001--
	20Y-30-00430	・ FLOATING SEAL ASS'Y	2	SN:B20001--
5	☆	・・ SEAL	2	SN:B20001--
6	☆	・・ O-RING	2	SN:B20001--
7	22U-30-11430	・ COLLAR	1	SN:B20001--
8	20Y-30-16330	・ PLUG	1	SN:B20001--
9	22U-30-11440	・ COLLAR	1	SN:B20001--
10	20Y-30-16170	・ PIN	2	SN:B20001--
11	20Y-30-11340	BOLT	56	SN:B20001--
12	01643-31845	WASHER	56	SN:B20001--

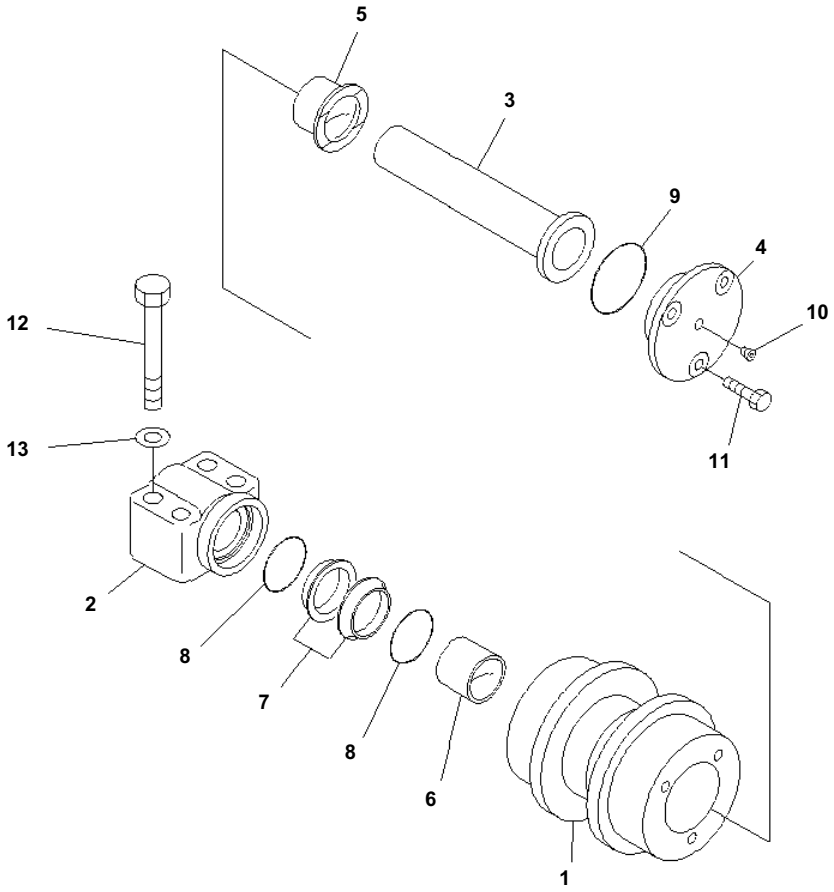

CARRIER ROLLER (#B20001-B20694)

Item	Part No.	Description	Qty	Options
	22U-30-00021	CARRIER ROLLER ASS'Y	4	SN:B20001--B20694
1	22U-30-25110	· ROLLER	1	SN:B20001--B20694
2	22U-30-25120	· SUPPORT	1	SN:B20001--B20694
3	22U-30-25130	· SHAFT	1	SN:B20001--B20694
4	22U-30-25140	· COVER	1	SN:B20001--B20694
5	22U-30-25150	· BUSHING	1	SN:B20001--B20694
6	22U-30-25160	· BUSHING	1	SN:B20001--B20694
	110-30-00086	· FLOATING SEAL ASS'Y	1	SN:B20001--B20694
7	☆	· · RING	2	SN:B20001--B20694
8	☆	· · O-RING	2	SN:B20001--B20694
9	07000-12060	· O-RING	1	SN:B20001--B20694
10	20Y-30-16330	· PLUG	1	SN:B20001--B20694
11	01010-81025	· BOLT	3	SN:B20001--B20694
12	01010-81485	BOLT	16	SN:B20001--B20694
13	01643-31445	WASHER	16	SN:B20001--B20694

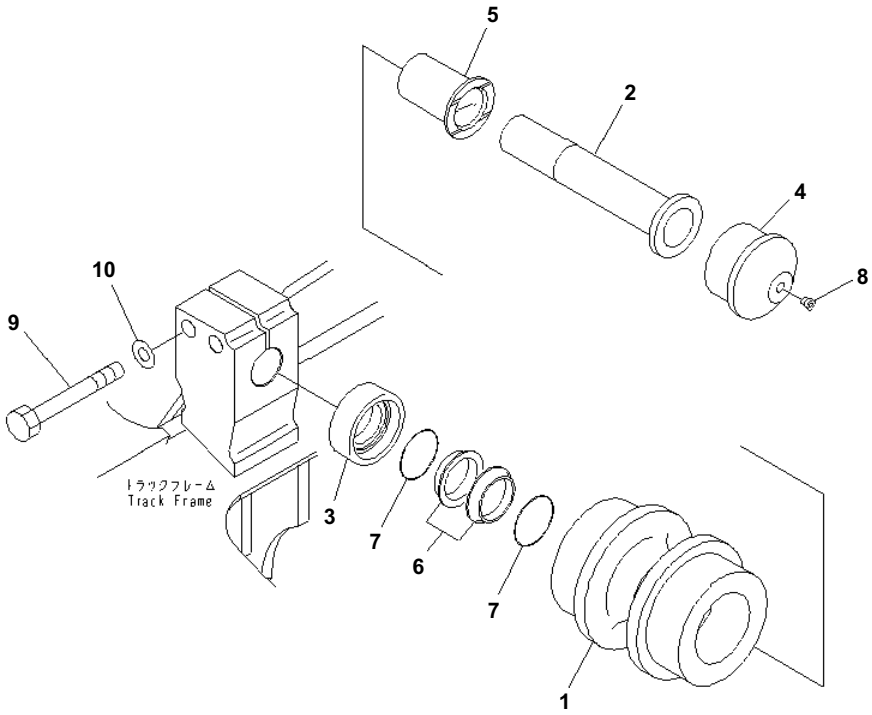

CARRIER ROLLER (#B20695-)

Item	Part No.	Description	Qty	Options
	20Y-30-00481	CARRIER ROLLER	4	SN:B20695--
1	20Y-30-43260	・ ROLLER	1	SN:B20695--
2	20Y-30-43221	・ SHAFT	1	SN:B20695--
3	20Y-30-43230	・ RING	1	SN:B20695--
4	20Y-30-43240	・ COVER	1	SN:B20695--
5	20Y-30-43250	・ BUSHING	1	SN:B20695--
	110-30-00086	・ FLOATING SEAL ASS'Y	1	SN:B20695--
6	☆	・・ RING	2	SN:B20695--
7	☆	・・ O-RING	2	SN:B20695--
8	20Y-30-16330	・ PLUG	1	SN:B20695--
9	01010-81680	BOLT	8	SN:B20695--
10	01643-31645	WASHER	8	SN:B20695--

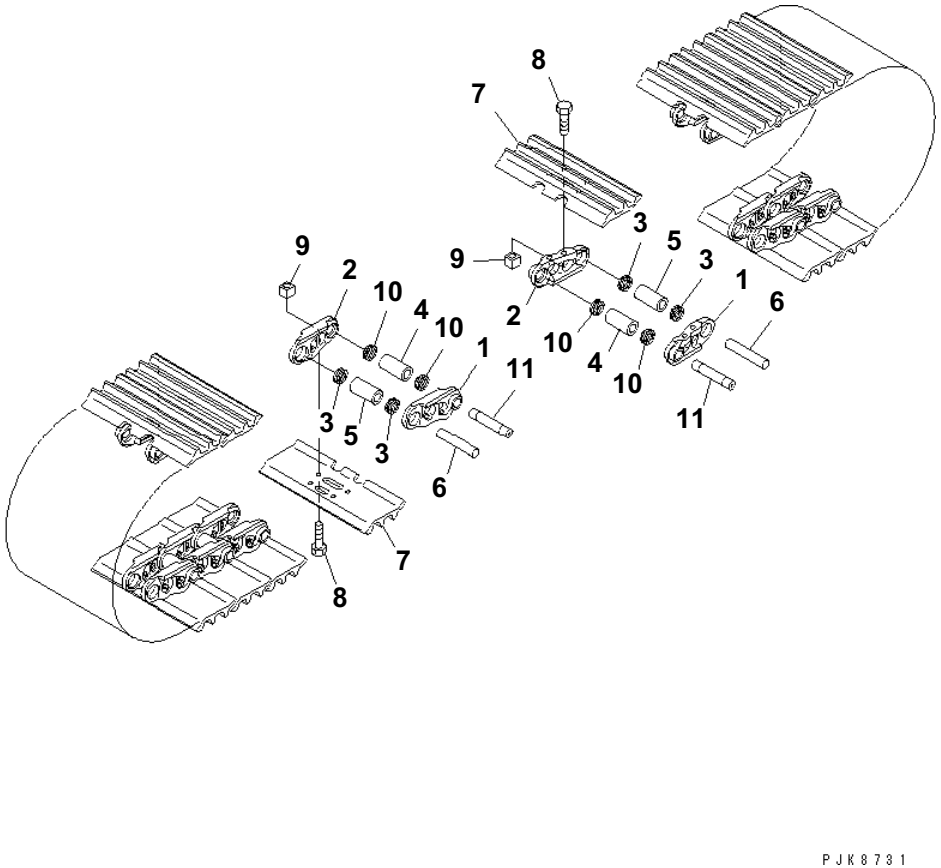

TRACK SHOE (TRIPLE GROUSER WITH HOLE) (500MM WIDE)

Item	Part No.	Description	Qty	Options
	21K-32-04410	TRACK SHOE ASS'Y	1	SN:B20001--
1	20Y-32-31120	· LINK,TRACK¤ L.H.	88	SN:B20001--
2	20Y-32-31130	· LINK,TRACK¤ R.H.	88	SN:B20001--
3	20Y-32-11240	· SEAL	168	SN:B20001--
4	20Y-32-11171	· BUSHING¤ MASTER	4	SN:B20001--
5	20Y-32-11141	· BUSHING¤ REGULAR	84	SN:B20001--
6	20Y-32-31150	· PIN	84	SN:B20001--
7	21K-32-21510	· SHOE	88	SN:B20001--
8	20Y-32-31210	· BOLT¤ SHOE (Y0320-K01	352	SN:B20001--
9	134-32-61221	· NUT (Y0320-K01	352	SN:B20001--
10	20Y-32-11260	· SEAL	8	SN:B20001--
11	20Y-32-31190	· PIN	4	SN:B20001--

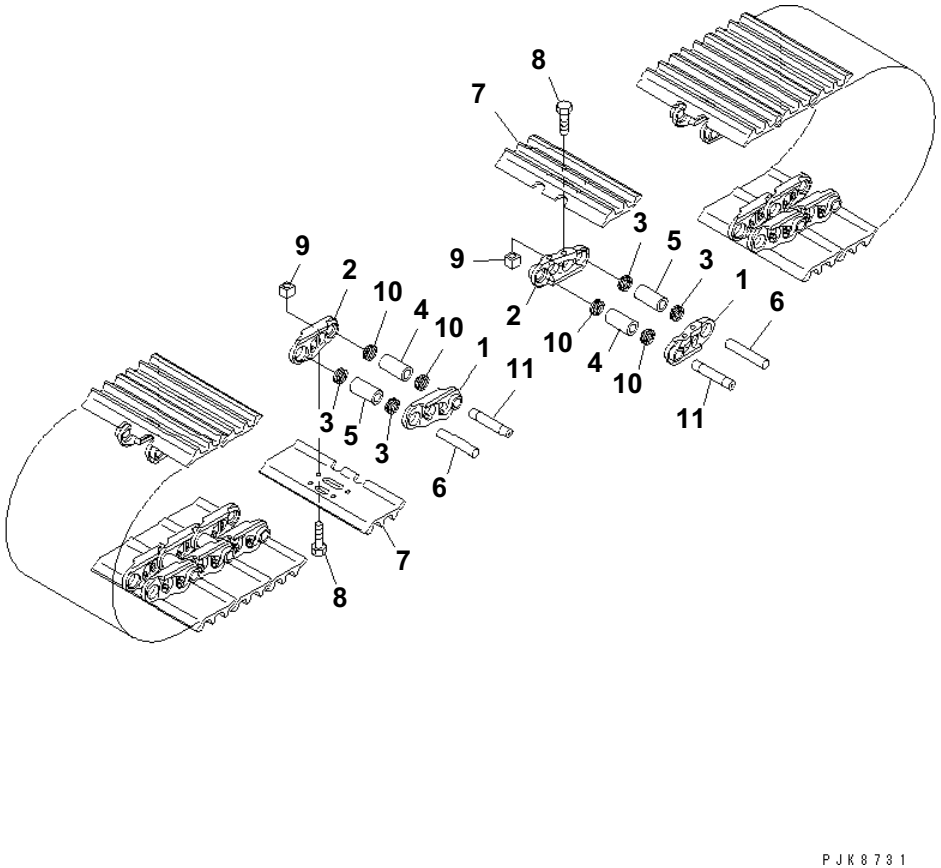

TRACK SHOE (TRIPLE GROUSER WITH HOLE) (700MM WIDE)(#B20001-B20173)

Item	Part No.	Description	Qty	Options
	21K-32-04420	TRACK SHOE ASS'Y	1	SN:B20001--B20173
1	20Y-32-31120	· LINK,TRACK¤ L.H.	88	SN:B20001--B20173
2	20Y-32-31130	· LINK,TRACK¤ R.H.	88	SN:B20001--B20173
3	20Y-32-11240	· SEAL	168	SN:B20001--B20173
4	20Y-32-11171	· BUSHING¤ MASTER	4	SN:B20001--B20173
5	20Y-32-11141	· BUSHING¤ REGULAR	84	SN:B20001--B20173
6	20Y-32-31150	· PIN	84	SN:B20001--B20173
7	21K-32-21520	· SHOE	88	SN:B20001--B20173
8	20Y-32-31210	· BOLT¤ SHOE (Y0320-K01	352	SN:B20001--B20173
9	134-32-61221	· NUT (Y0320-K01	352	SN:B20001--B20173
10	20Y-32-11260	· SEAL	8	SN:B20001--B20173
11	20Y-32-31190	· PIN	4	SN:B20001--B20173

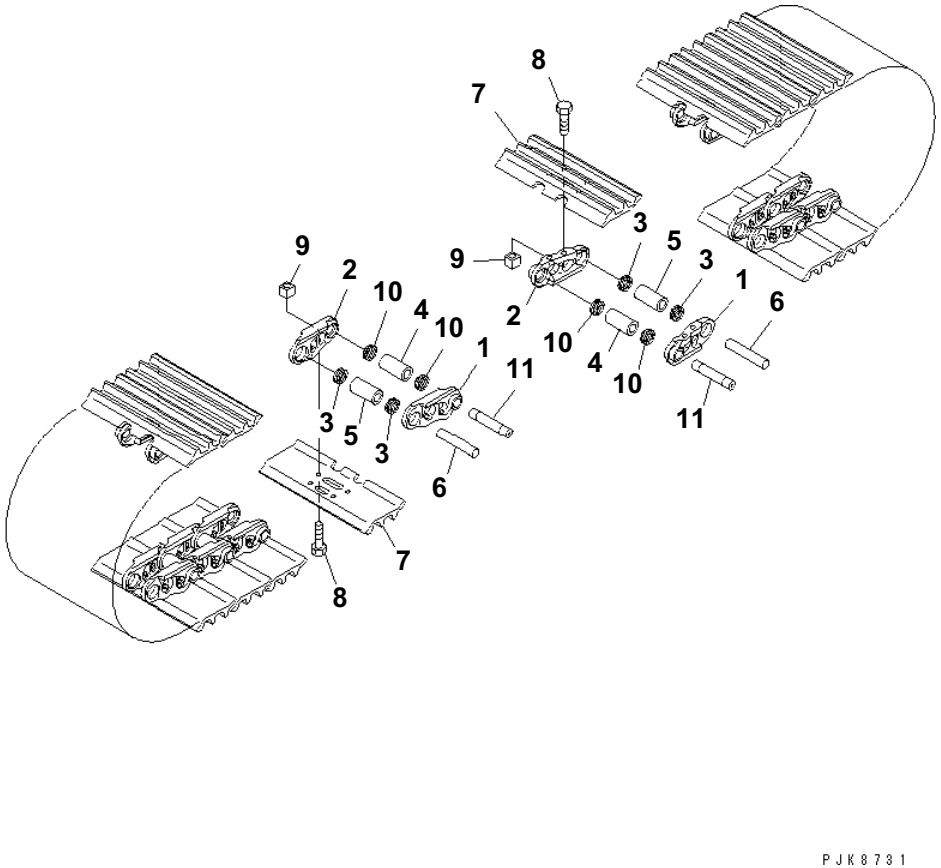

TRACK SHOE (TRIPLE GROUSER WITH HOLE) (700MM WIDE)

Item	Part No.	Description	Qty	Options
	21K-32-00840	TRACK SHOE ASS'Y	2	SN:B20001--
	21K-32-00810	· LINK ASS'Y	1	SN:B20001--
1	20Y-32-31120	· · LINK	88	SN:B20001--
2	20Y-32-31130	· · LINK	88	SN:B20001--
3	20Y-32-11240	· · SEAL	172	SN:B20001--
4	20Y-32-11171	· · BUSHING¤ MASTER	2	SN:B20001--
5	20Y-32-11141	· · BUSHING¤ REGULAR	86	SN:B20001--
6	20Y-32-31150	· · PIN	86	SN:B20001--
7	21K-32-21620	· · SHOE	88	SN:B20001--
8	20Y-32-31210	· BOLT¤ SHOE (Y0320-K01	352	SN:B20001--
9	134-32-61221	· NUT (Y0320-K01	352	SN:B20001--
10	20Y-32-11260	· SEAL	4	SN:B20001--
11	20Y-32-31190	· PIN	2	SN:B20001--

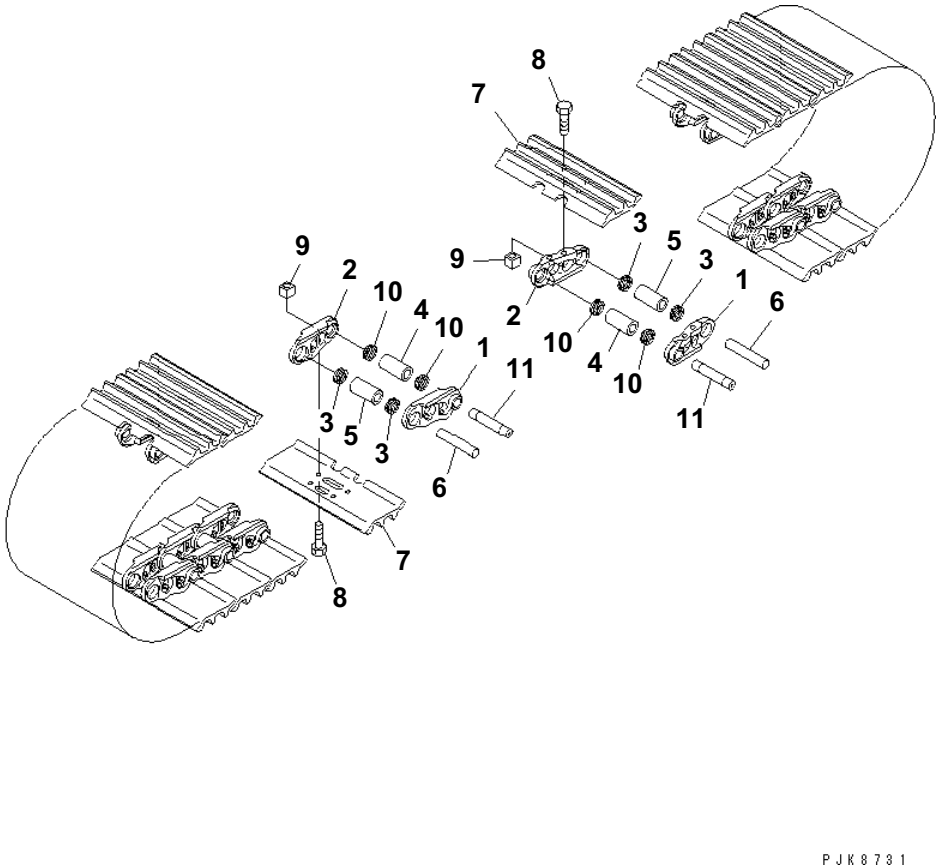

TRACK SHOE (TRIPLE GROUSER WITH HOLE) (700MM WIDE)(#B20500-)

Item	Part No.	Description	Qty	Options
	21K-32-04420	TRACK SHOE ASS'Y	1	SN:B20500--
1	20Y-32-31120	· LINK, TRACK, L.H.	88	SN:B20500--
2	20Y-32-31130	· LINK, TRACK, R.H.	88	SN:B20500--
3	20Y-32-11240	· SEAL	168	SN:B20500--
4	20Y-32-11171	· BUSHING¤ MASTER	4	SN:B20500--
5	20Y-32-11141	· BUSHING¤ REGULAR	84	SN:B20500--
6	20Y-32-31150	· PIN	84	SN:B20500--
7	21K-32-21520	· SHOE	88	SN:B20500--
8	20Y-32-31210	· BOLT¤ SHOE (Y0320-K01	352	SN:B20500--
9	134-32-61221	· NUT (Y0320-K01	352	SN:B20500--
10	20Y-32-11260	· SEAL	8	SN:B20500--
11	20Y-32-31190	· PIN	4	SN:B20500--

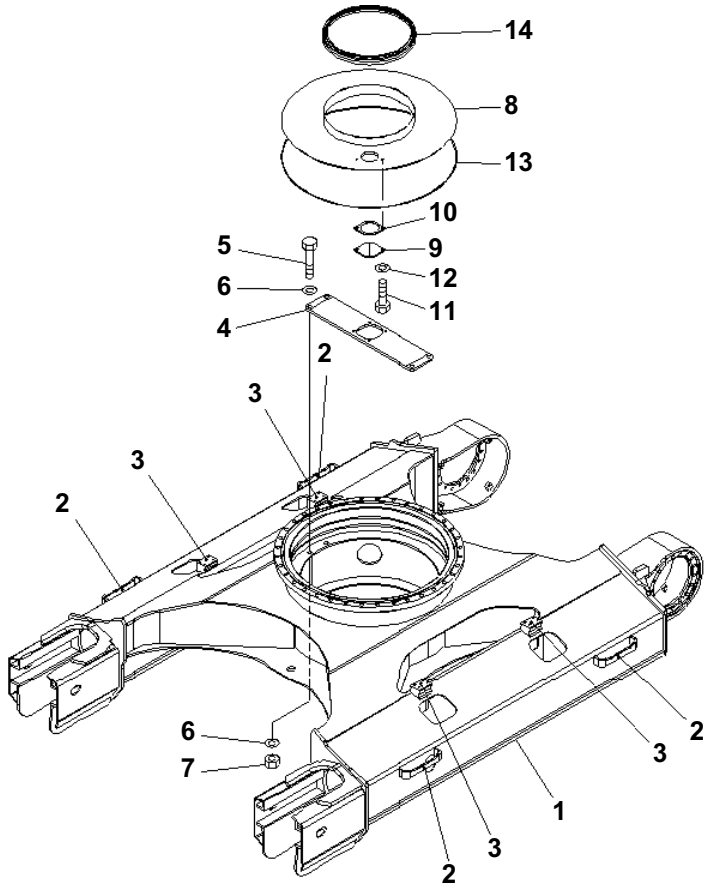

PC160LC-7B S/N B20001 AND UP

TRACK FRAME

Item	Part No.	Description	Qty	Options
1	21K-30-B7111	FRAME	1	SN:B20099--
	21K-30-71112	FRAME	1	SN:B20037--B20098
	21K-30-71210	TRACK FRAME	1	SN:B20001--B20036
2	21K-30-71C20	· PLATE (WELDED)	4	SN:B20001--
3	20Y-30-31D21	· BRACKET (WELDED)	4	SN:B20001--
4	21K-30-71B50	PLATE	1	SN:B20001--
5	01010-82065	BOLT	4	SN:B20001--
6	01643-32060	WASHER	8	SN:B20001--
7	01580-12016	NUT	4	SN:B20001--
8	21K-30-71141	COVER	1	SN:B20001--
9	205-30-71181	COVER	1	SN:B20001--
10	205-30-71191	GASKET	1	SN:B20001--
11	01010-81025	BOLT	2	SN:B20001--
12	01643-31032	WASHER	2	SN:B20001--
13	21K-30-71160	SEAL	1	SN:B20001--
14	21K-30-71150	SEAL	1	SN:B20001--

Ref. R1100-01A0 Page 330080

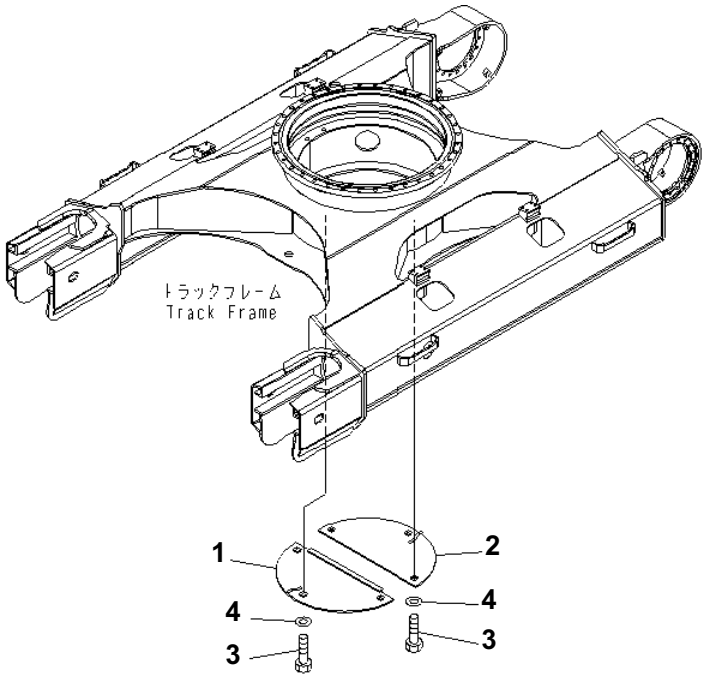

UNDER COVER (FOR TRACK FRAME)

Item	Part No.	Description	Qty	Options
1	20Y-973-2220	COVER	1	SN:B20001--
2	20Y-973-2230	COVER	1	SN:B20001--
3	01010-81235	BOLT	6	SN:B20001--
4	01643-31232	WASHER	6	SN:B20001--

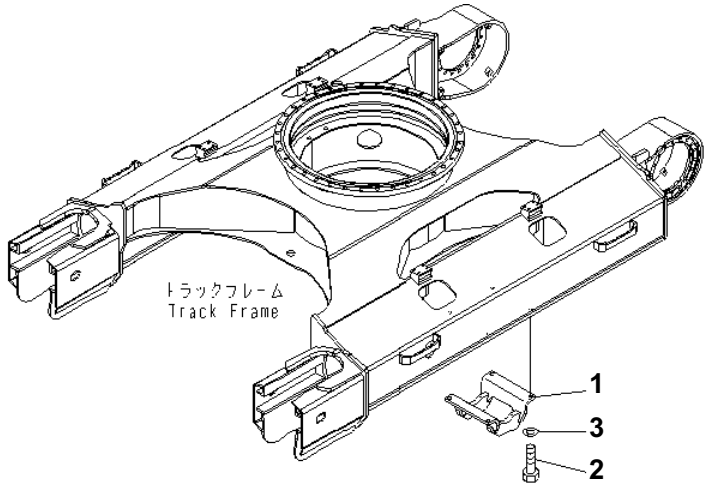

TRACK ROLLER GUARD

Item	Part No.	Description	Qty	Options
1	20Y-30-31160	GUARD	2	SN:B20001--
2	01010-62050	BOLT	8	SN:B20001--
3	01643-32060	WASHER	8	SN:B20001--

WORK EQUIPMENT

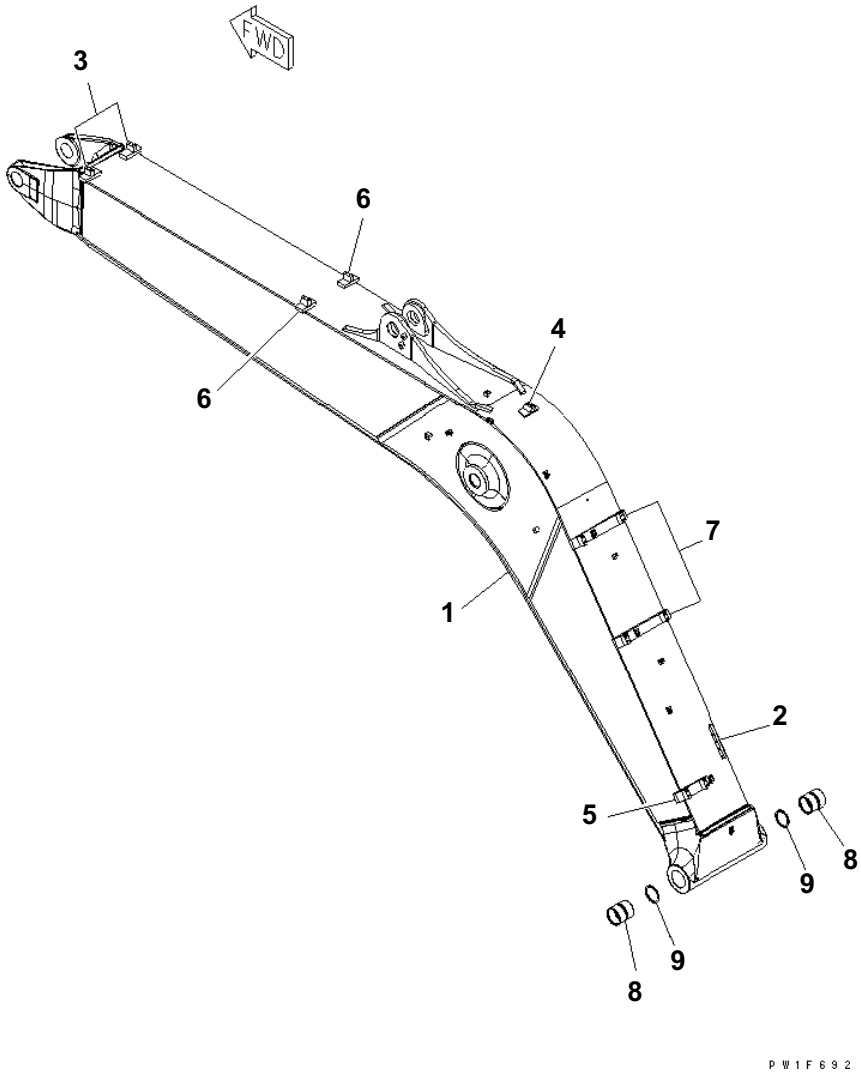

BOOM

Item	Part No.	Description	Qty	Options
1	21K-70-71112	BOOM	1	SN:B20127--
	21K-70-71510	BOOM	1	SN:B20001--B20126
2	20Y-70-11651	· SEAT (WELDED)	1	SN:B20001--
3	21K-62-74211	· BRACKET (WELDED)	2	SN:B20001--
4	21K-62-74221	· BRACKET (WELDED)	1	SN:B20001--
5	21K-62-74231	· BRACKET (WELDED)	1	SN:B20001--
6	203-70-51221	· SEAT (WELDED)	2	SN:B20001--
7	21K-62-74280	· BRACKET (WELDED)	2	SN:B20001--
8	21K-70-71311	BUSHING	2	SN:B20001--
9	07145-00080	SEAL	2	SN:B20001--

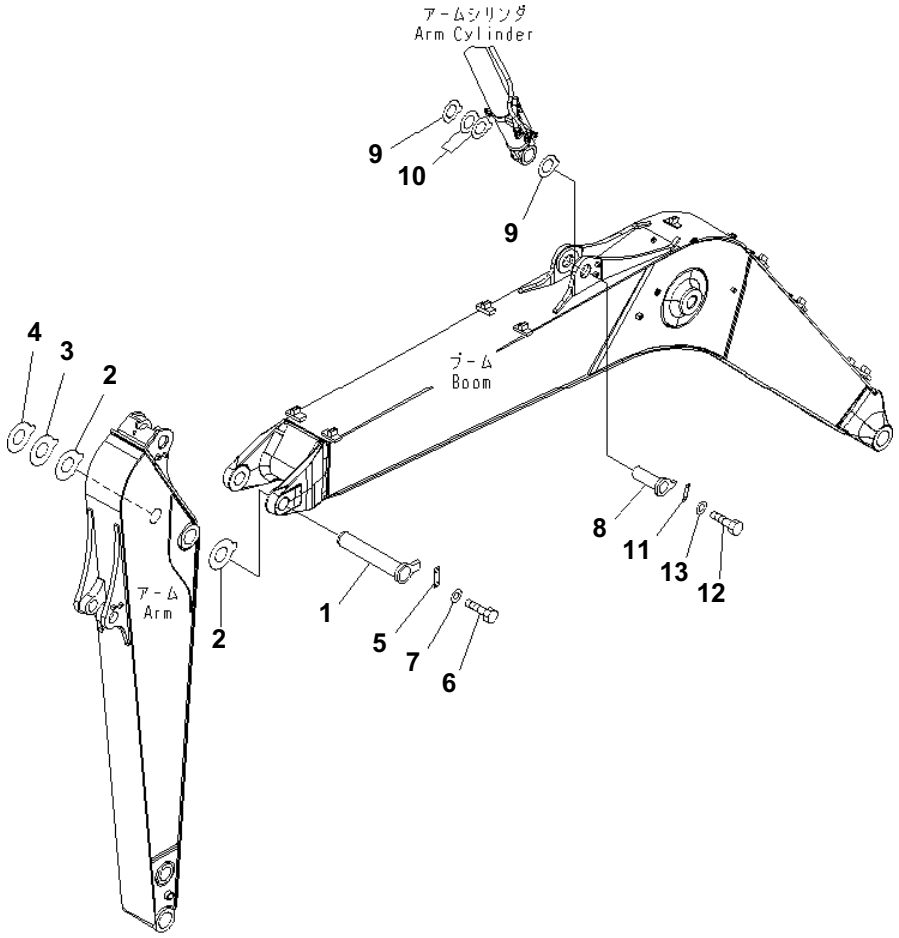

BOOM (TOP PIN AND BOTTOM PIN)

Item	Part No.	Description	Qty	Options
1	21K-70-71180	PIN	1	SN:B20001--
2	21K-70-71411	SPACER¤ 2.0MM	2	SN:B20371--
	21K-70-71410	SPACER¤ 2.0MM	2	SN:B20001--B20370
3	21K-70-71421	SPACER¤ 2.5MM	1	SN:B20297--
	21K-70-71420	SPACER¤ 2.5MM	1	SN:B20001--B20296
4	21K-70-71431	SPACER¤ 3.0MM	1	SN:B20388--
	21K-70-71430	SPACER¤ 3.0MM	1	SN:B20001--B20387
5	205-70-71310	PLATE	1	SN:B20001--
6	01010-81235	BOLT	2	SN:B20001--
7	01643-31232	WASHER	2	SN:B20001--
8	20Y-70-11182	PIN	1	SN:B20127--
	20Y-70-11180	PIN	1	SN:B20001--B20126
9	20Y-70-31430	SPACER¤ 1.0MM	2	SN:B20001--
10	206-70-71450	SPACER¤ 2.0MM	2	SN:B20001--
11	205-70-66581	PLATE	1	SN:B20127--
	205-70-66580	PLATE	1	SN:B20001--B20126
12	01010-81230	BOLT	2	SN:B20001--
13	01643-31232	WASHER	2	SN:B20001--

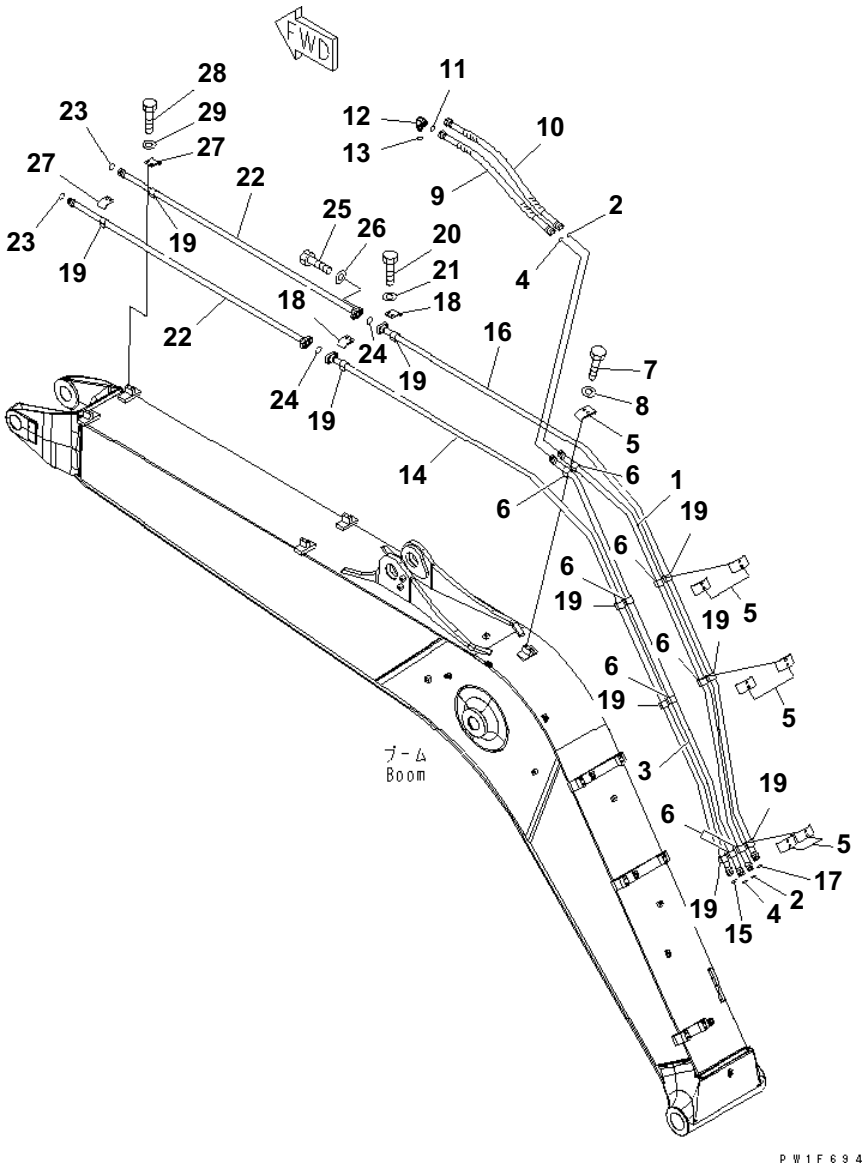

BOOM (ARM CYLINDER LINE AND BUCKET CYLINDER LINE)

Item	Part No.	Description	Qty	Options
1	21K-62-74120	TUBE	1	SN:B20001--
2	02896-61018	O-RING	2	SN:B20001--
3	21K-62-74110	TUBE	1	SN:B20001--
4	02896-61018	O-RING	2	SN:B20001--
5	203-70-53381	PLATE	7	SN:B20001--
6	21K-62-35270	CUSHION	8	SN:B20001--
7	01010-81025	BOLT	14	SN:B20001--
8	01643-31032	WASHER	14	SN:B20001--
9	02777-00608	HOSE	1	SN:B20001--
10	02777-006A8	HOSE	1	SN:B20001--
11	02896-61018	O-RING	1	SN:B20001--
12	02782-10628	ELBOW	1	SN:B20001--
13	07002-62434	O-RING	1	SN:B20001--
14	21K-62-74131	TUBE	1	SN:B20001--
15	02896-61018	O-RING	1	SN:B20001--
16	21K-62-74141	TUBE	1	SN:B20001--
17	02896-61018	O-RING	1	SN:B20001--
18	203-70-53391	PLATE	2	SN:B20001--
19	21K-62-35270	CUSHION	10	SN:B20001--
20	01010-81025	BOLT	4	SN:B20001--
21	01643-31032	WASHER	4	SN:B20001--
22	21K-62-74151	TUBE	2	SN:B20001--
23	02896-61018	O-RING	2	SN:B20001--
24	07000-13030	O-RING	2	SN:B20001--
25	07372-21035	BOLT	8	SN:B20001--
26	01643-51032	WASHER	8	SN:B20001--
27	203-70-53391	PLATE	2	SN:B20001--
28	01010-81025	BOLT	4	SN:B20001--
29	01643-31032	WASHER	4	SN:B20001--

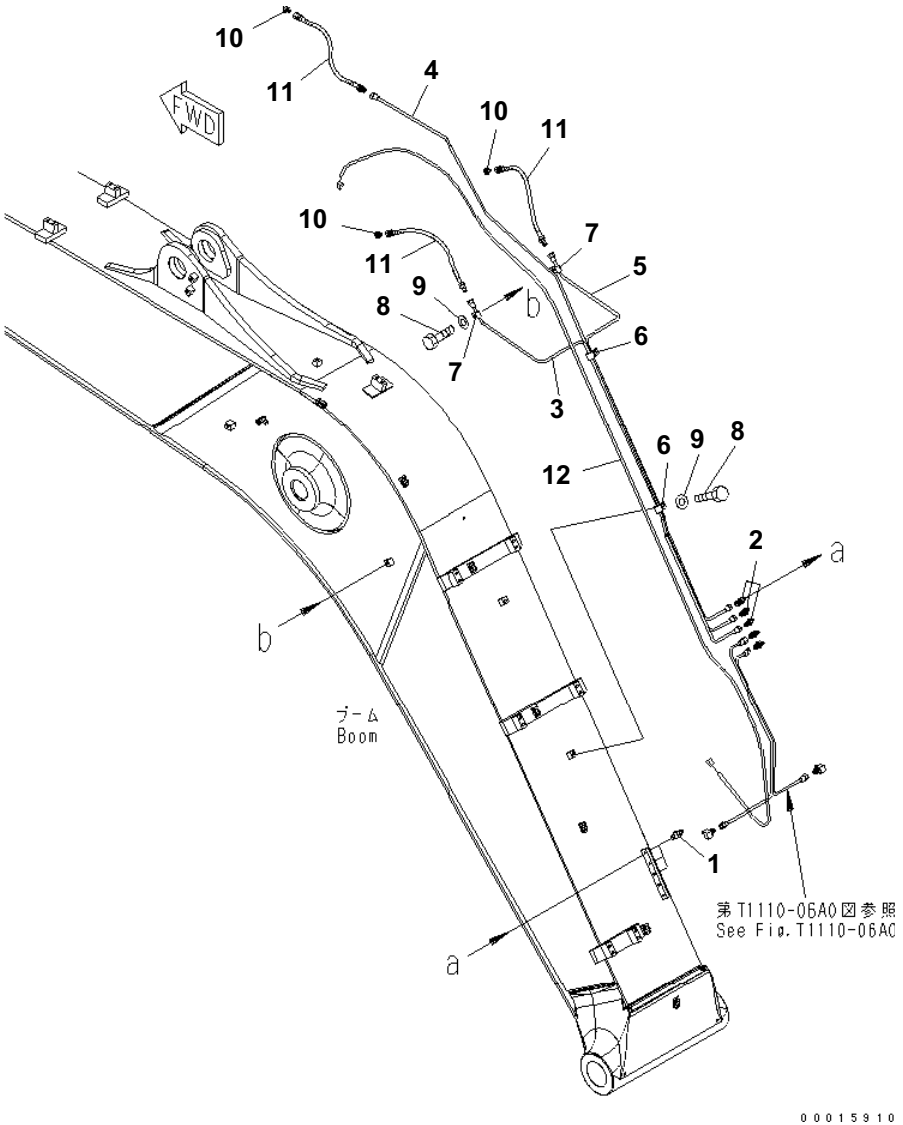

BOOM (LUBRICATING LINE)

Item	Part No.	Description	Qty	Options
1	07020-00000	FITTING	3	SN:B20001--
2	20Y-70-11540	CONNECTOR	3	SN:B20001--
3	21K-70-71231	TUBE	1	SN:B20001--
4	21K-70-71241	TUBE	1	SN:B20001--
5	21K-70-71251	TUBE	1	SN:B20001--
6	04434-51710	CLIP	2	SN:B20001--
7	04434-50810	CLIP	3	SN:B20001--
8	01010-81020	BOLT	5	SN:B20001--
9	01643-31032	WASHER	5	SN:B20001--
10	205-70-51390	NIPPLE	3	SN:B20001--
11	20Y-70-11520	HOSE¤ 440MM	3	SN:B20001--
12	21K-06-71310	WIRE	1	SN:B20001--

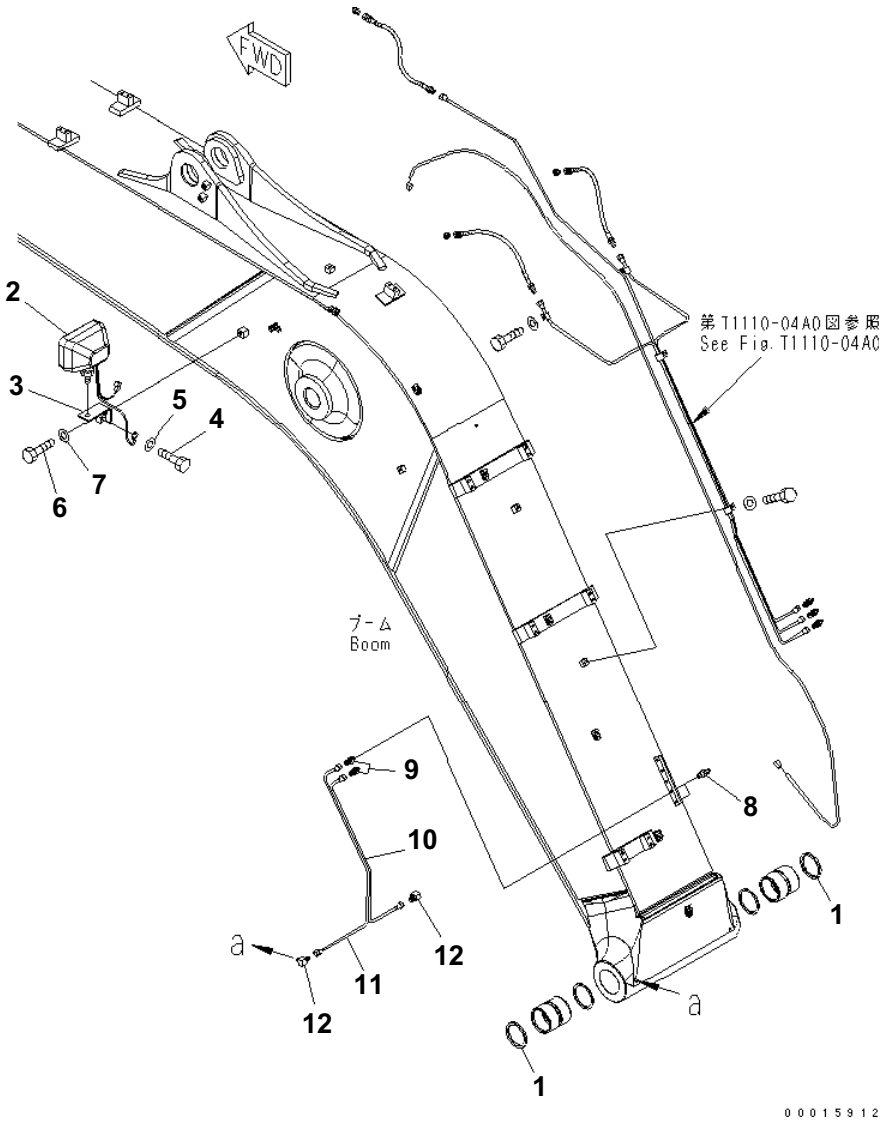

BOOM (FOOT LUBRICATING AND WORKING LAMP)

Item	Part No.	Description	Qty	Options
1	07145-00080	SEAL	2	SN:B20001--
2	20Y-06-25310	WORK LAMP ASS'Y	1	SN:B20001--
	421-06-23330	・ BULB¤ 70W	1	SN:B20001--
3	20Y-06-21551	BRACKET	1	SN:B20001--
4	01010-81220	BOLT	1	SN:B20001--
5	01643-31232	WASHER	1	SN:B20001--
6	01010-81230	BOLT	1	SN:B20001--
7	01643-31232	WASHER	1	SN:B20001--
8	07020-00000	FITTING	2	SN:B20001--
9	20Y-70-11540	CONNECTOR	2	SN:B20001--
10	21K-70-71211	TUBE	1	SN:B20001--
11	21K-70-71221	TUBE	1	SN:B20001--
12	20Y-70-11590	ELBOW	2	SN:B20001--

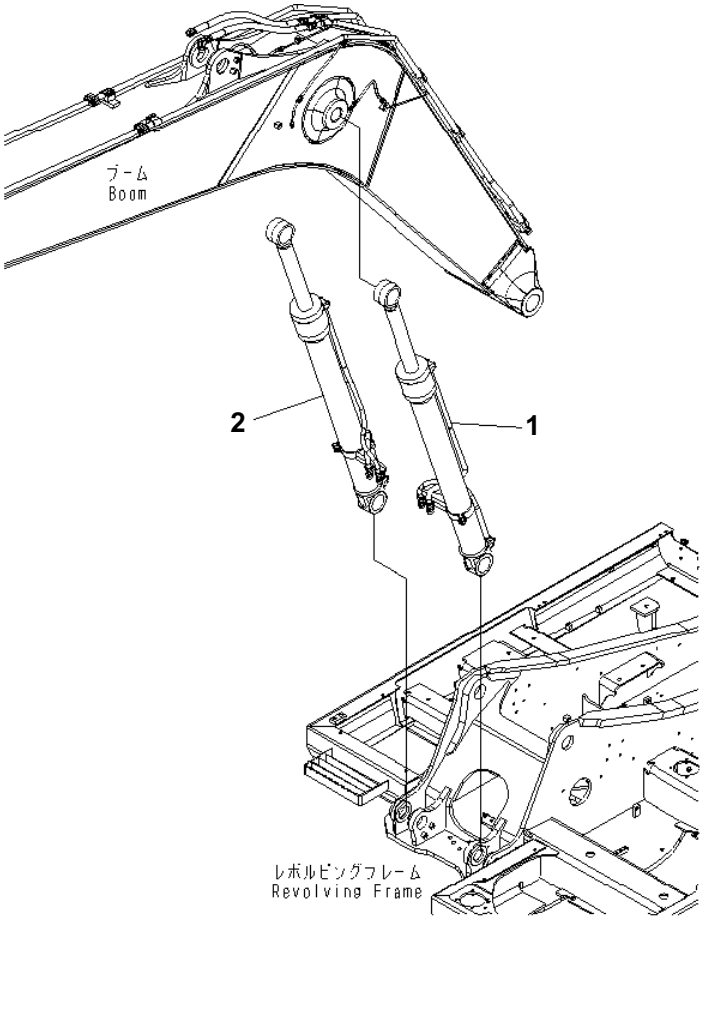

BOOM CYLINDER

Item	Part No.	Description	Qty	Options
1	(⊙707-01-XE490)	CYLINDER GROUP,L.H.	1	SN:B20001--
2	(⊙707-01-XE500)	CYLINDER GROUP,R.H.	1	SN:B20001--

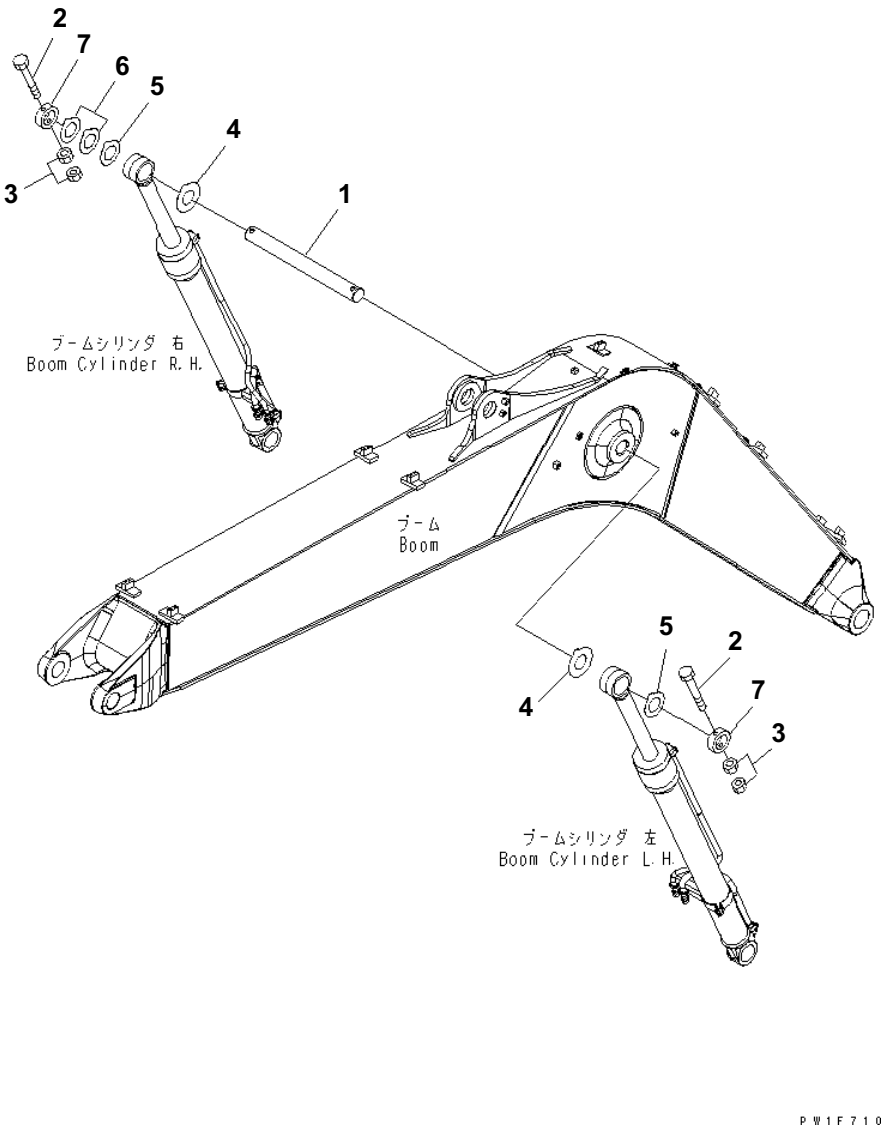

BOOM CYLINDER TOP PIN

Item	Part No.	Description	Qty	Options
1	21K-70-71261	PIN	1	SN:B20001--
2	01019-11640	BOLT	2	SN:B20001--
3	01580-11613	NUT	4	SN:B20001--
4	20Y-70-31380	SPACER¤ 1.0MM	2	SN:B20001--
5	20Y-70-31380	SPACER¤ 1.0MM	2	SN:B20001--
6	20Y-70-31390	SPACER¤ 2.0MM	2	SN:B20001--
7	21K-70-11410	PLATE	2	SN:B20001--

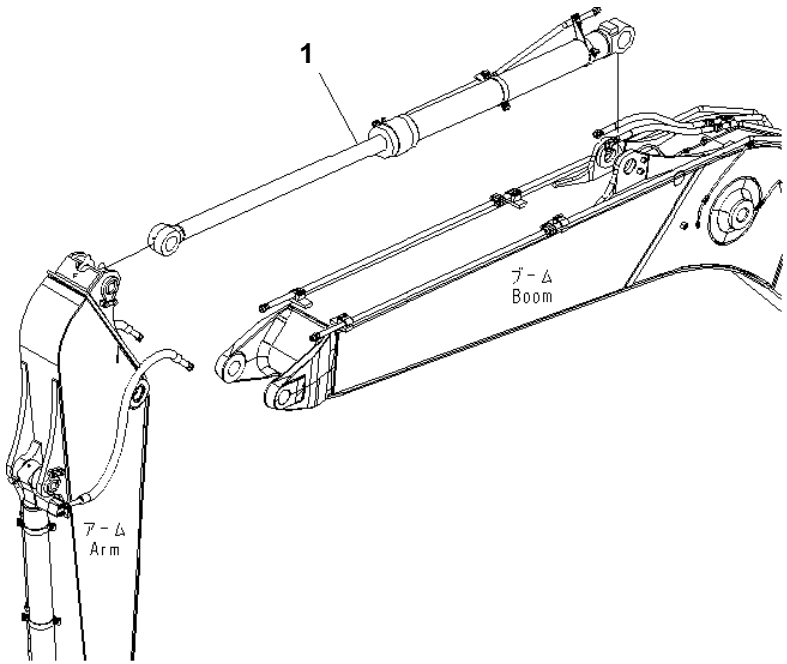

PC160LC-7B S/N B20001 AND UP

ARM CYLINDER

Item	Part No.	Description	Qty	Options
1	(⊙707-01-XE511)	CYLINDER GROUP	1	SN:B20164--
	(⊙707-01-XE510)	CYLINDER GROUP	1	SN:B20001--B20163

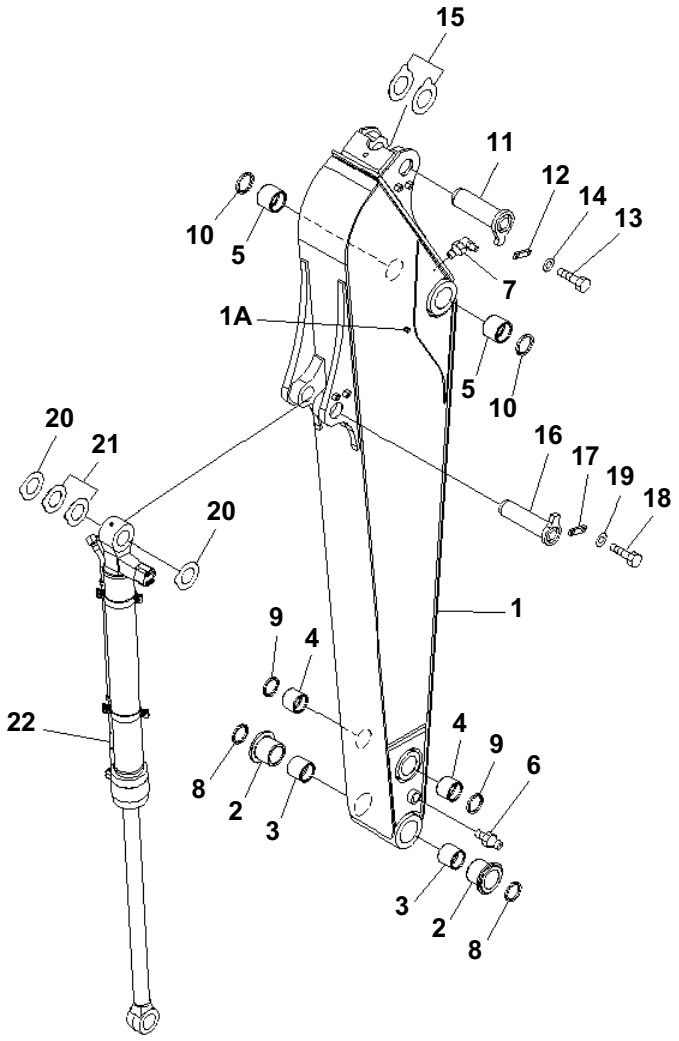

Item	Part No.	Description	Qty	Options
1	21K-70-B7151	ARM	1	SN:B20150--
	21K-70-B7150	ARM	1	SN:B20001--B20149
1A	22U-70-27110	· PIN (WELDED)	1	SN:B20001--
2	21K-70-72211	BUSHING	2	SN:B20001--
3	21K-70-72230	BUSHING	2	SN:B20001--
4	20Y-70-32371	BUSHING	2	SN:B20001--
5	20Y-70-32351	BUSHING	2	SN:B20001--
6	07020-00000	FITTING	1	SN:B20001--
7	07020-00900	FITTING	1	SN:B20001--
8	20Y-70-23220	SEAL	2	SN:B20001--
9	20Y-70-23220	SEAL	2	SN:B20001--
10	07145-00080	SEAL	2	SN:B20001--
11	20Y-70-31161	PIN	1	SN:B20150--
	20Y-70-31160	PIN	1	SN:B20001--B20149
12	205-70-66581	PLATE	1	SN:B20150--
	205-70-66580	PLATE	1	SN:B20001--B20149
13	01010-81230	BOLT	2	SN:B20001--
14	01643-31232	WASHER	2	SN:B20001--
15	20Y-70-31430	SPACER¤ 1.0MM	2	SN:B20001--
16	21K-70-71192	PIN	1	SN:B20150--
	21K-70-71191	PIN	1	SN:B20001--B20149
17	205-70-66581	PLATE	1	SN:B20150--
	205-70-66580	PLATE	1	SN:B20001--B20149
18	01010-81230	BOLT	2	SN:B20001--
19	01643-31232	WASHER	2	SN:B20001--
20	20Y-70-31380	SPACER¤ 1.0MM	2	SN:B20001--
21	20Y-70-31390	SPACER¤ 2.0MM	2	SN:B20001--
22	(⊙707-01-XE671)	CYLINDER GROUP	1	SN:B20164--
	(⊙707-01-XE670)	CYLINDER GROUP	1	SN:B20001--B20163

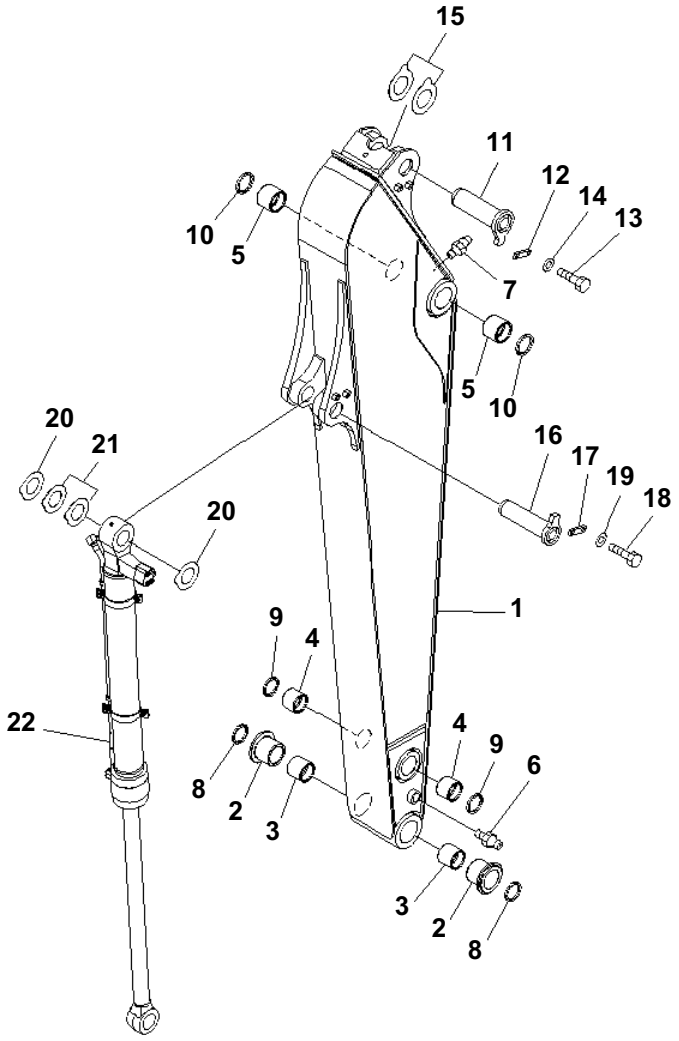

ARM (2.9M)

Item	Part No.	Description	Qty	Options
1	21K-943-B711	ARM	1	SN:B20150--
	21K-943-B710	ARM	1	SN:B20001--B20149
2	21K-70-72211	BUSHING	2	SN:B20001--
3	21K-70-72230	BUSHING	2	SN:B20001--
4	20Y-70-32371	BUSHING	2	SN:B20001--
5	20Y-70-32351	BUSHING	2	SN:B20001--
6	07020-00000	FITTING	1	SN:B20001--
7	07020-00900	FITTING	1	SN:B20001--
8	20Y-70-23220	SEAL	2	SN:B20001--
9	20Y-70-23220	SEAL	2	SN:B20001--
10	07145-00080	SEAL	2	SN:B20001--
11	20Y-70-31161	PIN	1	SN:B20150--
	20Y-70-31160	PIN	1	SN:B20001--B20149
12	205-70-66581	PLATE	1	SN:B20150--
	205-70-66580	PLATE	1	SN:B20001--B20149
13	01010-81230	BOLT	2	SN:B20001--
14	01643-31232	WASHER	2	SN:B20001--
15	20Y-70-31430	SPACER¤ 1.0MM	2	SN:B20001--
16	21K-70-71192	PIN	1	SN:B20150--
	21K-70-71191	PIN	1	SN:B20001--B20149
17	205-70-66581	PLATE	1	SN:B20150--
	205-70-66580	PLATE	1	SN:B20001--B20149
18	01010-81230	BOLT	2	SN:B20001--
19	01643-31232	WASHER	2	SN:B20001--
20	20Y-70-31380	SPACER¤ 1.0MM	2	SN:B20001--
21	20Y-70-31390	SPACER¤ 2.0MM	2	SN:B20001--
22	(⊙707-01-XE671)	CYLINDER GROUP	1	SN:B20164--
	(⊙707-01-XE670)	CYLINDER GROUP	1	SN:B20001--B20163

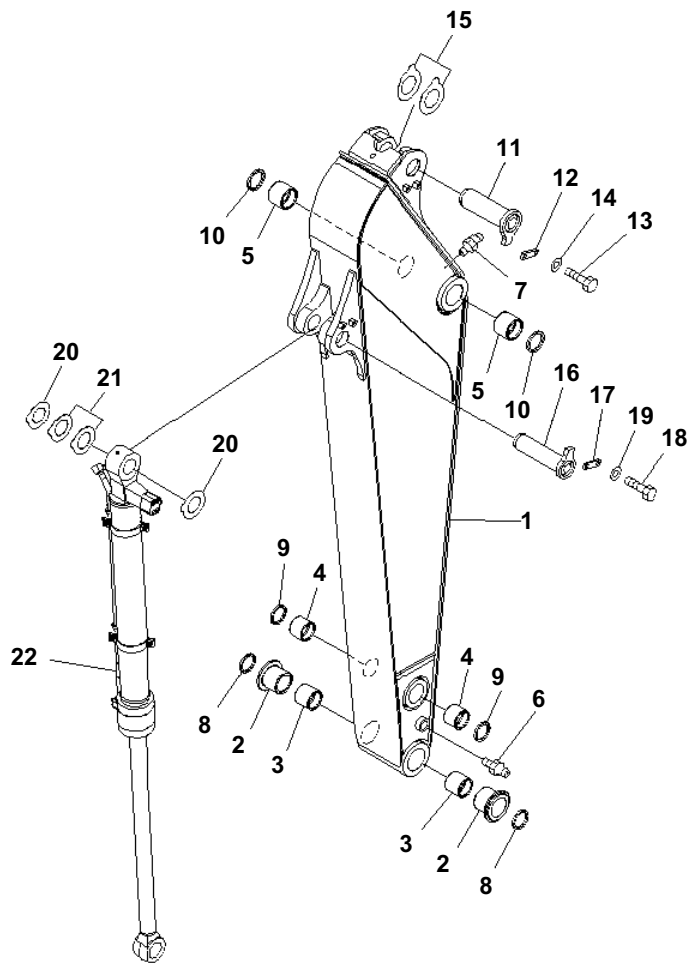

ARM (2.25M)

Item	Part No.	Description	Qty	Options
1	21K-944-B711	ARM	1	SN:B20150--
	21K-944-B710	ARM	1	SN:B20001--B20149
2	21K-70-72211	BUSHING	2	SN:B20001--
3	21K-70-72230	BUSHING	2	SN:B20001--
4	20Y-70-32371	BUSHING	2	SN:B20001--
5	20Y-70-32351	BUSHING	2	SN:B20001--
6	07020-00000	FITTING	1	SN:B20001--
7	07020-00900	FITTING	1	SN:B20001--
8	20Y-70-23220	SEAL	2	SN:B20001--
9	20Y-70-23220	SEAL	2	SN:B20001--
10	07145-00080	SEAL	2	SN:B20001--
11	20Y-70-31161	PIN	1	SN:B20150--
	20Y-70-31160	PIN	1	SN:B20001--B20149
12	205-70-66581	PLATE	1	SN:B20150--
	205-70-66580	PLATE	1	SN:B20001--B20149
13	01010-81230	BOLT	2	SN:B20001--
14	01643-31232	WASHER	2	SN:B20001--
15	20Y-70-31430	SPACER¤ 1.0MM	2	SN:B20001--
16	21K-70-71192	PIN	1	SN:B20150--
	21K-70-71191	PIN	1	SN:B20001--B20149
17	205-70-66581	PLATE	1	SN:B20150--
	205-70-66580	PLATE	1	SN:B20001--B20149
18	01010-81230	BOLT	2	SN:B20001--
19	01643-31232	WASHER	2	SN:B20001--
20	20Y-70-31380	SPACER¤ 1.0MM	2	SN:B20001--
21	20Y-70-31390	SPACER¤ 2.0MM	2	SN:B20001--
22	(⊙707-01-XE671)	CYLINDER GROUP	1	SN:B20164--
	(⊙707-01-XE670)	CYLINDER GROUP	1	SN:B20001--B20163

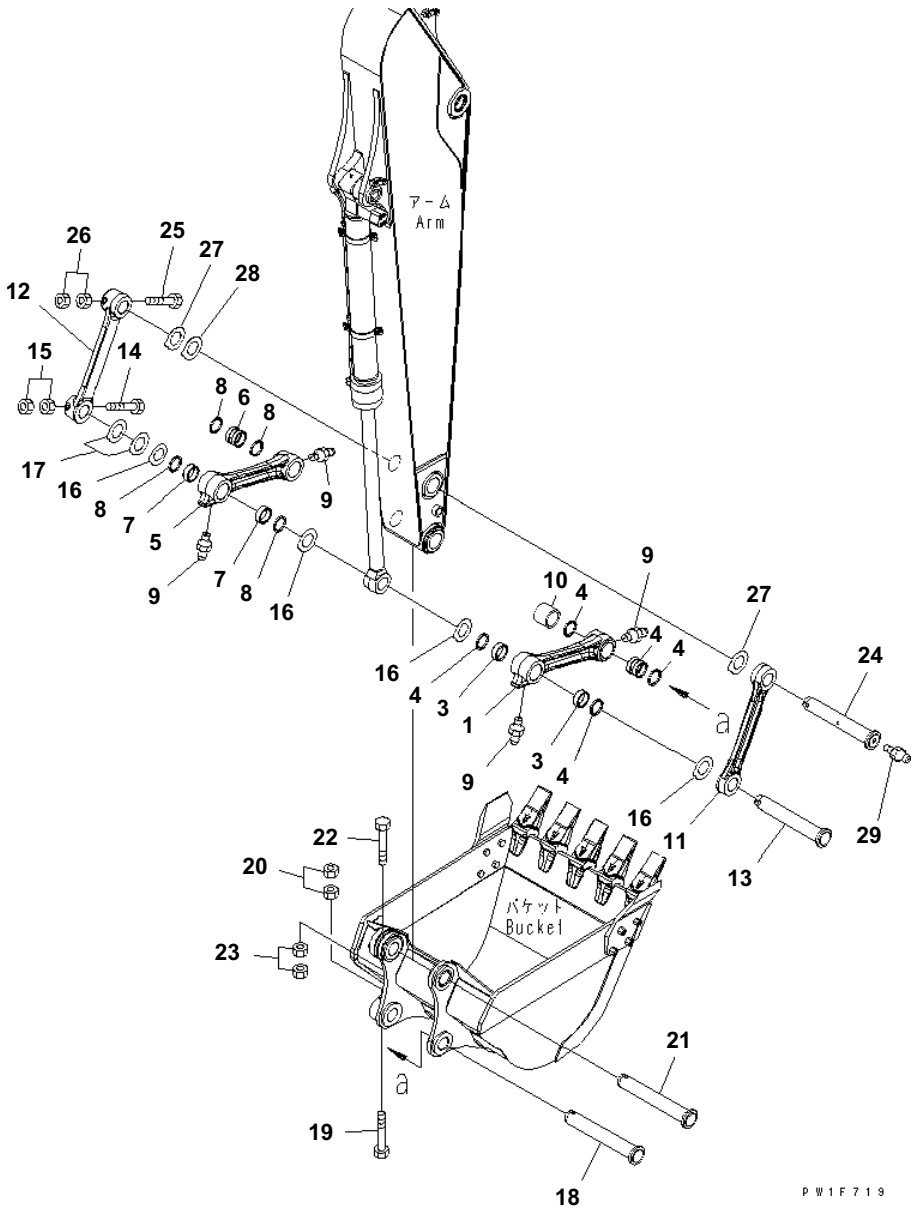

ARM (BUCKET LINK)

Item	Part No.	Description	Qty	Options
1	21K-70-73110	LINK,L.H.	1	SN:B20001--
2	21K-70-72240	BUSHING	1	SN:B20001--
3	20Y-70-32361	BUSHING	2	SN:B20001--
4	20Y-70-23220	SEAL	4	SN:B20001--
5	21K-70-73120	LINK,R.H.	1	SN:B20001--
6	21K-70-72240	BUSHING	1	SN:B20001--
7	20Y-70-32361	BUSHING	2	SN:B20001--
8	20Y-70-23220	SEAL	4	SN:B20001--
9	07020-00000	FITTING	4	SN:B20001--
10	21K-70-23130	SPACER	1	SN:B20001--
11	21K-70-23210	LINK	1	SN:B20001--
12	21K-70-73130	LINK,R.H.	1	SN:B20001--
13	21K-70-23191	PIN	1	SN:B20150--
	21K-70-23190	PIN	1	SN:B20001--B20149
14	01019-11640	BOLT	1	SN:B20001--
15	01580-11613	NUT	2	SN:B20001--
16	21K-70-71441	SPACER	4	SN:B20287--
	21K-70-71440	SPACER	4	SN:B20001--B20286
17	21K-70-71491	SPACER	2	SN:B20358--
	21K-70-71490	SPACER	2	SN:B20001--B20357
18	21K-70-23140	PIN	1	SN:B20001--
19	01011-81660	BOLT	1	SN:B20001--
20	01580-11613	NUT	2	SN:B20001--
21	21K-70-23140	PIN	1	SN:B20001--
22	01011-81690	BOLT	1	SN:B20001--
23	01580-11613	NUT	2	SN:B20001--
24	21K-70-23220	PIN	1	SN:B20001--
25	01019-11640	BOLT	1	SN:B20001--
26	01580-11613	NUT	2	SN:B20001--
27	20Y-70-31380	SPACER¤ 1.0MM	2	SN:B20001--
28	20Y-70-31390	SPACER¤ 2.0MM	1	SN:B20001--
29	07020-00000	FITTING	1	SN:B20001--

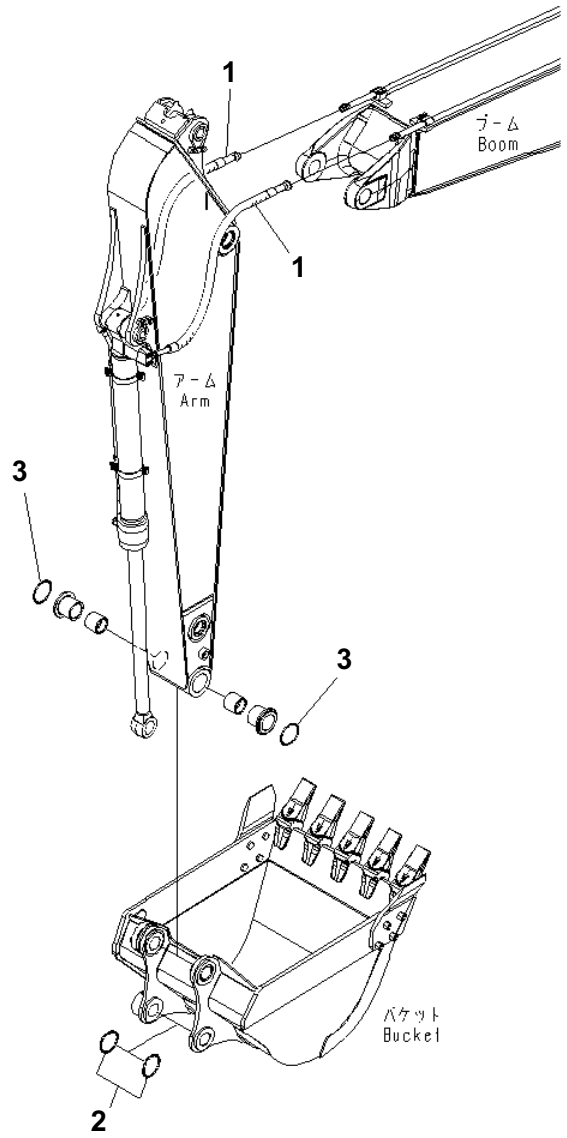

ARM (2.6M) (BUCKET CYLINDER HOSE AND O-RING)

Item	Part No.	Description	Qty	Options
1	21K-62-74260	HOSE¤ 1300MM	2	SN:B20001--
2	21K-70-72260	O-RING	2	SN:B20001--
3	21K-70-23160	O-RING	2	SN:B20001--

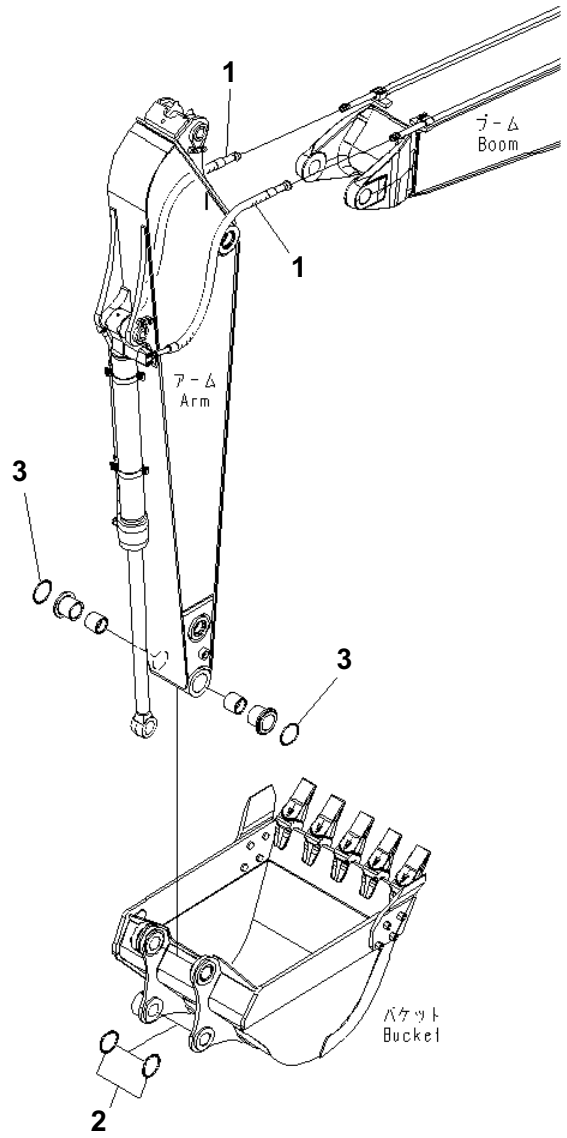

ARM (2.9M) (BUCKET CYLINDER HOSE AND O-RING)

Item	Part No.	Description	Qty	Options
1	21K-62-74290	HOSE¤ 1700MM	2	SN:B20001--
2	21K-70-72260	O-RING	2	SN:B20001--
3	21K-70-23160	O-RING	2	SN:B20001--

00029140

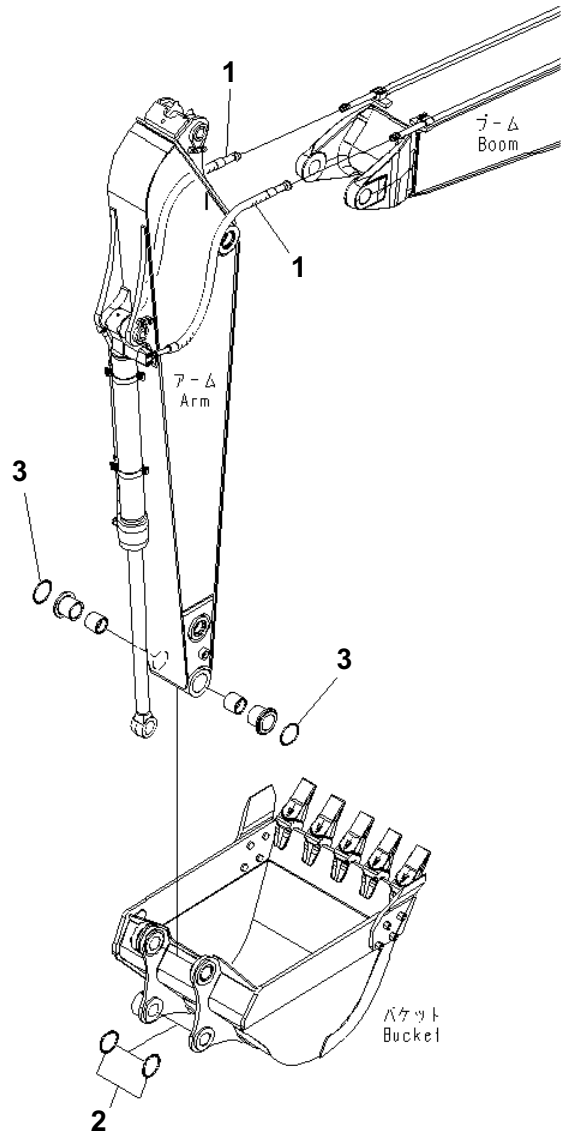

PC160LC-7B S/N B20001 AND UP

ARM (2.25M) (BUCKET CYLINDER HOSE AND O-RING)

Item	Part No.	Description	Qty	Options
1	21K-62-74520	HOSE¤ 1200MM	2	SN:B20001--
2	21K-70-72260	O-RING	2	SN:B20001--
3	21K-70-23160	O-RING	2	SN:B20001--

Ref. T1200-03A3 Page 360150

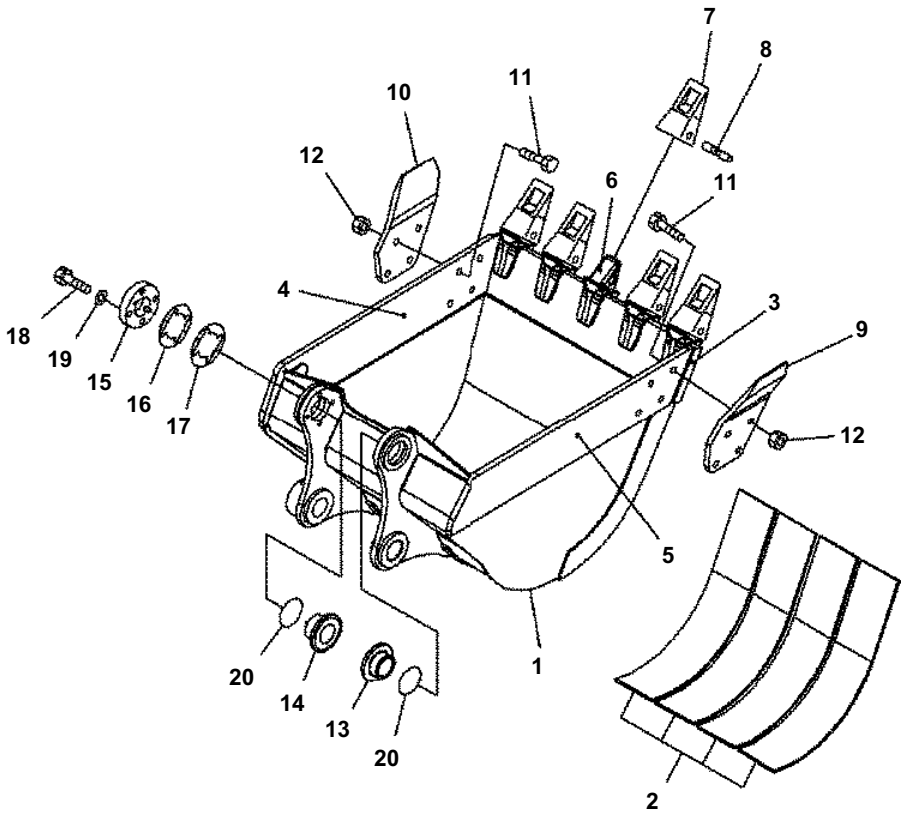

PC160LC-7B S/N B20001 AND UP

BUCKET, 0.6M3 (CECE 0.55M3), 966MM (HORIZONTAL PIN TYPE) (WITH ADJUSTER)

Item	Part No.	Description	Qty	Options
1	21K-70-B7130	BUCKET	1	SN:B20001--
2	21K-70-33150	· PLATE (WELDED)	4	SN:B20001--
3	21K-70-33160	· PLATE (WELDED)	1	SN:B20001--
4	21K-70-33130	· PLATE,R.H. (WELDED)	1	SN:B20001--
5	21K-70-33140	· PLATE,L.H. (WELDED)	1	SN:B20001--
6	20Y-70-14520	· ADAPTER (WELDED)	5	SN:B20001--
7	205-70-19570	TOOTH	5	SN:B20001--
8	09244-02496	PIN	5	SN:B20001--
9	21K-70-B1130	CUTTER,L.H.	1	SN:B20001--
10	21K-70-B1140	CUTTER,R.H.	1	SN:B20001--
11	208-32-11231	BOLT	8	SN:B20001--
12	01803-02228	NUT	8	SN:B20001--
13	21K-70-74220	BUSHING	1	SN:B20001--
14	21K-70-74210	BUSHING	1	SN:B20001--
15	21K-70-23170	PLATE	1	SN:B20001--
16	21K-70-23180	SPACER¤ 0.5MM	4	SN:B20001--
17	21K-70-23230	SPACER¤ 1.0MM	8	SN:B20001--
18	01010-81670	BOLT	4	SN:B20001--
19	01643-31645	WASHER	4	SN:B20001--
20	21K-70-23160	O-RING	2	SN:B20001--

Ref. T1510-01A0 Page 360160

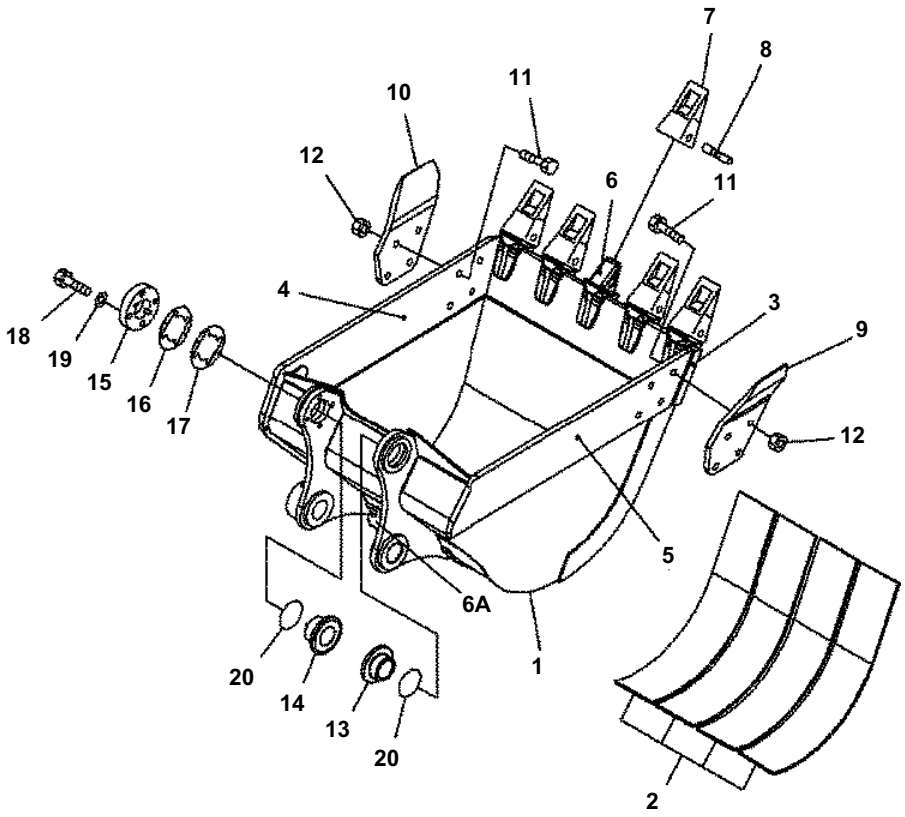

PC160LC-7B S/N B20001 AND UP

BUCKET, 0.6M3 (CECE 0.55M3), 966MM (HORIZONTAL PIN TYPE) (WITH ADJUSTER) (WITH HOOK)

Item	Part No.	Description	Qty	Options
1	21K-70-B7140	BUCKET	1	SN:B20001--
2	21K-70-33150	· PLATE (WELDED)	4	SN:B20001--
3	21K-70-33160	· PLATE (WELDED)	1	SN:B20001--
4	21K-70-33130	· PLATE,R.H. (WELDED)	1	SN:B20001--
5	21K-70-33140	· PLATE,L.H. (WELDED)	1	SN:B20001--
6	20Y-70-14520	· ADAPTER (WELDED)	5	SN:B20001--
6A	205-70-74420	· HOOK	1	SN:B20001--
7	205-70-19570	TOOTH	5	SN:B20001--
8	09244-02496	PIN	5	SN:B20001--
9	21K-70-B1130	CUTTER,L.H.	1	SN:B20001--
10	21K-70-B1140	CUTTER,R.H.	1	SN:B20001--
11	208-32-11231	BOLT	8	SN:B20001--
12	01803-02228	NUT	8	SN:B20001--
13	21K-70-74220	BUSHING	1	SN:B20001--
14	21K-70-74210	BUSHING	1	SN:B20001--
15	21K-70-23170	PLATE	1	SN:B20001--
16	21K-70-23180	SPACER¤ 0.5MM	4	SN:B20001--
17	21K-70-23230	SPACER¤ 1.0MM	8	SN:B20001--
18	01010-81670	BOLT	4	SN:B20001--
19	01643-31645	WASHER	4	SN:B20001--
20	21K-70-23160	O-RING	2	SN:B20001--

Ref. T1510-02A0 Page 360170

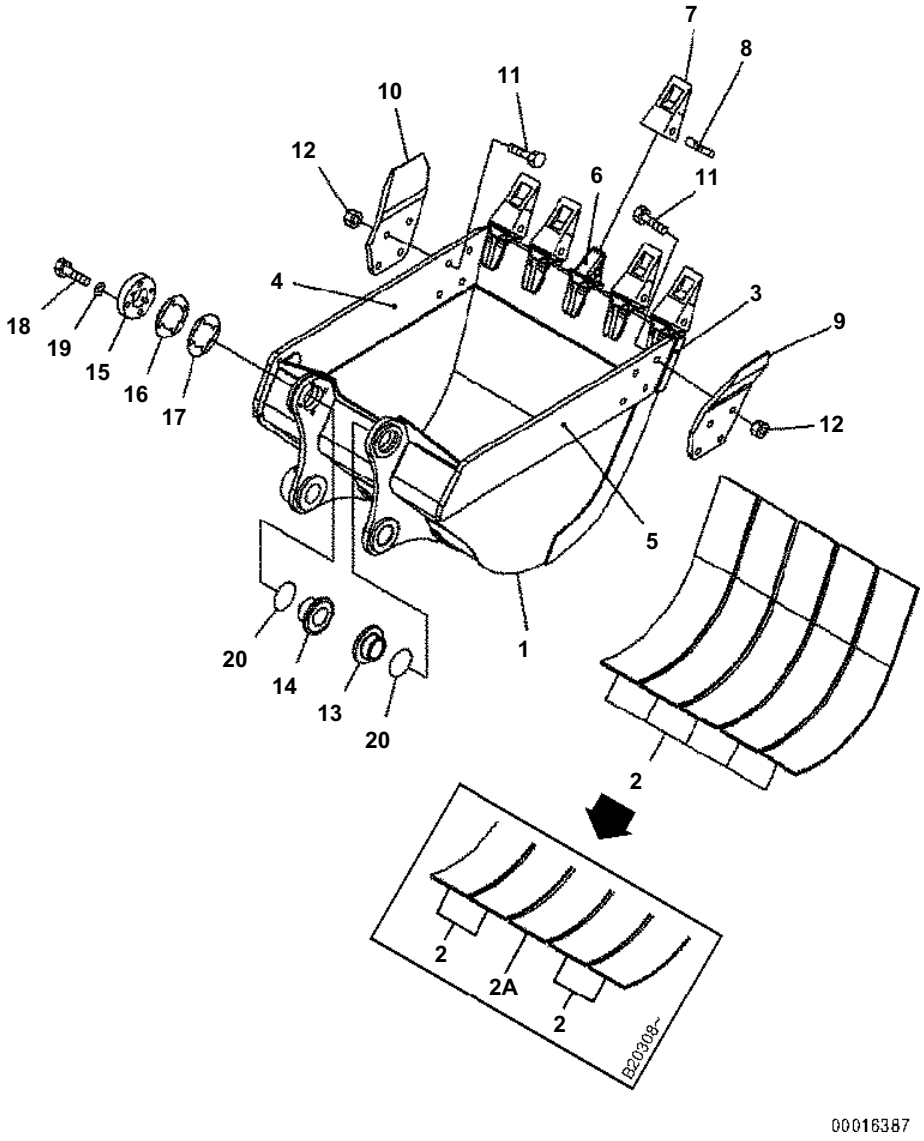

BUCKET, 0.8M3 (CECE 0.70M3), 1186MM (HORIZONTAL PIN TYPE) (WITH ADJUSTER)

Item	Part No.	Description	Qty	Options
1	21K-70-B7111	BUCKET	1	SN:B20308--
	21K-70-B7110	BUCKET	1	SN:B20001--B20307
2	21K-70-B2230	· PLATE (WELDED)	4	SN:B20308--
2A	21K-70-B2240	· PLATE (WELDED)	1	SN:B20308--
	21K-70-33150	· PLATE (WELDED)	5	SN:B20001--B20307
3	21K-70-B2250	· PLATE (WELDED)	1	SN:B20308--
	21K-70-B2130	· PLATE (WELDED)	1	SN:B20001--B20307
4	21K-70-B2210	· PLATE,R.H. (WELDED)	1	SN:B20308--
	21K-70-33130	· PLATE,R.H. (WELDED)	1	SN:B20001--B20307
5	21K-70-B2220	· PLATE,L.H. (WELDED)	1	SN:B20308--
	21K-70-33140	· PLATE,L.H. (WELDED)	1	SN:B20001--B20307
6	20Y-70-14520	· ADAPTER (WELDED)	5	SN:B20001--
7	205-70-19570	TOOTH	5	SN:B20001--
8	09244-02496	PIN	5	SN:B20001--
9	20Y-70-B1360	CUTTER,L.H.	1	SN:B20308--
	21K-70-B1130	CUTTER,L.H.	1	SN:B20001--B20307
10	20Y-70-B1370	CUTTER,R.H.	1	SN:B20308--
	21K-70-B1140	CUTTER,R.H.	1	SN:B20001--B20307
11	176-32-11210	BOLT	8	SN:B20308--
	208-32-11231	BOLT	8	SN:B20001--B20307
12	01803-02430	NUT	8	SN:B20308--
	01803-02228	NUT	8	SN:B20001--B20307
13	21K-70-74220	BUSHING	1	SN:B20001--
14	21K-70-74210	BUSHING	1	SN:B20001--
15	21K-70-23170	PLATE	1	SN:B20001--
16	21K-70-23180	SPACER¤ 0.5MM	4	SN:B20001--
17	21K-70-23230	SPACER¤ 1.0MM	8	SN:B20001--
18	01010-81670	BOLT	4	SN:B20001--
19	01643-31645	WASHER	4	SN:B20001--
20	21K-70-23160	O-RING	2	SN:B20001--

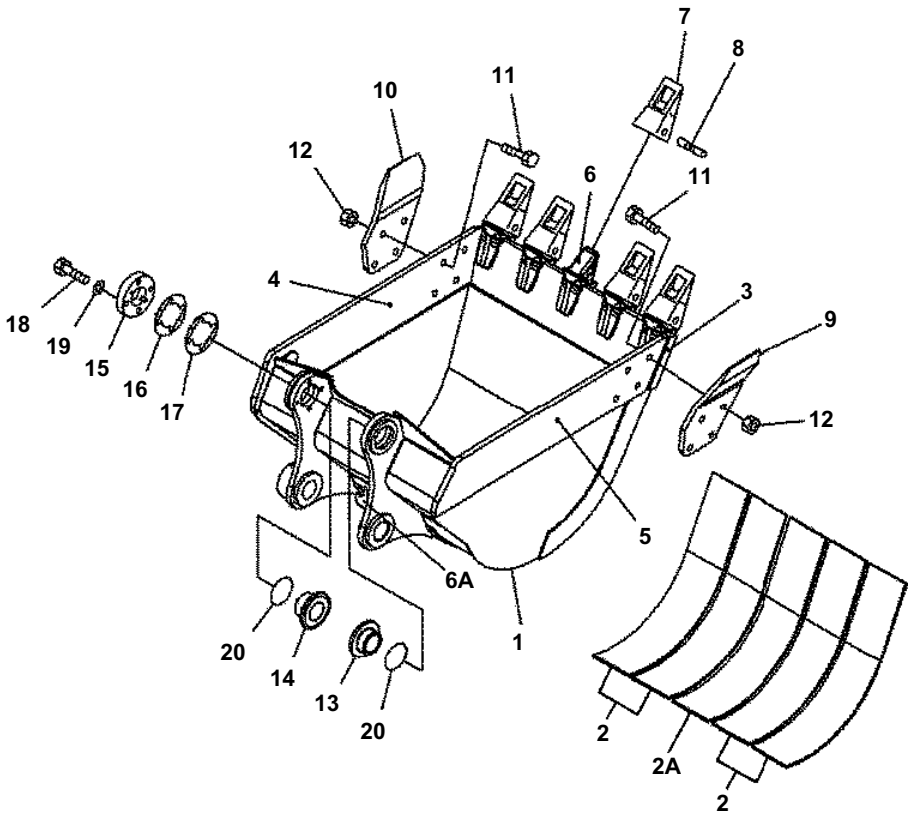

PC160LC-7B S/N B20001 AND UP

BUCKET, 0.8M3 (CECE 0.70M3), 1186MM (HORIZONTAL PIN TYPE) (WITH ADJUSTER) (WITH HOOK)

Item	Part No.	Description	Qty	Options
1	21K-70-B7121	BUCKET	1	SN:B20001--
2	21K-70-B2230	· PLATE (WELDED)	4	SN:B20001--
2A	21K-70-B2240	· PLATE (WELDED)	1	SN:B20001--
3	21K-70-B2250	· PLATE (WELDED)	1	SN:B20001--
4	21K-70-B2210	· PLATE,R.H. (WELDED)	1	SN:B20001--
5	21K-70-B2220	· PLATE,L.H. (WELDED)	1	SN:B20001--
6	20Y-70-14520	· ADAPTER (WELDED)	5	SN:B20001--
6A	205-70-74420	· HOOK	1	SN:B20001--
7	205-70-19570	TOOTH	5	SN:B20001--
8	09244-02496	PIN	5	SN:B20001--
9	20Y-70-B1360	CUTTER,L.H.	1	SN:B20001--
10	20Y-70-B1370	CUTTER,R.H.	1	SN:B20001--
11	176-32-11210	BOLT	8	SN:B20001--
12	01803-02430	NUT	8	SN:B20001--
13	21K-70-74220	BUSHING	1	SN:B20001--
14	21K-70-74210	BUSHING	1	SN:B20001--
15	21K-70-23170	PLATE	1	SN:B20001--
16	21K-70-23180	SPACER¤ 0.5MM	4	SN:B20001--
17	21K-70-23230	SPACER¤ 1.0MM	8	SN:B20001--
18	01010-81670	BOLT	4	SN:B20001--
19	01643-31645	WASHER	4	SN:B20001--
20	21K-70-23160	O-RING	2	SN:B20001--

Ref. T1510-04A0 Page 360190

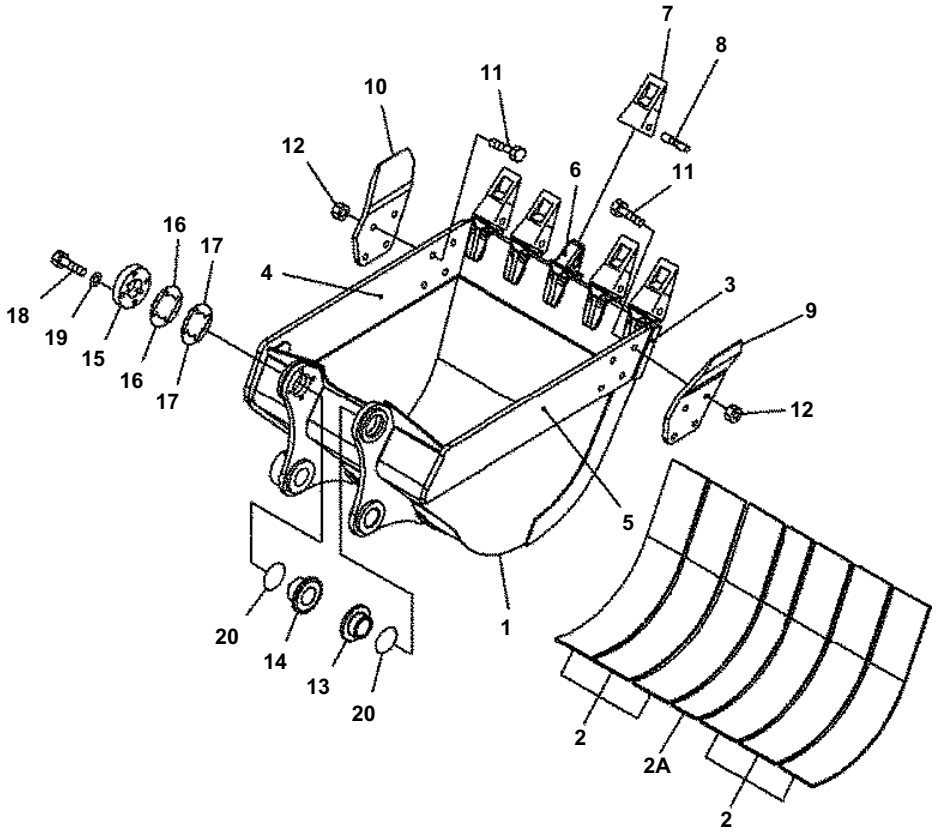

00016389

BUCKET, 1.05M3 (CECE 0.90M3), 1481MM (HORIZONTAL PIN TYPE) (WITH ADJUSTER)

Item	Part No.	Description	Qty	Options
1	21K-920-B710	BUCKET	1	SN:B20001--
2	21K-70-33150	· PLATE (WELDED)	6	SN:B20001--
2A	21K-920-B240	· PLATE (WELDED)	1	SN:B20001--
3	21K-920-B230	· PLATE (WELDED)	1	SN:B20001--
4	21K-70-33130	· PLATE,R.H. (WELDED)	1	SN:B20001--
5	21K-70-33140	· PLATE,L.H. (WELDED)	1	SN:B20001--
6	20Y-70-14520	· ADAPTER (WELDED)	5	SN:B20001--
7	205-70-19570	TOOTH	5	SN:B20001--
8	09244-02496	PIN	5	SN:B20001--
9	21K-70-B1130	CUTTER,L.H.	1	SN:B20001--
10	21K-70-B1140	CUTTER,R.H.	1	SN:B20001--
11	208-32-11231	BOLT	8	SN:B20001--
12	01803-02228	NUT	8	SN:B20001--
13	21K-70-74220	BUSHING	1	SN:B20001--
14	21K-70-74210	BUSHING	1	SN:B20001--
15	21K-70-23170	PLATE	1	SN:B20001--
16	21K-70-23180	SPACER¤ 0.5MM	4	SN:B20001--
17	21K-70-23230	SPACER¤ 1.0MM	8	SN:B20001--
18	01010-81670	BOLT	4	SN:B20001--
19	01643-31645	WASHER	4	SN:B20001--
20	21K-70-23160	O-RING	2	SN:B20001--

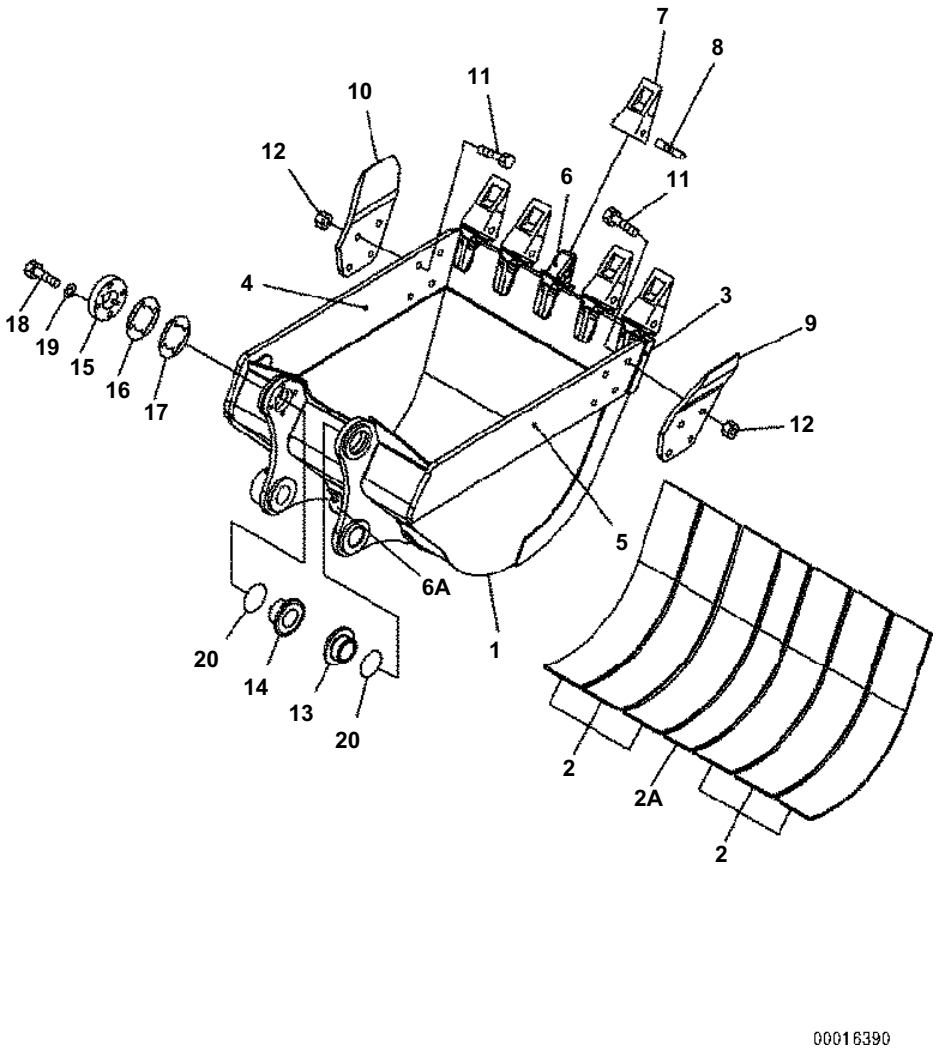

PC160LC-7B S/N B20001 AND UP

BUCKET, 1.05M3 (CECE 0.90M3), 1481MM (HORIZONTAL PIN TYPE) (WITH ADJUSTER) (WITH HOOK)

Item	Part No.	Description	Qty	Options
1	21K-920-B720	BUCKET	1	SN:B20001--
2	21K-70-33150	· PLATE (WELDED)	6	SN:B20001--
2A	21K-920-B240	· PLATE (WELDED)	1	SN:B20001--
3	21K-920-B230	· PLATE (WELDED)	1	SN:B20001--
4	21K-70-33130	· PLATE,R.H. (WELDED)	1	SN:B20001--
5	21K-70-33140	· PLATE,L.H. (WELDED)	1	SN:B20001--
6	20Y-70-14520	· ADAPTER (WELDED)	5	SN:B20001--
6A	205-70-74420	· HOOK	1	SN:B20001--
7	205-70-19570	TOOTH	5	SN:B20001--
8	09244-02496	PIN	5	SN:B20001--
9	21K-70-B1130	CUTTER,L.H.	1	SN:B20001--
10	21K-70-B1140	CUTTER,R.H.	1	SN:B20001--
11	208-32-11231	BOLT	8	SN:B20001--
12	01803-02228	NUT	8	SN:B20001--
13	21K-70-74220	BUSHING	1	SN:B20001--
14	21K-70-74210	BUSHING	1	SN:B20001--
15	21K-70-23170	PLATE	1	SN:B20001--
16	21K-70-23180	SPACER¤ 0.5MM	4	SN:B20001--
17	21K-70-23230	SPACER¤ 1.0MM	8	SN:B20001--
18	01010-81670	BOLT	4	SN:B20001--
19	01643-31645	WASHER	4	SN:B20001--
20	21K-70-23160	O-RING	2	SN:B20001--

Ref. T1510-06A0 Page 360210

MARKS AND PLATES

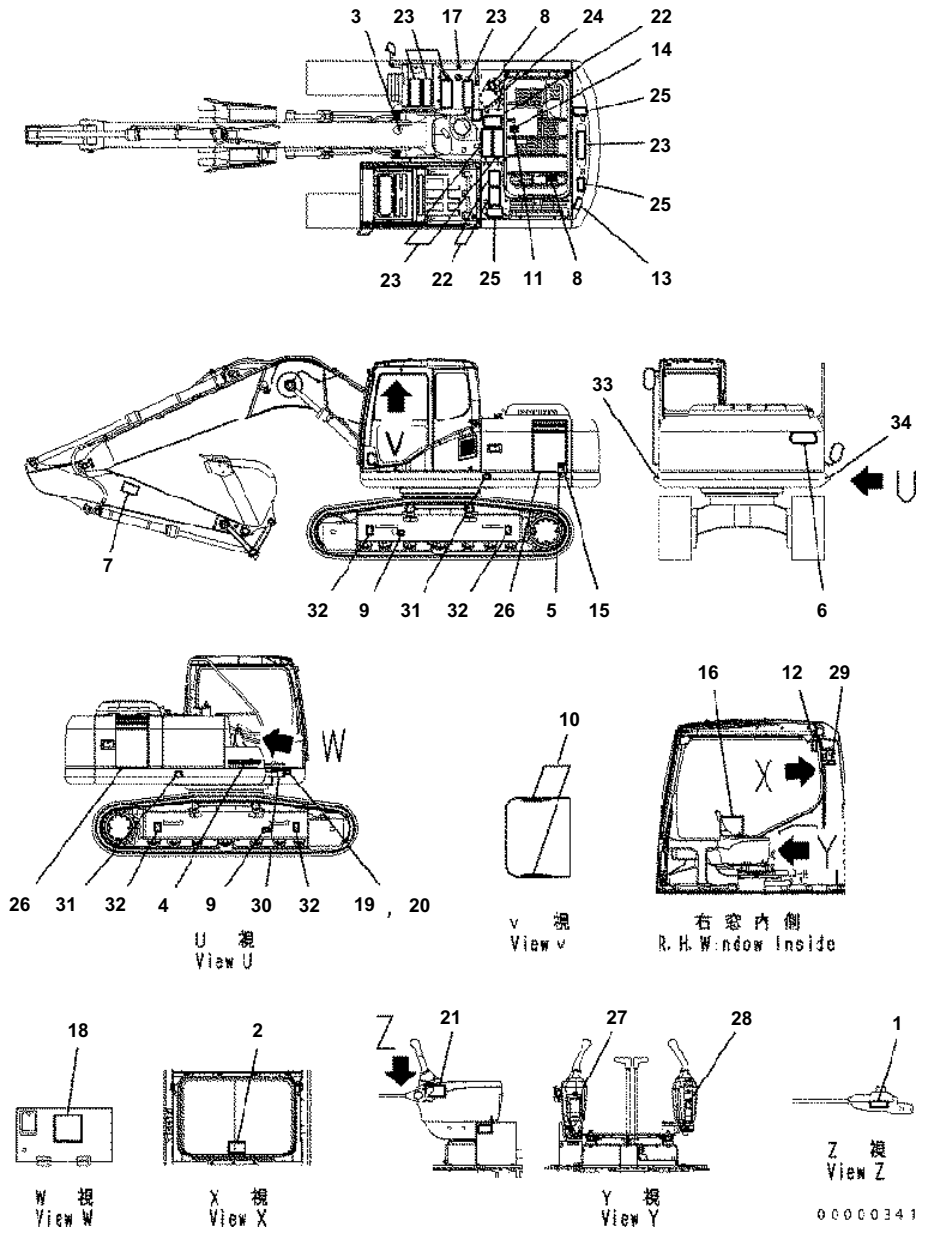

DECAL AND PLATES

Item	Part No.	Description	Qty	Options
1	09685-00002	PLATE¤ OPERATING	1	SN:B20001--
2	20Y-00-B1110	PLATE	1	SN:B20001--
3	09690-M0063	PLATE¤ MARK	1	SN:B20001--
4	09690-P0450	PLATE¤ MARK	1	SN:B20001--
5	09842-A0481	PLATE¤ CAUTION	2	SN:B20001--
6	09133-A3281	PLATE¤ SAFETY	1	SN:B20001--
7	09134-A1681	PLATE¤ SAFETY	2	SN:B20001--
8	09653-A0481	PLATE¤ SAFETY	2	SN:B20001--
9	09657-A0881	PLATE¤ SAFETY	2	SN:B20001--
10	09659-A057B	PLATE¤ SAFETY	2	SN:B20001--
11	09667-A0481	PLATE¤ SAFETY	1	SN:B20001--
12	09803-A0481	PLATE¤ SAFETY	1	SN:B20001--
13	09805-A0881	PLATE¤ SAFETY	1	SN:B20001--
14	09805-C0481	PLATE¤ SAFETY	1	SN:B20001--
15	09808-A0881	PLATE¤ SAFETY	1	SN:B20001--
16	207-00-B1110	PLATE¤ CAUTION	1	SN:B20001--
17	09669-0000E	PLATE¤ CAUTION	1	SN:B20001--
18	21K-00-71111	PLATE	1	SN:B20001--
19	(★09601-12051)	PLATE¤ NAME	1	SN:B20001--
20	04418-13060	SCREW	4	SN:B20001--
21	20Y-00-B1220	TAG	1	SN:B20001--
22	203-00-51170	SEAT	3	SN:B20001--
23	154-54-23260	SEAT	7	SN:B20001--
24	8221-93-2140	PLATE	1	SN:B20001--
25	206-00-71290	SEAT	3	SN:B20001--
26	21K-00-71220	PLATE	2	SN:B20001--
27	21K-00-B7111	PLATE	1	SN:B20200--
	21K-00-B7110	PLATE	1	SN:B20001--B20199
28	20Y-00-B1130	PLATE	1	SN:B20001--
29	20Y-00-B1140	PLATE	1	SN:B20001--
30	21K-00-B7120	PLATE	1	SN:B20001--
31	09960-00611	PLATE¤ MARK	2	SN:B20292--
	21U-98-31160	PLATE¤ MARK	2	SN:B20001--B20291
32	09960-00801	MARK	4	SN:B20293--
	21U-98-31150	MARK	4	SN:B20001--B20292
33	21K-98-B7110	MARK	1	SN:B20001--
34	21K-98-B7120	PLATE	1	SN:B20001--

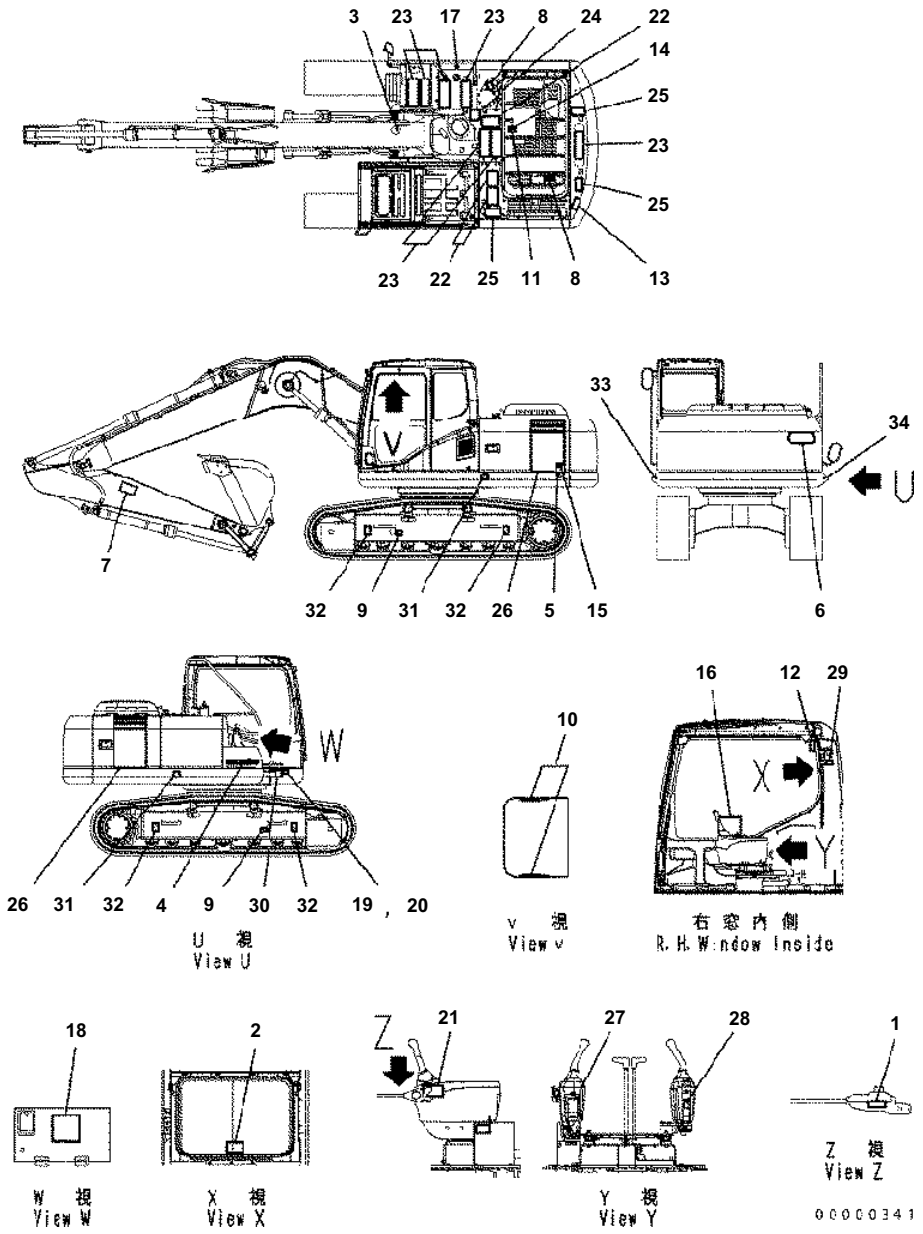

DECAL AND PLATES (FOR LATIN AMERICA)

Item	Part No.	Description	Qty	Options
1	09685-00002	PLATE¤ OPERATING	1	SN:B20001--
2	20Y-00-B1110	PLATE	1	SN:B20001--
3	09690-M0063	PLATE¤ MARK	1	SN:B20001--
4	09690-P0450	PLATE¤ MARK	1	SN:B20001--
5	09842-A0481	PLATE¤ CAUTION	2	SN:B20001--
6	20Y-00-B1120	PLATE¤ SAFETY	1	SN:B20001--
7	09134-A1681	PLATE¤ SAFETY	2	SN:B20001--
8	09653-01001	PLATE¤ SAFETY	2	SN:B20001--
9	09657-01004	PLATE¤ SAFETY	2	SN:B20001--
10	09659-51000	PLATE¤ SAFETY	2	SN:B20001--
11	09667-01001	PLATE¤ SAFETY	1	SN:B20001--
12	20Y-00-B1210	PLATE¤ SAFETY	1	SN:B20001--
13	09805-21000	PLATE¤ SAFETY	1	SN:B20001--
14	09805-11000	PLATE¤ SAFETY	1	SN:B20001--
15	09808-01000	PLATE¤ SAFETY	1	SN:B20001--
16	20Y-00-B1380	PLATE¤ CAUTION	1	SN:B20001--
17	09669-0000E	PLATE¤ CAUTION	1	SN:B20001--
18	21K-00-71111	PLATE	1	SN:B20001--
19	(★09601-12051)	PLATE¤ NAME	1	SN:B20001--
20	04418-13060	SCREW	4	SN:B20001--
21	20Y-00-B1220	TAG	1	SN:B20001--
22	203-00-51170	SEAT	3	SN:B20001--
23	154-54-23260	SEAT	7	SN:B20001--
24	8221-93-2140	PLATE	1	SN:B20001--
25	206-00-71290	SEAT	3	SN:B20001--
26	21K-00-71220	PLATE	2	SN:B20001--
27	21K-00-B7111	PLATE	1	SN:B20001--
28	20Y-00-B1130	PLATE	1	SN:B20001--
29	20Y-00-B1140	PLATE	1	SN:B20001--
30	21K-00-B7120	PLATE	1	SN:B20001--
31	09960-00611	PLATE¤ MARK	2	SN:B20001--
32	09960-00801	MARK	4	SN:B20001--
33	21K-98-B7110	MARK	1	SN:B20001--
34	21K-98-B7120	PLATE	1	SN:B20001--

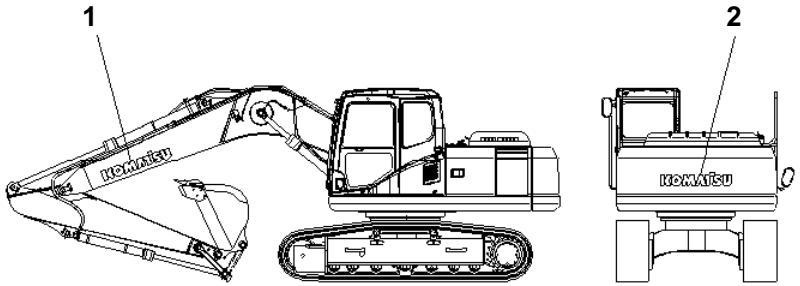

00000316

PC160LC-7B S/N B20001 AND UP

LOGO (KOMATSU) (SMALL) (GENERAL)

Item	Part No.	Description	Qty	Options
1	09690-P1120	PLATE¤ MARK	1	SN:B20001--
2	09690-P1120	PLATE¤ MARK	1	SN:B20001--

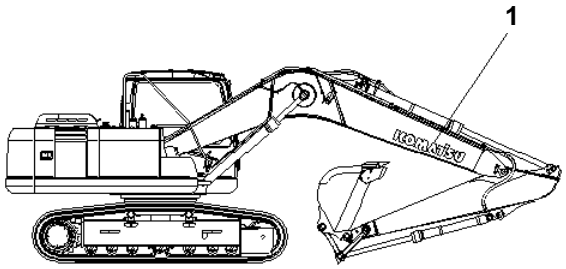

00000323

LOGO (BOOM SIDE)

Item	Part No.	Description	Qty	Options
1	09690-P1120	PLATE¤ MARK	1	SN:B20001--

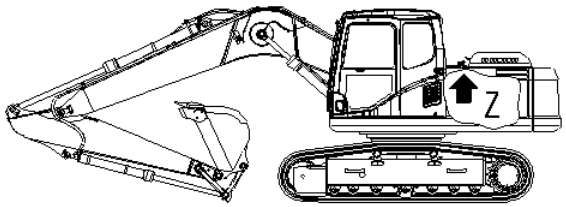

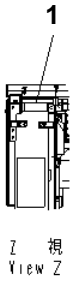

00000324

PLATE (AIR CLEANER¤ DOUBLE ELEMENT)

Item	Part No.	Description	Qty	Options
1	20Y-00-B1180	PLATE¤ INSTRUCTION	1	SN:B20001--

ACCESSORY

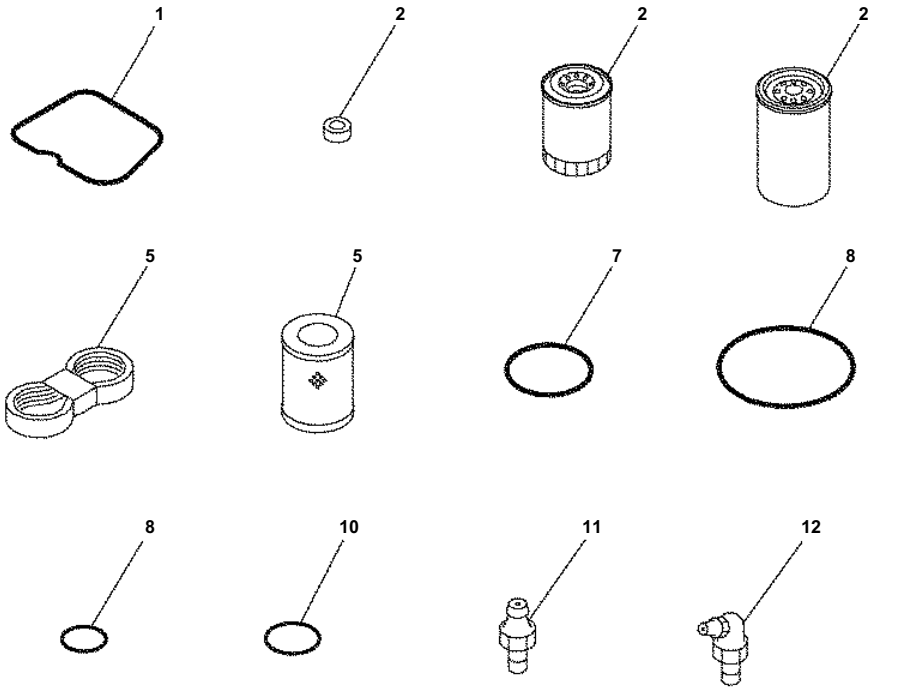

P J 6 F 0 6 8

SPARE PARTS (FOR LATIN AMERICA)

Item	Part No.	Description	Qty	Options
1	6732-11-8181	GASKET, HEAD COVER	4	SN:B20470--
2	6732-11-8210	GASKET, HEAD COVER	4	SN:B20470--
3	6733-51-5142	CARTRIDGE, OIL	1	SN:B20470--
4	6732-71-6112	CARTRIDGE, FUEL	1	SN:B20470--
5	6732-81-3440	BELT	1	SN:B20470--
6	207-60-71182	ELEMENT	1	SN:B20470--
7	07000-15160	O-RING	1	SN:B20470--
8	07000-15195	O-RING	1	SN:B20470--
9	07002-11223	O-RONG	1	SN:B20470--
10	07002-12434	O-RING	6	SN:B20470--
11	07020-00000	FITTING	4	SN:B20470--
12	07020-00900	FITTING	4	SN:B20470--

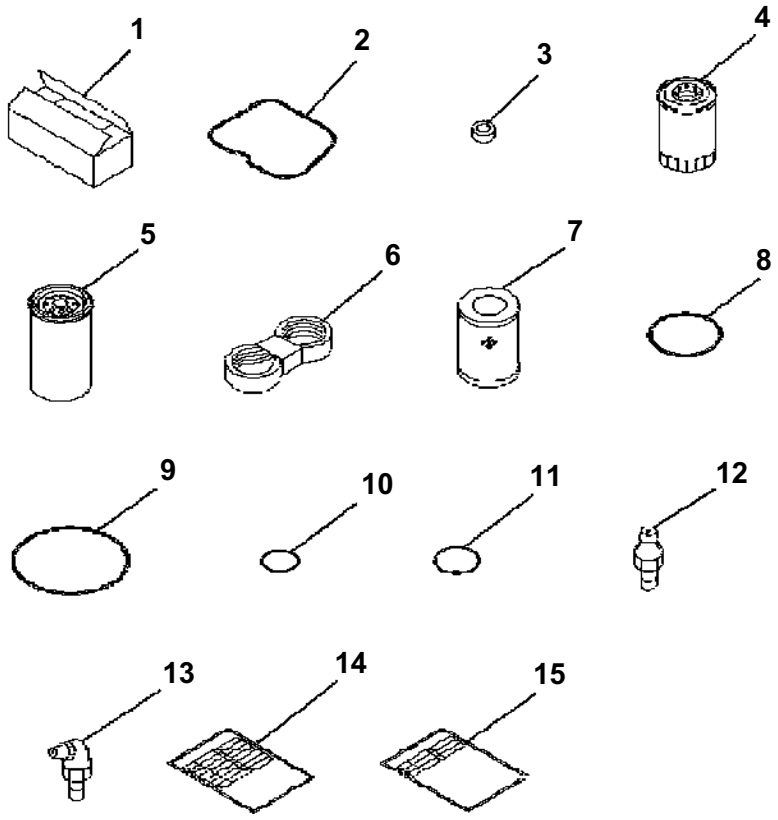

PC160LC-7B S/N B20001 AND UP

SPARE PARTS - PC160LC-7B

Item	Part No.	Description	Qty	Options
1	09059-00800	BOX	1	SN:B20470--
2	6732-11-8181	GASKET	4	SN:B20470--
3	6732-11-8210	CUSHION	4	SN:B20470--
4	6733-51-5142	CARTRIDGE	1	SN:B20470--
5	6232-71-6112	CARTRIDGE	1	SN:B20470--
6	6732-81-3440	BELT	1	SN:B20470--
7	207-60-71182	ELEMENT	1	SN:B20470--
8	07000-15160	O-RING	1	SN:B20470--
9	07000-15195	O-RING	1	SN:B20470--
10	07002-11223	O-RING	1	SN:B20470--
11	07002-12434	O-RING	6	SN:B20470--
12	07020-00000	FITTING	4	SN:B20470--
13	07020-00900	FITTING	4	SN:B20470--
14	20Y-98-B1220	TABLE	1	SN:B20470--
15	20Y-98-B1210	TABLE	1	SN:B20470--

Ref. V0100-01A1 Page 420010A

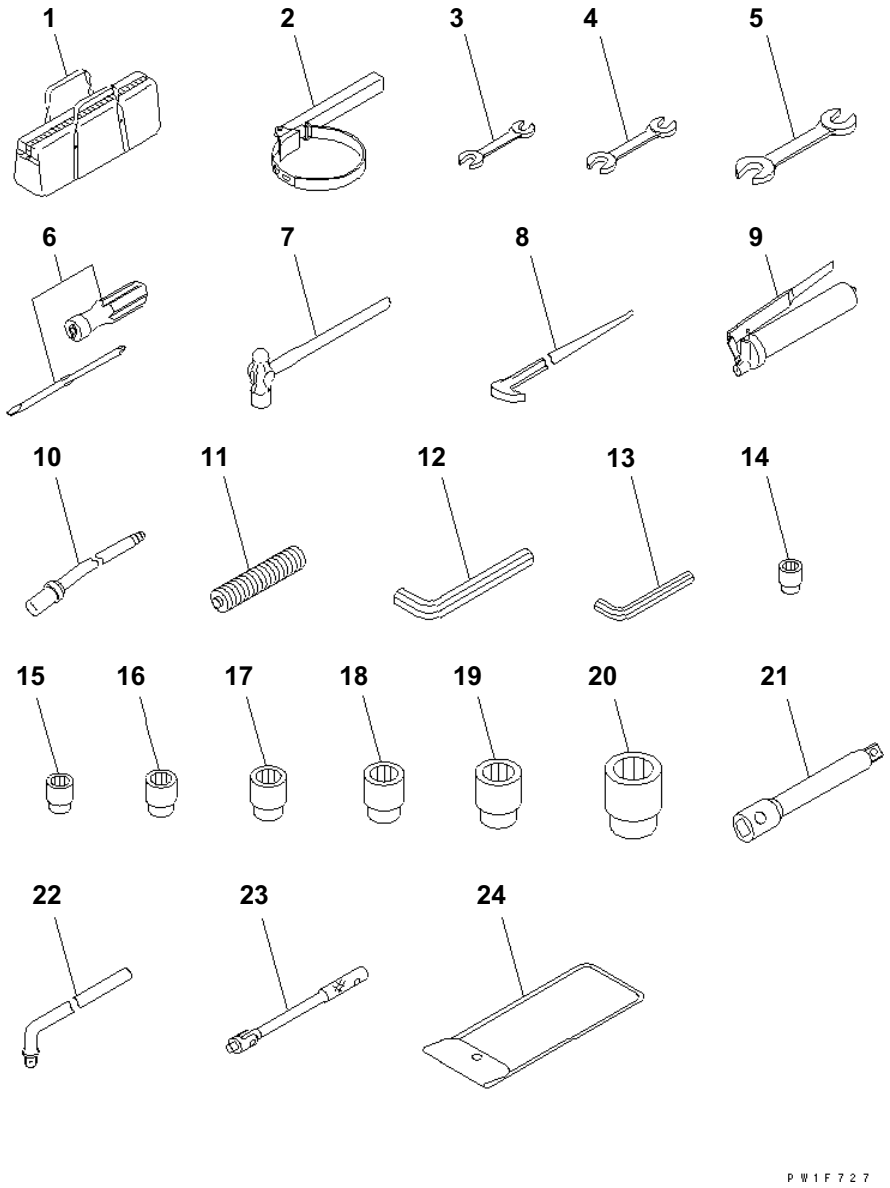

TOOL KIT

Item	Part No.	Description	Qty	Options
1	09056-04613	BAG	1	SN:B20001--
2	09019-08035	WRENCH	1	SN:B20001--
3	09002-01014	WRENCH¤ 10X14	1	SN:B20001--
4	09002-01317	WRENCH¤ 13X17	1	SN:B20001--
5	09002-02224	WRENCH	1	SN:B20001--
6	09033-00190	DRIVER	1	SN:B20001--
7	09039-00150	HAMMER	1	SN:B20001--
8	09055-10390	BAR	1	SN:B20001--
	07952-70004	GREASE PUMP ASS'Y	1	SN:B20001--
9	07950-10450	· PUMP	1	SN:B20001--
10	07951-41017	· NOZZLE	1	SN:B20001--
11	07950-90403	CARTRIDGE	1	SN:B20001--
12	09007-00836	WRENCH¤ 8	1	SN:B20001--
13	09007-00425	WRENCH¤ 4	1	SN:B20001--
	20Y-98-21130	TOOL KIT	1	SN:B20001--
14	09021-01219	· SOCKET¤ 12	1	SN:B20001--
15	09021-01422	· SOCKET¤ 14	1	SN:B20001--
16	09021-01725	· SOCKET¤ 17	1	SN:B20001--
17	09021-01928	· SOCKET¤ 19	1	SN:B20001--
18	09021-02233	· SOCKET¤ 22	1	SN:B20001--
19	09021-02436	· SOCKET¤ 24	1	SN:B20001--
20	09021-03044	· SOCKET¤ 30	1	SN:B20001--
21	09022-00150	· EXTENSION	1	SN:B20001--
22	09023-00300	· HANDLE	1	SN:B20001--
23	09024-00300	· HANDLE	1	SN:B20001--
24	20Y-98-21140	· BAG	1	SN:B20001--

SERVICE KIT AND COMPONENT PARTS

KIT 詳細については次のページを参照して下さい。
See subsequent pages for details.

20Y-32-05070 シュー ボルト および ナット サービスキット
SHOE BOLT AND NUT SERVICE KIT

PW1E313

PC160LC-7B S/N B20001 AND UP

SHOE BOLT AND NUT SERVICE KIT (FOR TRIPLE GROUSER TYPE) (B20001-B20173)

Item	Part No.	Description	Qty	Options
K01	20Y-32-05070	SHOE BOLT AND NUT K.,60	1	SN:B20001--B20173
	20Y-32-31210	・ BOLT¤ SHOE	50	SN:B20001--B20173
	134-32-61221	・ NUT	50	SN:B20001--B20173

Ref. Y0320-01A0 Page 450010

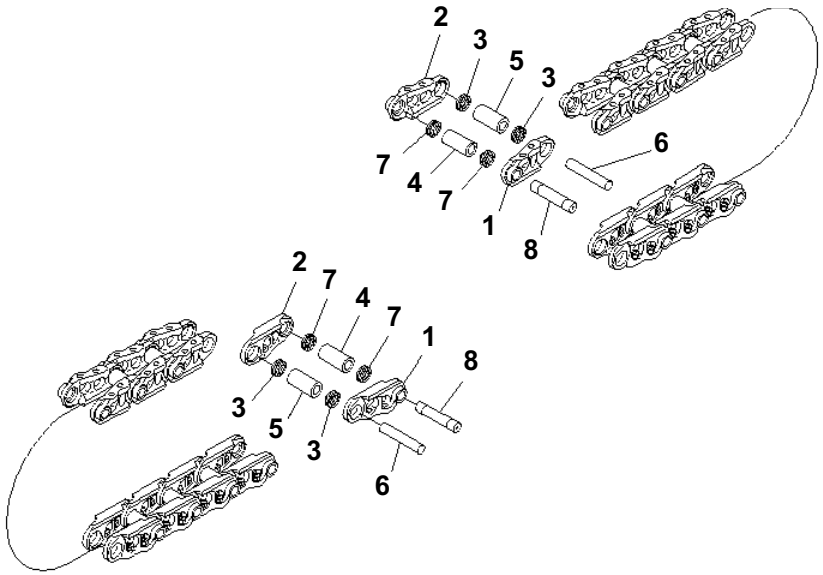

TRACK LINK ASS'Y (88 SET) (SUPPLY PARTS) (B20001-B20173)

Item	Part No.	Description	Qty	Options
	21K-32-00110	TRACK LINK ASS'Y	1	SN:B20001--B20173
1	20Y-32-31120	· LINK,TRACK¤ L.H.	88	SN:B20001--B20173
2	20Y-32-31130	· LINK,TRACK¤ R.H.	88	SN:B20001--B20173
3	20Y-32-11240	· SEAL,REGULAR	168	SN:B20001--B20173
4	20Y-32-11171	· BUSHING¤ MASTER,MASTER	4	SN:B20001--B20173
5	20Y-32-11141	· BUSHING¤ REGULAR,REGULAR	84	SN:B20001--B20173
6	20Y-32-31150	· PIN,REGULAR	84	SN:B20001--B20173
7	20Y-32-11260	· SEAL,MASTER	8	SN:B20001--B20173
8	20Y-32-31190	· PIN,MASTER	4	SN:B20001--B20173

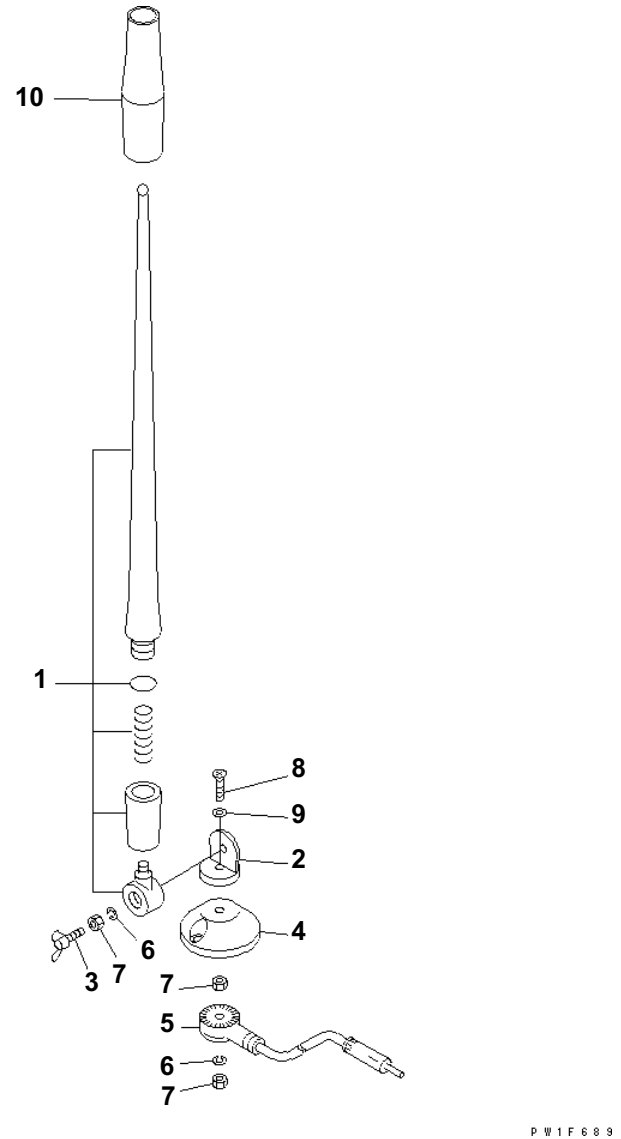

PC160LC-7B S/N B20001 AND UP

RUBBER ANTENNA (#B20001-BB20644)

Item	Part No.	Description	Qty	Options
	198-Z11-4610	RUBBER ANTENNA	1	SN:B20001--B20644
1	EP72-540-901	· RUBBER ELEMENT ASS'Y	1	SN:B20001--B20644
2	☆	· HOLDER	1	SN:B20001--B20644
3	EP23-141-001	· WING BOLT	1	SN:B20001--B20644
4	☆	· BASE	1	SN:B20001--B20644
5	☆	· CODE ASS'Y	1	SN:B20001--B20644
6	EP23-141-003	· SPRING WASHER	2	SN:B20001--B20644
7	EP23-141-004	· NUT	3	SN:B20001--B20644
8	☆	· SCREW	1	SN:B20001--B20644
9	☆	· WASHER	1	SN:B20001--B20644
10	☆	· TUBE	1	SN:B20001--B20644

Ref. Y1062-01A0 Page 450030

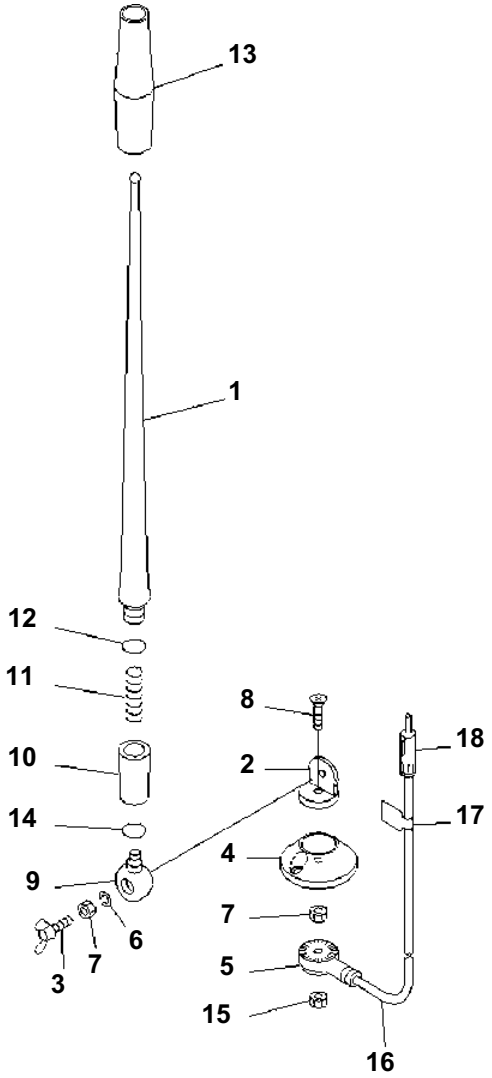

00084650

RUBBER ANTENNA (#B20645-)

Item	Part No.	Description	Qty	Options
	20Y-06-41990	RUBBER ANTENNA	1	SN:B20645--
1	RFU419B-418-A	· ROD	1	SN:B20645--
2	☆	· HOLDER	1	SN:B20645--
3	RFU419B-418-D	· BOLT, WING	1	SN:B20645--
4	RFU419B-418-E	· BASE	1	SN:B20645--
5	☆	· HOLDER	1	SN:B20645--
6	RFU419B-418-B	· SPRING WASHER	2	SN:B20645--
7	RFU419B-418-C	· NUT	3	SN:B20645--
8	☆	· SCREW	1	SN:B20645--
9	☆	· HOLDER	1	SN:B20645--
10	☆	· HOLDER ASS'Y	1	SN:B20645--
11	☆	· SPRING	1	SN:B20645--
12	☆	· O-RING	1	SN:B20645--
13	☆	· TUBE	1	SN:B20645--
14	☆	· O-RING	1	SN:B20645--
15	REU419B-418-C	· NUT	1	SN:B20645--
16	RFU419B-418-F	· CABLE	1	SN:B20645--
17	☆	· PLATE	1	SN:B20645--
18	☆	· PLUG	1	SN:B20645--

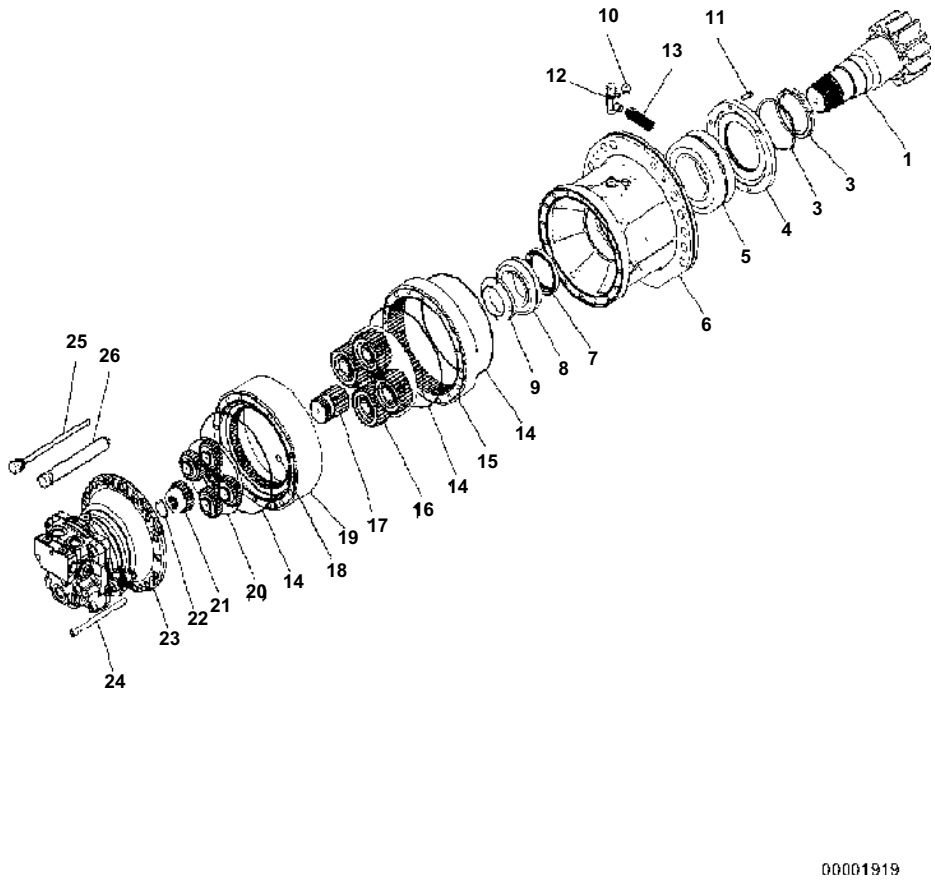

SWING MACHINERY

Item	Part No.	Description	Qty	Options
	21K-26-B7100	SWING MACHINERY	1	SN:B20001--
	21K-26-B7130	· OUTPUT ASSEMBLY	1	SN:B20001--
1	21K-26-B7010	· · PINON SHAFT	1	SN:B20001--
2	21K-26-B7020	· · SPACER	1	SN:B20001--
3	21K-26-B7030	· · SEALING	1	SN:B20001--
4	21K-26-B7040	· · COVER	1	SN:B20001--
5	21K-26-B7050	· · BEARING	1	SN:B20001--
6	21K-26-B7060	· · GEAR BOX HOUSING	1	SN:B20001--
7	21K-26-B7070	· · SEAL RING	1	SN:B20001--
8	21K-26-B7080	· · BEARING	1	SN:B20001--
9	21K-26-B7090	· · NUT	1	SN:B20001--
10	21K-26-B7110	· · PLUG	1	SN:B20001--
11	21K-26-B7120	· · SCREW	6	SN:B20001--
12	21K-26-B7140	· PLUG	1	SN:B20001--
13	21K-26-B7150	· LUBRICATION KIT	1	SN:B20001--
14	21K-26-B7160	· O-RING	3	SN:B20001--
15	21K-26-B7170	· GEAR	1	SN:B20001--
16	21K-26-B7180	· REDUCTION ASSEMBLY	1	SN:B20001--
17	21K-26-B7190	· GEAR	1	SN:B20001--
18	21K-26-B7210	· O-RING	1	SN:B20001--
19	21K-26-B7220	· GEAR	1	SN:B20001--
20	21K-26-B7230	· REDUCTION ASSEMBLY	1	SN:B20001--
21	21K-26-B7240	· GEAR	1	SN:B20001--
22	21K-26-B7250	· RING, SNAP	1	SN:B20001--
23	21K-26-B7300	· HYDRAULIC MOTOR (SEE FIG.Y1260-05A0)	1	SN:B20001--
24	21K-26-B7270	· SCREW	16	SN:B20001--
25	21K-26-B7280	· LUBRICATION KIT	1	SN:B20001--
26	21K-26-B7290	· LUBRICATION KIT	1	SN:B20001--

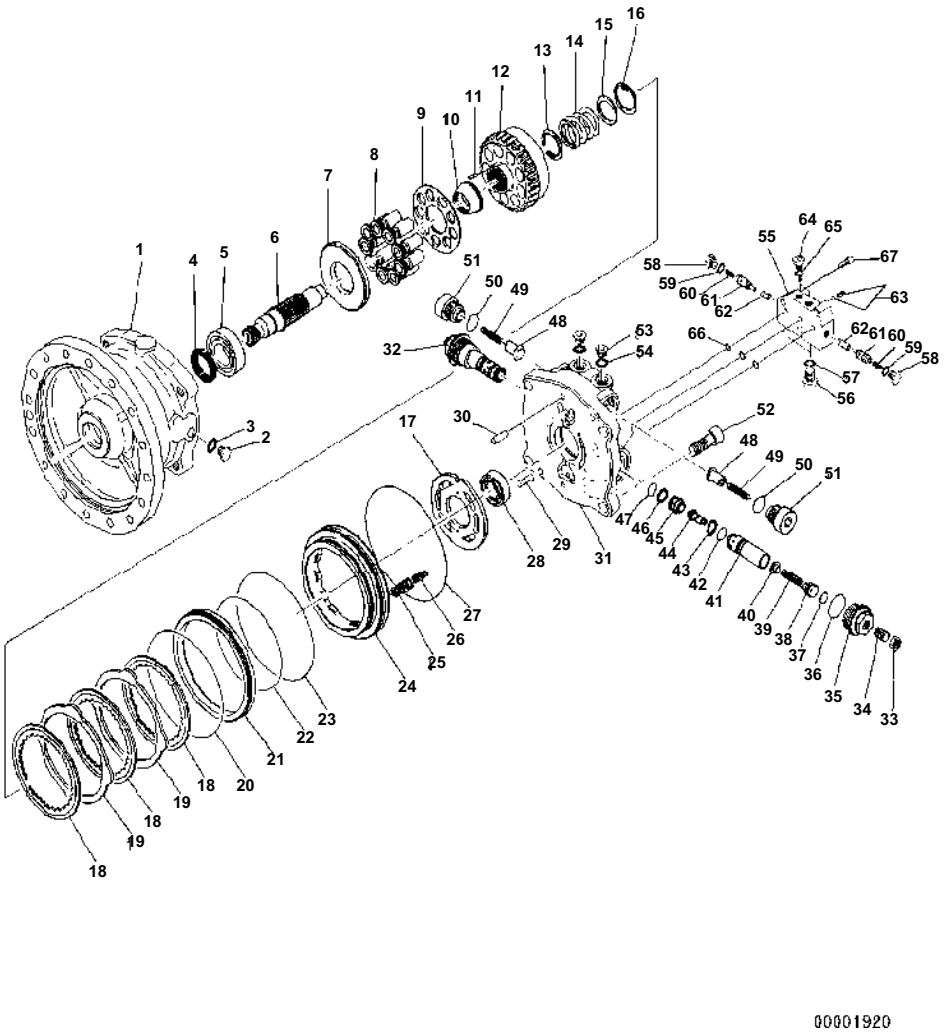

HYDRAULIC MOTOR

Item	Part No.	Description	Qty	Options
	21K-26-B7300	HYDRAULIC MOTOR	1	SN:B20001--
1	21K-26-B7310	· MOTOR HOUSING (K0)	1	SN:B20001--
2	☆	· PLUG (K1.4)	1	SN:B20001--
3	☆	· O-RING (K1.4)	1	SN:B20001--
4	21K-26-B7420	· MOTOR SEAL RING (K5)	1	SN:B20001--
5	☆	· BEARING (K6)	1	SN:B20001--
6	21K-26-B7410	· MOTOR SHAFT ASS'Y (K4)	1	SN:B20001--
	21K-26-B7390	· CYLINDER BLOCK ASS'Y (K2)	1	SN:B20001--
7	☆	· · THRUST PLATE	1	SN:B20001--
8	☆	· · PISTON	9	SN:B20001--
9	☆	· · RETAINER PLATE	1	SN:B20001--
10	☆	· · SPHERICAL BUSH	1	SN:B20001--
11	☆	· · PIN	3	SN:B20001--
12	☆	· · CYLINDER BLOCK	1	SN:B20001--
13	☆	· · COLLAR	1	SN:B20001--
14	☆	· · SPRING	1	SN:B20001--
15	☆	· · COLLAR WASHER	1	SN:B20001--
16	☆	· · CIRCLIP	1	SN:B20001--
17	☆	· · VALVE PLATE	1	SN:B20001--
18	☆	· STEEL DISC (K7)	3	SN:B20001--
19	☆	· BRAKE DISC (K7)	2	SN:B20001--
20	☆	· O-RING (K8)	1	SN:B20001--
21	☆	· BRAKE SPACER (K7)	1	SN:B20001--
22	☆	· O-RING (K8)	1	SN:B20001--
23	☆	· O-RING (K8)	1	SN:B20001--
24	☆	· BRAKE PISTON (K7)	1	SN:B20001--
25	☆	· SPRING (K7)	16	SN:B20001--
26	☆	· SPRING (K7)	12	SN:B20001--
27	☆	· O-RING (K8)	1	SN:B20001--
28	☆	· BEARING (K6)	1	SN:B20001--
29	☆	· PIN (K7)	1	SN:B20001--
	21K-26-B7320	· BASE PLATE ASS'Y (K1)	1	SN:B20001--
30	☆	· · PIN	2	SN:B20001--
31	21K-26-B7330	· · BASE PLATE	1	SN:B20001--
32	21K-26-B7350	· · RELIEF VALVE (ITEMS 33 TO 47) (K1.5A)	1	SN:B20001--
	21K-26-B7360	· · RELIEF VALVE (ITEMS 33 TO 47) (K1.5B)	1	SN:B20001--
33	☆	· · · NUT	1	SN:B20001--
34	☆	· · · SCREW	1	SN:B20001--

Item	Part No.	Description	Qty	Options
35	☆	・・・ PLUG	1	SN:B20001--
36	☆	・・・ O-RING (K8)	1	SN:B20001--
37	☆	・・・ O-RING (K8)	1	SN:B20001--
38	☆	・・・ SEAT	1	SN:B20001--
39	☆	・・・ SPRING	1	SN:B20001--
40	☆	・・・ SEAT SPRING	1	SN:B20001--
41	☆	・・・ SLEEVE	1	SN:B20001--
42	☆	・・・ O-RING (K8)	1	SN:B20001--
43	☆	・・・ RING BACK-UP	1	SN:B20001--
44	☆	・・・ VALVE	1	SN:B20001--
45	☆	・・・ SEAT VALVE	1	SN:B20001--
46	☆	・・・ RING BACK-UP	1	SN:B20001--
47	☆	・・・ O-RING (K8)	1	SN:B20001--
	21K-26-B7370	・・ ANTICAVIT.VALVE	1	SN:B20001--
48	☆	・・・ CHECK VALVE	2	SN:B20001--
49	☆	・・・ SPRING	2	SN:B20001--
50	☆	・・・ O-RING (K8)	2	SN:B20001--
51	☆	・・・ PLUG	2	SN:B20001--
52	☆	・・ SCREW	4	SN:B20001--
53	☆	・・ PLUG	2	SN:B20001--
54	☆	・・ O-RING (K1.4	2	SN:B20001--
	21K-26-B7380	・・ ANTISWING BACK VALVE ASS'Y (K1.9)	1	SN:B20001--
55	☆	・・・ ANTISWING BACK VALVE	1	SN:B20001--
56	☆	・・・・ PLUG (K1.4)	2	SN:B20001--
57	☆	・・・・ O-RING (K1.4	2	SN:B20001--
58	☆	・・・・ PLUG	2	SN:B20001--
59	☆	・・・・ O-RING (K8)	2	SN:B20001--
60	☆	・・・・ SPRING	2	SN:B20001--
61	☆	・・・・ PISTON	2	SN:B20001--
62	☆	・・・・ VALVE	2	SN:B20001--
63	☆	・・・・ PLUG	AR	SN:B20001--
64	☆	・・・・ PLUG	2	SN:B20001--
65	☆	・・・・ O-RING (K8)	2	SN:B20001--
66	☆	・・・ O-RING (K8)	3	SN:B20001--
67	☆	・・・ SCREW	3	SN:B20001--
SERVICE KIT				
K1.4	21K-26-B7340	MOTOR SHAFT ASS'Y	1	SN:B20001--
K6	21K-26-B7430	BEARING ASS'Y	1	SN:B20001--
K7	21K-26-B7440	BRAKE ASS'Y	1	SN:B20001--

PC160LC-7B S/N B20001 AND UP
HYDRAULIC MOTOR

Item	Part No.	Description	Qty	Options
K8	21K-26-B7450	SEALS ASS'Y	1	SN:B20001--

Ref. Y1260-05A0 Page 450050

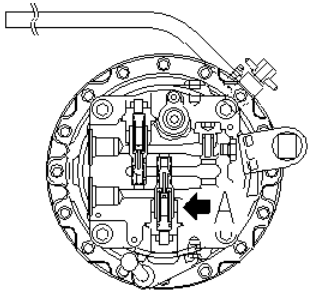

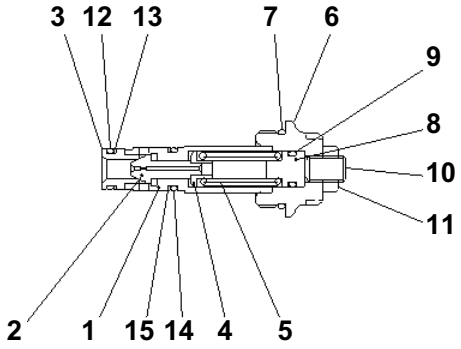

A 詳 細
Detail A

00001930

RELIEF VALVE (A) (FOR SWING MOTOR)

Item	Part No.	Description	Qty	Options
	KBB0853-01147	RELIEF VALVE ASS'Y	2	SN:B20001--
1	☆	· HOUSING	1	SN:B20001--
2	☆	· POPPET	1	SN:B20001--
3	☆	· SEAT	1	SN:B20001--
4	☆	· SEAT	1	SN:B20001--
5	☆	· SPRING	1	SN:B20001--
6	☆	· PLUG	1	SN:B20001--
7	☆	· O-RING (K1)	1	SN:B20001--
8	☆	· GUIDE	1	SN:B20001--
9	☆	· O-RING (K1)	1	SN:B20001--
10	☆	· SCREW	1	SN:B20001--
11	☆	· NUT	1	SN:B20001--
12	☆	· O-RING (K1)	1	SN:B20001--
13	☆	· RING (K1)	2	SN:B20001--
14	☆	· O-RING (K1)	1	SN:B20001--
15	☆	· RING¤ BACK-UP (K1)	1	SN:B20001--

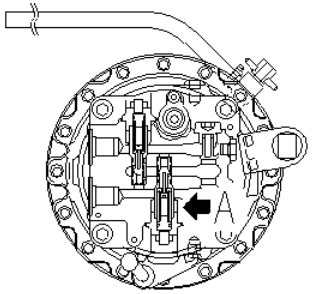

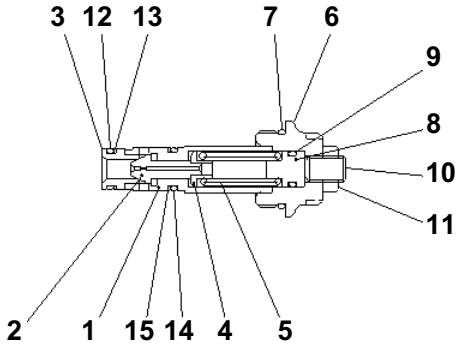

A 詳 細
Detail A

00001930

RELIEF VALVE (B) (FOR SWING MOTOR)

Item	Part No.	Description	Qty	Options
	KBB0853-01148	RELIEF VALVE ASS'Y	2	SN:B20001--
1	☆	· HOUSING	1	SN:B20001--
2	☆	· POPPET	1	SN:B20001--
3	☆	· SEAT	1	SN:B20001--
4	☆	· SEAT	1	SN:B20001--
5	☆	· SPRING	1	SN:B20001--
6	☆	· PLUG	1	SN:B20001--
7	☆	· O-RING (K1)	1	SN:B20001--
8	☆	· GUIDE	1	SN:B20001--
9	☆	· O-RING (K1)	1	SN:B20001--
10	☆	· SCREW	1	SN:B20001--
11	☆	· NUT	1	SN:B20001--
12	☆	· O-RING (K1)	1	SN:B20001--
13	☆	· RING (K1)	2	SN:B20001--
14	☆	· O-RING (K1)	1	SN:B20001--
15	☆	· RING¤ BACK-UP (K1)	1	SN:B20001--

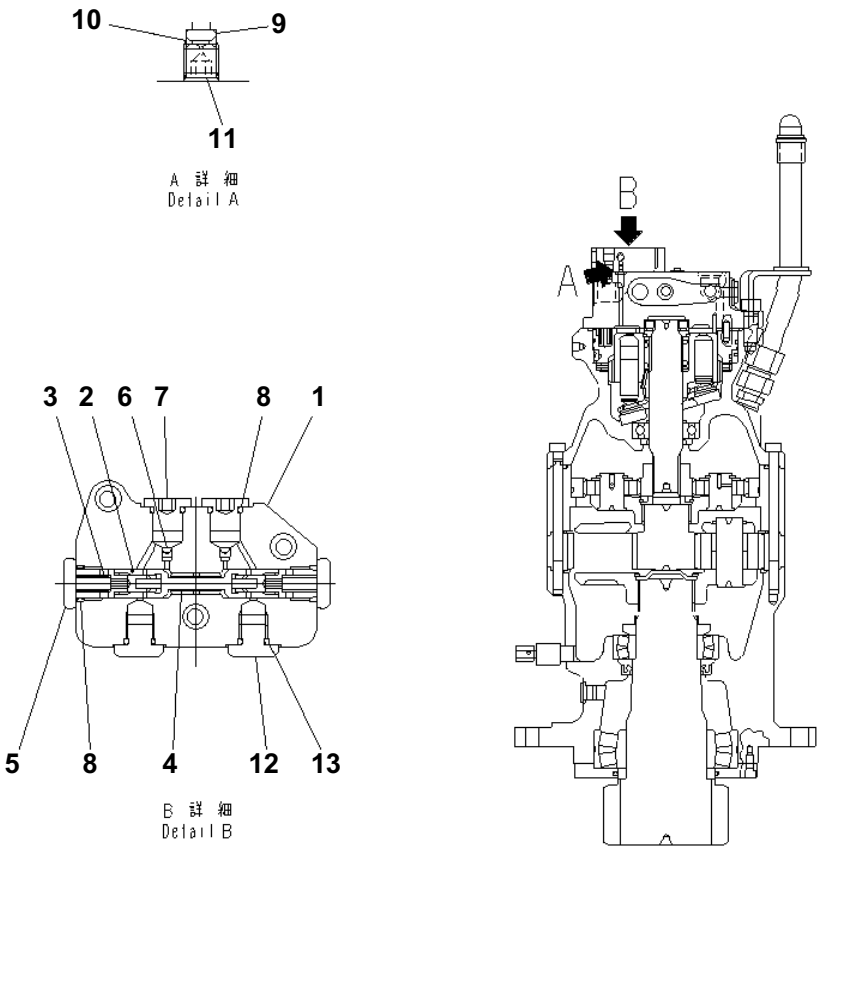

PC160LC-7B S/N B20001 AND UP

VALVE (FOR SWING MOTOR)

Item	Part No.	Description	Qty	Options
	KBB0443-09049	VALVE ASS'Y	1	SN:B20001--
1	☆	· BODY	1	SN:B20001--
2	☆	· CHECK VALVE ASS'Y	2	SN:B20001--
3	☆	· SPRING	2	SN:B20001--
4	☆	· SLEEVE	1	SN:B20001--
5	☆	· PLUG	2	SN:B20001--
6	☆	· ORIFICE	2	SN:B20001--
7	☆	· PLUG	2	SN:B20001--
8	☆	· O-RING (K1)	4	SN:B20001--
9	☆	· FILTER	1	SN:B20001--
10	☆	· WASHER	1	SN:B20001--
11	☆	· ORIFICE	1	SN:B20001--
12	☆	· PLUG	2	SN:B20001--
13	☆	· O-RING (K1)	2	SN:B20001--

Ref. Y1260-13A0 Page 450080

00002050

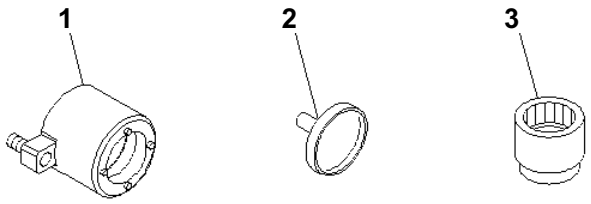

00002050

PC160LC-7B S/N B20001 AND UP

TOOL (FOR SWING MOTOR AND MACHINERY)

Item	Part No.	Description	Qty	Options
1	KBATZ030190	NUT,NUT	1	SN:B20001--
2	KBATZ060400	STOPPER,FOR SEAL RING	1	SN:B20001--
3	KBATZ080080	SOCKET,BOX WRENCH	1	SN:B20001--

Ref. Y1260-31A0 Page 450090

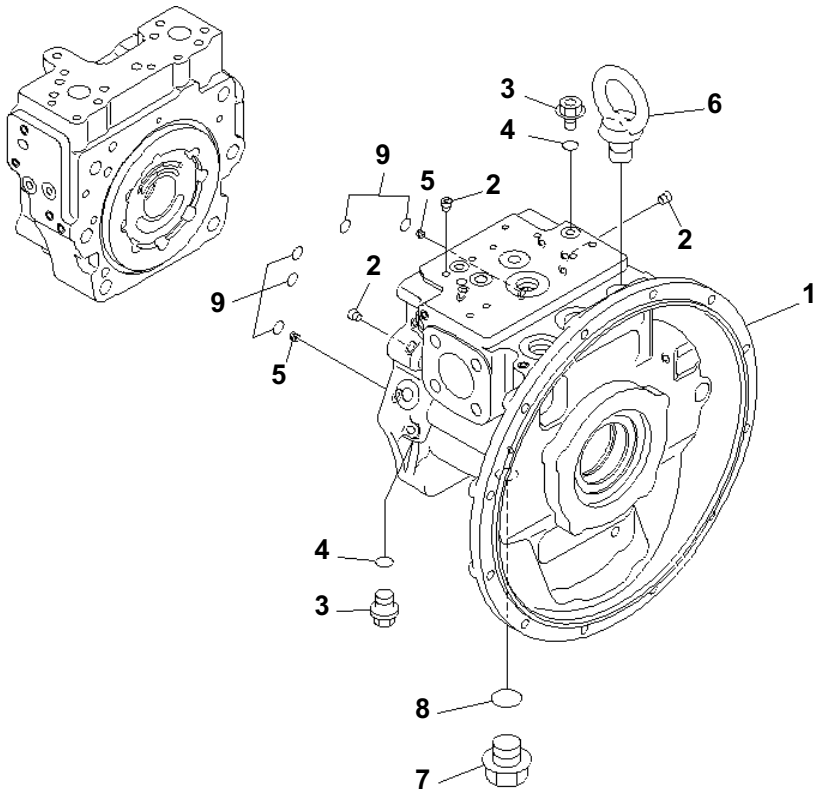

MAIN PUMP (1/9)

Item	Part No.	Description	Qty	Options
	708-3M-00020	PUMP ASS'Y	1	SN:B20025--
	708-3M-00011	PUMP ASS'Y	1	SN:B20001--B20024
		THESE ASSEMBLIES CONSIST OF ALL PARTS SHOWN IN FIGS.Y1600-01A0 TO Y1600-09A0.		
	708-3M-01015	・ PUMP SUB ASS'Y	1	SN:B20025--
	708-3M-01012	・ PUMP SUB ASS'Y	1	SN:B20001--B20024
	(★708-3M-04115)	・・ CASE ASS'Y, FRONT	1	SN:B20025--
	(★708-3M-04113)	・・ CASE ASS'Y, FRONT	1	SN:B20001--B20024
1	☆	・・・ CASE, FRONT	1	SN:B20025--
	☆	・・・ CASE, FRONT	1	SN:B20001--B20024
2	☆	・・・ PLUG	33	SN:B20001--
3	708-8E-16150	・・ PLUG	2	SN:B20001--
4	07002-61023	・・ O-RING	2	SN:B20001--
5	708-1L-29340	・・ ORIFICE	2	SN:B20001--
6	04530-11018	・・ BOLT,EYE	1	SN:B20001--
7	07044-12412	・・ PLUG	1	SN:B20001--
8	07002-62434	・・ O-RING	1	SN:B20001--
9	(★07000-B2012)	・・ O-RING	5	SN:B20001--

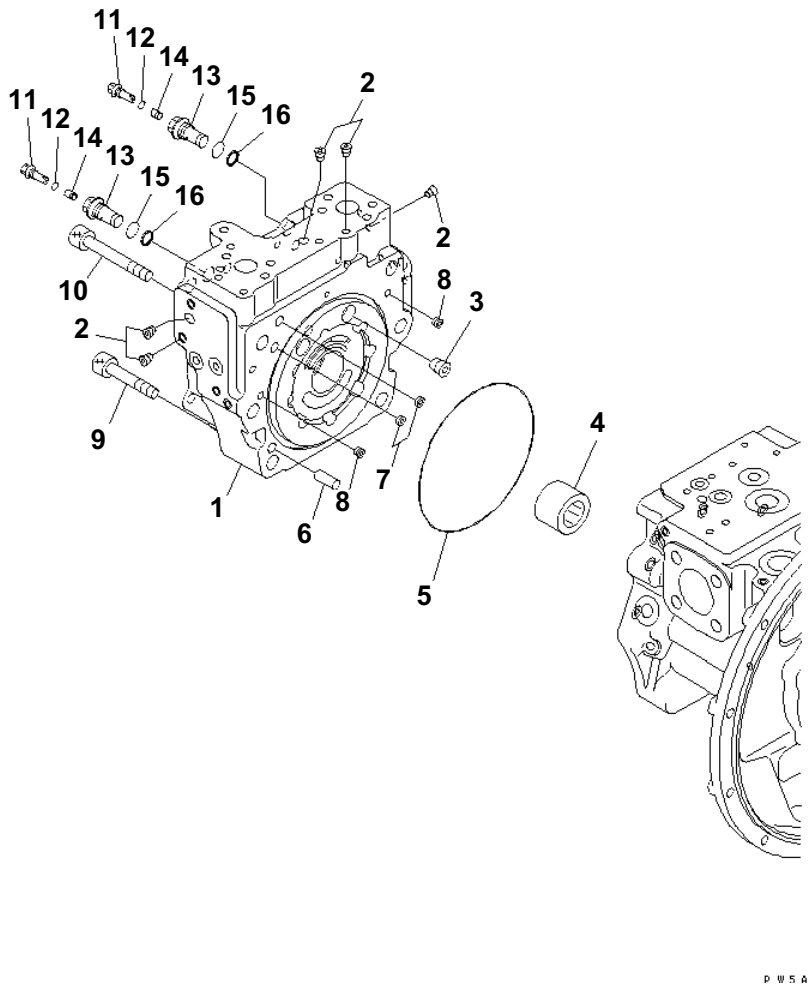

MAIN PUMP (2/9)

Item	Part No.	Description	Qty	Options
	(708-3M-00020)	PUMP ASS'Y	1	SN:B20025--
	(708-3M-00011)	PUMP ASS'Y	1	SN:B20001--B20024
		THESE ASSEMBLIES CONSIST OF ALL PARTS SHOWN IN FIGS.Y1600-01A0 TO Y1600-09A0.		
	(708-3M-01015)	· PUMP SUB ASS'Y	1	SN:B20025--
	(708-3M-01012)	· PUMP SUB ASS'Y	1	SN:B20001--B20024
	(★708-3M-04213)	· · CAP ASS'Y,END	1	SN:B20001--
1	☆	· · · CAP,END	1	SN:B20001--
2	☆	· · · PLUG	18	SN:B20001--
3	☆	· · · PLUG	2	SN:B20001--B20024
4	(★708-2G-12151)	· · BEARING	1	SN:B20001--
5	(★07000-A5185)	· · O-RING	1	SN:B20001--
6	(★04020-01228)	· · PIN	1	SN:B20001--
7	708-2L-25480	· · FILTER	2	SN:B20001--
8	708-1L-29340	· · ORIFICE	2	SN:B20001--
9	01252-61685	· · BOLT	5	SN:B20001--
10	01253-61620	· · BOLT	1	SN:B20001--
	708-3M-05110	· · VALVE ASS'Y	2	SN:B20001--
11	☆	· · · PLUG	1	SN:B20001--
12	☆	· · · O-RING	1	SN:B20001--
13	☆	· · · HOLDER	1	SN:B20001--
14	☆	· · · VALVE	1	SN:B20001--
15	☆	· · · O-RING	1	SN:B20001--
16	☆	· · · SEAL	1	SN:B20001--

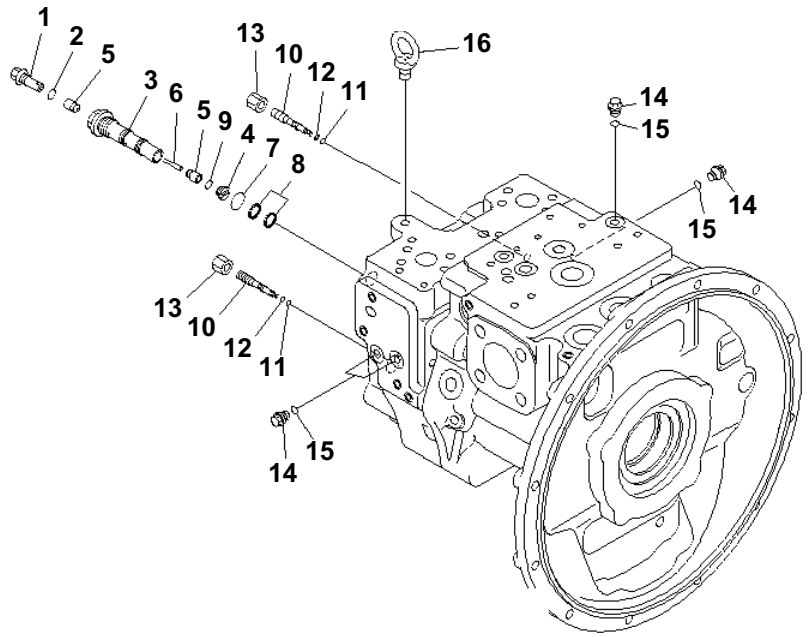

MAIN PUMP (3/9)

Item	Part No.	Description	Qty	Options
	(708-3M-00020)	PUMP ASS'Y	1	SN:B20025--
	(708-3M-00011)	PUMP ASS'Y	1	SN:B20001--B20024
		THESE ASSEMBLIES CONSIST OF ALL PARTS SHOWN IN FIGS.Y1600-01A0 TO Y1600-09A0.		
	(708-3M-01015)	· PUMP SUB ASS'Y	1	SN:B20025--
	(708-3M-01012)	· PUMP SUB ASS'Y	1	SN:B20001--B20024
	708-3M-05210	· · VALVE ASS'Y,SHUTTLE	1	SN:B20001--
1	☆	· · · PLUG	1	SN:B20001--
2	☆	· · · O-RING	1	SN:B20001--
3	☆	· · · HOLDER	1	SN:B20001--
4	☆	· · · SEAT	1	SN:B20001--
5	☆	· · · VALVE	2	SN:B20001--
6	☆	· · · PIN	1	SN:B20001--
7	☆	· · · O-RING	1	SN:B20001--
8	☆	· · · SEAL	2	SN:B20001--
9	☆	· · · O-RING	1	SN:B20001--
10	708-3M-15211	· · PLUG	2	SN:B20001--
11	07000-B1003	· · O-RING	2	SN:B20001--
12	07001-01003	· · RING,BACK-UP	2	SN:B20001--
13	708-3S-15820	· · NUT	2	SN:B20001--
14	708-8E-16150	· · PLUG	4	SN:B20001--
15	07002-61023	· · O-RING	4	SN:B20001--
16	04530-11018	· · BOLT,EYE	1	SN:B20001--

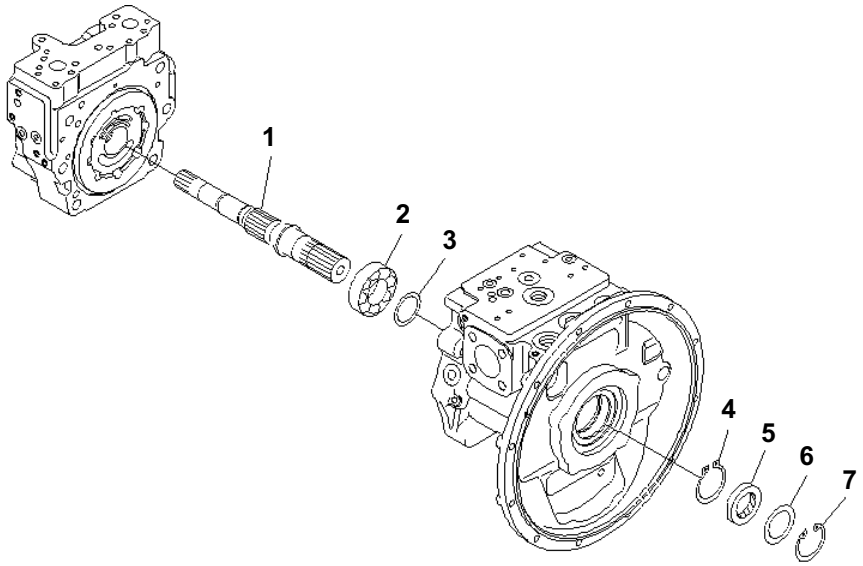

MAIN PUMP (4/9)

Item	Part No.	Description	Qty	Options
	(708-3M-00020)	PUMP ASS'Y	1	SN:B20025--
	(708-3M-00011)	PUMP ASS'Y	1	SN:B20001--B20024
		THESE ASSEMBLIES CONSIST OF ALL PARTS SHOWN IN FIGS.Y1600-01A0 TO Y1600-09A0.		
	(708-3M-01015)	· PUMP SUB ASS'Y	1	SN:B20025--
	(708-3M-01012)	· PUMP SUB ASS'Y	1	SN:B20001--B20024
1	(★708-3M-12111)	· · SHAFT	1	SN:B20001--
2	(★708-2G-12251)	· · BEARING	1	SN:B20001--
3	(★708-2G-05010)	· · WASHER KIT	1	SN:B20001--
	☆	· · · WASHER¤ 3.0MM	1	SN:B20001--
	☆	· · · WASHER¤ 3.1MM	1	SN:B20001--
	☆	· · · WASHER¤ 3.2MM	1	SN:B20001--
4	(★708-1F-12270)	· · RING,SNAP	1	SN:B20001--
5	708-2G-12220	· · SEAL, OIL	1	SN:B20025--
	708-3M-12280	· · SEAL, OIL	1	SN:B20001--B20024
6	708-8H-32160	· · SPACER	1	SN:B20001--
7	04065-07825	· · RING, SNAP	1	SN:B20001--

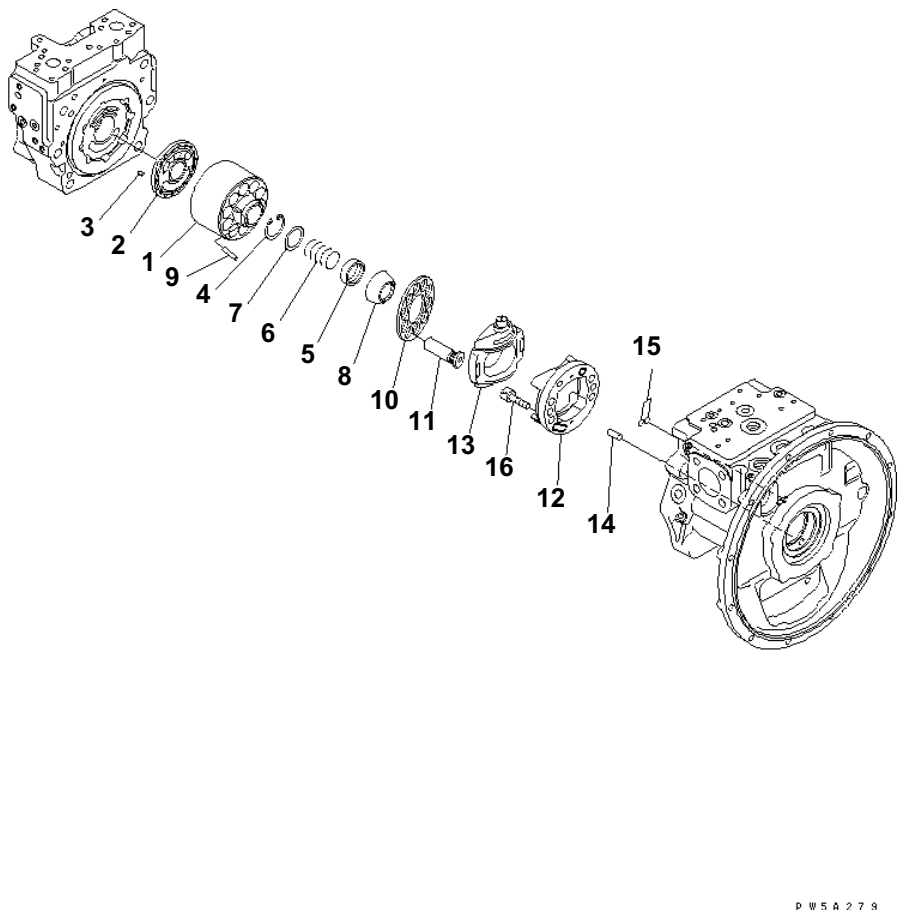

MAIN PUMP (5/9)

Item	Part No.	Description	Qty	Options
	(708-3M-00020)	PUMP ASS'Y	1	SN:B20025--
	(708-3M-00011)	PUMP ASS'Y	1	SN:B20001--B20024
		THESE ASSEMBLIES CONSIST OF ALL PARTS SHOWN IN FIGS.Y1600-01A0 TO Y1600-09A0.		
	(708-3M-01015)	· PUMP SUB ASS'Y	1	SN:B20025--
	(708-3M-01012)	· PUMP SUB ASS'Y	1	SN:B20001--B20024
	(★708-3M-04311)	· · BLOCK ASS'Y,CYLINDER	1	SN:B20001--
1	☆	· · · BLOCK,CYLINDER	1	SN:B20001--
2	☆	· · · PLATE,VALVE	1	SN:B20001--
3	(★708-18-13230)	· · PIN	1	SN:B20001--
4	(★04065-05520)	· · RING	1	SN:B20001--
5	(★708-2G-13131)	· · SEAT	1	SN:B20001--
6	(★708-3M-13150)	· · SPRING	1	SN:B20001--
7	(★708-2G-13141)	· · SEAT	1	SN:B20001--
8	(★708-2G-13510)	· · GUIDE,RETAINER	1	SN:B20001--
9	(★708-2H-23360)	· · PIN	3	SN:B20001--
10	(★708-3M-13342)	· · RETAINER,SHOE	1	SN:B20025--
	(★708-3M-13341)	· · RETAINER,SHOE	1	SN:B20001--B20024
11	(★708-3M-13311)	· · PISTON SUB ASS'Y	10	SN:B20025--
	(★708-3M-13310)	· · PISTON SUB ASS'Y	10	SN:B20001--B20024
	(★708-3M-04160)	· · CRADLE SUB ASS'Y	1	SN:B20001--
12	☆	· · · CRADLE	1	SN:B20001--
13	☆	· · · CAM,ROCKER	1	SN:B20001--
14	(★04020-01228)	· · PIN	1	SN:B20001--
15	(★07000-B1009)	· · O-RING	2	SN:B20001--
16	(★01252-61230)	· · BOLT	6	SN:B20001--

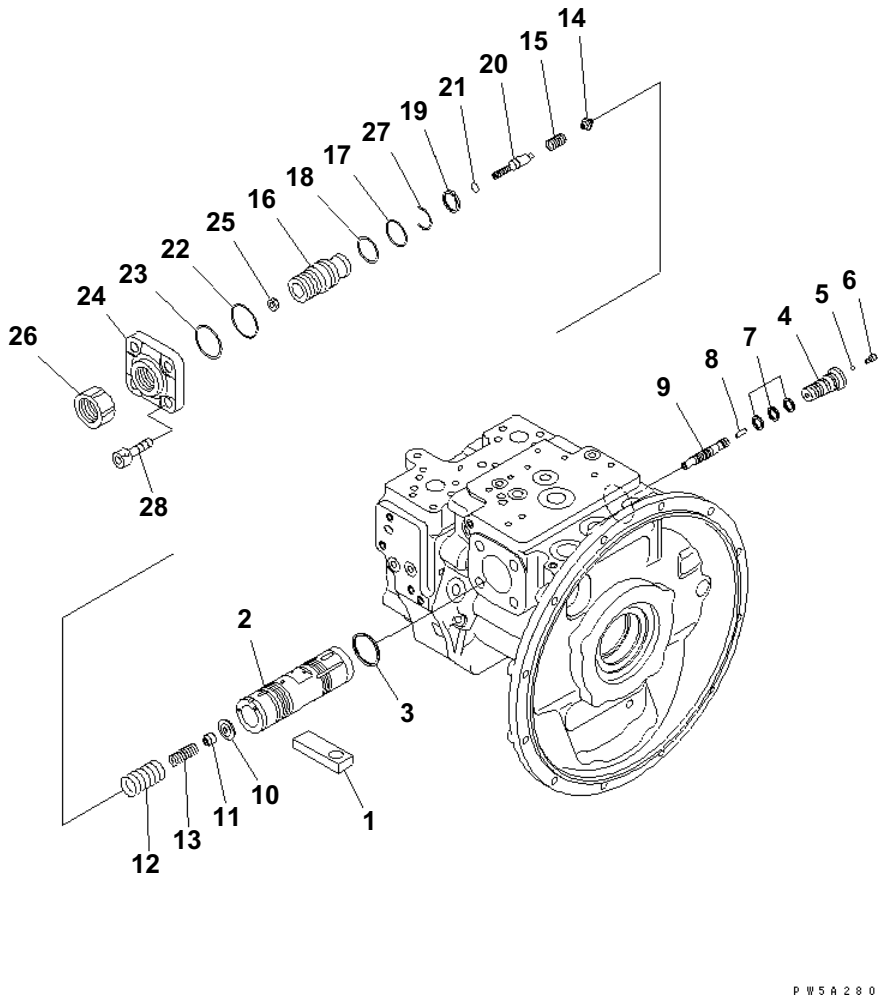

MAIN PUMP (6/9)

Item	Part No.	Description	Qty	Options
	(708-3M-00020)	PUMP ASS'Y	1	SN:B20025--
	(708-3M-00011)	PUMP ASS'Y	1	SN:B20001--B20024
		THESE ASSEMBLIES CONSIST OF ALL PARTS SHOWN IN FIGS.Y1600-01A0 TO Y1600-09A0.		
	(708-3M-01015)	· PUMP SUB ASS'Y	1	SN:B20025--
	(708-3M-01012)	· PUMP SUB ASS'Y	1	SN:B20001--B20024
1	(★708-2G-14120)	· · SLIDER	1	SN:B20001--
	(★708-3M-03012)	· · VALVE ASS'Y,PC	1	SN:B20001--
2	(★708-2G-03520)	· · · PISTON ASS'Y,SERVO	1	SN:B20001--
3	(★708-2G-15320)	· · · SEAL	1	SN:B20001--
4	(★708-3M-15630)	· · · PLUG	1	SN:B20001--
5	(★708-2L-35760)	· · · BALL	1	SN:B20001--
6	(★708-2L-35770)	· · · PLUG	1	SN:B20001--
7	(★708-2L-35690)	· · · SEAL	3	SN:B20001--
8	(★708-2L-35170)	· · · PIN	1	SN:B20001--
9	(★708-3M-15670)	· · · SPOOL	1	SN:B20001--
10	(★708-2G-15290)	· · · RETAINER	1	SN:B20001--
11	(★708-2G-15140)	· · · SEAT	1	SN:B20001--
12	(★708-2G-15270)	· · · SPRING	1	SN:B20001--
13	(★708-3M-15620)	· · · SPRING	1	SN:B20001--
14	(★708-2G-15151)	· · · SEAT	1	SN:B20001--
15	(★708-3M-15610)	· · · SPRING	1	SN:B20001--
16	(★708-2G-14340)	· · · SCREW	1	SN:B20001--
17	(★07000-B3038)	· · · O-RING	1	SN:B20001--
18	(★708-2G-15230)	· · · RING,BACK-UP	1	SN:B20001--
19	(★708-2G-15260)	· · · SEAL	1	SN:B20001--
20	(★708-2G-15240)	· · · PLUG	1	SN:B20001--
21	(★07000-B2012)	· · · O-RING	1	SN:B20001--
22	(★07000-B2050)	· · · O-RING	1	SN:B20001--
23	(★708-2G-15310)	· · · RING	1	SN:B20001--
24	(★708-2G-14190)	· · · COVER	1	SN:B20001--
25	(★01580-10806)	· · · NUT	1	SN:B20001--
26	(★708-2L-35540)	· · · NUT	1	SN:B20001--
27	(★708-2G-15330)	· · · RING,WIRE	1	SN:B20001--
28	(★01252-61645)	· · BOLT	4	SN:B20001--

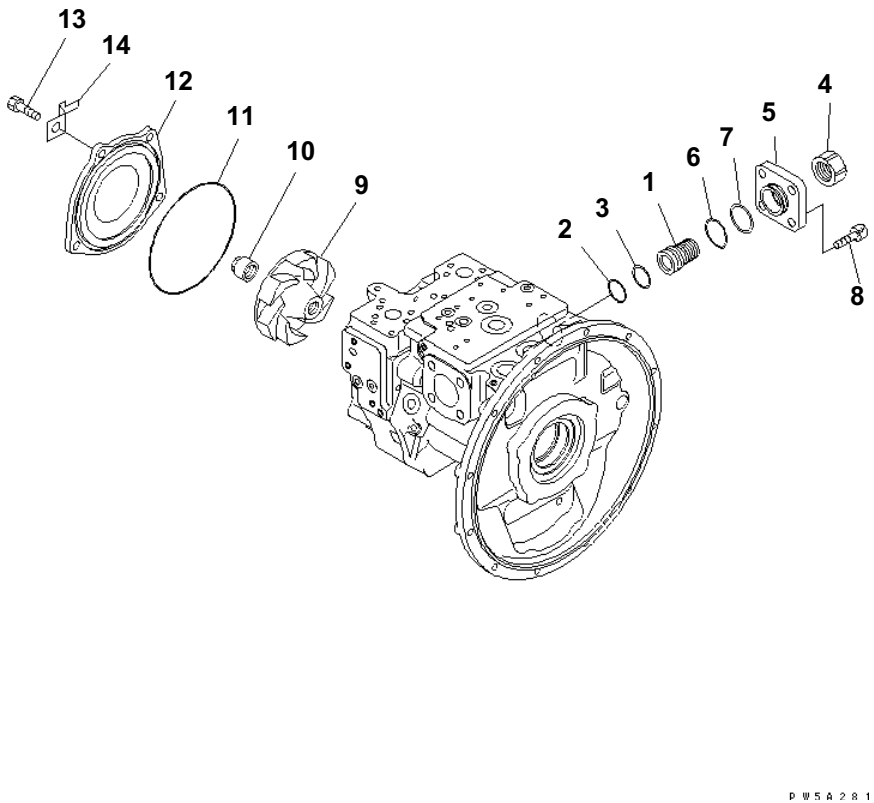

MAIN PUMP (7/9)

Item	Part No.	Description	Qty	Options
	(708-3M-00020)	PUMP ASS'Y	1	SN:B20025--
	(708-3M-00011)	PUMP ASS'Y	1	SN:B20001--B20024
		THESE ASSEMBLIES CONSIST OF ALL PARTS SHOWN IN FIGS.Y1600-01A0 TO Y1600-09A0.		
	(708-3M-01015)	· PUMP SUB ASS'Y	1	SN:B20025--
	(708-3M-01012)	· PUMP SUB ASS'Y	1	SN:B20001--B20024
	(★708-2G-03430)	· · COVER ASS'Y	1	SN:B20001--
1	(★708-2G-14310)	· · · SCREW	1	SN:B20001--
2	(★07000-B3038)	· · · O-RING	1	SN:B20001--
3	(★708-2G-15230)	· · · RING,BACK-UP	1	SN:B20001--
4	(★708-2L-35540)	· · · NUT	1	SN:B20001--
5	(★708-2G-14170)	· · · COVER	1	SN:B20001--
6	(★07000-B2050)	· · · O-RING	1	SN:B20001--
7	(★708-2G-15310)	· · · RING	1	SN:B20001--
8	(★01252-61645)	· · BOLT	4	SN:B20001--
9	(★708-3M-11611)	· · IMPELLER	1	SN:B20001--
10	(★708-3D-11630)	· · NUT	1	SN:B20001--
11	(★07000-A5185)	· · O-RING	1	SN:B20001--
12	708-3M-11713	· · COVER	1	SN:B20001--
13	01010-81230	· · BOLT	4	SN:B20001--
14	08193-21012	· · CLIP	2	SN:B20001--

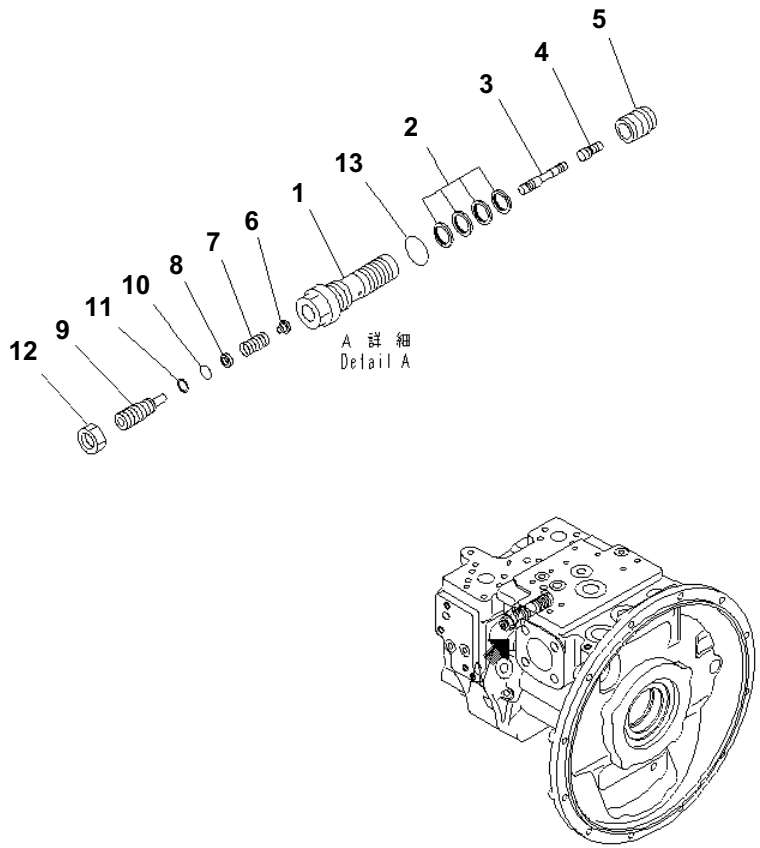

PW5A282

MAIN PUMP (8/9)

Item	Part No.	Description	Qty	Options
	(708-3M-00020)	PUMP ASS'Y	1	SN:B20025--
	(708-3M-00011)	PUMP ASS'Y	1	SN:B20001--B20024
		THESE ASSEMBLIES CONSIST OF ALL PARTS SHOWN IN FIGS.Y1600-01A0 TO Y1600-09A0.		
	708-3M-03620	・ VALVE ASS'Y,LS	1	SN:B20025--
	708-2L-06751	・ VALVE ASS'Y,LS	1	SN:B20001--B20024
1	(★708-2L-35311)	・・ SLEEVE	1	SN:B20001--
2	708-2L-24680	・・ SEAL	4	SN:B20001--
3	(★708-2L-35550)	・・ SPOOL	1	SN:B20001--
4	(★708-2L-28540)	・・ PISTON	1	SN:B20001--
5	(★708-2L-35360)	・・ SLEEVE	1	SN:B20001--
6	(★708-2G-15420)	・・ SEAT	1	SN:B20025--
	(★708-2L-35331)	・・ SEAT	1	SN:B20001--B20024
7	(★708-2L-35410)	・・ SPRING	1	SN:B20001--
8	(★708-2L-35341)	・・ SEAT	1	SN:B20001--
9	(★708-2L-35351)	・・ PLUG	1	SN:B20001--
10	(★07000-B1009)	・・ O-RING	1	SN:B20001--
11	(★07001-01009)	・・ RING,BACK-UP	1	SN:B20001--
12	01583-11408	・・ NUT	1	SN:B20001--
13	07002-62434	・・ O-RING	1	SN:B20001--

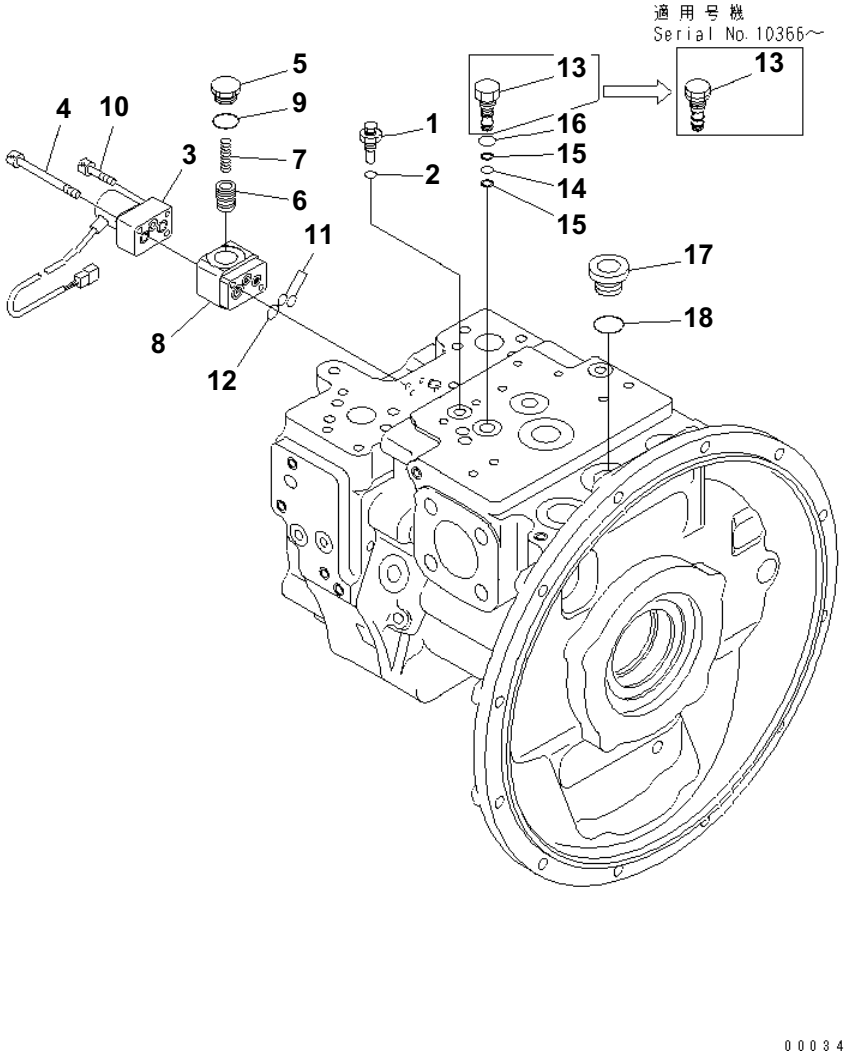

MAIN PUMP (9/9)

Item	Part No.	Description	Qty	Options
	(708-3M-00020)	PUMP ASS'Y	1	SN:B20025--
	(708-3M-00011)	PUMP ASS'Y	1	SN:B20001--B20024
		THESE ASSEMBLIES CONSIST OF ALL PARTS SHOWN IN FIGS.Y1600-01A0 TO Y1600-09A0.		
1	(★708-2L-35530)	· PLUG	1	SN:B20001--
2	(★07002-61023)	· O-RING	1	SN:B20001--
3	702-21-57500	· PILOT VALVE	1	SN:B20025--
	702-21-55701	· PILOT VALVE	1	SN:B20001--B20024
4	702-16-55260	· BOLT	2	SN:B20001--
	702-21-56600	· VALVE ASS'Y	1	SN:B20001--
5	702-21-55920	· · PLUG	1	SN:B20001--
6	702-21-55930	· · PISTON	1	SN:B20001--
7	702-21-56610	· · SPRING	1	SN:B20001--
8	702-21-55951	· · BLOCK	1	SN:B20001--
9	07002-12034	· · O-RING	1	SN:B20001--
10	01252-60530	· BOLT	1	SN:B20001--
11	07000-11008	· O-RING	2	SN:B20001--
12	722-12-18240	· O-RING	1	SN:B20001--
13	708-2H-15531	· PLUG	1	SN:B20025--
	708-3M-15720	· PLUG	1	SN:B20001--B20024
14	07000-B1008	· O-RING	1	SN:B20001--
15	07001-01008	· RING	2	SN:B20001--
16	07002-61423	· O-RING	1	SN:B20001--
17	07040-12414	· PLUG	1	SN:B20001--
18	07002-62434	· O-RING	1	SN:B20001--

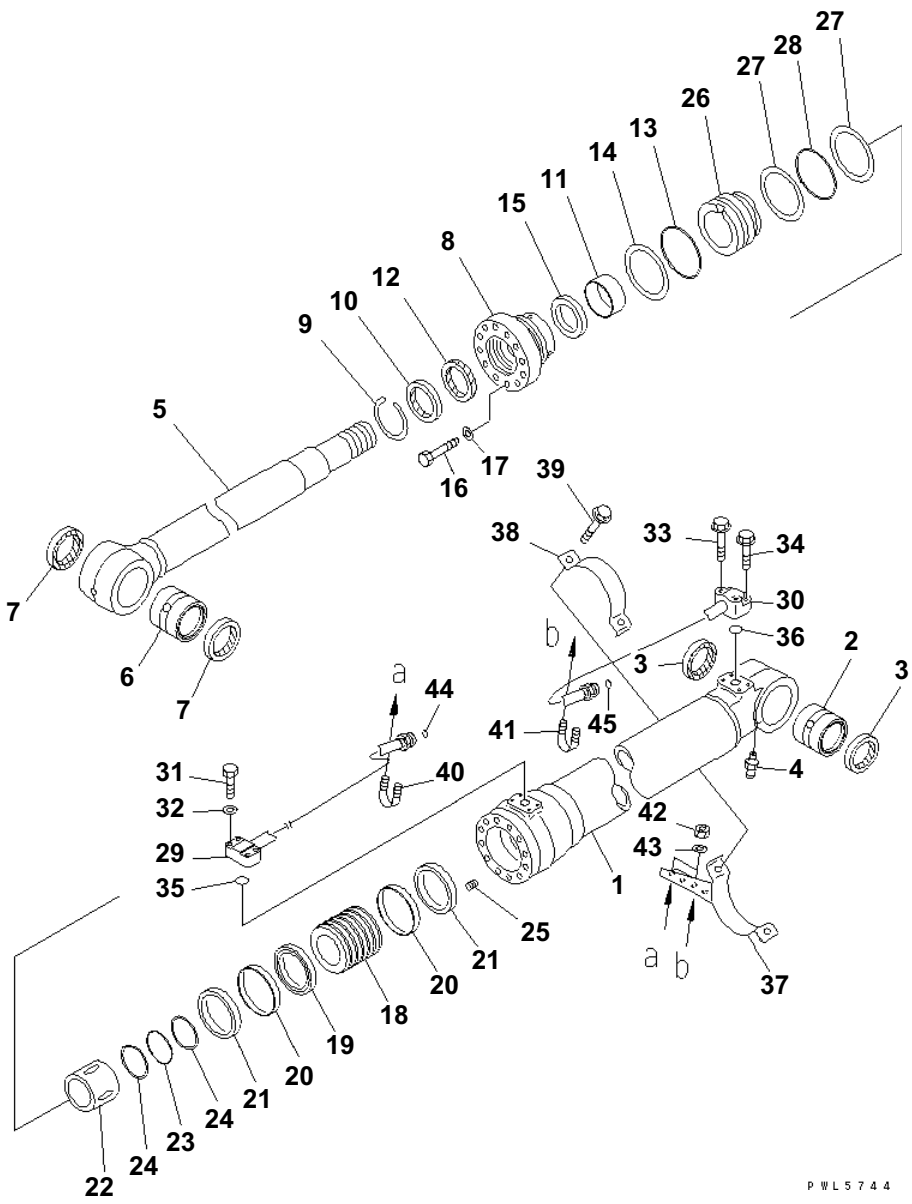

BOOM CYLINDER

Item	Part No.	Description	Qty	Options
G-1	(⊙707-01-XE490)	CYLINDER GROUP, L.H.	1	SN:B20001--
G-2	(⊙707-01-XE500)	CYLINDER GROUP, R.H.	1	SN:B20001--
		==========		
	707-01-0E490	CYLINDER ASS'Y	1	SN:B20001--
1	707-13-11160	· CYLINDER	1	SN:B20001--
2	21K-70-71320	· BUSHING	1	SN:B20001--
3	07145-00070	· SEAL,DUST (KIT)	2	SN:B20001--
4	07020-00000	· FITTING,GREASE	1	SN:B20001--
5	707-58-75650	· ROD,PISTON	1	SN:B20001--
6	21K-70-71320	· BUSHING	1	SN:B20001--
7	07145-00070	· SEAL,DUST (KIT)	2	SN:B20001--
8	707-27-11720	· HEAD,CYLINDER	1	SN:B20001--
9	07179-13089	· RING,SNAP	1	SN:B20001--
10	144-63-94170	· SEAL,DUST (KIT)	1	SN:B20001--
11	707-52-90500	· BUSHING	1	SN:B20001--
12	707-51-75030	· PACKING,ROD (KIT)	1	SN:B20001--
13	07000-15100	· O-RING (KIT)	1	SN:B20001--
14	707-35-91130	· RING,BACK-UP (KIT)	1	SN:B20001--
15	707-51-75640	· RING,BUFFER (KIT)	1	SN:B20001--
16	01010-81670	· BOLT	12	SN:B20001--
17	01643-51645	· WASHER	12	SN:B20001--
18	721-36-11020	· PISTON	1	SN:B20001--
19	707-44-11180	· RING,PISTON (KIT)	1	SN:B20001--
20	707-39-11150	· RING,WEAR (KIT)	2	SN:B20001--
21	707-44-11911	· RING	2	SN:B20001--
22	707-71-70810	· PLUNGER	1	SN:B20001--
23	07000-15070	· O-RING (KIT)	1	SN:B20001--
24	707-35-90360	· RING,BACK-UP (KIT)	2	SN:B20001--
25	01310-01216	· SCREW	1	SN:B20001--
26	707-71-34400	· COLLAR	1	SN:B20001--
27	707-35-91130	· RING,BACK-UP (KIT)	2	SN:B20001--
28	07000-15100	· O-RING (KIT)	1	SN:B20001--
29	707-86-47400	TUBE,L.H.	1	SN:B20001--
	707-86-47410	TUBE,R.H.	1	SN:B20001--
30	707-86-66780	TUBE,L.H.	1	SN:B20001--
	707-86-66790	TUBE,R.H.	1	SN:B20001--
31	01010-80850	BOLT	4	SN:B20001--
32	01643-50823	WASHER	4	SN:B20001--
33	01435-01055	BOLT	2	SN:B20001--
34	01435-01040	BOLT	2	SN:B20001--

PC160LC-7B S/N B20001 AND UP

BOOM CYLINDER

Item	Part No.	Description	Qty	Options
35	07000-13025	O-RING (KIT)	1	SN:B20001--
36	07000-13030	O-RING (KIT)	1	SN:B20001--
37	707-88-22910	BRACKET,L.H.	1	SN:B20001--
	707-88-22920	BRACKET,R.H.	1	SN:B20001--
38	707-88-21640	BAND	1	SN:B20001--
39	01435-01030	BOLT	2	SN:B20001--
40	07283-32236	CLIP	1	SN:B20001--
41	07283-32738	CLIP	1	SN:B20001--
42	01597-01009	NUT	4	SN:B20001--
43	01643-31032	WASHER	4	SN:B20001--
44	02896-61015	O-RING (KIT)	1	SN:B20001--
45	02896-61018	O-RING (KIT)	1	SN:B20001--
		==========		
	707-99-38720	SERVICE KIT	2	SN:B20001--

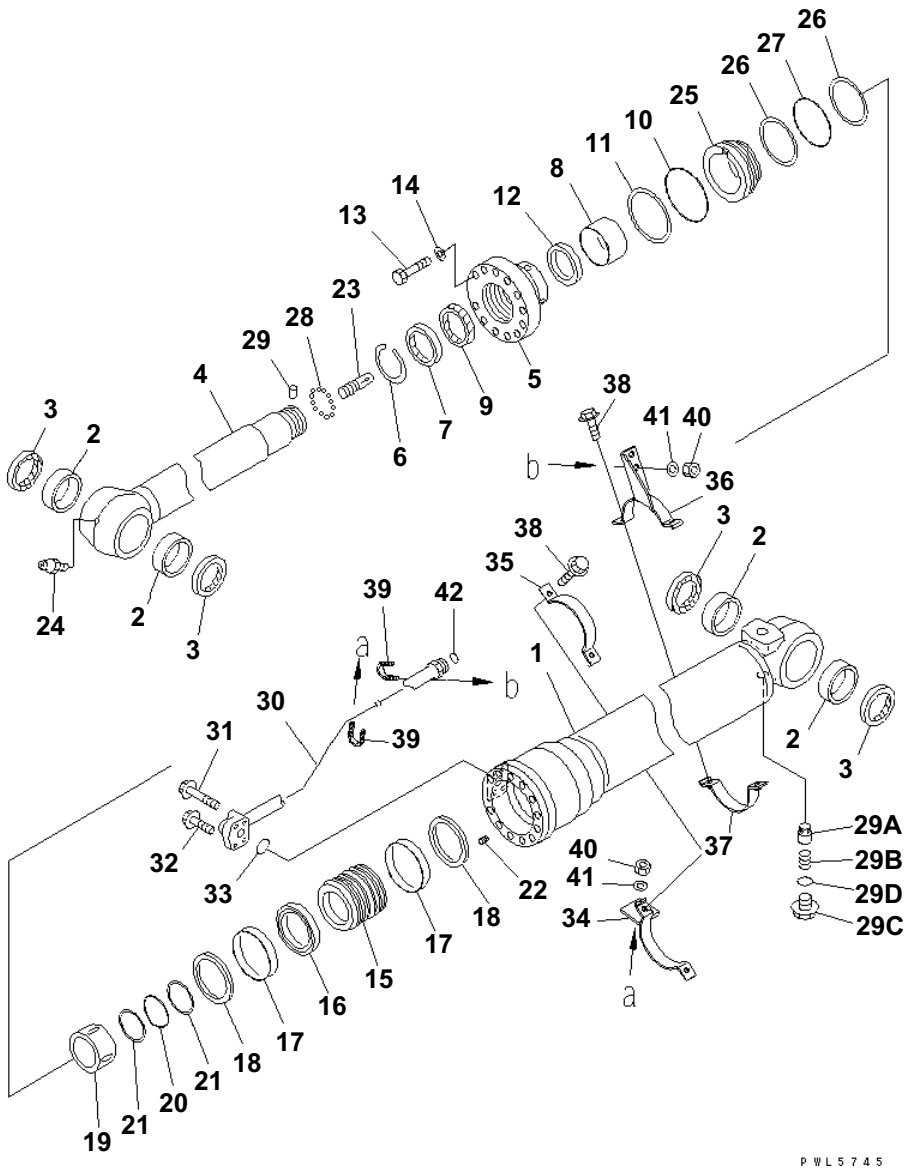

ARM CYLINDER

Item	Part No.	Description	Qty	Options
G-1	(⊙707-01-XE511)	CYLINDER GROUP,(FINAL COATING)	1	SN:B20164--
	(⊙707-01-XE510)	CYLINDER GROUP,(FINAL COATING)	1	SN:B20001--B20163
		==========		
	707-01-0E511	CYLINDER ASS'Y	1	SN:B20164--
	707-01-0E510	CYLINDER ASS'Y	1	SN:B20001--B20163
1	707-13-12340	· CYLINDER	1	SN:B20001--
2	707-76-80431	· BUSHING	4	SN:B20164--
	707-76-80470	· BUSHING	4	SN:B20001--B20163
3	07145-00080	· SEAL,DUST (KIT)	4	SN:B20001--
4	707-58-85310	· ROD,PISTON	1	SN:B20001--
5	707-27-12921	· HEAD,CYLINDER	1	SN:B20001--
6	07179-13099	· RING,SNAP	1	SN:B20001--
7	707-56-85510	· SEAL,DUST (KIT)	1	SN:B20001--
8	707-52-90610	· BUSHING	1	SN:B20001--
9	707-51-85030	· PACKING,ROD (KIT)	1	SN:B20001--
10	07000-15110	· O-RING (KIT)	1	SN:B20001--
11	707-35-91220	· RING,BACK-UP (KIT)	1	SN:B20001--
12	707-51-85640	· RING,BUFFER (KIT)	1	SN:B20001--
13	01010-81670	· BOLT	12	SN:B20001--
14	01643-51645	· WASHER	12	SN:B20001--
15	707-36-12851	· PISTON	1	SN:B20001--
16	707-44-12180	· RING,PISTON (KIT)	1	SN:B20001--
17	707-39-12140	· RING,WEAR (KIT)	2	SN:B20001--
18	707-44-12911	· RING	2	SN:B20001--
19	707-71-70820	· PLUNGER	1	SN:B20001--
20	07000-15075	· O-RING (KIT)	1	SN:B20001--
21	707-35-90930	· RING,BACK-UP (KIT)	2	SN:B20001--
22	01310-01216	· SCREW	1	SN:B20001--
23	707-71-80230	· PLUNGER	1	SN:B20001--
24	07020-00000	· FITTING,GREASE	1	SN:B20001--
25	707-71-34640	· COLLAR	1	SN:B20001--
26	707-35-91220	· RING,BACK-UP (KIT)	2	SN:B20001--
27	07000-15110	· O-RING (KIT)	1	SN:B20001--
28	04260-00635	· BALL	11	SN:B20001--
29	707-71-91270	· CAP	1	SN:B20001--
29A	707-83-13010	· VALVE	1	SN:B20001--
29B	07750-01628	· SPRING	1	SN:B20001--
29C	707-87-14070	· PLUG	1	SN:B20001--

PC160LC-7B S/N B20001 AND UP

ARM CYLINDER

Item	Part No.	Description	Qty	Options
29D	07002-12034	・ O-RING (KIT)	1	SN:B20001--
30	707-86-66770	TUBE	1	SN:B20001--
31	07375-21060	BOLT	2	SN:B20164--
	01435-01055	BOLT	2	SN:B20001--B20163
32	01435-21045	BOLT	2	SN:B20001--
	01435-01045	BOLT	2	SN:B20001--
33	07000-13030	O-RING (KIT)	1	SN:B20001--
34	707-88-22930	BRACKET	1	SN:B20001--
35	707-88-21620	BAND	1	SN:B20001--
36	707-88-22970	BRACKET	1	SN:B20001--
37	707-88-21630	BAND	1	SN:B20001--
38	07375-21035	BOLT	4	SN:B20001--
	01435-01030	BOLT	4	SN:B20001--
39	07283-32738	CLIP	2	SN:B20001--
40	01597-01009	NUT	4	SN:B20001--
41	01643-31032	WASHER	4	SN:B20001--
42	02896-61018	O-RING (KIT)	1	SN:B20001--
		==========		
	707-99-46320	SERVICE KIT	1	SN:B20001--

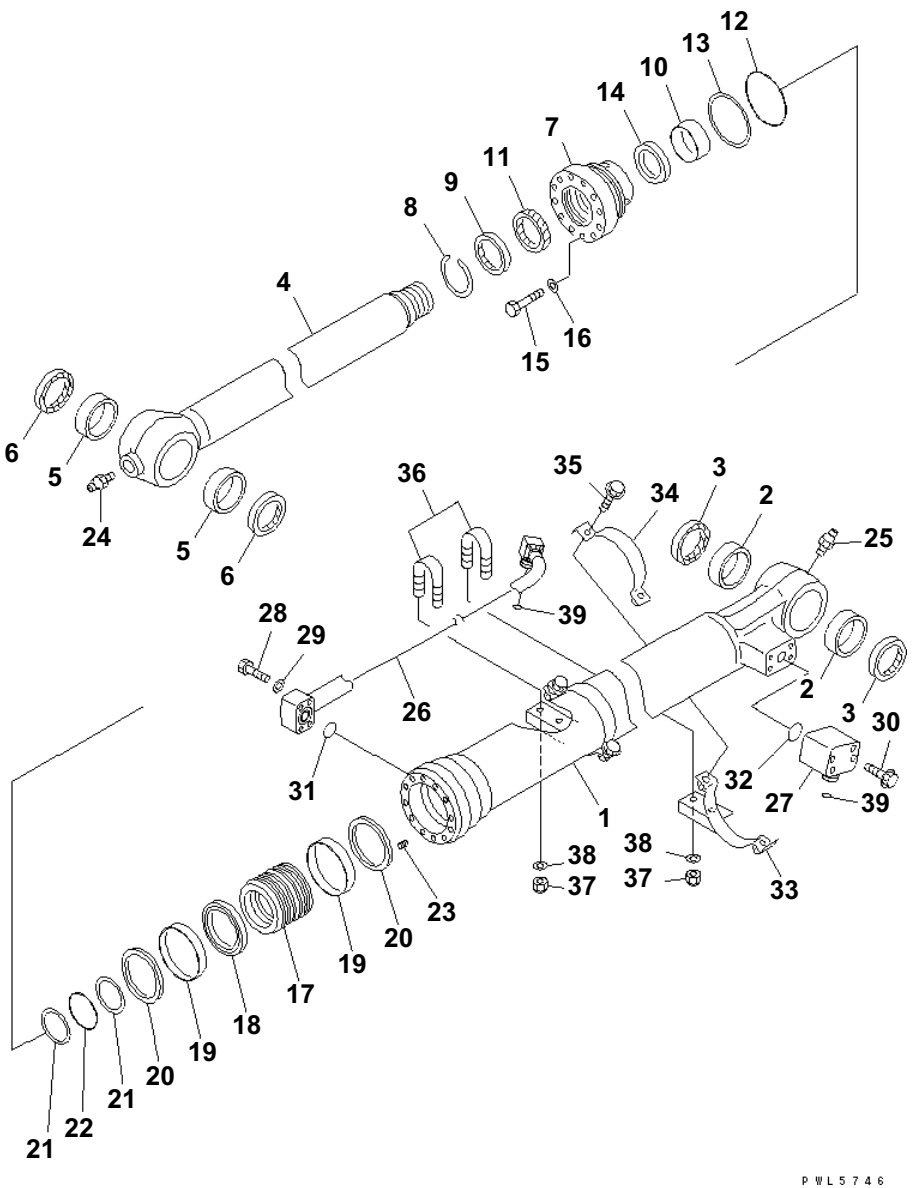

BUCKET CYLINDER

Item	Part No.	Description	Qty	Options
G-1	(⊙707-01-XE671)	CYLINDER GROUP	1	SN:B20164--
	(⊙707-01-XE670)	CYLINDER GROUP	1	SN:B20001--B20163
		==========		
	707-01-0E521	CYLINDER ASS'Y	1	SN:B20164--
	707-01-0E520	CYLINDER ASS'Y	1	SN:B20001--B20163
1	707-13-10530	· CYLINDER	1	SN:B20001--
2	21K-70-72250	· BUSHING	2	SN:B20001--
3	07145-00070	· SEAL, DUST (KIT)	2	SN:B20001--
4	721-58-70160	· ROD, PISTON	1	SN:B20001--
5	21K-70-72250	· BUSHING	2	SN:B20001--
6	20Y-70-23220	· SEAL, DUST (KIT)	2	SN:B20001--
7	707-27-10971	· HEAD, CYLINDER	1	SN:B20001--
8	07179-12084	· RING, SNAP	1	SN:B20001--
9	144-63-95170	· SEAL, DUST (KIT)	1	SN:B20001--
10	707-52-90470	· BUSHING	1	SN:B20001--
11	707-51-70030	· PACKING, ROD (KIT)	1	SN:B20001--
12	07000-15095	· O-RING (KIT)	1	SN:B20001--
13	707-35-91060	· RING, BACK-UP (KIT)	1	SN:B20001--
14	707-51-70640	· RING, BUFFER (KIT)	1	SN:B20001--
15	01010-81465	· BOLT	12	SN:B20001--
16	705-17-04980	· WASHER	12	SN:B20001--
17	707-36-10750	· PISTON	1	SN:B20001--
18	707-44-10280	· RING, PISTON (KIT)	1	SN:B20001--
19	707-39-10550	· RING, WEAR (KIT)	2	SN:B20001--
20	707-44-10911	· RING	2	SN:B20001--
21	707-35-90730	· RING (KIT)	2	SN:B20001--
22	707-34-60030	· O-RING (KIT)	1	SN:B20001--
23	01310-01216	· SCREW	1	SN:B20001--
24	07020-00000	· FITTING,GREASE	1	SN:B20001--
25	07020-00000	· FITTING,GREASE	1	SN:B20001--
26	707-86-47390	TUBE	1	SN:B20001--
27	707-87-24100	ELBOW	1	SN:B20001--
28	01010-80850	BOLT	4	SN:B20001--
29	01643-50823	WASHER	4	SN:B20001--
30	01435-01070	BOLT	4	SN:B20001--
31	07000-13025	O-RING (KIT)	1	SN:B20001--
32	07000-13030	O-RING (KIT)	1	SN:B20001--
33	707-88-22940	BRACKET	2	SN:B20001--
34	707-88-21650	BAND	2	SN:B20001--
35	01435-01030	BOLT	4	SN:B20001--

PC160LC-7B S/N B20001 AND UP

BUCKET CYLINDER

Item	Part No.	Description	Qty	Options
36	07283-32236	CLIP	2	SN:B20001--
37	01597-01009	NUT	4	SN:B20001--
38	01643-31032	WASHER	4	SN:B20001--
39	02896-61015	O-RING (KIT)	2	SN:B20001--
		==========		
	707-99-37290	SERVICE KIT	1	SN:B20001--

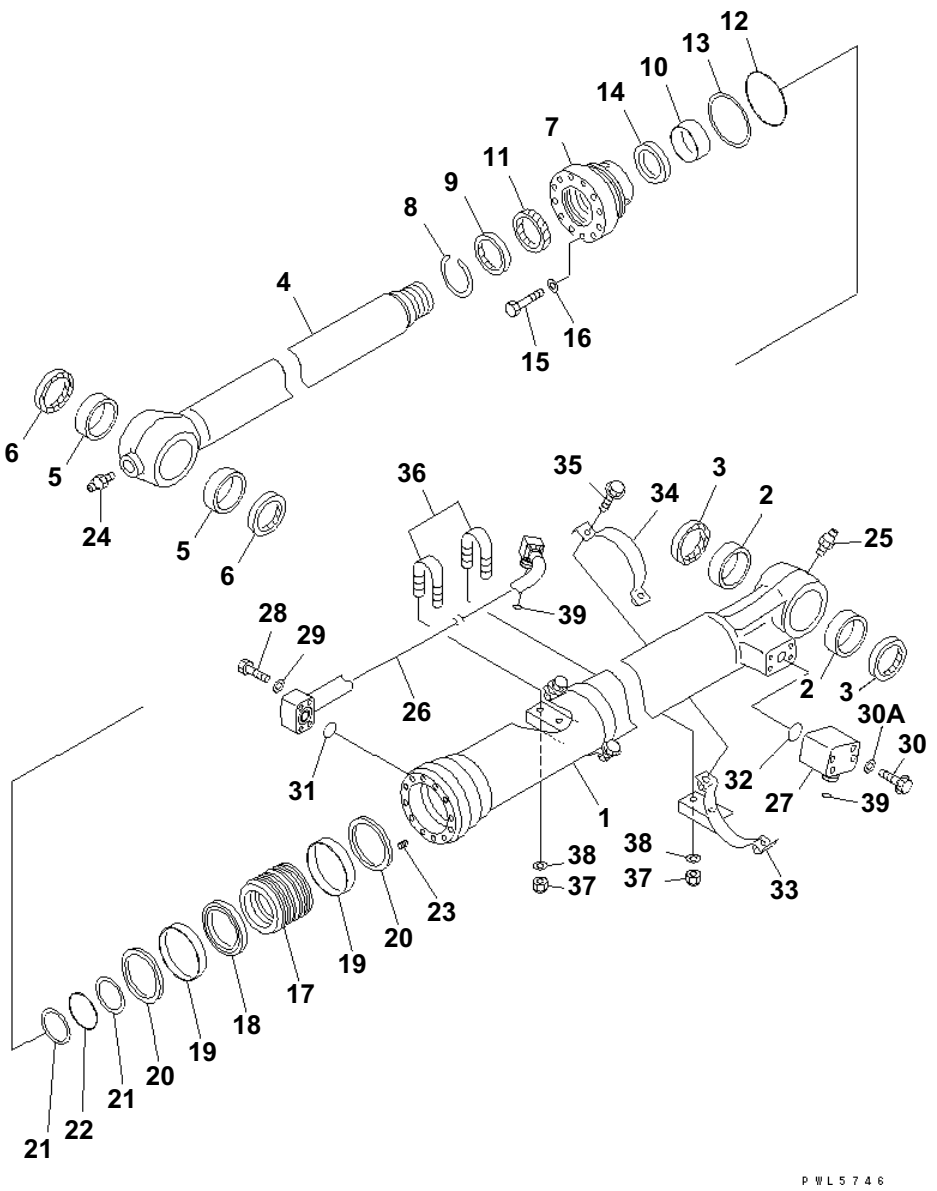

BUCKET CYLINDER (100 HOURS LUBRICATING)

Item	Part No.	Description	Qty	Options
G-1	(⊙707-01-XE671)	CYLINDER GROUP	1	SN:B20164--
	(⊙707-01-XE670)	CYLINDER GROUP	1	SN:B20001--B20163
		==========		
	707-01-0E521	CYLINDER ASS'Y	1	SN:B20164--
	707-01-0E520	· CYLINDER ASS'Y	1	SN:B20001--B20163
1	707-13-10530	· CYLINDER	1	SN:B20001--
2	21K-70-71320	· BUSHING	1	SN:B20164--
	21K-70-72250	· BUSHING	2	SN:B20001--B20163
3	07145-00070	· SEAL,DUST (KIT)	2	SN:B20001--
4	721-58-70160	· ROD,PISTON	1	SN:B20001--
5	21K-70-72250	· BUSHING	2	SN:B20001--
6	20Y-70-23220	· SEAL,DUST (KIT)	2	SN:B20001--
7	707-27-10971	· HEAD,CYLINDER	1	SN:B20001--
8	07179-12084	· RING,SNAP	1	SN:B20001--
9	144-63-95170	· SEAL,DUST (KIT)	1	SN:B20001--
10	707-52-90470	· BUSHING	1	SN:B20001--
11	707-51-70030	· PACKING,ROD (KIT)	1	SN:B20001--
12	07000-15095	· O-RING (KIT)	1	SN:B20001--
13	707-35-91060	· RING,BACK-UP (KIT)	1	SN:B20001--
14	707-51-70640	· RING,BUFFER (KIT)	1	SN:B20001--
15	01010-81465	· BOLT	12	SN:B20001--
16	705-17-04980	· WASHER	12	SN:B20001--
17	707-36-10750	· PISTON	1	SN:B20001--
18	707-44-10280	· RING,PISTON (KIT)	1	SN:B20001--
19	707-39-10550	· RING,WEAR (KIT)	2	SN:B20001--
20	707-44-10911	· RING	2	SN:B20001--
21	707-35-90730	· RING (KIT)	2	SN:B20001--
22	707-34-60030	· O-RING (KIT)	1	SN:B20001--
23	01310-01216	· SCREW	1	SN:B20001--
24	07020-00000	· FITTING,GREASE	1	SN:B20001--
25	07020-00000	· FITTING,GREASE	1	SN:B20001--
26	707-86-47390	TUBE	1	SN:B20001--
27	707-87-24100	ELBOW	1	SN:B20001--
28	01010-80850	BOLT	4	SN:B20001--
29	01643-50823	WASHER	4	SN:B20001--
30	01010-81070	BOLT	4	SN:B20164--
	01435-01070	BOLT	4	SN:B20001--B20163
30A	01643-51032	WASHER	4	SN:B20164--
31	07000-13025	O-RING (KIT)	1	SN:B20001--
32	07000-13030	O-RING (KIT)	1	SN:B20001--

PC160LC-7B S/N B20001 AND UP

BUCKET CYLINDER (100 HOURS LUBRICATING)

Item	Part No.	Description	Qty	Options
33	707-88-22940	BRACKET	2	SN:B20001--
34	707-88-21650	BAND	2	SN:B20001--
35	07375-21035	BOLT	4	SN:B20164--
	01435-01030	BOLT	4	SN:B20001--B20163
36	07283-32236	CLIP	2	SN:B20001--
37	01597-01009	NUT	4	SN:B20001--
38	01643-31032	WASHER	4	SN:B20001--
39	02896-61015	O-RING (KIT)	2	SN:B20001--B20163
		==========		
	707-99-37380	SERVICE KIT	1	SN:B20164--
	707-99-37290	SERVICE KIT	1	SN:B20001--B20163

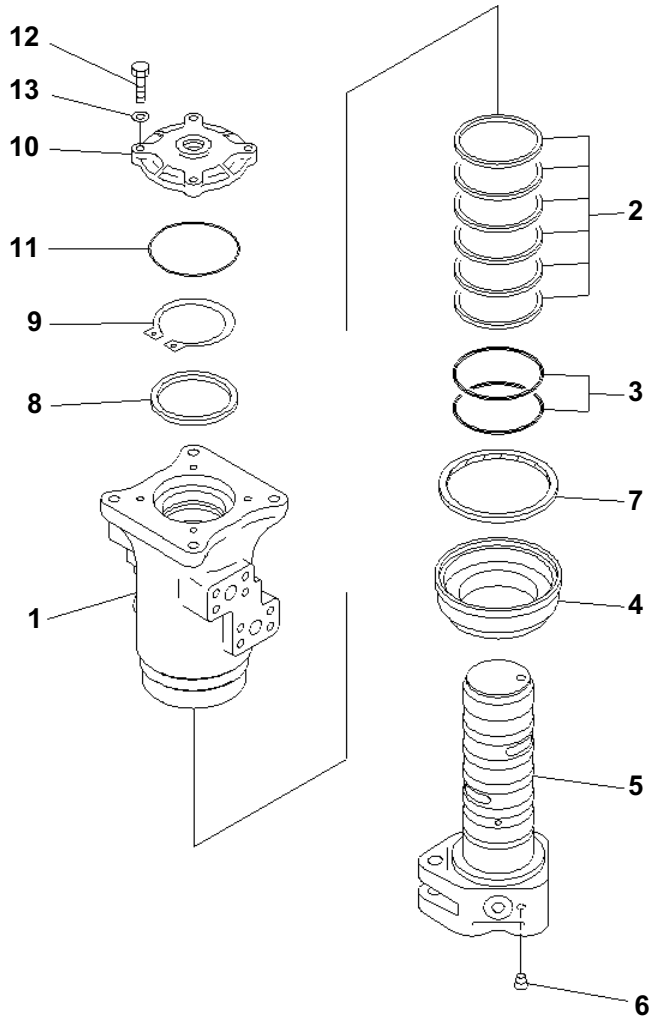

SWIVEL JOINT

Item	Part No.	Description	Qty	Options
	703-08-33630	SWIVEL JOINT ASS'Y	1	SN:B20001--
1	☆	· ROTOR	1	SN:B20001--
2	703-08-95620	· SEAL	6	SN:B20001--
3	07000-15080	· O-RING	2	SN:B20001--
4	703-08-93770	· COVER	1	SN:B20001--
5	☆	· SHAFT	1	SN:B20001--
6	703-13-98930	· · PLUG	1	SN:B20001--
7	703-08-95770	· SEAL,DUST	1	SN:B20001--
8	703-08-94510	· RING	1	SN:B20001--
9	04064-07525	· RING,SNAP	1	SN:B20001--
10	703-08-93170	· COVER	1	SN:B20001--
11	07000-12105	· O-RING	1	SN:B20001--
12	01010-80835	· BOLT	4	SN:B20001--
13	01643-30823	· WASHER	4	SN:B20001--

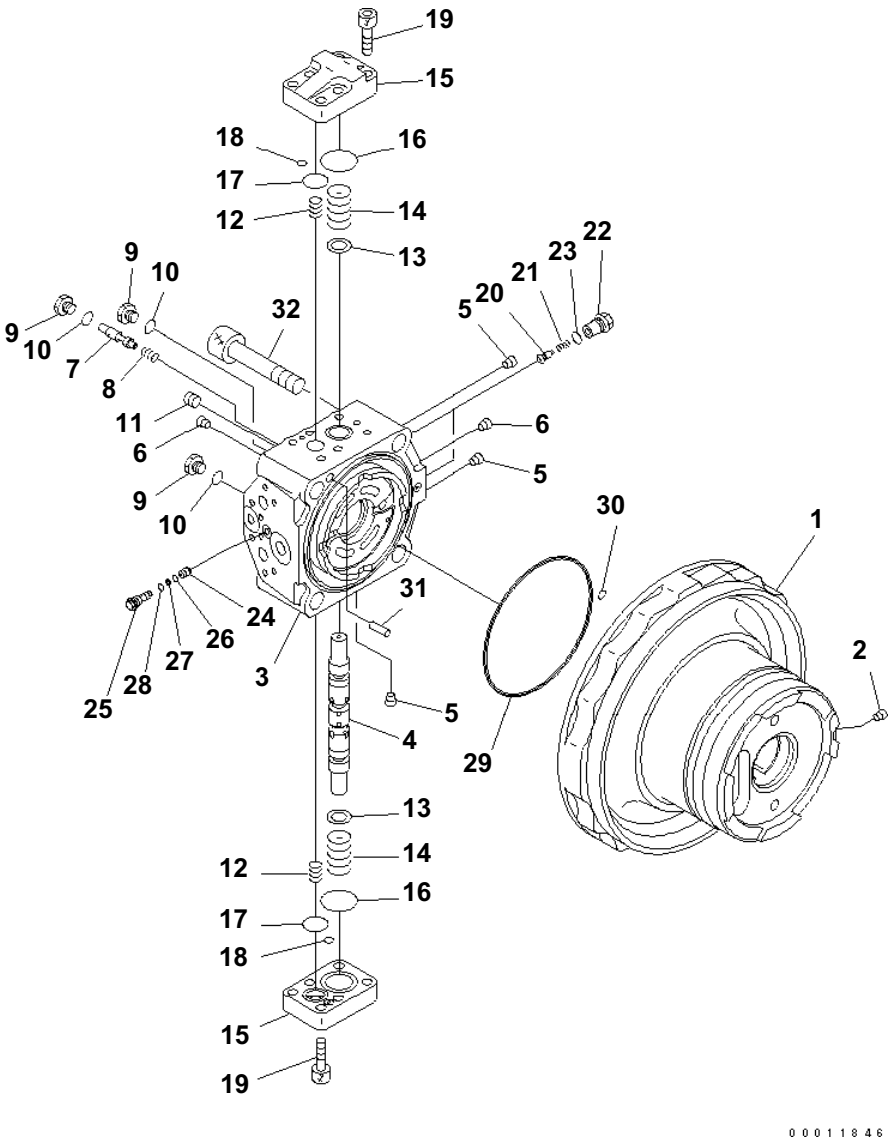

TRAVEL MOTOR (1/3)

Item	Part No.	Description	Qty	Options
	(708-8F-00230)	MOTOR ASS'Y THESE ASSEMBLIES CONSISTS OF ALL PARTS SHOWN IN FIGS.Y1641-01A0 TO Y1641-03A0.	1	SN:B20001--
	(★708-8F-04671)	· CASE SUB ASS'Y	1	SN:B20001--
1	☆	· · CASE,MOTOR	1	SN:B20001--
2	☆	· · PLUG	1	SN:B20001--
	(★708-8F-04251)	· END COVER SUB ASS'Y	1	SN:B20001--
3	☆	· · COVER,END	1	SN:B20001--
4	☆	· · SPOOL	1	SN:B20001--
5	☆	· · PLUG	3	SN:B20001--
6	☆	· · PLUG	2	SN:B20001--
7	☆	· · SPOOL	1	SN:B20001--
8	(★708-8F-34220)	· · SPRING	1	SN:B20001--
9	708-8H-11530	· PLUG	3	SN:B20001--
10	07002-11423	· O-RING	3	SN:B20001--
11	20B-27-11210	· BLEEDER	1	SN:B20001--
12	708-8F-36611	· SPRING	2	SN:B20001--
13	☆	· RING	2	SN:B20001--
14	708-8H-36121	· SPRING	2	SN:B20001--
15	708-8F-36311	· COVER	2	SN:B20001--
16	07000-13040	· O-RING	2	SN:B20001--
17	700-93-11320	· O-RING	2	SN:B20001--
18	07000-11009	· O-RING	2	SN:B20001--
19	01252-61235	· BOLT	12	SN:B20001--
20	708-8F-34120	· VALVE	2	SN:B20001--
21	722-10-91130	· SPRING	2	SN:B20001--
22	708-8F-34110	· PLUG	2	SN:B20001--
23	07002-11823	· O-RING	2	SN:B20001--
24	708-8E-16180	· VALVE	1	SN:B20001--
25	708-8F-31650	· PLUG	1	SN:B20001--
26	07000-11006	· O-RING	1	SN:B20001--
27	07001-01006	· RING	1	SN:B20001--
28	07002-11223	· O-RING	1	SN:B20001--
29	708-8F-31610	· O-RING	1	SN:B20001--
30	07000-11009	· O-RING	1	SN:B20001--
31	(★04020-01228)	· PIN	1	SN:B20001--
32	708-8F-31210	· BOLT	4	SN:B20001--

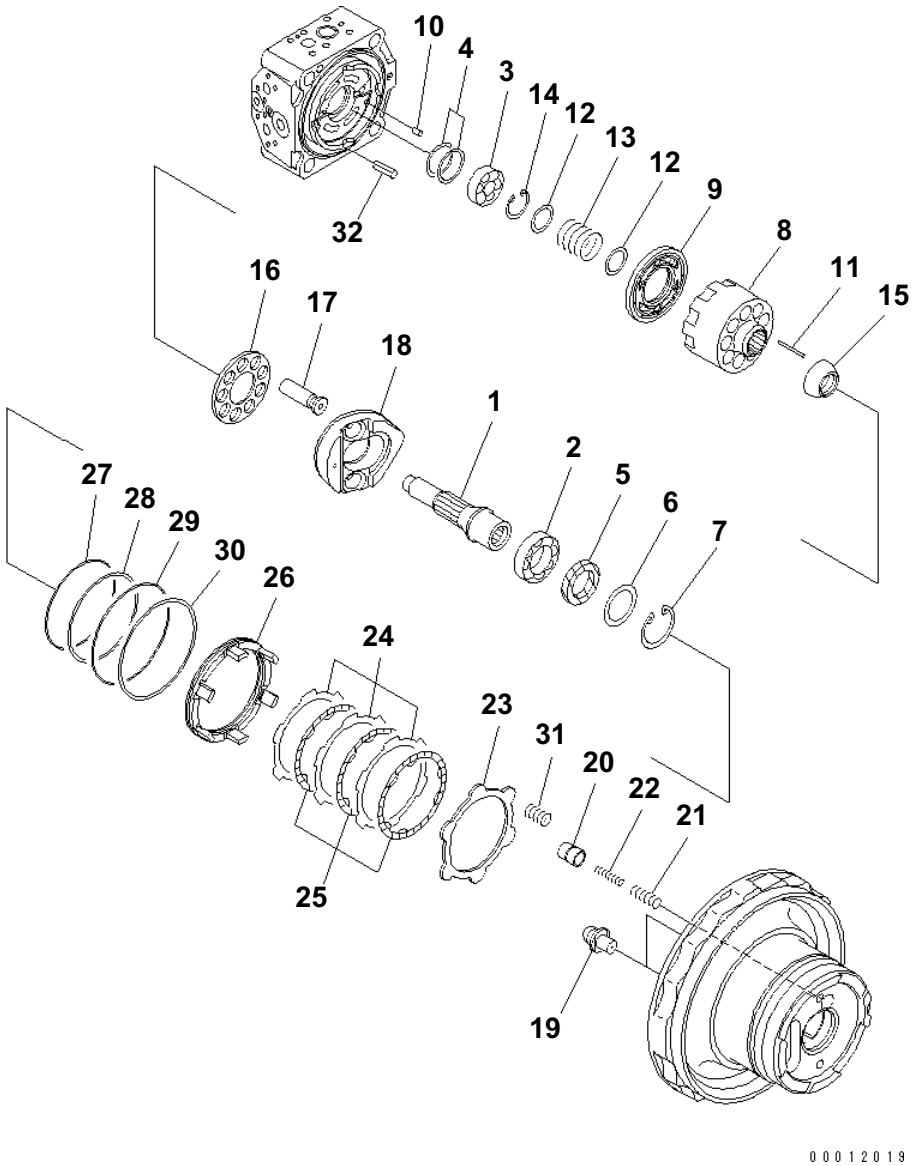

TRAVEL MOTOR (2/3)

Item	Part No.	Description	Qty	Options
	(708-8F-00230)	MOTOR ASS'Y THESE ASSEMBLIES CONSISTS OF ALL PARTS SHOWN IN FIGS.Y1641-01A0 TO Y1641-03A0.	1	SN:B20001--
1	(★708-8F-32121)	· SHAFT	1	SN:B20001--
2	(★708-8F-12151)	· BEARING	1	SN:B20001--
3	(★708-7L-12140)	· BEARING	1	SN:B20001--
4	(★708-7L-05010)	· SPACER KIT	1	SN:B20001--
	☆	· · SPACER¤ 1.5MM	1	SN:B20001--
	☆	· · SPACER¤ 1.6MM	1	SN:B20001--
	☆	· · SPACER¤ 1.7MM	1	SN:B20001--
	☆	· · SPACER¤ 1.8MM	1	SN:B20001--
	☆	· · SPACER¤ 1.9MM	1	SN:B20001--
	☆	· · SPACER¤ 2.0MM	1	SN:B20001--
5	706-7G-11291	· SEAL,OIL	1	SN:B20001--
6	708-8F-12230	· SPACER¤ 3.2MM	1	SN:B20001--
7	04065-07225	· RING	1	SN:B20001--
8	☆	· BLOCK,CYLINDER	1	SN:B20001--
9	☆	· PLATE,VALVE	1	SN:B20001--
10	☆	· PIN	1	SN:B20001--
11	(★708-8F-33360)	· PIN	3	SN:B20001--
12	(★708-7L-13140)	· SEAT	2	SN:B20001--
13	(★708-8F-33160)	· SPRING	1	SN:B20001--
14	(★04065-04818)	· RING,SNAP	1	SN:B20001--
15	(★708-8F-33350)	· GUIDE,RETAINER	1	SN:B20001--
16	(★708-2L-33350)	· RETAINER,SHOE	1	SN:B20001--
17	(★708-8F-33310)	· PISTON SUB ASS'Y	9	SN:B20001--
18	(★708-8F-33490)	· CAM,ROCKER	1	SN:B20001--
19	(★708-8F-33710)	· BALL,RETAINER	2	SN:B20001--
20	(★708-8F-34141)	· PISTON	1	SN:B20001--
21	(★708-8F-34240)	· SPRING	1	SN:B20001--
22	(★708-8F-34250)	· SPRING	1	SN:B20001--
23	(★708-8F-35110)	· PLATE	1	SN:B20001--
24	(★708-8F-35130)	· PLATE	3	SN:B20001--
25	(★708-8F-35120)	· DISC	3	SN:B20001--
26	(★708-8F-35140)	· PISTON,BRAKE	1	SN:B20001--
27	(★708-8F-35160)	· O-RING	1	SN:B20001--
28	(★708-8F-35170)	· RING,BACK-UP	1	SN:B20001--
29	(★708-8F-35180)	· O-RING	1	SN:B20001--

PC160LC-7B S/N B20001 AND UP

TRAVEL MOTOR (2/3)

Item	Part No.	Description	Qty	Options
30	(★708-8F-35190)	· RING,BACK-UP	1	SN:B20001--
31	(★708-8F-35150)	· SPRING	6	SN:B20001--
32	(★04025-00324)	· PIN,SPRING	1	SN:B20001--

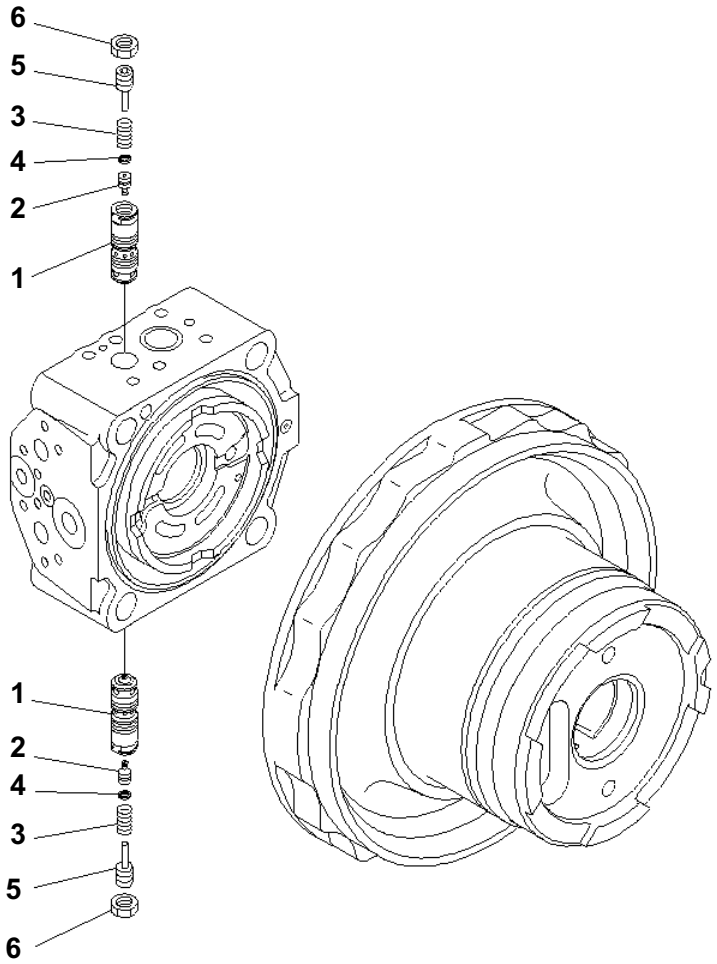

TRAVEL MOTOR (3/3)

Item	Part No.	Description	Qty	Options
	(708-8F-00230)	MOTOR ASS'Y THESE ASSEMBLIES CONSISTS OF ALL PARTS SHOWN IN FIGS.Y1641-01A0 TO Y1641-03A0.	1	SN:B20001--
	702-73-02190	· VALVE ASS'Y,RELIEF	2	SN:B20001--
1	☆	· · SLEEVE	1	SN:B20001--
2	☆	· · VALVE	1	SN:B20001--
3	☆	· · SPRING	1	SN:B20001--
4	☆	· · SEAL	1	SN:B20001--
5	☆	· · SCREW	1	SN:B20001--
6	☆	· · NUT	1	SN:B20001--

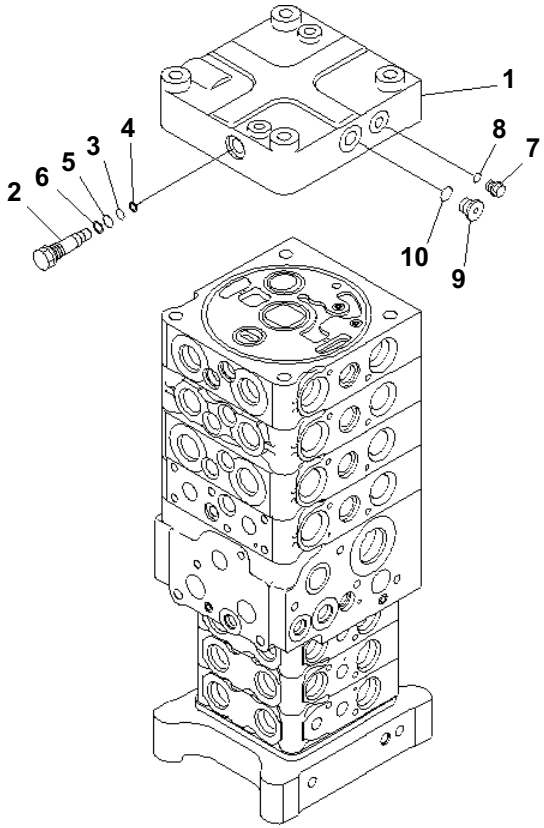

PW5J516

MAIN VALVE (7-VALVE) (1/28)

Item	Part No.	Description	Qty	Options
	(723-57-16101)	CONTROL VALVE	1	SN:B20091--
	(723-57-16100)	CONTROL VALVE	1	SN:B20001--B20090
		THESE ASSEMBLIES CONSIST OF ALL PARTS SHOWN IN FIGS.Y1662-01A0 TO Y1662-28A0.		
	☆	・ COVER GROUP	1	SN:B20001--
1	☆	・・ COVER	1	SN:B20001--
2	723-26-15190	・・ PLUG	1	SN:B20001--
3	07000-11007	・・ O-RING	1	SN:B20001--
4	07001-01007	・・ RING,BACK-UP	1	SN:B20001--
5	07000-11009	・・ O-RING	1	SN:B20001--
6	07001-01009	・・ RING,BACK-UP	1	SN:B20001--
7	708-8E-16160	・・ PLUG	1	SN:B20001--
8	07002-11023	・・ O-RING	1	SN:B20001--
9	702-21-55620	・・ PLUG	1	SN:B20001--
10	07002-11423	・・ O-RING	1	SN:B20001--

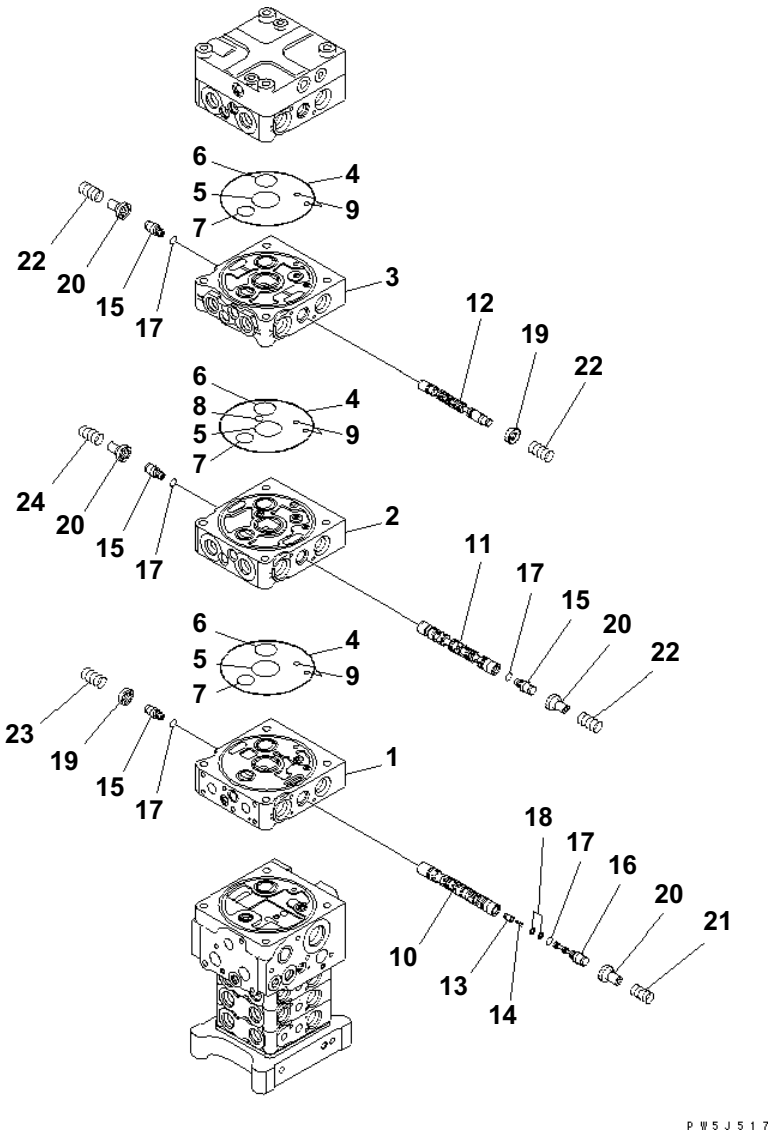

MAIN VALVE (7-VALVE) (2/28)

Item	Part No.	Description	Qty	Options
	(723-57-16101)	CONTROL VALVE	1	SN:B20091--
	(723-57-16100)	CONTROL VALVE	1	SN:B20001--B20090
		THESE ASSEMBLIES CONSIST OF ALL PARTS SHOWN IN FIGS.Y1662-01A0 TO Y1662-28A0.		
	☆	・ BODY GROUP	1	SN:B20091--
	☆	・ BODY GROUP	1	SN:B20001--B20090
1	☆	・・ BLOCK,VALVE	1	SN:B20001--
2	☆	・・ BLOCK,VALVE	1	SN:B20001--
3	☆	・・ BLOCK,VALVE	1	SN:B20001--
4	144-14-54610	・・ O-RING	3	SN:B20001--
5	723-56-31720	・・ O-RING	3	SN:B20001--
6	723-56-31730	・・ O-RING	3	SN:B20001--
7	702-75-11520	・・ O-RING	3	SN:B20001--
8	07000-12012	・・ O-RING	1	SN:B20001--
9	07000-11008	・・ O-RING	6	SN:B20001--
10	☆	・・ SPOOL	1	SN:B20001--
11	☆	・・ SPOOL	1	SN:B20001--
12	☆	・・ SPOOL	1	SN:B20001--
13	☆	・・ VALVE	1	SN:B20001--
14	☆	・・ SPRING	1	SN:B20001--
15	☆	・・ PLUG	4	SN:B20001--
16	☆	・・ PLUG	1	SN:B20001--
17	☆	・・ O-RING	5	SN:B20001--
18	☆	・・ SEAL	2	SN:B20001--
19	723-56-31211	・・ RETAINER	2	SN:B20001--
20	723-56-31221	・・ RETAINER	4	SN:B20001--
21	723-36-14110	・・ SPRING	1	SN:B20001--
22	723-36-14120	・・ SPRING	3	SN:B20001--
23	723-36-14130	・・ SPRING	1	SN:B20001--
24	723-56-31421	・・ SPRING	1	SN:B20001--

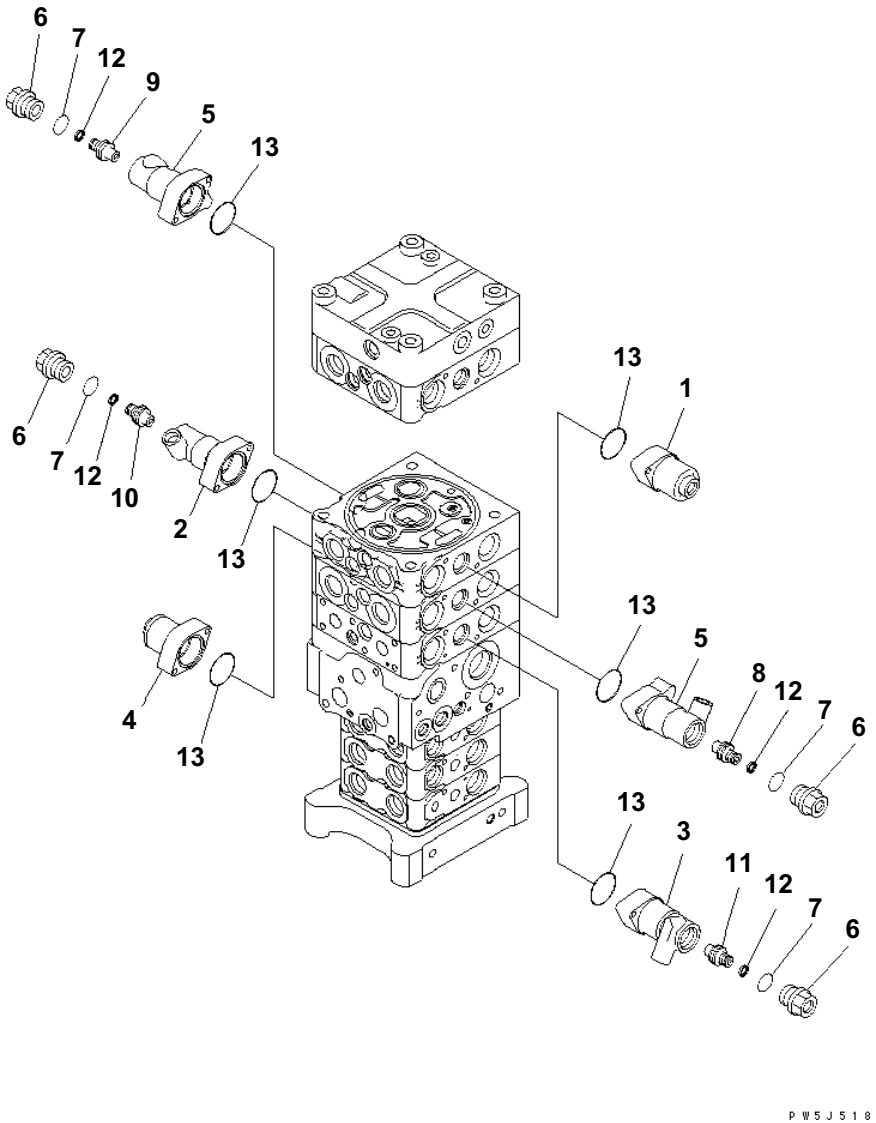

MAIN VALVE (7-VALVE) (3/28)

Item	Part No.	Description	Qty	Options
	(723-57-16101)	CONTROL VALVE	1	SN:B20091--
	(723-57-16100)	CONTROL VALVE	1	SN:B20001--B20090
		THESE ASSEMBLIES CONSIST OF ALL PARTS SHOWN IN FIGS.Y1662-01A0 TO Y1662-28A0.		
	☆	・ BODY GROUP	1	SN:B20091--
	☆	・ BODY GROUP	1	SN:B20001--B20090
1	723-56-31510	・・ CASE	1	SN:B20001--
2	723-56-31540	・・ CASE	1	SN:B20001--
3	723-56-31590	・・ CASE	1	SN:B20001--
4	723-56-31580	・・ CASE	1	SN:B20001--
5	723-56-31570	・・ CASE	2	SN:B20001--
6	723-36-15450	・・ PLUG	4	SN:B20001--
7	07002-12434	・・ O-RING	4	SN:B20001--
8	723-56-31320	・・ PISTON	1	SN:B20001--
9	723-56-31330	・・ PISTON	1	SN:B20001--
10	723-56-31341	・・ PISTON	1	SN:B20001--
11	723-56-31250	・・ PISTON	1	SN:B20001--
12	709-30-61130	・・ SEAL	4	SN:B20001--
13	702-21-55450	・・ O-RING	6	SN:B20001--

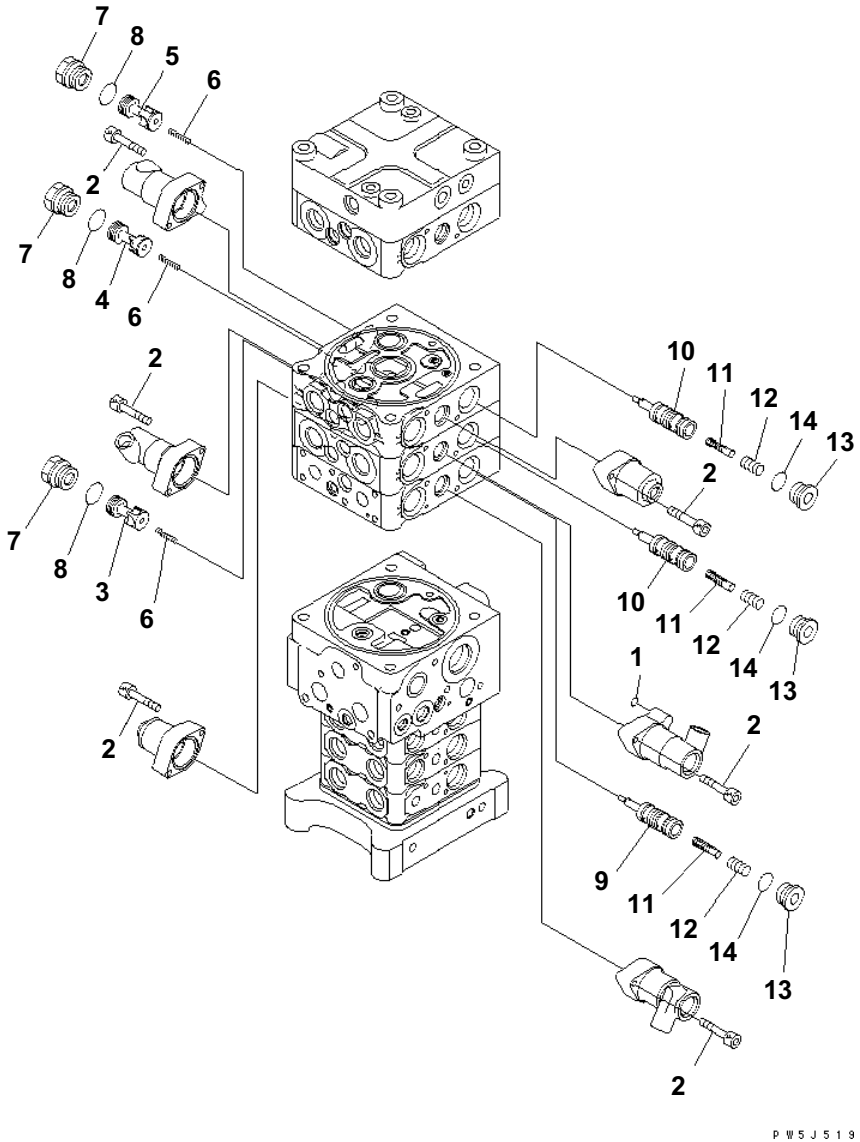

MAIN VALVE (7-VALVE) (4/28)

Item	Part No.	Description	Qty	Options
	(723-57-16101)	CONTROL VALVE	1	SN:B20091--
	(723-57-16100)	CONTROL VALVE	1	SN:B20001--B20090
		THESE ASSEMBLIES CONSIST OF ALL PARTS SHOWN IN FIGS.Y1662-01A0 TO Y1662-28A0.		
	☆	・ BODY GROUP	1	SN:B20091--
	☆	・ BODY GROUP	1	SN:B20001--B20090
1	07000-11006	・・ O-RING	1	SN:B20001--
2	01252-60630	・・ BOLT	12	SN:B20001--
3	☆	・・ VALVE	1	SN:B20001--
4	☆	・・ VALVE	1	SN:B20001--
5	☆	・・ VALVE	1	SN:B20001--
6	723-56-41710	・・ SPRING	3	SN:B20001--
7	723-56-41840	・・ PLUG	3	SN:B20001--
8	07000-13024	・・ O-RING	3	SN:B20001--
9	☆	・・ VALVE	1	SN:B20001--
10	☆	・・ VALVE	2	SN:B20001--
11	☆	・・ PISTON	3	SN:B20001--
12	723-56-41730	・・ SPRING	3	SN:B20001--
13	723-26-15230	・・ PLUG	3	SN:B20001--
14	07002-12434	・・ O-RING	3	SN:B20001--

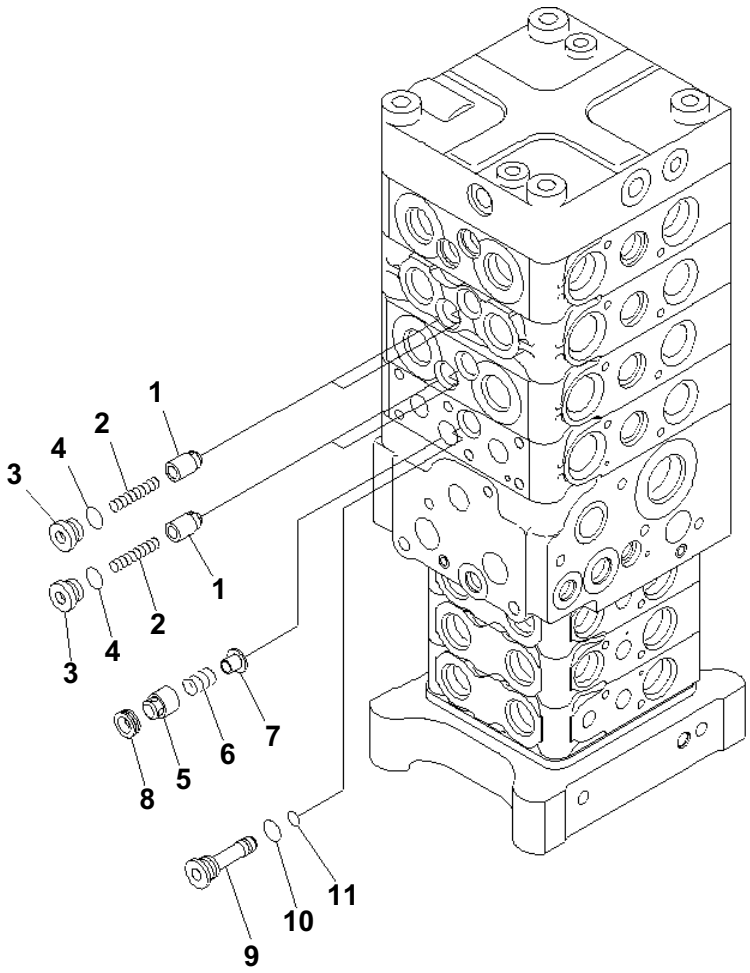

MAIN VALVE (7-VALVE) (5/28)

Item	Part No.	Description	Qty	Options
	(723-57-16101)	CONTROL VALVE	1	SN:B20091--
	(723-57-16100)	CONTROL VALVE	1	SN:B20001--B20090
		THESE ASSEMBLIES CONSIST OF ALL PARTS SHOWN IN FIGS.Y1662-01A0 TO Y1662-28A0.		
	☆	・ BODY GROUP	1	SN:B20091--
	☆	・ BODY GROUP	1	SN:B20001--B20090
1	☆	・・ VALVE	4	SN:B20001--
2	723-56-31620	・・ SPRING	4	SN:B20001--
3	723-56-31630	・・ PLUG	4	SN:B20001--
4	07002-11623	・・ O-RING	4	SN:B20001--
5	☆	・・ VALVE	1	SN:B20091--
	☆	・・ VALVE	1	SN:B20001--B20090
6	709-70-91420	・・ SPRING	1	SN:B20001--
7	723-56-31660	・・ RETAINER	1	SN:B20001--
8	723-56-31670	・・ SEAT	1	SN:B20001--
9	723-56-31640	・・ PLUG	1	SN:B20001--
10	07002-11623	・・ O-RING	1	SN:B20001--
11	07000-11008	・・ O-RING	1	SN:B20001--

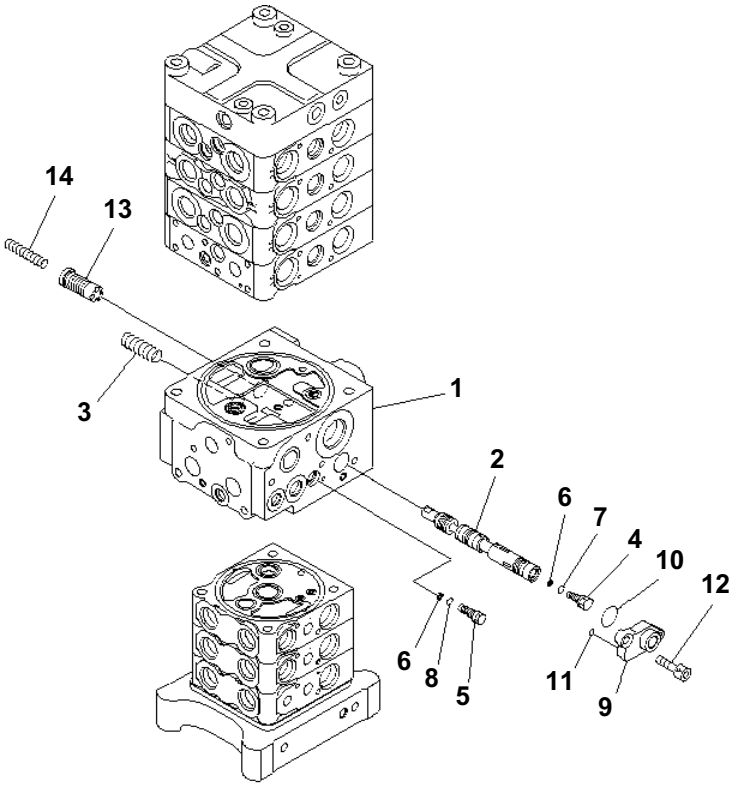

MAIN VALVE (7-VALVE) (6/28)

Item	Part No.	Description	Qty	Options
	(723-57-16101)	CONTROL VALVE	1	SN:B20091--
	(723-57-16100)	CONTROL VALVE	1	SN:B20001--B20090
		THESE ASSEMBLIES CONSIST OF ALL PARTS SHOWN IN FIGS.Y1662-01A0 TO Y1662-28A0.		
	☆	・ BODY GROUP	1	SN:B20001--
1	☆	・・ BLOCK	1	SN:B20001--
2	☆	・・ SPOOL	1	SN:B20001--
3	723-56-31970	・・ SPRING	1	SN:B20001--
4	723-11-14250	・・ ORIFICE	1	SN:B20001--
5	723-56-31960	・・ ORIFICE	1	SN:B20001--
6	722-12-15160	・・ RING	2	SN:B20001--
7	07002-10823	・・ O-RING	1	SN:B20001--
8	07002-11223	・・ O-RING	1	SN:B20001--
9	723-56-31940	・・ FLANGE	1	SN:B20001--
10	723-11-18430	・・ O-RING	1	SN:B20001--
11	07000-11008	・・ O-RING	1	SN:B20001--
12	01252-60825	・・ BOLT	2	SN:B20001--
13	☆	・・ VALVE	2	SN:B20001--
14	723-56-31990	・・ SPRING	2	SN:B20001--

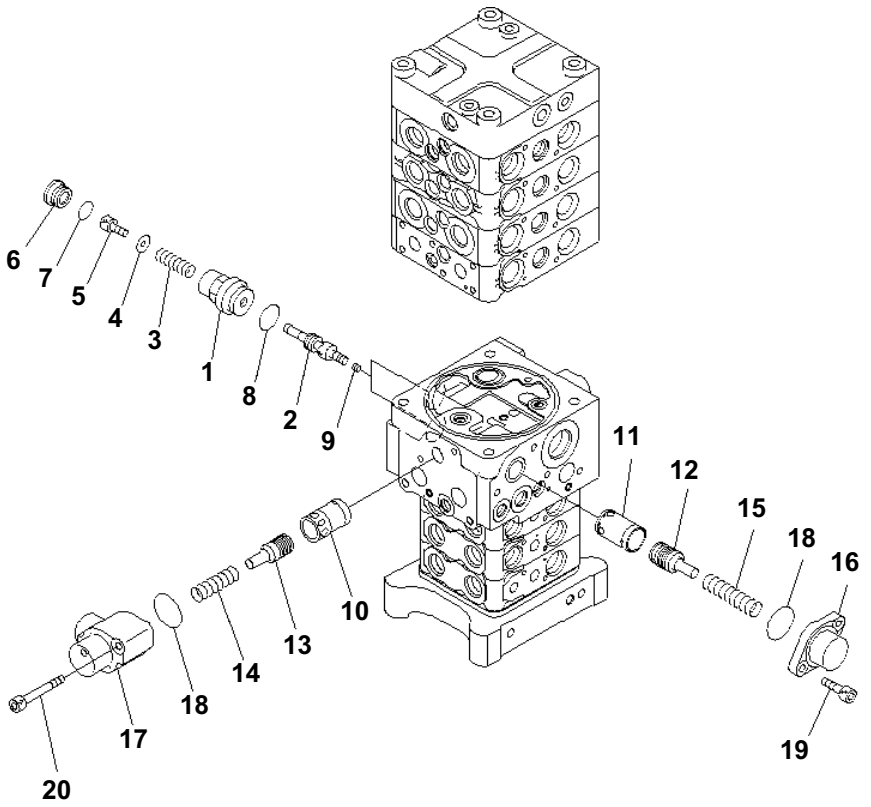

MAIN VALVE (7-VALVE) (7/28)

Item	Part No.	Description	Qty	Options
	(723-57-16101)	CONTROL VALVE	1	SN:B20091--
	(723-57-16100)	CONTROL VALVE	1	SN:B20001--B20090
		THESE ASSEMBLIES CONSIST OF ALL PARTS SHOWN IN FIGS.Y1662-01A0 TO Y1662-28A0.		
	☆	・ BODY GROUP	1	SN:B20001--
	723-50-56100	・・ VALVE ASS'Y	2	SN:B20001--
1	☆	・・・ SLEEVE	1	SN:B20001--
2	☆	・・・ SPOOL	1	SN:B20001--
3	☆	・・・ SPRING	1	SN:B20001--
4	☆	・・・ SPACER	1	SN:B20001--
5	☆	・・・ BOLT	1	SN:B20001--
6	☆	・・・ PLUG	1	SN:B20001--
7	☆	・・・ O-RING	1	SN:B20001--
8	07002-13334	・・・ O-RING	1	SN:B20001--
9	☆	・・ ORIFICE	2	SN:B20001--
10	☆	・・ SLEEVE	1	SN:B20001--
11	☆	・・ SLEEVE	1	SN:B20001--
12	☆	・・ PISTON	1	SN:B20001--
13	☆	・・ PISTON	1	SN:B20001--
14	723-36-15240	・・ SPRING	1	SN:B20001--
15	723-56-31930	・・ SPRING	1	SN:B20001--
16	723-36-15250	・・ CASE	1	SN:B20001--
17	723-56-31880	・・ CASE	1	SN:B20001--
18	07000-13042	・・ O-RING	2	SN:B20001--
19	01252-60820	・・ BOLT	2	SN:B20001--
20	01252-60860	・・ BOLT	2	SN:B20001--

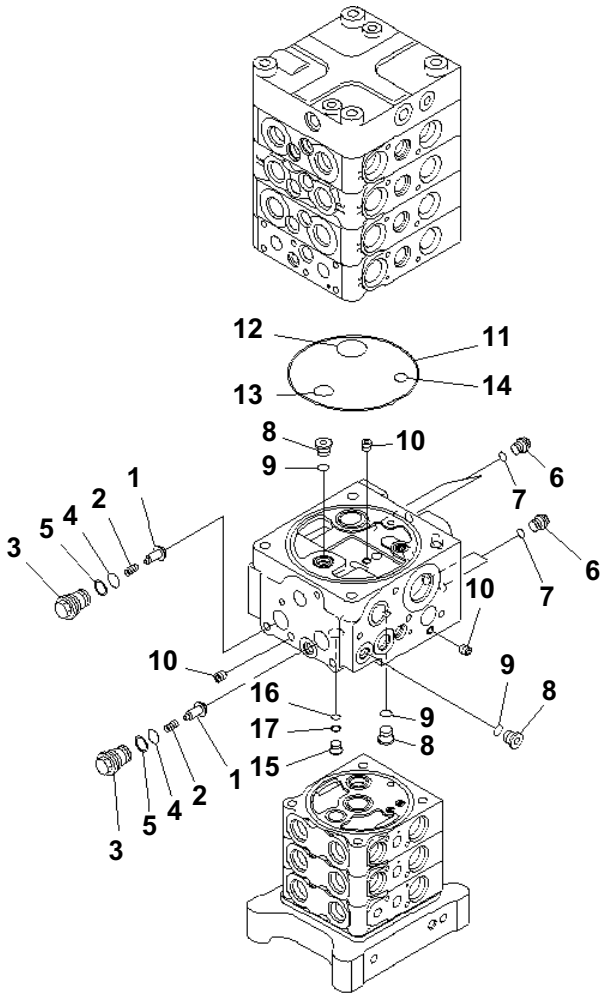

MAIN VALVE (7-VALVE) (8/28)

Item	Part No.	Description	Qty	Options
	(723-57-16101)	CONTROL VALVE	1	SN:B20091--
	(723-57-16100)	CONTROL VALVE	1	SN:B20001--B20090
		THESE ASSEMBLIES CONSIST OF ALL PARTS SHOWN IN FIGS.Y1662-01A0 TO Y1662-28A0.		
	☆	・ BODY GROUP	1	SN:B20001--
1	☆	・・ VALVE,CHECK	2	SN:B20001--
2	709-25-11361	・・ SPRING	2	SN:B20001--
3	723-26-15580	・・ PLUG	2	SN:B20001--
4	07000-12016	・・ O-RING	2	SN:B20001--
5	723-60-22230	・・ RING,BACK-UP	2	SN:B20001--
6	708-8E-16160	・・ PLUG	4	SN:B20001--
7	07002-11023	・・ O-RING	4	SN:B20001--
8	702-21-55620	・・ PLUG	3	SN:B20001--
9	07002-11423	・・ O-RING	3	SN:B20001--
10	708-21-12541	・・ PLUG	3	SN:B20001--
11	144-14-54610	・・ O-RING	1	SN:B20001--
12	723-56-31730	・・ O-RING	1	SN:B20001--
13	702-75-11520	・・ O-RING	1	SN:B20001--
14	07000-12014	・・ O-RING	1	SN:B20001--
15	723-26-16460	・・ PLUG	1	SN:B20001--
16	07000-11007	・・ O-RING	1	SN:B20001--
17	07001-01007	・・ RING,BACK-UP	1	SN:B20001--

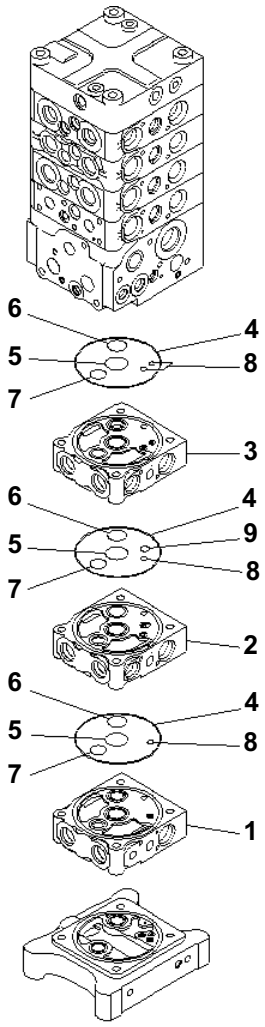

MAIN VALVE (7-VALVE) (9/28)

Item	Part No.	Description	Qty	Options
	(723-57-16101)	CONTROL VALVE	1	SN:B20091--
	(723-57-16100)	CONTROL VALVE	1	SN:B20001--B20090
		THESE ASSEMBLIES CONSIST OF ALL PARTS SHOWN IN FIGS.Y1662-01A0 TO Y1662-28A0.		
	☆	・ BODY GROUP	1	SN:B20091--
	☆	・ BODY GROUP	1	SN:B20001--B20090
1	☆	・・ BLOCK,VALVE	1	SN:B20001--
2	☆	・・ BLOCK,VALVE	1	SN:B20001--
3	☆	・・ BLOCK,VALVE	1	SN:B20001--
4	07000-12120	・・ O-RING	3	SN:B20001--
5	723-26-15830	・・ O-RING	3	SN:B20001--
6	723-26-15840	・・ O-RING	3	SN:B20001--
7	07000-12022	・・ O-RING	3	SN:B20001--
8	07000-11008	・・ O-RING	4	SN:B20001--
9	07000-12010	・・ O-RING	1	SN:B20001--

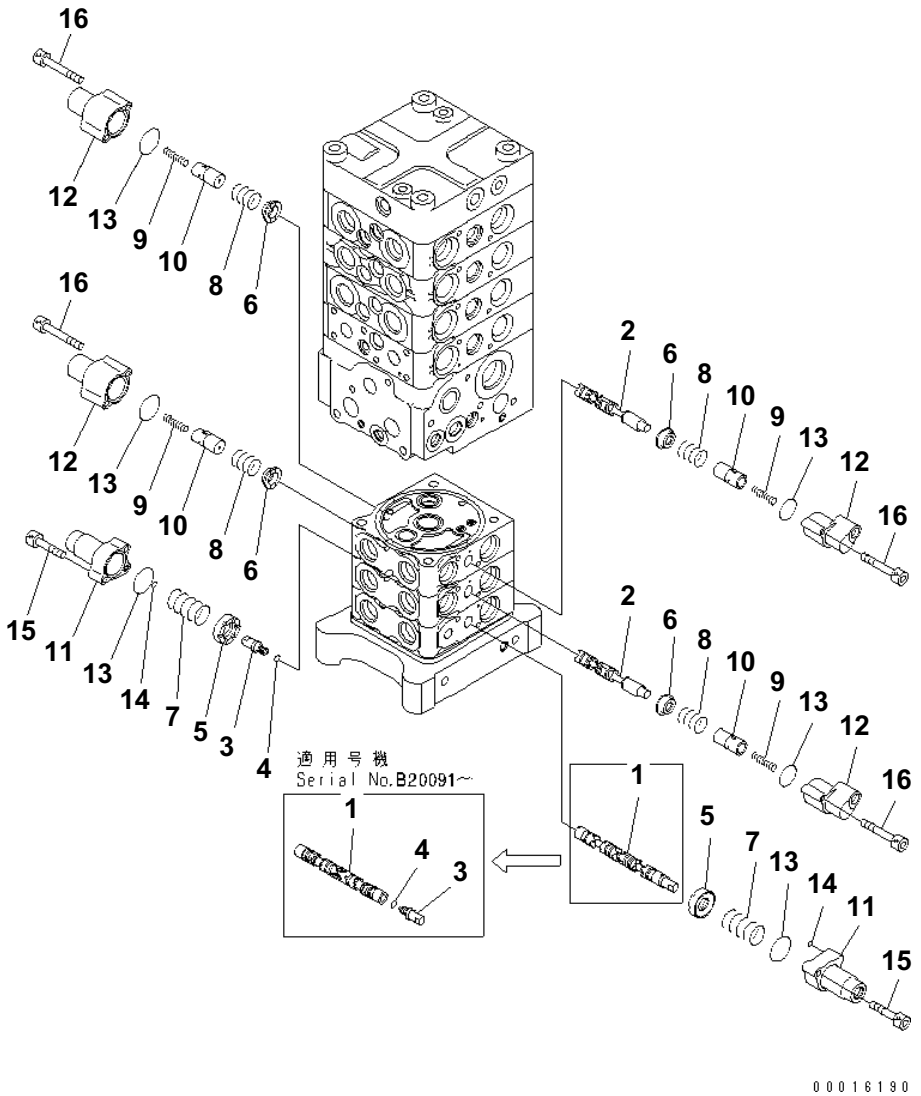

MAIN VALVE (7-VALVE) (10/28)

Item	Part No.	Description	Qty	Options
	(723-57-16101)	CONTROL VALVE	1	SN:B20091--
	(723-57-16100)	CONTROL VALVE	1	SN:B20001--B20090
		THESE ASSEMBLIES CONSIST OF ALL PARTS SHOWN IN FIGS.Y1662-01A0 TO Y1662-28A0.		
	☆	・ BODY GROUP	1	SN:B20091--
	☆	・ BODY GROUP	1	SN:B20001--B20090
1	☆	・・ SPOOL	1	SN:B20091--
	☆	・・ SPOOL	1	SN:B20001--B20090
2	☆	・・ SPOOL	2	SN:B20001--
3	☆	・・ PLUG	2	SN:B20091--
	☆	・・ PLUG	1	SN:B20001--B20090
4	☆	・・ O-RING	2	SN:B20091--
	☆	・・ O-RING	1	SN:B20001--B20090
5	723-26-15121	・・ RETAINER	2	SN:B20001--
6	723-26-16740	・・ RETAINER	4	SN:B20001--
7	723-26-14520	・・ SPRING	2	SN:B20001--
8	723-26-14530	・・ SPRING	4	SN:B20001--
9	723-26-14540	・・ SPRING	4	SN:B20001--
10	723-26-16730	・・ PISTON	4	SN:B20001--
11	723-26-16710	・・ CASE	2	SN:B20001--
12	723-26-16720	・・ CASE	4	SN:B20001--
13	575-41-17420	・・ O-RING	6	SN:B20001--
14	07000-11005	・・ O-RING	2	SN:B20001--
15	01252-60630	・・ BOLT	4	SN:B20001--
16	01252-60645	・・ BOLT	8	SN:B20001--

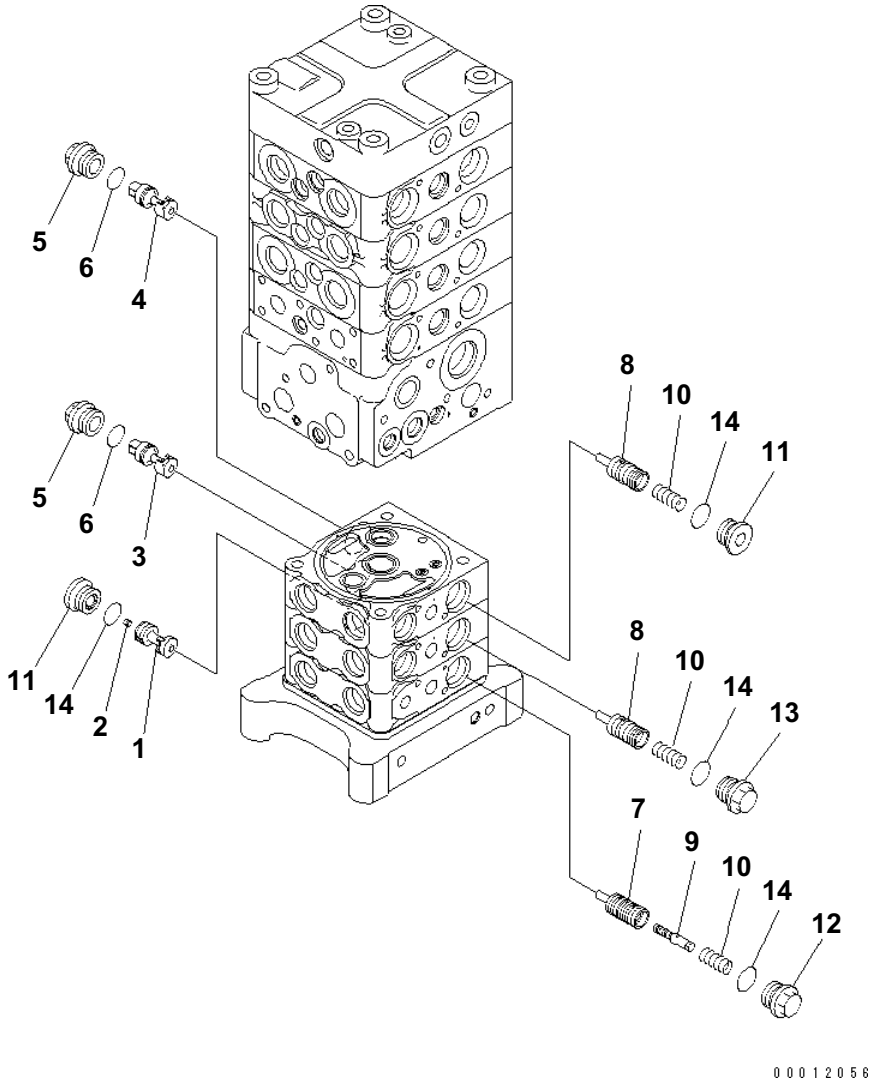

MAIN VALVE (7-VALVE) (11/28)

Item	Part No.	Description	Qty	Options
	(723-57-16101)	CONTROL VALVE	1	SN:B20091--
	(723-57-16100)	CONTROL VALVE	1	SN:B20001--B20090
		THESE ASSEMBLIES CONSIST OF ALL PARTS SHOWN IN FIGS.Y1662-01A0 TO Y1662-28A0.		
	☆	・ BODY GROUP	1	SN:B20091--
	☆	・ BODY GROUP	1	SN:B20001--B20090
1	☆	・・ VALVE	1	SN:B20001--
2	☆	・・ SCREW	1	SN:B20001--
3	☆	・・ VALVE SUB ASS'Y	1	SN:B20001--
4	☆	・・ VALVE SUB ASS'Y	1	SN:B20001--
5	723-26-16670	・・ PLUG	2	SN:B20001--
6	07002-12434	・・ O-RING	2	SN:B20001--
7	☆	・・ VALVE	1	SN:B20001--
8	☆	・・ VALVE SUB ASS'Y	2	SN:B20001--
9	☆	・・ VALVE SUB ASS'Y	1	SN:B20001--
10	723-26-14140	・・ SPRING	3	SN:B20001--
11	723-26-15230	・・ PLUG	2	SN:B20001--
12	723-26-15890	・・ PLUG	1	SN:B20001--
13	723-56-41850	・・ PLUG	1	SN:B20001--
14	07002-12434	・・ O-RING	4	SN:B20001--

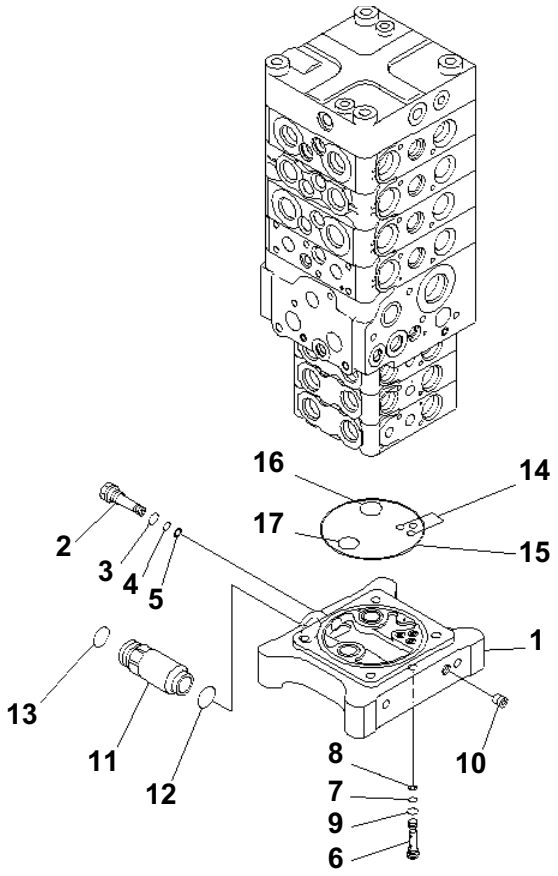

MAIN VALVE (7-VALVE) (12/28)

Item	Part No.	Description	Qty	Options
	(723-57-16101)	CONTROL VALVE	1	SN:B20091--
	(723-57-16100)	CONTROL VALVE	1	SN:B20001--B20090
		THESE ASSEMBLIES CONSIST OF ALL PARTS SHOWN IN FIGS.Y1662-01A0 TO Y1662-28A0.		
	☆	・ BODY GROUP	1	SN:B20001--
1	☆	・・ BLOCK	1	SN:B20001--
2	723-26-15170	・・ PLUG	1	SN:B20001--
3	07002-11423	・・ O-RING	1	SN:B20001--
4	07000-11007	・・ O-RING	1	SN:B20001--
5	07001-01007	・・ RING,BACK-UP	1	SN:B20001--
6	723-60-23301	・・ VALVE ASS'Y,CHECK	1	SN:B20001--
7	07000-11005	・・・ O-RING	1	SN:B20001--
8	07001-01005	・・・ RING,BACK-UP	1	SN:B20001--
9	07002-11023	・・・ O-RING	1	SN:B20001--
10	☆	・・ PLUG	1	SN:B20001--
11	723-26-15991	・・ UNION	1	SN:B20001--
12	07000-13024	・・ O-RING	1	SN:B20001--
13	02896-11018	・・ O-RING	1	SN:B20001--
14	07000-11008	・・ O-RING	3	SN:B20001--
15	07000-12120	・・ O-RING	1	SN:B20001--
16	723-26-15840	・・ O-RING	1	SN:B20001--
17	07000-12022	・・ O-RING	1	SN:B20001--

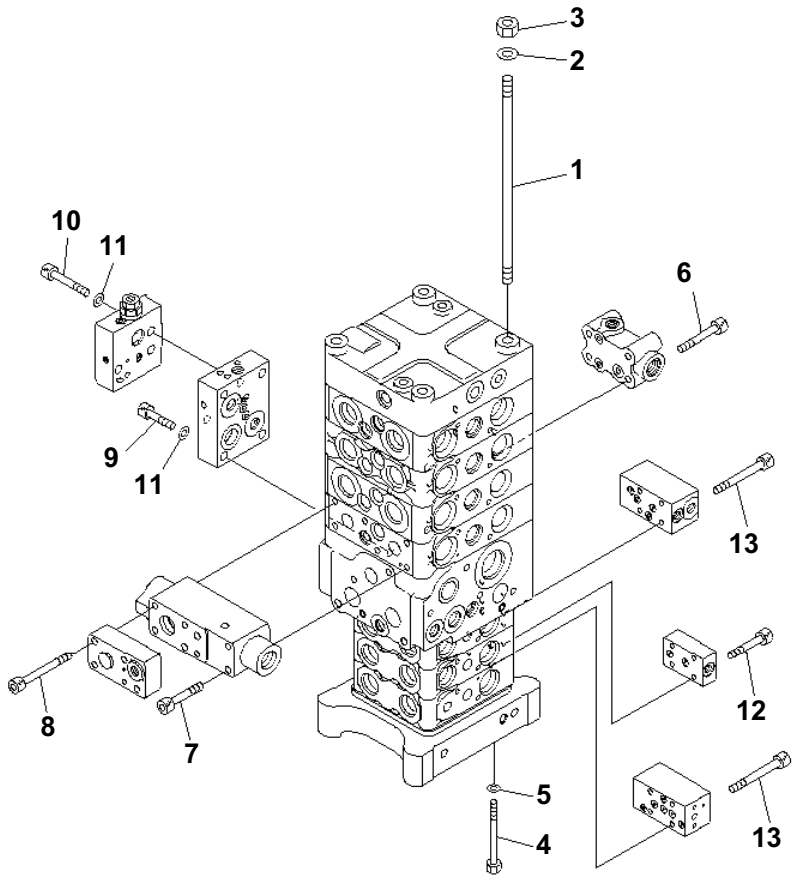

MAIN VALVE (7-VALVE) (13/28)

Item	Part No.	Description	Qty	Options
	(723-57-16101)	CONTROL VALVE	1	SN:B20091--
	(723-57-16100)	CONTROL VALVE	1	SN:B20001--B20090
		THESE ASSEMBLIES CONSIST OF ALL PARTS SHOWN IN FIGS.Y1662-01A0 TO Y1662-28A0.		
1	723-50-11140	· STUD	4	SN:B20001--
2	01643-31232	· WASHER	4	SN:B20001--
3	01580-11210	· NUT	4	SN:B20001--
4	01011-61085	· BOLT	4	SN:B20001--
5	01643-51032	· WASHER	4	SN:B20001--
6	01252-60850	· BOLT	4	SN:B20001--
7	01252-60865	· BOLT	2	SN:B20001--
8	708-25-19160	· BOLT	4	SN:B20001--
9	01252-61035	· BOLT	4	SN:B20001--
10	01252-61040	· BOLT	3	SN:B20001--
11	01643-51032	· WASHER	7	SN:B20001--
12	01252-60630	· BOLT	4	SN:B20001--
13	01252-60650	· BOLT	8	SN:B20001--

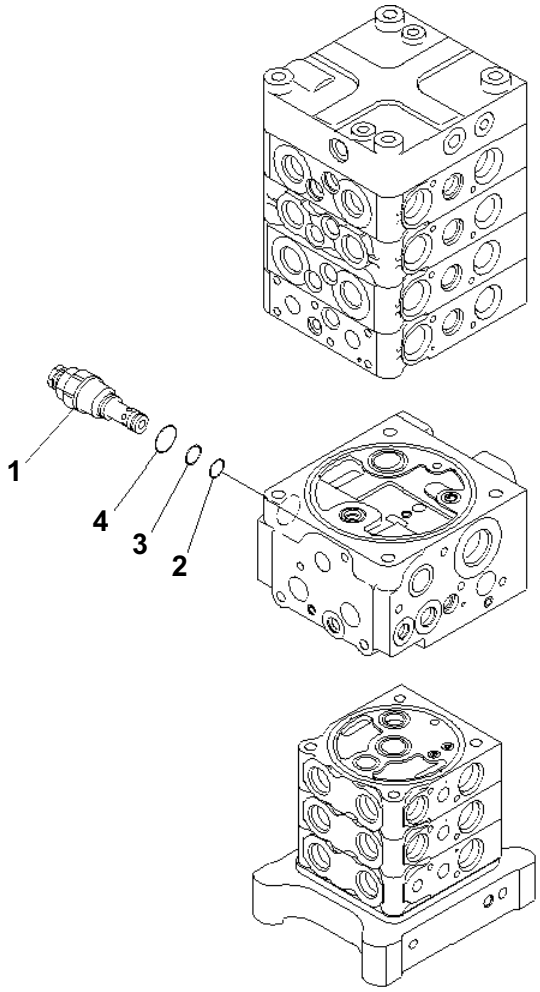

MAIN VALVE (7-VALVE) (14/28)

Item	Part No.	Description	Qty	Options
	(723-57-16101)	CONTROL VALVE	1	SN:B20091--
	(723-57-16100)	CONTROL VALVE	1	SN:B20001--B20090
		THESE ASSEMBLIES CONSIST OF ALL PARTS SHOWN IN FIGS.Y1662-01A0 TO Y1662-28A0.		
1	723-40-92303	・ VALVE ASS'Y, RELIEF	1	SN:B20001--
2	700-22-11410	・・ O-RING	1	SN:B20001--
3	700-80-64220	・・ RING	1	SN:B20001--
4	07002-12434	・・ O-RING	1	SN:B20001--

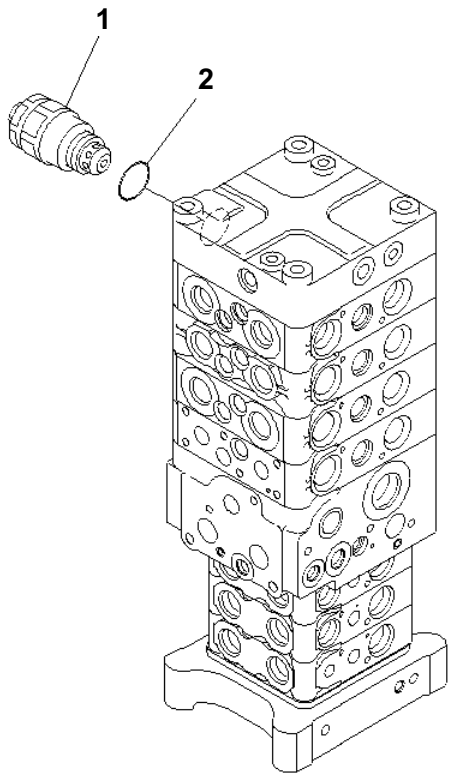

00012059

MAIN VALVE (7-VALVE) (15/28)

Item	Part No.	Description	Qty	Options
	(723-57-16101)	CONTROL VALVE	1	SN:B20091--
	(723-57-16100)	CONTROL VALVE	1	SN:B20001--B20090
		THESE ASSEMBLIES CONSIST OF ALL PARTS SHOWN IN FIGS.Y1662-01A0 TO Y1662-28A0.		
1	709-90-74200	・VALVE ASS'Y,SUCTION AND SAFETY	1	SN:B20001--
2	07002-13634	・・O-RING	1	SN:B20001--

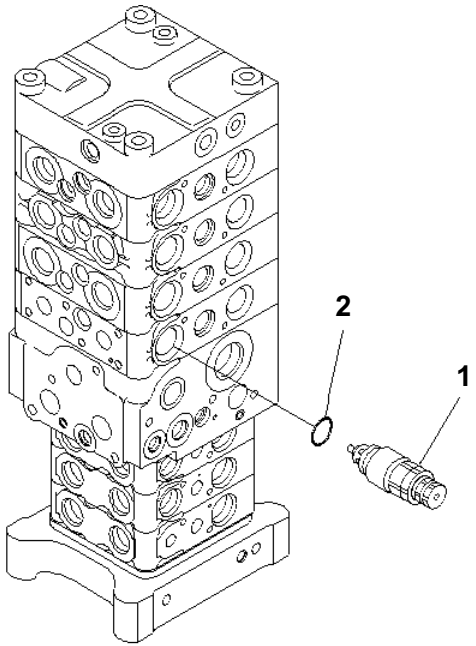

MAIN VALVE (7-VALVE) (16/28)

Item	Part No.	Description	Qty	Options
	(723-57-16101)	CONTROL VALVE	1	SN:B20091--
	(723-57-16100)	CONTROL VALVE	1	SN:B20001--B20091
		THESE ASSEMBLIES CONSIST OF ALL PARTS SHOWN IN FIGS.Y1662-01A0 TO Y1662-28A0.		
1	723-90-61600	・ VALVE ASS'Y,SUCTION AND SAFETY	1	SN:B20001--
2	07000-13024	・・ O-RING	1	SN:B20001--

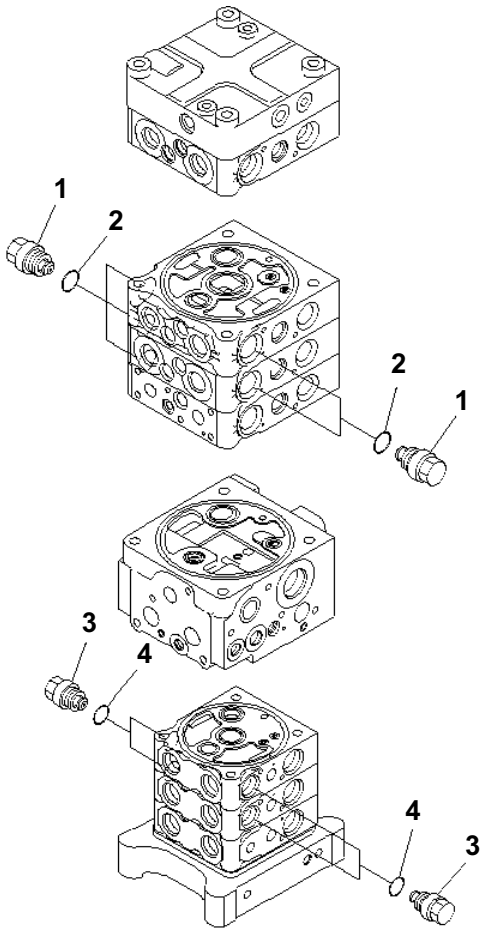

00012061

MAIN VALVE (7-VALVE) (17/28)

Item	Part No.	Description	Qty	Options
	(723-57-16101)	CONTROL VALVE	1	SN:B20091--
	(723-57-16100)	CONTROL VALVE	1	SN:B20001--B20090
		THESE ASSEMBLIES CONSIST OF ALL PARTS SHOWN IN FIGS.Y1662-01A0 TO Y1662-28A0.		
1	723-40-85100	・ VALVE ASS'Y,SUCTION	5	SN:B20001--
2	709-25-11390	・・ O-RING	1	SN:B20001--
3	723-20-80100	・ VALVE ASS'Y,SUCTION	4	SN:B20001--
4	07002-12034	・・ O-RING	1	SN:B20001--

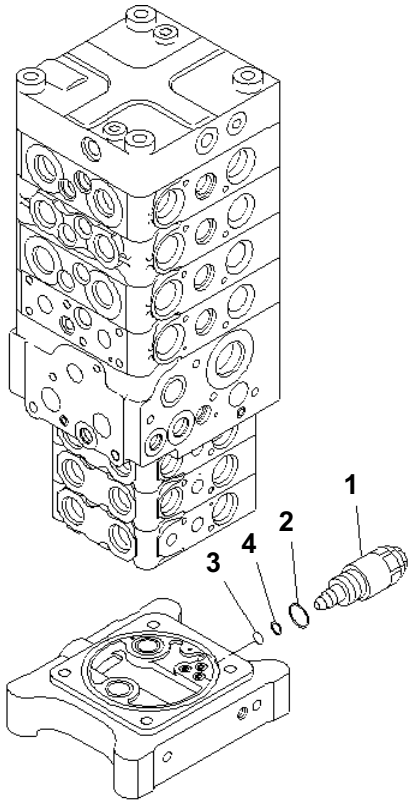

MAIN VALVE (7-VALVE) (18/28)

Item	Part No.	Description	Qty	Options
	(723-57-16101)	CONTROL VALVE	1	SN:B20091--
	(723-57-16100)	CONTROL VALVE	1	SN:B20001--B20090
		THESE ASSEMBLIES CONSIST OF ALL PARTS SHOWN IN FIGS.Y1662-01A0 TO Y1662-28A0.		
1	723-50-60200	・ VALVE ASS'Y	1	SN:B20001--
2	709-25-11390	・・ O-RING	1	SN:B20001--
3	07000-12012	・・ O-RING	1	SN:B20001--
4	07001-02012	・・ RING,BACK-UP	1	SN:B20001--

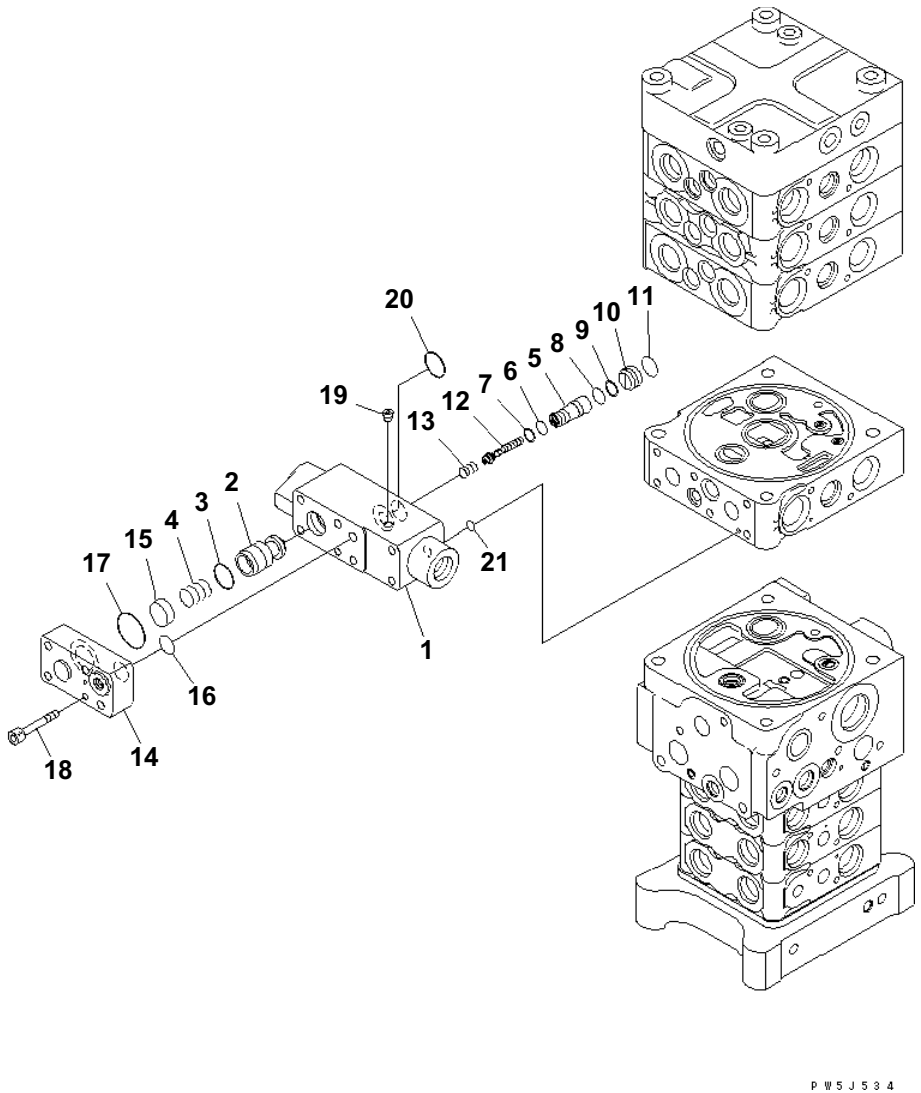

MAIN VALVE (7-VALVE) (19/28)

Item	Part No.	Description	Qty	Options
	(723-57-16101)	CONTROL VALVE	1	SN:B20091--
	(723-57-16100)	CONTROL VALVE	1	SN:B20001--B20090
		THESE ASSEMBLIES CONSIST OF ALL PARTS SHOWN IN FIGS.Y1662-01A0 TO Y1662-28A0.		
	723-50-53200	・ VALVE ASS'Y	1	SN:B20001--
1	☆	・・ BLOCK	1	SN:B20001--
2	☆	・・ VALVE	1	SN:B20001--
3	702-21-35130	・・ SEAL	1	SN:B20001--
4	723-50-53330	・・ SPRING	1	SN:B20001--
5	☆	・・ SLEEVE	1	SN:B20001--
6	07000-12010	・・ O-RING	1	SN:B20001--
7	07001-02010	・・ RING	1	SN:B20001--
8	07000-12012	・・ O-RING	1	SN:B20001--
9	07001-02012	・・ RING,BACK-UP	1	SN:B20001--
10	☆	・・ SEAT	1	SN:B20001--
11	07000-12016	・・ O-RING	1	SN:B20001--
12	☆	・・ PISTON	1	SN:B20001--
13	723-50-53350	・・ SPRING	1	SN:B20001--
14	723-50-53270	・・ PLATE	1	SN:B20001--
15	723-50-53260	・・ RETAINER	1	SN:B20001--
16	07000-12015	・・ O-RING	1	SN:B20001--
17	07000-13030	・・ O-RING	1	SN:B20001--
18	01252-60630	・・ BOLT	1	SN:B20001--
19	☆	・・ PLUG	1	SN:B20001--
20	700-13-31161	・・ O-RING	3	SN:B20001--
21	07000-11007	・・ O-RING	1	SN:B20001--

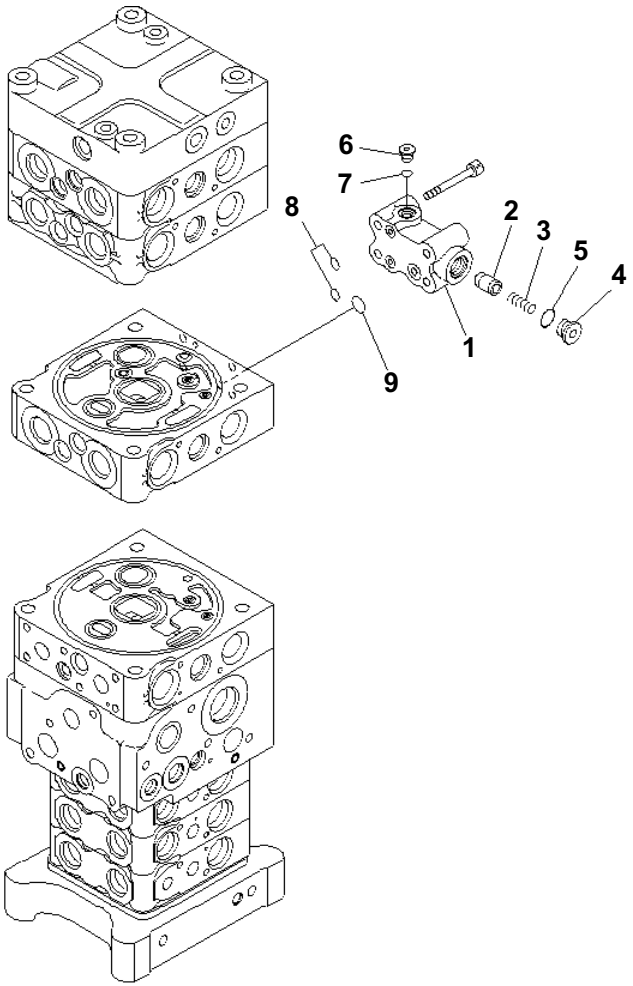

PC160LC-7B S/N B20001 AND UP

MAIN VALVE (7-VALVE) (20/28)

Item	Part No.	Description	Qty	Options
	(723-57-16101)	CONTROL VALVE	1	SN:B20091--
	(723-57-16100)	CONTROL VALVE	1	SN:B20001--B20090
		THESE ASSEMBLIES CONSIST OF ALL PARTS SHOWN IN FIGS.Y1662-01A0 TO Y1662-28A0.		
	723-50-54200	・ VALVE ASS'Y	1	SN:B20001--
1	☆	・・ BLOCK	1	SN:B20001--
2	☆	・・ VALVE	1	SN:B20001--
3	723-56-31620	・・ SPRING	1	SN:B20001--
4	723-56-31630	・・ PLUG	1	SN:B20001--
5	07002-11623	・・ O-RING	1	SN:B20001--
6	723-11-18190	・・ PLUG	1	SN:B20001--
7	07002-11023	・・ O-RING	1	SN:B20001--
8	07000-11009	・・ O-RING	2	SN:B20001--
9	708-2L-25490	・・ O-RING	1	SN:B20001--

Ref. Y1662-20A0 Page 450460

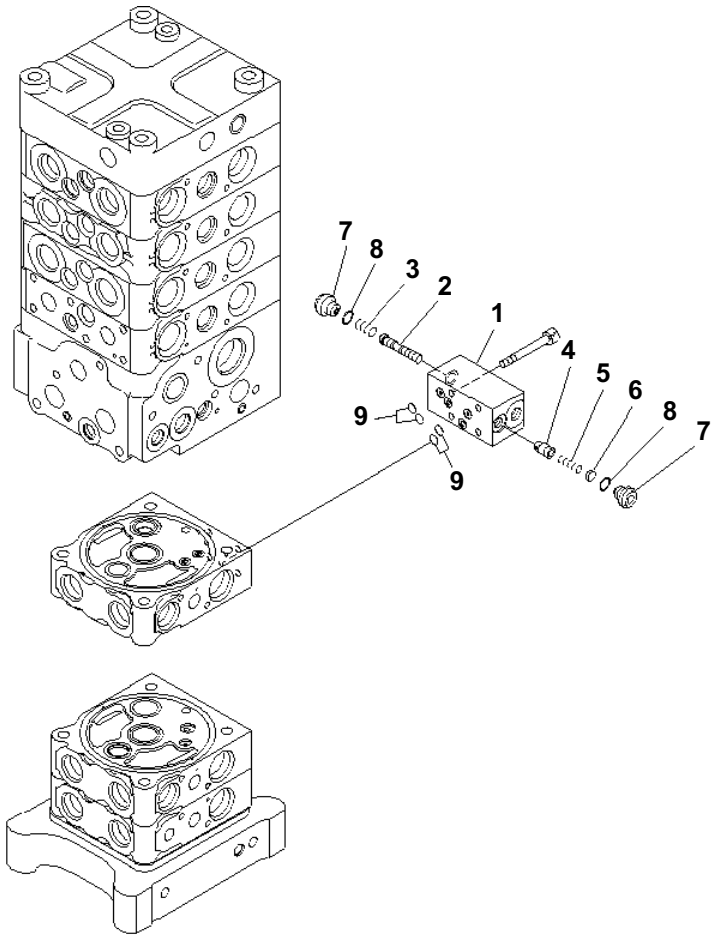

MAIN VALVE (7-VALVE) (21/28)

Item	Part No.	Description	Qty	Options
	(723-57-16101)	CONTROL VALVE	1	SN:B20091--
	(723-57-16100)	CONTROL VALVE	1	SN:B20001--B20090
		THESE ASSEMBLIES CONSIST OF ALL PARTS SHOWN IN FIGS.Y1662-01A0 TO Y1662-28A0.		
	723-20-95200	・ VALVE ASS'Y	1	SN:B20001--
1	☆	・・ BLOCK	1	SN:B20001--
2	☆	・・ SPOOL	1	SN:B20001--
3	723-11-27830	・・ SPRING	1	SN:B20001--
4	☆	・・ VALVE	1	SN:B20001--
5	723-11-18180	・・ SPRING	1	SN:B20001--
6	723-20-95140	・・ SPACER	1	SN:B20001--
7	723-11-27850	・・ PLUG	2	SN:B20001--
8	07002-11023	・・ O-RING	2	SN:B20001--
9	07000-11007	・・ O-RING	4	SN:B20001--

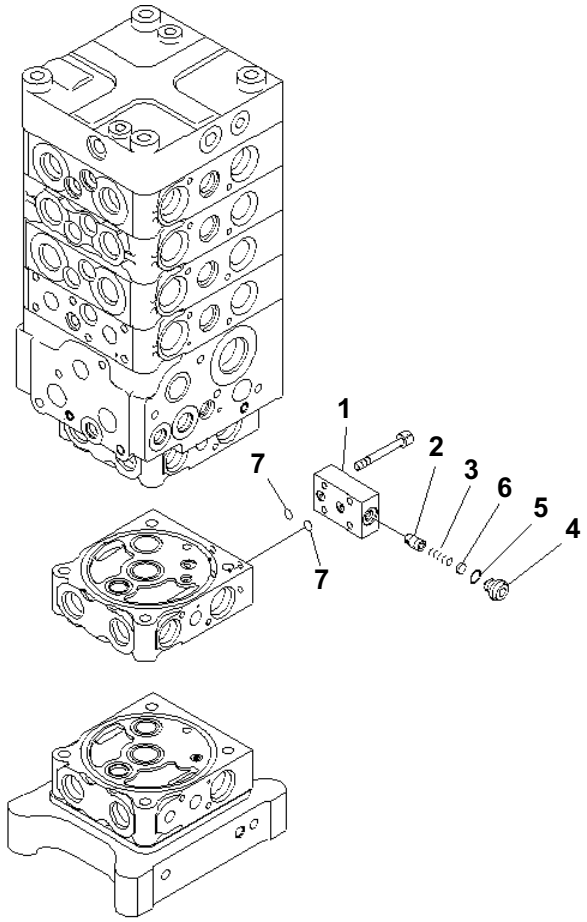

PW5J537

MAIN VALVE (7-VALVE) (22/28)

Item	Part No.	Description	Qty	Options
	(723-57-16101)	CONTROL VALVE	1	SN:B20091--
	(723-57-16100)	CONTROL VALVE	1	SN:B20001--B20090
		THESE ASSEMBLIES CONSIST OF ALL PARTS SHOWN IN FIGS.Y1662-01A0 TO Y1662-28A0.		
	723-20-95100	・VALVE ASS'Y	1	SN:B20001--
1	☆	・・BLOCK	1	SN:B20001--
2	☆	・・VALVE	1	SN:B20001--
3	723-11-18180	・・SPRING	1	SN:B20001--
4	723-11-27850	・・PLUG	1	SN:B20001--
5	07002-11023	・・O-RING	1	SN:B20001--
6	723-20-95140	・・SPACER	1	SN:B20001--
7	07000-11007	・・O-RING	2	SN:B20001--

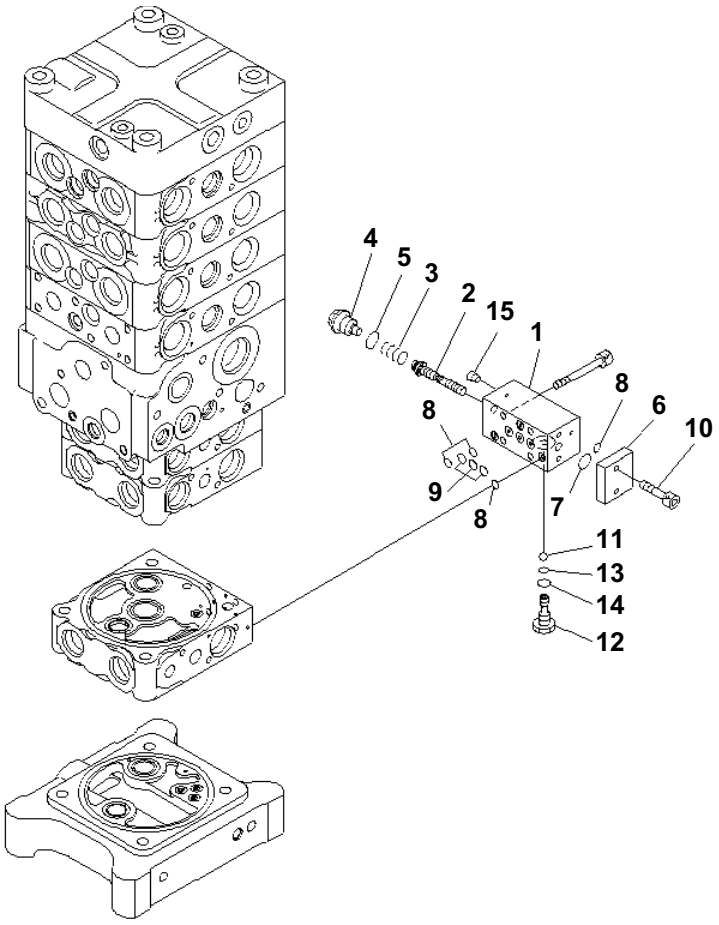

MAIN VALVE (7-VALVE) (23/28)

Item	Part No.	Description	Qty	Options
	(723-57-16101)	CONTROL VALVE	1	SN:B20091--
	(723-57-16100)	CONTROL VALVE	1	SN:B20001--B20090
		THESE ASSEMBLIES CONSIST OF ALL PARTS SHOWN IN FIGS.Y1662-01A0 TO Y1662-28A0.		
	723-20-94100	・ VALVE ASS'Y	1	SN:B20001--
1	☆	・・ BLOCK	1	SN:B20001--
2	☆	・・ SPOOL	1	SN:B20001--
3	723-20-94150	・・ SPRING	1	SN:B20001--
4	723-20-94130	・・ PLUG	1	SN:B20001--
5	07002-11623	・・ O-RING	1	SN:B20001--
6	723-20-94140	・・ FLANGE	1	SN:B20001--
7	07000-12011	・・ O-RING	1	SN:B20001--
8	07000-11006	・・ O-RING	4	SN:B20001--
9	07000-11007	・・ O-RING	3	SN:B20001--
10	01252-60616	・・ BOLT	2	SN:B20001--
11	☆	・・ BALL	1	SN:B20001--
12	☆	・・ PLUG	1	SN:B20001--
13	07000-11003	・・ O-RING	1	SN:B20001--
14	07002-10823	・・ O-RING	1	SN:B20001--
15	☆	・・ PLUG	1	SN:B20001--

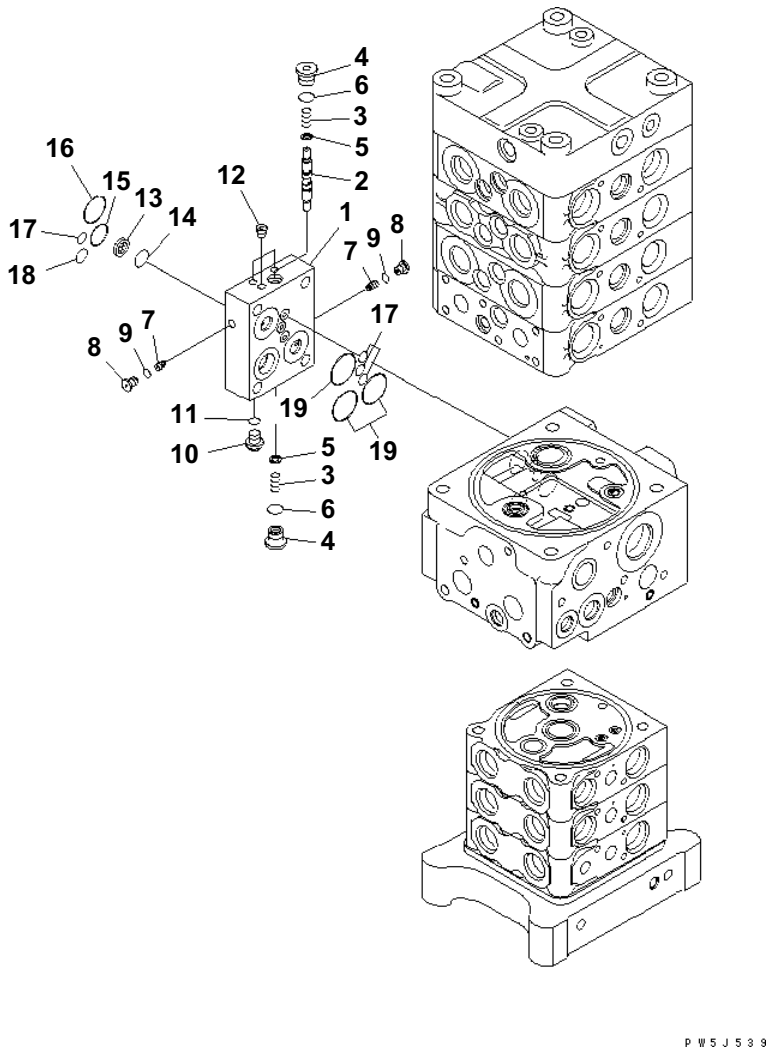

MAIN VALVE (7-VALVE) (24/28)

Item	Part No.	Description	Qty	Options
	(723-57-16101)	CONTROL VALVE	1	SN:B20091--
	(723-57-16100)	CONTROL VALVE	1	SN:B20001--B20090
		THESE ASSEMBLIES CONSIST OF ALL PARTS SHOWN IN FIGS.Y1662-01A0 TO Y1662-28A0.		
	723-50-61100	・VALVE ASS'Y	1	SN:B20001--
1	☆	・・BLOCK	1	SN:B20001--
2	☆	・・SPOOL	1	SN:B20001--
3	723-50-61340	・・SPRING	2	SN:B20001--
4	723-50-61330	・・PLUG	2	SN:B20001--
5	723-50-61350	・・SPACER	2	SN:B20001--
6	07002-11423	・・O-RING	2	SN:B20001--
7	☆	・・VALVE	2	SN:B20001--
8	723-11-27280	・・PLUG	2	SN:B20001--
9	07002-10823	・・O-RING	2	SN:B20001--
10	708-8E-16160	・・PLUG	1	SN:B20001--
11	07002-11023	・・O-RING	1	SN:B20001--
12	☆	・・PLUG	3	SN:B20001--
13	702-21-53120	・・FILTER	1	SN:B20001--
14	702-21-55420	・・O-RING	1	SN:B20001--
15	702-21-55520	・・O-RING	1	SN:B20001--
16	702-21-55440	・・O-RING	1	SN:B20001--
17	07000-11008	・・O-RING	4	SN:B20001--
18	07000-12010	・・O-RING	1	SN:B20001--
19	700-93-11320	・・O-RING	3	SN:B20001--

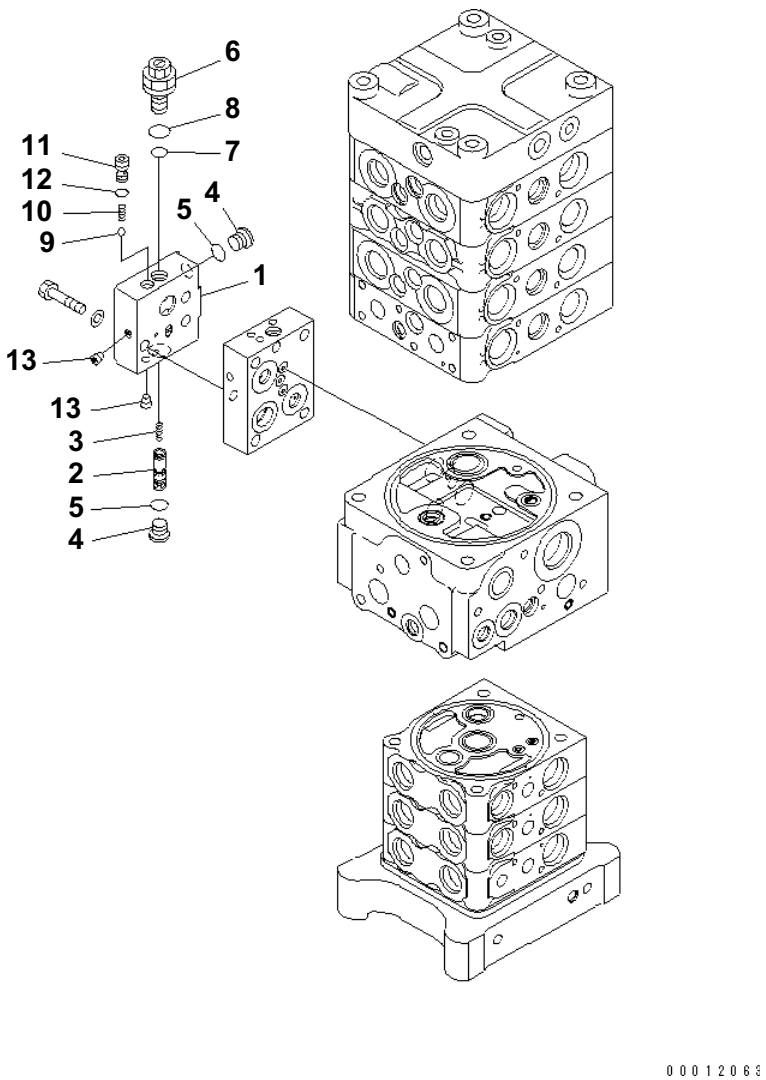

MAIN VALVE (7-VALVE) (25/28)

Item	Part No.	Description	Qty	Options
	(723-57-16101)	CONTROL VALVE	1	SN:B20091--
	(723-57-16100)	CONTROL VALVE	1	SN:B20001--B20090
		THESE ASSEMBLIES CONSIST OF ALL PARTS SHOWN IN FIGS.Y1662-01A0 TO Y1662-28A0.		
	723-50-62100	・VALVE ASS'Y	1	SN:B20001--
1	☆	・・BLOCK	1	SN:B20001--
2	☆	・・SPOOL	1	SN:B20001--
3	702-21-55640	・・SPRING	1	SN:B20001--
4	702-21-55620	・・PLUG	2	SN:B20001--
5	07002-11423	・・O-RING	2	SN:B20001--
6	723-40-91600	・・VALVE ASS'Y,RELIEF	1	SN:B20001--
7	702-16-53920	・・・O-RING	1	SN:B20001--
8	07002-11623	・・・O-RING	1	SN:B20001--
9	04260-00793	・・BALL	1	SN:B20001--
10	702-21-55720	・・SPRING	1	SN:B20001--
11	702-21-55710	・・SEAT	1	SN:B20001--
12	07000-11009	・・O-RING	1	SN:B20001--
13	☆	・・PLUG	2	SN:B20001--

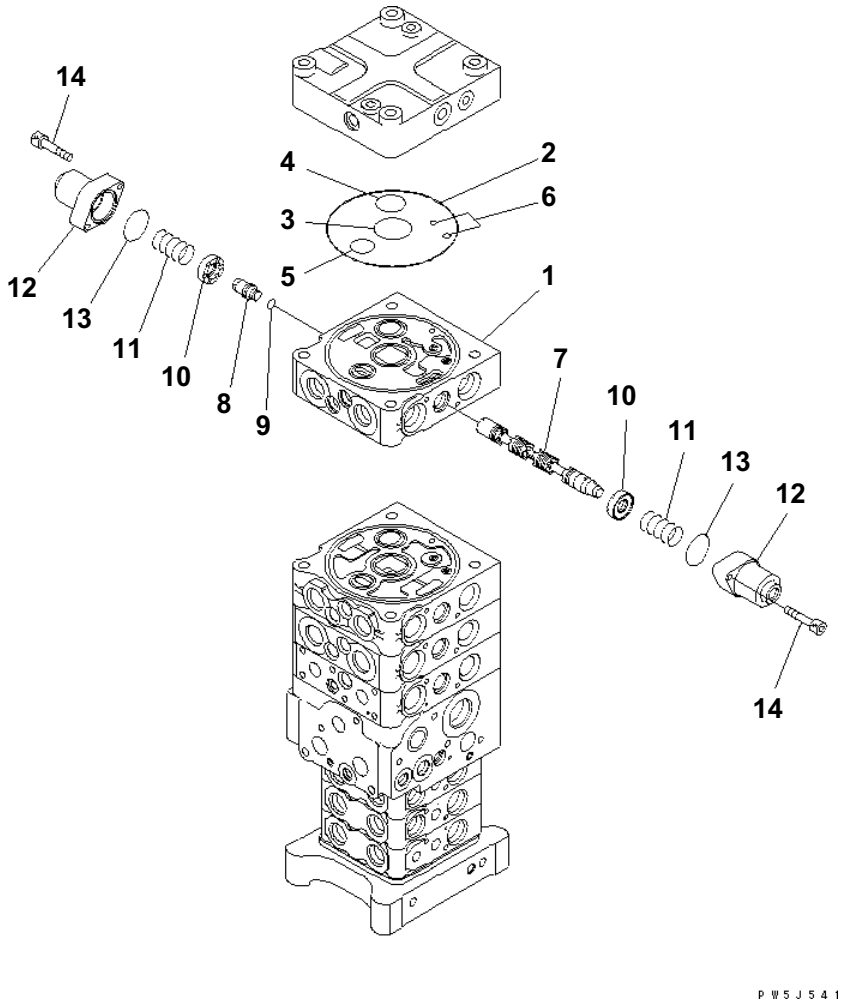

MAIN VALVE (7-VALVE) (26/28)

Item	Part No.	Description	Qty	Options
	(723-57-16101)	CONTROL VALVE	1	SN:B20091--
	(723-57-16100)	CONTROL VALVE	1	SN:B20001--B20090
		THESE ASSEMBLIES CONSIST OF ALL PARTS SHOWN IN FIGS.Y1662-01A0 TO Y1662-28A0.		
	723-51-03200	・ VALVE ASS'Y	1	SN:B20001--
1	☆	・・ BLOCK,VALVE	1	SN:B20001--
2	144-14-54610	・・ O-RING	1	SN:B20001--
3	723-56-31720	・・ O-RING	1	SN:B20001--
4	723-56-31730	・・ O-RING	1	SN:B20001--
5	702-75-11520	・・ O-RING	1	SN:B20001--
6	07000-11008	・・ O-RING	2	SN:B20001--
7	☆	・・ SPOOL	1	SN:B20001--
8	723-56-31130	・・ PLUG	1	SN:B20001--
9	07002-11223	・・ O-RING	1	SN:B20001--
10	723-56-31211	・・ RETAINER	2	SN:B20001--
11	723-36-14110	・・ SPRING	2	SN:B20001--
12	723-56-31510	・・ CASE	2	SN:B20001--
13	702-21-55450	・・ O-RING	2	SN:B20001--
14	01252-60630	・・ BOLT	4	SN:B20001--

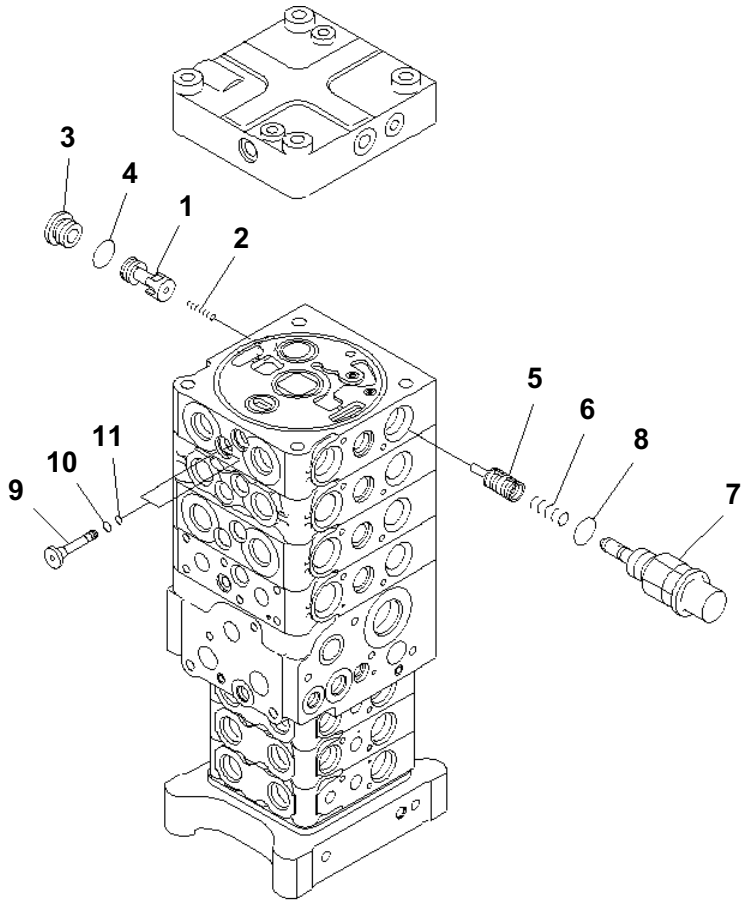

MAIN VALVE (7-VALVE) (27/28)

Item	Part No.	Description	Qty	Options
	(723-57-16101)	CONTROL VALVE	1	SN:B20091--
	(723-57-16100)	CONTROL VALVE	1	SN:B20001--B20090
		THESE ASSEMBLIES CONSIST OF ALL PARTS SHOWN IN FIGS.Y1662-01A0 TO Y1662-28A0.		
	(723-51-03200)	・ VALVE ASS'Y	1	SN:B20001--
1	☆	・・ VALVE	1	SN:B20001--
2	723-56-41710	・・ SPRING	1	SN:B20001--
3	723-26-15230	・・ PLUG	1	SN:B20001--
4	07002-12434	・・ O-RING	1	SN:B20001--
5	☆	・・ VALVE	1	SN:B20001--
6	723-56-41750	・・ SPRING	1	SN:B20001--
7	723-50-42103	・・ VALVE ASS'Y	1	SN:B20001--
8	07000-13024	・・・ O-RING	1	SN:B20001--
9	723-56-31640	・・ PLUG	2	SN:B20001--
10	07002-11623	・・ O-RING	2	SN:B20001--
11	07000-11008	・・ O-RING	2	SN:B20001--

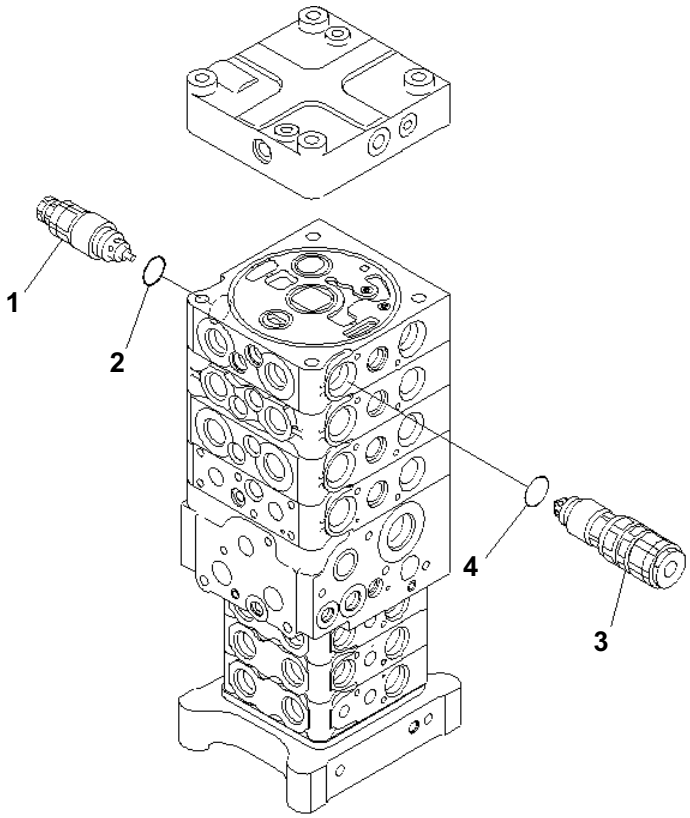

MAIN VALVE (7-VALVE) (28/28)

Item	Part No.	Description	Qty	Options
	(723-57-16101)	CONTROL VALVE	1	SN:B20091--
	(723-57-16100)	CONTROL VALVE THESE ASSEMBLIES CONSIST OF ALL PARTS SHOWN IN FIGS.Y1662-01A0 TO Y1662-28A0.	1	SN:B20001--B20090
	(723-51-03200)	・ VALVE ASS'Y	1	SN:B20001--
1	723-90-61400	・・ VALVE ASS'Y,SUCTION AND SAFETY	1	SN:B20001--
2	07000-13024	・・・ O-RING	1	SN:B20001--
3	723-90-76101	・・ VALVE ASS'Y,SUCTION AND SAFETY	1	SN:B20001--
4	07000-13024	・・・ O-RING	1	SN:B20001--

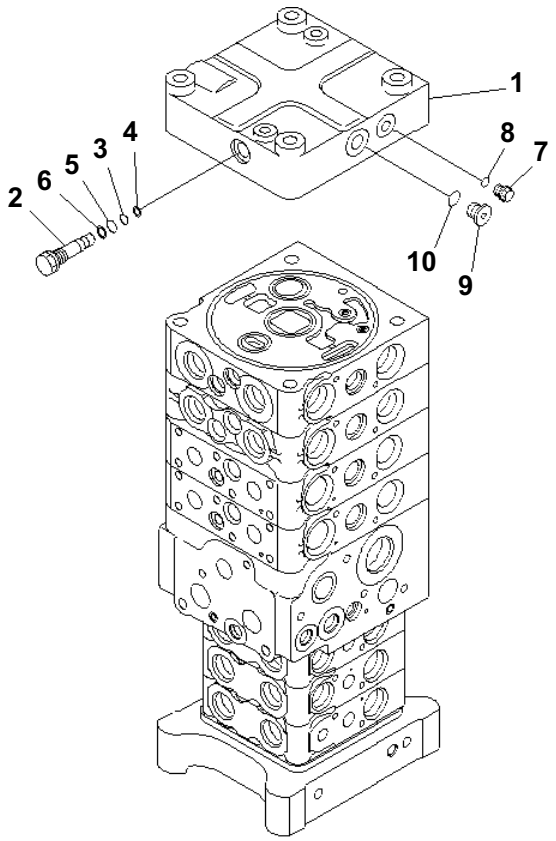

00012066

MAIN VALVE (7-VALVE) (1/29) (WITH ARM LOCK VALVE)

Item	Part No.	Description	Qty	Options
	723-57-16201	CONTROL VALVE	1	SN:B20091--
	723-57-16200	CONTROL VALVE	1	SN:B20001--B20090
		THESE ASSEMBLIES CONSIST OF ALL PARTS SHOWN IN FIGS.Y1662-31A0 TO Y1662-59A0.		
	☆	・ COVER GROUP	1	SN:B20001--
1	☆	・・ COVER	1	SN:B20001--
2	723-26-15190	・・ PLUG	1	SN:B20001--
3	07000-11007	・・ O-RING	1	SN:B20001--
4	07001-01007	・・ RING,BACK-UP	1	SN:B20001--
5	07000-11009	・・ O-RING	1	SN:B20001--
6	07001-01009	・・ RING,BACK-UP	1	SN:B20001--
7	708-8E-16160	・・ PLUG	1	SN:B20001--
8	07002-11023	・・ O-RING	1	SN:B20001--
9	702-21-55620	・・ PLUG	1	SN:B20001--
10	07002-11423	・・ O-RING	1	SN:B20001--

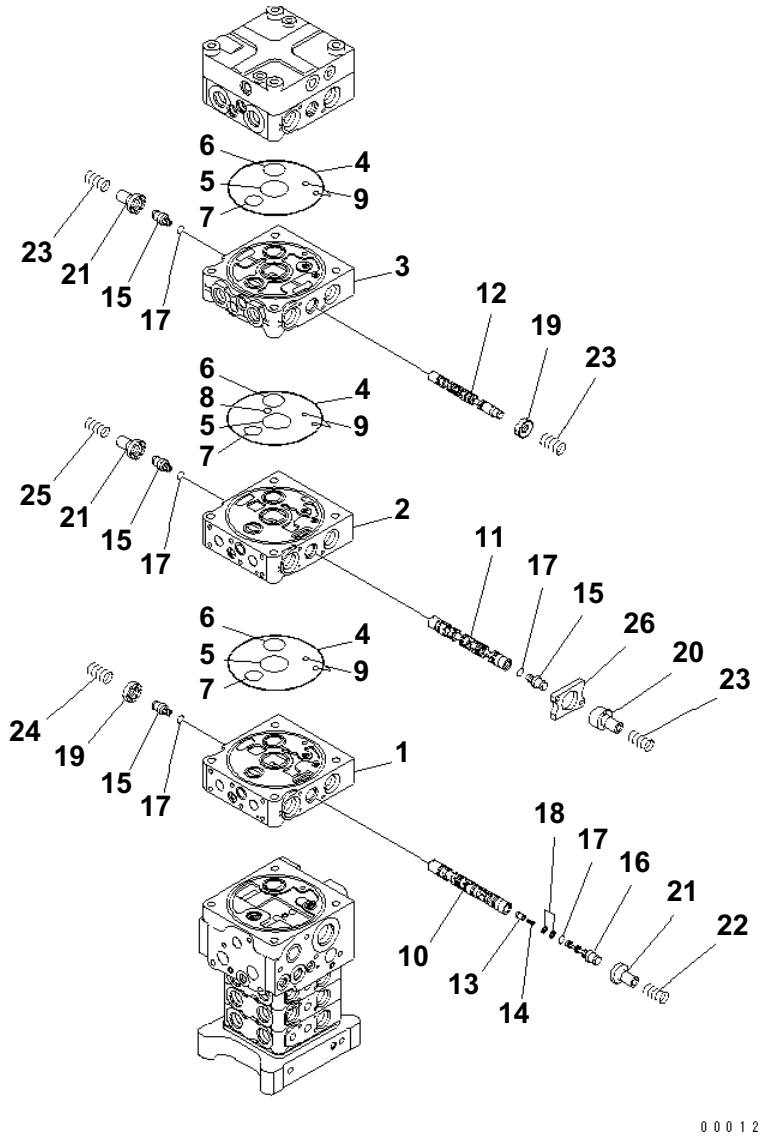

MAIN VALVE (7-VALVE) (2/29) (WITH ARM LOCK VALVE)

Item	Part No.	Description	Qty	Options
	(723-57-16201)	CONTROL VALVE	1	SN:B20091--
	(723-57-16200)	CONTROL VALVE	1	SN:B20001--B20090
		THESE ASSEMBLIES CONSIST OF ALL PARTS SHOWN IN FIGS.Y1662-31A0 TO Y1662-59A0.		
	☆	・ BODY GROUP	1	SN:B20091--
	☆	・ BODY GROUP	1	SN:B20001--B20090
1	☆	・・ BLOCK,VALVE	1	SN:B20001--
2	☆	・・ BLOCK,VALVE	1	SN:B20001--
3	☆	・・ BLOCK,VALVE	1	SN:B20001--
4	144-14-54610	・・ O-RING	3	SN:B20001--
5	723-56-31720	・・ O-RING	3	SN:B20001--
6	723-56-31730	・・ O-RING	3	SN:B20001--
7	702-75-11520	・・ O-RING	3	SN:B20001--
8	07000-12012	・・ O-RING	1	SN:B20001--
9	07000-11008	・・ O-RING	6	SN:B20001--
	☆	・・ SPOOL	1	SN:B20001--
11	☆	・・ SPOOL	1	SN:B20001--
12	☆	・・ SPOOL	1	SN:B20001--
13	☆	・・ VALVE	1	SN:B20001--
14	☆	・・ SPRING	1	SN:B20001--
15	☆	・・ PLUG	4	SN:B20001--
16	☆	・・ PLUG	1	SN:B20001--
17	☆	・・ O-RING	5	SN:B20001--
18	☆	・・ SEAL	2	SN:B20001--
19	723-56-31211	・・ RETAINER	2	SN:B20001--
20	723-56-31361	・・ RETAINER	1	SN:B20001--
21	723-56-31221	・・ RETAINER	3	SN:B20001--
22	723-36-14110	・・ SPRING	1	SN:B20001--
23	723-36-14120	・・ SPRING	3	SN:B20001--
24	723-36-14130	・・ SPRING	1	SN:B20001--
25	723-56-31421	・・ SPRING	1	SN:B20001--
26	723-56-32810	・・ PLATE	1	SN:B20001--

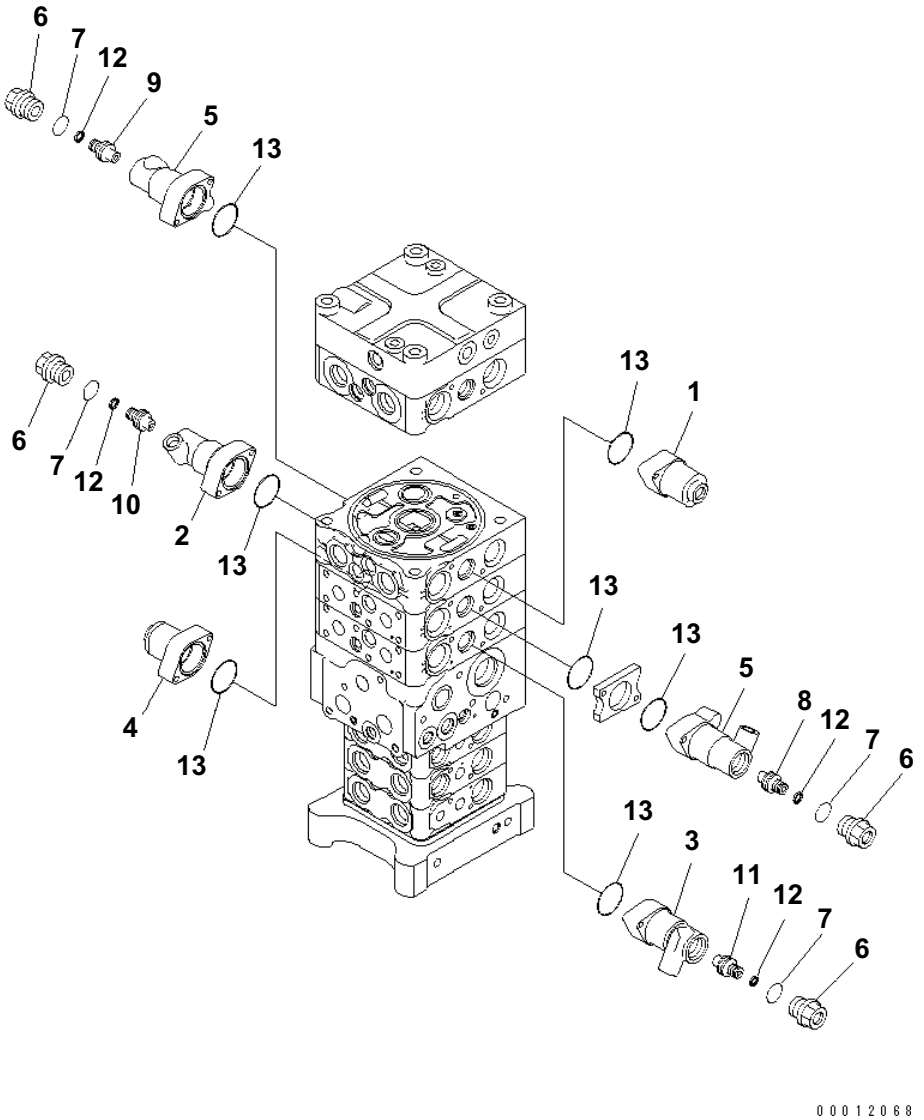

MAIN VALVE (7-VALVE) (3/29) (WITH ARM LOCK VALVE)

Item	Part No.	Description	Qty	Options
	(723-57-16201)	CONTROL VALVE	1	SN:B20091--
	(723-57-16200)	CONTROL VALVE	1	SN:B20001--B20090
		THESE ASSEMBLIES CONSIST OF ALL PARTS SHOWN IN FIGS.Y1662-31A0 TO Y1662-59A0.		
	☆	・ BODY GROUP	1	SN:B20001--
1	723-56-31510	・・ CASE	1	SN:B20001--
2	723-56-31540	・・ CASE	1	SN:B20001--
3	723-56-31590	・・ CASE	1	SN:B20001--
4	723-56-31580	・・ CASE	1	SN:B20001--
5	723-56-31570	・・ CASE	2	SN:B20001--
6	723-36-15450	・・ PLUG	4	SN:B20001--
7	07002-12434	・・ O-RING	4	SN:B20001--
8	723-56-31320	・・ PISTON	1	SN:B20001--
9	723-56-31330	・・ PISTON	1	SN:B20001--
10	723-56-31341	・・ PISTON	1	SN:B20001--
11	723-56-31250	・・ PISTON	1	SN:B20001--
12	709-30-61130	・・ SEAL	4	SN:B20001--
13	702-21-55450	・・ O-RING	7	SN:B20001--

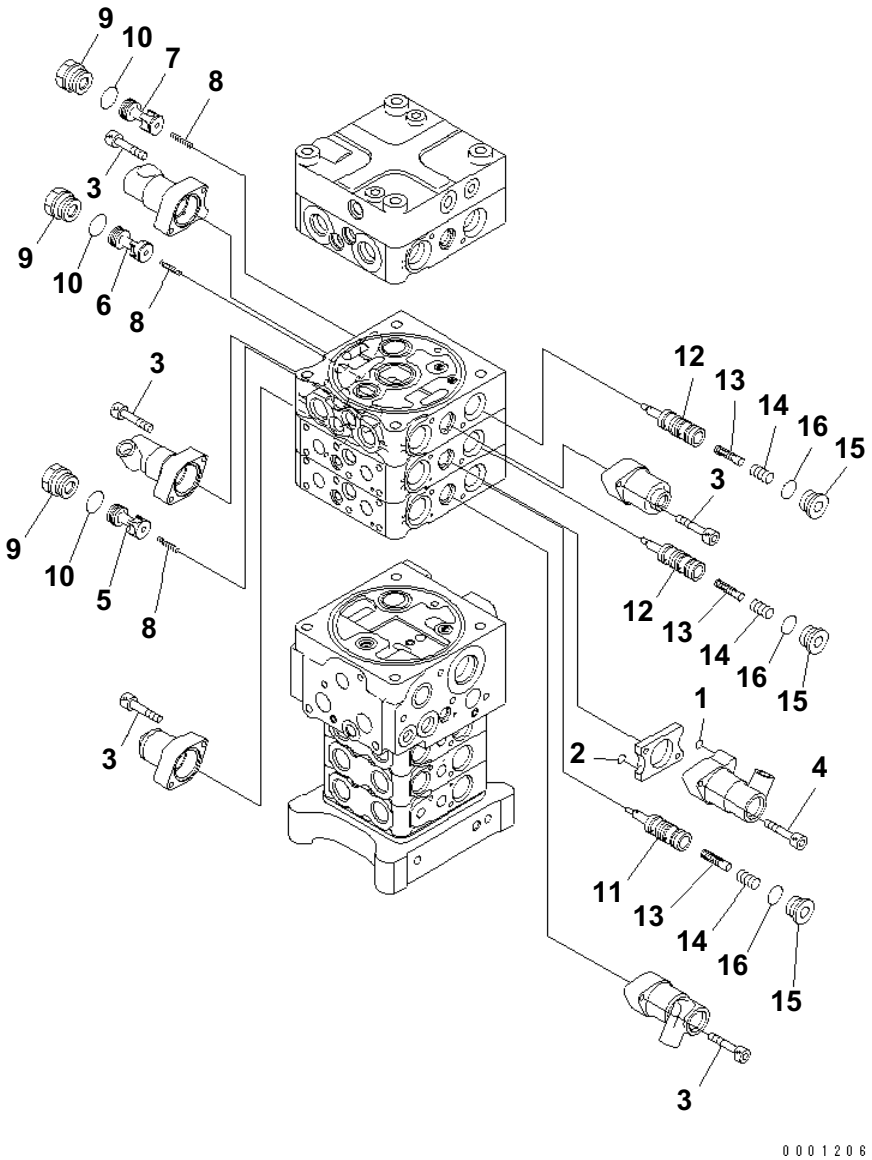

MAIN VALVE (7-VALVE) (4/29) (WITH ARM LOCK VALVE)

Item	Part No.	Description	Qty	Options
	(723-57-16201)	CONTROL VALVE	1	SN:B20091--
	(723-57-16200)	CONTROL VALVE	1	SN:B20001--B20090
		THESE ASSEMBLIES CONSIST OF ALL PARTS SHOWN IN FIGS.Y1662-31A0 TO Y1662-59A0.		
	☆	・BODY GROUP	1	SN:B20001--
1	07000-11006	・・O-RING	1	SN:B20001--
2	07000-11008	・・O-RING	1	SN:B20001--
3	01252-60630	・・BOLT	10	SN:B20001--
4	01252-60640	・・BOLT	2	SN:B20001--
5	☆	・・VALVE	1	SN:B20001--
6	☆	・・VALVE	1	SN:B20001--
7	☆	・・VALVE	1	SN:B20001--
8	723-56-41710	・・SPRING	3	SN:B20001--
9	723-56-41840	・・PLUG	3	SN:B20001--
10	07000-13024	・・O-RING	3	SN:B20001--
11	☆	・・VALVE	1	SN:B20001--
12	☆	・・VALVE	2	SN:B20001--
13	☆	・・PISTON	3	SN:B20001--
14	723-56-41730	・・SPRING	3	SN:B20001--
15	723-26-15230	・・PLUG	3	SN:B20001--
16	07002-12434	・・O-RING	3	SN:B20001--

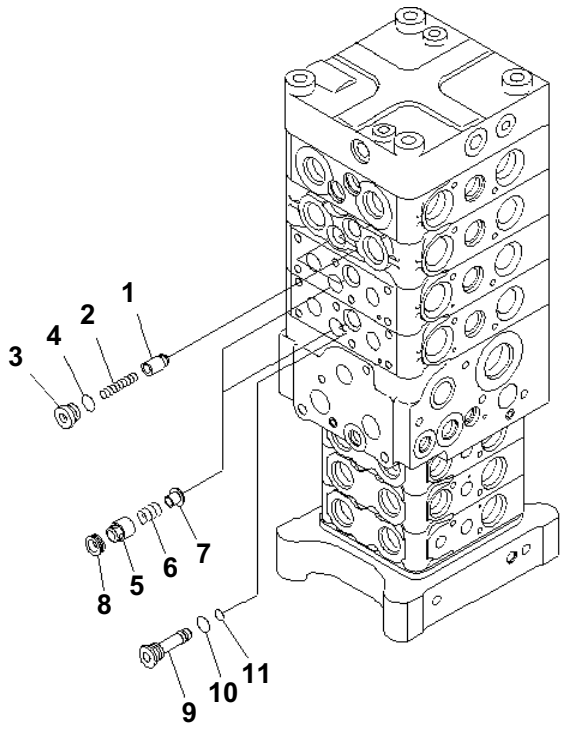

00012070

PC160LC-7B S/N B20001 AND UP

MAIN VALVE (7-VALVE) (5/29) (WITH ARM LOCK VALVE)

Item	Part No.	Description	Qty	Options
	(723-57-16201)	CONTROL VALVE	1	SN:B20091--
	(723-57-16200)	CONTROL VALVE	1	SN:B20001--B20090
		THESE ASSEMBLIES CONSIST OF ALL PARTS SHOWN IN FIGS.Y1662-31A0 TO Y1662-59A0.		
1	☆	VALVE	3	SN:B20001--
2	723-56-31620	SPRING	3	SN:B20001--
3	723-56-31630	PLUG	3	SN:B20001--
4	07002-11623	O-RING	3	SN:B20001--
5	☆	VALVE	2	SN:B20001--
6	709-70-91420	SPRING	2	SN:B20001--
7	723-56-31660	RETAINER	2	SN:B20001--
8	723-56-31670	SEAT	2	SN:B20001--
9	723-56-31640	PLUG	1	SN:B20001--
10	07002-11623	O-RING	1	SN:B20001--
11	07000-11008	O-RING	1	SN:B20001--

Ref. Y1662-35A0 Page 450590

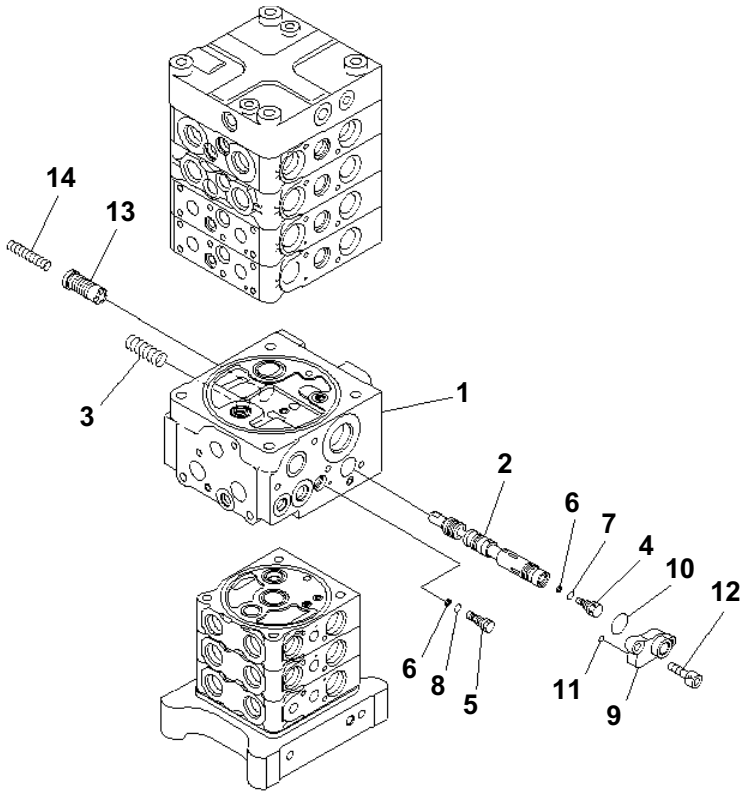

MAIN VALVE (7-VALVE) (6/29) (WITH ARM LOCK VALVE)

Item	Part No.	Description	Qty	Options
	(723-57-16201)	CONTROL VALVE	1	SN:B20091--
	(723-57-16200)	CONTROL VALVE	1	SN:B20001--B20090
		THESE ASSEMBLIES CONSIST OF ALL PARTS SHOWN IN FIGS.Y1662-31A0 TO Y1662-59A0.		
	☆	・ BODY GROUP	1	SN:B20001--
1	☆	・・ BLOCK	1	SN:B20001--
2	☆	・・ SPOOL	1	SN:B20001--
3	723-56-31970	・・ SPRING	1	SN:B20001--
4	723-11-14250	・・ ORIFICE	1	SN:B20001--
5	723-56-31960	・・ ORIFICE	1	SN:B20001--
6	722-12-15160	・・ RING	2	SN:B20001--
7	07002-10823	・・ O-RING	1	SN:B20001--
8	07002-11223	・・ O-RING	1	SN:B20001--
9	723-56-31940	・・ FLANGE	1	SN:B20001--
10	723-11-18430	・・ O-RING	1	SN:B20001--
11	07000-11008	・・ O-RING	1	SN:B20001--
12	01252-60825	・・ BOLT	2	SN:B20001--
13	☆	・・ VALVE	2	SN:B20001--
14	723-56-31990	・・ SPRING	2	SN:B20001--

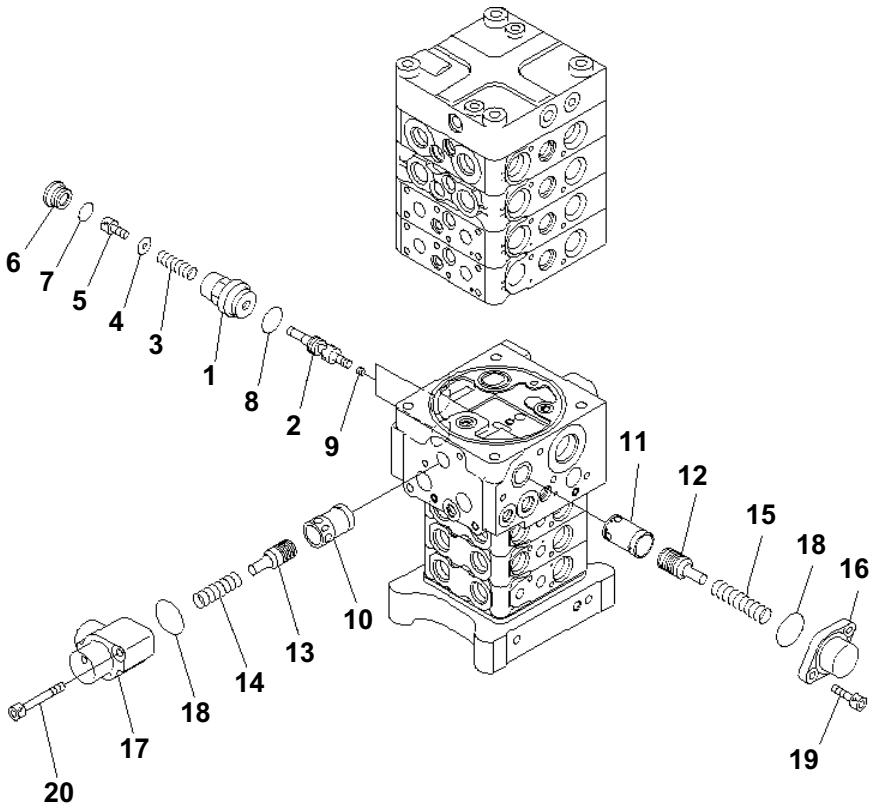

MAIN VALVE (7-VALVE) (7/29) (WITH ARM LOCK VALVE)

Item	Part No.	Description	Qty	Options
	(723-57-16201)	CONTROL VALVE	1	SN:B20091--
	(723-57-16200)	CONTROL VALVE	1	SN:B20001--B20090
		THESE ASSEMBLIES CONSIST OF ALL PARTS SHOWN IN FIGS.Y1662-31A0 TO Y1662-59A0.		
	☆	・ BODY GROUP	1	SN:B20001--
	723-50-56100	・・ VALVE ASS'Y	2	SN:B20001--
1	☆	・・・ SLEEVE	1	SN:B20001--
2	☆	・・・ SPOOL	1	SN:B20001--
3	☆	・・・ SPRING	1	SN:B20001--
4	☆	・・・ SPACER	1	SN:B20001--
5	☆	・・・ BOLT	1	SN:B20001--
6	☆	・・・ PLUG	1	SN:B20001--
7	☆	・・・ O-RING	1	SN:B20001--
8	07002-13334	・・・ O-RING	1	SN:B20001--
9	☆	・・ ORIFICE	2	SN:B20001--
10	☆	・・ SLEEVE	1	SN:B20001--
11	☆	・・ SLEEVE	1	SN:B20001--
12	☆	・・ PISTON	1	SN:B20001--
13	☆	・・ PISTON	1	SN:B20001--
14	723-36-15240	・・ SPRING	1	SN:B20001--
15	723-56-31930	・・ SPRING	1	SN:B20001--
16	723-36-15250	・・ CASE	1	SN:B20001--
17	723-56-31880	・・ CASE	1	SN:B20001--
18	07000-13042	・・ O-RING	2	SN:B20001--
19	01252-60820	・・ BOLT	2	SN:B20001--
20	01252-60860	・・ BOLT	2	SN:B20001--

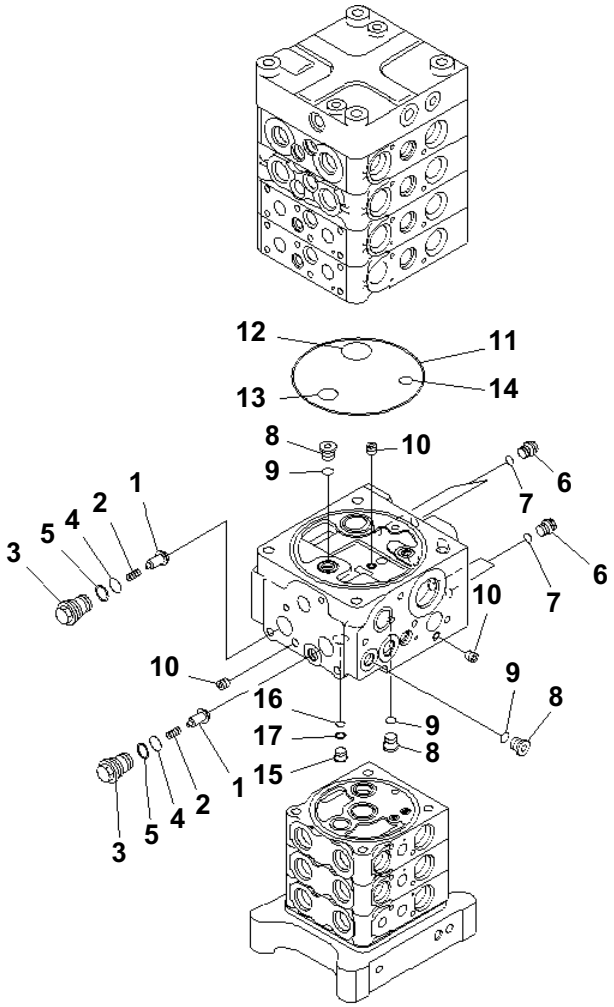

MAIN VALVE (7-VALVE) (8/29) (WITH ARM LOCK VALVE)

Item	Part No.	Description	Qty	Options
	(723-57-16201)	CONTROL VALVE	1	SN:B20091--
	(723-57-16200)	CONTROL VALVE	1	SN:B20001--B20090
		THESE ASSEMBLIES CONSIST OF ALL PARTS SHOWN IN FIGS.Y1662-31A0 TO Y1662-59A0.		
	☆	・ BODY GROUP	1	SN:B20001--
1	☆	・・ VALVE,CHECK	2	SN:B20001--
2	709-25-11361	・・ SPRING	2	SN:B20001--
3	723-26-15580	・・ PLUG	2	SN:B20001--
4	07000-12016	・・ O-RING	2	SN:B20001--
5	723-60-22230	・・ RING,BACK-UP	2	SN:B20001--
6	708-8E-16160	・・ PLUG	4	SN:B20001--
7	07002-11023	・・ O-RING	4	SN:B20001--
8	702-21-55620	・・ PLUG	3	SN:B20001--
9	07002-11423	・・ O-RING	3	SN:B20001--
10	708-21-12541	・・ PLUG	3	SN:B20001--
11	144-14-54610	・・ O-RING	1	SN:B20001--
12	723-56-31730	・・ O-RING	1	SN:B20001--
13	702-75-11520	・・ O-RING	1	SN:B20001--
14	07000-12014	・・ O-RING	1	SN:B20001--
15	723-26-16460	・・ PLUG	1	SN:B20001--
16	07000-11007	・・ O-RING	1	SN:B20001--
17	07001-01007	・・ RING,BACK-UP	1	SN:B20001--

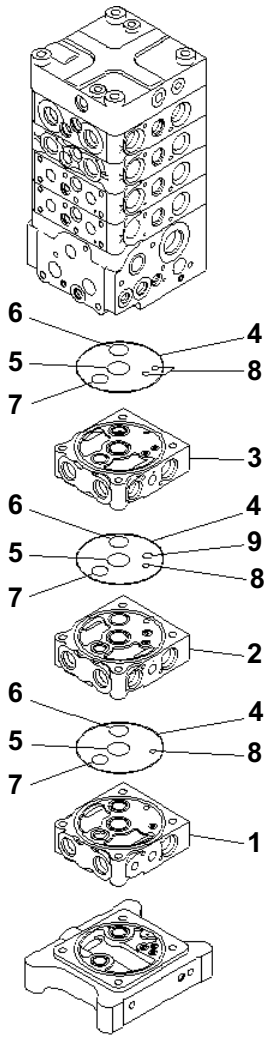

MAIN VALVE (7-VALVE) (9/29) (WITH ARM LOCK VALVE)

Item	Part No.	Description	Qty	Options
	(723-57-16201)	CONTROL VALVE	1	SN:B20091--
	(723-57-16200)	CONTROL VALVE	1	SN:B20001--B20090
		THESE ASSEMBLIES CONSIST OF ALL PARTS SHOWN IN FIGS.Y1662-31A0 TO Y1662-59A0.		
	☆	・ BODY GROUP	1	SN:B20091--
	☆	・ BODY GROUP	1	SN:B20001--B20090
1	☆	・・ BLOCK,VALVE	1	SN:B20001--
2	☆	・・ BLOCK,VALVE	1	SN:B20001--
3	☆	・・ BLOCK,VALVE	1	SN:B20001--
4	07000-12120	・・ O-RING	3	SN:B20001--
5	723-26-15830	・・ O-RING	3	SN:B20001--
6	723-26-15840	・・ O-RING	3	SN:B20001--
7	07000-12022	・・ O-RING	3	SN:B20001--
8	07000-11008	・・ O-RING	4	SN:B20001--
9	07000-12010	・・ O-RING	1	SN:B20001--

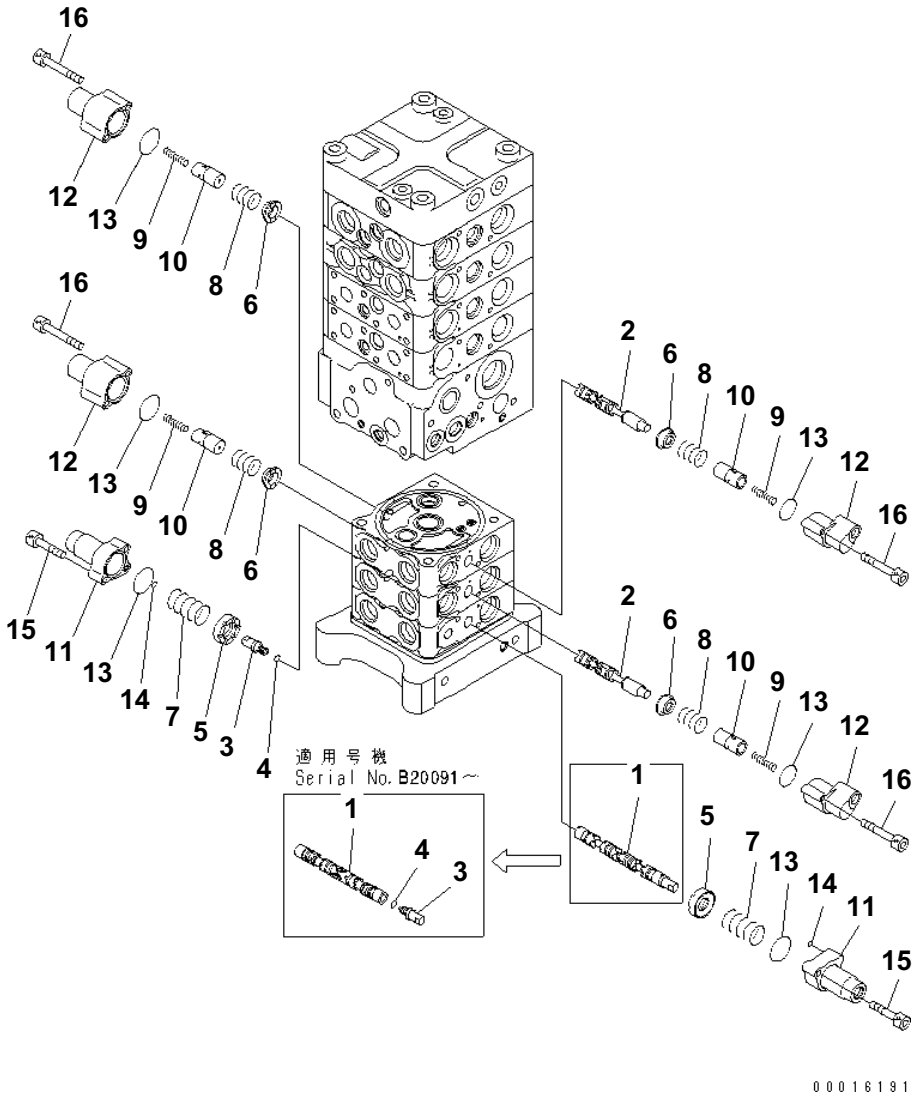

MAIN VALVE (7-VALVE) (10/29) (WITH ARM LOCK VALVE)

Item	Part No.	Description	Qty	Options
	(723-57-16201)	CONTROL VALVE	1	SN:B20091--
	(723-57-16200)	CONTROL VALVE	1	SN:B20001--B20090
		THESE ASSEMBLIES CONSIST OF ALL PARTS SHOWN IN FIGS.Y1662-31A0 TO Y1662-59A0.		
	☆	・BODY GROUP	1	SN:B20091--
	☆	・BODY GROUP	1	SN:B20001--B20090
1	☆	・・SPOOL	1	SN:B20091--
	☆	・・SPOOL	1	SN:B20001--B20090
2	☆	・・SPOOL	2	SN:B20001--
3	☆	・・PLUG	2	SN:B20091--
	☆	・・PLUG	1	SN:B20001--B20090
4	☆	・・O-RING	2	SN:B20091--
	☆	・・O-RING	1	SN:B20001--B20090
5	723-26-15121	・・RETAINER	2	SN:B20001--
6	723-26-16740	・・RETAINER	4	SN:B20001--
7	723-26-14520	・・SPRING	2	SN:B20001--
8	723-26-14530	・・SPRING	4	SN:B20001--
9	723-26-14540	・・SPRING	4	SN:B20001--
10	723-26-16730	・・PISTON	4	SN:B20001--
11	723-26-16710	・・CASE	2	SN:B20001--
12	723-26-16720	・・CASE	4	SN:B20001--
13	575-41-17420	・・O-RING	6	SN:B20001--
14	07000-11005	・・O-RING	2	SN:B20001--
15	01252-60630	・・BOLT	4	SN:B20001--
16	01252-60645	・・BOLT	8	SN:B20001--

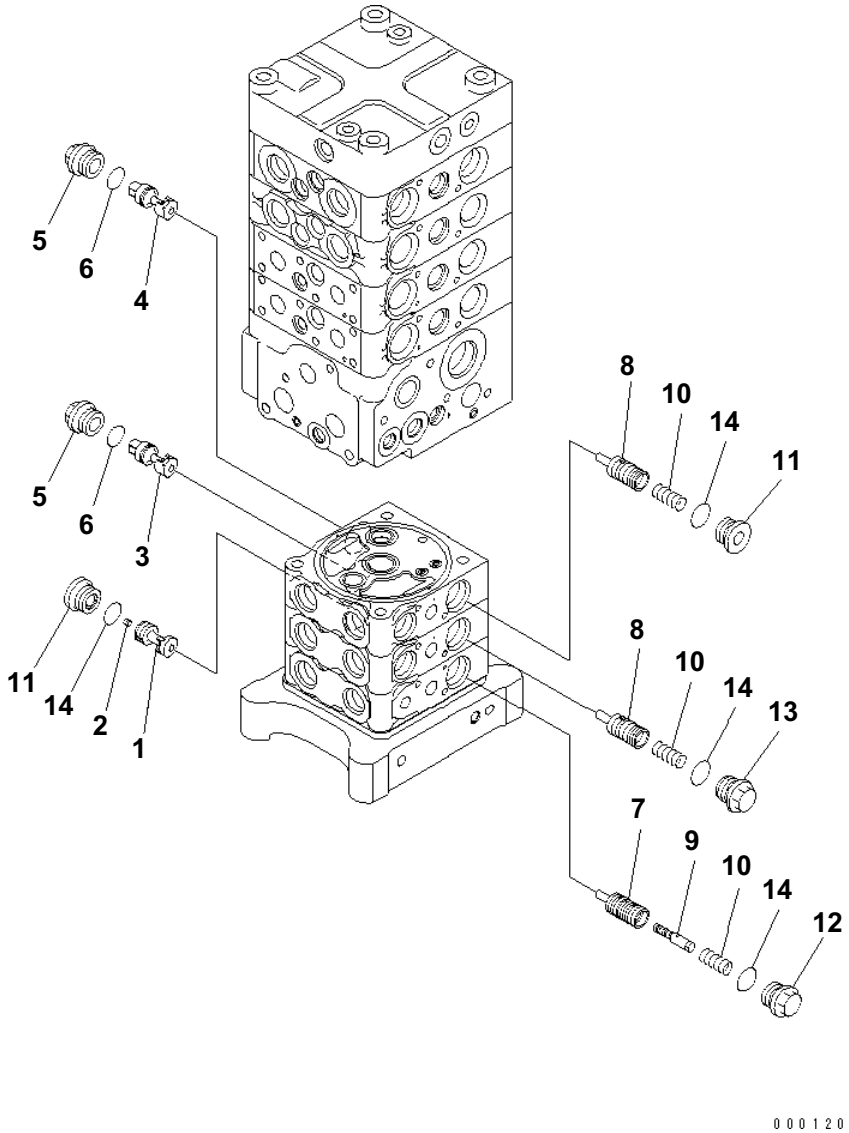

MAIN VALVE (7-VALVE) (11/29) (WITH ARM LOCK VALVE)

Item	Part No.	Description	Qty	Options
	(723-57-16201)	CONTROL VALVE	1	SN:B20091--
	(723-57-16200)	CONTROL VALVE	1	SN:B20001--B20090
		THESE ASSEMBLIES CONSIST OF ALL PARTS SHOWN IN FIGS.Y1662-31A0 TO Y1662-59A0.		
	☆	・BODY GROUP	1	SN:B20091--
	☆	・BODY GROUP	1	SN:B20001--B20090
1	☆	・・VALVE	1	SN:B20001--
2	☆	・・SCREW	1	SN:B20001--
3	☆	・・VALVE SUB ASS'Y	1	SN:B20001--
4	☆	・・VALVE SUB ASS'Y	1	SN:B20001--
5	723-26-16670	・・PLUG	2	SN:B20001--
6	07002-12434	・・O-RING	2	SN:B20001--
7	☆	・・VALVE	1	SN:B20001--
8	☆	・・VALVE SUB ASS'Y	2	SN:B20001--
9	☆	・・VALVE SUB ASS'Y	1	SN:B20001--
10	723-26-14140	・・SPRING	3	SN:B20001--
11	723-26-15230	・・PLUG	2	SN:B20001--
12	723-26-15890	・・PLUG	1	SN:B20001--
13	723-56-41850	・・PLUG	1	SN:B20001--
14	07002-12434	・・O-RING	4	SN:B20001--

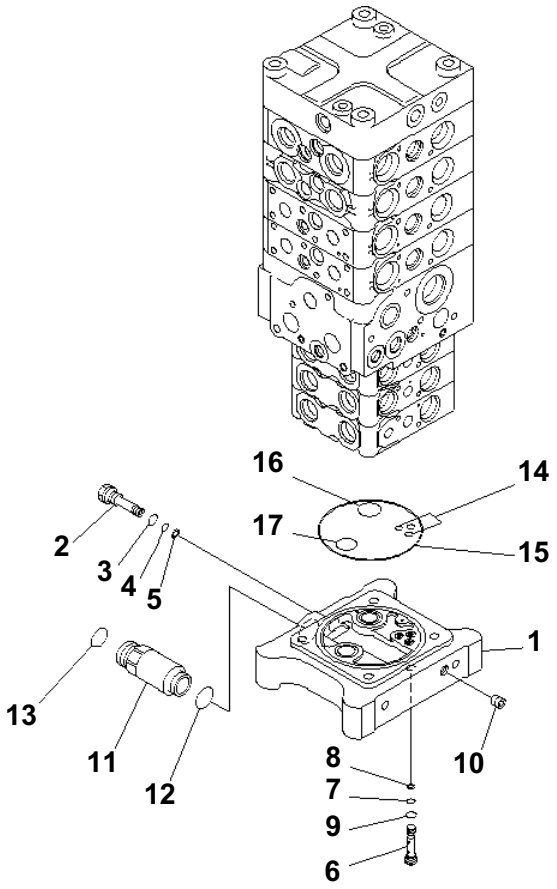

MAIN VALVE (7-VALVE) (12/29) (WITH ARM LOCK VALVE)

Item	Part No.	Description	Qty	Options
	(723-57-16201)	CONTROL VALVE	1	SN:B20091--
	(723-57-16200)	CONTROL VALVE	1	SN:B20001--B20090
		THESE ASSEMBLIES CONSIST OF ALL PARTS SHOWN IN FIGS.Y1662-31A0 TO Y1662-59A0.		
	☆	・BODY GROUP	1	SN:B20001--
1	☆	・・BLOCK	1	SN:B20001--
2	723-26-15170	・・PLUG	1	SN:B20001--
3	07002-11423	・・O-RING	1	SN:B20001--
4	07000-11007	・・O-RING	1	SN:B20001--
5	07001-01007	・・RING,BACK-UP	1	SN:B20001--
6	723-60-23301	・・VALVE ASS'Y,CHECK	1	SN:B20001--
7	07000-11005	・・・O-RING	1	SN:B20001--
8	07001-01005	・・・RING,BACK-UP	1	SN:B20001--
9	07002-11023	・・・O-RING	1	SN:B20001--
10	☆	・・PLUG	1	SN:B20001--
11	723-26-15991	・・UNION	1	SN:B20001--
12	07000-13024	・・O-RING	1	SN:B20001--
13	02896-11018	・・O-RING	1	SN:B20001--
14	07000-11008	・・O-RING	3	SN:B20001--
15	07000-12120	・・O-RING	1	SN:B20001--
16	723-26-15840	・・O-RING	1	SN:B20001--
17	07000-12022	・・O-RING	1	SN:B20001--

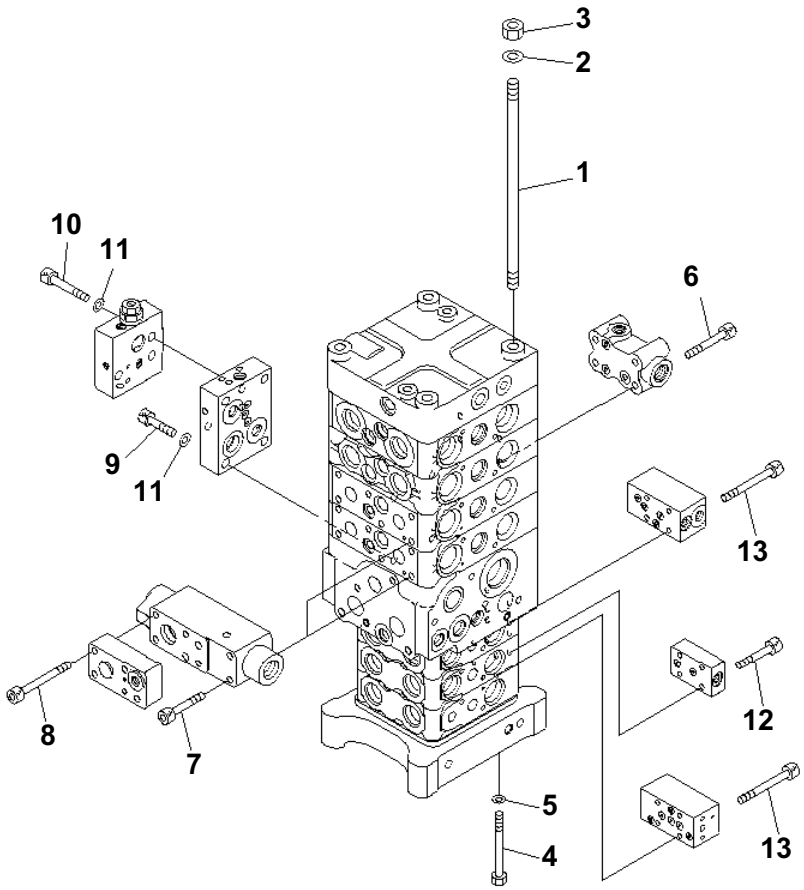

MAIN VALVE (7-VALVE) (13/29) (WITH ARM LOCK VALVE)

Item	Part No.	Description	Qty	Options
	(723-57-16201)	CONTROL VALVE	1	SN:B20091--
	(723-57-16200)	CONTROL VALVE	1	SN:B20001--B20090
		THESE ASSEMBLIES CONSIST OF ALL PARTS SHOWN IN FIGS.Y1662-31A0 TO Y1662-59A0.		
1	723-50-11140	· STUD	4	SN:B20001--
2	01643-31232	· WASHER	4	SN:B20001--
3	01580-11210	· NUT	4	SN:B20001--
4	01011-61085	· BOLT	4	SN:B20001--
5	01643-51032	· WASHER	4	SN:B20001--
6	01252-60850	· BOLT	4	SN:B20001--
7	01252-60865	· BOLT	4	SN:B20001--
8	708-25-19160	· BOLT	8	SN:B20001--
9	01252-61035	· BOLT	4	SN:B20001--
10	01252-61040	· BOLT	3	SN:B20001--
11	01643-51032	· WASHER	7	SN:B20001--
12	01252-60630	· BOLT	4	SN:B20001--
13	01252-60650	· BOLT	8	SN:B20001--

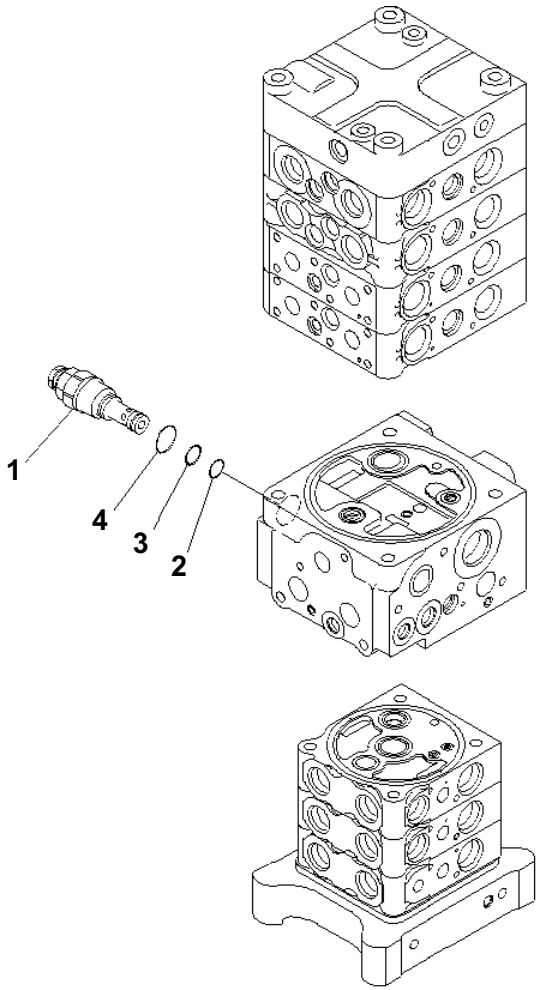

00012079

MAIN VALVE (7-VALVE) (14/29) (WITH ARM LOCK VALVE)

Item	Part No.	Description	Qty	Options
	(723-57-16201)	CONTROL VALVE	1	SN:B20091--
	(723-57-16200)	CONTROL VALVE	1	SN:B20001--B20090
		THESE ASSEMBLIES CONSIST OF ALL PARTS SHOWN IN FIGS.Y1662-31A0 TO Y1662-59A0.		
1	723-40-92303	・ VALVE ASS'Y,RELIEF	1	SN:B20001--
2	700-22-11410	・・ O-RING	1	SN:B20001--
3	700-80-64220	・・ RING	1	SN:B20001--
4	07002-12434	・・ O-RING	1	SN:B20001--

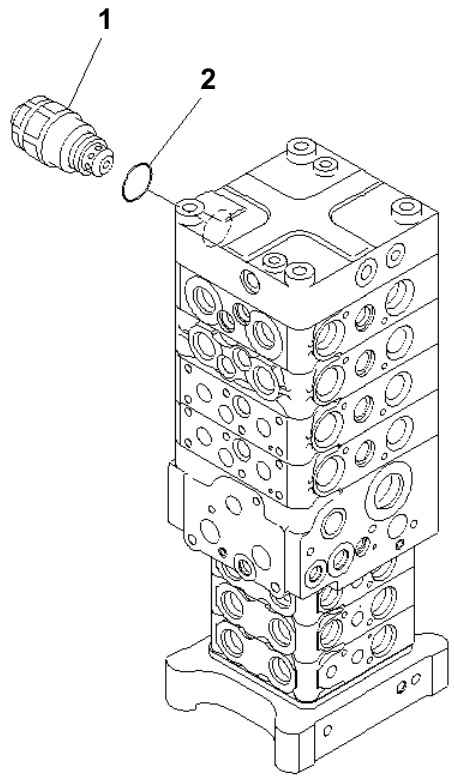

00012080

MAIN VALVE (7-VALVE) (15/29) (WITH ARM LOCK VALVE)

Item	Part No.	Description	Qty	Options
	(723-57-16201)	CONTROL VALVE	1	SN:B20091--
	(723-57-16200)	CONTROL VALVE	1	SN:B20001--B20090
		THESE ASSEMBLIES CONSIST OF ALL PARTS SHOWN IN FIGS.Y1662-31A0 TO Y1662-59A0.		
1	709-90-74200	・VALVE ASS'Y,SUCTION AND SAFETY	1	SN:B20001--
2	07002-13634	・・O-RING	1	SN:B20001--

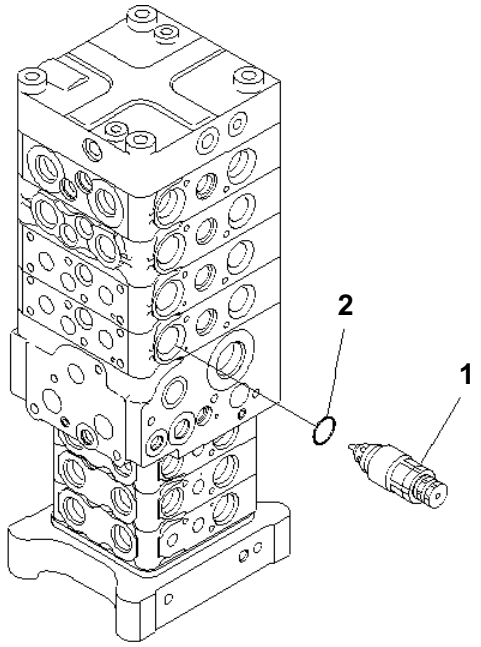

00012081

MAIN VALVE (7-VALVE) (16/29) (WITH ARM LOCK VALVE)

Item	Part No.	Description	Qty	Options
	(723-57-16201)	CONTROL VALVE	1	SN:B20091--
	(723-57-16200)	CONTROL VALVE	1	SN:B20001--B20090
		THESE ASSEMBLIES CONSIST OF ALL PARTS SHOWN IN FIGS.Y1662-31A0 TO Y1662-59A0.		
1	723-90-61600	・ VALVE ASS'Y, SUCTION AND SAFETY	1	SN:B20001--
2	07000-13024	・・ O-RING	1	SN:B20001--

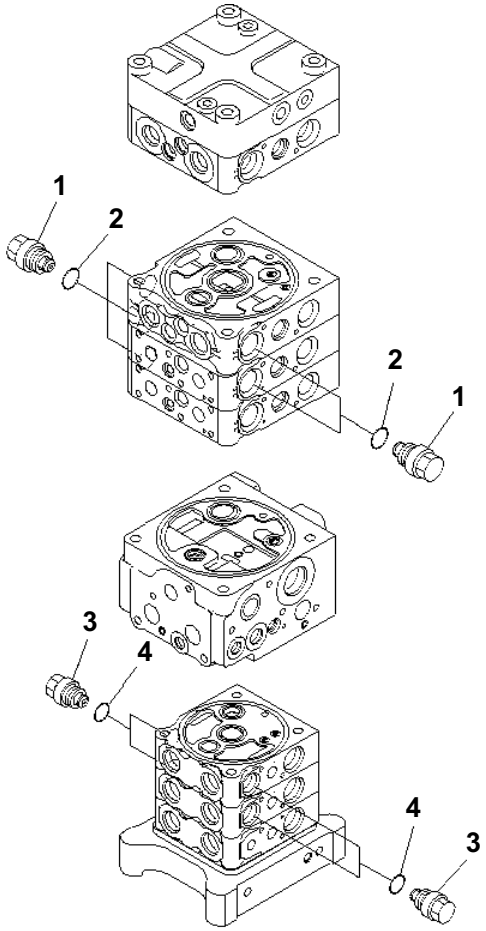

00012082

MAIN VALVE (7-VALVE) (17/29) (WITH ARM LOCK VALVE)

Item	Part No.	Description	Qty	Options
	(723-57-16201)	CONTROL VALVE	1	SN:B20091--
	(723-57-16200)	CONTROL VALVE	1	SN:B20001--B20090
		THESE ASSEMBLIES CONSIST OF ALL PARTS SHOWN IN FIGS.Y1662-31A0 TO Y1662-59A0.		
1	723-40-85100	・ VALVE ASS'Y, SUCTION	5	SN:B20001--
2	709-25-11390	・・ O-RING	1	SN:B20001--
3	723-20-80100	・ VALVE ASS'Y,SUCTION	4	SN:B20001--
4	07002-12034	・・ O-RING	1	SN:B20001--

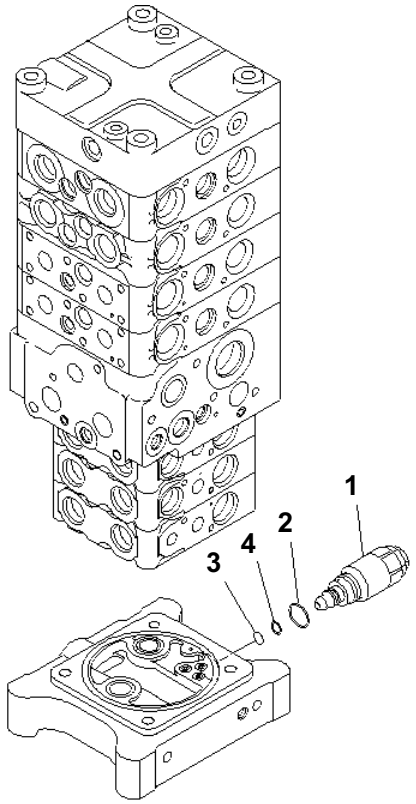

00012083

MAIN VALVE (7-VALVE) (18/29) (WITH ARM LOCK VALVE)

Item	Part No.	Description	Qty	Options
	(723-57-16201)	CONTROL VALVE	1	SN:B20091--
	(723-57-16200)	CONTROL VALVE	1	SN:B20001--B20090
		THESE ASSEMBLIES CONSIST OF ALL PARTS SHOWN IN FIGS.Y1662-31A0 TO Y1662-59A0.		
1	723-50-60200	・ VALVE ASS'Y	1	SN:B20001--
2	709-25-11390	・・ O-RING	1	SN:B20001--
3	07000-12012	・・ O-RING	1	SN:B20001--
4	07001-02012	・・ RING,BACK-UP	1	SN:B20001--

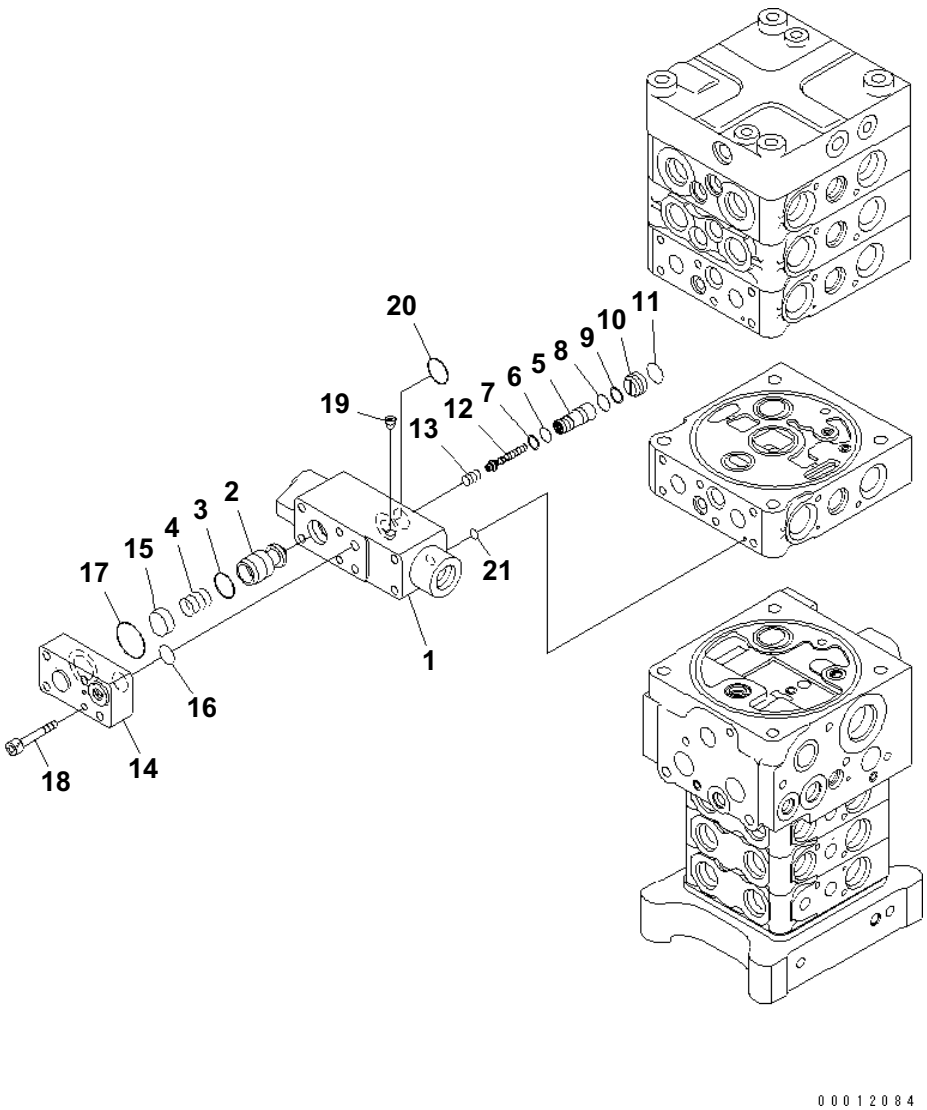

MAIN VALVE (7-VALVE) (19/29) (WITH ARM LOCK VALVE)

Item	Part No.	Description	Qty	Options
	(723-57-16201)	CONTROL VALVE	1	SN:B20091--
	(723-57-16200)	CONTROL VALVE	1	SN:B20001--B20090
		THESE ASSEMBLIES CONSIST OF ALL PARTS SHOWN IN FIGS.Y1662-31A0 TO Y1662-59A0.		
	723-50-53200	・VALVE ASS'Y	1	SN:B20001--
1	☆	・・BLOCK	1	SN:B20001--
2	☆	・・VALVE	1	SN:B20001--
3	702-21-35130	・・SEAL	1	SN:B20001--
4	723-50-53330	・・SPRING	1	SN:B20001--
5	☆	・・SLEEVE	1	SN:B20001--
6	07000-12010	・・O-RING	1	SN:B20001--
7	07001-02010	・・RING	1	SN:B20001--
8	07000-12012	・・O-RING	1	SN:B20001--
9	07001-02012	・・RING,BACK-UP	1	SN:B20001--
10	☆	・・SEAT	1	SN:B20001--
11	07000-12016	・・O-RING	1	SN:B20001--
12	☆	・・PISTON	1	SN:B20001--
13	723-50-53350	・・SPRING	1	SN:B20001--
14	723-50-53270	・・PLATE	1	SN:B20001--
15	723-50-53260	・・RETAINER	1	SN:B20001--
16	07000-12015	・・O-RING	1	SN:B20001--
17	07000-13030	・・O-RING	1	SN:B20001--
18	01252-60630	・・BOLT	1	SN:B20001--
19	☆	・・PLUG	1	SN:B20001--
20	700-13-31161	・・O-RING	3	SN:B20001--
21	07000-11007	・・O-RING	1	SN:B20001--

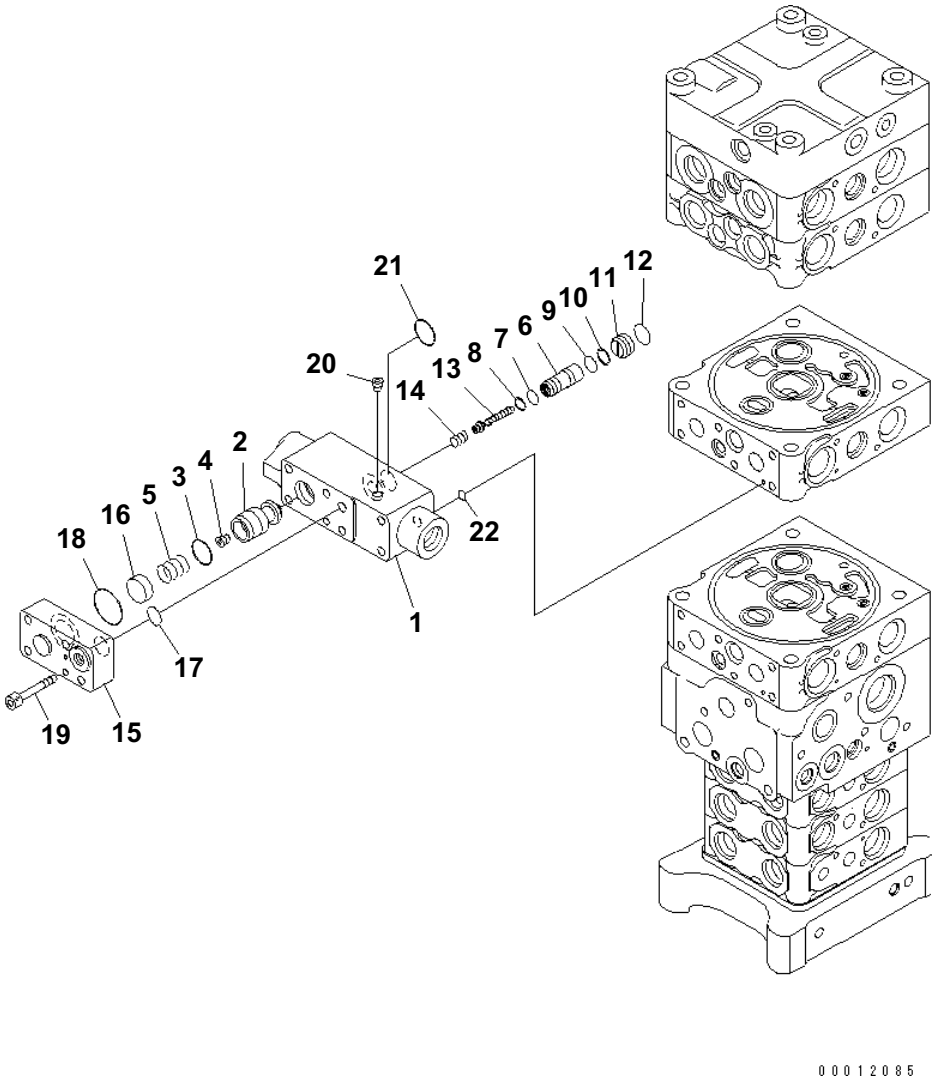

MAIN VALVE (7-VALVE) (20/29) (WITH ARM LOCK VALVE)

Item	Part No.	Description	Qty	Options
	(723-57-16201)	CONTROL VALVE	1	SN:B20091--
	(723-57-16200)	CONTROL VALVE	1	SN:B20001--B20090
		THESE ASSEMBLIES CONSIST OF ALL PARTS SHOWN IN FIGS.Y1662-31A0 TO Y1662-59A0.		
	723-50-53300	・VALVE ASS'Y	1	SN:B20001--
1	☆	・・BLOCK	1	SN:B20001--
2	☆	・・VALVE	1	SN:B20001--
3	702-21-35130	・・SEAL	1	SN:B20001--
4	723-30-51130	・・ORIFICE	1	SN:B20001--
5	723-50-53380	・・SPRING	1	SN:B20001--
6	☆	・・SLEEVE	1	SN:B20001--
7	07000-12010	・・O-RING	1	SN:B20001--
8	07001-02010	・・RING	1	SN:B20001--
9	07000-12012	・・O-RING	1	SN:B20001--
10	07001-02012	・・RING,BACK-UP	1	SN:B20001--
11	☆	・・SEAT	1	SN:B20001--
12	07000-12016	・・O-RING	1	SN:B20001--
13	☆	・・PISTON	1	SN:B20001--
14	723-50-53350	・・SPRING	1	SN:B20001--
15	723-50-53270	・・PLATE	1	SN:B20001--
16	723-50-53260	・・RETAINER	1	SN:B20001--
17	07000-12015	・・O-RING	1	SN:B20001--
18	07000-13030	・・O-RING	1	SN:B20001--
19	01252-60630	・・BOLT	1	SN:B20001--
20	☆	・・PLUG	1	SN:B20001--
21	700-13-31161	・・O-RING	3	SN:B20001--
22	07000-11007	・・O-RING	1	SN:B20001--

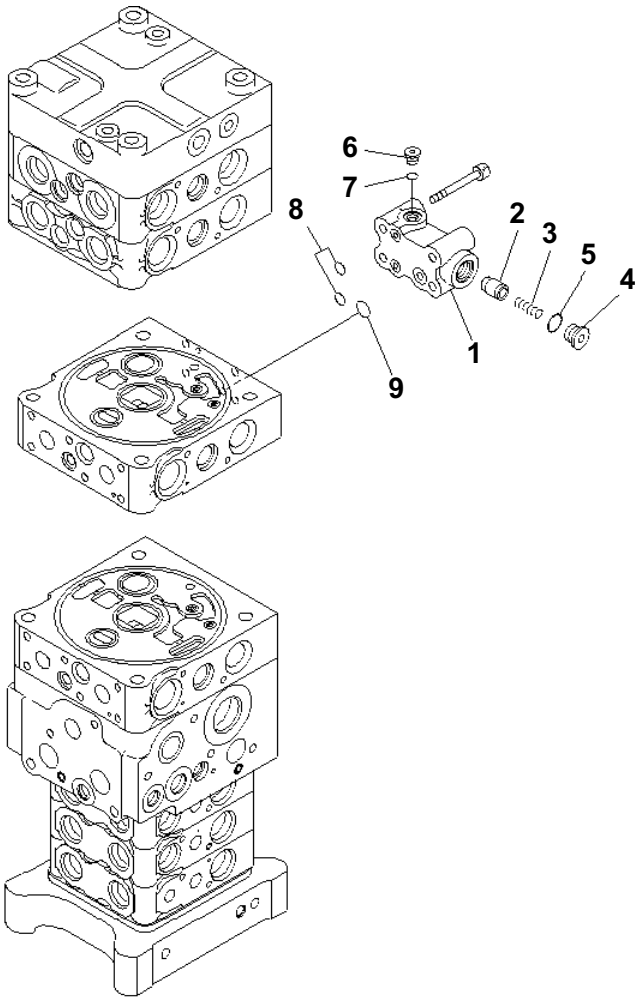

MAIN VALVE (7-VALVE) (21/29) (WITH ARM LOCK VALVE)

Item	Part No.	Description	Qty	Options
	(723-57-16201)	CONTROL VALVE	1	SN:B20091--
	(723-57-16200)	CONTROL VALVE	1	SN:B20001--B20090
		THESE ASSEMBLIES CONSIST OF ALL PARTS SHOWN IN FIGS.Y1662-31A0 TO Y1662-59A0.		
	723-50-54200	・ VALVE ASS'Y	1	SN:B20001--
1	☆	・・ BLOCK	1	SN:B20001--
2	☆	・・ VALVE	1	SN:B20001--
3	723-56-31620	・・ SPRING	1	SN:B20001--
4	723-56-31630	・・ PLUG	1	SN:B20001--
5	07002-11623	・・ O-RING	1	SN:B20001--
6	723-11-18190	・・ PLUG	1	SN:B20001--
7	07002-11023	・・ O-RING	1	SN:B20001--
8	07000-11009	・・ O-RING	2	SN:B20001--
9	708-2L-25490	・・ O-RING	1	SN:B20001--

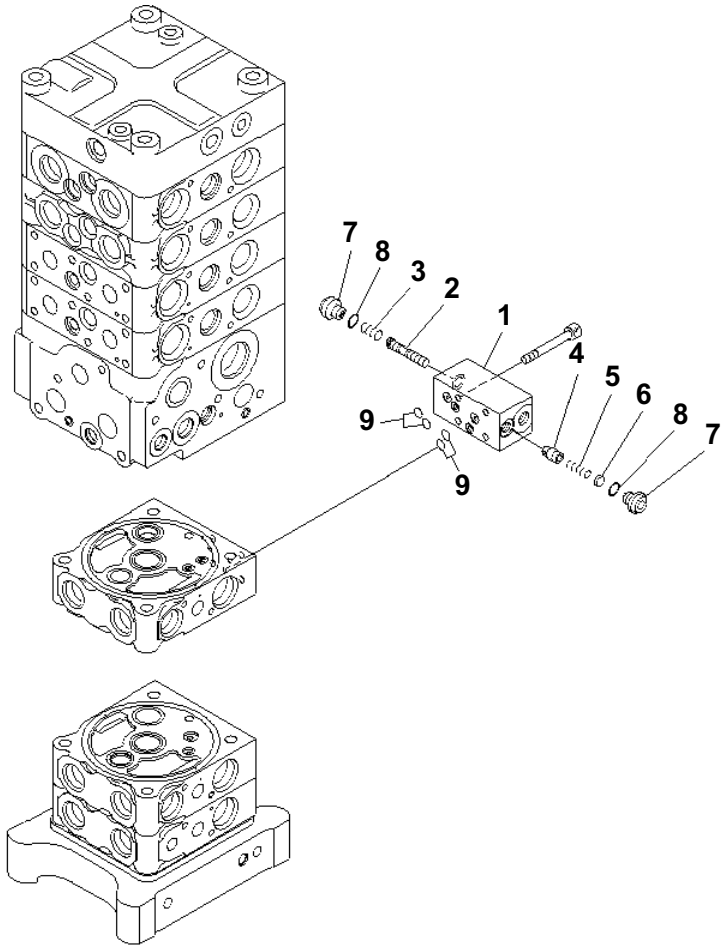

MAIN VALVE (7-VALVE) (22/29) (WITH ARM LOCK VALVE)

Item	Part No.	Description	Qty	Options
	(723-57-16201)	CONTROL VALVE	1	SN:B20091--
	(723-57-16200)	CONTROL VALVE	1	SN:B20001--B20090
		THESE ASSEMBLIES CONSIST OF ALL PARTS SHOWN IN FIGS.Y1662-31A0 TO Y1662-59A0.		
	723-20-95200	・VALVE ASS'Y	1	SN:B20001--
1	☆	・・BLOCK	1	SN:B20001--
2	☆	・・SPOOL	1	SN:B20001--
3	723-11-27830	・・SPRING	1	SN:B20001--
4	☆	・・VALVE	1	SN:B20001--
5	723-11-18180	・・SPRING	1	SN:B20001--
6	723-20-95140	・・SPACER	1	SN:B20001--
7	723-11-27850	・・PLUG	2	SN:B20001--
8	07002-11023	・・O-RING	2	SN:B20001--
9	07000-11007	・・O-RING	4	SN:B20001--

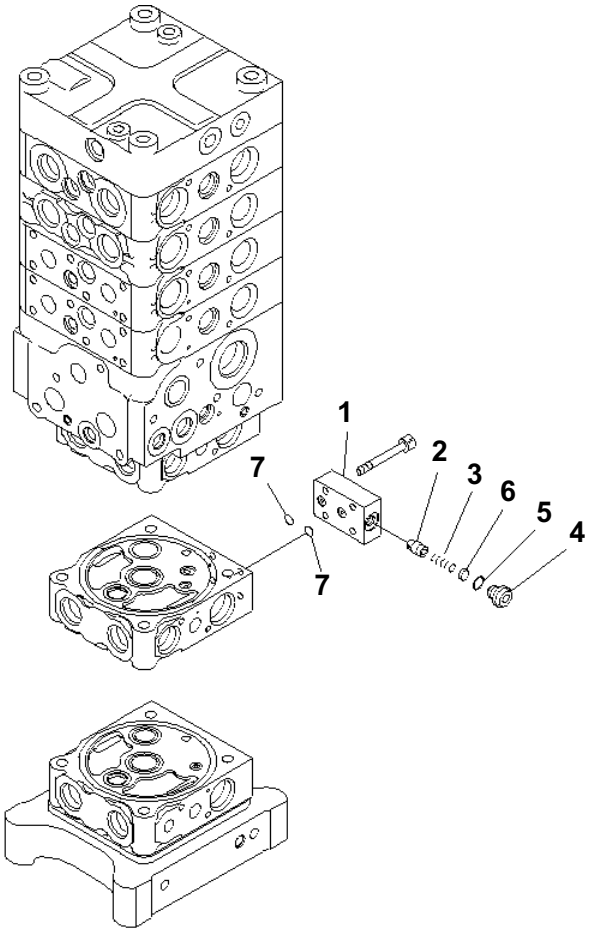

00012088

PC160LC-7B S/N B20001 AND UP

MAIN VALVE (7-VALVE) (23/29) (WITH ARM LOCK VALVE)

Item	Part No.	Description	Qty	Options
	(723-57-16201)	CONTROL VALVE	1	SN:B20091--
	(723-57-16200)	CONTROL VALVE THESE ASSEMBLIES CONSIST OF ALL PARTS SHOWN IN FIGS.Y1662-31A0 TO Y1662-59A0.	1	SN:B20001--B20090
	723-20-95100	・VALVE ASS'Y	1	SN:B20001--
1	☆	・・BLOCK	1	SN:B20001--
2	☆	・・VALVE	1	SN:B20001--
3	723-11-18180	・・SPRING	1	SN:B20001--
4	723-11-27850	・・PLUG	1	SN:B20001--
5	07002-11023	・・O-RING	1	SN:B20001--
6	723-20-95140	・・SPACER	1	SN:B20001--
7	07000-11007	・・O-RING	2	SN:B20001--

Ref. Y1662-53A0 Page 450770

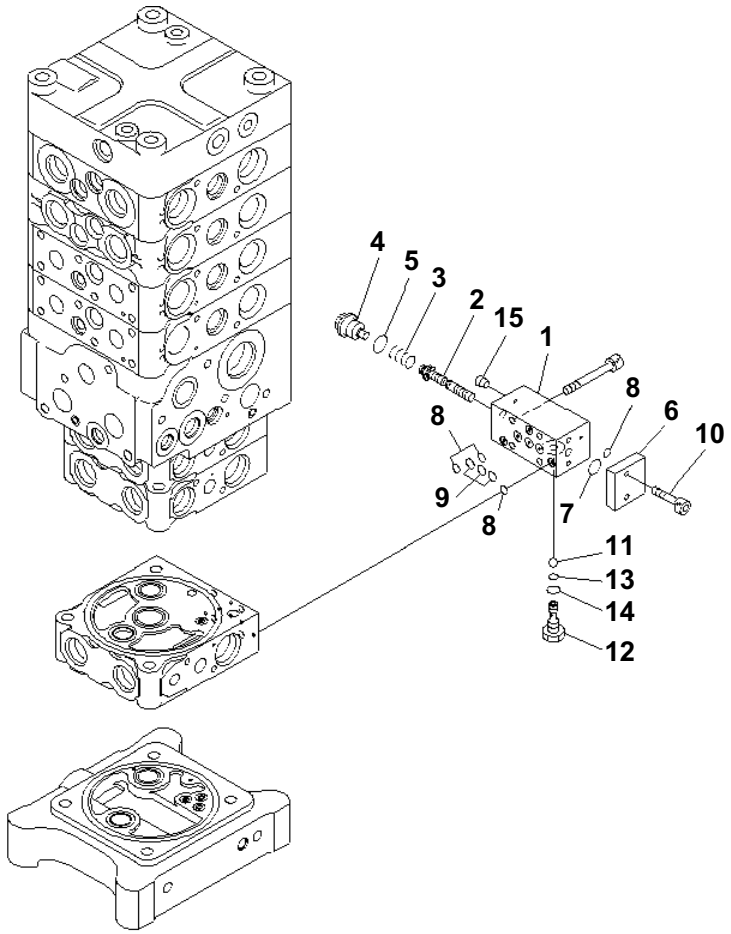

MAIN VALVE (7-VALVE) (24/29) (WITH ARM LOCK VALVE)

Item	Part No.	Description	Qty	Options
	(723-57-16201)	CONTROL VALVE	1	SN:B20091--
	(723-57-16200)	CONTROL VALVE	1	SN:B20001--B20090
		THESE ASSEMBLIES CONSIST OF ALL PARTS SHOWN IN FIGS.Y1662-31A0 TO Y1662-59A0.		
	723-20-94100	・ VALVE ASS'Y	1	SN:B20001--
1	☆	・・ BLOCK	1	SN:B20001--
2	☆	・・ SPOOL	1	SN:B20001--
3	723-20-94150	・・ SPRING	1	SN:B20001--
4	723-20-94130	・・ PLUG	1	SN:B20001--
5	07002-11623	・・ O-RING	1	SN:B20001--
6	723-20-94140	・・ FLANGE	1	SN:B20001--
7	07000-12011	・・ O-RING	1	SN:B20001--
8	07000-11006	・・ O-RING	4	SN:B20001--
9	07000-11007	・・ O-RING	3	SN:B20001--
10	01252-60616	・・ BOLT	2	SN:B20001--
11	☆	・・ BALL	1	SN:B20001--
12	☆	・・ PLUG	1	SN:B20001--
13	07000-11003	・・ O-RING	1	SN:B20001--
14	07002-10823	・・ O-RING	1	SN:B20001--
15	☆	・・ PLUG	1	SN:B20001--

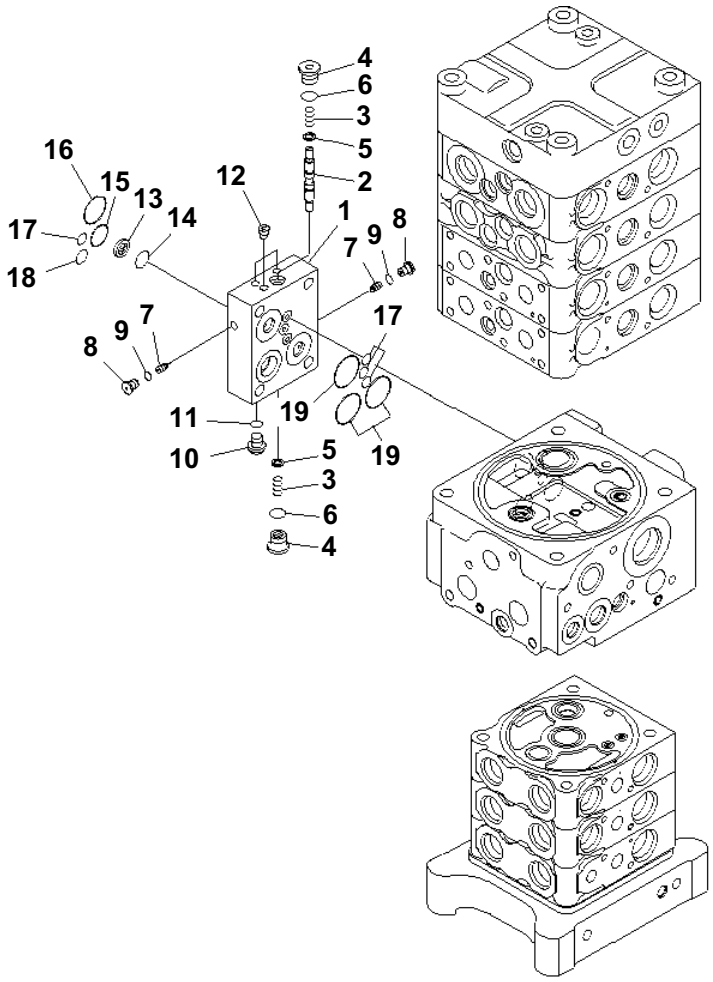

MAIN VALVE (7-VALVE) (25/29) (WITH ARM LOCK VALVE)

Item	Part No.	Description	Qty	Options
	(723-57-16201)	CONTROL VALVE	1	SN:B20091--
	(723-57-16200)	CONTROL VALVE	1	SN:B20001--B20090
		THESE ASSEMBLIES CONSIST OF ALL PARTS SHOWN IN FIGS.Y1662-31A0 TO Y1662-59A0.		
	723-50-61100	・ VALVE ASS'Y	1	SN:B20001--
1	☆	・・ BLOCK	1	SN:B20001--
2	☆	・・ SPOOL	1	SN:B20001--
3	723-50-61340	・・ SPRING	2	SN:B20001--
4	723-50-61330	・・ PLUG	2	SN:B20001--
5	723-50-61350	・・ SPACER	2	SN:B20001--
6	07002-11423	・・ O-RING	2	SN:B20001--
7	☆	・・ VALVE	2	SN:B20001--
8	723-11-27280	・・ PLUG	2	SN:B20001--
9	07002-10823	・・ O-RING	2	SN:B20001--
10	708-8E-16160	・・ PLUG	1	SN:B20001--
11	07002-11023	・・ O-RING	1	SN:B20001--
12	☆	・・ PLUG	3	SN:B20001--
13	702-21-53120	・・ FILTER	1	SN:B20001--
14	702-21-55420	・・ O-RING	1	SN:B20001--
15	702-21-55520	・・ O-RING	1	SN:B20001--
16	702-21-55440	・・ O-RING	1	SN:B20001--
17	07000-11008	・・ O-RING	4	SN:B20001--
18	07000-12010	・・ O-RING	1	SN:B20001--
19	700-93-11320	・・ O-RING	3	SN:B20001--

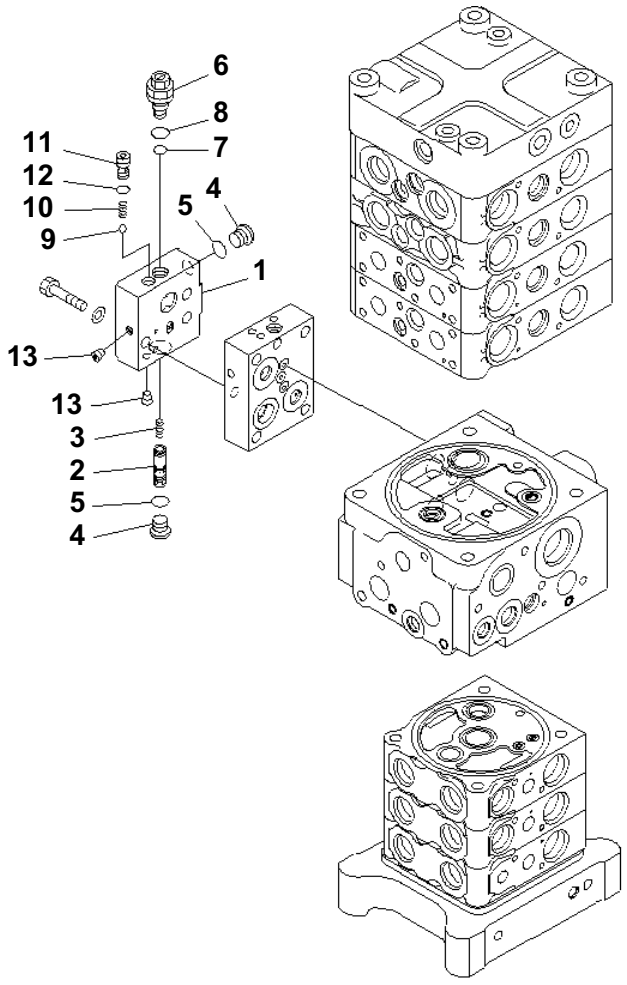

00012091

MAIN VALVE (7-VALVE) (26/29) (WITH ARM LOCK VALVE)

Item	Part No.	Description	Qty	Options
	(723-57-16201)	CONTROL VALVE	1	SN:B20091--
	(723-57-16200)	CONTROL VALVE	1	SN:B20001--B20090
		THESE ASSEMBLIES CONSIST OF ALL PARTS SHOWN IN FIGS.Y1662-31A0 TO Y1662-59A0.		
	723-50-62100	・ VALVE ASS'Y	1	SN:B20001--
1	☆	・・ BLOCK	1	SN:B20001--
2	☆	・・ SPOOL	1	SN:B20001--
3	702-21-55640	・・ SPRING	1	SN:B20001--
4	702-21-55620	・・ PLUG	2	SN:B20001--
5	07002-11423	・・ O-RING	2	SN:B20001--
6	723-40-91600	・・ VALVE ASS'Y,RELIEF	1	SN:B20001--
7	702-16-53920	・・・ O-RING	1	SN:B20001--
8	07002-11623	・・・ O-RING	1	SN:B20001--
9	04260-00793	・・ BALL	1	SN:B20001--
10	702-21-55720	・・ SPRING	1	SN:B20001--
11	702-21-55710	・・ SEAT	1	SN:B20001--
12	07000-11009	・・ O-RING	1	SN:B20001--
13	☆	・・ PLUG	2	SN:B20001--

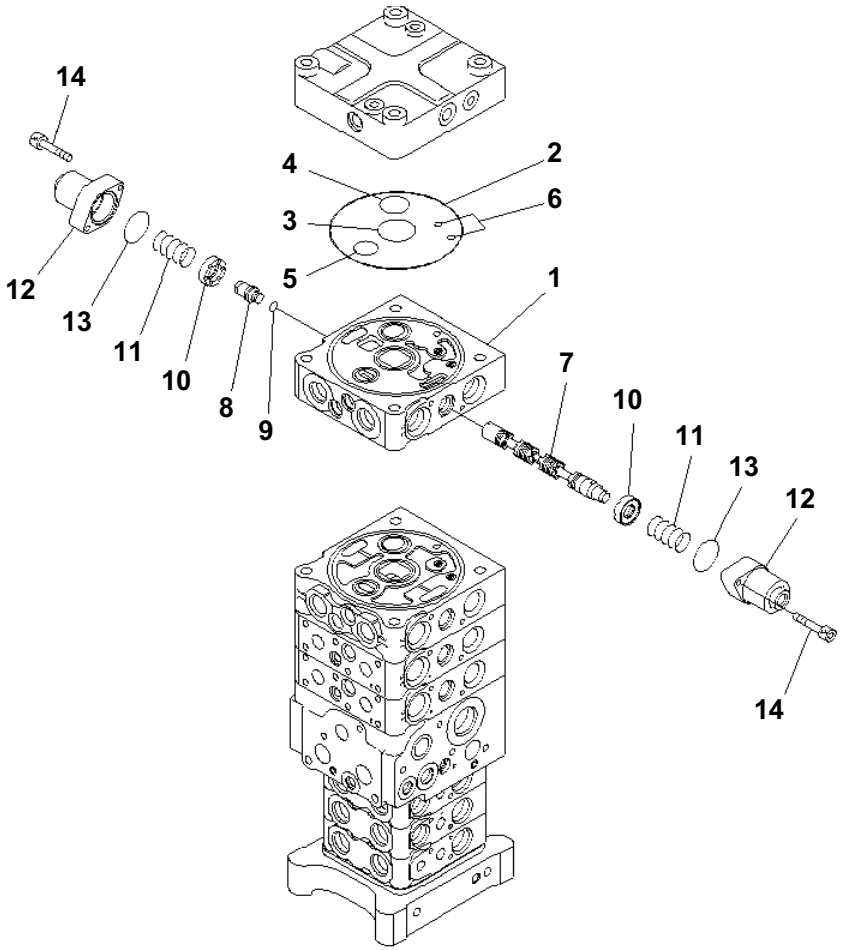

MAIN VALVE (7-VALVE) (27/29) (WITH ARM LOCK VALVE)

Item	Part No.	Description	Qty	Options
	(723-57-16201)	CONTROL VALVE	1	SN:B20091--
	(723-57-16200)	CONTROL VALVE	1	SN:B20001--B20090
		THESE ASSEMBLIES CONSIST OF ALL PARTS SHOWN IN FIGS.Y1662-31A0 TO Y1662-59A0.		
	723-51-03200	・ VALVE ASS'Y	1	SN:B20001--
1	☆	・・ BLOCK,VALVE	1	SN:B20001--
2	144-14-54610	・・ O-RING	1	SN:B20001--
3	723-56-31720	・・ O-RING	1	SN:B20001--
4	723-56-31730	・・ O-RING	1	SN:B20001--
5	702-75-11520	・・ O-RING	1	SN:B20001--
6	07000-11008	・・ O-RING	2	SN:B20001--
7	☆	・・ SPOOL	1	SN:B20001--
8	723-56-31130	・・ PLUG	1	SN:B20001--
9	07002-11223	・・ O-RING	1	SN:B20001--
10	723-56-31211	・・ RETAINER	2	SN:B20001--
11	723-36-14110	・・ SPRING	2	SN:B20001--
12	723-56-31510	・・ CASE	2	SN:B20001--
13	702-21-55450	・・ O-RING	2	SN:B20001--
14	01252-60630	・・ BOLT	4	SN:B20001--

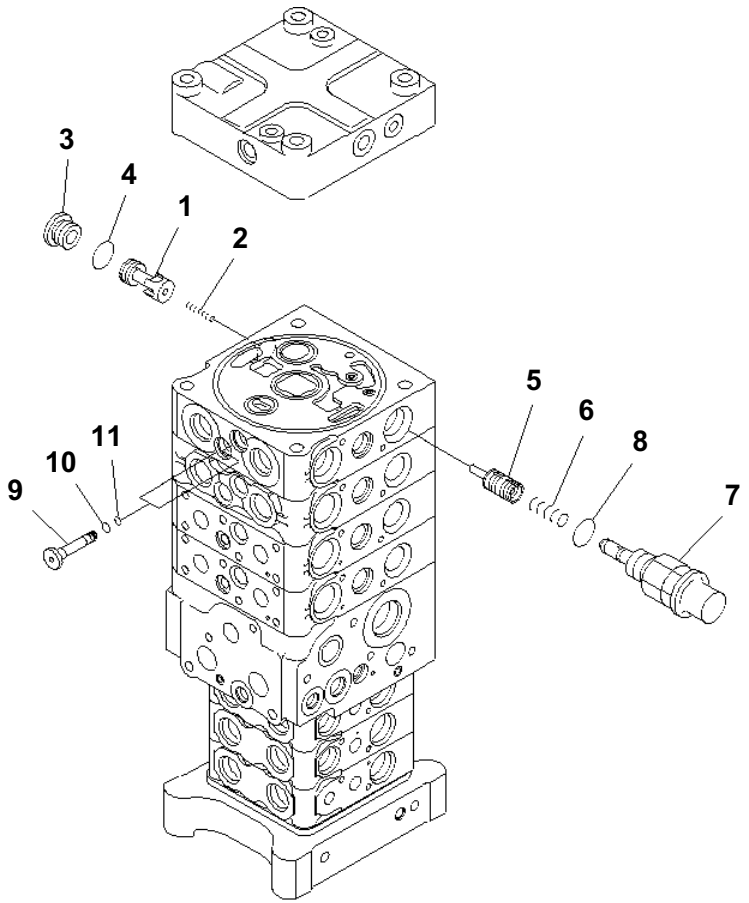

MAIN VALVE (7-VALVE) (28/29) (WITH ARM LOCK VALVE)

Item	Part No.	Description	Qty	Options
	(723-57-16201)	CONTROL VALVE	1	SN:B20091--
	(723-57-16200)	CONTROL VALVE THESE ASSEMBLIES CONSIST OF ALL PARTS SHOWN IN FIGS.Y1662-31A0 TO Y1662-59A0.	1	SN:B20001--B20090
	(723-51-03200)	・ VALVE ASS'Y	1	SN:B20001--
1	☆	・・ VALVE	1	SN:B20001--
2	723-56-41710	・・ SPRING	1	SN:B20001--
3	723-26-15230	・・ PLUG	1	SN:B20001--
4	07002-12434	・・ O-RING	1	SN:B20001--
5	☆	・・ VALVE	1	SN:B20001--
6	723-56-41750	・・ SPRING	1	SN:B20001--
7	723-50-42103	・・ VALVE ASS'Y	1	SN:B20001--
8	07000-13024	・・・ O-RING	1	SN:B20001--
9	723-56-31640	・・ PLUG	2	SN:B20001--
10	07002-11623	・・ O-RING	2	SN:B20001--
11	07000-11008	・・ O-RING	2	SN:B20001--

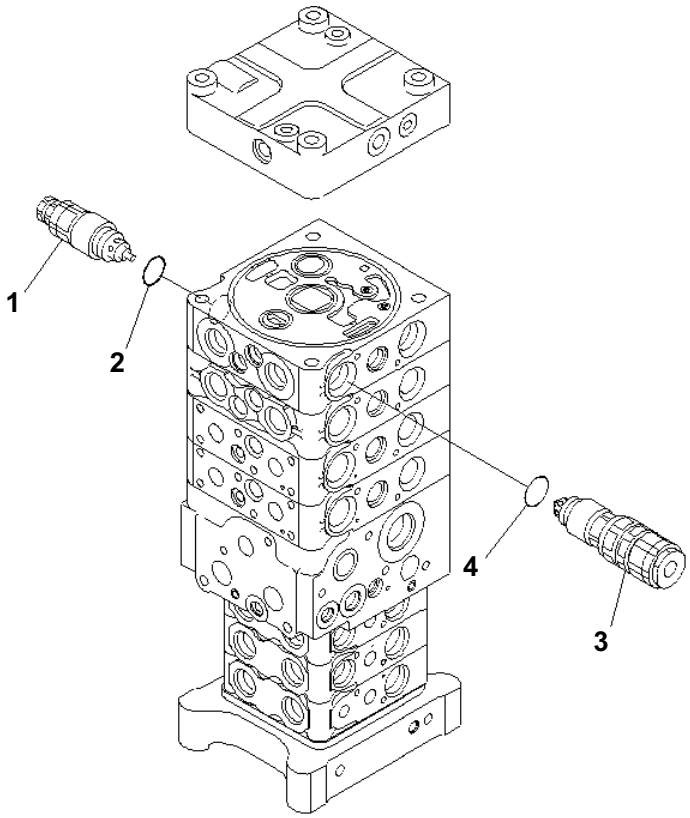

00012094

MAIN VALVE (7-VALVE) (29/29) (WITH ARM LOCK VALVE)

Item	Part No.	Description	Qty	Options
	(723-57-16201)	CONTROL VALVE	1	SN:B20091--
	(723-57-16200)	CONTROL VALVE THESE ASSEMBLIES CONSIST OF ALL PARTS SHOWN IN FIGS.Y1662-31A0 TO Y1662-59A0.	1	SN:B20001--B20090
	(723-51-03200)	・ VALVE ASS'Y	1	SN:B20001--
1	723-90-61400	・・ VALVE ASS'Y, SUCTION AND SAFETY	1	SN:B20001--
2	07000-13024	・・・ O-RING	1	SN:B20001--
3	723-90-76101	・・ VALVE ASS'Y, SUCTION AND SAFETY	1	SN:B20001--
4	07000-13024	・・・ O-RING	1	SN:B20001--

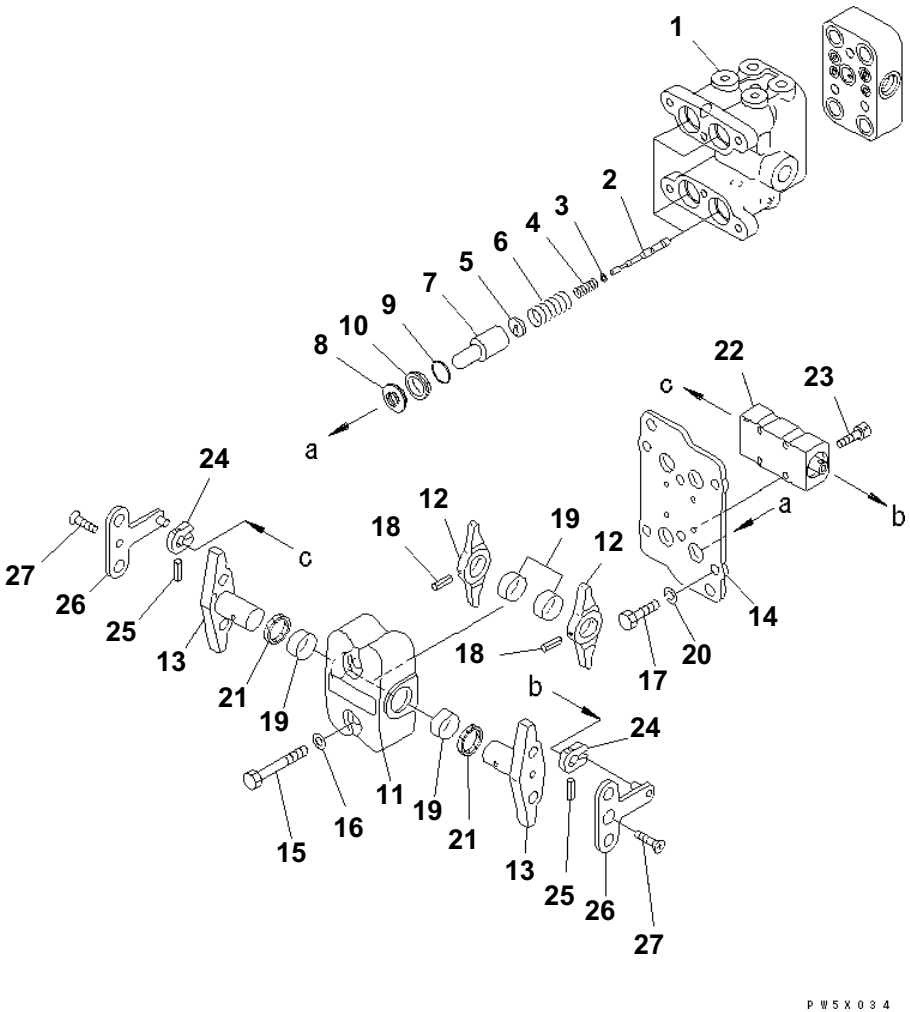

PPC VALVE (FOR TRAVEL) (1/2) (#B20001-B20199)

Item	Part No.	Description	Qty	Options
	(702-16-03730)	PILOT VALVE THESE ASSEMBLIES CONSISTS OF ALL PARTS SHOWN IN FIGS.Y1670-01A0 AND Y1670-02A0.	1	SN:B20001--B20199
1	☆	· BODY,VALVE	1	SN:B20001--B20199
2	☆	· VALVE	4	SN:B20001--B20199
3	702-16-51140	· SHIM¤ 0.30MM	4	SN:B20001--B20199
4	702-16-53420	· SPRING	4	SN:B20001--B20199
5	702-16-53140	· RETAINER	4	SN:B20001--B20199
6	702-16-57210	· SPRING	4	SN:B20001--B20199
7	702-16-53170	· PISTON	4	SN:B20001--B20199
8	702-16-51270	· SEAL	4	SN:B20001--B20199
9	07000-12020	· O-RING	4	SN:B20001--B20199
10	702-16-54170	· COLLAR	4	SN:B20001--B20199
11	702-16-54311	· CASE	1	SN:B20001--B20199
12	☆	· LEVER	2	SN:B20001--B20199
13	☆	· SHAFT	2	SN:B20001--B20199
14	☆	· PLATE	1	SN:B20001--B20199
15	01010-80855	· BOLT	2	SN:B20001--B20199
16	01643-30823	· WASHER	2	SN:B20001--B20199
17	01010-80816	· BOLT	4	SN:B20001--B20199
18	04025-00432	· PIN,SPRING	2	SN:B20001--B20199
19	702-16-54430	· BUSHING	4	SN:B20001--B20199
20	☆	· WASHER¤ 1.60MM	4	SN:B20001--B20199
	☆	· WASHER¤ 1.30MM	4	SN:B20001--B20199
	☆	· WASHER¤ 1.00MM	4	SN:B20001--B20199
21	702-16-54280	· SEAL,DUST	2	SN:B20001--B20199
22	(★702-16-54900)	· DAMPER ASS'Y	1	SN:B20001--B20199
23	01252-60525	· BOLT	4	SN:B20001--B20199
24	702-16-54511	· PLATE	2	SN:B20001--B20199
25	04025-00420	· PIN,SPRING	2	SN:B20001--B20199
26	702-16-54520	· LEVER	2	SN:B20001--B20199
27	01224-40612	· SCREW	2	SN:B20001--B20199

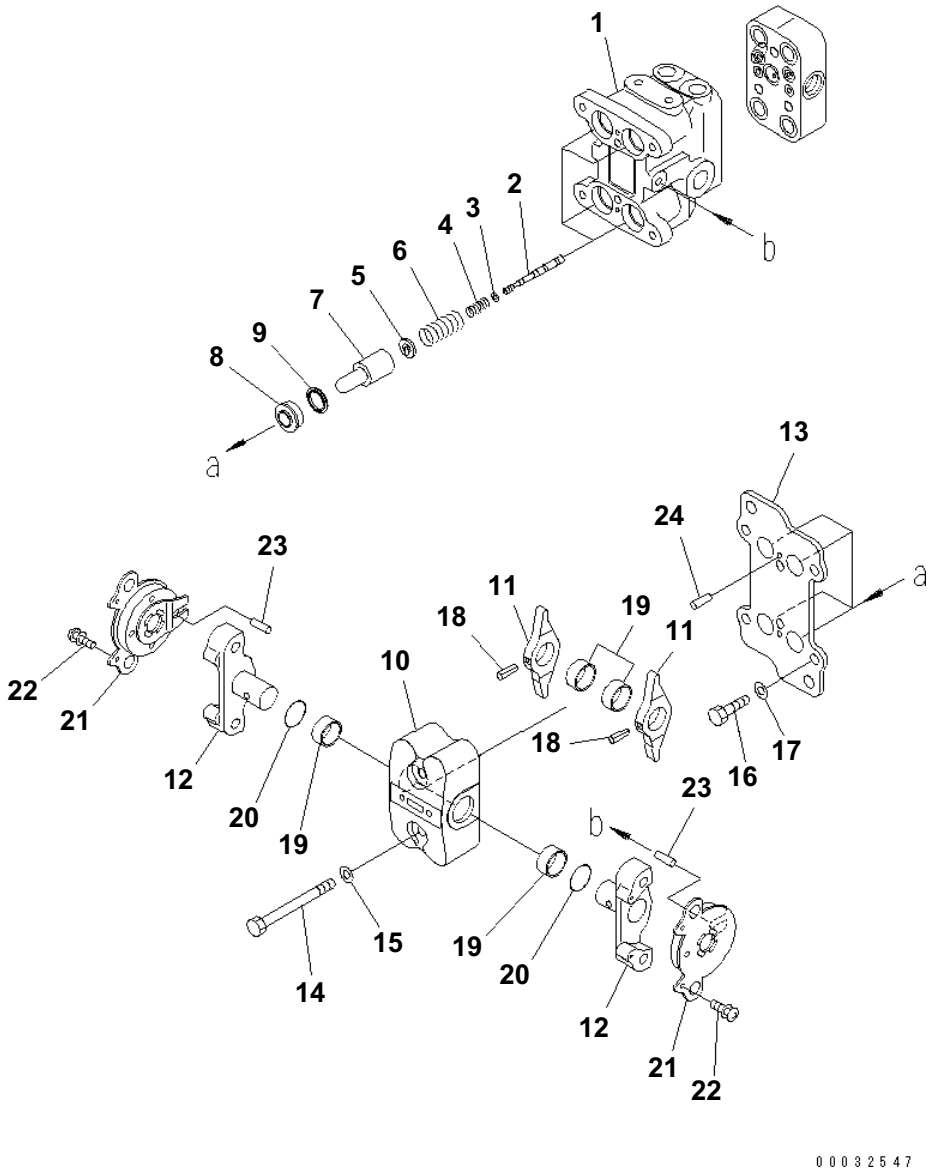

PPC VALVE (FOR TRAVEL) (OPERATOR'S CAB) (1/2)(#B20200-)

Item	Part No.	Description	Qty	Options
	(702-16-04250)	PILOT VALVE THESE ASSEMBLIES CONSISTS OF ALL PARTS SHOWN IN FIGS.Y1670-01A1 AND Y1670-02A1.	1	SN:B20200--
1	☆	· BODY,VALVE	1	SN:B20200--
2	☆	· VALVE	4	SN:B20200--
3	702-16-51140	· SHIM¤ 0.30MM	4	SN:B20200--
4	702-16-53420	· SPRING	4	SN:B20200--
5	702-16-53140	· RETAINER	4	SN:B20200--
6	702-16-54420	· SPRING	4	SN:B20200--
7	702-16-53170	· PISTON	4	SN:B20200--
8	702-16-71150	· SEAL	4	SN:B20200--
9	702-16-71160	· SEAT	4	SN:B20200--
10	702-16-73630	· CASE	1	SN:B20200--
11	☆	· LEVER	2	SN:B20200--
12	☆	· SHAFT	2	SN:B20200--
13	☆	· PLATE	1	SN:B20200--
14	01010-80855	· BOLT	2	SN:B20200--
15	01643-30823	· WASHER	2	SN:B20200--
16	01010-80816	· BOLT	4	SN:B20200--
17	702-16-54331	· WASHER¤ 1.60MM	4	SN:B20200--
	702-16-54341	· WASHER¤ 1.30MM	4	SN:B20200--
	702-16-54351	· WASHER¤ 1.00MM	4	SN:B20200--
18	04025-00432	· PIN,SPRING	2	SN:B20200--
19	702-16-54430	· BUSHING	4	SN:B20200--
20	07000-12018	· O-RING	2	SN:B20200--
21	(★702-16-73610)	· DAMPER ASS'Y	2	SN:B20200--
22	01023-10306	· SCREW	4	SN:B20200--
23	702-16-73650	· PIN	2	SN:B20200--
24	04022-04016	· PIN,DOWEL	2	SN:B20200--

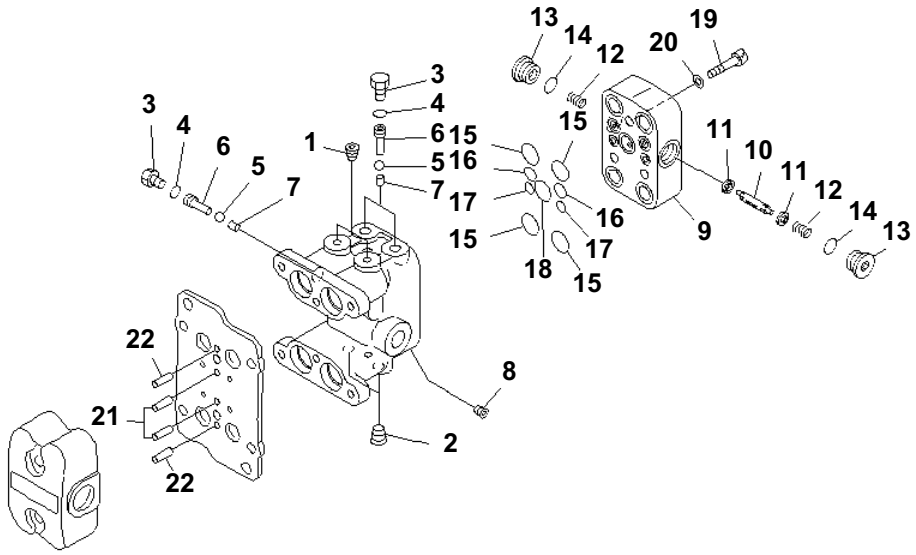

PPC VALVE (FOR TRAVEL) (2/2) (#B20001-B20199)

Item	Part No.	Description	Qty	Options
	(702-16-03730)	PILOT VALVE THESE ASSEMBLIES CONSISTS OF ALL PARTS SHOWN IN FIGS.Y1670-01A0 AND Y1670-02A0.	1	SN:B20001--B20199
1	☆	· PLUG	2	SN:B20001--B20199
2	☆	· PLUG	2	SN:B20001--B20199
3	07040-11209	· PLUG	3	SN:B20001--B20199
4	07002-11223	· O-RING	3	SN:B20001--B20199
5	☆	· BALL	3	SN:B20001--B20199
6	702-16-55940	· PLUG	3	SN:B20001--B20199
7	702-16-55950	· SEAT	3	SN:B20001--B20199
8	☆	· SCREW	2	SN:B20001--B20199
9	☆	· BODY, VALVE	1	SN:B20001--B20199
10	☆	· SPOOL	1	SN:B20001--B20199
11	702-16-57440	· RETAINER	2	SN:B20001--B20199
12	702-16-57450	· SPRING	2	SN:B20001--B20199
13	723-11-15110	· PLUG	2	SN:B20001--B20199
14	07002-11623	· O-RING	2	SN:B20001--B20199
15	07000-12015	· O-RING	4	SN:B20001--B20199
16	07000-11010	· O-RING	2	SN:B20001--B20199
17	07000-11007	· O-RING	2	SN:B20001--B20199
18	700-22-11410	· O-RING	1	SN:B20001--B20199
19	01252-60835	· BOLT	3	SN:B20001--B20199
20	01643-50823	· WASHER	3	SN:B20001--B20199
21	04022-04016	· PIN, DOWEL	2	SN:B20001--B20199
22	04022-04010	· PIN, DOWEL	2	SN:B20001--B20199

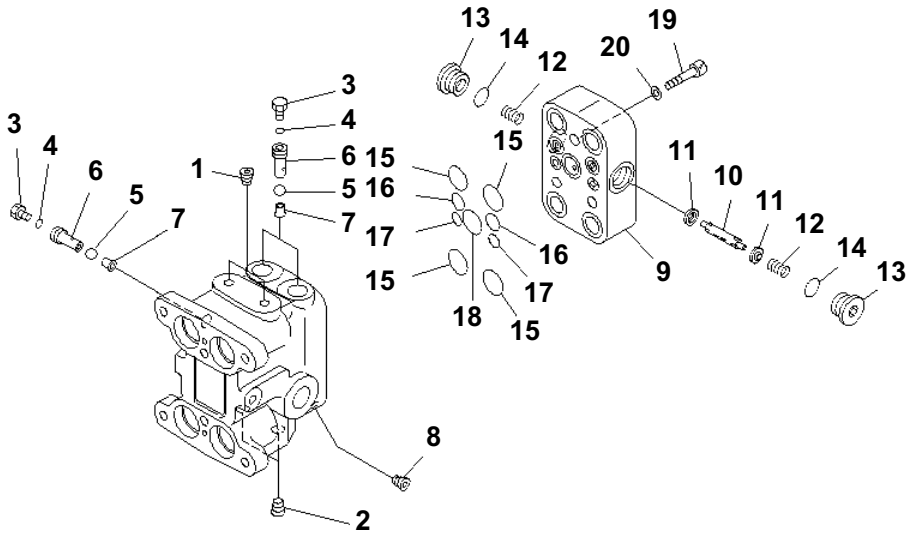

PPC VALVE (FOR TRAVEL) (OPERATOR'S CAB) (2/2)(#B20200-)

Item	Part No.	Description	Qty	Options
	(702-16-04250)	PILOT VALVE THESE ASSEMBLIES CONSISTS OF ALL PARTS SHOWN IN FIGS.Y1670-01A1 AND Y1670-02A1.	1	SN:B20200--
1	☆	・PLUG	2	SN:B20200--
2	☆	・PLUG	2	SN:B20200--
3	07040-11209	・PLUG	3	SN:B20200--
4	07002-11223	・O-RING	3	SN:B20200--
5	☆	・BALL	3	SN:B20200--
6	702-16-55940	・PLUG	3	SN:B20200--
7	702-16-55950	・SEAT	3	SN:B20200--
8	☆	・SCREW	2	SN:B20200--
9	☆	・BODY,VALVE	1	SN:B20200--
10	☆	・SPOOL	1	SN:B20200--
11	702-16-57440	・RETAINER	2	SN:B20200--
12	702-16-57450	・SPRING	2	SN:B20200--
13	723-11-15110	・PLUG	2	SN:B20200--
14	07002-11623	・O-RING	2	SN:B20200--
15	07000-12015	・O-RING	4	SN:B20200--
16	07000-11010	・O-RING	2	SN:B20200--
17	07000-11007	・O-RING	2	SN:B20200--
18	700-22-11410	・O-RING	1	SN:B20200--
19	01252-60835	・BOLT	3	SN:B20200--
20	01643-50823	・WASHER	3	SN:B20200--

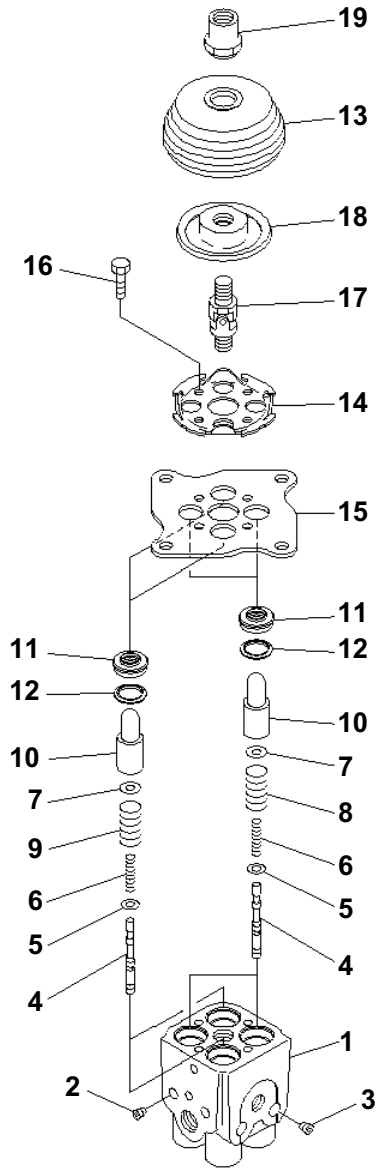

PPC VALVE (FOR WORK EQUIPMENT) (#B20001-B20199)

Item	Part No.	Description	Qty	Options
	702-16-03530	PILOT VALVE	1	SN:B20001--B20199
1	☆	· BODY,VALVE	1	SN:B20001--B20199
2	☆	· PLUG	2	SN:B20001--B20199
3	☆	· PLUG	2	SN:B20001--B20199
4	☆	· VALVE	4	SN:B20001--B20199
5	702-16-51140	· SHIM¤ 0.30MM	4	SN:B20001--B20199
6	702-16-53420	· SPRING	4	SN:B20001--B20199
7	702-16-53140	· RETAINER	4	SN:B20001--B20199
8	702-16-53470	· SPRING	2	SN:B20001--B20199
9	702-16-53590	· SPRING	2	SN:B20001--B20199
10	702-16-53170	· PISTON	4	SN:B20001--B20199
11	702-16-71150	· SEAL	4	SN:B20001--B20199
12	702-16-71160	· SEAT	4	SN:B20001--B20199
13	702-16-71280	· BOOT	1	SN:B20001--B20199
14	702-16-71131	· PLATE	1	SN:B20001--B20199
15	702-16-71141	· PLATE	1	SN:B20001--B20199
16	01010-80620	· BOLT	4	SN:B20001--B20199
17	702-16-51240	· JOINT,UNIVERSAL	1	SN:B20001--B20199
18	702-16-71361	· DISC	1	SN:B20001--B20199
19	702-16-71441	· NUT	1	SN:B20001--B20199

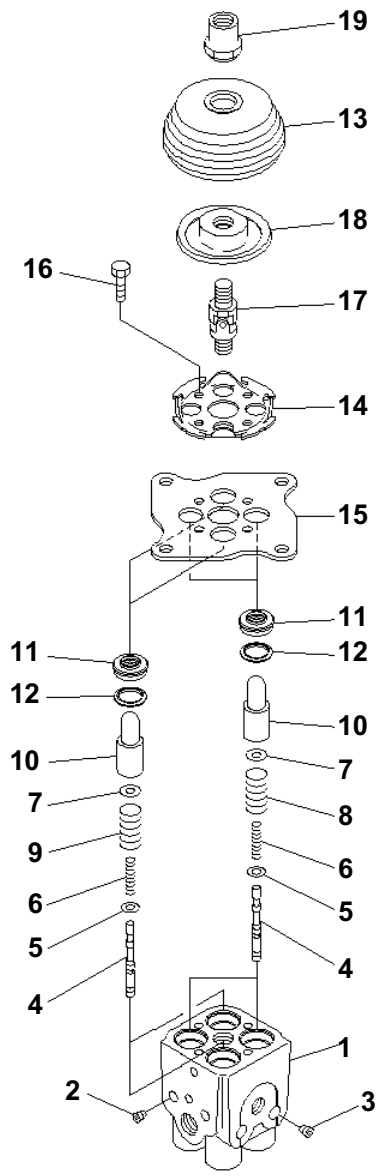

PC160LC-7B S/N B20001 AND UP

PPC VALVE (FOR WORK EQUIPMENT) (#B20200-)

Item	Part No.	Description	Qty	Options
	702-16-03910	PILOT VALVE	1	SN:B20200--
1	☆	· BODY,VALVE	1	SN:B20200--
2	☆	· PLUG	2	SN:B20200--
3	☆	· PLUG	2	SN:B20200--
4	☆	· VALVE	4	SN:B20200--
5	702-16-51140	· SHIM¤ 0.30MM	4	SN:B20200--
6	702-16-53420	· SPRING	4	SN:B20200--
7	702-16-53140	· RETAINER	4	SN:B20200--
8	702-16-53470	· SPRING	2	SN:B20200--
9	702-16-53590	· SPRING	2	SN:B20200--
10	702-16-53170	· PISTON	4	SN:B20200--
11	702-16-71210	· SEAL	4	SN:B20200--
12	702-16-71160	· SEAT	4	SN:B20200--
13	702-16-71280	· BOOT	1	SN:B20200--
14	702-16-71131	· PLATE	1	SN:B20200--
15	702-16-71141	· PLATE	1	SN:B20200--
16	01010-80620	· BOLT	4	SN:B20200--
17	702-16-51240	· JOINT,UNIVERSAL	1	SN:B20200--
18	702-16-71361	· DISC	1	SN:B20200--
19	702-16-71441	· NUT	1	SN:B20200--

Ref. Y1670-11A1 Page 450890

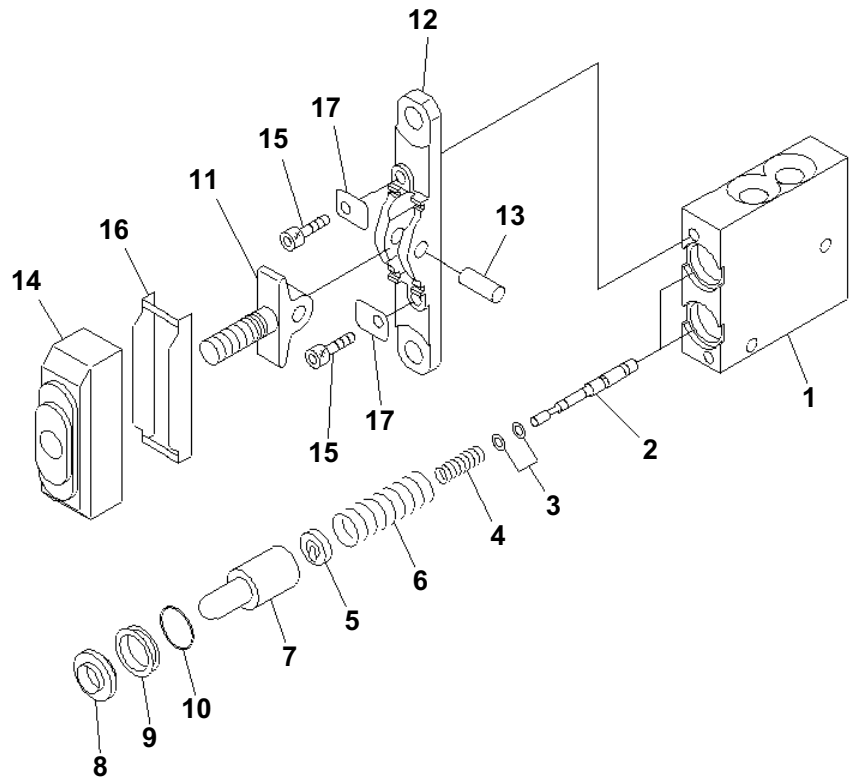

PPC VALVE (FOR ATTACHMENT)

Item	Part No.	Description	Qty	Options
	702-16-01230	PILOT VALVE	1	SN:B20001--
1	☆	· BODY,VALVE	1	SN:B20001--
2	☆	· VALVE	2	SN:B20001--
3	702-16-51140	· SHIM¤ 0.30MM	2	SN:B20001--
	702-16-54670	· SHIM¤ 0.20MM	4	SN:B20001--
4	702-16-54550	· SPRING	2	SN:B20001--
5	702-16-54571	· RETAINER	2	SN:B20001--
6	702-16-54560	· SPRING	2	SN:B20001--
7	702-16-53170	· PISTON	2	SN:B20001--
8	702-16-51270	· SEAL	2	SN:B20001--
9	702-16-54580	· COLLAR	2	SN:B20001--
10	702-16-54590	· O-RING	2	SN:B20001--
11	☆	· LEVER	1	SN:B20001--
12	☆	· PLATE	1	SN:B20001--
13	☆	· SHAFT	1	SN:B20001--
14	702-16-54641	· BOOT	1	SN:B20001--
15	01252-30625	· BOLT	2	SN:B20001--
16	702-16-54660	· PLATE	1	SN:B20001--
17	702-16-54650	· PLATE	2	SN:B20001--

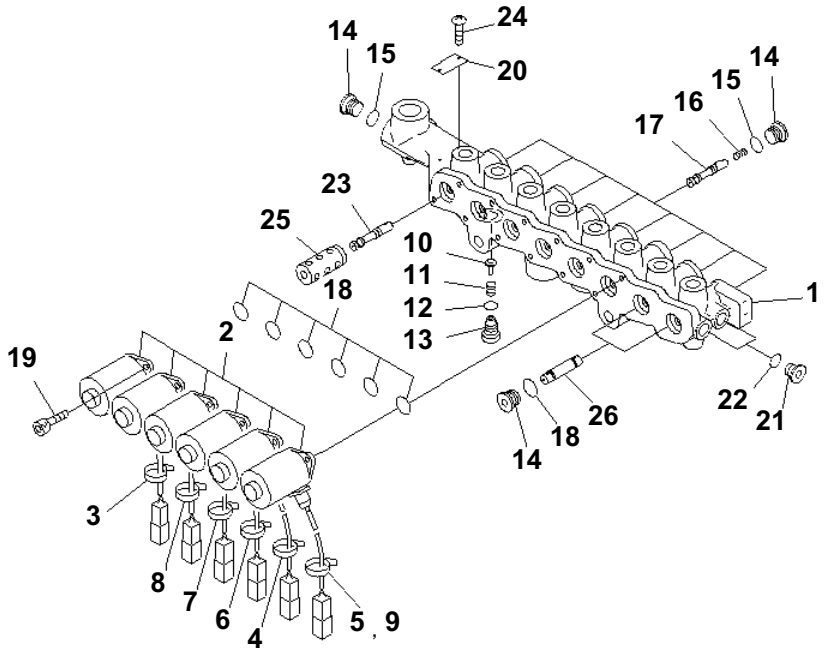

SOLENOID VALVE (INNER PARTS)

Item	Part No.	Description	Qty	Options
	21K-60-71211	VALVE A.	1	SN:B20001--
1	☆	· BLOCK	1	SN:B20001--
2	20Y-60-32120	· SOLENOID ASS'Y	6	SN:B20001--
3	NY07207-11700	· TUBE	1	SN:B20001--
4	NY07529-10200	· TUBE	1	SN:B20001--
5	NY07529-10300	· TUBE	1	SN:B20001--
6	NY07529-10400	· TUBE	1	SN:B20001--
7	NY07529-10500	· TUBE	1	SN:B20001--
8	NY07529-10600	· TUBE	1	SN:B20001--
9	NY89103-00090	· BAND	6	SN:B20001--
10	NY05062-1170A	· PLUNGER	1	SN:B20001--
11	NY05062-11800	· SPRING	1	SN:B20001--
12	07000-11010	· O-RING	1	SN:B20001--
13	NY06277-1320A	· PLUG	1	SN:B20001--
14	NY80000-02200	· PLUG	11	SN:B20001--
15	07000-12011	· O-RING	11	SN:B20001--
16	NY06339-10200	· SPRING	6	SN:B20001--
17	NY07493-10200	· SPOOL	5	SN:B20001--
18	07000-12016	· O-RING	6	SN:B20001--
19	NY81416-05012	· BOLT	12	SN:B20001--
20	NY09000-11400	· PLATE	1	SN:B20001--
21	NY80000-02100	· PLUG	3	SN:B20001--
22	07000-11008	· O-RING	3	SN:B20001--
23	NY16207-10300	· SPOOL	1	SN:B20001--
24	NY84110-00248	· SCREW	2	SN:B20001--
25	NY16207-10200	· SLEEVE	1	SN:B20001--
26	NY16207-10400	· SPOOL	2	SN:B20001--

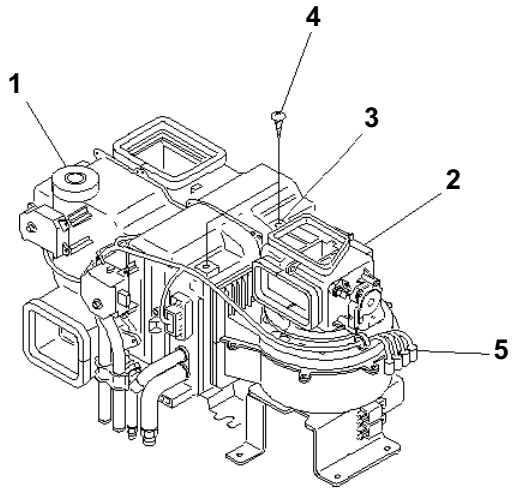

PW1D040

UNIT ASS'Y (FOR AIR CONDITIONER)

Item	Part No.	Description	Qty	Options
	20Y-979-6111	UNIT ASS'Y	1	SN:B20001--
1	(ND448800-5222)	・ UNIT ASS'Y,COOLING	1	SN:B20001--
2	(ND117200-0843)	・ BLOWER ASS'Y	1	SN:B20001--
3	ND146525-6041	・ BRACKET,PARTS	2	SN:B20001--
4	ND90930-06141	・ SCREW,TAPPING	2	SN:B20001--
5	ND246460-9451	・ HARNESS SUB ASS'Y,AIR CONDITIONER	1	SN:B20001--

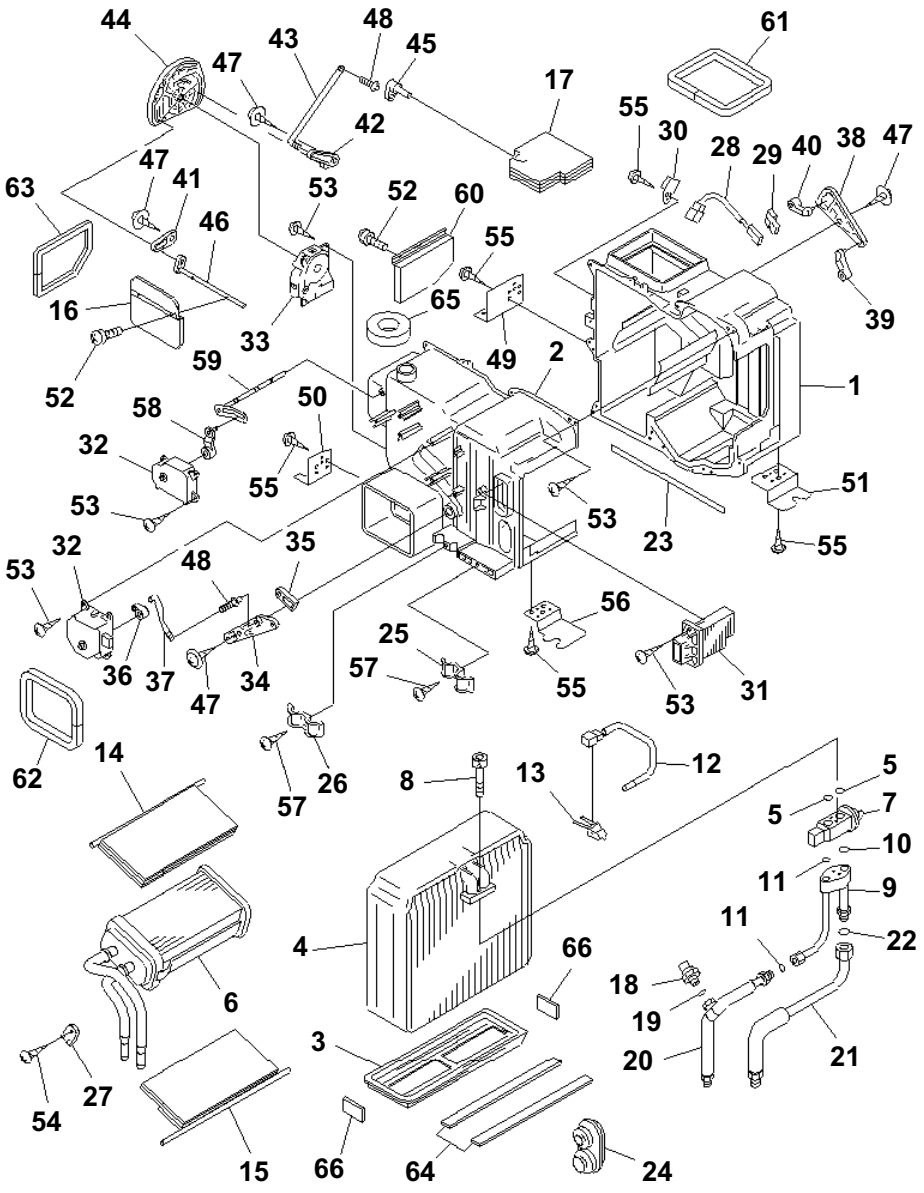

UNIT ASS'Y (COOLING) (FOR AIR CONDITIONER)(#B20001-B20199)

Item	Part No.	Description	Qty	Options
	ND448800-5222	UNIT ASS'Y,COOLING	1	SN:B20001--
1	ND245450-2221	· CASE,COOLING	1	SN:B20001--
2	ND245450-1721	· CASE,COOLING	1	SN:B20001--
3	ND116569-5010	· PLATE	1	SN:B20001--
4	ND447600-4970	· EVAPORATOR	1	SN:B20001--
5	ND949142-0030	· · O-RING	2	SN:B20001--
6	ND116120-7990	· CORE ASS'Y,HEATER	1	SN:B20001--
7	ND447500-1390	· VALVE,EXPANSION	1	SN:B20001--
8	ND949046-2150	· BOLT	2	SN:B20001--
9	ND446870-5650	· TUBE,ACCESSORY	1	SN:B20001--
10	ND949142-0030	· · O-RING	1	SN:B20001--
11	ND949142-0010	· · O-RING	2	SN:B20001--
12	ND077500-0710	· THERMISTOR	1	SN:B20001--
13	ND246690-2840	· CLAMP	2	SN:B20001--
14	ND116650-8800	· DOOR ASS'Y	1	SN:B20001--
15	ND116650-8820	· DOOR ASS'Y	1	SN:B20001--
16	ND116650-8840	· DOOR ASS'Y	1	SN:B20001--
17	ND116640-4652	· DAMPER ASS'Y	1	SN:B20001--
18	ND443440-0030	· SWITCH,PRESSURE	1	SN:B20001--
19	ND949142-0040	· · O-RING	1	SN:B20001--
20	ND446830-3880	· TUBE	1	SN:B20001--
21	ND446810-9520	· TUBE,SUCTION	1	SN:B20001--
22	ND949142-0030	· · O-RING	1	SN:B20001--
23	ND146678-4930	· PACKING	1	SN:B20001--
24	ND949321-9940	· GROMMET	1	SN:B20001--
25	ND246770-6990	· CLAMP,PIPING	1	SN:B20001--
26	ND017231-1400	· CLAMP	1	SN:B20001--
27	ND017660-3490	· BRACKET	1	SN:B20001--
28	ND170400-4310	· SENSOR ASS'Y,THERMO	1	SN:B20001--
29	ND146690-6020	· CLAMP	1	SN:B20001--
30	ND246634-6010	· BRACKET	1	SN:B20001--
31	ND499300-2051	· I.C. POWER	1	SN:B20001--
32	ND063700-7200	· SERVO MOTOR ASS'Y	2	SN:B20001--
33	ND063700-7210	· SERVO MOTOR ASS'Y	1	SN:B20001--
34	ND116569-5020	· PLATE	1	SN:B20001--
35	ND116682-0930	· LEVER	1	SN:B20001--
36	ND116682-0960	· LEVER	1	SN:B20001--
37	ND116662-4850	· SHAFT	1	SN:B20001--
38	ND116569-5030	· PLATE	1	SN:B20001--

PC160LC-7B S/N B20001 AND UP

UNIT ASS'Y (COOLING) (FOR AIR CONDITIONER)(#B20001-B20199)

Item	Part No.	Description	Qty	Options
39	ND116682-0940	· LEVER	1	SN:B20001--
40	ND116682-0951	· LEVER	1	SN:B20001--
41	ND116569-5041	· PLATE	1	SN:B20001--
42	ND116569-5051	· PLATE	1	SN:B20001--
43	ND116662-4860	· SHAFT	1	SN:B20001--
44	ND116569-5062	· PLATE	1	SN:B20001--
45	ND116682-0920	· LEVER	1	SN:B20001--
46	ND116682-0910	· LEVER	1	SN:B20001--
47	ND949008-0460	· SCREW,TAPPING	4	SN:B20001--
48	17M-911-3290	· CLAMP	2	SN:B20001--
49	ND146535-1311	· BRACKET	1	SN:B20001--
50	ND146535-0411	· BRACKET	1	SN:B20001--
51	ND146525-6070	· BRACKET	1	SN:B20001--
52	ND91310-03081	· SCREW,WASHER	4	SN:B20001--
53	ND949001-1730	· SCREW,TAPPING	23	SN:B20001--
54	ND90930-05121	· SCREW,TAPPING	1	SN:B20001--
55	ND90930-06141	· SCREW,TAPPING	8	SN:B20001--
56	ND146535-0421	· BRACKET	1	SN:B20001--
57	ND90930-05161	· SCREW,TAPPING	2	SN:B20001--
58	ND116682-3440	· LEVER	1	SN:B20001--
59	ND017730-8380	· LEVER,CONTROL	1	SN:B20001--
60	ND116660-2770	· DOOR ASS'Y	1	SN:B20001--
61	ND146698-6930	· PACKING	1	SN:B20001--
62	ND146698-6950	· PACKING	1	SN:B20001--
63	ND146698-8480	· PACKING	1	SN:B20001--
64	ND146637-5650	· PACKING	2	SN:B20001--
65	ND146647-0712	· PACKING	1	SN:B20001--
66	ND146647-3880	· PACKING	2	SN:B20001--

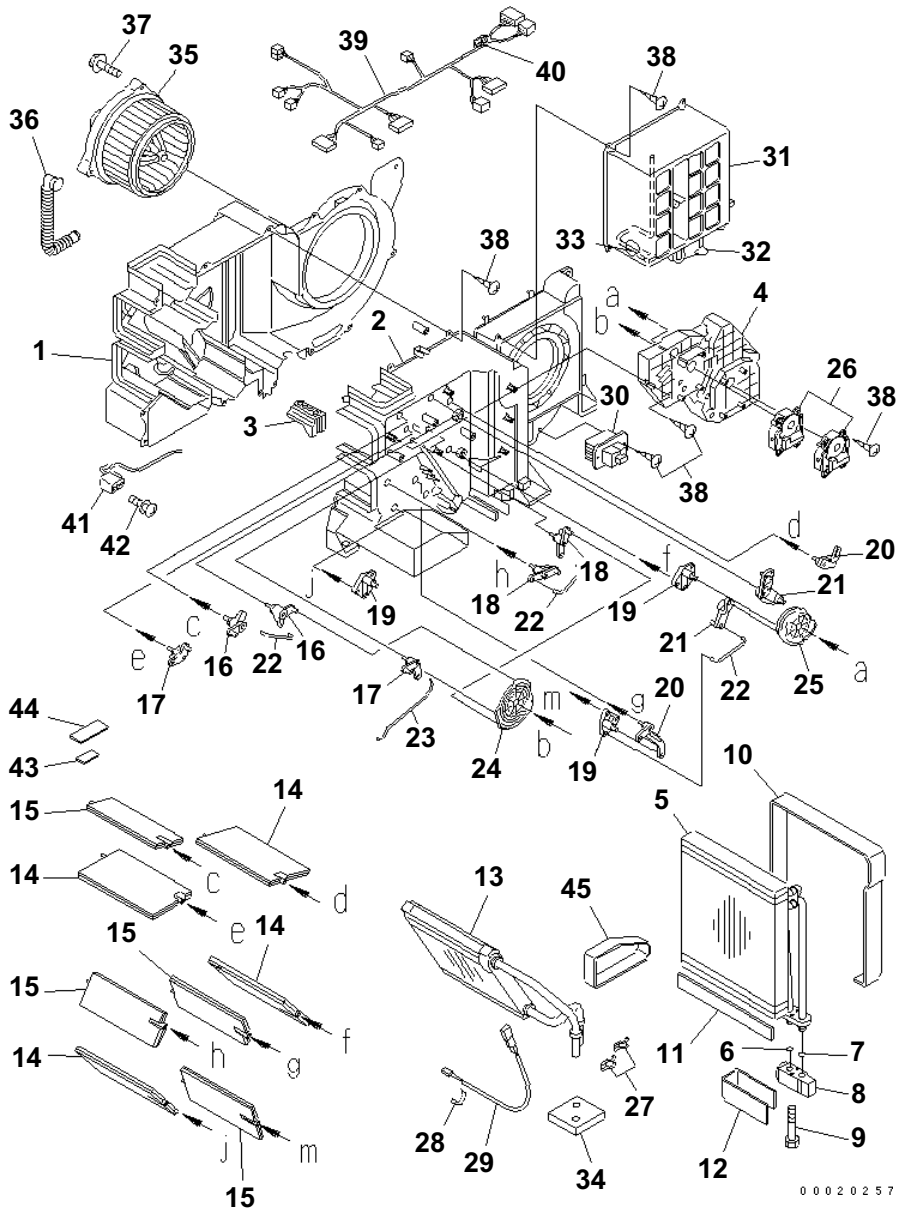

UNIT ASS'Y (COOLING) (FOR AIR CONDITIONER)(#B20200-)

Item	Part No.	Description	Qty	Options
	208-979-7610	AIR CONDITIONER	1	SN:B20200--
1	ND245450-5112	· CASE,COOLING	1	SN:B20200--
2	ND245450-5121	· CASE,COOLING	1	SN:B20200--
3	ND116576-3810	· PLATE	1	SN:B20200--
4	ND116576-3820	· PLATE	1	SN:B20200--
	ND446010-3131	· EVAPORATOR ASS'Y,PARTS	1	SN:B20200--
5	ND446600-0990	· · EVAPORATOR ASS'Y	1	SN:B20200--
6	ND949142-0020	· · · O-RING	1	SN:B20200--
7	ND949142-0030	· · · O-RING	1	SN:B20200--
8	ND447500-1482	· · VALVE,EXPANSION	1	SN:B20200--
9	ND949046-3100	· · BOLT	2	SN:B20200--
10	ND146657-8841	· · PACKING	1	SN:B20200--
11	ND146657-9811	· · PACKING	1	SN:B20200--
12	ND146657-8850	· · PACKING	1	SN:B20200--
13	ND116140-0050	· CORE SUB ASS'Y,HEATER	1	SN:B20200--
14	ND116660-7570	· DOOR SUB ASS'Y	4	SN:B20200--
15	ND116650-6850	· DOOR SUB ASS'Y	4	SN:B20200--
16	ND116780-2481	· LEVER SUB ASS'Y,LINK	2	SN:B20200--
17	ND116780-2491	· LEVER SUB ASS'Y,LINK	2	SN:B20200--
18	ND116780-2501	· LEVER SUB ASS'Y,LINK	2	SN:B20200--
19	ND116780-2510	· LEVER SUB ASS'Y,LINK	3	SN:B20200--
20	ND116781-3000	· LEVER	2	SN:B20200--
21	ND116780-2521	· LEVER SUB ASS'Y,LINK	2	SN:B20200--
22	ND116662-7670	· SHAFT	3	SN:B20200--
23	ND116662-7681	· SHAFT	1	SN:B20200--
24	ND116576-3851	· PLATE	1	SN:B20200--
25	ND116576-3861	· PLATE	1	SN:B20200--
26	ND063800-0300	· SERVO MOTOR ASS'Y	2	SN:B20200--
27	ND017231-0700	· CLAMP	2	SN:B20200--
28	ND170400-4670	· SENSOR ASS'Y,THERMO	1	SN:B20200--
29	ND145511-0040	· HOLDER,REMOTE VALVE	1	SN:B20200--
30	ND077800-0750	· POWER TRANSISTOR	1	SN:B20200--
31	ND146340-0531	· BOX SUB ASS'Y	1	SN:B20200--
32	ND063600-4580	· · SERVO MOTOR ASS'Y	1	SN:B20200--
33	ND077500-5650	· · THERMISTOR ASS'Y	1	SN:B20200--
34	ND146657-8860	· PACKING	1	SN:B20200--
35	ND116340-7030	· MOTOR ASS'Y,FAN	1	SN:B20200--
36	205-979-7260	· PIPE	1	SN:B20200--
37	ND949008-0330	· SCREW,TAPPING	3	SN:B20200--

PC160LC-7B S/N B20001 AND UP

UNIT ASS'Y (COOLING) (FOR AIR CONDITIONER)(#B20200-)

Item	Part No.	Description	Qty	Options
38	ND949001-1730	· SCREW,TAPPING	31	SN:B20200--
39	ND246470-2451	· HARNESS SUB ASS'Y,WIRE	1	SN:B20200--
40	ND93950-05003	· · FUSE	1	SN:B20200--
41	ND113550-0780	· THERMOSTAT ASS'Y	1	SN:B20200--
42	ND91370-04101	· SCREW,WASHER	2	SN:B20200--
43	ND146667-0300	· PACKING	1	SN:B20200--
44	ND146667-0380	· PACKING	1	SN:B20200--
45	ND146667-0440	· PACKING	1	SN:B20200--

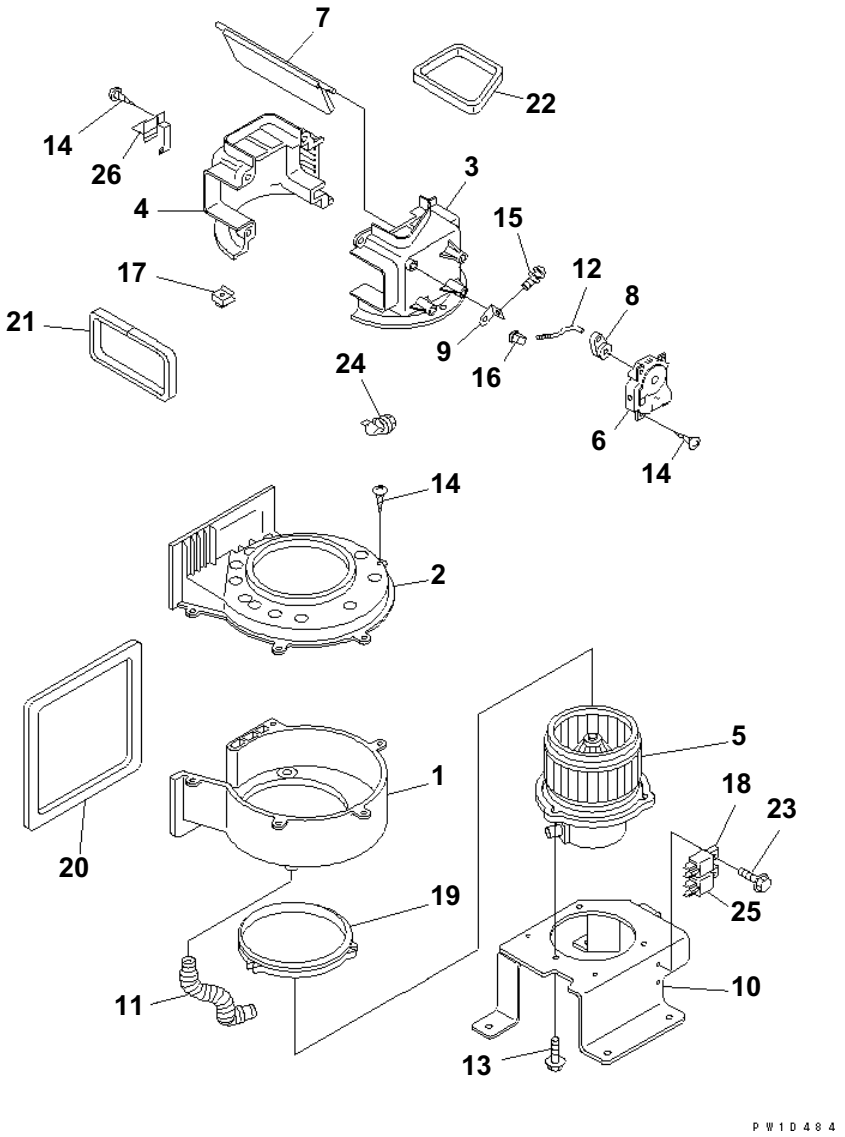

BLOWER ASS'Y (FOR AIR CONDITIONER)

Item	Part No.	Description	Qty	Options
	ND117200-0843	BLOWER ASS'Y	1	SN:B20001--
1	ND116241-3220	· CASE,BLOWER	1	SN:B20001--
2	ND116241-3230	· CASE,BLOWER	1	SN:B20001--
3	ND017321-3202	· CASE,AIR DAMPER	1	SN:B20001--
4	ND017321-3212	· CASE,AIR DAMPER	1	SN:B20001--
5	ND116340-3860	· MOTOR ASS'Y,FAN	1	SN:B20001--
6	ND063700-7210	· SERVO MOTOR ASS'Y	1	SN:B20001--
7	ND116660-4680	· DOOR ASS'Y	1	SN:B20001--
8	ND116682-0980	· LEVER	1	SN:B20001--
9	ND116682-0970	· LEVER	1	SN:B20001--
10	ND146535-1320	· BRACKET	1	SN:B20001--
11	205-979-7260	· PIPE	1	SN:B20001--
12	ND116662-7120	· SHAFT	1	SN:B20001--
13	ND949047-2370	· BOLT,WASHER	3	SN:B20001--
14	ND949001-1730	· SCREW,TAPPING	17	SN:B20001--
15	ND91370-03081	· SCREW,WASHER	1	SN:B20001--
16	17M-911-3290	· CLAMP	1	SN:B20001--
17	ND949057-0190	· NUT,PLATE	1	SN:B20001--
18	ND056700-8170	· RELAY ASS'Y	1	SN:B20001--
19	ND146622-6880	· PACKING	1	SN:B20001--
20	ND146678-4901	· PACKING	1	SN:B20001--
21	ND146678-5060	· PACKING	1	SN:B20001--
22	ND146647-0790	· PACKING	1	SN:B20001--
23	ND91570-06141	· BOLT,WASHER	2	SN:B20001--
24	ND146625-4450	· BUSH	1	SN:B20001--
25	ND056800-3130	· RELAY ASS'Y	1	SN:B20001--
26	ND146530-9530	· BRACKET ASS'Y	1	SN:B20001--

NUMERICAL INDEX

PARTS Nº	FIG. Nº	INDEX	PAGE
01010-61230	P1210-01A0	28	300020
01010-61655	R0110-02A0A	19	330020
01010-61660	P1210-01A0	35	300020
01010-62050	R1200-01A0	2	330100
01010-80612	D0100-01A0	8	090010
01010-80612	M1130-01A0	5	240030
01010-80612	M1140-01A0	5	240040
01010-80616	C0100-02A0A	42	060040
01010-80616	K0210-13A0	17	210160
01010-80616	K0210-14A0	9	210170
01010-80616	K1110-25A0	6	210720
01010-80616	M1130-01A0	22	240030
01010-80616	M1140-01A0	22	240040
01010-80616	M1220-01A0	16	240110
01010-80620	E0200-01A0	33	120020
01010-80620	E0200-01A0A	33	120030
01010-80620	K0700-01A1	29	210220
01010-80620	Y1670-11A0	16	450880
01010-80620	Y1670-11A1	16	450890
01010-80816	E0201-01A0	2	120091
01010-80816	K0700-01A1	6	210220
01010-80816	K1110-16D0	12	210570
01010-80816	K1110-16D0	2	210570
01010-80816	Y1670-01A0	17	450840
01010-80816	Y1670-01A1	16	450850
01010-80820	C0100-02A0	42	060030
01010-80820	C0100-04A0	4	060070
01010-80820	C0100-04A0A	4	060080
01010-80820	E0200-01A0	27	120020
01010-80820	E0200-01A0	29	120020
01010-80820	E0200-01A0A	27	120030
01010-80820	E0200-01A0A	29	120030
01010-80820	K0180-01A0	14	210020
01010-80820	K0180-01A0	20	210020
01010-80820	K0210-06A0	19	210090
01010-80820	K0210-14A0	5	210170
01010-80820	K0700-03A1	2	210260
01010-80820	K0700-03A1	5	210260
01010-80820	K1110-06D0	19	210370
01010-80820	K1110-07A0	4	210380
01010-80820	K1110-09A0	8	210420
01010-80820	K1110-10A0	13	210440
01010-80820	K1110-14A0	13	210520
01010-80820	K1110-16A0	24	210560
01010-80820	K1110-26D0	13	210740
01010-80820	K1110-29D0	13	210770
01010-80825	B0100-01A0	16	030100
01010-80825	B0200-01A0	13	030110
01010-80825	E0410-01A0	3	120100
01010-80825	K0180-01A0	9	210020
01010-80825	K1110-31D0	3	210790
01010-80830	E0200-01A0	5	120020
01010-80830	E0200-01A0A	5	120030
01010-80830	K0110-01A1	5	210010
01010-80835	C0100-02A0A	48	060040
01010-80835	Y1627-01A0A	12	450230
01010-80850	Y1620-01A0	31	450190
01010-80850	Y1620-41A0	28	450210
01010-80850	Y1620-41A1	28	450220
01010-80855	Y1670-01A0	15	450840
01010-80855	Y1670-01A1	14	450850
01010-80875	K0700-01A1	22	210220
01010-80875	K0700-01A1A	14	210230
01010-81016	B0100-01A0	29	030100
01010-81016	D0200-01A1	25	090020
01010-81016	E0200-04A0	8	120080
01010-81016	E0200-04A0A	8	120090
01010-81016	H0110-01A1	43	150010
01010-81016	K1110-08A0	10	210400
01010-81016	K1110-08A0	4	210400
01010-81016	K1110-08A0	47	210400
01010-81016	K1110-08A0	50	210400
01010-81016	K1110-08A0	7	210400
01010-81016	K1110-09A0	13	210420
01010-81016	K1110-09A0	2	210420
01010-81016	K1110-18A0	5	210590
01010-81016	K1110-18A0	8	210590
01010-81016	K1110-19D0	11	210620
01010-81016	K1110-21A0	13	210650
01010-81016	K1110-33D0	10	210810
01010-81016	K1110-36D0	13	210840
01010-81016	N1110-01A0	12	270010
01010-81020	B0000-01A0	3	030010
01010-81020	C0100-01A0	10	060010
01010-81020	C0100-01A0	40	060010
01010-81020	C0100-01A0	51	060010
01010-81020	C0100-01A0A	10	060020
01010-81020	C0100-01A0A	41	060020
01010-81020	C0100-01A0A	53	060020
01010-81020	C0100-02A0	14	060030
01010-81020	C0100-02A0	18	060030
01010-81020	C0100-02A0	21	060030
01010-81020	C0100-02A0	33	060030
01010-81020	C0100-02A0	36	060030
01010-81020	C0100-02A0	39	060030
01010-81020	C0100-02A0	9	060030
01010-81020	C0100-02A0A	14	060040
01010-81020	C0100-02A0A	18	060040
01010-81020	C0100-02A0A	21	060040
01010-81020	C0100-02A0A	33	060040
01010-81020	C0100-02A0A	36	060040
01010-81020	C0100-02A0A	39	060040
01010-81020	C0100-02A0A	9	060040
01010-81020	D0200-01A1A	28	090030
01010-81020	E0200-01A0	14	120020
01010-81020	E0200-01A0	24	120020
01010-81020	E0200-01A0A	14	120030
01010-81020	E0200-01A0A	24	120030
01010-81020	E0200-02A0	25	120040
01010-81020	E0200-02A0	37	120040
01010-81020	E0200-02A0A	25	120050
01010-81020	E0200-02A0A	35	120050
01010-81020	E0200-04A0	6	120080
01010-81020	E0200-04A0A	6	120090
01010-81020	K0210-09A0	11	210120
01010-81020	K0210-12A0	4	210150
01010-81020	K0210-13A0	4	210160
01010-81020	K0700-02A1A	34	210240
01010-81020	K0700-02A1B	38	210250
01010-81020	K1110-01A0	11	210270
01010-81020	K1110-03A0	5	210310
01010-81020	K1110-04A0	5	210330
01010-81020	K1110-07A0	15	210380
01010-81020	K1110-07A0	17	210380
01010-81020	K1110-08A0	19	210400
01010-81020	K1110-08A0	2	210400
01010-81020	K1110-08A0	22	210400
01010-81020	K1110-08A0	25	210400
01010-81020	K1110-08A0	28	210400
01010-81020	K1110-08A0	31	210400
01010-81020	K1110-08A0	40	210400
01010-81020	K1110-09D0	13	210430
01010-81020	K1110-16A0	2	210560
01010-81020	K1110-18D0	3	210600
01010-81020	K1110-19D0	14	210620
01010-81020	K1110-20D0	2	210640
01010-81020	K1110-20D0	5	210640
01010-81020	K1110-21A0	17	210650
01010-81020	K1110-21A0	2	210650
01010-81020	K1110-21A0	8	210650
01010-81020	K1110-21D0	5	210660
01010-81020	K1110-22D0	5	210680
01010-81020	K1110-24D0	15	210710
01010-81020	K1110-24D0	23	210710
01010-81020	K1110-24D0	26	210710
01010-81020	K1110-33D0	7	210810
01010-81020	K1110-36D0	2	210840
01010-81020	K1110-36D0	8	210840
01010-81020	P1210-01A0	8	300020
01010-81020	T1110-04A0	8	360040
01010-81025	C0100-01A0	15	060010
01010-81025	C0100-01A0	18	060010
01010-81025	C0100-01A0	21	060010
01010-81025	C0100-01A0	49	060010
01010-81025	C0100-01A0A	15	060020
01010-81025	C0100-01A0A	18	060020
01010-81025	C0100-01A0A	21	060020
01010-81025	C0100-01A0A	51	060020
01010-81025	C0310-01A0	13	060110
01010-81025	C0310-01A0	2	060110
01010-81025	C0310-01A0	5	060110
01010-81025	C0310-01A0	8	060110
01010-81025	D0200-02A1	7	090040
01010-81025	E0200-01A0	12	120020
01010-81025	E0200-01A0	17	120020
01010-81025	E0200-01A0A	12	120030
01010-81025	E0200-01A0A	17	120030
01010-81025	K1110-02A0	2	210290
01010-81025	K1110-02A0	38	210290
01010-81025	K1110-02A0	5	210290
01010-81025	K1110-03A0	3	210310
01010-81025	K1110-04A0	3	210330
01010-81025	K1110-06A0	7	210360
01010-81025	K1110-09A0	5	210420
01010-81025	K1110-21D0	3	210660
01010-81025	K1110-22D0	3	210680
01010-81025	M1210-01A0	19	240100
01010-81025	M1210-01A0	22	240100
01010-81025	R0300-01A0	11	330040
01010-81025	R1100-01A0	11	330080
01010-81025	T1110-03A0	20	360030
01010-81025	T1110-03A0	28	360030
01010-81025	T1110-03A0	7	360030
01010-81030	B0400-01A0	5	030130
01010-81030	C0100-01A0	23	060010
01010-81030	C0100-01A0A	23	060020
01010-81030	H0320-01A0	18	150070
01010-81030	K1110-01A0	9	210270
01010-81030	K1110-02A0	14	210290
01010-81030	K1110-08A0	13	210400
01010-81030	K1110-08A0	34	210400
01010-81030	K1110-08A0	37	210400
01010-81030	K1110-13A0	9	210500
01010-81030	K1110-15A1	41	210540
01010-81030	K1110-19D0	9	210620
01010-81030	K1110-20D0	14	210640
01010-81030	K1110-28D0	32	210760
01010-81030	K1110-30D2	42	210780
01010-81035	C0100-03A0	22	060050
01010-81035	C0100-03A0A	22	060060
01010-81035	C0100-05A0	6	060090
01010-81035	C0100-05A0A	6	060100
01010-81035	C0310-01A0	10	060110
01010-81035	H0320-01A0	11	150070
01010-81035	H0330-01A0	6	150080
01010-81035	H0340-01A0	7	150090
01010-81035	J1110-01A0	43	180010
01010-81035	J1110-01A0A	37	180020
01010-81035	K1120-01A0	2	210860
01010-81035	K1120-01A0A	3	210870
01010-81040	B0000-01A0	5	030010
01010-81040	B0400-01A0	2	030130
01010-81040	C0100-03A0	15	060050
01010-81040	C0100-03A0A	15	060060
01010-81040	C0100-05A0	12	060090
01010-81040	C0100-05A0A	12	060100
01010-81040	K0700-01A1A	3	210230
01010-81040	K1110-24D0	11	210710
01010-81040	K1110-24D0	20	210710
01010-81040	K1110-24D0	7	210710
01010-81045	B0000-01A0	5	030010
01010-81045	K1110-22A0	14	210670
01010-81045	K1110-22A0	2	210670
01010-81045	K1110-37D0	11	210850
01010-81045	K1110-37D0	2	210850
01010-81050	B0400-01A0	17	030130
01010-81055	C0100-05A0	15	060090
01010-81055	C0100-05A0A	15	060100
01010-81055	K0700-01A1	11	210220
01010-81055	K0700-01A1A	3	210230
01010-81070	Y1620-41A1	30	450220
01010-81090	H1831-01A0	2	150160
01010-81220	E0200-02A0	12	120040
01010-81220	E0200-02A0A	12	120050
01010-81220	H0110-01A1	43	150010
01010-81220	K0700-02A1A	15	210240
01010-81220	K0700-02A1B	16	210250
01010-81220	M1510-01A0	7	240140
01010-81220	T1110-06A0	4	360050
01010-81225	B0100-01A0	23	030100
01010-81225	B0200-01A0	15	030110
01010-81225	B0200-01A0	19	030110
01010-81225	B0400-01A0	20	030130
01010-81225	C0100-05A0	27	060090
01010-81225	C0100-05A0A	28	060100
01010-81225	D0200-01A1	12	090020
01010-81225	D0200-01A1	19	090020
01010-81225	D0200-01A1	22	090020
01010-81225	D0200-01A1	28	090020
01010-81225	D0200-01A1A	12	090030
01010-81225	D0200-01A1A	19	090030
01010-81225	D0200-01A1A	31	090030
01010-81225	D0200-02A1	12	090040
01010-81225	D0200-02A1	18	090040
01010-81225	E0200-01A0	21	120020
01010-81225	E0200-01A0	9	120020
01010-81225	E0200-01A0A	21	120030
01010-81225	E0200-01A0A	9	120030
01010-81225	E0200-02A0	15	120040
01010-81225	E0200-02A0	18	120040
01010-81225	E0200-02A0	21	120040
01010-81225	E0200-02A0	28	120040
01010-81225	E0200-02A0	3	120040
01010-81225	E0200-02A0	31	120040
01010-81225	E0200-02A0	35	120040
01010-81225	E0200-02A0	40	120040
01010-81225	E0200-02A0	6	120040
01010-81225	E0200-02A0	9	120040
01010-81225	E0200-02A0A	15	120050
01010-81225	E0200-02A0A	18	120050
01010-81225	E0200-02A0A	21	120050
01010-81225	E0200-02A0A	28	120050
01010-81225	E0200-02A0A	3	120050
01010-81225	E0200-02A0A	33	120050
01010-81225	E0200-02A0A	38	120050
01010-81225	E0200-02A0A	6	120050
01010-81225	E0200-02A0A	9	120050
01010-81225	E0200-03A0	24	120060
01010-81225	E0200-03A0	28	120060
01010-81225	E0200-03A0A	25	120070
01010-81225	E0200-03A0A	29	120070
01010-81225	E0420-01A0	6	120110
01010-81225	H0320-01A0	3	150070
01010-81225	H1831-02A0	13	150170
01010-81225	H1831-02A0	16	150170
01010-81225	H1831-02A0	38	150170
01010-81225	H1840-01A1	2	150190
01010-81225	H1840-01A1	29	150190
01010-81225	H1840-01A1	32	150190
01010-81225	J1110-01A0	45	180010
01010-81225	J1110-01A0A	39	180020
01010-81225	K0700-02A1A	13	210240
01010-81225	K0700-02A1A	27	210240
01010-81225	K0700-02A1A	5	210240
01010-81225	K0700-02A1B	14	210250
01010-81225	K0700-02A1B	28	210250
01010-81225	K0700-02A1B	31	210250
01010-81225	K0700-02A1B	6	210250
01010-81225	M1120-01A0	11	240020
01010-81225	M1130-01A0	13	240030

PARTS Nº	FIG. Nº	INDEX	PAGE
01010-81225	M1130-01A0	46	240030
01010-81225	M1140-01A0	13	240040
01010-81225	M1150-01A0	35	240050
01010-81225	M1150-01A0A	35	240060
01010-81225	M1150-02A0	12	240070
01010-81225	M1150-02A0	9	240070
01010-81225	M1150-02A0A	12	240080
01010-81225	M1150-02A0A	9	240080
01010-81225	R0110-02A0A	17	330020
01010-81225	R0110-02A0A	4	330020
01010-81230	B0100-01A0	18	030100
01010-81230	B0200-01A0	4	030110
01010-81230	C0100-05A0	18	060090
01010-81230	C0100-05A0A	18	060100
01010-81230	E0200-03A0	7	120060
01010-81230	E0200-03A0A	6	120070
01010-81230	H0110-01A1	24	150010
01010-81230	H0110-01A1	32	150010
01010-81230	H0320-01A0	7	150070
01010-81230	H1210-01A0	19	150100
01010-81230	H1831-02A0	35	150170
01010-81230	J1110-01A0	18	180010
01010-81230	J1110-01A0	4	180010
01010-81230	J1110-01A0A	18	180020
01010-81230	J1110-01A0A	4	180020
01010-81230	J1310-01A0	11	180030
01010-81230	K0700-01A1	36	210220
01010-81230	K0700-01A1A	23	210230
01010-81230	K1110-23D0	5	210690
01010-81230	M1110-01A0	16	240010
01010-81230	M1110-01A0	22	240010
01010-81230	M1120-01A0	13	240020
01010-81230	M1120-01A0	3	240020
01010-81230	M1120-01A0	8	240020
01010-81230	M1130-01A0	16	240030
01010-81230	M1130-01A0	19	240030
01010-81230	M1130-01A0	25	240030
01010-81230	M1130-01A0	28	240030
01010-81230	M1130-01A0	40	240030
01010-81230	M1130-01A0	42	240030
01010-81230	M1130-01A0	44	240030
01010-81230	M1140-01A0	16	240040
01010-81230	M1140-01A0	19	240040
01010-81230	M1140-01A0	25	240040
01010-81230	M1140-01A0	33	240040
01010-81230	M1140-01A0	38	240040
01010-81230	M1150-01A0	12	240050
01010-81230	M1150-01A0	15	240050
01010-81230	M1150-01A0	17	240050
01010-81230	M1150-01A0	26	240050
01010-81230	M1150-01A0	32	240050
01010-81230	M1150-01A0A	12	240060
01010-81230	M1150-01A0A	15	240060
01010-81230	M1150-01A0A	17	240060
01010-81230	M1150-01A0A	26	240060
01010-81230	M1150-01A0A	32	240060
01010-81230	M1150-02A0	19	240070
01010-81230	M1150-02A0	22	240070
01010-81230	M1150-02A0	3	240070
01010-81230	M1150-02A0	6	240070
01010-81230	M1150-02A0A	19	240080
01010-81230	M1150-02A0A	22	240080
01010-81230	M1150-02A0A	3	240080
01010-81230	M1150-02A0A	6	240080
01010-81230	M1160-01A0	3	240090
01010-81230	M1160-01A0	5	240090
01010-81230	M1160-01A0	9	240090
01010-81230	M1210-01A0	26	240100
01010-81230	M1210-01A0	3	240100
01010-81230	M1210-01A0	5	240100
01010-81230	M1220-01A0	24	240110
01010-81230	M1220-01A0	20	240110
01010-81230	M1220-01A0	24	240110
01010-81230	M1220-01A0	28	240110
01010-81230	M1220-01A0	30	240110
01010-81230	M1810-01A0	11	240160
01010-81230	M1810-01A0	13	240160
01010-81230	M1810-01A0	15	240160
01010-81230	M1810-01A0	18	240160
01010-81230	M1810-01A0	20	240160
01010-81230	M1810-01A0	22	240160
01010-81230	M1810-02A0	11	240170
01010-81230	M1810-02A0	14	240170
01010-81230	M1810-02A0	16	240170
01010-81230	M1810-02A0	19	240170
01010-81230	M1810-02A0	6	240170
01010-81230	M1810-02A0	9	240170
01010-81230	P1210-01A0	38	300020
01010-81230	T1110-02A0	12	360020
01010-81230	T1110-06A0	6	360050
01010-81230	T1200-01A0	13	360090
01010-81230	T1200-01A0	18	360090
01010-81230	T1200-01A1	13	360100
01010-81230	T1200-01A1	18	360100
01010-81230	T1200-01A3	13	360110
01010-81230	T1200-01A3	18	360110
01010-81230	Y1600-07A0	13	450160
01010-81235	H0311-01A0	3	150050
01010-81235	J1310-01A0	3	180030
01010-81235	M1130-01A0	7	240030
01010-81235	M1140-01A0	7	240040
01010-81235	M1310-01A0	2	240120
01010-81235	N1310-01A0	28	270040
01010-81235	R1140-01A0	3	330090
01010-81235	T1110-02A0	6	360020
01010-81240	C0100-01A0	37	060010
01010-81240	C0100-01A0A	38	060020
01010-81240	E0200-01A0	31	120020
01010-81240	E0200-01A0A	31	120030
01010-81240	H1833-01A0	2	150180
01010-81240	K1110-18D0	5	210600
01010-81240	K1120-01A0	13	210860
01010-81240	M1150-01A0	19	240050
01010-81240	M1150-01A0A	19	240060
01010-81245	C0100-02A0	24	060030
01010-81245	C0100-02A0	30	060030
01010-81245	C0100-02A0A	24	060040
01010-81245	C0100-02A0A	30	060040
01010-81250	E0200-03A0	12	120060
01010-81250	E0200-03A0A	11	120070
01010-81250	K0700-02A1A	38	210240
01010-81250	K0700-02A1B	42	210250
01010-81255	D0200-01A1A	24	090030
01010-81255	H1210-01A0	17	150100
01010-81260	H1833-01A0	5	150180
01010-81260	H1840-01A1	6	150190
01010-81260	M1310-01A0	4	240120
01010-81265	B0100-01A0	8	030100
01010-81275	D0200-01A1	16	090020
01010-81275	D0200-01A1A	16	090030
01010-81280	E0200-03A0	17	120060
01010-81280	E0200-03A0A	18	120070
01010-81280	K0700-02A1A	8	210240
01010-81280	K0700-02A1B	9	210250
01010-81285	E0200-03A0	21	120060
01010-81285	E0200-03A0A	22	120070
01010-81285	K1110-18D0	7	210600
01010-81285	K1120-01A0	15	210860
01010-81440	K0700-01A1	15	210220
01010-81440	K0700-01A1A	7	210230
01010-81465	Y1620-41A0	15	450210
01010-81465	Y1620-41A1	15	450220
01010-81485	R0300-01A0	12	330040
01010-81635	C0100-04A0	11	060070
01010-81635	C0100-04A0	9	060070
01010-81635	C0100-04A0A	11	060080
01010-81635	C0100-04A0A	9	060080
01010-81635	D0100-01A0	18	090010
01010-81635	H0110-01A1	49	150010
01010-81640	H0120-02A0	9	150030
01010-81670	T1510-01A0	18	360160
01010-81670	T1510-02A0	18	360170
01010-81670	T1510-03A0	18	360180
01010-81670	T1510-04A0	18	360190
01010-81670	T1510-05A0	18	360200
01010-81670	T1510-06A0	18	360210
01010-81670	Y1620-01A0	16	450190
01010-81670	Y1620-11A0	13	450200
01010-81680	R0300-01H1	9	330040a
01010-82060	N1210-01A0	2	270020
01010-82065	R1100-01A0	5	330080
01010-D0650	E0201-01A0	12	120091
01010-D0816	K0180-01A0	25	210020
01010-D0816	K1110-24A1	1	210700
01010-D0820	K0180-01A0A	14	210030
01010-D0820	K0180-01A0A	27	210030
01010-D0820	K0180-01A0A	30	210030
01010-D0820	K0180-01A0A	34	210030
01010-D0820	K0180-01A0A	6	210030
01010-D0820	K1110-07D0	2	210390
01010-D0820	K1110-14D0	2	210530
01010-D0820	K1110-14D0	8	210530
01010-D0820	K1110-15D0	12	210550
01010-D0820	K1110-15D0	19	210550
01010-D0820	K1110-15D0	5	210550
01010-D0825	K0110-01A1	5	210010
01010-D1016	K1110-06A0	27	210360
01010-D1016	K1110-16A0	16	210560
01010-D1025	K0210-10A0	20	210130
01010-D1025	K1110-10D0	19	210450
01010-D1035	K1110-06A0	5	210360
01010-D1045	K1110-02A0	12	210290
01010-D1045	K1110-20D0	12	210640
01010-D1050	K1110-08A0	16	210400
01010-D1050	K1110-08A0	44	210400
01010-D1230	K1110-06A0	24	210360
01010-D1230	K1110-23D0	19	210690
01010-D1235	K1110-06A0	2	210360
01011-61085	Y1662-13A0	4	450390
01011-61085	Y1662-43A0	4	450670
01011-81000	E0420-01A0	3	120110
01011-81600	H0120-02A0	7	150030
01011-81640	B0100-01A0	4	030100
01011-81660	T1200-02A0	19	360120
01011-81690	T1200-02A0	22	360120
01016-50845	K0700-03A1	7	210260
01016-51250	C0100-04A0	13	060070
01016-51250	C0100-04A0A	13	060080
01017-51420	K0700-01A1	19	210220
01017-51420	K0700-01A1A	11	210230
01019-11640	T1125-01A0	2	360070
01019-11640	T1200-02A0	14	360120
01019-11640	T1200-02A0	25	360120
01019-31400	K0700-01A1	17	210220
01019-31400	K0700-01A1A	9	210230
01023-10306	Y1670-01A1	22	450850
01023-10406	K0180-01A0A	21	210030
01023-10410	K0210-08A0	11	210110
01023-10412	K0210-09A0	10	210120
01023-10508	K1110-15A1	19	210540
01023-10508	K1110-30D2	19	210780
01023-10512	K1110-15A1	20	210540
01023-10512	K1110-30D2	20	210780
01023-10612	K0210-06A0	4	210090
01023-10612	K0210-06A0	4	210090
01023-10612	K0210-06A0	6	210090
01023-10612	K1110-06D0	4	210370
01023-10612	K1110-06D0	6	210370
01023-10614	K1110-15A1	39	210540
01023-10614	K1110-30D2	40	210780
01023-10616	K0210-02A0A	16	210050
01023-10616	K0210-04A0	7	210070
01023-10616	K0210-13A0	2	210160
01023-10616	K1110-02D0	16	210300
01023-10616	K1110-04D0	7	210340
01023-10616	K1110-13D0	2	210510
01023-20412	K0210-09A0	3	210120
01023-20412	K1110-09D0	10	210430
01023-20412	K1110-09D0	3	210430
01023-20416	K1110-02A0	24	210290
01023-20416	K1110-20D0	21	210640
01023-20614	K1110-13A0	3	210500
01023-20614	K1110-28D0	31	210760
01023-20616	K0210-03A0	10	210060
01023-20616	K1110-03D0	10	210320
01023-20616	K1110-10D0	9	210450
01023-20620	K0210-08A0	9	210110
01023-20620	K1110-08D0	9	210410
01023-60316	K1110-28D0	27	210760
01023-60320	K1110-12A0	17	210480
01023-60408	K1110-15A1	17	210540
01023-60408	K1110-30D2	17	210780
01023-60410	K1110-15A1	37	210540
01023-60410	K1110-28D0	9	210760
01023-60410	K1110-30D2	38	210780
01023-60412	K1110-25A0	4	210720
01023-60510	K1110-27D2	9	210750
01023-60512	K1110-11A1	9	210460
01023-60512	K1110-15A1	18	210540
01023-60512	K1110-30D2	18	210780
01023-60516	K1110-11A1	10	210460
01023-60516	K1110-27D2	10	210750
01023-60616	K1110-12A0	16	210480
01023-60616	K1110-15A1	34	210540
01023-60616	K1110-28D0	26	210760
01023-60616	K1110-30D2	35	210780
01023-60620	K1110-07A0	10	210380
01023-60620	K1110-07A0	9	210380
01023-60620	K1110-11A1	14	210460
01023-60620	K1110-15A1	22	210540
01023-60620	K1110-27D2	14	210750
01023-60630	K1110-27D2	15	210750
01023-60630	K1110-30D2	22	210780
01023-70514	K1110-15A1	23	210540
01023-70514	K1110-30D2	26	210780
01023-70616	K0210-07A0	6	210100
01023-70616	K0210-10A0	12	210130
01050-31216	A411S-01B9	6	030520
01050-81230	B0400-01A0	22	030130
01224-40410	K1110-06A0	22	210360
01224-40612	Y1670-01A0	27	450840
01224-40616	M1210-01A0	25	240100
01224-70612	K0210-02A0A	37	210050
01240-00616	K0210-06A0	7	210090
01240-00616	K1110-06D0	7	210370
01240-00620	K0210-03A0	15	210060
01240-00620	K1110-03D0	15	210320
01240-00816	K0210-04A0	18	210070
01240-01025	K0210-07A0	14	210100
01240-01025	K1110-07D0	22	210390
01245-00612	K0210-11A0	11	210140
01245-00612	K0310-01A0	3	210190
01245-00612	K1110-11D2	10	210470
01245-00616	K0210-02A0A	19	210050
01245-00616	K0210-11A0	16	210140
01245-00616	K0310-01A0A	3	210200
01245-00616	K1110-11D2	17	210470
01245-00620	K0210-04A0	22	210070
01245-00620	K1110-04D0	22	210340
01245-00625	K0210-03A0	16	210060
01245-00625	K1110-03D0	16	210320
01245-00816	K1110-02D0	19	210300
01245-00816	K1110-02D0	25	210300
01245-00816	K1110-13D0	13	210510
01245-00816	K1110-14D0	5	210530
01245-00820	K1110-04D0	18	210340
01245-00820	K1110-16A0	27	210560
01245-00820	K1110-31D0	8	210790
01245-01016	K0210-11A0	9	210140
01245-01016	K1110-11D2	8	210470

PARTS Nº	FIG. Nº	INDEX	PAGE
01245-01025	K1110-23D0	10	210690
01245-01025	K1110-23D0	8	210690
01245-01220	K0210-11A0	4	210140
01245-01220	K0210-11A0	6	210140
01245-01220	K1110-11D2	3	210470
01245-01220	K1110-11D2	5	210470
01252-30625	Y1670-21A0	15	450900
01252-41025	K1110-10A0	10	210440
01252-41025	K1110-14A0	10	210520
01252-41025	K1110-26D0	10	210740
01252-41025	K1110-29D0	10	210770
01252-41025	M1420-01A0	3	240130
01252-60525	Y1670-01A0	23	450840
01252-60530	Y1600-09A0	10	450180
01252-60616	Y1662-23A0	10	450490
01252-60616	Y1662-54A0	10	450780
01252-60630	Y1662-04A0	2	450300
01252-60630	Y1662-10A0	15	450360
01252-60630	Y1662-13A0	12	450390
01252-60630	Y1662-19A0	18	450450
01252-60630	Y1662-26A0	14	450520
01252-60630	Y1662-34A0	3	450580
01252-60630	Y1662-40A0	15	450640
01252-60630	Y1662-43A0	12	450670
01252-60630	Y1662-49A0	18	450730
01252-60630	Y1662-50A0	19	450740
01252-60630	Y1662-57A0	14	450810
01252-60640	Y1662-34A0	4	450580
01252-60645	Y1662-10A0	16	450360
01252-60645	Y1662-40A0	16	450640
01252-60650	Y1662-13A0	13	450390
01252-60650	Y1662-43A0	13	450670
01252-60820	Y1662-07A0	19	450330
01252-60820	Y1662-37A0	19	450610
01252-60825	Y1662-06A0	12	450320
01252-60825	Y1662-36A0	12	450600
01252-60835	Y1670-02A0	19	450860
01252-60835	Y1670-02A1	19	450870
01252-60850	Y1662-13A0	6	450390
01252-60850	Y1662-43A0	6	450670
01252-60860	Y1662-07A0	20	450330
01252-60860	Y1662-37A0	20	450610
01252-60865	Y1662-13A0	7	450390
01252-60865	Y1662-43A0	7	450670
01252-61035	Y1662-13A0	9	450390
01252-61035	Y1662-43A0	9	450670
01252-61040	Y1662-13A0	10	450390
01252-61040	Y1662-43A0	10	450670
01252-61230	Y1600-05A0	16	450140
01252-61235	Y1641-01A0	19	450240
01252-61645	Y1600-06A0	28	450150
01252-61645	Y1600-07A0	8	450160
01252-61685	Y1600-02A0	9	450110
01252-70516	H0110-01A1	38	150010
01252-70516	K1110-16A0	8	210560
01252-70616	K1740-01A0	2	210890
01252-70816	K0110-01A1	2	210010
01252-70816	K1110-28D0	17	210760
01252-70830	K1110-13A0	7	210500
01252-71030	M1420-01A0	3	240130
01252-80616	K0210-02A0A	23	210050
01252-80616	K0210-02A0A	38	210050
01252-80616	K1110-02D0	22	210300
01252-80616	K1110-02D0	29	210300
01252-80620	K0210-02A0A	27	210050
01252-80620	K1110-03D0	21	210320
01253-61620	Y1600-02A0	10	450110
01310-01216	Y1620-01A0	25	450190
01310-01216	Y1620-11A0	22	450200
01310-01216	Y1620-41A0	23	450210
01310-01216	Y1620-41A1	23	450220
01370-00408	K0180-01A0A	17	210030
01370-00410	K1110-13A0	6	210500
01370-00420	K0210-08A0	11	210110
01370-00420	K1110-08D0	13	210410
01370-00508	K0210-13A0	16	210160
01370-00508	M1510-01A0	6	240140
01370-00512	K0180-01A0	5	210020
01370-00512	K1110-12A0	22	210480
01370-00512	K1110-15A1	33	210540
01370-10308	K0180-01A0A	19	210030
01370-10308	K1110-10A0	2	210440
01370-10308	K1110-14A0	2	210520
01370-10308	K1110-26D0	2	210740
01370-10308	K1110-29D0	2	210770
01370-20308	K0180-01A0A	24	210030
01370-30412	K0210-10A0	7	210130
01370-30412	K1110-10D0	6	210450
01370-40408	K0210-15A0	3	210180
01370-40412	K0210-09A0	14	210120
01370-40412	K1110-09D0	16	210430
01434-00820	E0100-01A1	11	120010
01434-10616	C0100-02A0	2	060030
01434-10616	C0100-02A0	5	060030
01434-10616	C0100-02A0A	2	060040
01434-10616	C0100-02A0A	5	060040
01435-00610	K1110-16D0	16	210570
01435-00610	K1110-16D0	9	210570
01435-00612	K0210-15A0	4	210180
01435-00612	K1110-07A0	12	210380
01435-00612	K1110-13D0	8	210510
01435-00612	K1110-15A1	36	210540
01435-00612	K1110-16A0	7	210560
01435-00612	K1110-30D2	37	210780
01435-00616	A206P-01A8	7	030170
01435-00616	K0210-02A0A	51	210050
01435-00616	K0210-03A0	20	210060
01435-00616	K0210-08A0	2	210110
01435-00616	K1110-02D0	45	210300
01435-00625	K0700-02A1A	19	210240
01435-00625	K0700-02A1A	22	210240
01435-00625	K0700-02A1B	20	210250
01435-00625	K0700-02A1B	23	210250
01435-00625	K0700-02A1B	26	210250
01435-00625	K0700-02A1B	4	210250
01435-00630	K0700-02A1A	3	210240
01435-00630	K0700-02A1B	3	210250
01435-00816	B0000-02A0	2	030020
01435-00816	B0000-02A0	4	030020
01435-00816	K1110-16D0	7	210570
01435-00820	B0000-02A0	7	030020
01435-00825	E0201-01A0	5	120091
01435-00880	K1110-07A0	2	210380
01435-00885	K1110-16D0	5	210570
01435-01014	A408P-01B7	5	030500
01435-01016	K1110-24D0	13	210710
01435-01020	B0000-05A0	2	030050
01435-01020	K1110-12A0	19	210480
01435-01025	B0000-03A0	8	030030
01435-01030	Y1620-01A0	39	450190
01435-01030	Y1620-11A0	38	450200
01435-01030	Y1620-41A0	35	450210
01435-01030	Y1620-41A1	35	450220
01435-01040	Y1620-01A0	34	450190
01435-01045	Y1620-11A0	32	450200
01435-01055	Y1620-01A0	33	450190
01435-01055	Y1620-11A0	31	450200
01435-01070	Y1620-41A0	30	450210
01435-01070	Y1620-41A1	30	450220
01435-01090	A601T-01B4	5	030620
01435-01225	K0210-05A1	17	210080
01435-01225	K1110-05D0	17	210350
01435-01235	B0000-03A0	5	030030
01435-21045	Y1620-11A0	32	450200
01435-30820	K0210-07A0	2	210100
01435-40610	K0210-04A0	10	210070
01435-40610	K0210-10A0	10	210130
01435-40610	K0210-10A0	14	210130
01435-40610	K1110-04D0	14	210340
01435-40610	K1110-10D0	13	210450

PARTS Nº	FIG. Nº	INDEX	PAGE
01435-40612	K0210-02A0A	47	210050
01435-40612	K0210-04A0	14	210070
01435-40612	K0210-09A0	18	210120
01435-40612	K0210-15A0	6	210180
01435-40612	K1110-16A0	11	210560
01435-40616	K0210-02A0A	41	210050
01435-40616	K1110-02D0	33	210300
01435-40616	K1110-02D0	37	210300
01435-40616	K1110-02D0	41	210300
01435-40616	K1110-02D0	49	210300
01435-40616	K1110-04D0	10	210340
01435-40616	K1110-07D0	6	210390
01435-40616	K1110-07D0	8	210390
01435-40616	K1110-08D0	2	210410
01435-40616	K1110-09D0	12	210430
01435-40616	K1110-15D0	8	210550
01435-40620	K1110-32D0	7	210800
01435-40812	K0210-02A0A	11	210050
01435-40812	K1110-02D0	11	210300
01435-40820	K0210-10A0	18	210130
01435-40820	K1110-10D0	17	210450
01435-41225	J1110-01A0	52	180010
01435-41225	K0210-05A1	16	210080
01435-41225	K1110-05D0	16	210350
01580-00403	K0180-01A0A	22	210030
01580-10403	K0180-01A0	7	210020
01580-10403	K0180-01A0A	10	210030
01580-10403	K0180-01A0A	4	210030
01580-10605	B0400-01A0	14	030130
01580-10806	Y1600-06A0	25	450150
01580-11008	K0210-02A0A	45	210050
01580-11008	K0210-07A0	9	210100
01580-11008	K1110-02D0	39	210300
01580-11008	K1110-07D0	17	210390
01580-11008	M1130-01A0	32	240030
01580-11008	M1140-01A0	29	240040
01580-11210	M1110-01A0	5	240010
01580-11210	Y1662-13A0	3	450390
01580-11210	Y1662-43A0	3	450670
01580-11411	K0700-01A1	20	210220
01580-11411	K0700-01A1A	12	210230
01580-11613	K1120-01A0	5	210860
01580-11613	K1120-01A0	8	210860
01580-11613	K1120-01A0A	6	210870
01580-11613	K1120-01A0A	9	210870
01580-11613	T1125-01A0	3	360070
01580-11613	T1200-02A0	15	360120
01580-11613	T1200-02A0	20	360120
01580-11613	T1200-02A0	23	360120
01580-11613	T1200-02A0	26	360120
01580-12016	R1100-01A0	7	330080
01582-01411	A408P-01B7	10	030500
01582-11008	B0400-01A0	12	030130
01582-11008	B0400-01A0	8	030130
01583-11408	Y1600-08A0	12	450170
01583-11811	K0210-02A0A	43	210050
01583-11811	K1110-02D0	35	210300
01584-00806	B0000-03A0	3	030030
01584-01008	K0210-06A0	16	210090
01584-01008	K1110-06D0	16	210370
01584-30806	K0210-04A0	3	210070
01584-30806	K1110-04D0	3	210340
01593-31008	B0400-01A0	10	030130
01597-01009	C0100-02A0	28	060030
01597-01009	C0100-02A0A	28	060040
01597-01009	K0700-01A1	33	210220
01597-01009	K0700-01A1A	20	210230
01597-01009	Y1620-01A0	42	450190
01597-01009	Y1620-11A0	40	450200
01597-01009	Y1620-41A0	37	450210
01597-01009	Y1620-41A1	37	450220
01601-20410	K0180-01A0	8	210020
01601-20410	K0180-01A0A	11	210030
01601-20410	K0180-01A0A	5	210030
01601-20513	H0110-01A1	39	150010
01601-20513	K1110-15A1	21	210540
01601-20513	K1110-30D2	21	210780
01602-20619	B0400-01A0	15	030130
01602-21030	B0400-01A0	6	030130
01602-51032	B0400-01A0	6	030130
01640-01016	A601T-01B4	6	030620
01640-20508	K1110-16A0	9	210560
01640-20610	A206P-01A8	8	030170
01640-20610	K1110-27D2	16	210750
01640-20610	K1110-30D2	23	210780
01640-21626	E0201-01A0	10	120091
01641-50608	K0210-02A0A	28	210050
01641-50608	K0210-02A0A	39	210050
01641-50608	K0210-03A0	17	210060
01641-50608	K0210-11A0	17	210140
01641-50608	K1110-02D0	30	210300
01641-50608	K1110-03D0	17	210320
01641-50608	K1110-11D2	16	210470
01643-30623	C0100-02A0	3	060030
01643-30623	C0100-02A0	6	060030
01643-30623	C0100-02A0A	3	060040
01643-30623	C0100-02A0A	43	060040
01643-30623	C0100-02A0A	6	060040
01643-30623	D0100-01A0	9	090010
01643-30623	E0200-01A0	34	120020
01643-30623	E0200-01A0A	34	120030
01643-30623	E0201-01A0	13	120091
01643-30623	K0210-09A0	2	210120
01643-30623	K0210-13A0	18	210160
01643-30623	K0210-14A0	10	210170
01643-30623	K0700-01A1	30	210220
01643-30623	K1110-09D0	2	210430
01643-30623	K1110-15A1	40	210540
01643-30623	K1110-25A0	7	210720
01643-30623	K1110-30D2	41	210780
01643-30623	K1740-01A0	3	210890
01643-30623	M1130-01A0	23	240030
01643-30623	M1130-01A0	6	240030
01643-30623	M1140-01A0	23	240040
01643-30623	M1140-01A0	6	240040
01643-30623	M1220-01A0	10	240110
01643-30623	M1220-01A0	17	240110
01643-30823	B0100-01A0	17	030100
01643-30823	B0200-01A0	14	030110
01643-30823	C0100-02A0	43	060030
01643-30823	C0100-02A0A	49	060040
01643-30823	C0100-04A0	5	060070
01643-30823	C0100-04A0A	5	060080
01643-30823	E0100-01A1	12	120010
01643-30823	E0200-01A0	28	120020
01643-30823	E0200-01A0	30	120020
01643-30823	E0200-01A0	6	120020
01643-30823	E0200-01A0A	28	120030
01643-30823	E0200-01A0A	30	120030
01643-30823	E0200-01A0A	6	120030
01643-30823	E0201-01A0	3	120091
01643-30823	E0410-01A0	4	120100
01643-30823	K0110-01A1	3	210010
01643-30823	K0180-01A0	10	210020
01643-30823	K0180-01A0	15	210020
01643-30823	K0180-01A0	21	210020
01643-30823	K0210-06A0	20	210090
01643-30823	K0210-14A0	6	210170
01643-30823	K0700-01A1	23	210220
01643-30823	K0700-01A1	7	210220
01643-30823	K0700-01A1A	15	210230
01643-30823	K0700-03A1	3	210260
01643-30823	K0700-03A1	6	210260
01643-30823	K0700-03A1	8	210260
01643-30823	K1110-06D0	20	210370
01643-30823	K1110-07A0	5	210380
01643-30823	K1110-10A0	14	210440
01643-30823	K1110-13A0	8	210500
01643-30823	K1110-14A0	14	210520
01643-30823	K1110-16A0	25	210560

PARTS Nº	FIG. Nº	INDEX	PAGE
01643-30823	K1110-16D0	13	210570
01643-30823	K1110-16D0	3	210570
01643-30823	K1110-26D0	14	210740
01643-30823	K1110-29D0	14	210770
01643-30823	K1110-31D0	4	210790
01643-30823	Y1627-01A0A	13	450230
01643-30823	Y1670-01A0	16	450840
01643-30823	Y1670-01A1	15	450850
01643-31032	A408P-01B7	12	030500
01643-31032	B0000-01A0	4	030010
01643-31032	B0000-01A0	6	030010
01643-31032	B0100-01A0	30	030100
01643-31032	B0400-01A0	18	030130
01643-31032	B0400-01A0	3	030130
01643-31032	C0100-01A0	11	060010
01643-31032	C0100-01A0	16	060010
01643-31032	C0100-01A0	19	060010
01643-31032	C0100-01A0	22	060010
01643-31032	C0100-01A0	24	060010
01643-31032	C0100-01A0	41	060010
01643-31032	C0100-01A0	50	060010
01643-31032	C0100-01A0	52	060010
01643-31032	C0100-01A0A	11	060020
01643-31032	C0100-01A0A	16	060020
01643-31032	C0100-01A0A	19	060020
01643-31032	C0100-01A0A	22	060020
01643-31032	C0100-01A0A	24	060020
01643-31032	C0100-01A0A	42	060020
01643-31032	C0100-01A0A	52	060020
01643-31032	C0100-01A0A	54	060020
01643-31032	C0100-02A0	10	060030
01643-31032	C0100-02A0	15	060030
01643-31032	C0100-02A0	19	060030
01643-31032	C0100-02A0	22	060030
01643-31032	C0100-02A0	27	060030
01643-31032	C0100-02A0	34	060030
01643-31032	C0100-02A0	37	060030
01643-31032	C0100-02A0	40	060030
01643-31032	C0100-02A0A	10	060040
01643-31032	C0100-02A0A	15	060040
01643-31032	C0100-02A0A	19	060040
01643-31032	C0100-02A0A	22	060040
01643-31032	C0100-02A0A	27	060040
01643-31032	C0100-02A0A	34	060040
01643-31032	C0100-02A0A	37	060040
01643-31032	C0100-02A0A	40	060040
01643-31032	C0100-03A0	16	060050
01643-31032	C0100-03A0	23	060050
01643-31032	C0100-03A0A	16	060060
01643-31032	C0100-03A0A	23	060060

PARTS Nº	FIG. Nº	INDEX	PAGE
01643-31032	C0100-05A0	13	060090
01643-31032	C0100-05A0	16	060090
01643-31032	C0100-05A0	7	060090
01643-31032	C0100-05A0A	13	060100
01643-31032	C0100-05A0A	16	060100
01643-31032	C0100-05A0A	7	060100
01643-31032	C0310-01A0	11	060110
01643-31032	C0310-01A0	14	060110
01643-31032	C0310-01A0	3	060110
01643-31032	C0310-01A0	6	060110
01643-31032	C0310-01A0	9	060110
01643-31032	D0200-01A1	26	090020
01643-31032	D0200-01A1A	29	090030
01643-31032	D0200-02A1	8	090040
01643-31032	E0200-01A0	13	120020
01643-31032	E0200-01A0	15	120020
01643-31032	E0200-01A0	18	120020
01643-31032	E0200-01A0	25	120020
01643-31032	E0200-01A0A	13	120030
01643-31032	E0200-01A0A	15	120030
01643-31032	E0200-01A0A	18	120030
01643-31032	E0200-01A0A	25	120030
01643-31032	E0200-02A0	26	120040
01643-31032	E0200-02A0	38	120040
01643-31032	E0200-02A0A	26	120050
01643-31032	E0200-02A0A	36	120050
01643-31032	E0200-04A0	7	120080
01643-31032	E0200-04A0	9	120080
01643-31032	E0200-04A0A	7	120090
01643-31032	E0200-04A0A	9	120090
01643-31032	E0420-01A0	4	120110
01643-31032	H0320-01A0	12	150070
01643-31032	H0320-01A0	19	150070
01643-31032	H0330-01A0	7	150080
01643-31032	H0340-01A0	8	150090
01643-31032	H1831-01A0	3	150160
01643-31032	J1110-01A0	44	180010
01643-31032	J1110-01A0A	38	180020
01643-31032	K0210-07A0	10	210100
01643-31032	K0210-09A0	12	210120
01643-31032	K0210-12A0	5	210150
01643-31032	K0210-13A0	5	210160
01643-31032	K0700-01A1	12	210220
01643-31032	K0700-01A1	34	210220
01643-31032	K0700-01A1A	4	210230
01643-31032	K0700-01A1A	21	210230
01643-31032	K0700-02A1A	35	210240
01643-31032	K0700-02A1B	39	210250
01643-31032	K1110-01A0	10	210270
01643-31032	K1110-01A0	12	210270

PARTS Nº	FIG. Nº	INDEX	PAGE
01643-31032	K1110-02A0	15	210290
01643-31032	K1110-02A0	3	210290
01643-31032	K1110-02A0	39	210290
01643-31032	K1110-03A0	4	210310
01643-31032	K1110-03A0	6	210310
01643-31032	K1110-04A0	4	210330
01643-31032	K1110-04A0	6	210330
01643-31032	K1110-06A0	8	210360
01643-31032	K1110-07A0	16	210380
01643-31032	K1110-07A0	18	210380
01643-31032	K1110-07D0	18	210390
01643-31032	K1110-08A0	11	210400
01643-31032	K1110-08A0	14	210400
01643-31032	K1110-08A0	20	210400
01643-31032	K1110-08A0	23	210400
01643-31032	K1110-08A0	26	210400
01643-31032	K1110-08A0	29	210400
01643-31032	K1110-08A0	3	210400
01643-31032	K1110-08A0	32	210400
01643-31032	K1110-08A0	35	210400
01643-31032	K1110-08A0	38	210400
01643-31032	K1110-08A0	41	210400
01643-31032	K1110-08A0	48	210400
01643-31032	K1110-08A0	5	210400
01643-31032	K1110-08A0	51	210400
01643-31032	K1110-08A0	8	210400
01643-31032	K1110-09A0	14	210420
01643-31032	K1110-09A0	3	210420
01643-31032	K1110-09A0	6	210420
01643-31032	K1110-09D0	14	210430
01643-31032	K1110-13A0	10	210500
01643-31032	K1110-15A1	42	210540
01643-31032	K1110-16A0	3	210560
01643-31032	K1110-18A0	6	210590
01643-31032	K1110-18A0	9	210590
01643-31032	K1110-18D0	4	210600
01643-31032	K1110-19D0	10	210620
01643-31032	K1110-19D0	12	210620
01643-31032	K1110-19D0	15	210620
01643-31032	K1110-20D0	15	210640
01643-31032	K1110-20D0	3	210640
01643-31032	K1110-20D0	6	210640
01643-31032	K1110-21A0	14	210650
01643-31032	K1110-21A0	18	210650
01643-31032	K1110-21A0	3	210650
01643-31032	K1110-21A0	9	210650
01643-31032	K1110-21D0	4	210660
01643-31032	K1110-21D0	6	210660
01643-31032	K1110-22A0	15	210670
01643-31032	K1110-22A0	3	210670

PARTS Nº	FIG. Nº	INDEX	PAGE
01643-31032	K1110-22D0	4	210680
01643-31032	K1110-22D0	6	210680
01643-31032	K1110-24D0	12	210710
01643-31032	K1110-24D0	16	210710
01643-31032	K1110-24D0	21	210710
01643-31032	K1110-24D0	24	210710
01643-31032	K1110-24D0	27	210710
01643-31032	K1110-24D0	8	210710
01643-31032	K1110-28D0	33	210760
01643-31032	K1110-30D2	43	210780
01643-31032	K1110-33D0	11	210810
01643-31032	K1110-33D0	8	210810
01643-31032	K1110-36D0	14	210840
01643-31032	K1110-36D0	3	210840
01643-31032	K1110-36D0	9	210840
01643-31032	K1110-37D0	12	210850
01643-31032	K1110-37D0	3	210850
01643-31032	K1120-01A0	3	210860
01643-31032	K1120-01A0A	4	210870
01643-31032	M1210-01A0	20	240100
01643-31032	M1210-01A0	23	240100
01643-31032	N1110-01A0	13	270010
01643-31032	R1100-01A0	12	330080
01643-31032	T1110-03A0	21	360030
01643-31032	T1110-03A0	29	360030
01643-31032	T1110-03A0	8	360030
01643-31032	T1110-04A0	9	360040
01643-31032	Y1620-01A0	43	450190
01643-31032	Y1620-11A0	41	450200
01643-31032	Y1620-41A0	38	450210
01643-31032	Y1620-41A1	38	450220
01643-31232	A411S-01B9	5	030520
01643-31232	B0100-01A0	13	030100
01643-31232	B0100-01A0	19	030100
01643-31232	B0100-01A0	24	030100
01643-31232	B0100-01A0	9	030100
01643-31232	B0200-01A0	16	030110
01643-31232	B0200-01A0	20	030110
01643-31232	B0200-01A0	5	030110
01643-31232	B0400-01A0	21	030130
01643-31232	B0400-01A0	23	030130
01643-31232	C0100-01A0	38	060010
01643-31232	C0100-01A0A	39	060020
01643-31232	C0100-02A0	25	060030
01643-31232	C0100-02A0	31	060030
01643-31232	C0100-02A0A	25	060040
01643-31232	C0100-02A0A	31	060040
01643-31232	C0100-04A0	14	060070
01643-31232	C0100-04A0A	14	060080
01643-31232	C0100-05A0	19	060090

PARTS Nº	FIG. Nº	INDEX	PAGE
01643-31232	C0100-05A0	28	060090
01643-31232	C0100-05A0A	19	060100
01643-31232	C0100-05A0A	29	060100
01643-31232	D0200-01A1	13	090020
01643-31232	D0200-01A1	17	090020
01643-31232	D0200-01A1	20	090020
01643-31232	D0200-01A1	23	090020
01643-31232	D0200-01A1	29	090020
01643-31232	D0200-01A1A	13	090030
01643-31232	D0200-01A1A	17	090030
01643-31232	D0200-01A1A	20	090030
01643-31232	D0200-01A1A	25	090030
01643-31232	D0200-01A1A	32	090030
01643-31232	D0200-02A1	13	090040
01643-31232	D0200-02A1	19	090040
01643-31232	E0100-01A1	7	120010
01643-31232	E0200-01A0	10	120020
01643-31232	E0200-01A0	22	120020
01643-31232	E0200-01A0	32	120020
01643-31232	E0200-01A0A	10	120030
01643-31232	E0200-01A0A	22	120030
01643-31232	E0200-01A0A	32	120030
01643-31232	E0200-02A0	10	120040
01643-31232	E0200-02A0	13	120040
01643-31232	E0200-02A0	16	120040
01643-31232	E0200-02A0	19	120040
01643-31232	E0200-02A0	22	120040
01643-31232	E0200-02A0	29	120040
01643-31232	E0200-02A0	32	120040
01643-31232	E0200-02A0	36	120040
01643-31232	E0200-02A0	4	120040
01643-31232	E0200-02A0	41	120040
01643-31232	E0200-02A0	7	120040
01643-31232	E0200-02A0A	10	120050
01643-31232	E0200-02A0A	13	120050
01643-31232	E0200-02A0A	16	120050
01643-31232	E0200-02A0A	19	120050
01643-31232	E0200-02A0A	22	120050
01643-31232	E0200-02A0A	29	120050
01643-31232	E0200-02A0A	34	120050
01643-31232	E0200-02A0A	39	120050
01643-31232	E0200-02A0A	4	120050
01643-31232	E0200-02A0A	7	120050
01643-31232	E0200-03A0	13	120060
01643-31232	E0200-03A0	18	120060
01643-31232	E0200-03A0	22	120060
01643-31232	E0200-03A0	25	120060
01643-31232	E0200-03A0	29	120060
01643-31232	E0200-03A0	8	120060
01643-31232	E0200-03A0A	12	120070

PARTS Nº	FIG. Nº	INDEX	PAGE
01643-31232	E0200-03A0A	19	120070
01643-31232	E0200-03A0A	23	120070
01643-31232	E0200-03A0A	26	120070
01643-31232	E0200-03A0A	30	120070
01643-31232	E0200-03A0A	7	120070
01643-31232	E0420-01A0	7	120110
01643-31232	H0110-01A1	25	150010
01643-31232	H0110-01A1	33	150010
01643-31232	H0110-01A1	44	150010
01643-31232	H0311-01A0	4	150050
01643-31232	H0320-01A0	4	150070
01643-31232	H0320-01A0	8	150070
01643-31232	H1210-01A0	18	150100
01643-31232	H1210-01A0	20	150100
01643-31232	H1831-02A0	14	150170
01643-31232	H1831-02A0	17	150170
01643-31232	H1831-02A0	36	150170
01643-31232	H1831-02A0	39	150170
01643-31232	H1833-01A0	3	150180
01643-31232	H1833-01A0	6	150180
01643-31232	H1840-01A1	3	150190
01643-31232	H1840-01A1	30	150190
01643-31232	H1840-01A1	33	150190
01643-31232	H1840-01A1	7	150190
01643-31232	J1110-01A0	19	180010
01643-31232	J1110-01A0	46	180010
01643-31232	J1110-01A0	5	180010
01643-31232	J1110-01A0A	19	180020
01643-31232	J1110-01A0A	40	180020
01643-31232	J1110-01A0A	5	180020
01643-31232	J1310-01A0	12	180030
01643-31232	J1310-01A0	4	180030
01643-31232	K0700-01A1	37	210220
01643-31232	K0700-01A1A	24	210230
01643-31232	K0700-02A1A	14	210240
01643-31232	K0700-02A1A	16	210240
01643-31232	K0700-02A1A	28	210240
01643-31232	K0700-02A1A	39	210240
01643-31232	K0700-02A1A	6	210240
01643-31232	K0700-02A1A	9	210240
01643-31232	K0700-02A1B	10	210250
01643-31232	K0700-02A1B	15	210250
01643-31232	K0700-02A1B	17	210250
01643-31232	K0700-02A1B	29	210250
01643-31232	K0700-02A1B	32	210250
01643-31232	K0700-02A1B	43	210250
01643-31232	K0700-02A1B	7	210250
01643-31232	K1110-18D0	6	210600
01643-31232	K1110-18D0	8	210600
01643-31232	K1110-23D0	6	210690

PARTS Nº	FIG. Nº	INDEX	PAGE
01643-31232	K1120-01A0	14	210860
01643-31232	K1120-01A0	16	210860
01643-31232	M1110-01A0	17	240010
01643-31232	M1110-01A0	23	240010
01643-31232	M1110-01A0	6	240010
01643-31232	M1120-01A0	12	240020
01643-31232	M1120-01A0	14	240020
01643-31232	M1120-01A0	4	240020
01643-31232	M1120-01A0	9	240020
01643-31232	M1130-01A0	14	240030
01643-31232	M1130-01A0	17	240030
01643-31232	M1130-01A0	20	240030
01643-31232	M1130-01A0	26	240030
01643-31232	M1130-01A0	29	240030
01643-31232	M1130-01A0	41	240030
01643-31232	M1130-01A0	43	240030
01643-31232	M1130-01A0	45	240030
01643-31232	M1130-01A0	47	240030
01643-31232	M1130-01A0	8	240030
01643-31232	M1140-01A0	14	240040
01643-31232	M1140-01A0	17	240040
01643-31232	M1140-01A0	20	240040
01643-31232	M1140-01A0	26	240040
01643-31232	M1140-01A0	34	240040
01643-31232	M1140-01A0	39	240040
01643-31232	M1140-01A0	8	240040
01643-31232	M1150-01A0	13	240050
01643-31232	M1150-01A0	16	240050
01643-31232	M1150-01A0	18	240050
01643-31232	M1150-01A0	20	240050
01643-31232	M1150-01A0	27	240050
01643-31232	M1150-01A0	33	240050
01643-31232	M1150-01A0	36	240050
01643-31232	M1150-01A0A	13	240060
01643-31232	M1150-01A0A	16	240060
01643-31232	M1150-01A0A	18	240060
01643-31232	M1150-01A0A	20	240060
01643-31232	M1150-01A0A	27	240060
01643-31232	M1150-01A0A	33	240060
01643-31232	M1150-01A0A	36	240060
01643-31232	M1150-02A0	10	240070
01643-31232	M1150-02A0	13	240070
01643-31232	M1150-02A0	20	240070
01643-31232	M1150-02A0	23	240070
01643-31232	M1150-02A0	4	240070
01643-31232	M1150-02A0	7	240070
01643-31232	M1150-02A0A	10	240080
01643-31232	M1150-02A0A	13	240080
01643-31232	M1150-02A0A	20	240080
01643-31232	M1150-02A0A	23	240080
01643-31232	M1150-02A0A	4	240080
01643-31232	M1150-02A0A	7	240080
01643-31232	M1160-01A0	10	240090
01643-31232	M1160-01A0	6	240090
01643-31232	M1210-01A0	27	240100
01643-31232	M1210-01A0	6	240100
01643-31232	M1220-01A0	25	240110
01643-31232	M1220-01A0	25	240110
01643-31232	M1220-01A0	29	240110
01643-31232	M1310-01A0	3	240120
01643-31232	M1310-01A0	5	240120
01643-31232	M1510-01A0	8	240140
01643-31232	M1810-01A0	12	240160
01643-31232	M1810-01A0	14	240160
01643-31232	M1810-01A0	16	240160
01643-31232	M1810-01A0	19	240160
01643-31232	M1810-01A0	21	240160
01643-31232	M1810-01A0	23	240160
01643-31232	M1810-02A0	10	240170
01643-31232	M1810-02A0	12	240170
01643-31232	M1810-02A0	15	240170
01643-31232	M1810-02A0	17	240170
01643-31232	M1810-02A0	20	240170
01643-31232	M1810-02A0	7	240170
01643-31232	N1310-01A0	29	270040
01643-31232	P1210-01A0	29	300020
01643-31232	P1210-01A0	39	300020
01643-31232	R0110-02A0A	18	330020
01643-31232	R0110-02A0A	5	330020
01643-31232	R1140-01A0	4	330090
01643-31232	T1110-02A0	13	360020
01643-31232	T1110-02A0	7	360020
01643-31232	T1110-06A0	5	360050
01643-31232	T1110-06A0	7	360050
01643-31232	T1200-01A0	14	360090
01643-31232	T1200-01A0	19	360090
01643-31232	T1200-01A1	14	360100
01643-31232	T1200-01A1	19	360100
01643-31232	T1200-01A3	14	360110
01643-31232	T1200-01A3	19	360110
01643-31232	Y1662-13A0	2	450390
01643-31232	Y1662-43A0	2	450670
01643-31445	K0700-01A1	21	210220
01643-31445	K0700-01A1A	13	210230
01643-31445	R0300-01A0	13	330040
01643-31645	C0100-04A0	10	060070
01643-31645	C0100-04A0A	10	060080
01643-31645	D0100-01A0	19	090010
01643-31645	H0110-01A1	50	150010
01643-31645	H0120-02A0	6	150030
01643-31645	H0120-02A0	8	150030
01643-31645	K1120-01A0	6	210860
01643-31645	K1120-01A0	9	210860
01643-31645	K1120-01A0A	10	210870
01643-31645	K1120-01A0A	7	210870
01643-31645	P1210-01A0	36	300020
01643-31645	R0110-02A0A	20	330020
01643-31645	R0300-01H1	10	330040a
01643-31645	T1510-01A0	19	360160
01643-31645	T1510-02A0	19	360170
01643-31645	T1510-03A0	19	360180
01643-31645	T1510-04A0	19	360190
01643-31645	T1510-05A0	19	360200
01643-31645	T1510-06A0	19	360210
01643-31845	R0200-01A0	12	330030
01643-32060	N1210-01A0	3	270020
01643-32060	R1100-01A0	6	330080
01643-32060	R1200-01A0	3	330100
01643-50823	Y1620-01A0	32	450190
01643-50823	Y1620-41A0	29	450210
01643-50823	Y1620-41A1	29	450220
01643-50823	Y1670-02A0	20	450860
01643-50823	Y1670-02A1	20	450870
01643-51032	H0312-01A0	8	150060
01643-51032	K1110-10A0	11	210440
01643-51032	K1110-14A0	11	210520
01643-51032	K1110-26D0	11	210740
01643-51032	K1110-29D0	11	210770
01643-51032	N1310-01A0	22	270040
01643-51032	P1120-01A0	3	300010
01643-51032	T1110-03A0	26	360030
01643-51032	Y1620-41A1	30A	450220
01643-51032	Y1662-13A0	11	450390
01643-51032	Y1662-13A0	5	450390
01643-51032	Y1662-43A0	11	450670
01643-51032	Y1662-43A0	5	450670
01643-51645	Y1620-01A0	17	450190
01643-51645	Y1620-11A0	14	450200
01643-70623	K0210-02A0A	20	210050
01643-70623	K0210-02A0A	24	210050
01643-70623	K0210-04A0	23	210070
01643-70623	K0210-11A0	12	210140
01643-70623	K0310-01A0	4	210190
01643-70623	K0310-01A0A	4	210200
01643-70623	K1110-02D0	23	210300
01643-70623	K1110-03D0	22	210320
01643-70623	K1110-04D0	23	210340
01643-70623	K1110-11D2	11	210470
01643-70623	K1110-16A0	20	210560
01643-70823	K0110-01A1	6	210010

PARTS Nº	FIG. Nº	INDEX	PAGE
01643-70823	K0180-01A0	26	210020
01643-70823	K0180-01A0A	15	210030
01643-70823	K0180-01A0A	35	210030
01643-70823	K0180-01A0A	7	210030
01643-70823	K1110-02D0	26	210300
01643-70823	K1110-07D0	3	210390
01643-70823	K1110-13D0	14	210510
01643-70823	K1110-14D0	3	210530
01643-70823	K1110-14D0	6	210530
01643-70823	K1110-14D0	9	210530
01643-70823	K1110-15D0	13	210550
01643-70823	K1110-15D0	20	210550
01643-70823	K1110-15D0	6	210550
01643-70823	K1110-16A0	28	210560
01643-70823	K1110-24A1	2	210700
01643-70823	K1110-31D0	9	210790
01643-71032	K0210-10A0	21	210130
01643-71032	K0210-11A0	10	210140
01643-71032	K1110-02A0	13	210290
01643-71032	K1110-06A0	11	210360
01643-71032	K1110-06A0	14	210360
01643-71032	K1110-06A0	19	210360
01643-71032	K1110-06A0	28	210360
01643-71032	K1110-06A0	6	210360
01643-71032	K1110-08A0	17	210400
01643-71032	K1110-08A0	45	210400
01643-71032	K1110-10D0	20	210450
01643-71032	K1110-11D2	9	210470
01643-71032	K1110-16A0	17	210560
01643-71032	K1110-20D0	13	210640
01643-71032	K1110-23D0	15	210690
01643-71232	K0210-11A0	5	210140
01643-71232	K0210-11A0	7	210140
01643-71232	K1110-06A0	3	210360
01643-71232	K1110-11D2	4	210470
01643-71232	K1110-11D2	6	210470
01643-72060	N1110-01A0	16	270010
01643-72060	N1110-01A0	5	270010
01803-02228	T1510-01A0	12	360160
01803-02228	T1510-02A0	12	360170
01803-02228	T1510-03A0	12	360180
01803-02228	T1510-05A0	12	360200
01803-02228	T1510-06A0	12	360210
01803-02430	T1510-03A0	12	360180
01803-02430	T1510-04A0	12	360190
02756-00507	H1340-01A0	5	150140
02756-00608	H1310-01A0	5	150130
02756-006A7	H1310-01A0	4	150130
02760-00203	H1840-01A1	27	150190
02760-00207	H1831-02A0	31	150170
02760-00211	K1110-19A0	8	210610
02760-00219	P1120-01A0	23	300010
02760-00235	K1110-20A0	1	210630
02760-00235	K1110-34D0	3	210820
02760-002A9	H1831-02A0	26	150170
02760-002A9	K1110-34D0	7	210820
02760-00327	K1110-34D0	2	210820
02760-00329	K1110-20A0	2	210630
02761-00204	H1840-01A1	26	150190
02761-00211	H1831-02A0	18	150170
02761-002A4	H1840-01A1	23	150190
02761-002A4	H1840-01A1	24	150190
02761-00308	H1831-02A0	30	150170
02762-00207	C0100-05A0	23	060090
02762-00207	C0100-05A0A	24	060100
02762-00418	P1120-01A0	20	300010
02762-005A8	H0340-01A0	4	150090
02762-00605	H0320-01A0	23	150070
02763-00610	H0340-01A0	5	150090
02777-00608	T1110-03A0	9	360030
02777-00612	H1220-01A0	8	150110
02777-006A6	H1210-01A0	22	150100
02777-006A8	T1110-03A0	10	360030
02778-00212	H1831-02A0	33	150170
02778-00606	H1210-01A0	12	150100
02778-00606	H1210-01A0	6	150100
02779-00311	H1810-01A0	4	150150
02781-00210	H1831-02A0	1	150170
02781-0021D	K1110-37D0	16	210850
02781-0021D	K1110-37D0	7	210850
02781-0031D	K1110-37D0	13	210850
02781-00422	P1120-01A0	6	300010
02781-00522	H1210-01A0	13	150100
02781-00628	H0110-01A1	8	150010
02781-00628	H1210-01A0	7	150100
02781-00628	H1220-01A0	1	150110
02782-10210	C0100-05A0	20	060090
02782-10210	C0100-05A0A	21	060100
02782-10210	H1831-02A0	4	150170
02782-10311	K1110-37D0	4	210850
02782-10315	H0110-01A1	9	150010
02782-10522	H1340-01A0	1	150140
02782-10522	N1310-01A0	2	270040
02782-10524	H1340-01A0	2	150140
02782-10524	N1220-01A0	4	270030
02782-10628	H0110-01A1	10	150010
02782-10628	H0320-01A0	20	150070
02782-10628	H1210-01A0	1	150100
02782-10628	N1310-01A0	17	270040
02782-10628	T1110-03A0	12	360030
02782-10630	N1220-01A0	1	270030
02789-00210	H0110-01A1	17	150010
02789-00210	H1270-01A0	3	150120
02896-11008	C0100-05A0	22	060090
02896-11008	C0100-05A0	24	060090
02896-11008	C0100-05A0A	23	060100
02896-11008	C0100-05A0A	25	060100
02896-11008	H0110-01A1	11	150010
02896-11008	H0120-01A1	12	150020
02896-11008	H0120-01A1	19	150020
02896-11008	H0120-01A1	3	150020
02896-11008	H0120-01A1	32	150020
02896-11008	H0120-01A1	38	150020
02896-11008	H0120-01A1	41	150020
02896-11008	H0120-01A1	49	150020
02896-11008	H0120-01A1	52	150020
02896-11008	H0120-01A1	55	150020
02896-11008	H0120-01A1	58	150020
02896-11008	H0120-01A1	6	150020
02896-11008	H0120-01A1	61	150020
02896-11008	H0120-01A1	9	150020
02896-11008	H1831-01A0	12	150160
02896-11008	H1831-01A0	9	150160
02896-11008	H1831-02A0	2	150170
02896-11008	H1831-02A0	5	150170
02896-11008	K1110-02A0	28	210290
02896-11008	K1110-02A0	34	210290
02896-11008	K1110-10A0	20	210440
02896-11008	K1110-14A0	20	210520
02896-11008	K1110-20D0	25	210640
02896-11008	K1110-22A0	11	210670
02896-11008	K1110-22A0	20	210670
02896-11008	K1110-22A0	23	210670
02896-11008	K1110-22A0	8	210670
02896-11008	K1110-26D0	20	210740
02896-11008	K1110-29D0	20	210770
02896-11008	K1110-37D0	17	210850
02896-11008	K1110-37D0	8	210850
02896-11008	N1310-01A0	10	270040
02896-11008	P1120-01A0	10	300010
02896-11009	H0110-01A1	12	150010
02896-11009	H0120-01A1	35	150020
02896-11009	K1110-14A0	22	210520
02896-11009	K1110-22A0	17	210670
02896-11009	K1110-22A0	5	210670
02896-11009	K1110-29D0	22	210770
02896-11009	K1110-37D0	14	210850
02896-11009	K1110-37D0	5	210850
02896-11012	N1310-01A0	13	270040
02896-11012	P1120-01A0	7	300010

PARTS Nº	FIG. Nº	INDEX	PAGE
02896-11015	N1220-01A0	9	270030
02896-11015	N1310-01A0	3	270040
02896-11018	H0110-01A1	13	150010
02896-11018	H0320-01A0	14	150070
02896-11018	H0320-01A0	21	150070
02896-11018	N1220-01A0	2	270030
02896-11018	N1220-01A0	8	270030
02896-11018	Y1662-12A0	13	450380
02896-11018	Y1662-42A0	13	450660
02896-61009	H0120-01A1	46	150020
02896-61009	H1810-01A0	2	150150
02896-61015	H1210-01A0	14	150100
02896-61015	H1340-01A0	3	150140
02896-61015	N1220-01A0	5	270030
02896-61015	Y1620-01A0	44	450190
02896-61015	Y1620-41A0	39	450210
02896-61015	Y1620-41A1	39	450220
02896-61018	H1210-01A0	11	150100
02896-61018	H1210-01A0	2	150100
02896-61018	H1210-01A0	5	150100
02896-61018	H1210-01A0	8	150100
02896-61018	H1220-01A0	2	150110
02896-61018	H1220-01A0	5	150110
02896-61018	H1310-01A0	2	150130
02896-61018	N1310-01A0	18	270040
02896-61018	T1110-03A0	11	360030
02896-61018	T1110-03A0	15	360030
02896-61018	T1110-03A0	17	360030
02896-61018	T1110-03A0	2	360030
02896-61018	T1110-03A0	23	360030
02896-61018	T1110-03A0	4	360030
02896-61018	Y1620-01A0	45	450190
02896-61018	Y1620-11A0	42	450200
04010-00519	K1110-12A0	25	210480
04020-01228	B0100-01A0	14	030100
04020-01228	Y1600-02A0	6	450110
04020-01228	Y1600-05A0	14	450140
04020-01228	Y1641-01A0	31	450240
04020-01638	N1210-01A0	4	270020
04020-01842	N1110-01A0	6	270010
04022-04010	Y1670-02A0	22	450860
04022-04016	Y1670-01A1	24	450850
04022-04016	Y1670-02A0	21	450860
04025-00324	Y1641-02A0	32	450250
04025-00420	Y1670-01A0	25	450840
04025-00432	Y1670-01A0	18	450840
04025-00432	Y1670-01A1	18	450850
04050-11612	M1220-01A0	11	240110
04050-12018	B0400-01A0	11	030130
04050-13020	M1210-01A0	18	240100
04050-13022	M1110-01A0	21	240010
04050-14028	N1310-01A0	27	270040
04050-14030	N1310-01A0	27	270040
04052-10530	K1110-07D0	12	210390
04052-10833	K0210-04A0	16	210070
04052-10833	K1110-04D0	16	210340
04064-04518	R0110-02A0A	9	330020
04064-07525	Y1627-01A0A	9	450230
04065-04818	Y1641-02A0	14	450250
04065-05520	Y1600-05A0	4	450140
04065-07225	Y1641-02A0	7	450250
04065-07825	Y1600-04A0	7	450130
04077-00085	R0110-02A0A	14	330020
04120-21749	K0700-02A1A	46	210240
04120-21749	K0700-02A1B	50	210250
04205-10520	K1110-07D0	11	210390
04205-11038	M1210-01A0	17	240100
04205-11230	M1110-01A0	20	240010
04205-11648	N1310-01A0	26	270040
04252-21061	B0400-01A0	9	030130
04260-00635	Y1620-11A0	28	450200
04260-00793	Y1662-25A0	9	450510
04260-00793	Y1662-56A0	9	450800
04418-13060	U0100-01A2	20	390010
04418-13060	U0100-01A3	20	390011
04434-50508	A411S-01B9	7	030520
04434-50508	K0700-01A1	26A	210220
04434-50508	K0700-01A1A	17	210230
04434-50608	E0200-03A0A	32	120070
04434-50612	A221V-01A1	3	030240
04434-50810	T1110-04A0	7	360040
04434-51012	E0200-02A0	24	120040
04434-51012	E0200-02A0	30	120040
04434-51012	E0200-02A0	34	120040
04434-51012	E0200-02A0	5	120040
04434-51012	E0200-02A0A	24	120050
04434-51012	E0200-02A0A	32	120050
04434-51012	E0200-02A0A	5	120050
04434-51012	E0200-03A0	23	120060
04434-51012	E0200-03A0	4	120060
04434-51012	E0200-03A0A	24	120070
04434-51208	A219P-01A5	4	030230
04434-51312	H1831-02A0	12	150170
04434-51312	H1831-02A0	9	150170
04434-51410	H0110-01A1	42	150010
04434-51410	K1110-08A0	1	210400
04434-51410	K1110-31D0	5	210790
04434-51412	C0100-05A0	26	060090
04434-51412	C0100-05A0A	27	060100
04434-51412	D0200-01A1	27	090020
04434-51412	D0200-01A1A	30	090030
04434-51412	E0200-02A0	27	120040
04434-51412	E0200-02A0A	27	120050
04434-51412	E0200-03A0	27	120060
04434-51412	E0200-03A0A	28	120070
04434-51512	H0110-01A1	42	150010
04434-51512	K0700-02A1B	27	210250
04434-51612	D0200-02A1	17	090040
04434-51612	H1831-02A0	34	150170
04434-51612	H1840-01A1	31	150190
04434-51612	K0700-02A1A	25	210240
04434-51612	K0700-02A1A	26	210240
04434-51612	K0700-02A1B	30	210250
04434-51710	E0200-02A0	23	120040
04434-51710	E0200-02A0A	23	120050
04434-51710	K1110-08A0	6	210400
04434-51710	K1110-24D0	9	210710
04434-51710	T1110-04A0	6	360040
04434-51712	E0200-01A0	20	120020
04434-51712	E0200-01A0A	20	120030
04434-51712	E0200-03A0	16	120060
04434-51712	E0200-03A0A	15	120070
04434-51810	K1110-33D0	6	210810
04434-51908	K1110-15D0	11	210550
04434-51910	E0200-03A0	3	120060
04434-51910	E0200-03A0A	3	120070
04434-51910	K0210-12A0	3	210150
04434-51910	K1110-08A0	36	210400
04434-51910	K1110-08A0	39	210400
04434-51910	K1110-08A0	42	210400
04434-51910	K1110-16A0	29	210560
04434-51910	K1110-24D0	25	210710
04434-51912	E0200-02A0	39	120040
04434-51912	E0200-02A0A	37	120050
04434-51912	H1810-01A0	5	150150
04434-51912	K0700-02A1B	13	210250
04434-52110	K0700-02A1A	33	210240
04434-52110	K0700-02A1B	37	210250
04434-52112	K0700-02A1A	12	210240
04434-52112	K0700-02A1A	40	210240
04434-52112	K0700-02A1B	44	210250
04434-52208	K1110-18D0	2	210600
04434-52310	K1110-08A0	15	210400
04434-52310	K1110-08A0	46	210400
04434-52310	K1110-08A0	49	210400
04434-52310	K1110-08A0	9	210400
04434-52310	K1110-24D0	18	210710
04434-52312	E0200-02A0	33	120040
04434-52312	K0700-02A1A	11	210240
04434-52312	K0700-02A1A	29	210240

PARTS Nº	FIG. Nº	INDEX	PAGE
04434-52312	K0700-02A1B	12	210250
04434-52312	K0700-02A1B	33	210250
04434-52511	D0200-01A1A	26	090030
04434-52511	K1110-33D0	5	210810
04434-52512	D0200-01A1A	21	090030
04434-52712	E0200-02A0	11	120040
04434-52712	E0200-02A0	14	120040
04434-52712	E0200-02A0A	11	120050
04434-52712	E0200-02A0A	14	120050
04434-52712	E0200-03A0A	16	120070
04434-53211	K1110-08A0	21	210400
04434-53211	K1110-21A0	1	210650
04434-53211	K1110-36D0	1	210840
04434-53212	D0200-01A1	14	090020
04434-53212	D0200-01A1A	14	090030
04434-53212	E0200-02A0A	30	120050
04434-53212	H1831-02A0	15	150170
04434-53411	K1110-08A0	24	210400
04434-53411	K1110-08A0	27	210400
04434-53411	K1110-08A0	30	210400
04434-53411	K1110-18D0	1	210600
04434-53411	K1110-21A0	7	210650
04434-53411	K1110-24D0	14	210710
04434-53411	K1110-24D0	5	210710
04434-53411	K1110-36D0	7	210840
04434-53412	E0200-02A0	17	120040
04434-53412	E0200-02A0	2	120040
04434-53412	E0200-02A0	8	120040
04434-53412	E0200-02A0A	17	120050
04434-53412	E0200-02A0A	2	120050
04434-53412	E0200-02A0A	8	120050
04434-53412	H1840-01A1	5	150190
04435-51310	K1110-21A0	6	210650
04435-51310	K1110-36D0	6	210840
04435-51910	D0200-01A1	24	090020
04435-51912	D0200-01A1	11	090020
04435-51912	D0200-01A1	21	090020
04435-51912	D0200-01A1A	11	090030
04435-52110	K0700-02A1A	36	210240
04435-52110	K0700-02A1B	40	210250
04435-52112	E0200-03A0	6	120060
04435-52112	E0200-03A0A	5	120070
04435-52112	K0700-02A1A	37	210240
04435-52112	K0700-02A1A	4	210240
04435-52112	K0700-02A1B	41	210250
04435-52112	K0700-02A1B	5	210250
04530-11018	Y1600-01A0	6	450100
04530-11018	Y1600-03A0	16	450120
06124-01616	K1110-12A0	12	210480
06124-01616	K1110-28D0	21	210760
07000-11003	Y1662-23A0	13	450490
07000-11003	Y1662-54A0	13	450780
07000-11005	Y1662-10A0	14	450360
07000-11005	Y1662-12A0	7	450380
07000-11005	Y1662-40A0	14	450640
07000-11005	Y1662-42A0	7	450660
07000-11006	D0200-02A1	2	090040
07000-11006	Y1641-01A0	26	450240
07000-11006	Y1662-04A0	1	450300
07000-11006	Y1662-23A0	8	450490
07000-11006	Y1662-34A0	1	450580
07000-11006	Y1662-54A0	8	450780
07000-11007	C0100-01A0	7	060010
07000-11007	C0100-01A0A	7	060020
07000-11007	D0200-02A1	3	090040
07000-11007	Y1662-01A0	3	450270
07000-11007	Y1662-08A0	16	450340
07000-11007	Y1662-12A0	4	450380
07000-11007	Y1662-19A0	21	450450
07000-11007	Y1662-21A0	9	450470
07000-11007	Y1662-22A0	7	450480
07000-11007	Y1662-23A0	9	450490
07000-11007	Y1662-31A0	3	450550
07000-11007	Y1662-38A0	16	450620
07000-11007	Y1662-42A0	4	450660
07000-11007	Y1662-49A0	21	450730
07000-11007	Y1662-50A0	22	450740
07000-11007	Y1662-52A0	9	450760
07000-11007	Y1662-53A0	7	450770
07000-11007	Y1662-54A0	9	450780
07000-11007	Y1670-02A0	17	450860
07000-11007	Y1670-02A1	17	450870
07000-11008	Y1600-09A0	11	450180
07000-11008	Y1662-02A0	9	450280
07000-11008	Y1662-05A0	11	450310
07000-11008	Y1662-06A0	11	450320
07000-11008	Y1662-09A0	8	450350
07000-11008	Y1662-12A0	14	450380
07000-11008	Y1662-24A0	17	450500
07000-11008	Y1662-26A0	6	450520
07000-11008	Y1662-27A0	11	450530
07000-11008	Y1662-32A0	9	450560
07000-11008	Y1662-34A0	2	450580
07000-11008	Y1662-35A0	11	450590
07000-11008	Y1662-36A0	11	450600
07000-11008	Y1662-39A0	8	450630
07000-11008	Y1662-42A0	14	450660
07000-11008	Y1662-55A0	17	450790
07000-11008	Y1662-57A0	6	450810
07000-11008	Y1662-58A0	11	450820
07000-11008	Y1670-02A0	15	450860
07000-11008	Y1670-02A1	15	450870
07000-11009	Y1641-01A0	18	450240
07000-11009	Y1641-01A0	30	450240
07000-11009	Y1662-01A0	5	450270
07000-11009	Y1662-20A0	8	450460
07000-11009	Y1662-25A0	12	450510
07000-11009	Y1662-31A0	5	450550
07000-11009	Y1662-51A0	8	450750
07000-11009	Y1662-56A0	12	450800
07000-11010	Y1670-02A0	16	450860
07000-11010	Y1670-02A1	16	450870
07000-11010	Y1860-01A0	12	450910
07000-12010	Y1662-09A0	9	450350
07000-12010	Y1662-19A0	6	450450
07000-12010	Y1662-24A0	18	450500
07000-12010	Y1662-39A0	9	450630
07000-12010	Y1662-49A0	6	450730
07000-12010	Y1662-50A0	7	450740
07000-12010	Y1662-55A0	18	450790
07000-12011	Y1662-23A0	7	450490
07000-12011	Y1662-54A0	7	450780
07000-12011	Y1860-01A0	15	450910
07000-12012	Y1662-02A0	8	450280
07000-12012	Y1662-18A0	3	450440
07000-12012	Y1662-19A0	8	450450
07000-12012	Y1662-32A0	8	450560
07000-12012	Y1662-48A0	3	450720
07000-12012	Y1662-49A0	8	450730
07000-12012	Y1662-50A0	9	450740
07000-12014	Y1662-08A0	14	450340
07000-12014	Y1662-38A0	14	450620
07000-12015	K1110-02A0	31	210290
07000-12015	K1110-10A0	18	210440
07000-12015	K1110-14A0	18	210520
07000-12015	K1110-20D0	28	210640
07000-12015	K1110-26D0	18	210740
07000-12015	K1110-29D0	18	210770
07000-12015	Y1662-19A0	16	450450
07000-12015	Y1662-49A0	16	450730
07000-12015	Y1662-50A0	17	450740
07000-12015	Y1670-02A0	15	450860
07000-12015	Y1670-02A1	15	450870
07000-12016	Y1662-08A0	4	450340
07000-12016	Y1662-19A0	11	450450
07000-12016	Y1662-38A0	4	450620
07000-12016	Y1662-49A0	11	450730
07000-12016	Y1662-50A0	12	450740
07000-12016	Y1860-01A0	18	450910
07000-12018	K1110-02A0	26	210290
07000-12018	K1110-10A0	16	210440

PARTS Nº	FIG. Nº	INDEX	PAGE
07000-12018	K1110-14A0	16	210520
07000-12018	K1110-20D0	23	210640
07000-12018	K1110-26D0	16	210740
07000-12018	K1110-29D0	16	210770
07000-12018	Y1670-01A1	20	450850
07000-12020	Y1670-01A0	9	450840
07000-12022	Y1662-09A0	7	450350
07000-12022	Y1662-12A0	17	450380
07000-12022	Y1662-39A0	7	450630
07000-12022	Y1662-42A0	17	450660
07000-12060	R0110-01A0	5	330010
07000-12060	R0300-01A0	9	330040
07000-12065	D0200-02A1	4	090040
07000-12100	H0311-01A0	2	150050
07000-12105	Y1627-01A0A	11	450230
07000-12120	Y1662-09A0	4	450350
07000-12120	Y1662-12A0	15	450380
07000-12120	Y1662-39A0	4	450630
07000-12120	Y1662-42A0	15	450660
07000-13024	Y1662-04A0	8	450300
07000-13024	Y1662-12A0	12	450380
07000-13024	Y1662-16A0	2	450420
07000-13024	Y1662-27A0	8	450530
07000-13024	Y1662-28A0	2	450540
07000-13024	Y1662-28A0	4	450540
07000-13024	Y1662-34A0	10	450580
07000-13024	Y1662-42A0	12	450660
07000-13024	Y1662-46A0	2	450700
07000-13024	Y1662-58A0	8	450820
07000-13024	Y1662-59A0	2	450830
07000-13024	Y1662-59A0	4	450830
07000-13025	H0120-02A0	3	150030
07000-13025	H0340-01A0	9	150090
07000-13025	P1120-01A0	13	300010
07000-13025	P1120-01A0	16	300010
07000-13025	Y1620-01A0	35	450190
07000-13025	Y1620-41A0	31	450210
07000-13025	Y1620-41A1	31	450220
07000-13030	T1110-03A0	24	360030
07000-13030	Y1620-01A0	36	450190
07000-13030	Y1620-11A0	33	450200
07000-13030	Y1620-41A0	32	450210
07000-13030	Y1620-41A1	32	450220
07000-13030	Y1662-19A0	17	450450
07000-13030	Y1662-49A0	17	450730
07000-13030	Y1662-50A0	18	450740
07000-13035	H0320-01A0	17	150070
07000-13038	H0320-01A0	10	150070
07000-13038	H0330-01A0	5	150080
07000-13040	Y1641-01A0	16	450240
07000-13042	Y1662-07A0	18	450330
07000-13042	Y1662-37A0	18	450610
07000-13045	C0100-01A0	34	060010
07000-13045	C0100-01A0	36	060010
07000-13045	C0100-01A0A	35	060020
07000-13045	C0100-01A0A	37	060020
07000-13050	D0100-01A0	7	090010
07000-15070	Y1620-01A0	23	450190
07000-15075	Y1620-11A0	20	450200
07000-15080	Y1627-01A0A	3	450230
07000-15095	Y1620-41A0	12	450210
07000-15095	Y1620-41A1	12	450220
07000-15100	Y1620-01A0	13	450190
07000-15100	Y1620-01A0	28	450190
07000-15110	Y1620-11A0	10	450200
07000-15110	Y1620-11A0	27	450200
07000-15160	H0110-01A1	31	150010
07000-15160	V0100-01A0	7	420010
07000-15160	V0100-01A1	8	420010A
07000-15195	H0110-01A1	23	150010
07000-15195	V0100-01A0	8	420010
07000-15195	V0100-01A1	9	420010A
07000-72110	A8124-02A0	2	030660
07000-A5185	Y1600-02A0	5	450110
07000-A5185	Y1600-07A0	11	450160
07000-B1003	Y1600-03A0	11	450120
07000-B1008	Y1600-09A0	14	450180
07000-B1009	Y1600-05A0	15	450140
07000-B1009	Y1600-08A0	10	450170
07000-B2012	Y1600-01A0	9	450100
07000-B2012	Y1600-06A0	21	450150
07000-B2050	Y1600-06A0	22	450150
07000-B2050	Y1600-07A0	6	450160
07000-B3038	Y1600-06A0	17	450150
07000-B3038	Y1600-07A0	2	450160
07001-01003	Y1600-03A0	12	450120
07001-01005	Y1662-12A0	8	450380
07001-01005	Y1662-42A0	8	450660
07001-01006	Y1641-01A0	27	450240
07001-01007	Y1662-01A0	4	450270
07001-01007	Y1662-08A0	17	450340
07001-01007	Y1662-12A0	5	450380
07001-01007	Y1662-31A0	4	450550
07001-01007	Y1662-38A0	17	450620
07001-01007	Y1662-42A0	5	450660
07001-01008	Y1600-09A0	15	450180
07001-01009	Y1600-08A0	11	450170
07001-01009	Y1662-01A0	6	450270
07001-01009	Y1662-31A0	6	450550
07001-02010	Y1662-19A0	7	450450
07001-02010	Y1662-49A0	7	450730
07001-02010	Y1662-50A0	8	450740
07001-02012	Y1662-18A0	4	450440
07001-02012	Y1662-19A0	9	450450
07001-02012	Y1662-48A0	4	450720
07001-02012	Y1662-49A0	9	450730
07001-02012	Y1662-50A0	10	450740
07002-02434	H0110-01A1	5	150010
07002-10823	Y1662-06A0	7	450320
07002-10823	Y1662-23A0	14	450490
07002-10823	Y1662-24A0	9	450500
07002-10823	Y1662-36A0	7	450600
07002-10823	Y1662-54A0	14	450780
07002-10823	Y1662-55A0	9	450790
07002-11023	Y1662-01A0	8	450270
07002-11023	Y1662-08A0	7	450340
07002-11023	Y1662-12A0	9	450380
07002-11023	Y1662-20A0	7	450460
07002-11023	Y1662-21A0	8	450470
07002-11023	Y1662-22A0	5	450480
07002-11023	Y1662-24A0	11	450500
07002-11023	Y1662-31A0	8	450550
07002-11023	Y1662-38A0	7	450620
07002-11023	Y1662-42A0	9	450660
07002-11023	Y1662-51A0	7	450750
07002-11023	Y1662-52A0	8	450760
07002-11023	Y1662-53A0	5	450770
07002-11023	Y1662-55A0	11	450790
07002-11223	H0120-01A1	39	150020
07002-11223	H0210-01A0	6	150040
07002-11223	V0100-01A0	9	420010
07002-11223	V0100-01A1	10	420010A
07002-11223	Y1641-01A0	28	450240
07002-11223	Y1662-06A0	8	450320
07002-11223	Y1662-26A0	9	450520
07002-11223	Y1662-36A0	8	450600
07002-11223	Y1662-57A0	9	450810
07002-11223	Y1670-02A0	4	450860
07002-11223	Y1670-02A1	4	450870
07002-11423	C0100-05A0	21	060090
07002-11423	C0100-05A0	29	060090
07002-11423	C0100-05A0A	22	060100
07002-11423	C0100-05A0A	30	060100
07002-11423	H0110-01A1	14	150010
07002-11423	H0120-01A1	10	150020
07002-11423	H0120-01A1	13	150020
07002-11423	H0120-01A1	17	150020
07002-11423	H0120-01A1	20	150020
07002-11423	H0120-01A1	24	150020
07002-11423	H0120-01A1	26	150020

PARTS Nº	FIG. Nº	INDEX	PAGE
07002-11423	H0120-01A1	30	150020
07002-11423	H0120-01A1	33	150020
07002-11423	H0120-01A1	36	150020
07002-11423	H0120-01A1	4	150020
07002-11423	H0120-01A1	42	150020
07002-11423	H0120-01A1	47	150020
07002-11423	H0120-01A1	50	150020
07002-11423	H0120-01A1	53	150020
07002-11423	H0120-01A1	56	150020
07002-11423	H0120-01A1	59	150020
07002-11423	H0120-01A1	62	150020
07002-11423	H0120-01A1	7	150020
07002-11423	H1810-01A0	3	150150
07002-11423	H1831-01A0	10	150160
07002-11423	H1831-01A0	13	150160
07002-11423	H1831-01A0	19	150160
07002-11423	H1831-01A0	7	150160
07002-11423	H1831-02A0	3	150170
07002-11423	H1831-02A0	6	150170
07002-11423	H1833-01A0	11	150180
07002-11423	H1833-01A0	12	150180
07002-11423	H1833-01A0	18	150180
07002-11423	H1833-01A0	19	150180
07002-11423	H1833-01A0	25	150180
07002-11423	K1110-02A0	29	210290
07002-11423	K1110-02A0	35	210290
07002-11423	K1110-10A0	21	210440
07002-11423	K1110-14A0	23	210520
07002-11423	K1110-20D0	26	210640
07002-11423	K1110-20D0	30	210640
07002-11423	K1110-22A0	12	210670
07002-11423	K1110-22A0	18	210670
07002-11423	K1110-22A0	21	210670
07002-11423	K1110-22A0	24	210670
07002-11423	K1110-22A0	6	210670
07002-11423	K1110-22A0	9	210670
07002-11423	K1110-26D0	21	210740
07002-11423	K1110-29D0	23	210770
07002-11423	K1110-37D0	15	210850
07002-11423	K1110-37D0	18	210850
07002-11423	K1110-37D0	6	210850
07002-11423	K1110-37D0	9	210850
07002-11423	N1220-01A0	14	270030
07002-11423	N1310-01A0	11	270040
07002-11423	N1310-01A0	8	270040
07002-11423	P1120-01A0	11	300010
07002-11423	Y1641-01A0	10	450240
07002-11423	Y1662-01A0	10	450270
07002-11423	Y1662-08A0	9	450340
07002-11423	Y1662-12A0	3	450380
07002-11423	Y1662-24A0	6	450500
07002-11423	Y1662-25A0	5	450510
07002-11423	Y1662-31A0	10	450550
07002-11423	Y1662-38A0	9	450620
07002-11423	Y1662-42A0	3	450660
07002-11423	Y1662-55A0	6	450790
07002-11423	Y1662-56A0	5	450800
07002-11623	Y1662-05A0	10	450310
07002-11623	Y1662-05A0	4	450310
07002-11623	Y1662-20A0	5	450460
07002-11623	Y1662-23A0	5	450490
07002-11623	Y1662-25A0	8	450510
07002-11623	Y1662-27A0	10	450530
07002-11623	Y1662-35A0	10	450590
07002-11623	Y1662-35A0	4	450590
07002-11623	Y1662-51A0	5	450750
07002-11623	Y1662-54A0	5	450780
07002-11623	Y1662-56A0	8	450800
07002-11623	Y1662-58A0	10	450820
07002-11623	Y1670-02A0	14	450860
07002-11623	Y1670-02A1	14	450870
07002-11823	H0120-02A0	11	150030
07002-11823	Y1641-01A0	23	450240
07002-12034	H0110-01A1	15	150010
07002-12034	H1831-01A0	15	150160
07002-12034	H1831-01A0	24	150160
07002-12034	H1831-01A0	26	150160
07002-12034	P1120-01A0	8	300010
07002-12034	Y1600-09A0	9	450180
07002-12034	Y1620-11A0	29D	450200
07002-12034	Y1662-17A0	4	450430
07002-12034	Y1662-47A0	4	450710
07002-12434	H0110-01A1	16	150010
07002-12434	H0210-01A0	4	150040
07002-12434	H0320-01A0	15	150070
07002-12434	H0320-01A0	22	150070
07002-12434	H0340-01A0	2	150090
07002-12434	H1270-01A0	2	150120
07002-12434	N1220-01A0	10	270030
07002-12434	N1220-01A0	3	270030
07002-12434	N1310-01A0	14	270040
07002-12434	N1310-01A0	16	270040
07002-12434	N1310-01A0	19	270040
07002-12434	N1310-01A0	4	270040
07002-12434	P1210-01A0	32	300020
07002-12434	V0100-01A0	10	420010
07002-12434	V0100-01A1	11	420010A
07002-12434	Y1662-03A0	7	450290
07002-12434	Y1662-04A0	14	450300
07002-12434	Y1662-11A0	14	450370
07002-12434	Y1662-11A0	6	450370
07002-12434	Y1662-14A0	4	450400
07002-12434	Y1662-27A0	4	450530
07002-12434	Y1662-33A0	7	450570
07002-12434	Y1662-34A0	16	450580
07002-12434	Y1662-41A0	14	450650
07002-12434	Y1662-41A0	6	450650
07002-12434	Y1662-44A0	4	450680
07002-12434	Y1662-58A0	4	450820
07002-13334	H0330-01A0	3	150080
07002-13334	Y1662-07A0	8	450330
07002-13334	Y1662-37A0	8	450610
07002-13634	Y1662-15A0	2	450410
07002-13634	Y1662-45A0	2	450690
07002-61023	Y1600-01A0	4	450100
07002-61023	Y1600-03A0	15	450120
07002-61023	Y1600-09A0	2	450180
07002-61423	Y1600-09A0	16	450180
07002-62434	H1210-01A0	15	150100
07002-62434	H1210-01A0	3	150100
07002-62434	H1210-01A0	9	150100
07002-62434	H1220-01A0	3	150110
07002-62434	H1220-01A0	6	150110
07002-62434	H1310-01A0	3	150130
07002-62434	H1340-01A0	4	150140
07002-62434	N1220-01A0	6	270030
07002-62434	T1110-03A0	13	360030
07002-62434	Y1600-01A0	8	450100
07002-62434	Y1600-08A0	13	450170
07002-62434	Y1600-09A0	18	450180
07003-01015	A8124-01A0	1	030650
07005-00812	D0100-01A0	16	090010
07005-01012	A408P-01B7	19	030500
07005-01012	A8124-01A0	1	030650
07005-01012	A8124-02A0	2	030660
07005-01212	A411P-01A8	10	030510
07005-01212	A411P-01A8	17	030510
07005-01212	A8124-01A0	1	030650
07005-01212	A8124-01A0	1	030650
07005-01412	A8124-01A0	1	030650
07005-01412	A8124-01A0	1	030650
07005-01412	D0200-01A1	10	090020
07005-01412	D0200-01A1A	10	090030
07005-02216	A2119-01B5	11	030220
07005-02216	A2119-01B5	7	030220
07005-02216	A8124-02A0	2	030660
07005-03016	H0210-01A0	2	150040
07020-00000	N1110-01A0	14	270010
07020-00000	T1110-04A0	1	360040
07020-00000	T1110-06A0	8	360050

PARTS Nº	FIG. Nº	INDEX	PAGE
07020-00000	T1200-01A0	6	360090
07020-00000	T1200-01A1	6	360100
07020-00000	T1200-01A3	6	360110
07020-00000	T1200-02A0	29	360120
07020-00000	T1200-02A0	9	360120
07020-00000	V0100-01A0	11	420010
07020-00000	V0100-01A1	12	420010A
07020-00000	Y1620-01A0	4	450190
07020-00000	Y1620-11A0	24	450200
07020-00000	Y1620-41A0	24	450210
07020-00000	Y1620-41A0	25	450210
07020-00000	Y1620-41A1	24	450220
07020-00000	Y1620-41A1	25	450220
07020-00900	T1200-01A0	7	360090
07020-00900	T1200-01A1	7	360100
07020-00900	T1200-01A3	7	360110
07020-00900	V0100-01A0	12	420010
07020-00900	V0100-01A1	13	420010A
07030-03034	H0210-01A0	1	150040
07040-11209	H0210-01A0	5	150040
07040-11209	Y1670-02A0	3	450860
07040-11209	Y1670-02A1	3	450870
07040-11409	C0100-05A0	30	060090
07040-11409	C0100-05A0A	31	060100
07040-12412	H0210-01A0	3	150040
07040-12412	H1270-01A0	1	150120
07040-12414	Y1600-09A0	17	450180
07042-00108	A153S-01B8	2	030080
07042-70108	H1831-01A0	23	150160
07043-70108	A131P-01A7	2	030040
07043-A0108	A311P-01A2	6	030380
07043-A0108	D0100-01A0	4	090010
07044-12412	H0110-01A1	4	150010
07044-12412	Y1600-01A0	7	450100
07048-01310	K1110-01A0	8	210270
07048-01310	K1110-19D0	8	210620
07049-01012	H0120-02A0	12	150030
07049-01012	K1110-01A0	13	210270
07049-01012	P1210-01A0	30	300020
07049-02025	N1210-01A0	5	270020
07052-31624	R0110-01A0	4	330010
07056-18425	D0100-01A0	13	090010
07069-34075	H0110-01A1	21	150010
07095-01241	H0320-01A0	6	150070
07095-20318	D0200-01A1A	22	090030
07095-20318	D0200-01A1A	27	090030
07095-20418	E0200-03A0A	17	120070
07095-20523	E0200-02A0A	31	120050
07095-20627	B0100-01A0	20	030100
07095-20627	E0200-03A0	15	120060
07095-20627	E0200-03A0A	14	120070
07098-00618	P1120-01A0	17	300010
07145-00070	Y1620-01A0	3	450190
07145-00070	Y1620-01A0	7	450190
07145-00070	Y1620-41A0	3	450210
07145-00070	Y1620-41A1	3	450220
07145-00080	T1110-01A0	9	360010
07145-00080	T1110-06A0	1	360050
07145-00080	T1200-01A0	10	360090
07145-00080	T1200-01A1	10	360100
07145-00080	T1200-01A3	10	360110
07145-00080	Y1620-11A0	3	450200
07155-00720	R0110-02A0A	7	330020
07177-07030	R0110-02A0A	12	330020
07179-12084	Y1620-41A0	8	450210
07179-12084	Y1620-41A1	8	450220
07179-13089	Y1620-01A0	9	450190
07179-13099	Y1620-11A0	6	450200
07206-30508	D0100-01A0	17	090010
07206-30710	A408P-01B7	18	030500
07206-31014	D0200-01A1	9	090020
07206-31014	D0200-01A1A	9	090030
07214-50813	N1110-01A0	8	270010
07260-08732	H0311-01A0	5	150050
07260-20956	B0100-01A0	27	030100
07270-00630	D0200-02A1	9	090040
07270-01020	H0110-01A1	52	150010
07270-01080	D0200-02A1	22	090040
07270-01420	H0110-01A1	52	150010
07270-50429	D0200-01A1	1	090020
07270-50429	D0200-01A1A	1	090030
07270-60514	H0110-01A1	53	150010
07270-61411	H0110-01A1	53	150010
07270-61414	H0110-01A1	53	150010
07270-61417	H0110-01A1	41	150010
07280-04726	K1110-01A0	7	210270
07280-04726	K1110-19D0	7	210620
07281-00197	D0200-01A1	6	090020
07281-00197	D0200-01A1A	6	090030
07281-00197	D0200-02A1	15	090040
07281-00709	A111P-01B8	9	030030
07281-01029	B0200-01A0	18	030110
07281-02429	B0200-01A0	2	030110
07283-32236	Y1620-01A0	40	450190
07283-32236	Y1620-41A0	36	450210
07283-32236	Y1620-41A1	36	450220
07283-32738	Y1620-01A0	41	450190
07283-32738	Y1620-11A0	39	450200
07283-34346	C0100-02A0	26	060030
07283-34346	C0100-02A0A	26	060040
07283-36155	K0700-01A1	32	210220
07283-36155	K0700-01A1A	19	210230
07285-00080	D0200-01A1	7	090020
07285-00080	D0200-01A1A	7	090030
07285-00080	D0200-02A1	10	090040
07285-00115	D0200-02A1	21	090040
07285-00155	B0100-01A0	28	030100
07285-00155	H0110-01A1	40	150010
07285-00155	H0110-01A1	40	150010
07286-03828	K1110-01A0	6	210270
07286-03828	K1110-19D0	6	210620
07288-01007	D0200-02A1	14	090040
07288-01016	D0200-01A1	2	090020
07288-01016	D0200-01A1A	2	090030
07288-01025	D0200-01A1	4	090020
07288-01025	D0200-01A1A	4	090030
07288-01034	D0200-01A1	3	090020
07288-01034	D0200-01A1A	3	090030
07289-00045	B0200-01A0	9	030110
07289-00055	C0100-03A0	12	060050
07289-00055	C0100-03A0	18	060050
07289-00055	C0100-03A0A	12	060060
07289-00055	C0100-03A0A	18	060060
07289-00070	C0100-03A0	19	060050
07289-00070	C0100-03A0A	19	060060
07289-00105	H0311-01A0	6	150050
07299-00055	C0100-05A0	2	060090
07299-00055	C0100-05A0A	2	060100
07299-00070	C0100-05A0	3	060090
07299-00070	C0100-05A0	9	060090
07299-00070	C0100-05A0A	3	060100
07299-00070	C0100-05A0A	9	060100
07299-00080	B0200-01A0	11	030110
07299-00105	B0200-01A0	10	030110
07371-30640	H0312-01A0	10	150060
07371-30640	N1310-01A0	20	270040
07371-30640	P1120-01A0	1	300010
07371-31049	H0312-01A0	9	150060
07372-21035	H0312-01A0	7	150060
07372-21035	N1310-01A0	21	270040
07372-21035	P1120-01A0	2	300010
07372-21035	T1110-03A0	25	360030
07375-21035	Y1620-11A0	38	450200
07375-21035	Y1620-41A1	35	450220
07375-21060	Y1620-11A0	31	450200
07376-70210	C0100-05A0	25	060090
07376-70210	C0100-05A0A	26	060100
07700-50240	D0100-01A0	2	090010
07700-50240	D0200-02A1	20	090040
07750-01628	Y1620-11A0	29B	450200

PARTS Nº	FIG. Nº	INDEX	PAGE
07950-10450	V0300-01A0	9	420020
07950-90403	V0300-01A0	11	420020
07951-41017	V0300-01A0	10	420020
07952-70004	V0300-01A0	9	420020
07959-20001	R0110-02A0A	15	330020
08000-00000	E0100-01A1	2	120010
08000-00001	E0100-01A1	3	120010
08017-31005	D0200-01A1	5	090020
08017-31005	D0200-01A1A	5	090030
08028-42040	E0200-04A0	1	120080
08028-42040	E0200-04A0A	1	120090
08028-43030	E0200-01A0	23	120020
08028-43030	E0200-01A0A	23	120030
08028-43030	K1110-07A0	14	210380
08028-43030	K1110-24D0	22	210710
08028-62035	E0100-01A1	9	120010
08028-CB040	E0200-04A0	3	120080
08028-CB040	E0200-04A0A	3	120090
08034-00310	K1110-11A1	13	210460
08034-00310	K1110-27D2	13	210750
08034-00414	K0210-09A0	6	210120
08034-00519	K1110-16A0	30	210560
08034-00519	K1110-17A0	3	210580
08034-00519	K1110-19A0	9	210610
08034-00519	K1110-20A0	26	210630
08034-00519	K1110-21A0	15	210650
08034-00536	P1120-01A0	15	300010
08034-00536	P1120-01A0	18	300010
08034-00536	P1120-01A0	21	300010
08034-00536	P1120-01A0	25	300010
08034-10414	K1110-15A1	16	210540
08034-10414	K1110-30D2	16	210780
08034-20414	K1110-08D0	10	210410
08034-20414	K1110-09D0	6	210430
08034-20414	K1110-12D0	1	210490
08034-20519	E0200-03A0A	33	120070
08034-20519	E0201-01A0	15	120091
08034-20519	K0700-02A1A	10	210240
08034-20519	K0700-02A1B	11	210250
08034-20519	K1110-08A0	52	210400
08034-20519	K1110-15D0	10	210550
08034-20519	K1110-24D0	17	210710
08034-20519	K1110-25D0	3	210730
08034-20536	E0200-03A0	26	120060
08034-20536	E0200-03A0A	27	120070
08034-20536	E0200-03A0A	31	120070
08034-20536	K0700-02A1A	42	210240
08034-20536	K0700-02A1B	46	210250
08034-20536	K1110-21A0	10	210650
08034-20536	K1110-21A0	11	210650
08034-20536	K1110-21A0	4	210650
08034-20536	K1110-21A0	5	210650
08034-20536	K1110-31D0	6	210790
08034-20536	K1110-36D0	10	210840
08034-20536	K1110-36D0	11	210840
08034-20536	K1110-36D0	15	210840
08034-20536	K1110-36D0	4	210840
08034-20536	K1110-36D0	5	210840
08034-20536	P1120-01A0	5	300010
08034-20834	B0100-01A0	25	030100
08034-20834	H1831-02A0	23	150170
08034-20834	H1831-02A0	29	150170
08034-20834	H1831-02A0	32	150170
08034-20834	H1840-01A1	22	150190
08034-20834	H1840-01A1	25	150190
08034-20834	K1110-19A0	1	210610
08034-20834	K1110-34D0	8	210820
08034-20876	K1110-12D0	2	210490
08034-20876	K1110-12D0	3	210490
08034-20876	K1110-13D0	17	210510
08036-00814	N1110-01A0	11	270010
08036-01014	E0410-01A0	5	120100
08037-01008	K0210-09A0	16	210120
08037-01610	K1110-07D0	13	210390
08037-01610	K1110-09D0	18	210430
08037-02512	K0210-03A0	4	210060
08037-02512	K1110-03D0	4	210320
08037-11025	K0210-08A0	12	210110
08037-11025	K1110-08D0	14	210410
08037-11425	K1110-28D0	10	210760
08037-12536	K0210-09A0	7	210120
08037-12536	K1110-09D0	7	210430
08037-12536	M1220-01A0	14	240110
08038-00035	E0200-01A0	2	120020
08038-00035	E0200-01A0A	2	120030
08038-00519	E0200-01A0	3	120020
08038-00519	E0200-01A0	35	120020
08038-00519	E0200-01A0A	3	120030
08038-00519	E0200-01A0A	35	120030
08038-00519	E0200-03A0	2	120060
08038-00519	E0200-03A0A	2	120070
08038-06031	E0200-01A0	36	120020
08038-06031	E0200-01A0A	36	120030
08038-06031	E0200-04A0	5	120080
08038-06031	E0200-04A0A	5	120090
08038-12027	E0200-03A0	10	120060
08038-12027	E0200-03A0A	9	120070
08038-22009	E0200-04A0	2	120080
08038-22009	E0200-04A0A	2	120090
08038-42009	E0100-01A1	8	120010
08038-42009	E0200-04A0	4	120080
08038-42009	E0200-04A0A	4	120090
08041-01000	K1110-07A0	7	210380
08041-01000	K1110-12A0	3	210480
08041-01000	K1110-24D0	2	210710
08041-01000	K1110-28D0	3	210760
08041-02000	K1110-07A0	8	210380
08041-02000	K1110-12A0	4	210480
08041-02000	K1110-24D0	3	210710
08041-02000	K1110-28D0	4	210760
08041-02500	K1110-12A0	5	210480
08041-02500	K1110-28D0	5	210760
08051-00801	E0201-01A0	16	120091
08053-01510	K0700-01A1	26	210220
08053-01510	K0700-01A1A	16	210230
08053-01512	H1833-01A0	7	150180
08059-00310	K1110-08D0	11	210410
08059-00413	K0210-09A0	8	210120
08059-00413	K0210-12A0	2	210150
08059-00413	K1110-07D0	15	210390
08059-00413	K1110-09D0	8	210430
08086-20000	K1110-15A1	9	210540
08086-20000	K1110-30D2	9	210780
08088-30000	E0200-01A0	4	120020
08088-30000	E0200-01A0A	4	120030
08116-02410	K0210-08A0	10	210110
08116-02410	K1110-08D0	13	210410
08160-62420	E0410-01A0	1	120100
08160-62430	E0410-01A0	2	120100
08164-C1100	E0420-01A0	1	120110
08193-20010	A211V-01A3	4	030210
08193-20010	B0000-01A0	9	030010
08193-20010	E0420-01A0	2	120110
08193-20012	A221V-01A1	2	030240
08193-21012	E0200-03A0	14	120060
08193-21012	E0200-03A0A	13	120070
08193-21012	H0311-01A0	8	150050
08193-21012	Y1600-07A0	14	450160
08910-10000	K0210-09A0	9	210120
08910-10000	K1110-09D0	9	210430
08912-51600	K1110-11A1	4	210460
08912-51600	K1110-27D2	4	210750
09002-01014	V0300-01A0	3	420020
09002-01317	V0300-01A0	4	420020
09002-02224	V0300-01A0	5	420020
09007-00425	V0300-01A0	13	420020
09007-00836	V0300-01A0	12	420020
09019-08035	V0300-01A0	2	420020
09021-01219	V0300-01A0	14	420020
09021-01422	V0300-01A0	15	420020

PARTS Nº	FIG. Nº	INDEX	PAGE
09021-01725	V0300-01A0	16	420020
09021-01928	V0300-01A0	17	420020
09021-02233	V0300-01A0	18	420020
09021-02436	V0300-01A0	19	420020
09021-03044	V0300-01A0	20	420020
09022-00150	V0300-01A0	21	420020
09023-00300	V0300-01A0	22	420020
09024-00300	V0300-01A0	23	420020
09033-00190	V0300-01A0	6	420020
09039-00150	V0300-01A0	7	420020
09055-10390	V0300-01A0	8	420020
09056-04613	V0300-01A0	1	420020
09059-00800	V0100-01A1	1	420010A
09133-A3281	U0100-01A2	6	390010
09134-A1681	U0100-01A2	7	390010
09134-A1681	U0100-01A3	7	390011
09244-02496	T1510-01A0	8	360160
09244-02496	T1510-02A0	8	360170
09244-02496	T1510-03A0	8	360180
09244-02496	T1510-04A0	8	360190
09244-02496	T1510-05A0	8	360200
09244-02496	T1510-06A0	8	360210
09370-00070	R0110-02A0A	8	330020
09415-01008	K0210-11A0	15	210140
09415-01008	K1110-11D2	18	210470
09415-01008	K1110-11D2	19	210470
09415-01610	K1110-07D0	14	210390
09415-02110	K0180-01A0	23	210020
09415-02110	K0180-01A0A	32	210030
09415-02512	K0210-11A0	3	210140
09415-02512	K1110-11D2	2	210470
09452-06506	K1110-06A0	21	210360
09452-14503	K0180-01A0A	18	210030
09479-02400	K1110-33D0	2	210810
09479-02400	K1110-33D0	4	210810
09482-50000	K0700-02A1A	30	210240
09482-50000	K0700-02A1B	34	210250
09601-12051	U0100-01A2	19	390010
09601-12051	U0100-01A3	19	390011
09653-01001	U0100-01A3	8	390011
09653-A0481	U0100-01A2	8	390010
09657-01004	U0100-01A3	9	390011
09657-A0881	U0100-01A2	9	390010
09659-51000	U0100-01A3	10	390011
09659-53000	H1831-02A0	40	150170
09659-A057A	H1831-02A0	40	150170
09659-A057B	H1831-02A0	40	150170
09659-A057B	U0100-01A2	10	390010
09667-01001	U0100-01A3	11	390011
09667-A0481	U0100-01A2	11	390010
09669-0000E	U0100-01A2	17	390010
09669-0000E	U0100-01A3	17	390011
09685-00002	U0100-01A2	1	390010
09685-00002	U0100-01A3	1	390011
09690-M0063	U0100-01A2	3	390010
09690-M0063	U0100-01A3	3	390011
09690-P0450	U0100-01A2	4	390010
09690-P0450	U0100-01A3	4	390011
09690-P1120	U0150-01A0	1	390020
09690-P1120	U0150-01A0	2	390020
09690-P1120	U0510-01A0	1	390030
09803-A0481	U0100-01A2	12	390010
09805-11000	U0100-01A3	14	390011
09805-21000	U0100-01A3	13	390011
09805-A0881	U0100-01A2	13	390010
09805-C0481	U0100-01A2	14	390010
09808-01000	U0100-01A3	15	390011
09808-A0881	U0100-01A2	15	390010
09842-A0481	U0100-01A2	5	390010
09842-A0481	U0100-01A3	5	390011
09920-00150	A2049-01A1	16	030160
09920-00150	A2119-01B5	12	030220
09920-00150	A2219-01B2	18	030250
09920-00150	A283P-01A1	2	030360
09960-00611	U0100-01A2	31	390010
09960-00611	U0100-01A3	31	390011
09960-00801	U0100-01A2	32	390010
09960-00801	U0100-01A3	32	390011
09970-00230	K0210-15A0	7	210180
09970-00230	K1110-12D0	5	210490
102-60-15240	K1110-16A0	26	210560
103-21-21260	K1110-08A0	12	210400
103-21-21260	K1110-08A0	33	210400
110-30-00086	R0300-01A0	7	330040
110-30-00086	R0300-01H1	6	330040a
113-01-21120	B0100-01A0	3	030100
113-01-21120	K1120-01A0	4	210860
113-01-21120	K1120-01A0A	5	210870
113-43-23230	K1110-09A0	9	210420
11T-27-11180	D0200-01A1A	23	090030
11Y-09-11160	K0700-02A1A	32	210240
11Y-09-11160	K0700-02A1B	36	210250
11Y-09-11160	K1110-18A0	3	210590
11Y-62-12130	H0120-01A1	31	150020
11Y-62-12130	H0120-01A1	2	150020
11Y-62-12130	H0120-01A1	40	150020
11Y-62-12130	H0120-01A1	57	150020
11Y-62-12130	H1831-01A0	11	150160
11Y-62-12130	K1110-10A0	19	210440
11Y-62-12130	K1110-14A0	19	210520
11Y-62-12130	K1110-22A0	10	210670
11Y-62-12130	K1110-22A0	22	210670
11Y-62-12130	K1110-26D0	19	210740
11Y-62-12130	K1110-29D0	19	210770
11Y-62-12130	P1120-01A0	9	300010
11Y-62-12160	H0120-01A1	5	150020
11Y-62-12160	H0120-01A1	51	150020
11Y-62-12160	H0120-01A1	60	150020
11Y-62-12160	K1110-02A0	27	210290
11Y-62-12160	K1110-20D0	24	210640
11Y-62-12160	K1110-22A0	19	210670
11Y-62-12160	K1110-22A0	7	210670
11Y-62-12250	H0120-01A1	8	150020
11Y-62-12250	N1310-01A0	9	270040
11Y-62-12330	H0120-01A1	11	150020
11Y-62-12330	H0120-01A1	48	150020
11Y-62-12520	H1810-01A0	1	150150
11Y-62-12520	K1110-14A0	21	210520
11Y-62-12520	K1110-29D0	21	210770
11Y-62-12810	H0110-01A1	6	150010
124-54-26540	M1220-01A0	21	240110
124-54-26540	M1220-01A0	31	240110
124-911-5750	K0210-11A0	8	210140
124-Z11-1170	B0100-01A0	31	030100
12R-60-11230	H0110-01A1	28	150010
134-04-71180	D0100-01A0	5	090010
134-32-61221	R0500-01A1	9	330050
134-32-61221	R0500-01A2	9	330060
134-32-61221	R0500-01A3	9	330070
134-32-61221	R0500-01A4	9	330075
134-32-61221	Y0320-01A0	1	450010
141-06-11220	K1110-18A0	4	210590
141-06-11220	K1110-18A0	7	210590
141-06-11220	K1110-21A0	16	210650
141-06-11220	K1110-33D0	9	210810
144-14-54610	Y1662-02A0	4	450280
144-14-54610	Y1662-08A0	11	450340
144-14-54610	Y1662-26A0	2	450520
144-14-54610	Y1662-32A0	4	450560
144-14-54610	Y1662-38A0	11	450620
144-14-54610	Y1662-57A0	2	450810
144-63-94170	Y1620-01A0	10	450190
144-63-95170	Y1620-41A0	9	450210
144-63-95170	Y1620-41A1	9	450220
14X-43-14830	H1831-01A0	20	150160
14X-43-14840	H1831-01A0	4	150160
14X-54-12590	M1220-01A0	22	240110
14X-54-18450	K0180-01A0	3	210020
14X-54-18540	K0180-01A0	6	210020
14X-911-1330	K0210-05A1	15	210080

PARTS Nº	FIG. Nº	INDEX	PAGE
14X-911-1330	K1110-05D0	15	210350
150-27-00330	P1210-01A0	2	300020
154-54-23260	U0100-01A2	23	390010
154-54-23260	U0100-01A3	23	390011
154-61-16570	B0000-02A0	5	030020
154-979-1480	D0200-01A1	15	090020
154-979-1480	D0200-01A1A	15	090030
154-979-1480	E0200-03A0	19	120060
154-979-1480	E0200-03A0A	20	120070
175-54-34170	M1160-01A0	4	240090
175-54-34170	M1210-01A0	4	240100
175-54-34170	M1810-02A0	13	240170
175-54-34170	M1810-02A0	18	240170
175-61-17240	E0200-03A0	20	120060
175-61-17240	E0200-03A0A	21	120070
176-32-11210	T1510-03A0	11	360180
176-32-11210	T1510-04A0	11	360190
17A-60-11310	H0110-01A1	34	150010
17M-911-2670	K0210-09A0	15	210120
17M-911-2670	K1110-09D0	17	210430
17M-911-3290	Y1979-21A0	48	450930
17M-911-3290	Y1979-31A0	16	450950
17M-911-3530	K0700-01A1	3	210220
17M-911-3530	K1110-14D0	16	210530
195-03-11570	D0100-01A0	20	090010
195-03-11570	H0110-01A1	51	150010
195-06-25940	K0700-02A1A	43	210240
195-06-25940	K0700-02A1B	47	210250
195-30-00302	R0110-01A0	6	330010
195-33-11220	E0200-03A0	11	120060
195-33-11220	E0200-03A0A	10	120070
195-33-11220	K0700-02A1A	41	210240
195-33-11220	K0700-02A1B	45	210250
195-33-11220	K1110-24D0	10	210710
195-33-11220	K1110-24D0	19	210710
195-33-11220	K1110-24D0	6	210710
195-71-32220	K0700-01A1	16	210220
195-71-32220	K0700-01A1A	8	210230
195-911-4350	H1840-01A1	28	150190
195-979-8590	K0350-01A0	3	210210
195-979-8590	M1220-01A0	19	240110
195-Z11-1690	K0210-06A0	8	210090
195-Z11-1690	K1110-06D0	8	210370
198-38-12460	K0700-01A1	18	210220
198-38-12460	K0700-01A1A	10	210230
198-54-41982	M1130-01A0	2	240030
198-54-41982	M1140-01A0	2	240040
198-911-9240	K1110-16D0	14	210570
198-Z11-4610	K0210-09A0	1	210120
198-Z11-4610	K1110-09D0	1	210430
198-Z11-4610	Y1062-01A0	1	450030
19M-06-31720	K1110-13D0	16	210510
19M-06-31720	K1110-24D0	4	210710
201-03-29160	C0100-03A0	14	060050
201-03-29160	C0100-03A0	21	060050
201-03-29160	C0100-03A0A	14	060060
201-03-29160	C0100-03A0A	21	060060
201-03-29160	C0100-05A0	11	060090
201-03-29160	C0100-05A0A	11	060100
201-54-13210	E0200-01A0	19	120020
201-54-13210	E0200-01A0A	19	120030
201-60-11390	H0120-01A1	15	150020
201-60-11390	H0120-01A1	22	150020
201-60-11390	H1831-01A0	17	150160
201-60-11390	H1831-01A0	21	150160
201-60-11390	H1831-01A0	5	150160
201-60-11390	H1833-01A0	14	150180
201-60-11390	H1833-01A0	21	150180
201-60-11390	H1833-01A0	9	150180
201-60-11390	N1220-01A0	12	270030
201-60-11390	N1310-01A0	6	270040
201-62-71820	N1310-01A0	15	270040
201-979-7820	K0180-01A0	12	210020
201-979-7820	K0210-13A0	7	210160
201-979-7820	K1110-13D0	19	210510
203-00-51170	U0100-01A2	22	390010
203-00-51170	U0100-01A3	22	390011
203-01-51120	B0000-01A0	2	030010
203-03-41410	C0100-01A0	8	060010
203-03-41410	C0100-01A0A	8	060020
203-03-56650	C0100-04A0	3	060070
203-03-56650	C0100-04A0A	3	060080
203-06-61132	M1220-01A0	18	240110
203-06-61730	E0200-01A0	39	120020
203-06-61730	E0200-01A0A	39	120030
203-06-61730	E0200-02A0	20	120040
203-06-61730	E0200-02A0A	20	120050
203-43-51620	K1110-02A0	8	210290
203-43-51620	K1110-20D0	8	210640
203-43-61120	B0400-01A0	4	030130
203-43-62121	B0400-01A0	7	030130
203-54-21110	H0120-02A0	4	150030
203-54-56630	M1220-01A0	9	240110
203-54-56970	K1110-02A0	7	210290
203-54-62180	M1130-01A0	3	240030
203-54-62180	M1140-01A0	3	240040
203-54-62670	M1150-02A0	11	240070
203-54-62670	M1150-02A0A	11	240080
203-54-67730	M1220-01A0	2	240110
203-54-67741	M1220-01A0	3	240110
203-54-67750	M1220-01A0	6	240110
203-54-67760	M1220-01A0	7	240110
203-54-67780	M1220-01A0	8	240110
203-60-31100	H0110-01A1	2	150010
203-60-31160	H0110-01A1	3	150010
203-60-62300	H1833-01A0	19	150180
203-60-62310	H1833-01A0	20	150180
203-60-62320	H1833-01A0	23	150180
203-60-62401	H1833-01A0	12	150180
203-60-62430	H1833-01A0	17	150180
203-62-61572	H0120-02A0	5	150030
203-62-61581	H0120-02A0	2	150030
203-62-63730	H1210-01A0	16	150100
203-70-51221	T1110-01A0	6	360010
203-70-53381	T1110-03A0	5	360030
203-70-53391	T1110-03A0	18	360030
203-70-53391	T1110-03A0	27	360030
205-00-73360	H0110-01A1	48	150010
205-03-62660	C0100-01A0	6	060010
205-03-62660	C0100-01A0A	6	060020
205-03-71440	E0200-01A0	8	120020
205-03-71440	E0200-01A0A	8	120030
205-03-71532	C0100-04A0	2	060070
205-03-71532	C0100-04A0A	2	060080
205-03-71540	C0100-04A0	2	060070
205-03-71540	C0100-04A0A	2	060080
205-04-62150	D0200-01A1	8	090020
205-04-62150	D0200-01A1A	8	090030
205-04-71141	D0100-01A0	10A	090010
205-25-71280	N1110-01A0	3	270010
205-30-71181	J1110-01A0	2	180010
205-30-71181	J1110-01A0A	2	180020
205-30-71181	R1100-01A0	9	330080
205-30-71191	J1110-01A0	3	180010
205-30-71191	J1110-01A0A	3	180020
205-30-71191	R1100-01A0	10	330080
205-30-72170	R0110-02A0A	16	330020
205-30-76190	R0110-01A0	9	330010
205-30-76260	R0200-01A0	4	330030
205-54-51250	K0210-10A0	6	210130
205-54-51250	K1110-10D0	5	210450
205-54-51970	M1130-01A0	21	240030
205-54-51970	M1140-01A0	21	240040
205-54-53550	M1130-01A0	4	240030
205-54-53550	M1140-01A0	4	240040
205-54-68440	M1210-01A0	24	240100
205-54-76280	K1110-10D0	15	210450
205-62-72140	P1120-01A0	24	300010
205-62-72240	P1120-01A0	14	300010
205-62-72240	P1120-01A0	19	300010

PARTS Nº	FIG. Nº	INDEX	PAGE
205-62-72240	P1120-01A0	22	300010
205-70-19570	T1510-01A0	7	360160
205-70-19570	T1510-02A0	7	360170
205-70-19570	T1510-03A0	7	360180
205-70-19570	T1510-04A0	7	360190
205-70-19570	T1510-05A0	7	360200
205-70-19570	T1510-06A0	7	360210
205-70-51390	T1110-04A0	10	360040
205-70-66580	J1310-01A0	10	180030
205-70-66580	T1110-02A0	11	360020
205-70-66580	T1200-01A0	12	360090
205-70-66580	T1200-01A0	17	360090
205-70-66580	T1200-01A1	12	360100
205-70-66580	T1200-01A1	17	360100
205-70-66580	T1200-01A3	12	360110
205-70-66580	T1200-01A3	17	360110
205-70-66581	T1110-02A0	11	360020
205-70-66581	T1200-01A0	12	360090
205-70-66581	T1200-01A0	17	360090
205-70-66581	T1200-01A1	12	360100
205-70-66581	T1200-01A1	17	360100
205-70-66581	T1200-01A3	12	360110
205-70-66581	T1200-01A3	17	360110
205-70-71310	J1310-01A0	2	180030
205-70-71310	T1110-02A0	5	360020
205-70-74420	T1510-02A0	6A	360170
205-70-74420	T1510-04A0	6A	360190
205-70-74420	T1510-06A0	6A	360210
205-979-7260	Y1979-21A0A	36	450940
205-979-7260	Y1979-31A0	11	450950
206-00-71290	U0100-01A2	25	390010
206-00-71290	U0100-01A3	25	390011
206-03-43340	C0100-02A0	45	060030
206-03-43340	C0100-02A0A	45	060040
206-03-43340	C0100-04A0	7	060070
206-03-43340	C0100-04A0A	7	060080
206-06-61130	H1833-01A0	26	150180
206-06-61130	K1110-02A0	37	210290
206-06-61130	K1110-20D0	32	210640
206-30-45262	R0110-02A0A	3	330020
206-30-45381	R0110-02A0A	2	330020
206-30-72140	R0110-02A0A	6	330020
206-46-71180	J1110-01A0	48	180010
206-46-71180	J1110-01A0A	42	180020
206-70-71450	T1110-02A0	10	360020
207-00-B1110	U0100-01A2	16	390010
207-06-61490	K1110-09A0	11	210420
207-06-61490	K1110-25D0	2	210730
207-30-56140	R0110-01A0	2	330010
207-54-65130	K1120-01A0	1	210860
207-54-65132	K1120-01A0A	1	210870
207-54-65260	K1120-01A0A	2	210870
207-60-61150	H0110-01A1	26	150010
207-60-71182	H0110-01A1	18	150010
207-60-71182	V0100-01A0	6	420010
207-60-71182	V0100-01A1	7	420010A
207-62-64740	H0330-01A0	2	150080
207-62-72110	H0330-01A0	1	150080
207-62-72120	H1831-01A0	8	150160
207-62-72620	H1831-02A0	28	150170
207-62-72720	H1831-02A0	21	150170
208-06-71530	E0201-01A0	6	120091
208-32-11231	T1510-01A0	11	360160
208-32-11231	T1510-02A0	11	360170
208-32-11231	T1510-03A0	11	360180
208-32-11231	T1510-05A0	11	360200
208-32-11231	T1510-06A0	11	360210
208-43-71410	K1110-28D0	8	210760
208-43-71420	K1110-15A1	26A	210540
208-43-71420	K1110-30D2	30	210780
208-43-71511	K1110-23D0	1	210690
208-43-71520	K1110-23D0	2	210690
208-43-71530	K1110-23D0	3	210690
208-43-71541	K1110-23D0	7	210690
208-43-71551	K1110-23D0	9	210690
208-43-71560	K1110-23D0	13	210690
208-43-71570	K1110-23D0	18	210690
208-43-71580	K1110-31D0	7	210790
208-43-71590	K1110-23D0	4	210690
208-43-71610	K1110-27D2	17	210750
208-43-71610	K1110-30D2	24	210780
208-43-71620	K1110-27D2	18	210750
208-43-71620	K1110-30D2	25	210780
208-43-71670	K1110-30D2	32	210780
208-43-71680	K1110-27D2	5	210750
208-43-71690	K1110-30D2	6	210780
208-53-00010	K1110-05D0	1	210350
208-53-00010	K1110-06D0	1	210370
208-53-00020	K1110-02D0	1	210300
208-53-00122	K1110-01D0	1	210280
208-53-00122	K1110-02D0	1	210300
208-53-00122	K1110-03D0	1	210320
208-53-00122	K1110-04D0	1	210340
208-53-00122	K1110-05D0	1	210350
208-53-00122	K1110-06D0	1	210370
208-53-00122	K1110-07D0	1	210390
208-53-00122	K1110-08D0	1	210410
208-53-00122	K1110-09D0	1	210430
208-53-00122	K1110-10D0	1	210450
208-53-00122	K1110-11D2	1	210470
208-53-00122	K1110-12D0	1	210490
208-53-11270	K1110-01D0	6	210280
208-53-11320	K0210-06A0	13	210090
208-53-11320	K1110-06D0	13	210370
208-53-11330	K0180-01A0A	28	210030
208-53-11330	K0180-01A0A	31	210030
208-53-11470	K1110-02D0	48	210300
208-53-11480	K1110-09D0	11	210430
208-53-11540	K1110-02D0	43	210300
208-53-11560	K1110-02D0	24	210300
208-53-11710	K1110-04D0	1	210340
208-53-11750	K1110-10D0	12	210450
208-53-11760	K1110-10D0	14	210450
208-53-11780	K0180-01A0A	36	210030
208-53-11790	K1110-15D0	7	210550
208-53-11810	K1110-37D0	19	210850
208-53-11820	K1110-37D0	20	210850
208-53-11830	K1110-03D0	6	210320
208-53-11850	K1110-13D0	12	210510
208-53-11860	K1110-03D0	5	210320
208-53-11871	K1110-15D0	2	210550
208-53-11890	K1110-15D0	3	210550
208-53-11920	K1110-13D0	6	210510
208-53-11941	K1110-13D0	4	210510
208-53-11980	K1110-07D0	9	210390
208-53-11990	K1110-07D0	10	210390
208-53-11M50	K1110-04D0	2	210340
208-53-12110	K1110-03D0	19	210320
208-53-12120	K1110-14D0	12	210530
208-53-12120	K1110-14D0	18	210530
208-53-12152	K1110-13D0	3	210510
208-53-12160	K1110-03D0	20	210320
208-53-12170	K1110-14D0	13	210530
208-53-12180	K1110-14D0	4	210530
208-53-12190	K1110-14D0	7	210530
208-53-12220	K1110-14D0	10	210530
208-53-12220	K1110-14D0	17	210530
208-53-12230	K1110-15D0	4	210550
208-53-12260	K1110-14D0	11	210530
208-53-12280	K1110-28D0	11	210760
208-53-12290	K0180-01A0A	2	210030
208-53-12290	K0180-01A0A	9	210030
208-53-12310	K1110-13D0	5	210510
208-53-12320	K0180-01A0A	25	210030
208-53-12330	K0180-01A0A	26	210030
208-53-12350	K0180-01A0A	16	210030
208-53-12390	K0180-01A0A	20	210030
208-53-12410	K0180-01A0A	23	210030
208-53-12432	K1110-14D0	19	210530
208-53-12440	K1110-13D0	7	210510

PARTS Nº	FIG. Nº	INDEX	PAGE
208-53-12460	K0180-01A0A	3	210030
208-53-12470	K1110-10D0	10	210450
208-53-12520	K1110-14D0	14	210530
208-53-12551	K1110-15D0	18	210550
208-53-12561	K1110-15D0	1	210550
208-53-12580	K1110-11D2	14	210470
208-53-12611	K0310-01A0A	1	210200
208-53-12620	K1110-12D0	4	210490
208-53-12630	K1110-02D0	17	210300
208-53-12680	K1110-14D0	15	210530
208-53-12690	K1110-02D0	14	210300
208-53-12730	K0180-01A0A	29	210030
208-53-12750	K0180-01A0A	33	210030
208-53-12770	K1110-14D0	1	210530
208-53-12780	K1110-08D0	1	210410
208-53-12790	K1110-08D0	12	210410
208-53-12810	K1110-10D0	11	210450
208-53-12830	K1110-02D0	18	210300
208-53-12860	K1110-16D0	1	210570
208-53-12870	E0201-01A0	1	120091
208-53-12880	K1110-16D0	11	210570
208-53-12891	K1110-19D0	13	210620
208-53-12920	K1110-13D0	15	210510
208-53-12970	K1110-19D0	3	210620
208-53-12980	K1110-10D0	8	210450
208-53-12991	K1110-10D0	7	210450
208-53-13270	K0210-11A0	8	210140
208-53-13270	K1110-11D2	7	210470
208-53-13610	K0180-01A0A	1	210030
208-53-13620	K0180-01A0A	8	210030
208-53-13650	K1110-15D0	1	210550
208-53-13710	K0180-01A0A	12	210030
208-53-14540	K1110-07D0	5	210390
208-53-14720	K1110-07D0	7	210390
208-53-14810	K1110-19D0	1	210620
208-54-57180	M1140-01A0	37	240040
208-60-71180	H0110-01A1	36	150010
208-62-38370	C0100-03A0	13	060050
208-62-38370	C0100-03A0	20	060050
208-62-38370	C0100-03A0A	13	060060
208-62-38370	C0100-03A0A	20	060060
208-62-72770	K1110-35D0	1	210830
208-62-72780	K1110-35D0	2	210830
208-62-72860	K1110-35D0	9	210830
208-62-72870	K1110-35D0	10	210830
208-979-7520	C0100-02A0A	41	060040
208-979-7530	K1110-15D0	14	210550
208-979-7540	K1110-31D0	2	210790
208-979-7550	K1110-27D2	2	210750
208-979-7560	K0180-01A0A	13	210030
208-979-7610	K1110-31D0	1	210790
208-979-7610	Y1979-21A0A	1	450940
208-979-7620	K1110-15D0	15	210550
208-979-7630	K1110-27D2	1	210750
208-979-7640	K1110-32D0	1	210800
208-979-7650	K1110-32D0	6	210800
209-53-14411	E0201-01A0	11	120091
20B-27-11210	H0340-01A0	3	150090
20B-27-11210	Y1641-01A0	11	450240
20F-61-12460	H0120-01A1	25	150020
20K-54-31590	K0210-13A0	7	210160
20S-977-1170	K0700-02A1A	45	210240
20S-977-1170	K0700-02A1B	49	210250
20T-54-75250	K0210-01A1	8	210040
20T-54-75250	K1110-01D0	8	210280
20U-62-41820	H0110-01A1	7	150010
20X-06-31130	J1110-01A0	50	180010
20X-06-31130	J1110-01A0A	44	180020
20X-54-21460	M1210-01A0	16	240100
20Y-00-B1110	U0100-01A2	2	390010
20Y-00-B1110	U0100-01A3	2	390011
20Y-00-B1120	U0100-01A3	6	390011
20Y-00-B1130	U0100-01A2	28	390010
20Y-00-B1130	U0100-01A3	28	390011
20Y-00-B1140	U0100-01A2	29	390010
20Y-00-B1140	U0100-01A3	29	390011
20Y-00-B1180	U0550-01A0	1	390040
20Y-00-B1210	U0100-01A3	12	390011
20Y-00-B1220	U0100-01A2	21	390010
20Y-00-B1220	U0100-01A3	21	390011
20Y-00-B1240	M1420-01A0	5	240130
20Y-00-B1380	U0100-01A3	16	390011
20Y-01-21260	B0100-01A0	10	030100
20Y-01-22111	B0100-01A0	5	030100
20Y-03-11220	H1840-01A1	4	150190
20Y-03-11330	C0100-01A0	9	060010
20Y-03-11330	C0100-01A0A	9	060020
20Y-03-12220	C0100-02A0	44	060030
20Y-03-21390	C0100-02A0	44	060030
20Y-03-21390	C0100-02A0A	44	060040
20Y-03-21390	C0100-04A0	6	060070
20Y-03-21390	C0100-04A0A	6	060080
20Y-03-22110	C0100-01A0	5	060010
20Y-03-22110	C0100-01A0A	5	060020
20Y-03-31210	C0100-04A0	8	060070
20Y-03-31210	C0100-04A0A	8	060080
20Y-04-11160	D0100-01A0	5	090010
20Y-04-11240	D0100-01A0	5	090010
20Y-04-21131	D0100-01A0	14	090010
20Y-04-21141	D0100-01A0	15	090010
20Y-04-21580	D0100-01A0	11	090010
20Y-04-31131	D0200-02A1	11	090040
20Y-04-31160	D0200-01A1	18	090020
20Y-04-31160	D0200-01A1A	18	090030
20Y-04-31170	D0200-02A1	16	090040
20Y-06-15240	C0100-04A0	1	060070
20Y-06-15240	C0100-04A0A	1	060080
20Y-06-21551	T1110-06A0	3	360050
20Y-06-21710	K1110-02A0	36	210290
20Y-06-21710	K1110-20D0	31	210640
20Y-06-22741	K1110-11A1	3	210460
20Y-06-23472	K1110-13D0	11	210510
20Y-06-23472	K1740-01A0	5	210890
20Y-06-23770	K1110-11A1	11	210460
20Y-06-23770	K1110-15A1	14	210540
20Y-06-23770	K1110-27D2	11	210750
20Y-06-23770	K1110-30D2	14	210780
20Y-06-23920	K1110-15A1	15	210540
20Y-06-23920	K1110-30D2	15	210780
20Y-06-25310	T1110-06A0	2	360050
20Y-06-31120	K0210-12A0	1	210150
20Y-06-31320	K1110-15A1	25	210540
20Y-06-31320	K1110-30D2	28	210780
20Y-06-31330	K1110-15A1	25	210540
20Y-06-31330	K1110-30D2	28	210780
20Y-06-31630	E0200-03A0	9	120060
20Y-06-31630	E0200-03A0A	8	120070
20Y-06-31660	E0200-02A0	2	120040
20Y-06-31660	E0200-02A0A	2	120050
20Y-06-41240	K1110-27D2	3	210750
20Y-06-41248	K1110-27D2	3	210750
20Y-06-41990	K1110-09D0	1	210430
20Y-06-41990	Y1062-01A0A	1	450031
20Y-25-11270	N1110-01A0	10	270010
20Y-25-11290	N1110-01A0	4	270010
20Y-27-11561	P1210-01A0	34	300020
20Y-27-11582	P1210-01A0	33	300020
20Y-27-13310	P1210-01A0	15	300020
20Y-27-21220	P1210-01A0	22	300020
20Y-27-21240	P1210-01A0	21	300020
20Y-27-21250	P1210-01A0	12	300020
20Y-27-21280	P1210-01A0	23	300020
20Y-27-21290	P1210-01A0	14	300020
20Y-27-21310	P1210-01A0	25	300020
20Y-27-22120	P1210-01A0	19	300020
20Y-27-22130	P1210-01A0	16	300020
20Y-27-22140	P1210-01A0	10	300020
20Y-27-22170	P1210-01A0	9	300020
20Y-27-22210	P1210-01A0	20	300020
20Y-27-22220	P1210-01A0	11	300020

PARTS Nº	FIG. Nº	INDEX	PAGE
20Y-27-22240	P1210-01A0	17	300020
20Y-27-22250	P1210-01A0	27	300020
20Y-27-22261	P1210-01A0	6	300020
20Y-27-31110	P1210-01A0	18	300020
20Y-27-31120	P1210-01A0	4	300020
20Y-27-31130	P1210-01A0	5	300020
20Y-27-31140	P1210-01A0	24	300020
20Y-27-31150	P1210-01A0	26	300020
20Y-27-31160	P1210-01A0	13	300020
20Y-27-31180	P1210-01A0	7	300020
20Y-27-31190	P1210-01A0	31	300020
20Y-30-00016	R0200-01A0	1	330030
20Y-30-00100	R0110-01A0	6	330010
20Y-30-00321	R0110-01A0	1	330010
20Y-30-00322	R0110-01A0	1	330010
20Y-30-00430	R0200-01A0	5	330030
20Y-30-00481	R0300-01H1	1	330040a
20Y-30-11340	R0200-01A0	11	330030
20Y-30-11420	P1210-01A0	37	300020
20Y-30-12112	R0110-02A0A	10	330020
20Y-30-13130	R0110-01A0	3	330010
20Y-30-13131	R0110-01A0	3	330010
20Y-30-13150	R0110-01A0	8	330010
20Y-30-16170	R0200-01A0	10	330030
20Y-30-16330	R0200-01A0	8	330030
20Y-30-16330	R0300-01A0	10	330040
20Y-30-16330	R0300-01H1	8	330040a
20Y-30-16411	R0200-01A0	1	330030
20Y-30-21191	P1210-01A0	37	300020
20Y-30-31160	R1200-01A0	1	330100
20Y-30-31750	R0110-01A0	8	330010
20Y-30-31D21	R1100-01A0	3	330080
20Y-30-32110	R0110-02A0A	1	330020
20Y-30-32130	R0110-02A0A	11	330020
20Y-30-33211	R0110-01A0	1	330010
20Y-30-42110	R0110-02A0A	1	330020
20Y-30-42120	R0110-02A0A	11	330020
20Y-30-42130	R0110-02A0A	10	330020
20Y-30-42160	R0110-02A0A	3	330020
20Y-30-43221	R0300-01H1	2	330040a
20Y-30-43230	R0300-01H1	3	330040a
20Y-30-43240	R0300-01H1	4	330040a
20Y-30-43250	R0300-01H1	5	330040a
20Y-30-43260	R0300-01H1	1	330040a
20Y-30-43310	R0110-01A0	1	330010
20Y-30-43340	R0110-01A0	2	330010
20Y-32-05070	Y0320-01A0	K01	450010
20Y-32-11141	R0500-01A1	5	330050
20Y-32-11141	R0500-01A2	5	330060
20Y-32-11141	R0500-01A3	5	330070

PARTS Nº	FIG. Nº	INDEX	PAGE
20Y-32-11141	R0500-01A4	5	330075
20Y-32-11141	Y0321-01A0	5	450020
20Y-32-11171	R0500-01A1	4	330050
20Y-32-11171	R0500-01A2	4	330060
20Y-32-11171	R0500-01A3	4	330070
20Y-32-11171	R0500-01A4	4	330075
20Y-32-11171	Y0321-01A0	4	450020
20Y-32-11240	R0500-01A1	3	330050
20Y-32-11240	R0500-01A2	3	330060
20Y-32-11240	R0500-01A3	3	330070
20Y-32-11240	R0500-01A4	3	330075
20Y-32-11240	Y0321-01A0	3	450020
20Y-32-11260	R0500-01A1	10	330050
20Y-32-11260	R0500-01A2	10	330060
20Y-32-11260	R0500-01A3	10	330070
20Y-32-11260	R0500-01A4	10	330075
20Y-32-11260	Y0321-01A0	7	450020
20Y-32-31120	R0500-01A1	1	330050
20Y-32-31120	R0500-01A2	1	330060
20Y-32-31120	R0500-01A3	1	330070
20Y-32-31120	R0500-01A4	1	330075
20Y-32-31120	Y0321-01A0	1	450020
20Y-32-31130	R0500-01A1	2	330050
20Y-32-31130	R0500-01A2	2	330060
20Y-32-31130	R0500-01A3	2	330070
20Y-32-31130	R0500-01A4	2	330075
20Y-32-31130	Y0321-01A0	2	450020
20Y-32-31150	R0500-01A1	6	330050
20Y-32-31150	R0500-01A2	6	330060
20Y-32-31150	R0500-01A3	6	330070
20Y-32-31150	R0500-01A4	6	330075
20Y-32-31150	Y0321-01A0	6	450020
20Y-32-31190	R0500-01A1	11	330050
20Y-32-31190	R0500-01A2	11	330060
20Y-32-31190	R0500-01A3	11	330070
20Y-32-31190	R0500-01A4	11	330075
20Y-32-31190	Y0321-01A0	8	450020
20Y-32-31210	R0500-01A1	8	330050
20Y-32-31210	R0500-01A2	8	330060
20Y-32-31210	R0500-01A3	8	330070
20Y-32-31210	R0500-01A4	8	330075
20Y-32-31210	Y0320-01A0	1	450010
20Y-43-11281	J1110-01A0	49	180010
20Y-43-11281	J1110-01A0A	43	180020
20Y-43-12180	B0400-01A0	13	030130
20Y-43-15410	K0700-01A1A	4	210230
20Y-43-21151	K1110-02A0	4	210290
20Y-43-21161	K1110-02A0	18	210290
20Y-43-21231	K1110-02A0	22	210290
20Y-43-21231	K1110-20D0	19	210640

PARTS Nº	FIG. Nº	INDEX	PAGE
20Y-43-21241	K1110-02A0	23	210290
20Y-43-21241	K1110-20D0	20	210640
20Y-43-21260	K1110-02A0	6	210290
20Y-43-22211	K1110-10A0	1	210440
20Y-43-22211	K1110-26D0	1	210740
20Y-43-22221	K1110-14A0	1	210520
20Y-43-22221	K1110-29D0	1	210770
20Y-43-22250	K1110-10A0	6	210440
20Y-43-22250	K1110-14A0	6	210520
20Y-43-22250	K1110-26D0	6	210740
20Y-43-22250	K1110-29D0	6	210770
20Y-43-22261	K1110-10A0	7	210440
20Y-43-22261	K1110-14A0	7	210520
20Y-43-22261	K1110-26D0	7	210740
20Y-43-22261	K1110-29D0	7	210770
20Y-43-22370	K1110-10A0	8	210440
20Y-43-22370	K1110-14A0	8	210520
20Y-43-22370	K1110-26D0	8	210740
20Y-43-22370	K1110-29D0	8	210770
20Y-43-22381	K1110-10A0	3	210440
20Y-43-22381	K1110-26D0	3	210740
20Y-43-22390	K1110-14A0	3	210520
20Y-43-22390	K1110-29D0	3	210770
20Y-43-22421	K1110-10A0	4	210440
20Y-43-22421	K1110-14A0	4	210520
20Y-43-22421	K1110-26D0	4	210740
20Y-43-22421	K1110-29D0	4	210770
20Y-43-31121	K1110-06A0	1	210360
20Y-43-31140	K1110-06A0	9	210360
20Y-43-31150	K1110-06A0	12	210360
20Y-43-31181	K1110-06A0	17	210360
20Y-43-31191	K1110-06A0	23	210360
20Y-43-31231	K1110-06A0	26	210360
20Y-43-31260	K1110-06A0	4	210360
20Y-43-31410	K1110-12A0	7	210480
20Y-43-31412	K1110-28D0	7	210760
20Y-43-31420	K1110-12A0	9	210480
20Y-43-31421	K1110-28D0	18	210760
20Y-43-31431	K1110-12A0	8	210480
20Y-43-31432	K1110-28D0	16	210760
20Y-43-31440	K1110-12A0	10	210480
20Y-43-31440	K1110-28D0	19	210760
20Y-43-31450	K1110-12A0	11	210480
20Y-43-31450	K1110-28D0	20	210760
20Y-43-31503	K1110-28D0	9	210760
20Y-43-31504	K1110-28D0	9	210760
20Y-43-31511	K1110-13A0	4	210500
20Y-43-31513	K1110-28D0	12	210760
20Y-43-31521	K1110-13A0	5	210500
20Y-43-31522	K1110-28D0	13	210760

PARTS Nº	FIG. Nº	INDEX	PAGE
20Y-43-31601	K1110-25A0	1	210720
20Y-43-31602	K1110-25A0	1	210720
20Y-43-31610	K1110-25A0	1	210720
20Y-43-31611	K1110-25A0	1	210720
20Y-43-31611	K1110-28D0	14	210760
20Y-43-31620	K1110-25A0	2	210720
20Y-43-31621	K1110-28D0	15	210760
20Y-43-31631	K1110-25A0	3	210720
20Y-43-31632	K1110-25A0	3	210720
20Y-43-31640	K1110-25A0	5	210720
20Y-43-31690	K1110-13A0	1	210500
20Y-43-31690	K1110-28D0	29	210760
20Y-43-41111	K1110-20D0	11	210640
20Y-43-41121	K1110-20D0	4	210640
20Y-43-41361	K1110-20D0	7	210640
20Y-46-11270	M1510-01A0	5	240140
20Y-46-21520	N1110-01A0	7	270010
20Y-46-42210	J1110-01A0	35	180010
20Y-46-42210	J1110-01A0A	29	180020
20Y-46-42231	J1110-01A0	22	180010
20Y-46-42232	J1110-01A0A	22	180020
20Y-46-42241	J1110-01A0	30	180010
20Y-46-42242	J1110-01A0A	26	180020
20Y-46-42251	J1110-01A0	25	180010
20Y-46-42252	J1110-01A0A	24	180020
20Y-46-42260	J1110-01A0	34	180010
20Y-46-42260	J1110-01A0A	28	180020
20Y-46-42310	J1110-01A0	36	180010
20Y-46-42310	J1110-01A0A	30	180020
20Y-46-42320	J1110-01A0	37	180010
20Y-46-42320	J1110-01A0A	31	180020
20Y-46-42330	J1110-01A0	38	180010
20Y-46-42330	J1110-01A0A	32	180020
20Y-46-42340	J1110-01A0	39	180010
20Y-46-42340	J1110-01A0A	33	180020
20Y-46-42350	J1110-01A0	40	180010
20Y-46-42350	J1110-01A0A	34	180020
20Y-46-42360	J1110-01A0	41	180010
20Y-46-42360	J1110-01A0A	35	180020
20Y-46-42370	J1110-01A0	42	180010
20Y-46-42370	J1110-01A0A	36	180020
20Y-46-42411	J1110-01A0	21	180010
20Y-46-42412	J1110-01A0A	21	180020
20Y-46-42422	J1110-01A0	24	180010
20Y-46-42423	J1110-01A0A	23	180020
20Y-46-42431	J1110-01A0	29	180010
20Y-46-42432	J1110-01A0A	25	180020
20Y-46-42440	J1110-01A0	33	180010
20Y-46-42440	J1110-01A0A	27	180020
20Y-46-42460	J1110-01A0	23	180010

PARTS Nº	FIG. Nº	INDEX	PAGE
20Y-46-42460	J1110-01A0	26	180010
20Y-46-42460	J1110-01A0	31	180010
20Y-46-42470	J1110-01A0	27	180010
20Y-46-42480	J1110-01A0	28	180010
20Y-46-42490	J1110-01A0	32	180010
20Y-53-12280	K1110-07D0	4	210390
20Y-54-01122	K0210-05A1	1	210080
20Y-54-01122	K0210-06A0	1	210090
20Y-54-01132	K0210-02A0A	1	210050
20Y-54-01141	K0210-01A1	1	210040
20Y-54-01141	K0210-02A0A	1	210050
20Y-54-01141	K0210-03A0	1	210060
20Y-54-01141	K0210-04A0	1	210070
20Y-54-01141	K0210-05A1	1	210080
20Y-54-01141	K0210-06A0	1	210090
20Y-54-01141	K0210-07A0	1	210100
20Y-54-01141	K0210-08A0	1	210110
20Y-54-01141	K0210-09A0	1	210120
20Y-54-01141	K0210-10A0	1	210130
20Y-54-01141	K0210-11A0	1	210140
20Y-54-11611	K0210-02A0A	44	210050
20Y-54-11611	K0210-07A0	8	210100
20Y-54-11611	K1110-02D0	38	210300
20Y-54-11611	K1110-07D0	16	210390
20Y-54-11611	M1130-01A0	31	240030
20Y-54-11611	M1140-01A0	28	240040
20Y-54-12320	M1150-01A0	34	240050
20Y-54-12320	M1150-01A0A	34	240060
20Y-54-12550	M1150-02A0	5	240070
20Y-54-12550	M1150-02A0A	5	240080
20Y-54-12550	M1810-01A0	17	240160
20Y-54-12550	M1810-02A0	8	240170
20Y-54-12670	C0100-05A0	19A	060090
20Y-54-12670	C0100-05A0A	20	060100
20Y-54-13180	K0210-05A1	9	210080
20Y-54-13180	K1110-05D0	9	210350
20Y-54-13322	K0210-05A1	8	210080
20Y-54-13322	K1110-05D0	8	210350
20Y-54-14590	K0210-02A0A	15	210050
20Y-54-14590	K0210-04A0	6	210070
20Y-54-14590	K1110-02D0	15	210300
20Y-54-14590	K1110-04D0	6	210340
20Y-54-18690	K0210-04A0	5	210070
20Y-54-18690	K0210-10A0	2	210130
20Y-54-18690	K0210-10A0	4	210130
20Y-54-18690	K1110-04D0	5	210340
20Y-54-18690	K1110-10D0	2	210450
20Y-54-18690	K1110-10D0	4	210450
20Y-54-25681	M1110-01A0	9	240010
20Y-54-25850	M1210-01A0	10	240100

PARTS Nº	FIG. Nº	INDEX	PAGE
20Y-54-27123	M1110-01A0	2	240010
20Y-54-27131	M1110-01A0	15	240010
20Y-54-27141	M1110-01A0	14	240010
20Y-54-27172	M1110-01A0	3	240010
20Y-54-27182	M1210-01A0	21	240100
20Y-54-27290	M1110-01A0	19	240010
20Y-54-27330	M1110-01A0	4	240010
20Y-54-27370	M1110-01A0	18	240010
20Y-54-27511	M1210-01A0	12	240100
20Y-54-27523	M1210-01A0	13	240100
20Y-54-27540	M1210-01A0	11	240100
20Y-54-27963	M1420-01A0	1	240130
20Y-54-27991	M1420-01A0	2	240130
20Y-54-28170	M1130-01A0	18	240030
20Y-54-28170	M1140-01A0	18	240040
20Y-54-28291	M1130-01A0	9	240030
20Y-54-28291	M1140-01A0	9	240040
20Y-54-28911	M1420-01A0	4	240130
20Y-54-29231	M1130-01A0	30	240030
20Y-54-29231	M1140-01A0	27	240040
20Y-54-29291	M1110-01A0	10	240010
20Y-54-35470	K0210-07A0	12	210100
20Y-54-35470	K1110-07D0	20	210390
20Y-54-35480	K0210-07A0	13	210100
20Y-54-35480	K1110-07D0	21	210390
20Y-54-36150	K0210-11A0	14	210140
20Y-54-36150	K1110-11D2	13	210470
20Y-54-36342	K0210-04A0	15	210070
20Y-54-36342	K1110-04D0	15	210340
20Y-54-36360	K0210-04A0	9	210070
20Y-54-36360	K1110-04D0	9	210340
20Y-54-36380	K0210-07A0	1	210100
20Y-54-36380	K1110-07D0	1	210390
20Y-54-39450	K0210-08A0	4	210110
20Y-54-39450	K1110-08D0	4	210410
20Y-54-39460	K0210-08A0	5	210110
20Y-54-39460	K1110-08D0	5	210410
20Y-54-39480	K0210-08A0	6	210110
20Y-54-39480	K1110-08D0	6	210410
20Y-54-39511	K0210-09A0	13	210120
20Y-54-39511	K1110-09D0	15	210430
20Y-54-43150	K1110-06A0	16	210360
20Y-54-51241	K0210-01A1	2	210040
20Y-54-51241	K1110-01D0	2	210280
20Y-54-51251	K0210-01A1	7	210040
20Y-54-51251	K1110-01D0	7	210280
20Y-54-51261	K0210-01A1	3	210040
20Y-54-51261	K1110-01D0	3	210280
20Y-54-51272	K0210-01A1	6	210040
20Y-54-51321	K0210-06A0	14	210090

PARTS Nº	FIG. Nº	INDEX	PAGE
20Y-54-51321	K1110-06D0	14	210370
20Y-54-51330	K0210-05A1	14	210080
20Y-54-51330	K1110-05D0	14	210350
20Y-54-51341	K0210-06A0	15	210090
20Y-54-51341	K1110-06D0	15	210370
20Y-54-51393	K0210-06A0	18	210090
20Y-54-51393	K1110-06D0	18	210370
20Y-54-51401	K0210-05A1	2	210080
20Y-54-51401	K1110-05D0	2	210350
20Y-54-51420	K0210-02A0A	53	210050
20Y-54-51420	K1110-02D0	47	210300
20Y-54-51441	K0210-06A0	11	210090
20Y-54-51441	K1110-06D0	11	210370
20Y-54-51451	K0210-05A1	11	210080
20Y-54-51451	K1110-05D0	11	210350
20Y-54-51461	K0210-05A1	12	210080
20Y-54-51461	K1110-05D0	12	210350
20Y-54-51470	K0210-05A1	10	210080
20Y-54-51470	K1110-05D0	10	210350
20Y-54-51482	K0210-05A1	13	210080
20Y-54-51482	K1110-05D0	13	210350
20Y-54-51490	K0210-06A0	17	210090
20Y-54-51490	K1110-06D0	17	210370
20Y-54-51522	K0210-02A0A	2	210050
20Y-54-51522	K1110-02D0	2	210300
20Y-54-51531	K0210-02A0A	3	210050
20Y-54-51531	K1110-02D0	3	210300
20Y-54-51541	K0210-02A0A	49	210050
20Y-54-51551	K0210-02A0A	4	210050
20Y-54-51551	K1110-02D0	4	210300
20Y-54-51591	K0210-02A0A	50	210050
20Y-54-51591	K1110-02D0	44	210300
20Y-54-51601	K0210-03A0	1	210060
20Y-54-51601	K1110-03D0	1	210320
20Y-54-51621	K1110-02D0	42	210300
20Y-54-51622	K0210-02A0A	48	210050
20Y-54-51633	K0210-02A0A	25	210050
20Y-54-51633	K1110-02D0	27	210300
20Y-54-51640	K0210-02A0A	52	210050
20Y-54-51640	K1110-02D0	46	210300
20Y-54-51652	K0210-02A0A	29	210050
20Y-54-51663	K0210-02A0A	33	210050
20Y-54-51670	K0210-02A0A	21	210050
20Y-54-51670	K1110-02D0	20	210300
20Y-54-51680	K0210-02A0A	22	210050
20Y-54-51680	K1110-02D0	21	210300
20Y-54-51713	K0210-04A0	1	210070
20Y-54-51720	K0210-04A0	12	210070
20Y-54-51720	K1110-04D0	12	210340
20Y-54-51733	K0210-04A0	13	210070
20Y-54-51733	K1110-04D0	13	210340
20Y-54-51744	K0210-04A0	11	210070
20Y-54-51744	K1110-04D0	11	210340
20Y-54-51760	K0210-04A0	20	210070
20Y-54-51760	K1110-04D0	20	210340
20Y-54-51801	K0210-07A0	3	210100
20Y-54-51812	K0210-03A0	1	210060
20Y-54-51812	K1110-03D0	1	210320
20Y-54-51820	K0210-10A0	17	210130
20Y-54-51820	K1110-10D0	16	210450
20Y-54-51832	K0210-10A0	19	210130
20Y-54-51832	K1110-10D0	18	210450
20Y-54-51842	K0210-01A1	4	210040
20Y-54-51842	K1110-01D0	4	210280
20Y-54-51851	K0210-01A1	5	210040
20Y-54-51851	K1110-01D0	5	210280
20Y-54-51862	K0210-03A0	5	210060
20Y-54-51880	K0210-09A0	17	210120
20Y-54-51880	K1110-02D0	36	210300
20Y-54-51910	K0210-07A0	11	210100
20Y-54-51910	K1110-07D0	19	210390
20Y-54-51922	K0210-04A0	4	210070
20Y-54-51922	K1110-04D0	4	210340
20Y-54-51930	K0210-07A0	7	210100
20Y-54-51941	K0210-07A0	5	210100
20Y-54-51952	K0310-01A0	2	210190
20Y-54-51952	K0310-01A0A	2	210200
20Y-54-51972	K0210-07A0	4	210100
20Y-54-52122	K0210-03A0	19	210060
20Y-54-52131	K0210-03A0	21	210060
20Y-54-52161	K0210-03A0	11	210060
20Y-54-52161	K1110-03D0	11	210320
20Y-54-52171	K0210-03A0	13	210060
20Y-54-52171	K1110-03D0	13	210320
20Y-54-52192	K0210-02A0A	26	210050
20Y-54-52192	K1110-02D0	28	210300
20Y-54-52200	K0210-06A0	1	210090
20Y-54-52200	K1110-06D0	1	210370
20Y-54-52211	K0210-08A0	1	210110
20Y-54-52221	K0210-08A0	3	210110
20Y-54-52221	K1110-08D0	3	210410
20Y-54-52231	K0210-08A0	8	210110
20Y-54-52231	K1110-08D0	8	210410
20Y-54-52282	K0210-02A0A	30	210050
20Y-54-52300	K0210-06A0	2	210090
20Y-54-52300	K1110-06D0	2	210370
20Y-54-52310	K0210-09A0	4	210120
20Y-54-52310	K1110-09D0	4	210430
20Y-54-52320	K0210-09A0	5	210120
20Y-54-52320	K1110-09D0	5	210430
20Y-54-52350	K0210-08A0	3	210110
20Y-54-52350	K1110-08D0	3	210410
20Y-54-52361	K0210-03A0	12	210060
20Y-54-52361	K1110-03D0	12	210320
20Y-54-52371	K0210-03A0	14	210060
20Y-54-52371	K1110-03D0	14	210320
20Y-54-52380	K0210-03A0	18	210060
20Y-54-52380	K1110-03D0	18	210320
20Y-54-52400	K0210-06A0	3	210090
20Y-54-52400	K1110-06D0	3	210370
20Y-54-52412	K0210-10A0	1	210130
20Y-54-52412	K1110-10D0	1	210450
20Y-54-52423	K0210-10A0	3	210130
20Y-54-52423	K1110-10D0	3	210450
20Y-54-52432	K0210-10A0	5	210130
20Y-54-52440	K0210-11A0	1	210140
20Y-54-52440	K1110-11D2	15	210470
20Y-54-52470	K0210-11A0	13	210140
20Y-54-52470	K1110-11D2	12	210470
20Y-54-52491	K0210-02A0A	46	210050
20Y-54-52491	K1110-02D0	40	210300
20Y-54-52621	K0210-02A0A	12	210050
20Y-54-52621	K1110-02D0	12	210300
20Y-54-52632	K0210-02A0A	17	210050
20Y-54-52643	K0210-02A0A	18	210050
20Y-54-52651	K0210-04A0	19	210070
20Y-54-52651	K0210-04A0	21	210070
20Y-54-52651	K1110-04D0	19	210340
20Y-54-52651	K1110-04D0	21	210340
20Y-54-52681	K0210-02A0A	13	210050
20Y-54-52681	K1110-02D0	13	210300
20Y-54-52691	K0210-02A0A	14	210050
20Y-54-52720	K0210-10A0	15	210130
20Y-54-52731	K0210-10A0	11	210130
20Y-54-52740	K0210-10A0	8	210130
20Y-54-52751	K0210-10A0	13	210130
20Y-54-52761	K0700-01A1	4	210220
20Y-54-52771	K0700-01A1	5	210220
20Y-54-52781	K0210-10A0	9	210130
20Y-54-52820	K0210-06A0	9	210090
20Y-54-52820	K1110-06D0	9	210370
20Y-54-52840	K0210-05A1	3	210080
20Y-54-52840	K1110-05D0	3	210350
20Y-54-52850	K0210-05A1	4	210080
20Y-54-52850	K1110-05D0	4	210350
20Y-54-52860	K0210-05A1	5	210080
20Y-54-52860	K1110-05D0	5	210350
20Y-54-52870	K0210-05A1	6	210080
20Y-54-52870	K1110-05D0	6	210350
20Y-54-52880	K0210-05A1	7	210080

PARTS Nº	FIG. Nº	INDEX	PAGE
20Y-54-52880	K1110-05D0	7	210350
20Y-54-52910	K0210-10A0	16	210130
20Y-54-52940	K0210-02A0A	34	210050
20Y-54-52990	K0210-06A0	5	210090
20Y-54-52990	K1110-06D0	5	210370
20Y-54-53520	K0210-08A0	10	210110
20Y-54-53531	K0210-02A0A	32	210050
20Y-54-53541	K0210-02A0A	35	210050
20Y-54-53570	K0210-02A0A	31	210050
20Y-54-53610	E0201-01A0	14	120091
20Y-54-61240	M1110-01A0	13	240010
20Y-54-61371	M1130-01A0	27	240030
20Y-54-61411	M1130-01A0	10	240030
20Y-54-61431	M1140-01A0	12	240040
20Y-54-61451	M1130-01A0	33	240030
20Y-54-61451	M1140-01A0	30	240040
20Y-54-61470	M1130-01A0	24	240030
20Y-54-61470	M1140-01A0	24	240040
20Y-54-61621	M1420-01A0	1	240130
20Y-54-61630	M1420-01A0	2	240130
20Y-54-61670	M1220-01A0	26	240110
20Y-54-61680	M1220-01A0	27	240110
20Y-54-61770	M1810-01A0	2	240160
20Y-54-61790	M1210-01A0	8	240100
20Y-54-61990	M1210-01A0	7	240100
20Y-54-62110	M1810-01A0	1	240160
20Y-54-63360	M1140-01A0	31	240040
20Y-54-63370	M1140-01A0	32	240040
20Y-54-65121	K1110-01A0	2	210270
20Y-54-65121	K1110-19D0	2	210620
20Y-54-65130	K1110-16A0	13	210560
20Y-54-65141	K1110-09A0	1	210420
20Y-54-65151	K1110-09A0	7	210420
20Y-54-65161	K1110-09A0	4	210420
20Y-54-65170	K1110-01A0	3	210270
20Y-54-65180	K1110-16A0	14	210560
20Y-54-65190	K1110-16A0	15	210560
20Y-54-65220	K0210-14A0	8	210170
20Y-54-65230	K0210-14A0	1	210170
20Y-54-65240	K0210-14A0	3	210170
20Y-54-65250	K0180-01A0	1	210020
20Y-54-65260	K0180-01A0	17	210020
20Y-54-65270	K0180-01A0	17	210020
20Y-54-65310	K0210-13A0	8	210160
20Y-54-65310	K1110-13D0	20	210510
20Y-54-65340	K1110-06A0	10	210360
20Y-54-65340	K1110-06A0	13	210360
20Y-54-65340	K1110-06A0	18	210360
20Y-54-65340	K1110-23D0	14	210690
20Y-54-65350	K0180-01A0	4	210020
20Y-54-65370	K0180-01A0	2	210020
20Y-54-65380	K0180-01A0	13	210020
20Y-54-65440	K0180-01A0	24	210020
20Y-54-65540	K1110-06A0	20	210360
20Y-54-65540	K1110-23D0	16	210690
20Y-54-65580	K0210-13A0	6	210160
20Y-54-65580	K1110-13D0	18	210510
20Y-54-65610	K0310-01A0	1	210190
20Y-54-65690	K1110-15D0	17	210550
20Y-54-65690	K1110-16A0	21	210560
20Y-54-65750	K1110-22A0	25	210670
20Y-54-65760	K1110-22A0	26	210670
20Y-54-65770	K1110-22A0	27	210670
20Y-54-65790	K1110-15D0	16	210550
20Y-54-65790	K1110-16A0	19	210560
20Y-54-65810	K1120-01A0	10	210860
20Y-54-65811	K1120-01A0A	11	210870
20Y-54-65820	K1120-01A0	11	210860
20Y-54-65821	K1120-01A0A	12	210870
20Y-54-65860	K1120-01A0	12	210860
20Y-54-68850	M1810-01A0	4	240160
20Y-57-B1110	K0110-01A1	1	210010
20Y-60-21240	H0110-01A1	21	150010
20Y-60-21320	H0110-01A1	27	150010
20Y-60-21340	H0110-01A1	37	150010
20Y-60-21470	H0110-01A1	35	150010
20Y-60-22270	H0120-01A1	28	150020
20Y-60-31121	H0110-01A1	18	150010
20Y-60-31131	H0110-01A1	20	150010
20Y-60-31140	H0110-01A1	19	150010
20Y-60-31171	H0110-01A1	26	150010
20Y-60-32120	Y1860-01A0	2	450910
20Y-62-12540	P1120-01A0	12	300010
20Y-62-12590	P1120-01A0	4	300010
20Y-62-15831	K1110-22A0	1	210670
20Y-62-15831	K1110-22A0	13	210670
20Y-62-15831	K1110-37D0	1	210850
20Y-62-15831	K1110-37D0	10	210850
20Y-62-15951	H1840-01A1	1	150190
20Y-62-16630	H1833-01A0	8	150180
20Y-62-18890	K1110-02A0	30	210290
20Y-62-18890	K1110-10A0	17	210440
20Y-62-18890	K1110-14A0	17	210520
20Y-62-18890	K1110-20D0	27	210640
20Y-62-18890	K1110-26D0	17	210740
20Y-62-18890	K1110-29D0	17	210770
20Y-62-18910	K1110-02A0	25	210290
20Y-62-18910	K1110-10A0	15	210440
20Y-62-18910	K1110-14A0	15	210520
20Y-62-18910	K1110-20D0	22	210640
20Y-62-18910	K1110-26D0	15	210740
20Y-62-18910	K1110-29D0	15	210770
20Y-62-19560	H0120-01A1	16	150020
20Y-62-19560	H0120-01A1	23	150020
20Y-62-19560	H1831-01A0	18	150160
20Y-62-19560	H1831-01A0	22	150160
20Y-62-19560	H1831-01A0	6	150160
20Y-62-19560	H1833-01A0	10	150180
20Y-62-19560	H1833-01A0	15	150180
20Y-62-19560	H1833-01A0	22	150180
20Y-62-19560	N1220-01A0	13	270030
20Y-62-19560	N1310-01A0	7	270040
20Y-62-21940	H1831-01A0	14	150160
20Y-62-22271	N1220-01A0	11	270030
20Y-62-22271	N1310-01A0	5	270040
20Y-62-22410	H1833-01A0	13	150180
20Y-62-22790	H1831-02A0	22	150170
20Y-62-22790	H1831-02A0	25	150170
20Y-62-22790	H1840-01A1	11	150190
20Y-62-22790	K1110-19A0	10	210610
20Y-62-22790	K1110-19A0	5	210610
20Y-62-22790	K1110-20A0	11	210630
20Y-62-22790	K1110-20A0	20	210630
20Y-62-22790	K1110-20A0	4	210630
20Y-62-22790	K1110-34D0	12	210820
20Y-62-22790	K1110-34D0	4	210820
20Y-62-22790	K1110-35D0	15	210830
20Y-62-22790	K1110-35D0	6	210830
20Y-62-22810	H1831-02A0	8	150170
20Y-62-22810	H1840-01A1	12	150190
20Y-62-22810	K1110-20A0	12	210630
20Y-62-22810	K1110-35D0	7	210830
20Y-62-22820	H1831-02A0	11	150170
20Y-62-22820	H1840-01A1	19	150190
20Y-62-22820	K1110-19A0	11	210610
20Y-62-22820	K1110-19A0	6	210610
20Y-62-22820	K1110-20A0	13	210630
20Y-62-22820	K1110-20A0	21	210630
20Y-62-22820	K1110-20A0	5	210630
20Y-62-22820	K1110-34D0	13	210820
20Y-62-22820	K1110-34D0	5	210820
20Y-62-22820	K1110-35D0	16	210830
20Y-62-22820	K1110-35D0	8	210830
20Y-62-22830	H1831-02A0	27	150170
20Y-62-22830	H1840-01A1	20	150190
20Y-62-22830	K1110-20A0	22	210630
20Y-62-22830	K1110-35D0	17	210830
20Y-62-22840	H1840-01A1	13	150190
20Y-62-22840	K1110-20A0	23	210630
20Y-62-22840	K1110-35D0	18	210830

PARTS Nº	FIG. Nº	INDEX	PAGE
20Y-62-22850	H1831-02A0	19	150170
20Y-62-22850	H1840-01A1	14	150190
20Y-62-22850	K1110-19A0	7	210610
20Y-62-22850	K1110-20A0	24	210630
20Y-62-22850	K1110-34D0	14	210820
20Y-62-22850	K1110-35D0	19	210830
20Y-62-22860	H1831-02A0	20	150170
20Y-62-22860	H1840-01A1	21	150190
20Y-62-22860	K1110-20A0	25	210630
20Y-62-22860	K1110-35D0	20	210830
20Y-62-27770	K1110-21A0	12	210650
20Y-62-27770	K1110-36D0	12	210840
20Y-62-41390	K1110-02A0	32	210290
20Y-62-41390	K1110-20D0	29	210640
20Y-62-41550	H1833-01A0	4	150180
20Y-62-41700	H0120-01A1	27	150020
20Y-62-41701	H0120-01A1	27	150020
20Y-62-41920	H0120-01A1	37	150020
20Y-62-41930	N1310-01A0	12	270040
20Y-62-41970	H0120-01A1	18	150020
20Y-62-42210	K1110-20A0	14	210630
20Y-62-42220	K1110-20A0	15	210630
20Y-62-42230	K1110-20A0	6	210630
20Y-62-42240	K1110-20A0	7	210630
20Y-62-42251	K1110-19A0	12	210610
20Y-62-42320	K1110-20A0	3	210630
20Y-62-43490	K1110-20A0	16	210630
20Y-62-43490	K1110-35D0	12	210830
20Y-62-43510	K1110-20A0	17	210630
20Y-62-43510	K1110-35D0	11	210830
20Y-62-44620	K1110-34D0	1	210820
20Y-62-44630	K1110-34D0	6	210820
20Y-62-47630	H0120-01A1	31	150020
20Y-62-51671	H0311-01A0	6	150050
20Y-70-11180	T1110-02A0	8	360020
20Y-70-11182	T1110-02A0	8	360020
20Y-70-11520	T1110-04A0	11	360040
20Y-70-11540	T1110-04A0	2	360040
20Y-70-11540	T1110-06A0	9	360050
20Y-70-11590	T1110-06A0	12	360050
20Y-70-11651	T1110-01A0	2	360010
20Y-70-14520	T1510-01A0	6	360160
20Y-70-14520	T1510-02A0	6	360170
20Y-70-14520	T1510-03A0	6	360180
20Y-70-14520	T1510-04A0	6	360190
20Y-70-14520	T1510-05A0	6	360200
20Y-70-14520	T1510-06A0	6	360210
20Y-70-23220	T1200-01A0	8	360090
20Y-70-23220	T1200-01A0	9	360100
20Y-70-23220	T1200-01A1	9	360100
20Y-70-23220	T1200-01A3	8	360110
20Y-70-23220	T1200-01A3	9	360110
20Y-70-23220	T1200-02A0	4	360120
20Y-70-23220	T1200-02A0	8	360120
20Y-70-23220	Y1620-41A0	6	450210
20Y-70-23220	Y1620-41A1	6	450220
20Y-70-31160	T1200-01A0	11	360090
20Y-70-31160	T1200-01A1	11	360100
20Y-70-31160	T1200-01A3	11	360110
20Y-70-31161	T1200-01A0	11	360090
20Y-70-31161	T1200-01A1	11	360100
20Y-70-31161	T1200-01A3	11	360110
20Y-70-31380	J1310-01A0	13	180030
20Y-70-31380	T1125-01A0	4	360070
20Y-70-31380	T1125-01A0	5	360070
20Y-70-31380	T1200-01A0	20	360090
20Y-70-31380	T1200-01A1	20	360100
20Y-70-31380	T1200-01A3	20	360110
20Y-70-31380	T1200-02A0	27	360120
20Y-70-31390	J1310-01A0	14	180030
20Y-70-31390	T1125-01A0	6	360070
20Y-70-31390	T1200-01A0	21	360090
20Y-70-31390	T1200-01A1	21	360100
20Y-70-31390	T1200-01A3	21	360110
20Y-70-31390	T1200-02A0	28	360120
20Y-70-31430	T1110-02A0	9	360020
20Y-70-31430	T1200-01A0	15	360090
20Y-70-31430	T1200-01A1	15	360100
20Y-70-31430	T1200-01A3	15	360110
20Y-70-32351	T1200-01A0	5	360090
20Y-70-32351	T1200-01A1	5	360100
20Y-70-32351	T1200-01A3	5	360110
20Y-70-32361	T1200-02A0	3	360120
20Y-70-32361	T1200-02A0	7	360120
20Y-70-32371	T1200-01A0	4	360090
20Y-70-32371	T1200-01A1	4	360100
20Y-70-32371	T1200-01A3	4	360110
20Y-70-B1360	T1510-03A0	9	360180
20Y-70-B1360	T1510-04A0	9	360190
20Y-70-B1370	T1510-03A0	10	360180
20Y-70-B1370	T1510-04A0	10	360190
20Y-810-1240	C0100-02A0A	47	060040
20Y-973-2220	R1140-01A0	1	330090
20Y-973-2230	R1140-01A0	2	330090
20Y-979-3120	K0700-01A1	31	210220
20Y-979-3120	K0700-01A1A	18	210230
20Y-979-3130	K1110-17A0	7	210580
20Y-979-3130	K1110-32D0	3	210800
20Y-979-3140	K0700-02A1A	2	210240
20Y-979-3140	K0700-02A1B	2	210250
20Y-979-3150	K0700-02A1A	18	210240
20Y-979-3150	K0700-02A1A	21	210240
20Y-979-3150	K0700-02A1A	24	210240
20Y-979-3150	K0700-02A1B	19	210250
20Y-979-3150	K0700-02A1B	22	210250
20Y-979-3150	K0700-02A1B	25	210250
20Y-979-3150	K1110-17A0	5	210580
20Y-979-3150	K1110-32D0	5	210800
20Y-979-6111	K1110-16A0	1	210560
20Y-979-6111	Y1979-11A0	1	450920
20Y-979-6121	K0700-01A1	9	210220
20Y-979-6121	K0700-01A1A	1	210230
20Y-979-6131	C0100-02A0	41	060030
20Y-979-6141	K1110-11A1	1	210460
20Y-979-6151	K1110-11A1	2	210460
20Y-979-6161	K0210-13A0	9	210160
20Y-979-6161	K1110-13D0	21	210510
20Y-979-6191	K0700-01A1	27	210220
20Y-979-6212	K0700-01A1	1	210220
20Y-979-6222	K0210-15A0	5	210180
20Y-979-6231	K1110-16A0	10	210560
20Y-979-6241	K1110-16A0	4	210560
20Y-979-6252	K0700-01A1	2	210220
20Y-979-6261	K1110-16A0	12	210560
20Y-979-6271	K0700-01A1	28	210220
20Y-979-6281	K1110-17A0	1	210580
20Y-979-6291	K1110-17A0	2	210580
20Y-979-6341	K1110-16A0	5	210560
20Y-979-6351	K1110-16A0	6	210560
20Y-979-6410	K0700-03A1	1	210260
20Y-979-6420	K0210-13A0	10	210160
20Y-979-6430	K0700-03A1	4	210260
20Y-979-6481	K1110-16A0	18	210560
20Y-979-6542	K0700-02A1A	20	210240
20Y-979-6542	K0700-02A1B	21	210250
20Y-979-6591	K1110-16A0	22	210560
20Y-979-6621	K0700-01A1	35	210220
20Y-979-6621	K0700-01A1A	22	210230
20Y-979-6630	K1110-23D0	17	210690
20Y-979-6650	K0700-02A1A	17	210240
20Y-979-6650	K0700-02A1B	18	210250
20Y-979-6771	K1110-16D0	15	210570
20Y-979-7250	K0700-01A1	8	210220
20Y-98-21130	V0300-01A0	14	420020
20Y-98-21140	V0300-01A0	24	420020
20Y-98-21181	M1420-01A0	5	240130
20Y-98-B1210	V0100-01A1	15	420010A
20Y-98-B1220	V0100-01A1	14	420010A
21J-06-12440	K0210-02A0A	42	210050

PARTS Nº	FIG. Nº	INDEX	PAGE
21J-06-12440	K1110-02D0	34	210300
21K-00-71111	U0100-01A2	18	390010
21K-00-71111	U0100-01A3	18	390011
21K-00-71220	U0100-01A2	26	390010
21K-00-71220	U0100-01A3	26	390011
21K-00-B7110	U0100-01A2	27	390010
21K-00-B7111	U0100-01A2	27	390010
21K-00-B7111	U0100-01A3	27	390011
21K-00-B7120	U0100-01A2	30	390010
21K-00-B7120	U0100-01A3	30	390011
21K-01-71110	B0100-01A0	6	030100
21K-01-71120	B0100-01A0	7	030100
21K-01-71131	B0100-01A0	11	030100
21K-01-71141	B0200-01A0	3	030110
21K-01-71150	B0200-01A0	7	030110
21K-01-71151	B0200-01A0	7	030110
21K-01-71161	C0100-05A0	1	060090
21K-01-71161	C0100-05A0A	1	060100
21K-01-71171	C0100-05A0	8	060090
21K-01-71171	C0100-05A0A	8	060100
21K-01-71181	B0100-01A0	15	030100
21K-01-71190	B0100-01A0	26	030100
21K-01-71211	B0200-01A0	12	030110
21K-01-71230	B0200-01A0	6	030110
21K-01-71240	B0200-01A0	17	030110
21K-01-71250	B0100-01A0	21	030100
21K-01-71260	B0100-01A0	22	030100
21K-01-71270	B0100-01A0	1	030100
21K-03-71113	C0100-01A0	1	060010
21K-03-71114	C0100-01A0	1	060010
21K-03-71114	C0100-01A0A	1	060020
21K-03-71121	C0100-01A0	33	060010
21K-03-71121	C0100-01A0A	34	060020
21K-03-71141	C0100-01A0	39	060010
21K-03-71141	C0100-01A0A	40	060020
21K-03-71151	C0100-02A0	38	060030
21K-03-71152	C0100-02A0	38	060030
21K-03-71152	C0100-02A0A	38	060040
21K-03-71161	C0100-01A0	12	060010
21K-03-71161	C0100-01A0A	12	060020
21K-03-71171	C0100-01A0	13	060010
21K-03-71171	C0100-01A0A	13	060020
21K-03-71181	C0100-01A0	14	060010
21K-03-71182	C0100-01A0	14	060010
21K-03-71182	C0100-01A0A	14	060020
21K-03-71191	C0100-01A0	17	060010
21K-03-71192	C0100-01A0	17	060010
21K-03-71192	C0100-01A0A	17	060020
21K-03-71211	C0100-03A0	11	060050
21K-03-71211	C0100-03A0A	11	060060
21K-03-71221	C0100-03A0	17	060050
21K-03-71221	C0100-03A0A	17	060060
21K-03-71230	C0310-01A0	1	060110
21K-03-71240	C0310-01A0	4	060110
21K-03-71261	C0100-03A0	1	060050
21K-03-71261	C0100-03A0A	1	060060
21K-03-71270	C0100-03A0	2	060050
21K-03-71270	C0100-03A0A	2	060060
21K-03-71281	C0100-01A0	26	060010
21K-03-71281	C0100-01A0A	26	060020
21K-03-71292	C0100-03A0	3	060050
21K-03-71292	C0100-03A0A	3	060060
21K-03-71311	C0100-03A0	4	060050
21K-03-71311	C0100-03A0A	4	060060
21K-03-71321	C0100-01A0	27	060010
21K-03-71321	C0100-01A0A	27	060020
21K-03-71331	C0100-02A0	23	060030
21K-03-71331	C0100-02A0A	23	060040
21K-03-71341	C0100-02A0	29	060030
21K-03-71341	C0100-02A0A	29	060040
21K-03-71351	C0100-02A0	32	060030
21K-03-71352	C0100-02A0A	32	060040
21K-03-71361	C0100-02A0	35	060030
21K-03-71362	C0100-02A0A	35	060040
21K-03-71371	C0100-02A0	7	060030
21K-03-71371	C0100-02A0A	7	060040
21K-03-71380	C0100-02A0	20	060030
21K-03-71380	C0100-02A0A	20	060040
21K-03-71421	C0100-02A0	1	060030
21K-03-71421	C0100-02A0A	1	060040
21K-03-71431	C0100-02A0	4	060030
21K-03-71431	C0100-02A0A	4	060040
21K-03-71441	C0100-01A0	20	060010
21K-03-71441	C0100-01A0A	20	060020
21K-03-71461	C0100-05A0	14	060090
21K-03-71461	C0100-05A0A	14	060100
21K-03-71471	C0100-01A0	35	060010
21K-03-71471	C0100-01A0A	36	060020
21K-03-71480	C0310-01A0	7	060110
21K-03-71490	C0310-01A0	12	060110
21K-03-71511	C0100-02A0	12	060030
21K-03-71511	C0100-02A0A	12	060040
21K-03-71521	C0100-02A0	13	060030
21K-03-71521	C0100-02A0A	13	060040
21K-03-71541	C0100-02A0	8	060030
21K-03-71541	C0100-02A0A	8	060040
21K-03-71561	C0100-02A0	17	060030
21K-03-71561	C0100-02A0A	17	060040
21K-03-71581	C0100-01A0	42	060010
21K-03-71581	C0100-01A0A	43	060020
21K-03-71590	C0100-01A0	43	060010
21K-03-71590	C0100-01A0A	44	060020
21K-03-71611	C0100-01A0	44	060010
21K-03-71611	C0100-01A0A	45	060020
21K-03-71621	C0100-01A0	2	060010
21K-03-71621	C0100-01A0A	2	060020
21K-03-71631	C0100-01A0	28	060010
21K-03-71631	C0100-01A0A	28	060020
21K-03-71641	C0100-01A0	45	060010
21K-03-71641	C0100-01A0A	46	060020
21K-03-71650	C0100-01A0	29	060010
21K-03-71650	C0100-01A0A	29	060020
21K-03-71671	C0100-01A0	3	060010
21K-03-71671	C0100-01A0A	3	060020
21K-03-71681	C0100-01A0	4	060010
21K-03-71681	C0100-01A0A	4	060020
21K-03-71690	C0100-01A0	30	060010
21K-03-71690	C0100-01A0A	30	060020
21K-03-71710	C0100-01A0	31	060010
21K-03-71710	C0100-01A0A	31	060020
21K-03-71721	C0100-01A0	32	060010
21K-03-71721	C0100-01A0A	32	060020
21K-03-71730	C0100-01A0	46	060010
21K-03-71730	C0100-01A0A	47	060020
21K-03-71741	C0100-01A0	47	060010
21K-03-71741	C0100-01A0A	48	060020
21K-03-71750	C0100-01A0	48	060010
21K-03-71750	C0100-01A0A	49	060020
21K-03-71772	C0100-03A0	5	060050
21K-03-71772	C0100-03A0A	5	060060
21K-03-71780	C0100-03A0	6	060050
21K-03-71780	C0100-03A0A	6	060060
21K-03-71790	C0100-03A0	7	060050
21K-03-71790	C0100-03A0A	7	060060
21K-03-71830	C0100-02A0	11	060030
21K-03-71830	C0100-02A0A	11	060040
21K-03-71840	C0100-02A0	16	060030
21K-03-71840	C0100-02A0A	16	060040
21K-03-71850	C0100-03A0	8	060050
21K-03-71850	C0100-03A0A	8	060060
21K-03-71860	C0100-03A0	9	060050
21K-03-71860	C0100-03A0A	9	060060
21K-03-71870	C0100-03A0	10	060050
21K-03-71870	C0100-03A0A	10	060060
21K-03-71920	C0100-01A0	32A	060010
21K-03-71920	C0100-01A0A	33	060020
21K-03-71930	C0100-01A0	48A	060010
21K-03-71930	C0100-01A0A	50	060020
21K-03-B2190	C0100-02A0A	35	060040
21K-03-B3110	C0100-02A0A	46	060040

PARTS Nº	FIG. Nº	INDEX	PAGE
21K-03-B3120	C0100-02A0A	32	060040
21K-04-71111	D0100-01A0	1	090010
21K-04-71170	D0200-02A1	23	090040
21K-04-B7110	D0100-01A0	1	090010
21K-06-71112	K1110-07A0	6	210380
21K-06-71150	E0100-01A1	10	120010
21K-06-71171	E0200-01A0	1	120020
21K-06-71171	E0200-01A0A	1	120030
21K-06-71181	E0200-01A0	7	120020
21K-06-71181	E0200-01A0A	7	120030
21K-06-71192	E0200-02A0	1	120040
21K-06-71231	E0200-03A0	5	120060
21K-06-71231	E0200-03A0A	4	120070
21K-06-71251	E0200-01A0	37	120020
21K-06-71251	E0200-01A0A	37	120030
21K-06-71261	E0200-03A0	1	120060
21K-06-71261	E0200-03A0A	1	120070
21K-06-71281	E0200-01A0	11	120020
21K-06-71281	E0200-01A0A	11	120030
21K-06-71291	E0200-01A0	16	120020
21K-06-71291	E0200-01A0A	16	120030
21K-06-71310	T1110-04A0	12	360040
21K-06-71320	E0420-01A0	5	120110
21K-06-71340	K0350-01A0	1	210210
21K-06-71511	K1110-24D0	1	210710
21K-06-B7110	E0100-01A1	4	120010
21K-06-B7120	E0100-01A1	5	120010
21K-06-B7130	E0100-01A1	6	120010
21K-06-B7140	E0200-02A0A	1	120050
21K-25-00101	N1110-01A0	1	270010
21K-25-41150	N1110-01A0	2	270010
21K-25-41170	N1110-01A0	15	270010
21K-25-41190	N1110-01A0	9	270010
21K-26-B7010	Y1260-04A0	1	450040
21K-26-B7020	Y1260-04A0	2	450040
21K-26-B7030	Y1260-04A0	3	450040
21K-26-B7040	Y1260-04A0	4	450040
21K-26-B7050	Y1260-04A0	5	450040
21K-26-B7060	Y1260-04A0	6	450040
21K-26-B7070	Y1260-04A0	7	450040
21K-26-B7080	Y1260-04A0	8	450040
21K-26-B7090	Y1260-04A0	9	450040
21K-26-B7100	N1210-01A0	1	270020
21K-26-B7100	Y1260-04A0	1	450040
21K-26-B7110	Y1260-04A0	10	450040
21K-26-B7120	Y1260-04A0	11	450040
21K-26-B7130	Y1260-04A0	1	450040
21K-26-B7140	Y1260-04A0	12	450040
21K-26-B7150	Y1260-04A0	13	450040
21K-26-B7160	Y1260-04A0	14	450040
21K-26-B7170	Y1260-04A0	15	450040
21K-26-B7180	Y1260-04A0	16	450040
21K-26-B7190	Y1260-04A0	17	450040
21K-26-B7210	Y1260-04A0	18	450040
21K-26-B7220	Y1260-04A0	19	450040
21K-26-B7230	Y1260-04A0	20	450040
21K-26-B7240	Y1260-04A0	21	450040
21K-26-B7250	Y1260-04A0	22	450040
21K-26-B7270	Y1260-04A0	24	450040
21K-26-B7280	Y1260-04A0	25	450040
21K-26-B7290	Y1260-04A0	26	450040
21K-26-B7300	Y1260-04A0	23	450040
21K-26-B7300	Y1260-05A0	1	450050
21K-26-B7310	Y1260-05A0	1	450050
21K-26-B7320	Y1260-05A0	30	450050
21K-26-B7330	Y1260-05A0	31	450050
21K-26-B7340	Y1260-05A0	K1.4	450050
21K-26-B7350	Y1260-05A0	32	450050
21K-26-B7360	Y1260-05A0	32	450050
21K-26-B7370	Y1260-05A0	48	450050
21K-26-B7380	Y1260-05A0	55	450050
21K-26-B7390	Y1260-05A0	7	450050
21K-26-B7410	Y1260-05A0	6	450050
21K-26-B7420	Y1260-05A0	4	450050
21K-26-B7430	Y1260-05A0	K6	450050
21K-26-B7440	Y1260-05A0	K7	450050
21K-26-B7450	Y1260-05A0	K8	450050
21K-27-00101	P1210-01A0	1	300020
21K-30-71112	R1100-01A0	1	330080
21K-30-71141	R1100-01A0	8	330080
21K-30-71150	R1100-01A0	14	330080
21K-30-71160	R1100-01A0	13	330080
21K-30-71210	R1100-01A0	1	330080
21K-30-71B50	R1100-01A0	4	330080
21K-30-71C20	R1100-01A0	2	330080
21K-30-B7111	R1100-01A0	1	330080
21K-32-00110	Y0321-01A0	1	450020
21K-32-00810	R0500-01A3	1	330070
21K-32-00840	R0500-01A3	1	330070
21K-32-04410	R0500-01A1	1	330050
21K-32-04420	R0500-01A2	1	330060
21K-32-04420	R0500-01A4	1	330075
21K-32-21510	R0500-01A1	7	330050
21K-32-21520	R0500-01A2	7	330060
21K-32-21520	R0500-01A4	7	330075
21K-32-21620	R0500-01A3	7	330070
21K-43-71110	B0400-01A0	16	030130
21K-43-71121	B0400-01A0	19	030130
21K-46-11410	M1520-01A0	3	240150
21K-46-71102	J1110-01A0	1	180010
21K-46-71160	J1110-01A0	6	180010
21K-46-71160	J1110-01A0A	6	180020
21K-46-71180	J1110-01A0	47	180010
21K-46-71180	J1110-01A0A	41	180020
21K-46-71210	J1110-01A0	7	180010
21K-46-71210	J1110-01A0A	7	180020
21K-46-71220	J1110-01A0	8	180010
21K-46-71220	J1110-01A0A	8	180020
21K-46-71230	J1110-01A0	9	180010
21K-46-71230	J1110-01A0A	9	180020
21K-46-71241	J1110-01A0	10	180010
21K-46-71241	J1110-01A0A	10	180020
21K-46-71260	J1110-01A0	13	180010
21K-46-71260	J1110-01A0A	13	180020
21K-46-71280	J1110-01A0	16	180010
21K-46-71280	J1110-01A0A	16	180020
21K-46-71291	J1110-01A0	11	180010
21K-46-71310	J1110-01A0	12	180010
21K-46-71310	J1110-01A0A	12	180020
21K-46-71320	J1110-01A0	15	180010
21K-46-71320	J1110-01A0A	15	180020
21K-46-71330	J1110-01A0	14	180010
21K-46-71330	J1110-01A0A	14	180020
21K-46-71340	J1110-01A0	17	180010
21K-46-71340	J1110-01A0A	17	180020
21K-46-71350	J1110-01A0	20	180010
21K-46-71350	J1110-01A0A	20	180020
21K-46-74130	M1510-01A0	2	240140
21K-46-74140	M1520-01A0	2	240150
21K-46-74151	M1510-01A0	3	240140
21K-46-74160	M1510-01A0	4	240140
21K-46-74170	M1520-01A0	1	240150
21K-46-74322	M1510-01A0	1	240140
21K-46-B7100	J1110-01A0	1	180010
21K-46-B7100	J1110-01A0A	1	180020
21K-46-B7120	J1110-01A0	51	180010
21K-46-B7190	J1110-01A0	11	180010
21K-46-B7190	J1110-01A0A	11	180020
21K-54-26341	M1210-01A0	14	240100
21K-54-26351	M1210-01A0	15	240100
21K-54-71112	M1110-01A0	1	240010
21K-54-71122	M1110-01A0	7	240010
21K-54-71131	M1110-01A0	8	240010
21K-54-71140	M1110-01A0	11	240010
21K-54-71150	M1110-01A0	12	240010
21K-54-71211	M1120-01A0	1	240020
21K-54-71231	M1120-01A0	2	240020
21K-54-71241	M1120-01A0	3	240020
21K-54-71260	M1150-02A0	21	240070
21K-54-71260	M1150-02A0A	21	240080

PARTS Nº	FIG. Nº	INDEX	PAGE
21K-54-71270	M1120-01A0	10	240020
21K-54-71280	M1120-01A0	6	240020
21K-54-71290	M1120-01A0	7	240020
21K-54-71312	M1140-01A0	35	240040
21K-54-71330	M1140-01A0	36	240040
21K-54-71340	M1140-01A0	10	240040
21K-54-71350	M1140-01A0	11	240040
21K-54-71360	M1140-01A0	15	240040
21K-54-71371	M1130-01A0	1	240030
21K-54-71380	M1130-01A0	36	240030
21K-54-71390	M1140-01A0	1	240040
21K-54-71411	M1130-01A0	11	240030
21K-54-71420	M1130-01A0	12	240030
21K-54-71431	M1130-01A0	15	240030
21K-54-71461	M1130-01A0	37	240030
21K-54-71471	M1130-01A0	38	240030
21K-54-71491	M1130-01A0	39	240030
21K-54-71541	M1150-02A0	8	240070
21K-54-71541	M1150-02A0A	8	240080
21K-54-71551	M1150-02A0	1	240070
21K-54-71551	M1150-02A0A	1	240080
21K-54-71561	M1150-02A0	2	240070
21K-54-71561	M1150-02A0A	2	240080
21K-54-71631	M1150-02A0	15	240070
21K-54-71631	M1150-02A0A	15	240080
21K-54-71640	M1150-02A0	16	240070
21K-54-71640	M1150-02A0A	16	240080
21K-54-71650	M1150-02A0	17	240070
21K-54-71650	M1150-02A0A	17	240080
21K-54-71660	M1150-01A0	31	240050
21K-54-71660	M1150-01A0A	31	240060
21K-54-71670	M1150-01A0	29	240050
21K-54-71670	M1150-01A0A	29	240060
21K-54-71680	M1150-01A0	22	240050
21K-54-71680	M1150-01A0A	22	240060
21K-54-71690	M1150-01A0	23	240050
21K-54-71690	M1150-01A0A	23	240060
21K-54-71711	M1210-01A0	9	240100
21K-54-71741	M1160-01A0	7	240090
21K-54-71760	M1160-01A0	8	240090
21K-54-71780	M1150-01A0	14	240050
21K-54-71780	M1150-01A0A	14	240060
21K-54-71790	M1150-01A0	1	240050
21K-54-71791	M1150-01A0A	1	240060
21K-54-71811	M1220-01A0	1	240110
21K-54-71830	M1220-01A0	23	240110
21K-54-71910	M1310-01A0	1	240120
21K-54-71920	M1150-01A0	21	240050
21K-54-71920	M1150-01A0A	21	240060
21K-54-71930	M1150-01A0	28	240050
21K-54-71930	M1150-01A0A	28	240060
21K-54-71940	M1150-01A0	30	240050
21K-54-71940	M1150-01A0A	30	240060
21K-54-71951	M1150-02A0	14	240070
21K-54-71951	M1150-02A0A	14	240080
21K-54-71970	M1150-01A0	24	240050
21K-54-71970	M1150-01A0A	24	240060
21K-54-71980	M1210-01A0	2	240100
21K-54-71991	M1150-01A0	2	240050
21K-54-71991	M1150-01A0A	2	240060
21K-54-72110	M1810-01A0	3	240160
21K-54-72130	M1810-02A0	3	240170
21K-54-72152	M1810-01A0	5	240160
21K-54-72160	M1810-01A0	6	240160
21K-54-72180	M1810-01A0	7	240160
21K-54-72190	M1810-01A0	8	240160
21K-54-72220	M1150-01A0	10	240050
21K-54-72220	M1150-01A0A	10	240060
21K-54-72230	M1150-01A0	3	240050
21K-54-72230	M1150-01A0A	3	240060
21K-54-72240	M1130-01A0	34	240030
21K-54-72250	M1130-01A0	35	240030
21K-54-72270	M1810-01A0	9	240160
21K-54-72280	M1810-01A0	10	240160
21K-54-72290	M1810-02A0	1	240170
21K-54-72310	M1150-02A0	18	240070
21K-54-72310	M1150-02A0A	18	240080
21K-54-72320	M1150-01A0	4	240050
21K-54-72320	M1150-01A0A	4	240060
21K-54-72330	M1150-01A0	25	240050
21K-54-72330	M1150-01A0A	25	240060
21K-54-72340	M1150-01A0	9	240050
21K-54-72340	M1150-01A0A	9	240060
21K-54-72350	M1150-01A0	11	240050
21K-54-72350	M1150-01A0A	11	240060
21K-54-72390	M1160-01A0	2	240090
21K-54-72410	M1160-01A0	1	240090
21K-54-72420	M1150-01A0	5	240050
21K-54-72420	M1150-01A0A	5	240060
21K-54-72430	M1150-01A0	6	240050
21K-54-72430	M1150-01A0A	6	240060
21K-54-72440	M1210-01A0	1	240100
21K-54-72450	M1810-02A0	4	240170
21K-54-72460	M1150-01A0	7	240050
21K-54-72460	M1150-01A0A	7	240060
21K-54-72470	M1150-01A0	8	240050
21K-54-72470	M1150-01A0A	8	240060
21K-54-72510	K1110-01A0	1	210270
21K-54-B7110	M1110-01A0	1	240010
21K-54-B7120	M1110-01A0	7	240010
21K-54-B7190	M1310-01A0	1	240120
21K-54-B7230	M1810-02A0	3	240170
21K-54-B7290	M1810-02A0	1	240170
21K-54-B7350	M1810-02A0	4	240170
21K-57-B1110	K0110-01A1	4	210010
21K-57-B7120	K0110-01A1	4	210010
21K-60-71111	H0110-01A1	1	150010
21K-60-71120	H0110-01A1	30	150010
21K-60-71140	H0110-01A1	45	150010
21K-60-71150	H0110-01A1	46	150010
21K-60-71160	H0110-01A1	47	150010
21K-60-71211	H1831-01A0	1	150160
21K-60-71211	Y1860-01A0	1	450910
21K-60-71230	H0120-01A1	43	150020
21K-60-B2010	H0110-01A1	41	150010
21K-60-B7010	H0110-01A1	1	150010
21K-60-B7011	H0110-01A1	1	150010
21K-62-35270	T1110-03A0	19	360030
21K-62-35270	T1110-03A0	6	360030
21K-62-71111	H0311-01A0	1	150050
21K-62-71121	H0120-02A0	1	150030
21K-62-71130	H0312-01A0	1	150060
21K-62-71140	H0312-01A0	4	150060
21K-62-71210	H0330-01A0	4	150080
21K-62-71221	H0320-01A0	9	150070
21K-62-71231	H0340-01A0	6	150090
21K-62-71240	H0340-01A0	1	150090
21K-62-71251	H1210-01A0	4	150100
21K-62-71271	H0320-01A0	2	150070
21K-62-71281	H0320-01A0	1	150070
21K-62-71290	H1220-01A0	4	150110
21K-62-71290	H1310-01A0	1	150130
21K-62-71320	H1220-01A0	7	150110
21K-62-71340	H0320-01A0	16	150070
21K-62-71351	N1220-01A0	7	270030
21K-62-71810	K1110-20A0	8	210630
21K-62-71810	K1110-35D0	4	210830
21K-62-71820	K1110-20A0	9	210630
21K-62-71820	K1110-35D0	5	210830
21K-62-71830	K1110-20A0	10	210630
21K-62-71830	K1110-35D0	3	210830
21K-62-71840	K1110-20A0	18	210630
21K-62-71840	K1110-35D0	14	210830
21K-62-71850	K1110-20A0	19	210630
21K-62-71850	K1110-35D0	13	210830
21K-62-71860	K1110-19A0	2	210610
21K-62-71860	K1110-34D0	9	210820
21K-62-71870	K1110-19A0	3	210610
21K-62-71870	K1110-34D0	10	210820
21K-62-71911	H1840-01A1	15	150190

PARTS Nº	FIG. Nº	INDEX	PAGE
21K-62-71921	H1831-02A0	7	150170
21K-62-71931	H1840-01A1	16	150190
21K-62-71940	H1840-01A1	17	150190
21K-62-71961	H1840-01A1	8	150190
21K-62-71970	H1840-01A1	9	150190
21K-62-71981	H1831-02A0	10	150170
21K-62-72111	H1831-02A0	37	150170
21K-62-72120	H1833-01A0	1	150180
21K-62-72141	H1831-02A0	18	150170
21K-62-72151	H1831-02A0	21	150170
21K-62-72160	K1110-19A0	4	210610
21K-62-72160	K1110-34D0	11	210820
21K-62-72190	H1840-01A1	18	150190
21K-62-72250	H1831-02A0	24	150170
21K-62-72260	H1831-02A0	24	150170
21K-62-72360	H1831-01A0	16	150160
21K-62-72711	H1831-02A0	26	150170
21K-62-72740	H1840-01A1	10	150190
21K-62-72810	H0320-01A0	5	150070
21K-62-72830	H0120-01A1	14	150020
21K-62-72840	N1310-01A0	23	270040
21K-62-72851	H1210-01A0	10	150100
21K-62-72860	H0120-01A1	21	150020
21K-62-72880	H0120-01A1	54	150020
21K-62-72970	H1340-01A0	6	150140
21K-62-72980	H1210-01A0	21	150100
21K-62-74110	T1110-03A0	3	360030
21K-62-74120	T1110-03A0	1	360030
21K-62-74131	T1110-03A0	14	360030
21K-62-74141	T1110-03A0	16	360030
21K-62-74151	T1110-03A0	22	360030
21K-62-74211	T1110-01A0	3	360010
21K-62-74221	T1110-01A0	4	360010
21K-62-74231	T1110-01A0	5	360010
21K-62-74260	T1200-03A0	1	360130
21K-62-74280	T1110-01A0	7	360010
21K-62-74290	T1200-03A1	1	360140
21K-62-74520	T1200-03A3	1	360150
21K-70-11410	T1125-01A0	7	360070
21K-70-23130	T1200-02A0	10	360120
21K-70-23140	T1200-02A0	18	360120
21K-70-23140	T1200-02A0	21	360120
21K-70-23160	T1200-03A0	3	360130
21K-70-23160	T1200-03A1	3	360140
21K-70-23160	T1200-03A3	3	360150
21K-70-23160	T1510-01A0	20	360160
21K-70-23160	T1510-02A0	20	360170
21K-70-23160	T1510-03A0	20	360180
21K-70-23160	T1510-04A0	20	360190
21K-70-23160	T1510-05A0	20	360200

PARTS Nº	FIG. Nº	INDEX	PAGE
21K-70-23160	T1510-06A0	20	360210
21K-70-23170	T1510-01A0	15	360160
21K-70-23170	T1510-02A0	15	360170
21K-70-23170	T1510-03A0	15	360180
21K-70-23170	T1510-04A0	15	360190
21K-70-23170	T1510-05A0	15	360200
21K-70-23170	T1510-06A0	15	360210
21K-70-23180	T1510-01A0	16	360160
21K-70-23180	T1510-02A0	16	360170
21K-70-23180	T1510-03A0	16	360180
21K-70-23180	T1510-04A0	16	360190
21K-70-23180	T1510-05A0	16	360200
21K-70-23180	T1510-06A0	16	360210
21K-70-23190	T1200-02A0	13	360120
21K-70-23191	T1200-02A0	13	360120
21K-70-23210	T1200-02A0	11	360120
21K-70-23220	T1200-02A0	24	360120
21K-70-23230	T1510-01A0	17	360160
21K-70-23230	T1510-02A0	17	360170
21K-70-23230	T1510-03A0	17	360180
21K-70-23230	T1510-04A0	17	360190
21K-70-23230	T1510-05A0	17	360200
21K-70-23230	T1510-06A0	17	360210
21K-70-33130	T1510-01A0	4	360160
21K-70-33130	T1510-02A0	4	360170
21K-70-33130	T1510-03A0	4	360180
21K-70-33130	T1510-05A0	4	360200
21K-70-33130	T1510-06A0	4	360210
21K-70-33140	T1510-01A0	5	360160
21K-70-33140	T1510-02A0	5	360170
21K-70-33140	T1510-03A0	5	360180
21K-70-33140	T1510-05A0	5	360200
21K-70-33140	T1510-06A0	5	360210
21K-70-33150	T1510-01A0	2	360160
21K-70-33150	T1510-02A0	2	360170
21K-70-33150	T1510-03A0	2	360180
21K-70-33150	T1510-05A0	2	360200
21K-70-33150	T1510-06A0	2	360210
21K-70-33160	T1510-01A0	3	360160
21K-70-33160	T1510-02A0	3	360170
21K-70-71112	T1110-01A0	1	360010
21K-70-71160	J1310-01A0	1	180030
21K-70-71170	J1310-01A0	9	180030
21K-70-71180	T1110-02A0	1	360020
21K-70-71191	T1200-01A0	16	360090
21K-70-71191	T1200-01A1	16	360100
21K-70-71191	T1200-01A3	16	360110
21K-70-71192	T1200-01A0	16	360090
21K-70-71192	T1200-01A1	16	360100
21K-70-71192	T1200-01A3	16	360110

PARTS Nº	FIG. Nº	INDEX	PAGE
21K-70-71211	T1110-06A0	10	360050
21K-70-71221	T1110-06A0	11	360050
21K-70-71231	T1110-04A0	3	360040
21K-70-71241	T1110-04A0	4	360040
21K-70-71251	T1110-04A0	5	360040
21K-70-71261	T1125-01A0	1	360070
21K-70-71311	T1110-01A0	8	360010
21K-70-71320	Y1620-01A0	2	450190
21K-70-71320	Y1620-01A0	6	450190
21K-70-71320	Y1620-41A1	2	450220
21K-70-71410	T1110-02A0		360020
21K-70-71411	T1110-02A0	2	360020
21K-70-71420	T1110-02A0	3	360020
21K-70-71421	T1110-02A0	3	360020
21K-70-71430	T1110-02A0	4	360020
21K-70-71431	T1110-02A0	4	360020
21K-70-71440	T1200-02A0	16	360120
21K-70-71441	T1200-02A0	16	360120
21K-70-71450	J1310-01A0	5	180030
21K-70-71451	J1310-01A0	5	180030
21K-70-71460	J1310-01A0	6	180030
21K-70-71461	J1310-01A0	6	180030
21K-70-71470	J1310-01A0	7	180030
21K-70-71471	J1310-01A0	7	180030
21K-70-71480	J1310-01A0	8	180030
21K-70-71481	J1310-01A0	8	180030
21K-70-71490	T1200-02A0	17	360120
21K-70-71491	T1200-02A0	17	360120
21K-70-71510	T1110-01A0	1	360010
21K-70-72211	T1200-01A0	2	360090
21K-70-72211	T1200-01A1	2	360100
21K-70-72211	T1200-01A3	2	360110
21K-70-72230	T1200-01A0	3	360090
21K-70-72230	T1200-01A1	3	360100
21K-70-72230	T1200-01A3	3	360110
21K-70-72240	T1200-02A0	2	360120
21K-70-72240	T1200-02A0	6	360120
21K-70-72250	Y1620-41A0	2	450210
21K-70-72250	Y1620-41A0	5	450210
21K-70-72250	Y1620-41A1	2	450220
21K-70-72250	Y1620-41A1	5	450220
21K-70-72260	T1200-03A0	2	360130
21K-70-72260	T1200-03A1	2	360140
21K-70-72260	T1200-03A3	2	360150
21K-70-73110	T1200-02A0	1	360120
21K-70-73120	T1200-02A0	5	360120
21K-70-73130	T1200-02A0	12	360120
21K-70-74210	T1510-01A0	14	360160
21K-70-74210	T1510-02A0	14	360170
21K-70-74210	T1510-03A0	14	360180
21K-70-74210	T1510-04A0	14	360190
21K-70-74210	T1510-05A0	14	360200
21K-70-74210	T1510-06A0	14	360210
21K-70-74220	T1510-01A0	13	360160
21K-70-74220	T1510-02A0	13	360170
21K-70-74220	T1510-03A0	13	360180
21K-70-74220	T1510-04A0	13	360190
21K-70-74220	T1510-05A0	13	360200
21K-70-74220	T1510-06A0	13	360210
21K-70-B1130	T1510-01A0	9	360160
21K-70-B1130	T1510-02A0	9	360170
21K-70-B1130	T1510-03A0	9	360180
21K-70-B1130	T1510-05A0	9	360200
21K-70-B1130	T1510-06A0	9	360210
21K-70-B1140	T1510-01A0	10	360160
21K-70-B1140	T1510-02A0	10	360170
21K-70-B1140	T1510-03A0	10	360180
21K-70-B1140	T1510-05A0	10	360200
21K-70-B1140	T1510-06A0	10	360210
21K-70-B2130	T1510-03A0	3	360180
21K-70-B2210	T1510-03A0	4	360180
21K-70-B2210	T1510-04A0	4	360190
21K-70-B2220	T1510-03A0	5	360180
21K-70-B2220	T1510-04A0	5	360190
21K-70-B2230	T1510-03A0	2	360180
21K-70-B2230	T1510-04A0	2	360190
21K-70-B2240	T1510-03A0	2A	360180
21K-70-B2240	T1510-04A0	2A	360190
21K-70-B2250	T1510-03A0	3	360180
21K-70-B2250	T1510-04A0	3	360190
21K-70-B7110	T1510-03A0	1	360180
21K-70-B7111	T1510-03A0	1	360180
21K-70-B7121	T1510-04A0	1	360190
21K-70-B7130	T1510-01A0	1	360160
21K-70-B7140	T1510-02A0	1	360170
21K-70-B7150	T1200-01A0	1	360090
21K-70-B7151	T1200-01A0	1	360090
21K-920-B230	T1510-05A0	3	360200
21K-920-B230	T1510-06A0	3	360210
21K-920-B240	T1510-05A0	2A	360200
21K-920-B240	T1510-06A0	2A	360210
21K-920-B710	T1510-05A0	1	360200
21K-920-B720	T1510-06A0	1	360210
21K-943-B710	T1200-01A1	1	360100
21K-943-B711	T1200-01A1	1	360100
21K-944-B710	T1200-01A3	1	360110
21K-944-B711	T1200-01A3	1	360110
21K-979-7111	K0700-02A1A	7	210240
21K-979-7111	K0700-02A1B	8	210250
21K-979-7121	K0700-01A1	13	210220

PARTS Nº	FIG. Nº	INDEX	PAGE
21K-979-7131	K0700-02A1A	1	210240
21K-979-7132	K0700-02A1B	1	210250
21K-979-7141	K0700-02A1A	23	210240
21K-979-7142	K0700-02A1B	24	210250
21K-979-7152	K1110-18A0	2	210590
21K-979-7162	K1110-18A0	1	210590
21K-979-7172	K1110-17A0	6	210580
21K-979-7181	K1110-17A0	4	210580
21K-979-7280	K0700-01A1	10	210220
21K-979-7281	K0700-01A1A	2	210230
21K-979-7290	K0700-01A1	14	210220
21K-979-7290	K0700-01A1A	6	210230
21K-979-7341	K1110-32D0	4	210800
21K-979-7350	K1110-32D0	2	210800
21K-979-7361	K1110-33D0	3	210810
21K-979-7371	K1110-33D0	1	210810
21K-979-B720	K0700-01A1	13	210220
21K-979-B720	K0700-01A1A	5	210230
21K-979-B780	K0700-01A1	10	210220
21K-979-B780	K0700-01A1A	2	210230
21K-98-B7110	U0100-01A2	33	390010
21K-98-B7110	U0100-01A3	33	390011
21K-98-B7120	U0100-01A2	34	390010
21K-98-B7120	U0100-01A3	34	390011
21M-62-15440	C0100-05A0	10	060090
21M-62-15440	C0100-05A0	17	060090
21M-62-15440	C0100-05A0	4	060090
21M-62-15440	C0100-05A0A	10	060100
21M-62-15440	C0100-05A0A	17	060100
21M-62-15440	C0100-05A0A	4	060100
21P-06-K2340	K1730-01A0	1	210880
21T-06-11350	M1220-01A0	15	240110
21T-06-71250	K1110-09A0	10	210420
21T-06-71250	K1110-25D0	1	210730
21T-06-71870	K1110-15D0	9	210550
21T-09-11430	H0312-01A0	3	150060
21T-09-11430	H0312-01A0	6	150060
21T-09-11460	H0312-01A0	2	150060
21T-09-11460	H0312-01A0	5	150060
21T-27-71220	K1120-01A0	7	210860
21T-27-71220	K1120-01A0A	8	210870
21T-38-12270	K0350-01A0	2	210210
21T-38-12270	K1110-09A0	12	210420
21T-54-16150	C0100-04A0	12	060070
21T-54-16150	C0100-04A0A	12	060080
21U-98-31150	U0100-01A2	32	390010
21U-98-31160	U0100-01A2	31	390010
21W-06-22120	M1220-01A0	12	240110
21W-06-22130	M1220-01A0	13	240110
21W-62-42490	H0120-01A1	34	150020

PARTS Nº	FIG. Nº	INDEX	PAGE
21W-62-42490	K1110-22A0	16	210670
21W-62-42490	K1110-22A0	4	210670
21W-62-43910	K1110-02A0	33	210290
21W-62-43910	K1110-20D0	29A	210640
21W-973-3420	H0120-01A1	44	150020
21Y-62-11591	H0120-01A1	45	150020
22B-01-11110	B0200-01A0	8	030110
22B-01-11190	B0100-01A0	12	030100
22B-03-12590	C0100-01A0	25	060010
22B-03-12590	C0100-01A0A	25	060020
22B-54-15411	K0210-02A0A	5	210050
22B-54-15411	K1110-02D0	5	210300
22B-54-15421	K0210-02A0A	8	210050
22B-54-15421	K1110-02D0	8	210300
22B-54-15432	K0210-02A0A	40	210050
22B-54-15432	K1110-02D0	32	210300
22B-54-15440	K0210-02A0A	6	210050
22B-54-15440	K1110-02D0	6	210300
22B-54-15450	K0210-02A0A	9	210050
22B-54-15450	K1110-02D0	9	210300
22B-54-15470	K0210-02A0A	7	210050
22B-54-15470	K1110-02D0	7	210300
22B-54-15480	K0210-02A0A	10	210050
22B-54-15480	K1110-02D0	10	210300
22B-54-15580	K0210-03A0	9	210060
22B-54-15580	K1110-03D0	9	210320
22B-54-15621	K0210-02A0A	36	210050
22B-54-15621	K1110-02D0	31	210300
22B-54-15781	K0210-03A0	7	210060
22B-54-15781	K1110-03D0	7	210320
22B-54-15791	K0210-03A0	8	210060
22B-54-15791	K1110-03D0	8	210320
22B-54-15832	K0210-03A0	6	210060
22B-54-15921	K0210-04A0	17	210070
22B-54-15970	K0210-03A0	2	210060
22B-54-15970	K1110-03D0	2	210320
22B-54-15980	K0210-03A0	3	210060
22B-54-15980	K1110-03D0	3	210320
22B-54-15990	K0210-04A0	8	210070
22B-54-15990	K1110-04D0	8	210340
22B-54-15M50	K0210-04A0	2	210070
22B-54-16330	K0210-06A0	10	210090
22B-54-16330	K1110-06D0	10	210370
22B-54-16461	K0210-06A0	12	210090
22B-54-16461	K1110-06D0	12	210370
22B-54-17282	K0210-11A0	2	210140
22B-54-17282	K1110-11D2	1	210470
22B-60-11160	H0110-01A1	29	150010
22U-01-21310	B0000-01A0	1	030010
22U-01-21330	B0100-01A0	2	030100

PARTS Nº	FIG. Nº	INDEX	PAGE
22U-04-21120	D0100-01A0	3	090010
22U-04-21131	D0200-02A1	1	090040
22U-04-21200	D0100-01A0	10	090010
22U-04-21210	D0100-01A0	10	090010
22U-04-21220	D0100-01A0	12	090010
22U-04-21241	D0100-01A0	10	090010
22U-04-21260	D0200-02A1	5	090040
22U-04-21330	D0200-02A1	6	090040
22U-06-11270	E0200-02A0	2	120040
22U-06-11270	E0200-02A0A	2	120050
22U-06-22151	K0210-13A0	3	210160
22U-06-22190	K1110-15A1	11	210540
22U-06-22190	K1110-30D2	11	210780
22U-06-22290	K1110-15A1	12	210540
22U-06-22290	K1110-30D2	12	210780
22U-06-22320	K1110-15A1	5	210540
22U-06-22320	K1110-30D2	5	210780
22U-06-22330	K1110-15A1	2	210540
22U-06-22330	K1110-30D2	2	210780
22U-06-22350	K1110-11A1	12	210460
22U-06-22350	K1110-27D2	12	210750
22U-06-22360	K1110-12A0	14	210480
22U-06-22360	K1110-28D0	23	210760
22U-06-22390	K1110-15A1	13	210540
22U-06-22390	K1110-30D2	13	210780
22U-06-22420	K1110-15A1	7	210540
22U-06-22420	K1110-30D2	7	210780
22U-06-22440	K1110-12A0	23	210480
22U-06-22470	K1110-15A1	8	210540
22U-06-22470	K1110-30D2	8	210780
22U-06-22480	K1110-15A1	10	210540
22U-06-22480	K1110-30D2	10	210780
22U-06-22490	K1110-12A0	13	210480
22U-06-22490	K1110-28D0	22	210760
22U-06-22510	K1110-11A1	8	210460
22U-06-22510	K1110-27D2	8	210750
22U-06-22590	K0210-13A0	15	210160
22U-06-22661	K1110-19D0	13	210620
22U-30-00021	R0300-01A0	1	330040
22U-30-11420	R0200-01A0	3	330030
22U-30-11430	R0200-01A0	7	330030
22U-30-11440	R0200-01A0	9	330030
22U-30-11450	R0200-01A0	2	330030
22U-30-25110	R0300-01A0	1	330040
22U-30-25120	R0300-01A0	2	330040
22U-30-25130	R0300-01A0	3	330040
22U-30-25140	R0300-01A0	4	330040
22U-30-25150	R0300-01A0	5	330040
22U-30-25160	R0300-01A0	6	330040
22U-43-21111	K1110-02A0	16	210290
22U-43-21111	K1110-20D0	16	210640
22U-43-21121	K1110-02A0	17	210290
22U-43-21121	K1110-20D0	17	210640
22U-43-21130	K1110-02A0	20	210290
22U-43-21131	K1110-20D0	18	210640
22U-43-21140	K1110-02A0	21	210290
22U-43-21150	K1110-02A0	11	210290
22U-43-21181	K1110-10A0	2	210440
22U-43-21181	K1110-26D0	2	210740
22U-43-21191	K1110-14A0	2	210520
22U-43-21191	K1110-29D0	2	210770
22U-43-21211	K1110-10A0	5	210440
22U-43-21211	K1110-14A0	5	210520
22U-43-21211	K1110-26D0	5	210740
22U-43-21211	K1110-29D0	5	210770
22U-43-21260	K1110-06A0	15	210360
22U-43-21260	K1110-23D0	11	210690
22U-43-21340	K1110-16A0	23	210560
22U-43-21350	K1110-02A0	9	210290
22U-43-21350	K1110-20D0	9	210640
22U-43-21360	K1110-02A0	10	210290
22U-43-21360	K1110-20D0	10	210640
22U-43-21380	K1110-02A0	19	210290
22U-43-21390	K1110-23D0	12	210690
22U-43-22110	K1110-11A1	15	210460
22U-43-22110	K1110-27D2	19	210750
22U-43-22210	K1110-11A1	5	210460
22U-43-22220	K1110-11A1	6	210460
22U-43-22220	K1110-27D2	6	210750
22U-43-22230	K1110-11A1	7	210460
22U-43-22230	K1110-27D2	7	210750
22U-43-22310	K1110-12A0	1	210480
22U-43-22310	K1110-28D0	1	210760
22U-43-22320	K1110-12A0	2	210480
22U-43-22320	K1110-28D0	2	210760
22U-43-22340	K1110-12A0	6	210480
22U-43-22340	K1110-28D0	6	210760
22U-43-22410	K1110-12A0	15	210480
22U-43-22410	K1110-28D0	24	210760
22U-43-22430	K1110-12A0	18	210480
22U-43-22430	K1110-28D0	28	210760
22U-43-22450	K1110-12A0	20	210480
22U-43-22830	K1110-13A0	2	210500
22U-43-22830	K1110-28D0	30	210760
22U-43-23110	K1110-15A1	1	210540
22U-43-23111	K1110-30D2	1	210780
22U-43-23120	K1110-15A1	3	210540
22U-43-23120	K1110-30D2	3	210780
22U-43-23130	K1110-15A1	4	210540
22U-43-23130	K1110-30D2	4	210780
22U-43-23140	K1110-15A1	6	210540
22U-43-23210	K1110-15A1	24	210540
22U-43-23210	K1110-30D2	27	210780
22U-43-23220	K1110-15A1	27	210540
22U-43-23230	K1110-15A1	28	210540
22U-43-23230	K1110-30D2	31	210780
22U-43-23240	K1110-15A1	29	210540
22U-43-23250	K1110-15A1	30	210540
22U-43-23250	K1110-30D2	33	210780
22U-43-23260	K1110-12A0	24	210480
22U-43-23260	K1110-15A1	31	210540
22U-43-23260	K1110-28D0	25	210760
22U-43-23260	K1110-30D2	34	210780
22U-43-23270	K1110-12A0	21	210480
22U-43-23270	K1110-15A1	32	210540
22U-43-23711	K1110-15A1	38	210540
22U-43-23711	K1110-30D2	39	210780
22U-54-24760	M1810-02A0	2	240170
22U-54-24760	M1810-02A0	5	240170
22U-54-25110	K1110-03A0	1	210310
22U-54-25110	K1110-21D0	1	210660
22U-54-25120	K1110-04A0	1	210330
22U-54-25120	K1110-22D0	1	210680
22U-54-25170	K1110-06A0	25	210360
22U-54-25170	K1110-23D0	20	210690
22U-54-25221	K0210-13A0	11	210160
22U-54-25231	K1740-01A0	1	210890
22U-54-25331	K0180-01A0	11	210020
22U-54-25331	K0180-01A0	16	210020
22U-54-25331	K0180-01A0	22	210020
22U-54-25331	K0210-14A0	7	210170
22U-54-25340	K0210-13A0	12	210160
22U-54-25351	K0210-14A0	11	210170
22U-54-25351	K1740-01A0	4	210890
22U-54-25360	K0180-01A0	19	210020
22U-54-25360	K0210-14A0	2	210170
22U-54-25360	K0210-14A0	4	210170
22U-54-25371	K0210-13A0	13	210160
22U-54-25371	K1110-13D0	10	210510
22U-54-25521	K1110-03A0	2	210310
22U-54-25521	K1110-21D0	2	210660
22U-54-25531	K1110-04A0	2	210330
22U-54-25531	K1110-22D0	2	210680
22U-54-25581	K1110-01A0	4	210270
22U-54-25581	K1110-19D0	4	210620
22U-54-25590	K1110-01A0	5	210270
22U-54-25590	K1110-19D0	5	210620
22U-54-28920	K1110-04D0	17	210340
22U-60-21231	H0110-01A1	22	150010
22U-60-21323	H0110-01A1	22	150010

PARTS Nº	FIG. Nº	INDEX	PAGE
22U-60-21330	H1831-01A0	25	150160
22U-62-21480	H0320-01A0	13	150070
22U-62-21870	N1310-01A0	24	270040
22U-62-24420	N1310-01A0	25	270040
22U-70-27110	T1200-01A0	1A	360090
22U-979-2300	K0210-15A0	1	210180
22U-979-2351	K0210-15A0	2	210180
22U-979-2381	K0210-13A0	14	210160
391-40-13220	K0700-02A1A	44	210240
391-40-13220	K0700-02A1B	48	210250
417-06-B1840	E0100-01A1	1	120010
417-06-B1940	E0100-01A1	1	120010
421-06-23330	T1110-06A0	2	360050
421-07-33870	K1110-13D0	9	210510
421-54-11372	M1220-01A0	4	240110
421-54-11381	M1220-01A0	5	240110
423-01-31150	A211V-01A3	7	030210
560-43-15220	C0100-05A0	5	060090
560-43-15220	C0100-05A0A	5	060100
565-06-13212	B0000-01A0	8	030010
569-06-61960	K1110-07A0	11	210380
569-06-61960	K1110-15A1	35	210540
569-06-61960	K1110-16D0	8	210570
569-06-61960	K1110-30D2	36	210780
575-41-17420	Y1662-10A0	13	450360
575-41-17420	Y1662-40A0	13	450640
600-181-1930	B0200-02A0	7	030120
600-184-1240	B0200-02A0	5	030120
600-184-1250	B0200-02A0	6	030120
600-184-1280	B0200-02A0	4	030120
600-185-2500	B0200-02A0	2	030120
600-185-2510	B0200-02A0	2	030120
600-211-1870	A311P-01A2	3	030380
600-411-1280	K1110-10A0	9	210440
600-411-1280	K1110-14A0	9	210520
600-411-1280	K1110-26D0	9	210740
600-411-1280	K1110-29D0	9	210770
600-625-7550	B0000-05A0	1	030050
600-815-2170	B0000-10A0	1	030091
600-815-2170	E0200-01A0	38	120020
600-815-2170	E0200-01A0A	38	120030
600-815-8941	E0200-01A0	26	120020
600-815-8941	E0200-01A0A	26	120030
600-861-6420	B0000-06A0	1	030060
600-861-6420	B0000-07A0	1	030070
600-863-4210	B0000-08A0	1	030080
600-863-4210	B0000-09A0	1	030090
6110-23-6490	A2219-01B2	13	030250
6130-12-1961	B0000-04A0	2	030040
6130-12-8610	A111P-01B8	10	030030
6130-12-8630	A111P-01B8	8	030030
6130-32-1361	A408P-01B7	9	030500
6131-12-4570	B0000-02A0	8	030020
6131-22-3760	A237P-01A3	3	030290
6136-21-5870	A8124-02A0	2	030660
6141-71-1710	A411P-01A8	23	030510
6144-21-5880	A411P-01A8	7	030510
6144-71-5750	A423V-01A0	1	030550
6144-85-6680	A211V-01A3	8	030210
6162-53-5420	A311P-01A2	5	030380
6162-53-5430	A311P-01A2	4	030380
6162-53-5430	A8124-02A0	2	030660
6162-53-5450	A311P-01A2	2	030380
6162-53-5450	A8124-02A0	2	030660
6162-75-5820	A411P-01A8	11	030510
6202-83-6760	K1110-08A0	18	210400
6202-83-6760	K1110-08A0	43	210400
6204-81-6740	K0700-01A1	25	210220
6205-11-5580	A8124-01A0	1	030650
6206-11-5980	B0000-03A0	2	030030
6207-11-5850	B0000-03A0	6	030030
6207-11-5921	B0000-03A0	4	030030
6211-11-9790	A3110-01A7	3	030390
6211-21-5490	A411P-01A8	14	030510
6215-81-9510	A2019-01A0A	15	030150
6215-81-9510	A2019-01A0A	17	030150
6215-81-9710	A2019-01A0A	16	030150
6215-81-9710	A2019-01A0A	18	030150
6215-81-9710	A408P-01B7	17	030500
6215-81-9710	A8124-02A0	2	030660
6216-74-6190	A504P-01A1	2	030600
6222-11-4910	A131P-01A7	5	030040
6232-71-6112	V0100-01A1	5	420010A
6354-81-6310	A411P-01A8	19	030510
6691-41-8230	A131P-01A7	6	030040
6731-11-1411	A1009-01A0	1	030010
6731-21-1190	A2019-01A0A	11	030150
6731-21-1190	A8124-02A0	2	030660
6731-21-1220	A2019-01A0A	10	030150
6731-21-4120	A221V-01A1	4	030240
6731-21-4220	A8124-02A0	2	030660
6731-21-4240	A2219-01B2	2	030250
6731-21-6231	A2219-01B2	2	030250
6731-21-8610	A2319-01A1		030270
6731-21-8620	A2319-01A1		030270
6731-22-1110	A2019-01A0A	1	030150
6731-22-7140	A2019-01A0A	2	030150
6731-31-2410	A2359-01A3	9	030280
6731-41-4511	A1009-01A0	11	030010
6731-51-5201	A311P-01A2	1	030380
6731-51-5211	A311P-01A2	1	030380
6731-51-5250	A331P-01B1	6	030400
6731-51-5260	A311P-01A2	7	030380
6731-51-5290	A311P-01A2	10	030380
6731-51-5290	A311P-01A2	8	030380
6731-51-5290	A331P-01B1	6	030400
6731-51-5290	A331P-01B1	7	030400
6731-51-5290	A8124-02A0	2	030660
6731-61-1370	A501P-01A3	3	030560
6731-61-6260	A501R-01A0	2	030570
6731-71-6270	A411P-01A8	22	030510
6732-11-1151	A1009-01A0	14	030010
6732-11-1151	A8124-01A0	1	030650
6732-11-1170	A1009-01A0	15	030010
6732-11-1180	A1009-01A0	16	030010
6732-11-1610	A1009-01A0	12	030010
6732-11-1620	A1009-01A0	13	030010
6732-11-1640	A241P-01A1	3	030300
6732-11-1720	A105P-01A0	2	030020
6732-11-1910	A1009-01A0	3	030010
6732-11-1910	A131V-01A1	1	030060
6732-11-1910	A2019-01A0A	14	030150
6732-11-1910	A2219-01B2	9	030250
6732-11-1910	A501S-01A0	1	030580
6732-11-1920	A2019-01A0A	23	030150
6732-11-1930	A1009-01A0	4	030010
6732-11-3850	A4219-01A8	6	030540
6732-11-3850	A8124-01A0	1	030650
6732-11-4160	A131V-01A1	4	030060
6732-11-4530	A131V-01A1	2	030060
6732-11-4811	A131R-01A0	2	030050
6732-11-4811	A8124-01A0	1	030650
6732-11-4812	A131P-01A7	4	030040
6732-11-5230	A153S-01B8	1	030080
6732-11-5420	B0000-03A0	7	030030
6732-11-5722	B0000-03A0	9	030030
6732-11-6130	K0700-02A1A	31	210240
6732-11-6130	K0700-02A1B	35	210250
6732-11-8130	A111P-01B8	2	030030
6732-11-8150	A111P-01B8	6	030030
6732-11-8150	A206P-01A8	2	030170
6732-11-8181	A111P-01B8	4	030030
6732-11-8181	A8124-01A0	1	030650
6732-11-8181	V0100-01A0	1	420010
6732-11-8181	V0100-01A1	2	420010A
6732-11-8210	A111P-01B8	5	030030
6732-11-8210	A206P-01A8	1	030170
6732-11-8210	A8124-01A0	1	030650
6732-11-8210	A8124-02A0	2	030660
6732-11-8210	V0100-01A0	2	420010

PARTS Nº	FIG. Nº	INDEX	PAGE
6732-11-8210	V0100-01A1	3	420010A
6732-11-8620	A8124-02A0	2	030660
6732-18-1151	A8110-01B0	5	030640
6732-19-1151	A8110-01B0	4	030640
6732-21-1210	A2019-01A0A	4	030150
6732-21-1311	A2219-01B2	3	030250
6732-21-1311	A2219-01B2	3	030250
6732-21-1411	A2019-01A0A	5	030150
6732-21-1611	A2019-01A0A	6	030150
6732-21-1810	A2019-01A0A	9	030150
6732-21-1910	A2019-01A0A	12	030150
6732-21-1910	A2019-01A0A	3	030150
6732-21-1930	A2019-01A0A	22	030150
6732-21-1960	A2019-01A0A	15	030150
6732-21-3120	A219P-01A5	5	030230
6732-21-3120	A411S-01B9	8	030520
6732-21-3140	A2049-01A1	5	030160
6732-21-3150	A2049-01A1	6	030160
6732-21-3160	A2049-01A1	10	030160
6732-21-3180	A2049-01A1	8	030160
6732-21-3190	A281P-01A0	1	030350
6732-21-3220	A281P-01A0	2	030350
6732-21-3220	A8124-02A0	2	030660
6732-21-3380	A261P-01A1	1	030330
6732-21-3811	A8124-02A0	2	030660
6732-21-3812	A2049-01A1	2	030160
6732-21-3870	A2049-01A1	7	030160
6732-21-3870	A8124-02A0	2	030660
6732-21-3880	A2049-01A1	9	030160
6732-21-3880	A8124-02A0	2	030660
6732-21-4111	A2219-01B2	6	030250
6732-21-4120	A2219-01B2	10	030250
6732-21-4130	A2219-01B2	8	030250
6732-21-4150	A2219-01B2	11	030250
6732-21-4161	A2219-01B2	12	030250
6732-21-4161	A8124-02A0	2	030660
6732-21-4170	A2219-01B2	4	030250
6732-21-4171	A8124-02A0	2	030660
6732-21-4220	A2219-01B2	7	030250
6732-21-5110	A2119-01B5	5	030220
6732-21-5150	A283P-01A1	1	030360
6732-21-5160	A2219-01B2	15	030250
6732-21-5160	A408P-01B7	15	030500
6732-21-5160	A408P-01B7	2	030500
6732-21-5160	A411P-01A8	4	030510
6732-21-5160	A601T-01B4	3	030620
6732-21-5160	A601T-01B4	8	030620
6732-21-5160	B0000-04A0	3	030040
6732-21-5490	A219P-01A5	3	030230
6732-21-5491	A219P-01A5	3	030230
6732-21-5530	A2019-01A0A	8	030150
6732-21-5530	A219P-01A5	1	030230
6732-21-5591	A219P-01A5	2	030230
6732-21-6120	A2019-01A0A	13	030150
6732-21-6130	A2019-01A0A	20	030150
6732-21-6140	A2019-01A0A	10	030150
6732-21-6150	A2319-01A1	2	030270
6732-21-6160	A2019-01A0A	21	030150
6732-21-6160	A207P-01A0	1	030190
6732-21-6610	A211R-01A4	1	030200
6732-21-6630	A2119-01B5	4	030220
6732-21-6630	A411P-01A8	20	030510
6732-21-7140	A8124-02A0	2	030660
6732-21-9310	A261P-01A1	2	030330
6732-22-3110	A621S-01A7	2	030630
6732-25-8100	A2319-01A1		030270
6732-26-8100	A2319-01A1		030270
6732-27-8100	A2319-01A1		030270
6732-28-8100	A2319-01A1		030270
6732-29-8110	A2319-01A1	4	030270
6732-31-1100	A2319-01A1	1	030270
6732-31-1211	A2319-01A1	3	030270
6732-31-1410	A237P-01A3	2	030290
6732-31-2420	A2359-01A3	7	030280
6732-31-3232	A2359-01A3	2	030280
6732-31-3320	A2359-01A3	3	030280
6732-31-3411	A2359-01A3	4	030280
6732-31-3420	A2359-01A3	5	030280
6732-31-4120	A223P-01B9	3	030260
6732-31-4130	A223P-01B9	4	030260
6732-31-4180	A223P-01B9	1	030260
6732-31-8120	A237P-01A3	1	030290
6732-41-1111	A2419-01A1	1	030320
6732-41-1220	A2419-01A1	4	030320
6732-41-1231	A2419-01A1	2	030320
6732-41-1260	A2419-01A1	5	030320
6732-41-1280	A2419-01A1	3	030320
6732-41-2112	A241R-01A1	1	030310
6732-41-3111	A241P-01A1	1	030300
6732-41-4430	A1009-01A0	10	030010
6732-41-4520	A1009-01A0	7	030010
6732-41-4520	A1009-01A0	9	030010
6732-41-4541	A1009-01A0	5	030010
6732-41-4541	A8124-01A0	1	030650
6732-41-5101	A241P-01A1		030300
6732-41-5160	A241P-01A1	5	030300
6732-41-5170	A241P-01A1	4	030300
6732-41-5180	A241P-01A1	2	030300
6732-41-5200	A241P-01A1		030300
6732-41-5400	A241P-01A1		030300
6732-41-5440	A241P-01A1	11	030300
6732-41-5440	A241P-01A1	7	030300
6732-51-1112	A301P-01A6	2	030370
6732-51-4420	A331P-01B1	5	030400
6732-51-4420	A8124-02A0	2	030660
6732-51-4432	A331P-01B1	8	030400
6732-51-4432	A8124-02A0	2	030660
6732-51-5130	A261P-01A1	3	030330
6732-51-8180	A153T-01B9	6	030090
6732-51-8280	A153T-01B9	9	030090
6732-51-8330	A153T-01B9	4	030090
6732-51-8330	A8124-02A0	2	030660
6732-51-8340	A153T-01B9	1	030090
6732-51-8350	A153T-01B9	3	030090
6732-51-8350	A8124-01A0	1	030650
6732-61-2311	A331P-01B1	10	030400
6732-61-2311	A8124-02A0	2	030660
6732-61-2312	A331P-01B1	10	030400
6732-61-2312	A8124-02A0	2	030660
6732-61-3120	A502P-01D1	1	030590
6732-61-3170	A502P-01D1	8	030590
6732-61-3410	A502P-01D1	4	030590
6732-61-3420	A502P-01D1	3	030590
6732-61-3430	A502P-01D1	6	030590
6732-61-3440	A502P-01D1	2	030590
6732-61-3450	A502P-01D1	1	030590
6732-61-3610	A504P-01A1	1	030600
6732-61-4120	A601S-01F2	1	030610
6732-61-4220	A601S-01F2	4	030610
6732-61-6120	A501R-01A0	1	030570
6732-61-6130	A501R-01A0	3	030570
6732-61-6130	A8124-02A0	2	030660
6732-61-6140	A173P-01B2	1	030120
6732-61-6140	A331P-01B1	11	030400
6732-61-6171	A173P-01B2	10	030120
6732-61-6180	A173P-01B2	2	030120
6732-61-6231	A173P-01B2	4	030120
6732-61-6240	A173P-01B2	6	030120
6732-61-6240	A8124-01A0	1	030650
6732-61-6250	A173P-01B2	5	030120
6732-61-6250	A8124-01A0	1	030650
6732-61-6280	A173P-01B2	7	030120
6732-61-6380	A173P-01B2	9	030120
6732-62-2110	A331P-01B1	9	030400
6732-71-3210	A219P-01A5	6	030230
6732-71-3220	A206P-01A8	14	030170
6732-71-3220	A2119-01B5	3	030220
6732-71-3220	A311P-01A2	14	030380
6732-71-3220	A417P-01A3	1	030530
6732-71-3611	A408P-01B7	3	030500

PARTS Nº	FIG. Nº	INDEX	PAGE
6732-71-3630	A408P-01B7	11	030500
6732-71-3681	A408P-01B7	1	030500
6732-71-5210	A411S-01B9	9	030520
6732-71-5220	A411S-01B9	10	030520
6732-71-5230	A411S-01B9	11	030520
6732-71-5240	A411S-01B9	16	030520
6732-71-5450	A408P-01B7	16	030500
6732-71-5740	A4010-01B0	1	030490
6732-71-5750	A411S-01B9	12	030520
6732-71-5760	A411S-01B9	17	030520
6732-71-6112	A411P-01A8	1	030510
6732-71-6112	V0100-01A0	4	420010
6732-71-6240	A411S-01B9	2	030520
6732-71-6260	A411S-01B9	3	030520
6732-71-6260	A4219-01A8	5	030540
6732-71-6260	A8124-01A0	1	030650
6732-71-6510	A411P-01A8	16	030510
6732-71-6510	A411P-01A8	9	030510
6732-71-6650	A411P-01A8	2	030510
6732-81-3440	V0100-01A0	5	420010
6732-81-3440	V0100-01A1	6	420010A
6732-81-6611	A601T-01B4	1	030620
6732-81-6630	A601T-01B4	2	030620
6732-81-6641	A601T-01B4	1	030620
6732-81-6811	A621S-01A7	1	030630
6732-81-6811	A8124-02A0	2	030660
6732-81-8150	A401R-01B4	3	030480
6732-81-8220	A151R-01A0	1	030070
6732-81-8220	A8124-01A0	1	030650
6732-81-8430	B0000-02A0	1	030020
6732-81-8450	B0000-02A0	6	030020
6732-81-8451	B0000-02A0	6	030020
6732-81-8480	A1570-01E1	1	030110
6732-81-8850	A153T-01B9	7	030090
6732-81-8860	A153T-01B9	11	030090
6732-81-8860	A153T-01B9	8	030090
6732-82-3480	A601S-01F2	2	030610
6733-11-4861	A131V-01A1	3	030060
6733-11-4861	A8124-01A0	1	030650
6733-21-5520	A8124-02A0	2	030660
6733-21-5521	A2119-01B5	2	030220
6733-51-5142	A311P-01A2	13	030380
6733-51-5142	V0100-01A0	3	420010
6733-51-5142	V0100-01A1	4	420010A
6733-71-5680	A211V-01A3	3	030210
6733-81-8910	A401R-01B4	1	030480
6734-11-3610	A4219-01A8	3	030540
6734-11-3620	A4219-01A8	3	030540
6734-11-3630	A4219-01A8	3	030540
6734-11-3640	A4219-01A8	3	030540
6734-11-3650	A4219-01A8	3	030540
6734-11-3660	A4219-01A8	3	030540
6734-11-3670	A4219-01A8	3	030540
6734-11-3680	A4219-01A8	3	030540
6734-11-3690	A4219-01A8	3	030540
6734-11-3710	A4219-01A8	3	030540
6734-11-3720	A4219-01A8	3	030540
6734-11-3730	A4219-01A8	3	030540
6734-11-3740	A4219-01A8	3	030540
6734-11-3750	A4219-01A8	3	030540
6734-11-3760	A4219-01A8	3	030540
6734-11-3770	A4219-01A8	3	030540
6734-11-3780	A4219-01A8	3	030540
6734-11-3790	A4219-01A8	3	030540
6734-11-3810	A4219-01A8	3	030540
6734-11-3820	A4219-01A8	3	030540
6734-11-3830	A4219-01A8	3	030540
6734-11-3840	A4219-01A8	3	030540
6734-11-3850	A4219-01A8	3	030540
6734-11-3860	A4219-01A8	3	030540
6734-11-3870	A4219-01A8	3	030540
6734-11-3880	A4219-01A8	3	030540
6734-11-3890	A4219-01A8	3	030540
6734-11-3910	A4219-01A8	3	030540
6734-11-3920	A4219-01A8	3	030540
6734-11-3930	A4219-01A8	3	030540
6734-21-8610	A3110-01A7	2	030390
6734-71-5520	A411S-01B9	15	030520
6734-71-5520	A411S-01B9	20	030520
6734-71-5610	A211V-01A3	5	030210
6734-71-5720	A411S-01B9	14	030520
6735-11-1910	A173P-01B2	3	030120
6735-11-4150	A153S-01B8	4	030080
6735-11-8120	A111P-01B8	3	030030
6735-21-3511	A2049-01A1	11	030160
6735-21-4191	A2219-01B2	1	030250
6735-21-4191	A8124-02A0	2	030660
6735-21-4250	A2060-01B4	2	030180
6735-21-4250	A2219-01B2	16	030250
6735-21-5530	A2019-01A0A	19	030150
6735-21-6130	A2060-01B4	3	030180
6735-41-5550	A241P-01A1	12	030300
6735-41-5550	A241P-01A1	8	030300
6735-51-1120	A301P-01A6	1	030370
6735-51-5531	A2119-01B5	1	030220
6735-61-1502	A501P-01A3	1	030560
6735-61-2120	A331P-01B1	12	030400
6735-61-2140	A331P-01B1	2	030400
6735-61-2160	A331P-01B1	3	030400
6735-61-2190	A331P-01B1	4	030400
6735-61-2221	A331P-01B1	1	030400
6735-61-3810	A408P-01B7	4	030500
6735-61-6411	A417P-01A3	3	030530
6735-61-6411	A8124-02A0	2	030660
6735-61-6471	A173R-01A0	1	030130
6735-71-3220	A408P-01B7	13	030500
6735-71-5190	A153T-01B9	2	030090
6735-71-5411	A408P-01B7	20	030500
6735-71-5830	A411S-01B9	13	030520
6735-71-5840	A411S-01B9	18	030520
6735-71-5860	A411S-01B9	19	030520
6735-71-6230	A411P-01A8	3	030510
6735-71-6550	A331P-01B1	13	030400
6736-11-1150	A1009-01A0	2	030010
6736-11-1910	A105P-01A0	1	030020
6736-11-3430	A4219-01A8	4	030540
6736-11-3430	A8124-01A0	1	030650
6736-11-5820	A153S-01B8	3	030080
6736-11-5820	A8124-01A0	1	030650
6736-18-1310	A8110-01B0	3	030640
6736-19-1310	A8110-01B0	1	030640
6736-19-1410	A8110-01B0	2	030640
6736-21-1810	A2019-01A0A	2	030150
6736-21-3210	A2049-01A1	14	030160
6736-21-3210	A2049-01A1	3	030160
6736-21-3210	A601T-01B4	4	030620
6736-21-3230	B0000-04A0	4	030040
6736-21-3310	A2049-01A1	12	030160
6736-21-3360	A8124-02A0	2	030660
6736-21-3450	A2049-01A1	13	030160
6736-21-3450	A8124-02A0	2	030660
6736-21-4220	A2219-01B2	3	030250
6736-21-4220	A8124-02A0	2	030660
6736-21-5310	A1570-01E1	2	030110
6736-21-5310	A2049-01A1	15	030160
6736-21-5310	A2049-01A1	4	030160
6736-21-5320	A2119-01B5	6	030220
6736-29-2110	A2019-01A0A	24	030150
6736-36-3400	A2359-01A3	4	030280
6736-37-3400	A2359-01A3	4	030280
6736-38-3400	A2359-01A3	4	030280
6736-39-1140	A2319-01A1	8	030270
6736-39-1221	A2319-01A1	7	030270
6736-39-3400	A2359-01A3	4	030280
6736-41-4110	A1009-01A0	6	030010
6736-41-4210	A1009-01A0	8	030010
6736-41-5110	A241P-01A1		030300
6736-51-8710	A8124-01A0	1	030650
6736-61-1402	A501P-01A3	1	030560
6736-61-1520	A501P-01A3	2	030560

PARTS Nº	FIG. Nº	INDEX	PAGE
6736-61-1520	A8124-02A0	2	030660
6736-61-4120	A601S-01F2	3	030610
6736-71-5530	A411P-01A8	18	030510
6736-71-5540	A411P-01A8	21	030510
6736-71-5811	A417P-01A3	2	030530
6736-81-6170	A408P-01B7	14	030500
6736-81-6170	A408P-01B7	7	030500
6737-11-4480	A131P-01A7	3	030040
6737-11-5540	B0000-03A0	1	030030
6737-11-5580	A1539-01B7	3	030100
6737-11-5850	A1539-01B7	2	030100
6737-11-5860	A1539-01B7	5	030100
6737-11-5870	A1539-01B7	4	030100
6737-11-8110	A111P-01B8	1	030030
6737-11-8710	A111P-01B8	7	030030
6737-21-5710	A219P-01A5	7	030230
6737-21-6100	A206P-01A8	4	030170
6737-21-6180	A206P-01A8	15	030170
6737-21-6180	A8124-02A0	2	030660
6737-21-6620	A206P-01A8	10	030170
6737-21-6650	A206P-01A8	11	030170
6737-21-6650	A8124-02A0	2	030660
6737-31-4200	A223P-01B9	1	030260
6737-32-3110	A2359-01A3	1	030280
6737-51-8750	A153T-01B9	5	030090
6737-51-8760	A153T-01B9	10	030090
6737-51-8770	A153T-01B9	6	030090
6737-51-9810	A311P-01A2	12	030380
6737-51-9910	A311P-01A2	11	030380
6737-61-6270	A173P-01B2	8	030120
6737-71-1211	A401P-01H1	1	030410
6737-71-1211	A401P-02H1	1	030420
6737-71-1211	A401P-03H1	1	030430
6737-71-1211	A401P-04H1	1	030440
6737-71-1211	A401P-05H1	1	030450
6737-71-1211	A401P-06H1	1	030460
6737-71-1211	A401P-07H1	1	030470
6737-71-5510	A411S-01B9	1	030520
6737-71-5580	A411S-01B9	4	030520
6737-71-5630	A411P-01A8	15	030510
6737-71-5640	A411P-01A8	8	030510
6737-81-6580	A601T-01B4	7	030620
6737-81-7401	B0200-01A0	1	030110
6737-81-7401	B0200-02A0	1	030120
6737-81-7410	B0200-02A0	1	030120
6737-81-8021	A1539-01B7	1	030100
6737-81-8410	A1570-01E1	3	030110
6737-81-8510	B0000-02A0	3	030020
6737-K1-1200	A8124-01A0	1	030650
6737-K2-1200	A8124-02A0	2	030660

PARTS Nº	FIG. Nº	INDEX	PAGE
6738-11-3090	A4219-01A8	1	030540
6738-11-3100	A4219-01A8	1	030540
6738-11-3120	A4219-01A8	2	030540
6738-11-4410	A131P-01A7	1	030040
6738-21-3110	A2049-01A1	1	030160
6738-21-3910	B0000-04A0	1	030040
6738-21-5610	A2119-01B5	8	030220
6738-21-5620	A2119-01B5	8	030220
6738-21-5630	A2119-01B5	9	030220
6738-21-5640	A2119-01B5	10	030220
6738-21-6280	A206P-01A8	3	030170
6738-21-6660	A206P-01A8	12	030170
6738-21-6660	A8124-02A0	2	030660
6738-21-6670	A206P-01A8	13	030170
6738-21-6680	A206P-01A8	16	030170
6738-21-7710	A206P-01A8	5	030170
6738-21-7780	A206P-01A8	6	030170
6738-21-7810	A206P-01A8	9	030170
6738-22-4110	A2219-01B2	5	030250
6738-22-5110	A2219-01B2	14	030250
6738-31-2030	A2359-01A3	8	030280
6738-32-2010	A2359-01A3	6	030280
6738-36-3400	A2359-01A3	5	030280
6738-37-3400	A2359-01A3	5	030280
6738-38-3400	A2359-01A3	5	030280
6738-39-3400	A2359-01A3	5	030280
6738-51-5240	A331P-01B1	7	030400
6738-51-5260	A311P-01A2	9	030380
6738-51-9950	A3110-01A7	1	030390
6738-61-3140	A502P-01D1	7	030590
6738-61-3990	A601S-01F2	5	030610
6738-71-3100	A408P-01B7	8	030500
6738-71-3120	A408P-01B7	6	030500
6738-71-5590	A411P-01A8	18	030510
6738-71-6710	A411P-01A8	5	030510
6738-81-8220	A401R-01B4	2	030480
6738-82-5810	A211V-01A3	6	030210
6738-91-1510	A267P-01A1	1	030340
6741-81-9220	A211V-01A3	1	030210
6742-01-2630	A411P-01A8	12	030510
6742-01-2660	A411P-01A8	13	030510
6742-01-3780	A211V-01A3	9	030210
6742-01-4460	A411P-01A8	6	030510
6742-01-5158	A2219-01B2	17	030250
6742-11-4360	A401R-01B4	4	030480
6743-82-4110	A131R-01A0	1	030050
6743-82-4110	A131R-01A0	1	030050
6751-51-8180	A153T-01B9	9	030090
6754-11-4120	A131R-01A0	2	030050
6754-21-6170	A2060-01B4	1	030180

PARTS Nº	FIG. Nº	INDEX	PAGE
6754-31-3110	A2359-01A3	1	030280
6754-31-3110	A2359-01A3		030280
6754-31-3111	A2359-01A3	1	030280
6754-81-5110	A131R-01A0	1	030050
6754-81-6110	A601T-01B4	1	030620
6754-81-6120	A601T-01B4	1	030620
700-13-31161	Y1662-19A0	20	450450
700-13-31161	Y1662-49A0	20	450730
700-13-31161	Y1662-50A0	21	450740
700-22-11410	Y1662-14A0	2	450400
700-22-11410	Y1662-44A0	2	450680
700-22-11410	Y1670-02A0	18	450860
700-22-11410	Y1670-02A1	18	450870
700-80-64220	Y1662-14A0	3	450400
700-80-64220	Y1662-44A0	3	450680
700-93-11320	Y1641-01A0	17	450240
700-93-11320	Y1662-24A0	19	450500
700-93-11320	Y1662-55A0	19	450790
701-20-61230	H0120-01A1	29	150020
702-16-01230	Y1670-21A0	1	450900
702-16-03530	K1110-10A0	12	210440
702-16-03530	K1110-14A0	12	210520
702-16-03530	Y1670-11A0	1	450880
702-16-03730	K1110-02A0	1	210290
702-16-03730	Y1670-01A0	1	450840
702-16-03730	Y1670-02A0	1	450860
702-16-03910	K1110-26D0	12	210740
702-16-03910	K1110-29D0	12	210770
702-16-03910	Y1670-11A1	1	450890
702-16-04250	K1110-20D0	1	210640
702-16-04250	Y1670-01A1	1	450850
702-16-04250	Y1670-02A1	1	450870
702-16-51140	Y1670-01A0	3	450840
702-16-51140	Y1670-01A1	3	450850
702-16-51140	Y1670-11A0	5	450880
702-16-51140	Y1670-11A1	5	450890
702-16-51140	Y1670-21A0	3	450900
702-16-51240	Y1670-11A0	17	450880
702-16-51240	Y1670-11A1	17	450890
702-16-51270	Y1670-01A0	8	450840
702-16-51270	Y1670-21A0	8	450900
702-16-53140	Y1670-01A0	5	450840
702-16-53140	Y1670-01A1	5	450850
702-16-53140	Y1670-11A0	7	450880
702-16-53140	Y1670-11A1	7	450890
702-16-53170	Y1670-01A0	7	450840
702-16-53170	Y1670-01A1	7	450850
702-16-53170	Y1670-11A0	10	450880
702-16-53170	Y1670-11A1	10	450890
702-16-53170	Y1670-21A0	7	450900

PARTS Nº	FIG. Nº	INDEX	PAGE
702-16-53420	Y1670-01A0	4	450840
702-16-53420	Y1670-01A1	4	450850
702-16-53420	Y1670-11A0	6	450880
702-16-53420	Y1670-11A1	6	450890
702-16-53470	Y1670-11A0	8	450880
702-16-53470	Y1670-11A1	8	450890
702-16-53590	Y1670-11A0	9	450880
702-16-53590	Y1670-11A1	9	450890
702-16-53920	Y1662-25A0	7	450510
702-16-53920	Y1662-56A0	7	450800
702-16-54170	Y1670-01A0	10	450840
702-16-54280	Y1670-01A0	21	450840
702-16-54311	Y1670-01A0	11	450840
702-16-54331	Y1670-01A1	17	450850
702-16-54341	Y1670-01A1	17	450850
702-16-54351	Y1670-01A1	17	450850
702-16-54420	Y1670-01A1	6	450850
702-16-54430	Y1670-01A0	19	450840
702-16-54430	Y1670-01A1	19	450850
702-16-54511	Y1670-01A0	24	450840
702-16-54520	Y1670-01A0	26	450840
702-16-54550	Y1670-21A0	4	450900
702-16-54560	Y1670-21A0	6	450900
702-16-54571	Y1670-21A0	5	450900
702-16-54580	Y1670-21A0	9	450900
702-16-54590	Y1670-21A0	10	450900
702-16-54641	Y1670-21A0	14	450900
702-16-54650	Y1670-21A0	17	450900
702-16-54660	Y1670-21A0	16	450900
702-16-54670	Y1670-21A0	3	450900
702-16-54900	Y1670-01A0	22	450840
702-16-55260	Y1600-09A0	4	450180
702-16-55940	Y1670-02A0	6	450860
702-16-55940	Y1670-02A1	6	450870
702-16-55950	Y1670-02A0	7	450860
702-16-55950	Y1670-02A1	7	450870
702-16-57210	Y1670-01A0	6	450840
702-16-57440	Y1670-02A0	11	450860
702-16-57440	Y1670-02A1	11	450870
702-16-57450	Y1670-02A0	12	450860
702-16-57450	Y1670-02A1	12	450870
702-16-71131	Y1670-11A0	14	450880
702-16-71131	Y1670-11A1	14	450890
702-16-71141	Y1670-11A0	15	450880
702-16-71141	Y1670-11A1	15	450890
702-16-71150	Y1670-01A1	8	450850
702-16-71150	Y1670-11A0	11	450880
702-16-71160	Y1670-01A1	9	450850
702-16-71160	Y1670-11A0	12	450880
702-16-71160	Y1670-11A1	12	450890

PARTS Nº	FIG. Nº	INDEX	PAGE
702-16-71210	Y1670-11A1	11	450890
702-16-71280	Y1670-11A0	13	450880
702-16-71280	Y1670-11A1	13	450890
702-16-71361	Y1670-11A0	18	450880
702-16-71361	Y1670-11A1	18	450890
702-16-71441	Y1670-11A0	19	450880
702-16-71441	Y1670-11A1	19	450890
702-16-73610	Y1670-01A1	21	450850
702-16-73630	Y1670-01A1	10	450850
702-16-73650	Y1670-01A1	23	450850
702-21-35130	Y1662-19A0	3	450450
702-21-35130	Y1662-49A0	3	450730
702-21-35130	Y1662-50A0	3	450740
702-21-53120	Y1662-24A0	13	450500
702-21-53120	Y1662-55A0	13	450790
702-21-55420	Y1662-24A0	14	450500
702-21-55420	Y1662-55A0	14	450790
702-21-55440	Y1662-24A0	16	450500
702-21-55440	Y1662-55A0	16	450790
702-21-55450	Y1662-03A0	13	450290
702-21-55450	Y1662-26A0	13	450520
702-21-55450	Y1662-33A0	13	450570
702-21-55450	Y1662-57A0	13	450810
702-21-55520	Y1662-24A0	15	450500
702-21-55520	Y1662-55A0	15	450790
702-21-55620	Y1662-01A0	9	450270
702-21-55620	Y1662-08A0	8	450340
702-21-55620	Y1662-25A0	4	450510
702-21-55620	Y1662-31A0	9	450550
702-21-55620	Y1662-38A0	8	450620
702-21-55620	Y1662-56A0	4	450800
702-21-55640	Y1662-25A0	3	450510
702-21-55640	Y1662-56A0	3	450800
702-21-55701	Y1600-09A0	3	450180
702-21-55710	Y1662-25A0	11	450510
702-21-55710	Y1662-56A0	11	450800
702-21-55720	Y1662-25A0	10	450510
702-21-55720	Y1662-56A0	10	450800
702-21-55920	Y1600-09A0	5	450180
702-21-55930	Y1600-09A0	6	450180
702-21-55951	Y1600-09A0	8	450180
702-21-56600	Y1600-09A0	5	450180
702-21-56610	Y1600-09A0	7	450180
702-21-57500	Y1600-09A0	3	450180
702-73-02190	Y1641-03A0	1	450260
702-75-11520	Y1662-02A0	7	450280
702-75-11520	Y1662-08A0	13	450340
702-75-11520	Y1662-26A0	5	450520
702-75-11520	Y1662-32A0	7	450560
702-75-11520	Y1662-38A0	13	450620

PARTS Nº	FIG. Nº	INDEX	PAGE
702-75-11520	Y1662-57A0	5	450810
703-08-33630	N1310-01A0	1	270040
703-08-33630	Y1627-01A0A	1	450230
703-08-33631	N1310-01A0	1	270040
703-08-93170	Y1627-01A0A	10	450230
703-08-93770	Y1627-01A0A	4	450230
703-08-94510	Y1627-01A0A	8	450230
703-08-95620	Y1627-01A0A	2	450230
703-08-95770	Y1627-01A0A	7	450230
703-13-98930	Y1627-01A0A	6	450230
705-17-04980	Y1620-41A0	16	450210
705-17-04980	Y1620-41A1	16	450220
706-7G-11291	Y1641-02A0	5	450250
707-01-0E490	Y1620-01A0	1	450190
707-01-0E510	Y1620-11A0	1	450200
707-01-0E511	Y1620-11A0	1	450200
707-01-0E520	Y1620-41A0	1	450210
707-01-0E520	Y1620-41A1	1	450220
707-01-0E521	Y1620-41A0	1	450210
707-01-0E521	Y1620-41A1	1	450220
707-01-XE490	T1120-01A0	1	360060
707-01-XE490	Y1620-01A0	G-1	450190
707-01-XE500	T1120-01A0	2	360060
707-01-XE500	Y1620-01A0	G-2	450190
707-01-XE510	T1140-01A0	1	360080
707-01-XE510	Y1620-11A0	G-1	450200
707-01-XE511	T1140-01A0	1	360080
707-01-XE511	Y1620-11A0	G-1	450200
707-01-XE670	T1200-01A0	22	360090
707-01-XE670	T1200-01A1	22	360100
707-01-XE670	T1200-01A3	22	360110
707-01-XE670	Y1620-41A0	G-1	450210
707-01-XE670	Y1620-41A1	G-1	450220
707-01-XE671	T1200-01A0	22	360090
707-01-XE671	T1200-01A1	22	360100
707-01-XE671	T1200-01A3	22	360110
707-01-XE671	Y1620-41A0	G-1	450210
707-01-XE671	Y1620-41A1	G-1	450220
707-13-10530	Y1620-41A0	1	450210
707-13-10530	Y1620-41A1	1	450220
707-13-11160	Y1620-01A0	1	450190
707-13-12340	Y1620-11A0	1	450200
707-27-10971	Y1620-41A0	7	450210
707-27-10971	Y1620-41A1	7	450220
707-27-11720	Y1620-01A0	8	450190
707-27-12921	Y1620-11A0	5	450200
707-34-60030	Y1620-41A0	22	450210
707-34-60030	Y1620-41A1	22	450220
707-35-90360	Y1620-01A0	24	450190
707-35-90730	Y1620-41A0	21	450210

PARTS Nº	FIG. Nº	INDEX	PAGE
707-35-90730	Y1620-41A1	21	450220
707-35-90930	Y1620-11A0	21	450200
707-35-91060	Y1620-41A0	13	450210
707-35-91060	Y1620-41A1	13	450220
707-35-91130	Y1620-01A0	14	450190
707-35-91130	Y1620-01A0	27	450190
707-35-91220	Y1620-11A0	11	450200
707-35-91220	Y1620-11A0	26	450200
707-36-10750	Y1620-41A0	17	450210
707-36-10750	Y1620-41A1	17	450220
707-36-12851	Y1620-11A0	15	450200
707-39-10550	Y1620-41A0	19	450210
707-39-10550	Y1620-41A1	19	450220
707-39-11150	Y1620-01A0	20	450190
707-39-12140	Y1620-11A0	17	450200
707-44-10280	Y1620-41A0	18	450210
707-44-10280	Y1620-41A1	18	450220
707-44-10911	Y1620-41A0	20	450210
707-44-10911	Y1620-41A1	20	450220
707-44-11180	Y1620-01A0	19	450190
707-44-11911	Y1620-01A0	21	450190
707-44-12180	Y1620-11A0	16	450200
707-44-12911	Y1620-11A0	18	450200
707-51-70030	Y1620-41A0	11	450210
707-51-70030	Y1620-41A1	11	450220
707-51-70640	Y1620-41A0	14	450210
707-51-70640	Y1620-41A1	14	450220
707-51-75030	Y1620-01A0	12	450190
707-51-75640	Y1620-01A0	15	450190
707-51-85030	Y1620-11A0	9	450200
707-51-85640	Y1620-11A0	12	450200
707-52-90470	Y1620-41A0	10	450210
707-52-90470	Y1620-41A1	10	450220
707-52-90500	Y1620-01A0	11	450190
707-52-90610	Y1620-11A0	8	450200
707-56-70540	R0110-02A0A	13	330020
707-56-85510	Y1620-11A0	7	450200
707-58-75650	Y1620-01A0	5	450190
707-58-85310	Y1620-11A0	4	450200
707-71-34400	Y1620-01A0	26	450190
707-71-34640	Y1620-11A0	25	450200
707-71-70810	Y1620-01A0	22	450190
707-71-70820	Y1620-11A0	19	450200
707-71-80230	Y1620-11A0	23	450200
707-71-91270	Y1620-11A0	29	450200
707-76-80431	Y1620-11A0	2	450200
707-76-80470	Y1620-11A0	2	450200
707-83-13010	Y1620-11A0	29A	450200
707-86-47390	Y1620-41A0	26	450210
707-86-47390	Y1620-41A1	26	450220
707-86-47400	Y1620-01A0	29	450190
707-86-47410	Y1620-01A0	29	450190
707-86-66770	Y1620-11A0	30	450200
707-86-66780	Y1620-01A0	30	450190
707-86-66790	Y1620-01A0	30	450190
707-87-14070	Y1620-11A0	29C	450200
707-87-24100	Y1620-41A0	27	450210
707-87-24100	Y1620-41A1	27	450220
707-88-21620	Y1620-11A0	35	450200
707-88-21630	Y1620-11A0	37	450200
707-88-21640	Y1620-01A0	38	450190
707-88-21650	Y1620-41A0	34	450210
707-88-21650	Y1620-41A1	34	450220
707-88-22910	Y1620-01A0	37	450190
707-88-22920	Y1620-01A0	37	450190
707-88-22930	Y1620-11A0	34	450200
707-88-22940	Y1620-41A0	33	450210
707-88-22940	Y1620-41A1	33	450220
707-88-22970	Y1620-11A0	36	450200
707-99-37290	Y1620-41A0	K	450210
707-99-37290	Y1620-41A1	K	450220
707-99-37380	Y1620-41A1	K	450220
707-99-38720	Y1620-01A0	K	450190
707-99-46320	Y1620-11A0	K	450200
708-18-13230	Y1600-05A0	3	450140
708-1F-12270	Y1600-04A0	4	450130
708-1L-29340	Y1600-01A0	5	450100
708-1L-29340	Y1600-02A0	8	450110
708-21-12541	Y1662-08A0	10	450340
708-21-12541	Y1662-38A0	10	450620
708-25-19160	Y1662-13A0	8	450390
708-25-19160	Y1662-43A0	8	450670
708-2G-03430	Y1600-07A0	1	450160
708-2G-03520	Y1600-06A0	2	450150
708-2G-05010	Y1600-04A0	3	450130
708-2G-12151	Y1600-02A0	4	450110
708-2G-12220	Y1600-04A0	5	450130
708-2G-12251	Y1600-04A0	2	450130
708-2G-13131	Y1600-05A0	5	450140
708-2G-13141	Y1600-05A0	7	450140
708-2G-13510	Y1600-05A0	8	450140
708-2G-14120	Y1600-06A0	1	450150
708-2G-14170	Y1600-07A0	5	450160
708-2G-14190	Y1600-06A0	24	450150
708-2G-14310	Y1600-07A0	1	450160
708-2G-14340	Y1600-06A0	16	450150
708-2G-15140	Y1600-06A0	11	450150
708-2G-15151	Y1600-06A0	14	450150
708-2G-15230	Y1600-06A0	18	450150
708-2G-15230	Y1600-07A0	3	450160
708-2G-15240	Y1600-06A0	20	450150
708-2G-15260	Y1600-06A0	19	450150
708-2G-15270	Y1600-06A0	12	450150
708-2G-15290	Y1600-06A0	10	450150
708-2G-15310	Y1600-06A0	23	450150
708-2G-15310	Y1600-07A0	7	450160
708-2G-15320	Y1600-06A0	3	450150
708-2G-15330	Y1600-06A0	27	450150
708-2G-15420	Y1600-08A0	6	450170
708-2H-15531	Y1600-09A0	13	450180
708-2H-23360	Y1600-05A0	9	450140
708-2L-06751	Y1600-08A0	1	450170
708-2L-24680	Y1600-08A0	2	450170
708-2L-25480	Y1600-02A0	7	450110
708-2L-25490	Y1662-20A0	9	450460
708-2L-25490	Y1662-51A0	9	450750
708-2L-28540	Y1600-08A0	4	450170
708-2L-33350	Y1641-02A0	16	450250
708-2L-35170	Y1600-06A0	8	450150
708-2L-35311	Y1600-08A0	1	450170
708-2L-35331	Y1600-08A0	6	450170
708-2L-35341	Y1600-08A0	8	450170
708-2L-35351	Y1600-08A0	9	450170
708-2L-35360	Y1600-08A0	5	450170
708-2L-35410	Y1600-08A0	7	450170
708-2L-35530	Y1600-09A0	1	450180
708-2L-35540	Y1600-06A0	26	450150
708-2L-35540	Y1600-07A0	4	450160
708-2L-35550	Y1600-08A0	3	450170
708-2L-35690	Y1600-06A0	7	450150
708-2L-35760	Y1600-06A0	5	450150
708-2L-35770	Y1600-06A0	6	450150
708-3D-11630	Y1600-07A0	10	450160
708-3M-00011	B0000-01A0	10	030010
708-3M-00011	Y1600-01A0	1	450100
708-3M-00011	Y1600-02A0	1	450110
708-3M-00011	Y1600-03A0	1	450120
708-3M-00011	Y1600-04A0	1	450130
708-3M-00011	Y1600-05A0	1	450140
708-3M-00011	Y1600-06A0	1	450150
708-3M-00011	Y1600-07A0	1	450160
708-3M-00020	B0000-01A0	10	030010
708-3M-00020	Y1600-01A0	1	450100
708-3M-00020	Y1600-02A0	1	450110
708-3M-00020	Y1600-03A0	1	450120
708-3M-00020	Y1600-04A0	1	450130
708-3M-00020	Y1600-05A0	1	450140
708-3M-00020	Y1600-06A0	1	450150
708-3M-00020	Y1600-07A0	1	450160
708-3M-00020	Y1600-08A0	1	450170
708-3M-00020	Y1600-09A0	1	450180
708-3M-01012	Y1600-01A0	1	450100
708-3M-01012	Y1600-02A0	1	450110
708-3M-01012	Y1600-03A0	1	450120
708-3M-01012	Y1600-04A0	1	450130
708-3M-01012	Y1600-05A0	1	450140
708-3M-01012	Y1600-06A0	1	450150
708-3M-01012	Y1600-07A0	1	450160
708-3M-01015	Y1600-01A0	1	450100
708-3M-01015	Y1600-02A0	1	450110
708-3M-01015	Y1600-03A0	1	450120
708-3M-01015	Y1600-04A0	1	450130
708-3M-01015	Y1600-05A0	1	450140
708-3M-01015	Y1600-06A0	1	450150
708-3M-01015	Y1600-07A0	1	450160
708-3M-03012	Y1600-06A0	2	450150
708-3M-03620	Y1600-08A0	1	450170
708-3M-04113	Y1600-01A0	1	450100
708-3M-04115	Y1600-01A0	1	450100
708-3M-04160	Y1600-05A0	12	450140
708-3M-04213	Y1600-02A0	1	450110
708-3M-04311	Y1600-05A0	1	450140
708-3M-05110	Y1600-02A0	11	450110
708-3M-05210	Y1600-03A0	1	450120
708-3M-11611	Y1600-07A0	9	450160
708-3M-11713	Y1600-07A0	12	450160
708-3M-12111	Y1600-04A0	1	450130
708-3M-12280	Y1600-04A0	5	450130
708-3M-13150	Y1600-05A0	6	450140
708-3M-13310	Y1600-05A0	11	450140
708-3M-13311	Y1600-05A0	11	450140
708-3M-13341	Y1600-05A0	10	450140
708-3M-13342	Y1600-05A0	10	450140
708-3M-15211	Y1600-03A0	10	450120
708-3M-15610	Y1600-06A0	15	450150
708-3M-15620	Y1600-06A0	13	450150
708-3M-15630	Y1600-06A0	4	450150
708-3M-15670	Y1600-06A0	9	450150
708-3M-15720	Y1600-09A0	13	450180
708-3S-15820	Y1600-03A0	13	450120
708-7L-05010	Y1641-02A0	4	450250
708-7L-12140	Y1641-02A0	3	450250
708-7L-13140	Y1641-02A0	12	450250
708-8E-16150	Y1600-01A0	3	450100
708-8E-16150	Y1600-03A0	14	450120
708-8E-16160	Y1662-01A0	7	450270
708-8E-16160	Y1662-08A0	6	450340
708-8E-16160	Y1662-24A0	10	450500
708-8E-16160	Y1662-31A0	7	450550
708-8E-16160	Y1662-38A0	6	450620
708-8E-16160	Y1662-55A0	10	450790
708-8E-16180	Y1641-01A0	24	450240
708-8F-00230	P1210-01A0	1	300020
708-8F-00230	Y1641-01A0	1	450240
708-8F-00230	Y1641-02A0	1	450250
708-8F-00230	Y1641-03A0	1	450260
708-8F-04251	Y1641-01A0	3	450240
708-8F-04671	Y1641-01A0	1	450240
708-8F-12151	Y1641-02A0	2	450250
708-8F-12230	Y1641-02A0	6	450250
708-8F-31210	Y1641-01A0	32	450240
708-8F-31610	Y1641-01A0	29	450240
708-8F-31650	Y1641-01A0	25	450240
708-8F-32121	Y1641-02A0	1	450250
708-8F-33160	Y1641-02A0	13	450250
708-8F-33310	Y1641-02A0	17	450250
708-8F-33350	Y1641-02A0	15	450250
708-8F-33360	Y1641-02A0	11	450250
708-8F-33490	Y1641-02A0	18	450250
708-8F-33710	Y1641-02A0	19	450250
708-8F-34110	Y1641-01A0	22	450240
708-8F-34120	Y1641-01A0	20	450240
708-8F-34141	Y1641-02A0	20	450250
708-8F-34220	Y1641-01A0	8	450240
708-8F-34240	Y1641-02A0	21	450250
708-8F-34250	Y1641-02A0	22	450250
708-8F-35110	Y1641-02A0	23	450250
708-8F-35120	Y1641-02A0	25	450250
708-8F-35130	Y1641-02A0	24	450250
708-8F-35140	Y1641-02A0	26	450250
708-8F-35150	Y1641-02A0	31	450250
708-8F-35160	Y1641-02A0	27	450250
708-8F-35170	Y1641-02A0	28	450250
708-8F-35180	Y1641-02A0	29	450250
708-8F-35190	Y1641-02A0	30	450250
708-8F-36311	Y1641-01A0	15	450240
708-8F-36611	Y1641-01A0	12	450240
708-8H-11530	Y1641-01A0	9	450240
708-8H-32160	Y1600-04A0	6	450130
708-8H-36121	Y1641-01A0	14	450240
709-25-11361	Y1662-08A0	2	450340
709-25-11361	Y1662-38A0	2	450620
709-25-11390	Y1662-17A0	2	450430
709-25-11390	Y1662-18A0	2	450440
709-25-11390	Y1662-47A0	2	450710
709-25-11390	Y1662-48A0	2	450720
709-30-61130	Y1662-03A0	12	450290
709-30-61130	Y1662-33A0	12	450570
709-70-91420	Y1662-05A0	6	450310
709-70-91420	Y1662-35A0	6	450590
709-90-74200	Y1662-15A0	1	450410
709-90-74200	Y1662-45A0	1	450690
721-36-11020	Y1620-01A0	18	450190
721-58-70160	Y1620-41A0	4	450210
721-58-70160	Y1620-41A1	4	450220
722-10-91130	Y1641-01A0	21	450240
722-12-15160	Y1662-06A0	6	450320
722-12-15160	Y1662-36A0	6	450600
722-12-18240	Y1600-09A0	12	450180
723-11-14250	Y1662-06A0	4	450320
723-11-14250	Y1662-36A0	4	450600
723-11-15110	Y1670-02A0	13	450860
723-11-15110	Y1670-02A1	13	450870
723-11-18180	Y1662-21A0	5	450470
723-11-18180	Y1662-22A0	3	450480
723-11-18180	Y1662-52A0	5	450760
723-11-18180	Y1662-53A0	3	450770
723-11-18190	Y1662-20A0	6	450460
723-11-18190	Y1662-51A0	6	450750
723-11-18430	Y1662-06A0	10	450320
723-11-18430	Y1662-36A0	10	450600
723-11-27280	Y1662-24A0	8	450500
723-11-27280	Y1662-55A0	8	450790
723-11-27830	Y1662-21A0	3	450470
723-11-27830	Y1662-52A0	3	450760
723-11-27850	Y1662-21A0	7	450470
723-11-27850	Y1662-22A0	4	450480
723-11-27850	Y1662-52A0	7	450760
723-11-27850	Y1662-53A0	4	450770
723-20-80100	Y1662-17A0	3	450430
723-20-80100	Y1662-47A0	3	450710
723-20-94100	Y1662-23A0	1	450490
723-20-94100	Y1662-54A0	1	450780
723-20-94130	Y1662-23A0	4	450490
723-20-94130	Y1662-54A0	4	450780
723-20-94140	Y1662-23A0	6	450490
723-20-94140	Y1662-54A0	6	450780
723-20-94150	Y1662-23A0	3	450490
723-20-94150	Y1662-54A0	3	450780
723-20-95100	Y1662-22A0	1	450480
723-20-95100	Y1662-53A0	1	450770
723-20-95140	Y1662-21A0	6	450470
723-20-95140	Y1662-22A0	6	450480
723-20-95140	Y1662-52A0	6	450760
723-20-95140	Y1662-53A0	6	450770
723-20-95200	Y1662-21A0	1	450470
723-20-95200	Y1662-52A0	1	450760
723-26-14140	Y1662-11A0	10	450370

PARTS Nº	FIG. Nº	INDEX	PAGE
723-26-14140	Y1662-41A0	10	450650
723-26-14520	Y1662-10A0	7	450360
723-26-14520	Y1662-40A0	7	450640
723-26-14530	Y1662-10A0	8	450360
723-26-14530	Y1662-40A0	8	450640
723-26-14540	Y1662-10A0	9	450360
723-26-14540	Y1662-40A0	9	450640
723-26-15121	Y1662-10A0	5	450360
723-26-15121	Y1662-40A0	5	450640
723-26-15170	Y1662-12A0	2	450380
723-26-15170	Y1662-42A0	2	450660
723-26-15190	Y1662-01A0	2	450270
723-26-15190	Y1662-31A0	2	450550
723-26-15230	Y1662-04A0	13	450300
723-26-15230	Y1662-11A0	11	450370
723-26-15230	Y1662-27A0	3	450530
723-26-15230	Y1662-34A0	15	450580
723-26-15230	Y1662-41A0	11	450650
723-26-15230	Y1662-58A0	3	450820
723-26-15580	Y1662-08A0	3	450340
723-26-15580	Y1662-38A0	3	450620
723-26-15830	Y1662-09A0	5	450350
723-26-15830	Y1662-39A0	5	450630
723-26-15840	Y1662-09A0	6	450350
723-26-15840	Y1662-12A0	16	450380
723-26-15840	Y1662-39A0	6	450630
723-26-15840	Y1662-42A0	16	450660
723-26-15890	Y1662-11A0	12	450370
723-26-15890	Y1662-41A0	12	450650
723-26-15991	Y1662-12A0	11	450380
723-26-15991	Y1662-42A0	11	450660
723-26-16460	Y1662-08A0	15	450340
723-26-16460	Y1662-38A0	15	450620
723-26-16670	Y1662-11A0	5	450370
723-26-16670	Y1662-41A0	5	450650
723-26-16710	Y1662-10A0	11	450360
723-26-16710	Y1662-40A0	11	450640
723-26-16720	Y1662-10A0	12	450360
723-26-16720	Y1662-40A0	12	450640
723-26-16730	Y1662-10A0	10	450360
723-26-16730	Y1662-40A0	10	450640
723-26-16740	Y1662-10A0	6	450360
723-26-16740	Y1662-40A0	6	450640
723-30-51130	Y1662-50A0	4	450740
723-36-14110	Y1662-02A0	21	450280
723-36-14110	Y1662-26A0	11	450520
723-36-14110	Y1662-32A0	22	450560
723-36-14110	Y1662-57A0	11	450810
723-36-14120	Y1662-02A0	22	450280
723-36-14120	Y1662-32A0	23	450560
723-36-14130	Y1662-02A0	23	450280
723-36-14130	Y1662-32A0	24	450560
723-36-15240	Y1662-07A0	14	450330
723-36-15240	Y1662-37A0	14	450610
723-36-15250	Y1662-07A0	16	450330
723-36-15250	Y1662-37A0	16	450610
723-36-15450	Y1662-03A0	6	450290
723-36-15450	Y1662-33A0	6	450570
723-40-85100	Y1662-17A0	1	450430
723-40-85100	Y1662-47A0	1	450710
723-40-91600	Y1662-25A0	6	450510
723-40-91600	Y1662-56A0	6	450800
723-40-92303	Y1662-14A0	1	450400
723-40-92303	Y1662-44A0	1	450680
723-50-11140	Y1662-13A0	1	450390
723-50-11140	Y1662-43A0	1	450670
723-50-42103	Y1662-27A0	7	450530
723-50-42103	Y1662-58A0	7	450820
723-50-53200	Y1662-19A0	1	450450
723-50-53200	Y1662-49A0	1	450730
723-50-53260	Y1662-19A0	15	450450
723-50-53260	Y1662-49A0	15	450730
723-50-53260	Y1662-50A0	16	450740
723-50-53270	Y1662-19A0	14	450450
723-50-53270	Y1662-49A0	14	450730
723-50-53270	Y1662-50A0	15	450740
723-50-53300	Y1662-50A0	1	450740
723-50-53330	Y1662-19A0	4	450450
723-50-53330	Y1662-49A0	4	450730
723-50-53350	Y1662-19A0	13	450450
723-50-53350	Y1662-49A0	13	450730
723-50-53350	Y1662-50A0	14	450740
723-50-53380	Y1662-50A0	5	450740
723-50-54200	Y1662-20A0	1	450460
723-50-54200	Y1662-51A0	1	450750
723-50-56100	Y1662-07A0	1	450330
723-50-56100	Y1662-37A0	1	450610
723-50-60200	Y1662-18A0	1	450440
723-50-60200	Y1662-48A0	1	450720
723-50-61100	Y1662-24A0	1	450500
723-50-61100	Y1662-55A0	1	450790
723-50-61330	Y1662-24A0	4	450500
723-50-61330	Y1662-55A0	4	450790
723-50-61340	Y1662-24A0	3	450500
723-50-61340	Y1662-55A0	3	450790
723-50-61350	Y1662-24A0	5	450500
723-50-61350	Y1662-55A0	5	450790
723-50-62100	Y1662-25A0	1	450510
723-50-62100	Y1662-56A0	1	450800
723-51-03200	Y1662-26A0	1	450520
723-51-03200	Y1662-27A0	1	450530
723-51-03200	Y1662-28A0	1	450540
723-51-03200	Y1662-57A0	1	450810
723-51-03200	Y1662-58A0	1	450820
723-51-03200	Y1662-59A0	1	450830
723-56-31130	Y1662-26A0	8	450520
723-56-31130	Y1662-57A0	8	450810
723-56-31211	Y1662-02A0	19	450280
723-56-31211	Y1662-26A0	10	450520
723-56-31211	Y1662-32A0	19	450560
723-56-31211	Y1662-57A0	10	450810
723-56-31221	Y1662-02A0	20	450280
723-56-31221	Y1662-32A0	21	450560
723-56-31250	Y1662-03A0	11	450290
723-56-31250	Y1662-33A0	11	450570
723-56-31320	Y1662-03A0	8	450290
723-56-31320	Y1662-33A0	8	450570
723-56-31330	Y1662-03A0	9	450290
723-56-31330	Y1662-33A0	9	450570
723-56-31341	Y1662-03A0	10	450290
723-56-31341	Y1662-33A0	10	450570
723-56-31361	Y1662-32A0	20	450560
723-56-31421	Y1662-02A0	24	450280
723-56-31421	Y1662-32A0	25	450560
723-56-31510	Y1662-03A0	1	450290
723-56-31510	Y1662-26A0	12	450520
723-56-31510	Y1662-33A0	1	450570
723-56-31510	Y1662-57A0	12	450810
723-56-31540	Y1662-03A0	2	450290
723-56-31540	Y1662-33A0	2	450570
723-56-31570	Y1662-03A0	5	450290
723-56-31570	Y1662-33A0	5	450570
723-56-31580	Y1662-03A0	4	450290
723-56-31580	Y1662-33A0	4	450570
723-56-31590	Y1662-03A0	3	450290
723-56-31590	Y1662-33A0	3	450570
723-56-31620	Y1662-05A0	2	450310
723-56-31620	Y1662-20A0	3	450460
723-56-31620	Y1662-35A0	2	450590
723-56-31620	Y1662-51A0	3	450750
723-56-31630	Y1662-05A0	3	450310
723-56-31630	Y1662-20A0	4	450460
723-56-31630	Y1662-35A0	3	450590
723-56-31630	Y1662-51A0	4	450750
723-56-31640	Y1662-05A0	9	450310
723-56-31640	Y1662-27A0	9	450530
723-56-31640	Y1662-35A0	9	450590
723-56-31640	Y1662-58A0	9	450820
723-56-31660	Y1662-05A0	7	450310
723-56-31660	Y1662-35A0	7	450590

PARTS Nº	FIG. Nº	INDEX	PAGE
723-56-31670	Y1662-05A0	8	450310
723-56-31670	Y1662-35A0	8	450590
723-56-31720	Y1662-02A0	5	450280
723-56-31720	Y1662-26A0	3	450520
723-56-31720	Y1662-32A0	5	450560
723-56-31720	Y1662-57A0	3	450810
723-56-31730	Y1662-02A0	6	450280
723-56-31730	Y1662-08A0	12	450340
723-56-31730	Y1662-26A0	4	450520
723-56-31730	Y1662-32A0	6	450560
723-56-31730	Y1662-38A0	12	450620
723-56-31730	Y1662-57A0	4	450810
723-56-31880	Y1662-07A0	17	450330
723-56-31880	Y1662-37A0	17	450610
723-56-31930	Y1662-07A0	15	450330
723-56-31930	Y1662-37A0	15	450610
723-56-31940	Y1662-06A0	9	450320
723-56-31940	Y1662-36A0	9	450600
723-56-31960	Y1662-06A0	5	450320
723-56-31960	Y1662-36A0	5	450600
723-56-31970	Y1662-06A0	3	450320
723-56-31970	Y1662-36A0	3	450600
723-56-31990	Y1662-06A0	14	450320
723-56-31990	Y1662-36A0	14	450600
723-56-32810	Y1662-32A0	26	450560
723-56-41710	Y1662-04A0	6	450300
723-56-41710	Y1662-27A0	2	450530
723-56-41710	Y1662-34A0	8	450580
723-56-41710	Y1662-58A0	2	450820
723-56-41730	Y1662-04A0	12	450300
723-56-41730	Y1662-34A0	14	450580
723-56-41750	Y1662-27A0	6	450530
723-56-41750	Y1662-58A0	6	450820
723-56-41840	Y1662-04A0	7	450300
723-56-41840	Y1662-34A0	9	450580
723-56-41850	Y1662-11A0	13	450370
723-56-41850	Y1662-41A0	13	450650
723-57-16100	H0120-01A1	1	150020
723-57-16100	Y1662-01A0	1	450270
723-57-16100	Y1662-02A0	1	450280
723-57-16100	Y1662-03A0	1	450290
723-57-16100	Y1662-04A0	1	450300
723-57-16100	Y1662-05A0	1	450310
723-57-16100	Y1662-06A0	1	450320
723-57-16100	Y1662-07A0	1	450330
723-57-16100	Y1662-08A0	1	450340
723-57-16100	Y1662-09A0	1	450350
723-57-16100	Y1662-10A0	1	450360
723-57-16100	Y1662-11A0	1	450370
723-57-16100	Y1662-12A0	1	450380
723-57-16100	Y1662-13A0	1	450390
723-57-16100	Y1662-14A0	1	450400
723-57-16100	Y1662-15A0	1	450410
723-57-16100	Y1662-16A0	1	450420
723-57-16100	Y1662-17A0	1	450430
723-57-16100	Y1662-18A0	1	450440
723-57-16100	Y1662-19A0	1	450450
723-57-16100	Y1662-20A0	1	450460
723-57-16100	Y1662-21A0	1	450470
723-57-16100	Y1662-22A0	1	450480
723-57-16100	Y1662-23A0	1	450490
723-57-16100	Y1662-24A0	1	450500
723-57-16100	Y1662-25A0	1	450510
723-57-16100	Y1662-26A0	1	450520
723-57-16100	Y1662-27A0	1	450530
723-57-16100	Y1662-28A0	1	450540
723-57-16101	H0120-01A1	1	150020
723-57-16101	Y1662-01A0	1	450270
723-57-16101	Y1662-02A0	1	450280
723-57-16101	Y1662-03A0	1	450290
723-57-16101	Y1662-04A0	1	450300
723-57-16101	Y1662-05A0	1	450310
723-57-16101	Y1662-06A0	1	450320
723-57-16101	Y1662-07A0	1	450330
723-57-16101	Y1662-08A0	1	450340
723-57-16101	Y1662-09A0	1	450350
723-57-16101	Y1662-10A0	1	450360
723-57-16101	Y1662-11A0	1	450370
723-57-16101	Y1662-12A0	1	450380
723-57-16101	Y1662-13A0	1	450390
723-57-16101	Y1662-14A0	1	450400
723-57-16101	Y1662-15A0	1	450410
723-57-16101	Y1662-16A0	1	450420
723-57-16101	Y1662-17A0	1	450430
723-57-16101	Y1662-18A0	1	450440
723-57-16101	Y1662-19A0	1	450450
723-57-16101	Y1662-20A0	1	450460
723-57-16101	Y1662-21A0	1	450470
723-57-16101	Y1662-22A0	1	450480
723-57-16101	Y1662-23A0	1	450490
723-57-16101	Y1662-24A0	1	450500
723-57-16101	Y1662-25A0	1	450510
723-57-16101	Y1662-26A0	1	450520
723-57-16101	Y1662-27A0	1	450530
723-57-16101	Y1662-28A0	1	450540
723-57-16103	H0120-01A1	1	150020
723-57-16104	H0120-01A1	1	150020
723-57-16200	Y1662-31A0	1	450550
723-57-16200	Y1662-32A0	1	450560
723-57-16200	Y1662-33A0	1	450570
723-57-16200	Y1662-34A0	1	450580
723-57-16200	Y1662-35A0	1	450590
723-57-16200	Y1662-36A0	1	450600
723-57-16200	Y1662-37A0	1	450610
723-57-16200	Y1662-38A0	1	450620
723-57-16200	Y1662-39A0	1	450630
723-57-16200	Y1662-40A0	1	450640
723-57-16200	Y1662-41A0	1	450650
723-57-16200	Y1662-42A0	1	450660
723-57-16200	Y1662-43A0	1	450670
723-57-16200	Y1662-44A0	1	450680
723-57-16200	Y1662-45A0	1	450690
723-57-16200	Y1662-46A0	1	450700
723-57-16200	Y1662-47A0	1	450710
723-57-16200	Y1662-48A0	1	450720
723-57-16200	Y1662-49A0	1	450730
723-57-16200	Y1662-50A0	1	450740
723-57-16200	Y1662-51A0	1	450750
723-57-16200	Y1662-52A0	1	450760
723-57-16200	Y1662-53A0	1	450770
723-57-16200	Y1662-54A0	1	450780
723-57-16200	Y1662-55A0	1	450790
723-57-16200	Y1662-56A0	1	450800
723-57-16200	Y1662-57A0	1	450810
723-57-16200	Y1662-58A0	1	450820
723-57-16200	Y1662-59A0	1	450830
723-57-16201	Y1662-31A0	1	450550
723-57-16201	Y1662-32A0	1	450560
723-57-16201	Y1662-33A0	1	450570
723-57-16201	Y1662-34A0	1	450580
723-57-16201	Y1662-35A0	1	450590
723-57-16201	Y1662-36A0	1	450600
723-57-16201	Y1662-37A0	1	450610
723-57-16201	Y1662-38A0	1	450620
723-57-16201	Y1662-39A0	1	450630
723-57-16201	Y1662-40A0	1	450640
723-57-16201	Y1662-41A0	1	450650
723-57-16201	Y1662-42A0	1	450660
723-57-16201	Y1662-43A0	1	450670
723-57-16201	Y1662-44A0	1	450680
723-57-16201	Y1662-45A0	1	450690
723-57-16201	Y1662-46A0	1	450700
723-57-16201	Y1662-47A0	1	450710
723-57-16201	Y1662-48A0	1	450720
723-57-16201	Y1662-49A0	1	450730
723-57-16201	Y1662-50A0	1	450740
723-57-16201	Y1662-51A0	1	450750
723-57-16201	Y1662-52A0	1	450760
723-57-16201	Y1662-53A0	1	450770
723-57-16201	Y1662-54A0	1	450780

PARTS Nº	FIG. Nº	INDEX	PAGE
723-57-16201	Y1662-55A0	1	450790
723-57-16201	Y1662-56A0	1	450800
723-57-16201	Y1662-57A0	1	450810
723-57-16201	Y1662-58A0	1	450820
723-57-16201	Y1662-59A0	1	450830
723-60-22230	Y1662-08A0	5	450340
723-60-22230	Y1662-38A0	5	450620
723-60-23301	Y1662-12A0	6	450380
723-60-23301	Y1662-42A0	6	450660
723-90-61400	Y1662-28A0	1	450540
723-90-61400	Y1662-59A0	1	450830
723-90-61600	Y1662-16A0	1	450420
723-90-61600	Y1662-46A0	1	450700
723-90-76101	Y1662-28A0	3	450540
723-90-76101	Y1662-59A0	3	450830
7826-20-7033	E0201-01A0	4	120091
7826-20-7034	E0201-01A0	4	120091
7826-20-9200	E0201-01A0	8	120091
7834-41-2001	B0400-01A0	1	030130
7834-41-2002	B0400-01A0	1	030130
7835-12-1007	K0210-13A0	1	210160
7835-12-1012	K1110-13D0	1	210510
7835-26-3004	K1110-07A0	1	210380
7835-26-3004	K1110-16D0	4	210570
7861-91-4220	A211V-01A3	2	030210
7861-92-5810	D0100-01A0	6	090010
7861-93-1420	B0200-01A0	21	030110
7861-93-1650	H0120-02A0	10	150030
7861-93-2310	A221V-01A1	1	030240
7861-93-3320	H0311-01A0	7	150050
7861-93-3380	A201Y-01A1	1	030140
7861-93-3520	B0000-01A0	7	030010
7861-94-3000	K1110-07A0	3	210380
7861-94-3000	K1110-16D0	6	210570
8221-93-2140	U0100-01A2	24	390010
8221-93-2140	U0100-01A3	24	390011
8233-06-3350	K1110-07A0	13	210380
8233-06-3350	K1110-16D0	10	210570
8A13-10-1310	E0201-01A0	7	120091
8A13-10-2200	E0201-01A0	9	120091
DK010038-1840	A401P-04H1	41	030440
DK010235-1040	A401P-04H1	9	030440
DK013030-6040	A401P-05H1	12	030450
DK014010-8140	A401P-04H1	45	030440
DK014110-3440	A401P-06H1	3	030460
DK014110-6440	A401P-05H1	15	030450
DK014110-6440	A401P-05H1	19	030450
DK014110-8440	A401P-04H1	44	030440
DK016010-0540	A401P-04H1	30	030440
DK016010-0540	A401P-04H1	6	030440
DK016010-1640	A401P-06H1	25	030460
DK016630-2030	A401P-02H1	12	030420
DK016640-2030	A401P-02H1	13	030420
DK020006-1640	A401P-06H1	15	030460
DK020006-2040	A401P-06H1	13	030460
DK020006-2040	A401P-06H1	14	030460
DK020006-2040	A401P-06H1	16	030460
DK020106-1640	A401P-05H1	17	030450
DK020106-1840	A401P-04H1	16	030440
DK020106-3840	A401P-06H1	10	030460
DK025803-1310	A401P-06H1	30	030460
DK026506-1040	A401P-05H1	11	030450
DK026508-1140	A401P-06H1	37	030460
DK026512-1540	A401P-06H1	20	030460
DK026518-2240	A401P-04H1	20	030440
DK026518-2240	A401P-04H1	38	030440
DK028201-7020	A401P-02H1	12	030420
DK028202-0020	A401P-02H1	13	030420
DK029010-6810	A401P-02H1	20	030420
DK029010-6810	A401P-04H1	15	030440
DK029040-6020	A401P-02H1	2	030420
DK029111-2090	A401P-05H1	7	030450
DK029201-2290	A401P-06H1	19	030460
DK029201-6010	A401P-04H1	28	030440
DK029231-2030	A401P-04H1	23	030440
DK029311-0010	A401P-04H1	25	030440
DK029311-0020	A401P-03H1	15	030430
DK029311-0030	A401P-03H1	15	030430
DK029311-0040	A401P-03H1	15	030430
DK029311-0050	A401P-03H1	15	030430
DK029311-0060	A401P-03H1	15	030430
DK029311-0070	A401P-03H1	15	030430
DK029311-0080	A401P-03H1	15	030430
DK029311-0090	A401P-03H1	15	030430
DK029311-0110	A401P-03H1	15	030430
DK029311-0120	A401P-03H1	15	030430
DK029311-0130	A401P-03H1	15	030430
DK029311-0140	A401P-03H1	15	030430
DK029311-0180	A401P-04H1	25	030440
DK029311-0190	A401P-04H1	25	030440
DK029311-0210	A401P-04H1	25	030440
DK029311-0270	A401P-03H1	15	030430
DK029311-0280	A401P-03H1	15	030430
DK029311-0290	A401P-03H1	15	030430
DK029311-0310	A401P-03H1	15	030430
DK029311-0320	A401P-03H1	15	030430
DK029311-0330	A401P-03H1	15	030430
DK029311-0340	A401P-03H1	15	030430
DK029311-0350	A401P-03H1	15	030430
DK029311-0490	A401P-03H1	15	030430
DK029311-0500	A401P-03H1	15	030430
DK029311-0580	A401P-03H1	15	030430
DK029311-0590	A401P-03H1	15	030430
DK029311-0600	A401P-03H1	15	030430
DK029311-0610	A401P-03H1	15	030430
DK029311-0620	A401P-03H1	15	030430
DK029311-0630	A401P-03H1	15	030430
DK029311-0710	A401P-03H1	15	030430
DK029311-1070	A401P-06H1	28	030460
DK029311-7010	A401P-02H1	17	030420
DK029311-7020	A401P-02H1	17	030420
DK029311-7030	A401P-02H1	17	030420
DK029311-7040	A401P-02H1	17	030420
DK029311-7050	A401P-02H1	17	030420
DK029311-7060	A401P-02H1	17	030420
DK029311-7070	A401P-02H1	17	030420
DK029311-7090	A401P-02H1	17	030420
DK029311-7210	A401P-02H1	17	030420
DK029311-7220	A401P-02H1	17	030420
DK029312-0310	A401P-02H1	16	030420
DK029312-0320	A401P-02H1	16	030420
DK029312-0330	A401P-02H1	16	030420
DK029312-0340	A401P-02H1	16	030420
DK029312-0350	A401P-02H1	16	030420
DK029312-0360	A401P-02H1	16	030420
DK029312-0370	A401P-02H1	16	030420
DK029312-0380	A401P-02H1	16	030420
DK029321-2020	A401P-04H1	22	030440
DK029331-2130	A401P-05H1	6	030450
DK029332-6030	A401P-07H1	5	030470
DK029340-6020	A401P-02H1	8	030420
DK029341-0110	A401P-02H1	27	030420
DK029341-0110	A401P-05H1	20	030450
DK029341-4130	A401P-02H1	24	030420
DK029341-4130	A401P-07H1	18	030470
DK029341-4130	A401P-07H1	19	030470
DK029622-0190	A401P-02H1	18	030420
DK029631-6060	A401P-07H1	13	030470
DK029631-8020	A401P-06H1	24	030460
DK029632-0030	A401P-03H1	9	030430
DK029633-1010	A401P-02H1	10	030420
DK029637-5030	A401P-02H1	25	030420
DK029731-0120	A401P-02H1	26	030420
DK029731-0120	A401P-05H1	21	030450
DK029731-4680	A401P-07H1	17	030470
DK101041-9260	A401P-02H1	1	030420
DK101041-9260	A401P-03H1	1	030430
DK105220-5960	A401P-07H1	1	030470
DK105404-6040	A401P-04H1	1	030440
DK105404-6040	A401P-05H1	1	030450

PARTS Nº	FIG. Nº	INDEX	PAGE
DK105404-6040	A401P-06H1	1	030460
DK131002-2000	A401P-02H1	4	030420
DK131011-1900	A401P-02H1	6	030420
DK131017-1000	A401P-02H1	7	030420
DK131028-6220	A401P-02H1	5	030420
DK131034-1401	A401P-03H1	1	030430
DK131067-5620	A401P-02H1	1	030420
DK131110-7720	A401P-03H1	3	030430
DK131112-5600	A401P-03H1	4	030430
DK131115-1600	A401P-03H1	5	030430
DK131116-8420	A401P-03H1	6	030430
DK131117-3100	A401P-03H1	7	030430
DK131122-0520	A401P-03H1	8	030430
DK131154-3920	A401P-03H1	2	030430
DK131200-2820	A401P-03H1	10	030430
DK131203-0800	A401P-03H1	11	030430
DK131204-1000	A401P-03H1	12	030430
DK131205-0500	A401P-03H1	13	030430
DK131206-0200	A401P-03H1	14	030430
DK131215-2500	A401P-03H1	16	030430
DK131216-0100	A401P-03H1	17	030430
DK131217-0200	A401P-03H1	18	030430
DK131226-0300	A401P-03H1	20	030430
DK131240-0100	A401P-03H1	21	030430
DK131241-0100	A401P-03H1	22	030430
DK131242-0100	A401P-03H1	23	030430
DK131254-0600	A401P-03H1	19	030430
DK131302-0300	A401P-02H1	15	030420
DK131302-1300	A401P-02H1	14	030420
DK131321-1900	A401P-02H1	21	030420
DK131330-6400	A401P-02H1	19	030420
DK131361-2700	A401P-02H1	11	030420
DK131401-0020	A401P-02H1	23	030420
DK131424-3420	A401P-02H1	22	030420
DK134026-0000	A401P-02H1	3	030420
DK139006-7100	A401P-06H1	7	030460
DK139206-0400	A401P-02H1	9	030420
DK139208-0400	A401P-06H1	5	030460
DK139406-1400	A401P-04H1	5	030440
DK139410-0000	A401P-04H1	25	030440
DK139410-0100	A401P-04H1	25	030440
DK139410-3000	A401P-04H1	25	030440
DK139410-3100	A401P-04H1	25	030440
DK139410-3200	A401P-04H1	25	030440
DK139411-0000	A401P-06H1	27	030460
DK139417-0000	A401P-02H1	17	030420
DK139611-0000	A401P-06H1	26	030460
DK146711-0000	A401P-05H1	4	030450
DK152003-1020	A401P-07H1	1	030470
DK152100-1120	A401P-07H1	2	030470
DK152102-1600	A401P-07H1	3	030470
DK152105-1600	A401P-07H1	4	030470
DK152111-2820	A401P-07H1	6	030470
DK152112-0100	A401P-07H1	7	030470
DK152113-0700	A401P-07H1	8	030470
DK152114-0400	A401P-07H1	9	030470
DK152115-0500	A401P-07H1	10	030470
DK152116-0200	A401P-07H1	11	030470
DK152118-0900	A401P-07H1	12	030470
DK152121-0200	A401P-07H1	14	030470
DK152200-5420	A401P-07H1	15	030470
DK152300-5920	A401P-07H1	16	030470
DK152320-0100	A401P-07H1	20	030470
DK154010-0200	A401P-06H1	8	030460
DK154011-0100	A401P-06H1	9	030460
DK154011-4900	A401P-04H1	18	030440
DK154013-6000	A401P-04H1	17	030440
DK154022-8720	A401P-06H1	1	030460
DK154031-4700	A401P-06H1	4	030460
DK154035-1600	A401P-05H1	13	030450
DK154035-2900	A401P-06H1	38	030460
DK154036-0300	A401P-06H1	6	030460
DK154062-2720	A401P-05H1	23	030450
DK154062-2900	A401P-05H1	14	030450
DK154062-3520	A401P-04H1	47	030440
DK154062-3900	A401P-06H1	40	030460
DK154062-4020	A401P-06H1	39	030460
DK154062-5001	A401P-05H1	18	030450
DK154064-4900	A401P-06H1	11	030460
DK154123-2320	A401P-04H1	24	030440
DK154150-0400	A401P-06H1	17	030460
DK154154-5200	A401P-04H1	26	030440
DK154158-5820	A401P-06H1	18	030460
DK154159-1200	A401P-06H1	21	030460
DK154177-0420	A401P-04H1	27	030440
DK154200-7020	A401P-06H1	22	030460
DK154204-4300	A401P-06H1	23	030460
DK154204-4400	A401P-06H1	29	030460
DK154206-0200	A401P-06H1	32	030460
DK154206-2800	A401P-06H1	31	030460
DK154218-7320	A401P-04H1	29	030440
DK154222-2700	A401P-06H1	2	030460
DK154222-5800	A401P-04H1	33	030440
DK154232-3300	A401P-04H1	32	030440
DK154235-5220	A401P-04H1	31	030440
DK154237-1100	A401P-06H1	33	030460
DK154239-5120	A401P-04H1	35	030440
DK154343-9220	A401P-06H1	34	030460
DK154375-9020	A401P-04H1	14	030440
DK154376-3000	A401P-06H1	12	030460
DK154390-0000	A401P-04H1	36	030440
DK154390-0300	A401P-06H1	35	030460
DK154390-5000	A401P-06H1	36	030460
DK154400-9820	A401P-05H1	2	030450
DK154402-3000	A401P-05H1	22	030450
DK154404-5600	A401P-05H1	9	030450
DK154410-4720	A401P-04H1	8	030440
DK154413-2600	A401P-05H1	8	030450
DK154415-1300	A401P-05H1	5	030450
DK154415-1800	A401P-05H1	10	030450
DK154415-4600	A401P-05H1	3	030450
DK154422-7101	A401P-05H1	1	030450
DK154423-1220	A401P-05H1	1	030450
DK154620-1500	A401P-04H1	42	030440
DK154620-3200	A401P-05H1	16	030450
DK154620-4700	A401P-04H1	43	030440
DK154620-7900	A401P-04H1	13	030440
DK154620-8800	A401P-04H1	39	030440
DK154620-8901	A401P-04H1	40	030440
DK154620-9621	A401P-04H1	1	030440
DK154620-9721	A401P-04H1	1	030440
DK154621-1200	A401P-04H1	3	030440
DK154621-2520	A401P-04H1	21	030440
DK154621-3000	A401P-04H1	37	030440
DK154621-3200	A401P-04H1	46	030440
DK154621-3600	A401P-04H1	10	030440
DK154621-4100	A401P-04H1	12	030440
DK154621-4300	A401P-04H1	11	030440
DK154621-4720	A401P-04H1	4	030440
DK154621-4900	A401P-04H1	7	030440
DK154621-5200	A401P-04H1	2	030440
DK155402-3800	A401P-04H1	34	030440
DK155404-5120	A401P-04H1	19	030440
EP23-141-001	Y1062-01A0	3	450030
EP23-141-003	Y1062-01A0	6	450030
EP23-141-004	Y1062-01A0	7	450030
EP72-540-901	Y1062-01A0	1	450030
KBATZ030190	Y1260-31A0	1	450090
KBATZ060400	Y1260-31A0	2	450090
KBATZ080080	Y1260-31A0	3	450090
KBB0443-09049	Y1260-13A0	1	450080
KBB0853-01147	Y1260-11A0	1	450060
KBB0853-01148	Y1260-12A0	1	450070
ND017231-0700	Y1979-21A0A	27	450940
ND017231-1400	Y1979-21A0	26	450930
ND017321-3202	Y1979-31A0	3	450950
ND017321-3212	Y1979-31A0	4	450950
ND017660-3490	Y1979-21A0	27	450930
ND017730-8380	Y1979-21A0	59	450930
ND021041-8620	B0000-07A0	22	030070

PARTS Nº	FIG. Nº	INDEX	PAGE
ND021045-0530	B0000-07A0	4	030070
ND021100-4210	B0000-07A0	1	030070
ND021200-8380	B0000-07A0	19	030070
ND021401-4980	B0000-07A0	2	030070
ND021411-0570	B0000-07A0	3	030070
ND021501-8050	B0000-07A0	8	030070
ND021506-0070	B0000-07A0	21	030070
ND021542-0160	B0000-07A0	26	030070
ND021551-2480	B0000-07A0	12	030070
ND021580-4820	B0000-07A0	9	030070
ND021602-5230	B0000-07A0	29	030070
ND021605-1970	B0000-07A0	13	030070
ND021605-2481	B0000-07A0	14	030070
ND021620-2720	B0000-07A0	10	030070
ND021626-0190	B0000-07A0	24	030070
ND021626-0250	B0000-07A0	25	030070
ND028062-0130	B0000-09A0	2	030090
ND028062-5790	B0000-09A0	40	030090
ND028063-0030	B0000-09A0	29	030090
ND028065-0250	B0000-09A0	21	030090
ND028099-3160	B0000-09A0	16	030090
ND028099-3270	B0000-09A0	7	030090
ND028099-3570	B0000-09A0	3	030090
ND028099-5620	B0000-09A0	15	030090
ND028100-2882	B0000-09A0	1	030090
ND028200-1590	B0000-09A0	4	030090
ND028300-6551	B0000-09A0	7	030090
ND028300-6751	B0000-09A0	8	030090
ND028306-0070	B0000-09A0	28	030090
ND028327-0171	B0000-09A0	30	030090
ND028371-1500	B0000-09A0	27	030090
ND028381-0071	B0000-09A0	12	030090
ND028501-8091	B0000-09A0	24	030090
ND028510-5390	B0000-09A0	22	030090
ND028901-5190	B0000-09A0	42	030090
ND053404-0240	B0000-09A0	18	030090
ND053480-7560	B0000-09A0	20	030090
ND053505-0290	B0000-09A0	19	030090
ND053660-7170	B0000-09A0	17	030090
ND056700-8170	Y1979-31A0	18	450950
ND056800-3130	Y1979-31A0	25	450950
ND063600-4580	Y1979-21A0A	32	450940
ND063700-7200	Y1979-21A0	32	450930
ND063700-7210	Y1979-21A0	33	450930
ND063700-7210	Y1979-31A0	6	450950
ND063800-0300	Y1979-21A0A	26	450940
ND077500-0710	Y1979-21A0	12	450930
ND077500-5650	Y1979-21A0A	33	450940
ND077800-0750	Y1979-21A0A	30	450940
ND113550-0780	Y1979-21A0A	41	450940

PARTS Nº	FIG. Nº	INDEX	PAGE
ND116120-7990	Y1979-21A0	6	450930
ND116140-0050	Y1979-21A0A	13	450940
ND116241-3220	Y1979-31A0	1	450950
ND116241-3230	Y1979-31A0	2	450950
ND116340-3860	Y1979-31A0	5	450950
ND116340-7030	Y1979-21A0A	35	450940
ND116569-5010	Y1979-21A0	3	450930
ND116569-5020	Y1979-21A0	34	450930
ND116569-5030	Y1979-21A0	38	450930
ND116569-5041	Y1979-21A0	41	450930
ND116569-5051	Y1979-21A0	42	450930
ND116569-5062	Y1979-21A0	44	450930
ND116576-3810	Y1979-21A0A	3	450940
ND116576-3820	Y1979-21A0A	4	450940
ND116576-3851	Y1979-21A0A	24	450940
ND116576-3861	Y1979-21A0A	25	450940
ND116640-4652	Y1979-21A0	17	450930
ND116650-6850	Y1979-21A0A	15	450940
ND116650-8800	Y1979-21A0	14	450930
ND116650-8820	Y1979-21A0	15	450930
ND116650-8840	Y1979-21A0	16	450930
ND116660-2770	Y1979-21A0	60	450930
ND116660-4680	Y1979-31A0	7	450950
ND116660-7570	Y1979-21A0A	14	450940
ND116662-4850	Y1979-21A0	37	450930
ND116662-4860	Y1979-21A0	43	450930
ND116662-7120	Y1979-31A0	12	450950
ND116662-7670	Y1979-21A0A	22	450940
ND116662-7681	Y1979-21A0A	23	450940
ND116682-0910	Y1979-21A0	46	450930
ND116682-0920	Y1979-21A0	45	450930
ND116682-0930	Y1979-21A0	35	450930
ND116682-0940	Y1979-21A0	39	450930
ND116682-0951	Y1979-21A0	40	450930
ND116682-0960	Y1979-21A0	36	450930
ND116682-0970	Y1979-31A0	9	450950
ND116682-0980	Y1979-31A0	8	450950
ND116682-3440	Y1979-21A0	58	450930
ND116780-2481	Y1979-21A0A	16	450940
ND116780-2491	Y1979-21A0A	17	450940
ND116780-2501	Y1979-21A0A	18	450940
ND116780-2510	Y1979-21A0A	19	450940
ND116780-2521	Y1979-21A0A	21	450940
ND116781-3000	Y1979-21A0A	20	450940
ND117200-0843	Y1979-11A0	2	450920
ND117200-0843	Y1979-31A0	1	450950
ND121400-0800	B0000-07A0	1	030070
ND126000-2320	B0000-07A0	11	030070
ND128950-0520	B0000-09A0	31	030090
ND128961-0010	B0000-09A0	25	030090

PARTS Nº	FIG. Nº	INDEX	PAGE
ND145511-0040	Y1979-21A0A	29	450940
ND146340-0531	Y1979-21A0A	31	450940
ND146525-6041	Y1979-11A0	3	450920
ND146525-6070	Y1979-21A0	51	450930
ND146530-9530	Y1979-31A0	26	450950
ND146535-0411	Y1979-21A0	50	450930
ND146535-0421	Y1979-21A0	56	450930
ND146535-1311	Y1979-21A0	49	450930
ND146535-1320	Y1979-31A0	10	450950
ND146622-6880	Y1979-31A0	19	450950
ND146625-4450	Y1979-31A0	24	450950
ND146637-5650	Y1979-21A0	64	450930
ND146647-0712	Y1979-21A0	65	450930
ND146647-0790	Y1979-31A0	22	450950
ND146647-3880	Y1979-21A0	66	450930
ND146657-8841	Y1979-21A0A	10	450940
ND146657-8850	Y1979-21A0A	12	450940
ND146657-8860	Y1979-21A0A	34	450940
ND146657-9811	Y1979-21A0A	11	450940
ND146667-0300	Y1979-21A0A	43	450940
ND146667-0380	Y1979-21A0A	44	450940
ND146667-0440	Y1979-21A0A	45	450940
ND146678-4901	Y1979-31A0	20	450950
ND146678-4930	Y1979-21A0	23	450930
ND146678-5060	Y1979-31A0	21	450950
ND146690-6020	Y1979-21A0	29	450930
ND146698-6930	Y1979-21A0	61	450930
ND146698-6950	Y1979-21A0	62	450930
ND146698-8480	Y1979-21A0	63	450930
ND153400-8530	B0000-09A0	14	030090
ND170400-4310	Y1979-21A0	28	450930
ND170400-4670	Y1979-21A0A	28	450940
ND228401-0633	B0000-09A0	13	030090
ND245450-1721	Y1979-21A0	2	450930
ND245450-2221	Y1979-21A0	1	450930
ND245450-5112	Y1979-21A0A	1	450940
ND245450-5121	Y1979-21A0A	2	450940
ND246460-9451	Y1979-11A0	5	450920
ND246470-2451	Y1979-21A0A	39	450940
ND246634-6010	Y1979-21A0	30	450930
ND246690-2840	Y1979-21A0	13	450930
ND246770-6990	Y1979-21A0	25	450930
ND443440-0030	Y1979-21A0	18	450930
ND446010-3131	Y1979-21A0A	5	450940
ND446600-0990	Y1979-21A0A	5	450940
ND446810-9520	Y1979-21A0	21	450930
ND446830-3880	Y1979-21A0	20	450930
ND446870-5650	Y1979-21A0	9	450930
ND447500-1390	Y1979-21A0	7	450930
ND447500-1482	Y1979-21A0A	8	450940

PARTS Nº	FIG. Nº	INDEX	PAGE
ND447600-4970	Y1979-21A0	4	450930
ND448800-5222	Y1979-11A0	1	450920
ND448800-5222	Y1979-21A0	1	450930
ND499300-2051	Y1979-21A0	31	450930
ND90170-10061	B0000-09A0	35	030090
ND90200-06241	B0000-09A0	39	030090
ND90258-10001	B0000-09A0	37	030090
ND90801-10050	B0000-09A0	33	030090
ND90930-05121	Y1979-21A0	54	450930
ND90930-05161	Y1979-21A0	57	450930
ND90930-06141	Y1979-11A0	4	450920
ND90930-06141	Y1979-21A0	55	450930
ND91310-03081	Y1979-21A0	52	450930
ND91310-04251	B0000-07A0	16	030070
ND91370-03081	Y1979-31A0	15	450950
ND91370-04101	Y1979-21A0A	42	450940
ND91570-06141	Y1979-31A0	23	450950
ND92150-06061	B0000-07A0	30	030070
ND93950-05003	Y1979-21A0A	40	450940
ND949001-1730	Y1979-21A0	53	450930
ND949001-1730	Y1979-21A0A	38	450940
ND949001-1730	Y1979-31A0	14	450950
ND949006-4720	B0000-09A0	38	030090
ND949006-5460	B0000-07A0	15	030070
ND949006-5590	B0000-07A0	5	030070
ND949006-6401	B0000-07A0	27	030070
ND949007-2350	K0210-08A0	7	210110
ND949007-2350	K1110-08D0	7	210410
ND949007-5110	B0000-07A0	16	030070
ND949007-6280	B0000-07A0	28	030070
ND949007-6530	B0000-09A0	34	030090
ND949007-6850	B0000-09A0	41	030090
ND949008-0330	Y1979-21A0A	37	450940
ND949008-0460	Y1979-21A0	47	450930
ND949020-0600	B0000-09A0	32	030090
ND949043-2000	B0000-07A0	7	030070
ND949046-2150	Y1979-21A0	8	450930
ND949046-3100	Y1979-21A0A	9	450940
ND949047-2370	Y1979-31A0	13	450950
ND949056-2481	B0000-07A0	17	030070
ND949056-2520	B0000-07A0	23	030070
ND949056-3080	B0000-07A0	18	030070
ND949056-4480	B0000-09A0	36	030090
ND949057-0190	Y1979-31A0	17	450950
ND949100-1750	B0000-09A0	6	030090
ND949100-1920	B0000-09A0	10	030090
ND949100-1930	B0000-09A0	5	030090
ND949100-2790	B0000-07A0	20	030070
ND949100-4500	B0000-09A0	9	030090
ND949100-5010	B0000-07A0	6	030070

PARTS Nº	FIG. Nº	INDEX	PAGE
ND949142-0010	Y1979-21A0	11	450930
ND949142-0020	Y1979-21A0A	6	450940
ND949142-0030	Y1979-21A0	10	450930
ND949142-0030	Y1979-21A0	22	450930
ND949142-0030	Y1979-21A0	5	450930
ND949142-0030	Y1979-21A0A	7	450940
ND949142-0040	Y1979-21A0	19	450930
ND949170-4040	B0000-09A0	11	030090
ND949170-4070	B0000-09A0	26	030090
ND949173-0571	B0000-09A0	23	030090
ND949321-9940	Y1979-21A0	24	450930
NY05062-1170A	Y1860-01A0	10	450910
NY05062-11800	Y1860-01A0	11	450910
NY06277-1320A	Y1860-01A0	13	450910
NY06339-10200	Y1860-01A0	16	450910
NY07207-11700	Y1860-01A0	3	450910
NY07493-10200	Y1860-01A0	17	450910
NY07529-10200	Y1860-01A0	4	450910
NY07529-10300	Y1860-01A0	5	450910
NY07529-10400	Y1860-01A0	6	450910
NY07529-10500	Y1860-01A0	7	450910
NY07529-10600	Y1860-01A0	8	450910
NY09000-11400	Y1860-01A0	20	450910
NY16207-10200	Y1860-01A0	25	450910
NY16207-10300	Y1860-01A0	23	450910
NY16207-10400	Y1860-01A0	26	450910
NY80000-02100	Y1860-01A0	21	450910
NY80000-02200	Y1860-01A0	14	450910
NY81416-05012	Y1860-01A0	19	450910
NY84110-00248	Y1860-01A0	24	450910
NY89103-00090	Y1860-01A0	9	450910
REU419B-418-C	Y1062-01A0A	15	450031
RFU419B-418-A	Y1062-01A0A	1	450031
RFU419B-418-B	Y1062-01A0A	6	450031
RFU419B-418-C	Y1062-01A0A	7	450031
RFU419B-418-D	Y1062-01A0A	3	450031
RFU419B-418-E	Y1062-01A0A	4	450031
RFU419B-418-F	Y1062-01A0A	16	450031

PARTS Nº	FIG. Nº	INDEX	PAGE