PEPBK21P0301

RUTHZIL TRATOR COMERCIAL DE PEÇAS LTDA 11 97083-6812 ROLANDO CITRANGULO

PARTS BOOK

KOMATSU

PC180LC-3K
PC180LLC-3K
PC180NLC-3K

HYDRAULIC EXCAVATOR

SERIAL NUMBERS	**PC180LC-3K**	**K10001** AND UP
	PC180LLC-3K	**K10001** AND UP
	PC180NLC-3K	**K10001** AND UP

KOMATSU

FOREWORD

Due to a continuous research and development, some procedures, specification and parts may be changed. Periodic revision may be made to this publication and mailed automatically to distributors.

It is recommended that customers contact their distributor or dealer for information on the latest revision.

The satisfactory ordering and receiving of parts are dependent largely upon the proper use of available information. To avoid errors in ordering, the following procedures should be followed:

1. Give the part number, catalog name and quantity of parts needed.
2. Give the model number. The chassis serial number plate is located on the engine hood or on the dashboard near the operator seat.
3. When ordering parts for the engine, be sure to give the serial number of such unit.
4. Give the desired destination and method of shipment along with any special invoicing instruction.

For full understanding, the parts book is written as follows:

Fig. No.	Figure numbers are not in numerical order in both SECTIONS. Fig. Nos. of drawings in both SECTIONS are made independently each other.
Description	Any of assembly parts or components is marked with (.) fixed to its part name and is listed up after the assembly name. When a part with (.) is a component part, it has (. .) prefixed to its part name.
Q'ty	"Q'ty" indicates the quantity of a part required per machine. In case of a component part of an assembly, however, it indicates the quantity of the part required per assembly.
Serial No.	Serial No. indicates the Engine or Machine Serial No.

Codes	Codes and letters use in the columns of the Part Name and Part Number are as follows:
□	The part which is listed in the line above and does not have a mark can be substituted for this part. (One-way substitution)
☆	Part is not supplied as an independent part, but the assembly containing the part is.
KIT	The part is contained in a kit. please refer to the service-kit parts list.
OP	This part is not included in a standard machine. The part can be specially ordered as an optional one.
US	Undersize part.
OS	Oversize part.
STD	Standard part.

AVANT-PROPOS

En raison d'un programme de recherche et développement initerrompu, il se peut que certaines méthodes de travail, caractéristiques et pièces subissent des modifications tendant à améliorer les machines. Il se peut donc que cette publication soit soumise a des mises à jour périodiques, auquel cas elle sera automatiquement envoyée aux distributeurs.

En ce qui concerne les renseignements portant sur les toutes dernières mises a jour, nous recommandons aux usagers de s'adresser à leur distributeur ou concessionnaire.

La bonne marche des commandes et réceptions de pièces détachées dépend dans une large mesure de l'utilisation faite des renseignements disponibles. Dans le but d'éviter les erreurs à la commande, il est recommandé de procéder de la manière indiquée ci-après:

1. Donner le numéro de pièce, le titre du catalogue et le nombre d'articles désiré.
2. Donner le numéro du modèle. La plaque de numéro de châssis est implantée sous le capot du moteur ou sur le tableau de bord, près du siège de conduite.
3. Lors d'une commande de pièces détachées pour le moteur, ne pas omettre de signaler le numéro de série ainsi que celui de modèle dudit moteur.
4. Signaler la destination ainsi que le mode d'envoi souhaité et toute instruction particulière concernant la facturation.

Le manuel de pièces a été composé en fonction des méthodes suivantes qu'il convient de bien assimiler.

No. de fig.	Les numéros de figure ne sont affectés en ordre numérique au cours d'aucun des chapitres. L'affectation des No. de fig. est faite indépendamment pour chacun des chapitres. Par conséquent, il se peut que des No. de fig. identiques apparaissent dans différents chapitres.
Désignation	Toutes les désignations de pièce appartenant à un ensemble sont procédés d'un point (.) et sont répertoriées en-dessous de la désignation de l'ensemble lui-même. Lorsqu'une pièce precédée d'un point possède elle-même plusieurs pièces constitutives, ces dernieres sont alors précédées de deux points (..).
Qté	Chaque "QTE" signale le nombre de pièces nécessaires pour une machine. Toutefois, au niveau des pièces d'un ensemble, cette abréviation indique le nombre de pièces nécessaires pour un ensemble.
No. de serie	Il s'agit du numéro de série du moteur ou de la machine à laquelle la pièce est affectée.

Codes employés	Les codes et lettres employés au cours des colonnes de désignation de pièce et de numéro de pièce sont suivants:
□	La pièce indiquée à la ligne précédente et ne portant pas de repère peut être substitueé à celle-ci (substitution en un sens).
☆	La pièce en question ne peut être fournie isolément mais l'ensemble dont elle fait partie peut l'être.
KIT	Cette pièce fait partie d'un kit. Prière de se reporter a la liste des kits.
OP	Cette pièce n'est pas présente d'origine sur la machine concernée. Elle peut être commandée en tant qu'option.
US	Cote de réparation inférieure
OS	Cote de réparation supérieure
STD	Pièce d'origine

VORWORT

Auf Grund einer ständigen Forschung und Entwicklung kann ein Teil der Verfahren, der Spezifikation und der Teile geändert werden. Eine regelmäßige Revision kann zu dieser Ausgabe gemacht und automatisch den Vertreibern zugestellt werden.

Es empfiehlt sich den Kunden, mit ihren Vertreiber oder Verteiler Kontakt aufzunehmen, um Information über die neueste Revision einzuholen.

Die befriedigende Bestellung und der befriedigende Empfang von Teilen hängt größtenteils von der entsprechenden Benutzung von erhältlichen Informationen ab. Um Fehler in der Bestellung zu vermeiden, ist folgendes Verfahren zu befolgen:

1. Teil-Nr., Name des Prospektes und Menge der erforderlichen Teile angeben.
2. Modell-Nr. angeben. Das Seriennummerschild des Chassis befindet sich an der Motorhaube oder am Instrumentenbrett nahe dem Führersitz.
3. Bei der Bestellung von Teilen für den Motor sind unbedingt die Seriennummer solcher Teile anzugeben.
4. Neben jeweiligen Lieferungsanweisungen sind der gewünschte Bestimmungsort und die gewünschte Art der Verschiffung anzugeben.

Zur vollkommener Verständigung ist das Teilebuch wie folgt geschrieben:

Bild-Nr.	Bildnummern sind nicht in Zahlenfolge in beiden ABSCHNITTEN. Bildnummern der Zeichnungen in beiden ABSCHNITTEN sind voneinander unabhängig vorgesehen.
Beschreibung	Jeder eine der Zusammenbauteile oder -komponen- ten ist mit einem Zeichen (.) gekennzeichnet, das seinem Namen hinzugefügt steht, und ist hinter der betreffenden Baugruppenbezeichnung angeführt. Wenn ein Teil mit (.) ein Komponent ist, hat er (..) vor seiner Teilbezeichnung.
Menge (Q'ty)	"Q'ty" gibt die Anzahl der erforderlichen Teile pro Maschine an. Bei einem Komponenten einer Baugruppe, jedoch, gibt sie die Anzahl der erforderlichen solchen Komponenten pro Baugruppe an.
Serien -Nr.	Serien-Nr. stellt solche der Motor oder Maschine dar.

Zeichen	Die in den Spalten "Teilbezeichnung" und "Teilnummer" verwendeten Zeichen und Buchstaben sind folgende:
□	Der Teil, der in der obigen Zeile angeführt und nicht mit einem Zeichen versehen ist, kann diesen teil.
☆	Geliefert ist der Teil nicht einzeln sonder die Baugruppe, die solchen enthält.
KIT	Der Teil ist in einer Kiste enthalten. Siehe Service-Kit Ersatzteilliste.
OP	Dieser Teil ist nicht in einer Standard-Maschine eingeschlossen. Er kann als ein wahlweiser Teil besonders bestellt werden.
US	Untergrößenteil.
OS	Übergrößenteil
STD	Standard-Teil

PREFACIO

Debido al programa continuo de investigación y desarrollo, algunos de procedimientos, especificaciones y piezas pueden modificarse en un esfuerzo constante de mejorar las máquinas. Modificaciones periódicas pueden presentarse a esta publicación y enviarse por correo espontáneamente a los distribuidores.

Por lo tanto, se recomienda que los usuarios se ponga en contacto con su distribuidor o concesionarios para que se puedan obtener informaciones acerca de las últimas modificaciones.

El pedido y recepción satisfactoria de las piezas de recambio con buenos resultados dependen mucho de la manera adecuada de manejo de las informaciones disponibles. A fin de evitar confusiones en hacer un pedido, se aconseja que proceda de la siguiente manera:

1. Indique el número de referencia, título del catálogo y cantidad de las piezas requeridas.
2. Indique el número del modelo. La placa de identidad que muestra el número de serie del chasis se encuentra montada en el capó o en el tablero de instrumentos cerca del asiento del conductor.
3. Al hacer un pedido de piezas del motor, sin falta indique el número de serie y el del modelo de cada unidad.
4. Indique la destinación y el método de despacho deseado junto con todas las otras instrucciones especiales para facturación.

Este manual de partes está redactado a base del siguiente principio con que el lector deba familiarizarse.

Fig. No.	Los números de figuras no se asignan en todas secciones de este manual en orden numérico. La asignación de los números de figura a los diseños de las dos SECCIONES se realiza no teniendo nada que ver una con otra. Por lo tanto, los mismos números de figura pueden aparecer en las dos SECCIONES.
Descripción	Todas las piezas componentes de un conjunto llevan un pequeño puntito (.) prefijado a la designación de la misma, y están enumeradas en la línea debajo de la designación del conjunto. En caso de que una pieza que lleva un puntito tiene en su vez algunas piezas componente de la misma, todas tales sub-componentes llevarán dos puntidos (..) prefijados a la designación.
Cantidad	Cada mención de "Cantidad" indica la cantidad de piezas necesaria para cada máquina. En el caso de una pieza componente de algún conjunto, esta rúbrica indicará la cantidad de piezas requeridas por conjunto.
No. de serie	Esto indica el número de serie del modelo de la máquina en que la pieza correspondiente está empleada. Las siguientes letras representan los modolos del motor o de la máquina.

Códigos usados	Los códigos y letras empleados en las columnas de la designación de pieza y el número de referencia son los siguientes:
□	La pieza enumerada en la línea arriba que no lleva ninguna marca puede substituirse por esta pieza. (Substitución unilateral)
☆	Esta pieza no se suministra como la independiente sino como la componente de un conjunto.
KIT	Esta pieza es contenida en un equipo o un kit. Sírvase hacer referencia a la lista de piezas del kit de servicio.
OP	Esta pieza no está incluída en una máquina estándard. Esta pieza podrá pedirse separadamente como un equipo de opción.
US	Pieza de subtamaño.
OS	Pieza rectificada a sobremedida.
STD	Pieza estándard.

PREFÁCIO

Devido à continuidade de pesquisas e desenvolvimento, pode haver alteração em alguns procedimentos, especificações e peças. Esta publicação deve ser periodicamente revisada e enviada automaticamente para os distribuidores.

Recomenda-se que os clientes entrem em contato com seu distribuidor para receber informações sobre as últimas revisões.

A encomenda e o recebimento satisfatórios de peças dependem grandemente da utilização apropriada das informações que se possui. Para evitar enganos ao encomendar novas peças, favor observar os seguintes ítens:

1. Mencionar o número da peça, a denominação do catálogo e a quantidade de peças necesárias.
2. Indicar o número do modelo. A placa do número de série do chassis encontra-se no cofre do motor ou sobre o painel de instrumentos cerca do assento do operador.
3. Ao encomendar peças para o motor, assegurar-se de indicar o número de série de cada unidade.
4. Mencionar o destino desejado e o método de transporte juntamente com quaisquer instruções especiais para a fatura.

Para melhor entendimento o livro de peças contém descrições assim como a seguinte:

Nº Fig.	Os números da figuras não estão em ordem numérica em ambas as seções pois as ilustrações das seções são compiladas independentemente.
Descrição	Quaisquer peças ou componentes de montagem possuem a marca (.) fixada a sua denominação e são listadas abaixo da denominação do conjunto. Quando uma peça com marca (.) é uma peça componente, esta possui uma marca (..) pré-fixada à denominação da peça.
Qtde.	"Qtde" significa a quantidade de peças iguais requeridas por máquina. No caso de ser uma peça componente, isto indica a quantidade de peças iguais requeridas por conjunto ou unidade.
Nº Série	Nº Série significa o número de série do motor ou da máquina.

Códigos	Códigos e letras usados nas colunas de Denominação das Peças e Número das Peças são os seguintes:
□	Uma peça que está indicada na linha acima e não possui uma marca pode ser substituída por esta parte (substituição de sentido único).
☆	Esta peça não é fornecidade isoladamente, mas o conjunto que a contém o é.
KIT	Esta peça faz parte de um jogo. Assim sendo, favor referir-se à lista de peças de jogos de serviço.
OP	Esta peça não está incluída na máquina padrão. Ela pode ser encomendada como peça opcional.
US	Peça de dimensões menores.
OS	Peça de dimensões maiores.
STD	Peça padrão.

تقديم

نتيجة الابحاث والتطويرات المستمرة، فان بعض العمليات، المواصفات والاجزاء ربما يتم تغييرها. ان طبعة دورية منقحة ربما سيتم عملها لهذه الطبعة وترسل اعتياديا الى الموزعين.

ونقترح قيام الزبائن بالاتصال بالموزعين والوكلاء الخاصين بهم للحصول على المعلومات في آخر نسخة منقحة.

ان عمل امر بطلب المواد واستلامها يعتمدان بصورة كبيرة على الاستعمال الصحيح للمعلومات المتوفرة لديكم. ولتلافي الخطأ في امر الطلب يجب اتباع الطريقة التالية:

١ – اعطي رقم الجزء، اسم الكاتلوك وكمية الاجزاء المطلوبة.

٢ – اعطي رقم الموديل. ان لوحة رقم التسلسل للهيكل موجودة على الغطاء المعدني للمحرك او على لوحة المقاييس قرب مقعد السائق.

٣ – عند طلب اجزاء للمحرك لا تنسى أن تذكر رقم تسلسل المحرك.

٤ – اعطي المكان المطلوب لوصول المواد وطريقة الشحن مع اية معلومات خاصة بقوائم الاسعار.

للمعرفة التامة فان كتاب الاجزاء قد تمت كتابته كما يلي:

رقم الشكل: ارقام الاشكال ليست متسلسلة على التوالي في كلا القسمين. ارقام الاشكال للرسومات في كلا القسمين تم عملها بصورة مستقلة.

الوصف: اية مجموعة اجزاء مجمعة او وحدة مكونة من عدة اجزاء سوف يؤشر عليها بالعلامة (.) حيث تثبت على اسم الجزء ويتم درجها بعد اسم المجمع. وعندما يكون الجزء ذو العلامة (.) هو وحدة مكونة من عدة اجزاء فقد تم تثبيت العلامة (. .) امام أجزاء الوحدة.

الكمية: الكمية المذكورة تشير الى كمية الجزء الضرورية لماكنة واحدة ومع ذلك ففي حالة الوحدة المكونة من عدة اجزاء مجمعة فأن الكمية المذكورة تبين كمية الجزء الضرورية للمجمع الواحد.

رقم التسلسل: رقم مسلسل يوضح الرقم المسلسل للمحرك او المعدة.

رموز الدلالة: حروف ورموز الدلالة المستعملة في اعمدة اسم الجزء ورقم الجزء هي كما يلي:

□ الجزء المسجل في السطر الذى قبله وليس فيه علامة يمكن تعويضه بهذا الجزء (طريقة واحدة للتعويض).

☆ جزء لا يجهز كجزء مستقل، ولكونه يدخل في وحدة تتكون من عدة اجزاء.

KIT الجزء سوف يكون ضمن طقم من الاجزاء. يرجى الرجوع الى قائمة اجزاء طواقم الخدمات.

OP هذا الجزء غير متضمن في المكائن الاعتيادية. ويمكن تجهيز بطلب خاص حسب الاختيار.

US جزء اصغر من الحجم الاعتيادى.

OS جزء اكبر من الحجم الاعتيادى.

STD جزء اعتيادى.

ENGINE

S6D95L-1B Engine No. 10001 and up

SECTION INDEX

1. CYLINDER HEAD 1
2. CYLINDER BLOCK 2
3. LUBRICATING OIL SYSTEM 3
4. FUEL SYSTEM 4
5. COOLING SYSTEM 5
6. ELECTRICAL SYSTEM 6
K. KIT ..... K

CYLINDER HEAD

CONTENTS

	FIG NO.	PAGE
CYLINDER HEAD	1001	2
ROCKER ARM	1101	4
CYLINDER HEAD COVER	1151	6
AIR INTAKE MANIFOLD AND CONNECTION	1301	8
AIR CLEANER	1401	10
EXHAUST MANIFOLD AND TURBOCHARGER	1501	12
MUFFLER	1601	14

Fig. 1001 CYLINDER HEAD

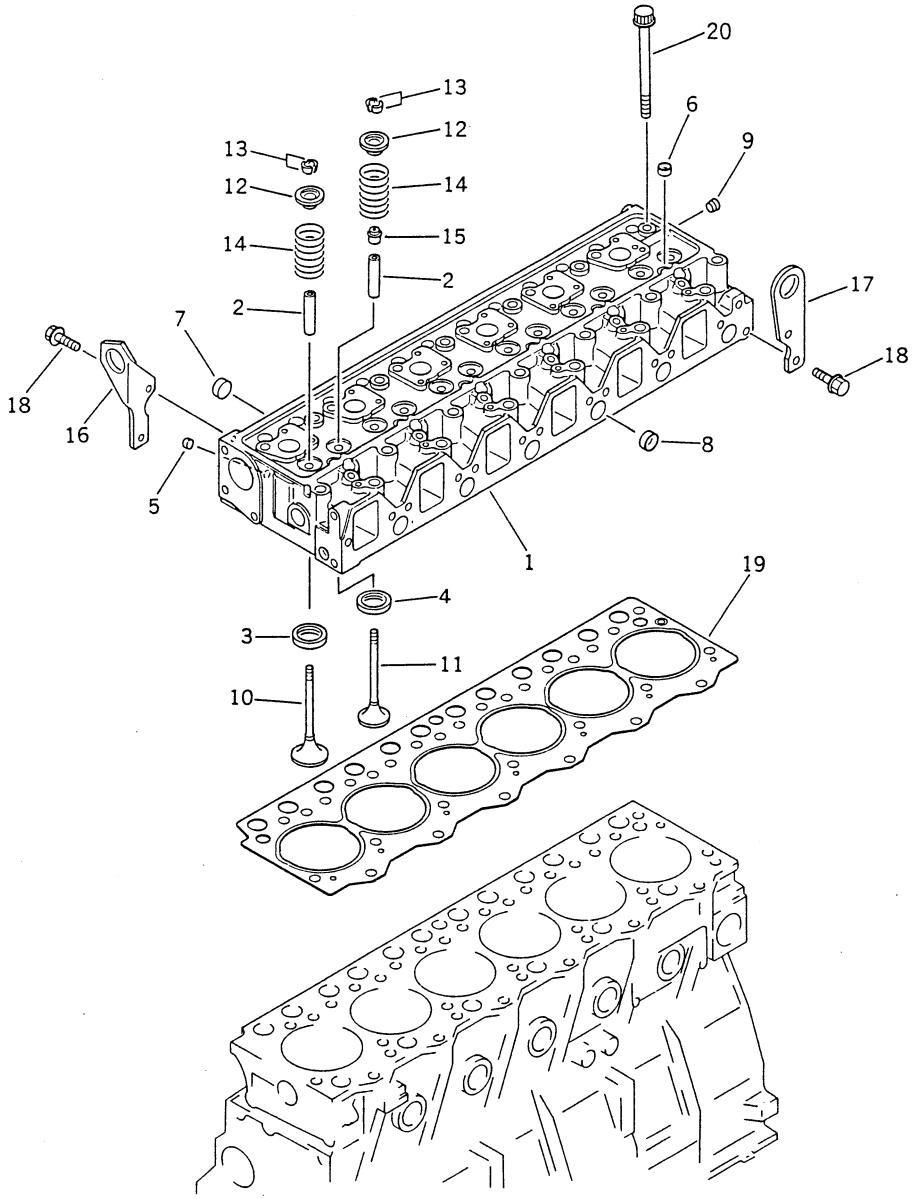

FIG NO. 1001

INDEX NO.	PART NO.	DESCRIPTION	Q'TY	SERIAL NO. S6D95L-1B	SERIAL NO.
	6207-11-1020	CYLINDER HEAD ASS'Y, WITH VALVE	1	10001 –	
	6207-11-1100	• CYLINDER HEAD ASS'Y, VALVE LESS	1	10001 –	
1	(☆6207-11-1110)	•• HEAD, CYLINDER	1	10001 –	
2	6204-11-1310	•• GUIDE, VALVE	12	10001 –	
3	6207-11-1430	•• SEAT, INTAKE VALVE (STD)	6	10001 –	
3	6207-19-1430	•• SEAT, INTAKE VALVE 0.25MM(OS)	6	10001 –	
3	6207-18-1430	•• SEAT, INTAKE VALVE 0.50MM(OS)	6	10001 –	
4	6207-11-1440	•• SEAT, EXHAUST VALVE (STD)	6	10001 –	
4	6207-19-1440	•• SEAT, EXHAUST VALVE 0.25MM (OS)	6	10001 –	
4	6207-18-1440	•• SEAT, EXHAUST VALVE 0.50MM (OS)	6	10001 –	
5	07046-41008	•• PLUG	6	10001 –	
6	07046-41810	•• PLUG	7	10001 –	
7	07046-42216	•• PLUG	5	10001 –	
8	07046-42516	•• PLUG	16	10001 –	
9	02720-40104	•• PLUG	1	10001 –	
10	6207-41-4110	• VALVE, INTAKE	6	10001 –	
11	6204-41-4210	• VALVE, EXHAUST	6	10001 –	
12	6204-41-4510	• SEAT, SPRING	12	10001 –	
13	6204-41-4520	• COTTER	24	10001 –	
14	6204-41-4431	• SPRING, VALVE	12	10001 –	
15	6204-41-4540	• SEAL, VALVE (K1)	6	10001 –	
16	6206-11-1930	HANGER, FRONT	1	10001 –	
17	6206-11-1910	HANGER, REAR	1	10001 –	
18	01435-01020	BOLT	4	10001 –	
19	6207-11-1810	GASKET, HEAD (K1)	1	10001 –	
20	6142-11-1611	BOLT, HEAD	25	10001 –	

Fig. 1101 ROCKER ARM

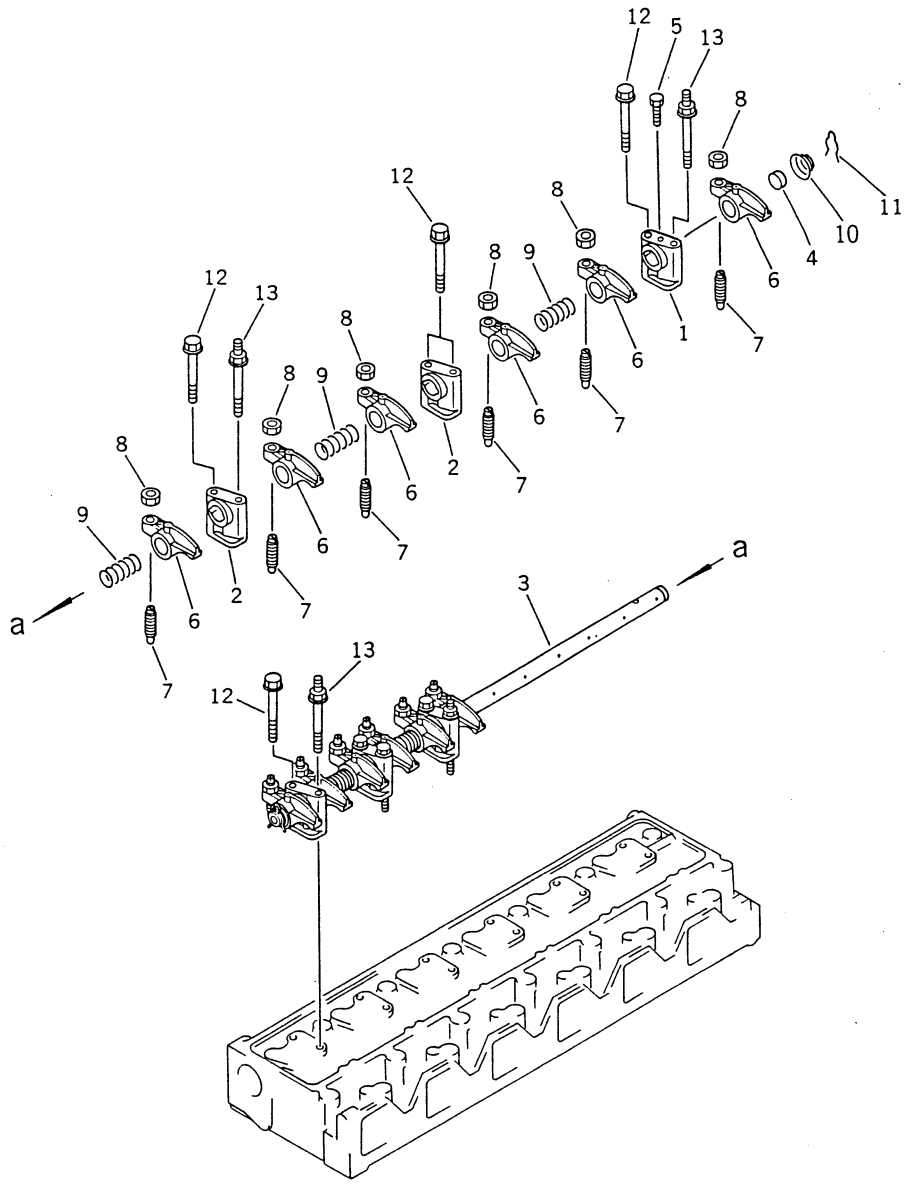

FIG NO. 1101

INDEX NO.	PART NO.	DESCRIPTION	Q'TY	SERIAL NO. S6D95L-1B	SERIAL NO.
	6206-41-5100	ROCKER ARM ASS'Y	1	10001 –	
1	6204-41-5110	• BRACKET	1	10001 –	
2	6204-41-5120	• BRACKET	5	10001 –	
3	6206-41-5210	• SHAFT	1	10001 –	
4	6142-42-5550	• PLUG	2	10001 –	
5	01010-30612	• BOLT	1	10001 –	
6	6204-41-5410	• ARM, ROCKER	12	10001 –	
7	6204-41-5420	• SCREW, ADJUST	12	10001 –	
8	6130-41-5430	• NUT	12	10001 –	
9	6142-42-5320	• SPRING	5	10001 –	
10	6136-41-5320	• SPRING	2	10001 –	
11	6136-41-5330	• CLIP	2	10001 –	
12	01435-00865	BOLT	8	10001 –	
13	6204-41-5710	BOLT	4	10001 –	

Fig. 1151 CYLINDER HEAD COVER

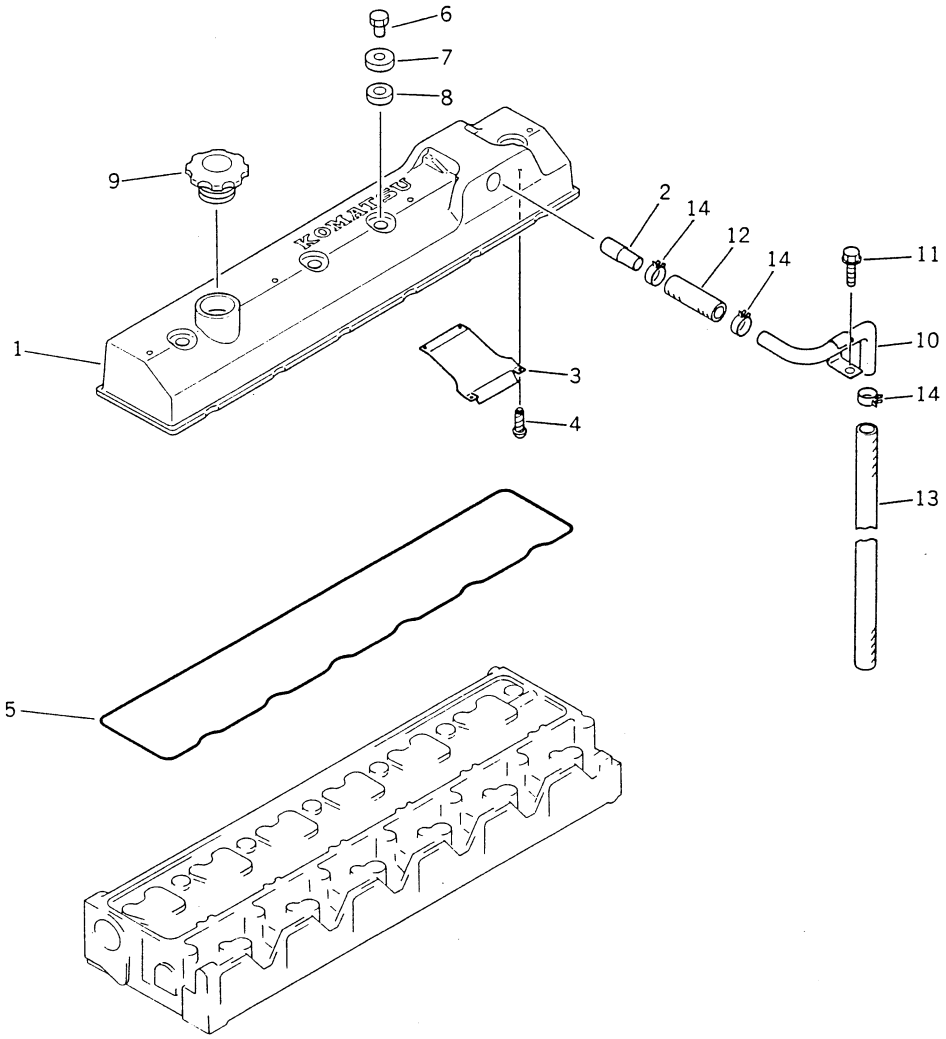

FIG NO. 1151

INDEX NO.	PART NO.	DESCRIPTION	Q'TY	SERIAL NO. S6D95L-1B	SERIAL NO.
	6207-11-8100	HEAD COVER ASS'Y	1	10001 –	
1	6207-11-8110	• COVER, HEAD	1	10001 –	
2	6207-11-8170	• TUBE	1	10001 –	
3	6207-11-8140	• PLATE	1	10001 –	
4	04418-02550	• SCREW	4	10001 –	
5	6206-11-8810	O-RING (K1)	1	10001 –	
6	6136-11-8120	NUT	4	10001 –	
7	6136-11-8130	WASHER	4	10001 –	
8	6136-11-8142	RUBBER (K1)	4	10001 –	
9	6130-12-8610	CAP	1	10001 –	
10	6207-11-8910	TUBE, BREATHER	1	10001 –	
11	01435-21020	BOLT	1	10001 –	
12	07286-01606	HOSE	1	10001 –	
13	07286-01670	HOSE	1	10001 –	
14	07285-00180	CLAMP	3	10001 –	

Fig. 1301 AIR INTAKE MANIFOLD AND CONNECTION

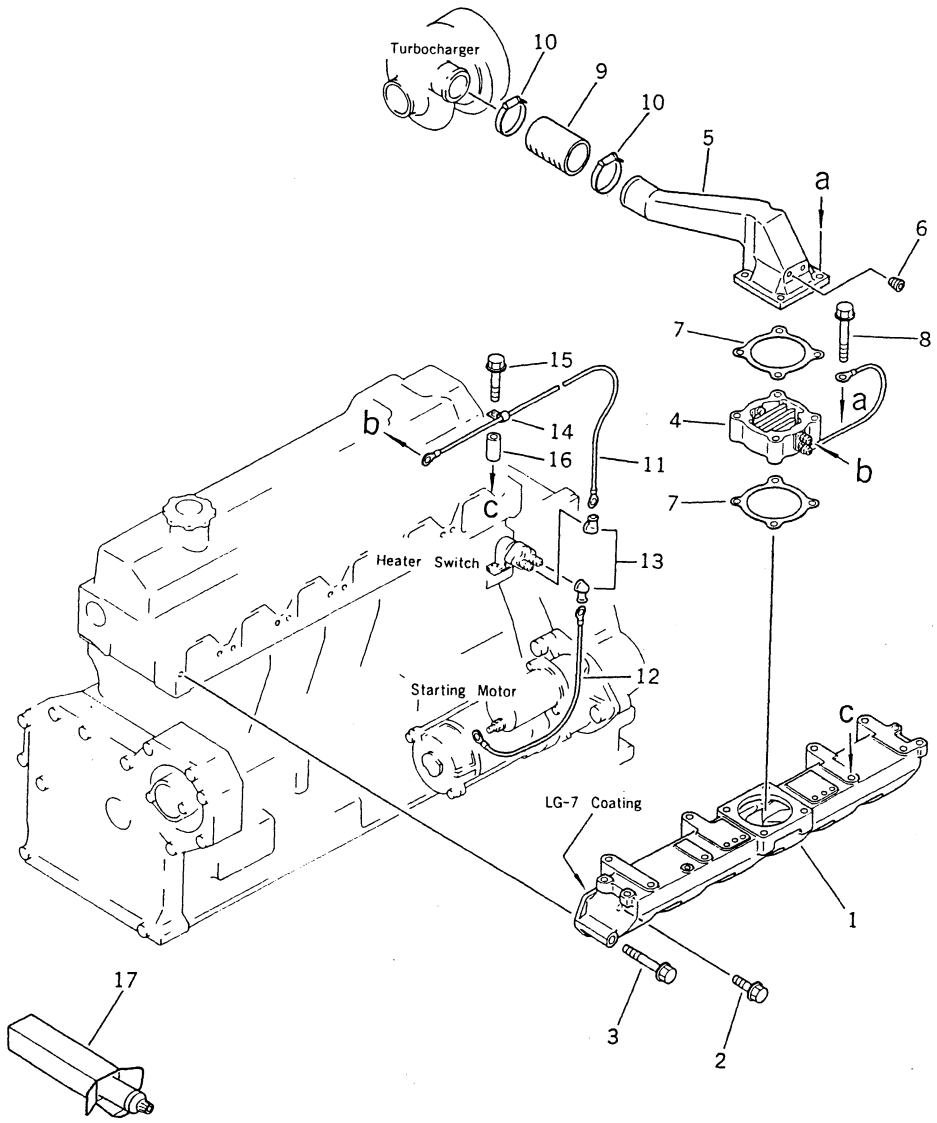

FIG NO. 1301

INDEX NO.	PART NO.	DESCRIPTION	Q'TY	SERIAL NO. S6D95L-1B	SERIAL NO.
1	6206-11-4110	MANIFOLD, INTAKE	1	10001 –	
2	01435-21030	BOLT	11	10001 –	
3	01435-21085	BOLT	1	10001 –	
4	600-815-2341	HEATER, RIBBON	1	10001 –	
5	6207-11-4310	CONNECTOR, AIR	1	10001 –	
6	07043-50108	PLUG	2	10001 –	
7	6136-11-4820	GASKET (K1)	2	10001 –	
8	01435-21070	BOLT	4	10001 –	
9	6131-11-4370	HOSE	1	10001 –	
10	07281-00709	CLAMP	2	10001 –	
11	6206-81-4720	WIRE	1	10001 –	
12	6206-81-4730	WIRE	1	10001 –	
13	08038-00518	CAP	2	10001 –	
14	08036-10814	CLIP	1	10001 –	
15	01435-21045	BOLT	1	10001 –	
16	6144-11-5630	SPACER	1	10001 –	
17	09920-00150	GASKET, LIQUID, LG-7, 150G (SERVICE PARTS)	AR	10001 –	

Fig. 1401 AIR CLEANER

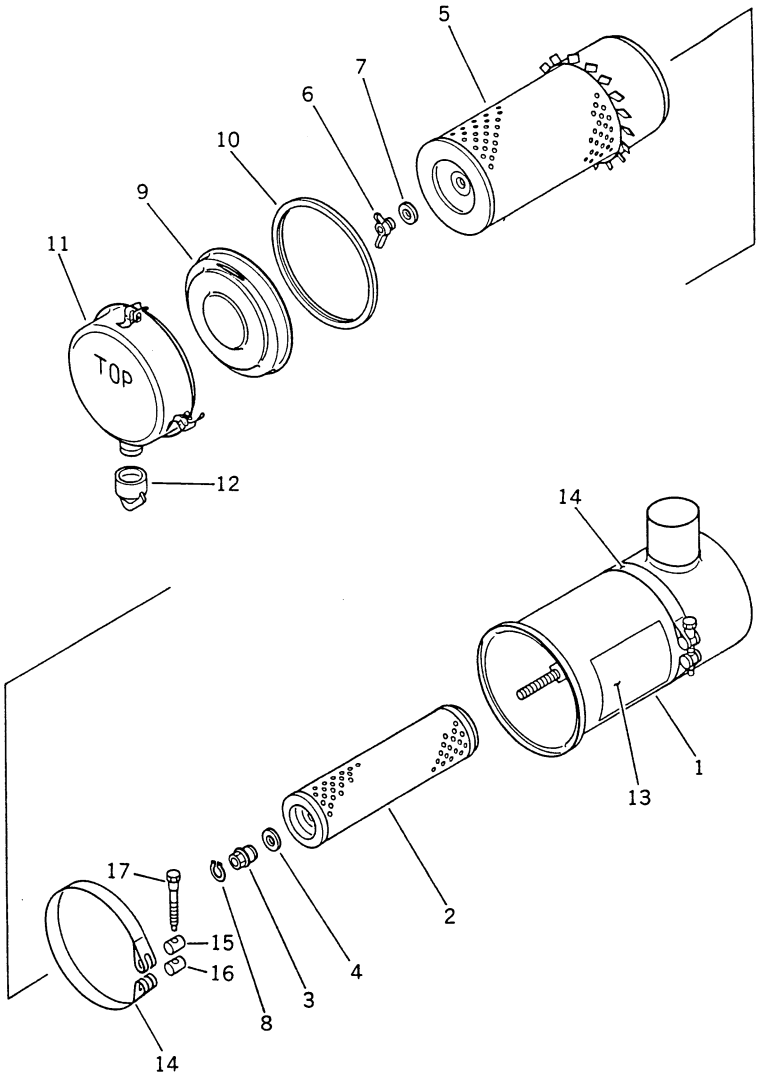

FIG NO. 1401

INDEX NO.	PART NO.	DESCRIPTION	Q'TY	SERIAL NO. S6D95L-1B	SERIAL NO.
	6130-82-7401	AIR CLEANER ASS'Y	1	10001 –	
1	6130-82-7411	• BODY	1	10001 –	
2	600-181-9500	• ELEMENT ASS'Y	1	10001 –	
2	(☆600-181-9340)	•• ELEMENT, INNER	1	10001 –	
3	600-181-9631	•• NUT	1	10001 –	
4	600-181-7511	•• WASHER, SEAL	1	10001 –	
5	600-181-9200	•• ELEMENT ASS'Y, OUTER	1	10001 –	
5	(☆600-181-9240)	••• ELEMENT, OUTER	1	10001 –	
6	600-181-8640	••• NUT, WING	1	10001 –	
7	600-181-7511	••• WASHER, SEAL	1	10001 –	
8	04064-01510	••• RING, SNAP	1	10001 –	
9	600-181-9551	• DIVIDER	1	10001 –	
10	600-181-9430	• GASKET	1	10001 –	
11	600-181-9541	• PAN, DUST	1	10001 –	
12	600-181-7680	• VALVE	1	10001 –	
13	09461-00161	PLATE, CAUTION	1	10001 –	
14	6134-11-4610	BAND	2	10001 –	
15	6110-21-6530	PIN	2	10001 –	
16	6110-21-6540	PIN	2	10001 –	
17	6110-23-6520	BOLT	2	10001 –	

Fig. 1501 EXHAUST MANIFOLD AND TURBOCHARGER

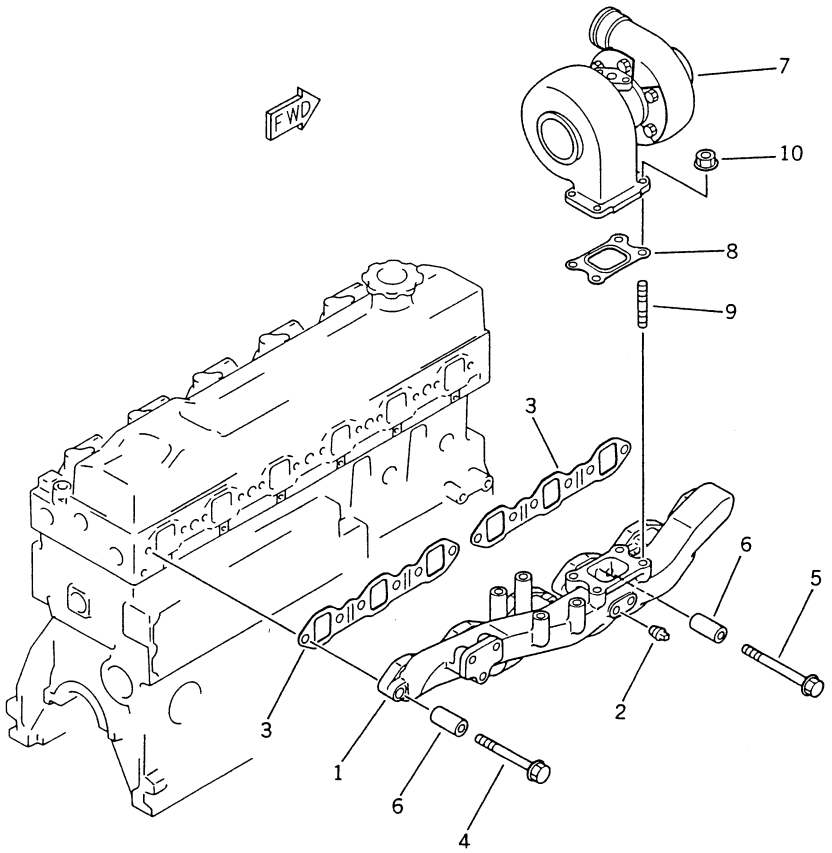

FIG NO. 1501

INDEX NO.	PART NO.	DESCRIPTION	Q'TY	SERIAL NO. S6D95L-1B	SERIAL NO.
1	6207-11-5110	MANIFOLD, EXHAUST	1	10001 –	
2	07042-20108	PLUG	2	10001 –	
3	6207-11-5810	GASKET (K1)	2	10001 –	
4	01435-01090	BOLT	11	10001 –	
5	01435-01095	BOLT	1	10001 –	
6	6134-11-5120	SPACER	12	10001 –	
7	6207-81-8130	TURBOCHARGER ASS'Y	1	10001 –	
8	6207-11-5580	GASKET (K1)	1	10001 –	
9	01140-61025	STUD	4	10001 –	
10	6142-12-5850	NUT	4	10001 –	

Fig. 1601 MUFFLER

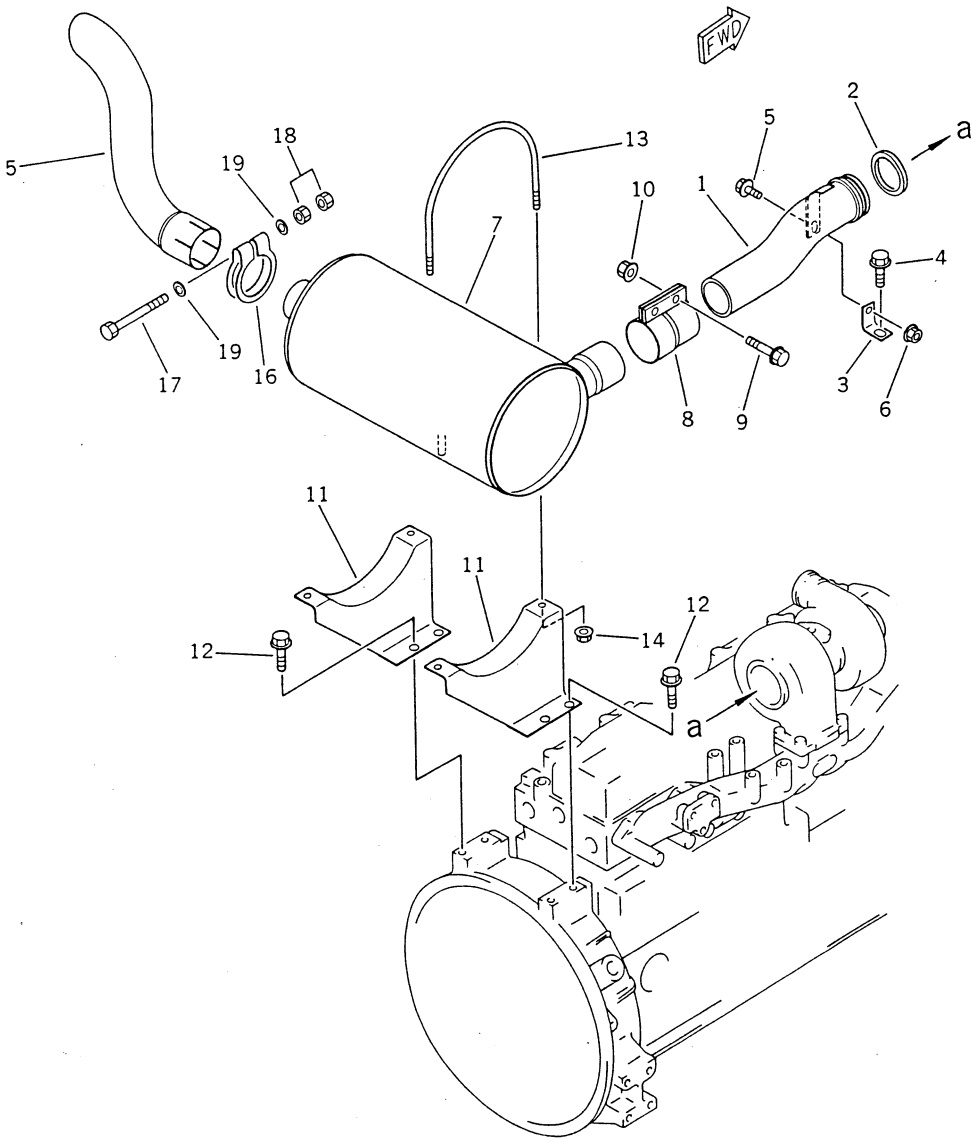

FIG NO. 1601

INDEX NO.	PART NO.	DESCRIPTION	Q'TY	SERIAL NO. S6D95L-1B	SERIAL NO.
1	6207-11-5621	PIPE	1	10001 –	
2	6207-11-5380	RING, SEAL	1	10001 –	
3	6207-11-5980	BRACKET	1	10001 –	
4	01435-01016	BOLT	1	10001 –	
5	01435-20816	BOLT	1	10001 –	
6	01584-00806	NUT	1	10001 –	
7	6207-11-5220	MUFFLER	1	10001 –	
8	6206-11-5910	CLAMP	1	10001 –	
9	01435-01235	BOLT	2	10001 –	
10	01584-01210	NUT	2	10001 –	
11	6207-11-5520	BRACKET	2	10001 –	
12	01435-01020	BOLT	4	10001 –	
13	6206-11-5980	U-BOLT	2	10001 –	
14	01584-00806	NUT	4	10001 –	
15	6207-11-5710	PIPE, EXHAUST	1	10001 –	
16	6206-11-5920	CLAMP	1	10001 –	
17	01010-31080	BOLT	1	10001 –	
18	01580-21008	NUT	2	10001 –	
19	01640-21016	WASHER	2	10001 –	

CYLINDER BLOCK

CONTENTS

	FIG NO.	PAGE
CYLINDER BLOCK	2001	18
FRONT COVER AND GEAR	2021	22
OIL PAN	2101	24
FLYWHEEL AND FLYWHEEL HOUSING	2201	26
CRANKSHAFT	2301	28
PISTON AND CONNECTING ROD	2351	32
CAMSHAFT AND TAPPET	2401	36

2

Fig. 2001 CYLINDER BLOCK

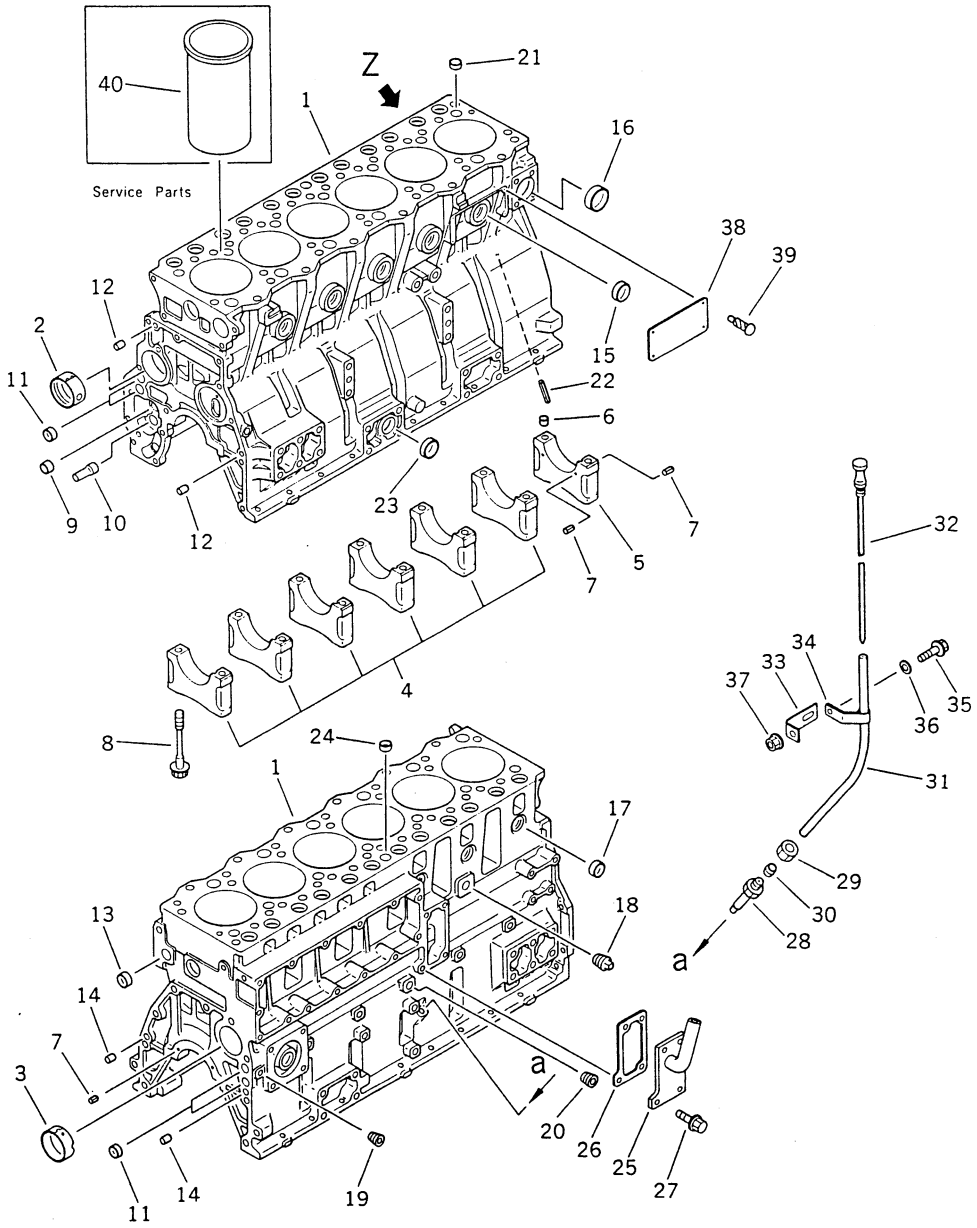

View Z

INDEX NO.	PART NO.	DESCRIPTION	Q'TY	SERIAL NO. S6D95L-1B	SERIAL NO.
	6207-21-1101	CYLINDER BLOCK ASS'Y	1	10001 –	
1	(☆6207-21-1111)	• BLOCK, CYLINDER	1	10001 –	
2	6204-21-1410	• BUSHING, CAMSHAFT	1	10001 –	
3	6206-21-1420	• BUSHING, CAMSHAFT	3	10001 –	
4	6204-29-1210	• CAP, MAIN METAL, NO.1,2,3,4,5,6	6	10001 –	
4	(△6204-21-1210)	• CAP, MAIN METAL, NO.1,2,3,4,5,6	6	10001 –	
5	6204-29-1220	• CAP, MAIN METAL, NO.7	1	10001 –	
5	(△6204-21-1220)	• CAP, MAIN METAL, NO.7	1	10001 –	
6	6141-21-1530	• BUSHING, DOWEL	2	10001 –	
7	04025-00408	• PIN, SPRING	6	10001 –	
8	6204-21-1610	• BOLT, MAIN CAP	14	10001 –	
9	6204-51-1710	• BUSHING, OIL PUMP	1	10001 –	
10	6204-51-1620	• SHAFT, OIL PUMP	1	10001 –	
11	07046-21810	• PLUG	4	10001 –	
12	04020-00820	• PIN, DOWEL	2	10001 –	
13	07046-42010	• PLUG	1	10001 –	
14	04020-01228	• PIN, DOWEL	2	10001 –	
15	07046-43016	• PLUG	7	10001 –	
16	07046-44016	• PLUG	1	10001 –	
17	07046-42516	• PLUG	6	10001 –	
18	07042-00312	• PLUG	1	10001 –	
19	07043-50108	• PLUG	6	10001 –	
20	07043-50211	• PLUG	1	10001 –	
21	6140-21-1130	• BUSHING, DOWEL	2	10001 –	
22	6207-21-1190	• PIN	6	10001 –	
23	07046-23016	PLUG	1	10001 –	
24	6206-21-1790	PLUG	1	10001 –	
25	6207-21-6710	PLATE	1	10001 –	
26	6206-21-6810	GASKET (K2)	1	10001 –	
27	01435-20816	BOLT	4	10001 –	
28	6204-21-5510	GUIDE, BASE	1	10001 –	
29	6150-21-5930	NUT	1	10001 –	
30	6150-21-5920	SLEEVE	1	10001 –	
31	6206-21-5420	GUIDE, OIL GAUGE	1	10001 –	
32	6206-21-5321	GAUGE, OIL	1	10001 –	

FIG NO. 2001

INDEX NO.	PART NO.	DESCRIPTION	Q'TY	SERIAL NO. S6D95L-1B	SERIAL NO.
33	6136-71-5730	BRACKET	1	10001 –	
34	6206-21-5510	CLIP	1	10001 –	
35	01435-20816	BOLT	1	10001 –	
36	01642-20810	WASHER	1	10001 –	
37	01584-20806	NUT	1	10001 –	
38	09605-01411	PLATE,NAME (LIMITED SUPPLY)	1	10001 –	
39	04418-02550	SCREW	4	10001 –	
40	6207-21-2110	LINER, CYLINDER, A (SERVICE PARTS)	AR	10001 –	
40	6207-21-2120	LINER, CYLINDER, B (SERVICE PARTS)	AR	10001 –	

Fig. 2021 FRONT COVER AND GEAR

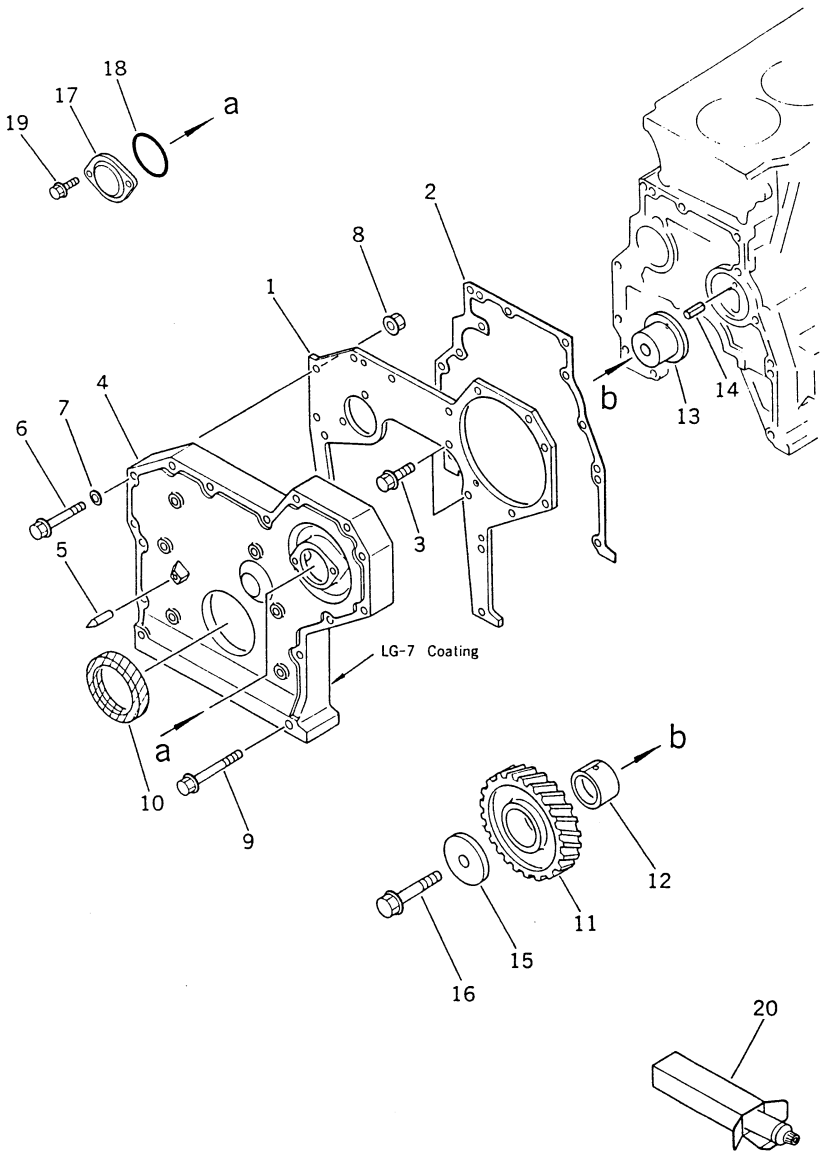

INDEX NO.	PART NO.	DESCRIPTION	Q'TY	SERIAL NO. S6D95L-1B	SERIAL NO.
1	6206-21-3210	PLATE, FRONT	1	10001 –	
2	6204-21-3811	GASKET (K2)	1	10001 –	
3	01435-20816	BOLT	2	10001 –	
4	6204-21-3111	COVER, FRONT	1	10001 –	
5	6204-21-3850	POINTER	1	10001 –	
6	01435-20855	BOLT	13	10001 –	
7	01641-20812	WASHER	1	10001 –	
8	01584-00806	NUT	2	10001 –	
9	01435-20870	BOLT	2	10001 –	
10	6204-21-3510	SEAL, FRONT (K2)	1	10001 –	
11	6206-31-6300	IDLER GEAR ASS'Y	1	10001 –	
11	(☆6206-31-6310)	• GEAR, IDLER	1	10001 –	
12	6204-31-6340	• BUSHING	1	10001 –	
13	6204-31-6330	SHAFT	1	10001 –	
14	04025-00512	PIN, SPRING	1	10001 –	
15	6204-31-6350	WASHER	1	10001 –	
16	01435-01270	BOLT	1	10001 –	
17	6144-81-5151	COVER	1	10001 –	
18	07000-03050	O-RING (K2)	1	10001 –	
19	01435-20616	BOLT	2	10001 –	
20	(09920-00150)	GASKET, LIQUID, LG-7, 150G (SERVICE PARTS)	AR	10001 –	

Fig. 2101 OIL PAN

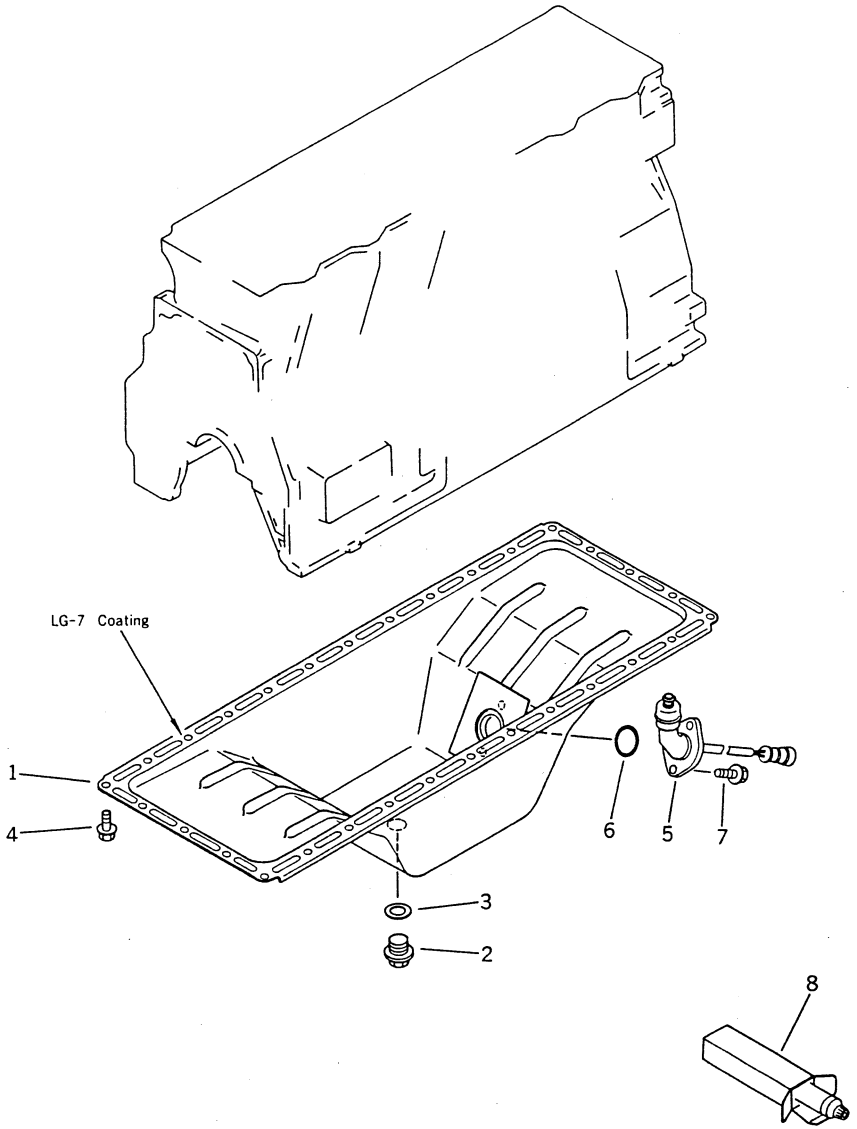

INDEX NO.	PART NO.	DESCRIPTION	Q'TY	SERIAL NO. S6D95L-1B	SERIAL NO.
1	6206-21-5130	PAN, OIL	1	10001 –	
2	6204-21-5190	PLUG, DRAIN	1	10001 –	
3	6204-21-5290	GASKET (K2)	1	10001 –	
4	01435-20814	BOLT	30	10001 –	
5	203-06-41160	SENSOR, OIL LEVEL	1	10001 –	
6	07000-63030	O-RING (K2)	1	10001 –	
7	01435-20816	BOLT	2	10001 –	
8	(09920-00150)	GASKET, LIQUID, LG-7, 150G (SERVICE PARTS)	AR	10001 –	

Fig. 2201 FLYWHEEL AND FLYWHEEL HOUSING

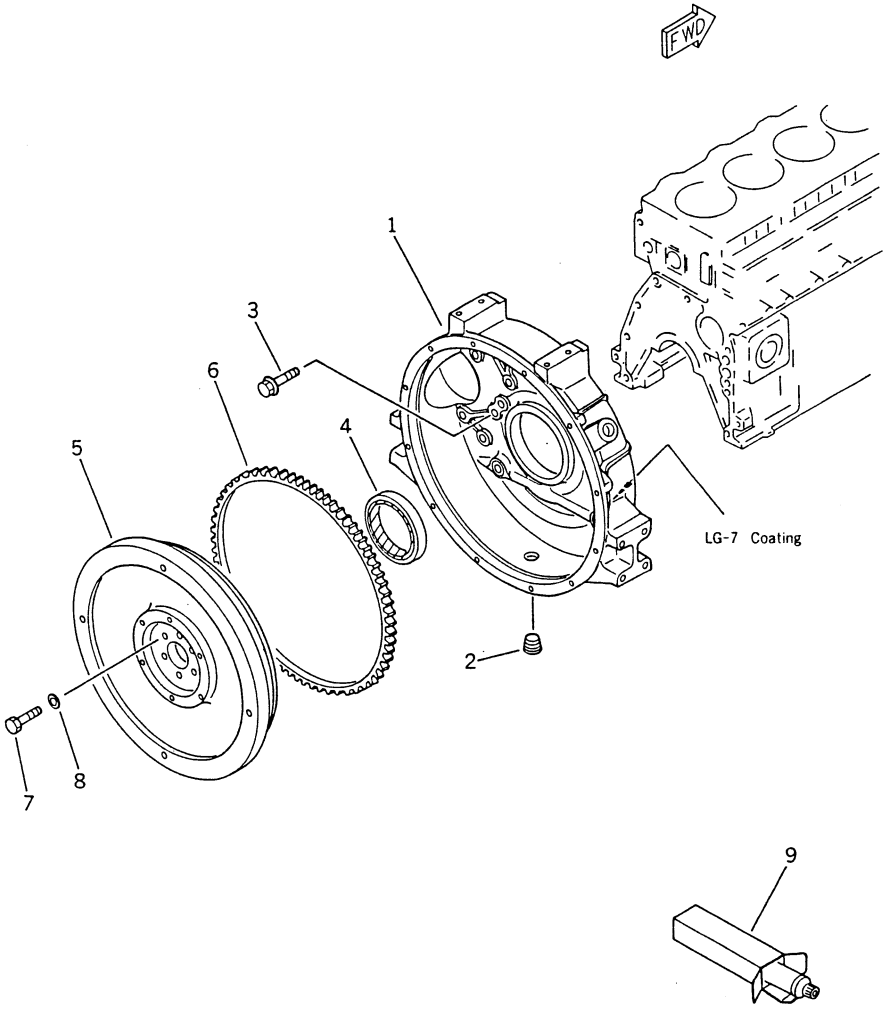

FIG NO. 2201

INDEX NO.	PART NO.	DESCRIPTION	Q'TY	SERIAL NO. S6D95L-1B	SERIAL NO.
1	6206-21-4140	HOUSING, FLYWHEEL	1	10001 –	
2	07043-50415	PLUG	1	10001 –	
3	01435-01030	BOLT	11	10001 –	
4	6141-21-1332	SEAL, REAR (K2)	1	10001 –	
5	6206-31-4230	FLYWHEEL ASS'Y	1	10001 –	
5	(☆6206-31-4240)	• FLYWHEEL	1	10001 –	
6	6206-31-4790	• GEAR, RING	1	10001 –	
7	01050-31430	BOLT	6	10001 –	
8	6130-32-1361	WASHER	6	10001 –	
9	(09920-00150)	GASKET, LIQUID, LG-7, 150G (SERVICE PARTS)	AR	10001 –	

Fig. 2301 CRANKSHAFT

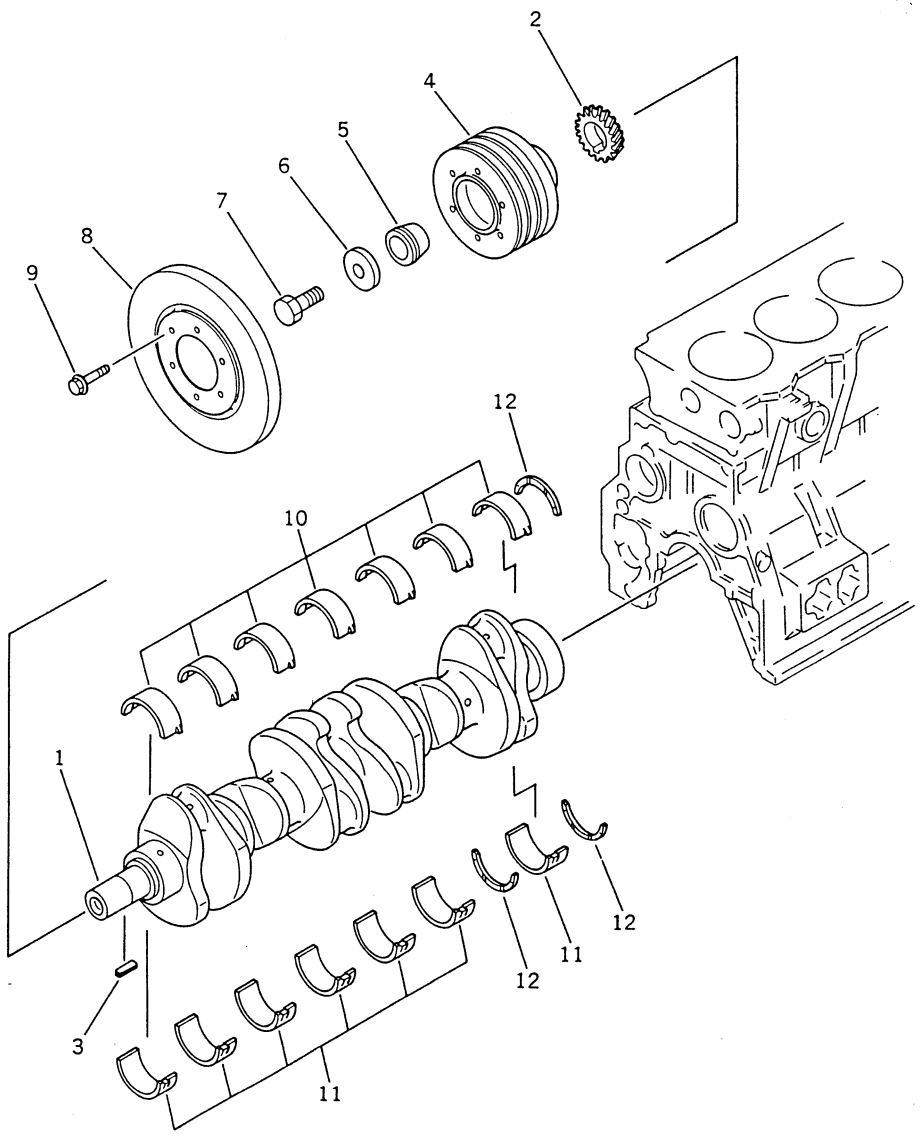

INDEX NO.	PART NO.	DESCRIPTION	Q'TY	SERIAL NO. S6D95L-1B	SERIAL NO.
	6207-31-1100	CRANKSHAFT ASS'Y	1	10001 –	
1	(☆6207-31-1110)	• CRANKSHAFT	1	10001 –	
2	6204-31-1220	• GEAR, CRANKSHAFT	1	10001 –	
3	6206-31-1530	• KEY	1	10001 –	
4	6206-31-1430	PULLEY, CRANK	1	10001 –	
5	6136-31-1420	COLLAR, TAPER	1	10001 –	
6	6136-31-1431	PLATE	1	10001 –	
7	6110-33-1411	BOLT, NYLOCK	1	10001 –	
8	6206-31-8100	DAMPER	1	10001 –	
9	01435-21016	BOLT	6	10001 –	
10	6204-21-8100	MAIN METAL ASS'Y	7	10001 –	
10	(☆6204-21-8110)	• METAL, UPPER	1	10001 –	
11	(☆6204-21-8120)	• METAL, LOWER	1	10001 –	
12	6204-21-8500	THRUST METAL ASS'Y	1	10001 –	
12	(☆6204-21-8510)	• METAL	3	10001 –	

Fig. 2351 PISTON AND CONNECTING ROD

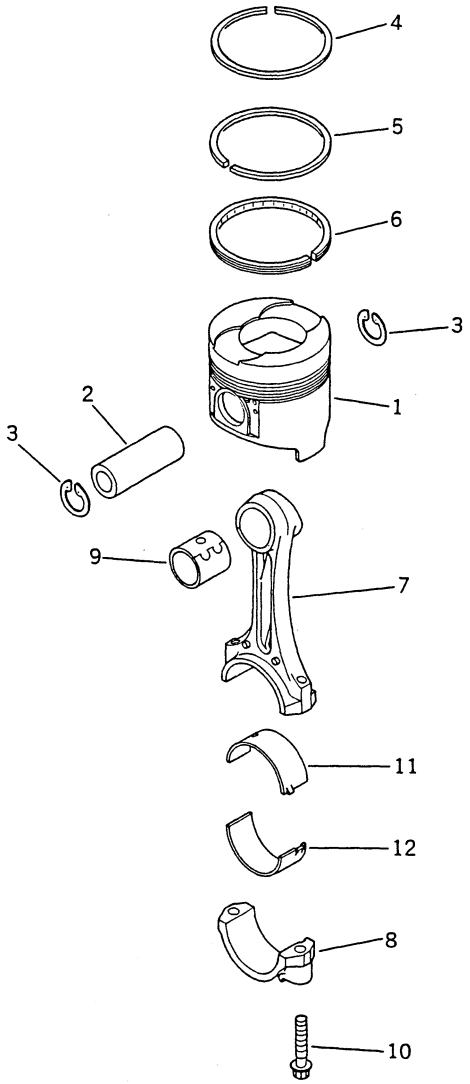

FIG NO. 2351

INDEX NO.	PART NO.	DESCRIPTION	Q'TY	SERIAL NO. S6D95L-1B	SERIAL NO.
		STANDARD			
1	6207-31-2110	PISTON (L)	6	10001 –	
	6207-31-2120	PISTON (S)	6	10001 –	
		OVERSIZE 0.25MM			
1	6207-39-2110	PISTON (L)	6	10001 –	
	6207-39-2120	PISTON (S)	6	10001 –	
		OVERSIZE 0.50MM			
1	6207-38-2110	PISTON (L)	6	10001 –	
	6207-38-2120	PISTON (S)	6	10001 –	
2	6207-31-2410	PIN, PISTON	6	10001 –	
3	04065-03012	RING, SNAP	12	10001 –	
		STANDARD			
4	6207-31-2200	PISTON RING ASS'Y, PER CYLINDER	6	10001 –	
4	(☆6207-31-2210)	• RING, TOP	1	10001 –	
5	(☆6207-31-2220)	• RING, SECOND	1	10001 –	
6	(☆6204-31-2230)	• RING, OIL	1	10001 –	
		OVERSIZE 0.25MM			
4	6207-39-2200	PISTON RING ASS'Y, PER CYLINDER	6	10001 –	
4	(☆6207-39-2210)	• RING, TOP	1	10001 –	
5	(☆6207-39-2220)	• RING, SECOND	1	10001 –	
6	(☆6204-39-2230)	• RING, OIL	1	10001 –	
		OVERSIZE 0.50MM			
4	6207-38-2200	PISTON RING ASS'Y, PER CYLINDER	6	10001 –	
4	(☆6207-38-2210)	• RING, TOP	1	10001 –	
5	(☆6207-38-2220)	• RING, SECOND	1	10001 –	
6	(☆6204-38-2230)	• RING, OIL	1	10001 –	
7	6207-31-3100	CONNECTING ROD ASS'Y	6	10001 –	
7	(☆6207-31-3110)	• ROD, CONNECTING	1	10001 –	

FIG NO. 2351

NDEX NO.	PART NO.	DESCRIPTION	Q'TY	SERIAL NO. S6D95L-1B	SERIAL NO.
8	(☆6204-31-3120)	• CAP	1	10001 –	
9	6207-31-3130	• BUSHING	1	10001 –	
10	6204-31-3310	• BOLT	2	10001 –	
		STANDARD			
11	6207-31-3400	CRANK PIN METAL ASS'Y	6	10001 –	
11	(☆6207-31-3410)	• METAL, UPPER	1	10001 –	
12	(☆6204-31-3410)	• METAL, LOWER	1	10001 –	
		UNDERSIZE 0.25MM			
11	6207-39-3400	CRANK PIN METAL ASS'Y	6	10001 –	
11	(☆6207-39-3410)	• METAL, UPPER	1	10001 –	
12	(☆6204-39-3410)	• METAL, LOWER	1	10001 –	
		UNDERSIZE 0.50MM			
11	6207-38-3400	CRANK PIN METAL ASS'Y	6	10001 –	
11	(☆6207-38-3410)	• METAL, UPPER	1	10001 –	
12	(☆6204-38-3410)	• METAL, LOWER	1	10001 –	
		UNDERSIZE 0.75MM			
11	6207-37-3400	CRANK PIN METAL ASS'Y	6	10001 –	
11	(☆6207-37-3410)	• METAL, UPPER	1	10001 –	
12	(☆6204-37-3410)	• METAL, LOWER	1	10001 –	
		UNDERSIZE 1.00MM			
11	6207-36-3400	CRANK PIN METAL ASS'Y	6	10001 –	
11	(☆6207-36-3410)	• METAL, UPPER	1	10001 –	
12	(☆6204-36-3410)	• METAL, LOWER	1	10001 –	

Fig. 2401 CAMSHAFT AND TAPPET

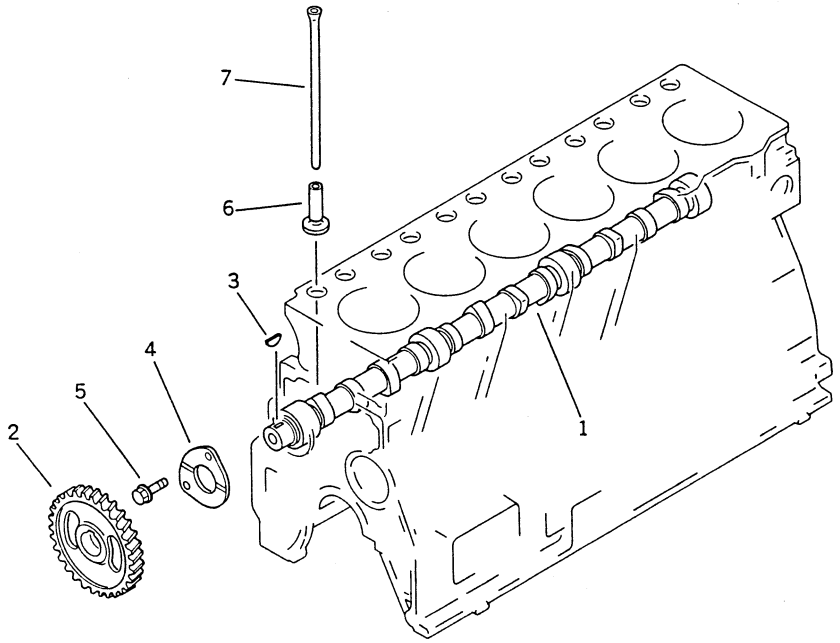

FIG NO. 2401

INDEX NO.	PART NO.	DESCRIPTION	Q'TY	SERIAL NO. S6D95L-1B	SERIAL NO.
	6207-41-1100	CAMSHAFT ASS'Y	1	10001 –	
1	(☆6207-41-1111)	• CAMSHAFT	1	10001 –	
2	6206-41-1220	• GEAR, CAMSHAFT	1	10001 –	
3	04010-00516	• KEY	1	10001 –	
4	6206-41-1131	• PLATE, THRUST	1	10001 –	
5	01435-20820	BOLT	2	10001 –	
6	6204-41-2110	TAPPET	12	10001 –	
7	6204-41-3110	ROD, PUSH	12	10001 –	

LUBRICATING OIL SYSTEM

CONTENTS

	FIG NO.	PAGE
LUBRICATING OIL PUMP AND SUCTION PIPE	3001	40
LUBRICATING OIL FILTER	3101	42
TURBOCHARGER LUBRICATING OIL PIPING	3251	44
LUBRICATING OIL COOLER	3301	46

Fig. 3001 LUBRICATING OIL PUMP AND SUCTION PIPE

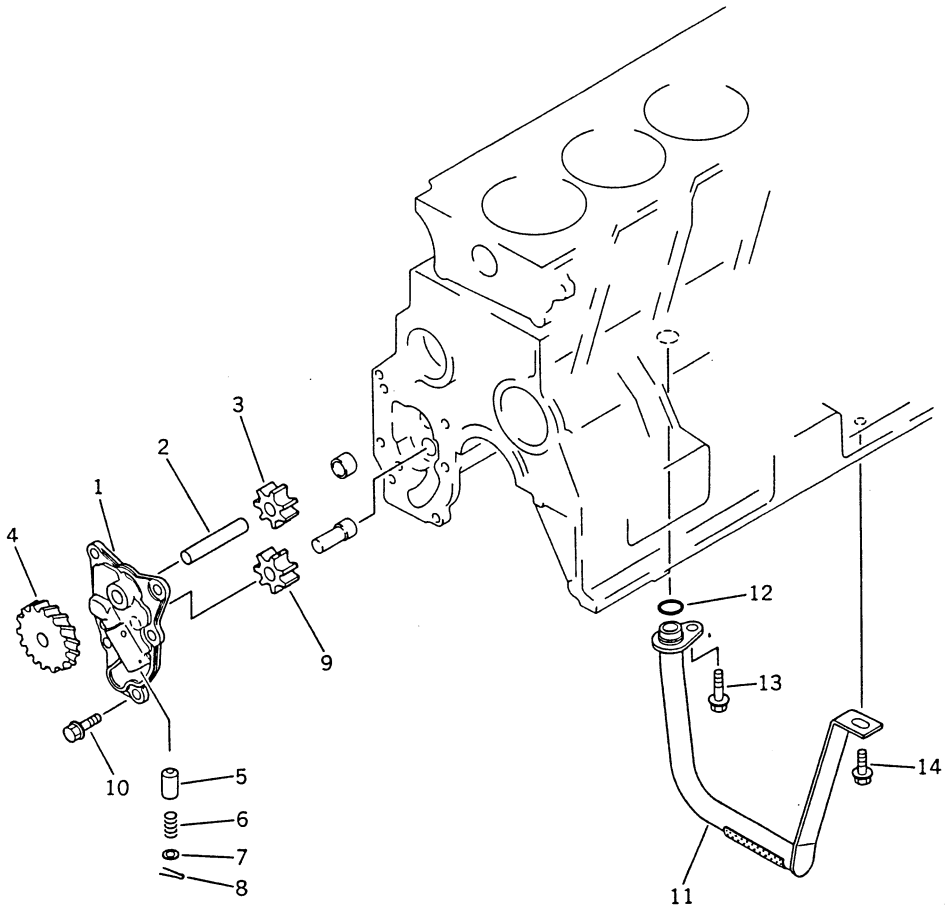

INDEX NO.	PART NO.	DESCRIPTION	Q'TY	SERIAL NO. S6D95L-1B	SERIAL NO.
	6207-51-1100	OIL PUMP ASS'Y	1	10001 –	
	6207-51-1200	• COVER ASS'Y	1	10001 –	
1	(☆6204-51-1210)	•• COVER	1	10001 –	
2	6207-51-1400	•• SHAFT ASS'Y	1	10001 –	
2	(☆6204-51-1420)	••• SHAFT	1	10001 –	
3	6207-51-1410	••• GEAR, DRIVE	1	10001 –	
4	6204-51-1510	•• GEAR	1	10001 –	
5	6204-51-1310	•• VALVE	1	10001 –	
6	6206-51-1320	•• SPRING	1	10001 –	
7	6204-51-1330	•• WASHER	1	10001 –	
8	6204-51-1340	•• PIN, COTTER	1	10001 –	
9	6207-51-1610	• GEAR, DRIVEN	1	10001 –	
10	01435-20816	BOLT	5	10001 –	
11	6206-51-6230	TUBE, SUCTION	1	10001 –	
12	6204-51-6120	O-RING (K2)	1	10001 –	
13	01435-20816	BOLT	1	10001 –	
14	01435-20812	BOLT	1	10001 –	

Fig. 3101 LUBRICATING OIL FILTER

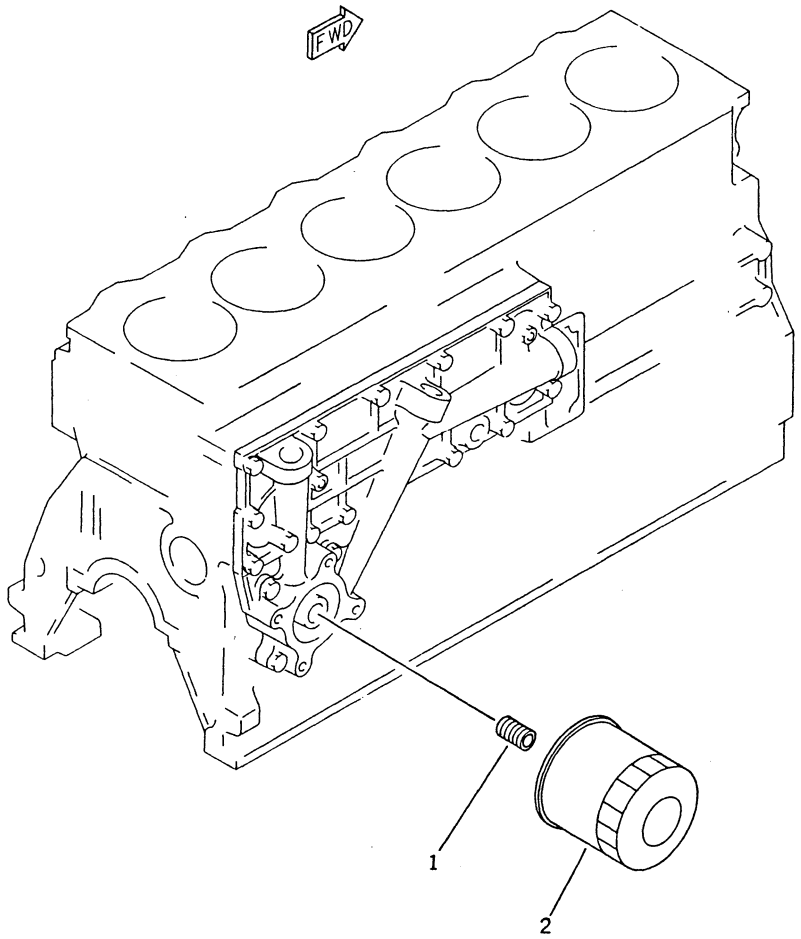

FIG NO. 3101

INDEX NO.	PART NO.	DESCRIPTION	Q'TY	SERIAL NO. S6D95L-1B	SERIAL NO.
1	6204-51-5910	NIPPLE	1	10001 –	
2	600-211-6240	CARTRIDGE	1	10001 –	

Fig. 3251 TURBOCHARGER LUBRICATING OIL PIPING

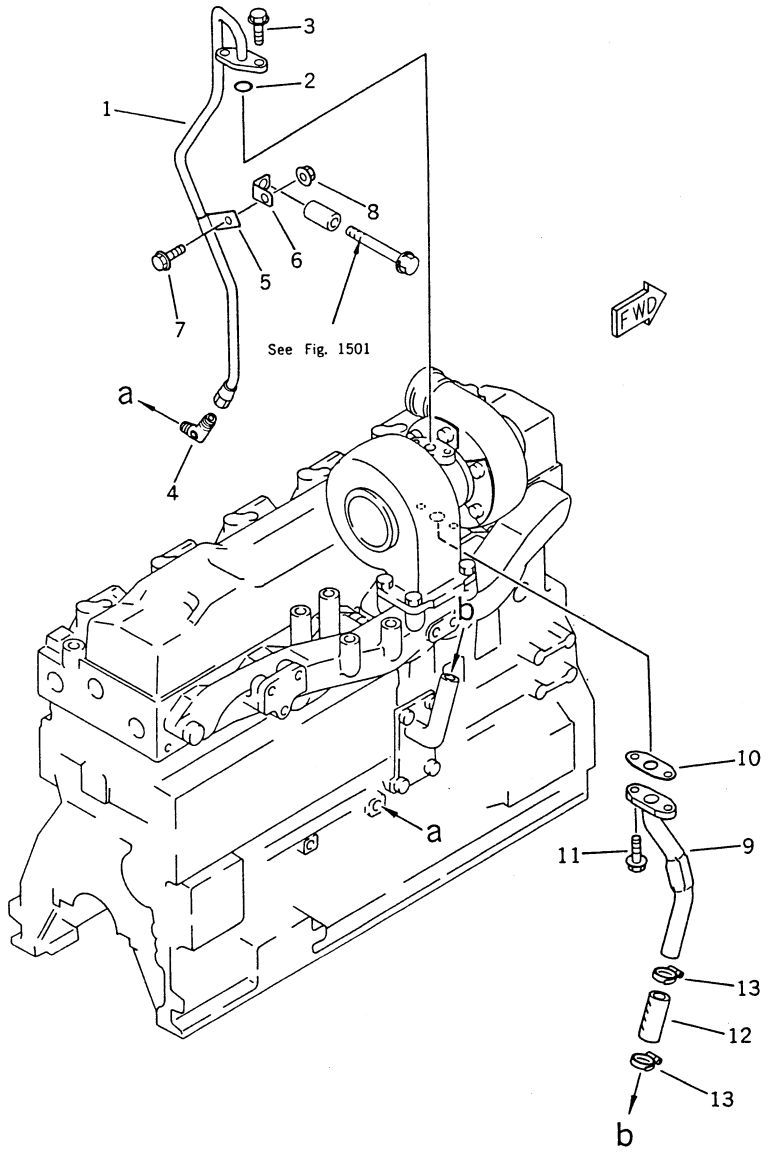

FIG NO. 3251

INDEX NO.	PART NO.	DESCRIPTION	Q'TY	SERIAL NO. S6D95L-1B	SERIAL NO.
1	6207-51-8120	PIPE, INLET	1	10001 –	
2	07000-62018	O-RING (K1)	1	10001 –	
3	01435-20820	BOLT	2	10001 –	
4	6207-51-8150	ELBOW	1	10001 –	
5	6207-51-8190	CLIP	1	10001 –	
6	6207-51-8180	BRACKET	1	10001 –	
7	01435-20816	BOLT	1	10001 –	
8	01584-20806	NUT	1	10001 –	
9	6207-51-8320	PIPE, OUTLET	1	10001 –	
10	6131-51-7681	GASKET (K1)	1	10001 –	
11	01435-20820	BOLT	2	10001 –	
12	6207-51-8350	HOSE	1	10001 –	
13	07281-00359	CLAMP	2	10001 –	

Fig. 3301 LUBRICATING OIL COOLER

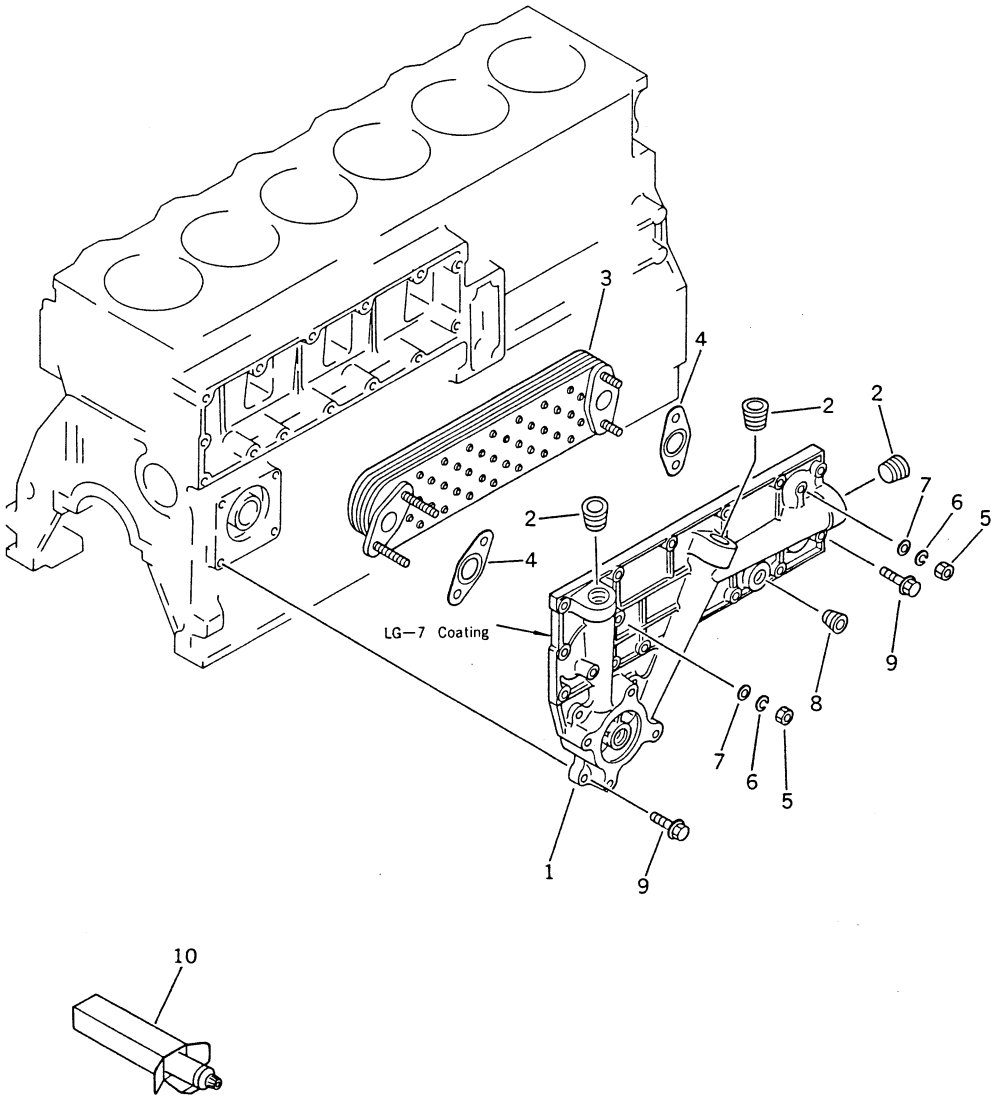

FIG NO. 3301

INDEX NO.	PART NO.	DESCRIPTION	Q'TY	SERIAL NO. S6D95L-1B	SERIAL NO.
	6207-61-5100	OIL COOLER ASS'Y	1	10001 –	
1	6207-61-5110	• COVER ASS'Y	1	10001 –	
2	07043-50617	• PLUG	3	10001 –	
3	600-651-1520	• ELEMENT	1	10001 –	
4	6204-61-5190	• GASKET (K2)	2	10001 –	
5	01580-10806	• NUT	4	10001 –	
6	01602-20825	• WASHER, SPRING	4	10001 –	
7	01641-20812	• WASHER	4	10001 –	
8	07043-50312	• PLUG	1	10001 –	
9	01435-20825	BOLT	18	10001 –	
10	(09920-00150)	GASKET, LIQUID, LG-7, 150G (SERVICE PARTS)	AR	10001 –	

FUEL SYSTEM

CONTENTS

	FIG NO.	PAGE
FUEL INJECTION PUMP AND PIPING	4001	50
FUEL FILTER	4101	52
NOZZLE HOLDER	4201	54
FUEL INJECTION PUMP (1/4) (PUMP)	4501	56
FUEL INJECTION PUMP (2/4) (GOVERNOR)	4511	64
FUEL INJECTION PUMP (3/4) (GOVERNOR)	4512	68
FUEL INJECTION PUMP (4/4) (FEED PUMP)	4531	80

Fig. 4001 FUEL INJECTION PUMP AND PIPING

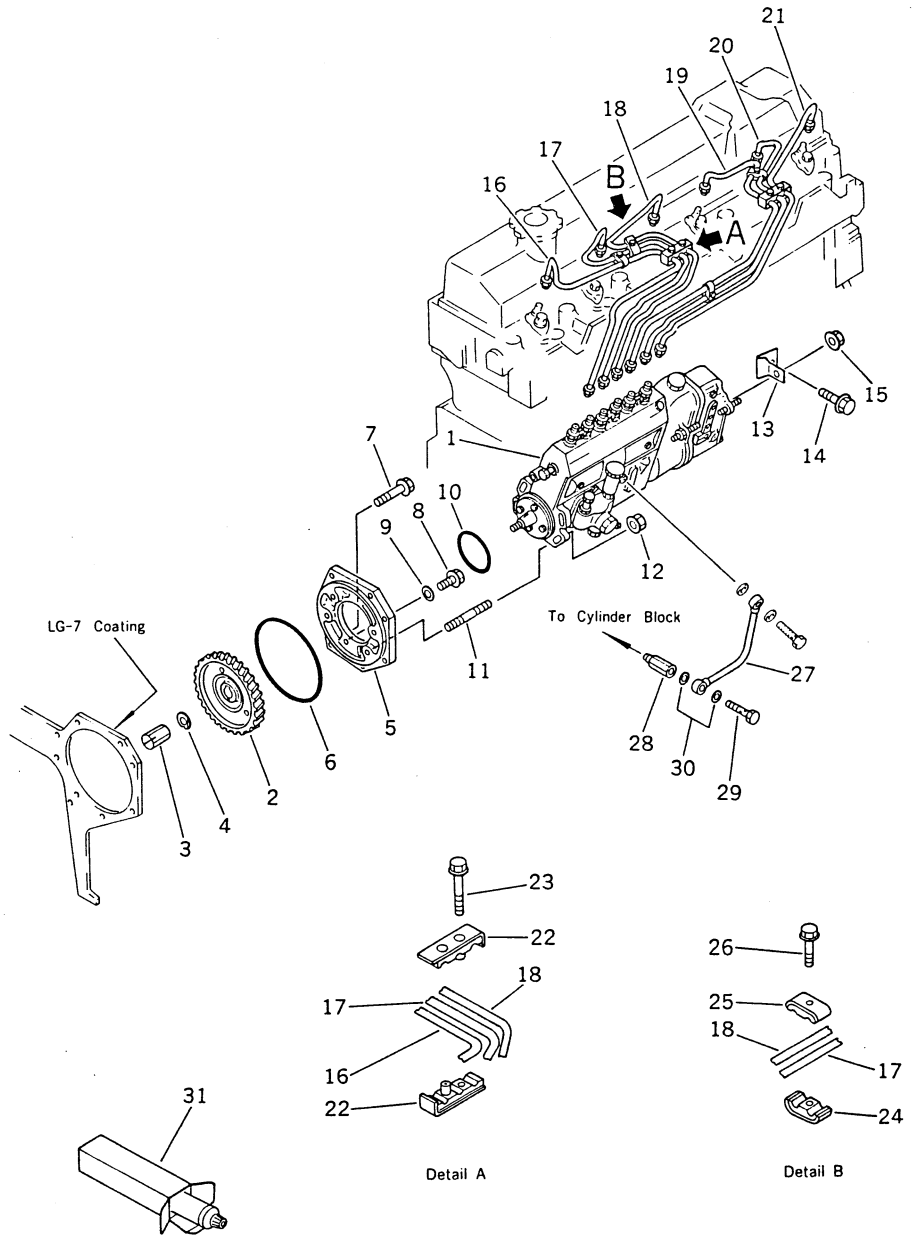

FIG NO. 4001

INDEX NO.	PART NO.	DESCRIPTION	Q'TY	SERIAL NO. S6D95L-1B	SERIAL NO.
1	6207-71-1320	INJECTION PUMP ASS'Y	1	10001 –	
2	6207-71-3131	GEAR	1	10001 –	
3	6206-71-3630	NUT	1	10001 –	
4	01653-21412	WASHER, LOCK (K2)	1	10001 –	
5	6206-71-3110	HOLDER	1	10001 –	
6	07000-02135	O-RING (K2)	1	10001 –	
7	6204-71-3190	BOLT	1	10001 –	
8	01435-20812	BOLT	1	10001 –	
9	07005-00812	GASKET (K2)	1	10001 –	
10	287-01-12231	O-RING (K2)	1	10001 –	
11	01144-31035	STUD	4	10001 –	
12	01584-01008	NUT	4	10001 –	
13	6206-71-1852	BRACKET	1	10001 –	
14	01435-21016	BOLT	1	10001 –	
15	01584-20806	NUT	1	10001 –	
16	6207-71-5110	TUBE, INJECTION, NO.1	1	10001 –	
17	6207-71-5120	TUBE, INJECTION, NO.2	1	10001 –	
18	6207-71-5130	TUBE, INJECTION, NO.3	1	10001 –	
19	6207-71-5140	TUBE, INJECTION, NO.4	1	10001 –	
20	6207-71-5150	TUBE, INJECTION, NO.5	1	10001 –	
21	6207-71-5160	TUBE, INJECTION, NO.6	1	10001 –	
22	6206-71-5720	CLAMP	4	10001 –	
23	01435-20625	BOLT	4	10001 –	
24	6206-71-5700	CLIP ASS'Y	4	10001 –	
24	6206-71-5730	• CLAMP	1	10001 –	
25	6144-71-5730	• CLAMP	1	10001 –	
26	6206-71-5740	• BOLT	1	10001 –	
27	6204-71-4230	PIPE, OIL	1	10001 –	
28	6204-71-4250	CONNECTOR	1	10001 –	
29	07206-30710	BOLT, JOINT	1	10001 –	
30	07005-01012	GASKET (K2)	2	10001 –	
31	(09920-00150)	GASKET, LIQUID, LG-7, 150G (SERVICE PARTS)	AR	10001 –	

Fig. 4101 FUEL FILTER

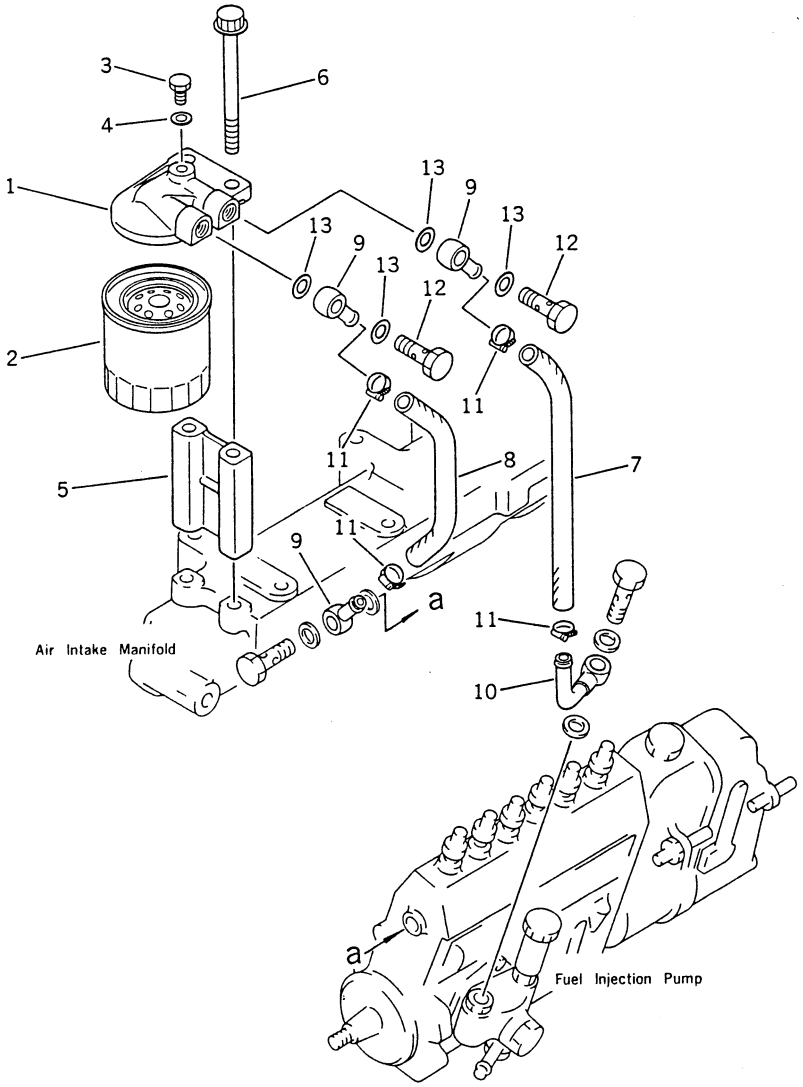

FIG NO. 4101

INDEX NO.	PART NO.	DESCRIPTION	Q'TY	SERIAL NO. S6D95L-1B	SERIAL NO.
	600-311-9600	FUEL FILTER ASS'Y	1	10001 –	
1	600-311-9640	• HEAD	1	10001 –	
2	600-311-6220	• CARTRIDGE	1	10001 –	
3	600-311-6720	• PLUG	1	10001 –	
4	07005-00812	• GASKET	1	10001 –	
5	6206-71-6590	SPACER	1	10001 –	
6	6206-71-6990	BOLT	2	10001 –	
7	07260-20932	HOSE	1	10001 –	
8	07260-20925	HOSE	1	10001 –	
9	6144-71-5750	JOINT	3	10001 –	
10	6206-71-5850	JOINT	1	10001 –	
11	07281-00197	CLAMP	4	10001 –	
12	07206-31014	BOLT, JOINT	2	10001 –	
13	07005-01412	GASKET (K2)	4	10001 –	

Fig. 4201 NOZZLE HOLDER

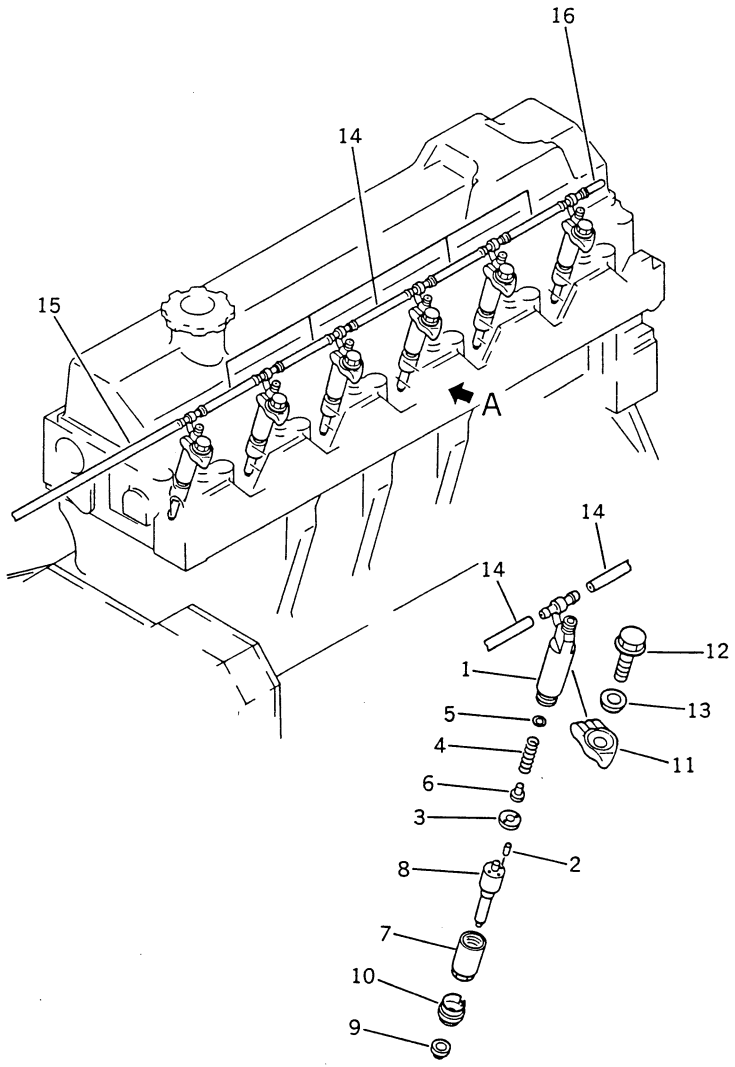

Detail A

FIG NO. 4201

INDEX NO.	PART NO.	DESCRIPTION	Q'TY	SERIAL NO. S6D95L-1B	SERIAL NO.
	6207-11-3100	NOZZLE HOLDER ASS'Y	6	10001 –	
1	6207-11-3110	• HOLDER ASS'Y	1	10001 –	
		THE DIESEL KIKI PART NUMBER IS THAT DK IS REMOVED FROM KOMATSU PART NUMBER LISTED BELOW.			
2	DK150508-5900	•• PIN	2	10001 –	
3	DK150515-9900	•• SEAT	1	10001 –	
4	DK150562-4300	•• SPRING	1	10001 –	
5	DK150534-3600	•• SHIM, 0.1MM	AR	10001 –	
5	DK150534-3700	•• SHIM, 0.2MM	AR	10001 –	
5	DK150534-3800	•• SHIM, 0.3MM	AR	10001 –	
5	DK150534-3900	•• SHIM, 0.4MM	AR	10001 –	
5	DK150534-4000	•• SHIM, 0.5MM	AR	10001 –	
5	DK150534-4100	•• SHIM, 0.52MM	AR	10001 –	
5	DK150534-4200	•• SHIM, 0.54MM	AR	10001 –	
5	DK150534-4300	•• SHIM, 0.56MM	AR	10001 –	
5	DK150534-4400	•• SHIM, 0.58MM	AR	10001 –	
6	DK150524-4600	•• SPACER	1	10001 –	
7	DK150655-0000	•• NUT, RETAINING	1	10001 –	
8	6207-11-3130	• NOZZLE	1	10001 –	
9	6204-11-3880	GASKET (K1)	6	10001 –	
10	6204-11-3850	SEAL, DUST (K1)	6	10001 –	
11	6204-11-3810	HOLDER	6	10001 –	
12	01435-01035	BOLT	6	10001 –	
13	6204-11-3830	WASHER	6	10001 –	
14	07270-20410	HOSE, SPILL	5	10001 –	
15	07270-40430	HOSE, SPILL	1	10001 –	
16	6204-71-5580	CAP	1	10001 –	

FIG. 4501 FUEL INJECTION PUMP (1/4) (PUMP)

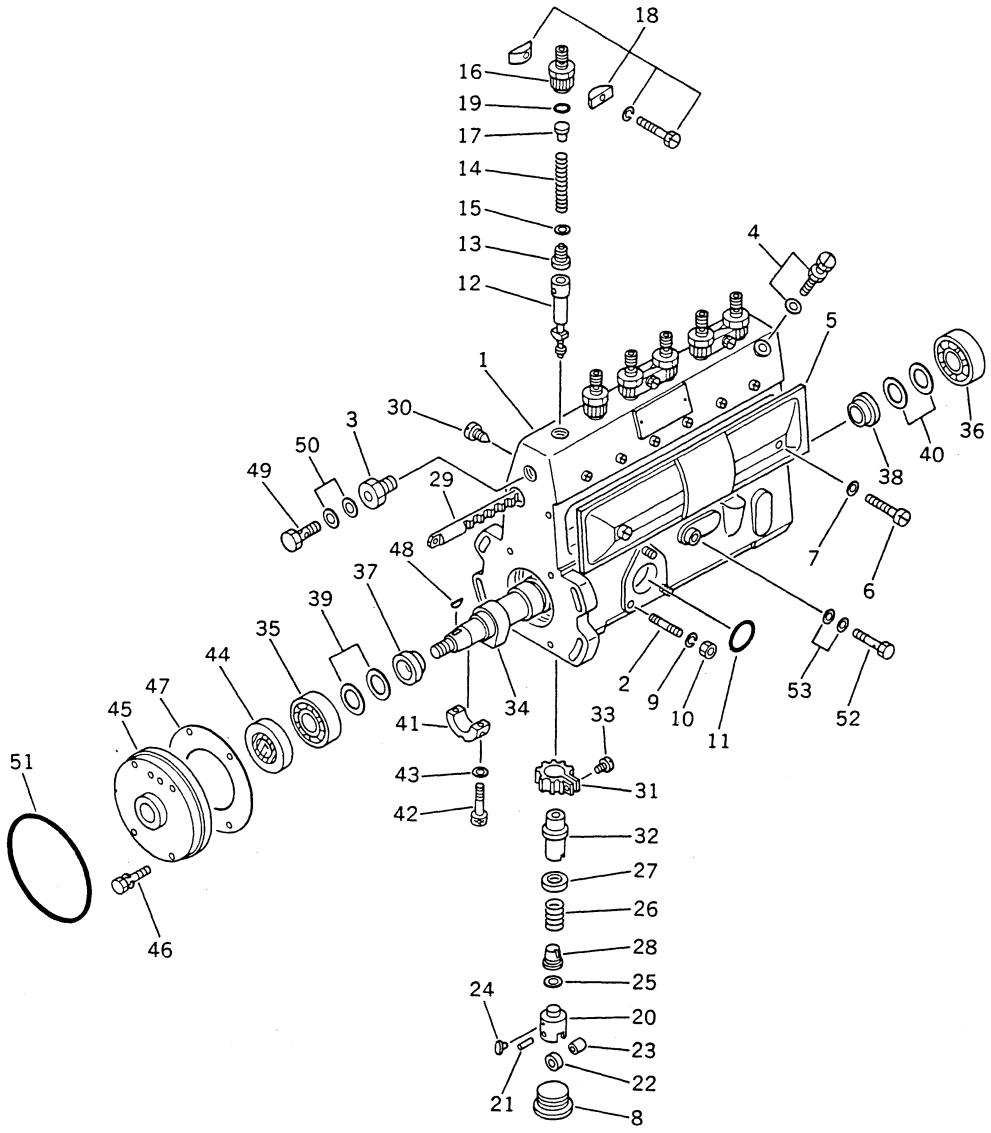

INDEX NO.	PART NO.	DESCRIPTION	Q'TY	SERIAL NO. S6D95L-1B	SERIAL NO.
	6207-71-1320	FUEL INJECTION PUMP ASS'Y	1	10001 –	
		THIS ASSEMBLY CONSISTS OF ALL PARTS SHOWN IN FIGS 4501, 4511, 4512 AND 4531.			
		THE DIESEL KIKI PART NUMBER IS THAT DK IS REMOVED FROM KOMATSU PART NUMBER LISTED BELOW.			
	DK101069-9110	• PUMP ASS'Y	1	10001 –	
1	DK131073-6520	•• HOUSING	1	10001 –	
2	DK029040-6020	••• STUD	3	10001 –	
3	DK131400-0100	••• ADAPTER	1	10001 –	
4	DK131420-0420	••• BOLT	1	10001 –	
5	DK131028-6020	•• COVER	1	10001 –	
6	DK131017-1000	•• SCREW	2	10001 –	
7	DK029340-6020	•• GASKET	2	10001 –	
8	DK131034-1401	•• PLUG	6	10001 –	
9	DK014110-6440	•• WASHER, SPRING	3	10001 –	
10	DK013020-6040	•• NUT	3	10001 –	
11	DK029633-1010	•• O-RING	1	10001 –	
12	DK131152-4020	•• PLUNGER ASS'Y	6	10001 –	
13	DK131110-6820	•• VALVE, DELIVERY	6	10001 –	
14	DK131112-4200	•• SPRING	6	10001 –	
15	DK131115-1600	•• GASKET	6	10001 –	
16	DK131116-8720	•• HOLDER	6	10001 –	
17	DK131117-2100	•• STOPPER	6	10001 –	
18	DK131122-0520	•• PLATE	3	10001 –	
19	DK029632-0030	•• O-RING	6	10001 –	
20	DK131200-0220	•• TAPPET	6	10001 –	
21	DK131203-0200	••• PIN	1	10001 –	
22	DK131204-1000	••• ROLLER	1	10001 –	
23	DK131205-0500	••• BUSHING	1	10001 –	
24	DK131206-0200	••• GUIDE	1	10001 –	
25	DK029311-0580	•• SHIM, 0.2MM	AR	10001 –	
25	DK029311-0590	•• SHIM, 0.25MM	AR	10001 –	
25	DK029311-0020	•• SHIM, 0.30MM	AR	10001 –	
25	DK029311-0600	•• SHIM, 0.35MM	AR	10001 –	

INDEX NO.	PART NO.	DESCRIPTION	Q'TY	SERIAL NO. S6D95L-1B	SERIAL NO.
25	DK029311-0030	•• SHIM, 0.40MM	AR	10001 –	
25	DK029311-0610	•• SHIM, 0.45MM	AR	10001 –	
25	DK029311-0040	•• SHIM, 0.50MM	AR	10001 –	
25	DK029311-0270	•• SHIM, 0.55MM	AR	10001 –	
25	DK029311-0050	•• SHIM, 0.6MM	AR	10001 –	
25	DK029311-0280	•• SHIM, 0.65MM	AR	10001 –	
25	DK029311-0060	•• SHIM, 0.7MM	AR	10001 –	
25	DK029311-0290	•• SHIM, 0.75MM	AR	10001 –	
25	DK029311-0070	•• SHIM, 0.8MM	AR	10001 –	
25	DK029311-0310	•• SHIM, 0.85MM	AR	10001 –	
25	DK029311-0080	•• SHIM, 0.9MM	AR	10001 –	
25	DK029311-0320	•• SHIM, 0.95MM	AR	10001 –	
25	DK029311-0090	•• SHIM, 1MM	AR	10001 –	
25	DK029311-0330	•• SHIM, 1.05MM	AR	10001 –	
25	DK029311-0110	•• SHIM, 1.1MM	AR	10001 –	
25	DK029311-0340	•• SHIM, 1.15MM	AR	10001 –	
25	DK029311-0120	•• SHIM, 1.2MM	AR	10001 –	
25	DK029311-0350	•• SHIM, 1.25MM	AR	10001 –	
25	DK029311-0130	•• SHIM, 1.3MM	AR	10001 –	
25	DK029311-0620	•• SHIM, 1.35MM	AR	10001 –	
25	DK029311-0140	•• SHIM, 1.4MM	AR	10001 –	
25	DK029311-0630	•• SHIM, 1.45MM	AR	10001 –	
25	DK029311-0490	•• SHIM, 1.5MM	AR	10001 –	
25	DK029311-0710	•• SHIM, 1.55MM	AR	10001 –	
25	DK029311-0500	•• SHIM, 1.6MM	AR	10001 –	
26	DK131215-2500	•• SPRING	6	10001 –	
27	DK131216-0100	•• SEAT	6	10001 –	
28	DK131217-0200	•• SEAT	6	10001 –	
29	DK131256-0000	•• RACK, CONTROL	1	10001 –	
30	DK131226-0300	•• SCREW	1	10001 –	
31	DK131240-0100	•• PINION	6	10001 –	
32	DK131241-0100	•• SLEEVE	6	10001 –	
33	DK131242-0100	•• SCREW	6	10001 –	
34	DK131371-2800	•• CAMSHAFT	1	10001 –	
35	DK016630-2030	•• BEARING	1	10001 –	

INDEX NO.	PART NO.	DESCRIPTION	Q'TY	SERIAL NO. S6D95L-1B	SERIAL NO.
36	DK016640-2030	•• BEARING	1	10001 –	
37	DK131302-1300	•• RING	1	10001 –	
38	DK131302-1700	•• RING	1	10001 –	
39	DK029312-0310	•• SHIM, 0.10MM	AR	10001 –	
39	DK029312-0320	•• SHIM, 0.12MM	AR	10001 –	
39	DK029312-0330	•• SHIM, 0.14MM	AR	10001 –	
39	DK029312-0340	•• SHIM, 0.16MM	AR	10001 –	
39	DK029312-0350	•• SHIM, 0.18MM	AR	10001 –	
39	DK029312-0360	•• SHIM, 0.3MM	AR	10001 –	
39	DK029312-0370	•• SHIM, 0.5MM	AR	10001 –	
39	DK029312-0380	•• SHIM, 1.0MM	AR	10001 –	
40	DK029311-7010	•• SHIM, 0.1MM	AR	10001 –	
40	DK029311-7020	•• SHIM, 0.12MM	AR	10001 –	
40	DK029311-7030	•• SHIM, 0.14MM	AR	10001 –	
40	DK029311-7040	•• SHIM, 0.16MM	AR	10001 –	
40	DK029311-7050	•• SHIM, 0.18MM	AR	10001 –	
40	DK029311-7090	•• SHIM, 0.3MM	AR	10001 –	
40	DK029311-7060	•• SHIM, 0.5MM	AR	10001 –	
40	DK029311-7210	•• SHIM, 0.7MM	AR	10001 –	
40	DK029311-7070	•• SHIM, 1.0MM	AR	10001 –	
40	DK029311-7220	•• SHIM, 1.4MM	AR	10001 –	
41	DK131306-0800	•• BEARING, CENTER	1	10001 –	
42	DK029050-5010	•• SCREW	2	10001 –	
43	DK026505-0940	•• GASKET	2	10001 –	
44	DK029622-0190	•• SEAL, OIL	1	10001 –	
45	DK131330-1800	•• COVER	1	10001 –	
46	DK020006-2040	•• BOLT	4	10001 –	
47	DK131321-1700	•• GASKET	1	10001 –	
48	DK029470-4030	•• KEY	1	10001 –	
49	DK029731-4680	•• BOLT, JOINT	1	10001 –	
50	DK029341-4130	•• GASKET	2	10001 –	
51	DK029637-5020	•• O-RING	1	10001 –	
52	DK029731-0120	•• BOLT, JOINT	1	10001 –	
53	DK029341-0110	•• GASKET	2	10001 –	

FIG. 4511 FUEL INJECTION PUMP (2/4) (GOVERNOR)

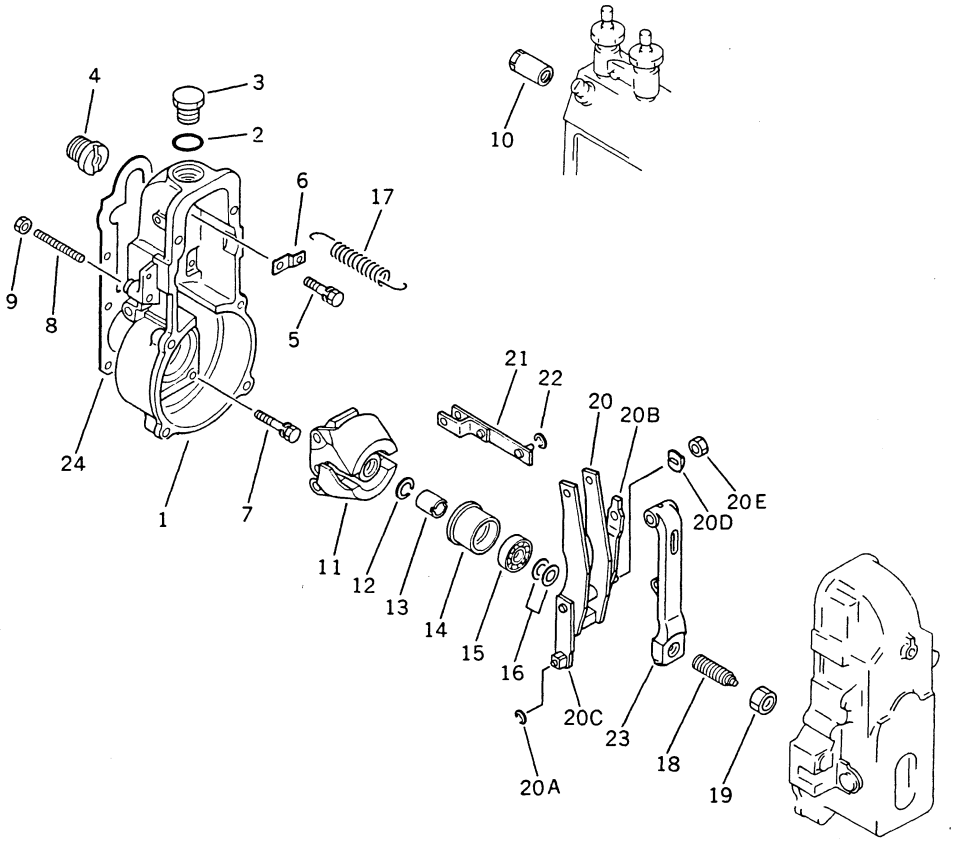

INDEX NO.	PART NO.	DESCRIPTION	Q'TY	SERIAL NO. S6D95L-1B	SERIAL NO.
	(6207-71-1320)	FUEL INJECTION PUMP ASS'Y	1	10001 –	
		THIS ASSEMBLY CONSISTS OF ALL PARTS SHOWN IN FIGS 4501, 4511, 4512 AND 4531.			
		THE DIESEL KIKI PART NUMBER IS THAT DK IS REMOVED FROM KOMATSU PART NUMBER LISTED BELOW.			
	DK105400-3300	• GOVERNOR ASS'Y	1	10001 –	
1	DK154000-6300	•• HOUSING	1	10001 –	
2	DK029632-5070	•• O-RING	1	10001 –	
3	DK154007-2900	•• PLUG	1	10001 –	
4	DK154007-0200	•• ADAPTER	1	10001 –	
5	DK020018-1840	•• BOLT	1	10001 –	
6	DK154350-1900	•• PLATE	1	10001 –	
7	DK020006-1440	•• BOLT	6	10001 –	
8	DK154010-0100	•• SCREW	1	10001 –	
9	DK154011-0100	•• NUT, LOCK	1	10001 –	
10	DK155404-5300	•• CAP	1	10001 –	
11	DK154101-0120	•• FLYWEIGHT	1	10001 –	
12	DK029321-2020	•• WASHER, SPRING	1	10001 –	
13	DK029231-2030	•• NUT	1	10001 –	
14	DK154123-0120	•• SLEEVE	1	10001 –	
15	DK029801-0030	•• BEARING	1	10001 –	
16	DK029311-0010	•• SHIM, 0.2MM	AR	10001 –	
16	DK029311-0180	•• SHIM, 0.3MM	AR	10001 –	
16	DK029311-0190	•• SHIM, 0.40MM	AR	10001 –	
16	DK139410-0000	•• SHIM, 0.5MM	AR	10001 –	
16	DK029311-0210	•• SHIM, 1MM	AR	10001 –	
16	DK139410-0100	•• SHIM, 1.5MM	AR	10001 –	
17	DK154154-0701	•• SPRING	1	10001 –	
18	DK154177-1520	•• CAPSULE, SPRING	1	10001 –	
19	DK029201-6010	•• NUT	1	10001 –	
20	DK154210-0920	•• GUIDE LEVER ASS'Y	1	10001 –	
20A	DK026110-0510	••• RING, SNAP	1	10001 –	
20B	DK154224-0420	••• FLOATING LEVER	1	10001 –	
20C	DK154225-0520	••• FLOATING LEVER	1	10001 –	

FIG NO. 4511

NDEX NO.	PART NO.	DESCRIPTION	Q'TY	SERIAL NO. S6D95L-1B	SERIAL NO.
20D	DK153313-0400	••• WASHER, LOCK	1	10001 –	
20E	DK029200-8020	••• NUT	1	10001 –	
21	DK154230-3920	•• LINK	1	10001 –	
22	DK016010-0540	•• RING, SNAP	1	10001 –	
23	DK154236-4100	•• LEVER, TENSION	1	10001 –	
24	DK154350-7700	•• GASKET	1	10001 –	

FIG. 4512 FUEL INJECTION PUMP (3/4) (GOVERNOR)

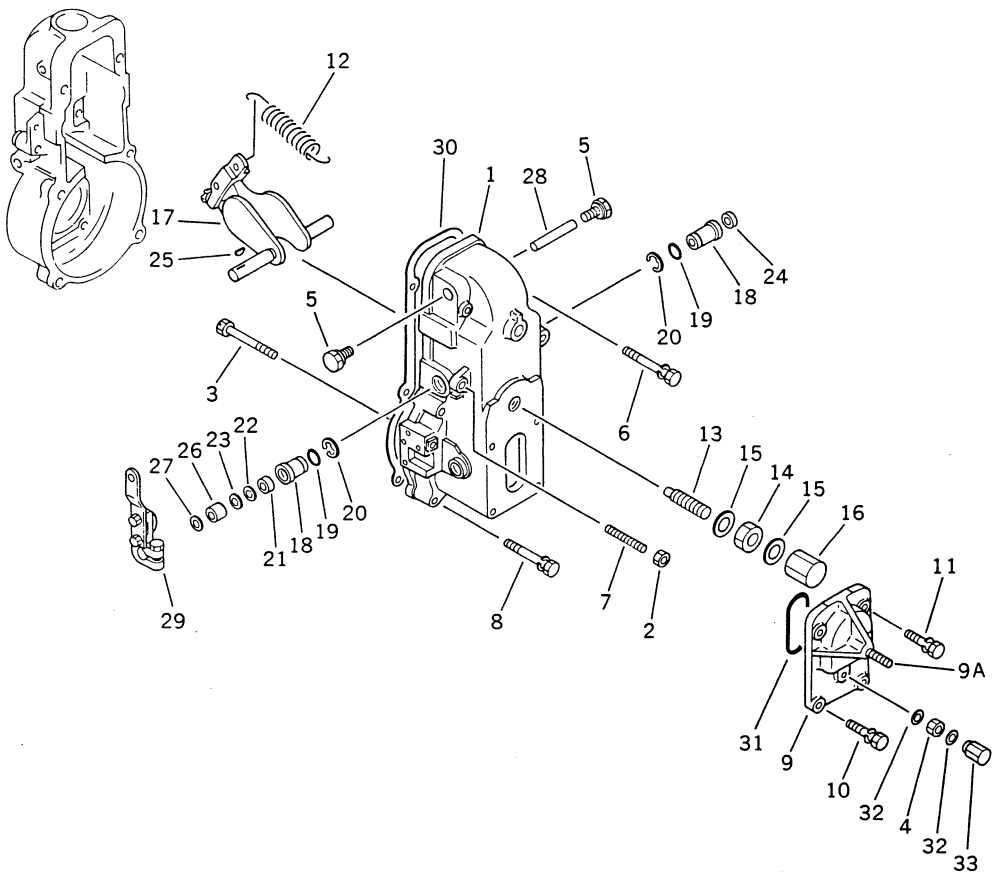

FIG NO. 4512

INDEX NO.	PART NO.	DESCRIPTION	Q'TY	SERIAL NO. S6D95L-1B	SERIAL NO.
	(6207-71-1320)	FUEL INJECTION PUMP ASS'Y	1	10001 –	
		THIS ASSEMBLY CONSISTS OF ALL PARTS SHOWN IN FIGS 4501, 4511, 4512 AND 4531.			
		THE DIESEL KIKI PART NUMBER IS THAT DK IS REMOVED FROM KOMATSU PART NUMBER LISTED BELOW.			
	(DK105400-3300)	• GOVERNOR ASS'Y	1	10001 –	
1	DK154500-2020	•• COVER	1	10001 –	
2	DK154011-0100	•• NUT, LOCK	1	10001 –	
3	DK154031-2400	•• SCREW	1	10001 –	
4	DK029240-6010	•• NUT	1	10001 –	
5	DK154036-0300	•• PLUG	2	10001 –	
6	DK020106-5040	•• BOLT	2	10001 –	
7	DK154010-0300	•• SCREW	1	10001 –	
8	DK020106-3840	•• BOLT	4	10001 –	
9	DK154063-6820	•• COVER	1	10001 –	
9A	DK139008-0400	••• STUD	1	10001 –	
10	DK020006-1640	•• BOLT	2	10001 –	
11	DK029020-6210	•• BOLT	2	10001 –	
12	DK154150-0400	•• SPRING, GOVERNOR	1	10001 –	
13	DK154158-1520	•• CAPSULE, SPRING	1	10001 –	
14	DK154011-1700	•• NUT	1	10001 –	
15	DK026512-1540	•• GASKET	2	10001 –	
16	DK154159-1200	•• NUT, CAP	1	10001 –	
17	DK154200-0220	•• LEVER, SWIVEL	1	10001 –	
18	DK154204-1900	•• BUSHING	2	10001 –	
19	DK029631-8020	•• O-RING	2	10001 –	
20	DK016010-1640	•• RING, SNAP	2	10001 –	
21	DK139611-0000	•• SEAL, OIL	1	10001 –	
22	DK139411-0000	•• SHIM	1	10001 –	
23	DK029311-1090	•• SHIM, 0.3 MM	AR	10001 –	
24	DK029141-7010	•• PLUG	1	10001 –	
25	DK025803-1310	•• KEY	1	10001 –	
26	DK154206-2800	•• COLLAR	1	10001 –	

FIG NO. 4512

INDEX NO.	PART NO.	DESCRIPTION	Q'TY	SERIAL NO. S6D95L-1B	SERIAL NO.
27	DK154206-0200	•• WASHER	AR	10001 –	
28	DK154237-0100	•• PIN	1	10001 –	
29	DK154341-9520	•• LEVER	1	10001 –	
30	DK154350-7800	•• GASKET	1	10001 –	
31	DK029635-2020	•• O-RING	1	10001 –	
32	DK026506-1040	•• GASKET	2	10001 –	
33	DK154035-1600	•• NUT, CAP	1	10001 –	

FIG. 4531 FUEL INJECTION PUMP (4/4) (FEED PUMP)

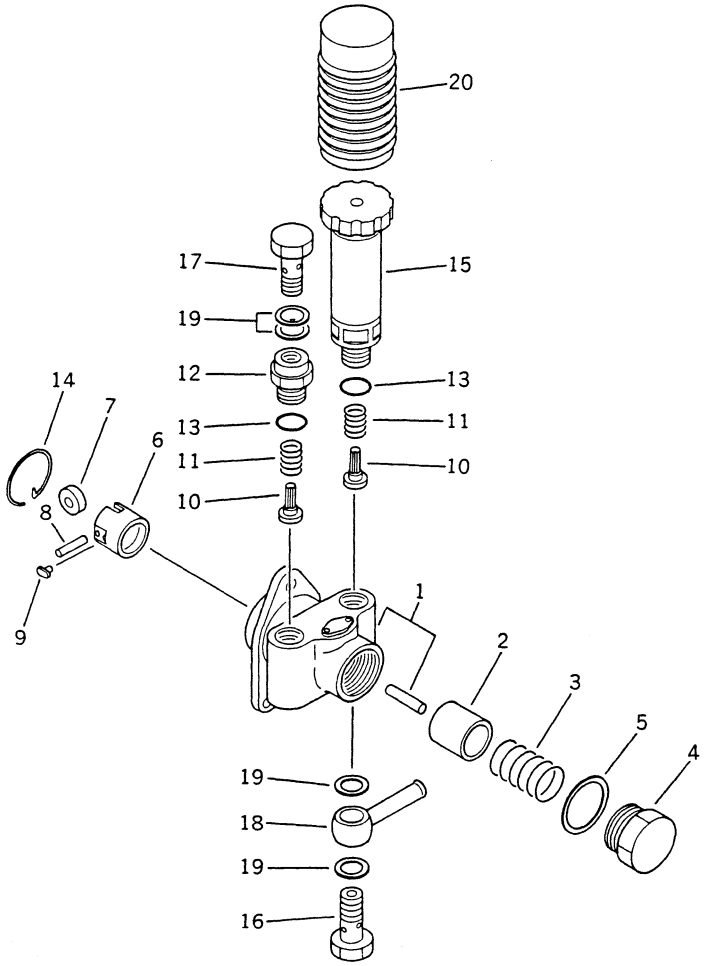

INDEX NO.	PART NO.	DESCRIPTION	Q'TY	SERIAL NO. S6D95L-1B	SERIAL NO.
	(6207-71-1320)	FUEL INJECTION PUMP ASS'Y	1	10001 –	
		THIS ASSEMBLY CONSISTS OF ALL PARTS SHOWN IN FIGS 4501, 4511, 4512 AND 4531.			
		THE DIESEL KIKI PART NUMBER IS THAT DK IS REMOVED FROM KOMATSU PART NUMBER LISTED BELOW.			
	DK105220-5280	• FEED PUMP ASS'Y	1	10001 –	
1	DK152003-1020	•• HOUSING	1	10001 –	
2	DK152100-1120	•• PISTON	1	10001 –	
3	DK152102-1600	•• SPRING	1	10001 –	
4	DK152105-0200	•• PLUG	1	10001 –	
5	DK029332-6030	•• GASKET	1	10001 –	
6	DK152111-2820	•• TAPPET	1	10001 –	
7	DK152112-0100	••• ROLLER	1	10001 –	
8	DK152113-0700	••• PIN	1	10001 –	
9	DK152114-0400	••• GUIDE	2	10001 –	
10	DK152115-0500	•• VALVE	2	10001 –	
11	DK152116-0200	•• SPRING	2	10001 –	
12	DK152118-0900	•• ADAPTER	1	10001 –	
13	DK029631-6060	•• O-RING	2	10001 –	
14	DK152121-0200	•• RING, SNAP	1	10001 –	
15	DK152200-5420	•• PUMP, PRINING	1	10001 –	
16	DK152300-5920	•• BOLT, JOINT	1	10001 –	
17	DK029731-4680	•• BOLT, JOINT	1	10001 –	
18	DK029711-4310	•• JOINT	1	10001 –	
19	DK029341-4130	•• GASKET	4	10001 –	
20	DK152320-0100	•• COVER	1	10001 –	

COOLING SYSTEM

CONTENTS

	FIG NO.	PAGE
WATER PUMP AND COOLING FAN	5001	86
CORROSION RESISTOR AND PIPING (EXCEPT JAPAN)	5202	92

Fig. 5001 WATER PUMP AND COOLING FAN

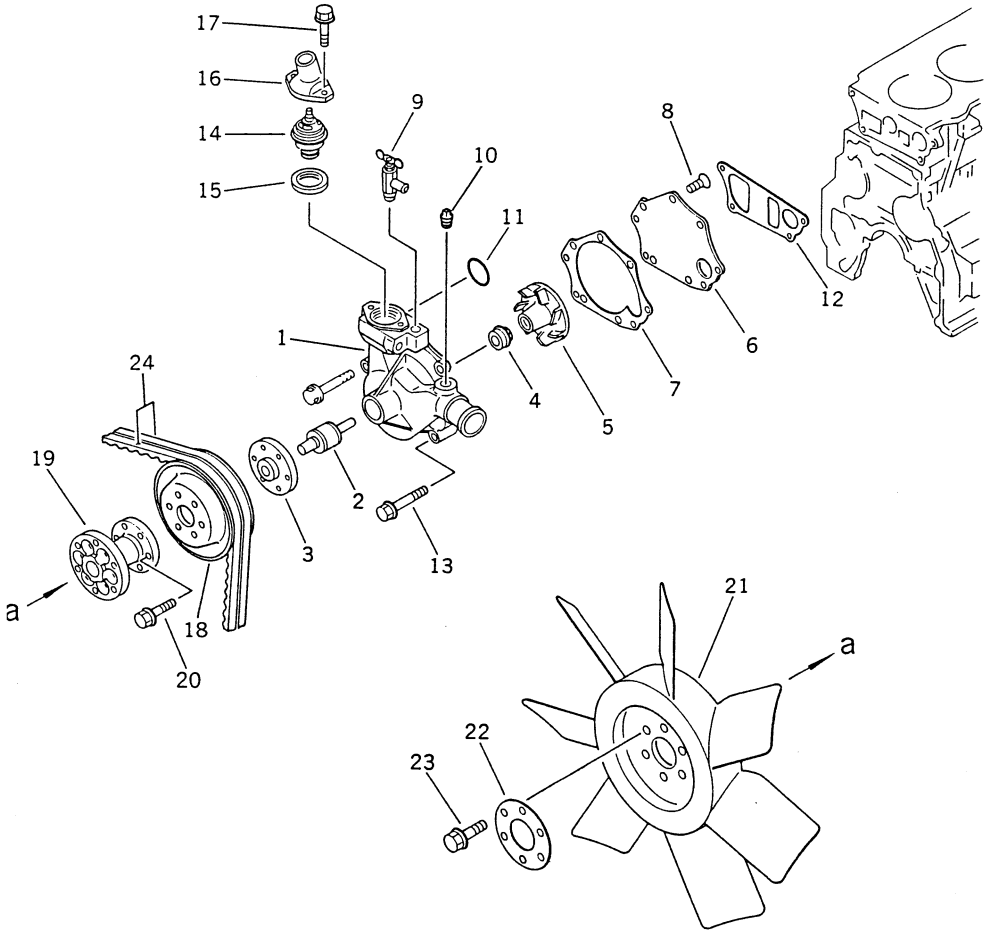

FIG NO. 5001

INDEX NO.	PART NO.	DESCRIPTION	Q'TY	SERIAL NO. S6D95L-1B	SERIAL NO.
	6206-61-1100	WATER PUMP ASS'Y	1	10001 –	
1	6206-61-1110	• BODY	1	10001 –	
2	6206-61-1310	• SHAFT	1	10001 –	
3	6206-61-1410	• BOSS	1	10001 –	
4	6204-61-1510	• SEAL, WATER (K2)	1	10001 –	
5	6206-61-1550	• IMPELLER	1	10001 –	
6	6206-61-1120	• COVER	1	10001 –	
7	6206-61-1130	• GASKET (K1)	1	10001 –	
8	01236-40816	• SCREW	5	10001 –	
9	201-54-24130	VALVE	1	10001 –	
10	07042-00312	PLUG	1	10001 –	
11	07000-03040	O-RING (K1)	1	10001 –	
12	6206-61-1710	GASKET (K1)	1	10001 –	
13	01435-20855	BOLT	3	10001 –	
14	600-421-6110	THERMOSTAT	1	10001 –	
15	6140-11-6331	GASKET (K1)	1	10001 –	
16	6204-11-6420	CONNECTOR, WATER OUTLET	1	10001 –	
17	01435-20820	BOLT	2	10001 –	
18	6207-61-3260	PULLEY	1	10001 –	
19	6206-61-3980	SPACER	1	10001 –	
20	01435-20830	BOLT	6	10001 –	
21	600-625-6580	FAN	1	10001 –	
22	6131-62-3310	PLATE	1	10001 –	
23	01435-21030	BOLT	6	10001 –	
24	04121-21748	V-BELT SET	1	10001 –	

Fig. 5202 CORROSION RESISTOR AND PIPING (EXCEPT JAPAN)

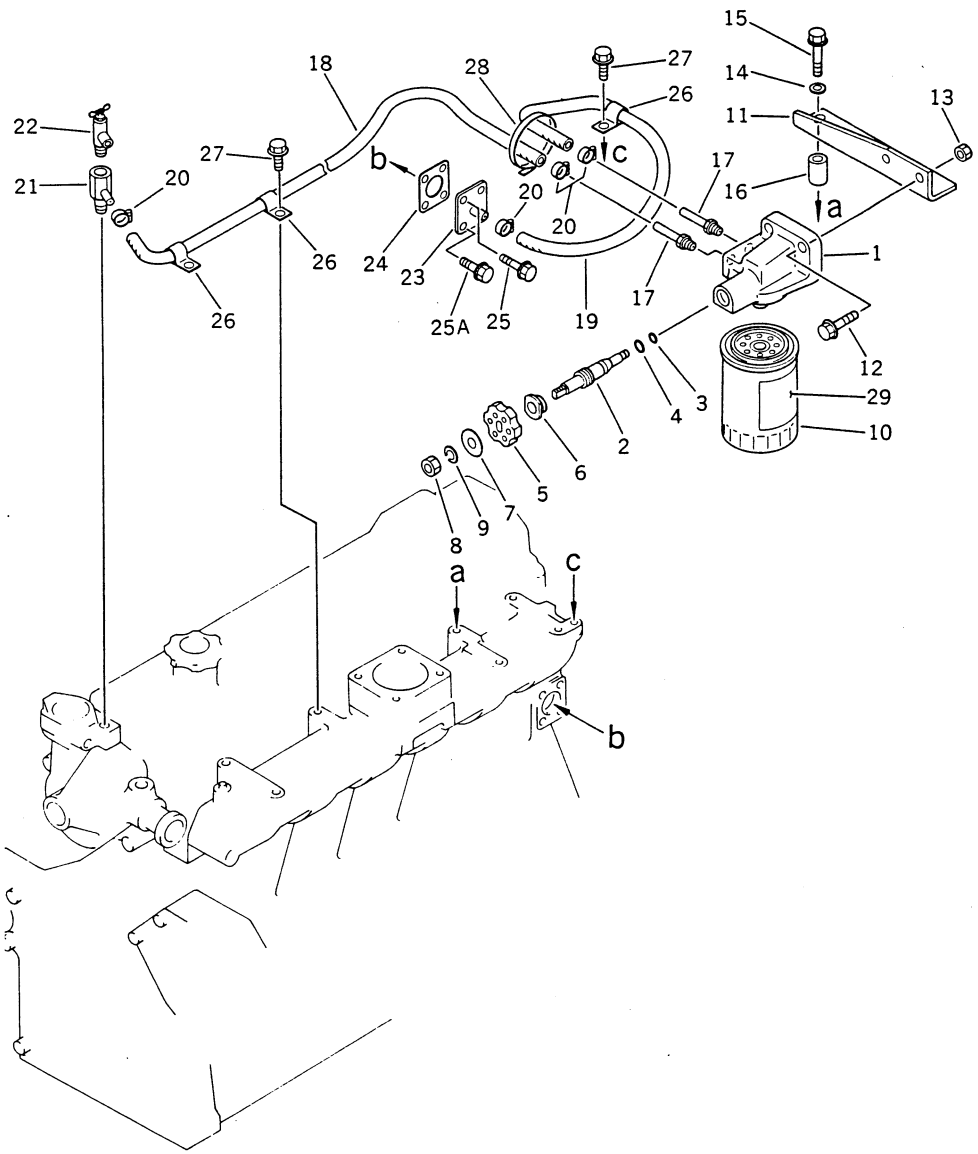

FIG NO. 5202

INDEX NO.	PART NO.	DESCRIPTION	Q'TY	SERIAL NO. S6D95L-1B	SERIAL NO.
	600-411-1920	CORROSION RESISTOR ASS'Y	1	10001 –	
	600-411-1511	• HEAD ASS'Y	1	10001 –	
1	600-411-1521	•• HEAD	1	10001 –	
2	600-411-1231	•• VALVE	1	10001 –	
3	07000-01006	•• O-RING	1	10001 –	
4	07000-02014	•• O-RING	1	10001 –	
5	600-411-1240	•• HANDLE	1	10001 –	
6	600-411-1250	•• PLUG	1	10001 –	
7	600-411-1260	•• PLATE	1	10001 –	
8	600-411-1280	•• NUT	1	10001 –	
9	600-411-1290	•• WASHER,	1	10001 –	
10	600-411-1010	• CARTRIDGE	1	10001 –	
11	6206-61-8110	BRACKET	1	10001 –	
12	01435-21040	BOLT	2	10001 –	
13	01584-01008	NUT	2	10001 –	
14	01642-21016	WASHER	1	10001 –	
15	01435-21060	BOLT	2	10001 –	
16	6142-22-4640	SPACER	2	10001 –	
17	113-04-32130	NIPPLE	2	10001 –	
18	07260-20963	HOSE	1	10001 –	
19	07260-20971	HOSE	1	10001 –	
20	07281-00197	CLAMP	4	10001 –	
21	6206-61-8620	TEE	1	10001 –	
22	201-54-24130	VALVE	1	10001 –	
23	6206-61-8610	PLATE	1	10001 –	
24	6206-61-8810	GASKET	1	10001 –	
25	01435-21025	BOLT	2	10001 –	
25A	01435-21020	BOLT	2	10001 –	
26	6114-61-8550	CLAMP	3	10001 –	
27	01435-21014	BOLT	3	10001 –	
28	08034-00519	BAND	1	10001 –	
29	6134-61-8810	PLATE, CAUTION	1	10001 –	

ELECTRICAL SYSTEM

CONTENTS

	FIG NO.	PAGE
ALTERNATOR AND MOUNTING	6001	96
STARTING MOTOR AND MOUNTING	6101	98
HEATER SIGNAL	6201	100
ALTERNATOR	6301	102
STARTING MOTOR (1/2)	6401	104
STARTING MOTOR (2/2)	6402	108

Fig. 6001 ALTERNATOR AND MOUNTING

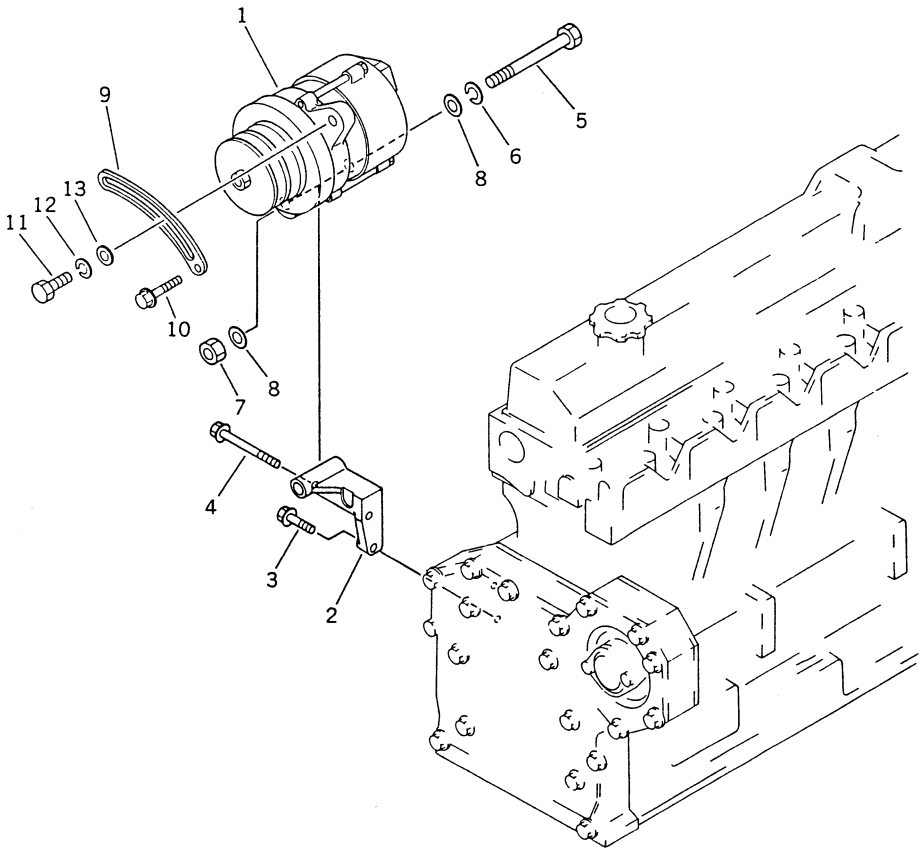

FIG NO. 6001

INDEX NO.	PART NO.	DESCRIPTION	Q'TY	SERIAL NO. S6D95L-1B	SERIAL NO.
1	(600-821-5540)	ALTERNATOR ASS'Y	1	10001 –	
2	6206-81-6560	BRACKET	1	10001 –	
3	01435-20825	BOLT	1	10001 –	
4	01435-20895	BOLT	1	10001 –	
5	6112-21-6580	BOLT	1	10001 –	
6	01602-01442	WASHER, SPRING	1	10001 –	
7	01580-01411	NUT	1	10001 –	
8	01641-21423	WASHER	2	10001 –	
9	6206-81-6620	PLATE, ADJUST	1	10001 –	
10	01435-20855	BOLT	1	10001 –	
11	01050-31230	BOLT	1	10001 –	
12	01602-01236	WASHER, SPRING	1	10001 –	
13	01643-31232	WASHER	1	10001 –	

Fig. 6101 STARTING MOTOR AND MOUNTING

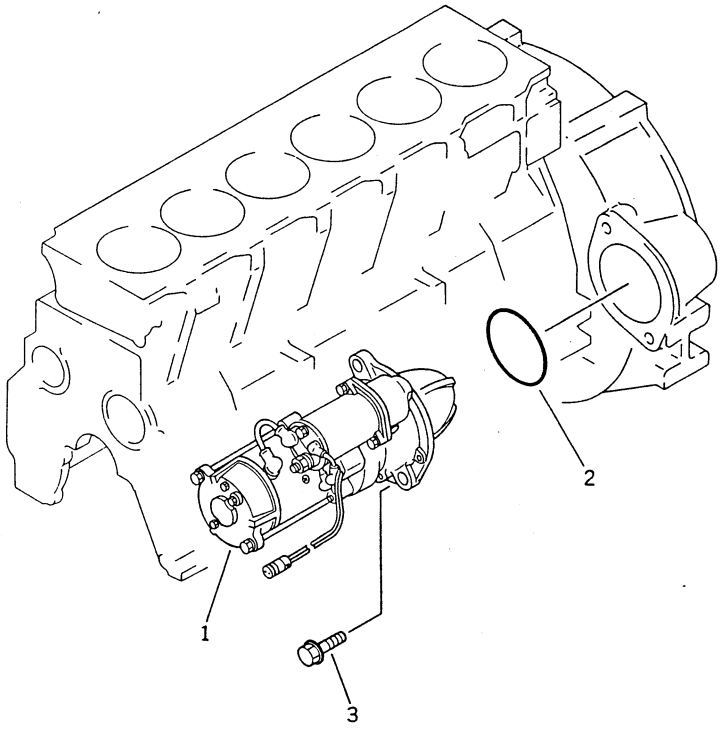

FIG NO. 6101

INDEX NO.	PART NO.	DESCRIPTION	Q'TY	SERIAL NO. S6D95L-1B	SERIAL NO.
1	(600-813-3330)	STARTING MOTOR ASS'Y	1	10001 –	
2	07000-02105	O-RING (K2)	1	10001 –	
3	01435-21230	BOLT	2	10001 –	

Fig. 6201 HEATER SIGNAL

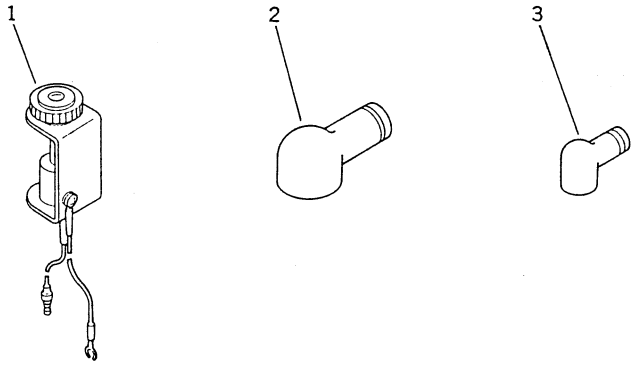

FIG NO. 6201

INDEX NO.	PART NO.	DESCRIPTION	Q'TY	SERIAL NO. S6D95L-1B	SERIAL NO.
1	600-815-3730	SIGNAL, HEATER	1	10001 –	
2	6004000-9-80	CAP	1	10001 –	
3	6004000-9-90	CAP	3	10001 –	

Fig. 6301 ALTERNATOR

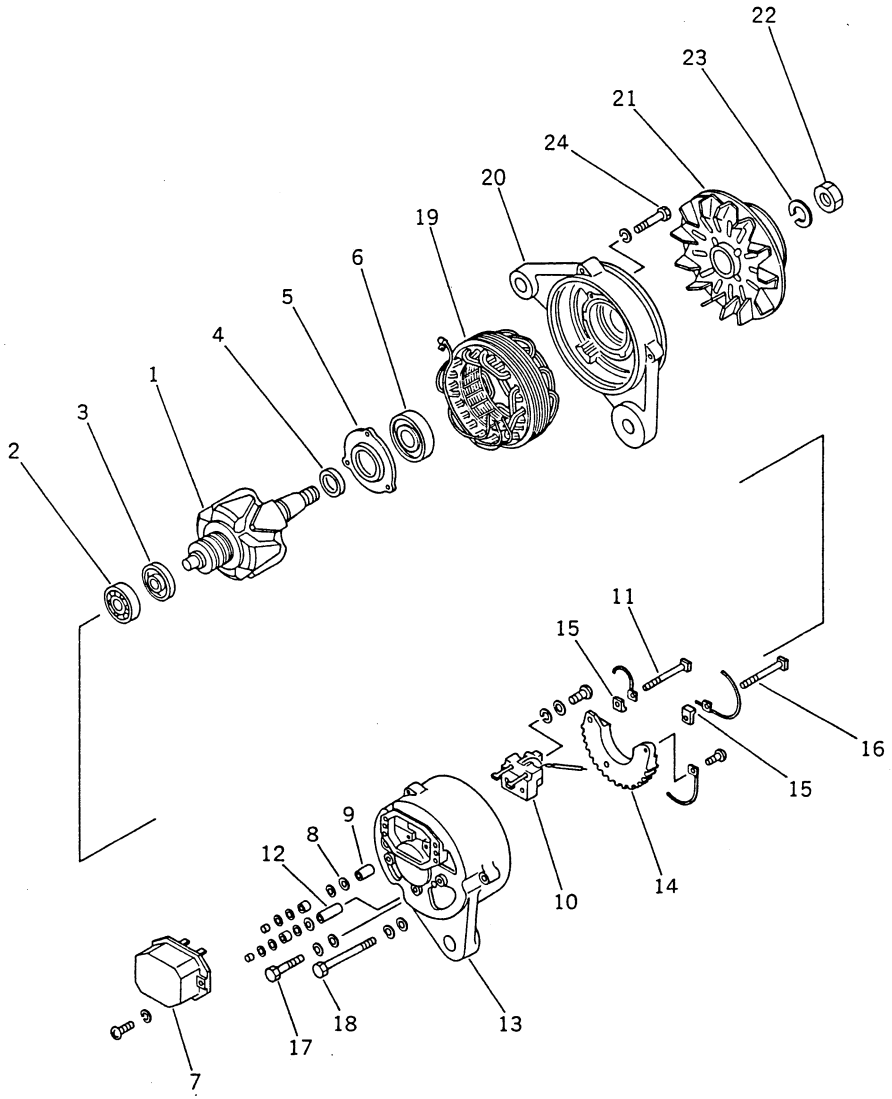

FIG NO. 6301

INDEX NO.	PART NO.	DESCRIPTION	Q'TY	SERIAL NO. S6D95L-1B	SERIAL NO.
	600-821-5540	ALTERNATOR ASS'Y	1	10001 –	
		THE NIKKO DENKI PART NUMBER IS THAT KD IS REMOVED FROM KOMATSU PART NUMBER LISTED BELOW.			
1	KD7-33100-0530	• ROTOR ASS'Y	1	10001 –	
2	KD1-0472-62027	•• BEARING, BALL, REAR	1	10001 –	
3	KD1-33926-0380	•• RETAINER	1	10001 –	
4	KD1-33923-0570	•• COLLAR	1	10001 –	
5	KD0-33926-0370	•• RETAINER	1	10001 –	
6	KD1-0472-63057	•• BEARING, BALL, FRONT	1	10001 –	
7	KD1-44000-0730	• REGULATOR ASS'Y	1	10001 –	
8	KD0-33700-1970	• REAR BRACKET ASS'Y	1	10001 –	
8	KD1-09102-0010	•• WASHER, INSULATE	1	10001 –	
9	KD1-33944-0490	•• TUBE, INSULATE, B-TERMINAL	1	10001 –	
10	KD1-33720-0792	•• BRUSH HOLDER ASS'Y	1	10001 –	
11	KD0-33901-0500	•• BOLT, B-TERMINAL	1	10001 –	
12	KD1-33944-0540	•• TUBE, INSULATE, R-TERMINAL	1	10001 –	
13	KD0-33710-1661	•• REAR BRACKET ASS'Y	1	10001 –	
14	KD0-33730-1600	•• RECTIFIER ASS'Y	1	10001 –	
15	KD1-33943-0870	•• BUSHING, INSULATE	2	10001 –	
16	KD0-33901-0370	•• BOLT, R-TERMINAL	1	10001 –	
17	KD0-0080-05102	• BOLT, E-TERMINAL	1	10001 –	
18	KD0-0275-06852	• BOLT, THROUGH	3	10001 –	
19	KD1-33200-0970	• STATOR ASS'Y	1	10001 –	
20	KD1-33310-0682	• FRONT BRACKET ASS'Y	1	10001 –	
21	KD0-33400-1670	• PULLEY ASS'Y	1	10001 –	
22	KD0-0280-18022	• NUT	1	10001 –	
23	KD1-0335-18022	• WASHER, SPRING	1	10001 –	
24	KD0-0055-05282	• SCREW	1	10001 –	

FIG. 6401 STARTING MOTOR (1/2)

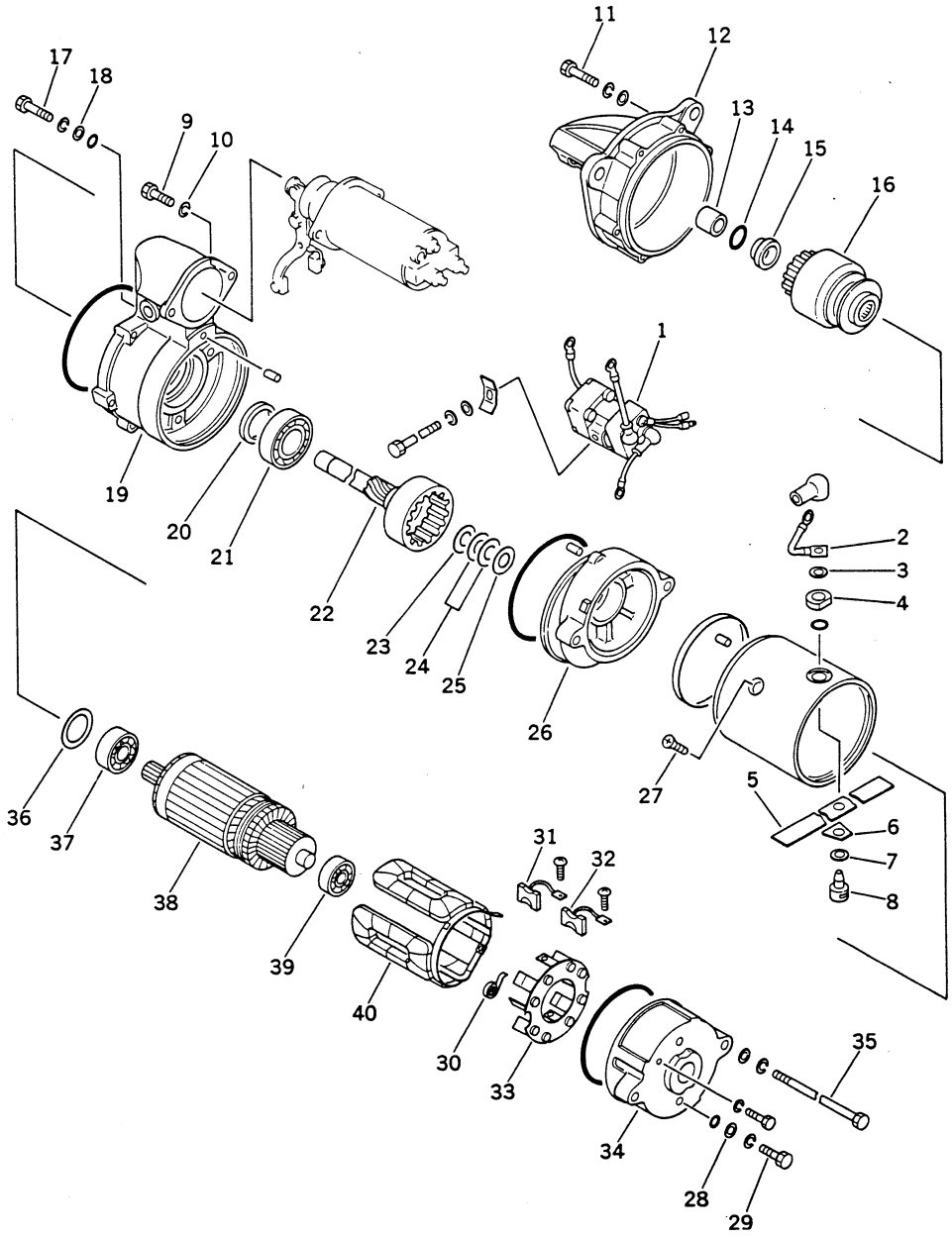

S6D95L-1B

INDEX NO.	PART NO.	DESCRIPTION	Q'TY	SERIAL NO. S6D95L-1B	SERIAL NO.
	600-813-3330	STARTING MOTOR ASS'Y	1	10001 –	
		THIS ASSEMBLY CONSISTS OF ALL PARTS SHOWN IN FIGS. 6401 AND 6402.			
		THE NIKKO DENKI PART NUMBER IS THAT KD IS REMOVED FROM KOMATSU PART NUMBER LISTED BELOW.			
1	KD0-25000-6950	• SAFETY RELAY SWITCH ASS'Y	1	10001 –	
2	KD1-23785-0100	• LEAD WIRE ASS'Y	1	10001 –	
3	KD1-47921-0010	• WASHER	1	10001 –	
4	KD1-23941-0060	• WASHER,INSULATE	1	10001 –	
5	KD1-23946-0070	• SHEET, INSULATE	1	10001 –	
6	KD1-23946-0080	• SHEET, INSULATE	1	10001 –	
7	KD1-23921-0110	• WASHER	1	10001 –	
8	KD1-23905-0042	• RIVET	1	10001 –	
9	KD0-0275-06222	• BOLT	2	10001 –	
10	KD1-23921-0210	• WASHER	1	10001 –	
11	KD0-0240-05505	• BOLT	6	10001 –	
12	KD1-23310-0520	• FRONT BRACKET ASS'Y	1	10001 –	
13	KD7-23351-0140	•• METAL	1	10001 –	
14	KD1-23914-0030	• RING, CLIP	1	10001 –	
15	KD1-23181-0030	• STOPPER, PINION	1	10001 –	
16	KD1-23500-0260	• OVER RUNNING CLUTCH ASS'Y	1	10001 –	
17	KD1-0240-06285	• BOLT	3	10001 –	
18	KD1-47921-0790	• WASHER	3	10001 –	
19	KD1-23600-0160	• CENTER BRACKET ASS'Y	1	10001 –	
20	KD1-09210-1020	•• SEAL, OIL	1	10001 –	
21	KD1-0454-60057	• BEARING, BALL	1	10001 –	
22	KD1-23111-0350	• SHAFT	1	10001 –	
23	KD1-23921-0130	• WASHER	1	10001 –	
24	KD1-23921-0140	• WASHER	2	10001 –	
25	KD1-23941-0030	• WASHER, INSULATE	1	10001 –	
26	KD1-23611-0430	• BRACKET, CENTER	1	10001 –	
27	KD1-23903-0010	• SCREW	4	10001 –	
28	KD1-47921-1000	• WASHER	2	10001 –	

FIG NO. 6401

INDEX NO.	PART NO.	DESCRIPTION	Q'TY	SERIAL NO. S6D95L-1B	SERIAL NO.
29	KD0-09001-4180	• BOLT	2	10001 –	
30	KD1-23913-0010	• SPRING, BRUSH	4	10001 –	
31	KD1-23740-0170	• BRUSH, +	2	10001 –	
32	KD0-23740-0180	• BRUSH, –	2	10001 –	
33	KD0-23750-0120	• BRUSH HOLDER ASS'Y	1	10001 –	
34	KD0-23711-0170	• BRACKET, REAR	1	10001 –	
35	KD1-23901-0080	• BOLT	2	10001 –	
36	KD1-21921-0030	• WASHER	2	10001 –	
37	KD1-0454-60047	• BEARING, BALL	1	10001 –	
38	KD1-23100-0160	• ARMATURE ASS'Y	1	10001 –	
39	KD1-0454-62007	• BEARING, BALL	1	10001 –	
40	KD0-23230-0210	• FIELD COIL ASS'Y	1	10001 –	

FIG. 6402 STARTING MOTOR (2/2)

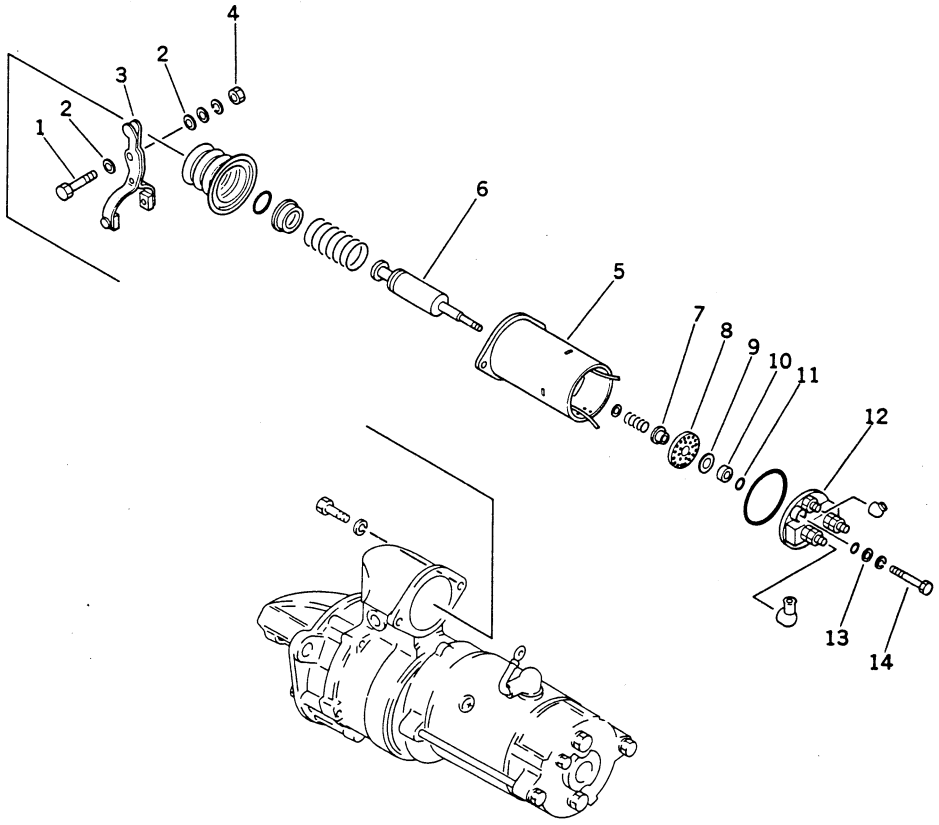

FIG NO. 6402

INDEX NO.	PART NO.	DESCRIPTION	Q'TY	SERIAL NO. S6D95L-1B	SERIAL NO.
	(600-813-3330)	STARTING MOTOR ASS'Y	1	10001 –	
		THIS ASSEMBLY CONSISTS OF ALL PARTS SHOWN IN FIGS.6401 AND 6402.			
		THE NIKKO DENKI PART NUMBER IS THAT KD IS REMOVED FROM KOMATSU PART NUMBER LISTED BELOW.			
1	KD0-23303-0020	• PIN, LEVER	1	10001 –	
2	KD1-0345-08001	• WASHER, SEAL	2	10001 –	
3	KD1-23320-0170	• SHIFT LEVER ASS'Y	1	10001 –	
4	KD1-09279-0090	• NUT	1	10001 –	
5	KD0-47100-3510	• MAGNETIC SWITCH ASS'Y	1	10001 –	
6	KD1-47121-1580	•• PLUNGER ASS'Y	1	10001 –	
7	KD1-47943-0690	•• BUSHING, INSULATE	1	10001 –	
8	KD1-47151-0550	•• CONTACTOR, MOVING	1	10001 –	
9	KD1-47941-0490	•• WASHER, INSULATE	1	10001 –	
10	KD1-47927-1060	•• HOLDER	1	10001 –	
11	KD1-47914-0110	•• RING, CLIP	2	10001 –	
12	KD0-47780-0670	•• TERMINAL ASS'Y	1	10001 –	
13	KD1-47921-1030	•• WASHER	2	10001 –	
14	KD0-0080-05422	•• BOLT	2	10001 –	

GASKET KIT

CONTENTS

	FIG NO.	PAGE
GASKET KIT	9999	112

K

KIT

See subsequent pages for detail.

K-1	6207-K1-2100	CYLINDER HEAD GASKET KIT
K-2	6207-K2-2100	CYLINDER BLOCK GASKET KIT

INDEX NO.	PART NO.	DESCRIPTION	Q'TY	SERIAL NO. S6D95L-1B	SERIAL NO.
1	6207-K1-2100	CYLINDER HEAD GASKET KIT	1	10001 –	
1	6204-41-4540	• SEAL, VALVE	6	10001 –	
1	6207-11-1810	• GASKET, HEAD	1	10001 –	
1	6206-11-8810	• O-RING, HEAD COVER	1	10001 –	
1	6136-11-8142	• RUBBER, HEAD COVER	4	10001 –	
1	6136-11-4820	• GASKET, RIBBON HEATER	2	10001 –	
1	6207-11-5810	• GASKET, EXHAUST MANIFOLD	2	10001 –	
1	6207-11-5580	• GASKET, TURBOCHARGER	1	10001 –	
1	07000-62018	• O-RING, TURBO. LUB. PIPE	1	10001 –	
1	6131-51-7681	• GASKET, TURBO. LUB. PIPE	1	10001 –	
1	6204-11-3880	• GASKET, NOZZLE HOLDER	6	10001 –	
1	6204-11-3850	• SEAL, DUST, NOZZLE HOLDER	6	10001 –	
1	6206-61-1130	• GASKET, WATER PUMP COVER	1	10001 –	
1	07000-03040	• O-RING, WATER PUMP BODY	1	10001 –	
1	6206-61-1710	• GASKET, WATER PUMP BODY	1	10001 –	
1	6140-11-6331	• GASKET, THERMOSTAT	1	10001 –	
2	6207-K2-2100	CYLINDER BLOCK GASKET KIT	1	10001 –	
2	6206-21-6810	• GASKET, PLATE	1	10001 –	
2	6204-21-3811	• GASKET, FRONT PLATE	1	10001 –	
2	6204-21-3510	• SEAL, FRONT	1	10001 –	
2	07000-03050	• O-RING, FRONT COVER	1	10001 –	
2	6204-21-5290	• GASKET, OIL PAN DRAIN	1	10001 –	
2	6141-21-1332	• SEAL, REAR	1	10001 –	
2	6204-51-6120	• O-RING, SUCTION TUBE	1	10001 –	
2	6204-61-5190	• GASKET, OIL COOLER	2	10001 –	
2	01653-21412	• WASHER, LOCK, INJECTION GEAR	1	10001 –	
2	07000-02135	• O-RING, HOLDER	1	10001 –	
2	07005-00812	• GASKET, HOLDER	1	10001 –	
2	287-01-12231	• O-RING, INJECTION PUMP	1	10001 –	
2	07005-01012	• GASKET, OIL PIPE	4	10001 –	
2	07005-01412	• GASKET, FUEL FILTER JOINT	8	10001 –	
2	6204-61-1510	• SEAL, WATER	1	10001 –	
2	07000-02100	• O-RING, STARTING MOTOR	1	10001 –	

CHASSIS

PC150-3 Serial No. 3001 and up
PC150LC-3 Serial No. 3001 and up

SECTION INDEX

1. ENGINE RELATED PARTS AND ELECTRICAL SYSTEM 1
2. TRAVEL AND FINAL DRIVE 2
3. UNDER CARRIAGE 3
4. SWING AND CONTROL SYSTEM 4
5. REVOLVING FRAME AND CAB 5
6. WORK EQUIPMENT CONTROL SYSTEM 6
7. WORK EQUIPMENT 7
8. OPTIONAL PARTS 8
9. OPTIONAL PARTS, MARK PLATE, TOOL AND KIT 9
10. ENGINE NUMERICAL INDEX 10
11. CHASSIS NUMERICAL INDEX 11

The PC150-3, PC150LC-3 are available in the following combinations.

1. Auto-deceleration system: Installed / Not installed
2. Swing mechanical brake: Installed / Not installed

Relationship between Fig. No. and system combination.

	Auto-deceleration		
		Installed	Not installed
		Fig. No.	Fig. No.
		1101	1102
		1105	1106
		1111	1112
		1125	–
		1411, 1413	1414
		1423	1424
		6505	6506
2	Swing mechanical brake		
		Installed	Not installed
		Fig. No.	Fig. No.
		1411, 1413	1414
		4101, 4103	4105, 4107
		4425	4426
		6505	6506

When using the parts book, please confirm the type of machine by checking for the appropriate switch and lamp on monitor panel.

ENGINE RELATED PARTS AND ELECTRICAL SYSTEM

CONTENTS

	FIG NO.	PAGE
ENGINE MOUNT	1001	2
POWER TAKE OFF	1021	4
AIR CLEANER CONNECTION	1051	6
FUEL CONTROL LEVER (WITH AUTO DECELERATION)	1101	8
FUEL CONTROL LEVER (WITHOUT AUTO DECELERATION)	1102	12
HYDRAULIC PIPING (WITH AUTO DECELERATION)	1105	16
HYDRAULIC PIPING (WITHOUT AUTO DECELERATION)	1106	18
FUEL CONTROL LINKAGE (WITH AUTO DECELERATION)	1111	20
FUEL CONTROL LINKAGE (WITHOUT AUTO DECELERATION)	1112	22
AUTO DECELERATION CYLINDER (WITH AUTO DECELERATION)	1125	24
RADIATOR AND OIL COOLER	1201	26
RADIATOR GUARD AND PIPING	1211	30
FUEL PIPING	1301	32
BATTERY AND RELAY SWITCH	1401	34
INSTRUMENT PANEL (FOR LONG LEVER CONTROL) (WITH AUTO DECELERATION) (WITH SWING MECHANICAL BRAKE)	1411	36
INSTRUMENT PANEL (FOR WRIST CONTROL) (WITH AUTO DECELERATION) (WITH SWING MECHANICAL BRAKE)	1413	40
INSTRUMENT PANEL (FOR WRIST CONTROL) (WITHOUT AUTO DECELERATION) (WITHOUT SWING MECHANICAL BRAKE)	1414	44
ELECTRICAL SYSTEM (1/2)	1421	48
ELECTRICAL SYSTEM (2/2) (WITH AUTO DECELERATION)	1423	50
ELECTRICAL SYSTEM (2/2) (WITHOUT AUTO DECELERATION)	1424	52
MONITOR SYSTEM	1501	54

FIG. 1001 ENGINE MOUNT

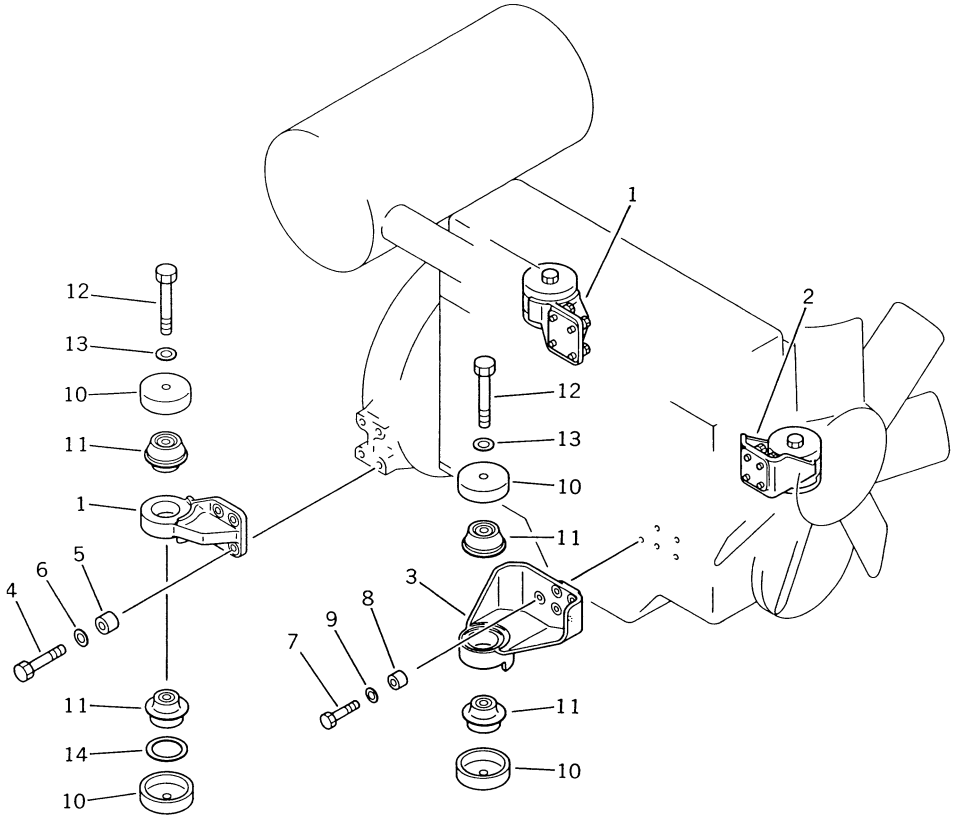

FIG NO. 1001

INDEX NO.	PART NO.	DESCRIPTION	Q'TY	SERIAL NO. PC150-3	SERIAL NO. PC150LC-3
1	203-01-42122	BRACKET	2	3001 –	3001 –
2	21K-01-22120	BRACKET	1	3001 –	3001 –
3	21K-01-22110	BRACKET	1	3001 –	3001 –
4	01010-51255	BOLT	8	3001 –	3001 –
5	6131-22-3750	BOSS	8	3001 –	3001 –
6	01643-31232	WASHER	8	3001 –	3001 –
7	01010-51050	BOLT	8	3001 –	3001 –
8	6631-11-5630	SPACER	8	3001 –	3001 –
9	01643-31032	WASHER	8	3001 –	3001 –
10	203-01-32110	STOPPER	8	3001 –	3001 –
11	113-01-21110	CUSHION	8	3001 –	3001 –
12	01011-51625	BOLT	4	3001 –	3001 –
13	01643-31645	WASHER	4	3001 –	3001 –
14	20S-71-11230	SPACER	2	3001 –	3001 –

FIG. 1021 POWER TAKE OFF

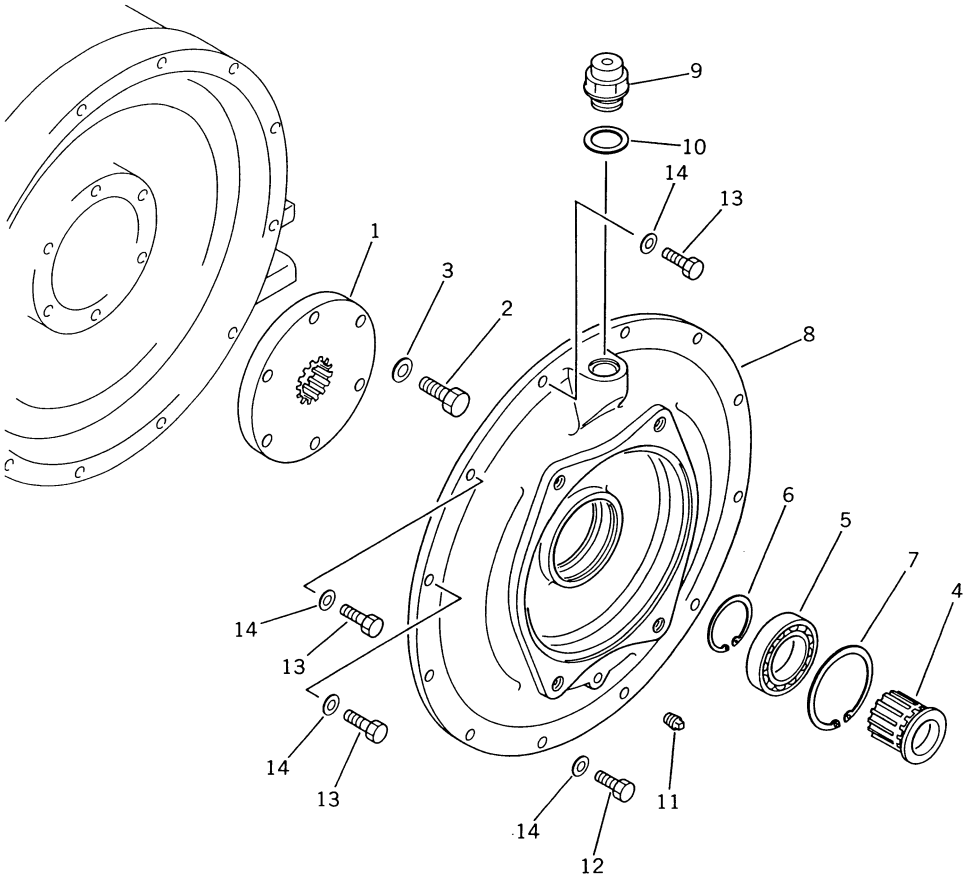

FIG NO. 1021

INDEX NO.	PART NO.	DESCRIPTION	Q'TY	SERIAL NO. PC150-3	SERIAL NO. PC150LC-3
1	20G-01-11120	COUPLING	1	3001–	3001–
2	01010-51235	BOLT	6	3001–	3001–
3	01643-31232	WASHER	6	3001–	3001–
4	20G-01-11130	SHAFT	1	3001–	3001–
5	06045-06012	BEARING	1	3001–	3001–
6	04064-06020	RING, SNAP	1	3001–	3001–
7	04065-09530	RING, SNAP	1	3001–	3001–
8	20G-01-11110	COVER	1	3001–	3001–
9	07030-03034	BREATHER	1	3001–	3001–
10	07005-03016	GASKET	1	3001–	3001–
11	07042-30108	PLUG	1	3001–	3001–
12	01010-51030	BOLT	9	3001–	3001–
13	01010-51035	BOLT	3	3001–	3001–
14	01643-31032	WASHER	12	3001–	3001–

FIG. 1051 AIR CLEANER CONNECTION

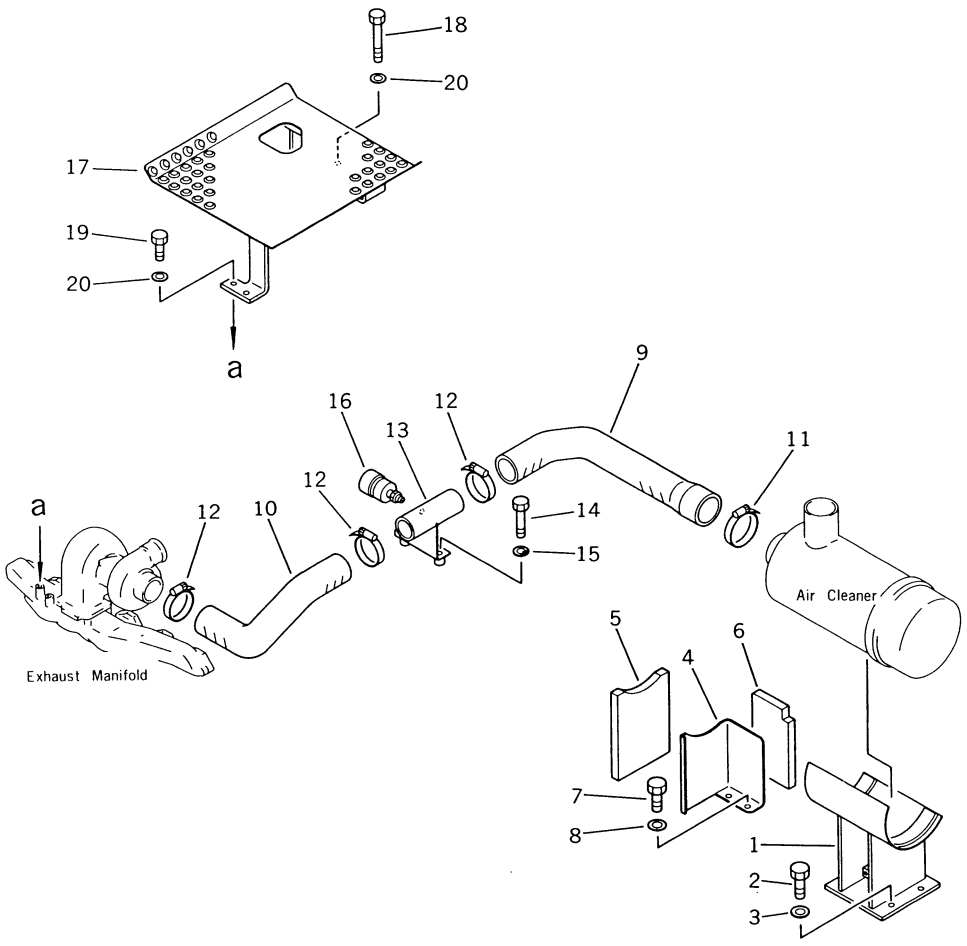

INDEX NO.	PART NO.	DESCRIPTION	Q'TY	SERIAL NO. PC150-3	SERIAL NO. PC150LC-3
1	20G-01-12112	BRACKET	1	3001 –	3001 –
2	01010-51225	BOLT	4	3001 –	3001 –
3	01643-31232	WASHER	4	3001 –	3001 –
4	20G-01-12140	PLATE	1	3001 –	3001 –
5	20G-01-12160	SHEET	1	3001 –	3001 –
6	20G-01-12150	SHEET	1	3001 –	3001 –
7	01010-51220	BOLT	2	3001 –	3001 –
8	01643-31232	WASHER	2	3001 –	3001 –
9	21K-01-21220	HOSE	1	3001 –	3001 –
10	21K-01-21230	HOSE	1	3001 –	3001 –
11	07281-01029	CLAMP	1	3001 –	3001 –
12	07281-00809	CLAMP	3	3001 –	3001 –
13	21K-01-21240	BRACKET	1	3001 –	3001 –
14	01010-51055	BOLT	2	3001 –	3001 –
15	01643-31032	WASHER	2	3001 –	3001 –
16	08670-00635	INDICATER, DUST	1	3001 –	3001 –
17	21K-01-21110	STEP	1	3001 –	3001 –
18	01010-51070	BOLT	2	3001 –	3001 –
19	01010-51025	BOLT	2	3001 –	3001 –
20	01643-31032	WASHER	4	3001 –	3001 –

FIG. 1101 FUEL CONTROL LEVER (WITH AUTO DECELERATION)

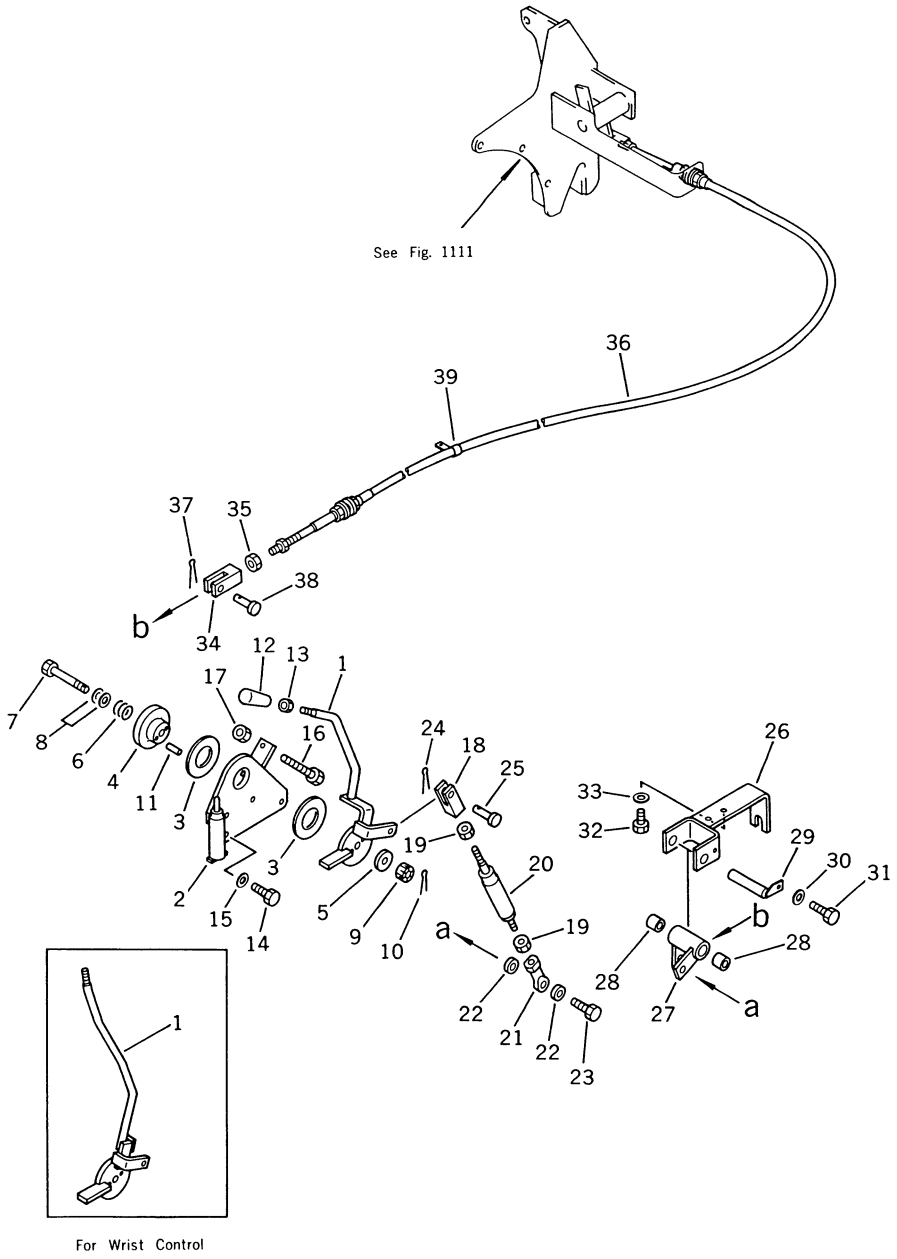

FIG NO. 1101

INDEX NO.	PART NO.	DESCRIPTION	Q'TY	SERIAL NO. PC150-3	SERIAL NO. PC150LC-3
1	203-43-42821	LEVER (FOR LONG LEVER CONTROL)	1	3001–	3001–
	203-43-43210	LEVER (FOR WRIST CONTROL)	1	3001–	3001–
2	203-43-42830	BRACKET (FOR LONG LEVER CONTROL)	1	3001–	3001–
2	203-43-43220	BRACKET (FOR WRIST CONTROL)	1	3001–	3001–
3	101-43-11281	FACING	2	3001–	3001–
4	201-43-22181	DISC	1	3001–	3001–
5	101-43-11380	COVER	1	3001–	3001–
6	154-43-14690	SPRING	1	3001–	3001–
7	01052-51265	BOLT	1	3001–	3001–
8	01640-21223	WASHER	2	3001–	3001–
9	01593-11210	NUT	1	3001–	3001–
10	04050-13030	PIN, COTTER	1	3001–	3001–
11	04020-00616	PIN, DOWEL	2	3001–	3001–
12	09304-01240	KNOB	1	3001–	3001–
13	01582-11210	NUT	1	3001–	3001–
14	01010-51030	BOLT	4	3001–	3001–
15	01643-31032	WASHER	4	3001–	3001–
16	01016-31070	BOLT	1	3001–	3001–
17	01580-11008	NUT	1	3001–	3001–
18	04210-21040	YOKE	1	3001–	3001–
19	01582-11008	NUT	2	3001–	3001–
20	20X-43-12230	SPRING ASS'Y	1	3001–	3001–
21	04250-81068	END, ROD	1	3001–	3001–
22	04254-01032	SPACER	2	3001–	3001–
23	01010-51035	BOLT	1	3001–	3001–
24	04050-13018	PIN, COTTER	1	3001–	3001–
25	04205-11028	PIN	1	3001–	3001–
26	203-43-42840	BRACKET	1	3001–	3001–
27	203-43-42850	LEVER	1	3001–	3001–
28	09350-02220	BUSHING	2	3001–	3001–
29	203-43-42910	SHAFT	1	3001–	3001–
30	01643-30823	WASHER	1	3001–	3001–
31	01010-50816	BOLT	1	3001–	3001–
32	01010-51020	BOLT	2	3001–	3001–
33	01643-31032	WASHER	2	3001–	3001–

FIG NO. 1101

INDEX NO.	PART NO.	DESCRIPTION	Q'TY	SERIAL NO. PC150-3	SERIAL NO. PC150LC-3
34	144-947-2850	YOKE	1	3001–	3001–
35	01580-11008	NUT	1	3001–	3001–
36	21K-43-21130	CABLE	1	3001–	3001–
37	04050-13018	PIN, COTTER	1	3001–	3001–
38	04205-11028	PIN	1	3001–	3001–
39	21T-68-11320	CLIP	1	3001–	3001–

FIG. 1102 FUEL CONTROL LEVER (WITHOUT AUTO DECELERATION)

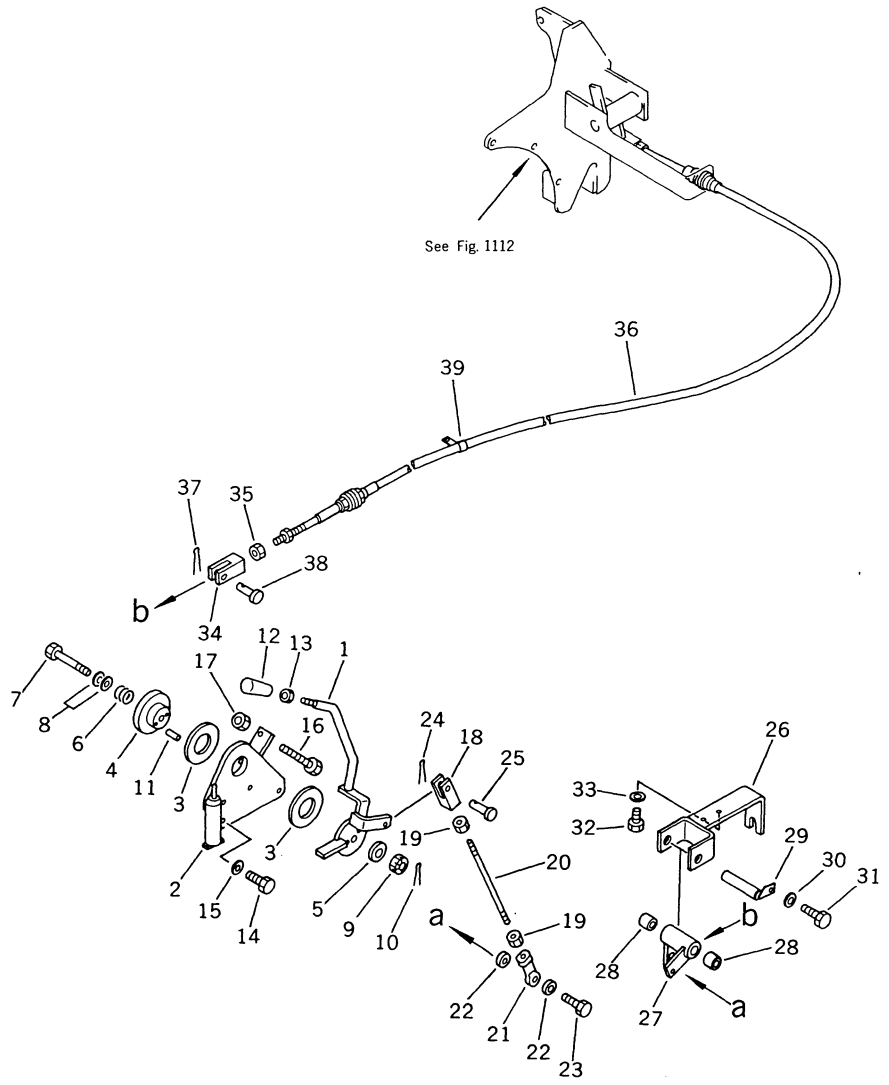

FIG NO. 1102

INDEX NO.	PART NO.	DESCRIPTION	Q'TY	SERIAL NO. PC150-3	SERIAL NO. PC150LC-3
1	203-43-42821	LEVER	1	3001 –	3001 –
2	203-43-43220	BRACKET	1	3001 –	3001 –
3	101-43-11281	FACING	2	3001 –	3001 –
4	201-43-22181	DISC	1	3001 –	3001 –
5	101-43-11380	COVER	1	3001 –	3001 –
6	154-43-14690	SPRING	1	3001 –	3001 –
7	01052-51265	BOLT	1	3001 –	3001 –
8	01640-21223	WASHER	2	3001 –	3001 –
9	01593-11210	NUT	1	3001 –	3001 –
10	04050-13030	PIN, COTTER	1	3001 –	3001 –
11	04020-00616	PIN, DOWEL	2	3001 –	3001 –
12	09304-01240	KNOB	1	3001 –	3001 –
13	01582-11210	NUT	1	3001 –	3001 –
14	01010-51030	BOLT	4	3001 –	3001 –
15	01643-31032	WASHER	4	3001 –	3001 –
16	01016-31070	BOLT	1	3001 –	3001 –
17	01580-11008	NUT	1	3001 –	3001 –
18	04210-21040	YOKE	1	3001 –	3001 –
19	01582-11008	NUT	2	3001 –	3001 –
20	04245-41025	ROD	1	3001 –	3001 –
21	04250-81068	END, ROD	1	3001 –	3001 –
22	04254-01032	SPACER	2	3001 –	3001 –
23	01010-51035	BOLT	1	3001 –	3001 –
24	04050-13018	PIN, COTTER	1	3001 –	3001 –
25	04205-11028	PIN	1	3001 –	3001 –
26	203-43-42840	BRACKET	1	3001 –	3001 –
27	203-43-42850	LEVER	1	3001 –	3001 –
28	09350-02220	BUSHING	2	3001 –	3001 –
29	203-43-42910	SHAFT	1	3001 –	3001 –
30	01643-30823	WASHER	1	3001 –	3001 –
31	01010-50816	BOLT	1	3001 –	3001 –
32	01010-51020	BOLT	2	3001 –	3001 –
33	01643-31032	WASHER	2	3001 –	3001 –
34	144-947-2850	YOKE	1	3001 – •	3001 – •
34	203-43-44280	YOKE	1	• –	• –

FIG NO. 1102

INDEX NO.	PART NO.	DESCRIPTION	Q'TY	SERIAL NO. PC150-3	SERIAL NO. PC150LC-3
35	01580-11008	NUT	1	3001 –	3001 –
36	21K-43-21130	CABLE	1	3001 – •	3001 – •
36	203-43-42860	CABLE	1	• – •	• – •
36	203-43-44290	CABLE	1	• –	• –
37	04050-13018	PIN, COTTER	1	3001 –	3001 –
38	04205-11028	PIN	1	3001 –	3001 –
39	21T-68-11320	CLIP	1	3001 –	3001 –

FIG. 1105 HYDRAULIC PIPING (WITH AUTO DECELERATION)

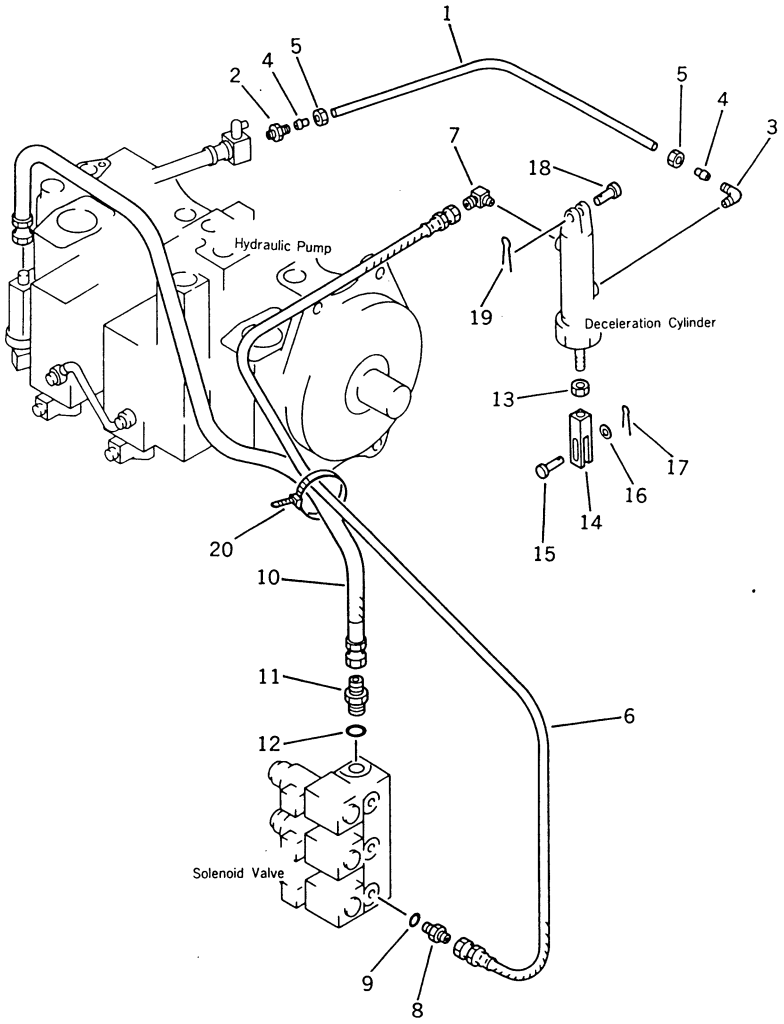

FIG NO. 1105

INDEX NO.	PART NO.	DESCRIPTION	Q'TY	SERIAL NO. PC150-3	SERIAL NO. PC150LC-3
1	07822-00405	TUBE	1	3001 –	3001 –
2	07836-00410	CONNECTOR	1	3001 –	3001 –
3	07834-00410	ELBOW	1	3001 –	3001 –
4	07831-00411	SLEEVE	2	3001 –	3001 –
5	07832-00410	NUT	2	3001 –	3001 –
6	20G-62-15430	HOSE	1	3001 –	3001 –
7	203-62-42920	ELBOW	1	3001 –	3001 –
8	203-62-44930	NIPPLE	1	3001 –	3001 –
9	07002-01423	O-RING	1	3001 –	3001 –
10	07102-20412	HOSE	1	3001 –	3001 –
11	07230-10422	NIPPLE	1	3001 –	3001 –
12	07002-02034	O-RING	1	3001 –	3001 –
13	01583-11408	NUT	1	3001 –	3001 –
14	203-43-43240	YOKE	1	3001 –	3001 –
15	04205-10830	PIN	1	3001 –	3001 –
16	01641-20812	WASHER	1	3001 –	3001 –
17	04050-12015	PIN, COTTER	1	3001 –	3001 –
18	04205-11235	PIN	1	3001 –	3001 –
19	04050-13020	PIN, COTTER	1	3001 –	3001 –
20	(08034-00519)	BAND	6	3001 –	3001 –

FIG. 1106 HYDRAULIC PIPING (WITHOUT AUTO DECELERATION)

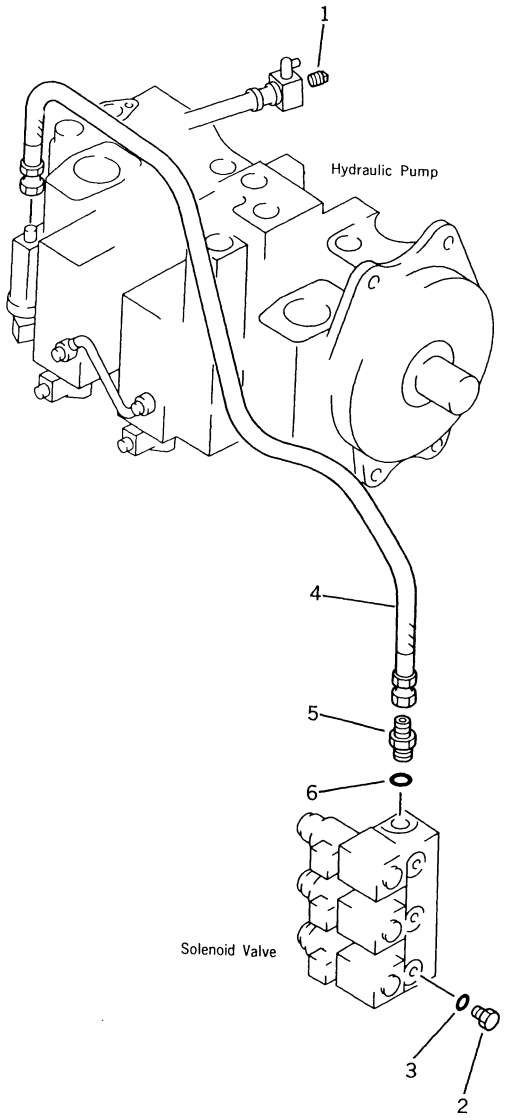

FIG NO. 1106

INDEX NO.	PART NO.	DESCRIPTION	Q'TY	SERIAL NO. PC150-3	SERIAL NO. PC150LC-3
1	07042-30108	PLUG	1	3001–	3001–
2	07040-11409	PLUG	1	3001–	3001–
3	07002-01423	O-RING	1	3001–	3001–
4	07102-20412	HOSE	1	3001–	3001–
5	07230-10422	NIPPLE	1	3001–	3001–
6	07002-02034	O-RING	1	3001–	3001–

FIG. 1111 FUEL CONTROL LINKAGE (WITH AUTO DECELERATION)

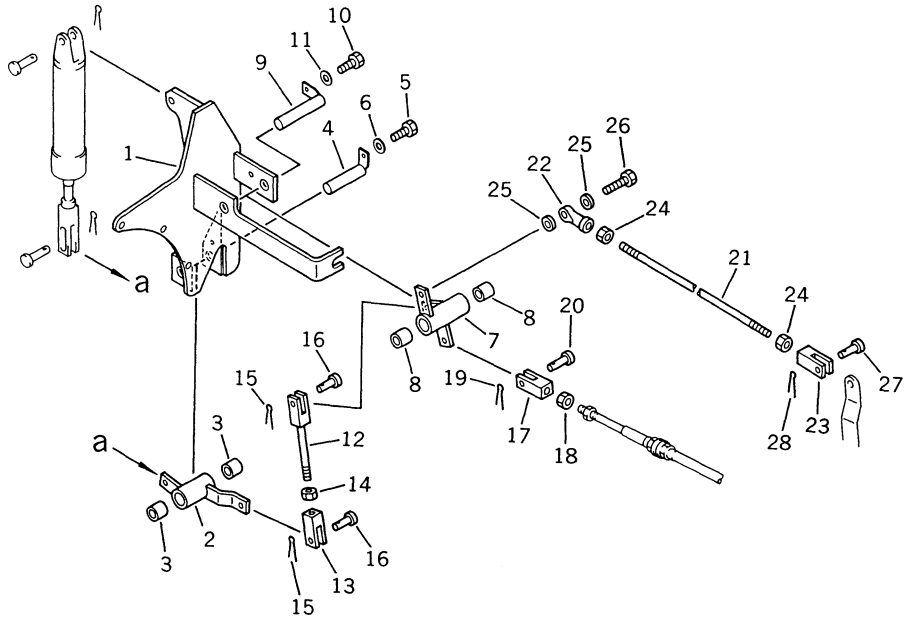

FIG NO. 1111

INDEX NO.	PART NO.	DESCRIPTION	Q'TY	SERIAL NO. PC150-3	SERIAL NO. PC150LC-3
1	203-43-42870	BRACKET	1	3001–	3001–
2	203-43-42920	LEVER	1	3001–	3001–
3	09350-02220	BUSHING	2	3001–	3001–
4	203-43-42930	SHAFT	1	3001–	3001–
5	01010-50816	BOLT	1	3001–	3001–
6	01643-30823	WASHER	1	3001–	3001–
7	203-43-42890	LEVER	1	3001–	3001–
8	09350-02220	BUSHING	2	3001–	3001–
9	203-43-42910	SHAFT	1	3001–	3001–
10	01010-50816	BOLT	1	3001–	3001–
11	01643-30823	WASHER	1	3001–	3001–
12	04244-41011	ROD	1	3001–	3001–
13	04210-21040	YOKE	1	3001–	3001–
14	01582-11008	NUT	1	3001–	3001–
15	04050-13018	PIN, COTTER	2	3001–	3001–
16	04205-11028	PIN	2	3001–	3001–
17	144-947-2850	YOKE	1	3001–	3001–
18	01580-11008	NUT	1	3001–	3001–
19	04050-13018	PIN, COTTER	1	3001–	3001–
20	04205-11028	PIN	1	3001–	3001–
21	04245-51038	ROD	1	3001–	3001–
22	04250-81068	END, ROD	1	3001–	3001–
23	201-43-21370	YOKE	1	3001–	3001–
24	01582-11008	NUT	2	3001–	3001–
25	04254-01032	SPACER	2	3001–	3001–
26	01010-51035	BOLT	1	3001–	3001–
27	04205-10622	PIN	1	3001–	3001–
28	04050-11612	PIN, COTTER	1	3001–	3001–

FIG. 1112 FUEL CONTROL LINKAGE (WITHOUT AUTO DECELERATION)

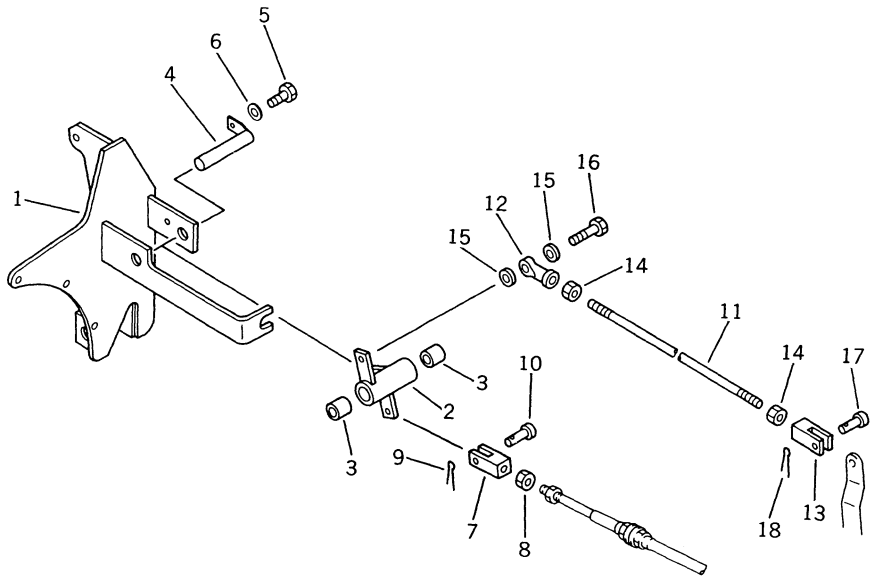

FIG NO. 1112

INDEX NO.	PART NO.	DESCRIPTION	Q'TY	SERIAL NO. PC150-3	SERIAL NO. PC150LC-3
1	203-43-42870	BRACKET	1	3001–	3001–
2	203-43-42890	LEVER	1	3001–	3001–
3	09350-02220	BUSHING	2	3001–	3001–
4	203-43-42910	SHAFT	1	3001–	3001–
5	01010-50816	BOLT	1	3001–	3001–
6	01643-30823	WASHER	1	3001–	3001–
7	144-947-2850	YOKE	1	3001–	3001–
8	01580-11008	NUT	1	3001–	3001–
9	04050-13018	PIN, COTTER	1	3001–	3001–
10	04205-11028	PIN	1	3001–	3001–
11	04245-51038	ROD	1	3001–	3001–
12	04250-81068	END, ROD	1	3001–	3001–
13	201-43-21370	YOKE	1	3001–	3001–
14	01582-11008	NUT	2	3001–	3001–
15	04254-01032	SPACER	2	3001–	3001–
16	01010-51035	BOLT	1	3001–	3001–
17	04205-10622	PIN	1	3001–	3001–
18	04050-11612	PIN, COTTER	1	3001–	3001–

FIG. 1125 AUTO DECELERATION CYLINDER (WITH AUTO DECELERATION)

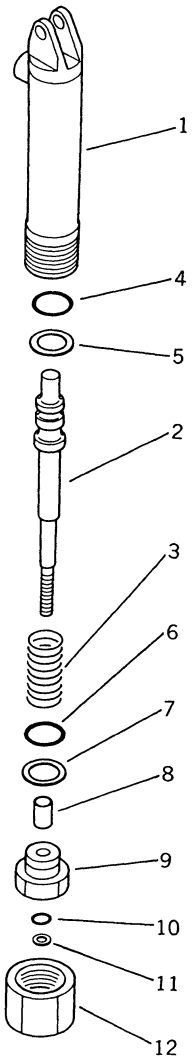

FIG NO. 1125

INDEX NO.	PART NO.	DESCRIPTION	Q'TY	SERIAL NO. PC150-3	SERIAL NO. PC150LC-3
	21K-62-21750	CYLINDER ASS'Y	1	3001–	3001–
1	21K-62-21760	• CYLINDER	1	3001–	3001–
2	203-62-44741	• PISTON	1	3001–	3001–
3	20X-62-13592	• SPRING	1	3001–	3001–
4	07002-12434	• O-RING	1	3001–	3001–
5	07001-03022	• RING, BACK-UP	1	3001–	3001–
6	07002-13028	• O-RING	1	3001–	3001–
7	07001-03028	• RING, BACK-UP	1	3001–	3001–
8	20X-62-13622	• BUSHING	1	3001–	3001–
9	20X-62-13612	• STOPPER	1	3001–	3001–
10	07002-12015	• O-RING	1	3001–	3001–
11	07001-02015	• RING, BACK-UP	1	3001–	3001–
12	20X-62-13632	• NUT	1	3001–	3001–

FIG. 1201 RADIATOR AND OIL COOLER

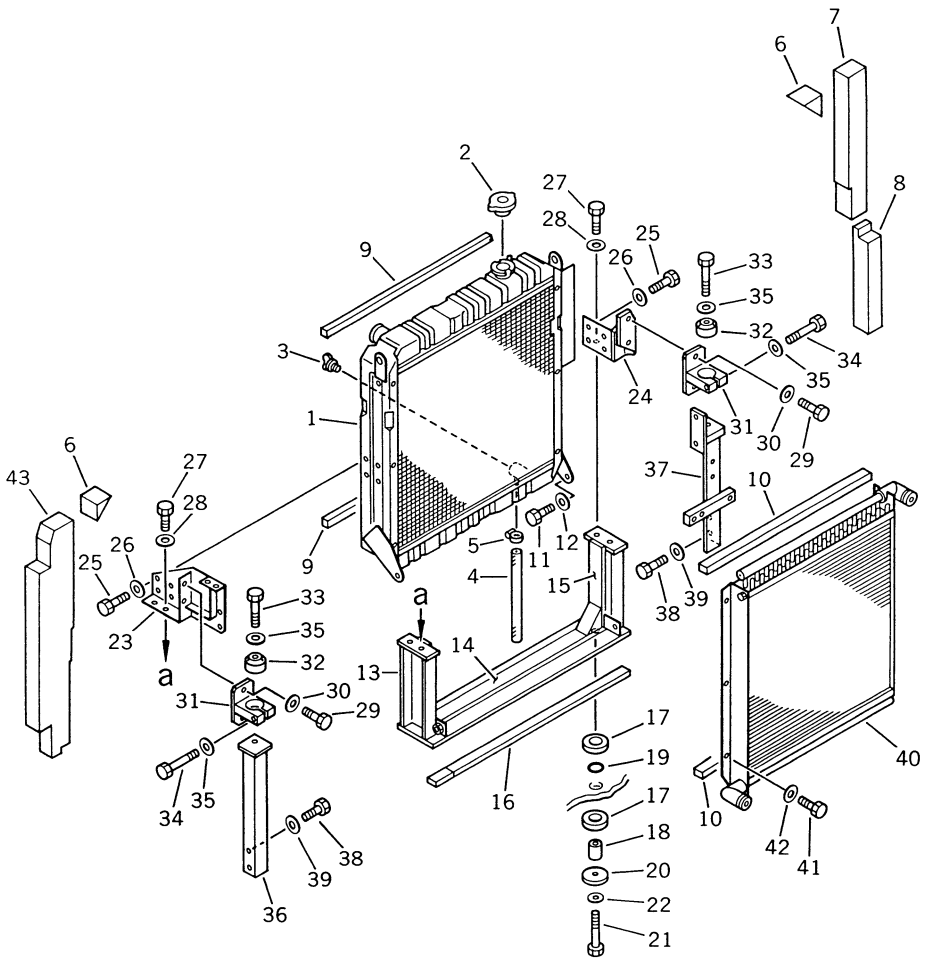

INDEX NO.	PART NO.	DESCRIPTION	Q'TY	SERIAL NO. PC150-3	SERIAL NO. PC150LC-3
	21K-03-00011	RADIATOR ASS'Y	1	3001–	3001–
1	21K-03-21110	• CORE ASS'Y	1	3001–	3001–
2	203-03-41280	• CAP	1	3001–	3001–
3	205-03-62660	PLUG	1	3001–	3001–
4	203-03-41410	HOSE	1	3001–	3001–
5	07280-01010	CLAMP	1	3001–	3001–
6	203-03-41480	SHEET	2	3001–	3001–
7	203-03-41461	SHEET	1	3001–	3001–
8	203-03-41471	SHEET	1	3001–	3001–
9	203-03-41530	SHEET	2	3001–	3001–
10	20G-03-11320	SHEET	2	3001–	3001–
11	01010-51025	BOLT	2	3001–	3001–
12	01643-31032	WASHER	2	3001–	3001–
13	21K-03-21510	BRACKET	1	3001–	3001–
14	203-03-41490	• SHEET	1	3001–	3001–
15	203-03-41520	• SHEET	1	3001–	3001–
16	203-03-41510	SHEET	1	3001–	3001–
17	205-03-62680	CUSHION	4	3001–	3001–
18	205-03-71330	COLLAR	2	3001–	3001–
19	07000-03022	O-RING	2	3001–	3001–
20	205-03-71340	PLATE	2	3001–	3001–
21	01010-51270	BOLT	2	3001–	3001–
22	01643-31232	WASHER	2	3001–	3001–
23	21K-03-21540	BRACKET	1	3001–	3001–
24	21K-03-21520	BRACKET	1	3001–	3001–
25	01010-50820	BOLT	8	3001–	3001–
26	01643-30823	WASHER	8	3001–	3001–
27	01010-51025	BOLT	4	3001–	3001–
28	01643-31032	WASHER	4	3001–	3001–
29	01010-51025	BOLT	4	3001–	3001–
30	01643-31032	WASHER	4	3001–	3001–
31	203-03-41190	BRACKET	2	3001–	3001–
32	135-03-12110	DAMPER	2	3001–	3001–
33	01010-51225	BOLT	2	3001–	3001–
34	01010-51260	BOLT	2	3001–	3001–

FIG NO. 1201

INDEX NO.	PART NO.	DESCRIPTION	Q'TY	SERIAL NO. PC150-3	SERIAL NO. PC150LC-3
35	01643-31232	WASHER	4	3001 –	3001 –
36	203-03-41350	BRACKET	1	3001 –	3001 –
37	21K-03-21550	BRACKET	1	3001 –	3001 –
38	01010-51025	BOLT	2	3001 –	3001 –
39	01643-31032	WASHER	2	3001 –	3001 –
40	21K-03-21120	OIL COOLER ASS'Y	1	3001 –	3001 –
41	01010-50816	BOLT	6	3001 –	3001 –
42	01643-30823	WASHER	6	3001 –	3001 –
43	21K-03-21530	SHEET	1	3001 –	3001 –

FIG. 1211 RADIATOR GUARD AND PIPING

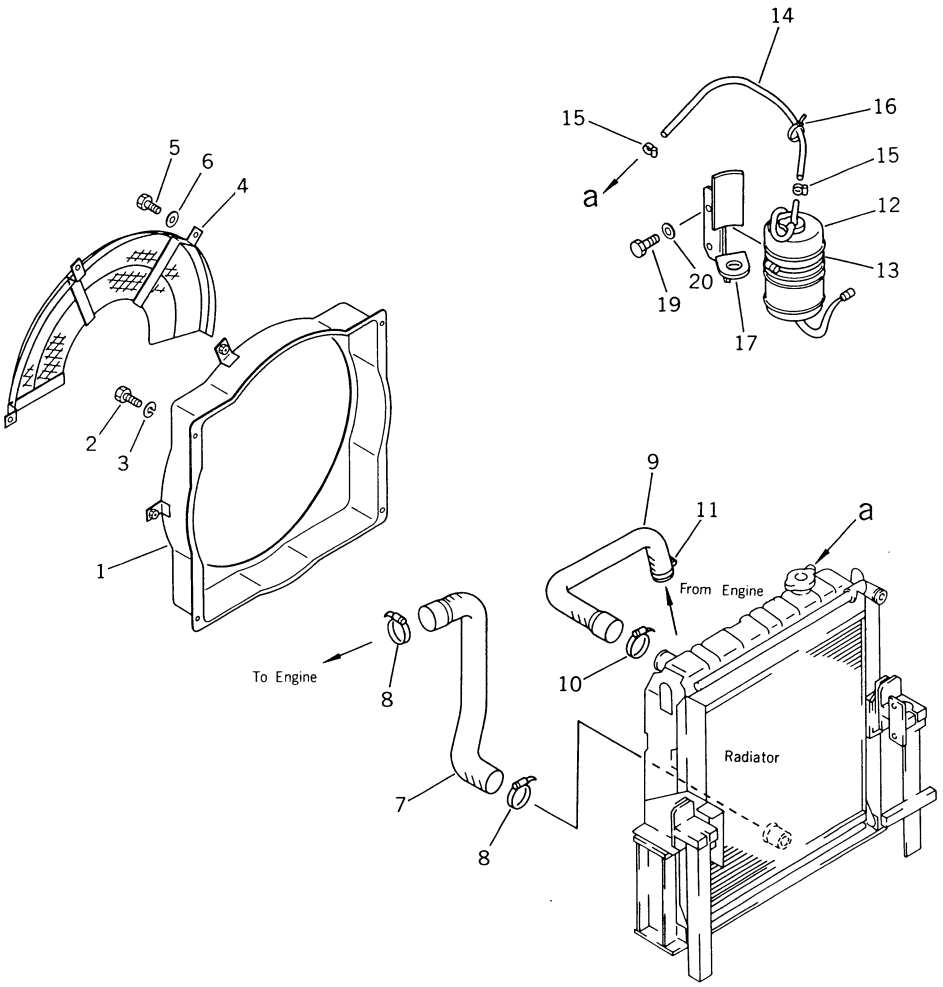

FIG NO. 1211

INDEX NO.	PART NO.	DESCRIPTION	Q'TY	SERIAL NO. PC150-3	SERIAL NO. PC150LC-3
1	203-03-41131	SHROUD	1	3001–	3001–
2	01010-50816	BOLT	4	3001–	3001–
3	01643-30823	WASHER	4	3001–	3001–
4	203-03-41141	GUARD	1	3001–	3001–
5	01010-51025	BOLT	3	3001–	3001–
6	01643-31032	WASHER	3	3001–	3001–
7	203-03-41223	HOSE	1	3001–	3001–
8	07281-00609	CLAMP	2	3001–	3001–
9	203-03-41211	HOSE	1	3001–	3001–
10	07281-00609	CLAMP	1	3001–	3001–
11	07281-00489	CLAMP	1	3001–	3001–
12	203-03-41231	TANK	1	3001–	3001–
13	07281-01469	CLAMP	1	3001–	3001–
14	21K-03-12660	HOSE	1	3001–	3001–
15	07280-01210	CLAMP	2	3001–	3001–
16	08034-00519	BAND	1	3001–	3001–
17	203-03-41360	BRACKET	1	3001–	3001–
18	08036-11214	CLIP	1	3001–	3001–
19	01010-51025	BOLT	2	3001–	3001–
20	01643-31032	WASHER	2	3001–	3001–

FIG. 1301 FUEL PIPING

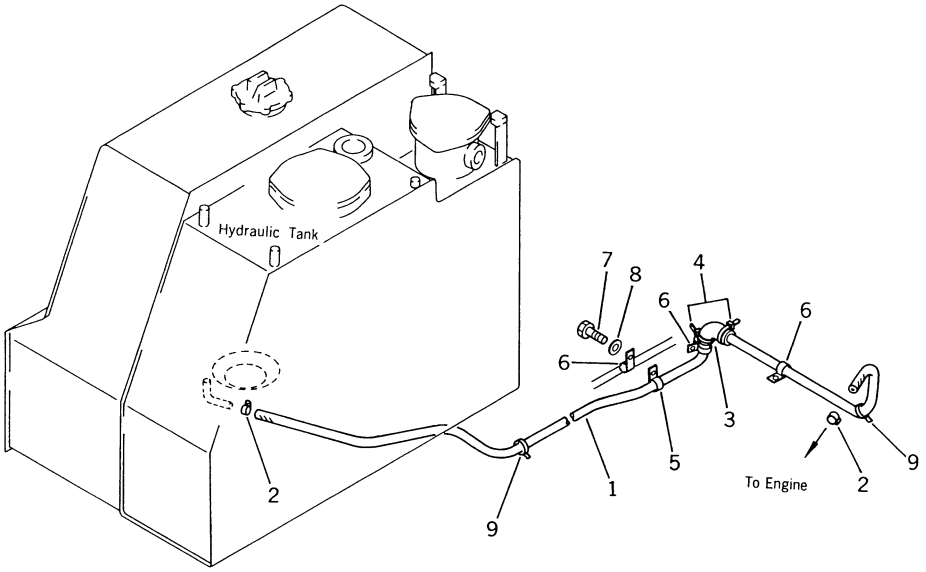

FIG NO. 1301

INDEX NO.	PART NO.	DESCRIPTION	Q'TY	SERIAL NO. PC150-3	SERIAL NO. PC150LC-3
1	07288-01024	HOSE	1	3001–	3001–
2	07281-00197	CLAMP	2	3001–	3001–
3	203-04-31230	COVER	1	3001–	3001–
4	08034-00519	BAND	2	3001–	3001–
5	08036-01814	CLIP	2	3001–	3001–
6	08036-10814	CLIP	3	3001–	3001–
7	01010-51020	BOLT	3	3001–	3001–
8	01643-31032	WASHER	3	3001–	3001–
9	08034-00519	BAND	2	3001–	3001–

FIG. 1401 BATTERY AND RELAY SWITCH

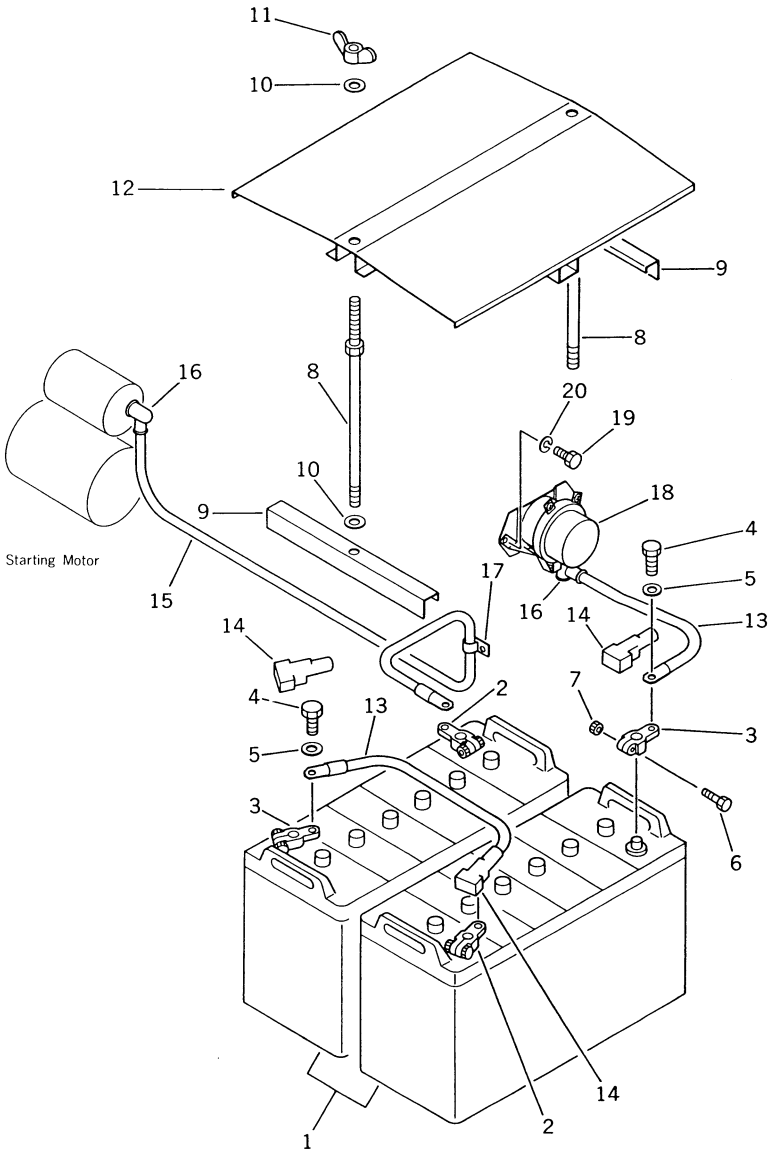

FIG NO. 1401

INDEX NO.	PART NO.	DESCRIPTION	Q'TY	SERIAL NO. PC150-3	SERIAL NO. PC150LC-3
1	08000-32212	BATTERY, 12V 110AH	2	3001–	3001–
2	08000-00000	TERMINAL (+)	2	3001–	3001–
3	08000-00001	TERMINAL (–)	2	3001–	3001–
4	01050-31018	• BOLT	1	3001–	3001–
5	01640-01016	• WASHER	1	3001–	3001–
6	01010-30830	• BOLT	1	3001–	3001–
7	01580-00806	• NUT	1	3001–	3001–
8	203-06-41640	BOLT	2	3001–	3001–
9	203-06-41651	CLAMP	2	3001–	3001–
10	01643-31232	WASHER	4	3001–	3001–
11	01541-21260	NUT	2	3001–	3001–
12	203-06-41630	COVER	1	3001–	3001–
13	08028-12045	WIRE	2	3001–	3001–
14	08038-22009	CAP, TERMINAL	4	3001–	3001–
15	21K-06-21170	WIRE	1	3001–	3001–
16	08038-04030	CAP	2	3001–	3001–
17	08036-11214	CLIP	1	3001–	3001–
18	08088-10000	SWITCH, BATTERY RELAY	1	3001–	3001–
19	01010-50816	BOLT	2	3001–	3001–
20	01602-20825	WASHER, SPRING	2	3001–	3001–

FIG. 1411 INSTRUMENT PANEL (FOR LONG LEVER CONTROL) (WITH AUTO DECELERATION) (WITH SWING MECHANICAL BRAKE)

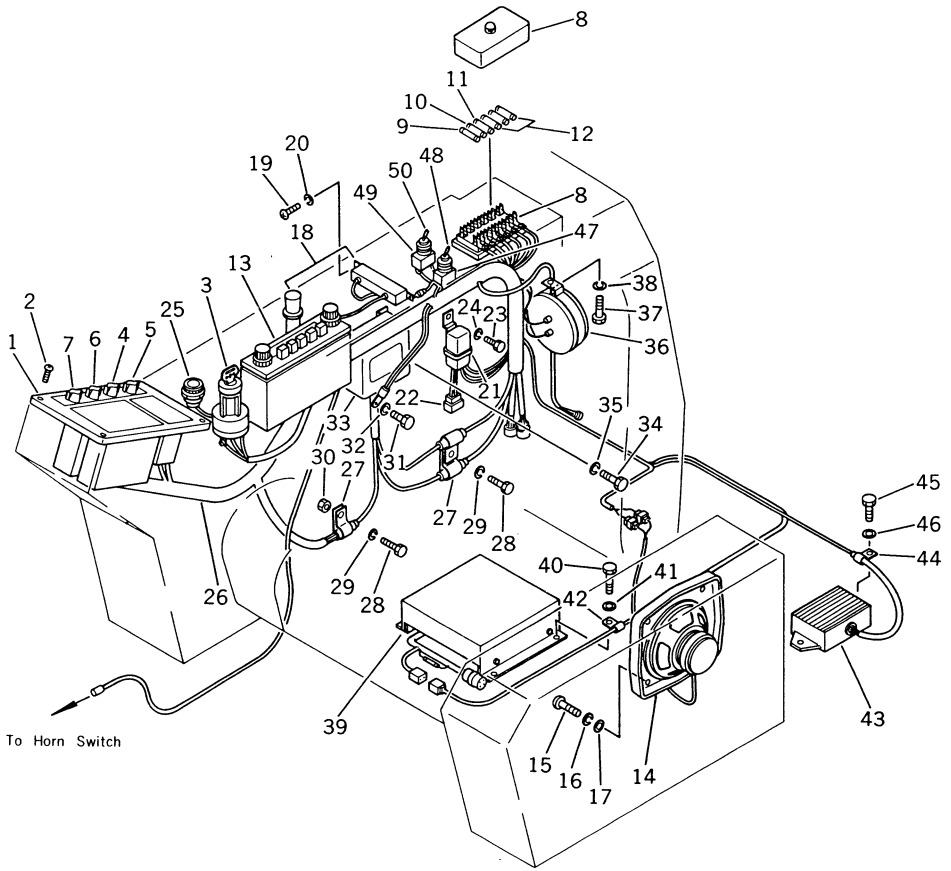

FIG NO. 1411

INDEX NO.	PART NO.	DESCRIPTION	Q'TY	SERIAL NO. PC150-3	SERIAL NO. PC150LC-3
1	(7861-21-1100)	PANEL ASS'Y	1	3001–	3001–
2	01220-40616	SCREW	4	3001–	3001–
3	201-06-21510	SWITCH, STARTING	1	3001–	3001–
4	205-06-71331	SWITCH, LAMP	1	3001–	3001–
5	205-06-71341	SWITCH, WIPER	1	3001–	3001–
6	205-06-71321	SWITCH, HEATER	1	3001–	3001–
7	205-06-71311	SWITCH, MODE	1	3001–	3001–
8	203-06-41540	BOX, FUSE	1	3001–	3001–
9	08040-04000	FUSE, 40A	1	3001–	3001–
10	08040-03000	FUSE, 30A	1	3001–	3001–
11	08040-02000	FUSE, 20A	1	3001–	3001–
12	08040-01000	FUSE, 10A	3	3001–	3001–
13	20G-06-15110	RADIO	1	3001–	3001–
14	20G-06-15120	SPEAKER	1	3001–	3001–
15	01220-40420	SCREW	4	3001–	3001–
16	01601-20410	WASHER, SPRING	4	3001–	3001–
17	01641-20405	WASHER	4	3001–	3001–
18	195-822-6151	LIGHTER	1	3001–	3001–
19	01220-40412	SCREW	2	3001–	3001–
20	01601-20410	WASHER, SPRING	2	3001–	3001–
21	22W-06-13450	RELAY ASS'Y	1	3001–	3001–
22	22W-06-13590	DIODE	2	3001–	3001–
23	01010-50612	BOLT	1	3001–	3001–
24	01602-20619	WASHER, SPRING	1	3001–	3001–
25	203-06-41810	LAMP	1	3001–	3001–
25	08111-02430	• BULB	1	3001–	3001–
26	203-06-41513	WIRE ASS'Y	1	3001–	3001–
27	08036-01814	CLIP	3	3001–	3001–
28	01010-51016	BOLT	3	3001–	3001–
29	01602-21030	WASHER, SPRING	3	3001–	3001–
30	01571-01016	NUT	3	3001–	3001–
31	01010-50610	BOLT	1	3001–	3001–
32	01602-20619	WASHER, SPRING	1	3001–	3001–
33	7861-72-3000	CONTROLLER	1	3001–	3001–
33	(□7861-01-3000)	CONTROLLER	1	(3001–3369)	(3001–3276)

FIG NO. 1411

INDEX NO.	PART NO.	DESCRIPTION	Q'TY	SERIAL NO. PC150-3	SERIAL NO. PC150LC-3
34	01010-50612	BOLT	4	3001 –	3001 –
35	01602-20619	WASHER, SPRING	4	3001 –	3001 –
36	175-06-51210	BUZZER	1	3001 –	3001 –
37	01220-40612	SCREW	1	3001 –	3001 –
38	01602-20619	WASHER, SPRING	1	3001 –	3001 –
39	203-06-41282	CONTROL BOX ASS'Y	1	3001 –	3001 –
40	01010-50816	BOLT	4	3001 –	3001 –
41	01643-30823	WASHER	4	3001 –	3001 –
42	08036-03014	CLIP	1	3001 –	3001 –
43	203-06-41790	RESISTOR	1	3001 –	3001 –
44	08036-01814	CLIP	1	3001 –	3001 –
45	01010-50816	BOLT	2	3001 –	3001 –
46	01643-30823	WASHER	2	3001 –	3001 –
47	203-06-41860	SWITCH, AUTO DECELERATION	1	3001 –	3001 –
48	203-06-41610	CAP	1	3001 –	3001 –
49	203-06-41570	SWITCH, PARKING BRAKE	1	3001 –	3001 –
50	203-06-41680	CAP	1	3001 –	3001 –

FIG. 1413 INSTRUMENT PANEL (FOR WRIST CONTROL) (WITH AUTO DECELERATION) (WITH SWING MECHANICAL BRAKE)

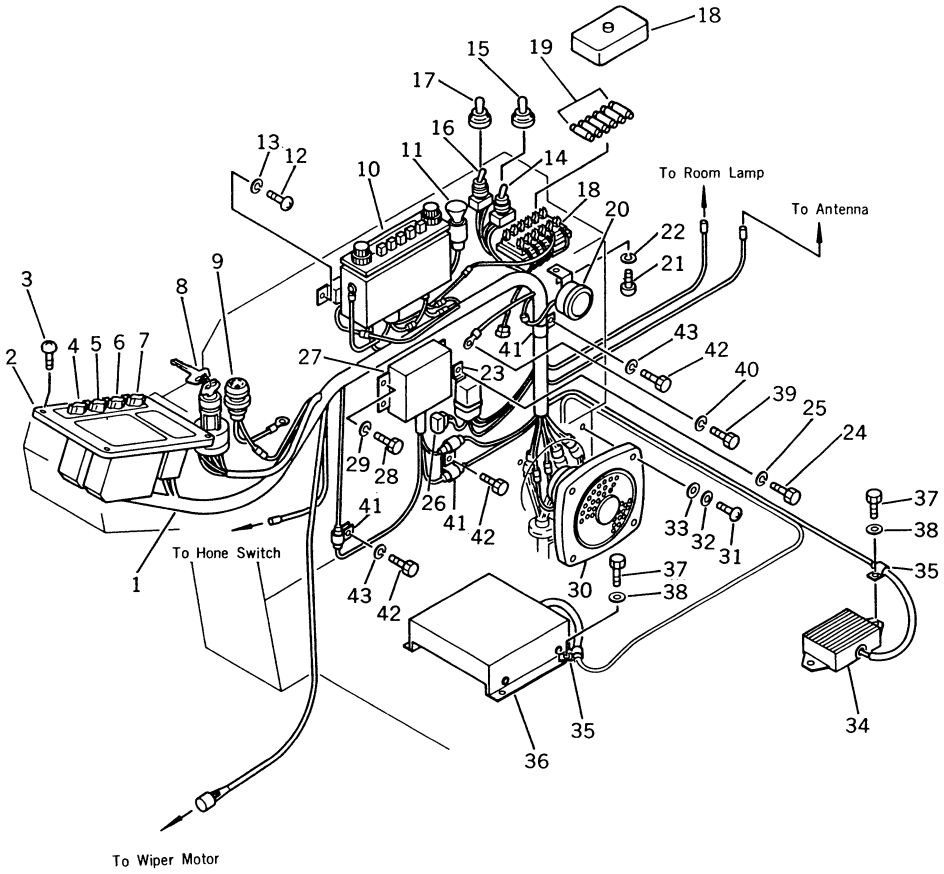

INDEX NO.	PART NO.	DESCRIPTION	Q'TY	SERIAL NO. PC150-3	SERIAL NO. PC150LC-3
1	203-06-41672	WIRE ASS'Y	1	3001–	3001–
2	(7861-21-1100)	PANEL ASS'Y	1	3001–	3001–
3	01220-40616	SCREW	4	3001–	3001–
4	205-06-71311	SWITCH, MODE	1	3001–	3001–
5	205-06-71321	SWITCH, HEATER	1	3001–	3001–
6	205-06-71331	SWITCH, LAMP	1	3001–	3001–
7	205-06-71341	SWITCH, WIPER	1	3001–	3001–
8	201-06-21510	SWITCH, STARTING	1	3001–	3001–
9	203-06-41810	LAMP	1	3001–	3001–
9	08111-02430	• BULB, 3W	1	3001–	3001–
10	20G-06-15110	RADIO	1	3001–	3001–
11	195-822-6151	LIGHTER	1	3001–	3001–
12	01220-40412	SCREW	2	3001–	3001–
13	01601-20410	WASHER, SPRING	2	3001–	3001–
14	203-06-41570	SWITCH, AUTO DECELERATION	1	3001–	3001–
15	203-06-41610	CAP	1	3001–	3001–
16	203-06-41570	SWITCH, PARKING BRAKE	1	3001–	3001–
17	203-06-41680	CAP	1	3001–	3001–
18	203-06-41540	BOX, FUSE	1	3001–	3001–
19	08040-04000	FUSE, 40A	1	3001–	3001–
19	08040-03000	FUSE, 30A	1	3001–	3001–
19	08040-02000	FUSE, 20A	1	3001–	3001–
19	08040-01000	FUSE, 10A	3	3001–	3001–
20	175-06-51210	BUZZER	1	3001–	3001–
21	01220-50612	SCREW	1	3001–	3001–
22	01602-20619	WASHER, SPRING	1	3001–	3001–
23	22W-06-13450	RELAY ASS'Y	1	3001–	3001–
24	01010-50612	BOLT	1	3001–	3001–
25	01602-20619	WASHER, SPRING	1	3001–	3001–
26	22W-06-13590	DIODE	2	3001–	3001–
27	7861-72-3000	CONTROLLER	1	3001–	3001–
27	(□7861-01-3000)	CONTROLLER	1	(3001–3376)	(3001–3349)
28	01010-50612	BOLT	4	3001–	3001–
29	01602-20619	WASHER, SPRING	4	3001–	3001–
30	20G-06-15120	SPEAKER	1	3001–	3001–

FIG NO. 1413

INDEX NO.	PART NO.	DESCRIPTION	Q'TY	SERIAL NO. PC150-3	SERIAL NO. PC150LC-3
31	01220-40420	SCREW	4	3001 –	3001 –
32	01601-20410	WASHER, SPRING	4	3001 –	3001 –
33	01641-20405	WASHER	4	3001 –	3001 –
34	203-06-41790	RESISTOR	1	3001 –	3001 –
35	08036-01814	CLIP	2	3001 –	3001 –
36	203-06-41281	CONTROL BOX ASS'Y	1	3001 –	3001 –
37	01010-50816	BOLT	6	3001 –	3001 –
38	01643-30823	WASHER	6	3001 –	3001 –
39	01010-50610	BOLT	1	3001 –	3001 –
40	01602-20619	WASHER, SPRING	1	3001 –	3001 –
41	08036-01814	CLIP	4	3001 –	3001 –
42	01010-51016	BOLT	3	3001 –	3001 –
43	01602-21030	WASHER, SPRING	2	3001 –	3001 –

FIG. 1414 INSTRUMENT PANEL (FOR WRIST CONTROL) (WITHOUT AUTO DECELERATION) (WITHOUT SWING MECHANICAL BRAKE)

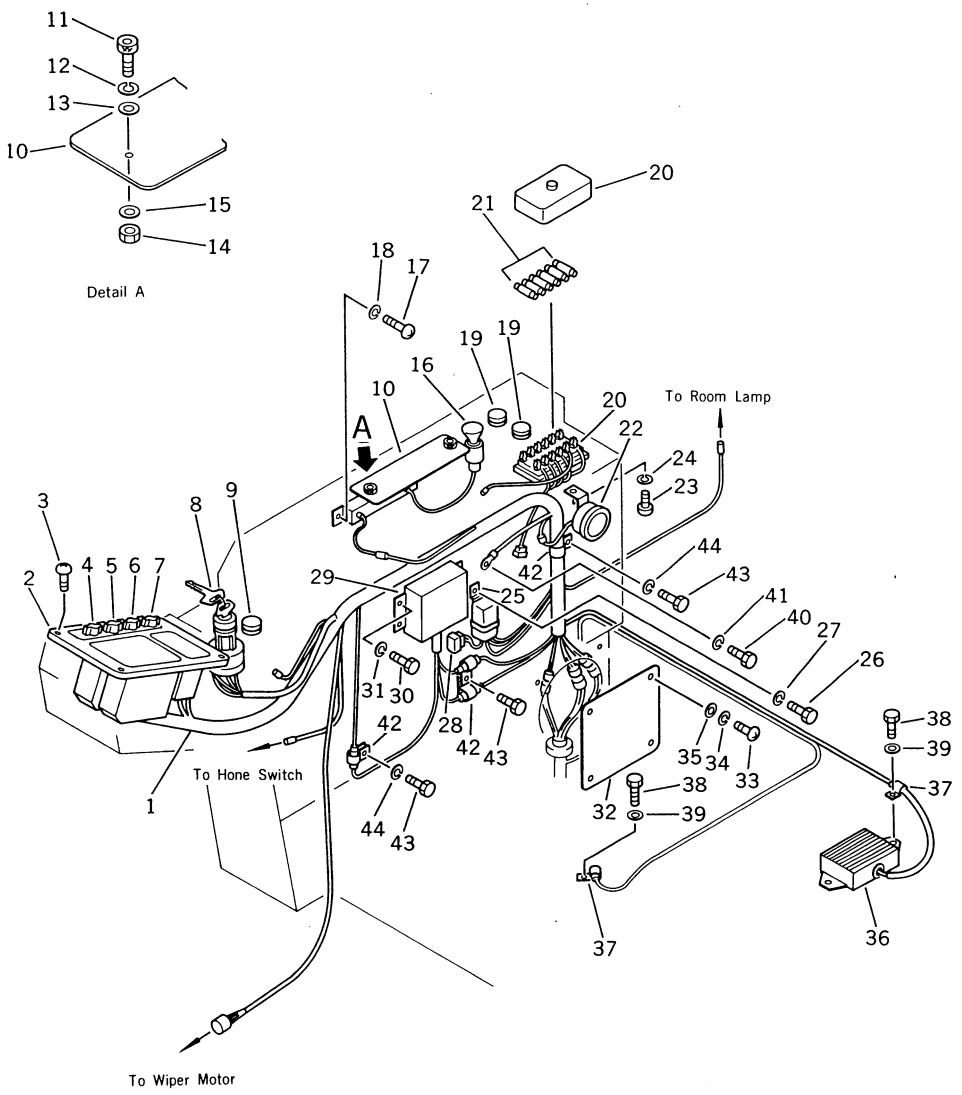

FIG NO. 1414

INDEX NO.	PART NO.	DESCRIPTION	Q'TY	SERIAL NO. PC150-3	SERIAL NO. PC150LC-3
1	203-06-41672	WIRE ASS'Y	1	3001–	3001–
2	(7861-21-1100)	PANEL ASS'Y	1	3001–	3001–
3	01220-40616	SCREW	4	3001–	3001–
4	205-06-71311	SWITCH, MODE	1	3001–	3001–
5	205-06-71321	SWITCH, HEATER	1	3001–	3001–
6	205-06-71331	SWITCH, LAMP	1	3001–	3001–
7	205-06-71341	SWITCH, WIPER	1	3001–	3001–
8	201-06-21510	SWITCH, STARTING	1	3001–	3001–
9	09415-01610	CAP	1	3001–	3001–
10	203-06-31160	PLATE	1	3001–	3001–
11	205-06-62170	BOLT	2	3001–	3001–
12	205-06-62180	WASHER, SPRING	2	3001–	3001–
13	205-06-62190	WASHER	2	3001–	3001–
14	01580-10403	NUT	2	3001–	3001–
15	145-Z79-6630	WASHER	2	3001–	3001–
16	195-822-6151	LIGHTER	1	3001–	3001–
17	01220-40412	SCREW	2	3001–	3001–
18	01601-20410	WASHER, SPRING	2	3001–	3001–
19	09415-00706	CAP	2	3001–	3001–
20	203-06-41540	BOX, FUSE	1	3001–	3001–
21	08040-04000	FUSE, 40A	1	3001–	3001–
21	08040-03000	FUSE, 30A	1	3001–	3001–
21	08040-02000	FUSE, 20A	1	3001–	3001–
21	08040-01000	FUSE, 10A	3	3001–	3001–
22	175-06-51210	BUZZER	1	3001–	3001–
23	01220-50612	SCREW	1	3001–	3001–
24	01602-20619	WASHER, SPRING	1	3001–	3001–
25	22W-06-13450	RELAY ASS'Y	1	3001–	3001–
26	01010-50612	BOLT	1	3001–	3001–
27	01602-20619	WASHER, SPRING	1	3001–	3001–
28	22W-06-13590	DIODE	2	3001–	3001–
29	7861-01-3000	CONTROLLER	1	3001–	3001–
30	01010-50612	BOLT	4	3001–	3001–
31	01602-20619	WASHER, SPRING	4	3001–	3001–
32	203-06-41840	PLATE	1	3001–	3001–

FIG NO. 1414

INDEX NO.	PART NO.	DESCRIPTION	Q'TY	SERIAL NO. PC150-3	SERIAL NO. PC150LC-3
33	01220-40410	SCREW	4	3001–	3001–
34	01601-20410	WASHER, SPRING	4	3001–	3001–
35	01641-20405	WASHER	4	3001–	3001–
36	203-06-41790	RESISTOR	1	3001–	3001–
37	08036-01814	CLIP	2	3001–	3001–
38	01010-50816	BOLT	3	3001–	3001–
39	01643-30823	WASHER	3	3001–	3001–
40	01010-50610	BOLT	1	3001–	3001–
41	01602-20619	WASHER, SPRING	1	3001–	3001–
42	08036-01814	CLIP	4	3001–	3001–
43	01010-51016	BOLT	3	3001–	3001–
44	01602-21030	WASHER, SPRING	2	3001–	3001–

FIG. 1421 ELECTRICAL SYSTEM (1/2)

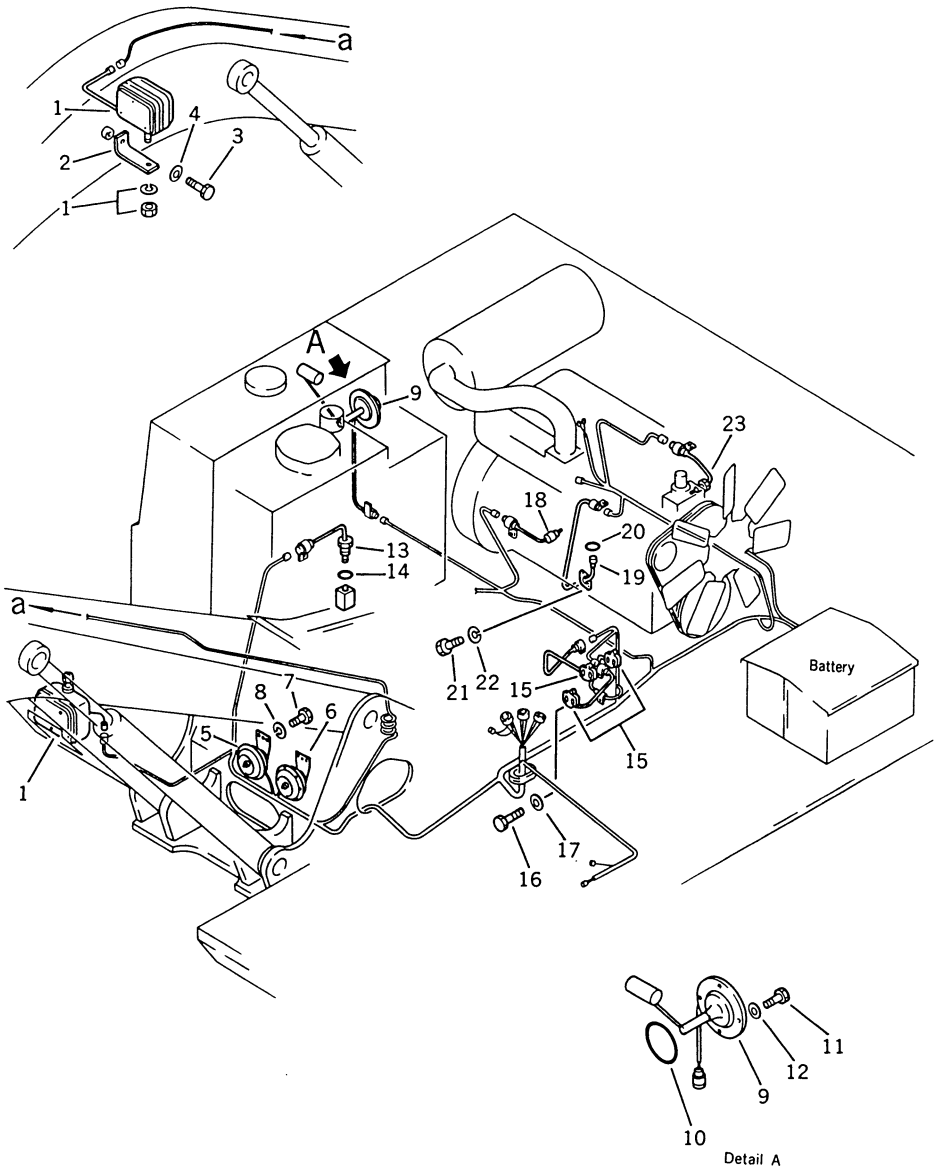

FIG NO. 1421

INDEX NO.	PART NO.	DESCRIPTION	Q'TY	SERIAL NO. PC150-3	SERIAL NO. PC150LC-3
1	22W-06-12381	WORK LAMP ASS'Y	2	3001 –	3001 –
2	203-06-41130	BRACKET	1	3001 –	3001 –
3	01010-51430	BOLT	1	3001 –	3001 –
4	01643-31445	WASHER	1	3001 –	3001 –
5	08160-52400	HORN, HIGH	1	3001 –	3001 –
6	205-06-64430	HORN, LOW	1	3001 –	3001 –
7	01010-50816	BOLT	4	3001 –	3001 –
8	01602-20825	WASHER, SPRING	4	3001 –	3001 –
9	7861-99-4700	SENSOR, FUEL	1	3001 –	3001 –
10	07000-02085	O-RING	1	3001 –	3001 –
11	01010-51025	BOLT	4	3001 –	3001 –
12	01643-31032	WASHER	4	3001 –	3001 –
13	7861-99-4500	SENSOR, HYDRAULIC OIL	1	3001 –	3001 –
14	07002-23634	O-RING	1	3001 –	3001 –
15	22W-06-15860	SWITCH	3	3001 –	3001 –
16	01010-51035	BOLT	6	3001 –	3001 –
17	01643-31032	WASHER	6	3001 –	3001 –
18	7861-99-1300	SENSOR, OIL PRESSURE	1	3001 –	3001 –
19	203-06-41160	SENSOR, ENGINE OIL LEVEL	1	3001 –	3001 –
20	07000-63050	O-RING	1	3001 –	3001 –
21	01010-50816	BOLT	2	3001 –	3001 –
22	01602-20825	WASHER, SPRING	2	3001 –	3001 –
23	7861-99-3300	SENSOR, WATER TEMPERATURE	1	3001 –	3001 –

FIG. 1423 ELECTRICAL SYSTEM (2/2) (WITH AUTO DECELERATION)

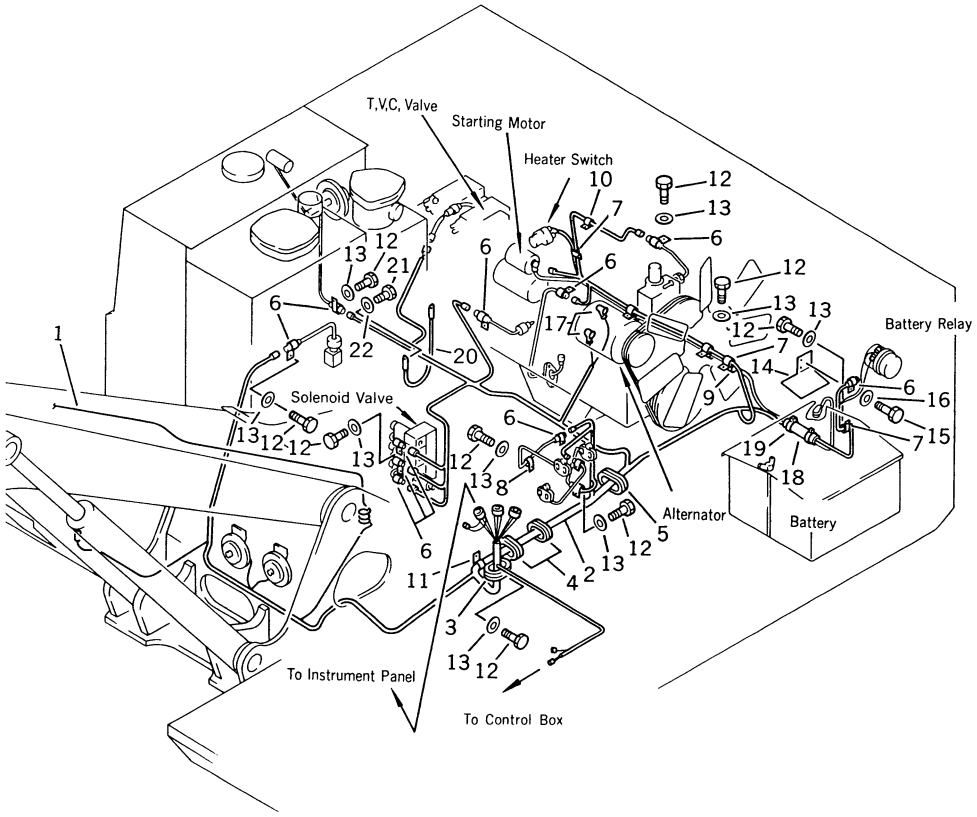

FIG NO. 1423

INDEX NO.	PART NO.	DESCRIPTION	Q'TY	SERIAL NO. PC150-3	SERIAL NO. PC150LC-3
1	21K-06-21120	WIRE	1	3001 –	3001 –
2	21K-06-21110	WIRE ASS'Y	1	3001 –	3001 –
3	176-911-4160	GROMMET	1	3001 –	3001 –
4	203-06-41550	GROMMET	2	3001 –	3001 –
5	150-952-7160	GROMMET	1	3001 –	3001 –
6	08036-01814	CLIP	12	3001 –	3001 –
7	08036-01414	CLIP	5	3001 –	3001 –
8	08036-10814	CLIP	1	3001 –	3001 –
9	08036-11214	CLIP	3	3001 –	3001 –
10	08036-10614	CLIP	1	3001 –	3001 –
11	08036-03014	CLIP	1	3001 –	3001 –
12	01010-51020	BOLT	16	3001 –	3001 –
13	01643-31032	WASHER	16	3001 –	3001 –
14	21K-06-21130	PLATE	1	3001 –	3001 –
15	01010-51020	BOLT	2	3001 –	3001 –
16	01643-31032	WASHER	2	3001 –	3001 –
17	08038-00519	CAP	4	3001 –	3001 –
18	203-04-31230	COVER	1	3001 –	3001 –
19	08034-00519	BAND	2	3001 –	3001 –
20	08028-12025	WIRE	1	3001 –	3001 –
21	01010-51016	BOLT	1	3001 –	3001 –
22	01643-31032	WASHER	1	3001 –	3001 –

FIG. 1424 ELECTRICAL SYSTEM (2/2) (WITHOUT AUTO DECELERATION)

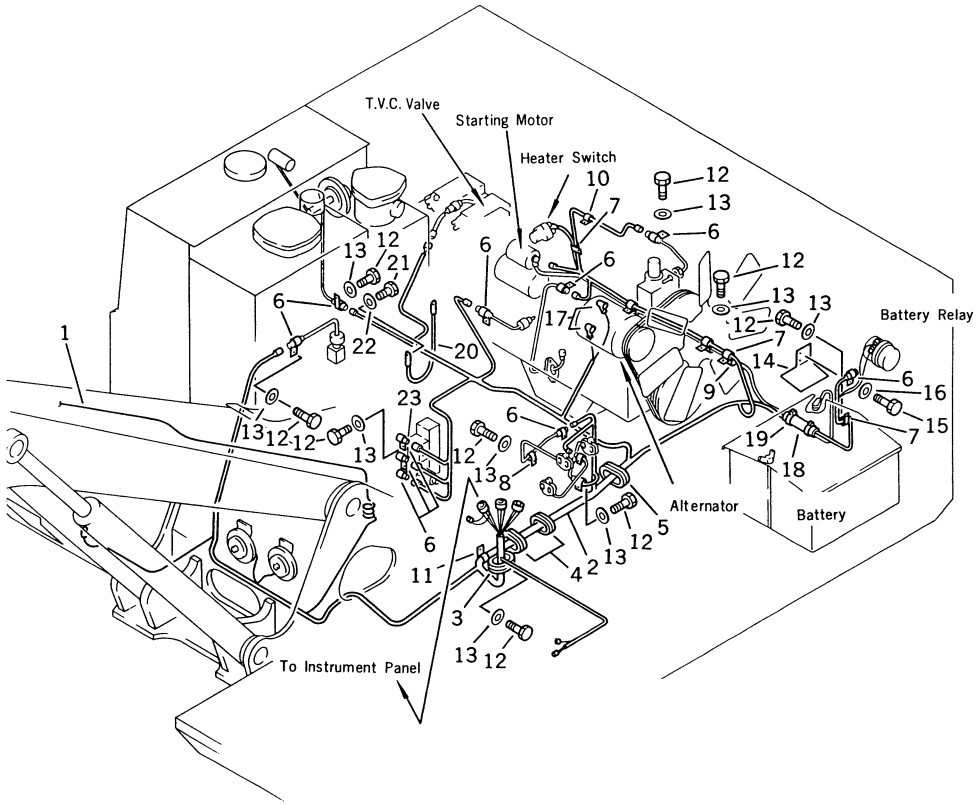

FIG NO. 1424

INDEX NO.	PART NO.	DESCRIPTION	Q'TY	SERIAL NO. PC150-3	SERIAL NO. PC150LC-3
1	21K-06-21120	WIRE	1	3001 –	3001 –
2	21K-06-21110	WIRE ASS'Y	1	3001 –	3001 –
3	176-911-4160	GROMMET	1	3001 –	3001 –
4	203-06-41550	GROMMET	2	3001 –	3001 –
5	150-952-7160	GROMMET	1	3001 –	3001 –
6	08036-01814	CLIP	12	3001 –	3001 –
7	08036-01414	CLIP	5	3001 –	3001 –
8	08036-10814	CLIP	1	3001 –	3001 –
9	08036-11214	CLIP	3	3001 –	3001 –
10	08036-10614	CLIP	1	3001 –	3001 –
11	08036-03014	CLIP	1	3001 –	3001 –
12	01010-51020	BOLT	16	3001 –	3001 –
13	01643-31032	WASHER	16	3001 –	3001 –
14	21K-06-21130	PLATE	1	3001 –	3001 –
15	01010-51020	BOLT	2	3001 –	3001 –
16	01643-31032	WASHER	2	3001 –	3001 –
17	08038-00519	CAP	4	3001 –	3001 –
18	203-04-31230	COVER	1	3001 –	3001 –
19	08034-00519	BAND	2	3001 –	3001 –
20	08028-12025	WIRE	1	3001 –	3001 –
21	01010-51016	BOLT	1	3001 –	3001 –
22	01643-31032	WASHER	1	3001 –	3001 –
23	22W-07-14650	CONNECTOR	2	3001 –	3001 –
24	22W-07-14700	CAP (NOT SHOWN)	2	3001 –	3001 –
25	22W-07-11960	PLUG (NOT SHOWN)	4	3001 –	3001 –
26	22W-07-11910	O-RING (NOT SHOWN)	2	3001 –	3001 –

FIG. 1501 MONITOR SYSTEM

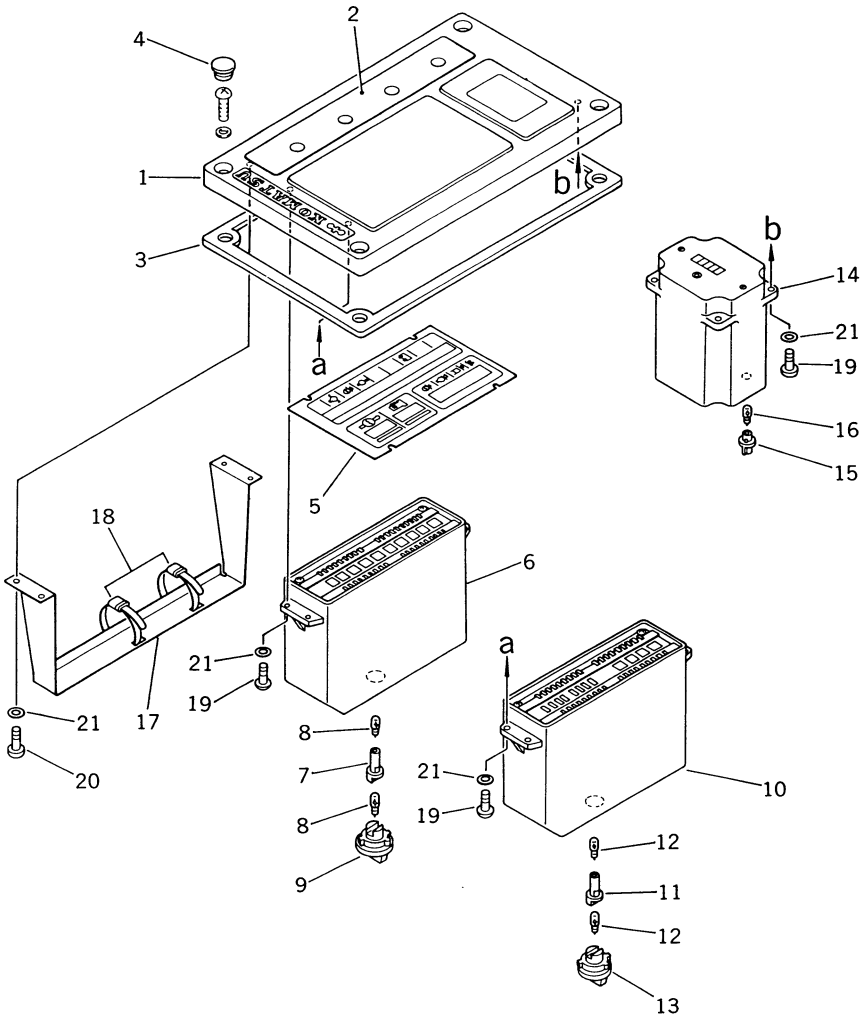

FIG NO. 1501

INDEX NO.	PART NO.	DESCRIPTION	Q'TY	SERIAL NO. PC150-3	SERIAL NO. PC150LC-3
	7861-21-1100	PANEL ASS'Y	1	3001–	3001–
1	7861-21-1110	• PANEL	1	3001–	3001–
2	7861-21-1130	•• PLATE	1	3001–	3001–
3	7861-21-1160	•• GASKET	2	3001–	3001–
4	7861-21-1150	• BAND	1	3001–	3001–
5	7861-21-1180	• BRACKET	1	3001–	3001–
6	7861-21-1140	• PLATE	1	3001–	3001–
7	7861-21-1190	• CAP	1	3001–	3001–
8	7861-21-1300	• MONITOR ASS'Y	4	3001–	3001–
9	7861-01-1820	•• SOCKET	1	3001–	3001–
10	7861-21-1700	• GAUGE ASS'Y	1	3001–	3001–
11	7861-01-1320	•• SOCKET	1	3001–	3001–
12	7815-11-1010	•• BULB	2	3001–	3001–
13	7861-21-1170	•• CAP	1	3001–	3001–
14	7861-21-1800	• SERVICE METER ASS'Y	1	3001–	3001–
15	7861-01-1820	•• SOCKET	1	3001–	3001–
16	7815-11-1010	•• BULB	1	3001–	3001–
17	7861-21-1180	• BRACKET	1	3001–	3001–
18	7861-21-1150	• BAND	2	3001–	3001–
19	01235-50412	• SCREW	12	3001–	3001–
20	01235-50408	• SCREW	4	3001–	3001–
21	01641-20405	• WASHER	16	3001–	3001–

TRAVEL AND FINAL DRIVE

CONTENTS

	FIG NO.	PAGE
TRAVEL MOTOR (1/2)	2001	58
TRAVEL MOTOR (2/2)	2003	62
SWIVEL JOINT	2101	66
HYDRAULIC PIPING (VALVE TO/ FROM SWIVEL JOINT)	2201	68
HYDRAULIC PIPING (SWIVEL JOINT TO/FROM TRAVEL MOTOR)	2203	70
HYDRAULIC PIPING (SERVO VALVE)	2205	72
HYDRAULIC PIPING (MOTOR DRAIN)	2207	74
SPROCKET	2401	76

FIG. 2001 TRAVEL MOTOR (1/2)

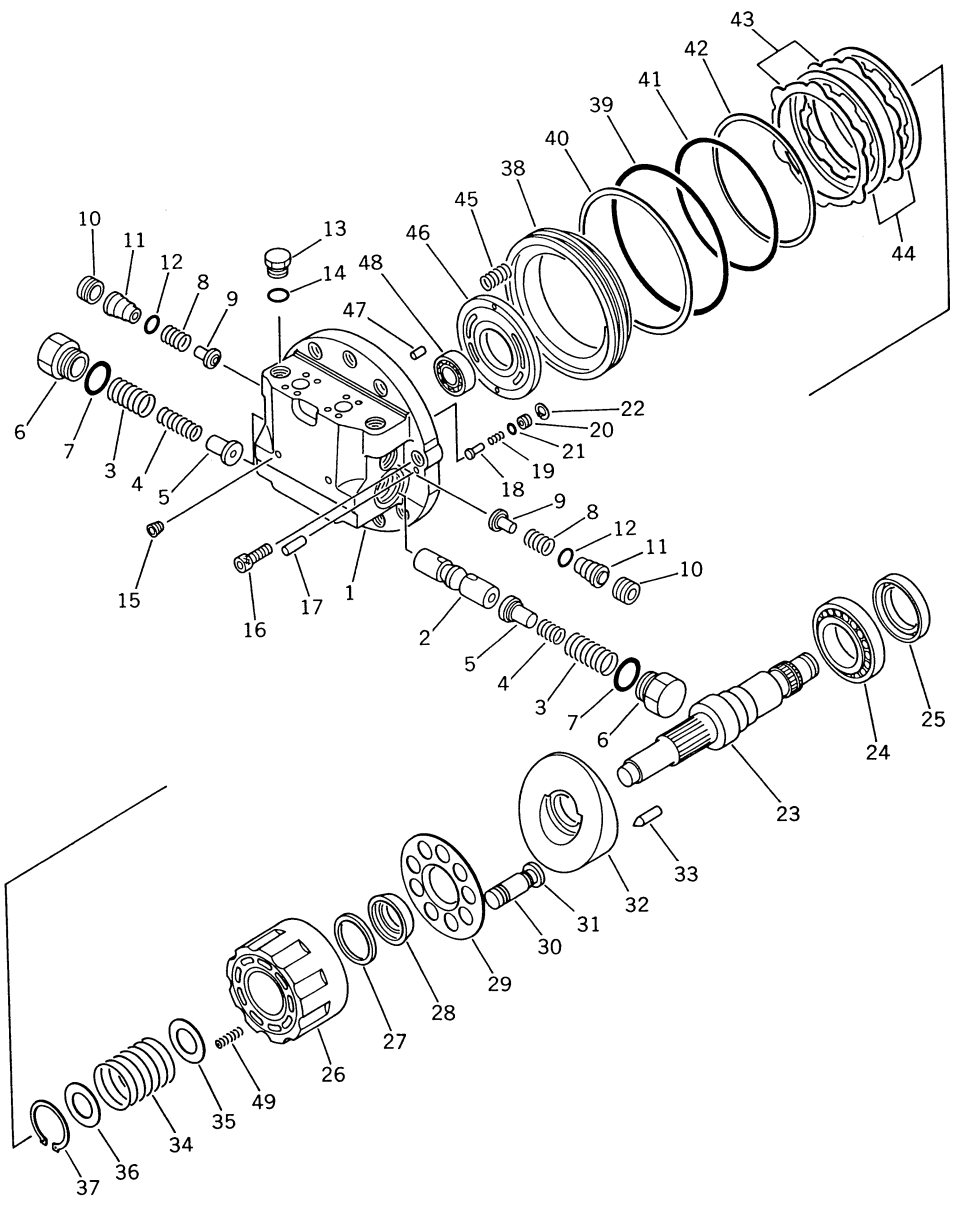

INDEX NO.	PART NO.	DESCRIPTION	Q'TY	SERIAL NO. PC150-3	SERIAL NO. PC150LC-3
	21K-60-21100	TRAVEL MOTOR ASS'Y	2	3001–	
	21K-60-21200	TRAVEL MOTOR ASS'Y	2		3001–
		THESE ASSEMBLIES CONSIST OF ALL PARTS SHOWN IN FIGS. 2001 AND 2003.			
	TZ210A2101-00	• FLANGE-SPOOL ASS'Y	1	3001–	3001–
1	(☆TZ200A2101-00)	•• FLANGE, REAR	1	3001–	3001–
2	TZ430F2049-00-E	•• SPOOL	1	3001–	3001–
3	TZ100A2055-00	• SPRING	2	3001–	3001–
4	TZ200A2056-00	• SPRING	2	3001–	3001–
5	TZ200A2052-00	• STOPPER	2	3001–	3001–
6	TZ100A2051-00	• PLUG	2	3001–	3001–
7	07000-13032	• O-RING	2	3001–	3001–
8	TZ100A2057-01	• SPRING	2	3001–	3001–
9	TZ100A2054-01	• VALVE	2	3001–	3001–
10	TZ150A2053-00	• PLUG	2	3001–	3001–
11	TZ150A2058-00	• GUIDE	2	3001–	3001–
12	07000-12020	• O-RING	2	3001–	3001–
13	TZ100A2021-00	• PLUG	1	3001–	3001–
14	07002-02034	• O-RING	1	3001–	3001–
15	TZROHP00001-8	• PLUG	2	3001–	3001–
16	01252-31440	• BOLT	8	3001–	3001–
17	TZROPP0100-28	• PIN, DOWEL	2	3001–	3001–
18	TZ430F2019-00	• VALVE	1	3001–	3001–
19	TZ100A2020-00	• SPRING	1	3001–	3001–
20	TZ100A2018-00	• SEAT, VALVE	1	3001–	3001–
21	07000-11009	• O-RING	1	3001–	3001–
22	TZ100A2022-00	• RING	1	3001–	3001–
23	TZ210A2002-01	• SHAFT	1	3001–	3001–
24	06000-32011	• BEARING, ROLLER	1	3001–	3001–
25	TZ05507812	• SEAL, OIL	1	3001–	3001–
26	TZ210A2020-00	• BLOCK, CYLINDER	1	3001–	3001–
27	TZ100A2011-00	• WASHER ASS'Y	1	3001–	3001–
28	TZ100A2008-00	• BALL, THRUST	1	3001–	3001–
29	TZ100A2007-00	• PLATE, RETAINER	1	3001–	3001–
30	TZ200A2040-01	• PISTON-SHOE ASS'Y	1	3001–	3001–

FIG NO. 2001

INDEX NO.	PART NO.	DESCRIPTION	Q'TY	SERIAL NO. PC150-3	SERIAL NO. PC150LC-3
30	(☆TZ430F2030-00)	•• PISTON	9	3001–	3001–
31	(☆TZ200A2006-01)	•• SHOE	9	3001–	3001–
32	TZ200A2003-00-H	• PLATE, SWASH	1	3001–	
32	TZ200A2003-00-G	• PLATE, SWASH	1		3001–
33	TZ150A2017-00	• PIN	1	3001–	3001–
34	TZ461F2028-01	• SPRING	1	3001–	3001–
35	TZ100A2010-00	• WASHER	1	3001–	3001–
36	TZ200D2011-00	• WASHER	2	3001–	3001–
37	TZIRT05520	• RING, SNAP	1	3001–	3001–
38	TZ231F2012-00	• PISTON	1	3001–	3001–
39	07000-15170	• O-RING	1	3001–	3001–
40	TZ00-2BG-170	• RING, BACK-UP	1	3001–	3001–
41	07000-15145	• O-RING	1	3001–	3001–
42	TZ231F2023-00	• RING, BACK-UP	1	3001–	3001–
43	TZ100A2016-00	• PLATE	2	3001–	3001–
44	TZ200A2015-00	• PLATE, DISC	2	3001–	3001–
45	TZ100A2013-00	• SPRING	10	3001–	3001–
46	TZ210A2009-00	• PLATE, TIMING	1	3001–	3001–
47	TZRPP0050-12	• PIN	2	3001–	3001–
48	06000-06005	• BEARING,BALL	1	3001–	3001–
49	TZ210A2059-00	• SPRING	3	3001–	3001–

FIG. 2003 TRAVEL MOTOR (2/2)

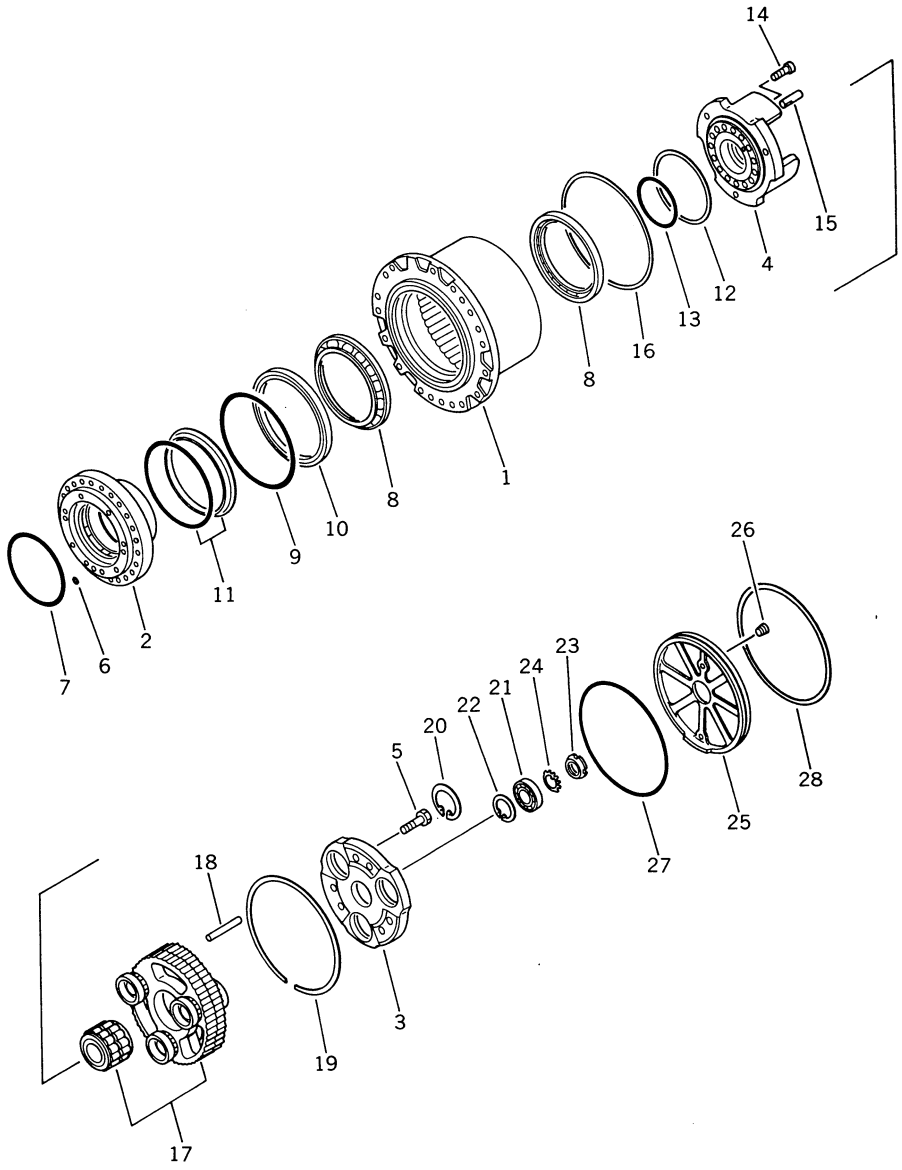

INDEX NO.	PART NO.	DESCRIPTION	Q'TY	SERIAL NO. PC150-3	SERIAL NO. PC150LC-3
	(21K-60-21100)	TRAVEL MOTOR ASS'Y	2	3001–	
	(21K-60-21200)	TRAVEL MOTOR ASS'Y	2		3001–
		THESE ASSEMBLIES CONSIST OF ALL PARTS SHOWN IN FIGS. 2001 AND 2003.			
1	TZ210A1001-00	• HUB	1	3001–	3001–
2	TZ210A1101-00	• SPINDLE ASS'Y	1	3001–	3001–
2	(☆TZ210A1002-00)	•• SPINDLE	1	3001–	3001–
3	(☆TZ200A1003-00)	•• FLANGE, HOLD	1	3001–	3001–
4	(☆TZ210A1006-00)	•• CARRIER	1	3001–	3001–
5	(☆TZ800A1019-00)	•• BOLT	6	3001–	3001–
6	07000-11006	• O-RING	1	3001–	3001–
7	TZOWG1383	• O-RING	1	3001–	3001–
8	TZ200A1021-00	• BEARING	2	3001–	3001–
9	07000-15260	• O-RING	1	3001–	3001–
10	TZ150A1010-00	• PIECE, DISTANCE	1	3001–	3001–
11	TZES209A00	• SEAL, FLOATING	1	3001–	3001–
12	TZ200A1013-00	• DISTANCE PIECE ASS'Y	1	3001–	3001–
13	TZOWG13120	• O-RING	1	3001–	3001–
14	01252-31850	• BOLT	9	3001–	3001–
15	TZ200A1015-00	• PIN	6	3001–	3001–
16	TZ200A1011-00	• RING	1	3001–	3001–
17	TZ200A1102-00	• RV GEAR ASS'Y	1	3001–	3001–
17	(☆TZ200A1004-00)	•• RV GEAR	1	3001–	3001–
17	(☆TZ200A1005-00)	•• RV GEAR	1	3001–	3001–
17	(☆TZ200A1007-00)	•• BEARING	1	3001–	3001–
17	(☆TZ200A1009-00)	•• SHAFT, CRANK	3	3001–	3001–
17	(☆TZ200A1022-00)	•• BEARING	6	3001–	3001–
17	(☆TZ200A1023-00)	•• BEARING	6	3001–	3001–
18	TZ200A1017-00	• PIN	60	3001–	3001–
19	TZ210A1012-00	• RING	1	3001–	3001–
20	TZ200A1020-00	• RING ASS'Y	3	3001–	3001–
21	06000-30208	• BEARING	1	3001–	3001–
22	04064-05020	• RING, SNAP	1	3001–	3001–
23	TZ1554AN08	• NUT	1	3001–	3001–
24	TZ1555AW08	• PLATE	1	3001–	3001–

FIG NO. 2003

INDEX NO.	PART NO.	DESCRIPTION	Q'TY	SERIAL NO. PC150-3	SERIAL NO. PC150LC-3
25	TZ200A1008-00	• COVER	1	3001–	3001–
26	TZROHP00001-2	• PLUG	2	3001–	3001–
27	TZOWP16304	• O-RING	1	3001–	3001–
28	TZ200A1018-00	• RING	1	3001–	3001–

FIG. 2101 SWIVEL JOINT

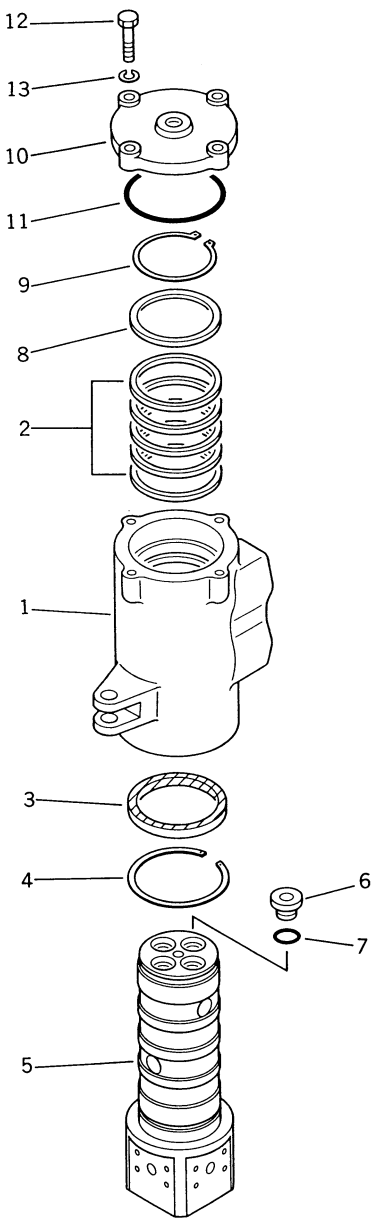

FIG NO. 2101

INDEX NO.	PART NO.	DESCRIPTION	Q'TY	SERIAL NO. PC150-3	SERIAL NO. PC150LC-3
	703-09-31630	SWIVEL JOINT ASS'Y	1	3001–	3001–
1	703-09-91570	• ROTOR, SWIVEL	1	3001–	3001–
2	703-09-95312	• SEAL, SLIPPER	5	3001–	3001–
3	703-09-96310	• SEAL, OIL	1	3001–	3001–
4	04077-00110	• RING, SNAP	1	3001–	3001–
5	703-09-92560	• SHAFT, SWIVEL	1	3001–	3001–
6	07040-12414	• PLUG	4	3001–	3001–
7	07002-12434	• O-RING	4	3001–	3001–
8	703-09-94210	• RING	1	3001–	3001–
9	04064-08530	• RING, SNAP	1	3001–	3001–
10	703-09-93230	• COVER	1	3001–	3001–
11	07000-02115	• O-RING	1	3001–	3001–
12	01010-50835	• BOLT	4	3001–	3001–
13	01602-20825	• WASHER, SPRING	4	3001–	3001–

FIG. 2201 HYDRAULIC PIPING (VALVE TO/FROM SWIVEL JOINT)

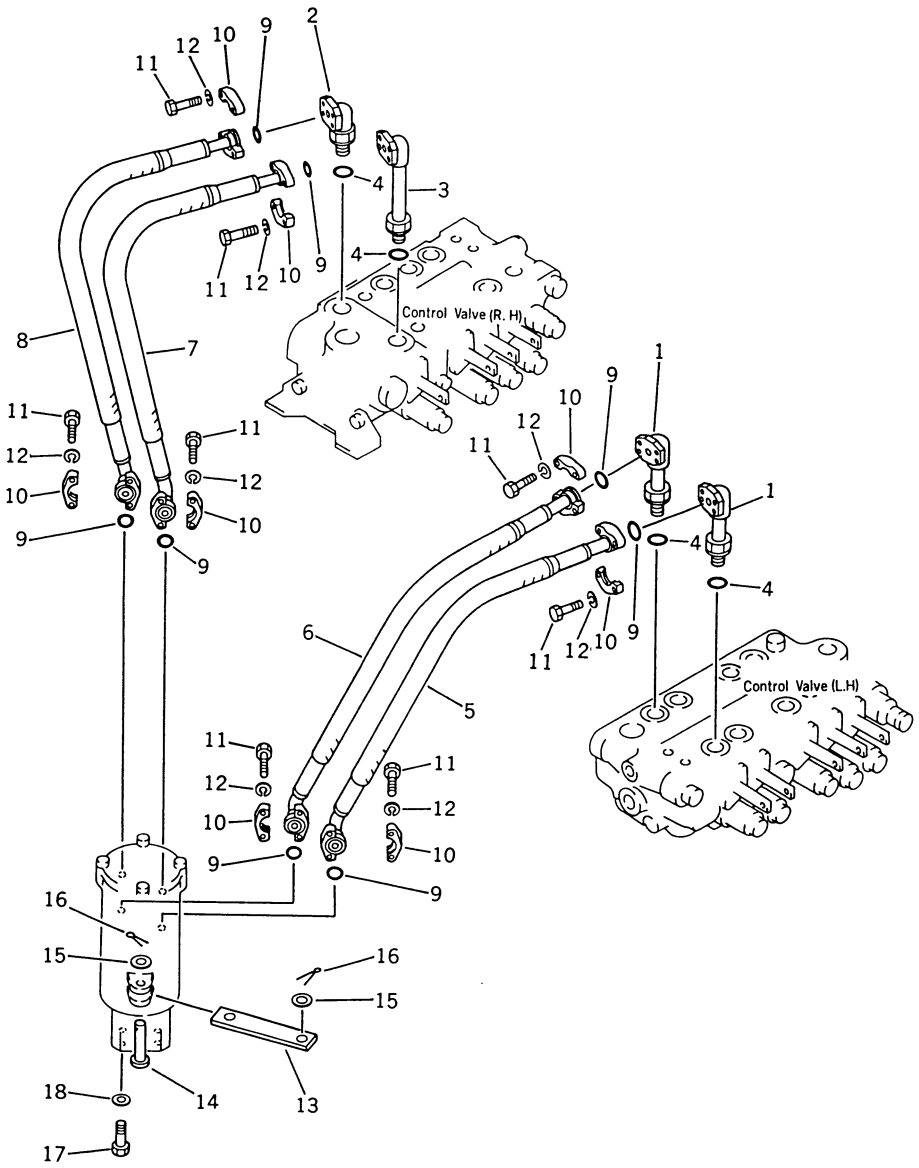

FIG NO. 2201

INDEX NO.	PART NO.	DESCRIPTION	Q'TY	SERIAL NO. PC150-3	SERIAL NO. PC150LC-3
1	21K-62-21281	ELBOW	2	3001–	3001–
2	21K-62-21270	ELBOW	1	3001–	3001–
3	21K-62-21620	ELBOW	1	3001–	3001–
4	07002-12434	O-RING	4	3001–	3001–
5	07098-00609	HOSE	1	3001–	3001–
6	07098-00610	HOSE	1	3001–	3001–
7	07097-00610	HOSE	1	3001–	3001–
8	07097-00609	HOSE	1	3001–	3001–
9	07000-13025	O-RING	8	3001–	3001–
10	07371-30638	FLANGE, SPLIT	16	3001–	3001–
11	01010-50830	BOLT	32	3001–	3001–
12	01602-20825	WASHER, SPRING	32	3001–	3001–
13	201-60-11240	LINK	1	3001–	3001–
14	201-60-11230	PIN	1	3001–	3001–
15	01641-21626	WASHER	2	3001–	3001–
16	04050-14025	PIN, COTTER	2	3001–	3001–
17	01010-51240	BOLT	4	3001–	3001–
18	01643-31232	WASHER	4	3001–	3001–

FIG. 2203 HYDRAULIC PIPING (SWIVEL JOINT TO/FROM TRAVEL MOTOR)

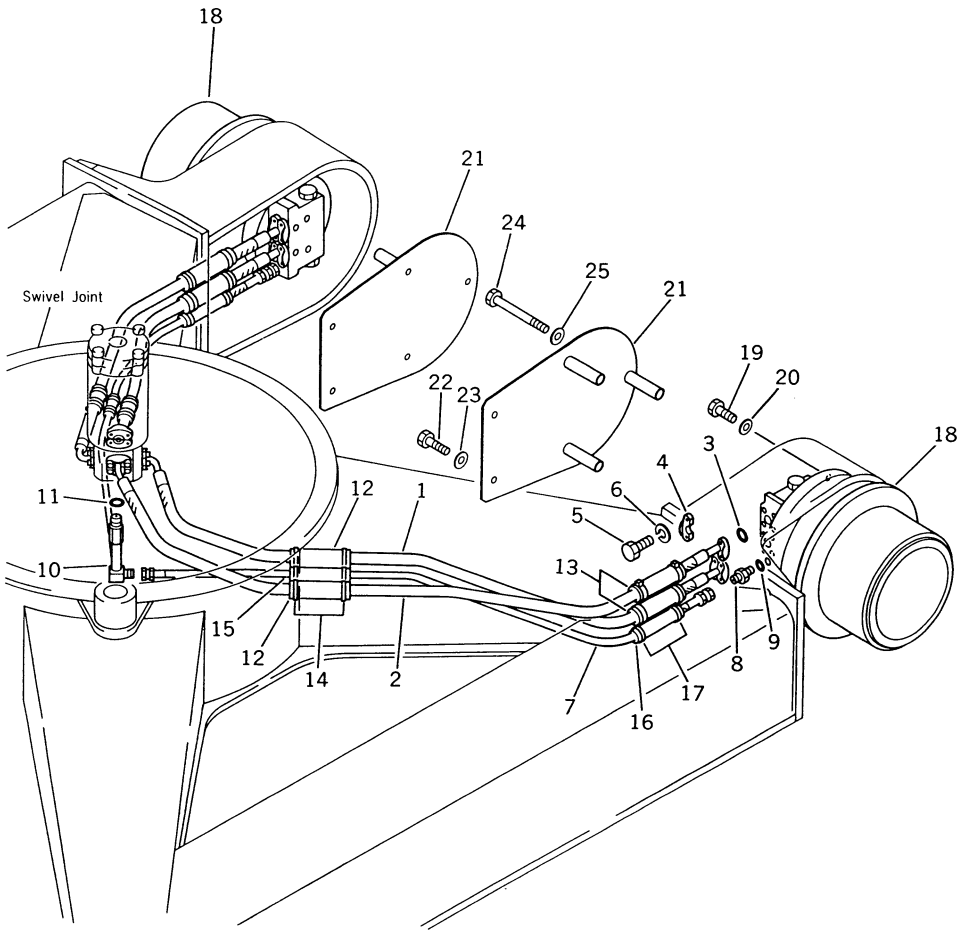

FIG NO. 2203

INDEX NO.	PART NO.	DESCRIPTION	Q'TY	SERIAL NO. PC150-3	SERIAL NO. PC150LC-3
1	07097-00619	HOSE	2	3001–	
	07097-00620	HOSE	2		3001–
2	07098-00620	HOSE	2	3001–	
2	07098-00621	HOSE	2		3001–
3	07000-13025	O-RING	8	3001–	3001–
4	07371-30638	FLANGE, SPLIT	16	3001–	3001–
5	01010-50830	BOLT	32	3001–	3001–
6	01643-50823	WASHER	32	3001–	3001–
7	07102-20318	HOSE	2	3001–	
7	07102-20320	HOSE	2		3001–
8	07230-10315	NIPPLE	2	3001–	3001–
9	07002-02034	O-RING	2	3001–	3001–
10	203-62-41141	ELBOW	1	3001–	3001–
11	07002-02034	O-RING	1	3001–	3001–
12	203-62-41150	COVER	4	3001–	3001–
13	21K-62-23120	COVER	4	3001–	3001–
14	08034-00023	BAND	16	3001–	3001–
15	203-62-41160	COVER	2	3001–	3001–
16	21K-62-23130	COVER	2	3001–	3001–
17	08034-00519	BAND	8	3001–	3001–
18	(21K-60-21100)	TRAVEL MOTOR ASS'Y	2	3001–	
18	(21K-60-21200)	TRAVEL MOTOR ASS'Y	2		3001–
19	01010-51655	BOLT	40	3001–	3001–
20	01643-31645	WASHER	40	3001–	3001–
21	21K-62-23110	COVER	2	3001–	3001–
22	01010-51225	BOLT	4	3001–	3001–
23	01643-31232	WASHER	4	3001–	3001–
24	01011-51665	BOLT	6	3001–	3001–
25	01643-31645	WASHER	6	3001–	3001–

FIG. 2205 HYDRAULIC PIPING (SERVO VALVE)

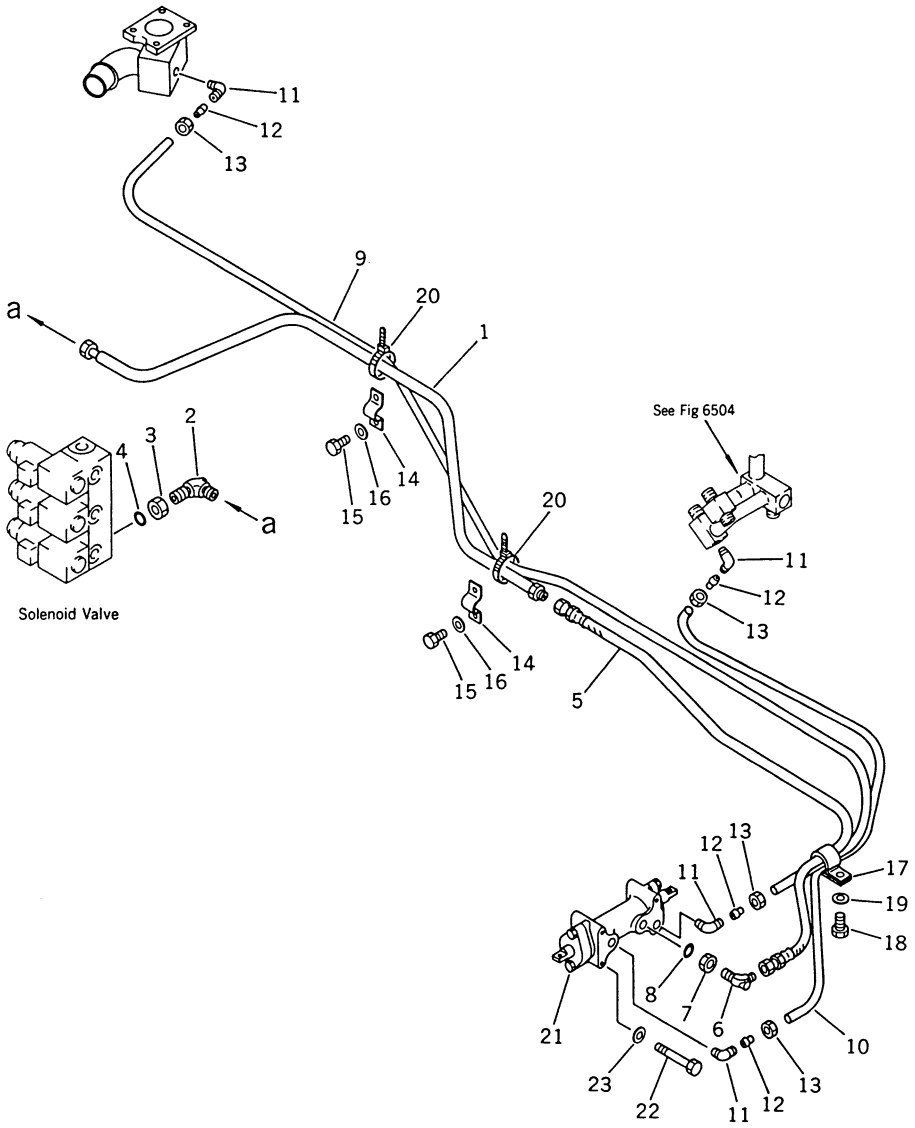

FIG NO. 2205

INDEX NO.	PART NO.	DESCRIPTION	Q'TY	SERIAL NO. PC150-3	SERIAL NO. PC150LC-3
1	21K-62-21550	TUBE	1	3001–	3001–
2	07232-20315	ELBOW	1	3001–	3001–
3	07239-12009	NUT	1	3001–	3001–
4	07002-02034	O-RING	1	3001–	3001–
5	203-62-42980	HOSE	1	3001–	3001–
6	07232-20210	ELBOW	1	3001–	3001–
7	07239-11408	NUT	1	3001–	3001–
8	07002-01423	O-RING	1	3001–	3001–
9	07822-00630	TUBE	1	3001–	3001–
10	07822-00610	TUBE	1	3001–	3001–
11	07834-00613	ELBOW	4	3001–	3001–
12	07831-00612	SLEEVE	4	3001–	3001–
13	07832-00614	NUT	4	3001–	3001–
14	07282-01568	CLAMP	2	3001–	3001–
15	01010-50816	BOLT	4	3001–	3001–
16	01643-30823	WASHER	4	3001–	3001–
17	08036-02514	CLIP	1	3001–	3001–
18	01010-51025	BOLT	1	3001–	3001–
19	01643-31032	WASHER	1	3001–	3001–
20	08034-00519	BAND	2	3001–	3001–
21	(702-18-11000)	SERVO VALVE ASS'Y	1	3001–	3001–
22	01010-50880	BOLT	3	3001–	3001–
23	01643-30823	WASHER	6	3001–	3001–

FIG. 2207 HYDRAULIC PIPING (MOTOR DRAIN)

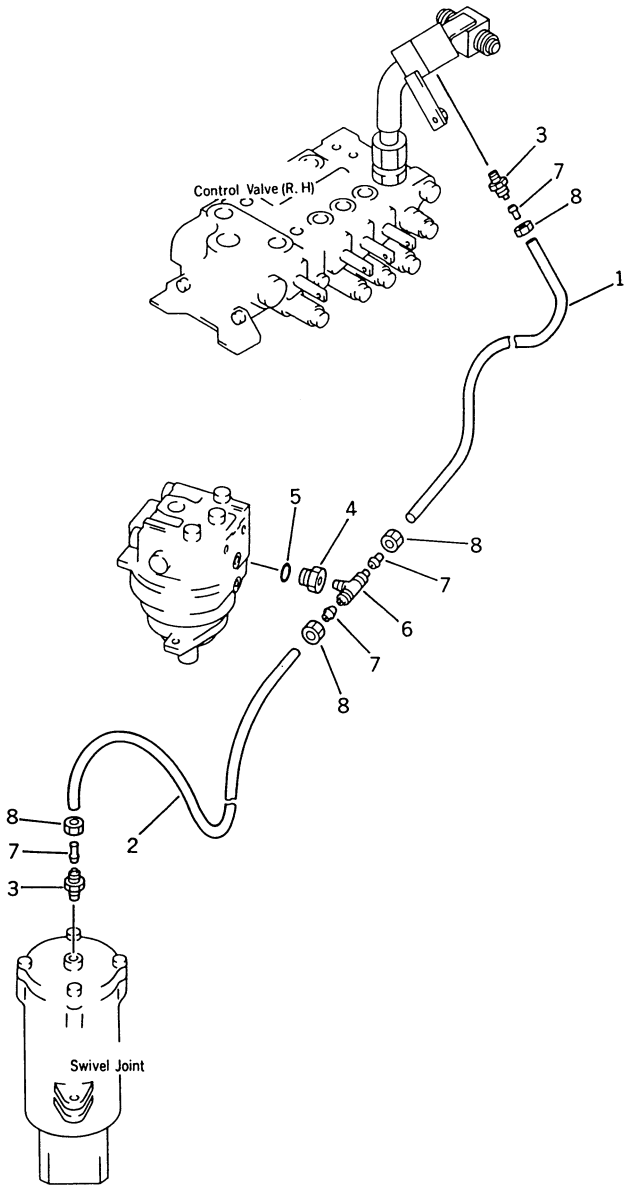

FIG NO. 2207

INDEX NO.	PART NO.	DESCRIPTION	Q'TY	SERIAL NO. PC150-3	SERIAL NO. PC150LC-3
1	07822-00605	TUBE	1	3001 –	3001 –
2	07822-00606	TUBE	1	3001 –	3001 –
3	07836-00613	CONNECTOR	2	3001 –	3001 –
4	201-62-21680	BUSHING	1	3001 –	3001 –
5	07002-02034	O-RING	1	3001 –	3001 –
6	07835-00613	TEE	1	3001 –	3001 –
7	07831-00612	SLEEVE	4	3001 –	3001 –
8	07832-00614	NUT	4	3001 –	3001 –

FIG. 2401 SPROCKET

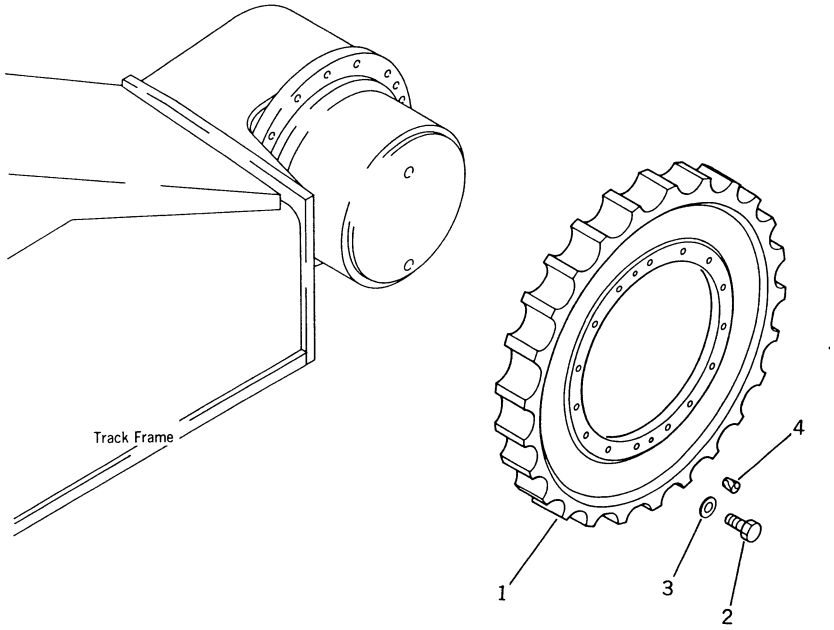

FIG NO. 2401

INDEX NO.	PART NO.	DESCRIPTION	Q'TY	SERIAL NO. PC150-3	SERIAL NO. PC150LC-3
1	21K-27-11250	SPROCKET	2	3001 –	3001 –
2	01010-51650	BOLT	30	3001 –	3001 –
3	01643-31645	WASHER	30	3001 –	3001 –
4	07049-01620	PLUG	4	3001 –	3001 –

UNDER CARRIAGE

CONTENTS

	FIG NO.	PAGE
TRACK FRAME	3001	80
RECOIL SPRING	3011	82
FRONT IDLER	3021	84
TRACK ROLLER	3031	86
CARRIER ROLLER	3041	88
TRACK SHOE (PC150)	3101	90
TRACK SHOE (PC150LC)	3111	94

FIG. 3001 TRACK FRAME

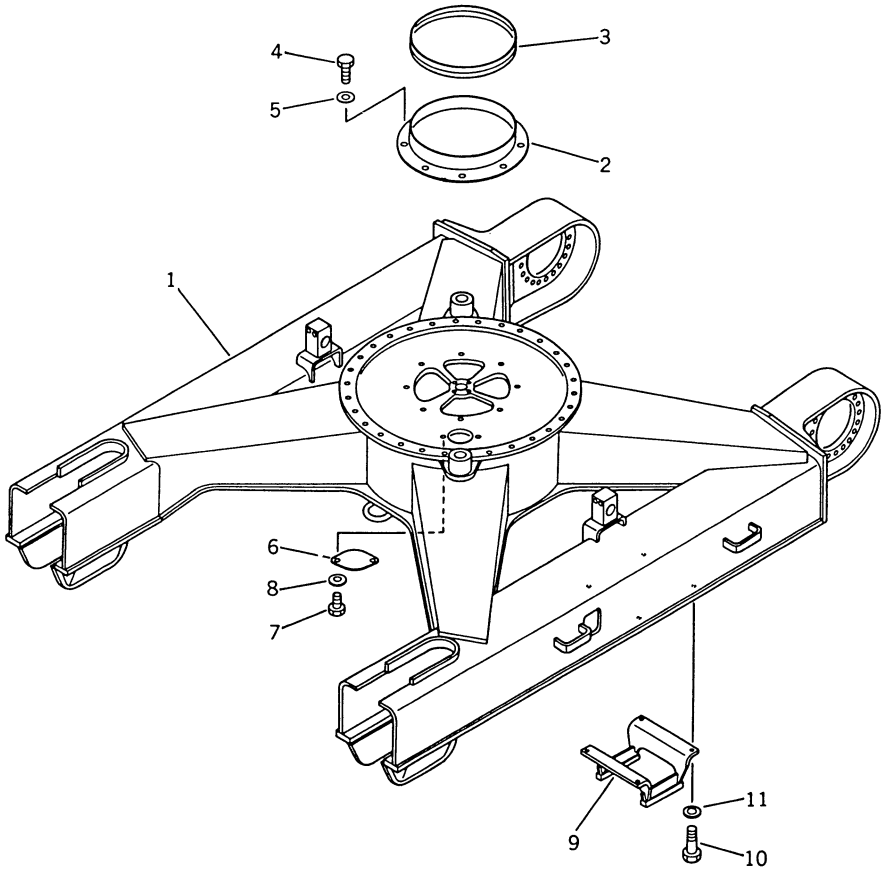

FIG NO. 3001

INDEX NO.	PART NO.	DESCRIPTION	Q'TY	SERIAL NO. PC150-3	SERIAL NO. PC150LC-3
1	21K-30-21210	FRAME, TRACK	1	3001–	
1	21K-30-21310	FRAME, TRACK	1		3001–
2	21K-30-22120	COVER	1	3001–	3001–
3	20G-47-11381	SEAL	1	3001–	3001–
4	01010-51225	BOLT	8	3001–	3001–
5	01643-31232	WASHER	8	3001–	3001–
6	205-30-67650	COVER	1	3001–	3001–
7	01010-51225	BOLT	2	3001–	3001–
8	01643-31232	WASHER	2	3001–	3001–
9	204-30-31140	GUARD	2	3001–	3001–
10	01010-51645	BOLT	8	3001–	3001–
11	01643-31645	WASHER	8	3001–	3001–

FIG. 3011 RECOIL SPRING

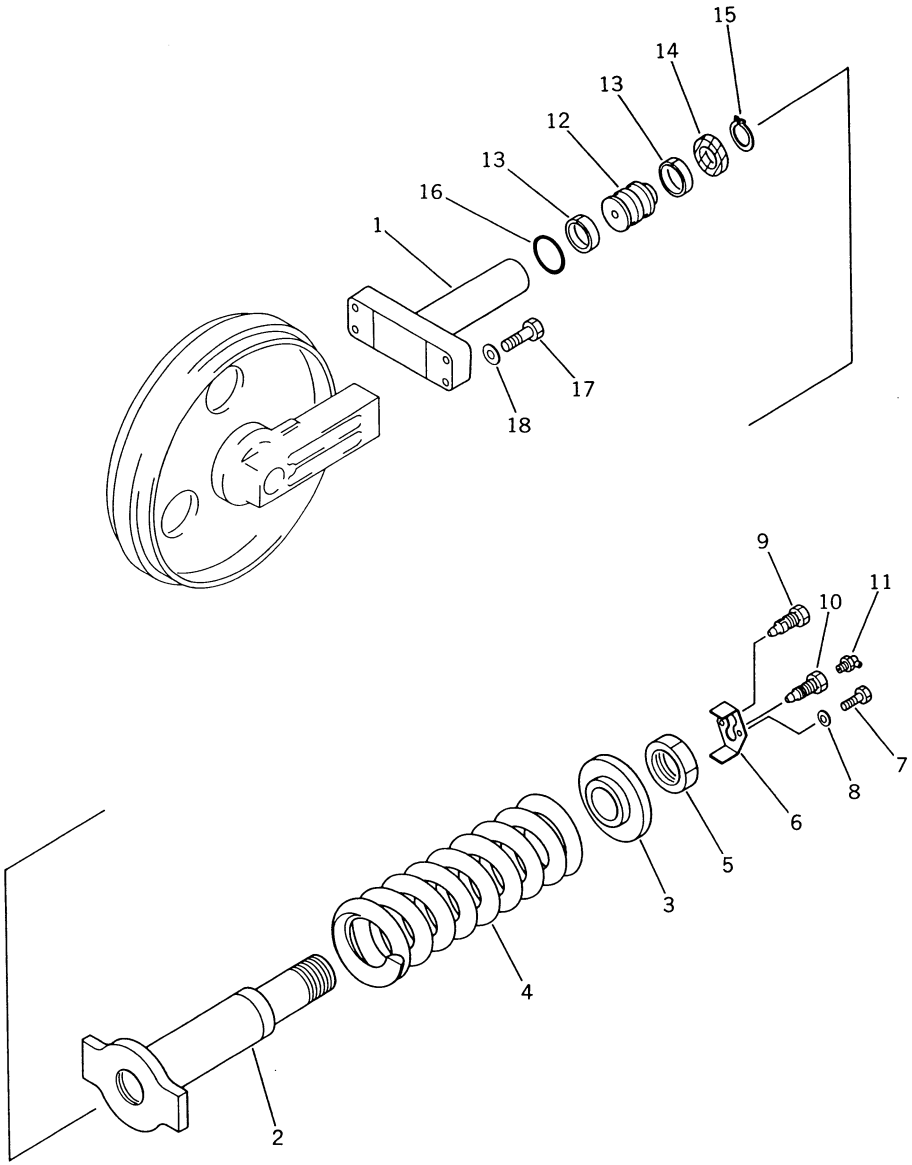

FIG NO. 3011

INDEX NO.	PART NO.	DESCRIPTION	Q'TY	SERIAL NO. PC150-3	SERIAL NO. PC150LC-3
1	21K-30-24110	YOKE	2	3001–	3001–
2	21K-30-21420	CYLINDER	2	3001–	3001–
3	21K-30-24130	PILOT	2	3001–	3001–
4	21K-30-24140	SPRING, RECOIL	2	3001–	3001–
5	203-30-34220	NUT	2	3001–	3001–
6	203-30-42250	LOCK	2	3001–	3001–
7	01010-51020	BOLT	4	3001–	3001–
8	01643-31032	WASHER	4	3001–	3001–
9	203-30-34240	CAP	2	3001–	3001–
10	201-30-14280	LUBRICATOR	2	3001–	3001–
11	07020-00900	FITTING, GREASE	2	3001–	3001–
12	203-30-42220	PISTON	2	3001–	3001–
13	07155-00720	RING, WEAR	4	3001–	3001–
14	09370-00700	U-PACKING	2	3001–	3001–
15	04064-04518	RING, SNAP	2	3001–	3001–
16	07000-05070	O-RING	2	3001–	3001–
17	01010-51470	BOLT	8	3001–	3001–
18	01643-31445	WASHER	8	3001–	3001–

FIG. 3021 FRONT IDLER

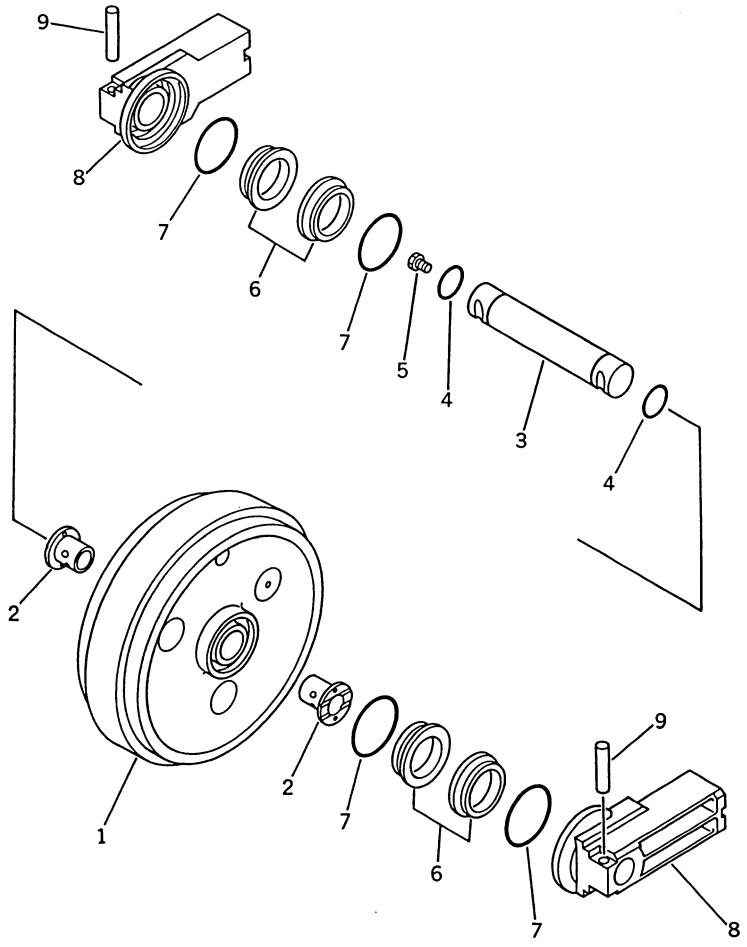

FIG NO. 3021

INDEX NO.	PART NO.	DESCRIPTION	Q'TY	SERIAL NO. PC150-3	SERIAL NO. PC150LC-3
	205-30-00181	FRONT IDLER ASS'Y	2	3001–	3001–
1	205-30-73110	• IDLER	1	3001–	3001–
2	205-30-73170	• BUSHING	2	3001–	3001–
3	205-30-73140	• SHAFT	1	3001–	3001–
4	07000-02060	• O-RING	2	3001–	3001–
5	07052-31624	• PLUG	1	3001–	3001–
6	195-30-00302	• FLOATING SEAL ASS'Y	2	3001–	3001–
6	195-30-00291	•• SEAL RING ASS'Y	1	3001–	3001–
6	(☆195-30-16242)	••• RING, SEAL	2	3001–	3001–
7	130-27-00161	•• O-RING ASS'Y	1	3001–	3001–
7	(☆130-27-12551)	••• O-RING	2	3001–	3001–
8	205-30-73211	• SUPPORT	2	3001–	3001–
9	205-30-76190	• PIN, DOWEL	2	3001–	3001–

FIG. 3031 TRACK ROLLER

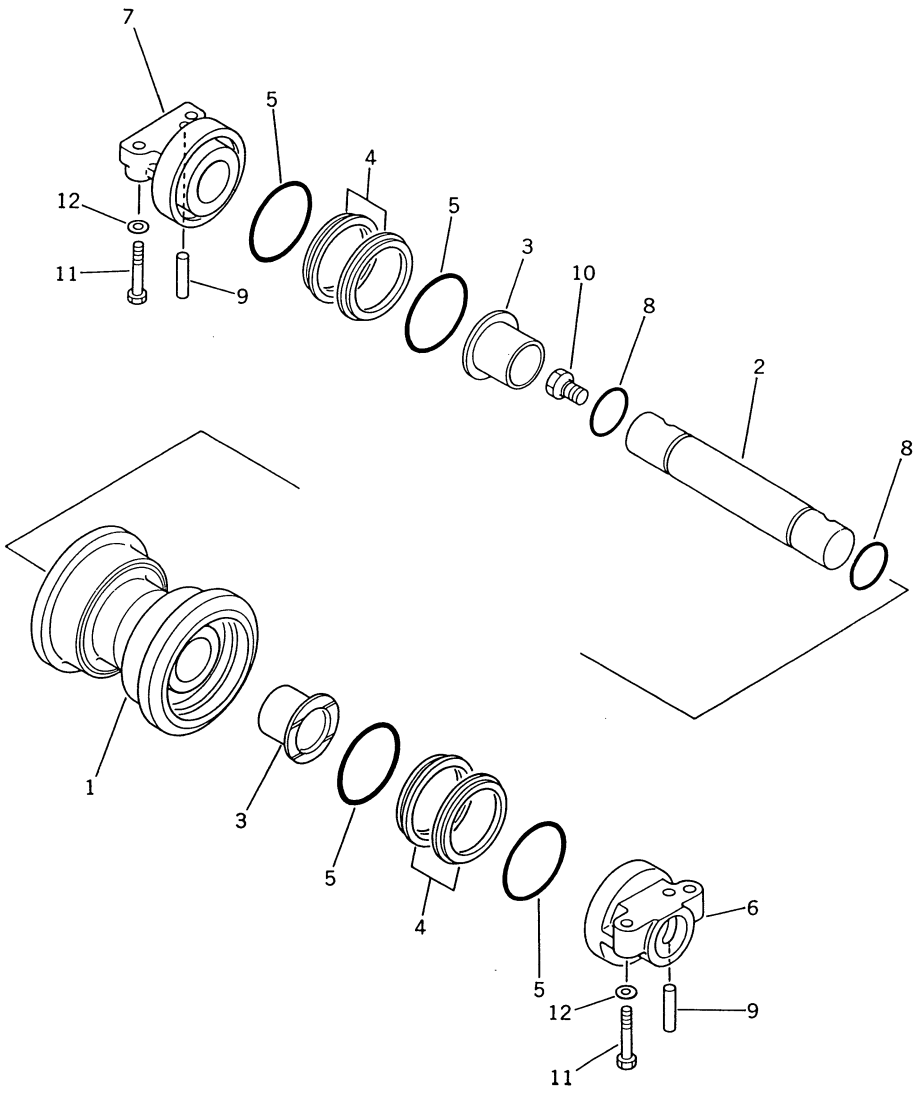

FIG NO. 3031

INDEX NO.	PART NO.	DESCRIPTION	Q'TY	SERIAL NO. PC150-3	SERIAL NO. PC150LC-3
	205-30-00171	SINGLE FLANGE TRACK ROLLER ASS'Y	12	3001–	3001–
1	205-30-66511	• ROLLER, TRACK	1	3001–	3001–
2	205-30-76141	• SHAFT	1	3001–	3001–
3	205-30-66590	• BUSHING	2	3001–	3001–
4	205-30-00052	• FLOATING SEAL ASS'Y	2	3001–	3001–
4	205-30-00150	•• SEAL RING ASS'Y	1	3001–	3001–
4	(☆205-30-66650)	••• RING, SEAL	2	3001–	3001–
5	205-30-00061	•• O-RING ASS'Y	1	3001–	3001–
5	(☆205-30-66561)	••• O-RING	2	3001–	3001–
6	205-30-76171	• COLLAR, L.H.	1	3001–	3001–
7	205-30-76181	• COLLAR, R.H.	1	3001–	3001–
8	07000-02055	• O-RING	2	3001–	3001–
9	205-30-76190	• PIN, DOWEL	2	3001–	3001–
10	07052-31624	• PLUG	1	3001–	3001–
11	01010-51680	BOLT	48	3001–	3001–
12	01643-31645	WASHER	48	3001–	3001–

FIG. 3041 CARRIER ROLLER

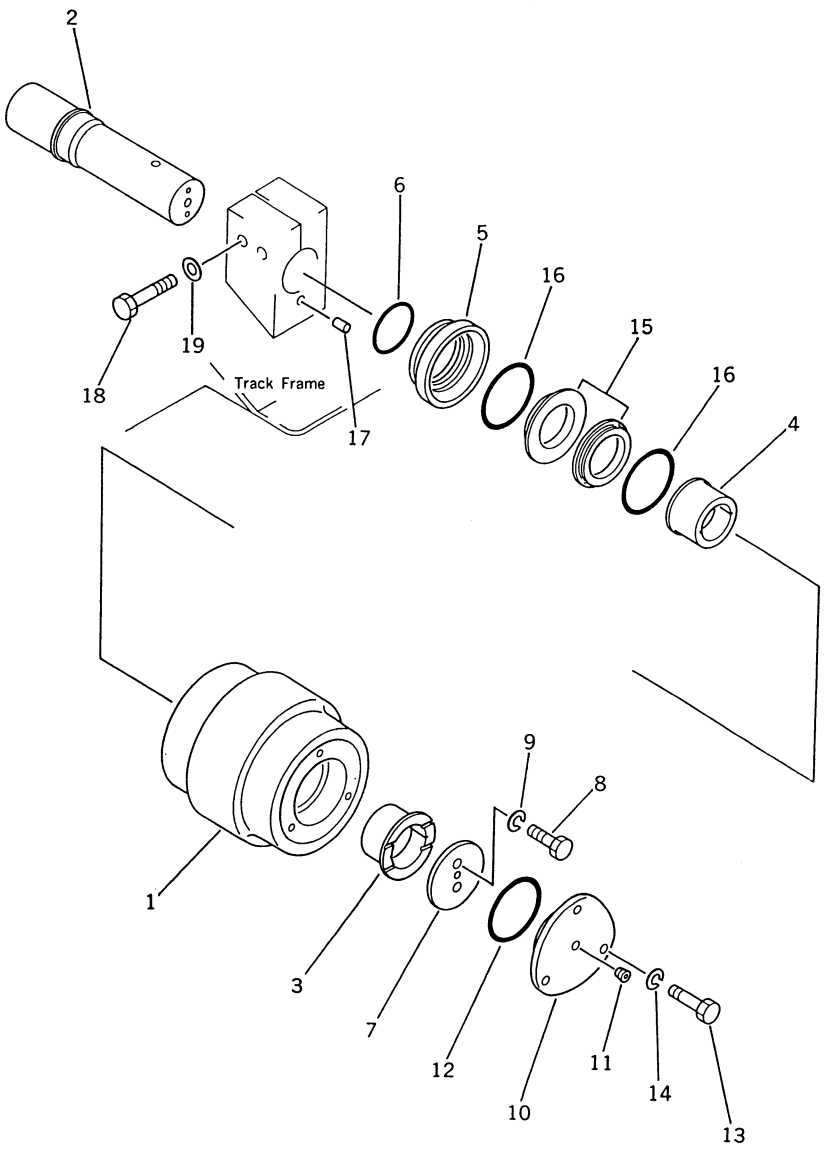

FIG NO. 3041

INDEX NO.	PART NO.	DESCRIPTION	Q'TY	SERIAL NO. PC150-3	SERIAL NO. PC150LC-3
	205-30-00190	CARRIER ROLLER ASS'Y	2	3001–	3001–
1	205-30-75111	• ROLLER	1	3001–	3001–
2	205-30-75120	• SHAFT	1	3001–	3001–
3	203-30-36140	• BUSHING	1	3001–	3001–
4	205-30-75130	• BUSHING	1	3001–	3001–
5	205-30-65532	• COLLAR	1	3001–	3001–
6	07000-02055	• O-RING	1	3001–	3001–
7	103-30-15150	• PLATE	1	3001–	3001–
8	01010-31020	• BOLT	2	3001–	3001–
9	01602-21030	• WASHER, SPRING	2	3001–	3001–
10	205-30-65652	• COVER	1	3001–	3001–
11	07043-50211	• PLUG	1	3001–	3001–
12	07000-02075	• O-RING	1	3001–	3001–
13	01010-51025	• BOLT	3	3001–	3001–
14	01602-21030	• WASHER, SPRING	3	3001–	3001–
15	140-30-00141	• FLOATING SEAL ASS'Y	1	3001–	3001–
15	140-30-00401	•• SEAL RING ASS'Y	1	3001–	3001–
15	(☆120-30-12162)	••• RING, SEAL	2	3001–	3001–
16	140-30-00411	•• O-RING ASS'Y	1	3001–	3001–
16	(☆140-30-16221)	••• O-RING	2	3001–	3001–
17	155-30-15150	• PIN	1	3001–	3001–
18	01010-51680	BOLT	4	3001–	3001–
19	01643-31645	WASHER	4	3001–	3001–

FIG. 3101 TRACK SHOE (PC150)

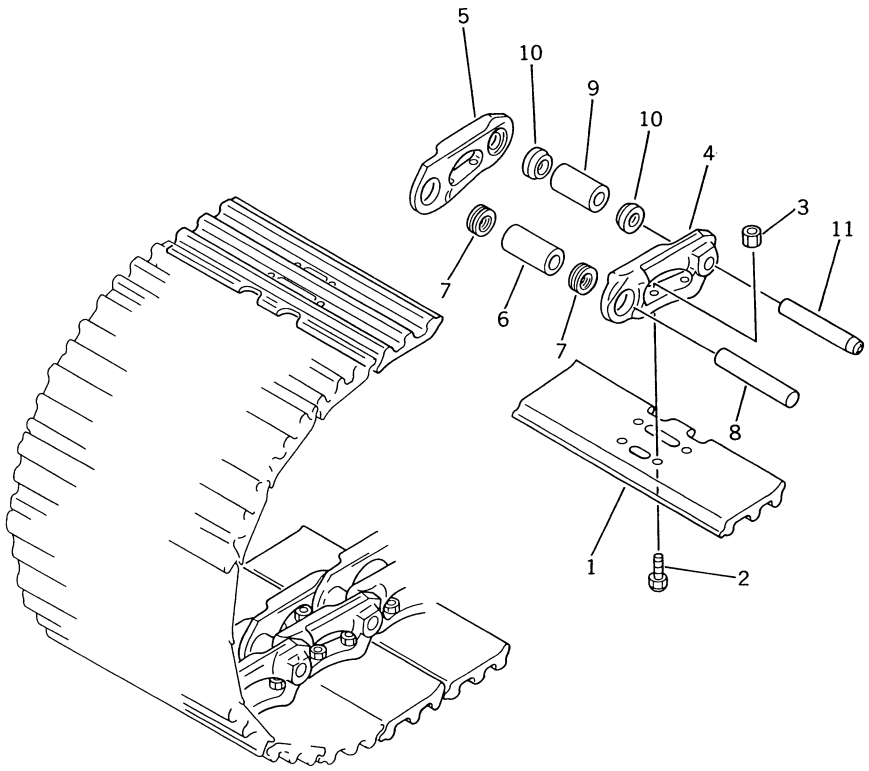

Optional Shoe

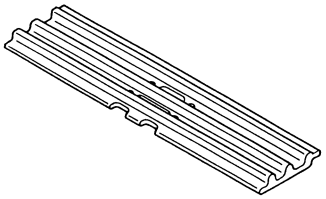

Triple Grouser With Hole 610mm Wide

Triple Grouser With Hole 710mm Wide

Triple Grouser With Hole 810mm Wide

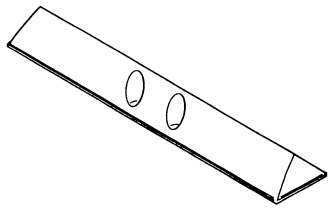

Swanp Type 720mm Wide

INDEX NO.	PART NO.	DESCRIPTION	Q'TY	SERIAL NO. PC150-3	SERIAL NO. PC150LC-3
		STANDARD TRACK SHOE			
		TRIPLE GROUSER 510MM WIDE,WITH HOLE			
	21K-32-01040	TRACK SHOE ASS'Y	1	3001 –	
1	21K-32-11110	• SHOE, TRACK	88	3001 –	
2	205-32-51120	• BOLT, SHOE (KIT)	352	3001 –	
3	01803-01622	• NUT, SHOE (KIT)	352	3001 –	
4	21K-32-00030	• TRACK LINK ASS'Y	1	3001 –	
4	130-32-11126	•• LINK, TRACK, L.H.	88	3001 –	
5	130-32-11136	•• LINK, TRACK, R.H.	88	3001 –	
6	130-32-11144	•• BUSHING, REGULAR	84	3001 –	
7	135-32-11271	•• SEAL DUST, REGULAR	168	3001 –	
8	205-32-51152	•• PIN, REGULAR	84	3001 –	
9	130-32-11172	•• BUSHING, MASTER	4	3001 –	
10	135-32-11381	•• SEAL, DUST, MASTER	8	3001 –	
11	205-32-21192	•• PIN, MASTER	4	3001 –	
		SERVICE KIT			
	205-32-05010	SHOE BOLT AND NUT SERVICE KIT	1	3001 –	
1	205-32-51120	• BOLT, SHOE	50	3001 –	
2	01803-01622	• NUT, SHOE	50	3001 –	
		OVERSIZE PARTS			
		SELECT AS REQUIRED NOT NECESSARY TO USE ALL OF THE OVERSIZE PARTS.			
		OVERSIZE 0.10MM			
6	130-98-09113	BUSHING, REGULAR	AR	3001 –	
8	205-98-09012	PIN, REGULAR	AR	3001 –	
9	130-98-09142	BUSHING, MASTER	AR	3001 –	
11	205-98-09042	PIN, MASTER	AR	3001 –	
		OVERSIZE 0.18MM			
6	130-98-09133	BUSHING, REGULAR	AR	3001 –	
8	205-98-09032	PIN, REGULAR	AR	3001 –	
9	130-98-09162	BUSHING, MASTER	AR	3001 –	
11	205-98-09062	PIN, MASTER	AR	3001 –	
		OPTIONAL TRACK SHOE			
		TRIPLE GROUSER 610MM WIDE,WITH HOLE			
	21K-32-01050	TRACK SHOE ASS'Y	1	3001 –	

FIG NO. 3101

INDEX NO.	PART NO.	DESCRIPTION	Q'TY	SERIAL NO. PC150-3	SERIAL NO. PC150LC-3
1	21K-32-11270	• SHOE, TRACK	88	3001–	
2	205-32-51120	• BOLT, SHOE (KIT)	352	3001–	
3	01803-01622	• NUT, SHOE (KIT)	352	3001–	
4	21K-32-00030	• TRACK LINK ASS'Y	1	3001–	
		SEE "STANDARD TRACK SHOE" FOR PARTS INDEX NO.4 TO 11 INCLUDING OVERSIZE PARTS.			
		TRIPLE GROUSER 710MM WIDE,WITH HOLE			
	21K-32-01060	TRACK SHOE ASS'Y	1	3001–	
1	21K-32-11260	• SHOE, TRACK	88	3001–	
2	205-32-51120	• BOLT, SHOE (KIT)	352	3001–	
3	01803-01622	• NUT, SHOE (KIT)	352	3001–	
4	21K-32-00030	• TRACK LINK ASS'Y	1	3001–	
		SEE "STANDARD TRACK SHOE" FOR PARTS INDEX NO.4 TO 11 INCLUDING OVERSIZE PARTS.			
		TRIPLE GROUSER 810MM WIDE,WITH HOLE			
	21K-32-01070	TRACK SHOE ASS'Y	1	3001–	
1	21K-32-11280	• SHOE, TRACK	88	3001–	
2	205-32-51120	• BOLT, SHOE (KIT)	352	3001–	
3	01803-01622	• NUT, SHOE (KIT)	352	3001–	
4	21K-32-00030	• TRACK LINK ASS'Y	1	3001–	
		SEE "STANDARD TRACK SHOE" FOR PARTS INDEX NO.4 TO 11 INCLUDING OVERSIZE PARTS.			
		SWAMP TYPE 720MM WIDE			
	21K-32-01110	TRACK SHOE ASS'Y	1	3001–	
1	12F-32-11111	• SHOE, TRACK	88	3001–	
2	13F-32-21220	• BOLT, SHOE (KIT)	352	3001–	
3	01803-01622	• NUT, SHOE (KIT)	352	3001–	
4	21K-32-00030	• TRACK LINK ASS'Y	1	3001–	
		SEE "STANDARD TRACK SHOE" FOR PARTS INDEX NO.4 TO 11 INCLUDING OVERSIZE PARTS.			
		SERVICE KIT (FOR SWAMP SHOE)			
	13F-32-05000	SHOE BOLT AND NUT SERVICE KIT	1	3001–	
1	13F-32-21220	• BOLT, SHOE	50	3001–	
2	01803-01622	• NUT, SHOE	50	3001–	

FIG. 3111 TRACK SHOE (PC150LC)

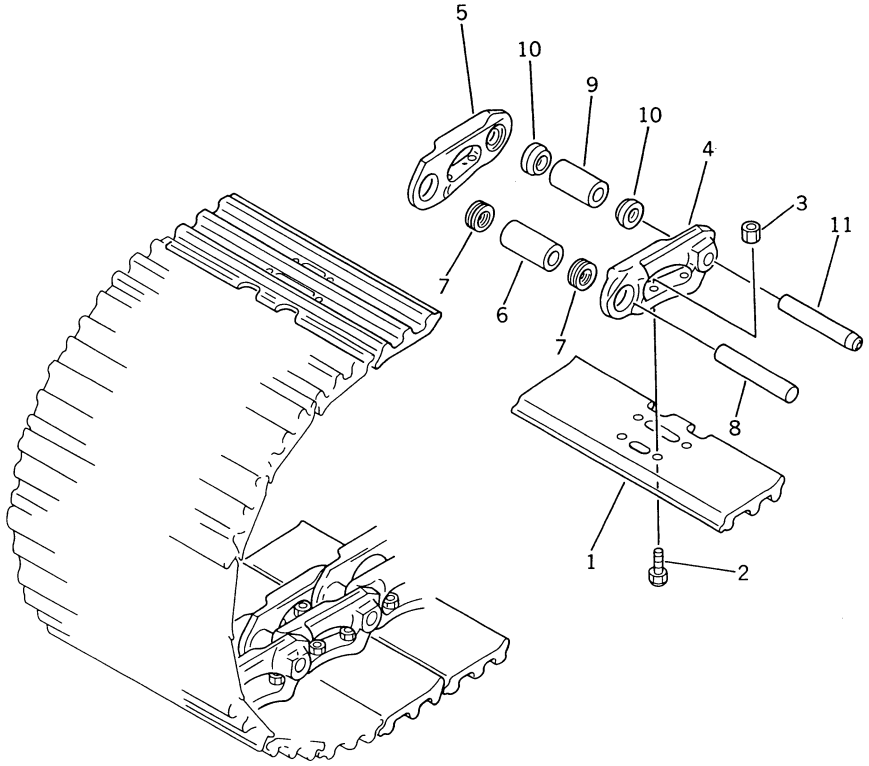

Optional Shoe

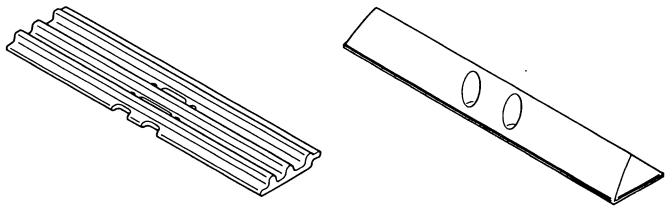

Triple Grouser With Hole 610mm Wide

Triple Grouser With Hole 710mm Wide

Triple Grouser With Hole 810mm Wide

Swanp Type 720mm Wide

INDEX NO.	PART NO.	DESCRIPTION	Q'TY	SERIAL NO. PC150-3	SERIAL NO. PC150LC-3
		STANDARD TRACK SHOE			
		TRIPLE GROUSER 510MM WIDE,WITH HOLE			
	21K-32-02040	TRACK SHOE ASS'Y	1		3001–
1	21K-32-11110	• SHOE, TRACK	94		3001–
2	205-32-51120	• BOLT, SHOE (KIT)	376		3001–
3	01803-01622	• NUT, SHOE (KIT)	376		3001–
4	21K-32-00040	• TRACK LINK ASS'Y	1		3001–
4	130-32-11126	•• LINK, TRACK, L.H.	94		3001–
5	130-32-11136	•• LINK, TRACK, R.H.	94		3001–
6	130-32-11144	•• BUSHING, REGULAR	90		3001–
7	135-32-11271	•• SEAL DUST, REGULAR	180		3001–
8	205-32-51152	•• PIN, REGULAR	90		3001–
9	130-32-11172	•• BUSHING, MASTER	4		3001–
10	135-32-11381	•• SEAL, DUST, MASTER	8		3001–
11	205-32-21192	•• PIN, MASTER	4		3001–
		SERVICE KIT			
	205-32-05010	SHOE BOLT AND NUT SERVICE KIT	1		3001–
1	205-32-51120	• BOLT, SHOE	50		3001–
2	01803-01622	• NUT, SHOE	50		3001–
		OVERSIZE PARTS			
		SELECT AS REQUIRED NOT NECESSARY TO USE ALL OF THE OVERSIZE PARTS.			
		OVERSIZE 0.10MM			
6	130-98-09113	BUSHING, REGULAR	AR		3001–
8	205-98-09012	PIN, REGULAR	AR		3001–
9	130-98-09142	BUSHING, MASTER	AR		3001–
11	205-98-09042	PIN, MASTER	AR		3001–
		OVERSIZE 0.18MM			
6	130-98-09133	BUSHING, REGULAR	AR		3001–
8	205-98-09032	PIN, REGULAR	AR		3001–
9	130-98-09162	BUSHING, MASTER	AR		3001–
11	205-98-09062	PIN, MASTER	AR		3001–
		OPTIONAL TRACK SHOE			
		TRIPLE GROUSER 610MM WIDE,WITH HOLE			
	21K-32-02050	TRACK SHOE ASS'Y	1		3001–

FIG NO. 3111

INDEX NO.	PART NO.	DESCRIPTION	Q'TY	SERIAL NO. PC150-3	SERIAL NO. PC150LC-3
1	21K-32-11270	• SHOE, TRACK	94		3001–
2	205-32-51120	• BOLT, SHOE (KIT)	376		3001–
3	01803-01622	• NUT, SHOE (KIT)	376		3001–
4	21K-32-00040	• TRACK LINK ASS'Y	1		3001–
		SEE "STANDARD TRACK SHOE" FOR PARTS INDEX NO.4 TO 11 INCLUDING OVERSIZE PARTS.			
		TRIPLE GROUSER 710MM WIDE,WITH HOLE			
	21K-32-02060	TRACK SHOE ASS'Y	1		3001–
1	21K-32-11260	• SHOE, TRACK	94		3001–
2	205-32-51120	• BOLT, SHOE (KIT)	376		3001–
3	01803-01622	• NUT, SHOE (KIT)	376		3001–
4	21K-32-00040	• TRACK LINK ASS'Y	1		3001–
		SEE "STANDARD TRACK SHOE" FOR PARTS INDEX NO.4 TO 11 INCLUDING OVERSIZE PARTS.			
		TRIPLE GROUSER 810MM WIDE,WITH HOLE			
	21K-32-02070	TRACK SHOE ASS'Y	1		3001–
1	21K-32-11280	• SHOE, TRACK	94		3001–
2	205-32-51120	• BOLT, SHOE (KIT)	376		3001–
3	01803-01622	• NUT, SHOE (KIT)	376		3001–
4	21K-32-00040	• TRACK LINK ASS'Y	1		3001–
		SEE "STANDARD TRACK SHOE" FOR PARTS INDEX NO.4 TO 11 INCLUDING OVERSIZE PARTS.			
		SWAMP TYPE 720MM WIDE			
	21K-32-02110	TRACK SHOE ASS'Y	1		3001–
1	12F-32-11111	• SHOE, TRACK	94		3001–
2	113F-32-21220	• BOLT, SHOE (KIT)	376		3001–
3	01803-01622	• NUT, SHOE (KIT)	376		3001–
4	21K-32-00040	• TRACK LINK ASS'Y	1		3001–
		SEE "STANDARD TRACK SHOE" FOR PARTS INDEX NO.4 TO 11 INCLUDING OVERSIZE PARTS.			
		SERVICE KIT (FOR SWAMP SHOE)			
	13F-32-05000	SHOE BOLT AND NUT SERVICE KIT	1		3001–
1	13F-32-21220	• BOLT, SHOE	50		3001–
2	01803-01622	• NUT, SHOE	50		3001–

SWING AND CONTROL SYSTEM

CONTENTS

	FIG NO.	PAGE
SWING CIRCLE	4001	98
SWING MACHINERY	4011	100
SWING MOTOR (1/2) (WITH SWING MECHANICAL BRAKE)	4101	104
SWING MOTOR (2/2) (WITH SWING MECHANICAL BRAKE)	4103	108
SWING MOTOR (1/2) (WITHOUT SWING MECHANICAL BRAKE)	4105	110
SWING MOTOR (2/2) (WITHOUT SWING MECHANICAL BRAKE)	4107	112
HYDRAULIC PIPING (VALVE TO/FROM SWING MOTOR)	4301	114
WORK EQUIPMENT CONTROL LEVER (FOR LONG LEVER CONTROL)	4401	116
TRAVEL CONTROL LEVER AND PEDAL (FOR LONG LEVER CONTROL)	4403	120
VALVE CONTROL LINKAGE (1/3) (FOR LONG LEVER CONTROL) (PC150 SERIAL NO. 3001– ••) (PC150LC SERIAL NO. 3001– ••)	4405	122
VALVE CONTROL LINKAGE (1/3) (FOR LONG LEVER CONTROL) (PC150 SERIAL NO. •• –) (PC150LC SERIAL NO. •• –)	4405A	126
VALVE CONTROL LINKAGE (2/3) (FOR LONG LEVER CONTROL) (PC150 SERIAL NO. 3001– ••) (PC150LC SERIAL NO. 3001– ••)	4407	130
VALVE CONTROL LINKAGE (2/3) (FOR LONG LEVER CONTROL) (PC150 SERIAL NO. •• –) (PC150LC SERIAL NO. •• –)	4407A	134
VALVE CONTROL LINKAGE (3/3) (FOR LONG LEVER CONTROL)	4409	138
WORK EQUIPMENT CONTROL LEVER (FOR WRIST CONTROL)	4411	140
TRAVEL CONTROL LEVER AND PEDAL (FOR WRIST CONTROL) (PC150 SERIAL NO. 3001– ••) (PC150LC SERIAL NO. 3001– ••)	4413	142
TRAVEL CONTROL LEVER AND PEDAL (FOR WRIST CONTROL) (PC150 SERIAL NO. •• –) (PC150LC SERIAL NO. •• –)	4413A	146
VALVE CONTROL LINKAGE (FOR WRIST CONTROL) (PC150 SERIAL NO. 3001– ••) (PC150LC SERIAL NO. 3001– ••)	4415	150
VALVE CONTROL LINKAGE (FOR WRIST CONTROL) (PC150 SERIAL NO. •• –) (PC150LC SERIAL NO. •• –)	4415A	154
HYD. PIPING (VALVE TO PPC VALVE L.H.) (FOR WRIST CONTROL)	4417	158
HYD. PIPING (VALVE TO PPC VALVE R.H.) (FOR WRIST CONTROL)	4419	160
HYD. PIPING (VALVE TO ACCUMLATOR) (FOR WRIST CONTROL)	4421	162
HYD. PIPING (VALVE TO T-BLOCK) (FOR WRIST CONTROL)	4423	164
HYD. PIPING (VALVE TO SHUTTLE VALVE) (FOR WRIST CONTROL) (WITH SWING MECHANICAL BRAKE)	4425	166
HYD. PIPING (VALVE TO SHUTTLE VALVE) (FOR WRIST CONTROL) (WITHOUT SWING MECHANICAL BRAKE)	4426	168
PROPOTIONAL PRESSURE CONTROL VALVE (FOR WRIST CONTROL)	4427	170

FIG. 4001 SWING CIRCLE

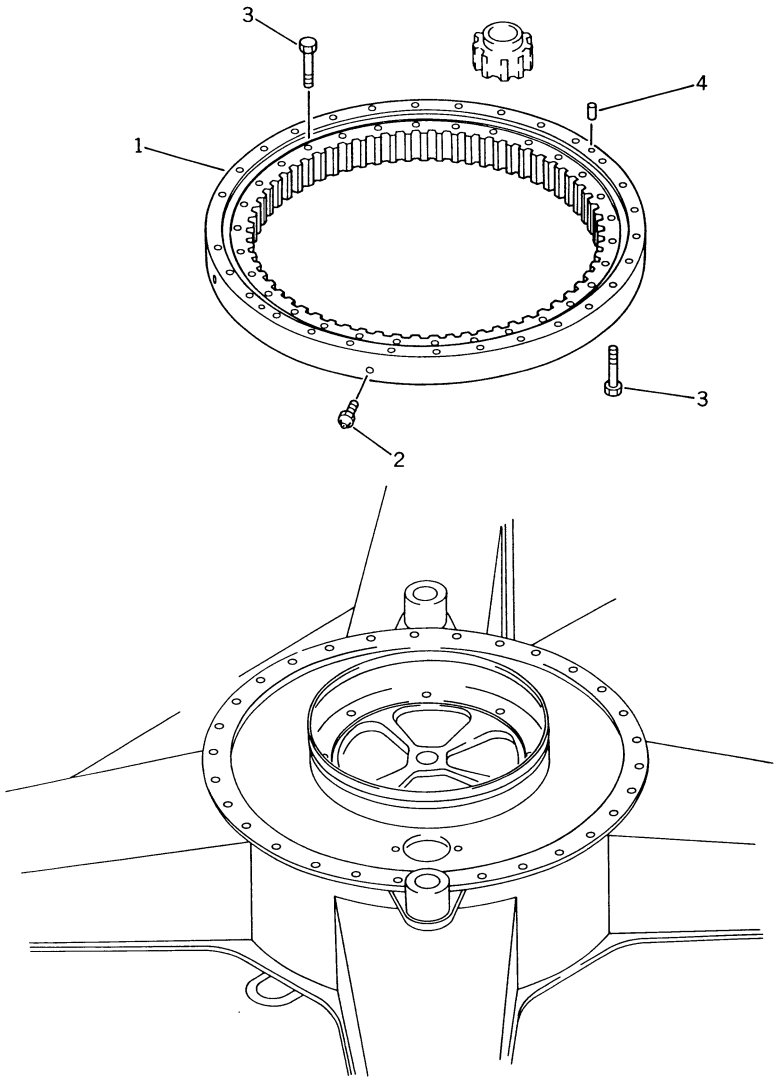

FIG NO. 4001

INDEX NO.	PART NO.	DESCRIPTION	Q'TY	SERIAL NO. PC150-3	SERIAL NO. PC150LC-3
1	21K-25-21110	CIRCLE, SWING	1	3001–	3001–
2	07020-00000	FITTING, GREASE	4	3001–	3001–
3	21K-09-11130	BOLT	60	3001–	3001–
4	04020-01842	PIN, DOWEL	2	3001–	3001–

FIG. 4011 SWING MACHINERY

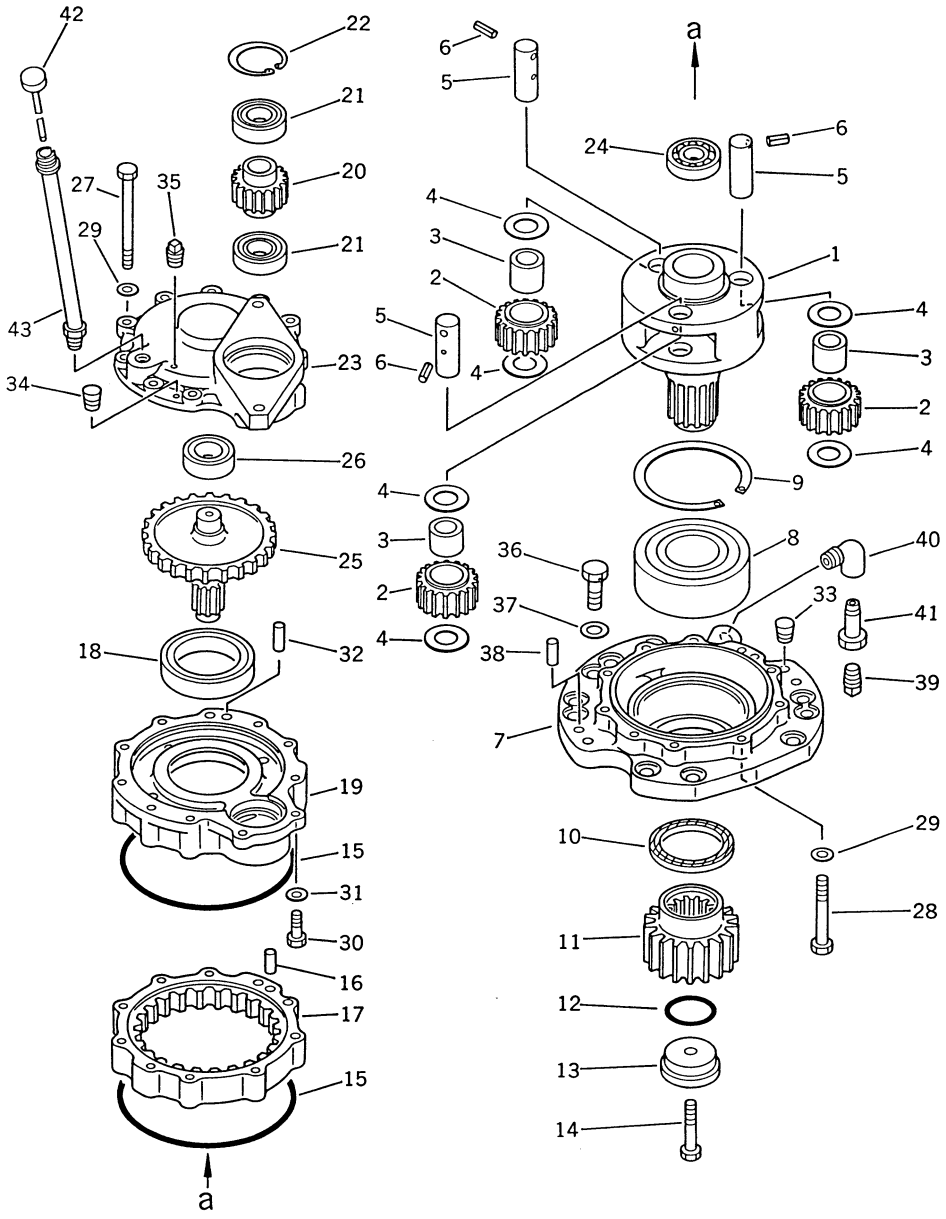

INDEX NO.	PART NO.	DESCRIPTION	Q'TY	SERIAL NO. PC150-3	SERIAL NO. PC150LC-3
1	20G-26-11141	CARRIER	1	3001–	3001–
2	20G-26-11170	GEAR	3	3001–	3001–
3	20G-26-11240	BEARING	3	3001–	3001–
4	203-26-41250	WASHER	6	3001–	3001–
5	20G-26-11231	SHAFT	3	3001–	3001–
6	04025-00832	PIN, SPRING	3	3001–	3001–
7	20G-26-11110	CAGE	1	3001–	3001–
8	06030-22317	BEARING	1	3001–	3001–
9	04071-00180	RING, SNAP	1	3001–	3001–
10	07012-00100	SEAL, OIL	1	3001–	3001–
11	21K-26-21120	GEAR	1	3001–	3001–
12	07000-05065	O-RING	1	3001–	3001–
13	20G-26-11250	HOLDER	1	3001–	3001–
14	01010-52075	BOLT	1	3001–	3001–
15	203-26-41220	O-RING	2	3001–	3001–
16	04020-01434	PIN DOWEL	1	3001–	3001–
17	20G-26-11181	GEAR	1	3001–	3001–
18	20G-26-11260	BEARING	1	3001–	3001–
19	20G-26-11121	CASE	1	3001–	3001–
20	20G-26-11150	GEAR	1	3001–	3001–
21	06040-06210	BEARING	2	3001–	3001–
22	04065-09030	RING, SNAP	1	3001–	3001–
23	20G-26-11131	COVER	1	3001–	3001–
24	06040-06007	BEARING	1	3001–	3001–
25	21K-26-21110	GEAR	1	3001–	3001–
26	06030-21307	BEARING	1	3001–	3001–
27	01011-51460	BOLT	9	3001–	3001–
28	01011-51420	BOLT	1	3001–	3001–
29	01643-31445	WASHER	10	3001–	3001–
30	01010-51255	BOLT	2	3001–	3001–
31	01643-31232	WASHER	2	3001–	3001–
32	04020-01024	PIN, DOWEL	1	3001–	3001–
33	07049-02025	PLUG	2	3001–	3001–
34	07049-01215	PLUG	3	3001–	3001–
35	07042-00108	PLUG	1	3001–	3001–

FIG NO. 4011

INDEX NO.	PART NO.	DESCRIPTION	Q'TY	SERIAL NO. PC150-3	SERIAL NO. PC150LC-3
36	01010-52060	BOLT	10	3001–	3001–
37	01643-32060	WASHER	10	3001–	3001–
38	04020-01638	PIN, DOWEL	2	3001–	3001–
39	07042-30617	PLUG	1	3001–	3001–
40	07323-30600	ELBOW	1	3001–	3001–
41	20G-26-11340	FILLER	1	3001–	3001–
42	20G-26-11320	GAUGE	1	3001–	3001–
43	20G-26-11310	FILLER	1	3001–	3001–

FIG. 4101 SWING MOTOR (1/2) (WITH SWING MECHANICAL BRAKE)

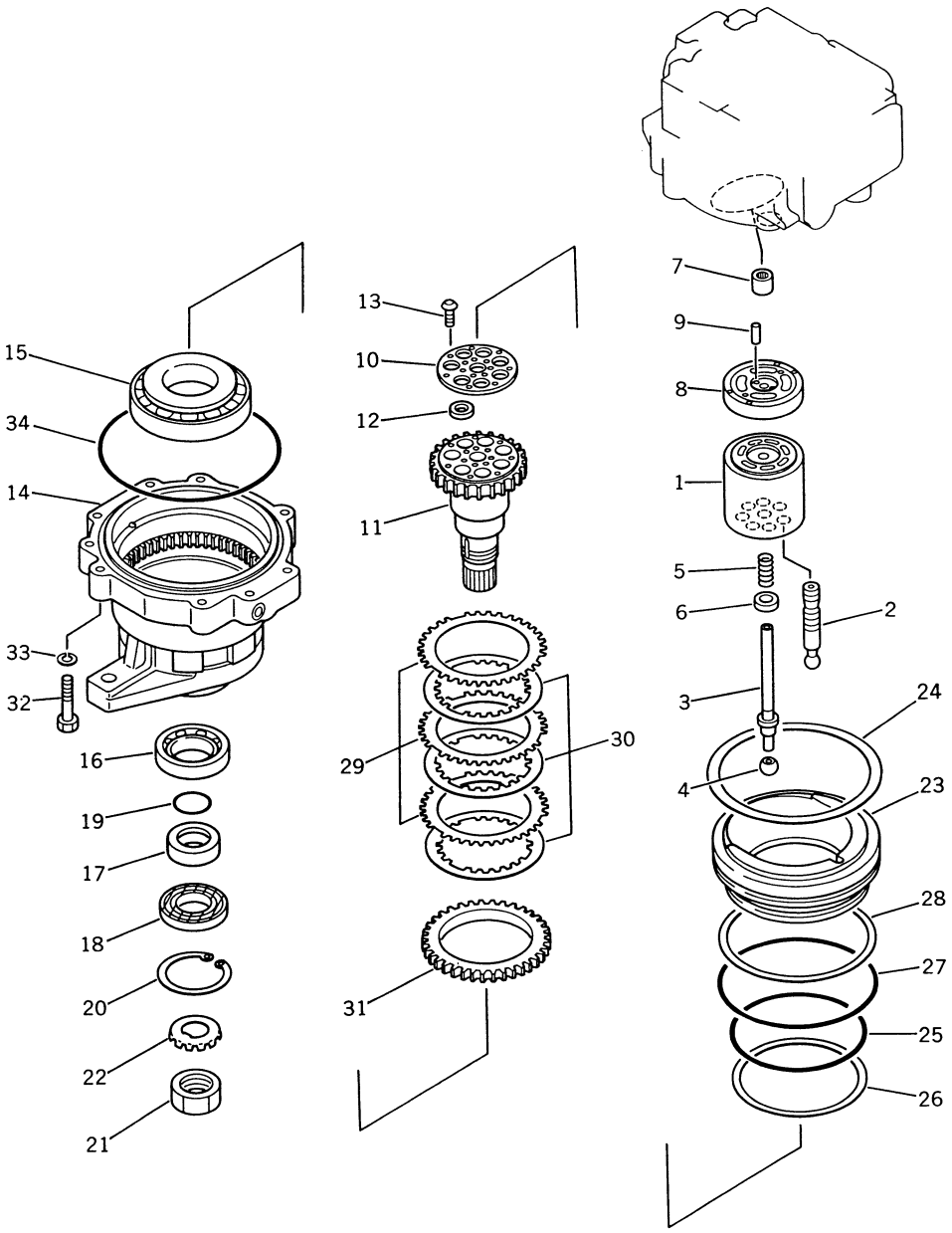

INDEX NO.	PART NO.	DESCRIPTION	Q'TY	SERIAL NO. PC150-3	SERIAL NO. PC150LC-3
	706-75-11801	SWING MOTOR ASS'Y	1	3001–	3001–
		THIS ASSEMBLY CONSISTS OF ALL PARTS SHOWN IN FIGS 4101 AND 4103.			
1	(☆706-75-41091)	• BLOCK, CYLINDER	1	3001–	3001–
2	(☆706-73-41163)	• PISTON ASS'Y	7	3001–	3001–
3	(☆706-75-42080)	• SHAFT, CENTER	1	3001–	3001–
4	(☆706-75-41220)	• BALL, CENTER	1	3001–	3001–
5	(☆706-75-41110)	• SPRING	1	3001–	3001–
6	(☆706-75-41130)	• RING, CENTER	1	3001–	3001–
7	(☆706-75-40010)	• BEARING	1	3001–	3001–
8	(☆706-75-42840)	• PLATE, VALVE	1	3001–	3001–
9	(☆04020-00820)	• PIN, DOWEL	1	3001–	3001–
10	(☆706-75-41263)	• RETAINER	1	3001–	3001–
11	(☆706-75-42960)	• SHAFT, DRIVE	1	3001–	3001–
12	(☆706-75-41251)	• HOLDER	8	3001–	3001–
13	(☆706-75-41271)	• SCREW	14	3001–	3001–
14	(☆706-75-42051)	• CASE, BRAKE	1	3001–	3001–
15	(☆706-75-42880)	• BEARING	1	3001–	3001–
16	(☆706-75-40890)	• BEARING	1	3001–	3001–
17	(☆706-75-42910)	• RING	1	3001–	3001–
18	706-76-40920	• SEAL, OIL	1	3001–	3001–
19	(☆07000-03040)	• O-RING	1	3001–	3001–
20	04065-09030	• RING, SNAP	1	3001–	3001–
21	(☆01530-03912)	• NUT	1	3001–	3001–
22	(☆706-75-40940)	• WASHER, LOCK	1	3001–	3001–
23	(☆706-75-91481)	• PISTON, BRAKE	1	3001–	3001–
24	(☆706-75-91431)	• SPRING	1	3001–	3001–
25	(☆07000-15155)	• O-RING	1	3001–	3001–
26	(☆07001-05155)	• RING, BACK-UP	1	3001–	3001–
27	(☆07000-15175)	• O-RING	1	3001–	3001–
28	(☆07001-05175)	• RING, BACK-UP	1	3001–	3001–
29	(☆706-75-91340)	• PLATE	3	3001–	3001–
30	(☆706-75-91350)	• DISC	3	3001–	3001–
31	(☆706-75-91330)	• PLATE	1	3001–	3001–
32	(☆01010-51450)	• BOLT	9	3001–	3001–

FIG NO. 4101

INDEX NO.	PART NO.	DESCRIPTION	Q'TY	SERIAL NO. PC150-3	SERIAL NO. PC150LC-3
33	(☆01602-21442)	• WASHER, SPRING	9	3001–	3001–
34	(☆706-75-42370)	• O-RING	1	3001–	3001–

FIG. 4103 SWING MOTOR (2/2) (WITH SWING MECHANICAL BRAKE)

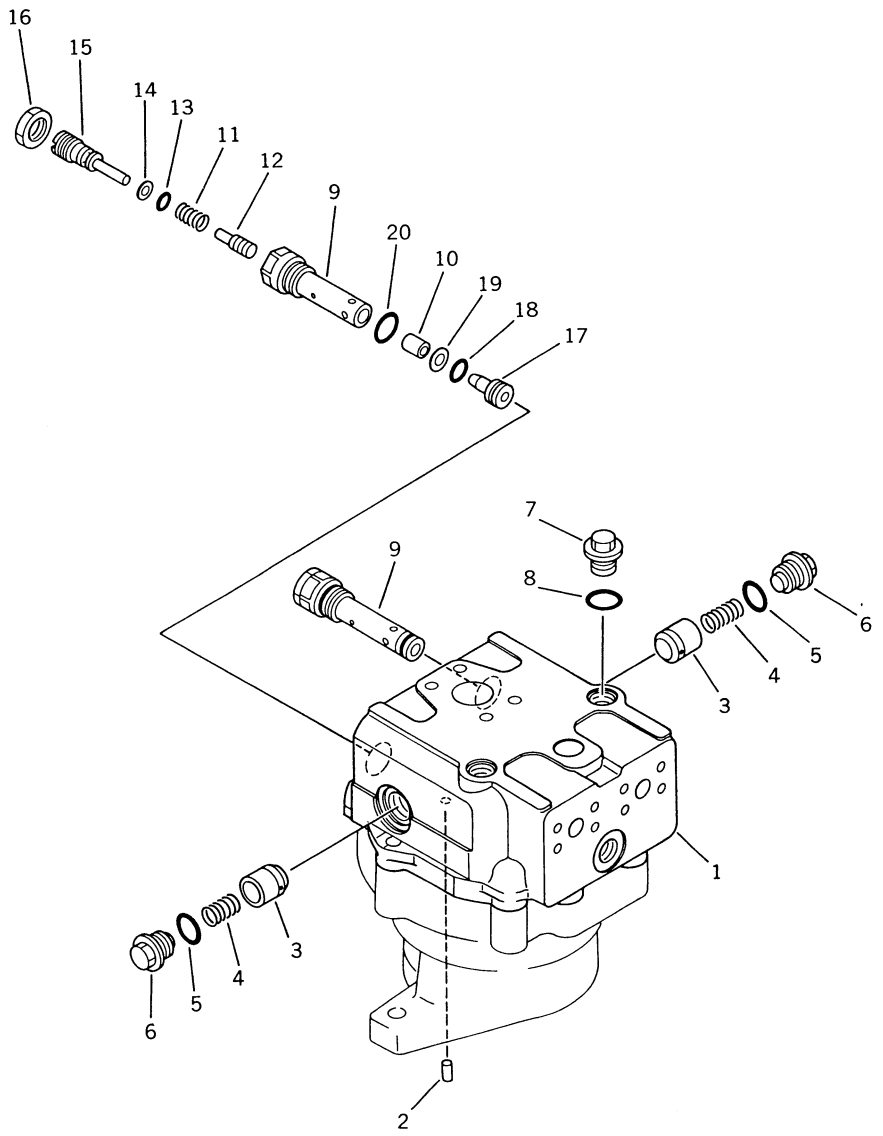

FIG NO. 4103

INDEX NO.	PART NO.	DESCRIPTION	Q'TY	SERIAL NO. PC150-3	SERIAL NO. PC150LC-3
	(706-75-11801)	SWING MOTOR ASS'Y	1	3001–	3001–
		THIS ASSEMBLY CONSISTS OF ALL PARTS SHOWN IN FIGS 4101 AND 4103.			
1	(☆706-75-74141)	• HOUSING	1	3001–	3001–
2	(☆706-75-42820)	• PIN, DOWEL	1	3001–	3001–
3	706-75-74540	• VALVE	2	3001–	3001–
4	706-75-74550	• SPRING	2	3001–	3001–
5	07002-13334	• O-RING	2	3001–	3001–
6	706-75-74560	• PLUG	2	3001–	3001–
7	706-77-72170	• PLUG	3	3001–	3001–
8	07002-12434	• O-RING	3	3001–	3001–
9	706-75-85801	• RELIEF VALVE ASS'Y	2	3001–	3001–
9	(☆706-75-75331)	•• SLEEVE	1	3001–	3001–
10	(☆706-75-75310)	•• VALVE	1	3001–	3001–
11	(☆706-73-75170)	•• SPRING	1	3001–	3001–
12	(☆706-75-75280)	•• PISTON	1	3001–	3001–
13	(☆07000-12012)	•• O-RING	1	3001–	3001–
14	(☆07001-02012)	•• RING, BACK-UP	1	3001–	3001–
15	(☆706-75-75291)	•• SCREW	1	3001–	3001–
16	(☆706-75-75350)	•• NUT	1	3001–	3001–
17	(☆706-75-75392)	•• SEAT, VALVE	1	3001–	3001–
18	07000-22020	•• O-RING	1	3001–	3001–
19	07001-02020	•• RING, BACK-UP	1	3001–	3001–
20	07002-13034	•• O-RING	1	3001–	3001–

FIG. 4105 SWING MOTOR (1/2) (WITHOUT SWING MECHANICAL BRAKE)

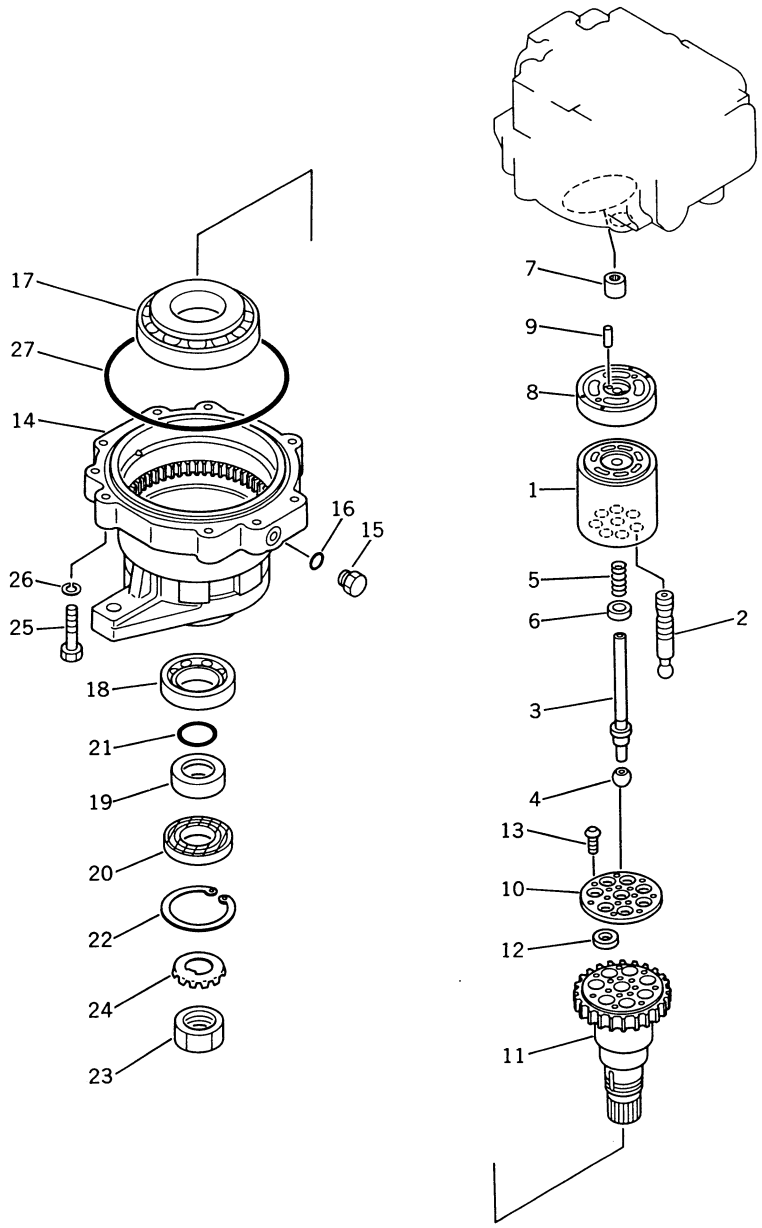

FIG NO. 4105

INDEX NO.	PART NO.	DESCRIPTION	Q'TY	SERIAL NO. PC150-3	SERIAL NO. PC150LC-3
	706-75-14000	SWING MOTOR ASS'Y	1	3001 –	3001 –
		THIS ASSEMBLY CONSISTS OF ALL PARTS SHOWN IN FIGS 4105 AND 4107.			
1	(☆706-75-41091)	• BLOCK, CYLINDER	1	3001 –	3001 –
2	(☆706-73-41163)	• PISTON ASS'Y	7	3001 –	3001 –
3	(☆706-75-42080)	• SHAFT, CENTER	1	3001 –	3001 –
4	(☆706-75-41220)	• BALL, CENTER	1	3001 –	3001 –
5	(☆706-75-41110)	• SPRING	1	3001 –	3001 –
6	(☆706-75-41130)	• RING, CENTER	1	3001 –	3001 –
7	(☆706-75-40010)	• BEARING	1	3001 –	3001 –
8	(☆706-75-42840)	• PLATE, VALVE	1	3001 –	3001 –
9	(☆04020-00820)	• PIN, DOWEL	1	3001 –	3001 –
10	(☆706-75-41263)	• RETAINER	1	3001 –	3001 –
11	(☆706-75-42960)	• SHAFT, DRIVE	1	3001 –	3001 –
12	(☆706-75-41251)	• HOLDER	8	3001 –	3001 –
13	(☆706-75-41271)	• SCREW	14	3001 –	3001 –
14	(☆706-75-42051)	• CASE, BRAKE	1	3001 –	3001 –
15	07040-11409	• PLUG	1	3001 –	3001 –
16	07002-01423	• O-RING	1	3001 –	3001 –
17	(☆706-75-42880)	• BEARING	1	3001 –	3001 –
18	(☆706-75-40890)	• BEARING	1	3001 –	3001 –
19	(☆706-75-42910)	• RING	1	3001 –	3001 –
20	706-76-40920	• SEAL, OIL	1	3001 –	3001 –
21	(☆07000-03040)	• O-RING	1	3001 –	3001 –
22	04065-09030	• RING, SNAP	1	3001 –	3001 –
23	(☆01530-03912)	• NUT	1	3001 –	3001 –
24	(☆706-75-40940)	• WASHER, LOCK	1	3001 –	3001 –
25	(☆01010-51450)	• BOLT	9	3001 –	3001 –
26	(☆01602-21442)	• WASHER, SPRING	9	3001 –	3001 –
27	(☆706-75-42370)	• O-RING	1	3001 –	3001 –

FIG. 4107 SWING MOTOR (2/2) (WITHOUT SWING MECHANICAL BRAKE)

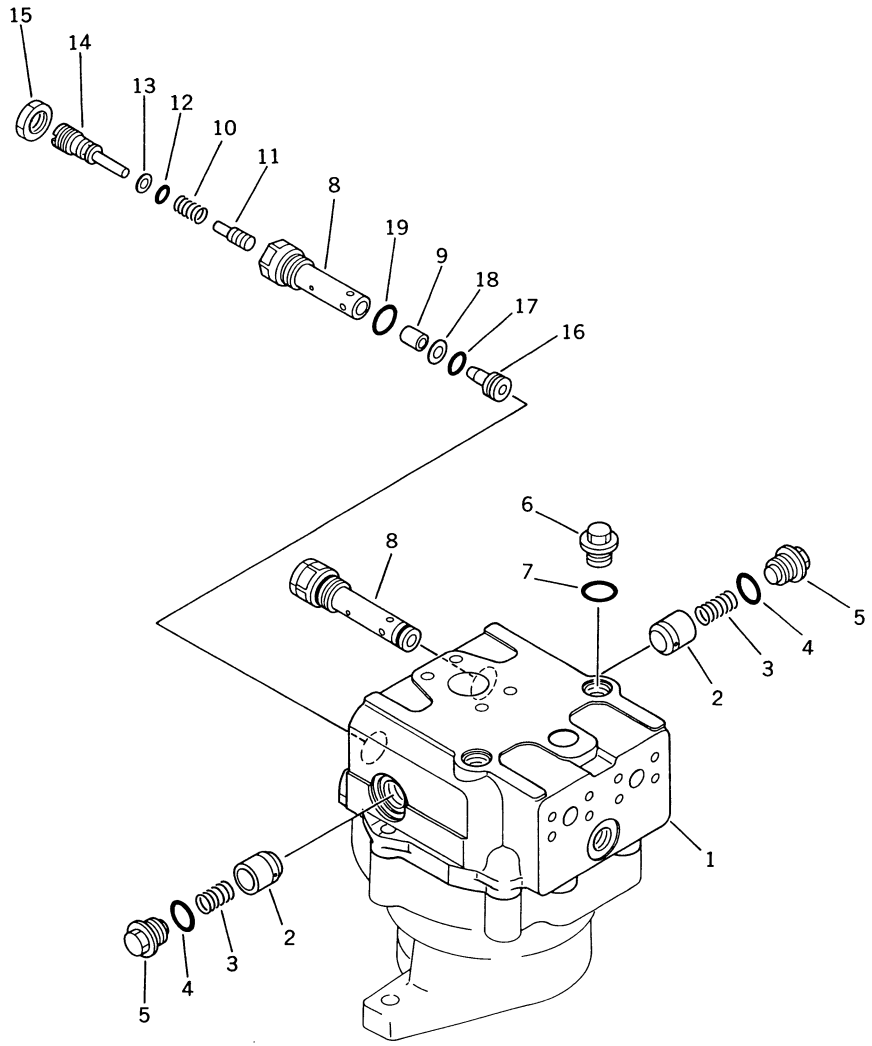

FIG NO. 4107

INDEX NO.	PART NO.	DESCRIPTION	Q'TY	SERIAL NO. PC150-3	SERIAL NO. PC150LC-3
	(706-75-14000)	SWING MOTOR ASS'Y	1	3001–	3001–
		THIS ASSEMBLY CONSISTS OF ALL PARTS SHOWN IN FIGS 4105 AND 4107.			
1	(☆706-75-74141)	• HOUSING	1	3001–	3001–
2	706-75-74540	• VALVE	2	3001–	3001–
3	706-75-74550	• SPRING	2	3001–	3001–
4	07002-13334	• O-RING	2	3001–	3001–
5	706-75-74560	• PLUG	2	3001–	3001–
6	706-77-72170	• PLUG	3	3001–	3001–
7	07002-12434	• O-RING	3	3001–	3001–
8	706-75-85702	• RELIEF VALVE ASS'Y	2	3001–	3001–
8	(☆706-75-75331)	•• SLEEVE	1	3001–	3001–
9	(☆706-75-75310)	•• VALVE	1	3001–	3001–
10	(☆706-73-75170)	•• SPRING	1	3001–	3001–
11	(☆706-75-75280)	•• PISTON	1	3001–	3001–
12	(☆07000-12012)	•• O-RING	1	3001–	3001–
13	(☆07001-02012)	•• RING, BACK-UP	1	3001–	3001–
14	(☆706-75-75291)	•• SCREW	1	3001–	3001–
15	(☆706-75-75350)	•• NUT	1	3001–	3001–
16	(☆706-75-75392)	•• SEAT, VALVE	1	3001–	3001–
17	07000-22020	•• O-RING	1	3001–	3001–
18	07001-02020	•• RING, BACK-UP	1	3001–	3001–
19	07002-13034	•• O-RING	1	3001–	3001–

FIG. 4301 HYDRAULIC PIPING (VALVE TO/FROM SWING MOTOR)

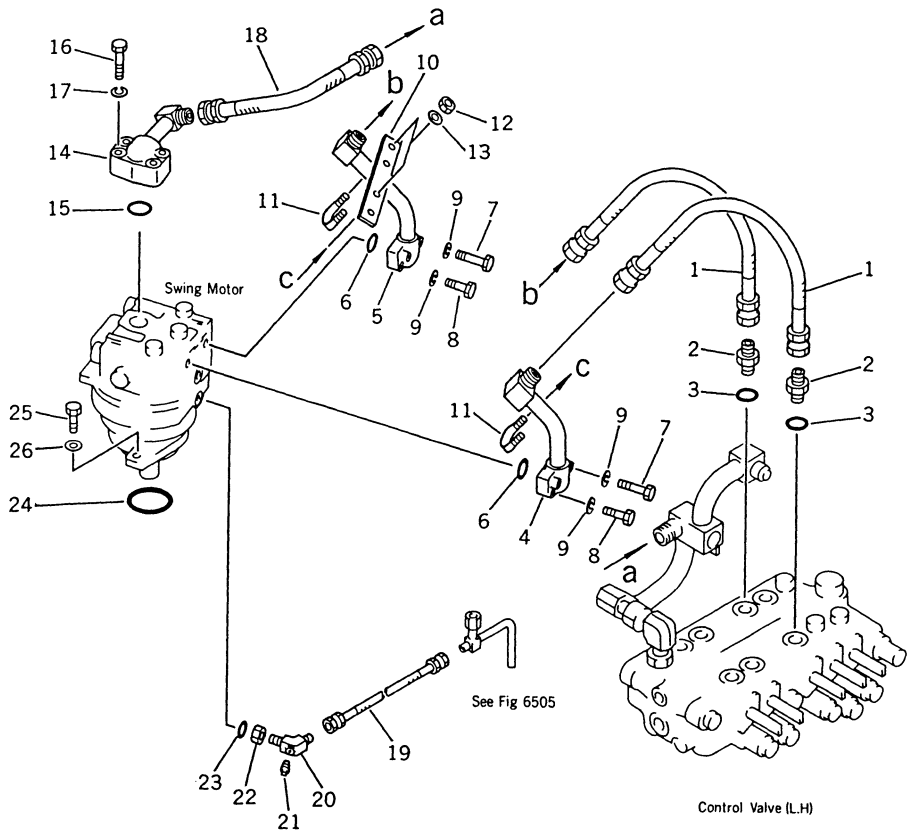

FIG NO. 4301

INDEX NO.	PART NO.	DESCRIPTION	Q'TY	SERIAL NO. PC150-3	SERIAL NO. PC150LC-3
1	07121-00606	HOSE	2	3001 –	3001 –
2	07230-10628	NIPPLE	2	3001 –	3001 –
3	07002-12434	O-RING	2	3001 –	3001 –
4	21K-62-21461	TUBE	1	3001 –	3001 –
5	21K-62-21451	TUBE	1	3001 –	3001 –
6	07000-13030	O-RING	2	3001 –	3001 –
7	01010-50855	BOLT	4	3001 –	3001 –
8	01010-50840	BOLT	4	3001 –	3001 –
9	01602-20825	WASHER, SPRING	8	3001 –	3001 –
10	21K-62-21770	PLATE	1	3001 –	3001 –
11	07283-22738	CLIP	2	3001 –	3001 –
12	01599-01011	NUT	4	3001 –	3001 –
13	01643-31032	WASHER	4	3001 –	3001 –
14	21K-62-21421	TUBE	1	3001 –	3001 –
15	07000-03045	O-RING	1	3001 –	3001 –
16	01010-51260	BOLT	4	3001 –	3001 –
17	01602-21236	WASHER, SPRING	4	3001 –	3001 –
18	07102-21003	HOSE	1	3001 –	3001 –
19	21K-62-21570	HOSE	1	3001 –	3001 –
20	07233-20210	ELBOW	1	3001 –	3001 –
21	07042-00108	PLUG	1	3001 –	3001 –
22	07239-11408	NUT	1	3001 –	3001 –
23	07002-01423	O-RING	1	3001 –	3001 –
24	07000-02110	O-RING	1	3001 –	3001 –
25	01010-52060	BOLT	2	3001 –	3001 –
26	01643-32060	WASHER	2	3001 –	3001 –

FIG. 4401 WORK EQUIPMENT CONTROL LEVER (FOR LONG LEVER CONTROL)

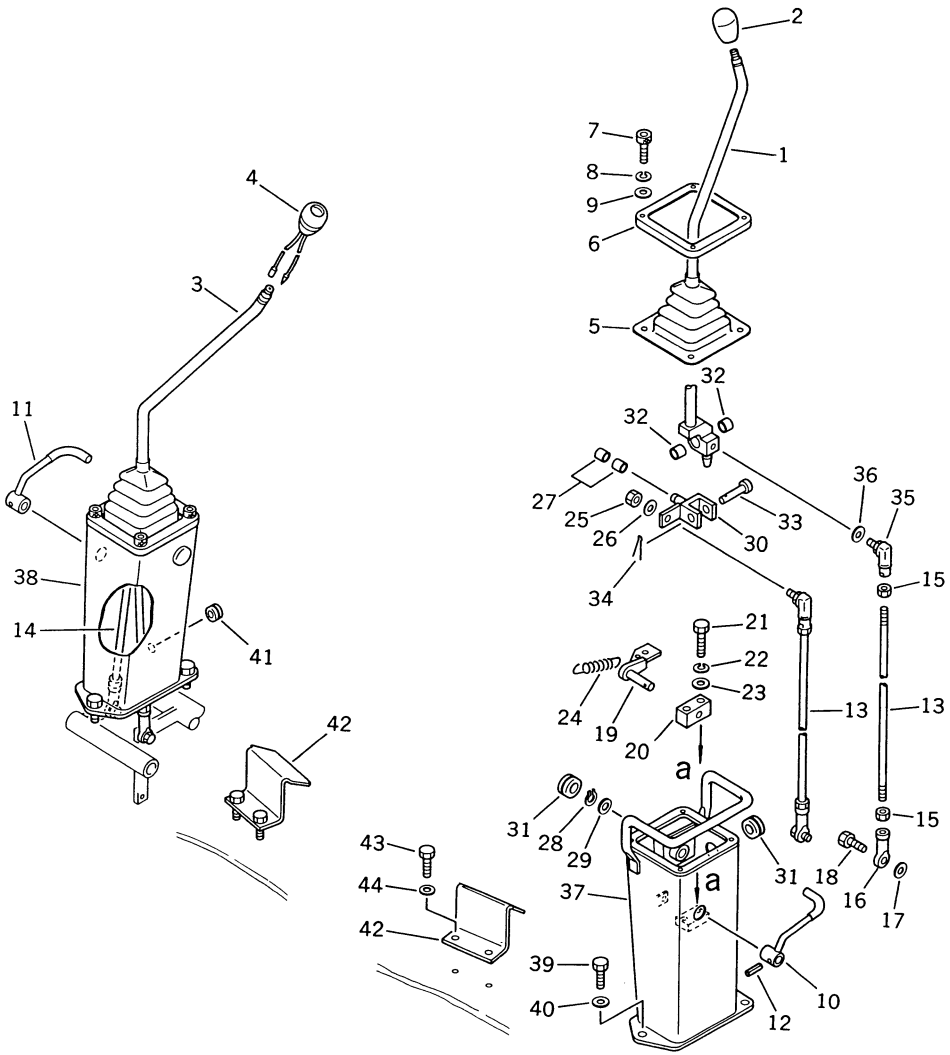

FIG NO. 4401

INDEX NO.	PART NO.	DESCRIPTION	Q'TY	SERIAL NO. PC150-3	SERIAL NO. PC150LC-3
1	203-43-42132	LEVER, L.H.	1	3001–	3001–
2	20D-43-11370	KNOB	1	3001–	3001–
3	203-43-42142	LEVER, R.H.	1	3001–	3001–
4	203-06-21140	SWITCH, HORN	1	3001–	3001–
5	203-43-42780	BELLOWS	2	3001–	3001–
6	205-43-62260	COVER	2	3001–	3001–
7	205-06-62170	BOLT	8	3001–	3001–
8	205-06-62180	WASHER, SPRING	8	3001–	3001–
9	205-06-62190	WASHER	8	3001–	3001–
10	205-43-63820	LEVER, L.H.	1	3001–	3001–
11	205-43-63830	LEVER, R.H.	1	3001–	3001–
12	04025-00520	PIN, SPRING	2	3001–	3001–
13	04245-41031	ROD	3	3001–	3001–
14	04245-41029	ROD	1	3001–	3001–
15	01582-11008	NUT	8	3001–	3001–
16	04250-81056	END, ROD	4	3001–	3001–
17	04254-41032	SPACER	4	3001–	3001–
18	01010-51030	BOLT	4	3001–	3001–
19	205-43-62320	LEVER	2	3001–	3001–
20	205-43-62330	BLOCK	2	3001–	3001–
21	01010-50840	BOLT	4	3001–	3001–
22	01602-20825	WASHER, SPRING	4	3001–	3001–
23	01643-30823	WASHER	4	3001–	3001–
24	203-43-21370	SPRING	2	3001–	3001–
25	01582-11008	NUT	2	3001–	3001–
26	01643-31032	WASHER	2	3001–	3001–
27	203-43-31420	BUSHING	4	3001–	3001–
28	04064-01410	RING, SNAP	2	3001–	3001–
29	01641-21423	WASHER	2	3001–	3001–
30	205-43-52140	YOKE	2	3001–	3001–
31	09415-02512	CAP	4	3001–	3001–
32	203-43-31420	BUSHING	4	3001–	3001–
33	04205-01450	PIN	2	3001–	3001–
34	04050-14022	PIN, COTTER	2	3001–	3001–
35	207-43-11170	JOINT	4	3001–	3001–

FIG NO. 4401

INDEX NO.	PART NO.	DESCRIPTION	Q'TY	SERIAL NO. PC150-3	SERIAL NO. PC150LC-3
36	01643-31032	WASHER	2	3001–	3001–
37	203-43-42791	STAND, L.H.	1	3001–	3001–
38	203-43-42811	STAND, R.H.	1	3001–	3001–
39	01010-51230	BOLT	6	3001–	3001–
40	01643-31232	WASHER	6	3001–	3001–
41	08037-01008	GROMMET	1	3001–	3001–
42	203-43-42572	BRACKET	2	3001–	3001–
43	01010-51030	BOLT	4	3001–	3001–
44	01643-31032	WASHER	4	3001–	3001–

FIG. 4403 TRAVEL CONTROL LEVER AND PEDAL (FOR LONG LEVER CONTROL)

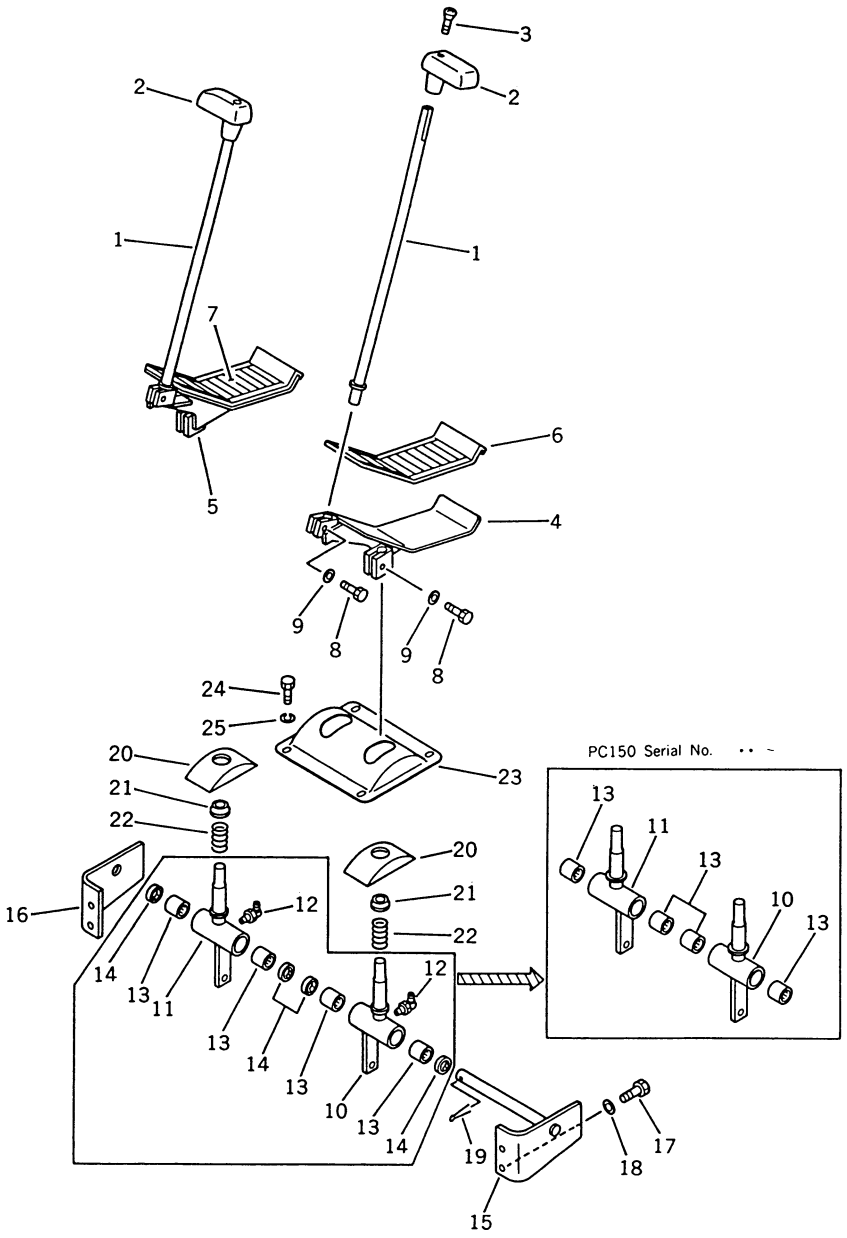

FIG NO. 4403

INDEX NO.	PART NO.	DESCRIPTION	Q'TY	SERIAL NO. PC150-3	SERIAL NO. PC150LC-3
1	205-43-71871	LEVER	2	3001 –	3001 –
2	203-43-41340	KNOB	2	3001 –	3001 –
3	01225-40625	SCREW	2	3001 –	3001 –
4	203-43-41612	PEDAL, L.H.	1	3001 –	3001 –
5	203-43-41592	PEDAL, R.H.	1	3001 –	3001 –
6	205-43-71911	CAP, PEDAL, L.H.	1	3001 –	3001 –
7	205-43-71921	CAP, PEDAL, R.H.	1	3001 –	3001 –
8	01010-50825	BOLT	4	3001 –	3001 –
9	01643-30823	WASHER	4	3001 –	3001 –
10	203-43-42373	LEVER, L.H. (■203-43-42374, 195-61-34130(2))	1	3001 – ••	3001 – ••
10	203-43-42374	LEVER, L.H.	1	•• –	•• –
11	203-43-42671	LEVER, R.H. (■203-43-42672, 195-61-34130(2))	1	3001 – ••	3001 – ••
11	203-43-42672	LEVER, R.H.	1	•• –	•• –
12	07020-00900	FITTING, GREASE	2	3001 – ••	3001 – ••
13	06120-02016	BEARING	4	3001 – ••	3001 – ••
13	195-61-34130	BEARING	4	•• –	•• –
14	06122-02004	SEAL, BEARING	4	3001 – ••	3001 – ••
15	203-43-42721	SHAFT	1	3001 –	3001 –
16	203-43-42731	BRACKET	1	3001 –	3001 –
17	01010-51030	BOLT	4	3001 –	3001 –
18	01643-31032	WASHER	4	3001 –	3001 –
19	04050-13030	PIN, COTTER	1	3001 –	3001 –
20	20S-43-11230	COVER	2	3001 –	3001 –
21	203-43-41660	SPACER	2	3001 –	3001 –
22	09340-10130	SPRING	2	3001 –	3001 –
23	203-43-41541	COVER	1	3001 –	3001 –
24	01010-50820	BOLT	4	3001 –	3001 –
25	01602-20825	WASHER, SPRING	4	3001 –	3001 –

FIG. 4405 VALVE CONTROL LINKAGE (1/3) (FOR LONG LEVER CONTROL)

(PC150 SERIAL NO. 3001– ••)
(PC150LC SERIAL NO. 3001– ••)

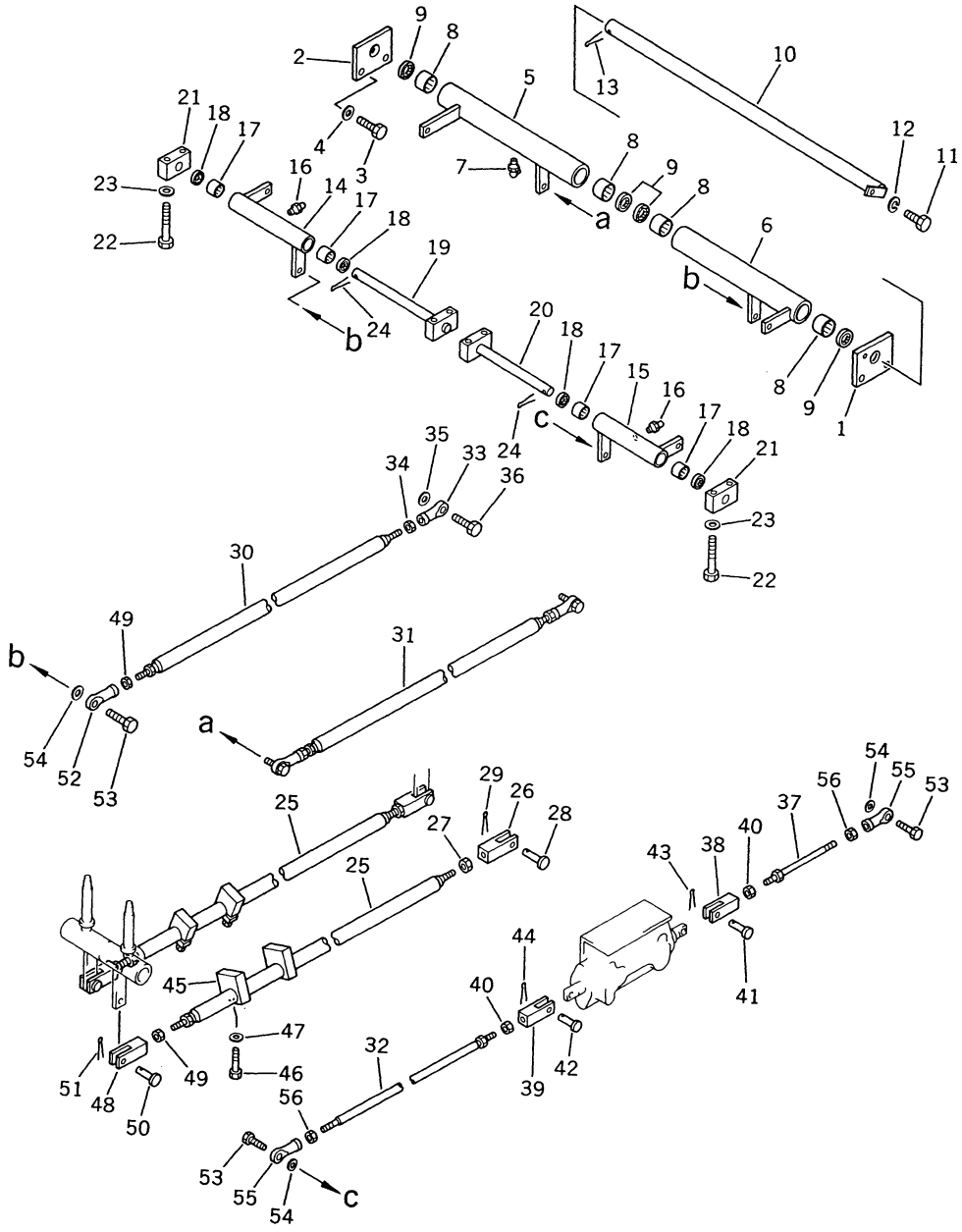

INDEX NO.	PART NO.	DESCRIPTION	Q'TY	SERIAL NO. PC150-3	SERIAL NO. PC150LC-3
1	203-43-42322	BRACKET	1	3001– ★	3001– ★
2	203-43-42680	BRACKET	1	3001– ★	3001– ★
3	01010-51230	BOLT	4	3001– ★	3001– ★
4	01643-31232	WASHER	4	3001– ★	3001– ★
5	203-43-42391	LEVER (■203-43-42392, 205-43-73190(2))	1	3001– ••	3001– ••
6	203-43-42640	LEVER (■203-43-42641, 205-43-73190(2))	1	3001– ••	3001– ••
7	07020-00900	FITTING, GREASE	2	3001– ••	3001– ••
8	06120-03020	BEARING	4	3001– ••	3001– ••
9	06122-03004	SEAL, BEARING	4	3001– ••	3001– ••
10	203-43-42312	SHAFT	1	3001– ★	3001– ★
11	01010-50820	BOLT	1	3001– ★	3001– ★
12	01602-20825	WASHER, SPRING	1	3001– ★	3001– ★
13	04050-13040	PIN, COTTER	1	3001– ★	3001– ★
14	203-43-42421	LEVER (■203-43-42422, 195-61-34130(2))	1	3001– ••	3001– ••
15	203-43-42630	LEVER (■203-43-42631, 195-61-34130(2))	1	3001– ••	3001– ••
16	07020-00000	FITTING, GREASE	2	3001– ••	3001– ••
17	06120-02016	BEARING	4	3001– ••	3001– ••
18	06122-02004	SEAL, BEARING	4	3001– ••	3001– ••
19	203-43-42710	SHAFT	1	3001– ★	3001– ★
20	203-43-42690	SHAFT	1	3001– ★	3001– ★
21	203-43-41310	BLOCK	2	3001– ★	3001– ★
22	01010-51060	BOLT	8	3001– ★	3001– ★
23	01643-31032	WASHER	8	3001– ★	3001– ★
24	04050-13030	PIN, COTTER	2	3001– ★	3001– ★
25	21K-43-21150	ROD	2	3001– ★	3001– ★
26	04220-21040	YOKE, L.H. THREAD	2	3001– ★	3001– ★
27	01508-21006	NUT, L.H. THREAD	2	3001– ★	3001– ★
28	04205-11028	PIN	2	3001– ★	3001– ★
29	04050-13015	PIN, COTTER	2	3001– ★	3001– ★
30	21K-43-21160	ROD	2	3001– ★	3001– ★
31	21K-43-21140	ROD	1	3001– ★	3001– ★

FIG NO. 4405

INDEX NO.	PART NO.	DESCRIPTION	Q'TY	SERIAL NO. PC150-3	SERIAL NO. PC150LC-3
32	203-43-42332	ROD	1	3001– ★	3001– ★
33	04250-91056	END, ROD, L.H. THREAD	2	3001– ★	3001– ★
34	01508-21006	NUT, L.H. THREAD	2	3001– ★	3001– ★
35	04254-01032	SPACER	2	3001– ★	3001– ★
36	01010-51030	BOLT	2	3001– ★	3001– ★
37	04248-31022	ROD	1	3001– ★	3001– ★
38	20T-43-22210	YOKE	1	3001– ★	3001– ★
39	201-43-21370	YOKE	1	3001– ★	3001– ★
40	01582-11008	NUT	2	3001– ★	3001– ★
41	04205-10822	PIN	1	3001– ★	3001– ★
42	04205-10622	PIN	1	3001– ★	3001– ★
43	04050-12012	PIN, COTTER	1	3001– ★	3001– ★
44	04050-11610	PIN, COTTER	1	3001– ★	3001– ★
45	203-43-42750	PLATE	4	3001– ★	3001– ★
46	01010-51030	BOLT	4	3001– ★	3001– ★
47	01643-31032	WASHER	4	3001– ★	3001– ★
48	04210-21040	YOKE	2	3001– ★	3001– ★
49	01582-11008	NUT	6	3001– ★	3001– ★
50	04205-11028	PIN	2	3001– ★	3001– ★
51	04050-13015	PIN, COTTER	2	3001– ★	3001– ★
52	04250-81056	END, ROD	2	3001– ★	3001– ★
53	01010-51030	BOLT	4	3001– ★	3001– ★
54	04254-01032	SPACER	4	3001– ★	3001– ★
55	04250-91056	END, ROD, L.H. THREAD	2	3001– ★	3001– ★
56	01508-21006	NUT, L.H. THREAD	2	3001– ★	3001– ★

FIG. 4405A VALVE CONTROL LINKAGE (1/3) (FOR LONG LEVER CONTROL)
(PC150 SERIAL NO. •• –)
(PC150LC SERIAL NO. •• –)

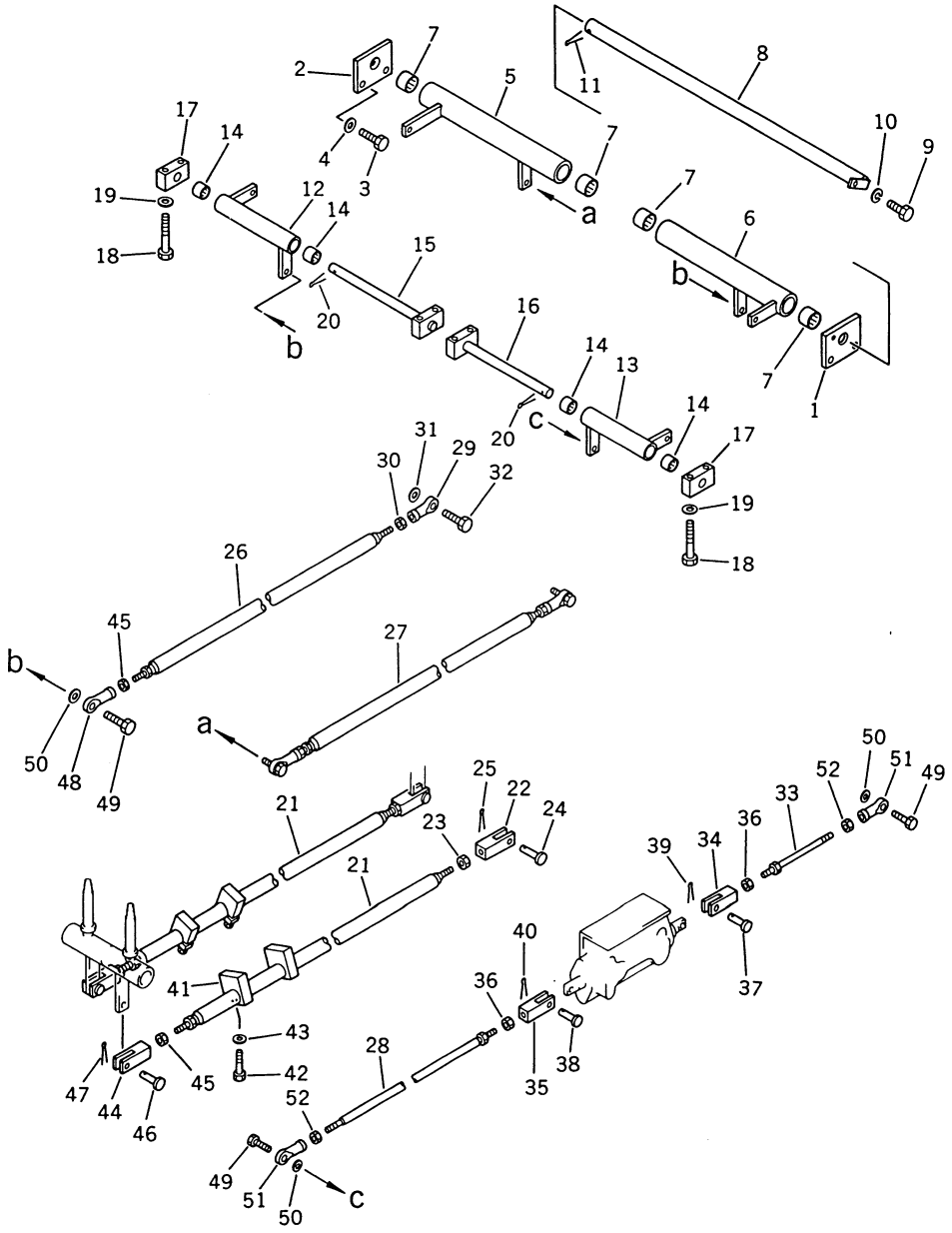

FIG NO. 4405A

INDEX NO.	PART NO.	DESCRIPTION	Q'TY	SERIAL NO. PC150-3	SERIAL NO. PC150LC-3
1	203-43-42322	BRACKET	1	3001 –	3001 –
2	203-43-42680	BRACKET	1	3001 –	3001 –
3	01010-51230	BOLT	4	3001 –	3001 –
4	01643-31232	WASHER	4	3001 –	3001 –
5	203-43-42392	LEVER	1	•• –	•• –
6	203-43-42641	LEVER	1	•• –	•• –
7	205-43-73190	BEARING	4	•• –	•• –
8	203-43-42312	SHAFT	1	3001 –	3001 –
9	01010-50820	BOLT	1	3001 –	3001 –
10	01602-20825	WASHER, SPRING	1	3001 –	3001 –
11	04050-13040	PIN, COTTER	1	3001 –	3001 –
12	203-43-42422	LEVER	1	•• –	•• –
13	203-43-42631	LEVER	1	•• –	•• –
14	195-61-34130	BEARING	4	•• –	•• –
15	203-43-42710	SHAFT	1	3001 –	3001 –
16	203-43-42690	SHAFT	1	3001 –	3001 –
17	203-43-41310	BLOCK	2	3001 –	3001 –
18	01010-51060	BOLT	8	3001 –	3001 –
19	01643-31032	WASHER	8	3001 –	3001 –
20	04050-13030	PIN, COTTER	2	3001 –	3001 –
21	21K-43-21150	ROD	2	3001 –	3001 –
22	04220-21040	YOKE, L.H. THREAD	2	3001 –	3001 –
23	01508-21006	NUT, L.H. THREAD	2	3001 –	3001 –
24	04205-11028	PIN	2	3001 –	3001 –
25	04050-13015	PIN, COTTER	2	3001 –	3001 –
26	21K-43-21160	ROD	2	3001 –	3001 –
27	21K-43-21140	ROD	1	3001 –	3001 –
28	203-43-42332	ROD	1	3001 –	3001 –
29	04250-91056	END, ROD, L.H. THREAD	2	3001 –	3001 –
30	01508-21006	NUT, L.H. THREAD	2	3001 –	3001 –
31	04254-01032	SPACER	2	3001 –	3001 –
32	01010-51030	BOLT	2	3001 –	3001 –
33	04248-31022	ROD	1	3001 –	3001 –
34	20T-43-22210	YOKE	1	3001 –	3001 –
35	201-43-21370	YOKE	1	3001 –	3001 –

FIG NO. 4405A

INDEX NO.	PART NO.	DESCRIPTION	Q'TY	SERIAL NO. PC150-3	SERIAL NO. PC150LC-3
36	01582-11008	NUT	2	3001 –	3001 –
37	04205-10822	PIN	1	3001 –	3001 –
38	04205-10622	PIN	1	3001 –	3001 –
39	04050-12012	PIN, COTTER	1	3001 –	3001 –
40	04050-11610	PIN, COTTER	1	3001 –	3001 –
41	203-43-42750	PLATE	4	3001 –	3001 –
42	01010-51030	BOLT	4	3001 –	3001 –
43	01643-31032	WASHER	4	3001 –	3001 –
44	04210-21040	YOKE	2	3001 –	3001 –
45	01582-11008	NUT	6	3001 –	3001 –
46	04205-11028	PIN	2	3001 –	3001 –
47	04050-13015	PIN, COTTER	2	3001 –	3001 –
48	04250-81056	END, ROD	3	3001 –	3001 –
49	01010-51030	BOLT	5	3001 –	3001 –
50	04254-01032	SPACER	5	3001 –	3001 –
51	04250-91056	END, ROD, L.H. THREAD	2	3001 –	3001 –
52	01508-21006	NUT, L.H. THREAD	2	3001 –	3001 –

FIG. 4407 VALVE CONTROL LINKAGE (2/3) (FOR LONG LEVER CONTROL)
(PC150 SERIAL NO. 3001– ••)
(PC150LC SERIAL NO. 3001– ••)

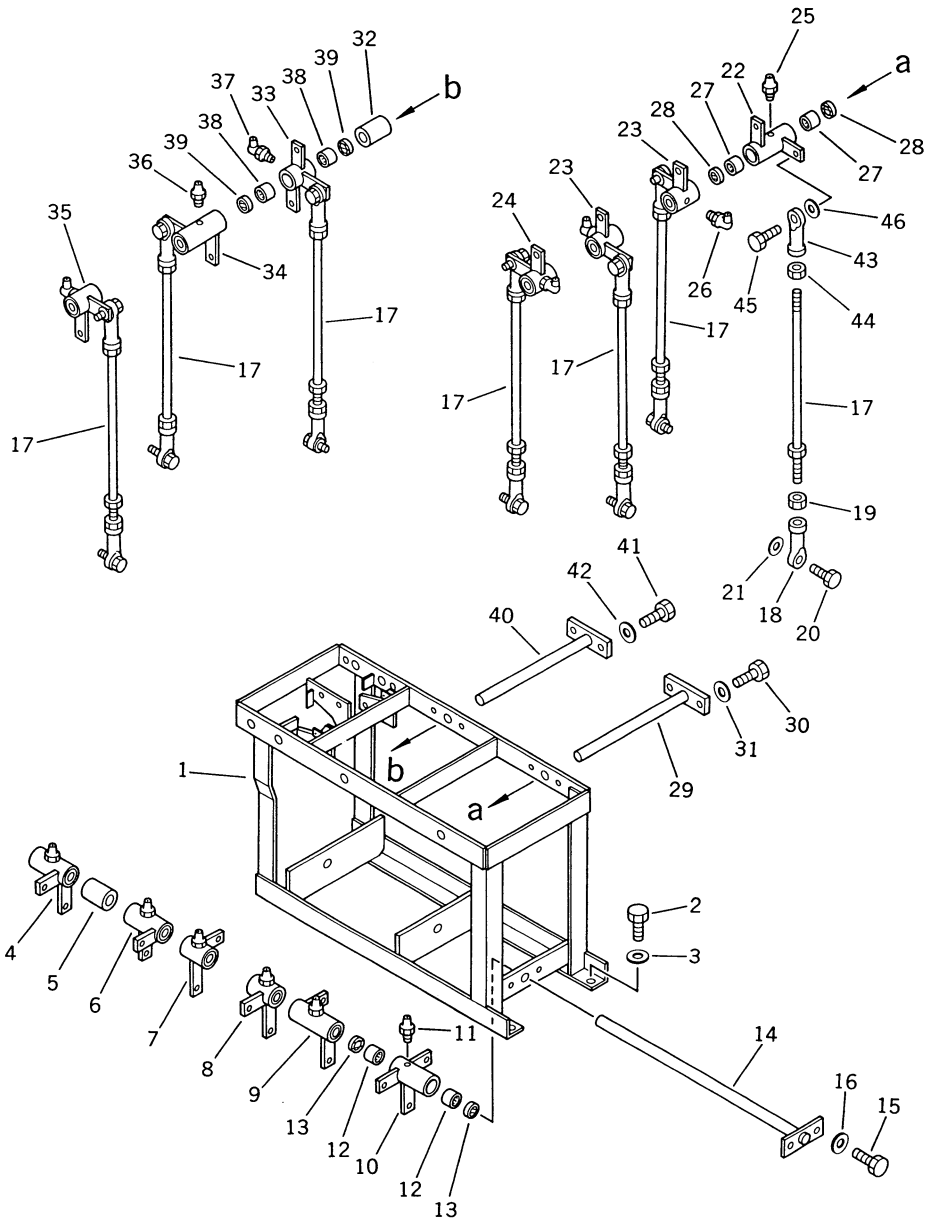

FIG NO. 4407

INDEX NO.	PART NO.	DESCRIPTION	Q'TY	SERIAL NO. PC150-3	SERIAL NO. PC150LC-3
1	203-43-41113	BRACKET	1	3001– ★	3001– ★
2	01010-51225	BOLT	4	3001– ★	3001– ★
3	01643-31232	WASHER	4	3001– ★	3001– ★
4	203-43-42441	LEVER (■203-43-42442, 195-61-34130(2))	1	3001– ••	3001– ••
5	203-43-42760	PIPE	1	3001– ★	3001– ★
6	203-43-41172	LEVER (■203-43-41173, 195-61-34130(2))	1	3001– ••	3001– ••
7	203-43-41151	LEVER (■203-43-41152, 195-61-34130(2))	1	3001– ••	3001– ••
8	203-43-41141	LEVER (■203-43-41142, 195-61-34130(2))	1	3001– ••	3001– ••
9	203-43-41132	LEVER (■230-43-41133, 195-61-34130(2))	1	3001– ••	3001– ••
10	203-43-41122	LEVER (■203-43-41123, 195-61-34130(2))	1	3001– ••	3001– ••
11	07020-00000	FITTING, GREASE	6	3001– ••	3001– ••
12	06120-02016	BEARING	12	3001– ••	3001– ••
13	06122-02004	SEAL, BEARING	12	3001– ••	3001– ••
14	203-43-41192	SHAFT	1	3001– ★	3001– ★
15	01010-51025	BOLT	2	3001– ★	3001– ★
16	01643-31032	WASHER	2	3001– ★	3001– ★
17	04248-31028	ROD	7	3001– ★	3001– ★
18	04250-81056	END, ROD	7	3001– ★	3001– ★
19	01582-11008	NUT	7	3001– ★	3001– ★
20	01010-51030	BOLT	7	3001– ★	3001– ★
21	04254-01032	SPACER	7	3001– ★	3001– ★
22	203-43-41210	LEVER (■203-43-41211, 195-61-34130(2))	1	3001– ••	3001– ••
23	203-43-41220	LEVER (■203-43-41221, 195-61-34130(2))	2	3001– ••	3001– ••
24	203-43-41231	LEVER (■203-43-41232, 195-61-34130(2))	1	3001– ••	3001– ••
25	07020-00000	FITTING, GREASE	1	3001– ••	3001– ••
26	07020-00900	FITTING, GREASE	3	3001– ••	3001– ••

FIG NO. 4407

INDEX NO.	PART NO.	DESCRIPTION	Q'TY	SERIAL NO. PC150-3	SERIAL NO. PC150LC-3
27	06120-02016	BEARING	8	3001– • •	3001– • •
28	06122-02004	SEAL, BEARING	8	3001– • •	3001– • •
29	203-43-41272	SHAFT	1	3001– ★	3001– ★
30	01010-51025	BOLT	2	3001– ★	3001– ★
31	01643-31032	WASHER	2	3001– ★	3001– ★
32	203-43-42770	PIPE	1	3001– ★	3001– ★
33	203-43-41250	LEVER (■203-43-41251, 195-61-34130(2))	1	3001– • •	3001– • •
34	203-43-41260	LEVER (■203-43-41261, 195-61-34130(2))	1	3001– • •	3001– • •
35	203-43-41231	LEVER (■203-43-41232, 195-61-34130(2))	1	3001– • •	3001– • •
36	07020-00000	FITTING, GREASE	1	3001– • •	3001– • •
37	07020-00900	FITTING, GREASE	2	3001– • •	3001– • •
38	06120-02016	BEARING	6	3001– • •	3001– • •
39	06122-02004	SEAL, BEARING	6	3001– • •	3001– • •
40	203-43-41272	SHAFT	1	3001– ★	3001– ★
41	01010-51025	BOLT	2	3001– ★	3001– ★
42	01643-31032	WASHER	2	3001– ★	3001– ★
43	04250-91056	END, ROD, L.H. THREAD	7	3001– ★	3001– ★
44	01508-21006	NUT, L.H. THREAD	7	3001– ★	3001– ★
45	01010-51030	BOLT	7	3001– ★	3001– ★
46	04254-01032	SPACER	7	3001– ★	3001– ★

FIG. 4407A VALVE CONTROL LINKAGE (2/3) (FOR LONG LEVER CONTROL)
(PC150 SERIAL NO. •• –)
(PC150LC SERIAL NO. •• –)

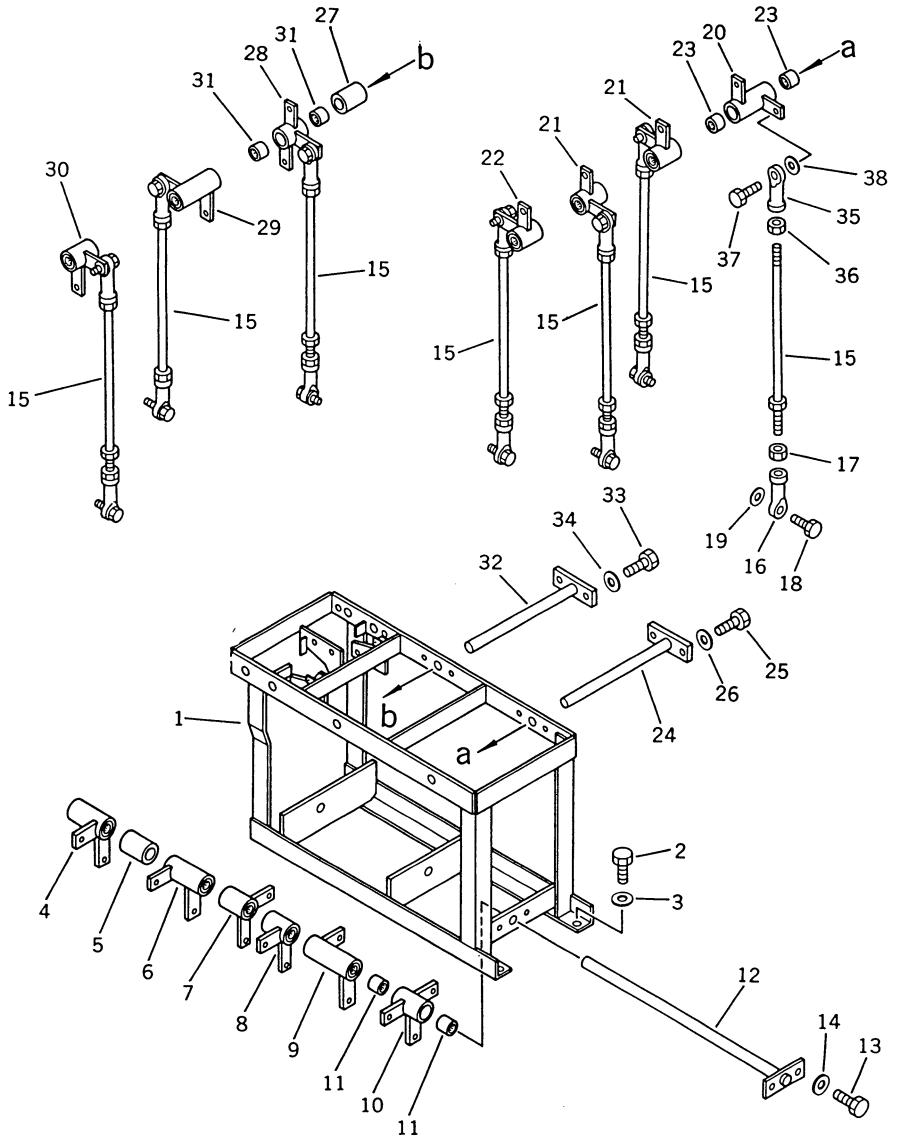

INDEX NO.	PART NO.	DESCRIPTION	Q'TY	SERIAL NO. PC150-3	SERIAL NO. PC150LC-3
1	203-43-41113	BRACKET	1	3001–	3001–
2	01010-51225	BOLT	4	3001–	3001–
3	01643-31232	WASHER	4	3001–	3001–
4	203-43-42442	LEVER	1	•• –	•• –
5	203-43-42760	PIPE	1	3001–	3001–
6	203-43-41173	LEVER	1	•• –	•• –
7	203-43-41152	LEVER	1	•• –	•• –
8	203-43-41142	LEVER	1	•• –	•• –
9	203-43-41133	LEVER	1	•• –	•• –
10	203-43-41123	LEVER	1	•• –	•• –
11	195-61-34130	BEARING	12	•• –	•• –
12	203-43-41192	SHAFT	1	3001–	3001–
13	01010-51025	BOLT	2	3001–	3001–
14	01643-31032	WASHER	2	3001–	3001–
15	04248-31028	ROD	7	3001–	3001–
16	04250-81056	END, ROD	7	3001–	3001–
17	01582-11008	NUT	7	3001–	3001–
18	01010-51030	BOLT	7	3001–	3001–
19	04254-01032	SPACER	7	3001–	3001–
20	203-43-41211	LEVER	1	•• –	•• –
21	203-43-41221	LEVER	2	•• –	•• –
22	203-43-41232	LEVER	1	•• –	•• –
23	195-61-34130	BEARING	8	•• –	•• –
24	203-43-41272	SHAFT	1	3001–	3001–
25	01010-51025	BOLT	2	3001–	3001–
26	01643-31032	WASHER	2	3001–	3001–
27	203-43-42770	PIPE	1	3001–	3001–
28	203-43-41251	LEVER	1	•• –	•• –
29	203-43-41261	LEVER	1	•• –	•• –
30	203-43-41232	LEVER	1	•• –	•• –
31	195-61-34130	BEARING	6	•• –	•• –
32	203-43-41272	SHAFT	1	3001–	3001–
33	01010-51025	BOLT	2	3001–	3001–
34	01643-31032	WASHER	2	3001–	3001–
35	04250-91056	END, ROD, L.H. THREAD	7	3001–	3001–

FIG NO. 4407A

INDEX NO.	PART NO.	DESCRIPTION	Q'TY	SERIAL NO. PC150-3	SERIAL NO. PC150LC-3
36	01508-21006	NUT, L.H. THREAD	7	3001–	3001–
37	01010-51030	BOLT	7	3001–	3001–
38	04254-01032	SPACER	7	3001–	3001–

FIG. 4409 VALVE CONTROL LINKAGE (3/3) (FOR LONG LEVER CONTROL)

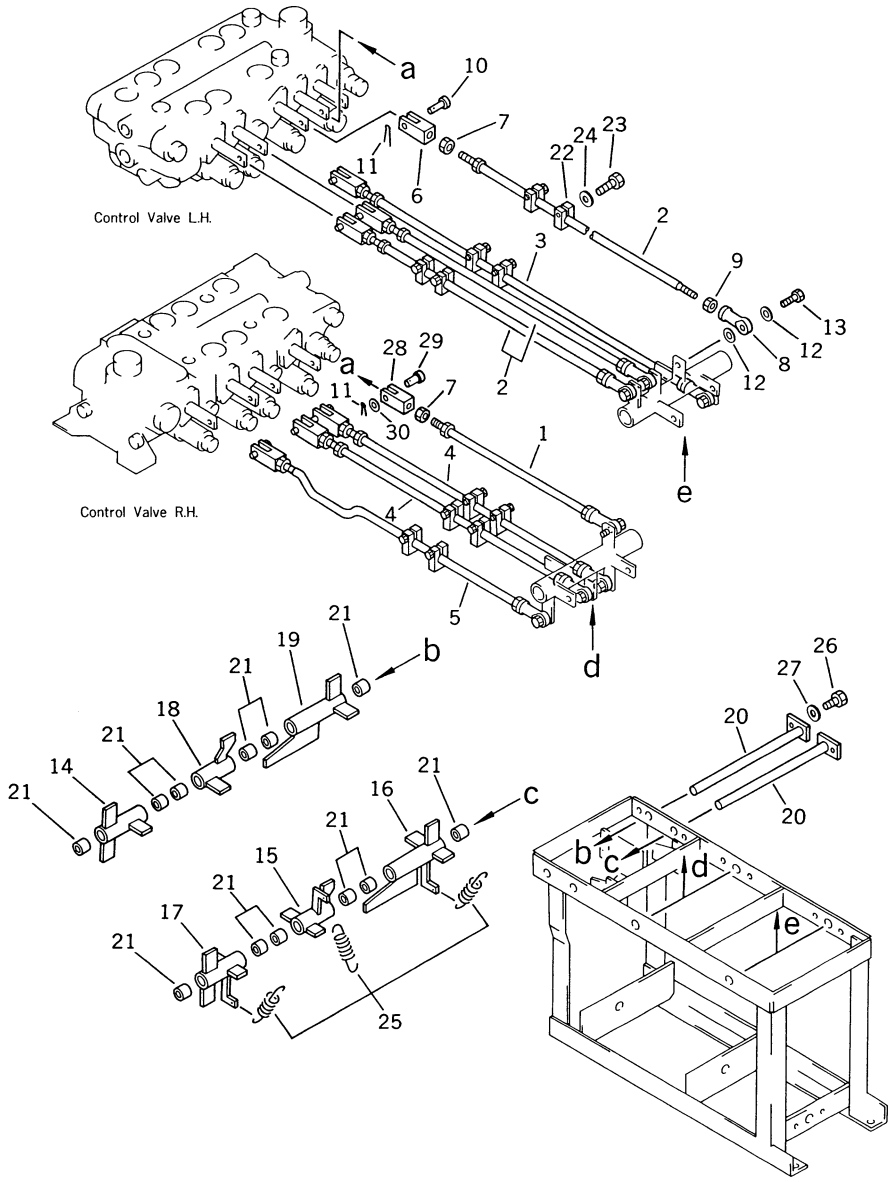

FIG NO. 4409

INDEX NO.	PART NO.	DESCRIPTION	Q'TY	SERIAL NO. PC150-3	SERIAL NO. PC150LC-3
1	04248-31033	ROD	1	3001–	3001–
2	21K-43-21120	ROD	3	3001–	3001–
3	203-43-41491	ROD	1	3001–	3001–
4	203-43-42450	ROD	2	3001–	3001–
5	203-43-41752	ROD	1	3001–	3001–
6	20T-43-22210	YOKE	7	3001–	3001–
7	01582-11008	NUT	8	3001–	3001–
8	04250-91056	END, ROD, L.H. THREAD	8	3001–	3001–
9	01508-21006	NUT, L.H. THREAD	8	3001–	3001–
10	04205-10822	PIN	7	3001–	3001–
11	04050-12012	PIN, COTTER	8	3001–	3001–
12	04254-01032	SPACER	16	3001–	3001–
13	01010-51030	BOLT	8	3001–	3001–
14	203-43-42561	LEVER	1	3001–	3001–
15	203-43-42611	LEVER	1	3001–	3001–
16	203-43-42511	LEVER	1	3001–	3001–
17	203-43-42551	LEVER	1	3001–	3001–
18	203-43-42621	LEVER	1	3001–	3001–
19	203-43-42521	LEVER	1	3001–	3001–
20	203-43-42530	SHAFT	2	3001–	3001–
21	203-43-31420	BUSHING	12	3001–	3001–
22	203-43-42541	PLATE	12	3001–	3001–
23	01010-50825	BOLT	12	3001–	3001–
24	01602-20825	WASHER, SPRING	12	3001–	3001–
25	203-43-43230	SPRING	3	3001–	3001–
26	01010-51016	BOLT	2	3001–	3001–
27	01643-31032	WASHER	2	3001–	3001–
28	203-43-41740	YOKE	1	3001–	3001–
29	04205-10825	PIN	1	3001–	3001–
30	01641-20812	WASHER	1	3001–	3001–

FIG. 4411 WORK EQUIPMENT CONTROL LEVER (FOR WRIST CONTROL)

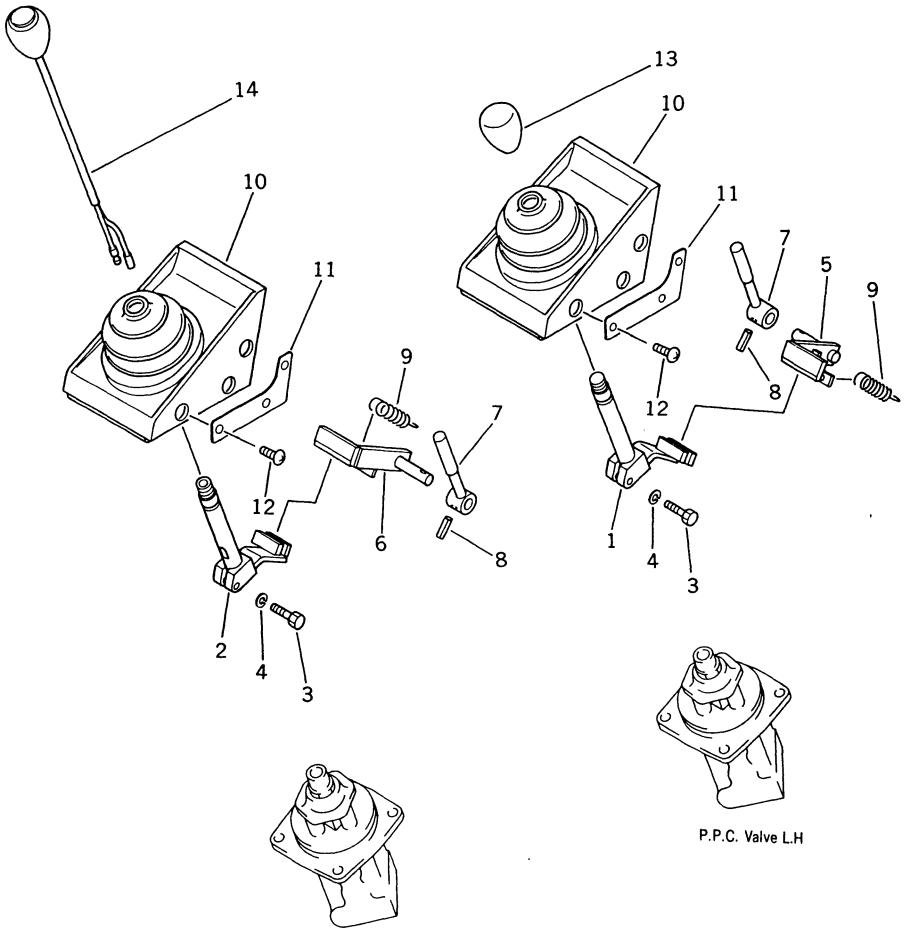

FIG NO. 4411

INDEX NO.	PART NO.	DESCRIPTION	Q'TY	SERIAL NO. PC150-3	SERIAL NO. PC150LC-3
1	203-43-41435	LEVER, L.H.	1	3001–	3001–
	(□203-43-41433)	LEVER, L.H.	1	(3001–3257)	(3001–3266)
2	203-43-41425	LEVER, R.H.	1	3001–	3001–
2	(□203-43-41423)	LEVER, R.H.	1	(3001–3257)	(3001–3266)
3	01010-50825	BOLT	2	3001–	3001–
4	01602-20825	WASHER, SPRING	2	3001–	3001–
5	203-43-41823	LEVER, L.H.	1	3001–	3001–
5	(□203-43-41822)	LEVER, L.H.	1	(3001–3257)	(3001–3266)
6	203-43-41813	LEVER, R.H.	1	3001–	3001–
6	(□203-43-41812)	LEVER, R.H.	1	(3001–3257)	(3001–3266)
7	203-43-41391	LEVER	2	3001–	3001–
8	04025-00524	PIN, SPRING	2	3001–	3001–
9	203-43-21370	SPRING	2	3001–	3001–
10	205-43-71223	BOOT	2	3001–	3001–
10	(□205-43-71222)	BOOT	2	(3001–3257)	(3001–3266)
11	205-43-71991	COVER	4	3001–	3001–
12	205-43-71280	SCREW	12	3001–	3001–
13	20D-43-11370	KNOB	1	3001–	3001–
14	205-06-71360	SWITCH, HORN	1	3001–	3001–

FIG. 4413 TRAVEL CONTROL LEVER AND PEDAL (FOR WRIST CONTROL)
(PC150 SERIAL NO. 3001– ••)
(PC150LC SERIAL NO. 3001– ••)

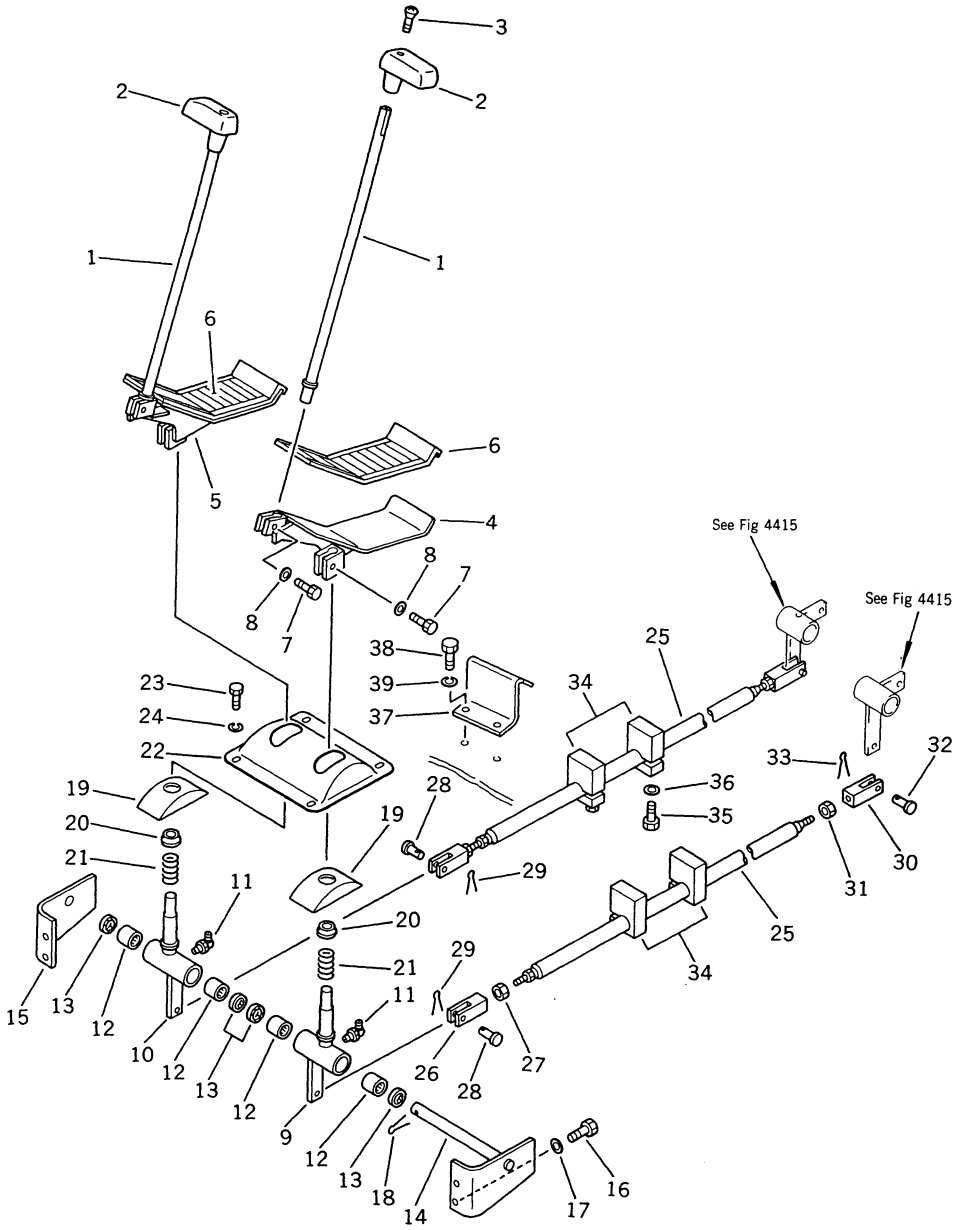

INDEX NO.	PART NO.	DESCRIPTION	Q'TY	SERIAL NO. PC150-3	SERIAL NO. PC150LC-3
1	205-43-71871	LEVER	2	3001– ★	3001– ★
2	203-43-41340	KNOB	2	3001– ★	3001– ★
3	01225-40625	SCREW	2	3001– ★	3001– ★
4	203-43-41612	PEDAL, L.H.	1	3001– ★	3001– ★
5	203-43-41592	PEDAL, R.H.	1	3001– ★	3001– ★
6	205-43-71911	CAP, PEDAL	2	3001– ★	3001– ★
7	01010-50825	BOLT	4	3001– ★	3001– ★
8	01643-30823	WASHER	4	3001– ★	3001– ★
9	203-43-42373	LEVER, L.H. (■203-43-42374, 195-61-34130(2))	1	3001– ••	3001– ••
10	203-43-42671	LEVER, R.H. (■203-43-42672, 195-61-34130(2))	1	3001– ••	3001– ••
11	07020-00900	FITTING, GREASE	2	3001– ••	3001– ••
12	06120-02016	BEARING	4	3001– ••	3001– ••
13	06122-02004	SEAL, BEARING	4	3001– ••	3001– ••
14	203-43-42721	SHAFT	1	3001– ★	3001– ★
15	203-43-42731	BRACKET	1	3001– ★	3001– ★
16	01010-51030	BOLT	4	3001– ★	3001– ★
17	01643-31032	WASHER	4	3001– ★	3001– ★
18	04050-13030	PIN, COTTER	1	3001– ★	3001– ★
19	205-43-11230	COVER	2	3001– ★	3001– ★
20	203-43-41660	SPACER	2	3001– ★	3001– ★
21	09340-10130	SPRING	2	3001– ★	3001– ★
22	203-43-41541	COVER	1	3001– ★	3001– ★
23	01010-50820	BOLT	4	3001– ★	3001– ★
24	01602-20825	WASHER, SPRING	4	3001– ★	3001– ★
25	21K-43-21150	ROD	2	3001– ★	3001– ★
26	04220-21040	YOKE, L.H. THREAD	2	3001– ★	3001– ★
27	01508-21006	NUT, L.H. THREAD	2	3001– ★	3001– ★
28	04205-11028	PIN	2	3001– ★	3001– ★
29	04050-13015	PIN, COTTER	2	3001– ★	3001– ★
30	04210-21040	YOKE	2	3001– ★	3001– ★
31	01582-11008	NUT	2	3001– ★	3001– ★
32	04205-11028	PIN	2	3001– ★	3001– ★
33	04050-13015	PIN, COTTER	2	3001– ★	3001– ★

FIG NO. 4413

INDEX NO.	PART NO.	DESCRIPTION	Q'TY	SERIAL NO. PC150-3	SERIAL NO. PC150LC-3
34	203-43-42750	PLATE	4	3001 – ★	3001 – ★
35	01010-51030	BOLT	4	3001 – ★	3001 – ★
36	01643-31032	WASHER	4	3001 – ★	3001 – ★
37	203-43-42572	BRACKET	2	3001 – ★	3001 – ★
38	01010-51030	BOLT	4	3001 – ★	3001 – ★
39	01602-21030	WASHER, SPRING	4	3001 – ★	3001 – ★

FIG. 4413A TRAVEL CONTROL LEVER AND PEDAL (FOR WRIST CONTROL)
(PC150 SERIAL NO. •• –)
(PC150LC SERIAL NO. •• –)

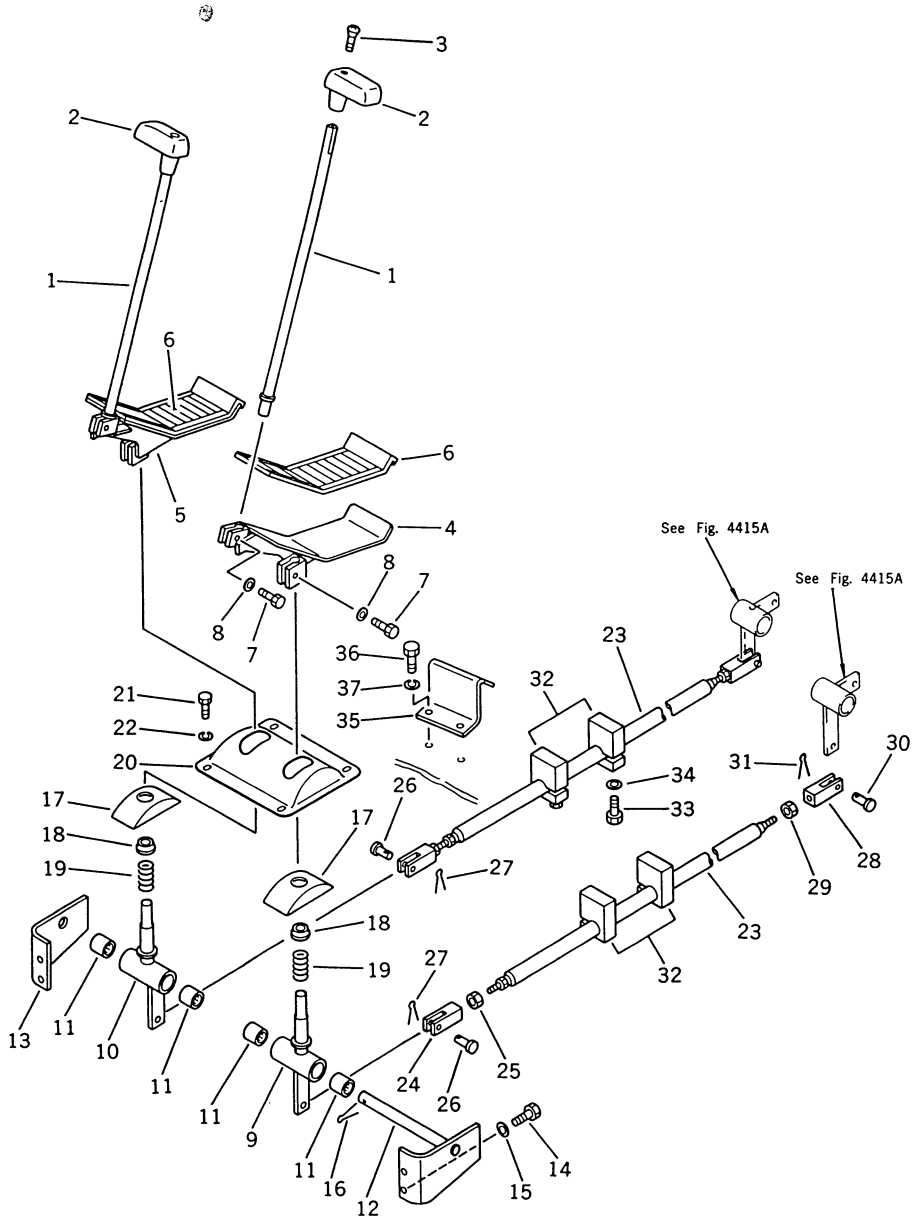

FIG NO. 4413A

INDEX NO.	PART NO.	DESCRIPTION	Q'TY	SERIAL NO. PC150-3	SERIAL NO. PC150LC-3
1	205-43-71871	LEVER	2	3001 –	3001 –
2	203-43-41340	KNOB	2	3001 –	3001 –
3	01225-40625	SCREW	2	3001 –	3001 –
4	203-43-41612	PEDAL, L.H.	1	3001 –	3001 –
5	203-43-41592	PEDAL, R.H.	1	3001 –	3001 –
6	205-43-71911	CAP, PEDAL	2	3001 –	3001 –
7	01010-50825	BOLT	4	3001 –	3001 –
8	01643-30823	WASHER	4	3001 –	3001 –
9	203-43-42374	LEVER, L.H.	1	•• –	•• –
10	203-43-42672	LEVER, R.H.	1	•• –	•• –
11	195-61-34130	BEARING	4	•• –	•• –
12	203-43-42721	SHAFT	1	3001 –	3001 –
13	203-43-42731	BRACKET	1	3001 –	3001 –
14	01010-51030	BOLT	4	3001 –	3001 –
15	01643-31032	WASHER	4	3001 –	3001 –
16	04050-13030	PIN, COTTER	1	3001 –	3001 –
17	205-43-11230	COVER	2	3001 –	3001 –
18	203-43-41660	SPACER	2	3001 –	3001 –
19	09340-10130	SPRING	2	3001 –	3001 –
20	203-43-41541	COVER	1	3001 –	3001 –
21	01010-50820	BOLT	4	3001 –	3001 –
22	01602-20825	WASHER, SPRING	4	3001 –	3001 –
23	21K-43-21150	ROD	2	3001 –	3001 –
24	04220-21040	YOKE, L.H. THREAD	2	3001 –	3001 –
25	01508-21006	NUT, L.H. THREAD	2	3001 –	3001 –
26	04205-11028	PIN	2	3001 –	3001 –
27	04050-13015	PIN, COTTER	2	3001 –	3001 –
28	04210-21040	YOKE	2	3001 –	3001 –
29	01582-11008	NUT	2	3001 –	3001 –
30	04205-11028	PIN	2	3001 –	3001 –
31	04050-13015	PIN, COTTER	2	3001 –	3001 –
32	203-43-42750	PLATE	4	3001 –	3001 –
33	01010-51030	BOLT	4	3001 –	3001 –
34	01643-31032	WASHER	4	3001 –	3001 –
35	203-43-42572	BRACKET	2	3001 –	3001 –

FIG NO. 4413A

NDEX NO.	PART NO.	DESCRIPTION	Q'TY	SERIAL NO. PC150-3	SERIAL NO. PC150LC-3
36	01010-51030	BOLT	4	3001 –	3001 –
37	01602-21030	WASHER, SPRING	4	3001 –	3001 –

FIG. 4415 VALVE CONTROL LINKAGE (FOR WRIST CONTROL)
(PC150 SERIAL NO. 3001– ••)
(PC150LC SERIAL NO. 3001– ••)

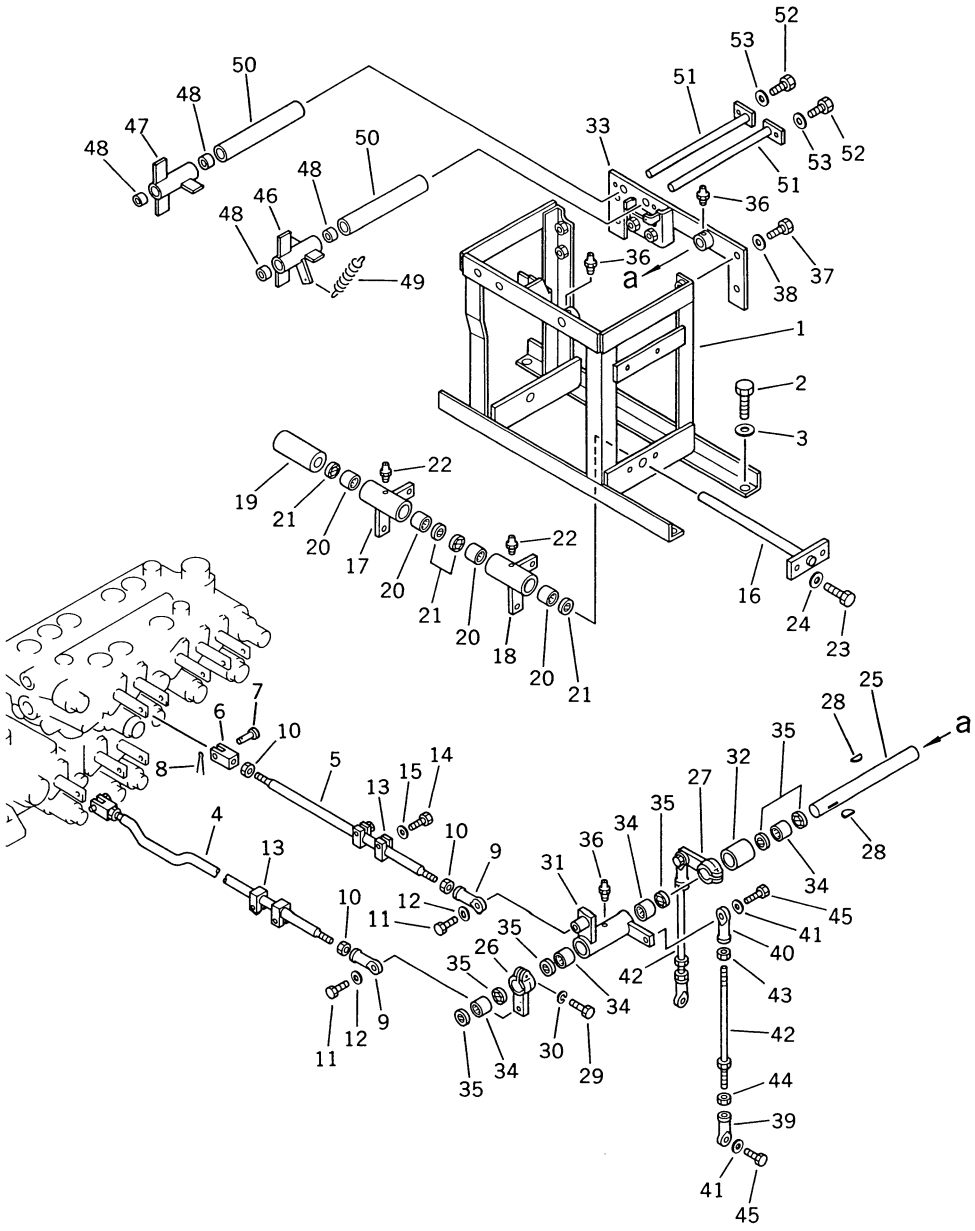

INDEX NO.	PART NO.	DESCRIPTION	Q'TY	SERIAL NO. PC150-3	SERIAL NO. PC150LC-3
1	21K-43-22110	BRACKET	1	3001– ★	3001– ★
2	01010-51225	BOLT	4	3001– ★	3001– ★
3	01643-31232	WASHER	4	3001– ★	3001– ★
4	203-43-43160	ROD	1	3001– ★	3001– ★
5	21K-43-21110	ROD	1	3001– ★	3001– ★
6	20T-43-22210	YOKE	2	3001– ★	3001– ★
7	04205-10822	PIN	2	3001– ★	3001– ★
8	04050-12012	PIN, COTTER	2	3001– ★	3001– ★
9	04250-41056	END, ROD	2	3001– ★	3001– ★
10	01582-11008	NUT	4	3001– ★	3001– ★
11	01010-51030	BOLT	2	3001– ★	3001– ★
12	01643-31032	WASHER	4	3001– ★	3001– ★
13	203-43-42541	PLATE	4	3001– ★	3001– ★
14	01010-50825	BOLT	4	3001– ★	3001– ★
15	01643-30823	WASHER	4	3001– ★	3001– ★
16	203-43-42950	SHAFT	1	3001– ★	3001– ★
17	203-43-42970	LEVER (■203-43-42971, 195-61-34130(2))	1	3001– ••	3001– ••
18	203-43-42960	LEVER (■203-43-42961, 195-61-34130(2))	1	3001– ••	3001– ••
19	203-43-43150	SPACER	1	3001– ★	3001– ★
20	06120-02016	BEARING	4	3001– ••	3001– ••
21	06122-02004	SEAL, BEARING	4	3001– ••	3001– ••
22	07020-00000	FITTING, GREASE	2	3001– ••	3001– ••
23	01010-51020	BOLT	2	3001– ★	3001– ★
24	01643-31032	WASHER	2	3001– ★	3001– ★
25	203-43-42980	SHAFT	1	3001– ★	3001– ★
26	203-43-43120	LEVER	1	3001– ★	3001– ★
27	203-43-42990	LEVER	1	3001– ★	3001– ★
28	04010-00519	KEY	2	3001– ★	3001– ★
29	01010-50830	BOLT	2	3001– ★	3001– ★
30	01602-20825	WASHER, SPRING	2	3001– ★	3001– ★
31	203-43-43110	LEVER (■203-43-43111, 195-61-34130(2))	1	3001– ••	3001– ••
32	203-43-43180	SPACER	1	3001– ★	3001– ★

FIG NO. 4415

INDEX NO.	PART NO.	DESCRIPTION	Q'TY	SERIAL NO. PC150-3	SERIAL NO. PC150LC-3
33	203-43-43140	BRACKET	1	3001– ★	3001– ★
34	06120-02016	BEARING	4	3001– • •	3001– • •
35	06122-02004	SEAL, BEARING	6	3001– • •	3001– • •
36	07020-00000	FITTING, GREASE	3	3001– • •	3001– • •
37	01010-51025	BOLT	4	3001– ★	3001– ★
38	01643-31032	WASHER	4	3001– ★	3001– ★
39	04250-81056	END, ROD	2	3001– ★	3001– ★
40	04250-91056	END, ROD, L.H. THREAD	2	3001– ★	3001– ★
41	04254-01032	SPACER	4	3001– ★	3001– ★
42	04248-31028	ROD	2	3001– ★	3001– ★
43	01508-21006	NUT, L.H. THREAD	2	3001– ★	3001– ★
44	01582-11008	NUT, L.H. THREAD	2	3001– ★	3001– ★
45	01010-51030	BOLT	4	3001– ★	3001– ★
46	203-43-42551	LEVER, L.H.	1	3001– ★	3001– ★
47	203-43-42561	LEVER, R.H.	1	3001– ★	3001– ★
48	203-43-31420	BUSHING	4	3001– ★	3001– ★
49	203-43-43230	SPRING	1	3001– ★	3001– ★
50	203-43-43190	SPACER	2	3001– ★	3001– ★
51	203-43-42530	SHAFT	2	3001– ★	3001– ★
52	01010-51016	BOLT	2	3001– ★	3001– ★
53	01643-31032	WASHER	2	3001– ★	3001– ★

FIG. 4415A VALVE CONTROL LINKAGE (FOR WRIST CONTROL)
(PC150 SERIAL NO. •• –)
(PC150LC SERIAL NO. •• –)

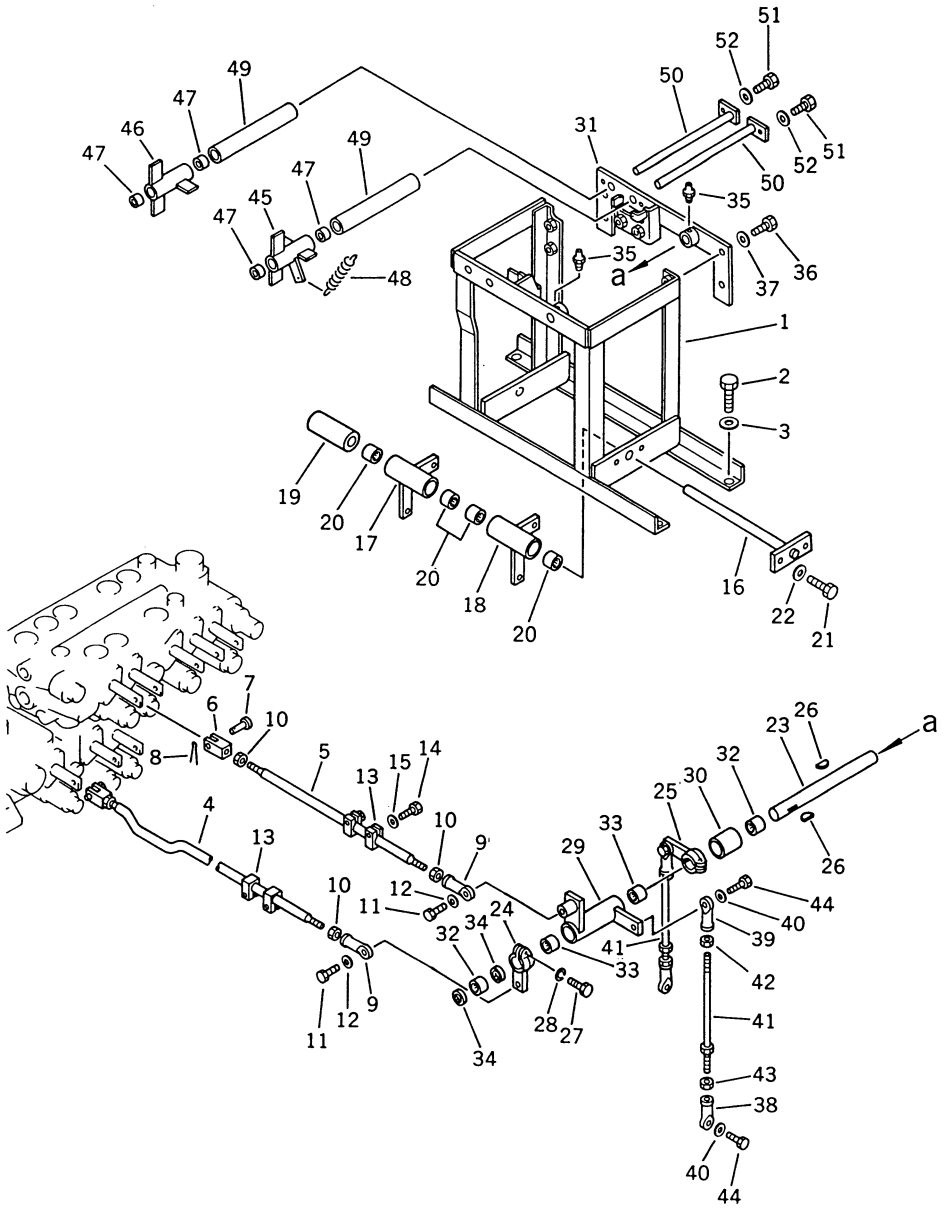

FIG NO. 4415A

INDEX NO.	PART NO.	DESCRIPTION	Q'TY	SERIAL NO. PC150-3	SERIAL NO. PC150LC-3
1	21K-43-22110	BRACKET	1	3001 –	3001 –
2	01010-51225	BOLT	4	3001 –	3001 –
3	01643-31232	WASHER	4	3001 –	3001 –
4	203-43-43160	ROD	1	3001 –	3001 –
5	21K-43-21110	ROD	1	3001 –	3001 –
6	20T-43-22210	YOKE	2	3001 –	3001 –
7	04205-10822	PIN	2	3001 –	3001 –
8	04050-12012	PIN, COTTER	2	3001 –	3001 –
9	04250-41056	END, ROD	2	3001 –	3001 –
10	01582-11008	NUT	4	3001 –	3001 –
11	01010-51030	BOLT	2	3001 –	3001 –
12	01643-31032	WASHER	4	3001 –	3001 –
13	203-43-42541	PLATE	4	3001 –	3001 –
14	01010-50825	BOLT	4	3001 –	3001 –
15	01643-30823	WASHER	4	3001 –	3001 –
16	203-43-42950	SHAFT	1	3001 –	3001 –
17	203-43-42971	LEVER	1	•• –	•• –
18	203-43-42961	LEVER	1	•• –	•• –
19	203-43-43150	SPACER	1	3001 –	3001 –
20	195-61-34130	BEARING	4	•• –	•• –
21	01010-51020	BOLT	2	3001 –	3001 –
22	01643-31032	WASHER	2	3001 –	3001 –
23	203-43-42980	SHAFT	1	3001 –	3001 –
24	203-43-43120	LEVER	1	3001 –	3001 –
25	203-43-42990	LEVER	1	3001 –	3001 –
26	04010-00519	KEY	2	3001 –	3001 –
27	01010-50830	BOLT	2	3001 –	3001 –
28	01602-20825	WASHER, SPRING	2	3001 –	3001 –
29	203-43-43111	LEVER	1	•• –	•• –
30	203-43-43180	SPACER	1	3001 –	3001 –
31	203-43-43140	BRACKET	1	3001 –	3001 –
32	06120-02016	BEARING	2	•• –	•• –
33	195-61-34130	BEARING	2	•• –	•• –
34	06122-02004	SEAL, BEARING	4	•• –	•• –
35	07020-00000	FITTING, GREASE	2	•• –	•• –

FIG NO. 4415A

INDEX NO.	PART NO.	DESCRIPTION	Q'TY	SERIAL NO. PC150-3	SERIAL NO. PC150LC-3
36	01010-51025	BOLT	4	3001–	3001–
37	01643-31032	WASHER	4	3001–	3001–
38	04250-81056	END, ROD	2	3001–	3001–
39	04250-91056	END, ROD, L.H. THREAD	2	3001–	3001–
40	04254-01032	SPACER	4	3001–	3001–
41	04248-31028	ROD	2	3001–	3001–
42	01508-21006	NUT, L.H. THREAD	2	3001–	3001–
43	01582-11008	NUT, L.H. THREAD	2	3001–	3001–
44	01010-51030	BOLT	4	3001–	3001–
45	203-43-42551	LEVER, L.H.	1	3001–	3001–
46	203-43-42561	LEVER, R.H.	1	3001–	3001–
47	203-43-31420	BUSHING	4	3001–	3001–
48	203-43-43230	SPRING	1	3001–	3001–
49	203-43-43190	SPACER	2	3001–	3001–
50	203-43-42530	SHAFT	2	3001–	3001–
51	01010-51016	BOLT	2	3001–	3001–
52	01643-31032	WASHER	2	3001–	3001–

FIG. 4417 HYDRAULIC PIPING (VALVE TO P.P.C. VALVE L.H.)

(FOR WRIST CONTROL)

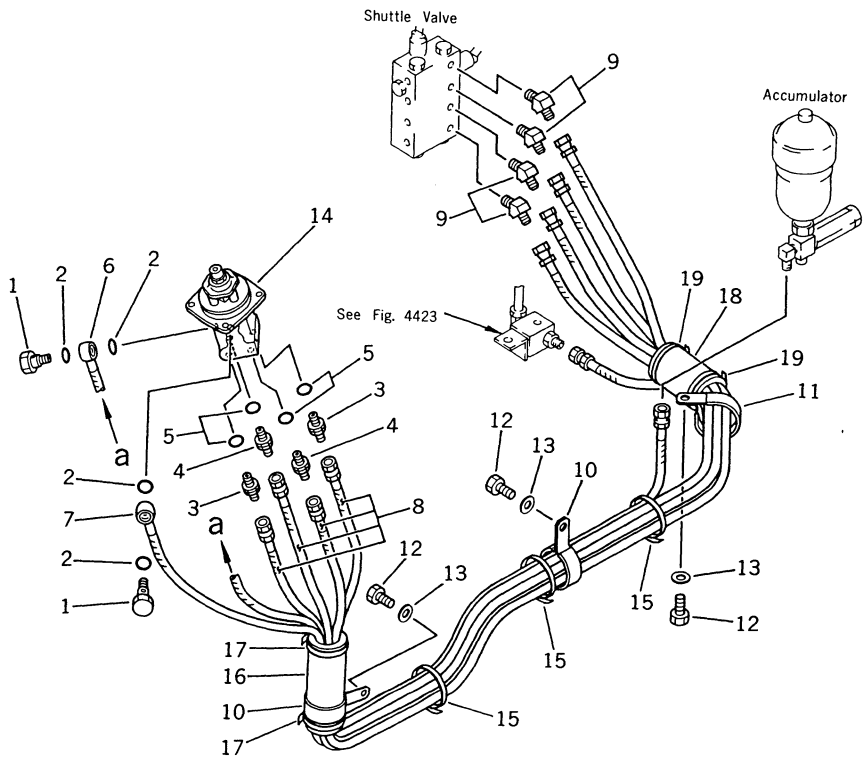

FIG NO. 4417

INDEX NO.	PART NO.	DESCRIPTION	Q'TY	SERIAL NO. PC150-3	SERIAL NO. PC150LC-3
1	706-46-56290	BOLT, JOINT	2	3001–	3001–
2	07000-02018	O-RING	4	3001–	3001–
3	203-62-44660	NIPPLE	2	3001–	3001–
4	07230-10210	NIPPLE	2	3001–	3001–
5	07002-01423	O-RING	4	3001–	3001–
6	20G-62-15370	HOSE	1	3001–	3001–
7	21K-62-22230	HOSE	1	3001–	3001–
8	205-62-71810	HOSE, 2200MM	4	3001–	3001–
9	175-79-82560	ELBOW	4	3001–	3001–
10	20D-03-11241	CLIP	2	3001–	3001–
11	21K-03-11190	CLIP	1	3001–	3001–
12	01010-51225	BOLT	3	3001–	3001–
13	01643-31232	WASHER	3	3001–	3001–
14	(702-16-51000)	P.P.C. VALVE ASS'Y, L.H.	1	3001–	3001–
15	08034-00823	BAND	3	3001–	3001–
16	20D-62-12620	TUBE	1	3001–	3001–
17	08034-00823	BAND	2	3001–	3001–
18	205-62-53780	COVER	1	3001–	3001–
19	08034-00823	BAND	2	3001–	3001–

FIG. 4419 HYDRAULIC PIPING (VALVE TO P.P.C. VALVE R.H.)

(FOR WRIST CONTROL)

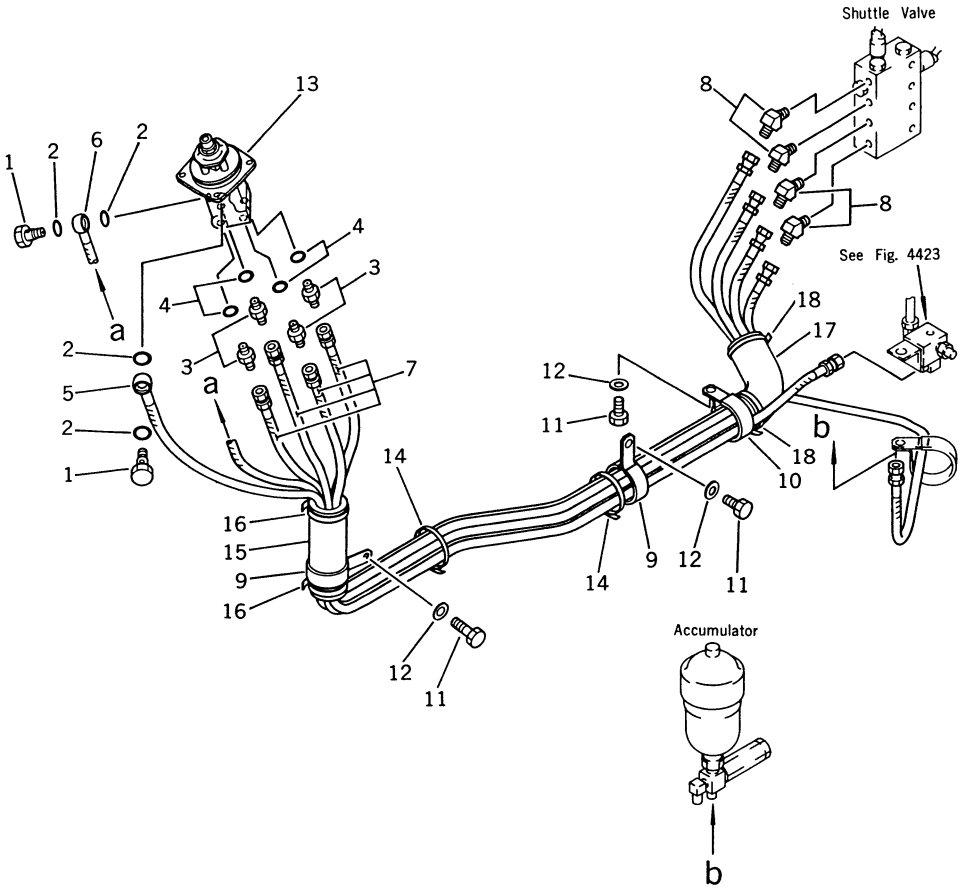

FIG NO. 4419

INDEX NO.	PART NO.	DESCRIPTION	Q'TY	SERIAL NO. PC150-3	SERIAL NO. PC150LC-3
1	706-46-56290	BOLT, JOINT	2	3001–	3001–
2	07000-02018	O-RING	4	3001–	3001–
3	07230-10210	UNION	4	3001–	3001–
4	07002-01423	O-RING	4	3001–	3001–
5	203-54-44620	HOSE	1	3001–	3001–
6	21K-62-22210	HOSE	1	3001–	3001–
7	21K-62-22220	HOSE	4	3001–	3001–
8	175-79-82560	ELBOW	4	3001–	3001–
9	20D-03-11241	CLIP	2	3001–	3001–
10	21K-03-11190	CLIP	1	3001–	3001–
11	01010-51225	BOLT	3	3001–	3001–
12	01643-31232	WASHER	3	3001–	3001–
13	(702-16-51000)	P.P.C. VALVE ASS'Y, R.H.	1	3001–	3001–
14	08034-00823	BAND	2	3001–	3001–
15	20D-62-12620	TUBE	1	3001–	3001–
16	08034-00823	BAND	2	3001–	3001–
17	205-62-53780	COVER	1	3001–	3001–
18	08034-00823	BAND	2	3001–	3001–

FIG. 4421 HYDRAULIC PIPING (VALVE TO ACCUMULATOR)

(FOR WRIST CONTROL)

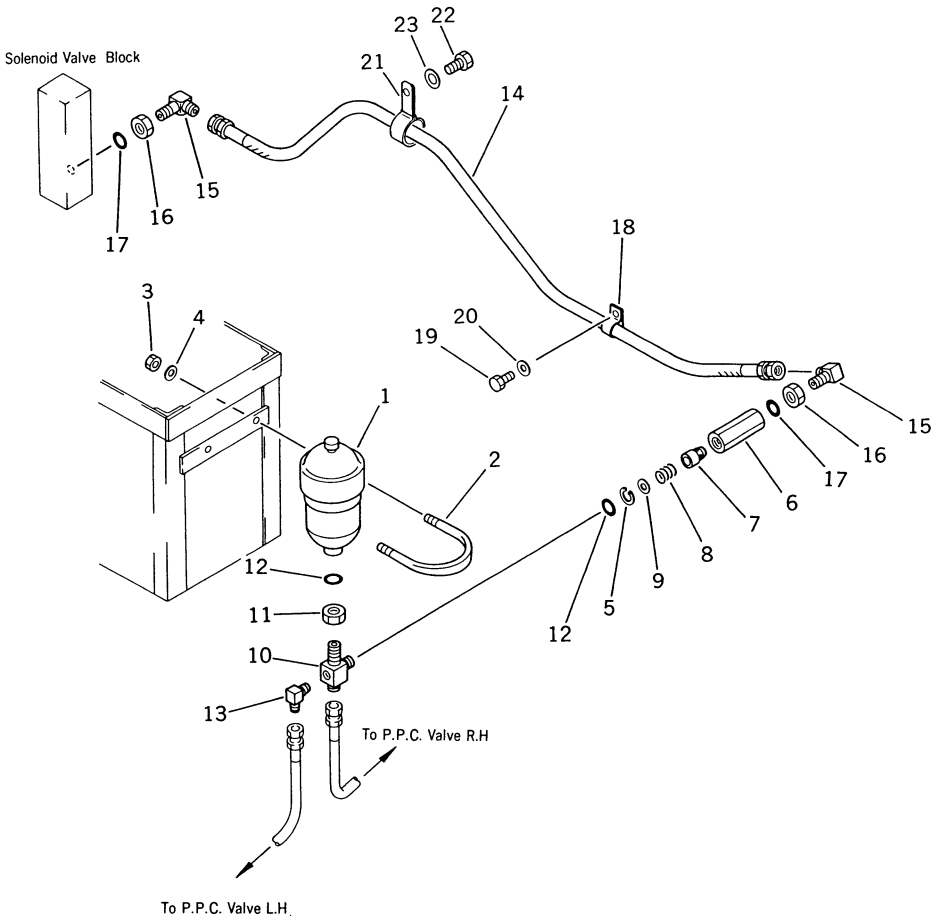

FIG NO. 4421

INDEX NO.	PART NO.	DESCRIPTION	Q'TY	SERIAL NO. PC150-3	SERIAL NO. PC150LC-3
1	205-60-71150	ACCUMULATOR	1	3001 –	3001 –
2	07283-28973	CLIP	1	3001 –	3001 –
3	01599-01214	NUT	2	3001 –	3001 –
4	01643-31232	WASHER	2	3001 –	3001 –
5	205-60-64300	VALVE ASS'Y	1	3001 –	3001 –
5	04065-01410	• RING, SNAP	1	3001 –	3001 –
6	205-60-64290	• BODY	1	3001 –	3001 –
7	205-60-51390	• POPPET	1	3001 –	3001 –
8	205-60-51410	• SPRING	1	3001 –	3001 –
9	205-60-51420	• SEAT	1	3001 –	3001 –
10	203-62-44411	TEE	1	3001 –	3001 –
11	07239-12009	NUT	1	3001 –	3001 –
12	07002-02034	O-RING	2	3001 –	3001 –
13	234-60-22140	ELBOW	1	3001 –	3001 –
14	07102-20315	HOSE	1	3001 –	3001 –
15	07232-20315	ELBOW	2	3001 –	3001 –
16	07239-12009	NUT	2	3001 –	3001 –
17	07002-02034	O-RING	2	3001 –	3001 –
18	08036-01814	CLIP	1	3001 –	3001 –
19	01010-50820	BOLT	1	3001 –	3001 –
20	01643-30823	WASHER	1	3001 –	3001 –
21	21K-977-1210	CLIP	1	3001 –	3001 –
22	01010-51225	BOLT	1	3001 –	3001 –
23	01643-31232	WASHER	1	3001 –	3001 –

FIG. 4423 HYDRAULIC PIPING (VALVE TO T-BLOCK) (FOR WRIST CONTROL)

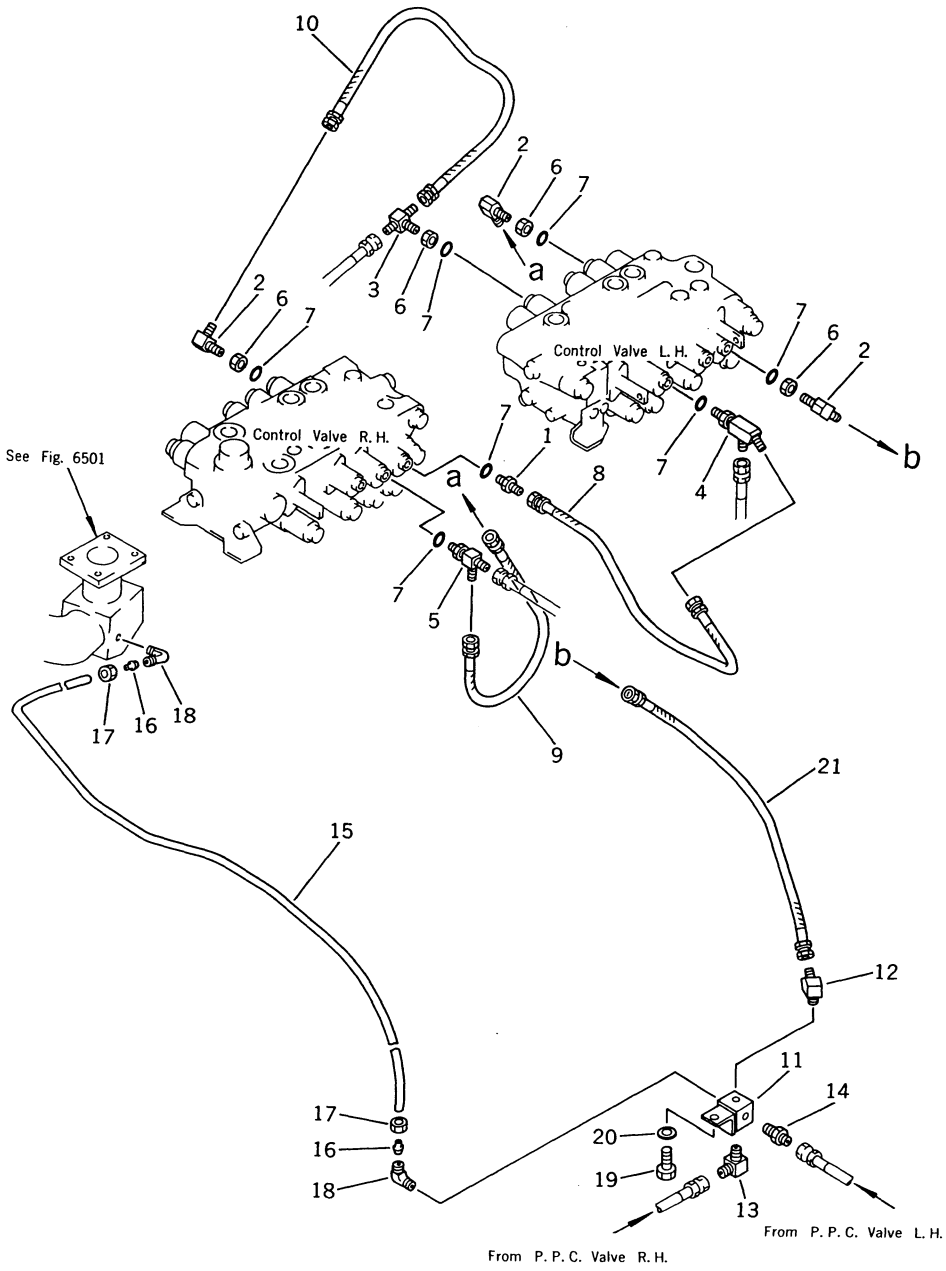

FIG NO. 4423

INDEX NO.	PART NO.	DESCRIPTION	Q'TY	SERIAL NO. PC150-3	SERIAL NO. PC150LC-3
1	07230-10210	UNION	1	3001–	3001–
2	07232-20210	ELBOW	3	3001–	3001–
3	208-26-11610	TEE	1	3001–	3001–
4	208-62-18430	ELBOW	1	3001–	3001–
5	208-62-17550	TEE	1	3001–	3001–
6	07239-11408	NUT	4	3001–	3001–
7	07002-01423	O-RING	7	3001–	3001–
8	20G-62-15470	HOSE	1	3001–	3001–
9	20G-62-15420	HOSE	1	3001–	3001–
10	20G-62-15470	HOSE	1	3001–	3001–
11	203-62-44580	T-BLOCK	1	3001–	3001–
12	175-79-82560	ELBOW	1	3001–	3001–
13	234-60-22140	ELBOW	1	3001–	3001–
14	07238-00210	NIPPLE	1	3001–	3001–
15	07822-00620	TUBE	1	3001–	3001–
16	07831-00612	SLEEVE	2	3001–	3001–
17	07832-00614	NUT	2	3001–	3001–
18	07834-00613	ELBOW	2	3001–	3001–
19	01010-51225	BOLT	1	3001–	3001–
20	01643-31232	WASHER	1	3001–	3001–
21	203-62-44760	HOSE	1	3001–	3001–

FIG. 4425 HYDRAULIC PIPING (VALVE TO SHUTTLE VALVE) (FOR WRIST CONTROL) (WITH SWING MECHANICAL BRAKE)

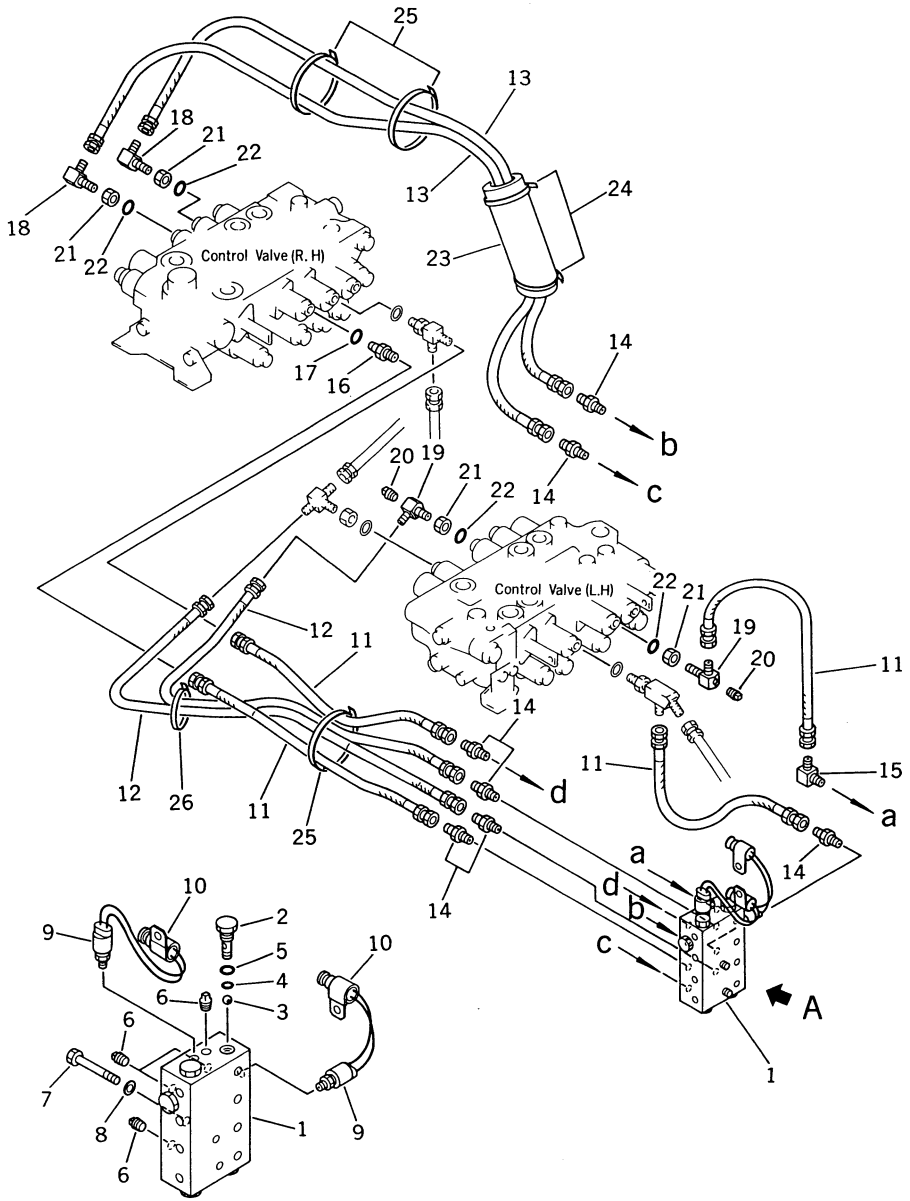

FIG NO. 4425

INDEX NO.	PART NO.	DESCRIPTION	Q'TY	SERIAL NO. PC150-3	SERIAL NO. PC150LC-3
	203-62-44560	SHUTTLE VALVE ASS'Y	1	3001 –	3001 –
1	(☆203-62-44570)	• BLOCK	1	3001 –	3001 –
2	702-19-12120	• PLUG	6	3001 –	3001 –
3	04260-00793	• BALL	6	3001 –	3001 –
4	07000-01007	• O-RING	6	3001 –	3001 –
5	07002-01423	• O-RING	6	3001 –	3001 –
6	07042-10108	• PLUG	4	3001 –	3001 –
7	01010-51065	BOLT	2	3001 –	3001 –
8	01643-31032	WASHER	2	3001 –	3001 –
9	203-06-41661	SWITCH, PRESSURE	2	3001 –	3001 –
9	(□203-06-41660)	SWITCH, PRESSURE	2	(3001 – 3264)	(3001 – •)
10	08036-01814	CLIP	2	3001 –	3001 –
11	20G-62-15420	HOSE, 400MM	4	3001 –	3001 –
12	20G-62-15410	HOSE, 800MM	2	3001 –	3001 –
13	203-62-44610	HOSE, 1000MM	2	3001 –	3001 –
14	07238-00210	NIPPLE	7	3001 –	3001 –
15	234-60-22140	ELBOW	1	3001 –	3001 –
16	07230-10210	UNION	1	3001 –	3001 –
17	07002-01423	O-RING	1	3001 –	3001 –
18	07232-20210	ELBOW	2	3001 –	3001 –
19	203-62-44791	ELBOW	2	3001 –	3001 –
20	07042-30108	PLUG	2	3001 –	3001 –
21	07239-11408	NUT	4	3001 –	3001 –
22	07002-01423	O-RING	4	3001 –	3001 –
23	203-04-31230	COVER	1	3001 –	3001 –
24	08034-00519	BAND	2	3001 –	3001 –
25	08034-00823	BAND	3	3001 –	3001 –
26	08034-00519	BAND	1	3001 –	3001 –

FIG. 4426 HYDRAULIC PIPING (VALVE TO SHUTTLE VALVE) (FOR WRIST CONTROL) (WITHOUT SWING MECHANICAL BRAKE)

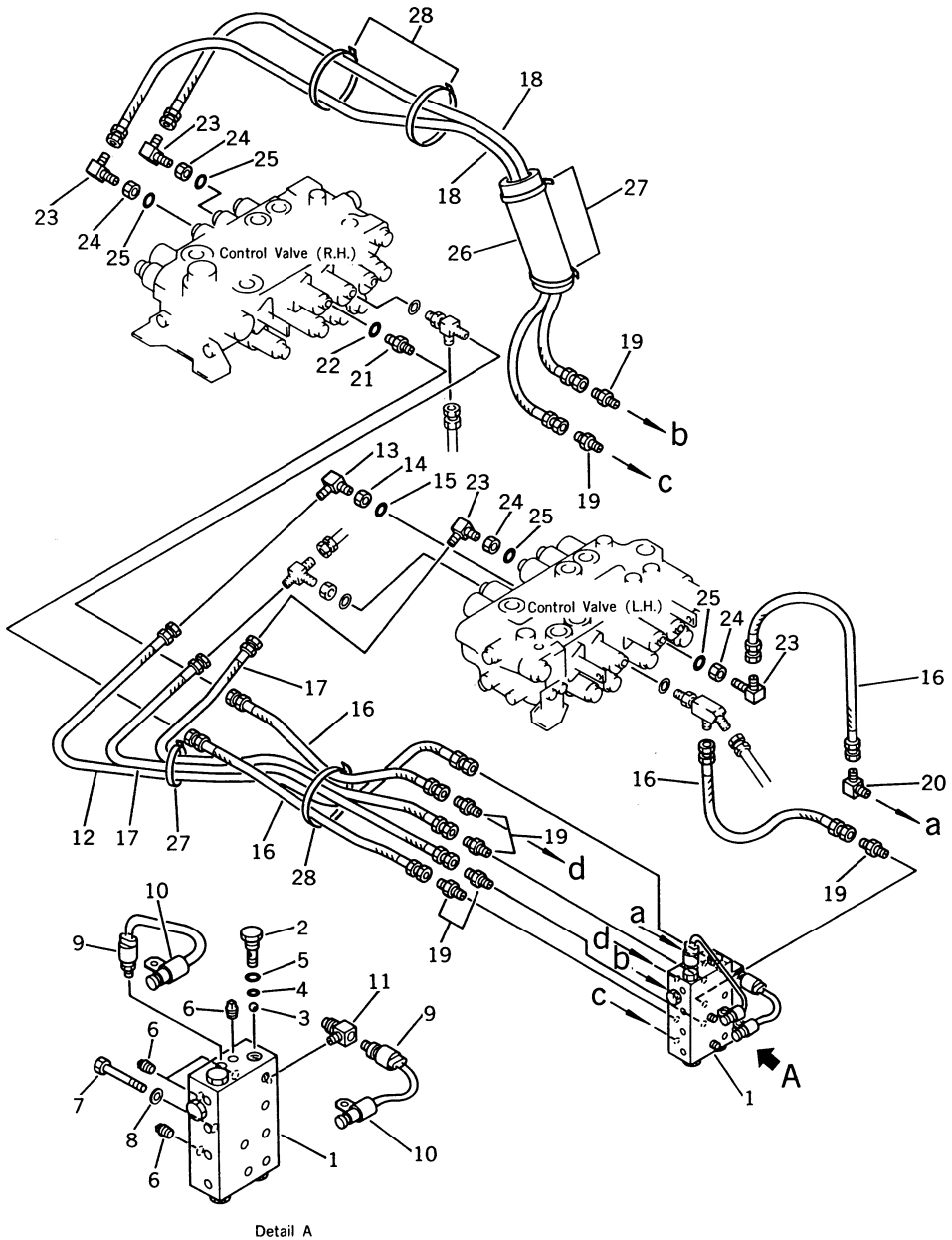

FIG NO. 4426

INDEX NO.	PART NO.	DESCRIPTION	Q'TY	SERIAL NO. PC150-3	SERIAL NO. PC150LC-3
	203-62-44560	SHUTTLE VALVE ASS'Y	1	3001–	3001–
1	(☆203-62-44570)	• BLOCK	1	3001–	3001–
2	702-19-12120	• PLUG	6	3001–	3001–
3	04260-00793	• BALL	6	3001–	3001–
4	07000-01007	• O-RING	6	3001–	3001–
5	07002-01423	• O-RING	6	3001–	3001–
6	07042-10108	• PLUG	4	3001–	3001–
7	01010-51065	BOLT	2	3001–	3001–
8	01643-31032	WASHER	2	3001–	3001–
9	203-06-41661	SWITCH, PRESSURE	2	3001–	3001–
9	(□203-06-41660)	SWITCH, PRESSURE	2	(3001–3264)	(3001– •)
10	08036-01814	CLIP	2	3001–	3001–
11ù	203-62-44780	ELBOW	1	3001–	3001–
12	20G-62-15470	HOSE	1	3001–	3001–
13	07232-20210	ELBOW	1	3001–	3001–
14	07239-11408	NUT	1	3001–	3001–
15	07002-01423	O-RING	1	3001–	3001–
16	20G-62-15420	HOSE, 400MM	4	3001–	3001–
17	20G-62-15410	HOSE, 800MM	2	3001–	3001–
18	203-62-44610	HOSE, 1000MM	2	3001–	3001–
19	07238-00210	CONNECTOR	7	3001–	3001–
20	234-60-22140	ELBOW	1	3001–	3001–
21	07230-10210	UNION	1	3001–	3001–
22	07002-01423	O-RING	1	3001–	3001–
23	07232-20210	ELBOW	4	3001–	3001–
24	07239-11408	NUT	4	3001–	3001–
25	07002-01423	O-RING	4	3001–	3001–
26	203-04-31230	COVER	1	3001–	3001–
27	08034-00519	BAND	3	3001–	3001–
28	08034-00823	BAND	3	3001–	3001–

FIG. 4427 PROPORTIONAL PRESSURE CONTROL VALVE

(FOR WRIST CONTROL)

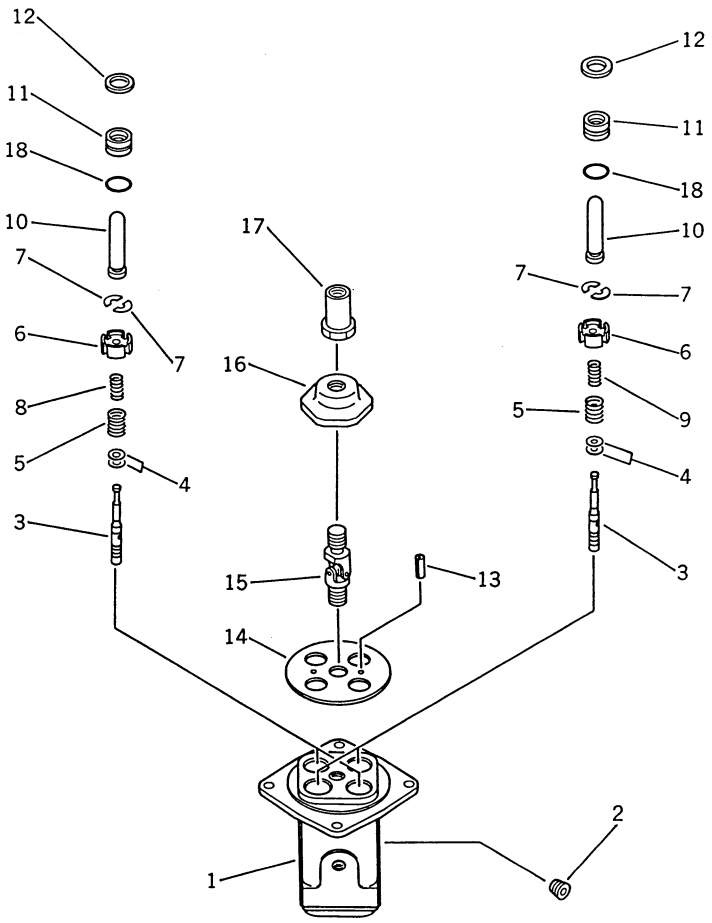

FIG NO. 4427

INDEX NO.	PART NO.	DESCRIPTION	Q'TY	SERIAL NO. PC150-3	SERIAL NO. PC150LC-3
	702-16-51000	P.P.C. VALVE ASS'Y	2	3001–	3001–
1	(☆702-11-31110)	• BODY, VALVE	1	3001–	3001–
2	07043-50312	• PLUG	2	3001–	3001–
3	(☆702-16-51120)	• VALVE	4	3001–	3001–
4	702-16-51140	• SHIM, 0.3MM	8	3001–	3001–
5	702-16-51150	• SPRING	4	3001–	3001–
6	702-16-51160	• RETAINER	4	3001–	3001–
7	702-16-51170	• COLLAR	8	3001–	3001–
8	702-16-51180	• SPRING	2	3001–	3001–
9	702-16-51190	• SPRING	2	3001–	3001–
10	702-16-51210	• PISTON	4	3001–	3001–
11	702-16-51220	• COLLAR	4	3001–	3001–
12	702-16-51270	• SEAL	4	3001–	3001–
13	04025-00312	• PIN, SPRING	2	3001–	3001–
14	702-16-51230	• PLATE	1	3001–	3001–
15	702-16-51240	• JOINT	1	3001–	3001–
16	702-16-51250	• DISC	1	3001–	3001–
17	702-16-51260	• NUT	1	3001–	3001–
18	07000-02020	• O-RING	4	3001–	3001–

REVOLVING FRAME AND CAB

CONTENTS

	FIG NO.	PAGE
REVOLVING FRAME	5001	174
MACHINERY COMPARTMENT (1/3)	5101	176
MACHINERY COMPARTMENT (2/3)	5103	180
MACHINERY COMPARTMENT (3/3)	5105	182
OPERATOR'S CAB (1/6) (EXCEPT JAPAN)	5221	224
OPERATOR'S CAB (2/6) (EXCEPT JAPAN)	5223	228
OPERATOR'S CAB (3/6) (EXCEPT JAPAN)	5225	232
OPERATOR'S CAB (4/6) (EXCEPT JAPAN)	5227	234
OPERATOR'S CAB (5/6) (EXCEPT JAPAN)	5229	236
OPERATOR'S CAB (6/6) (EXCEPT JAPAN)	5231	240
OPERATOR'S CAB, FLOOR FRAME (FOR LONG LEVER CONTROL)	5301	244
OPERATOR'S CAB, FLOOR FRAME (FOR WRIST CONTROL)	5311	246
OPERATOR'S SEAT (FOR LONG LEVER CONTROL)	5401	250
OPERATOR'S SEAT (FOR WRIST CONTROL)	5411	254
CAR HEATER (FOR LONG LEVER CONTROL)	5501	258
CAR HEATER (FOR WRIST CONTROL)	5503	260

5

FIG. 5001 REVOLVING FRAME

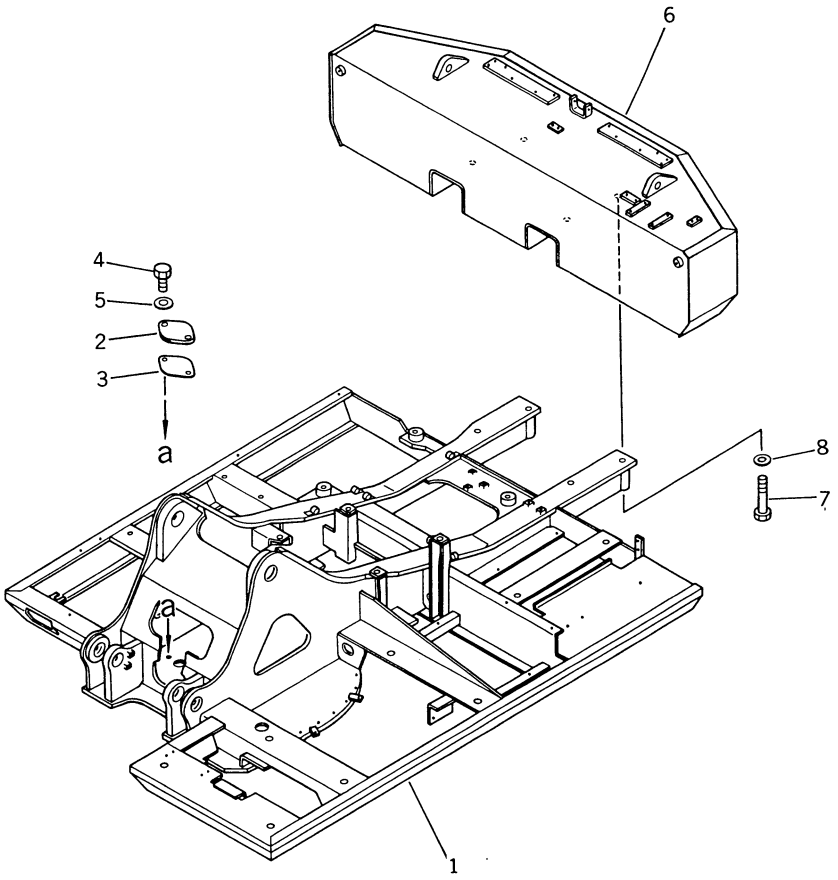

FIG NO. 5001

INDEX NO.	PART NO.	DESCRIPTION	Q'TY	SERIAL NO. PC150-3	SERIAL NO. PC150LC-3
1	21K-46-21110	FRAME, REVOLVING	1	3001 –	3001 –
2	203-46-31131	COVER	1	3001 –	3001 –
3	203-46-31181	GASKET	1	3001 –	3001 –
4	01010-51230	BOLT	2	3001 –	3001 –
5	01643-31232	WASHER	2	3001 –	3001 –
6	21K-46-22110	WEIGHT, COUNTER	1	3001 –	
6	21K-46-23110	WEIGHT, COUNTER	1		3001 –
7	203-46-62160	BOLT	2	3001 –	3001 –
8	01643-32460	WASHER	2	3001 –	3001 –

FIG. 5101 MACHINERY COMPARTMENT (1/3)

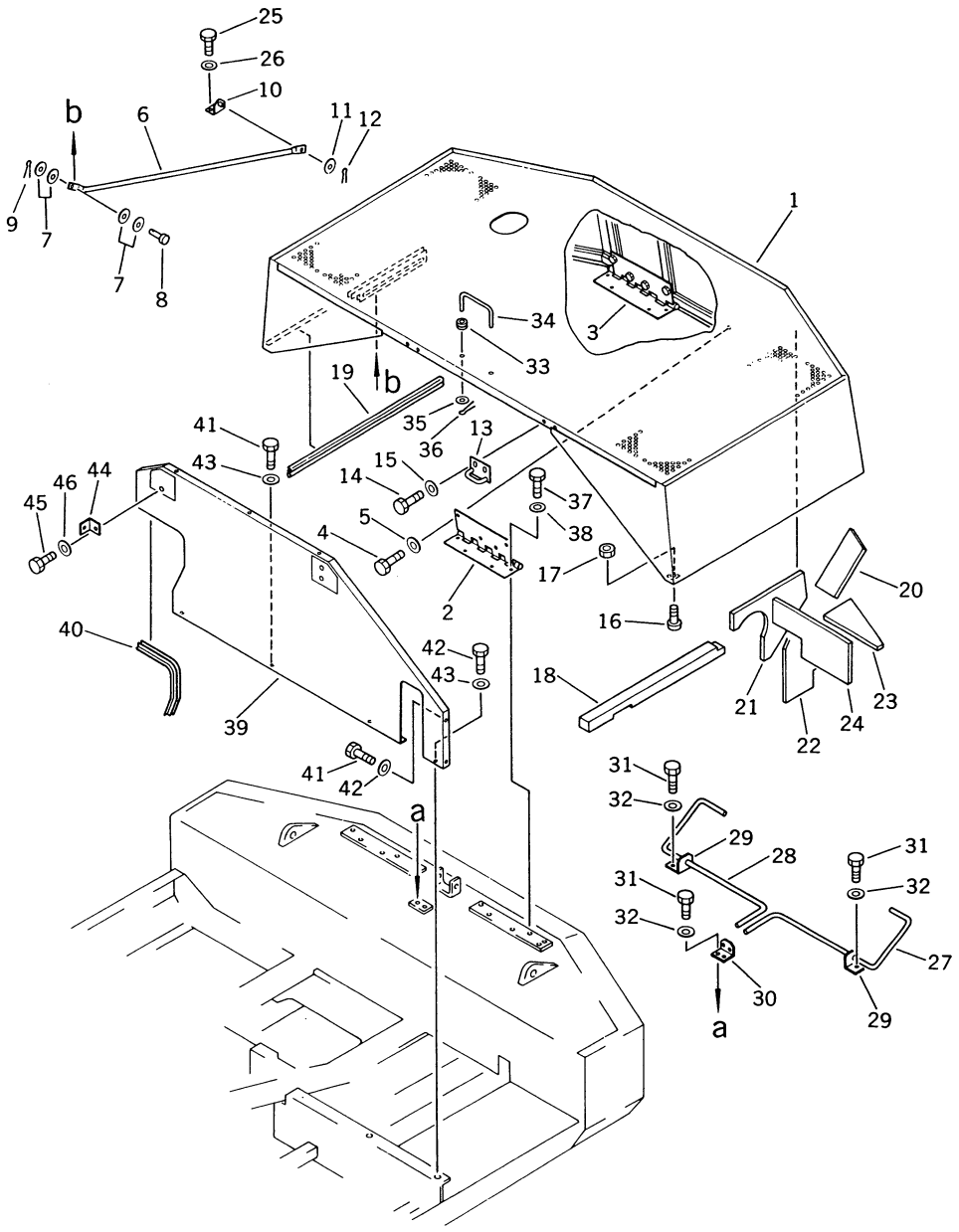

INDEX NO.	PART NO.	DESCRIPTION	Q'TY	SERIAL NO. PC150-3	SERIAL NO. PC150LC-3
	21K-54-00200	MACHINE CAB ASS'Y	1	3001–	3001–
1	(☆21K-54-26111)	• HOOD	1	3001–	3001–
2	203-54-44950	• HINGE, L.H.	1	3001–	3001–
3	203-54-44960	• HINGE, R.H.	1	3001–	3001–
4	01010-51020	• BOLT	8	3001–	3001–
5	01643-31032	• WASHER	8	3001–	3001–
6	21K-54-26271	• STAY	1	3001–	3001–
7	175-54-88110	• WASHER	4	3001–	3001–
8	04205-11035	• PIN	1	3001–	3001–
9	04050-13020	• PIN, COTTER	1	3001–	3001–
10	21K-54-26280	• BRACKET	1	3001–	3001–
11	01641-21016	• WASHER	1	3001–	3001–
12	04050-13020	• PIN, COTTER	1	3001–	3001–
13	21K-54-26320	• BRACKET	2	3001–	3001–
14	01010-51025	• BOLT	4	3001–	3001–
15	01643-31032	• WASHER	4	3001–	3001–
16	201-54-21360	• CUSHION	2	3001–	3001–
17	01580-10504	• NUT	2	3001–	3001–
18	21K-54-26130	• SHEET	1	3001–	3001–
19	21K-54-26120	• TRIM	2	3001–	3001–
20	20G-54-11710	• SHEET	1	3001–	3001–
21	20G-54-11730	• SHEET	1	3001–	3001–
22	20G-54-11740	• SHEET	1	3001–	3001–
23	20G-54-11860	• SHEET	1	3001–	3001–
24	20G-54-11870	• SHEET	1	3001–	3001–
25	01010-51025	BOLT	2	3001–	3001–
26	01643-31032	WASHER	2	3001–	3001–
27	21K-54-26250	BAR, TORSION, L.H.	1	3001–	3001–
28	21K-54-26260	BAR, TORSION, R.H.	1	3001–	3001–
29	203-54-42270	PLATE	2	3001–	3001–
30	203-54-42280	PLATE	1	3001–	3001–
31	01010-51025	BOLT	6	3001–	3001–
32	01643-31032	WASHER	6	3001–	3001–
33	08037-01008	GROMMET	2	3001–	3001–
34	20G-54-11590	BAR	1	3001–	3001–

FIG NO. 5101

INDEX NO.	PART NO.	DESCRIPTION	Q'TY	SERIAL NO. PC150-3	SERIAL NO. PC150LC-3
35	01643-31032	WASHER	2	3001–	3001–
36	04050-12020	PIN, COTTER	2	3001–	3001–
37	01010-51020	BOLT	8	3001–	3001–
38	144-854-1890	WASHER	8	3001–	3001–
39	21K-54-26140	COVER	1	3001–	3001–
40	203-54-42840	TRIM	1	3001–	3001–
41	01010-51020	BOLT	4	3001–	3001–
42	01010-51025	BOLT	2	3001–	3001–
43	01643-31032	WASHER	6	3001–	3001–
44	203-54-42780	PLATE	1	3001–	3001–
45	01010-51020	BOLT	1	3001–	3001–
46	01643-31032	WASHER	1	3001–	3001–

FIG. 5103 MACHINERY COMPARTMENT (2/3)

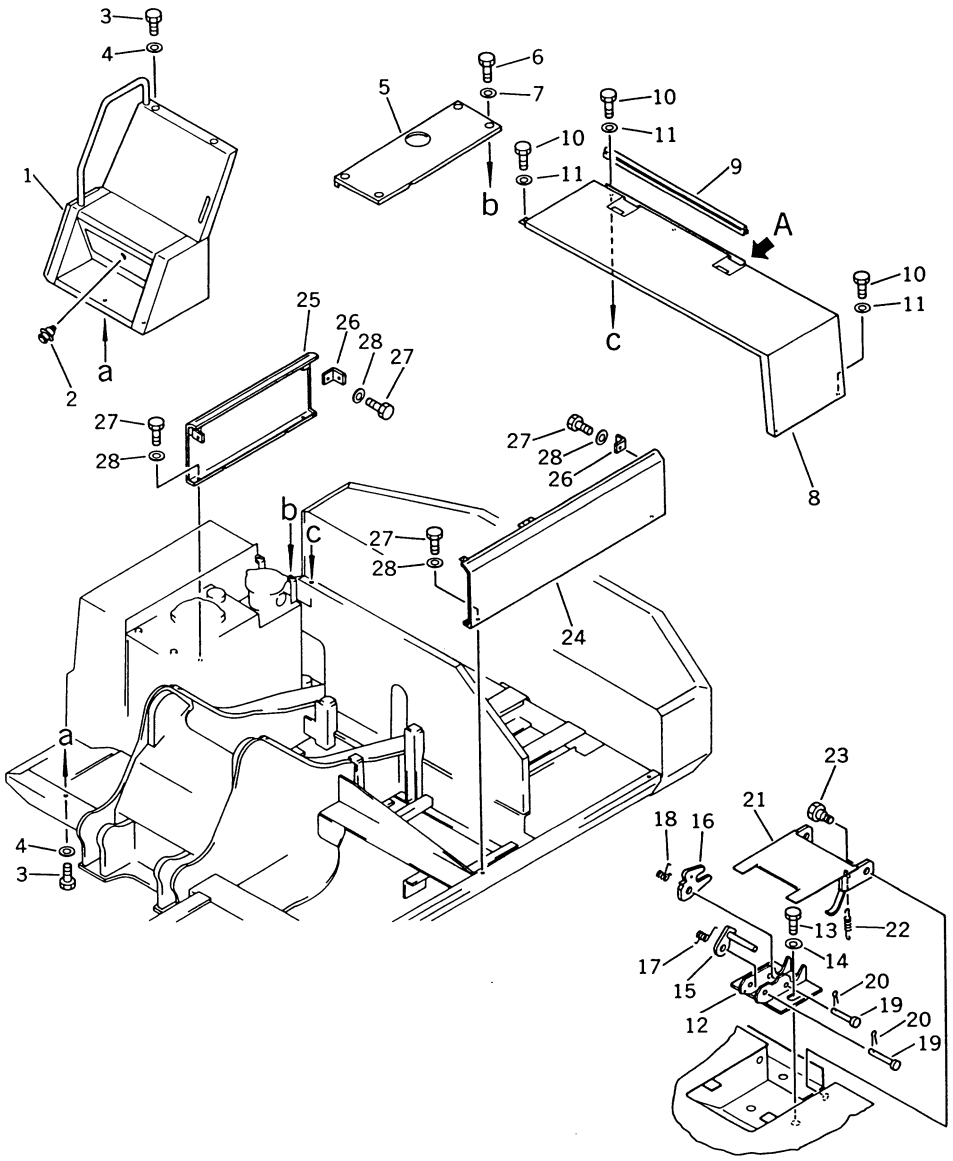

Detail A

FIG NO. 5103

INDEX NO.	PART NO.	DESCRIPTION	Q'TY	SERIAL NO. PC150-3	SERIAL NO. PC150LC-3
1	21K-54-26180	COVER	1	3001–	3001–
2	205-60-71220	LOCK ASS'Y	1	3001–	3001–
3	01010-51020	BOLT	6	3001–	3001–
4	01643-31032	WASHER	6	3001–	3001–
5	21K-54-26190	COVER	1	3001–	3001–
6	01010-51020	BOLT	4	3001–	3001–
7	01643-31032	WASHER	4	3001–	3001–
8	21K-54-26151	COVER	1	3001–	3001–
9	09412-10092	SEAL	1	3001–	3001–
10	01010-51020	BOLT	6	3001–	3001–
11	01643-31032	WASHER	6	3001–	3001–
12	21K-54-26310	BRACKET	2	3001–	3001–
13	01010-51020	BOLT	4	3001–	3001–
14	01643-31032	WASHER	4	3001–	3001–
15	21K-54-26330	PLATE	2	3001–	3001–
16	21K-54-26340	LEVER	2	3001–	3001–
17	21K-54-26350	SPRING	2	3001–	3001–
18	21K-54-26360	SPRING	2	3001–	3001–
19	04205-11038	PIN	4	3001–	3001–
20	04050-13020	PIN, COTTER	4	3001–	3001–
21	21K-54-26291	COVER	2	3001–	3001–
22	21K-54-26380	SPRING	2	3001–	3001–
23	21K-54-26370	BOLT	4	3001–	3001–
24	21K-54-26160	COVER	1	3001–	3001–
25	21K-54-26170	COVER	1	3001–	3001–
26	203-54-42780	PLATE	3	3001–	3001–
27	01010-51020	BOLT	10	3001–	3001–
28	01643-31032	WASHER	10	3001–	3001–

FIG. 5105 MACHINERY COMPARTMENT (3/3)

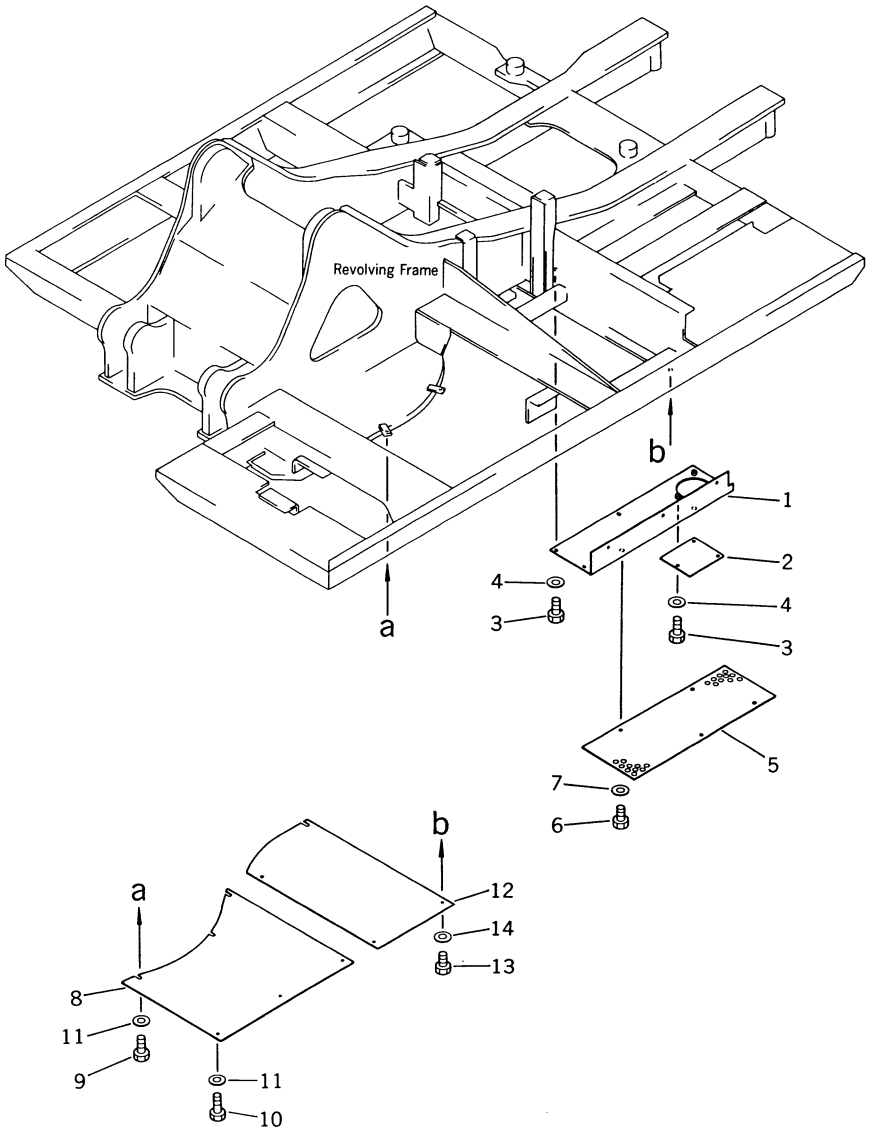

FIG NO. 5105

INDEX NO.	PART NO.	DESCRIPTION	Q'TY	SERIAL NO. PC150-3	SERIAL NO. PC150LC-3
1	21K-54-26240	COVER	1	3001–	3001–
2	201-54-26420	COVER	1	3001–	3001–
3	01010-51020	BOLT	11	3001–	3001–
4	01643-31032	WASHER	11	3001–	3001–
5	21K-54-26230	COVER	1	3001–	3001–
6	01010-51020	BOLT	5	3001–	3001–
7	01643-31032	WASHER	5	3001–	3001–
8	21K-54-26210	COVER	1	3001–	3001–
9	01010-51020	BOLT	5	3001–	3001–
10	01010-51035	BOLT	1	3001–	3001–
11	01643-31032	WASHER	6	3001–	3001–
12	21K-54-26220	COVER	1	3001–	3001–
13	01010-51020	BOLT	4	3001–	3001–
14	01643-31032	WASHER	4	3001–	3001–

FIG. 5221 OPERATOR'S CAB (1/6) (EXCEPT JAPAN)

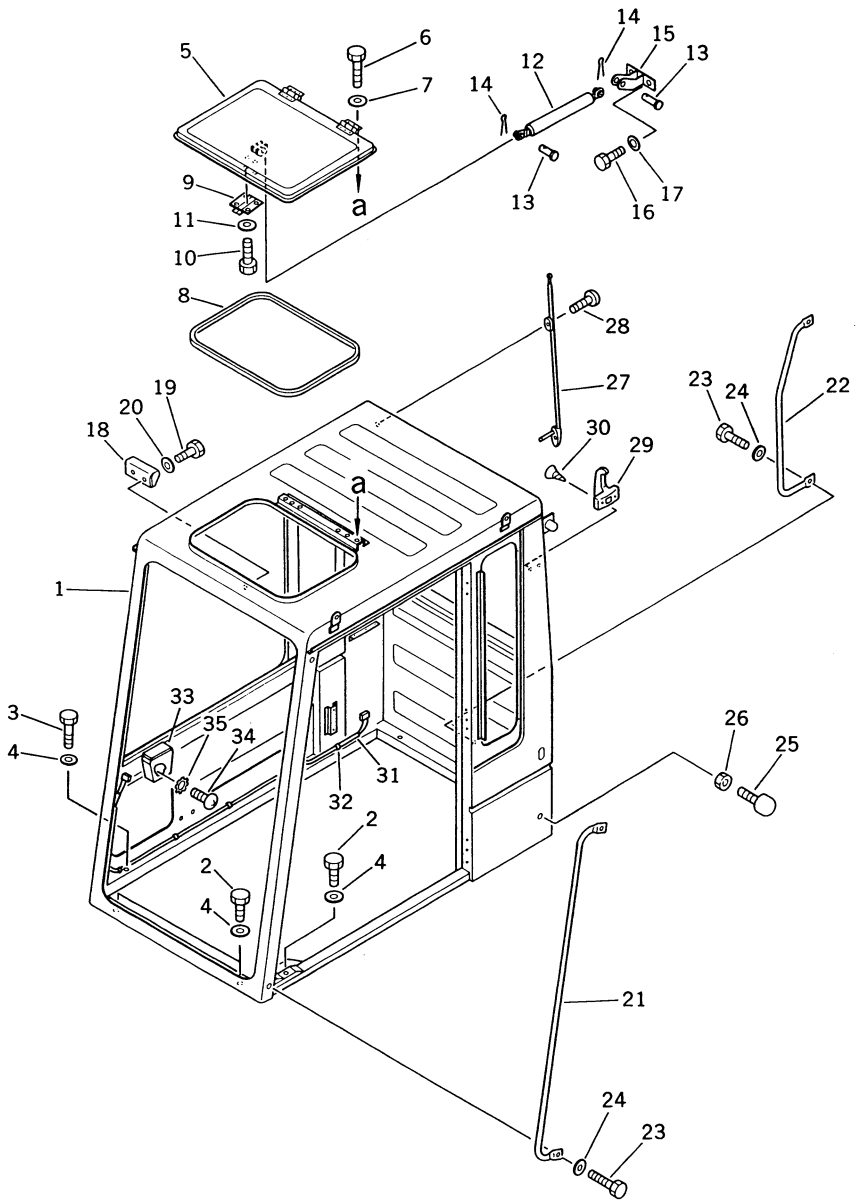

FIG NO. 5221

INDEX NO.	PART NO.	DESCRIPTION	Q'TY	SERIAL NO. PC150-3	SERIAL NO. PC150LC-3
	203-54-00340	OPERATOR'S CAB ASS'Y	1	3001–	3001–
		(FOR WRIST CONTROL)			
		THIS ASSEMBLY CONSISTS OF ALL PARTS SHOWN IN FIGS. 5221 TO 5231.			
1	203-54-43440	• CABIN	1	3001–	3001–
2	01010-51245	• BOLT	3	3001–	3001–
3	01010-51265	• BOLT	6	3001–	3001–
4	01643-31232	• WASHER	9	3001–	3001–
5	203-54-43410	• COVER	1	3001–	3001–
6	01010-50612	• BOLT	6	3001–	3001–
7	01643-30623	• WASHER	6	3001–	3001–
8	203-54-43460	• TRIM	1	3001–	3001–
9	205-54-66190	• LOCK ASS'Y	1	3001–	3001–
10	01010-50616	• BOLT	4	3001–	3001–
11	01643-30623	• WASHER	4	3001–	3001–
12	205-54-63650	• GAS SPRING ASS'Y	1	3001–	3001–
13	04205-10825	• PIN	2	3001–	3001–
14	04050-12012	• PIN, COTTER	2	3001–	3001–
15	203-54-43640	• BRACKET	1	3001–	3001–
16	01010-50816	• BOLT	2	3001–	3001–
17	01643-30823	• WASHER	2	3001–	3001–
18	203-54-43490	• BRACKET	1	3001–	3001–
19	01010-50616	• BOLT	2	3001–	3001–
20	01643-30623	• WASHER	2	3001–	3001–
21	203-54-43230	• GRIP	1	3001–	3001–
22	203-54-43430	• GRIP	1	3001–	3001–
23	01010-51025	• BOLT	4	3001–	3001–
24	01643-31032	• WASHER	4	3001–	3001–
25	09453-00002	• STOPPER	2	3001–	3001–
26	01580-11210	• NUT	2	3001–	3001–
27	205-06-62350	• ANTENNA	1	3001–	3001–
28	01220-40420	• SCREW	2	3001–	3001–
29	205-54-51250	• HANGER	1	3001–	3001–
30	01380-10420	• WASHER	2	3001–	3001–
31	203-06-41710	• WIRE	1	3001–	3001–

FIG NO. 5221

INDEX NO.	PART NO.	DESCRIPTION	Q'TY	SERIAL NO. PC150-3	SERIAL NO. PC150LC-3
32	205-54-72710	• CLIP	6	3001–	3001–
33	203-54-43480	• ASH TRAY	1	3001–	3001–
34	01370-00510	• CLIP	3	3001–	3001–
35	01611-04045	• WASHER	3	3001–	3001–

FIG. 5223 OPERATOR'S CAB (2/6) (EXCEPT JAPAN)

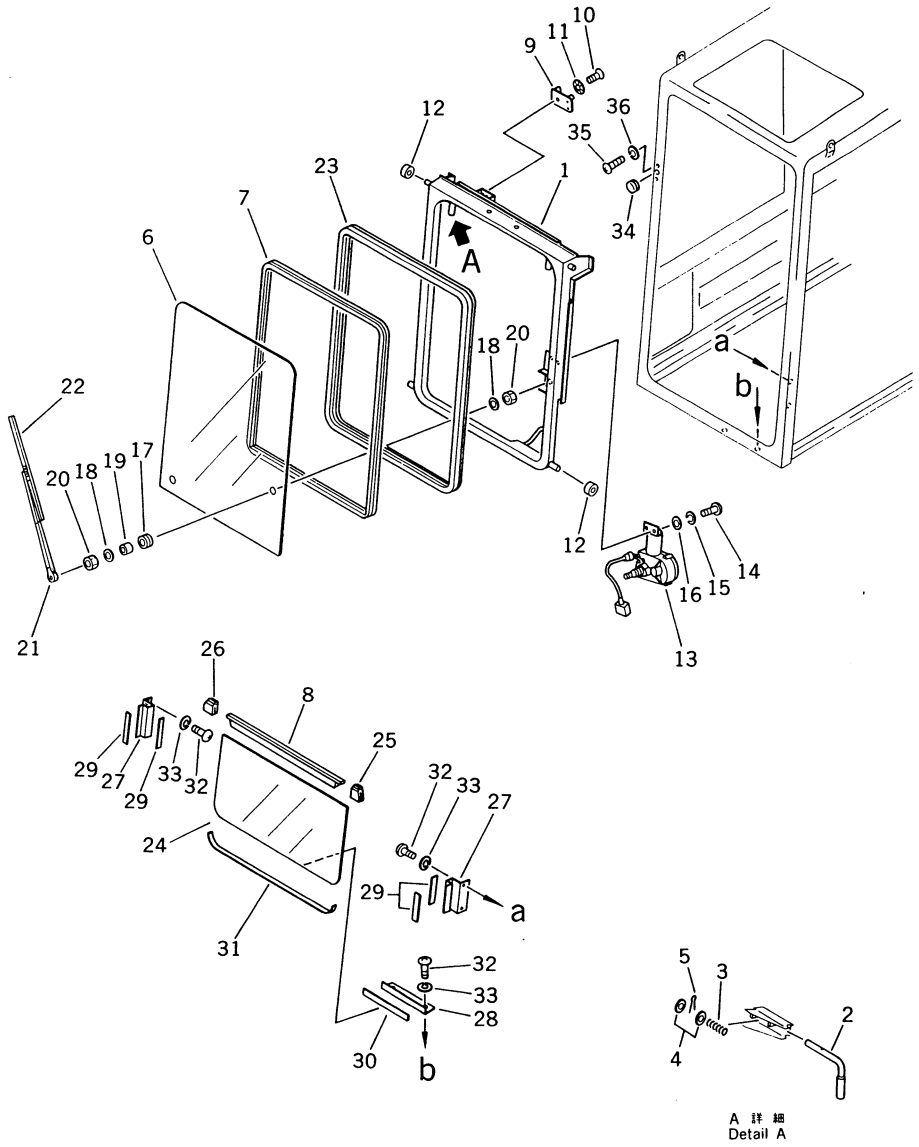

FIG NO. 5223

INDEX NO.	PART NO.	DESCRIPTION	Q'TY	SERIAL NO. PC150-3	SERIAL NO. PC150LC-3
	(203-54-00340)	OPERATOR'S CAB ASS'Y (FOR WRIST CONTROL)	1	3001 –	3001 –
		THIS ASSEMBLY CONSISTS OF ALL PARTS SHOWN IN FIGS. 5221 TO 5231.			
	20G-54-00030	• FRONT WINDOW ASS'Y	1	3001 –	3001 –
1	203-54-43470	•• WINDOW, FRONT	1	3001 –	3001 –
2	203-54-43650	•• PIN	2	3001 –	3001 –
3	205-54-66330	•• SPRING	2	3001 –	3001 –
4	01641-21016	•• WASHER	4	3001 –	3001 –
5	04050-13018	•• PIN, COTTER	2	3001 –	3001 –
6	203-54-43560	•• GLASS	1	3001 –	3001 –
7	205-54-71520	•• STRIP, WEATHER	1	3001 –	3001 –
7	(□203-54-43510)	•• STRIP, WEATHER	1	(3001 – •)	(3001 – •)
8	203-54-43940	•• SEAL	1	3001 –	3001 –
9	566-54-24511	•• STRIKER	1	3001 –	3001 –
10	01224-40820	•• SCREW	3	3001 –	3001 –
11	205-54-72750	•• WASHER, LOCK	3	3001 –	3001 –
12	205-54-72590	•• ROLLER	4	3001 –	3001 –
13	203-06-41720	• WIPER MOTOR ASS'Y	1	3001 –	3001 –
14	01220-40516	• SCREW	2	3001 –	3001 –
15	01601-20513	• WASHER, SPRING	2	3001 –	3001 –
16	01641-20508	• WASHER	2	3001 –	3001 –
17	205-06-62230	• GROMMET	1	3001 –	3001 –
18	205-06-62270	• WASHER	2	3001 –	3001 –
19	205-06-62240	• COLLAR	1	3001 –	3001 –
20	205-06-62250	• NUT	2	3001 –	3001 –
21	205-06-71420	• ARM	1	3001 –	3001 –
22	205-06-62570	• BLADE	1	3001 –	3001 –
23	203-54-43950	• TRIM	1	3001 –	3001 –
24	205-54-71220	• GLASS	1	3001 –	3001 –
25	205-54-72731	• SEAL, L.H.	1	3001 –	3001 –
26	205-54-72721	• SEAL, R.H.	1	3001 –	3001 –
27	203-54-43980	• PROTECTOR	4	3001 –	3001 –
28	203-54-43960	• PROTECTOR	1	3001 –	3001 –
29	203-54-43990	• RUBBER	2	3001 –	3001 –

FIG NO. 5223

INDEX NO.	PART NO.	DESCRIPTION	Q'TY	SERIAL NO. PC150-3	SERIAL NO. PC150LC-3
30	203-54-43970	• RUBBER	1	3001–	3001–
31	203-54-44970	• RUBBER	1	3001–	3001–
32	01220-40612	• SCREW	6	3001–	3001–
33	01602-20619	• WASHER	6	3001–	3001–
34	09415-01008	• CAP	1	3001–	3001–
35	01220-40412	• SCREW	2	3001–	3001–
36	01601-20410	• WASHER, SPRING	2	3001–	3001–

FIG. 5225 OPERATOR'S CAB (3/6) (EXCEPT JAPAN)

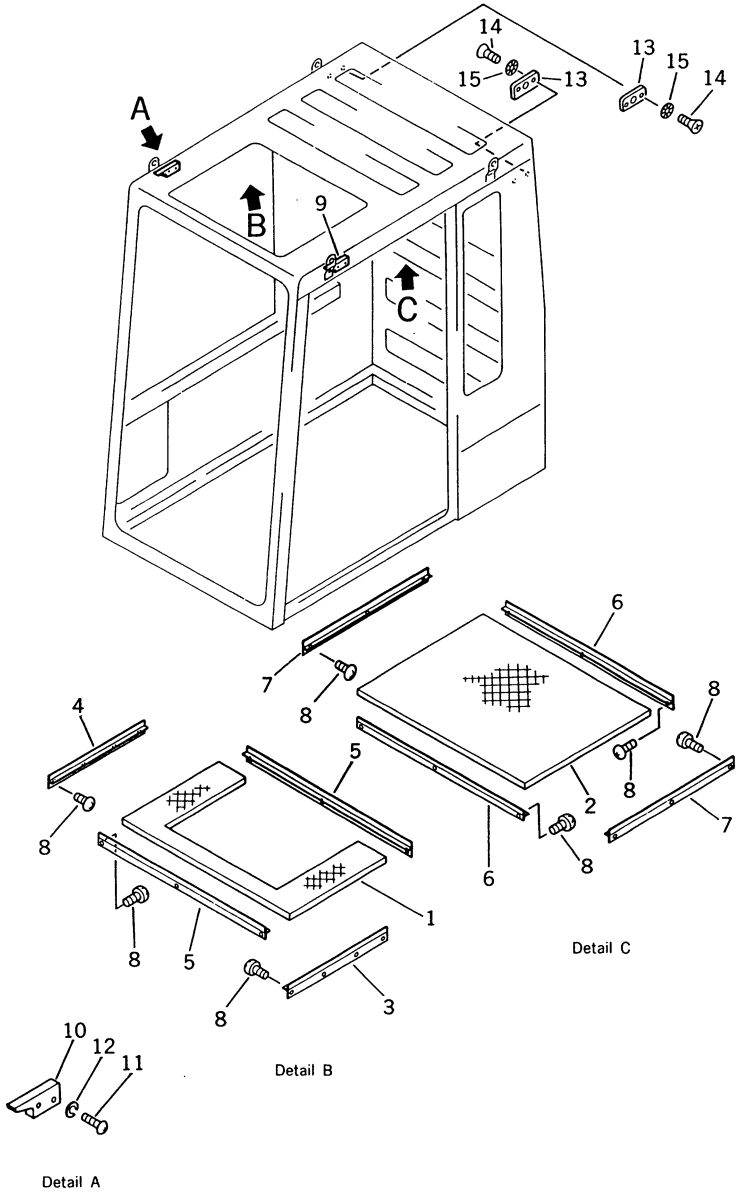

FIG NO. 5225

INDEX NO.	PART NO.	DESCRIPTION	Q'TY	SERIAL NO. PC150-3	SERIAL NO. PC150LC-3
	(203-54-00340)	OPERATOR'S CAB ASS'Y (FOR WRIST CONTROL)	1	3001–	3001–
		THIS ASSEMBLY CONSISTS OF ALL PARTS SHOWN IN FIGS. 5221 TO 5231.			
1	203-54-43280	• LINING	1	3001–	3001–
2	203-54-43340	• LINING	1	3001–	3001–
3	203-54-43240	• FINISHER, L.H.	1	3001–	3001–
4	203-54-43250	• FINISHER, R.H.	1	3001–	3001–
5	203-54-43690	• FINISHER	2	3001–	3001–
6	203-54-43260	• FINISHER	2	3001–	3001–
7	203-54-43270	• FINISHER	2	3001–	3001–
8	01370-00412	• SCREW	24	3001–	3001–
9	203-54-43540	• TAIL, DOVE, L.H.	1	3001–	3001–
10	203-54-43550	• TAIL, DOVE, R.H.	1	3001–	3001–
11	01220-40625	• SCREW	4	3001–	3001–
12	01602-20619	• WASHER, SPRING	4	3001–	3001–
13	203-54-43290	• LOCK	2	3001–	3001–
14	01224-40820	• SCREW	4	3001–	3001–
15	205-54-72750	• WASHER, LOCK	4	3001–	3001–

FIG. 5227 OPERATOR'S CAB (4/6) (EXCEPT JAPAN)

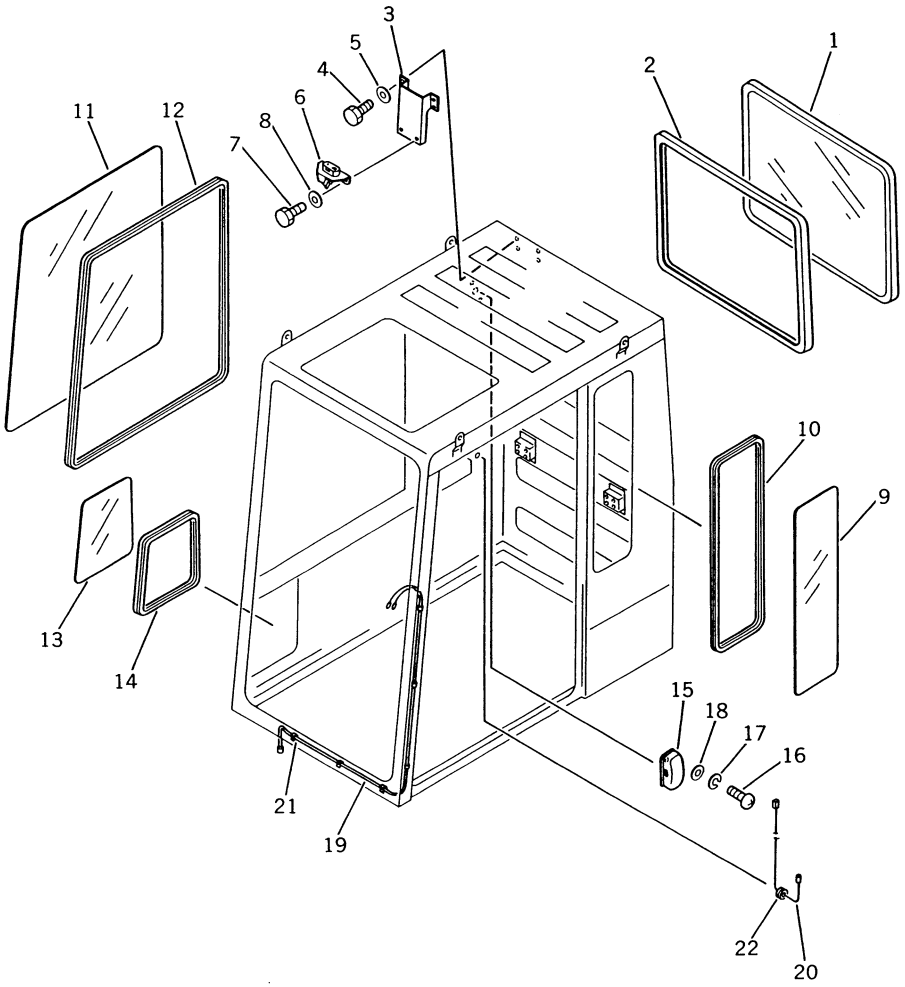

FIG NO. 5227

INDEX NO.	PART NO.	DESCRIPTION	Q'TY	SERIAL NO. PC150-3	SERIAL NO. PC150LC-3
	(203-54-00340)	OPERATOR'S CAB ASS'Y	1	3001–	3001–
		THIS ASSEMBLY CONSISTS OF ALL PARTS SHOWN IN FIGS. 5221 TO 5231.			
1	203-54-43710	• WINDOW SASH ASS'Y	1	3001–	3001–
2	203-54-43660	• FINISHER	1	3001–	3001–
3	203-54-43680	• BRACKET	1	3001–	3001–
4	01010-50816	• BOLT	4	3001–	3001–
5	01643-30823	• WASHER	4	3001–	3001–
6	205-54-63310	• LOCK ASS'Y	1	3001–	3001–
7	01010-50820	• BOLT	2	3001–	3001–
8	01643-30823	• WASHER	2	3001–	3001–
9	205-54-71241	• GLASS	1	3001–	3001–
10	205-54-71531	• STRIP, WEATHER	1	3001–	3001–
11	20G-54-12150	• GLASS	1	3001–	3001–
12	203-54-43220	• STRIP, WEATHER	1	3001–	3001–
13	205-54-72671	• GLASS	1	3001–	3001–
14	205-54-72661	• STRIP, WEATHER	1	3001–	3001–
15	08141-02400	• LAMP	1	3001–	3001–
15	08116-02410	•• BULB	1	3001–	3001–
16	01220-40412	• SCREW	2	3001–	3001–
17	01601-20410	• WASHER, SPRING	2	3001–	3001–
18	01641-20405	• WASHER	2	3001–	3001–
19	205-06-71540	• WIRE	1	3001–	3001–
20	205-06-71550	• WIRE	1	3001–	3001–
21	205-54-72710	• CLIP	6	3001–	3001–
22	08037-01008	• GROMMET	4	3001–	3001–
23	22D-62-14560	• CLAMP	4	3001–	3001–
24	01010-50816	• BOLT	8	3001–	3001–
25	01643-30823	• WASHER	8	3001–	3001–

FIG. 5229 OPERATOR'S CAB (5/6) (EXCEPT JAPAN)

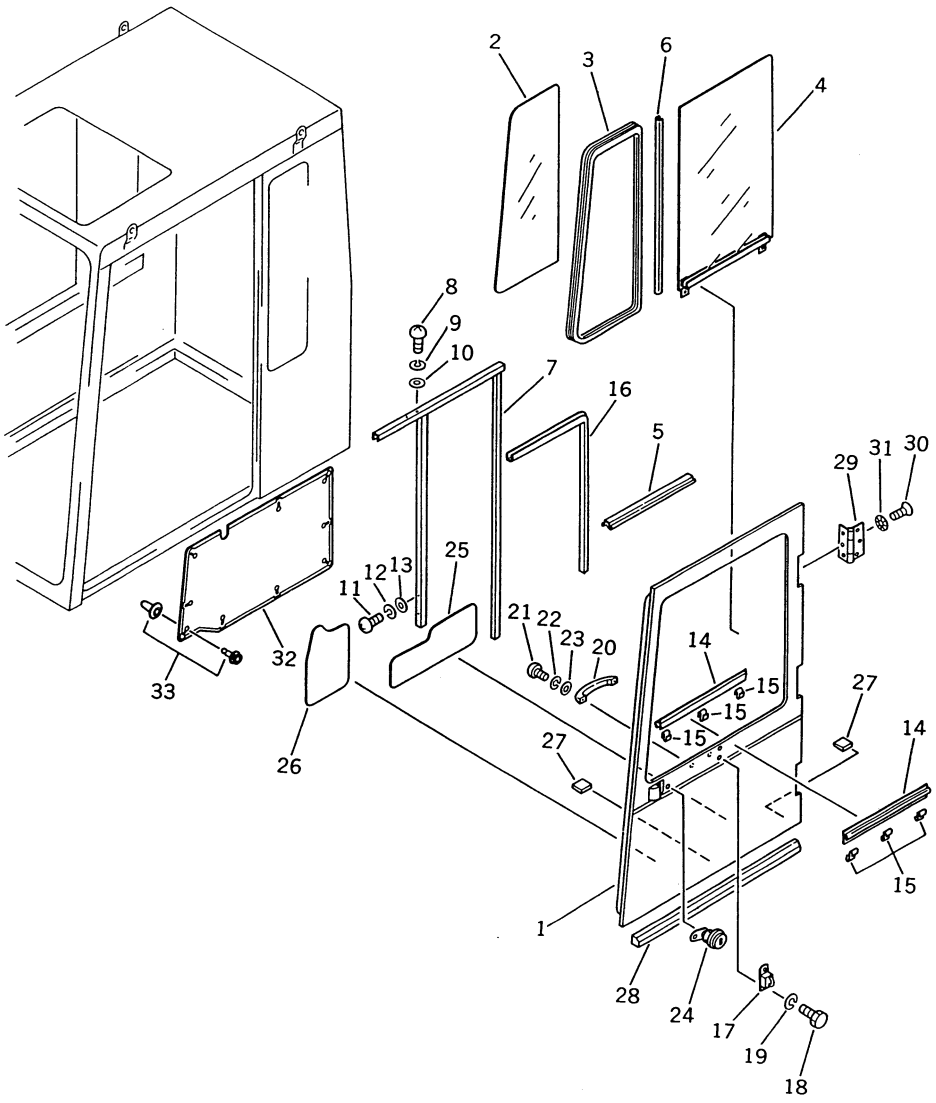

FIG NO. 5229

INDEX NO.	PART NO.	DESCRIPTION	Q'TY	SERIAL NO. PC150-3	SERIAL NO. PC150LC-3
	(203-54-00340)	OPERATOR'S CAB ASS'Y (FOR WRIST CONTROL)	1	3001–	3001–
		THIS ASSEMBLY CONSISTS OF ALL PARTS SHOWN IN FIGS. 5229 TO 5231.			
	203-54-00150	• DOOR ASS'Y	1	3001–	3001–
		THIS ASSEMBLY CONSISTS OF ALL PARTS SHOWN IN FIGS 5221 AND 5231.			
1	203-54-43450	•• DOOR	1	3001–	3001–
2	205-54-71252	•• GLASS	1	3001–	3001–
3	203-54-43580	•• STRIP, WEATHER	1	3001–	3001–
4	205-54-72252	•• GLASS ASS'Y	1	3001–	3001–
5	203-54-43720	•• SEAL	1	3001–	3001–
6	205-54-72231	•• SEAL	1	3001–	3001–
7	205-54-71651	•• DEVISION BAR ASS'Y	1	3001–	3001–
8	01220-40410	•• SCREW	2	3001–	3001–
9	01601-20410	•• WASHER, SPRING	2	3001–	3001–
10	01641-20405	•• WASHER	2	3001–	3001–
11	01220-40610	•• SCREW	2	3001–	3001–
12	01602-20619	•• WASHER, SPRING	2	3001–	3001–
13	01641-20608	•• WASHER	2	3001–	3001–
14	205-54-71581	•• SEAL	2	3001–	3001–
15	203-54-43630	•• CLIP	6	3001–	3001–
16	203-54-43790	•• TRIM	1	3001–	3001–
17	203-54-43670	•• BRACKET	1	3001–	3001–
18	01010-50820	•• BOLT	2	3001–	3001–
19	01643-30823	•• WASHER	2	3001–	3001–
20	205-54-72220	•• HANDLE	1	3001–	3001–
21	01220-40610	•• SCREW	2	3001–	3001–
22	01602-20619	•• WASHER, SPRING	2	3001–	3001–
23	01641-20608	•• WASHER	2	3001–	3001–
24	205-54-71641	•• LOCK ASS'Y	1	3001–	3001–
25	203-54-43360	•• SEAL	1	3001–	3001–
26	203-54-43350	•• SEAL	1	3001–	3001–
27	205-54-71910	•• STOPPER	2	3001–	3001–
28	203-54-43420	•• SHEET	1	3001–	3001–

FIG NO. 5229

INDEX NO.	PART NO.	DESCRIPTION	Q'TY	SERIAL NO. PC150-3	SERIAL NO. PC150LC-3
29	205-54-72760	•• HINGE ASS'Y	3	3001 –	3001 –
30	01224-40830	•• SCREW	21	3001 –	3001 –
31	205-54-72750	•• WASHER, LOCK	21	3001 –	3001 –
32	203-54-41452	COVER	1	3001 –	3001 –
33	205-00-65310	CLIP ASS'Y	9	3001 –	3001 –

FIG. 5231 OPERATOR'S CAB (6/6) (EXCEPT JAPAN)

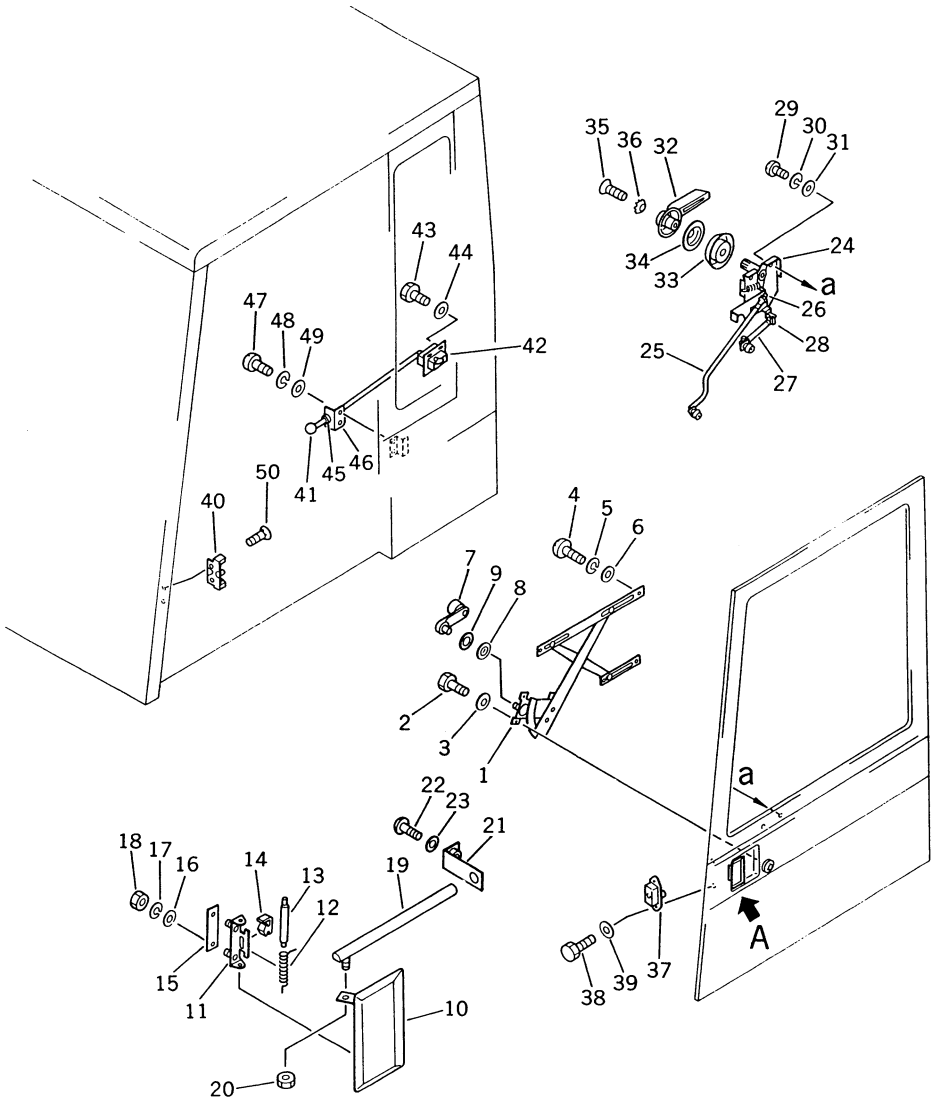

FIG NO. 5231

INDEX NO.	PART NO.	DESCRIPTION	Q'TY	SERIAL NO. PC150-3	SERIAL NO. PC150LC-3
	(203-54-00340)	OPERATOR'S CAB ASS'Y (FOR LONG LEVER CONTROL)	1	3001–	3001–
		THIS ASSEMBLY CONSISTS OF ALL PARTS SHOWN IN FIGS. 5221 TO 5231.			
	(203-54-00150)	• DOOR ASS'Y	1	3001–	3001–
		THIS ASSEMBLY CONSISTS OF ALL PARTS SHOWN IN FIGS. 5229 AND 5231.			
1	205-54-71631	•• REGULATOR ASS'Y	1	3001–	3001–
2	01010-50610	•• BOLT	6	3001–	3001–
3	01643-30623	•• WASHER	6	3001–	3001–
4	01220-40608	•• SCREW	2	3001–	3001–
5	01602-20619	•• WASHER, SPRING	2	3001–	3001–
6	01641-20608	•• WASHER	2	3001–	3001–
7	203-54-43310	•• HANDLE	1	3001–	3001–
8	203-54-43330	•• ESCUTCHEON	1	3001–	3001–
9	203-54-43740	•• SEAL, WATER	1	3001–	3001–
10	205-54-72101	•• HANDLE ASS'Y	1	3001–	3001–
10	205-54-72111	••• HANDLE	1	3001–	3001–
11	205-54-72121	••• BRACKET	1	3001–	3001–
12	205-54-72130	••• SPRING	1	3001–	3001–
13	205-54-72140	••• PIN	1	3001–	3001–
14	205-54-72150	••• CUSHION	1	3001–	3001–
15	205-54-72160	••• PACKING	1	3001–	3001–
16	01641-20608	•• WASHER	2	3001–	3001–
17	01602-20619	•• WASHER, SPRING	2	3001–	3001–
18	01580-10605	•• NUT	2	3001–	3001–
19	203-54-43370	•• ROD	1	3001–	3001–
20	203-54-43380	•• NUT	1	3001–	3001–
21	203-54-43730	•• GUIDE	1	3001–	3001–
22	01220-40616	•• SCREW	1	3001–	3001–
23	01643-30623	•• WASHER	1	3001–	3001–
24	205-54-71802	•• CONTROL ASS'Y	1	3001–	3001–
24	205-54-71811	••• REMOTE CONTROL ASS'Y	1	3001–	3001–
25	205-54-71822	••• ROD	1	3001–	3001–
26	205-54-71830	••• SNAP	2	3001–	3001–

FIG NO. 5231

INDEX NO.	PART NO.	DESCRIPTION	Q'TY	SERIAL NO. PC150-3	SERIAL NO. PC150LC-3
27	205-54-71721	••• ROD	1	3001–	3001–
28	205-54-71840	••• SNAP	1	3001–	3001–
29	01220-40610	•• SCREW	2	3001–	3001–
30	01602-20619	•• WASHER, SPRING	2	3001–	3001–
31	01641-20608	•• WASHER	2	3001–	3001–
32	203-54-43320	•• HANDLE	1	3001–	3001–
33	566-54-24260	•• BASE	1	3001–	3001–
34	203-54-43330	•• ESCUTCHEON	1	3001–	3001–
35	01225-40510	•• SCREW	1	3001–	3001–
36	205-54-71880	•• WASHER, LOCK	1	3001–	3001–
37	205-54-71710	•• LOCK ASS'Y	1	3001–	3001–
38	01010-50616	•• BOLT	2	3001–	3001–
39	01643-30623	•• WASHER	2	3001–	3001–
40	205-54-71731	• STRIKER	1	3001–	3001–
41	205-54-72840	• KNOB	1	3001–	3001–
42	20G-54-12110	• LOCK ASS'Y	1	3001–	3001–
43	01010-50620	• BOLT	4	3001–	3001–
44	01643-30623	• WASHER	4	3001–	3001–
45	205-54-72830	• GROMMET	1	3001–	3001–
46	20G-54-12120	• BRACKET	1	3001–	3001–
47	01220-40620	• SCREW	2	3001–	3001–
48	01602-20619	• WASHER, SPRING	2	3001–	3001–
49	01641-20608	• WASHER	2	3001–	3001–
50	203-54-43590	• SCREW	2	3001–	3001–

FIG. 5301 OPERATOR'S CAB, FLOOR FRAME (FOR LONG LEVER CONTROL)

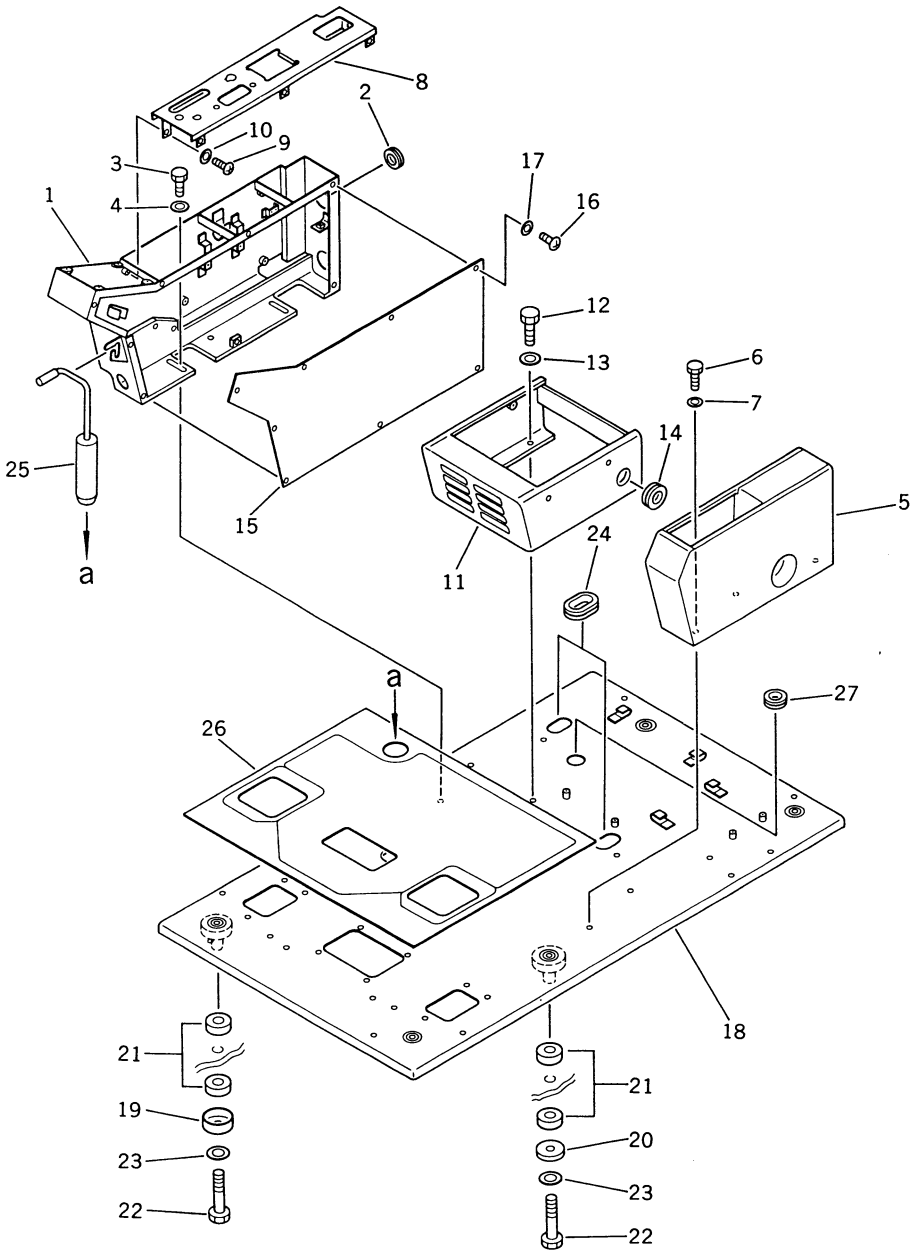

FIG NO. 5301

INDEX NO.	PART NO.	DESCRIPTION	Q'TY	SERIAL NO. PC150-3	SERIAL NO. PC150LC-3
1	203-54-41461	BOX, R.H.	1	3001–	3001–
2	08037-05016	GROMMET	1	3001–	3001–
3	01010-51025	BOLT	4	3001–	3001–
4	01643-31032	WASHER	4	3001–	3001–
5	203-54-41471	BOX, L.H.	1	3001–	3001–
6	01010-51020	BOLT	3	3001–	3001–
7	01643-31032	WASHER	3	3001–	3001–
8	203-54-41480	PANEL	1	3001–	3001–
9	01220-40816	SCREW	2	3001–	3001–
10	01643-30823	WASHER	2	3001–	3001–
11	203-54-41491	BRACKET	1	3001–	3001–
12	01010-51230	BOLT	4	3001–	3001–
13	01643-31232	WASHER	4	3001–	3001–
14	08037-03614	GROMMET	1	3001–	3001–
15	203-54-41511	COVER	1	3001–	3001–
16	01010-50816	BOLT	8	3001–	3001–
17	01643-30823	WASHER	8	3001–	3001–
18	21K-54-25110	FRAME, FLOOR	1	3001–	3001–
19	201-54-21860	COLLAR	4	3001–	3001–
20	205-54-51950	PLATE	2	3001–	3001–
21	203-54-21110	CUSHION	12	3001–	3001–
22	01010-51675	BOLT	6	3001–	3001–
23	01643-31645	WASHER	6	3001–	3001–
24	176-911-4160	GROMMET	2	3001–	3001–
25	203-54-41412	PIN	1	3001–	3001–
26	203-54-41382	MAT, FLOOR	1	3001–	3001–
27	08037-03614	GROMMET	1	3001–	3001–

FIG. 5311 OPERATOR'S CAB, FLOOR FRAME (FOR WRIST CONTROL)

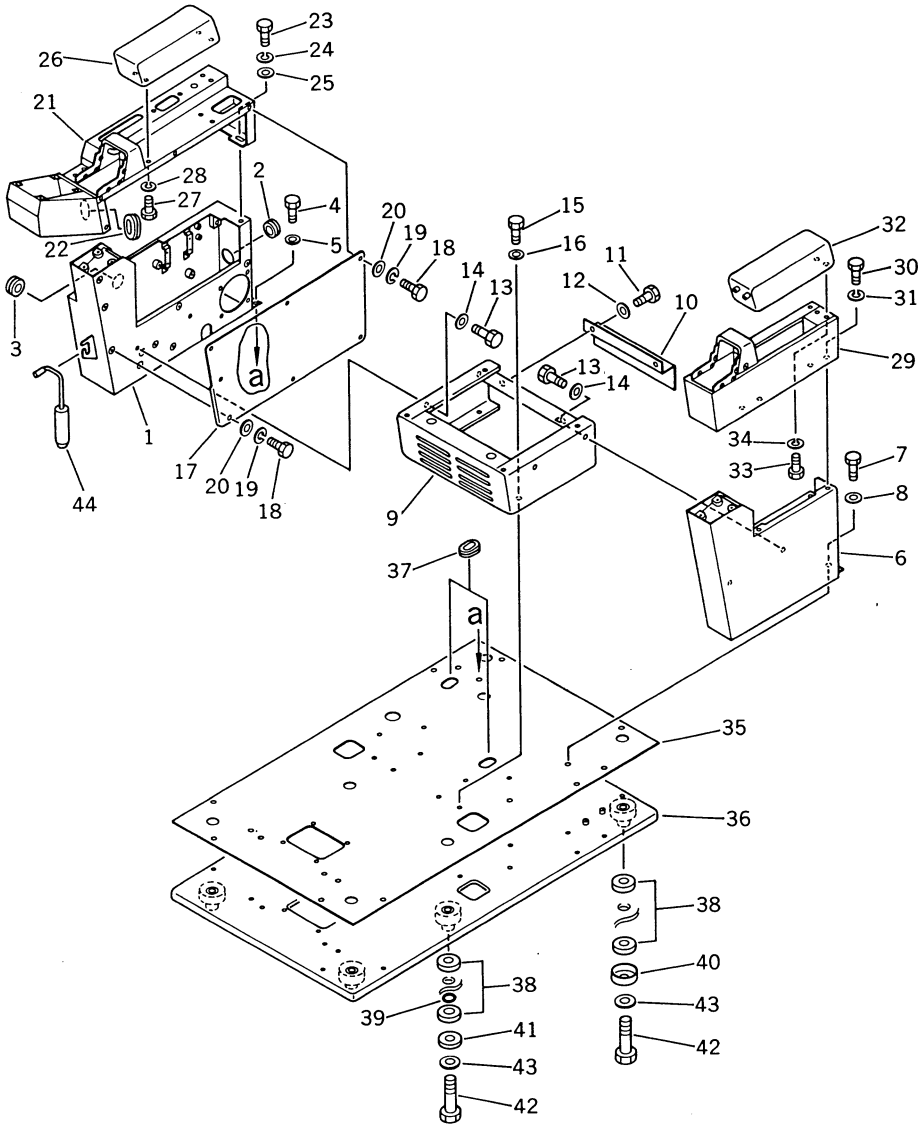

FIG NO. 5311

INDEX NO.	PART NO.	DESCRIPTION	Q'TY	SERIAL NO. PC150-3	SERIAL NO. PC150LC-3
1	21K-54-25540	BOX, R.H.	1	3001–	3001–
2	08037-03016	GROMMET	1	3001–	3001–
3	08037-03614	GROMMET	1	3001–	3001–
4	01010-51225	BOLT	5	3001–	3001–
5	01643-31232	WASHER	5	3001–	3001–
6	21K-54-25530	BOX, L.H.	1	3001–	3001–
7	01010-51225	BOLT	2	3001–	3001–
8	01643-31232	WASHER	2	3001–	3001–
9	21K-54-25550	BRACKET	1	3001–	3001–
10	21K-54-25210	COVER	1	3001–	3001–
11	01010-51020	BOLT	2	3001–	3001–
12	01643-31032	WASHER	2	3001–	3001–
13	01010-51025	BOLT	4	3001–	3001–
14	01643-31032	WASHER	4	3001–	3001–
15	01010-51230	BOLT	4	3001–	3001–
16	01643-31232	WASHER	4	3001–	3001–
17	203-54-41192	COVER	1	3001–	3001–
18	01010-50612	BOLT	7	3001–	3001–
19	01602-20619	WASHER, SPRING	7	3001–	3001–
20	01640-20610	WASHER	7	3001–	3001–
21	203-54-41122	BOX, R.H.	1	3001–	3001–
22	203-54-41570	GROMMET	1	3001–	3001–
23	01010-50820	BOLT	3	3001–	3001–
24	01602-20825	WASHER, SPRING	3	3001–	3001–
25	01643-30823	WASHER	3	3001–	3001–
26	203-54-41172	CUSHION, R.H.	1	3001–	3001–
27	01010-50820	BOLT	4	3001–	3001–
28	01602-20825	WASHER, SPRING	4	3001–	3001–
29	203-54-41132	BOX, L.H.	1	3001–	3001–
30	01010-50820	BOLT	4	3001–	3001–
31	01602-20825	WASHER, SPRING	4	3001–	3001–
32	203-54-41182	CUSHION, L.H.	1	3001–	3001–
33	01010-50820	BOLT	2	3001–	3001–
34	01602-20825	WASHER, SPRING	2	3001–	3001–
35	203-54-41251	MAT, FLOOR	1	3001–	3001–

FIG NO. 5311

INDEX NO.	PART NO.	DESCRIPTION	Q'TY	SERIAL NO. PC150-3	SERIAL NO. PC150LC-3
36	21K-54-25511	FRAME, FLOOR	1	3001–	3001–
37	176-911-4160	GROMMET	2	3001–	3001–
38	203-54-21110	CUSHION	12	3001–	3001–
39	07000-03025	O-RING	1	3001–	3001–
40	201-54-21860	COLLAR	4	3001–	3001–
41	205-54-51950	PLATE	2	3001–	3001–
42	01010-51675	BOLT	6	3001–	3001–
43	01643-31645	WASHER	6	3001–	3001–
44	21K-54-25120	PIN	1	3001–	3001–

FIG. 5401 OPERATOR'S SEAT (FOR LONG LEVER CONTROL)

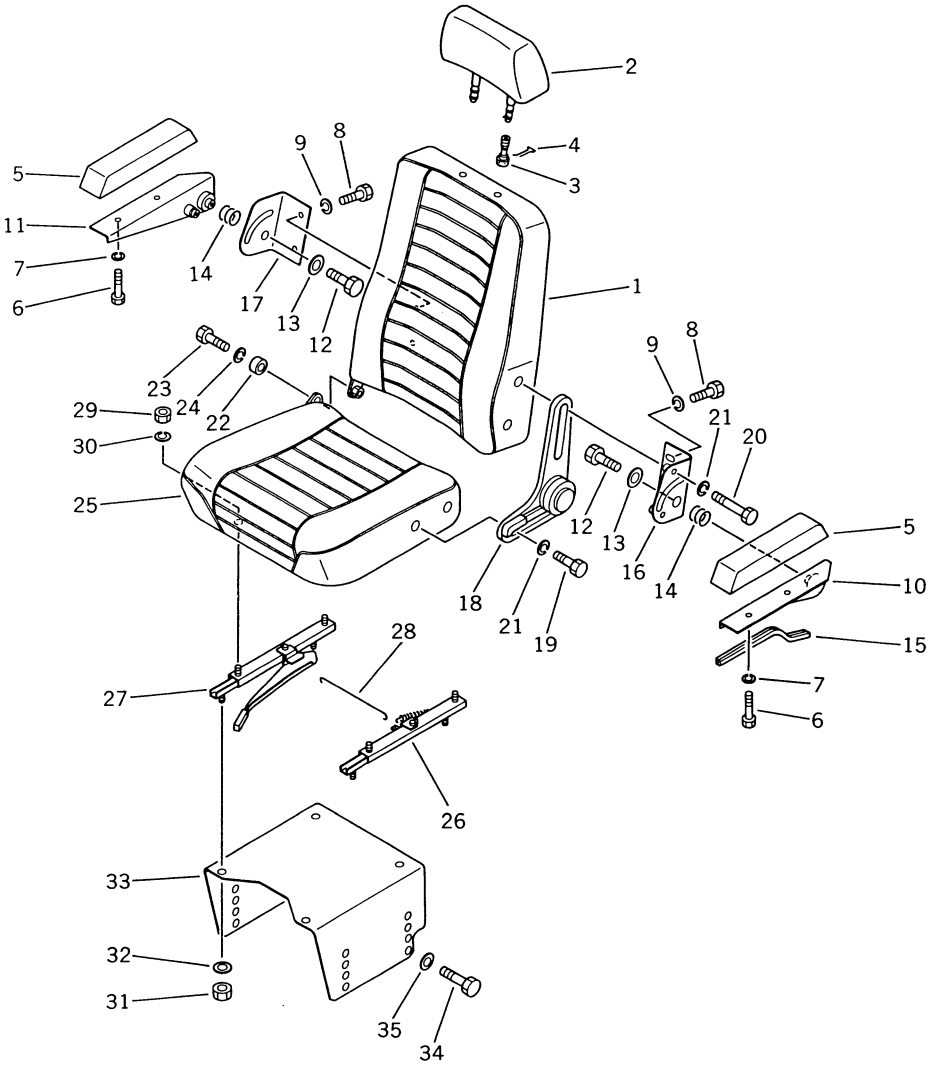

INDEX NO.	PART NO.	DESCRIPTION	Q'TY	SERIAL NO. PC150-3	SERIAL NO. PC150LC-3
	205-57-00072	SEAT ASS'Y	1	3001–	3001–
1	205-57-72321	• CUSHION, BACK	1	3001–	3001–
2	205-57-72411	• REST, HEAD	1	3001–	3001–
3	(☆205-57-72420)	• HOLDER	2	3001–	3001–
4	(☆205-57-72430)	• SPRING	2	3001–	3001–
5	205-57-72341	• REST, ARM	2	3001–	3001–
6	01010-50835	• BOLT	4	3001–	3001–
7	01602-20825	• WASHER, SPRING	4	3001–	3001–
8	01010-51020	• BOLT	4	3001–	3001–
9	01643-31032	• WASHER	4	3001–	3001–
10	205-57-72441	• SUPPORT, L.H.	1	3001–	3001–
11	205-57-72451	• SUPPORT, R.H.	1	3001–	3001–
12	01010-51220	• BOLT	2	3001–	3001–
13	01643-31232	• WASHER	2	3001–	3001–
14	175-54-27350	• SPRING	2	3001–	3001–
15	205-57-72590	• SEAL	1	3001–	3001–
16	205-57-72361	• BRACKET, L.H.	1	3001–	3001–
17	205-57-72371	• BRACKET, R.H.	1	3001–	3001–
18	205-57-63510	• LEVER	1	3001–	3001–
19	01010-51020	• BOLT	2	3001–	3001–
20	01010-51050	• BOLT	2	3001–	3001–
21	01602-21030	• WASHER, SPRING	4	3001–	3001–
22	203-57-21330	• SPACER	1	3001–	3001–
23	01010-51020	• BOLT	1	3001–	3001–
24	01602-21030	• WASHER, SPRING	1	3001–	3001–
25	205-57-00023	• CUSHION ASS'Y	1	3001–	3001–
25	(☆205-57-72311)	•• CUSHION	1	3001–	3001–
26	(☆205-57-63520)	•• ADJUSTER	1	3001–	3001–
27	(☆205-57-63530)	•• ADJUSTER	1	3001–	3001–
28	205-57-63540	•• BAR	1	3001–	3001–
29	(☆01580-11210)	•• NUT	4	3001–	3001–
30	(☆01602-21236)	•• WASHER, SPRING	4	3001–	3001–
31	01580-01210	NUT	4	3001–	3001–
32	01643-31232	WASHER	4	3001–	3001–
33	203-57-41212	BRACKET	1	3001–	3001–

FIG NO. 5401

INDEX NO.	PART NO.	DESCRIPTION	Q'TY	SERIAL NO. PC150-3	SERIAL NO. PC150LC-3
34	01010-51230	BOLT	4	3001–	3001–
35	01643-31232	WASHER	4	3001–	3001–

FIG. 5411 OPERATOR'S SEAT (FOR WRIST CONTROL)

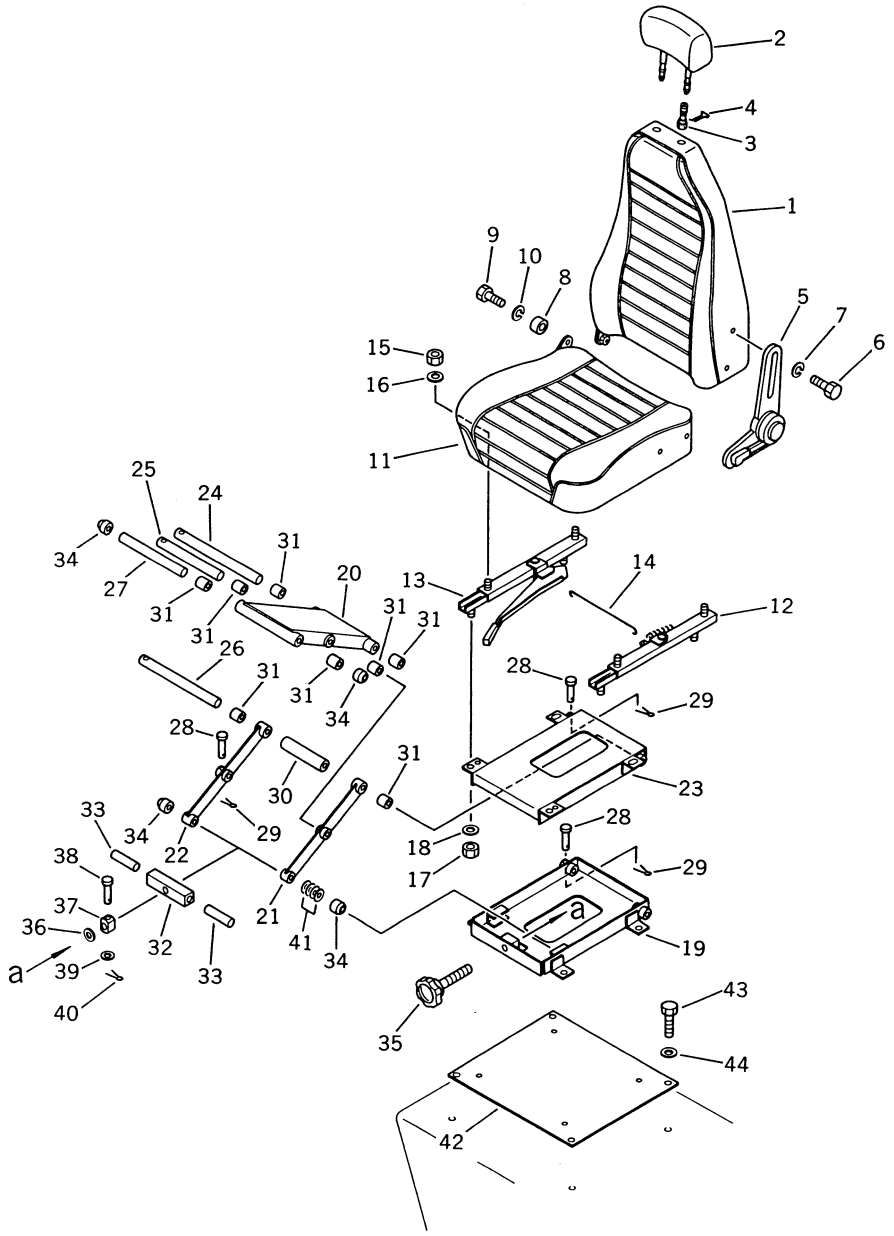

FIG NO. 5411

INDEX NO.	PART NO.	DESCRIPTION	Q'TY	SERIAL NO. PC150-3	SERIAL NO. PC150LC-3
	203-57-00041	OPERATOR'S SEAT ASS'Y	1	3001–	3001–
	205-57-00042	• SEAT ASS'Y	1	3001–	3001–
1	205-57-72331	•• CUSHON, BACK	1	3001–	3001–
2	205-57-72411	•• REST, HEAD	1	3001–	3001–
3	205-57-72420	•• HOLDER	2	3001–	3001–
4	205-57-72430	•• SPRING	2	3001–	3001–
5	205-57-63510	•• LEVER	1	3001–	3001–
6	01010-31020	•• BOLT	4	3001–	3001–
7	01602-01030	•• WASHER, SPRING	4	3001–	3001–
8	203-57-21330	•• SPACER	1	3001–	3001–
9	01010-31020	•• BOLT	1	3001–	3001–
10	01602-01030	•• WASHER, SPRING	1	3001–	3001–
11	205-57-00023	•• CUSHION ASS'Y	1	3001–	3001–
11	(☆205-57-72311)	••• CUSHION	1	3001–	3001–
12	(☆205-57-63520)	••• ADJUSTER	1	3001–	3001–
13	(☆205-57-63530)	••• ADJUSTER	1	3001–	3001–
14	205-57-63540	••• BAR	1	3001–	3001–
15	(☆01580-01210)	••• NUT	4	3001–	3001–
16	(☆01602-21236)	••• WASHER, SPRING	4	3001–	3001–
17	01580-01210	• NUT	4	3001–	3001–
18	01643-31232	• WASHER	4	3001–	3001–
19	203-57-41101	• STAND ASS'Y	1	3001–	3001–
19	203-57-41121	•• BRACKET	1	3001–	3001–
20	203-57-41171	•• LINK	1	3001–	3001–
21	203-57-41181	•• LINK	1	3001–	3001–
22	203-57-41191	•• LINK	1	3001–	3001–
23	203-57-41141	•• BRACKET	1	3001–	3001–
24	205-57-63160	•• PIN	1	3001–	3001–
25	205-57-63170	•• PIN	1	3001–	3001–
26	205-57-63180	•• PIN	1	3001–	3001–
27	205-57-63190	•• PIN	1	3001–	3001–
28	207-57-11240	•• PIN	4	3001–	3001–
29	04050-11610	•• PIN, COTTER	4	3001–	3001–
30	205-57-72560	•• COLLAR	1	3001–	3001–
31	203-57-21280	•• BUSHING	10	3001–	3001–

FIG NO. 5411

INDEX NO.	PART NO.	DESCRIPTION	Q'TY	SERIAL NO. PC150-3	SERIAL NO. PC150LC-3
32	205-57-72570	•• BAR	1	3001–	3001–
33	207-57-11220	•• PIN	2	3001–	3001–
34	203-57-21310	•• ROLLER	4	3001–	3001–
35	203-57-41112	•• KNOB	1	3001–	3001–
36	01643-31445	•• WASHER	1	3001–	3001–
37	205-57-72580	•• NUT	1	3001–	3001–
38	205-57-63250	•• PIN	1	3001–	3001–
39	01641-20608	•• WASHER	1	3001–	3001–
40	04050-11610	•• PIN, COTTER	1	3001–	3001–
41	203-57-21320	•• SHIM	20	3001–	3001–
42	203-57-41131	PLATE	1	3001–	3001–
43	01010-51230	BOLT	4	3001–	3001–
44	01643-31232	WASHER	4	3001–	3001–

FIG. 5501 CAR HEATER (FOR LONG LEVER CONTROL)

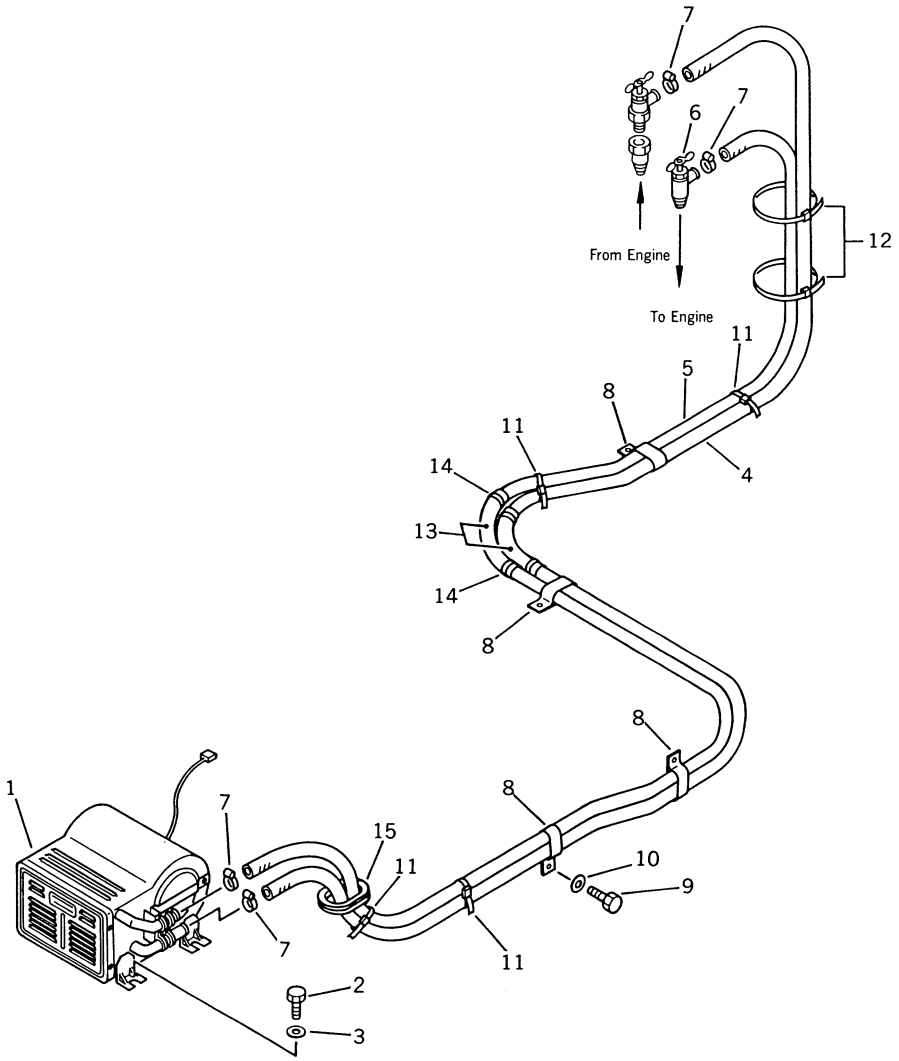

FIG NO. 5501

INDEX NO.	PART NO.	DESCRIPTION	Q'TY	SERIAL NO. PC150-3	SERIAL NO. PC150LC-3
1	205-977-7110	HEATER	1	3001–	3001–
2	01010-51025	BOLT	4	3001–	3001–
3	01643-31032	WASHER	4	3001–	3001–
4	09483-00436	HOSE	1	3001–	3001–
5	09483-00434	HOSE	1	3001–	3001–
6	201-54-24130	VALVE	1	3001–	3001–
7	07281-00259	CLAMP	4	3001–	3001–
8	176-911-4170	CLIP	4	3001–	3001–
9	01010-51020	BOLT	4	3001–	3001–
10	01643-31032	WASHER	4	3001–	3001–
11	08034-00519	BAND	4	3001–	3001–
12	08034-00536	BAND	2	3001–	3001–
13	203-04-31230	COVER	2	3001–	3001–
14	08034-00519	BAND	4	3001–	3001–
15	176-911-4160	GROMMET	1	3001–	3001–

FIG. 5503 CAR HEATER (FOR WRIST CONTROL)

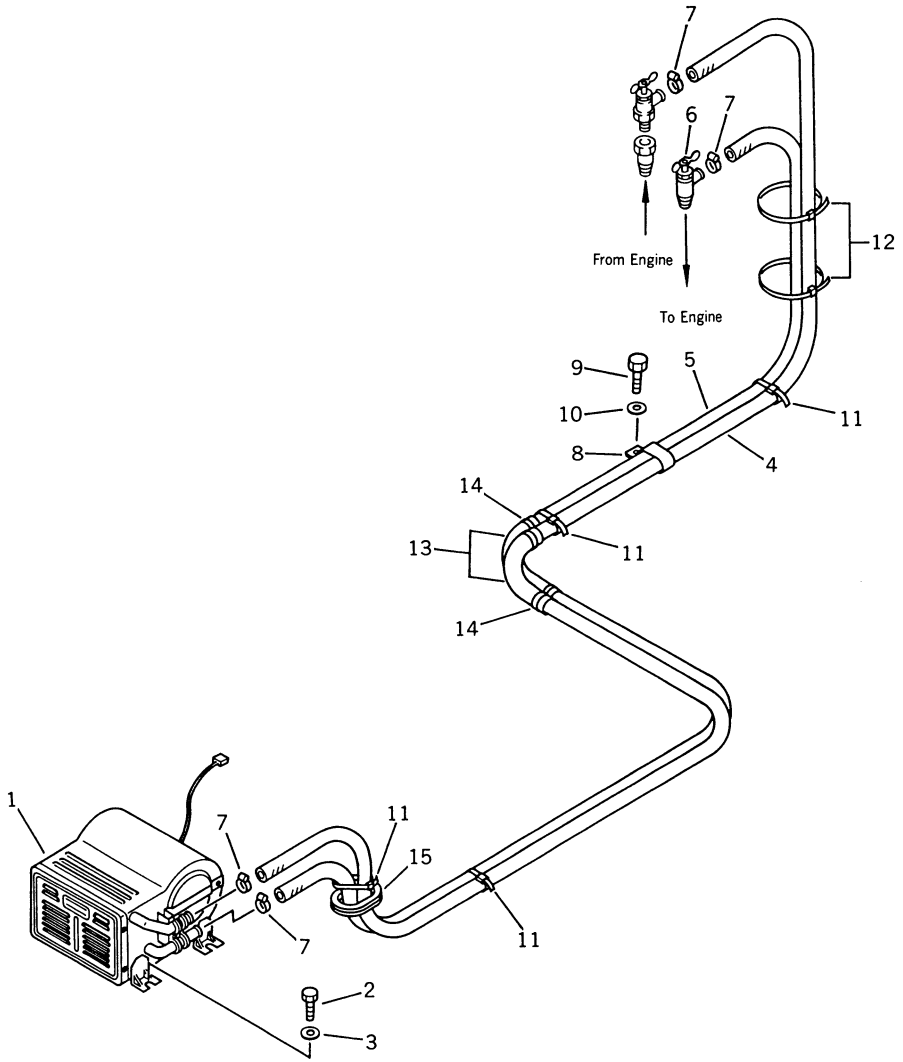

FIG NO. 5503

INDEX NO.	PART NO.	DESCRIPTION	Q'TY	SERIAL NO. PC150-3	SERIAL NO. PC150LC-3
1	205-977-7110	HEATER	1	3001–	3001–
2	01010-51025	BOLT	4	3001–	3001–
3	01643-31032	WASHER	4	3001–	3001–
4	09483-00434	HOSE	1	3001–	3001–
5	09483-00432	HOSE	1	3001–	3001–
6	201-54-24130	VALVE	1	3001–	3001–
7	07281-00259	CLAMP	4	3001–	3001–
8	176-911-4170	CLIP	1	3001–	3001–
9	01010-51020	BOLT	1	3001–	3001–
10	01643-31032	WASHER	1	3001–	3001–
11	08034-00519	BAND	4	3001–	3001–
12	08034-00536	BAND	2	3001–	3001–
13	203-04-31230	COVER	2	3001–	3001–
14	08034-00519	BAND	4	3001–	3001–
15	176-911-4160	GROMMET	1	3001–	3001–

WORK EQUIPMENT CONTROL SYSTEM

CONTENTS

	FIG NO.	PAGE
HYDRAULIC PUMP UNIT	6001	264
HYDRAULIC PUMP, FRONT (1/2)	6002	268
HYDRAULIC PUMP, FRONT (2/2)	6003	272
HYDRAULIC PUMP, END CAP	6004	274
HYDRAULIC PUMP, REAR (1/2)	6005	276
HYDRAULIC PUMP, REAR (2/2)	6006	280
SERVO VALVE, FRONT (1/2)	6011	282
SERVO VALVE, FRONT (2/2)	6012	284
CUT OFF AND NEGATIVE CONTROL VALVE, FRONT	6013	288
TORQUE VARIABLE CONTROL VALVE	6014	292
SERVO VALVE REAR (1/2)	6015	294
SERVO VALVE REAR (2/2)	6016	296
CUT OFF AND NEGATIVE CONTROL VALVE, REAR	6017	300
RELIEF VALVE	6018	304
HYDRAULIC PUMP (EXCEPT JAPAN)	6022	308
HYDRAULIC OIL AND FUEL TANK	6101	310
CONTROL VALVE, L.H. (1/4) (FOR LONG LEVER CONTROL)	6201	314
CONTROL VALVE, L.H. (2/4) (FOR LONG LEVER CONTROL)	6202	318
CONTROL VALVE, L.H. (3/4) (FOR LONG LEVER CONTROL)	6203	322
CONTROL VALVE, L.H. (4/4) (FOR LONG LEVER CONTROL)	6204	326
CONTROL VALVE, R.H. (1/4) (FOR LONG LEVER CONTROL)	6205	330
CONTROL VALVE, R.H. (2/4) (FOR LONG LEVER CONTROL)	6206	334
CONTROL VALVE, R.H. (3/4) (FOR LONG LEVER CONTROL)	6207	338
CONTROL VALVE, R.H. (4/4) (FOR LONG LEVER CONTROL)	6208	342
CONTROL VALVE, L.H. (1/4) (FOR WRIST CONTROL)	6211	344
CONTROL VALVE, L.H. (2/4) (FOR WRIST CONTROL)	6212	348
CONTROL VALVE, L.H. (3/4) (FOR WRIST CONTROL)	6213	352
CONTROL VALVE, L.H. (4/4) (FOR WRIST CONTROL)	6214	356
CONTROL VALVE, R.H. (1/4) (FOR WRIST CONTROL)	6215	360
CONTROL VALVE, R.H. (2/4) (FOR WRIST CONTROL)	6216	364
CONTROL VALVE, R.H. (3/4) (FOR WRIST CONTROL)	6217	368
CONTROL VALVE, R.H. (4/4) (FOR WRIST CONTROL)	6218	372
SERVO VALVE (FOR LONG LEVER CONTROL)	6231	374
BOOM CYLINDER	6401	376
ARM CYLINDER	6403	380
BUCKET CYLINDER	6405	384
HYDRAULIC PIPING (TANK TO PUMP)	6501	388
HYDRAULIC PIPING (PUMP TO VALVE)	6502	390
HYDRAULIC PIPING (VALVE TO VALVE)	6503	392
HYDRAULIC PIPING (VALVE TO TANK AND OIL COOLER)	6504	396
HYDRAULIC PIPING (VALVE TO/FROM SOLENOID VALVE) (WITH AUTO DECELERATION) (WITH SWING MECHANICAL BRAKE)	6505	400
HYDRAULIC PIPING (VALVE TO/FROM SOLENOID VALVE) (WITHOUT AUTO DECELERATION) (WITHOUT SWING MECHANICAL BRAKE)	6506	402

CONTENTS

	FIG NO.	PAGE
HYDRAULIC PIPING (VALVE TO BOOM CYLINDER)	6511	404
HYDRAULIC PIPING (VALVE TO ARM CYLINDER)	6513	408
HYDRAULIC PIPING (VALVE TO BUCKET CYLINDER)	6515	410

FIG. 6001 HYDRAULIC PUMP UNIT

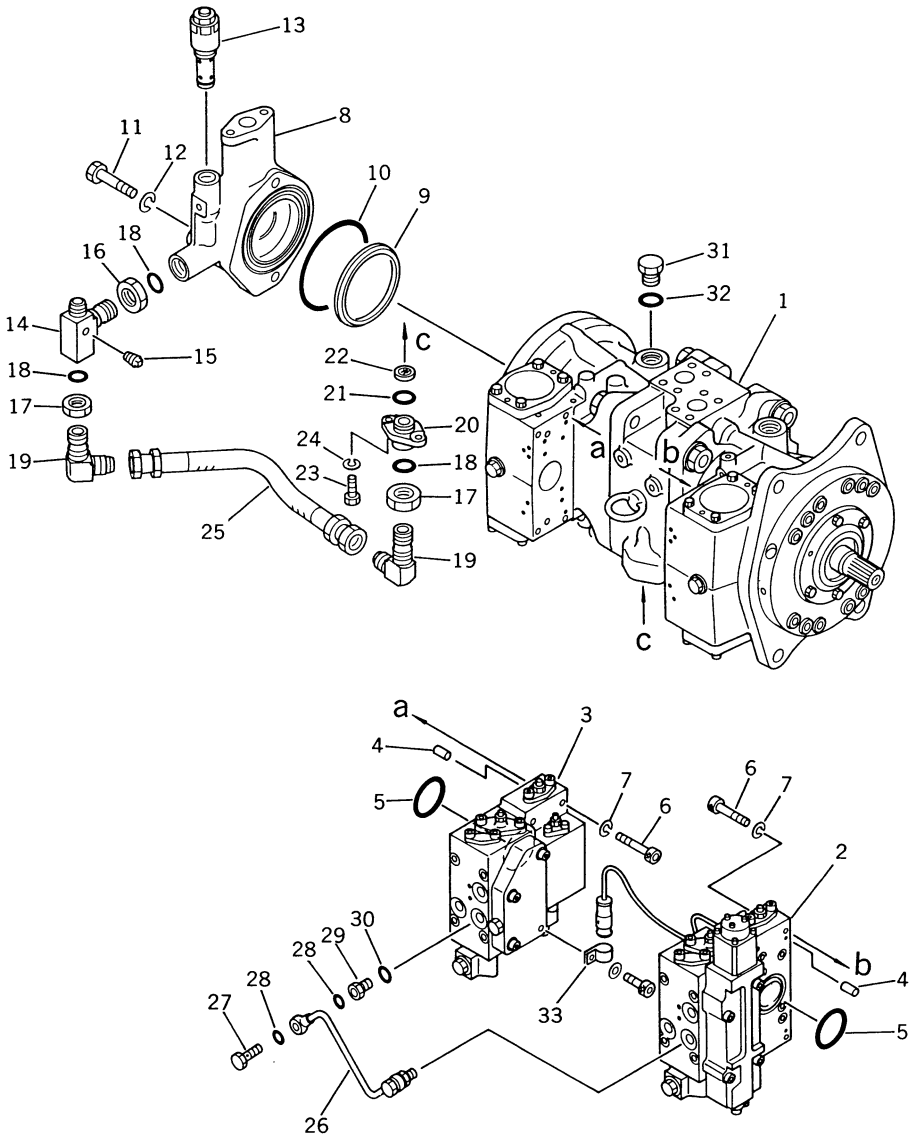

INDEX NO.	PART NO.	DESCRIPTION	Q'TY	SERIAL NO. PC150-3	SERIAL NO. PC150LC-3
	708-25-20100	HYDRAULIC PUMP ASS'Y (HPV71+71)	1	3001–	3001–
		THIS ASSEMBLY CONSISTS OF ALL PARTS SHOWN IN FIGS 6001 TO 6022.			
1	(708-25-21100)	• HYDRAULIC PUMP SUB ASS'Y	1	3001–	3001–
2	(708-25-25100)	• SERVO VALVE ASS'Y, FRONT	1	3001–	3001–
3	(708-25-26100)	• SERVO VALVE ASS'Y, REAR	1	3001–	3001–
4	04020-00616	• PIN, DOWEL	4	3001–	3001–
5	07000-03048	• O-RING	2	3001–	3001–
6	708-25-19130	• BOLT	8	3001–	3001–
7	01602-20825	• WASHER, SPRING	8	3001–	3001–
8	(704-24-28210)	• PUMP ASS'Y	1	3001–	3001–
9	708-25-22960	• O-RING	1	3001–	3001–
10	704-28-02710	• O-RING	1	3001–	3001–
11	01010-31260	• BOLT	2	3001–	3001–
12	01602-01236	• WASHER, SPRING	2	3001–	3001–
13	(708-23-14800)	• RELIEF VALVE ASS'Y	1	3001–	3001–
14	708-25-29120	• ELBOW	1	3001–	3001–
15	07042-20108	• PLUG	1	3001–	3001–
16	07239-12410	• NUT	1	3001–	3001–
17	07239-12009	• NUT	2	3001–	3001–
18	07002-02434	• O-RING	1	3001–	3001–
19	07232-20422	• NIPPLE	2	3001–	3001–
20	708-25-19120	• FLANGE	1	3001–	3001–
21	07002-02034	• O-RING	1	3001–	3001–
22	720-68-15240	• FILTER	1	3001–	3001–
23	01010-30820	• BOLT	2	3001–	3001–
24	01602-20825	• WASHER, SPRING	2	3001–	3001–
25	708-25-29110	• HOSE	1	3001–	3001–
26	708-25-29140	• TUBE	1	3001–	3001–
27	706-46-53180	• BOLT, EYE	2	3001–	3001–
28	07000-02012	• O-RING	4	3001–	3001–
29	706-46-53260	• PLUG	2	3001–	3001–
30	07002-01423	• O-RING	2	3001–	3001–
31	07040-02412	• PLUG	3	3001–	3001–
32	07002-02434	• O-RING	3	3001–	3001–

FIG NO. 6001

INDEX NO.	PART NO.	DESCRIPTION	Q'TY	SERIAL NO. PC150-3	SERIAL NO. PC150LC-3
33	08036-21814	• CLIP	1	3001 –	3001 –

FIG. 6002 HYDRAULIC PUMP, FRONT (1/2)

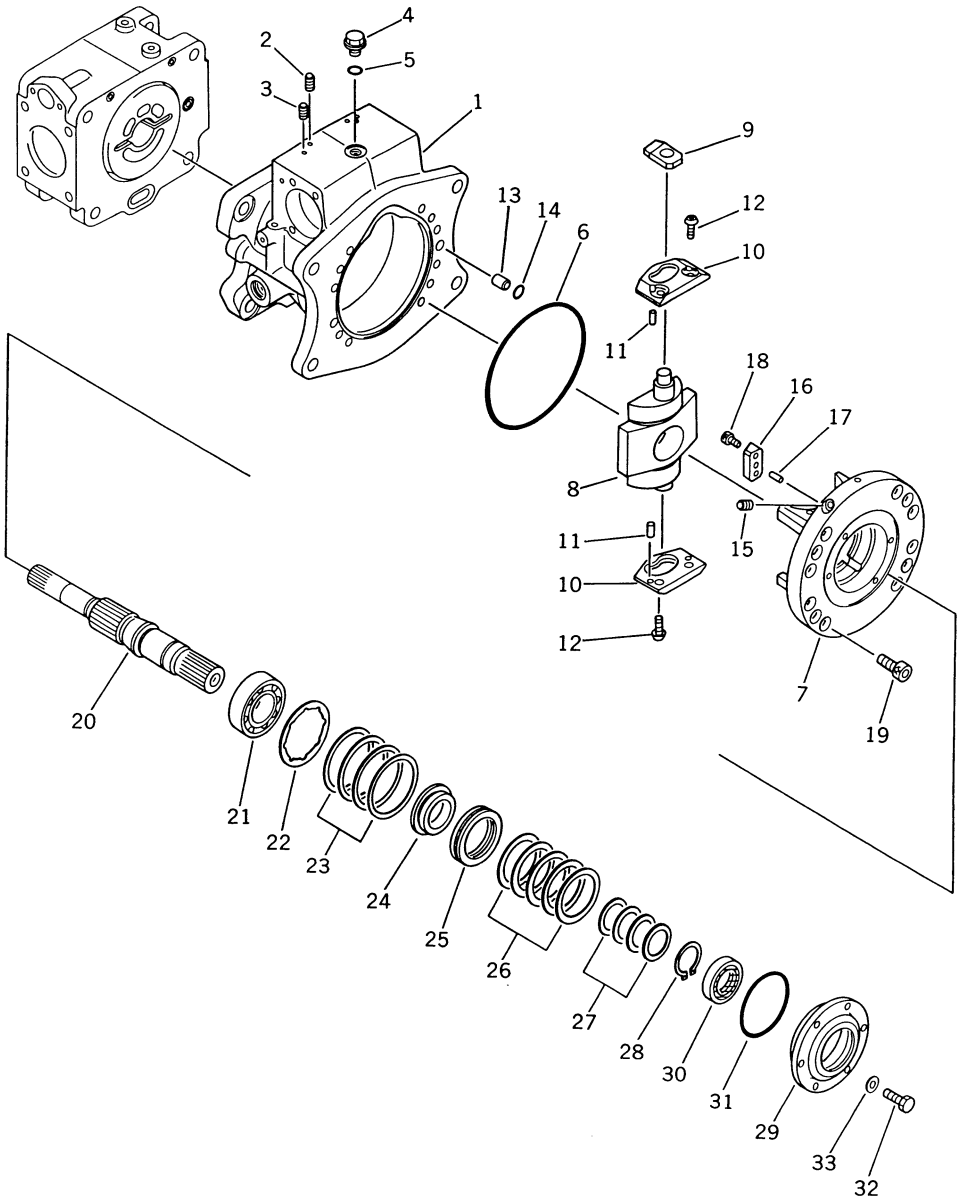

INDEX NO.	PART NO.	DESCRIPTION	Q'TY	SERIAL NO. PC150-3	SERIAL NO. PC150LC-3
	(708-25-20100)	HYDRAULIC PUMP ASS'Y (HPV71+71)	1	3001–	3001–
		THIS ASSEMBLY CONSISTS OF ALL PARTS SHOWN IN FIGS 6001 TO 6022.			
	708-25-21100	• HYDRAULIC PUMP SUB ASS'Y	1	3001–	3001–
		THIS ASSEMBLY CONSISTS OF ALL PARTS SHOWN IN FIGS 6002 TO 6006.			
		PARTS WITH A STAR MARK ARE SUPPLIED SEPARATELY ONLY TO DESIGNATED DEALERS WHICH ARE EQUIPPED THE HYDRAULIC PUMP TESTER.			
1	(☆708-25-22110)	•• CASE, FRONT	1	3001–	3001–
2	(☆720-68-19740)	•• PLUG	8	3001–	3001–
3	(☆720-68-19510)	•• PLUG	4	3001–	3001–
4	720-68-19870	•• PLUG	1	3001–	3001–
5	07002-01223	•• O-RING	1	3001–	3001–
6	(☆708-25-12340)	•• O-RING	1	3001–	3001–
7	(☆708-25-00050)	•• CRADLE ASS'Y	1	3001–	3001–
7	(☆708-25-22310)	••• CRADLE, FRONT	1	3001–	3001–
8	(☆708-25-23410)	••• ROCKER, CAM	1	3001–	3001–
9	(☆708-25-14120)	•• SLIDER	1	3001–	3001–
10	(☆708-25-23410)	•• PLATE	2	3001–	3001–
11	(☆04020-00820)	•• PIN	4	3001–	3001–
12	(☆01010-30816)	•• SCREW	4	3001–	3001–
13	(☆708-25-12330)	•• JOINT	1	3001–	3001–
14	(☆07000-12015)	•• O-RING	1	3001–	3001–
15	(☆720-68-19510)	•• PLUG	1	3001–	3001–
16	(☆708-25-12370)	•• STOPPER	1	3001–	3001–
17	(☆04020-00616)	•• PIN, DOWEL	1	3001–	3001–
18	(☆708-25-12380)	•• BOLT	1	3001–	3001–
19	(☆708-25-12350)	•• BOLT	12	3001–	3001–
20	(☆708-25-22710)	•• SHAFT	1	3001–	3001–
21	(☆708-25-12730)	•• BEARING	1	3001–	3001–
22	(☆708-25-12950)	•• COLLAR	1	3001–	3001–
23	(☆708-25-22880)	•• SHIM, 0.05MM	1	3001–	3001–
23	(☆708-25-22870)	•• SHIM, 0.10MM	3	3001–	3001–
23	(☆708-25-22860)	•• SHIM, 0.15MM	2	3001–	3001–

FIG NO. 6002

INDEX NO.	PART NO.	DESCRIPTION	Q'TY	SERIAL NO. PC150-3	SERIAL NO. PC150LC-3
24	(☆708-25-22750)	•• RETAINER	1	3001–	3001–
25	(☆06000-51112)	•• BEARING	1	3001–	3001–
26	(☆708-25-22970)	•• SHIM, 0.10MM	2	3001–	3001–
26	(☆708-25-22910)	•• SHIM, 0.20MM	2	3001–	3001–
26	(☆708-25-22890)	•• SHIM, 0.50MM	1	3001–	3001–
27	(☆708-25-12760)	•• WASHER, 2.0MM	1	3001–	3001–
27	(☆708-25-12770)	•• WASHER, 2.1MM	1	3001–	3001–
27	(☆708-25-12780)	•• WASHER, 2.2MM	1	3001–	3001–
27	(☆708-25-22770)	•• WASHER, 2.3MM	1	3001–	3001–
28	(☆708-25-12790)	•• RING, SNAP	1	3001–	3001–
29	(☆708-25-22840)	•• HOUSING	1	3001–	3001–
30	706-73-40920	•• SEAL, OIL	1	3001–	3001–
31	07000-02090	•• O-RING	1	3001–	3001–
32	01010-30820	•• BOLT	6	3001–	3001–
33	01643-30823	•• WASHER	6	3001–	3001–

FIG. 6003 HYDRAULIC PUMP, FRONT (2/2)

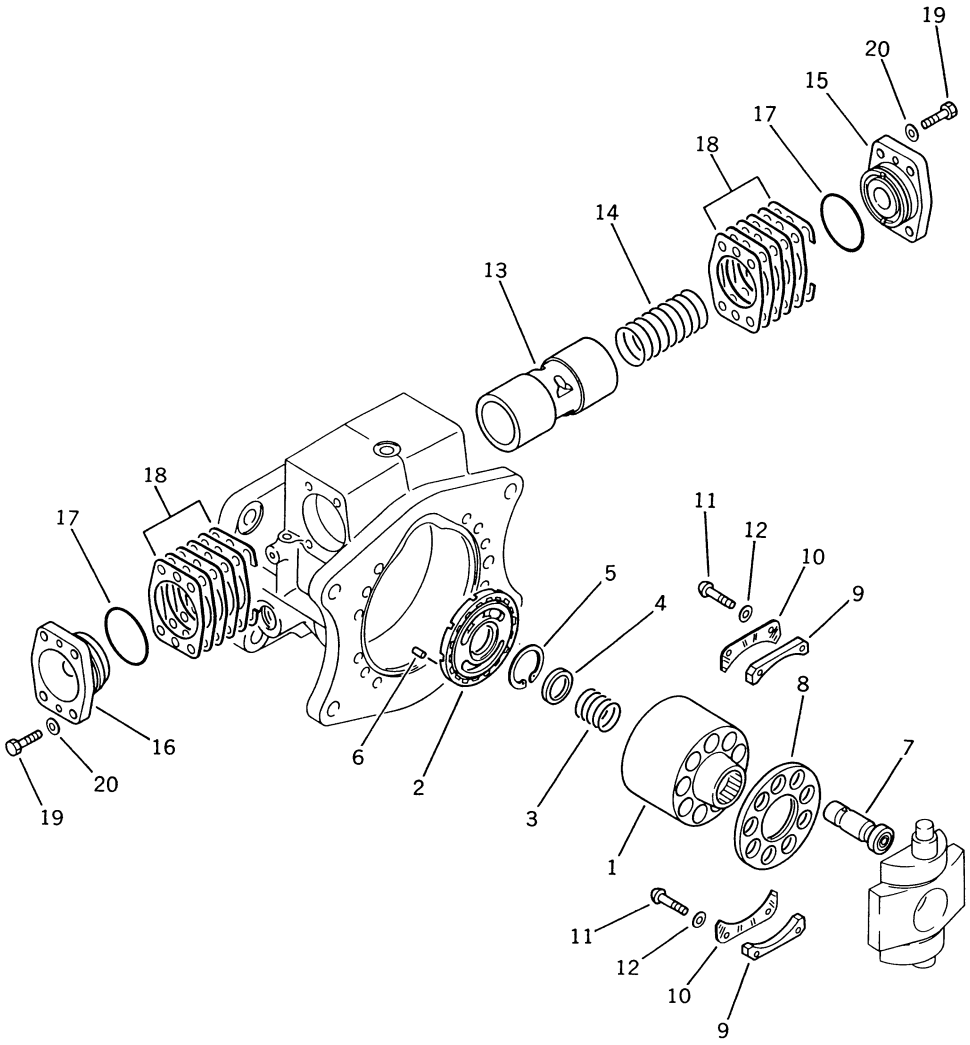

FIG NO. 6003

INDEX NO.	PART NO.	DESCRIPTION	Q'TY	SERIAL NO. PC150-3	SERIAL NO. PC150LC-3
	(708-25-20100)	HYDRAULIC PUMP ASS'Y (HPV71+71)	1	3001–	3001–
		THIS ASSEMBLY CONSISTS OF ALL PARTS SHOWN IN FIGS 6001 TO 6022.			
	(708-25-21100)	• HYDRAULIC PUMP SUB ASS'Y	1	3001–	3001–
		THIS ASSEMBLY CONSISTS OF ALL PARTS SHOWN IN FIGS 6002 TO 6006.			
		PARTS WITH A STAR MARK ARE SUPPLIED SEPARATELY ONLY TO DESIGNATED DEALERS WHICH ARE EQUIPPED THE HYDRAULIC PUMP TESTER.			
	(☆708-25-00010)	•• BLOCK ASS'Y	1	3001–	3001–
1	(☆708-25-13150)	••• BLOCK, CYLINDER	1	3001–	3001–
2	(☆708-25-13210)	••• PLATE, VALVE	1	3001–	3001–
3	(☆708-25-13130)	•• SPRING	1	3001–	3001–
4	(☆708-25-13120)	•• WASHER	1	3001–	3001–
5	(☆708-25-13140)	•• RING, SNAP	1	3001–	3001–
6	(☆720-68-19610)	•• PIN	1	3001–	3001–
7	(☆708-25-13310)	•• PISTON SUB ASS'Y	9	3001–	3001–
8	(☆708-25-13421)	•• RETAINER, SHOE	1	3001–	3001–
9	(☆708-25-13510)	•• SPACER, 12.015MM	2	3001–	3001–
9	(☆708-25-13520)	•• SPACER, 12.040MM	2	3001–	3001–
9	(☆708-25-13530)	•• SPACER, 12.060MM	2	3001–	3001–
10	(☆708-25-13441)	•• RETAINER, BEARING	2	3001–	3001–
11	(☆708-25-13470)	•• SCREW	4	3001–	3001–
12	(☆01643-30623)	•• WASHER	4	3001–	3001–
13	(☆708-25-14110)	•• PISTON	1	3001–	3001–
14	708-25-14130	•• SPRING	1	3001–	3001–
15	(☆708-25-24110)	•• CAP	1	3001–	3001–
16	(☆708-25-14150)	•• CAP	1	3001–	3001–
17	07000-02065	•• O-RING	2	3001–	3001–
18	(☆708-25-14190)	•• SHIM, 0.10MM	8	3001–	3001–
18	(☆708-25-14180)	•• SHIM, 0.10MM	4	3001–	3001–
18	(☆708-25-14170)	•• SHIM, 0.20MM	4	3001–	3001–
18	(☆708-25-14160)	•• SHIM, 0.50MM	6	3001–	3001–
19	01010-31025	•• BOLT	8	3001–	3001–
20	01643-31032	•• WASHER	8	3001–	3001–

FIG. 6004 HYDRAULIC PUMP, END CAP

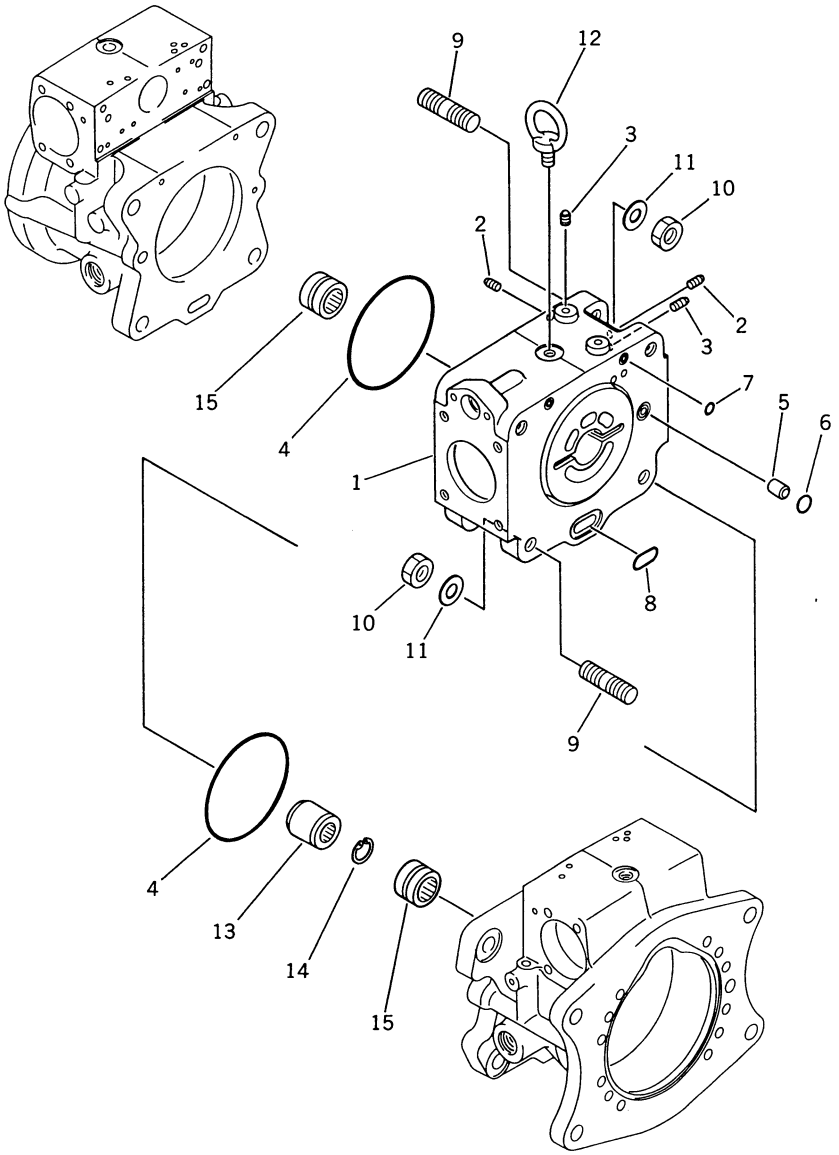

INDEX NO.	PART NO.	DESCRIPTION	Q'TY	SERIAL NO. PC150-3	SERIAL NO. PC150LC-3
	(708-25-20100)	HYDRAULIC PUMP ASS'Y (HPV71+71)	1	3001–	3001–
		THIS ASSEMBLY CONSISTS OF ALL PARTS SHOWN IN FIGS 6001 TO 6022.			
	(708-25-21100)	• HYDRAULIC PUMP SUB ASS'Y	1	3001–	3001–
		THIS ASSEMBLY CONSISTS OF ALL PARTS SHOWN IN FIGS 6002 TO 6006.			
		PARTS WITH A STAR MARK ARE SUPPLIED SEPARATELY ONLY TO DESIGNATED DEALERS WHICH ARE EQUIPPED THE HYDRAULIC PUMP TESTER.			
1	(☆708-25-22510)	•• CAP, END	1	3001–	3001–
2	(☆720-68-19740)	•• PLUG	2	3001–	3001–
3	(☆720-68-19510)	•• PLUG	6	3001–	3001–
4	(☆07000-02135)	•• O-RING	2	3001–	3001–
5	(☆6130-21-1910)	•• JOINT	2	3001–	3001–
6	(☆07000-12015)	•• O-RING	2	3001–	3001–
7	(☆07000-11009)	•• O-RING	4	3001–	3001–
8	(☆07000-03032)	•• O-RING	2	3001–	3001–
9	(☆01140-81645)	•• STUD	8	3001–	3001–
10	(☆01582-01613)	•• NUT	8	3001–	3001–
11	(☆01643-31645)	•• WASHER	8	3001–	3001–
12	04530-01222	•• BOLT, EYE	1	3001–	3001–
13	(☆708-25-22730)	•• CUPLING	1	3001–	3001–
14	(☆708-25-22740)	•• RING, SNAP	1	3001–	3001–
15	(☆708-25-12740)	•• BEARING	2	3001–	3001–

FIG. 6005 HYDRAULIC PUMP, REAR (1/2)

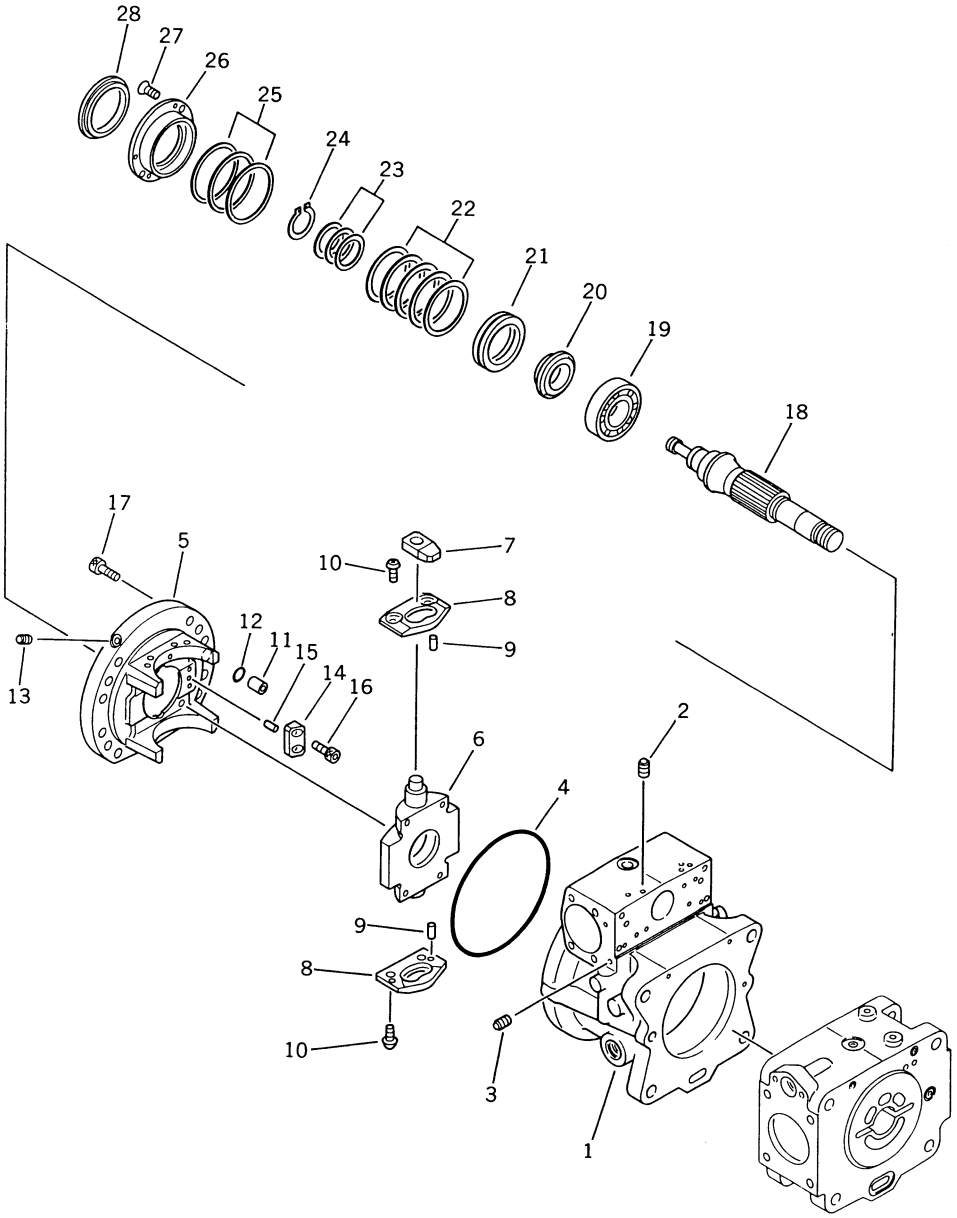

FIG NO. 6005

INDEX NO.	PART NO.	DESCRIPTION	Q'TY	SERIAL NO. PC150-3	SERIAL NO. PC150LC-3
	(708-25-20100)	HYDRAULIC PUMP ASS'Y (HPV71+71)	1	3001–	3001–
		THIS ASSEMBLY CONSISTS OF ALL PARTS SHOWN IN FIGS 6001 TO 6022.			
	(708-25-21100)	• HYDRAULIC PUMP SUB ASS'Y	1	3001–	3001–
		THIS ASSEMBLY CONSISTS OF ALL PARTS SHOWN IN FIGS 6002 TO 6006.			
		PARTS WITH A STAR MARK ARE SUPPLIED SEPARATELY ONLY TO DESIGNATED DEALERS WHICH ARE EQUIPPED THE HYDRAULIC PUMP TESTER.			
1	(☆708-25-22120)	•• CASE, REAR	1	3001–	3001–
2	(☆720-68-19740)	•• PLUG	9	3001–	3001–
3	(☆720-68-19510)	•• PLUG	3	3001–	3001–
4	(☆708-25-12340)	•• O-RING	1	3001–	3001–
5	(☆708-25-00060)	•• CRADLE ASS'Y	1	3001–	3001–
5	(☆708-25-22320)	••• CRADLE, REAR	1	3001–	3001–
6	(☆708-25-23410)	••• ROCKER, CAM	1	3001–	3001–
7	(☆708-25-14120)	•• SLIDER	1	3001–	3001–
8	(☆708-25-12360)	•• PLATE	2	3001–	3001–
9	(☆04020-00820)	•• PIN	4	3001–	3001–
10	(☆01010-30816)	•• BOLT	4	3001–	3001–
11	(☆708-23-12330)	•• JOINT	1	3001–	3001–
12	(☆07000-12015)	•• O-RING	1	3001–	3001–
13	(☆720-68-19510)	•• PLUG	1	3001–	3001–
14	(☆708-23-12370)	•• STOPPER	1	3001–	3001–
15	(☆04020-00616)	•• PIN, DOWEL	1	3001–	3001–
16	(☆708-25-12380)	•• BOLT	1	3001–	3001–
17	(☆708-25-12350)	•• BOLT	12	3001–	3001–
18	(☆708-25-22720)	•• SHAFT	1	3001–	3001–
19	(☆708-25-12730)	•• BEARING	1	3001–	3001–
20	(☆708-25-22760)	•• RETAINER	1	3001–	3001–
21	(☆06000-51108)	•• BEARING	1	3001–	3001–
22	(☆708-25-22940)	•• SHIM, 0.10MM	2	3001–	3001–
22	(☆708-25-22930)	•• SHIM, 0.20MM	2	3001–	3001–
22	(☆708-25-22920)	•• SHIM, 0.50MM	1	3001–	3001–
23	(☆708-25-22780)	•• WASHER; 2.0MM	1	3001–	3001–

FIG NO. 6005

INDEX NO.	PART NO.	DESCRIPTION	Q'TY	SERIAL NO. PC150-3	SERIAL NO. PC150LC-3
23	(☆708-25-22790)	•• WASHER, 2.1MM	1	3001–	3001–
23	(☆708-25-22810)	•• WASHER, 2.2MM	1	3001–	3001–
23	(☆708-25-22820)	•• WASHER, 2.3MM	1	3001–	3001–
24	(☆708-25-22830)	•• RING, SNAP	1	3001–	3001–
25	(☆708-25-12920)	•• SHIM, 0.50MM	1	3001–	3001–
25	(☆708-25-12910)	•• SHIM, 0.10MM	2	3001–	3001–
25	(☆708-25-12890)	•• SHIM, 0.15MM	2	3001–	3001–
26	(☆708-25-22850)	•• HOUSING, REAR	1	3001–	3001–
27	(☆706-75-40270)	•• SCREW	4	3001–	3001–
28	(☆708-25-22960)	•• COLLAR	1	3001–	3001–

FIG. 6006 HYDRAULIC PUMP, REAR (2/2)

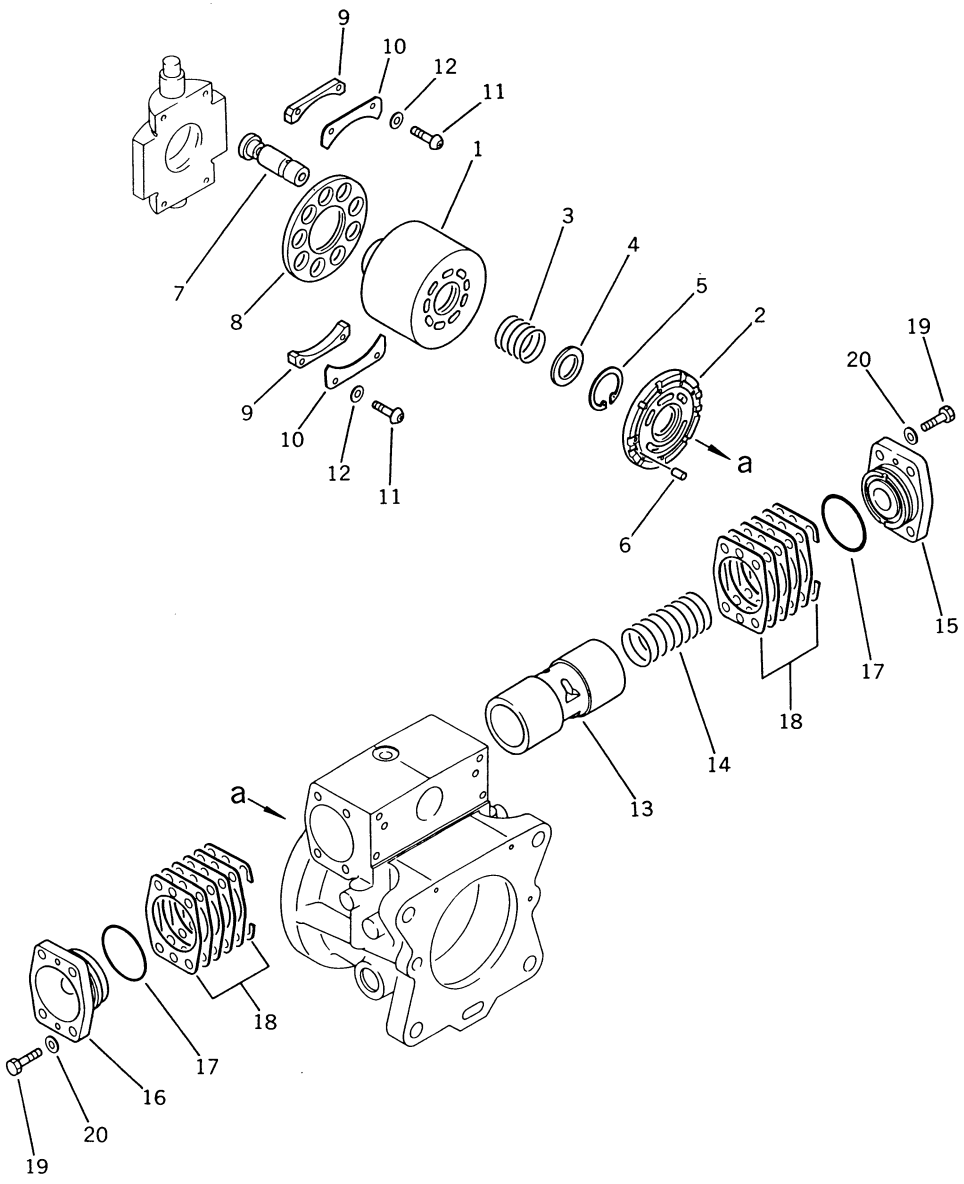

INDEX NO.	PART NO.	DESCRIPTION	Q'TY	SERIAL NO. PC150-3	SERIAL NO. PC150LC-3
	(708-25-20100)	HYDRAULIC PUMP ASS'Y (HPV71+71)	1	3001–	3001–
		THIS ASSEMBLY CONSISTS OF ALL PARTS SHOWN IN FIGS 6001 TO 6022.			
	(708-25-21100)	• HYDRAULIC PUMP SUB ASS'Y	1	3001–	3001–
		THIS ASSEMBLY CONSISTS OF ALL PARTS SHOWN IN FIGS 6002 TO 6006.			
		PARTS WITH A STAR MARK ARE SUPPLIED SEPARATELY ONLY TO DESIGNATED DEALERS WHICH ARE EQUIPPED THE HYDRAULIC PUMP TESTER.			
	(☆708-25-00020)	•• BLOCK ASS'Y	1	3001–	3001–
1	(☆708-25-13150)	••• BLOCK, CYLINDER	1	3001–	3001–
2	(☆708-25-13220)	••• PLATE, VALVE	1	3001–	3001–
3	(☆708-25-13130)	•• SPRING	1	3001–	3001–
4	(☆708-25-13120)	•• WASHER	1	3001–	3001–
5	(☆708-25-13140)	•• RING, SNAP	1	3001–	3001–
6	(☆720-68-19610)	•• PIN	1	3001–	3001–
7	(☆708-25-13310)	•• PISTON SUB ASS'Y	9	3001–	3001–
8	(☆708-25-13421)	•• RETAINER, SHOE	1	3001–	3001–
9	(☆708-25-13510)	•• SPACER, 10.040MM	2	3001–	3001–
9	(☆708-25-13520)	•• SPACER, 10.065MM	2	3001–	3001–
9	(☆708-25-13530)	•• SPACER, 10.075MM	2	3001–	3001–
10	(☆708-25-13441)	•• RETAINER, BEARING	2	3001–	3001–
11	(☆708-25-13470)	•• SCREW	4	3001–	3001–
12	(☆01643-30623)	•• WASHER	4	3001–	3001–
13	(☆708-25-14110)	•• PISTON	1	3001–	3001–
14	708-25-14130	•• SPRING	1	3001–	3001–
15	(☆708-25-24110)	•• CAP	1	3001–	3001–
16	(☆708-25-14150)	•• CAP	1	3001–	3001–
17	07000-02065	•• O-RING	2	3001–	3001–
18	(☆708-25-14190)	•• SHIM, 0.10MM	8	3001–	3001–
18	(☆708-25-14180)	•• SHIM, 0.10MM	4	3001–	3001–
18	(☆708-25-14170)	•• SHIM, 0.20MM	4	3001–	3001–
18	(☆708-25-14160)	•• SHIM, 0.50MM	6	3001–	3001–
19	01010-31025	•• BOLT	8	3001–	3001–
20	01643-31032	•• WASHER	8	3001–	3001–

FIG. 6011 SERVO VALVE, FRONT (1/2)

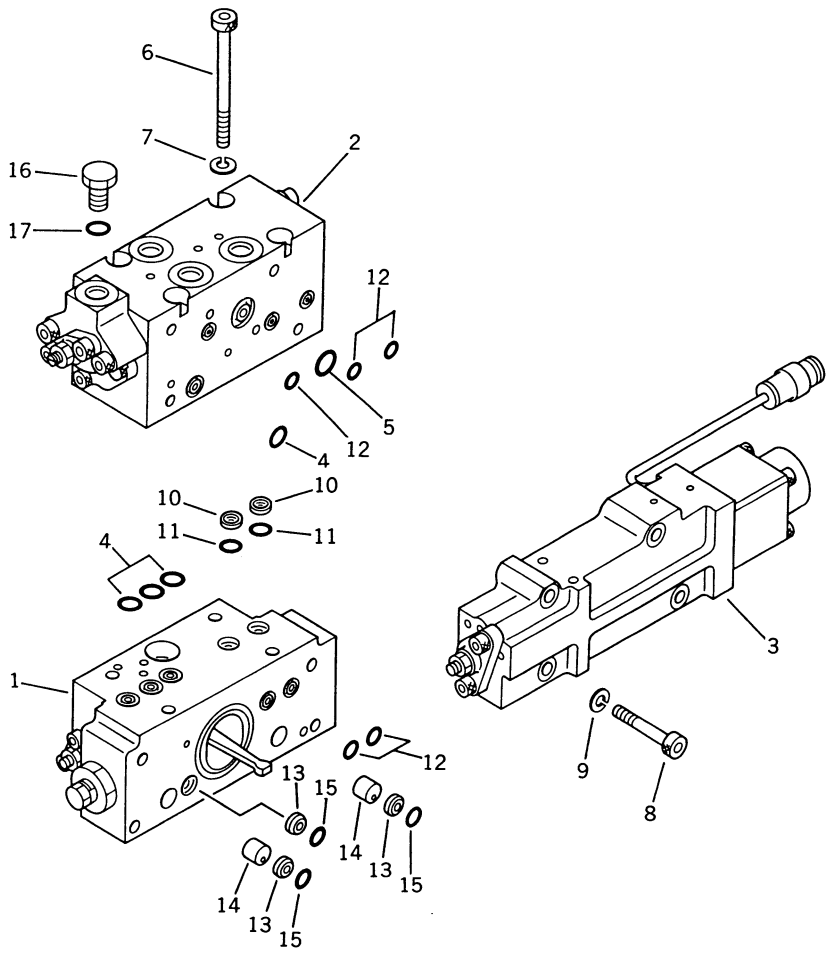

FIG NO. 6011

INDEX NO.	PART NO.	DESCRIPTION	Q'TY	SERIAL NO. PC150-3	SERIAL NO. PC150LC-3
	(708-25-20100)	HYDRAULIC PUMP ASS'Y (HPV71+71)	1	3001–	3001–
		THIS ASSEMBLY CONSISTS OF ALL PARTS SHOWN IN FIGS 6001 TO 6022.			
	708-25-25100	• SERVO VALVE ASS'Y, FRONT	1	3001–	3001–
		THIS ASSEMBLY CONSISTS OF ALL PARTS SHOWN IN FIGS. 6011 TO 6014.			
1	(708-25-25200)	•• SERVO VALVE SUB ASS'Y, FRONT	1	3001–	3001–
2	(708-25-27100)	•• CO AND NC VALVE ASS'Y	1	3001–	3001–
3	(708-25-28100)	•• T.V.C. VALVE ASS'Y	1	3001–	3001–
4	07000-02011	•• O-RING	4	3001–	3001–
5	07000-02018	•• O-RING	1	3001–	3001–
6	708-25-19160	•• BOLT	4	3001–	3001–
7	01602-20825	•• WASHER, SPRING	4	3001–	3001–
8	01252-30850	•• BOLT	4	3001–	3001–
9	01602-20825	•• WASHER, SPRING	4	3001–	3001–
10	720-68-11920	•• FILTER	2	3001–	3001–
11	07000-12010	•• O-RING	2	3001–	3001–
12	07000-11009	•• O-RING	5	3001–	3001–
13	720-68-11920	•• FILTER	3	3001–	3001–
14	708-25-19150	•• ORIFICE	2	3001–	3001–
15	07000-12010	•• O-RING	3	3001–	3001–
16	07040-11409	•• PLUG	1	3001–	3001–
17	07002-01423	•• O-RING	1	3001–	3001–

FIG. 6012 SERVO VALVE, FRONT (2/2)

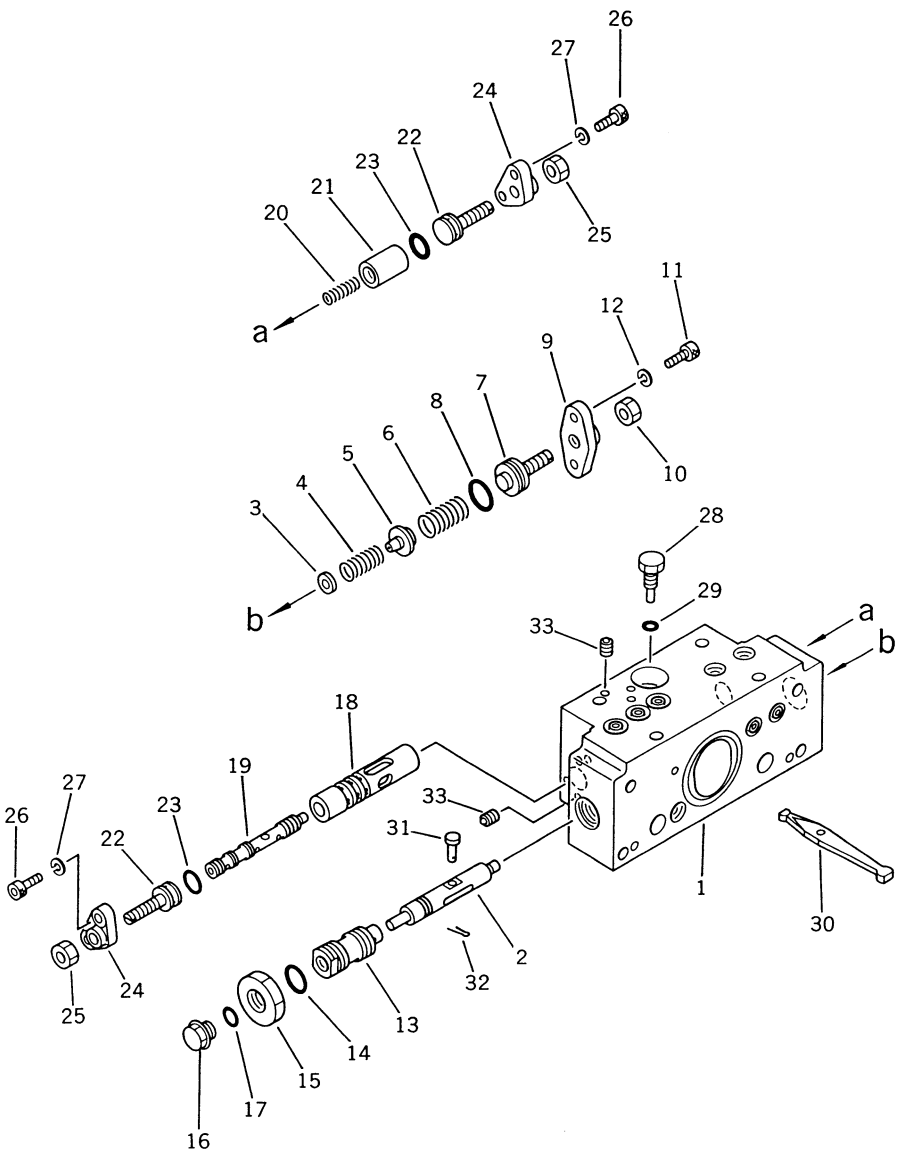

INDEX NO.	PART NO.	DESCRIPTION	Q'TY	SERIAL NO. PC150-3	SERIAL NO. PC150LC-3
	(708-25-20100)	HYDRAULIC PUMP ASS'Y (HPV71+71)	1	3001–	3001–
		THIS ASSEMBLY CONSISTS OF ALL PARTS SHOWN IN FIGS 6001 TO 6022.			
	(708-25-25100)	• SERVO VALVE ASS'Y, FRONT	1	3001–	3001–
		THIS ASSEMBLY CONSISTS OF ALL PARTS SHOWN IN FIGS. 6011 TO 6014.			
	708-25-25200	•• SERVO VALVE SUB ASS'Y, FRONT	1	3001–	3001–
		PARTS WITH A STAR MARK ARE SUPPLIED SEPARATELY ONLY TO DESIGNATED DEALERS WHICH ARE EQUIPPED THE HYDRAULIC PUMP TESTER.			
1	(☆708-25-16110)	••• BODY	1	3001–	3001–
2	(☆708-25-15120)	••• PISTON	1	3001–	3001–
3	(☆708-25-15130)	••• SEAT	1	3001–	3001–
4	(☆708-25-25110)	••• SPRING	1	3001–	3001–
5	(☆708-23-15120)	••• SEAT	1	3001–	3001–
6	(☆708-23-15130)	••• SPRING	1	3001–	3001–
7	(☆708-23-15140)	••• PLUG	1	3001–	3001–
8	(☆07000-02018)	••• O-RING	1	3001–	3001–
9	(☆708-25-15150)	••• COVER	1	3001–	3001–
10	(☆01580-10806)	••• NUT	1	3001–	3001–
11	(☆01252-30616)	••• BOLT	2	3001–	3001–
12	(☆01602-20619)	••• WASHER, SPRING	2	3001–	3001–
13	(☆708-25-15171)	••• PLUG	1	3001–	3001–
14	(☆07002-02034)	••• O-RING	1	3001–	3001–
15	(☆07239-12009)	••• NUT	1	3001–	3001–
16	(☆07040-11007)	••• PLUG	1	3001–	3001–
17	(☆07002-01023)	••• O-RING	1	3001–	3001–
18	(☆708-25-15180)	••• SLEEVE	1	3001–	3001–
19	(☆708-25-15280)	••• SPOOL	1	3001–	3001–
20	(☆708-25-15310)	••• SPRING	1	3001–	3001–
21	(☆708-25-15290)	••• SPACER	1	3001–	3001–
22	(☆708-25-15240)	••• PLUG	2	3001–	3001–
23	(☆07000-02012)	••• O-RING	2	3001–	3001–
24	(☆708-25-15250)	••• COVER	2	3001–	3001–
25	(☆01580-10806)	••• NUT	2	3001–	3001–

FIG NO. 6012

INDEX NO.	PART NO.	DESCRIPTION	Q'TY	SERIAL NO. PC150-3	SERIAL NO. PC150LC-3
26	(☆01252-30616)	••• BOLT	4	3001–	3001–
27	(☆01602-20619)	••• WASHER, SPRING	4	3001–	3001–
28	(☆708-25-15260)	••• PLUG	1	3001–	3001–
29	(☆07002-00823)	••• O-RING	1	3001–	3001–
30	(☆708-25-15270)	••• ARM	1	3001–	3001–
31	(☆04205-00514)	••• PIN	1	3001–	3001–
32	(☆04050-01210)	••• PIN, COTTER	1	3001–	3001–
33	(☆720-68-19740)	••• PLUG	7	3001–	3001–

FIG. 6013 CUT OFF AND NEGATIVE CONTROL VALVE, FRONT

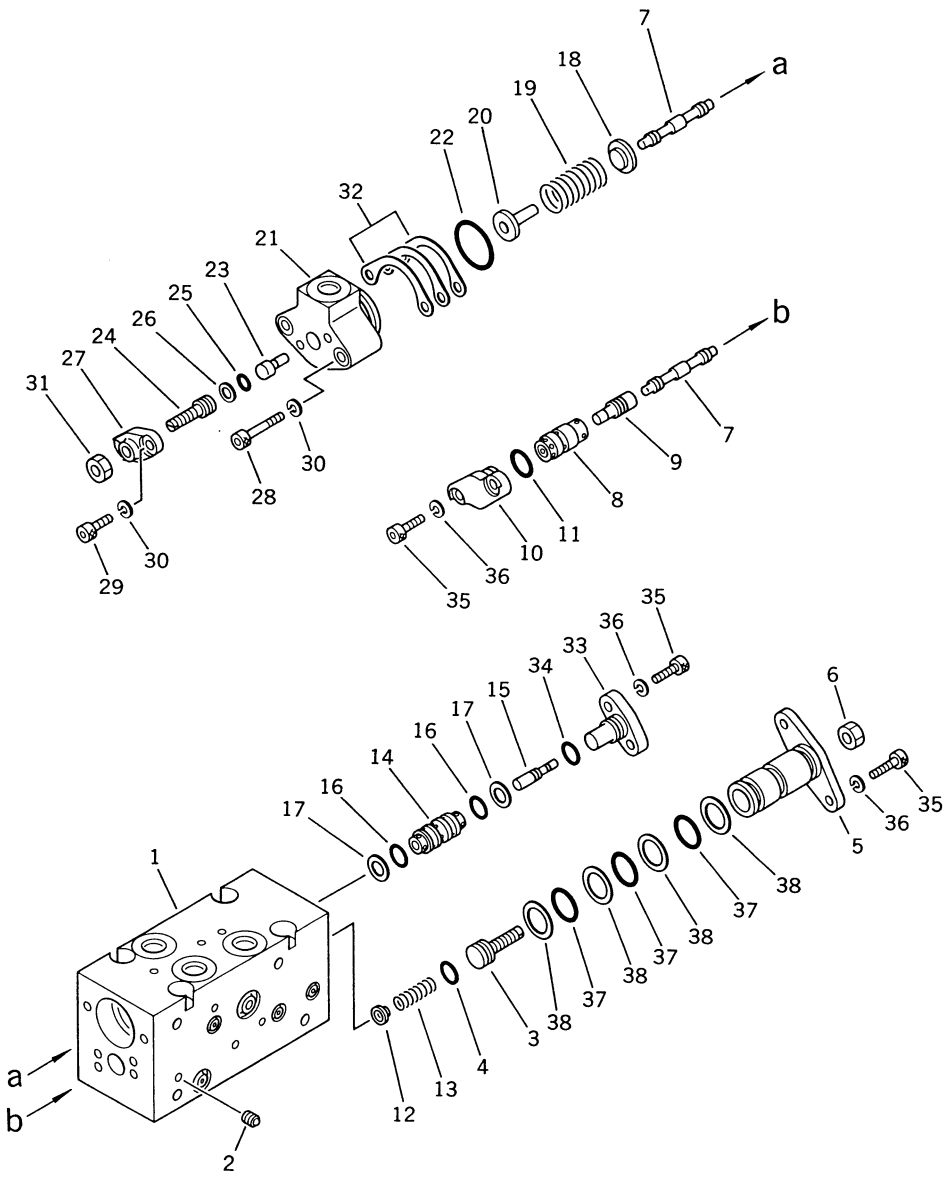

INDEX NO.	PART NO.	DESCRIPTION	Q'TY	SERIAL NO. PC150-3	SERIAL NO. PC150LC-3
	(708-25-20100)	HYDRAULIC PUMP ASS'Y (HPV71+71)	1	3001–	3001–
		THIS ASSEMBLY CONSISTS OF ALL PARTS SHOWN IN FIGS 6001 TO 6022.			
	(708-25-25100)	• SERVO VALVE ASS'Y, FRONT	1	3001–	3001–
		THIS ASSEMBLY CONSISTS OF ALL PARTS SHOWN IN FIGS 6011. TO 6014.			
	708-25-27100	•• CO AND NC VALVE ASS'Y	1	3001–	3001–
		PARTS WITH A STAR MARK ARE SUPPLIED SEPARATERY ONLY TO DESIGNATED DEALERS WHICH ARE EQUIPPED THE HYDRAULIC PUMP TESTER.			
1	(☆708-25-17110)	••• BODY	1	3001–	3001–
2	(☆720-68-19740)	••• PLUG	15	3001–	3001–
3	(☆708-25-17121)	••• PLUG	1	3001–	3001–
4	(☆07000-02010)	••• O-RING	1	3001–	3001–
5	(☆708-25-17131)	••• COVER	1	3001–	3001–
6	(☆01580-10806)	••• NUT	1	3001–	3001–
7	(☆708-25-17140)	••• SPOOL	2	3001–	3001–
8	(☆708-25-17150)	••• SLEEVE	1	3001–	3001–
9	(☆708-25-17160)	••• PISTON	1	3001–	3001–
10	(☆708-25-17170)	••• COVER	1	3001–	3001–
11	(☆07000-02014)	••• O-RING	1	3001–	3001–
12	(☆708-25-17180)	••• SEAT	1	3001–	3001–
13	(☆708-25-17190)	••• SPRING	1	3001–	3001–
14	(☆708-25-17210)	••• SLEEVE	1	3001–	3001–
15	(☆708-25-17220)	••• PISTON	1	3001–	3001–
16	(☆07000-12012)	••• O-RING	2	3001–	3001–
17	(☆07001-02012)	••• RING, BACK-UP	2	3001–	3001–
18	(☆708-25-17240)	••• SEAT	1	3001–	3001–
19	(☆708-25-17250)	••• SPRING	1	3001–	3001–
20	(☆708-25-17260)	••• SEAT	1	3001–	3001–
21	(☆708-25-17280)	••• COVER	1	3001–	3001–
22	(☆07000-03028)	••• O-RING	1	3001–	3001–
23	(☆708-25-17270)	••• PISTON	1	3001–	3001–
24	(☆708-25-17290)	••• PLUG	1	3001–	3001–
25	(☆07000-11009)	••• O-RING	1	3001–	3001–

FIG NO. 6013

INDEX NO.	PART NO.	DESCRIPTION	Q'TY	SERIAL NO. PC150-3	SERIAL NO. PC150LC-3
26	(☆07001-01009)	••• RING, BACK-UP	1	3001–	3001–
27	(☆708-25-17310)	••• COVER	1	3001–	3001–
28	(☆01252-30630)	••• BOLT	2	3001–	3001–
29	(☆01252-30616)	••• BOLT	2	3001–	3001–
30	(☆01602-20619)	••• WASHER, SPRING	4	3001–	3001–
31	(☆01580-10806)	••• NUT	1	3001–	3001–
32	(☆708-25-17320)	••• SHIM, 0.10MM	1	3001–	3001–
32	(☆708-25-17330)	••• SHIM, 0.20MM	2	3001–	3001–
32	(☆708-25-17340)	••• SHIM, 0.50MM	2	3001–	3001–
33	(☆708-25-17230)	••• COVER	1	3001–	3001–
34	(☆07000-02012)	••• O-RING	1	3001–	3001–
35	(☆01252-30616)	••• BOLT	6	3001–	3001–
36	(☆01602-20619)	••• WASHER, SPRING	6	3001–	3001–
37	(☆07000-12021)	••• O-RING	3	3001–	3001–
38	(☆07001-02021)	••• RING, BACK-UP	4	3001–	3001–

FIG. 6014 TORQUE VARIABLE CONTROL VALVE

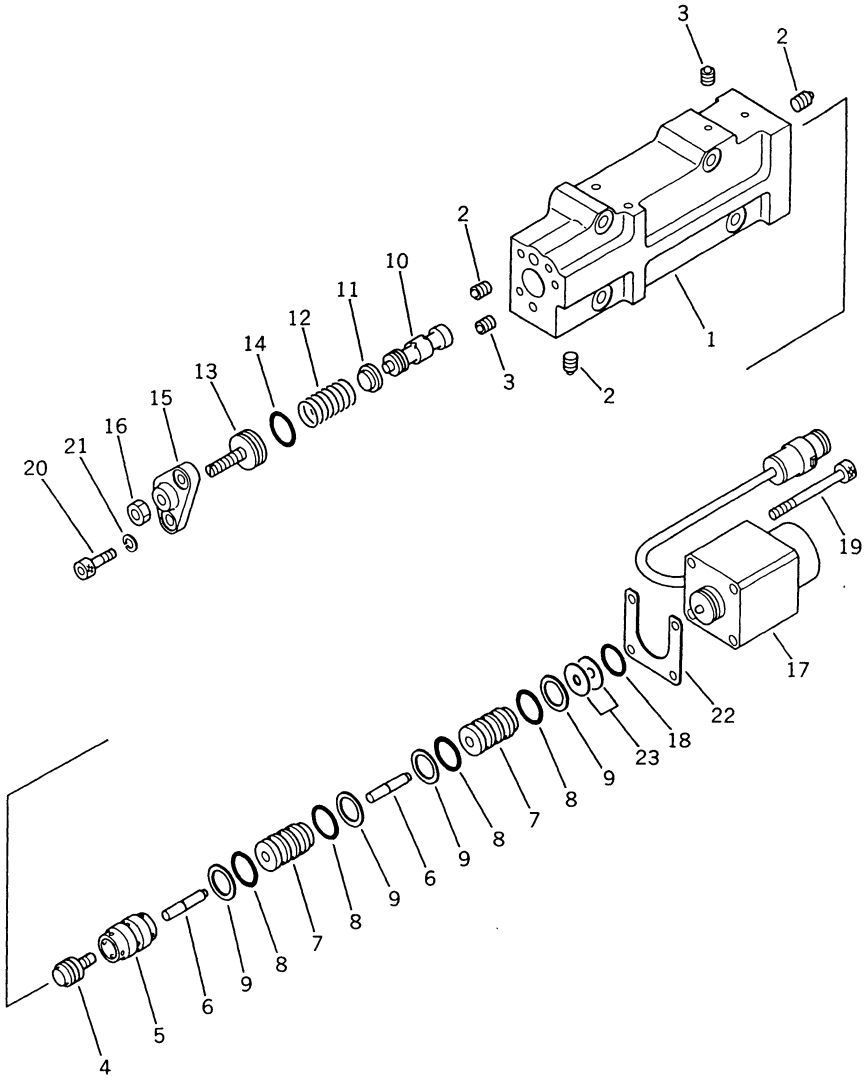

FIG NO. 6014

INDEX NO.	PART NO.	DESCRIPTION	Q'TY	SERIAL NO. PC150-3	SERIAL NO. PC150LC-3
	(708-25-20100)	HYDRAULIC PUMP ASS'Y (HPV71+71)	1	3001–	3001–
		THIS ASSEMBLY CONSISTS OF ALL PARTS SHOWN IN FIGS 6001 TO 6022.			
	(708-25-25100)	• SERVO VALVE ASS'Y, FRONT	1	3001–	3001–
		THIS ASSEMBLY CONSISTS OF ALL PARTS SHOWN IN FIGS 6011. TO 6014.			
	708-25-27100	•• T.V.C. VALVE ASS'Y	1	3001–	3001–
		PARTS WITH A STAR MARK ARE SUPPLIED SEPARATERY ONLY TO DESIGNATED DEALERS WHICH ARE EQUIPPED THE HYDRAULIC PUMP TESTER.			
1	(☆708-23-18111)	••• BODY	1	3001–	3001–
2	(☆720-68-19510)	••• PLUG	2	3001–	3001–
3	(☆720-68-19740)	••• PLUG	12	3001–	3001–
4	(☆708-23-18120)	••• PISTON	1	3001–	3001–
5	(☆708-23-18130)	••• SLEEVE	1	3001–	3001–
6	(☆708-23-18140)	••• PISTON	2	3001–	3001–
7	(☆708-23-18150)	••• SLEEVE	2	3001–	3001–
8	(☆07000-12016)	••• O-RING	4	3001–	3001–
9	(☆07001-02016)	••• RING, BACK-UP	4	3001–	3001–
10	(☆708-23-18161)	••• SPOOL	1	3001–	3001–
11	(☆708-23-18170)	••• SEAT	1	3001–	3001–
12	(☆708-23-18181)	••• SPRING	1	3001–	3001–
13	(☆708-23-15140)	••• PLUG	1	3001–	3001–
14	(☆07000-02018)	••• O-RING	1	3001–	3001–
15	(☆708-23-18210)	••• COVER	1	3001–	3001–
16	(☆01580-10806)	••• NUT	1	3001–	3001–
17	708-23-18220	••• SOLENOID ASS'Y	1	3001–	3001–
18	07000-02016	••• O-RING	1	3001–	3001–
19	720-68-19750	••• BOLT	4	3001–	3001–
20	(☆01252-30616)	••• BOLT	2	3001–	3001–
21	(☆01602-20619)	••• WASHER, SPRING	2	3001–	3001–
22	(☆708-25-18570)	••• SHIM, 0.50MM	2	3001–	3001–
23	(☆708-25-18580)	••• SHIM, 0.50MM	2	3001–	3001–

FIG. 6015 SERVO VALVE, REAR (1/2)

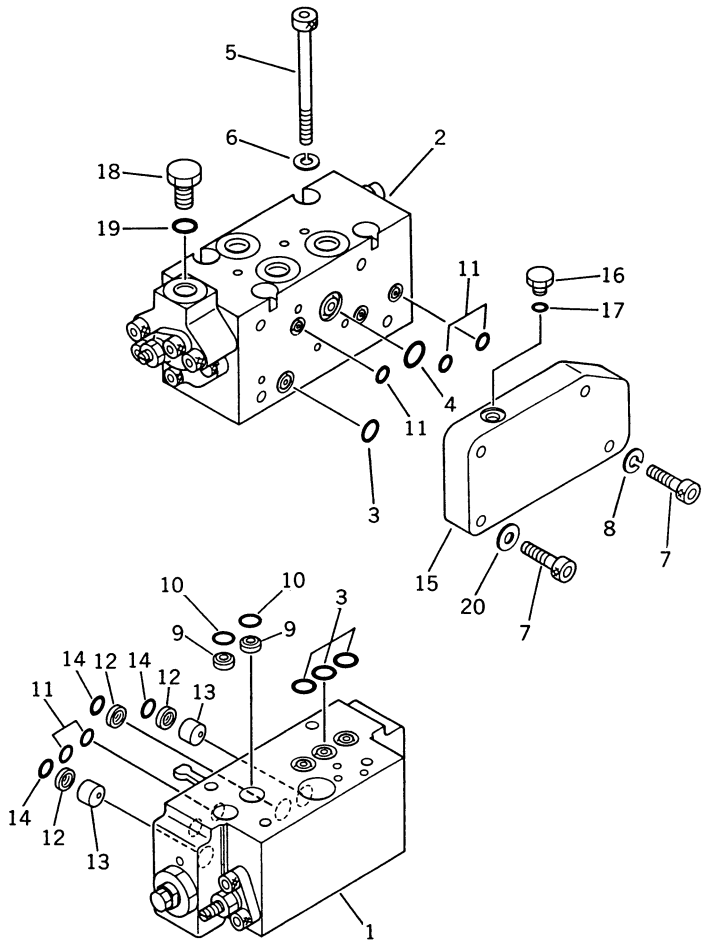

FIG NO. 6015

INDEX NO.	PART NO.	DESCRIPTION	Q'TY	SERIAL NO. PC150-3	SERIAL NO. PC150LC-3
	(708-25-20100)	HYDRAULIC PUMP ASS'Y (HPV71+71)	1	3001–	3001–
		THIS ASSEMBLY CONSISTS OF ALL PARTS SHOWN IN FIGS 6001 TO 6022.			
	708-25-26100	• SERVO VALVE ASS'Y, REAR	1	3001–	3001–
		THIS ASSEMBLY CONSISTS OF ALL PARTS SHOWN IN FIGS 6015 AND 6017.			
1	(708-25-26200)	•• SERVO VALVE ASS'Y, REAR	1	3001–	3001–
2	(708-25-27100)	•• CO AND NC VALVE ASS'Y	1	3001–	3001–
3	07000-02011	•• O-RING	5	3001–	3001–
4	07000-02018	•• O-RING	1	3001–	3001–
5	708-25-19160	•• BOLT	4	3001–	3001–
6	01602-20825	•• WASHER, SPRING	4	3001–	3001–
7	01252-30835	•• BOLT	4	3001–	3001–
8	01602-20825	•• WASHER, SPRING	3	3001–	3001–
9	720-68-11920	•• FILTER	2	3001–	3001–
10	07000-12010	•• O-RING	2	3001–	3001–
11	07000-11009	•• O-RING	5	3001–	3001–
12	720-68-11920	•• FILTER	3	3001–	3001–
13	708-25-19150	•• ORIFICE	2	3001–	3001–
14	07000-12010	•• O-RING	3	3001–	3001–
15	708-23-18241	•• PLATE	1	3001–	3001–
16	07040-11007	•• PLUG	1	3001–	3001–
17	07002-01023	•• O-RING	1	3001–	3001–
18	07040-11409	•• PLUG	1	3001–	3001–
19	07002-01423	•• O-RING	1	3001–	3001–
20	01643-30823	•• WASHER	1	3001–	3001–

FIG. 6016 SERVO VALVE, REAR (2/2)

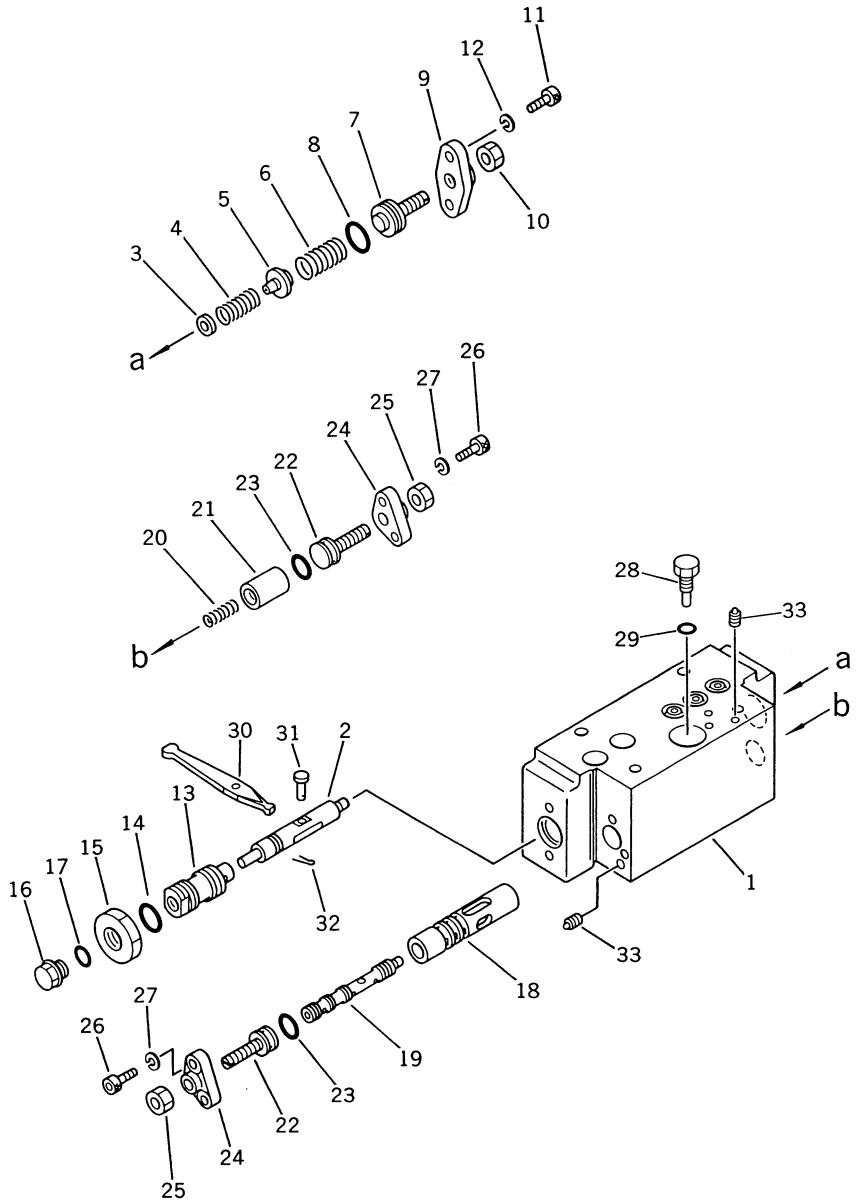

INDEX NO.	PART NO.	DESCRIPTION	Q'TY	SERIAL NO. PC150-3	SERIAL NO. PC150LC-3
	(708-25-20100)	HYDRAULIC PUMP ASS'Y (HPV71+71)	1	3001–	3001–
		THIS ASSEMBLY CONSISTS OF ALL PARTS SHOWN IN FIGS 6001 TO 6022.			
	(708-25-26100)	• SERVO VALVE ASS'Y, REAR	1	3001–	3001–
		THIS ASSEMBLY CONSISTS OF ALL PARTS SHOWN IN FIGS 6015 AND 6017.			
	708-25-26200	•• SERVO VALVE SUB ASS'Y, REAR	1	3001–	3001–
		PARTS WITH A STAR MARK ARE SUPPLIED SEPARATELY ONLY TO DESIGNATED DEALERS WHICH ARE EQUIPPED THE HYDRAULIC PUMP TESTER.			
1	(☆708-25-15110)	••• BODY	1	3001–	3001–
2	(☆708-25-15120)	••• PISTON	1	3001–	3001–
3	(☆708-25-15130)	••• SEAT	1	3001–	3001–
4	(☆708-25-25110)	••• SPRING	1	3001–	3001–
5	(☆708-23-15120)	••• SEAT	1	3001–	3001–
6	(☆708-23-15130)	••• SPRING	1	3001–	3001–
7	(☆708-23-15140)	••• PLUG	1	3001–	3001–
8	(☆07000-02018)	••• O-RING	1	3001–	3001–
9	(☆708-25-15150)	••• COVER	1	3001–	3001–
10	(☆01580-10806)	••• NUT	1	3001–	3001–
11	(☆01252-30616)	••• BOLT	2	3001–	3001–
12	(☆01602-20619)	••• WASHER, SPRING	2	3001–	3001–
13	(☆708-25-15171)	••• PLUG	1	3001–	3001–
14	(☆07002-02034)	••• O-RING	1	3001–	3001–
15	(☆07239-12009)	••• NUT	1	3001–	3001–
16	(☆07040-11007)	••• PLUG	1	3001–	3001–
17	(☆07002-01023)	••• O-RING	1	3001–	3001–
18	(☆708-25-15180)	••• SLEEVE	1	3001–	3001–
19	(☆708-25-15280)	••• SPOOL	1	3001–	3001–
20	(☆708-25-15310)	••• SPRING	1	3001–	3001–
21	(☆708-25-15290)	••• SPACER	1	3001–	3001–
22	(☆708-25-15240)	••• PLUG	2	3001–	3001–
23	(☆07000-02012)	••• O-RING	2	3001–	3001–
24	(☆708-25-15250)	••• COVER	2	3001–	3001–
25	(☆01580-10806)	••• NUT	2	3001–	3001–

FIG NO. 6016

INDEX NO.	PART NO.	DESCRIPTION	Q'TY	SERIAL NO. PC150-3	SERIAL NO. PC150LC-3
26	(☆01252-30616)	••• BOLT	4	3001–	3001–
27	(☆01602-20619)	••• WASHER, SPRING	4	3001–	3001–
28	(☆708-25-15260)	••• PLUG	1	3001–	3001–
29	(☆07002-00823)	••• O-RING	1	3001–	3001–
30	(☆708-25-15270)	••• ARM	1	3001–	3001–
31	(☆04205-00514)	••• PIN	1	3001–	3001–
32	(☆04050-01210)	••• PIN, COTTER	1	3001–	3001–
33	(☆720-68-19740)	••• PLUG	7	3001–	3001–

FIG. 6017 CUT OFF AND NEGATIVE CONTROL VALVE, REAR

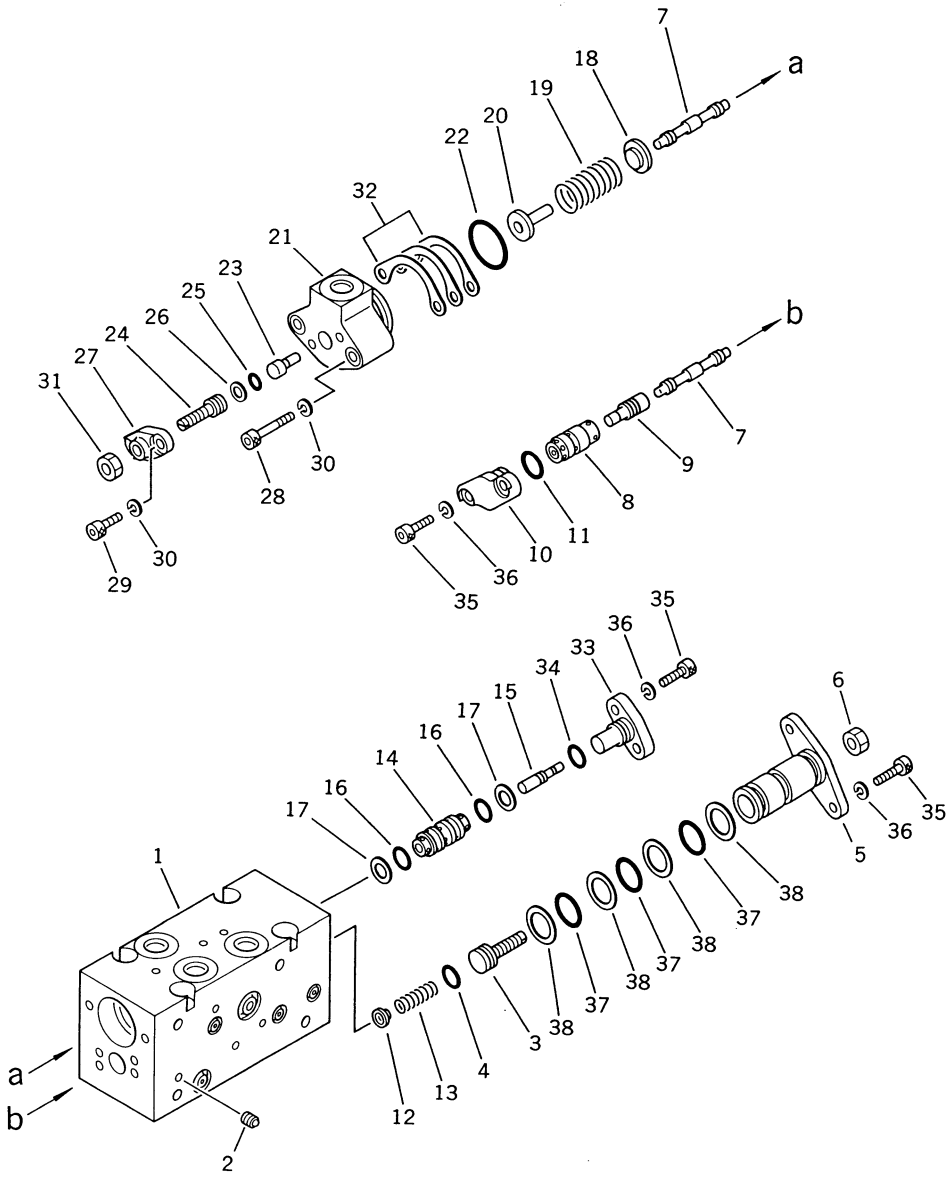

INDEX NO.	PART NO.	DESCRIPTION	Q'TY	SERIAL NO. PC150-3	SERIAL NO. PC150LC-3
	(708-25-20100)	HYDRAULIC PUMP ASS'Y (HPV71+71)	1	3001–	3001–
		THIS ASSEMBLY CONSISTS OF ALL PARTS SHOWN IN FIGS 6001 TO 6022.			
	(708-25-26100)	• SERVO VALVE ASS'Y, REAR	1	3001–	3001–
		THIS ASSEMBLY CONSISTS OF ALL PARTS SHOWN IN FIGS. 6015 TO 6017.			
	708-25-27100	•• CO AND NC VALVE ASS'Y	1	3001–	3001–
		PARTS WITH A STAR MARK ARE SUPPLIED SEPARATERY ONLY TO DESIGNATED DEALERS WHICH ARE EQUIPPED THE HYDRAULIC PUMP TESTER.			
1	(☆708-25-17110)	••• BODY	1	3001–	3001–
2	(☆720-68-19740)	••• PLUG	15	3001–	3001–
3	(☆708-25-17121)	••• PLUG	1	3001–	3001–
4	(☆07000-02010)	••• O-RING	1	3001–	3001–
5	(☆708-25-17131)	••• COVER	1	3001–	3001–
6	(☆01580-10806)	••• NUT	1	3001–	3001–
7	(☆708-25-17140)	••• SPOOL	2	3001–	3001–
8	(☆708-25-17150)	••• SLEEVE	1	3001–	3001–
9	(☆708-25-17160)	••• PISTON	1	3001–	3001–
10	(☆708-25-17170)	••• COVER	1	3001–	3001–
11	(☆07000-02014)	••• O-RING	1	3001–	3001–
12	(☆708-25-17180)	••• SEAT	1	3001–	3001–
13	(☆708-25-17190)	••• SPRING	1	3001–	3001–
14	(☆708-25-17210)	••• SLEEVE	1	3001–	3001–
15	(☆708-25-17220)	••• PISTON	1	3001–	3001–
16	(☆07000-12012)	••• O-RING	2	3001–	3001–
17	(☆07001-02012)	••• RING, BACK-UP	2	3001–	3001–
18	(☆708-25-17240)	••• SEAT	1	3001–	3001–
19	(☆708-25-17250)	••• SPRING	1	3001–	3001–
20	(☆708-25-17260)	••• SEAT	1	3001–	3001–
21	(☆708-25-17280)	••• COVER	1	3001–	3001–
22	(☆07000-03028)	••• O-RING	1	3001–	3001–
23	(☆708-25-17270)	••• PISTON	1	3001–	3001–
24	(☆708-25-17290)	••• PLUG	1	3001–	3001–
25	(☆07000-11009)	••• O-RING	1	3001–	3001–

FIG NO. 6017

INDEX NO.	PART NO.	DESCRIPTION	Q'TY	SERIAL NO. PC150-3	SERIAL NO. PC150LC-3
26	(☆07001-01009)	••• RING, BACK-UP	1	3001–	3001–
27	(☆708-25-17310)	••• COVER	1	3001–	3001–
28	(☆01252-30630)	••• BOLT	2	3001–	3001–
29	(☆01252-30616)	••• BOLT	2	3001–	3001–
30	(☆01602-20619)	••• WASHER, SPRING	4	3001–	3001–
31	(☆01580-10806)	••• NUT	1	3001–	3001–
32	(☆708-25-17320)	••• SHIM, 0.10MM	1	3001–	3001–
32	(☆708-25-17330)	••• SHIM, 0.20MM	2	3001–	3001–
32	(☆708-25-17340)	••• SHIM, 0.50MM	2	3001–	3001–
33	(☆708-25-17230)	••• COVER	1	3001–	3001–
34	(☆07000-02012)	••• O-RING	1	3001–	3001–
35	(☆01252-30616)	••• BOLT	6	3001–	3001–
36	(☆01602-20619)	••• WASHER, SPRING	6	3001–	3001–
37	(☆07000-12021)	••• O-RING	3	3001–	3001–
38	(☆07001-02021)	••• RING, BACK-UP	4	3001–	3001–

FIG. 6018 RELIEF VALVE

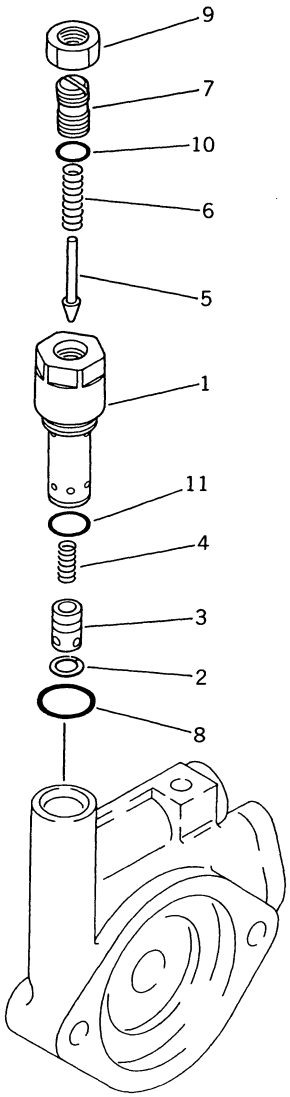

FIG NO. 6018

INDEX NO.	PART NO.	DESCRIPTION	Q'TY	SERIAL NO. PC150-3	SERIAL NO. PC150LC-3
	(708-25-20100)	HYDRAULIC PUMP ASS'Y (HPV71+71)	1	3001–	3001–
		THIS ASSEMBLY CONSISTS OF ALL PARTS SHOWN IN FIGS 6001 TO 6022.			
	708-23-14800	• RELIEF VALVE ASS'Y	1	3001–	3001–
		PARTS WITH A STAR MARK ARE SUPPLIED SEPARETELY ONLY TO DESIGNATED DEALERS WHICH ARE EQUIPPED THE HYDRAULIC PUMP TESTER.			
1	(☆700-20-51210)	•• SLEEVE	1	3001–	3001–
2	(☆700-20-51240)	•• RING	1	3001–	3001–
3	(☆720-68-15810)	•• VALVE	1	3001–	3001–
4	(☆700-20-51250)	•• SPRING	1	3001–	3001–
5	(☆700-80-61190)	•• POPPET	1	3001–	3001–
6	(☆720-68-15730)	•• SPRING	1	3001–	3001–
7	(☆700-20-51340)	•• SCREW	1	3001–	3001–
8	07002-02434	•• O-RING	1	3001–	3001–
9	(☆01583-11408)	•• NUT	1	3001–	3001–
10	(☆07000-02011)	•• O-RING	1	3001–	3001–
11	700-22-11410	•• O-RING	1	3001–	3001–

FIG. 6022 HYDRAULIC PUMP (EXCEPT JAPAN)

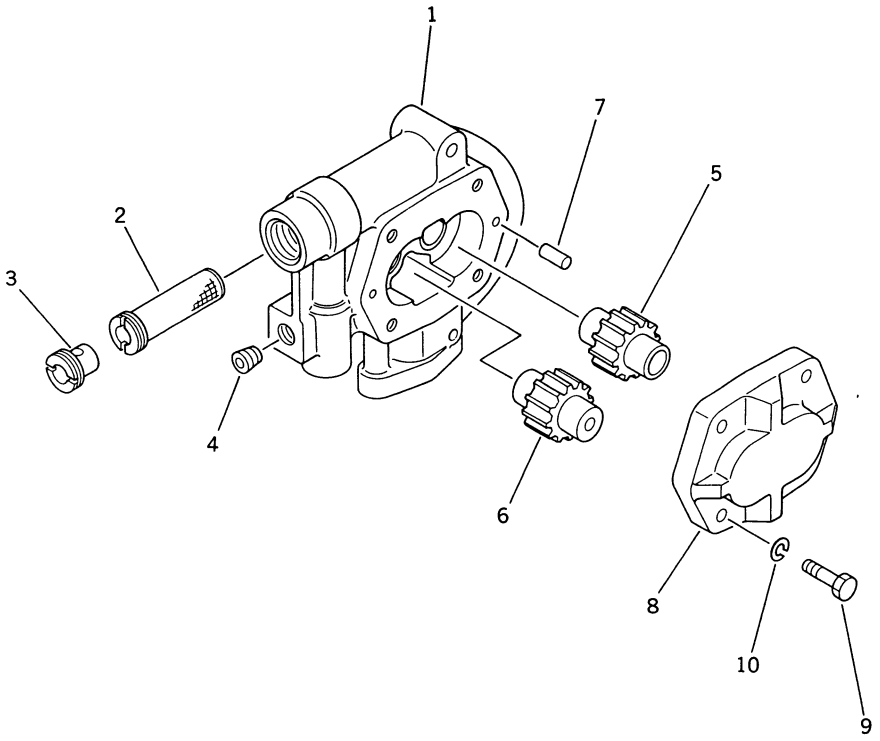

INDEX NO.	PART NO.	DESCRIPTION	Q'TY	SERIAL NO. PC150-3	SERIAL NO. PC150LC-3
	(708-25-20100)	HYDRAULIC PUMP ASS'Y	1	3001–	3001–
		THIS ASSEMBLY CONSISTS OF ALL PARTS SHOWN IN FIGS 6001 TO 6023.			
	704-24-28210	• PUMP ASS'Y	1	3001–	3001–
		PARTS WITH A STAR MARK IN PARTS NUMBER COLUM ARE SUPPLIED SEPARATELY ONLY TO DESIGNATED DEARERS WHICH ARE EQUIPPED THE HYDRAULIC PUMP TESTER.			
1	(☆704-28-28050)	•• BODY	1	3001–	3001–
2	704-28-02750	•• FILTER	1	3001–	3001–
3	704-28-02760	•• SCREW	1	3001–	3001–
4	07043-50312	•• PLUG	1	3001–	3001–
5	704-28-28450	•• GEAR, DRIVE	1	3001–	3001–
6	704-28-28550	•• GEAR, DRIVEN	1	3001–	3001–
7	04020-00820	•• PIN, DOWEL	2	3001–	3001–
8	(☆704-28-02410)	•• HOUSING	1	3001–	3001–
9	01010-51240	•• BOLT	4	3001–	3001–
10	01602-21236	•• WASHER, SPRING	4	3001–	3001–

FIG. 6101 HYDRAULIC OIL AND FUEL TANK

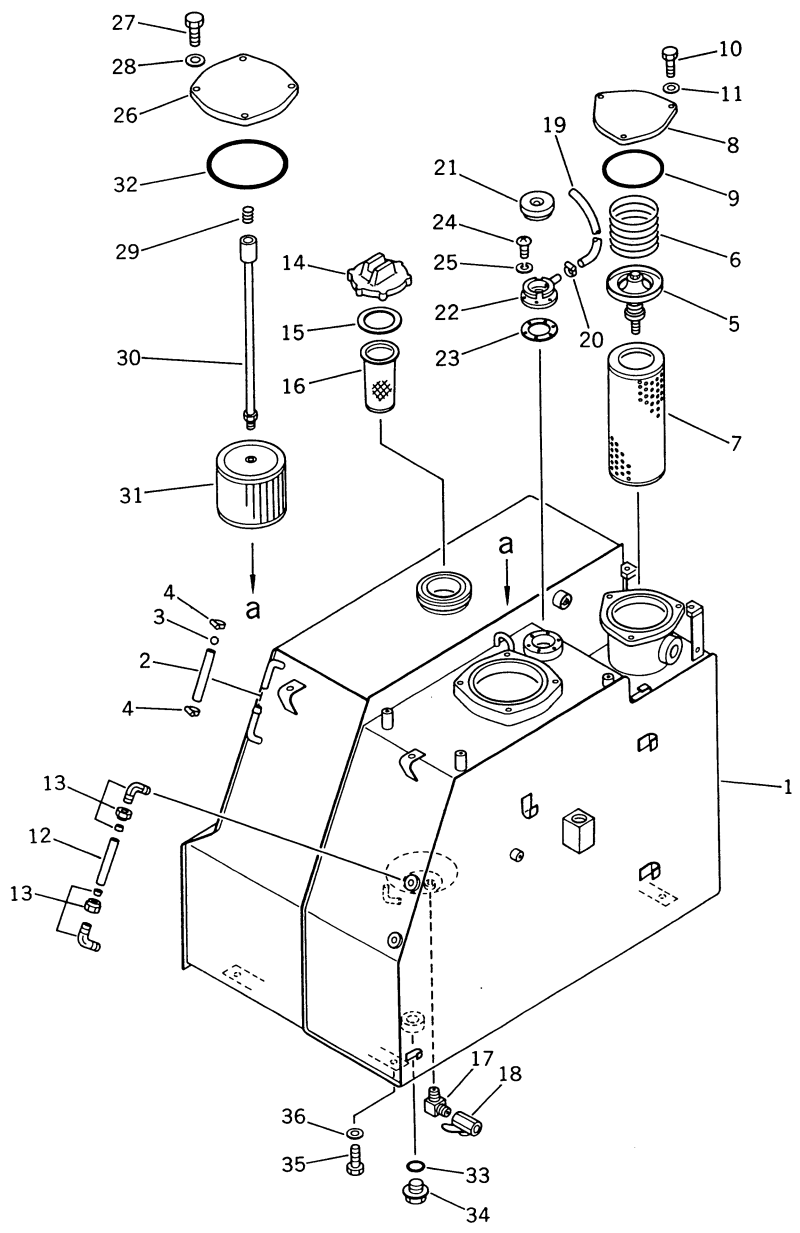

FIG NO. 6101

INDEX NO.	PART NO.	DESCRIPTION	Q'TY	SERIAL NO. PC150-3	SERIAL NO. PC150LC-3
	21K-60-00012	TANK ASS'Y	1	3001–	3001–
1	21K-60-22110	• TANK	1	3001–	3001–
2	203-60-42180	• TUBE	1	3001–	3001–
3	201-04-21160	• BALL, FLOAT	1	3001–	3001–
4	07281-00197	• CLAMP	2	3001–	3001–
5	175-60-27300	• VALVE ASS'Y	1	3001–	3001–
6	175-60-27340	• SPRING	1	3001–	3001–
7	175-60-27380	• ELEMENT	1	3001–	3001–
8	203-60-31172	• COVER	1	3001–	3001–
9	07000-05155	• O-RING	1	3001–	3001–
10	01010-51025	• BOLT	3	3001–	3001–
11	01643-31032	• WASHER	3	3001–	3001–
12	203-60-31160	• TUBE	1	3001–	3001–
13	203-60-31100	• ELBOW ASS'Y	2	3001–	3001–
14	07050-21200	• CAP	1	3001–	3001–
14	07091-11200	• CAP (FOR VANDALISM) (OP)	1	3001–	3001–
15	07050-21202	•• GASKET	1	3001–	3001–
16	07056-18416	• STRAINER	1	3001–	3001–
17	20D-68-11670	• ELBOW	1	3001–	3001–
18	07700-40240	• VALVE	1	3001–	3001–
19	203-60-12170	• TUBE	1	3001–	3001–
20	07280-01110	• CLAMP	1	3001–	3001–
21	201-60-12190	• CAP ASS'Y	1	3001–	3001–
22	201-60-12171	• FILLER, NECK	1	3001–	3001–
23	205-60-51460	• GASKET	1	3001–	3001–
24	01220-40516	• SCREW	6	3001–	3001–
25	01601-20513	• WASHER, SPRING	6	3001–	3001–
26	21K-60-11180	• COVER	1	3001–	3001–
27	01010-51025	• BOLT	4	3001–	3001–
28	01643-31032	• WASHER	4	3001–	3001–
29	12R-60-11230	• SPRING	1	3001–	3001–
30	203-60-42160	• ROD	1	3001–	3001–
31	21K-60-11190	• STRAINER	1	3001–	3001–
32	07000-05180	• O-RING	1	3001–	3001–
33	07002-03634	• O-RING	1	3001–	3001–

FIG NO. 6101

INDEX NO.	PART NO.	DESCRIPTION	Q'TY	SERIAL NO. PC150-3	SERIAL NO. PC150LC-3
34	07044-13620	• PLUG	1	3001 –	3001 –
35	01010-51435	BOLT	6	3001 –	3001 –
36	01643-31445	WASHER	6	3001 –	3001 –

FIG. 6201 CONTROL VALVE, L.H. (1/4) (FOR LONG LEVER CONTROL)

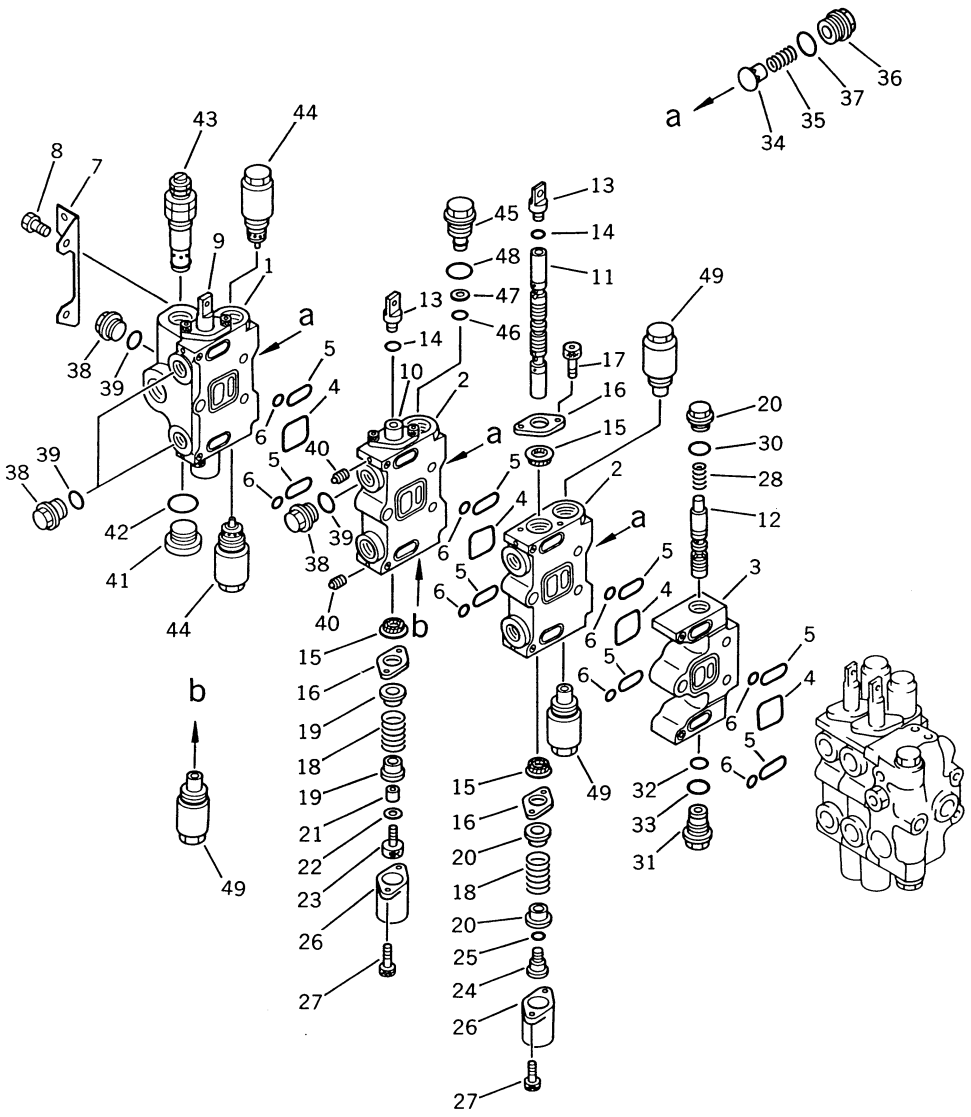

INDEX NO.	PART NO.	DESCRIPTION	Q'TY	SERIAL NO. PC150-3	SERIAL NO. PC150LC-3
	700-86-27000	CONTROL VALVE ASS'Y, L.H.	1	3001–	3001–
		THIS ASSEMBLY CONSISTS OF ALL PARTS SHOWN IN FIGS. 6201 TO 6204.			
1	(☆700-84-13123)	• BODY, VALVE	1	3001–	3001–
2	(☆700-84-13131)	• BLOCK, VALVE	2	3001–	3001–
3	(☆700-84-13151)	• BLOCK, VALVE	1	3001–	3001–
4	07000-13050	• O-RING	4	3001–	3001–
5	07000-03030	• O-RING	8	3001–	3001–
6	07000-01007	• O-RING	8	3001–	3001–
7	700-84-11330	• BRACKET	1	3001–	3001–
8	01010-51020	• BOLT	2	3001–	3001–
9	(☆700-84-14570)	• SPOOL, SERVICE	1	3001–	3001–
10	(☆700-84-14511)	• SPOOL, BOOM HIGH	1	3001–	3001–
11	(☆700-84-14561)	• SPOOL, SWING	1	3001–	3001–
12	(☆700-84-14590)	• SPOOL	1	3001–	3001–
13	700-84-11870	• JOINT	2	3001–	3001–
14	07002-11223	• O-RING	2	3001–	3001–
15	(☆700-84-13910)	• SEAL	6	3001–	3001–
16	700-84-13891	• PLATE	6	3001–	3001–
17	01252-30612	• BOLT	6	3001–	3001–
18	700-84-11650	• SPRING	3	3001–	3001–
19	700-84-13711	• RETAINER	4	3001–	3001–
20	700-84-13721	• RETAINER	2	3001–	3001–
21	700-84-11641	• COLLAR	2	3001–	3001–
22	01643-30823	• WASHER	2	3001–	3001–
23	01252-30830	• BOLT	2	3001–	3001–
24	700-84-11881	• PLUG	1	3001–	3001–
25	07002-11223	• O-RING	1	3001–	3001–
26	700-84-11390	• COVER	3	3001–	3001–
27	01252-30625	• BOLT	6	3001–	3001–
28	700-84-13570	• SPRING	1	3001–	3001–
29	700-84-13870	• PLUG	1	3001–	3001–
30	07002-02434	• O-RING	1	3001–	3001–
31	700-84-13510	• NIPPLE	1	3001–	3001–
32	07000-02015	• O-RING	1	3001–	3001–

FIG NO. 6201

INDEX NO.	PART NO.	DESCRIPTION	Q'TY	SERIAL NO. PC150-3	SERIAL NO. PC150LC-3
33	07002-02434	• O-RING	1	3001–	3001–
34	700-42-31460	• VALVE	3	3001–	3001–
35	700-42-31470	• SPRING	3	3001–	3001–
36	700-84-11320	• PLUG	3	3001–	3001–
37	07002-13034	• O-RING	3	3001–	3001–
38	700-22-11370	• PLUG	4	3001–	3001–
39	07002-12434	• O-RING	4	3001–	3001–
40	706-86-51170	• PLUG	6	3001–	3001–
41	07040-13316	• PLUG	1	3001–	3001–
42	07002-13334	• O-RING	1	3001–	3001–
43	(700-87-56000)	• RELIEF VALVE ASS'Y	1	3001–	3001–
44	(709-70-51200)	• SUCTION AND SAFETY VALVE ASS'Y	2	3001–	3001–
45	700-84-13960	• PLUG	1	3001–	3001–
46	700-22-11410	• O-RING	1	3001–	3001–
47	700-80-64220	• RING, BACK-UP	1	3001–	3001–
48	07002-03034	• O-RING	1	3001–	3001–
49	(700-81-81000)	• SUCTION VALVE ASS'Y	3	3001–	3001–

FIG. 6202 CONTROL VALVE, L.H. (2/4) (FOR LONG LEVER CONTROL)

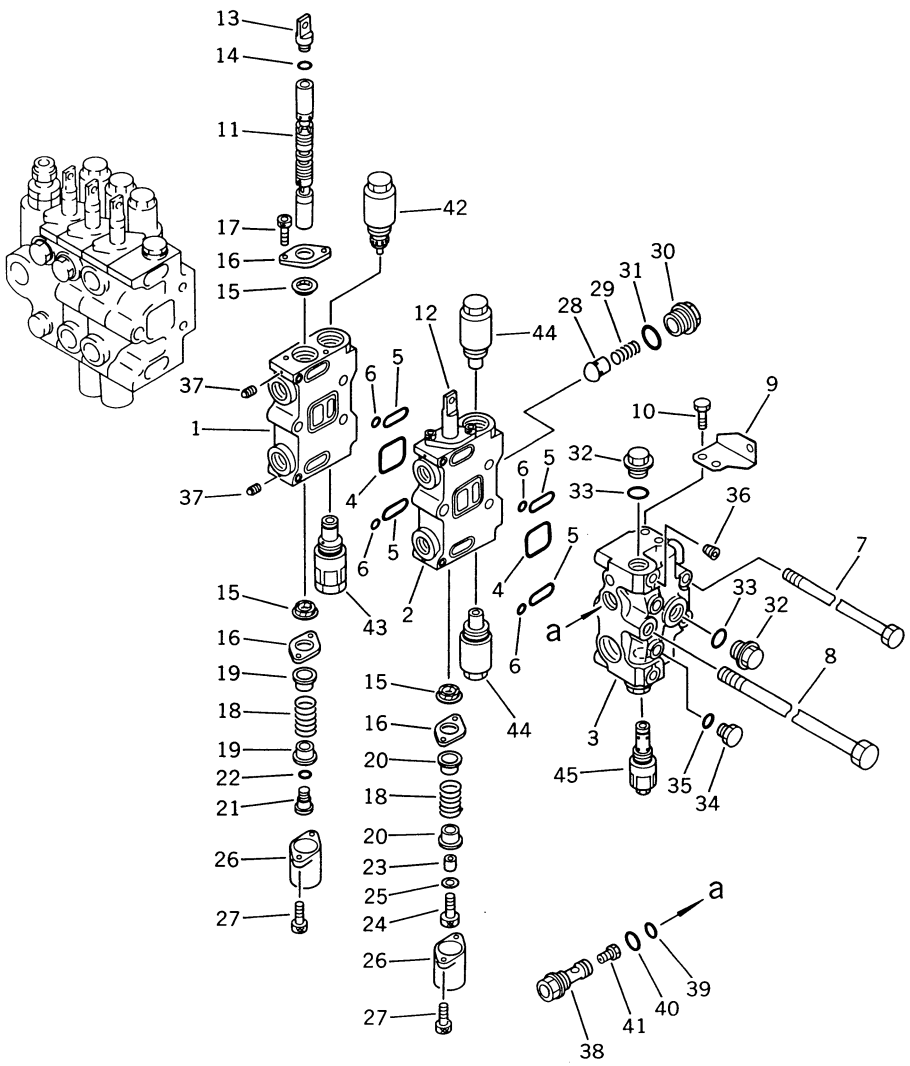

FIG NO. 6202

INDEX NO.	PART NO.	DESCRIPTION	Q'TY	SERIAL NO. PC150-3	SERIAL NO. PC150LC-3
	(700-86-27000)	CONTROL VALVE ASS'Y, L.H.	1	3001–	3001–
		THIS ASSEMBLY CONSISTS OF ALL PARTS SHOWN IN FIGS. 6201 TO 6204.			
1	(☆700-84-13131)	• BLOCK, VALVE	1	3001–	3001–
2	(☆700-84-13231)	• BLOCK, VALVE	1	3001–	3001–
3	(☆700-84-13280)	• COVER, VALVE	1	3001–	3001–
4	07000-13050	• O-RING	2	3001–	3001–
5	07000-03030	• O-RING	4	3001–	3001–
6	07000-01007	• O-RING	4	3001–	3001–
7	700-87-11110	• BOLT	2	3001–	3001–
8	700-87-11120	• BOLT	1	3001–	3001–
9	700-84-13830	• BRACKET	1	3001–	3001–
10	01010-51020	• BOLT	2	3001–	3001–
11	(☆700-84-14531)	• SPOOL, ARM LOW	1	3001–	3001–
12	(☆700-84-14581)	• SPOOL, L.H. TRAVEL	1	3001–	3001–
13	700-84-11870	• JOINT	1	3001–	3001–
14	07002-11223	• O-RING	2	3001–	3001–
15	(☆700-84-13910)	• SEAL	4	3001–	3001–
16	700-84-13891	• PLATE	4	3001–	3001–
17	01252-30612	• BOLT	4	3001–	3001–
18	700-84-11650	• SPRING	2	3001–	3001–
19	700-84-13721	• RETAINER	2	3001–	3001–
20	700-84-13711	• RETAINER	2	3001–	3001–
21	700-84-11881	• PLUG	1	3001–	3001–
22	07002-11223	• O-RING	1	3001–	3001–
23	700-84-11641	• COLLAR	1	3001–	3001–
24	01252-30830	• BOLT	1	3001–	3001–
25	01643-30823	• WASHER	1	3001–	3001–
26	700-84-11390	• COVER	2	3001–	3001–
27	01252-30625	• BOLT	4	3001–	3001–
28	700-42-31460	• VALVE	1	3001–	3001–
29	700-42-31470	• SPRING	1	3001–	3001–
30	700-84-11320	• PLUG	1	3001–	3001–
31	07002-13034	• O-RING	1	3001–	3001–
32	700-22-11370	• PLUG	3	3001–	3001–

FIG NO. 6202

INDEX NO.	PART NO.	DESCRIPTION	Q'TY	SERIAL NO. PC150-3	SERIAL NO. PC150LC-3
33	07002-12434	• O-RING	3	3001 –	3001 –
34	07040-11409	• PLUG	2	3001 –	3001 –
35	07002-01423	• O-RING	2	3001 –	3001 –
36	07043-70108	• PLUG	1	3001 –	3001 –
37	706-86-51170	• PLUG	4	3001 –	3001 –
38	709-70-91300	• ORIFICE ASS'Y	1	3001 –	3001 –
38	700-93-12660	•• ORIFICE	1	3001 –	3001 –
39	709-70-91210	•• SENSOR	1	3001 –	3001 –
40	07000-02014	•• O-RING	1	3001 –	3001 –
41	07002-02434	•• O-RING	1	3001 –	3001 –
42	(709-70-61200)	• SUCTION AND SAFETY VALVE ASS'Y	1	3001 –	3001 –
43	(709-70-62100)	• SAFETY VALVE ASS'Y	1	3001 –	3001 –
44	(700-81-81000)	• SUCTION VALVE ASS'Y	2	3001 –	3001 –
45	(709-70-55100)	• RELIEF VALVE ASS'Y	1	3001 –	3001 –

FIG. 6203 CONTROL VALVE, L.H. (3/4) (FOR LONG LEVER CONTROL)

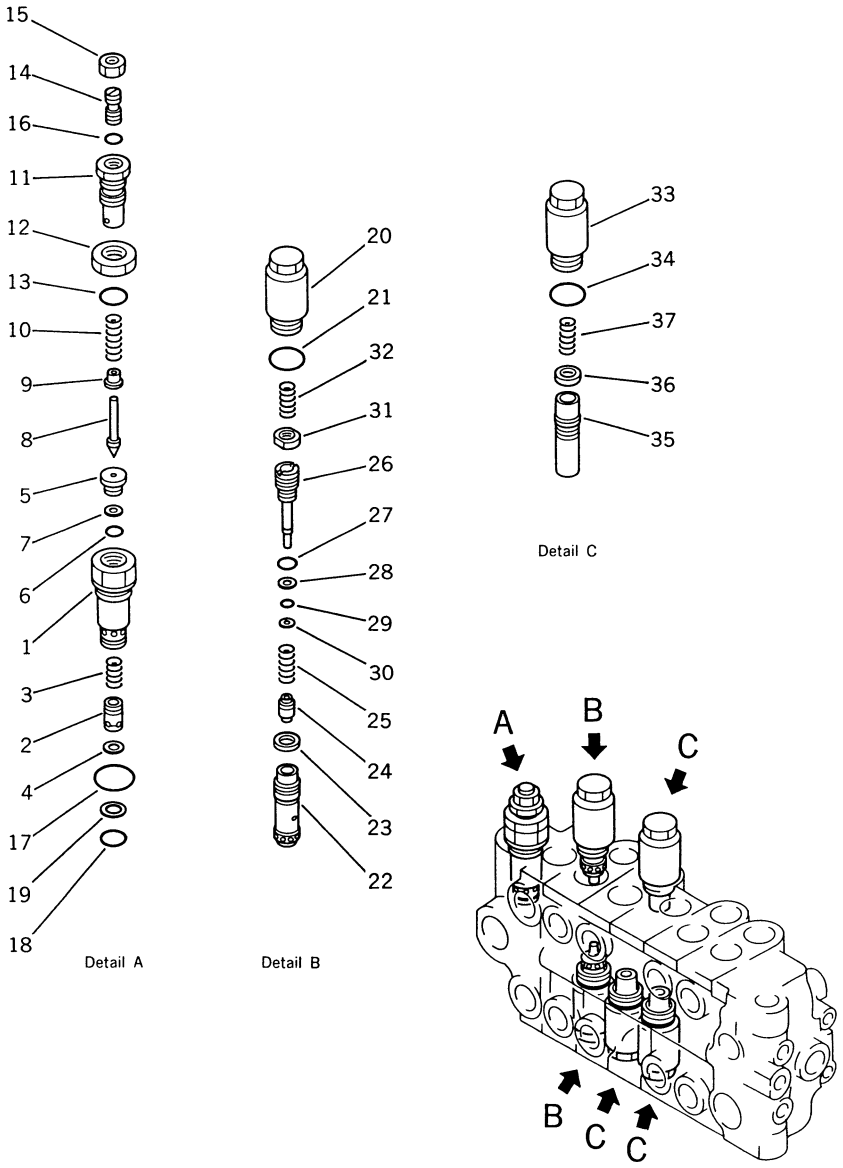

FIG NO. 6203

INDEX NO.	PART NO.	DESCRIPTION	Q'TY	SERIAL NO. PC150-3	SERIAL NO. PC150LC-3
	(700-86-27000)	CONTROL VALVE ASS'Y, L.H.	1	3001–	3001–
		THIS ASSEMBLY CONSISTS OF ALL PARTS SHOWN IN FIGS. 6201 TO 6204.			
	700-87-56000	•RELIEF VALVE ASS'Y	1	3001–	3001–
1	(☆700-80-51610)	••SLEEVE	1	3001–	3001–
2	(☆700-80-51380)	••VALVE	1	3001–	3001–
3	700-80-51390	••SPRING	1	3001–	3001–
4	700-80-51350	••RING, SNAP	1	3001–	3001–
5	700-80-51340	••SEAT	1	3001–	3001–
6	07000-22012	••O-RING	1	3001–	3001–
7	07001-02012	••RING, BACK-UP	1	3001–	3001–
8	720-68-15540	••POPPET	1	3001–	3001–
9	720-68-15550	••RETAINER	1	3001–	3001–
10	720-68-15560	••SPRING	1	3001–	3001–
11	700-80-51360	••HOLDER	1	3001–	3001–
12	07239-12410	••NUT	1	3001–	3001–
13	07002-02434	••O-RING	1	3001–	3001–
14	700-80-51630	••SCREW	1	3001–	3001–
15	01582-11411	••NUT	1	3001–	3001–
16	07000-02011	••O-RING	1	3001–	3001–
17	07002-03334	••O-RING	1	3001–	3001–
18	700-13-31161	••O-RING	1	3001–	3001–
19	700-80-51190	••RING, BACK-UP	1	3001–	3001–
20	709-70-51200	•SUCTION AND SAFETY VALVE ASS'Y	2	3001–	3001–
20	700-80-62310	••SLEEVE	1	3001–	3001–
21	07002-03034	••O-RING	1	3001–	3001–
22	(☆700-80-62431)	••VALVE	1	3001–	3001–
23	(☆700-80-62350)	••SEAL AND O-RING	1	3001–	3001–
24	(☆700-80-62440)	••POPPET	1	3001–	3001–
25	(☆700-80-62390)	••SPRING	1	3001–	3001–
26	(☆700-80-62341)	••PISTON	1	3001–	3001–
27	(☆07000-12012)	••O-RING	1	3001–	3001–
28	(☆07001-02012)	••RING, BACK-UP	1	3001–	3001–
29	(☆700-80-62380)	••O-RING	1	3001–	3001–
30	(☆700-80-62370)	••SEAL	1	3001–	3001–

FIG NO. 6203

INDEX NO.	PART NO.	DESCRIPTION	Q'TY	SERIAL NO. PC150-3	SERIAL NO. PC150LC-3
31	(☆700-80-62360)	••NUT	1	3001–	3001–
32	700-80-62250	••SPRING	1	3001–	3001–
33	700-81-81000	•SUCTION VALVE ASS'Y	3	3001–	3001–
33	(☆700-80-62310)	••SLEEVE	1	3001–	3001–
34	07002-03034	••O-RING	1	3001–	3001–
35	(☆700-80-63320)	••VALVE	1	3001–	3001–
36	(☆700-80-62350)	••SEAL AND O-RING	1	3001–	3001–
37	700-80-62250	••SPRING	1	3001–	3001–

FIG. 6204 CONTROL VALVE, L.H. (4/4) (FOR LONG LEVER CONTROL)

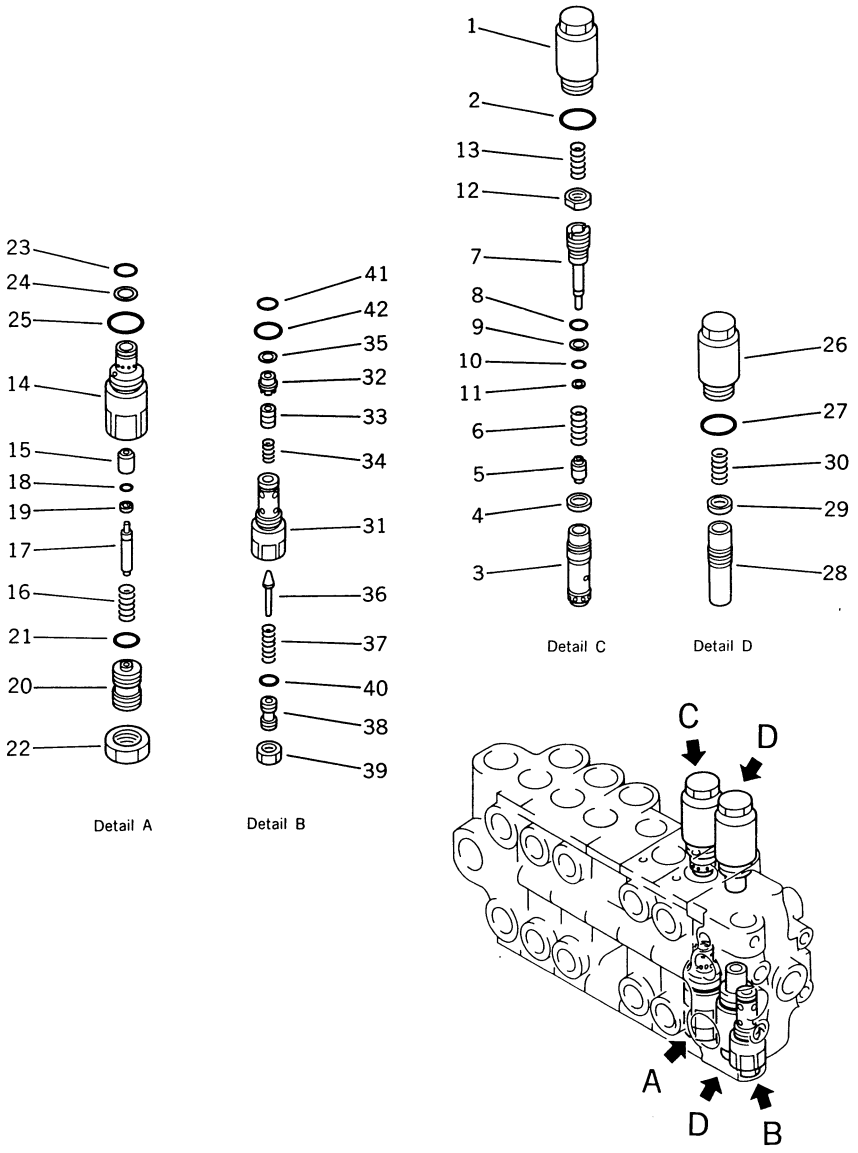

INDEX NO.	PART NO.	DESCRIPTION	Q'TY	SERIAL NO. PC150-3	SERIAL NO. PC150LC-3
	(700-86-27000)	CONTROL VALVE ASS'Y, L.H.	1	3001–	3001–
		THIS ASSEMBLY CONSISTS OF ALL PARTS SHOWN IN FIGS. 6201 TO 6204.			
	709-70-61200	• SUCTION AND SAFETY VALVE ASS'Y	1	3001–	3001–
1	700-80-62310	•• SLEEVE	1	3001–	3001–
2	07002-03034	•• O-RING	1	3001–	3001–
3	(☆700-80-62431)	•• VALVE	1	3001–	3001–
4	(☆700-80-62350)	•• SEAL AND O-RING	1	3001–	3001–
5	(☆700-80-62440)	•• POPPET	1	3001–	3001–
6	(☆700-80-62390)	•• SPRING	1	3001–	3001–
7	(☆700-80-62341)	•• PISTON	1	3001–	3001–
8	(☆07000-12012)	•• O-RING	1	3001–	3001–
9	(☆07001-02012)	•• RING, BACK-UP	1	3001–	3001–
10	(☆700-80-62380)	•• O-RING	1	3001–	3001–
11	(☆700-80-62370)	•• SEAL	1	3001–	3001–
12	(☆700-80-62360)	•• NUT	1	3001–	3001–
13	700-80-62250	•• SPRING	1	3001–	3001–
14	709-70-62100	• SAFETY VALVE ASS'Y	1	3001–	3001–
14	(☆700-80-71160)	•• SLEEVE	1	3001–	3001–
15	(☆700-80-62440)	•• POPPET	1	3001–	3001–
16	(☆700-80-62390)	•• SPRING	1	3001–	3001–
17	(☆700-80-71140)	•• PISTON	1	3001–	3001–
18	(☆700-80-62380)	•• O-RING	1	3001–	3001–
19	(☆700-80-62370)	•• SEAL	1	3001–	3001–
20	(☆700-80-71151)	•• SCREW	1	3001–	3001–
21	(☆07002-02434)	•• O-RING	1	3001–	3001–
22	(☆01583-12414)	•• NUT	1	3001–	3001–
23	700-22-11410	•• O-RING	1	3001–	3001–
24	700-80-64220	•• RING, BACK-UP	1	3001–	3001–
25	07002-03034	•• O-RING	1	3001–	3001–
26	700-81-81000	• SUCTION VALVE ASS'Y	2	3001–	3001–
26	(☆700-80-62310)	•• SLEEVE	1	3001–	3001–
27	07002-03034	•• O-RING	1	3001–	3001–
28	(☆700-80-63320)	•• VALVE	1	3001–	3001–
29	(☆700-80-62350)	•• SEAL AND O-RING	1	3001–	3001–

FIG NO. 6204

INDEX NO.	PART NO.	DESCRIPTION	Q'TY	SERIAL NO. PC150-3	SERIAL NO. PC150LC-3
30	700-80-62250	•• SPRING	1	3001–	3001–
31	700-70-55100	• RELIEF VALVE ASS'Y	1	3001–	3001–
31	(☆709-70-51110)	•• SLEEVE	1	3001–	3001–
32	700-20-51540	•• RETAINER	1	3001–	3001–
33	(☆709-70-51120)	•• VALVE	1	3001–	3001–
34	700-20-51610	•• SPRING	1	3001–	3001–
35	700-20-51550	•• RING, SNAP	1	3001–	3001–
36	700-80-61190	•• POPPET	1	3001–	3001–
37	700-20-51580	•• SPRING	1	3001–	3001–
38	700-20-51340	•• SCREW	1	3001–	3001–
39	01582-11411	•• NUT	1	3001–	3001–
40	07000-02011	•• O-RING	1	3001–	3001–
41	700-22-11410	•• O-RING	1	3001–	3001–
42	07002-02434	•• O-RING	1	3001–	3001–

FIG. 6205 CONTROL VALVE, R.H. (1/4) (FOR LONG LEVER CONTROL)

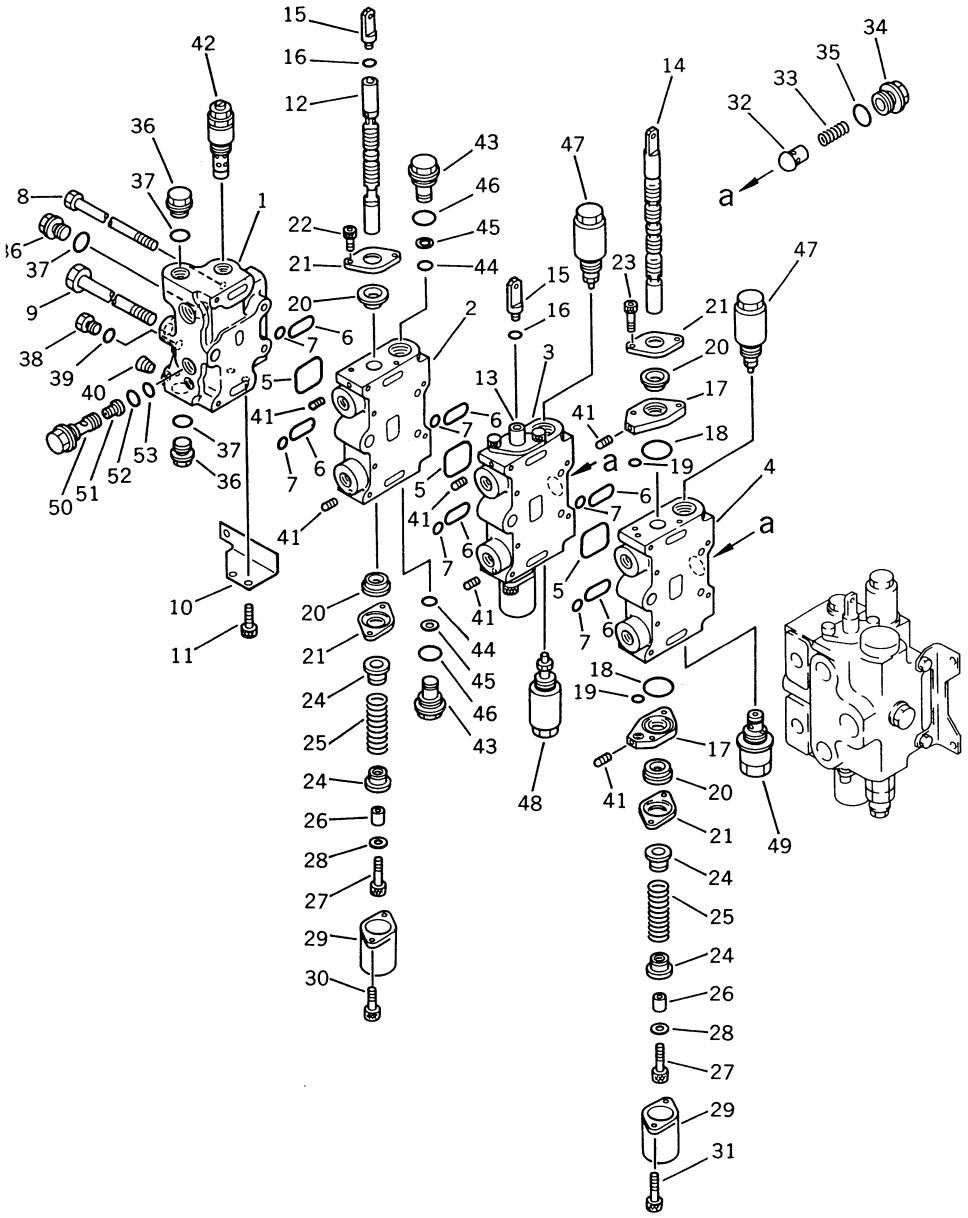

INDEX NO.	PART NO.	DESCRIPTION	Q'TY	SERIAL NO. PC150-3	SERIAL NO. PC150LC-3
	700-85-28000	CONTROL VALVE ASS'Y, R.H.	1	3001–	3001–
		THIS ASSEMBLY CONSISTS OF ALL PARTS SHOWN IN FIGS. 6205 TO 6208.			
1	(☆700-84-13280)	• BODY, VALVE	1	3001–	3001–
2	(☆700-84-13231)	• BLOCK, VALVE	1	3001–	3001–
3	(☆700-84-13131)	• BLOCK, VALVE	1	3001–	3001–
4	(☆700-84-13290)	• BLOCK, VALVE	1	3001–	3001–
5	07000-13050	• O-RING	3	3001–	3001–
6	07000-03030	• O-RING	6	3001–	3001–
7	07000-01007	• O-RING	6	3001–	3001–
8	700-86-11112	• BOLT	2	3001–	3001–
9	700-84-13220	• BOLT	1	3001–	3001–
10	700-84-13480	• BRACKET	1	3001–	3001–
11	01010-51020	• BOLT	2	3001–	3001–
12	(☆700-84-14541)	• SPOOL, ARM	1	3001–	3001–
13	(☆700-84-14511)	• SPOOL, BOOM	1	3001–	3001–
14	(☆700-84-14550)	• SPOOL, BUCKET	1	3001–	3001–
15	700-84-11870	• JOINT	2	3001–	3001–
16	07002-11223	• O-RING	2	3001–	3001–
17	700-84-13921	• PLATE	2	3001–	3001–
18	700-84-11240	• O-RING	2	3001–	3001–
19	07000-01007	• O-RING	2	3001–	3001–
20	700-84-13910	• SEAL	6	3001–	3001–
21	700-84-13891	• PLATE	6	3001–	3001–
22	01252-30612	• BOLT	4	3001–	3001–
23	01252-30625	• BOLT	2	3001–	3001–
24	700-84-13711	• RETAINER	6	3001–	3001–
25	700-84-11650	• SPRING	3	3001–	3001–
26	700-84-11641	• COLLAR	3	3001–	3001–
27	01252-30830	• BOLT	3	3001–	3001–
28	01643-30823	• WASHER	3	3001–	3001–
29	700-84-11390	• COVER	3	3001–	3001–
30	01252-30625	• BOLT	4	3001–	3001–
31	01252-30630	• BOLT	2	3001–	3001–
32	700-42-31460	• VALVE	2	3001–	3001–

FIG NO. 6205

INDEX NO.	PART NO.	DESCRIPTION	Q'TY	SERIAL NO. PC150-3	SERIAL NO. PC150LC-3
33	700-42-31470	• SPRING	2	3001 –	3001 –
34	700-84-11320	• PLUG	2	3001 –	3001 –
35	07002-13034	• O-RING	2	3001 –	3001 –
36	700-22-11370	• PLUG	3	3001 –	3001 –
37	07002-12434	• O-RING	3	3001 –	3001 –
38	07040-11409	• PLUG	2	3001 –	3001 –
39	07002-01423	• O-RING	2	3001 –	3001 –
40	07043-70108	• PLUG	1	3001 –	3001 –
41	706-86-51170	• PLUG	6	3001 –	3001 –
42	(709-70-55100)	• RELIEF VALVE ASS'Y	1	3001 –	3001 –
43	700-84-13960	• PLUG	2	3001 –	3001 –
44	700-22-11410	• O-RING	2	3001 –	3001 –
45	700-80-64220	• RING, BACK-UP	2	3001 –	3001 –
46	07002-03034	• O-RING	2	3001 –	3001 –
47	(709-70-61200)	• SUCTION AND SAFETY VALVE ASS'Y	2	3001 –	3001 –
48	(700-81-61001)	• SUCTION AND SAFETY VALVE ASS'Y	1	3001 –	3001 –
49	(700-81-77000)	• SAFETY VALVE ASS'Y	1	3001 –	3001 –
50	709-70-91300	• ORIFICE ASS'Y	1	3001 –	3001 –
50	700-93-12660	•• ORIFICE	1	3001 –	3001 –
51	709-70-91210	•• SENSOR	1	3001 –	3001 –
52	07002-02434	•• O-RING	1	3001 –	3001 –
53	07000-02014	•• O-RING	1	3001 –	3001 –

FIG. 6206 CONTROL VALVE, R.H. (2/4) (FOR LONG LEVER CONTROL)

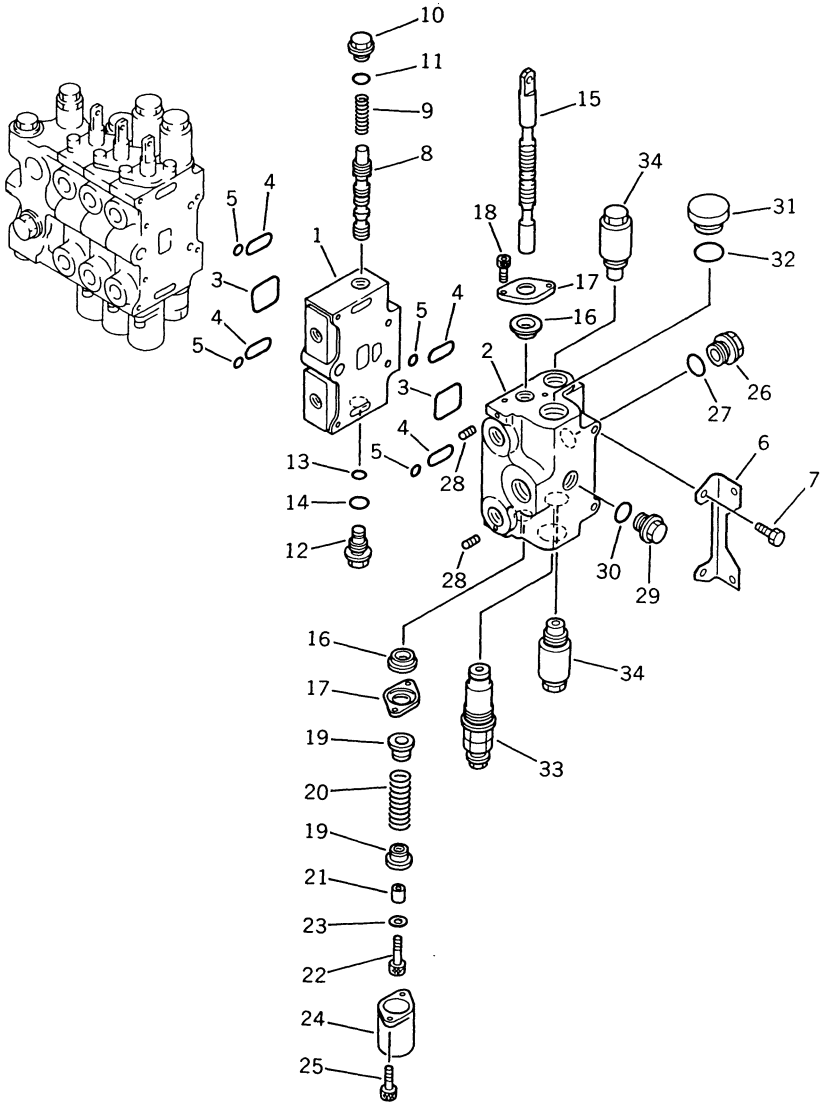

FIG NO. 6206

INDEX NO.	PART NO.	DESCRIPTION	Q'TY	SERIAL NO. PC150-3	SERIAL NO. PC150LC-3
	(700-85-28000)	CONTROL VALVE ASS'Y, R.H.	1	3001–	3001–
		THIS ASSEMBLY CONSISTS OF ALL PARTS SHOWN IN FIGS. 6205 TO 6208.			
1	(☆700-84-13141)	• BLOCK, VALVE	1	3001–	3001–
2	(☆700-84-13123)	• BODY, VALVE	1	3001–	3001–
3	07000-13050	• O-RING	2	3001–	3001–
4	07000-03030	• O-RING	4	3001–	3001–
5	07000-01007	• O-RING	4	3001–	3001–
6	700-84-11330	• BRACKET	1	3001–	3001–
7	01010-51020	• BOLT	2	3001–	3001–
8	(☆700-84-13930)	• SPOOL	1	3001–	3001–
9	700-84-13880	• SPRING	1	3001–	3001–
10	700-84-13870	• PLUG	1	3001–	3001–
11	07002-02434	• O-RING	1	3001–	3001–
12	700-84-13510	• NIPPLE	1	3001–	3001–
13	07000-02015	• O-RING	1	3001–	3001–
14	07002-02434	• O-RING	1	3001–	3001–
15	(☆700-84-14581)	• SPOOL, R.H. TRAVEL	1	3001–	3001–
16	700-84-13910	• SEAL	2	3001–	3001–
17	700-84-13891	• PLATE	2	3001–	3001–
18	01252-30612	• BOLT	2	3001–	3001–
19	700-84-13711	• RETAINER	2	3001–	3001–
20	700-84-11650	• SPRING	1	3001–	3001–
21	700-84-11641	• COLLAR	1	3001–	3001–
22	01252-30830	• BOLT	1	3001–	3001–
23	01643-30823	• WASHER	1	3001–	3001–
24	700-84-11390	• COVER	1	3001–	3001–
25	01252-30625	• BOLT	2	3001–	3001–
26	700-84-11320	• PLUG	1	3001–	3001–
27	07002-13034	• O-RING	1	3001–	3001–
28	706-86-51170	• PLUG	2	3001–	3001–
29	700-22-11370	• PLUG	1	3001–	3001–
30	07002-12434	• O-RING	1	3001–	3001–
31	07040-13316	• PLUG	1	3001–	3001–
32	07002-13334	• O-RING	1	3001–	3001–

FIG NO. 6206

INDEX NO.	PART NO.	DESCRIPTION	Q'TY	SERIAL NO. PC150-3	SERIAL NO. PC150LC-3
33	(700-82-56000)	• RELIEF VALVE ASS'Y	1	3001 –	3001 –
34	(700-81-81000)	• SUCTION VALVE ASS'Y	2	3001 –	3001 –

FIG. 6207 CONTROL VALVE, R.H. (3/4) (FOR LONG LEVER CONTROL)

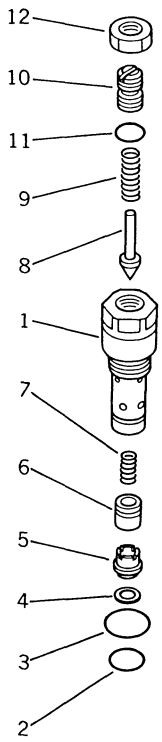

Detail A

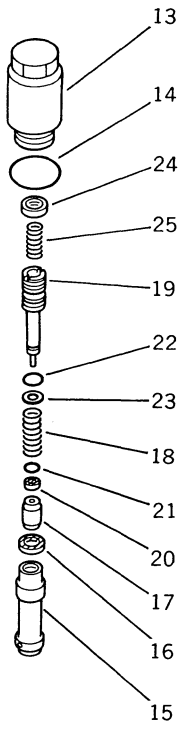

Detail B

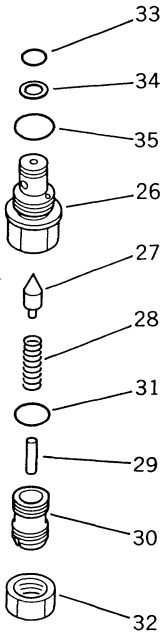

Detail C

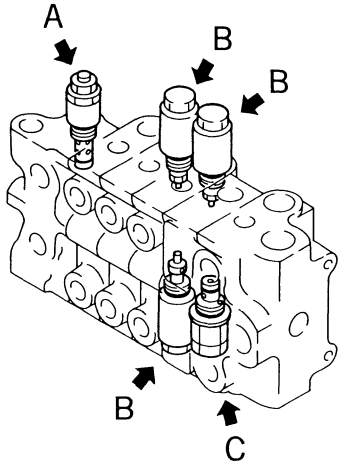

INDEX NO.	PART NO.	DESCRIPTION	Q'TY	SERIAL NO. PC150-3	SERIAL NO. PC150LC-3
	(700-85-28000)	CONTROL VALVE ASS'Y, R.H.	1	3001–	3001–
		THIS ASSEMBLY CONSISTS OF ALL PARTS SHOWN IN FIGS. 6205 TO 6208.			
	709-70-55100	• RELIEF VALVE ASS'Y	2	3001–	3001–
1	(☆709-70-51110)	•• SLEEVE	1	3001–	3001–
2	700-22-11410	•• O-RING	1	3001–	3001–
3	07002-02434	•• O-RING	1	3001–	3001–
4	700-20-51550	•• RING, SNAP	1	3001–	3001–
5	700-20-51540	•• RETAINER	1	3001–	3001–
6	(☆709-70-51120)	•• VALVE	1	3001–	3001–
7	700-20-51610	•• SPRING	1	3001–	3001–
8	700-80-61190	•• POPPET	1	3001–	3001–
9	700-20-51580	•• SPRING	1	3001–	3001–
10	700-20-51340	•• SCREW	1	3001–	3001–
11	07000-02011	•• O-RING	1	3001–	3001–
12	01582-11411	•• NUT	1	3001–	3001–
13	709-70-61200	• SUCTION AND SAFETY VALVE ASS'Y	2	3001–	3001–
13	700-81-61001	• SUCTION AND SAFETY VALVE ASS'Y	1	3001–	3001–
13	700-80-62310	•• SLEEVE	1	3001–	3001–
14	07002-03034	•• O-RING	1	3001–	3001–
15	(☆700-80-62431)	•• VALVE	1	3001–	3001–
16	(☆700-80-62350)	•• SEAL AND O-RING	1	3001–	3001–
17	(☆700-80-62440)	•• POPPET	1	3001–	3001–
18	(☆700-80-62390)	•• SPRING	1	3001–	3001–
19	(☆700-80-62341)	•• PISTON	1	3001–	3001–
20	(☆700-80-62370)	•• SEAL	1	3001–	3001–
21	(☆700-80-62380)	•• O-RING	1	3001–	3001–
22	(☆07000-12012)	•• O-RING	1	3001–	3001–
23	(☆07001-02012)	•• RING, BACK-UP	1	3001–	3001–
24	(☆700-80-62360)	•• NUT	1	3001–	3001–
25	700-80-62250	•• SPRING	1	3001–	3001–
26	700-81-77000	• SAFETY VALVE ASS'Y	1	3001–	3001–
26	700-80-64180	•• SLEEVE	1	3001–	3001–
27	700-80-64120	•• POPPET	1	3001–	3001–
28	700-80-64210	•• SPRING	1	3001–	3001–

FIG NO. 6207

INDEX NO.	PART NO.	DESCRIPTION	Q'TY	SERIAL NO. PC150-3	SERIAL NO. PC150LC-3
29	04022-06030	•• PIN	1	3001–	3001–
30	700-80-64190	•• SCREW	1	3001–	3001–
31	07002-02434	•• O-RING	1	3001–	3001–
32	01583-12414	•• NUT	1	3001–	3001–
33	700-22-11410	•• O-RING	1	3001–	3001–
34	700-80-64220	•• RING, BACK-UP	1	3001–	3001–
35	07002-03034	•• O-RING	1	3001–	3001–

FIG. 6208 CONTROL VALVE, R.H. (4/4) (FOR LONG LEVER CONTROL)

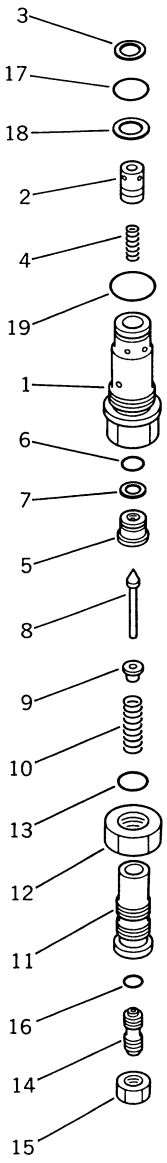

Detail A

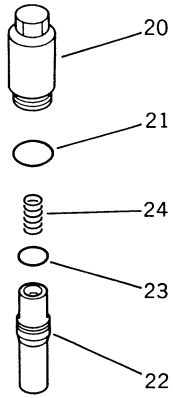

Detail B

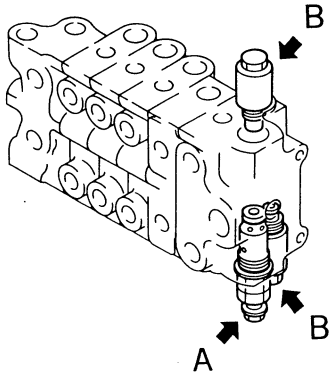

FIG NO. 6208

INDEX NO.	PART NO.	DESCRIPTION	Q'TY	SERIAL NO. PC150-3	SERIAL NO. PC150LC-3
	(700-85-28000)	CONTROL VALVE ASS'Y, R.H.	1	3001 –	3001 –
		THIS ASSEMBLY CONSISTS OF ALL PARTS SHOWN IN FIGS. 6205 TO 6208.			
	700-87-56000	• RELIEF VALVE ASS'Y	1	3001 –	3001 –
1	(☆700-80-51610)	•• SLEEVE	1	3001 –	3001 –
2	700-80-51380	•• VALVE	1	3001 –	3001 –
3	700-80-51350	•• RING, SNAP	1	3001 –	3001 –
4	700-80-51390	•• SPRING	1	3001 –	3001 –
5	700-80-51340	•• SEAT	1	3001 –	3001 –
6	07000-22012	•• O-RING	1	3001 –	3001 –
7	07001-02012	•• RING, BACK-UP	1	3001 –	3001 –
8	720-68-15540	•• POPPET	1	3001 –	3001 –
9	720-68-15550	•• RETAINER	1	3001 –	3001 –
10	720-68-15560	•• SPRING	1	3001 –	3001 –
11	700-80-51360	•• HOLDER	1	3001 –	3001 –
12	07239-12410	•• NUT	1	3001 –	3001 –
13	07002-02434	•• O-RING	1	3001 –	3001 –
14	700-80-51630	•• SCREW	1	3001 –	3001 –
15	01582-11411	•• NUT	1	3001 –	3001 –
16	07000-02011	•• O-RING	1	3001 –	3001 –
17	700-13-31161	•• O-RING	1	3001 –	3001 –
18	700-80-51190	•• RING, BACK-UP	1	3001 –	3001 –
19	07002-03334	•• O-RING	1	3001 –	3001 –
20	700-81-81000	• SUCTION VALVE ASS'Y	2	3001 –	3001 –
20	(☆700-80-62310)	•• SLEEVE	1	3001 –	3001 –
21	07002-03034	•• O-RING	1	3001 –	3001 –
22	(☆700-80-63320)	•• VALVE	1	3001 –	3001 –
23	(☆700-80-62350)	•• SEAL AND O-RING	1	3001 –	3001 –
24	700-80-62250	•• SPRING	1	3001 –	3001 –

FIG. 6211 CONTROL VALVE, L.H. (1/4) (FOR WRIST CONTROL)

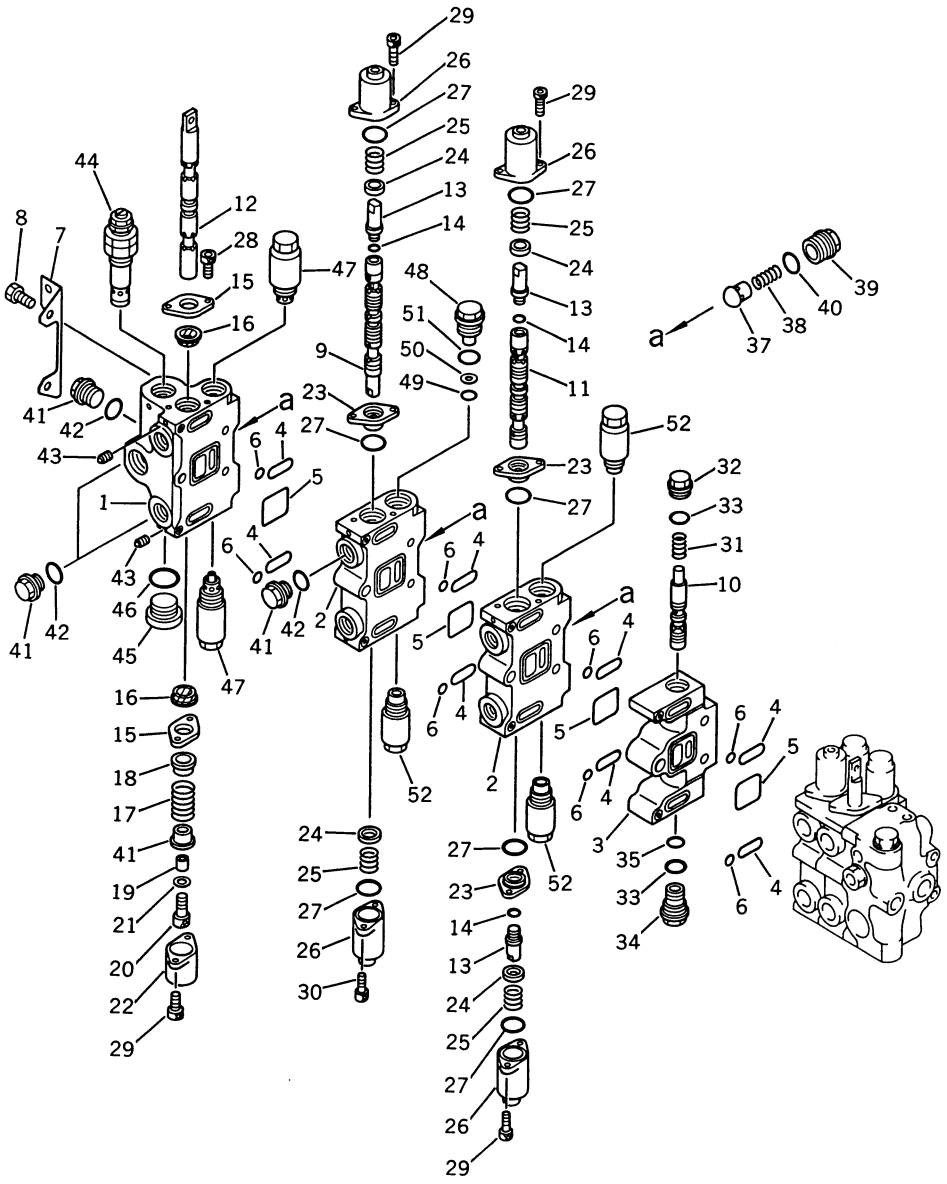

INDEX NO.	PART NO.	DESCRIPTION	Q'TY	SERIAL NO. PC150-3	SERIAL NO. PC150LC-3
	700-86-28000	CONTROL VALVE ASS'Y, L.H.	1	3001–	3001–
		THIS ASSEMBLY CONSISTS OF ALL PARTS SHOWN IN FIGS. 6211 TO 6214.			
1	(☆700-84-13123)	• BODY, VALVE	1	3001–	3001–
2	(☆700-84-14130)	• BLOCK, VALVE	2	3001–	3001–
3	(☆700-84-13151)	• BLOCK, VALVE	1	3001–	3001–
4	07000-03030	• O-RING	8	3001–	3001–
5	07000-13050	• O-RING	4	3001–	3001–
6	07000-01007	• O-RING	8	3001–	3001–
7	700-84-11330	• BRACKET	1	3001–	3001–
8	01010-51020	• BOLT	2	3001–	3001–
9	(☆700-84-14570)	• SPOOL, SERVICE	1	3001–	3001–
10	(☆700-84-14611)	• SPOOL, BOOM HIGH	1	3001–	3001–
11	(☆700-84-14661)	• SPOOL, SWING	1	3001–	3001–
12	(☆700-84-14590)	• SPOOL	1	3001–	3001–
13	700-84-13790	• JOINT	5	3001–	3001–
14	07002-11223	• O-RING	3	3001–	3001–
15	700-84-13891	• PLATE	2	3001–	3001–
16	700-84-13910	• SEAL	2	3001–	3001–
17	700-84-11650	• SPRING	1	3001–	3001–
18	700-84-13711	• RETAINER	2	3001–	3001–
19	700-84-11641	• COLLAR	1	3001–	3001–
20	01252-30830	• BOLT	1	3001–	3001–
21	01643-30823	• WASHER	1	3001–	3001–
22	700-84-11390	• COVER	1	3001–	3001–
23	700-84-13490	• PLATE	3	3001–	3001–
24	700-84-13781	• SPACER	4	3001–	3001–
25	700-84-13770	• SPRING	4	3001–	3001–
26	700-84-12510	• CASE	4	3001–	3001–
27	700-84-11240	• O-RING	7	3001–	3001–
28	01252-30612	• BOLT	2	3001–	3001–
29	01252-30625	• BOLT	8	3001–	3001–
30	01252-30616	• BOLT	2	3001–	3001–
31	700-84-13570	• SPRING	1	3001–	3001–
32	700-84-13870	• PLUG	1	3001–	3001–

FIG NO. 6211

INDEX NO.	PART NO.	DESCRIPTION	Q'TY	SERIAL NO. PC150-3	SERIAL NO. PC150LC-3
33	07002-02434	• O-RING	1	3001 –	3001 –
34	700-84-13510	• NIPPLE	1	3001 –	3001 –
35	07000-02015	• O-RING	1	3001 –	3001 –
36	07002-02434	• O-RING	1	3001 –	3001 –
37	700-42-31460	• VALVE	3	3001 –	3001 –
38	700-42-31470	• SPRING	3	3001 –	3001 –
39	700-84-11320	• PLUG	3	3001 –	3001 –
40	07002-13034	• O-RING	3	3001 –	3001 –
41	700-22-11370	• PLUG	4	3001 –	3001 –
42	07002-12434	• O-RING	4	3001 –	3001 –
43	706-86-51170	• PLUG	2	3001 –	3001 –
44	(700-87-56000)	• RELIEF VALVE ASS'Y	1	3001 –	3001 –
45	07040-13316	• PLUG	1	3001 –	3001 –
46	07002-13334	• O-RING	1	3001 –	3001 –
47	(700-81-61200)	• SUCTION AND SAFETY VALVE ASS'Y	2	3001 –	3001 –
48	700-84-13960	• PLUG	1	3001 –	3001 –
49	700-22-11410	• O-RING	1	3001 –	3001 –
50	700-80-64220	• RING, BACK-UP	1	3001 –	3001 –
51	07002-03034	• O-RING	1	3001 –	3001 –
52	(700-81-81000)	• SUCTION VALVE ASS'Y	3	3001 –	3001 –

FIG. 6212 CONTROL VALVE, L.H. (2/4) (FOR WRIST CONTROL)

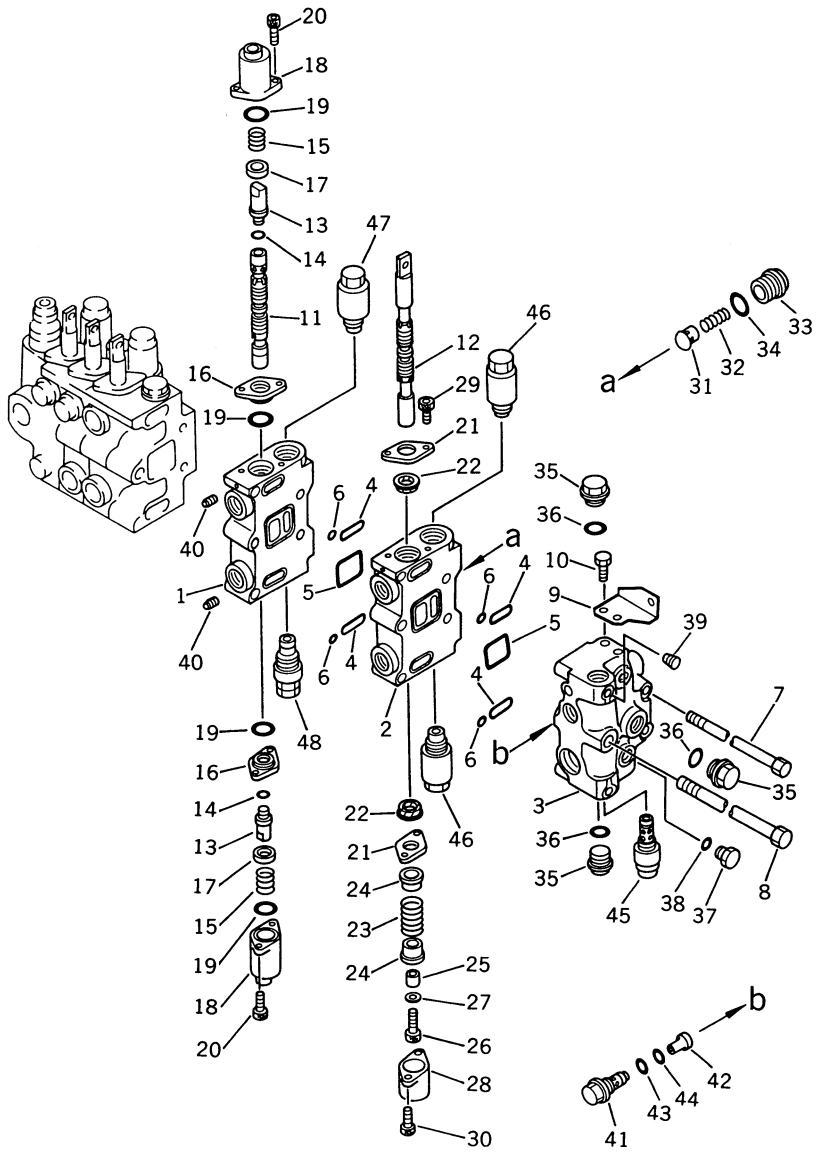

INDEX NO.	PART NO.	DESCRIPTION	Q'TY	SERIAL NO. PC150-3	SERIAL NO. PC150LC-3
	(700-86-28000)	CONTROL VALVE ASS'Y, L.H.	1	3001–	3001–
		THIS ASSEMBLY CONSISTS OF ALL PARTS SHOWN IN FIGS. 6211 TO 6214.			
1	(☆700-84-14130)	• BLOCK, VALVE	1	3001–	3001–
2	(☆700-84-13231)	• BLOCK, VALVE	1	3001–	3001–
3	(☆700-84-13280)	• COVER, VALVE	1	3001–	3001–
4	07000-03030	• O-RING	4	3001–	3001–
5	07000-13050	• O-RING	2	3001–	3001–
6	07000-01007	• O-RING	4	3001–	3001–
7	700-87-11110	• BOLT	2	3001–	3001–
8	700-87-11120	• BOLT	1	3001–	3001–
9	700-84-13830	• BRACKET	1	3001–	3001–
10	01010-51020	• BOLT	2	3001–	3001–
11	(☆700-84-14631)	• SPOOL, ARM LOW	1	3001–	3001–
12	(☆700-84-14581)	• SPOOL, L.H. TRAVEL	1	3001–	3001–
13	700-84-13790	• JOINT	2	3001–	3001–
14	07002-11223	• O-RING	2	3001–	3001–
15	700-84-13770	• SPRING	2	3001–	3001–
16	700-84-13490	• PLATE	2	3001–	3001–
17	700-84-13781	• SPACER	2	3001–	3001–
18	700-84-12510	• CASE	2	3001–	3001–
19	700-84-11240	• O-RING	4	3001–	3001–
20	01252-30625	• BOLT	4	3001–	3001–
21	700-84-13891	• PLATE	2	3001–	3001–
22	700-84-13910	• SEAL	2	3001–	3001–
23	700-84-11650	• SPRING	1	3001–	3001–
24	700-84-13711	• RETAINER	2	3001–	3001–
25	700-84-11641	• COLLAR	1	3001–	3001–
26	01252-30830	• BOLT	1	3001–	3001–
27	01643-30823	• WASHER	1	3001–	3001–
28	700-84-11390	• COVER	1	3001–	3001–
29	01252-30612	• BOLT	2	3001–	3001–
30	01252-30625	• BOLT	2	3001–	3001–
31	700-42-31460	• VALVE	1	3001–	3001–
32	700-42-31470	• SPRING	1	3001–	3001–

FIG NO. 6212

INDEX NO.	PART NO.	DESCRIPTION	Q'TY	SERIAL NO. PC150-3	SERIAL NO. PC150LC-3
33	700-84-11320	• PLUG	1	3001–	3001–
34	07002-13034	• O-RING	1	3001–	3001–
35	700-22-11370	• PLUG	3	3001–	3001–
36	07002-12434	• O-RING	3	3001–	3001–
37	07040-11409	• PLUG	2	3001–	3001–
38	07002-01423	• O-RING	2	3001–	3001–
39	07043-70108	• PLUG	1	3001–	3001–
40	706-86-51170	• PLUG	2	3001–	3001–
41	700-84-13860	• ORIFICE ASS'Y	1	3001–	3001–
41	700-93-12660	•• ORIFICE	1	3001–	3001–
42	709-70-91210	•• SENSOR	1	3001–	3001–
43	07000-02014	•• O-RING	1	3001–	3001–
44	07002-02434	•• O-RING	1	3001–	3001–
45	(709-70-55100)	• RELIEF VALVE ASS'Y	1	3001–	3001–
46	(700-81-81000)	• SUCTION VALVE ASS'Y	2	3001–	3001–
47	(709-70-61200)	• SUCTION AND SAFETY VALVE ASS'Y	1	3001–	3001–
48	(709-70-62100)	• SAFETY VALVE ASS'Y	1	3001–	3001–

FIG. 6213 CONTROL VALVE, L.H. (3/4) (FOR WRIST CONTROL)

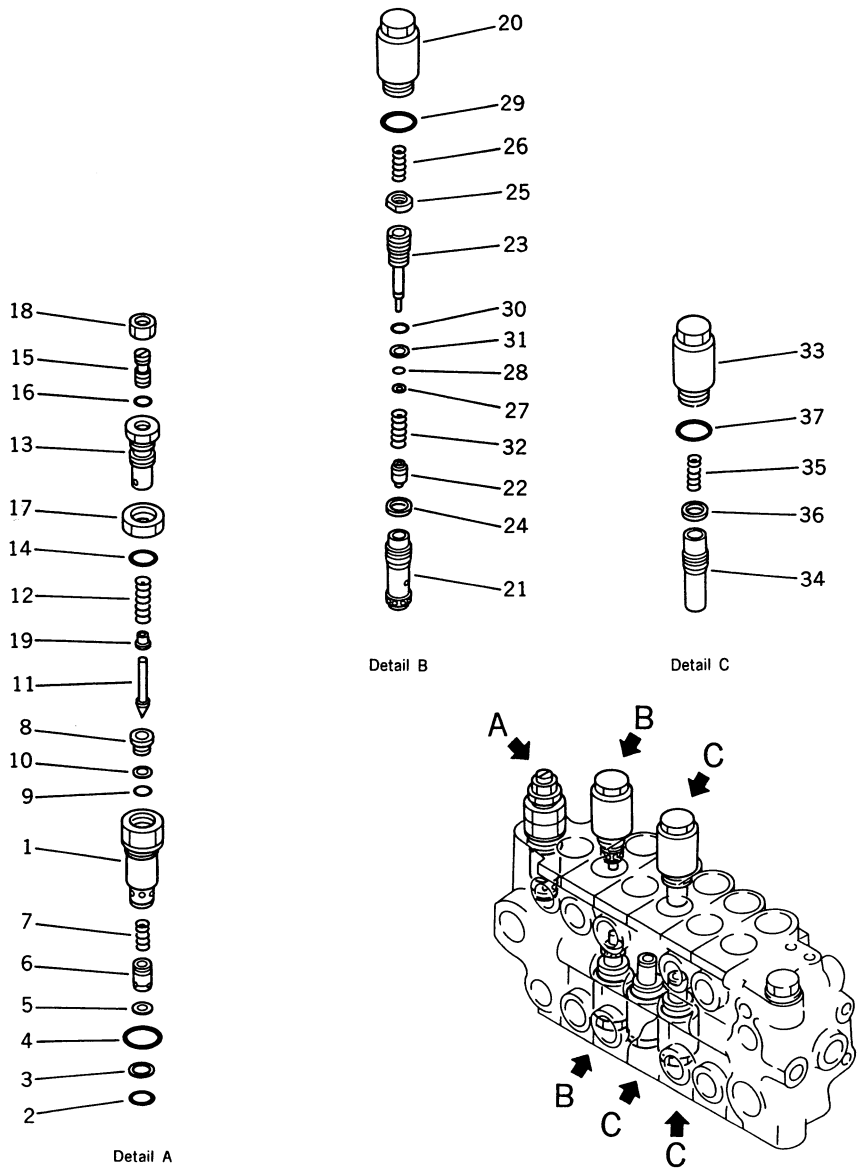

INDEX NO.	PART NO.	DESCRIPTION	Q'TY	SERIAL NO. PC150-3	SERIAL NO. PC150LC-3
	(700-86-28000)	CONTROL VALVE ASS'Y, L.H.	1	3001–	3001–
		THIS ASSEMBLY CONSISTS OF ALL PARTS SHOWN IN FIGS. 6211 TO 6214.			
	700-87-56000	• RELIEF VALVE ASS'Y	1	3001–	3001–
1	(☆700-80-51610)	•• SLEEVE	1	3001–	3001–
2	700-13-31161	•• O-RING	1	3001–	3001–
3	700-80-51190	•• RING, BACK-UP	1	3001–	3001–
4	07002-03334	•• O-RING	1	3001–	3001–
5	700-80-51350	•• RING, SNAP	1	3001–	3001–
6	(☆700-80-51380)	•• VALVE	1	3001–	3001–
7	700-80-51390	•• SPRING	1	3001–	3001–
8	700-80-51340	•• SEAT	1	3001–	3001–
9	07000-22012	•• O-RING	1	3001–	3001–
10	07001-02012	•• RING, BACK-UP	1	3001–	3001–
11	720-68-15540	•• POPPET	1	3001–	3001–
12	720-68-15560	•• SPRING	1	3001–	3001–
13	700-80-51360	•• HOLDER	1	3001–	3001–
14	07002-02434	•• O-RING	1	3001–	3001–
15	700-80-51630	•• SCREW	1	3001–	3001–
16	07000-02011	•• O-RING	1	3001–	3001–
17	07239-12410	•• NUT	1	3001–	3001–
18	01582-11411	•• NUT	1	3001–	3001–
19	720-68-15550	•• RETAINER	1	3001–	3001–
20	700-81-61200	• SUCTION AND SAFETY VALVE ASS'Y	2	3001–	3001–
20	700-80-62310	•• SLEEVE	1	3001–	3001–
21	(☆700-80-62431)	•• VALVE	1	3001–	3001–
22	(☆700-80-62440)	•• POPPET	1	3001–	3001–
23	(☆700-80-62341)	•• PISTON	1	3001–	3001–
24	(☆700-80-62350)	•• SEAL AND O-RING	1	3001–	3001–
25	(☆700-80-62360)	•• NUT	1	3001–	3001–
26	700-80-62250	•• SPRING	1	3001–	3001–
27	(☆700-80-62370)	•• SEAL	1	3001–	3001–
28	(☆700-80-62380)	•• O-RING	1	3001–	3001–
29	07002-03034	•• O-RING	1	3001–	3001–
30	(☆07000-12012)	•• O-RING	1	3001–	3001–

FIG NO. 6213

INDEX NO.	PART NO.	DESCRIPTION	Q'TY	SERIAL NO. PC150-3	SERIAL NO. PC150LC-3
31	(☆07001-02012)	•• RING, BACK-UP	1	3001–	3001–
32	(☆700-80-62390)	•• SPRING	1	3001–	3001–
33	700-81-81000	• SUCTION VALVE ASS'Y	3	3001–	3001–
33	(☆700-80-62310)	•• SLEEVE	1	3001–	3001–
34	(☆700-80-63320)	•• VALVE	1	3001–	3001–
35	700-80-62250	•• SPRING	1	3001–	3001–
36	(☆700-80-62350)	•• SEAL AND O-RING	1	3001–	3001–
37	07002-03034	•• O-RING	1	3001–	3001–

FIG. 6214 CONTROL VALVE, L.H. (4/4) (FOR WRIST CONTROL)

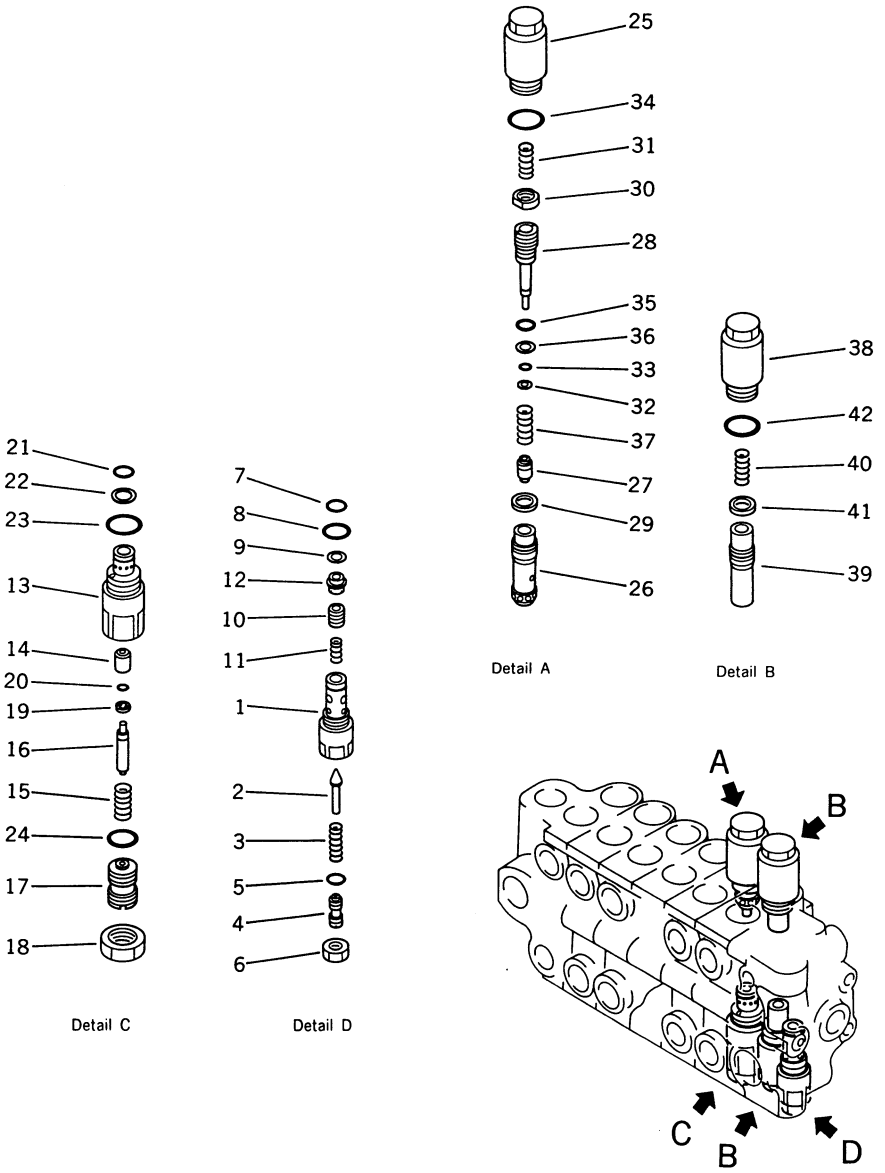

INDEX NO.	PART NO.	DESCRIPTION	Q'TY	SERIAL NO. PC150-3	SERIAL NO. PC150LC-3
	(700-86-28000)	CONTROL VALVE ASS'Y, L.H.	1	3001 –	3001 –
		THIS ASSEMBLY CONSISTS OF ALL PARTS SHOWN IN FIGS. 6211 TO 6214.			
	709-70-55100	• RELIEF VALVE ASS'Y	1	3001 –	3001 –
1	(☆709-70-51110)	•• SLEEVE	1	3001 –	3001 –
2	700-80-61190	•• POPPET	1	3001 –	3001 –
3	700-20-51580	•• SPRING	1	3001 –	3001 –
4	700-20-51340	•• SCREW	1	3001 –	3001 –
5	07000-02011	•• O-RING	1	3001 –	3001 –
6	01582-11411	•• NUT	1	3001 –	3001 –
7	700-22-11410	•• O-RING	1	3001 –	3001 –
8	07002-02434	•• O-RING	1	3001 –	3001 –
9	700-20-51550	•• RING	1	3001 –	3001 –
10	(☆709-70-51120)	•• VALVE	1	3001 –	3001 –
11	700-20-51610	•• SPRING	1	3001 –	3001 –
12	700-20-51540	•• RETAINER	1	3001 –	3001 –
13	709-70-62100	• SAFETY VALVE ASS'Y	1	3001 –	3001 –
13	(☆700-80-71160)	•• SLEEVE	1	3001 –	3001 –
14	(☆700-80-62440)	•• POPPET	1	3001 –	3001 –
15	(☆700-80-62390)	•• SPRING	1	3001 –	3001 –
16	(☆700-80-71140)	•• PISTON	1	3001 –	3001 –
17	(☆700-80-71151)	•• SCREW	1	3001 –	3001 –
18	(☆01583-12414)	•• NUT	1	3001 –	3001 –
19	(☆700-80-62370)	•• SEAL	1	3001 –	3001 –
20	(☆700-80-62380)	•• O-RING	1	3001 –	3001 –
21	700-22-11410	•• O-RING	1	3001 –	3001 –
22	700-80-64220	•• RING, BACK-UP	1	3001 –	3001 –
23	07002-03034	•• O-RING	1	3001 –	3001 –
24	(☆07002-02434)	•• O-RING	1	3001 –	3001 –
25	709-70-61200	• SUCTION AND SAFETY VALVE ASS'Y	1	3001 –	3001 –
25	700-80-62310	•• SLEEVE	1	3001 –	3001 –
26	(☆700-80-62431)	•• VALVE	1	3001 –	3001 –
27	(☆700-80-62440)	•• POPPET	1	3001 –	3001 –
28	(☆700-80-62341)	•• PISTON	1	3001 –	3001 –
29	(☆700-80-62350)	•• SEAL AND O-RING	1	3001 –	3001 –

FIG NO. 6214

INDEX NO.	PART NO.	DESCRIPTION	Q'TY	SERIAL NO. PC150-3	SERIAL NO. PC150LC-3
30	(☆700-80-62360)	•• NUT	1	3001 –	3001 –
31	700-80-62250	•• SPRING	1	3001 –	3001 –
32	(☆700-80-62370)	•• SEAL	1	3001 –	3001 –
33	(☆700-80-62380)	•• O-RING	1	3001 –	3001 –
34	07002-03034	•• O-RING	1	3001 –	3001 –
35	(☆07000-12012)	•• O-RING	1	3001 –	3001 –
36	(☆07001-02012)	•• RING, BACK-UP	1	3001 –	3001 –
37	(☆700-80-62390)	•• SPRING	1	3001 –	3001 –
38	700-81-81000	• SUCTION VALVE ASS'Y	2	3001 –	3001 –
38	(☆700-80-62310)	•• SLEEVE	1	3001 –	3001 –
39	(☆700-80-63320)	•• VALVE	1	3001 –	3001 –
40	700-80-62250	•• SPRING	1	3001 –	3001 –
41	(☆700-80-62350)	•• SEAL AND O-RING	1	3001 –	3001 –
42	07002-03034	•• O-RING	1	3001 –	3001 –

FIG. 6215 CONTROL VALVE, R.H. (1/4) (FOR WRIST CONTROL)

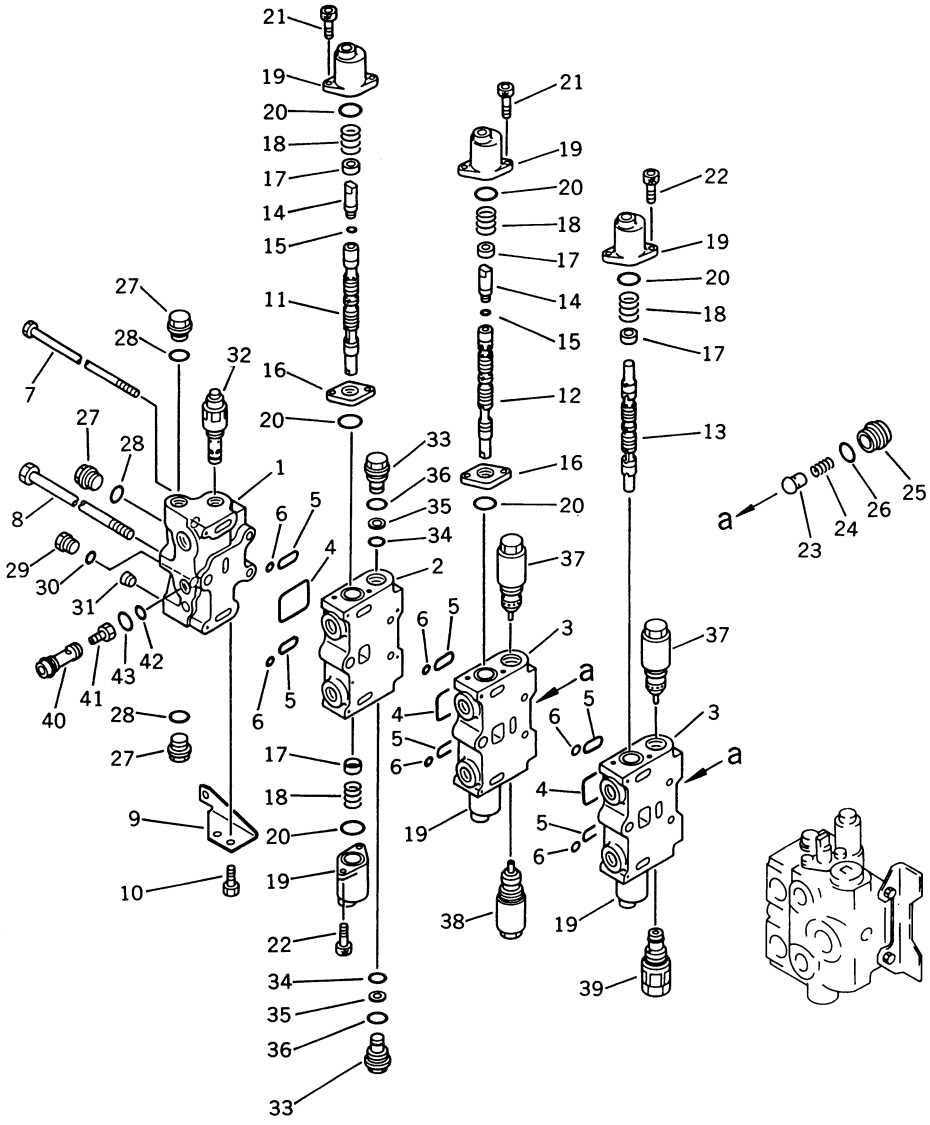

FIG NO. 6215

INDEX NO.	PART NO.	DESCRIPTION	Q'TY	SERIAL NO. PC150-3	SERIAL NO. PC150LC-3
	700-85-29000	CONTROL VALVE ASS'Y, R.H.	1	3001–	3001–
		THIS ASSEMBLY CONSISTS OF ALL PARTS SHOWN IN FIGS. 6215 TO 6218.			
1	(☆700-84-13280)	• COVER, VALVE	1	3001–	3001–
2	(☆700-84-14120)	• BLOCK, VALVE	1	3001–	3001–
3	(☆700-84-14130)	• BLOCK, VALVE	2	3001–	3001–
4	07000-13050	• O-RING	3	3001–	3001–
5	07000-03030	• O-RING	6	3001–	3001–
6	07000-01007	• O-RING	6	3001–	3001–
7	700-88-11112	• BOLT	2	3001–	3001–
8	700-84-13220	• BOLT	1	3001–	3001–
9	700-84-13480	• BRACKET	1	3001–	3001–
10	01010-51020	• BOLT	2	3001–	3001–
11	(☆700-84-14641)	• SPOOL, ARM	1	3001–	3001–
12	(☆700-84-14611)	• SPOOL, BOOM	1	3001–	3001–
13	(☆700-84-14650)	• SPOOL, BUCKET	1	3001–	3001–
14	700-84-13790	• JOINT	2	3001–	3001–
15	07002-11223	• O-RING	2	3001–	3001–
16	700-84-13490	• PLATE	2	3001–	3001–
17	700-84-13781	• RETAINER	6	3001–	3001–
18	700-84-13770	• SPRING	6	3001–	3001–
19	700-84-12510	• CASE	6	3001–	3001–
20	700-84-11240	• O-RING	8	3001–	3001–
21	01252-30625	• BOLT	4	3001–	3001–
22	01252-30616	• BOLT	8	3001–	3001–
23	700-42-31460	• VALVE	2	3001–	3001–
24	700-42-31470	• SPRING	2	3001–	3001–
25	700-84-11320	• PLUG	2	3001–	3001–
26	07002-13034	• O-RING	2	3001–	3001–
27	700-22-11370	• PLUG	3	3001–	3001–
28	07002-12434	• O-RING	3	3001–	3001–
29	07040-11409	• PLUG	2	3001–	3001–
30	07002-01423	• O-RING	2	3001–	3001–
31	07043-70108	• PLUG	1	3001–	3001–
32	(709-70-55100)	• RELIEF VALVE ASS'Y	1	3001–	3001–

FIG NO. 6215

INDEX NO.	PART NO.	DESCRIPTION	Q'TY	SERIAL NO. PC150-3	SERIAL NO. PC150LC-3
33	700-84-13960	• PLUG	2	3001 –	3001 –
34	700-22-11410	• O-RING	2	3001 –	3001 –
35	700-80-64220	• RING, BACK-UP	2	3001 –	3001 –
36	07002-03034	• O-RING	2	3001 –	3001 –
37	(709-70-61200)	• SUCTION AND SAFETY VALVE ASS'Y	2	3001 –	3001 –
38	(700-81-61001)	• SUCTION AND SAFETY VALVE ASS'Y	1	3001 –	3001 –
39	(700-81-77000)	• SAFETY VALVE ASS'Y	1	3001 –	3001 –
40	709-70-91300	• ORIFICE ASS'Y	1	3001 –	3001 –
40	700-93-12660	•• ORIFICE	1	3001 –	3001 –
41	709-70-91210	•• SENSOR	1	3001 –	3001 –
42	07000-02014	•• O-RING	1	3001 –	3001 –
43	07002-02434	•• O-RING	1	3001 –	3001 –

FIG. 6216 CONTROL VALVE, R.H. (2/4) (FOR WRIST CONTROL)

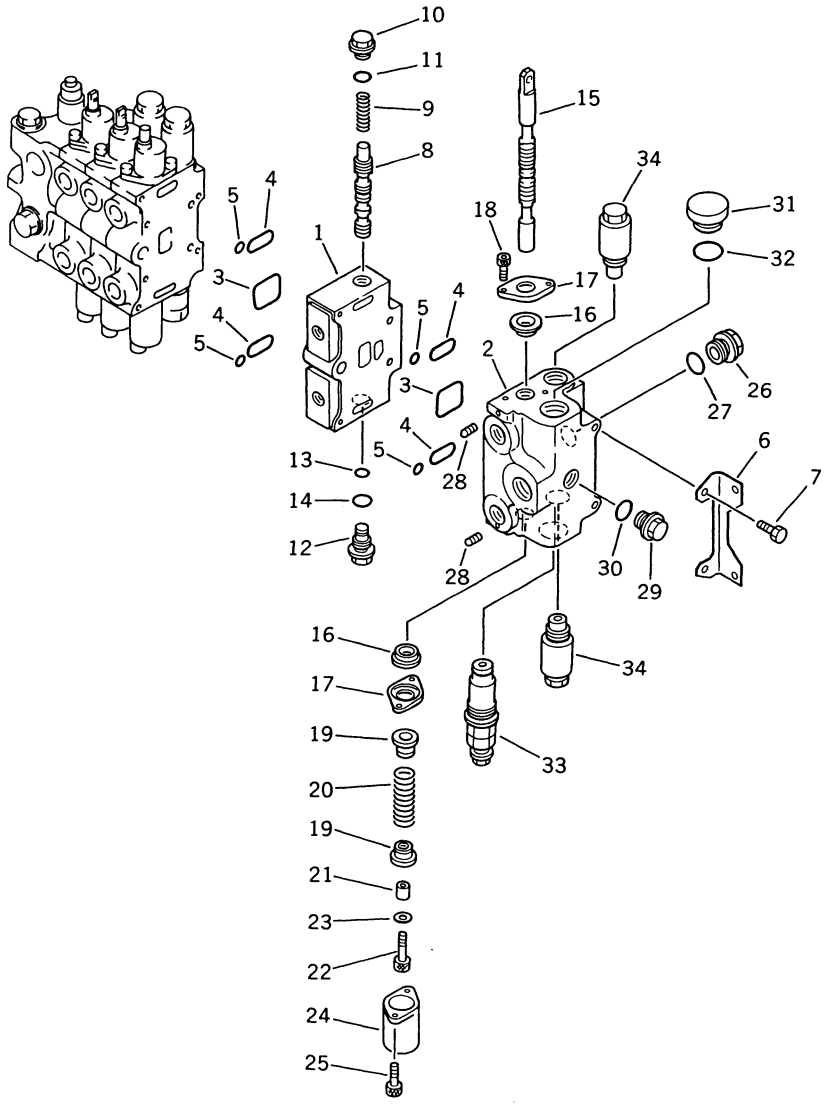

INDEX NO.	PART NO.	DESCRIPTION	Q'TY	SERIAL NO. PC150-3	SERIAL NO. PC150LC-3
	(700-85-29000)	CONTROL VALVE ASS'Y, R.H.	1	3001–	3001–
		THIS ASSEMBLY CONSISTS OF ALL PARTS SHOWN IN FIGS. 6215 TO 6218.			
1	(☆700-84-13141)	• BLOCK, VALVE	1	3001–	3001–
2	(☆700-84-13123)	• BODY, VALVE	1	3001–	3001–
3	07000-13050	• O-RING	2	3001–	3001–
4	07000-03030	• O-RING	4	3001–	3001–
5	07000-01007	• O-RING	4	3001–	3001–
6	700-84-11330	• BRACKET	1	3001–	3001–
7	01010-51020	• BOLT	2	3001–	3001–
8	(☆700-84-13930)	• SPOOL	1	3001–	3001–
9	700-84-13880	• SPRING	1	3001–	3001–
10	700-84-13870	• PLUG	1	3001–	3001–
11	07002-02434	• O-RING	1	3001–	3001–
12	700-84-13510	• NIPPLE	1	3001–	3001–
13	07000-02015	• O-RING	1	3001–	3001–
14	07002-02434	• O-RING	1	3001–	3001–
15	(☆700-84-14581)	• SPOOL, R.H. TRAVEL	1	3001–	3001–
16	700-84-13910	• SEAL	2	3001–	3001–
17	700-84-13891	• PLATE	2	3001–	3001–
18	01252-30612	• BOLT	2	3001–	3001–
19	700-84-13711	• RETAINER	2	3001–	3001–
20	700-84-11650	• SPRING	1	3001–	3001–
21	700-84-11641	• COLLAR	1	3001–	3001–
22	01252-30830	• BOLT	1	3001–	3001–
23	01643-30823	• WASHER	1	3001–	3001–
24	700-84-11390	• COVER	1	3001–	3001–
25	01252-30625	• BOLT	2	3001–	3001–
26	700-84-11320	• PLUG	1	3001–	3001–
27	07002-13034	• O-RING	1	3001–	3001–
28	706-86-51170	• PLUG	2	3001–	3001–
29	700-22-11370	• PLUG	1	3001–	3001–
30	07002-12434	• O-RING	1	3001–	3001–
31	07040-13316	• PLUG	1	3001–	3001–
32	07002-13334	• O-RING	1	3001–	3001–

FIG NO. 6216

INDEX NO.	PART NO.	DESCRIPTION	Q'TY	SERIAL NO. PC150-3	SERIAL NO. PC150LC-3
33	(700-82-56000)	• RELIEF VALVE ASS'Y	1	3001 –	3001 –
34	(700-81-81000)	• SUCTION VALVE ASS'Y	2	3001 –	3001 –

FIG. 6217 CONTROL VALVE, R.H. (3/4) (FOR WRIST CONTROL)

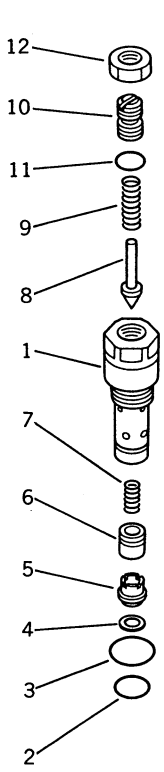

Detail A

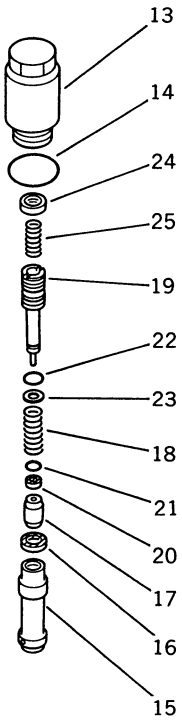

Detail B

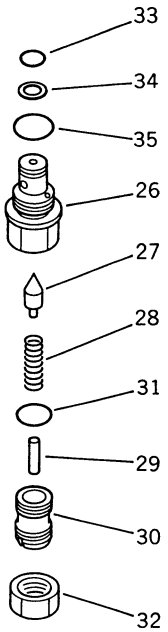

Detail C

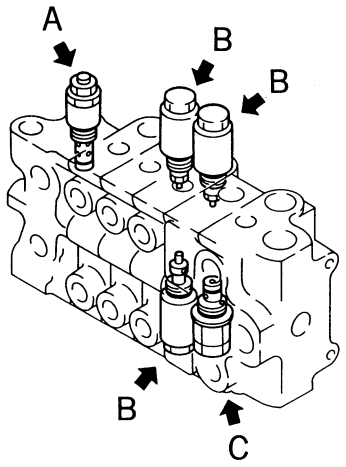

INDEX NO.	PART NO.	DESCRIPTION	Q'TY	SERIAL NO. PC150-3	SERIAL NO. PC150LC-3
	(700-85-29000)	CONTROL VALVE ASS'Y, R.H.	1	3001–	3001–
		THIS ASSEMBLY CONSISTS OF ALL PARTS SHOWN IN FIGS. 6215 TO 6218.			
	709-70-55100	• RELIEF VALVE ASS'Y	2	3001–	3001–
1	(☆700-70-51110)	•• SLEEVE	1	3001–	3001–
2	700-22-11410	•• O-RING	1	3001–	3001–
3	07002-02434	•• O-RING	1	3001–	3001–
4	700-20-51550	•• RING, SNAP	1	3001–	3001–
5	700-20-51540	•• RETAINER	1	3001–	3001–
6	(☆709-70-51120)	•• VALVE	1	3001–	3001–
7	700-20-51610	•• SPRING	1	3001–	3001–
8	700-80-61190	•• POPPET	1	3001–	3001–
9	700-20-51580	•• SPRING	1	3001–	3001–
10	700-20-51340	•• SCREW	1	3001–	3001–
11	07000-02011	•• O-RING	1	3001–	3001–
12	01582-11411	•• NUT	1	3001–	3001–
13	709-70-61200	• SUCTION AND SAFETY VALVE ASS'Y	2	3001–	3001–
13	700-81-61001	• SUCTION AND SAFETY VALVE ASS'Y	1	3001–	3001–
13	700-80-62310	•• SLEEVE	1	3001–	3001–
14	07002-03034	•• O-RING	1	3001–	3001–
15	(☆700-80-62431)	•• VALVE	1	3001–	3001–
16	(☆700-80-62350)	•• SEAL AND O-RING	1	3001–	3001–
17	(☆700-80-62440)	•• POPPET	1	3001–	3001–
18	(☆700-80-62390)	•• SPRING	1	3001–	3001–
19	(☆700-80-62341)	•• PISTON	1	3001–	3001–
20	(☆700-80-62370)	•• SEAL	1	3001–	3001–
21	(☆700-80-62380)	•• O-RING	1	3001–	3001–
22	(☆07000-12012)	•• O-RING	1	3001–	3001–
23	(☆07001-02012)	•• RING, BACK-UP	1	3001–	3001–
24	(☆700-80-62360)	•• NUT	1	3001–	3001–
25	700-80-62250	•• SPRING	1	3001–	3001–
26	700-81-77000	• SAFETY VALVE ASS'Y	1	3001–	3001–
26	700-80-64180	•• SLEEVE	1	3001–	3001–
27	700-80-64120	•• POPPET	1	3001–	3001–
28	700-80-64210	•• SPRING	1	3001–	3001–

FIG NO. 6217

INDEX NO.	PART NO.	DESCRIPTION	Q'TY	SERIAL NO. PC150-3	SERIAL NO. PC150LC-3
29	04022-06030	•• PIN	1	3001–	3001–
30	700-80-64190	•• SCREW	1	3001–	3001–
31	07002-02434	•• O-RING	1	3001–	3001–
32	01583-12414	•• NUT	1	3001–	3001–
33	700-22-11410	•• O-RING	1	3001–	3001–
34	700-80-64220	•• RING, BACK-UP	1	3001–	3001–
35	07002-03034	•• O-RING	1	3001–	3001–

FIG. 6218 CONTROL VALVE, R.H. (4/4) (FOR WRIST CONTROL)

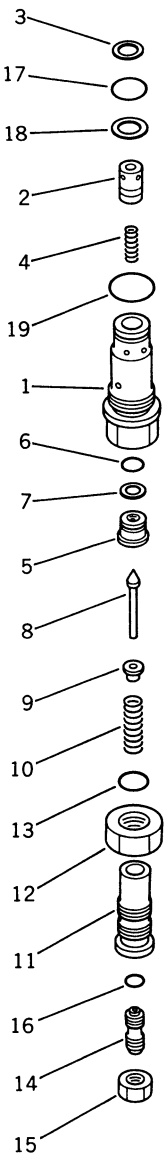

Detail A

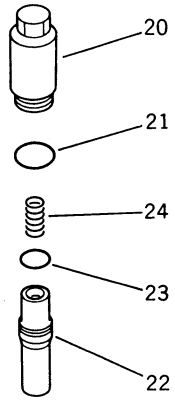

Detail B

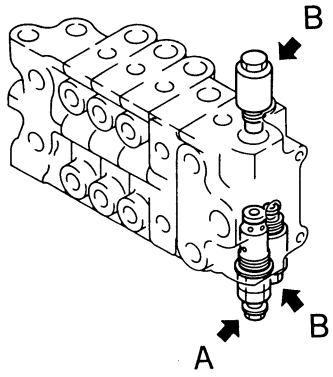

FIG NO. 6218

INDEX NO.	PART NO.	DESCRIPTION	Q'TY	SERIAL NO. PC150-3	SERIAL NO. PC150LC-3
	(700-85-29000)	CONTROL VALVE ASS'Y, R.H.	1	3001–	3001–
		THIS ASSEMBLY CONSISTS OF ALL PARTS SHOWN IN FIGS. 6215 TO 6218.			
	700-87-56000	• RELIEF VALVE ASS'Y	1	3001–	3001–
1	(☆700-80-51610)	•• SLEEVE	1	3001–	3001–
2	700-80-51380	•• VALVE	1	3001–	3001–
3	700-80-51350	•• RING, SNAP	1	3001–	3001–
4	700-80-51390	•• SPRING	1	3001–	3001–
5	700-80-51340	•• SEAT	1	3001–	3001–
6	07000-22012	•• O-RING	1	3001–	3001–
7	07001-02012	•• RING, BACK-UP	1	3001–	3001–
8	720-68-15540	•• POPPET	1	3001–	3001–
9	720-68-15550	•• RETAINER	1	3001–	3001–
10	720-68-15560	•• SPRING	1	3001–	3001–
11	700-80-51360	•• HOLDER	1	3001–	3001–
12	07239-12410	•• NUT	1	3001–	3001–
13	07002-02434	•• O-RING	1	3001–	3001–
14	700-80-51630	•• SCREW	1	3001–	3001–
15	01582-11411	•• NUT	1	3001–	3001–
16	07000-02011	•• O-RING	1	3001–	3001–
17	700-13-31161	•• O-RING	1	3001–	3001–
18	700-80-51190	•• RING, BACK-UP	1	3001–	3001–
19	07002-03334	•• O-RING	1	3001–	3001–
20	700-81-81000	• SUCTION VALVE ASS'Y	2	3001–	3001–
20	(☆700-80-62310)	•• SLEEVE	1	3001–	3001–
21	07002-03034	•• O-RING	1	3001–	3001–
22	(☆700-80-63320)	•• VALVE	1	3001–	3001–
23	(☆700-80-62350)	•• SEAL AND O-RING	1	3001–	3001–
24	700-80-62250	•• SPRING	1	3001–	3001–

FIG. 6231 SERVO VALVE (FOR LONG LEVER CONTROL)

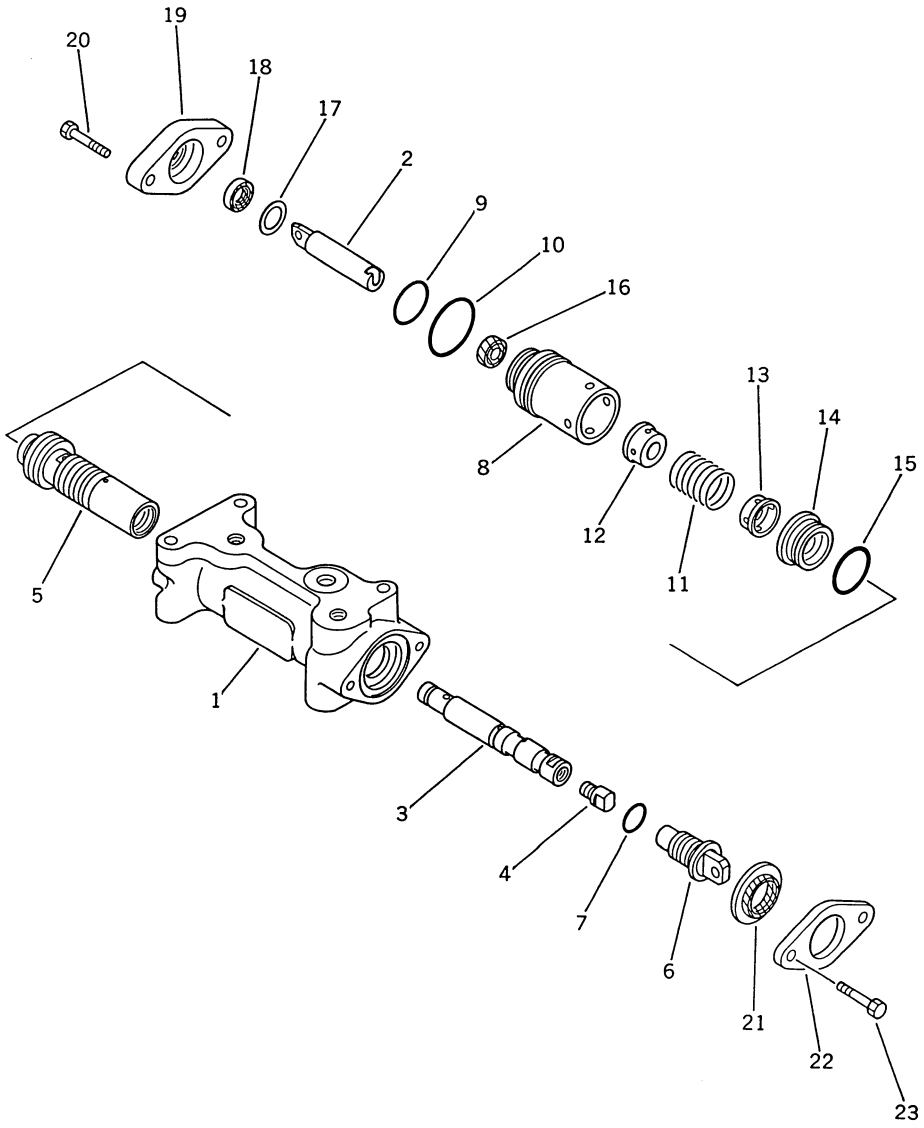

INDEX NO.	PART NO.	DESCRIPTION	Q'TY	SERIAL NO. PC150-3	SERIAL NO. PC150LC-3
	702-18-11000	SERVO VALVE ASS'Y	1	3001–	3001–
1	702-18-11130	• BODY	1	3001–	3001–
2	702-18-11240	• SPOOL	1	3001–	3001–
3	702-18-11170	• SPOOL	1	3001–	3001–
4	702-18-11180	• PLUG	1	3001–	3001–
5	702-18-11160	• PISTON	1	3001–	3001–
6	702-18-11190	• JOINT	1	3001–	3001–
7	07002-01823	• O-RING	1	3001–	3001–
8	702-18-11140	• HOLDER	1	3001–	3001–
9	07000-03028	• O-RING	1	3001–	3001–
10	07000-03035	• O-RING	1	3001–	3001–
11	702-18-11270	• SPRING	1	3001–	3001–
12	702-18-11230	• RETAINER	1	3001–	3001–
13	702-18-11220	• RETAINER	1	3001–	3001–
14	702-18-11150	• SPACER	1	3001–	3001–
15	07000-03028	• O-RING	1	3001–	3001–
16	700-22-11252	• U-PACKING	1	3001–	3001–
17	700-22-11430	• COLLAR	1	3001–	3001–
18	700-22-11261	• SEAL, DUST	1	3001–	3001–
19	702-18-11250	• PLATE	1	3001–	3001–
20	01010-50835	• BOLT	2	3001–	3001–
21	700-94-11710	• SEAL	1	3001–	3001–
22	702-18-11260	• PLATE	1	3001–	3001–
23	01010-50820	• BOLT	2	3001–	3001–

FIG. 6401 BOOM CYLINDER

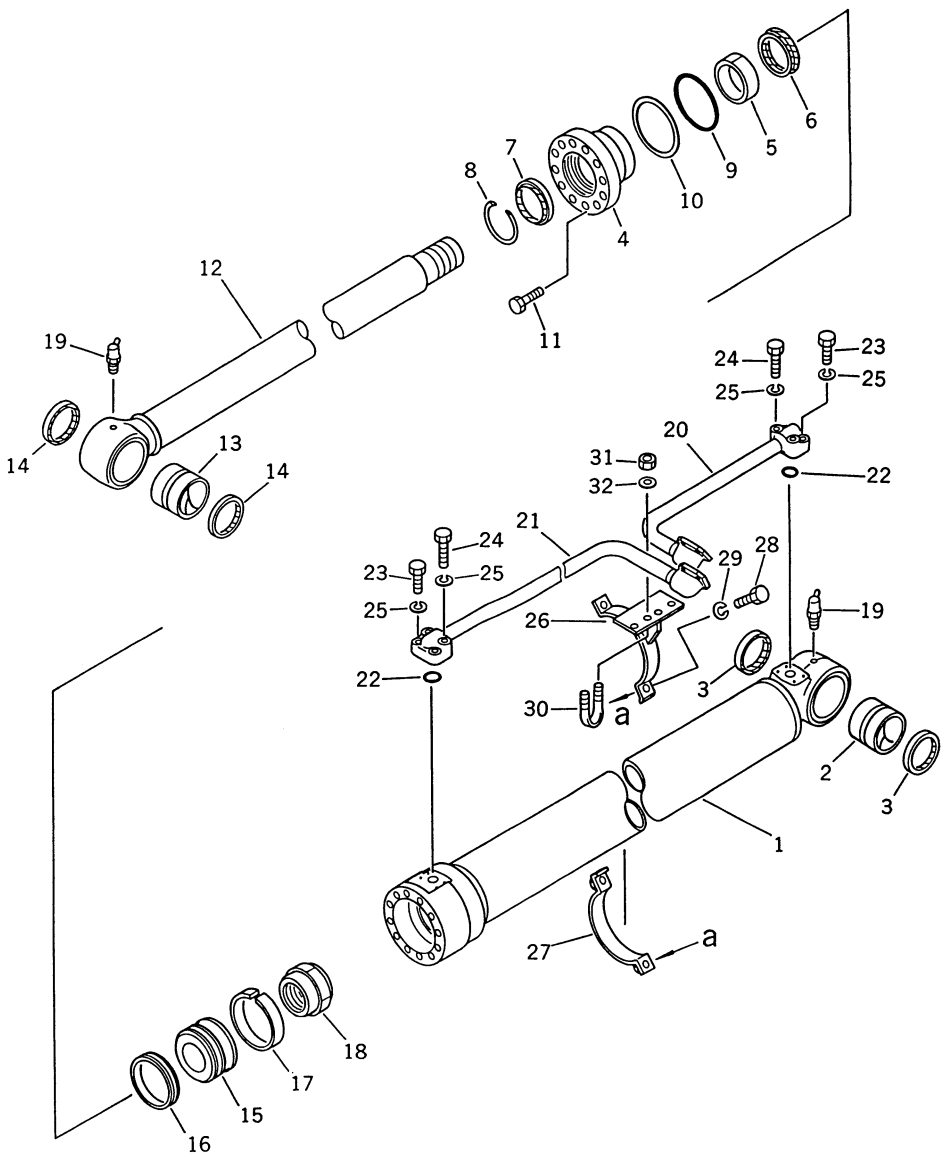

INDEX NO.	PART NO.	DESCRIPTION	Q'TY	SERIAL NO. PC150-3	SERIAL NO. PC150LC-3
	21K-63-56500	BOOM CYLINDER ASS'Y, L.H.	1	3001–	3001–
	21K-63-56600	BOOM CYLINDER ASS'Y, R.H.	1	3001–	3001–
	21K-63-56510	• CYLINDER SUB ASS'Y	1	3001–	3001–
1	21K-63-56540	•• CYLINDER	1	3001–	3001–
2	707-76-70040	•• BUSHING	1	3001–	3001–
3	07145-00070	•• SEAL, DUST	2	3001–	3001–
4	707-27-11371	•• HEAD, CYLINDER	1	3001–	3001–
5	07177-07530	•• BUSHING	1	3001–	3001–
6	707-51-75211	•• PACKING, ROD	1	3001–	3001–
7	144-63-94170	•• SEAL, DUST	1	3001–	3001–
8	07179-00097	•• RING, SNAP	1	3001–	3001–
9	07000-12105	•• O-RING	1	3001–	3001–
10	07146-02106	•• RING, BACK-UP	1	3001–	3001–
11	01010-81655	•• BOLT	12	3001–	3001–
12	21K-63-56520	•• ROD	1	3001–	3001–
13	707-76-70040	•• BUSHING	1	3001–	3001–
14	07145-00070	•• SEAL, DUST	2	3001–	3001–
15	707-36-11460	•• PISTON	1	3001–	3001–
16	707-44-11080	•• RING, PISTON	1	3001–	3001–
17	07155-01125	•• RING, WEAR	1	3001–	3001–
18	707-68-10580	•• NUT	1	3001–	3001–
19	07020-00675	• FITTING, GREASE	2	3001–	3001–
20	21K-63-56580	• TUBE, L.H.	1	3001–	3001–
20	21K-63-56680	• TUBE, R.H.	1	3001–	3001–
21	21K-63-56570	• TUBE, L.H.	1	3001–	3001–
21	21K-63-56670	• TUBE, R.H.	1	3001–	3001–
22	07000-13030	• O-RING	2	3001–	3001–
23	01010-50845	• BOLT	4	3001–	3001–
24	01010-50855	• BOLT	4	3001–	3001–
25	01602-20825	• WASHER, SPRING	8	3001–	3001–
26	707-88-99100	• BRACKET	1	3001–	3001–
27	707-88-99120	• BAND	1	3001–	3001–
28	01010-51035	• BOLT	2	3001–	3001–
29	01602-21030	• WASHER, SPRING	2	3001–	3001–
30	07283-22738	• CLIP	2	3001–	3001–

FIG NO. 6401

INDEX NO.	PART NO.	DESCRIPTION	Q'TY	SERIAL NO. PC150-3	SERIAL NO. PC150LC-3
31	01599-01011	• NUT	4	3001–	3001–
32	01643-31032	• WASHER	4	3001–	3001–

FIG. 6403 ARM CYLINDER

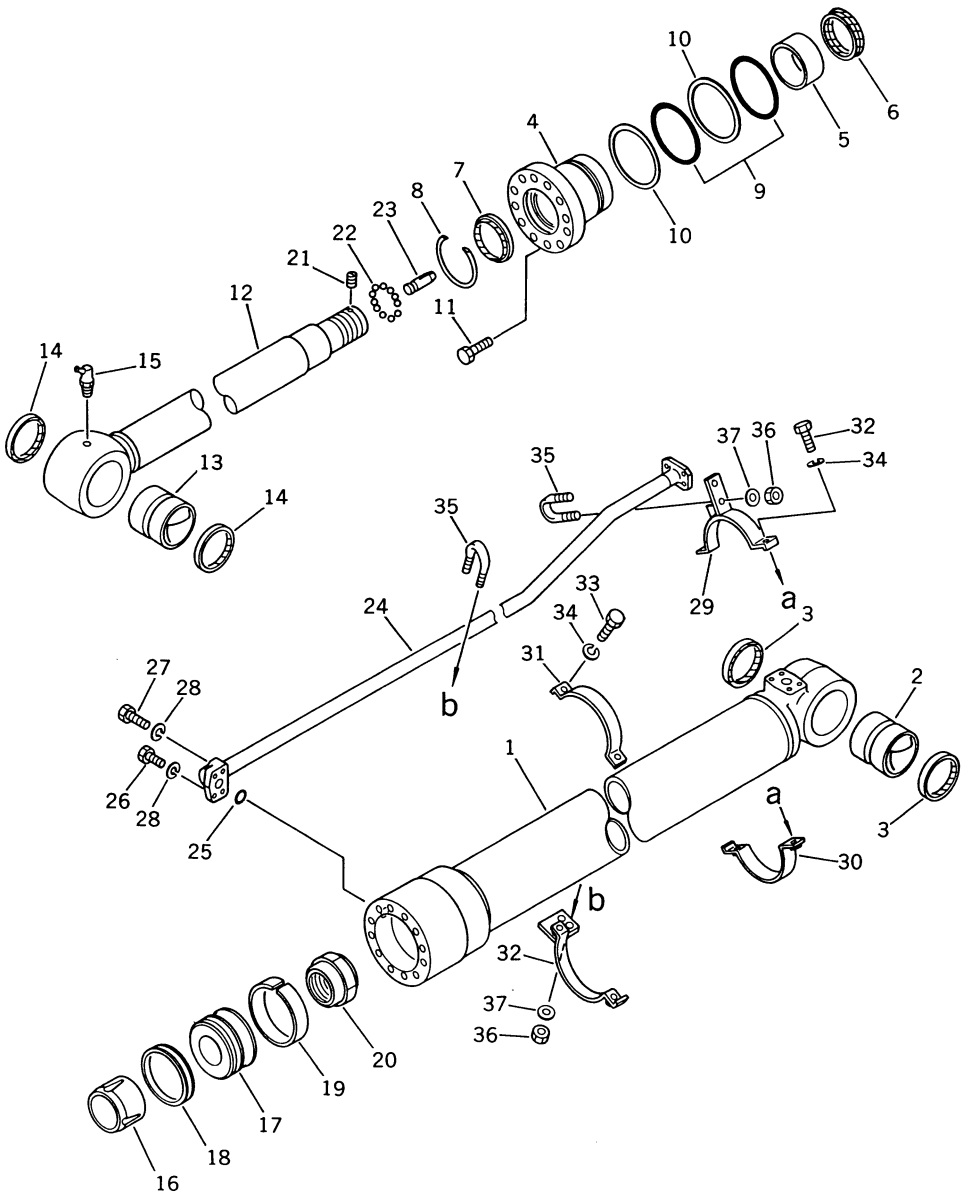

FIG NO. 6403

INDEX NO.	PART NO.	DESCRIPTION	Q'TY	SERIAL NO. PC150-3	SERIAL NO. PC150LC-3
	21K-63-66500	ARM CYLINDER ASS'Y	1	3001–	3001–
1	21K-63-66540	• CYLINDER	1	3001–	3001–
2	707-76-80010	• BUSHING	1	3001–	3001–
3	07145-00080	• SEAL, DUST	2	3001–	3001–
4	707-28-12370	• HEAD, CYLINDER	1	3001–	3001–
5	07177-08030	• BUSHING	1	3001–	3001–
6	707-51-80211	• PACKING, ROD	1	3001–	3001–
7	195-63-92190	• SEAL, DUST	1	3001–	3001–
8	07179-00103	• RING, SNAP	1	3001–	3001–
9	07000-12115	• O-RING	2	3001–	3001–
10	07146-02116	• RING, BACK-UP	2	3001–	3001–
11	01010-81655	• BOLT	12	3001–	3001–
12	21K-63-66520	• ROD	1	3001–	3001–
13	707-76-80010	• BUSHING	1	3001–	3001–
14	07145-00080	• SEAL, DUST	2	3001–	3001–
15	07020-00675	• FITTING, GREASE	1	3001–	3001–
16	707-71-50890	• PLUNGER	1	3001–	3001–
17	707-36-12360	• PISTON	1	3001–	3001–
18	707-44-12080	• RING, PISTON	1	3001–	3001–
19	07155-01230	• RING, WEAR	1	3001–	3001–
20	707-68-10580	• NUT	1	3001–	3001–
21	707-71-91250	• PLUNGER	1	3001–	3001–
22	04260-00635	• BALL	11	3001–	3001–
23	707-71-50220	• PLUNGER	1	3001–	3001–
24	21K-63-66570	• TUBE	1	3001–	3001–
25	07000-13030	• O-RING	1	3001–	3001–
26	01010-50845	• BOLT	2	3001–	3001–
27	01010-50855	• BOLT	2	3001–	3001–
28	01602-20825	• WASHER, SPRING	4	3001–	3001–
29	707-88-99280	• BAND	1	3001–	3001–
30	707-88-99250	• BAND	1	3001–	3001–
31	707-88-99240	• BAND	1	3001–	3001–
32	707-88-99290	• BAND	1	3001–	3001–
33	01010-51035	• BOLT	4	3001–	3001–
34	01602-21030	• WASHER, SPRING	4	3001–	3001–

FIG NO. 6403

INDEX NO.	PART NO.	DESCRIPTION	Q'TY	SERIAL NO. PC150-3	SERIAL NO. PC150LC-3
35	07283-22738	• CLIP	2	3001–	3001–
36	01599-01011	• NUT	4	3001–	3001–
37	01643-31032	• WASHER	4	3001–	3001–

FIG. 6405 BUCKET CYLINDER

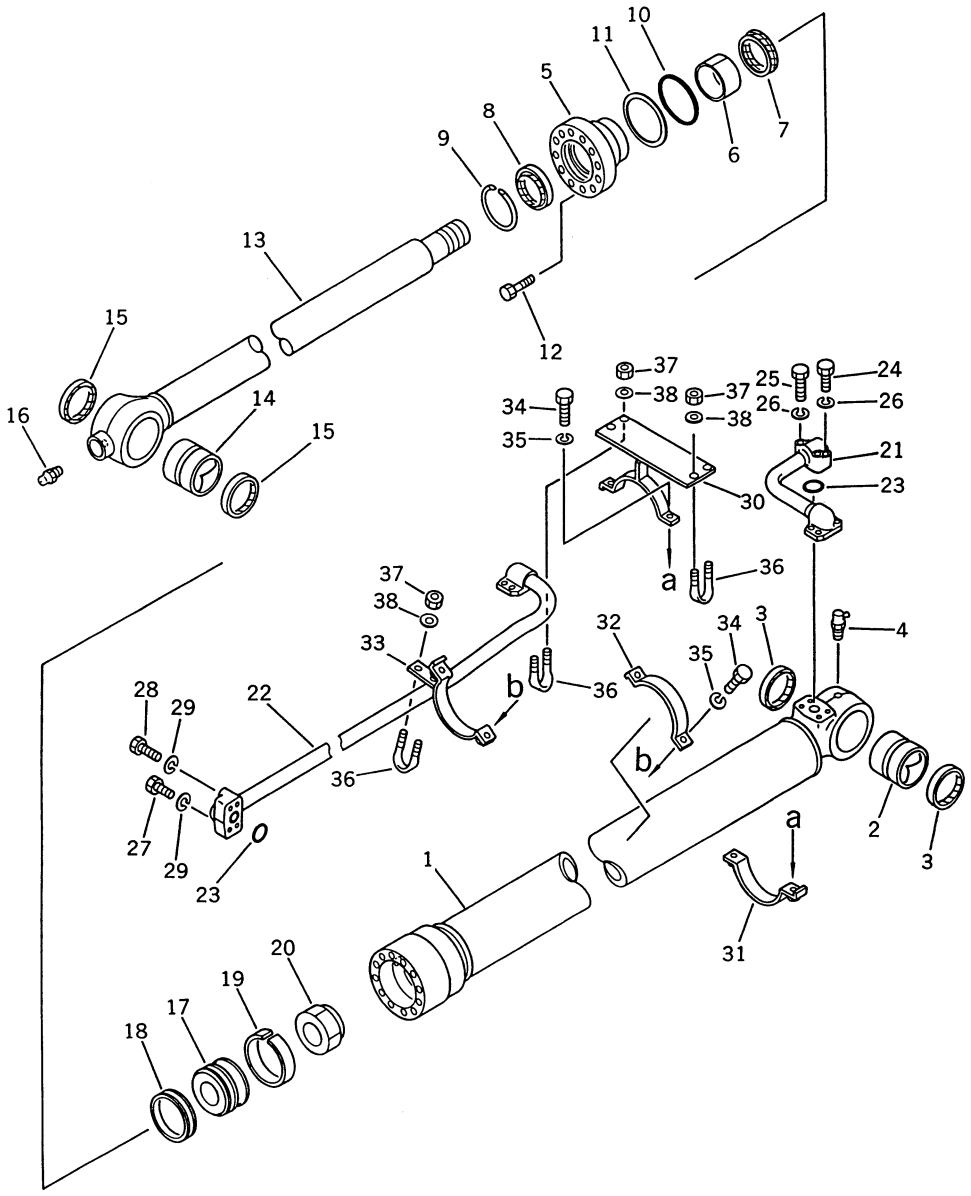

INDEX NO.	PART NO.	DESCRIPTION	Q'TY	SERIAL NO. PC150-3	SERIAL NO. PC150LC-3
	21K-63-76500	BUCKET CYLINDER ASS'Y	1	3001–	3001–
1	21K-63-76540	• CYLINDER	1	3001–	3001–
2	707-76-70040	• BUSHING	1	3001–	3001–
3	07145-00070	• SEAL, DUST	2	3001–	3001–
4	07020-00900	• FITTING, GREASE	1	3001–	3001–
5	707-27-10270	• HEAD, CYLINDER	1	3001–	3001–
6	07177-07030	• BUSHING	1	3001–	3001–
7	707-51-70211	• PACKING, ROD	1	3001–	3001–
8	144-63-95170	• SEAL, DUST	1	3001–	3001–
9	07179-00093	• RING, SNAP	1	3001–	3001–
10	07000-12095	• O-RING	1	3001–	3001–
11	07146-02096	• RING, BACK-UP	1	3001–	3001–
12	01010-81450	• BOLT	12	3001–	3001–
13	21K-63-76520	• ROD	1	3001–	3001–
14	707-76-70060	• BUSHING	1	3001–	3001–
15	21K-70-12180	• SEAL, DUST	2	3001–	3001–
16	07020-00000	• FITTING, GREASE	1	3001–	3001–
17	707-36-10360	• PISTON	1	3001–	3001–
18	707-44-10080	• RING, PISTON	1	3001–	3001–
19	07155-01025	• RING, WEAR	1	3001–	3001–
20	07165-15252	• NUT	1	3001–	3001–
21	21K-63-76580	• TUBE	1	3001–	3001–
22	21K-63-76570	• TUBE	1	3001–	3001–
23	07000-13025	• O-RING	2	3001–	3001–
24	01010-50845	• BOLT	2	3001–	3001–
25	01010-50855	• BOLT	2	3001–	3001–
26	01602-20825	• WASHER, SPRING	4	3001–	3001–
27	01010-50840	• BOLT	2	3001–	3001–
28	01010-50855	• BOLT	2	3001–	3001–
29	01602-20825	• WASHER, SPRING	4	3001–	3001–
30	707-88-99050	• BRACKET	1	3001–	3001–
31	707-88-99020	• BAND	1	3001–	3001–
32	707-88-99010	• BAND	1	3001–	3001–
33	707-88-99070	• BAND	1	3001–	3001–
34	01010-51035	• BOLT	4	3001–	3001–

FIG NO. 6405

INDEX NO.	PART NO.	DESCRIPTION	Q'TY	SERIAL NO. PC150-3	SERIAL NO. PC150LC-3
35	01602-21030	• WASHER, SPRING	4	3001 –	3001 –
36	07283-22738	• CLIP	3	3001 –	3001 –
37	01599-01011	• NUT	6	3001 –	3001 –
38	01643-31032	• WASHER	6	3001 –	3001 –

FIG. 6501 HYDRAULIC PIPING (TANK TO PUMP)

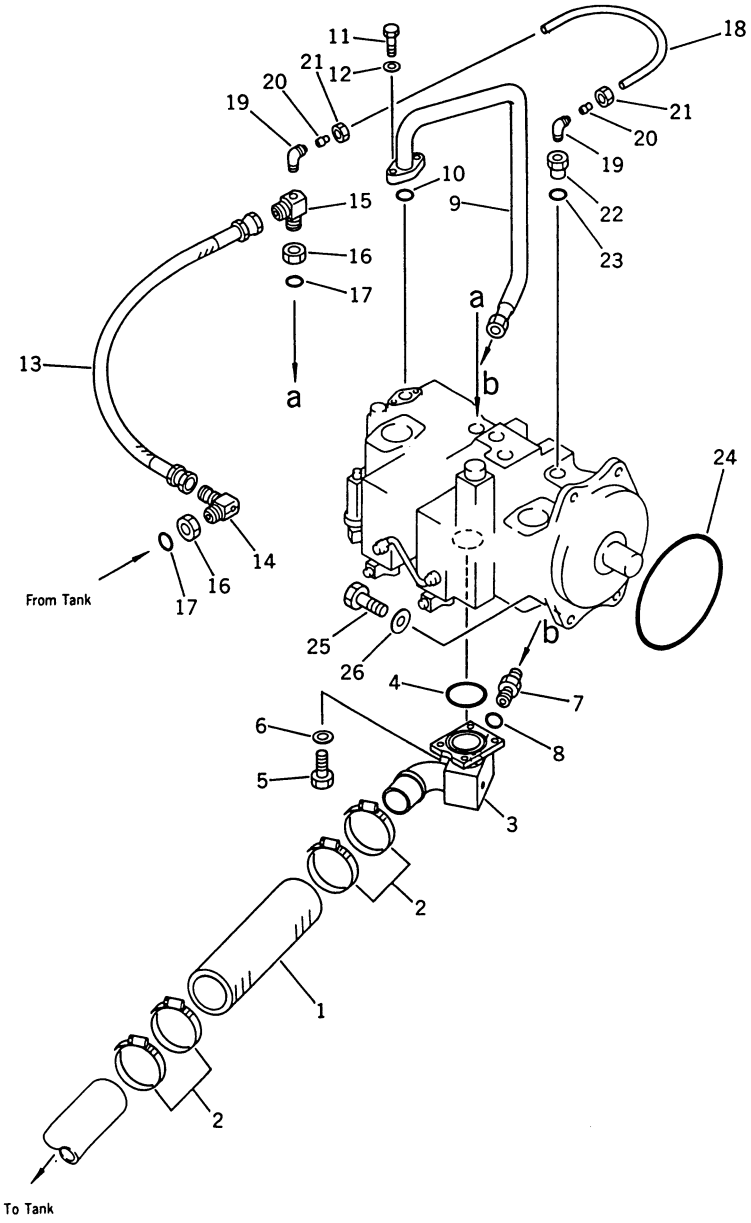

FIG NO. 6501

INDEX NO.	PART NO.	DESCRIPTION	Q'TY	SERIAL NO. PC150-3	SERIAL NO. PC150LC-3
1	07260-27422	HOSE	1	3001–	3001–
2	07281-01029	CLAMP	4	3001–	3001–
3	21K-62-21111	TUBE	1	3001–	3001–
4	07000-02085	O-RING	1	3001–	3001–
5	01010-51235	BOLT	4	3001–	3001–
6	01643-31232	WASHER	4	3001–	3001–
7	07230-10628	NIPPLE	1	3001–	3001–
8	07002-02434	O-RING	1	3001–	3001–
9	21K-62-21160	TUBE	1	3001–	3001–
10	07000-03028	O-RING	1	3001–	3001–
11	01010-51035	BOLT	2	3001–	3001–
12	01643-31032	WASHER	2	3001–	3001–
13	07102-20606	HOSE	1	3001–	3001–
14	07232-20628	ELBOW	1	3001–	3001–
15	203-62-42640	ELBOW	1	3001–	3001–
16	07239-12410	NUT	2	3001–	3001–
17	07002-02434	O-RING	2	3001–	3001–
18	07822-00804	TUBE	1	3001–	3001–
19	07834-00817	ELBOW	2	3001–	3001–
20	07831-00813	SLEEVE	2	3001–	3001–
21	07832-00817	NUT	2	3001–	3001–
22	203-62-42590	BUSHING	1	3001–	3001–
23	07002-02434	O-RING	1	3001–	3001–
24	07000-05220	O-RING	1	3001–	3001–
25	01010-51650	BOLT	4	3001–	3001–
26	01643-31645	WASHER	4	3001–	3001–

FIG. 6502 HYDRAULIC PIPING (PUMP TO VALVE)

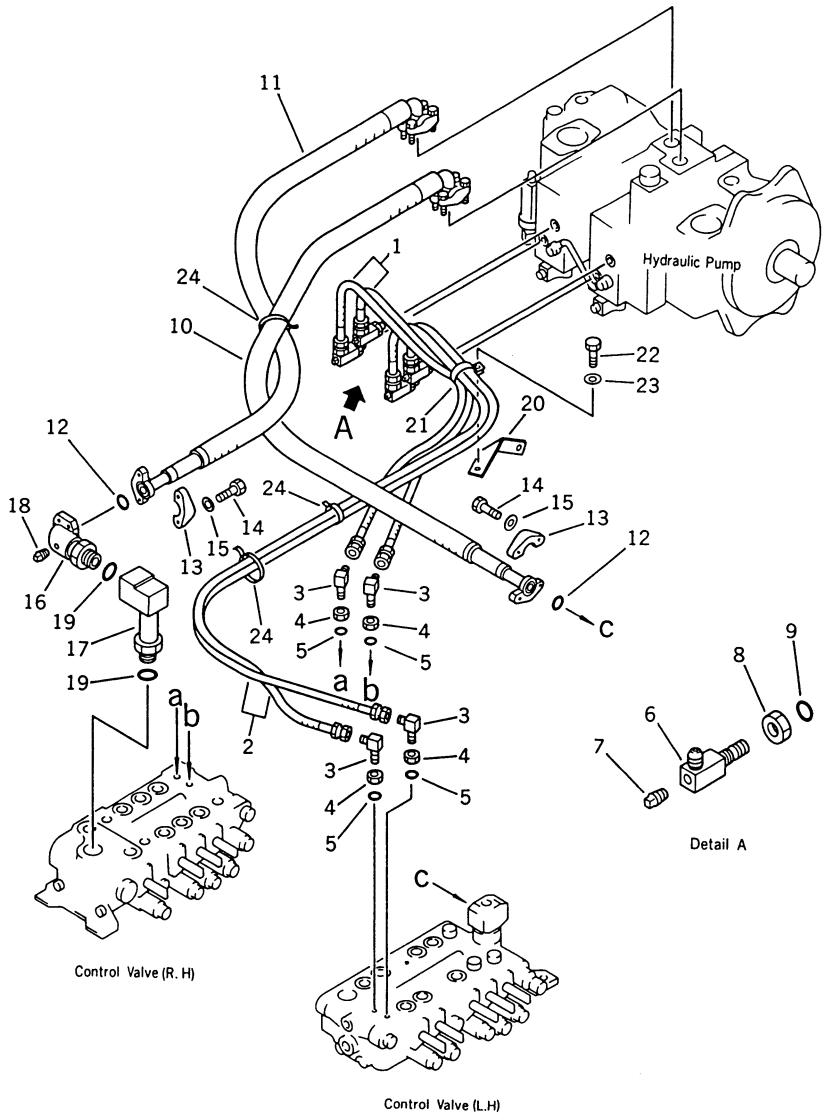

FIG NO. 6502

INDEX NO.	PART NO.	DESCRIPTION	Q'TY	SERIAL NO. PC150-3	SERIAL NO. PC150LC-3
1	203-62-42980	HOSE	2	3001 –	3001 –
2	20G-62-15430	HOSE	2	3001 –	3001 –
3	07232-20210	ELBOW	4	3001 –	3001 –
4	07239-11408	NUT	4	3001 –	3001 –
5	07002-01423	O-RING	4	3001 –	3001 –
6	203-62-44750	ELBOW	4	3001 –	3001 –
7	07042-30108	PLUG	4	3001 –	3001 –
8	07239-11408	NUT	4	3001 –	3001 –
9	07002-01423	O-RING	4	3001 –	3001 –
10	07098-01011	HOSE	1	3001 –	3001 –
11	07098-01012	HOSE	1	3001 –	3001 –
12	07000-13032	O-RING	4	3001 –	3001 –
13	07371-31049	FLANGE, SPLIT	8	3001 –	3001 –
14	07372-21035	BOLT	16	3001 –	3001 –
15	01643-51032	WASHER	16	3001 –	3001 –
16	21K-62-21610	ELBOW	1	3001 –	3001 –
17	21K-62-21141	ELBOW	1	3001 –	3001 –
18	07042-30108	PLUG	1	3001 –	3001 –
19	07002-13334	O-RING	2	3001 –	3001 –
20	21K-62-21560	BRACKET	1	3001 –	3001 –
21	20D-03-11241	CLIP	1	3001 –	3001 –
22	01010-51020	BOLT	1	3001 –	3001 –
23	01643-31032	WASHER	2	3001 –	3001 –
24	08034-00519	BAND	6	3001 –	3001 –

FIG. 6503 HYDRAULIC PIPING (VALVE TO VALVE)

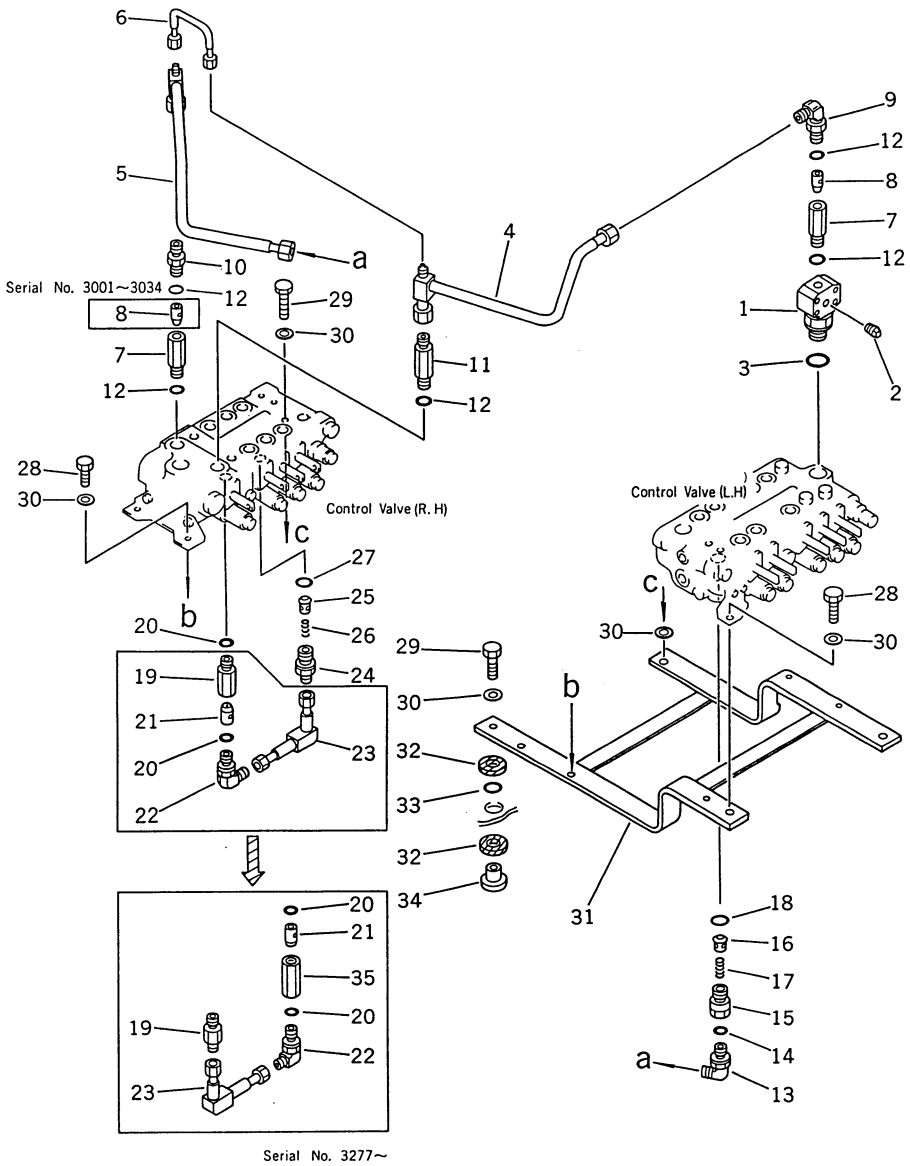

FIG NO. 6503

INDEX NO.	PART NO.	DESCRIPTION	Q'TY	SERIAL NO. PC150-3	SERIAL NO. PC150LC-3
1	21K-62-21120	ELBOW	1	3001–	3001–
2	07042-30108	PLUG	1	3001–	3001–
3	07002-13334	O-RING	1	3001–	3001–
4	21K-62-21430	TUBE	1	3001–	3001–
5	21K-62-21440	TUBE	1	3001–	3001–
6	203-62-42691	TUBE	1	3001–	3001–
7	203-62-42710	BODY	2	3001–	3001–
8	203-62-42720	VALVE	2	3001–3034	3001–3034
8	203-62-42720	VALVE	1	3035–	3035–
9	07235-10422	ELBOW	1	3001–	3001–
10	07230-10422	NIPPLE	1	3001–	3001–
11	203-62-42510	NIPPLE	1	3001–	3001–
12	07002-12034	O-RING	5	3001–	3001–
13	203-62-42751	ELBOW	1	3001–	3001–
14	07002-12034	O-RING	1	3001–	3001–
15	203-62-42731	NIPPLE	1	3001–	3001–
16	203-62-42741	VALVE	1	3001–	3001–
17	700-42-31470	SPRING	1	3001–	3001–
18	07002-13034	O-RING	1	3001–	3001–
19	203-62-42710	BODY	1	3001–3276	3001–3276
19	203-62-43830	NIPPLE	1	3277–	3277–
20	07002-12034	O-RING	2	3001–3276	3001–3276
20	07002-12034	O-RING	3	3277–	3277–
21	203-62-42720	VALVE	1	3001–	3001–
22	07235-10315	ELBOW	1	3001–	3001–
23	21K-62-21730	TUBE	1	3001–	3001–
24	203-62-44174	NIPPLE	1	3001–3276	3001–3276
24	203-62-43840	NIPPLE	1	3277–	3277–
25	203-62-42741	VALVE	1	3001–	3001–
26	203-62-44811	SPRING	1	3001–	3001–
27	07002-13034	O-RING	1	3001–	3001–
28	01010-51225	BOLT	5	3001–	3001–
29	01010-51235	BOLT	4	3001–	3001–
30	01643-31232	WASHER	10	3001–	3001–
31	21K-62-21490	BRACKET	1	3001–	3001–

FIG NO. 6503

INDEX NO.	PART NO.	DESCRIPTION	Q'TY	SERIAL NO. PC150-3	SERIAL NO. PC150LC-3
32	203-62-42770	CUSHION	8	3001–	3001–
33	07000-03025	O-RING	4	3001–	3001–
34	203-62-42780	COLLAR	4	3001–	3001–
35	203-62-43850	BODY	1	3277–	3277–

FIG. 6504 HYDRAULIC PIPING (VALVE TO TANK AND OIL COOLER)

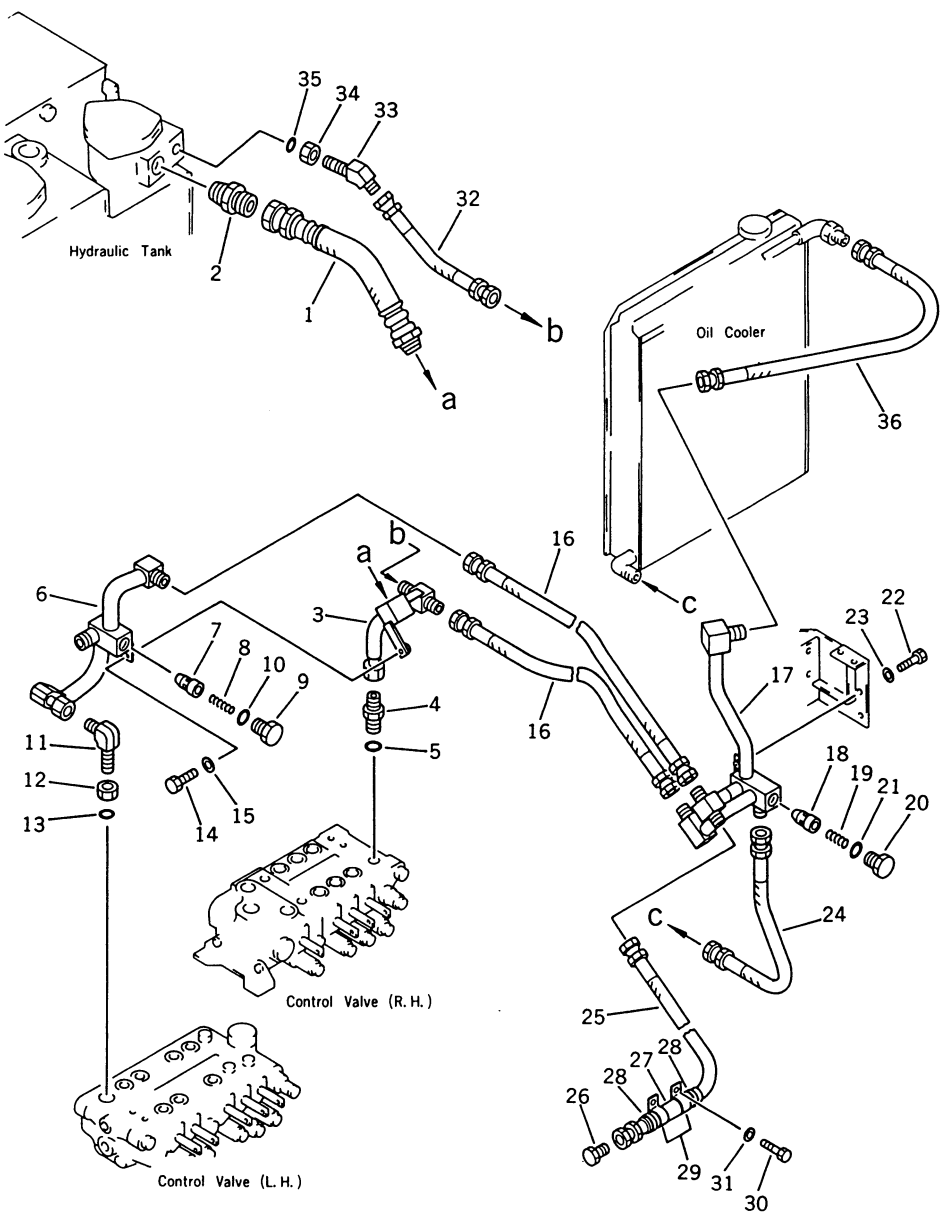

FIG NO. 6504

INDEX NO.	PART NO.	DESCRIPTION	Q'TY	SERIAL NO. PC150-3	SERIAL NO. PC150LC-3
1	203-62-44280	HOSE	1	3001–	3001–
2	203-62-44290	NIPPLE	1	3001–	3001–
3	21K-62-21471	TUBE	1	3001–	3001–
4	07230-11034	NIPPLE	1	3001–	3001–
5	07002-03334	O-RING	1	3001–	3001–
6	21K-62-21481	TUBE	1	3001–	3001–
7	21K-60-99976	POPPET	1	3001–	3001–
8	150-49-11560	SPRING	1	3001–	3001–
9	203-62-31660	PLUG	1	3001–	3001–
10	07002-03334	O-RING	1	3001–	3001–
11	07232-21034	ELBOW	1	3001–	3001–
12	07239-13320	NUT	1	3001–	3001–
13	07002-03334	O-RING	1	3001–	3001–
14	01010-51220	BOLT	1	3001–	3001–
15	01643-31232	WASHER	1	3001–	3001–
16	07102-21009	HOSE	2	3001–	3001–
17	21K-62-21513	TUBE	1	3001–	3001–
18	205-60-21590	POPPET	1	3001–	3001–
19	150-49-11560	SPRING	1	3001–	3001–
20	203-62-31660	PLUG	1	3001–	3001–
21	07002-03334	O-RING	1	3001–	3001–
22	01010-51025	BOLT	2	3001–	3001–
23	01643-31032	WASHER	2	3001–	3001–
24	21K-62-21740	HOSE	1	3001–	3001–
25	07102-21006	HOSE	1	3001–	3001–
26	07376-51034	PLUG	1	3001–	3001–
27	205-62-53780	COVER	1	3001–	3001–
28	08034-00823	BAND	2	3001–	3001–
29	21T-06-11950	CLIP	2	3001–	3001–
30	01010-51025	BOLT	2	3001–	3001–
31	01643-31032	WASHER	2	3001–	3001–
32	21K-62-21740	HOSE	1	3001–	3001–
33	07234-21034	ELBOW	1	3001–	3001–
34	07239-13320	NUT	1	3001–	3001–
35	07002-03334	O-RING	1	3001–	3001–

FIG NO. 6504

INDEX NO.	PART NO.	DESCRIPTION	Q'TY	SERIAL NO. PC150-3	SERIAL NO. PC150LC-3
36	07102-21008	HOSE	1	3001–	3001–

FIG. 6505 HYDRAULIC PIPING (VALVE TO/FROM SOLENOID VALVE) (WITH AUTO DECELERATION) (WITH SWING MECHANICAL BRAKE)

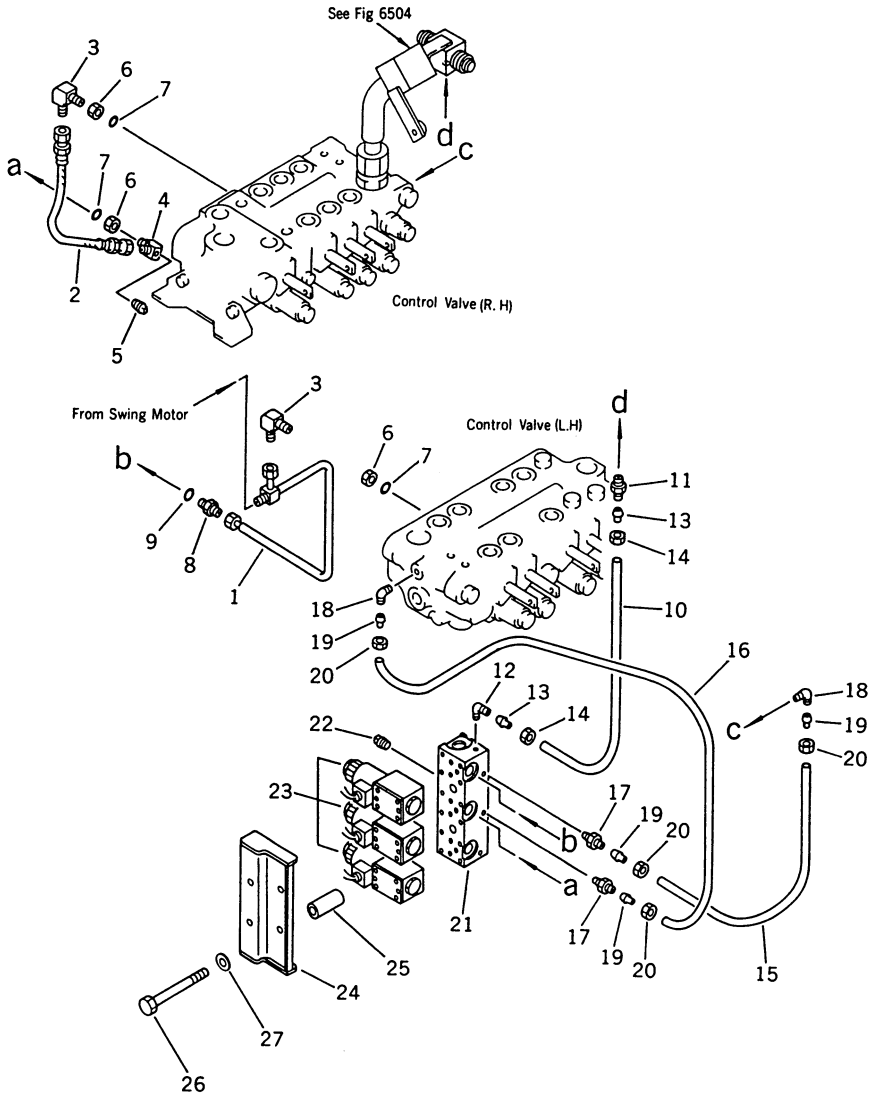

FIG NO. 6505

INDEX NO.	PART NO.	DESCRIPTION	Q'TY	SERIAL NO. PC150-3	SERIAL NO. PC150LC-3
1	21K-62-21540	TUBE	1	3001–	3001–
2	203-62-44120	HOSE	1	3001–	3001–
3	07232-20210	ELBOW	2	3001–	3001–
4	07231-20210	ELBOW	1	3001–	3001–
5	07042-00108	PLUG	1	3001–	3001–
6	07239-11408	NUT	3	3001–	3001–
7	07002-01423	O-RING	3	3001–	3001–
8	07230-10210	NIPPLE	1	3001–	3001–
9	07002-01423	O-RING	1	3001–	3001–
10	07822-00606	TUBE	1	3001–	3001–
11	07836-00613	CONNECTOR	1	3001–	3001–
12	07834-00613	ELBOW	1	3001–	3001–
13	07831-00612	SLEEVE	2	3001–	3001–
14	07832-00614	NUT	2	3001–	3001–
15	07822-00404	TUBE	1	3001–	3001–
16	07822-00409	TUBE	1	3001–	3001–
17	07836-00410	CONNECTOR	2	3001–	3001–
18	07834-00410	ELBOW	2	3001–	3001–
19	07831-00411	SLEEVE	4	3001–	3001–
20	07832-00410	NUT	4	3001–	3001–
21	203-62-41812	BLOCK	1	3001–	3001–
22	07042-30108	PLUG	4	3001–	3001–
23	21K-60-12301	SOLENOID VALVE ASS'Y	3	3001–	3001–
23	07000-11009	• O-RING	4	3001–	3001–
23	01252-40545	• BOLT	4	3001–	3001–
24	203-62-44490	COVER	1	3001–	3001–
25	203-62-44510	SPACER	2	3001–	3001–
26	01011-51235	BOLT	2	3001–	3001–
27	01643-31232	WASHER	2	3001–	3001–

FIG. 6506 HYDRAULIC PIPING (VALVE TO/FROM SOLENOID VALVE) (WITHOUT AUTO DECELERATION) (WITHOUT SWING MECHANICAL BRAKE)

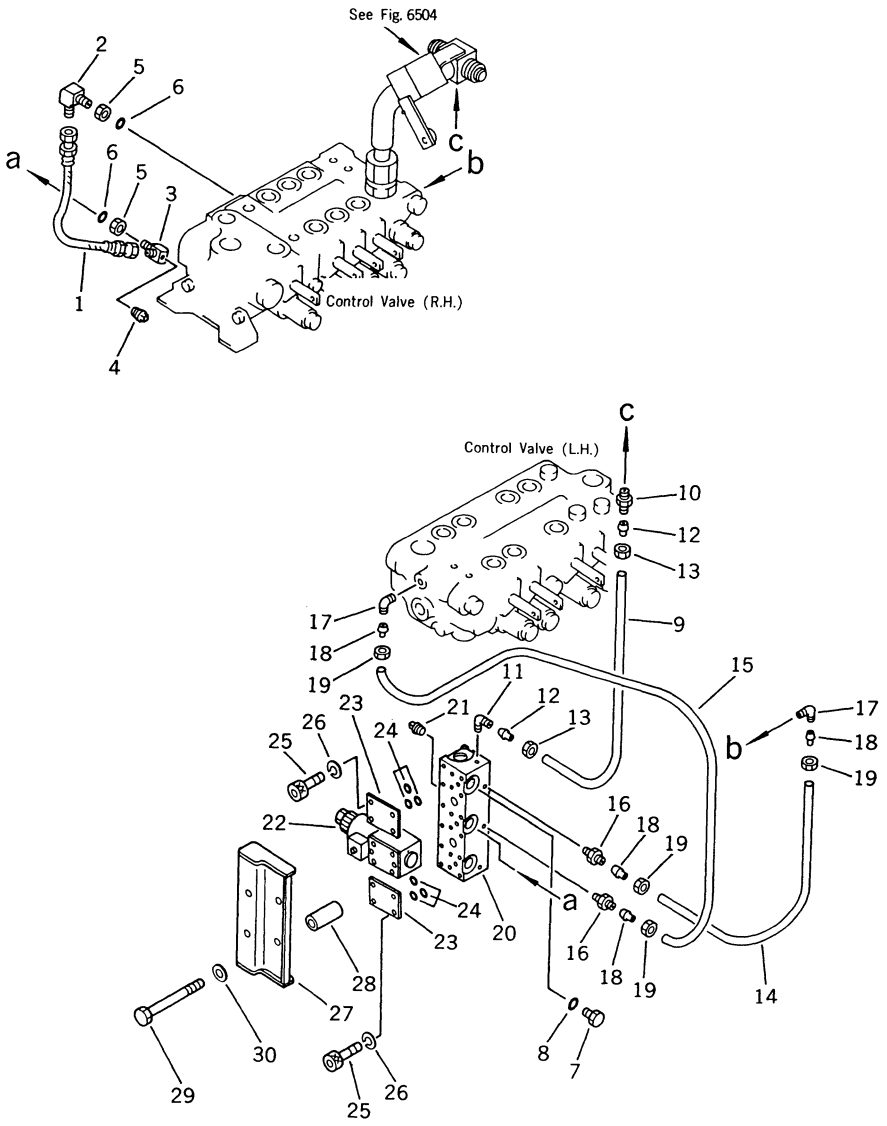

FIG NO. 6506

INDEX NO.	PART NO.	DESCRIPTION	Q'TY	SERIAL NO. PC150-3	SERIAL NO. PC150LC-3
1	203-62-44120	HOSE	1	3001–	3001–
2	07232-20210	ELBOW	1	3001–	3001–
3	07231-20210	ELBOW	1	3001–	3001–
4	07042-00108	PLUG	1	3001–	3001–
5	07239-11408	NUT	2	3001–	3001–
6	07002-01423	O-RING	2	3001–	3001–
7	07040-11409	PLUG	1	3001–	3001–
8	07002-01423	O-RING	1	3001–	3001–
9	07822-00606	TUBE	1	3001–	3001–
10	07836-00613	CONNECTOR	1	3001–	3001–
11	07834-00613	ELBOW	1	3001–	3001–
12	07831-00612	SLEEVE	2	3001–	3001–
13	07832-00614	NUT	2	3001–	3001–
14	07822-00404	TUBE	1	3001–	3001–
15	07822-00409	TUBE	1	3001–	3001–
16	07836-00410	CONNECTOR	2	3001–	3001–
17	07834-00410	ELBOW	2	3001–	3001–
18	07831-00411	SLEEVE	4	3001–	3001–
19	07832-00410	NUT	4	3001–	3001–
20	203-62-41812	BLOCK	1	3001–	3001–
21	07042-10108	PLUG	4	3001–	3001–
22	21K-60-12301	SOLENOID VALVE ASS'Y	1	3001–	3001–
22	07000-11009	• O-RING	4	3001–	3001–
22	01252-40545	• BOLT	4	3001–	3001–
23	203-62-42960	COVER	2	3001–	3001–
24	07000-11009	O-RING	6	3001–	3001–
25	01252-40520	SCREW	8	3001–	3001–
26	01601-20513	WASHER, SPRING	8	3001–	3001–
27	203-62-44490	COVER	1	3001–	3001–
28	203-62-44510	SPACER	2	3001–	3001–
29	01011-51235	BOLT	2	3001–	3001–
30	01643-31232	WASHER	2	3001–	3001–

FIG. 6511 HYDRAULIC PIPING (VALVE TO BOOM CYLINDER)

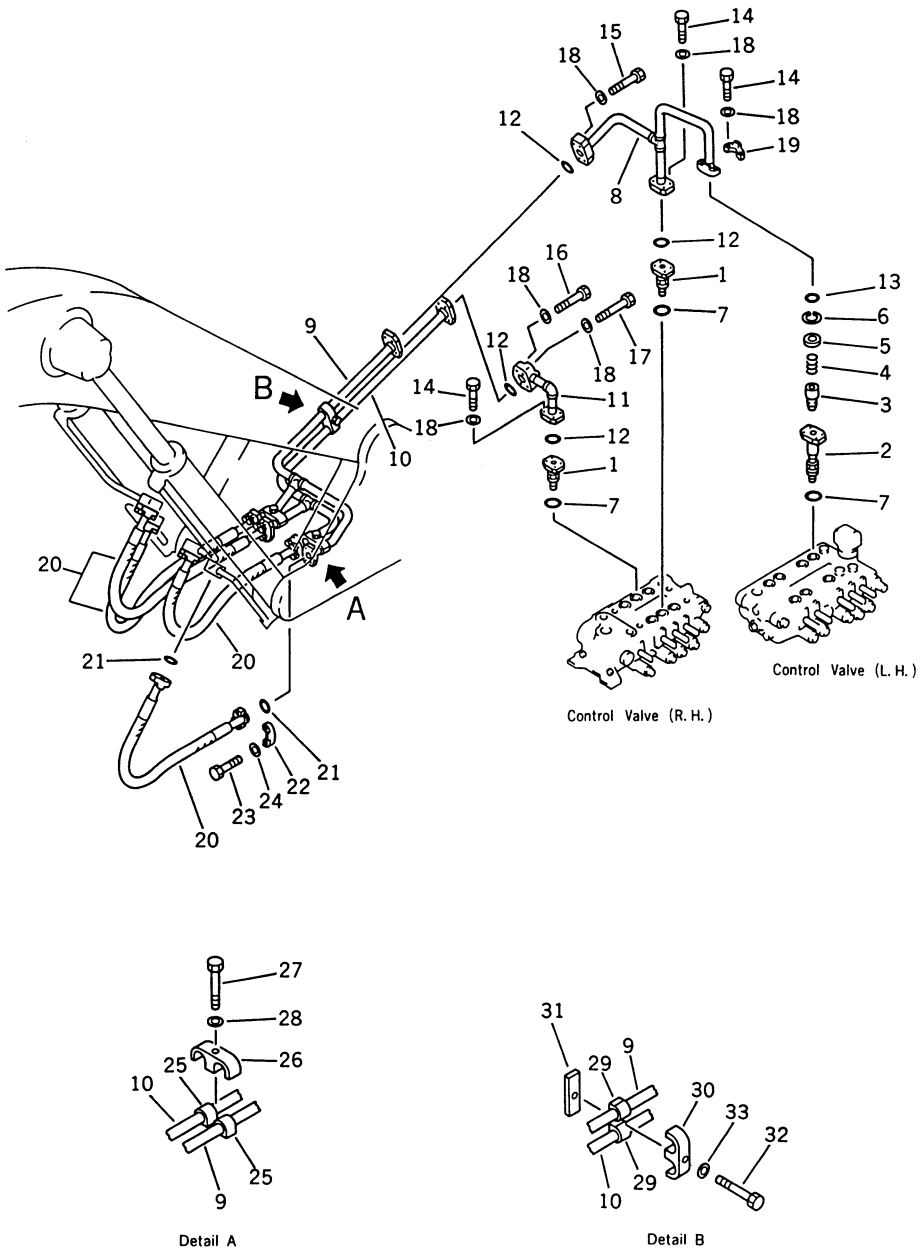

INDEX NO.	PART NO.	DESCRIPTION	Q'TY	SERIAL NO. PC150-3	SERIAL NO. PC150LC-3
1	21K-62-21210	FLANGE	2	3001–	3001–
2	21K-62-21241	VALVE ASS'Y	1	3001–	3001–
2	(□21K-62-21240)	VALVE ASS'Y	1	(3001–3061)	(3001–3061)
2	21K-62-21250	• FLANGE	1	3001–	3001–
3	203-60-21250	• POPPET	1	3001–3061	3001–3061
3	21K-62-21780	• POPPET	1	3062–	3062–
4	203-60-21260	• SPRING	1	3001–	3001–
5	203-60-21270	• SEAT	1	3001–	3001–
6	04065-02212	• RING, BACK-UP	1	3001–	3001–
7	07002-12434	O-RING	3	3001–	3001–
8	21K-62-21322	TUBE	1	3001–	3001–
9	21K-62-21312	TUBE	1	3001–	3001–
10	21K-62-21332	TUBE	1	3001–	3001–
11	21K-62-21630	TUBE	1	3001–	3001–
12	07000-13030	O-RING	4	3001–	3001–
13	07000-13025	O-RING	1	3001–	3001–
14	01010-50830	BOLT	12	3001–	3001–
15	01010-50845	BOLT	4	3001–	3001–
16	01010-50840	BOLT	2	3001–	3001–
17	01010-50855	BOLT	2	3001–	3001–
18	01643-50823	WASHER	20	3001–	3001–
19	07371-30638	FLANGE, SPLIT	2	3001–	3001–
20	07099-00610	HOSE	4	3001–	3001–
21	07000-13025	O-RING	8	3001–	3001–
22	07371-30638	FLANGE, SPLIT	16	3001–	3001–
23	01010-50830	BOLT	32	3001–	3001–
24	01643-50823	WASHER	32	3001–	3001–
25	203-62-43380	CUSHION	4	3001–	3001–
26	203-62-43360	CLAMP	2	3001–	3001–
27	01010-51265	BOLT	2	3001–	3001–
28	01643-31232	WASHER	2	3001–	3001–
29	203-62-43380	CUSHION	2	3001–	3001–
30	203-62-43360	CLAMP	1	3001–	3001–
31	203-62-42321	PLATE	1	3001–	3001–
32	01010-51265	BOLT	1	3001–	3001–

FIG NO. 6511

INDEX NO.	PART NO.	DESCRIPTION	Q'TY	SERIAL NO. PC150-3	SERIAL NO. PC150LC-3
33	01643-31232	WASHER	1	3001 –	3001 –

FIG. 6513 HYDRAULIC PIPING (VALVE TO ARM CYLINDER)

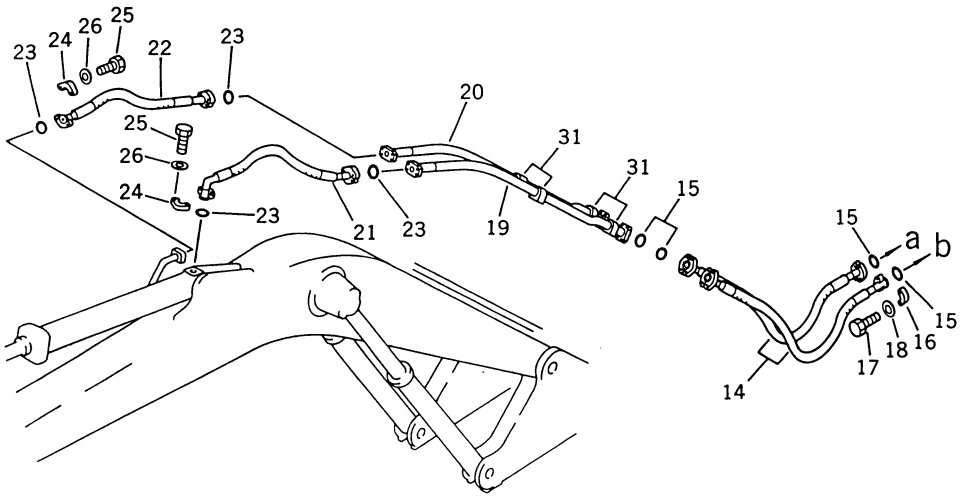

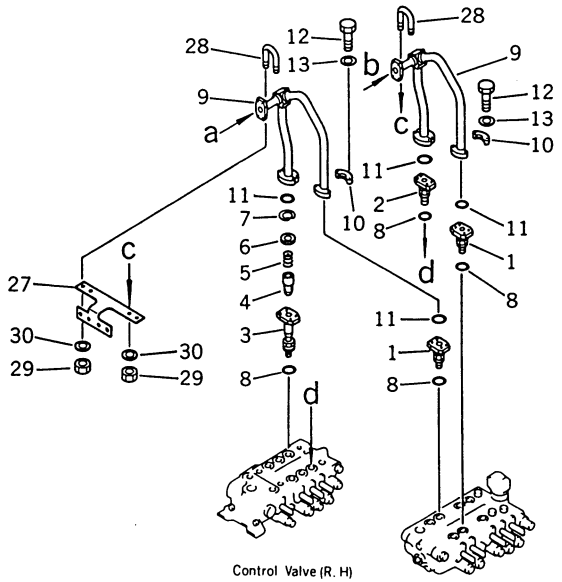

Control Valve (R. H)

Control Valve (L.H)

INDEX NO.	PART NO.	DESCRIPTION	Q'TY	SERIAL NO. PC150-3	SERIAL NO. PC150LC-3
1	21K-62-21231	FLANGE	2	3001 –	3001 –
2	21K-62-21220	FLANGE	1	3001 –	3001 –
3	21K-62-21241	VALVE ASS'Y	1	3001 –	3001 –
3	(□21K-62-21240)	VALVE ASS'Y	1	(3001 – 3061)	(3001 – 3061)
3	21K-62-21250	• FLANGE	1	3001 –	3001 –
4	203-60-21250	• POPPET	1	3001 – 3061	3001 – 3061
4	21K-62-21780	• POPPET	1	3062 –	3062 –
5	203-60-21260	• SPRING	1	3001 –	3001 –
6	203-60-21270	• SEAT	1	3001 –	3001 –
7	04065-02212	• RING, SNAP	1	3001 –	3001 –
8	07002-12434	O-RING	4	3001 –	3001 –
9	21K-62-21362	TUBE	2	3001 –	3001 –
10	07371-30638	FLANGE, SPLIT	8	3001 –	3001 –
11	07000-13025	O-RING	4	3001 –	3001 –
12	01010-50830	BOLT	16	3001 –	3001 –
13	01643-50823	WASHER	16	3001 –	3001 –
14	07099-00612	HOSE	2	3001 –	3001 –
15	07000-13025	O-RING	4	3001 –	3001 –
16	07371-30638	FLANGE, SPLIT	8	3001 –	3001 –
17	01010-50830	BOLT	16	3001 –	3001 –
18	01643-50823	WASHER	16	3001 –	3001 –
19	21K-62-24240	TUBE	1	3001 –	3001 –
20	21K-62-24230	TUBE	1	3001 –	3001 –
21	07098-00609	HOSE	1	3001 –	3001 –
22	07099-00609	HOSE	1	3001 –	3001 –
23	07000-13025	O-RING	4	3001 –	3001 –
24	07371-30638	FLANGE, SPLIT	8	3001 –	3001 –
25	01010-50830	BOLT	16	3001 –	3001 –
26	01643-30823	WASHER	16	3001 –	3001 –
27	21K-62-21411	BRACKET	1	3001 –	3001 –
28	07283-22738	CLIP	2	3001 –	3001 –
29	01599-01011	NUT	4	3001 –	3001 –
30	01643-31032	WASHER	4	3001 –	3001 –
31	203-62-43410	CUSHION	4	3001 –	3001 –

FIG. 6515 HYDRAULIC PIPING (VALVE TO BUCKET CYLINDER)

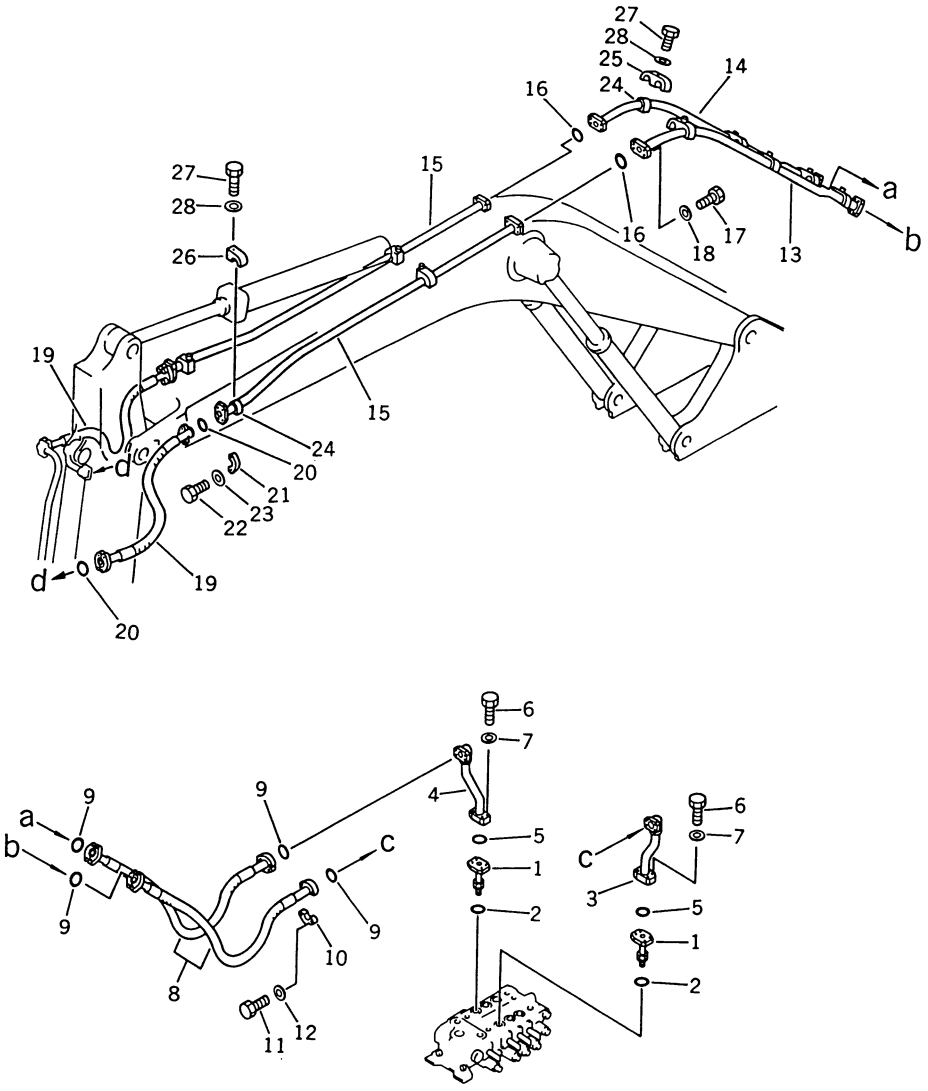

Control Valve (R. H)

FIG NO. 6515

INDEX NO.	PART NO.	DESCRIPTION	Q'TY	SERIAL NO. PC150-3	SERIAL NO. PC150LC-3
1	21K-62-21220	FLANGE	2	3001–	3001–
2	07002-12434	O-RING	2	3001–	3001–
3	21K-62-21370	TUBE	1	3001–	3001–
4	21K-62-21380	TUBE	1	3001–	3001–
5	07000-13030	O-RING	2	3001–	3001–
6	01010-50845	BOLT	8	3001–	3001–
7	01643-50823	WASHER	8	3001–	3001–
8	07099-00612	HOSE	2	3001–	3001–
9	07000-13025	O-RING	4	3001–	3001–
10	07371-30638	FLANGE, SPLIT	8	3001–	3001–
11	01010-50830	BOLT	16	3001–	3001–
12	01643-50823	WASHER	16	3001–	3001–
13	21K-62-24220	TUBE	1	3001–	3001–
14	21K-62-24210	TUBE	1	3001–	3001–
15	21K-62-24250	TUBE	2	3001–	3001–
16	07000-13030	O-RING	2	3001–	3001–
17	01010-50835	BOLT	8	3001–	3001–
18	01643-50823	WASHER	8	3001–	3001–
19	07099-20614	HOSE	2	3001–	3001–
20	07000-13025	O-RING	4	3001–	3001–
21	07371-30638	FLANGE, SPLIT	8	3001–	3001–
22	01010-50830	BOLT	16	3001–	3001–
23	01643-50823	WASHER	16	3001–	3001–
24	203-62-43410	CUSHION	12	3001–	3001–
25	203-62-43360	CLAMP	4	3001–	3001–
26	203-62-43370	CLAMP	4	3001–	3001–
27	01010-51270	BOLT	8	3001–	3001–
28	01643-31232	WASHER	8	3001–	3001–

WORK EQUIPMENT

CONTENTS

	FIG NO.	PAGE
BOOM	7001	414
LUBLICATION PIPING	7003	416
ARM	7005	418
LINK	7007	420
BUCKET 0.55M3 WIDTH 960MM (PC150)	7011	422
BUCKET 0.6M3 WIDTH 960MM (PC150LC)	7013	424
BOOM (FOR OVER LOAD WARING DEVICE) (OP)	7051	426
BUCKET 0.55M3 WIDTH 850MM, WITH HOOK (PC150) (OP) (EXCEPT JAPAN)	7101	428
BUCKET 0.6M3 WIDTH 850MM, WITH HOOK (PC150LC) (OP) (EXCEPT JAPAN)	7103	430
BUCKET 0.5M3 WIDTH 900MM (OP)	7105	432
LIGHT WORK BUCKET (OP)	7107	434
LIGHT WORK BUCKET WITH HOOK (EXCEPT JAPAN) (OP)	7109	436
DITCH CLEANING BUCKET (OP)	7111	438
BUCKET 0.55M3 WIDTH 960MM (HORIZONAL PIN TYPE) (OP)	7113	440
LONG ARM (OP)	7311	442
SHORT ARM (OP)	7313	444
SUPER SHORT ARM (OP)	7315	446

FIG. 7001 BOOM

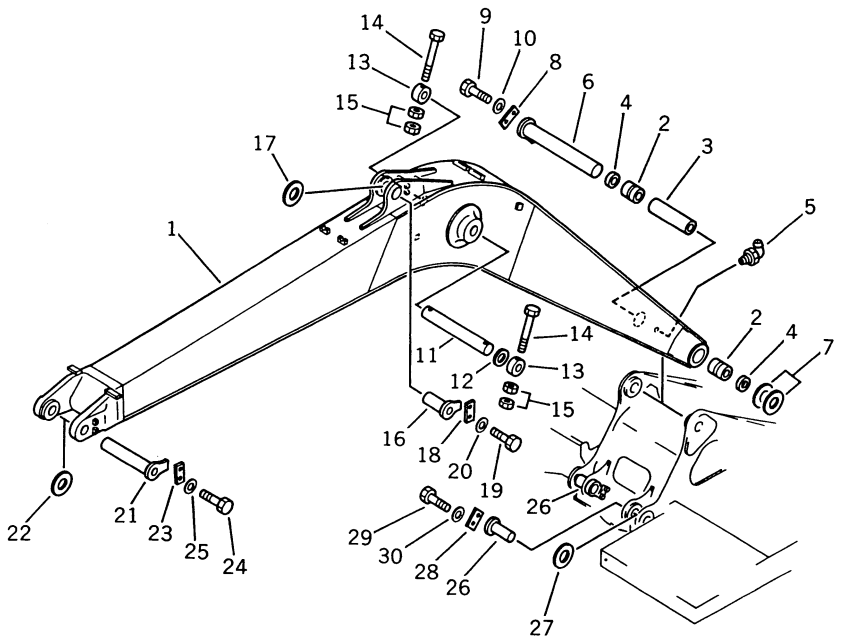

FIG NO. 7001

INDEX NO.	PART NO.	DESCRIPTION	Q'TY	SERIAL NO. PC150-3	SERIAL NO. PC150LC-3
	21K-70-00011	BOOM ASS'Y	1	3001–	3001–
1	(☆21K-70-21110)	• BOOM	1	3001–	3001–
2	21K-70-11481	• BUSHING	2	3001–	3001–
3	21K-70-11380	• SPACER	1	3001–	3001–
4	07145-00080	SEAL, DUST	2	3001–	3001–
5	07020-00900	FITTING, GREASE	2	3001–	3001–
6	21K-70-21160	PIN	1	3001–	3001–
7	205-70-51450	SPACER, 1.0MM	4	3001–	3001–
8	205-70-71310	PLATE	1	3001–	3001–
9	01010-51235	BOLT	2	3001–	3001–
10	01643-31232	WASHER	2	3001–	3001–
11	21K-70-21180	PIN	1	3001–	3001–
12	203-70-24170	SPACER, 1.0MM	2	3001–	3001–
13	21K-70-11410	PLATE	2	3001–	3001–
14	01019-11640	BOLT	2	3001–	3001–
15	01580-11613	NUT	4	3001–	3001–
16	21K-70-21170	PIN	1	3001–	3001–
17	205-70-51450	SPACER	2	3001–	3001–
18	205-70-66580	PLATE	1	3001–	3001–
19	01010-51230	BOLT	2	3001–	3001–
20	01643-31232	WASHER	2	3001–	3001–
21	21K-70-21190	PIN	1	3001–	3001–
22	205-70-51450	SPACER	1	3001–	3001–
23	205-70-71310	PLATE	1	3001–	3001–
24	01010-51235	BOLT	2	3001–	3001–
25	01643-31232	WASHER	2	3001–	3001–
26	21K-70-11170	PIN	2	3001–	3001–
27	203-70-11210	SPACER	6	3001–	3001–
28	205-70-66580	PLATE	2	3001–	3001–
29	01010-51230	BOLT	4	3001–	3001–
30	01643-31232	WASHER	4	3001–	3001–

FIG. 7003 LUBRICATION PIPING

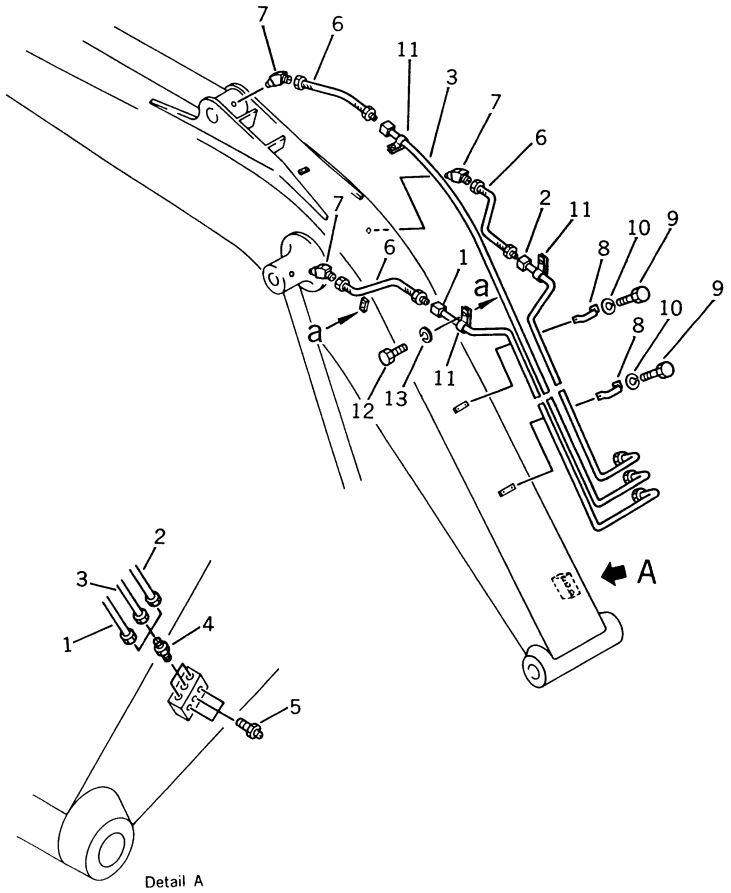

FIG NO. 7003

INDEX NO.	PART NO.	DESCRIPTION	Q'TY	SERIAL NO. PC150-3	SERIAL NO. PC150LC-3
1	21K-70-21530	TUBE, L.H.	1	3001–	3001–
2	21K-70-21510	TUBE, R.H.	1	3001–	3001–
3	21K-70-21520	TUBE, CENTER	1	3001–	3001–
4	07213-50813	NIPPLE	3	3001–	3001–
5	07020-00000	FITTING, GREASE	3	3001–	3001–
6	205-70-51370	HOSE	3	3001–	3001–
7	205-70-65780	ELBOW	3	3001–	3001–
8	205-70-51410	CLIP	2	3001–	3001–
9	01010-50612	BOLT	4	3001–	3001–
10	01602-20619	WASHER, SPRING	4	3001–	3001–
11	21T-62-25740	CLIP	3	3001–	3001–
12	01010-51020	BOLT	3	3001–	3001–
13	01643-31032	WASHER	3	3001–	3001–

FIG. 7005 ARM

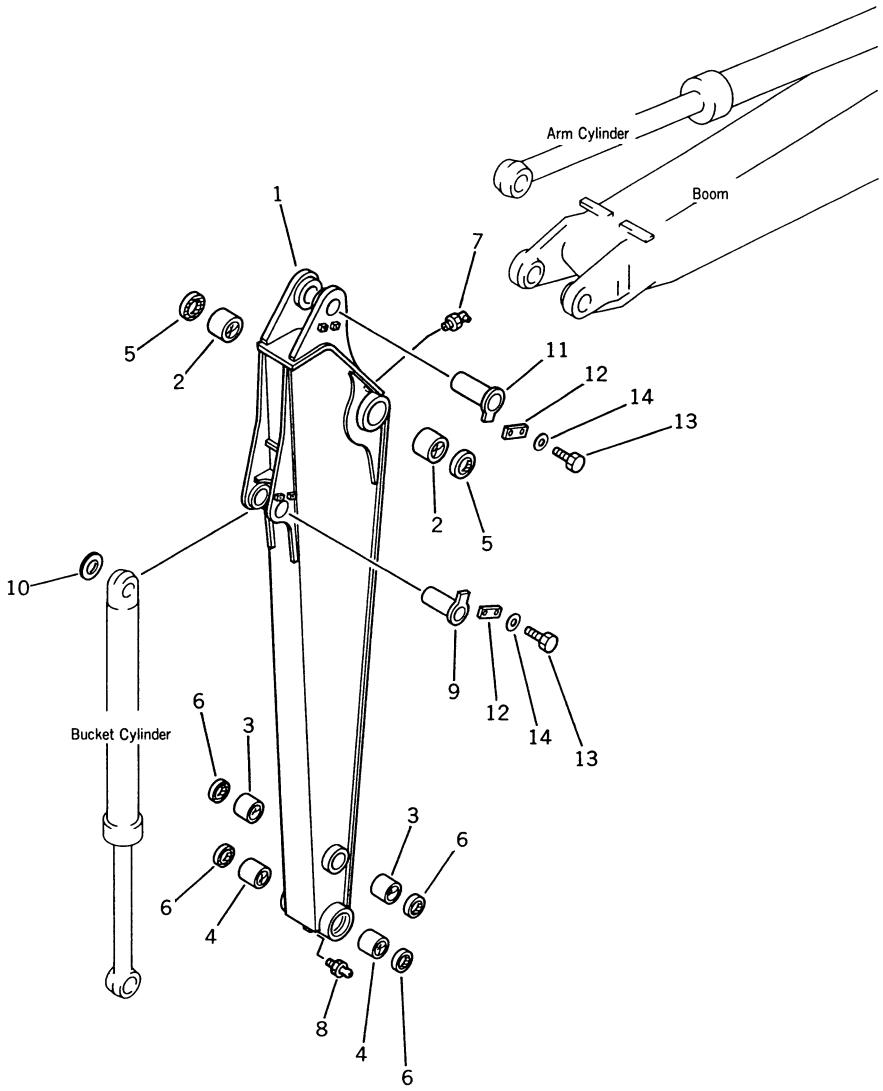

FIG NO. 7005

INDEX NO.	PART NO.	DESCRIPTION	Q'TY	SERIAL NO. PC150-3	SERIAL NO. PC150LC-3
	21K-70-00021	ARM ASS'Y	1	3001–	3001–
1	(☆21K-70-22110)	• ARM	1	3001–	3001–
2	21K-70-12161	• BUSHING	2	3001–	3001–
3	21K-70-12170	• BUSHING	2	3001–	3001–
4	21K-70-22130	• BUSHING	2	3001–	3001–
5	07145-00080	SEAL, DUST	2	3001–	3001–
6	21K-70-12180	SEAL, DUST	4	3001–	3001–
7	07020-00900	FITTING, GREASE	1	3001–	3001–
8	07020-00000	FITTING, GREASE	1	3001–	3001–
9	21K-70-12151	PIN	1	3001–	3001–
10	203-70-24170	SPACER, 1.0MM	2	3001–	3001–
11	21K-70-22120	PIN	1	3001–	3001–
12	205-70-66580	PLATE	2	3001–	3001–
13	01010-51230	BOLT	4	3001–	3001–
14	01643-31232	WASHER	4	3001–	3001–

FIG. 7007 LINK

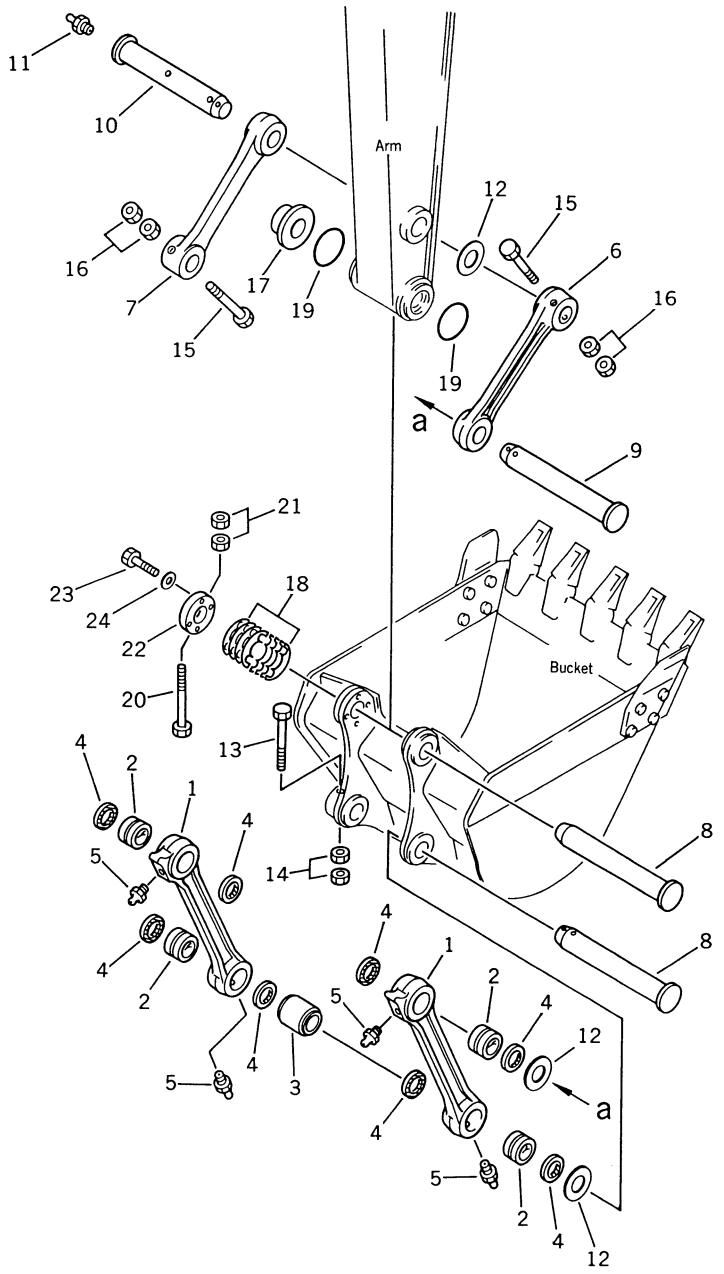

FIG NO. 7007

INDEX NO.	PART NO.	DESCRIPTION	Q'TY	SERIAL NO. PC150-3	SERIAL NO. PC150LC-3
	21K-70-00041	LINK ASS'Y	2	3001 –	3001 –
1	(☆21K-70-23120)	• LINK	1	3001 –	3001 –
2	21K-70-13150	• BUSHING	2	3001 –	3001 –
3	21K-70-23130	SPACER	2	3001 –	3001 –
4	21K-70-12180	SEAL, DUST	8	3001 –	3001 –
5	07020-00000	FITTING, GREASE	4	3001 –	3001 –
6	21K-70-23210	LINK	1	3001 –	3001 –
7	21K-70-23110	LINK	1	3001 –	3001 –
8	21K-70-23140	PIN	2	3001 –	3001 –
9	21K-70-23190	PIN	1	3001 –	3001 –
10	21K-70-23220	PIN	1	3001 –	3001 –
11	07020-00000	FITTING, GREASE	1	3001 –	3001 –
12	203-70-24170	SPACER, 1.0MM	3	3001 –	3001 –
13	01011-51660	BOLT	1	3001 –	3001 –
14	01580-11613	NUT	2	3001 –	3001 –
15	01019-11640	BOLT	2	3001 –	3001 –
16	01580-11613	NUT	4	3001 –	3001 –
17	21K-70-23150	SPACER	1	3001 –	3001 –
18	21K-70-23180	SHIM	20	3001 –	3001 –
19	21K-70-23160	O-RING	2	3001 –	3001 –
20	01011-51690	BOLT	1	3001 –	3001 –
21	01580-11613	NUT	2	3001 –	3001 –
22	21K-70-23170	PLATE	1	3001 –	3001 –
23	01010-51665	BOLT	4	3001 –	3001 –
24	01643-31645	WASHER	4	3001 –	3001 –

FIG. 7011 BUCKET 0.55M³ WIDTH 960MM (PC150)

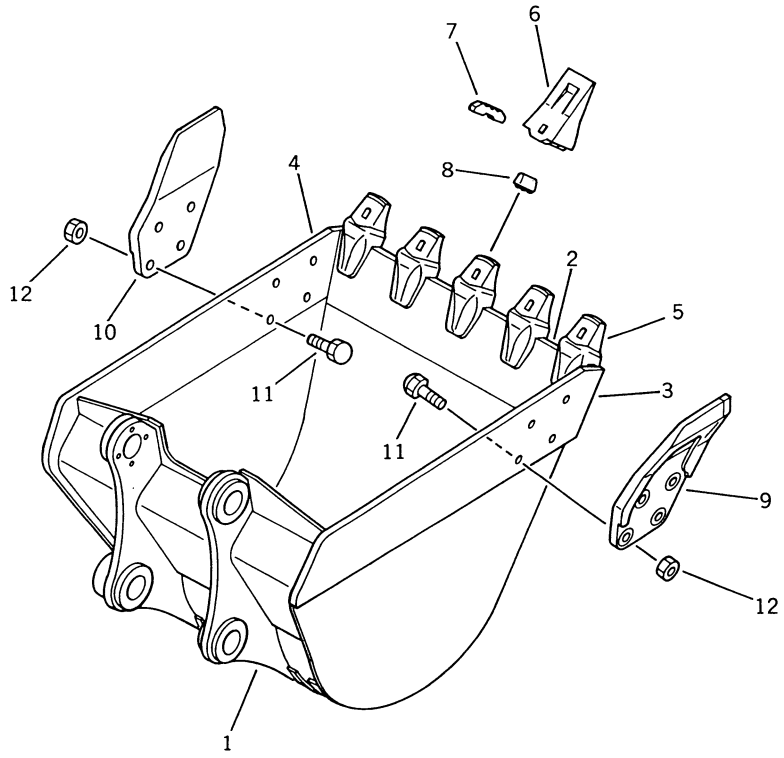

FIG NO. 7011

INDEX NO.	PART NO.	DESCRIPTION	Q'TY	SERIAL NO. PC150-3	SERIAL NO. PC150LC-3
	21K-70-00100	BUCKET ASS'Y	1	3001–	
1	21K-70-24110	• BUCKET	1	3001–	
2	21K-70-24120	•• PLATE (WELDED)	1	3001–	
3	21K-70-24130	•• PLATE, L.H. (WELDED)	1	3001–	
4	21K-70-24140	•• PLATE, R.H. (WELDED)	1	3001–	
5	205-70-74261	•• ADAPTER (WELDED)	5	3001–	
6	205-70-74271	• TOOTH	5	3001–	
7	205-70-74280	• PIN	5	3001–	
8	205-70-74290	• LOCK	5	3001–	
9	203-70-43260	• CUTTER, L.H.	1	3001–	
10	203-70-43270	• CUTTER, R.H.	1	3001–	
11	01802-02262	• BOLT	8	3001–	
12	01803-02228	• NUT	8	3001–	

FIG. 7013 BUCKET 0.6M³ WIDTH 960MM (PC150LC)

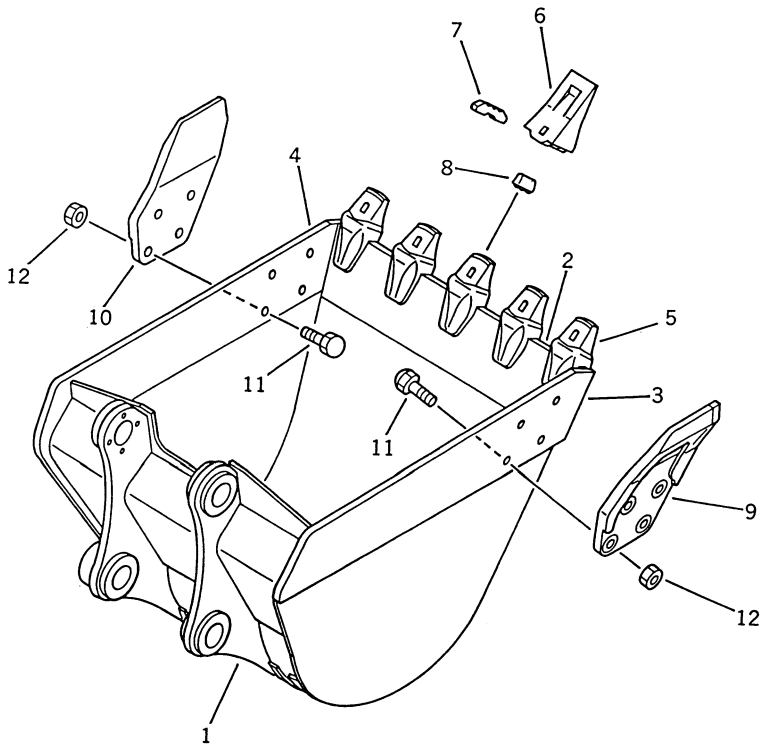

FIG NO. 7013

INDEX NO.	PART NO.	DESCRIPTION	Q'TY	SERIAL NO. PC150-3	SERIAL NO. PC150LC-3
	21K-70-00110	BUCKET ASS'Y	1		3001–
1	21K-70-24210	• BUCKET	1		3001–
2	21K-70-24120	•• PLATE (WELDED)	1		3001–
3	21K-70-24130	•• PLATE, L.H. (WELDED)	1		3001–
4	21K-70-24140	•• PLATE, R.H. (WELDED)	1		3001–
5	205-70-74261	•• ADAPTER (WELDED)	5		3001–
6	205-70-74271	• TOOTH	5		3001–
7	205-70-74280	• PIN	5		3001–
8	205-70-74290	• LOCK	5		3001–
9	203-70-43260	• CUTTER, L.H.	1		3001–
10	203-70-43270	• CUTTER, R.H.	1		3001–
11	01802-02262	• BOLT	8		3001–
12	01803-02228	• NUT	8		3001–

FIG. 7051 BOOM (FOR OVER LOAD WARNING DEVICE) (OP)

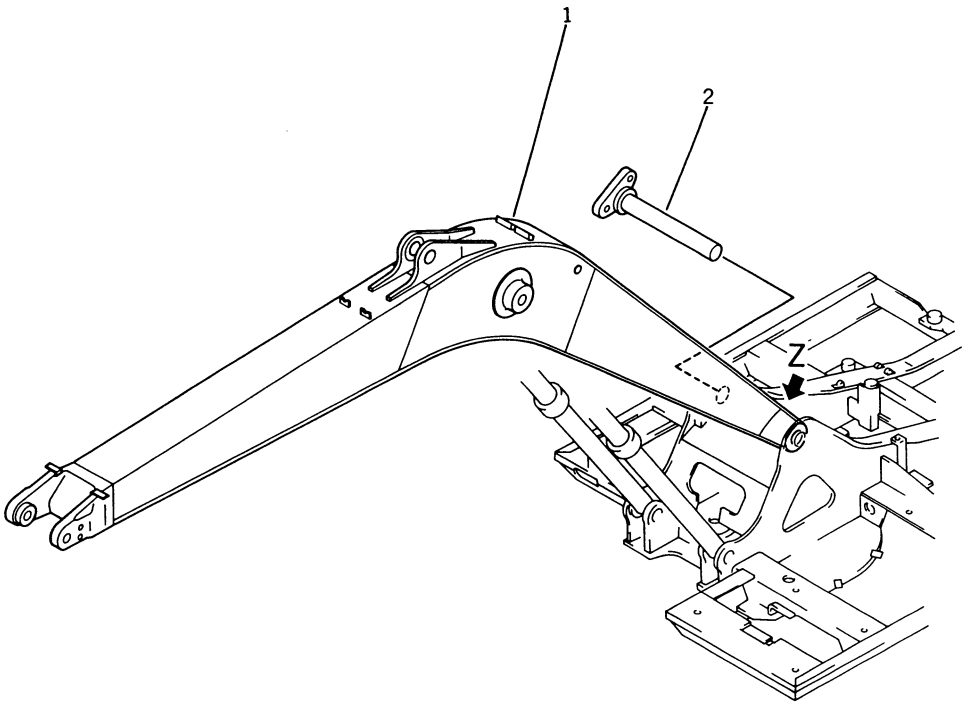

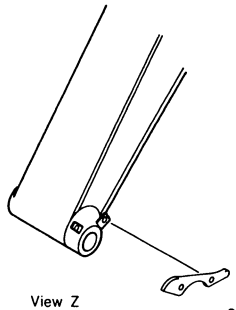

View Z

See Fig. 8101

FIG NO. 7051

INDEX NO.	PART NO.	DESCRIPTION	Q'TY	SERIAL NO. PC150-3	SERIAL NO. PC150LC-3
1	21K-70-21330	BOOM ..... (MODIFIED FROM 21K-70-21110)	1	3001–	3001–
2	21K-70-21320	PIN ..... (MODIFIED FROM 21K-70-21160)	1	3001–	3001–

FIG. 7101 BUCKET 0.55M^3 WIDTH 850MM WITH HOOK (PC150) (OP) (EXCEPT JAPAN)

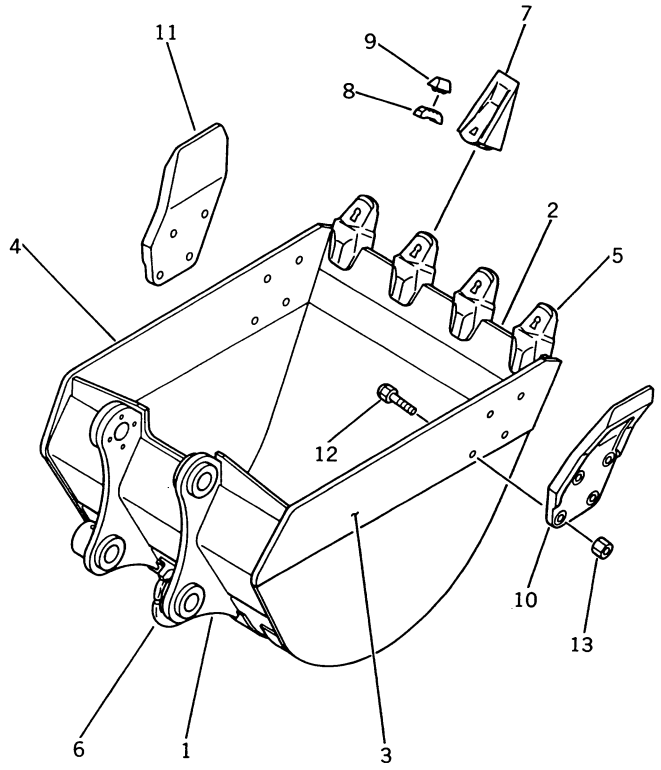

FIG NO. 7101

INDEX NO.	PART NO.	DESCRIPTION	Q'TY	SERIAL NO. PC150-3	SERIAL NO. PC150LC-3
	21K-70-00120	BUCKET ASS'Y	1	3001–	
1	21K-70-25110	• BUCKET (MODIFIED FROM 21K-70-24110)	1	3001–	
2	21K-70-24120	•• PLATE (WELDED)	1	3001–	
3	21K-70-24140	•• PLATE, L.H. (WELDED)	1	3001–	
4	21K-70-24130	•• PLATE, R.H. (WELDED)	1	3001–	
5	205-70-74261	• ADAPTER (WELDED)	4	3001–	
6	21K-70-14290	• HOOK (WELDED)	1	3001–	
7	205-70-74271	• TOOTH	4	3001–	
8	205-70-74280	• PIN	4	3001–	
9	205-70-74290	• LOCK	4	3001–	
10	203-70-43260	• CUTTER, L.H.	1	3001–	
11	203-70-43270	• CUTTER, R.H.	1	3001–	
12	01802-02262	• BOLT	8	3001–	
13	01803-02228	• NUT	8	3001–	

FIG. 7103 BUCKET 0.6M^3 WIDTH 850MM WITH HOOK (PC150LC) (OP) (EXCEPT JAPAN)

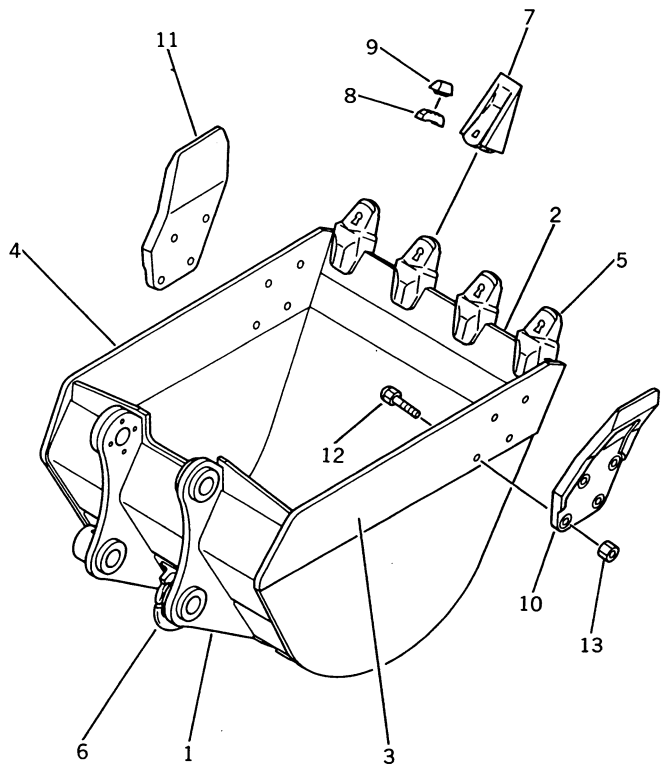

FIG NO. 7103

INDEX NO.	PART NO.	DESCRIPTION	Q'TY	SERIAL NO. PC150-3	SERIAL NO. PC150LC-3
	21K-70-00130	BUCKET ASS'Y	1		3001–
1	21K-70-25130	• BUCKET (MODIFIED FROM 21K-70-24210)	1		3001–
2	21K-70-24120	•• PLATE (WELDED)	1		3001–
3	21K-70-24140	•• PLATE, L.H. (WELDED)	1		3001–
4	21K-70-24130	•• PLATE, R.H. (WELDED)	1		3001–
5	205-70-74261	•• ADAPTER (WELDED)	4		3001–
6	21K-70-14290	• HOOK (WELDED)	1		3001–
7	205-70-74271	• TOOTH	4		3001–
8	205-70-74280	• PIN	4		3001–
9	205-70-74290	• LOCK	4		3001–
10	203-70-43260	• CUTTER, L.H.	1		3001–
11	203-70-43270	• CUTTER, R.H.	1		3001–
12	01802-02262	• BOLT	8		3001–
13	01803-02228	• NUT	8		3001–

FIG. 7105 BUCKET 0.5M³ WIDTH 900MM (OP)

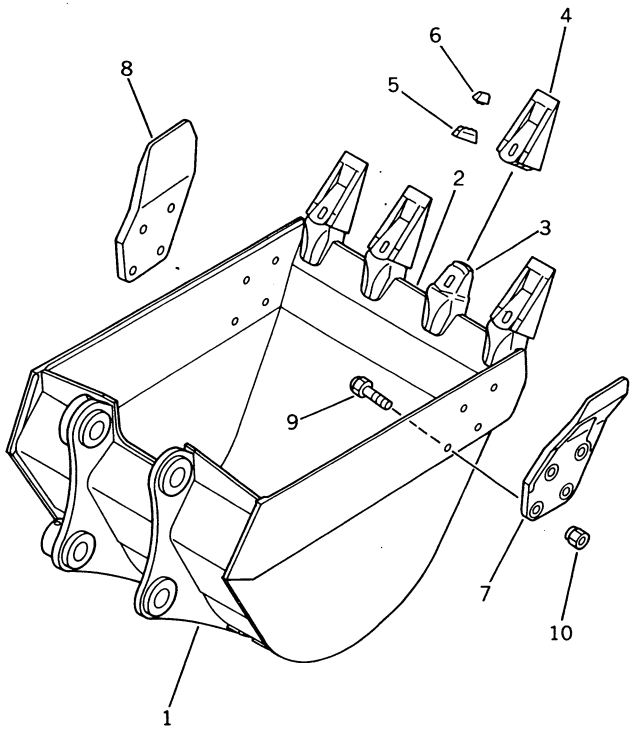

FIG NO. 7105

INDEX NO.	PART NO.	DESCRIPTION	Q'TY	SERIAL NO. PC150-3	SERIAL NO. PC150LC-3
	21K-926-0020	BUCKET ASS'Y	1	3001 –	3001 –
1	21K-926-2110	• BUCKET	1	3001 –	3001 –
2	21K-926-2120	•• PLATE (WELDED)	1	3001 –	3001 –
3	21K-70-74261	•• ADAPTER (WELDED)	4	3001 –	3001 –
4	205-70-74271	• TOOTH	4	3001 –	3001 –
5	205-70-74280	• PIN	4	3001 –	3001 –
6	205-70-74290	• LOCK	4	3001 –	3001 –
7	203-70-43260	• CUTTER, L.H.	1	3001 –	3001 –
8	203-70-43270	• CUTTER, R.H.	1	3001 –	3001 –
9	01802-02262	• BOLT	8	3001 –	3001 –
10	01803-02228	• NUT	8	3001 –	3001 –

FIG. 7107 LIGHT WORK BUCKET (OP)

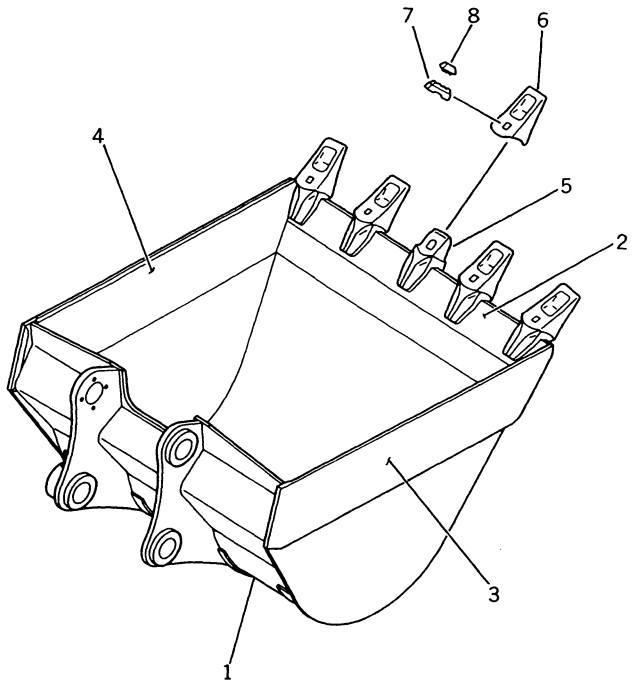

FIG NO. 7107

INDEX NO.	PART NO.	DESCRIPTION	Q'TY	SERIAL NO. PC150-3	SERIAL NO. PC150LC-3
	21K-920-0020	BUCKET ASS'Y	1	3001–	3001–
1	21K-920-2110	• BUCKET	1	3001–	3001–
2	21K-920-2120	•• PLATE (WELDED)	1	3001–	3001–
3	21K-920-2130	•• PLATE, L.H. (WELDED)	1	3001–	3001–
4	21K-920-2140	•• PLATE, R.H. (WELDED)	1	3001–	3001–
5	205-70-74261	•• ADAPTER (WELDED)	5	3001–	3001–
6	205-70-74271	• TOOTH	5	3001–	3001–
7	205-70-74280	• PIN	5	3001–	3001–
8	205-70-74290	• LOCK	5	3001–	3001–

FIG. 7109 LIGHT WORK BUCKET WITH HOOK (OP) (EXCEPT JAPAN)

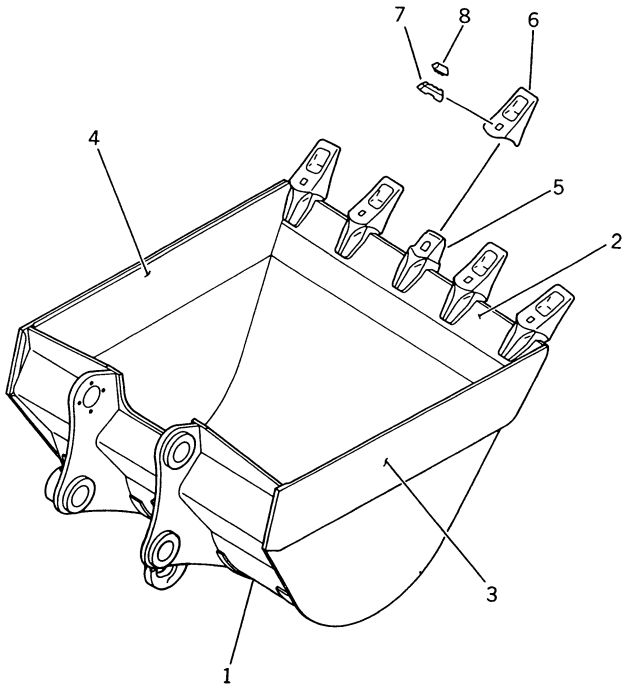

FIG NO. 7109

INDEX NO.	PART NO.	DESCRIPTION	Q'TY	SERIAL NO. PC150-3	SERIAL NO. PC150LC-3
	21K-920-0030	BUCKET ASS'Y	1	3001 –	3001 –
1	21K-920-2210	• BUCKET	1	3001 –	3001 –
2	21K-920-2120	•• PLATE (WELDED)	1	3001 –	3001 –
3	21K-920-2130	•• PLATE, L.H. (WELDED)	1	3001 –	3001 –
4	21K-920-2140	•• PLATE, R.H. (WELDED)	1	3001 –	3001 –
5	205-70-74261	•• ADAPTER (WELDED)	5	3001 –	3001 –
6	205-70-74271	• TOOTH	5	3001 –	3001 –
7	205-70-74280	• PIN	5	3001 –	3001 –
8	205-70-74290	• LOCK	5	3001 –	3001 –

FIG. 7111 DITCH CLEANING BUCKET (OP)

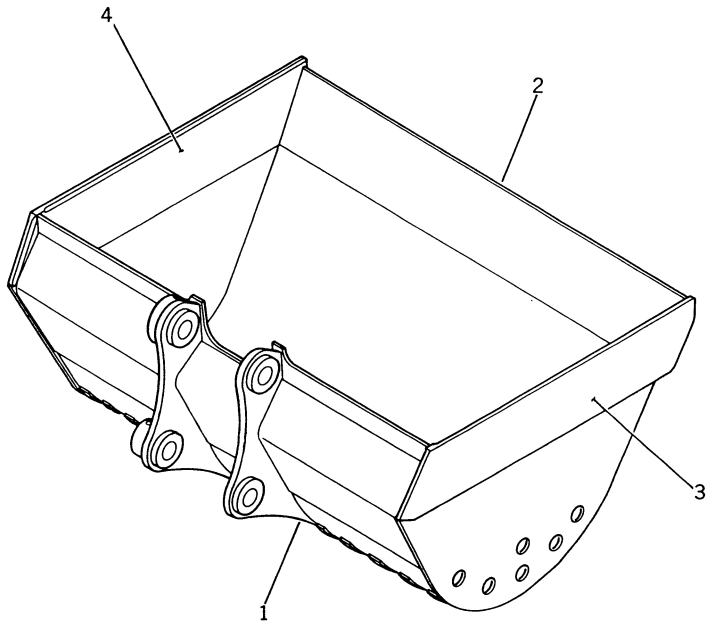

FIG NO. 7111

INDEX NO.	PART NO.	DESCRIPTION	Q'TY	SERIAL NO. PC150-3	SERIAL NO. PC150LC-3
1	21K-938-2110	BUCKET	1	3001–	3001–
2	21K-938-2120	• PLATE (WELDED)	1	3001–	3001–
3	21K-938-2130	• PLATE, L.H. (WELDED)	1	3001–	3001–
4	21K-938-2140	• PLATE, R.H. (WELDED)	1	3001–	3001–

FIG. 7113 BUCKET 0.55M³ WIDTH 960MM (HORIZONTAL PIN TYPE) (OP)

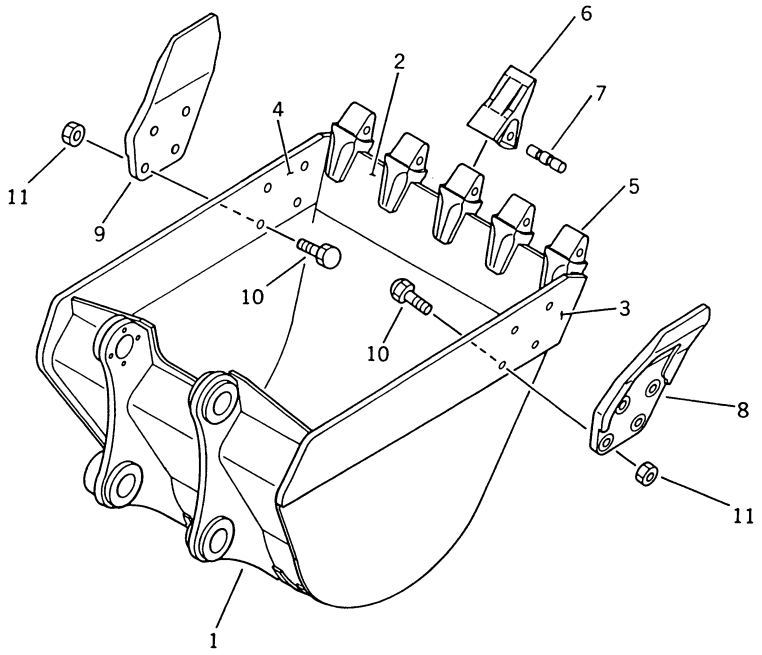

FIG NO. 7113

INDEX NO.	PART NO.	DESCRIPTION	Q'TY	SERIAL NO. PC150-3	SERIAL NO. PC150LC-3
	21K-70-00160	BUCKET ASS'Y	1	3001–	3001–
1	21K-70-24150	• BUCKET	1	3001–	3001–
2	21K-70-24121	•• PLATE (WELDED)	1	3001–	3001–
3	21K-70-24131	•• PLATE, L.H. (WELDED)	1	3001–	3001–
4	21K-70-24141	•• PLATE, R.H. (WELDED)	1	3001–	3001–
5	205-939-7120	•• ADAPTER (WELDED)	5	3001–	3001–
6	205-70-19570	• TOOTH	5	3001–	3001–
7	09244-02496	• PIN	5	3001–	3001–
8	203-70-43260	• CUTTER, L.H.	1	3001–	3001–
9	203-70-43270	• PLATE, R.H. (WELDED)	1	3001–	3001–
10	01802-02262	• BOLT	8	3001–	3001–
11	01803-02228	• NUT	8	3001–	3001–

FIG. 7311 LONG ARM (OP)

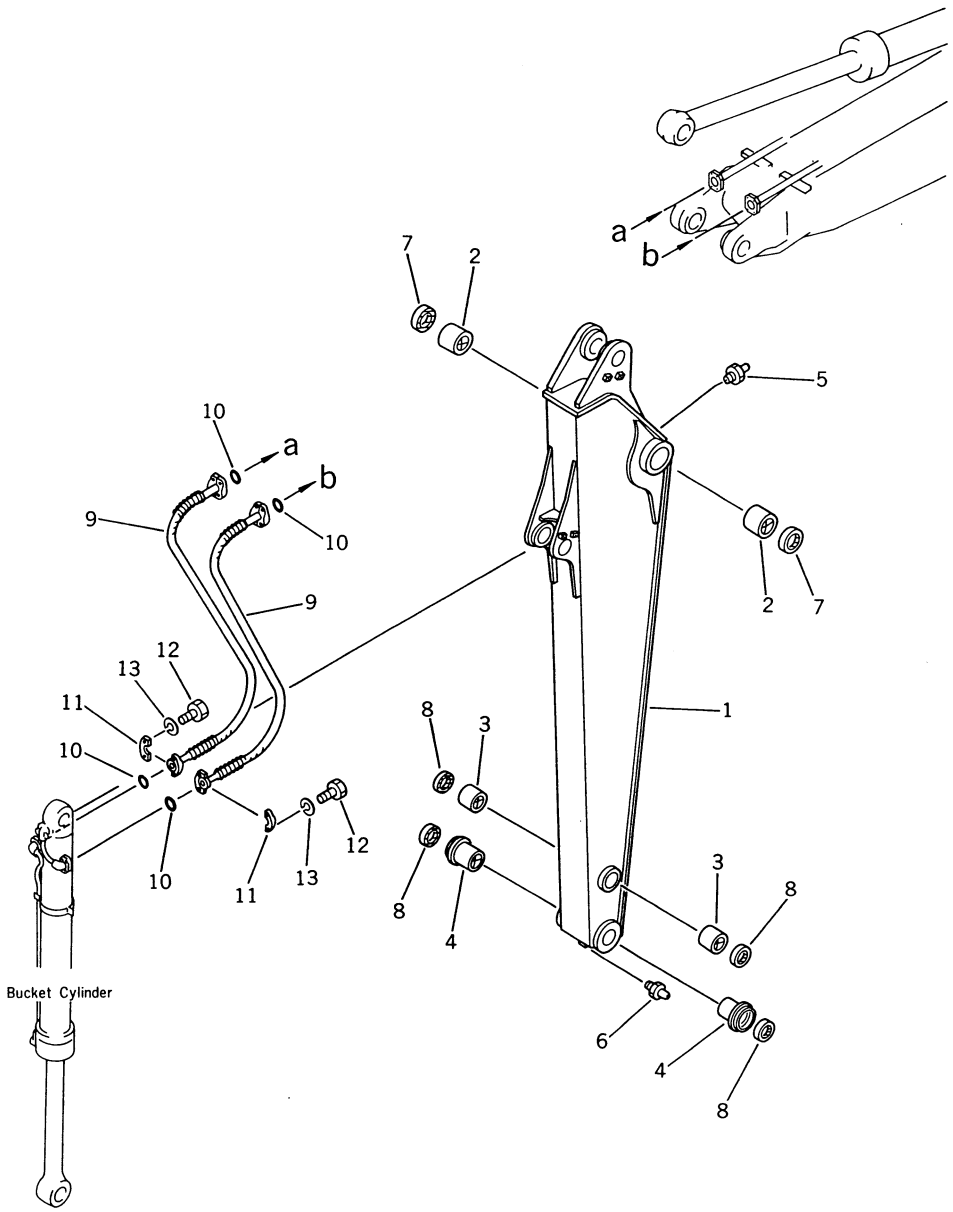

FIG NO. 7311

INDEX NO.	PART NO.	DESCRIPTION	Q'TY	SERIAL NO. PC150-3	SERIAL NO. PC150LC-3
	21K-943-0020	LONG ARM ASS'Y	1	3001–	3001–
1	(☆21K-943-2110)	• ARM	1	3001–	3001–
2	21K-70-12161	• BUSHING	2	3001–	3001–
3	21K-70-12170	• BUSHING	2	3001–	3001–
4	21K-70-22130	• BUSHING	2	3001–	3001–
5	07020-00900	• FITTING, GREASE	1	3001–	3001–
6	07020-00000	• FITTING, GREASE	1	3001–	3001–
7	07145-00080	SEAL, DUST	2	3001–	3001–
8	21K-70-12180	SEAL, DUST	4	3001–	3001–
9	07099-20617	HOSE	2	3001– •	3001– •
9	07099-20517	HOSE	2	• –	• –
10	07000-13025	O-RING	4	3001–	3001–
11	07371-30638	FLANGE, SPLIT	8	3001–	3001–
12	01010-50830	BOLT	16	3001–	3001–
13	01602-20825	WASHER, SPRING	16	3001–	3001–

FIG. 7313 SHORT ARM (OP)

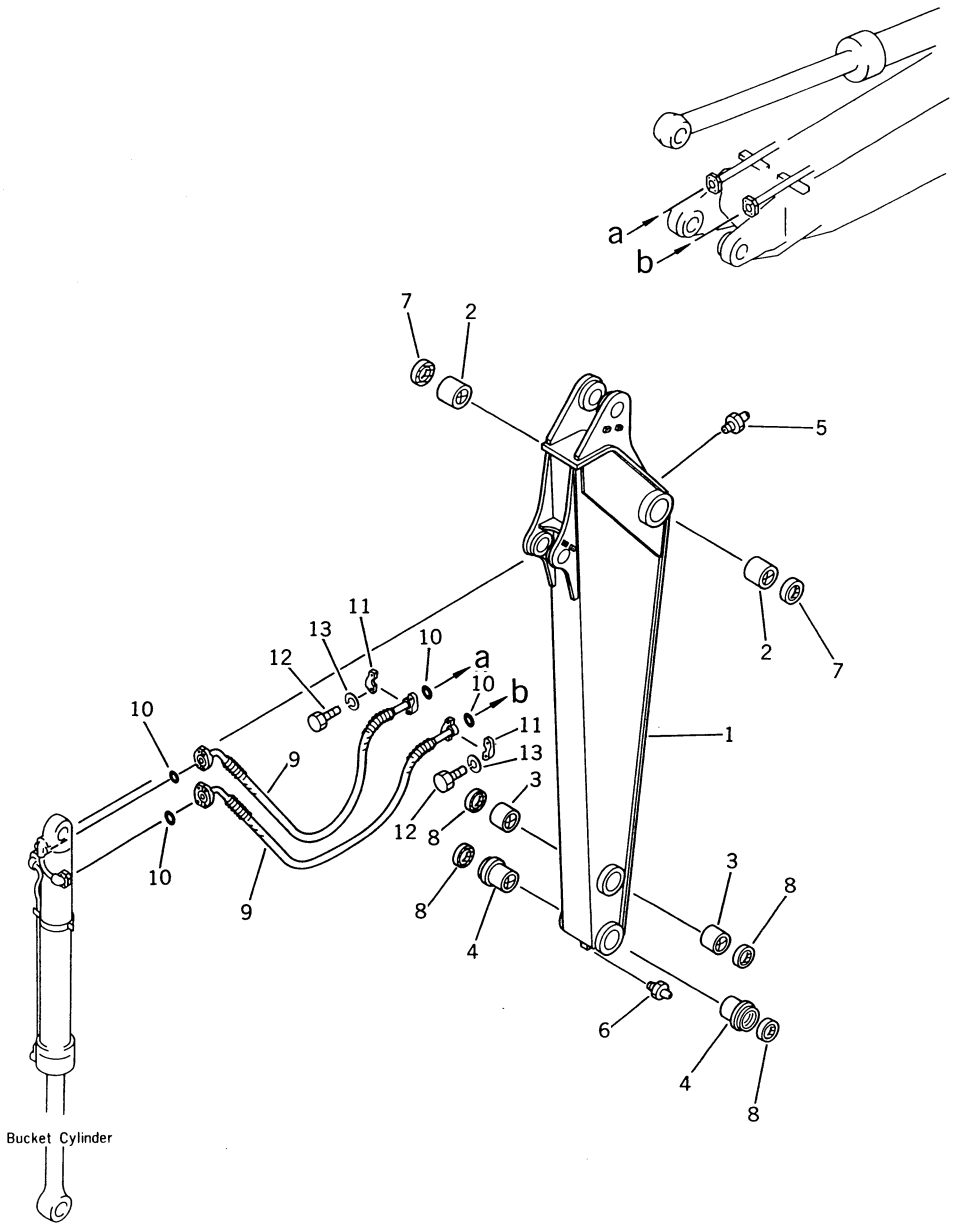

FIG NO. 7313

INDEX NO.	PART NO.	DESCRIPTION	Q'TY	SERIAL NO. PC150-3	SERIAL NO. PC150LC-3
	21K-945-0010	SHORT ARM ASS'Y	1	3001–	3001–
1	(☆21K-945-2110)	• ARM	1	3001–	3001–
2	21K-70-12161	• BUSHING	2	3001–	3001–
3	21K-70-12170	• BUSHING	2	3001–	3001–
4	21K-70-22130	• BUSHING	2	3001–	3001–
5	07020-00900	• FITTING, GREASE	1	3001–	3001–
6	07020-00000	• FITTING, GREASE	1	3001–	3001–
7	07145-00080	SEAL, DUST	2	3001–	3001–
8	21K-70-12180	SEAL, DUST	4	3001–	3001–
9	07097-20613	HOSE	2	3001– •	3001– •
9	07097-20513	HOSE	2	• –	• –
10	07000-13025	O-RING	4	3001–	3001–
11	07371-30638	FLANGE, SPLIT	8	3001–	3001–
12	01010-50830	BOLT	16	3001–	3001–
13	01602-20825	WASHER, SPRING	16	3001–	3001–

FIG. 7315 SUPPER SHORT ARM (OP)

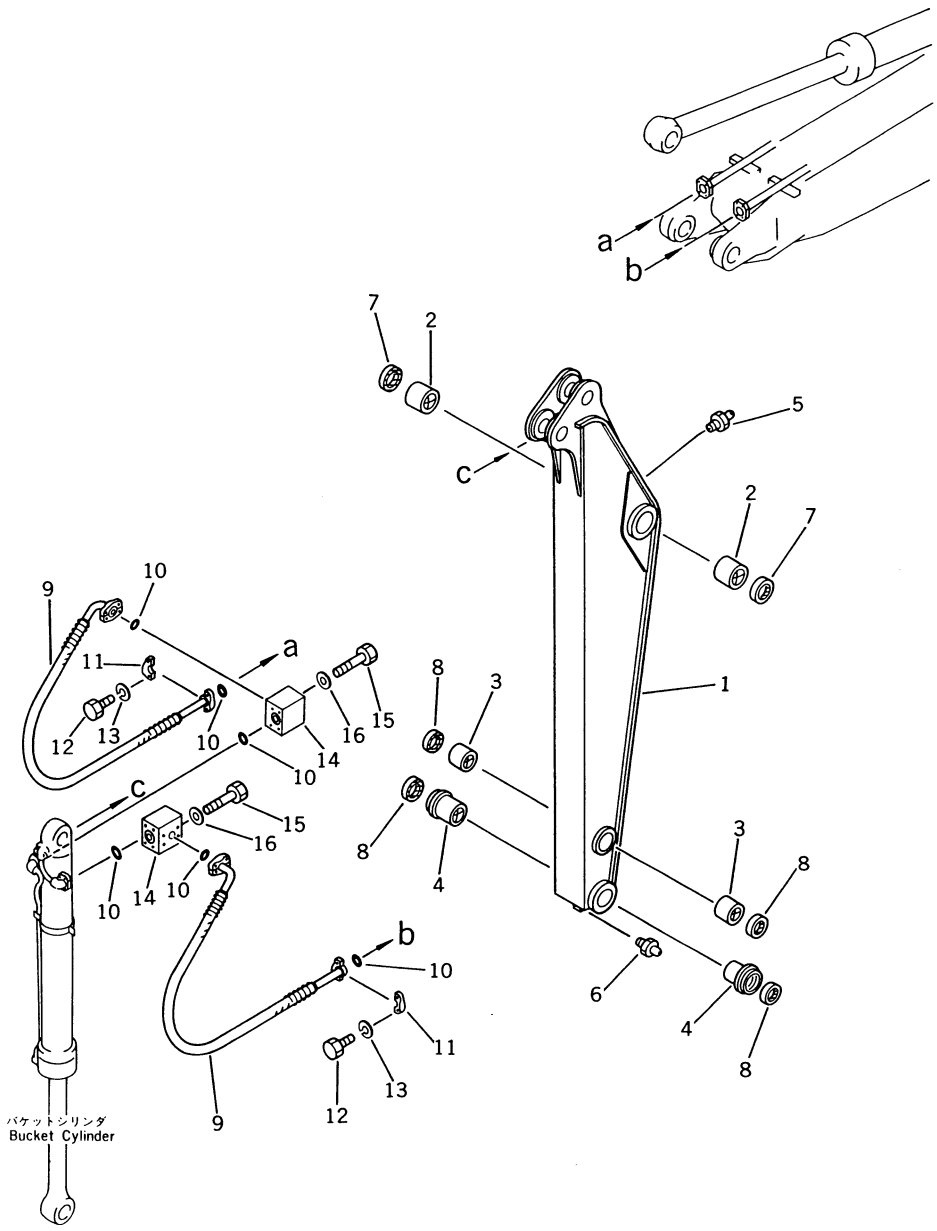

FIG NO. 7315

INDEX NO.	PART NO.	DESCRIPTION	Q'TY	SERIAL NO. PC150-3	SERIAL NO. PC150LC-3
	21K-944-0010	SUPER SHORT ARM ASS'Y	1	3001–	3001–
1	(☆21K-944-2110)	• ARM	1	3001–	3001–
2	21K-70-12161	• BUSHING	2	3001–	3001–
3	21K-70-12170	• BUSHING	2	3001–	3001–
4	21K-70-22130	• BUSHING	2	3001–	3001–
5	07020-00900	• FITTING, GREASE	1	3001–	3001–
6	07020-00000	• FITTING, GREASE	1	3001–	3001–
7	07145-00080	SEAL, DUST	2	3001–	3001–
8	21K-70-12180	SEAL, DUST	4	3001–	3001–
9	07098-20613	HOSE	2	3001– •	3001– •
9	07098-20513	HOSE	2	• –	• –
10	07000-13025	O-RING	6	3001–	3001–
11	07371-30638	FLANGE, SPLIT	8	3001–	3001–
12	01010-50830	BOLT	16	3001–	3001–
13	01602-20825	WASHER, SPRING	16	3001–	3001–
14	21K-944-2120	BLOCK	2	3001– •	3001– •
14	21K-944-2121	BLOCK	2	• –	• –
15	01010-50870	BOLT	8	3001– •	3001– •
15	01010-50875	BOLT	8	• –	• –
16	01643-30823	WASHER	8	3001–	3001–

OPTIONAL PARTS

CONTENTS

	FIG NO.	PAGE
HEAD GUARD	8001	450
FALLING OBJECTIVE PROTECTIVE STRUCTURE	8021	452
WINDOW WASHER	8031	454
WATER SEPARATOR	8051	456
PRE-FUEL FILTER	8071	458
ADDITIONAL HYDRAULIC CIRCUIT (1/2) (ATTACHMENT SIDE)	8081	460
ADDITIONAL HYDRAULIC CIRCUIT (2/2) (ATTACHMENT SIDE)	8083	464
ADDITIONAL HYDRAULIC CIRCUIT (CHASSIS SIDE)	8085	468
CONTROL LINKAGE (1/2) (ADDITIONAL HYDRAULIC CIRCUIT)	8087	472
CONTROL LINKAGE (2/2) (ADDITIONAL HYDRAULIC CIRCUIT)	8089	474
FLOOR FRAME (ADDITIONAL HYDRAULIC CIRCUIT)(FOR LONG LEVER)	8091	476
OVER LOAD WARNING DEVICE	8101	478
DELUXE SEAT (WITH ARM REST)	8111	480
DELUXE SEAT (WITHOUT ARM REST)	8112	482
AIR CONDITIONER PIPING (COOLING)	8901	484
AIR CONDITIONER PIPING (HEATING)	8903	486
AIR PIPING AND AIR CONDITIONER RELATED PARTS (FOR LONG LEVER CONTROL)	8905	488
AIR PIPING AND AIR CONDITIONER RELATED PARTS (FOR WRIST CONTROL)	8906	492
COMPRESSOR RELATED PARTS (AIR CONDITIONER)	8907	496
ELECTRICAL SYSTEM (AIR CONDITIONER)	8909	498
COOLING UNIT (AIR CONDITIONER)	8911	500
CONDENSER UNIT (AIR CONDITIONER)	8913	504
FREON GAS COMPRESSOR (AIR CONDITIONER)	8915	506
CONTROL UNIT (AIR CONDITIONER)	8917	508
CAR COOLER PIPING (1/2) (FOR LONG LEVER CONTROL)	8951	510
CAR COOLER PIPING (1/2) (FOR WRIST CONTROL)	8953	512
CAR COOLER PIPING (2/2)	8955	514
CAR COOLER RELATED PARTS	8957	518

8

FIG. 8001 HEAD GUARD

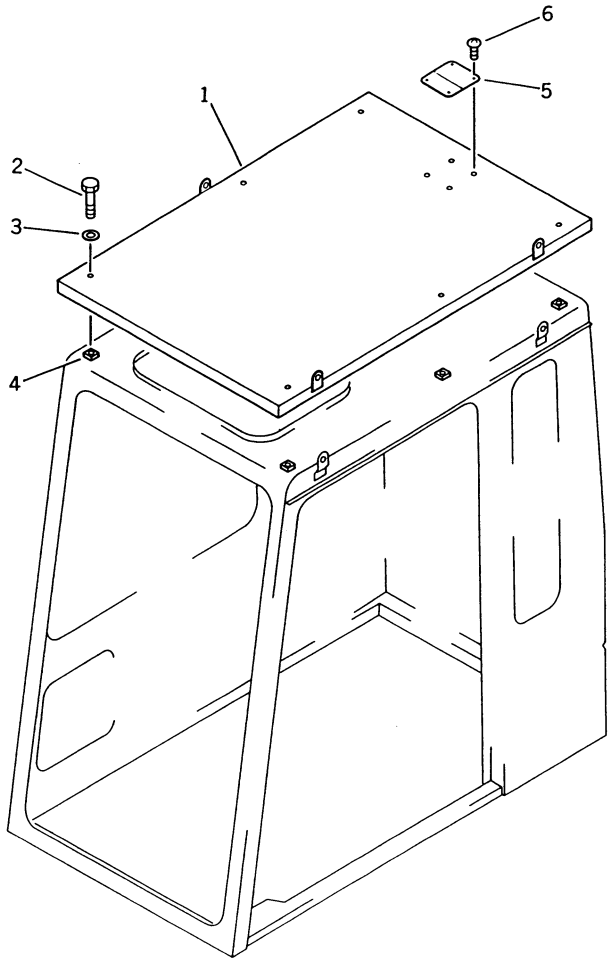

FIG NO. 8001

INDEX NO.	PART NO.	DESCRIPTION	Q'TY	SERIAL NO. PC150-3	SERIAL NO. PC150LC-3
1	205-954-7120	GUARD, HEAD	1	3001 –	3001 –
2	01010-51265	BOLT	8	3001 –	3001 –
3	01643-31232	WASHER	8	3001 –	3001 –
4	01572-21232	SEAT (WELDED TO OPERATOR'S CAB)	8	3001 –	3001 –
5	09660-20100	PLATE, SAFETY (LIMITED SUPPLY)	1	3001 –	3001 –
6	04418-13060	SCREW	4	3001 –	3001 –

FIG. 8021 FALLING OBJECTIVE PROTECTIVE STRUCTURE

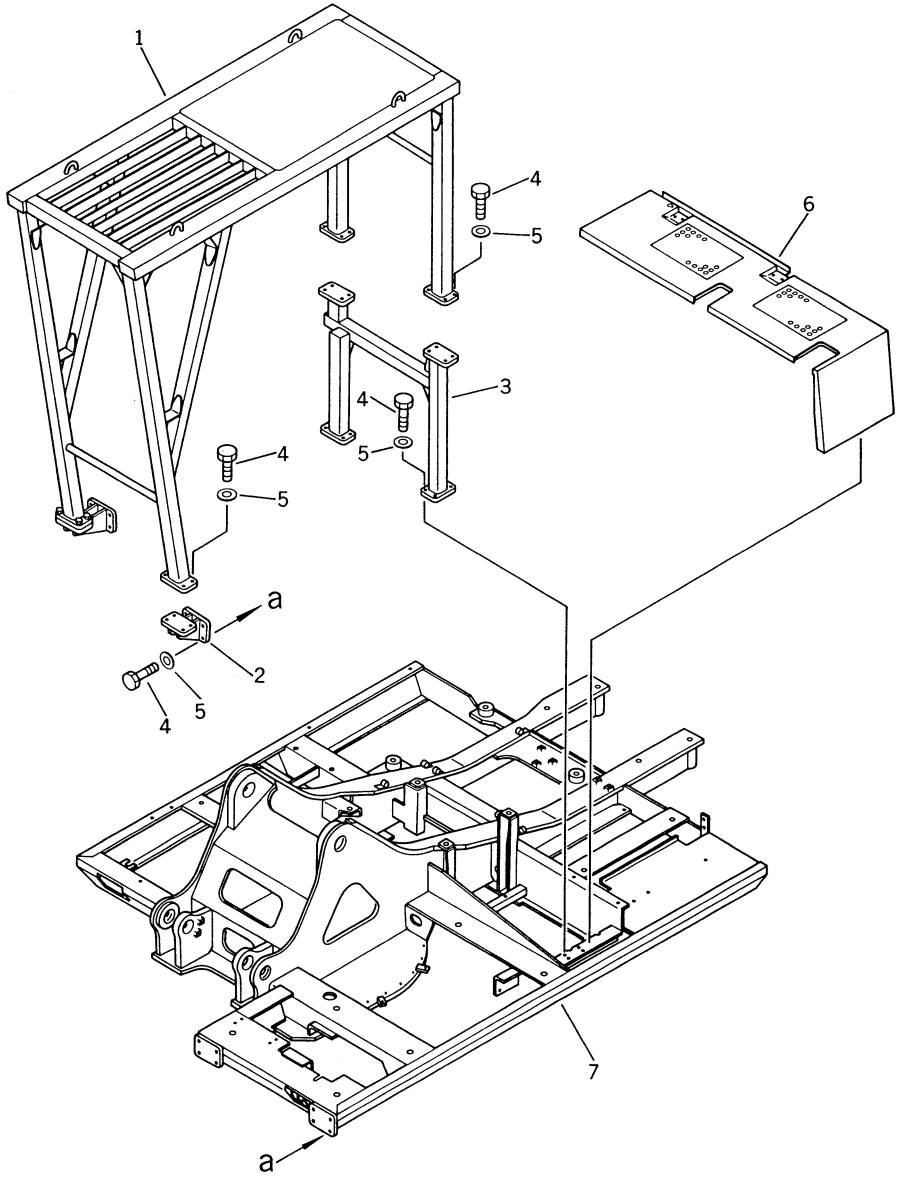

FIG NO. 8021

INDEX NO.	PART NO.	DESCRIPTION	Q'TY	SERIAL NO. PC150-3	SERIAL NO. PC150LC-3
1	205-956-1110	GUARD	1	3001 –	3001 –
2	203-956-4120	BRACKET	2	3001 –	3001 –
3	21K-956-2110	BRACKET	1	3001 –	3001 –
4	01010-51640	BOLT	32	3001 –	3001 –
5	01643-31645	WASHER	32	3001 –	3001 –
6	21K-54-28141	COVER	1	3001 –	3001 –
7	21K-46-24120	FRAME, REVOLVING (MODIFIED FROM 21K-46-21110)	1	3001 –	3001 –

FIG. 8031 WINDOW WASHER

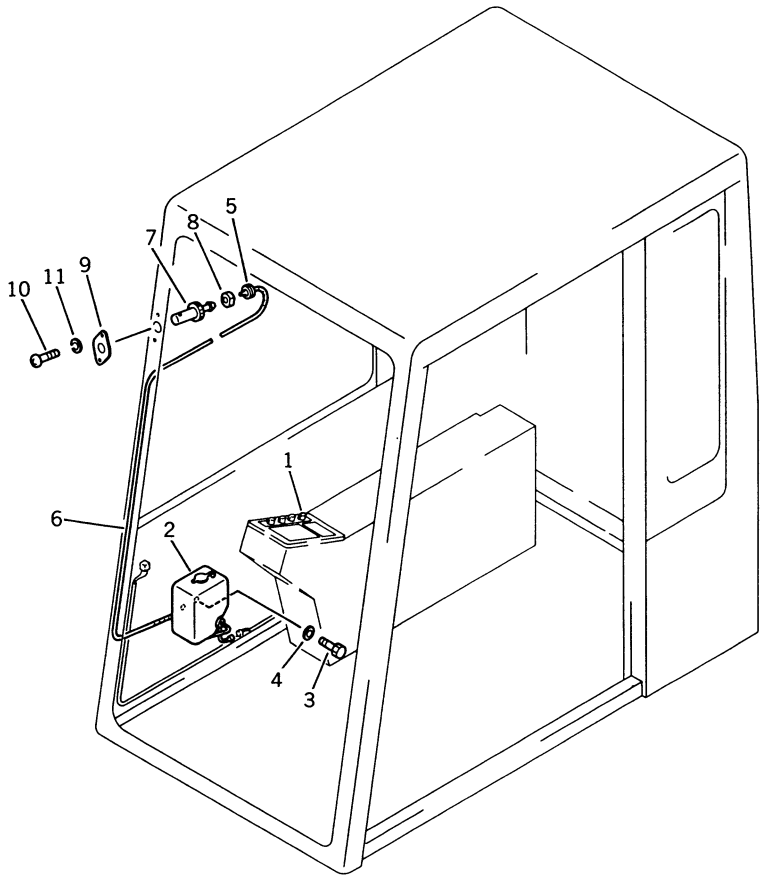

FIG NO. 8031

INDEX NO.	PART NO.	DESCRIPTION	Q'TY	SERIAL NO. PC150-3	SERIAL NO. PC150LC-3
1	205-06-71690	SWITCH, WINDOW WASHER	1	3001–	3001–
2	206-06-15230	TANK, WASHER	1	3001–	3001–
3	01010-50612	BOLT	2	3001–	3001–
4	01643-30623	WASHER	2	3001–	3001–
5	201-54-22890	GROMMET	1	3001–	3001–
6	205-06-71470	HOSE	1	3001–	3001–
7	205-06-61220	NOZZLE	1	3001–	3001–
8	205-06-71610	NUT	1	3001–	3001–
9	205-06-71590	BRACKET	1	3001–	3001–
10	01220-40412	SCREW	2	3001–	3001–
11	01601-20410	WASHER, SPRING	2	3001–	3001–

FIG. 8051 WATER SEPARATOR

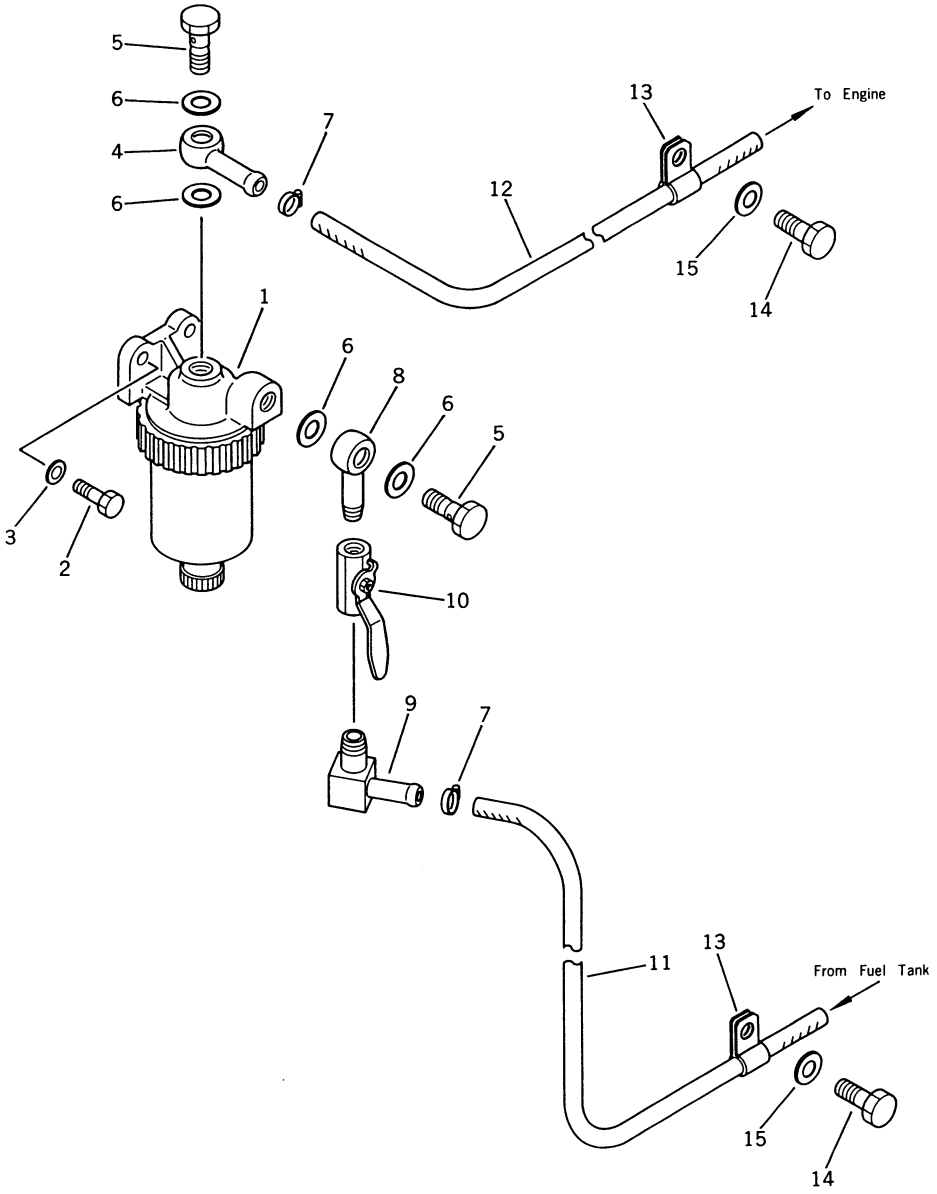

INDEX NO.	PART NO.	DESCRIPTION	Q'TY	SERIAL NO. PC150-3	SERIAL NO. PC150LC-3
1	600-311-9800	WATER SEPARATOR ASS'Y	1	3001 –	3001 –
2	01010-30825	BOLT	2	3001 –	3001 –
3	01643-30823	WASHER	2	3001 –	3001 –
4	205-04-62150	JOINT	1	3001 –	3001 –
5	07206-31014	BOLT, JOINT	2	3001 –	3001 –
6	07005-01412	GASKET	4	3001 –	3001 –
7	07281-00197	CLAMP	2	3001 –	3001 –
8	205-04-62140	JOINT	1	3001 –	3001 –
9	205-04-62130	JOINT	1	3001 –	3001 –
10	07700-40240	VALVE	1	3001 –	3001 –
11	07288-01023	HOSE	1	3001 –	3001 –
12	07288-01020	HOSE	1	3001 –	3001 –
13	08036-01814	CLIP	2	3001 –	3001 –
14	01010-31220	BOLT	2	3001 –	3001 –
15	01643-31232	WASHER	2	3001 –	3001 –

FIG. 8071 PRE-FUEL FILTER

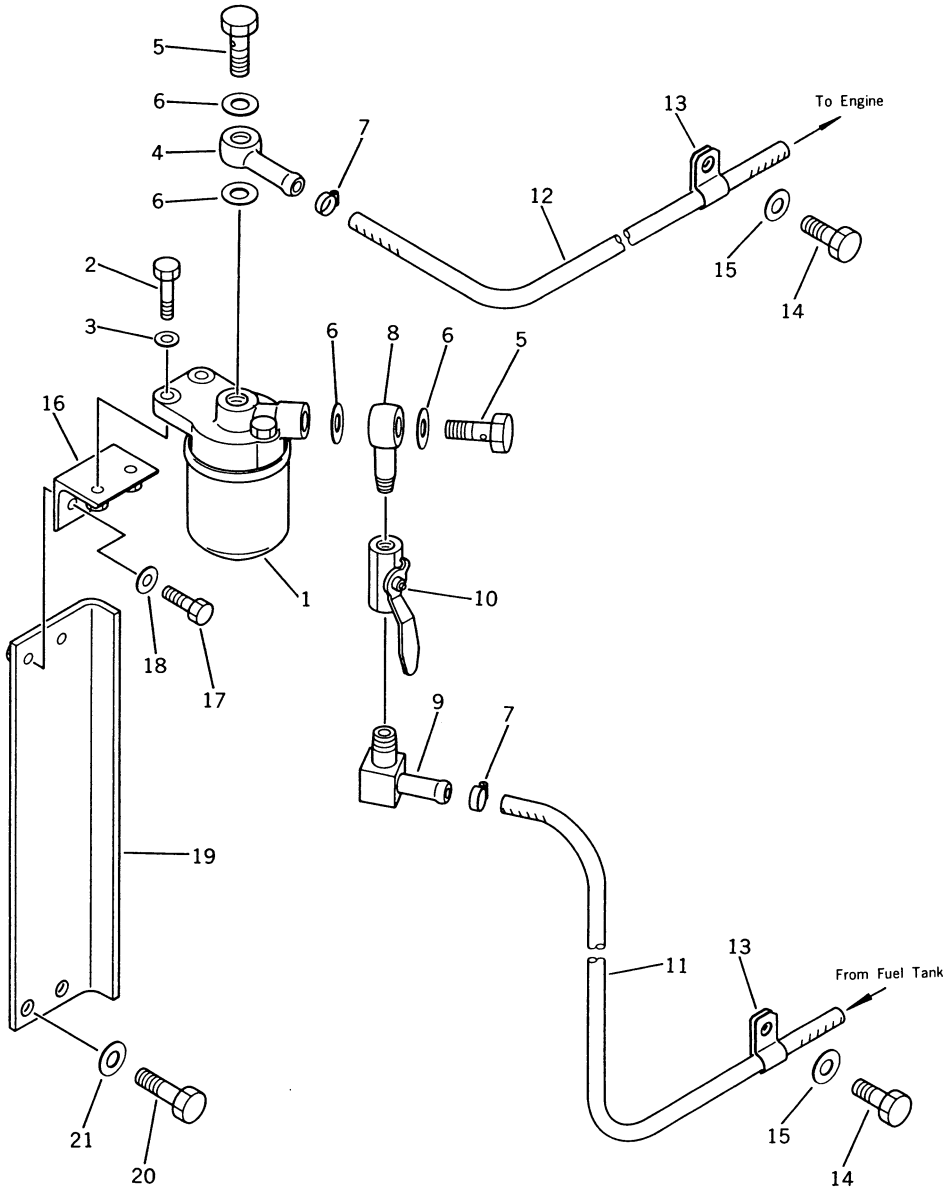

INDEX NO.	PART NO.	DESCRIPTION	Q'TY	SERIAL NO. PC150-3	SERIAL NO. PC150LC-3
1	600-311-9500	FUEL FILTER	1	3001 –	3001 –
2	01010-50830	BOLT	2	3001 –	3001 –
3	01643-30823	WASHER	2	3001 –	3001 –
4	205-04-62150	JOINT	1	3001 –	3001 –
5	07206-31016	BOLT, JOINT	2	3001 –	3001 –
6	07005-01414	GASKET	4	3001 –	3001 –
7	07281-00197	CLAMP	2	3001 –	3001 –
8	205-04-62140	JOINT	1	3001 –	3001 –
9	205-04-62130	JOINT	1	3001 –	3001 –
10	07700-40240	VALVE	1	3001 –	3001 –
11	07288-01023	HOSE	1	3001 –	3001 –
12	07288-01020	HOSE	1	3001 –	3001 –
13	08036-01814	CLIP	2	3001 –	3001 –
14	01010-31220	BOLT	2	3001 –	3001 –
15	01643-31232	WASHER	2	3001 –	3001 –
16	203-04-31180	BRACKET	1	3001 –	3001 –
17	01010-50825	BOLT	2	3001 –	3001 –
18	01643-31232	WASHER	2	3001 –	3001 –
19	203-04-4110	BRACKET	1	3001 –	3001 –
20	01010-51225	BOLT	2	3001 –	3001 –
21	01643-31232	WASHER	2	3001 –	3001 –

FIG. 8081 ADDITIONAL HYDRAULIC CIRCUIT (1/2) (ATTACHMENT SIDE)

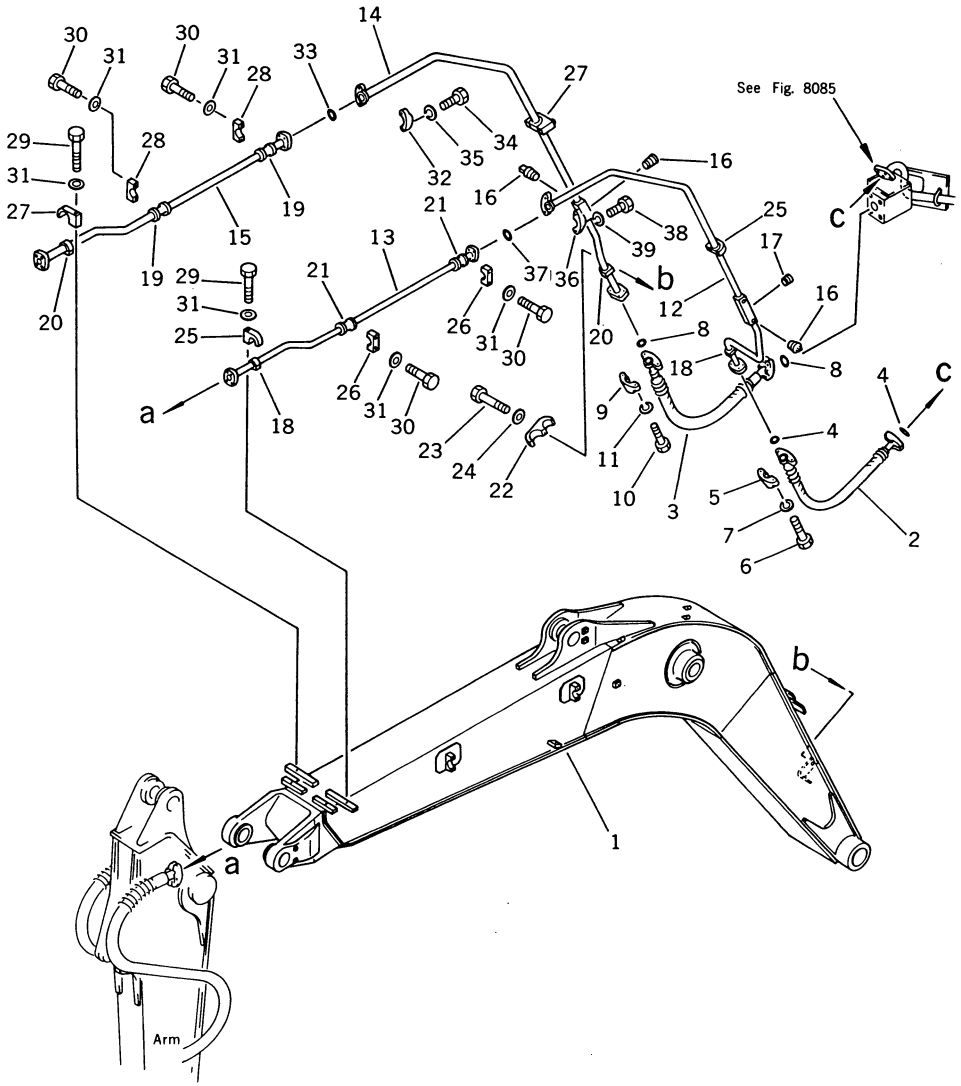

FIG NO. 8081

INDEX NO.	PART NO.	DESCRIPTION	Q'TY	SERIAL NO. PC150-3	SERIAL NO. PC150LC-3
1	21K-973-2110	BOOM (MODIFIED FROM 21K-70-21110)	1	3001–	3001–
2	07099-20612	HOSE	1	3001–	3001–
3	07097-21012	HOSE	1	3001–	3001–
4	07000-13025	O-RING	2	3001–	3001–
5	07371-30638	FLANGE, SPLIT	4	3001–	3001–
6	01010-50830	BOLT	8	3001–	3001–
7	01602-20825	WASHER, SPRING	8	3001–	3001–
8	07000-13032	O-RING	2	3001–	3001–
9	07371-31049	FLANGE, SPLIT	4	3001–	3001–
10	01010-51035	BOLT	8	3001–	3001–
11	01602-21030	WASHER, SPRING	8	3001–	3001–
12	21K-973-2220	TUBE	1	3001–	3001–
13	21K-973-2240	TUBE	1	3001–	3001–
14	21K-973-2210	TUBE	1	3001–	3001–
15	21K-973-2230	TUBE	1	3001–	3001–
16	07042-20108	PLUG	4	3001–	3001–
17	07043-00617	PLUG	2	3001–	3001–
18	203-62-43380	CUSHION	3	3001–	3001–
19	21K-973-1450	CUSHION	2	3001–	3001–
20	203-973-4390	CUSHION	3	3001–	3001–
21	21K-62-12250	CUSHION	2	3001–	3001–
22	203-973-4440	CLAMP	1	3001–	3001–
23	01010-51265	BOLT	1	3001–	3001–
24	01643-31232	WASHER	1	3001–	3001–
25	203-62-43370	CLAMP	2	3001–	3001–
26	21K-62-15340	CLAMP	2	3001–	3001–
27	203-973-4450	CLAMP	2	3001–	3001–
28	21K-973-1560	CLAMP	2	3001–	3001–
29	01010-51265	BOLT	4	3001–	3001–
30	01010-51260	BOLT	8	3001–	3001–
31	01643-31232	WASHER	12	3001–	3001–
32	07371-31049	FLANGE	2	3001–	3001–
33	07000-13032	O-RING	1	3001–	3001–
34	01010-51035	BOLT	4	3001–	3001–

FIG NO. 8081

INDEX NO.	PART NO.	DESCRIPTION	Q'TY	SERIAL NO. PC150-3	SERIAL NO. PC150LC-3
35	01602-21030	WASHER, SPRING	4	3001 –	3001 –
36	07371-30638	FLANGE	2	3001 –	3001 –
37	07000-13025	O-RING	1	3001 –	3001 –
38	01010-50830	BOLT	4	3001 –	3001 –
39	01602-20825	WASHER, SPRING	4	3001 –	3001 –

FIG. 8083 ADDITIONAL HYDRAULIC CIRCUIT (2/2) (ATTACHMENT SIDE)

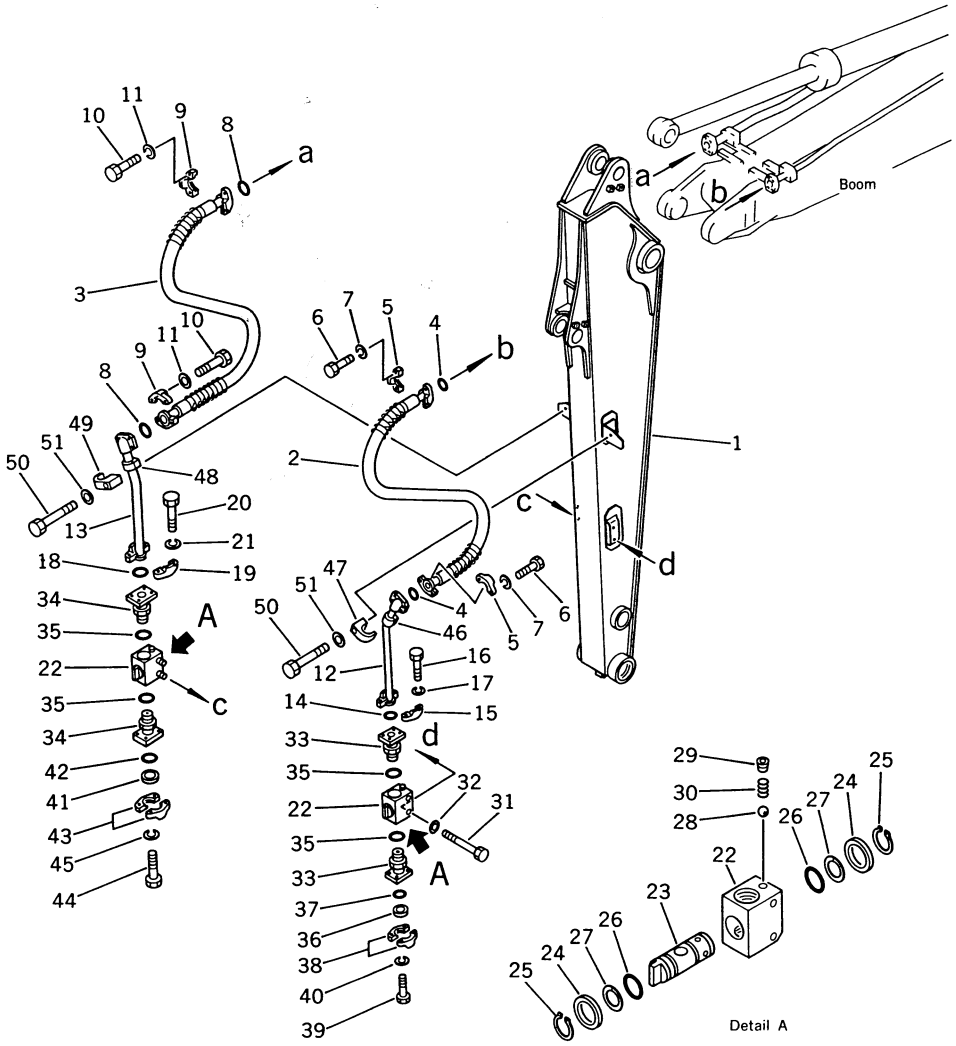

FIG NO. 8083

INDEX NO.	PART NO.	DESCRIPTION	Q'TY	SERIAL NO. PC150-3	SERIAL NO. PC150LC-3
1	21K-973-2120	ARM (MODIFIED FROM 21K-70-22110)	1	3001–	3001–
2	07099-20618	HOSE	1	3001–	3001–
3	07099-21018	HOSE	1	3001–	3001–
4	07000-13025	O-RING	2	3001–	3001–
5	07371-30638	FLANGE, SPLIT	4	3001–	3001–
6	01010-50830	BOLT	8	3001–	3001–
7	01602-20825	WASHER, SPRING	8	3001–	3001–
8	07000-13032	O-RING	2	3001–	3001–
9	07371-31049	FLANGE, SPLIT	4	3001–	3001–
10	01010-51035	BOLT	8	3001–	3001–
11	01602-21030	WASHER, SPRING	8	3001–	3001–
12	21K-973-2250	TUBE	1	3001–	3001–
13	203-973-4250	TUBE	1	3001–	3001–
14	07000-13025	O-RING	1	3001–	3001–
15	07371-30638	FLANGE, SPLIT	2	3001–	3001–
16	01010-50830	BOLT	4	3001–	3001–
17	01602-20825	WASHER, SPRING	4	3001–	3001–
18	07000-13032	O-RING	1	3001–	3001–
19	07371-31049	FLANGE, SPLIT	2	3001–	3001–
20	01010-51030	BOLT	4	3001–	3001–
21	01602-21030	WASHER, SPRING	4	3001–	3001–
22	203-973-3900	VALVE ASS'Y	2	3001–	3001–
22	203-973-3910	• BODY	1	3001–	3001–
23	203-973-3920	• SPOOL	1	3001–	3001–
24	131-60-16170	• WASHER	2	3001–	3001–
25	04064-03818	• RING, SNAP	2	3001–	3001–
26	07000-13032	• O-RING	2	3001–	3001–
27	07001-03032	• RING, BACK-UP	2	3001–	3001–
28	04260-00793	• BALL	1	3001–	3001–
29	07043-00108	• PLUG	1	3001–	3001–
30	236-10-12240	• SPRING	1	3001–	3001–
31	01010-51075	BOLT	4	3001–	3001–
32	01643-31032	WASHER	4	3001–	3001–
33	21K-973-2330	NIPPLE	2	3001–	3001–

FIG NO. 8083

INDEX NO.	PART NO.	DESCRIPTION	Q'TY	SERIAL NO. PC150-3	SERIAL NO. PC150LC-3
34	20D-62-11660	NIPPLE	2	3001–	3001–
35	07002-13334	O-RING	4	3001–	3001–
36	07378-10500	HEAD	1	3001–	3001–
37	07000-13022	O-RING	1	3001–	3001–
38	07371-30500	FLANGE, SPLIT	2	3001–	3001–
39	01010-50830	BOLT	4	3001–	3001–
40	01602-20825	WASHER, SPRING	4	3001–	3001–
41	07378-11000	HEAD	1	3001–	3001–
42	07000-13032	O-RING	1	3001–	3001–
43	07371-31049	FLANGE, SPLIT	2	3001–	3001–
44	01010-51035	BOLT	4	3001–	3001–
45	01602-21030	WASHER, SPRING	4	3001–	3001–
46	203-62-43380	CUSHION	1	3001–	3001–
47	203-62-43370	CLAMP	1	3001–	3001–
48	203-973-4390	CUSHION	1	3001–	3001–
49	203-973-4450	CLAMP	1	3001–	3001–
50	01010-51265	BOLT	2	3001–	3001–
51	01643-31232	WASHER	2	3001–	3001–

FIG. 8085 ADDITIONAL HYDRAULIC CIRCUIT (CHASSIS SIDE)

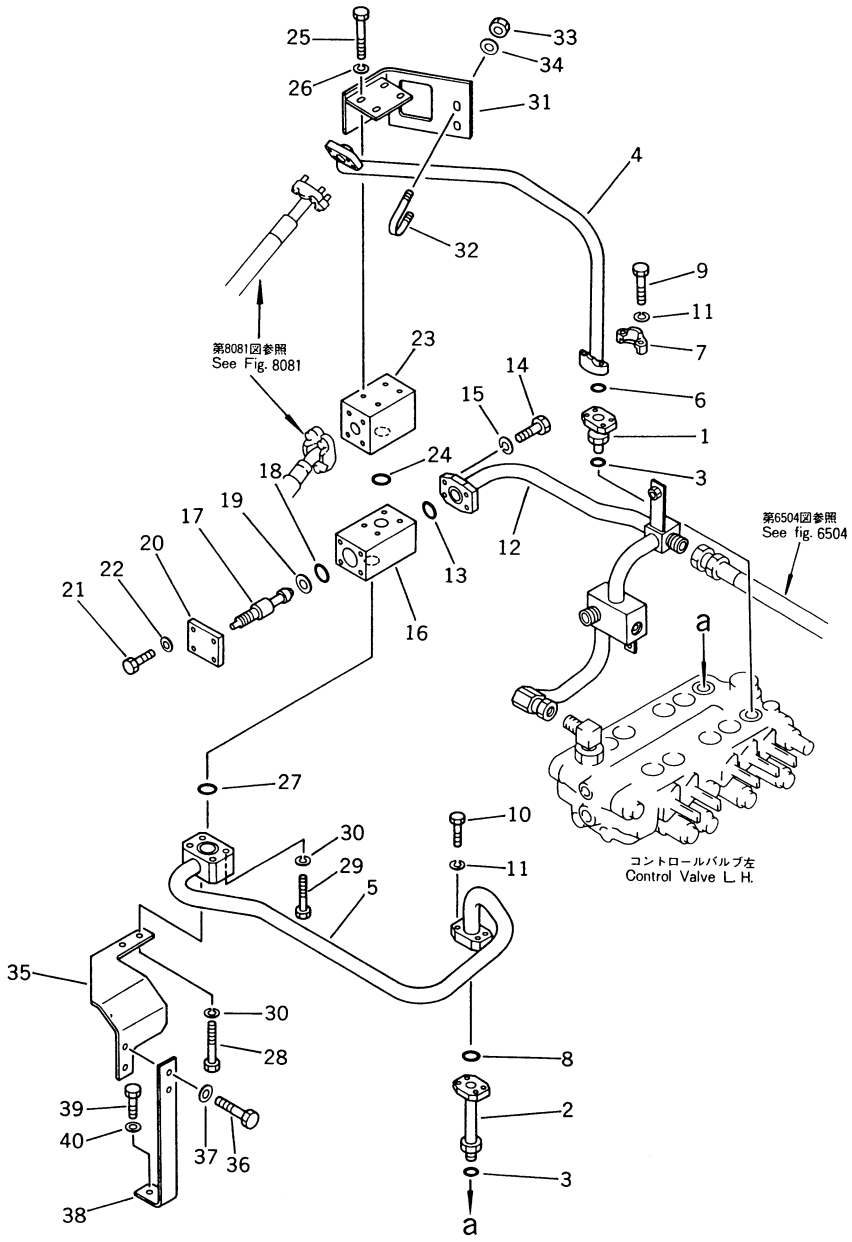

FIG NO. 8085

INDEX NO.	PART NO.	DESCRIPTION	Q'TY	SERIAL NO. PC150-3	SERIAL NO. PC150LC-3
1	21K-973-2310	FLANGE	1	3001–	3001–
2	21K-973-2320	FLANGE	1	3001–	3001–
3	07002-12434	O-RING	2	3001–	3001–
4	21K-973-2350	TUBE	1	3001–	3001–
5	21K-973-2341	TUBE	1	3001–	3001–
6	07000-13025	O-RING	1	3001–	3001–
7	07371-30638	FLANGE, SPLIT	2	3001–	3001–
8	07000-13030	O-RING	1	3001–	3001–
9	01010-50830	BOLT	4	3001–	3001–
10	01010-50845	BOLT	4	3001–	3001–
11	01602-20825	WASHER, SPRING	8	3001–	3001–
12	21K-973-2360	TUBE	1	3001– •	3001– •
12	21K-973-2361	TUBE	1	• –	• –
13	07000-13030	O-RING	1	3001–	3001–
14	01010-51030	BOLT	4	3001–	3001–
15	01602-21030	WASHER, SPRING	4	3001–	3001–
16	203-973-3800	VALVE ASS'Y	1	3001–	3001–
16	203-973-3810	• BODY	1	3001–	3001–
17	203-973-3820	• SPOOL	1	3001–	3001–
18	07000-13025	• O-RING	1	3001–	3001–
19	07001-03025	• RING, BACK-UP	1	3001–	3001–
20	20T-973-2640	• PLATE	1	3001–	3001–
21	01010-50820	• BOLT	4	3001–	3001–
22	01643-30823	• WASHER	4	3001–	3001–
23	203-973-4340	BLOCK	1	3001–	3001–
24	07000-13030	O-RING	1	3001–	3001–
25	01011-51000	BOLT	4	3001–	3001–
26	01602-21030	WASHER, SPRING	4	3001–	3001–
27	07000-13030	O-RING	1	3001–	3001–
28	01010-51070	BOLT	2	3001–	3001–
29	01010-51050	BOLT	2	3001– •	3001–
30	01602-21030	WASHER, SPRING	4	3001–	3001–
31	21K-973-2410	BRACKET	1	3001–	3001–
32	07283-22738	CLIP	1	3001–	3001–
33	01599-01011	NUT	2	3001–	3001–

FIG NO. 8085

INDEX NO.	PART NO.	DESCRIPTION	Q'TY	SERIAL NO. PC150-3	SERIAL NO. PC150LC-3
34	01643-31032	WASHER	2	3001 –	3001 –
35	21K-973-2391	BRACKET	1	3001 –	3001 –
36	01010-51030	BOLT	2	3001 –	3001 –
37	01643-31032	WASHER	2	3001 –	3001 –
38	21K-973-2380	BRACKET	1	3001 –	3001 –
39	01010-51245	BOLT	1	3001 –	3001 –
40	01643-31232	WASHER	1	3001 –	3001 –

FIG. 8087 CONTROL LINKAGE (1/2) (ADDITIONAL HYDRAULIC CIRCUIT)

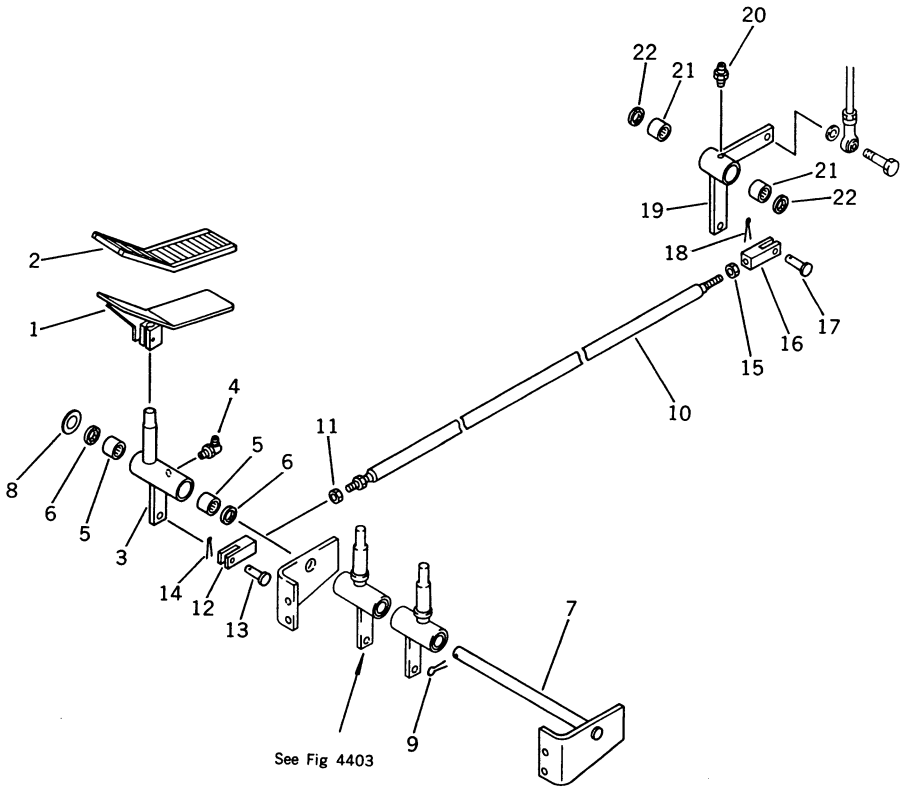

FIG NO. 8087

INDEX NO.	PART NO.	DESCRIPTION	Q'TY	SERIAL NO. PC150-3	SERIAL NO. PC150LC-3
1	203-43-41712	PEDAL	1	3001–	3001–
2	203-43-41650	CAP	1	3001–	3001–
3	21K-973-2510	LEVER	1	3001–	3001–
4	07020-00900	FITTING, GREASE	1	3001–	3001–
5	06120-02016	BEARING, NEEDLE	2	3001–	3001–
6	06122-02004	SEAL, BEARING	2	3001–	3001–
7	203-43-43270	SHAFT	1	3001–	3001–
8	01643-32060	WASHER	1	3001–	3001–
9	04050-13030	PIN, COTTER	1	3001–	3001–
10	21K-973-2520	ROD	1	3001–	3001–
11	01508-21006	NUT, L.H. THREAD	1	3001–	3001–
12	04220-21040	YOKE	1	3001–	3001–
13	04205-11028	PIN	1	3001–	3001–
14	04050-13015	PIN, COTTER	1	3001–	3001–
15	01582-11008	NUT	1	3001–	3001–
16	04210-21040	YOKE	1	3001–	3001–
17	04205-11028	PIN	1	3001–	3001–
18	04050-13015	PIN, COTTER	1	3001–	3001–
19	21K-973-2530	LEVER	1	3001–	3001–
20	07020-00000	FITTING, GREASE	1	3001–	3001–
21	06120-02016	BEARING, NEEDLE	2	3001–	3001–
22	06122-02004	SEAL, BEARING	2	3001–	3001–

FIG. 8089 CONTROL LINKAGE (2/2) (ADDITIONAL HYDRAULIC CIRCUIT)

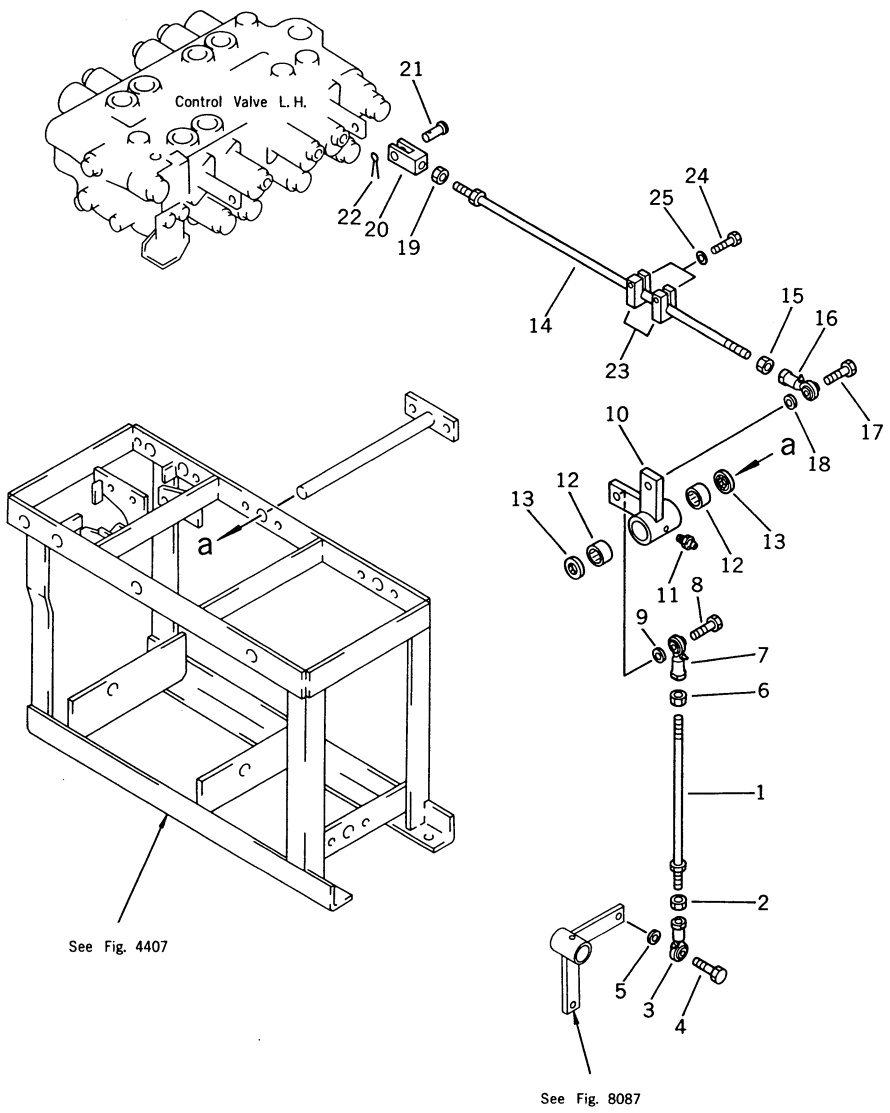

INDEX NO.	PART NO.	DESCRIPTION	Q'TY	SERIAL NO. PC150-3	SERIAL NO. PC150LC-3
1	04248-31028	ROD	1	3001–	3001–
2	01582-11008	NUT	1	3001–	3001–
3	04250-41056	END, ROD	1	3001–	3001–
4	01010-51030	BOLT	1	3001–	3001–
5	04254-01032	SPACER	1	3001–	3001–
6	01508-21006	NUT, L.H. THREAD	1	3001–	3001–
7	04250-61056	END, ROD, L.H. THREAD	1	3001–	3001–
8	01010-51030	BOLT	1	3001–	3001–
9	04254-01032	SPACER	1	3001–	3001–
10	203-43-41242	LEVER	1	3001–	3001–
11	07020-00900	FITTING, GREASE	1	3001–	3001–
12	06120-02016	BEARING, NEEDLE	2	3001–	3001–
13	06122-02004	SEAL, BEARING	2	3001–	3001–
14	04248-31032	ROD	1	3001–	3001–
15	01508-21006	NUT, L.H. THREAD	1	3001–	3001–
16	04250-61056	END, ROD, L.H. THREAD	1	3001–	3001–
17	01010-51030	BOLT	1	3001–	3001–
18	04254-01032	SPACER	1	3001–	3001–
19	01582-11008	NUT	1	3001–	3001–
20	20T-43-22210	YOKE	1	3001–	3001–
21	04205-10822	PIN	1	3001–	3001–
22	04050-12012	PIN, COTTER	1	3001–	3001–
23	203-43-42491	PLATE	2	3001–	3001–
24	01010-50830	BOLT	2	3001–	3001–
25	01643-30823	WASHER	2	3001–	3001–

FIG. 8091 FLOOR FRAME (ADDITIONAL HYDRAULIC CIRCUIT) (FOR LONG LEVER CONTROL)

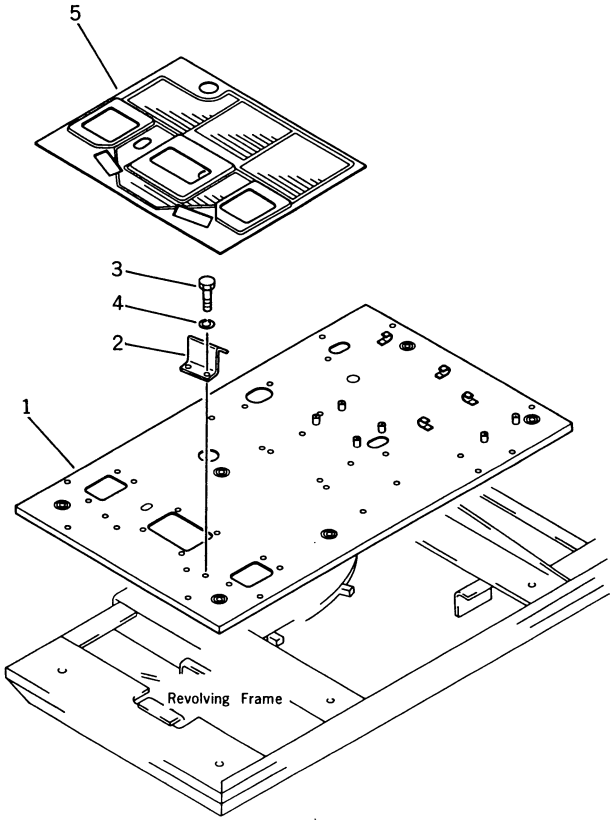

FIG NO. 8091

INDEX NO.	PART NO.	DESCRIPTION	Q'TY	SERIAL NO. PC150-3	SERIAL NO. PC150LC-3
1	21K-973-2130	FRAME, FLOOR (MODIFIED FROM 21K-54-25110)	1	3001–	3001–
2	203-43-42572	BRACKET	1	3001–	3001–
3	01010-51030	BOLT	2	3001–	3001–
4	01602-21030	WASHER, SPRING	2	3001–	3001–
5	203-973-4160	MAT, FLOOR	1	3001–	3001–

FIG. 8101 OVER LOAD WARNING DEVICE

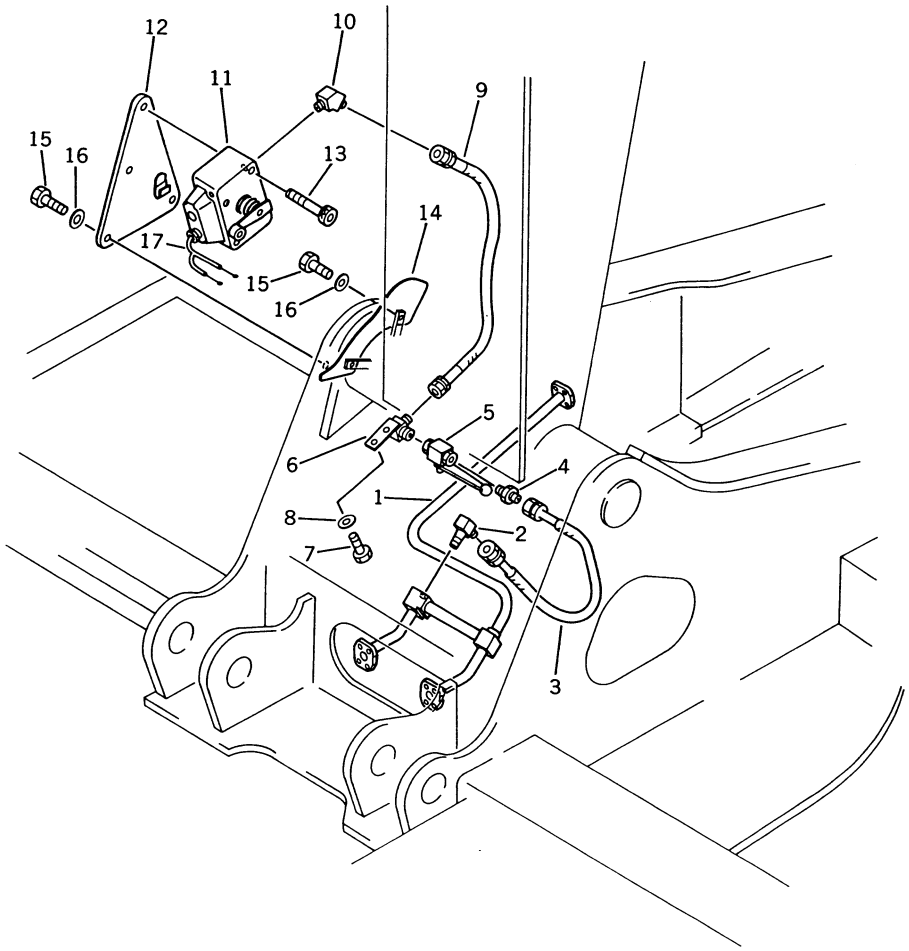

FIG NO. 8101

INDEX NO.	PART NO.	DESCRIPTION	Q'TY	SERIAL NO. PC150-3	SERIAL NO. PC150LC-3
1	21K-62-22530	TUBE	1	3001–	3001–
2	175-79-82550	ELBOW	1	3001–	3001–
3	07096-00205	HOSE	1	3001–	3001–
4	07238-00210	CONNECTOR	1	3001–	3001–
5	205-62-69250	VALVE	1	3001–	3001–
6	203-62-44690	ELBOW	1	3001–	3001–
7	01010-51020	BOLT	2	3001–	3001–
8	01643-31032	WASHER	2	3001–	3001–
9	07096-00207	HOSE	1	3001–	3001–
10	175-79-82560	ELBOW	1	3001–	3001–
11	205-62-69240	SWITCH, OVER LOAD	1	3001–	3001–
12	21K-62-22510	PLATE	1	3001–	3001–
13	01252-40616	BOLT	2	3001–	3001–
14	21K-62-22520	CAM	1	3001–	
14	21K-62-22550	CAM	1		3001–
15	01010-51030	BOLT	4	3001–	3001–
16	01643-31032	WASHER	4	3001–	3001–
17	203-06-41770	WIRE ASS'Y	1	3001–	3001–

FIG. 8111 DELUXE SEAT (WITH ARM REST)

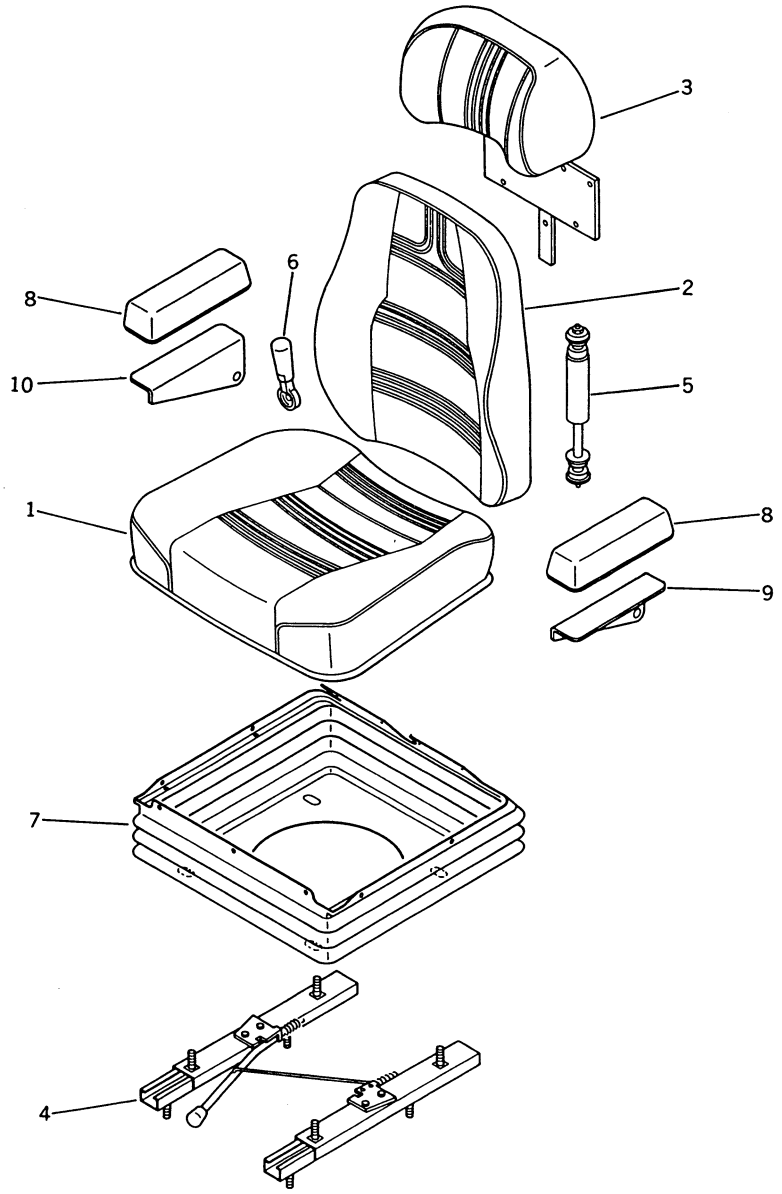

FIG NO. 8111

INDEX NO.	PART NO.	DESCRIPTION	Q'TY	SERIAL NO. PC150-3	SERIAL NO. PC150LC-3
	205-57-63400	SEAT ASS'Y	1	3001–	3001–
1	205-57-63550	• CUSHION, SEAT	1	3001–	3001–
2	205-57-63560	• CUSHION, BACK	1	3001–	3001–
3	205-57-63570	• HEAD REST ASS'Y	1	3001–	3001–
4	205-57-63630	• ADJUSTER ASS'Y	1	3001–	3001–
5	205-57-63640	• DAMPER ASS'Y	1	3001–	3001–
6	205-57-63650	• HANDLE	1	3001–	3001–
7	205-57-63660	• COVER	1	3001–	3001–
8	205-57-63580	• ARM REST KIT	1	3001–	3001–
8	205-57-63590	•• REST, ARM	2	3001–	3001–
9	205-57-63610	•• BRACKET, L.H.	1	3001–	3001–
10	205-57-63620	•• BRACKET, R.H.	1	3001–	3001–

FIG. 8112 DELUXE SEAT (WITHOUT ARM REST)

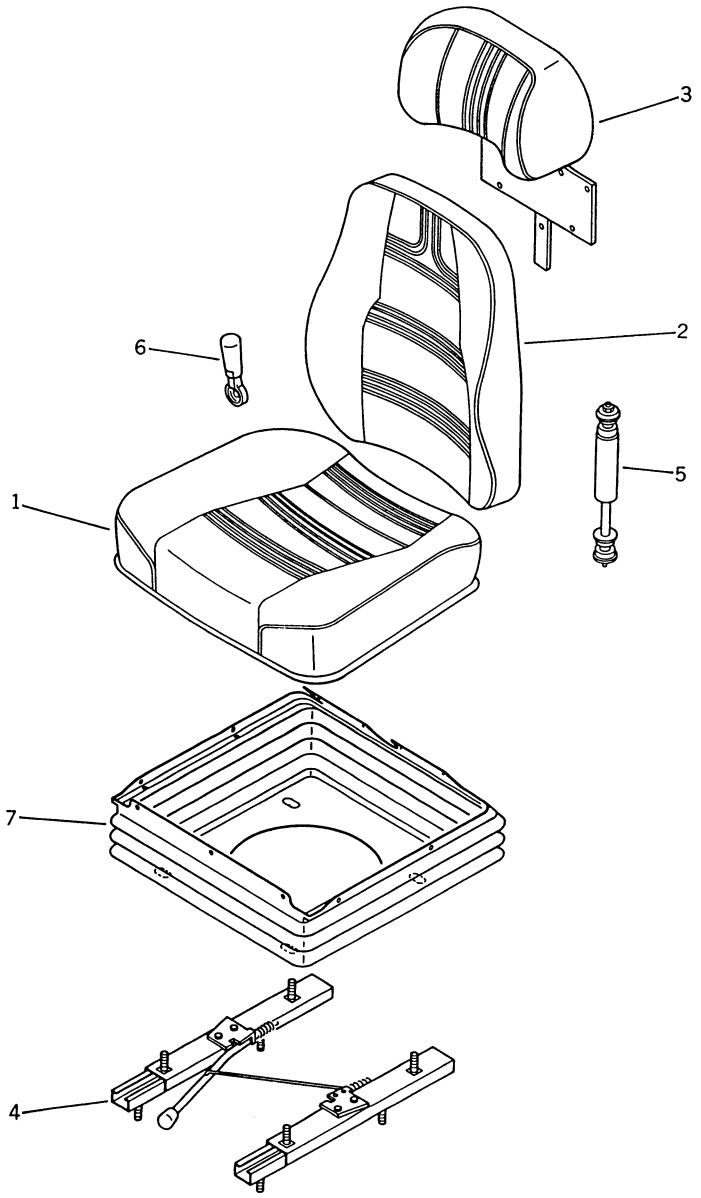

INDEX NO.	PART NO.	DESCRIPTION	Q'TY	SERIAL NO. PC150-3	SERIAL NO. PC150LC-3
	205-57-71500	SEAT ASS'Y	1	3001 –	3001 –
1	205-57-63550	• CUSHION, SEAT	1	3001 –	3001 –
2	205-57-63560	• CUSHION, BACK	1	3001 –	3001 –
3	205-57-63570	• HEAD REST ASS'Y	1	3001 –	3001 –
4	205-57-63630	• ADJUSTER ASS'Y	1	3001 –	3001 –
5	205-57-63640	• DAMPER ASS'Y	1	3001 –	3001 –
6	205-57-63650	• HANDLE	1	3001 –	3001 –
7	205-57-63660	• COVER	1	3001 –	3001 –

FIG. 8901 AIR CONDITIONER PIPING (COOLING)

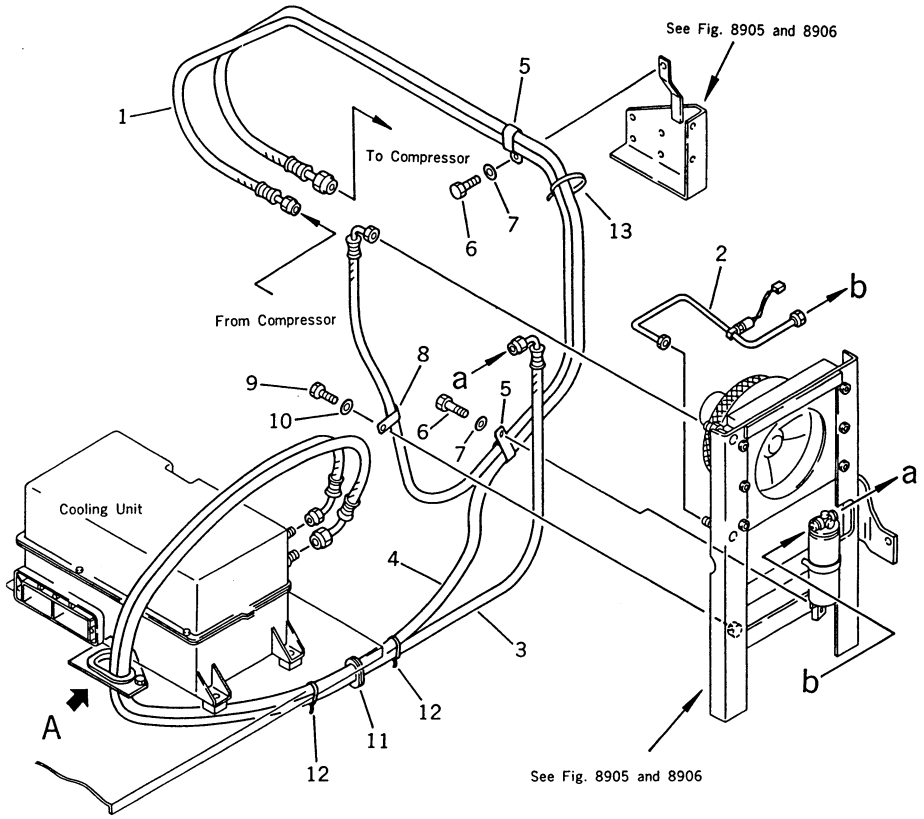

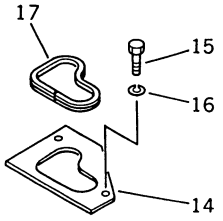

Detail A

FIG NO. 8901

INDEX NO.	PART NO.	DESCRIPTION	Q'TY	SERIAL NO. PC150-3	SERIAL NO. PC150LC-3
1	21K-979-2150	HOSE	1	3001–	3001–
2	21K-979-2180	TUBE	1	3001–	3001–
3	21K-979-2160	HOSE	1	3001–	3001–
4	21K-979-2170	HOSE	1	3001–	3001–
5	176-911-4180	CLIP	2	3001–	3001–
6	01010-51020	BOLT	2	3001–	3001–
7	01643-31032	WASHER	2	3001–	3001–
8	08036-22514	CLIP	1	3001–	3001–
9	01010-51020	BOLT	1	3001–	3001–
10	01643-31032	WASHER	1	3001–	3001–
11	203-06-41550	GROMMET	1	3001–	3001–
12	08034-00519	BAND	3	3001–	3001–
13	08034-00536	BAND	1	3001–	3001–
14	205-979-1270	COVER	1	3001–	3001–
15	01010-50820	BOLT	2	3001–	3001–
16	01602-20825	WASHER, SPRING	2	3001–	3001–
17	205-979-1280	SEAL	1	3001–	3001–

FIG. 8903 AIR CONDITIONER PIPING (HEATING)

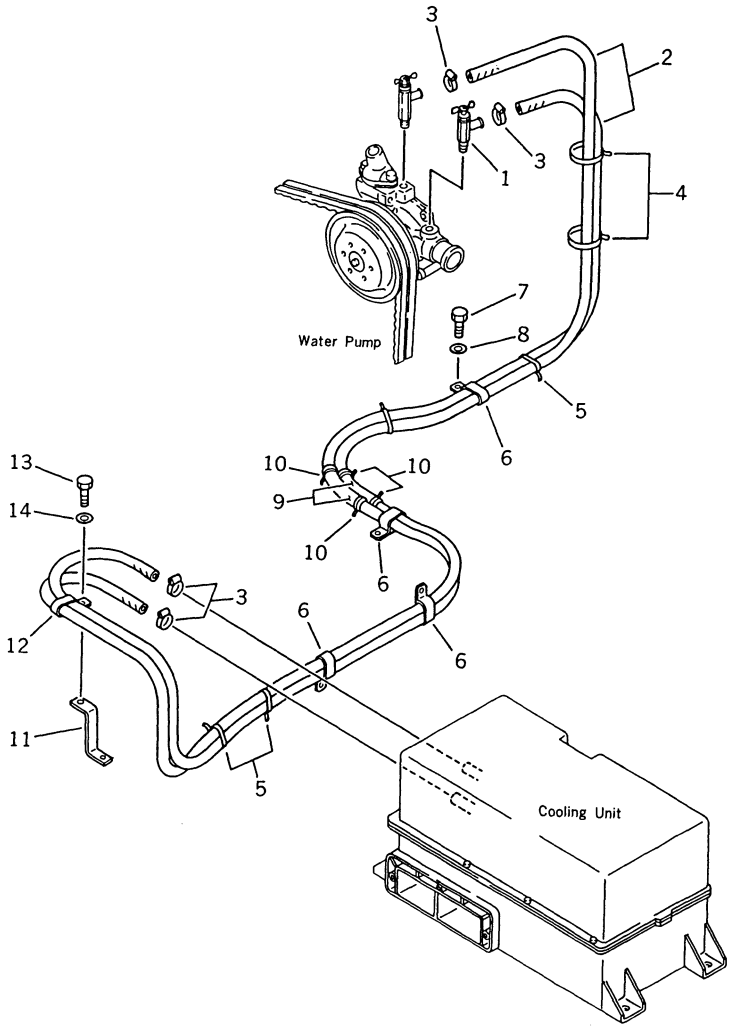

FIG NO. 8903

INDEX NO.	PART NO.	DESCRIPTION	Q'TY	SERIAL NO. PC150-3	SERIAL NO. PC150LC-3
1	203-977-4130	VALVE	1	3001–	3001–
2	09483-00438	HOSE	2	3001–	3001–
3	07281-00259	CLAMP	4	3001–	3001–
4	08034-00536	BAND	2	3001–	3001–
5	08034-00519	BAND	4	3001–	3001–
6	176-911-4170	CLIP	4	3001–	3001–
7	01010-51020	BOLT	4	3001–	3001–
8	01643-31032	WASHER	4	3001–	3001–
9	203-04-31230	COVER	2	3001–	3001–
10	08034-00519	BAND	4	3001–	3001–
11	21K-979-2280	BRACKET	1	3001–	3001–
12	176-911-4170	CLIP	1	3001–	3001–
13	01010-51020	BOLT	1	3001–	3001–
14	01643-31032	WASHER	1	3001–	3001–

FIG. 8905 AIR PIPING AND AIR CONDITIONER RELATED PARTS

(FOR LONG LEVER CONTROL)

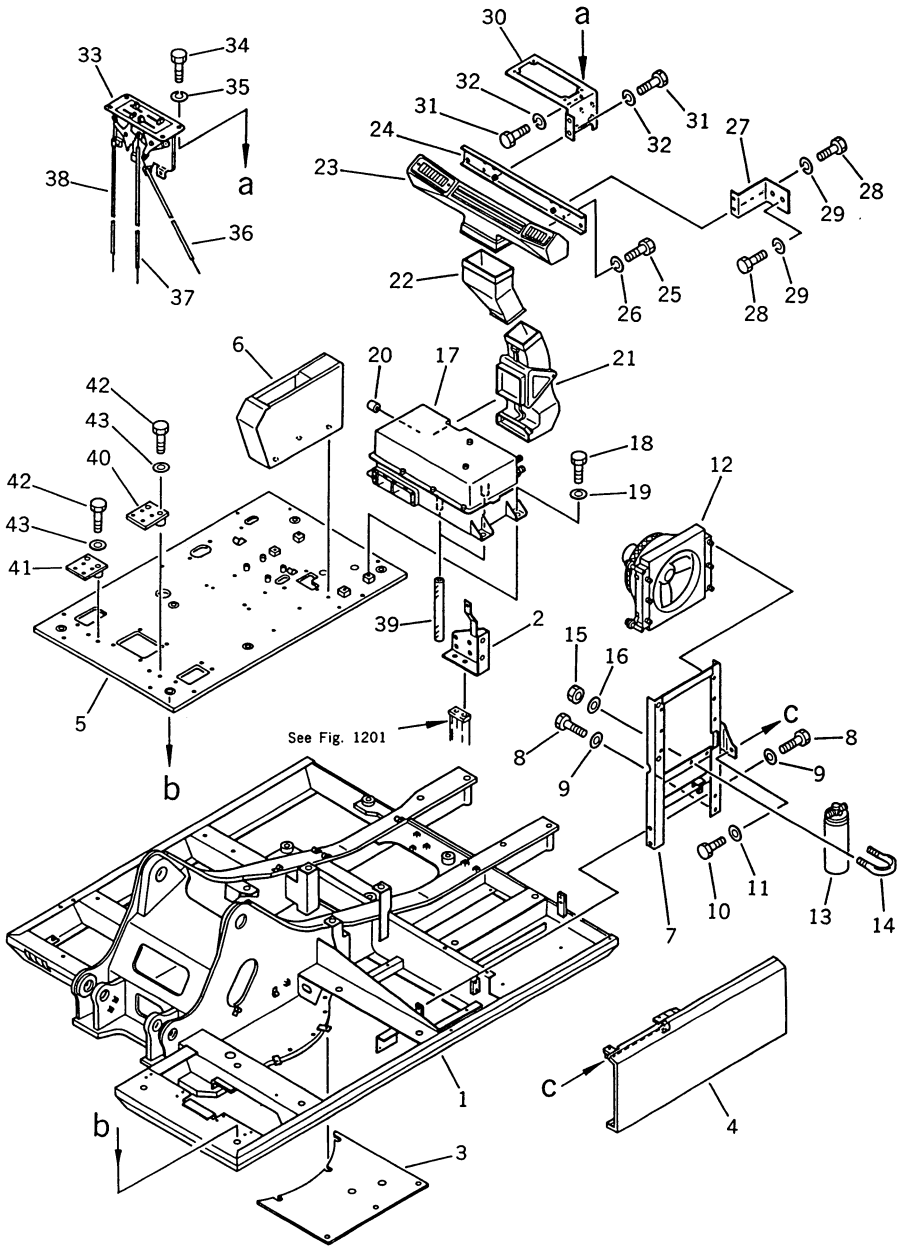

INDEX NO.	PART NO.	DESCRIPTION	Q'TY	SERIAL NO. PC150-3	SERIAL NO. PC150LC-3
1	21K-979-2190	FRAME	1	3001–	3001–
2	21K-979-2210	BRACKET	1	3001–	3001–
3	21K-979-2220	COVER	1	3001–	3001–
4	21K-979-2230	COVER	1	3001–	3001–
5	21K-979-2240	FRAME, FLOOR	1	3001–	3001–
6	21K-979-2260	BOX, L.H.	1	3001–	3001–
7	21K-979-2130	BRACKET	1	3001–	3001–
8	01010-51025	BOLT	4	3001–	3001–
9	01643-31032	WASHER	4	3001–	3001–
10	01010-51225	BOLT	1	3001–	3001–
11	01643-31232	WASHER	1	3001–	3001–
12	(205-979-6150)	CONDENSER ASS'Y (NIPPON DENSO PART NO. 047700-5870)	1	3001–	3001–
13	198-911-4610	RECEIVER, DRYER	1	3001–	3001–
14	205-979-1230	CLIP	1	3001–	3001–
15	01599-01011	NUT	2	3001–	3001–
16	01643-31032	WASHER	2	3001–	3001–
17	(205-979-6110)	COOLING UNIT (NIPPON DENSO PART NO. 145400-7030)	1	3001–	3001–
18	01010-51225	BOLT	4	3001–	3001–
19	01643-31232	WASHER	4	3001–	3001–
20	195-979-4160	BUSHING, CONTROL CABLE (NIPPON DENSO PART NO. 146625-0930)	3	3001–	3001–
21	205-979-6120	DUCT	1	3001–	3001–
22	205-979-6140	DUCT	1	3001–	3001–
23	205-979-6130	DUCT	1	3001–	3001–
24	205-979-6171	BRACKET	1	3001–	3001–
25	01010-50812	BOLT	4	3001–	3001–
26	01602-20825	WASHER, SPRING	4	3001–	3001–
27	205-979-1240	BRACKET	1	3001–	3001–
28	01010-50816	BOLT	4	3001–	3001–
29	01602-20825	WASHER, SPRING	4	3001–	3001–
30	205-979-1250	BRACKET	1	3001–	3001–
31	01010-50816	BOLT	6	3001–	3001–
32	01602-20825	WASHER, SPRING	6	3001–	3001–

FIG NO. 8905

INDEX NO.	PART NO.	DESCRIPTION	Q'TY	SERIAL NO. PC150-3	SERIAL NO. PC150LC-3
33	(205-979-6160)	CONTROL ASS'Y (NIPPON DENSO PART NO. 017710-3660)	1	3001–	3001–
34	01010-50816	BOLT	4	3001–	3001–
35	01602-20825	WASHER, SPRING	4	3001–	3001–
36	205-979-1150	CABLE, HEATER	1	3001–	3001–
37	205-979-1160	CABLE, COOLER	1	3001–	3001–
38	205-979-1170	CABLE, MODE	1	3001–	3001–
39	205-979-6350	HOSE, DRAIN	2	3001–	3001–
40	205-979-1310	BRACKET, L.H.	1	3001–	3001–
41	205-979-1320	BRACKET, R.H.	1	3001–	3001–
42	01010-51055	BOLT	4	3001–	3001–
43	01643-31032	BRACKET	4	3001–	3001–

FIG. 8906 AIR PIPING AND AIR CONDITIONER RELATED PARTS

(FOR WRIST CONTROL)

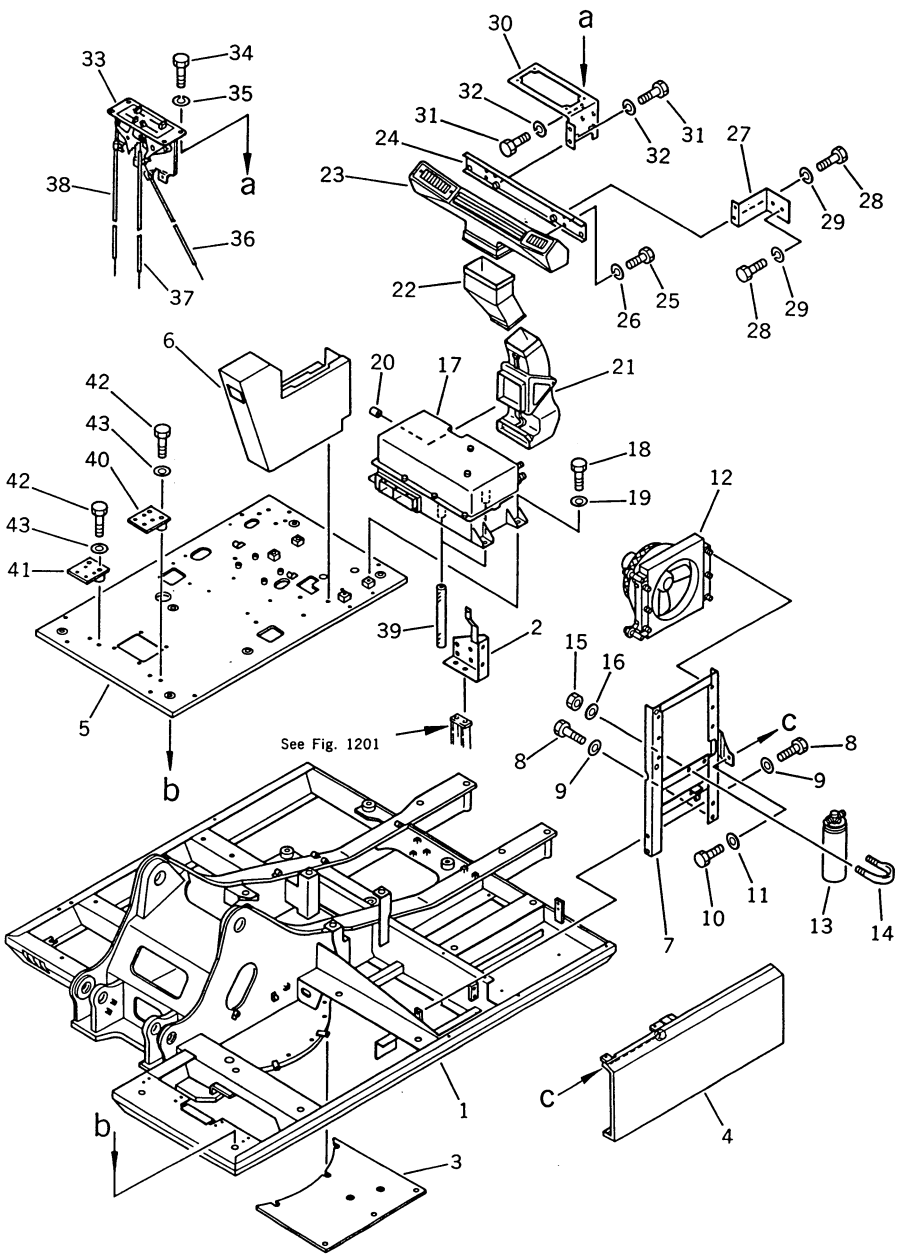

INDEX NO.	PART NO.	DESCRIPTION	Q'TY	SERIAL NO. PC150-3	SERIAL NO. PC150LC-3
1	21K-979-2190	FRAME	1	3001–	3001–
2	21K-979-2210	BRACKET	1	3001–	3001–
3	21K-979-2220	COVER	1	3001–	3001–
4	21K-979-2230	COVER	1	3001–	3001–
5	21K-979-2250	FRAME, FLOOR	1	3001–	3001–
6	21K-979-2270	BOX, L.H.	1	3001–	3001–
7	21K-979-2130	BRACKET	1	3001–	3001–
8	01010-51025	BOLT	4	3001–	3001–
9	01643-31032	WASHER	4	3001–	3001–
10	01010-51225	BOLT	1	3001–	3001–
11	01643-31232	WASHER	1	3001–	3001–
12	(205-979-6150)	CONDENSER ASS'Y (NIPPON DENSO PART NO. 047700-5870)	1	3001–	3001–
13	198-911-4610	RECEIVER, DRYER	1	3001–	3001–
14	205-979-1230	CLIP	1	3001–	3001–
15	01599-01011	NUT	2	3001–	3001–
16	01643-31032	WASHER	2	3001–	3001–
17	(205-979-6110)	COOLING UNIT (NIPPON DENSO PART NO. 145400-7030)	1	3001–	3001–
18	01010-51225	BOLT	4	3001–	3001–
19	01643-31232	WASHER	4	3001–	3001–
20	195-979-4160	BUSHING, CONTROL CABLE (NIPPON DENSO PART NO. 146625-0930)	3	3001–	3001–
21	205-979-6120	DUCT	1	3001–	3001–
22	205-979-6140	DUCT	1	3001–	3001–
23	205-979-6130	DUCT	1	3001–	3001–
24	205-979-6171	BRACKET	1	3001–	3001–
25	01010-50812	BOLT	4	3001–	3001–
26	01602-20825	WASHER, SPRING	4	3001–	3001–
27	205-979-1240	BRACKET	1	3001–	3001–
28	01010-50816	BOLT	4	3001–	3001–
29	01602-20825	WASHER, SPRING	4	3001–	3001–
30	205-979-1250	BRACKET	1	3001–	3001–
31	01010-50816	BOLT	6	3001–	3001–
32	01602-20825	WASHER, SPRING	6	3001–	3001–

FIG NO. 8906

INDEX NO.	PART NO.	DESCRIPTION	Q'TY	SERIAL NO. PC150-3	SERIAL NO. PC150LC-3
33	(205-979-6160)	CONTROL ASS'Y (NIPPON DENSO PART NO. 017710-3660)	1	3001 –	3001 –
34	01010-50816	BOLT	4	3001 –	3001 –
35	01602-20825	WASHER, SPRING	4	3001 –	3001 –
36	205-979-1150	CABLE, HEATER	1	3001 –	3001 –
37	205-979-1160	CABLE, COOLER	1	3001 –	3001 –
38	205-979-1170	CABLE, MODE	1	3001 –	3001 –
39	205-979-6350	HOSE, DRAIN	2	3001 –	3001 –
40	205-979-1310	BRACKET, L.H.	1	3001 –	3001 –
41	205-979-1320	BRACKET, R.H.	1	3001 –	3001 –
42	01010-51055	BOLT	4	3001 –	3001 –
43	01643-31032	BRACKET	4	3001 –	3001 –

FIG. 8907 COMPRESSOR RELATED PARTS (AIR CONDITIONER)

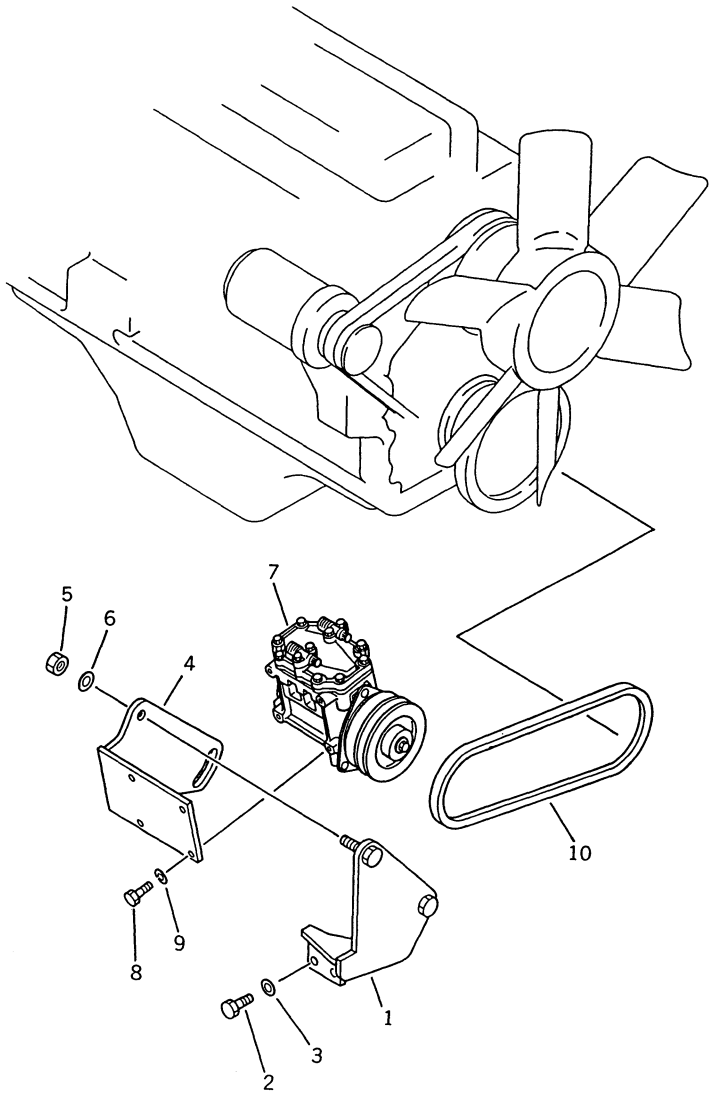

FIG NO. 8907

INDEX NO.	PART NO.	DESCRIPTION	Q'TY	SERIAL NO. PC150-3	SERIAL NO. PC150LC-3
1	21K-979-2110	BRACKET	1	3001–	3001–
2	01010-51230	BOLT	2	3001–	3001–
3	01643-31232	BOLT	2	3001–	3001–
4	21K-979-2120	BRACKET	1	3001–	3001–
5	01580-11210	NUT	2	3001–	3001–
6	01643-31232	WASHER	2	3001–	3001–
7	(198-911-4500)	COMPRESSOR ASS'Y (NIPPON DENSO PART NO. 047100-8370)	1	3001–	3001–
8	01010-50825	BOLT	4	3001–	3001–
9	01602-20825	WASHER, SPRING	4	3001–	3001–
10	04120-21746	V-BELT	1	3001–	3001–

FIG. 8909 ELECTRICAL SYSTEM (AIR CONDITIONER)

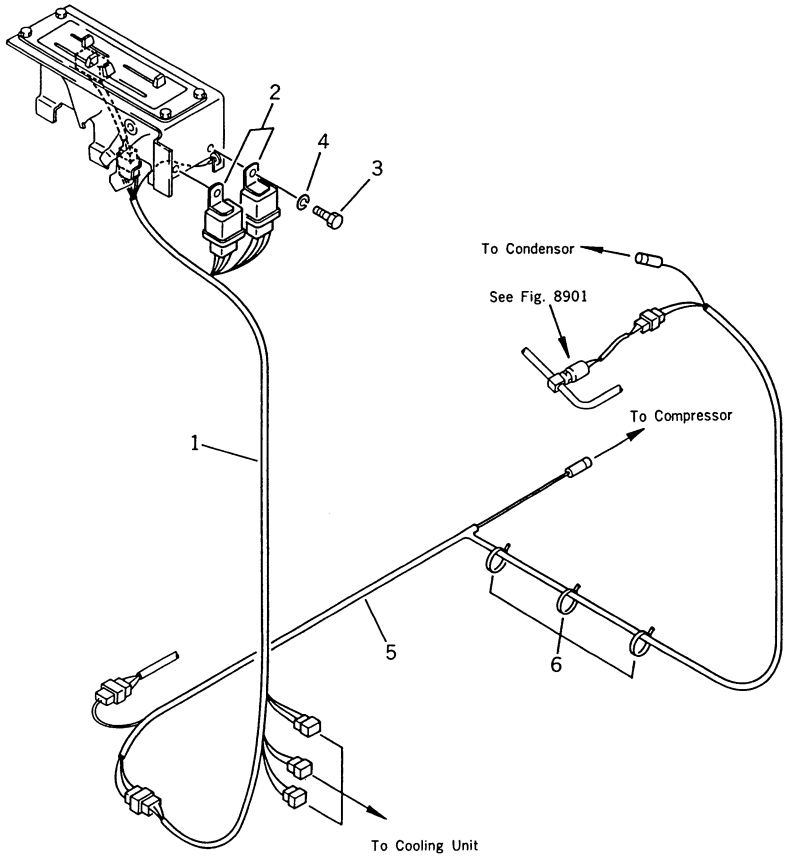

FIG NO. 8909

INDEX NO.	PART NO.	DESCRIPTION	Q'TY	SERIAL NO. PC150-3	SERIAL NO. PC150LC-3
1	205-979-1330	WIRE ASS'Y	1	3001–	3001–
2	205-979-6460	RELAY ASS'Y	2	3001–	3001–
3	01010-50816	BOLT	2	3001–	3001–
4	01602-20825	WASHER, SPRING	2	3001–	3001–
5	21K-979-2140	WIRE ASS'Y	1	3001–	3001–
6	08034-00519	BAND	3	3001–	3001–

FIG. 8911 COOLING UNIT (AIR CONDITIONER)

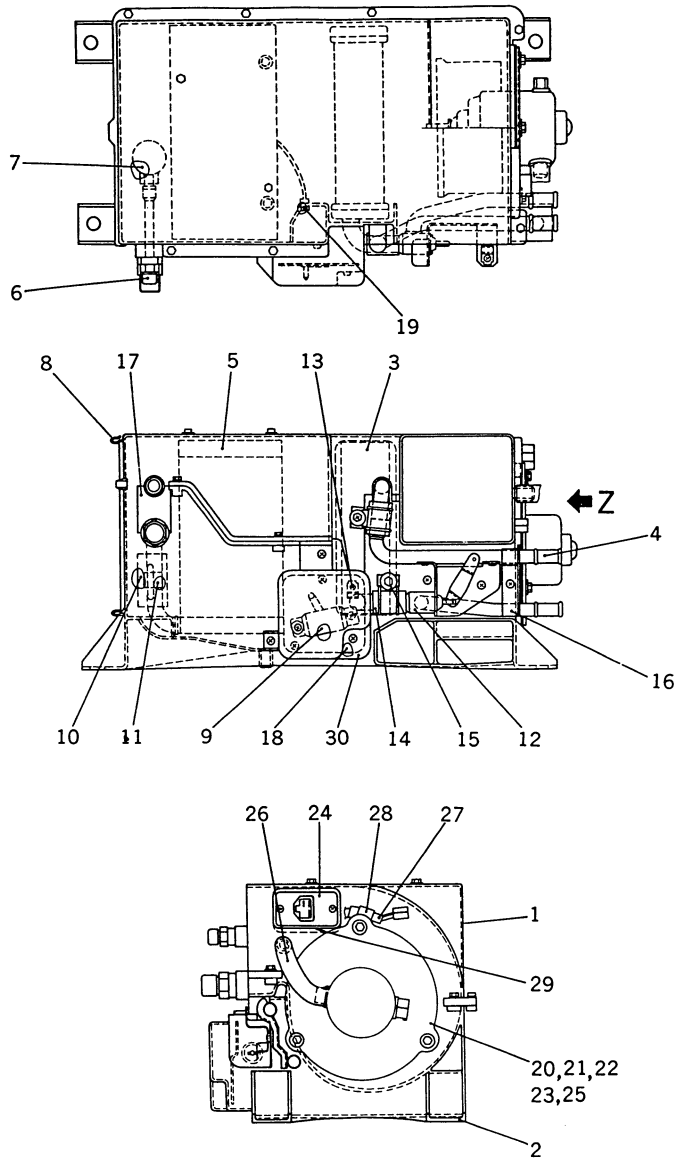

View Z

FIG NO. 8911

INDEX NO.	PART NO.	DESCRIPTION	Q'TY	SERIAL NO. PC150-3	SERIAL NO. PC150LC-3
	205-979-6110	COOLING UNIT (NIPPON DENSO PART NO. 145400-7030)	1	3001–	3001–
1	205-979-7010	• CASE ASS'Y (NIPPON DENSO PART NO. 145420-3230)	1	3001–	3001–
2	205-979-7020	• CASE ASS'Y (NIPPON DENSO PART NO. 145420-3240)	1	3001–	3001–
3	205-979-7030	• UNIT ASS'Y (NIPPON DENSO PART NO. 116410-3550)	1	3001–	3001–
4	205-979-7040	• PIPE (NIPPON DENSO PART NO. 116424-4930)	1	3001–	3001–
5	205-979-7050	• EVAPORATOR (NIPPON DENSO PART NO. 047600-3390)	1	3001–	3001–
6	205-979-7060	• TUBE (NIPPON DENSO PART NO. 246190-8590)	1	3001–	3001–
7	205-979-7070	• VALVE (NIPPON DENSO PART NO. 047500-0600)	1	3001–	3001–
8	205-979-7080	• FILLER (NIPPON DENSO PART NO. 145520-0091)	1	3001–	3001–
9	205-979-7090	• THERMOSTAT (NIPPON DENSO PART NO. 113550-0360)	1	3001–	3001–
10	205-979-7100	• PACKING (NIPPON DENSO PART NO. 146639-7250)	1	3001–	3001–
11	205-979-7110	• HOLDER (NIPPON DENSO PART NO. 145511-0070)	1	3001–	3001–
12	205-979-7120	• VALVE (NIPPON DENSO PART NO. 113600-4540)	1	3001–	3001–
13	205-979-7130	• CLAMP (NIPPON DENSO PART NO. 116563-0520)	1	3001–	3001–
14	205-979-7140	• HOSE (NIPPON DENSO PART NO. 7052-200350)	2	3001–	3001–
15	205-979-7150	• CLAMP (NIPPON DENSO PART NO. 016360-1060)	2	3001–	3001–
16	205-979-7160	• CLAMP (NIPPON DENSO PART NO. 246680-2690)	1	3001–	3001–

FIG NO. 8911

INDEX NO.	PART NO.	DESCRIPTION	Q'TY	SERIAL NO. PC150-3	SERIAL NO. PC150LC-3
17	205-979-7170	• PLATE (NIPPON DENSO PART NO. 146641-5120)	1	3001 –	3001 –
18	205-979-7180	• BRACKET (NIPPON DENSO PART NO. 246620-2240)	1	3001 –	3001 –
19	205-979-7190	• INSULATOR (NIPPON DENSO PART NO. 146212-4450)	1	3001 –	3001 –
20	205-979-7200	• FAN (NIPPON DENSO PART NO. 116221-0520)	1	3001 –	3001 –
21	205-979-7210	• NUT (NIPPON DENSO PART NO. 949056-2230)	1	3001 –	3001 –
22	205-979-7220	• WASHER (NIPPON DENSO PART NO. 949011-7650)	1	3001 –	3001 –
23	205-979-7230	• MOTOR ASS'Y (NIPPON DENSO PART NO. 162500-2590)	1	3001 –	3001 –
24	205-979-7240	• RESISTOR (NIPPON DENSO PART NO. 146820-2300)	1	3001 –	3001 –
25	205-979-7250	• PACKING (NIPPON DENSO PART NO. 146622-5070)	1	3001 –	3001 –
26	205-979-7260	• PIPE (NIPPON DENSO PART NO. 146651-1120)	1	3001 –	3001 –
27	205-979-7270	• WIRE (NIPPON DENSO PART NO. 146420-9200)	1	3001 –	3001 –
28	205-979-7280	• CLAMP (NIPPON DENSO PART NO. 146691-0730)	1	3001 –	3001 –
29	205-979-7290	• PLATE (NIPPON DENSO PART NO. 116621-3330)	1	3001 –	3001 –
30	205-979-7300	• COVER (NIPPON DENSO PART NO. 146371-4610)	1	3001 –	3001 –

FIG. 8913 CONDENSER UNIT (AIR CONDITIONER)

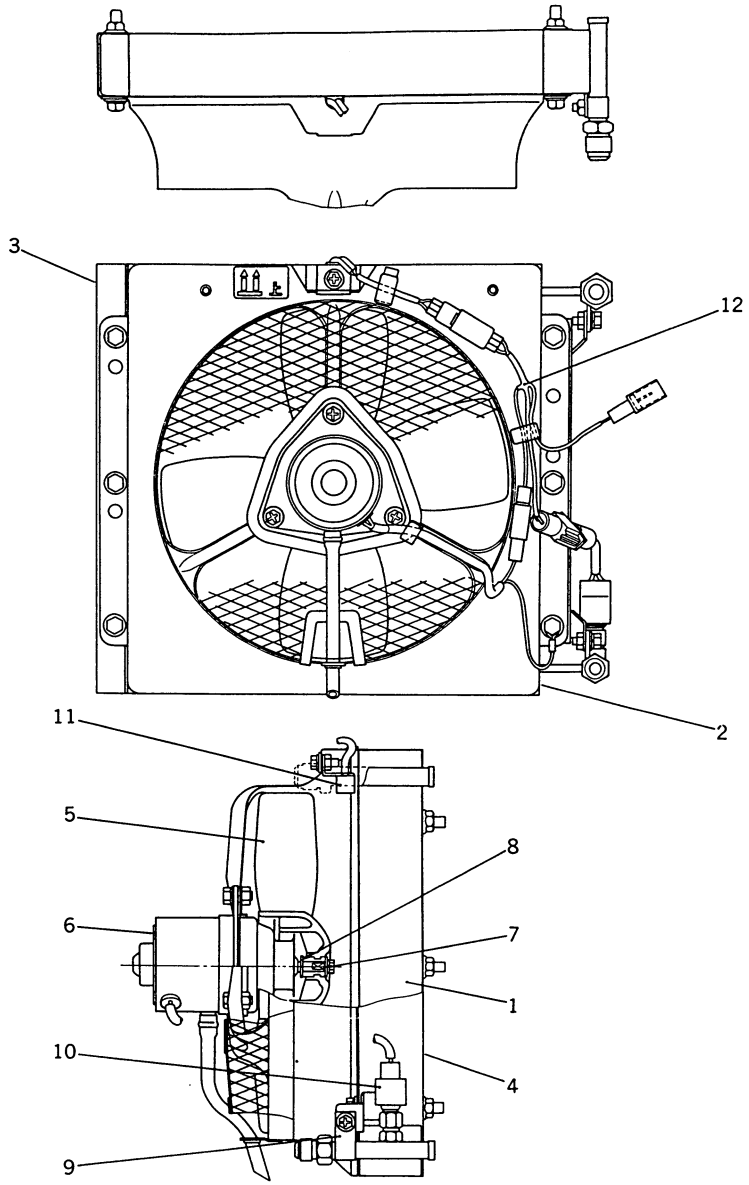

INDEX NO.	PART NO.	DESCRIPTION	Q'TY	SERIAL NO. PC150-3	SERIAL NO. PC150LC-3
	205-979-6150	CONDENSER ASS'Y (NIPPON DENSO PART NO. 047700-5870)	1	3001 –	3001 –
1	205-979-7550	• CORE (NIPPON DENSO PART NO. 047710-3130)	1	3001 –	3001 –
2	205-979-7560	• SHROUD (NIPPON DENSO PART NO. 146240-2032)	1	3001 –	3001 –
3	205-979-7570	• BRACKET (NIPPON DENSO PART NO. 047741-1320)	1	3001 –	3001 –
4	205-979-7580	• BRACKET (NIPPON DENSO PART NO. 047740-5110)	1	3001 –	3001 –
5	205-979-7590	• FAN ASS'Y (NIPPON DENSO PART NO. 022770-0211)	1	3001 –	3001 –
6	205-979-7600	• MOTOR ASS'Y (NIPPON DENSO PART NO. 162500-2030)	1	3001 –	3001 –
7	205-979-7610	• NUT (NIPPON DENSO PART NO. 949056-2230)	1	3001 –	3001 –
8	205-979-7620	• WASHER (NIPPON DENSO PART NO. 949011-3040)	1	3001 –	3001 –
9	205-979-7630	• CLAMP (NIPPON DENSO PART NO. 146680-9090)	2	3001 –	3001 –
10	205-979-7640	• SWITCH (NIPPON DENSO PART NO. 113440-0150)	1	3001 –	3001 –
11	205-979-7650	• RESISTOR (NIPPON DENSO PART NO. 146810-1470)	1	3001 –	3001 –
12	205-979-7660	• HARNESS ASS'Y (NIPPON DENSO PART NO. 146410-7530)	1	3001 –	3001 –

FIG. 8915 FREON GAS COMPRESSOR (AIR CONDITIONER)

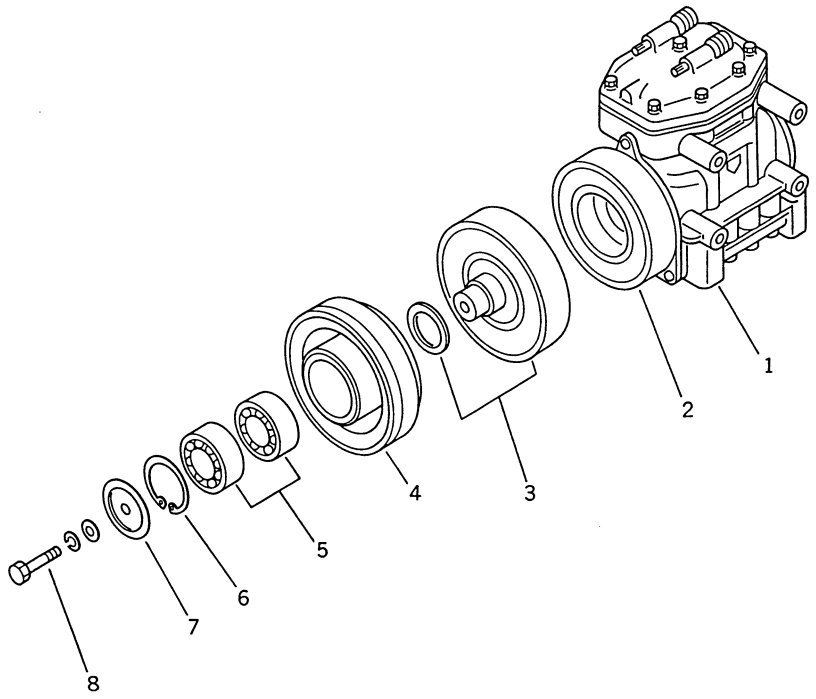

FIG NO. 8915

INDEX NO.	PART NO.	DESCRIPTION	Q'TY	SERIAL NO. PC150-3	SERIAL NO. PC150LC-3
	198-911-4500	COMPRESSOR ASS'Y, PULLEY 130 (NIPPON DENSO PART NO. 047100-8370)	1	3001–	3001–
1	198-911-4740	• COMPRESSOR	1	3001–	3001–
2	145-Z79-6210	• CLUTCH ASS'Y	1	3001–	3001–
2	145-Z79-6220	•• STARTER	1	3001–	3001–
3	145-Z79-6230	•• ROTOR SUB ASS'Y	1	3001–	3001–
4	145-Z79-6260	••• PULLEY SUB ASS'Y	1	3001–	3001–
5	145-Z79-6190	•••• BEARING	2	3001–	3001–
6	04065-05520	•••• RING, SNAP	1	3001–	3001–
7	145-Z79-6240	•• PLATE	1	3001–	3001–
8	145-Z79-6250	•• BOLT	1	3001–	3001–

FIG. 8917 CONTROL UNIT (AIR CONDITIONER)

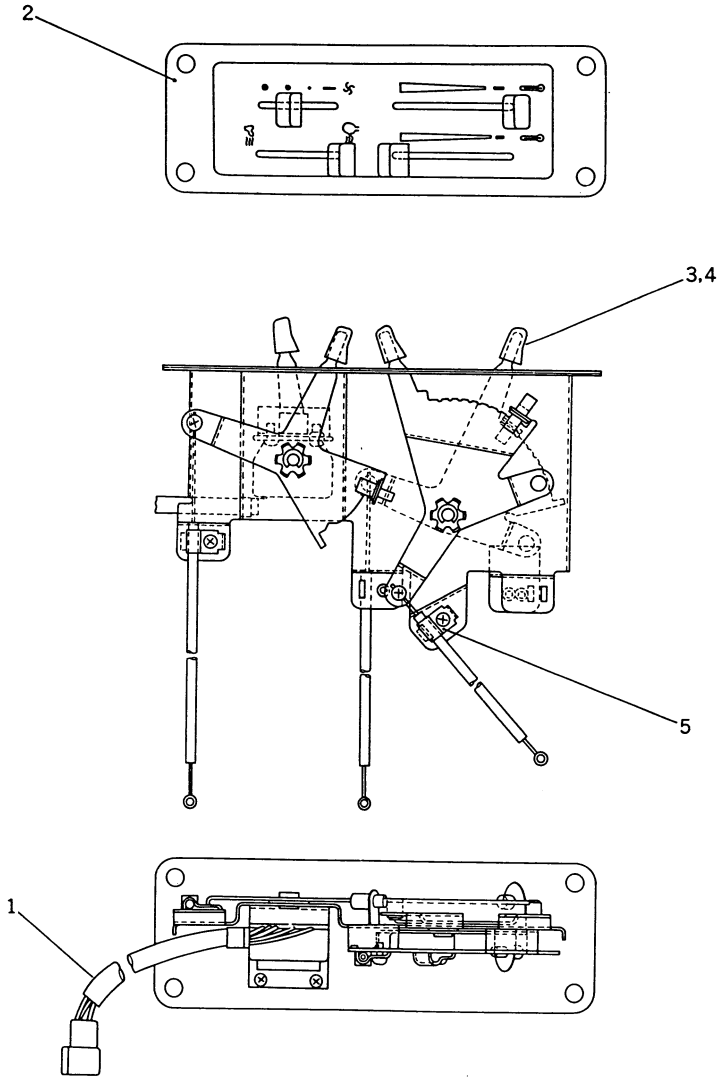

FIG NO. 8917

INDEX NO.	PART NO.	DESCRIPTION	Q'TY	SERIAL NO. PC150-3	SERIAL NO. PC150LC-3
	205-979-6160	CONTROL ASS'Y (NIPPON DENSO PART NO. 017710-3660)	1	3001–	3001–
1	205-979-7700	• SWITCH (NIPPON DENSO PART NO. 054000-5390)	1	3001–	3001–
2	205-979-7710	• ORNAMENT (NIPPON DENSO PART NO. 146741-2430)	1	3001–	3001–
3	205-979-7720	• KNOB (NIPPON DENSO PART NO. 017771-0260)	4	3001–	3001–
4	205-979-7730	• CLIP (NIPPON DENSO PART NO. 017773-0040)	4	3001–	3001–
5	205-979-7740	• CLAMP (NIPPON DENSO PART NO. 116563-0520)	3	3001–	3001–

FIG. 8951 CAR COOLER PIPING (1/2) (FOR LONG LEVER CONTROL)

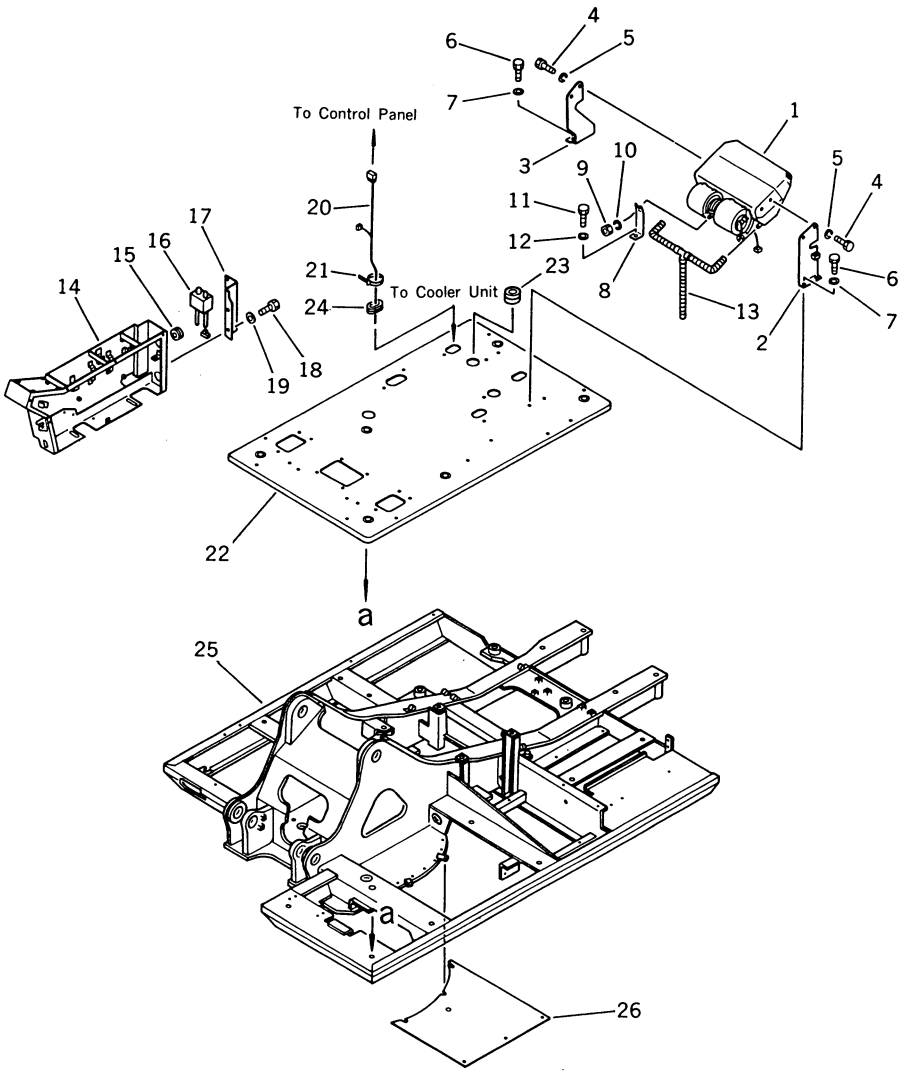

FIG NO. 8951

INDEX NO.	PART NO.	DESCRIPTION	Q'TY	SERIAL NO. PC150-3	SERIAL NO. PC150LC-3
1	(205-981-5110)	COOLING UNIT (DIESEL KIKI PART NO. 509623-4180)	1	3001–	3001–
2	203-978-4211	PLATE, L.H.	1	3001–	3001–
3	203-978-4191	PLATE, R.H.	1	3001–	3001–
4	01010-50825	BOLT	4	3001–	3001–
5	01602-20825	WASHER, SPRING	4	3001–	3001–
6	01010-51225	BOLT	4	3001–	3001–
7	01643-31232	WASHER	4	3001–	3001–
8	203-978-4121	PLATE	1	3001–	3001–
9	01580-10806	NUT	1	3001–	3001–
10	01602-20825	WASHER, SPRING	1	3001–	3001–
11	01010-51225	BOLT	1	3001–	3001–
12	01643-31232	WASHER	1	3001–	3001–
13	203-978-4380	HOSE, DRAIN (MODIFIED FROM 205-981-5170)	1	3001–	3001–
14	21K-978-2180	BOX, R.H. (MODIFIED FROM 21K-54-25170)	1	3001–	3001–
15	08037-03614	GROMMET	1	3001–	3001–
16	(205-981-5150)	PANEL ASS'Y (DIESEL KIKI PART NO. 509634-9700)	1	3001–	3001–
17	203-978-4271	BRACKET	1	3001–	3001–
18	01010-50812	BOLT	2	3001–	3001–
19	01643-30823	WASHER	2	3001–	3001–
20	203-978-4261	WIRE ASS'Y	1	3001–	3001–
21	08034-00519	BAND	1	3001–	3001–
22	21K-978-2170	FRAME, FLOOR (MODIFIED FROM 21K-54-25511)	1	3001–	3001–
23	08037-03614	GROMMET	1	3001–	3001–
24	176-911-4160	GROMMET	1	3001–	3001–
25	21K-978-2190	FRAME (MODIFIED FROM 21K-46-21110)	1	3001–	3001–
26	21K-978-2110	COVER	1	3001–	3001–

FIG. 8953 CAR COOLER PIPING (1/2) (FOR WRIST CONTROL)

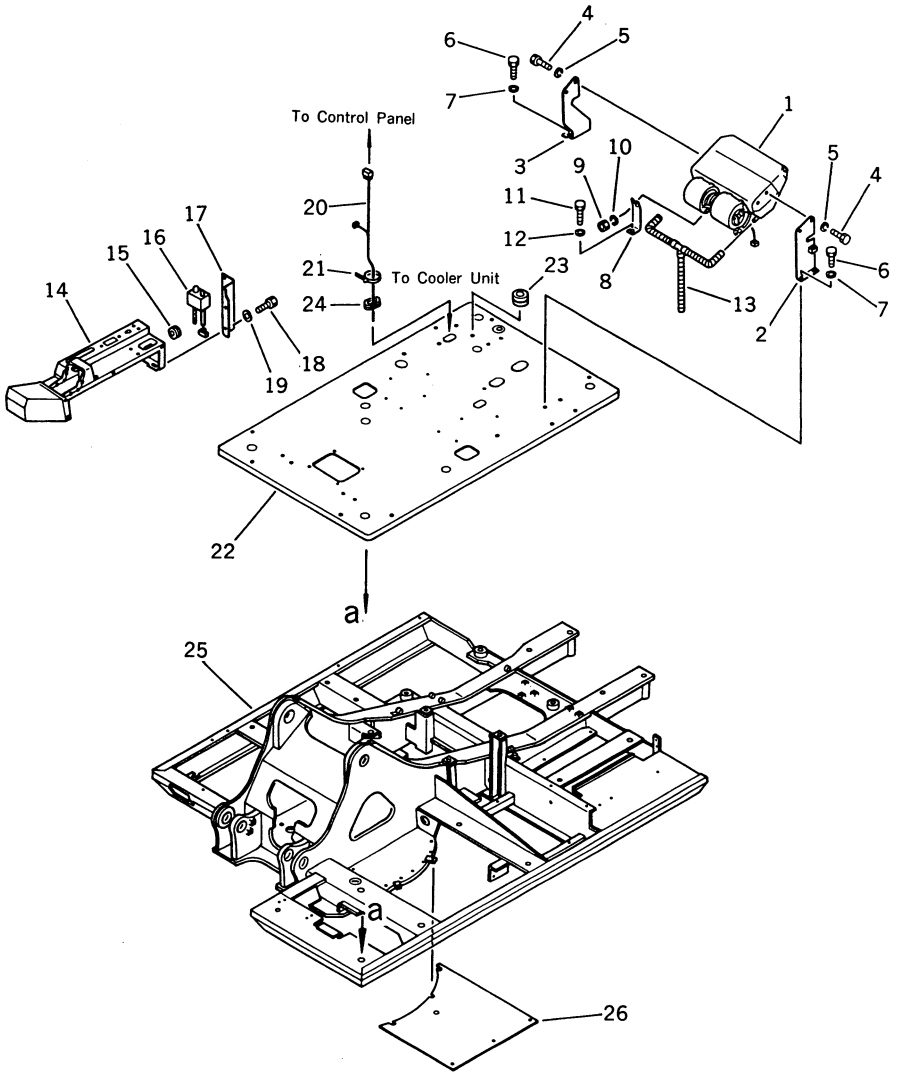

FIG NO. 8953

INDEX NO.	PART NO.	DESCRIPTION	Q'TY	SERIAL NO. PC150-3	SERIAL NO. PC150LC-3
1	(205-981-5110)	COOLING UNIT (DIESEL KIKI PART NO. 509623-4180)	1	3001–	3001–
2	203-978-4211	PLATE, L.H.	1	3001–	3001–
3	203-978-4191	PLATE, R.H.	1	3001–	3001–
4	01010-50825	BOLT	4	3001–	3001–
5	01602-20825	WASHER, SPRING	4	3001–	3001–
6	01010-51225	BOLT	4	3001–	3001–
7	01643-31232	WASHER	4	3001–	3001–
8	203-978-4121	PLATE	1	3001–	3001–
9	01580-10806	NUT	1	3001–	3001–
10	01602-20825	WASHER, SPRING	1	3001–	3001–
11	01010-51225	BOLT	1	3001–	3001–
12	01643-31232	WASHER	1	3001–	3001–
13	203-978-4380	HOSE, DRAIN (MODIFIED FROM 205-981-5170)	1	3001–	3001–
14	203-978-4311	BOX, R.H. (MODIFIED FROM 203-54-41122)	1	3001–	3001–
15	08037-03614	GROMMET	1	3001–	3001–
16	(205-981-5150)	PANEL ASS'Y (DIESEL KIKI PART NO. 509634-9700)	1	3001–	3001–
17	203-978-4271	BRACKET	1	3001–	3001–
18	01010-50812	BOLT	2	3001–	3001–
19	01643-30823	WASHER	2	3001–	3001–
20	203-978-4261	WIRE ASS'Y	1	3001–	3001–
21	08034-00519	BAND	1	3001–	3001–
22	21K-978-2210	FRAME, FLOOR (MODIFIED FROM 21K-54-25511)	1	3001–	3001–
23	08037-03614	GROMMET	1	3001–	3001–
24	176-911-4160	GROMMET	1	3001–	3001–
25	21K-978-2190	FRAME (MODIFIED FROM 21K-46-21110)	1	3001–	3001–
26	21K-978-2110	COVER	1	3001–	3001–

FIG. 8955 CAR COOLER PIPING (2/2)

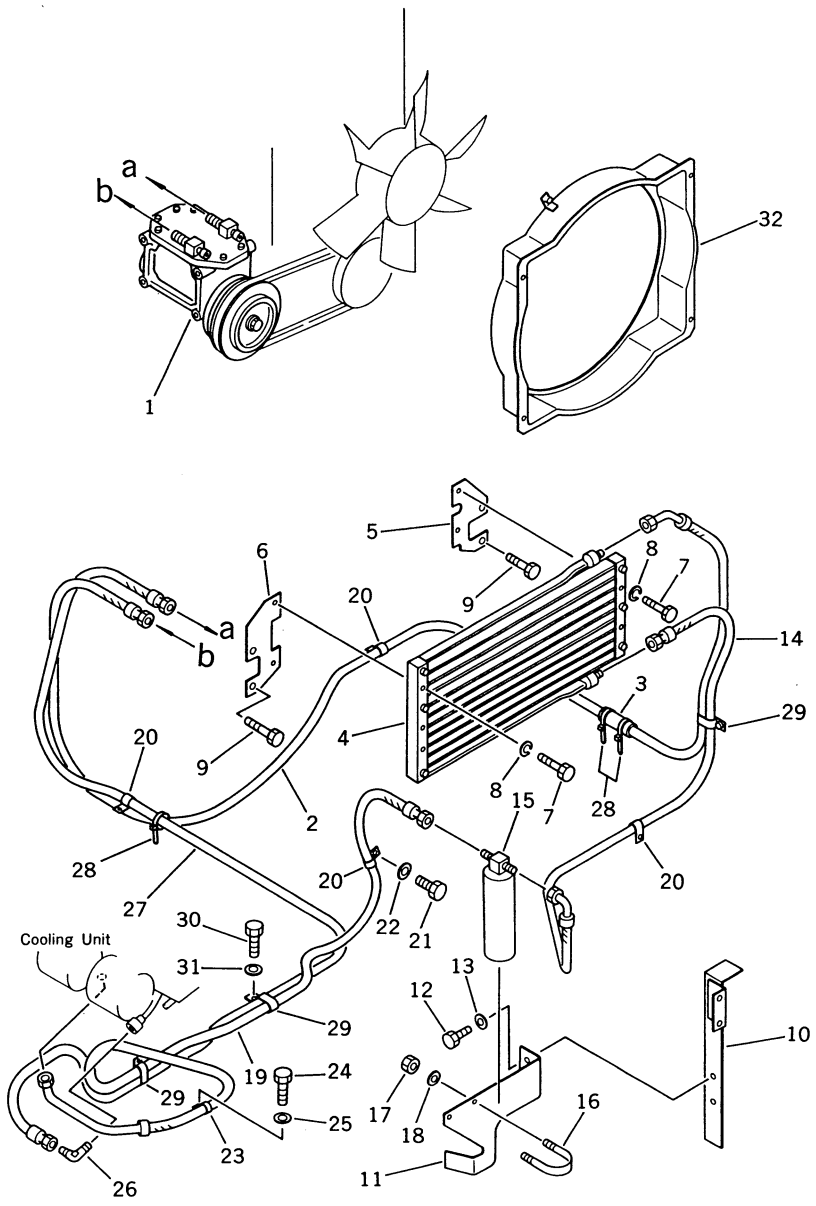

INDEX NO.	PART NO.	DESCRIPTION	Q'TY	SERIAL NO. PC150-3	SERIAL NO. PC150LC-3
1	(205-981-5130)	COMPRESSOR ASS'Y (DIESEL KIKI PART NO. 509615-2460)	1	3001–	3001–
2	09488-20627	HOSE	1	3001–	3001–
3	203-04-31230	COVER	1	3001–	3001–
4	203-978-4340	CONDENSER ASS'Y (DIESEL KIKI PART NO. 509631-6950)	1	3001–	3001–
5	203-978-2120	BRACKET, L.H.	1	3001–	3001–
6	203-978-2130	BRACKET, R.H.	1	3001–	3001–
7	01010-50640	BOLT	5	3001–	3001–
8	01602-00619	WASHER, SPRING	5	3001–	3001–
9	01010-51030	BOLT	4	3001–	3001–
10	21K-978-2140	BRACKET, L.H. (MODIFIED FROM 21K-03-21560)	1	3001–	3001–
11	21K-978-2150	BRACKET, R.H.	1	3001–	3001–
12	01010-51025	BOLT	2	3001–	3001–
13	01643-31032	WASHER	2	3001–	3001–
14	09488-20626	HOSE	1	3001–	3001–
15	566-07-11240	RECEIVER DRYER ASS'Y	1	3001–	3001–
16	07283-26155	CLIP	1	3001–	3001–
17	01599-01011	NUT	2	3001–	3001–
18	01643-31032	WASHER	2	3001–	3001–
19	09488-20517	HOSE	1	3001–	3001–
20	08036-02514	CLIP	4	3001–	3001–
21	01010-51020	BOLT	4	3001–	3001–
22	01643-31032	WASHER	4	3001–	3001–
23	08036-02514	CLIP	1	3001–	3001–
24	01010-51020	BOLT	1	3001–	3001–
25	01643-31032	WASHER	1	3001–	3001–
26	205-981-5250	ELBOW	1	3001–	3001–
27	09488-20522	HOSE	1	3001–	3001–
28	08034-00519	BAND	3	3001–	3001–
29	176-911-4170	CLIP	3	3001–	3001–
30	01010-51020	BOLT	3	3001–	3001–
31	01643-31032	WASHER	3	3001–	3001–

FIG NO. 8955

INDEX NO.	PART NO.	DESCRIPTION	Q'TY	SERIAL NO. PC150-3	SERIAL NO. PC150LC-3
32	203-978-4350	SHROUD ..... (MODIFIED FROM 203-03-41131)	1	3001 –	3001 –

FIG. 8957 CAR COOLER RELATED PARTS

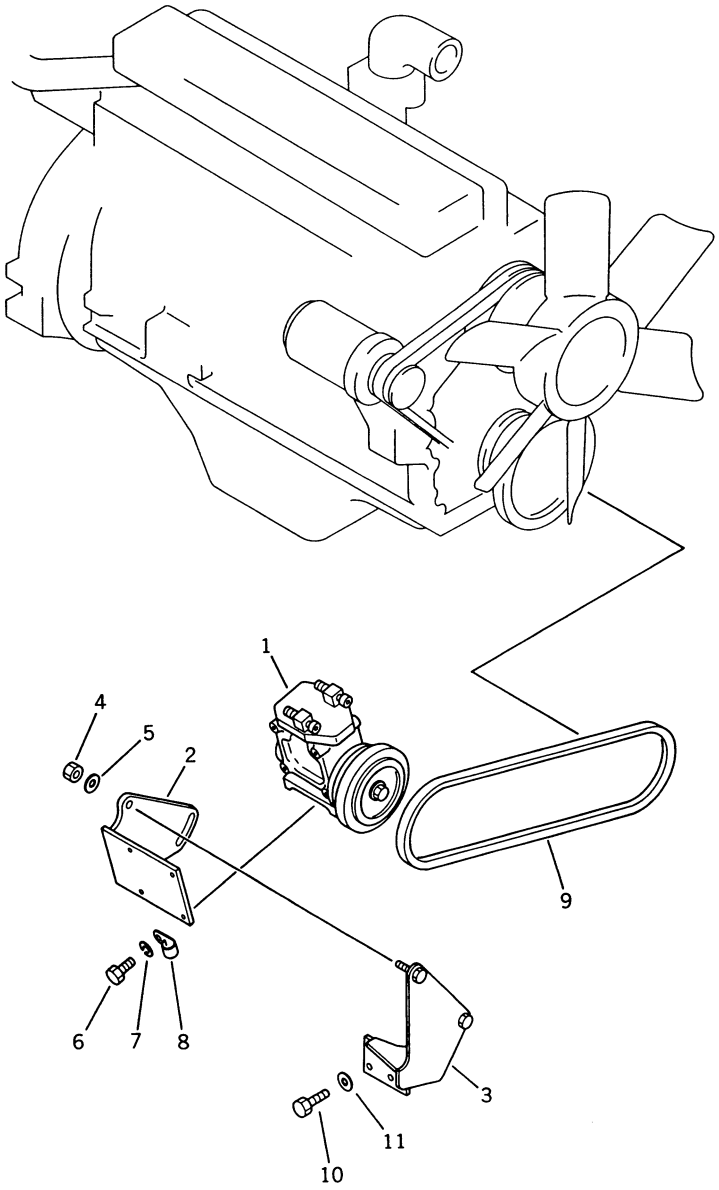

FIG NO. 8957

INDEX NO.	PART NO.	DESCRIPTION	Q'TY	SERIAL NO. PC150-3	SERIAL NO. PC150LC-3
1	(205-981-5130)	COMPRESSOR ASS'Y (DIESEL KIKI PART NO. 509615-2460)	1	3001–	3001–
2	203-978-4221	BRACKET	1	3001–	3001–
3	21K-978-2160	BRACKET	1	3001–	3001–
4	01580-11210	NUT	2	3001–	3001–
5	01643-31232	WASHER	2	3001–	3001–
6	01010-50825	BOLT	4	3001–	3001–
7	01602-20825	WASHER, SPRING	4	3001–	3001–
8	08036-10614	CLIP	1	3001–	3001–
9	04120-21746	V-VELT	1	3001–	3001–
10	01010-51235	BOLT	2	3001–	3001–
11	01643-31232	WASHER	2	3001–	3001–

OPTIONAL PARTS, MARK PLATE, TOOL AND KIT

CONTENTS

	FIG NO.	PAGE
INSTRUMENT PANEL (TBG SPEC.)	9001	522
ELECTRICAL SYSTEM (1/2) (TBG SPEC.)	9003	526
ELECTRICAL SYSTEM (2/2) (TBG SPEC.)	9004	528
TRACK FRAME (TBG SPEC.)	9006	530
WORK EQUIPMENT CONTROL LEVER (TBG SPEC.)	9008	532
TRAVEL CONTROL LEVER AND PEDAL (TBG SPEC.)	9010	534
REVOLVING FRAME (TBG SPEC.)	9012	538
MACHINERY COMPARTMENT (1/3) (TBG SPEC.)	9014	540
MACHINERY COMPARTMENT (2/3) (TBG SPEC.)	9015	544
MACHINERY COMPARTMENT (3/3) (TBG SPEC.)	9016	546
OPERATOR'S CAB (1/6) (TBG SPEC.)	9018	548
OPERATOR'S CAB (2/6) (TBG SPEC.)	9019	552
OPERATOR'S CAB (3/6) (TBG SPEC.)	9020	554
OPERATOR'S CAB (4/6) (TBG SPEC.)	9021	556
OPERATOR'S CAB (5/6) (TBG SPEC.)	9022	558
OPERATOR'S CAB (6/6) (TBG SPEC.)	9023	562
OPERATOR'S CAB, FLOOR FRAME (TBG SPEC.)	9025	566
OPERATOR'S SEAT (TBG SPEC.)	9027	570
HYDRAULIC OIL AND FUEL TANK (TBG SPEC.)	9029	572
BOOM (TBG SPEC.)	9031	576
OVER LOAD WARNING DEVICE (TBG SPEC.)	9033	578
MARKS AND PLATES (GERMAN-ENGLISH) (TBG SPEC.)	9035	580
MARKS AND PLATES (FOR LONG LEVER CONTROL) (ENGLISH) (EXCEPT JAPAN)	9902	588
MARKS AND PLATES (FOR WRIST CONTROL) (ENGLISH) (EXCEPT JAPAN)	9922	596
TOOL	9991	600

9

FIG. 9001 INSTRUMENT PANEL (TBG SPEC.)

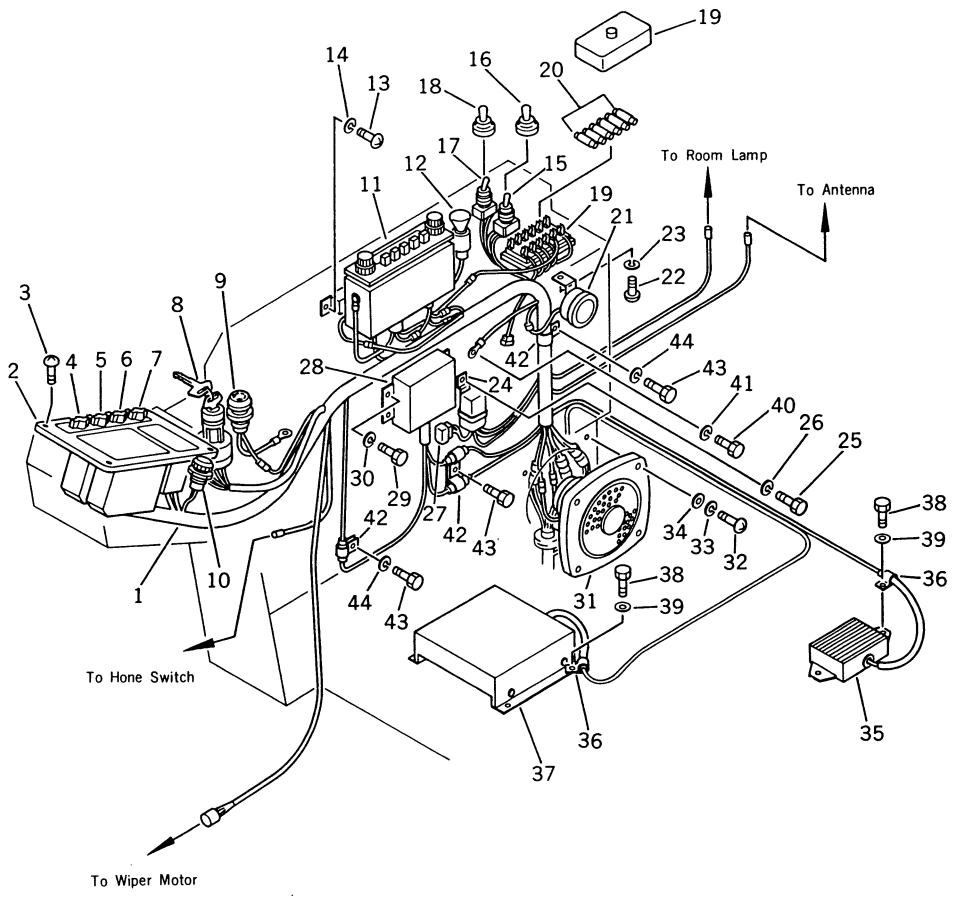

INDEX NO.	PART NO.	DESCRIPTION	Q'TY	SERIAL NO. PC150-3	SERIAL NO. PC150LC-3
1	203-06-41750	WIRE ASS'Y	1	3001–	3001–
2	(7861-21-1100)	PANEL ASS'Y	1	3001–	3001–
3	01220-40616	SCREW	4	3001–	3001–
4	205-06-71311	SWITCH, MODE	1	3001–	3001–
5	205-06-71321	SWITCH, HEATER	1	3001–	3001–
6	205-06-71331	SWITCH, LAMP	1	3001–	3001–
7	205-06-71341	SWITCH, WIPER	1	3001–	3001–
8	201-06-21510	SWITCH, STARTING	1	3001–	3001–
9	203-06-41810	LAMP	1	3001–	3001–
9	08111-02430	• BULB, 3W	1	3001–	3001–
10	08147-22400	LAMP	1	3001–	3001–
10	08111-02430	• BULB, 3W	1	3001–	3001–
11	20G-06-15110	RADIO	1	3001–	3001–
12	195-822-6151	LIGHTER	1	3001–	3001–
13	01220-40412	SCREW	2	3001–	3001–
14	01601-20410	WASHER, SPRING	2	3001–	3001–
15	203-06-41570	SWITCH, AUTO DECELERATION	1	3001–	3001–
16	203-06-41610	CAP	1	3001–	3001–
17	203-06-41570	SWITCH, PARKING BRAKE	1	3001–	3001–
18	203-06-41680	CAP	1	3001–	3001–
19	203-06-41540	BOX, FUSE	1	3001–	3001–
20	08040-04000	FUSE, 40A	1	3001–	3001–
20	08040-03000	FUSE, 30A	1	3001–	3001–
20	08040-02000	FUSE, 20A	1	3001–	3001–
20	08040-01000	FUSE, 10A	3	3001–	3001–
21	175-06-51210	BUZZER	1	3001–	3001–
22	01220-50612	SCREW	1	3001–	3001–
23	01602-20619	WASHER, SPRING	1	3001–	3001–
24	22W-06-13450	RELAY ASS'Y	1	3001–	3001–
25	01010-50612	BOLT	1	3001–	3001–
26	01602-20619	WASHER, SPRING	1	3001–	3001–
27	22W-06-13590	DIODE	2	3001–	3001–
28	7861-01-3000	CONTROLLER	1	3001–	3001–
29	01010-50612	BOLT	4	3001–	3001–
30	01602-20619	WASHER, SPRING	4	3001–	3001–

FIG NO. 9001

INDEX NO.	PART NO.	DESCRIPTION	Q'TY	SERIAL NO. PC150-3	SERIAL NO. PC150LC-3
31	20G-06-15120	SPEAKER	1	3001–	3001–
32	01220-40420	SCREW	4	3001–	3001–
33	01601-20410	WASHER, SPRING	4	3001–	3001–
34	01641-20405	WASHER	4	3001–	3001–
35	203-06-41790	RESISTOR	1	3001–	3001–
36	08036-01814	CLIP	2	3001–	3001–
37	203-06-41281	CONTROL BOX ASS'Y	1	3001–	3001–
38	01010-50816	BOLT	6	3001–	3001–
39	01643-30823	WASHER	6	3001–	3001–
40	01010-50610	BOLT	1	3001–	3001–
41	01602-20619	WASHER, SPRING	1	3001–	3001–
42	08036-01814	CLIP	4	3001–	3001–
43	01010-51016	BOLT	3	3001–	3001–
44	01602-21030	WASHER, SPRING	2	3001–	3001–

FIG. 9003 ELECTRICAL SYSTEM (1/2) (TBG SPEC.)

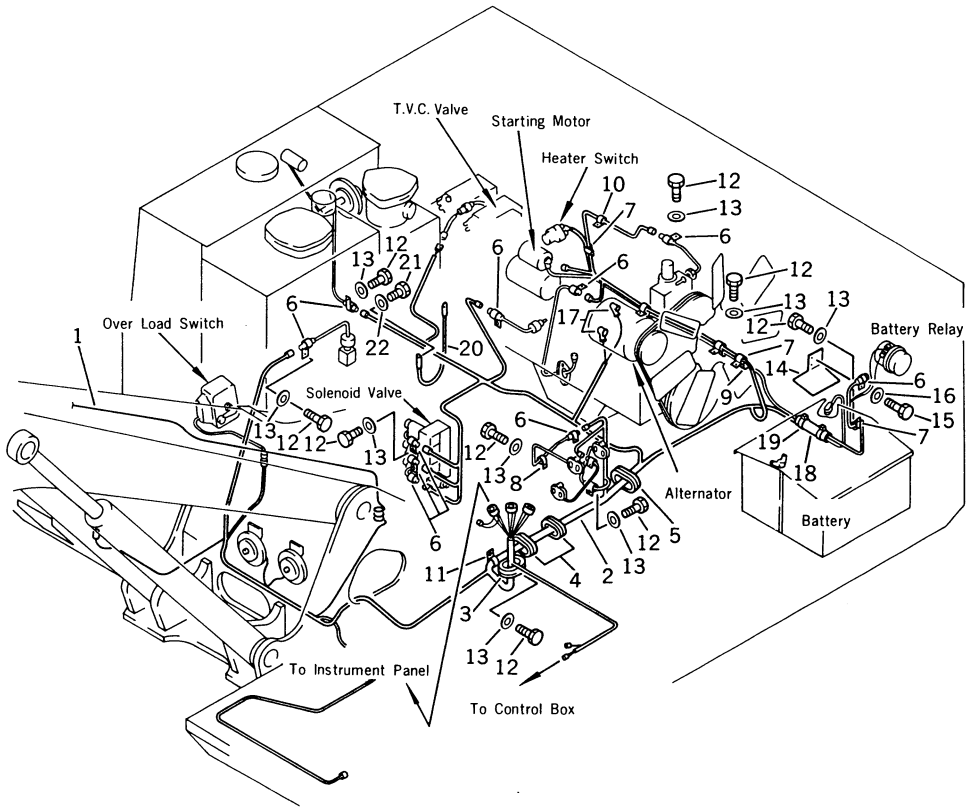

FIG NO. 9003

INDEX NO.	PART NO.	DESCRIPTION	Q'TY	SERIAL NO. PC150-3	SERIAL NO. PC150LC-3
1	22W-06-12381	WORK LAMP ASS'Y	3	3001–	3001–
2	203-06-41130	BRACKET	1	3001–	3001–
3	01010-51430	BOLT	1	3001–	3001–
4	01643-31445	WASHER	1	3001–	3001–
5	08160-52400	HORN	2	3001–	3001–
6	01010-50816	BOLT	4	3001–	3001–
7	01602-20825	WASHER, SPRING	4	3001–	3001–
8	7861-99-4700	SENSOR, FUEL	1	3001–	3001–
9	07000-02085	O-RING	1	3001–	3001–
10	01010-51025	BOLT	4	3001–	3001–
11	01643-31032	WASHER	4	3001–	3001–
12	7861-99-4500	SENSOR, HYDRAULIC OIL	1	3001–	3001–
13	07002-23634	O-RING	1	3001–	3001–
14	22W-06-15860	SWITCH	3	3001–	3001–
15	01010-51035	BOLT	6	3001–	3001–
16	01643-31032	WASHER	6	3001–	3001–
17	7861-99-1300	SENSOR, OIL PRESSURE	1	3001–	3001–
18	203-06-41160	SENSOR, ENGINE OIL LEVEL	1	3001–	3001–
19	07000-63050	O-RING	1	3001–	3001–
20	01010-50816	BOLT	2	3001–	3001–
21	01602-20825	WASHER, SPRING	2	3001–	3001–
22	7861-99-3300	SENSOR, WATER TEMPERATURE	1	3001–	3001–

FIG. 9004 ELECTRICAL SYSTEM (2/2) (TBG SPEC.)

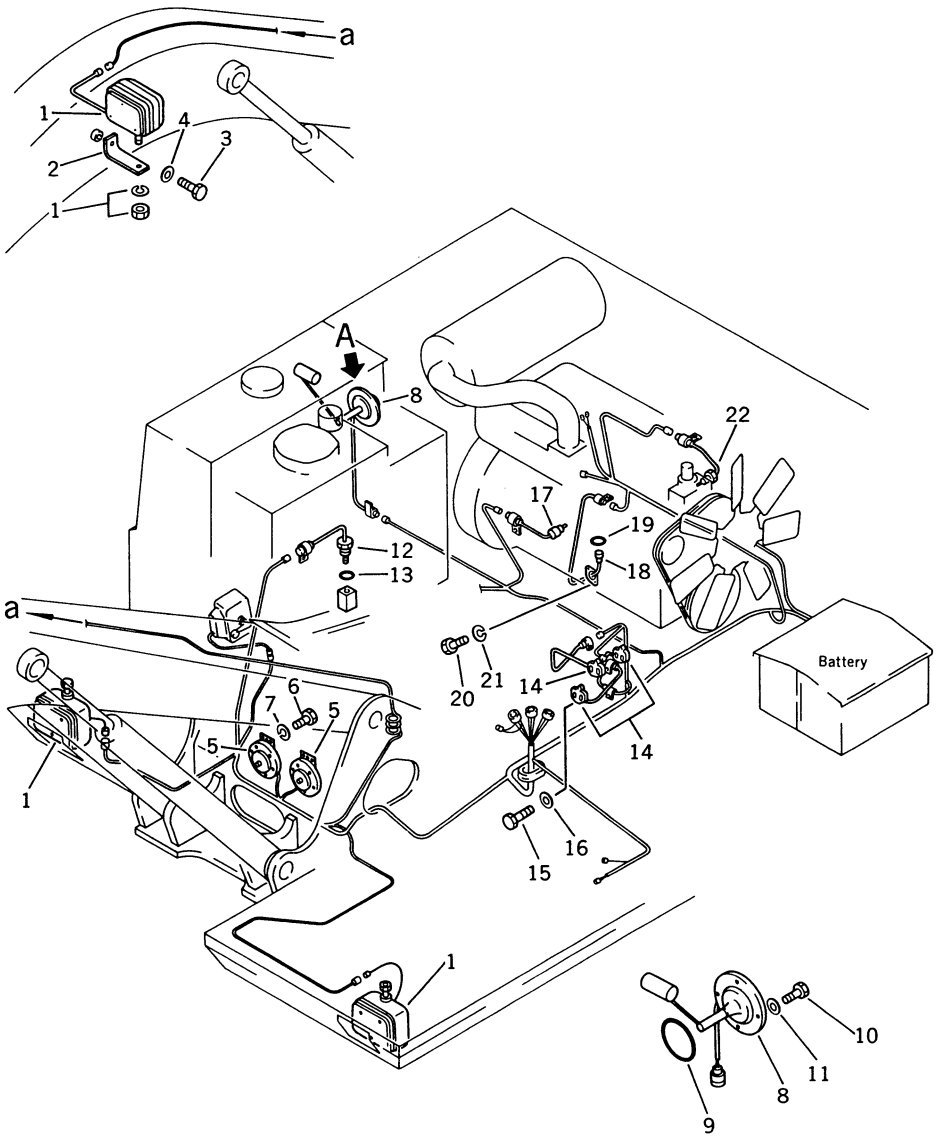

Detail A

FIG NO. 9004

INDEX NO.	PART NO.	DESCRIPTION	Q'TY	SERIAL NO. PC150-3	SERIAL NO. PC150LC-3
1	21K-06-21120	WIRE	1	3001–	3001–
2	21K-06-24510	WIRE ASS'Y	1	3001–	3001–
3	176-911-4160	GROMMET	1	3001–	3001–
4	203-06-41550	GROMMET	2	3001–	3001–
5	150-952-7160	GROMMET	1	3001–	3001–
6	08036-01814	CLIP	12	3001–	3001–
7	08036-01414	CLIP	5	3001–	3001–
8	08036-10814	CLIP	1	3001–	3001–
9	08036-11214	CLIP	3	3001–	3001–
10	08036-10614	CLIP	1	3001–	3001–
11	08036-03014	CLIP	1	3001–	3001–
12	01010-51020	BOLT	16	3001–	3001–
13	01643-31032	WASHER	16	3001–	3001–
14	21K-06-21130	PLATE	1	3001–	3001–
15	01010-51020	BOLT	2	3001–	3001–
16	01643-31032	WASHER	2	3001–	3001–
17	08038-00519	CAP	4	3001–	3001–
18	203-04-31230	COVER	1	3001–	3001–
19	08038-00519	BAND	2	3001–	3001–
20	08028-12025	WIRE	1	3001–	3001–
21	01010-51016	BOLT	1	3001–	3001–
22	01643-31032	WASHER	1	3001–	3001–

FIG. 9006 TRACK FRAME (TBG SPEC.)

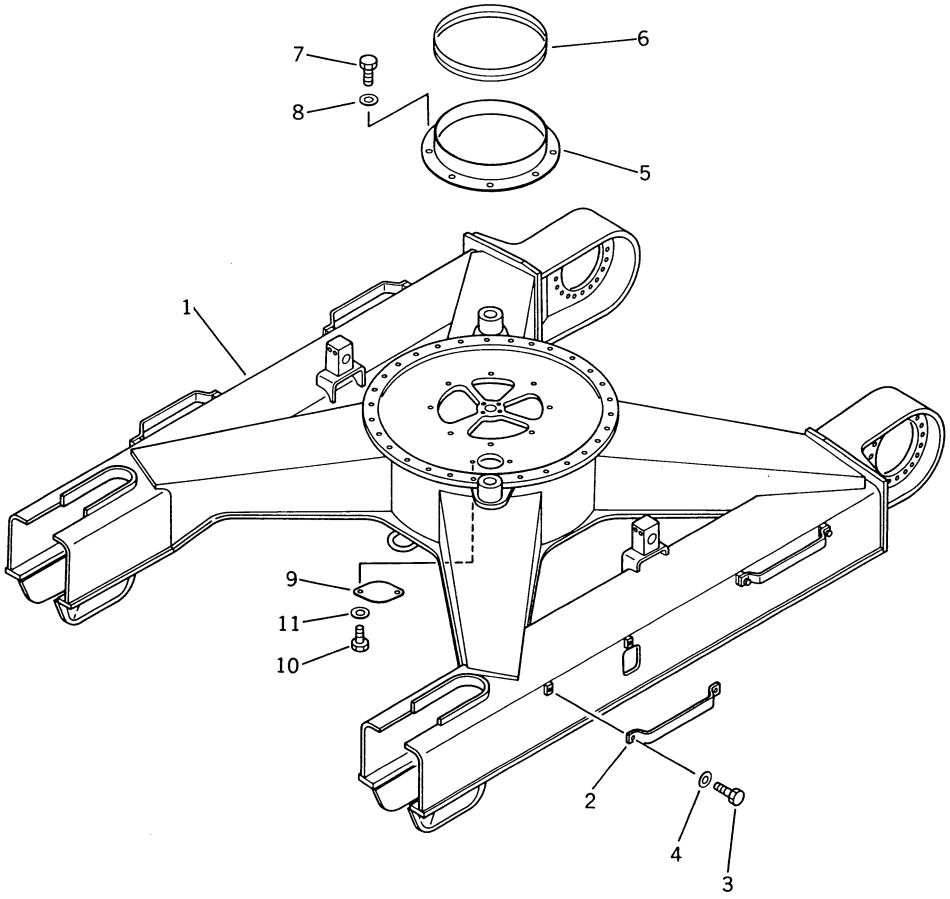

FIG NO. 9006

INDEX NO.	PART NO.	DESCRIPTION	Q'TY	SERIAL NO. PC150-3	SERIAL NO. PC150LC-3
1	21K-30-21410	FRAME, TRACK	1	3001–	
	21K-30-21510	FRAME, TRACK	1		3001–
2	21K-30-21430	STEP	4	3001–	3001–
3	01010-51230	BOLT	8	3001–	3001–
4	01643-31232	WASHER	8	3001–	3001–
5	21K-30-22120	COVER	1	3001–	3001–
6	20G-47-11381	SEAL	1	3001–	3001–
7	01010-51225	BOLT	8	3001–	3001–
8	01643-31232	WASHER	8	3001–	3001–
9	205-30-67650	COVER	1	3001–	3001–
10	01010-51225	BOLT	2	3001–	3001–
11	01643-31232	WASHER	2	3001–	3001–

FIG. 9008 WORK EQUIPMENT CONTROL LEVER (TBG SPEC.)

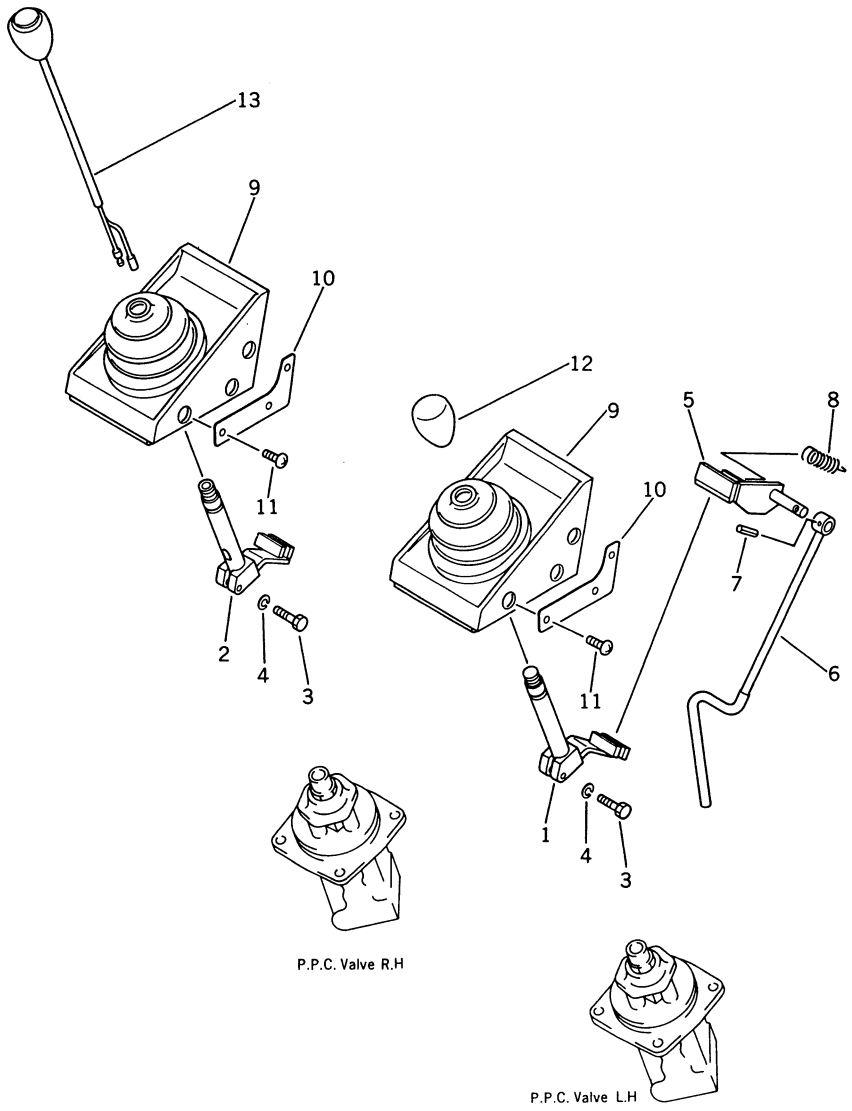

INDEX NO.	PART NO.	DESCRIPTION	Q'TY	SERIAL NO. PC150-3	SERIAL NO. PC150LC-3
1	203-43-41433	LEVER, L.H.	1	3001–	3001–
2	203-43-41423	LEVER, R.H.	1	3001–	3001–
3	01010-50825	BOLT	2	3001–	3001–
4	01602-20825	WASHER, SPRING	2	3001–	3001–
5	203-43-43350	LEVER	1	3001–	3001–
6	203-43-43310	LEVER	1	3001–	3001–
7	04025-00524	PIN, SPRING	1	3001–	3001–
8	203-43-21370	SPRING	1	3001–	3001–
9	205-43-71222	BOOT	2	3001–	3001–
10	205-43-71991	COVER	4	3001–	3001–
11	205-43-71280	SCREW	12	3001–	3001–
12	20D-43-11370	KNOB	1	3001–	3001–
13	205-06-71360	SWITCH, HORN	1	3001–	3001–

FIG. 9010 TRAVEL CONTROL LEVER AND PEDAL (TBG SPEC.)

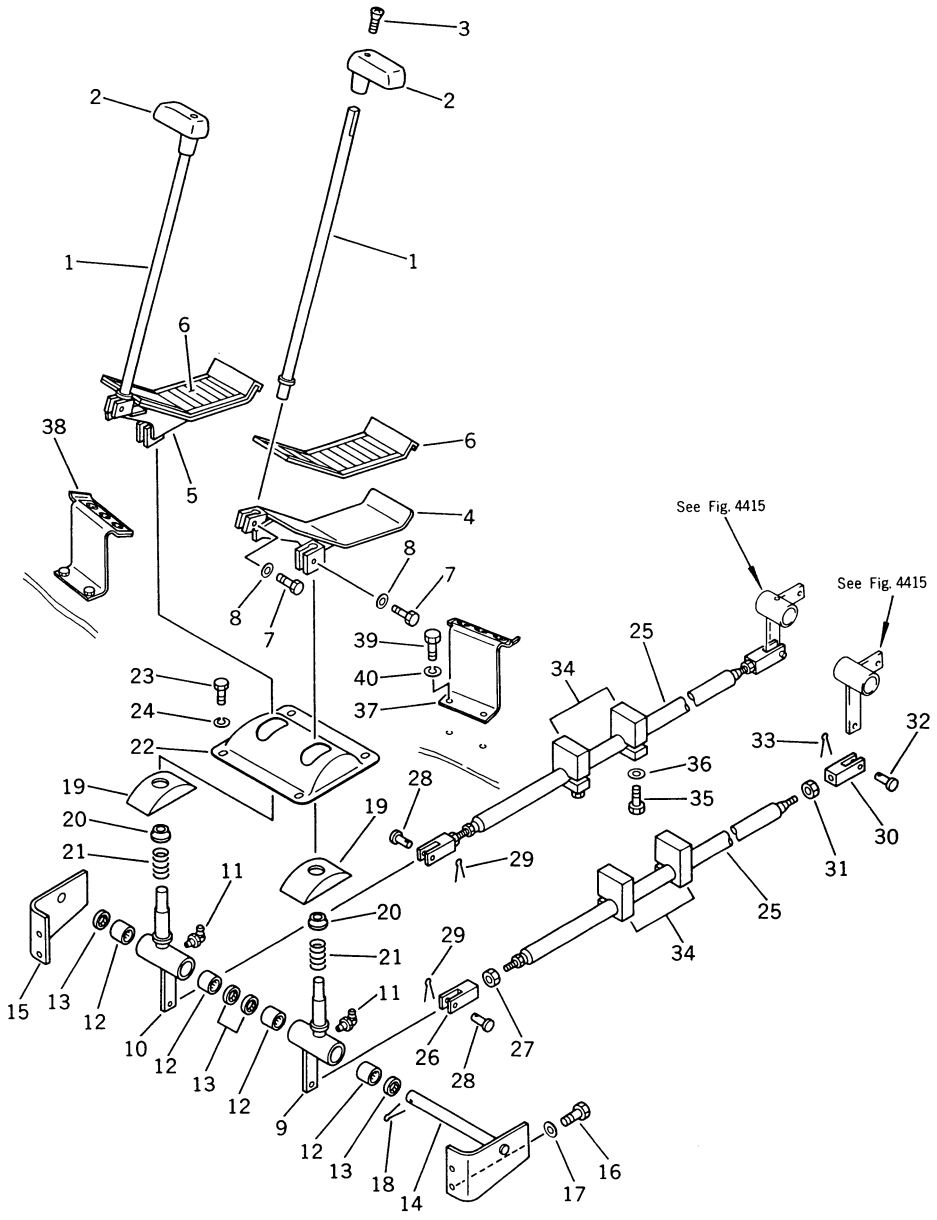

INDEX NO.	PART NO.	DESCRIPTION	Q'TY	SERIAL NO. PC150-3	SERIAL NO. PC150LC-3
1	205-43-71871	LEVER	2	3001–	3001–
2	203-43-41340	KNOB	2	3001–	3001–
3	01225-40625	SCREW	2	3001–	3001–
4	203-43-41612	PEDAL, L.H.	1	3001–	3001–
5	203-43-41592	PEDAL, R.H.	1	3001–	3001–
6	205-43-71911	CAP, PEDAL	2	3001–	3001–
7	01010-50825	BOLT	4	3001–	3001–
8	01643-30823	WASHER	4	3001–	3001–
9	203-43-42373	LEVER, L.H.	1	3001–	3001–
10	203-43-42671	LEVER, R.H.	1	3001–	3001–
11	07020-00900	FITTING, GREASE	2	3001–	3001–
12	06120-02016	BEARING	4	3001–	3001–
13	06122-02004	SEAL, BEARING	4	3001–	3001–
14	203-43-42721	SHAFT	1	3001–	3001–
15	203-43-42731	BRACKET	1	3001–	3001–
16	01010-51030	BOLT	4	3001–	3001–
17	01643-31032	WASHER	4	3001–	3001–
18	04050-13030	PIN, COTTER	1	3001–	3001–
19	205-43-11230	COVER	2	3001–	3001–
20	203-43-41660	SPACER	2	3001–	3001–
21	09340-10130	SPRING	2	3001–	3001–
22	203-43-41541	COVER	1	3001–	3001–
23	01010-50820	BOLT	4	3001–	3001–
24	01602-20825	WASHER, SPRING	4	3001–	3001–
25	21K-43-21150	ROD	2	3001–	3001–
26	04220-21040	YOKE, L.H. THREAD	2	3001–	3001–
27	01508-21006	NUT, L.H. THREAD	2	3001–	3001–
28	04205-11028	PIN	2	3001–	3001–
29	04050-13015	PIN, COTTER	2	3001–	3001–
30	04210-21040	YOKE	2	3001–	3001–
31	01582-11008	NUT	2	3001–	3001–
32	04205-11028	PIN	2	3001–	3001–
33	04050-13015	PIN, COTTER	2	3001–	3001–
34	203-43-42750	PLATE	4	3001–	3001–
35	01010-51030	BOLT	4	3001–	3001–

FIG NO. 9010

INDEX NO.	PART NO.	DESCRIPTION	Q'TY	SERIAL NO. PC150-3	SERIAL NO. PC150LC-3
36	01643-31032	WASHER	4	3001–	3001–
37	203-43-43320	BRACKET, L.H.	1	3001–	3001–
38	203-43-43330	BRACKET, R.H.	1	3001–	3001–
39	01010-51030	BOLT	4	3001–	3001–
40	01602-21030	WASHER, SPRING	4	3001–	3001–

FIG. 9012 REVOLVING FRAME (TBG SPEC.)

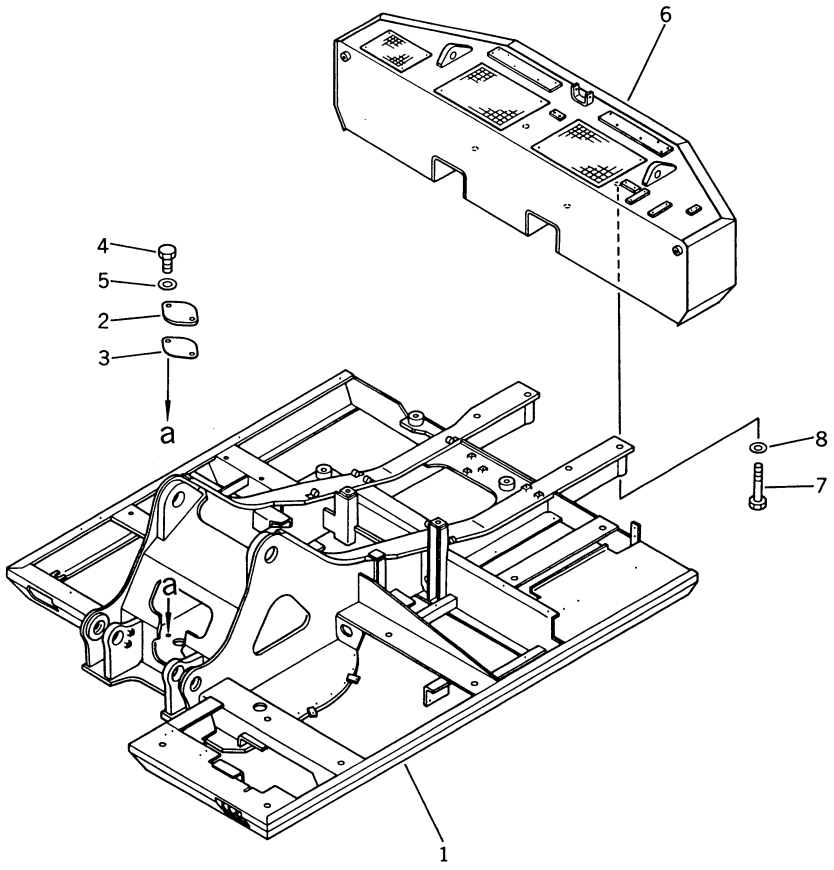

FIG NO. 9012

INDEX NO.	PART NO.	DESCRIPTION	Q'TY	SERIAL NO. PC150-3	SERIAL NO. PC150LC-3
1	21K-46-24110	FRAME, REVOLVING	1	3001–	3001–
2	203-46-31131	COVER	1	3001–	3001–
3	203-46-31181	GASKET	1	3001–	3001–
4	01010-51230	BOLT	2	3001–	3001–
5	01643-31232	WASHER	2	3001–	3001–
6	21K-46-24130	WEIGHT, COUNTER	1	3001–	
6	21K-46-24140	WEIGHT, COUNTER	1		3001–
7	203-46-62160	BOLT	2	3001–	3001–
8	01643-32460	WASHER	2	3001–	3001–

FIG. 9014 MACHINERY COMPARTMENT (1/3) (TBG SPEC.)

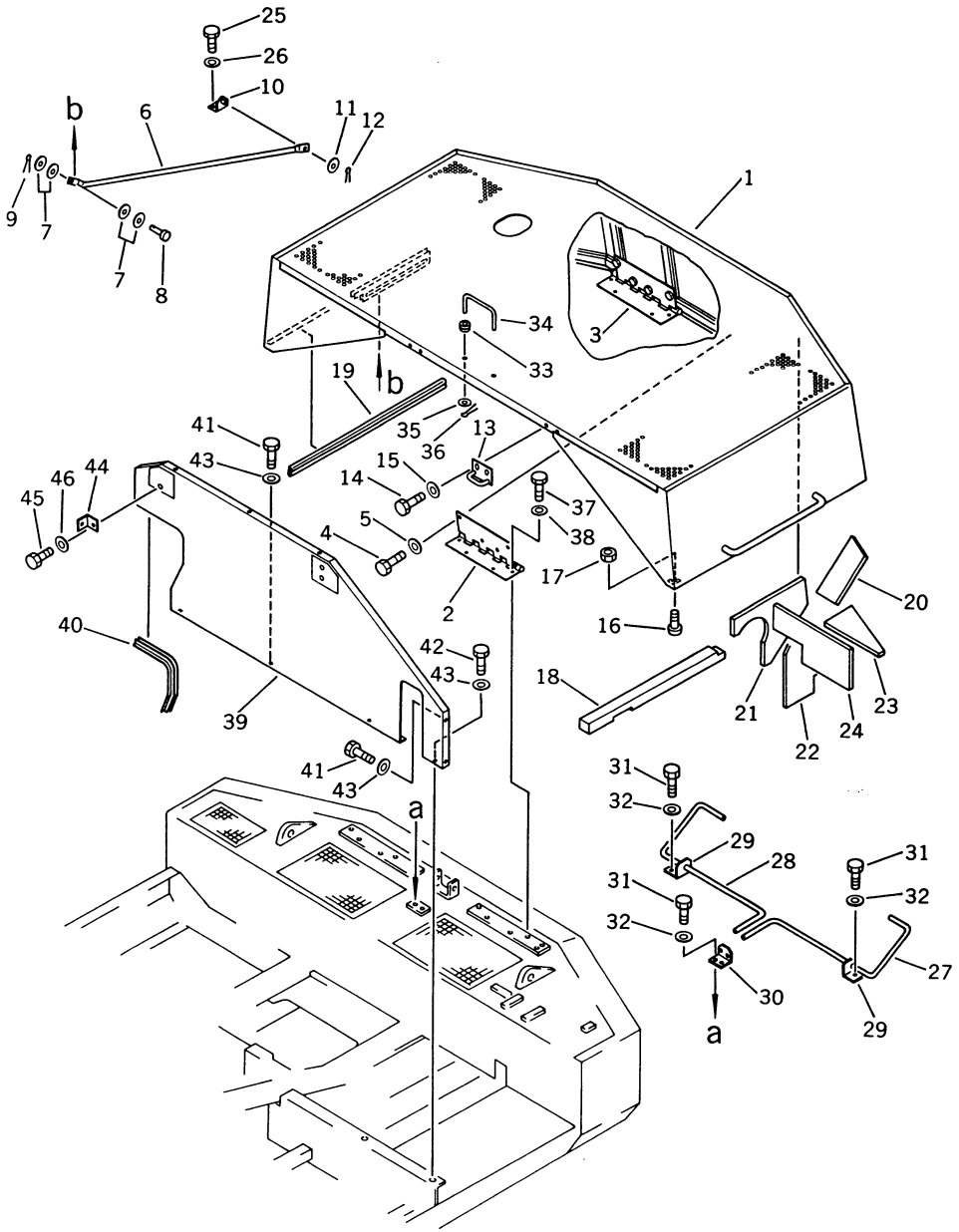

FIG NO. 9014

INDEX NO.	PART NO.	DESCRIPTION	Q'TY	SERIAL NO. PC150-3	SERIAL NO. PC150LC-3
	21K-54-00300	MACHINE CAB ASS'Y	1	3001–	3001–
1	(☆21K-54-28110)	• HOOD	1	3001–	3001–
2	203-54-44950	• HINGE, L.H.	1	3001–	3001–
3	203-54-44960	• HINGE, R.H.	1	3001–	3001–
4	01010-51020	• BOLT	8	3001–	3001–
5	01643-31032	• WASHER	8	3001–	3001–
6	21K-54-26271	• STAY	1	3001–	3001–
7	175-54-88110	• WASHER	4	3001–	3001–
8	04205-11035	• PIN	1	3001–	3001–
9	04050-13020	• PIN, COTTER	1	3001–	3001–
10	21K-54-26280	• BRACKET	1	3001–	3001–
11	01641-21016	• WASHER	1	3001–	3001–
12	04050-13020	• PIN, COTTER	1	3001–	3001–
13	21K-54-26320	• BRACKET	2	3001–	3001–
14	01010-51025	• BOLT	4	3001–	3001–
15	01643-31032	• WASHER	4	3001–	3001–
16	201-54-21360	• CUSHION	2	3001–	3001–
17	01580-10504	• NUT	2	3001–	3001–
18	21K-54-26130	• SHEET	1	3001–	3001–
19	21K-54-26120	• TRIM	2	3001–	3001–
20	20G-54-11710	• SHEET	1	3001–	3001–
21	20G-54-11730	• SHEET	1	3001–	3001–
22	20G-54-11740	• SHEET	1	3001–	3001–
23	20G-54-11860	• SHEET	1	3001–	3001–
24	20G-54-11870	• SHEET	1	3001–	3001–
25	01010-51025	BOLT	2	3001–	3001–
26	01643-31032	WASHER	2	3001–	3001–
27	21K-54-26250	BAR, TORSION, L.H.	1	3001–	3001–
28	21K-54-26260	BAR, TORSION, R.H.	1	3001–	3001–
29	203-54-42270	PLATE	2	3001–	3001–
30	203-54-42280	PLATE	1	3001–	3001–
31	01010-51025	BOLT	6	3001–	3001–
32	01643-31032	WASHER	6	3001–	3001–
33	08037-01008	GROMMET	2	3001–	3001–
34	20G-54-11590	BAR	1	3001–	3001–

FIG NO. 9014

INDEX NO.	PART NO.	DESCRIPTION	Q'TY	SERIAL NO. PC150-3	SERIAL NO. PC150LC-3
35	01643-31032	WASHER	2	3001–	3001–
36	04050-12020	PIN, COTTER	2	3001–	3001–
37	01010-51020	BOLT	8	3001–	3001–
38	144-854-1890	WASHER	8	3001–	3001–
39	21K-54-26140	COVER	1	3001–	3001–
40	203-54-42840	TRIM	1	3001–	3001–
41	01010-51020	BOLT	4	3001–	3001–
42	01010-51025	BOLT	2	3001–	3001–
43	01643-31032	WASHER	6	3001–	3001–
44	203-54-42780	PLATE	1	3001–	3001–
45	01010-51020	BOLT	1	3001–	3001–
46	01643-31032	WASHER	1	3001–	3001–

FIG. 9015 MACHINERY COMPARTMENT (2/3) (TBG SPEC.)

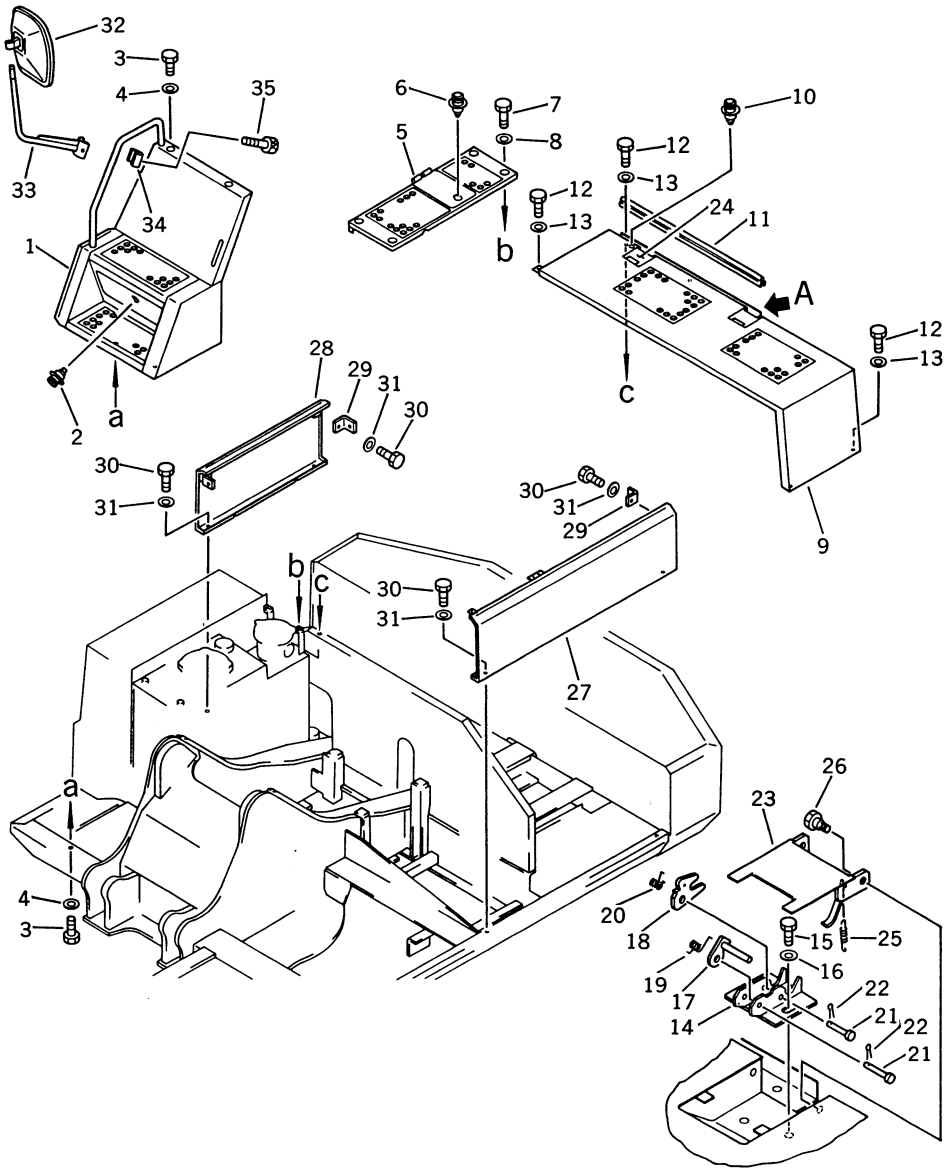

Detail A

FIG NO. 9015

INDEX NO.	PART NO.	DESCRIPTION	Q'TY	SERIAL NO. PC150-3	SERIAL NO. PC150LC-3
1	21K-54-28120	COVER	1	3001–	3001–
2	205-60-71220	LOCK ASS'Y	1	3001–	3001–
3	01010-51020	BOLT	6	3001–	3001–
4	01643-31032	WASHER	6	3001–	3001–
5	21K-54-28130	COVER	1	3001–	3001–
6	205-60-71220	LOCK ASS'Y	1	3001–	3001–
7	01010-51020	BOLT	4	3001–	3001–
8	01643-31032	WASHER	4	3001–	3001–
9	21K-54-28150	COVER	1	3001–	3001–
10	205-60-71220	LOCK ASS'Y	1	3001–	3001–
11	09412-10092	SEAL	1	3001–	3001–
12	01010-51020	BOLT	6	3001–	3001–
13	01643-31032	WASHER	6	3001–	3001–
14	21K-54-26310	BRACKET	2	3001–	3001–
15	01010-51020	BOLT	4	3001–	3001–
16	01643-31032	WASHER	4	3001–	3001–
17	21K-54-26330	PLATE	2	3001–	3001–
18	21K-54-26340	LEVER	2	3001–	3001–
19	21K-54-26350	SPRING	2	3001–	3001–
20	21K-54-26360	SPRING	2	3001–	3001–
21	04205-11038	PIN	4	3001–	3001–
22	04050-13020	PIN, COTTER	4	3001–	3001–
23	21K-54-26291	COVER	1	3001–	3001–
24	21K-54-28540	COVER	1	3001–	3001–
25	21K-54-26380	SPRING	2	3001–	3001–
26	21K-54-26370	BOLT	4	3001–	3001–
27	21K-54-26160	COVER	1	3001–	3001–
28	21K-54-26170	COVER	1	3001–	3001–
29	203-54-42780	PLATE	3	3001–	3001–
30	01010-51020	BOLT	10	3001–	3001–
31	01643-31032	WASHER	10	3001–	3001–
32	01874-33023	MIRROR	1	3001–	3001–
33	203-54-42910	SUPPORT	1	3001–	3001–
34	207-54-17840	CLAMP	1	3001–	3001–
35	01252-41025	BOLT	2	3001–	3001–

FIG. 9016 MACHINERY COMPARTMENT (3/3) (TBG SPEC.)

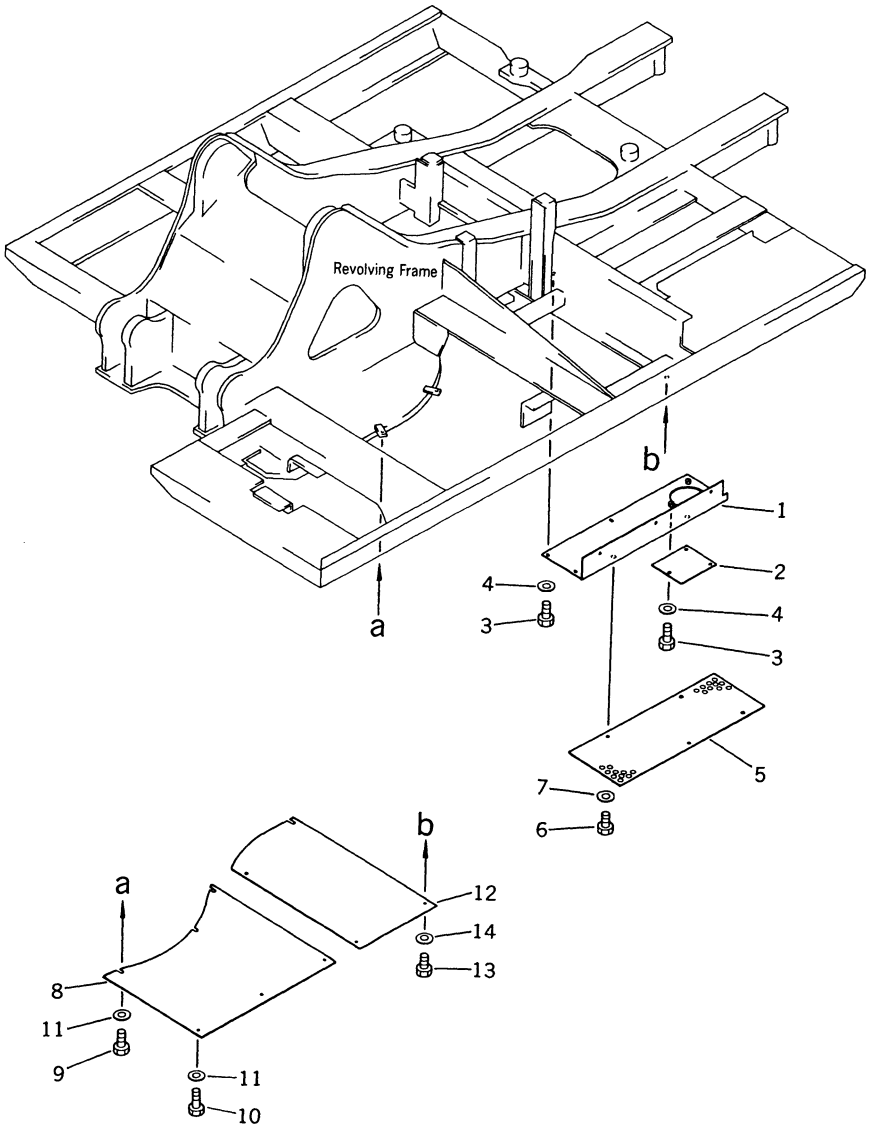

FIG NO. 9016

INDEX NO.	PART NO.	DESCRIPTION	Q'TY	SERIAL NO. PC150-3	SERIAL NO. PC150LC-3
1	21K-54-26240	COVER	1	3001–	3001–
2	201-54-26420	COVER	1	3001–	3001–
3	01010-51020	BOLT	11	3001–	3001–
4	01643-31032	WASHER	11	3001–	3001–
5	21K-54-26230	COVER	1	3001–	3001–
6	01010-51020	BOLT	5	3001–	3001–
7	01643-31032	WASHER	5	3001–	3001–
8	21K-54-26210	COVER	1	3001–	3001–
9	01010-51020	BOLT	5	3001–	3001–
10	01010-51035	BOLT	1	3001–	3001–
11	01643-31032	WASHER	6	3001–	3001–
12	21K-54-26220	COVER	1	3001–	3001–
13	01010-51020	BOLT	4	3001–	3001–
14	01643-31032	WASHER	4	3001–	3001–

FIG. 9018 OPERATOR'S CAB (1/6) (TBG SPEC.)

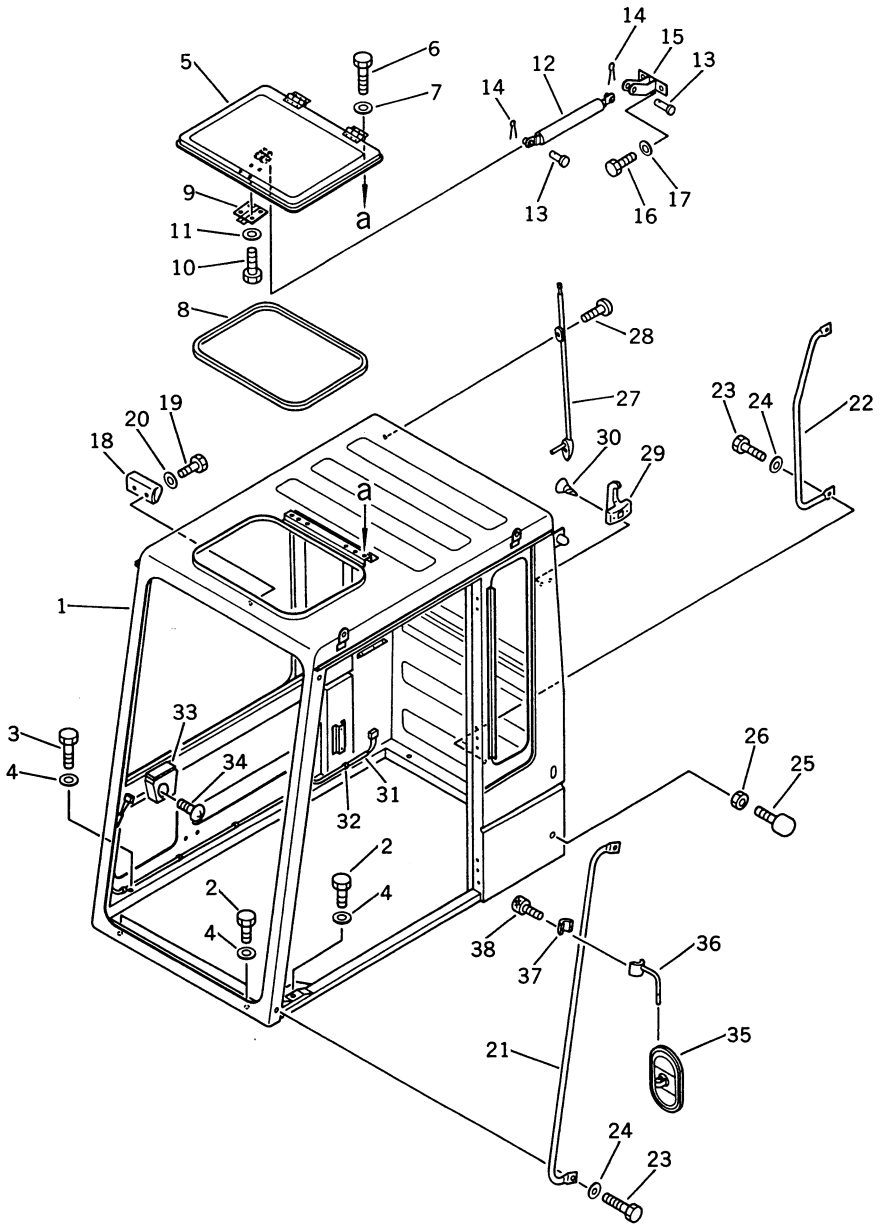

INDEX NO.	PART NO.	DESCRIPTION	Q'TY	SERIAL NO. PC150-3	SERIAL NO. PC150LC-3
	203-54-00340	OPERATOR'S CAB ASS'Y	1	3001–	3001–
		THIS ASSEMBLY CONSISTS OF ALL PARTS SHOWN IN FIGS 9018 TO 9023.			
1	203-54-43440	• CABIN	1	3001–	3001–
2	01010-51250	• BOLT	3	3001–	3001–
3	01010-51270	• BOLT	6	3001–	3001–
4	01643-31232	• WASHER	9	3001–	3001–
5	203-54-43410	• COVER	1	3001–	3001–
6	01010-50612	• BOLT	6	3001–	3001–
7	01643-30623	• WASHER	6	3001–	3001–
8	203-54-43460	• TRIM	1	3001–	3001–
9	205-54-72470	• LOCK ASS'Y	1	3001–	3001–
10	01010-50616	• BOLT	4	3001–	3001–
11	01643-30623	• WASHER	4	3001–	3001–
12	205-54-63650	• GAS SPRING ASS'Y	1	3001–	3001–
13	04205-10825	• PIN	2	3001–	3001–
14	04050-12012	• PIN, COTTER	2	3001–	3001–
15	203-54-43640	• BRACKET	1	3001–	3001–
16	01010-50816	• BOLT	2	3001–	3001–
17	01643-30823	• WASHER	2	3001–	3001–
18	205-54-72520	• BRACKET	1	3001–	3001–
19	01010-50616	• BOLT	2	3001–	3001–
20	01643-30623	• WASHER	2	3001–	3001–
21	203-54-43230	• GRIP	1	3001–	3001–
22	203-54-43430	• GRIP	1	3001–	3001–
23	01010-51025	• BOLT	4	3001–	3001–
24	01643-31032	• WASHER	4	3001–	3001–
25	09453-00002	• STOPPER	2	3001–	3001–
26	01580-11210	• NUT	2	3001–	3001–
27	205-06-62350	• ANTENNA	1	3001–	3001–
28	01220-40420	• SCREW	2	3001–	3001–
29	205-54-51250	• HANGER	1	3001–	3001–
30	01381-10420	• SCREW	2	3001–	3001–
31	203-06-41710	• WIRE	1	3001–	3001–
32	205-54-72710	• CLIP	6	3001–	3001–

FIG NO. 9018

INDEX NO.	PART NO.	DESCRIPTION	Q'TY	SERIAL NO. PC150-3	SERIAL NO. PC150LC-3
33	203-54-43480	• ASH TRAY	1	3001–	3001–
34	01370-00510	• SCREW	3	3001–	3001–
35	01874-13116	MIRROR	1	3001–	3001–
36	205-54-77120	SUPPORT	1	3001–	3001–
37	207-54-17840	CLAMP	1	3001–	3001–
38	01252-41015	BOLT	2	3001–	3001–

FIG. 9019 OPERATOR'S CAB (2/6) (TBG SPEC.)

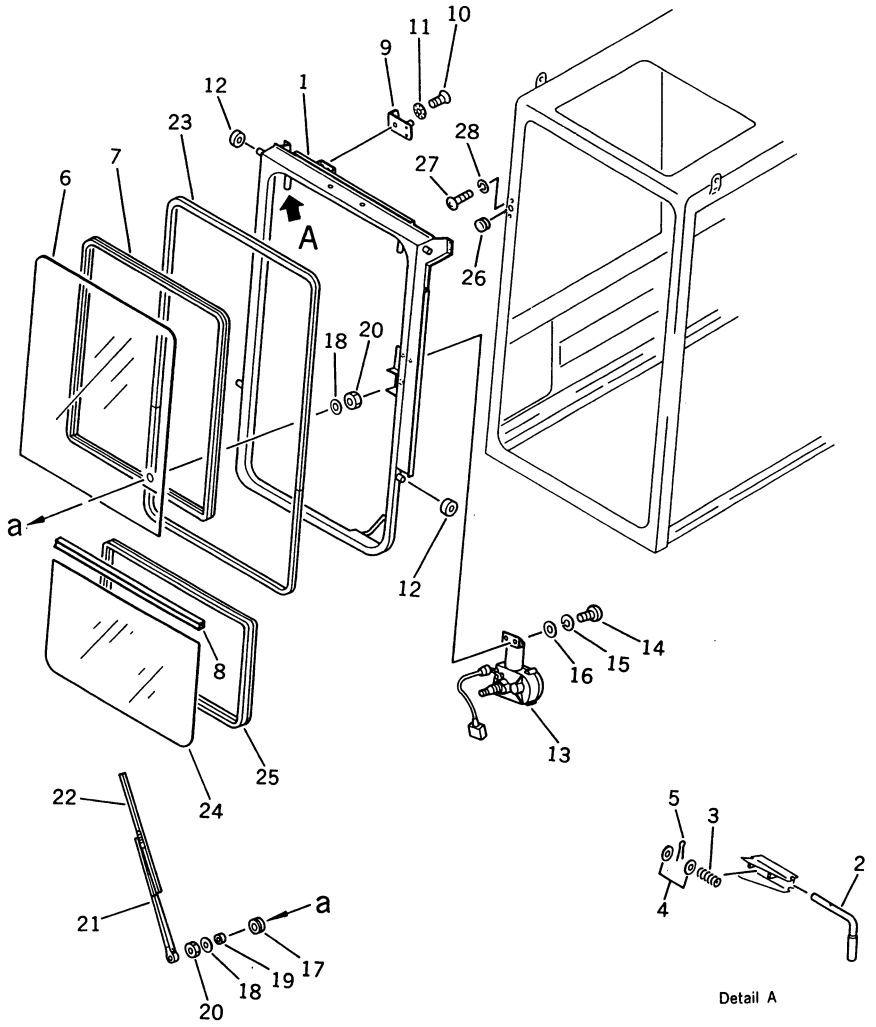

INDEX NO.	PART NO.	DESCRIPTION	Q'TY	SERIAL NO. PC150-3	SERIAL NO. PC150LC-3
	(203-54-00340)	OPERATOR'S CAB ASS'Y	1	3001–	3001–
		THIS ASSEMBLY CONSISTS OF ALL PARTS SHOWN IN FIGS 9018 TO 9023.			
	20G-54-00030	• FRONT WINDOW ASS'Y	1	3001–	3001–
1	203-54-43470	•• WINDOW, FRONT	1	3001–	3001–
2	203-54-43650	•• PIN	2	3001–	3001–
3	205-54-66330	•• SPRING	2	3001–	3001–
4	01641-21016	•• WASHER	4	3001–	3001–
5	04050-13018	•• PIN, COTTER	2	3001–	3001–
6	203-54-43560	•• GLASS	1	3001–	3001–
7	203-54-43510	•• STRIP, WEATHER	1	3001–	3001–
8	203-54-43530	•• SEAL	1	3001–	3001–
9	566-54-24511	•• STRIKER	1	3001–	3001–
10	01224-40820	•• SCREW	3	3001–	3001–
11	205-54-72750	•• WASHER, LOCK	3	3001–	3001–
12	205-54-72590	•• ROLLER	4	3001–	3001–
13	203-06-41720	• WIPER MOTOR ASS'Y	1	3001–	3001–
14	01220-40516	• SCREW	2	3001–	3001–
15	01601-20513	• WASHER, SPRING	2	3001–	3001–
16	01641-20508	• WASHER	2	3001–	3001–
17	205-06-62230	• GROMMET	1	3001–	3001–
18	205-06-62270	• WASHER	2	3001–	3001–
19	205-06-62240	• COLLAR	1	3001–	3001–
20	205-06-62250	• NUT	2	3001–	3001–
21	205-06-71420	• ARM	1	3001–	3001–
22	205-06-62570	• BLADE	1	3001–	3001–
23	203-54-43520	• SEAL	1	3001–	3001–
24	203-54-43620	• GLASS ASS'Y	1	3001–	3001–
25	203-54-43570	• STRIP, WEATHER	1	3001–	3001–
26	09415-01008	• CAP	1	3001–	3001–
27	01220-40412	• SCREW	2	3001–	3001–
28	01601-20410	• WASHER, SPRING	2	3001–	3001–

FIG. 9020 OPERATOR'S CAB (3/6) (TBG SPEC.)

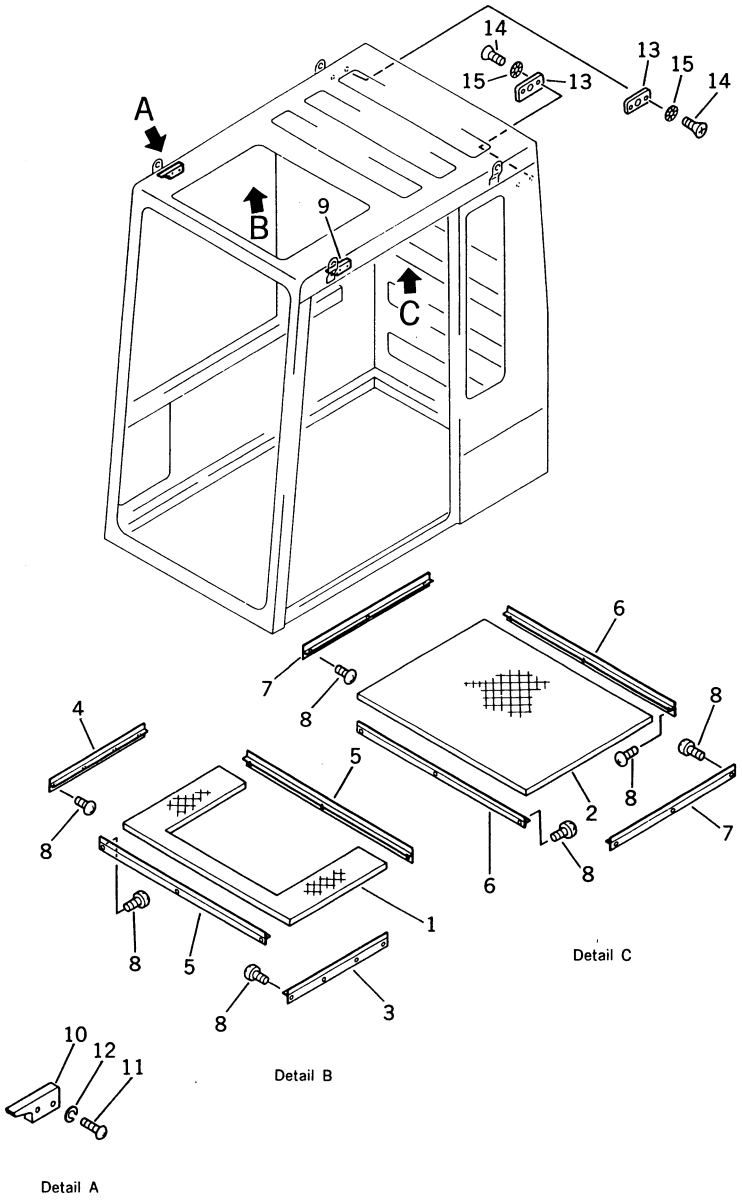

FIG NO. 9020

INDEX NO.	PART NO.	DESCRIPTION	Q'TY	SERIAL NO. PC150-3	SERIAL NO. PC150LC-3
	(203-54-00340)	OPERATOR'S CAB ASS'Y	1	3001–	3001–
		THIS ASSEMBLY CONSISTS OF ALL PARTS SHOWN IN FIGS 9018 TO 9023.			
1	203-54-43280	• LINING	1	3001–	3001–
2	203-54-43340	• LINING	1	3001–	3001–
3	203-54-43240	• FINISHER, L.H.	1	3001–	3001–
4	203-54-43250	• FINISHER, R.H.	1	3001–	3001–
5	203-54-43690	• FINISHER	2	3001–	3001–
6	203-54-43260	• FINISHER	3	3001–	3001–
7	203-54-43270	• FINISHER	1	3001–	3001–
8	01370-00412	• SCREW	24	3001–	3001–
9	203-54-43540	• TAIL, DOVE, L.H.	1	3001–	3001–
10	203-54-43550	• TAIL, DOVE, R.H.	1	3001–	3001–
11	01220-40625	• SCREW	4	3001–	3001–
12	01602-20619	• WASHER, SPRING	4	3001–	3001–
13	203-54-43290	• LOCK	2	3001–	3001–
14	01224-40820	• SCREW	4	3001–	3001–
15	205-54-72750	• WASHER, LOCK	4	3001–	3001–

FIG. 9021 OPERATOR'S CAB (4/6) (TBG SPEC.)

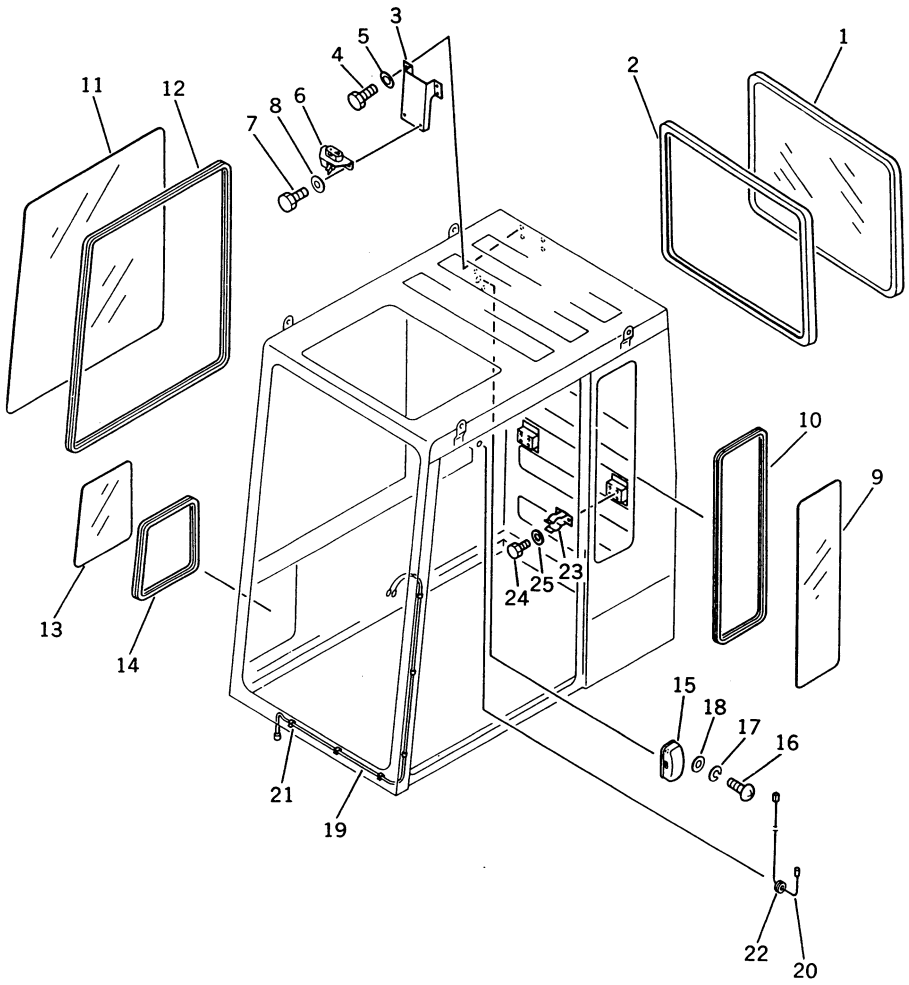

FIG NO. 9021

INDEX NO.	PART NO.	DESCRIPTION	Q'TY	SERIAL NO. PC150-3	SERIAL NO. PC150LC-3
	(203-54-00340)	OPERATOR'S CAB ASS'Y	1	3001–	3001–
		THIS ASSEMBLY CONSISTS OF ALL PARTS SHOWN IN FIGS 9018 TO 9023.			
1	203-54-43710	• WINDOW SASH ASS'Y	1	3001–	3001–
2	203-54-43660	• FINISHER	1	3001–	3001–
3	203-54-43680	• BRACKET	1	3001–	3001–
4	01010-50816	• BOLT	4	3001–	3001–
5	01643-30823	• WASHER	4	3001–	3001–
6	205-54-63310	• LOCK ASS'Y	1	3001–	3001–
7	01010-50820	• BOLT	2	3001–	3001–
8	01643-30823	• WASHER	2	3001–	3001–
9	205-54-71241	• GLASS	1	3001–	3001–
10	205-54-71531	• STRIP, WEATHER	1	3001–	3001–
11	20G-54-12150	• GLASS	1	3001–	3001–
12	203-54-43220	• STRIP, WEATHER	1	3001–	3001–
13	205-54-72671	• GLASS	1	3001–	3001–
14	205-54-72661	• STRIP, WEATHER	1	3001–	3001–
15	08141-02400	• LAMP	1	3001–	3001–
15	08116-02410	•• BULB	1	3001–	3001–
16	01220-40412	• SCREW	2	3001–	3001–
17	01601-20410	• WASHER, SPRING	2	3001–	3001–
18	01641-20405	• WASHER	2	3001–	3001–
19	205-06-71540	• WIRE	1	3001–	3001–
20	205-06-71550	• WIRE	1	3001–	3001–
21	205-54-72710	• CLIP	6	3001–	3001–
22	08037-01008	• GROMMET	4	3001–	3001–
23	22D-62-14560	• CLAMP	4	3001–	3001–
24	01010-50816	• BOLT	8	3001–	3001–
25	01643-30823	• WASHER	8	3001–	3001–

FIG. 9022 OPERATOR'S CAB (5/6) (TBG SPEC.)

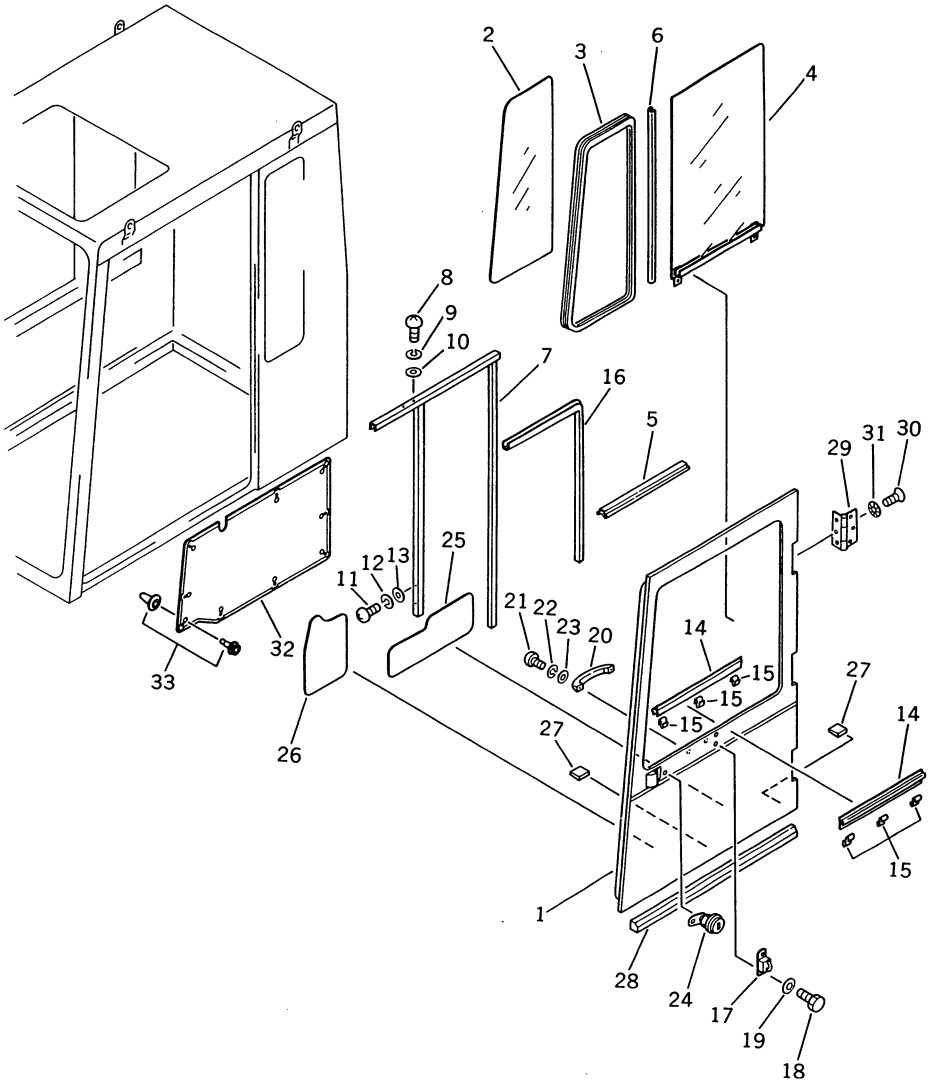

FIG NO. 9022

INDEX NO.	PART NO.	DESCRIPTION	Q'TY	SERIAL NO. PC150-3	SERIAL NO. PC150LC-3
	(203-54-00340)	OPERATOR'S CAB ASS'Y	1	3001–	3001–
		THIS ASSEMBLY CONSISTS OF ALL PARTS SHOWN IN FIGS 9018 TO 9023.			
	203-54-00150	• DOOR ASS'Y	1	3001–	3001–
		THIS ASSEMBLY CONSISTS OF ALL PARTS SHOWN IN FIGS 9022 AND 9023.			
1	203-54-43450	•• DOOR	1	3001–	3001–
2	205-54-71252	•• GLASS	1	3001–	3001–
3	203-54-43580	•• STRIP, WEATHER	1	3001–	3001–
4	205-54-72252	•• GLASS ASS'Y	1	3001–	3001–
5	203-54-43720	•• SEAL	1	3001–	3001–
6	205-54-72231	•• SEAL	1	3001–	3001–
7	205-54-71651	•• DEVISION BAR ASS'Y	1	3001–	3001–
8	01220-40410	•• SCREW	2	3001–	3001–
9	01601-20410	•• WASHER, SPRING	2	3001–	3001–
10	01641-20405	•• WASHER	2	3001–	3001–
11	01220-40610	•• SCREW	2	3001–	3001–
12	01602-20619	•• WASHER, SPRING	2	3001–	3001–
13	01641-20608	•• WASHER	2	3001–	3001–
14	205-54-71581	•• SEAL	2	3001–	3001–
15	203-54-43630	•• CLIP	6	3001–	3001–
16	203-54-43790	•• TRIM	1	3001–	3001–
17	203-54-43670	•• BRACKET	1	3001–	3001–
18	01010-50820	•• BOLT	2	3001–	3001–
19	01643-30823	•• WASHER	2	3001–	3001–
20	205-54-72220	•• HANDLE	1	3001–	3001–
21	01220-40610	•• SCREW	2	3001–	3001–
22	01602-20619	•• WASHER, SPRING	2	3001–	3001–
23	01641-20608	•• WASHER	2	3001–	3001–
24	205-54-71641	•• LOCK ASS'Y	1	3001–	3001–
25	203-54-43360	•• SEAL	1	3001–	3001–
26	203-54-43350	•• SEAL	1	3001–	3001–
27	205-54-71910	•• STOPPER	2	3001–	3001–
28	203-54-43420	•• SHEET	1	3001–	3001–
29	205-54-72760	•• HINGE ASS'Y	3	3001–	3001–

FIG NO. 9022

INDEX NO.	PART NO.	DESCRIPTION	Q'TY	SERIAL NO. PC150-3	SERIAL NO. PC150LC-3
30	01224-40830	•• SCREW	21	3001–	3001–
31	205-54-72750	•• WASHER, LOCK	21	3001–	3001–
32	203-54-41452	COVER	1	3001–	3001–
33	205-00-65310	CLIP ASS'Y	9	3001–	3001–

FIG. 9023 OPERATOR'S CAB (6/6) (TBG SPEC.)

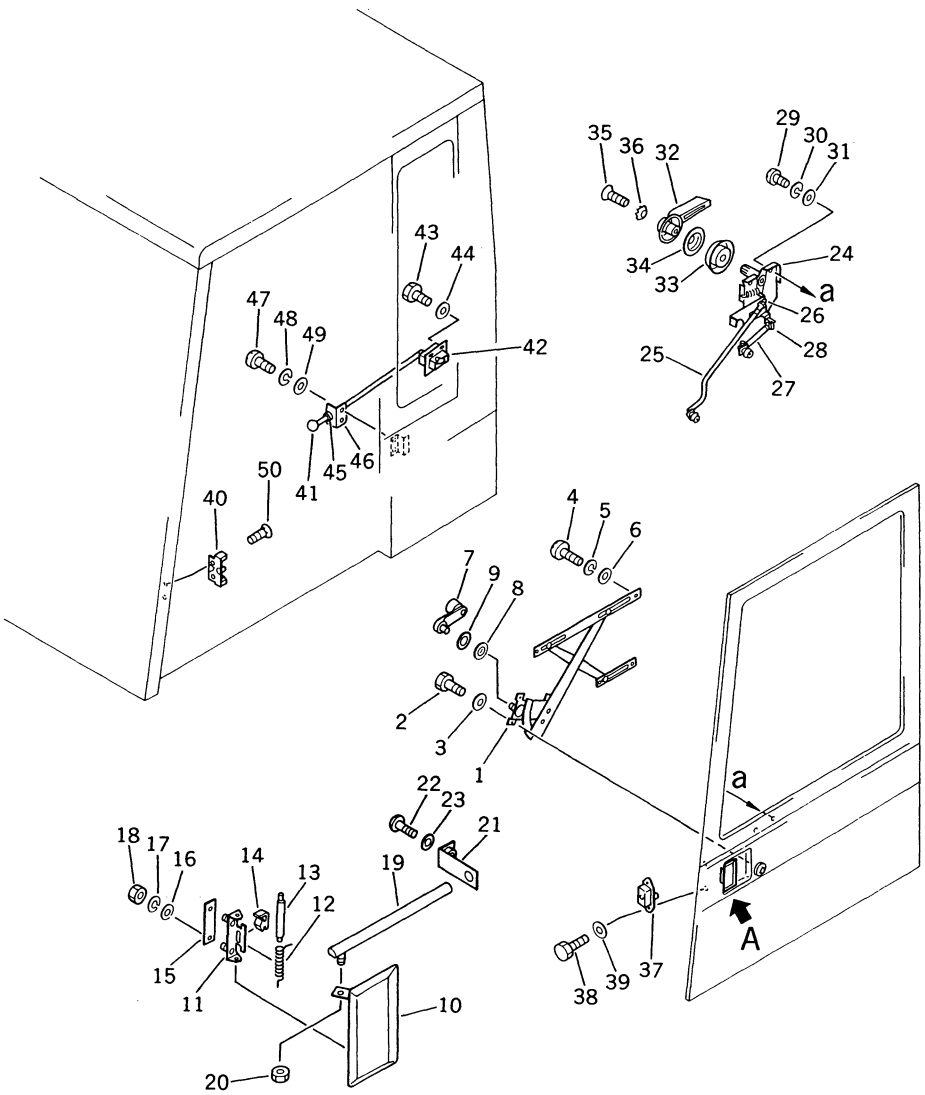

Detail A

INDEX NO.	PART NO.	DESCRIPTION	Q'TY	SERIAL NO. PC150-3	SERIAL NO. PC150LC-3
	(203-54-00340)	OPERATOR'S CAB ASS'Y	1	3001–	3001–
		THIS ASSEMBLY CONSISTS OF ALL PARTS SHOWN IN FIGS 9018 TO 9023.			
	(203-54-00150)	• DOOR ASS'Y	1	3001–	3001–
		THIS ASSEMBLY CONSISTS OF ALL PARTS SHOWN IN FIGS 9022 AND 9023.			
1	205-54-71631	•• REGULATOR ASS'Y	1	3001–	3001–
2	01010-50610	•• BOLT	6	3001–	3001–
3	01643-30623	•• WASHER	6	3001–	3001–
4	01220-40608	•• SCREW	2	3001–	3001–
5	01602-20619	•• WASHER, SPRING	2	3001–	3001–
6	01641-20608	•• WASHER	2	3001–	3001–
7	203-54-43310	•• HANDLE	1	3001–	3001–
8	203-54-43330	•• ESCUTCHEON	1	3001–	3001–
9	203-54-43740	•• SEAL, WATER	1	3001–	3001–
10	205-54-72101	•• HANDLE ASS'Y	1	3001–	3001–
10	205-54-72111	••• HANDLE	1	3001–	3001–
11	205-54-72121	••• BRACKET	1	3001–	3001–
12	205-54-72130	••• SPRING	1	3001–	3001–
13	205-54-72140	••• PIN	1	3001–	3001–
14	205-54-72150	••• CUSHION	1	3001–	3001–
15	205-54-72160	••• PACKING	1	3001–	3001–
16	01641-20608	•• WASHER	2	3001–	3001–
17	01602-20619	•• WASHER, SPRING	2	3001–	3001–
18	01580-10605	•• NUT	2	3001–	3001–
19	203-54-43370	•• ROD	1	3001–	3001–
20	203-54-43380	•• NUT	1	3001–	3001–
21	203-54-43730	•• GUIDE	1	3001–	3001–
22	01220-40616	•• SCREW	1	3001–	3001–
23	01643-30623	•• WASHER	1	3001–	3001–
24	205-54-71802	•• CONTROL ASS'Y	1	3001–	3001–
24	205-54-71811	••• REMOTE CONTROL ASS'Y	1	3001–	3001–
25	205-54-71822	••• ROD	1	3001–	3001–
26	205-54-71830	••• SNAP	2	3001–	3001–
27	205-54-71721	••• ROD	1	3001–	3001–

FIG NO. 9023

INDEX NO.	PART NO.	DESCRIPTION	Q'TY	SERIAL NO. PC150-3	SERIAL NO. PC150LC-3
28	205-54-71840	••• SNAP	1	3001–	3001–
29	01220-40610	•• SCREW	2	3001–	3001–
30	01602-20619	•• WASHER, SPRING	2	3001–	3001–
31	01641-20608	•• WASHER	2	3001–	3001–
32	203-54-43320	•• HANDLE	1	3001–	3001–
33	566-54-24260	•• BASE	1	3001–	3001–
34	203-54-43330	•• ESCUTCHEON	1	3001–	3001–
35	01225-40510	•• SCREW	1	3001–	3001–
36	205-54-71880	•• WASHER, LOCK	1	3001–	3001–
37	205-54-71710	•• LOCK ASS'Y	1	3001–	3001–
38	01010-50616	•• BOLT	2	3001–	3001–
39	01643-30623	•• WASHER	2	3001–	3001–
40	205-54-71731	• STRIKER	1	3001–	3001–
41	205-54-72840	• KNOB	1	3001–	3001–
42	20G-54-12110	• LOCK ASS'Y	1	3001–	3001–
43	01010-50620	• BOLT	4	3001–	3001–
44	01643-30623	• WASHER	4	3001–	3001–
45	205-54-72830	• GROMMET	1	3001–	3001–
46	20G-54-12120	• BRACKET	1	3001–	3001–
47	01220-40620	• SCREW	2	3001–	3001–
48	01602-20619	• WASHER, SPRING	2	3001–	3001–
49	01641-20608	• WASHER	2	3001–	3001–
50	203-54-43590	• SCREW	2	3001–	3001–

FIG. 9025 OPERATOR'S CAB, FLOOR FRAME (TBG SPEC.)

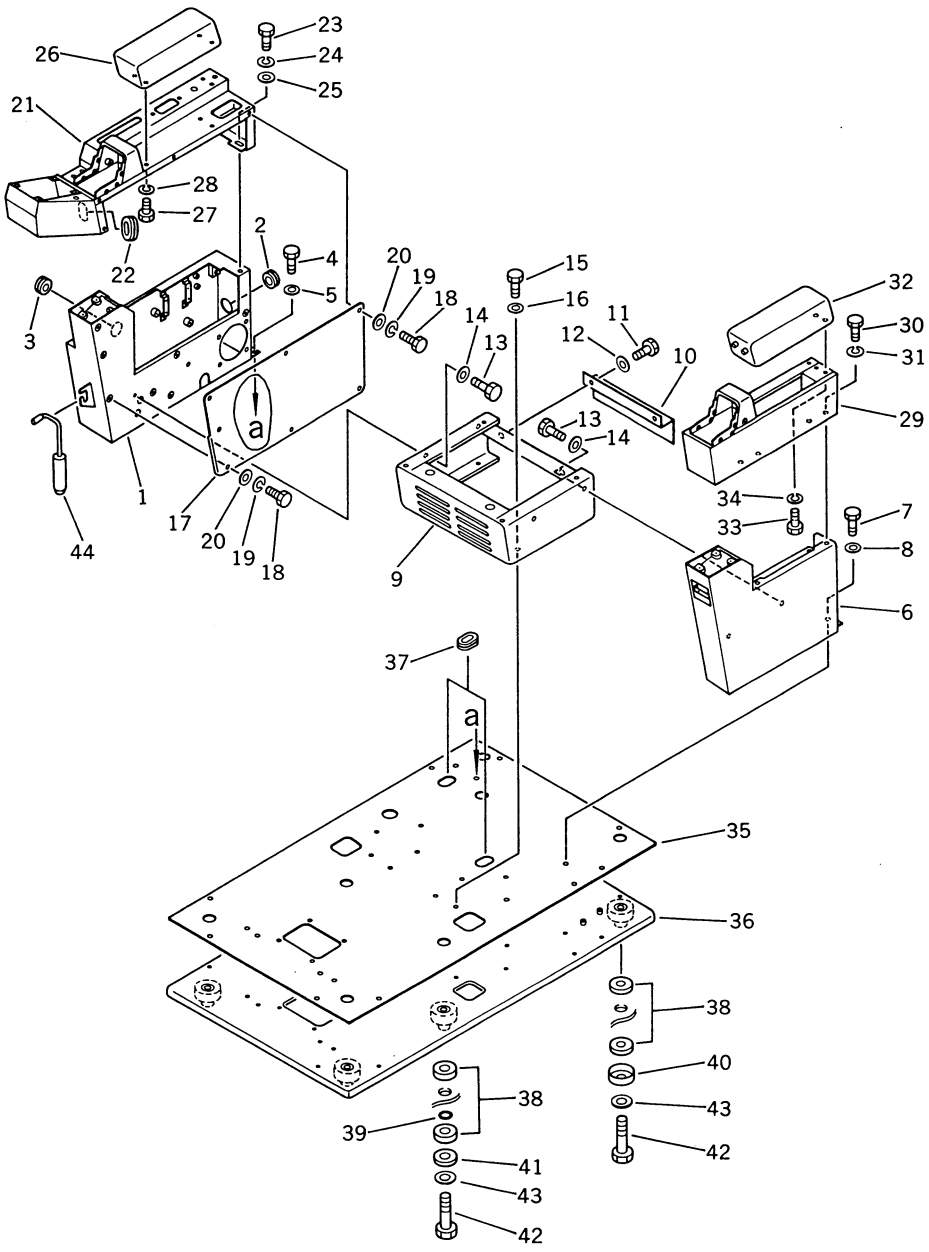

FIG NO. 9025

INDEX NO.	PART NO.	DESCRIPTION	Q'TY	SERIAL NO. PC150-3	SERIAL NO. PC150LC-3
1	21K-54-25540	BOX, R.H.	1	3001–	3001–
2	08037-03016	GROMMET	1	3001–	3001–
3	08037-03614	GROMMET	1	3001–	3001–
4	01010-51225	BOLT	5	3001–	3001–
5	01643-31232	WASHER	5	3001–	3001–
6	21K-54-25580	BOX, L.H.	1	3001–	3001–
7	01010-51225	BOLT	2	3001–	3001–
8	01643-31232	WASHER	2	3001–	3001–
9	21K-54-25550	BRACKET	1	3001–	3001–
10	21K-54-25210	COVER	1	3001–	3001–
11	01010-51020	BOLT	2	3001–	3001–
12	01643-31032	WASHER	2	3001–	3001–
13	01010-51025	BOLT	4	3001–	3001–
14	01643-31032	WASHER	4	3001–	3001–
15	01010-51230	BOLT	4	3001–	3001–
16	01643-31232	WASHER	4	3001–	3001–
17	203-54-41192	COVER	1	3001–	3001–
18	01010-50612	BOLT	7	3001–	3001–
19	01602-20619	WASHER, SPRING	7	3001–	3001–
20	01640-20610	WASHER	7	3001–	3001–
21	203-54-41560	BOX, R.H.	1	3001–	3001–
22	203-54-41570	GROMMET	1	3001–	3001–
23	01010-50820	BOLT	3	3001–	3001–
24	01602-20825	WASHER, SPRING	3	3001–	3001–
25	01643-30823	WASHER	3	3001–	3001–
26	203-54-41172	CUSHION, R.H.	1	3001–	3001–
27	01010-50820	BOLT	4	3001–	3001–
28	01602-20825	WASHER, SPRING	4	3001–	3001–
29	203-54-41132	BOX, L.H.	1	3001–	3001–
30	01010-50820	BOLT	4	3001–	3001–
31	01602-20825	WASHER, SPRING	4	3001–	3001–
32	203-54-41182	CUSHION, L.H.	1	3001–	3001–
33	01010-50820	BOLT	2	3001–	3001–
34	01602-20825	WASHER, SPRING	2	3001–	3001–
35	203-54-41251	MAT, FLOOR	1	3001–	3001–

FIG NO. 9025

INDEX NO.	PART NO.	DESCRIPTION	Q'TY	SERIAL NO. PC150-3	SERIAL NO. PC150LC-3
36	21K-54-25511	FRAME, FLOOR	1	3001–	3001–
37	176-911-4160	GROMMET	2	3001–	3001–
38	203-54-21110	CUSHION	12	3001–	3001–
39	07000-03025	O-RING	1	3001–	3001–
40	201-54-21860	COLLAR	4	3001–	3001–
41	205-54-51950	PLATE	2	3001–	3001–
42	01010-51675	BOLT	6	3001–	3001–
43	01643-31645	WASHER	6	3001–	3001–
44	21K-54-25120	PIN	1	3001–	3001–

FIG. 9027 OPERATOR'S SEAT (TBG SPEC.)

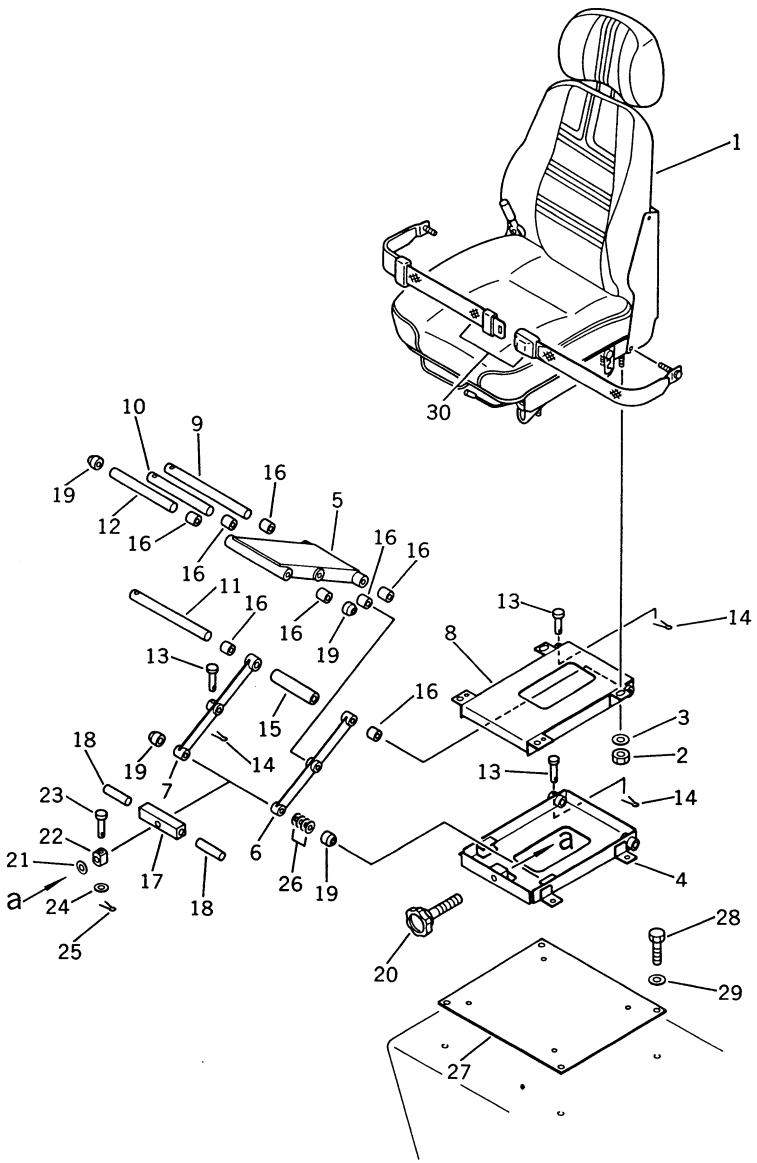

FIG NO. 9027

INDEX NO.	PART NO.	DESCRIPTION	Q'TY	SERIAL NO. PC150-3	SERIAL NO. PC150LC-3
1	21K-57-11100	SEAT ASS'Y	1	3001–	3001–
2	01580-10806	NUT	4	3001–	3001–
3	207-57-11260	WASHER	4	3001–	3001–
4	203-57-41101	STAND ASS'Y	1	3001–	3001–
4	203-57-41121	• BRACKET	1	3001–	3001–
5	203-57-41171	• LINK	1	3001–	3001–
6	203-57-41181	• LINK	1	3001–	3001–
7	203-57-41191	• LINK	1	3001–	3001–
8	203-57-41141	• BRACKET	1	3001–	3001–
9	205-57-63160	• PIN	1	3001–	3001–
10	205-57-63170	• PIN	1	3001–	3001–
11	205-57-63180	• PIN	1	3001–	3001–
12	205-57-63190	• PIN	1	3001–	3001–
13	207-57-11240	• PIN	4	3001–	3001–
14	04050-11610	• PIN, COTTER	4	3001–	3001–
15	205-57-72560	• COLLAR	1	3001–	3001–
16	203-57-21280	• BUSHING	10	3001–	3001–
17	205-57-72570	• BAR	1	3001–	3001–
18	207-57-11220	• PIN	2	3001–	3001–
19	203-57-21310	• ROLLER	4	3001–	3001–
20	203-57-41112	• KNOB	1	3001–	3001–
21	01643-31445	• WASHER	1	3001–	3001–
22	205-57-72580	• NUT	1	3001–	3001–
23	205-57-63250	• PIN	1	3001–	3001–
24	01641-20608	• WASHER	1	3001–	3001–
25	04050-11610	• PIN, COTTER	1	3001–	3001–
26	203-57-21320	• SHIM	20	3001–	3001–
27	203-57-41131	PLATE	1	3001–	3001–
28	01010-51230	BOLT	4	3001–	3001–
29	01643-31232	WASHER	4	3001–	3001–
30	205-57-62140	BELT, SEAT	1	3001–	3001–

FIG. 9029 HYDRAULIC OIL AND FUEL TANK (TBG SPEC.)

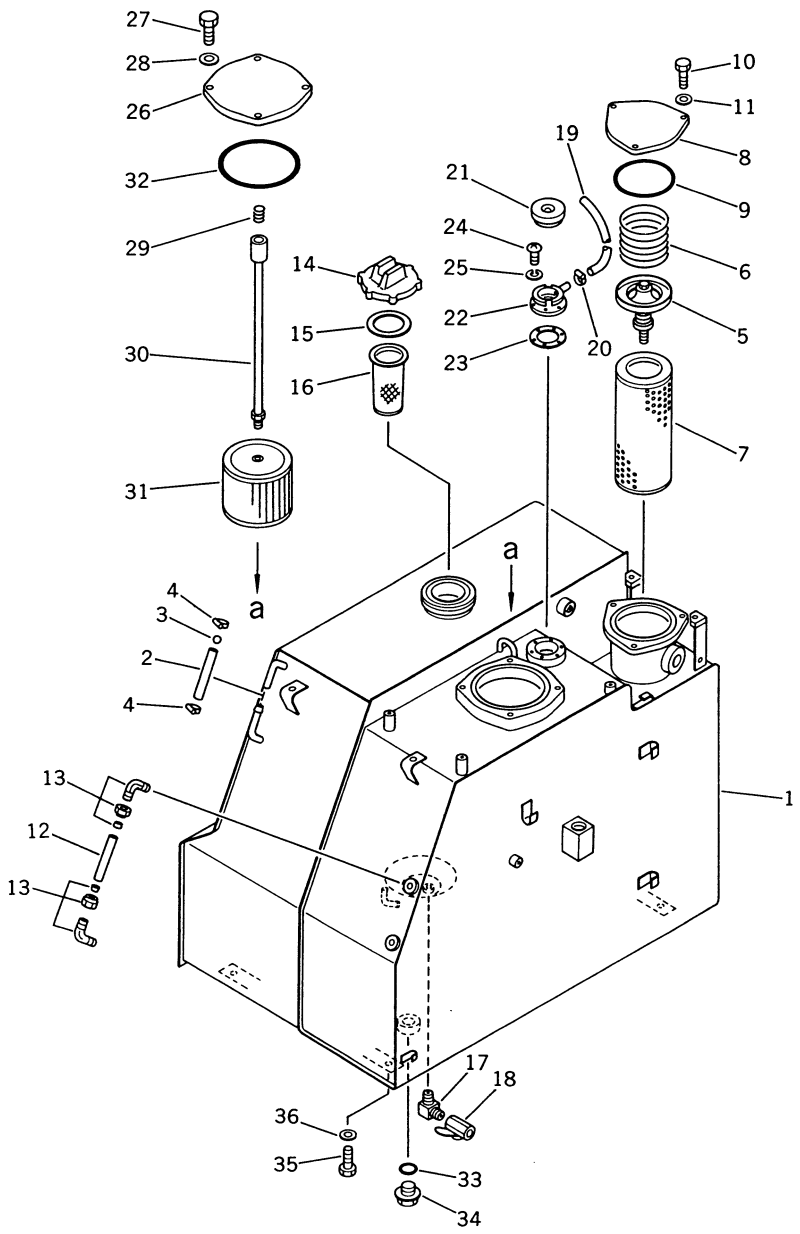

FIG NO. 9029

INDEX NO.	PART NO.	DESCRIPTION	Q'TY	SERIAL NO. PC150-3	SERIAL NO. PC150LC-3
	21K-60-00012	TANK ASS'Y	1	3001–	3001–
1	21K-60-22110	• TANK	1	3001–	3001–
2	203-60-42180	• TUBE	1	3001–	3001–
3	201-04-21160	• BALL, FLOAT	1	3001–	3001–
4	07281-00197	• CLAMP	2	3001–	3001–
5	175-60-27300	• VALVE ASS'Y	1	3001–	3001–
6	175-60-27340	• SPRING	1	3001–	3001–
7	175-60-27380	• ELEMENT	1	3001–	3001–
8	203-60-31172	• COVER	1	3001–	3001–
9	07000-05155	• O-RING	1	3001–	3001–
10	01010-51025	• BOLT	3	3001–	3001–
11	01643-31032	• WASHER	3	3001–	3001–
12	203-60-31160	• TUBE	1	3001–	3001–
13	203-60-31100	• ELBOW ASS'Y	2	3001–	3001–
14	07091-11200	• CAP	1	3001–	3001–
15	07050-21202	•• GASKET	1	3001–	3001–
16	07056-18416	• STRAINER	1	3001–	3001–
17	20D-68-11670	• ELBOW	1	3001–	3001–
18	07700-40240	• VALVE	1	3001–	3001–
19	203-60-12170	• TUBE	1	3001–	3001–
20	07280-01110	• CLAMP	1	3001–	3001–
21	201-60-12190	• CAP ASS'Y	1	3001–	3001–
22	201-60-12171	• FILLER, NECK	1	3001–	3001–
23	205-60-51460	• GASKET	1	3001–	3001–
24	01220-40516	• SCREW	6	3001–	3001–
25	01601-20513	• WASHER, SPRING	6	3001–	3001–
26	21K-60-11180	• COVER	1	3001–	3001–
27	01010-51025	• BOLT	4	3001–	3001–
28	01643-31032	• WASHER	4	3001–	3001–
29	12R-60-11230	• SPRING	1	3001–	3001–
30	203-60-42160	• ROD	1	3001–	3001–
31	21K-60-11190	• STRAINER	1	3001–	3001–
32	07000-05180	• O-RING	1	3001–	3001–
33	07002-03634	• O-RING	1	3001–	3001–
34	07044-13620	• PLUG	1	3001–	3001–

FIG NO. 9029

INDEX NO.	PART NO.	DESCRIPTION	Q'TY	SERIAL NO. PC150-3	SERIAL NO. PC150LC-3
35	01010-51435	BOLT	6	3001–	3001–
36	01643-31445	WASHER	6	3001–	3001–

FIG. 9031 BOOM (TBG SPEC.)

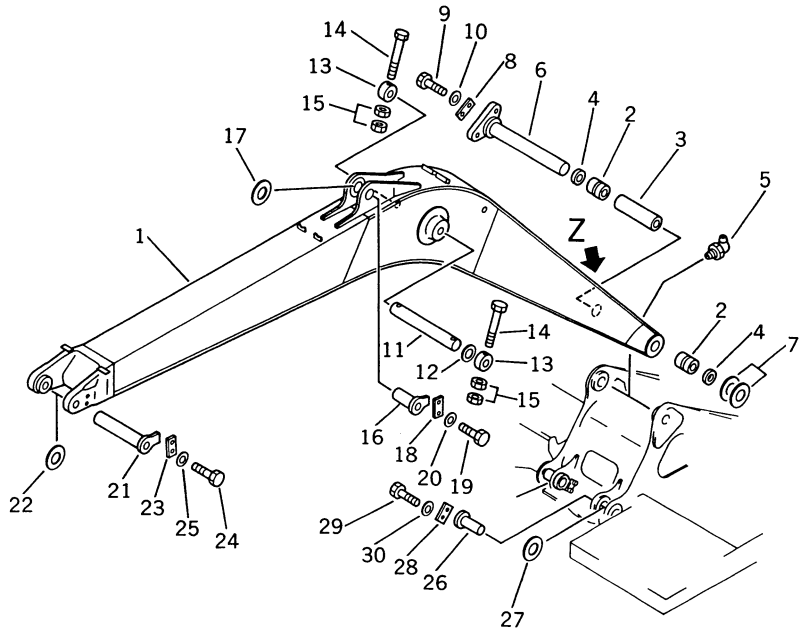

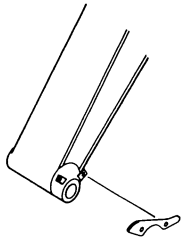

View Z

FIG NO. 9031

INDEX NO.	PART NO.	DESCRIPTION	Q'TY	SERIAL NO. PC150-3	SERIAL NO. PC150LC-3
	21K-70-00140	BOOM ASS'Y	1	3001–	3001–
1	(☆21K-70-21330)	• BOOM	1	3001–	3001–
2	21K-70-11481	• BUSHING	2	3001–	3001–
3	21K-70-11380	• SPACER	1	3001–	3001–
4	07145-00080	SEAL, DUST	2	3001–	3001–
5	07020-00900	FITTING, GREASE	2	3001–	3001–
6	21K-70-21320	PIN	1	3001–	3001–
7	205-70-51450	SPACER, 1.0MM	4	3001–	3001–
8	205-70-71310	PLATE	1	3001–	3001–
9	01010-51235	BOLT	2	3001–	3001–
10	01643-31232	WASHER	2	3001–	3001–
11	21K-70-21180	PIN	1	3001–	3001–
12	203-70-24170	SPACER, 1.0MM	2	3001–	3001–
13	21K-70-11410	PLATE	2	3001–	3001–
14	01019-11640	BOLT	2	3001–	3001–
15	01580-11613	NUT	4	3001–	3001–
16	21K-70-21170	PIN	1	3001–	3001–
17	205-70-51450	SPACER	2	3001–	3001–
18	205-70-66580	PLATE	1	3001–	3001–
19	01010-51230	BOLT	2	3001–	3001–
20	01643-31232	WASHER	2	3001–	3001–
21	21K-70-21190	PIN	1	3001–	3001–
22	205-70-51450	SPACER	1	3001–	3001–
23	205-70-71310	PLATE	1	3001–	3001–
24	01010-51235	BOLT	2	3001–	3001–
25	01643-31232	WASHER	2	3001–	3001–
26	21K-70-11170	PIN	2	3001–	3001–
27	203-70-11210	SPACER	6	3001–	3001–
28	205-70-66580	PLATE	2	3001–	3001–
29	01010-51230	BOLT	4	3001–	3001–
30	01643-31232	WASHER	4	3001–	3001–

FIG. 9033 OVER LOAD WARNING DEVICE (TBG SPEC.)

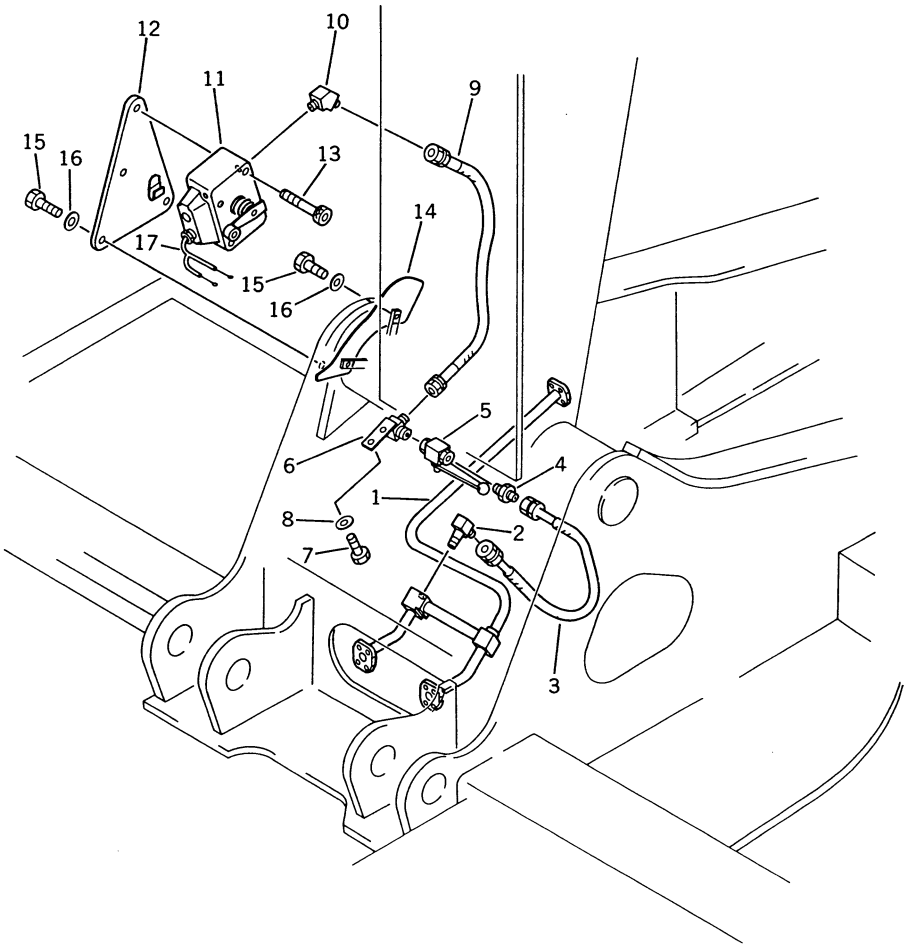

FIG NO. 9033

INDEX NO.	PART NO.	DESCRIPTION	Q'TY	SERIAL NO. PC150-3	SERIAL NO. PC150LC-3
1	21K-62-22530	TUBE	1	3001–	3001–
2	175-79-82550	ELBOW	1	3001–	3001–
3	07096-00205	HOSE	1	3001–	3001–
4	07238-00210	CONNECTOR	1	3001–	3001–
5	205-62-69250	VALVE	1	3001–	3001–
6	203-62-44690	ELBOW	1	3001–	3001–
7	01010-51020	BOLT	2	3001–	3001–
8	01643-31032	WASHER	2	3001–	3001–
9	07096-00207	HOSE	1	3001–	3001–
10	175-79-82560	ELBOW	1	3001–	3001–
11	205-62-69240	SWITCH, OVER LOAD	1	3001–	3001–
12	21K-62-22510	PLATE	1	3001–	3001–
13	01252-40616	BOLT	2	3001–	3001–
14	21K-62-22520	CAM	1	3001–	
14	21K-62-22550	CAM	1		3001–
15	01010-51030	BOLT	4	3001–	3001–
16	01643-31032	WASHER	4	3001–	3001–
17	203-06-41770	WIRE ASS'Y	1	3001–	3001–

FIG. 9035 MARKS AND PLATES (GERMAN–ENGLISH) (TBG SPEC.)

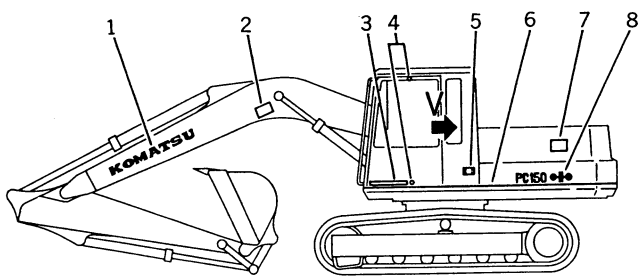

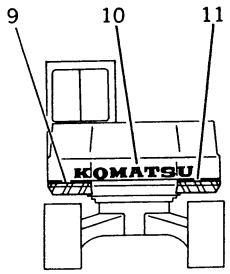

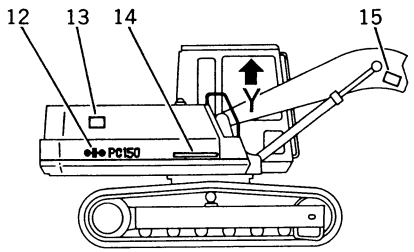

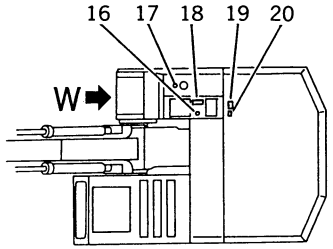

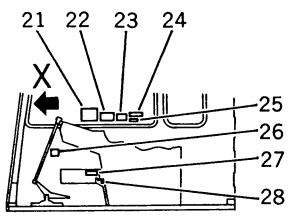

R.H. Window Inside

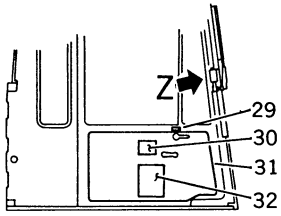

L.H. Door Inside

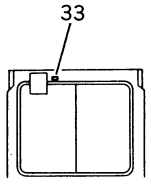

View V

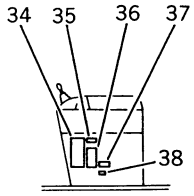

Control Box L.H.

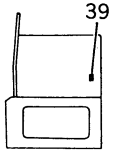

View W

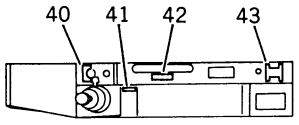

Instrument Panel

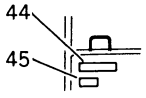

View X

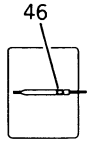

View Y



View Z

INDEX NO.	PART NO.	DESCRIPTION	Q'TY	SERIAL NO. PC150-3	SERIAL NO. PC150LC-3
1	09690-01250	PLATE, NAME, KOMATSU	1	3001–	3001–
2	20T-98-22240	PLATE, CAUTION, KEEP OUT OF TURNING AREA	1	3001–	3001–
3	09690-10500	PLATE, NAME, KOMATSU	1	3001–	3001–
4	205-00-63770	PLATE, GUARD	2	3001–	3001–
5	09602-21643	PLATE, NAME	1	3001–	3001–
5	01220-60408	SCREW	4	3001–	3001–
5	01601-20410	WASHER, SPRING	4	3001–	3001–
6	142-54-16170	LINE, STRIPE	8	3001–	3001–
7	20T-98-22240	PLATE, CAUTION, KEEP OUT OF TURNING AREA	1	3001–	3001–
8	21K-00-21130	PLATE, MARK, PC150, L.H.	1	3001–	
8	21K-00-21160	PLATE, MARK, PC150LC, L.H.	1		3001–
9	203-00-41260	PLATE, ZEBRA MARK, L.H.	1	3001–	3001–
10	203-00-41130	PLATE, NAME, KOMATSU	1	3001–	3001–
11	203-00-41270	PLATE, ZEBRA MARK, R.H.	1	3001–	3001–
12	21K-00-21140	PLATE, MARK, PC150, R.H.	1	3001–	
12	21K-00-21170	PLATE, MARK, PC150LC, R.H.	1		3001–
13	20T-98-22240	PLATE, CAUTION, KEEP OUT OF TURNING AREA	1	3001–	3001–
14	09690-10500	PLATE, NAME, KOMATSU	1	3001–	3001–
15	20T-98-22240	PLATE, CAUTION, KEEP OUT OF TURNING AREA	1	3001–	3001–
16	09669-00003	PLATE, GAGE, HYDRAULIC TANK OIL	1	3001–	3001–
17	09669-00002	PLATE, CAUTION, FUEL	1	3001–	3001–
18	09653-02000	PLATE, CAUTION, HYDRAULIC TANK CAP	1	3001–	3001–
19	205-00-65290	PLATE, CAUTION	1	3001–	3001–
20	09668-02000	PLATE, CAUTION, RADIATOR CAP	1	3001–	3001–
21	205-00-75490	PLATE, OPERATING	1	3001–	3001–
22	205-00-13490	PLATE, CAUTION	1	3001–	3001–
23	205-00-13480	PLATE, CAUTION	1	3001–	3001–
24	09649-02001	PLATE, CAUTION	1	3001–	3001–
25	21K-54-27180	PLATE, CAUTION	1	3001–	3001–
26	207-00-13550	PLATE, CAUTION, WINDOW WASHER (OP)	1	3001–	3001–
27	09131-02000	PLATE, SAFETY, SWING LOCK LEVER	1	3001–	3001–

FIG NO. 9035

INDEX NO.	PART NO.	DESCRIPTION	Q'TY	SERIAL NO. PC150-3	SERIAL NO. PC150LC-3
28	09685-00002	PLATE, OPERATING, SWING LOCK LEVER	1	3001–	3001–
29	205-00-71340	PLATE, OPERATING, DOOR LOCK	1	3001–	3001–
30	207-00-13540	PLATE, SAFETY	1	3001–	3001–
31	21K-54-25150	COVER	1	3001–	3001–
32	21K-00-21190	CHART, OIL	1	3001–	3001–
33	207-00-13450	PLATE, CAUTION, INSPECTION AND MAINTENANCE	1	3001–	3001–
34	21K-54-27170	PLATE, CAUTION	1	3001–	3001–
35	09651-02000	PLATE, SAFETY, BEFORE OPERATING	1	3001–	3001–
36	09173-02000	PLATE, SAFETY	1	3001–	3001–
37	20T-98-22330	PLATE, SAFETY	1	3001–	3001–
38	203-00-41180	PLATE, OPERATING	1	3001–	3001–
39	205-00-71380	PLATE, LEVEL GAUGE, HYDRAULIC OIL TANK	1	3001–	3001–
40	09683-21060	PLATE, OPERATING	1	3001–	3001–
41	09685-00001	PLATE, OPERATING, SAFETY LOCK LEVER	1	3001–	3001–
42	362-54-17320	PLATE, OPERATING, FUEL CONTROL LEVER	1	3001–	3001–
43	203-00-41321	PLATE, OPERATING	1	3001–	3001–
44	205-00-66110	PLATE, OPERATING	1	3001–	3001–
45	205-00-66170	PLATE, CAUTION, FOPS (OP)	1	3001–	3001–
46	207-00-13510	PLATE, CAUTION, GAS SPRING	1	3001–	3001–
47	207-00-13460	PLATE, CAUTION	1	3001–	3001–

FIG. 9902 MARKS AND PLATES (FOR LONG LEVER CONTROL) (ENGLISH) (EXCEPT JAPAN)

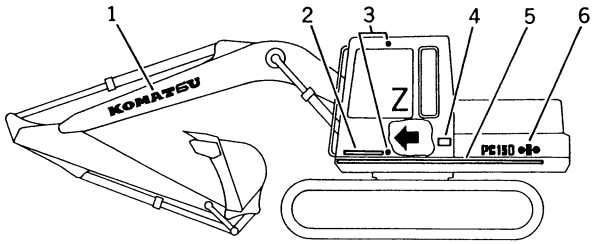

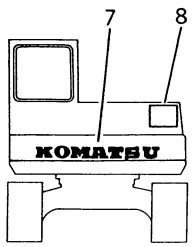

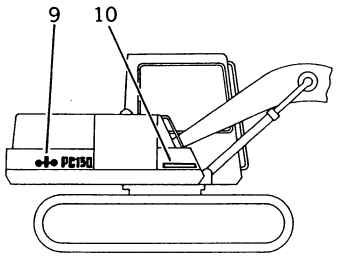

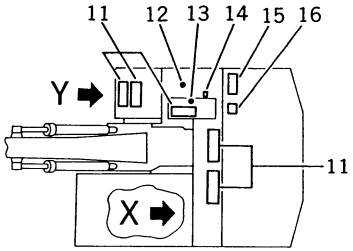

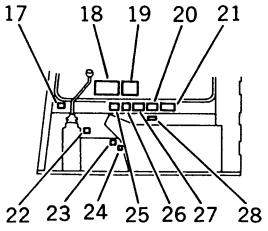

R.H. Window Inside

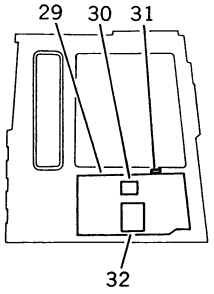

L.H. Door Inside

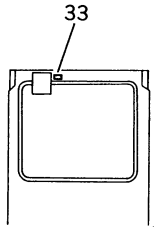

View X

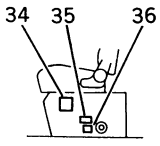

Operator's Seat L.H.

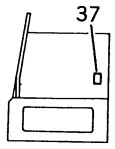

View Y

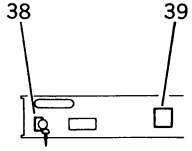

Instrument Panel

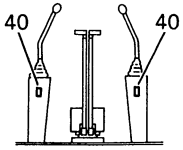

View Z

FIG NO. 9902

INDEX NO.	PART NO.	DESCRIPTION	Q'TY	SERIAL NO. PC150-3	SERIAL NO. PC150LC-3
1	09690-01250	PLATE, NAME, KOMATSU	1	3001–	3001–
2	09690-10500	PLATE, NAME, KOMATSU	1	3001–	3001–
3	205-00-63770	PLATE, GUARD	2	3001–	3001–
4	09602-01643	PLATE, NAME	1	3001–	3001–
4	01220-60408	SCREW	4	3001–	3001–
4	01601-20410	WASHER, SPRING	4	3001–	3001–
5	142-54-16170	LINE, STRIPE	8	3001–	3001–
6	21K-00-21130	PLATE, MARK, PC150, L.H.	1	3001–	
6	21K-00-21160	PLATE, MARK, PC150LC, L.H.	1		3001–
7	203-00-41130	PLATE, NAME, KOMATSU	1	3001–	3001–
8	09133-03000	PLATE, CAUTION, KEEP OUT OF TURNING AREA	1	3001–	3001–
9	21K-00-21140	PLATE, MARK, PC150, R.H.	1	3001–	
9	21K-00-21170	PLATE, MARK, PC150LC, R.H.	1		3001–
10	09690-10500	PLATE, NAME, KOMATSU	1	3001–	3001–
11	154-54-23260	SEAT, NONSKID	5	3001–	3001–
12	09669-00002	PLATE, CAUTION, FUEL	1	3001–	3001–
13	09669-00003	PLATE, GAGE, HYDRAULIC TANK OIL	1	3001–	3001–
14	09653-03000	PLATE, CAUTION, HYDRAULIC TANK CAP	1	3001–	3001–
15	205-00-65270	PLATE, CAUTION	1	3001–	3001–
16	09668-03000	PLATE, CAUTION, RADIATOR CAP	1	3001–	3001–
17	205-00-63360	PLATE, CAUTION	1	3001–	3001–
18	205-00-66110	PLATE, OPERATING	1	3001–	3001–
19	205-00-75340	PLATE, OPERATING	1	3001–	3001–
20	09649-03001	PLATE, CAUTION	1	3001–	3001–
21	205-00-63550	PLATE, CAUTION	1	3001–	3001–
22	205-00-63750	PLATE, CAUTION, WINDOW WASHER (OP)	1	3001–	3001–
23	09131-03000	PLATE, SAFETY, SWING LOCK LEVER	1	3001–	3001–
24	09685-00002	PLATE, OPERATING, SWING LOCK LEVER	1	3001–	3001–
25	205-00-63390	PLATE, CAUTION	1	3001–	3001–
26	09651-03000	PLATE, SAFETY, BEFORE OPERATING	1	3001–	3001–
27	09173-03000	PLATE, SAFETY, INSPECTION AND MAINTENANCE	1	3001–	3001–
28	203-00-31350	PLATE, CAUTION	1	3001–	3001–
29	21K-54-25140	COVER	1	3001–	3001–

FIG NO. 9902

INDEX NO.	PART NO.	DESCRIPTION	Q'TY	SERIAL NO. PC150-3	SERIAL NO. PC150LC-3
30	205-00-63340	PLATE, SAFETY	1	3001–	3001–
31	205-00-71340	PLATE, OPERATING, DOOR LOCK	1	3001–	3001–
32	21K-00-21180	CHART, OIL	1	3001–	3001–
33	205-00-63350	PLATE, CAUTION	1	3001–	3001–
34	203-00-31340	PLATE, CAUTION	1	3001–	3001–
35	09667-03000	PLATE, SAFETY	1	3001–	3001–
36	203-00-41180	PLATE, OPERATING	1	3001–	3001–
37	203-00-31120	PLATE, LEVEL GAUGE, HYDRAULIC OIL TANK	1	3001–	3001–
38	09683-30060	PLATE, OPERATING	1	3001–	3001–
39	203-00-41311	PLATE, OPERATING	1	3001–	3001–
40	09685-00001	PLATE, OPERATING, SAFETY LOCK LEVER	2	3001–	3001–

FIG. 9922 MARKS AND PLATES (FOR WRIST CONTROL) (ENGLISH) (EXCEPT JAPAN)

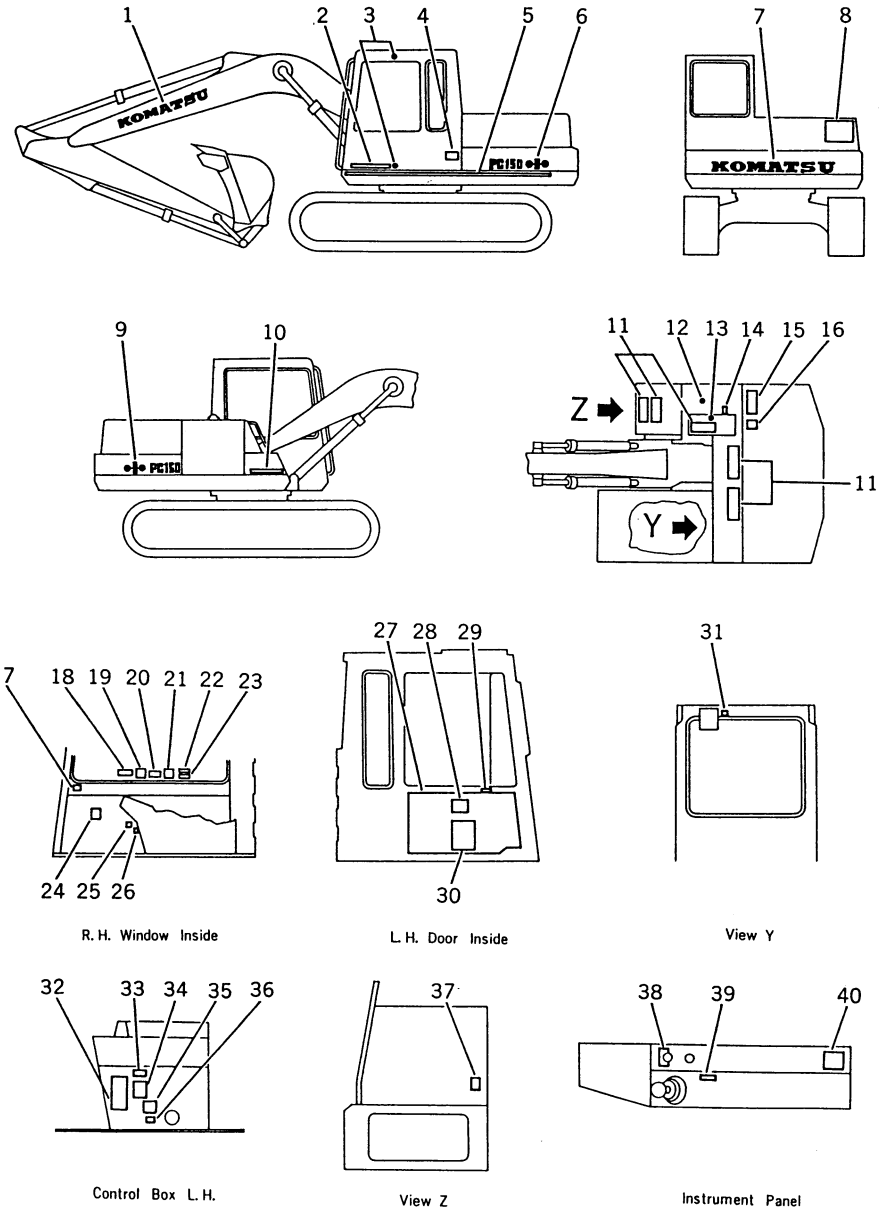

INDEX NO.	PART NO.	DESCRIPTION	Q'TY	SERIAL NO. PC150-3	SERIAL NO. PC150LC-3
1	09690-01250	PLATE, NAME, KOMATSU	1	3001–	3001–
2	09690-10500	PLATE, NAME, KOMATSU	1	3001–	3001–
3	205-00-63770	PLATE, GUARD	2	3001–	3001–
4	09602-01643	PLATE, NAME	1	3001–	3001–
4	01220-60408	SCREW	4	3001–	3001–
4	01601-20410	WASHER, SPRING	4	3001–	3001–
5	142-54-16170	LINE, STRIPE	8	3001–	3001–
6	21K-00-21130	PLATE, MARK, PC150, L.H.	1	3001–	
6	21K-00-21160	PLATE, MARK, PC150LC, L.H.	1		3001–
7	203-00-41130	PLATE, NAME, KOMATSU	1	3001–	3001–
8	09133-03000	PLATE, CAUTION, KEEP OUT OF TURNING AREA	1	3001–	3001–
9	21K-00-21140	PLATE, MARK, PC150, R.H.	1	3001–	
9	21K-00-21170	PLATE, MARK, PC150LC, R.H.	1		3001–
10	09690-10500	PLATE, NAME, KOMATSU	1	3001–	3001–
11	154-54-23260	SEAT, NONSKID	1	3001–	3001–
12	09669-00002	PLATE, CAUTION, FUEL	1	3001–	3001–
13	09669-00003	PLATE, GAGE, HYDRAULIC TANK OIL	1	3001–	3001–
14	09653-03000	PLATE, CAUTION, HYDRAULIC TANK CAP	1	3001–	3001–
15	205-00-65270	PLATE, CAUTION	1	3001–	3001–
16	09668-03000	PLATE, CAUTION, RADIATOR CAP	1	3001–	3001–
17	205-00-63360	PLATE, CAUTION	1	3001–	3001–
18	205-00-66110	PLATE, OPERATING	1	3001–	3001–
19	205-00-75340	PLATE, OPERATING	1	3001–	3001–
20	205-00-63550	PLATE, CAUTION	1	3001–	3001–
21	205-00-63390	PLATE, CAUTION	1	3001–	3001–
22	09649-03001	PLATE, CAUTION	1	3001–	3001–
23	203-00-31350	PLATE, CAUTION	1	3001–	3001–
24	205-00-63750	PLATE, CAUTION, WINDOW WASHER (OP)	1	3001–	3001–
25	09131-03000	PLATE, SAFETY, SWING LOCK LEVER	1	3001–	3001–
26	09685-00002	PLATE, OPERATING, SWING LOCK LEVER	1	3001–	3001–
27	21K-54-25140	COVER	1	3001–	3001–
28	205-00-63340	PLATE, SAFETY	1	3001–	3001–
29	205-00-71340	PLATE, OPERATING, DOOR LOCK	1	3001–	3001–
30	21K-00-21180	CHART, OIL	1	3001–	3001–

FIG NO. 9922

INDEX NO.	PART NO.	DESCRIPTION	Q'TY	SERIAL NO. PC150-3	SERIAL NO. PC150LC-3
31	205-00-63350	PLATE, CAUTION, ... INSPECTION AND MAINTENANCE	1	3001 –	3001 –
32	203-00-31340	PLATE, CAUTION	1	3001 –	3001 –
33	09651-03000	PLATE, SAFETY, BEFORE OPERATING.....	1	3001 –	3001 –
34	09173-03000	PLATE, SAFETY	1	3001 –	3001 –
35	09667-03000	PLATE, SAFETY	1	3001 –	3001 –
36	203-00-41180	PLATE, OPERATING	1	3001 –	3001 –
37	203-00-31120	PLATE, LEVEL GAUGE, ... HYDRAULIC OIL TANK	1	3001 –	3001 –
38	09683-30060	PLATE, OPERATING	1	3001 –	3001 –
39	09685-00001	PLATE, OPERATING, SAFETY LOCK LEVER	1	3001 –	3001 –
40	203-00-41311	PLATE, OPERATING	1	3001 –	3001 –

FIG. 9991 TOOL

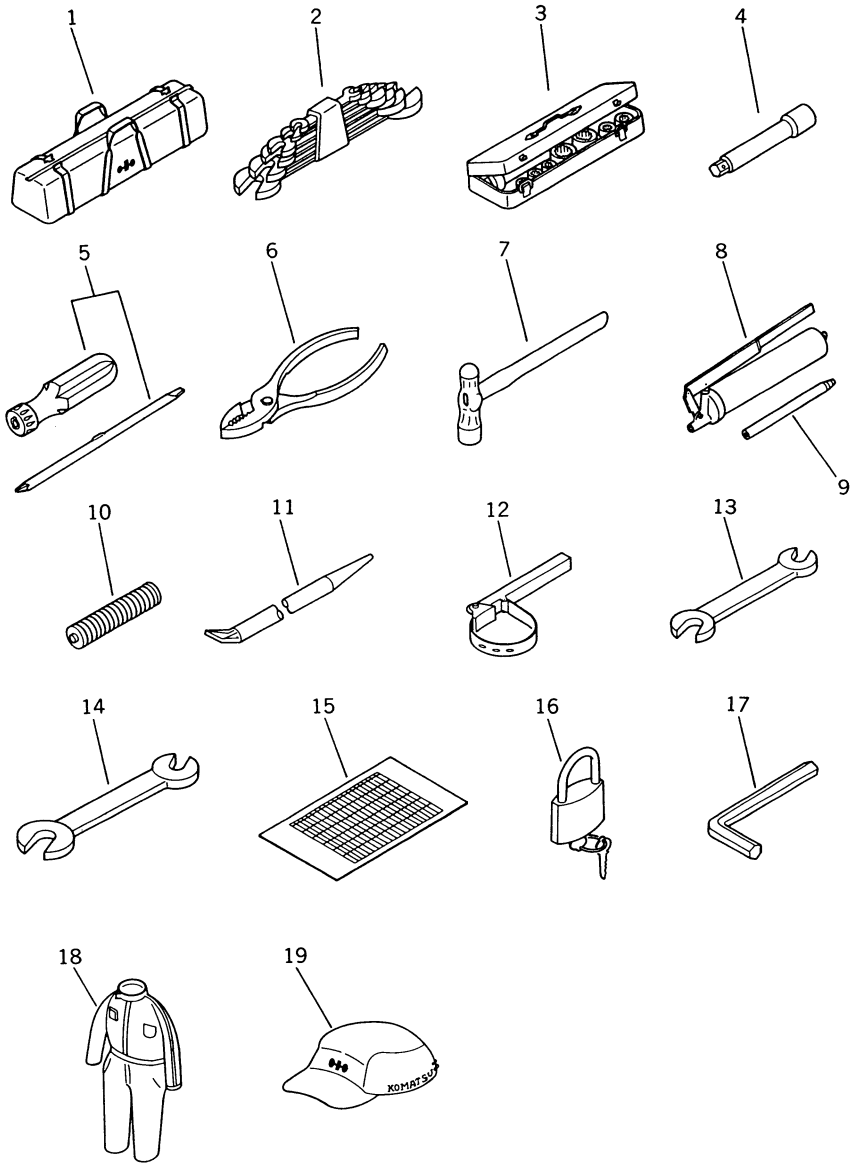

INDEX NO.	PART NO.	DESCRIPTION	Q'TY	SERIAL NO. PC150-3	SERIAL NO. PC150LC-3
1	09056-00513	BAG, TOOL	1	3001–	3001–
2	09000-30006	WRENCH SET	1	3001–	3001–
3	203-98-41110	SOCKET WRENCH SET	1	3001–	3001–
4	09022-00250	EXTENSION	1	3001–	3001–
5	09033-00190	DRIVER, SCREW	1	3001–	3001–
6	09036-00150	PLIERS	1	3001–	3001–
7	09039-00150	HAMMER	1	3001–	3001–
8	07952-80002	GREASE PUMP ASS'Y	1	3001–	3001–
8	07950-10450	• PUMP, GREASE	1	3001–	3001–
9	07951-21045	• NOZZLE	1	3001–	3001–
10	07950-90403	CARTRIDGE, GREASE	1	3001–	3001–
11	09055-00520	BAR, PINCH	1	3001–	3001–
12	09019-08035	WRENCH, FILTER	1	3001–	3001–
13	09002-03641	WRENCH	1	3001–	3001–
14	09001-05500	WRENCH	1	3001–	3001–
15	203-98-41120	TABLE, TOOL	1	3001–	3001–
16	09460-00000	LOCK, PAD	1	3001–	3001–
17	09007-01040	WRENCH	1	3001–	3001–
18	09980-20450	OVERALL	1	3001–	3001–
19	09982-20057	CAP, WORK	1	3001–	3001–

ENGINE NUMERICAL INDEX

10

PART NO	F/NO	I/NO	M/NO
DK013020-6040	4501	10	
DK014110-6440	4501	9	
DK016010-0540	4511	22	
DK016010-1640	4512	20	
DK016630-2030	4501	35	
DK016640-2030	4501	36	
DK020006-1440	4511	7	
DK020006-1640	4512	10	
DK020006-2040	4501	46	
DK020018-1840	4511	5	
DK020106-3840	4512	8	
DK020106-5040	4512	6	
DK025803-1310	4512	25	
DK026110-0510	4511	20A	
DK026505-0940	4501	43	
DK026506-1040	4512	32	
DK026512-1540	4512	15	
DK029020-6210	4512	11	
DK029040-6020	4501	2	
DK029050-5010	4501	42	
DK029141-7010	4512	24	
DK029200-8020	4511	20E	
DK029201-6010	4511	19	
DK029231-2030	4511	13	
DK029240-6010	4512	4	
DK029311-0010	4511	16	
DK029311-0020	4501	25	
DK029311-0030	4501	25	
DK029311-0040	4501	25	
DK029311-0050	4501	25	
DK029311-0060	4501	25	
DK029311-0070	4501	25	
DK029311-0080	4501	25	
DK029311-0090	4501	25	
DK029311-0110	4501	25	
DK029311-0120	4501	25	
DK029311-0130	4501	25	
DK029311-0140	4501	25	
DK029311-0180	4511	16	
DK029311-0190	4511	16	
DK029311-0210	4511	16	
DK029311-0270	4501	25	
DK029311-0280	4501	25	
DK029311-0290	4501	25	
DK029311-0310	4501	25	
DK029311-0320	4501	25	
DK029311-0330	4501	25	
DK029311-0340	4501	25	
DK029311-0350	4501	25	
DK029311-0490	4501	25	

PART NO	F/NO	I/NO	M/NO
DK029311-0500	4501	25	
DK029311-0580	4501	25	
DK029311-0590	4501	25	
DK029311-0600	4501	25	
DK029311-0610	4501	25	
DK029311-0620	4501	25	
DK029311-0630	4501	25	
DK029311-0710	4501	25	
DK029311-1090	4512	23	
DK029311-7010	4501	40	
DK029311-7020	4501	40	
DK029311-7030	4501	40	
DK029311-7040	4501	40	
DK029311-7050	4501	40	
DK029311-7060	4501	40	
DK029311-7070	4501	40	
DK029311-7090	4501	40	
DK029311-7210	4501	40	
DK029311-7220	4501	40	
DK029312-0310	4501	39	
DK029312-0320	4501	39	
DK029312-0330	4501	39	
DK029312-0340	4501	39	
DK029312-0350	4501	39	
DK029312-0360	4501	39	
DK029312-0370	4501	39	
DK029312-0380	4501	39	
DK029321-2020	4511	12	
DK029332-6030	4531	5	
DK029340-6020	4501	7	
DK029341-0110	4501	53	
DK029341-4130	4501	50	
DK029341-4130	4531	19	
DK029470-4030	4501	48	
DK029622-0190	4501	44	
DK029631-6060	4531	13	
DK029631-8020	4512	19	
DK029632-0030	4501	19	
DK029632-5070	4511	2	
DK029633-1010	4501	11	
DK029635-2020	4512	31	
DK029637-5020	4501	51	
DK029711-4310	4531	18	
DK029731-0120	4501	52	
DK029731-4680	4501	49	
DK029731-4680	4531	17	
DK029801-0030	4511	15	
DK101069-9110	4501	1	
DK105220-5280	4531	1	
DK105400-3300	4511	1	

PART NO	F/NO	I/NO	M/NO
DK105400-3300	4512	1	
DK131017-1000	4501	6	
DK131028-6020	4501	5	
DK131034-1401	4501	8	
DK131073-6520	4501	1	
DK131110-6820	4501	13	
DK131112-4200	4501	14	
DK131115-1600	4501	15	
DK131116-8720	4501	16	
DK131117-2100	4501	17	
DK131122-0520	4501	18	
DK131152-4020	4501	12	
DK131200-0220	4501	20	
DK131203-0200	4501	21	
DK131204-1000	4501	22	
DK131205-0500	4501	23	
DK131206-0200	4501	24	
DK131215-2500	4501	26	
DK131216-0100	4501	27	
DK131217-0200	4501	28	
DK131226-0300	4501	30	
DK131240-0100	4501	31	
DK131241-0100	4501	32	
DK131242-0100	4501	33	
DK131256-0000	4501	29	
DK131302-1300	4501	37	
DK131302-1700	4501	38	
DK131306-0800	4501	41	
DK131321-1700	4501	47	
DK131330-1800	4501	45	
DK131371-2800	4501	34	
DK131400-0100	4501	3	
DK131420-0420	4501	4	
DK139008-0400	4512	9A	
DK139410-0000	4511	16	
DK139410-0100	4511	16	
DK139411-0000	4512	22	
DK139611-0000	4512	21	
DK150508-5900	4201	2	
DK150515-9900	4201	3	
DK150524-4600	4201	6	
DK150534-3600	4201	5	
DK150534-3700	4201	5	
DK150534-3800	4201	5	
DK150534-3900	4201	5	
DK150534-4000	4201	5	
DK150534-4100	4201	5	
DK150534-4200	4201	5	
DK150534-4300	4201	5	
DK150534-4400	4201	5	

PART NO	F/NO	I/NO	M/NO
DK150562-4300	4201	4	
DK150655-0000	4201	7	
DK152003-1020	4531	1	
DK152100-1120	4531	2	
DK152102-1600	4531	3	
DK152105-0200	4531	4	
DK152111-2820	4531	6	
DK152112-0100	4531	7	
DK152113-0700	4531	8	
DK152114-0400	4531	9	
DK152115-0500	4531	10	
DK152116-0200	4531	11	
DK152118-0900	4531	12	
DK152121-0200	4531	14	
DK152200-5420	4531	15	
DK152300-5920	4531	16	
DK152320-0100	4531	20	
DK153313-0400	4511	20D	
DK154000-6300	4511	1	
DK154007-0200	4511	4	
DK154007-2900	4511	3	
DK154010-0100	4511	8	
DK154010-0300	4512	7	
DK154011-0100	4511	9	
DK154011-0100	4512	2	
DK154011-1700	4512	14	
DK154031-2400	4512	3	
DK154035-1600	4512	33	
DK154036-0300	4512	5	
DK154063-6820	4512	9	
DK154101-0120	4511	11	
DK154123-0120	4511	14	
DK154150-0400	4512	12	
DK154154-0701	4511	17	
DK154158-1520	4512	13	
DK154159-1200	4512	16	
DK154177-1520	4511	18	
DK154200-0220	4512	17	
DK154204-1900	4512	18	
DK154206-0200	4512	27	
DK154206-2800	4512	26	
DK154210-0920	4511	20	
DK154224-0420	4511	20B	
DK154225-0520	4511	20C	
DK154230-3920	4511	21	
DK154236-4100	4511	23	
DK154237-0100	4512	28	
DK154341-9520	4512	29	
DK154350-1900	4511	6	
DK154350-7700	4511	24	

PART NO	F/NO	I/NO	M/NO
DK154350-7800	4512	30	
DK154500-2020	4512	1	
DK155404-5300	4511	10	
KD0-0055-05282	6301	24	
KD0-0080-05102	6301	17	
KD0-0080-05422	6402	14	
KD0-0240-05505	6401	11	
KD0-0275-06222	6401	9	
KD0-0275-06852	6301	18	
KD0-0280-18022	6301	22	
KD0-09001-4180	6401	29	
KD0-23230-0210	6401	40	
KD0-23303-0020	6402	1	
KD0-23711-0170	6401	34	
KD0-23740-0180	6401	32	
KD0-23750-0120	6401	33	
KD0-25000-6950	6401	1	
KD0-33400-1670	6301	21	
KD0-33700-1970	6301	8	
KD0-33710-1661	6301	13	
KD0-33730-1600	6301	14	
KD0-33901-0370	6301	16	
KD0-33901-0500	6301	11	
KD0-33926-0370	6301	5	
KD0-47100-3510	6402	5	
KD0-47780-0670	6402	12	
KD1-0240-06285	6401	17	
KD1-0335-18022	6301	23	
KD1-0345-08001	6402	2	
KD1-0454-60047	6401	37	
KD1-0454-60057	6401	21	
KD1-0454-62007	6401	39	
KD1-0472-62027	6301	2	
KD1-0472-63057	6301	6	
KD1-09102-0010	6301	8	
KD1-09210-1020	6401	20	
KD1-09279-0090	6402	4	
KD1-21921-0030	6401	36	
KD1-23100-0160	6401	38	
KD1-23111-0350	6401	22	
KD1-23181-0030	6401	15	
KD1-23310-0520	6401	12	
KD1-23320-0170	6402	3	
KD1-23500-0260	6401	16	
KD1-23600-0160	6401	19	
KD1-23611-0430	6401	26	
KD1-23740-0170	6401	31	
KD1-23785-0100	6401	2	
KD1-23901-0080	6401	35	
KD1-23903-0010	6401	27	

PART NO	F/NO	I/NO	M/NO
KD1-23905-0042	6401	8	
KD1-23913-0010	6401	30	
KD1-23914-0030	6401	14	
KD1-23921-0110	6401	7	
KD1-23921-0130	6401	23	
KD1-23921-0140	6401	24	
KD1-23921-0210	6401	10	
KD1-23941-0030	6401	25	
KD1-23941-0060	6401	4	
KD1-23946-0070	6401	5	
KD1-23946-0080	6401	6	
KD1-33200-0970	6301	19	
KD1-33310-0682	6301	20	
KD1-33720-0792	6301	10	
KD1-33923-0570	6301	4	
KD1-33926-0380	6301	3	
KD1-33943-0870	6301	15	
KD1-33944-0490	6301	9	
KD1-33944-0540	6301	12	
KD1-44000-0730	6301	7	
KD1-47121-1580	6402	6	
KD1-47151-0550	6402	8	
KD1-47914-0110	6402	11	
KD1-47921-0010	6401	3	
KD1-47921-0790	6401	18	
KD1-47921-1000	6401	28	
KD1-47921-1030	6402	13	
KD1-47927-1060	6402	10	
KD1-47941-0490	6402	9	
KD1-47943-0690	6402	7	
KD7-23351-0140	6401	13	
KD7-33100-0530	6301	1	
01010-30612	1101	5	
01010-31080	1601	17	
01050-31230	6001	11	
01050-31430	2201	7	
01140-61025	1501	9	
01144-31035	4001	11	
01236-40816	5001	8	
01435-00865	1101	12	
01435-01016	1601	4	
01435-01020	1001	18	
01435-01020	1601	12	
01435-01030	2201	3	
01435-01035	4201	12	
01435-01090	1501	4	
01435-01095	1501	5	
01435-01235	1601	9	
01435-01270	2021	16	
01435-20616	2021	19	

PART NO	F/NO	I/NO	M/NO
01435-20625	4001	23	
01435-20812	3001	14	
01435-20812	4001	8	
01435-20814	2101	4	
01435-20816	1601	5	
01435-20816	2001	27	
01435-20816	2001	35	
01435-20816	2021	3	
01435-20816	2101	7	
01435-20816	3001	10	
01435-20816	3001	13	
01435-20816	3251	7	
01435-20820	2401	5	
01435-20820	3251	3	
01435-20820	3251	11	
01435-20820	5001	17	
01435-20825	3301	9	
01435-20825	6001	3	
01435-20830	5001	20	
01435-20855	2021	6	
01435-20855	5001	13	
01435-20855	6001	10	
01435-20870	2021	9	
01435-20895	6001	4	
01435-21014	5202	27	
01435-21016	2301	9	
01435-21016	4001	14	
01435-21020	1151	11	
01435-21020	5202	25A	
01435-21025	5202	25	
01435-21030	1301	2	
01435-21030	5001	23	
01435-21040	5202	12	
01435-21045	1301	15	
01435-21060	5202	15	
01435-21070	1301	8	
01435-21085	1301	3	
01435-21230	6101	3	
01580-01411	6001	7	
01580-10806	3301	5	
01580-21008	1601	18	
01584-00806	1601	6	
01584-00806	1601	14	
01584-00806	2021	8	
01584-01008	4001	12	
01584-01008	5202	13	
01584-01210	1601	10	
01584-20806	2001	37	
01584-20806	3251	8	
01584-20806	4001	15	

PART NO	F/NO	I/NO	M/NO
01602-01236	6001	12	
01602-01442	6001	6	
01602-20825	3301	6	
01640-21016	1601	19	
01641-20812	2021	7	
01641-20812	3301	7	
01641-21423	6001	8	
01642-20810	2001	36	
01642-21016	5202	14	
01643-31232	6001	13	
01653-21412	4001	4	
01653-21412	9999	2	
02720-40104	1001	9	
04010-00516	2401	3	
04020-00820	2001	12	
04020-01228	2001	14	
04025-00408	2001	7	
04025-00512	2021	14	
04064-01510	1401	8	
04065-03012	2351	3	
04121-21748	5001	24	
04418-02550	1151	4	
04418-02550	2001	39	
07000-01006	5202	3	
07000-02014	5202	4	
07000-02100	9999	2	
07000-02105	6101	2	
07000-02135	4001	6	
07000-02135	9999	2	
07000-03040	5001	11	
07000-03040	9999	1	
07000-03050	2021	18	
07000-03050	9999	2	
07000-62018	3251	2	
07000-62018	9999	1	
07000-63030	2101	6	
07005-00812	4001	9	
07005-00812	4101	4	
07005-00812	9999	2	
07005-01012	4001	30	
07005-01012	9999	2	
07005-01412	4101	13	
07005-01412	9999	2	
07042-00312	2001	18	
07042-00312	5001	10	
07042-20108	1501	2	
07043-50108	1301	6	
07043-50108	2001	19	
07043-50211	2001	20	
07043-50312	3301	8	

PART NO	F/NO	I/NO	M/NO
07043-50415	2201	2	
07043-50617	3301	2	
07046-21810	2001	11	
07046-23016	2001	23	
07046-41008	1001	5	
07046-41810	1001	6	
07046-42010	2001	13	
07046-42216	1001	7	
07046-42516	1001	8	
07046-42516	2001	17	
07046-43016	2001	15	
07046-44016	2001	16	
07206-30710	4001	29	
07206-31014	4101	12	
07260-20925	4101	8	
07260-20932	4101	7	
07260-20963	5202	18	
07260-20971	5202	19	
07270-20410	4201	14	
07270-40430	4201	15	
07281-00197	4101	11	
07281-00197	5202	20	
07281-00359	3251	13	
07281-00709	1301	10	
07285-00180	1151	14	
07286-01606	1151	12	
07286-01670	1151	13	
08034-00519	5202	28	
08036-10814	1301	14	
08038-00518	1301	13	
09461-00161	1401	13	
09605-01411	2001	38	
09920-00150	1301	17	
09920-00150	2021	20	
09920-00150	2101	8	
09920-00150	2201	9	
09920-00150	3301	10	
09920-00150	4001	31	
113-04-32130	5202	17	
201-54-24130	5001	9	
201-54-24130	5202	22	
203-06-41160	2101	5	
287-01-12231	4001	10	
287-01-12231	9999	2	
600-181-7511	1401	4	
600-181-7511	1401	7	
600-181-7680	1401	12	
600-181-8640	1401	6	
600-181-9200	1401	5	
600-181-9240	1401	5	

PART NO	F/NO	I/NO	M/NO
600-181-9340	1401	2	
600-181-9430	1401	10	
600-181-9500	1401	2	
600-181-9541	1401	11	
600-181-9551	1401	9	
600-181-9631	1401	3	
600-211-6240	3101	2	
600-311-6220	4101	2	
600-311-6720	4101	3	
600-311-9600	4101	1	
600-311-9640	4101	1	
600-411-1010	5202	10	
600-411-1231	5202	2	
600-411-1240	5202	5	
600-411-1250	5202	6	
600-411-1260	5202	7	
600-411-1280	5202	8	
600-411-1290	5202	9	
600-411-1511	5202	1	
600-411-1521	5202	1	
600-411-1920	5202	1	
600-421-6110	5001	14	
600-625-6580	5001	21	
600-651-1520	3301	3	
600-813-3330	6101	1	
600-813-3330	6401	1	
600-813-3330	6402	1	
600-815-2341	1301	4	
600-815-3730	6201	1	
600-821-5540	6001	1	
600-821-5540	6301	1	
6004000-9-80	6201	2	
6004000-9-90	6201	3	
6110-21-6530	1401	15	
6110-21-6540	1401	16	
6110-23-6520	1401	17	
6110-33-1411	2301	7	
6112-21-6580	6001	5	
6114-61-8550	5202	26	
6130-12-8610	1151	9	
6130-32-1361	2201	8	
6130-41-5430	1101	8	
6130-82-7401	1401	1	
6130-82-7411	1401	1	
6131-11-4370	1301	9	
6131-51-7681	3251	10	
6131-51-7681	9999	1	
6131-62-3310	5001	22	
6134-11-4610	1401	14	
6134-11-5120	1501	6	

PART NO	F/NO	I/NO	M/NO
6134-61-8810	5202	29	
6136-11-4820	1301	7	
6136-11-4820	9999	1	
6136-11-8120	1151	6	
6136-11-8130	1151	7	
6136-11-8142	1151	8	
6136-11-8142	9999	1	
6136-31-1420	2301	5	
6136-31-1431	2301	6	
6136-41-5320	1101	10	
6136-41-5330	1101	11	
6136-71-5730	2001	33	
6140-11-6331	5001	15	
6140-11-6331	9999	1	
6140-21-1130	2001	21	
6141-21-1332	2201	4	
6141-21-1332	9999	2	
6141-21-1530	2001	6	
6142-11-1611	1001	20	
6142-12-5850	1501	10	
6142-22-4640	5202	16	
6142-42-5320	1101	9	
6142-42-5550	1101	4	
6144-11-5630	1301	16	
6144-71-5730	4001	25	
6144-71-5750	4101	9	
6144-81-5151	2021	17	
6150-21-5920	2001	30	
6150-21-5930	2001	29	
6204-11-1310	1001	2	
6204-11-3810	4201	11	
6204-11-3830	4201	13	
6204-11-3850	4201	10	
6204-11-3850	9999	1	
6204-11-3880	4201	9	
6204-11-3880	9999	1	
6204-11-6420	5001	16	
6204-21-1410	2001	2	
6204-21-1610	2001	8	
6204-21-3111	2021	4	
6204-21-3510	2021	10	
6204-21-3510	9999	2	
6204-21-3811	2021	2	
6204-21-3811	9999	2	
6204-21-3850	2021	5	
6204-21-5190	2101	2	
6204-21-5290	2101	3	
6204-21-5290	9999	2	
6204-21-5510	2001	28	
6204-21-8100	2301	10	

PART NO	F/NO	I/NO	M/NO
6204-21-8110	2301	10	
6204-21-8120	2301	11	
6204-21-8500	2301	12	
6204-21-8510	2301	12	
6204-29-1210	2001	4	
6204-29-1220	2001	5	
6204-31-1220	2301	2	
6204-31-2230	2351	6	
6204-31-3120	2351	8	
6204-31-3310	2351	10	
6204-31-3410	2351	12	
6204-31-6330	2021	13	
6204-31-6340	2021	12	
6204-31-6350	2021	15	
6204-36-3410	2351	12	
6204-37-3410	2351	12	
6204-38-2230	2351	6	
6204-38-3410	2351	12	
6204-39-2230	2351	6	
6204-39-3410	2351	12	
6204-41-2110	2401	6	
6204-41-3110	2401	7	
6204-41-4210	1001	11	
6204-41-4431	1001	14	
6204-41-4510	1001	12	
6204-41-4520	1001	13	
6204-41-4540	1001	15	
6204-41-4540	9999	1	
6204-41-5110	1101	1	
6204-41-5120	1101	2	
6204-41-5410	1101	6	
6204-41-5420	1101	7	
6204-41-5710	1101	13	
6204-51-1210	3001	1	
6204-51-1310	3001	5	
6204-51-1330	3001	7	
6204-51-1340	3001	8	
6204-51-1420	3001	2	
6204-51-1510	3001	4	
6204-51-1620	2001	10	
6204-51-1710	2001	9	
6204-51-5910	3101	1	
6204-51-6120	3001	12	
6204-51-6120	9999	2	
6204-61-1510	5001	4	
6204-61-1510	9999	2	
6204-61-5190	3301	4	
6204-61-5190	9999	2	
6204-71-3190	4001	7	
6204-71-4230	4001	27	

PART NO	F/NO	I/NO	M/NO
6204-71-4250	4001	28	
6204-71-5580	4201	16	
6206-11-1910	1001	17	
6206-11-1930	1001	16	
6206-11-4110	1301	1	
6206-11-5910	1601	8	
6206-11-5920	1601	16	
6206-11-5980	1601	13	
6206-11-8810	1151	5	
6206-11-8810	9999	1	
6206-21-1420	2001	3	
6206-21-1790	2001	24	
6206-21-3210	2021	1	
6206-21-4140	2201	1	
6206-21-5130	2101	1	
6206-21-5321	2001	32	
6206-21-5420	2001	31	
6206-21-5510	2001	34	
6206-21-6810	2001	26	
6206-21-6810	9999	2	
6206-31-1430	2301	4	
6206-31-1530	2301	3	
6206-31-4230	2201	5	
6206-31-4240	2201	5	
6206-31-4790	2201	6	
6206-31-6300	2021	11	
6206-31-6310	2021	11	
6206-31-8100	2301	8	
6206-41-1131	2401	4	
6206-41-1220	2401	2	
6206-41-5100	1101	1	
6206-41-5210	1101	3	
6206-51-1320	3001	6	
6206-51-6230	3001	11	
6206-61-1100	5001	1	
6206-61-1110	5001	1	
6206-61-1120	5001	6	
6206-61-1130	5001	7	
6206-61-1130	9999	1	
6206-61-1310	5001	2	
6206-61-1410	5001	3	
6206-61-1550	5001	5	
6206-61-1710	5001	12	
6206-61-1710	9999	1	
6206-61-3980	5001	19	
6206-61-8110	5202	11	
6206-61-8610	5202	23	
6206-61-8620	5202	21	
6206-61-8810	5202	24	
6206-71-1852	4001	13	

PART NO	F/NO	I/NO	M/NO
6206-71-3110	4001	5	
6206-71-3630	4001	3	
6206-71-5700	4001	24	
6206-71-5720	4001	22	
6206-71-5730	4001	24	
6206-71-5740	4001	26	
6206-71-5850	4101	10	
6206-71-6590	4101	5	
6206-71-6990	4101	6	
6206-81-4720	1301	11	
6206-81-4730	1301	12	
6206-81-6560	6001	2	
6206-81-6620	6001	9	
6207-K1-2100	9999	1	
6207-K2-2100	9999	2	
6207-11-1020	1001	1	
6207-11-1100	1001	1	
6207-11-1110	1001	1	
6207-11-1430	1001	3	
6207-11-1440	1001	4	
6207-11-1810	1001	19	
6207-11-1810	9999	1	
6207-11-3100	4201	1	
6207-11-3110	4201	1	
6207-11-3130	4201	8	
6207-11-4310	1301	5	
6207-11-5110	1501	1	
6207-11-5220	1601	7	
6207-11-5380	1601	2	
6207-11-5520	1601	11	
6207-11-5580	1501	8	
6207-11-5580	9999	1	
6207-11-5621	1601	1	
6207-11-5710	1601	15	
6207-11-5810	1501	3	
6207-11-5810	9999	1	
6207-11-5980	1601	3	
6207-11-8100	1151	1	
6207-11-8110	1151	1	
6207-11-8140	1151	3	
6207-11-8170	1151	2	
6207-11-8910	1151	10	
6207-18-1430	1001	3	
6207-18-1440	1001	4	
6207-19-1430	1001	3	
6207-19-1440	1001	4	
6207-21-1101	2001	1	
6207-21-1111	2001	1	
6207-21-1190	2001	22	
6207-21-2110	2001	40	

PART NO	F/NO	I/NO	M/NO
6207-21-2120	2001	40	
6207-21-6710	2001	25	
6207-31-1100	2301	1	
6207-31-1110	2301	1	
6207-31-2110	2351	1	
6207-31-2120	2351	1	
6207-31-2200	2351	4	
6207-31-2210	2351	4	
6207-31-2220	2351	5	
6207-31-2410	2351	2	
6207-31-3100	2351	7	
6207-31-3110	2351	7	
6207-31-3130	2351	9	
6207-31-3400	2351	11	
6207-31-3410	2351	11	
6207-36-3400	2351	11	
6207-36-3410	2351	11	
6207-37-3400	2351	11	
6207-37-3410	2351	11	
6207-38-2110	2351	1	
6207-38-2120	2351	1	
6207-38-2200	2351	4	
6207-38-2210	2351	4	
6207-38-2220	2351	5	
6207-38-3400	2351	11	
6207-38-3410	2351	11	
6207-39-2110	2351	1	
6207-39-2120	2351	1	
6207-39-2200	2351	4	
6207-39-2210	2351	4	
6207-39-2220	2351	5	
6207-39-3400	2351	11	
6207-39-3410	2351	11	
6207-41-1100	2401	1	
6207-41-1111	2401	1	
6207-41-4110	1001	10	
6207-51-1100	3001	1	
6207-51-1200	3001	1	
6207-51-1400	3001	2	
6207-51-1410	3001	3	
6207-51-1610	3001	9	
6207-51-8120	3251	1	
6207-51-8150	3251	4	
6207-51-8180	3251	6	
6207-51-8190	3251	5	
6207-51-8320	3251	9	
6207-51-8350	3251	12	
6207-61-3260	5001	18	
6207-61-5100	3301	1	
6207-61-5110	3301	1	

PART NO	F/NO	I/NO	M/NO
6207-71-1320	4001	1	
6207-71-1320	4501	1	
6207-71-1320	4511	1	
6207-71-1320	4512	1	
6207-71-1320	4531	1	
6207-71-3131	4001	2	
6207-71-5110	4001	16	
6207-71-5120	4001	17	
6207-71-5130	4001	18	
6207-71-5140	4001	19	
6207-71-5150	4001	20	
6207-71-5160	4001	21	
6207-81-8130	1501	7	

CHASSIS NUMERICAL INDEX

PART NO	F/NO	I/NO	M/NO
HORYU FIG	7181	?	
HORYU FIG	7183	?	
TZES209A00	2003	11	
TZIRT05520	2001	37	
TZOWG13120	2003	13	
TZOWG1383	2003	7	
TZOWP16304	2003	27	
TZROHP00001-2	2003	26	
TZROHP00001-8	2001	15	
TZROPP0100-28	2001	17	
TZRPP0050-12	2001	47	
TZ00-2BG-170	2001	40	
TZ05507812	2001	25	
TZ100A2007-00	2001	29	
TZ100A2008-00	2001	28	
TZ100A2010-00	2001	35	
TZ100A2011-00	2001	27	
TZ100A2013-00	2001	45	
TZ100A2016-00	2001	43	
TZ100A2018-00	2001	20	
TZ100A2020-00	2001	19	
TZ100A2021-00	2001	13	
TZ100A2022-00	2001	22	
TZ100A2051-00	2001	6	
TZ100A2054-01	2001	9	
TZ100A2055-00	2001	3	
TZ100A2057-01	2001	8	
TZ150A1010-00	2003	10	
TZ150A2017-00	2001	33	
TZ150A2053-00	2001	10	
TZ150A2058-00	2001	11	
TZ1554AN08	2003	23	
TZ1555AW08	2003	24	
TZ200A1003-00	2003	3	
TZ200A1004-00	2003	17	
TZ200A1005-00	2003	17	
TZ200A1007-00	2003	17	
TZ200A1008-00	2003	25	
TZ200A1009-00	2003	17	
TZ200A1011-00	2003	16	
TZ200A1013-00	2003	12	
TZ200A1015-00	2003	15	
TZ200A1017-00	2003	18	
TZ200A1018-00	2003	28	
TZ200A1020-00	2003	20	
TZ200A1021-00	2003	8	
TZ200A1022-00	2003	17	
TZ200A1023-00	2003	17	
TZ200A1102-00	2003	17	
TZ200A2003-00-	2001	32	

PART NO	F/NO	I/NO	M/NO
TZ200A2006-01	2001	31	
TZ200A2015-00	2001	44	
TZ200A2040-01	2001	30	
TZ200A2052-00	2001	5	
TZ200A2056-00	2001	4	
TZ200A2101-00	2001	1	
TZ200D2011-00	2001	36	
TZ210A1001-00	2003	1	
TZ210A1002-00	2003	2	
TZ210A1006-00	2003	4	
TZ210A1012-00	2003	19	
TZ210A1101-00	2003	2	
TZ210A2002-01	2001	23	
TZ210A2009-00	2001	46	
TZ210A2020-00	2001	26	
TZ210A2059-00	2001	49	
TZ210A2101-00	2001	1	
TZ231F2012-00	2001	38	
TZ231F2023-00	2001	42	
TZ430F2019-00	2001	18	
TZ430F2030-00	2001	30	
TZ430F2049-00-	2001	2	
TZ461F2028-01	2001	34	
TZ800A1019-00	2003	5	
01010-30816	6002	12	
01010-30816	6005	10	
01010-30820	6001	23	
01010-30820	6002	32	
01010-30825	8051	2	
01010-30830	1401	6	
01010-31020	3041	8	
01010-31020	5411	6	
01010-31020	5411	9	
01010-31025	6003	19	
01010-31025	6006	19	
01010-31220	8051	14	
01010-31220	8071	14	
01010-31260	6001	11	
01010-50610	1411	31	
01010-50610	1413	39	
01010-50610	1414	40	
01010-50610	5231	2	
01010-50610	9001	40	
01010-50610	9023	2	
01010-50612	1411	23	
01010-50612	1411	34	
01010-50612	1413	24	
01010-50612	1413	28	
01010-50612	1414	26	
01010-50612	1414	30	

PART NO	F/NO	I/NO	M/NO
01010-50612	5221	6	
01010-50612	5311	18	
01010-50612	7003	9	
01010-50612	8031	3	
01010-50612	9001	25	
01010-50612	9001	29	
01010-50612	9018	6	
01010-50612	9025	18	
01010-50616	5221	10	
01010-50616	5221	19	
01010-50616	5231	38	
01010-50616	9018	10	
01010-50616	9018	19	
01010-50616	9023	38	
01010-50620	5231	43	
01010-50620	9023	43	
01010-50640	8955	7	
01010-50812	8905	25	
01010-50812	8906	25	
01010-50812	8951	18	
01010-50812	8953	18	
01010-50816	1101	31	
01010-50816	1102	31	
01010-50816	1111	5	
01010-50816	1111	10	
01010-50816	1112	5	
01010-50816	1201	41	
01010-50816	1211	2	
01010-50816	1401	19	
01010-50816	1411	40	
01010-50816	1411	45	
01010-50816	1413	37	
01010-50816	1414	38	
01010-50816	1421	7	
01010-50816	1421	21	
01010-50816	2205	15	
01010-50816	5221	16	
01010-50816	5227	4	
01010-50816	5227	24	
01010-50816	5301	16	
01010-50816	8905	28	
01010-50816	8905	31	
01010-50816	8905	34	
01010-50816	8906	28	
01010-50816	8906	31	
01010-50816	8906	34	
01010-50816	8909	3	
01010-50816	9001	38	
01010-50816	9003	6	
01010-50816	9003	20	

PART NO	F/NO	I/NO	M/NO
01010-50816	9018	16	
01010-50816	9021	4	
01010-50816	9021	24	
01010-50820	1201	25	
01010-50820	4403	24	
01010-50820	4405	11	
01010-50820	4405A	9	
01010-50820	4413	23	
01010-50820	4413A	21	
01010-50820	4421	19	
01010-50820	5227	7	
01010-50820	5229	18	
01010-50820	5311	23	
01010-50820	5311	27	
01010-50820	5311	30	
01010-50820	5311	33	
01010-50820	6231	23	
01010-50820	8085	21	
01010-50820	8901	15	
01010-50820	9010	23	
01010-50820	9021	7	
01010-50820	9022	18	
01010-50820	9025	23	
01010-50820	9025	27	
01010-50820	9025	30	
01010-50820	9025	33	
01010-50825	4403	8	
01010-50825	4409	23	
01010-50825	4411	3	
01010-50825	4413	7	
01010-50825	4413A	7	
01010-50825	4415	14	
01010-50825	4415A	14	
01010-50825	8071	17	
01010-50825	8907	8	
01010-50825	8951	4	
01010-50825	8953	4	
01010-50825	8957	6	
01010-50825	9008	3	
01010-50825	9010	7	
01010-50830	2201	11	
01010-50830	2203	5	
01010-50830	4415	29	
01010-50830	4415A	27	
01010-50830	6511	14	
01010-50830	6511	23	
01010-50830	6513	12	
01010-50830	6513	17	
01010-50830	6513	25	
01010-50830	6515	11	

PART NO	F/NO	I/NO	M/NO
01010-50830	6515	22	
01010-50830	7311	12	
01010-50830	7313	12	
01010-50830	7315	12	
01010-50830	8071	2	
01010-50830	8081	6	
01010-50830	8081	38	
01010-50830	8083	6	
01010-50830	8083	16	
01010-50830	8083	39	
01010-50830	8085	9	
01010-50830	8089	24	
01010-50835	2101	12	
01010-50835	5401	6	
01010-50835	6231	20	
01010-50835	6515	17	
01010-50840	4301	8	
01010-50840	4401	21	
01010-50840	6405	27	
01010-50840	6511	16	
01010-50845	6401	23	
01010-50845	6403	26	
01010-50845	6405	24	
01010-50845	6511	15	
01010-50845	6515	6	
01010-50845	8085	10	
01010-50855	4301	7	
01010-50855	6401	24	
01010-50855	6403	27	
01010-50855	6405	25	
01010-50855	6405	28	
01010-50855	6511	17	
01010-50870	7315	15	
01010-50875	7315	15	
01010-50880	2205	22	
01010-50885	7185	11	
01010-51016	1411	28	
01010-51016	1413	42	
01010-51016	1414	43	
01010-51016	1423	21	
01010-51016	1424	21	
01010-51016	4409	26	
01010-51016	4415	52	
01010-51016	4415A	51	
01010-51016	9001	43	
01010-51016	9004	21	
01010-51020	1101	32	
01010-51020	1102	32	
01010-51020	1301	7	
01010-51020	1423	12	

PART NO	F/NO	I/NO	M/NO
01010-51020	1423	15	
01010-51020	1424	12	
01010-51020	1424	15	
01010-51020	3011	7	
01010-51020	4415	23	
01010-51020	4415A	21	
01010-51020	5101	4	
01010-51020	5101	37	
01010-51020	5101	41	
01010-51020	5101	45	
01010-51020	5103	3	
01010-51020	5103	6	
01010-51020	5103	10	
01010-51020	5103	13	
01010-51020	5103	27	
01010-51020	5105	3	
01010-51020	5105	6	
01010-51020	5105	9	
01010-51020	5105	13	
01010-51020	5301	6	
01010-51020	5311	11	
01010-51020	5401	8	
01010-51020	5401	19	
01010-51020	5401	23	
01010-51020	5501	9	
01010-51020	5503	9	
01010-51020	6201	8	
01010-51020	6202	10	
01010-51020	6205	11	
01010-51020	6206	7	
01010-51020	6211	8	
01010-51020	6212	10	
01010-51020	6215	10	
01010-51020	6216	7	
01010-51020	6502	22	
01010-51020	7003	12	
01010-51020	8101	7	
01010-51020	8901	6	
01010-51020	8901	9	
01010-51020	8903	7	
01010-51020	8903	13	
01010-51020	8955	21	
01010-51020	8955	24	
01010-51020	8955	30	
01010-51020	9004	12	
01010-51020	9004	15	
01010-51020	9014	4	
01010-51020	9014	37	
01010-51020	9014	41	
01010-51020	9014	45	

PART NO	F/NO	I/NO	M/NO
01010-51020	9015	3	
01010-51020	9015	7	
01010-51020	9015	12	
01010-51020	9015	15	
01010-51020	9015	30	
01010-51020	9016	3	
01010-51020	9016	6	
01010-51020	9016	9	
01010-51020	9016	13	
01010-51020	9025	11	
01010-51020	9033	7	
01010-51025	1051	19	
01010-51025	1201	11	
01010-51025	1201	27	
01010-51025	1201	29	
01010-51025	1201	38	
01010-51025	1211	5	
01010-51025	1211	19	
01010-51025	1421	11	
01010-51025	2205	18	
01010-51025	3041	13	
01010-51025	4407	15	
01010-51025	4407	30	
01010-51025	4407	41	
01010-51025	4407A	13	
01010-51025	4407A	25	
01010-51025	4407A	33	
01010-51025	4415	37	
01010-51025	4415A	36	
01010-51025	5101	14	
01010-51025	5101	25	
01010-51025	5101	31	
01010-51025	5101	42	
01010-51025	5221	23	
01010-51025	5301	3	
01010-51025	5311	13	
01010-51025	5501	2	
01010-51025	5503	2	
01010-51025	6101	10	
01010-51025	6101	27	
01010-51025	6504	22	
01010-51025	6504	30	
01010-51025	8905	8	
01010-51025	8906	8	
01010-51025	8955	12	
01010-51025	9003	10	
01010-51025	9014	14	
01010-51025	9014	25	
01010-51025	9014	31	
01010-51025	9014	42	

PART NO	F/NO	I/NO	M/NO
01010-51025	9018	23	
01010-51025	9025	13	
01010-51025	9029	10	
01010-51025	9029	27	
01010-51030	1021	12	
01010-51030	1101	14	
01010-51030	1102	14	
01010-51030	4401	18	
01010-51030	4401	43	
01010-51030	4403	17	
01010-51030	4405	36	
01010-51030	4405	46	
01010-51030	4405	53	
01010-51030	4405A	32	
01010-51030	4405A	42	
01010-51030	4405A	49	
01010-51030	4407	20	
01010-51030	4407	45	
01010-51030	4407A	18	
01010-51030	4407A	37	
01010-51030	4409	13	
01010-51030	4413	16	
01010-51030	4413	35	
01010-51030	4413	38	
01010-51030	4413A	14	
01010-51030	4413A	33	
01010-51030	4413A	36	
01010-51030	4415	11	
01010-51030	4415	45	
01010-51030	4415A	11	
01010-51030	4415A	44	
01010-51030	8083	20	
01010-51030	8085	14	
01010-51030	8085	36	
01010-51030	8089	4	
01010-51030	8089	8	
01010-51030	8089	17	
01010-51030	8091	3	
01010-51030	8101	15	
01010-51030	8955	9	
01010-51030	9010	16	
01010-51030	9010	35	
01010-51030	9010	39	
01010-51030	9033	15	
01010-51035	1021	13	
01010-51035	1101	23	
01010-51035	1102	23	
01010-51035	1111	26	
01010-51035	1112	16	
01010-51035	1421	16	

PART NO	F/NO	I/NO	M/NO
01010-51035	5105	10	
01010-51035	6401	28	
01010-51035	6403	33	
01010-51035	6405	34	
01010-51035	6501	11	
01010-51035	8081	10	
01010-51035	8081	34	
01010-51035	8083	10	
01010-51035	8083	44	
01010-51035	9003	15	
01010-51035	9016	10	
01010-51050	1001	7	
01010-51050	5401	20	
01010-51050	8085	29	
01010-51055	1051	14	
01010-51055	8905	42	
01010-51055	8906	42	
01010-51060	4405	22	
01010-51060	4405A	18	
01010-51065	4425	7	
01010-51065	4426	7	
01010-51070	1051	18	
01010-51070	8085	28	
01010-51075	8083	31	
01010-51220	1051	7	
01010-51220	5401	12	
01010-51220	6504	14	
01010-51225	1051	2	
01010-51225	1201	33	
01010-51225	2203	22	
01010-51225	3001	4	
01010-51225	3001	7	
01010-51225	4407	2	
01010-51225	4407A	2	
01010-51225	4415	2	
01010-51225	4415A	2	
01010-51225	4417	12	
01010-51225	4419	11	
01010-51225	4421	22	
01010-51225	4423	19	
01010-51225	5311	4	
01010-51225	5311	7	
01010-51225	6503	28	
01010-51225	7181	16	
01010-51225	8071	20	
01010-51225	8905	10	
01010-51225	8905	18	
01010-51225	8906	10	
01010-51225	8906	18	
01010-51225	8951	6	

PART NO	F/NO	I/NO	M/NO
01010-51225	8951	11	
01010-51225	8953	6	
01010-51225	8953	11	
01010-51225	9006	7	
01010-51225	9006	10	
01010-51225	9025	4	
01010-51225	9025	7	
01010-51230	4401	39	
01010-51230	4405	3	
01010-51230	4405A	3	
01010-51230	5001	4	
01010-51230	5301	12	
01010-51230	5311	15	
01010-51230	5401	34	
01010-51230	5411	43	
01010-51230	7001	19	
01010-51230	7001	29	
01010-51230	7005	13	
01010-51230	8907	2	
01010-51230	9006	3	
01010-51230	9012	4	
01010-51230	9025	15	
01010-51230	9027	28	
01010-51230	9031	19	
01010-51230	9031	29	
01010-51235	1021	2	
01010-51235	6501	5	
01010-51235	6503	29	
01010-51235	7001	9	
01010-51235	7001	24	
01010-51235	8957	10	
01010-51235	9031	9	
01010-51235	9031	24	
01010-51240	2201	17	
01010-51240	6022	9	
01010-51245	5221	2	
01010-51245	8085	39	
01010-51250	7185	15	
01010-51250	9018	2	
01010-51255	1001	4	
01010-51255	4011	30	
01010-51260	1201	34	
01010-51260	4301	16	
01010-51260	8081	30	
01010-51265	5221	3	
01010-51265	6511	27	
01010-51265	6511	32	
01010-51265	8001	2	
01010-51265	8081	23	
01010-51265	8081	29	

PART NO	F/NO	I/NO	M/NO
01010-51265	8083	50	
01010-51270	1201	21	
01010-51270	6515	27	
01010-51270	9018	3	
01010-51430	1421	3	
01010-51430	7181	25	
01010-51430	9003	3	
01010-51435	6101	35	
01010-51435	9029	35	
01010-51450	4101	32	
01010-51450	4105	25	
01010-51470	3011	17	
01010-51640	8021	4	
01010-51645	3001	10	
01010-51650	2401	2	
01010-51650	6501	25	
01010-51655	2203	19	
01010-51665	7007	23	
01010-51675	5301	22	
01010-51675	5311	42	
01010-51675	9025	42	
01010-51680	3031	11	
01010-51680	3041	18	
01010-52060	4011	36	
01010-52060	4301	25	
01010-52075	4011	14	
01010-81450	6405	12	
01010-81655	6401	11	
01010-81655	6403	11	
01011-51000	8085	25	
01011-51235	6505	26	
01011-51235	6506	29	
01011-51420	4011	28	
01011-51460	4011	27	
01011-51620	7181	10	
01011-51620	7181	29	
01011-51625	1001	12	
01011-51660	7007	13	
01011-51665	2203	24	
01011-51690	7007	20	
01013-53020	7181	20	
01016-31070	1101	16	
01016-31070	1102	16	
01019-11640	7001	14	
01019-11640	7007	15	
01019-11640	9031	14	
01050-31018	1401	4	
01052-51265	1101	7	
01052-51265	1102	7	
01140-81645	6004	9	

PART NO	F/NO	I/NO	M/NO
01220-40410	1414	33	
01220-40410	5229	8	
01220-40410	9022	8	
01220-40412	1411	19	
01220-40412	1413	12	
01220-40412	1414	17	
01220-40412	5223	35	
01220-40412	5227	16	
01220-40412	8031	10	
01220-40412	9001	13	
01220-40412	9019	27	
01220-40412	9021	16	
01220-40420	1411	15	
01220-40420	1413	31	
01220-40420	5221	28	
01220-40420	9001	32	
01220-40420	9018	28	
01220-40516	5223	14	
01220-40516	6101	24	
01220-40516	9019	14	
01220-40516	9029	24	
01220-40608	5231	4	
01220-40608	9023	4	
01220-40610	5229	11	
01220-40610	5229	21	
01220-40610	5231	29	
01220-40610	9022	11	
01220-40610	9022	21	
01220-40610	9023	29	
01220-40612	1411	37	
01220-40612	5223	32	
01220-40616	1411	2	
01220-40616	1413	3	
01220-40616	1414	3	
01220-40616	5231	22	
01220-40616	9001	3	
01220-40616	9023	22	
01220-40620	5231	47	
01220-40620	9023	47	
01220-40625	5225	11	
01220-40625	9020	11	
01220-40816	5301	9	
01220-50612	1413	21	
01220-50612	1414	23	
01220-50612	9001	22	
01220-60408	9035	5	
01220-60408	9902	4	
01220-60408	9922	4	
01224-40820	5223	10	
01224-40820	5225	14	

PART NO	F/NO	I/NO	M/NO
01224-40820	9019	10	
01224-40820	9020	14	
01224-40830	5229	30	
01224-40830	9022	30	
01225-40510	5231	35	
01225-40510	9023	35	
01225-40625	4403	3	
01225-40625	4413	3	
01225-40625	4413A	3	
01225-40625	9010	3	
01235-50408	1501	20	
01235-50412	1501	19	
01252-30612	6201	17	
01252-30612	6202	17	
01252-30612	6205	22	
01252-30612	6206	18	
01252-30612	6211	28	
01252-30612	6212	29	
01252-30612	6216	18	
01252-30616	6012	11	
01252-30616	6012	26	
01252-30616	6013	29	
01252-30616	6013	35	
01252-30616	6014	20	
01252-30616	6016	11	
01252-30616	6016	26	
01252-30616	6017	29	
01252-30616	6017	35	
01252-30616	6211	30	
01252-30616	6215	22	
01252-30625	6201	27	
01252-30625	6202	27	
01252-30625	6205	23	
01252-30625	6205	30	
01252-30625	6206	25	
01252-30625	6211	29	
01252-30625	6212	20	
01252-30625	6212	30	
01252-30625	6215	21	
01252-30625	6216	25	
01252-30630	6013	28	
01252-30630	6017	28	
01252-30630	6205	31	
01252-30830	6201	23	
01252-30830	6202	24	
01252-30830	6205	27	
01252-30830	6206	22	
01252-30830	6211	20	
01252-30830	6212	26	
01252-30830	6216	22	

PART NO	F/NO	I/NO	M/NO
01252-30835	6015	7	
01252-30850	6011	8	
01252-31440	2001	16	
01252-31850	2003	14	
01252-40520	6506	25	
01252-40545	6505	23	
01252-40545	6506	22	
01252-40616	8101	13	
01252-40616	9033	13	
01252-41015	9018	38	
01252-41025	9015	35	
01370-00412	5225	8	
01370-00412	9020	8	
01370-00510	5221	34	
01370-00510	9018	34	
01380-10420	5221	30	
01381-10420	9018	30	
01508-21006	4405	27	
01508-21006	4405	34	
01508-21006	4405	56	
01508-21006	4405A	23	
01508-21006	4405A	30	
01508-21006	4405A	52	
01508-21006	4407	44	
01508-21006	4407A	36	
01508-21006	4409	9	
01508-21006	4413	27	
01508-21006	4413A	25	
01508-21006	4415	43	
01508-21006	4415A	42	
01508-21006	8087	11	
01508-21006	8089	6	
01508-21006	8089	15	
01508-21006	9010	27	
01530-03912	4101	21	
01530-03912	4105	23	
01541-21260	1401	11	
01571-01016	1411	30	
01572-21232	8001	4	
01580-00806	1401	7	
01580-01210	5401	31	
01580-01210	5411	15	
01580-01210	5411	17	
01580-10403	1414	14	
01580-10504	5101	17	
01580-10504	9014	17	
01580-10605	5231	18	
01580-10605	9023	18	
01580-10806	6012	10	
01580-10806	6012	25	

PART NO	F/NO	I/NO	M/NO
01580-10806	6013	6	
01580-10806	6013	31	
01580-10806	6014	16	
01580-10806	6016	10	
01580-10806	6016	25	
01580-10806	6017	6	
01580-10806	6017	31	
01580-10806	8951	9	
01580-10806	8953	9	
01580-10806	9027	2	
01580-11008	1101	17	
01580-11008	1101	35	
01580-11008	1102	17	
01580-11008	1102	35	
01580-11008	1111	18	
01580-11008	1112	8	
01580-11210	5221	26	
01580-11210	5401	29	
01580-11210	8907	5	
01580-11210	8957	4	
01580-11210	9018	26	
01580-11613	7001	15	
01580-11613	7007	14	
01580-11613	7007	16	
01580-11613	7007	21	
01580-11613	7181	11	
01580-11613	7181	30	
01580-11613	9031	15	
01582-01613	6004	10	
01582-11008	1101	19	
01582-11008	1102	19	
01582-11008	1111	14	
01582-11008	1111	24	
01582-11008	1112	14	
01582-11008	4401	15	
01582-11008	4401	25	
01582-11008	4405	40	
01582-11008	4405	49	
01582-11008	4405A	36	
01582-11008	4405A	45	
01582-11008	4407	19	
01582-11008	4407A	17	
01582-11008	4409	7	
01582-11008	4413	31	
01582-11008	4413A	29	
01582-11008	4415	10	
01582-11008	4415	44	
01582-11008	4415A	10	
01582-11008	4415A	43	
01582-11008	8087	15	

PART NO	F/NO	I/NO	M/NO
01582-11008	8089	2	
01582-11008	8089	19	
01582-11008	9010	31	
01582-11210	1101	13	
01582-11210	1102	13	
01582-11411	6203	15	
01582-11411	6204	39	
01582-11411	6207	12	
01582-11411	6208	15	
01582-11411	6213	18	
01582-11411	6214	6	
01582-11411	6217	12	
01582-11411	6218	15	
01583-11408	1105	13	
01583-11408	6018	9	
01583-12414	6204	22	
01583-12414	6207	32	
01583-12414	6214	18	
01583-12414	6217	32	
01590-13033	7181	22	
01593-11210	1101	9	
01593-11210	1102	9	
01599-01011	4301	12	
01599-01011	6401	31	
01599-01011	6403	36	
01599-01011	6405	37	
01599-01011	6513	29	
01599-01011	8085	33	
01599-01011	8905	15	
01599-01011	8906	15	
01599-01011	8955	17	
01599-01214	4421	3	
01601-20410	1411	16	
01601-20410	1411	20	
01601-20410	1413	13	
01601-20410	1413	32	
01601-20410	1414	18	
01601-20410	1414	34	
01601-20410	5223	36	
01601-20410	5227	17	
01601-20410	5229	9	
01601-20410	8031	11	
01601-20410	9001	14	
01601-20410	9001	33	
01601-20410	9019	28	
01601-20410	9021	17	
01601-20410	9022	9	
01601-20410	9035	5	
01601-20410	9902	4	
01601-20410	9922	4	

PART NO	F/NO	I/NO	M/NO
01601-20513	5223	15	
01601-20513	6101	25	
01601-20513	6506	26	
01601-20513	9019	15	
01601-20513	9029	25	
01602-00619	8955	8	
01602-01030	5411	7	
01602-01030	5411	10	
01602-01236	6001	12	
01602-01957	7181	4	
01602-20619	1411	24	
01602-20619	1411	32	
01602-20619	1411	35	
01602-20619	1411	38	
01602-20619	1413	22	
01602-20619	1413	25	
01602-20619	1413	29	
01602-20619	1413	40	
01602-20619	1414	24	
01602-20619	1414	27	
01602-20619	1414	31	
01602-20619	1414	41	
01602-20619	5223	33	
01602-20619	5225	12	
01602-20619	5229	12	
01602-20619	5229	22	
01602-20619	5231	5	
01602-20619	5231	17	
01602-20619	5231	30	
01602-20619	5231	48	
01602-20619	5311	19	
01602-20619	6012	12	
01602-20619	6012	27	
01602-20619	6013	30	
01602-20619	6013	36	
01602-20619	6014	21	
01602-20619	6016	12	
01602-20619	6016	27	
01602-20619	6017	30	
01602-20619	6017	36	
01602-20619	7003	10	
01602-20619	9001	23	
01602-20619	9001	26	
01602-20619	9001	30	
01602-20619	9001	41	
01602-20619	9020	12	
01602-20619	9022	12	
01602-20619	9022	22	
01602-20619	9023	5	
01602-20619	9023	17	

PART NO	F/NO	I/NO	M/NO
01602-20619	9023	30	
01602-20619	9023	48	
01602-20619	9025	19	
01602-20825	1401	20	
01602-20825	1421	8	
01602-20825	1421	22	
01602-20825	2101	13	
01602-20825	2201	12	
01602-20825	4301	9	
01602-20825	4401	22	
01602-20825	4403	25	
01602-20825	4405	12	
01602-20825	4405A	10	
01602-20825	4409	24	
01602-20825	4411	4	
01602-20825	4413	24	
01602-20825	4413A	22	
01602-20825	4415	30	
01602-20825	4415A	28	
01602-20825	5311	24	
01602-20825	5311	28	
01602-20825	5311	31	
01602-20825	5311	34	
01602-20825	5401	7	
01602-20825	6001	7	
01602-20825	6001	24	
01602-20825	6011	7	
01602-20825	6011	9	
01602-20825	6015	6	
01602-20825	6015	8	
01602-20825	6401	25	
01602-20825	6403	28	
01602-20825	6405	26	
01602-20825	6405	29	
01602-20825	7185	12	
01602-20825	7311	13	
01602-20825	7313	13	
01602-20825	7315	13	
01602-20825	8081	7	
01602-20825	8081	39	
01602-20825	8083	7	
01602-20825	8083	17	
01602-20825	8083	40	
01602-20825	8085	11	
01602-20825	8901	16	
01602-20825	8905	26	
01602-20825	8905	29	
01602-20825	8905	32	
01602-20825	8905	35	
01602-20825	8906	26	

PART NO	F/NO	I/NO	M/NO
01602-20825	8906	29	
01602-20825	8906	32	
01602-20825	8906	35	
01602-20825	8907	9	
01602-20825	8909	4	
01602-20825	8951	5	
01602-20825	8951	10	
01602-20825	8953	5	
01602-20825	8953	10	
01602-20825	8957	7	
01602-20825	9003	7	
01602-20825	9003	21	
01602-20825	9008	4	
01602-20825	9010	24	
01602-20825	9025	24	
01602-20825	9025	28	
01602-20825	9025	31	
01602-20825	9025	34	
01602-21030	1411	29	
01602-21030	1413	43	
01602-21030	1414	44	
01602-21030	3041	9	
01602-21030	3041	14	
01602-21030	4413	39	
01602-21030	4413A	37	
01602-21030	5401	21	
01602-21030	5401	24	
01602-21030	6401	29	
01602-21030	6403	34	
01602-21030	6405	35	
01602-21030	8081	11	
01602-21030	8081	35	
01602-21030	8083	11	
01602-21030	8083	21	
01602-21030	8083	45	
01602-21030	8085	15	
01602-21030	8085	26	
01602-21030	8085	30	
01602-21030	8091	4	
01602-21030	9001	44	
01602-21030	9010	40	
01602-21236	4301	17	
01602-21236	5401	30	
01602-21236	5411	16	
01602-21236	6022	10	
01602-21236	7181	17	
01602-21442	4101	33	
01602-21442	4105	26	
01611-04045	5221	35	
01640-01016	1401	5	

PART NO	F/NO	I/NO	M/NO
01640-20610	5311	20	
01640-20610	9025	20	
01640-21223	1101	8	
01640-21223	1102	8	
01641-20405	1411	17	
01641-20405	1413	33	
01641-20405	1414	35	
01641-20405	1501	21	
01641-20405	5227	18	
01641-20405	5229	10	
01641-20405	9001	34	
01641-20405	9021	18	
01641-20405	9022	10	
01641-20508	5223	16	
01641-20508	9019	16	
01641-20608	5229	13	
01641-20608	5229	23	
01641-20608	5231	6	
01641-20608	5231	16	
01641-20608	5231	31	
01641-20608	5231	49	
01641-20608	5411	39	
01641-20608	9022	13	
01641-20608	9022	23	
01641-20608	9023	6	
01641-20608	9023	16	
01641-20608	9023	31	
01641-20608	9023	49	
01641-20608	9027	24	
01641-20812	1105	16	
01641-20812	4409	30	
01641-21016	5101	11	
01641-21016	5223	4	
01641-21016	9014	11	
01641-21016	9019	4	
01641-21423	4401	29	
01641-21626	2201	15	
01643-30623	5221	7	
01643-30623	5221	11	
01643-30623	5221	20	
01643-30623	5231	3	
01643-30623	5231	23	
01643-30623	5231	39	
01643-30623	5231	44	
01643-30623	6003	12	
01643-30623	6006	12	
01643-30623	8031	4	
01643-30623	9018	7	
01643-30623	9018	11	
01643-30623	9018	20	

PART NO	F/NO	I/NO	M/NO
01643-30623	9023	3	
01643-30623	9023	23	
01643-30623	9023	39	
01643-30623	9023	44	
01643-30823	1101	30	
01643-30823	1102	30	
01643-30823	1111	6	
01643-30823	1111	11	
01643-30823	1112	6	
01643-30823	1201	26	
01643-30823	1201	42	
01643-30823	1211	3	
01643-30823	1411	41	
01643-30823	1411	46	
01643-30823	1413	38	
01643-30823	1414	39	
01643-30823	2205	16	
01643-30823	2205	23	
01643-30823	4401	23	
01643-30823	4403	9	
01643-30823	4413	8	
01643-30823	4413A	8	
01643-30823	4415	15	
01643-30823	4415A	15	
01643-30823	4421	20	
01643-30823	5221	17	
01643-30823	5227	5	
01643-30823	5227	8	
01643-30823	5227	25	
01643-30823	5229	19	
01643-30823	5301	10	
01643-30823	5301	17	
01643-30823	5311	25	
01643-30823	6002	33	
01643-30823	6015	20	
01643-30823	6201	22	
01643-30823	6202	25	
01643-30823	6205	28	
01643-30823	6206	23	
01643-30823	6211	21	
01643-30823	6212	27	
01643-30823	6216	23	
01643-30823	6513	26	
01643-30823	7315	16	
01643-30823	8051	3	
01643-30823	8071	3	
01643-30823	8085	22	
01643-30823	8089	25	
01643-30823	8951	19	
01643-30823	8953	19	

PART NO	F/NO	I/NO	M/NO
01643-30823	9001	39	
01643-30823	9010	8	
01643-30823	9018	17	
01643-30823	9021	5	
01643-30823	9021	8	
01643-30823	9021	25	
01643-30823	9022	19	
01643-30823	9025	25	
01643-31032	1001	9	
01643-31032	1021	14	
01643-31032	1051	15	
01643-31032	1051	20	
01643-31032	1101	15	
01643-31032	1101	33	
01643-31032	1102	15	
01643-31032	1102	33	
01643-31032	1201	12	
01643-31032	1201	28	
01643-31032	1201	30	
01643-31032	1201	39	
01643-31032	1211	6	
01643-31032	1211	20	
01643-31032	1301	8	
01643-31032	1421	12	
01643-31032	1421	17	
01643-31032	1423	13	
01643-31032	1423	16	
01643-31032	1423	22	
01643-31032	1424	13	
01643-31032	1424	16	
01643-31032	1424	22	
01643-31032	2205	19	
01643-31032	3011	8	
01643-31032	4301	13	
01643-31032	4401	26	
01643-31032	4401	36	
01643-31032	4401	44	
01643-31032	4403	18	
01643-31032	4405	23	
01643-31032	4405	47	
01643-31032	4405A	19	
01643-31032	4405A	43	
01643-31032	4407	16	
01643-31032	4407	31	
01643-31032	4407	42	
01643-31032	4407A	14	
01643-31032	4407A	26	
01643-31032	4407A	34	
01643-31032	4409	27	
01643-31032	4413	17	

PART NO	F/NO	I/NO	M/NO
01643-31032	4413	36	
01643-31032	4413A	15	
01643-31032	4413A	34	
01643-31032	4415	12	
01643-31032	4415	24	
01643-31032	4415	38	
01643-31032	4415	53	
01643-31032	4415A	12	
01643-31032	4415A	22	
01643-31032	4415A	37	
01643-31032	4415A	52	
01643-31032	4425	8	
01643-31032	4426	8	
01643-31032	5101	5	
01643-31032	5101	15	
01643-31032	5101	26	
01643-31032	5101	32	
01643-31032	5101	35	
01643-31032	5101	43	
01643-31032	5101	46	
01643-31032	5103	4	
01643-31032	5103	7	
01643-31032	5103	11	
01643-31032	5103	14	
01643-31032	5103	28	
01643-31032	5105	4	
01643-31032	5105	7	
01643-31032	5105	11	
01643-31032	5105	14	
01643-31032	5221	24	
01643-31032	5301	4	
01643-31032	5301	7	
01643-31032	5311	12	
01643-31032	5311	14	
01643-31032	5401	9	
01643-31032	5501	3	
01643-31032	5501	10	
01643-31032	5503	3	
01643-31032	5503	10	
01643-31032	6003	20	
01643-31032	6006	20	
01643-31032	6101	11	
01643-31032	6101	28	
01643-31032	6401	32	
01643-31032	6403	37	
01643-31032	6405	38	
01643-31032	6501	12	
01643-31032	6502	23	
01643-31032	6504	23	
01643-31032	6504	31	

PART NO	F/NO	I/NO	M/NO
01643-31032	6513	30	
01643-31032	7003	13	
01643-31032	8083	32	
01643-31032	8085	34	
01643-31032	8085	37	
01643-31032	8101	8	
01643-31032	8101	16	
01643-31032	8901	7	
01643-31032	8901	10	
01643-31032	8903	8	
01643-31032	8903	14	
01643-31032	8905	9	
01643-31032	8905	16	
01643-31032	8905	43	
01643-31032	8906	9	
01643-31032	8906	16	
01643-31032	8906	43	
01643-31032	8955	13	
01643-31032	8955	18	
01643-31032	8955	22	
01643-31032	8955	25	
01643-31032	8955	31	
01643-31032	9003	11	
01643-31032	9003	16	
01643-31032	9004	13	
01643-31032	9004	16	
01643-31032	9004	22	
01643-31032	9010	17	
01643-31032	9010	36	
01643-31032	9014	5	
01643-31032	9014	15	
01643-31032	9014	26	
01643-31032	9014	32	
01643-31032	9014	35	
01643-31032	9014	43	
01643-31032	9014	46	
01643-31032	9015	4	
01643-31032	9015	8	
01643-31032	9015	13	
01643-31032	9015	16	
01643-31032	9015	31	
01643-31032	9016	4	
01643-31032	9016	7	
01643-31032	9016	11	
01643-31032	9016	14	
01643-31032	9018	24	
01643-31032	9025	12	
01643-31032	9025	14	
01643-31032	9029	11	
01643-31032	9029	28	

PART NO	F/NO	I/NO	M/NO
01643-31032	9033	8	
01643-31032	9033	16	
01643-31232	1001	6	
01643-31232	1021	3	
01643-31232	1051	3	
01643-31232	1051	8	
01643-31232	1201	22	
01643-31232	1201	35	
01643-31232	1401	10	
01643-31232	2201	18	
01643-31232	2203	23	
01643-31232	3001	5	
01643-31232	3001	8	
01643-31232	4011	31	
01643-31232	4401	40	
01643-31232	4405	4	
01643-31232	4405A	4	
01643-31232	4407	3	
01643-31232	4407A	3	
01643-31232	4415	3	
01643-31232	4415A	3	
01643-31232	4417	13	
01643-31232	4419	12	
01643-31232	4421	4	
01643-31232	4421	23	
01643-31232	4423	20	
01643-31232	5001	5	
01643-31232	5221	4	
01643-31232	5301	13	
01643-31232	5311	5	
01643-31232	5311	8	
01643-31232	5311	16	
01643-31232	5401	13	
01643-31232	5401	32	
01643-31232	5401	35	
01643-31232	5411	18	
01643-31232	5411	44	
01643-31232	6501	6	
01643-31232	6503	30	
01643-31232	6504	15	
01643-31232	6505	27	
01643-31232	6506	30	
01643-31232	6511	28	
01643-31232	6511	33	
01643-31232	6515	28	
01643-31232	7001	10	
01643-31232	7001	20	
01643-31232	7001	25	
01643-31232	7001	30	
01643-31232	7005	14	

PART NO	F/NO	I/NO	M/NO
01643-31232	8001	3	
01643-31232	8051	15	
01643-31232	8071	15	
01643-31232	8071	18	
01643-31232	8071	21	
01643-31232	8081	24	
01643-31232	8081	31	
01643-31232	8083	51	
01643-31232	8085	40	
01643-31232	8905	11	
01643-31232	8905	19	
01643-31232	8906	11	
01643-31232	8906	19	
01643-31232	8907	3	
01643-31232	8907	6	
01643-31232	8951	7	
01643-31232	8951	12	
01643-31232	8953	7	
01643-31232	8953	12	
01643-31232	8957	5	
01643-31232	8957	11	
01643-31232	9006	4	
01643-31232	9006	8	
01643-31232	9006	11	
01643-31232	9012	5	
01643-31232	9018	4	
01643-31232	9025	5	
01643-31232	9025	8	
01643-31232	9025	16	
01643-31232	9027	29	
01643-31232	9031	10	
01643-31232	9031	20	
01643-31232	9031	25	
01643-31232	9031	30	
01643-31445	1421	4	
01643-31445	3011	18	
01643-31445	4011	29	
01643-31445	5411	36	
01643-31445	6101	36	
01643-31445	7181	26	
01643-31445	9003	4	
01643-31445	9027	21	
01643-31445	9029	36	
01643-31645	1001	13	
01643-31645	2203	20	
01643-31645	2203	25	
01643-31645	2401	3	
01643-31645	3001	11	
01643-31645	3031	12	
01643-31645	3041	19	

PART NO	F/NO	I/NO	M/NO
01643-31645	5301	23	
01643-31645	5311	43	
01643-31645	6004	11	
01643-31645	6501	26	
01643-31645	7007	24	
01643-31645	8021	5	
01643-31645	9025	43	
01643-32060	4011	37	
01643-32060	4301	26	
01643-32060	8087	8	
01643-32460	5001	8	
01643-32460	9012	8	
01643-33080	7181	21	
01643-50823	2203	6	
01643-50823	6511	18	
01643-50823	6511	24	
01643-50823	6513	13	
01643-50823	6513	18	
01643-50823	6515	7	
01643-50823	6515	12	
01643-50823	6515	18	
01643-50823	6515	23	
01643-51032	6502	15	
01643-51232	7185	16	
01802-02262	7011	11	
01802-02262	7101	12	
01802-02262	7105	9	
01802-02262	7113	10	
01803-01622	3101	3	
01803-01622	3101	2	
01803-01622	3101	3	
01803-01622	3101	3	
01803-01622	3101	3	
01803-01622	3101	3	
01803-01622	3101	2	
01803-02228	7011	12	
01803-02228	7101	13	
01803-02228	7105	10	
01803-02228	7113	11	
01874-13116	9018	35	
01874-33023	9015	32	
02090-01275	7181	3	
02290-01219	7181	5	
04010-00519	4415	28	
04010-00519	4415A	26	
04020-00616	1101	11	
04020-00616	1102	11	
04020-00616	6001	4	
04020-00616	6002	17	
04020-00616	6005	15	

PART NO	F/NO	I/NO	M/NO
04020-00820	4101	9	
04020-00820	4105	9	
04020-00820	6002	11	
04020-00820	6005	9	
04020-00820	6022	7	
04020-01024	4011	32	
04020-01434	4011	16	
04020-01638	4011	38	
04020-01842	4001	4	
04022-06030	6207	29	
04022-06030	6217	29	
04025-00312	4427	13	
04025-00520	4401	12	
04025-00524	4411	8	
04025-00524	9008	7	
04025-00832	4011	6	
04050-01210	6012	32	
04050-01210	6016	32	
04050-11610	4405	44	
04050-11610	4405A	40	
04050-11610	5411	29	
04050-11610	5411	40	
04050-11610	9027	14	
04050-11610	9027	25	
04050-11612	1111	28	
04050-11612	1112	18	
04050-12012	4405	43	
04050-12012	4405A	39	
04050-12012	4409	11	
04050-12012	4415	8	
04050-12012	4415A	8	
04050-12012	5221	14	
04050-12012	8089	22	
04050-12012	9018	14	
04050-12015	1105	17	
04050-12020	5101	36	
04050-12020	9014	36	
04050-13015	4405	29	
04050-13015	4405	51	
04050-13015	4405A	25	
04050-13015	4405A	47	
04050-13015	4413	29	
04050-13015	4413	33	
04050-13015	4413A	27	
04050-13015	4413A	31	
04050-13015	8087	14	
04050-13015	8087	18	
04050-13015	9010	29	
04050-13015	9010	33	
04050-13018	1101	24	

PART NO	F/NO	I/NO	M/NO
04050-13018	1101	37	
04050-13018	1102	24	
04050-13018	1102	37	
04050-13018	1111	15	
04050-13018	1111	19	
04050-13018	1112	9	
04050-13018	5223	5	
04050-13018	9019	5	
04050-13020	1105	19	
04050-13020	5101	9	
04050-13020	5101	12	
04050-13020	5103	20	
04050-13020	9014	9	
04050-13020	9014	12	
04050-13020	9015	22	
04050-13030	1101	10	
04050-13030	1102	10	
04050-13030	4403	19	
04050-13030	4405	24	
04050-13030	4405A	20	
04050-13030	4413	18	
04050-13030	4413A	16	
04050-13030	8087	9	
04050-13030	9010	18	
04050-13040	4405	13	
04050-13040	4405A	11	
04050-14022	4401	34	
04050-14025	2201	16	
04050-16055	7181	23	
04064-01410	4401	28	
04064-03818	8083	25	
04064-04518	3011	15	
04064-05020	2003	22	
04064-06020	1021	6	
04064-08530	2101	9	
04065-01410	4421	5	
04065-02212	6511	6	
04065-02212	6513	7	
04065-05520	8915	6	
04065-09030	4011	22	
04065-09030	4101	20	
04065-09030	4105	22	
04065-09530	1021	7	
04071-00180	4011	9	
04077-00110	2101	4	
04082-00212	7181	15	
04120-21746	8907	10	
04120-21746	8957	9	
04205-00514	6012	31	
04205-00514	6016	31	

PART NO	F/NO	I/NO	M/NO
04205-01450	4401	33	
04205-10622	1111	27	
04205-10622	1112	17	
04205-10622	4405	42	
04205-10622	4405A	38	
04205-10822	4405	41	
04205-10822	4405A	37	
04205-10822	4409	10	
04205-10822	4415	7	
04205-10822	4415A	7	
04205-10822	8089	21	
04205-10825	4409	29	
04205-10825	5221	13	
04205-10825	9018	13	
04205-10830	1105	15	
04205-11028	1101	25	
04205-11028	1101	38	
04205-11028	1102	25	
04205-11028	1102	38	
04205-11028	1111	16	
04205-11028	1111	20	
04205-11028	1112	10	
04205-11028	4405	28	
04205-11028	4405	50	
04205-11028	4405A	24	
04205-11028	4405A	46	
04205-11028	4413	28	
04205-11028	4413	32	
04205-11028	4413A	26	
04205-11028	4413A	30	
04205-11028	8087	13	
04205-11028	8087	17	
04205-11028	9010	28	
04205-11028	9010	32	
04205-11035	5101	8	
04205-11035	9014	8	
04205-11038	5103	19	
04205-11038	9015	21	
04205-11235	1105	18	
04210-21040	1101	18	
04210-21040	1102	18	
04210-21040	1111	13	
04210-21040	4405	48	
04210-21040	4405A	44	
04210-21040	4413	30	
04210-21040	4413A	28	
04210-21040	8087	16	
04210-21040	9010	30	
04220-21040	4405	26	
04220-21040	4405A	22	

PART NO	F/NO	I/NO	M/NO
04220-21040	4413	26	
04220-21040	4413A	24	
04220-21040	8087	12	
04220-21040	9010	26	
04244-41011	1111	12	
04245-41025	1102	20	
04245-41029	4401	14	
04245-41031	4401	13	
04245-51038	1111	21	
04245-51038	1112	11	
04248-31022	4405	37	
04248-31022	4405A	33	
04248-31028	4407	17	
04248-31028	4407A	15	
04248-31028	4415	42	
04248-31028	4415A	41	
04248-31028	8089	1	
04248-31032	8089	14	
04248-31033	4409	1	
04250-41056	4415	9	
04250-41056	4415A	9	
04250-41056	8089	3	
04250-61056	8089	7	
04250-61056	8089	16	
04250-81056	4401	16	
04250-81056	4405	52	
04250-81056	4405A	48	
04250-81056	4407	18	
04250-81056	4407A	16	
04250-81056	4415	39	
04250-81056	4415A	38	
04250-81068	1101	21	
04250-81068	1102	21	
04250-81068	1111	22	
04250-81068	1112	12	
04250-91056	4405	33	
04250-91056	4405	55	
04250-91056	4405A	29	
04250-91056	4405A	51	
04250-91056	4407	43	
04250-91056	4407A	35	
04250-91056	4409	8	
04250-91056	4415	40	
04250-91056	4415A	39	
04254-01032	1101	22	
04254-01032	1102	22	
04254-01032	1111	25	
04254-01032	1112	15	
04254-01032	4405	35	
04254-01032	4405	54	

PART NO	F/NO	I/NO	M/NO
04254-01032	4405A	31	
04254-01032	4405A	50	
04254-01032	4407	21	
04254-01032	4407	46	
04254-01032	4407A	19	
04254-01032	4407A	38	
04254-01032	4409	12	
04254-01032	4415	41	
04254-01032	4415A	40	
04254-01032	8089	5	
04254-01032	8089	9	
04254-01032	8089	18	
04254-41032	4401	17	
04260-00635	6403	22	
04260-00793	4425	3	
04260-00793	4426	3	
04260-00793	8083	28	
04418-13060	8001	6	
04530-01222	6004	12	
06000-06005	2001	48	
06000-30208	2003	21	
06000-32011	2001	24	
06000-51108	6005	21	
06000-51112	6002	25	
06030-21307	4011	26	
06030-22317	4011	8	
06040-06007	4011	24	
06040-06210	4011	21	
06045-06012	1021	5	
06120-02016	4403	13	
06120-02016	4405	17	
06120-02016	4407	12	
06120-02016	4407	27	
06120-02016	4407	38	
06120-02016	4413	12	
06120-02016	4415	20	
06120-02016	4415	34	
06120-02016	4415A	32	
06120-02016	8087	5	
06120-02016	8087	21	
06120-02016	8089	12	
06120-02016	9010	12	
06120-03020	4405	8	
06122-02004	4403	14	
06122-02004	4405	18	
06122-02004	4407	13	
06122-02004	4407	28	
06122-02004	4407	39	
06122-02004	4413	13	
06122-02004	4415	21	

PART NO	F/NO	I/NO	M/NO
06122-02004	4415	35	
06122-02004	4415A	34	
06122-02004	8087	6	
06122-02004	8087	22	
06122-02004	8089	13	
06122-02004	9010	13	
06122-03004	4405	9	
07000-01007	4425	4	
07000-01007	4426	4	
07000-01007	6201	6	
07000-01007	6202	6	
07000-01007	6205	7	
07000-01007	6205	19	
07000-01007	6206	5	
07000-01007	6211	6	
07000-01007	6212	6	
07000-01007	6215	6	
07000-01007	6216	5	
07000-02010	6013	4	
07000-02010	6017	4	
07000-02011	6011	4	
07000-02011	6015	3	
07000-02011	6018	10	
07000-02011	6203	16	
07000-02011	6204	40	
07000-02011	6207	11	
07000-02011	6208	16	
07000-02011	6213	16	
07000-02011	6214	5	
07000-02011	6217	11	
07000-02011	6218	16	
07000-02012	6001	28	
07000-02012	6012	23	
07000-02012	6013	34	
07000-02012	6016	23	
07000-02012	6017	34	
07000-02014	6013	11	
07000-02014	6017	11	
07000-02014	6202	40	
07000-02014	6205	53	
07000-02014	6212	43	
07000-02014	6215	42	
07000-02015	6201	32	
07000-02015	6206	13	
07000-02015	6211	35	
07000-02015	6216	13	
07000-02016	6014	18	
07000-02018	4417	2	
07000-02018	4419	2	
07000-02018	6011	5	

PART NO	F/NO	I/NO	M/NO
07000-02018	6012	8	
07000-02018	6014	14	
07000-02018	6015	4	
07000-02018	6016	8	
07000-02020	4427	18	
07000-02055	3031	8	
07000-02055	3041	6	
07000-02060	3021	4	
07000-02065	6003	17	
07000-02065	6006	17	
07000-02075	3041	12	
07000-02085	1421	10	
07000-02085	6501	4	
07000-02085	9003	9	
07000-02090	6002	31	
07000-02110	4301	24	
07000-02115	2101	11	
07000-02135	6004	4	
07000-03022	1201	19	
07000-03025	5311	39	
07000-03025	6503	33	
07000-03025	9025	39	
07000-03028	6013	22	
07000-03028	6017	22	
07000-03028	6231	9	
07000-03028	6231	15	
07000-03028	6501	10	
07000-03030	6201	5	
07000-03030	6202	5	
07000-03030	6205	6	
07000-03030	6206	4	
07000-03030	6211	4	
07000-03030	6212	4	
07000-03030	6215	5	
07000-03030	6216	4	
07000-03032	6004	8	
07000-03035	6231	10	
07000-03040	4101	19	
07000-03040	4105	21	
07000-03045	4301	15	
07000-03048	6001	5	
07000-05065	4011	12	
07000-05070	3011	16	
07000-05155	6101	9	
07000-05155	9029	9	
07000-05180	6101	32	
07000-05180	9029	32	
07000-05220	6501	24	
07000-11006	2003	6	
07000-11009	2001	21	

PART NO	F/NO	I/NO	M/NO
07000-11009	6004	7	
07000-11009	6011	12	
07000-11009	6013	25	
07000-11009	6015	11	
07000-11009	6017	25	
07000-11009	6505	23	
07000-11009	6506	22	
07000-11009	6506	24	
07000-12010	6011	11	
07000-12010	6011	15	
07000-12010	6015	10	
07000-12010	6015	14	
07000-12012	4103	13	
07000-12012	4107	12	
07000-12012	6013	16	
07000-12012	6017	16	
07000-12012	6203	27	
07000-12012	6204	8	
07000-12012	6207	22	
07000-12012	6213	30	
07000-12012	6214	35	
07000-12012	6217	22	
07000-12015	6002	14	
07000-12015	6004	6	
07000-12015	6005	12	
07000-12016	6014	8	
07000-12020	2001	12	
07000-12021	6013	37	
07000-12021	6017	37	
07000-12095	6405	10	
07000-12105	6401	9	
07000-12115	6403	9	
07000-12115	7183	10	
07000-13022	8083	37	
07000-13025	2201	9	
07000-13025	2203	3	
07000-13025	6405	23	
07000-13025	6511	13	
07000-13025	6511	21	
07000-13025	6513	11	
07000-13025	6513	15	
07000-13025	6513	23	
07000-13025	6515	9	
07000-13025	6515	20	
07000-13025	7185	9	
07000-13025	7311	10	
07000-13025	7313	10	
07000-13025	7315	10	
07000-13025	8081	4	
07000-13025	8081	37	

PART NO	F/NO	I/NO	M/NO
07000-13025	8083	4	
07000-13025	8083	14	
07000-13025	8085	6	
07000-13025	8085	18	
07000-13030	4301	6	
07000-13030	6401	22	
07000-13030	6403	25	
07000-13030	6511	12	
07000-13030	6515	5	
07000-13030	6515	16	
07000-13030	8085	8	
07000-13030	8085	13	
07000-13030	8085	24	
07000-13030	8085	27	
07000-13032	2001	7	
07000-13032	6502	12	
07000-13032	8081	8	
07000-13032	8081	33	
07000-13032	8083	8	
07000-13032	8083	18	
07000-13032	8083	26	
07000-13032	8083	42	
07000-13050	6201	4	
07000-13050	6202	4	
07000-13050	6205	5	
07000-13050	6206	3	
07000-13050	6211	5	
07000-13050	6212	5	
07000-13050	6215	4	
07000-13050	6216	3	
07000-15145	2001	41	
07000-15155	4101	25	
07000-15170	2001	39	
07000-15175	4101	27	
07000-15260	2003	9	
07000-22012	6203	6	
07000-22012	6208	6	
07000-22012	6213	9	
07000-22012	6218	6	
07000-22020	4103	18	
07000-22020	4107	17	
07000-63050	1421	20	
07000-63050	9003	19	
07001-01009	6013	26	
07001-01009	6017	26	
07001-02012	4103	14	
07001-02012	4107	13	
07001-02012	6013	17	
07001-02012	6017	17	
07001-02012	6203	7	

PART NO	F/NO	I/NO	M/NO
07001-02012	6203	28	
07001-02012	6204	9	
07001-02012	6207	23	
07001-02012	6208	7	
07001-02012	6213	10	
07001-02012	6213	31	
07001-02012	6214	36	
07001-02012	6217	23	
07001-02012	6218	7	
07001-02015	1125	11	
07001-02016	6014	9	
07001-02020	4103	19	
07001-02020	4107	18	
07001-02021	6013	38	
07001-02021	6017	38	
07001-03022	1125	5	
07001-03025	8085	19	
07001-03028	1125	7	
07001-03032	8083	27	
07001-05155	4101	26	
07001-05175	4101	28	
07002-00823	6012	29	
07002-00823	6016	29	
07002-01023	6012	17	
07002-01023	6015	17	
07002-01023	6016	17	
07002-01223	6002	5	
07002-01423	1105	9	
07002-01423	1106	3	
07002-01423	2205	8	
07002-01423	4105	16	
07002-01423	4301	23	
07002-01423	4417	5	
07002-01423	4419	4	
07002-01423	4423	7	
07002-01423	4425	5	
07002-01423	4425	17	
07002-01423	4425	22	
07002-01423	4426	5	
07002-01423	4426	15	
07002-01423	4426	22	
07002-01423	4426	25	
07002-01423	6001	30	
07002-01423	6011	17	
07002-01423	6015	19	
07002-01423	6202	35	
07002-01423	6205	39	
07002-01423	6212	38	
07002-01423	6215	30	
07002-01423	6502	5	

PART NO	F/NO	I/NO	M/NO
07002-01423	6502	9	
07002-01423	6505	7	
07002-01423	6505	9	
07002-01423	6506	6	
07002-01423	6506	8	
07002-01823	6231	7	
07002-02034	1105	12	
07002-02034	1106	6	
07002-02034	2001	14	
07002-02034	2203	9	
07002-02034	2203	11	
07002-02034	2205	4	
07002-02034	2207	5	
07002-02034	4421	12	
07002-02034	4421	17	
07002-02034	6001	21	
07002-02034	6012	14	
07002-02034	6016	14	
07002-02434	6001	18	
07002-02434	6001	32	
07002-02434	6018	8	
07002-02434	6201	30	
07002-02434	6201	33	
07002-02434	6202	41	
07002-02434	6203	13	
07002-02434	6204	21	
07002-02434	6204	42	
07002-02434	6205	52	
07002-02434	6206	11	
07002-02434	6206	14	
07002-02434	6207	3	
07002-02434	6207	31	
07002-02434	6208	13	
07002-02434	6211	33	
07002-02434	6211	36	
07002-02434	6212	44	
07002-02434	6213	14	
07002-02434	6214	8	
07002-02434	6214	24	
07002-02434	6215	43	
07002-02434	6216	11	
07002-02434	6216	14	
07002-02434	6217	3	
07002-02434	6217	31	
07002-02434	6218	13	
07002-02434	6501	8	
07002-02434	6501	17	
07002-02434	6501	23	
07002-03034	6201	48	
07002-03034	6203	21	

PART NO	F/NO	I/NO	M/NO
07002-03034	6203	34	
07002-03034	6204	2	
07002-03034	6204	25	
07002-03034	6204	27	
07002-03034	6205	46	
07002-03034	6207	14	
07002-03034	6207	35	
07002-03034	6208	21	
07002-03034	6211	51	
07002-03034	6213	29	
07002-03034	6213	37	
07002-03034	6214	23	
07002-03034	6214	34	
07002-03034	6214	42	
07002-03034	6215	36	
07002-03034	6217	14	
07002-03034	6217	35	
07002-03034	6218	21	
07002-03334	6203	17	
07002-03334	6208	19	
07002-03334	6213	4	
07002-03334	6218	19	
07002-03334	6504	5	
07002-03334	6504	10	
07002-03334	6504	13	
07002-03334	6504	21	
07002-03334	6504	35	
07002-03634	6101	33	
07002-03634	9029	33	
07002-11223	6201	14	
07002-11223	6201	25	
07002-11223	6202	14	
07002-11223	6202	22	
07002-11223	6205	16	
07002-11223	6211	14	
07002-11223	6212	14	
07002-11223	6215	15	
07002-12015	1125	10	
07002-12034	6503	12	
07002-12034	6503	14	
07002-12034	6503	20	
07002-12034	6503	20	
07002-12434	1125	4	
07002-12434	2101	7	
07002-12434	2201	4	
07002-12434	4103	8	
07002-12434	4107	7	
07002-12434	4301	3	
07002-12434	6201	39	
07002-12434	6202	33	

PART NO	F/NO	I/NO	M/NO
07002-12434	6205	37	
07002-12434	6206	30	
07002-12434	6211	42	
07002-12434	6212	36	
07002-12434	6215	28	
07002-12434	6216	30	
07002-12434	6511	7	
07002-12434	6513	8	
07002-12434	6515	2	
07002-12434	8085	3	
07002-13028	1125	6	
07002-13034	4103	20	
07002-13034	4107	19	
07002-13034	6201	37	
07002-13034	6202	31	
07002-13034	6205	35	
07002-13034	6206	27	
07002-13034	6211	40	
07002-13034	6212	34	
07002-13034	6215	26	
07002-13034	6216	27	
07002-13034	6503	18	
07002-13034	6503	27	
07002-13334	4103	5	
07002-13334	4107	4	
07002-13334	6201	42	
07002-13334	6206	32	
07002-13334	6211	46	
07002-13334	6216	32	
07002-13334	6502	19	
07002-13334	6503	3	
07002-13334	8083	35	
07002-23634	1421	14	
07002-23634	9003	13	
07005-01412	8051	6	
07005-01414	8071	6	
07005-03016	1021	10	
07012-00100	4011	10	
07020-00000	4001	2	
07020-00000	4405	16	
07020-00000	4407	11	
07020-00000	4407	25	
07020-00000	4407	36	
07020-00000	4415	22	
07020-00000	4415	36	
07020-00000	4415A	35	
07020-00000	6405	16	
07020-00000	7003	5	
07020-00000	7005	8	
07020-00000	7007	5	

PART NO	F/NO	I/NO	M/NO
07020-00000	7007	11	
07020-00000	7181	9	
07020-00000	7183	4	
07020-00000	7311	6	
07020-00000	7313	6	
07020-00000	7315	6	
07020-00000	8087	20	
07020-00675	6401	19	
07020-00675	6403	15	
07020-00675	7181	34	
07020-00900	3011	11	
07020-00900	4403	12	
07020-00900	4405	7	
07020-00900	4407	26	
07020-00900	4407	37	
07020-00900	4413	11	
07020-00900	6405	4	
07020-00900	7001	5	
07020-00900	7005	7	
07020-00900	7311	5	
07020-00900	7313	5	
07020-00900	7315	5	
07020-00900	8087	4	
07020-00900	8089	11	
07020-00900	9010	11	
07020-00900	9031	5	
07030-03034	1021	9	
07040-02412	6001	31	
07040-11007	6012	16	
07040-11007	6015	16	
07040-11007	6016	16	
07040-11409	1106	2	
07040-11409	4105	15	
07040-11409	6011	16	
07040-11409	6015	18	
07040-11409	6202	34	
07040-11409	6205	38	
07040-11409	6212	37	
07040-11409	6215	29	
07040-11409	6506	7	
07040-12414	2101	6	
07040-13316	6201	41	
07040-13316	6206	31	
07040-13316	6211	45	
07040-13316	6216	31	
07042-00108	4011	35	
07042-00108	4301	21	
07042-00108	6505	5	
07042-00108	6506	4	
07042-10108	4425	6	

PART NO	F/NO	I/NO	M/NO
07042-10108	4426	6	
07042-10108	6506	21	
07042-20108	6001	15	
07042-20108	8081	16	
07042-30108	1021	11	
07042-30108	1106	1	
07042-30108	4425	20	
07042-30108	6502	7	
07042-30108	6502	18	
07042-30108	6503	2	
07042-30108	6505	22	
07042-30617	4011	39	
07043-00108	8083	29	
07043-00617	8081	17	
07043-50211	3041	11	
07043-50312	4427	2	
07043-50312	6022	4	
07043-70108	6202	36	
07043-70108	6205	40	
07043-70108	6212	39	
07043-70108	6215	31	
07044-13620	6101	34	
07044-13620	9029	34	
07049-01215	4011	34	
07049-01620	2401	4	
07049-02025	4011	33	
07050-21200	6101	14	
07050-21202	6101	15	
07050-21202	9029	15	
07052-31624	3021	5	
07052-31624	3031	10	
07056-18416	6101	16	
07056-18416	9029	16	
07091-11200	6101	14	
07091-11200	9029	14	
07096-00205	8101	3	
07096-00205	9033	3	
07096-00207	8101	9	
07096-00207	9033	9	
07097-00609	2201	8	
07097-00610	2201	7	
07097-00619	2203	1	
07097-20513	7313	9	
07097-20613	7313	9	
07097-21012	8081	3	
07098-00609	2201	5	
07098-00609	6513	21	
07098-00610	2201	6	
07098-00620	2203	2	
07098-01011	6502	10	

PART NO	F/NO	I/NO	M/NO
07098-01012	6502	11	
07098-20513	7315	9	
07098-20613	7315	9	
07098-20619	7185	8	
07099-00609	6513	22	
07099-00610	6511	20	
07099-00612	6513	14	
07099-00612	6515	8	
07099-20517	7311	9	
07099-20612	8081	2	
07099-20614	6515	19	
07099-20617	7311	9	
07099-20618	8083	2	
07099-21018	8083	3	
07102-20315	4421	14	
07102-20318	2203	7	
07102-20412	1105	10	
07102-20412	1106	4	
07102-20606	6501	13	
07102-21003	4301	18	
07102-21006	6504	25	
07102-21008	6504	36	
07102-21009	6504	16	
07121-00606	4301	1	
07144-10505	7183	2	
07145-00050	7183	3	
07145-00070	6401	3	
07145-00070	6401	14	
07145-00070	6405	3	
07145-00080	6403	3	
07145-00080	6403	14	
07145-00080	7001	4	
07145-00080	7005	5	
07145-00080	7185	4	
07145-00080	7311	7	
07145-00080	7313	7	
07145-00080	7315	7	
07145-00080	9031	4	
07146-02096	6405	11	
07146-02106	6401	10	
07146-02116	6403	10	
07155-00720	3011	13	
07155-01025	6405	19	
07155-01125	6401	17	
07155-01125	7183	15	
07155-01230	6403	19	
07165-15252	6405	20	
07165-15252	7183	16	
07177-07030	6405	6	
07177-07030	7183	6	

PART NO	F/NO	I/NO	M/NO
07177-07530	6401	5	
07177-08030	6403	5	
07179-00093	6405	9	
07179-00093	7183	9	
07179-00097	6401	8	
07179-00103	6403	8	
07206-31014	8051	5	
07206-31016	8071	5	
07213-50813	7003	4	
07230-10210	4417	4	
07230-10210	4419	3	
07230-10210	4423	1	
07230-10210	4425	16	
07230-10210	4426	21	
07230-10210	6505	8	
07230-10315	2203	8	
07230-10422	1105	11	
07230-10422	1106	5	
07230-10422	6503	10	
07230-10628	4301	2	
07230-10628	6501	7	
07230-11034	6504	4	
07231-20210	6505	4	
07231-20210	6506	3	
07232-20210	2205	6	
07232-20210	4423	2	
07232-20210	4425	18	
07232-20210	4426	13	
07232-20210	4426	23	
07232-20210	6502	3	
07232-20210	6505	3	
07232-20210	6506	2	
07232-20315	2205	2	
07232-20315	4421	15	
07232-20422	6001	19	
07232-20628	6501	14	
07232-21034	6504	11	
07233-20210	4301	20	
07234-21034	6504	33	
07235-10315	6503	22	
07235-10422	6503	9	
07238-00210	4423	14	
07238-00210	4425	14	
07238-00210	4426	19	
07238-00210	8101	4	
07238-00210	9033	4	
07239-11408	2205	7	
07239-11408	4301	22	
07239-11408	4423	6	
07239-11408	4425	21	

PART NO	F/NO	I/NO	M/NO
07239-11408	4426	14	
07239-11408	4426	24	
07239-11408	6502	4	
07239-11408	6502	8	
07239-11408	6505	6	
07239-11408	6506	5	
07239-12009	2205	3	
07239-12009	4421	11	
07239-12009	4421	16	
07239-12009	6001	17	
07239-12009	6012	15	
07239-12009	6016	15	
07239-12410	6001	16	
07239-12410	6203	12	
07239-12410	6208	12	
07239-12410	6213	17	
07239-12410	6218	12	
07239-12410	6501	16	
07239-13320	6504	12	
07239-13320	6504	34	
07260-27422	6501	1	
07280-01010	1201	5	
07280-01110	6101	20	
07280-01110	9029	20	
07280-01210	1211	15	
07281-00197	1301	2	
07281-00197	6101	4	
07281-00197	8051	7	
07281-00197	8071	7	
07281-00197	9029	4	
07281-00259	5501	7	
07281-00259	5503	7	
07281-00259	8903	3	
07281-00489	1211	11	
07281-00609	1211	8	
07281-00609	1211	10	
07281-00809	1051	12	
07281-01029	1051	11	
07281-01029	6501	2	
07281-01469	1211	13	
07282-01568	2205	14	
07283-22738	4301	11	
07283-22738	6401	30	
07283-22738	6403	35	
07283-22738	6405	36	
07283-22738	6513	28	
07283-22738	8085	32	
07283-26155	8955	16	
07283-28973	4421	2	
07288-01020	8051	12	

PART NO	F/NO	I/NO	M/NO
07288-01020	8071	12	
07288-01023	8051	11	
07288-01023	8071	11	
07288-01024	1301	1	
07323-30600	4011	40	
07371-30500	8083	38	
07371-30638	2201	10	
07371-30638	2203	4	
07371-30638	6511	19	
07371-30638	6511	22	
07371-30638	6513	10	
07371-30638	6513	16	
07371-30638	6513	24	
07371-30638	6515	10	
07371-30638	6515	21	
07371-30638	7185	10	
07371-30638	7311	11	
07371-30638	7313	11	
07371-30638	7315	11	
07371-30638	8081	5	
07371-30638	8081	36	
07371-30638	8083	5	
07371-30638	8083	15	
07371-30638	8085	7	
07371-31049	6502	13	
07371-31049	8081	9	
07371-31049	8081	32	
07371-31049	8083	9	
07371-31049	8083	19	
07371-31049	8083	43	
07372-21035	6502	14	
07376-51034	6504	26	
07378-10500	8083	36	
07378-11000	8083	41	
07700-40240	6101	18	
07700-40240	8051	10	
07700-40240	8071	10	
07700-40240	9029	18	
07822-00404	6505	15	
07822-00404	6506	14	
07822-00405	1105	1	
07822-00409	6505	16	
07822-00409	6506	15	
07822-00605	2207	1	
07822-00606	2207	2	
07822-00606	6505	10	
07822-00606	6506	9	
07822-00610	2205	10	
07822-00620	4423	15	
07822-00630	2205	9	

PART NO	F/NO	I/NO	M/NO
07822-00804	6501	18	
07831-00411	1105	4	
07831-00411	6505	19	
07831-00411	6506	18	
07831-00612	2205	12	
07831-00612	2207	7	
07831-00612	4423	16	
07831-00612	6505	13	
07831-00612	6506	12	
07831-00813	6501	20	
07832-00410	1105	5	
07832-00410	6505	20	
07832-00410	6506	19	
07832-00614	2205	13	
07832-00614	2207	8	
07832-00614	4423	17	
07832-00614	6505	14	
07832-00614	6506	13	
07832-00817	6501	21	
07834-00410	1105	3	
07834-00410	6505	18	
07834-00410	6506	17	
07834-00613	2205	11	
07834-00613	4423	18	
07834-00613	6505	12	
07834-00613	6506	11	
07834-00817	6501	19	
07835-00613	2207	6	
07836-00410	1105	2	
07836-00410	6505	17	
07836-00410	6506	16	
07836-00613	2207	3	
07836-00613	6505	11	
07836-00613	6506	10	
07950-10450	9991	8	
07950-90403	9991	10	
07951-21045	9991	9	
07952-80002	9991	8	
08000-00000	1401	2	
08000-00001	1401	3	
08000-32212	1401	1	
08028-12025	1423	20	
08028-12025	1424	20	
08028-12025	9004	20	
08028-12045	1401	13	
08034-00023	2203	14	
08034-00519	1105	20	
08034-00519	1211	16	
08034-00519	1301	4	
08034-00519	1301	9	

PART NO	F/NO	I/NO	M/NO
08034-00519	1423	19	
08034-00519	1424	19	
08034-00519	2203	17	
08034-00519	2205	20	
08034-00519	4425	24	
08034-00519	4425	26	
08034-00519	4426	27	
08034-00519	5501	11	
08034-00519	5501	14	
08034-00519	5503	11	
08034-00519	5503	14	
08034-00519	6502	24	
08034-00519	8901	12	
08034-00519	8903	5	
08034-00519	8903	10	
08034-00519	8909	6	
08034-00519	8951	21	
08034-00519	8953	21	
08034-00519	8955	28	
08034-00536	5501	12	
08034-00536	5503	12	
08034-00536	8901	13	
08034-00536	8903	4	
08034-00823	4417	15	
08034-00823	4417	17	
08034-00823	4417	19	
08034-00823	4419	14	
08034-00823	4419	16	
08034-00823	4419	18	
08034-00823	4425	25	
08034-00823	4426	28	
08034-00823	6504	28	
08036-01414	1423	7	
08036-01414	1424	7	
08036-01414	9004	7	
08036-01814	1301	5	
08036-01814	1411	27	
08036-01814	1411	44	
08036-01814	1413	35	
08036-01814	1413	41	
08036-01814	1414	37	
08036-01814	1414	42	
08036-01814	1423	6	
08036-01814	1424	6	
08036-01814	4421	18	
08036-01814	4425	10	
08036-01814	4426	10	
08036-01814	8051	13	
08036-01814	8071	13	
08036-01814	9001	36	

PART NO	F/NO	I/NO	M/NO
08036-01814	9001	42	
08036-01814	9004	6	
08036-02514	2205	17	
08036-02514	8955	20	
08036-02514	8955	23	
08036-03014	1411	42	
08036-03014	1423	11	
08036-03014	1424	11	
08036-03014	9004	11	
08036-10614	1423	10	
08036-10614	1424	10	
08036-10614	8957	8	
08036-10614	9004	10	
08036-10814	1301	6	
08036-10814	1423	8	
08036-10814	1424	8	
08036-10814	9004	8	
08036-11214	1211	18	
08036-11214	1401	17	
08036-11214	1423	9	
08036-11214	1424	9	
08036-11214	9004	9	
08036-21814	6001	33	
08036-22514	8901	8	
08037-01008	4401	41	
08037-01008	5101	33	
08037-01008	5227	22	
08037-01008	9014	33	
08037-01008	9021	22	
08037-03016	5311	2	
08037-03016	9025	2	
08037-03614	5301	14	
08037-03614	5301	27	
08037-03614	5311	3	
08037-03614	8951	15	
08037-03614	8951	23	
08037-03614	8953	15	
08037-03614	8953	23	
08037-03614	9025	3	
08037-05016	5301	2	
08038-00519	1423	17	
08038-00519	1424	17	
08038-00519	9004	17	
08038-00519	9004	19	
08038-04030	1401	16	
08038-22009	1401	14	
08040-01000	1411	12	
08040-01000	1413	19	
08040-01000	1414	21	
08040-01000	9001	20	

PART NO	F/NO	I/NO	M/NO
08040-02000	1411	11	
08040-02000	1413	19	
08040-02000	1414	21	
08040-02000	9001	20	
08040-03000	1411	10	
08040-03000	1413	19	
08040-03000	1414	21	
08040-03000	9001	20	
08040-04000	1411	9	
08040-04000	1413	19	
08040-04000	1414	21	
08040-04000	9001	20	
08088-10000	1401	18	
08111-02430	1411	25	
08111-02430	1413	9	
08111-02430	9001	9	
08111-02430	9001	10	
08116-02410	5227	15	
08116-02410	9021	15	
08141-02400	5227	15	
08141-02400	9021	15	
08147-22400	9001	10	
08160-52400	1421	5	
08160-52400	9003	5	
08670-00635	1051	16	
09000-30006	9991	2	
09001-05500	9991	14	
09002-03641	9991	13	
09007-01040	9991	17	
09019-08035	9991	12	
09022-00250	9991	4	
09033-00190	9991	5	
09036-00150	9991	6	
09039-00150	9991	7	
09055-00520	9991	11	
09056-00513	9991	1	
09131-02000	9035	27	
09131-03000	9902	23	
09131-03000	9922	25	
09133-03000	9902	8	
09133-03000	9922	8	
09173-02000	9035	36	
09173-03000	9902	27	
09173-03000	9922	34	
09244-02496	7113	7	
09304-01240	1101	12	
09304-01240	1102	12	
09340-10130	4403	22	
09340-10130	4413	21	
09340-10130	4413A	19	

PART NO	F/NO	I/NO	M/NO
09340-10130	9010	21	
09350-02220	1101	28	
09350-02220	1102	28	
09350-02220	1111	3	
09350-02220	1111	8	
09350-02220	1112	3	
09370-00700	3011	14	
09412-10092	5103	9	
09412-10092	9015	11	
09415-00706	1414	19	
09415-01008	5223	34	
09415-01008	9019	26	
09415-01610	1414	9	
09415-02512	4401	31	
09453-00002	5221	25	
09453-00002	9018	25	
09460-00000	9991	16	
09483-00432	5503	5	
09483-00434	5501	5	
09483-00434	5503	4	
09483-00436	5501	4	
09483-00438	8903	2	
09488-20517	8955	19	
09488-20522	8955	27	
09488-20626	8955	14	
09488-20627	8955	2	
09602-01643	9902	4	
09602-01643	9922	4	
09602-21643	9035	5	
09649-02001	9035	24	
09649-03001	9902	20	
09649-03001	9922	22	
09651-02000	9035	35	
09651-03000	9902	26	
09651-03000	9922	33	
09653-02000	9035	18	
09653-03000	9902	14	
09653-03000	9922	14	
09660-20100	8001	5	
09667-03000	9902	35	
09667-03000	9922	35	
09668-02000	9035	20	
09668-03000	9902	16	
09668-03000	9922	16	
09669-00002	9035	17	
09669-00002	9902	12	
09669-00002	9922	12	
09669-00003	9035	16	
09669-00003	9902	13	
09669-00003	9922	13	

PART NO	F/NO	I/NO	M/NO
09683-21060	9035	40	
09683-30060	9902	38	
09683-30060	9922	38	
09685-00001	9035	41	
09685-00001	9902	40	
09685-00001	9922	39	
09685-00002	9035	28	
09685-00002	9902	24	
09685-00002	9922	26	
09690-01250	9035	1	
09690-01250	9902	1	
09690-01250	9922	1	
09690-10500	9035	3	
09690-10500	9035	14	
09690-10500	9902	2	
09690-10500	9902	10	
09690-10500	9922	2	
09690-10500	9922	10	
09980-20450	9991	18	
09982-20057	9991	19	
101-43-11281	1101	3	
101-43-11281	1102	3	
101-43-11380	1101	5	
101-43-11380	1102	5	
103-30-15150	3041	7	
113-01-21110	1001	11	
12F-32-11111	3101	1	
12R-60-11230	6101	29	
12R-60-11230	9029	29	
120-30-12162	3041	15	
13F-32-05000	3101	1	
13F-32-21220	3101	2	
13F-32-21220	3101	1	
130-27-00161	3021	7	
130-27-12551	3021	7	
130-32-11126	3101	4	
130-32-11136	3101	5	
130-32-11144	3101	6	
130-32-11172	3101	9	
130-98-09113	3101	6	
130-98-09133	3101	6	
130-98-09142	3101	9	
130-98-09162	3101	9	
131-60-16170	8083	24	
135-03-12110	1201	32	
135-32-11271	3101	7	
135-32-11381	3101	10	
140-30-00141	3041	15	
140-30-00401	3041	15	
140-30-00411	3041	16	

PART NO	F/NO	I/NO	M/NO
140-30-16221	3041	16	
142-54-16170	9035	6	
142-54-16170	9902	5	
142-54-16170	9922	5	
144-63-94170	6401	7	
144-63-95170	6405	8	
144-63-95170	7183	8	
144-854-1890	5101	38	
144-854-1890	9014	38	
144-947-2850	1101	34	
144-947-2850	1102	34	
144-947-2850	1111	17	
144-947-2850	1112	7	
145-Z79-6190	8915	5	
145-Z79-6210	8915	2	
145-Z79-6220	8915	2	
145-Z79-6230	8915	3	
145-Z79-6240	8915	7	
145-Z79-6250	8915	8	
145-Z79-6260	8915	4	
145-Z79-6630	1414	15	
150-49-11560	6504	8	
150-49-11560	6504	19	
150-952-7160	1423	5	
150-952-7160	1424	5	
150-952-7160	9004	5	
154-43-14690	1101	6	
154-43-14690	1102	6	
154-54-23260	9902	11	
154-54-23260	9922	11	
155-30-15150	3041	17	
175-06-51210	1411	36	
175-06-51210	1413	20	
175-06-51210	1414	22	
175-06-51210	9001	21	
175-54-27350	5401	14	
175-54-88110	5101	7	
175-54-88110	9014	7	
175-60-27300	6101	5	
175-60-27300	9029	5	
175-60-27340	6101	6	
175-60-27340	9029	6	
175-60-27380	6101	7	
175-60-27380	9029	7	
175-79-82550	8101	2	
175-79-82550	9033	2	
175-79-82560	4417	9	
175-79-82560	4419	8	
175-79-82560	4423	12	
175-79-82560	8101	10	

PART NO	F/NO	I/NO	M/NO
175-79-82560	9033	10	
176-911-4160	1423	3	
176-911-4160	1424	3	
176-911-4160	5301	24	
176-911-4160	5311	37	
176-911-4160	5501	15	
176-911-4160	5503	15	
176-911-4160	8951	24	
176-911-4160	8953	24	
176-911-4160	9004	3	
176-911-4160	9025	37	
176-911-4170	5501	8	
176-911-4170	5503	8	
176-911-4170	8903	6	
176-911-4170	8903	12	
176-911-4170	8955	29	
176-911-4180	8901	5	
195-30-00291	3021	6	
195-30-00302	3021	6	
195-30-16242	3021	6	
195-61-34130	4403	13	
195-61-34130	4405A	14	
195-61-34130	4407A	11	
195-61-34130	4407A	23	
195-61-34130	4407A	31	
195-61-34130	4413A	11	
195-61-34130	4415A	20	
195-61-34130	4415A	33	
195-63-92190	6403	7	
195-822-6151	1411	18	
195-822-6151	1413	11	
195-822-6151	1414	16	
195-822-6151	9001	12	
195-979-4160	8905	20	
195-979-4160	8906	20	
198-911-4500	8907	7	
198-911-4500	8915	1	
198-911-4610	8905	13	
198-911-4610	8906	13	
198-911-4740	8915	1	
20D-03-11241	4417	10	
20D-03-11241	4419	9	
20D-03-11241	6502	21	
20D-43-11370	4401	2	
20D-43-11370	4411	13	
20D-43-11370	9008	12	
20D-62-11660	8083	34	
20D-62-12620	4417	16	
20D-62-12620	4419	15	
20D-63-32290	7183	11	

PART NO	F/NO	I/NO	M/NO
20D-68-11670	6101	17	
20D-68-11670	9029	17	
20G-01-11110	1021	8	
20G-01-11120	1021	1	
20G-01-11130	1021	4	
20G-01-12112	1051	1	
20G-01-12140	1051	4	
20G-01-12150	1051	6	
20G-01-12160	1051	5	
20G-03-11320	1201	10	
20G-06-15110	1411	13	
20G-06-15110	1413	10	
20G-06-15110	9001	11	
20G-06-15120	1411	14	
20G-06-15120	1413	30	
20G-06-15120	9001	31	
20G-26-11110	4011	7	
20G-26-11121	4011	19	
20G-26-11131	4011	23	
20G-26-11141	4011	1	
20G-26-11150	4011	20	
20G-26-11170	4011	2	
20G-26-11181	4011	17	
20G-26-11231	4011	5	
20G-26-11240	4011	3	
20G-26-11250	4011	13	
20G-26-11260	4011	18	
20G-26-11310	4011	43	
20G-26-11320	4011	42	
20G-26-11340	4011	41	
20G-47-11381	3001	3	
20G-47-11381	9006	6	
20G-54-00030	5223	1	
20G-54-00030	9019	1	
20G-54-11590	5101	34	
20G-54-11590	9014	34	
20G-54-11710	5101	20	
20G-54-11710	9014	20	
20G-54-11730	5101	21	
20G-54-11730	9014	21	
20G-54-11740	5101	22	
20G-54-11740	9014	22	
20G-54-11860	5101	23	
20G-54-11860	9014	23	
20G-54-11870	5101	24	
20G-54-11870	9014	24	
20G-54-12110	5231	42	
20G-54-12110	9023	42	
20G-54-12120	5231	46	
20G-54-12120	9023	46	

PART NO	F/NO	I/NO	M/NO
20G-54-12150	5227	11	
20G-54-12150	9021	11	
20G-62-15370	4417	6	
20G-62-15410	4425	12	
20G-62-15410	4426	17	
20G-62-15420	4423	9	
20G-62-15420	4425	11	
20G-62-15420	4426	16	
20G-62-15430	1105	6	
20G-62-15430	6502	2	
20G-62-15470	4423	8	
20G-62-15470	4423	10	
20G-62-15470	4426	12	
20S-43-11230	4403	20	
20S-71-11230	1001	14	
20T-43-22210	4405	38	
20T-43-22210	4405A	34	
20T-43-22210	4409	6	
20T-43-22210	4415	6	
20T-43-22210	4415A	6	
20T-43-22210	8089	20	
20T-973-2640	8085	20	
20T-98-22240	9035	2	
20T-98-22240	9035	7	
20T-98-22240	9035	13	
20T-98-22240	9035	15	
20T-98-22330	9035	37	
20X-43-12230	1101	20	
20X-62-13592	1125	3	
20X-62-13612	1125	9	
20X-62-13622	1125	8	
20X-62-13632	1125	12	
201-04-21160	6101	3	
201-04-21160	9029	3	
201-06-21510	1411	3	
201-06-21510	1413	8	
201-06-21510	1414	8	
201-06-21510	9001	8	
201-30-14280	3011	10	
201-43-21370	1111	23	
201-43-21370	1112	13	
201-43-21370	4405	39	
201-43-21370	4405A	35	
201-43-22181	1101	4	
201-43-22181	1102	4	
201-54-21360	5101	16	
201-54-21360	9014	16	
201-54-21860	5301	19	
201-54-21860	5311	40	
201-54-21860	9025	40	

PART NO	F/NO	I/NO	M/NO
201-54-22890	8031	5	
201-54-24130	5501	6	
201-54-24130	5503	6	
201-54-26420	5105	2	
201-54-26420	9016	2	
201-60-11230	2201	14	
201-60-11240	2201	13	
201-60-12171	6101	22	
201-60-12171	9029	22	
201-60-12190	6101	21	
201-60-12190	9029	21	
201-62-21680	2207	4	
201-63-96101	7181	18	
201-63-96101	7183	1	
201-63-96121	7183	12	
201-63-96140	7183	1	
202-931-1180	7181	2	
202-931-4560	7185	14	
203-00-31120	9902	37	
203-00-31120	9922	37	
203-00-31340	9902	34	
203-00-31340	9922	32	
203-00-31350	9902	28	
203-00-31350	9922	23	
203-00-41130	9035	10	
203-00-41130	9902	7	
203-00-41130	9922	7	
203-00-41180	9035	38	
203-00-41180	9902	36	
203-00-41180	9922	36	
203-00-41260	9035	9	
203-00-41270	9035	11	
203-00-41311	9902	39	
203-00-41311	9922	40	
203-00-41321	9035	43	
203-01-32110	1001	10	
203-01-42122	1001	1	
203-03-41131	1211	1	
203-03-41141	1211	4	
203-03-41190	1201	31	
203-03-41211	1211	9	
203-03-41223	1211	7	
203-03-41231	1211	12	
203-03-41280	1201	2	
203-03-41350	1201	36	
203-03-41360	1211	17	
203-03-41410	1201	4	
203-03-41461	1201	7	
203-03-41471	1201	8	
203-03-41480	1201	6	

PART NO	F/NO	I/NO	M/NO
203-03-41490	1201	14	
203-03-41510	1201	16	
203-03-41520	1201	15	
203-03-41530	1201	9	
203-04-31180	8071	16	
203-04-31230	1301	3	
203-04-31230	1423	18	
203-04-31230	1424	18	
203-04-31230	4425	23	
203-04-31230	4426	26	
203-04-31230	5501	13	
203-04-31230	5503	13	
203-04-31230	8903	9	
203-04-31230	8955	3	
203-04-31230	9004	18	
203-04-41110	8071	19	
203-06-21140	4401	4	
203-06-31160	1414	10	
203-06-41130	1421	2	
203-06-41130	9003	2	
203-06-41160	1421	19	
203-06-41160	9003	18	
203-06-41281	1413	36	
203-06-41281	9001	37	
203-06-41282	1411	39	
203-06-41513	1411	26	
203-06-41540	1411	8	
203-06-41540	1413	18	
203-06-41540	1414	20	
203-06-41540	9001	19	
203-06-41550	1423	4	
203-06-41550	1424	4	
203-06-41550	8901	11	
203-06-41550	9004	4	
203-06-41570	1411	49	
203-06-41570	1413	14	
203-06-41570	1413	16	
203-06-41570	9001	15	
203-06-41570	9001	17	
203-06-41610	1411	48	
203-06-41610	1413	15	
203-06-41610	9001	16	
203-06-41630	1401	12	
203-06-41640	1401	8	
203-06-41651	1401	9	
203-06-41661	4425	9	
203-06-41661	4426	9	
203-06-41672	1413	1	
203-06-41672	1414	1	
203-06-41680	1411	50	

PART NO	F/NO	I/NO	M/NO
203-06-41680	1413	17	
203-06-41680	9001	18	
203-06-41710	5221	31	
203-06-41710	9018	31	
203-06-41720	5223	13	
203-06-41720	9019	13	
203-06-41750	9001	1	
203-06-41770	8101	17	
203-06-41770	9033	17	
203-06-41790	1411	43	
203-06-41790	1413	34	
203-06-41790	1414	36	
203-06-41790	9001	35	
203-06-41810	1411	25	
203-06-41810	1413	9	
203-06-41810	9001	9	
203-06-41840	1414	32	
203-06-41860	1411	47	
203-26-41220	4011	15	
203-26-41250	4011	4	
203-30-34220	3011	5	
203-30-34240	3011	9	
203-30-36140	3041	3	
203-30-42220	3011	12	
203-30-42250	3011	6	
203-43-21370	4401	24	
203-43-21370	4411	9	
203-43-21370	9008	8	
203-43-31420	4401	27	
203-43-31420	4401	32	
203-43-31420	4409	21	
203-43-31420	4415	48	
203-43-31420	4415A	47	
203-43-41113	4407	1	
203-43-41113	4407A	1	
203-43-41122	4407	10	
203-43-41123	4407A	10	
203-43-41132	4407	9	
203-43-41133	4407A	9	
203-43-41141	4407	8	
203-43-41142	4407A	8	
203-43-41151	4407	7	
203-43-41152	4407A	7	
203-43-41172	4407	6	
203-43-41173	4407A	6	
203-43-41192	4407	14	
203-43-41192	4407A	12	
203-43-41210	4407	22	
203-43-41211	4407A	20	
203-43-41220	4407	23	

PART NO	F/NO	I/NO	M/NO
203-43-41221	4407A	21	
203-43-41231	4407	24	
203-43-41231	4407	35	
203-43-41232	4407A	22	
203-43-41232	4407A	30	
203-43-41242	8089	10	
203-43-41250	4407	33	
203-43-41251	4407A	28	
203-43-41260	4407	34	
203-43-41261	4407A	29	
203-43-41272	4407	29	
203-43-41272	4407	40	
203-43-41272	4407A	24	
203-43-41272	4407A	32	
203-43-41310	4405	21	
203-43-41310	4405A	17	
203-43-41340	4403	2	
203-43-41340	4413	2	
203-43-41340	4413A	2	
203-43-41340	9010	2	
203-43-41391	4411	7	
203-43-41423	9008	2	
203-43-41425	4411	2	
203-43-41433	9008	1	
203-43-41435	4411	1	
203-43-41491	4409	3	
203-43-41541	4403	23	
203-43-41541	4413	22	
203-43-41541	4413A	20	
203-43-41541	9010	22	
203-43-41592	4403	5	
203-43-41592	4413	5	
203-43-41592	4413A	5	
203-43-41592	9010	5	
203-43-41612	4403	4	
203-43-41612	4413	4	
203-43-41612	4413A	4	
203-43-41612	9010	4	
203-43-41650	8087	2	
203-43-41660	4403	21	
203-43-41660	4413	20	
203-43-41660	4413A	18	
203-43-41660	9010	20	
203-43-41712	8087	1	
203-43-41740	4409	28	
203-43-41752	4409	5	
203-43-41813	4411	6	
203-43-41823	4411	5	
203-43-42132	4401	1	
203-43-42142	4401	3	

PART NO	F/NO	I/NO	M/NO
203-43-42312	4405	10	
203-43-42312	4405A	8	
203-43-42322	4405	1	
203-43-42322	4405A	1	
203-43-42332	4405	32	
203-43-42332	4405A	28	
203-43-42373	4403	10	
203-43-42373	4413	9	
203-43-42373	9010	9	
203-43-42374	4403	10	
203-43-42374	4413A	9	
203-43-42391	4405	5	
203-43-42392	4405A	5	
203-43-42421	4405	14	
203-43-42422	4405A	12	
203-43-42441	4407	4	
203-43-42442	4407A	4	
203-43-42450	4409	4	
203-43-42491	8089	23	
203-43-42511	4409	16	
203-43-42521	4409	19	
203-43-42530	4409	20	
203-43-42530	4415	51	
203-43-42530	4415A	50	
203-43-42541	4409	22	
203-43-42541	4415	13	
203-43-42541	4415A	13	
203-43-42551	4409	17	
203-43-42551	4415	46	
203-43-42551	4415A	45	
203-43-42561	4409	14	
203-43-42561	4415	47	
203-43-42561	4415A	46	
203-43-42572	4401	42	
203-43-42572	4413	37	
203-43-42572	4413A	35	
203-43-42572	8091	2	
203-43-42611	4409	15	
203-43-42621	4409	18	
203-43-42630	4405	15	
203-43-42631	4405A	13	
203-43-42640	4405	6	
203-43-42641	4405A	6	
203-43-42671	4403	11	
203-43-42671	4413	10	
203-43-42671	9010	10	
203-43-42672	4403	11	
203-43-42672	4413A	10	
203-43-42680	4405	2	
203-43-42680	4405A	2	

PART NO	F/NO	I/NO	M/NO
203-43-42690	4405	20	
203-43-42690	4405A	16	
203-43-42710	4405	19	
203-43-42710	4405A	15	
203-43-42721	4403	15	
203-43-42721	4413	14	
203-43-42721	4413A	12	
203-43-42721	9010	14	
203-43-42731	4403	16	
203-43-42731	4413	15	
203-43-42731	4413A	13	
203-43-42731	9010	15	
203-43-42750	4405	45	
203-43-42750	4405A	41	
203-43-42750	4413	34	
203-43-42750	4413A	32	
203-43-42750	9010	34	
203-43-42760	4407	5	
203-43-42760	4407A	5	
203-43-42770	4407	32	
203-43-42770	4407A	27	
203-43-42780	4401	5	
203-43-42791	4401	37	
203-43-42811	4401	38	
203-43-42821	1101	1	
203-43-42821	1102	1	
203-43-42830	1101	2	
203-43-42840	1101	26	
203-43-42840	1102	26	
203-43-42850	1101	27	
203-43-42850	1102	27	
203-43-42860	1102	36	
203-43-42870	1111	1	
203-43-42870	1112	1	
203-43-42890	1111	7	
203-43-42890	1112	2	
203-43-42910	1101	29	
203-43-42910	1102	29	
203-43-42910	1111	9	
203-43-42910	1112	4	
203-43-42920	1111	2	
203-43-42930	1111	4	
203-43-42950	4415	16	
203-43-42950	4415A	16	
203-43-42960	4415	18	
203-43-42961	4415A	18	
203-43-42970	4415	17	
203-43-42971	4415A	17	
203-43-42980	4415	25	
203-43-42980	4415A	23	

PART NO	F/NO	I/NO	M/NO
203-43-42990	4415	27	
203-43-42990	4415A	25	
203-43-43110	4415	31	
203-43-43111	4415A	29	
203-43-43120	4415	26	
203-43-43120	4415A	24	
203-43-43140	4415	33	
203-43-43140	4415A	31	
203-43-43150	4415	19	
203-43-43150	4415A	19	
203-43-43160	4415	4	
203-43-43160	4415A	4	
203-43-43180	4415	32	
203-43-43180	4415A	30	
203-43-43190	4415	50	
203-43-43190	4415A	49	
203-43-43210	1101	1	
203-43-43220	1101	2	
203-43-43220	1102	2	
203-43-43230	4409	25	
203-43-43230	4415	49	
203-43-43230	4415A	48	
203-43-43240	1105	14	
203-43-43270	8087	7	
203-43-43310	9008	6	
203-43-43320	9010	37	
203-43-43330	9010	38	
203-43-43350	9008	5	
203-43-44280	1102	34	
203-43-44290	1102	36	
203-46-31131	5001	2	
203-46-31131	9012	2	
203-46-31181	5001	3	
203-46-31181	9012	3	
203-46-62160	5001	7	
203-46-62160	9012	7	
203-54-00150	5229	1	
203-54-00150	5231	1	
203-54-00150	9022	1	
203-54-00150	9023	1	
203-54-00340	5221	1	
203-54-00340	5223	1	
203-54-00340	5225	1	
203-54-00340	5227	1	
203-54-00340	5229	1	
203-54-00340	5231	1	
203-54-00340	9018	1	
203-54-00340	9019	1	
203-54-00340	9020	1	
203-54-00340	9021	1	

PART NO	F/NO	I/NO	M/NO
203-54-00340	9022	1	
203-54-00340	9023	1	
203-54-21110	5301	21	
203-54-21110	5311	38	
203-54-21110	9025	38	
203-54-41122	5311	21	
203-54-41132	5311	29	
203-54-41132	9025	29	
203-54-41172	5311	26	
203-54-41172	9025	26	
203-54-41182	5311	32	
203-54-41182	9025	32	
203-54-41192	5311	17	
203-54-41192	9025	17	
203-54-41251	5311	35	
203-54-41251	9025	35	
203-54-41382	5301	26	
203-54-41412	5301	25	
203-54-41452	5229	32	
203-54-41452	9022	32	
203-54-41461	5301	1	
203-54-41471	5301	5	
203-54-41480	5301	8	
203-54-41491	5301	11	
203-54-41511	5301	15	
203-54-41560	9025	21	
203-54-41570	5311	22	
203-54-41570	9025	22	
203-54-42270	5101	29	
203-54-42270	9014	29	
203-54-42280	5101	30	
203-54-42280	9014	30	
203-54-42780	5101	44	
203-54-42780	5103	26	
203-54-42780	9014	44	
203-54-42780	9015	29	
203-54-42840	5101	40	
203-54-42840	9014	40	
203-54-42910	9015	33	
203-54-43220	5227	12	
203-54-43220	9021	12	
203-54-43230	5221	21	
203-54-43230	9018	21	
203-54-43240	5225	3	
203-54-43240	9020	3	
203-54-43250	5225	4	
203-54-43250	9020	4	
203-54-43260	5225	6	
203-54-43260	9020	6	
203-54-43270	5225	7	

PART NO	F/NO	I/NO	M/NO
203-54-43270	9020	7	
203-54-43280	5225	1	
203-54-43280	9020	1	
203-54-43290	5225	13	
203-54-43290	9020	13	
203-54-43310	5231	7	
203-54-43310	9023	7	
203-54-43320	5231	32	
203-54-43320	9023	32	
203-54-43330	5231	8	
203-54-43330	5231	34	
203-54-43330	9023	8	
203-54-43330	9023	34	
203-54-43340	5225	2	
203-54-43340	9020	2	
203-54-43350	5229	26	
203-54-43350	9022	26	
203-54-43360	5229	25	
203-54-43360	9022	25	
203-54-43370	5231	19	
203-54-43370	9023	19	
203-54-43380	5231	20	
203-54-43380	9023	20	
203-54-43410	5221	5	
203-54-43410	9018	5	
203-54-43420	5229	28	
203-54-43420	9022	28	
203-54-43430	5221	22	
203-54-43430	9018	22	
203-54-43440	5221	1	
203-54-43440	9018	1	
203-54-43450	5229	1	
203-54-43450	9022	1	
203-54-43460	5221	8	
203-54-43460	9018	8	
203-54-43470	5223	1	
203-54-43470	9019	1	
203-54-43480	5221	33	
203-54-43480	9018	33	
203-54-43490	5221	18	
203-54-43510	9019	7	
203-54-43520	9019	23	
203-54-43530	9019	8	
203-54-43540	5225	9	
203-54-43540	9020	9	
203-54-43550	5225	10	
203-54-43550	9020	10	
203-54-43560	5223	6	
203-54-43560	9019	6	
203-54-43570	9019	25	

PART NO	F/NO	I/NO	M/NO
203-54-43580	5229	3	
203-54-43580	9022	3	
203-54-43590	5231	50	
203-54-43590	9023	50	
203-54-43620	9019	24	
203-54-43630	5229	15	
203-54-43630	9022	15	
203-54-43640	5221	15	
203-54-43640	9018	15	
203-54-43650	5223	2	
203-54-43650	9019	2	
203-54-43660	5227	2	
203-54-43660	9021	2	
203-54-43670	5229	17	
203-54-43670	9022	17	
203-54-43680	5227	3	
203-54-43680	9021	3	
203-54-43690	5225	5	
203-54-43690	9020	5	
203-54-43710	5227	1	
203-54-43710	9021	1	
203-54-43720	5229	5	
203-54-43720	9022	5	
203-54-43730	5231	21	
203-54-43730	9023	21	
203-54-43740	5231	9	
203-54-43740	9023	9	
203-54-43790	5229	16	
203-54-43790	9022	16	
203-54-43940	5223	8	
203-54-43950	5223	23	
203-54-43960	5223	28	
203-54-43970	5223	30	
203-54-43980	5223	27	
203-54-43990	5223	29	
203-54-44620	4419	5	
203-54-44950	5101	2	
203-54-44950	9014	2	
203-54-44960	5101	3	
203-54-44960	9014	3	
203-54-44970	5223	31	
203-57-00041	5411	1	
203-57-21280	5411	31	
203-57-21280	9027	16	
203-57-21310	5411	34	
203-57-21310	9027	19	
203-57-21320	5411	41	
203-57-21320	9027	26	
203-57-21330	5401	22	
203-57-21330	5411	8	

PART NO	F/NO	I/NO	M/NO
203-57-41101	5411	19	
203-57-41101	9027	4	
203-57-41112	5411	35	
203-57-41112	9027	20	
203-57-41121	5411	19	
203-57-41121	9027	4	
203-57-41131	5411	42	
203-57-41131	9027	27	
203-57-41141	5411	23	
203-57-41141	9027	8	
203-57-41171	5411	20	
203-57-41171	9027	5	
203-57-41181	5411	21	
203-57-41181	9027	6	
203-57-41191	5411	22	
203-57-41191	9027	7	
203-57-41212	5401	33	
203-60-12170	6101	19	
203-60-12170	9029	19	
203-60-21250	6511	3	
203-60-21250	6513	4	
203-60-21260	6511	4	
203-60-21260	6513	5	
203-60-21270	6511	5	
203-60-21270	6513	6	
203-60-31100	6101	13	
203-60-31100	9029	13	
203-60-31160	6101	12	
203-60-31160	9029	12	
203-60-31172	6101	8	
203-60-31172	9029	8	
203-60-42160	6101	30	
203-60-42160	9029	30	
203-60-42180	6101	2	
203-60-42180	9029	2	
203-62-31660	6504	9	
203-62-31660	6504	20	
203-62-41141	2203	10	
203-62-41150	2203	12	
203-62-41160	2203	15	
203-62-41812	6505	21	
203-62-41812	6506	20	
203-62-42321	6511	31	
203-62-42510	6503	11	
203-62-42590	6501	22	
203-62-42640	6501	15	
203-62-42691	6503	6	
203-62-42710	6503	7	
203-62-42710	6503	19	
203-62-42720	6503	8	

PART NO	F/NO	I/NO	M/NO
203-62-42720	6503	8	
203-62-42720	6503	21	
203-62-42731	6503	15	
203-62-42741	6503	16	
203-62-42741	6503	25	
203-62-42751	6503	13	
203-62-42770	6503	32	
203-62-42780	6503	34	
203-62-42920	1105	7	
203-62-42960	6506	23	
203-62-42980	2205	5	
203-62-42980	6502	1	
203-62-43360	6511	26	
203-62-43360	6511	30	
203-62-43360	6515	25	
203-62-43370	6515	26	
203-62-43370	8081	25	
203-62-43370	8083	47	
203-62-43380	6511	25	
203-62-43380	6511	29	
203-62-43380	8081	18	
203-62-43380	8083	46	
203-62-43410	6513	31	
203-62-43410	6515	24	
203-62-43830	6503	19	
203-62-43840	6503	24	
203-62-43850	6503	35	
203-62-44120	6505	2	
203-62-44120	6506	1	
203-62-44174	6503	24	
203-62-44280	6504	1	
203-62-44290	6504	2	
203-62-44411	4421	10	
203-62-44490	6505	24	
203-62-44490	6506	27	
203-62-44510	6505	25	
203-62-44510	6506	28	
203-62-44560	4425	1	
203-62-44560	4426	1	
203-62-44570	4425	1	
203-62-44570	4426	1	
203-62-44580	4423	11	
203-62-44610	4425	13	
203-62-44610	4426	18	
203-62-44660	4417	3	
203-62-44690	8101	6	
203-62-44690	9033	6	
203-62-44741	1125	2	
203-62-44750	6502	6	
203-62-44760	4423	21	

PART NO	F/NO	I/NO	M/NO
203-62-44780	4426	11	
203-62-44791	4425	19	
203-62-44811	6503	26	
203-62-44930	1105	8	
203-70-11210	7001	27	
203-70-11210	9031	27	
203-70-24170	7001	12	
203-70-24170	7005	10	
203-70-24170	7007	12	
203-70-24170	9031	12	
203-70-33150	7181	6	
203-70-33150	7181	32	
203-70-33210	7181	7	
203-70-33210	7181	33	
203-70-43260	7011	9	
203-70-43260	7101	10	
203-70-43260	7105	7	
203-70-43260	7113	8	
203-70-43270	7011	10	
203-70-43270	7101	11	
203-70-43270	7105	8	
203-70-43270	7113	9	
203-956-4120	8021	2	
203-973-3800	8085	16	
203-973-3810	8085	16	
203-973-3820	8085	17	
203-973-3900	8083	22	
203-973-3910	8083	22	
203-973-3920	8083	23	
203-973-4160	8091	5	
203-973-4250	8083	13	
203-973-4340	8085	23	
203-973-4390	8081	20	
203-973-4390	8083	48	
203-973-4440	8081	22	
203-973-4450	8081	27	
203-973-4450	8083	49	
203-977-4130	8903	1	
203-978-2120	8955	5	
203-978-2130	8955	6	
203-978-4121	8951	8	
203-978-4121	8953	8	
203-978-4191	8951	3	
203-978-4191	8953	3	
203-978-4211	8951	2	
203-978-4211	8953	2	
203-978-4221	8957	2	
203-978-4261	8951	20	
203-978-4261	8953	20	
203-978-4271	8951	17	

PART NO	F/NO	I/NO	M/NO
203-978-4271	8953	17	
203-978-4311	8953	14	
203-978-4340	8955	4	
203-978-4350	8955	32	
203-978-4380	8951	13	
203-978-4380	8953	13	
203-98-41110	9991	3	
203-98-41120	9991	15	
204-30-31140	3001	9	
205-00-13480	9035	23	
205-00-13490	9035	22	
205-00-63340	9902	30	
205-00-63340	9922	28	
205-00-63350	9902	33	
205-00-63350	9922	31	
205-00-63360	9902	17	
205-00-63360	9922	17	
205-00-63390	9902	25	
205-00-63390	9922	21	
205-00-63550	9902	21	
205-00-63550	9922	20	
205-00-63750	9902	22	
205-00-63750	9922	24	
205-00-63770	9035	4	
205-00-63770	9902	3	
205-00-63770	9922	3	
205-00-65270	9902	15	
205-00-65270	9922	15	
205-00-65290	9035	19	
205-00-65310	5229	33	
205-00-65310	9022	33	
205-00-66110	9035	44	
205-00-66110	9902	18	
205-00-66110	9922	18	
205-00-66170	9035	45	
205-00-71340	9035	29	
205-00-71340	9902	31	
205-00-71340	9922	29	
205-00-71380	9035	39	
205-00-75340	9902	19	
205-00-75340	9922	19	
205-00-75490	9035	21	
205-03-62660	1201	3	
205-03-62680	1201	17	
205-03-71330	1201	18	
205-03-71340	1201	20	
205-04-62130	8051	9	
205-04-62130	8071	9	
205-04-62140	8051	8	
205-04-62140	8071	8	

PART NO	F/NO	I/NO	M/NO
205-04-62150	8051	4	
205-04-62150	8071	4	
205-06-61220	8031	7	
205-06-62170	1414	11	
205-06-62170	4401	7	
205-06-62180	1414	12	
205-06-62180	4401	8	
205-06-62190	1414	13	
205-06-62190	4401	9	
205-06-62230	5223	17	
205-06-62230	9019	17	
205-06-62240	5223	19	
205-06-62240	9019	19	
205-06-62250	5223	20	
205-06-62250	9019	20	
205-06-62270	5223	18	
205-06-62270	9019	18	
205-06-62350	5221	27	
205-06-62350	9018	27	
205-06-62570	5223	22	
205-06-62570	9019	22	
205-06-64430	1421	6	
205-06-71311	1411	7	
205-06-71311	1413	4	
205-06-71311	1414	4	
205-06-71311	9001	4	
205-06-71321	1411	6	
205-06-71321	1413	5	
205-06-71321	1414	5	
205-06-71321	9001	5	
205-06-71331	1411	4	
205-06-71331	1413	6	
205-06-71331	1414	6	
205-06-71331	9001	6	
205-06-71341	1411	5	
205-06-71341	1413	7	
205-06-71341	1414	7	
205-06-71341	9001	7	
205-06-71360	4411	14	
205-06-71360	9008	13	
205-06-71420	5223	21	
205-06-71420	9019	21	
205-06-71470	8031	6	
205-06-71540	5227	19	
205-06-71540	9021	19	
205-06-71550	5227	20	
205-06-71550	9021	20	
205-06-71590	8031	9	
205-06-71610	8031	8	
205-06-71690	8031	1	

PART NO	F/NO	I/NO	M/NO
205-30-00052	3031	4	
205-30-00061	3031	5	
205-30-00150	3031	4	
205-30-00171	3031	1	
205-30-00181	3021	1	
205-30-00190	3041	1	
205-30-65532	3041	5	
205-30-65652	3041	10	
205-30-66511	3031	1	
205-30-66561	3031	5	
205-30-66590	3031	3	
205-30-66650	3031	4	
205-30-67650	3001	6	
205-30-67650	9006	9	
205-30-73110	3021	1	
205-30-73140	3021	3	
205-30-73170	3021	2	
205-30-73211	3021	8	
205-30-75111	3041	1	
205-30-75120	3041	2	
205-30-75130	3041	4	
205-30-76141	3031	2	
205-30-76171	3031	6	
205-30-76181	3031	7	
205-30-76190	3021	9	
205-30-76190	3031	9	
205-32-05010	3101	1	
205-32-21192	3101	11	
205-32-51120	3101	2	
205-32-51120	3101	1	
205-32-51120	3101	2	
205-32-51120	3101	2	
205-32-51120	3101	2	
205-32-51152	3101	8	
205-43-11230	4413	19	
205-43-11230	4413A	17	
205-43-11230	9010	19	
205-43-52140	4401	30	
205-43-62260	4401	6	
205-43-62320	4401	19	
205-43-62330	4401	20	
205-43-63820	4401	10	
205-43-63830	4401	11	
205-43-71222	9008	9	
205-43-71223	4411	10	
205-43-71280	4411	12	
205-43-71280	9008	11	
205-43-71871	4403	1	
205-43-71871	4413	1	
205-43-71871	4413A	1	

PART NO	F/NO	I/NO	M/NO
205-43-71871	9010	1	
205-43-71911	4403	6	
205-43-71911	4413	6	
205-43-71911	4413A	6	
205-43-71911	9010	6	
205-43-71921	4403	7	
205-43-71991	4411	11	
205-43-71991	9008	10	
205-43-73190	4405A	7	
205-54-51250	5221	29	
205-54-51250	9018	29	
205-54-51950	5301	20	
205-54-51950	5311	41	
205-54-51950	9025	41	
205-54-63310	5227	6	
205-54-63310	9021	6	
205-54-63650	5221	12	
205-54-63650	9018	12	
205-54-66190	5221	9	
205-54-66330	5223	3	
205-54-66330	9019	3	
205-54-71220	5223	24	
205-54-71241	5227	9	
205-54-71241	9021	9	
205-54-71252	5229	2	
205-54-71252	9022	2	
205-54-71520	5223	7	
205-54-71531	5227	10	
205-54-71531	9021	10	
205-54-71581	5229	14	
205-54-71581	9022	14	
205-54-71631	5231	1	
205-54-71631	9023	1	
205-54-71641	5229	24	
205-54-71641	9022	24	
205-54-71651	5229	7	
205-54-71651	9022	7	
205-54-71710	5231	37	
205-54-71710	9023	37	
205-54-71721	5231	27	
205-54-71721	9023	27	
205-54-71731	5231	40	
205-54-71731	9023	40	
205-54-71802	5231	24	
205-54-71802	9023	24	
205-54-71811	5231	24	
205-54-71811	9023	24	
205-54-71822	5231	25	
205-54-71822	9023	25	
205-54-71830	5231	26	

PART NO	F/NO	I/NO	M/NO
205-54-71830	9023	26	
205-54-71840	5231	28	
205-54-71840	9023	28	
205-54-71880	5231	36	
205-54-71880	9023	36	
205-54-71910	5229	27	
205-54-71910	9022	27	
205-54-72101	5231	10	
205-54-72101	9023	10	
205-54-72111	5231	10	
205-54-72111	9023	10	
205-54-72121	5231	11	
205-54-72121	9023	11	
205-54-72130	5231	12	
205-54-72130	9023	12	
205-54-72140	5231	13	
205-54-72140	9023	13	
205-54-72150	5231	14	
205-54-72150	9023	14	
205-54-72160	5231	15	
205-54-72160	9023	15	
205-54-72220	5229	20	
205-54-72220	9022	20	
205-54-72231	5229	6	
205-54-72231	9022	6	
205-54-72252	5229	4	
205-54-72252	9022	4	
205-54-72470	9018	9	
205-54-72520	9018	18	
205-54-72590	5223	12	
205-54-72590	9019	12	
205-54-72661	5227	14	
205-54-72661	9021	14	
205-54-72671	5227	13	
205-54-72671	9021	13	
205-54-72710	5221	32	
205-54-72710	5227	21	
205-54-72710	9018	32	
205-54-72710	9021	21	
205-54-72721	5223	26	
205-54-72731	5223	25	
205-54-72750	5223	11	
205-54-72750	5225	15	
205-54-72750	5229	31	
205-54-72750	9019	11	
205-54-72750	9020	15	
205-54-72750	9022	31	
205-54-72760	5229	29	
205-54-72760	9022	29	
205-54-72830	5231	45	

PART NO	F/NO	I/NO	M/NO
205-54-72830	9023	45	
205-54-72840	5231	41	
205-54-72840	9023	41	
205-54-77120	9018	36	
205-57-00023	5401	25	
205-57-00023	5411	11	
205-57-00042	5411	1	
205-57-00072	5401	1	
205-57-62140	9027	30	
205-57-63160	5411	24	
205-57-63160	9027	9	
205-57-63170	5411	25	
205-57-63170	9027	10	
205-57-63180	5411	26	
205-57-63180	9027	11	
205-57-63190	5411	27	
205-57-63190	9027	12	
205-57-63250	5411	38	
205-57-63250	9027	23	
205-57-63400	8111	1	
205-57-63510	5401	18	
205-57-63510	5411	5	
205-57-63520	5401	26	
205-57-63520	5411	12	
205-57-63530	5401	27	
205-57-63530	5411	13	
205-57-63540	5401	28	
205-57-63540	5411	14	
205-57-63550	8111	1	
205-57-63550	8112	1	
205-57-63560	8111	2	
205-57-63560	8112	2	
205-57-63570	8111	3	
205-57-63570	8112	3	
205-57-63580	8111	8	
205-57-63590	8111	8	
205-57-63610	8111	9	
205-57-63620	8111	10	
205-57-63630	8111	4	
205-57-63630	8112	4	
205-57-63640	8111	5	
205-57-63640	8112	5	
205-57-63650	8111	6	
205-57-63650	8112	6	
205-57-63660	8111	7	
205-57-63660	8112	7	
205-57-71500	8112	1	
205-57-72311	5401	25	
205-57-72311	5411	11	
205-57-72321	5401	1	

PART NO	F/NO	I/NO	M/NO
205-57-72331	5411	1	
205-57-72341	5401	5	
205-57-72361	5401	16	
205-57-72371	5401	17	
205-57-72411	5401	2	
205-57-72411	5411	2	
205-57-72420	5401	3	
205-57-72420	5411	3	
205-57-72430	5401	4	
205-57-72430	5411	4	
205-57-72441	5401	10	
205-57-72451	5401	11	
205-57-72560	5411	30	
205-57-72560	9027	15	
205-57-72570	5411	32	
205-57-72570	9027	17	
205-57-72580	5411	37	
205-57-72580	9027	22	
205-57-72590	5401	15	
205-60-21590	6504	18	
205-60-51390	4421	7	
205-60-51410	4421	8	
205-60-51420	4421	9	
205-60-51460	6101	23	
205-60-51460	9029	23	
205-60-64290	4421	6	
205-60-64300	4421	5	
205-60-71150	4421	1	
205-60-71220	5103	2	
205-60-71220	9015	2	
205-60-71220	9015	6	
205-60-71220	9015	10	
205-62-53780	4417	18	
205-62-53780	4419	17	
205-62-53780	6504	27	
205-62-69240	8101	11	
205-62-69240	9033	11	
205-62-69250	8101	5	
205-62-69250	9033	5	
205-62-71810	4417	8	
205-70-19570	7113	6	
205-70-51370	7003	6	
205-70-51410	7003	8	
205-70-51450	7001	7	
205-70-51450	7001	17	
205-70-51450	7001	22	
205-70-51450	9031	7	
205-70-51450	9031	17	
205-70-51450	9031	22	
205-70-65780	7003	7	

PART NO	F/NO	I/NO	M/NO
205-70-66580	7001	18	
205-70-66580	7001	28	
205-70-66580	7005	12	
205-70-66580	9031	18	
205-70-66580	9031	28	
205-70-71310	7001	8	
205-70-71310	7001	23	
205-70-71310	9031	8	
205-70-71310	9031	23	
205-70-74261	7011	5	
205-70-74261	7101	5	
205-70-74261	7107	5	
205-70-74261	7109	5	
205-70-74271	7011	6	
205-70-74271	7101	7	
205-70-74271	7105	4	
205-70-74271	7107	6	
205-70-74271	7109	6	
205-70-74280	7011	7	
205-70-74280	7101	8	
205-70-74280	7105	5	
205-70-74280	7107	7	
205-70-74280	7109	7	
205-70-74290	7011	8	
205-70-74290	7101	9	
205-70-74290	7105	6	
205-70-74290	7107	8	
205-70-74290	7109	8	
205-939-7120	7113	5	
205-954-7120	8001	1	
205-956-1110	8021	1	
205-977-7110	5501	1	
205-977-7110	5503	1	
205-979-1150	8905	36	
205-979-1150	8906	36	
205-979-1160	8905	37	
205-979-1160	8906	37	
205-979-1170	8905	38	
205-979-1170	8906	38	
205-979-1230	8905	14	
205-979-1230	8906	14	
205-979-1240	8905	27	
205-979-1240	8906	27	
205-979-1250	8905	30	
205-979-1250	8906	30	
205-979-1270	8901	14	
205-979-1280	8901	17	
205-979-1310	8905	40	
205-979-1310	8906	40	
205-979-1320	8905	41	

PART NO	F/NO	I/NO	M/NO
205-979-1320	8906	41	
205-979-1330	8909	1	
205-979-6110	8905	17	
205-979-6110	8906	17	
205-979-6110	8911	1	
205-979-6120	8905	21	
205-979-6120	8906	21	
205-979-6130	8905	23	
205-979-6130	8906	23	
205-979-6140	8905	22	
205-979-6140	8906	22	
205-979-6150	8905	12	
205-979-6150	8906	12	
205-979-6150	8913	1	
205-979-6160	8905	33	
205-979-6160	8906	33	
205-979-6160	8917	1	
205-979-6171	8905	24	
205-979-6171	8906	24	
205-979-6350	8905	39	
205-979-6350	8906	39	
205-979-6460	8909	2	
205-979-7010	8911	1	
205-979-7020	8911	2	
205-979-7030	8911	3	
205-979-7040	8911	4	
205-979-7050	8911	5	
205-979-7060	8911	6	
205-979-7070	8911	7	
205-979-7080	8911	8	
205-979-7090	8911	9	
205-979-7100	8911	10	
205-979-7110	8911	11	
205-979-7120	8911	12	
205-979-7130	8911	13	
205-979-7140	8911	14	
205-979-7150	8911	15	
205-979-7160	8911	16	
205-979-7170	8911	17	
205-979-7180	8911	18	
205-979-7190	8911	19	
205-979-7200	8911	20	
205-979-7210	8911	21	
205-979-7220	8911	22	
205-979-7230	8911	23	
205-979-7240	8911	24	
205-979-7250	8911	25	
205-979-7260	8911	26	
205-979-7270	8911	27	
205-979-7280	8911	28	

PART NO	F/NO	I/NO	M/NO
205-979-7290	8911	29	
205-979-7300	8911	30	
205-979-7550	8913	1	
205-979-7560	8913	2	
205-979-7570	8913	3	
205-979-7580	8913	4	
205-979-7590	8913	5	
205-979-7600	8913	6	
205-979-7610	8913	7	
205-979-7620	8913	8	
205-979-7630	8913	9	
205-979-7640	8913	10	
205-979-7650	8913	11	
205-979-7660	8913	12	
205-979-7700	8917	1	
205-979-7710	8917	2	
205-979-7720	8917	3	
205-979-7730	8917	4	
205-979-7740	8917	5	
205-98-09012	3101	8	
205-98-09032	3101	8	
205-98-09042	3101	11	
205-98-09062	3101	11	
205-981-5110	8951	1	
205-981-5110	8953	1	
205-981-5130	8955	1	
205-981-5130	8957	1	
205-981-5150	8951	16	
205-981-5150	8953	16	
205-981-5250	8955	26	
206-06-15230	8031	2	
207-00-13450	9035	33	
207-00-13460	9035	47	
207-00-13510	9035	46	
207-00-13540	9035	30	
207-00-13550	9035	26	
207-43-11170	4401	35	
207-54-17840	9015	34	
207-54-17840	9018	37	
207-57-11220	5411	33	
207-57-11220	9027	18	
207-57-11240	5411	28	
207-57-11240	9027	13	
207-57-11260	9027	3	
208-26-11610	4423	3	
208-62-17550	4423	5	
208-62-18430	4423	4	
21K-00-21130	9035	8	
21K-00-21130	9902	6	
21K-00-21130	9922	6	

PART NO	F/NO	I/NO	M/NO
21K-00-21140	9035	12	
21K-00-21140	9902	9	
21K-00-21140	9922	9	
21K-00-21180	9902	32	
21K-00-21180	9922	30	
21K-00-21190	9035	32	
21K-01-21110	1051	17	
21K-01-21220	1051	9	
21K-01-21230	1051	10	
21K-01-21240	1051	13	
21K-01-22110	1001	3	
21K-01-22120	1001	2	
21K-03-00011	1201	1	
21K-03-11190	4417	11	
21K-03-11190	4419	10	
21K-03-12660	1211	14	
21K-03-21110	1201	1	
21K-03-21120	1201	40	
21K-03-21510	1201	13	
21K-03-21520	1201	24	
21K-03-21530	1201	43	
21K-03-21540	1201	23	
21K-03-21550	1201	37	
21K-06-21110	1423	2	
21K-06-21110	1424	2	
21K-06-21120	1423	1	
21K-06-21120	1424	1	
21K-06-21120	9004	1	
21K-06-21130	1423	14	
21K-06-21130	1424	14	
21K-06-21130	9004	14	
21K-06-21170	1401	15	
21K-06-24510	9004	2	
21K-09-11130	4001	3	
21K-25-21110	4001	1	
21K-26-21110	4011	25	
21K-26-21120	4011	11	
21K-27-11250	2401	1	
21K-30-21210	3001	1	
21K-30-21410	9006	1	
21K-30-21420	3011	2	
21K-30-21430	9006	2	
21K-30-22120	3001	2	
21K-30-22120	9006	5	
21K-30-24110	3011	1	
21K-30-24130	3011	3	
21K-30-24140	3011	4	
21K-32-00030	3101	4	
21K-32-00030	3101	4	
21K-32-00030	3101	4	

PART NO	F/NO	I/NO	M/NO
21K-32-00030	3101	4	
21K-32-00030	3101	4	
21K-32-01040	3101	1	
21K-32-01050	3101	1	
21K-32-01060	3101	1	
21K-32-01070	3101	1	
21K-32-01110	3101	1	
21K-32-11110	3101	1	
21K-32-11260	3101	1	
21K-32-11270	3101	1	
21K-32-11280	3101	1	
21K-43-21110	4415	5	
21K-43-21110	4415A	5	
21K-43-21120	4409	2	
21K-43-21130	1101	36	
21K-43-21130	1102	36	
21K-43-21140	4405	31	
21K-43-21140	4405A	27	
21K-43-21150	4405	25	
21K-43-21150	4405A	21	
21K-43-21150	4413	25	
21K-43-21150	4413A	23	
21K-43-21150	9010	25	
21K-43-21160	4405	30	
21K-43-21160	4405A	26	
21K-43-22110	4415	1	
21K-43-22110	4415A	1	
21K-46-21110	5001	1	
21K-46-22110	5001	6	
21K-46-24110	9012	1	
21K-46-24120	8021	7	
21K-46-24130	9012	6	
21K-54-00200	5101	1	
21K-54-00300	9014	1	
21K-54-25110	5301	18	
21K-54-25120	5311	44	
21K-54-25120	9025	44	
21K-54-25140	9902	29	
21K-54-25140	9922	27	
21K-54-25150	9035	31	
21K-54-25210	5311	10	
21K-54-25210	9025	10	
21K-54-25511	5311	36	
21K-54-25511	9025	36	
21K-54-25530	5311	6	
21K-54-25540	5311	1	
21K-54-25540	9025	1	
21K-54-25550	5311	9	
21K-54-25550	9025	9	
21K-54-25580	9025	6	

PART NO	F/NO	I/NO	M/NO
21K-54-26111	5101	1	
21K-54-26120	5101	19	
21K-54-26120	9014	19	
21K-54-26130	5101	18	
21K-54-26130	9014	18	
21K-54-26140	5101	39	
21K-54-26140	9014	39	
21K-54-26151	5103	8	
21K-54-26160	5103	24	
21K-54-26160	9015	27	
21K-54-26170	5103	25	
21K-54-26170	9015	28	
21K-54-26180	5103	1	
21K-54-26190	5103	5	
21K-54-26210	5105	8	
21K-54-26210	9016	8	
21K-54-26220	5105	12	
21K-54-26220	9016	12	
21K-54-26230	5105	5	
21K-54-26230	9016	5	
21K-54-26240	5105	1	
21K-54-26240	9016	1	
21K-54-26250	5101	27	
21K-54-26250	9014	27	
21K-54-26260	5101	28	
21K-54-26260	9014	28	
21K-54-26271	5101	6	
21K-54-26271	9014	6	
21K-54-26280	5101	10	
21K-54-26280	9014	10	
21K-54-26291	5103	21	
21K-54-26291	9015	23	
21K-54-26310	5103	12	
21K-54-26310	9015	14	
21K-54-26320	5101	13	
21K-54-26320	9014	13	
21K-54-26330	5103	15	
21K-54-26330	9015	17	
21K-54-26340	5103	16	
21K-54-26340	9015	18	
21K-54-26350	5103	17	
21K-54-26350	9015	19	
21K-54-26360	5103	18	
21K-54-26360	9015	20	
21K-54-26370	5103	23	
21K-54-26370	9015	26	
21K-54-26380	5103	22	
21K-54-26380	9015	25	
21K-54-27170	9035	34	
21K-54-27180	9035	25	

PART NO	F/NO	I/NO	M/NO
21K-54-28110	9014	1	
21K-54-28120	9015	1	
21K-54-28130	9015	5	
21K-54-28141	8021	6	
21K-54-28150	9015	9	
21K-54-28540	9015	24	
21K-57-11100	9027	1	
21K-60-00012	6101	1	
21K-60-00012	9029	1	
21K-60-11180	6101	26	
21K-60-11180	9029	26	
21K-60-11190	6101	31	
21K-60-11190	9029	31	
21K-60-12301	6505	23	
21K-60-12301	6506	22	
21K-60-21100	2001	1	
21K-60-21100	2003	1	
21K-60-21100	2203	18	
21K-60-22110	6101	1	
21K-60-22110	9029	1	
21K-60-99976	6504	7	
21K-62-12250	8081	21	
21K-62-15340	8081	26	
21K-62-21111	6501	3	
21K-62-21120	6503	1	
21K-62-21141	6502	17	
21K-62-21160	6501	9	
21K-62-21210	6511	1	
21K-62-21220	6513	2	
21K-62-21220	6515	1	
21K-62-21231	6513	1	
21K-62-21241	6511	2	
21K-62-21241	6513	3	
21K-62-21250	6511	2	
21K-62-21250	6513	3	
21K-62-21270	2201	2	
21K-62-21281	2201	1	
21K-62-21312	6511	9	
21K-62-21322	6511	8	
21K-62-21332	6511	10	
21K-62-21362	6513	9	
21K-62-21370	6515	3	
21K-62-21380	6515	4	
21K-62-21411	6513	27	
21K-62-21421	4301	14	
21K-62-21430	6503	4	
21K-62-21440	6503	5	
21K-62-21451	4301	5	
21K-62-21461	4301	4	
21K-62-21471	6504	3	

PART NO	F/NO	I/NO	M/NO
21K-62-21481	6504	6	
21K-62-21490	6503	31	
21K-62-21513	6504	17	
21K-62-21540	6505	1	
21K-62-21550	2205	1	
21K-62-21560	6502	20	
21K-62-21570	4301	19	
21K-62-21610	6502	16	
21K-62-21620	2201	3	
21K-62-21630	6511	11	
21K-62-21730	6503	23	
21K-62-21740	6504	24	
21K-62-21740	6504	32	
21K-62-21750	1125	1	
21K-62-21760	1125	1	
21K-62-21770	4301	10	
21K-62-21780	6511	3	
21K-62-21780	6513	4	
21K-62-22210	4419	6	
21K-62-22220	4419	7	
21K-62-22230	4417	7	
21K-62-22510	8101	12	
21K-62-22510	9033	12	
21K-62-22520	8101	14	
21K-62-22520	9033	14	
21K-62-22530	8101	1	
21K-62-22530	9033	1	
21K-62-23110	2203	21	
21K-62-23120	2203	13	
21K-62-23130	2203	16	
21K-62-24210	6515	14	
21K-62-24220	6515	13	
21K-62-24230	6513	20	
21K-62-24240	6513	19	
21K-62-24250	6515	15	
21K-63-56500	6401	1	
21K-63-56510	6401	1	
21K-63-56520	6401	12	
21K-63-56540	6401	1	
21K-63-56570	6401	21	
21K-63-56580	6401	20	
21K-63-56600	6401	1	
21K-63-56670	6401	21	
21K-63-56680	6401	20	
21K-63-66500	6403	1	
21K-63-66520	6403	12	
21K-63-66540	6403	1	
21K-63-66570	6403	24	
21K-63-76500	6405	1	
21K-63-76520	6405	13	

PART NO	F/NO	I/NO	M/NO
21K-63-76540	6405	1	
21K-63-76570	6405	22	
21K-63-76580	6405	21	
21K-70-00011	7001	1	
21K-70-00021	7005	1	
21K-70-00041	7007	1	
21K-70-00100	7011	1	
21K-70-00120	7101	1	
21K-70-00140	9031	1	
21K-70-00160	7113	1	
21K-70-11170	7001	26	
21K-70-11170	9031	26	
21K-70-11380	7001	3	
21K-70-11380	9031	3	
21K-70-11410	7001	13	
21K-70-11410	9031	13	
21K-70-11481	7001	2	
21K-70-11481	9031	2	
21K-70-12151	7005	9	
21K-70-12161	7005	2	
21K-70-12161	7185	2	
21K-70-12161	7311	2	
21K-70-12161	7313	2	
21K-70-12161	7315	2	
21K-70-12170	7005	3	
21K-70-12170	7185	3	
21K-70-12170	7311	3	
21K-70-12170	7313	3	
21K-70-12170	7315	3	
21K-70-12180	6405	15	
21K-70-12180	7005	6	
21K-70-12180	7007	4	
21K-70-12180	7185	5	
21K-70-12180	7311	8	
21K-70-12180	7313	8	
21K-70-12180	7315	8	
21K-70-13150	7007	2	
21K-70-14290	7101	6	
21K-70-21110	7001	1	
21K-70-21160	7001	6	
21K-70-21170	7001	16	
21K-70-21170	9031	16	
21K-70-21180	7001	11	
21K-70-21180	9031	11	
21K-70-21190	7001	21	
21K-70-21190	9031	21	
21K-70-21320	7051	2	
21K-70-21320	9031	6	
21K-70-21330	7051	1	
21K-70-21330	9031	1	

PART NO	F/NO	I/NO	M/NO
21K-70-21510	7003	2	
21K-70-21520	7003	3	
21K-70-21530	7003	1	
21K-70-22110	7005	1	
21K-70-22120	7005	11	
21K-70-22130	7005	4	
21K-70-22130	7311	4	
21K-70-22130	7313	4	
21K-70-22130	7315	4	
21K-70-23110	7007	7	
21K-70-23120	7007	1	
21K-70-23130	7007	3	
21K-70-23140	7007	8	
21K-70-23150	7007	17	
21K-70-23160	7007	19	
21K-70-23160	7185	6	
21K-70-23170	7007	22	
21K-70-23180	7007	18	
21K-70-23190	7007	9	
21K-70-23210	7007	6	
21K-70-23220	7007	10	
21K-70-24110	7011	1	
21K-70-24120	7011	2	
21K-70-24120	7101	2	
21K-70-24121	7113	2	
21K-70-24130	7011	3	
21K-70-24130	7101	4	
21K-70-24131	7113	3	
21K-70-24140	7011	4	
21K-70-24140	7101	3	
21K-70-24141	7113	4	
21K-70-24150	7113	1	
21K-70-25110	7101	1	
21K-70-74261	7105	3	
21K-920-0020	7107	1	
21K-920-0030	7109	1	
21K-920-2110	7107	1	
21K-920-2120	7107	2	
21K-920-2120	7109	2	
21K-920-2130	7107	3	
21K-920-2130	7109	3	
21K-920-2140	7107	4	
21K-920-2140	7109	4	
21K-920-2210	7109	1	
21K-926-0020	7105	1	
21K-926-2110	7105	1	
21K-926-2120	7105	2	
21K-931-0010	7181	1	
21K-931-2110	7181	1	
21K-931-2120	7181	8	

PART NO	F/NO	I/NO	M/NO
21K-931-2130	7181	12	
21K-931-2140	7181	13	
21K-931-2150	7181	14	
21K-931-2160	7181	19	
21K-931-2170	7181	24	
21K-931-2180	7181	27	
21K-931-2190	7181	28	
21K-931-2210	7181	31	
21K-931-2220	7185	1	
21K-931-2230	7185	7	
21K-931-2240	7185	13	
21K-938-2110	7111	1	
21K-938-2120	7111	2	
21K-938-2130	7111	3	
21K-938-2140	7111	4	
21K-943-0020	7311	1	
21K-943-2110	7311	1	
21K-944-0010	7315	1	
21K-944-2110	7315	1	
21K-944-2120	7315	14	
21K-944-2121	7315	14	
21K-945-0010	7313	1	
21K-945-2110	7313	1	
21K-956-2110	8021	3	
21K-973-1450	8081	19	
21K-973-1560	8081	28	
21K-973-2110	8081	1	
21K-973-2120	8083	1	
21K-973-2130	8091	1	
21K-973-2210	8081	14	
21K-973-2220	8081	12	
21K-973-2230	8081	15	
21K-973-2240	8081	13	
21K-973-2250	8083	12	
21K-973-2310	8085	1	
21K-973-2320	8085	2	
21K-973-2330	8083	33	
21K-973-2341	8085	5	
21K-973-2350	8085	4	
21K-973-2360	8085	12	
21K-973-2361	8085	12	
21K-973-2380	8085	38	
21K-973-2391	8085	35	
21K-973-2410	8085	31	
21K-973-2510	8087	3	
21K-973-2520	8087	10	
21K-973-2530	8087	19	
21K-977-1210	4421	21	
21K-978-2110	8951	26	
21K-978-2110	8953	26	

PART NO	F/NO	I/NO	M/NO
21K-978-2140	8955	10	
21K-978-2150	8955	11	
21K-978-2160	8957	3	
21K-978-2170	8951	22	
21K-978-2180	8951	14	
21K-978-2190	8951	25	
21K-978-2190	8953	25	
21K-978-2210	8953	22	
21K-979-2110	8907	1	
21K-979-2120	8907	4	
21K-979-2130	8905	7	
21K-979-2130	8906	7	
21K-979-2140	8909	5	
21K-979-2150	8901	1	
21K-979-2160	8901	3	
21K-979-2170	8901	4	
21K-979-2180	8901	2	
21K-979-2190	8905	1	
21K-979-2190	8906	1	
21K-979-2210	8905	2	
21K-979-2210	8906	2	
21K-979-2220	8905	3	
21K-979-2220	8906	3	
21K-979-2230	8905	4	
21K-979-2230	8906	4	
21K-979-2240	8905	5	
21K-979-2250	8906	5	
21K-979-2260	8905	6	
21K-979-2270	8906	6	
21K-979-2280	8903	11	
21T-06-11950	6504	29	
21T-62-25740	7003	11	
21T-68-11320	1101	39	
21T-68-11320	1102	39	
22D-62-14560	5227	23	
22D-62-14560	9021	23	
22W-06-12381	1421	1	
22W-06-12381	9003	1	
22W-06-13450	1411	21	
22W-06-13450	1413	23	
22W-06-13450	1414	25	
22W-06-13450	9001	24	
22W-06-13590	1411	22	
22W-06-13590	1413	26	
22W-06-13590	1414	28	
22W-06-13590	9001	27	
22W-06-15860	1421	15	
22W-06-15860	9003	14	
22W-07-11910	1424	26	
22W-07-11960	1424	25	

PART NO	F/NO	I/NO	M/NO
22W-07-14650	1424	23	
22W-07-14700	1424	24	
234-60-22140	4421	13	
234-60-22140	4423	13	
234-60-22140	4425	15	
234-60-22140	4426	20	
236-10-12240	8083	30	
362-54-17320	9035	42	
566-07-11240	8955	15	
566-54-24260	5231	33	
566-54-24260	9023	33	
566-54-24511	5223	9	
566-54-24511	9019	9	
600-311-9500	8071	1	
600-311-9800	8051	1	
6130-21-1910	6004	5	
6131-22-3750	1001	5	
6631-11-5630	1001	8	
700-13-31161	6203	18	
700-13-31161	6208	17	
700-13-31161	6213	2	
700-13-31161	6218	17	
700-20-51210	6018	1	
700-20-51240	6018	2	
700-20-51250	6018	4	
700-20-51340	6018	7	
700-20-51340	6204	38	
700-20-51340	6207	10	
700-20-51340	6214	4	
700-20-51340	6217	10	
700-20-51540	6204	32	
700-20-51540	6207	5	
700-20-51540	6214	12	
700-20-51540	6217	5	
700-20-51550	6204	35	
700-20-51550	6207	4	
700-20-51550	6214	9	
700-20-51550	6217	4	
700-20-51580	6204	37	
700-20-51580	6207	9	
700-20-51580	6214	3	
700-20-51580	6217	9	
700-20-51610	6204	34	
700-20-51610	6207	7	
700-20-51610	6214	11	
700-20-51610	6217	7	
700-22-11252	6231	16	
700-22-11261	6231	18	
700-22-11370	6201	38	
700-22-11370	6202	32	

PART NO	F/NO	I/NO	M/NO
700-22-11370	6205	36	
700-22-11370	6206	29	
700-22-11370	6211	41	
700-22-11370	6212	35	
700-22-11370	6215	27	
700-22-11370	6216	29	
700-22-11410	6018	11	
700-22-11410	6201	46	
700-22-11410	6204	23	
700-22-11410	6204	41	
700-22-11410	6205	44	
700-22-11410	6207	2	
700-22-11410	6207	33	
700-22-11410	6211	49	
700-22-11410	6214	7	
700-22-11410	6214	21	
700-22-11410	6215	34	
700-22-11410	6217	2	
700-22-11410	6217	33	
700-22-11430	6231	17	
700-42-31460	6201	34	
700-42-31460	6202	28	
700-42-31460	6205	32	
700-42-31460	6211	37	
700-42-31460	6212	31	
700-42-31460	6215	23	
700-42-31470	6201	35	
700-42-31470	6202	29	
700-42-31470	6205	33	
700-42-31470	6211	38	
700-42-31470	6212	32	
700-42-31470	6215	24	
700-42-31470	6503	17	
700-70-51110	6217	1	
700-70-55100	6204	31	
700-80-51190	6203	19	
700-80-51190	6208	18	
700-80-51190	6213	3	
700-80-51190	6218	18	
700-80-51340	6203	5	
700-80-51340	6208	5	
700-80-51340	6213	8	
700-80-51340	6218	5	
700-80-51350	6203	4	
700-80-51350	6208	3	
700-80-51350	6213	5	
700-80-51350	6218	3	
700-80-51360	6203	11	
700-80-51360	6208	11	
700-80-51360	6213	13	

PART NO	F/NO	I/NO	M/NO
700-80-51360	6218	11	
700-80-51380	6203	2	
700-80-51380	6208	2	
700-80-51380	6213	6	
700-80-51380	6218	2	
700-80-51390	6203	3	
700-80-51390	6208	4	
700-80-51390	6213	7	
700-80-51390	6218	4	
700-80-51610	6203	1	
700-80-51610	6208	1	
700-80-51610	6213	1	
700-80-51610	6218	1	
700-80-51630	6203	14	
700-80-51630	6208	14	
700-80-51630	6213	15	
700-80-51630	6218	14	
700-80-61190	6018	5	
700-80-61190	6204	36	
700-80-61190	6207	8	
700-80-61190	6214	2	
700-80-61190	6217	8	
700-80-62250	6203	32	
700-80-62250	6203	37	
700-80-62250	6204	13	
700-80-62250	6204	30	
700-80-62250	6207	25	
700-80-62250	6208	24	
700-80-62250	6213	26	
700-80-62250	6213	35	
700-80-62250	6214	31	
700-80-62250	6214	40	
700-80-62250	6217	25	
700-80-62250	6218	24	
700-80-62310	6203	20	
700-80-62310	6203	33	
700-80-62310	6204	1	
700-80-62310	6204	26	
700-80-62310	6207	13	
700-80-62310	6208	20	
700-80-62310	6213	20	
700-80-62310	6213	33	
700-80-62310	6214	25	
700-80-62310	6214	38	
700-80-62310	6217	13	
700-80-62310	6218	20	
700-80-62341	6203	26	
700-80-62341	6204	7	
700-80-62341	6207	19	
700-80-62341	6213	23	

PART NO	F/NO	I/NO	M/NO
700-80-62341	6214	28	
700-80-62341	6217	19	
700-80-62350	6203	23	
700-80-62350	6203	36	
700-80-62350	6204	4	
700-80-62350	6204	29	
700-80-62350	6207	16	
700-80-62350	6208	23	
700-80-62350	6213	24	
700-80-62350	6213	36	
700-80-62350	6214	29	
700-80-62350	6214	41	
700-80-62350	6217	16	
700-80-62350	6218	23	
700-80-62360	6203	31	
700-80-62360	6204	12	
700-80-62360	6207	24	
700-80-62360	6213	25	
700-80-62360	6214	30	
700-80-62360	6217	24	
700-80-62370	6203	30	
700-80-62370	6204	11	
700-80-62370	6204	19	
700-80-62370	6207	20	
700-80-62370	6213	27	
700-80-62370	6214	19	
700-80-62370	6214	32	
700-80-62370	6217	20	
700-80-62380	6203	29	
700-80-62380	6204	10	
700-80-62380	6204	18	
700-80-62380	6207	21	
700-80-62380	6213	28	
700-80-62380	6214	20	
700-80-62380	6214	33	
700-80-62380	6217	21	
700-80-62390	6203	25	
700-80-62390	6204	6	
700-80-62390	6204	16	
700-80-62390	6207	18	
700-80-62390	6213	32	
700-80-62390	6214	15	
700-80-62390	6214	37	
700-80-62390	6217	18	
700-80-62431	6203	22	
700-80-62431	6204	3	
700-80-62431	6207	15	
700-80-62431	6213	21	
700-80-62431	6214	26	
700-80-62431	6217	15	

PART NO	F/NO	I/NO	M/NO
700-80-62440	6203	24	
700-80-62440	6204	5	
700-80-62440	6204	15	
700-80-62440	6207	17	
700-80-62440	6213	22	
700-80-62440	6214	14	
700-80-62440	6214	27	
700-80-62440	6217	17	
700-80-63320	6203	35	
700-80-63320	6204	28	
700-80-63320	6208	22	
700-80-63320	6213	34	
700-80-63320	6214	39	
700-80-63320	6218	22	
700-80-64120	6207	27	
700-80-64120	6217	27	
700-80-64180	6207	26	
700-80-64180	6217	26	
700-80-64190	6207	30	
700-80-64190	6217	30	
700-80-64210	6207	28	
700-80-64210	6217	28	
700-80-64220	6201	47	
700-80-64220	6204	24	
700-80-64220	6205	45	
700-80-64220	6207	34	
700-80-64220	6211	50	
700-80-64220	6214	22	
700-80-64220	6215	35	
700-80-64220	6217	34	
700-80-71140	6204	17	
700-80-71140	6214	16	
700-80-71151	6204	20	
700-80-71151	6214	17	
700-80-71160	6204	14	
700-80-71160	6214	13	
700-81-61001	6205	48	
700-81-61001	6207	13	
700-81-61001	6215	38	
700-81-61001	6217	13	
700-81-61200	6211	47	
700-81-61200	6213	20	
700-81-77000	6205	49	
700-81-77000	6207	26	
700-81-77000	6215	39	
700-81-77000	6217	26	
700-81-81000	6201	49	
700-81-81000	6202	44	
700-81-81000	6203	33	
700-81-81000	6204	26	

PART NO	F/NO	I/NO	M/NO
700-81-81000	6206	34	
700-81-81000	6208	20	
700-81-81000	6211	52	
700-81-81000	6212	46	
700-81-81000	6213	33	
700-81-81000	6214	38	
700-81-81000	6216	34	
700-81-81000	6218	20	
700-82-56000	6206	33	
700-82-56000	6216	33	
700-84-11240	6205	18	
700-84-11240	6211	27	
700-84-11240	6212	19	
700-84-11240	6215	20	
700-84-11320	6201	36	
700-84-11320	6202	30	
700-84-11320	6205	34	
700-84-11320	6206	26	
700-84-11320	6211	39	
700-84-11320	6212	33	
700-84-11320	6215	25	
700-84-11320	6216	26	
700-84-11330	6201	7	
700-84-11330	6206	6	
700-84-11330	6211	7	
700-84-11330	6216	6	
700-84-11390	6201	26	
700-84-11390	6202	26	
700-84-11390	6205	29	
700-84-11390	6206	24	
700-84-11390	6211	22	
700-84-11390	6212	28	
700-84-11390	6216	24	
700-84-11641	6201	21	
700-84-11641	6202	23	
700-84-11641	6205	26	
700-84-11641	6206	21	
700-84-11641	6211	19	
700-84-11641	6212	25	
700-84-11641	6216	21	
700-84-11650	6201	18	
700-84-11650	6202	18	
700-84-11650	6205	25	
700-84-11650	6206	20	
700-84-11650	6211	17	
700-84-11650	6212	23	
700-84-11650	6216	20	
700-84-11870	6201	13	
700-84-11870	6202	13	
700-84-11870	6205	15	

PART NO	F/NO	I/NO	M/NO
700-84-11881	6201	24	
700-84-11881	6202	21	
700-84-12510	6211	26	
700-84-12510	6212	18	
700-84-12510	6215	19	
700-84-13123	6201	1	
700-84-13123	6206	2	
700-84-13123	6211	1	
700-84-13123	6216	2	
700-84-13131	6201	2	
700-84-13131	6202	1	
700-84-13131	6205	3	
700-84-13141	6206	1	
700-84-13141	6216	1	
700-84-13151	6201	3	
700-84-13151	6211	3	
700-84-13220	6205	9	
700-84-13220	6215	8	
700-84-13231	6202	2	
700-84-13231	6205	2	
700-84-13231	6212	2	
700-84-13280	6202	3	
700-84-13280	6205	1	
700-84-13280	6212	3	
700-84-13280	6215	1	
700-84-13290	6205	4	
700-84-13480	6205	10	
700-84-13480	6215	9	
700-84-13490	6211	23	
700-84-13490	6212	16	
700-84-13490	6215	16	
700-84-13510	6201	31	
700-84-13510	6206	12	
700-84-13510	6211	34	
700-84-13510	6216	12	
700-84-13570	6201	28	
700-84-13570	6211	31	
700-84-13711	6201	19	
700-84-13711	6202	20	
700-84-13711	6205	24	
700-84-13711	6206	19	
700-84-13711	6211	18	
700-84-13711	6212	24	
700-84-13711	6216	19	
700-84-13721	6201	20	
700-84-13721	6202	19	
700-84-13770	6211	25	
700-84-13770	6212	15	
700-84-13770	6215	18	
700-84-13781	6211	24	

PART NO	F/NO	I/NO	M/NO
700-84-13781	6212	17	
700-84-13781	6215	17	
700-84-13790	6211	13	
700-84-13790	6212	13	
700-84-13790	6215	14	
700-84-13830	6202	9	
700-84-13830	6212	9	
700-84-13860	6212	41	
700-84-13870	6201	29	
700-84-13870	6206	10	
700-84-13870	6211	32	
700-84-13870	6216	10	
700-84-13880	6206	9	
700-84-13880	6216	9	
700-84-13891	6201	16	
700-84-13891	6202	16	
700-84-13891	6205	21	
700-84-13891	6206	17	
700-84-13891	6211	15	
700-84-13891	6212	21	
700-84-13891	6216	17	
700-84-13910	6201	15	
700-84-13910	6202	15	
700-84-13910	6205	20	
700-84-13910	6206	16	
700-84-13910	6211	16	
700-84-13910	6212	22	
700-84-13910	6216	16	
700-84-13921	6205	17	
700-84-13930	6206	8	
700-84-13930	6216	8	
700-84-13960	6201	45	
700-84-13960	6205	43	
700-84-13960	6211	48	
700-84-13960	6215	33	
700-84-14120	6215	2	
700-84-14130	6211	2	
700-84-14130	6212	1	
700-84-14130	6215	3	
700-84-14511	6201	10	
700-84-14511	6205	13	
700-84-14531	6202	11	
700-84-14541	6205	12	
700-84-14550	6205	14	
700-84-14561	6201	11	
700-84-14570	6201	9	
700-84-14570	6211	9	
700-84-14581	6202	12	
700-84-14581	6206	15	
700-84-14581	6212	12	

PART NO	F/NO	I/NO	M/NO
700-84-14581	6216	15	
700-84-14590	6201	12	
700-84-14590	6211	12	
700-84-14611	6211	10	
700-84-14611	6215	12	
700-84-14631	6212	11	
700-84-14641	6215	11	
700-84-14650	6215	13	
700-84-14661	6211	11	
700-85-28000	6205	1	
700-85-28000	6206	1	
700-85-28000	6207	1	
700-85-28000	6208	1	
700-85-29000	6215	1	
700-85-29000	6216	1	
700-85-29000	6217	1	
700-85-29000	6218	1	
700-86-11112	6205	8	
700-86-27000	6201	1	
700-86-27000	6202	1	
700-86-27000	6203	1	
700-86-27000	6204	1	
700-86-28000	6211	1	
700-86-28000	6212	1	
700-86-28000	6213	1	
700-86-28000	6214	1	
700-87-11110	6202	7	
700-87-11110	6212	7	
700-87-11120	6202	8	
700-87-11120	6212	8	
700-87-56000	6201	43	
700-87-56000	6203	1	
700-87-56000	6208	1	
700-87-56000	6211	44	
700-87-56000	6213	1	
700-87-56000	6218	1	
700-88-11112	6215	7	
700-93-12660	6202	38	
700-93-12660	6205	50	
700-93-12660	6212	41	
700-93-12660	6215	40	
700-94-11710	6231	21	
702-11-31110	4427	1	
702-16-51000	4417	14	
702-16-51000	4419	13	
702-16-51000	4427	1	
702-16-51120	4427	3	
702-16-51140	4427	4	
702-16-51150	4427	5	
702-16-51160	4427	6	

PART NO	F/NO	I/NO	M/NO
702-16-51170	4427	7	
702-16-51180	4427	8	
702-16-51190	4427	9	
702-16-51210	4427	10	
702-16-51220	4427	11	
702-16-51230	4427	14	
702-16-51240	4427	15	
702-16-51250	4427	16	
702-16-51260	4427	17	
702-16-51270	4427	12	
702-18-11000	2205	21	
702-18-11000	6231	1	
702-18-11130	6231	1	
702-18-11140	6231	8	
702-18-11150	6231	14	
702-18-11160	6231	5	
702-18-11170	6231	3	
702-18-11180	6231	4	
702-18-11190	6231	6	
702-18-11220	6231	13	
702-18-11230	6231	12	
702-18-11240	6231	2	
702-18-11250	6231	19	
702-18-11260	6231	22	
702-18-11270	6231	11	
702-19-12120	4425	2	
702-19-12120	4426	2	
703-09-31630	2101	1	
703-09-91570	2101	1	
703-09-92560	2101	5	
703-09-93230	2101	10	
703-09-94210	2101	8	
703-09-95312	2101	2	
703-09-96310	2101	3	
704-24-28210	6001	8	
704-24-28210	6022	1	
704-28-02410	6022	8	
704-28-02710	6001	10	
704-28-02750	6022	2	
704-28-02760	6022	3	
704-28-28050	6022	1	
704-28-28450	6022	5	
704-28-28550	6022	6	
706-46-53180	6001	27	
706-46-53260	6001	29	
706-46-56290	4417	1	
706-46-56290	4419	1	
706-73-40920	6002	30	
706-73-41163	4101	2	
706-73-41163	4105	2	

PART NO	F/NO	I/NO	M/NO
706-73-75170	4103	11	
706-73-75170	4107	10	
706-75-11801	4101	1	
706-75-11801	4103	1	
706-75-14000	4105	1	
706-75-14000	4107	1	
706-75-40010	4101	7	
706-75-40010	4105	7	
706-75-40270	6005	27	
706-75-40890	4101	16	
706-75-40890	4105	18	
706-75-40940	4101	22	
706-75-40940	4105	24	
706-75-41091	4101	1	
706-75-41091	4105	1	
706-75-41110	4101	5	
706-75-41110	4105	5	
706-75-41130	4101	6	
706-75-41130	4105	6	
706-75-41220	4101	4	
706-75-41220	4105	4	
706-75-41251	4101	12	
706-75-41251	4105	12	
706-75-41263	4101	10	
706-75-41263	4105	10	
706-75-41271	4101	13	
706-75-41271	4105	13	
706-75-42051	4101	14	
706-75-42051	4105	14	
706-75-42080	4101	3	
706-75-42080	4105	3	
706-75-42370	4101	34	
706-75-42370	4105	27	
706-75-42820	4103	2	
706-75-42840	4101	8	
706-75-42840	4105	8	
706-75-42880	4101	15	
706-75-42880	4105	17	
706-75-42910	4101	17	
706-75-42910	4105	19	
706-75-42960	4101	11	
706-75-42960	4105	11	
706-75-74141	4103	1	
706-75-74141	4107	1	
706-75-74540	4103	3	
706-75-74540	4107	2	
706-75-74550	4103	4	
706-75-74550	4107	3	
706-75-74560	4103	6	
706-75-74560	4107	5	

PART NO	F/NO	I/NO	M/NO
706-75-75280	4103	12	
706-75-75280	4107	11	
706-75-75291	4103	15	
706-75-75291	4107	14	
706-75-75310	4103	10	
706-75-75310	4107	9	
706-75-75331	4103	9	
706-75-75331	4107	8	
706-75-75350	4103	16	
706-75-75350	4107	15	
706-75-75392	4103	17	
706-75-75392	4107	16	
706-75-85702	4107	8	
706-75-85801	4103	9	
706-75-91330	4101	31	
706-75-91340	4101	29	
706-75-91350	4101	30	
706-75-91431	4101	24	
706-75-91481	4101	23	
706-76-40920	4101	18	
706-76-40920	4105	20	
706-77-72170	4103	7	
706-77-72170	4107	6	
706-86-51170	6201	40	
706-86-51170	6202	37	
706-86-51170	6205	41	
706-86-51170	6206	28	
706-86-51170	6211	43	
706-86-51170	6212	40	
706-86-51170	6216	28	
707-27-10270	6405	5	
707-27-11371	6401	4	
707-28-12370	6403	4	
707-29-11150	7183	5	
707-36-10360	6405	17	
707-36-11380	7183	13	
707-36-11460	6401	15	
707-36-12360	6403	17	
707-44-10080	6405	18	
707-44-11080	6401	16	
707-44-11080	7183	14	
707-44-12080	6403	18	
707-51-70211	6405	7	
707-51-70211	7183	7	
707-51-75211	6401	6	
707-51-80211	6403	6	
707-68-10580	6401	18	
707-68-10580	6403	20	
707-71-50220	6403	23	
707-71-50890	6403	16	

PART NO	F/NO	I/NO	M/NO
707-71-91250	6403	21	
707-76-70040	6401	2	
707-76-70040	6401	13	
707-76-70040	6405	2	
707-76-70060	6405	14	
707-76-80010	6403	2	
707-76-80010	6403	13	
707-88-99010	6405	32	
707-88-99020	6405	31	
707-88-99050	6405	30	
707-88-99070	6405	33	
707-88-99100	6401	26	
707-88-99120	6401	27	
707-88-99240	6403	31	
707-88-99250	6403	30	
707-88-99280	6403	29	
707-88-99290	6403	32	
708-23-12330	6005	11	
708-23-12370	6005	14	
708-23-14800	6001	13	
708-23-14800	6018	1	
708-23-15120	6012	5	
708-23-15120	6016	5	
708-23-15130	6012	6	
708-23-15130	6016	6	
708-23-15140	6012	7	
708-23-15140	6014	13	
708-23-15140	6016	7	
708-23-18111	6014	1	
708-23-18120	6014	4	
708-23-18130	6014	5	
708-23-18140	6014	6	
708-23-18150	6014	7	
708-23-18161	6014	10	
708-23-18170	6014	11	
708-23-18181	6014	12	
708-23-18210	6014	15	
708-23-18220	6014	17	
708-23-18241	6015	15	
708-25-00010	6003	1	
708-25-00020	6006	1	
708-25-00050	6002	7	
708-25-00060	6005	5	
708-25-12330	6002	13	
708-25-12340	6002	6	
708-25-12340	6005	4	
708-25-12350	6002	19	
708-25-12350	6005	17	
708-25-12360	6005	8	
708-25-12370	6002	16	

PART NO	F/NO	I/NO	M/NO
708-25-12380	6002	18	
708-25-12380	6005	16	
708-25-12730	6002	21	
708-25-12730	6005	19	
708-25-12740	6004	15	
708-25-12760	6002	27	
708-25-12770	6002	27	
708-25-12780	6002	27	
708-25-12790	6002	28	
708-25-12890	6005	25	
708-25-12910	6005	25	
708-25-12920	6005	25	
708-25-12950	6002	22	
708-25-13120	6003	4	
708-25-13120	6006	4	
708-25-13130	6003	3	
708-25-13130	6006	3	
708-25-13140	6003	5	
708-25-13140	6006	5	
708-25-13150	6003	1	
708-25-13150	6006	1	
708-25-13210	6003	2	
708-25-13220	6006	2	
708-25-13310	6003	7	
708-25-13310	6006	7	
708-25-13421	6003	8	
708-25-13421	6006	8	
708-25-13441	6003	10	
708-25-13441	6006	10	
708-25-13470	6003	11	
708-25-13470	6006	11	
708-25-13510	6003	9	
708-25-13510	6006	9	
708-25-13520	6003	9	
708-25-13520	6006	9	
708-25-13530	6003	9	
708-25-13530	6006	9	
708-25-14110	6003	13	
708-25-14110	6006	13	
708-25-14120	6002	9	
708-25-14120	6005	7	
708-25-14130	6003	14	
708-25-14130	6006	14	
708-25-14150	6003	16	
708-25-14150	6006	16	
708-25-14160	6003	18	
708-25-14160	6006	18	
708-25-14170	6003	18	
708-25-14170	6006	18	
708-25-14180	6003	18	

PART NO	F/NO	I/NO	M/NO
708-25-14180	6006	18	
708-25-14190	6003	18	
708-25-14190	6006	18	
708-25-15110	6016	1	
708-25-15120	6012	2	
708-25-15120	6016	2	
708-25-15130	6012	3	
708-25-15130	6016	3	
708-25-15150	6012	9	
708-25-15150	6016	9	
708-25-15171	6012	13	
708-25-15171	6016	13	
708-25-15180	6012	18	
708-25-15180	6016	18	
708-25-15240	6012	22	
708-25-15240	6016	22	
708-25-15250	6012	24	
708-25-15250	6016	24	
708-25-15260	6012	28	
708-25-15260	6016	28	
708-25-15270	6012	30	
708-25-15270	6016	30	
708-25-15280	6012	19	
708-25-15280	6016	19	
708-25-15290	6012	21	
708-25-15290	6016	21	
708-25-15310	6012	20	
708-25-15310	6016	20	
708-25-16110	6012	1	
708-25-17110	6013	1	
708-25-17110	6017	1	
708-25-17121	6013	3	
708-25-17121	6017	3	
708-25-17131	6013	5	
708-25-17131	6017	5	
708-25-17140	6013	7	
708-25-17140	6017	7	
708-25-17150	6013	8	
708-25-17150	6017	8	
708-25-17160	6013	9	
708-25-17160	6017	9	
708-25-17170	6013	10	
708-25-17170	6017	10	
708-25-17180	6013	12	
708-25-17180	6017	12	
708-25-17190	6013	13	
708-25-17190	6017	13	
708-25-17210	6013	14	
708-25-17210	6017	14	
708-25-17220	6013	15	

PART NO	F/NO	I/NO	M/NO
708-25-17220	6017	15	
708-25-17230	6013	33	
708-25-17230	6017	33	
708-25-17240	6013	18	
708-25-17240	6017	18	
708-25-17250	6013	19	
708-25-17250	6017	19	
708-25-17260	6013	20	
708-25-17260	6017	20	
708-25-17270	6013	23	
708-25-17270	6017	23	
708-25-17280	6013	21	
708-25-17280	6017	21	
708-25-17290	6013	24	
708-25-17290	6017	24	
708-25-17310	6013	27	
708-25-17310	6017	27	
708-25-17320	6013	32	
708-25-17320	6017	32	
708-25-17330	6013	32	
708-25-17330	6017	32	
708-25-17340	6013	32	
708-25-17340	6017	32	
708-25-18570	6014	22	
708-25-18580	6014	23	
708-25-19120	6001	20	
708-25-19130	6001	6	
708-25-19150	6011	14	
708-25-19150	6015	13	
708-25-19160	6011	6	
708-25-19160	6015	5	
708-25-20100	6001	1	
708-25-20100	6002	1	
708-25-20100	6003	1	
708-25-20100	6004	1	
708-25-20100	6005	1	
708-25-20100	6006	1	
708-25-20100	6011	1	
708-25-20100	6012	1	
708-25-20100	6013	1	
708-25-20100	6014	1	
708-25-20100	6015	1	
708-25-20100	6016	1	
708-25-20100	6017	1	
708-25-20100	6018	1	
708-25-20100	6022	1	
708-25-21100	6001	1	
708-25-21100	6002	1	
708-25-21100	6003	1	
708-25-21100	6004	1	

PART NO	F/NO	I/NO	M/NO
708-25-21100	6005	1	
708-25-21100	6006	1	
708-25-22110	6002	1	
708-25-22120	6005	1	
708-25-22310	6002	7	
708-25-22320	6005	5	
708-25-22510	6004	1	
708-25-22710	6002	20	
708-25-22720	6005	18	
708-25-22730	6004	13	
708-25-22740	6004	14	
708-25-22750	6002	24	
708-25-22760	6005	20	
708-25-22770	6002	27	
708-25-22780	6005	23	
708-25-22790	6005	23	
708-25-22810	6005	23	
708-25-22820	6005	23	
708-25-22830	6005	24	
708-25-22840	6002	29	
708-25-22850	6005	26	
708-25-22860	6002	23	
708-25-22870	6002	23	
708-25-22880	6002	23	
708-25-22890	6002	26	
708-25-22910	6002	26	
708-25-22920	6005	22	
708-25-22930	6005	22	
708-25-22940	6005	22	
708-25-22960	6001	9	
708-25-22960	6005	28	
708-25-22970	6002	26	
708-25-23410	6002	8	
708-25-23410	6002	10	
708-25-23410	6005	6	
708-25-24110	6003	15	
708-25-24110	6006	15	
708-25-25100	6001	2	
708-25-25100	6011	1	
708-25-25100	6012	1	
708-25-25100	6013	1	
708-25-25100	6014	1	
708-25-25110	6012	4	
708-25-25110	6016	4	
708-25-25200	6011	1	
708-25-25200	6012	1	
708-25-26100	6001	3	
708-25-26100	6015	1	
708-25-26100	6016	1	
708-25-26100	6017	1	

PART NO	F/NO	I/NO	M/NO
708-25-26200	6015	1	
708-25-26200	6016	1	
708-25-27100	6011	2	
708-25-27100	6013	1	
708-25-27100	6014	1	
708-25-27100	6015	2	
708-25-27100	6017	1	
708-25-28100	6011	3	
708-25-29110	6001	25	
708-25-29120	6001	14	
708-25-29140	6001	26	
709-70-51110	6204	31	
709-70-51110	6207	1	
709-70-51110	6214	1	
709-70-51120	6204	33	
709-70-51120	6207	6	
709-70-51120	6214	10	
709-70-51120	6217	6	
709-70-51200	6201	44	
709-70-51200	6203	20	
709-70-55100	6202	45	
709-70-55100	6205	42	
709-70-55100	6207	1	
709-70-55100	6212	45	
709-70-55100	6214	1	
709-70-55100	6215	32	
709-70-55100	6217	1	
709-70-61200	6202	42	
709-70-61200	6204	1	
709-70-61200	6205	47	
709-70-61200	6207	13	
709-70-61200	6212	47	
709-70-61200	6214	25	
709-70-61200	6215	37	
709-70-61200	6217	13	
709-70-62100	6202	43	
709-70-62100	6204	14	
709-70-62100	6212	48	
709-70-62100	6214	13	
709-70-91210	6202	39	
709-70-91210	6205	51	
709-70-91210	6212	42	
709-70-91210	6215	41	
709-70-91300	6202	38	
709-70-91300	6205	50	
709-70-91300	6215	40	
720-68-11920	6011	10	
720-68-11920	6011	13	
720-68-11920	6015	9	
720-68-11920	6015	12	

PART NO	F/NO	I/NO	M/NO
720-68-15240	6001	22	
720-68-15540	6203	8	
720-68-15540	6208	8	
720-68-15540	6213	11	
720-68-15540	6218	8	
720-68-15550	6203	9	
720-68-15550	6208	9	
720-68-15550	6213	19	
720-68-15550	6218	9	
720-68-15560	6203	10	
720-68-15560	6208	10	
720-68-15560	6213	12	
720-68-15560	6218	10	
720-68-15730	6018	6	
720-68-15810	6018	3	
720-68-19510	6002	3	
720-68-19510	6002	15	
720-68-19510	6004	3	
720-68-19510	6005	3	
720-68-19510	6005	13	
720-68-19510	6014	2	
720-68-19610	6003	6	
720-68-19610	6006	6	
720-68-19740	6002	2	
720-68-19740	6004	2	
720-68-19740	6005	2	
720-68-19740	6012	33	
720-68-19740	6013	2	
720-68-19740	6014	3	
720-68-19740	6016	33	
720-68-19740	6017	2	
720-68-19750	6014	19	
720-68-19870	6002	4	
7815-11-1010	1501	12	
7815-11-1010	1501	16	
7861-01-1320	1501	11	
7861-01-1820	1501	9	
7861-01-1820	1501	15	
7861-01-3000	1414	29	
7861-01-3000	9001	28	
7861-21-1100	1411	1	
7861-21-1100	1413	2	
7861-21-1100	1414	2	
7861-21-1100	1501	1	
7861-21-1100	9001	2	
7861-21-1110	1501	1	
7861-21-1130	1501	2	
7861-21-1140	1501	6	
7861-21-1150	1501	4	
7861-21-1150	1501	18	

PART NO	F/NO	I/NO	M/NO
7861-21-1160	1501	3	
7861-21-1170	1501	13	
7861-21-1180	1501	5	
7861-21-1180	1501	17	
7861-21-1190	1501	7	
7861-21-1300	1501	8	
7861-21-1700	1501	10	
7861-21-1800	1501	14	
7861-72-3000	1411	33	
7861-72-3000	1413	27	
7861-99-1300	1421	18	
7861-99-1300	9003	17	
7861-99-3300	1421	23	
7861-99-3300	9003	22	
7861-99-4500	1421	13	
7861-99-4500	9003	12	
7861-99-4700	1421	9	
7861-99-4700	9003	8	