RUTHZIL TRATOR COMERCIAL DE PEÇAS LTDA 11 97083-6812 ROLANDO CITRANGULO

KEPB003000



PARTS BOOK

KOMATSU

PC200-6B
PC200LC-6B

HYDRAULIC EXCAVATOR

SERIAL NUMBERS	PC200-6B	B10001	and up
	PC200LC-6B	B20001	

KOMATSU

KOMATSU

© 2001 KOMATSU
Todos os direitos reservados
Impresso no Brasil 06-01

PC200/PC200LC-6B

KEPB003000



PARTS BOOK

PC200-6B

SERIAL NUMBERS: B10001 and up

PC200LC-6B

SERIAL NUMBERS: B20001 and up

KOMATSU

INTRODUÇÃO

Ao solicitar uma peça, informe o número, nome e quantidade da peça necessária, bem como o número da carroçaria, número do motor, e leitura do medidor de serviço.

Esta lista de peças não somente especifica os acessórios padrões mas também as peças opcionais e aditamentos. Para pedir uma peça, entre em contato com o revendedor Komatsu mais próximo.

Este livro de peças consiste nos seguintes itens.

Figura e lista	Ao abrir este livro de peças, você encontrará na página esquerda (a página com número par), uma ilustração das peças componentes do conjunto. Cada peça individual no conjunto tem um número de índice. Na página direita (a página com número ímpar), as peças componentes do conjunto são relacionadas na ordem dos números de índice mostrados na página esquerda. Cada peça é designada com um número, nome, e número de série aplicável.
FIG. NO. (Número da figura)	O número da figura é o número da figura mostrada em tal página. Ele não é um número para fornecimento da peça. Do mesmo modo, os números das figuras nem sempre são contínuos.
INDEX (Número de índice)	Este número é igual ao número de índice na figura. As peças são relacionadas na ordem dos números de índice.
PART NO. (Número de peça)	O número designado na coluna "Número da peça" é o número para a peça mostrada. Ele é o código usado para o pedido da peça. É importante que não haja equívoco com respeito a este número ao pedir uma peça.
DESCRIP-TION (Descrição)	Este item descreve o nome da peça que tem o número de peça relacionado. É colocado um "." na frente do nome de um componente de conjunto e o item é introduzido após o conjunto. Se uma peça marcada com "." é um conjunto, seus componentes são marcados com "..". Exemplo: ELEMENT ASSEMBLY, AIR CLEANER .ELEMENT ASSEMBLY, OUTER ..ELEMENT, OUTER ..NUT, WING ..WASHER
Q'ty (Quantidade)	Este item especifica o número de peças usadas para 1 máquina. No entanto, para o conjunto ou componentes de um grupo de peças, o número de peças por conjunto é especificado.
SERIAL NO. (Número de série)	No livro de peças do motor, esse número indica o número de série do motor no qual a peça é usada. No livro de peças da máquina, esse número indica o número de série da máquina na qual a peça é usada.
Códigos	Os códigos e número de peça especificados nas colunas "N.º de peça" e "Descrição" representam o seguinte: □ A peça especificada na linha acima pode ser usada no lugar desta peça.

⊡	Esta peça pode ser usada no lugar da peça especificada na linha imediatamente acima.
◆	Esta peça e a peça especificada na linha imediatamente acima são intercambiáveis.
■	A peça especificada na coluna "Descrição" pode ser usada no lugar desta peça se ela for usada como um jogo.
⊠	Esta peça não é mais fornecida. A peça especificada na linha acima é fornecida em seu lugar.
▼	Esta peça não é mais fornecida. A peça especificada na coluna "Descrição" é fornecida em seu lugar como um jogo.
☆	Esta peça não pode ser fornecida como uma peça individual. Ela é fornecida como um conjunto.
★	Esta peça não pode ser fornecida como uma peça individual. Ela é fornecida como um conjunto. No entanto, ela é fornecida como uma peça individual somente por revendedores específicos.
⊙	Isso indica um grupo de peças. Esta peça não é considerada uma peça de fornecimento.
====	As peças envolvidas por esta linha são componentes do grupo de peças especificado acima.
G-1, G-2	Isso indica a categoria do grupo de peças.
KIT	Isso indica componentes de um kit. Para os componentes de um kit, refira-se à tabela de kits de serviço.
Δ	Isso indica uma peça fornecida como produto semi-acabado. Ela deve ser reformada antes do uso.
PAINT(1)	Isso indica peças embarcadas pintadas com uma primeira mão de fundo.
PAINT(2)	Isso indica peças embarcadas com cores diferentes.
(A)	Isso indica peças especiais para especificação (A) de tempo frio (-30°C).
(B)	Isso indica peças especiais para especificação (B) de tempo frio (-50°C).

FOREWORD

When ordering a spare part, specify the part number, part name, and quantity required, and also specify your machine model code, machine serial number, engine serial number and the service meter reading.

This Parts Book describes not only standard items but also optional equipment and attachments. To order a part, please contact your nearest Komatsu distributor.

This Parts Book contains the information and special symbols as follows:

Figure and list

When you open this Parts Book, you will find an illustration on the left page (even-numbered page) for the spare parts group. Each individual part in the group is given an index number.
On the right page, the component parts of the group are listed in the order of the index numbers shown on the illustration page. The part number, part name, and applicable machine serial number are given for each part.

FIG. No.

The FIG. No. is the number of the illustration shown on the page. It is not the spare part number. The numbers are not always continuous.

INDEX

This is the same as the index number in the illustration. The parts are listed in index number order.

PART No.

The number given in the PART No. column is the part number for the part shown. It is the code used when ordering that part. It is important that there be no mistake in this code number when ordering.

DESCRIP-TION

This gives the name of part that has the part number listed. The mark "." is put in front of the part name of an assembly part and the item is entered following the assembly. If a part marked with "." is a sub assembly, its components are marked with "..".

Example:
```
ELEMENT ASSEMBLY, AIR CLEANER
.ELEMENT ASSEMBLY, OUTER
..ELEMENT, OUTER
..NUT, WING
..WASHER
```

Q'TY (Quantity)

This specifies the number of pieces used for one machine. However, if a part is included in the assembly and/or component, the quantity per such assembly and/or component is specified.

SERIAL No.

Applicable engine serial number is indicated for the engine volume. In the chassis volume, this indicates the machine serial number in which the part is used.

Symbols and codes

Symbols and codes are used in the PART No. and DESCRIPTION columns, and represent the following:

□	The part specified in the line above can be used instead of this part.

Symbols and codes (Cont'd)

⊡	This part can be used instead of the part specified in the line immediately above.
◆	This part and the part specified in the line immediately above are interchangeable.
■	The part specified in the DESCRIPTION column can be used instead of this part if it is used as a set.
☒	This shows discontinued part. The part specified in the above line is supplied instead.
▼	This shows a discontinued part. The part specified in the DESCRIPTION column is supplied instead as a set.
☆	This part cannot be supplied as an individual part. It is supplied as an assembly.
★	This part cannot be supplied as an individual part. It is supplied as an assembly. However, it is supplied as an individual part by authorized distributors only.
⊙	This indicates a part group. The part marked with this symbol is not considered a supply part.
====	The parts surrounded by this line are components of the part group specified in the above line.
G-1,G-2	These indicate categories of part groups.
KIT	This indicates kit parts. For kit parts, refer to the service kit tables provided in this Parts Book.
△	This indicates a part supplied as semi-finished. It requires additional work before installation.
PAINT(1)	This indicates parts shipped painted with undercoat.
PAINT(2)	This indicates parts supplied with different colors from the original color of your machine.
(A)	This code indicates special parts for cold weather "A" specification (-30°C) machines.
(B)	This indicates special parts for cold weather "B" specification (-50°C) machines.

PROLOGO

Cuando tenga que efectuar un pedido de repuestos, se ruega especificar el número, el nombre y la cantidad de piezas requeridas, indicando asimismo el número de modelo, el número de serie del motor y la lectura del contador de servicio.

Esta lista de piezas especifica no solamente accesorios estándar sino también piezas y accesorios opcionales. Para realizar un pedido, sírvase ponerse en contacto con su distribuidor Komatsu más cercano.

La lista de repuestos se compone de los elementos siguientes.

Figura y lista	Al abrir esta lista de repuestos, encontrará en la página izquierda (página de número impar) una ilustración de los componentes del conjunto. La figura de cada componente individual va provista de un número de índice. En la página derecha (página de número par), los componentes del conjunto están listados siguiendo el orden de los números de índice de la página izquierda.
FIG. NO. (Número de figura)	El número de figura es el número indicado en cada una de las respectivas figuras, y no es el número de la pieza. Los números de figura no son siempre continuos.
INDEX (Número de índice)	Coincide con el número de índice de cada figura, y aparecen en la lista en orden numérico.
PART NO. (Número de pieza)	El número indicado en la columna de "Número de piezas" es el número de pieza que aparece en la figura. Es sumamente importante debido a que se utiliza como código al efectuar el pedido de piezas.
DESCRIP-TION (Nombre de las piezas)	Indica la descripción correspondiente a cada número de pieza. Los componentes de un conjunto llevan la marca "." antes del nombre. Por otra parte, cuando se tratan de piezas armadas, llevan la marca ".." antes del nombre Ejemplo: ELEMENT ASSEMBLY, AIR CLEANER .ELEMENT ASSEMBLY, OUTER ..ELEMENT, OUTER ..NUT, WING ..WASHER
Q'ty (Cantidad)	Especifica el número de piezas utilizadas en cada máquina. Sin embargo, para un conjunto o componentes de un grupo de piezas, se especifica el número de piezas por conjunto.
SERIAL NO. (Número de serie)	En el manual de piezas del motor, indica el número de serie del motor en que se utiliza la pieza. En el manual de piezas de la máquina, indica el número de serie del vehículo en que se utiliza esa pieza.

Códigos

Los códigos y números de piezas especificados en las columnas "N°. de pieza" y "Nombre de la pieza" representan lo siguiente:

□	En lugar de esta pieza es posible utilizar la pieza indicada en el renglón de arriba.
⊡	Es posible utilizar esta pieza en lugar de la indicada en el renglón inmediatamente anterior.
◆	Esta pieza y la indicada en el renglón inmediatamente anterior son intercambiables.
■	Es posible utilizar la pieza especificada en la columna "Nombre de las piezas" si se utiliza como un conjunto.
☒	Esta pieza se ha dejado de suministrar. En su lugar, se suministra la pieza indicada en el renglón anterior.
▼	Esta pieza se ha dejado de suministrar. En su lugar, se suministra la pieza especificada en la columna "Nombre de las piezas" como un conjunto.
☆	Esta pieza no se suministra como pieza individual. Se suministra como un conjunto.
★	Esta pieza no se suministra como pieza individual. Se suministra como un conjunto. Sin embargo, es suministrada como pieza individual por ciertos distribuidores.
⊙	Indica grupo de piezas. Las piezas que llevan este código no son suministrables.
====	Las piezas rodeadas por esta línea son componentes del grupo de piezas especificado arriba.
G-1, G-2	Indica la clasificación del grupo de piezas.
KIT	Indica componentes de un juego. Para los componentes de un juego, refiérase a la tabla de los juegos de servicio.
Δ	Indica pieza suministrada como semiterminada. Debe ser reelaborada antes del uso.
PAINT(1)	Indica piezas despachadas con una primera mano de pintura.
PAINT(2)	Indica piezas despachadas con colores diferentes.
(A)	Indica piezas especiales (A) especificadas para climas fríos (-30°C).
(B)	Indica piezas especiales (B) especificadas para climas fríos (-50°C)

CONTENTS

PC200-6B Serial No. B10001 and up
PC200LC-6B Serial No. B20001 and up
ENGINE S6D102E-1EE Engine No. 30736312 and up

CONTENTS

CONTENTS

AA [ENGINE]	FIG. NO	PAGE
ENGINE ASSEMBLIES	A1.00	A-02
ENGINE BLOCK	A1.01	A-04
CRANCKSHAFT	A1.02	A-06
VIBRATION DAMPER	A1.02.2	A-08
CONNECTING ROD AND PISTON	A1.04	A-10
CAMSHAFT	A1.07	A-12
CYLINDER BLOCK COVER	A1.08	A-14
CYLINDER HEAD	A2.01	A-16
CYLINDER HEAD GASKET	A2.01.1	A-18
ROCKER LEVERS	A3.01	A-20
VALVE COVER	A3.01.1	A-22
VALVE TAPPET	A4.01	A-24
CAM FOLLOWER COVER	A4.03	A-26
CAM FOLLOWER COVER BOLT	A4.03.1	A-28
AIR FUEL CONTROL PLUMBING	A5.01.5	A-30
FUEL SHUTOFF VALVE	A5.06	A-32
FUEL SYSTEM ACCESSORIES	A5.19	A-34
BOSH INJECTION PUMP	A5.21	A-36
FUEL INJECTOR	A6.01	A-38
FUEL PLUMBING	A6.03	A-40
FUEL FILTER	A6.04	A-42
FUEL FILTER PLUMBING	A6.04.1	A-44
FUEL DRAIN LOCATION	A6.07	A-46
OIL PAN MOUNTING	A7.01	A-48
OIL LEVEL GAUGE	A7.02	A-50
ENGINE OIL COOLER	A7.05	A-52
LUBE OIL PUMP	A7.06	A-54
VIBRATION DAMPER	A8.03	A-56
FAN DRIVE	A8.03.1	A-58
THERMOSTAT	A8.07	A-60
THERMOSTAT HOUSING	A8.07.1	A-62
WATER INLET CONNECTION	A8.07.2	A-64
WATER PUMP	A8.07.3	A-66
FUEL PUMP COUPLING	A9.01	A-68
ACCESSORY DRIVE PULLEY (WITHOUT AIR CONDITIONER)	A9.03	A-70
FRONT GEAR TRAIN ACCESSORY	A9.04	A-72
AIR HEATER	A10.02	A-74
TURBOCHARGER	A10.06	A-76
TURBOCHARGER MOUNTING	A10.06.1	A-78
EXHAUST MANIFOLD	A10.06.2	A-80
TURBOCHARGER PLUMBING	A10.06.3	A-82
EXHAUST CONNECTION	A11.01.1	A-84
ALTERNATOR AND RELATED PARTS	A13.02	A-86
ALTERNATOR - 24V - 40A - INNER PARTS	A13.02.1	A-88
ALTERNATOR MOUNTING	A13.02.2	A-90
TENSION PULLEY	A13.02.3	A-92
STARTING MOTOR MOUNTING	A13.05.1	A-94
TEMPERATURE SENSOR	A15.01	A-96
OIL PRESSURE SENSOR	A15.01.1	A-98
FLUID LEVEL SENSOR	A15.01.2	A-100
MECHANICAL TACHOMETER DRIVE	A15.06	A-102
FLYWHEEL HOUSING	A16.01	A-104
FLYWHEEL	A16.02	A-106
LIFTING BRACKET	A17.06	A-108
NOISE PANEL	A17.07	A-110

B0 [ENGINE RELATED PARTS]		
ENGINE RELATED PARTS (BRACKET)	B0000—01A0A	B-02

	FIG. NO	PAGE
ENGINE MOUNT	B0100—01A0A	B-04
AIR CLEANER CONNECTION (FOR DOUBLE ELEMENT)	B0200—01A1C	B-06
MUFFLER	B0300—01A0A	B-08
STEP (PLATES AND BRACKETS)	B0300—01A1B	B-10
FUEL CONTROL	B0400—01A0A	B-12
ENGINE WIRING	B0500—01A0A	B-14
DAMPER	B0600—01A0A	B-16
OIL GAUGE BRACKET	B0700—01A0A	B-18
ACCESSORY DRIVE PULLEY (WITH AIR CONDITIONER)	B0800—01A0A	B-20
STARTING MOTOR	B0900-01A0A	B-22
STARTING MOTOR - 5.5 KW - INNER PARTS	B0900-01A1B	B-24
C0 [COOLING SYSTEM]		
COOLING (STD RADIATOR) (WITHOUT AIR CONDITIONER)	C0100-01A7A	C-02
COOLING (STD RADIATOR) (WITH AIR CONDITIONER)	C0100—01A7C	C-04
COOLING (LARGE RADIATOR) (WITHOUT AIR CONDITIONER)	C0100—01A7D	C-06
COOLING (LARGE RADIATOR) (WITH AIR CONDITIONER)	C0100—01A7E	C-08
COOLING (PIPING)	C0100—02A0A	C-10
COOLING (SUB TANK AND RADIATOR MOUNT)	C0100—03A0A	C-12
COOLING FAN	C0200—01A0	C-14
FAN TENSION PULLEY	C0200—02A0	C-16
FAN GUARD (WITHOUT AIR CONDITIONER)	C0310—01A0	C-18
FAN GUARD (WITH AIR CONDITIONER) (OPTIONAL)	C0310—02A0	C-20
D0 [FUEL TANK AND RELATED PARTS]		
FUEL TANK	D0100—01A0	D-02
FUEL LINES (OLD)	D0200—01A0	D-04
FUEL LINES (NEW)	D0200—02A0	D-06
E0 [ELETRICAL SYSTEM]		
BATTERY	E0100—01A0	E-02
WIRING (STARTING HARNESS)	E0200—01A0	E-04
WIRING (MAIN HARNESS)	E0200—02A0	E-06
WIRING (MAIN HARNESS) (CLIP)	E0200—03A0	E-08
WIRING (BATTERY CASE)	E0200—04A0	E-10
WIRING (CLAMP)	E0200—05A0	E-12
WIRING (WORKING LAMP, FRONT)	E0200—06A0	E-14
HORN	E0410—01A0	E-16
H0 [HYDRAULIC SYSTEM]		
HYDRAULIC TANK (WITH SENSOR)	H0110—01A0	H-02
MAIN VALVE (CONNECTING PARTS) (1 ACTUATOR) (PIPING LESS)	H0120—01A0	H-04
MAIN VALVE (CONNECTING PARTS) (1 ACTUATOR) (WITH PIPING)	H0120—02A0	H-06
MAIN VALVE (VALVE BRACKET)	H0120—03A0	H-08
MAIN VALVE (SENSOR)	H0120—04A0	H-10
MAIN VALVE (SENSOR AND BLIND PARTS) (1 ACTUATOR) (SAFETY VALVE LESS)	H0120—05A0	H-12
MAIN PUMP (CONNECTING PARTS)	H0210—01A0	H-14
SUCTION LINE	H0311—01A0	H-16
DELIVERY LINE	H0312—01A0	H-18
OIL COOLER LINE	H0320—01A0	H-20
RETURN LINE (HOSE)	H0330—01A0	H-22
RETURN LINE (BLOCK) (SWITCH VALVE)	H0330—02A0	H-24
RETURN LINE (BLOCK) (SWITCH VALVE) (FOR ADDITIONAL PIPING)	H0330—02A1	H-26
RETURN LINE (BLOCK)	H0330—03A0	H-28
RETURN LINE (BLOCK) (FOR ADDITIONAL PIPING)	H0330—03A1	H-30
DRAIN LINE	H0340—01A0	H-32
BOOM LINE (VALVE BOOM LINE) (WITH DRIFT PRIVENTIVE)	H1210—01A0	H-34
BOOM LINE (VALVE BOOM FRAME) (WITH DRIFT PRIVENTIVE)	H1210—02A0	H-36
BOOM LINE (VALVE BOOM HOSE)	H1210—03A0	H-38
ARM AND BUCKET LINE (VALVE ARM LINE)	H1220—01A0	H-40
ARM AND BUCKET LINE (VALVE BUCKET LINE)	H1220—02A0	H-42
DRIFT PREVENTIVE (BOOM)	H1240—01A0	H-44
ATTACHMENT LINE (1 ACTUATOR) (CROSS VALVE, L.H.)	H1270—01A0	H-46

	FIG. NO	PAGE
BOOM LINE CLAMP (PIPING LESS)	H1270—01A8A	H-48
ATTACHMENT LINE (1 ACTUATOR) (CROSS VALVE, L.H.) (SAFETY VALVE) (FOR ADDITIONAL LINE AND PIPING)	H1270—02A0	H-50
ATTACHMENT LINE (1 ACTUATOR) (CROSS VALVE, R.H.) (SAFETY VALVE)	H1270—03A0	H-52
ATTACHMENT LINE (1 ACTUATOR) (CROSS VALVE, R.H.)	H1270—04A0	H-54
ATTACHMENT LINE (1 ACTUATOR) (RETURN LINE) (FILTER)	H1270—05A0	H-56
ATTACHMENT LINE (1 ACTUATOR) (RETURN LINE)	H1270—06A0	H-58
ATTACHMENT LINE (1 ACTUATOR) (LINE AND PIPING LESS)	H1270—06A1C	H-60
ATTACHMENT LINE (1 ACTUATOR) (ATTACHMENT LINE BRACKET)	H1270—07A0	H-62
ATTACHMENT LINE (1 ACTUATOR) (VALVE SIDE)	H1270—08A0	H-64
TRAVEL LINES	H1310—01A0	H-66
SWING LINES	H1340—01A0	H-68
LS LINES	H1810—01A0D	H-70
SOLENOID VALVE (SOLENOID VALVE AND ACUMULATOR)	H1831—01A0	H-72
SOLENOID VALVE (SOLENOID VALVE LINE)	H1831—02A0	H-74
PRESSURE SWITCH BLOCK (WITH SENSOR)	H1833—01A0E	H-76
PPC MAIN LINE (VALVE PPC LINES)	H1840—01A1H	H-78
PPC MAIN LINE (PPC MAIN LINES) (1 ACTUATOR)	H1840—02A1A	H-80
PPC MAIN LINE (HOSE MAIN VALVE PPC)	H1840—03A1D	H-82
J0 [MAIN/REVOLVING FRAME AND RELATES PARTS]		
REVOLVING FRAME	J1110—01A0E	J-02
BOOM FOOT PIN	J1310—01A0E	J-04
K0 [OPERATOR´S COMPARTMENT AND CONTROL SYSTEM]		
OPERATOR'S SEAT (TILT)	K0110—01A0A	K-02
OPERATOR'S SEAT (TILT)	K0120—01A0A	K-04
SEAT BELT (FOR RIGID TYPE) (78MM WIDE)	K0160—01A0B	K-06
SEAT REAR COVER (WITH SPEAKER) (WITH AIR CONDITIONER)	K0180—01A1B	K-08
SEAT REAR COVER (WITH SPEAKER) (WITH HEATER)	K0180—01A2B	K-10
OPERATOR'S CAB (WITH GUARD) (CAB GRIP AND OPEN LOCK)	K0210—01A1D	K-12
OPERATOR'S CAB (FRONT WINDOW)	K0210—02A0B	K-14
OPERATOR'S CAB (WINDOW AND ROOF VENTILATOR)	K0210-05A0D	K-16
OPERATOR'S CAB (ELECTRICAL)	K0210-06A0	K-18
OPERATOR'S CAB (INSIDE COVER)	K0210-07A0B	K-20
OPERATOR'S CAB (DOOR)	K0210-08A0A	K-22
OPERATOR'S CAB (DOOR LOCK)	K0210-09A0B	K-24
OPERATOR'S CAB (BASE) (WORK LEVER WITH PPC VALVE) (ELECTRIC GOVERNOR)	K0210-10A1F	K-26
OPERATOR'S CAB (PANEL COVER) (ELECTRIC GOVERNOR CONTROL) (WITH AIR CONDITIONER)	K0210-11A1B	K-28
OPERATOR'S CAB (PANEL COVER) (ELECTRIC GOVERNOR) (WITH HEATER)	K0210-11A2B	K-30
OPERATOR'S CAB (PANEL) (FM-RADIO AND HARNESS) (ELECTRIC GOVERNOR)	K0210-12D8	K-32
OPERATOR'S CAB (PANEL COVER AND MONITOR SYSTEM)	K0210-13A8	K-34
OPERATOR'S CAB (INSTALLATION PARTS) (FOR POWER PULL UP WINDOW)	K0210-14A1A	K-36
OPERATOR'S CAB (TERMINAL BRACKET) (FOR POWER PULL UP WINDOW)	K0210-15A2A	K-38
FLOOR MAT	K0310-01A1	K-40
FLOOR MAT (FOR ADDITIONAL PIPING) (1 ACTUATOR)	K0310-01A3	K-42
WINDOW WASHER	K0350-01A0	K-44
AIR CONDITIONER (UNIT)	K0700-01A0B	K-46
CAR HEATER (2000 KCAL)	K0700-01A1A	K-48
AIR CONDITIONER (COOLING LINE)	K0700-02A0C	K-50
AIR CONDITIONER (HEATING LINE AND DUCT)	K0700-03A0C	K-52
FLOOR FRAME (ELECTRIC GOVERNOR CONTROL) (WORK LEVER WITH PPC VALVE)	K1110-01A0E	K-54
FLOOR FRAME (LEFT STAND) (LEVER AND COVER) (WORK LEVER WITH PPC VALVE)	K1110-03A0	K-56
FLOOR FRAME (LEFT STAND) (STAND AND REAR COVER)	K1110-04A0	K-58
FLOOR FRAME (RIGHT STAND) (LEVER AND COVER) (WORK LEVER WITH PPC VALVE)	K1110-06A0	K-60

	FIG. NO	PAGE
FLOOR FRAME (RIGHT STAND) (STAND FRAME AND ADJUSTER)	K1110-07A0A	K-62
FLOOR FRAME (TRAVEL LEVER)	K1110-10A0	K-64
FLOOR FRAME (TRAVEL LEVER) (FOR ADDITIONAL PIPING) (1 ACTUATOR)	K1110-10A2	K-66
FLOOR FRAME (PPC TRAVEL LINES)	K1110-11A0A	K-68
FLOOR FRAME (PPC TRAVEL LINES) (1 ACTUATOR)	K1110-11A2B	K-70
FLOOR FRAME (PPC WORK LINE) (PPC VALVE AND LEFT STAND HOSE)	K1110-12A0A	K-72
FLOOR FRAME (PPC WORK LINE) (RIGHT STAND HOSE)	K1110-13A0A	K-74
FLOOR FRAME (ELECTRIC GOVERNOR CONTROL) (AIR CONDITIONER UNIT)	K1110-17A1A	K-76
FLOOR FRAME (ELECTRIC GOVERNOR CONTROL) (HEATER UNIT 2000KCAL)	K1110-17B0	K-78
FLOOR FRAME (MOUNT CUSHION)	K1110-18A0A	K-80
FLOOR FRAME (ATTACHMENT PPC LINE) (1 ACTUATOR)	K1110-21A4A	K-82
LOW MOUNT (FLOOR FRAME)	K1120-01A0D	K-84
PPC WORK LINE CLIPING	K1520-01A0D	K-86
PPC WORK LINE CLIPING (1 ACTUATOR)	K1520-01A2	K-88
ATTACHMENT CONTROL PEDAL (1 ACTUATOR)	K1530-01A0B	K-90
ATTACHMENT PPC LINE (1 ACTUATOR)	K1540-01A1C	K-92
SWITCH (MODEL SELECTION CONNECTOR)	K1730-01A0	K-94
GARNISH COVER	K1740-01A0C	K-96
M0 [GUARD]		
HOOD	M1110-01A0B	M-02
HOOD (FOR LARGE RADIATOR) (OPTIONAL)	M1110-02A0	M-04
FRAME (MACHINE CAB)	M1120-01A0C	M-06
LEFT SIDE DOOR (DOOR) (MACHINE CAB)	M1130-01A0D	M-08
LEFT SIDE DOOR (INSTALLATION PARTS) (MACHINE CAB)	M1130-02A0B	M-10
RIGHT SIDE DOOR (MACHINE CAB)	M1140-01A0B	M-12
PARTITION (MACHINE CAB)	M1150-01A0C	M-14
PARTITION	M1160-01A0C	M-16
COVER (MACHINE CAB) (UPPER)	M1210-01A0C	M-18
RIGHT SIDE CASE	M1220-01A0E	M-20
HAND RAIL	M1310-01A0	M-22
REAR VIEW MIRROR R.H.	M1420-01A0	M-24
COUNTER WEIGHT (3750 KG)	M1510-01A2B	M-26
COUNTER WEIGHT MOUNTING	M1520-01A0	M-28
UNDER COVER (REVOLVING FRAME) (LEFT SIDE COVER AND TOOL BOX)	M1810-01A0E	M-30
UNDER COVER (REVOLVING FRAME) (ENGINE ROOM)	M1810-02A0C	M-32
N0 [SWING CIRCLE AND RELATED PARTS]		
SWING CIRCLE (CONCENTRATED GREASING)	N1110-01A0	N-02
SWING MACHINERY (WITH SWING BY-PASS VALVE)	N1210-01A1A	N-04
SWING MOTOR (CONNECTING PARTS)	N1220-01A0D	N-06
SWIVEL JOINT (CONNECTING PARTS) (TRAVEL SPEED 3RD)	N1310-01A0	N-08
P0 [TRAVEL AND LOWER PIPING]		
TRAVEL PIPING (TRAVEL SPEED 3RD)	P1120-01A1A	P-02
FINAL DRIVE (TRAVEL SPEED 3RD)	P1210-01A0A	P-04
R0 [UNDERCARRIAGE]		
FRONT IDLER	R0110-01A0	R-02
IDLER CUSHION	R0120-01A0	R-04
TRACK ROLLER	R0200-01A0A	R-06
TRACK ROLLER	R0200-01A2A	R-08
CARRIER ROLLER	R0300-01A0	R-10
CARRIER ROLLER	R0300-02A0	R-12
TRACK SHOE (TRIPLE GROUSER WITH HOLE) (700MM WIDE)	R0500-01A2	R-14
TRACK SHOE (TRIPLE GROUSER WITH HOLE) (800MM WIDE)	R0500-01A3	R-16
TRACK FRAME	R1100-01A0A	R-18
TRACK FRAME	R1100-01A2A	R-20
TRACK ROLLER GUARD	R1200-01A0	R-22
T0 [WORK EQUIPMENT]		
BOOM	T1110-01A0	T-02

	FIG. NO	PAGE
BOOM (HD) (FOR ADDITIONAL PIPING)	T1110-01A1B	T-04
BOOM (5.2M)	T1110-01A2C	T-06
BOOM (TOP PIN AND BOTTOM PIN)	T1110-02A0	T-08
BOOM (ARM CYLINDER LINE AND BUCKET CYLINDER LINE)	T1110-03A0B	T-10
BOOM (LUBRICATING LINE AND WORKING LAMP HARNESS)	T1110-04A0B	T-12
BOOM (HD) (ADDITIONAL LINE) (FOR ADDITIONAL PIPING)	T1110-05A1B	T-14
BOOM (WORKING LAMP AND BOOM FOOT LUBRICATING)	T1110-10A0B	T-16
BOOM CYLINDER	T1120-01A0	T-18
BOOM PIN	T1125-01A0	T-20
ARM CYLINDER	T1140-01A0	T-22
ARM (2.4M) (HEAVY DUTY)	T1200-01A0	T-24
ARM (2.4M) (HEAVY DUTY - 1 ATTACHMENT)	T1200-01A0C	T-26
ARM (1.8M) (HEAVY DUTY)	T1200-01A1	T-28
ARM (1.8M) (HEAVY DUTY - 1 ATTACHMENT)	T1200-01A1C	T-30
ARM (2.4M) (FOR COMPONENT) (STD)	T1200-01A2	T-32
ARM (2.4M) (HEAVY DUTY) (STD)	T1200-01A3	T-34
ARM (2.9M) (FOR ADDITIONAL PIPING) (KIT)	T1200-01B0	T-36
ARM (2.9M) (FOR COMPONENT)	T1200-01C5	T-38
ARM (2.9M) (FOR ADDITIONAL PIPING) (FOR COMPONENT)	T1200-01C7	T-40
ARM (BUCKET LINK)	T1200-02A0C	T-42
ARM (BUCKET LINK)	T1200-02A1	T-44
ARM (BUCKET CYLINDER HOSE AND SPACER)	T1200-03A0	T-46
ARM (2.9M) (ADDITIONAL PIPING)	T1200-05A7	T-48
ARM (2.4M) (HEAVY DUTY - 1 ATTACHMENT) (ADDITIONAL PIPING)	T1200-05B9	T-50
ARM (1.8M) (HEAVY DUTY - 1 ATTACHMENT) (ADDITIONAL PIPING)	T1200-05C1	T-52
BUCKET LESS	T1290-01A0C	T-54
TRAPEZOIDAL BUCKET	T1510-01D1	T-56
BUCKET, 1.15M3 (SAE 1,30M3) (HORIZONTAL PIN TYPE) (WITH HOOK)	T1510-01F0	T-58
BUCKET, 1.0M3 (SAE 1,17M3) (HORIZONTAL PIN TYPE) (WITH HOOK)	T1510-01F1	T-60
BUCKET, 0.7M3 (SAE 0,8M3) (HORIZONTAL PIN TYPE) (WITH ADJUSTER, SIDE CUTTER AND HOOK)	T1510-01F1C	T-62
BUCKET, 0.8M3 (SAE 0,93M3) (HORIZONTAL PIN TYPE) (WITH ADJUSTER, SIDE CUTTER AND HOOK)	T1510-01F3C	T-64
BUCKET, 0.9M3 (SAE 1,05M3) (HORIZONTAL PIN TYPE) (WITH SIDE CUTTER AND HOOK)	T1510-01F5C	T-66
SIDE CUTTER (FOR BUCKET)	T1510-02A1	T-68
BUCKET HOOK	T1510-02A3	T-70
U0 [MARKS AND PLATE]		
DECAL AND PLATE (ENGLISH)	U0100-01A5C	U-02
DECAL AND PLATE (ENGLISH)	U0100-01A5D	U-04
LOGO (KOMATSU) (LARGE) (GENERAL)	U0150-01A2	U-06
MARKS AND PLATES (SIFT PATTERN, ISO)	U0300-01A7	U-08
PLATE (BOOM SIDE, R.H.) (LOGO MARK)	U0510-01A0	U-10
PLATE (AIR CLEANER, DOUBLE ELEMENT)	U0550-01A1	U-12
V0 [ACESSORY]		
SPARE PARTS	V0100-01A0A	V-02
TOOL KIT	V0300-01A0C	V-04
Y0 [SERVICE KIT]		
SERVICE KIT (CYLINDER)	Y0163-51A0C	Y-02
SWING MACHINERY ASS'Y (SUPPLY ONLY)	Y0260-01A0C	Y-04
FINAL DRIVE (TRAVEL SPEED 3RD) (SUPPLY ONLY)	Y0270-01A0A	Y-06
MAIN PUMP (1/10)	Y1600-01A0C	Y-08
MAIN PUMP (2/10)	Y1600-02A0C	Y-10
MAIN PUMP (3/10)	Y1600-03A0C	Y-12
MAIN PUMP (4/10)	Y1600-04A0C	Y-14
MAIN PUMP (5/10)	Y1600-05A0C	Y-16
MAIN PUMP (6/10)	Y1600-06A0C	Y-18
MAIN PUMP (7/10)	Y1600-07A0C	Y-20
MAIN PUMP (8/10)	Y1600-08A0C	Y-22

	FIG. NO	PAGE
MAIN PUMP (9/10)	Y1600-09A0C	Y-24
MAIN PUMP (10/10)	Y1600-10A0C	Y-26
BOOM CYLINDER	Y1620-01A0C	Y-28
ARM CYLINDER	Y1620-11A0C	Y-30
BUCKET CYLINDER (FOR 2.4M ARM AND 2.9M ARM)	Y1620-41A0C	Y-32
BUCKET CYLINDER (FOR 1.8M ARM)	Y1620-41A1C	Y-34
SWIVEL JOINT	Y1627-01A0	Y-36
SWING MOTOR (1/3)	Y1640-01A1C	Y-38
SWING MOTOR (2/3)	Y1640-02A1C	Y-40
SWING MOTOR (3/3)	Y1640-03A1C	Y-42
TRAVEL MOTOR (1/3)	Y1641-01A0A	Y-44
TRAVEL MOTOR (2/3)	Y1641-02A0A	Y-46
TRAVEL MOTOR (3/3)	Y1641-03A0A	Y-48
MAIN VALVE (1-ACTUATOR) (1/14)	Y1662-01A0G	Y-50
MAIN VALVE (1-ACTUATOR) (2/14)	Y1662-02A0G	Y-54
MAIN VALVE (1-ACTUATOR) (3/14)	Y1662-03A0G	Y-56
MAIN VALVE (1-ACTUATOR) (4/14)	Y1662-04A0G	Y-60
MAIN VALVE (1-ACTUATOR) (5/14)	Y1662-05A0G	Y-62
MAIN VALVE (1-ACTUATOR) (6/14)	Y1662-06A0G	Y-64
MAIN VALVE (1-ACTUATOR) (7/14)	Y1662-07A0G	Y-66
MAIN VALVE (1-ACTUATOR) (8/14)	Y1662-08A0G	Y-68
MAIN VALVE (1-ACTUATOR) (9/14)	Y1662-09A0G	Y-70
MAIN VALVE (1-ACTUATOR) (10/14)	Y1662-10A0G	Y-72
MAIN VALVE (1-ACTUATOR) (11/14)	Y1662-11A0G	Y-74
MAIN VALVE (1-ACTUATOR) (12/14)	Y1662-12A0G	Y-76
MAIN VALVE (1-ACTUATOR) (13/14)	Y1662-13A0G	Y-78
MAIN VALVE (1-ACTUATOR) (14/14)	Y1662-14A0G	Y-80
MAIN VALVE (1-ACTUATOR) (1/13) (FOR BLIND PLUG OF SAFETY-SUCTION SERVICE VALVE)	Y1662-41A0F	Y-82
MAIN VALVE (1-ACTUATOR) (2/13) (FOR BLIND PLUG OF SAFETY-SUCTION SERVICE VALVE)	Y1662-42A0F	Y-86
MAIN VALVE (1-ACTUATOR) (3/13) (FOR BLIND PLUG OF SAFETY-SUCTION SERVICE VALVE)	Y1662-43A0F	Y-88
MAIN VALVE (1-ACTUATOR) (4/13) (FOR BLIND PLUG OF SAFETY-SUCTION SERVICE VALVE)	Y1662-44A0F	Y-92
MAIN VALVE (1-ACTUATOR) (5/13) (FOR BLIND PLUG OF SAFETY-SUCTION SERVICE VALVE)	Y1662-45A0F	Y-94
MAIN VALVE (1-ACTUATOR) (6/13) (FOR BLIND PLUG OF SAFETY-SUCTION SERVICE VALVE)	Y1662-46A0F	Y-96
MAIN VALVE (1-ACTUATOR) (7/13) (FOR BLIND PLUG OF SAFETY-SUCTION SERVICE VALVE)	Y1662-47A0F	Y-98
MAIN VALVE (1-ACTUATOR) (8/13) (FOR BLIND PLUG OF SAFETY-SUCTION SERVICE VALVE)	Y1662-48A0F	Y-100
MAIN VALVE (1-ACTUATOR) (9/13) (FOR BLIND PLUG OF SAFETY-SUCTION SERVICE VALVE)	Y1662-49A0F	Y-102
MAIN VALVE (1-ACTUATOR) (10/13) (FOR BLIND PLUG OF SAFETY-SUCTION SERVICE VALVE)	Y1662-50A0F	Y-104
MAIN VALVE (1-ACTUATOR) (11/13) (FOR BLIND PLUG OF SAFETY-SUCTION SERVICE VALVE)	Y1662-51A0F	Y-106
MAIN VALVE (1-ACTUATOR) (12/13) (FOR BLIND PLUG OF SAFETY-SUCTION SERVICE VALVE)	Y1662-52A0F	Y-108
MAIN VALVE (1-ACTUATOR) (13/13) (FOR BLIND PLUG OF SAFETY-SUCTION SERVICE VALVE)	Y1662-53A0F	Y-110
SERVICE VALVE (1/2)	Y1669-01A0A	Y-112
SERVICE VALVE (2/2)	Y1669-02A0A	Y-114
PPC VALVE (FOR TRAVEL)	Y1670-01A0E	Y-116
PPC VALVE (FOR WORK EQUIPMENT)	Y1670-11A0	Y-118
PPC VALVE (FOR ATTACHMENT)	Y1670-21A0	Y-120
SUCTION AND SAFETY VALVE	Y1672-01A0	Y-122
LOCK VALVE	Y1675-01A0	Y-124
PILOT VALVE	Y1679-01A0A	Y-126
HEATER ASS'Y (2000 KCAL) (FOR CAR HEATER)	Y1977-01A0	Y-128
COMPRESSOR ASS'Y (FOR AIR CONDITIONER)	Y1979-01A0	Y-130

	FIG. NO	PAGE
UNIT ASS'Y (COOLING) (FOR AIR CONDITIONER)	Y1979-11A0C	Y-132
CORE UNIT ASS'Y (FOR AIR CONDITIONER)	Y1979-21A0C	Y-134
BLOWER ASS'Y (FOR AIR CONDITIONER)	Y1979-31A0C	Y-136
FILTER BOX ASS'Y (FOR AIR CONDITIONER)	Y1979-41A0C	Y-138
BOX ASS'Y (AIR DAMPER CASE) (FOR AIR CONDITIONER)	Y1979-61A0	Y-140

ENGINE

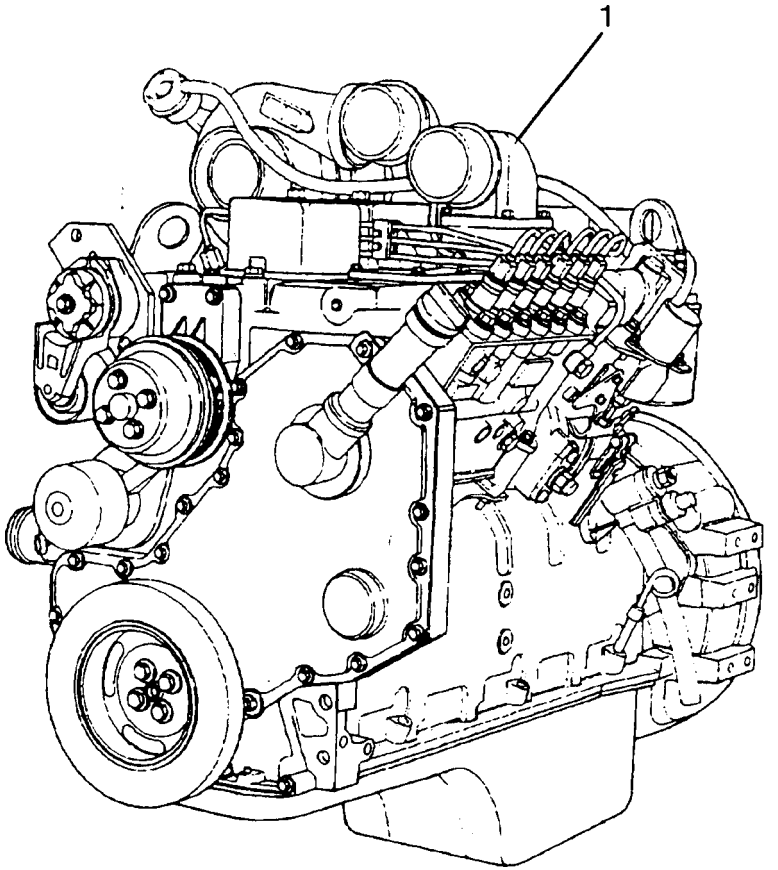

INDEX	PART NO.	DESCRIPTION	Q'TY	SERIAL NO.
1	20Y-01-B1110	ENGINE, COMPLETE	1	30736312-

FIG. A1.01 ENGINE BLOCK

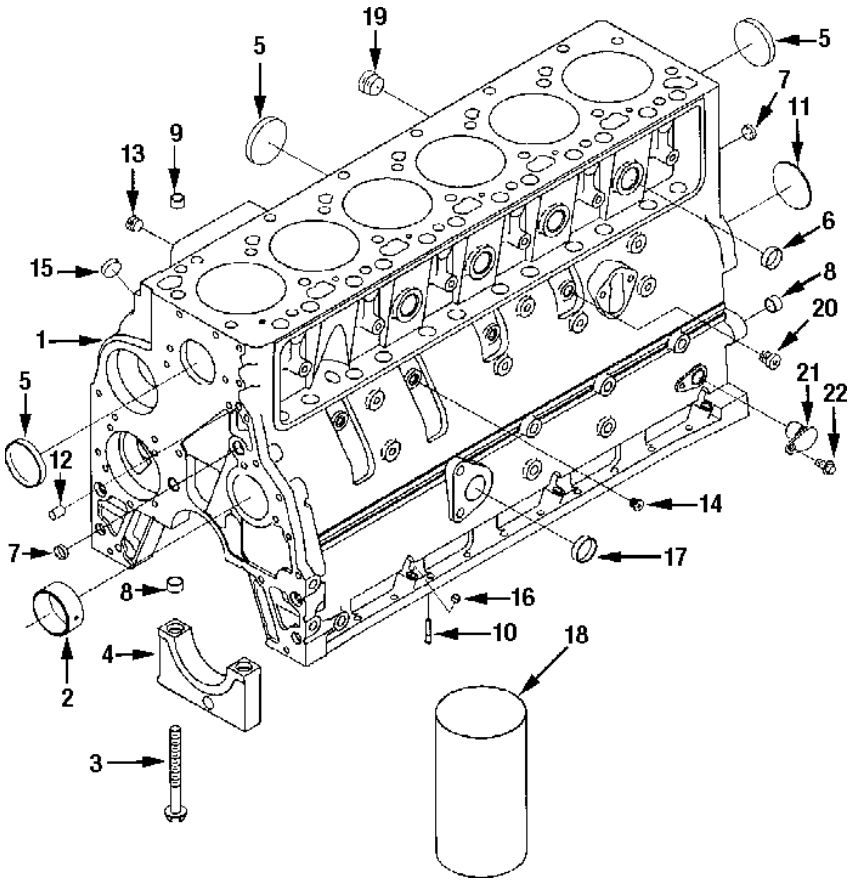

FIG. NO: A1.01

INDEX	PART NO.	DESCRIPTION	Q'TY	SERIAL NO.
	6736-21-1400	BLOCK,CYLINDER	1	30736312-
1	6732-21-9920	. BLOCK	1	30736312-
2	6732-21-1411	. BUSHING	1	30736312-
3	6732-21-1611	. SCREW	16	30736312-
4	6732-21-1210	. CAP,MAIN BEARING	7	30736312-
5	6742-01-1390	. PLUG, EXPANSION	5	30736312-
6	6732-21-1820	. PLUG, EXPANSION	4	30736312-
7	6732-21-1810	. PLUG, EXPANSION	3	30736312-
8	6732-21-1910	. DOWEL, RING	14	30736312-
	6731-21-1210	KIT, BLOCK HARDWARE	1	30736312-
9	6732-21-6140	. DOWEL, RING	2	30736312-
10	6732-21-1191	. NOZZLE, PISTON COOLING	6	30736312-
11	6732-21-6130	. PLUG, EXPANSION	1	30736312-
12	6732-21-6120	. DOWEL, PIN	2	30736312-
13	6732-11-1910	. PLUG, PIPE	1	30736312-
14	6732-21-1960	. PLUG, THREADED	3	30736312-
8	6732-21-1910	. DOWEL, RING	2	30736312-
15	6735-21-5530	. PLUG, EXPANSION	1	30736312-
16	6732-21-5530	. PLUG, EXPANSION	3	30736312-
17	6732-21-6160	. PLUG, EXPANSION	1	30736312-
18	6736-29-2110	. SLEEVE, SALVAGE	A/R	30736312-
19	6732-11-1920	. PLUG, PIPE	1	30736312-
20	6735-21-1910	. PLUG, THREADED	1	30736312-
21	6735-21-1940	. PLUG, O-RING	1	30736312-
22	6732-21-3120	. SCREW	1	30736312-
		SERVICE PARTS		30736312-
2	6736-29-1410	BUSHING	A/R	30736312-
2	6736-29-1420	BUSHING	A/R	30736312-
4	6732-21-1210	CAP,MAIN BERARING	7	30736312-
18	6736-29-2110	SLEEVE	A/R	30736312-

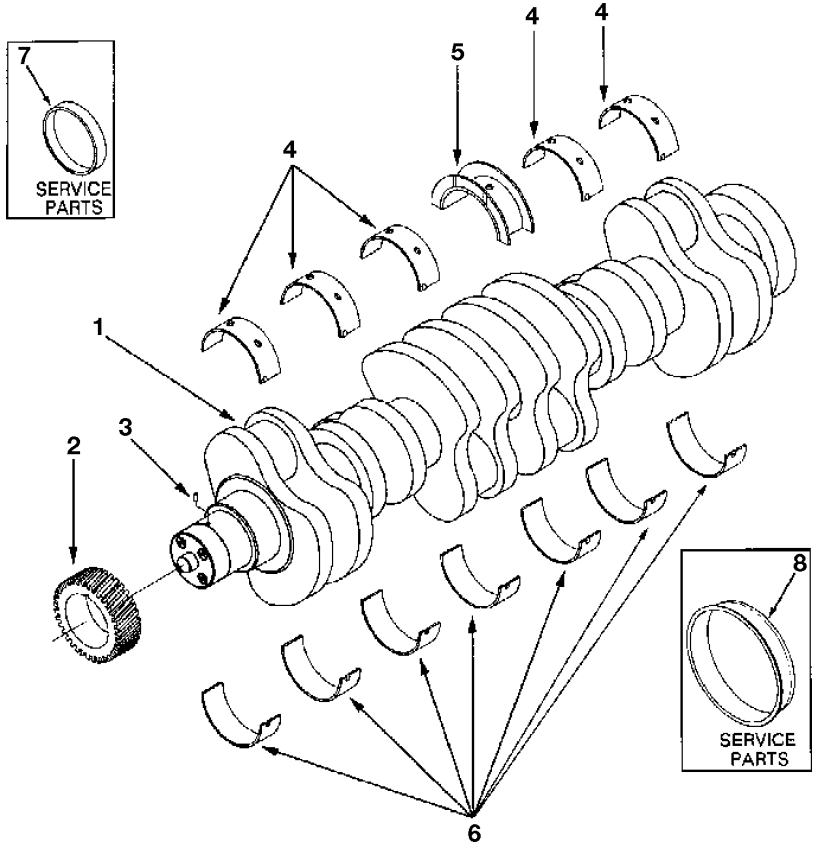

INDEX	PART NO.	DESCRIPTION	Q'TY	SERIAL NO.
	6736-31-1100	CRANCKSHAFT, ASSEMBLY	1	30736312-
1	6735-31-1111	. CRANCKSHAFT	1	30736312-
2	6732-31-1211	. GEAR, CRANCKSHAFT	1	30736312-
3	6732-21-6150	. DOWEL, PIN	1	30736312-
	6735-21-8100	MAIN BEARING SETS (STD)	1	30736312-
4	6735-21-8110	. BEARING, MAIN	6	30736312-
5	6742-01-4060	. BEARING, CRANCKSHAFT THRUST	1	30736312-
6	6735-21-8210	. BEARING, MAIN	7	30736312-
	6736-29-8100	SET,MAIN BRG (0.25MM OVERSIZE)	6	30736312-
4	6735-29-8110	. BEARING, MAIN	6	30736312-
5	6731-29-8310	. BEARING, CRANKSHAFT THRUST	1	30736312-
6	6735-29-8210	. BEARING, MAIN	7	30736312-
	6736-28-8100	SET,MAIN BRG (0.50MM OVERSIZE)	1	30736312-
4	6735-28-8110	. BEARING, MAIN	6	30736312-
5	6731-28-8310	. BEARING, CRANKSHAFT THRUST	1	30736312-
6	6735-28-8210	. BEARING, MAIN	7	30736312-
	6736-27-8100	SET, MAIN BRG (0.75MM OVERSIZE)	1	30736312-
4	6735-27-8110	. BEARING, MAIN	6	30736312-
5	6731-27-8310	. BEARING, CRANKSHAFT THRUST	1	30736312-
6	6735-27-8210	. BEARING, MAIN	7	30736312-
	6736-26-8100	SET, MAIN BRG (1.00MM OVERSIZE)	1	30736312-
4	6735-26-8110	. BEARING, MAIN	6	30736312-
5	6731-26-8310	. BEARING, CRANSHAFT THRUST	1	30736312-
6	6735-26-8210	. BEARING, MAIN	7	30736312-
	6731-21-8610	BEARING, CRANKSHAFT THRUST (0.5MM OVERSIZE)	1	30736312-
5	6731-28-8410	. BEARING, CRANKSHAFT THRUST	1	30736312-
6	6735-28-8210	. BEARING, MAIN	1	30736312-
	6731-21-8620	BEARING, CRANKSHAFT THRUST (1.0MM OVERSIZE)	1	30736312-
5	6731-26-8410	. BEARING, CRANKSHAFT THRUST	1	30736312-
6	6735-26-8210	. BEARING, MAIN	1	30736312-
		SERVICE PARTS		30736312-
7	6736-39-1220	KIT, SEAL	1	30736312-
8	6736-39-1140	KIT, SEAL	1	30736312-

FIG. A1.02.2 VIBRATION DAMPER

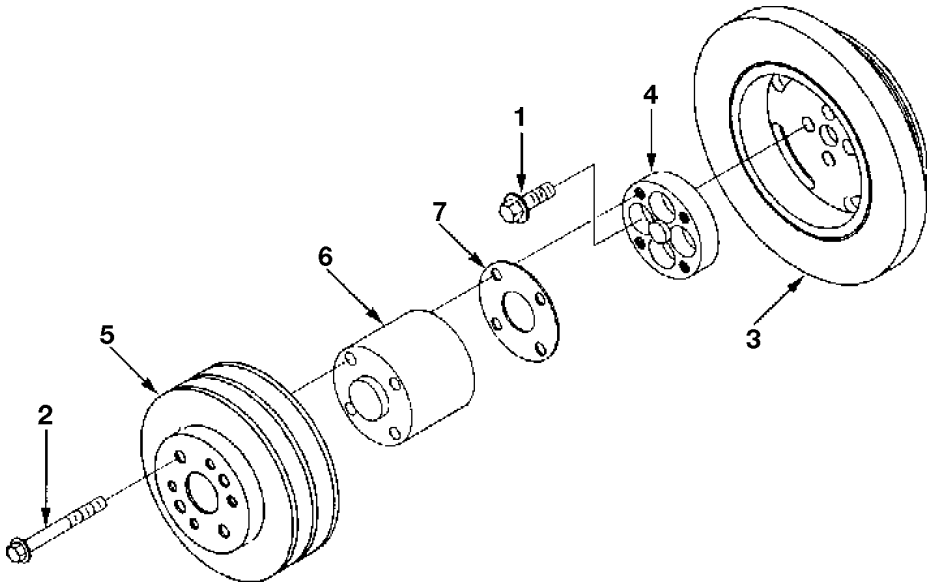

FIG. NO: A1.02.2

INDEX	PART NO.	DESCRIPTION	Q'TY	SERIAL NO.
1	6732-31-8120	SCREW	4	30736312-
2	6735-61-2140	SCREW	4	30736312-
3	6735-31-8120	DAMPER	1	30736312-
4	6732-91-1611	ADAPTER	1	30736312-
5	6735-61-3260	PULLEY, CRANKSHAFT	1	30736312-
6	6735-91-1620	SPACER, MOUNTING	1	30736312-
7	6735-61-3510	FLANGE, CRANKSHAFT	1	30736312-

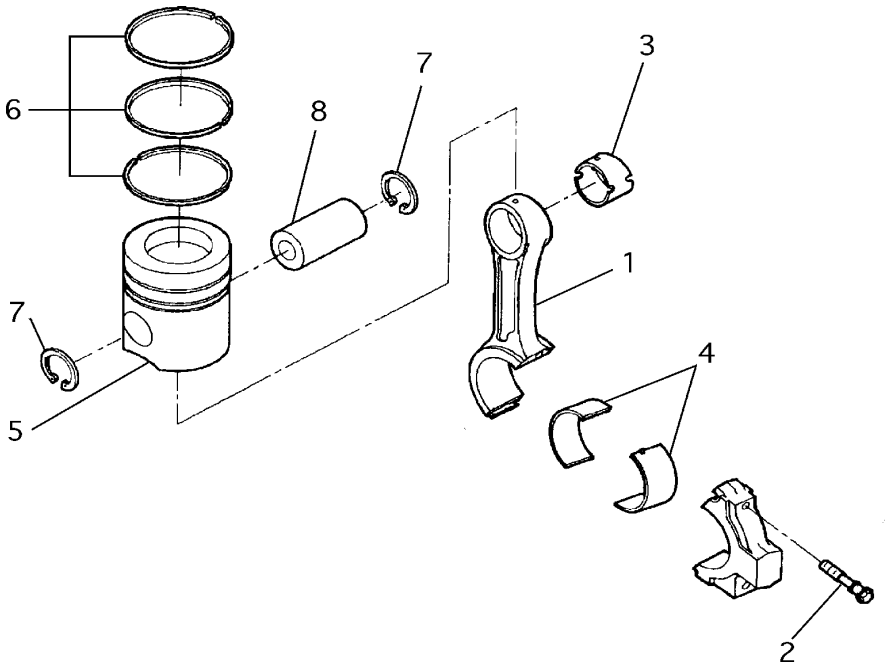

INDEX	PART NO.	DESCRIPTION	Q'TY	SERIAL NO.
	6732-31-3101	CONNECTING ROD A.	6	30736312-
1	☆ 6732-31-3111	.ROD	1	30736312-
2	6732-31-3310	.BOLT	2	30736312-
3	6732-31-3131	.BUSHING	1	30736312-
4	6732-31-3410	METAL	12	30736312-
	6736-39-3400	METAL 0,25mm 0.25mm (OS)	AR	30736312-
	6736-38-3400	METAL 0,50mm 0.50mm (OS)	AR	30736312-
	6736-37-3400	METAL 0,75mm 0.75mm (OS)	AR	30736312-
	6736-36-3400	METAL 1,00mm 1.00mm (OS)	AR	30736312-
		STANDARD		
	6735-31-2140	PISTON RING ASS'Y	6	30736312-
5	☆ 6735-31-2110	.PISTON	1	30736312-
6	6732-31-2300	.PISTON RING ASS'Y	1	30736312-
7	6732-31-2420	.RING	2	30736312-
8	6736-31-2420	PIN	6	30736312-
		OVERSIZE 0.50 mm		
	6735-39-2210	PISTON RIN GASS'Y	6	30736312-
5	☆ 6735-38-2120	.PISTON	1	30736312-
6	6732-39-2300	.PISTON RING ASS'Y	1	30736312-
7	6732-31-2420	.RING	2	30736312-
		OVERSIZE 1.00 mm		
	6735-38-2210	PISTON RIN GASS'Y	6	30736312-
5	☆ 6735-38-2130	.PISTON	1	30736312-
6	6732-38-2300	.PISTON RING ASS'Y	1	30736312-
7	6732-31-2420	.RING	2	30736312-

FIG. A1.07 CAMSHAFT

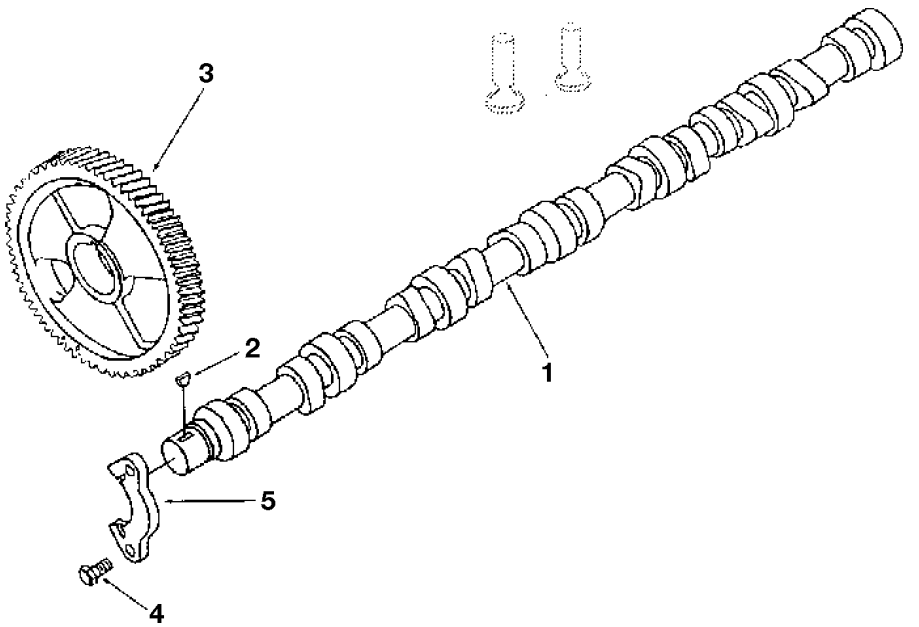

FIG. NO: A1.07

INDEX	PART NO.	DESCRIPTION	Q'TY	SERIAL NO.
1	6735-41-1111	CAMSHAFT	1	30736312-
2	6732-41-1280	KEY	1	30736312-
3	6732-41-1231	GEAR	1	30736312-
4	6732-41-1260	SCREW	2	30736312-
5	6732-41-1220	SUPPORT	1	30736312-

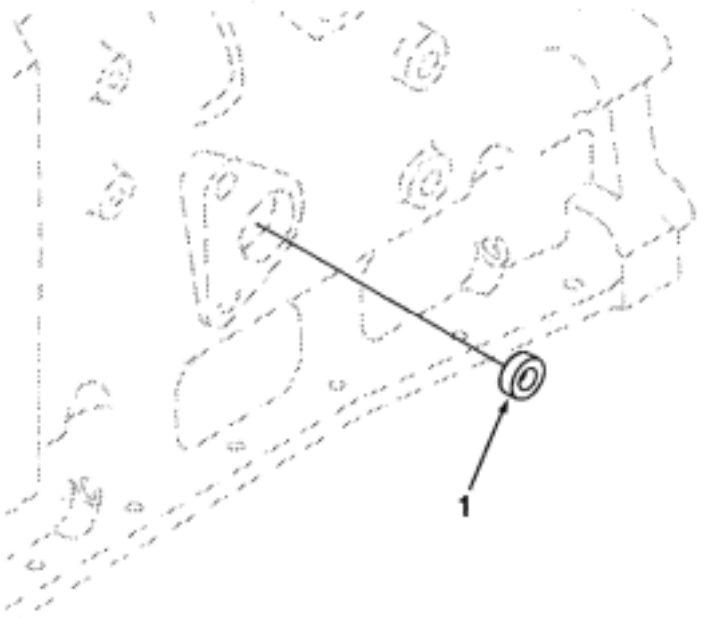

INDEX	PART NO.	DESCRIPTION	Q'TY	SERIAL NO.
1	6731-21-1930	PLUG	1	30736312-

FIG. A2.01 CYLINDER HEAD

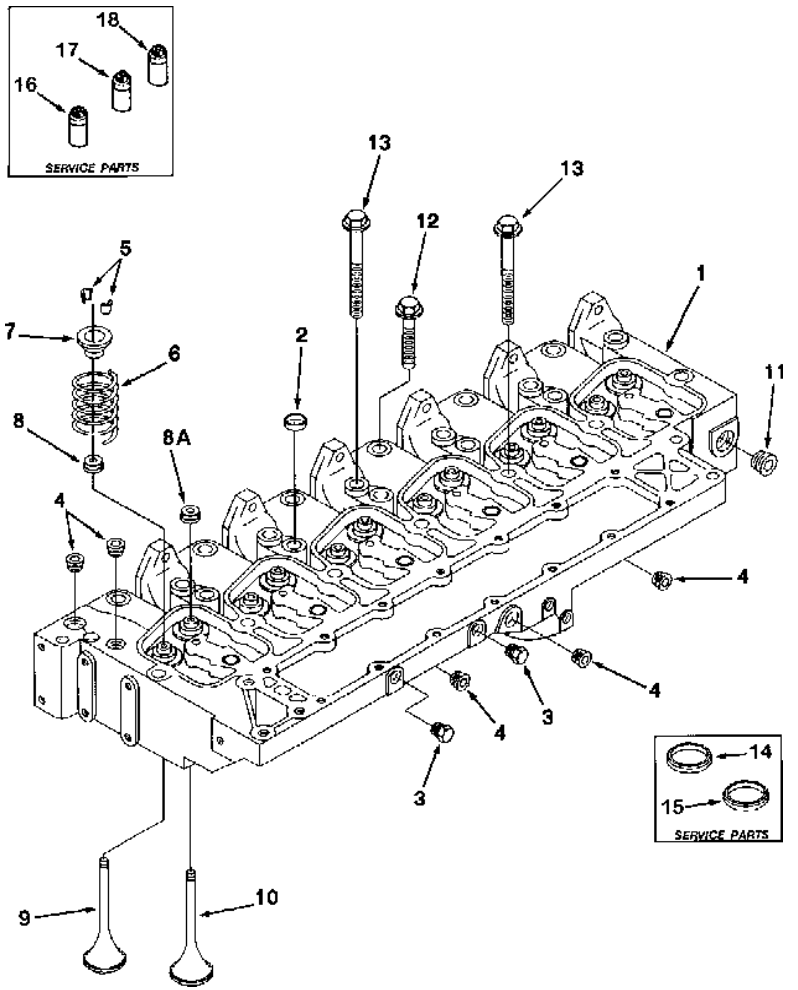

FIG. NO: A2.01

INDEX	PART NO.	DESCRIPTION	Q'TY	SERIAL NO.
	6731-11-1420	HEAD, CYLINDER	1	30736312-
1	☆	. HEAD, CYLINDER	1	30736312-
2	6736-11-1150	. PLUG	5	30736312-
3	6732-11-1930	. PLUG	2	30736312-
4	6732-11-1910	. PLUG	5	30736312-
	6736-41-4110	. VALVE	6	30736312-
5	6732-41-4520	. . COLLET	2	30736312-
9	6732-41-4110	. . VALVE	1	30736312-
	6736-41-4210	. VALVE	6	30736312-
5	6732-41-4520	. . COLLET	2	30736312-
10	6732-41-4210	. . VALVE	1	30736312-
6	6732-41-4410	. SPRING	12	30736312-
7	6732-41-4510	. RETAINER	12	30736312-
8	6732-41-4530	. SEAL	6	30736312-
8A	6732-41-4540	. SEAL	6	30736312-
11	6732-11-1920	. PLUG	1	30736312-
12	6732-11-1610	SCREW	6	30736312-
13	6732-11-1620	SCREW	14	30736312-
		SERVICE PARTS		30736312-
14	6736-19-1440	INSERT, VALVE		30736312-
15	6736-19-1430	INSERT, VALVE		30736312-
16	6736-19-1310	GUIDE, VALVE STEM (THICK WALL 60.50MM)		30736312-
17	6736-19-1410	GUIDE, VALVE STEM (THICK WALL 51.75MM)		30736312-
18	6736-18-1310	GUIDE, VALVE STEM (THICK WALL FOR 60.50MM AND 51.75MM)		30736312-

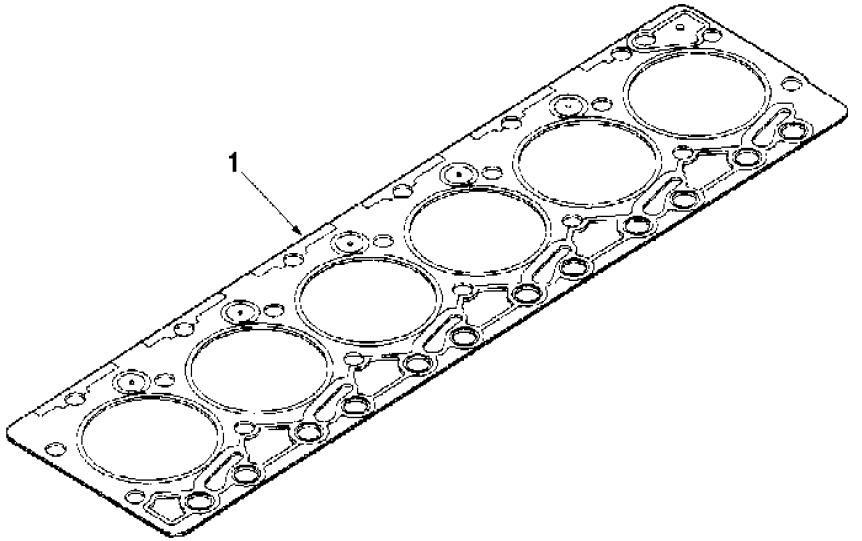

INDEX	PART NO.	DESCRIPTION	Q'TY	SERIAL NO.
1	6735-11-1811	GASKET, CYLINDER HEAD	1	30736312-

FIG. A3.01 ROCKER LEVERS

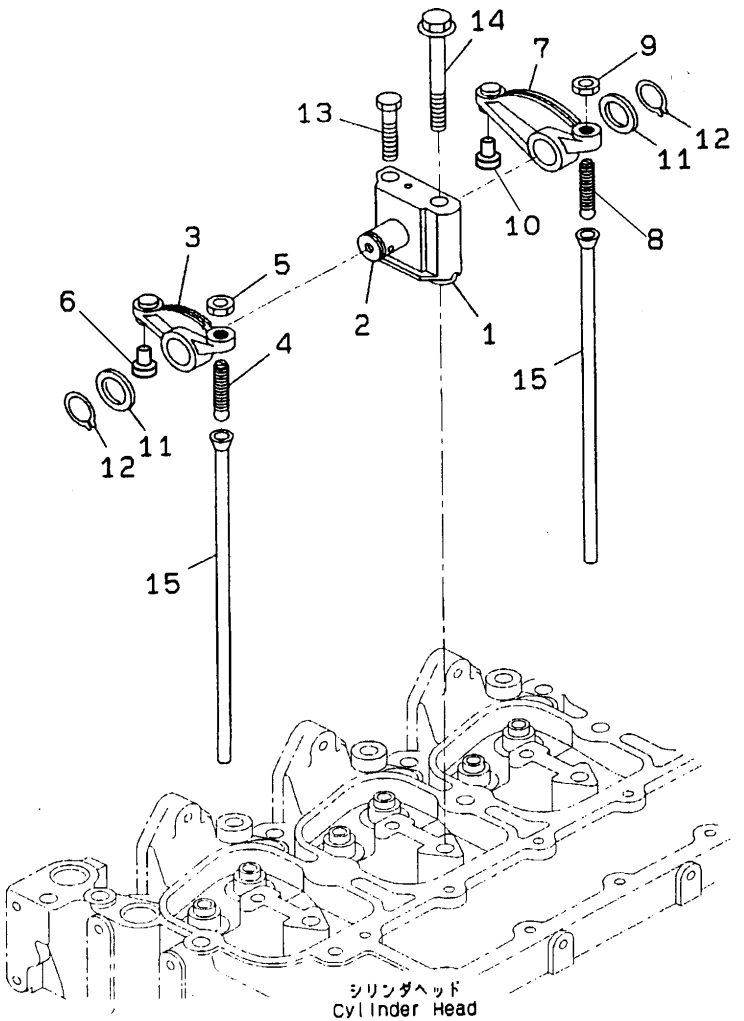

PC34421Z

FIG. NO: A3.01

INDEX	PART NO.	DESCRIPTION	Q'TY	SERIAL NO.
	6736-41-5110	BRACKET ASS'Y, ROCKER LEVER	6	30736312-
1	6732-41-5120	. BRACKET	1	30736312-
2	6732-41-5130	. SHAFT ASS'Y	1	30736312-
	6732-41-5200	ARM ASS'Y	6	30736312-
3	6732-41-5210	. ARM	1	30736312-
4	6731-41-5270	. SCREW	1	30736312-
5	6735-41-5550	. NUT	1	30736312-
6	6732-41-5440	. INSERT	1	30736312-
	6732-41-5400	ARM ASS'Y	6	30736312-
7	6732-41-5410	. ARM	1	30736312-
8	6731-41-5270	. SCREW	1	30736312-
9	6735-41-5550	. NUT	1	30736312-
10	6732-41-5440	. INSERT	1	30736312-
11	6732-41-5160	WASHER	12	30736312-
12	6732-41-5170	RING	12	30736312-
13	6732-41-5180	BOLT	6	30736312-
14	6732-11-1640	BOLT	6	30736312-
15	6732-41-3111	ROD, PUSH	12	30736312-

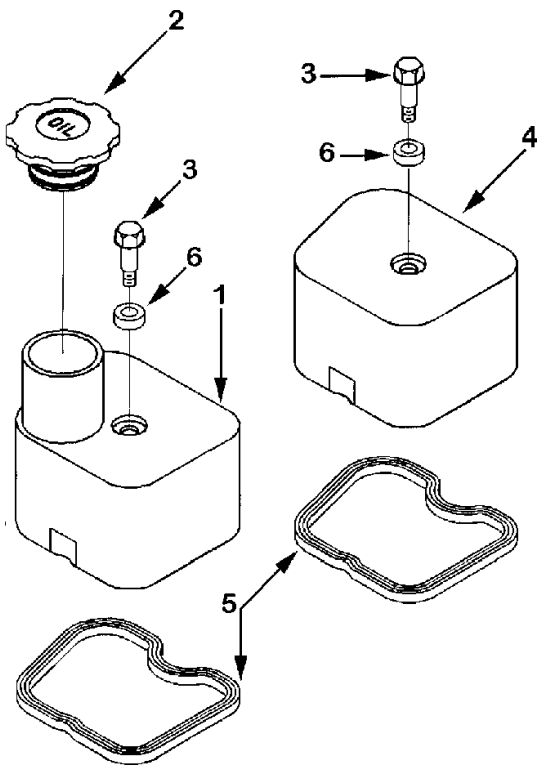

INDEX	PART NO.	DESCRIPTION	Q'TY	SERIAL NO.
1	6735-11-8110	COVER	1	30736312-
2	6130-12-8610	CAP	1	30736312-
3	6732-11-8130	SCREW	6	30736312-
4	6735-11-8120	COVER	5	30736312-
5	6732-11-8181	GASKET	6	30736312-
6	6732-11-8210	ISOLATOR	6	30736312-

FIG. A4.01 VALVE TAPPET

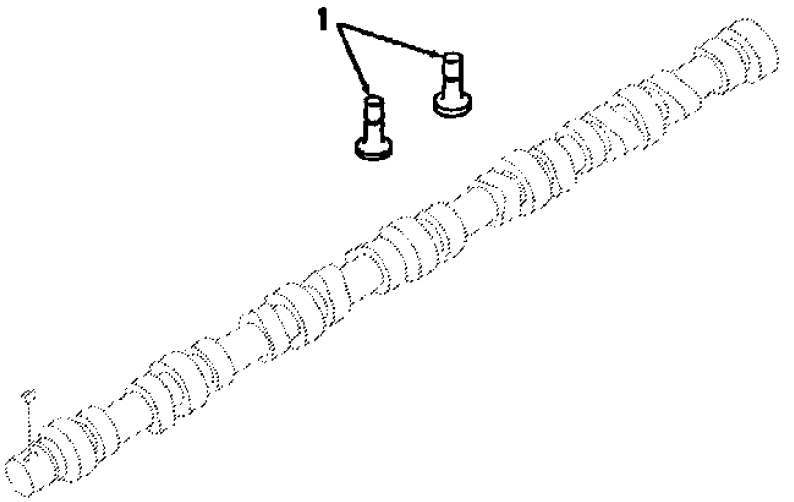

FIG. NO: A4.01

INDEX	PART NO.	DESCRIPTION	Q'TY	SERIAL NO.
1	6732-41-2112	TAPPET, VALVE	2	30736312-

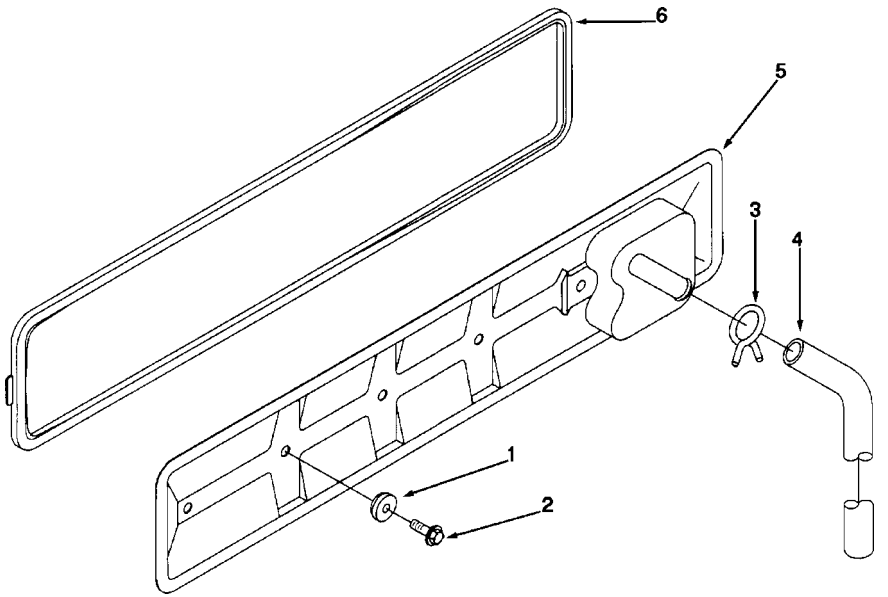

INDEX	PART NO.	DESCRIPTION	Q'TY	SERIAL NO.
1	6732-21-6280	SEAL, GROMMET	4	30736312-
2	6732-21-3120	SCREW	4	30736312-
3	6735-21-6130	CLAMP	1	30736312-
4	6735-21-6120	HOSE	1	30736312-
5	6735-21-6160	COVER	1	30736312-
6	6735-21-6260	GASKET	1	30736312-

FIG. A4.03.1 CAM FOLLOWER COVER BOLT

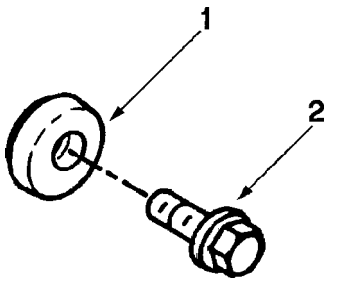

FIG. NO: A4.03.1

INDEX	PART NO.	DESCRIPTION	Q'TY	SERIAL NO.
1	6732-21-6280	SEAL	2	30736312-
2	6732-21-3120	SCREW	2	30736312-

FIG. A5.01.5 AIR FUEL CONTROL PLUMBING

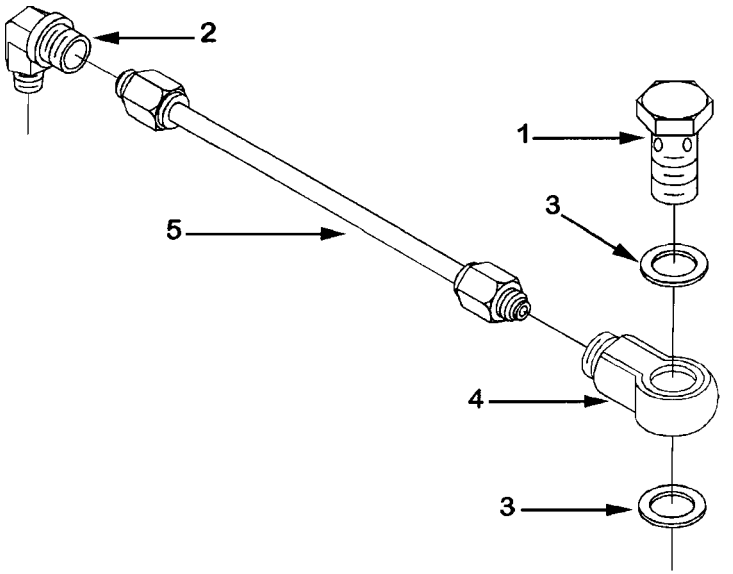

FIG. NO: A5.01.5

INDEX	PART NO.	DESCRIPTION	Q'TY	SERIAL NO.
1	6732-71-6510	Screw	1	30736312-
2	6732-81-8150	Elbow	1	30736312-
3	07005-01212	Washer	2	30736312-
4	6733-11-4510	Conector	1	30736312-
5	6731-81-8120	Tube	1	30736312-

FIG. A5.06 FUEL SHUTOFF VALVE

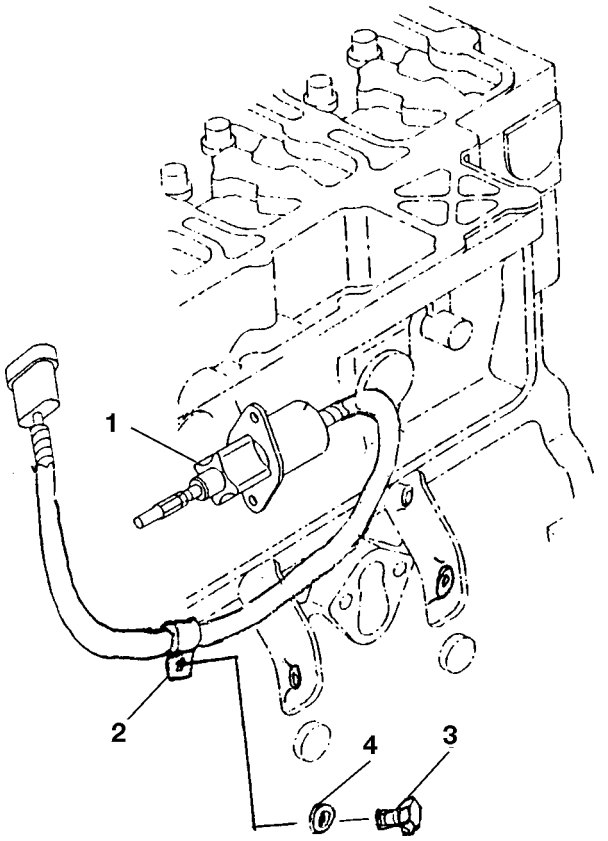

FIG. NO: A5.06

INDEX	PART NO.	DESCRIPTION	Q'TY	SERIAL NO.
1	6735-81-9140	SOLENOID	1	30736312-
2	04434-51010	CLIP	1	30736312-
3	01010-80816	BOLT	1	30736312-
4	01643-30823	WASHER	1	30736312-

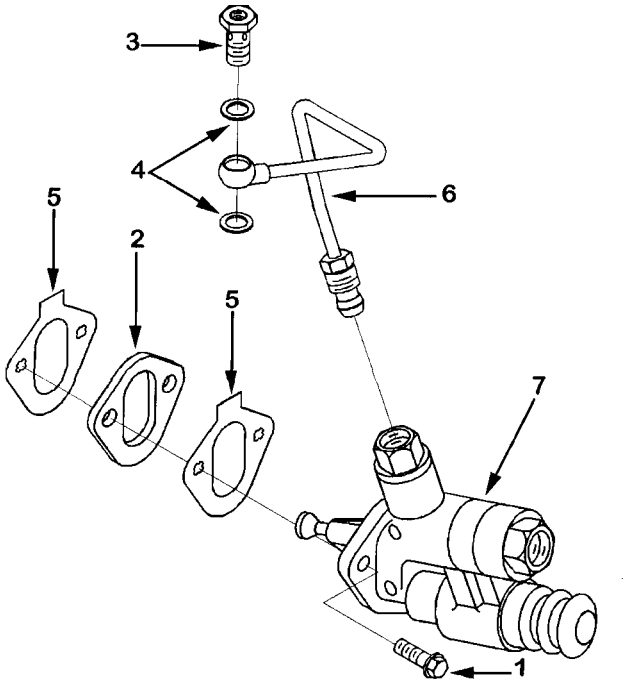

INDEX	PART NO.	DESCRIPTION	Q'TY	SERIAL NO.
1	6732-21-5160	Screw	2	30736312-
2	6732-71-6520	Spacer	1	30736312-
3	6736-71-5820	Screw	1	30736312-
4	07005-01212	Washer	2	30736312-
5	6731-71-6550	Gasket	2	30736312-
6	6735-71-5270	Tube	1	30736312-
7	6734-71-1720	Pump	1	30736312-

FIG. A5.21 BOSH INJECTION PUMP

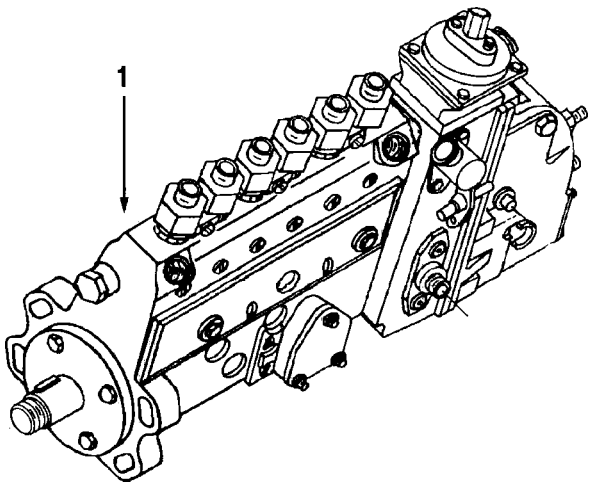

FIG. NO: A5.21

INDEX	PART NO.	DESCRIPTION	Q'TY	SERIAL NO.
1	6731-71-1340	PUMP	1	30736312-

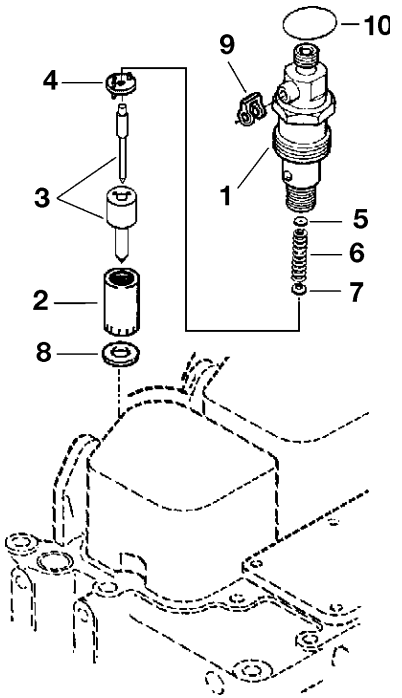

INDEX	PART NO.	DESCRIPTION	Q'TY	SERIAL NO.
	6733-11-3100	KIT, INJECTOR	6	30736312-
1	6735-11-3150	. INJECTOR	1	30736312-
2	6734-11-3140	. RETAINER	6	30736312-
3	6735-11-3160	. NOZZLE	6	30736312-
4	6734-11-3170	. DISC	6	30736312-
5	6734-11-3610	. SHIM	A/R	30736312-
5	6734-11-3620	. SHIM	A/R	30736312-
5	6734-11-3630	. SHIM	A/R	30736312-
5	6734-11-3640	. SHIM	A/R	30736312-
5	6734-11-3650	. SHIM	A/R	30736312-
5	6734-11-3660	. SHIM	A/R	30736312-
5	6734-11-3670	. SHIM	A/R	30736312-
5	6734-11-3680	. SHIM	A/R	30736312-
5	6734-11-3690	. SHIM	A/R	30736312-
5	6734-11-3710	. SHIM	A/R	30736312-
5	6734-11-3720	. SHIM	A/R	30736312-
5	6734-11-3730	. SHIM	A/R	30736312-
5	6734-11-3740	. SHIM	A/R	30736312-
5	6734-11-3750	. SHIM	A/R	30736312-
5	6734-11-3760	. SHIM	A/R	30736312-
5	6734-11-3770	. SHIM	A/R	30736312-
5	6734-11-3780	. SHIM	A/R	30736312-
5	6734-11-3790	. SHIM	A/R	30736312-
5	6734-11-3810	. SHIM	A/R	30736312-
5	6734-11-3820	. SHIM	A/R	30736312-
5	6734-11-3830	. SHIM	A/R	30736312-
5	6734-11-3840	. SHIM	A/R	30736312-
5	6734-11-3850	. SHIM	A/R	30736312-
5	6734-11-3860	. SHIM	A/R	30736312-
5	6734-11-3870	. SHIM	A/R	30736312-
5	6734-11-3880	. SHIM	A/R	30736312-
5	6734-11-3890	. SHIM	A/R	30736312-
5	6734-11-3910	. SHIM	A/R	30736312-
5	6734-11-3920	. SHIM	A/R	30736312-
5	6734-11-3930	. SHIM	A/R	30736312-
6	6734-11-3160	. SPRING	6	30736312-
7	6734-11-3180	. SPINDLE	6	30736312-
8	6736-11-3430	SEAL	1	30736312-
9	6732-71-6230	SEAL	1	30736312-
10	6732-11-3850	SEAL	1	30736312-

FIG. A6.03 FUEL PLUMBING

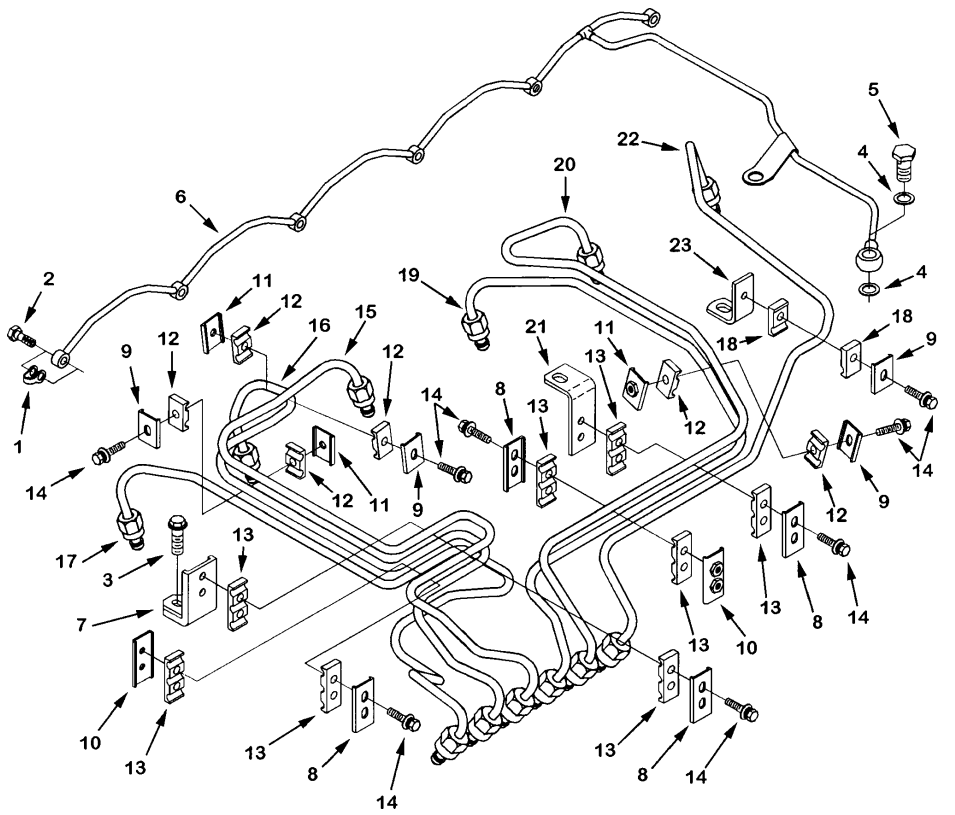

FIG. NO: A6.03

INDEX	PART NO.	DESCRIPTION	Q'TY	SERIAL NO.
1	6732-71-6230	SEAL	6	30736312-
2	6732-71-6240	SCREW	6	30736312-
3	6732-11-4160	SCREW	1	30736312-
4	07005-00812	WASHER	2	30736312-
5	6732-71-5690	VALVE	1	30736312-
6	6731-71-5650	MANIFOLD	1	30736312-
7	6735-71-5790	BRACE	1	30736312-
8	6734-71-5710	BRACE	4	30736312-
9	6735-71-5820	BRACE	4	30736312-
10	6735-71-5830	BRACE	2	30736312-
11	6735-71-5840	BRACE	3	30736312-
12	6735-71-5860	ISOLATOR	5	30736312-
13	6734-71-5720	ISOLATOR	8	30736312-
14	6734-71-5520	SCREW	12	30736312-
15	6735-71-5950	TUBE	1	30736312-
16	6735-71-5960	TUBE	1	30736312-
17	6735-71-5970	TUBE	1	30736312-
18	6735-72-5110	ISOLATOR	2	30736312-
19	6735-72-5120	TUBE	1	30736312-
20	6735-72-5130	TUBE	1	30736312-
21	6735-71-5990	BRACE	1	30736312-
22	6735-72-5140	TUBE	1	30736312-
23	6735-72-5150	BRACE	1	30736312-

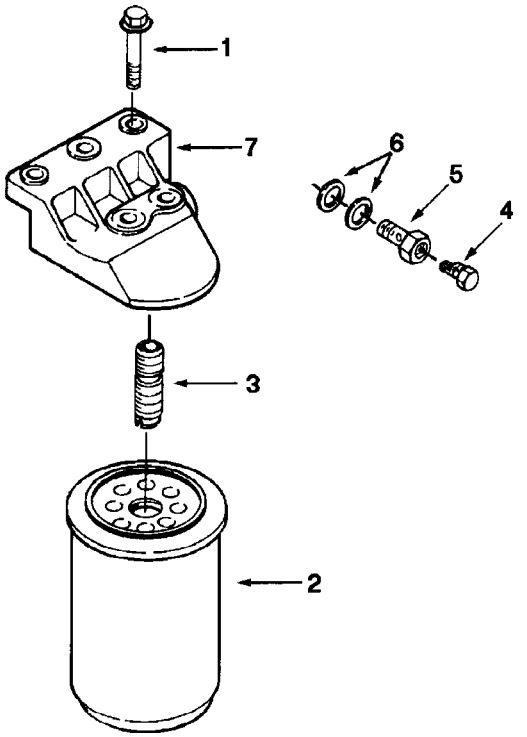

INDEX	PART NO.	DESCRIPTION	Q'TY	SERIAL NO.
1	6732-61-6140	SCREW	2	30736312-
2	6732-71-6320	FILTER	1	30736312-
3	124-01-55530	ADAPTER	1	30736312-
4	6735-71-6540	SCREW	1	30736312-
5	6735-71-6530	SCREW	1	30736312-
6	07005-01212	WASHER	2	30736312-
7	6735-71-6230	HEAD	1	30736312-

FIG. A6.04.1 FUEL FILTER PLUMBING

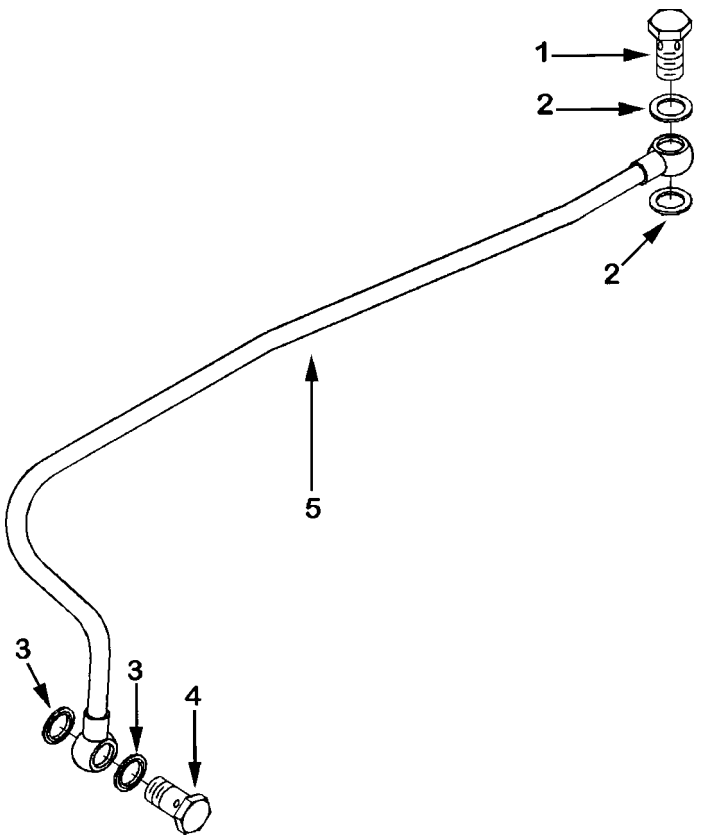

FIG. NO: A6.04.1

INDEX	PART NO.	DESCRIPTION	Q'TY	SERIAL NO.
1	6735-71-6510	SCREW	1	30736312-
2	6742-01-5157	WASHER	2	30736312-
3	6731-71-5881	WASHER	2	30736312-
4	6732-71-5620	SCREW	1	30736312-
5	6731-71-5920	TUBE	1	30736312-

FIG. A6.07 FUEL DRAIN LOCATION

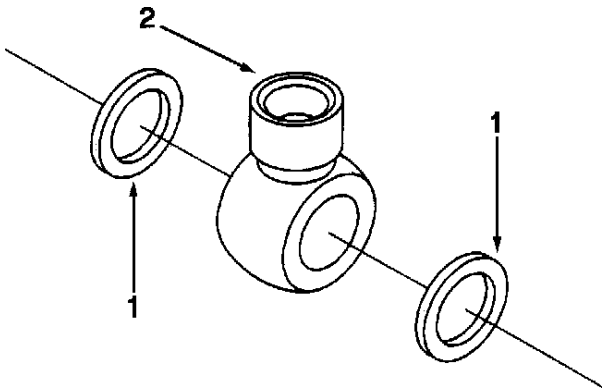

FIG. NO: A6.07

INDEX	PART NO.	DESCRIPTION	Q'TY	SERIAL NO.
1	07005-01412	WASHER	2	30736312-
2	6732-71-2170	CONNECTOR	1	30736312-

FIG. A7.01 OIL PAN MOUNTING

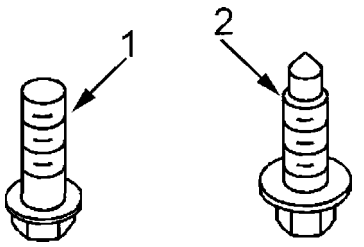

FIG. NO: A7.01

INDEX	PART NO.	DESCRIPTION	Q'TY	SERIAL NO.
1	6732-21-5160	SCREW	2	30736312-
2	6732-21-6610	SCREW	36	30736312-

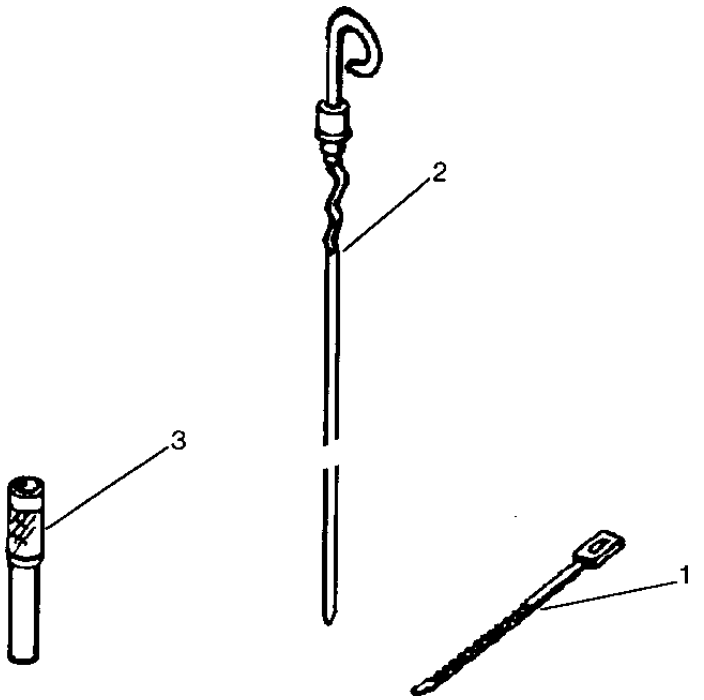

INDEX	PART NO.	DESCRIPTION	Q'TY	SERIAL NO.
1	6732-21-5520	CLAMP	1	30736312-
2	6732-21-5640	DIPSTICK	1	30736312-
3	6732-21-5490	TUBE	1	30736312-

FIG. A7.05 ENGINE OIL COOLER

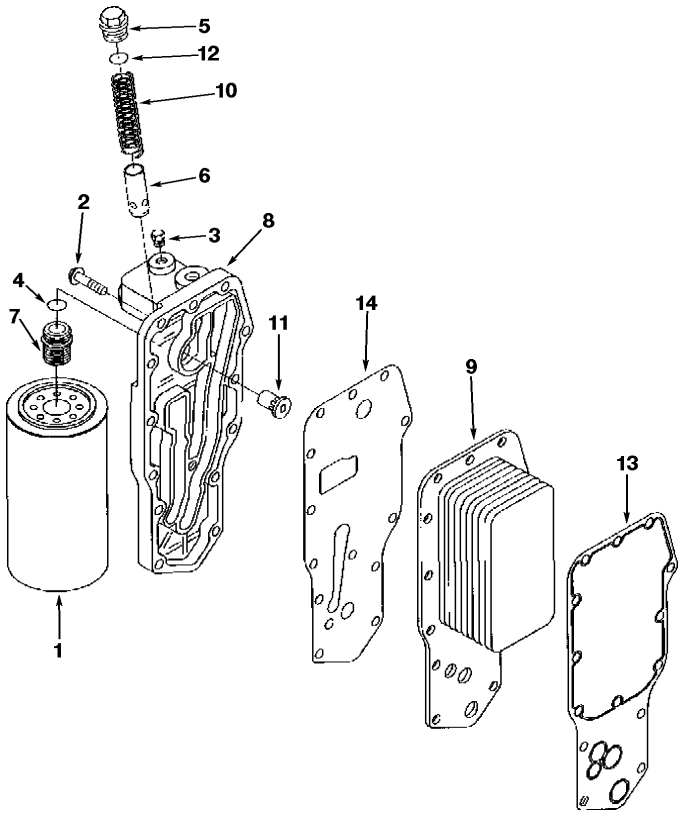

FIG. NO: A7.05

INDEX	PART NO.	DESCRIPTION	Q'TY	SERIAL NO.
1	6736-51-5140	ELEMENT	1	30736312-
2	6732-61-6140	SCREW	14	30736312-
3	6732-11-1930	PLUG	1	30736312-
4	6732-51-4420	SEAL	1	30736312-
5	6735-61-2140	PLUG	1	30736312-
6	6735-61-2160	PLUNGER	1	30736312-
7	6736-61-5180	ADAPTER	1	30736312-
8	6736-61-5170	HEAD	1	30736312-
9	6735-61-2110	CORE	1	30736312-
10	6735-61-2190	SPRING	1	30736312-
11	6731-61-2150	VALVE	1	30736312-
12	6735-61-2130	SEAL	1	30736312-
13	6732-61-2311	GASKET	1	30736312-
14	6732-51-4431	GASKET	1	30736312-

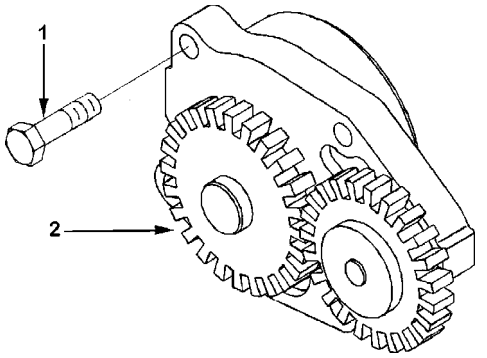

INDEX	PART NO.	DESCRIPTION	Q'TY	SERIAL NO.
1	6735-51-1120	SCREW	4	30736312-
2	6731-51-1110	PUMP	1	30736312-

FIG. A8.03 VIBRATION DAMPER

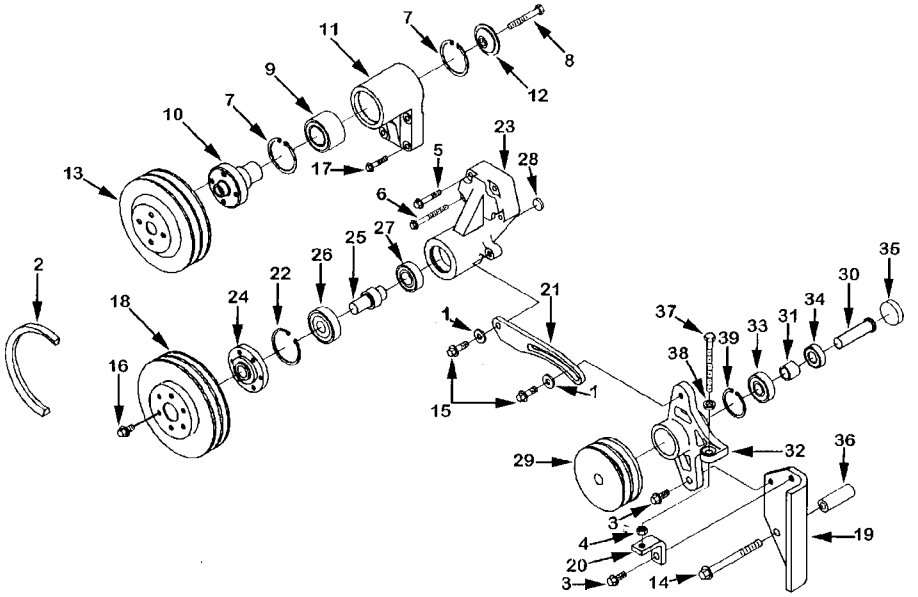

FIG. NO: A8.03

INDEX	PART NO.	DESCRIPTION	Q'TY	SERIAL NO.
1	6216-34-6270	WASHER	2	30736312-
2	6731-61-4240	BELT	2	30736312-
3	6731-61-4250	SCREW	2	30736312-
4	6731-61-4260	NUT	1	30736312-
5	6736-21-3210	SCREW	2	30736312-
6	6736-81-8730	SCREW	2	30736312-
	6732-61-3120	SUPPORT, FAN	1	30736312-
7	6732-61-3450	. RING	2	30736312-
8	6732-61-3440	. SCREW	1	30736312-
9	6732-61-3420	. BEARING	1	30736312-
10	6732-61-3410	. HUB	1	30736312-
11	6732-61-3340	. SUPPORT	1	30736312-
12	6732-61-3430	. RETAINER	1	30736312-
13	6732-61-3750	PULLEY	1	30736312-
14	6731-61-4270	SCREW	2	30736312-
15	6731-61-4280	SCREW	2	30736312-
16	6736-21-5310	SCREW	6	30736312-
17	6732-61-3170	SCREW	4	30736312-
18	6207-61-3280	PULLEY	1	30736312-
19	6735-81-6310	PLATE	1	30736312-
20	6222-83-6620	BRACKET	1	30736312-
21	6735-81-6410	BRACKET	1	30736312-
	6735-61-3300	SUPPORT	1	30736312-
22	6731-61-3310	. RING	1	30736312-
23	6735-61-3310	. SUPPORT	1	30736312-
24	6207-61-3330	. BOSS	1	30736312-
25	6735-61-3320	. SHAFT	1	30736312-
26	06000-06205	. BEARING	1	30736312-
27	06037-06305	. BEARING	1	30736312-
28	07046-22216	. COVER	1	30736312-
	6735-81-6200	SUPPORT	1	30736312-
29	6735-81-6220	. PULLEY	1	30736312-
30	6206-81-6240	. SHAFT	1	30736312-
31	6206-81-6250	. SPACER	1	30736312-
32	6735-81-6210	. SUPPORT	1	30736312-
33	6136-61-1340	. BEARING	1	30736312-
34	06000-06004	. BEARING	1	30736312-
35	07046-44516	. COVER	1	30736312-
39	6731-61-3320	. RING	1	30736312-
36	6211-11-9790	SPACER	2	30736312-
37	6151-81-4340	SCREW	1	30736312-
38	6204-11-3830	WASHER	1	30736312-

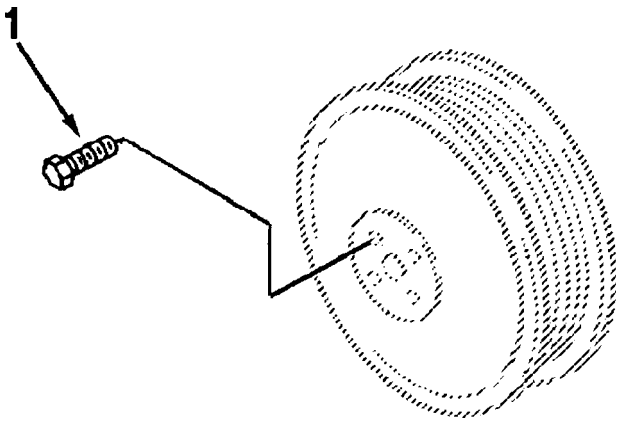

INDEX	PART NO.	DESCRIPTION	Q'TY	SERIAL NO.
1	6732-61-3140	SCREW	4	30736312-

FIG. A8.07 THERMOSTAT

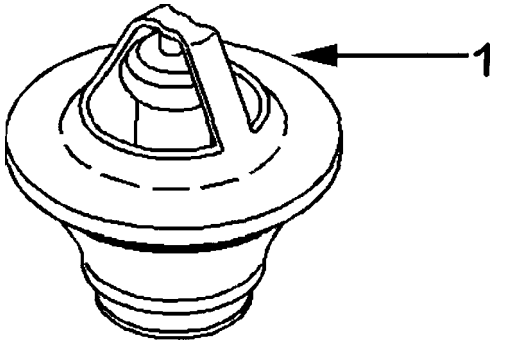

FIG. NO: A8.07

INDEX	PART NO.	DESCRIPTION	Q'TY	SERIAL NO.
1	6731-61-1610	THERMOSTAT	1	30736312-

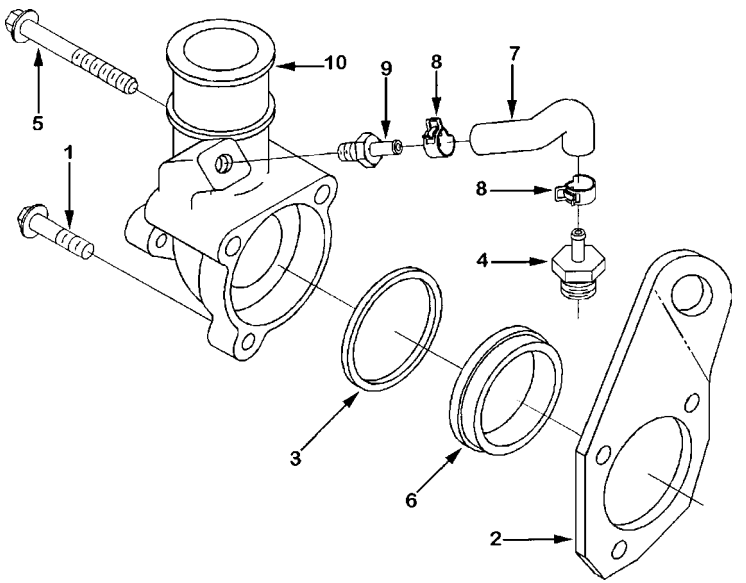

INDEX	PART NO.	DESCRIPTION	Q'TY	SERIAL NO.
1	6732-61-6140	SCREW	1	30736312-
2	6735-11-1910	BRACKET	1	30736312-
3	6732-61-6250	SEAL	1	30736312-
4	6732-61-6270	VALVE	1	30736312-
5	6732-61-6180	SCREW	2	30736312-
6	6732-61-6240	GASKET	1	30736312-
7	6732-61-6280	HOSE	1	30736312-
8	07285-00125	CLAMP	2	30736312-
9	6732-61-6171	COUPLING	1	30736312-
10	6732-61-6231	HOUSING	1	30736312-

FIG. A8.07.2 WATER INLET CONNECTION

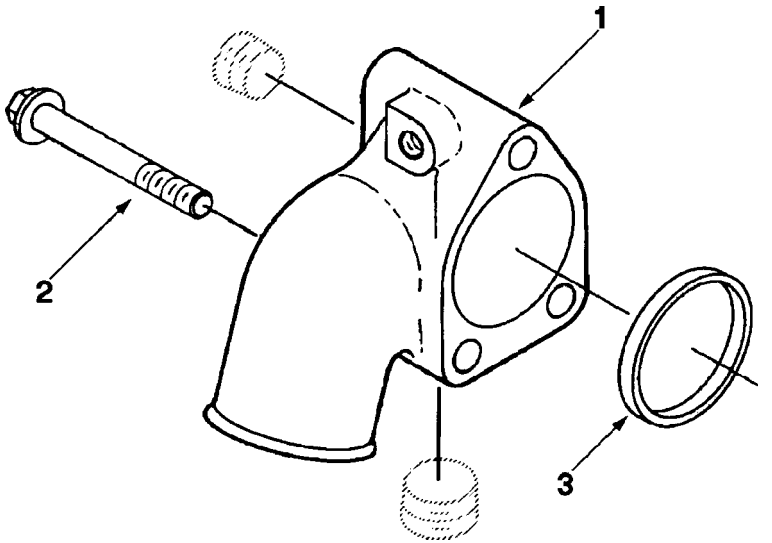

FIG. NO: A8.07.2

INDEX	PART NO.	DESCRIPTION	Q'TY	SERIAL NO.
1	6731-61-6260	CONNECTION	1	30736312-
2	6732-61-6120	SCREW	3	30736312-
3	6732-61-6130	SEAL	1	30736312-

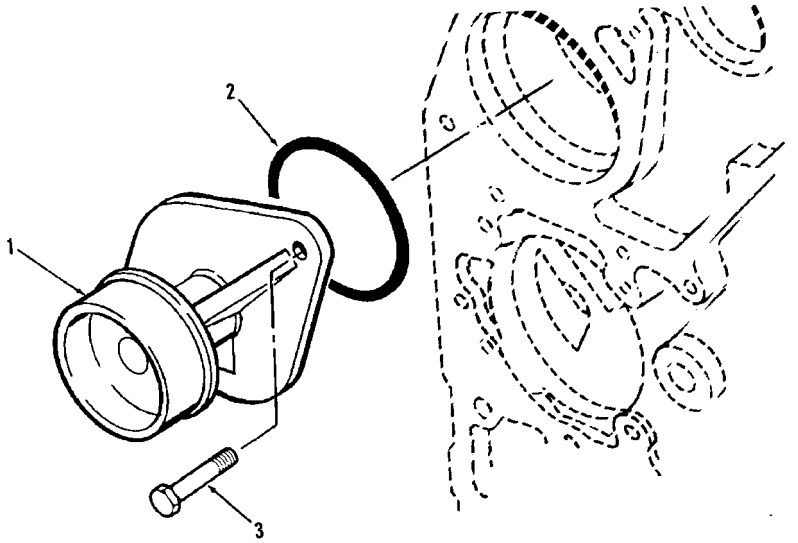

INDEX	PART NO.	DESCRIPTION	Q'TY	SERIAL NO.
	6736-61-1401	PUMP, WATER	1	30736312-
1	☆	. PUMP, WATER	1	30736312-
2	6732-61-1110	. SEAL	1	30736312-
3	6731-61-1370	SCREW	2	30736312-

FIG. A9.01 FUEL PUMP COUPLING

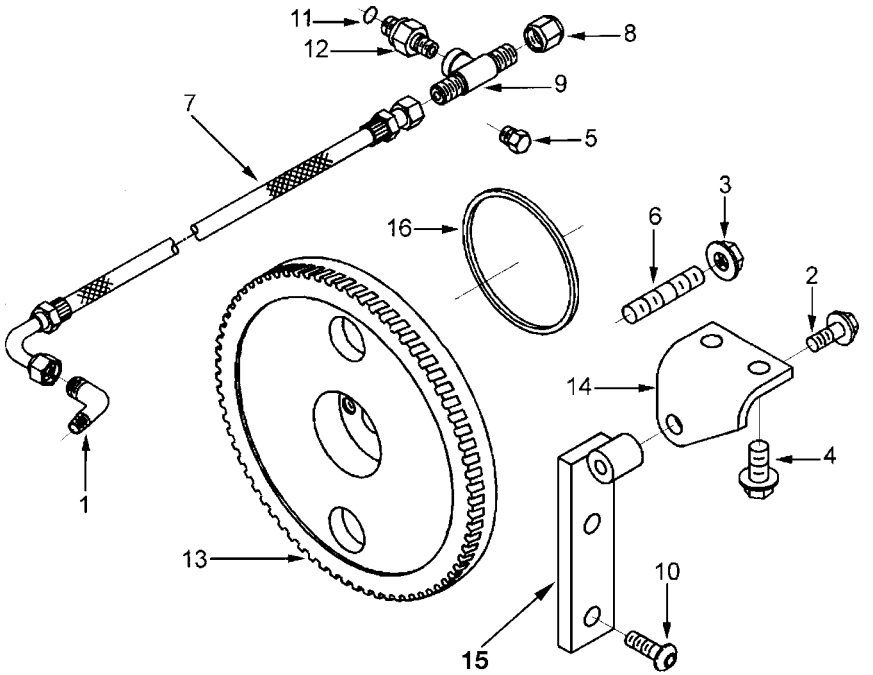

FIG. NO: A9.01

INDEX	PART NO.	DESCRIPTION	Q'TY	SERIAL NO.
1	6742-01-2350	ELBOW	1	30736312-
2	6732-71-3220	SCREW	1	30736312-
3	6736-81-6170	NUT	4	30736312-
4	6732-61-3140	SCREW	2	30736312-
5	6732-11-1930	PLUG	1	30736312-
6	6735-71-5220	STUD	4	30736312-
7	6733-71-5520	HOSE	1	30736312-
8	6735-71-5240	CAP	1	30736312-
9	6734-71-5550	TEE	1	30736312-
10	6735-71-3110	SCREW	2	30736312-
	6731-71-5560	CONNECTOR	1	30736312-
11	124-01-55540	. SEAL	1	30736312-
12	☆	. CONNECTOR	1	30736312-
13	6731-71-3111	GEAR	1	30736312-
14	6731-71-3350	BRACE	1	30736312-
15	6734-71-6550	BRACE	1	30736312-
16	6731-21-3250	SEAL	1	30736312-

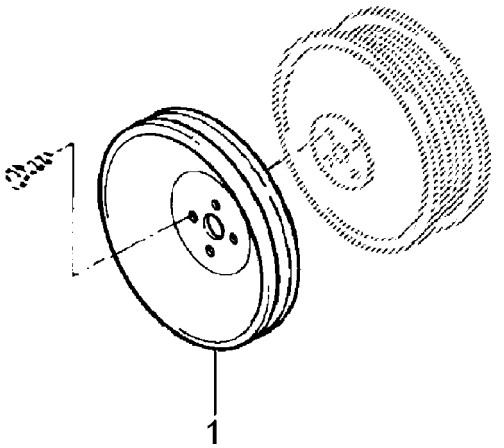

INDEX	PART NO.	DESCRIPTION	Q'TY	SERIAL NO.
1	6732-81-2810	PULLEY, ACCESSORY DRIVE	1	30736312-

FIG. A9.04 FRONT GEAR TRAIN ACCESSORY

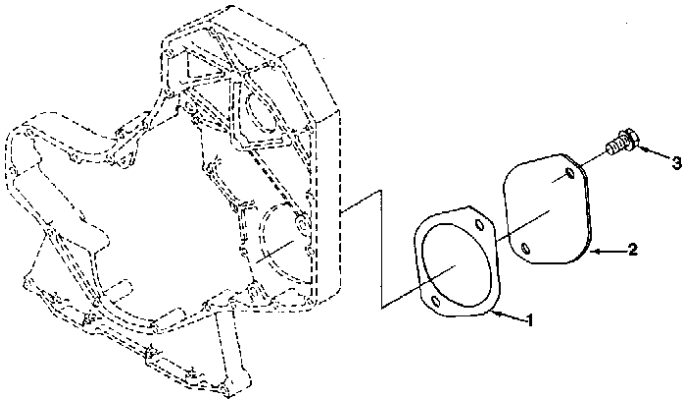

FIG. NO: A9.04

INDEX	PART NO.	DESCRIPTION	Q'TY	SERIAL NO.
1	6732-21-3380	GASKET, ACC DRIVE COVER	1	30736312-
2	6732-21-9310	PLATE, COVER	1	30736312-
3	6732-51-5130	SCREW	2	30736312-

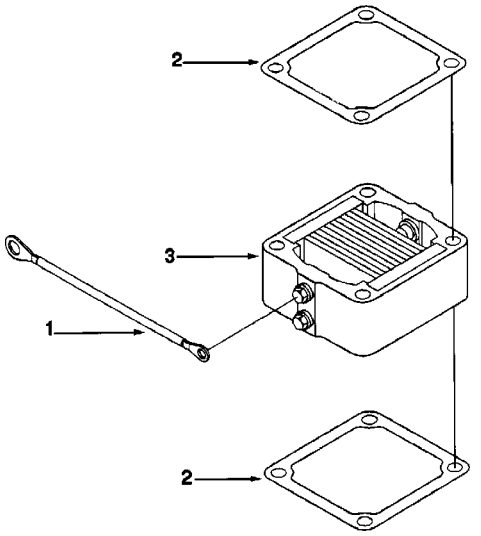

INDEX	PART NO.	DESCRIPTION	Q'TY	SERIAL NO.
1	6732-81-4610	HARNESS, WIRING	1	30736312-
2	6732-11-4811	GASKET, CONNECTION	1	30736312-
3	6732-81-5120	HEATER, ENGINE	1	30736312-
	6732-81-4620	TAG, INSTRUCTION	1	30736312-

FIG. A10.06 TURBOCHARGER

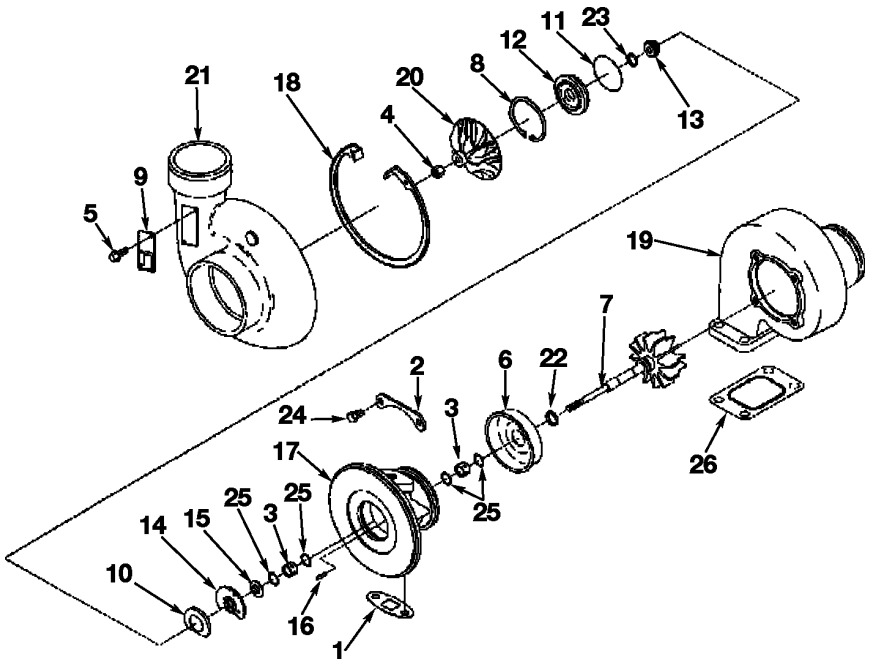

FIG. NO: A10.06

INDEX	PART NO.	DESCRIPTION	Q'TY	SERIAL NO.
1	6736-51-8720	GASKET	1	30736312-
	6735-81-8180	TURBOCHARGER	1	30736312-
	☆	. TURBOCHARGER	1	30736312-
2	6736-81-8390	. PLATE	2	30736312-
3	6736-81-8370	. BEARING	2	30736312-
4	6736-81-8250	. NUT	1	30736312-
5	6736-81-8480	. SCREW	2	30736312-
6	6736-81-8430	. SHIELD	1	30736312-
7	6736-81-8280	. SHAFT & WHEEL	1	30736312-
8	6733-81-8360	. RING	1	30736312-
9	6736-81-8470	. DATAPLATE	1	30736312-
10	6733-81-8330	. BAFFLE	1	30736312-
11	6733-81-8460	. SEAL	1	30736312-
12	6733-81-8270	. PLATE	1	30736312-
13	6733-81-8260	. SLINGER	1	30736312-
14	6735-81-8610	. BEARING	1	30736312-
15	6735-81-8620	. COLLAR	1	30736312-
16	6733-81-8480	. PIN	1	30736312-
17	6735-81-8470	. HOUSING	1	30736312-
18	6735-81-8310	. RING	1	30736312-
19	6735-81-8530	. HOUSING	1	30736312-
20	6735-81-8540	. IMPELLER	1	30736312-
21	6735-81-8270	. HOUSING	1	30736312-
22	6736-81-8440	. SEAL	1	30736312-
23	6736-81-8320	. SEAL	1	30736312-
24	6736-81-8380	. SCREW	4	30736312-
25	6736-81-8360	. RING	4	30736312-
26	6736-11-5710	. GASKET	1	30736312-

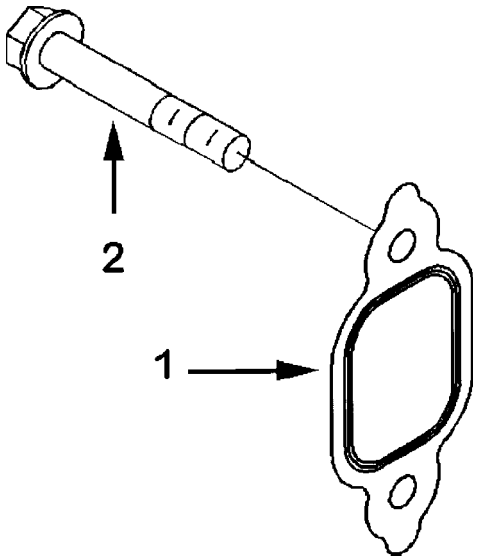

INDEX	PART NO.	DESCRIPTION	Q'TY	SERIAL NO.
1	6736-11-5810	GASKET, EXHAUST MANIFOLD	6	30736312-
2	6735-11-4150	SCREW	12	30736312-

FIG. A10.06.2 EXHAUST MANIFOLD

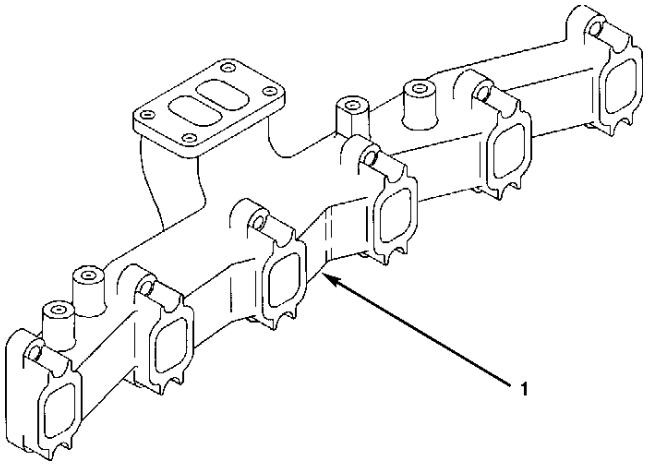

FIG. NO: A10.06.2

INDEX	PART NO.	DESCRIPTION	Q'TY	SERIAL NO.
1	6735-11-5110	MANIFOLD, EXHAUST	1	30736312-

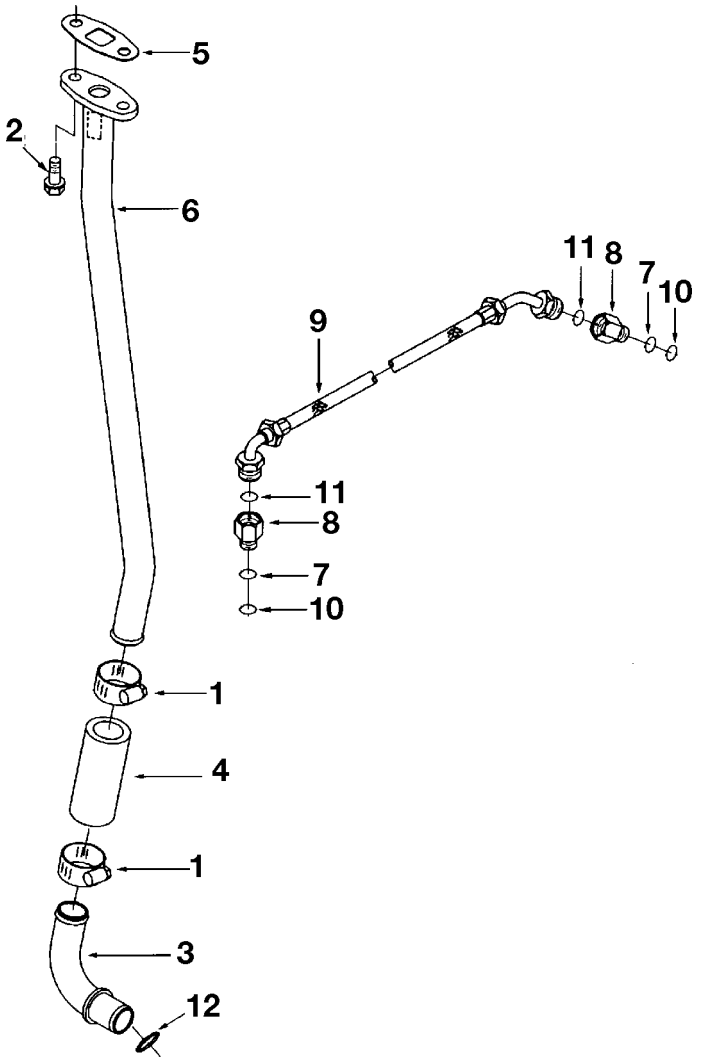

INDEX	PART NO.	DESCRIPTION	Q'TY	SERIAL NO.
1	6731-81-8320	CLAMP	2	30736312-
2	6732-71-3220	SCREW	2	30736312-
3	6731-51-8170	TUBE	1	30736312-
4	6731-51-8220	HOSE	1	30736312-
5	6732-51-8150	GASKET	1	30736312-
6	6732-51-8170	CONNECTION	1	30736312-
	6736-51-8140	CONNECTOR	2	30736312-
7	6736-51-8710	. SEAL	1	30736312-
8	6735-51-8270	. CONNECTOR	1	30736312-
9	6736-51-8130	HOSE	1	30736312-
10	6736-51-8730	WASHER	2	30736312-
11	6732-51-8330	SEAL	2	30736312-
12	6731-51-8150	SEAL	1	30736312-

FIG. A11.01.1 EXHAUST CONNECTION

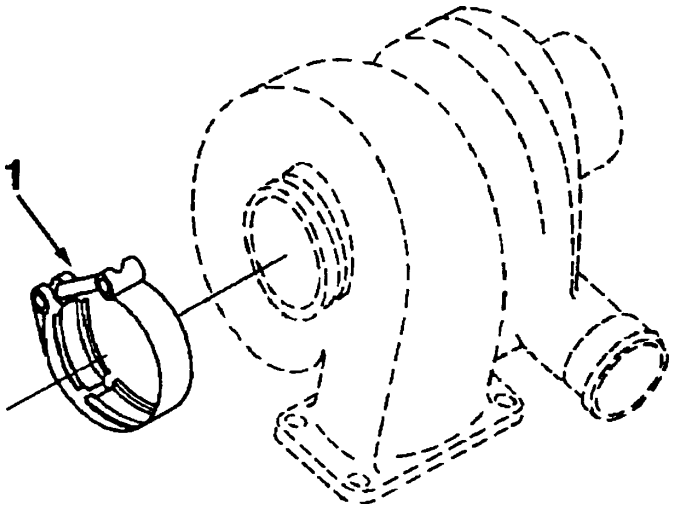

FIG. NO: A11.01.1

INDEX	PART NO.	DESCRIPTION	Q'TY	SERIAL NO.
1	6732-81-8220	CLAMP	1	30736312-

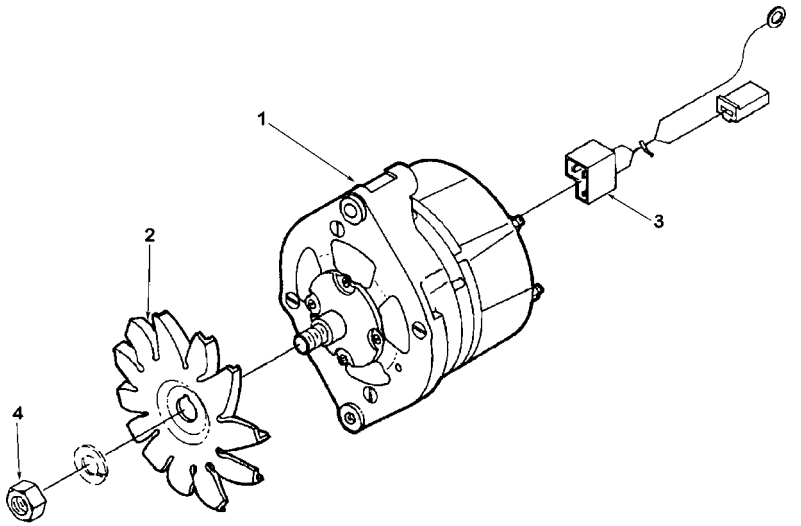

INDEX	PART NO.	DESCRIPTION	Q'TY	SERIAL NO.
1	6735-81-6110	ALTERNATOR	1	30736312-
2	124-01-55380	FAN, ALTERNATOR	1	30736312-
3	124-01-55470	HARNESS	1	30736312-
4	6735-71-3240	NUT	1	30736312-

FIG. A13.02.1 ALTERNATOR - 24V - 40A - INNER PARTS

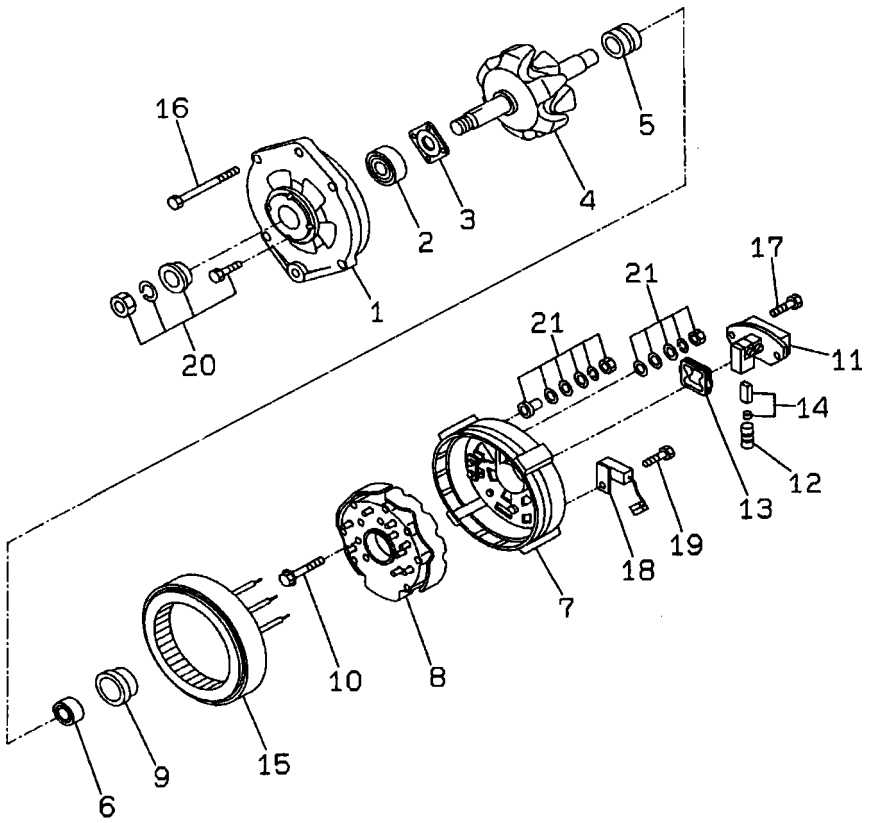

PFP0341

FIG. NO: A13.02.1

INDEX	PART NO.	DESCRIPTION	Q'TY	SERIAL NO.
	6735-81-6110	ALTERNATOR A. (40A)	1	30736312-
1	20Y-01-K1510	. COVER	1	30736312-
2	20Y-01-K1520	. BEARING	1	30736312-
3	20Y-01-K1530	. PLATE	1	30736312-
4	20Y-01-K1540	. ROTOR ASS'Y	1	30736312-
5	20Y-01-K1550	. COLLAR	1	30736312-
6	20Y-01-K1560	. BEARING, BALL	1	30736312-
7	20Y-01-K1570	. COVER	1	30736312-
8	20Y-01-K1580	. RECTIFIER	1	30736312-
9	20Y-01-K1590	. GUARD	1	30736312-
10	20Y-01-K1610	. SCREW	1	30736312-
11	20Y-01-K1620	. REGULATOR	1	30736312-
12	20Y-01-K1630	. SPRING	1	30736312-
13	20Y-01-K1640	. GASKET	1	30736312-
14	20Y-01-K1650	. BRUSH ASS'Y	1	30736312-
15	20Y-01-K1660	. STATOR	1	30736312-
16	20Y-01-K1670	. SCREW	1	30736312-
17	20Y-01-K1680	. SCREW	1	30736312-
18	20Y-01-K1690	. SUPPRESSOR	1	30736312-
19	20Y-01-K1710	. SCREW	1	30736312-
20	20Y-01-K1720	. ARMATURE ASS'Y	1	30736312-
21	20Y-01-K1730	. TERMINAL ASS'Y	1	30736312-

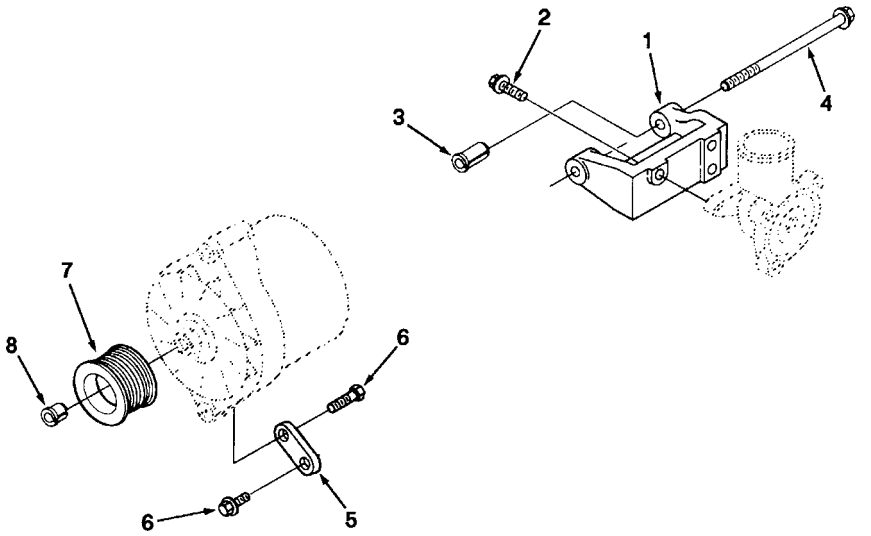

INDEX	PART NO.	DESCRIPTION	Q'TY	SERIAL NO.
1	124-01-55480	SUPPORT, ALTERNATOR	1	30736312-
2	6732-21-5160	SCREW	3	30736312-
3	124-01-55450	SPACER	1	30736312-
4	6734-21-8610	SCREW	1	30736312-
5	124-01-55360	BRACE	1	30736312-
6	6732-71-3220	SCREW	2	30736312-
7	124-01-55430	PULLEY	1	30736312-
8	124-01-55440	RETAINER	1	30736312-

FIG. A13.02.3 TENSION PULLEY

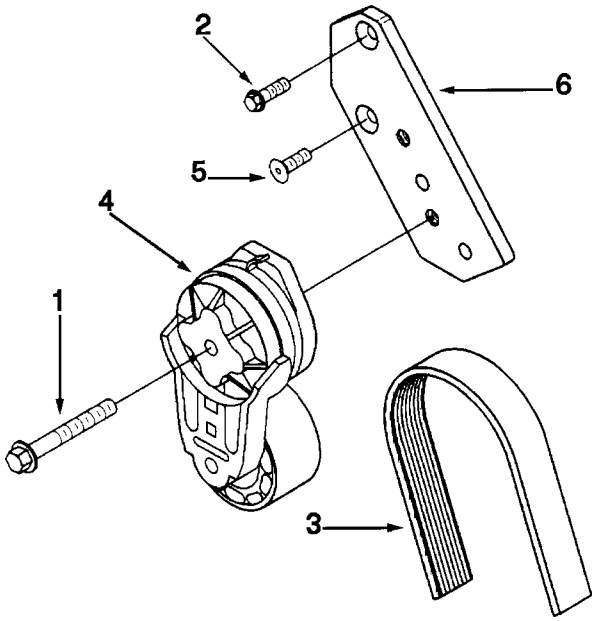

FIG. NO: A13.02.3

INDEX	PART NO.	DESCRIPTION	Q'TY	SERIAL NO.
1	6736-81-6190	SCREW	1	30736312-
2	6732-21-5160	SCREW	1	30736312-
3	6732-81-3430	BELT, V RIBBED	1	30736312-
4	6731-61-4520	TENSIONER	1	30736312-
5	6732-61-4220	SCREW	1	30736312-
6	124-01-55490	BRACKET	1	30736312-

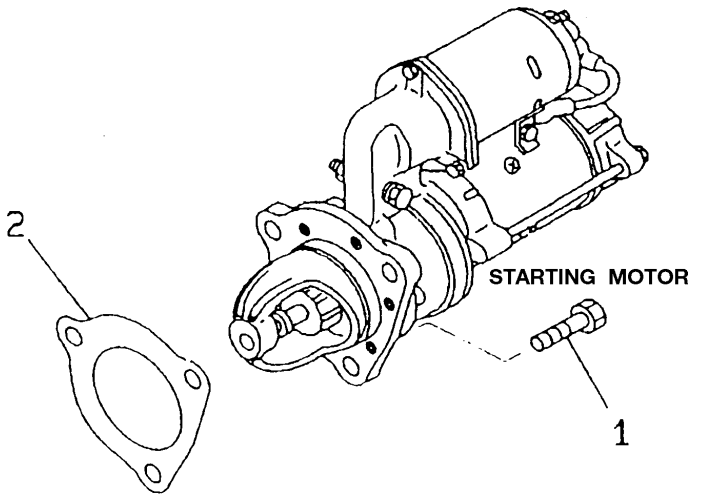

INDEX	PART NO.	DESCRIPTION	Q'TY	SERIAL NO.
1	6732-81-6820	BOLT	3	30736312-
2	6735-81-6180	GASKET, STARTER	1	30736312-

FIG. A15.01 TEMPERATURE SENSOR

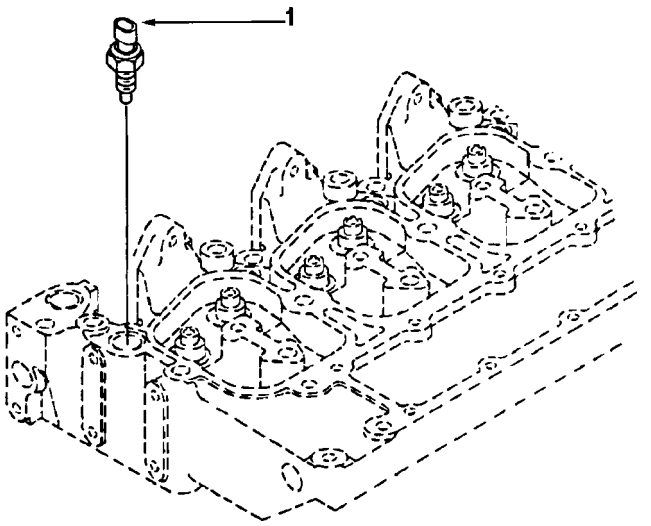

FIG. NO: A15.01

INDEX	PART NO.	DESCRIPTION	Q'TY	SERIAL NO.
1	6732-81-3120	SENSOR	1	30736312-

FIG. A15.01.1 OIL PRESSURE SENSOR

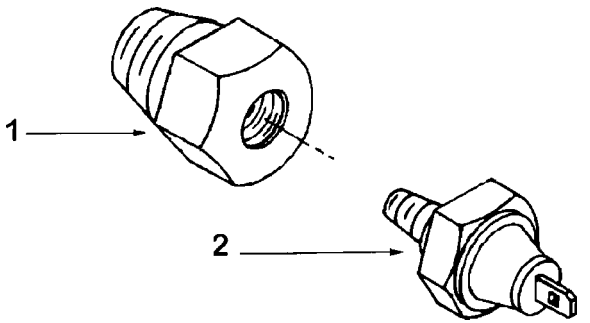

FIG. NO: A15.01.1

INDEX	PART NO.	DESCRIPTION	Q'TY	SERIAL NO.
1	6732-81-3190	CONNECTOR	1	30736312-
2	6732-81-3110	SWITCH	1	30736312-

FIG. A15.01.2 FLUID LEVEL SENSOR

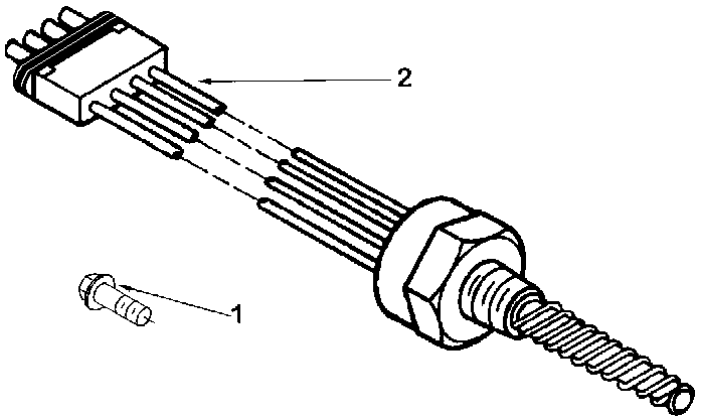

FIG. NO: A15.01.2

INDEX	PART NO.	DESCRIPTION	Q'TY	SERIAL NO.
1	6733-71-5680	SCREW	3	30736312-
2	7861-92-4210	SENSOR	1	30736312-

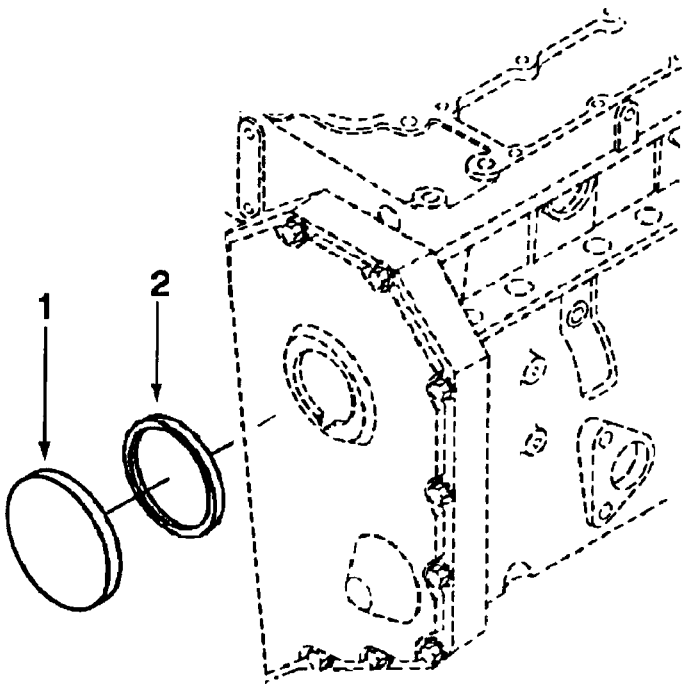

INDEX	PART NO.	DESCRIPTION	Q'TY	SERIAL NO.
1	6732-21-3190	COVER	1	30736312-
2	6732-21-3220	SEAL	1	30736312-

FIG. A16.01 FLYWHEEL HOUSING

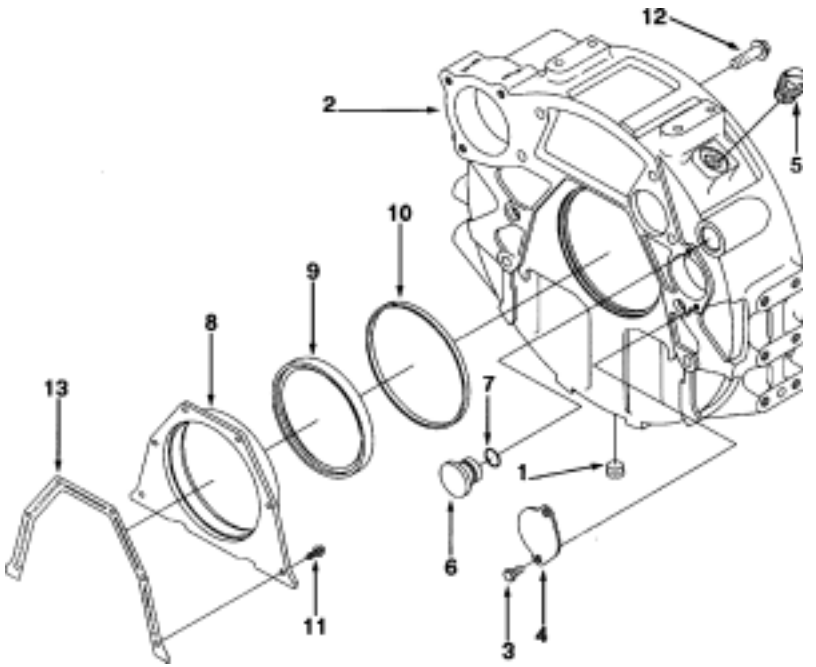

FIG. NO: A16.01

INDEX	PART NO.	DESCRIPTION	Q'TY	SERIAL NO.
1	6732-11-1910	PLUG	1	30736312-
2	6732-21-4111	HOUSING	1	30736312-
3	6732-21-4120	SCREW	2	30736312-
4	6732-21-4130	PLATE	1	30736312-
5	6735-21-4270	PLUG	1	30736312-
6	6732-21-4150	PLUG	1	30736312-
7	6732-21-4160	SEAL	1	30736312-
	6735-K2-3000	REAR,CRANK SEAR SERV.KIT	1	30736312-
8	6732-21-4200	. COVER	1	30736312-
9	6732-21-4260	. SEAL	1	30736312-
10	6732-21-4170	SEAL	1	30736312-
11	6732-21-4180	SCREW	6	30736312-
12	6732-21-4220	SCREW	8	30736312-
13	6735-21-4190	GASKET	1	30736312-

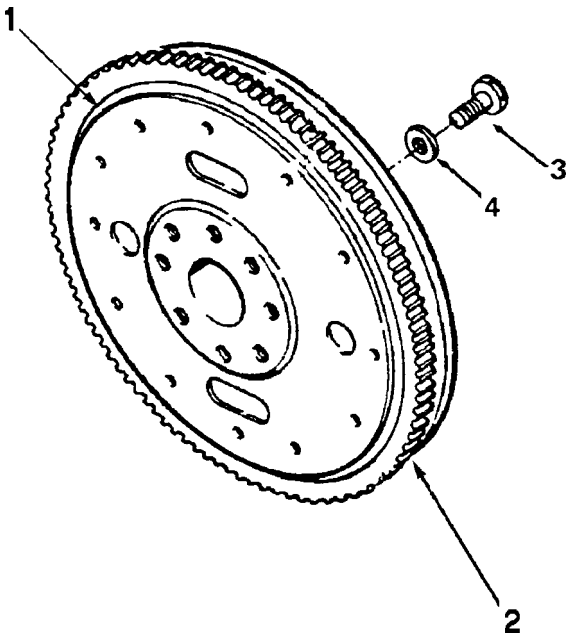

INDEX	PART NO.	DESCRIPTION	Q'TY	SERIAL NO.
	6732-31-4100	FLYWHEEL	1	30736312-
1	6732-31-4110	. FLYWHEEL	1	30736312-
2	6732-31-4180	. GEAR, RING	1	30736312-
3	6732-31-4130	SCREW	8	30736312-
4	6732-31-4120	WASHER	8	30736312-

FIG. A17.06 LIFTING BRACKET

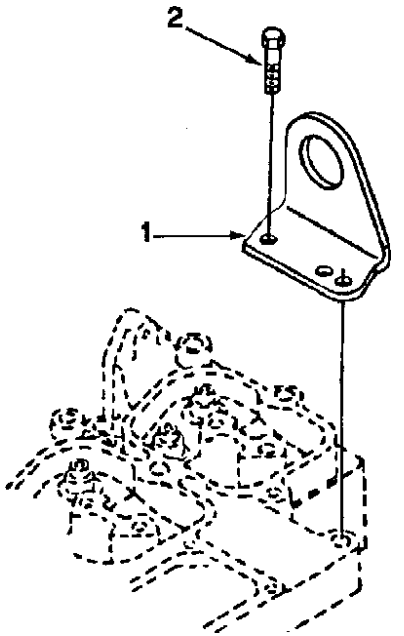

FIG. NO: A17.06

INDEX	PART NO.	DESCRIPTION	Q'TY	SERIAL NO.
1	6736-11-1910	BRACKET	1	30736312-
2	6732-11-1720	SCREW	2	30736312-

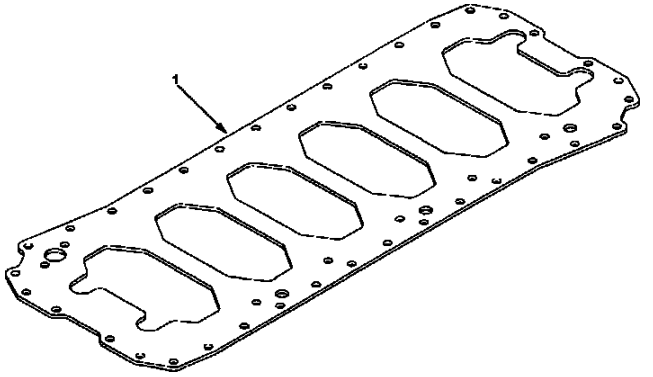

INDEX	PART NO.	DESCRIPTION	Q'TY	SERIAL NO.
1	6735-21-5151	PLATE	1	30736312-

ENGINE RELATED PARTS

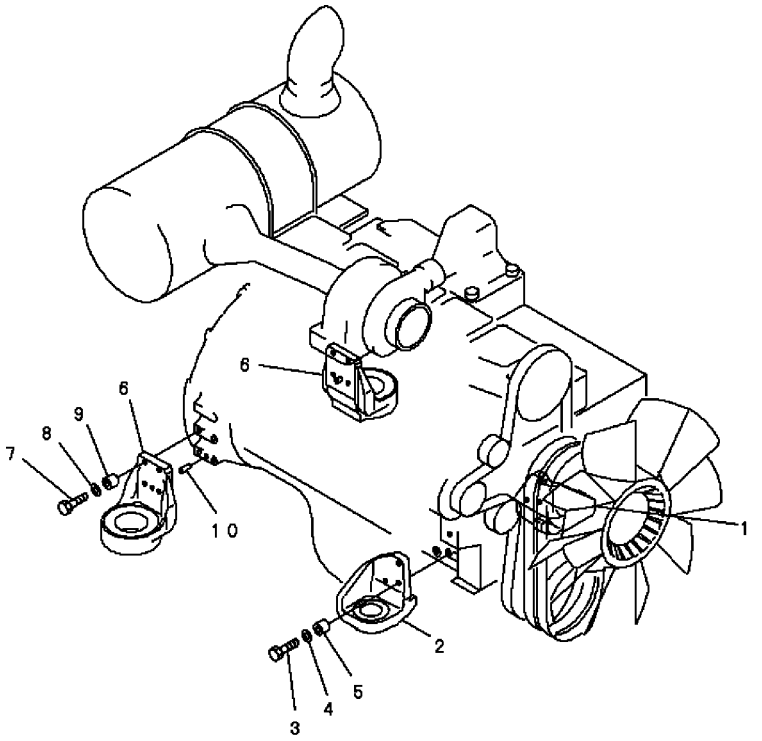

PDB5134

INDEX	PART NO.	DESCRIPTION	Q'TY	SERIAL NO. PC200-6B	SERIAL NO. PC200LC-6B
1	20Y-01-29231	BRACKET, L.H.	1	B10001-	B20001-
2	20Y-01-29241	BRACKET, R.H.	1	B10001-	B20001-
3	01010-81265	BOLT	6	B10001-	B20001-
4	01643-31232	WASHER	6	B10001-	B20001-
5	20Y-01-21260	BOSS	6	B10001-	B20001-
6	20Y-01-22120	BRACKET	2	B10001-	B20001-
7	01010-81265	BOLT	8	B10001-	B20001-
8	01643-31232	WASHER	8	B10001-	B20001-
9	20Y-01-21260	BOSS	8	B10001-	B20001-
10	04020-01228	PIN	1	B10001-	B20001-

FIG. B0100–01A0A ENGINE MOUNT

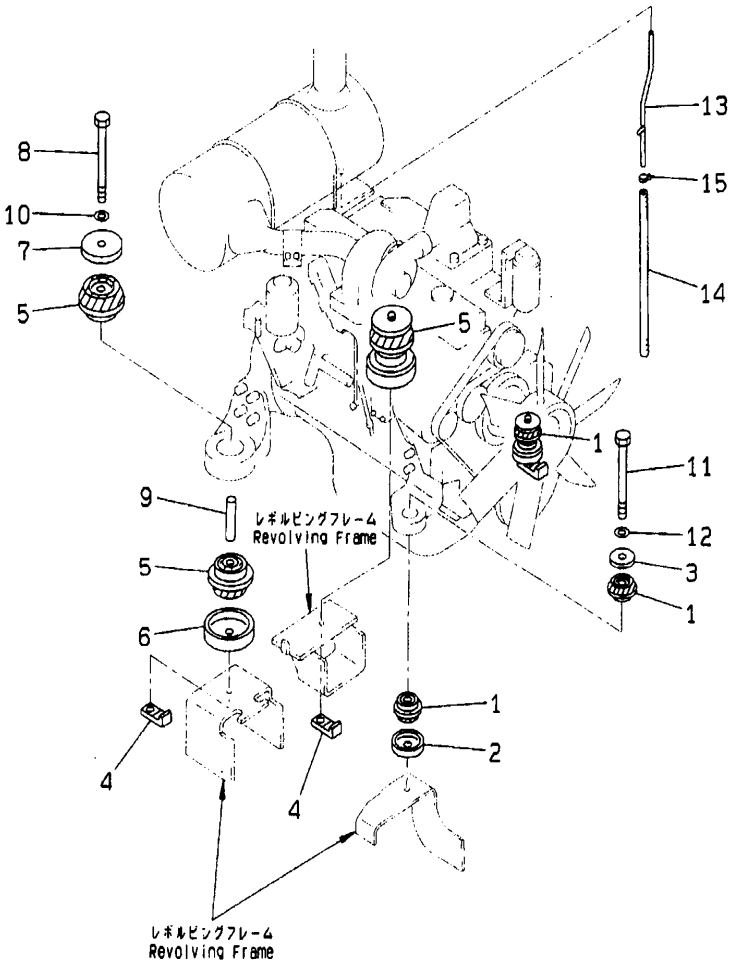

FIG. NO: B0100–01A0A

INDEX	PART NO.	DESCRIPTION	Q'TY	SERIAL NO. PC200-6B	SERIAL NO. PC200LC-6B
1	20Y-01-12210	CUSHION	4	B10001-	B20001-
2	20Y-01-12141	STOPPER	2	B10001-	B20001-
3	20Y-01-11141	WASHER	2	B10001-	B20001-
4	20Y-01-22111	NUT	2	B10001-	B20001-
5	20Y-01-12221	CUSHION	4	B10001-	B20001-
6	20Y-01-12160	STOPPER	2	B10001-	B20001-
7	20Y-01-12180	WASHER	2	B10001-	B20001-
8	20Y-01-12280	BOLT	2	B10001-	B20001-
9	20Y-01-12250	SPACER	2	B10001-	B20001-
10	01643-31645	WASHER	2	B10001-	B20001-
11	20Y-01-12270	BOLT	2	B10001-	B20001-
12	01643-31645	WASHER	2	B10001-	B20001-
13	6209-11-5480	TUBE	1	B10001-	B20001-
14	07260-20950	HOSE	1	B10001-	B20001-
15	07285-00155	CLIP	1	B10001-	B20001-

FIG. B0200–01A1C AIR CLEANER CONNECTION (FOR DOUBLE ELEMENT)

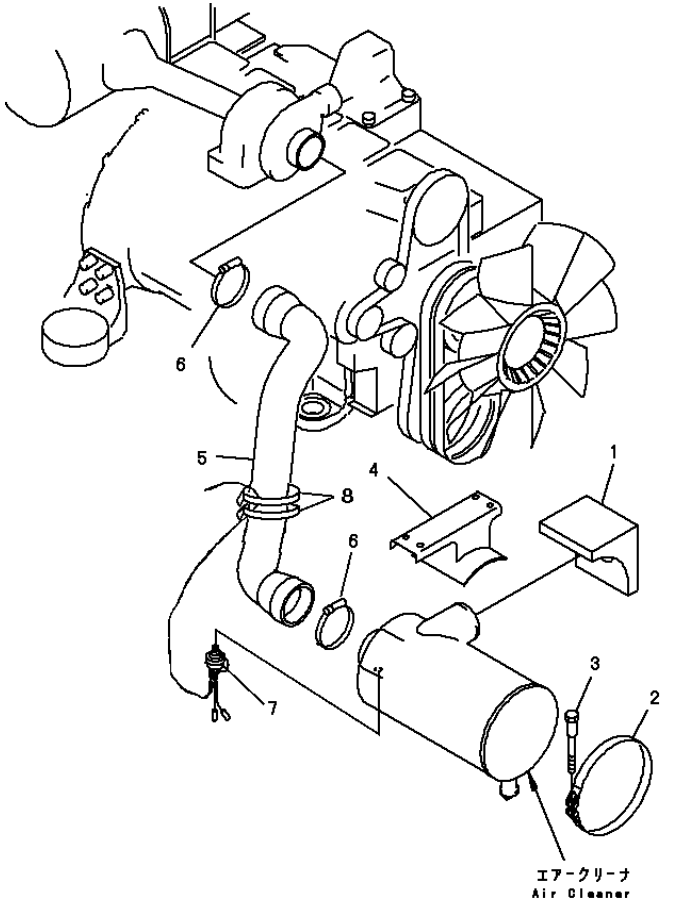

PDB5136

FIG. NO: B0200–01A1C

INDEX	PART NO.	DESCRIPTION	Q'TY	SERIAL NO. PC200-6B	SERIAL NO. PC200LC-6B
1	20Y-54-27551	SEAL	1	B10001-	B20001-
2	6131-11-4520	BAND ASS'Y	2	B10001-	B20001-
3	6643-11-4641	BOLT	2	B10001-	B20001-
4	20Y-54-29194	FRAME	1	B10001-	B20001-
5	20Y-01-29210	HOSE	1	B10001-	B20001-
6	07289-00120	CLAMP	2	B10001-	B20001-
7	7861-91-1420	SENSOR	1	B10001-	B20001-
8	08034-00834	BAND	2	B10001-	B20001-

FIG. B0300–01A0A MUFFLER

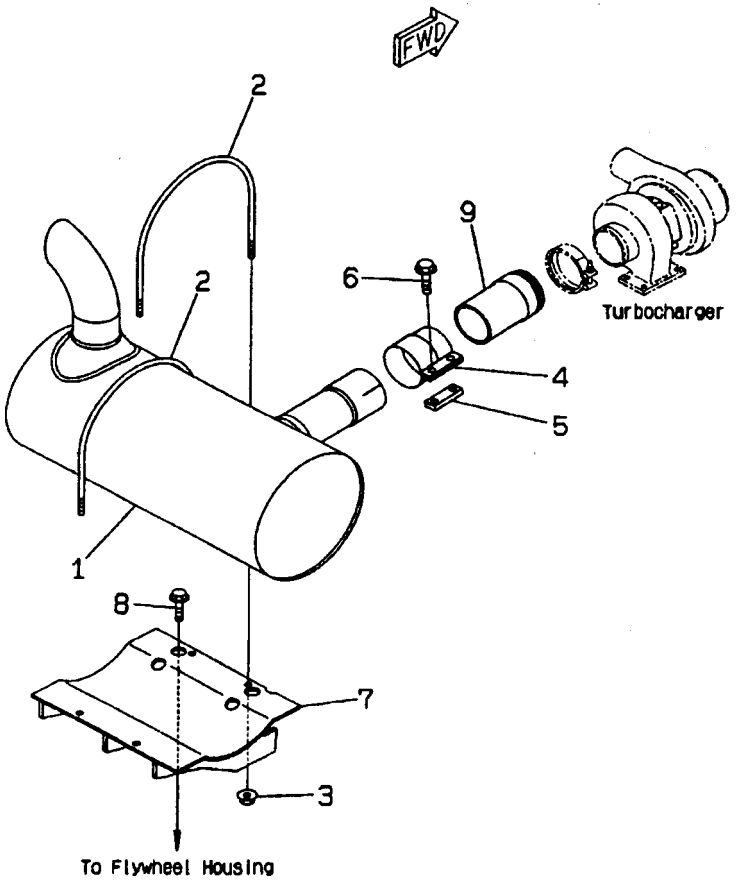

FIG. NO: B0300–01A0A

INDEX	PART NO.	DESCRIPTION	Q'TY	SERIAL NO. PC200-6B	SERIAL NO. PC200LC-6B
1	206-01-68220	MUFFLER	1	B10013-	B20001-
	6735-11-5530	MUFFLER	1	B10001-B10012	
2	6222-11-5940	U-BOLT	2	B10001-	B20001-
3	01594-01008	NUT	4	B10001-	B20001-
4	6210-11-5232	CLAMP	1	B10001-	B20001-
5	6206-11-5850	PLATE	1	B10001-	B20001-
6	01435-01235	BOLT	2	B10001-	B20001-
7	20Y-01-22230	BRACKET	1	B10001-	B20001-
8	01435-01025	BOLT	4	B10001-	B20001-
9	6735-11-5610	TUBE	1	B10001-	B20001-

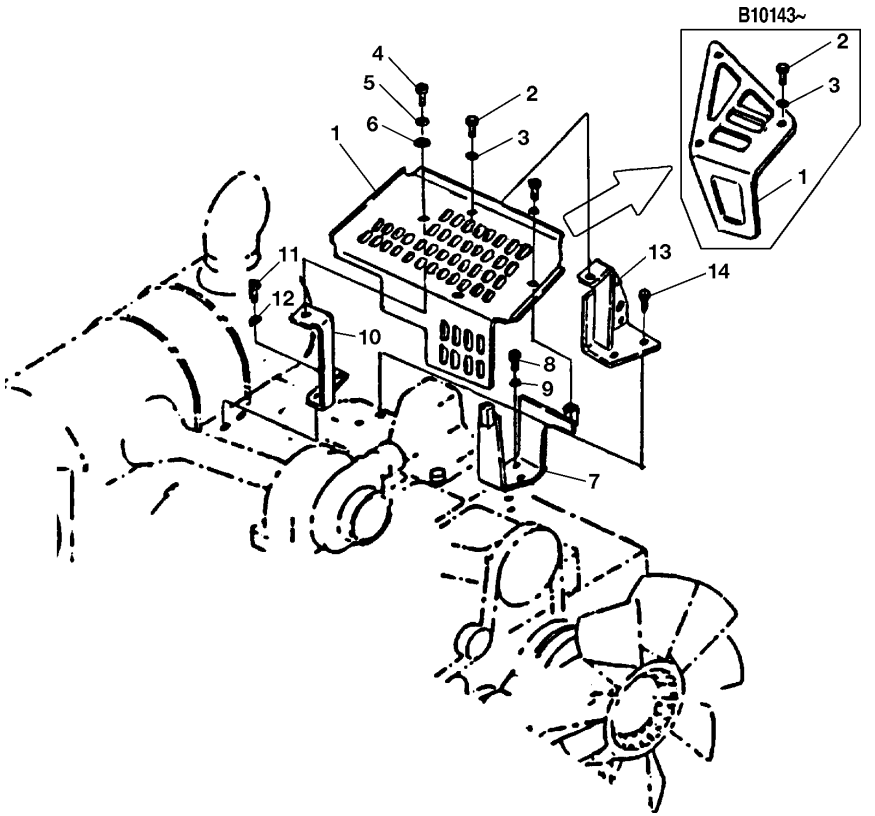

INDEX	PART NO.	DESCRIPTION	Q'TY	SERIAL NO. PC200-6B	SERIAL NO. PC200LC-6B
1	20Y-01-B1160	PLATE	1	B10143-	B20001-
	20Y-01-22220	PLATE	1	B10001-B10142	
2	01010-81035	BOLT	3	B10001-	B20001-
3	01643-31032	WASHER	3	B10001-	B20001-
4	01010-81040	BOLT	1	B10001-B10142	
5	01643-31032	WASHER	1	B10001-B10142	
6	203-54-56960	COLLAR	1	B10001-B10142	
7	20Y-01-B1140	BRACKET	1	B10052-	B20001-
	20Y-01-22150	BRACKET	1	B10001-B10051	
8	01010-81030	BOLT	2	B10001-	B20001-
9	01643-31032	WASHER	2	B10001-	B20001-
10	20Y-01-22190	BRACKET	1	B10001-B10142	
11	01010-81040	BOLT	2	B10001-B10142	
12	01643-31032	WASHER	2	B10001-B10142	
13	20Y-01-22210	BRACKET	1	B10001-	B20001-
14	01435-21255	BOLT	2	B10001-	B20001-

FIG. B0400–01A0A FUEL CONTROL

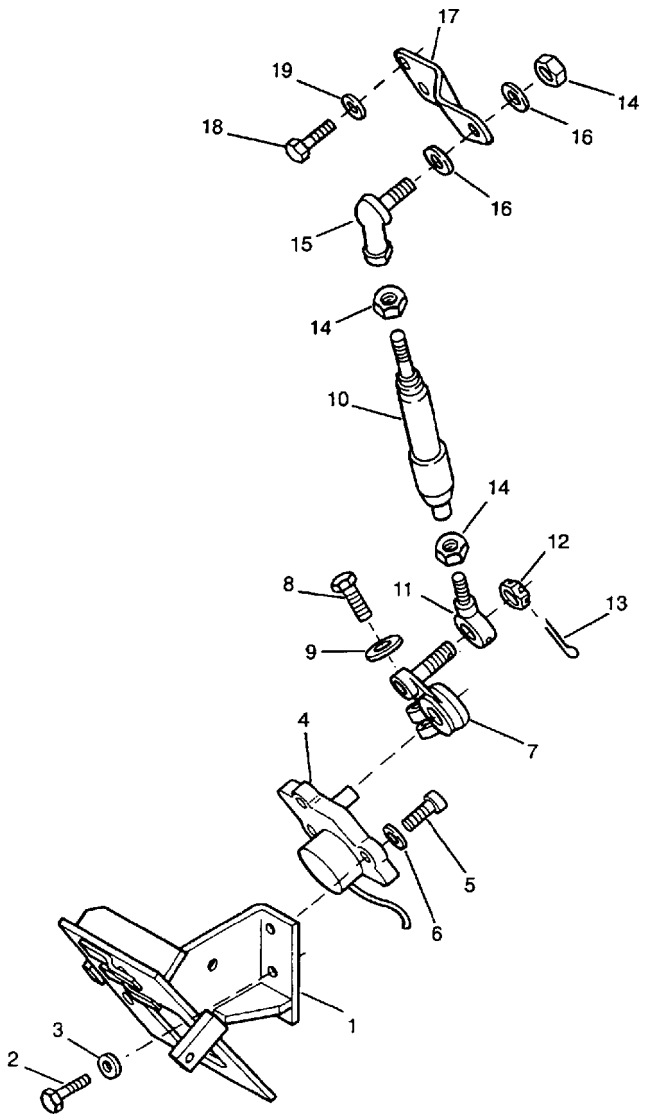

FIG. NO: B0400–01A0A

INDEX	PART NO.	DESCRIPTION	Q'TY	SERIAL NO. PC200-6B	SERIAL NO. PC200LC-6B
1	20Y-43-23370	BRACKET	1	B10001-	B20001-
2	01010-81230	BOLT	2	B10001-	B20001-
3	01643-31232	WASHER	2	B10001-	B20001-
4	7834-40-3000	MOTOR ASS'Y, GOVERNOR	1	B10001-	B20001-
5	01010-81040	BOLT	3	B10001-	B20001-
6	01643-31032	WASHER	3	B10001-	B20001-
7	207-43-68121	LEVER	1	B10001-	B20001-
8	01010-81035	BOLT	1	B10001-	B20001-
9	01602-21030	WASHER	1	B10001-	B20001-
10	20Y-43-23470	SPRING ASSEMBLY	1	B10001-	B20001-
11	04252-21061	END	1	B10001-	B20001-
12	01593-31008	NUT	1	B10001-	B20001-
13	04050-12022	PIN	1	B10001-	B20001-
14	01582-11008	NUT	3	B10001-	B20001-
15	04256-41020	JOINT	1	B10001-	B20001-
16	01643-31032	WASHER	2	B10001-	B20001-
17	20Y-43-23381	PLATE	1	B10001-	B20001-
18	01010-80616	BOLT	2	B10001-	B20001-
19	01643-30623	WASHER	4	B10001-	B20001-

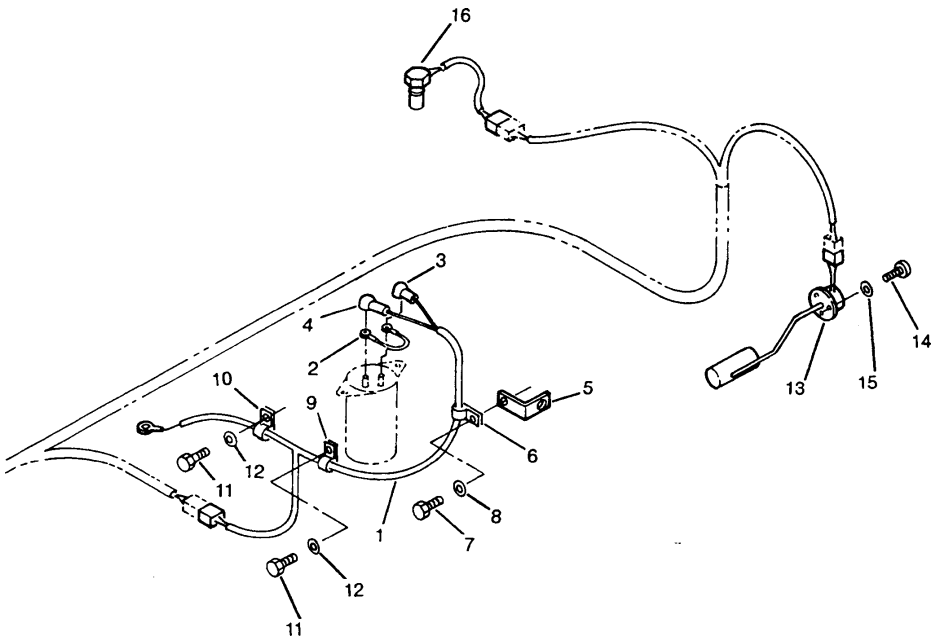

INDEX	PART NO.	DESCRIPTION	Q'TY	SERIAL NO. PC200-6B	SERIAL NO. PC200LC-6B
1	20Y-06-B1110	WIRING HARNESS	1	B10001-	B20001-
2	20Y-06-B1120	WIRING HARNESS	1	B10001-	B20001-
3	08038-10519	CAP	1	B10001-	B20001-
4	08038-10525	CAP	1	B10001-	B20001-
5	362-03-11550	BRACKET	1	B10001-	B20001-
6	08036-01014	CLIP	1	B10001-	B20001-
7	01010-81025	BOLT	1	B10001-	B20001-
8	01643-31032	WASHER	1	B10001-	B20001-
9	08036-01014	CLIP	1	B10001-	B20001-
10	08036-00814	CLIP	1	B10001-	B20001-
11	01010-81225	BOLT	2	B10001-	B20001-
12	01643-31232	WASHER	2	B10001-	B20001-
13	7861-92-4210	SENSOR, OIL LEVER	1	B10001-	B20001-
14	01010-80612	BOLT	3	B10001-	B20001-
15	01641-20608	WASHER	3	B10001-	B20001-
16	7861-92-2310	SENSOR, PICK UP	1	B10001-	B20001-

FIG. B0600–01A0A DAMPER

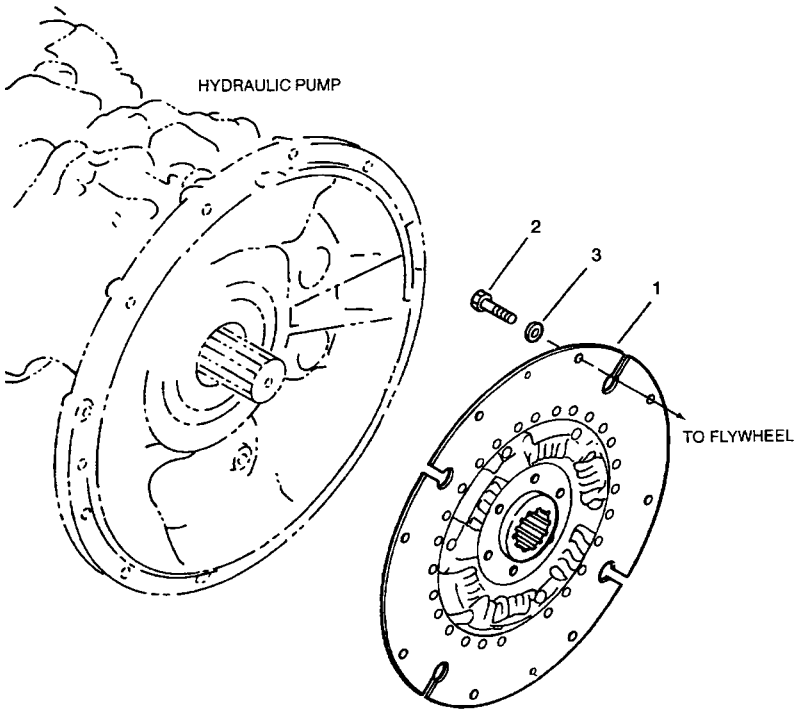

FIG. NO: B0600–01A0A

INDEX	PART NO.	DESCRIPTION	Q'TY	SERIAL NO. PC200-6B	SERIAL NO. PC200LC-6B
1	20Y-01-18280	DAMPER	1	B10001-	B20001-
2	01010-81020	BOLT	8	B10001-	B20001-
3	01643-31032	WASHER	8	B10001-	B20001-

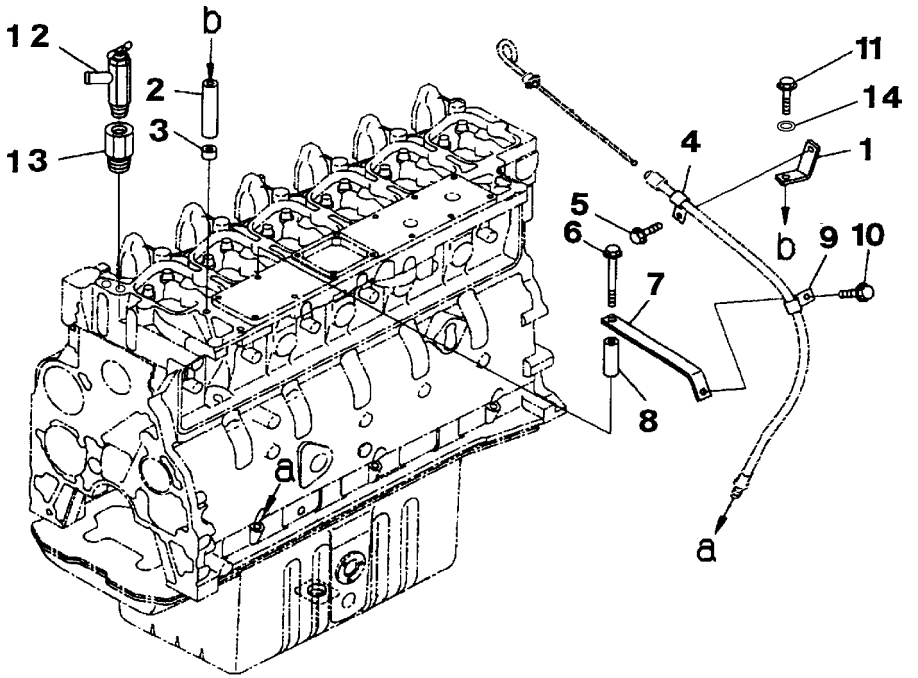

INDEX	PART NO.	DESCRIPTION	Q'TY	SERIAL NO. PC200-6B	SERIAL NO. PC200LC-6B
1	6735-21-5220	BRACKET	1	B10001-	B20001-
2	6150-71-7130	COLLAR	1	B10001-	B20001-
3	6131-12-5920	SPACER	1	B10001-	B20001-
4	04434-51210	CLIP	1	B10001-	B20001-
5	01435-21014	BOLT	1	B10001-	B20001-
6	01435-00890	BOLT	1	B10001-	B20001-
7	6735-21-5230	BRACKET	1	B10001-	B20001-
8	20Y-01-A3210	SPACER	1	B10001-	B20001-
9	04434-51210	CLIP	1	B10001-	B20001-
10	01435-21014	BOLT	1	B10001-	B20001-
11	01011-81020	BOLT	1	B10001-	B20001-
12	203-977-4130	VALVE	1	B10001-	B20001-
13	20Y-01-B1120	ADAPTER	1	B10001-	B20001-
14	01643-31032	WASHER	1	B10001-	B20001-

FIG. B0800–01A0A ACCESSORY DRIVE PULLEY (WITH AIR CONDITIONER)

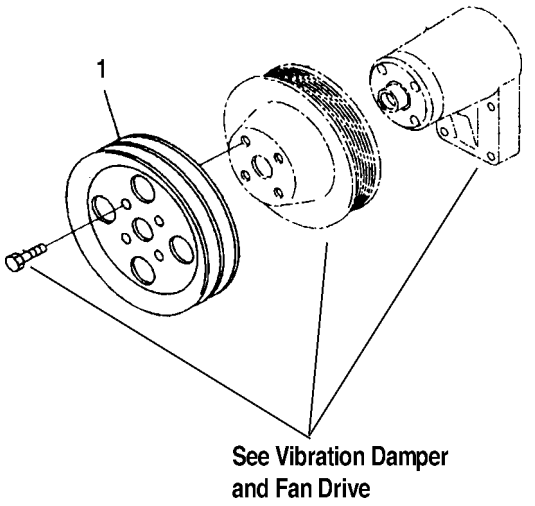

FIG. NO: B0800–01A0A

INDEX	PART NO.	DESCRIPTION	Q'TY	SERIAL NO. PC200-6B	SERIAL NO. PC200LC-6B
1	6731-91-1510	PULLEY (WITH AIR CONDITIONER) (OPTIONAL) ...	1	B10052-	B20001-

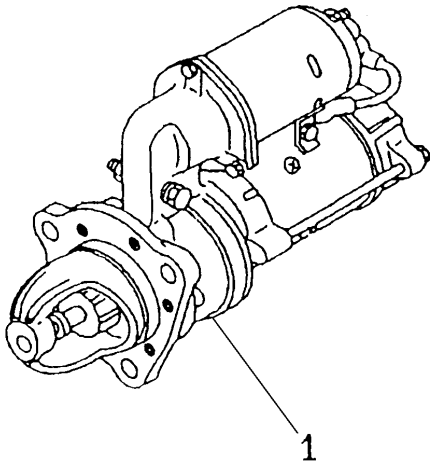

INDEX	PART NO.	DESCRIPTION	Q'TY	SERIAL NO. PC200-6B	SERIAL NO. PC200LC-6B
1	600-863-5110	STARTING MOTOR ASS'Y (5.5KW)	1	B10001-	B20001-

FIG. B0900–01A1B STARTING MOTOR - 5.5 KW - INNER PARTS

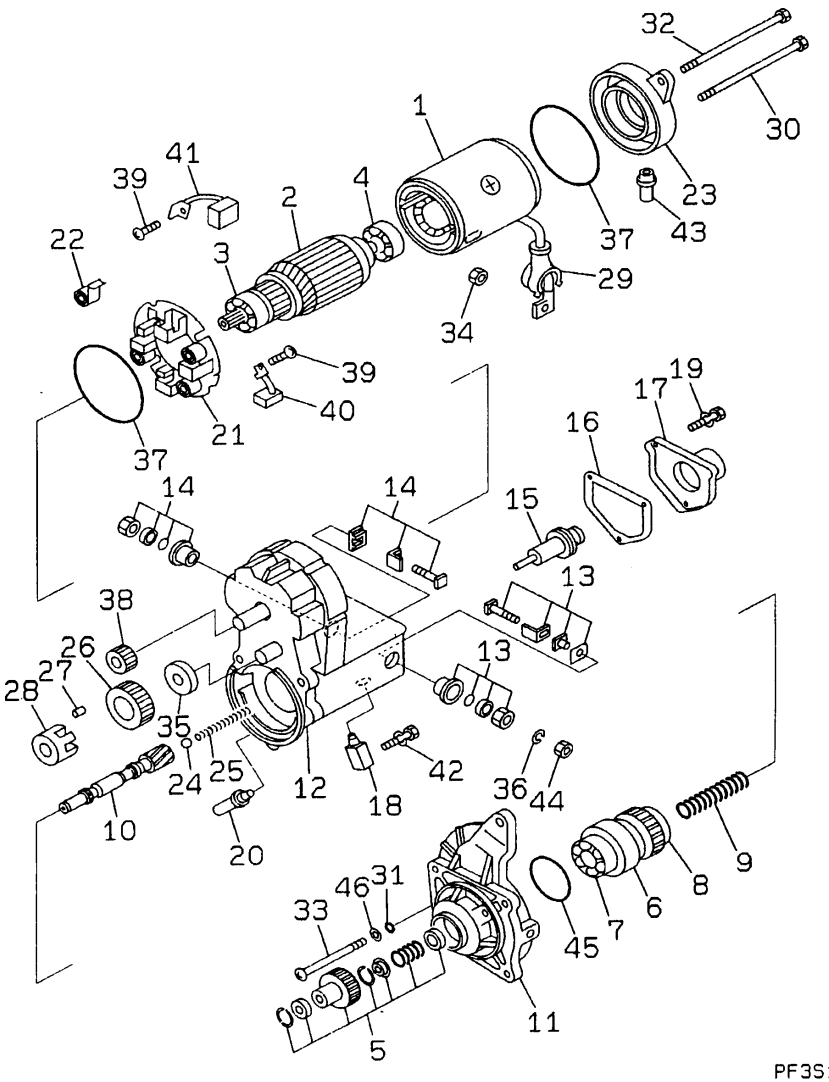

FIG. NO: B0900–01A1B

INDEX	PART NO.	DESCRIPTION	Q'TY	SERIAL NO. PC200-6B	SERIAL NO. PC200LC-6B
	600-863-5110	STARTING MOTOR A., (5.5KW)	1	B10001-	B20001-
1	ND028100-5410	. YOKE ASS'Y	1	B10001-	B20001-
2	ND028200-5250	. ARMATURE ASS'Y	1	B10001-	B20001-
3	ND949100-3161	. . BEARING, BALL	1	B10001-	B20001-
	ND949100-5290	. . BEARING, BALL	1	B10001-	B20001-
4	ND949100-3540	. . BEARING, BALL	1	B10001-	B20001-
	ND028300-6551	. CLUTCH ASS'Y	1	B10001-	B20001-
5	ND028099-3270	. . STARTER KIT	1	B10001-	B20001-
6	ND028300-6751	. . CLUTCH ASS'Y	1	B10001-	B20001-
7	ND949100-4500	. . . BEARING, BALL, FRONT	1	B10001-	B20001-
8	ND949100-1920	. . . BEARING, BALL, REAR	1	B10001-	B20001-
9	ND949170-4040	. . SPRING	1	B10001-	B20001-
10	ND028381-0071	. . SHAFT	1	B10001-	B20001-
11	ND128401-5621	. HOUSING	1	B10001-	B20001-
12	ND153400-2600	. SWITCH ASS'Y, MAGNETIC	1	B10001-	B20001-
13	ND028099-5090	. . KIT, STARTER	1	B10001-	B20001-
14	ND028099-5100	. . KIT, STARTER	1	B10001-	B20001-
15	ND053660-0443	. . PLUNGER	1	B10001-	B20001-
16	ND053404-0240	. . GASKET	1	B10001-	B20001-
17	ND053505-0290	. . COVER, SOLENOID	1	B10001-	B20001-
18	ND053480-7560	. . BOLT ASS'Y, TERMINAL	1	B10001-	B20001-
19	ND949047-4440	. . BOLT	3	B10001-	B20001-
20	ND028065-0250	. . BUSHING, DRAIN	1	B10001-	B20001-
21	ND028510-0880	. HOLDER ASS'Y, BRUSH	1	B10001-	B20001-
22	ND028520-0011	. . SPRING, BRUSH	4	B10001-	B20001-
23	ND028501-7711	. FRAME	1	B10001-	B20001-
24	ND949120-0240	. BALL, STEEL	1	B10001-	B20001-
25	ND949170-4070	. SPRING	1	B10001-	B20001-
26	ND028371-3210	. PINION, STARTER	1	B10001-	B20001-
27	ND028306-0070	. ROLLER, CLUTCH	5	B10001-	B20001-
28	ND028063-0030	. RETAINER	1	B10001-	B20001-
29	ND028062-0130	. CAP	1	B10001-	B20001-
30	ND949042-3680	. BOLT	1	B10001-	B20001-
31	ND90801-10050	. O-RING	3	B10001-	B20001-
32	ND949042-3690	. BOLT	1	B10001-	B20001-
33	ND949006-4720	. SCREW	3	B10001-	B20001-
34	ND949056-4480	. NUT	1	B10001-	B20001-
35	ND028327-0171	. RETAINER, SNAP	1	B10001-	B20001-
36	ND90258-10001	. WASHER, SPRING	1	B10001-	B20001-
37	ND028901-0361	. SEAL	2	B10001-	B20001-
38	ND028371-3200	. PINION	1	B10001-	B20001-
39	ND949007-6530	. SCREW	4	B10001-	B20001-
40	ND028530-1090	. BRUSH ASS'Y	2	B10001-	B20001-
41	ND028530-1100	. BRUSH ASS'Y	2	B10001-	B20001-
42	ND949007-6850	. SCREW	1	B10001-	B20001-
43	ND028062-5790	. COVER	1	B10001-	B20001-
44	ND90170-10061	. NUT	1	B10001-	B20001-
45	ND90801-20470	. O-RING	1	B10001-	B20001-
46	ND90200-06241	. WASHER	3	B10001-	B20001-

COOLING SYSTEM

FIG. C0100–01A7A COOLING (STD RADIATOR) (WITHOUT AIR CONDITIONER)

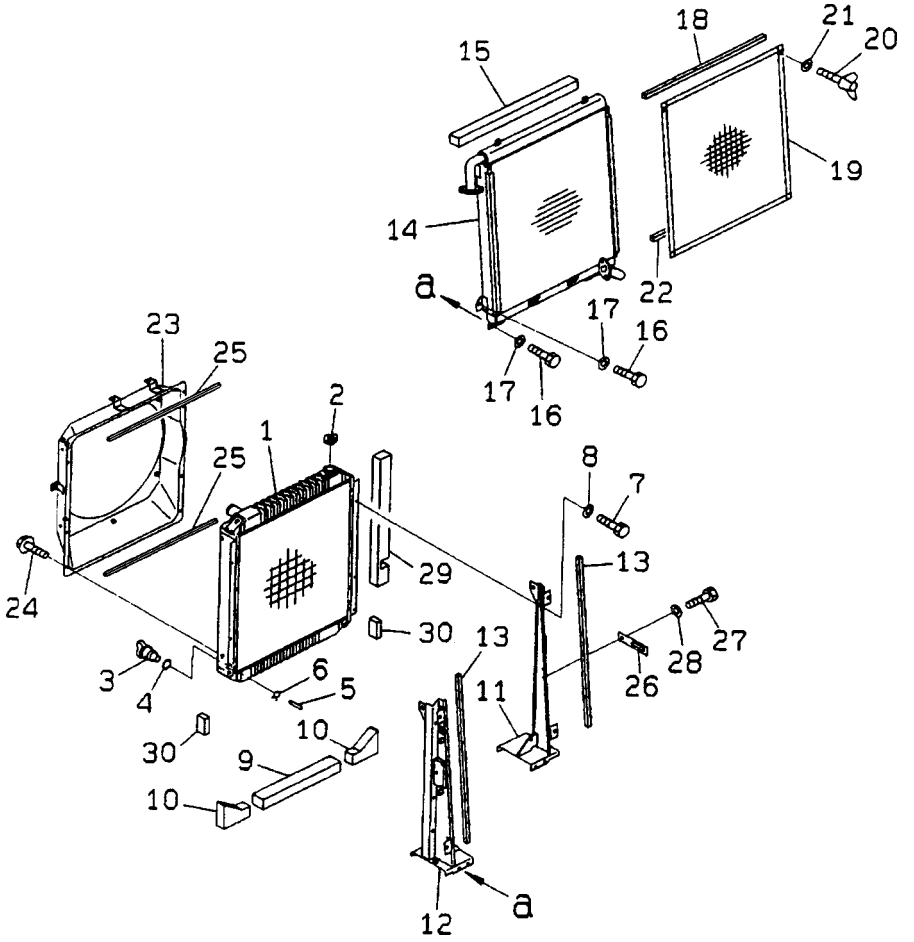

FIG. NO: C0100–01A7A

INDEX	PART NO.	DESCRIPTION	Q'TY	SERIAL NO. PC200-6B	SERIAL NO. PC200LC-6B
1	20Y-03-21711	CORE ASS'Y	1	B10049-	B20001-
	20Y-03-21710	CORE ASS'Y	1	B10001-B10048	
2	20Y-03-22110	CAP	1	B10001-	B20001-
3	205-03-62660	PLUG	1	B10001-	B20001-
4	07000-01007	O-RING	1	B10001-	B20001-
5	203-03-41410	HOSE	1	B10001-	B20001-
6	20Y-03-11330	CLIP	1	B10001-	B20001-
7	01010-81025	BOLT	6	B10001-	B20001-
8	01643-31032	WASHER	6	B10001-	B20001-
9	20Y-03-21481	SEAL	1	B10049-	B20001-
	20Y-03-21480	SEAL	1	B10001-B10048	
10	20Y-03-21491	SEAL	2	B10049-	B20001-
	20Y-03-21490	SEAL	2	B10001-B10048	
11	20Y-03-21750	BRACKET	1	B10001-	B20001-
12	20Y-03-21760	BRACKET	1	B10001-	B20001-
13	20Y-03-21320	SEAL	2	B10001-	B20001-
14	20Y-03-21720	OIL COOLER ASS'Y	1	B10001-	B20001-
15	20Y-03-21330	SEAL	1	B10001-	B20001-
16	01010-81225	BOLT	8	B10001-	B20001-
17	01643-31232	WASHER	8	B10001-	B20001-
18	20Y-03-21430	SEAL	1	B10001-	B20001-
19	20Y-03-21141	NET	1	B10001-	B20001-
20	01434-10616	BOLT	2	B10001-	B20001-
21	01643-30823	WASHER	2	B10001-	B20001-
22	20Y-03-21430	SEAL	1	B10001-	B20001-
23	20Y-03-21631	SHROUD	1	B10001-	B20001-
24	01435-20816	BOLT	8	B10001-	B20001-
25	20Y-03-14110	SEAL	2	B10001-	B20001-
26	20Y-03-21380	PLATE	1	B10001-	B20001-
27	01010-81025	BOLT	1	B10001-	B20001-
28	01643-31032	WASHER	1	B10001-	B20001-
29	20Y-03-21270	SEAL	1	B10001-	B20001-
30	20Y-03-21260	SEAL	2	B10001-	B20001-

FIG. C0100–01A7C COOLING (STD RADIATOR) (WITH AIR CONDITIONER)

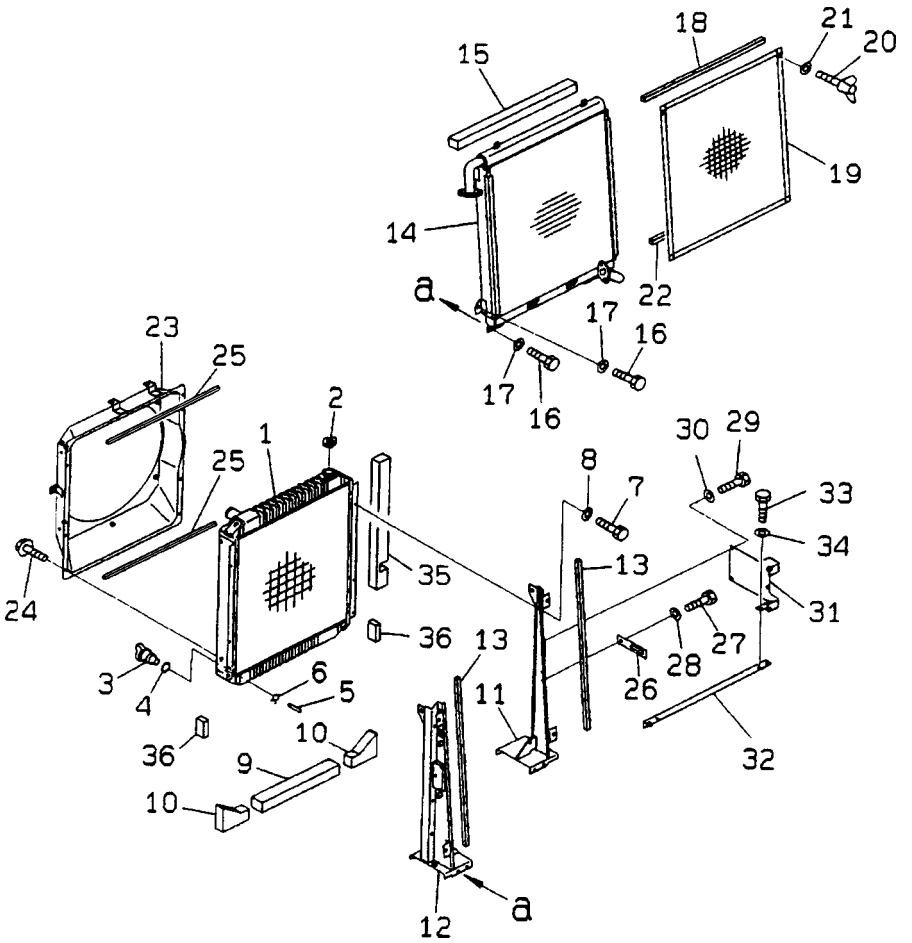

FIG. NO: C0100–01A7C

INDEX	PART NO.	DESCRIPTION	Q'TY	SERIAL NO. PC200-6B	SERIAL NO. PC200LC-6B
1	20Y-03-21711	CORE ASS'Y	1	B10049-	B20001-
	20Y-03-21710	CORE ASS'Y	1	B10001-B10048	
2	20Y-03-22110	CAP	1	B10001-	B20001-
3	205-03-62660	PLUG	1	B10001-	B20001-
4	07000-01007	O-RING	1	B10001-	B20001-
5	203-03-41410	HOSE	1	B10001-	B20001-
6	20Y-03-11330	CLIP	1	B10001-	B20001-
7	01010-81025	BOLT	6	B10001-	B20001-
8	01643-31032	WASHER	6	B10001-	B20001-
9	20Y-03-21481	SEAL	1	B10049-	B20001-
	20Y-03-21480	SEAL	1	B10001-B10048	
10	20Y-03-21491	SEAL	2	B10049-	B20001-
	20Y-03-21490	SEAL	2	B10001-B10048	
11	20Y-03-21750	BRACKET	1	B10001-	B20001-
12	20Y-03-21760	BRACKET	1	B10001-	B20001-
13	20Y-03-21320	SEAL	2	B10001-	B20001-
14	20Y-03-21720	OIL COOLER ASS'Y	1	B10001-	B20001-
15	20Y-03-21330	SEAL	1	B10001-	B20001-
16	01010-81225	BOLT	8	B10001-	B20001-
17	01643-31232	WASHER	8	B10001-	B20001-
18	20Y-03-21430	SEAL	1	B10001-	B20001-
19	20Y-03-21141	NET	1	B10001-	B20001-
20	01434-10616	BOLT WING	2	B10001-	B20001-
21	01643-30823	WASHER	2	B10001-	B20001-
22	20Y-03-21430	SEAL	1	B10001-	B20001-
23	20Y-03-21631	SHROUD	1	B10001-	B20001-
24	01435-20816	BOLT	8	B10001-	B20001-
25	20Y-03-14110	SEAL	2	B10001-	B20001-
26	20Y-03-21380	PLATE	1	B10001-	B20001-
27	01010-81025	BOLT	1	B10001-	B20001-
28	01643-31032	WASHER	1	B10001-	B20001-
29	01010-81025	BOLT	2	B10001-	B20001-
30	01643-31032	WASHER	2	B10001-	B20001-
31	20Y-979-2841	BRACKET	1	B10001-	B20001-
32	20Y-979-2820	BRACKET	1	B10001-	B20001-
33	01010-81025	BOLT	4	B10001-	B20001-
34	01643-31032	WASHER	4	B10001-	B20001-
35	20Y-03-21270	SEAL	1	B10001-	B20001-
36	20Y-03-21260	SEAL	2	B10001-	B20001-

FIG. C0100–01A7D COOLING (LARGE RADIATOR) (WITHOUT AIR CONDITIONER)

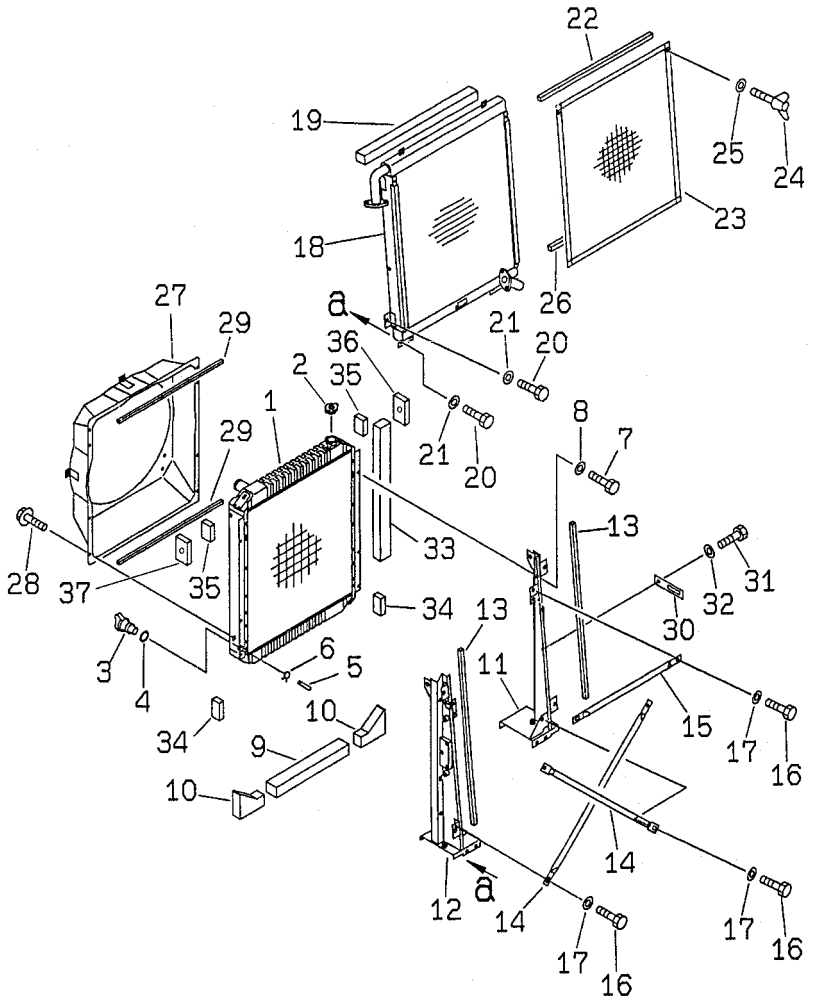

FIG. NO: C0100–01A7D

INDEX	PART NO.	DESCRIPTION	Q'TY	SERIAL NO. PC200-6B	SERIAL NO. PC200LC-6B
1	206-03-61410	CORE ASS'Y	1	B10001-	B20001-
2	20Y-03-22110	CAP	1	B10001-	B20001-
3	205-03-62660	PLUG	1	B10001-	B20001-
4	07000-01007	O-RING	1	B10001-	B20001-
5	203-03-41410	HOSE	1	B10001-	B20001-
6	20Y-03-11330	CLIP	1	B10001-	B20001-
7	01010-81025	BOLT	6	B10001-	B20001-
8	01643-31032	WASHER	6	B10001-	B20001-
9	20Y-03-21340	SEAL	1	B10001-	B20001-
10	20Y-03-21350	SEAL	2	B10001-	B20001-
11	20Y-03-21152	BRACKET	1	B10001-	B20001-
12	20Y-03-21162	BRACKET	1	B10001-	B20001-
13	20Y-03-21320	SEAL	2	B10001-	B20001-
14	20Y-03-21410	STAY	2	B10001-	B20001-
15	20Y-03-21420	STAY	1	B10001-	B20001-
16	01010-81225	BOLT	6	B10001-	B20001-
17	01643-31232	WASHER	6	B10001-	B20001-
18	20Y-03-27120	OIL COOLER ASS'Y	1	B10001-	B20001-
19	20Y-03-21330	SEAL	1	B10001-	B20001-
20	01010-81225	BOLT	8	B10001-	B20001-
21	01643-31232	WASHER	8	B10001-	B20001-
22	20Y-03-21430	SEAL	1	B10001-	B20001-
23	20Y-03-21141	NET	1	B10001-	B20001-
24	01434-10616	BOLT WING	2	B10001-	B20001-
25	01643-30823	WASHER	2	B10001-	B20001-
26	20Y-03-21430	SEAL	1	B10001-	B20001-
27	20Y-03-27140	SHROUD	1	B10001-	B20001-
28	01435-20816	BOLT	8	B10001-	B20001-
29	20Y-03-14110	SEAL	2	B10001-	B20001-
30	20Y-03-21380	PLATE	1	B10001-	B20001-
31	01010-81025	BOLT	1	B10001-	B20001-
32	01643-31032	WASHER	1	B10001-	B20001-
33	20Y-03-K1280	SEAL	1	B10001-	B20001-
34	20Y-03-21260	SEAL	2	B10001-	B20001-
35	20Y-03-12470	SHEET	2	B10001-	B20001-
36	20Y-03-12480	SHEET	1	B10001-	B20001-
37	20Y-03-12490	SHEET	1	B10001-	B20001-

FIG. C0100–01A7E COOLING (LARGE RADIATOR) (WITH AIR CONDITIONER)

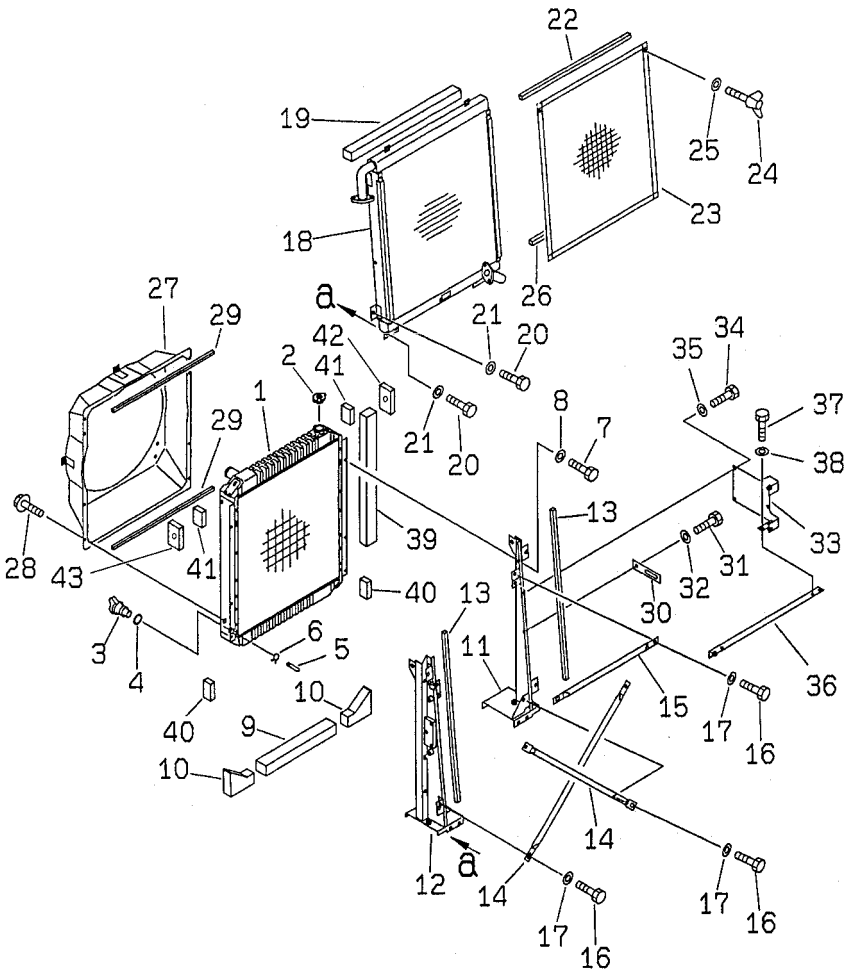

FIG. NO: C0100–01A7E

INDEX	PART NO.	DESCRIPTION	Q'TY	SERIAL NO. PC200-6B	SERIAL NO. PC200LC-6B
1	206-03-61410	CORE ASS'Y	1	B10001-	B20001-
2	20Y-03-22110	CAP	1	B10001-	B20001-
3	205-03-62660	PLUG	1	B10001-	B20001-
4	07000-01007	O-RING	1	B10001-	B20001-
5	203-03-41410	HOSE	1	B10001-	B20001-
6	20Y-03-11330	CLIP	1	B10001-	B20001-
7	01010-81025	BOLT	6	B10001-	B20001-
8	01643-31032	WASHER	6	B10001-	B20001-
9	20Y-03-21340	SEAL	1	B10001-	B20001-
10	20Y-03-21350	SEAL	2	B10001-	B20001-
11	20Y-03-21152	BRACKET	1	B10001-	B20001-
12	20Y-03-21162	BRACKET	1	B10001-	B20001-
13	20Y-03-21320	SEAL	2	B10001-	B20001-
14	20Y-03-21410	STAY	2	B10001-	B20001-
15	20Y-03-21420	STAY	1	B10001-	B20001-
16	01010-81225	BOLT	6	B10001-	B20001-
17	01643-31232	WASHER	6	B10001-	B20001-
18	20Y-03-27120	OIL COOLER ASS'Y	1	B10001-	B20001-
19	20Y-03-21330	SEAL	1	B10001-	B20001-
20	01010-81225	BOLT	8	B10001-	B20001-
21	01643-31232	WASHER	8	B10001-	B20001-
22	20Y-03-21430	SEAL	1	B10001-	B20001-
23	20Y-03-21141	NET	1	B10001-	B20001-
24	01434-10616	BOLT, WING	2	B10001-	B20001-
25	01643-30823	WASHER	2	B10001-	B20001-
26	20Y-03-21430	SEAL	1	B10001-	B20001-
27	20Y-03-27140	SHROUD	1	B10001-	B20001-
28	01435-20816	BOLT	8	B10001-	B20001-
29	20Y-03-14110	SEAL	2	B10001-	B20001-
30	20Y-03-21380	PLATE	1	B10001-	B20001-
31	01010-81025	BOLT	1	B10001-	B20001-
32	01643-31032	WASHER	1	B10001-	B20001-
33	20Y-979-2841	BRACKET	1	B10001-	B20001-
34	01010-81025	BOLT	2	B10001-	B20001-
35	01643-31032	WASHER	2	B10001-	B20001-
36	20Y-979-2820	BRACKET	1	B10001-	B20001-
37	01010-81025	BOLT	4	B10001-	B20001-
38	01643-31032	WASHER	4	B10001-	B20001-
39	20Y-03-K1280	SEAL	1	B10001-	B20001-
40	20Y-03-K1260	SEAL	2	B10001-	B20001-
41	20Y-03-12470	SHEET	2	B10001-	B20001-
42	20Y-03-12480	SHEET	1	B10001-	B20001-
43	20Y-03-12490	SHEET	1	B10001-	B20001-

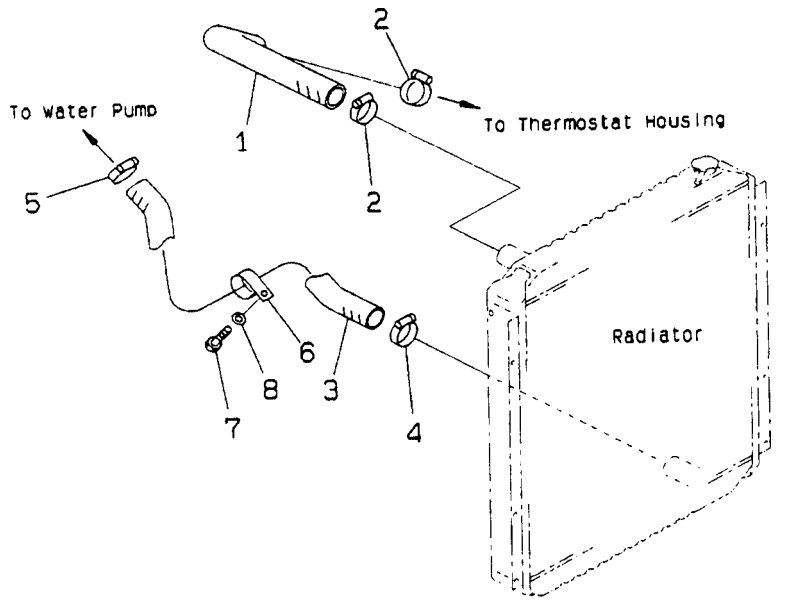

INDEX	PART NO.	DESCRIPTION	Q'TY	SERIAL NO. PC200-6B	SERIAL NO. PC200LC-6B
1	20Y-03-28292	HOSE (FOR STD RADIATOR)	1	B10001-	B20001-
1	20Y-03-27170	HOSE (FOR LARGE RADIATOR)	1	B10001-	B20001-
2	07289-00055	CLAMP	2	B10001-	B20001-
3	20Y-03-21890	HOSE (FOR STD RADIATOR)	1	B10001-	B20001-
3	20Y-03-27180	HOSE (FOR LARGE RADIATOR)	1	B10001-	B20001-
4	07289-00055	CLAMP	1	B10001-	B20001-
5	07289-00070	CLAMP	1	B10001-	B20001-
6	208-62-38370	CLIP	1	B10001-	B20001-
7	01010-81025	BOLT	1	B10001-	B20001-
8	01643-31032	WASHER	1	B10001-	B20001-

FIG. C0100–03A0A COOLING (SUB TANK AND RADIATOR MOUNT)

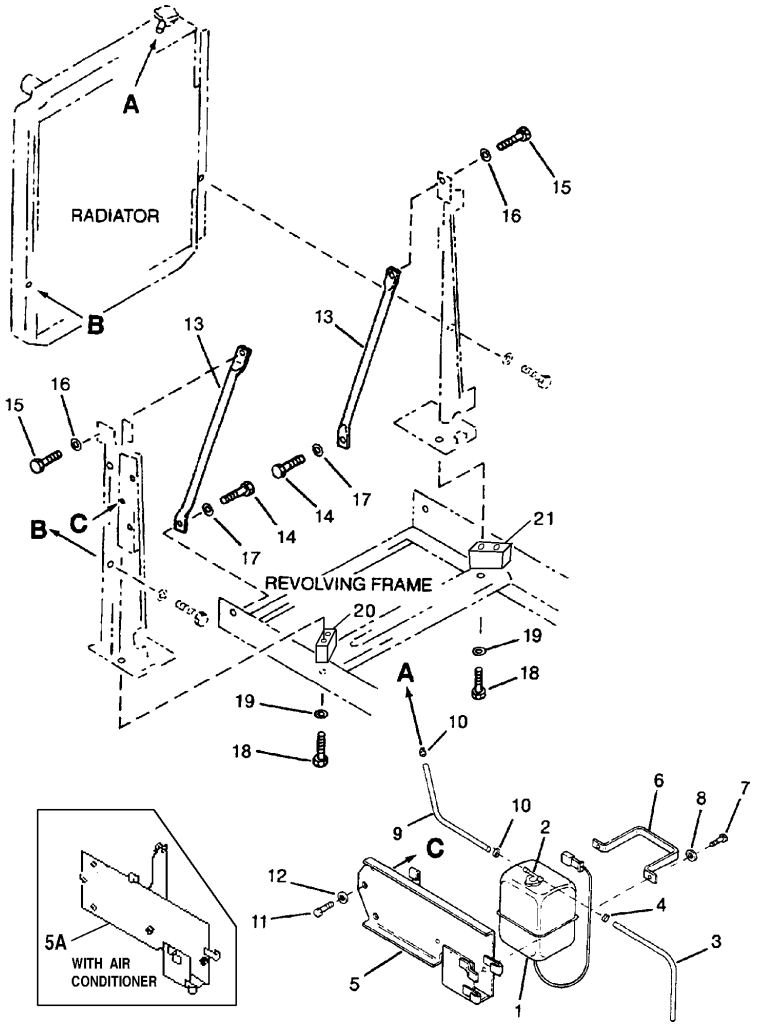

FIG. NO: C0100–03A0A

INDEX	PART NO.	DESCRIPTION	Q'TY	SERIAL NO. PC200-6B	SERIAL NO. PC200LC-6B
	20Y-06-15240	TANK ASS'Y	1	B10001-	B20001-
1	205-03-71271	. TANK	1	B10001-	B20001-
2	205-03-71532	. CAP	1	B10001-	B20001-
	205-03-71540	.. SEAL, CAP	1	B10001-	B20001-
3	20Y-03-21450	HOSE	1	B10001-	B20001-
4	206-03-43340	CLIP	1	B10001-	B20001-
5	20Y-03-21252	BRACKET (FOR USE WITHOUT AIR CONDITIONER)	1	B10001-	B20001-
5A	20Y-03-21253	BRACKET (FOR USE WITH AIR CONDITIONER)	1	B10001-	B20001-
6	203-03-56650	BRACKET	1	B10001-	B20001-
7	01010-80820	BOLT	2	B10001-	B20001-
8	01643-30823	WASHER	2	B10001-	B20001-
9	20Y-03-21460	HOSE	1	B10001-	B20001-
10	206-03-43340	CLIP	2	B10001-	B20001-
11	01010-81020	BOLT	3	B10001-	B20001-
12	01643-31032	WASHER	3	B10001-	B20001-
13	20Y-03-21171	STAY (FOR USE WITHOUT AIR CONDITIONER)	2	B10001-	B20001-
13	20Y-03-K1260	STAY (FOR USE WITH AIR CONDITIONER)	2	B10001-	B20001-
14	01010-81635	BOLT	2	B10001-	B20001-
15	01010-81635	BOLT	2	B10001-	B20001-
16	01643-31645	WASHER	2	B10001-	B20001-
17	21T-54-16150	WASHER	2	B10001-	B20001-
18	01016-51250	BOLT (FOR USE WITHOUT AIR CONDITIONER)	4	B10001-	B20001-
18	01016-81295	BOLT (FOR USE WITH AIR CONDITIONER)	4	B10001-	B20001-
19	01643-31232	WASHER (FOR USE WITHOUT AIR CONDITIONER)	4	B10001-	B20001-
20	20Y-03-27130	PLATE (ONLY FOR LARGE RADIATOR)	1	B10001-	B20001-
21	20Y-03-27190	PLATE (ONLY FOR LARGE RADIATOR)	1	B10001-	B20001-

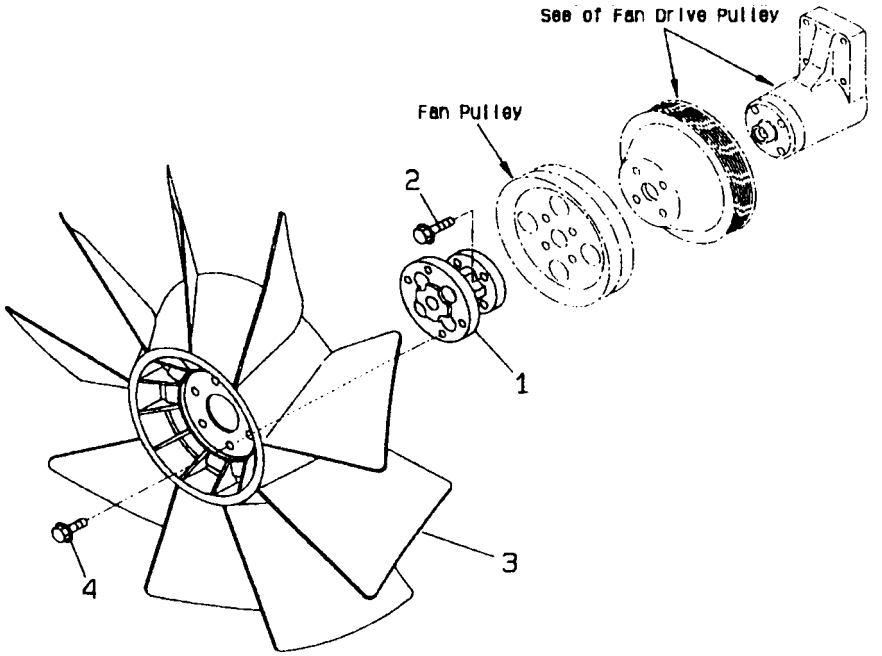

INDEX	PART NO.	DESCRIPTION	Q'TY	SERIAL NO. PC200-6B	SERIAL NO. PC200LC-6B
1	6206-61-3980	SPACER	1	B10001-	B20001-
2	01435-20830	BOLT	6	B10001-	B20001-
3	600-625-7620	FAN	1	B10001-	B20001-
4	01435-01025	BOLT	6	B10001-	B20001-

FIG. C0200–02A0 FAN TENSION PULLEY

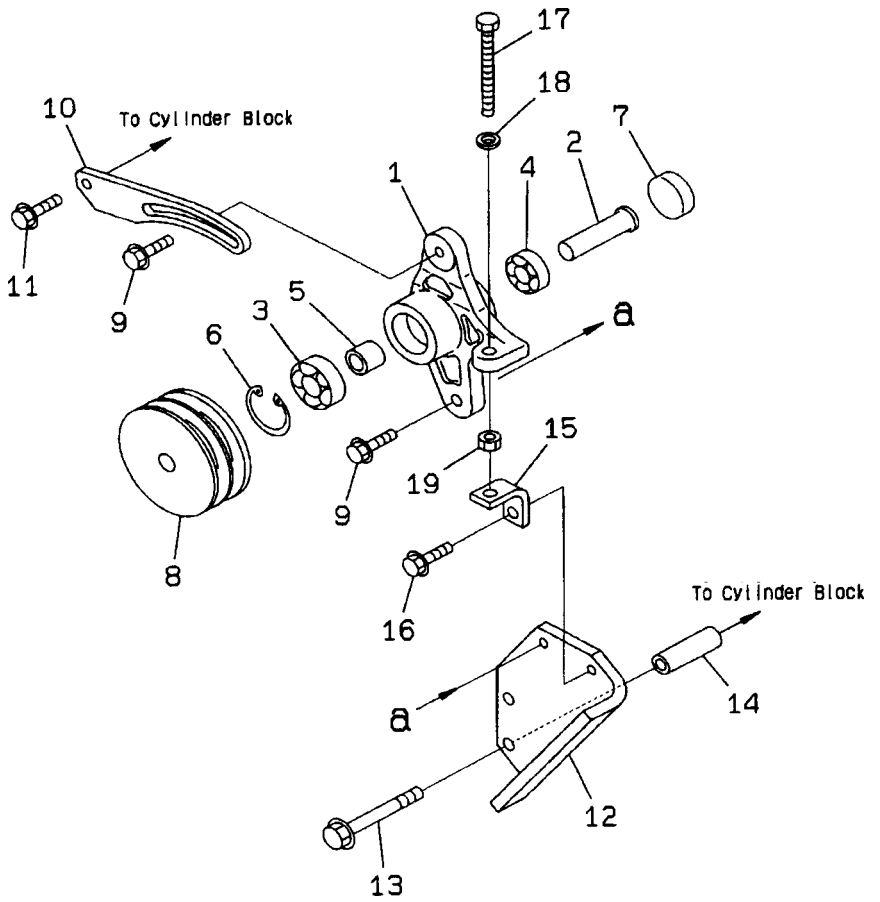

FIG. NO: C0200–02A0

INDEX	PART NO.	DESCRIPTION	Q'TY	SERIAL NO. PC200-6B	SERIAL NO. PC200LC-6B
	6735-81-6200	TENSION ASS'Y	1	B10001-	B20001-
1	6735-81-6210	. CASE	1	B10001-	B20001-
2	6206-81-6240	. SHAFT	1	B10001-	B20001-
3	6136-61-1340	. BEARING	1	B10001-	B20001-
4	06000-06004	. BEARING	1	B10001-	B20001-
5	6206-81-6250	. SPACER	1	B10001-	B20001-
6	04065-05220	. RING, SNAP	1	B10001-	B20001-
7	07046-44516	. PLUG	1	B10001-	B20001-
8	6735-81-6220	. PULLEY	1	B10001-	B20001-
9	01435-01030	BOLT	2	B10001-	B20001-
10	6735-81-6410	PLATE	1	B10001-	B20001-
11	01435-01025	BOLT	1	B10001-	B20001-
12	6735-81-6310	BRACKET	1	B10001-	B20001-
13	01436-01210	BOLT	2	B10001-	B20001-
14	6211-11-9790	SPACER	2	B10001-	B20001-
15	6222-83-6620	BRACKET, ADJUST	1	B10001-	B20001-
16	01435-01025	BOLT	1	B10001-	B20001-
17	6151-81-4340	BOLT	1	B10001-	B20001-
18	6204-11-3830	WASHER	1	B10001-	B20001-
19	01580-11008	NUT	1	B10001-	B20001-

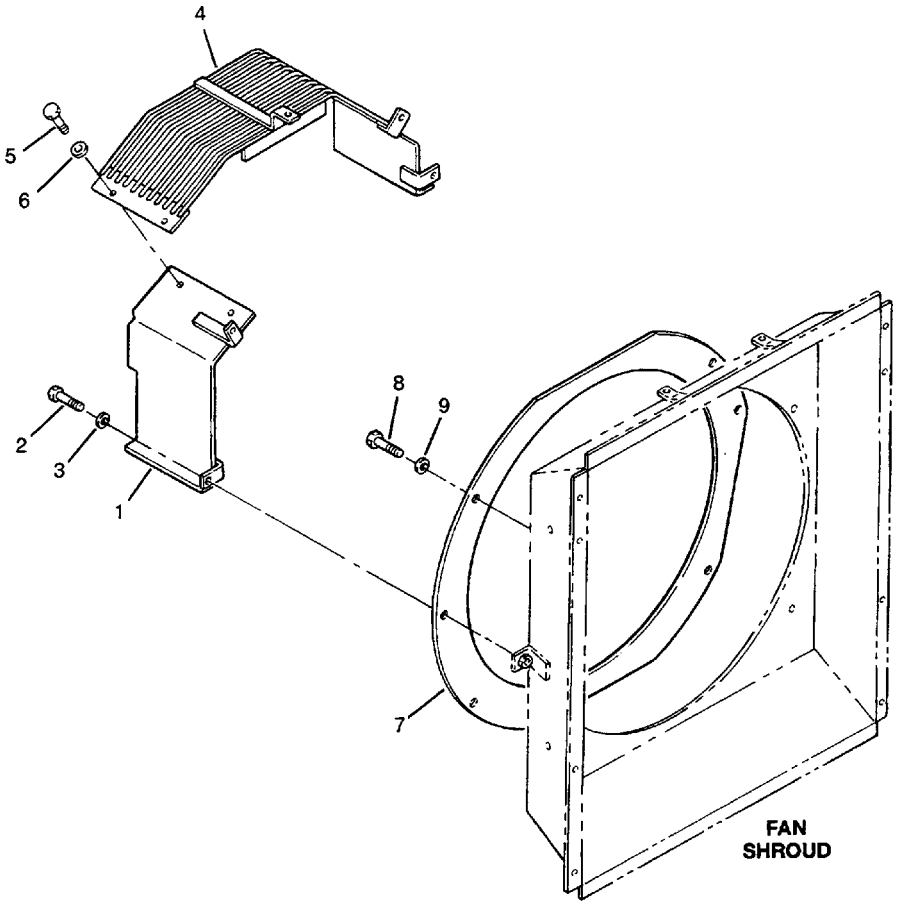

INDEX	PART NO.	DESCRIPTION	Q'TY	SERIAL NO. PC200-6B	SERIAL NO. PC200LC-6B
1	20Y-03-27160	COVER (FOR LARGE RADIATOR) (STANTARD)	1	B10001-	B20001-
1	20Y-03-21661	COVER (FOR STD RADIATOR) (OPTIONAL)	1	B10001-	B20001-
2	01010-81025	BOLT	2	B10001-	B20001-
3	01643-31032	WASHER	2	B10001-	B20001-
4	20Y-03-27150	GUARD	1	B10001-	B20001-
5	01010-81025	BOLT	5	B10001-	B20001-
6	01643-31032	WASHER	5	B10001-	B20001-
7	20Y-03-21990	PLATE	1	B10001-	B20001-
8	01010-81020	BOLT	4	B10001-	B20001-
9	01643-31032	WASHER	4	B10001-	B20001-

FIG. C0310–02A0 FAN GUARD (WITH AIR CONDITIONER) (OPTIONAL)

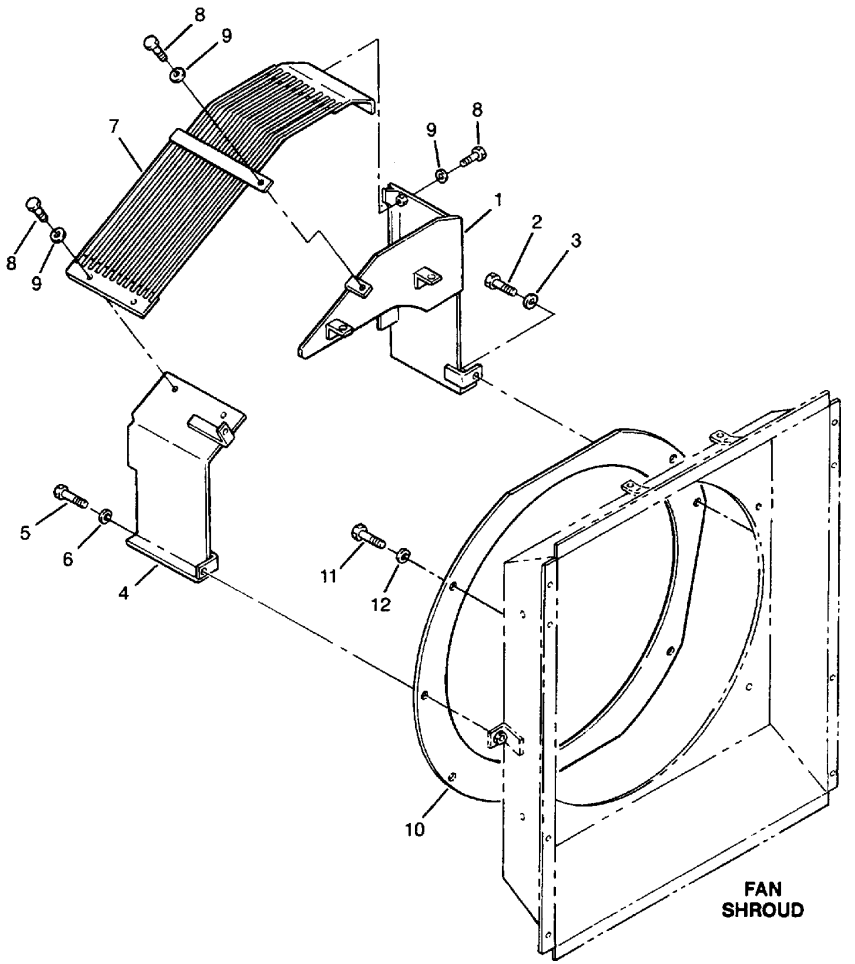

FIG. NO: C0310–02A0

INDEX	PART NO.	DESCRIPTION	Q'TY	SERIAL NO. PC200-6B	SERIAL NO. PC200LC-6B
1	20Y-03-21653	COVER	1	B10001-	B20001-
2	01010-81025	BOLT	3	B10001-	B20001-
3	01643-31032	WASHER	3	B10001-	B20001-
4	20Y-03-21661	COVER (FOR STD RADIATOR) (OPTIONAL)	1	B10001-	B20001-
4	20Y-03-27160	COVER (FOR LARGE RADIATOR) (OPTIONAL)	1	B10001-	B20001-
5	01010-81025	BOLT	2	B10001-	B20001-
6	01643-31032	WASHER	2	B10001-	B20001-
7	20Y-03-21772	GUARD	1	B10001-	B20001-
8	01010-81025	BOLT	5	B10001-	B20001-
9	01643-31032	WASHER	5	B10001-	B20001-
10	20Y-03-21990	PLATE	1	B10001-	B20001-
11	01010-81020	BOLT	4	B10001-	B20001-
12	01643-31032	WASHER	4	B10001-	B20001-

FUEL TANK AND RELATED PARTS

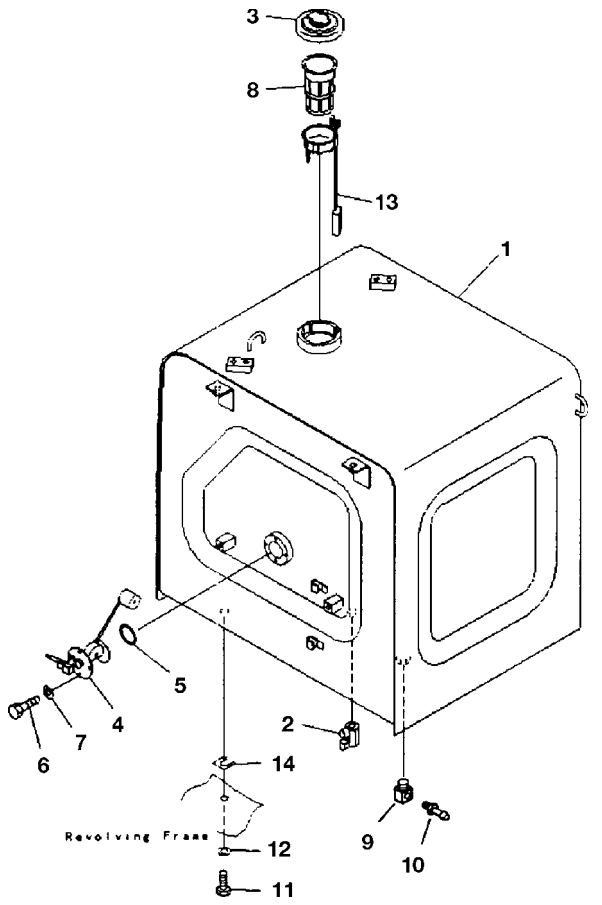

INDEX	PART NO.	DESCRIPTION	Q'TY	SERIAL NO. PC200-6B	SERIAL NO. PC200LC-6B
1	20Y-04-B1130	TANK	1	B10143-	B20001-
	20Y-04-21431	TANK	1	B10001-B10142	
2	07700-50240	VALVE	1	B10001-	B20001-
3	20Y-04-11160	CAP	1	B10001-	B20001-
4	7861-92-5810	SENSOR	1	B10001-	B20001-
5	07000-13050	O-RING	1	B10001-	B20001-
6	01010-80612	BOLT	4	B10001-	B20001-
7	01643-30623	WASHER	4	B10001-	B20001-
8	22U-04-21231	STRAINER	1	B10143-	B20001-
	205-04-71141	STRAINER	1	B10001-B10142	
9	209-04-13130	ELBOW	1	B10001-	B20001-
10	140-999-9360	NIPPLE	1	B10001-	B20001-
11	01010-81635	BOLT	6	B10001-	B20001-
12	01643-31645	WASHER	6	B10001-	B20001-
13	20Y-04-21550	FLOAT ASS'Y	1	B10001-B10142	
14	195-03-11570	SHIM	6	B10001-	B20001-

FIG. D0200–01A0 FUEL LINES (OLD)

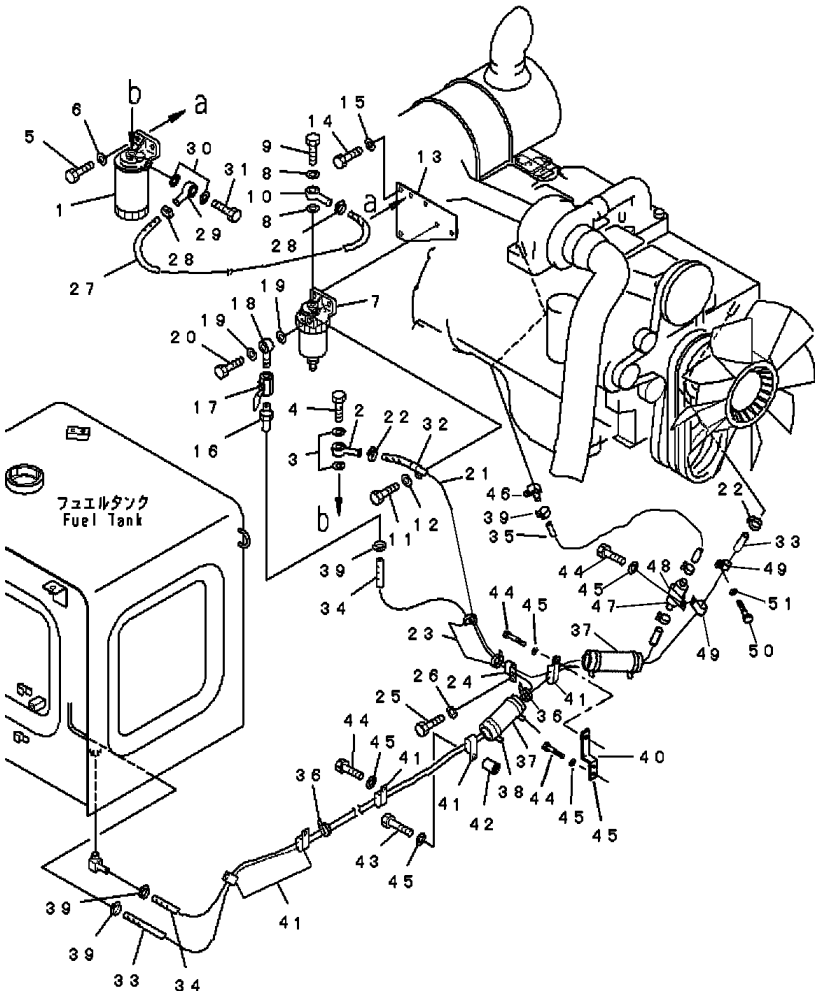

FIG. NO: D0200–01A0

INDEX	PART NO.	DESCRIPTION	Q'TY	SERIAL NO. PC200-6B	SERIAL NO. PC200LC-6B
1	600-311-9101	FUEL FILTER ASS'Y	1	B10001- B10166	B20001-B20006
2	20Y-04-21630	JOINT	1	B10001- B10166	B20001-B20006
3	07005-01412	GASKET	2	B10001- B10166	B20001-B20006
4	07206-31014	JOINT	1	B10001- B10166	B20001-B20006
5	01010-81030	BOLT	2	B10001- B10166	B20001-B20006
6	01643-31032	WASHER	2	B10001- B10166	B20001-B20006
7	600-311-9731	WATER SEPARATOR A.	1	B10001-	B20001-
8	07005-01412	GASKET	2	B10001-	B20001-
9	07206-31014	BOLT	1	B10001-	B20001-
10	20Y-04-21630	JOINT	1	B10001-	B20001-
11	01010-81030	BOLT	2	B10001-	B20001-
12	01643-31032	WASHER	2	B10001-	B20001-
13	20Y-04-21211	BRACKET	1	B10001-	B20001-
14	01010-81225	BOLT	2	B10001-	B20001-
15	01643-31232	WASHER	2	B10001-	B20001-
16	103-04-22150	NIPPLE	1	B10001-	B20001-
17	07700-40240	VALVE	1	B10001-	B20001-
18	205-04-62140	JOINT	1	B10001- B10166	B20001-B20006
19	07005-01412	GASKET	2	B10001-	B20001-
20	07206-31014	BOLT	1	B10001-	B20001-
21	07288-01214	HOSE	1	B10001- B10166	B20001-B20006
22	07281-00197	CLAMP	2	B10001- B10166	B20001-B20006
23	08034-00519	BAND	2	B10001-	B20001-
24	141-06-11220	CLIP	1	B10001-	B20001-
25	01010-81225	BOLT	1	B10001-	B20001-
26	01643-31232	WASHER	1	B10001-	B20001-
27	07288-01203	HOSE	1	B10001- B10166	B20001-B20006
28	07281-00197	CLAMP	2	B10001- B10166	B20001-B20006
29	20Y-04-21630	JOINT	1	B10001- B10166	B20001-B20006
30	07005-01412	GASKET	2	B10001- B10166	B20001-B20006
31	07206-31014	JOINT	1	B10001- B10166	B20001-B20006
32	08036-01814	CLIP	1	B10001- B10166	B20001-B20006
33	07288-00831	HOSE	1	B10001-	B20001-
34	07288-01229	HOSE	1	B10001-	B20001-
35	07288-01205	HOSE	1	B10001- B10166	B20001-B20006
36	08034-00519	BAND	2	B10001-	B20001-
37	205-62-53780	COVER	2	B10001-	B20001-
38	08034-00834	BAND	4	B10001-	B20001-
39	07281-00197	CLAMP	6	B10001-	B20001-
40	20Y-04-21151	BRACKET	1	B10001-	B20001-
41	04435-51912	CLIP	5	B10001-	B20001-
42	142-03-11160	SPACER	1	B10001-	B20001-
43	01010-81260	BOLT	1	B10001-	B20001-
44	01010-81225	BOLT	7	B10001-	B20001-
45	01643-31232	WASHER	8	B10001-	B20001-
46	6995-71-1340	ELBOW	1	B10001-	B20001-
47	207-04-A1100	STRAINER ASS' Y	1	B10001- B10166	B20001-B20006
48	23S-62-25850	CLIP	1	B10001- B10166	B20001-B20006
49	08036-01414	CLIP	2	B10001- B10166	B20001-B20006
50	01010-81020	BOLT	1	B10001-	B20001-
51	01643-31032	WASHER	1	B10001-	B20001-

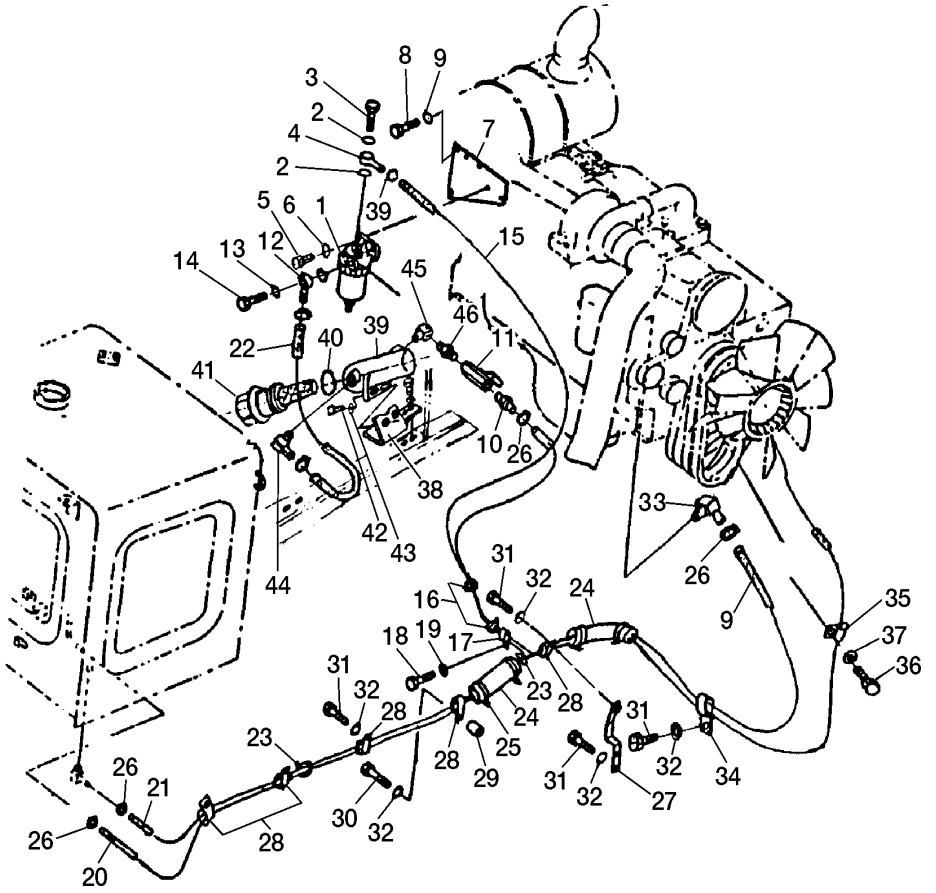

INDEX	PART NO.	DESCRIPTION	Q'TY	SERIAL NO. PC200-6B	SERIAL NO. PC200LC-6B
1	600-311-9731	WATER SEPARATOR A.	1	B10001-	B20001-
2	07005-01412	GASKET	2	B10001-	B20001-
3	07206-31014	BOLT	1	B10001-	B20001-
4	20Y-04-21630	JOINT	1	B10001-	B20001-
5	01010-81030	BOLT	2	B10001-	B20001-
6	01643-31032	WASHER	2	B10001-	B20001-
7	20Y-04-21211	BRACKET	1	B10001-	B20001-
8	01010-81225	BOLT	2	B10001-	B20001-
9	01643-31232	WASHER	2	B10001-	B20001-
10	103-04-22150	NIPPLE	1	B10001-	B20001-
11	07700-40240	VALVE	1	B10001-	B20001-
12	20Y-04-21630	JOINT	1	B10167-	B20007-
13	07005-01412	GASKET	2	B10001-	B20001-
14	07206-31014	JOINT	1	B10001-	B20001-
15	07288-01219	HOSE	1	B10167-	B20007-
16	08034-00519	BAND	2	B10001-	B20001-
17	141-06-11220	CLIP	1	B10001-	B20001-
18	01010-81225	BOLT	1	B10001-	B20001-
19	01643-31232	WASHER	1	B10001-	B20001-
20	07288-00831	HOSE	1	B10001-	B20001-
21	07288-01229	HOSE	1	B10001-	B20001-
22	07288-01206	HOSE	1	B10167-	B20007-
23	08034-00519	BAND	2	B10001-	B20001-
24	205-62-53780	COVER	2	B10001-	B20001-
25	08034-00834	BAND	4	B10001-	B20001-
26	07281-00197	CLAMP	6	B10001-	B20001-
27	20Y-04-21151	BRACKET	1	B10001-	B20001-
28	04435-51912	CLIP	5	B10001-	B20001-
29	142-03-11160	SPACER	1	B10001-	B20001-
30	01010-81260	BOLT	1	B10001-	B20001-
31	01010-81225	BOLT	7	B10001-	B20001-
32	01643-31232	WASHER	8	B10001-	B20001-
33	6995-71-1340	ELBOW	1	B10001-	B20001-
34	04435-51912	CLIP	1	B10167-	B20007-
35	08036-01414	CLIP	1	B10167-	B20007-
36	01010-81020	BOLT	1	B10001-	B20001-
37	01643-31032	WASHER	1	B10001-	B20001-
38	20Y-04-B1140	BRACKET	1	B10167-	B20007-
39	07058-00001	CASE	1	B10167-	B20007-
40	07002-04234	O-RING	1	B10167-	B20007-
41	154-04-12531	STRAINER	1	B10167-	B20007-
42	01010-81025	BOLT	2	B10167-	B20007-
43	01643-30823	WASHER	2	B10167-	B20007-
44	6995-71-1340	ELBOW	1	B10167-	B20007-
45	565-44-15380	ELBOW	1	B10167-	B20007-
46	135-A90-1970	NIPPLE	1	B10167-	B20007-

ELECTRICAL SYSTEM

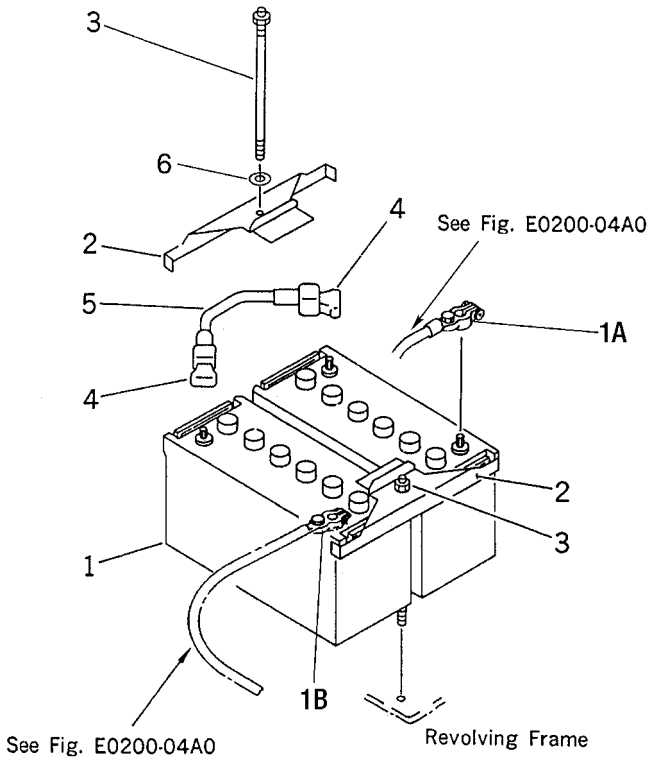

INDEX	PART NO.	DESCRIPTION	Q'TY	SERIAL NO. PC200-6B	SERIAL NO. PC200LC-6B
1	20Y-06-B1130	BATTERY	2	B10122-	B20001-
1	20Y-06-24840	BATTERY	2	B10001-B10121	
1A	08000-00000	TERMINAL (+)	2	B10122-	B20001-
1B	08000-00001	TERMINAL (-)	2	B10122-	B20001-
2	20Y-06-B1140	HOLDER	2	B10122-	B20001-
	205-06-71173	HOLDER	2	B10001-B10121	
3	20Y-06-B1150	BOLT	2	B10122-	B20001-
	205-06-71180	BOLT	2	B10001-B10121	
4	08038-22511	CAP	2	B10001-	B20001-
5	08028-43030	WIRE	1	B10001-	B20001-
6	01643-31232	WASHER	2	B10001-	B20001-

FIG. E0200–01A0 WIRING (STARTING HARNESS)

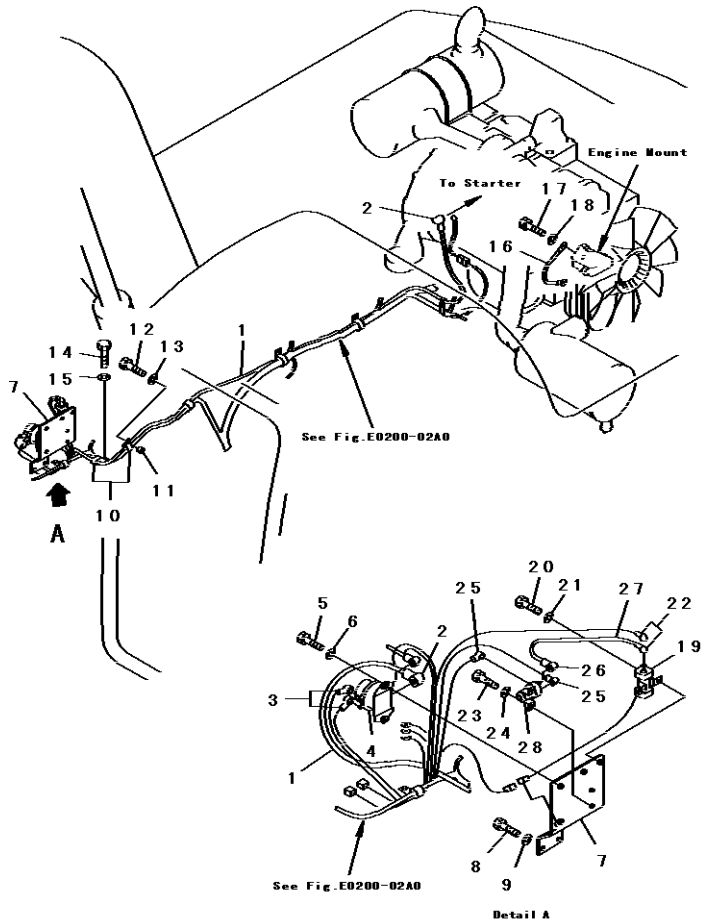

FIG. NO: E0200–01A0

INDEX	PART NO.	DESCRIPTION	Q'TY	SERIAL NO. PC200-6B	SERIAL NO. PC200LC-6B
1	20Y-06-22860	CABLE	1	B10001-	B20001-
2	08038-00035	CAP	2	B10001-	B20001-
3	08038-00519	CAP	2	B10001-	B20001-
4	08088-30000	SWITCH	1	B10001-	B20001-
5	01010-80830	BOLT	2	B10001-	B20001-
6	01643-30823	WASHER	2	B10001-	B20001-
7	20Y-06-22852	BRACKET	1	B10001-	B20001-
8	01010-81225	BOLT	2	B10001-	B20001-
9	01643-31232	WASHER	2	B10001-	B20001-
10	176-911-4180	CLIP	2	B10001-	B20001-
11	144-947-3490	SPACER	1	B10001-	B20001-
12	01010-81245	BOLT	1	B10001-	B20001-
13	01643-31232	WASHER	1	B10001-	B20001-
14	01010-81225	BOLT	1	B10001-	B20001-
15	01643-31232	WASHER	1	B10001-	B20001-
16	08028-43030	WIRE	1	B10001-	B20001-
17	01010-81020	BOLT	2	B10001-	B20001-
18	01643-31032	WASHER	2	B10001-	B20001-
19	203-06-59320	SWITCH	1	B10001-	B20001-
20	01010-80820	BOLT	2	B10001-	B20001-
21	01643-30823	WASHER	2	B10001-	B20001-
22	08038-02027	CAP	2	B10001-	B20001-
23	01010-80620	BOLT	2	B10001-	B20001-
24	01643-30623	WASHER	2	B10001-	B20001-
25	08038-00519	CAP	2	B10001-	B20001-
26	08038-06031	CAP	1	B10001-	B20001-
27	20Y-06-22872	CABLE	1	B10001-	B20001-
28	600-815-2170	SWITCH	1	B10001-	B20001-

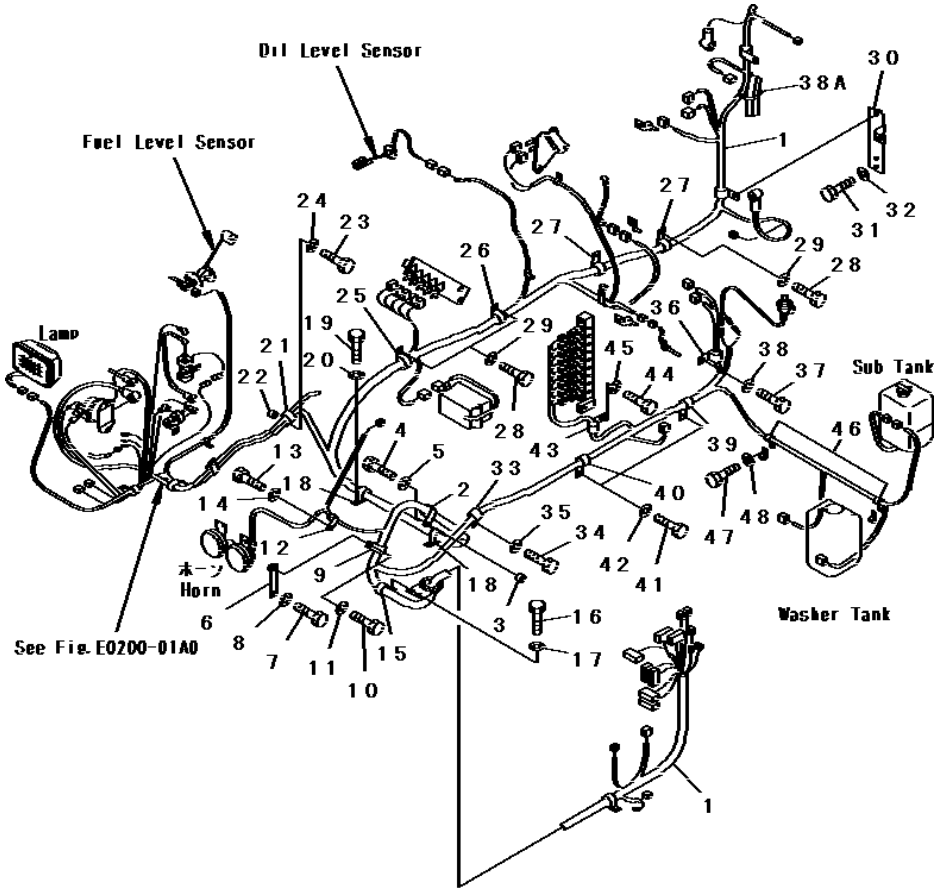

INDEX	PART NO.	DESCRIPTION	Q'TY	SERIAL NO. PC200-6B	SERIAL NO. PC200LC-6B
1	20Y-06-24811	WIRING HARNESS	1	B10001-	B20001-
2	113-899-7950	CLIP	1	B10001-	B20001-
3	144-947-3490	SPACER	1	B10001-	B20001-
4	01010-81250	BOLT	1	B10001-	B20001-
5	01643-31232	WASHER	1	B10001-	B20001-
6	20Y-06-21240	PLATE	1	B10001-	B20001-
7	01010-81225	BOLT	1	B10001-	B20001-
8	01643-31232	WASHER	1	B10001-	B20001-
9	113-899-7950	CLIP	1	B10001-	B20001-
10	01010-81225	BOLT	1	B10001-	B20001-
11	01643-31232	WASHER	1	B10001-	B20001-
12	08036-01014	CLIP	1	B10001-	B20001-
13	01010-81225	BOLT	1	B10001-	B20001-
14	01643-31232	WASHER	1	B10001-	B20001-
15	113-899-7950	CLIP	1	B10001-B10001	
16	01010-81245	BOLT	2	B10001-B10001	
17	01643-31232	WASHER	1	B10001-B10001	
18	113-899-7950	CLIP	2	B10001-	B20001-
19	01010-81025	BOLT	2	B10001-	B20001-
20	01643-31032	WASHER	2	B10001-	B20001-
21	208-06-19170	CLIP	1	B10001-	B20001-
22	144-947-3490	SPACER	1	B10001-	B20001-
23	01010-81245	BOLT	1	B10001-	B20001-
24	01643-31232	WASHER	1	B10001-	B20001-
25	208-06-19170	CLIP	1	B10001-	B20001-
26	208-06-19170	CLIP	1	B10001-	B20001-
27	04434-52712	CLIP	2	B10001-	B20001-
28	01010-81225	BOLT	4	B10001-	B20001-
29	01643-31232	WASHER	4	B10001-	B20001-
30	20Y-06-21532	BRACKET	1	B10001-	B20001-
31	01010-81225	BOLT	2	B10001-	B20001-
32	01643-31232	WASHER	2	B10001-	B20001-
33	08036-02514	CLIP	1	B10001-	B20001-
34	01010-81225	BOLT	1	B10001-	B20001-
35	01643-31232	WASHER	1	B10001-	B20001-
36	08036-01814	CLIP	1	B10001-	B20001-
37	01010-81225	BOLT	1	B10001-	B20001-
38	01643-31232	WASHER	1	B10001-	B20001-
39	08036-01814	CLIP	1	B10001-	B20001-
40	08036-02514	CLIP	1	B10001-	B20001-
41	01010-81225	BOLT	2	B10001-	B20001-
42	01643-31232	WASHER	2	B10001-	B20001-
43	08036-01814	CLIP	1	B10001-	B20001-
44	01010-81225	BOLT	1	B10001-	B20001-
45	01643-31232	WASHER	1	B10001-	B20001-
46	08036-01414	CLIP	2	B10001-	B20001-
47	01010-81225	BOLT	2	B10001-	B20001-
48	01643-31232	WASHER	2	B10001-	B20001-

FIG. E0200–03A0 WIRING (MAIN HARNESS) (CLIP)

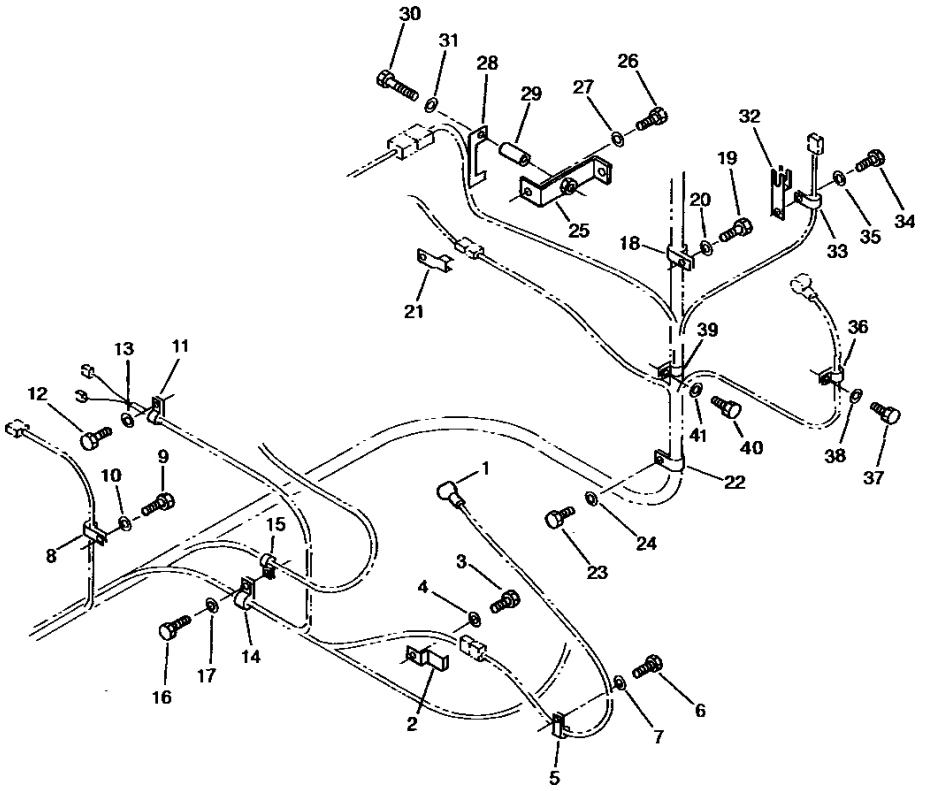

FIG. NO: E0200–03A0

INDEX	PART NO.	DESCRIPTION	Q'TY	SERIAL NO. PC200-6B	SERIAL NO. PC200LC-6B
1	08038-00519	CAP	1	B10001-	B20001-
2	08053-01512	CLIP	1	B10001-	B20001-
3	01010-81225	BOLT	1	B10001-	B20001-
4	01643-31232	WASHER	1	B10001-	B20001-
5	08036-00814	CLIP	1	B10001-	B20001-
6	01010-81225	BOLT	1	B10001-	B20001-
7	01643-31232	WASHER	1	B10001-	B20001-
8	08036-01014	CLIP	1	B10001-	B20001-
9	01010-81225	BOLT	1	B10001-	B20001-
10	01643-31232	WASHER	1	B10001-	B20001-
11	08036-01814	CLIP	1	B10001-	B20001-
12	01010-81225	BOLT	1	B10001-	B20001-
13	01643-31232	WASHER	1	B10001-	B20001-
14	08036-01814	CLIP	1	B10001-	B20001-
15	08036-01414	CLIP	1	B10001-	B20001-
16	01010-81225	BOLT	1	B10001-	B20001-
17	01643-31232	WASHER	1	B10001-	B20001-
18	08036-01814	CLIP	1	B10001-	B20001-
19	01010-81230	BOLT	1	B10001-	B20001-
20	01643-31232	WASHER	1	B10001-	B20001-
21	08053-01512	CLIP	1	B10001-	B20001-
22	08036-02514	CLIP	1	B10001-	B20001-
23	01010-81225	BOLT	1	B10001-	B20001-
24	01643-31232	WASHER	1	B10001-	B20001-
25	20Y-06-27160	BRACKET	1	B10001-	B20001-
26	01050-51220	BOLT	1	B10001-	B20001-
27	01643-31232	WASHER	1	B10001-	B20001-
28	20Y-06-27170	CLIP	1	B10001-	B20001-
29	207-62-32890	COLLAR	1	B10001-	B20001-
30	01010-80850	BOLT	1	B10001-	B20001-
31	01643-30823	WASHER	1	B10001-	B20001-
32	08053-01510	CLIP	1	B10001-	B20001-
33	08036-10814	CLIP	1	B10001-	B20001-
34	01010-81016	BOLT	1	B10001-	B20001-
35	01643-31032	WASHER	1	B10001-	B20001-
36	08036-01414	CLIP	1	B10001-	B20001-
37	01010-81016	BOLT	1	B10001-	B20001-
38	01643-31032	WASHER	1	B10001-	B20001-
39	08036-01814	CLIP	1	B10001-	B20001-
40	01010-81225	BOLT	1	B10001-	B20001-
41	01643-31232	WASHER	1	B10001-	B20001-

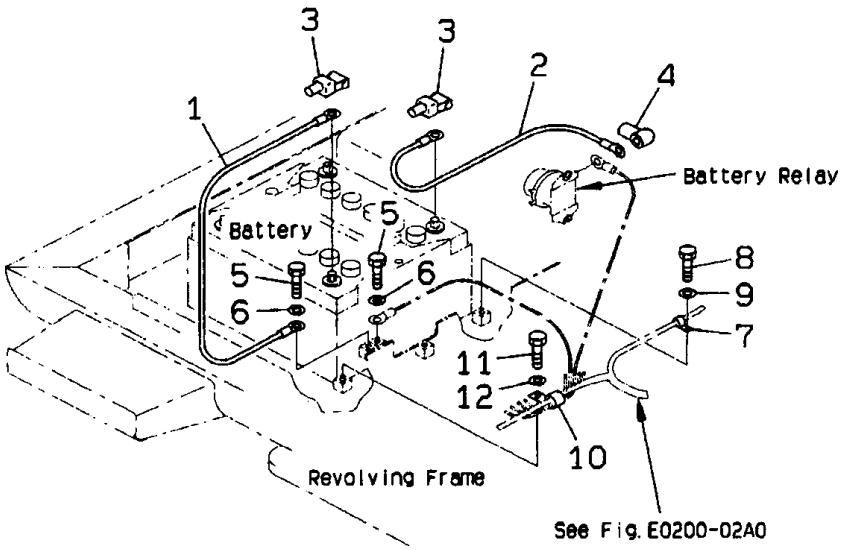

INDEX	PART NO.	DESCRIPTION	Q'TY	SERIAL NO. PC200-6B	SERIAL NO. PC200LC-6B
1	08028-43030	CABLE	1	B10001-	B20001-
2	08028-43045	CABLE	1	B10001-	B20001-
3	08038-22511	CAP	2	B10001-	B20001-
4	08038-06031	CAP	1	B10001-	B20001-
5	01010-81025	BOLT	2	B10001-	B20001-
6	01643-31032	WASHER	2	B10001-	B20001-
7	08036-01014	CLIP	1	B10001-	B20001-
8	01010-81225	BOLT	1	B10001-	B20001-
9	01643-31232	WASHER	1	B10001-	B20001-
10	08036-01814	CLIP	1	B10001-	B20001-
11	01010-81225	BOLT	1	B10001-	B20001-
12	01643-31232	WASHER	1	B10001-	B20001-

FIG. E0200–05A0 WIRING (CLAMP)

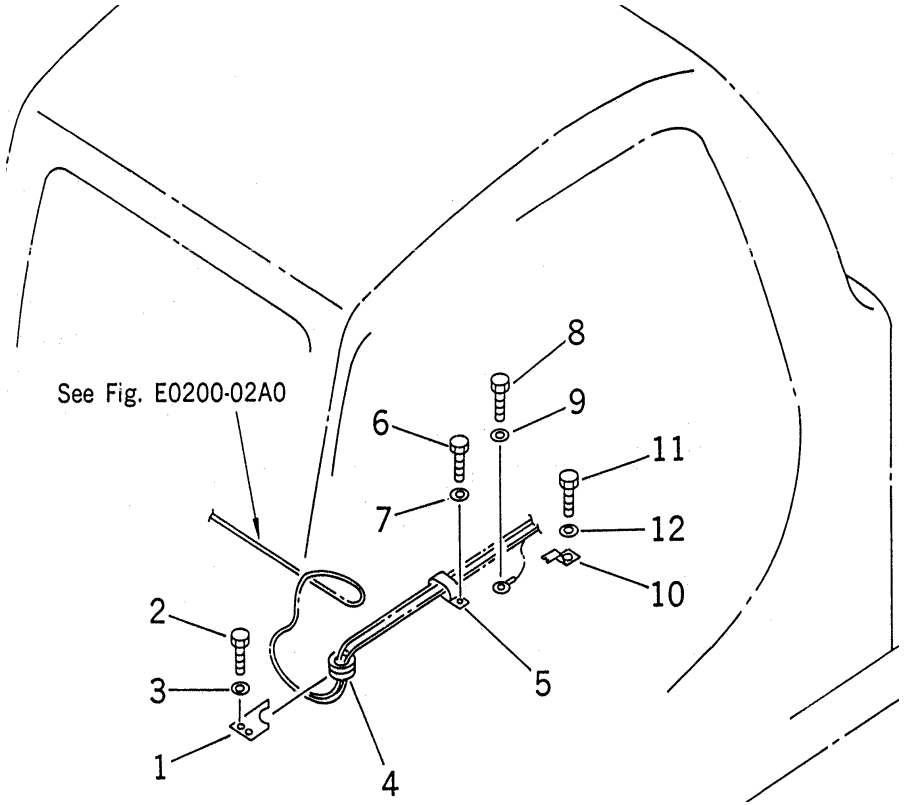

FIG. NO: E0200–05A0

INDEX	PART NO.	DESCRIPTION	Q'TY	SERIAL NO. PC200-6B	SERIAL NO. PC200LC-6B
1	20Y-06-21561	PLATE	1	B10001-	B20001-
2	01010-81025	BOLT	2	B10001-	B20001-
3	01643-31032	WASHER	2	B10001-	B20001-
4	21T-06-73320	GROMMET	1	B10001-	B20001-
5	113-899-7950	CLIP	1	B10001-	B20001-
6	01010-81025	BOLT	1	B10001-	B20001-
7	01643-31032	WASHER	1	B10001-	B20001-
8	01010-81225	BOLT	1	B10001-	B20001-
9	01643-31232	WASHER	1	B10001-	B20001-
10	08053-01512	CLIP	1	B10001-	B20001-
11	01010-81225	BOLT	1	B10001-	B20001-
12	01643-31232	WASHER	1	B10001-	B20001-

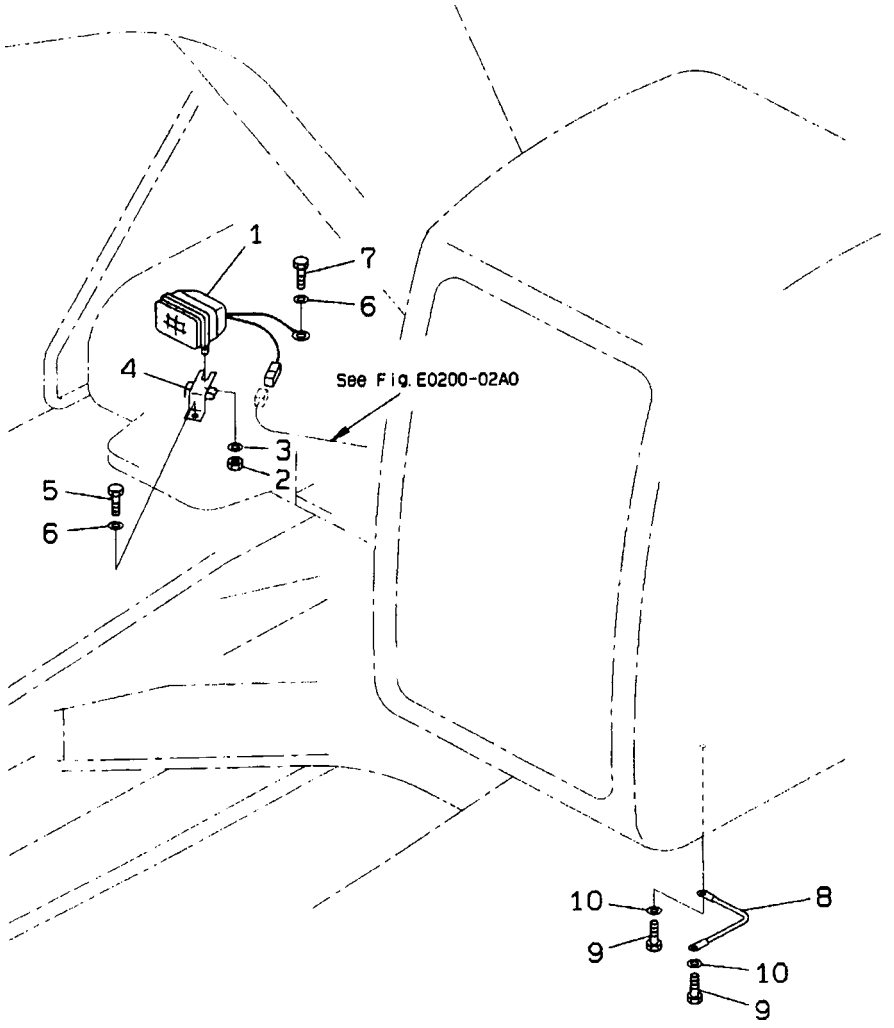

INDEX	PART NO.	DESCRIPTION	Q'TY	SERIAL NO. PC200-6B	SERIAL NO. PC200LC-6B
1	20Y-06-25310	WORK LAMP ASS'Y	1	B10001-	B20001-
2	01582-11411	. NUT	1	B10001-	B20001-
3	01643-31445	. WASHER	1	B10001-	B20001-
4	20Y-06-21692	BRACKET	1	B10001-	B20001-
5	01010-81230	BOLT	1	B10001-	B20001-
6	01643-31232	WASHER	2	B10001-	B20001-
7	01010-81220	BOLT	1	B10001-	B20001-
8	08028-43030	CABLE	1	B10001-	B20001-
9	01010-81016	BOLT	2	B10001-	B20001-
10	01643-31032	WASHER	2	B10001-	B20001-

FIG. E0410–01A0 HORN

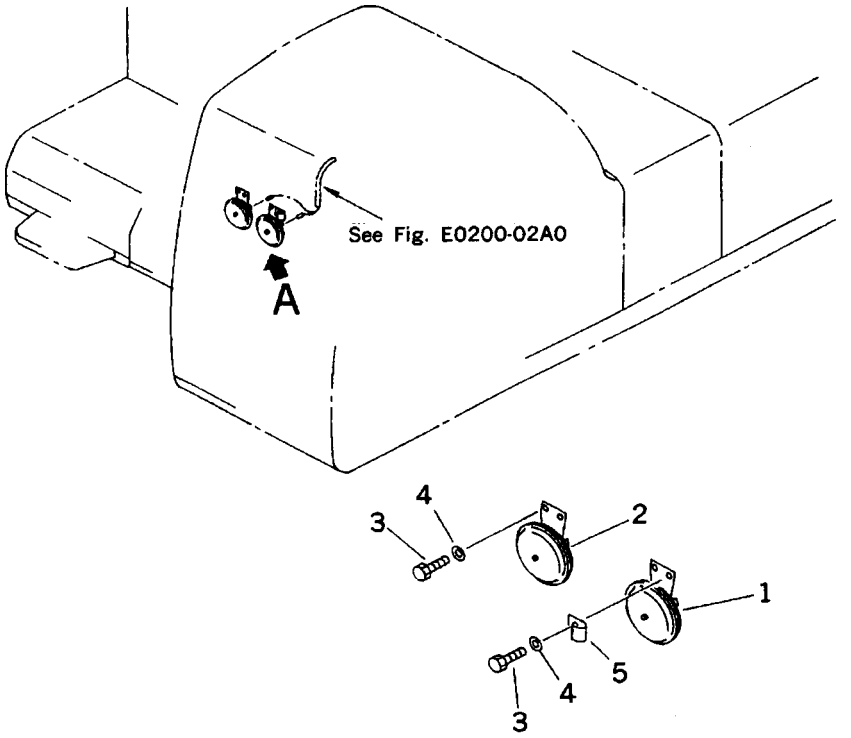

Detail A

FIG. NO: E0410–01A0

INDEX	PART NO.	DESCRIPTION	Q'TY	SERIAL NO. PC200-6B	SERIAL NO. PC200LC-6B
1	08160-62420	HORN	1	B10001-	B20001-
2	08160-62430	HORN	1	B10001-	B20001-
3	01010-80825	BOLT	4	B10001-	B20001-
4	01643-30823	WASHER	4	B10001-	B20001-
5	08036-10810	CLIP	1	B10001-	B20001-

HYDRAULIC SYSTEM

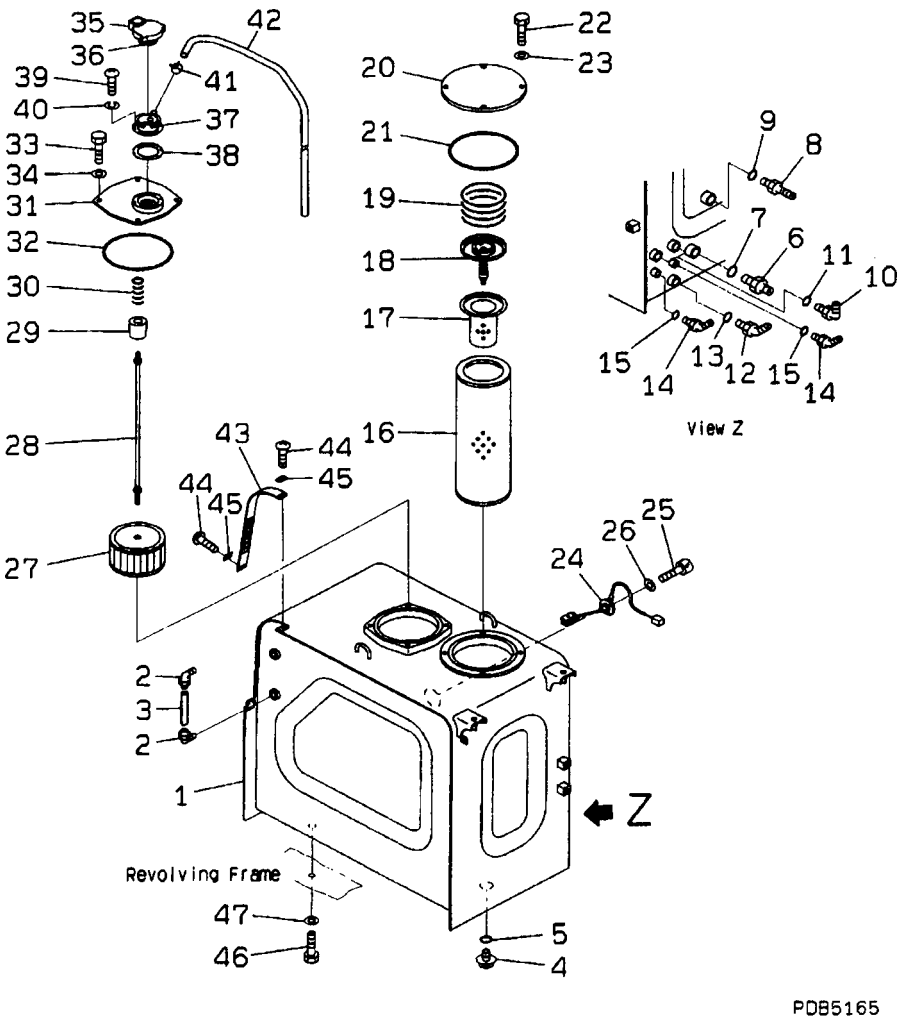

INDEX	PART NO.	DESCRIPTION	Q'TY	SERIAL NO. PC200-6B	SERIAL NO. PC200LC-6B
	20Y-60-00063	HYDRAULIC TANK ASS'Y	1	B10001-	B20001-
1	☆	. TANK	1	B10001-	B20001-
2	203-60-31100	. ELBOW	2	B10001-	B20001-
3	203-60-31160	. TUBE	1	B10001-	B20001-
4	07044-12412	. PLUG	1	B10001-	B20001-
5	07002-02434	. O-RING	1	B10001-	B20001-
6	07230-20628	. UNION	1	B10001-	B20001-
7	07002-02434	. O-RING	1	B10001-	B20001-
8	07236-10522	. ELBOW	1	B10001-	B20001-
9	07002-02434	. O-RING	1	B10001-	B20001-
10	07235-10315	. ELBOW	2	B10001-	B20001-
11	07002-02034	. O-RING	2	B10001-	B20001-
12	07236-10315	. ELBOW	1	B10001-	B20001-
13	07002-02034	. O-RING	1	B10001-	B20001-
14	07236-10210	. ELBOW	2	B10001-	B20001-
15	07002-01423	. O-RING	2	B10001-	B20001-
16	20Y-60-21510	ELEMENT	1	B10001-	B20001-
17	206-60-41221	STRAINER	1	B10001-	B20001-
18	12R-60-11300	VALVE ASS'Y	1	B10001-	B20001-
19	20Y-60-21240	SPRING	1	B10001-	B20001-
20	20Y-60-22530	COVER	1	B10001-	B20001-
21	07000-05180	O-RING	1	B10001-	B20001-
22	01010-81230	BOLT	4	B10001-	B20001-
23	01643-31232	WASHER	4	B10001-	B20001-
24	7861-92-4210	SENSOR	1	B10001-	B20001-
25	01252-40612	BOLT	3	B10001-	B20001-
26	01641-20608	WASHER	3	B10001-	B20001-
	20Y-60-22550	STRAINER ASSY	1	B10001-	B20001-
27	20Y-60-21311	. STRAINER	1	B10001-	B20001-
28	207-60-61150	. ROD ASS'Y	1	B10001-	B20001-
29	20Y-60-21320	. . HOLDER	1	B10001-	B20001-
30	12R-60-11230	. . SPRING	1	B10001-	B20001-
31	203-60-61140	COVER	1	B10001-	B20001-
32	07000-05180	O-RING	1	B10001-	B20001-
33	01010-81225	BOLT	4	B10001-	B20001-
34	01643-31232	WASHER	4	B10001-	B20001-
35	17A-60-11310	CAP ASS'Y	1	B10001-	B20001-
36	20Y-60-21470	. ELEMENT	1	B10001-	B20001-
37	20Y-60-21460	NECK	1	B10001-	B20001-
38	20Y-60-21340	GASKET	1	B10001-	B20001-
39	01252-70516	BOLT	6	B10001-	B20001-
40	01601-20513	WASHER	6	B10001-	B20001-
41	07285-00155	CLIP	1	B10001-	B20001-
42	20Y-60-21190	TUBE	1	B10001-	B20001-
43	20Y-60-22561	COVER	1	B10001-	B20001-
44	01220-40412	SCREW	4	B10001-	B20001-
45	20Y-60-22540	PLATE	2	B10001-	B20001-
46	01010-81635	BOLT	6	B10001-	B20001-
47	01643-31645	WASHER	6	B10001-	B20001-

FIG. H0120–01A0 MAIN VALVE (CONNECTING PARTS) (1 ACTUATOR) (PIPING LESS)

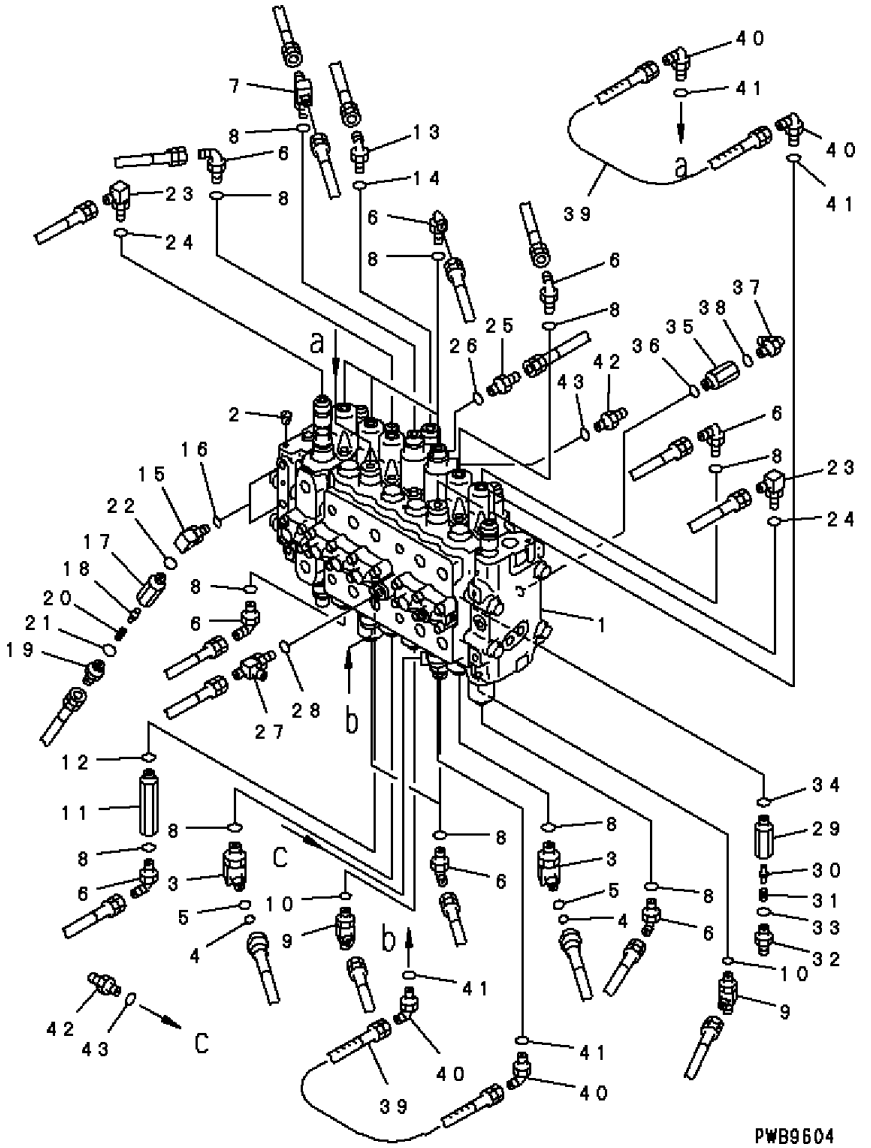

FIG. NO: H0120–01A0

INDEX	PART NO.	DESCRIPTION	Q'TY	SERIAL NO. PC200-6B	SERIAL NO. PC200LC-6B
1	(723-47-13802)	CONTROL VALVE	1	B10001-	B20001-
2	07049-01012	PLUG	1	B10001-	B20001-
3	20Y-62-22271	ELBOW	2	B10001-	B20001-
4	201-60-11390	. O-RING	1	B10001-	B20001-
5	20Y-62-19560	. O-RING	1	B10001-	B20001-
6	07235-10210	ELBOW	11	B10001-	B20001-
7	208-26-11611	TEE	1	B10001-	B20001-
8	07002-11423	O-RING	14	B10001-	B20001-
9	208-62-17550	ELBOW	2	B10001-	B20001-
10	07002-11423	O-RING	2	B10001-	B20001-
11	20Y-62-27680	ADAPTER	1	B10001-	B20001-
12	07002-11423	O-RING	1	B10001-	B20001-
13	07235-10210	ELBOW	1	B10001-	B20001-
14	07002-11423	O-RING	1	B10001-	B20001-
15	20F-61-12460	ELBOW	2	B10001-	B20001-
16	07002-11423	O-RING	2	B10001-	B20001-
	20Y-60-22190	VALVE ASS'Y	2	B10001-	B20001-
17	☆	. BODY	1	B10001-	B20001-
18	20Y-60-22270	. POPPET	1	B10001-	B20001-
19	20Y-60-22440	. NIPPLE	1	B10001-	B20001-
20	701-20-61230	. SPRING	1	B10001-	B20001-
21	07002-11423	. O-RING	1	B10001-	B20001-
22	07002-11423	O-RING	2	B10001-	B20001-
23	205-62-74190	ELBOW	2	B10001-	B20001-
24	07002-11223	O-RING	2	B10001-	B20001-
25	07230-20210	UNION	1	B10001-	B20001-
26	07002-11423	O-RING	1	B10001-	B20001-
27	208-62-17550	ELBOW	1	B10001-	B20001-
28	07002-11423	O-RING	1	B10001-	B20001-
	20Y-60-22261	VALVE ASS'Y	1	B10001-	B20001-
29	☆	. BODY	1	B10001-	B20001-
30	20Y-60-22270	. POPPET	1	B10001-	B20001-
31	701-20-61230	. SPRING	1	B10001-	B20001-
32	07230-20210	. UNION	1	B10001-	B20001-
33	07002-11423	. O-RING	1	B10001-	B20001-
34	07002-11423	O-RING	1	B10001-	B20001-
35	20Y-62-22160	ADAPTER	1	B10001-	B20001-
36	07002-11423	O-RING	1	B10001-	B20001-
37	07235-10210	ELBOW	1	B10001-	B20001-
38	07002-11423	O-RING	1	B10001-	B20001-
39	07096-00204	HOSE	2	B10001-	B20001-
40	07235-10210	ELBOW	4	B10001-	B20001-
41	07002-11423	O-RING	4	B10001-	B20001-
42	07230-20210	UNION	2	B10001-	B20001-
43	07002-11423	O-RING	2	B10001-	B20001-

FIG. H0120–02A0 MAIN VALVE (CONNECTING PARTS) (1 ACTUATOR) (WITH PIPING)

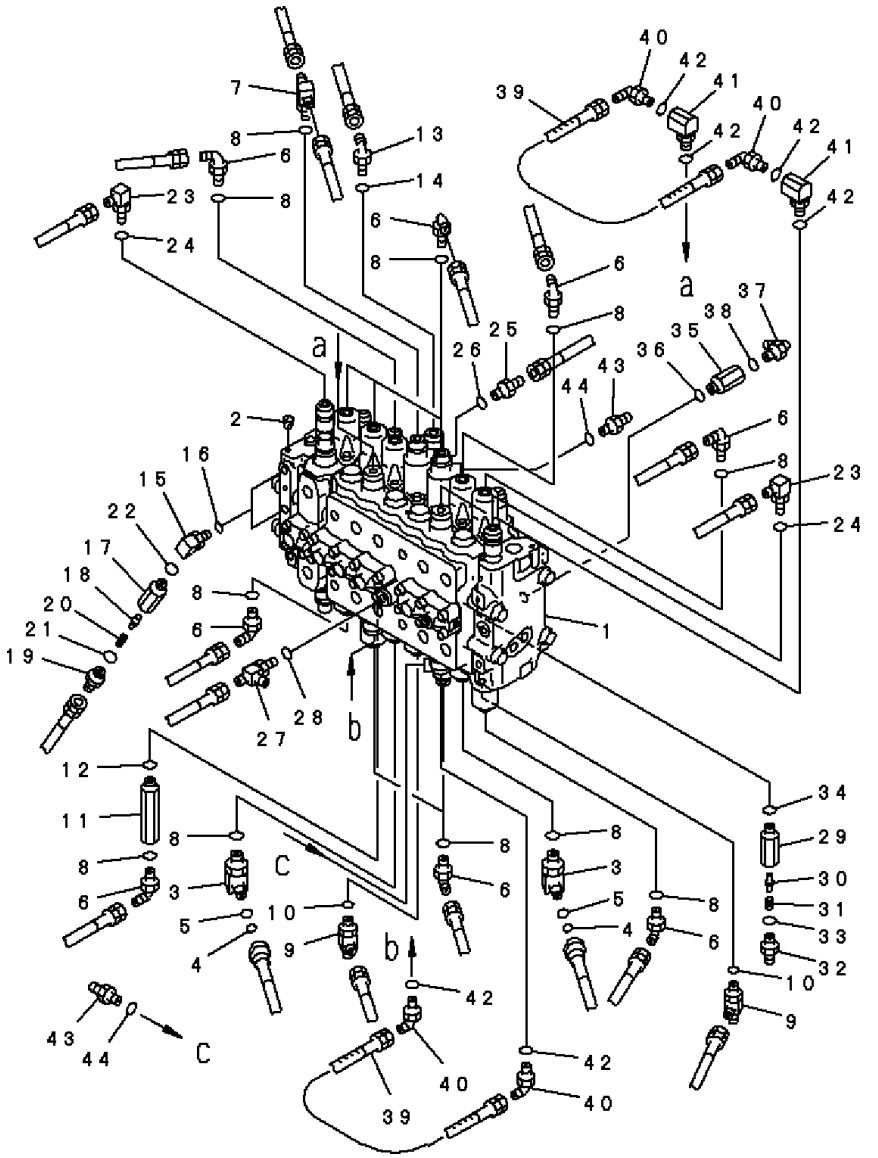

FIG. NO: H0120–02A0

INDEX	PART NO.	DESCRIPTION	Q'TY	SERIAL NO. PC200-6B	SERIAL NO. PC200LC-6B
1	(723-47-13701)	CONTROL VALVE	1	B10001-	B20001-
2	07049-01012	PLUG	1	B10001-	B20001-
3	20Y-62-22271	ELBOW	2	B10001-	B20001-
4	201-60-11390	. O-RING	1	B10001-	B20001-
5	20Y-62-19560	. O-RING	1	B10001-	B20001-
6	07235-10210	ELBOW	11	B10001-	B20001-
7	208-26-11611	TEE	1	B10001-	B20001-
8	07002-11423	O-RING	14	B10001-	B20001-
9	208-62-17550	ELBOW	2	B10001-	B20001-
10	07002-11423	O-RING	2	B10001-	B20001-
11	20Y-62-27680	ADAPTER	1	B10001-	B20001-
12	07002-11423	O-RING	1	B10001-	B20001-
13	07235-10210	ELBOW	1	B10001-	B20001-
14	07002-11423	O-RING	1	B10001-	B20001-
15	20F-61-12460	ELBOW	2	B10001-	B20001-
16	07002-11423	O-RING	2	B10001-	B20001-
	20Y-60-22190	VALVE ASS'Y	2	B10001-	B20001-
17	☆	. BODY	1	B10001-	B20001-
18	20Y-60-22270	. POPPET	1	B10001-	B20001-
19	20Y-60-22440	. NIPPLE	1	B10001-	B20001-
20	701-20-61230	. SPRING	1	B10001-	B20001-
21	07002-11423	. O-RING	1	B10001-	B20001-
22	07002-11423	O-RING	2	B10001-	B20001-
23	205-62-74190	ELBOW	2	B10001-	B20001-
24	07002-11223	O-RING	2	B10001-	B20001-
25	07230-20210	UNION	1	B10001-	B20001-
26	07002-11423	O-RING	1	B10001-	B20001-
27	208-62-17550	ELBOW	1	B10001-	B20001-
28	07002-11423	O-RING	1	B10001-	B20001-
	20Y-60-22261	VALVE ASS'Y	1	B10001-	B20001-
29	☆	. BODY	1	B10001-	B20001-
30	20Y-60-22270	. POPPET	1	B10001-	B20001-
31	701-20-61230	. SPRING	1	B10001-	B20001-
32	07230-20210	. UNION	1	B10001-	B20001-
33	07002-11423	. O-RING	1	B10001-	B20001-
34	07002-11423	O-RING	1	B10001-	B20001-
35	20Y-62-22160	ADAPTER	1	B10001-	B20001-
36	07002-11423	O-RING	1	B10001-	B20001-
37	07235-10210	ELBOW	1	B10001-	B20001-
38	07002-11423	O-RING	1	B10001-	B20001-
39	07096-00204	HOSE	2	B10001-	B20001-
40	07235-10210	ELBOW	4	B10001-	B20001-
41	20F-61-12460	ELBOW	2	B10001-	B20001-
42	07002-11423	O-RING	6	B10001-	B20001-
43	07230-20210	UNION	2	B10001-	B20001-
44	07002-11423	O-RING	2	B10001-	B20001-

FIG. H0120–03A0 MAIN VALVE (VALVE BRACKET)

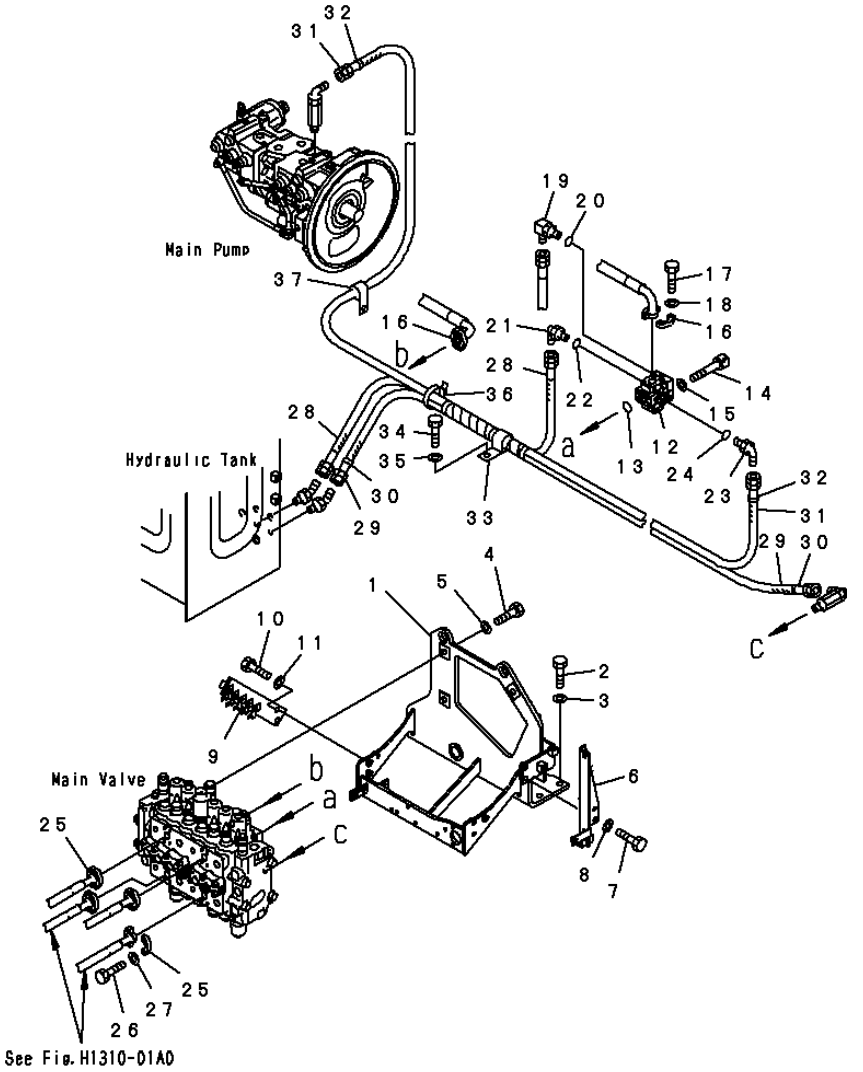

FIG. NO: H0120–03A0

INDEX	PART NO.	DESCRIPTION	Q'TY	SERIAL NO. PC200-6B	SERIAL NO. PC200LC-6B
1	20Y-62-27412	BRACKET	1	B10001-	B20001-
2	01010-81655	BOLT	4	B10001-	B20001-
3	01643-31645	WASHER	4	B10001-	B20001-
4	01010-81650	BOLT	3	B10001-	B20001-
5	01643-31645	WASHER	3	B10001-	B20001-
6	20Y-62-27192	BRACKET	1	B10001-	B20001-
7	01010-81230	BOLT	2	B10001-	B20001-
8	01643-31232	WASHER	2	B10001-	B20001-
9	20Y-62-21264	BRACKET	1	B10001-	B20001-
10	01010-81235	BOLT	2	B10001-	B20001-
11	01643-31232	WASHER	2	B10001-	B20001-
12	702-21-09147	VALVE ASS'Y	1	B10001-	B20001-
13	21T-09-11460	O-RING	1	B10001-	B20001-
14	708-27-12560	BOLT	4	B10001-	B20001-
15	01643-51032	WASHER	4	B10001-	B20001-
16	07371-31049	FLANGE	4	B10001-	B20001-
17	07372-21035	BOLT	8	B10001-	B20001-
18	01643-51032	WASHER	8	B10001-	B20001-
19	21Y-62-17810	ELBOW	1	B10001-	B20001-
20	07002-12434	O-RING	1	B10001-	B20001-
21	07235-10210	ELBOW	1	B10001-	B20001-
22	07002-11423	O-RING	1	B10001-	B20001-
23	07235-10210	ELBOW	1	B10001-	B20001-
24	07002-11423	O-RING	1	B10001-	B20001-
25	07371-31049	FLANGE	8	B10001-	B20001-
26	07372-21035	BOLT	16	B10001-	B20001-
27	01643-51032	WASHER	16	B10001-	B20001-
28	203-62-52280	HOSE 900MM	1	B10001-	B20001-
29	20Y-62-22881	HOSE	1	B10001-	B20001-
30	20Y-62-22820	BAND BLUE	2	B10001-	B20001-
31	07096-00221	HOSE	1	B10001-	B20001-
32	20Y-62-22810	BAND YELLOW	2	B10001-	B20001-
33	04434-52712	CLIP	1	B10001-	B20001-
34	01010-81225	BOLT	1	B10001-	B20001-
35	01643-31232	WASHER	1	B10001-	B20001-
36	08034-00519	BAND	2	B10001-	B20001-
37	04434-51512	CLIP	1	B10001-	B20001-

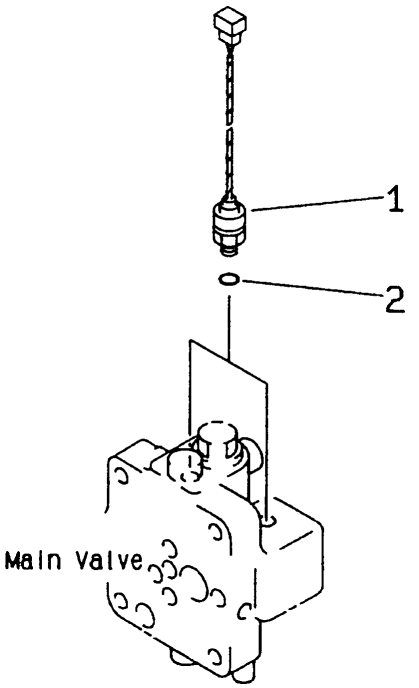

INDEX	PART NO.	DESCRIPTION	Q'TY	SERIAL NO. PC200-6B	SERIAL NO. PC200LC-6B
1	7861-92-1610	SENSOR	2	B10001-	B20001-
2	07002-11823	O-RING	2	B10001-	B20001-

FIG. H0120–05A0 MAIN VALVE (SENSOR AND BLIND PARTS) (1 ACTUATOR) (SAFETY VALVE LESS)

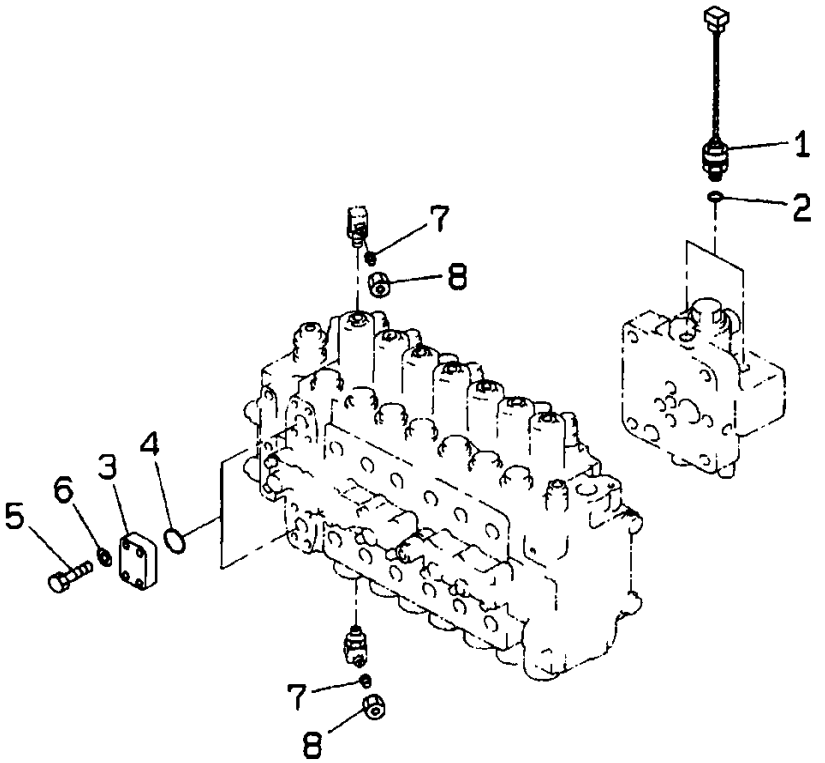

FIG. NO: H0120–05A0

INDEX	PART NO.	DESCRIPTION	Q'TY	SERIAL NO. PC200-6B	SERIAL NO. PC200LC-6B
1	7861-92-1610	SENSOR	2	B10001-	B20001-
2	07002-11823	O-RING	2	B10001-	B20001-
3	207-62-56190	FLANGE	2	B10001-	B20001-
4	21T-09-11470	O-RING	2	B10001-	B20001-
5	07372-21040	BOLT	8	B10001-	B20001-
6	01643-51032	WASHER	8	B10001-	B20001-
7	07222-00210	PLUG	2	B10001-	B20001-
8	07221-20210	NUT	2	B10001-	B20001-

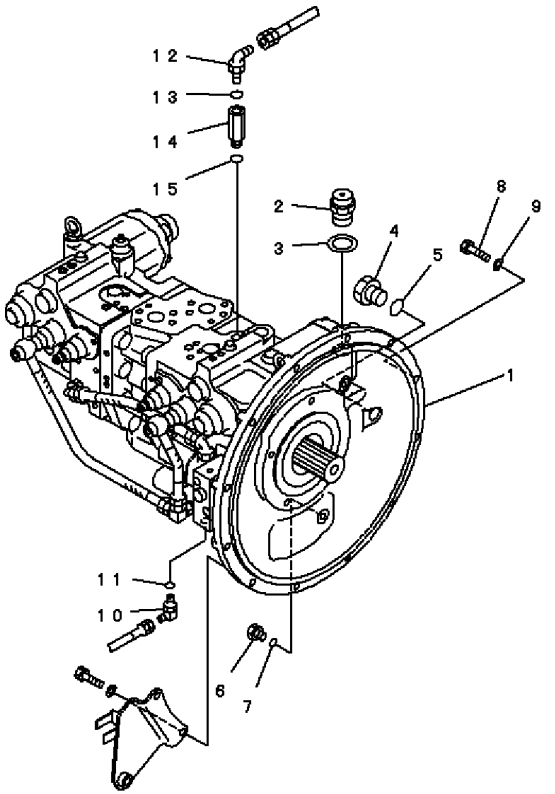

PWBS279

INDEX	PART NO.	DESCRIPTION	Q'TY	SERIAL NO. PC200-6B	SERIAL NO. PC200LC-6B
1	(708-2L-00461)	PUMP ASS'Y, PC200	1	B10001-	B20001-
2	07030-03034	BREATHER	1	B10001-	B20001-
3	07005-03016	GASKET	1	B10001-	B20001-
4	07040-12412	PLUG	1	B10001-	B20001-
5	07002-02434	O-RING	1	B10001-	B20001-
6	07040-11209	PLUG	1	B10001-	B20001-
7	07002-01223	O-RING	1	B10001-	B20001-
8	01010-81040	BOLT	10	B10001-	B20001-
9	01643-31032	WASHER	10	B10001-	B20001-
10	21Y-62-17810	ELBOW	1	B10001-	B20001-
11	07002-11423	O-RING	1	B10001-	B20001-
12	07235-10210	ELBOW	1	B10001-	B20001-
13	07002-11423	O-RING	1	B10001-	B20001-
14	20Y-60-22210	BODY	1	B10001-	B20001-
15	07002-11423	O-RING	1	B10001-	B20001-

FIG. H0311–01A0 SUCTION LINE

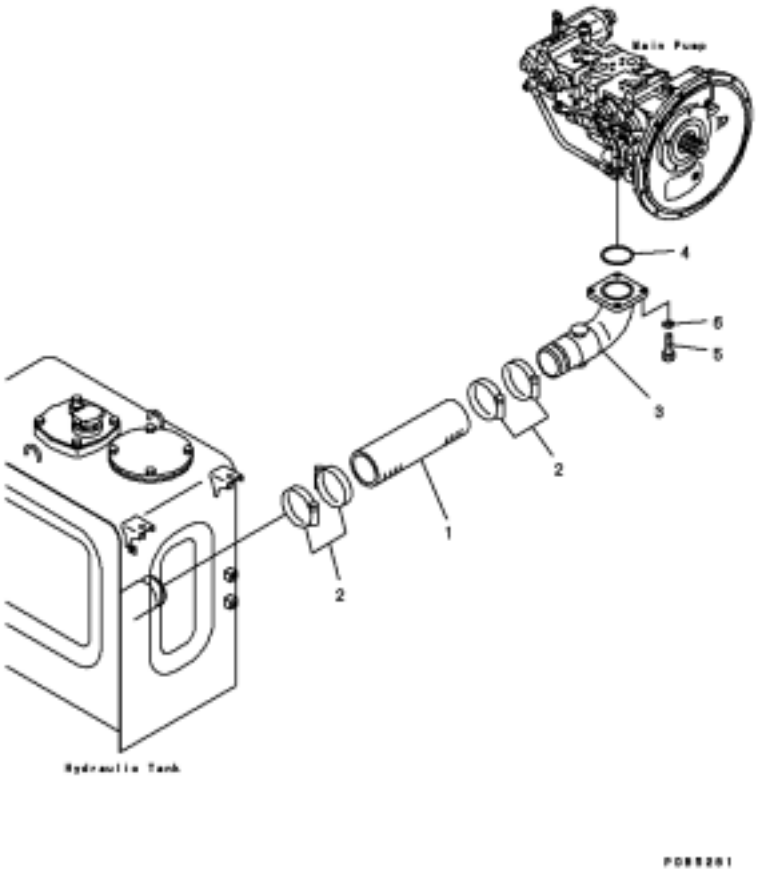

FIG. NO: H0311–01A0

INDEX	PART NO.	DESCRIPTION	Q'TY	SERIAL NO. PC200-6B	SERIAL NO. PC200LC-6B
1	07260-08732	HOSE	1	B10001-	B20001-
2	07289-00105	CLAMP	4	B10001-	B20001-
3	20Y-62-27651	ELBOW	1	B10001-	B20001-
4	07000-02085	O-RING	1	B10001-	B20001-
5	01010-81235	BOLT	4	B10001-	B20001-
6	01643-31232	WASHER	4	B10001-	B20001-

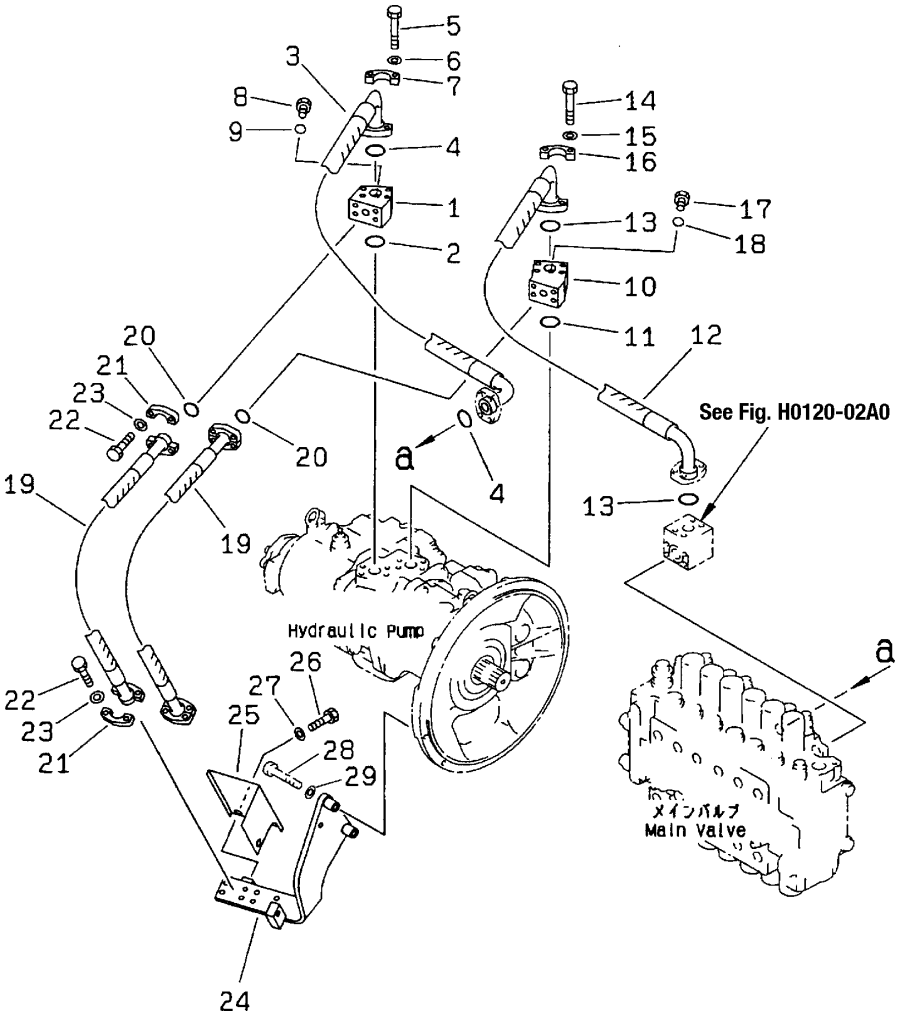

INDEX	PART NO.	DESCRIPTION	Q'TY	SERIAL NO. PC200-6B	SERIAL NO. PC200LC-6B
1	20Y-62-21670	BLOCK	1	B10001-	B20001-
2	21T-09-11460	O-RING	1	B10001-	B20001-
3	20Y-62-21442	HOSE	1	B10001-	B20001-
4	21T-09-11460	O-RING	2	B10001-	B20001-
5	205-62-74740	BOLT	4	B10001-	B20001-
6	01643-51032	WASHER	4	B10001-	B20001-
7	07371-31049	FLANGE	2	B10001-	B20001-
8	07040-11007	PLUG	1	B10001-	B20001-
9	07002-11023	O-RING	1	B10001-	B20001-
10	20Y-62-21680	BLOCK	1	B10001-	B20001-
11	21T-09-11460	O-RING	1	B10001-	B20001-
12	20Y-62-21430	HOSE	1	B10001-	B20001-
13	21T-09-11460	O-RING	2	B10001-	B20001-
14	205-62-74740	BOLT	4	B10001-	B20001-
15	01643-51032	WASHER	4	B10001-	B20001-
16	07371-31049	FLANGE	2	B10001-	B20001-
17	07040-11007	PLUG	1	B10001-	B20001-
18	07002-11023	O-RING	1	B10001-	B20001-
19	20Y-62-21750	HOSE	2	B10001-	B20001-
20	21T-09-11430	O-RING	2	B10001-	B20001-
21	07371-30640	FLANGE	8	B10001-	B20001-
22	07372-21035	BOLT	16	B10001-	B20001-
23	01643-51032	WASHER	16	B10001-	B20001-
24	20Y-62-21692	BRACKET	1	B10001-	B20001-
25	20Y-54-27672	COVER	1	B10001-B10133	
26	01010-51225	BOLT	2	B10001-B10133	
27	01643-31232	WASHER	2	B10001-B10133	
28	01010-81080	BOLT	2	B10001-	B20001-
29	01643-31032	WASHER	2	B10001-	B20001-

FIG. H0320–01A0 OIL COOLER LINE

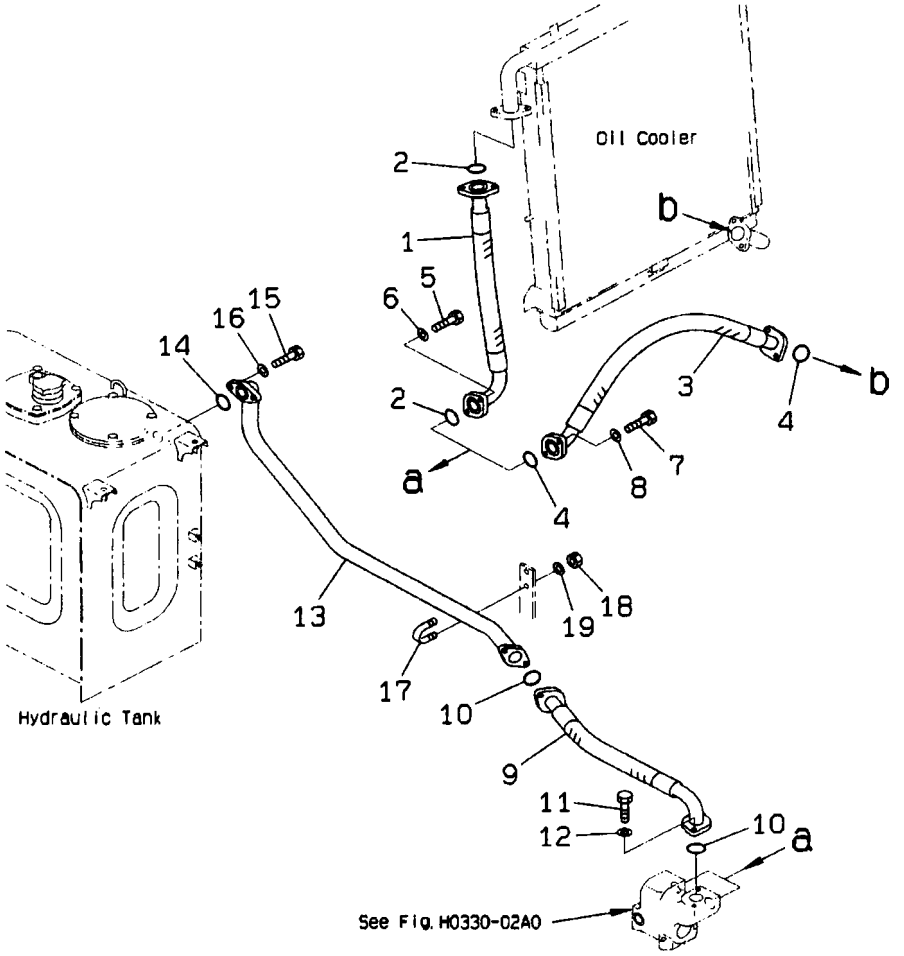

FIG. NO: H0320–01A0

INDEX	PART NO.	DESCRIPTION	Q'TY	SERIAL NO. PC200-6B	SERIAL NO. PC200LC-6B
1	20Y-62-21520	HOSE	1	B10001-	B20001-
2	07000-13048	O-RING	2	B10001-	B20001-
3	20Y-62-21530	HOSE	1	B10001-	B20001-
4	07000-13048	O-RING	2	B10001-	B20001-
5	01010-81240	BOLT	4	B10001-	B20001-
6	01643-31232	WASHER	4	B10001-	B20001-
7	01010-81240	BOLT	4	B10001-	B20001-
8	01643-31232	WASHER	4	B10001-	B20001-
9	20Y-62-21540	HOSE	1	B10001-	B20001-
10	07000-13048	O-RING	2	B10001-	B20001-
11	01010-81240	BOLT	4	B10001-	B20001-
12	01643-31232	WASHER	4	B10001-	B20001-
13	20Y-62-27511	TUBE	1	B10001-	B20001-
14	07000-13045	O-RING	1	B10001-	B20001-
15	01010-81240	BOLT	2	B10001-	B20001-
16	01643-31232	WASHER	2	B10001-	B20001-
17	07283-24346	CLIP	1	B10001-	B20001-
18	01599-01011	NUT	2	B10001-	B20001-
19	01643-31032	WASHER	2	B10001-	B20001-

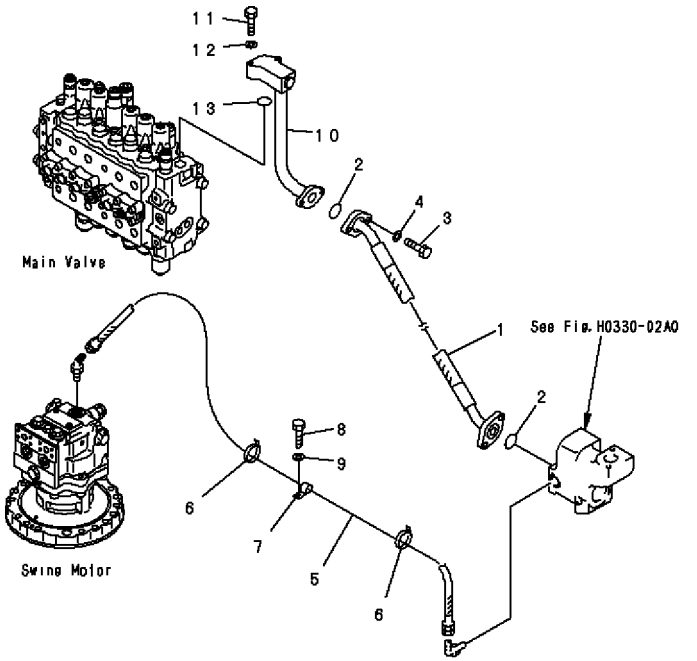

INDEX	PART NO.	DESCRIPTION	Q'TY	SERIAL NO. PC200-6B	SERIAL NO. PC200LC-6B
1	20Y-62-21510	HOSE	1	B10001-	B20001-
2	07000-13038	O-RING	2	B10001-	B20001-
3	01010-81040	BOLT	4	B10001-	B20001-
4	01643-31032	WASHER	4	B10001-	B20001-
5	07102-20614	HOSE	1	B10001-	B20001-
6	08034-00536	BAND	2	B10001-	B20001-
7	04434-52712	CLIP	1	B10001-	B20001-
8	01010-81225	BOLT	1	B10001-	B20001-
9	01643-31232	WASHER	1	B10001-	B20001-
10	20Y-62-21631	TUBE	1	B10001-	B20001-
11	01010-81070	BOLT	2	B10001-	B20001-
12	01643-31032	WASHER	2	B10001-	B20001-
13	07000-03038	O-RING	1	B10001-	B20001-

FIG. H0330–02A0 RETURN LINE (BLOCK) (SWITCH VALVE)

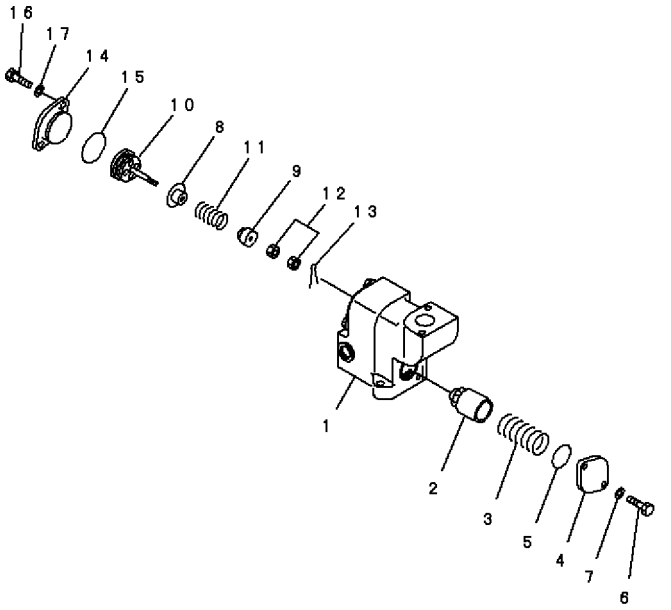

FIG. NO: H0330–02A0

INDEX	PART NO.	DESCRIPTION	Q'TY	SERIAL NO. PC200-6B	SERIAL NO. PC200LC-6B
1	20Y-62-21573	BLOCK	1	B10001-	B20001-
2	20Y-60-22331	POPPET	1	B10001-	B20001-
3	20Y-60-11530	SPRING	1	B10001-	B20001-
4	20Y-60-22181	COVER	1	B10001-	B20001-
5	07000-12060	O-RING	1	B10001-	B20001-
6	01010-81030	BOLT	2	B10001-	B20001-
7	01643-31032	WASHER	2	B10001-	B20001-
	205-60-22282	VALVE ASS'Y	1	B10001-	B20001-
8	205-60-71290	. COLLAR	1	B10001-	B20001-
9	20Y-60-22311	. COLLAR	1	B10001-	B20001-
10	20Y-60-22320	. HOLDER	1	B10001-	B20001-
11	205-60-51360	. SPRING	1	B10001-	B20001-
12	01580-00806	. NUT	2	B10001-	B20001-
13	04050-02015	. PIN	1	B10001-	B20001-
14	20Y-62-21660	COVER	1	B10001-	B20001-
15	07000-02055	O-RING	1	B10001-	B20001-
16	01010-81230	BOLT	2	B10001-	B20001-
17	01643-31232	WASHER	2	B10001-	B20001-

FIG. H0330–02A1 RETURN LINE (BLOCK) (SWITCH VALVE) (FOR ADDITIONAL PIPING)

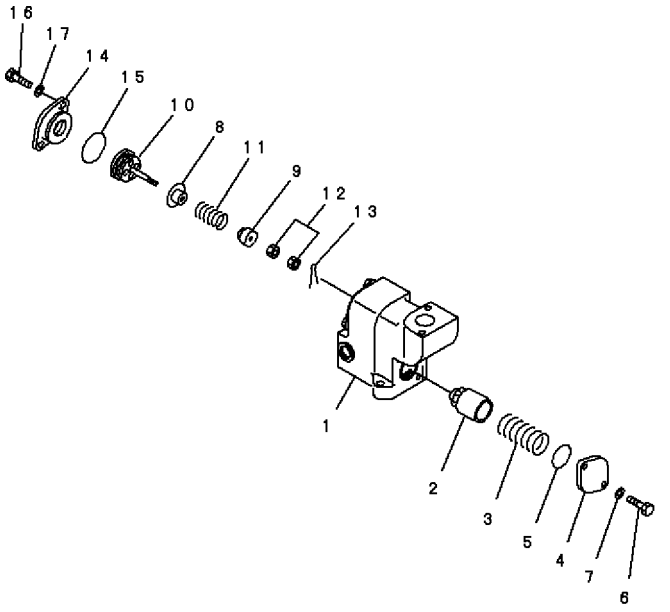

FIG. NO: H0330–02A1

INDEX	PART NO.	DESCRIPTION	Q'TY	SERIAL NO. PC200-6B	SERIAL NO. PC200LC-6B
1	20Y-62-21573	BLOCK	1	B10001-	B20001-
2	20Y-60-22331	POPPET	1	B10001-	B20001-
3	20Y-60-11530	SPRING	1	B10001-	B20001-
4	20Y-60-22181	COVER	1	B10001-	B20001-
5	07000-12060	O-RING	1	B10001-	B20001-
6	01010-81030	BOLT	2	B10001-	B20001-
7	01643-31032	WASHER	2	B10001-	B20001-
	20Y-60-22282	VALVE ASS'Y	1	B10001-	B20001-
8	205-60-71290	. COLLAR	1	B10001-	B20001-
9	20Y-60-22311	. COLLAR	1	B10001-	B20001-
10	20Y-60-22320	. HOLDER	1	B10001-	B20001-
11	205-60-51360	. SPRING	1	B10001-	B20001-
12	01580-00806	. NUT	2	B10001-	B20001-
13	04050-02015	. PIN	1	B10001-	B20001-
14	20Y-62-21590	COVER	1	B10001-	B20001-
15	07000-02055	O-RING	1	B10001-	B20001-
16	01010-81230	BOLT	2	B10001-	B20001-
17	01643-31232	WASHER	2	B10001-	B20001-

FIG. H0330–03A0 RETURN LINE (BLOCK)

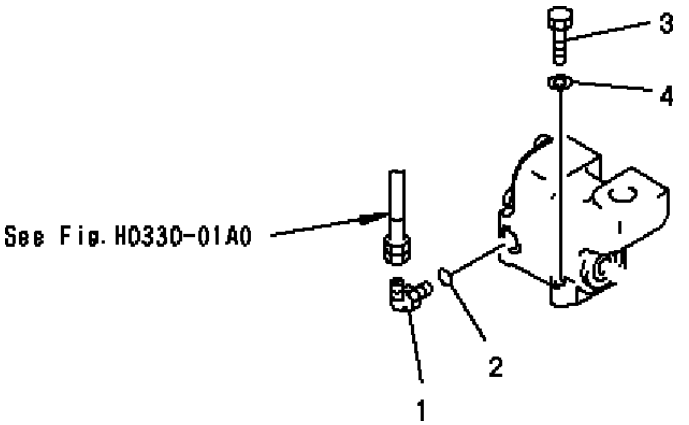

FIG. NO: H0330–03A0

INDEX	PART NO.	DESCRIPTION	Q'TY	SERIAL NO. PC200-6B	SERIAL NO. PC200LC-6B
1	07235-10628	ELBOW	1	B10001-	B20001-
2	07002-02434	O-RING	1	B10001-	B20001-
3	01010-81250	BOLT	2	B10001-	B20001-
4	01643-31232	WASHER	2	B10001-	B20001-

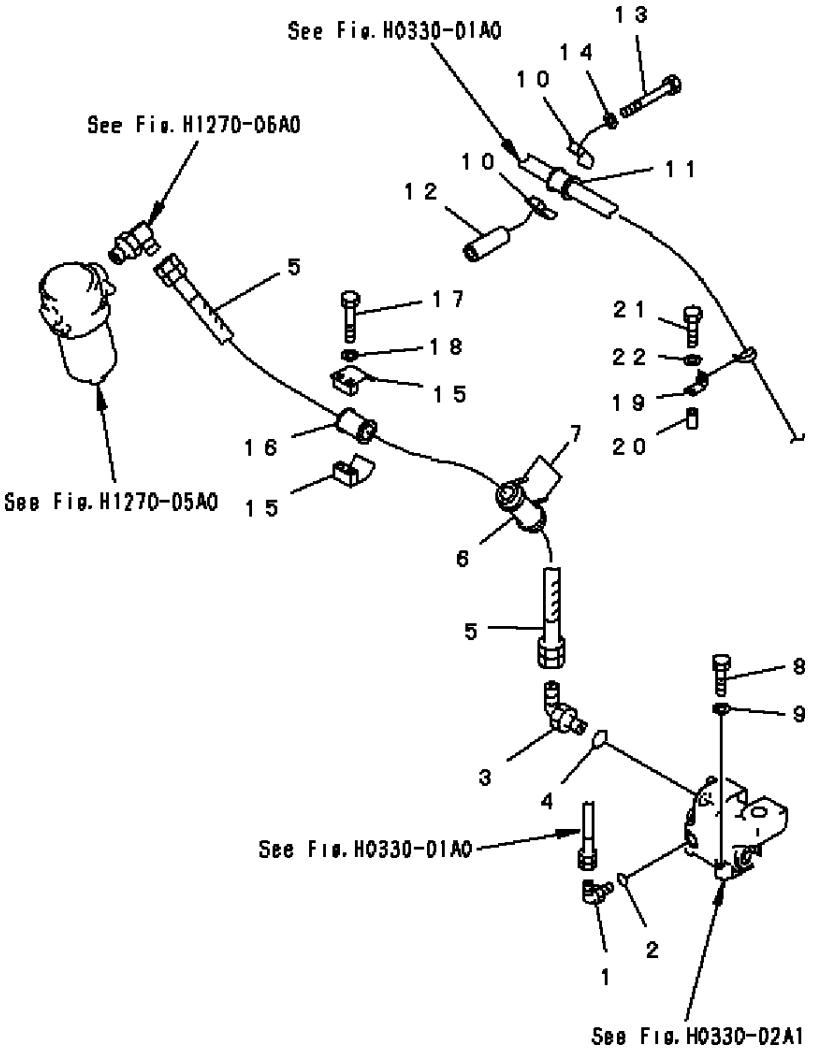

INDEX	PART NO.	DESCRIPTION	Q'TY	SERIAL NO. PC200-6B	SERIAL NO. PC200LC-6B
1	07235-10628	ELBOW	1	B10001-	B20001-
2	07002-02434	O-RING	1	B10001-	B20001-
3	07235-11034	ELBOW	1	B10001-	B20001-
4	07002-13334	O-RING	1	B10001-	B20001-
5	07102-21015	HOSE	1	B10001-	B20001-
6	205-62-55780	COVER	1	B10001-	B20001-
7	08034-00519	BAND	2	B10001-	B20001-
8	01010-81250	BOLT	2	B10001-	B20001-
9	01643-31232	WASHER	2	B10001-	B20001-
10	07094-10620	CLAMP	2	B10001-	B20001-
11	07095-00628	CUSHION	1	B10001-	B20001-
12	175-61-17240	COLLAR	1	B10001-	B20001-
13	01011-81250	BOLT	1	B10001-	B20001-
14	01643-31232	WASHER	1	B10001-	B20001-
15	07094-11024	CLAMP	2	B10001-	B20001-
16	07095-01035	CUSHION	1	B10001-	B20001-
17	01010-81275	BOLT	2	B10001-	B20001-
18	01643-31232	WASHER	2	B10001-	B20001-
19	17M-49-15260	BRACKET	1	B10001-	B20001-
20	205-03-71330	COLLAR	1	B10001-	B20001-
21	01010-81260	BOLT	1	B10001-	B20001-
22	01643-31232	WASHER	1	B10001-	B20001-

FIG. H0340–01A0 DRAIN LINE

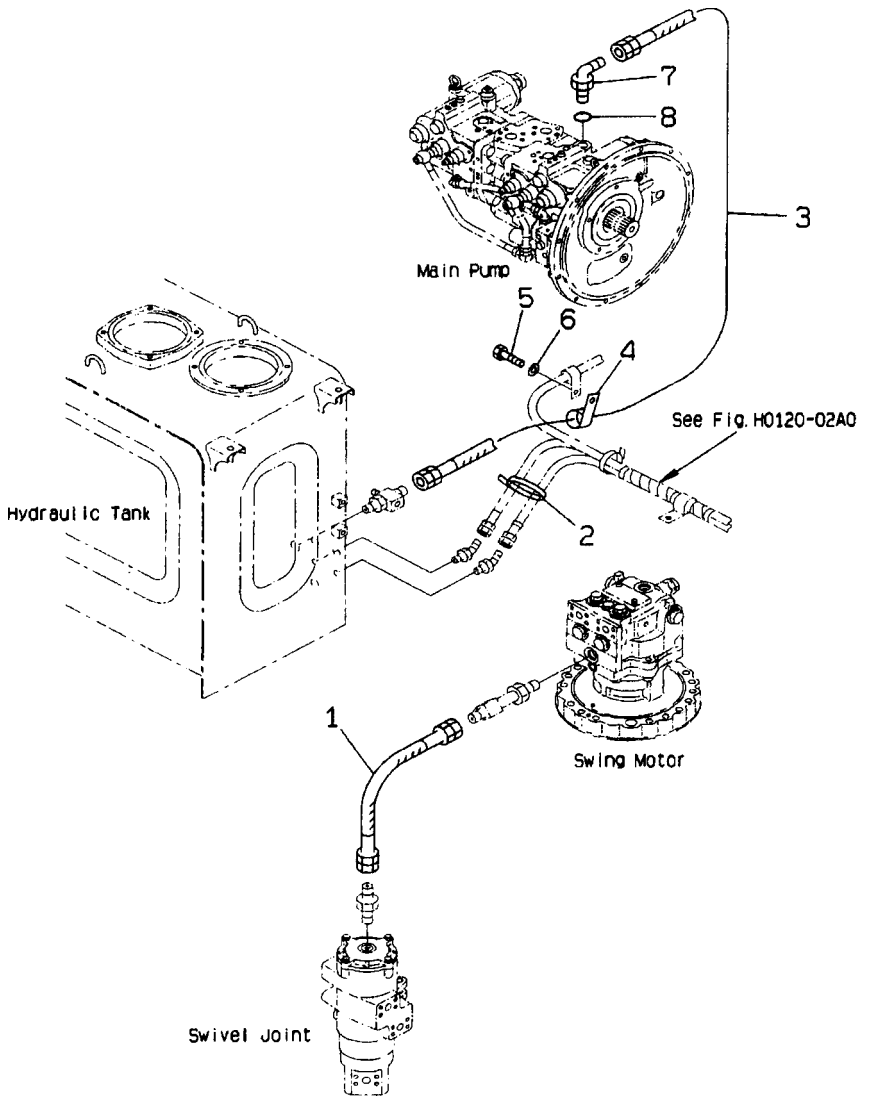

FIG. NO: H0340–01A0

INDEX	PART NO.	DESCRIPTION	Q'TY	SERIAL NO. PC200-6B	SERIAL NO. PC200LC-6B
1	07102-20504	HOSE	1	B10001-	B20001-
2	08034-00519	BAND	1	B10001-	B20001-
3	07102-20612	HOSE	1	B10001-	B20001-
4	04434-52712	CLIP	1	B10001-	B20001-
5	01010-81225	BOLT	1	B10001-	B20001-
6	01643-31232	WASHER	1	B10001-	B20001-
7	07235-10628	ELBOW	1	B10001-	B20001-
8	07002-02434	O-RING	1	B10001-	B20001-

FIG. H1210–01A0 BOOM LINE (VALVE BOOM LINE) (WITH DRIFT PRIVENTIVE)

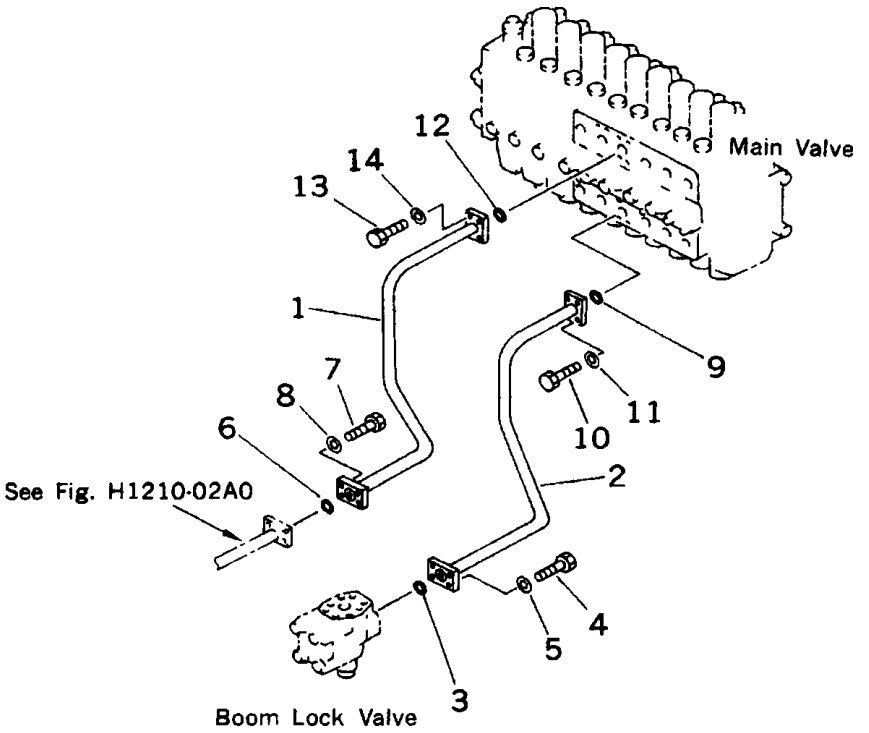

FIG. NO: H1210–01A0

INDEX	PART NO.	DESCRIPTION	Q'TY	SERIAL NO. PC200-6B	SERIAL NO. PC200LC-6B
1	20Y-62-21223	TUBE	1	B10001-	B20001-
2	20Y-62-21242	TUBE	1	B10001-	B20001-
3	21T-09-11460	O-RING	1	B10001-	B20001-
4	07372-21040	BOLT	4	B10001-	B20001-
5	01643-51032	WASHER	4	B10001-	B20001-
6	07000-13030	O-RING	1	B10001-	B20001-
7	07372-21040	BOLT	4	B10001-	B20001-
8	01643-51032	WASHER	4	B10001-	B20001-
9	21T-09-11460	O-RING	1	B10001-	B20001-
10	07372-21040	BOLT	4	B10001-	B20001-
11	01643-51032	WASHER	4	B10001-	B20001-
12	21T-09-11460	O-RING	1	B10001-	B20001-
13	07372-21040	BOLT	4	B10001-	B20001-
14	01643-51032	WASHER	4	B10001-	B20001-

FIG. H1210–02A0 BOOM LINE (VALVE BOOM FRAME) (WITH DRIFT PRIVENTIVE)

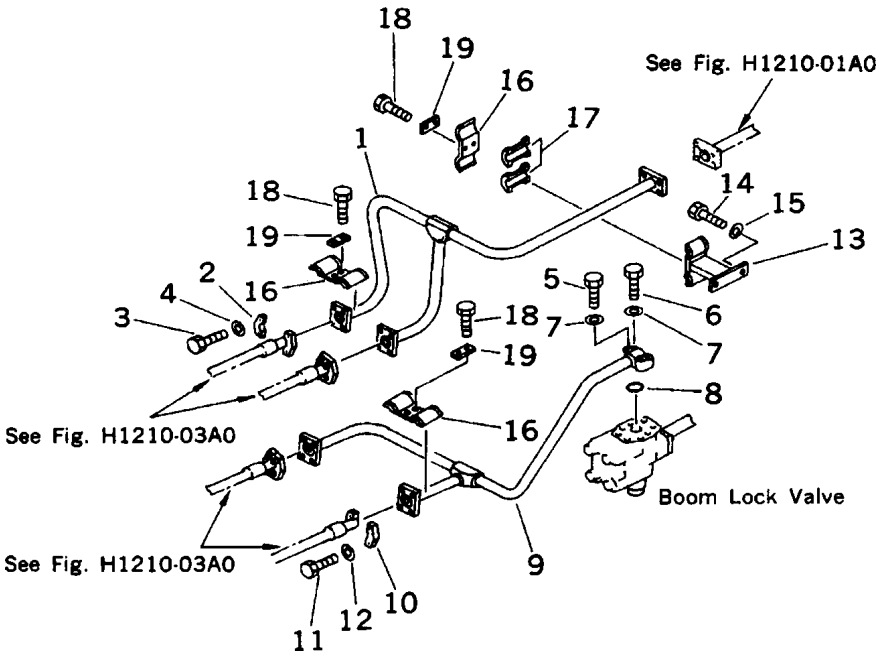

FIG. NO: H1210–02A0

INDEX	PART NO.	DESCRIPTION	Q'TY	SERIAL NO. PC200-6B	SERIAL NO. PC200LC-6B
1	20Y-62-21194	TUBE	1	B10001-	B20001-
2	07371-30640	FLANGE	4	B10001-	B20001-
3	07372-21035	BOLT	8	B10001-	B20001-
4	01643-51032	WASHER	8	B10001-	B20001-
5	07372-21060	BOLT	2	B10001-	B20001-
6	07372-21045	BOLT	2	B10001-	B20001-
7	01643-51032	WASHER	4	B10001-	B20001-
8	07000-13030	O-RING	1	B10001-	B20001-
9	20Y-62-21212	TUBE	1	B10001-	B20001-
10	07371-30640	FLANGE	4	B10001-	B20001-
11	07372-21035	BOLT	8	B10001-	B20001-
12	01643-51032	WASHER	8	B10001-	B20001-
13	20Y-62-21650	CLAMP	1	B10001-	B20001-
14	01010-81235	BOLT	2	B10001-	B20001-
15	01643-31232	WASHER	2	B10001-	B20001-
16	20Y-62-13230	CLAMP	3	B10001-	B20001-
17	20Y-62-13760	. SEAT	2	B10001-	B20001-
18	01010-81235	BOLT	6	B10001-	B20001-
19	20Y-62-13450	PLATE	3	B10001-	B20001-

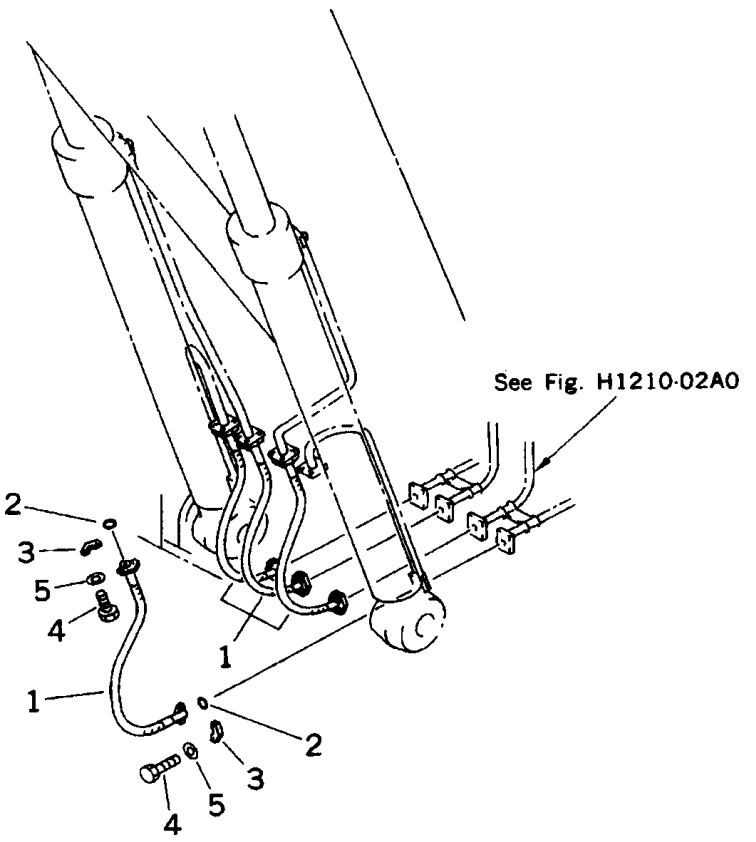

INDEX	PART NO.	DESCRIPTION	Q'TY	SERIAL NO. PC200-6B	SERIAL NO. PC200LC-6B
1	20Y-62-17480	TUBE	4	B10001-	B20001-
2	07000-13025	O-RING	8	B10001-	B20001-
3	07371-30640	FLANGE	8	B10001-	B20001-
4	07372-21035	BOLT	16	B10001-	B20001-
5	01643-51032	WASHER	16	B10001-	B20001-

FIG. H1220–01A0 ARM AND BUCKET LINE (VALVE ARM LINE)

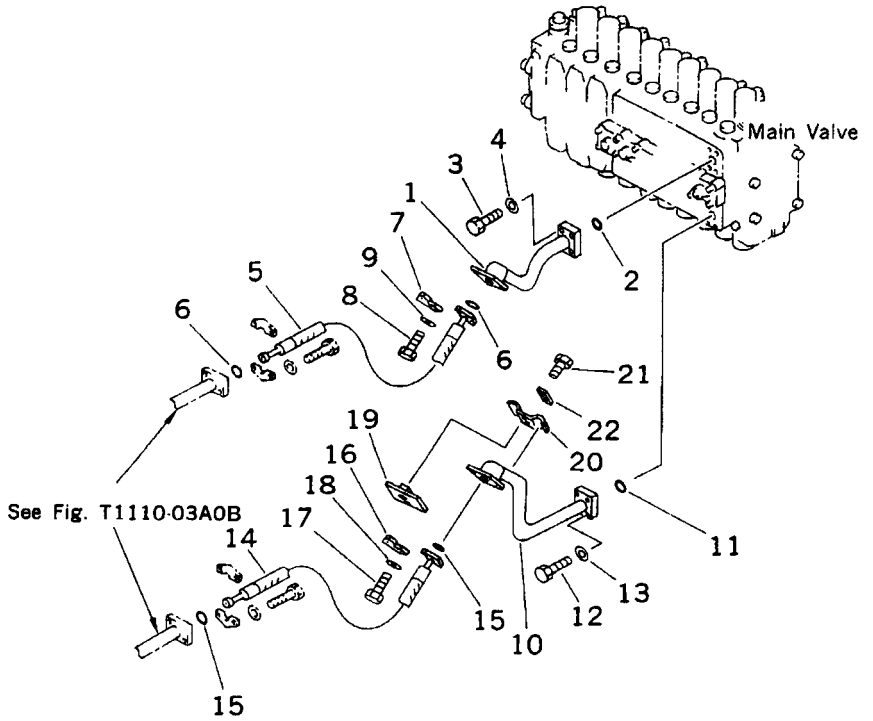

FIG. NO: H1220–01A0

INDEX	PART NO.	DESCRIPTION	Q'TY	SERIAL NO. PC200-6B	SERIAL NO. PC200LC-6B
1	20Y-62-21131	TUBE	1	B10001-	B20001-
2	21T-09-11460	O-RING	1	B10001-	B20001-
3	07372-21040	BOLT	4	B10001-	B20001-
4	01643-51032	WASHER	4	B10001-	B20001-
5	20Y-62-21290	HOSE	1	B10001-	B20001-
6	07000-13032	O-RING	2	B10001-	B20001-
7	07371-31049	FLANGE	2	B10001-	B20001-
8	07372-21035	BOLT	4	B10001-	B20001-
9	01643-51032	WASHER	4	B10001-	B20001-
10	20Y-62-21141	TUBE	1	B10001-	B20001-
11	21T-09-11460	O-RING	1	B10001-	B20001-
12	07372-21040	BOLT	4	B10001-	B20001-
13	01643-51032	WASHER	4	B10001-	B20001-
14	20Y-62-21280	HOSE	1	B10001-	B20001-
15	07000-13025	O-RING	2	B10001-	B20001-
16	07371-30640	FLANGE	2	B10001-	B20001-
17	07372-21035	BOLT	4	B10001-	B20001-
18	01643-51032	WASHER	4	B10001-	B20001-
19	20Y-62-21480	BRACKET	1	B10001-	B20001-
20	20Y-62-13711	CLAMP	1	B10001-	B20001-
21	01010-81235	BOLT	2	B10001-	B20001-
22	20Y-62-13450	PLATE	1	B10001-	B20001-

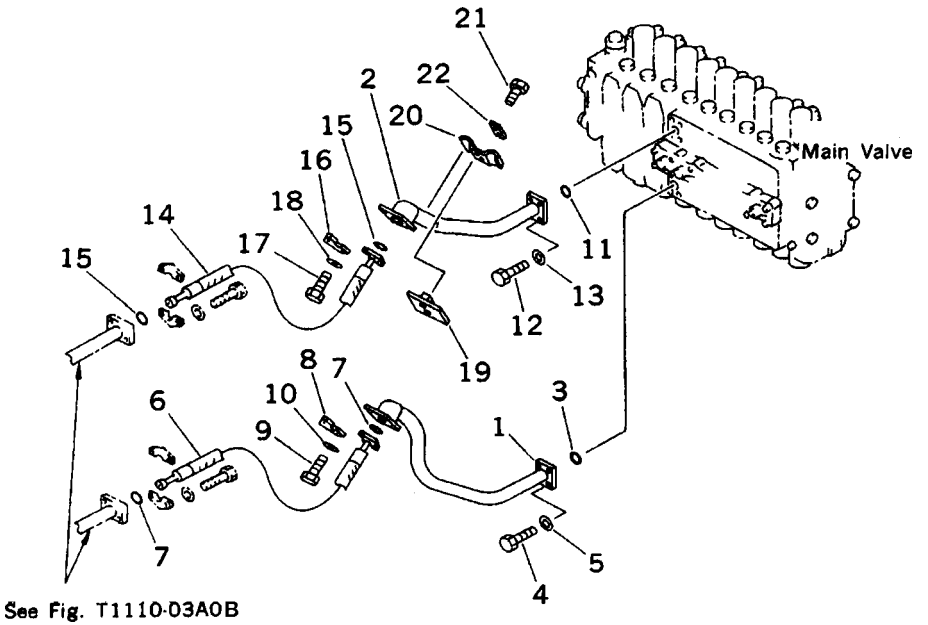

See Fig. T1110-03A0B

INDEX	PART NO.	DESCRIPTION	Q'TY	SERIAL NO. PC200-6B	SERIAL NO. PC200LC-6B
1	20Y-62-21171	TUBE	1	B10001-	B20001-
2	20Y-62-21182	TUBE	1	B10001-	B20001-
3	21T-09-11450	O-RING	1	B10001-	B20001-
4	07372-21035	BOLT	4	B10001-	B20001-
5	01643-51032	WASHER	4	B10001-	B20001-
6	20Y-62-21280	HOSE	1	B10001-	B20001-
7	07000-13025	O-RING	2	B10001-	B20001-
8	07371-30640	FLANGE	2	B10001-	B20001-
9	07372-21035	BOLT	4	B10001-	B20001-
10	01643-51032	WASHER	4	B10001-	B20001-
11	21T-09-11450	O-RING	1	B10001-	B20001-
12	07372-21035	BOLT	4	B10001-	B20001-
13	01643-51032	WASHER	4	B10001-	B20001-
14	20Y-62-21280	HOSE	1	B10001-	B20001-
15	07000-13025	O-RING	2	B10001-	B20001-
16	07371-30640	FLANGE	2	B10001-	B20001-
17	07372-21035	BOLT	4	B10001-	B20001-
18	01643-51032	WASHER	4	B10001-	B20001-
19	20Y-62-21480	BRACKET	1	B10001-	B20001-
20	20Y-62-13711	CLAMP	1	B10001-	B20001-
21	01010-81235	BOLT	2	B10001-	B20001-
22	20Y-62-13450	PLATE	1	B10001-	B20001-

FIG. H1240–01A0 DRIFT PREVENTIVE (BOOM)

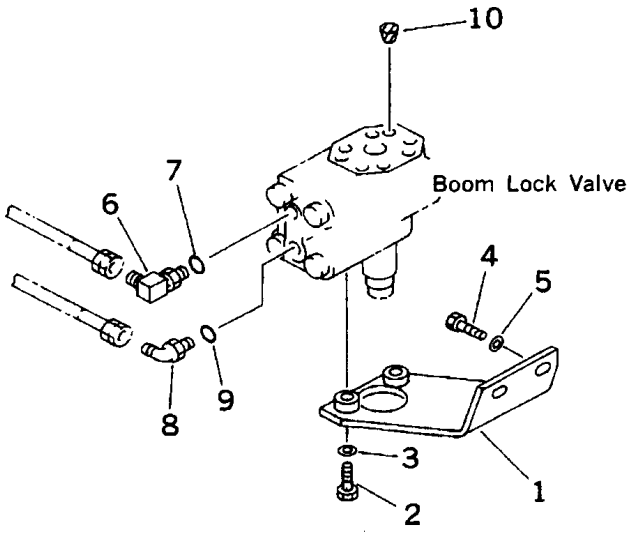

FIG. NO: H1240–01A0

INDEX	PART NO.	DESCRIPTION	Q'TY	SERIAL NO. PC200-6B	SERIAL NO. PC200LC-6B
	(702-21-04220)	LOCK VALVE ASS'Y, BOOM	1	B10001-	B20001-
1	20Y-62-21640	BRACKET	1	B10001-	B20001-
2	01010-81040	BOLT	2	B10001-	B20001-
3	01643-31032	WASHER	2	B10001-	B20001-
4	01010-81230	BOLT	2	B10001-	B20001-
5	01643-31232	WASHER	2	B10001-	B20001-
6	07235-10210	ELBOW	1	B10001-	B20001-
7	07002-01423	O-RING	1	B10001-	B20001-
8	07235-10315	ELBOW	1	B10001-	B20001-
9	07002-02034	O-RING	1	B10001-	B20001-
10	07049-01012	PLUG	4	B10001-	B20001-

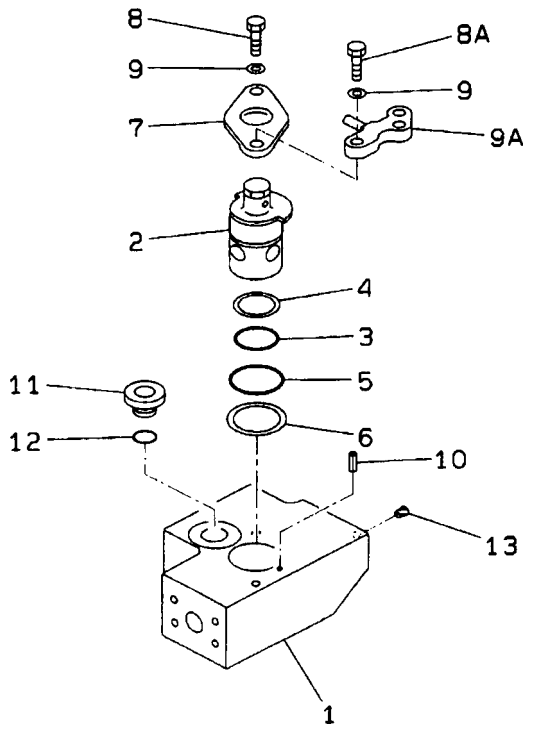

INDEX	PART NO.	DESCRIPTION	Q'TY	SERIAL NO. PC200-6B	SERIAL NO. PC200LC-6B
1	20Y-62-25153	BLOCK	1	B10001-	B20001-
2	20Y-970-3390	ROTOR	1	B10001-	B20001-
3	07000-13042	O-RING	1	B10001-	B20001-
4	07001-03042	RING	1	B10001-	B20001-
5	07000-13048	O-RING	1	B10001-	B20001-
6	07001-03048	RING	1	B10001-	B20001-
7	20Y-970-3350	FLANGE	1	B10001-	B20001-
8	01010-81025	BOLT	1	B10001-	B20001-
8A	01010-81040	BOLT	1	B10001-	B20001-
9	01643-31032	WASHER	2	B10001-	B20001-
9A	20Y-970-4580	PIN	1	B10001-	B20001-
10	04025-00412	PIN	1	B10001-	B20001-
11	07040-12414	PLUG	1	B10001-	B20001-
12	07002-12434	O-RING	1	B10001-	B20001-
13	07049-01215	PLUG	2	B10001-	B20001-

FIG. H1270–01A8A BOOM LINE CLAMP (PIPING LESS)

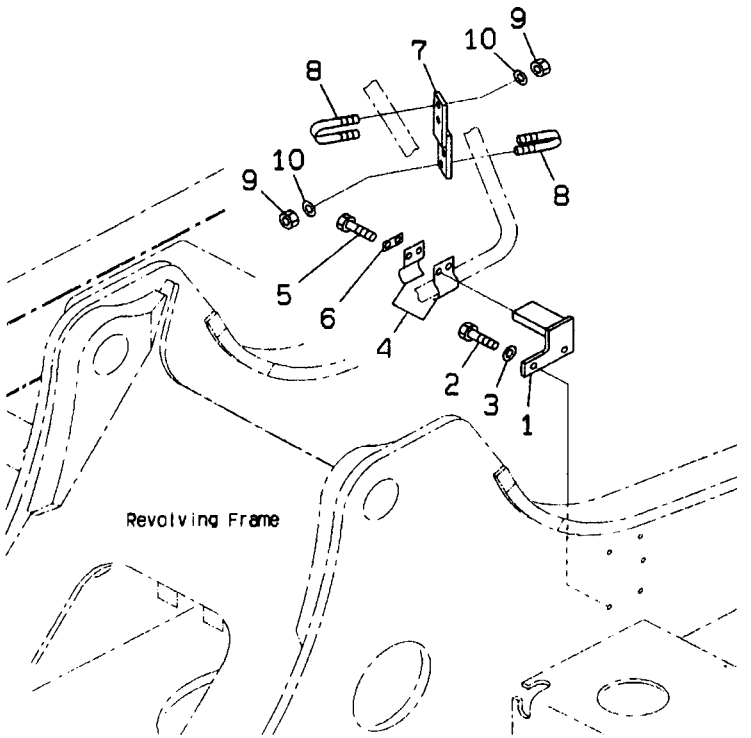

FIG. NO: H1270–01A8A

INDEX	PART NO.	DESCRIPTION	Q'TY	SERIAL NO. PC200-6B	SERIAL NO. PC200LC-6B
1	20Y-62-25740	BRACKET	1	B10001-	B20001-
2	01010-81235	BOLT	2	B10001-	B20001-
3	01643-31232	WASHER	2	B10001-	B20001-
4	20Y-62-13651	CLAMP	2	B10001-	B20001-
5	01010-81230	BOLT	2	B10001-	B20001-
6	20Y-62-13450	PLATE	1	B10001-	B20001-
7	20Y-62-25790	BRACKET	1	B10001-	B20001-
8	07283-32738	CLIP	2	B10001-	B20001-
9	01599-01011	NUT	4	B10001-	B20001-
10	01643-31032	WASHER	4	B10001-	B20001-

FIG. H1270–02A0 ATTACHMENT LINE (1 ACTUATOR) (CROSS VALVE, L.H.) (SAFETY VALVE) (FOR ADDITIONAL LINE AND PIPING)

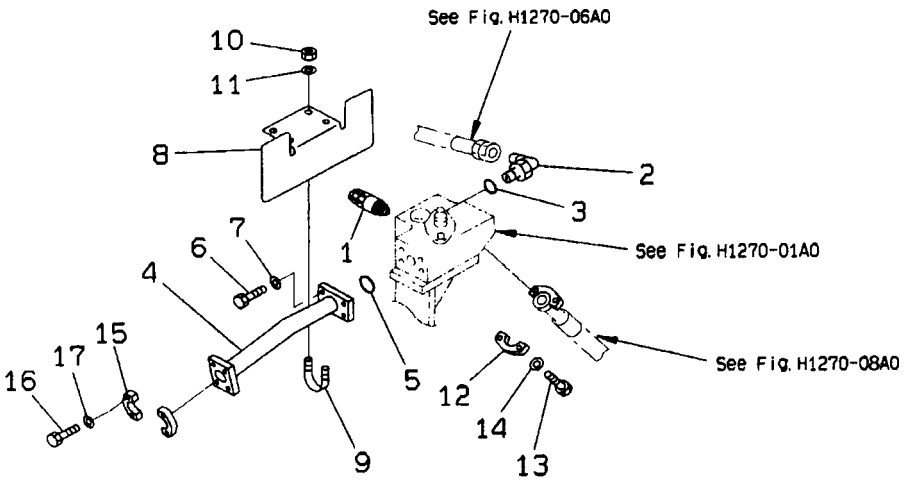

FIG. NO: H1270–02A0

INDEX	PART NO.	DESCRIPTION	Q'TY	SERIAL NO. PC200-6B	SERIAL NO. PC200LC-6B
1	(709-70-74800)	VALVE ASS'Y	1	B10001-	B20001-
2	07235-10628	ELBOW	1	B10001-	B20001-
3	07002-02434	O-RING	1	B10001-	B20001-
4	20Y-62-25350	TUBE	1	B10001-	B20001-
5	07000-13035	O-RING	1	B10001-	B20001-
6	07372-21035	BOLT	4	B10001-	B20001-
7	01643-51032	WASHER	4	B10001-	B20001-
8	20Y-970-1981	BRACKET	1	B10001-	B20001-
9	07283-23442	CLIP	2	B10001-	B20001-
10	01599-01011	NUT	4	B10001-	B20001-
11	01643-31032	WASHER	4	B10001-	B20001-
12	07371-31049	FLANGE	2	B10001-	B20001-
13	07372-21035	BOLT	4	B10001-	B20001-
14	01643-51032	WASHER	4	B10001-	B20001-
15	07371-31049	FLANGE	2	B10001-	B20001-
16	07372-21035	BOLT	4	B10001-	B20001-
17	01643-51032	WASHER	4	B10001-	B20001-

FIG. H1270–03A0 ATTACHMENT LINE (1 ACTUATOR) (CROSS VALVE, R.H.) (SAFETY VALVE)

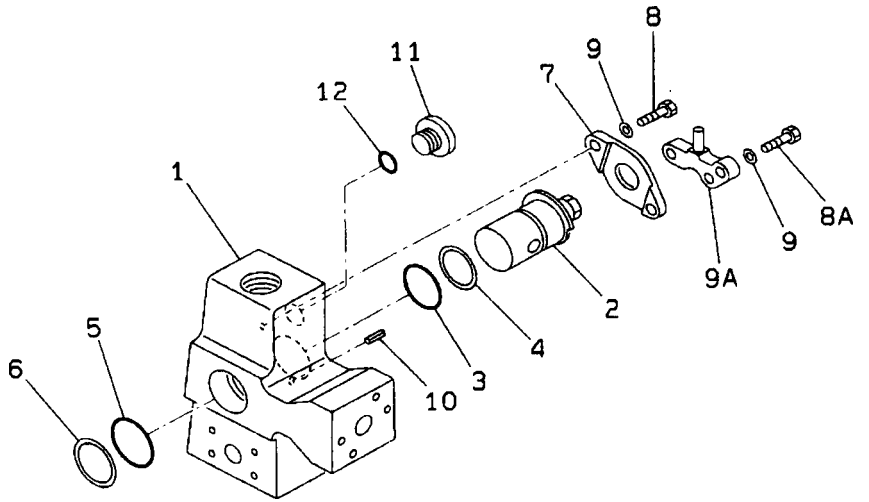

FIG. NO: H1270–03A0

INDEX	PART NO.	DESCRIPTION	Q'TY	SERIAL NO. PC200-6B	SERIAL NO. PC200LC-6B
1	20Y-62-25161	BLOCK	1	B10001-	B20001-
2	20Y-970-3410	ROTOR	1	B10001-	B20001-
3	07000-13042	O-RING	1	B10001-	B20001-
4	07001-03042	RING	1	B10001-	B20001-
5	07000-13048	O-RING	1	B10001-	B20001-
6	07001-03048	RING	1	B10001-	B20001-
7	20Y-970-3350	FLANGE	1	B10001-	B20001-
8	01010-81025	BOLT	1	B10001-	B20001-
8A	01010-81040	BOLT	1	B10001-	B20001-
9	01643-31032	WASHER	2	B10001-	B20001-
9A	20Y-970-4580	PIN	1	B10001-	B20001-
10	04025-00412	PIN	1	B10001-	B20001-
11	07040-12414	PLUG	1	B10001-	B20001-
12	07002-12434	O-RING	1	B10001-	B20001-

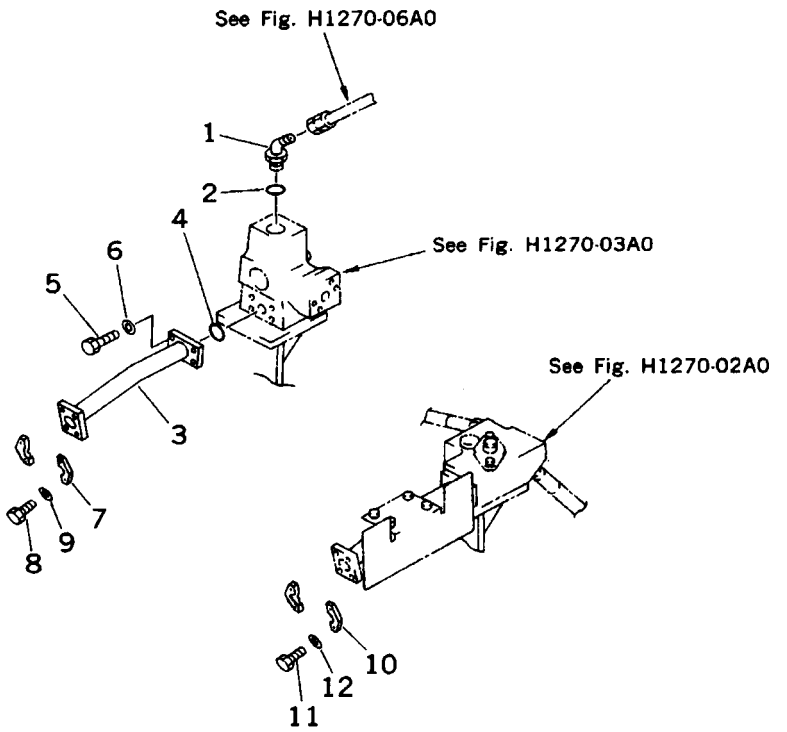

INDEX	PART NO.	DESCRIPTION	Q'TY	SERIAL NO. PC200-6B	SERIAL NO. PC200LC-6B
1	07236-11034	ELBOW	1	B10001-	B20001-
2	07002-13334	O-RING	1	B10001-	B20001-
3	20Y-62-25350	TUBE	1	B10001-	B20001-
4	07000-13035	O-RING	1	B10001-	B20001-
5	07372-21035	BOLT	4	B10001-	B20001-
6	01643-51032	WASHER	4	B10001-	B20001-
7	07371-31049	FLANGE	2	B10001-	B20001-
8	07372-21035	BOLT	4	B10001-	B20001-
9	01643-51032	WASHER	4	B10001-	B20001-
10	07371-31049	FLANGE	2	B10001-	B20001-
11	07372-21035	BOLT	4	B10001-	B20001-
12	01643-51032	WASHER	4	B10001-	B20001-

FIG. H1270–05A0 ATTACHMENT LINE (1 ACTUATOR) (RETURN LINE) (FILTER)

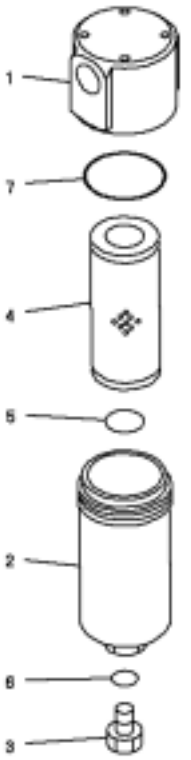

PW09S18

FIG. NO: H1270–05A0

INDEX	PART NO.	DESCRIPTION	Q'TY	SERIAL NO. PC200-6B	SERIAL NO. PC200LC-6B
	20Y-970-2700	FILTER ASS'Y	1	B10001-	B20001-
1	☆	. HEAD	1	B10001-	B20001-
2	☆	. CASE	1	B10001-	B20001-
3	☆	. PLUG	1	B10001-	B20001-
4	20Y-970-1820	. ELEMENT	1	B10001-	B20001-
5	07000-03050	. . O-RING	1	B10001-	B20001-
6	07000-12115	. O-RING	1	B10001-	B20001-
7	07000-12014	. O-RING	1	B10001-	B20001-

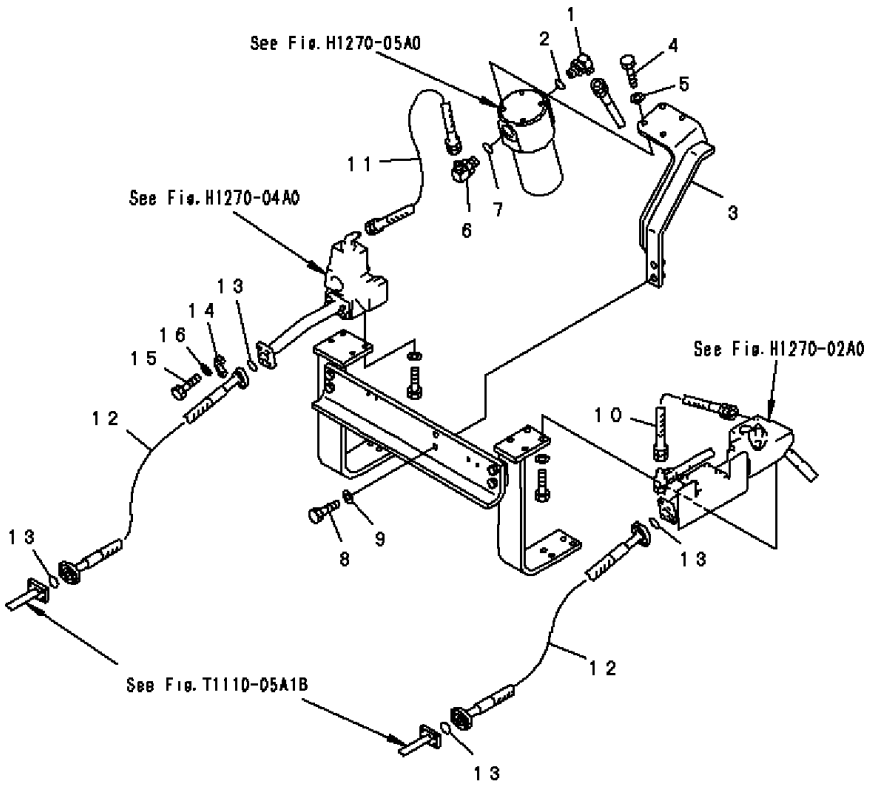

INDEX	PART NO.	DESCRIPTION	Q'TY	SERIAL NO. PC200-6B	SERIAL NO. PC200LC-6B
1	20Y-970-2240	NIPPLE	1	B10001-	B20001-
2	07002-14234	O-RING	1	B10001-	B20001-
3	20Y-62-25212	BRACKET	1	B10001-	B20001-
4	01010-81235	BOLT	4	B10001-	B20001-
5	01643-31232	WASHER	4	B10001-	B20001-
6	20Y-970-2240	NIPPLE	1	B10001-	B20001-
7	07002-14234	O-RING	1	B10001-	B20001-
8	01010-81650	BOLT	2	B10001-	B20001-
9	01643-31645	WASHER	2	B10001-	B20001-
10	07102-20604	HOSE	1	B10001-	B20001-
11	07102-21003	HOSE	1	B10001-	B20001-
12	07099-21012	HOSE	2	B10001-	B20001-
13	21T-09-11460	O-RING	4	B10001-	B20001-
14	07371-31049	FLANGE	4	B10001-	B20001-
15	07372-21035	BOLT	8	B10001-	B20001-
16	01643-51032	WASHER	8	B10001-	B20001-

FIG. H1270–06A1C ATTACHMENT LINE (1 ACTUATOR) (LINE AND PIPING LESS)

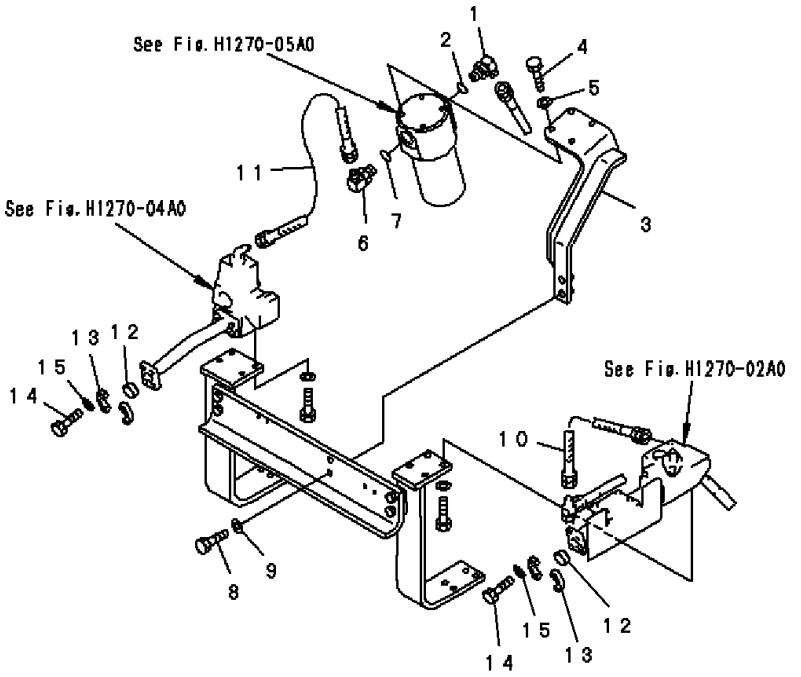

PWB9619

FIG. NO: H1270–06A1C

INDEX	PART NO.	DESCRIPTION	Q'TY	SERIAL NO. PC200-6B	SERIAL NO. PC200LC-6B
1	20Y-970-2240	NIPPLE	1	B10001-	B20001-
2	07002-14234	O-RING	1	B10001-	B20001-
3	20Y-62-25212	BRACKET	1	B10001-	B20001-
4	01010-81235	BOLT	4	B10001-	B20001-
5	01643-31232	WASHER	4	B10001-	B20001-
6	20Y-970-2240	NIPPLE	1	B10001-	B20001-
7	07002-14234	O-RING	1	B10001-	B20001-
8	01010-81650	BOLT	2	B10001-	B20001-
9	01643-31645	WASHER	2	B10001-	B20001-
10	07102-20604	HOSE	1	B10001-	B20001-
11	07102-21003	HOSE	1	B10001-	B20001-
12	07378-11000	COVER	2	B10001-	B20001-
13	07371-31049	FLANGE	4	B10001-	B20001-
14	07372-21035	BOLT	8	B10001-	B20001-
15	01643-51032	WASHER	8	B10001-	B20001-

FIG. H1270–07A0 ATTACHMENT LINE (1 ACTUATOR) (ATTACHMENT LINE BRACKET)

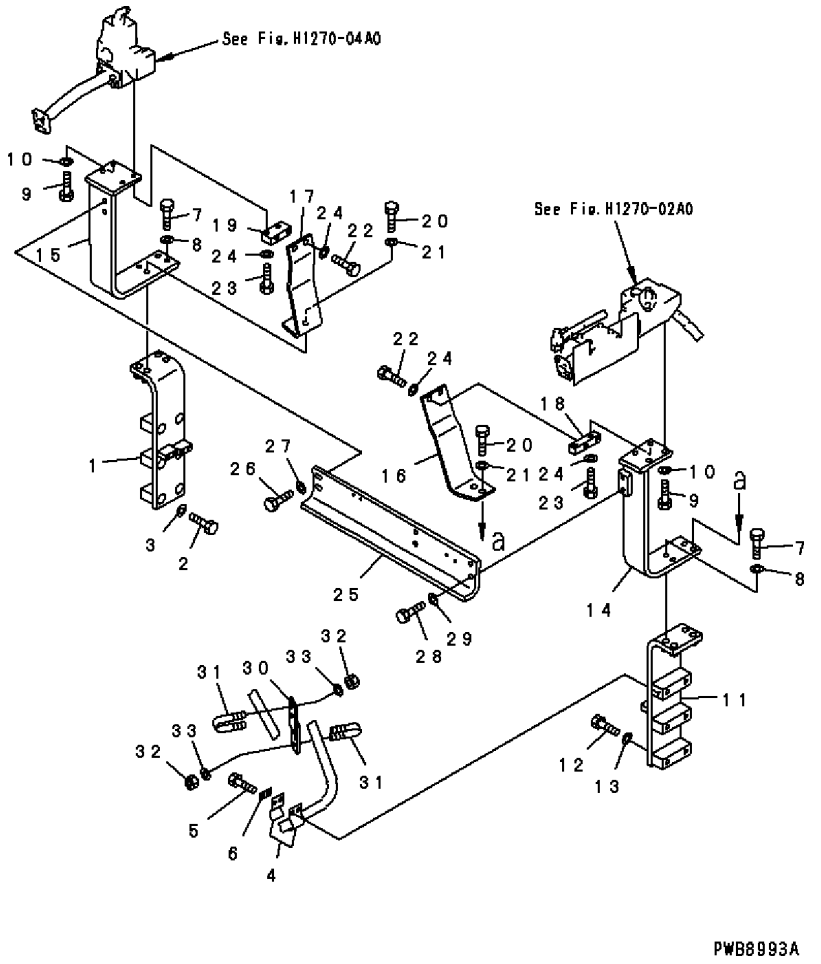

FIG. NO: H1270–07A0

INDEX	PART NO.	DESCRIPTION	Q'TY	SERIAL NO. PC200-6B	SERIAL NO. PC200LC-6B
1	20Y-62-25173	BRACKET	1	B10001-	B20001-
2	01010-81275	BOLT	6	B10001-	B20001-
3	01643-31232	WASHER	6	B10001-	B20001-
4	20Y-62-13651	CLAMP	2	B10001-	B20001-
5	01010-81230	BOLT	2	B10001-	B20001-
6	20Y-62-13450	PLATE	1	B10001-	B20001-
7	01010-81660	BOLT	4	B10001-	B20001-
8	01643-31645	WASHER	4	B10001-	B20001-
9	01010-81240	BOLT	4	B10001-	B20001-
10	01643-31232	WASHER	4	B10001-	B20001-
11	20Y-62-25173	BRACKET	1	B10001-	B20001-
12	01010-81275	BOLT	6	B10001-	B20001-
13	01643-31232	WASHER	6	B10001-	B20001-
14	20Y-62-25183	BRACKET	1	B10001-	B20001-
15	20Y-62-25192	BRACKET	1	B10001-	B20001-
16	20Y-62-25950	BRACKET	1	B10001-	B20001-
17	20Y-62-25960	BRACKET	1	B10001-	B20001-
18	20Y-62-25970	PLATE	1	B10001-	B20001-
19	20Y-62-25980	PLATE	1	B10001-	B20001-
20	01010-81670	BOLT	4	B10001-	B20001-
21	01643-31645	WASHER	4	B10001-	B20001-
22	01010-81230	BOLT	4	B10001-	B20001-
23	01010-81260	BOLT	4	B10001-	B20001-
24	01643-31232	WASHER	8	B10001-	B20001-
25	20Y-62-25232	BRACKET	1	B10001-	B20001-
26	01010-81655	BOLT	2	B10001-	B20001-
27	01643-31645	WASHER	2	B10001-	B20001-
28	01010-81640	BOLT	2	B10001-	B20001-
29	01643-31645	WASHER	2	B10001-	B20001-
30	20Y-62-25790	BRACKET	1	B10001-	B20001-
31	07283-32738	CLIP	2	B10001-	B20001-
32	01599-01011	NUT	4	B10001-	B20001-
33	01643-31032	WASHER	4	B10001-	B20001-

FIG. H1270–08A0 ATTACHMENT LINE (1 ACTUATOR) (VALVE SIDE)

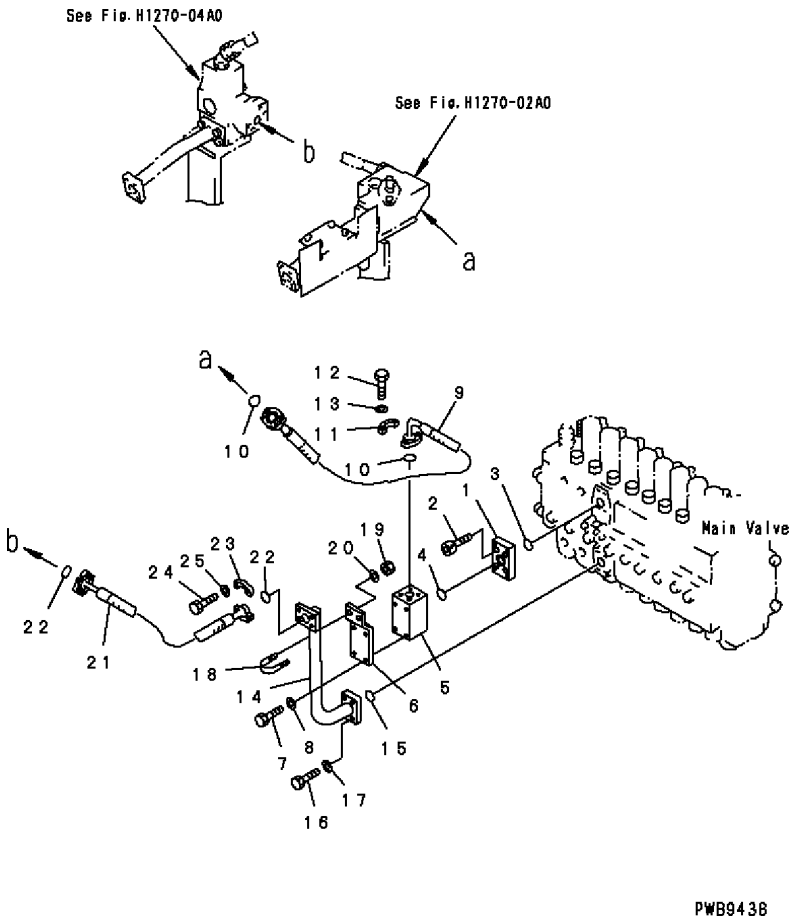

FIG. NO: H1270–08A0

INDEX	PART NO.	DESCRIPTION	Q'TY	SERIAL NO. PC200-6B	SERIAL NO. PC200LC-6B
1	20Y-62-25120	PLATE	1	B10001-	B20001-
2	01252-41025	BOLT	4	B10001-	B20001-
3	21T-09-11470	O-RING	1	B10001-	B20001-
4	21T-09-11450	O-RING	1	B10001-	B20001-
5	20Y-62-25110	BLOCK	1	B10001-	B20001-
6	20Y-62-25241	BRACKET	1	B10001-	B20001-
7	01010-81095	BOLT	4	B10001-	B20001-
8	01643-31032	WASHER	4	B10001-	B20001-
9	07098-01009	HOSE	1	B10001-	B20001-
10	07000-13032	O-RING	2	B10001-	B20001-
11	07371-31049	FLANGE	2	B10001-	B20001-
12	07372-21035	BOLT	4	B10001-	B20001-
13	01643-51032	WASHER	4	B10001-	B20001-
14	20Y-62-25131	TUBE	1	B10001-	B20001-
15	21T-09-11460	O-RING	1	B10001-	B20001-
16	01010-81040	BOLT	4	B10001-	B20001-
17	01643-51032	WASHER	4	B10001-	B20001-
18	07283-22738	CLIP	1	B10001-	B20001-
19	01599-01011	NUT	2	B10001-	B20001-
20	01643-31032	WASHER	2	B10001-	B20001-
21	20Y-62-25140	HOSE	1	B10001-	B20001-
22	07000-13032	O-RING	2	B10001-	B20001-
23	07371-31049	FLANGE	2	B10001-	B20001-
24	07372-21035	BOLT	4	B10001-	B20001-
25	01643-51032	WASHER	4	B10001-	B20001-

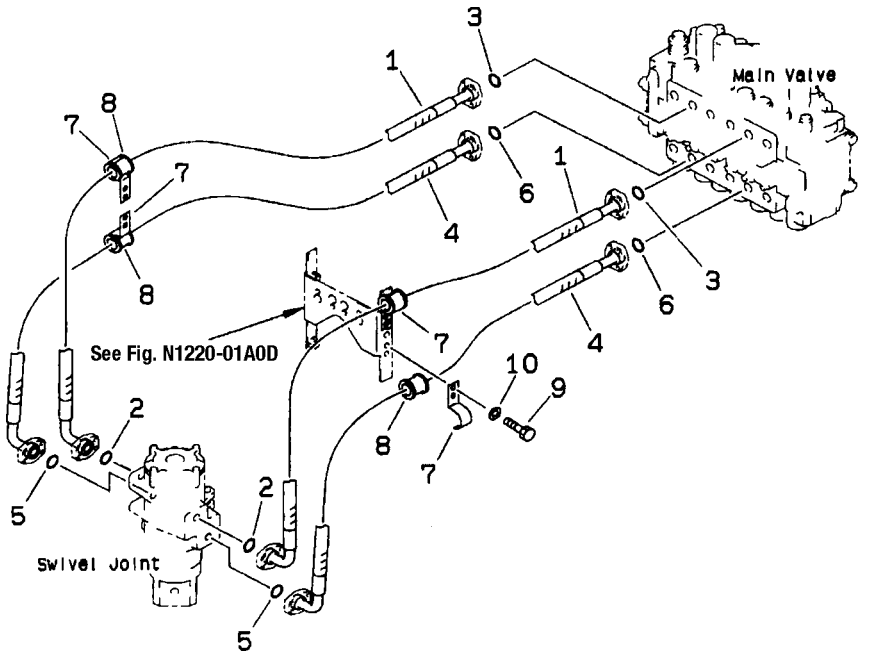

INDEX	PART NO.	DESCRIPTION	Q'TY	SERIAL NO. PC200-6B	SERIAL NO. PC200LC-6B
1	20Y-62-21312	HOSE	2	B10001-	B20001-
2	07000-13025	O-RING	2	B10001-	B20001-
3	21T-09-11460	O-RING	2	B10001-	B20001-
4	20Y-62-21321	HOSE	2	B10001-	B20001-
5	07000-13025	O-RING	2	B10001-	B20001-
6	21T-09-11460	O-RING	2	B10001-	B20001-
7	20Y-62-21362	BRACKET	4	B10001-	B20001-
8	07095-00628	CUSHION	4	B10001-	B20001-
9	01010-81025	BOLT	8	B10001-	B20001-
10	01643-31032	WASHER	8	B10001-	B20001-

FIG. H1340–01A0 SWING LINES

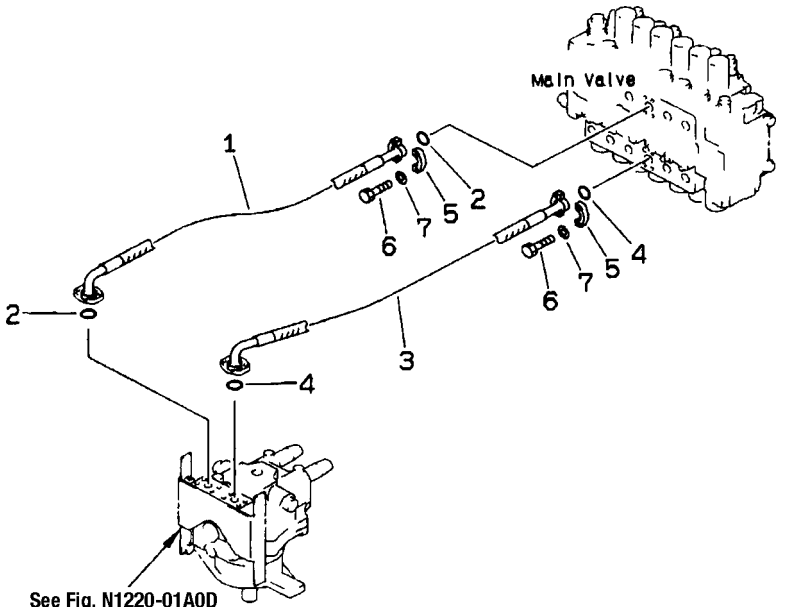

FIG. NO: H1340–01A0

INDEX	PART NO.	DESCRIPTION	Q'TY	SERIAL NO. PC200-6B	SERIAL NO. PC200LC-6B
1	07098-00607	HOSE	1	B10001-	B20001-
2	21T-09-11430	O-RING	2	B10001-	B20001-
3	20Y-62-21830	HOSE 730MM	1	B10001-	B20001-
4	21T-09-11430	O-RING	2	B10001-	B20001-
5	07371-30640	FLANGE	4	B10001-	B20001-
6	07372-21035	BOLT	8	B10001-	B20001-
7	01643-51032	WASHER	8	B10001-	B20001-

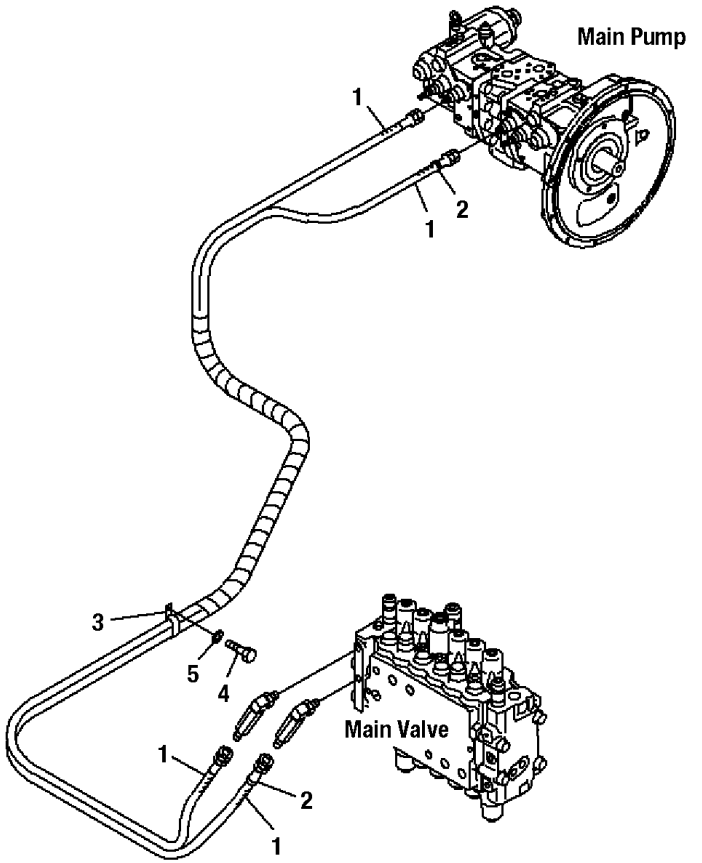

INDEX	PART NO.	DESCRIPTION	Q'TY	SERIAL NO. PC200-6B	SERIAL NO. PC200LC-6B
1	07096-00214	HOSE	2	B10001-	B20001-
2	20Y-62-22790	BAND RED	2	B10001-	B20001-
3	04435-51812	CLIP	2	B10001-	B20001-
4	01010-81225	BOLT	2	B10001-	B20001-
5	01643-31232	WASHER	2	B10001-	B20001-

FIG. H1831–01A0 SOLENOID VALVE (SOLENOID VALVE AND ACUMULATOR)

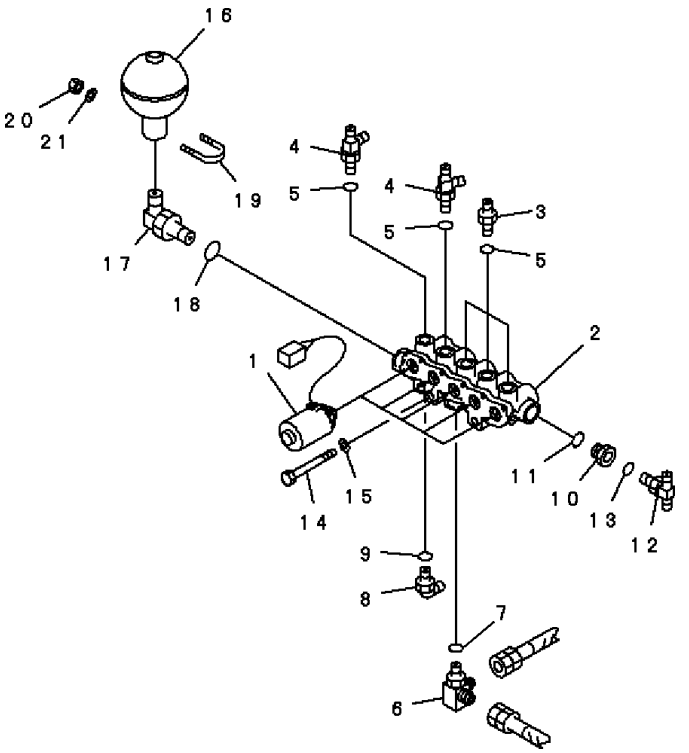

FIG. NO: H1831–01A0

INDEX	PART NO.	DESCRIPTION	Q'TY	SERIAL NO. PC200-6B	SERIAL NO. PC200LC-6B
	206-60-51101	VALVE ASS'Y	1	B10001-	B20001-
1	206-60-51131	. SOLENOID VALVE	5	B10001-	B20001-
2	206-60-51140	. BLOCK	1	B10001-	B20001-
3	07230-20210	UNION	3	B10001-	B20001-
4	208-62-17550	ELBOW	2	B10001-	B20001-
5	07002-11423	O-RING	5	B10001-	B20001-
6	20Y-62-23520	TEE	1	B10001-	B20001-
7	07002-12034	O-RING	1	B10001-	B20001-
8	07235-10315	ELBOW	1	B10001-	B20001-
9	07002-12034	O-RING	1	B10001-	B20001-
10	20Y-62-21940	FILTER ASS'Y	1	B10001-	B20001-
11	07002-12034	O-RING	1	B10001-	B20001-
12	208-26-11611	TEE	1	B10001-	B20001-
13	07002-11423	O-RING	1	B10001-	B20001-
14	01010-81095	BOLT	2	B10001-	B20001-
15	01643-31032	WASHER	2	B10001-	B20001-
16	20Y-60-11410	ACCUMULATOR	1	B10001-	B20001-
17	20Y-62-22310	ELBOW	1	B10001-	B20001-
18	07002-12034	O-RING	2	B10001-	B20001-
19	07283-23450	CLIP	1	B10001-	B20001-
20	01599-01011	NUT	2	B10001-	B20001-
21	01643-31032	WASHER	2	B10001-	B20001-

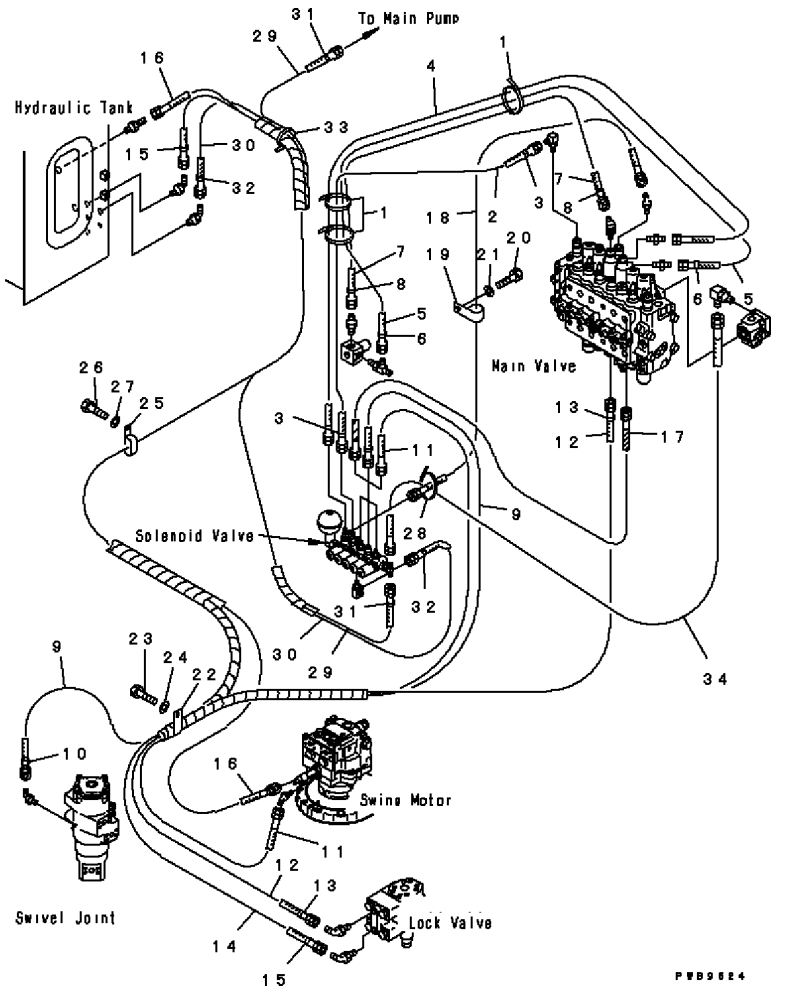

INDEX	PART NO.	DESCRIPTION	Q'TY	SERIAL NO. PC200-6B	SERIAL NO. PC200LC-6B
1	08034-00536	BAND	3	B10001-	B20001-
2	203-62-52310	HOSE 700MM	1	B10001-	B20001-
3	20Y-62-22860	BAND BROWN	2	B10001-	B20001-
4	203-62-52350	HOSE 1200MM	1	B10001-	B20001-
5	203-62-52270	HOSE 1400MM	1	B10001-	B20001-
6	20Y-62-22850	BAND GREEN	2	B10001-	B20001-
7	203-62-52290	HOSE 1100MM	1	B10001-	B20001-
8	20Y-62-22810	BAND YELLOW	2	B10001-	B20001-
9	203-62-52260	HOSE 1300MM	1	B10001-	B20001-
10	20Y-62-22810	BAND YELLOW	2	B10001-	B20001-
11	203-62-52290	HOSE 1100MM	1	B10001-	B20001-
12	20Y-62-22951	HOSE	1	B10001-	B20001-
13	20Y-62-22790	BAND RED	2	B10001-	B20001-
14	20Y-62-22920	HOSE 2000MM	1	B10001-	B20001-
15	20Y-62-22820	BAND BLUE	2	B10001-	B20001-
16	07102-20517	HOSE	1	B10001-	B20001-
17	20Y-62-22981	HOSE 600MM	1	B10001-	B20001-
18	20Y-62-21930	HOSE 980MM	1	B10001-	B20001-
19	04434-51312	CLIP	1	B10001-	B20001-
20	01010-81225	BOLT	1	B10001-	B20001-
21	01643-31232	WASHER	1	B10001-	B20001-
22	04434-53212	CLIP	1	B10001-	B20001-
23	01010-81230	BOLT	1	B10001-	B20001-
24	01643-31232	WASHER	1	B10001-	B20001-
25	141-06-11220	CLIP	2	B10001-	B20001-
26	01010-81225	BOLT	2	B10001-	B20001-
27	01643-31232	WASHER	2	B10001-	B20001-
28	08034-00519	BAND	3	B10001-	B20001-
29	22T-61-11650	HOSE	1	B10001-	B20001-
30	20Y-62-22910	HOSE 1050MM	1	B10001-	B20001-
31	20Y-62-22810	BAND YELLOW	2	B10001-	B20001-
32	20Y-62-22820	BAND BLUE	2	B10001-	B20001-
33	08034-00519	BAND	1	B10001-	B20001-
34	20Y-62-21890	HOSE 830MM	1	B10001-	B20001-

FIG. H1833–01A0E PRESSURE SWITCH BLOCK (WITH SENSOR)

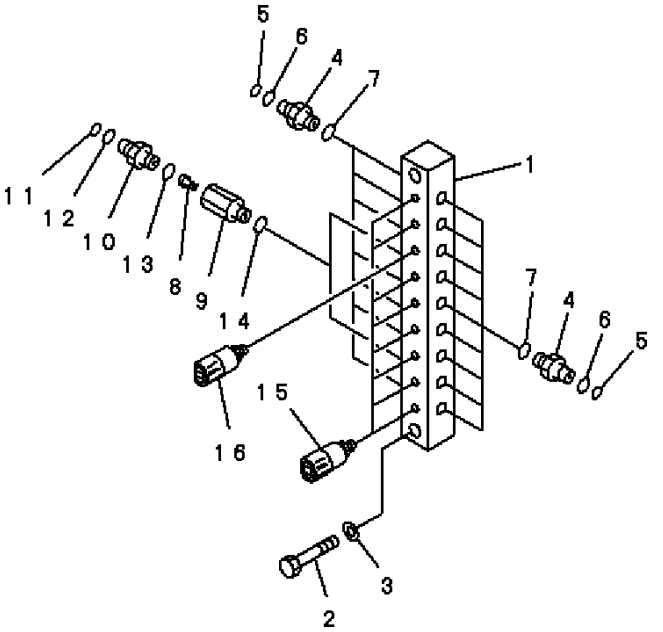

FIG. NO: H1833–01A0E

INDEX	PART NO.	DESCRIPTION	Q'TY	SERIAL NO. PC200-6B	SERIAL NO. PC200LC-6B
1	203-62-63691	BLOCK	1	B10001-	B20001-
2	01010-81260	BOLT	2	B10001-	B20001-
3	01643-31232	WASHER	2	B10001-	B20001-
4	20Y-62-16630	NIPPLE	16	B10001-	B20001-
5	201-60-11390	. O-RING	1	B10001-	B20001-
6	20Y-62-19560	. O-RING	1	B10001-	B20001-
7	07002-11423	O-RING	16	B10001-	B20001-
	20Y-60-22201	VALVE ASS'Y	2	B10001-	B20001-
8	20Y-60-11750	. POPPET	1	B10001-	B20001-
9	☆	. BODY	1	B10001-	B20001-
10	20Y-62-22410	. NIPPLE	1	B10001-	B20001-
11	201-60-11390	. . O-RING	1	B10001-	B20001-
12	20Y-62-19560	. . O-RING	1	B10001-	B20001-
13	07002-01423	. O-RING	1	B10001-	B20001-
14	07002-11423	O-RING	2	B10001-	B20001-
15	206-06-61130	SWITCH	8	B10001-	B20001-
16	20Y-06-21710	SWITCH, (FOR TRAVEL)	1	B10001-	B20001-

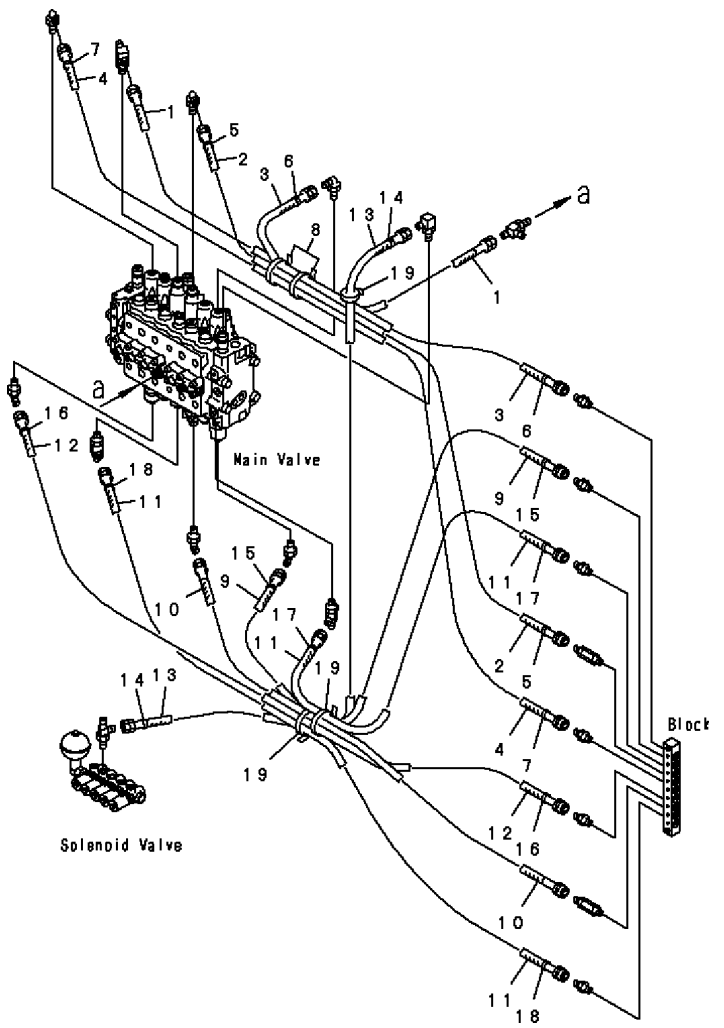

INDEX	PART NO.	DESCRIPTION	Q'TY	SERIAL NO. PC200-6B	SERIAL NO. PC200LC-6B
1	203-62-52310	HOSE 700MM	1	B10001-	B20001-
2	203-62-62632	HOSE 450MM	1	B10001-	B20001-
3	20Y-62-22672	HOSE 355MM	1	B10001-	B20001-
4	20Y-62-22782	HOSE 650MM	1	B10001-	B20001-
5	20Y-62-22790	BAND RED	2	B10001-	B20001-
6	20Y-62-22830	BAND WHITE	2	B10001-	B20001-
7	20Y-62-22840	BAND BLACK	2	B10001-	B20001-
8	08034-00536	BAND	2	B10001-	B20001-
9	20Y-62-22772	HOSE 700MM	1	B10001-	B20001-
10	20Y-62-22662	HOSE 470MM	1	B10001-	B20001-
11	20Y-62-22722	HOSE 535MM	2	B10001-	B20001-
12	20Y-62-23832	HOSE 800MM	1	B10001-	B20001-
13	203-62-52280	HOSE 900MM	1	B10001-	B20001-
14	20Y-62-22810	BAND YELLOW	2	B10001-	B20001-
15	20Y-62-22820	BAND BLUE	2	B10001-	B20001-
16	20Y-62-22830	BAND WHITE	2	B10001-	B20001-
17	20Y-62-22850	BAND GREEN	2	B10001-	B20001-
18	20Y-62-22860	BAND BROWN	2	B10001-	B20001-
19	08034-00536	BAND	3	B10001-	B20001-

FIG. H1840–02A1A PPC MAIN LINE (PPC MAIN LINES) (1 ACTUATOR)

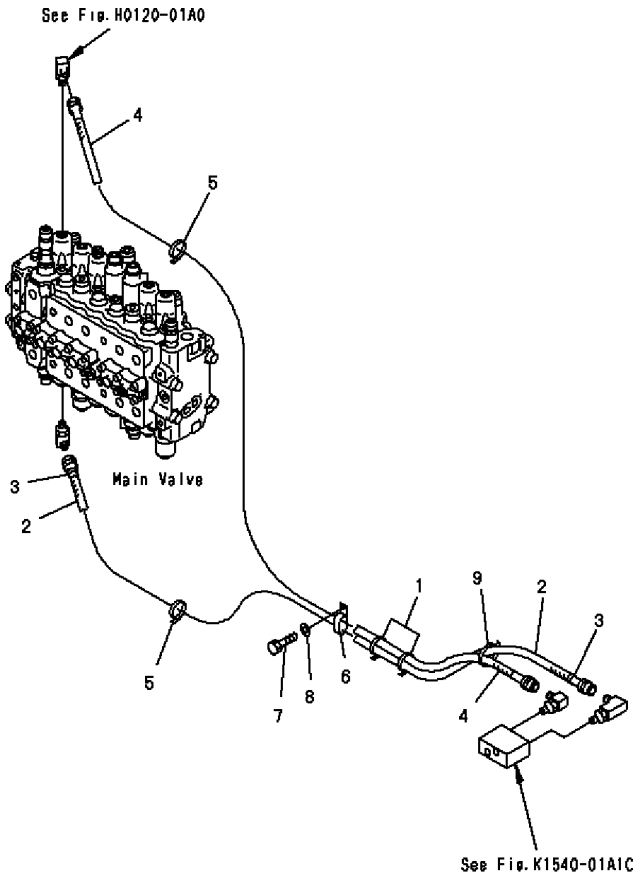

PWB9635

FIG. NO: H1840–02A1A

INDEX	PART NO.	DESCRIPTION	Q'TY	SERIAL NO. PC200-6B	SERIAL NO. PC200LC-6B
1	08034-00536	BAND	2	B10001-	B20001-
2	20Y-62-23422	HOSE 1300MM	1	B10001-	B20001-
3	20Y-62-22810	BAND YELLOW	2	B10001-	B20001-
4	20Y-62-23432	HOSE 1600MM	1	B10001-	B20001-
5	08034-00536	BAND	4	B10001-	B20001-
6	21T-72-23270	CLIP	1	B10001-	B20001-
7	01010-81230	BOLT	1	B10001-	B20001-
8	01643-31232	WASHER	1	B10001-	B20001-
9	08034-00414	BAND	1	B10001-	B20001-

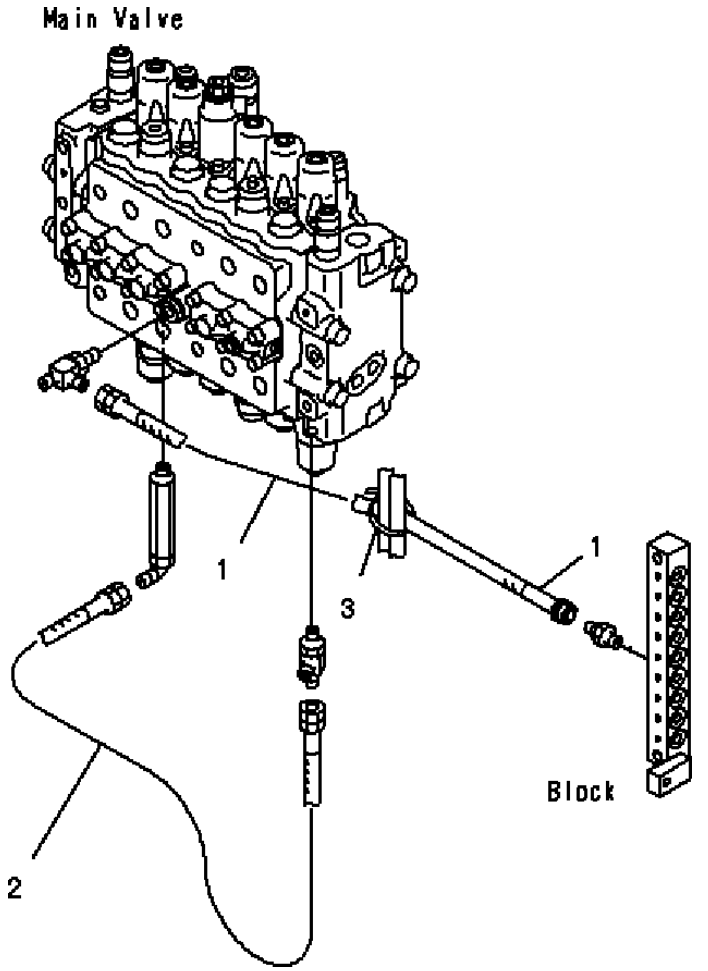

INDEX	PART NO.	DESCRIPTION	Q'TY	SERIAL NO. PC200-6B	SERIAL NO. PC200LC-6B
1	203-62-63281	HOSE 300MM	1	B10001-	B20001-
2	203-62-52330	HOSE 600MM	1	B10001-	B20001-
3	08034-00519	BAND	5	B10001-	B20001-

MAIN/REVOLVING FRAME AND RELATED PARTS

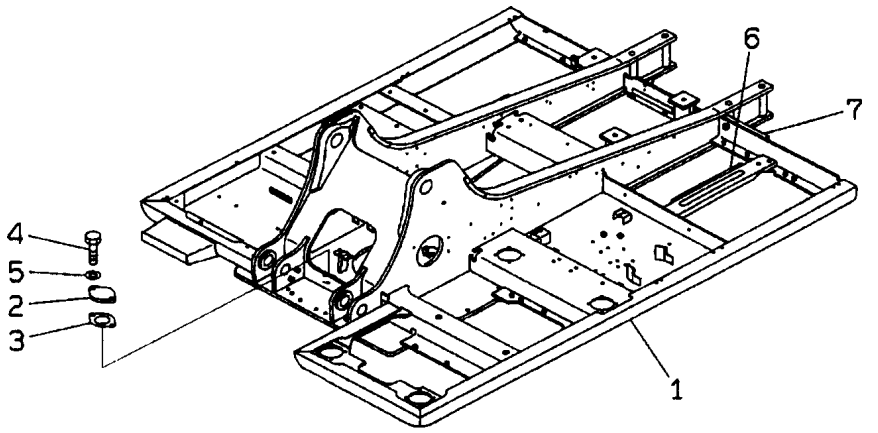

INDEX	PART NO.	DESCRIPTION	Q'TY	SERIAL NO. PC200-6B	SERIAL NO. PC200LC-6B
1	20Y-46-21611	FRAME	1	B10001-	B20001-
2	205-30-71181	COVER	1	B10001-	B20001-
3	205-30-71191	GASKET	1	B10001-	B20001-
4	01010-81230	BOLT	2	B10001-	B20001-
5	01643-31232	WASHER	2	B10001-	B20001-
6	20Y-54-28960	SHEET	1	B10001-	B20001-
7	20Y-46-21890	SHEET	1	B10001-	B20001-

FIG. J1310–01A0E BOOM FOOT PIN

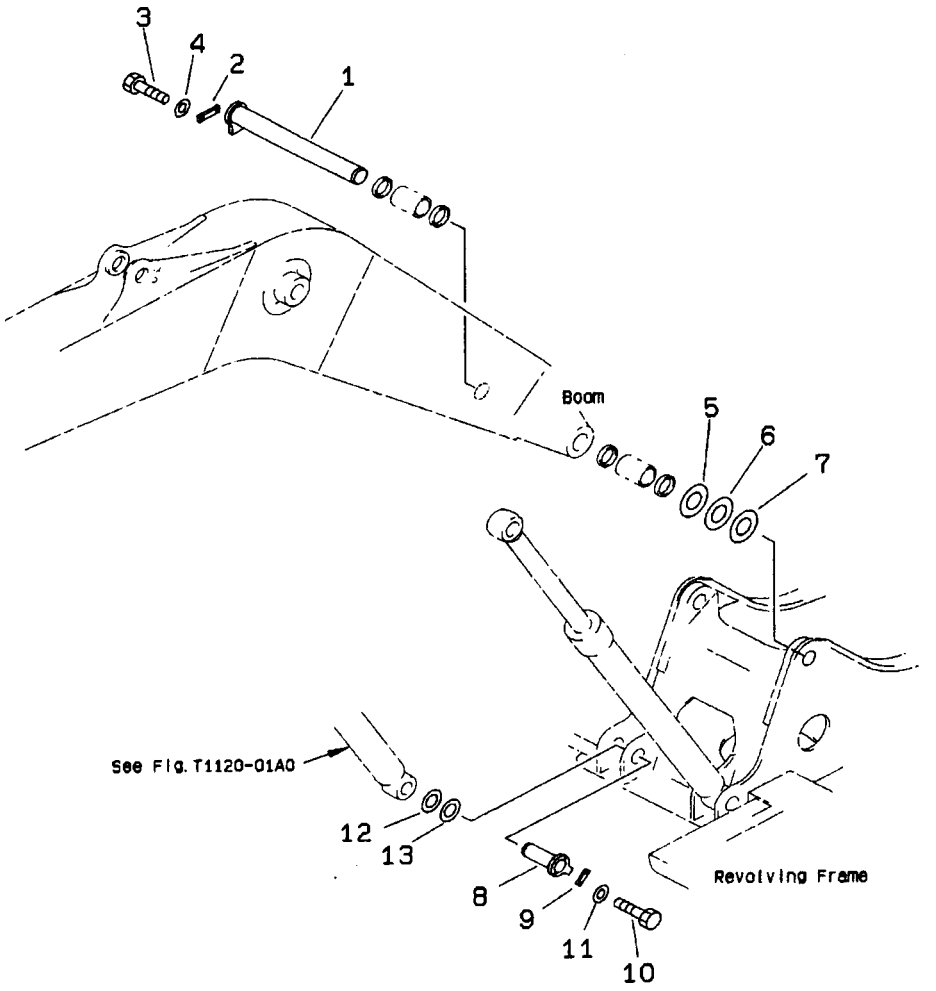

FIG. NO: J1310–01A0E

INDEX	PART NO.	DESCRIPTION	Q'TY	SERIAL NO. PC200-6B	SERIAL NO. PC200LC-6B
1	206-70-55160	PIN	1	B10001-	B20001-
2	20Y-70-11190	PLATE	1	B10001-	B20001-
3	01010-81640	BOLT	2	B10001-	B20001-
4	01643-31645	WASHER	2	B10001-	B20001-
5	20Y-70-11410	SPACER 0.8MM	1	B10001-	B20001-
6	20Y-70-11420	SPACER 1.5MM	2	B10001-	B20001-
7	20Y-70-11470	SPACER 1.0MM	1	B10001-	B20001-
8	205-70-71210	PIN	2	B10001-	B20001-
9	205-70-66580	PLATE	2	B10001-	B20001-
10	01010-81235	BOLT	4	B10001-	B20001-
11	01643-31232	WASHER	4	B10001-	B20001-
12	20Y-70-11430	SPACER 0.8MM	2	B10001-	B20001-
13	20Y-70-11440	SPACER 1.5MM	4	B10001-	B20001-

OPERATOR'S COMPARTMENT AND CONTROL SYSTEM

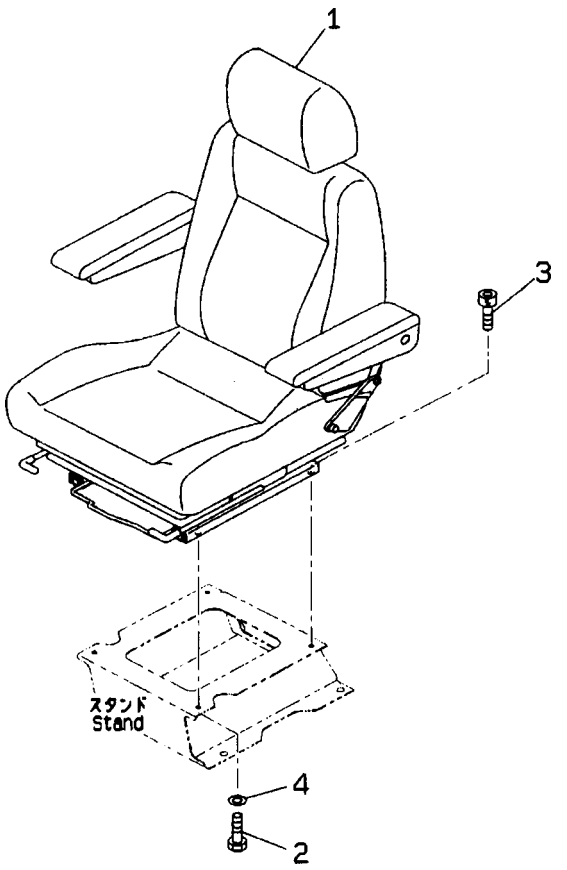

INDEX	PART NO.	DESCRIPTION	Q'TY	SERIAL NO. PC200-6B	SERIAL NO. PC200LC-6B
1	20Y-57-B1110	SEAT ASS'Y	1	B10055-	B20001-
	207-57-61100	SEAT ASS'Y	1	B10001-B10054	
2	01010-80816	BOLT	2	B10001-B10054	
3	01252-40820	BOLT	4	B10055-	B20001-
	01252-40820	BOLT	2	B10001-B10054	
4	01643-30823	WASHER	4	B10055-	B20001-
	01643-30823	WASHER	2	B10001-B10054	

FIG. K0120–01A0A OPERATOR'S SEAT (TILT)

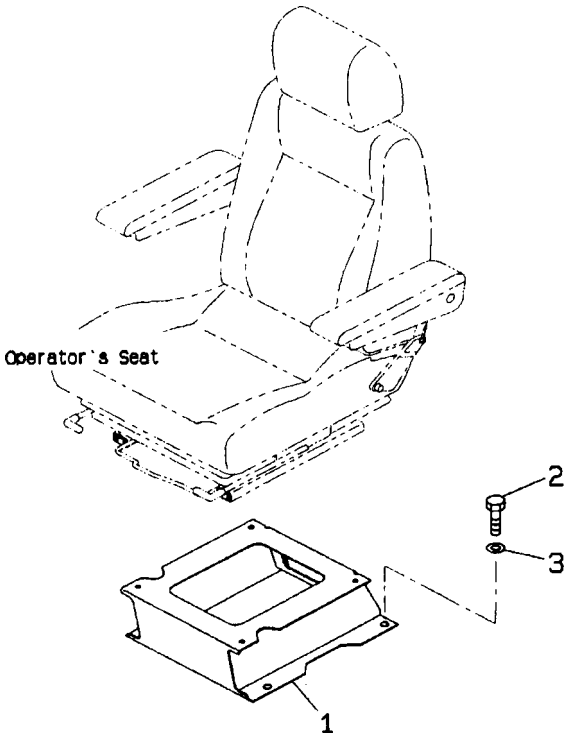

FIG. NO: K0120–01A0A

INDEX	PART NO.	DESCRIPTION	Q'TY	SERIAL NO. PC200-6B	SERIAL NO. PC200LC-6B
1	20Y-57-B1120	STAND	1	B10055-	B20001-
	207-57-61310	STAND	1	B10001-B10054	
2	01010-81225	BOLT	4	B10001-	B20001-
3	01643-31232	WASHER	4	B10001-	B20001-

FIG. K0160–01A0B SEAT BELT (FOR RIGID TYPE) (78MM WIDE)

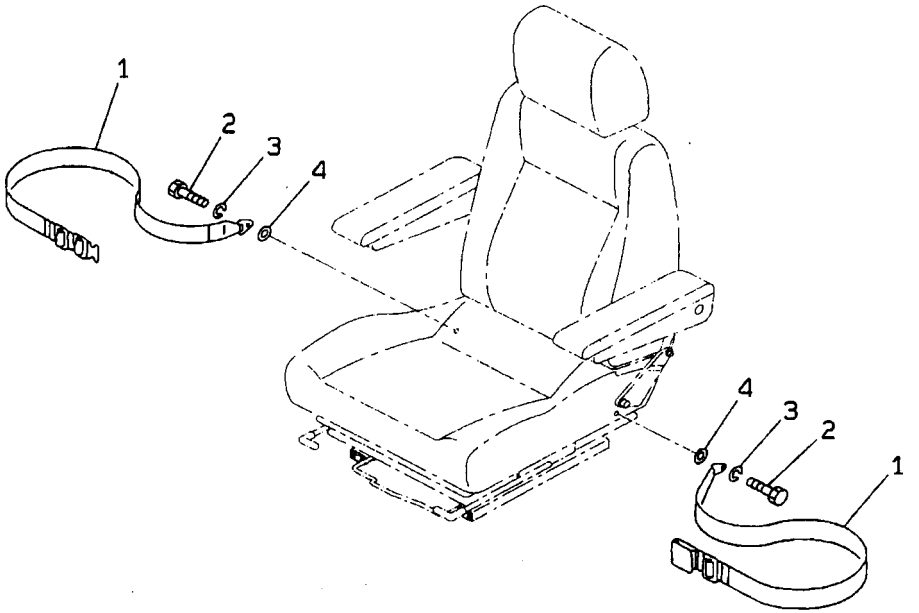

FIG. NO: K0160–01A0B

INDEX	PART NO.	DESCRIPTION	Q'TY	SERIAL NO. PC200-6B	SERIAL NO. PC200LC-6B
1	09409-10001	BELT LAP	1	B10001-B10054	
2	01010-81045	BOLT	2	B10001-B10054	
3	01602-21030	WASHER	2	B10001-B10054	
4	01643-31032	WASHER	2	B10001-B10054	

FIG. K0180–01A1B SEAT REAR COVER (WITH SPEAKER) (WITH AIR CONDITIONER)

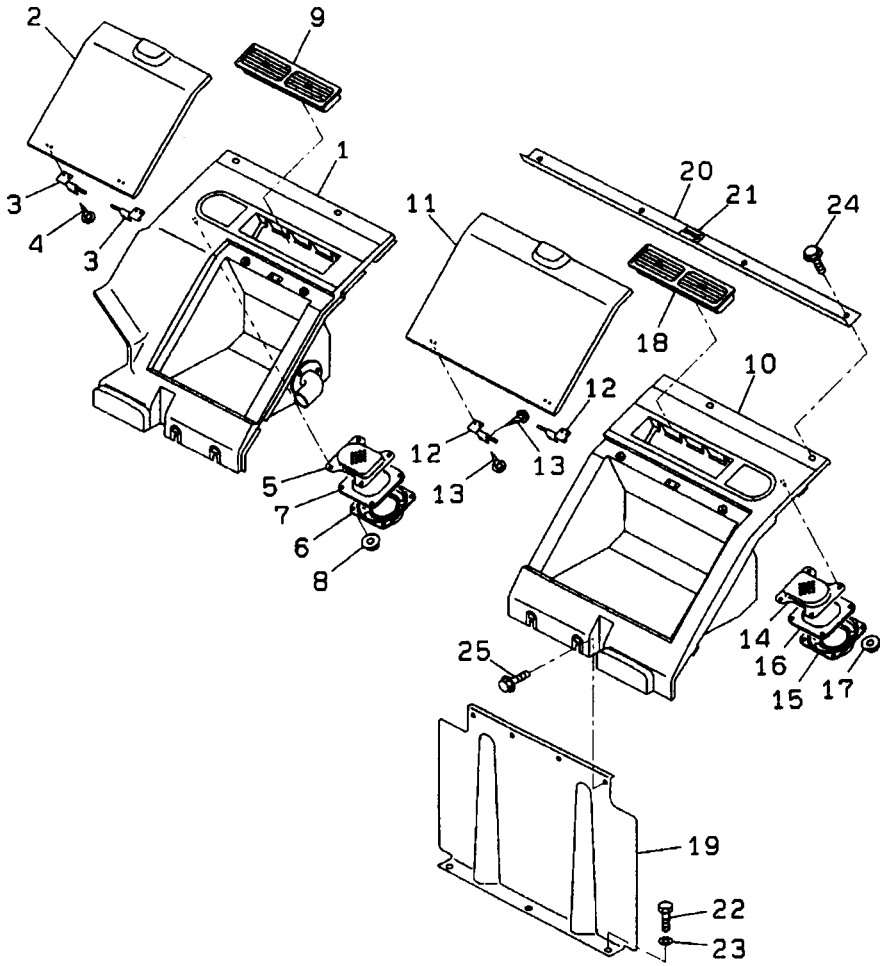

FIG. NO: K0180–01A1B

INDEX	PART NO.	DESCRIPTION	Q'TY	SERIAL NO. PC200-6B	SERIAL NO. PC200LC-6B
1	20Y-979-2581	PANEL, R.H.	1	B10001-	B20001-
2	20Y-979-2511	COVER, R.H.	1	B10001-	B20001-
3	20Y-979-2630	HINGE	2	B10001-	B20001-
4	01370-20308	SCREW	8	B10001-	B20001-
5	20Y-979-2541	GRILLE	1	B10001-	B20001-
6	08910-10000	SPEAKER	1	B10001-	B20001-
7	20Y-979-3340	SPACER	1	B10001-	B20001-
8	01584-00504	NUT	4	B10001-	B20001-
9	20Y-979-2161	GRILL	1	B10001-	B20001-
10	20Y-979-2571	PANEL, L.H.	1	B10001-	B20001-
11	20Y-979-2590	COVER, L.H.	1	B10001-	B20001-
12	20Y-979-2630	HINGE	2	B10001-	B20001-
13	01370-20308	SCREW	8	B10001-	B20001-
14	20Y-979-2541	GRILLE	1	B10001-	B20001-
15	08910-10000	SPEAKER	1	B10001-	B20001-
16	20Y-979-3340	SPACER	1	B10001-	B20001-
17	01584-00504	NUT	4	B10001-	B20001-
18	20Y-979-2161	GRILL	1	B10001-	B20001-
19	20Y-979-2671	COVER	1	B10001-	B20001-
20	20Y-979-2281	BRACKET	1	B10001-	B20001-
21	20Y-979-2290	. SEAT	1	B10001-	B20001-
22	01010-51220	BOLT	3	B10001-	B20001-
23	01643-31232	WASHER	3	B10001-	B20001-
24	01435-30830	BOLT	4	B10001-	B20001-
25	01435-30820	BOLT	4	B10001-	B20001-

FIG. K0180–01A2B SEAT REAR COVER (WITH SPEAKER) (WITH HEATER)

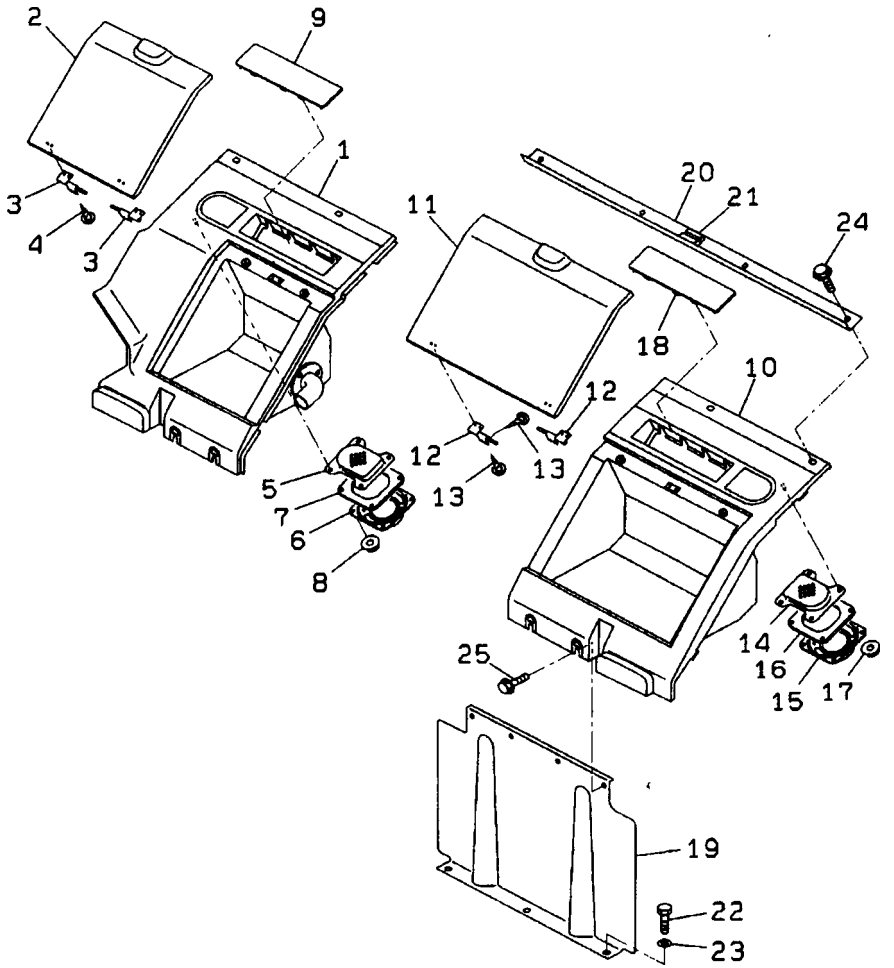

FIG. NO: K0180–01A2B

INDEX	PART NO.	DESCRIPTION	Q'TY	SERIAL NO. PC200-6B	SERIAL NO. PC200LC-6B
1	20Y-979-2581	PANEL, R.H.	1	B10001-	B20001-
2	20Y-979-2511	COVER, R.H.	1	B10001-	B20001-
3	20Y-979-2630	HINGE	2	B10001-	B20001-
4	01370-20308	SCREW	8	B10001-	B20001-
5	20Y-979-2541	GRILLE	1	B10001-	B20001-
6	08910-10000	SPEAKER	1	B10001-	B20001-
7	20Y-979-3340	SPACER	1	B10001-	B20001-
8	01584-00504	NUT	4	B10001-	B20001-
9	20Y-977-2150	COVER	1	B10001-	B20001-
10	20Y-979-2571	PANEL, L.H.	1	B10001-	B20001-
11	20Y-979-2590	COVER, L.H.	1	B10001-	B20001-
12	20Y-979-2630	HINGE	2	B10001-	B20001-
13	01370-20308	SCREW	8	B10001-	B20001-
14	20Y-979-2541	GRILLE	1	B10001-	B20001-
15	08910-10000	SPEAKER	1	B10001-	B20001-
16	20Y-979-3340	SPACER	1	B10001-	B20001-
17	01584-00504	NUT	4	B10001-	B20001-
18	20Y-979-2150	COVER	1	B10001-	B20001-
19	20Y-979-2671	COVER	1	B10001-	B20001-
20	20Y-979-2281	BRACKET	1	B10001-	B20001-
21	20Y-979-2290	. SEAT	1	B10001-	B20001-
22	01010-81225	BOLT	3	B10107-	B20001-
	01010-51220	BOLT	3	B10001-B10106	
23	01643-31032	WASHER	3	B10107-	B20001-
	01643-31232	WASHER	3	B10001-B10106	
24	01435-30830	BOLT	4	B10001-	B20001-
25	01435-30820	BOLT	4	B10001-	B20001-

FIG. K0210–01A1D OPERATOR'S CAB (WITH GUARD) (CAB GRIP AND OPEN LOCK)

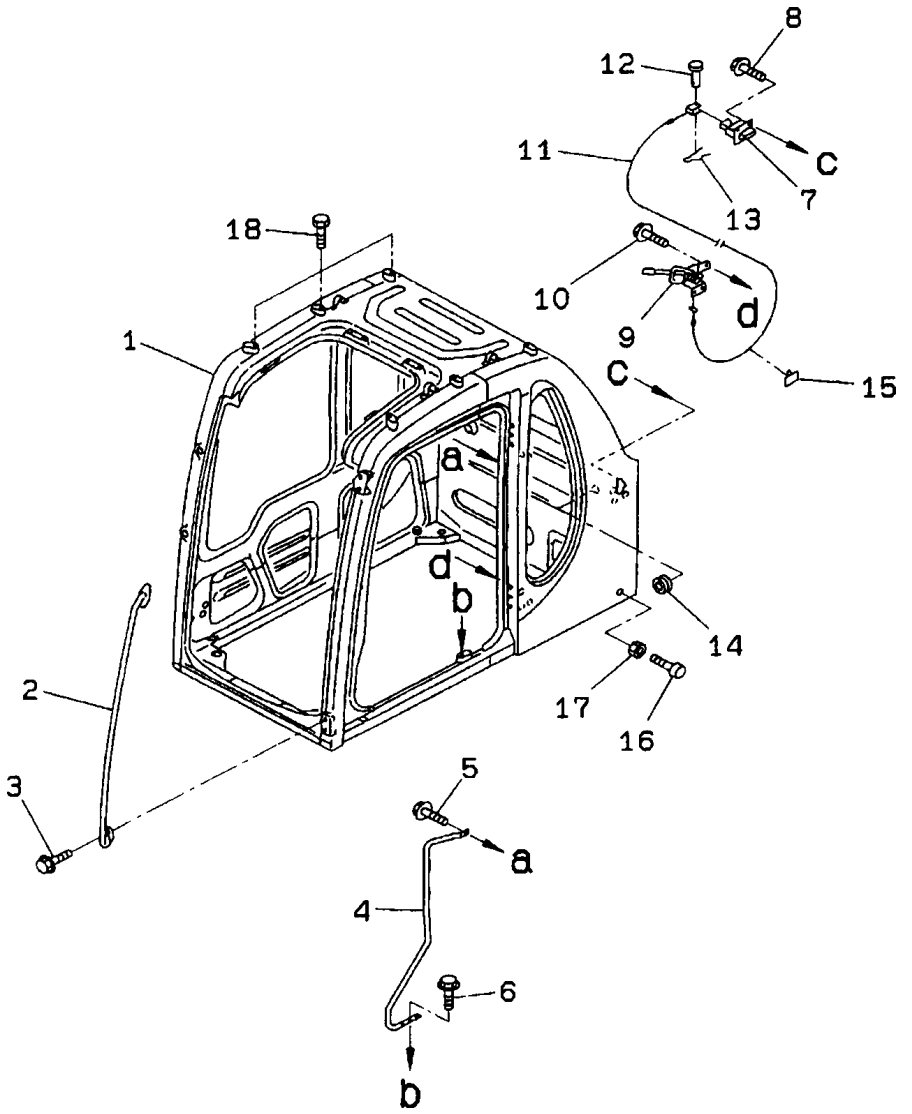

FIG. NO: K0210–01A1D

INDEX	PART NO.	DESCRIPTION	Q'TY	SERIAL NO. PC200-6B	SERIAL NO. PC200LC-6B
1	☆	CAB	1	B10001-	B20001-
2	20Y-54-35680	GRIP	1	B10001-	B20001-
3	01435-30820	BOLT	4	B10001-	B20001-
4	20Y-54-36240	GRIP	1	B10001-	B20001-
5	01435-31025	BOLT	1	B10001-	B20001-
6	01435-31020	BOLT	2	B10001-	B20001-
7	20Y-54-36380	LOCK	1	B10001-	B20001-
8	01435-30820	BOLT	4	B10001-	B20001-
9	20Y-54-35982	LOCK, RELEASE	1	B10001-	B20001-
10	01435-30616	BOLT	3	B10001-	B20001-
11	20Y-54-35996	CABLE	1	B10001-	B20001-
12	04205-10520	PIN	1	B10001-	B20001-
13	04052-10530	PIN	1	B10001-	B20001-
14	09415-01610	CAP	1	B10001-	B20001-
15	08051-00801	CLIP	2	B10001-	B20001-
16	20Y-54-11611	STOPPER	2	B10001-	B20001-
17	01580-11008	NUT	2	B10001-	B20001-
18	01010-31218	BOLT	6	B10001-	B20001-

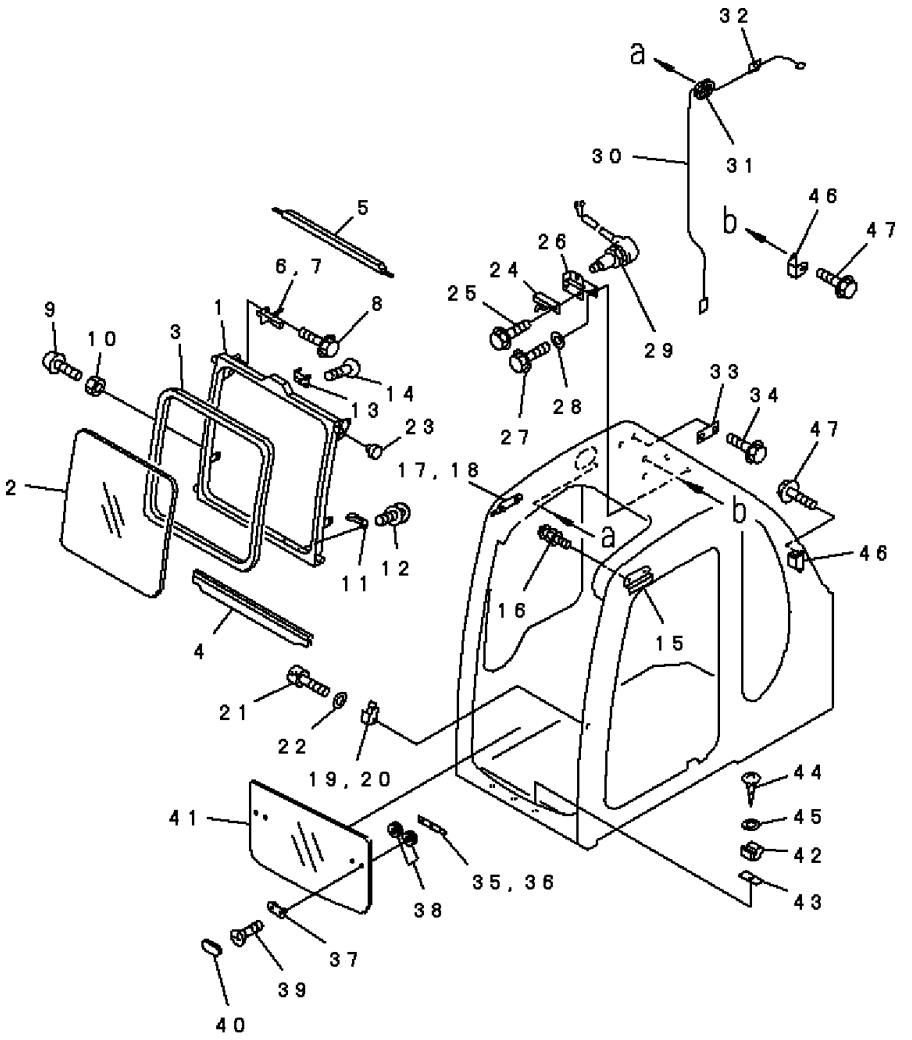

INDEX	PART NO.	DESCRIPTION	Q'TY	SERIAL NO. PC200-6B	SERIAL NO. PC200LC-6B
	20Y-54-36704	FRONT WINDOW ASS'Y	1	B10001-	B20001-
1	20Y-54-36713	. WINDOW	1	B10001-	B20001-
2	20Y-54-38122	. GLASS	1	B10001-	B20001-
3	20Y-54-38132	. WEATHER STRIP	1	B10001-	B20001-
4	20Y-54-38143	. SEAL	1	B10001-	B20001-
5	20Y-54-38152	. SEAL	1	B10001-	B20001-
6	20Y-54-43130	LATCH ASS'Y, L.H.	1	B10001-	B20001-
7	20Y-54-43140	LATCH ASS'Y, R.H.	1	B10001-	B20001-
8	01435-30816	BOLT	4	B10001-	B20001-
9	20Y-54-14290	STOPPER	1	B10001-	B20001-
10	01580-11008	NUT	1	B10001-	B20001-
11	20Y-54-14590	HANDLE	2	B10001-	B20001-
12	01023-10616	SCREW	4	B10001-	B20001-
13	20Y-54-14310	STRIKER	1	B10001-	B20001-
14	20Y-54-14280	SCREW	3	B10001-	B20001-
15	20Y-54-37810	STOPPER, L.H.	1	B10001-	B20001-
16	01023-70416	SCREW	2	B10001-	B20001-
17	20Y-54-37820	STOPPER, R.H.	1	B10001-	B20001-
18	01023-70416	SCREW	2	B10001-	B20001-
19	20Y-54-36835	BLOCK, L.H.	1	B10001-	B20001-
20	20Y-54-36845	BLOCK, R.H.	1	B10001-	B20001-
21	01252-50635	BOLT	2	B10001-	B20001-
22	01641-50608	WASHER	2	B10001-	B20001-
23	20Y-54-39152	ROLLER	4	B10001-	B20001-
24	205-54-63310	LOCK ASS'Y	1	B10001-	B20001-
25	01435-30820	BOLT	2	B10001-	B20001-
26	20Y-54-39363	BRACKET	1	B10001-	B20001-
27	01435-30820	BOLT	2	B10001-	B20001-
28	154-61-16570	WASHER	2	B10001-	B20001-
29	08074-40000	SWITCH	1	B10001-	B20001-
30	20Y-54-39590	WIRING HARNESS	1	B10001-	B20001-
31	20Y-54-36150	GROMMET	1	B10001-	B20001-
32	08051-00801	CLIP	6	B10001-	B20001-
33	20Y-54-14721	LOCK	2	B10001-	B20001-
34	01435-30820	BOLT	4	B10001-	B20001-
	20Y-54-36103	LOWER WINDOW ASS'Y	1	B10001-	B20001-
35	20Y-54-36122	. LATCH ASS'Y, R.H.	1	B10001-	B20001-
36	20Y-54-36132	. LATCH ASS'Y, L.H.	1	B10001-	B20001-
37	20Y-54-36142	. PLATE	2	B10001-	B20001-
38	08037-01610	. GROMMET	4	B10001-	B20001-
39	01225-70612	. SCREW	4	B10001-	B20001-
40	20Y-54-36211	. COVER	2	B10001-	B20001-
41	20Y-54-36113	. GLASS	1	B10001-	B20001-
42	20Y-54-36171	SEAT	2	B10001-	B20001-
43	20Y-54-36230	SHIM 2.0MM	2	B10001-	B20001-
44	01370-00620	SCREW	2	B10001-	B20001-
45	01643-30623	WASHER	2	B10001-	B20001-
46	20Y-54-36182	STOPPER	2	B10001-	B20001-
47	01435-30820	BOLT	4	B10001-	B20001-

FIG. K0210-05A0D OPERATOR'S CAB (WINDOW AND ROOF VENTILATOR)

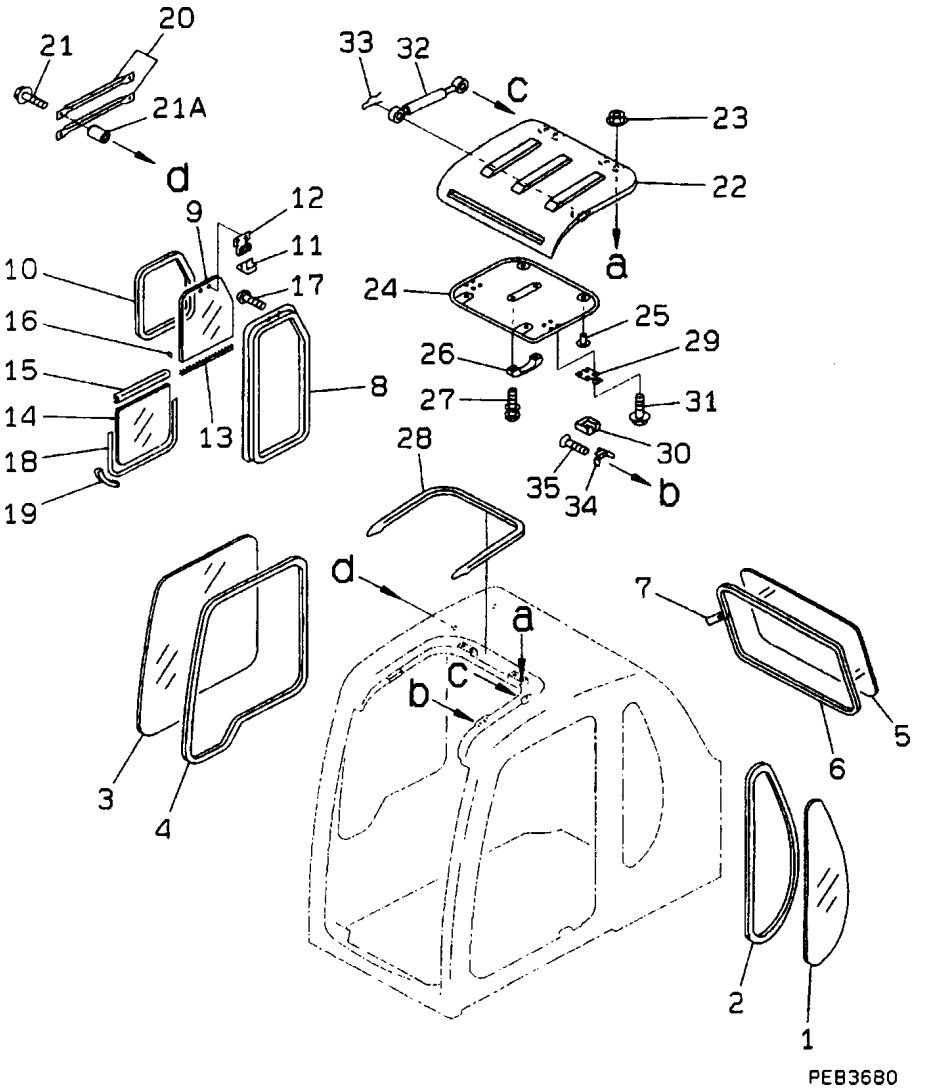

FIG. NO: K0210–05A0D

INDEX	PART NO.	DESCRIPTION	Q'TY	SERIAL NO. PC200-6B	SERIAL NO. PC200LC-6B
1	20Y-54-35121	GLASS	1	B10001-	B20001-
2	20Y-54-35351	WEATHER STRIP	1	B10001-	B20001-
3	20Y-54-35132	GLASS	1	B10001-	B20001-
4	20Y-54-35362	WEATHER STRIP	1	B10001-	B20001-
5	20Y-54-35142	GLASS	1	B10001-	B20001-
6	20Y-54-35372	WEATHER STRIP	1	B10001-	B20001-
7	20T-54-75250	TAG	1	B10001-	B20001-
	20Y-54-35201	SASH ASS'Y	1	B10001-	B20001-
8	☆	. SASH	1	B10001-	B20001-
9	☆	. GLASS	1	B10001-	B20001-
10	☆	. SEAL	1	B10001-	B20001-
11	☆	. LOCK	1	B10001-	B20001-
12	☆	. HOOK	1	B10001-	B20001-
13	☆	. SEAL	1	B10001-	B20001-
14	☆	. GLASS	1	B10001-	B20001-
15	☆	. SASH	1	B10001-	B20001-
16	☆	. SEAL	2	B10001-	B20001-
17	☆	. SCREW	2	B10001-	B20001-
18	☆	. LINER	1	B10001-	B20001-
19	☆	. STOPPER	2	B10001-	B20001-
20	20Y-54-35550	GUARD	2	B10001-	B20001-
21	01435-30640	BOLT	4	B10001-	B20001-
21A	20D-54-41390	COLLAR	4	B10001-	B20001-
22	20Y-54-35671	ROOF	1	B10001-	B20001-
23	01584-00806	NUT	4	B10001-	B20001-
24	20Y-54-36321	COVER	1	B10001-	B20001-
25	20Y-54-18690	RIVET	4	B10001-	B20001-
26	20Y-54-14590	HANDLE	1	B10001-	B20001-
27	01023-10616	SCREW	2	B10001-	B20001-
28	20Y-54-36331	SEAL, (SEE FIG. K0210-07A0B)	1	B10001-	B20001-
29	20Y-54-36351	LOCK ASS'Y	2	B10001-	B20001-
30	20Y-54-36360	COVER	2	B10001-	B20001-
31	01435-30610	BOLT	8	B10001-	B20001-
32	20Y-54-36342	GAS SPRING ASS'Y	2	B10001-	B20001-
33	04052-10833	PIN	4	B10001-	B20001-
34	20Y-54-36370	STRIKER	2	B10001-	B20001-
35	01240-00816	SCREW	4	B10001-	B20001-

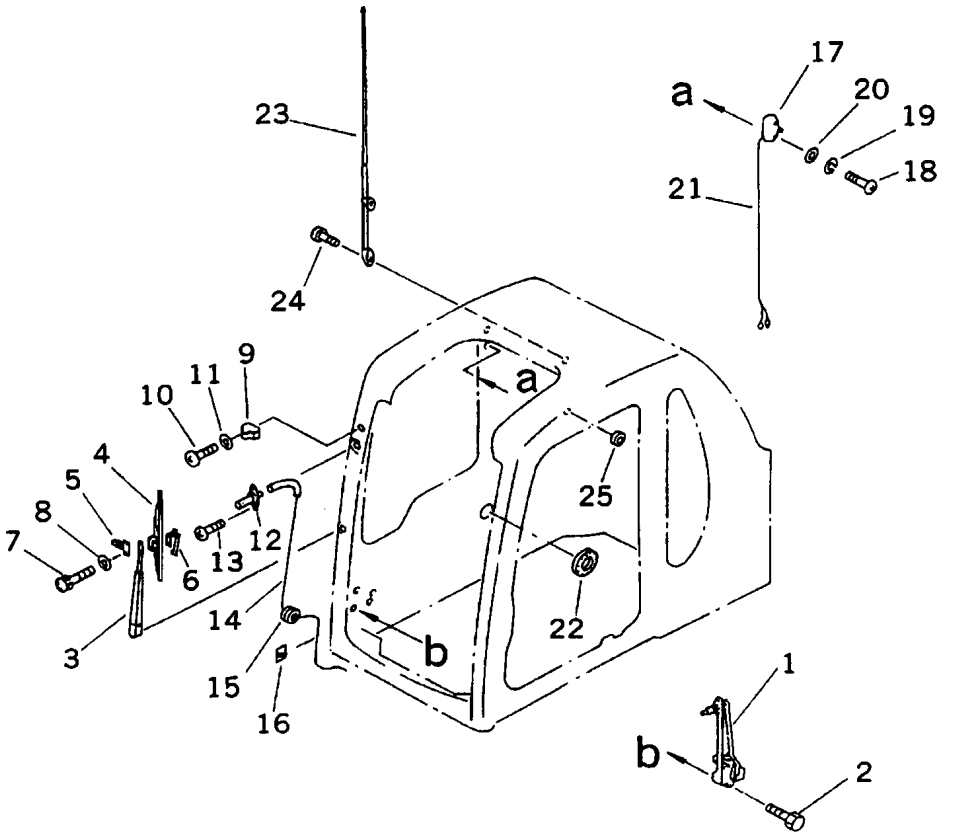

INDEX	PART NO.	DESCRIPTION	Q'TY	SERIAL NO. PC200-6B	SERIAL NO. PC200LC-6B
1	20Y-54-39402	WIPER MOTOR ASS'Y	1	B10001-	B20001-
2	01435-30610	BOLT	4	B10001-	B20001-
	20Y-54-39502	WIPER ASS'Y	1	B10001-	B20001-
3	20Y-54-39442	. ARM	1	B10001-	B20001-
4	20Y-54-39450	. BLADE	1	B10001-	B20001-
5	20Y-54-39460	. SLIDER	1	B10001-	B20001-
6	20Y-54-39480	. PLATE	1	B10001-	B20001-
7	01235-50306	. BOLT	2	B10001-	B20001-
8	01601-00307	. WASHER	2	B10001-	B20001-
9	20Y-54-39471	STOPPER	1	B10001-	B20001-
10	01220-70620	SCREW	1	B10001-	B20001-
11	01641-20608	WASHER	1	B10001-	B20001-
12	20Y-54-39511	NOZZLE	1	B10001-	B20001-
13	01370-10520	SCREW	2	B10001-	B20001-
14	17M-911-2670	HOSE	1	B10001-	B20001-
15	08037-01008	GROMMET	1	B10001-	B20001-
16	08051-00801	CLIP	2	B10001-	B20001-
17	08141-02400	LAMP	1	B10001-	B20001-
18	01220-40420	SCREW	2	B10001-	B20001-
19	01601-20410	WASHER	2	B10001-	B20001-
20	01641-20405	WASHER	2	B10001-	B20001-
21	205-06-71550	WIRE	1	B10001-	B20001-
22	20Y-54-36150	GROMMET	1	B10001-	B20001-
23	08912-00000	ANTENNA	1	B10001-	B20001-
24	01220-40420	SCREW	2	B10001-	B20001-
25	08037-01610	GROMMET	1	B10001-	B20001-

FIG. K0210-07A0B OPERATOR'S CAB (INSIDE COVER)

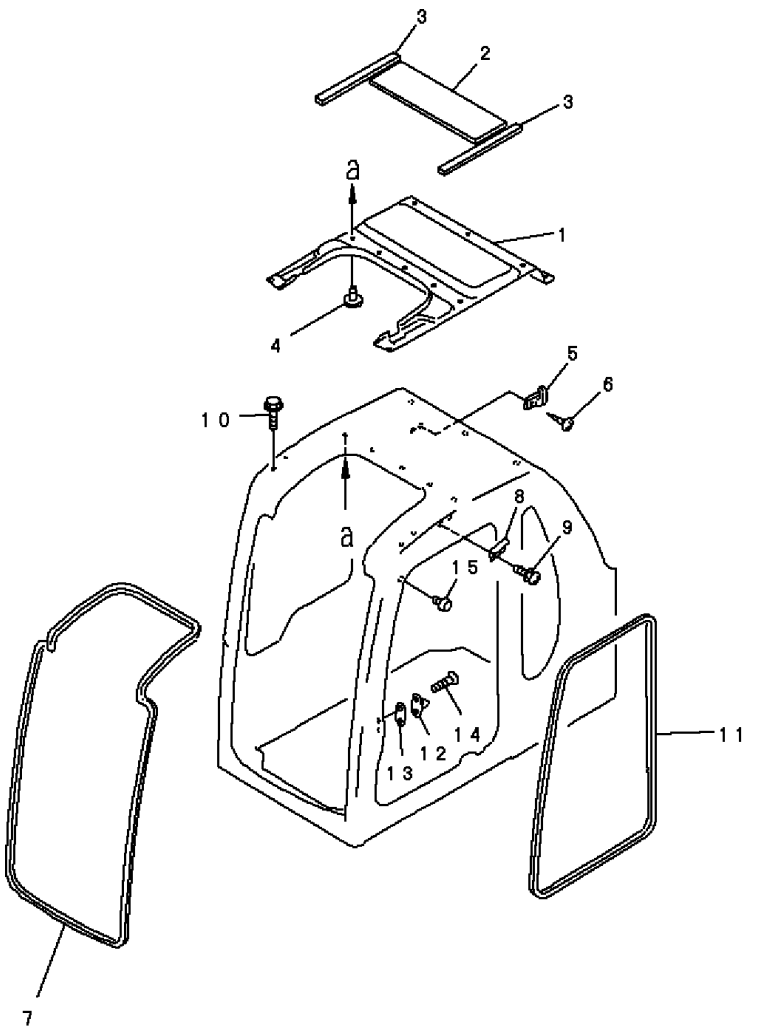

PWB7627

FIG. NO: K0210–07A0B

INDEX	PART NO.	DESCRIPTION	Q'TY	SERIAL NO. PC200-6B	SERIAL NO. PC200LC-6B
1	20Y-54-35312	COVER	1	B10001-	B20001-
2	20Y-54-36420	SHEET	1	B10001-	B20001-
3	20Y-54-36430	SHEET	2	B10001-	B20001-
4	20Y-54-18690	RIVET	13	B10001-	B20001-
5	205-54-51250	HANGER	1	B10001-	B20001-
6	01370-10412	SCREW	2	B10001-	B20001-
7	20Y-54-35492	TRIM	1	B10001-	B20001-
8	20Y-54-35290	STAY	2	B10001-	B20001-
9	01023-10612	SCREW	4	B10001-	B20001-
10	01435-30816	BOLT	4	B10001-	B20001-
11	20Y-54-35380	TRIM	1	B10001-	B20001-
12	20Y-54-35470	STRIKER	1	B10001-	B20001-
13	20Y-54-35480	SHIM	1	B10001-	B20001-
14	01240-01025	SCREW	2	B10001-	B20001-
15	20Y-54-35780	STOPPER	1	B10001-	B20001-

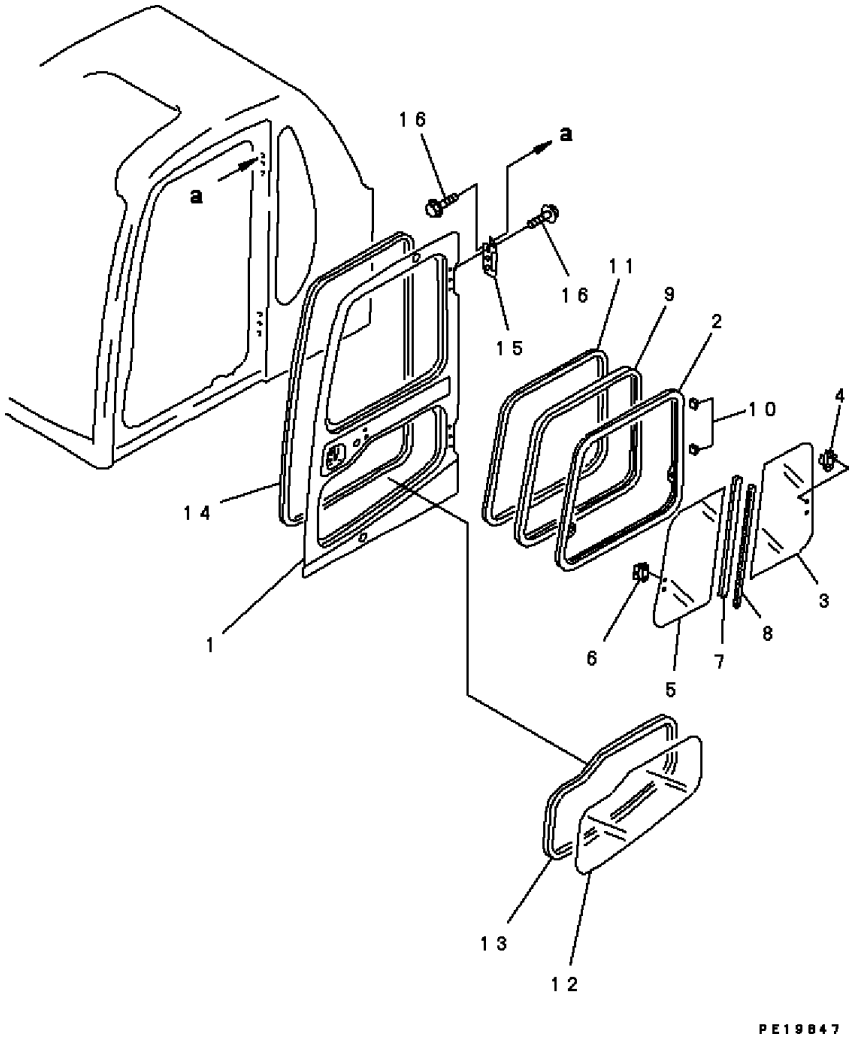

INDEX	PART NO.	DESCRIPTION	Q'TY	SERIAL NO. PC200-6B	SERIAL NO. PC200LC-6B
	20Y-54-00515	DOOR ASS'Y	1	B10001-	B20001-
1	☆	. DOOR	1	B10001-	B20001-
	20Y-54-35801	. SASH ASS'Y	1	B10001-	B20001-
2	20Y-54-35811	. . FRAME	1	B10001-	B20001-
3	20Y-54-35821	. . GLASS	1	B10001-	B20001-
4	20Y-54-14352	. . LOCK ASS'Y	1	B10001-	B20001-
5	20Y-54-35831	. . GLASS	1	B10001-	B20001-
6	20Y-54-13322	. . LOCK	1	B10001-	B20001-
7	20Y-54-35850	. . SASH	1	B10001-	B20001-
8	20Y-54-35860	. . SASH	1	B10001-	B20001-
9	20Y-54-35840	. . SEAL	1	B10001-	B20001-
10	20Y-54-13180	. SEAT	12	B10001-	B20001-
11	20Y-54-35870	. TRIM	1	B10001-	B20001-
12	20Y-54-35721	. GLASS	1	B10001-	B20001-
13	20Y-54-35731	. WEATHER STRIP	1	B10001-	B20001-
14	20Y-54-35743	. WEATHER STRIP	1	B10001-	B20001-
15	14X-911-1330	. HINGE	2	B10001-	B20001-
16	01435-31225	. BOLT	12	B10001-	B20001-

FIG. K0210-09A0B OPERATOR'S CAB (DOOR LOCK)

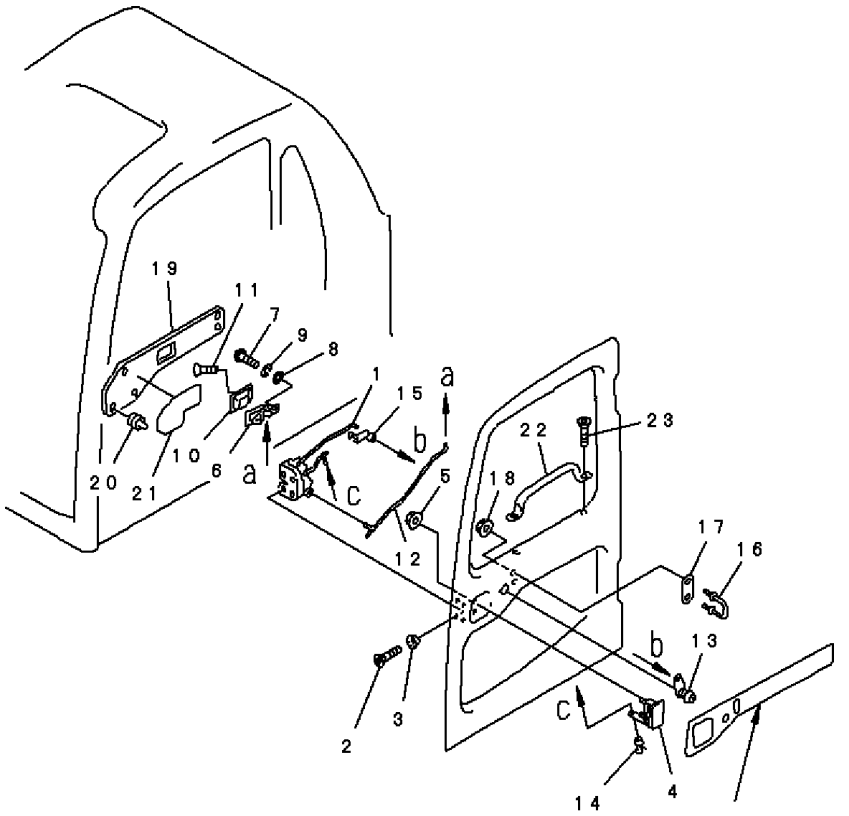

See Fig. U0100-01A0

FIG. NO: K0210–09A0B

INDEX	PART NO.	DESCRIPTION	Q'TY	SERIAL NO. PC200-6B	SERIAL NO. PC200LC-6B
	(20Y-54-00515)	DOOR ASS'Y	1	B10001-	B20001-
1	20Y-54-35941	. LATCH,DOOR	1	B10001-	B20001-
2	01240-00616	. SCREW	3	B10001-	B20001-
3	195-Z11-1690	. WASHER	3	B10001-	B20001-
4	20Y-54-35932	. HANDLE ASS'Y	1	B10001-	B20001-
5	01584-00605	. NUT	2	B10001-	B20001-
6	20Y-54-35910	. HANDLE,I.S.	1	B10001-	B20001-
7	01220-40512	. SCREW	2	B10001-	B20001-
8	01641-20508	. WASHER	2	B10001-	B20001-
9	01601-20513	. WASHER	2	B10001-	B20001-
10	20Y-54-35920	. COVER	1	B10001-	B20001-
11	20Y-54-35880	. SCREW	1	B10001-	B20001-
12	20Y-54-35951	. ROD ASS'Y	1	B10001-	B20001-
13	20Y-54-35890	. LOCK ASS'Y	1	B10001-	B20001-
14	14X-911-1740	. SNAP,ROD	1	B10001-	B20001-
15	205-54-71840	. SNAP	1	B10001-	B20001-
16	20Y-54-35961	. STRIKER	1	B10001-	B20001-
17	20Y-54-35710	. PLATE	1	B10001-	B20001-
18	01584-01008	. NUT	2	B10001-	B20001-
19	20Y-54-35760	. COVER	1	B10001-	B20001-
20	20Y-54-14560	. CLIP ASS'Y	5	B10001-	B20001-
21	20Y-54-35771	. SEAL	1	B10001-	B20001-
22	20Y-54-35690	. GRIP	1	B10001-	B20001-
23	01240-00820	. SCREW	2	B10001-	B20001-

FIG. K0210-10A1F OPERATOR'S CAB (BASE) (WORK LEVER WITH PPC VALVE) (ELECTRIC GOVERNOR)

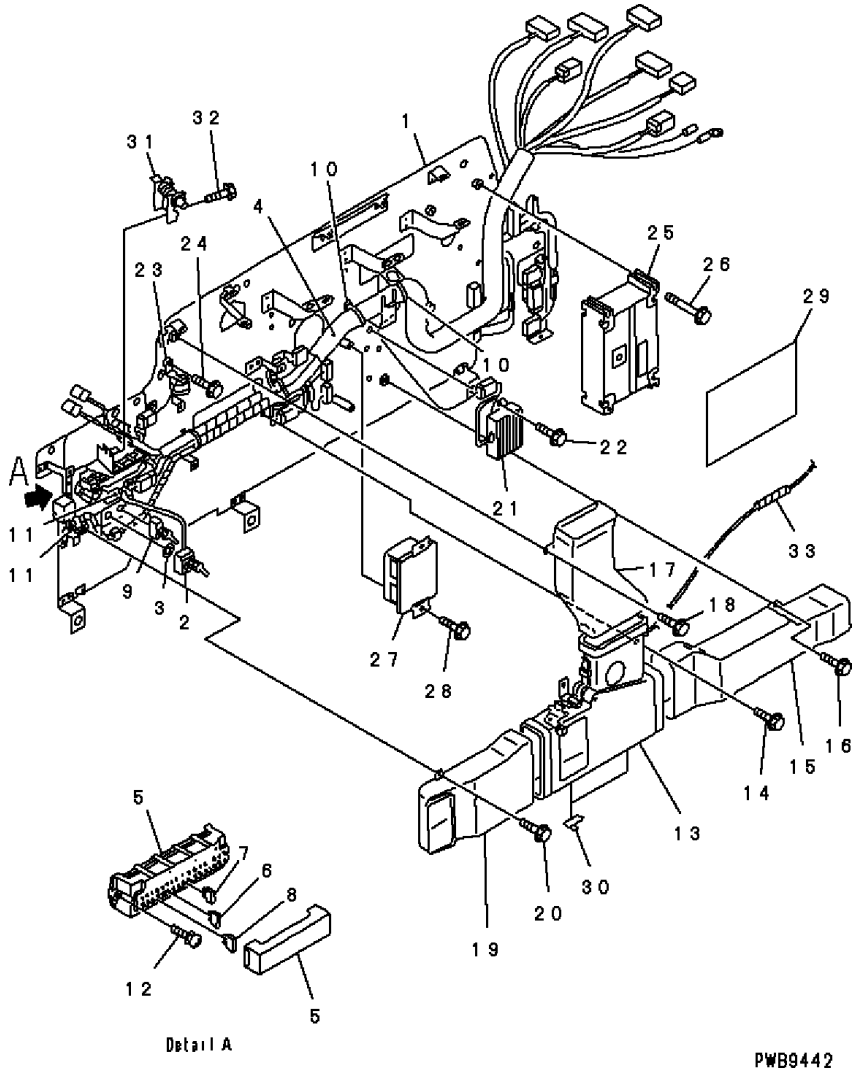

FIG. NO: K0210–10A1F

INDEX	PART NO.	DESCRIPTION	Q'TY	SERIAL NO. PC200-6B	SERIAL NO. PC200LC-6B
1	20Y-06-25110	BASE	1	B10001-	B20001-
2	20Y-06-24121	SWITCH ASS'Y, PUMP REDUNDANCY	1	B10001-	B20001-
3	01641-21223	WASHER	2	B10001-	B20001-
4	20Y-06-27751	WIRING HARNESS	1	B10001-	B20001-
5	08044-11500	. BOX, FUSE	1	B10001-	B20001-
6	08041-01000	. FUSE 10A	14	B10001-	B20001-
7	08041-01500	. FUSE 15A	3	B10001-	B20001-
8	08041-02000	. FUSE 20A	2	B10001-	B20001-
9	20Y-06-24130	. SWITCH, SWING REDUNDANCY	1	B10001-	B20001-
10	20Y-06-21460	CLIP	2	B10001-	B20001-
11	20Y-06-23960	CLIP	2	B10001-	B20001-
12	01023-10625	SCREW	2	B10001-	B20001-
13	(20Y-979-2130)	BOX ASS'Y, (SEE FIG. Y1979-61A0)	1	B10001-	B20001-
14	01435-01016	BOLT	2	B10001-	B20001-
15	20Y-979-2221	DUCT	1	B10001-	B20001-
16	01435-00610	BOLT	1	B10001-	B20001-
17	20Y-979-2231	DUCT	1	B10001-	B20001-
18	01435-00610	BOLT	2	B10001-	B20001-
19	20Y-979-2242	DUCT	1	B10001-	B20001-
20	01435-00610	BOLT	1	B10001-	B20001-
21	7861-94-4001	RESISTOR	1	B10001-	B20001-
22	01435-00820	BOLT	2	B10001-	B20001-
23	203-06-56230	BUZZER ASS'Y	1	B10001-	B20001-
24	01435-00610	BOLT	1	B10001-	B20001-
25	7834-21-7001	CONTROLLER, GOVERNOR	1	B10083-	B20001-
	7834-21-6000	CONTROLLER, GOVERNOR	1	B10001-B10082	
26	01435-00880	BOLT	3	B10001-	B20001-
27	20Y-06-25130	RELAY BOX ASS'Y, WIPER	1	B10001-	B20001-
28	01435-00630	BOLT	2	B10001-	B20001-
29	20Y-06-24220	SHEET	1	B10001-	B20001-
30	08051-00801	CLIP	2	B10001-	B20001-
31	20Y-06-23521	LOCK	1	B10001-	B20001-
32	01435-00820	BOLT	2	B10001-	B20001-
33	08017-30701	CONDUIT	1	B10001-	B20001-

FIG. K0210-11A1B OPERATOR'S CAB (PANEL COVER) (ELECTRIC GOVERNOR CONTROL) (WITH AIR CONDITIONER)

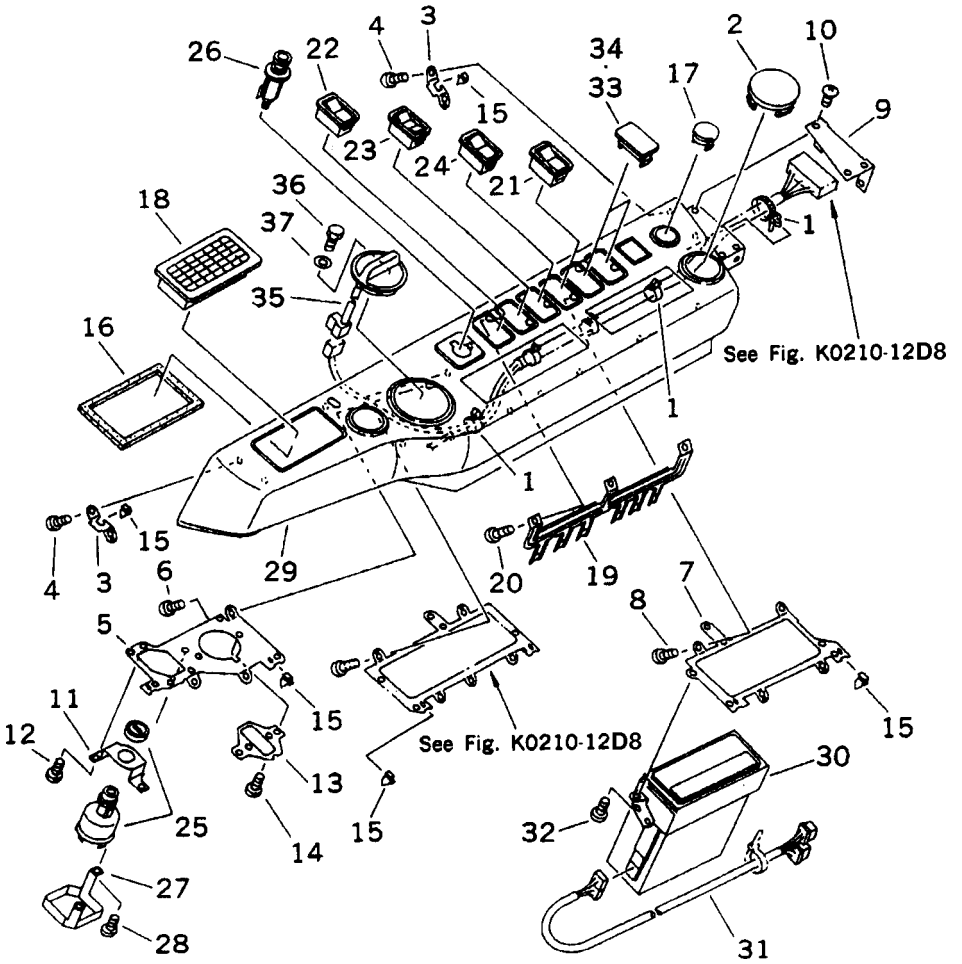

FIG. NO: K0210-11A1B

INDEX	PART NO.	DESCRIPTION	Q'TY	SERIAL NO. PC200-6B	SERIAL NO. PC200LC-6B
1	20Y-06-23940	BAND	5	B10001-	B20001-
2	09414-11053	CAP	1	B10001-	B20001-
3	20Y-06-23710	STAY	2	B10001-	B20001-
4	01370-00512	SCREW	4	B10001-	B20001-
5	20Y-06-23720	STAY	1	B10001-	B20001-
6	01370-00512	SCREW	3	B10001-	B20001-
7	20Y-06-23730	STAY	1	B10001-	B20001-
8	01370-00512	SCREW	4	B10001-	B20001-
9	20Y-06-23740	STAY	1	B10001-	B20001-
10	01023-10408	SCREW	5	B10001-	B20001-
11	20Y-06-23750	BRACKET	1	B10001-	B20001-
12	01023-10510	SCREW	2	B10001-	B20001-
13	20Y-06-23760	BRACKET	1	B10001-	B20001-
14	01023-10510	SCREW	2	B10001-	B20001-
15	20Y-06-23770	CLIP	8	B10001-	B20001-
16	20Y-54-36981	PACKING	1	B10001-	B20001-
17	20Y-06-23790	CAP	1	B10001-	B20001-
18	20Y-979-2171	GRILL	1	B10001-	B20001-
19	20Y-06-23810	STAY	1	B10001-	B20001-
20	01370-00512	SCREW	2	B10001-	B20001-
21	20Y-06-23431	SWITCH, BUZZER STOP	1	B10001-	B20001-
22	20Y-06-23441	SWITCH, SWING LOCK	1	B10001-	B20001-
23	20Y-06-23950	SWITCH, WIPER	1	B10001-	B20001-
24	20Y-06-23421	SWITCH, LIGHT	1	B10001-	B20001-
25	08086-20000	SWITCH	1	B10001-	B20001-
26	20Y-06-23471	LIGHTER	1	B10001-	B20001-
27	20Y-06-23820	HOLDER	1	B10001-	B20001-
28	01023-10510	SCREW	2	B10001-	B20001-
29	20Y-06-23211	PANEL	1	B10001-	B20001-
30	20Y-979-3170	PANEL ASS'Y, AIR CONDITIONER	1	B10001-	B20001-
31	20Y-979-3180	HARNESS ASS'Y	1	B10001-	B20001-
32	01023-10510	SCREW	3	B10001-	B20001-
33	20Y-06-23840	CAP	1	B10001-	B20001-
34	20Y-06-23840	CAP	1	B10001-	B20001-
35	7825-30-1301	DIAL	1	B10001-	B20001-
36	01252-40410	BOLT	2	B10001-	B20001-
37	01601-20410	WASHER	2	B10001-	B20001-

FIG. K0210-11A2B OPERATOR'S CAB (PANEL COVER) (ELECTRIC GOVERNOR) (WITH HEATER)

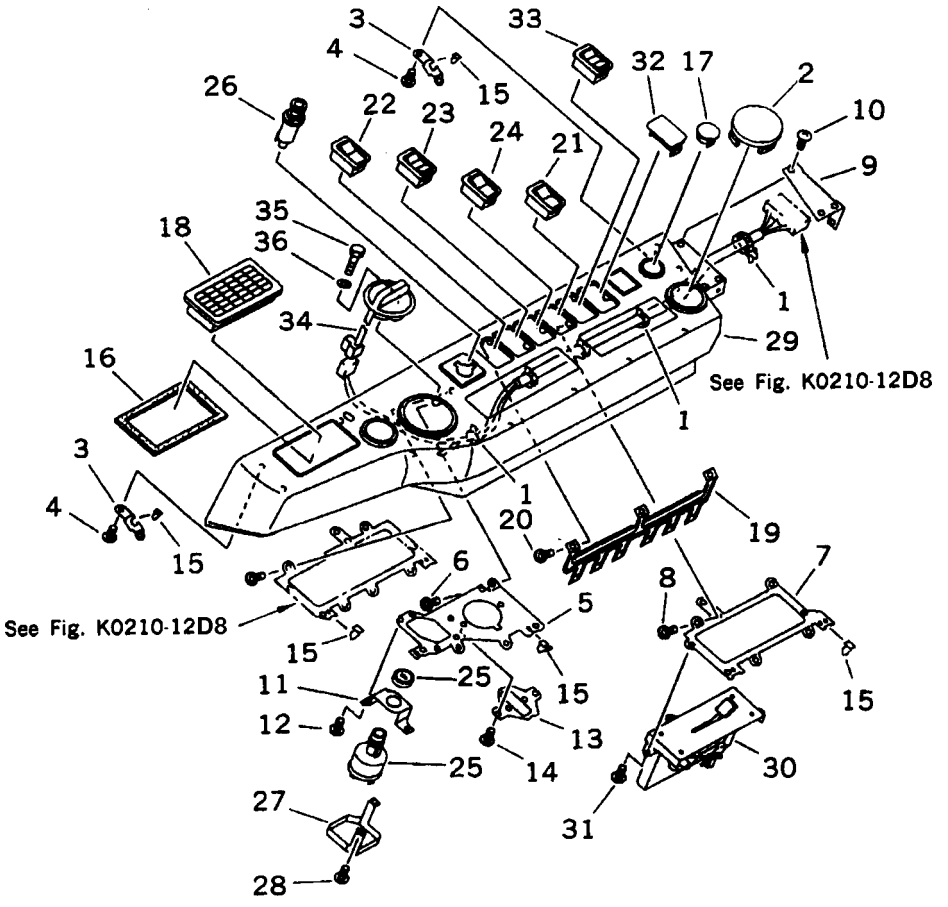

FIG. NO: K0210-11A2B

INDEX	PART NO.	DESCRIPTION	Q'TY	SERIAL NO. PC200-6B	SERIAL NO. PC200LC-6B
1	20Y-06-23940	BAND	5	B10001-	B20001-
2	09414-11053	CAP, SERVICE	1	B10001-	B20001-
3	20Y-06-23710	STAY	2	B10001-	B20001-
4	01370-00512	SCREW	4	B10001-	B20001-
5	20Y-06-23720	STAY	1	B10001-	B20001-
6	01370-00512	SCREW	3	B10001-	B20001-
7	20Y-06-23730	STAY	1	B10001-	B20001-
8	01370-00512	SCREW	4	B10001-	B20001-
9	20Y-06-23740	STAY	1	B10001-	B20001-
10	01023-10408	SCREW	5	B10001-	B20001-
11	20Y-06-23750	BRACKET	1	B10001-	B20001-
12	01023-10510	SCREW	2	B10001-	B20001-
13	20Y-06-23760	BRACKET	1	B10001-	B20001-
14	01023-10510	SCREW	2	B10001-	B20001-
15	20Y-06-23770	CLIP	8	B10001-	B20001-
16	20Y-54-36981	PACKING	1	B10001-	B20001-
17	20Y-06-23790	CAP	1	B10001-	B20001-
18	20Y-979-2171	GRILL	1	B10001-	B20001-
19	20Y-06-23810	STAY	1	B10001-	B20001-
20	01370-00512	SCREW	2	B10001-	B20001-
21	20Y-06-23431	SWITCH, BUZZER STOP	1	B10001-	B20001-
22	20Y-06-23441	SWITCH, SWING LOCK	1	B10001-	B20001-
23	20Y-06-23950	SWITCH, WIPER	1	B10001-	B20001-
24	20Y-06-23421	SWITCH, LIGHT	1	B10001-	B20001-
25	08086-20000	SWITCH, STARTER	1	B10001-	B20001-
26	20Y-06-23471	LIGHTER	1	B10001-	B20001-
27	20Y-06-23820	HOLDER	1	B10001-	B20001-
28	01023-10510	SCREW	2	B10001-	B20001-
29	20Y-06-23211	PANEL	1	B10001-	B20001-
30	20Y-977-2140	CONTROL ASS'Y, HEATER	1	B10001-	B20001-
31	01023-10510	SCREW	3	B10001-	B20001-
32	20Y-06-23840	CAP	1	B10001-	B20001-
33	20Y-06-23461	SWITCH, HEATER	1	B10001-	B20001-
34	7825-30-1301	DIAL	1	B10001-	B20001-
35	01252-40410	BOLT	2	B10001-	B20001-
36	01601-20410	WASHER	2	B10001-	B20001-

FIG. K0210-12D8 OPERATOR'S CAB (PANEL) (FM-RADIO AND HARNESS) (ELECTRIC GOVERNOR)

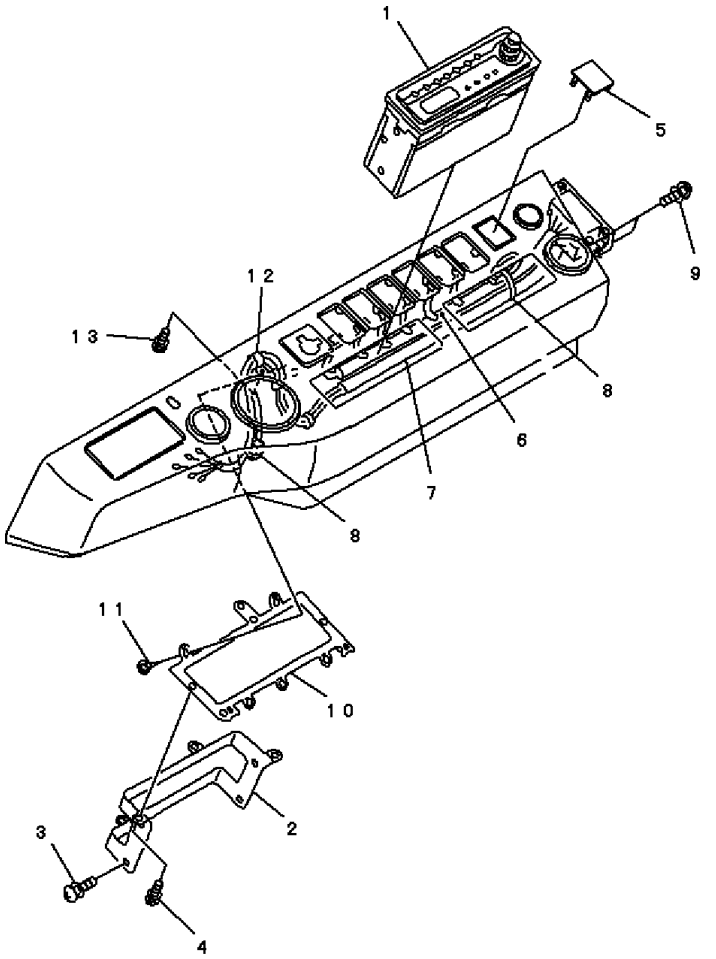

PWL1460

FIG. NO: K0210-12D8

INDEX	PART NO.	DESCRIPTION	Q'TY	SERIAL NO. PC200-6B	SERIAL NO. PC200LC-6B
1	20Y-06-22740	RADIO	1	B10001-	B20001-
2	20Y-06-23890	BRACKET	1	B10001-	B20001-
3	01023-10510	SCREW	4	B10001-	B20001-
4	01023-10510	SCREW	3	B10001-	B20001-
5	20Y-06-23860	CAP	1	B10001-	B20001-
6	20Y-06-27880	WIRING HARNESS	1	B10001-	B20001-
7	207-06-61210	WIRING HARNESS	1	B10001-	B20001-
8	08034-20414	BAND	2	B10001-	B20001-
9	01023-10408	SCREW	4	B10001-	B20001-
10	20Y-06-23910	BRACKET	1	B10001-	B20001-
11	01370-00512	SCREW	5	B10001-	B20001-
12	20Y-06-23920	CLAMP	1	B10001-	B20001-
13	01023-10408	SCREW	1	B10001-	B20001-

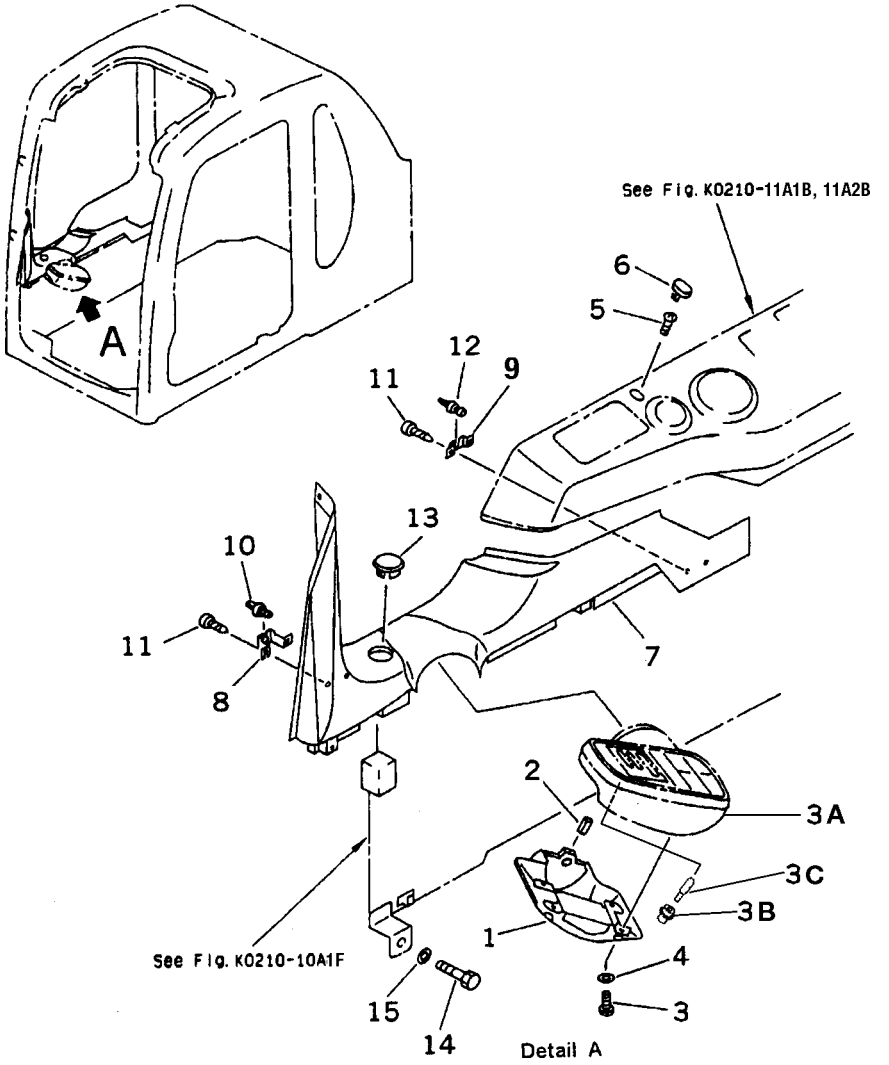

INDEX	PART NO.	DESCRIPTION	Q'TY	SERIAL NO. PC200-6B	SERIAL NO. PC200LC-6B
1	20Y-06-23320	BRACKET	1	B10001-	B20001-
2	04025-00532	PIN	1	B10001-	B20001-
3	01220-40608	SCREW	4	B10001-	B20001-
3A	7834-77-3001	MONITOR ASS'Y	1	B10001-	B20001-
3B	7861-01-1820	. SOCKET	2	B10001-	B20001-
3C	7815-11-1010	. BULB, 1.4W	2	B10001-	B20001-
4	01641-20608	WASHER	4	B10001-	B20001-
5	01023-10510	SCREW	3	B10001-	B20001-
6	20Y-06-23780	CAP	3	B10001-	B20001-
7	20Y-54-36481	COVER	1	B10001-	B20001-
8	20Y-54-36731	PLATE	3	B10001-	B20001-
9	20Y-54-36891	PLATE	1	B10001-	B20001-
10	20Y-54-36721	CLIP	4	B10001-	B20001-
11	01370-00412	SCREW	8	B10001-	B20001-
12	20Y-54-36791	RIVET	1	B10001-	B20001-
13	20Y-54-36460	CAP	1	B10001-	B20001-
14	01010-81020	BOLT	12	B10001-	B20001-
15	01643-31032	WASHER	12	B10001-	B20001-

FIG. K0210-14A1A OPERATOR'S CAB (INSTALLATION PARTS) (FOR POWER PULL UP WINDOW)

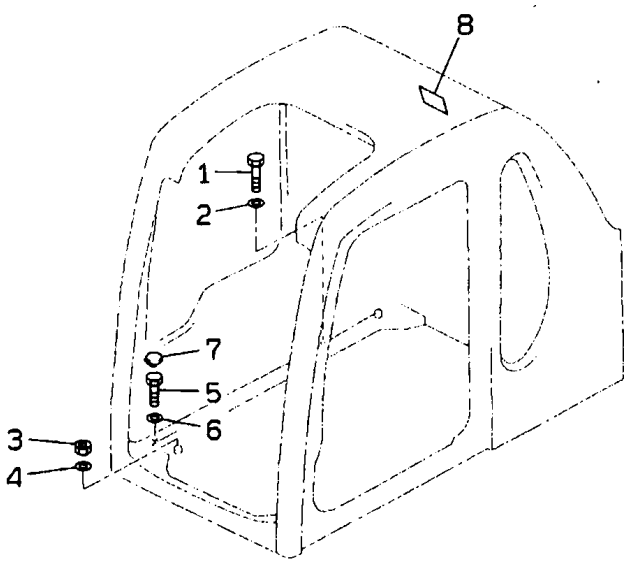

FIG. NO: K0210-14A1A

INDEX	PART NO.	DESCRIPTION	Q'TY	SERIAL NO. PC200-6B	SERIAL NO. PC200LC-6B
1	01010-81280	BOLT	4	B10001-	B20001-
2	01643-31232	WASHER	4	B10001-	B20001-
3	01580-11613	NUT	2	B10001-	B20001-
4	01643-31645	WASHER	2	B10001-	B20001-
5	01010-81235	BOLT	1	B10001-	B20001-
6	01643-31232	WASHER	1	B10001-	B20001-
7	20Y-54-13480	PLUG	1	B10001-	B20001-
8	20Y-00-22880	DECAL,(JAPANESE-ENGLISH)	1	B10001-	B20001-

FIG. K0210-15A2A OPERATOR'S CAB (TERMINAL BRACKET) (FOR POWER PULL UP WINDOW)

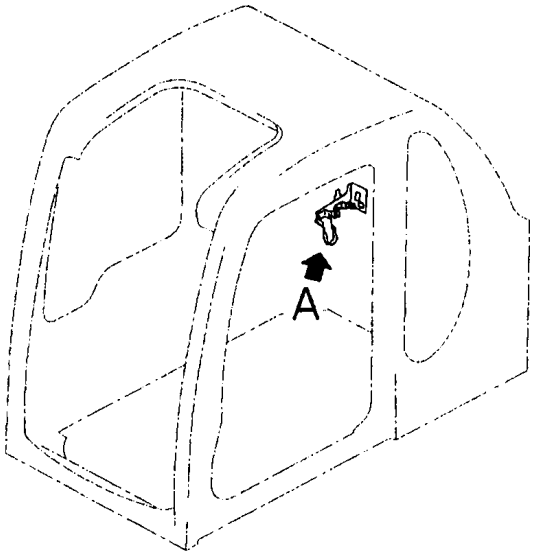

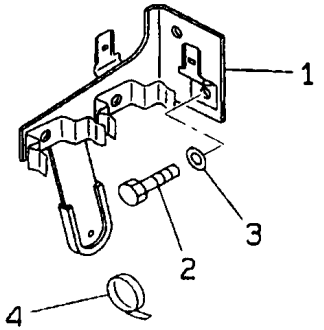

A 詳細
Detail A

FIG. NO: K0210-15A2A

INDEX	PART NO.	DESCRIPTION	Q'TY	SERIAL NO. PC200-6B	SERIAL NO. PC200LC-6B
1	20Y-06-21251	BRACKET	1	B10001-	B20001-
2	01010-81025	BOLT	2	B10001-	B20001-
3	01643-31032	WASHER	2	B10001-	B20001-
4	08034-00536	BAND	2	B10001-	B20001-

FIG. K0310-01A1 FLOOR MAT

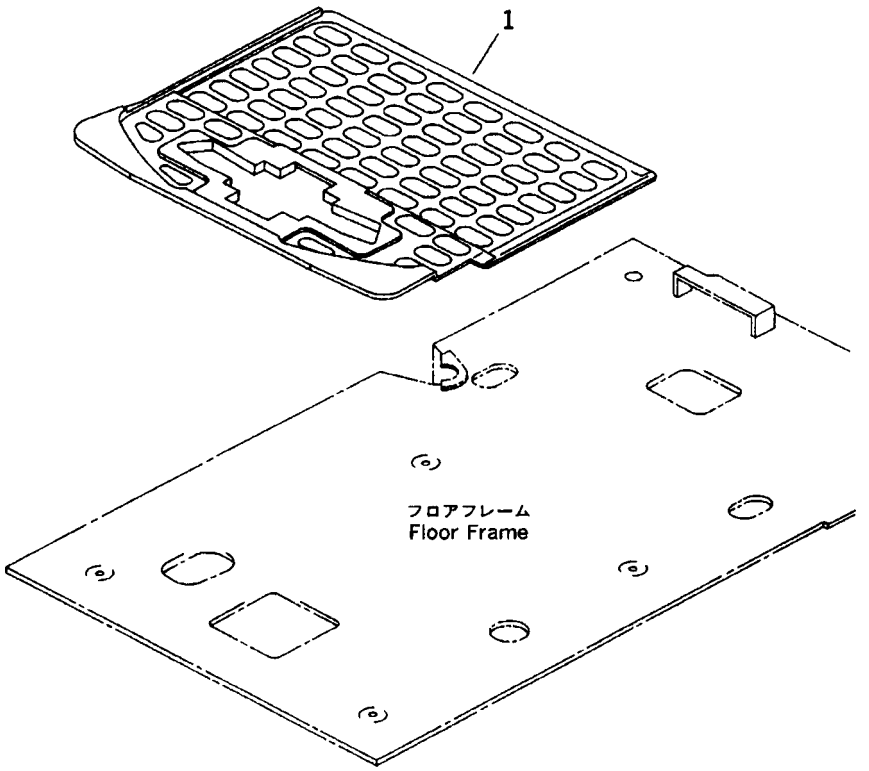

FIG. NO: K0310-01A1

INDEX	PART NO.	DESCRIPTION	Q'TY	SERIAL NO. PC200-6B	SERIAL NO. PC200LC-6B
1	20Y-54-36683	FLOOR MAT	1	B10153-	B20001-
	20Y-54-36682	FLOOR MAT	1	B10001-B10152	

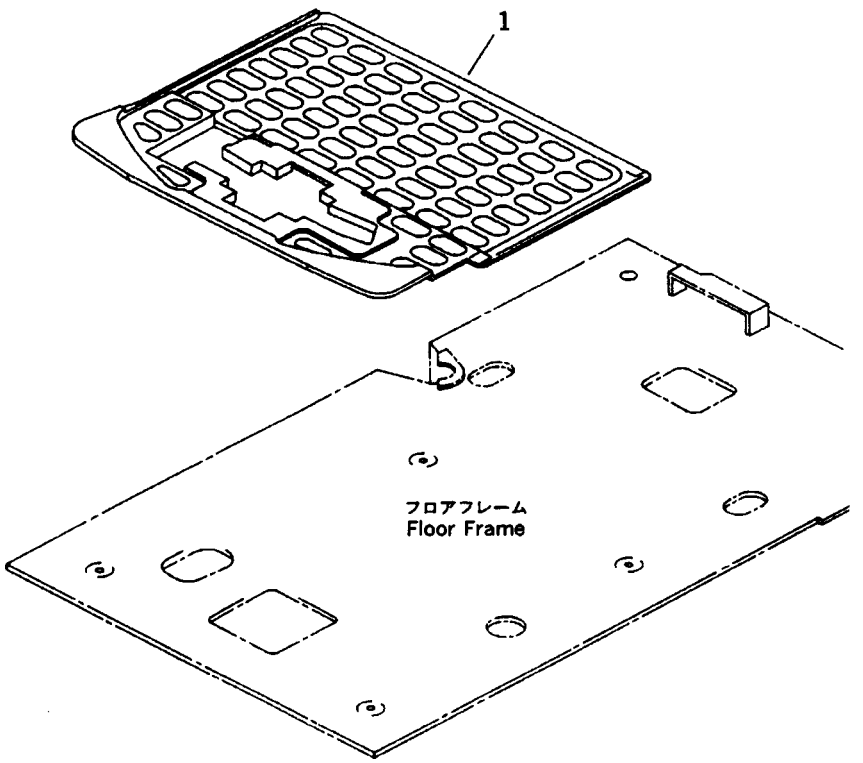

INDEX	PART NO.	DESCRIPTION	Q'TY	SERIAL NO. PC200-6B	SERIAL NO. PC200LC-6B
1	20Y-973-2683	FLOOR MAT (OPTIONAL)	1	B10153-	B20001-
	20Y-973-2682	FLOOR MAT (OPTIONAL)	1	B10001-B10152	

FIG. K0350-01A0 WINDOW WASHER

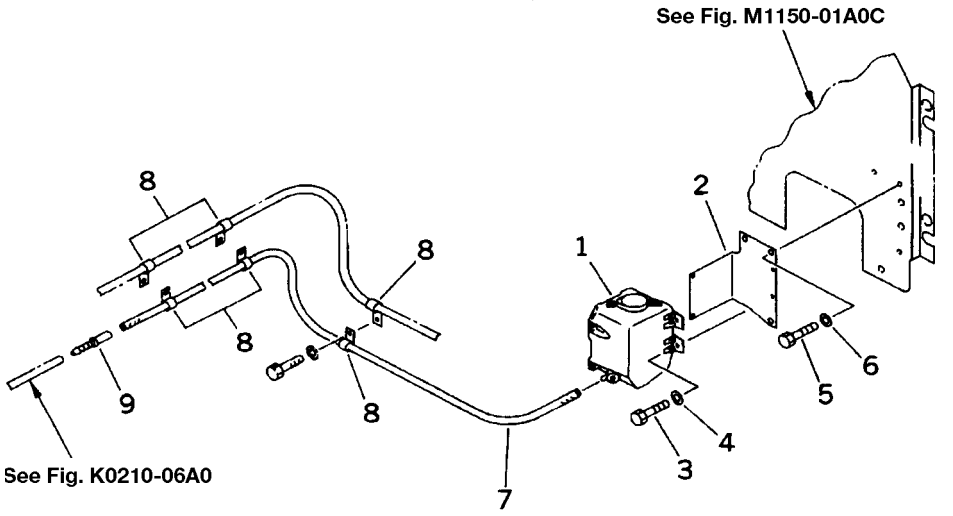

FIG. NO: K0350-01A0

INDEX	PART NO.	DESCRIPTION	Q'TY	SERIAL NO. PC200-6B	SERIAL NO. PC200LC-6B
1	21T-06-11350	TANK ASS'Y	1	B10001-	B20001-
2	20Y-06-21612	BRACKET	1	B10001-	B20001-
3	01010-50616	BOLT	4	B10001-	B20001-
4	01643-30623	WASHER	4	B10001-	B20001-
5	01010-51225	BOLT	3	B10001-	B20001-
6	01643-31232	WASHER	3	B10001-	B20001-
7	20Y-06-22520	HOSE	1	B10001-	B20001-
8	21T-38-12270	CLIP	6	B10001-	B20001-
9	195-979-8590	VALVE	1	B10001-	B20001-

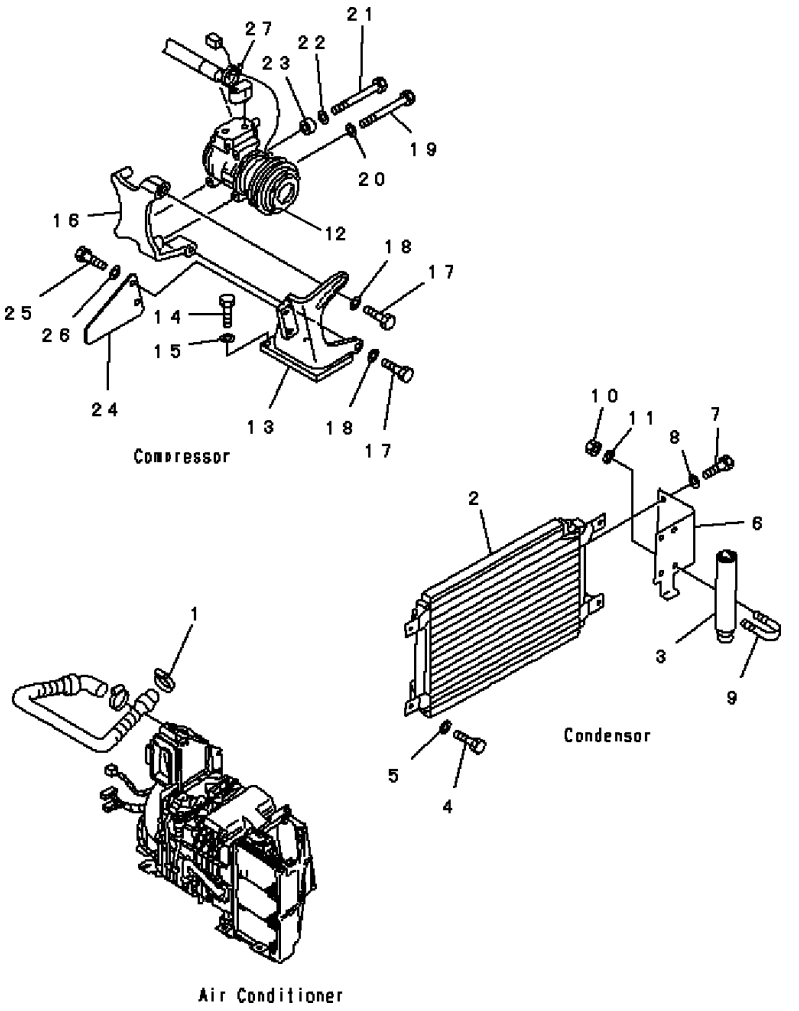

INDEX	PART NO.	DESCRIPTION	Q'TY	SERIAL NO. PC200-6B	SERIAL NO. PC200LC-6B
1	07281-00419	CLAMP	1	B10001-	B20001-
2	203-979-6281	CONDENSOR ASS'Y	1	B10001-	B20001-
3	20Y-979-3120	RECEIVER TANK	1	B10001-	B20001-
4	01010-81025	BOLT	4	B10001-	B20001-
5	01643-31032	WASHER	4	B10001-	B20001-
6	20Y-979-2851	BRACKET	1	B10001-	B20001-
7	01010-81025	BOLT	2	B10001-	B20001-
8	01643-31032	WASHER	2	B10001-	B20001-
9	07283-26155	CLIP	2	B10001-	B20001-
10	01599-01011	NUT	4	B10001-	B20001-
11	01643-31032	WASHER	4	B10001-	B20001-
12	(20Y-979-3111)	AIR COMPRESSOR ASS'Y	1	B10001-	B20001-
13	20Y-979-3411	BRACKET	1	B10001-	B20001-
14	01010-81035	BOLT	2	B10001-	B20001-
15	01643-31032	WASHER	2	B10001-	B20001-
16	20Y-979-3422	BRACKET	1	B10001-	B20001-
17	01010-81435	BOLT	2	B10001-	B20001-
18	01643-31445	WASHER	2	B10001-	B20001-
19	01010-80885	BOLT	3	B10001-	B20001-
20	01643-30823	WASHER	3	B10001-	B20001-
21	01010-80895	BOLT	1	B10001-	B20001-
22	01643-30823	WASHER	1	B10001-	B20001-
23	6204-81-6740	SPACER	1	B10001-	B20001-
24	20Y-03-21680	PLATE	1	B10001-	B20001-
25	01010-81025	BOLT	2	B10001-	B20001-
26	01643-31032	WASHER	2	B10001-	B20001-
27	08034-00519	BAND	1	B10001-	B20001-

FIG. K0700-01A1A CAR HEATER (2000 KCAL)

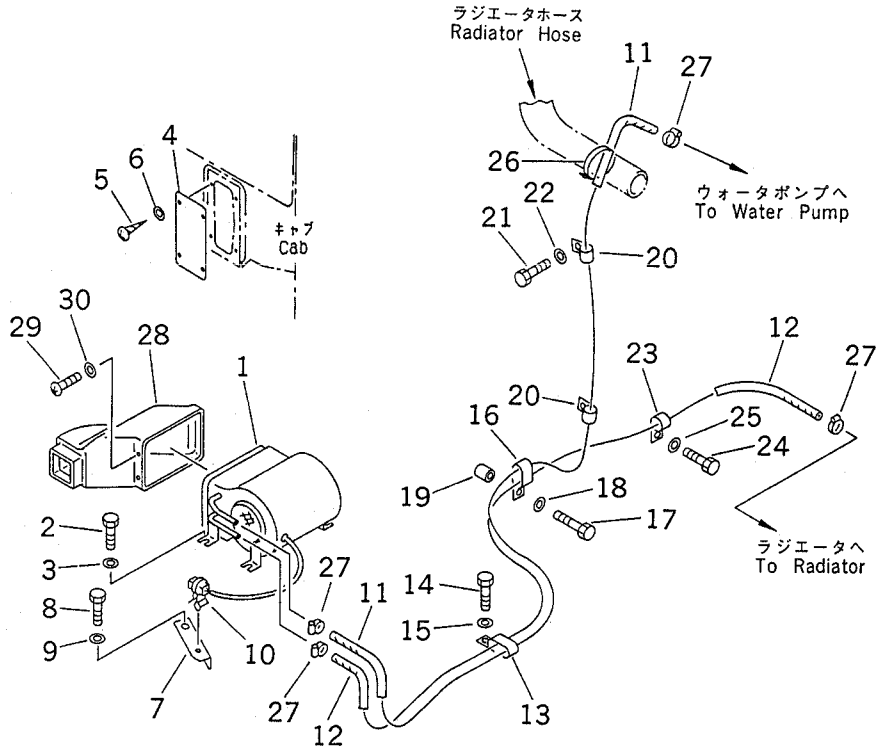

FIG. NO: K0700-01A1A

INDEX	PART NO.	DESCRIPTION	Q'TY	SERIAL NO. PC200-6B	SERIAL NO. PC200LC-6B
1	(20Y-977-2120)	HEATER ASS'Y	1	B10001-	B20001-
2	01010-81020	BOLT	3	B10001-	B20001-
3	01643-31032	WASHER	3	B10001-	B20001-
4	20Y-977-2170	COVER	1	B10001-	B20001-
5	01370-00512	SCREW	4	B10001-	B20001-
6	01641-20508	WASHER	4	B10001-	B20001-
7	20Y-977-2160	PLATE	1	B10001-	B20001-
8	01010-81020	BOLT	1	B10001-	B20001-
9	01643-31032	WASHER	1	B10001-	B20001-
10	20Y-06-24270	CLIP	1	B10001-	B20001-
11	09483-00433	HOSE	1	B10001-	B20001-
12	09483-00425	HOSE	1	B10001-	B20001-
13	141-06-11220	CLIP	1	B10001-	B20001-
14	01010-81230	BOLT	1	B10001-	B20001-
15	01643-31232	WASHER	1	B10001-	B20001-
16	141-06-11220	CLIP	1	B10001-	B20001-
17	01010-81250	BOLT	1	B10001-	B20001-
18	01643-31232	WASHER	1	B10001-	B20001-
19	195-33-11220	SPACER	1	B10001-	B20001-
20	04434-52112	CLIP	2	B10001-	B20001-
21	01010-81025	BOLT	2	B10001-	B20001-
22	01643-31032	WASHER	2	B10001-	B20001-
23	04434-52112	CLIP	1	B10001-	B20001-
24	01010-81230	BOLT	1	B10001-	B20001-
25	01643-31232	WASHER	1	B10001-	B20001-
26	08034-00536	BAND	2	B10001-	B20001-
27	09480-10100	CLAMP	4	B10001-	B20001-
28	20Y-977-2111	DUCT	1	B10001-	B20001-
29	7861-86-1330	SCREW	4	B10001-	B20001-
30	01642-20405	WASHER	4	B10001-	B20001-

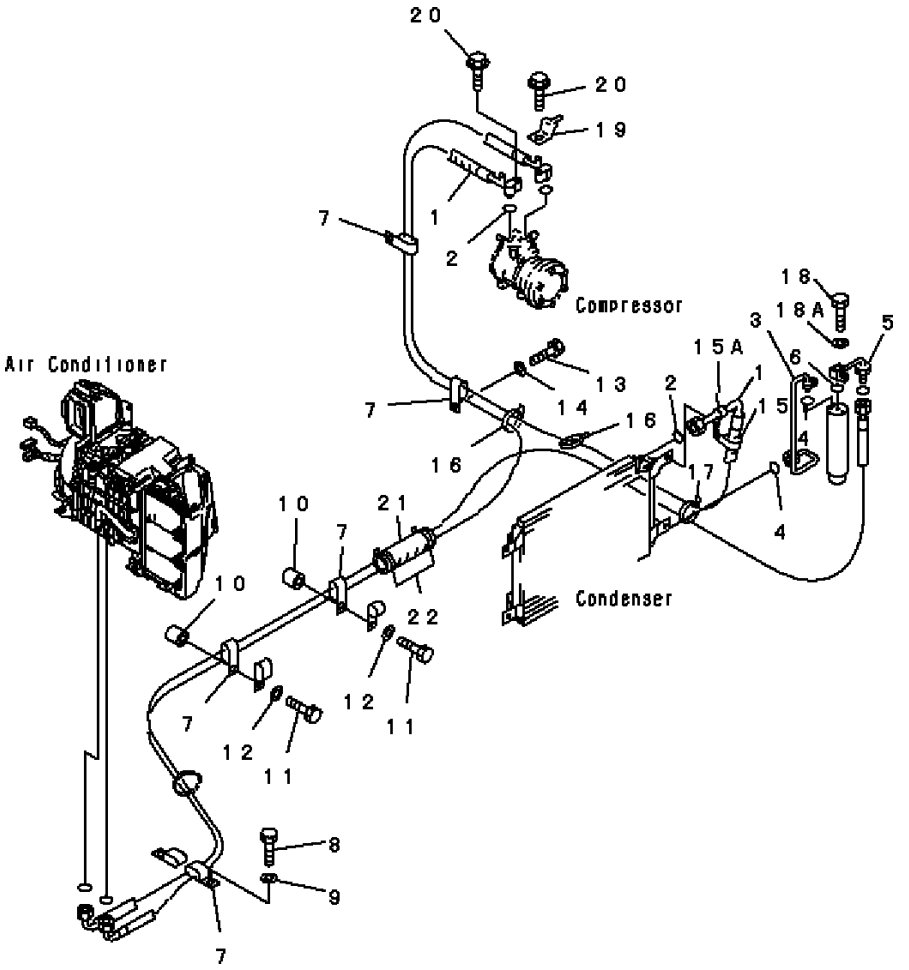

INDEX	PART NO.	DESCRIPTION	Q'TY	SERIAL NO. PC200-6B	SERIAL NO. PC200LC-6B
1	20Y-979-3441	HOSE	1	B10001-	B20001-
2	20Y-979-3140	. O-RING	2	B10001-	B20001-
3	20Y-979-2651	HOSE	1	B10001-	B20001-
4	20Y-979-3150	. O-RING	2	B10001-	B20001-
5	20Y-979-3210	TUBE	1	B10001-	B20001-
6	20Y-979-3150	. O-RING	1	B10001-	B20001-
7	141-06-11220	CLIP	5	B10001-	B20001-
8	01010-81230	BOLT	1	B10001-	B20001-
9	01643-31232	WASHER	1	B10001-	B20001-
10	195-33-11220	SPACER	2	B10001-	B20001-
11	01010-81250	BOLT	2	B10001-	B20001-
12	01643-31232	WASHER	2	B10001-	B20001-
13	01010-81225	BOLT	1	B10001-	B20001-
14	01643-31232	WASHER	1	B10001-	B20001-
15	04434-51910	CLIP	1	B10001-	B20001-
15A	21T-72-23260	CLIP	1	B10001-	B20001-
16	08034-00519	BAND	3	B10001-	B20001-
17	08034-00536	BAND	1	B10001-	B20001-
18	01010-80625	BOLT	2	B10001-	B20001-
18A	01643-30623	WASHER	2	B10001-	B20001-
19	08053-01510	CLIP	1	B10001-	B20001-
20	01435-00630	BOLT	2	B10001-	B20001-
21	205-62-53780	COVER	1	B10001-	B20001-
22	08034-00519	BAND	2	B10001-	B20001-

FIG. K0700-03A0C AIR CONDITIONER (HEATING LINE AND DUCT)

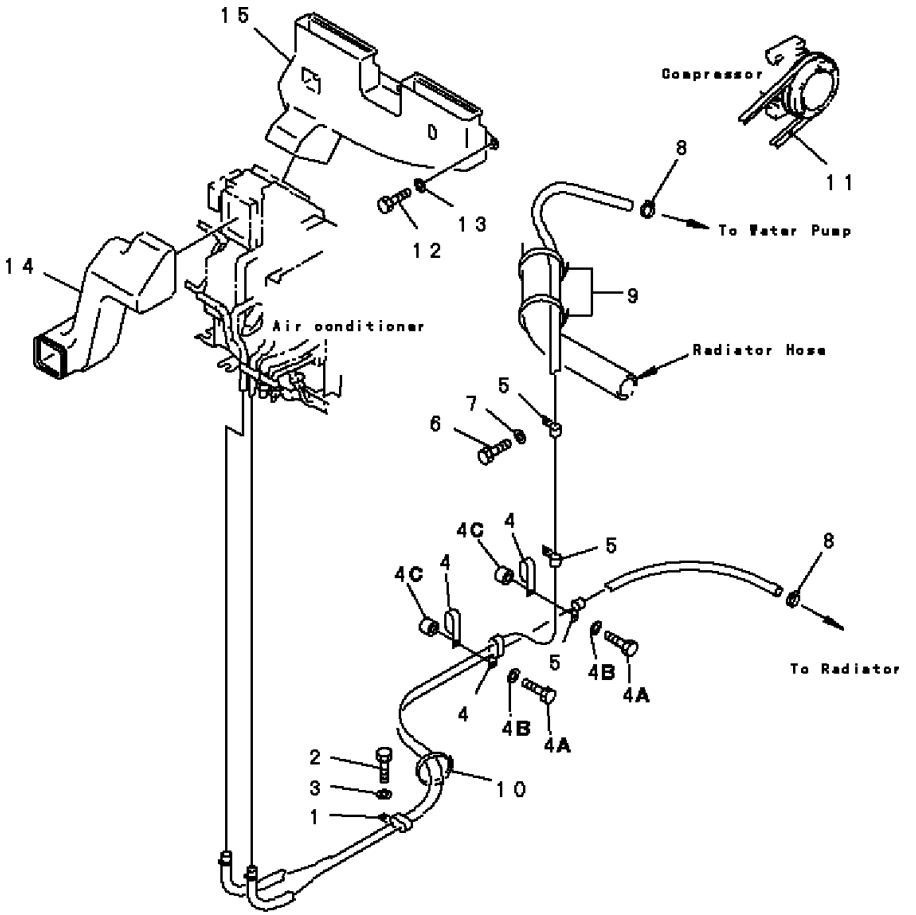

FIG. NO: K0700-03A0C

INDEX	PART NO.	DESCRIPTION	Q'TY	SERIAL NO. PC200-6B	SERIAL NO. PC200LC-6B
1	141-06-11220	CLIP	1	B10001-	B20001-
2	01010-81230	BOLT	1	B10001-	B20001-
3	01643-31232	WASHER	1	B10001-	B20001-
4	141-06-11220	CLIP	2	B10001-	B20001-
4A	01010-81250	BOLT	2	B10001-	B20001-
4B	01643-31232	WASHER	2	B10001-	B20001-
4C	195-33-11220	SPACER	2	B10001-	B20001-
5	04434-52112	CLIP	3	B10001-	B20001-
6	01010-81025	BOLT	2	B10001-	B20001-
7	01643-31032	WASHER	2	B10001-	B20001-
8	09480-10100	CLAMP	2	B10001-	B20001-
9	08034-00536	BAND	2	B10001-	B20001-
10	08034-00519	BAND	1	B10001-	B20001-
11	04120-21739	V-BELT	1	B10001-	B20001-
12	01010-81025	BOLT	3	B10001-	B20001-
13	01643-31032	WASHER	3	B10001-	B20001-
14	20Y-979-2262	DUCT	1	B10001-	B20001-
15	20Y-979-2271	DUCT	1	B10001-	B20001-

FIG. K1110-01A0E FLOOR FRAME (ELECTRIC GOVERNOR CONTROL) (WORK LEVER WITH PPC VALVE)

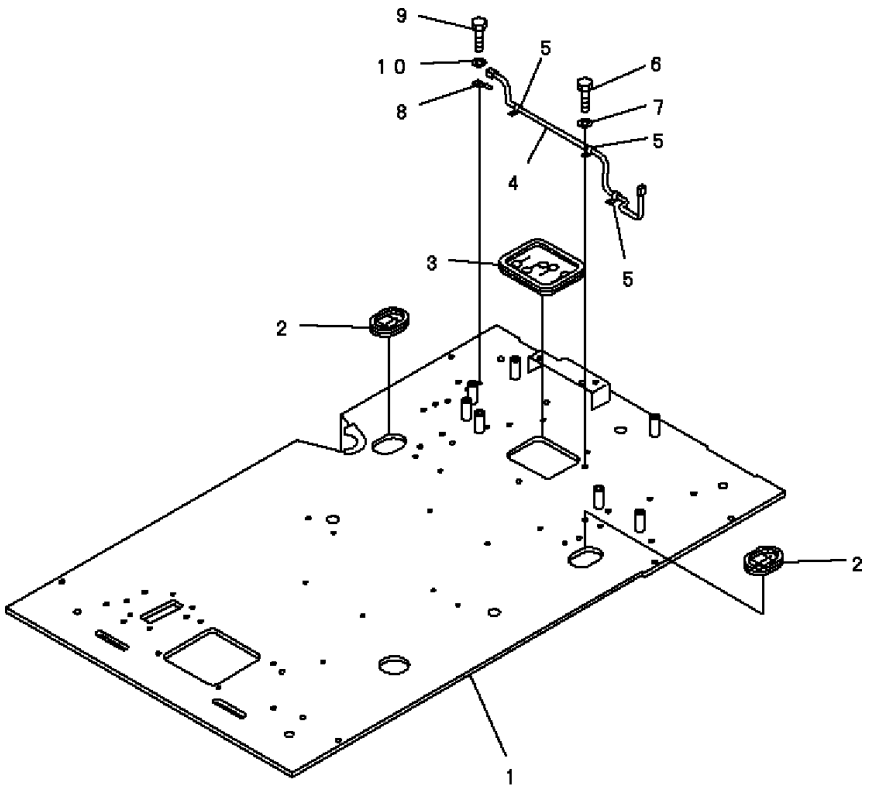

PWB9448

FIG. NO: K1110-01A0E

INDEX	PART NO.	DESCRIPTION	Q'TY	SERIAL NO. PC200-6B	SERIAL NO. PC200LC-6B
1	20Y-54-25823	FRAME	1	B10094-	B20001-
	20Y-54-25821	FRAME	1	B10001-B10093	
2	20Y-43-21831	GROMMET	2	B10001-	B20001-
3	20Y-43-21841	GROMMET	1	B10001-	B20001-
4	20Y-06-21361	WIRING HARNESS	1	B10001-	B20001-
5	08036-00814	CLIP	3	B10001-	B20001-
6	01010-81020	BOLT	3	B10001-	B20001-
7	01643-31032	WASHER	3	B10001-	B20001-
8	08053-01512	CLIP	1	B10001-	B20001-
9	01010-81020	BOLT	1	B10001-	B20001-
10	01643-31032	WASHER	1	B10001-	B20001-

FIG. K1110-03A0 FLOOR FRAME (LEFT STAND) (LEVER AND COVER) (WORK LEVER WITH PPC VALVE)

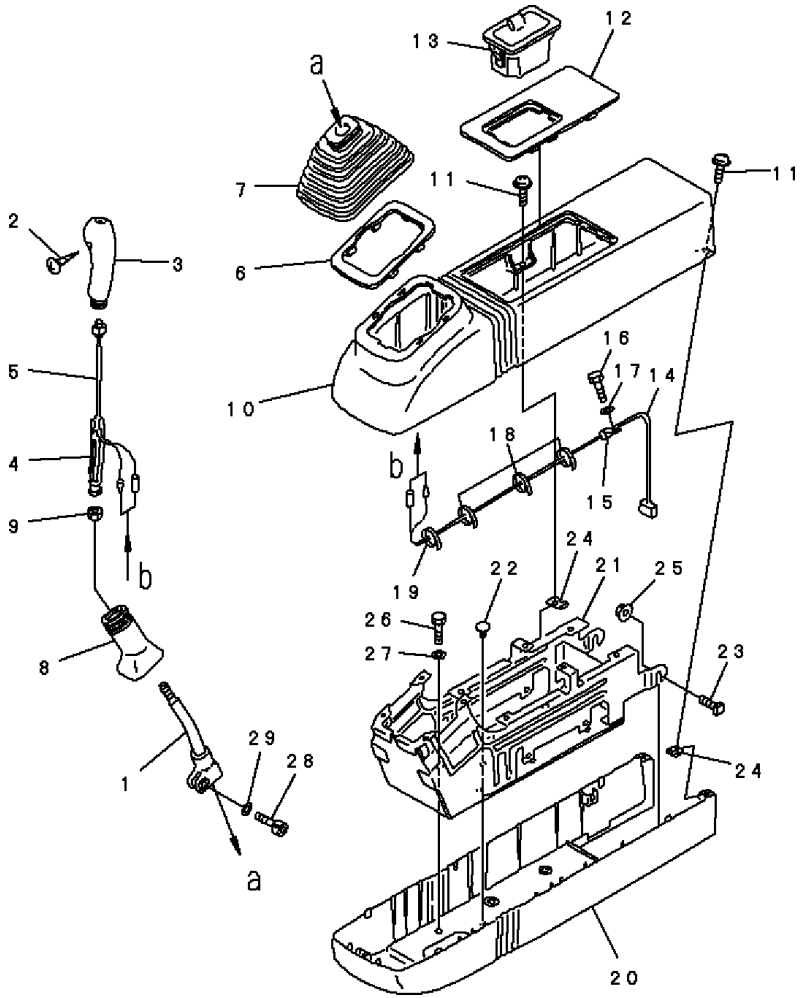

FIG. NO: K1110-03A0

INDEX	PART NO.	DESCRIPTION	Q'TY	SERIAL NO. PC200-6B	SERIAL NO. PC200LC-6B
	20Y-43-21613	LEVER ASS'Y, L.H.	1	B10001-	B20001-
1	20Y-43-22211	. LEVER, L.H.	1	B10001-	B20001-
	20Y-43-22233	. KNOB, L.H.	1	B10001-	B20001-
2	01370-10308	. . SCREW	1	B10001-	B20001-
3	20Y-43-22381	. . KNOB	1	B10001-	B20001-
	20Y-43-00010	. . SWITCH ASS'Y	1	B10001-	B20001-
4	20Y-43-22421	. . . INSERT	1	B10001-	B20001-
5	20Y-43-22441	. . . SWITCH, L.H.	1	B10001-	B20001-
6	20Y-43-22250	. PLATE	1	B10001-	B20001-
7	20Y-43-22261	. BOOT	1	B10001-	B20001-
8	20Y-43-22370	. BOOT	1	B10001-	B20001-
9	600-411-1280	. NUT	1	B10001-	B20001-
10	20Y-43-22121	CASE	1	B10001-	B20001-
11	20Y-43-16590	. SCREW	4	B10001-	B20001-
	20Y-43-22451	COVER ASS'Y	1	B10001-	B20001-
12	20Y-43-22152	. COVER, L.H.	1	B10001-	B20001-
13	20Y-06-21751	. ASHTRAY	1	B10001-	B20001-
14	20Y-06-21350	WIRING HARNESS	1	B10001-	B20001-
15	04434-51408	CLIP	1	B10001-	B20001-
16	01010-80820	BOLT	1	B10001-	B20001-
17	01643-30823	WASHER	1	B10001-	B20001-
18	08034-00519	BAND	4	B10001-	B20001-
19	08034-00310	BAND	1	B10001-	B20001-
	20Y-43-21651	COVER ASS'Y	1	B10001-	B20001-
20	20Y-43-22111	. CASE	1	B10001-	B20001-
21	20Y-43-22131	. FRAME	1	B10001-	B20001-
22	20Y-43-22310	. CLIP	2	B10001-	B20001-
23	20Y-43-22470	. BOLT	2	B10001-	B20001-
24	20Y-43-22480	. SPRING	4	B10001-	B20001-
25	198-911-5530	. NUT	2	B10001-	B20001-
26	01010-81025	BOLT	6	B10001-	B20001-
27	01643-31032	WASHER	6	B10001-	B20001-
28	01252-41025	BOLT	1	B10001-	B20001-
29	01643-51032	WASHER	1	B10001-	B20001-

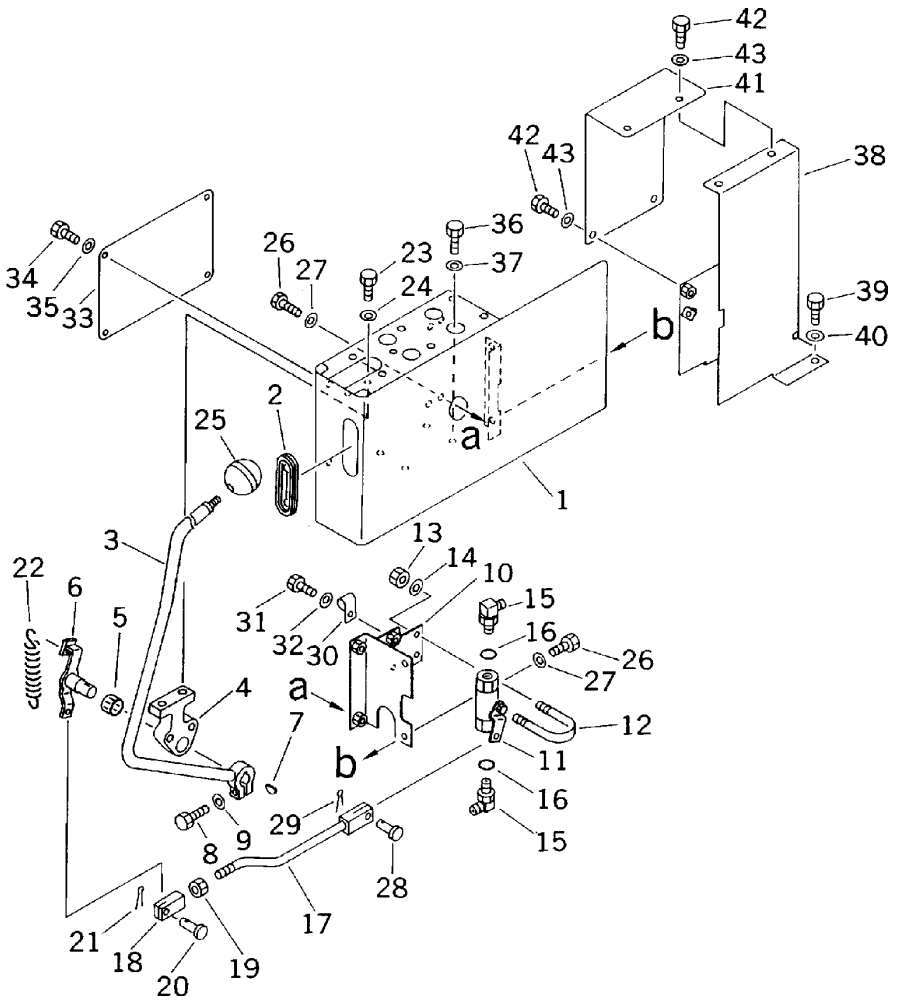

INDEX	PART NO.	DESCRIPTION	Q'TY	SERIAL NO. PC200-6B	SERIAL NO. PC200LC-6B
1	20Y-43-21372	COVER	1	B10001-	B20001-
2	20Y-43-21950	GROMMET	1	B10001-	B20001-
3	20Y-43-21892	LEVER	1	B10001-	B20001-
4	20Y-43-21920	PLATE	1	B10001-	B20001-
5	06124-02020	BEARING,959D	1	B10001-	B20001-
6	207-43-61150	SHAFT	1	B10001-	B20001-
7	04010-00519	KEY	1	B10001-	B20001-
8	01010-80830	BOLT	1	B10001-	B20001-
9	01643-30823	WASHER	1	B10001-	B20001-
10	20Y-43-21940	BRACKET	1	B10001-	B20001-
11	20Y-62-15651	VALVE	1	B10001-	B20001-
12	07283-23442	CLIP	2	B10001-	B20001-
13	01599-01011	NUT	4	B10001-	B20001-
14	01643-31032	WASHER	4	B10001-	B20001-
15	07235-10315	ELBOW	2	B10001-	B20001-
16	07002-02034	O-RING	2	B10001-	B20001-
17	20Y-43-21931	ROD	1	B10001-	B20001-
18	04211-20634	YOKE	1	B10001-	B20001-
19	01580-10605	NUT	1	B10001-	B20001-
20	04205-10618	PIN	1	B10001-	B20001-
21	04050-11612	PIN	1	B10001-	B20001-
22	20Y-43-22330	SPRING	1	B10001-	B20001-
23	01016-51040	BOLT	2	B10001-	B20001-
24	01643-31032	WASHER	2	B10001-	B20001-
25	09304-10835	KNOB	1	B10001-	B20001-
26	01010-80820	BOLT	4	B10001-	B20001-
27	01643-30823	WASHER	4	B10001-	B20001-
28	04205-10618	PIN	1	B10001-	B20001-
29	04050-11612	PIN	1	B10001-	B20001-
30	08036-01414	CLIP	1	B10001-	B20001-
31	01010-81025	BOLT	1	B10001-	B20001-
32	01643-31032	WASHER	1	B10001-	B20001-
33	20Y-43-21980	COVER	1	B10001-	B20001-
34	01010-80816	BOLT	4	B10001-	B20001-
35	01643-30823	WASHER	4	B10001-	B20001-
36	01010-81025	BOLT	4	B10001-	B20001-
37	01643-31032	WASHER	4	B10001-	B20001-
38	20Y-43-21871	COVER	1	B10001-	B20001-
39	01010-81025	BOLT	3	B10001-	B20001-
40	01643-31032	WASHER	3	B10001-	B20001-
41	20Y-43-21960	COVER	1	B10001-	B20001-
42	01010-80816	BOLT	4	B10001-	B20001-
43	01643-30823	WASHER	4	B10001-	B20001-

FIG. K1110-06A0 FLOOR FRAME (RIGHT STAND) (LEVER AND COVER) (WORK LEVER WITH PPC VALVE)

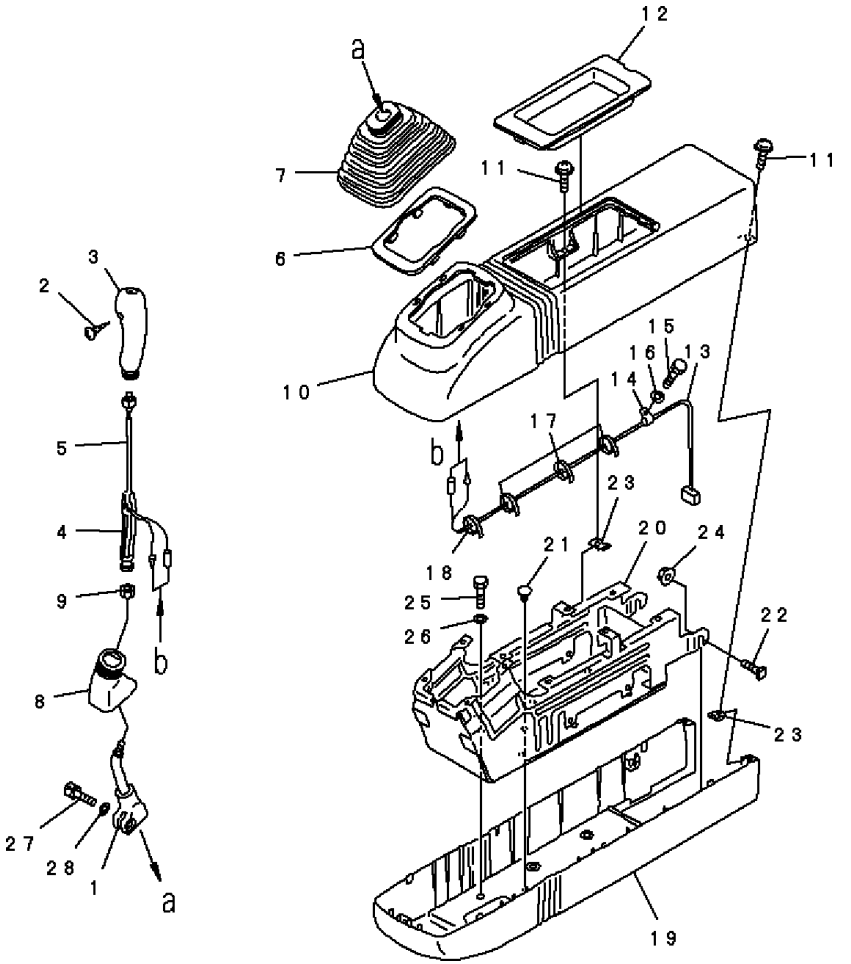

FIG. NO: K1110-06A0

INDEX	PART NO.	DESCRIPTION	Q'TY	SERIAL NO. PC200-6B	SERIAL NO. PC200LC-6B
	20Y-43-21621	LEVER ASS'Y, R.H.	1	B10001-	B20001-
1	20Y-43-22221	. LEVER,R.H.	1	B10001-	B20001-
	20Y-43-22241	. KNOB ASS'Y, R.H.	1	B10001-	B20001-
2	01370-10308	. . SCREW	1	B10001-	B20001-
3	20Y-43-22390	. . KNOB, R.H.	1	B10001-	B20001-
	20Y-43-00010	. . SWITCH ASS'Y	1	B10001-	B20001-
4	20Y-43-22421	. . . INSERT	1	B10001-	B20001-
5	20Y-43-22441	. . . SWITCH, R.H.	1	B10001-	B20001-
6	20Y-43-22250	. PLATE	1	B10001-	B20001-
7	20Y-43-22261	. BOOT	1	B10001-	B20001-
8	20Y-43-22370	. BOOT	1	B10001-	B20001-
9	600-411-1280	. NUT	1	B10001-	B20001-
10	20Y-43-22121	CASE	1	B10001-	B20001-
11	20Y-43-16590	. SCREW	4	B10001-	B20001-
12	20Y-43-22161	COVER, R.H.	1	B10001-	B20001-
13	20Y-06-21350	WIRING HARNESS	1	B10001-	B20001-
14	04434-51408	CLIP	1	B10001-	B20001-
15	01010-80820	BOLT	1	B10001-	B20001-
16	01643-30823	WASHER	1	B10001-	B20001-
17	08034-00519	BAND	4	B10001-	B20001-
18	08034-00310	BAND	1	B10001-	B20001-
	20Y-43-21651	COVER ASS'Y	1	B10001-	B20001-
19	20Y-43-22111	. CASE	1	B10001-	B20001-
20	20Y-43-22131	. FRAME	1	B10001-	B20001-
21	20Y-43-22310	. CLIP	2	B10001-	B20001-
22	20Y-43-22470	. BOLT	2	B10001-	B20001-
23	20Y-43-22480	. SPRING	4	B10001-	B20001-
24	198-911-5530	. NUT	2	B10001-	B20001-
25	01010-81025	BOLT	6	B10001-	B20001-
26	01643-31032	WASHER	6	B10001-	B20001-
27	01252-41025	BOLT	1	B10001-	B20001-
28	01643-51032	WASHER	1	B10001-	B20001-

FIG. K1110-07A0A FLOOR FRAME (RIGHT STAND) (STAND FRAME AND ADJUSTER)

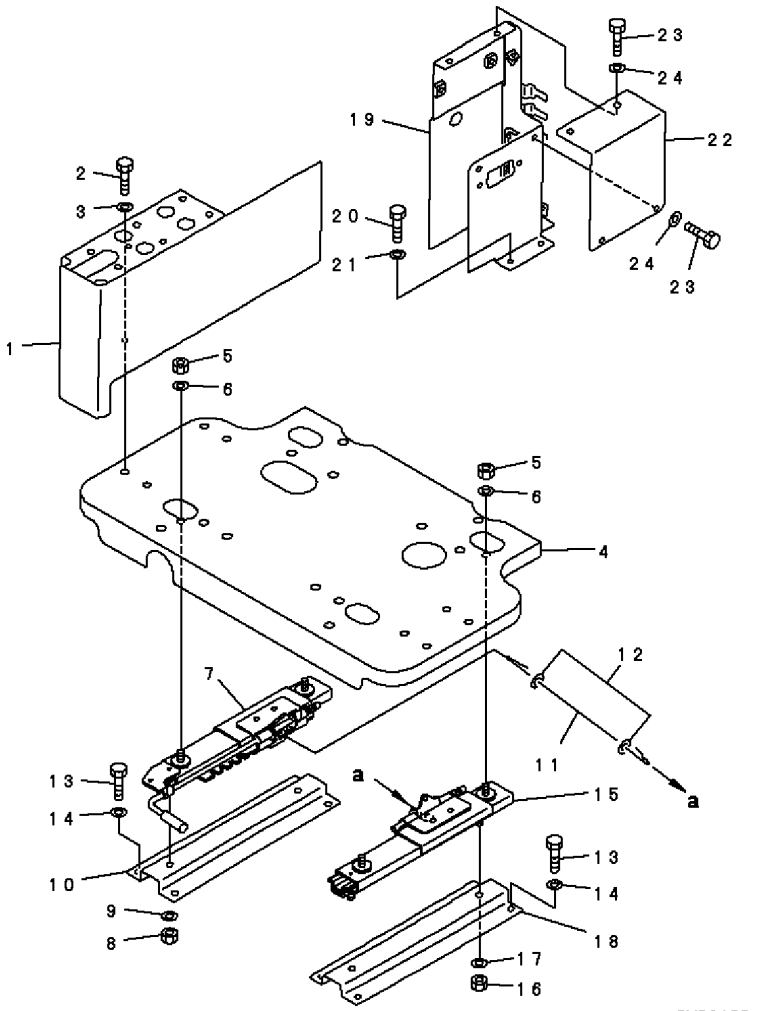

FIG. NO: K1110-07A0A

INDEX	PART NO.	DESCRIPTION	Q'TY	SERIAL NO. PC200-6B	SERIAL NO. PC200LC-6B
1	20Y-43-21382	COVER	1	B10001-	B20001-
2	01010-81025	BOLT	4	B10001-	B20001-
3	01643-31032	WASHER	4	B10001-	B20001-
4	207-43-61160	FRAME	1	B10001-	B20001-
5	01582-11008	NUT	4	B10001-	B20001-
6	01643-31032	WASHER	4	B10001-	B20001-
7	20Y-43-22680	ADJUSTER, R.H.	1	B10001-	B20001-
8	01582-11008	NUT	2	B10001-	B20001-
9	01643-31032	WASHER	2	B10001-	B20001-
10	20Y-43-22320	PLATE	1	B10001-	B20001-
11	20Y-43-22540	WIRE	1	B10001-	B20001-
12	01640-20816	WASHER	2	B10001-	B20001-
13	01010-81030	BOLT	6	B10094-	B20001-
	01010-81025	BOLT	8	B10001-B10093	
14	01643-31032	WASHER	6	B10094-	B20001-
	01643-31032	WASHER	8	B10001-B10093	
15	20Y-43-22670	ADJUSTER, L.H.	1	B10001-	B20001-
16	01582-11008	NUT	2	B10001-	B20001-
17	01643-31032	WASHER	2	B10001-	B20001-
18	20Y-43-22320	PLATE	1	B10001-	B20001-
19	20Y-43-21883	COVER, R.H.	1	B10001-	B20001-
20	01010-81025	BOLT	3	B10001-	B20001-
21	01643-31032	WASHER	3	B10001-	B20001-
22	20Y-43-21970	COVER	1	B10001-	B20001-
23	01010-80816	BOLT	4	B10001-	B20001-
24	01643-30823	WASHER	4	B10001-	B20001-

FIG. K1110-10A0 FLOOR FRAME (TRAVEL LEVER)

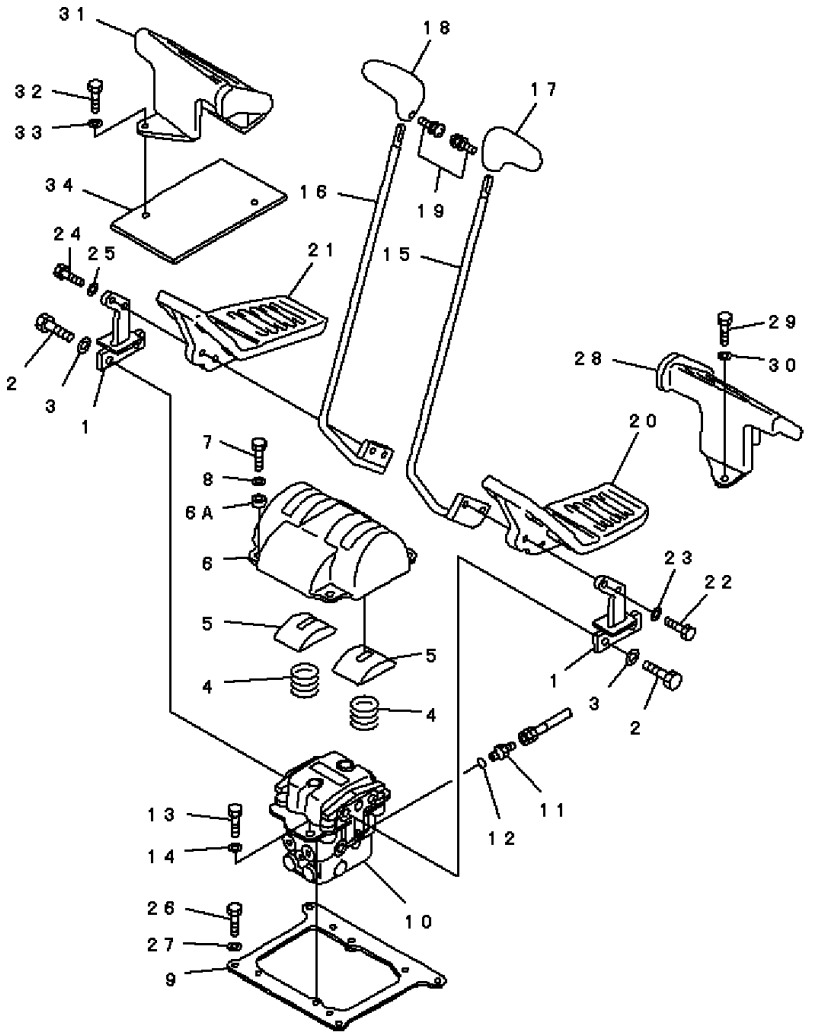

FIG. NO: K1110-10A0

INDEX	PART NO.	DESCRIPTION	Q'TY	SERIAL NO. PC200-6B	SERIAL NO. PC200LC-6B
1	22U-43-21150	LEVER	2	B10094-	B20001-
	203-43-61310	LEVER	2	B10001-B10093	
2	01010-81030	BOLT	4	B10001-	B20001-
3	01643-31032	WASHER	4	B10001-	B20001-
4	203-43-51620	SPRING	2	B10001-	B20001-
5	20Y-43-21140	COVER	2	B10001-	B20001-
6	20Y-43-21151	COVER	1	B10001-	B20001-
6A	20Y-43-21260	COLLAR	4	B10001-	B20001-
7	01010-D1025	BOLT	4	B10001-	B20001-
8	203-54-56970	WASHER	4	B10001-	B20001-
9	20Y-43-21161	PLATE	1	B10001-	B20001-
10	(702-16-01540)	PILOT VALVE	1	B10001-	B20001-
11	07230-20210	UNION	1	B10001-	B20001-
12	07002-01423	O-RING	1	B10001-	B20001-
13	01010-81025	BOLT	2	B10001-	B20001-
14	01643-31032	WASHER	2	B10001-	B20001-
15	22U-43-21130	LEVER, L.H.	1	B10094-	B20001-
	20Y-43-21121	LEVER, L.H.	1	B10001-B10093	
16	22U-43-21140	LEVER, R.H.	1	B10094-	B20001-
	20Y-43-21131	LEVER, R.H.	1	B10001-B10093	
17	20Y-43-21231	KNOB, L.H.	1	B10001-	B20001-
18	20Y-43-21241	KNOB, R.H.	1	B10001-	B20001-
19	01023-20416	SCREW	2	B10001-	B20001-
20	22U-43-21111	PEDAL, L.H.	1	B10094-	B20001-
	20Y-43-21180	PEDAL, L.H.	1	B10001-B10093	
21	22U-43-21121	PEDAL, R.H.	1	B10094-	B20001-
	20Y-43-21190	PEDAL, R.H.	1	B10001-B10093	
22	01010-D1045	BOLT	4	B10094-	B20001-
	01010-D1045	BOLT	2	B10001-B10093	
23	01643-71032	WASHER	4	B10094-	B20001-
	01643-71032	WASHER	2	B10001-B10093	
24	01010-D1045	BOLT	2	B10001-	B20001-
25	01643-71032	WASHER	2	B10001-	B20001-
26	01010-D1025	BOLT	4	B10001-	B20001-
27	01643-71032	WASHER	4	B10001-	B20001-
28	22U-43-25110	BRACKET, L.H.	1	B10094-	B20001-
	20Y-54-36521	BRACKET, L.H.	1	B10001-B10093	
29	01010-81025	BOLT	2	B10094-	B20001-
	01010-81225	BOLT	2	B10001-B10093	
30	01643-31032	WASHER	2	B10094-	B20001-
	01643-31232	WASHER	2	B10001-B10093	
31	22U-54-25120	BRACKET, R.H.	1	B10094-	B20001-
	20Y-54-36531	BRACKET, R.H.	1	B10001-B10093	
32	01010-81025	BOLT	2	B10094-	B20001-
	01010-81225	BOLT	2	B10001-B10093	
33	01643-31232	WASHER	2	B10094-	B20001-
	01643-31032	WASHER	2	B10001-B10093	
34	20Y-54-25170	COVER	1	B10094-	B20001-
	20Y-54-36691	COVER	1	B10001-B10093	

FIG. K1110-10A2 FLOOR FRAME (TRAVEL LEVER) (FOR ADDITIONAL PIPING) (1 ACTUATOR)

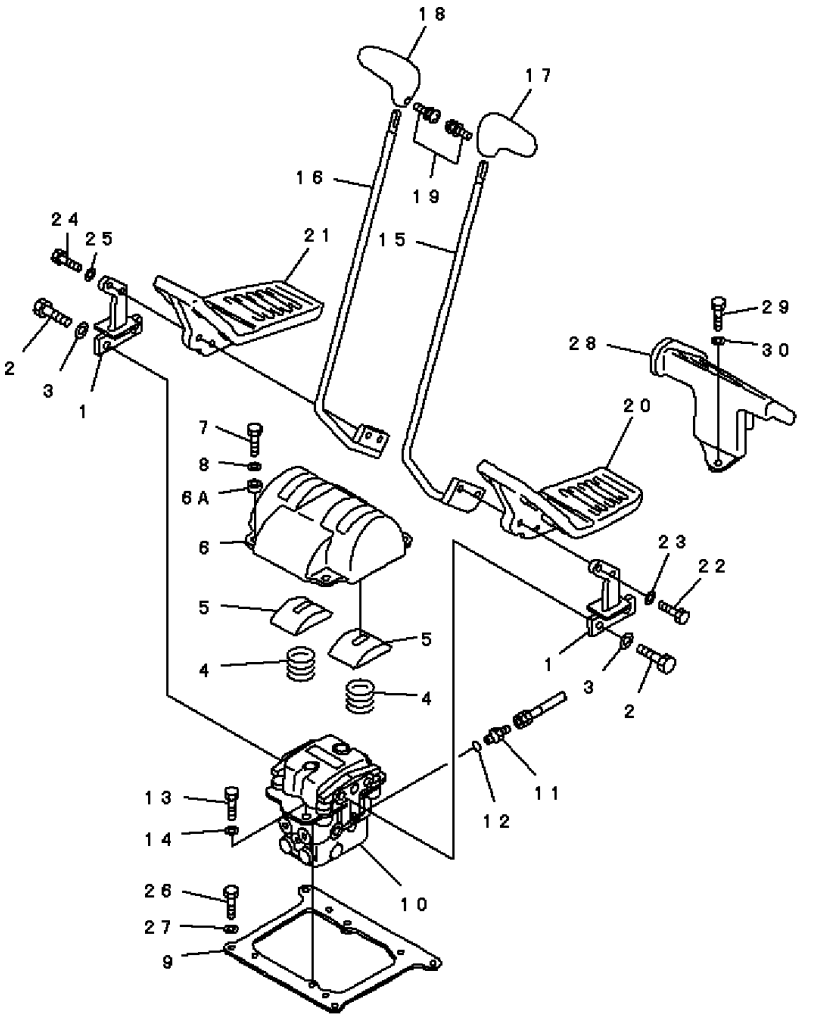

FIG. NO: K1110-10A2

INDEX	PART NO.	DESCRIPTION	Q'TY	SERIAL NO. PC200-6B	SERIAL NO. PC200LC-6B
1	22U-43-21150	LEVER	2	B10094-	B20001-
	203-43-61310	LEVER	2	B10001-B10093	
2	01010-81030	BOLT	4	B10001-	B20001-
3	01643-31032	WASHER	4	B10001-	B20001-
4	203-43-51620	SPRING	2	B10001-	B20001-
5	20Y-43-21140	COVER	2	B10001-	B20001-
6	20Y-43-21151	COVER	1	B10001-	B20001-
6A	20Y-43-21260	COLLAR	4	B10001-	B20001-
7	01010-D1025	BOLT	4	B10001-	B20001-
8	203-54-56970	WASHER	4	B10001-	B20001-
9	20Y-43-21161	PLATE	1	B10001-	B20001-
10	(702-16-01540)	PILOT VALVE	1	B10001-	B20001-
11	07230-20210	UNION	1	B10001-	B20001-
12	07002-01423	O-RING	1	B10001-	B20001-
13	01010-81025	BOLT	2	B10001-	B20001-
14	01643-31032	WASHER	2	B10001-	B20001-
15	22U-43-21130	LEVER, L.H.	1	B10094-	B20001-
	20Y-43-21121	LEVER, L.H.	1	B10001-B10093	
16	22U-43-21140	LEVER, R.H.	1	B10094-	B20001-
	20Y-43-21131	LEVER, R.H.	1	B10001-B10093	
17	20Y-43-21231	KNOB, L.H.	1	B10001-	B20001-
18	20Y-43-21241	KNOB, R.H.	1	B10001-	B20001-
19	01023-20416	SCREW	2	B10001-	B20001-
20	22U-43-21111	PEDAL, L.H.	1	B10094-	B20001-
	20Y-43-21180	PEDAL, L.H.	1	B10001-B10093	
21	22U-43-21121	PEDAL, R.H.	1	B10094-	B20001-
	20Y-43-21190	PEDAL, R.H.	1	B10001-B10093	
22	01010-D1045	BOLT	4	B10094-	B20001-
	01010-D1045	BOLT	2	B10001-B10093	
23	01643-71032	WASHER	4	B10094-	B20001-
	01643-71032	WASHER	2	B10001-B10093	
24	01010-D1045	BOLT	2	B10001-	B20001-
25	01643-71032	WASHER	2	B10001-	B20001-
26	01010-D1025	BOLT	4	B10001-	B20001-
27	01643-71032	WASHER	4	B10001-	B20001-
28	22U-43-25110	BRACKET, L.H.	1	B10094-	B20001-
	20Y-54-36521	BRACKET, L.H.	1	B10001-B10093	
29	01010-81025	BOLT	2	B10094-	B20001-
	01010-81225	BOLT	2	B10001-B10093	
30	01643-31032	WASHER	2	B10094-	B20001-
	01643-31232	WASHER	2	B10001-B10093	

FIG. K1110-11A0A FLOOR FRAME (PPC TRAVEL LINES)

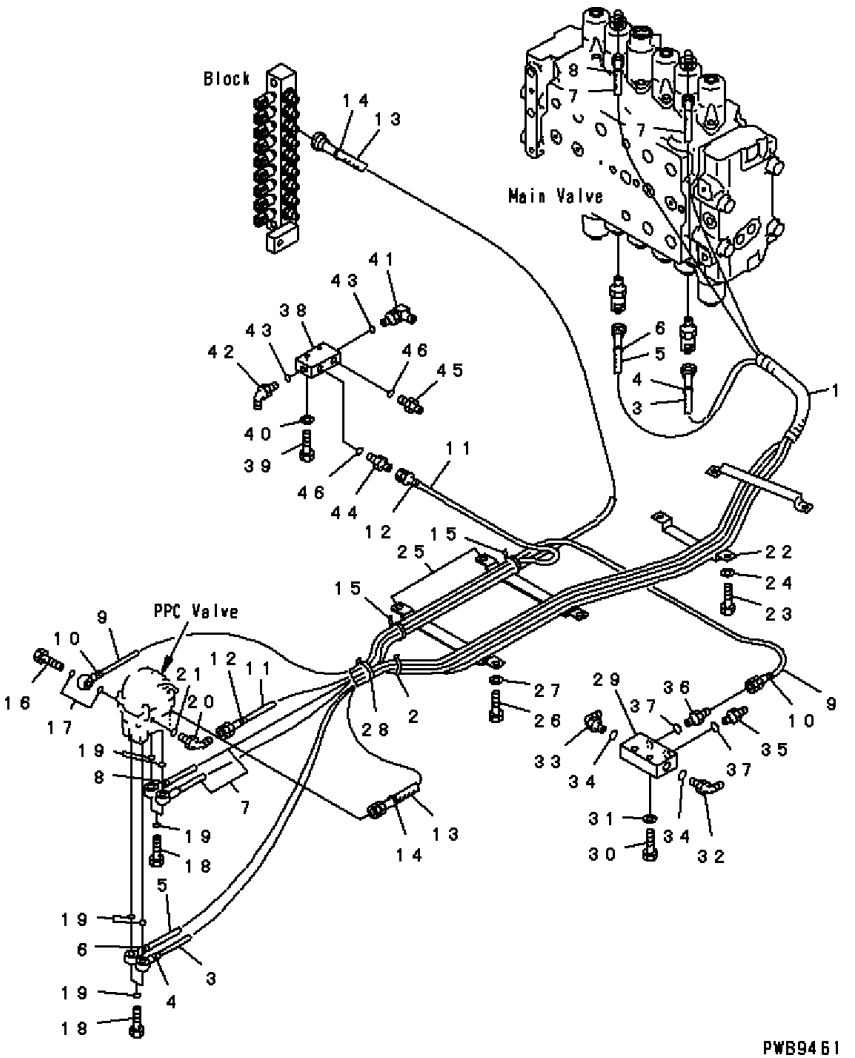

FIG. NO: K1110-11A0A

INDEX	PART NO.	DESCRIPTION	Q'TY	SERIAL NO. PC200-6B	SERIAL NO. PC200LC-6B
1	08017-32807	CONDUIT	1	B10001-	B20001-
2	08034-00536	BAND	1	B10001-	B20001-
3	20Y-62-27121	HOSE 2950MM	1	B10001-	B20001-
4	20Y-62-22790	BAND RED	2	B10001-	B20001-
5	20Y-62-27131	HOSE 3100MM	1	B10001-	B20001-
6	20Y-62-22850	BAND GREEN	2	B10001-	B20001-
7	20Y-62-27141	HOSE 3300MM	2	B10001-	B20001-
8	20Y-62-22820	BAND BLUE	2	B10001-	B20001-
9	20Y-62-22872	HOSE 1350MM	1	B10001-	B20001-
10	20Y-62-22790	BAND RED	2	B10001-	B20001-
11	203-62-52340	HOSE 1000MM	1	B10001-	B20001-
12	20Y-62-22820	BAND BLUE	2	B10001-	B20001-
13	20Y-62-25990	HOSE 2750MM	1	B10001-	B20001-
14	20Y-62-22830	BAND WHITE	2	B10001-	B20001-
15	08034-00519	BAND	2	B10001-	B20001-
16	20Y-62-18910	BOLT	1	B10001-	B20001-
17	07000-02018	O-RING	2	B10001-	B20001-
18	20Y-62-18890	BOLT	4	B10001-	B20001-
19	07000-02015	O-RING	8	B10001-	B20001-
20	07235-10210	ELBOW	1	B10001-	B20001-
21	07002-01423	O-RING	1	B10001-	B20001-
22	20Y-62-27770	CLAMP	1	B10001-	B20001-
23	01010-81020	BOLT	2	B10001-	B20001-
24	01643-31032	WASHER	2	B10001-	B20001-
25	201-62-72570	CLAMP	2	B10001-	B20001-
26	01010-81016	BOLT	4	B10001-	B20001-
27	01643-31032	WASHER	4	B10001-	B20001-
28	08034-00536	BAND	2	B10001-	B20001-
29	20Y-62-15831	BLOCK	1	B10001-	B20001-
30	01010-81045	BOLT	2	B10001-	B20001-
31	01643-31032	WASHER	2	B10001-	B20001-
32	07235-10311	ELBOW	1	B10001-	B20001-
33	07235-10210	ELBOW	1	B10001-	B20001-
34	07002-01423	O-RING	2	B10001-	B20001-
35	07230-20210	UNION	1	B10001-	B20001-
36	07230-20210	UNION	1	B10001-	B20001-
37	07002-01423	O-RING	2	B10001-	B20001-
38	20Y-62-15831	BLOCK	1	B10001-	B20001-
39	01010-81045	BOLT	2	B10001-	B20001-
40	01643-31032	WASHER	2	B10001-	B20001-
41	07235-10311	ELBOW	1	B10001-	B20001-
42	07235-10210	ELBOW	1	B10001-	B20001-
43	07002-01423	O-RING	2	B10001-	B20001-
44	07230-20210	UNION	1	B10001-	B20001-
45	07230-20210	UNION	1	B10001-	B20001-
46	07002-01423	O-RING	2	B10001-	B20001-

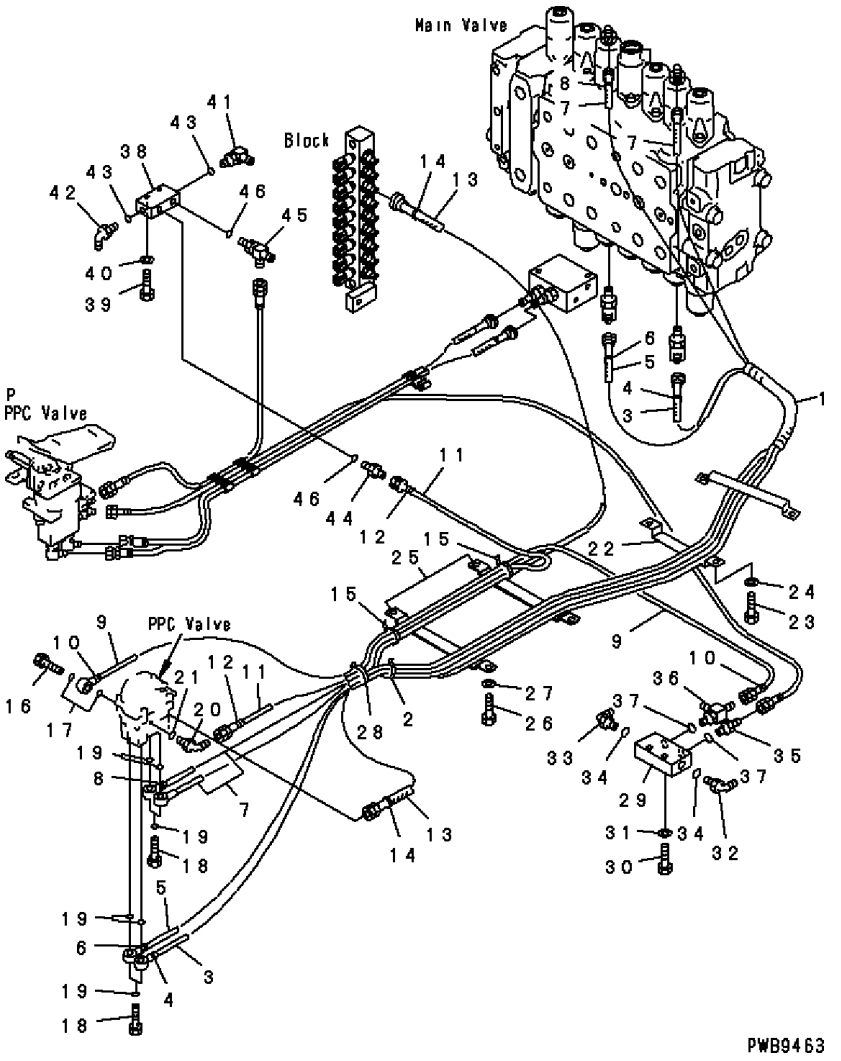

INDEX	PART NO.	DESCRIPTION	Q'TY	SERIAL NO. PC200-6B	SERIAL NO. PC200LC-6B
1	08017-32807	CONDUIT	1	B10001-	B20001-
2	08034-00536	BAND	1	B10001-	B20001-
3	20Y-62-27121	HOSE 2950MM	1	B10001-	B20001-
4	20Y-62-22790	BAND RED	2	B10001-	B20001-
5	20Y-62-27131	HOSE 3100MM	1	B10001-	B20001-
6	20Y-62-22850	BAND GREEN	2	B10001-	B20001-
7	20Y-62-27141	HOSE 3300MM	2	B10001-	B20001-
8	20Y-62-22820	BAND BLUE	2	B10001-	B20001-
9	20Y-62-22872	HOSE 1350MM	1	B10001-	B20001-
10	20Y-62-22790	BAND RED	2	B10001-	B20001-
11	203-62-52340	HOSE 1000MM	1	B10001-	B20001-
12	20Y-62-22820	BAND BLUE	2	B10001-	B20001-
13	20Y-62-25990	HOSE 2750MM	1	B10001-	B20001-
14	20Y-62-22830	BAND WHITE	2	B10001-	B20001-
15	08034-00519	BAND	2	B10001-	B20001-
16	20Y-62-18910	BOLT	1	B10001-	B20001-
17	07000-02018	O-RING	2	B10001-	B20001-
18	20Y-62-18890	BOLT	4	B10001-	B20001-
19	07000-02015	O-RING	8	B10001-	B20001-
20	07235-10210	ELBOW	1	B10001-	B20001-
21	07002-01423	O-RING	1	B10001-	B20001-
22	20Y-62-27770	CLAMP	1	B10001-	B20001-
23	01010-81020	BOLT	2	B10001-	B20001-
24	01643-31032	WASHER	2	B10001-	B20001-
25	201-62-72570	CLAMP	2	B10001-	B20001-
26	01010-81016	BOLT	4	B10001-	B20001-
27	01643-31032	WASHER	4	B10001-	B20001-
28	08034-00536	BAND	2	B10001-	B20001-
29	20Y-62-15831	BLOCK	1	B10001-	B20001-
30	01010-81045	BOLT	2	B10001-	B20001-
31	01643-31032	WASHER	2	B10001-	B20001-
32	07235-10311	ELBOW	1	B10001-	B20001-
33	07235-10210	ELBOW	1	B10001-	B20001-
34	07002-01423	O-RING	2	B10001-	B20001-
35	07230-20210	UNION	1	B10001-	B20001-
36	208-62-17550	ELBOW	1	B10001-	B20001-
37	07002-01423	O-RING	2	B10001-	B20001-
38	20Y-62-15831	BLOCK	1	B10001-	B20001-
39	01010-81045	BOLT	2	B10001-	B20001-
40	01643-31032	WASHER	2	B10001-	B20001-
41	07235-10311	ELBOW	1	B10001-	B20001-
42	07235-10210	ELBOW	1	B10001-	B20001-
43	07002-01423	O-RING	2	B10001-	B20001-
44	07230-20210	UNION	1	B10001-	B20001-
45	208-62-17550	ELBOW	1	B10001-	B20001-
46	07002-01423	O-RING	2	B10001-	B20001-

FIG. K1110-12A0A FLOOR FRAME (PPC WORK LINE) (PPC VALVE AND LEFT STAND HOSE)

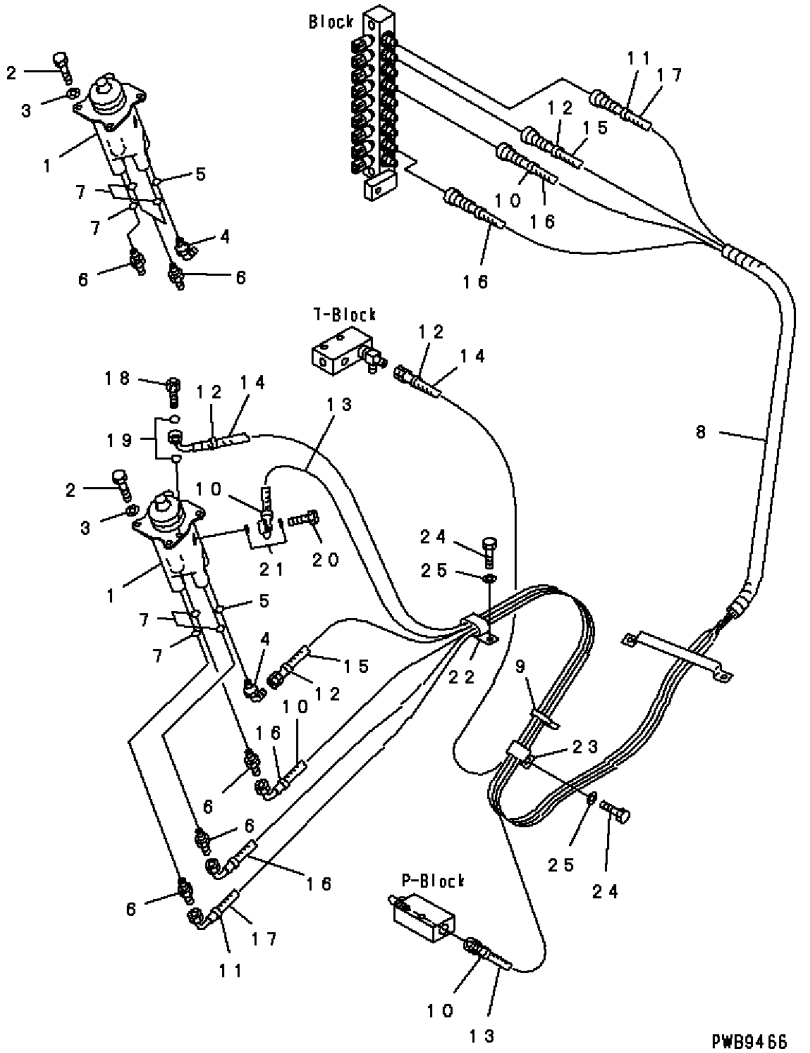

FIG. NO: K1110-12A0A

INDEX	PART NO.	DESCRIPTION	Q'TY	SERIAL NO. PC200-6B	SERIAL NO. PC200LC-6B
1	(702-16-01051)	PILOT VALVE	2	B10001-	B20001-
2	01010-80820	BOLT	6	B10001-	B20001-
3	01643-30823	WASHER	6	B10001-	B20001-
4	07235-10210	ELBOW	2	B10001-	B20001-
5	07002-01423	O-RING	2	B10001-	B20001-
6	07230-20210	UNION	6	B10001-	B20001-
7	07002-01423	O-RING	6	B10001-	B20001-
8	08017-32807	CONDUIT	1	B10001-	B20001-
9	08034-00519	BAND	1	B10001-	B20001-
10	20Y-62-22790	BAND RED	4	B10001-	B20001-
11	20Y-62-22810	BAND YELLOW	2	B10001-	B20001-
12	20Y-62-22820	BAND BLUE	4	B10001-	B20001-
13	20Y-62-23252	HOSE 1200MM	1	B10001-	B20001-
14	20Y-62-23262	HOSE 1400MM	1	B10001-	B20001-
15	20Y-62-23273	HOSE 2850MM	1	B10001-	B20001-
16	20Y-62-23284	HOSE 2800MM	2	B10001-	B20001-
17	20Y-62-23362	HOSE 3000MM	1	B10001-	B20001-
18	20Y-62-18910	BOLT	1	B10001-	B20001-
19	07000-02018	O-RING	2	B10001-	B20001-
20	20Y-62-18890	BOLT	1	B10001-	B20001-
21	07000-02015	O-RING	2	B10001-	B20001-
22	04434-53411	CLIP	1	B10001-	B20001-
23	20Y-62-23130	CLIP	1	B10001-	B20001-
24	01010-80820	BOLT	2	B10001-	B20001-
25	01643-30823	WASHER	2	B10001-	B20001-

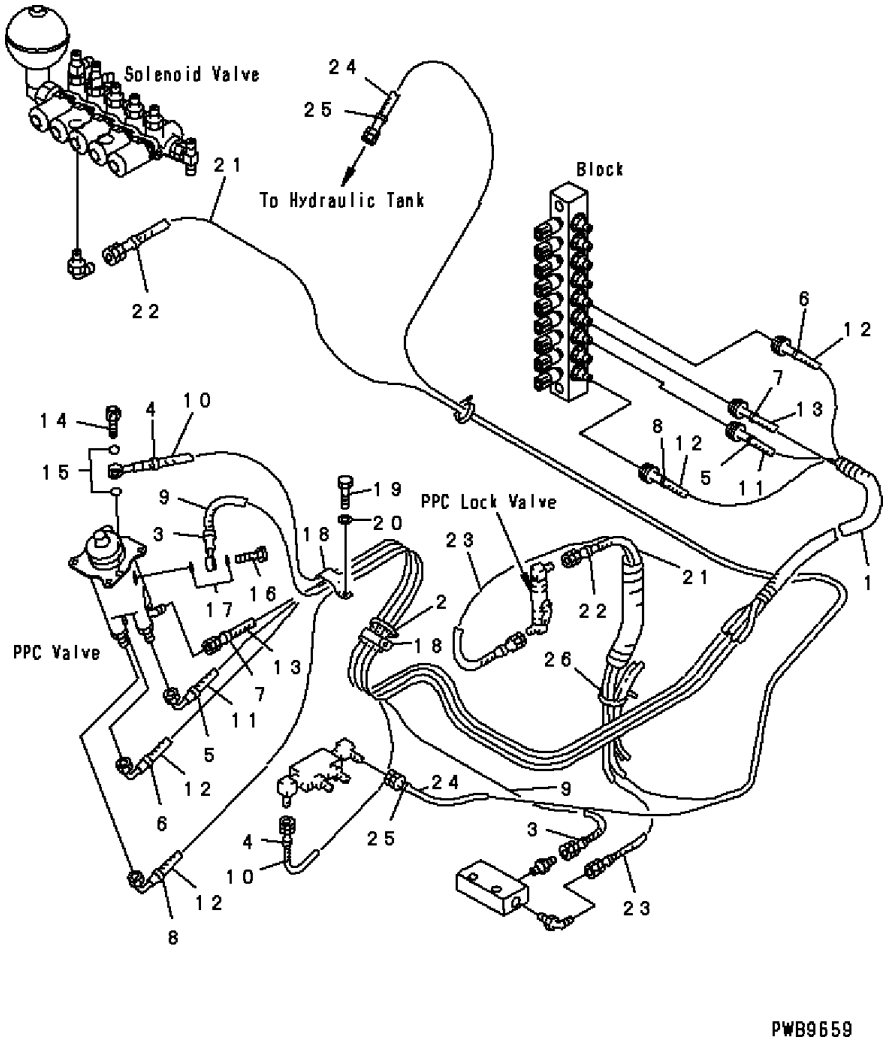

PWB9659

INDEX	PART NO.	DESCRIPTION	Q'TY	SERIAL NO. PC200-6B	SERIAL NO. PC200LC-6B
1	08017-32807	CONDUIT	1	B10001-	B20001-
2	08034-00519	BAND	1	B10001-	B20001-
3	20Y-62-22790	BAND RED	2	B10001-	B20001-
4	20Y-62-22820	BAND BLUE	2	B10001-	B20001-
5	20Y-62-22830	BAND WHITE	2	B10001-	B20001-
6	20Y-62-22840	BAND BLACK	2	B10001-	B20001-
7	20Y-62-22850	BAND GREEN	2	B10001-	B20001-
8	20Y-62-22860	BAND BROWN	2	B10001-	B20001-
9	20Y-62-23312	HOSE 1600MM	1	B10001-	B20001-
10	20Y-62-23322	HOSE 1100MM	1	B10001-	B20001-
11	20Y-62-23344	HOSE 2950MM	1	B10001-	B20001-
12	20Y-62-23362	HOSE 3000MM	2	B10001-	B20001-
13	20Y-62-26190	HOSE 2950MM	1	B10001-	B20001-
14	20Y-62-18910	BOLT	1	B10001-	B20001-
15	07000-02018	O-RING	2	B10001-	B20001-
16	20Y-62-18890	BOLT	1	B10001-	B20001-
17	07000-02015	O-RING	2	B10001-	B20001-
18	04434-53411	CLIP	2	B10001-	B20001-
19	01010-80820	BOLT	2	B10001-	B20001-
20	01643-30823	WASHER	2	B10001-	B20001-
21	20Y-62-22890	HOSE 2950MM	1	B10001-	B20001-
22	20Y-62-22790	BAND RED	2	B10001-	B20001-
23	20Y-62-22910	HOSE 1050MM	1	B10001-	B20001-
24	203-62-63220	HOSE 3400MM	1	B10001-	B20001-
25	20Y-62-22820	BAND BLUE	2	B10001-	B20001-
26	08034-00519	BAND	2	B10001-	B20001-

FIG. K1110-17A1A FLOOR FRAME (ELECTRIC GOVERNOR CONTROL) (AIR CONDITIONER UNIT)

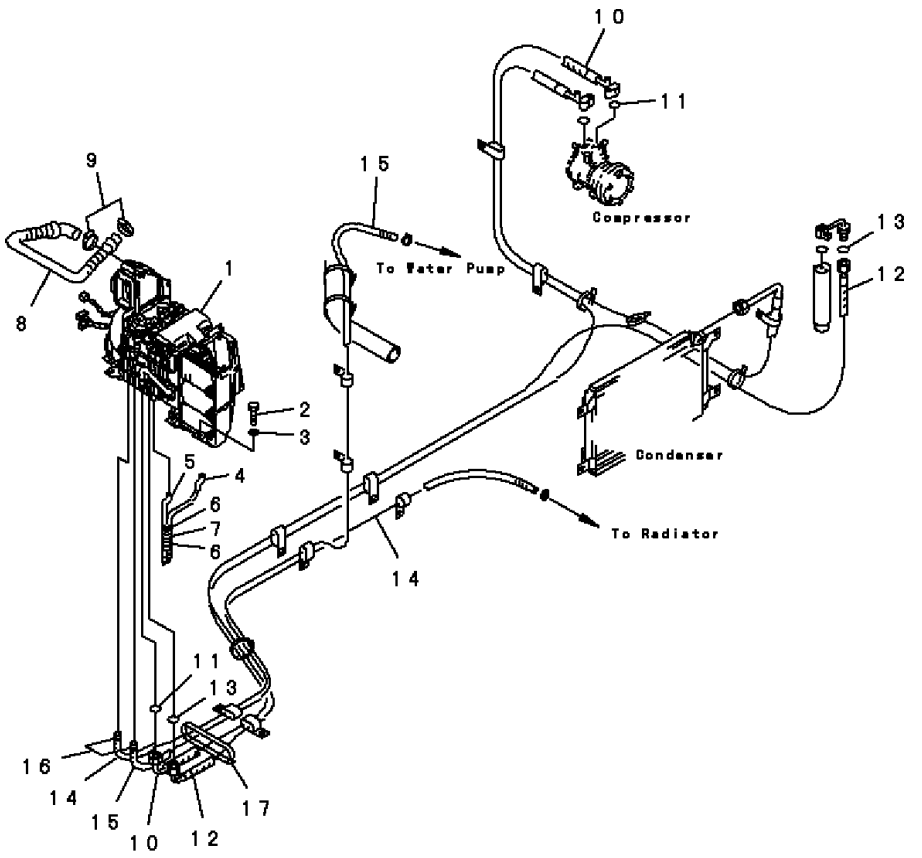

PEB5513

FIG. NO: K1110-17A1A

INDEX	PART NO.	DESCRIPTION	Q'TY	SERIAL NO. PC200-6B	SERIAL NO. PC200LC-6B
1	(20Y-979-3711)	UNIT ASS'Y	1	B10001-	B20001-
2	01010-81020	BOLT	7	B10001-	B20001-
3	01643-31032	WASHER	7	B10001-	B20001-
4	20Y-979-3720	HOSE	1	B10001-	B20001-
5	20Y-979-3730	HOSE	1	B10001-	B20001-
6	08034-00519	BAND	2	B10001-	B20001-
7	08017-32801	CONDUIT	1	B10001-	B20001-
8	20Y-979-2181	HOSE	1	B10001-	B20001-
9	07281-00419	CLAMP	2	B10001-	B20001-
10	20Y-979-3431	HOSE	1	B10001-	B20001-
11	20Y-979-3130	. O-RING	2	B10001-	B20001-
12	20Y-979-3330	HOSE	1	B10001-	B20001-
13	20Y-979-3150	. O-RING	2	B10001-	B20001-
14	20Y-979-2382	HOSE	1	B10001-	B20001-
15	20Y-979-2391	HOSE	1	B10001-	B20001-
16	09480-10100	CLAMP	2	B10001-	B20001-
17	08034-00536	BAND	1	B10001-	B20001-

FIG. K1110-17B0 FLOOR FRAME (ELECTRIC GOVERNOR CONTROL) (HEATER UNIT 2000KCAL)

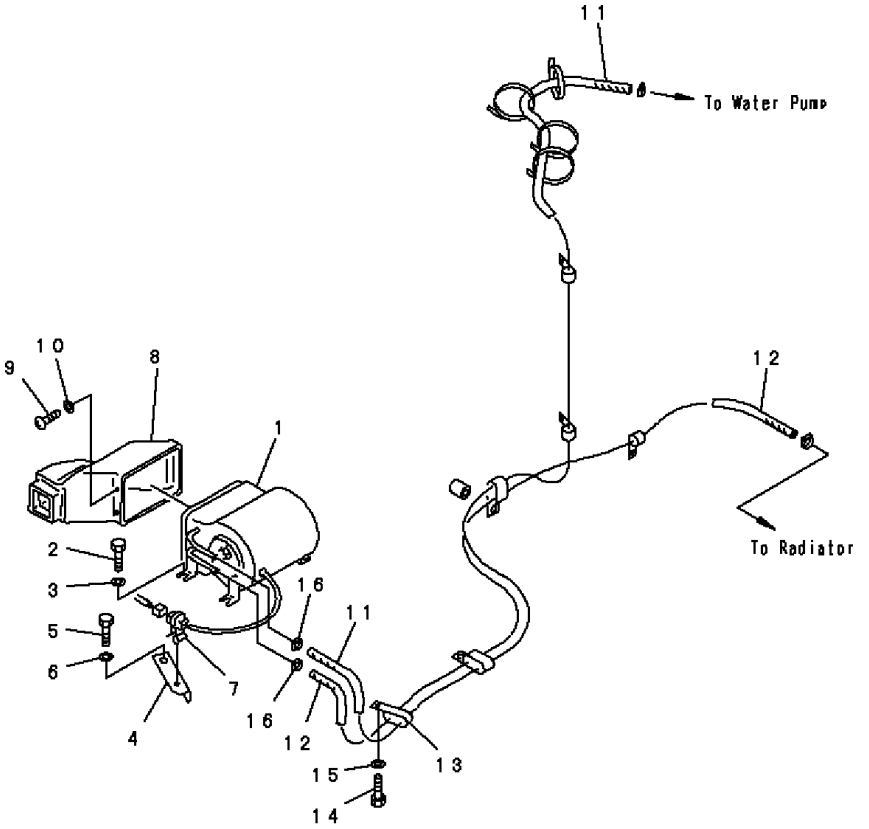

PWB9666

FIG. NO: K1110-17B0

INDEX	PART NO.	DESCRIPTION	Q'TY	SERIAL NO. PC200-6B	SERIAL NO. PC200LC-6B
1	(20Y-977-2120)	HEATER ASS'Y	1	B10001-	B20001-
2	01010-81020	BOLT	3	B10001-	B20001-
3	01643-31032	WASHER	3	B10001-	B20001-
4	20Y-977-2160	PLATE	1	B10001-	B20001-
5	01010-81020	BOLT	1	B10001-	B20001-
6	01643-31032	WASHER	1	B10001-	B20001-
7	20Y-06-24270	CLIP	1	B10001-	B20001-
8	20Y-977-2111	DUCT	1	B10001-	B20001-
9	7861-86-1330	SCREW	4	B10001-	B20001-
10	01642-20405	WASHER	4	B10001-	B20001-
11	09483-00433	HOSE	1	B10001-	B20001-
12	09483-00425	HOSE	1	B10001-	B20001-
13	141-06-11220	CLIP	1	B10001-	B20001-
14	01010-81020	BOLT	1	B10001-	B20001-
15	01643-31032	WASHER	1	B10001-	B20001-
16	09480-10100	CLAMP	2	B10001-	B20001-

FIG. K1110-18A0A FLOOR FRAME (MOUNT CUSHION)

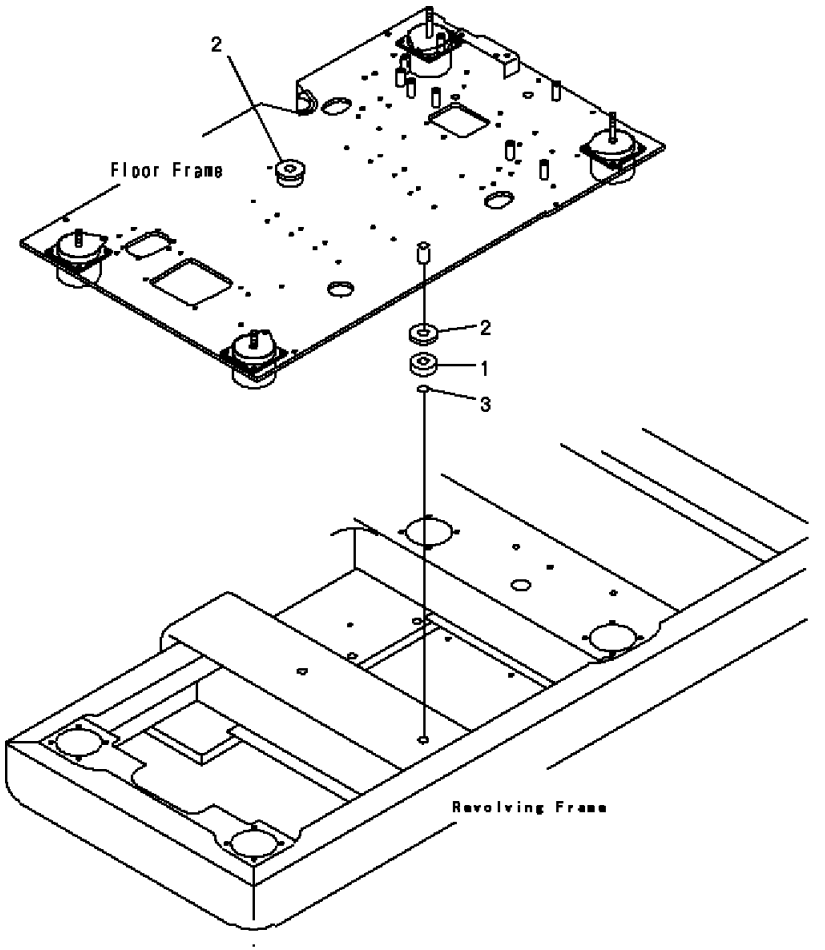

FIG. NO: K1110-18A0A

INDEX	PART NO.	DESCRIPTION	Q'TY	SERIAL NO. PC200-6B	SERIAL NO. PC200LC-6B
1	207-54-65210	CUSHION	2	B10001-	B20001-
2	207-54-65190	PLATE	2	B10001-	B20001-
3	07000-13025	O-RING	2	B10001-	B20001-

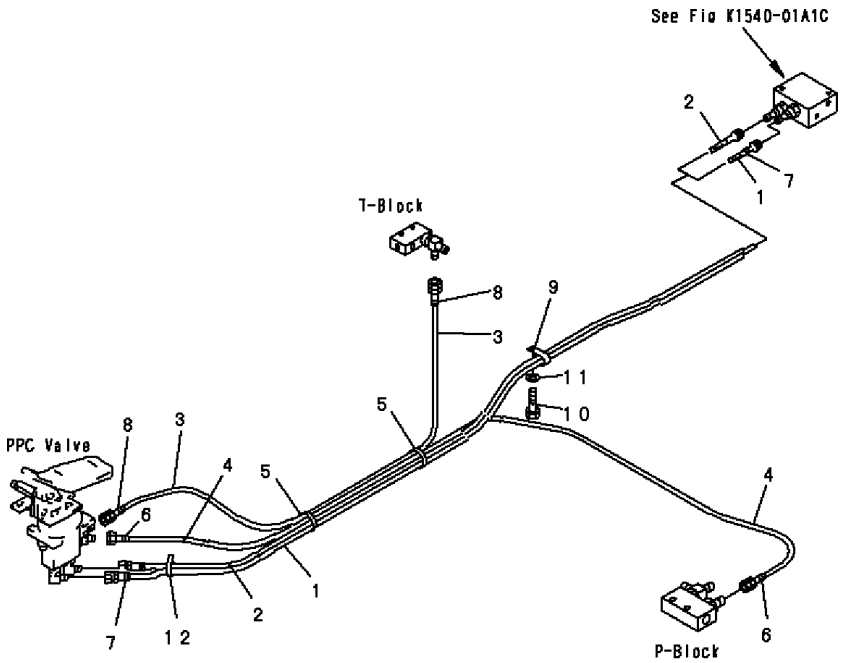

INDEX	PART NO.	DESCRIPTION	Q'TY	SERIAL NO. PC200-6B	SERIAL NO. PC200LC-6B
1	20Y-62-23412	HOSE 1950MM	1	B10001-	B20001-
2	20Y-62-23572	HOSE 1900MM	1	B10001-	B20001-
3	203-62-52340	HOSE 1000MM	1	B10001-	B20001-
4	203-62-52350	HOSE 1200MM	1	B10001-	B20001-
5	08034-00519	BAND	2	B10001-	B20001-
6	20Y-62-22790	BAND RED	2	B10001-	B20001-
7	20Y-62-22810	BAND YELLOW	2	B10001-	B20001-
8	20Y-62-22820	BAND BLUE	2	B10001-	B20001-
9	04434-52711	CLIP	1	B10001-	B20001-
10	01010-81016	BOLT	1	B10001-	B20001-
11	01643-31032	WASHER	1	B10001-	B20001-
12	08034-00536	BAND	1	B10001-	B20001-

FIG. K1120-01A0D LOW MOUNT (FLOOR FRAME)

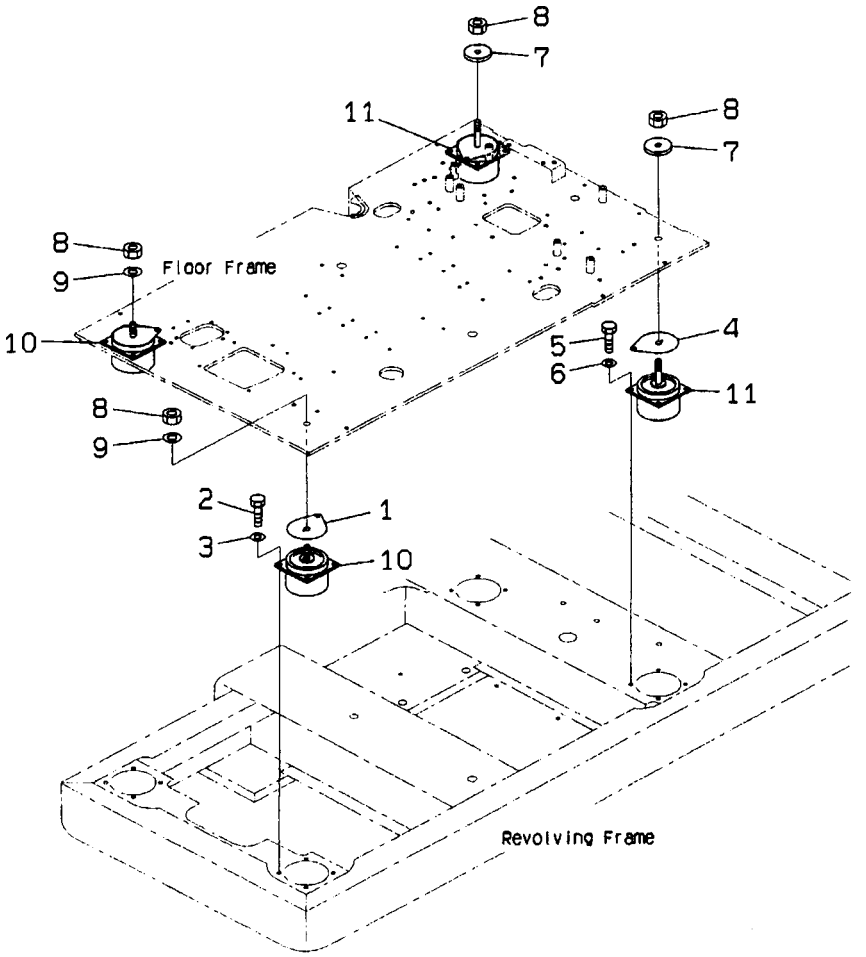

FIG. NO: K1120-01A0D

INDEX	PART NO.	DESCRIPTION	Q'TY	SERIAL NO. PC200-6B	SERIAL NO. PC200LC-6B
1	207-54-65130	SPACER	2	B10001-	B20001-
2	01010-81035	BOLT	8	B10001-	B20001-
3	01643-31032	WASHER	8	B10001-	B20001-
4	207-54-65130	SPACER	2	B10001-	B20001-
5	01010-81035	BOLT	8	B10001-	B20001-
6	01643-31032	WASHER	8	B10001-	B20001-
7	21T-27-71220	HOLDER	2	B10001-	B20001-
8	01580-11613	NUT	4	B10001-	B20001-
9	01643-31645	WASHER	2	B10001-	B20001-
10	20Y-54-39870	CUSHION	2	B10001-	B20001-
11	20Y-54-39880	CUSHION	2	B10001-	B20001-

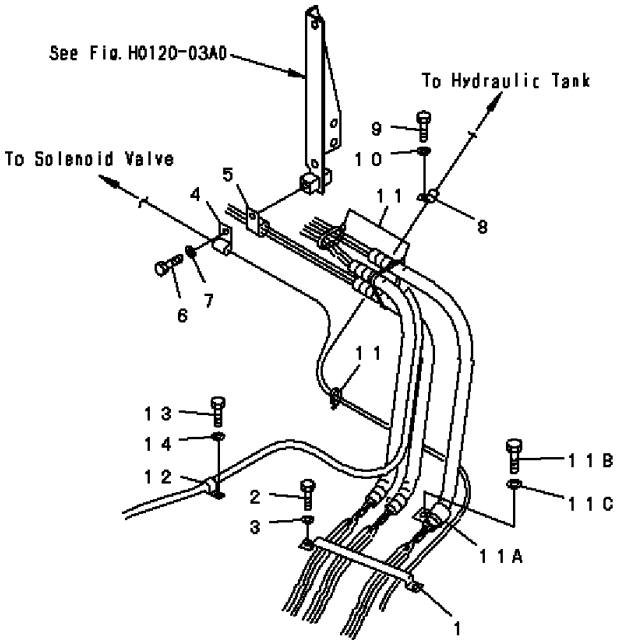

PWB5203

INDEX	PART NO.	DESCRIPTION	Q'TY	SERIAL NO. PC200-6B	SERIAL NO. PC200LC-6B
1	20Y-62-22291	CLAMP	1	B10001-	B20001-
2	01010-81230	BOLT	2	B10001-	B20001-
3	01643-31232	WASHER	2	B10001-	B20001-
4	08036-01414	CLIP	1	B10001-	B20001-
5	08036-02514	CLIP	1	B10001-	B20001-
6	01010-81230	BOLT	1	B10001-	B20001-
7	01643-31232	WASHER	1	B10001-	B20001-
8	08036-01414	CLIP	1	B10001-	B20001-
9	01010-81225	BOLT	1	B10001-	B20001-
10	01643-31232	WASHER	1	B10001-	B20001-
11	08034-00519	BAND	5	B10001-	B20001-
11A	208-06-19170	CLIP	1	B10001-	B20001-
11B	01010-81225	BOLT	1	B10001-	B20001-
11C	01643-31232	WASHER	1	B10001-	B20001-
12	04434-51312	CLIP	1	B10001-	B20001-
13	01010-81225	BOLT	1	B10001-	B20001-
14	01643-31232	WASHER	1	B10001-	B20001-

FIG. K1520-01A2 PPC WORK LINE CLIPING (1 ACTUATOR)

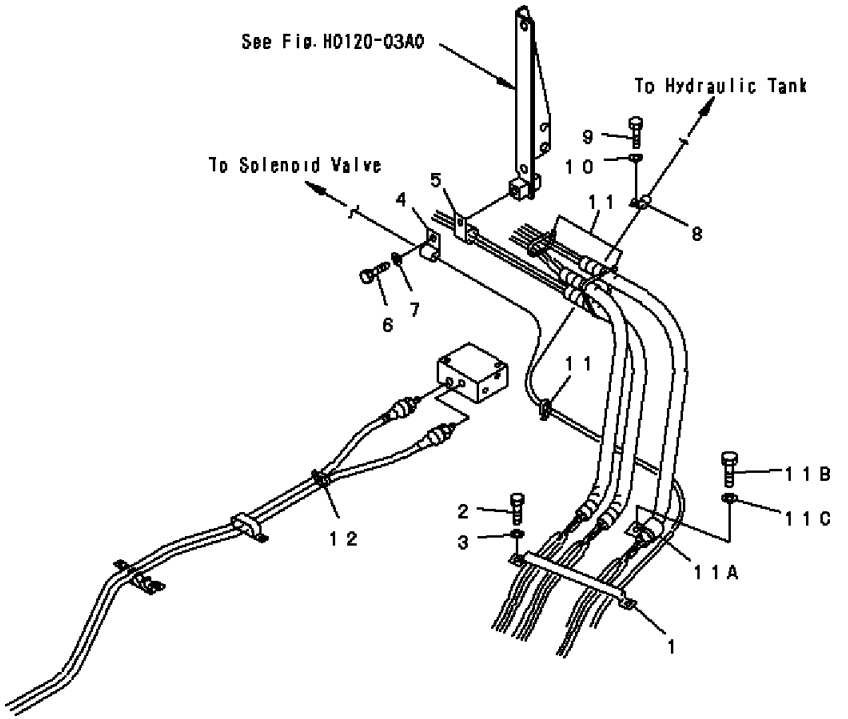

FIG. NO: K1520-01A2

INDEX	PART NO.	DESCRIPTION	Q'TY	SERIAL NO. PC200-6B	SERIAL NO. PC200LC-6B
1	20Y-62-22291	CLAMP	1	B10001-	B20001-
2	01010-81230	BOLT	2	B10001-	B20001-
3	01643-31232	WASHER	2	B10001-	B20001-
4	08036-01414	CLIP	1	B10001-	B20001-
5	08036-02514	CLIP	1	B10001-	B20001-
6	01010-81230	BOLT	1	B10001-	B20001-
7	01643-31232	WASHER	1	B10001-	B20001-
8	08036-01414	CLIP	1	B10001-	B20001-
9	01010-81225	BOLT	1	B10001-	B20001-
10	01643-31232	WASHER	1	B10001-	B20001-
11	08034-00519	BAND	5	B10001-	B20001-
11A	208-06-19170	CLIP	1	B10001-	B20001-
11B	01010-81225	BOLT	1	B10001-	B20001-
11C	01643-31232	WASHER	1	B10001-	B20001-
12	08034-00519	BAND	2	B10001-	B20001-

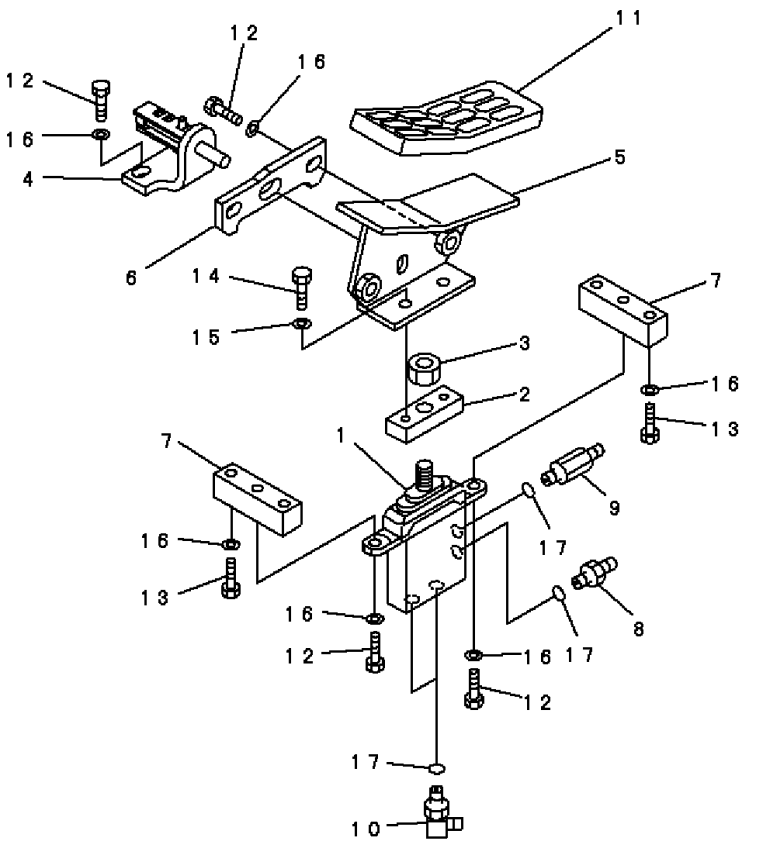

PWB9672

INDEX	PART NO.	DESCRIPTION	Q'TY	SERIAL NO. PC200-6B	SERIAL NO. PC200LC-6B
1	702-16-01230	PILOT VALVE	1	B10001-	B20001-
2	203-43-61520	SEAT	1	B10001-	B20001-
3	01583-11408	NUT	1	B10001-	B20001-
4	20Y-62-25360	BRACKET	1	B10001-	B20001-
5	203-43-61510	PEDAL	1	B10001-	B20001-
6	20Y-62-25380	PLATE	1	B10001-	B20001-
7	20Y-62-25411	PLATE	2	B10001-	B20001-
8	20N-62-31250	NIPPLE	1	B10001-	B20001-
9	20U-62-22280	NIPPLE	1	B10001-	B20001-
10	21P-62-11590	ELBOW	2	B10001-	B20001-
11	14X-43-12110	CAP	1	B10001-	B20001-
12	01010-81030	BOLT	6	B10001-	B20001-
13	01010-81040	BOLT	4	B10001-	B20001-
14	01010-80820	BOLT	2	B10001-	B20001-
15	01643-30823	WASHER	2	B10001-	B20001-
16	01643-31032	WASHER	12	B10001-	B20001-
17	07000-02011	O-RING	4	B10001-	B20001-

FIG. K1540-01A1C ATTACHMENT PPC LINE (1 ACTUATOR)

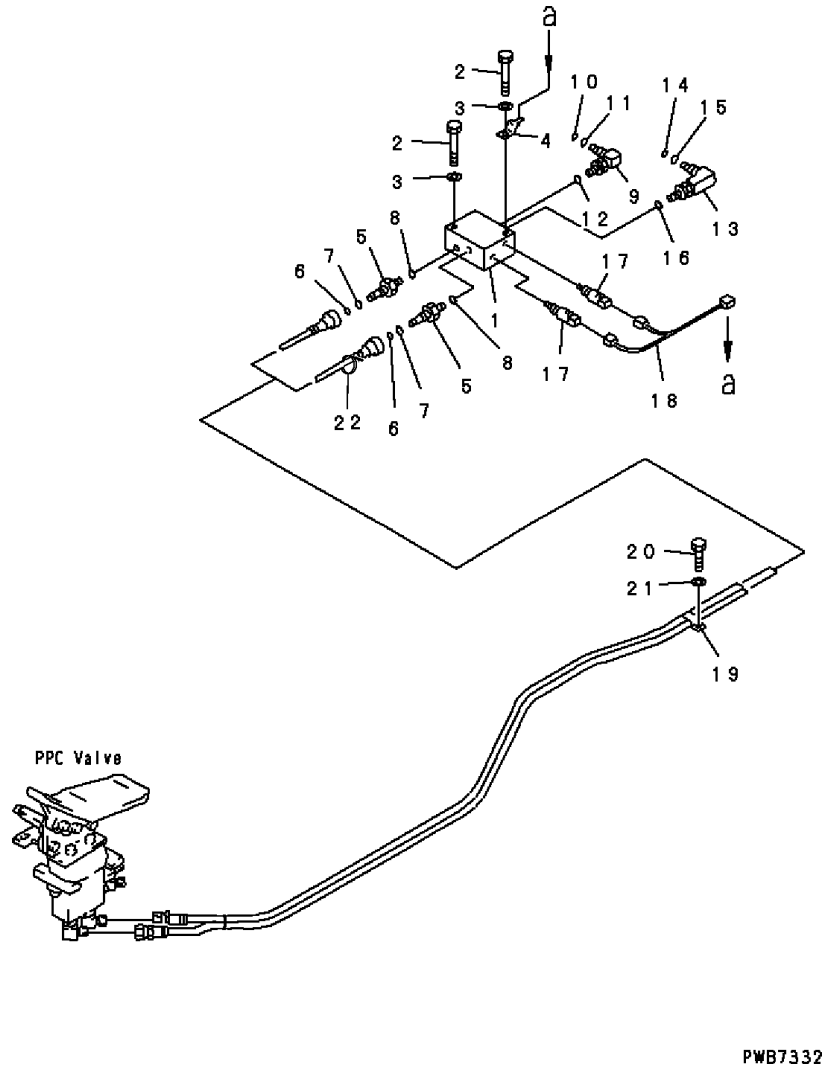

PWB7332

FIG. NO: K1540-01A1C

INDEX	PART NO.	DESCRIPTION	Q'TY	SERIAL NO. PC200-6B	SERIAL NO. PC200LC-6B
1	20Y-62-22220	BLOCK	1	B10001-	B20001-
2	01010-81065	BOLT	2	B10001-	B20001-
3	01643-31032	WASHER	2	B10001-	B20001-
4	08053-01512	CLIP	1	B10001-	B20001-
5	20Y-62-16630	NIPPLE	2	B10001-	B20001-
6	201-60-11390	. O-RING	1	B10001-	B20001-
7	20Y-62-19560	. O-RING	1	B10001-	B20001-
8	07002-01423	O-RING	2	B10001-	B20001-
9	20Y-62-22271	ELBOW	1	B10001-	B20001-
10	201-60-11390	. O-RING	1	B10001-	B20001-
11	20Y-62-19560	. O-RING	1	B10001-	B20001-
12	07002-01423	O-RING	1	B10001-	B20001-
13	14X-43-14840	ELBOW	1	B10001-	B20001-
14	201-60-11390	. O-RING	1	B10001-	B20001-
15	20Y-62-19560	. O-RING	1	B10001-	B20001-
16	07002-01423	O-RING	1	B10001-	B20001-
17	206-06-61130	SWITCH	2	B10001-	B20001-
18	20Y-06-21330	WIRING HARNESS	1	B10001-	B20001-
19	04435-51612	CLIP	1	B10001-	B20001-
20	01010-81225	BOLT	1	B10001-	B20001-
21	01643-31032	WASHER	1	B10001-	B20001-
22	08034-00519	BAND	4	B10001-	B20001-

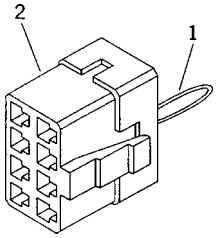

INDEX	PART NO.	DESCRIPTION	Q'TY	SERIAL NO. PC200-6B	SERIAL NO. PC200LC-6B
1	20Y-06-K2570	SWITCH	1	B10019-	B20001-
	20Y-06-24470	SWITCH	1	B10001-B10018	
2	08056-10881	CONNECTOR	1	B10001-	B20001-

FIG. K1740-01A0C GARNISH COVER

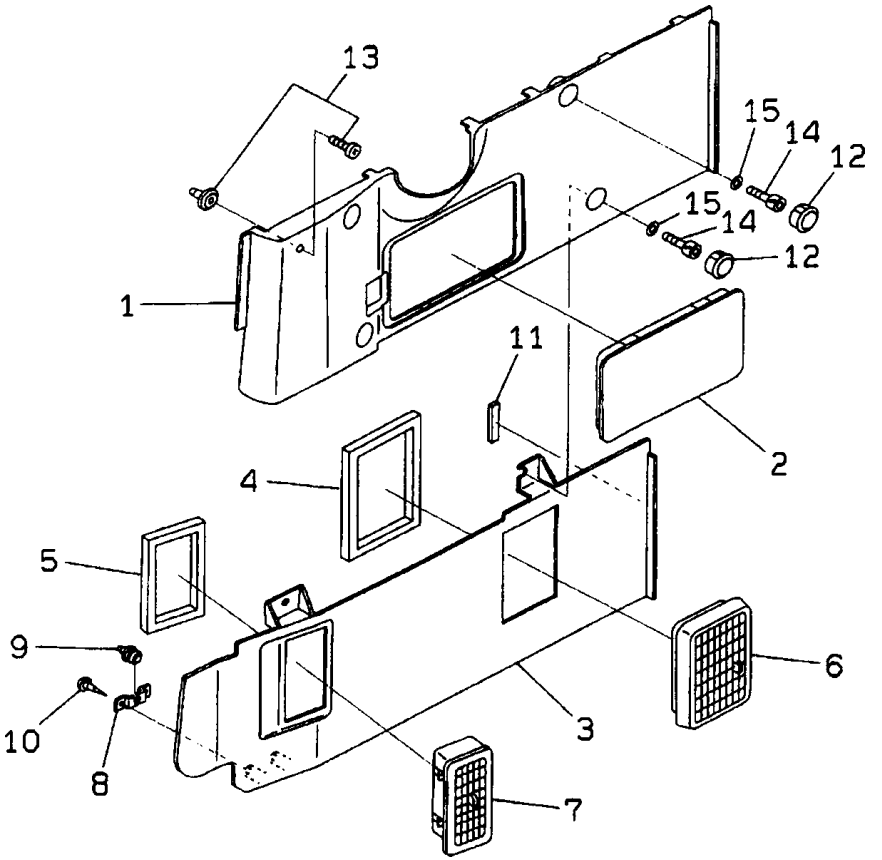

FIG. NO: K1740-01A0C

INDEX	PART NO.	DESCRIPTION	Q'TY	SERIAL NO. PC200-6B	SERIAL NO. PC200LC-6B
1	20Y-54-36752	COVER	1	B10001-	B20001-
2	20Y-54-36771	COVER	1	B10001-	B20001-
3	20Y-54-36882	COVER	1	B10001-	B20001-
4	20Y-54-36971	PACKING	1	B10001-	B20001-
5	20Y-54-36981	PACKING	1	B10001-	B20001-
6	20Y-979-3360	GRILL	1	B10001-	B20001-
7	20Y-979-2171	GRILL	1	B10001-	B20001-
8	20Y-54-36891	PLATE	3	B10001-	B20001-
9	20Y-54-36721	CLIP	3	B10001-	B20001-
10	01370-00412	SCREW	6	B10001-	B20001-
11	20Y-54-37630	SHEET	1	B10001-	B20001-
12	20Y-54-36470	CAP	4	B10001-	B20001-
13	20Y-54-36791	RIVET	1	B10001-	B20001-
14	01252-40620	BOLT	4	B10001-	B20001-
15	209-72-12230	WASHER	4	B10001-	B20001-

GUARD

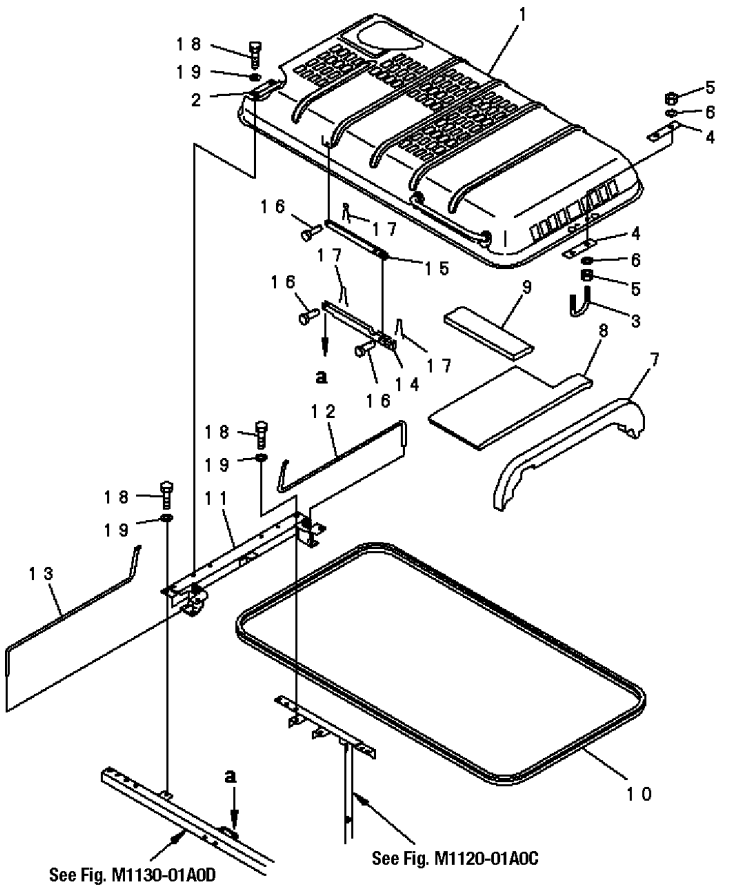

INDEX	PART NO.	DESCRIPTION	Q'TY	SERIAL NO. PC200-6B	SERIAL NO. PC200LC-6B
1	20Y-54-B1110	HOOD	1	B10013-	B20001-
	20Y-54-27113	HOOD	1	B10001-B10012	
2	20Y-54-27123	. HINGE (WELDED)	2	B10001-	B20001-
3	20Y-54-27172	U-BOLT	1	B10001-	B20001-
4	20Y-54-27330	PLATE	2	B10001-	B20001-
5	01580-11210	NUT	4	B10001-	B20001-
6	01643-31232	WASHER	4	B10001-	B20001-
7	20Y-54-B1131	SHEET	1	B10013-	B20001-
	20Y-54-27242	SHEET	1	B10001-B10012	
8	20Y-54-27261	SHEET	1	B10001-	B20001-
9	20Y-54-25680	SHEET	1	B10001-B10012	
10	20Y-54-29291	SEAL	1	B10001-	B20001-
11	20Y-54-25381	FRAME	1	B10001-	B20001-
12	20Y-54-27141	SPRING	1	B10001-	B20001-
13	20Y-54-27131	SPRING	1	B10001-	B20001-
14	20Y-54-27370	STAY	1	B10001-	B20001-
15	20Y-54-27290	STAY	1	B10001-	B20001-
16	04205-11230	PIN	3	B10001-	B20001-
17	04050-13022	PIN	3	B10001-	B20001-
18	01010-81230	BOLT	7	B10001-	B20001-
19	01643-31232	WASHER	7	B10001-	B20001-

FIG. M1110-02A0 HOOD (FOR LARGE RADIATOR) (OPTIONAL)

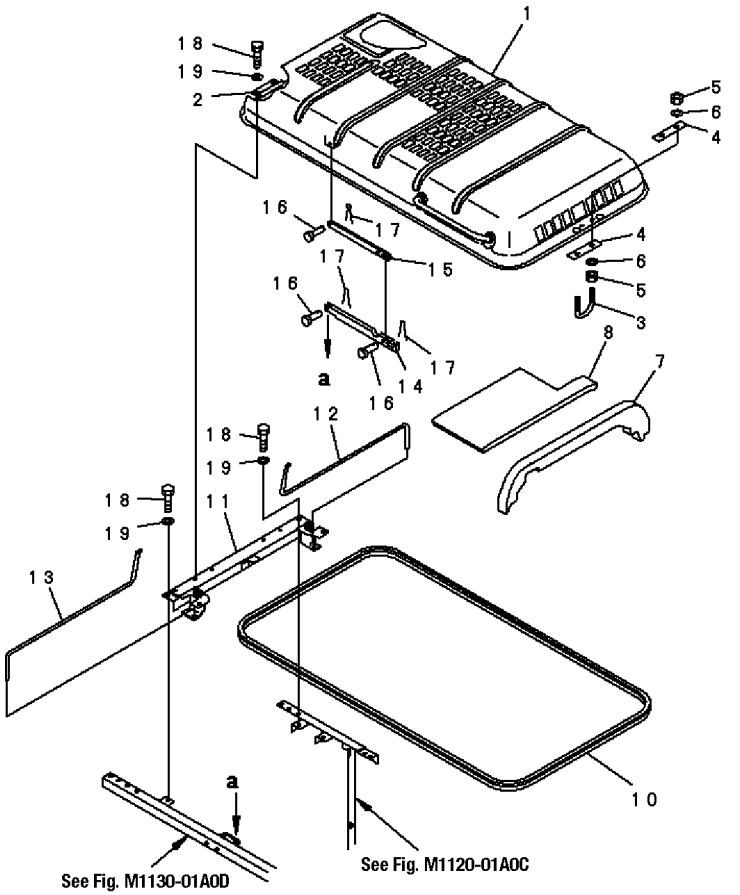

PDB5101

FIG. NO: M1110-02A0

INDEX	PART NO.	DESCRIPTION	Q'TY	SERIAL NO. PC200-6B	SERIAL NO. PC200LC-6B
1	20Y-54-B1600	HOOD	1	B10013-	B20001-
2	20Y-54-27123	. HINGE (WELDED)	2	B10001-	B20001-
3	20Y-54-27172	U-BOLT	1	B10001-	B20001-
4	20Y-54-27330	PLATE	2	B10001-	B20001-
5	01580-11210	NUT	4	B10001-	B20001-
6	01643-31232	WASHER	4	B10001-	B20001-
7	20Y-54-B1260	SHEET	1	B10013-	B20001-
8	20Y-54-27261	SHEET	1	B10001-	B20001-
10	20Y-54-29291	SEAL	1	B10001-	B20001-
11	20Y-54-25381	FRAME	1	B10001-	B20001-
12	20Y-54-27141	SPRING	1	B10001-	B20001-
13	20Y-54-27131	SPRING	1	B10001-	B20001-
14	20Y-54-27370	STAY	1	B10001-	B20001-
15	20Y-54-27290	STAY	1	B10001-	B20001-
16	04205-11230	PIN	3	B10001-	B20001-
17	04050-13022	PIN	3	B10001-	B20001-
18	01010-81230	BOLT	7	B10001-	B20001-
19	01643-31232	WASHER	7	B10001-	B20001-

FIG. M1120-01A0C FRAME (MACHINE CAB)

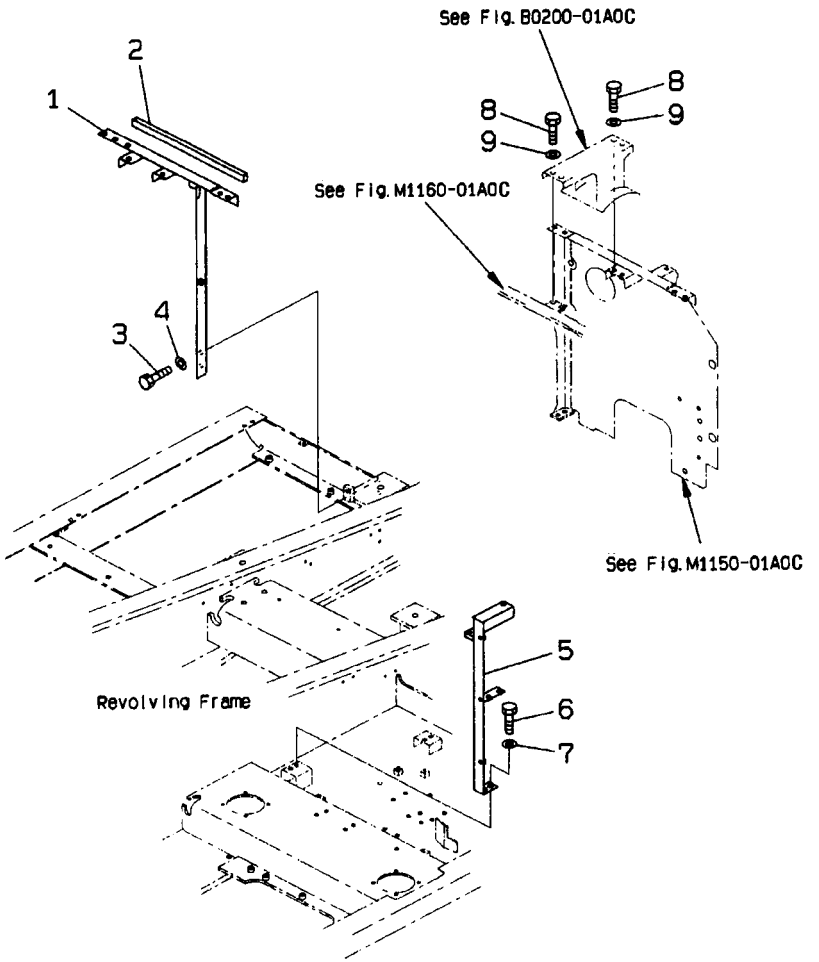

FIG. NO: M1120-01A0C

INDEX	PART NO.	DESCRIPTION	Q'TY	SERIAL NO. PC200-6B	SERIAL NO. PC200LC-6B
1	20Y-54-25321	FRAME	1	B10001-	B20001-
2	20Y-54-29280	. SHEET	1	B10001-	B20001-
3	01010-81230	BOLT	2	B10001-	B20001-
4	01643-31232	WASHER	2	B10001-	B20001-
5	20Y-54-25331	FRAME	1	B10001-	B20001-
6	01010-81230	BOLT	2	B10001-	B20001-
7	01643-31232	WASHER	2	B10001-	B20001-
8	01010-81230	BOLT	4	B10001-	B20001-
9	01643-31232	WASHER	4	B10001-	B20001-

FIG. M1130-01A0D LEFT SIDE DOOR (DOOR) (MACHINE CAB)

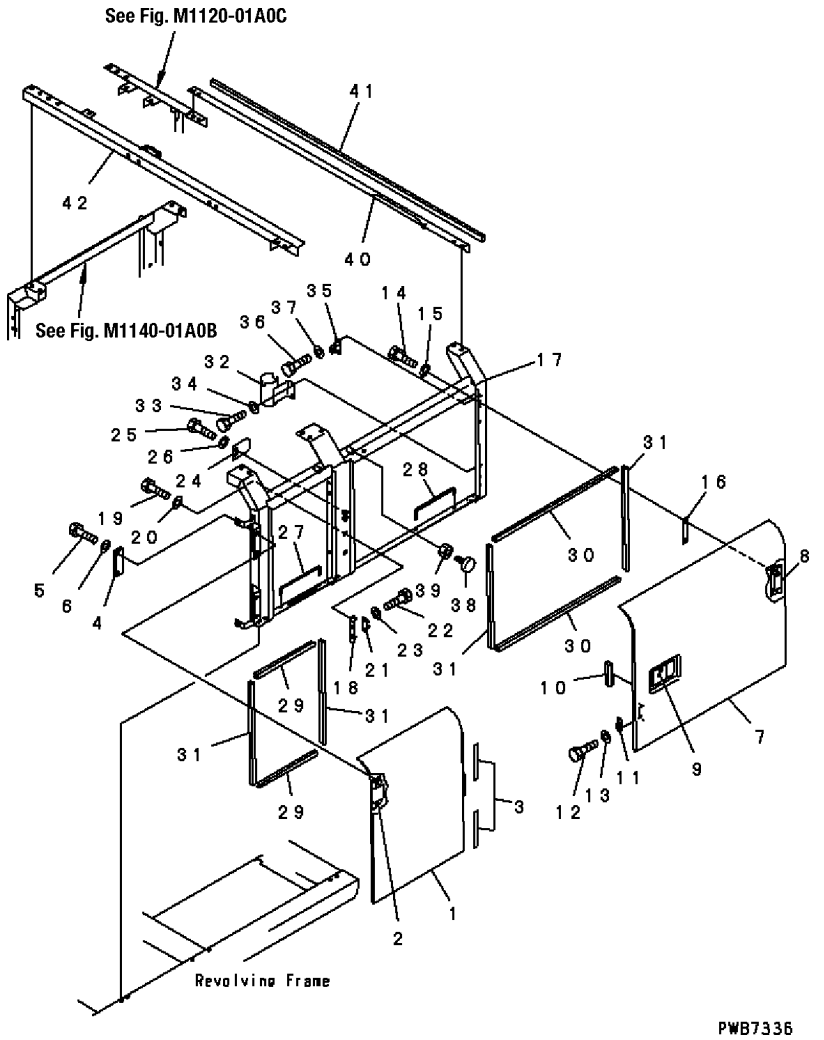

FIG. NO: M1130-01A0D

INDEX	PART NO.	DESCRIPTION	Q'TY	SERIAL NO. PC200-6B	SERIAL NO. PC200LC-6B
1	20Y-54-B1190	COVER	1	B10013-	B20001-
	20Y-54-28115	COVER	1	B10001-B10012	
2	203-54-62180	. HINGE (WELDED)	2	B10001-	B20001-
3	20Y-54-28281	. SHEET	2	B10001-	B20001-
4	20Y-54-28390	PLATE	2	B10001-	B20001-
5	01010-81235	BOLT	4	B10001-	B20001-
6	01643-31232	WASHER	4	B10001-	B20001-
7	20Y-54-25911	COVER	1	B10001-	B20001-
8	203-54-62180	. HINGE (WELDED)	2	B10001-	B20001-
9	198-54-41982	. LOCK ASS'Y	1	B10001-	B20001-
10	20Y-54-28191	. SHEET	1	B10001-	B20001-
11	205-54-53550	DOVE TAIL	1	B10001-	B20001-
12	01010-80612	BOLT	2	B10001-	B20001-
13	01643-30623	WASHER	2	B10001-	B20001-
14	01010-81235	BOLT	4	B10001-	B20001-
15	01643-31232	WASHER	4	B10001-	B20001-
16	20Y-54-28291	PLATE	2	B10001-	B20001-
17	20Y-54-25311	FRAME	1	B10001-	B20001-
18	20Y-54-28170	BRACKET	1	B10001-	B20001-
19	01010-81230	BOLT	2	B10001-	B20001-
20	01643-31232	WASHER	2	B10001-	B20001-
21	205-54-51970	DOVE TAIL	1	B10001-	B20001-
22	01010-80616	BOLT	2	B10001-	B20001-
23	01643-30623	WASHER	2	B10001-	B20001-
24	20Y-54-28182	PLATE	1	B10001-	B20001-
25	01010-81230	BOLT	2	B10001-	B20001-
26	01643-31232	WASHER	2	B10001-	B20001-
27	20Y-54-29232	BAR	1	B10001-	B20001-
28	20Y-54-29232	BAR	1	B10001-	B20001-
29	20Y-54-29241	SEAL	2	B10001-	B20001-
30	20Y-54-29251	SEAL	2	B10001-	B20001-
31	20Y-54-29261	SEAL	4	B10001-	B20001-
32	20Y-54-27341	BRACKET	1	B10001-	B20001-
33	01010-81230	BOLT	2	B10001-	B20001-
34	01643-31232	WASHER	2	B10001-	B20001-
35	20Y-54-12920	CLAMP	1	B10001-	B20001-
36	01010-81025	BOLT	2	B10001-	B20001-
37	01643-31032	WASHER	2	B10001-	B20001-
38	20Y-54-11611	STOPPER	2	B10001-	B20001-
39	01580-11008	NUT	2	B10001-	B20001-
40	20Y-54-25351	FRAME	1	B10001-	B20001-
41	20Y-54-29271	. SHEET	1	B10001-	B20001-
42	20Y-54-25361	FRAME	1	B10001-	B20001-

FIG. M1130-02A0B LEFT SIDE DOOR (INSTALLATION PARTS) (MACHINE CAB)

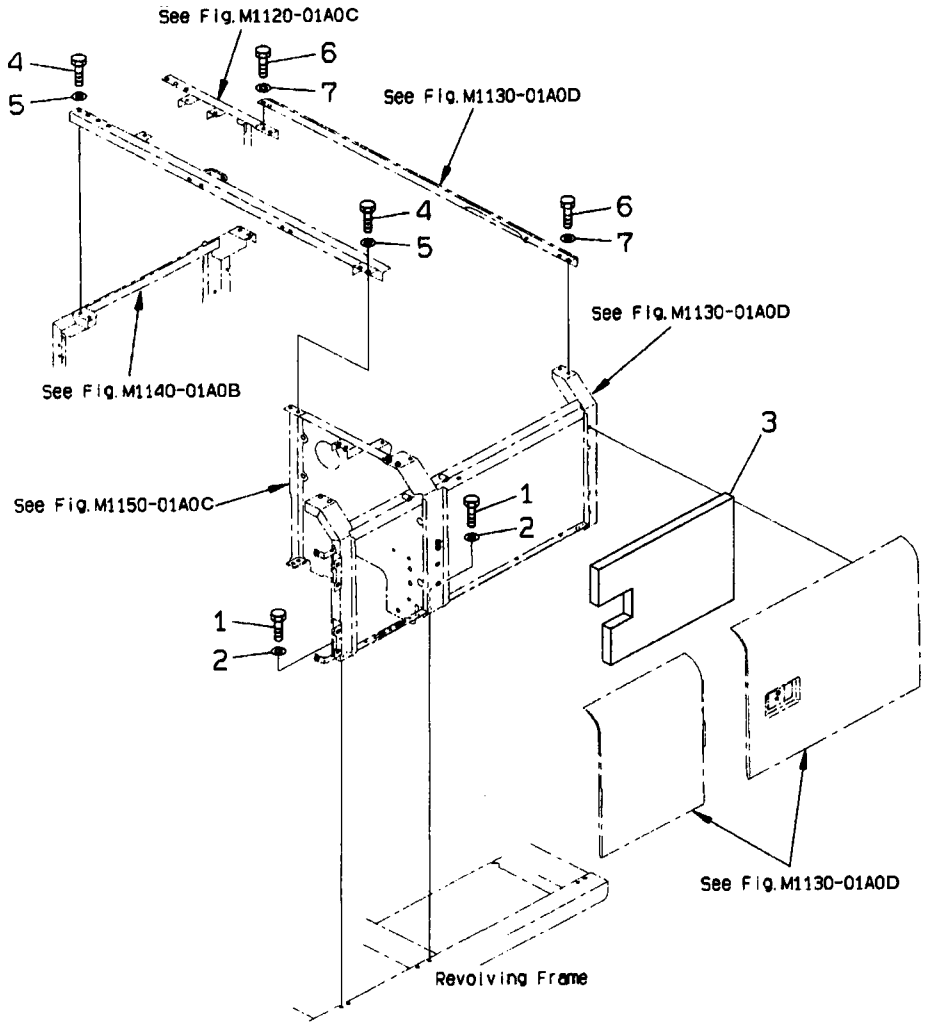

FIG. NO: M1130-02A0B

INDEX	PART NO.	DESCRIPTION	Q'TY	SERIAL NO. PC200-6B	SERIAL NO. PC200LC-6B
1	01010-81230	BOLT	6	B10001-	B20001-
2	01643-31232	WASHER	6	B10001-	B20001-
3	20Y-54-25211	SHEET	1	B10049-	B20001-
	20Y-54-25210	SHEET	1	B10001-B10048	
4	01010-81230	BOLT	4	B10001-	B20001-
5	01643-31232	WASHER	4	B10001-	B20001-
6	01010-81230	BOLT	4	B10001-	B20001-
7	01643-31232	WASHER	4	B10001-	B20001-

FIG. M1140-01A0B RIGHT SIDE DOOR (MACHINE CAB)

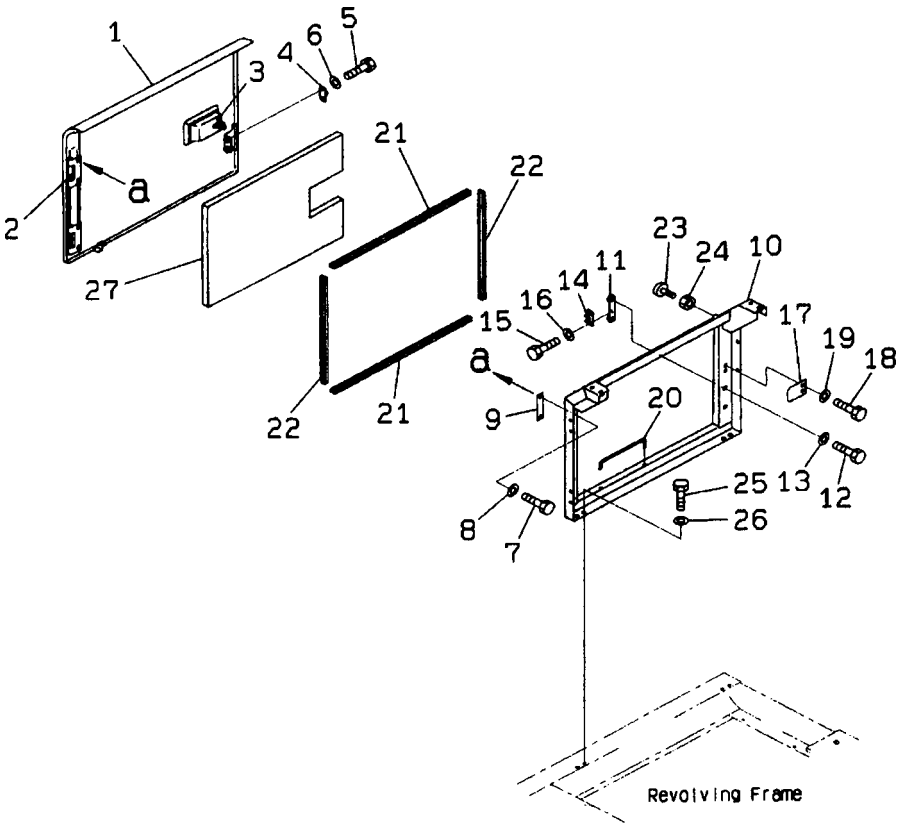

FIG. NO: M1140-01A0B

INDEX	PART NO.	DESCRIPTION	Q'TY	SERIAL NO. PC200-6B	SERIAL NO. PC200LC-6B
1	20Y-54-25921	COVER	1	B10001-	B20001-
2	203-54-62180	. HINGE (WELDED)	2	B10001-	B20001-
3	198-54-41982	. LOCK ASS'Y	1	B10001-	B20001-
4	205-54-53550	DOVE TAIL	1	B10001-	B20001-
5	01010-80612	BOLT	2	B10001-	B20001-
6	01643-30623	WASHER	2	B10001-	B20001-
7	01010-81235	BOLT	4	B10001-	B20001-
8	01643-31232	WASHER	4	B10001-	B20001-
9	20Y-54-28291	PLATE	2	B10001-	B20001-
10	20Y-54-25411	FRAME	1	B10001-	B20001-
11	20Y-54-28170	BRACKET	1	B10001-	B20001-
12	01010-81230	BOLT	2	B10001-	B20001-
13	01643-31232	WASHER	2	B10001-	B20001-
14	205-54-51970	DOVE TAIL	1	B10001-	B20001-
15	01010-80616	BOLT	2	B10001-	B20001-
16	01643-30623	WASHER	2	B10001-	B20001-
17	20Y-54-28182	PLATE	1	B10001-	B20001-
18	01010-81230	BOLT	2	B10001-	B20001-
19	01643-31232	WASHER	2	B10001-	B20001-
20	20Y-54-29232	BAR	1	B10001-	B20001-
21	20Y-54-29251	SEAL	2	B10001-	B20001-
22	20Y-54-29261	SEAL	2	B10001-	B20001-
23	20Y-54-11611	STOPPER	1	B10001-	B20001-
24	01580-11008	NUT	1	B10001-	B20001-
25	01010-81230	BOLT	4	B10001-	B20001-
26	01643-31232	WASHER	4	B10001-	B20001-
27	20Y-54-28361	SHEET	1	B10001-	B20001-

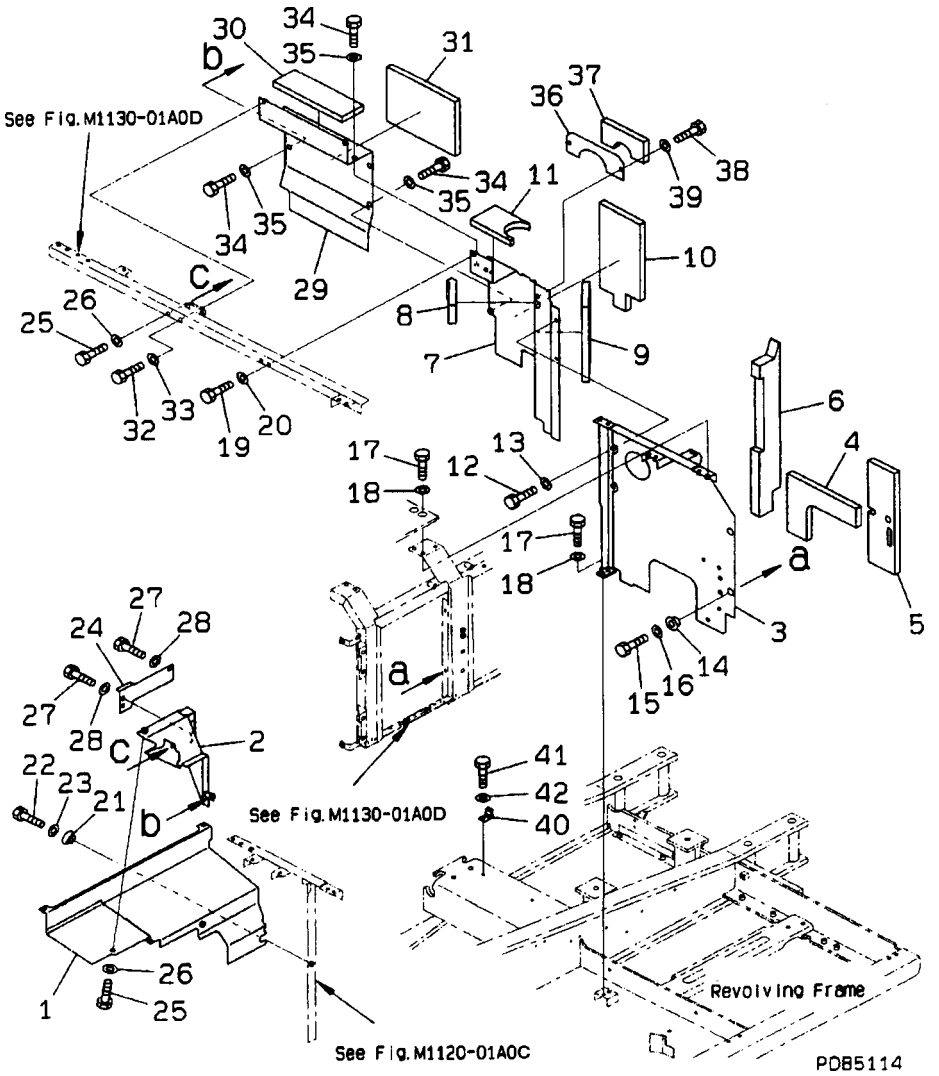

INDEX	PART NO.	DESCRIPTION	Q'TY	SERIAL NO. PC200-6B	SERIAL NO. PC200LC-6B
1	20Y-54-26211	COVER	1	B10001-	B20001-
2	20Y-54-26233	COVER	1	B10001-	B20001-
3	20Y-54-25392	COVER	1	B10001-	B20001-
4	20Y-54-27591	. SHEET	1	B10049-	B20001-
	20Y-54-27590	. SHEET	1	B10001-B10048	
5	20Y-54-29992	. SHEET	1	B10049-	B20001-
	20Y-54-29991	. SHEET	1	B10001-B10048	
6	20Y-54-27722	. SHEET	1	B10001-	B20001-
7	20Y-54-25511	COVER	1	B10001-	B20001-
8	20Y-54-25231	. SHEET	1	B10049-	B20001-
	20Y-54-25230	. SHEET	1	B10001-B10048	
9	20Y-54-25241	. SHEET	1	B10049-	B20001-
	20Y-54-25240	. SHEET	1	B10001-B10048	
10	20Y-54-25251	. SHEET	1	B10049-	B20001-
	20Y-54-25250	. SHEET	1	B10001-B10048	
11	20Y-54-25261	. SHEET	1	B10049-	B20001-
	20Y-54-25260	. SHEET	1	B10001-B10048	
12	01010-81230	BOLT	2	B10001-	B20001-
13	175-54-34170	WASHER	2	B10001-	B20001-
14	20Y-54-12550	COLLAR	2	B10001-	B20001-
15	01010-81230	BOLT	2	B10001-	B20001-
16	01643-31232	WASHER	2	B10001-	B20001-
17	01010-81230	BOLT	3	B10001-	B20001-
18	01643-31232	WASHER	3	B10001-	B20001-
19	01010-81230	BOLT	1	B10001-	B20001-
20	01643-31232	WASHER	1	B10001-	B20001-
21	20Y-54-12550	COLLAR	1	B10001-	B20001-
22	01010-81230	BOLT	1	B10001-	B20001-
23	01643-31232	WASHER	1	B10001-	B20001-
24	20Y-54-26221	COVER	1	B10001-	B20001-
25	01010-81230	BOLT	4	B10001-	B20001-
26	01643-31232	WASHER	4	B10001-	B20001-
27	01010-81230	BOLT	3	B10001-	B20001-
28	01643-31232	WASHER	3	B10001-	B20001-
29	20Y-54-25270	COVER	1	B10001-	B20001-
30	20Y-54-25571	. SHEET	1	B10049-	B20001-
	20Y-54-25570	. SHEET	1	B10001-B10048	
31	20Y-54-25581	. SHEET	1	B10049-	B20001-
	20Y-54-25580	. SHEET	1	B10001-B10048	
32	01010-81230	BOLT	2	B10001-	B20001-
33	01643-31232	WASHER	2	B10001-	B20001-
34	01010-81230	BOLT	4	B10001-	B20001-
35	175-54-34170	WASHER	4	B10001-	B20001-
36	20Y-54-27682	COVER	1	B10001-	B20001-
37	20Y-54-27571	. SHEET	1	B10049-	B20001-
	20Y-54-27570	. SHEET	1	B10001-B10048	
38	01010-81230	BOLT	2	B10001-	B20001-
39	01643-31232	WASHER	2	B10001-	B20001-
40	20Y-54-12320	CATCH	2	B10001-	B20001-
41	01010-81230	BOLT	2	B10001-	B20001-
42	01643-31232	WASHER	2	B10001-	B20001-

FIG. M1160-01A0C PARTITION

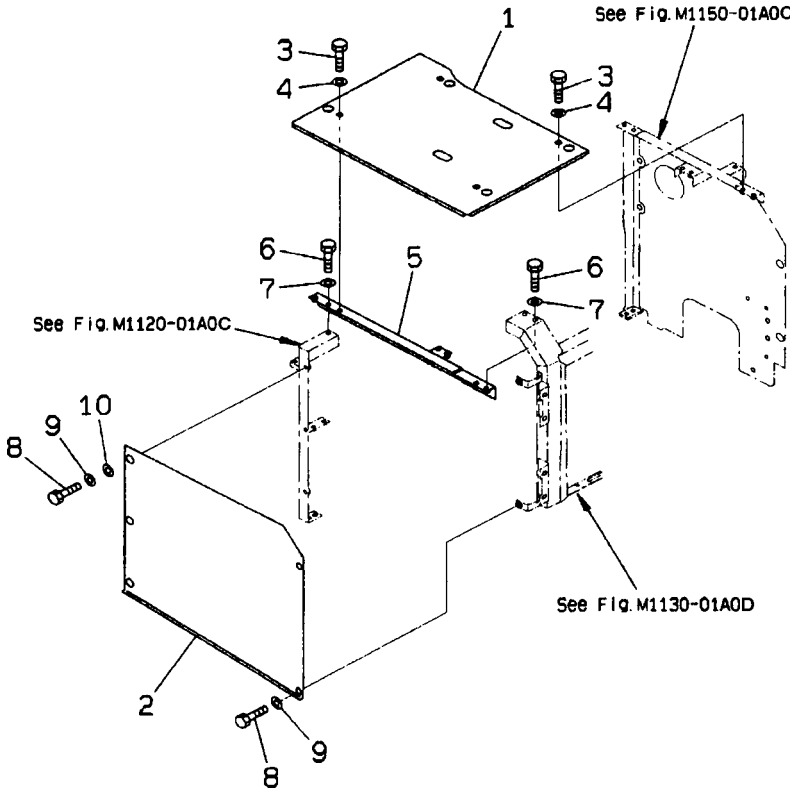

FIG. NO: M1160-01A0C

INDEX	PART NO.	DESCRIPTION	Q'TY	SERIAL NO. PC200-6B	SERIAL NO. PC200LC-6B
1	20Y-54-25461	COVER	1	B10001-	B20001-
2	20Y-54-29481	COVER	1	B10001-	B20001-
3	01010-81230	BOLT	4	B10001-	B20001-
4	175-54-34170	WASHER	4	B10001-	B20001-
5	20Y-54-25371	FRAME	1	B10001-	B20001-
6	01010-81230	BOLT	2	B10001-	B20001-
7	01643-31232	WASHER	2	B10001-	B20001-
8	01010-81230	BOLT	5	B10001-	B20001-
9	01643-31232	WASHER	5	B10001-	B20001-
10	20Y-54-29740	COLLAR	3	B10001-	B20001-

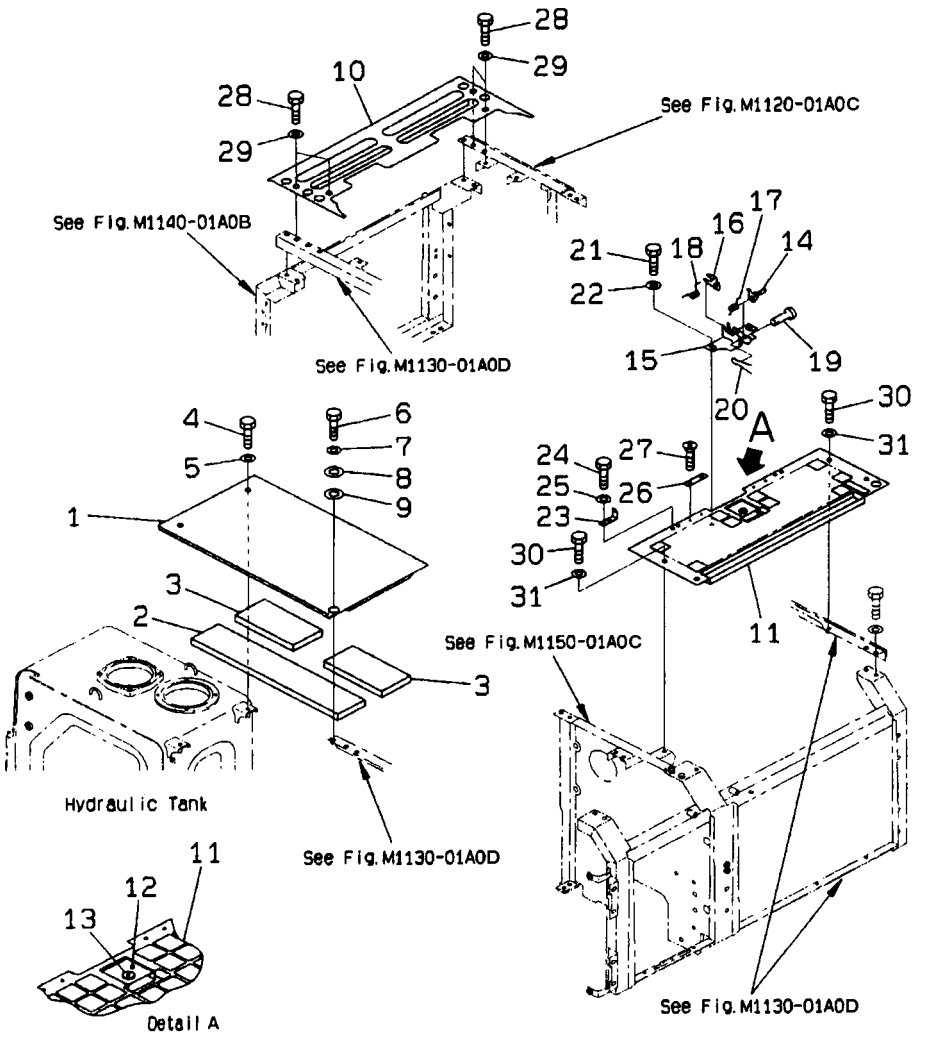

INDEX	PART NO.	DESCRIPTION	Q'TY	SERIAL NO. PC200-6B	SERIAL NO. PC200LC-6B
1	20Y-54-25481	COVER	1	B10001-	B20001-
2	20Y-54-25721	. SHEET	1	B10049-	B20001-
	20Y-54-25720	. SHEET	1	B10001-B10048	
3	20Y-54-25731	. SHEET	1	B10049-	B20001-
	20Y-54-25730	. SHEET	1	B10001-B10048	
4	01010-81230	BOLT	2	B10001-	B20001-
5	175-54-34170	WASHER	2	B10001-	B20001-
6	01010-51230	BOLT	1	B10001-	B20001-
7	01643-31232	WASHER	1	B10001-	B20001-
8	20Y-54-19930	COLLAR	1	B10001-	B20001-
9	20Y-54-19920	PLATE	1	B10001-	B20001-
10	20Y-54-25451	COVER	1	B10001-	B20001-
11	20Y-54-B1250	COVER	1	B10013-	B20001-
	20Y-54-26510	COVER	1	B10001-B10012-	
12	20Y-54-25850	. LOCK	1	B10001-	B20001-
13	20Y-54-27540	. . LOCK ASS'Y	1	B10001-	B20001-
14	20Y-54-27511	PLATE	1	B10001-	B20001-
15	20Y-54-27522	BRACKET	1	B10001-	B20001-
16	21K-54-26340	LEVER	1	B10001-	B20001-
17	21K-54-26351	SPRING	1	B10001-	B20001-
18	21K-54-26360	SPRING	1	B10001-	B20001-
19	04205-11038	PIN	2	B10001-	B20001-
20	04050-13020	PIN	2	B10001-	B20001-
21	01010-81025	BOLT	2	B10001-	B20001-
22	01643-31032	WASHER	2	B10001-	B20001-
23	20Y-54-27182	BRACKET	2	B10001-	B20001-
24	01010-81025	BOLT	4	B10001-	B20001-
25	01643-31032	WASHER	4	B10001-	B20001-
26	205-54-68440	PLATE	2	B10001-	B20001-
27	01224-40616	SCREW	4	B10001-	B20001-
28	01010-81230	BOLT	4	B10001-	B20001-
29	175-54-34170	WASHER	4	B10001-	B20001-
30	01010-81230	BOLT	3	B10001-	B20001-
31	01643-31232	WASHER	3	B10001-	B20001-

FIG. M1220-01A0E RIGHT SIDE CASE

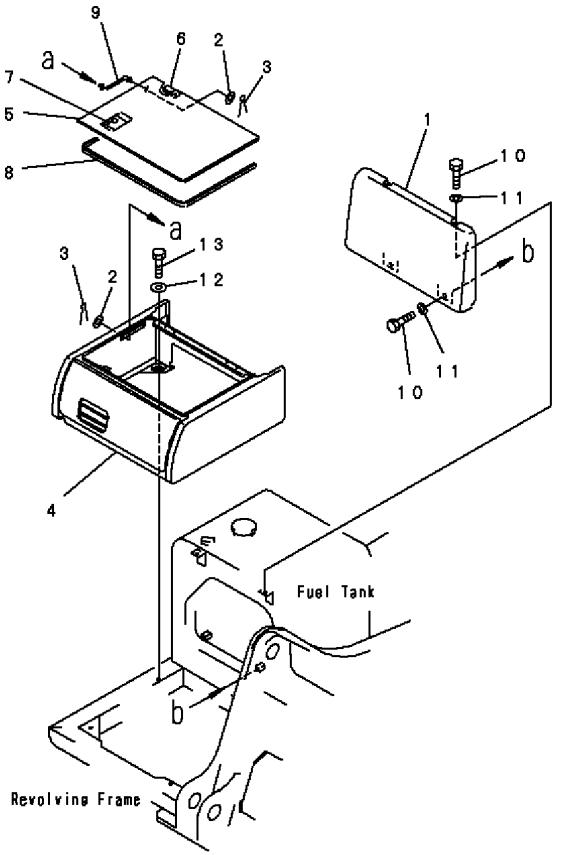

PWB9470

FIG. NO: M1220-01A0E

INDEX	PART NO.	DESCRIPTION	Q'TY	SERIAL NO. PC200-6B	SERIAL NO. PC200LC-6B
1	20Y-54-29633	COVER	1	B10167-	B20007-
	20Y-54-B1240	COVER	1	B10013-B10166	B20001-B20006
	20Y-54-29633	COVER	1	B10001-B10012	
2	01643-30623	WASHER	2	B10001-	B20001-
3	04050-11612	PIN	2	B10001-	B20001-
4	20Y-54-J1170	COVER	1	B10167-	B20007-
	20Y-54-B1230	COVER	1	B10013-B10166	B20001-B20006
	20Y-54-29613	COVER	1	B10001-B10012	
5	20Y-54-26360	COVER	1	B10001-	B20001-
6	20Y-54-29711	. HINGE (WELDED)	2	B10001-	B20001-
7	421-54-11372	. LOCK ASS'Y	1	B10001-	B20001-
8	20Y-54-29660	SEAL	1	B10001-	B20001-
9	203-54-56630	ROD	1	B10001-	B20001-
10	01010-81230	BOLT	4	B10001-	B20001-
11	01643-31232	WASHER	4	B10001-	B20001-
12	175-54-34170	WASHER	4	B10001-	B20001-
13	01010-81230	BOLT	4	B10001-	B20001-

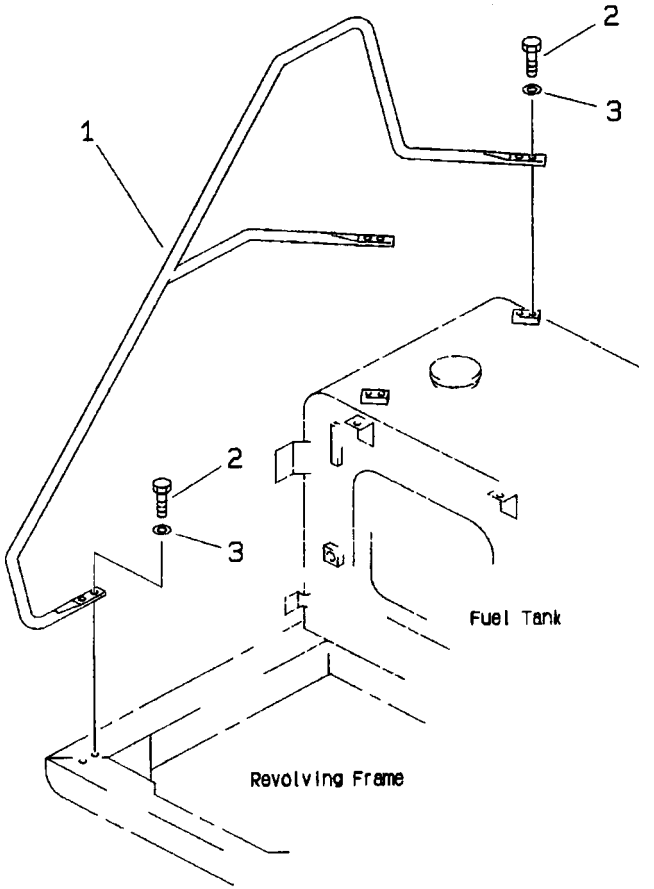

INDEX	PART NO.	DESCRIPTION	Q'TY	SERIAL NO. PC200-6B	SERIAL NO. PC200LC-6B
1	20Y-54-23870	HAND RAIL	1	B10001-	B20001-
2	01010-81235	BOLT	6	B10001-	B20001-
3	01643-31232	WASHER	6	B10001-	B20001-

FIG. M1420-01A0 REAR VIEW MIRROR R.H.

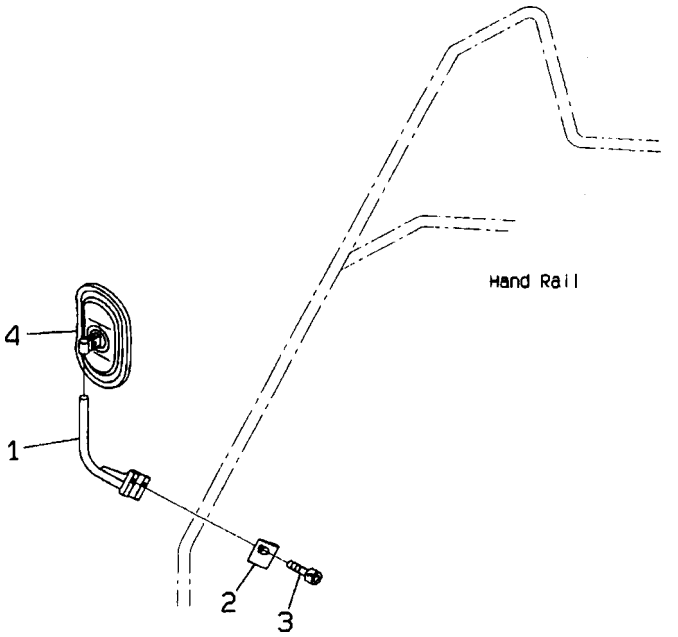

FIG. NO: M1420-01A0

INDEX	PART NO.	DESCRIPTION	Q'TY	SERIAL NO. PC200-6B	SERIAL NO. PC200LC-6B
1	20Y-54-27963	SUPPORT	1	B10001-	B20001-
2	20Y-54-27991	CLAMP	1	B10001-	B20001-
3	01252-41025	BOLT	2	B10001-	B20001-
4	20Y-54-28911	MIRROR	1	B10001-	B20001-
5	20Y-00-B1240	PLATE,INSTALLATION OF MIRROR	1	B10001-	B20001-

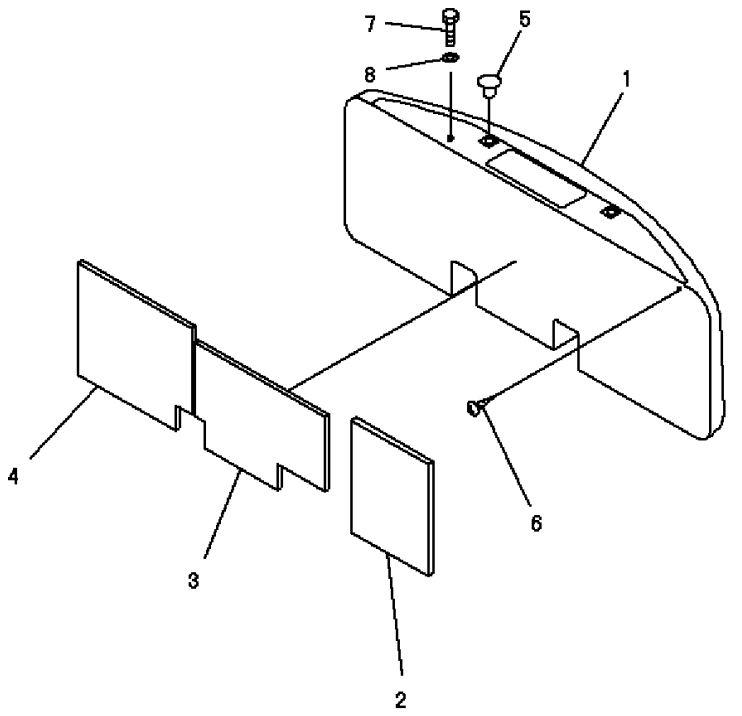

PWB5121

INDEX	PART NO.	DESCRIPTION	Q'TY	SERIAL NO. PC200-6B	SERIAL NO. PC200LC-6B
1	☆	WEIGHT	1	B10001-	B20001-
2	20Y-46-24142	. SHEET	1	B10049-	B20001-
	20Y-46-24141	. SHEET	1	B10001-B10048	
3	20Y-46-24392	. SHEET	1	B10049-	B20001-
	20Y-46-24391	. SHEET	1	B10001-B10048	
4	20Y-46-24491	. SHEET	1	B10049-	B20001-
	20Y-46-24490	. SHEET	1	B10001-B10048	
5	20Y-46-11270	CAP	2	B10001-	B20001-
6	01370-00508	SCREW	1	B10001-	B20001-
7	01010-81220	BOLT	1	B10001-	B20001-
8	01643-31232	WASHER	1	B10001-	B20001-

FIG. M1520-01A0 COUNTER WEIGHT MOUNTING

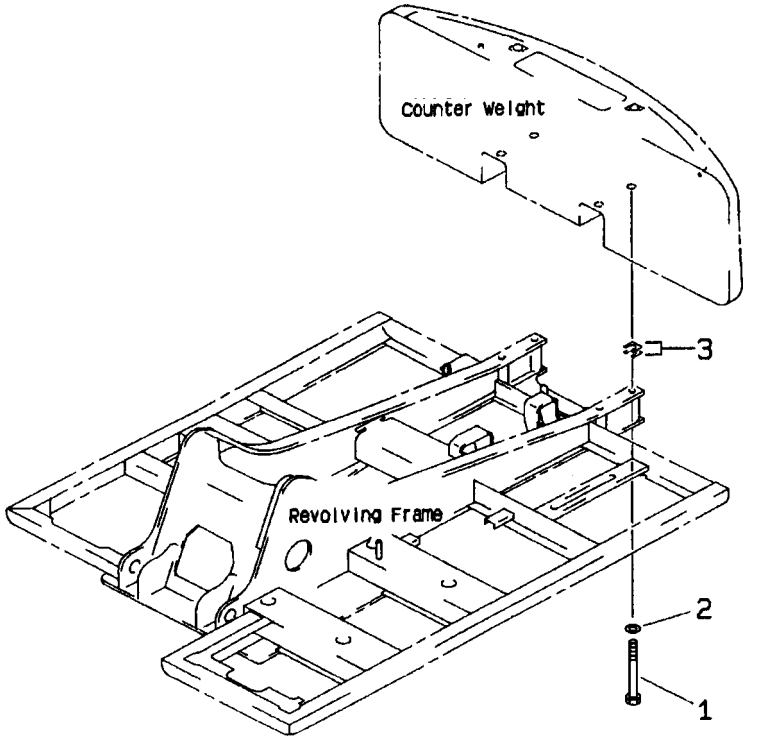

FIG. NO: M1520-01A0

INDEX	PART NO.	DESCRIPTION	Q'TY	SERIAL NO. PC200-6B	SERIAL NO. PC200LC-6B
1	175-09-11111	BOLT	4	B10001-	B20001-
2	207-46-32220	PLATE	4	B10001-	B20001-
3	20Y-46-11410	PLATE 1.6MM	2	B10001-	B20001-

FIG. M1810-01A0E UNDER COVER (REVOLVING FRAME) (LEFT SIDE COVER AND TOOL BOX)

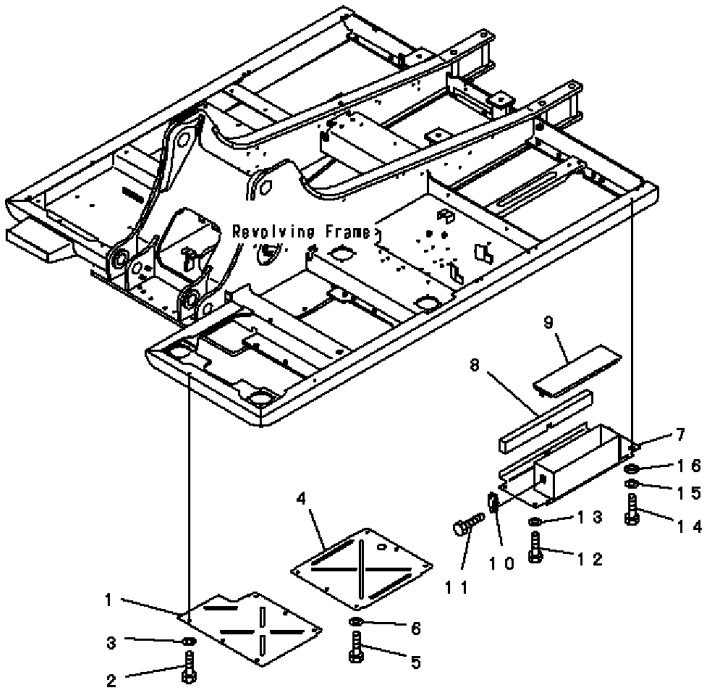

PJL1472

FIG. NO: M1810-01A0E

INDEX	PART NO.	DESCRIPTION	Q'TY	SERIAL NO. PC200-6B	SERIAL NO. PC200LC-6B
1	20Y-54-26240	COVER	1	B10013-	B20001-
	20Y-54-26242	COVER	1	B10001-B10012	
2	01010-81235	BOLT	6	B10001-	B20001-
3	01643-31232	WASHER	6	B10001-	B20001-
4	20Y-54-26250	COVER	1	B10013-	B20001-
	20Y-54-26251	COVER	1	B10001-B10012	
5	01010-81235	BOLT	6	B10001-	B20001-
6	01643-31232	WASHER	6	B10001-	B20001-
7	20Y-54-28543	COVER	1	B10001-	B20001-
8	20Y-54-28672	. SHEET	1	B10001-	B20001-
9	20Y-54-28611	COVER	1	B10001-	B20001-
10	195-57-11530	CATCHER	1	B10001-	B20001-
11	01023-20512	BOLT	3	B10001-	B20001-
12	01010-81230	BOLT	2	B10001-	B20001-
13	01643-31232	WASHER	2	B10001-	B20001-
14	01010-81230	BOLT	2	B10001-	B20001-
15	01643-31232	WASHER	2	B10001-	B20001-
16	20Y-54-12550	COLLAR	2	B10001-	B20001-

FIG. M1810-02A0C UNDER COVER (REVOLVING FRAME) (ENGINE ROOM)

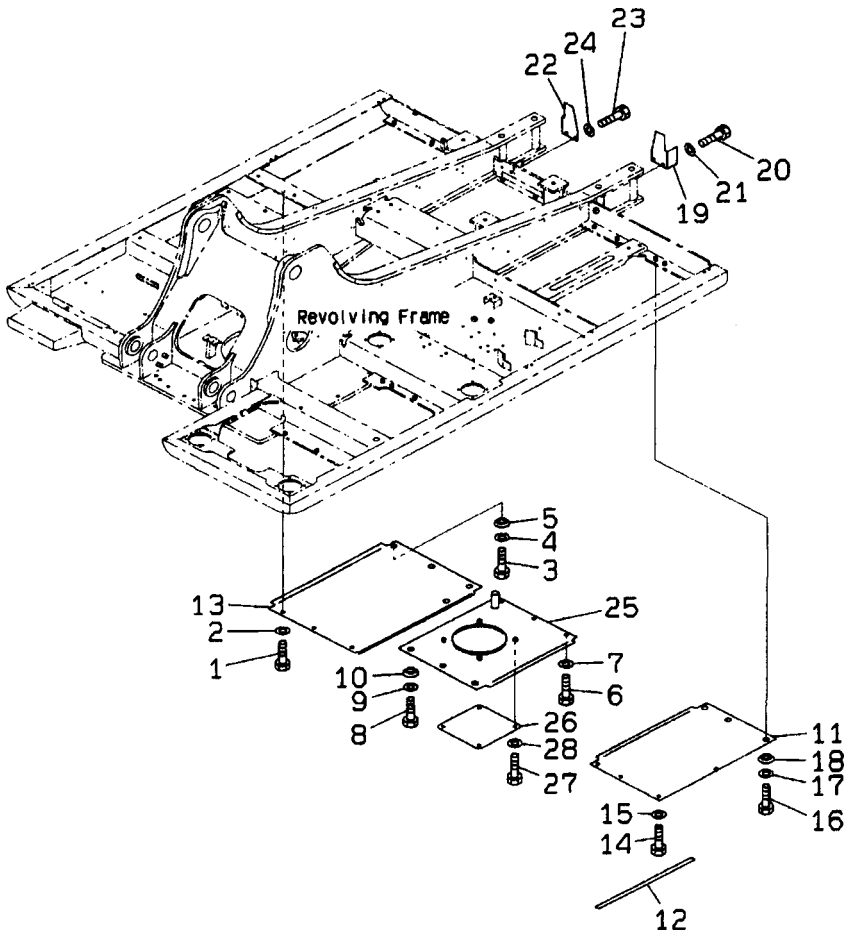

FIG. NO: M1810-02A0C

INDEX	PART NO.	DESCRIPTION	Q'TY	SERIAL NO. PC200-6B	SERIAL NO. PC200LC-6B
1	01010-81230	BOLT	3	B10001-	B20001-
2	01643-31232	WASHER	3	B10001-	B20001-
3	01010-81230	BOLT	3	B10001-	B20001-
4	01643-31232	WASHER	3	B10001-	B20001-
5	20Y-54-12550	COLLAR	3	B10001-	B20001-
6	01010-81230	BOLT	3	B10001-	B20001-
7	01643-31232	WASHER	3	B10001-	B20001-
8	01010-81230	BOLT	3	B10001-	B20001-
9	01643-31232	WASHER	3	B10001-	B20001-
10	20Y-54-12550	COLLAR	3	B10001-	B20001-
11	20Y-54-26260	COVER	1	B10001-	B20001-
12	20Y-54-26190	. SHEET	1	B10001-	B20001-
13	20Y-54-26280	COVER	1	B10001-	B20001-
14	01010-81230	BOLT	3	B10001-	B20001-
15	01643-31232	WASHER	3	B10001-	B20001-
16	01010-81230	BOLT	3	B10001-	B20001-
17	01643-31232	WASHER	3	B10001-	B20001-
18	20Y-54-12550	COLLAR	3	B10001-	B20001-
19	20Y-54-28872	COVER	1	B10001-	B20001-
20	01010-81225	BOLT	2	B10001-	B20001-
21	01643-31232	WASHER	2	B10001-	B20001-
22	20Y-54-28882	COVER	1	B10001-	B20001-
23	01010-81225	BOLT	2	B10001-	B20001-
24	01643-31232	WASHER	2	B10001-	B20001-
25	20Y-54-26270	COVER	1	B10001-	B20001-
26	20Y-54-28590	COVER	1	B10001-	B20001-
27	01010-81230	BOLT	4	B10001-	B20001-
28	01643-31232	WASHER	4	B10001-	B20001-

SWING CIRCLE AND RELATED PARTS

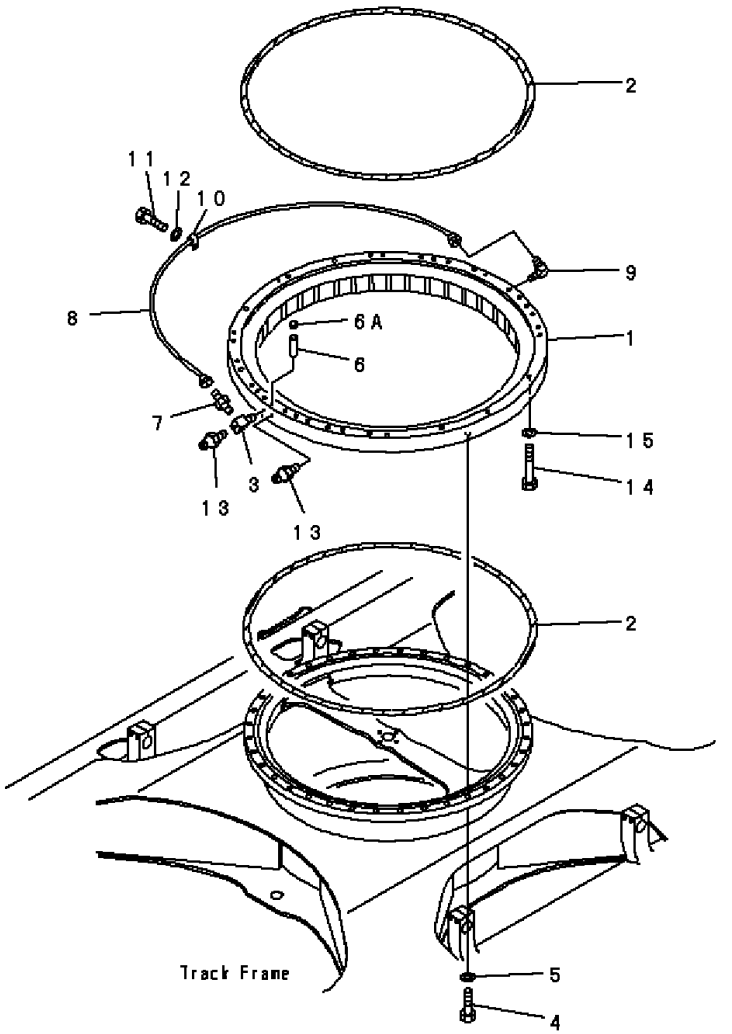

INDEX	PART NO.	DESCRIPTION	Q'TY	SERIAL NO. PC200-6B	SERIAL NO. PC200LC-6B
1	20Y-25-21200	CIRCLE	1	B10001-	B20001-
2	205-25-71152	. SEAL	2	B10001-	B20001-
3	205-25-71280	NIPPLE	1	B10001-	B20001-
4	20Y-25-11290	BOLT	36	B10001-	B20001-
5	01643-32060	WASHER	36	B10001-	B20001-
6	04020-01842	PIN	2	B10001-	B20001-
6A	20Y-46-21520	CAP	1	B10001-	B20001-
7	07214-50813	CONNECTOR	1	B10001-	B20001-
8	20Y-25-21122	TUBE	1	B10001-	B20001-
9	20Y-25-11270	ELBOW	1	B10001-	B20001-
10	08036-00814	CLIP	1	B10001-	B20001-
11	01010-81016	BOLT	1	B10001-	B20001-
12	01643-31032	WASHER	1	B10001-	B20001-
13	07020-00000	FITTING	2	B10001-	B20001-
14	20Y-25-21220	BOLT	32	B10001-	B20001-
15	01643-32060	WASHER	32	B10001-	B20001-

FIG. N1210-01A1A SWING MACHINERY (WITH SWING BY-PASS VALVE)

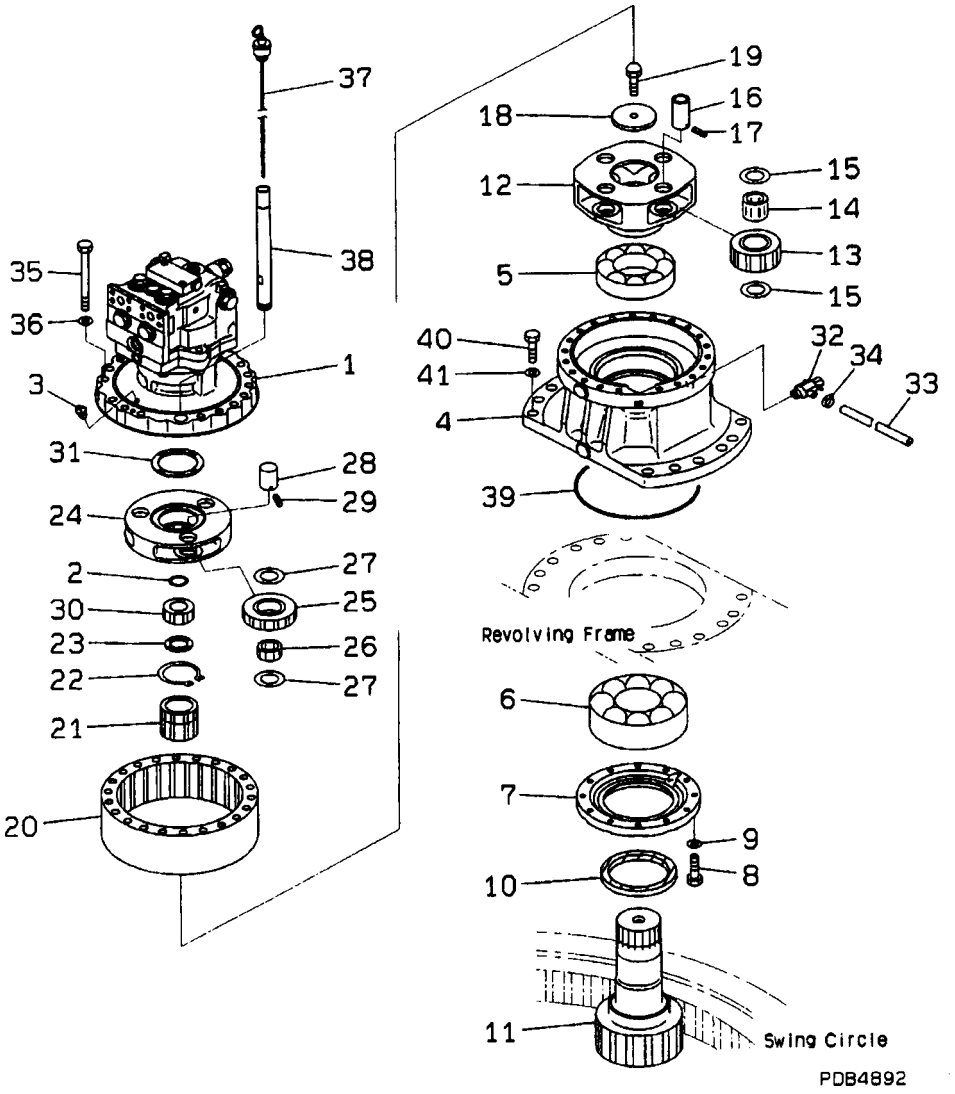

FIG. NO: N1210-01A1A

INDEX	PART NO.	DESCRIPTION	Q'TY	SERIAL NO. PC200-6B	SERIAL NO. PC200LC-6B
1	(706-75-01170)	SWING MOTOR ASS'Y	1	B10001-	B20001-
2	20Y-26-22270	RING	1	B10001-	B20001-
3	07042-30108	PLUG	1	B10001-	B20001-
4	20Y-26-22210	CASE	1	B10001-	B20001-
5	20Y-26-22330	BEARING	1	B10001-	B20001-
6	20Y-26-22340	BEARING	1	B10001-	B20001-
7	20Y-26-22191	COVER	1	B10001-	B20001-
8	01010-81045	BOLT	12	B10001-	B20001-
9	01643-31032	WASHER	12	B10001-	B20001-
10	20Y-26-22420	SEAL	1	B10001-	B20001-
11	20Y-26-21141	SHAFT 15 TEETH	1	B10001-	B20001-
12	20Y-26-22170	CARRIER	1	B10001-	B20001-
13	20Y-26-22141	GEAR 36 TEETH	4	B10001-	B20001-
14	20G-26-11240	BEARING	4	B10001-	B20001-
15	20Y-27-21240	WASHER	8	B10001-	B20001-
16	20Y-26-22250	PIN	4	B10001-	B20001-
17	20Y-27-21280	PIN	4	B10001-	B20001-
18	20Y-26-21240	PLATE	1	B10001-	B20001-
19	112-32-11211	BOLT SHOE	1	B10001-	B20001-
20	20Y-26-22151	GEAR 101 TEETH	1	B10001-	B20001-
21	20Y-26-22131	GEAR 27 TEETH	1	B10001-	B20001-
22	04064-07525	RING	1	B10001-	B20001-
23	20Y-26-22220	THRUST WASHER	1	B10001-	B20001-
24	20Y-26-22160	CARRIER	1	B10001-	B20001-
25	20Y-26-22120	GEAR 39 TEETH	3	B10001-	B20001-
26	20Y-26-21280	BEARING	3	B10001-	B20001-
27	20Y-27-21240	WASHER	6	B10001-	B20001-
28	20Y-26-22240	PIN	3	B10001-	B20001-
29	20Y-27-21280	PIN	3	B10001-	B20001-
30	20Y-26-22110	GEAR 22 TEETH	1	B10001-	B20001-
31	20Y-26-22230	THRUST WASHER	1	B10001-	B20001-
32	195-03-13241	VALVE	1	B10001-	B20001-
33	205-26-71620	TUBE	1	B10001-	B20001-
34	07281-00197	CLAMP	1	B10001-	B20001-
35	01011-81465	BOLT	18	B10001-	B20001-
36	01643-31445	WASHER	18	B10001-	B20001-
37	20Y-26-21340	GAUGE	1	B10001-	B20001-
38	20Y-26-22260	FILLER	1	B10001-	B20001-
39	07000-05240	O-RING	1	B10001-	B20001-
40	01010-82060	BOLT	12	B10001-	B20001-
41	01643-32060	WASHER	12	B10001-	B20001-

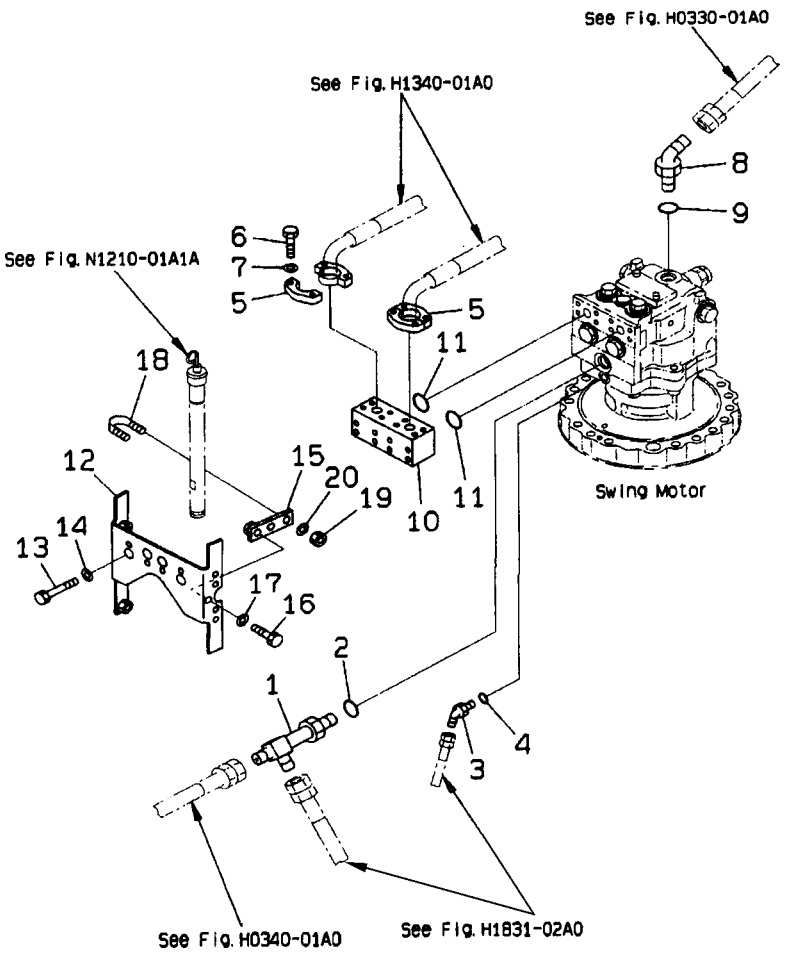

INDEX	PART NO.	DESCRIPTION	Q'TY	SERIAL NO. PC200-6B	SERIAL NO. PC200LC-6B
1	20Y-62-21620	TEE	1	B10001-	B20001-
2	07002-02434	O-RING	1	B10001-	B20001-
3	07236-10210	ELBOW	1	B10001-	B20001-
4	07002-01423	O-RING	1	B10001-	B20001-
5	07371-30640	FLANGE	4	B10001-	B20001-
6	07372-21035	BOLT	8	B10001-	B20001-
7	01643-51032	WASHER	8	B10001-	B20001-
8	07236-10628	ELBOW	1	B10001-	B20001-
9	07002-02434	O-RING	1	B10001-	B20001-
10	20Y-62-21421	BLOCK	1	B10001-	B20001-
11	21T-09-11450	O-RING	2	B10001-	B20001-
12	20Y-62-21335	BRACKET	1	B10001-	B20001-
13	01010-81080	BOLT	8	B10001-	B20001-
14	01643-51032	WASHER	8	B10001-	B20001-
15	20Y-62-21743	BRACKET	1	B10001-	B20001-
16	01010-81230	BOLT	1	B10001-	B20001-
17	01643-31232	WASHER	1	B10001-	B20001-
18	07283-22738	CLIP	1	B10001-	B20001-
19	01599-01011	NUT	2	B10001-	B20001-
20	01643-31032	WASHER	2	B10001-	B20001-

FIG. N1310-01A0 SWIVEL JOINT (CONNECTING PARTS) (TRAVEL SPEED 3RD)

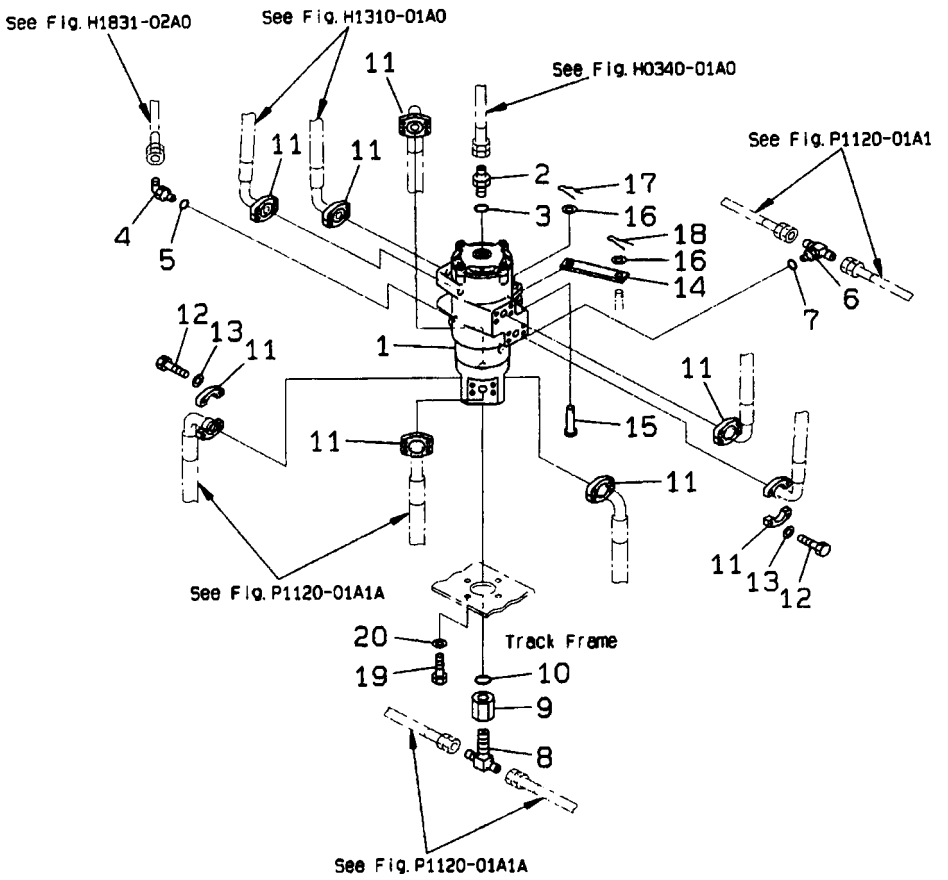

FIG. NO: N1310-01A0

INDEX	PART NO.	DESCRIPTION	Q'TY	SERIAL NO. PC200-6B	SERIAL NO. PC200LC-6B
1	703-09-00120	SWIVEL JOINT ASS'Y, (SEE FIG.Y1627-01A0)	1	B10001-	B20001-
	(703-09-33230)	. SWIVEL JOINT ASS'Y, (SEE FIG.Y1627-01A0)	1	B10001-	B20001-
2	07230-20522	UNION	1	B10001-	B20001-
3	07002-12434	O-RING	1	B10001-	B20001-
4	07236-10210	ELBOW	1	B10001-	B20001-
5	07002-11423	O-RING	1	B10001-	B20001-
6	208-26-11611	TEE	1	B10001-	B20001-
7	07002-01423	O-RING	1	B10001-	B20001-
8	20Y-62-21870	TEE	1	B10001-	B20001-
9	208-62-53120	. NUT	1	B10001-	B20001-
10	07002-02434	O-RING	1	B10001-	B20001-
11	07371-30640	FLANGE	16	B10001-	B20001-
12	07372-21035	BOLT	32	B10001-	B20001-
13	01643-51032	WASHER	32	B10001-	B20001-
14	209-62-14430	PLATE	1	B10001-	B20001-
15	209-62-52560	PIN	1	B10001-	B20001-
16	01641-21626	WASHER	2	B10001-	B20001-
17	04052-11664	PIN	1	B10001-	B20001-
18	04050-14025	PIN	1	B10001-	B20001-
19	01010-81235	BOLT	4	B10001-	B20001-
20	01643-31232	WASHER	4	B10001-	B20001-

TRAVEL AND LOWER PIPING

FIG. P1120-01A1A TRAVEL PIPING (TRAVEL SPEED 3RD)

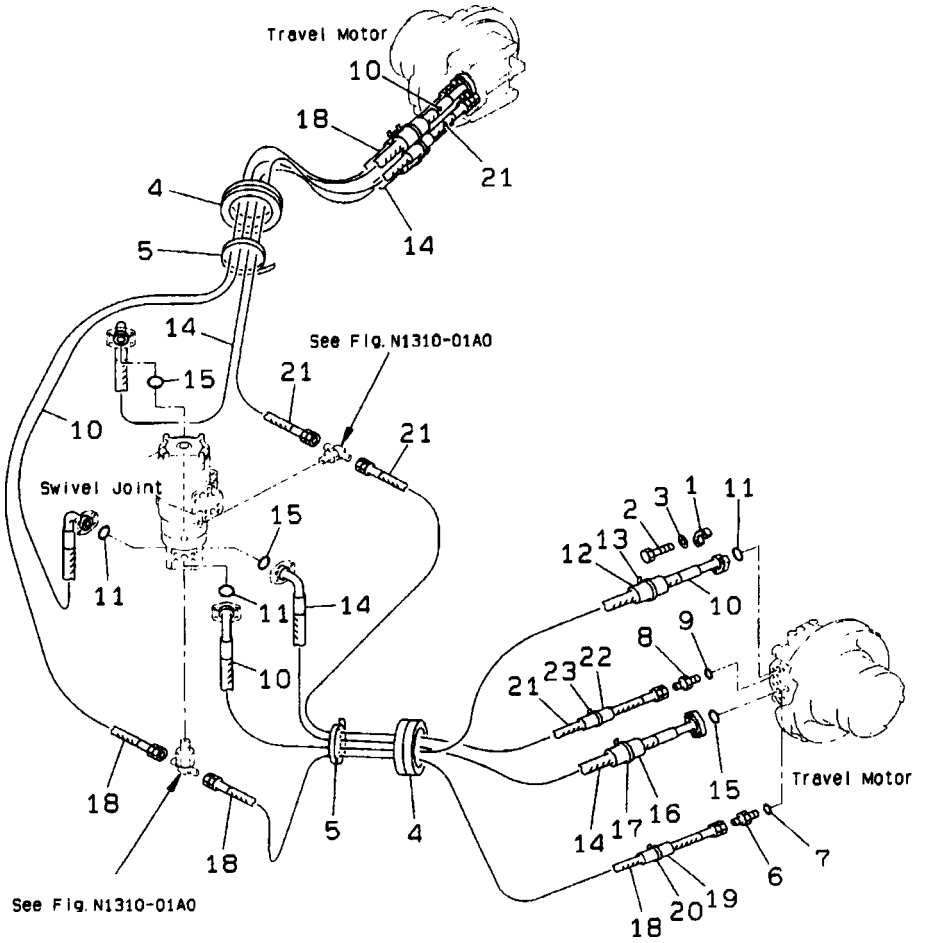

FIG. NO: P1120-01A1A

INDEX	PART NO.	DESCRIPTION	Q'TY	SERIAL NO. PC200-6B	SERIAL NO. PC200LC-6B
1	07371-30640	FLANGE	16	B10001-	B20001-
2	07372-21035	BOLT	32	B10001-	B20001-
3	01643-51032	WASHER	32	B10001-	B20001-
4	20Y-62-12590	GROMMET	2	B10001-	B20001-
5	08034-00536	BAND	2	B10001-	B20001-
6	07230-20422	UNION	2	B10001-	B20001-
7	07002-02034	O-RING	2	B10001-	B20001-
8	07230-20210	UNION	2	B10001-	B20001-
9	07002-01423	O-RING	2	B10001-	B20001-
10	07098-00621	HOSE (ONLY FOR PC200-6B)	2	B10001-	
10	07098-00623	HOSE (ONLY FOR PC200LC-6B)	2		B20001-
11	07000-13025	O-RING	4	B10001-	B20001-
12	205-62-72240	COVER	2	B10001-	B20001-
13	08034-00536	BAND	2	B10001-	B20001-
14	20Y-62-12540	HOSE (ONLY FOR PC200-6B)	2	B10001-	
14	20Y-62-12520	HOSE (ONLY FOR PC200LC-6B)	2		B20001-
15	07000-13025	O-RING	4	B10001-	B20001-
16	205-62-72240	COVER	2	B10001-	B20001-
17	08034-00536	BAND	2	B10001-	B20001-
18	07102-20420	HOSE (ONLY FOR PC200-6B)	2	B10001-	
18	07102-20422	HOSE (ONLY FOR PC200LC-6B)	2		B20001-
19	205-62-72240	COVER	2	B10001-	B20001-
20	08034-00536	BAND	2	B10001-	B20001-
21	07102-20220	HOSE (ONLY FOR PC200-6B)	2	B10001-	
21	07102-20222	HOSE (ONLY FOR PC200LC-6B)	2		B20001-
22	205-62-72140	COVER	2	B10001-	B20001-
23	08034-00536	BAND	2	B10001-	B20001-

FIG. P1210-01A0A FINAL DRIVE (TRAVEL SPEED 3RD)

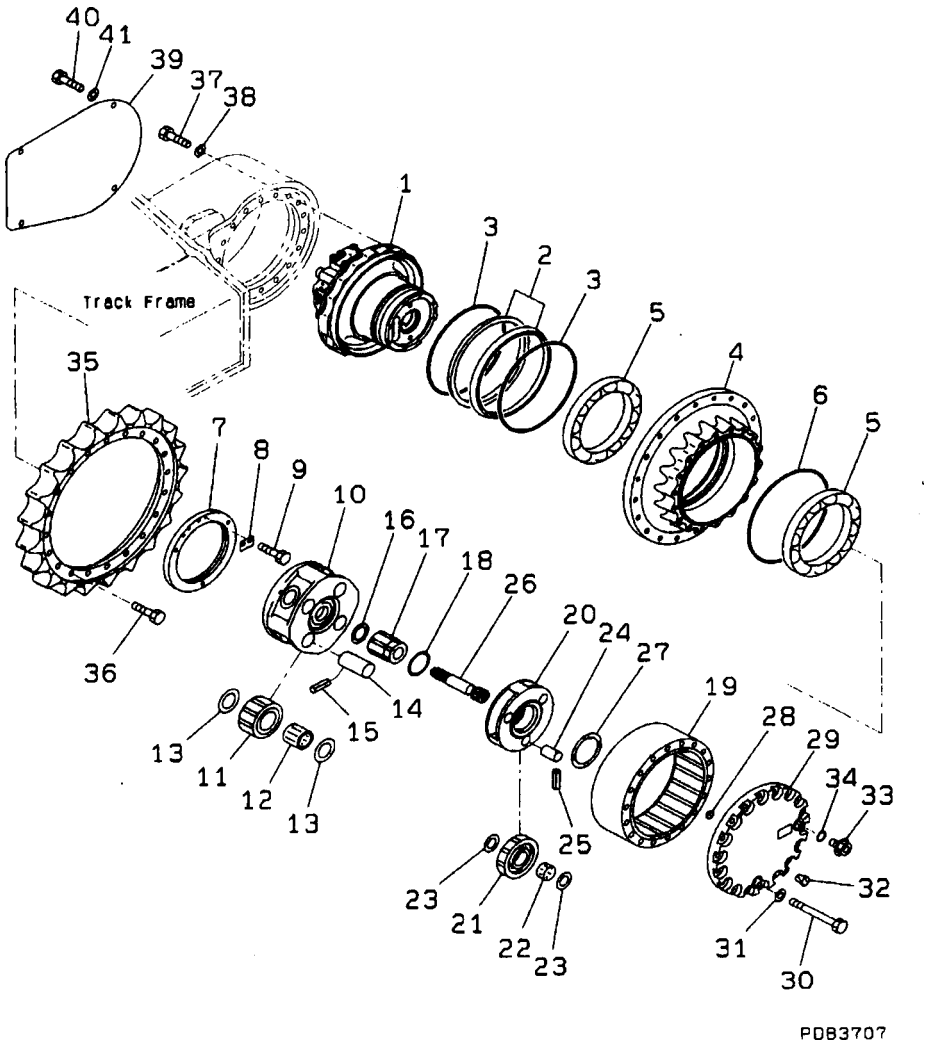

FIG. NO: P1210-01A0A

INDEX	PART NO.	DESCRIPTION	Q'TY	SERIAL NO. PC200-6B	SERIAL NO. PC200LC-6B
1	(708-8F-00110)	TRAVEL MOTOR ASS'Y	2	B10001-	B20001-
1	150-27-00330	FLOATING SEAL ASS'Y	2	B10001-	B20001-
2	150-27-00264	. SEAL RING ASS'Y	1	B10001-	B20001-
	☆	. . RING	2	B10001-	B20001-
	☆	. . RING	2	B10001-	B20001-
3	144-873-0310	. O-RING ASS'Y	1	B10001-	B20001-
	☆	. . O-RING	2	B10001-	B20001-
4	20Y-27-22181	HUB	2	B10001-	B20001-
5	20Y-27-22230	BEARING	4	B10001-	B20001-
6	20Y-27-22280	O-RING	2	B10001-	B20001-
7	20Y-27-22261	LOCK	2	B10001-	B20001-
8	20Y-27-22270	LOCK	2	B10001-	B20001-
9	01010-81020	BOLT	4	B10001-	B20001-
10	20Y-27-22170	CARRIER	2	B10001-	B20001-
11	20Y-27-22140	GEAR	8	B10001-	B20001-
12	20Y-27-22220	BEARING	8	B10001-	B20001-
13	20Y-27-21250	WASHER	16	B10001-	B20001-
14	20Y-27-21230	PIN	8	B10001-	B20001-
15	20Y-27-21290	PIN	8	B10001-	B20001-
16	20Y-27-13310	WASHER	2	B10001-	B20001-
17	20Y-27-22130	GEAR	2	B10001-	B20001-
18	20Y-27-22240	WASHER	2	B10001-	B20001-
19	20Y-27-22150	GEAR	2	B10001-	B20001-
20	20Y-27-22160	CARRIER	2	B10001-	B20001-
21	20Y-27-22120	GEAR	6	B10001-	B20001-
22	20Y-27-22210	BEARING	6	B10001-	B20001-
23	20Y-27-21240	WASHER	12	B10001-	B20001-
24	20Y-27-21220	PIN	6	B10001-	B20001-
25	20Y-27-21280	PIN	6	B10001-	B20001-
26	20Y-27-22110	SHAFT	2	B10001-	B20001-
27	20Y-27-21310	WASHER	2	B10001-	B20001-
28	20Y-27-22250	BUTTON	2	B10001-	B20001-
29	20Y-27-22190	COVER	2	B10001-	B20001-
30	20Y-27-13281	BOLT	36	B10001-	B20001-
31	01643-31645	WASHER	36	B10001-	B20001-
32	07049-01012	PLUG	4	B10001-	B20001-
33	07044-12412	PLUG	4	B10001-	B20001-
34	07002-02434	O-RING	4	B10001-	B20001-
35	20Y-27-11581	SPROCKET	2	B10001-	B20001-
36	20Y-27-11561	BOLT	40	B10001-	B20001-
37	01010-61670	BOLT	36	B10013-	B20001-
	01010-61660	BOLT	36	B10001-B10012	
38	01643-31645	WASHER	36	B10001-	B20001-
39	20Y-30-11420	COVER	2	B10013-	B20001-
	20Y-30-21190	COVER	2	B10001-B10012	
40	01010-81230	BOLT	8	B10001-	B20001-
41	01643-31232	WASHER	8	B10001-	B20001-

UNDERCARRIAGE

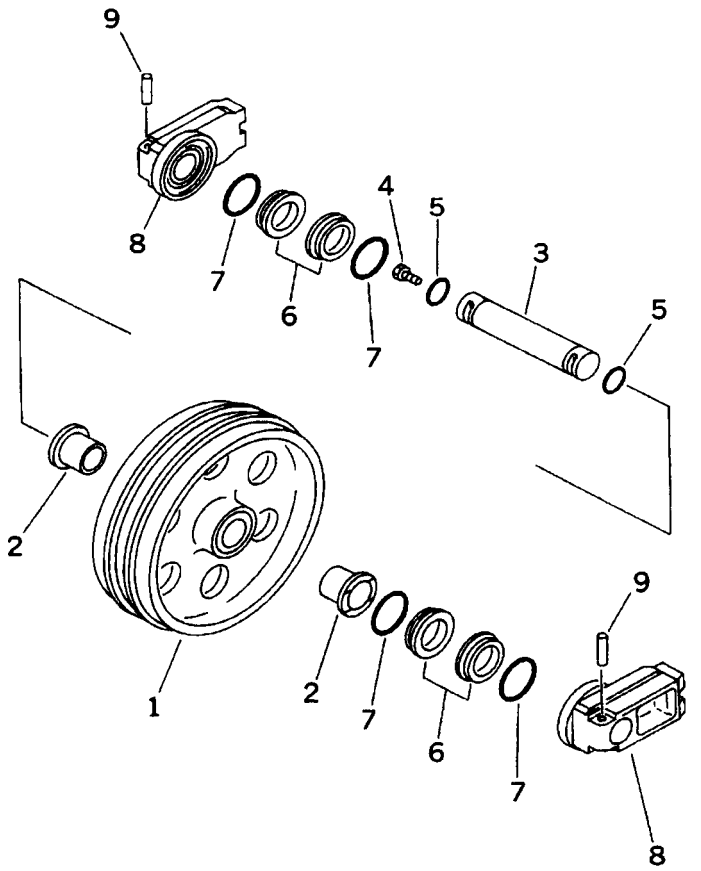

INDEX	PART NO.	DESCRIPTION	Q'TY	SERIAL NO. PC200-6B	SERIAL NO. PC200LC-6B
	20Y-30-00030	FRONT IDLER ASS'Y	2	B10001-	B20001-
1	20Y-30-13120	. IDLER	1	B10001-	B20001-
2	207-30-56140	. BUSHING	2	B10001-	B20001-
3	20Y-30-13130	. SHAFT	1	B10001-	B20001-
4	07052-31624	. PLUG	1	B10001-	B20001-
5	07000-02060	. O-RING	2	B10001-	B20001-
6	20Y-30-00100	. FLOATING SEAL ASS'Y	2	B10001-	B20001-
6	20Y-30-00110	. . SEAL RING ASS'Y	1	B10001-	B20001-
6	☆	. . . RING	2	B10001-	B20001-
7	20Y-30-00120	. . O-RING ASS'Y	1	B10001-	B20001-
7	☆	. . . O-RING	2	B10001-	B20001-
8	20Y-30-13150	. SUPPORT	2	B10001-	B20001-
9	205-30-76190	. PIN	2	B10001-	B20001-

FIG. R0120-01A0 IDLER CUSHION

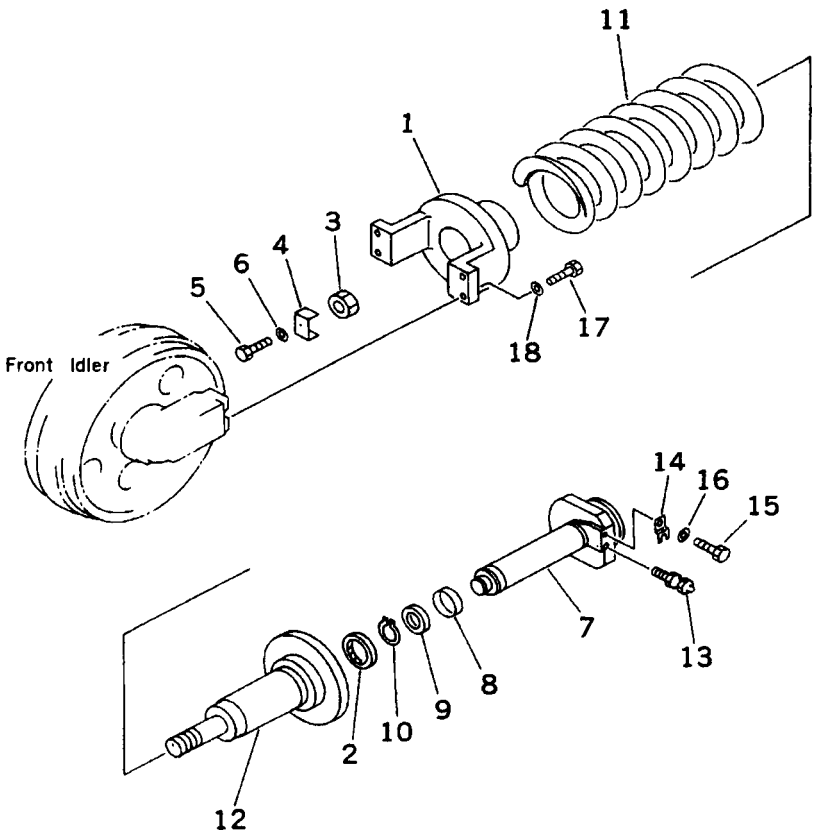

FIG. NO: R0120-01A0

INDEX	PART NO.	DESCRIPTION	Q'TY	SERIAL NO. PC200-6B	SERIAL NO. PC200LC-6B
1	20Y-30-22113	YOKE	2	B10001-	B20001-
2	206-30-55150	SEAL	2	B10001-	B20001-
3	206-30-45381	NUT	2	B10001-	B20001-
4	206-30-45262	LOCK	2	B10001-	B20001-
5	01010-81225	BOLT	2	B10001-	B20001-
6	01643-31232	WASHER	2	B10001-	B20001-
7	206-30-55122	SHAFT	2	B10001-	B20001-
8	07155-00720	RING	2	B10001-	B20001-
9	09370-00070	U-PACKING	2	B10001-	B20001-
10	04064-04518	RING	2	B10001-	B20001-
11	20Y-30-12110	SPRING (FOR PC200-6B)	2	B10001-	
11	206-30-55170	SPRING (FOR PC200LC-6B)	2		B20001-
12	20Y-30-22122	CYLINDER (FOR PC200-6B)	2	B10001-	
12	206-30-65181	CYLINDER (FOR PC200LC-6B)	2		B20001-
13	07959-20001	VALVE	2	B10001-	B20001-
14	205-30-72170	PLATE	2	B10001-	B20001-
15	01010-81225	BOLT	2	B10001-	B20001-
16	01643-31232	WASHER	2	B10001-	B20001-
17	01010-61655	BOLT	8	B10001-	B20001-
18	01643-31645	WASHER	8	B10001-	B20001-

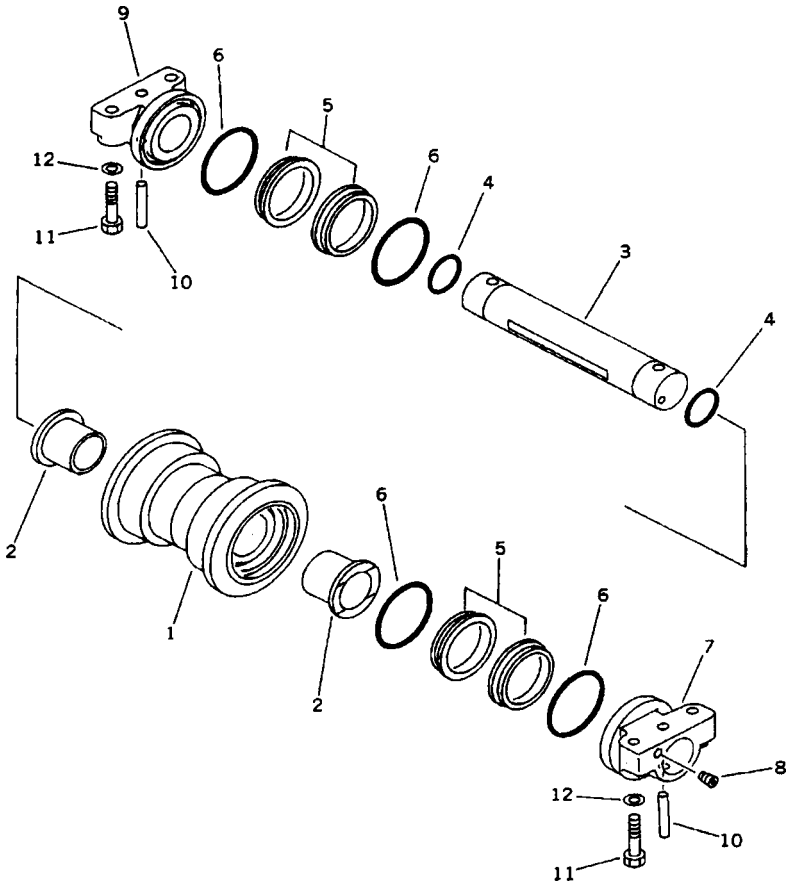

INDEX	PART NO.	DESCRIPTION	Q'TY	SERIAL NO. PC200-6B	SERIAL NO. PC200LC-6B
	20Y-30-00014	TRACK ROLLER ASS'Y	14	B10001-B10164	
1	20Y-30-16410	. ROLLER	1	B10001-B10164	
2	20Y-30-16450	. BUSHING	2	B10001-B10164	
3	20Y-30-16130	. SHAFT	1	B10001-B10164	
4	205-30-76260	. O-RING	2	B10001-	
	20Y-30-00041	. FLOATING SEAL ASS'Y	2	B10001-B10164	
5	20Y-30-00051	. . SEAL RING ASS'Y	1	B10001-B10164	
5	☆	. . . SEAL	2	B10001-B10164	
6	20Y-30-00061	. . O-RING ASS'Y	1	B10001-B10164	
6	☆	. . . O-RING	2	B10001-B10164	
7	20Y-30-16430	. COLLAR	1	B10001-B10164	
8	20Y-30-16330	. PLUG	1	B10001-	
9	20Y-30-16440	. COLLAR	1	B10001-B10164	
10	20Y-30-16170	. PIN	2	B10001-	
11	20Y-30-11340	BOLT	56	B10001-	
12	01643-31845	WASHER	56	B10001-	

FIG. R0200-01A2A TRACK ROLLER

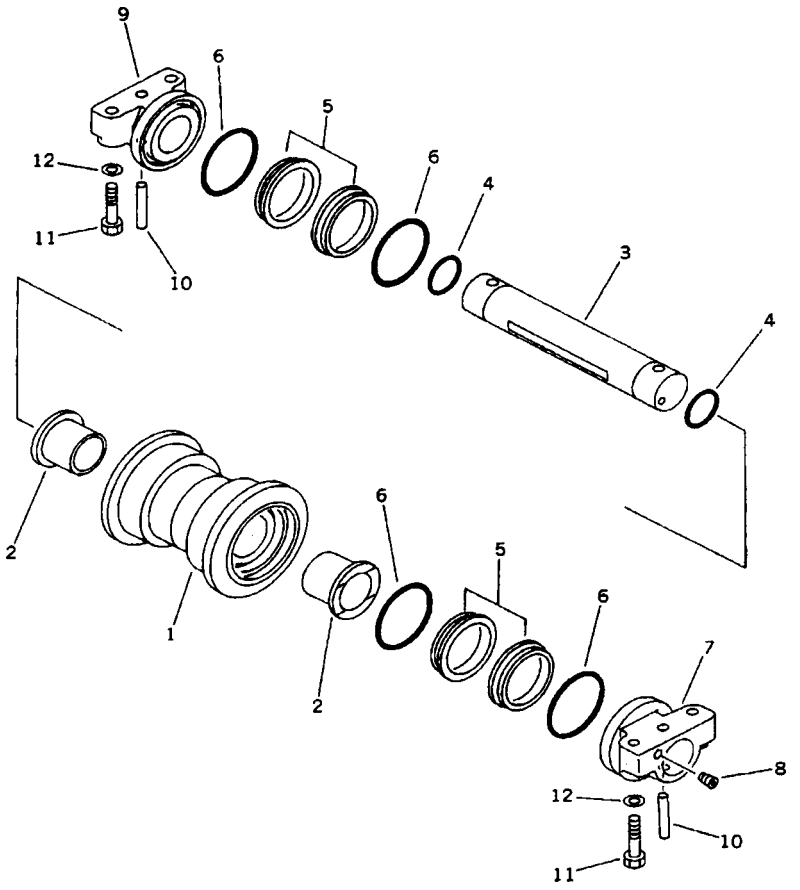

FIG. NO: R0200-01A2A

INDEX	PART NO.	DESCRIPTION	Q'TY	SERIAL NO. PC200-6B	SERIAL NO. PC200LC-6B
	20Y-30-00015	TRACK ROLLER ASS'Y	18	B10165-	B20001-
1	20Y-30-16411	. ROLLER	1	B10165-	B20001-
2	22U-30-11450	. BUSHING	2	B10165-	B20001-
3	22U-30-11420	. SHAFT	1	B10165-	B20001-
4	205-30-76260	. O-RING	2	B10001-	B20001-
	22B-30-00030	. FLOATING SEAL ASS'Y	2	B10165-	B20001-
5	22B-30-16200	. . SEAL RING ASS'Y	2	B10165-	B20001-
6	154-32-61170	. . O-RING ASS'Y	2	B10165-	B20001-
7	22U-30-11430	. COLLAR	1	B10165-	B20001-
8	20Y-30-16330	. PLUG	1	B10001-	B20001-
9	22U-30-11440	. COLLAR	1	B10165-	B20001-
10	20Y-30-16170	. PIN	2	B10001-	B20001-
11	20Y-30-11340	BOLT (FOR PC200-6B)	56	B10001-	
11	20Y-30-11340	BOLT (FOR PC200LC-6B)	72		B20001-
12	01643-31845	WASHER (FOR PC200-6B)	56	B10001-	
12	01643-31845	WASHER (FOR PC200LC-6B)	72		B20001-

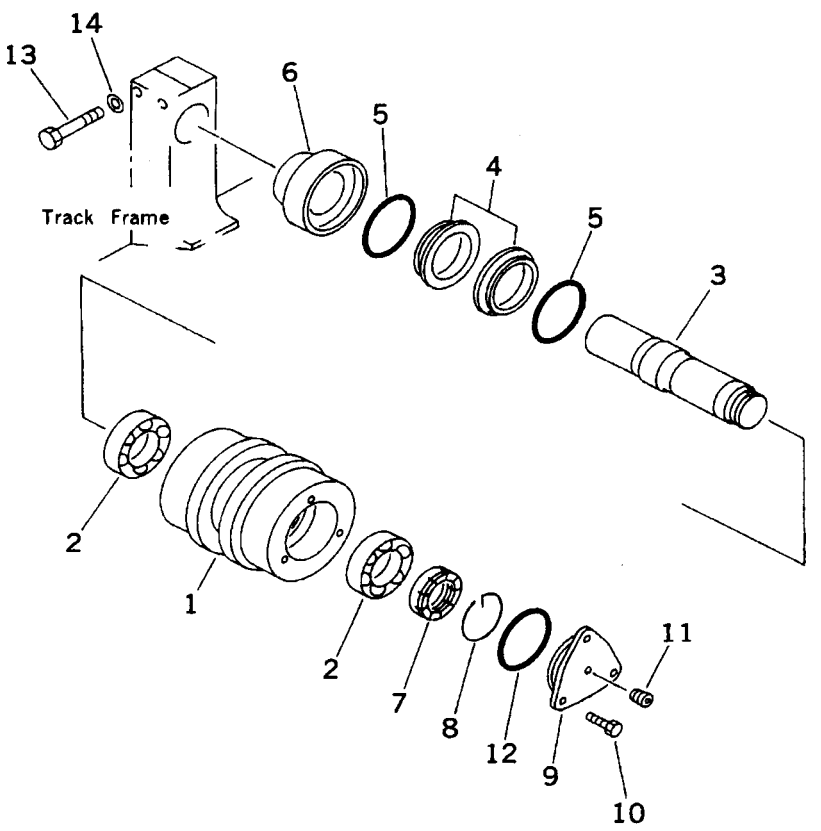

INDEX	PART NO.	DESCRIPTION	Q'TY	SERIAL NO. PC200-6B	SERIAL NO. PC200LC-6B
	20Y-30-00022	CARRIER ROLLER ASS'Y	4	B10001-B10178	
1	20Y-30-15221	. ROLLER	1	B10001-B10178	
2	06002-32010	. BEARING	2	B10001-B10178	
3	20Y-30-15131	. SHAFT	1	B10001-B10178	
	20Y-30-00070	. FLOATING SEAL ASS'Y	1	B10001-B10178	
4	20Y-30-00080	. . SEAL RING ASS'Y	1	B10001-B10178	
4	☆	. . . RING	2	B10001-B10178	
5	20Y-30-00090	. . O-RING ASS'Y	1	B10001-B10178	
5	☆	. . . O-RING	2	B10001-B10178	
6	20Y-30-15121	. RING	1	B10001-B10178	
7	141-30-35140	. NUT	1	B10001-B10178	
8	141-30-35150	. RING	1	B10001-B10178	
9	20Y-30-15140	. COVER	1	B10001-B10178	
10	01010-81025	. BOLT	3	B10001-B10178	
11	20Y-30-16330	. PLUG	1	B10001-B10178	
12	07000-02075	. O-RING	1	B10001-B10178	
13	01010-31675	BOLT	8	B10001-B10178	
14	01643-31645	WASHER	8	B10001-B10178	

FIG. R0300-02A0 CARRIER ROLLER

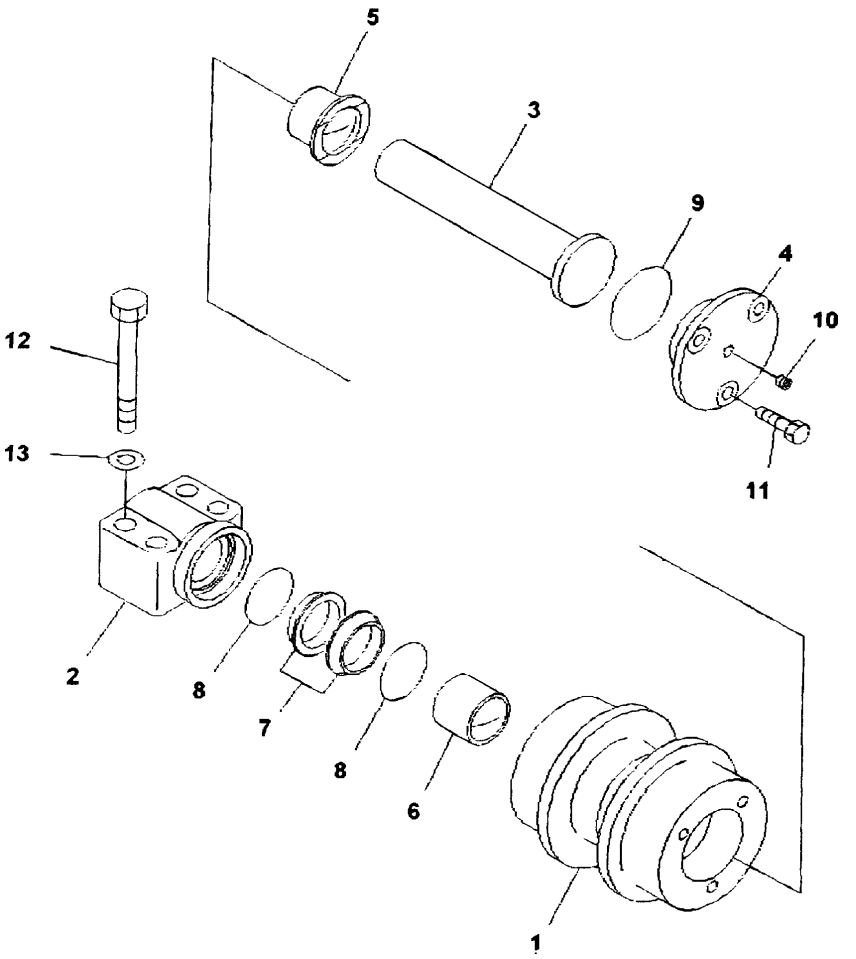

FIG. NO: R0300-02A0

INDEX	PART NO.	DESCRIPTION	Q'TY	SERIAL NO. PC200-6B	SERIAL NO. PC200LC-6B
	22U-30-00020	CARRIER ROLLER ASS'Y	4	B10179-	B20001-
1	22U-30-25110	. ROLLER	1	B10179-	B20001-
2	22U-30-25120	. SUPPORT	1	B10179-	B20001-
3	22U-30-25130	. SHAFT	1	B10179-	B20001-
4	22U-30-25140	. COVER	1	B10179-	B20001-
5	22U-30-25150	. BUSHING	1	B10179-	B20001-
6	22U-30-25160	. BUSHING	1	B10179-	B20001-
	110-30-00085	. FLOATING SEAL ASS'Y	1	B10179-	B20001-
7	101-30-00130	. . SEAL RING ASS'Y	1	B10179-	B20001-
	☆	. . . RING	2	B10179-	B20001-
8	101-30-00140	. . O-RING ASS'Y	1	B10179-	B20001-
	☆	. . . O-RING	2	B10179-	B20001-
9	07000-12060	. O-RING	1	B10179-	B20001-
10	20Y-30-16330	. PLUG	1	B10179-	B20001-
11	01010-81025	. BOLT	3	B10179-	B20001-
12	01010-81490	BOLT	16	B10179-	B20001-
13	01643-31445	WASHER	16	B10179-	B20001-

FIG. R0500-01A2 TRACK SHOE (TRIPLE GROUSER WITH HOLE) (700MM WIDE)

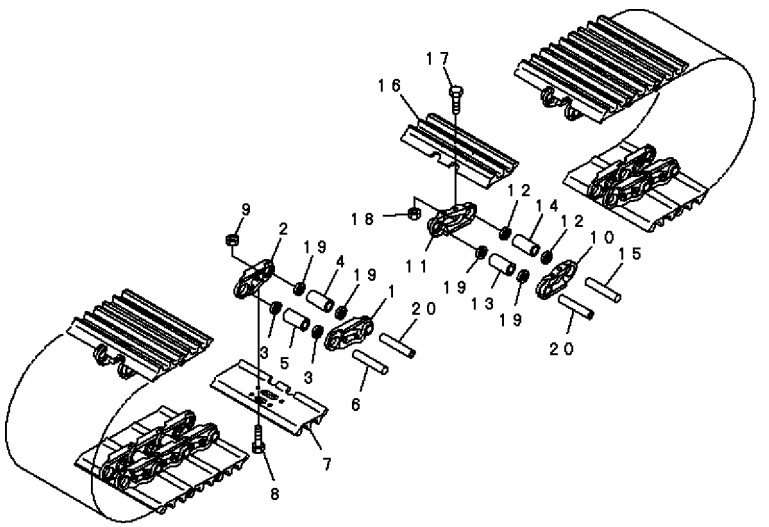

PDB3410

FIG. NO: R0500-01A2

INDEX	PART NO.	DESCRIPTION	Q'TY	SERIAL NO. PC200-6B	SERIAL NO. PC200LC-6B
	20Y-32-01014	TRACK SHOE ASS'Y	1	B10001-	
1	20Y-32-11123	. LINK,TRACK L.H.	44	B10001-	
2	20Y-32-11133	. LINK,TRACK R.H.	44	B10001-	
3	20Y-32-11240	. SEAL,DUST REGULAR W-TYPE	84	B10001-	
4	20Y-32-11170	. BUSHING MASTER	2	B10001-	
5	20Y-32-11140	. BUSHING REGULAR	42	B10001-	
6	20Y-32-11150	. PIN REGULAR	42	B10001-	
7	20Y-32-11311	. SHOE,TRACK	44	B10001-	
8	20Y-32-11210	. BOLT SHOE	176	B10001-	
9	154-32-31220	. NUT SHOE	176	B10001-	
10	20Y-32-11123	. LINK,TRACK L.H.	46	B10001-	
11	20Y-32-11133	. LINK,TRACK R.H.	46	B10001-	
12	20Y-32-11240	. SEAL,DUST REGULAR W-TYPE	88	B10001-	
13	20Y-32-11170	. BUSHING MASTER	2	B10001-	
14	20Y-32-11140	. BUSHING REGULAR	44	B10001-	
15	20Y-32-11150	. PIN REGULAR	44	B10001-	
16	20Y-32-11311	. SHOE,TRACK	46	B10001-	
17	20Y-32-11210	. BOLT SHOE	184	B10001-	
18	154-32-31220	. NUT SHOE	184	B10001-	
19	20Y-32-11260	. SEAL,DUST MASTER W-TYPE	8	B10001-	
20	20Y-32-11190	. PIN MASTER	4	B10001-	

FIG. R0500-01A3 TRACK SHOE (TRIPLE GROUSER WITH HOLE) (800MM WIDE)

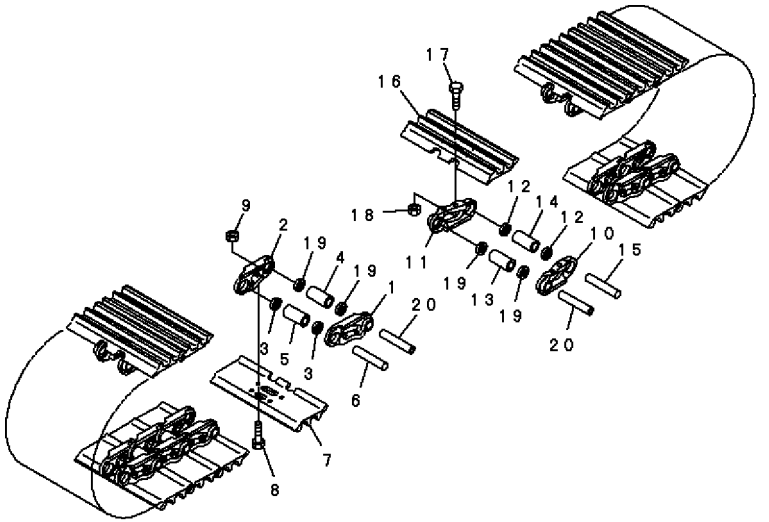

PDB3410

FIG. NO: R0500-01A3

INDEX	PART NO.	DESCRIPTION	Q'TY	SERIAL NO. PC200-6B	SERIAL NO. PC200LC-6B
	20Y-32-01225	TRACK SHOE ASS'Y	1		B20001-
1	20Y-32-11123	. LINK, TRACK L.H.	48		B20001-
2	20Y-32-11133	. LINK, TRACK R.H.	48		B20001-
3	20Y-32-11240	. SEAL, DUST REGULAR W-TYPE	92		B20001-
4	20Y-32-11171	. BUSHING MASTER	2		B20001-
5	20Y-32-11141	. BUSHING REGULAR	46		B20001-
6	20Y-32-11150	. PIN REGULAR	46		B20001-
7	20Y-32-11321	. SHOE, TRACK	48		B20001-
8	20Y-32-11210	. BOLT SHOE	192		B20001-
9	154-32-31220	. NUT SHOE	192		B20001-
10	20Y-32-11123	. LINK, TRACK L.H.	50		B20001-
11	20Y-32-11133	. LINK,TRACK R.H.	50		B20001-
12	20Y-32-11240	. SEAL, DUST REGULAR W-TYPE	96		B20001-
13	20Y-32-11171	. BUSHING MASTER	2		B20001-
14	20Y-32-11141	. BUSHING REGULAR	48		B20001-
15	20Y-32-11150	. PIN REGULAR	48		B20001-
16	20Y-32-11321	. SHOE, TRACK	50		B20001-
17	20Y-32-11210	. BOLT SHOE	200		B20001-
18	154-32-31220	. NUT SHOE	200		B20001-
19	20Y-32-11260	. SEAL, DUST MASTER W-TYPE	8		B20001-
20	20Y-32-11190	. PIN MASTER	4		B20001-

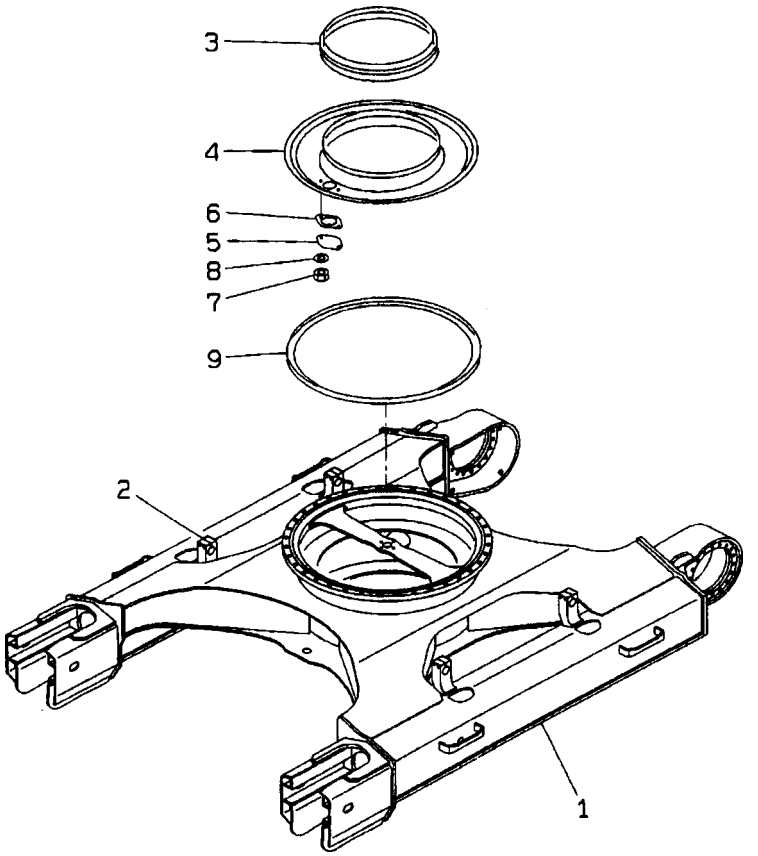

INDEX	PART NO.	DESCRIPTION	Q'TY	SERIAL NO. PC200-6B	SERIAL NO. PC200LC-6B
1	20Y-30-B1111	FRAME, TRACK	1	B10179-	
1	20Y-30-B1110	FRAME, TRACK	1	B10013-B10178	
1	20Y-30-21411	FRAME, TRACK	1	B10001-B10012	
2	20Y-30-21N61	. BRACKET (WELDED)	4	B10179-	
	20Y-30-21N60	. BRACKET (WELDED)	4	B10013-B10178	
3	205-30-71171	SEAL	1	B10001-	
4	20Y-30-21151	COVER	1	B10049-	
	20Y-30-21150	COVER	1	B10001-B10048	
5	205-30-71181	COVER	1	B10001-	
6	205-30-71191	GASKET	1	B10001-	
7	01580-11008	NUT	2	B10001-	
8	01643-31032	WASHER	2	B10001-	
9	20Y-30-11370	SEAL	1	B10001-	

FIG. R1100-01A2A TRACK FRAME

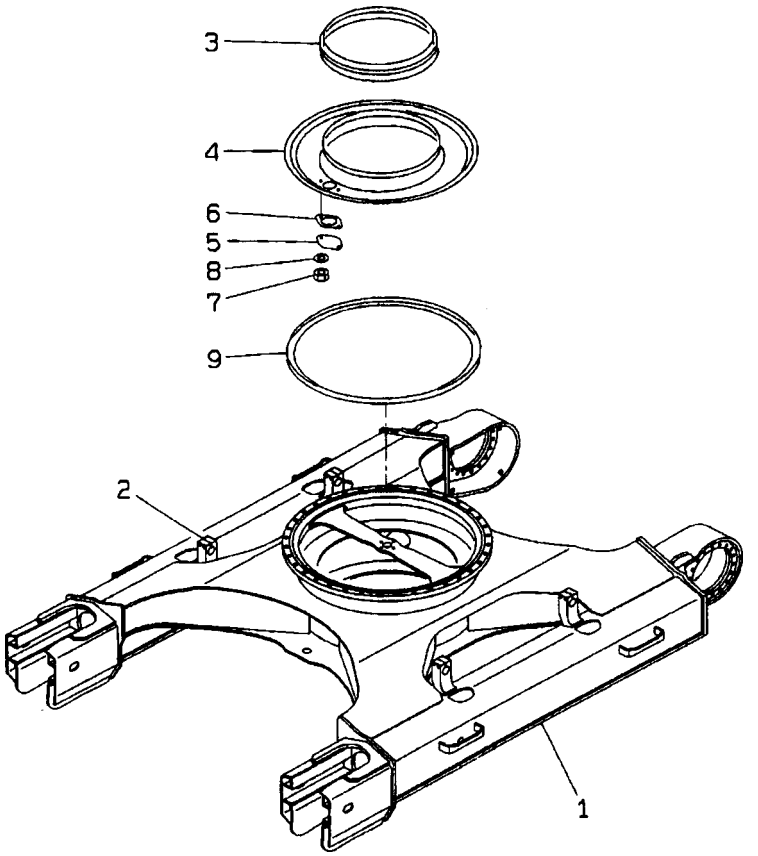

FIG. NO: R1100-01A2A

INDEX	PART NO.	DESCRIPTION	Q'TY	SERIAL NO. PC200-6B	SERIAL NO. PC200LC-6B
1	20Y-30-B2110	FRAME,TRACK	1		B20001-
2	20Y-30-21N61	. BRACKET (WELDED)	4		B20001-
3	205-30-71171	SEAL	1		B20001-
4	20Y-30-21151	COVER	1		B20001-
5	205-30-71181	COVER	1		B20001-
6	205-30-71191	GASKET	1		B20001-
7	01580-11008	NUT	2		B20001-
8	01643-31032	WASHER	2		B20001-
9	20Y-30-11370	SEAL	1		B20001-

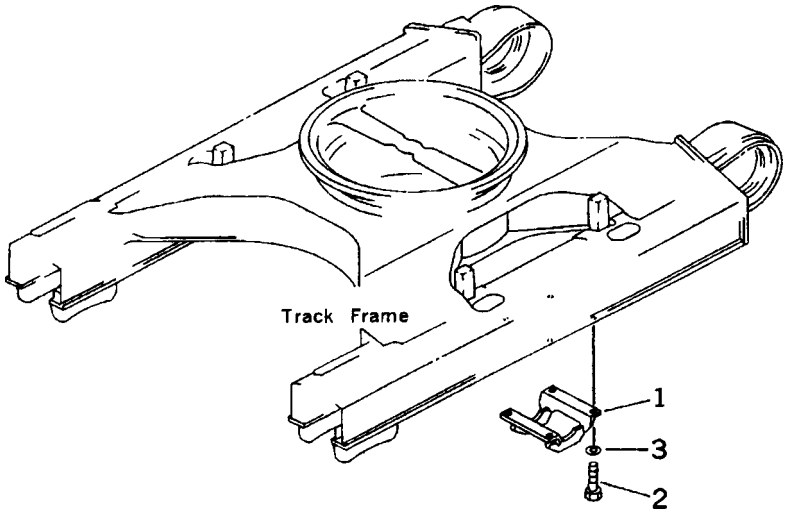

INDEX	PART NO.	DESCRIPTION	Q'TY	SERIAL NO. PC200-6B	SERIAL NO. PC200LC-6B
1	20Y-30-11312	GUARD	2	B10001-	
1	20Y-30-11312	GUARD	4		B20001-
2	01010-62050	BOLT	8	B10001-	
2	01010-62050	BOLT	16		B20001-
3	01643-32060	WASHER	8	B10001-	
3	01643-32060	WASHER	16		B20001-

WORK EQUIPMENT

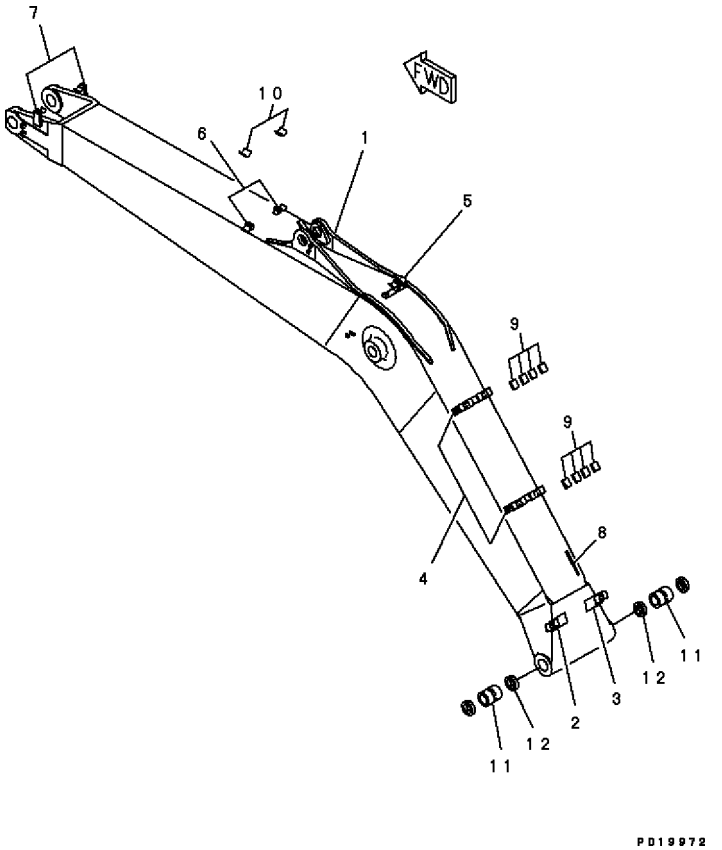

INDEX	PART NO.	DESCRIPTION	Q'TY	SERIAL NO. PC200-6B	SERIAL NO. PC200LC-6B
	20Y-70-00520	BOOM ASS'Y	1	B10001-	
1	☆	. BOOM	1	B10001-	
2	20Y-62-24180	. . BRACKET	1	B10001-	
3	20Y-62-24190	. . BRACKET	1	B10001-	
4	20Y-62-24211	. . BRACKET	2	B10001-	
5	20Y-62-24240	. . BRACKET	1	B10001-	
6	206-62-52281	. . BRACKET	2	B10001-	
7	20Y-70-11641	. . BRACKET	2	B10001-	
8	20Y-70-11650	. . SEAT	1	B10001-	
9	20Y-62-13760	. . SEAT	8	B10001-	
10	205-62-73430	. . SEAT	2	B10001-	
11	20Y-70-21640	. BUSHING	2	B10001-	
12	07145-00090	. SEAL	2	B10001-	

FIG. T1110-01A1B BOOM (HD) (FOR ADDITIONAL PIPING)

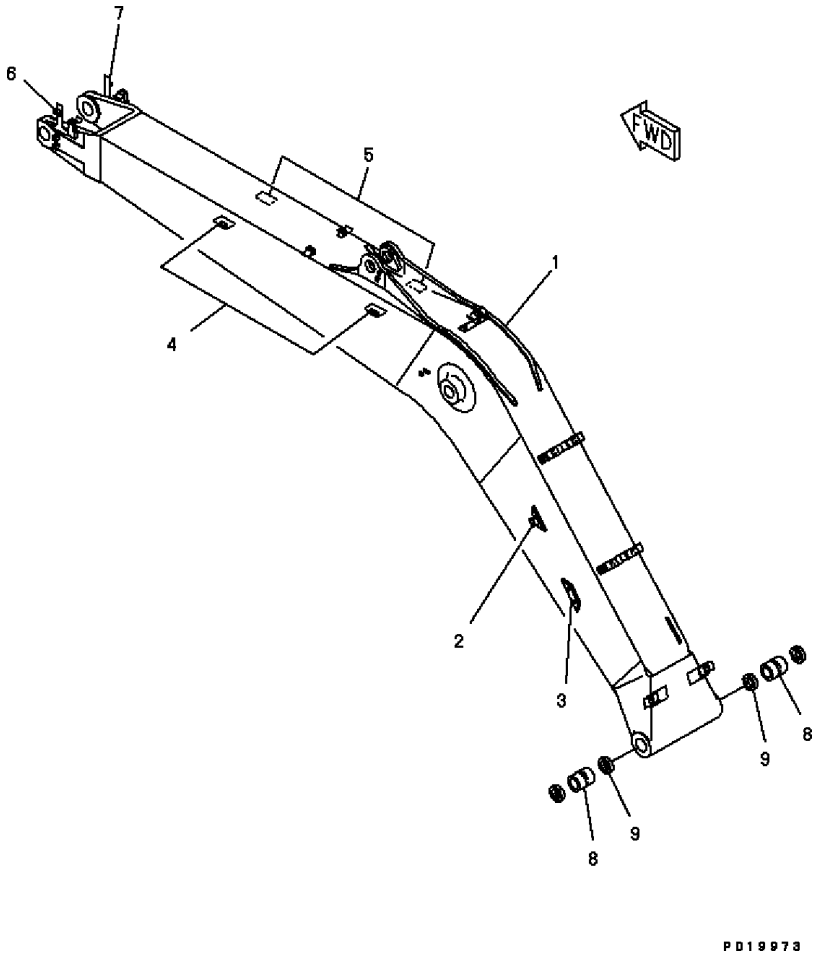

FIG. NO: T1110-01A1B

INDEX	PART NO.	DESCRIPTION	Q'TY	SERIAL NO. PC200-6B	SERIAL NO. PC200LC-6B
	20Y-70-00530	BOOM ASS'Y	1	B10001-	
1	☆	. BOOM	1	B10001-	
2	20Y-62-24252	. . BRACKET	2	B10001-	
3	20Y-62-24262	. . SEAT	2	B10001-	
4	20Y-62-24271	. . BRACKET	2	B10001-	
5	20Y-62-24360	. . BRACKET	2	B10001-	
6	20Y-62-24281	. . BRACKET	1	B10001-	
7	20Y-62-24291	. . BRACKET	1	B10001-	
8	20Y-70-21640	. BUSHING	2	B10001-	
9	07145-00090	. SEAL	2	B10001-	

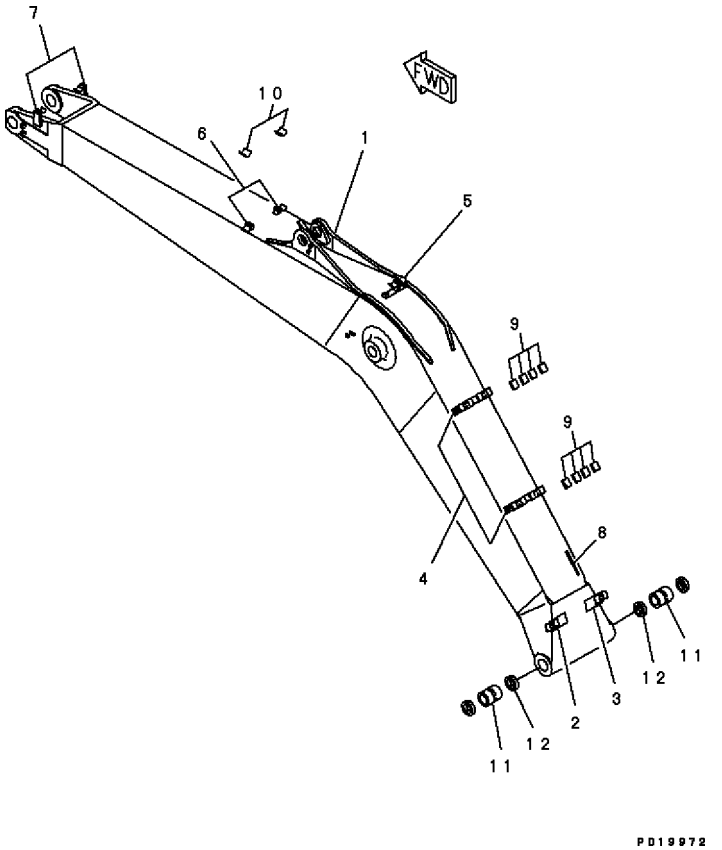

INDEX	PART NO.	DESCRIPTION	Q'TY	SERIAL NO. PC200-6B	SERIAL NO. PC200LC-6B
	20Y-942-8120	BOOM ASS'Y	1		B20001-
1	☆	. BOOM	1		B20001-
2	20Y-62-24180	. BRACKET	1		B20001-
3	20Y-62-24190	. BRACKET	1		B20001-
4	20Y-62-24211	. BRACKET	2		B20001-
5	20Y-942-8160	. BRACKET	1		B20001-
6	206-62-52281	. BRACKET	2		B20001-
7	20Y-70-11641	. BRACKET	2		B20001-
8	20Y-70-11651	. SEAT	1		B20001-
9	20Y-62-13760	. SEAT	8		B20001-
10	205-62-73430	. SEAT	2		B20001-
11	20Y-70-21640	BUSHING	2		B20001-
12	07145-00090	SEAL	2		B20001-

FIG. T1110-02A0 BOOM (TOP PIN AND BOTTOM PIN)

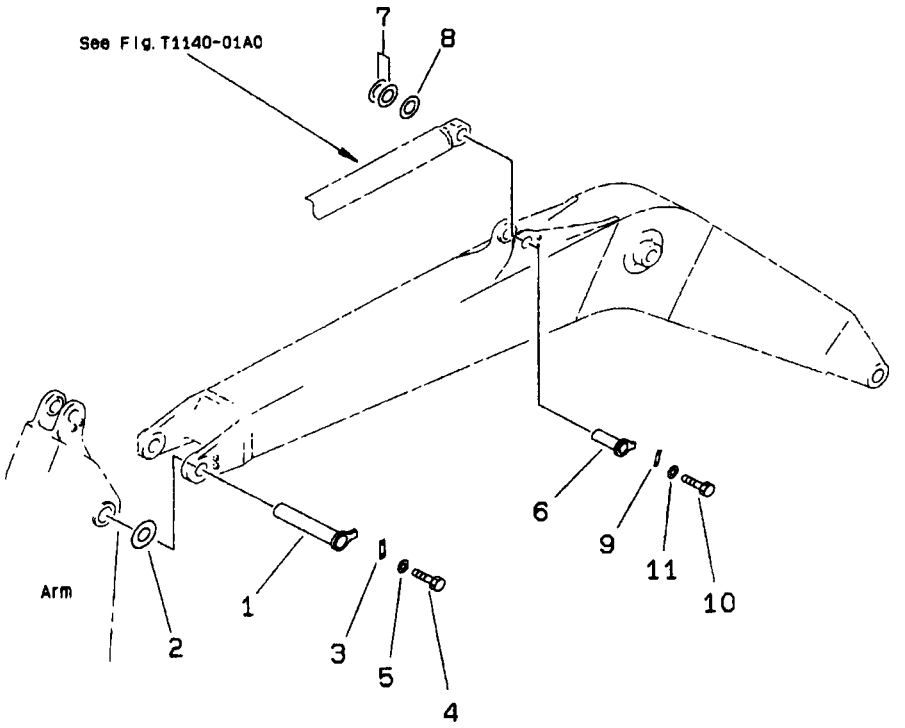

FIG. NO: T1110-02A0

INDEX	PART NO.	DESCRIPTION	Q'TY	SERIAL NO. PC200-6B	SERIAL NO. PC200LC-6B
1	205-70-65680	PIN	1	B10001-	B20001-
2	20Y-70-11360	SPACER 0.8MM	1	B10001-	B20001-
3	205-70-71310	PLATE	1	B10001-	B20001-
4	01010-81235	BOLT	2	B10001-	B20001-
5	01643-31232	WASHER	2	B10001-	B20001-
6	20Y-70-11180	PIN	1	B10001-	B20001-
7	20Y-70-11340	SPACER 0.8MM	2	B10001-	B20001-
8	205-70-51530	SPACER 1.5MM	1	B10001-	B20001-
9	205-70-66580	PLATE	1	B10001-	B20001-
10	01010-81230	BOLT	2	B10001-	B20001-
11	01643-31232	WASHER	2	B10001-	B20001-

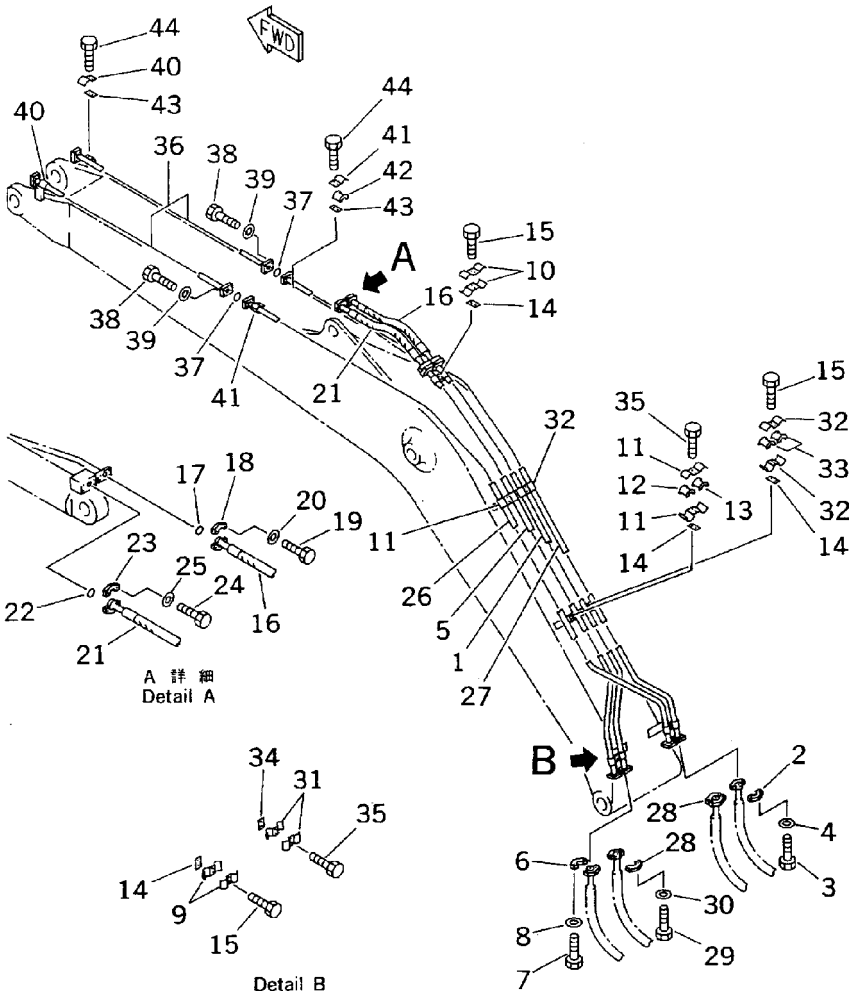

INDEX	PART NO.	DESCRIPTION	Q'TY	SERIAL NO. PC200-6B	SERIAL NO. PC200LC-6B
1	20Y-62-24480	TUBE	1	B10001-	B20001-
2	07371-30640	FLANGE	2	B10001-	B20001-
3	07372-21035	BOLT	4	B10001-	B20001-
4	01643-51032	WASHER	4	B10001-	B20001-
5	20Y-62-24470	TUBE	1	B10001-	B20001-
6	07371-31049	FLANGE	2	B10001-	B20001-
7	07372-21035	BOLT	4	B10001-	B20001-
8	01643-51032	WASHER	4	B10001-	B20001-
9	20Y-62-13690	CLAMP	1	B10001-	B20001-
10	20Y-62-13720	CLAMP	1	B10001-	B20001-
11	20Y-62-13740	CLAMP	2	B10001-	B20001-
12	20Y-62-13760	. SEAT	1	B10001-	B20001-
13	205-62-73430	. SEAT	1	B10001-	B20001-
14	20Y-62-13450	PLATE	4	B10001-	B20001-
15	01010-81230	BOLT	8	B10001-	B20001-
16	20Y-62-13570	HOSE 750MM	1	B10001-	B20001-
17	07000-13025	O-RING	2	B10001-	B20001-
18	07371-30640	FLANGE	4	B10001-	B20001-
19	07372-21035	BOLT	8	B10001-	B20001-
20	01643-51032	WASHER	8	B10001-	B20001-
21	20Y-62-13560	HOSE	1	B10001-	B20001-
22	07000-13032	O-RING	2	B10001-	B20001-
23	07371-31049	FLANGE	4	B10001-	B20001-
24	07372-21035	BOLT	8	B10001-	B20001-
25	01643-51032	WASHER	8	B10001-	B20001-
26	20Y-62-24490	TUBE	1	B10001-	B20001-
27	20Y-62-24510	TUBE	1	B10001-	B20001-
28	07371-30640	FLANGE	4	B10001-	B20001-
29	07372-21035	BOLT	8	B10001-	B20001-
30	01643-51032	WASHER	8	B10001-	B20001-
31	20Y-62-13710	CLAMP	1	B10001-	B20001-
32	20Y-62-13230	CLAMP	2	B10001-	B20001-
33	20Y-62-13760	. SEAT	2	B10001-	B20001-
34	20Y-62-13450	PLATE	3	B10001-	B20001-
35	01010-81230	BOLT	6	B10001-	B20001-
36	20Y-62-13580	TUBE	2	B10001-	B20001-
37	07000-13030	O-RING	2	B10001-	B20001-
38	07372-21035	BOLT	8	B10001-	B20001-
39	01643-51032	WASHER	8	B10001-	B20001-
40	20Y-62-13650	CLAMP	2	B10001-	B20001-
41	20Y-62-13220	CLAMP	2	B10001-	B20001-
42	20Y-62-13760	. SEAT	1	B10001-	B20001-
43	20Y-62-13450	PLATE	4	B10001-	B20001-
44	01010-81230	BOLT	8	B10001-	B20001-

FIG. T1110-04A0B BOOM (LUBRICATING LINE AND WORKING LAMP HARNESS)

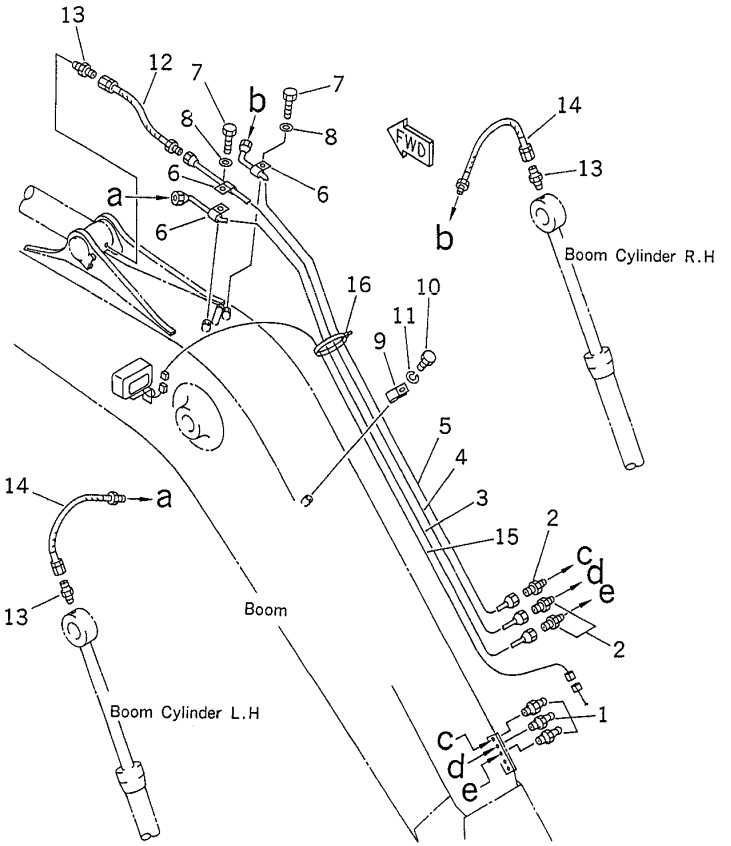

FIG. NO: T1110-04A0B

INDEX	PART NO.	DESCRIPTION	Q'TY	SERIAL NO. PC200-6B	SERIAL NO. PC200LC-6B
1	07020-00000	FITTING	3	B10001-	B20001-
2	20Y-70-11540	CONNECTOR	3	B10001-	B20001-
3	20Y-70-21520	TUBE	1	B10001-	B20001-
4	20Y-70-21530	TUBE	1	B10001-	B20001-
5	20Y-70-21540	TUBE	1	B10001-	B20001-
6	08036-00814	CLIP	3	B10001-	B20001-
7	01010-81220	BOLT	2	B10001-	B20001-
8	01643-31232	WASHER	2	B10001-	B20001-
9	04434-51712	CLIP	2	B10001-	B20001-
10	01010-81220	BOLT	2	B10001-	B20001-
11	01643-31232	WASHER	2	B10001-	B20001-
12	20Y-70-11520	HOSE 440MM	1	B10001-	B20001-
13	205-70-51390	NIPPLE	3	B10001-	B20001-
14	20Y-70-21550	HOSE 490MM	2	B10001-	B20001-
15	20Y-06-21310	WIRE	1	B10001-	B20001-
16	08034-20414	BAND	5	B10001-	B20001-

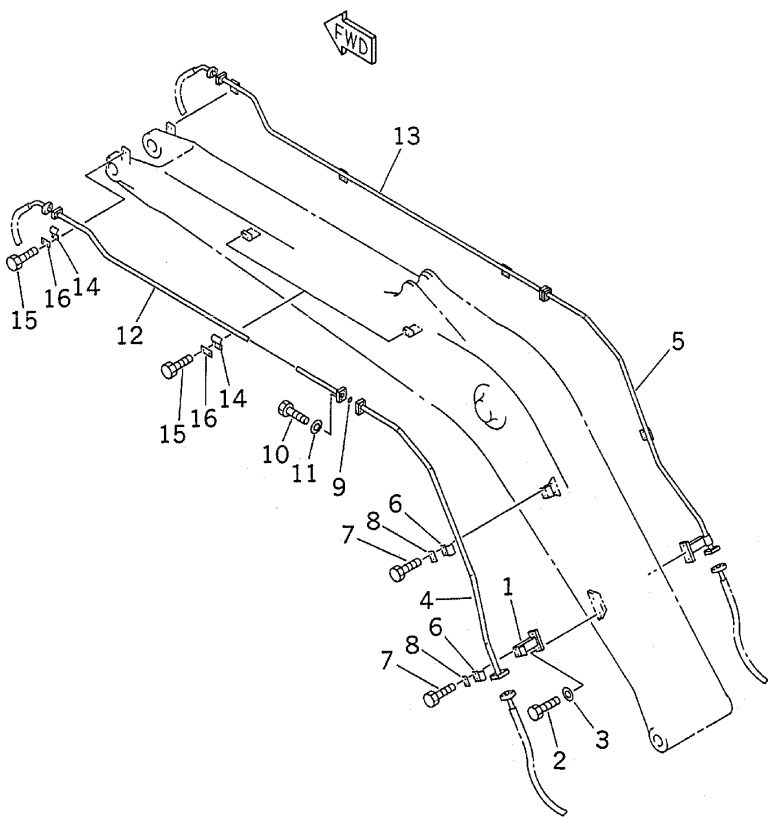

INDEX	PART NO.	DESCRIPTION	Q'TY	SERIAL NO. PC200-6B	SERIAL NO. PC200LC-6B
1	20Y-62-24560	BRACKET	2	B10001-	B20001-
2	01010-81230	BOLT	4	B10001-	B20001-
3	01643-31232	WASHER	4	B10001-	B20001-
4	20Y-62-24520	TUBE	1	B10001-	B20001-
5	20Y-62-24530	TUBE	1	B10001-	B20001-
6	207-62-31330	CLAMP	4	B10001-	B20001-
7	01010-81230	BOLT	8	B10001-	B20001-
8	20Y-62-13450	PLATE	4	B10001-	B20001-
9	07000-13035	O-RING	2	B10001-	B20001-
10	07372-21040	BOLT	8	B10001-	B20001-
11	01643-51032	WASHER	8	B10001-	B20001-
12	20Y-62-24540	TUBE	1	B10001-	B20001-
13	20Y-62-24550	TUBE	1	B10001-	B20001-
14	207-62-31330	CLAMP	6	B10001-	B20001-
15	01010-81225	BOLT	12	B10001-	B20001-
16	20Y-62-13450	PLATE	6	B10001-	B20001-

FIG. T1110-10A0B BOOM (WORKING LAMP AND BOOM FOOT LUBRICATING)

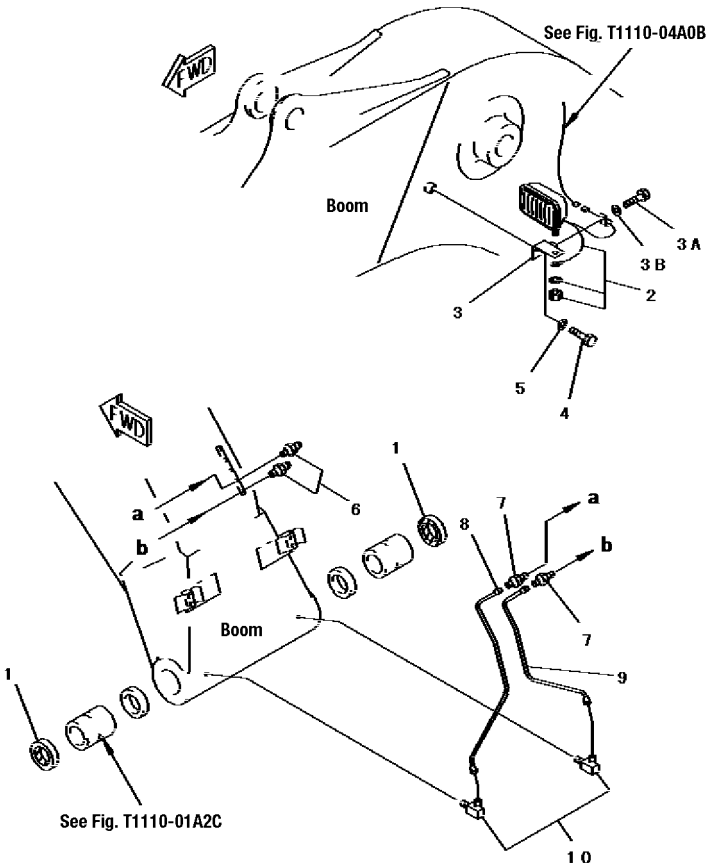

FIG. NO: T1110-10A0B

INDEX	PART NO.	DESCRIPTION	Q'TY	SERIAL NO. PC200-6B	SERIAL NO. PC200LC-6B
1	07145-00090	SEAL	2	B10001-	B20001-
2	20Y-06-25310	WORK LAMP ASS'Y	1	B10001-	B20001-
3	20Y-06-21551	BRACKET	1	B10001-	B20001-
3A	01010-81220	BOLT	1	B10001-	B20001-
3B	01643-31232	WASHER	1	B10001-	B20001-
4	01010-81230	BOLT	1	B10001-	B20001-
5	01643-31232	WASHER	1	B10001-	B20001-
6	07020-00000	FITTING	2	B10001-	B20001-
7	20Y-70-11540	CONNECTOR	2	B10001-	B20001-
8	20Y-70-21490	TUBE	1	B10001-	B20001-
9	20Y-70-21510	TUBE	1	B10001-	B20001-
10	20Y-25-11270	ELBOW	2	B10001-	B20001-

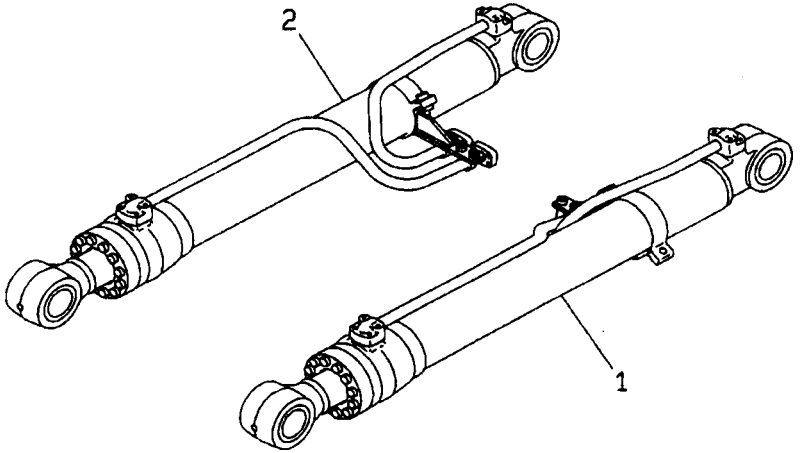

INDEX	PART NO.	DESCRIPTION	Q'TY	SERIAL NO. PC200-6B	SERIAL NO. PC200LC-6B
1	(☉205-63-X3101)	BOOM CYLINDER GROUP,LH (SEE FIG.Y1620-01A0C)	1	B10001-	B20001-
2	(☉205-63-X3111)	BOOM CYLINDER GROUP,RH (SEE FIG.Y1620-01A0C)	1	B10001-	B20001-

FIG. T1125-01A0 BOOM PIN

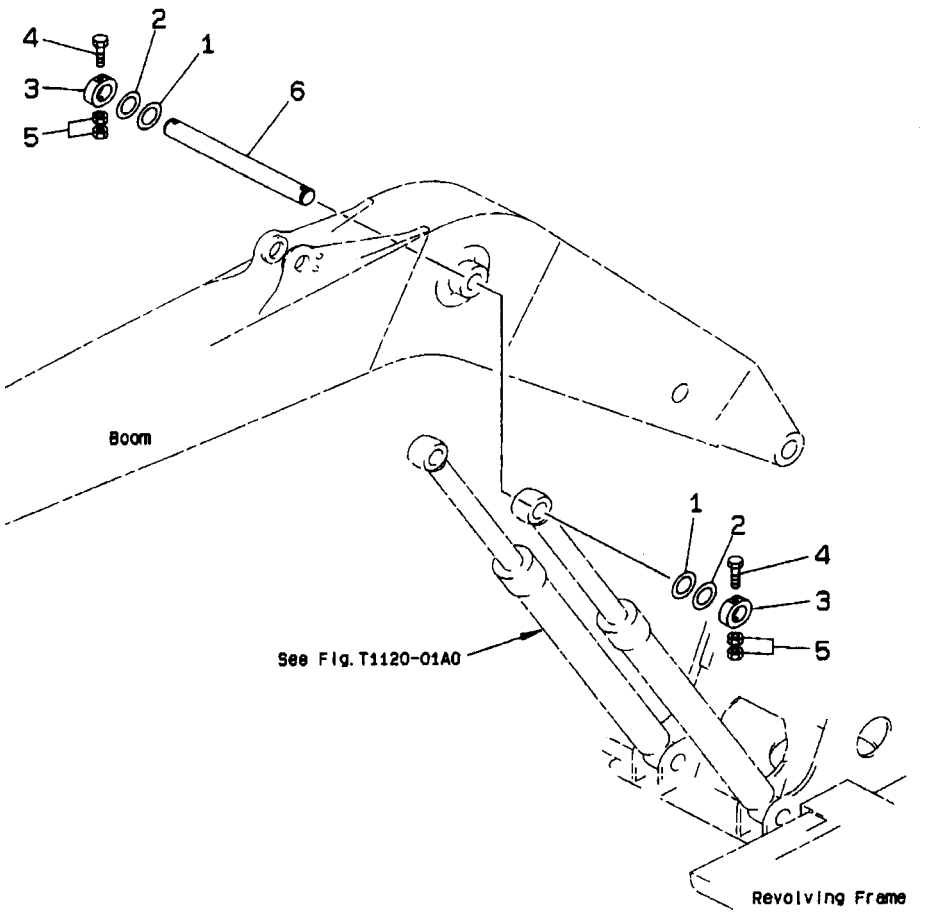

FIG. NO: T1125-01A0

INDEX	PART NO.	DESCRIPTION	Q'TY	SERIAL NO. PC200-6B	SERIAL NO. PC200LC-6B
1	20Y-70-11390	SPACER 0.8MM	2	B10001-	B20001-
2	20Y-70-11370	SPACER 1.5MM	3	B10001-	B20001-
3	20Y-70-11170	PLATE	2	B10001-	B20001-
4	20Y-70-11380	BOLT	2	B10001-	B20001-
5	01580-12016	NUT	4	B10001-	B20001-
6	206-70-51190	PIN	1	B10001-	B20001-

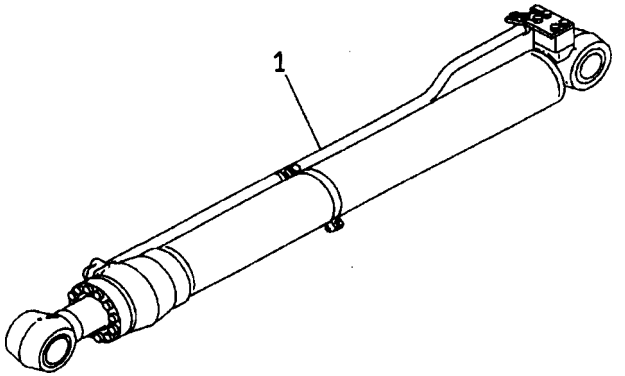

INDEX	PART NO.	DESCRIPTION	Q'TY	SERIAL NO. PC200-6B	SERIAL NO. PC200LC-6B
1	(☉205-63-X3122)	ARM CYLINDER GROUP,(SEE FIG.Y1620-11A0) ...	1	B10001-	B20001-

FIG. T1200-01A0 ARM (2.4M) (HEAVY DUTY)

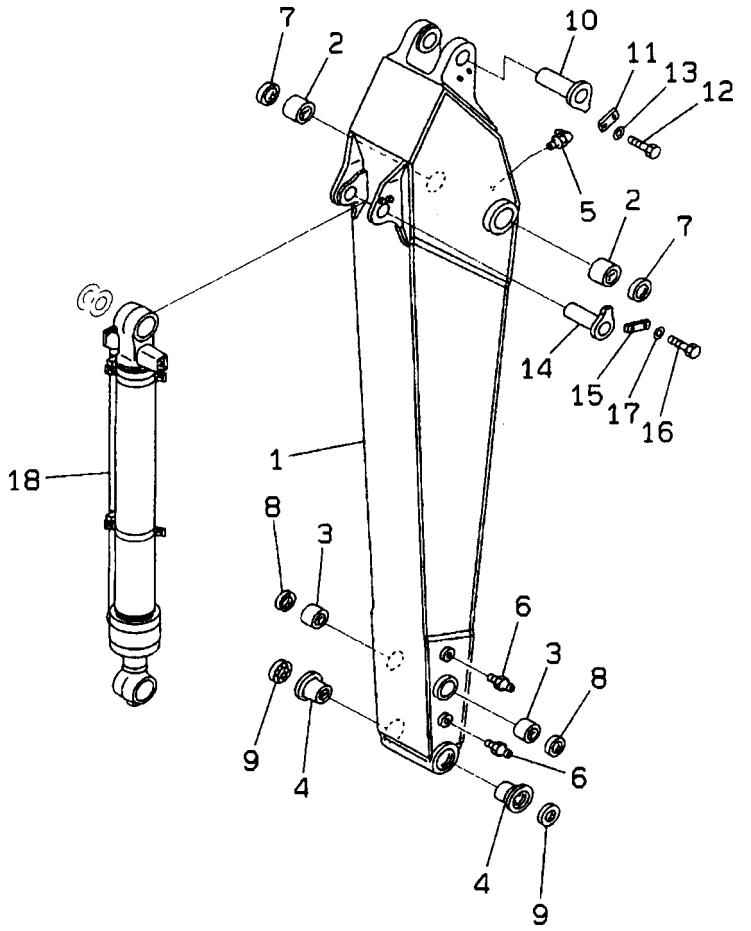

FIG. NO: T1200-01A0

INDEX	PART NO.	DESCRIPTION	Q'TY	SERIAL NO. PC200-6B	SERIAL NO. PC200LC-6B
	20Y-944-0080	ARM ASS'Y	1	B10001-	
1	☆	. ARM	1	B10001-	
2	205-70-72180	. BUSHING	2	B10001-	
3	21K-70-12170	. BUSHING	2	B10001-	
4	205-70-72130	. BUSHING	2	B10001-	
5	07020-00900	. FITTING	1	B10001-	
6	07020-00000	. FITTING	2	B10001-	
7	07145-00090	SEAL	2	B10001-	
8	21K-70-12180	SEAL	2	B10001-	
9	205-70-62150	SEAL	2	B10001-	
10	20Y-70-11180	PIN	1	B10001-	
11	205-70-66580	PLATE	1	B10001-	
12	01010-81230	BOLT	2	B10001-	
13	01643-31232	WASHER	2	B10001-	
14	205-70-71190	PIN	1	B10001-	
15	205-70-66580	PLATE	1	B10001-	
16	01010-81230	BOLT	2	B10001-	
17	01643-31232	WASHER	2	B10001-	
18	(☉205-63-X3131)	BUCKET CYLINDER G.,(SEE FIG.Y1620-41A0)	1	B10001-	

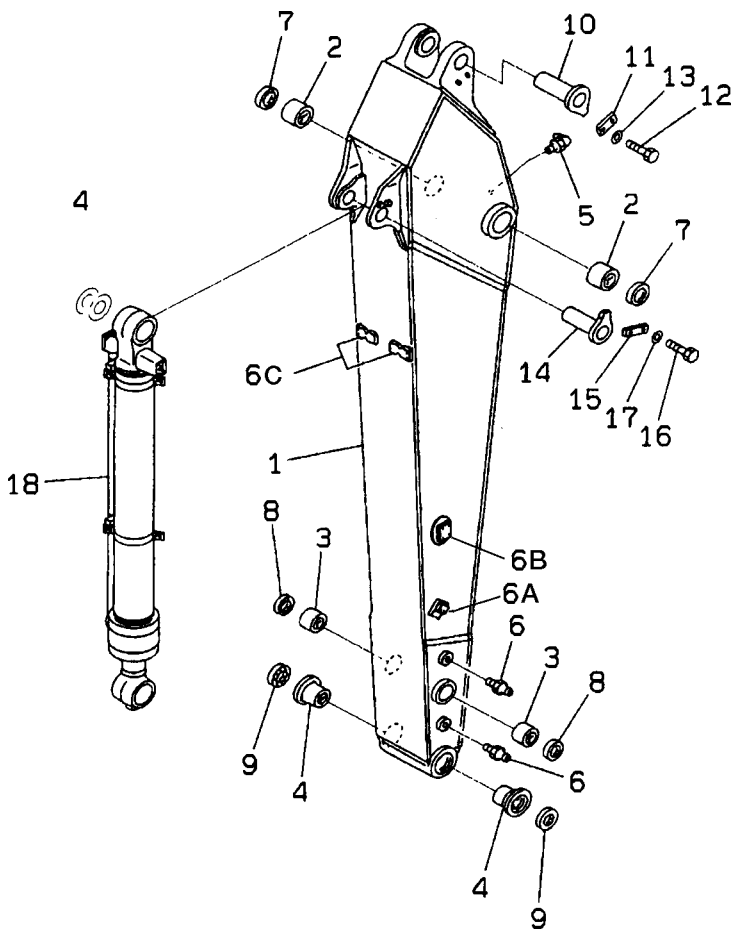

INDEX	PART NO.	DESCRIPTION	Q'TY	SERIAL NO. PC200-6B	SERIAL NO. PC200LC-6B
	20Y-944-0090	ARM ASS'Y	1	B10001-	
1	☆	. ARM	1	B10001-	
2	205-70-72180	. BUSHING	2	B10001-	
3	21K-70-12170	. BUSHING	2	B10001-	
4	205-70-72130	. BUSHING	2	B10001-	
5	07020-00900	. FITTING	1	B10001-	
6	07020-00000	. FITTING	2	B10001-	
6A	20Y-970-3560	. BRACKET (WELDED)	2	B10001-	
6B	20Y-970-3570	. BRACKET (WELDED)	2	B10001-	
6C	20Y-70-22G40	. SEAT (WELDED)	2	B10001-	
7	07145-00090	SEAL	2	B10001-	
8	21K-70-12180	SEAL	2	B10001-	
9	205-70-62150	SEAL	2	B10001-	
10	20Y-70-11180	PIN	1	B10001-	
11	205-70-66580	PLATE	1	B10001-	
12	01010-81230	BOLT	2	B10001-	
13	01643-31232	WASHER	2	B10001-	
14	205-70-71190	PIN	1	B10001-	
15	205-70-66580	PLATE	1	B10001-	
16	01010-81230	BOLT	2	B10001-	
17	01643-31232	WASHER	2	B10001-	
18	(⊙205-63-X3131)	BUCKET CYLINDER G.,(SEE FIG.Y1620-41A0)	1	B10001-	

FIG. T1200-01A1 ARM (1.8M) (HEAVY DUTY)

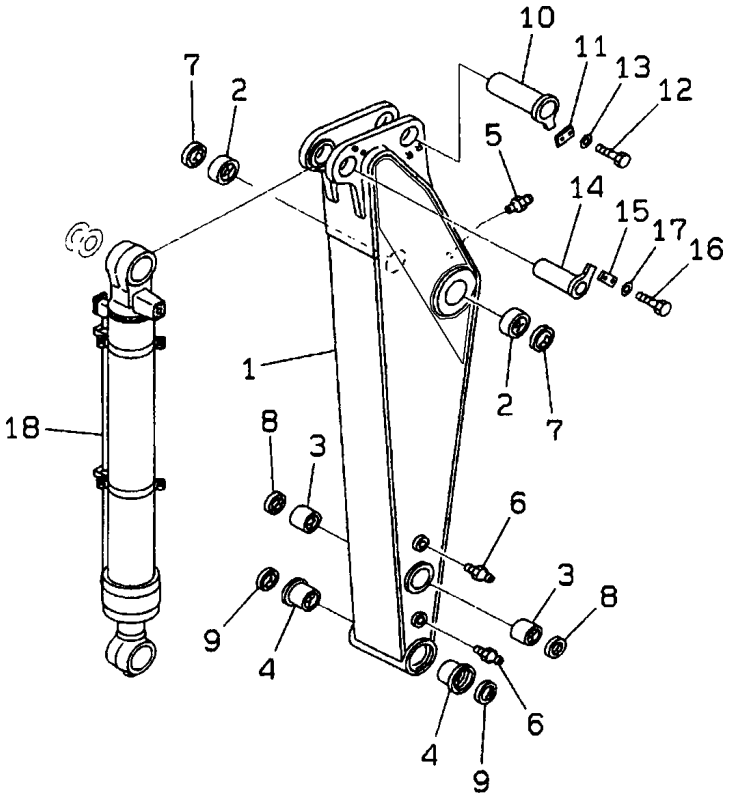

FIG. NO: T1200-01A1

INDEX	PART NO.	DESCRIPTION	Q'TY	SERIAL NO. PC200-6B	SERIAL NO. PC200LC-6B
	20Y-944-0120	ARM ASS'Y	1	B10001-	
1	☆	. ARM	1	B10001-	
2	205-70-72180	. BUSHING	2	B10001-	
3	21K-70-12170	. BUSHING	2	B10001-	
4	205-70-72130	. BUSHING	2	B10001-	
5	07020-00900	. FITTING	1	B10001-	
6	07020-00000	. FITTING	2	B10001-	
7	07145-00090	SEAL	2	B10001-	
8	21K-70-12180	SEAL	2	B10001-	
9	205-70-62150	SEAL	2	B10001-	
10	20Y-70-11180	PIN	1	B10001-	
11	205-70-66580	PLATE	1	B10001-	
12	01010-81230	BOLT	2	B10001-	
13	01643-31232	WASHER	2	B10001-	
14	205-70-71190	PIN	1	B10001-	
15	205-70-66580	PLATE	1	B10001-	
16	01010-81230	BOLT	2	B10001-	
17	01643-31232	WASHER	2	B10001-	
18	(☉205-63-X3140)	BUCKET CYLINDER G.,(SEE FIG.Y1620-41A1)	1	B10001-	

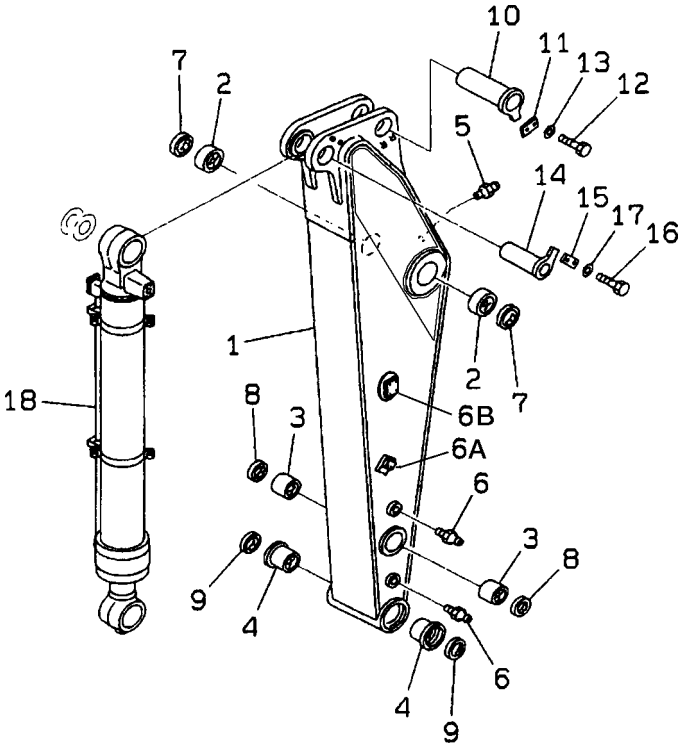

INDEX	PART NO.	DESCRIPTION	Q'TY	SERIAL NO. PC200-6B	SERIAL NO. PC200LC-6B
	20Y-944-0130	ARM ASS'Y	1	B10001-	
1	☆	. ARM	1	B10001-	
2	205-70-72180	. BUSHING	2	B10001-	
3	21K-70-12170	. BUSHING	2	B10001-	
4	205-70-72130	. BUSHING	2	B10001-	
5	07020-00900	. FITTING	1	B10001-	
6	07020-00000	. FITTING	2	B10001-	
6A	20Y-970-3560	. BRACKET (WELDED)	2	B10001-	
6B	20Y-970-3570	. BRACKET (WELDED)	2	B10001-	
7	07145-00090	SEAL	2	B10001-	
8	21K-70-12180	SEAL	2	B10001-	
9	205-70-62150	SEAL	2	B10001-	
10	20Y-70-11180	PIN	1	B10001-	
11	205-70-66580	PLATE	1	B10001-	
12	01010-81230	BOLT	2	B10001-	
13	01643-31232	WASHER	2	B10001-	
14	205-70-71190	PIN	1	B10001-	
15	205-70-66580	PLATE	1	B10001-	
16	01010-81230	BOLT	2	B10001-	
17	01643-31232	WASHER	2	B10001-	
18	(☉205-63-X3140)	BUCKET CYLINDER G.,(SEE FIG.Y1620-41A1)	1	B10001-	

FIG. T1200-01A2 ARM (2.4M) (FOR COMPONENT) (STD)

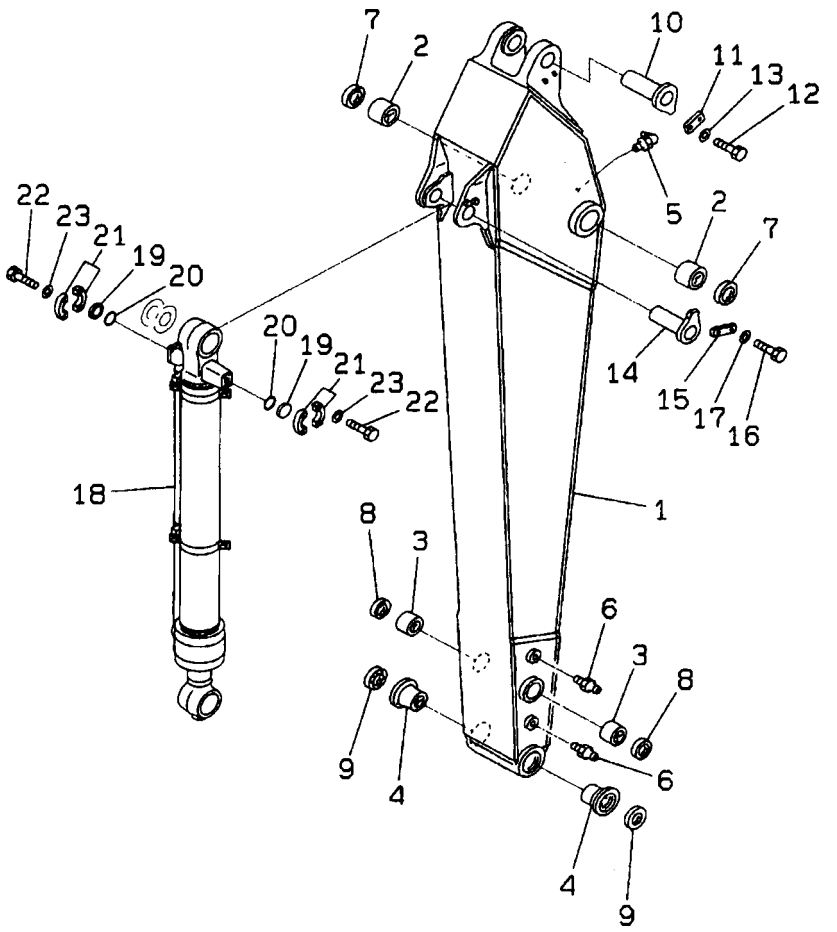

FIG. NO: T1200-01A2

INDEX	PART NO.	DESCRIPTION	Q'TY	SERIAL NO. PC200-6B	SERIAL NO. PC200LC-6B
	20Y-944-0012	ARM ASS'Y	1	B10001-	
1	☆	. ARM	1	B10001-	
2	205-70-72180	. BUSHING	2	B10001-	
3	21K-70-12170	. BUSHING	2	B10001-	
4	205-70-72130	. BUSHING	2	B10001-	
5	07020-00900	. FITTING	1	B10001-	
6	07020-00000	. FITTING	2	B10001-	
7	07145-00090	SEAL	2	B10001-	
8	21K-70-12180	SEAL	2	B10001-	
9	205-70-62150	SEAL	2	B10001-	
10	20Y-70-11180	PIN	1	B10001-	
11	205-70-66580	PLATE	1	B10001-	
12	01010-81230	BOLT	2	B10001-	
13	01643-31232	WASHER	2	B10001-	
14	205-70-71190	PIN	1	B10001-	
15	205-70-66580	PLATE	1	B10001-	
16	01010-81230	BOLT	2	B10001-	
17	01643-31232	WASHER	2	B10001-	
18	(☉205-63-X3131)	BUCKET CYLINDER G.,(SEE FIG.Y1620-41A0)	1	B10001-	
19	07378-10600	HEAD	2	B10001-	
20	07000-13025	O-RING	2	B10001-	
21	07371-30640	FLANGE	4	B10001-	
22	07372-21035	BOLT	8	B10001-	
23	01643-51032	WASHER	8	B10001-	

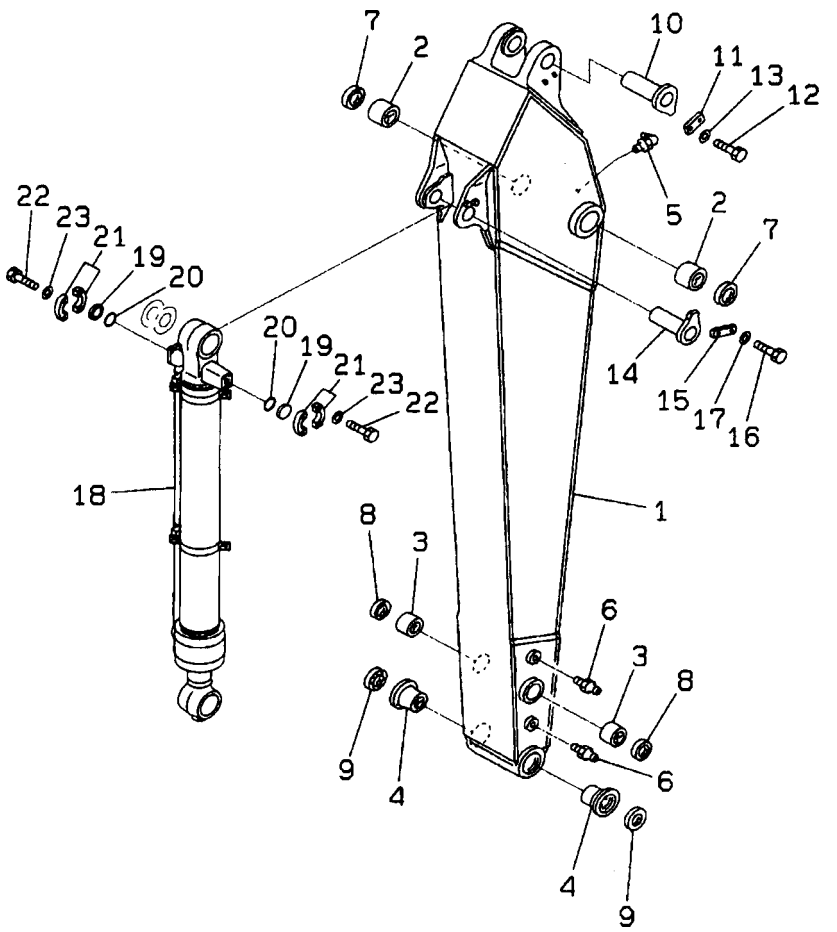

INDEX	PART NO.	DESCRIPTION	Q'TY	SERIAL NO. PC200-6B	SERIAL NO. PC200LC-6B
	20Y-944-B080	ARM ASS'Y	1		B20001-
1	☆	. ARM	1		B20001-
2	205-70-72180	. BUSHING	2		B20001-
3	21K-70-12170	. BUSHING	2		B20001-
4	205-70-72130	. BUSHING	2		B20001-
5	07020-00900	. FITTING	1		B20001-
6	07020-00000	. FITTING	2		B20001-
7	07145-00090	SEAL	2		B20001-
8	20Y-70-23220	SEAL	2		B20001-
9	205-70-62150	SEAL	2		B20001-
10	20Y-70-11180	PIN	1		B20001-
11	205-70-66580	PLATE	1		B20001-
12	01010-81230	BOLT	2		B20001-
13	01643-31232	WASHER	2		B20001-
14	205-70-71190	PIN	1		B20001-
15	205-70-66580	PLATE	1		B20001-
16	01010-81230	BOLT	2		B20001-
17	01643-31232	WASHER	2		B20001-
18	(☉205-63-X3131)	BUCKET CYLINDER G.,(SEE FIG.Y1620-41A0)	1		B20001-
19	07378-10600	HEAD	2		B20001-
20	07000-13025	O-RING	2		B20001-
21	07371-30640	FLANGE	4		B20001-
22	07372-21035	BOLT	8		B20001-
23	01643-51032	WASHER	8		B20001-

FIG. T1200-01B0 ARM (2.9M) (FOR ADDITIONAL PIPING) (KIT)

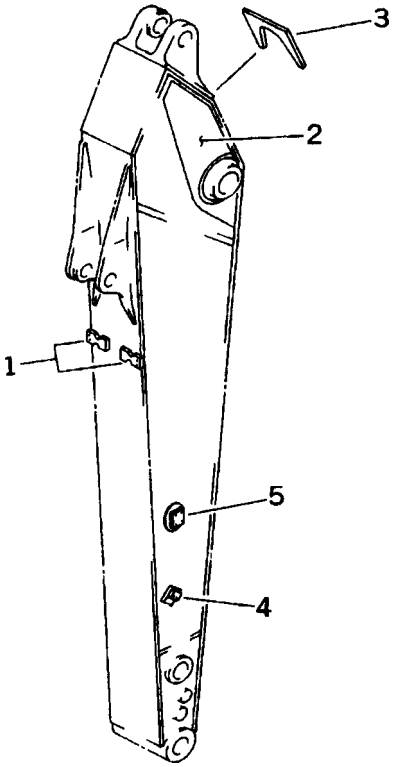

FIG. NO: T1200-01B0

INDEX	PART NO.	DESCRIPTION	Q'TY	SERIAL NO. PC200-6B	SERIAL NO. PC200LC-6B
1	20Y-70-22G40	SEAT	2	B10001-	
2	20Y-970-2A10	PLATE	2	B10001-	
3	20Y-970-2A20	PLATE	1	B10001-	
4	20Y-970-3560	BRACKET	2	B10001-	
5	20Y-970-6480	BRACKET	2	B10001-	

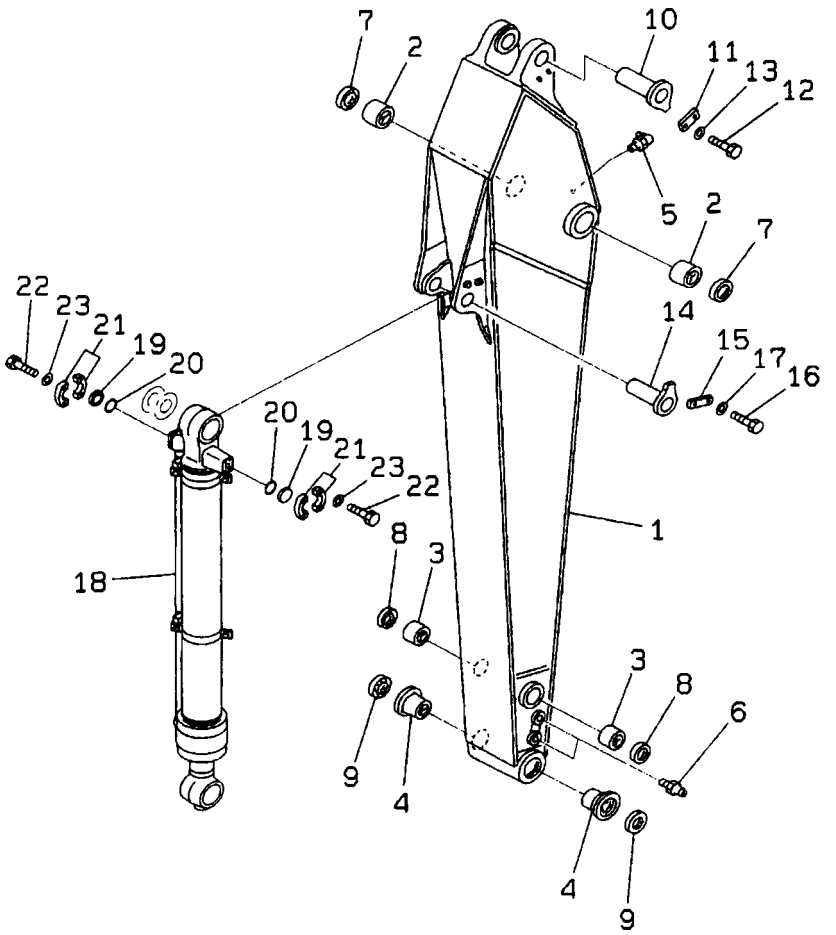

INDEX	PART NO.	DESCRIPTION	Q'TY	SERIAL NO. PC200-6B	SERIAL NO. PC200LC-6B
	20Y-70-00320	ARM ASS'Y	1	B10001-	
1	☆	. ARM	1	B10001-	
2	205-70-72180	. BUSHING	2	B10001-	
3	21K-70-12170	. BUSHING	2	B10001-	
4	205-70-72130	. BUSHING	2	B10001-	
5	07020-00900	. FITTING	1	B10001-	
6	07020-00000	. FITTING	2	B10001-	
7	07145-00090	SEAL	2	B10001-	
8	21K-70-12180	SEAL	2	B10001-	
9	205-70-62150	SEAL	2	B10001-	
10	20Y-70-11180	PIN	1	B10001-	
11	205-70-66580	PLATE	1	B10001-	
12	01010-81230	BOLT	2	B10001-	
13	01643-31232	WASHER	2	B10001-	
14	205-70-71190	PIN	1	B10001-	
15	205-70-66580	PLATE	1	B10001-	
16	01010-81230	BOLT	2	B10001-	
17	01643-31232	WASHER	2	B10001-	
18	(☉205-63-X3131)	BUCKET CYLINDER G.,(SEE FIG.Y1620-41A0)	1	B10001-	
19	07378-10600	HEAD	2	B10001-	
20	07000-13025	O-RING	2	B10001-	
21	07371-30640	FLANGE	4	B10001-	
22	07372-21035	BOLT	8	B10001-	
23	01643-51032	WASHER	8	B10001-	

FIG. T1200-01C7 ARM (2.9M) (FOR ADDITIONAL PIPING) (FOR COMPONENT)

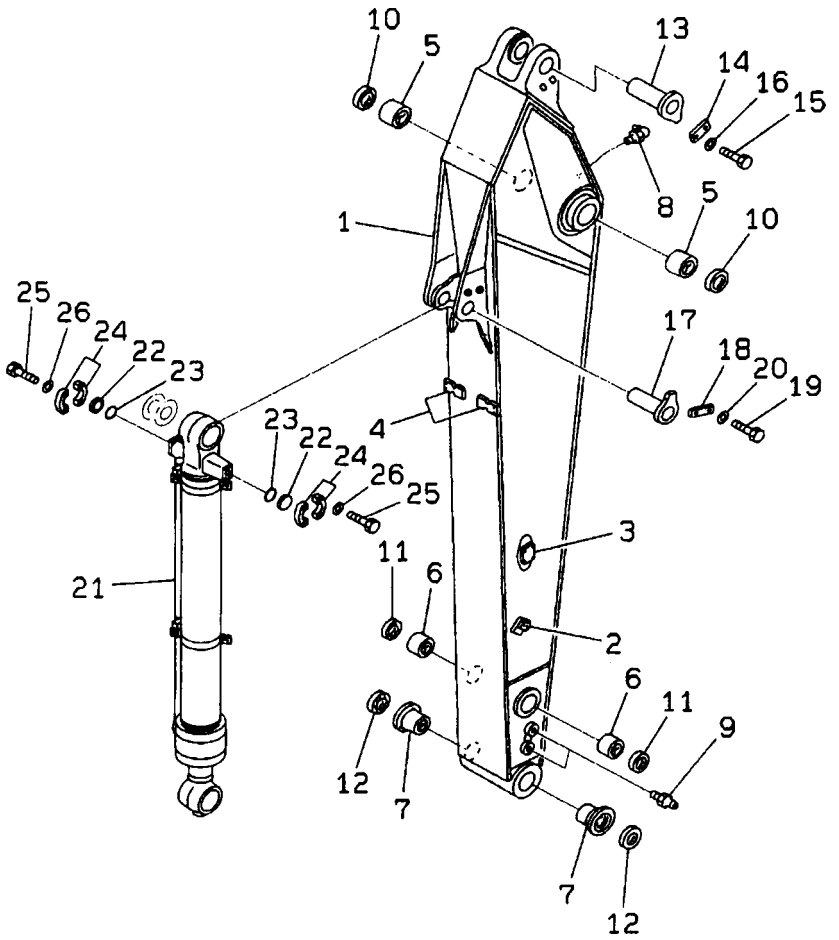

FIG. NO: T1200-01C7

INDEX	PART NO.	DESCRIPTION	Q'TY	SERIAL NO. PC200-6B	SERIAL NO. PC200LC-6B
	20Y-970-6510	ARM	1	B10001-	
1	☆	. ARM	1	B10001-	
2	20Y-970-6470	. BRACKET	2	B10001-	
3	20Y-970-6480	. BRACKET	2	B10001-	
4	20Y-70-22G40	. SEAT	2	B10001-	
5	205-70-72180	BUSHING	2	B10001-	
6	21K-70-12170	BUSHING	2	B10001-	
7	205-70-72130	BUSHING	2	B10001-	
8	07020-00900	FITTING	1	B10001-	
9	07020-00000	FITTING	2	B10001-	
10	07145-00090	SEAL	2	B10001-	
11	21K-70-12180	SEAL	2	B10001-	
12	205-70-62150	SEAL	2	B10001-	
13	20Y-70-11180	PIN	1	B10001-	
14	205-70-66580	PLATE	1	B10001-	
15	01010-81230	BOLT	2	B10001-	
16	01643-31232	WASHER	2	B10001-	
17	205-70-71190	PIN	1	B10001-	
18	205-70-66580	PLATE	1	B10001-	
19	01010-81230	BOLT	2	B10001-	
20	01643-31232	WASHER	2	B10001-	
21	(⊙205-63-X3131)	BUCKET CYLINDER G.,(SEE FIG.Y1620-41A0)	1	B10001-	
22	07378-10600	HEAD	2	B10001-	
23	07000-13025	O-RING	2	B10001-	
24	07371-30640	FLANGE	4	B10001-	
25	07372-21035	BOLT	8	B10001-	
26	01643-51032	WASHER	8	B10001-	

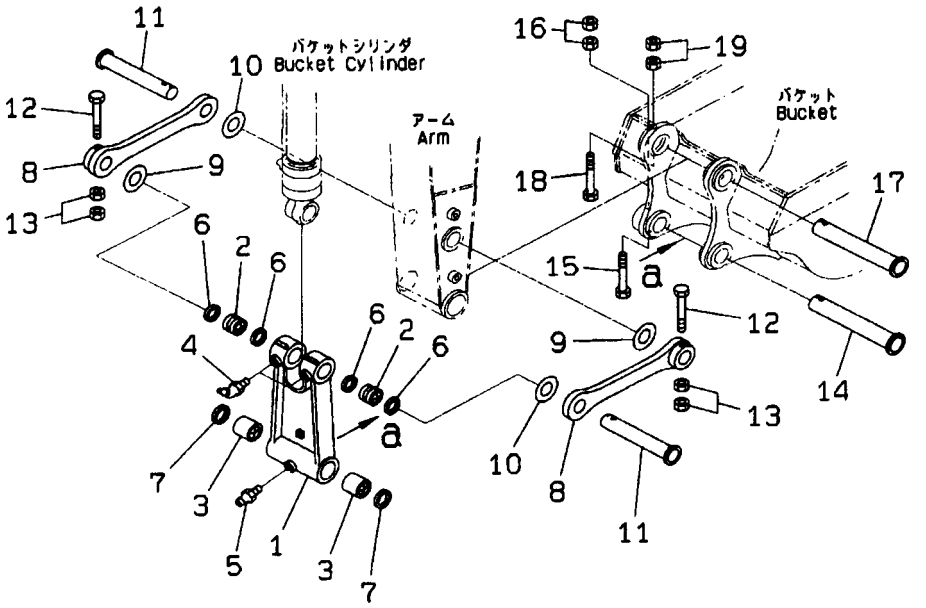

INDEX	PART NO.	DESCRIPTION	Q'TY	SERIAL NO. PC200-6B	SERIAL NO. PC200LC-6B
	20Y-70-00071	LINK ASS'Y	1	B10001-	
1	☆	. LINK	1	B10001-	
2	205-70-73180	. BUSHING	2	B10001-	
3	205-70-67150	. BUSHING	2	B10001-	
4	07020-00000	. FITTING	2	B10001-	
5	07020-00000	. FITTING	1	B10001-	
6	21K-70-12180	SEAL	4	B10001-	
7	205-70-62140	SEAL	2	B10001-	
8	205-70-73130	LINK	2	B10001-	
9	20Y-70-11320	SPACER 0.8MM	3	B10001-	
10	20Y-70-11330	SPACER 1.5MM	3	B10001-	
11	205-70-73160	PIN	2	B10001-	
12	205-70-73190	BOLT	2	B10001-	
13	01580-12016	NUT	4	B10001-	
14	205-70-73270	PIN	1	B10001-	
15	205-70-73190	BOLT	1	B10001-	
16	01580-12016	NUT	2	B10001-	
17	205-70-73270	PIN	1	B10001-	
18	362-46-11210	BOLT	1	B10001-	
19	01580-12016	NUT	2	B10001-	

FIG. T1200-02A1 ARM (BUCKET LINK)

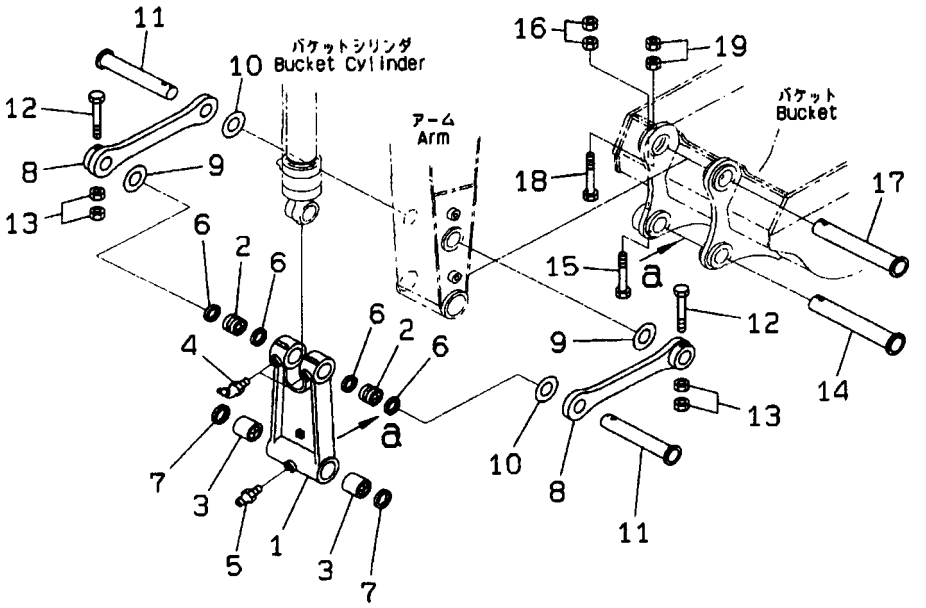

FIG. NO: T1200-02A1

INDEX	PART NO.	DESCRIPTION	Q'TY	SERIAL NO. PC200-6B	SERIAL NO. PC200LC-6B
	20Y-70-B0390	LINK ASS'Y	1		B20001-
1	☆	. LINK	1		B20001-
2	205-70-73180	. BUSHING	2		B20001-
3	205-70-67150	. BUSHING	2		B20001-
4	07020-00000	. FITTING	2		B20001-
5	07020-00000	. FITTING	1		B20001-
6	20Y-70-23220	SEAL	4		B20001-
7	20Y-70-23230	SEAL	2		B20001-
8	205-70-73130	LINK	2		B20001-
9	20Y-70-11320	SPACER 0.8MM	3		B20001-
10	20Y-70-11330	SPACER 1.5MM	3		B20001-
11	205-70-73160	PIN	2		B20001-
12	205-70-73190	BOLT	2		B20001-
13	01580-12016	NUT	4		B20001-
14	205-70-73270	PIN	1		B20001-
15	205-70-73190	BOLT	1		B20001-
16	01580-12016	NUT	2		B20001-
17	205-70-73270	PIN	1		B20001-
18	362-46-11210	BOLT	1		B20001-
19	01580-12016	NUT	2		B20001-

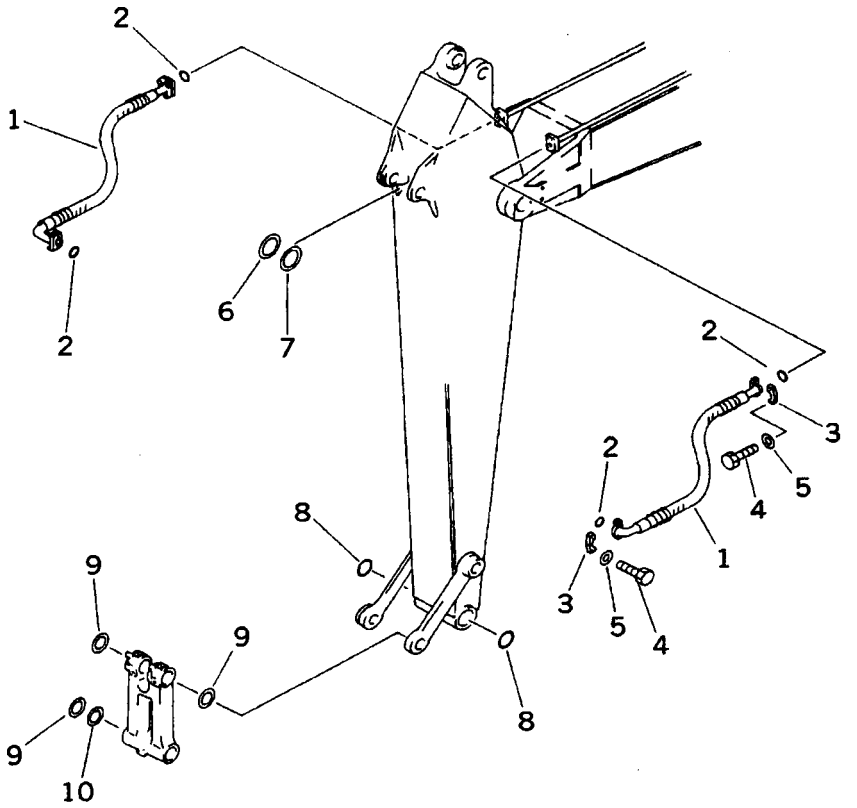

INDEX	PART NO.	DESCRIPTION	Q'TY	SERIAL NO. PC200-6B	SERIAL NO. PC200LC-6B
1	20Y-62-13412	HOSE	2	B10001-	B20001-
2	07000-13025	O-RING	4	B10001-	B20001-
3	07371-30640	FLANGE	8	B10001-	B20001-
4	07372-21035	BOLT	16	B10001-	B20001-
5	01643-51032	WASHER	16	B10001-	B20001-
6	20Y-70-11290	SPACER 0.8MM	1	B10001-	B20001-
7	20Y-70-11310	SPACER 1.5MM	2	B10001-	B20001-
8	205-70-73280	O-RING	2	B10001-	B20001-
9	20Y-70-11340	SPACER 0.8MM	1	B10001-	B20001-
10	205-70-51530	SPACER 1.5MM	2	B10001-	B20001-

FIG. T1200-05A7 ARM (2.9M) (ADDITIONAL PIPING)

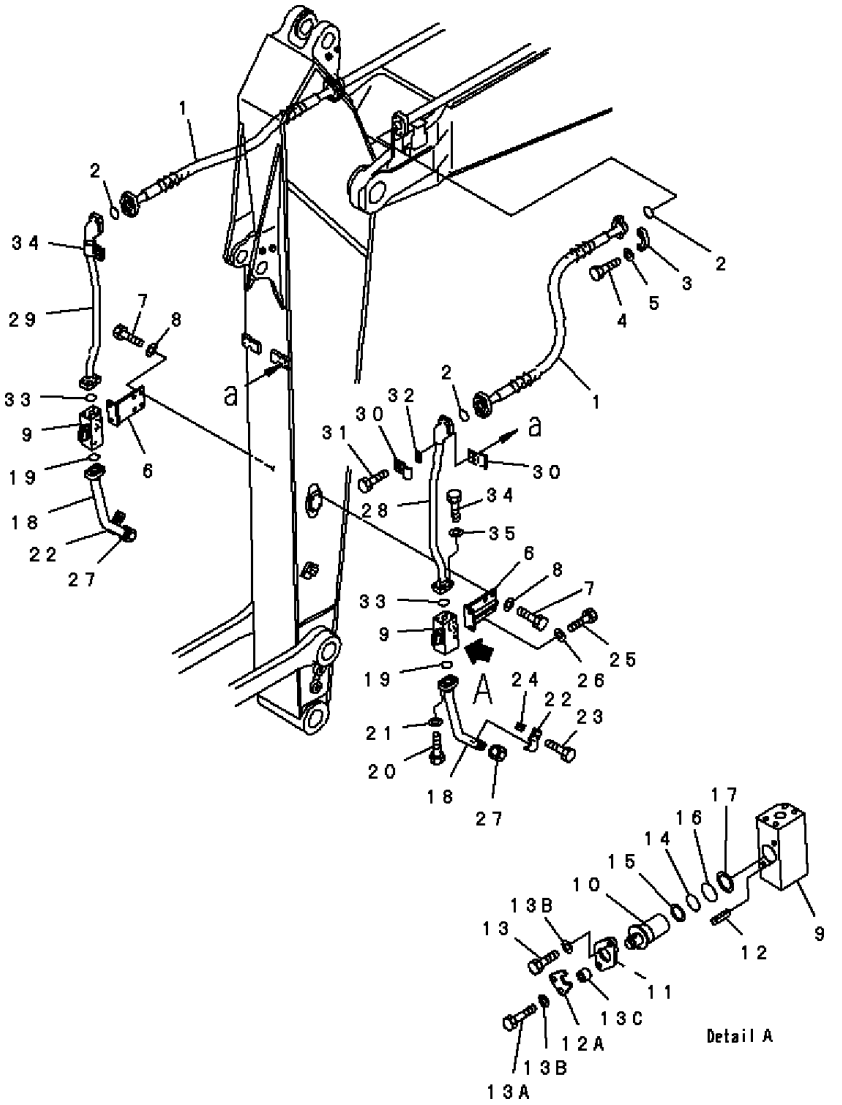

FIG. NO: T1200-05A7

INDEX	PART NO.	DESCRIPTION	Q'TY	SERIAL NO. PC200-6B	SERIAL NO. PC200LC-6B
1	07097-21014	HOSE	2	B10001-	
2	21T-09-11460	O-RING	4	B10001-	
3	07371-31049	FLANGE	8	B10001-	
4	07372-21035	BOLT	16	B10001-	
5	01643-51032	WASHER	16	B10001-	
6	20Y-970-3220	BRACKET	2	B10001-	
7	01010-81230	BOLT	8	B10001-	
8	01643-31232	WASHER	8	B10001-	
	20Y-970-2300	STOP VALVE ASS'Y	2	B10001-	
9	20Y-970-3230	. BODY	1	B10001-	
10	20Y-970-3240	. ROTOR	1	B10001-	
11	20Y-970-3270	. PLATE	1	B10001-	
12	04025-00412	. PIN	1	B10001-	
12A	20Y-970-4611	. PLATE	1	B10001-	
13	01010-81025	. BOLT	1	B10001-	
13A	01010-81045	. BOLT	1	B10001-	
13B	01643-31032	. WASHER	2	B10001-	
13C	201-03-29160	. SPACER	1	B10001-	
14	07000-13032	. O-RING	1	B10001-	
15	07001-03032	. RING	1	B10001-	
16	07000-13038	. O-RING	1	B10001-	
17	07001-03038	. RING	1	B10001-	
18	20Y-970-3210	TUBE	2	B10001-	
19	07000-13035	O-RING	2	B10001-	
20	07372-21040	BOLT	8	B10001-	
21	01643-51032	WASHER	8	B10001-	
22	207-62-31330	CLAMP	2	B10001-	
23	01010-81225	BOLT	4	B10001-	
24	20Y-62-13450	PLATE	2	B10001-	
25	01010-81230	BOLT	4	B10001-	
26	01643-31232	WASHER	4	B10001-	
27	205-970-7680	PLUG	2	B10001-	
28	20Y-970-3180	TUBE,L.H.	1	B10001-	
29	20Y-970-3190	TUBE,R.H.	1	B10001-	
30	207-62-31330	CLAMP	4	B10001-	
31	01010-81230	BOLT	4	B10001-	
32	20Y-62-13450	PLATE	2	B10001-	
33	07000-13035	O-RING	2	B10001-	
34	07372-21040	BOLT	8	B10001-	
35	01643-51032	WASHER	8	B10001-	

FIG. T1200-05B9 ARM (2.4M) (HEAVY DUTY - 1 ATTACHMENT) (ADDITIONAL PIPING)

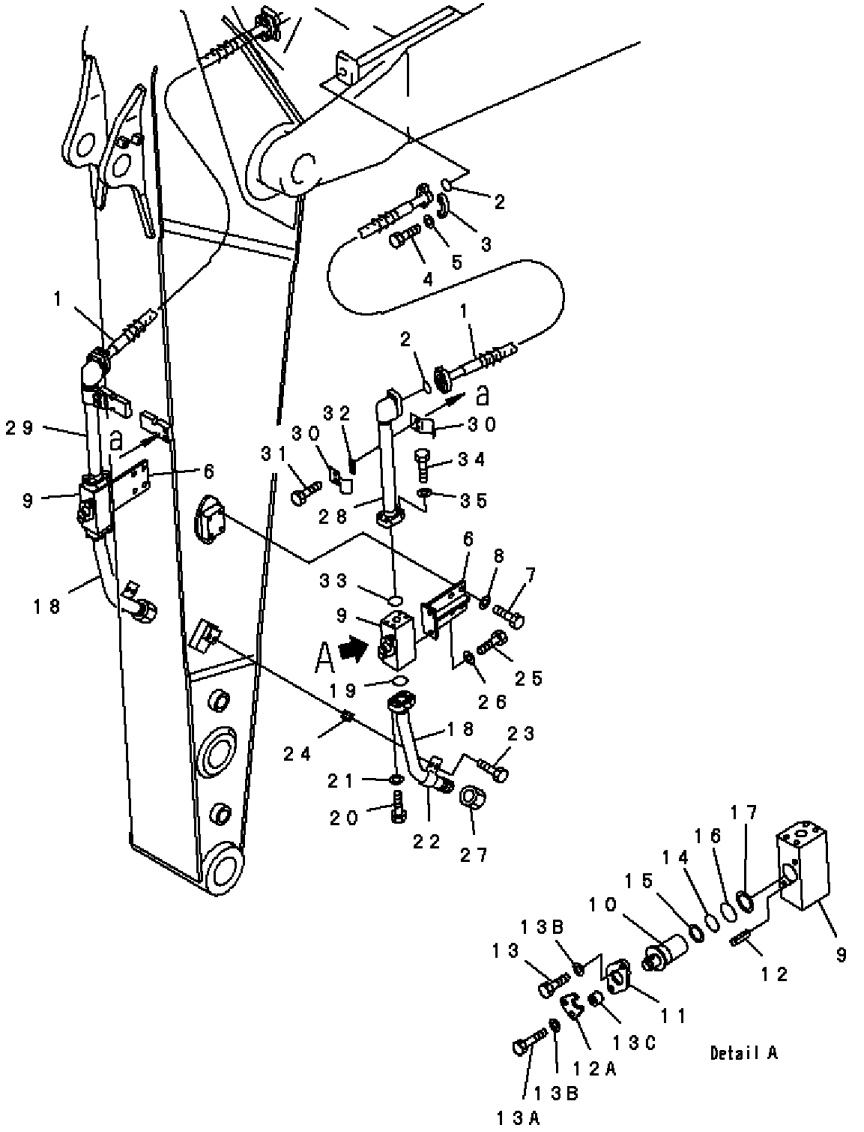

FIG. NO: T1200-05B9

INDEX	PART NO.	DESCRIPTION	Q'TY	SERIAL NO. PC200-6B	SERIAL NO. PC200LC-6B
1	07097-21014	HOSE	2	B10001-	
2	21T-09-11460	O-RING	4	B10001-	
3	07371-31049	FLANGE	8	B10001-	
4	07372-21035	BOLT	16	B10001-	
5	01643-51032	WASHER	16	B10001-	
6	20Y-970-3220	BRACKET	2	B10001-	
7	01010-81230	BOLT	8	B10001-	
8	01643-31232	WASHER	8	B10001-	
	20Y-970-2300	STOP VALVE ASS'Y	2	B10001-	
9	20Y-970-3230	. BODY	1	B10001-	
10	20Y-970-3240	. ROTOR	1	B10001-	
11	20Y-970-3270	. PLATE	1	B10001-	
12	04025-00412	. PIN	1	B10001-	
12A	20Y-970-4611	. PLATE	1	B10001-	
13	01010-81025	. BOLT	1	B10001-	
13A	01010-81045	. BOLT	1	B10001-	
13B	01643-31032	. WASHER	2	B10001-	
13C	201-03-29160	. SPACER	1	B10001-	
14	07000-13032	. O-RING	1	B10001-	
15	07001-03032	. RING	1	B10001-	
16	07000-13038	. O-RING	1	B10001-	
17	07001-03038	. RING	1	B10001-	
18	20Y-970-3210	TUBE	2	B10001-	
19	07000-13035	O-RING	2	B10001-	
20	07372-21040	BOLT	8	B10001-	
21	01643-51032	WASHER	8	B10001-	
22	207-62-31330	CLAMP	2	B10001-	
23	01010-81225	BOLT	4	B10001-	
24	20Y-62-13450	PLATE	2	B10001-	
25	01010-81230	BOLT	4	B10001-	
26	01643-31232	WASHER	4	B10001-	
27	205-970-7680	PLUG	2	B10001-	
28	20Y-970-6310	TUBE,L.H.	1	B10001-	
29	20Y-970-6390	TUBE,R.H.	1	B10001-	
30	207-62-31330	CLAMP	4	B10001-	
31	01010-81230	BOLT	4	B10001-	
32	20Y-62-13450	PLATE	2	B10001-	
33	07000-13035	O-RING	2	B10001-	
34	07372-21040	BOLT	8	B10001-	
35	01643-51032	WASHER	8	B10001-	

FIG. T1200-05C1 ARM (1.8M) (HEAVY DUTY - 1 ATTACHMENT) (ADDITIONAL PIPING)

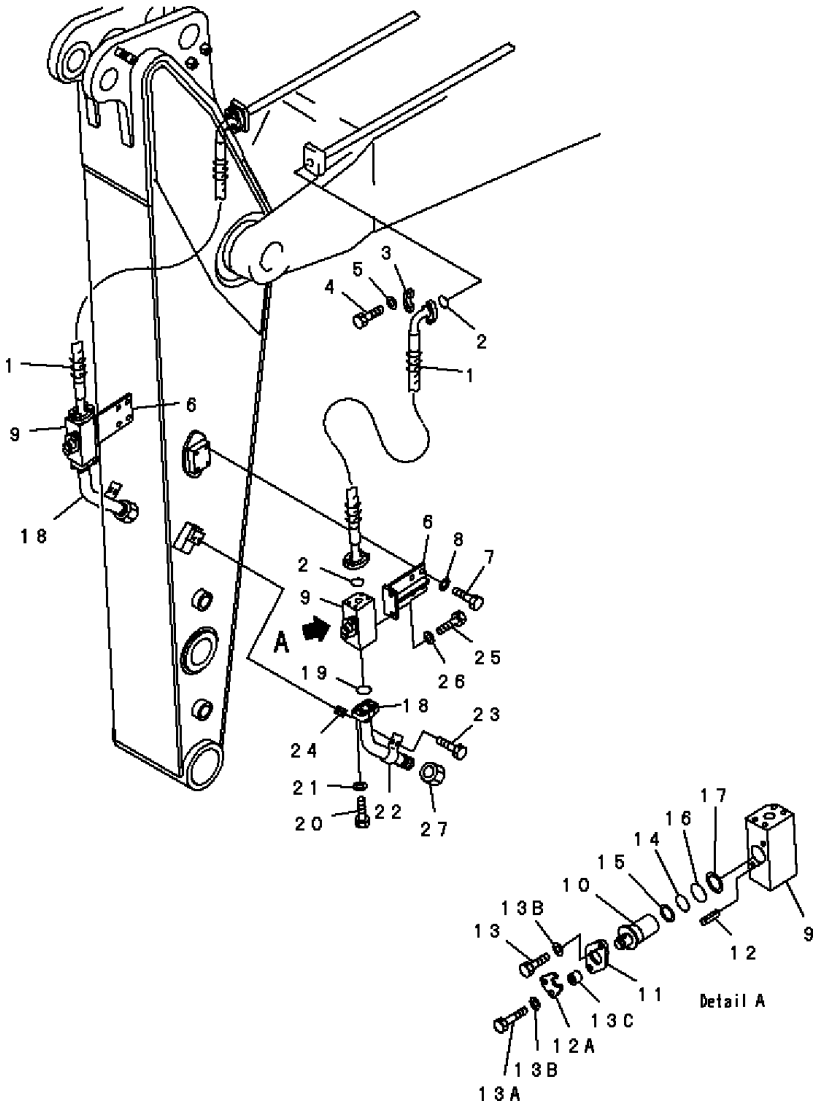

FIG. NO: T1200-05C1

INDEX	PART NO.	DESCRIPTION	Q'TY	SERIAL NO. PC200-6B	SERIAL NO. PC200LC-6B
1	20Y-970-6370	HOSE	2	B10001-	
2	21T-09-11460	O-RING	4	B10001-	
3	07371-31049	FLANGE	8	B10001-	
4	07372-21035	BOLT	16	B10001-	
5	01643-51032	WASHER	16	B10001-	
6	20Y-970-3220	BRACKET	2	B10001-	
7	01010-81230	BOLT	8	B10001-	
8	01643-31232	WASHER	8	B10001-	
	20Y-970-2300	STOP VALVE ASS'Y	2	B10001-	
9	20Y-970-3230	. BODY	1	B10001-	
10	20Y-970-3240	. ROTOR	1	B10001-	
11	20Y-970-3270	. PLATE	1	B10001-	
12	04025-00412	. PIN	1	B10001-	
12A	20Y-970-4611	. PLATE	1	B10001-	
13	01010-81025	. BOLT	1	B10001-	
13A	01010-81045	. BOLT	1	B10001-	
13B	01643-31032	. WASHER	2	B10001-	
13C	201-03-29160	. SPACER	1	B10001-	
14	07000-13032	. O-RING	1	B10001-	
15	07001-03032	. RING	1	B10001-	
16	07000-13038	. O-RING	1	B10001-	
17	07001-03038	. RING	1	B10001-	
18	20Y-970-6380	TUBE	2	B10001-	
19	07000-13035	O-RING	2	B10001-	
20	07372-21040	BOLT	8	B10001-	
21	01643-51032	WASHER	8	B10001-	
22	207-62-31330	CLAMP	2	B10001-	
23	01010-81225	BOLT	4	B10001-	
24	20Y-62-13450	PLATE	2	B10001-	
25	01010-81230	BOLT	4	B10001-	
26	01643-31232	WASHER	4	B10001-	
27	205-970-7680	PLUG	2	B10001-	

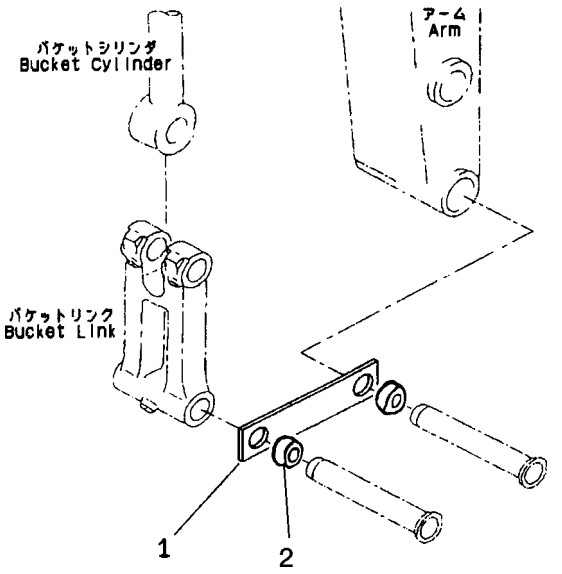

INDEX	PART NO.	DESCRIPTION	Q'TY	SERIAL NO. PC200-6B	SERIAL NO. PC200LC-6B
1	205-70-73290	LINK	2	B10001-	B20001-
2	20Y-70-B1340	COLLAR	2	B10001-	B20001-

FIG. T1510-01D1 TRAPEZOIDAL BUCKET

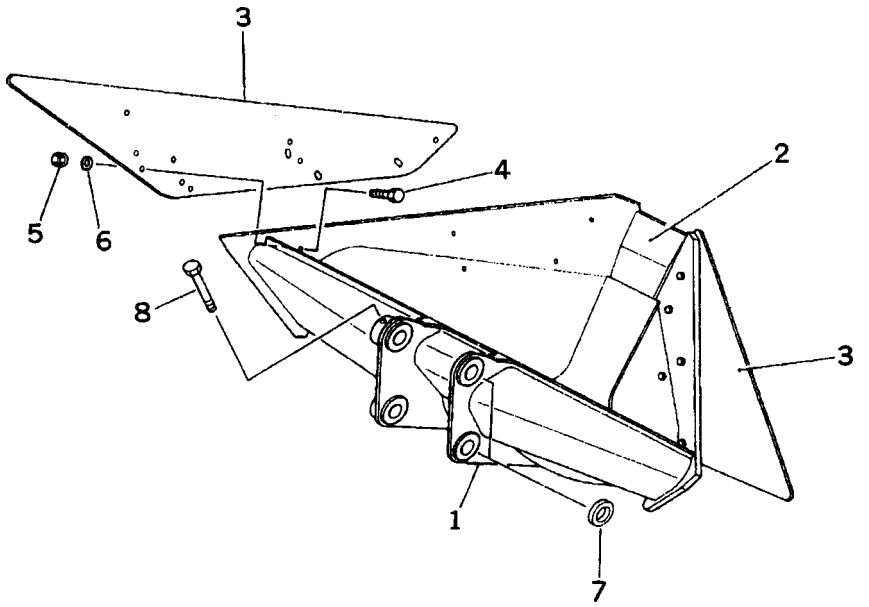

FIG. NO: T1510-01D1

INDEX	PART NO.	DESCRIPTION	Q'TY	SERIAL NO. PC200-6B	SERIAL NO. PC200LC-6B
1	205-929-B110	BUCKET	1	B10001-	B20001-
2	205-929-6120	. PLATE (WELDED)	1	B10001-	B20001-
3	205-929-6130	PLATE	2	B10001-	B20001-
4	01010-82460	BOLT	12	B10001-	B20001-
5	01580-12419	NUT	12	B10001-	B20001-
6	01643-32460	WASHER	12	B10001-	B20001-
7	205-70-74410	COLLAR	1	B10001-	B20001-
8	205-70-73190	BOLT	1	B10001-	B20001-

FIG. T1510-01F0 BUCKET, 1.15M3 (SAE 1,30M3) (HORIZONTAL PIN TYPE) (WITH HOOK)

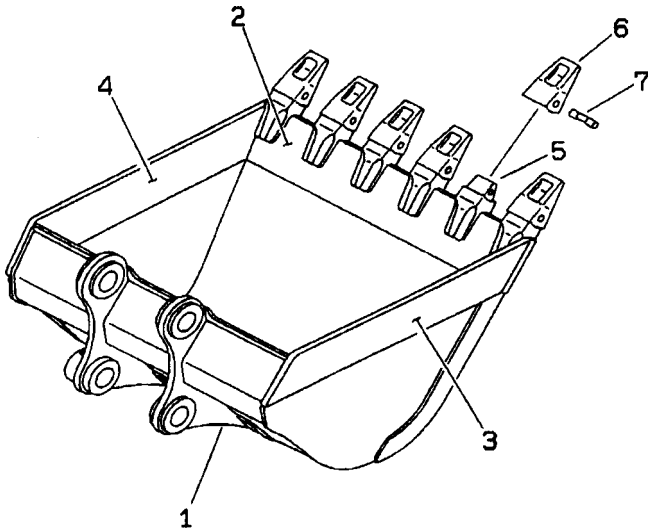

FIG. NO: T1510-01F0

INDEX	PART NO.	DESCRIPTION	Q'TY	SERIAL NO. PC200-6B	SERIAL NO. PC200LC-6B
1	20Y-920-B140	BUCKET	1	B10001-	B20001-
2	20Y-70-B1A90	. PLATE (WELDED)	1	B10001-	B20001-
3	20Y-70-B2A20	. PLATE, L.H. (WELDED)	1	B10001-	B20001-
4	20Y-70-B2A30	. PLATE, R.H. (WELDED)	1	B10001-	B20001-
5	20Y-70-14520	. ADAPTER (WELDED)	6	B10001-	B20001-
6	205-70-19570	TOOTH	6	B10001-	B20001-
7	09244-02496	PIN	6	B10001-	B20001-

FIG. T1510-01F1 BUCKET, 1.0M3 (SAE 1,17M3) (HORIZONTAL PIN TYPE) (WITH HOOK)

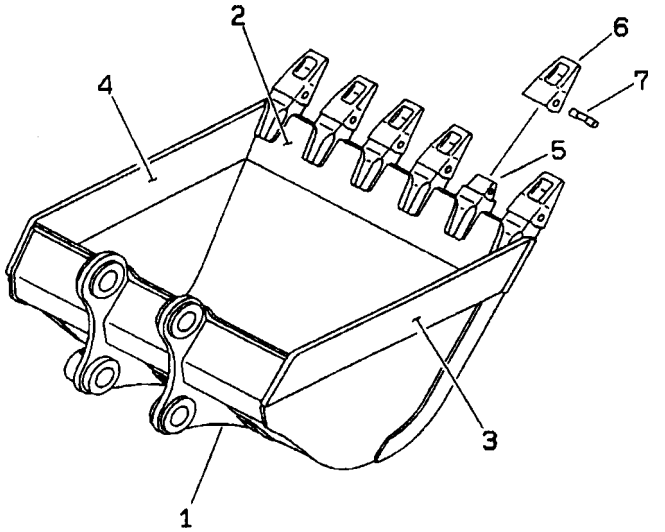

FIG. NO: T1510-01F1

INDEX	PART NO.	DESCRIPTION	Q'TY	SERIAL NO. PC200-6B	SERIAL NO. PC200LC-6B
1	20Y-920-B130	BUCKET	1	B10001-	B20001-
2	20Y-920-1420	. PLATE (WELDED)	1	B10001-	B20001-
3	20Y-70-B2A20	. PLATE, L.H. (WELDED)	1	B10001-	B20001-
4	20Y-70-B2A30	. PLATE, R.H. (WELDED)	1	B10001-	B20001-
5	20Y-70-14520	. ADAPTER (WELDED)	6	B10001-	B20001-
6	205-70-19570	TOOTH	6	B10001-	B20001-
7	09244-02496	PIN	6	B10001-	B20001-

FIG. T1510-01F1C BUCKET, 0.7M3 (SAE 0,8M3) (HORIZONTAL PIN TYPE) (WITH ADJUSTER, SIDE CUTTER AND HOOK)

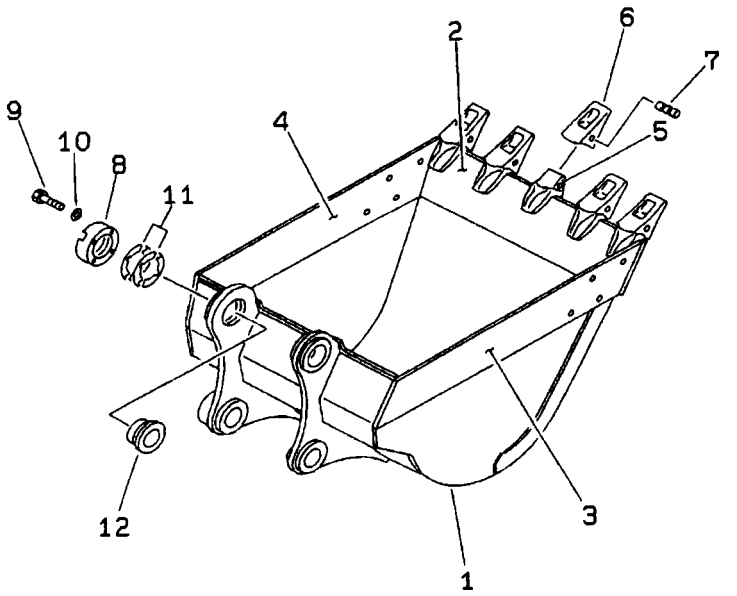

FIG. NO: T1510-01F1C

INDEX	PART NO.	DESCRIPTION	Q'TY	SERIAL NO. PC200-6B	SERIAL NO. PC200LC-6B
1	20Y-70-B1350	BUCKET	1	B10001-	B20001-
2	20Y-70-14122	. PLATE (WELDED)	1	B10001-	B20001-
3	20Y-70-24131	. PLATE (WELDED)	1	B10001-	B20001-
4	20Y-70-24141	. PLATE (WELDED)	1	B10001-	B20001-
5	20Y-70-14520	. ADAPTER (WELDED)	5	B10001-	B20001-
6	205-70-19570	TOOTH	5	B10001-	B20001-
7	09244-02496	PIN	5	B10001-	B20001-
8	205-70-74391	PLATE	1	B10001-	B20001-
9	01010-62055	BOLT	4	B10001-	B20001-
10	01643-32060	WASHER	4	B10001-	B20001-
11	205-70-00100	SHIM ASS'Y	1	B10001-	B20001-
	☆	. SHIM 1.0MM	8	B10001-	B20001-
	☆	. SHIM 0.5MM	4	B10001-	B20001-
12	205-70-74381	SPACER	1	B10001-	B20001-

FIG. T1510-01F3C BUCKET, 0.8M3 (SAE 0,93M3) (HORIZONTAL PIN TYPE) (WITH ADJUSTER, SIDE CUTTER AND HOOK)

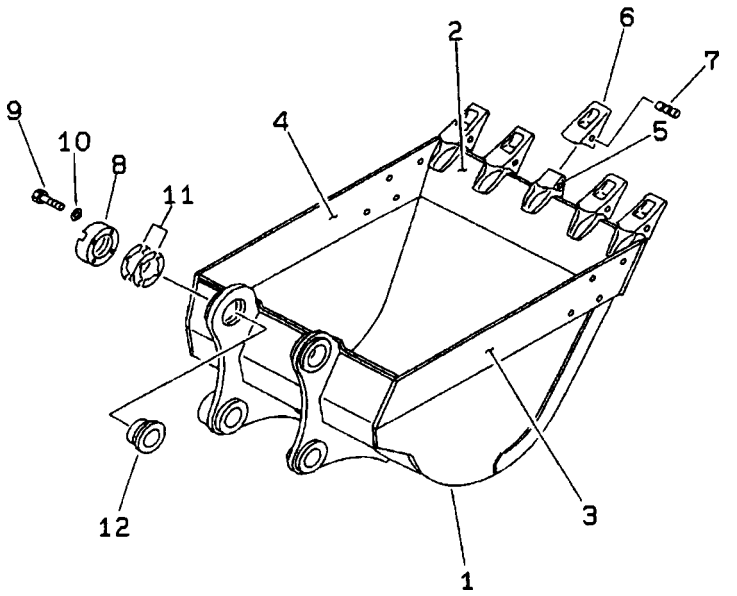

FIG. NO: T1510-01F3C

INDEX	PART NO.	DESCRIPTION	Q'TY	SERIAL NO. PC200-6B	SERIAL NO. PC200LC-6B
1	20Y-920-B120	BUCKET	1	B10001-	
2	20Y--920-1121	. PLATE (WELDED)	1	B10001-	
3	20Y-70-24131	. PLATE (WELDED)	1	B10001-	
4	20Y-70-24141	. PLATE (WELDED)	1	B10001-	
5	20Y-70-14520	. ADAPTER (WELDED)	5	B10001-	
6	205-70-19570	TOOTH	5	B10001-	
7	09244-02496	PIN	5	B10001-	
8	205-70-74391	PLATE	1	B10001-	
9	01010-62055	BOLT	4	B10001-	
10	01643-32060	WASHER	4	B10001-	
11	205-70-00100	SHIM ASS'Y	1	B10001-	
	☆	. SHIM 1.0MM	8	B10001-	
	☆	. SHIM 0.5MM	4	B10001-	
12	205-70-74381	SPACER	1	B10001-	

FIG. T1510-01F5C BUCKET, 0.9M3 (SAE 1,05M3) (HORIZONTAL PIN TYPE) (WITH SIDE CUTTER AND HOOK)

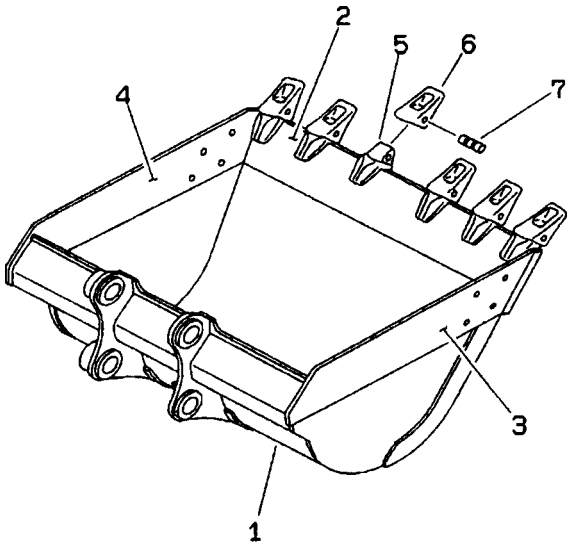

FIG. NO: T1510-01F5C

INDEX	PART NO.	DESCRIPTION	Q'TY	SERIAL NO. PC200-6B	SERIAL NO. PC200LC-6B
1	20Y-920-B110	BUCKET	1	B10001-	B20001-
2	20Y-920-1221	. PLATE (WELDED)	1	B10001-	B20001-
3	20Y-70-24131	. PLATE (WELDED)	1	B10001-	B20001-
4	20Y-70-24141	. PLATE (WELDED)	1	B10001-	B20001-
5	20Y-70-14520	. ADAPTER (WELDED)	6	B10001-	B20001-
6	205-70-19570	TOOTH	6	B10001-	B20001-
7	09244-02496	PIN	6	B10001-	B20001-

FIG. T1510-02A1 SIDE CUTTER (FOR BUCKET)

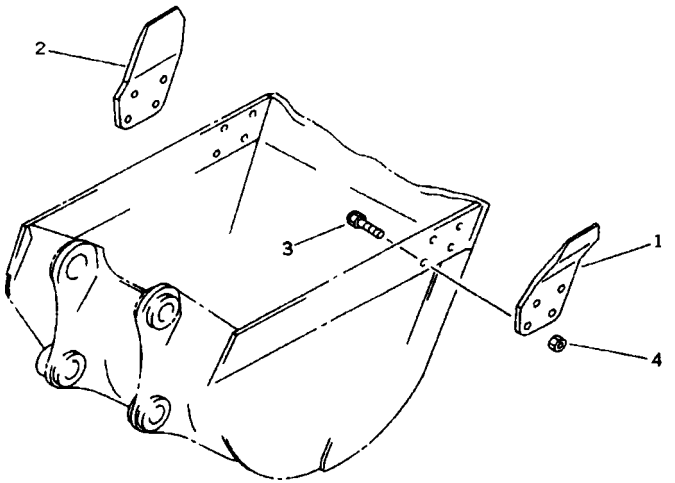

FIG. NO: T1510-02A1

INDEX	PART NO.	DESCRIPTION	Q'TY	SERIAL NO. PC200-6B	SERIAL NO. PC200LC-6B
1	205-70-74180	CUTTER, L.H.	1	B10001-	B20001-
2	205-70-74190	CUTTER, R.H.	1	B10001-	B20001-
3	176-32-11210	BOLT, SHOE	8	B10001-	B20001-
4	01803-02430	NUT	8	B10001-	B20001-

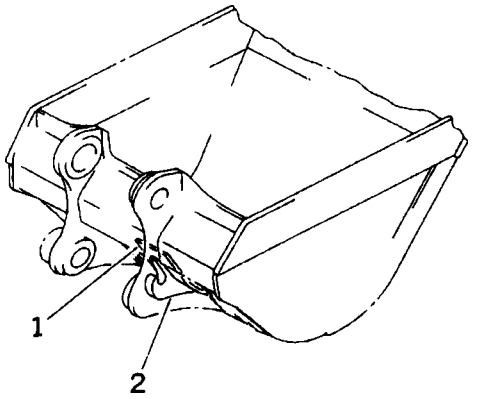

INDEX	PART NO.	DESCRIPTION	Q'TY	SERIAL NO. PC200-6B	SERIAL NO. PC200LC-6B
1	20Y-70-14221	PLATE	1	B10001-	B20001-
2	205-70-69570	HOOK	1	B10001-	B20001-

MARKS AND PLATES

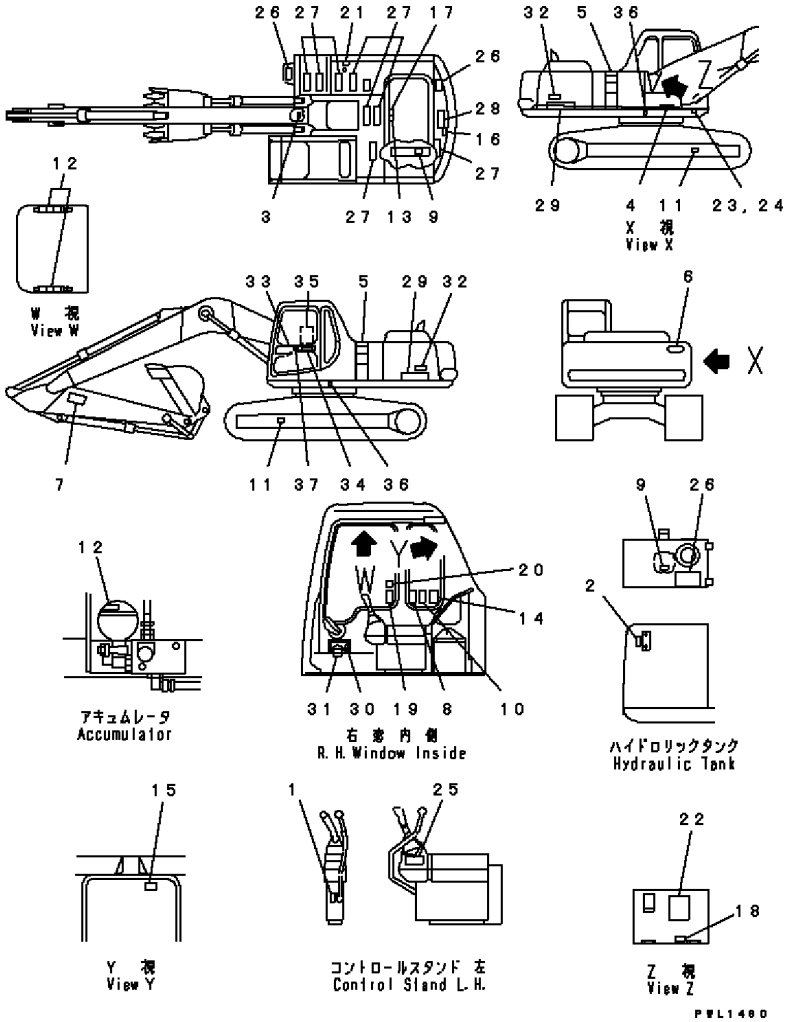

INDEX	PART NO.	DESCRIPTION	Q'TY	SERIAL NO. PC200-6B	SERIAL NO. PC200LC-6B
1	09685-00001	PLATE, OPERATING	1	B10001-	
2	205-00-73360	PLATE, OPERATING	1	B10001-	
3	09690-M0063	PLATE, MARK	1	B10001-	
4	09690-B0315	PLATE, MARK	1	B10001-	
5	20Y-00-22781	PLATE, MARK	2	B10083-	
	20Y-00-22780	PLATE, MARK	2	B10001-B10082	
6	09133-A3281	PLATE, MARK	1	B10001-	
7	09134-A1681	PLATE	2	B10001-	
8	09651-A0641	PLATE	1	B10001-	
9	09653-A0481	PLATE	2	B10001-	
10	09654-A0641	PLATE, SAFETY	1	B10001-	
11	09657-A0881	PLATE	2	B10001-	
12	09659-A057B	PLATE	3	B10001-	
13	09667-A0481	PLATE, SAFETY	1	B10001-	
14	09801-A0641	PLATE, CAUTION	1	B10001-	
15	09803-A0481	PLATE	1	B10001-	
16	09805-A0881	PLATE	1	B10001-	
17	09805-C0481	PLATE, SAFETY	1	B10001-	
18	09808-A0881	PLATE, SAFETY	1	B10001-	
19	20Y-00-B1120	PLATE, CAUTION	1	B10001-	
20	20Y-00-B1210	PLATE	1	B10001-	
21	20Y-00-B1130	PLATE, CAUTION	1	B10001-	
22	20Y-00-B1140	PLATE	1	B10001-	
23	09601-10050	PLATE, NAME	1	B10001-	
24	04418-13060	SCREW	4	B10001-	
25	20Y-00-B1220	TAG	1	B10001-	
26	203-00-51170	SEAT	3	B10001-	
27	154-54-23260	SEAT	8	B10001-	
28	20Y-00-22890	SHEET	1	B10001-	
29	20Y-00-21111	PLATE, MARK	2	B10001-	
30	20Y-00-B1150	PLATE	1	B10001-	
31	20Y-00-B1230	PLATE	1	B10001-	
32	20Y-00-21161	PLATE, AVANCE DECAL	2	B10001-	
33	20Y-54-36280	PLATE	1	B10001-	
34	20Y-00-B1110	DECAL	1	B10001-	
35	20Y-00-B1160	PLATE	1	B10001-	
36	09960-61012	PLATE, MARK HANDLING	2	B10001-	
37	20Y-00-22450	PLATE, MARK	1	B10001-	

FIG. U0100-01A5D DECAL AND PLATE (ENGLISH)

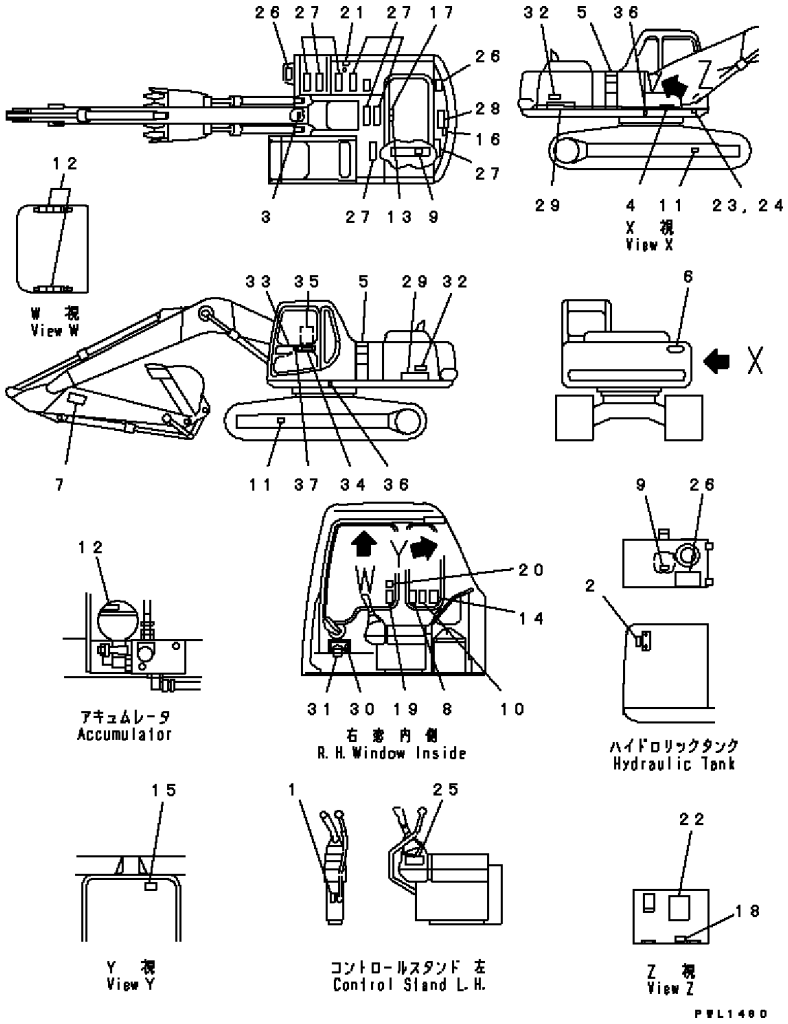

FIG. NO: U0100-01A5D

INDEX	PART NO.	DESCRIPTION	Q'TY	SERIAL NO. PC200-6B	SERIAL NO. PC200LC-6B
1	09685-00001	PLATE, OPERATING	1		B20001-
2	205-00-73360	PLATE, OPERATING	1		B20001-
3	09690-M0063	PLATE, MARK	1		B20001-
4	09690-B0315	PLATE, MARK	1		B20001-
5	20Y-00-22781	PLATE, MARK	2		B20001-
6	09133-A3281	PLATE, MARK	1		B20001-
7	09134-A1681	PLATE	2		B20001-
8	09651-A0641	PLATE	1		B20001-
9	09653-A0481	PLATE	2		B20001-
10	09654-A0641	PLATE, SAFETY	1		B20001-
11	09657-A0881	PLATE	2		B20001-
12	09659-A057B	PLATE	3		B20001-
13	09667-A0481	PLATE, SAFETY	1		B20001-
14	09801-A0641	PLATE, CAUTION	1		B20001-
15	09803-A0481	PLATE	1		B20001-
16	09805-A0881	PLATE	1		B20001-
17	09805-C0481	PLATE, SAFETY	1		B20001-
18	09808-A0881	PLATE, SAFETY	1		B20001-
19	20Y-00-B1120	PLATE, CAUTION	1		B20001-
20	20Y-00-B1210	PLATE	1		B20001-
21	20Y-00-B1130	PLATE, CAUTION	1		B20001-
22	20Y-00-B1140	PLATE	1		B20001-
23	09601-10050	PLATE, NAME	1		B20001-
24	04418-13060	SCREW	4		B20001-
25	20Y-00-B1220	TAG	1		B20001-
26	203-00-51170	SEAT	3		B20001-
27	154-54-23260	SEAT	8		B20001-
28	20Y-00-22890	SHEET	1		B20001-
29	20Y-00-21111	PLATE, MARK	2		B20001-
30	20Y-00-B1150	PLATE	1		B20001-
31	20Y-00-B1230	PLATE	1		B20001-
32	20Y-00-21161	PLATE, AVANCE DECAL	2		B20001-
33	20Y-54-36280	PLATE	1		B20001-
34	20Y-00-B1110	DECAL	1		B20001-
35	20Y-00-B1160	PLATE	1		B20001-
36	09960-61012	PLATE, MARK HANDLING	2		B20001-
37	20Y-00-22450	PLATE, MARK	1		B20001-

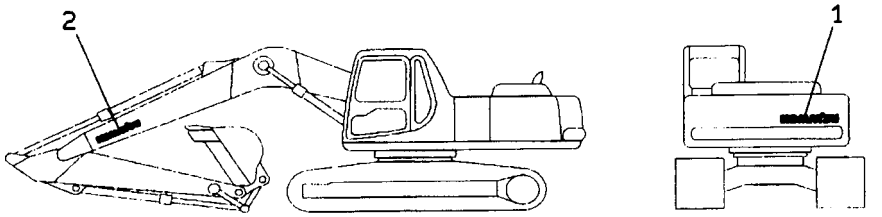

INDEX	PART NO.	DESCRIPTION	Q'TY	SERIAL NO. PC200-6B	SERIAL NO. PC200LC-6B
1	09690-B1000	PLATE, MARK	1	B10001-	B20001-
2	09690-B1120	PLATE, MARK	1	B10001-	B20001-

FIG. U0300-01A7 MARKS AND PLATES (SIFT PATTERN, ISO)

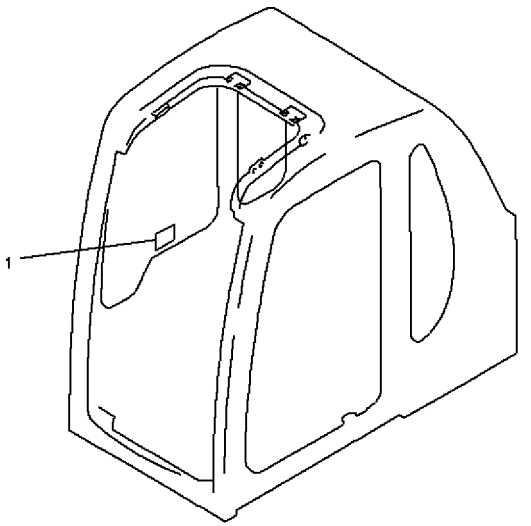

PWB7364

FIG. NO: U0300-01A7

INDEX	PART NO.	DESCRIPTION	Q'TY	SERIAL NO. PC200-6B	SERIAL NO. PC200LC-6B
1	20Y-00-B1170	CAUTION PLATE	1	B10001-	B20001-

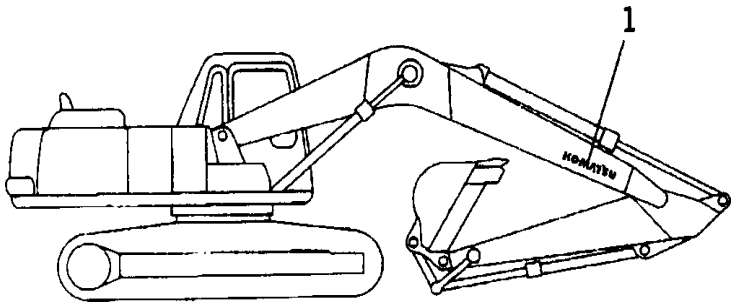

INDEX	PART NO.	DESCRIPTION	Q'TY	SERIAL NO. PC200-6B	SERIAL NO. PC200LC-6B
1	09690-B1000	PLATE MARK, (SMALL) (GENERAL)	1	B10001-	B20001-

FIG. U0550-01A1 PLATE (AIR CLEANER, DOUBLE ELEMENT)

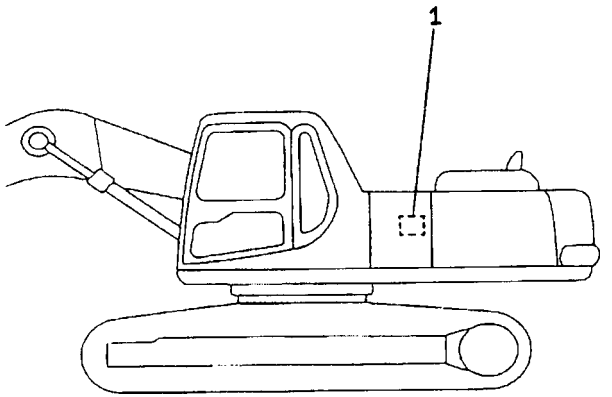

FIG. NO: U0550-01A1

INDEX	PART NO.	DESCRIPTION	Q'TY	SERIAL NO. PC200-6B	SERIAL NO. PC200LC-6B
1	20Y-00-B1180	CAUTION PLATE	1	B10001-	B20001-

ACCESSORY

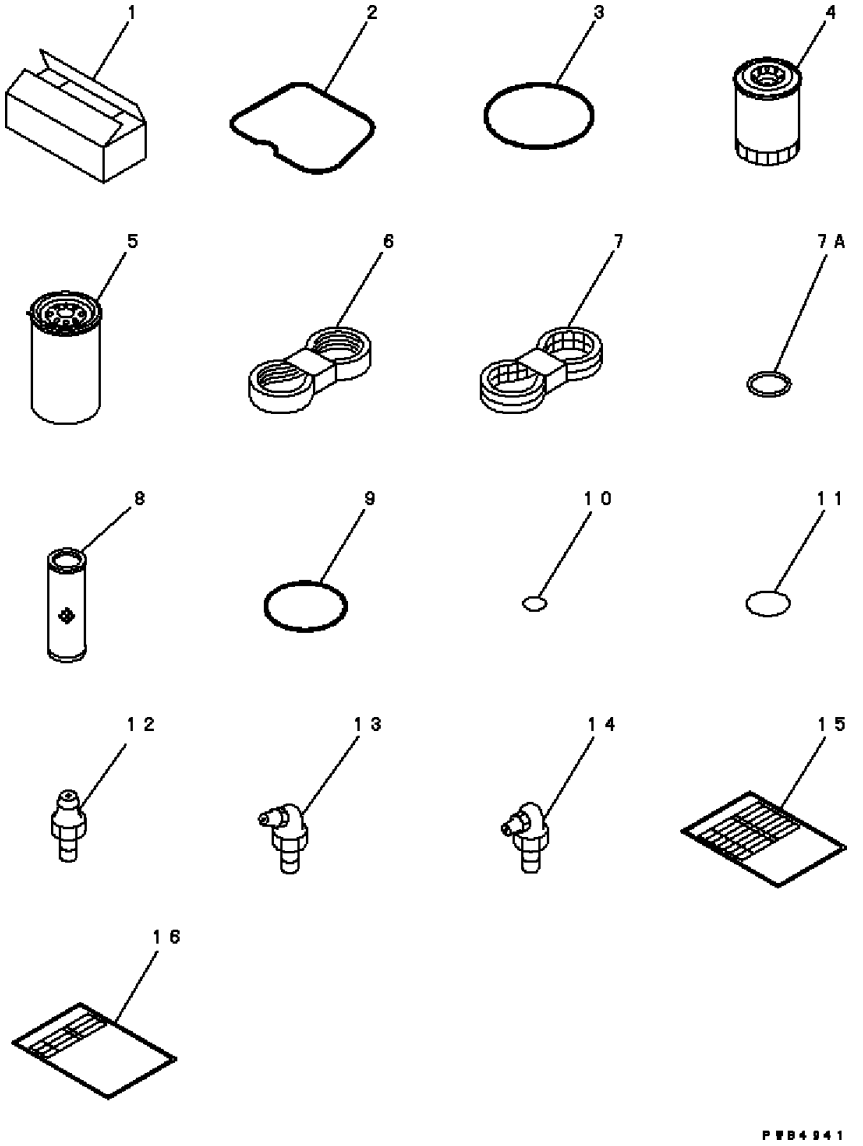

INDEX	PART NO.	DESCRIPTION	Q'TY	SERIAL NO. PC200-6B	SERIAL NO. PC200LC-6B
1	09059-00800	BOX	1	B10001-	B20001-
2	6732-11-8181	GASKET	6	B10001-	B20001-
3	6732-11-8210	GASKET	6	B10001-	B20001-
4	6735-51-5141	CARTRIDGE, OIL	1	B10001-	B20001-
5	6732-71-6111	CARTRIDGE, FUEL	1	B10001-	B20001-
6	6732-81-3430	BELT	1	B10001-	B20001-
7	04121-21744	V-BELT SET	1	B10001-	B20001-
7A	07005-02216	GASKET	1	B10001-	B20001-
8	20Y-60-21510	ELEMENT	1	B10001-	B20001-
9	07000-05180	O-RING	2	B10001-	B20001-
10	07000-11223	O-RING	1	B10001-	B20001-
11	07002-12434	O-RING	3	B10001-	B20001-
12	07020-00000	FITTING	4	B10001-	B20001-
13	07020-00675	FITTING	4	B10001-	B20001-
14	07020-00900	FITTING	4	B10001-	B20001-
15	20Y-98-B1111	TABLE, SPARE PARTS	1	B10167-	B20007-
	20Y-98-B1110	TABLE, SPARE PARTS	1	B10001-B10166	B20001-B20006
16	20Y-98-B1120	TABLE, ACCESSORY	1	B10001-	B20001-

FIG. V0300-01A0C TOOL KIT

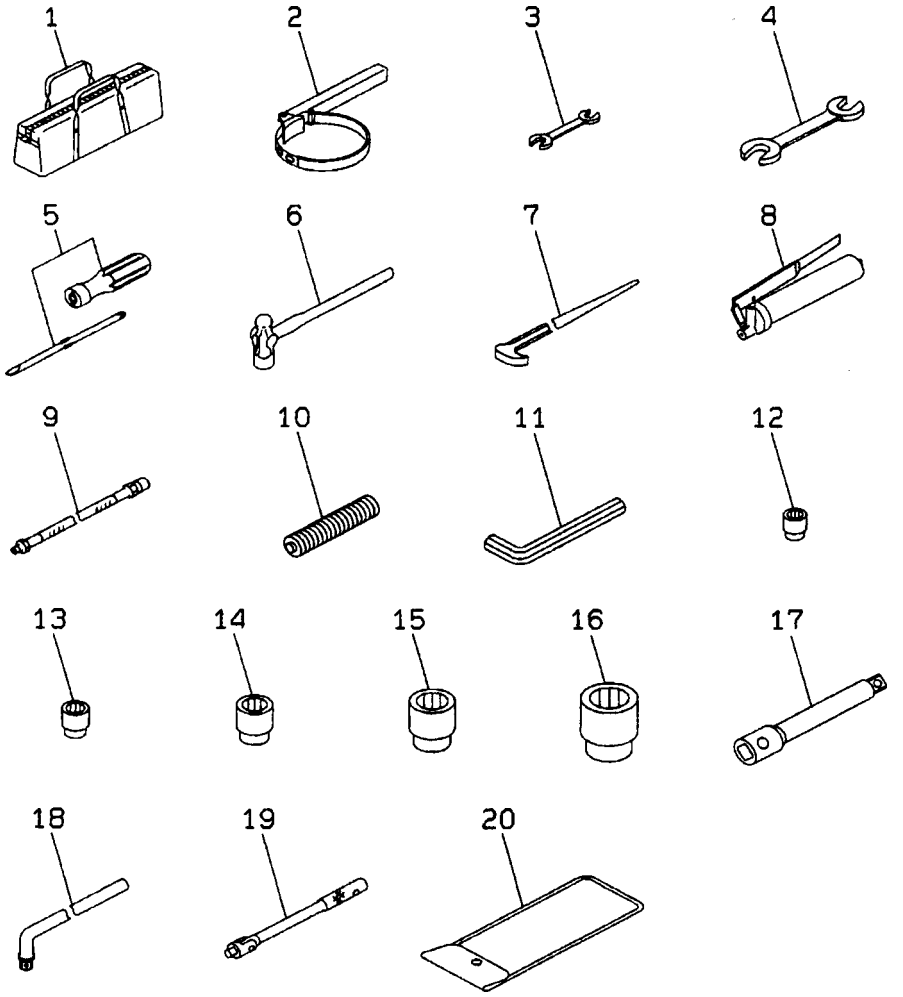

FIG. NO: V0300-01A0C

INDEX	PART NO.	DESCRIPTION	Q'TY	SERIAL NO. PC200-6B	SERIAL NO. PC200LC-6B
1	09056-04613	BAG	1	B10001-	B20001-
2	09019-08035	WRENCH	1	B10001-	B20001-
3	09002-01417	WRENCH, 14X17	1	B10001-	B20001-
4	09002-03032	WRENCH, 30X32	1	B10001-	B20001-
5	09033-00190	DRIVER	1	B10001-	B20001-
6	09039-00150	HAMMER	1	B10001-	B20001-
7	09055-10390	BAR	1	B10001-	B20001-
8	07950-10450	PUMP	1	B10001-	B20001-
9	07951-11400	NOZZLE	1	B10001-	B20001-
10	07950-90403	CARTRIDGE	1	B10001-	B20001-
11	09007-00836	WRENCH, 8	1	B10001-	B20001-
	20Y-98-21130	TOOL KIT	1	B10001-	B20001-
12	09021-01219	. SOCKET, 12MM	1	B10001-	B20001-
13	09021-01422	. SOCKET, 14MM	1	B10001-	B20001-
14	09021-01928	. SOCKET, 19MM	1	B10001-	B20001-
15	09021-02436	. SOCKET, 24MM	1	B10001-	B20001-
16	09021-03044	. SOCKET, 30MM	1	B10001-	B20001-
17	09022-00150	. EXTENSION	1	B10001-	B20001-
18	09023-00300	. HANDLE	1	B10001-	B20001-
19	09024-00300	. HANDLE	1	B10001-	B20001-
20	20Y-98-21140	. BAG, TOOL	1	B10001-	B20001-

SERVICE KIT

KIT See subsequent pages for details.

K-1	707-99-46270	BOOM CYLINDER KIT
K-2	707-99-57270	ARM CYLINDER KIT
K-3	707-98-45250	BUCKET CYLINDER KIT(FOR 2.4M ARM AND 2.9M ARM)
K-4	707-99-46290	BUCKET CYLINDER KIT(FOR 1.8M ARM)

INDEX	PART NO.	DESCRIPTION	Q'TY	SERIAL NO. PC200-6B	SERIAL NO. PC200LC-6B
1	707-99-46270	CYLINDER KIT, BOOM	2	B10001-	B20001-
	07145-00070	. SEAL, DUST	2	B10001-	B20001-
	07145-00080	. SEAL, DUST	2	B10001-	B20001-
	707-56-85510	. SEAL, DUST	1	B10001-	B20001-
	707-51-85030	. PACKING, ROD	1	B10001-	B20001-
	07000-15110	. O-RING	2	B10001-	B20001-
	707-35-91220	. RING, BACK-UP	1	B10001-	B20001-
	707-51-85630	. RING, BUFFER	1	B10001-	B20001-
	707-44-12180	. RING, PISTON	1	B10001-	B20001-
	707-39-12110	. RING, WEAR	2	B10001-	B20001-
	707-35-91220	. RING, BACK-UP	2	B10001-	B20001-
	707-35-90930	. RING, BACK-UP	2	B10001-	B20001-
	07000-15175	. O-RING	1	B10001-	B20001-
	07000-13030	. O-RING	1	B10001-	B20001-
2	707-99-57270	CYLINDER KIT, ARM	1	B10001-	B20001-
	07145-00080	. SEAL, DUST	4	B10001-	B20001-
	707-56-95510	. SEAL, DUST	1	B10001-	B20001-
	707-51-95030	. PACKING, ROD	1	B10001-	B20001-
	07000-15125	. O-RING	2	B10001-	B20001-
	707-35-91370	. RING, BACK-UP	3	B10001-	B20001-
	707-35-90960	. RING, BACK-UP	2	B10001-	B20001-
	707-51-95630	. RING, BUFFER	1	B10001-	B20001-
	707-44-13280	. RING, PISTON	1	B10001-	B20001-
	707-39-13510	. RING, WEAR	2	B10001-	B20001-
	07000-13030	. O-RING	1	B10001-	B20001-
	07000-15085	. O-RING	1	B10001-	B20001-
	07000-13035	. O-RING	1	B10001-	B20001-
	07002-12034	. O-RING	1	B10001-	B20001-
3	707-98-45250	CYLINDER KIT, BUCKET (FOR 2.4M AND 2.9M ARM)	1	B10001-	B20001-
	07145-00070	. SEAL, DUST	2	B10001-	B20001-
	21K-70-12180	. SEAL, DUST	2	B10001-	B20001-
	195-63-92190	. SEAL, DUST	1	B10001-	B20001-
	707-51-80030	. PACKING, ROD	1	B10001-	B20001-
	07000-15105	. O-RING	1	B10001-	B20001-
	707-35-91150	. RING, BACK-UP	1	B10001-	B20001-
	707-51-80630	. RING, BUFFER	1	B10001-	B20001-
	707-44-11280	. RING, PISTON	1	B10001-	B20001-
	707-39-11510	. RING, WEAR	2	B10001-	B20001-
	707-35-90360	. RING, BACK-UP	2	B10001-	B20001-
	07000-13030	. O-RING	1	B10001-	B20001-
	07000-15070	. O-RING	1	B10001-	B20001-
4	707-99-46290	CYLINDER KIT, BUCKET (FOR 1.8M ARM)	1	B10001-	B20001-
	07145-00070	. SEAL, DUST	2	B10001-	B20001-
	21K-70-12180	. SEAL, DUST	2	B10001-	B20001-
	707-56-85510	. SEAL, DUST	1	B10001-	B20001-
	707-51-85030	. PACKING, ROD	1	B10001-	B20001-
	07000-15115	. O-RING	1	B10001-	B20001-
	707-35-91250	. RING, BACK-UP	1	B10001-	B20001-
	707-51-85630	. RING, BUFFER	1	B10001-	B20001-
	707-44-12280	. RING, PISTON	1	B10001-	B20001-
	707-39-12530	. RING, WEAR	2	B10001-	B20001-
	707-35-90930	. RING, BACK-UP	2	B10001-	B20001-
	07000-13030	. O-RING	1	B10001-	B20001-
	07000-15075	. O-RING	1	B10001-	B20001-

FIG. Y0260-01A0C SWING MACHINERY ASS'Y (SUPPLY ONLY)

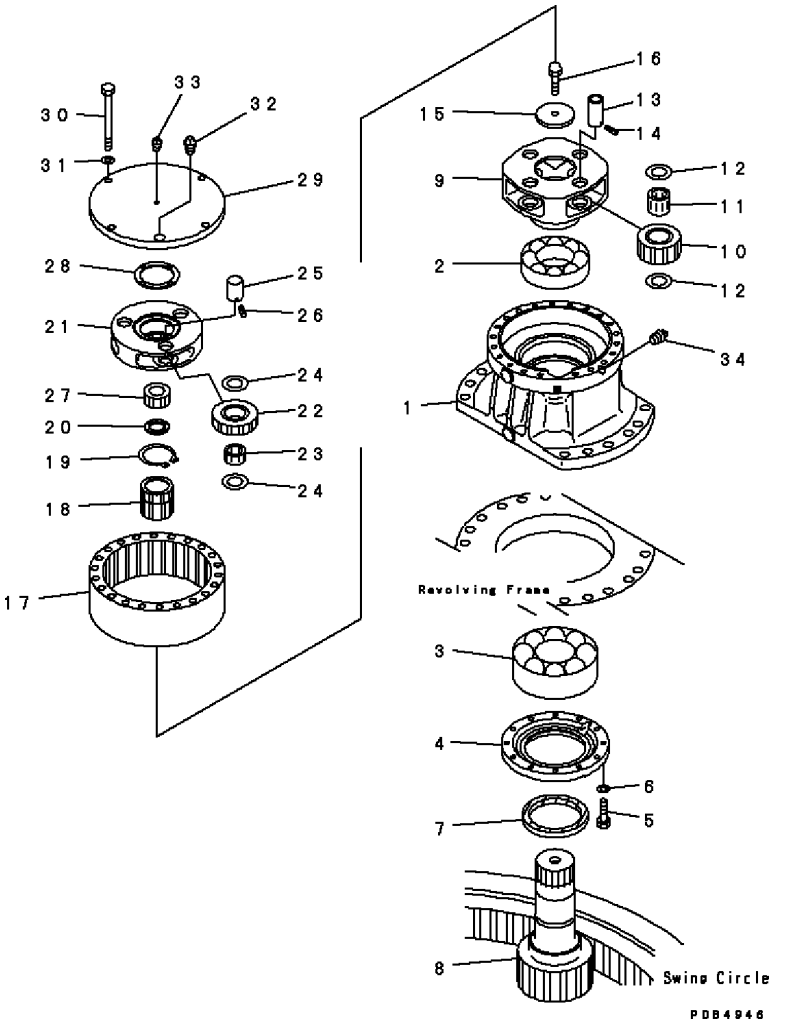

FIG. NO: Y0260-01A0C

INDEX	PART NO.	DESCRIPTION	Q'TY	SERIAL NO. PC200-6B	SERIAL NO. PC200LC-6B
	20Y-26-00151	SWING MACHINERY A.	1	B10001-	B20001-
1	20Y-26-22210	. CASE	1	B10001-	B20001-
2	20Y-26-22330	. BEARING	1	B10001-	B20001-
3	20Y-26-22340	. BEARING	1	B10001-	B20001-
4	20Y-26-22191	. COVER	1	B10001-	B20001-
5	01010-81045	. BOLT	12	B10001-	B20001-
6	01643-31032	. WASHER	12	B10001-	B20001-
7	20Y-26-22420	. SEAL	1	B10001-	B20001-
8	20Y-26-21141	. SHAFT, 15 TEETH	1	B10001-	B20001-
9	20Y-26-22170	. CARRIER	1	B10001-	B20001-
10	20Y-26-22141	. GEAR, 36 TEETH	4	B10001-	B20001-
11	20G-26-11240	. BEARING	4	B10001-	B20001-
12	20Y-27-21240	. WASHER	8	B10001-	B20001-
13	20Y-26-22250	. PIN	4	B10001-	B20001-
14	20Y-27-21280	. PIN	4	B10001-	B20001-
15	20Y-26-21240	. PLATE	1	B10001-	B20001-
16	112-32-11211	. BOLT, SHOE	1	B10001-	B20001-
17	20Y-26-22151	. GEAR, 101 TEETH	1	B10001-	B20001-
18	20Y-26-22131	. GEAR, 27 TEETH	1	B10001-	B20001-
19	04064-07525	. RING	1	B10001-	B20001-
20	20Y-26-22220	. THRUST WASHER	1	B10001-	B20001-
21	20Y-26-22160	. CARRIER	1	B10001-	B20001-
22	20Y-26-22120	. GEAR, 39 TEETH	3	B10001-	B20001-
23	20Y-26-21280	. BEARING	3	B10001-	B20001-
24	20Y-27-21240	. WASHER	6	B10001-	B20001-
25	20Y-26-22240	. PIN	3	B10001-	B20001-
26	20Y-27-21280	. PIN	3	B10001-	B20001-
27	20Y-26-22110	. GEAR, 22 TEETH	1	B10001-	B20001-
28	20Y-26-22230	. THRUST WASHER	1	B10001-	B20001-
29	20Y-26-22410	COVER	1	B10001-	B20001-
30	01011-81450	BOLT	4	B10001-	B20001-
31	01643-31445	WASHER	4	B10001-	B20001-
32	07042-30617	PLUG	1	B10001-	B20001-
33	07042-30108	PLUG	1	B10001-	B20001-
34	07042-30415	PLUG	1	B10001-	B20001-

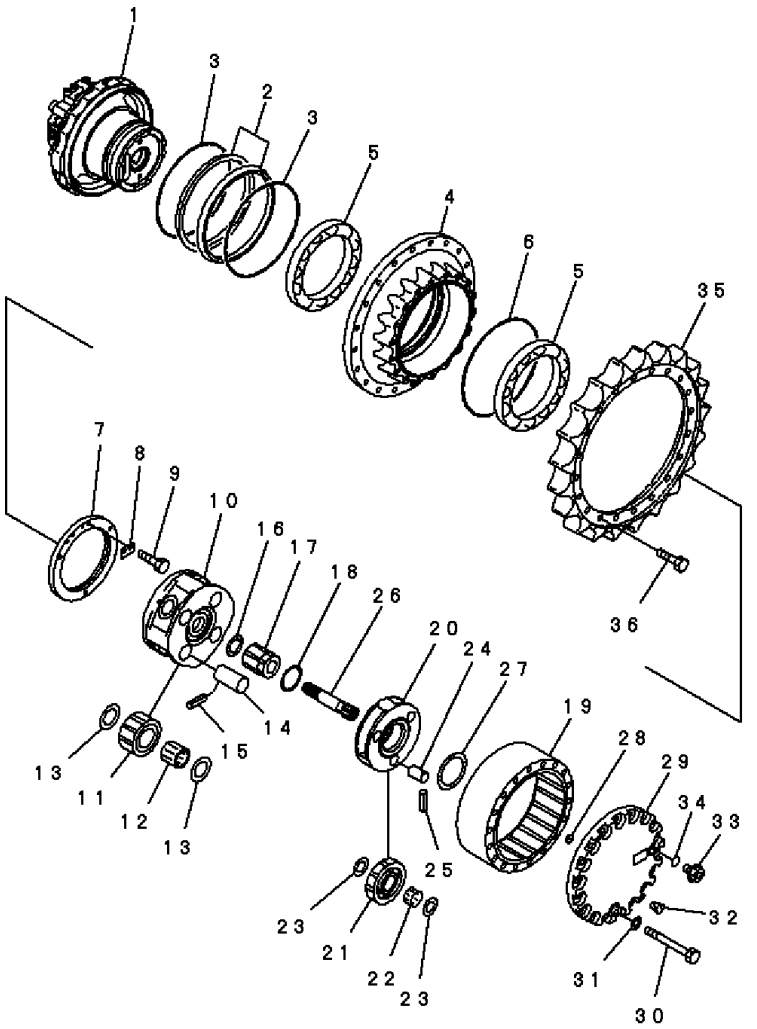

INDEX	PART NO.	DESCRIPTION	Q'TY	SERIAL NO. PC200-6B	SERIAL NO. PC200LC-6B
	20Y-27-00202	FINAL DRIVE ASS'Y	1	B10001-	B20001-
1	(708-8F-00110)	. TRAVEL MOTOR ASS'Y	1	B10001-	B20001-
	150-27-00330	. FLOATING SEAL ASS'Y	1	B10001-	B20001-
2	150-27-00264	. . SEAL RING ASS'Y	1	B10001-	B20001-
	☆	. . . RING	2	B10001-	B20001-
3	144-873-0310	. . O-RING ASS'Y	1	B10001-	B20001-
4	20Y-27-22181	. HUB	1	B10001-	B20001-
5	20Y-27-22230	. BEARING	2	B10001-	B20001-
6	20Y-27-22280	. O-RING	1	B10001-	B20001-
7	20Y-27-22261	. LOCK	1	B10001-	B20001-
8	20Y-27-22270	. LOCK	1	B10001-	B20001-
9	01010-81020	. BOLT	2	B10001-	B20001-
10	20Y-27-22170	. CARRIER	1	B10001-	B20001-
11	20Y-27-22140	. GEAR	4	B10001-	B20001-
12	20Y-27-22220	. BEARING	4	B10001-	B20001-
13	20Y-27-21250	. WASHER	8	B10001-	B20001-
14	20Y-27-21230	. PIN	4	B10001-	B20001-
15	20Y-27-21290	. PIN	4	B10001-	B20001-
16	20Y-27-13310	. WASHER	1	B10001-	B20001-
17	20Y-27-22130	. GEAR	1	B10001-	B20001-
18	20Y-27-22240	. WASHER	1	B10001-	B20001-
19	20Y-27-22150	. GEAR	1	B10001-	B20001-
20	20Y-27-22160	. CARRIER	1	B10001-	B20001-
21	20Y-27-22120	. GEAR	3	B10001-	B20001-
22	20Y-27-22210	. BEARING	3	B10001-	B20001-
23	20Y-27-21240	. WASHER	6	B10001-	B20001-
24	20Y-27-21220	. PIN	3	B10001-	B20001-
25	20Y-27-21280	. PIN	3	B10001-	B20001-
26	20Y-27-22110	. SHAFT	1	B10001-	B20001-
27	20Y-27-21310	. WASHER	1	B10001-	B20001-
28	20Y-27-22250	. BUTTON	1	B10001-	B20001-
29	20Y-27-22190	. COVER	1	B10001-	B20001-
30	20Y-27-13281	. BOLT	18	B10001-	B20001-
31	01643-31645	. WASHER	18	B10001-	B20001-
32	07049-01012	. PLUG	2	B10001-	B20001-
33	07044-12412	. PLUG	2	B10001-	B20001-
34	07002-02434	. O-RING	2	B10001-	B20001-
35	20Y-27-11581	. SPROCKET	1	B10001-	B20001-
36	20Y-27-11561	. BOLT	20	B10001-	B20001-

FIG. Y1600-01A0C MAIN PUMP (1/10)

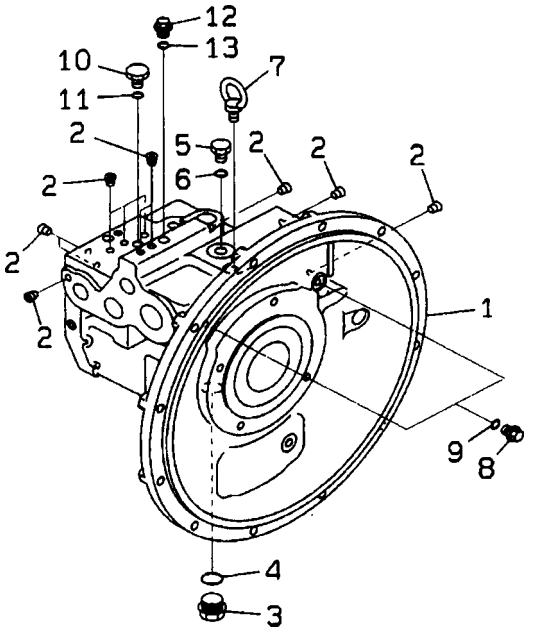

FIG. NO: Y1600-01A0C

INDEX	PART NO.	DESCRIPTION	Q'TY	SERIAL NO. PC200-6B	SERIAL NO. PC200LC-6B
	708-2L-00461	PUMP ASS'Y	1	B10001-	B20001-
		THESE ASSEMBLIES CONSIST OF ALL PARTS SHOWN IN FIGS.Y1600-01A0C TO Y1600-10A0C .			
	708-2L-01442	. PUMP SUB ASS'Y	1	B10001-	B20001-
	(☆708-2L-04240)	. . CASE ASS'Y, FRONT	1	B10001-	B20001-
1	☆	. . . CASE, FRONT	1	B10001-	B20001-
2	☆	. . . PLUG	16	B10001-	B20001-
3	07044-12412	. . PLUG	1	B10001-	B20001-
4	708-1W-28910	. . O-RING	1	B10001-	B20001-
5	720-68-19870	. . PLUG	1	B10001-	B20001-
6	708-2L-23940	. . O-RING	1	B10001-	B20001-
7	04530-01018	. . BOLT,EYE	1	B10001-	B20001-
8	708-8E-16150	. . PLUG	3	B10001-	B20001-
9	708-2L-23920	. . O-RING	3	B10001-	B20001-
10	708-8H-11530	. . PLUG	1	B10001-	B20001-
11	708-2L-23950	. . O-RING	1	B10001-	B20001-

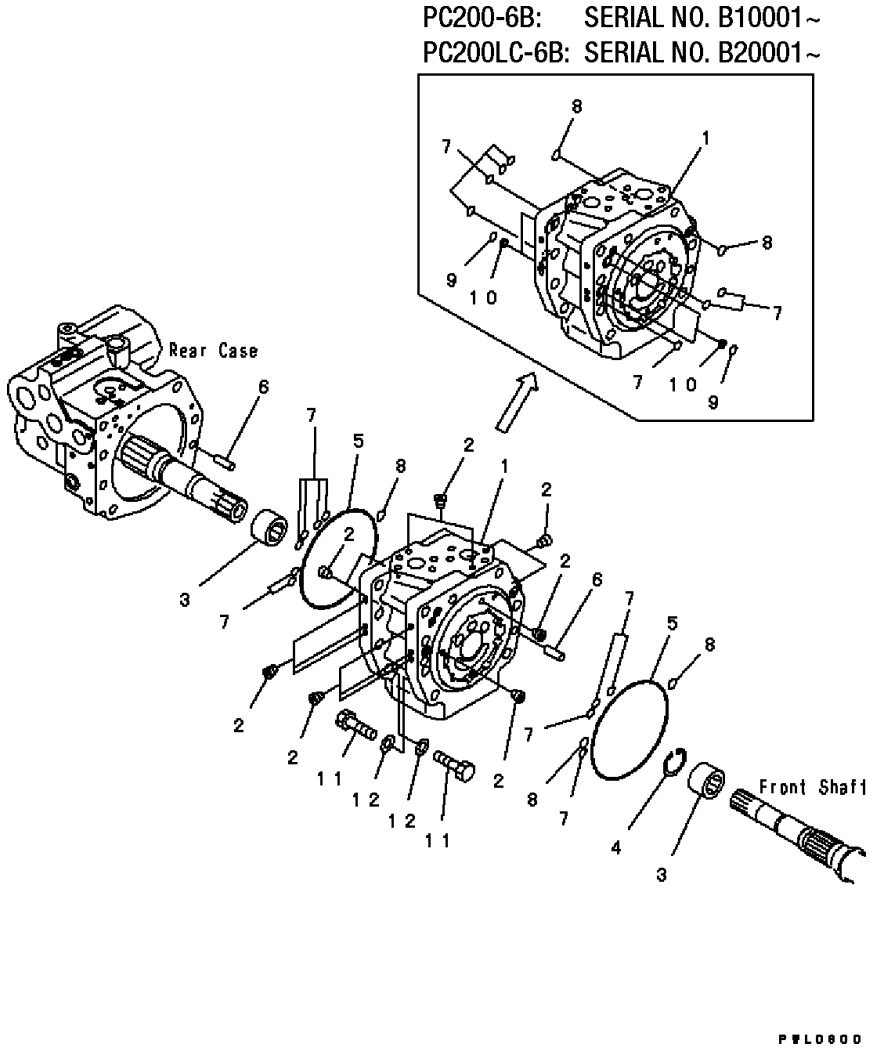

INDEX	PART NO.	DESCRIPTION	Q'TY	SERIAL NO. PC200-6B	SERIAL NO. PC200LC-6B
	(708-2L-00461)	PUMP ASS'Y	1	B10001-	B20001-
		THESE ASSEMBLIES CONSIST OF ALL PARTS SHOWN IN FIGS.Y1600-01A0C TO Y1600-10A0C.			
	(708-2L-01442)	. PUMP SUB ASS'Y	1	B10001-	B20001-
	(☆708-2L-04420)	. . CAP ASS'Y, END	1	B10001-	B20001-
1	☆	. . . CAP, END	1	B10001-	B20001-
2	☆	. . . PLUG	14	B10001-	B20001-
3	(☆708-2L-32260)	. . BEARING	2	B10001-	B20001-
4	(☆708-2L-22271)	. . RING, SNAP	1	B10001-	B20001-
5	(☆07000-A5165)	. . O-RING	2	B10001-	B20001-
6	(☆04020-01228)	. . PIN	2	B10001-	B20001-
7	(☆07000-B2010)	. . O-RING	7	B10001-	B20001-
8	(☆07000-B2012)	. . O-RING	2	B10001-	B20001-
9	(☆07000-B2014)	. . O-RING	4	B10001-	B20001-
10	(☆708-2L-25480)	. . FILTER	4	B10001-	B20001-
11	(☆01010-51450)	. . BOLT	14	B10001-	B20001-
12	(☆01643-31445)	. . WASHER	14	B10001-	B20001-

FIG. Y1600-03A0C MAIN PUMP (3/10)

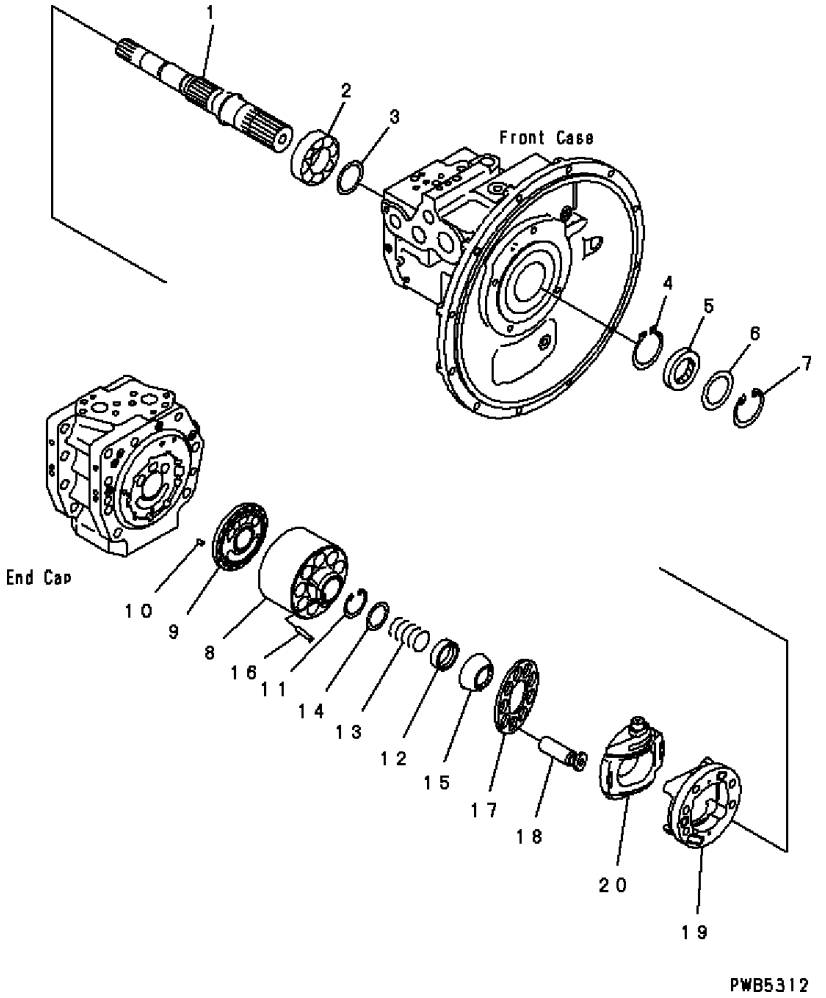

FIG. NO: Y1600-03A0C

INDEX	PART NO.	DESCRIPTION	Q'TY	SERIAL NO. PC200-6B	SERIAL NO. PC200LC-6B
	(708-2L-00461)	PUMP ASS'Y	1	B10001-	B20001-
		THESE ASSEMBLIES CONSIST OF ALL PARTS SHOWN IN FIGS.Y1600-01A0C TO Y1600-10A0C .			
	(708-2L-01442)	. PUMP SUB ASS'Y	1	B10001-	B20001-
1	(☆708-2L-32110)	. . SHAFT, FRONT	1	B10001-	B20001-
2	(☆708-2L-22150)	. . BEARING	1	B10001-	B20001-
3	(☆708-2E-05040)	. . WASHER KIT	1	B10001-	B20001-
	☆	. . . WASHER, 3.1MM	1	B10001-	B20001-
	☆	. . . WASHER, 3.0MM	1	B10001-	B20001-
	☆	. . . WASHER, 2.9MM	1	B10001-	B20001-
	☆	. . . WASHER, 2.8MM	1	B10001-	B20001-
4	(☆708-25-12790)	. . RING, SNAP	1	B10001-	B20001-
5	708-25-52860	. . SEAL, OIL	1	B10001-	B20001-
6	708-2L-22160	. . SPACER	1	B10001-	B20001-
7	04065-06825	. . RING, SNAP	1	B10001-	B20001-
	(☆708-2L-04141)	. . BLOCK ASS'Y, FRONT	1	B10001-	B20001-
8	☆	. . . BLOCK, CYLINDER	1	B10001-	B20001-
9	☆	. . . PLATE, VALVE	1	B10001-	B20001-
10	(☆720-68-19610)	. . PIN	1	B10001-	B20001-
11	(☆04065-04818)	. . RING, SNAP	1	B10001-	B20001-
12	(☆708-2L-23131)	. . SEAT	1	B10001-	B20001-
13	(☆708-2L-33160)	. . SPRING	1	B10001-	B20001-
14	(☆708-7L-13140)	. . SEAT	1	B10001-	B20001-
15	(☆708-2L-23351)	. . GUIDE, RETAINER	1	B10001-	B20001-
16	(☆708-2L-23360)	. . PIN	3	B10001-	B20001-
17	(☆708-2L-33340)	. . RETAINER, SHOE	1	B10001-	B20001-
18	(☆708-2L-33310)	. . PISTON SUB ASS'Y	9	B10001-	B20001-
	(☆708-2L-04361)	. . CRADLE ASS'Y, FRONT	1	B10001-	B20001-
19	☆	. . . CRADLE	1	B10001-	B20001-
20	☆	. . . CAM, ROCKER	1	B10001-	B20001-

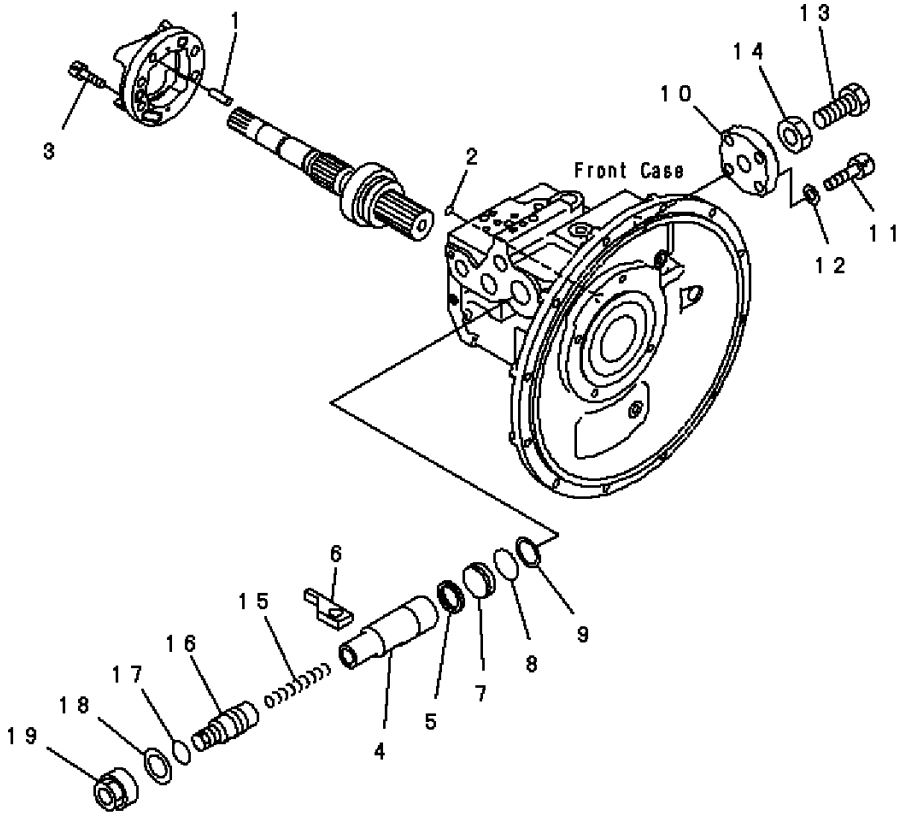

INDEX	PART NO.	DESCRIPTION	Q'TY	SERIAL NO. PC200-6B	SERIAL NO. PC200LC-6B
	(708-2L-00461)	PUMP ASS'Y ..... THESE ASSEMBLIES CONSIST OF ALL PARTS SHOWN IN FIGS.Y1600-01A0C TO Y1600-10A0C .	1	B10001-	B20001-
	(708-2L-01442)	. PUMP SUB ASS'Y	1	B10001-	B20001-
1	(☆04020-01228)	. . PIN	1	B10001-	B20001-
2	(☆07000-B1009)	. . O-RING	1	B10001-	B20001-
3	(☆01252-61230)	. . BOLT	4	B10001-	B20001-
4	(☆708-2L-24513)	. . PISTON,SERVO	1	B10001-	B20001-
5	(☆708-2L-24670)	. . SEAL	1	B10001-	B20001-
6	(☆708-2L-24570)	. . SLIDER	1	B10001-	B20001-
7	(☆708-2L-24560)	. . STOPPER	1	B10001-	B20001-
8	(☆07000-B3040)	. . O-RING	1	B10001-	B20001-
9	(☆07001-03040)	. . RING,BACK-UP	1	B10001-	B20001-
10	(☆708-2L-24522)	. . COVER	1	B10001-	B20001-
11	(☆01252-61445)	. . BOLT	4	B10001-	B20001-
12	(☆113-43-31380)	. . WASHER	4	B10001-	B20001-
13	(☆708-2L-24640)	. . BOLT	1	B10001-	B20001-
14	(☆708-2L-24650)	. . NUT	1	B10001-	B20001-
15	(☆708-2L-24630)	. . SPRING	1	B10001-	B20001-
16	(☆708-2L-24531)	. . SCREW	1	B10001-	B20001-
17	(☆708-2L-24620)	. . O-RING	1	B10001-	B20001-
18	(☆708-2L-24661)	. . WASHER	1	B10001-	B20001-
19	(☆708-2L-24590)	. . NUT	1	B10001-	B20001-

FIG. Y1600-05A0C MAIN PUMP (5/10)

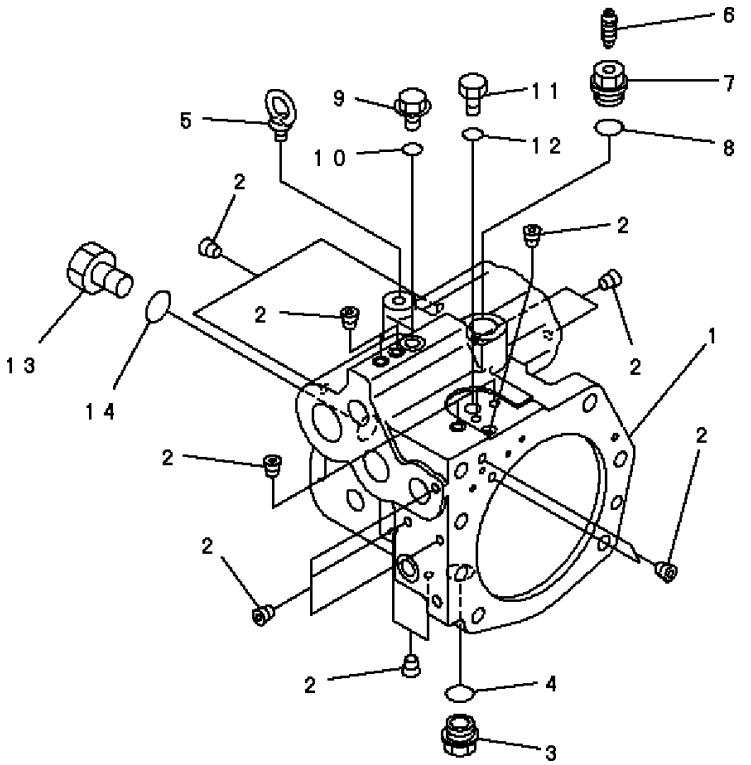

FIG. NO: Y1600-05A0C

INDEX	PART NO.	DESCRIPTION	Q'TY	SERIAL NO. PC200-6B	SERIAL NO. PC200LC-6B
	(708-2L-00461)	PUMP ASS'Y	1	B10001-	B20001-
		THESE ASSEMBLIES CONSIST OF ALL PARTS SHOWN IN FIGS.Y1600-01A0C TO Y1600-10A0C .			
	(708-2L-01442)	. PUMP SUB ASS'Y	1	B10001-	B20001-
	(☆708-2L-04250)	. . CASE ASS'Y, REAR	1	B10001-	B20001-
1	☆	. . . CASE, REAR	1	B10001-	B20001-
2	☆	. . . PLUG	17	B10001-	B20001-
3	07044-12412	. . PLUG	1	B10001-	B20001-
4	708-1W-28910	. . O-RING	1	B10001-	B20001-
5	04530-01222	. . BOLT, EYE	1	B10001-	B20001-
6	20B-27-11210	. . BLEEDER	1	B10001-	B20001-
7	706-87-40150	. . PLUG	1	B10001-	B20001-
8	708-1W-28910	. . O-RING	1	B10001-	B20001-
9	708-8E-16150	. . PLUG	1	B10001-	B20001-
10	708-2L-23920	. . O-RING	1	B10001-	B20001-
11	708-8H-11530	. . PLUG	1	B10001-	B20001-
12	708-2L-23950	. . O-RING	1	B10001-	B20001-
13	07040-12414	. . PLUG	1	B10001-	B20001-
14	708-1W-28910	. . O-RING	1	B10001-	B20001-

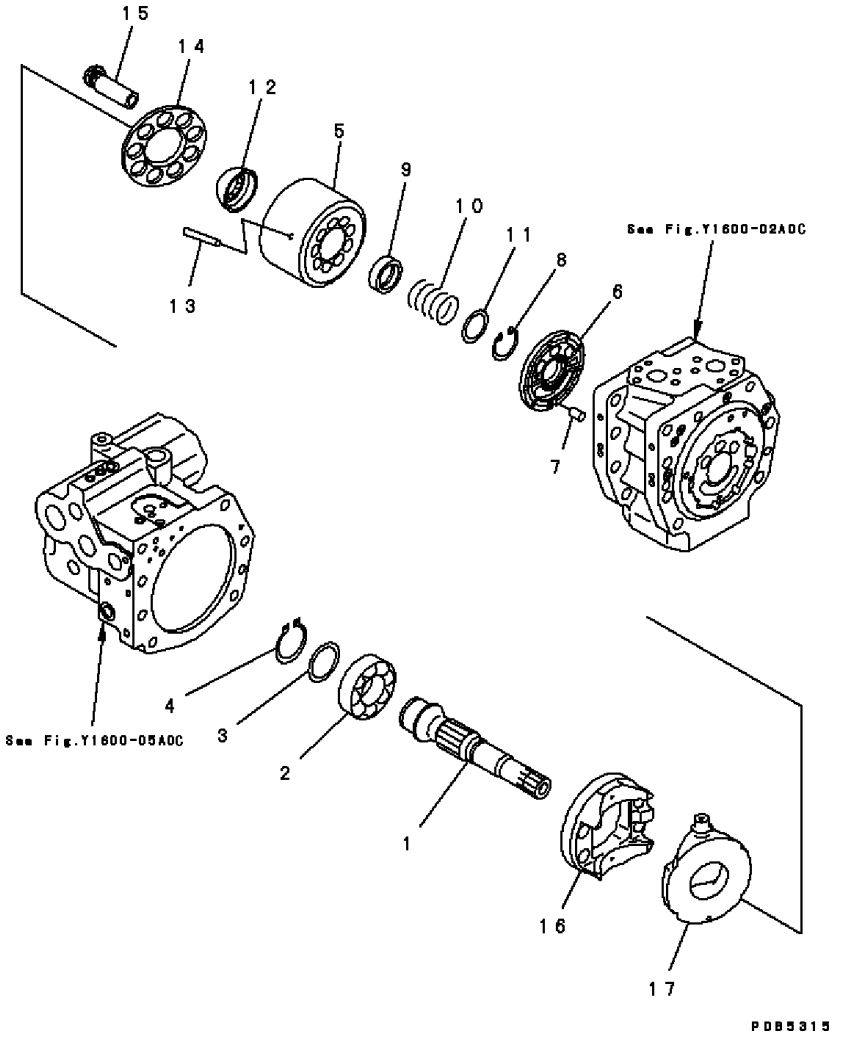

INDEX	PART NO.	DESCRIPTION	Q'TY	SERIAL NO. PC200-6B	SERIAL NO. PC200LC-6B
	(708-2L-00461)	PUMP ASS'Y	1	B10001-	B20001-
		THESE ASSEMBLIES CONSIST OF ALL PARTS SHOWN IN FIGS.Y1600-01A0C TO Y1600-10A0C .			
	(708-2L-01442)	. PUMP SUB ASS'Y	1	B10001-	B20001-
1	(☆708-2L-32130)	. . SHAFT, REAR	1	B10001-	B20001-
2	(☆708-2L-22150)	. . BEARING	1	B10001-	B20001-
3	(☆708-2E-05040)	. . WASHER KIT	1	B10001-	B20001-
	☆	. . . WASHER, 3.1MM	1	B10001-	B20001-
	☆	. . . WASHER, 3.0MM	1	B10001-	B20001-
	☆	. . . WASHER, 2.9MM	1	B10001-	B20001-
	☆	. . . WASHER, 2.8MM	1	B10001-	B20001-
4	(☆708-25-12790)	. . RING, SNAP	1	B10001-	B20001-
	(☆708-2L-04151)	. . BLOCK ASS'Y, REAR	1	B10001-	B20001-
5	☆	. . . BLOCK, CYLINDER	1	B10001-	B20001-
6	☆	. . . PLATE, VALVER	1	B10001-	B20001-
7	(☆720-68-19610)	. . PIN	1	B10001-	B20001-
8	(☆04065-04818)	. . RING, SNAP	1	B10001-	B20001-
9	(☆708-2L-23131)	. . SEAT	1	B10001-	B20001-
10	(☆708-2L-33160)	. . SPRING	1	B10001-	B20001-
11	(☆708-7L-13140)	. . SEAT	1	B10001-	B20001-
12	(☆708-2L-23351)	. . GUIDE, RETAINER	1	B10001-	B20001-
13	(☆708-2L-23360)	. . PIN	3	B10001-	B20001-
14	(☆708-2L-33340)	. . RETAINER, SHOE	1	B10001-	B20001-
15	(☆708-2L-33310)	. . PISTON SUB ASS'Y	9	B10001-	B20001-
	(☆708-2L-04371)	. . CRADLE ASS'Y, REAR	1	B10001-	B20001-
16	☆	. . . CRADLE	1	B10001-	B20001-
17	☆	. . . CAM, ROCKER	1	B10001-	B20001-

FIG. Y1600-07A0C MAIN PUMP (7/10)

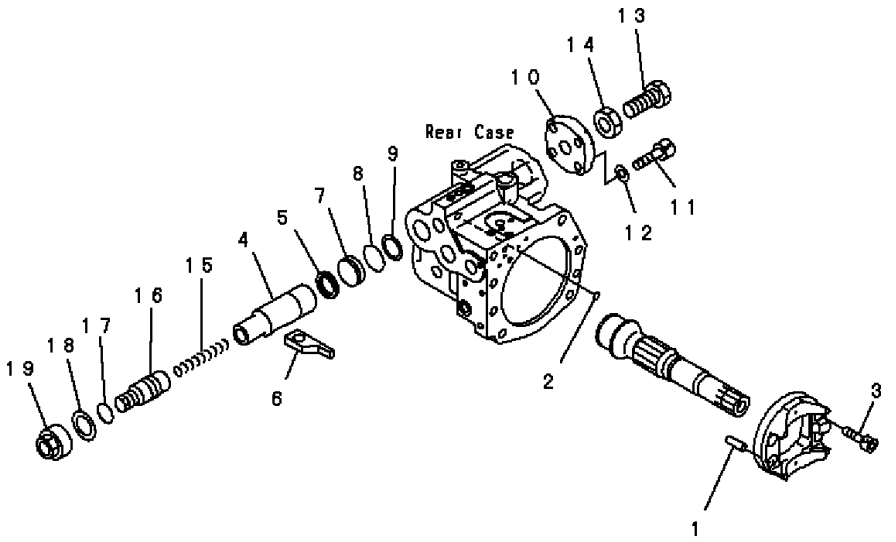

PWB5316

FIG. NO: Y1600-07A0C

INDEX	PART NO.	DESCRIPTION	Q'TY	SERIAL NO. PC200-6B	SERIAL NO. PC200LC-6B
	(708-2L-00461)	PUMP ASS'Y	1	B10001-	B20001-
		THESE ASSEMBLIES CONSIST OF ALL PARTS SHOWN IN FIGS.Y1600-01A0C TO Y1600-10A0C .			
	(708-2L-01442)	. PUMP SUB ASS'Y	1	B10001-	B20001-
1	(☆04020-01228)	. . PIN	1	B10001-	B20001-
2	(☆07000-B1009)	. . O-RING	1	B10001-	B20001-
3	(☆01252-61230)	. . BOLT	4	B10001-	B20001-
4	(☆708-2L-24513)	. . PISTON,SERVO	1	B10001-	B20001-
5	(☆708-2L-24670)	. . SEAL	1	B10001-	B20001-
6	(☆708-2L-24570)	. . SLIDER	1	B10001-	B20001-
7	(☆708-2L-24560)	. . STOPPER	1	B10001-	B20001-
8	(☆07000-B3040)	. . O-RING	1	B10001-	B20001-
9	(☆07001-03040)	. . RING,BACK-UP	1	B10001-	B20001-
10	(☆708-2L-24522)	. . COVER	1	B10001-	B20001-
11	(☆01252-61445)	. . BOLT	4	B10001-	B20001-
12	(☆113-43-31380)	. . WASHER	4	B10001-	B20001-
13	(☆708-2L-24640)	. . BOLT	1	B10001-	B20001-
14	(☆708-2L-24650)	. . NUT	1	B10001-	B20001-
15	(☆708-2L-24630)	. . SPRING	1	B10001-	B20001-
16	(☆708-2L-24531)	. . SCREW	1	B10001-	B20001-
17	(☆708-2L-24620)	. . O-RING	1	B10001-	B20001-
18	(☆708-2L-24660)	. . WASHER	1	B10001-	B20001-
19	(☆708-2L-24590)	. . NUT	1	B10001-	B20001-

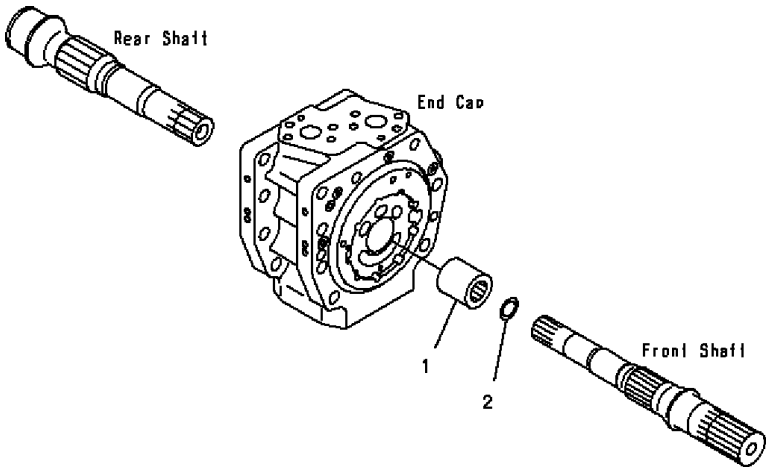

INDEX	PART NO.	DESCRIPTION	Q'TY	SERIAL NO. PC200-6B	SERIAL NO. PC200LC-6B
	(708-2L-00461)	PUMP ASS'Y ..... THESE ASSEMBLIES CONSIST OF ALL PARTS SHOWN IN FIGS.Y1600-01A0C TO Y1600-10A0C .	1	B10001-	B20001-
	(708-2L-01442)	. PUMP SUB ASS'Y	1	B10001-	B20001-
1	(☆708-2L-22130)	. . COUPLING	1	B10001-	B20001-
2	(☆708-2E-12140)	. . RING	1	B10001-	B20001-

FIG. Y1600-09A0C MAIN PUMP (9/10)

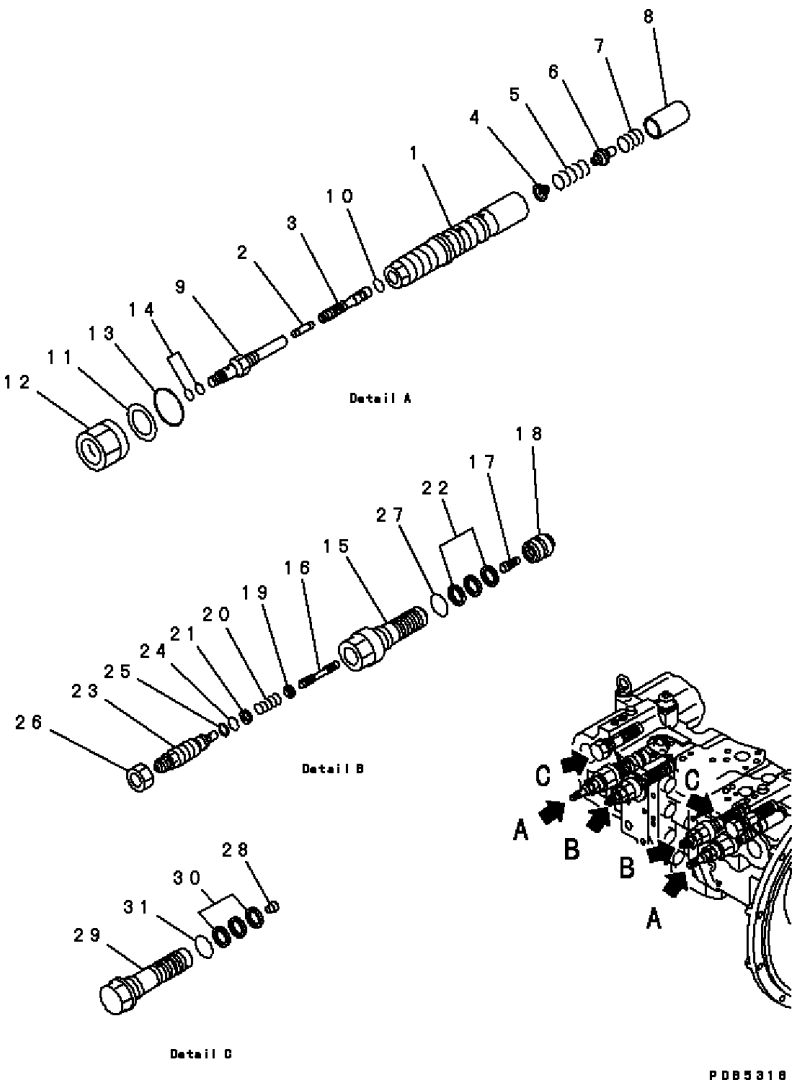

FIG. NO: Y1600-09A0C

INDEX	PART NO.	DESCRIPTION	Q'TY	SERIAL NO. PC200-6B	SERIAL NO. PC200LC-6B
	(708-2L-00461)	PUMP ASS'Y	1	B10001-	B20001-
		THESE ASSEMBLIES CONSIST OF ALL PARTS SHOWN IN FIGS.Y1600-01A0C TO Y1600-10A0C .			
	708-2L-04523	. VALVE ASS'Y, PC	2	B10001-	B20001-
1	(☆708-2L-28114)	. . SLEEVE	1	B10001-	B20001-
2	(☆708-2L-28470)	. . PIN	1	B10001-	B20001-
3	(☆708-2L-28253)	. . SPOOL	1	B10001-	B20001-
4	(☆708-2L-28231)	. . SEAT	1	B10001-	B20001-
5	(☆708-2L-28190)	. . SPRING	1	B10001-	B20001-
6	(☆708-2L-28221)	. . SEAT	1	B10001-	B20001-
7	(☆708-2L-28380)	. . SPRING	1	B10001-	B20001-
8	(☆708-2L-28122)	. . PISTON	1	B10001-	B20001-
9	(☆708-2L-28262)	. . PLUG	1	B10001-	B20001-
10	(☆708-2L-23940)	. . O-RING	1	B10001-	B20001-
11	(☆708-1W-25351)	. . WASHER	1	B10001-	B20001-
12	(☆708-2L-28280)	. . NUT	1	B10001-	B20001-
13	708-1W-28920	. . O-RING	1	B10001-	B20001-
14	07000-B1009	. . O-RING	2	B10001-	B20001-
	708-2L-04740	. VALVE ASS'Y, LS	2	B10001-	B20001-
15	(☆708-2L-28510)	. . SLEEVE	1	B10001-	B20001-
16	(☆708-2L-28620)	. . SPOOL	1	B10001-	B20001-
17	(☆708-2L-28540)	. . PISTON	1	B10001-	B20001-
18	(☆708-2L-28570)	. . SLEEVE	1	B10001-	B20001-
19	(☆708-1W-25591)	. . SEAT	1	B10001-	B20001-
20	(☆708-1W-25550)	. . SPRING	1	B10001-	B20001-
21	(☆708-1W-25580)	. . SEAT	1	B10001-	B20001-
22	708-2L-24680	. . SEAL	3	B10001-	B20001-
23	(☆708-2L-28560)	. . PLUG	1	B10001-	B20001-
24	(☆07000-B2010)	. . O-RING	1	B10001-	B20001-
25	(☆07001-02010)	. . RING	1	B10001-	B20001-
26	(☆01583-11811)	. . NUT	1	B10001-	B20001-
27	708-1W-28910	. . O-RING	1	B10001-	B20001-
28	(☆706-86-51180)	. . . PLUG	1	B10001-	B20001-
29	(☆708-2L-28892)	. . . PLUG	1	B10001-	B20001-
30	708-2L-24680	. . . SEAL	1	B10001-	B20001-
31	708-1W-28910	. . . O-RING	1	B10001-	B20001-

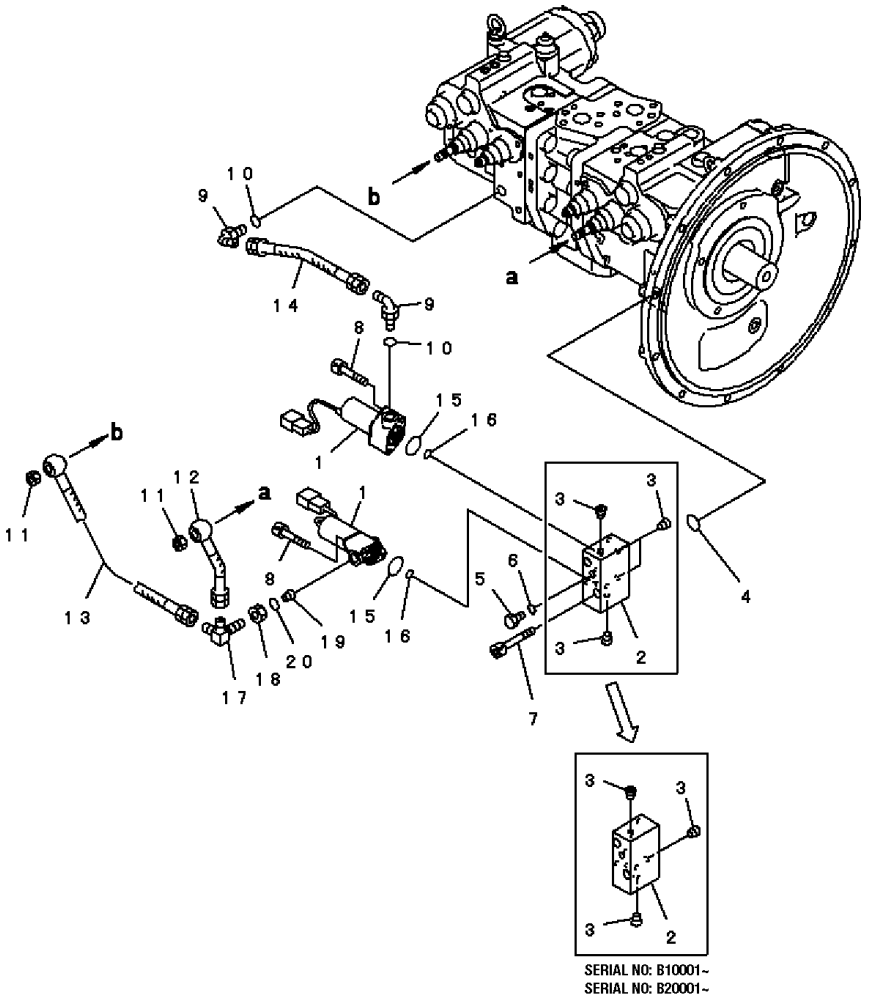

SERIAL NO: B10001~
SERIAL NO: B20001~

PWL0801

INDEX	PART NO.	DESCRIPTION	Q'TY	SERIAL NO. PC200-6B	SERIAL NO. PC200LC-6B
	(708-2L-00461)	PUMP ASS'Y	1	B10001-	B20001-
		THESE ASSEMBLIES CONSIST OF ALL PARTS SHOWN IN FIGS.Y1600-01A0C TO Y1600-10A0C .			
1	702-21-07010	. SOLENOID VALVE ASS'Y,SOLENOID	2	B10001-	B20001-
	(☆708-2L-04291)	. BLOCK ASS'Y	1	B10001-	B20001-
2	☆	. . BLOCK	1	B10001-	B20001-
3	☆	. . PLUG	3	B10001-	B20001-
4	708-2L-23970	. . O-RING	1	B10001-	B20001-
5	07040-11007	. PLUG	1	B10001-	B20001-
6	708-2L-23920	. O-RING	1	B10001-	B20001-
7	01252-30865	. BOLT	2	B10001-	B20001-
8	203-60-62220	. BOLT	4	B10001-	B20001-
9	07235-10210	. ELBOW	2	B10001-	B20001-
10	708-2L-23950	. O-RING	2	B10001-	B20001-
11	01582-11008	. NUT	2	B10001-	B20001-
12	708-2L-29410	. HOSE	1	B10001-	B20001-
13	708-2L-29420	. HOSE	1	B10001-	B20001-
14	708-2L-29430	. HOSE	1	B10001-	B20001-
15	708-2L-23960	. O-RING	2	B10001-	B20001-
16	07000-B2011	. O-RING	2	B10001-	B20001-
17	708-2L-29450	. ELBOW	1	B10001-	B20001-
18	01583-51408	. NUT	1	B10001-	B20001-
19	708-2L-29460	. ORIFICE	1	B10001-	B20001-
20	708-2L-23950	. O-RING	1	B10001-	B20001-

FIG. Y1620-01A0C BOOM CYLINDER

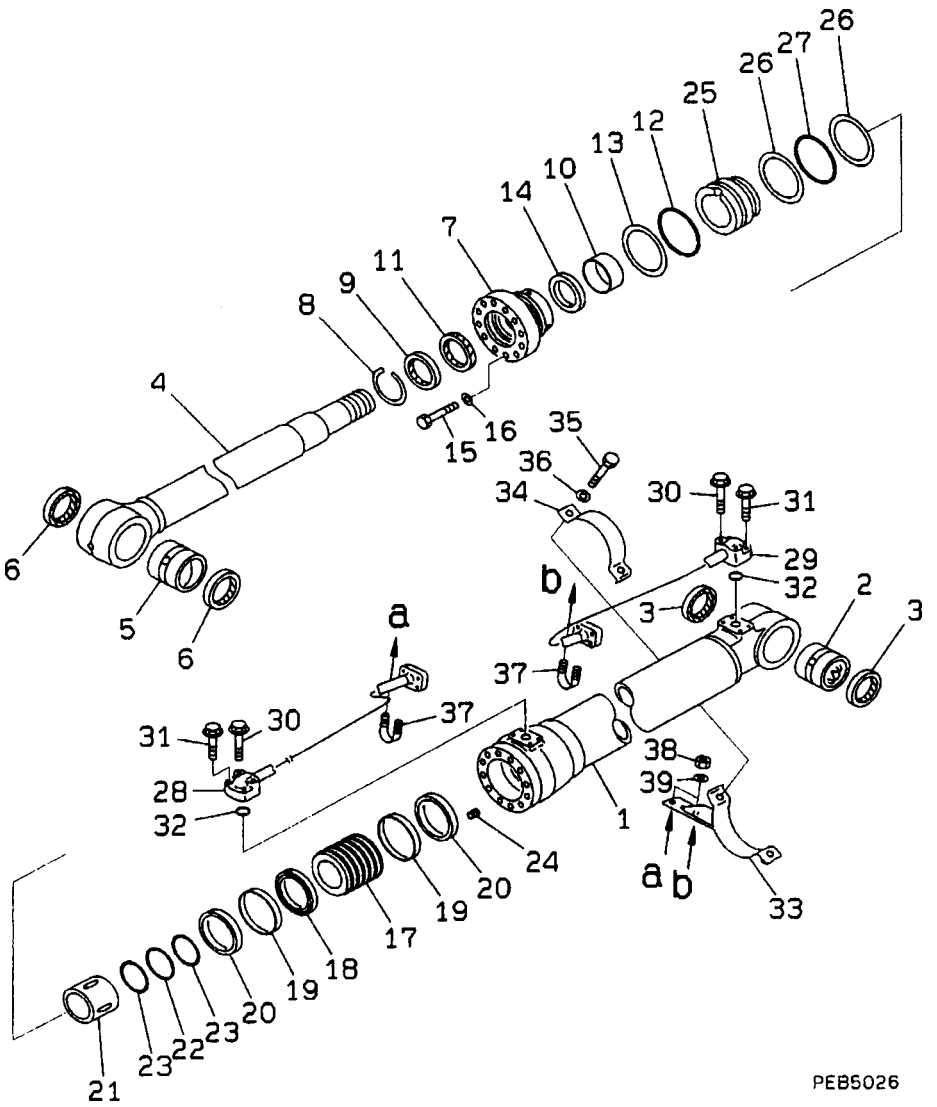

FIG. NO: Y1620-01A0C

INDEX	PART NO.	DESCRIPTION	Q'TY	SERIAL NO. PC200-6B	SERIAL NO. PC200LC-6B
G-1	(☉205-63-X3101)	BOOM CYLINDER GROUP, L.H.	1	B10001-	B20001-
G-2	(☉205-63-X3111)	BOOM CYLINDER GROUP, R.H.	1		
		==========			
	205-63-03101	CYLINDER ASS'Y	1	B10001-	B20001-
1	205-63-51141	. CYLINDER	1	B10001-	B20001-
2	205-70-71360	. BUSHING	1	B10001-	B20001-
3	07145-00070	. SEAL, DUST (KIT)	2	B10001-	B20001-
4	205-63-51121	. ROD, PISTON	1	B10001-	B20001-
5	707-76-80010	. BUSHING	1	B10001-	B20001-
6	07145-00080	. SEAL, DUST (KIT)	2	B10001-	B20001-
7	707-27-12921	. HEAD, CYLINDER	1	B10001-	B20001-
8	07179-13099	. RING, SNAP	1	B10001-	B20001-
9	707-56-85510	. SEAL, DUST (KIT)	1	B10001-	B20001-
10	707-52-90610	. BUSHING	1	B10001-	B20001-
11	707-51-85030	. PACKING, ROD (KIT)	1	B10001-	B20001-
12	07000-15110	. O-RING (KIT)	1	B10001-	B20001-
13	707-35-91220	. RING, BACK-UP (KIT)	1	B10001-	B20001-
14	707-51-85630	. RING, BUFFER (KIT)	1	B10001-	B20001-
15	01010-81670	. BOLT	12	B10001-	B20001-
16	01643-51645	. WASHER	12	B10001-	B20001-
17	707-36-12071	. PISTON	1	B10001-	B20001-
18	707-44-12180	. RING, PISTON (KIT)	1	B10001-	B20001-
19	707-39-12110	. RING, WEAR (KIT)	2	B10001-	B20001-
20	707-44-12911	. RING	2	B10001-	B20001-
21	707-71-60860	. PLUNGER	1	B10001-	B20001-
22	07000-15075	. O-RING (KIT)	1	B10001-	B20001-
23	707-35-90930	. RING, BACK-UP (KIT)	2	B10001-	B20001-
24	01310-01216	. SCREW	1	B10001-	B20001-
25	707-71-32670	. COLLAR	1	B10001-	B20001-
26	707-35-91220	. RING, BACK-UP (KIT)	2	B10001-	B20001-
27	07000-15110	. O-RING (KIT)	1	B10001-	B20001-
28	205-63-51171	TUBE, L.H.	1	B10001-	B20001-
29	20Y-62-24580	TUBE, L.H.	1	B10001-	B20001-
30	01435-01055	BOLT	4	B10001-	B20001-
31	01435-01040	BOLT	4	B10001-	B20001-
32	07000-13030	O-RING (KIT)	2	B10001-	B20001-
33	205-63-53592	BRACKET, L.H.	1	B10001-	B20001-
34	707-88-96530	BAND	1	B10001-	B20001-
35	01010-81035	BOLT	2	B10001-	B20001-
36	01643-51032	WASHER	2	B10001-	B20001-
37	07283-22738	CLIP	2	B10001-	B20001-
38	01599-01011	NUT	4	B10001-	B20001-
39	01643-31032	WASHER	4	B10001-	B20001-
		==========			

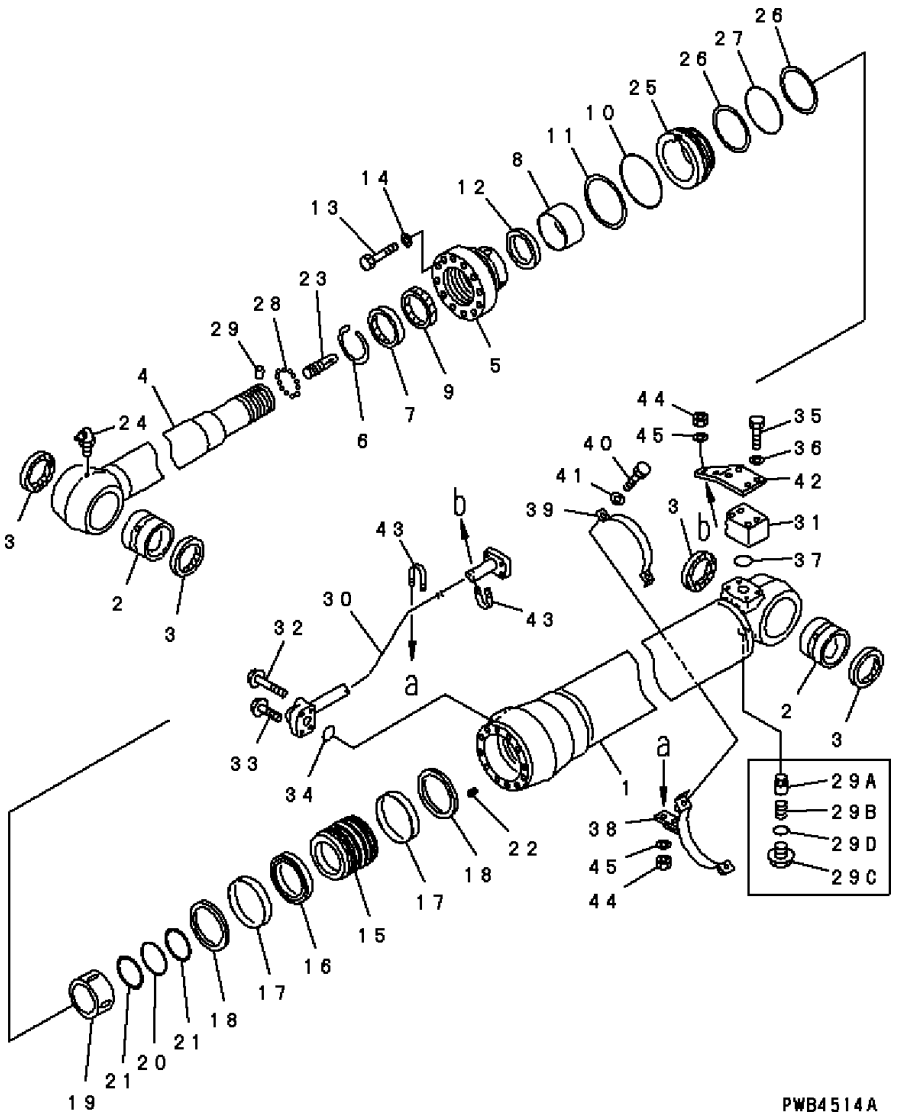

INDEX	PART NO.	DESCRIPTION	Q'TY	SERIAL NO. PC200-6B	SERIAL NO. PC200LC-6B
G-1	(☉205-63-X3122)	ARM CYLINDER GROUP	1	B10001-	B20001-
		==========			
	205-63-03122	CYLINDER ASS'Y	1	B10001-	B20001-
1	205-63-61142	. CYLINDER	1	B10001-	B20001-
2	707-76-80010	. BUSHING	2	B10001-	B20001-
3	07145-00080	. SEAL, DUST (KIT)	4	B10001-	B20001-
4	205-63-61121	. ROD, PISTON	1	B10001-	B20001-
5	707-27-13961	. HEAD, CYLINDER	1	B10001-	B20001-
6	07179-13109	. RING, SNAP	1	B10001-	B20001-
7	707-56-95510	. SEAL, DUST (KIT)	1	B10001-	B20001-
8	707-52-90720	. BUSHING	1	B10001-	B20001-
9	707-51-95030	. PACKING, ROD (KIT)	1	B10001-	B20001-
10	07000-15125	. O-RING (KIT)	1	B10001-	B20001-
11	707-35-91370	. RING, BACK-UP (KIT)	1	B10001-	B20001-
12	707-51-95630	. RING, BUFFER (KIT)	1	B10001-	B20001-
13	01010-81875	. BOLT	12	B10001-	B20001-
14	707-41-11840	. WASHER	12	B10001-	B20001-
15	707-36-13731	. PISTON	1	B10001-	B20001-
16	707-44-13280	. RING, PISTON (KIT)	1	B10001-	B20001-
17	707-39-13510	. RING, WEAR (KIT)	2	B10001-	B20001-
18	707-44-13920	. RING	2	B10001-	B20001-
19	707-71-61040	. PLUNGER	1	B10001-	B20001-
20	07000-15085	. O-RING (KIT)	1	B10001-	B20001-
21	707-35-90960	. RING, BACK-UP (KIT)	2	B10001-	B20001-
22	01310-01216	. SCREW	1	B10001-	B20001-
23	707-71-60230	. PLUNGER	1	B10001-	B20001-
24	07020-00900	. FITTING, GREASE	1	B10001-	B20001-
25	707-71-32770	. COLLAR	1	B10001-	B20001-
26	707-35-91370	. RING, BACK-UP (KIT)	2	B10001-	B20001-
27	07000-15125	. O-RING (KIT)	1	B10001-	B20001-
28	04260-00635	. BALL	12	B10001-	B20001-
29	707-71-91270	. CAP	1	B10001-	B20001-
29A	707-83-13010	. VALVE	1	B10001-	B20001-
29B	07750-01628	. SPRING	1	B10001-	B20001-
29C	707-87-14070	. PLUG	1	B10001-	B20001-
29D	07002-12034	. O-RING (KIT)	1	B10001-	B20001-
30	205-63-61171	TUBE	1	B10001-	B20001-
31	20D-62-17860	ELBOW	1	B10001-	B20001-
32	01435-01055	BOLT	2	B10001-	B20001-
33	01435-01040	BOLT	2	B10001-	B20001-
34	07000-13030	O-RING (KIT)	1	B10001-	B20001-
35	01010-81080	BOLT	4	B10001-	B20001-
36	01643-31032	WASHER	4	B10001-	B20001-
37	07000-13035	O-RING (KIT)	1	B10001-	B20001-
38	707-88-95341	BRACKET	1	B10001-	B20001-
39	707-88-95320	BAND	1	B10001-	B20001-
40	01010-81035	BOLT	2	B10001-	B20001-
41	01643-51032	WASHER	2	B10001-	B20001-
42	707-88-11560	PLATE	1	B10001-	B20001-
43	07283-22738	CLIP	2	B10001-	B20001-
44	01599-01011	NUT	4	B10001-	B20001-
45	01643-31032	WASHER	4	B10001-	B20001-
		==========			

FIG. Y1620-41A0C BUCKET CYLINDER (FOR 2.4M ARM AND 2.9M ARM)

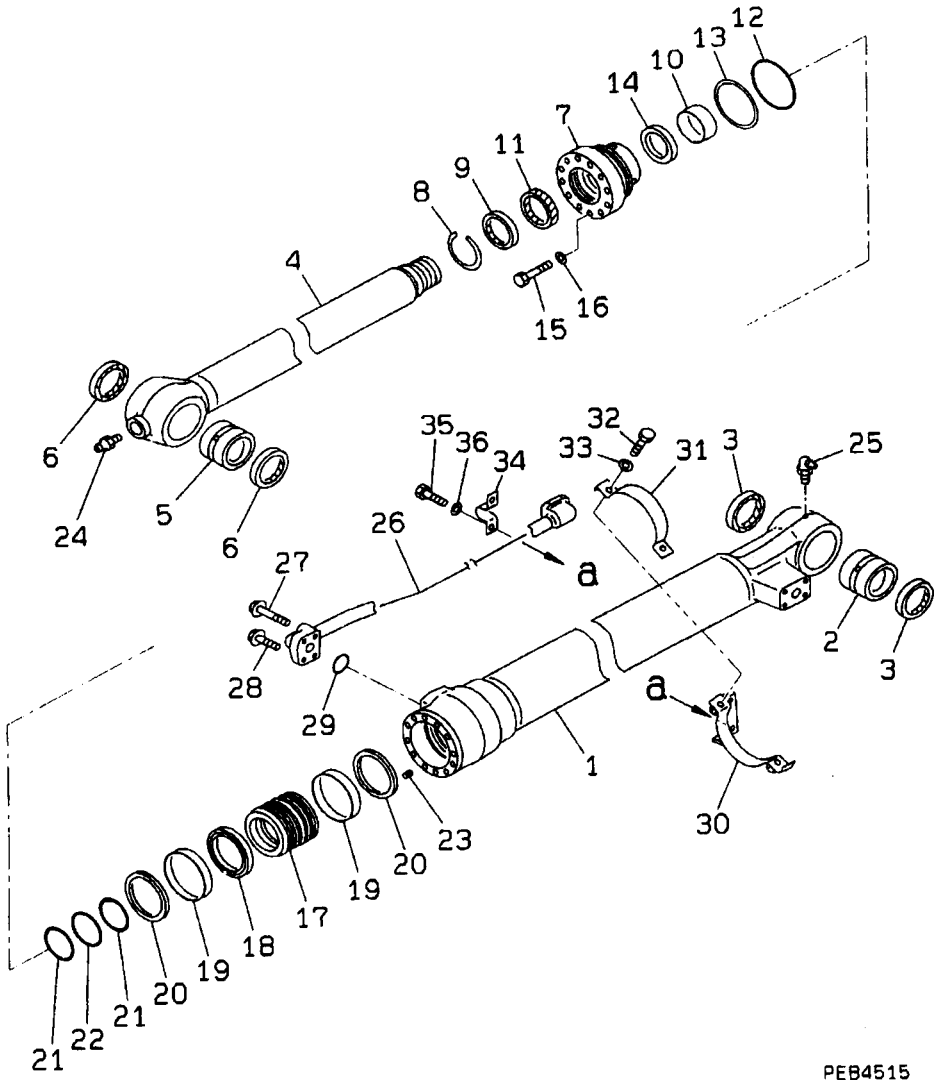

FIG. NO: Y1620-41A0C

INDEX	PART NO.	DESCRIPTION	Q'TY	SERIAL NO. PC200-6B	SERIAL NO. PC200LC-6B
G-1	(☉205-63-X3131)	BUCKET CYLINDER G.	1	B10001-	B20001-
		==========			
	205-63-03131	CYLINDER ASS'Y	1	B10001-	B20001-
1	205-63-71141	. CYLINDER	1	B10001-	B20001-
2	707-76-70110	. BUSHING	1	B10001-	B20001-
3	07145-00070	. SEAL, DUST (KIT)	2	B10001-	B20001-
4	205-63-71121	. ROD, PISTON	1	B10001-	B20001-
5	707-76-70120	. BUSHING	1	B10001-	B20001-
6	21K-70-12180	. SEAL, DUST (KIT)	2	B10001-	B20001-
7	707-27-11981	. HEAD, CYLINDER	1	B10001-	B20001-
8	07179-13094	. RING, SNAP	1	B10001-	B20001-
9	195-63-92190	. SEAL, DUST (KIT)	1	B10001-	B20001-
10	707-52-90560	. BUSHING	1	B10001-	B20001-
11	707-51-80030	. PACKING, ROD (KIT)	1	B10001-	B20001-
12	07000-15105	. O-RING (KIT)	1	B10001-	B20001-
13	707-35-91150	. RING, BACK-UP (KIT)	1	B10001-	B20001-
14	707-51-80630	. RING, BUFFER (KIT)	1	B10001-	B20001-
15	01010-81670	. BOLT	12	B10001-	B20001-
16	01643-51645	. WASHER	12	B10001-	B20001-
17	707-36-11661	. PISTON	1	B10001-	B20001-
18	707-44-11280	. RING, PISTON (KIT)	1	B10001-	B20001-
19	707-39-11510	. RING, WEAR (KIT)	2	B10001-	B20001-
20	707-44-11920	. RING	2	B10001-	B20001-
21	707-35-90360	. RING (KIT)	2	B10001-	B20001-
22	07000-15070	. O-RING (KIT)	1	B10001-	B20001-
23	01310-01216	. SCREW	1	B10001-	B20001-
24	07020-00000	. FITTING, GREASE	1	B10001-	B20001-
25	07020-00900	. FITTING, GREASE	1	B10001-	B20001-
26	205-63-71171	TUBE	1	B10001-	B20001-
27	01435-01055	BOLT	2	B10001-	B20001-
28	01435-01040	BOLT	2	B10001-	B20001-
29	07000-13030	O-RING (KIT)	1	B10001-	B20001-
30	707-88-95370	BRACKET	2	B10001-	B20001-
31	707-88-95350	BAND	2	B10001-	B20001-
32	01010-81035	BOLT	4	B10001-	B20001-
33	01643-51032	WASHER	4	B10001-	B20001-
34	07282-02793	CLAMP	2	B10001-	B20001-
35	01010-81020	BOLT	4	B10001-	B20001-
36	01643-31032	WASHER	4	B10001-	B20001-
		==========			

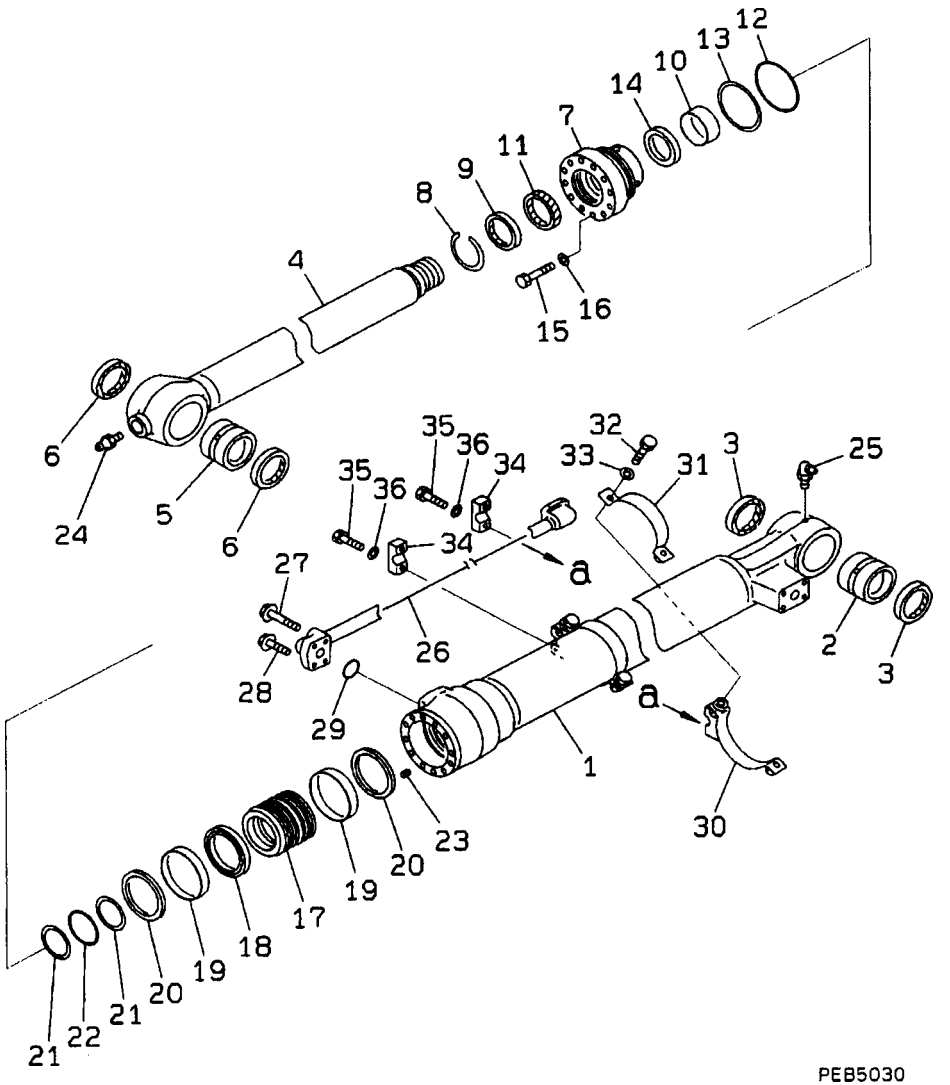

PEB5030

INDEX	PART NO.	DESCRIPTION	Q'TY	SERIAL NO. PC200-6B	SERIAL NO. PC200LC-6B
G-1	(☉205-63-X3140)	BUCKET CYLINDER G.	1	B10001-	B20001-
		==========			
	205-63-03140	CYLINDER ASS'Y	1	B10001-	B20001-
1	205-63-71540	. CYLINDER	1	B10001-	B20001-
2	707-76-70160	. BUSHING	1	B10001-	B20001-
3	07145-00070	. SEAL, DUST (KIT)	2	B10001-	B20001-
4	205-63-71520	. ROD, PISTON	1	B10001-	B20001-
5	707-76-70160	. BUSHING	1	B10001-	B20001-
6	21K-70-12180	. SEAL, DUST (KIT)	2	B10001-	B20001-
7	707-27-12960	. HEAD, CYLINDER	1	B10001-	B20001-
8	07179-13099	. RING, SNAP	1	B10001-	B20001-
9	707-56-85510	. SEAL, DUST (KIT)	1	B10001-	B20001-
10	707-52-90610	. BUSHING	1	B10001-	B20001-
11	707-51-85030	. PACKING, ROD (KIT)	1	B10001-	B20001-
12	07000-15115	. O-RING (KIT)	1	B10001-	B20001-
13	707-35-91250	. RING, BACK-UP (KIT)	1	B10001-	B20001-
14	707-51-85630	. RING, BUFFER (KIT)	1	B10001-	B20001-
15	01010-81670	. BOLT	12	B10001-	B20001-
16	01643-51645	. WASHER	12	B10001-	B20001-
17	707-36-12670	. PISTON	1	B10001-	B20001-
18	707-44-12280	. RING, PISTON (KIT)	1	B10001-	B20001-
19	707-39-12530	. RING, WEAR (KIT)	2	B10001-	B20001-
20	707-44-12921	. RING	2	B10001-	B20001-
21	707-35-90930	. RING, BACK-UP (KIT)	2	B10001-	B20001-
22	07000-15075	. O-RING (KIT)	1	B10001-	B20001-
23	01310-01216	. SCREW	1	B10001-	B20001-
24	07020-00000	. FITTING, GREASE	1	B10001-	B20001-
25	07020-00900	. FITTING, GREASE	1	B10001-	B20001-
26	205-63-71570	TUBE	1	B10001-	B20001-
27	01435-01055	BOLT	2	B10001-	B20001-
28	01435-01040	BOLT	2	B10001-	B20001-
29	07000-13030	O-RING (KIT)	1	B10001-	B20001-
30	707-88-87090	BRACKET	2	B10001-	B20001-
31	707-88-87150	BAND	2	B10001-	B20001-
32	01010-51035	BOLT	4	B10001-	B20001-
33	01643-51032	WASHER	4	B10001-	B20001-
34	707-88-13590	CLAMP	2	B10001-	B20001-
35	01010-51040	BOLT	4	B10001-	B20001-
36	01643-31032	WASHER	4	B10001-	B20001-
		==========			

FIG. Y1627-01A0 SWIVEL JOINT

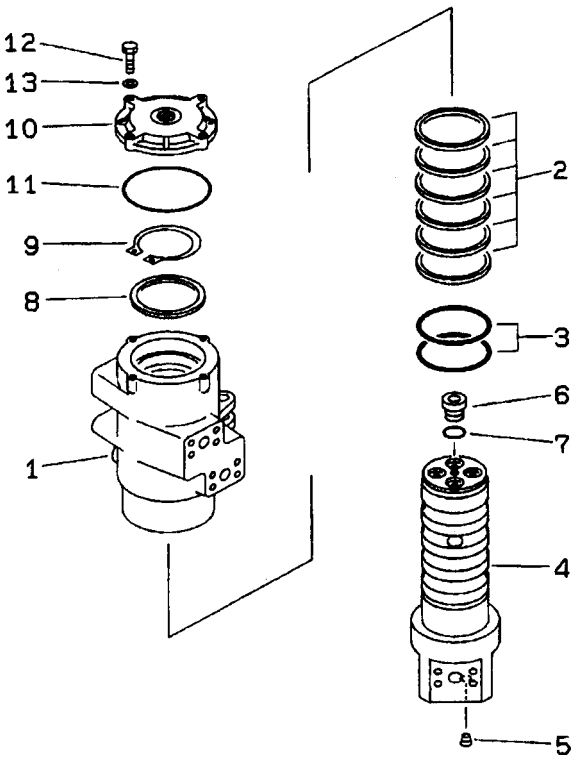

FIG. NO: Y1627-01A0

INDEX	PART NO.	DESCRIPTION	Q'TY	SERIAL NO. PC200-6B	SERIAL NO. PC200LC-6B
	703-09-33230	SWIVEL JOINT ASS'Y	1	B10001-	B20001-
1	☆	. ROTOR	1	B10001-	B20001-
2	703-09-95320	. SEAL	6	B10001-	B20001-
3	07000-15090	. O-RING	2	B10001-	B20001-
4	☆	. SHAFT	1	B10001-	B20001-
5	07043-20108	. PLUG	1	B10001-	B20001-
6	703-09-98610	. PLUG	4	B10001-	B20001-
7	07002-12434	. O-RING	4	B10001-	B20001-
8	703-09-94210	. RING	1	B10001-	B20001-
9	04064-08530	. RING, SNAP	1	B10001-	B20001-
10	☆	. COVER	1	B10001-	B20001-
11	07000-02115	. O-RING	1	B10001-	B20001-
12	01010-50835	. BOLT	4	B10001-	B20001-
13	01643-30823	. WASHER	4	B10001-	B20001-

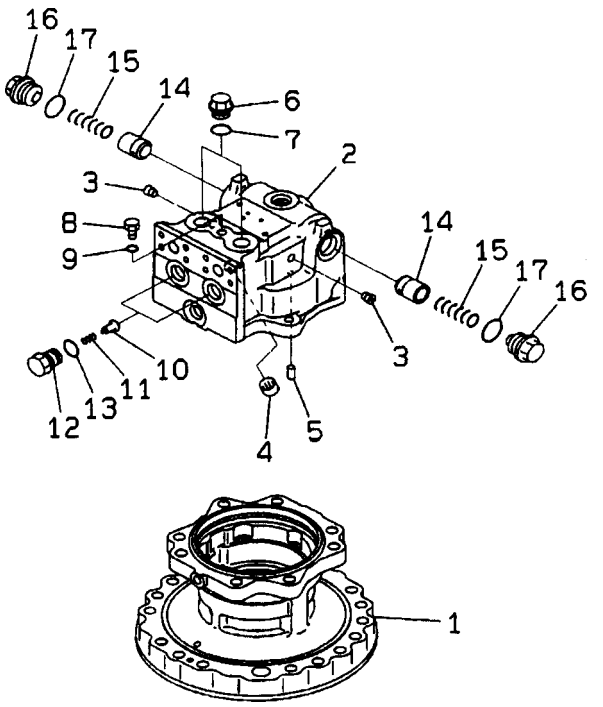

INDEX	PART NO.	DESCRIPTION	Q'TY	SERIAL NO. PC200-6B	SERIAL NO. PC200LC-6B
	706-75-01170	SWING MOTOR ASS'Y ..... THIS ASSEMBLY CONSISTS OF ALL PARTS SHOWN IN FIGS.Y1640-01A1C T0 Y1640-03A1C .	1	B10001-	B20001-
	706-75-03330	. MOTOR SUB ASS'Y	1	B10001-	B20001-
1	(☆706-75-43110)	. . CASE	1	B10001-	B20001-
	(☆706-75-00150)	. . HOUSING ASS'Y	1	B10001-	B20001-
2	☆	. . . HOUSING	1	B10001-	B20001-
3	☆	. . . PLUG	2	B10001-	B20001-
4	(☆706-75-40010)	. . BEARING	1	B10001-	B20001-
5	(☆706-75-42820)	. . PIN, DOWEL	1	B10001-	B20001-
6	706-77-72170	. . PLUG	2	B10001-	B20001-
7	07002-12434	. . O-RING	2	B10001-	B20001-
8	708-8H-11530	. . PLUG	1	B10001-	B20001-
9	07002-11423	. . O-RING	1	B10001-	B20001-
10	709-25-11650	. . VALVE	2	B10001-	B20001-
11	709-25-11361	. . SPRING	2	B10001-	B20001-
12	709-25-11640	. . PLUG	2	B10001-	B20001-
13	07000-12020	. . O-RING	2	B10001-	B20001-
14	706-75-74540	. . VALVE	2	B10001-	B20001-
15	706-75-74550	. . SPRING	2	B10001-	B20001-
16	706-75-74850	. . PLUG	2	B10001-	B20001-
17	07002-13334	. . O-RING	2	B10001-	B20001-

FIG. Y1640-02A1C SWING MOTOR (2/3)

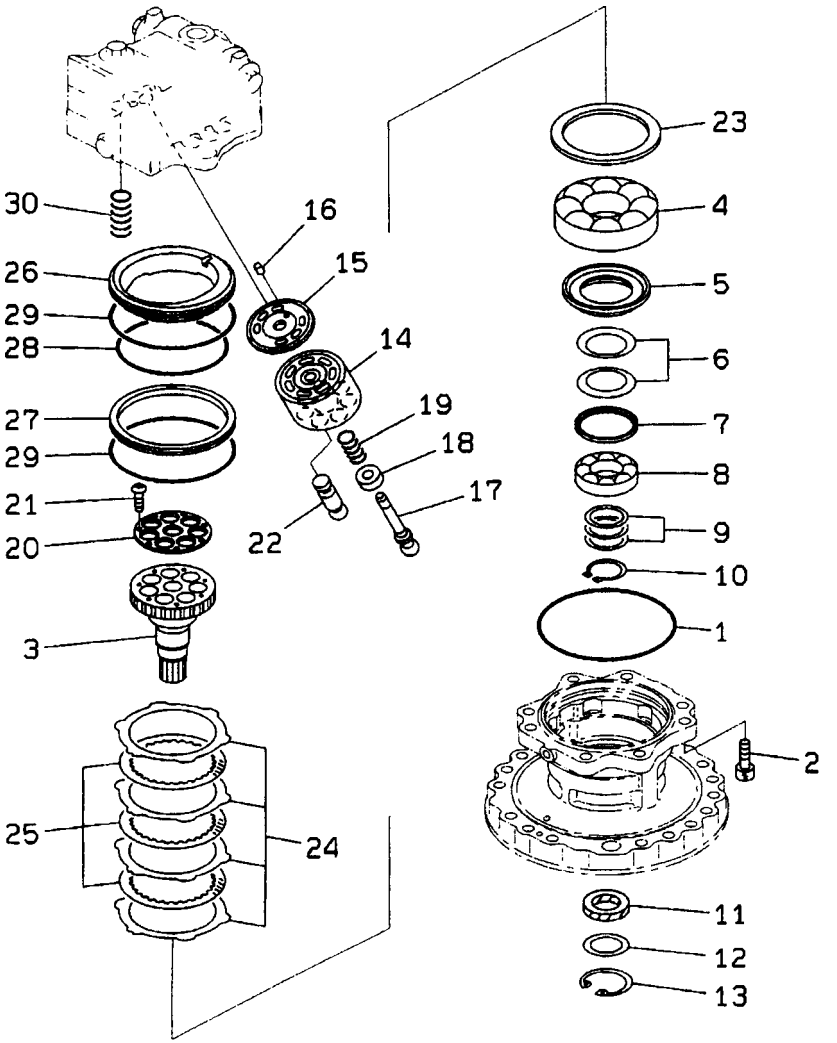

FIG. NO: Y1640-02A1C

INDEX	PART NO.	DESCRIPTION	Q'TY	SERIAL NO. PC200-6B	SERIAL NO. PC200LC-6B
	(706-75-01170)	SWING MOTOR ASS'Y	1	B10001-	B20001-
		THIS ASSEMBLY CONSISTS OF ALL PARTS SHOWN IN FIGS.Y1640-01A1C T0 Y1640-03A1C .			
	(706-75-03330)	. MOTOR SUB ASS'Y	1	B10001-	B20001-
1	(☆565-14-22440)	. . O-RING	1	B10001-	B20001-
2	(☆01252-61445)	. . BOLT	8	B10001-	B20001-
3	(☆706-75-43660)	. . SHAFT, DRIVE	1	B10001-	B20001-
4	(☆706-75-42880)	. . BEARING	1	B10001-	B20001-
5	(☆706-75-43810)	. . SPACER	1	B10001-	B20001-
6	(☆706-7E-11260)	. . SPRING	2	B10001-	B20001-
7	(☆706-7E-11270)	. . SEAT	1	B10001-	B20001-
8	(☆706-76-40890)	. . BEARING	1	B10001-	B20001-
9	(☆706-75-05040)	. . SPACER KIT	1	B10001-	B20001-
	☆	. . . SPACER, 3.10MM	1	B10001-	B20001-
	☆	. . . SPACER, 3.40MM	1	B10001-	B20001-
	☆	. . . SPACER, 3.70MM	1	B10001-	B20001-
10	(☆04064-04518)	. . RING, SNAP	1	B10001-	B20001-
11	706-7E-11280	. . SEAL, OIL	1	B10001-	B20001-
12	706-75-43720	. . SPACER	1	B10001-	B20001-
13	04065-06220	. . RING	1	B10001-	B20001-
14	(☆706-75-43190)	. . BLOCK, CYLINDER	1	B10001-	B20001-
15	(☆706-75-43741)	. . PLATE, VALVE	1	B10001-	B20001-
16	(☆706-75-43750)	. . PIN, DOWEL	1	B10001-	B20001-
17	(☆706-75-43120)	. . SHAFT, CENTER	1	B10001-	B20001-
18	(☆706-75-43130)	. . RING, CENTER	1	B10001-	B20001-
19	(☆706-75-41110)	. . SPRING	1	B10001-	B20001-
	(☆706-75-05020)	. . RETAINER KIT	1	B10001-	B20001-
20	☆	. . . RETAINER	1	B10001-	B20001-
21	☆	. . . SCREW	7	B10001-	B20001-
22	706-75-43160	. . PISTON SUB ASS'Y	7	B10001-	B20001-
23	706-75-92130	. . PLATE	1	B10001-	B20001-
24	706-75-92340	. . PLATE	4	B10001-	B20001-
25	706-75-92350	. . DISK	3	B10001-	B20001-
26	706-75-92380	. . PISTON, BRAKE	1	B10001-	B20001-
27	706-75-92390	. . RING, BRAKE	1	B10001-	B20001-
28	07000-12145	. . O-RING	1	B10001-	B20001-
29	706-75-92310	. . O-RING	2	B10001-	B20001-
30	706-75-92360	. . SPRING	6	B10001-	B20001-

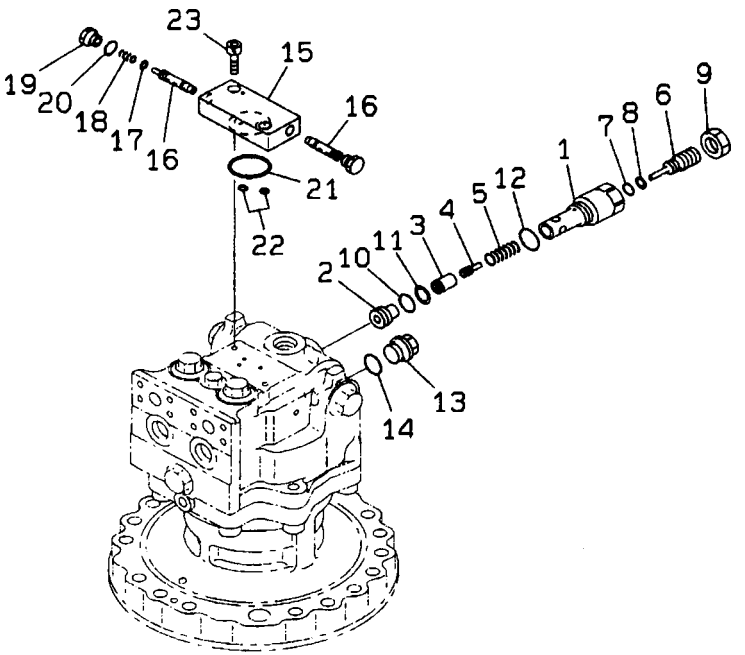

INDEX	PART NO.	DESCRIPTION	Q'TY	SERIAL NO. PC200-6B	SERIAL NO. PC200LC-6B
	(706-75-01170)	SWING MOTOR ASS'Y ..... THIS ASSEMBLY CONSISTS OF ALL PARTS SHOWN IN FIGS.Y1640-01A1C T0 Y1640-03A1C .	1	B10001-	B20001-
	702-75-01201	. RELIEF VALVE ASS'Y	1	B10001-	B20001-
1	☆	. . SLEEVE	1	B10001-	B20001-
2	☆	. . SEAT, VALVE	1	B10001-	B20001-
3	☆	. . VALVE	1	B10001-	B20001-
4	☆	. . PISTON	1	B10001-	B20001-
5	☆	. . SPRING	1	B10001-	B20001-
6	☆	. . SCREW	1	B10001-	B20001-
7	☆	. . O-RING	1	B10001-	B20001-
8	☆	. . RING, BACK-UP	1	B10001-	B20001-
9	☆	. . NUT	1	B10001-	B20001-
10	07000-F2020	. . O-RING	1	B10001-	B20001-
11	07001-02020	. . RING, BACK-UP	1	B10001-	B20001-
12	07002-13034	. . O-RING	1	B10001-	B20001-
13	706-77-72170	. PLUG	1	B10001-	B20001-
14	07002-12434	. O-RING	1	B10001-	B20001-
	702-15-72000	. VALVE ASS'Y	1	B10001-	B20001-
15	☆	. . BODY	1	B10001-	B20001-
16	☆	. . SPOOL	2	B10001-	B20001-
17	709-70-71610	. . SEAL	2	B10001-	B20001-
18	702-15-71130	. . SPRING	2	B10001-	B20001-
19	702-15-71140	. . PLUG	2	B10001-	B20001-
20	07002-01423	. . O-RING	2	B10001-	B20001-
21	07000-03042	. O-RING	1	B10001-	B20001-
22	07000-11007	. O-RING	2	B10001-	B20001-
23	01252-60825	. BOLT	2	B10001-	B20001-

FIG. Y1641-01A0A TRAVEL MOTOR (1/3)

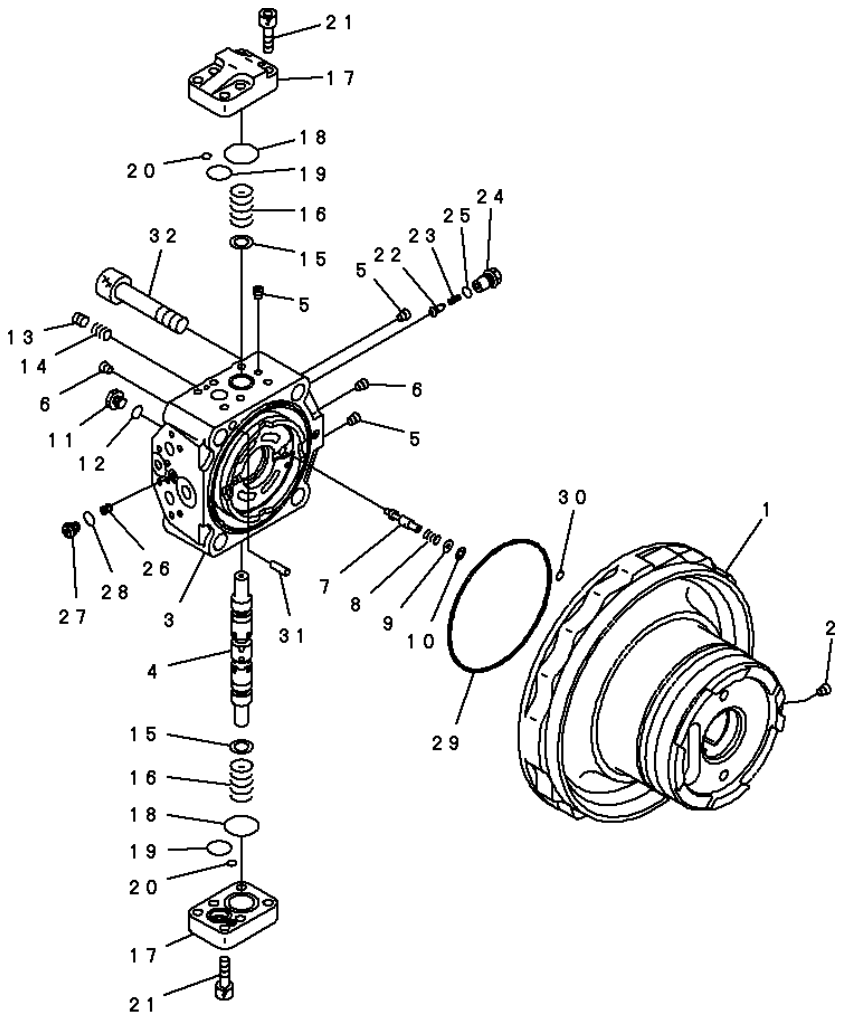

PDB3484

FIG. NO: Y1641-01A0A

INDEX	PART NO.	DESCRIPTION	Q'TY	SERIAL NO. PC200-6B	SERIAL NO. PC200LC-6B
	708-8F-00110	TRAVEL MOTOR ASS'Y	1	B10001-	B20001-
		THESE ASSEMBLIES CONSIST OF ALL PARTS SHOWN IN FIGS.Y1641-01A0A TO Y1641-03A0A .			
	(☆708-8F-04640)	. CASE SUB ASS'Y	1	B10001-	B20001-
1	☆	. . CASE, MOTOR	1	B10001-	B20001-
2	☆	. . PLUG	1	B10001-	B20001-
	(☆708-8F-04621)	. END COVER SUB ASS'Y	1	B10001-	B20001-
3	☆	. . COVER, END	1	B10001-	B20001-
4	☆	. . SPOOL	1	B10001-	B20001-
5	☆	. . PLUG	3	B10001-	B20001-
6	☆	. . PLUG	2	B10001-	B20001-
7	☆	. . SPOOL	1	B10001-	B20001-
8	(☆708-8F-34170)	. . SPRING	1	B10001-	B20001-
9	(☆708-8H-34210)	. . SEAT	1	B10001-	B20001-
10	(☆708-8H-34180)	. . RING	1	B10001-	B20001-
11	708-8H-11530	. PLUG	2	B10001-	B20001-
12	07002-11423	. O-RING	2	B10001-	B20001-
13	20B-27-11210	. BLEEDER	1	B10001-	B20001-
14	708-8F-36611	. SPRING	2	B10001-	B20001-
15	☆	. RING	2	B10001-	B20001-
16	708-8H-36121	. SPRING	2	B10001-	B20001-
17	708-8F-36311	. COVER	2	B10001-	B20001-
18	07000-13040	. O-RING	2	B10001-	B20001-
19	700-93-11320	. O-RING	2	B10001-	B20001-
20	07000-11009	. O-RING	2	B10001-	B20001-
21	01252-61235	. BOLT	12	B10001-	B20001-
22	708-8F-34120	. VALVE	2	B10001-	B20001-
23	722-10-91130	. SPRING	2	B10001-	B20001-
24	708-8F-34110	. PLUG	2	B10001-	B20001-
25	07002-11823	. O-RING	2	B10001-	B20001-
26	708-8E-16180	. VALVE	1	B10001-	B20001-
27	708-8E-16160	. PLUG	1	B10001-	B20001-
28	07002-11023	. O-RING	1	B10001-	B20001-
29	708-8F-31610	. O-RING	1	B10001-	B20001-
30	07000-11009	. O-RING	1	B10001-	B20001-
31	(☆04020-01228)	. PIN	1	B10001-	B20001-
32	708-8F-31210	. BOLT	4	B10001-	B20001-

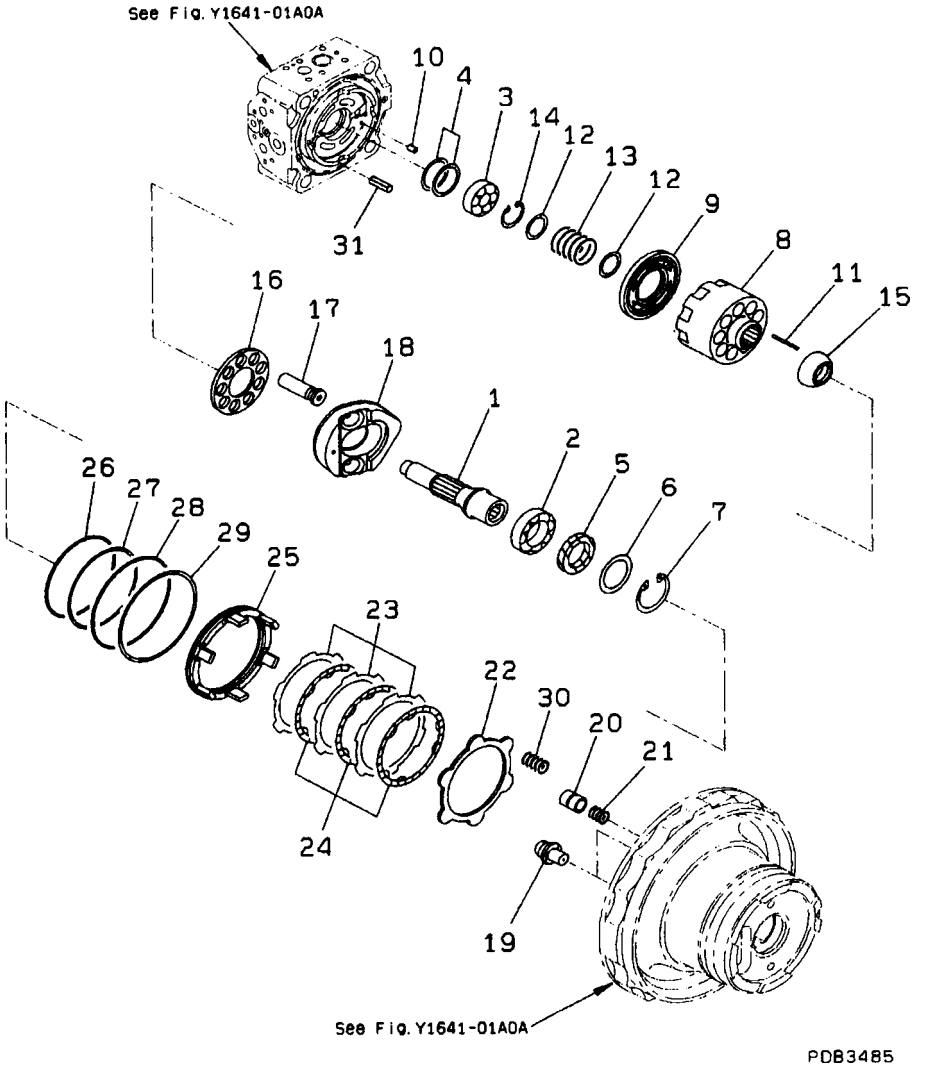

INDEX	PART NO.	DESCRIPTION	Q'TY	SERIAL NO. PC200-6B	SERIAL NO. PC200LC-6B
	708-8F-00110	TRAVEL MOTOR ASS'Y	1	B10001-	B20001-
		THESE ASSEMBLIES CONSIST OF ALL PARTS SHOWN IN FIGS.Y1641-01A0A TO Y1641-03A0A .			
1	(☆708-8F-32110)	. SHAFT	1	B10001-	B20001-
2	(☆708-8F-12151)	. BEARING	1	B10001-	B20001-
3	(☆708-7L-12140)	. BEARING	1	B10001-	B20001-
4	(☆708-7L-05010)	. SPACER KIT	1	B10001-	B20001-
	☆	. . SPACER, 1.5MM	1	B10001-	B20001-
	☆	. . SPACER, 1.6MM	1	B10001-	B20001-
	☆	. . SPACER, 1.7MM	1	B10001-	B20001-
	☆	. . SPACER, 1.8MM	1	B10001-	B20001-
	☆	. . SPACER, 1.9MM	1	B10001-	B20001-
	☆	. . SPACER, 2.0MM	1	B10001-	B20001-
5	706-7G-11290	. SEAL, OIL	1	B10001-	B20001-
6	708-8F-12230	. SPACER, 3.2MM	1	B10001-	B20001-
7	04065-07225	. RING	1	B10001-	B20001-
8	☆	. BLOCK, CYLINDER	1	B10001-	B20001-
9	☆	. PLATE, VALVE	1	B10001-	B20001-
10	☆	. PIN	1	B10001-	B20001-
11	(☆708-8F-33360)	. PIN	3	B10001-	B20001-
12	(☆708-7L-13140)	. SEAT	2	B10001-	B20001-
13	(☆708-8F-33150)	. SPRING	1	B10001-	B20001-
14	(☆04065-04818)	. RING, SNAP	1	B10001-	B20001-
15	(☆708-8F-33350)	. RETAINER, GUIDE	1	B10001-	B20001-
16	(☆708-8F-33340)	. RETAINER, SHOE	1	B10001-	B20001-
17	(☆708-8F-33310)	. PISTON SUB ASS'Y	9	B10001-	B20001-
18	(☆708-8F-33410)	. CAM, ROCKER	1	B10001-	B20001-
19	(☆708-8F-33710)	. BALL, RETAINER	2	B10001-	B20001-
20	(☆708-8F-34141)	. PISTON	1	B10001-	B20001-
21	(☆708-8F-34150)	. SPRING	1	B10001-	B20001-
22	(☆708-8F-35110)	. PLATE	1	B10001-	B20001-
23	(☆708-8F-35130)	. PLATE	3	B10001-	B20001-
24	(☆708-8F-35120)	. DISC	3	B10001-	B20001-
25	(☆708-8F-35140)	. PISTON, BRAKE	1	B10001-	B20001-
26	(☆708-8F-35160)	. O-RING	1	B10001-	B20001-
27	(☆708-8F-35170)	. RING, BACK-UP	1	B10001-	B20001-
28	(☆708-8F-35180)	. O-RING	1	B10001-	B20001-
29	(☆708-8F-35190)	. RING, BACK-UP	1	B10001-	B20001-
30	(☆708-8F-35150)	. SPRING	6	B10001-	B20001-
31	(☆04025-00324)	. PIN, SPRING	1	B10001-	B20001-

FIG. Y1641-03A0A TRAVEL MOTOR (3/3)

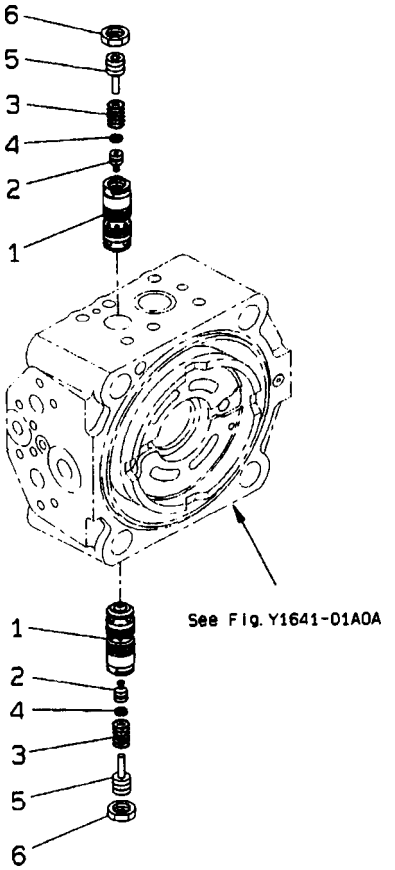

FIG. NO: Y1641-03A0A

INDEX	PART NO.	DESCRIPTION	Q'TY	SERIAL NO. PC200-6B	SERIAL NO. PC200LC-6B
	708-8F-00110	TRAVEL MOTOR ASS'Y	1	B10001-	B20001-
		THESE ASSEMBLIES CONSIST OF ALL PARTS SHOWN IN FIGS.Y1641-01A0A TO Y1641-03A0A .			
	702-73-02111	. RELIEF VALVE ASS'Y	2	B10001-	B20001-
1	☆	. . SLEEVE	1	B10001-	B20001-
2	☆	. . VALVE	1	B10001-	B20001-
3	☆	. . SPRING	1	B10001-	B20001-
4	☆	. . SEAL	1	B10001-	B20001-
5	☆	. . SCREW	1	B10001-	B20001-
6	☆	. . NUT	1	B10001-	B20001-

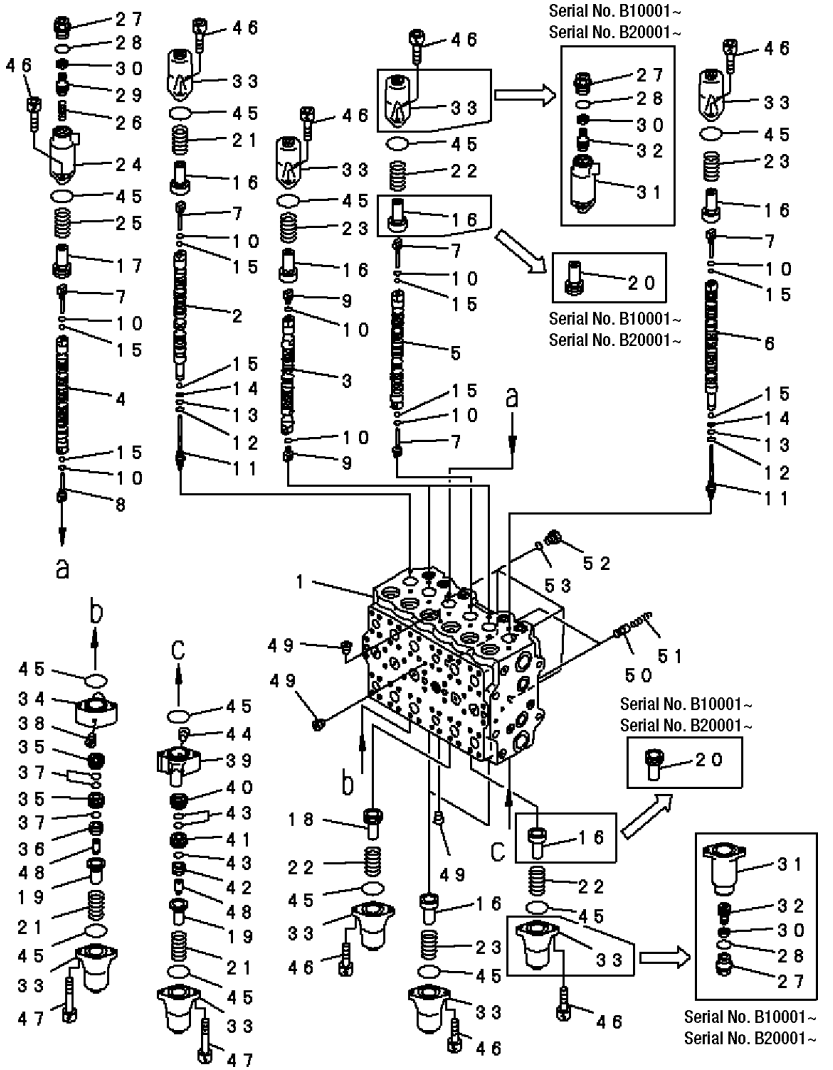

INDEX	PART NO.	DESCRIPTION	Q'TY	SERIAL NO. PC200-6B	SERIAL NO. PC200LC-6B
	723-47-13701	CONTROL VALVE	1	B10001-	B20001-
		THESE ASSEMBLIES CONSIST OF ALL PARTS SHOWN IN FIGS.Y1662-01A0G TO Y1662-14A0G .			
	☆	. BODY SUB ASS'Y	1	B10001-	B20001-
1	☆	. . BLOCK, VALVE	1	B10001-	B20001-
2	☆	. . SPOOL	1	B10001-	B20001-
3	☆	. . SPOOL	2	B10001-	B20001-
4	☆	. . SPOOL	1	B10001-	B20001-
5	☆	. . SPOOL	1	B10001-	B20001-
6	☆	. . SPOOL	1	B10001-	B20001-
7	☆	. . PLUG	5	B10001-	B20001-
8	723-46-15650	. . PLUG	1	B10001-	B20001-
9	723-46-15140	. . PLUG	4	B10001-	B20001-
10	07002-10823	. . O-RING	10	B10001-	B20001-
11	723-46-16171	. . PLUG	2	B10001-	B20001-
12	07002-11023	. . O-RING	2	B10001-	B20001-
13	07000-11005	. . O-RING	2	B10001-	B20001-
14	07001-01005	. . RING, BACK-UP	2	B10001-	B20001-
15	708-7T-16460	. . BALL	8	B10001-	B20001-
16	723-46-15120	. . RETAINER	6	B10001-	B20001-
17	723-46-15620	. . RETAINER	1	B10001-	B20001-
18	723-46-15880	. . RETAINER	1	B10001-	B20001-
19	723-46-16160	. . RETAINER	2	B10001-	B20001-
20	723-46-15690	. . RETAINER	2	B10001-	B20001-
21	723-46-14110	. . SPRING	3	B10001-	B20001-
22	723-46-14170	. . SPRING	3	B10001-	B20001-
23	723-46-14131	. . SPRING	5	B10001-	B20001-
24	723-46-15610	. . CASE	1	B10001-	B20001-
25	723-46-14210	. . SPRING	1	B10001-	B20001-
26	723-46-14220	. . SPRING	1	B10001-	B20001-
27	723-46-15630	. . PLUG	3	B10001-	B20001-
28	709-25-11390	. . O-RING	3	B10001-	B20001-
29	723-46-15640	. . PISTON	1	B10001-	B20001-
30	702-73-11510	. . SEAL	3	B10001-	B20001-
31	723-46-15770	. . CASE	2	B10001-	B20001-
32	723-46-15670	. . PISTON	2	B10001-	B20001-
33	723-46-15110	. . CASE	9	B10001-	B20001-
	723-46-00710	. . CASE SUB ASS'Y	1	B10001-	B20001-
34	723-46-16110	. . . CASE	1	B10001-	B20001-
35	723-46-16130	. . . PISTON	2	B10001-	B20001-
36	723-46-16152	. . . PISTON	1	B10001-	B20001-
37	723-46-16180	. . . SEAL	3	B10001-	B20001-
38	702-16-54490	. . . SCREW	1	B10001-	B20001-
	723-46-00720	. . CASE SUB ASS'Y	1	B10001-	B20001-
39	723-46-16110	. . . CASE	1	B10001-	B20001-
40	723-46-16120	. . . PISTON	1	B10001-	B20001-
41	723-46-16140	. . . PISTON	1	B10001-	B20001-
42	723-46-16152	. . . PISTON	1	B10001-	B20001-
43	723-46-16180	. . . SEAL	3	B10001-	B20001-
44	702-16-54490	. . . SCREW	1	B10001-	B20001-
45	07430-71380	. . O-RING	14	B10001-	B20001-
46	01252-60820	. . BOLT	20	B10001-	B20001-
47	01252-60860	. . BOLT	4	B10001-	B20001-
48	723-46-16190	. . NUT	2	B10001-	B20001-

FIG. Y1662-01A0G MAIN VALVE (1-ACTUATOR) (1/14)

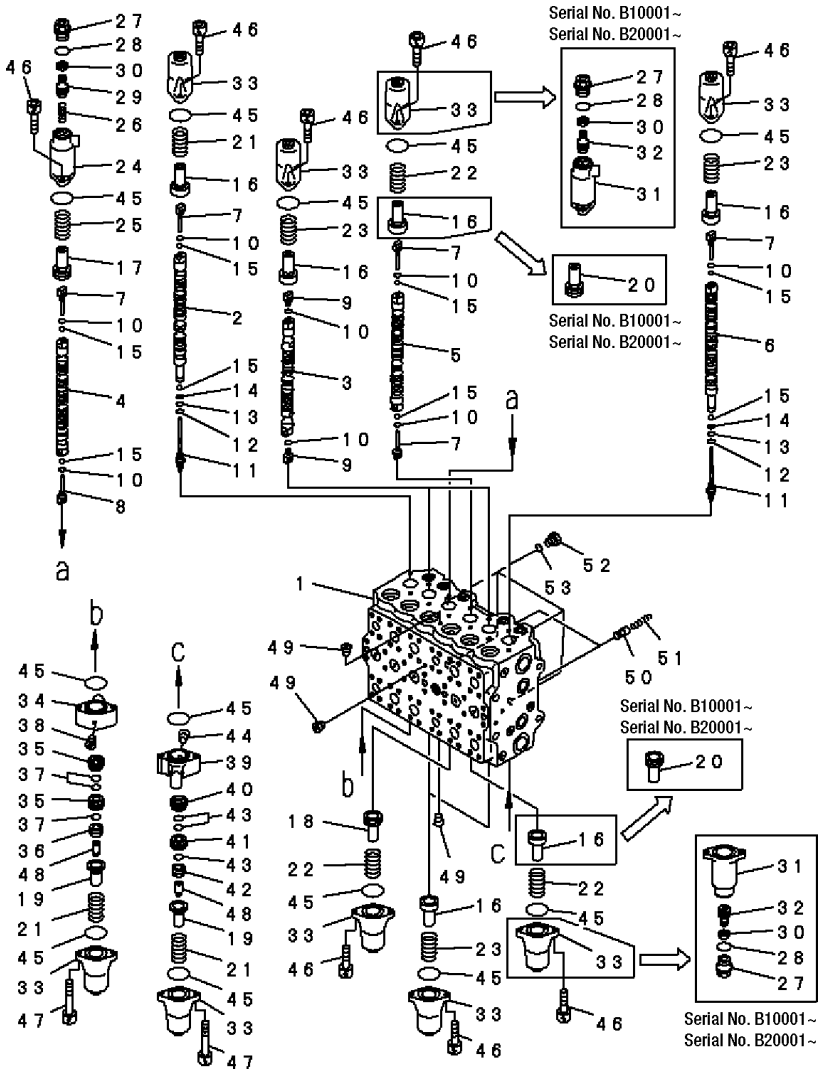

FIG. NO: Y1662-01A0G

INDEX	PART NO.	DESCRIPTION	Q'TY	SERIAL NO. PC200-6B	SERIAL NO. PC200LC-6B
49	706-86-51180	. . PLUG	9	B10001-	B20001-
50	723-46-15150	. . VALVE	2	B10001-	B20001-
51	723-46-14150	. . SPRING	2	B10001-	B20001-
52	708-8H-11530	. . PLUG	4	B10001-	B20001-
53	07002-11423	. . O-RING	4	B10001-	B20001-

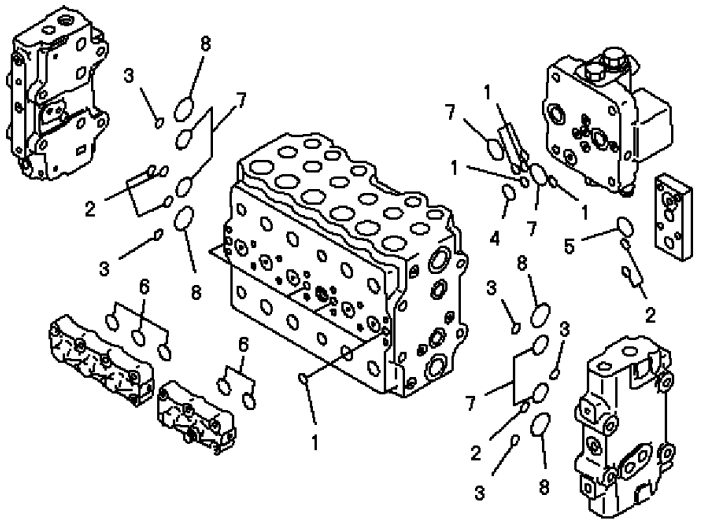

PEB5329

INDEX	PART NO.	DESCRIPTION	Q'TY	SERIAL NO. PC200-6B	SERIAL NO. PC200LC-6B
	(723-47-13701)	CONTROL VALVE	1	B10001-	B20001-
		THESE ASSEMBLIES CONSIST OF ALL PARTS SHOWN IN FIGS.Y1662-01A0G TO Y1662-14A0G .			
	☆	. BODY SUB ASS'Y	1	B10001-	B20001-
1	07000-12012	. . O-RING	9	B10001-	B20001-
2	07000-12015	. . O-RING	6	B10001-	B20001-
3	07000-12018	. . O-RING	5	B10001-	B20001-
4	07000-12021	. . O-RING	1	B10001-	B20001-
5	07000-13025	. . O-RING	1	B10001-	B20001-
6	07000-13028	. . O-RING	5	B10001-	B20001-
7	07000-13032	. . O-RING	6	B10001-	B20001-
8	07000-13040	. . O-RING	4	B10001-	B20001-

FIG. Y1662-03A0G MAIN VALVE (1-ACTUATOR) (3/14)

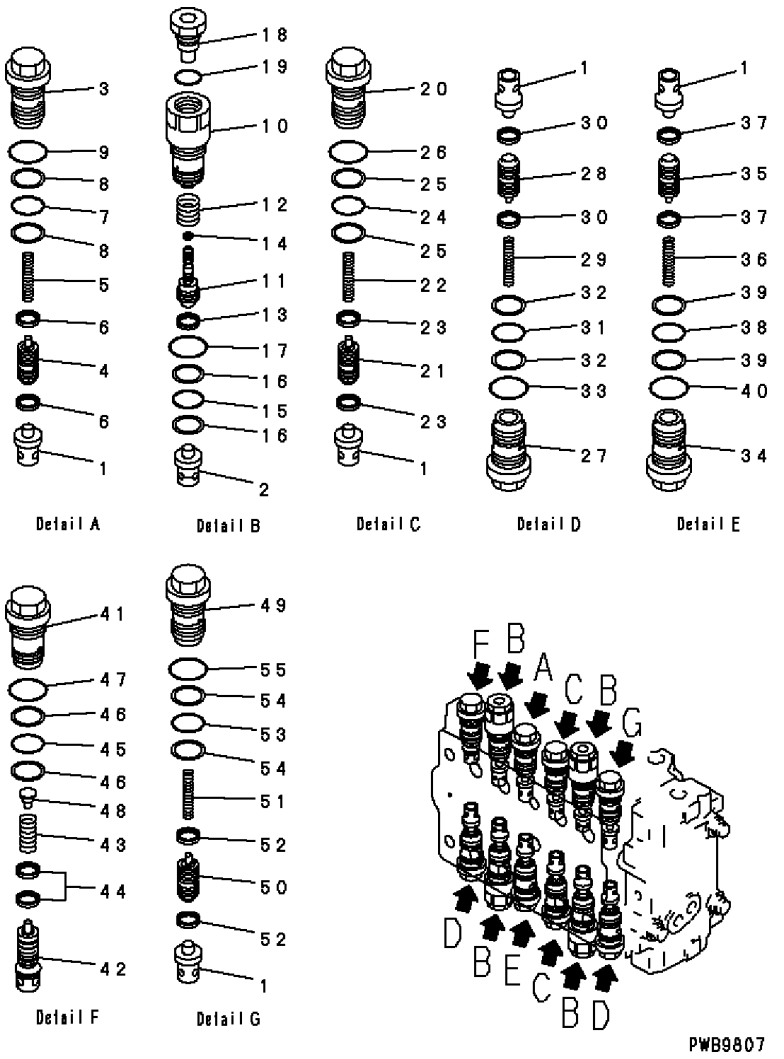

FIG. NO: Y1662-03A0G

INDEX	PART NO.	DESCRIPTION	Q'TY	SERIAL NO. PC200-6B	SERIAL NO. PC200LC-6B
	(723-47-13701)	CONTROL VALVE	1	B10001-	B20001-
		THESE ASSEMBLIES CONSIST OF ALL PARTS SHOWN IN FIGS.Y1662-01A0G TO Y1662-14A0G .			
	☆	. BODY SUB ASS'Y	1	B10001-	B20001-
1	723-46-41110	. . VALVE	7	B10001-	B20001-
2	723-46-41120	. . VALVE	4	B10001-	B20001-
	723-46-40100	. . VALVE ASS'Y	1	B10001-	B20001-
3	☆	. . . SLEEVE	1	B10001-	B20001-
4	☆	. . . PISTON SUB ASS'Y	1	B10001-	B20001-
5	☆	. . . SPRING	1	B10001-	B20001-
6	☆	. . . SEAL	2	B10001-	B20001-
7	700-93-11320	. . . O-RING	1	B10001-	B20001-
8	723-46-41950	. . . RING	2	B10001-	B20001-
9	07002-13634	. . . O-RING	1	B10001-	B20001-
	723-46-40702	. . VALVE ASS'Y	4	B10001-	B20001-
10	☆	. . . SLEEVE	1	B10001-	B20001-
11	☆	. . . PISTON	1	B10001-	B20001-
12	☆	. . . SPRING	1	B10001-	B20001-
13	☆	. . . SEAL	1	B10001-	B20001-
14	☆	. . . SEAL	1	B10001-	B20001-
15	700-93-11320	. . . O-RING	1	B10001-	B20001-
16	723-46-41950	. . . RING	2	B10001-	B20001-
17	07002-13634	. . . O-RING	1	B10001-	B20001-
18	723-46-42981	. . . PLUG	1	B10001-	B20001-
19	07002-12434	. . . O-RING	1	B10001-	B20001-
	723-46-41100	. . VALVE ASS'Y	2	B10001-	B20001-
20	☆	. . . SLEEVE	1	B10001-	B20001-
21	☆	. . . PISTON SUB ASS'Y	1	B10001-	B20001-
22	☆	. . . SPRING	1	B10001-	B20001-
23	☆	. . . SEAL	2	B10001-	B20001-
24	700-93-11320	. . . O-RING	1	B10001-	B20001-
25	723-46-41950	. . . RING	2	B10001-	B20001-
26	07002-13634	. . . O-RING	1	B10001-	B20001-
	723-46-45100	. . VALVE ASS'Y	2	B10001-	B20001-
27	☆	. . . SLEEVE	1	B10001-	B20001-
28	☆	. . . PISTON SUB ASS'Y	1	B10001-	B20001-
29	☆	. . . SPRING	1	B10001-	B20001-
30	☆	. . . SEAL	2	B10001-	B20001-
31	700-93-11320	. . . O-RING	1	B10001-	B20001-
32	723-46-41950	. . . RING	2	B10001-	B20001-
33	07002-13634	. . . O-RING	1	B10001-	B20001-
	723-46-46101	. . VALVE ASS'Y	1	B10001-	B20001-
34	☆	. . . SLEEVE	1	B10001-	B20001-
35	☆	. . . PISTON SUB ASS'Y	1	B10001-	B20001-
36	☆	. . . SPRING	1	B10001-	B20001-
37	☆	. . . SEAL	2	B10001-	B20001-
38	700-93-11320	. . . O-RING	1	B10001-	B20001-
39	723-46-41950	. . . RING	2	B10001-	B20001-
40	07002-13634	. . . O-RING	1	B10001-	B20001-
	723-46-43200	. . VALVE ASS'Y	1	B10001-	B20001-
41	☆	. . . SLEEVE	1	B10001-	B20001-
42	☆	. . . VALVE SUB ASS'Y	1	B10001-	B20001-
43	☆	. . . SPRING	1	B10001-	B20001-
44	☆	. . . SEAL	2	B10001-	B20001-

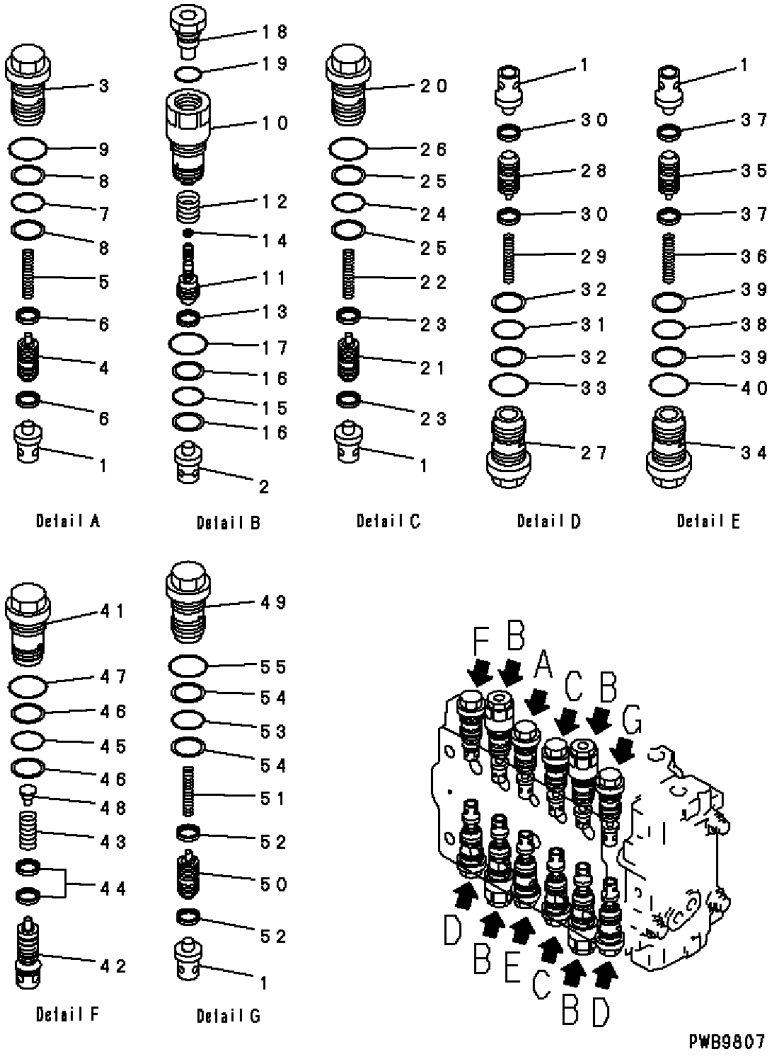

INDEX	PART NO.	DESCRIPTION	Q'TY	SERIAL NO. PC200-6B	SERIAL NO. PC200LC-6B
45	700-93-11320	. . . O-RING	1	B10001-	B20001-
46	723-46-41950	. . . RING	2	B10001-	B20001-
47	07002-13634	. . . O-RING	1	B10001-	B20001-
48	723-46-41980	. . . RETAINER	1	B10001-	B20001-
	723-46-46300	. . VALVE ASS'Y	1	B10001-	B20001-
49	☆	. . . SLEEVE	1	B10001-	B20001-
50	☆	. . . PISTON SUB ASS'Y	1	B10001-	B20001-
51	☆	. . . SPRING	1	B10001-	B20001-
52	☆	. . . SEAL	2	B10001-	B20001-
53	700-93-11320	. . . O-RING	1	B10001-	B20001-
54	723-46-41950	. . . RING	2	B10001-	B20001-
55	07002-13634	. . . O-RING	1	B10001-	B20001-

FIG. Y1662-04A0G MAIN VALVE (1-ACTUATOR) (4/14)

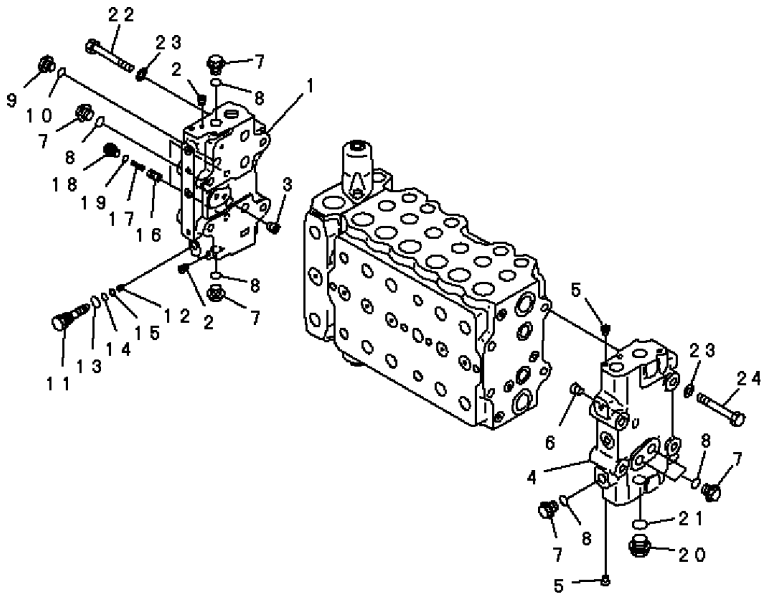

PWB9818

FIG. NO: Y1662-04A0G

INDEX	PART NO.	DESCRIPTION	Q'TY	SERIAL NO. PC200-6B	SERIAL NO. PC200LC-6B
	(723-47-13701)	CONTROL VALVE	1	B10001-	B20001-
		THESE ASSEMBLIES CONSIST OF ALL PARTS SHOWN IN FIGS.Y1662-01A0G TO Y1662-14A0G .			
	723-46-00640	. COVER ASS'Y	1	B10001-	B20001-
1	☆	. . COVER, A	1	B10001-	B20001-
2	☆	. . PLUG	6	B10001-	B20001-
3	☆	. . PLUG	1	B10001-	B20001-
	723-46-00620	. COVER ASS'Y	1	B10001-	B20001-
4	☆	. . COVER, B	1	B10001-	B20001-
5	☆	. . PLUG	2	B10001-	B20001-
6	☆	. . PLUG	1	B10001-	B20001-
7	☆	. PLUG	7	B10001-	B20001-
8	07002-11823	. O-RING	7	B10001-	B20001-
9	708-8H-11530	. PLUG	1	B10001-	B20001-
10	07002-11423	. O-RING	1	B10001-	B20001-
	723-46-15100	. PLUG ASS'Y	1	B10001-	B20001-
11	☆	. . PLUG	1	B10001-	B20001-
12	☆	. . SCREW	1	B10001-	B20001-
13	07002-11423	. . O-RING	1	B10001-	B20001-
14	07000-11007	. . O-RING	1	B10001-	B20001-
15	07001-01007	. . RING, BACK-UP	1	B10001-	B20001-
16	723-46-15190	. VALVE	2	B10001-	B20001-
17	723-46-14140	. SPRING	2	B10001-	B20001-
18	708-8E-16160	. PLUG	2	B10001-	B20001-
19	07002-11023	. O-RING	2	B10001-	B20001-
20	709-74-91860	. PLUG	1	B10001-	B20001-
21	07002-12434	. O-RING	1	B10001-	B20001-
22	01010-61490	. BOLT	4	B10001-	B20001-
23	01643-31445	. WASHER	8	B10001-	B20001-
24	01011-61455	. BOLT	4	B10001-	B20001-

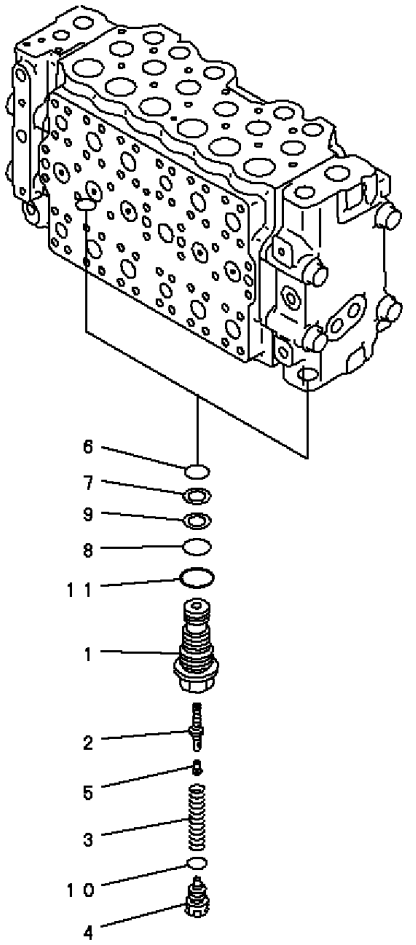

PEB5332

INDEX	PART NO.	DESCRIPTION	Q'TY	SERIAL NO. PC200-6B	SERIAL NO. PC200LC-6B
	(723-47-13701)	CONTROL VALVE	1	B10001-	B20001-
		THESE ASSEMBLIES CONSIST OF ALL PARTS SHOWN IN FIGS.Y1662-01A0G TO Y1662-14A0G .			
	723-40-56302	. UNLOAD VALVE ASS'Y	2	B10001-	B20001-
1	☆	. . SLEEVE	1	B10001-	B20001-
2	☆	. . VALVE	1	B10001-	B20001-
3	☆	. . SPRING	1	B10001-	B20001-
4	☆	. . PLUG	1	B10001-	B20001-
5	☆	. . PLUG	1	B10001-	B20001-
6	07000-12014	. . O-RING	1	B10001-	B20001-
7	723-40-56350	. . RING	1	B10001-	B20001-
8	07000-12016	. . O-RING	1	B10001-	B20001-
9	723-60-22230	. . RING,BACK-UP	1	B10001-	B20001-
10	☆	. . O-RING	1	B10001-	B20001-
11	07002-12434	. . O-RING	1	B10001-	B20001-

FIG. Y1662-06A0G MAIN VALVE (1-ACTUATOR) (6/14)

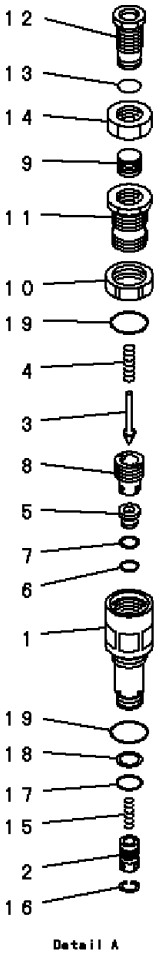

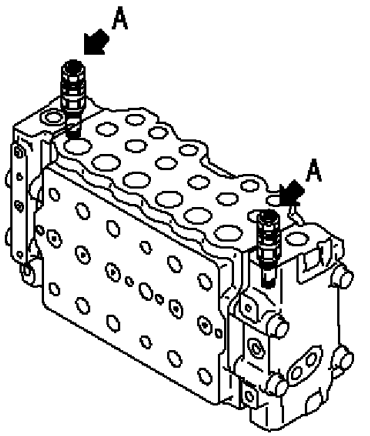

PEB5333

FIG. NO: Y1662-06A0G

INDEX	PART NO.	DESCRIPTION	Q'TY	SERIAL NO. PC200-6B	SERIAL NO. PC200LC-6B
	(723-47-13701)	CONTROL VALVE	1	B10001-	B20001-
		THESE ASSEMBLIES CONSIST OF ALL PARTS SHOWN IN FIGS.Y1662-01A0G TO Y1662-14A0G .			
	723-40-51401	. RELIEF VALVE ASS'Y	2	B10001-	B20001-
1	☆	. . SLEEVE	1	B10001-	B20001-
2	☆	. . VALVE	1	B10001-	B20001-
3	☆	. . POPPET	1	B10001-	B20001-
4	☆	. . SPRING	1	B10001-	B20001-
5	☆	. . SEAT	1	B10001-	B20001-
6	☆	. . O-RING	1	B10001-	B20001-
7	☆	. . RING	1	B10001-	B20001-
8	☆	. . HOLDER	1	B10001-	B20001-
9	☆	. . RETAINER	1	B10001-	B20001-
10	☆	. . NUT	1	B10001-	B20001-
11	☆	. . HOLDER	1	B10001-	B20001-
12	☆	. . PLUG	1	B10001-	B20001-
13	☆	. . O-RING	1	B10001-	B20001-
14	☆	. . NUT	1	B10001-	B20001-
15	☆	. . SPRING	1	B10001-	B20001-
16	☆	. . RING	1	B10001-	B20001-
17	700-22-11410	. . O-RING	1	B10001-	B20001-
18	700-80-64220	. . RING	1	B10001-	B20001-
19	07002-12434	. . O-RING	2	B10001-	B20001-

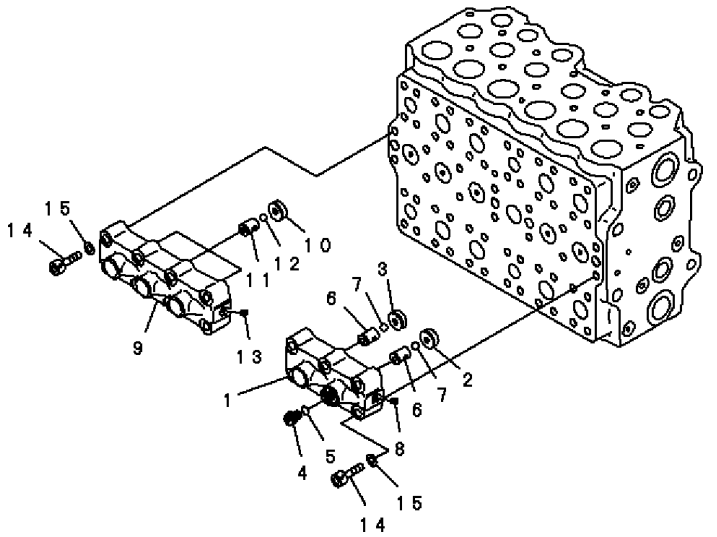

PEB5334

INDEX	PART NO.	DESCRIPTION	Q'TY	SERIAL NO. PC200-6B	SERIAL NO. PC200LC-6B
	(723-47-13701)	CONTROL VALVE	1	B10001-	B20001-
		THESE ASSEMBLIES CONSIST OF ALL PARTS SHOWN IN FIGS.Y1662-01A0G TO Y1662-14A0G .			
	723-40-66402	. VALVE ASS'Y	1	B10001-	B20001-
1	☆	. . CASE	1	B10001-	B20001-
2	☆	. . SEAT	1	B10001-	B20001-
3	☆	. . SEAT	1	B10001-	B20001-
4	708-8H-11530	. . PLUG	1	B10001-	B20001-
5	07002-11423	. . O-RING	1	B10001-	B20001-
6	☆	. . SEAT	2	B10001-	B20001-
7	☆	. . BALL	2	B10001-	B20001-
8	☆	. . PLUG	1	B10001-	B20001-
	723-40-66200	. VALVE ASS'Y	1	B10001-	B20001-
9	☆	. . CASE	1	B10001-	B20001-
10	☆	. . SEAT	3	B10001-	B20001-
11	☆	. . SEAT	3	B10001-	B20001-
12	☆	. . BALL	3	B10001-	B20001-
13	☆	. . PLUG	1	B10001-	B20001-
14	01252-61050	. BOLT	14	B10001-	B20001-
15	01643-51032	. WASHER	14	B10001-	B20001-

FIG. Y1662-08A0G MAIN VALVE (1-ACTUATOR) (8/14)

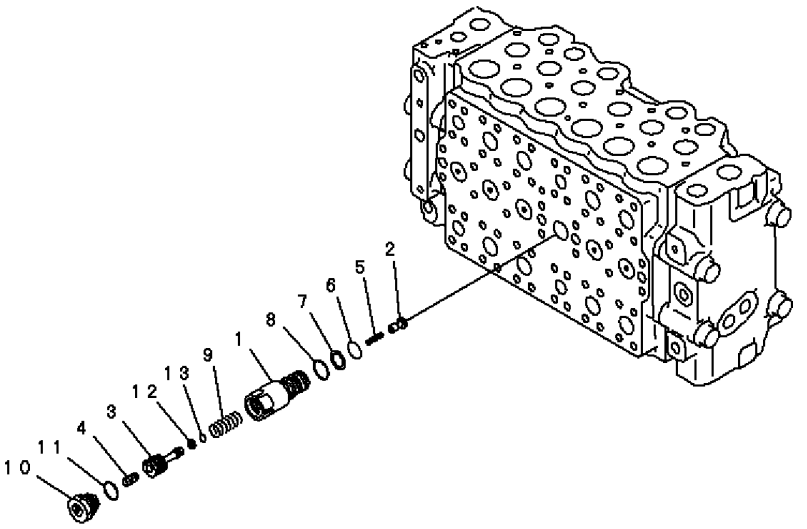

PEB5335

FIG. NO: Y1662-08A0G

INDEX	PART NO.	DESCRIPTION	Q'TY	SERIAL NO. PC200-6B	SERIAL NO. PC200LC-6B
	(723-47-13701)	CONTROL VALVE	1	B10001-	B20001-
		THESE ASSEMBLIES CONSIST OF ALL PARTS SHOWN IN FIGS.Y1662-01A0G TO Y1662-14A0G .			
	723-40-60101	. VALVE ASS'Y	1	B10001-	B20001-
1	☆	. . SLEEVE	1	B10001-	B20001-
2	☆	. . VALVE	1	B10001-	B20001-
3	☆	. . PISTON	1	B10001-	B20001-
4	☆	. . PISTON	1	B10001-	B20001-
5	☆	. . SPRING	1	B10001-	B20001-
6	07000-12020	. . O-RING	1	B10001-	B20001-
7	07001-02020	. . RING,BACK-UP	1	B10001-	B20001-
8	709-25-11390	. . O-RING	1	B10001-	B20001-
9	☆	. . SPRING	1	B10001-	B20001-
10	☆	. . PLUG	1	B10001-	B20001-
11	☆	. . O-RING	1	B10001-	B20001-
12	☆	. . SEAL	1	B10001-	B20001-
13	☆	. . O-RING	1	B10001-	B20001-

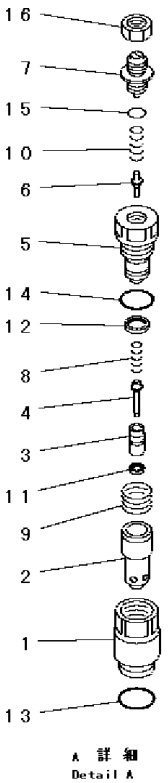

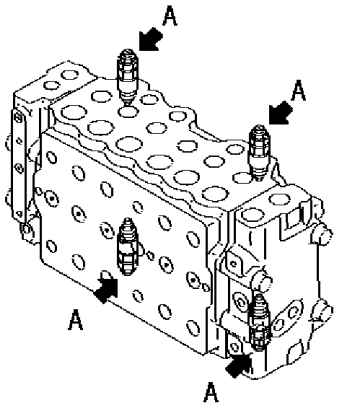

PEB5336

INDEX	PART NO.	DESCRIPTION	Q'TY	SERIAL NO. PC200-6B	SERIAL NO. PC200LC-6B
	(723-47-13701)	CONTROL VALVE	1	B10001-	B20001-
		THESE ASSEMBLIES CONSIST OF ALL PARTS SHOWN IN FIGS.Y1662-01A0G TO Y1662-14A0G .			
	709-70-74302	. VALVE ASS'Y, SUCTION AND SAFETY	4	B10001-	B20001-
1	☆	. . SLEEVE	1	B10001-	B20001-
2	☆	. . SLEEVE	1	B10001-	B20001-
3	☆	. . POPPET	1	B10001-	B20001-
4	☆	. . PISTON	1	B10001-	B20001-
5	☆	. . PLUG	1	B10001-	B20001-
6	☆	. . POPPET	1	B10001-	B20001-
7	☆	. . SCREW	1	B10001-	B20001-
8	☆	. . SPRING	1	B10001-	B20001-
9	☆	. . SPRING	1	B10001-	B20001-
10	☆	. . SPRING	1	B10001-	B20001-
11	☆	. . SEAL	1	B10001-	B20001-
12	☆	. . SEAL	1	B10001-	B20001-
13	709-25-11390	. . O-RING	1	B10001-	B20001-
14	07002-02434	. . O-RING	1	B10001-	B20001-
15	07000-02011	. . O-RING	1	B10001-	B20001-
16	☆	. . NUT	1	B10001-	B20001-

FIG. Y1662-10A0G MAIN VALVE (1-ACTUATOR) (10/14)

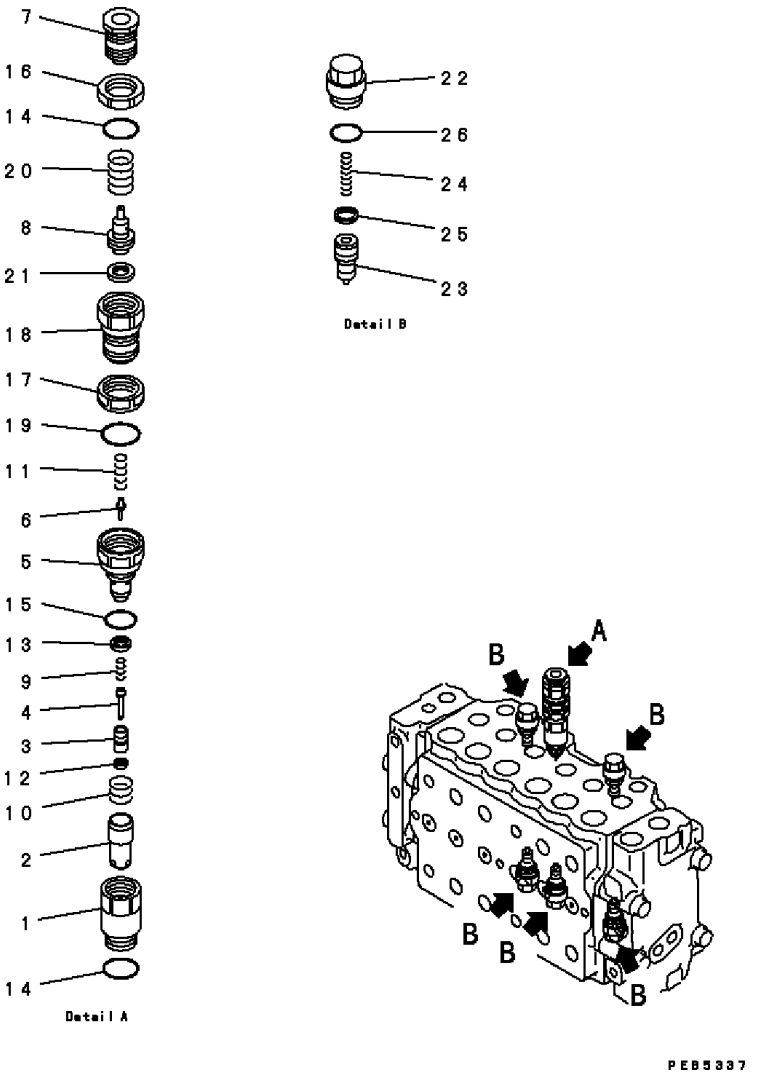

FIG. NO: Y1662-10A0G

INDEX	PART NO.	DESCRIPTION	Q'TY	SERIAL NO. PC200-6B	SERIAL NO. PC200LC-6B
	(723-47-13701)	CONTROL VALVE	1	B10001-	B20001-
		THESE ASSEMBLIES CONSIST OF ALL PARTS SHOWN IN FIGS.Y1662-01A0G TO Y1662-14A0G .			
	723-40-90200	. VALVE ASS'Y, SUCTION AND SAFETY	1	B10001-	B20001-
1	☆	. . SLEEVE	1	B10001-	B20001-
2	☆	. . SLEEVE	1	B10001-	B20001-
3	☆	. . POPPET	1	B10001-	B20001-
4	☆	. . PISTON	1	B10001-	B20001-
5	☆	. . SLEEVE	1	B10001-	B20001-
6	☆	. . POPPET	1	B10001-	B20001-
7	☆	. . UNION	1	B10001-	B20001-
8	☆	. . PISTON	1	B10001-	B20001-
9	☆	. . SPRING	1	B10001-	B20001-
10	☆	. . SPRING	1	B10001-	B20001-
11	☆	. . SPRING	1	B10001-	B20001-
12	☆	. . SEAL	1	B10001-	B20001-
13	☆	. . SEAL	1	B10001-	B20001-
14	709-25-11390	. . O-RING	2	B10001-	B20001-
15	07002-02434	. . O-RING	1	B10001-	B20001-
16	☆	. . NUT	1	B10001-	B20001-
17	☆	. . NUT	1	B10001-	B20001-
18	☆	. . HOLDER	1	B10001-	B20001-
19	07002-03034	. . O-RING	1	B10001-	B20001-
20	☆	. . SPRING	1	B10001-	B20001-
21	☆	. . SEAL	1	B10001-	B20001-
	723-40-85100	. VALVE ASS'Y, SUCTION	5	B10001-	B20001-
22	☆	. . SLEEVE	1	B10001-	B20001-
23	☆	. . VALVE	1	B10001-	B20001-
24	☆	. . SPRING	1	B10001-	B20001-
25	☆	. . SEAL	1	B10001-	B20001-
26	709-25-11390	. . O-RING	1	B10001-	B20001-

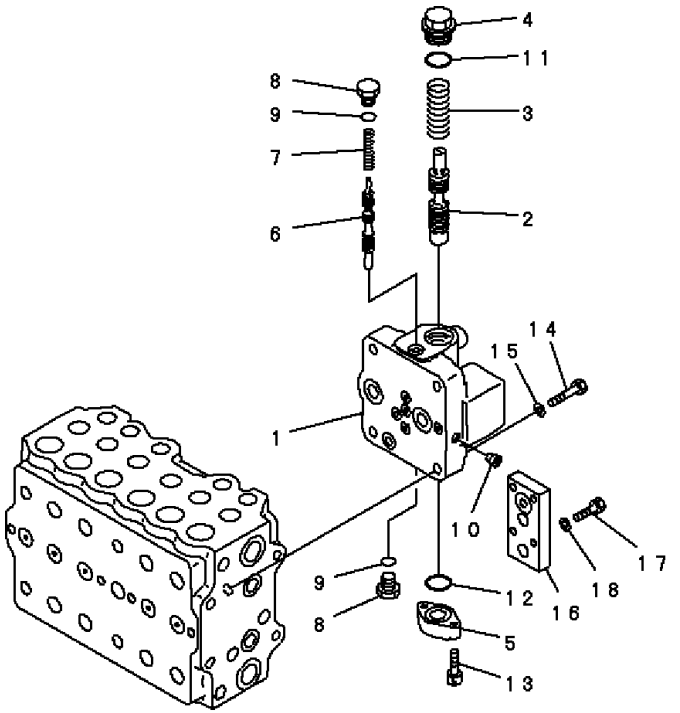

PEB5338

INDEX	PART NO.	DESCRIPTION	Q'TY	SERIAL NO. PC200-6B	SERIAL NO. PC200LC-6B
	(723-47-13701)	CONTROL VALVE	1	B10001-	B20001-
		THESE ASSEMBLIES CONSIST OF ALL PARTS SHOWN IN FIGS.Y1662-01A0G TO Y1662-14A0G .			
	723-40-70100	. VALVE ASS'Y	1	B10001-	B20001-
1	☆	. . BODY	1	B10001-	B20001-
2	☆	. . SPOOL	1	B10001-	B20001-
3	723-40-71160	. . SPRING	1	B10001-	B20001-
4	723-40-71140	. . PLUG	1	B10001-	B20001-
5	723-40-71150	. . PLATE	1	B10001-	B20001-
6	☆	. . SPOOL	1	B10001-	B20001-
7	723-40-71170	. . SPRING	1	B10001-	B20001-
8	07040-11812	. . PLUG	2	B10001-	B20001-
9	07002-11823	. . O-RING	2	B10001-	B20001-
10	☆	. . PLUG	3	B10001-	B20001-
11	07002-13634	. . O-RING	1	B10001-	B20001-
12	07000-13032	. . O-RING	1	B10001-	B20001-
13	01252-30830	. . BOLT	2	B10001-	B20001-
14	01010-61460	. BOLT	4	B10001-	B20001-
15	01643-31445	. WASHER	4	B10001-	B20001-
16	723-46-15280	. PLATE	1	B10001-	B20001-
17	01010-81040	. BOLT	4	B10001-	B20001-
18	01643-31032	. WASHER	4	B10001-	B20001-

FIG. Y1662-12A0G MAIN VALVE (1-ACTUATOR) (12/14)

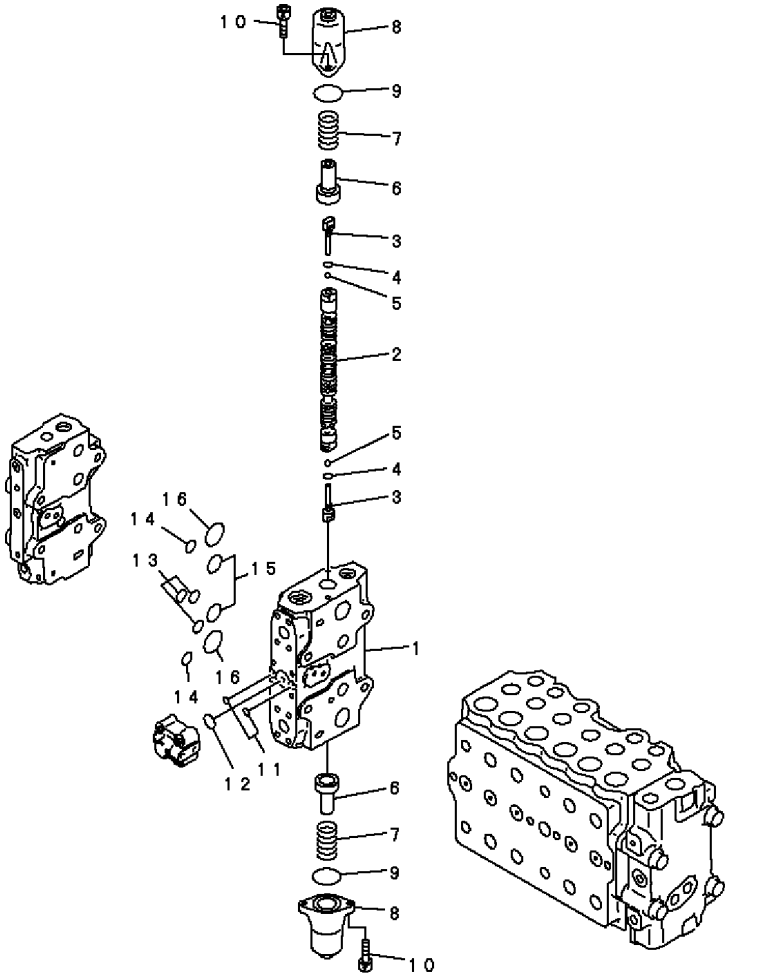

FIG. NO: Y1662-12A0G

INDEX	PART NO.	DESCRIPTION	Q'TY	SERIAL NO. PC200-6B	SERIAL NO. PC200LC-6B
	(723-47-13701)	CONTROL VALVE	1	B10001-	B20001-
		THESE ASSEMBLIES CONSIST OF ALL PARTS SHOWN IN FIGS.Y1662-01A0G TO Y1662-14A0G .			
	☆	. BODY SUB ASS'Y	1	B10001-	B20001-
1	☆	. . BLOCK, VALVE	1	B10001-	B20001-
2	☆	. . SPOOL	1	B10001-	B20001-
3	723-46-15130	. . PLUG	2	B10001-	B20001-
4	07002-10823	. . O-RING	2	B10001-	B20001-
5	708-7T-16460	. . BALL	2	B10001-	B20001-
6	723-46-15120	. . RETAINER	2	B10001-	B20001-
7	723-46-14110	. . SPRING	2	B10001-	B20001-
8	723-46-15110	. . CASE	2	B10001-	B20001-
9	07430-71380	. . O-RING	2	B10001-	B20001-
10	01252-30820	. . BOLT	4	B10001-	B20001-
11	07000-11009	. . O-RING	2	B10001-	B20001-
12	07000-12021	. . O-RING	1	B10001-	B20001-
13	07000-12015	. . O-RING	3	B10001-	B20001-
14	07000-12018	. . O-RING	2	B10001-	B20001-
15	07000-13032	. . O-RING	2	B10001-	B20001-
16	07000-03040	. . O-RING	2	B10001-	B20001-

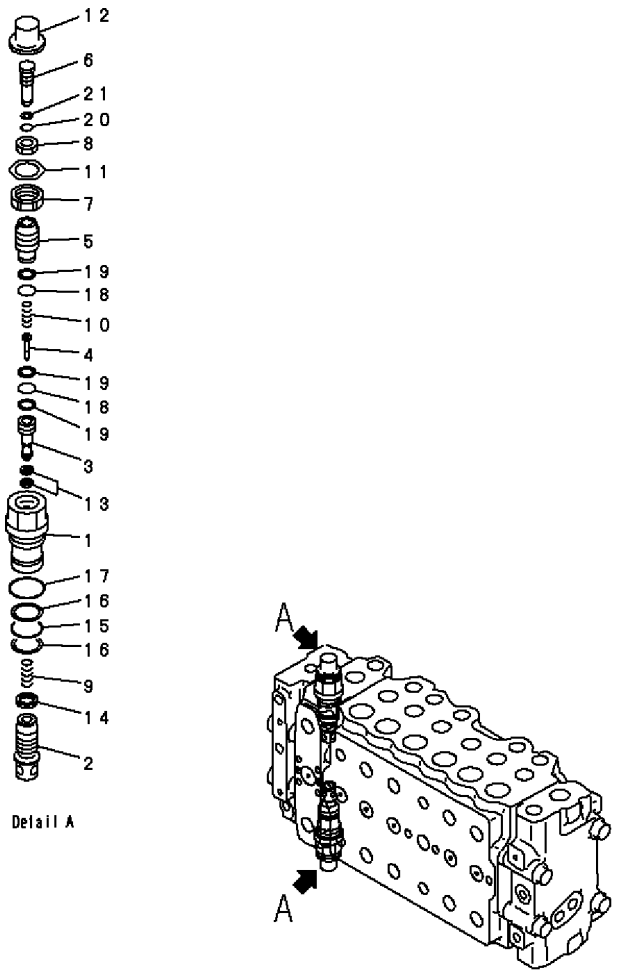

PWB7562

INDEX	PART NO.	DESCRIPTION	Q'TY	SERIAL NO. PC200-6B	SERIAL NO. PC200LC-6B
	(723-47-13701)	CONTROL VALVE	1	B10001-	B20001-
		THESE ASSEMBLIES CONSIST OF ALL PARTS SHOWN IN FIGS.Y1662-01A0G TO Y1662-14A0G .			
	☆	. BODY SUB ASS'Y	1	B10001-	B20001-
	723-46-48100	. . VALVE ASS'Y	2	B10001-	B20001-
1	☆	. . . SLEEVE	1	B10001-	B20001-
2	☆	. . . VALVE	1	B10001-	B20001-
3	☆	. . . SEAT	1	B10001-	B20001-
4	☆	. . . POPPET	1	B10001-	B20001-
5	☆	. . . PLUG	1	B10001-	B20001-
6	☆	. . . SCREW	1	B10001-	B20001-
7	☆	. . . NUT	1	B10001-	B20001-
8	☆	. . . NUT	1	B10001-	B20001-
9	☆	. . . SPRING	1	B10001-	B20001-
10	☆	. . . SPRING	1	B10001-	B20001-
11	☆	. . . PLATE	1	B10001-	B20001-
12	☆	. . . CAP	1	B10001-	B20001-
13	☆	. . . SEAL	2	B10001-	B20001-
14	☆	. . . SEAL	1	B10001-	B20001-
15	700-93-11320	. . . O-RING	1	B10001-	B20001-
16	723-46-41950	. . . RING	2	B10001-	B20001-
17	07002-13634	. . . O-RING	1	B10001-	B20001-
18	☆	. . . O-RING	2	B10001-	B20001-
19	☆	. . . RING	3	B10001-	B20001-
20	☆	. . . O-RING	1	B10001-	B20001-
21	☆	. . . RING,BACK-UP	1	B10001-	B20001-

FIG. Y1662-14A0G MAIN VALVE (1-ACTUATOR) (14/14)

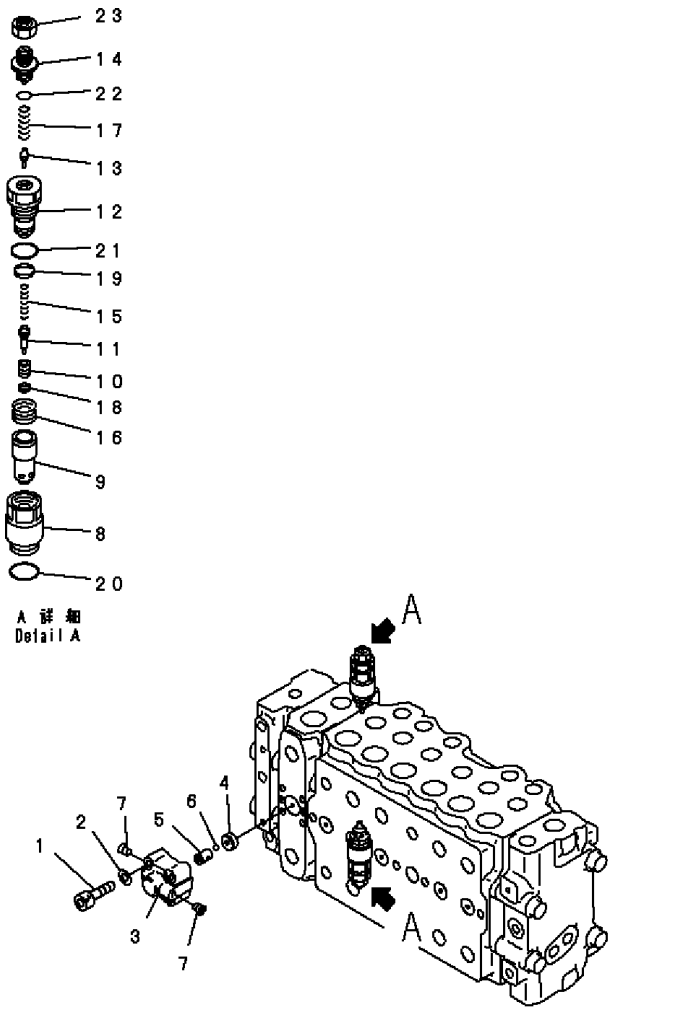

PWB7563

FIG. NO: Y1662-14A0G

INDEX	PART NO.	DESCRIPTION	Q'TY	SERIAL NO. PC200-6B	SERIAL NO. PC200LC-6B
	(723-47-13701)	CONTROL VALVE	1	B10001-	B20001-
		THESE ASSEMBLIES CONSIST OF ALL PARTS SHOWN IN FIGS.Y1662-01A0G TO Y1662-14A0G .			
1	01252-30845	. BOLT	4	B10001-	B20001-
2	01643-50823	. WASHER	4	B10001-	B20001-
	723-40-66300	. VALVE ASS'Y	1	B10001-	B20001-
3	☆	. . CASE	1	B10001-	B20001-
4	☆	. . SEAT	1	B10001-	B20001-
5	☆	. . SEAT	1	B10001-	B20001-
6	☆	. . BALL	1	B10001-	B20001-
7	☆	. . PLUG	2	B10001-	B20001-
	709-70-74600	. VALVE ASS'Y, SUCTION AND SAFETY	2	B10001-	B20001-
8	☆	. . SLEEVE	1	B10001-	B20001-
9	☆	. . SLEEVE	1	B10001-	B20001-
10	☆	. . POPPET	1	B10001-	B20001-
11	☆	. . PISTON	1	B10001-	B20001-
12	☆	. . PLUG	1	B10001-	B20001-
13	☆	. . POPPET	1	B10001-	B20001-
14	☆	. . SCREW	1	B10001-	B20001-
15	☆	. . SPRING	1	B10001-	B20001-
16	☆	. . SPRING	1	B10001-	B20001-
17	☆	. . SPRING	1	B10001-	B20001-
18	709-70-71610	. . SEAL	1	B10001-	B20001-
19	☆	. . SEAL	1	B10001-	B20001-
20	☆	. . O-RING	1	B10001-	B20001-
21	☆	. . O-RING	1	B10001-	B20001-
22	☆	. . O-RING	1	B10001-	B20001-
23	☆	. . NUT	1	B10001-	B20001-

FIG. Y1662-41A0F MAIN VALVE (1-ACTUATOR) (1/13) (FOR BLIND PLUG OF SAFETY-SUCTION SERVICE VALVE)

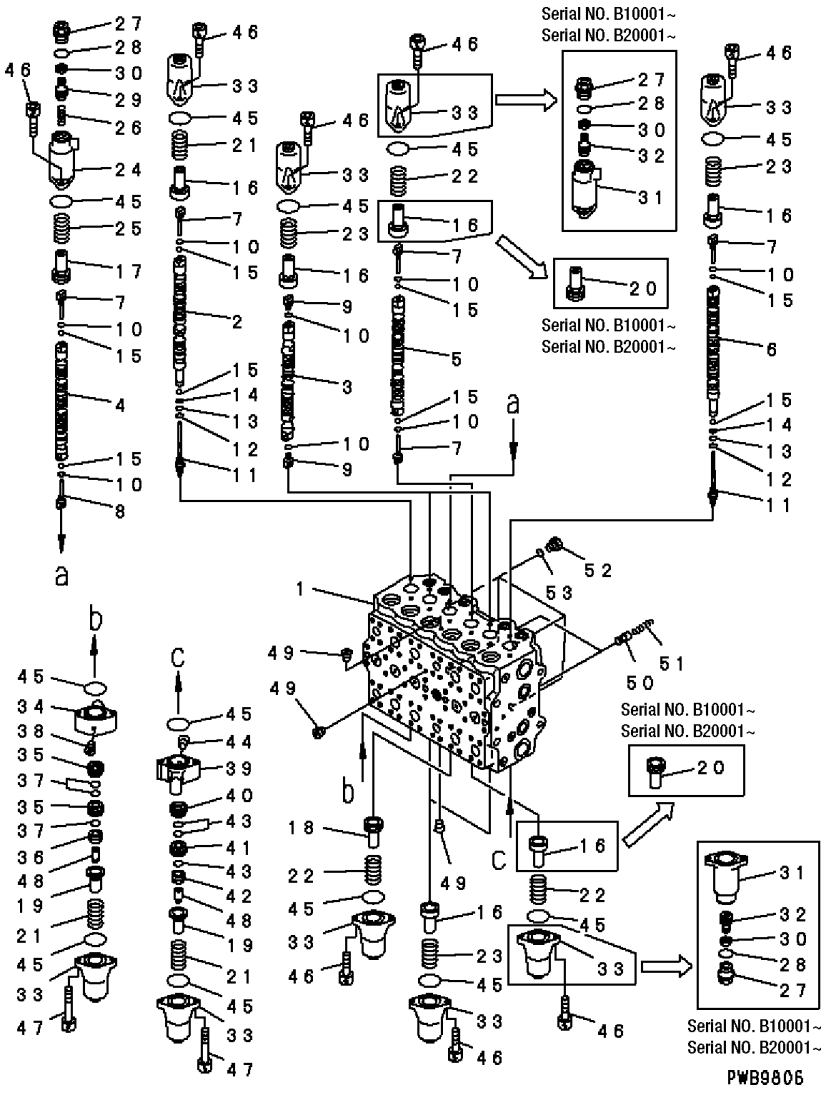

FIG. NO: Y1662-41A0F

INDEX	PART NO.	DESCRIPTION	Q'TY	SERIAL NO. PC200-6B	SERIAL NO. PC200LC-6B
	723-47-13802	CONTROL VALVE	1	B10001-	B20001-
		THESE ASSEMBLIES CONSIST OF ALL PARTS SHOWN IN FIGS.Y1662-41A0F TO Y1662-53A0F .			
	☆	. BODY SUB ASS'Y	1	B10001-	B20001-
1	☆	. . BLOCK, VALVE	1	B10001-	B20001-
2	☆	. . SPOOL	1	B10001-	B20001-
3	☆	. . SPOOL	2	B10001-	B20001-
4	☆	. . SPOOL	1	B10001-	B20001-
5	☆	. . SPOOL	1	B10001-	B20001-
6	☆	. . SPOOL	1	B10001-	B20001-
7	☆	. . PLUG	5	B10001-	B20001-
8	723-46-15650	. . PLUG	1	B10001-	B20001-
9	723-46-15140	. . PLUG	4	B10001-	B20001-
10	07002-10823	. . O-RING	10	B10001-	B20001-
11	723-46-16171	. . PLUG	2	B10001-	B20001-
12	07002-11023	. . O-RING	2	B10001-	B20001-
13	07000-11005	. . O-RING	2	B10001-	B20001-
14	07001-01005	. . RING, BACK-UP	2	B10001-	B20001-
15	708-7T-16460	. . BALL	8	B10001-	B20001-
16	723-46-15120	. . RETAINER	6	B10001-	B20001-
17	723-46-15620	. . RETAINER	1	B10001-	B20001-
18	723-46-15880	. . RETAINER	1	B10001-	B20001-
19	723-46-16160	. . RETAINER	2	B10001-	B20001-
20	723-46-15690	. . RETAINER	2	B10001-	B20001-
21	723-46-14110	. . SPRING	3	B10001-	B20001-
22	723-46-14170	. . SPRING	3	B10001-	B20001-
23	723-46-14131	. . SPRING	5	B10001-	B20001-
24	723-46-15610	. . CASE	1	B10001-	B20001-
25	723-46-14210	. . SPRING	1	B10001-	B20001-
26	723-46-14220	. . SPRING	1	B10001-	B20001-
27	723-46-15630	. . PLUG	3	B10001-	B20001-
28	709-25-11390	. . O-RING	3	B10001-	B20001-
29	723-46-15640	. . PISTON	1	B10001-	B20001-
30	702-73-11510	. . SEAL	3	B10001-	B20001-
31	723-46-15770	. . CASE	2	B10001-	B20001-
32	723-46-15670	. . PISTON	2	B10001-	B20001-
33	723-46-15110	. . CASE	9	B10001-	B20001-
	723-46-00710	. . CASE SUB ASS'Y	1	B10001-	B20001-
34	723-46-16110	. . . CASE	1	B10001-	B20001-
35	723-46-16130	. . . PISTON	2	B10001-	B20001-
36	723-46-16152	. . . PISTON	1	B10001-	B20001-
37	723-46-16180	. . . SEAL	3	B10001-	B20001-
38	702-16-54490	. . . SCREW	1	B10001-	B20001-
	723-46-00720	. . CASE SUB ASS'Y	1	B10001-	B20001-
39	723-46-16110	. . . CASE	1	B10001-	B20001-
40	723-46-16120	. . . PISTON	1	B10001-	B20001-
41	723-46-16140	. . . PISTON	1	B10001-	B20001-
42	723-46-16152	. . . PISTON	1	B10001-	B20001-
43	723-46-16180	. . . SEAL	3	B10001-	B20001-
44	702-16-54490	. . . SCREW	1	B10001-	B20001-
45	07430-71380	. . O-RING	14	B10001-	B20001-
46	01252-60820	. . BOLT	20	B10001-	B20001-
47	01252-60860	. . BOLT	4	B10001-	B20001-
48	723-46-16190	. . NUT	2	B10001-	B20001-

FIG. Y1662-41A0F MAIN VALVE (1-ACTUATOR) (1/13) (FOR BLIND PLUG OF SAFETY-SUCTION SERVICE VALVE)

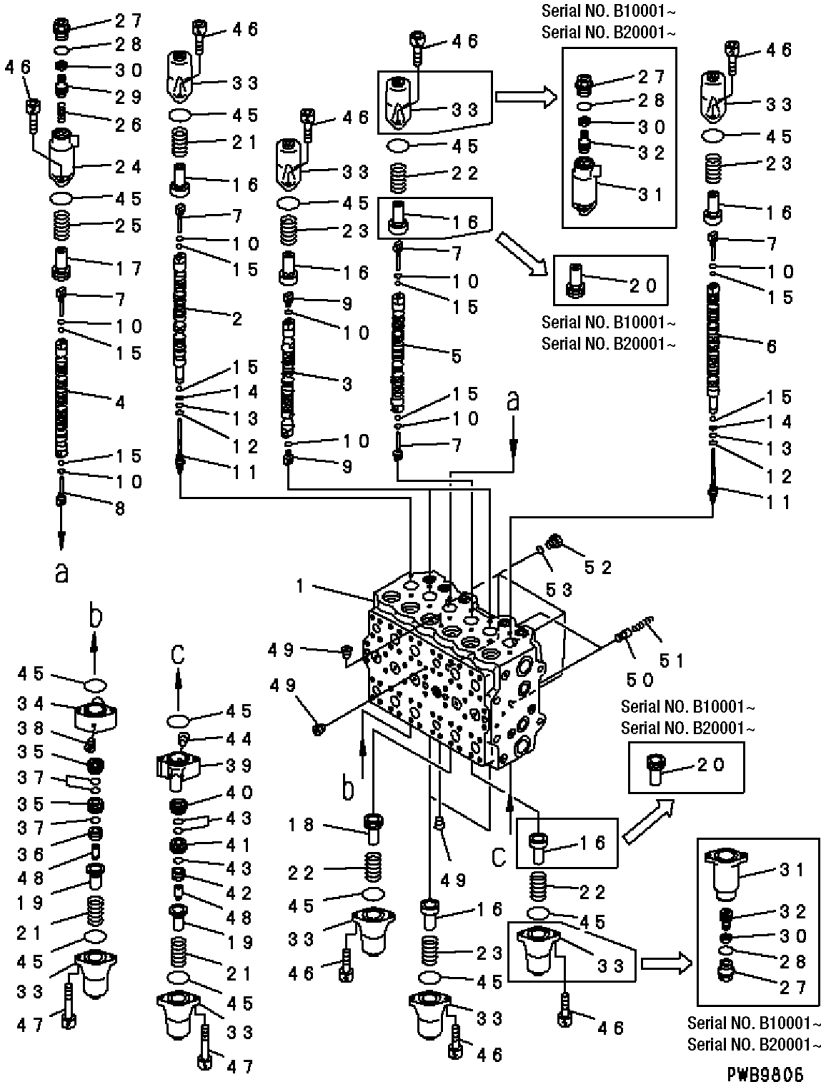

FIG. NO: Y1662-41A0F

INDEX	PART NO.	DESCRIPTION	Q'TY	SERIAL NO. PC200-6B	SERIAL NO. PC200LC-6B
49	706-86-51180	. . PLUG	9	B10001-	B20001-
50	723-46-15150	. . VALVE	2	B10001-	B20001-
51	723-46-14150	. . SPRING	2	B10001-	B20001-
52	708-8H-11530	. . PLUG	4	B10001-	B20001-
53	07002-11423	. . O-RING	4	B10001-	B20001-

FIG. Y1662-42A0F MAIN VALVE (1-ACTUATOR) (2/13) (FOR BLIND PLUG OF SAFETY-SUCTION SERVICE VALVE)

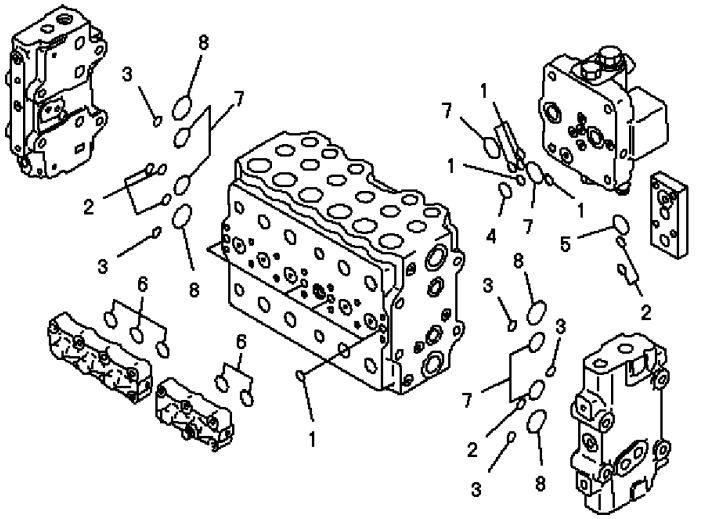

FIG. NO: Y1662-42A0F

INDEX	PART NO.	DESCRIPTION	Q'TY	SERIAL NO. PC200-6B	SERIAL NO. PC200LC-6B
	(723-47-13802)	CONTROL VALVE	1	B10001-	B20001-
		THESE ASSEMBLIES CONSIST OF ALL PARTS SHOWN IN FIGS.Y1662-41A0F TO Y1662-53A0F .			
	☆	. BODY SUB ASS'Y	1	B10001-	B20001-
1	07000-12012	. . O-RING	9	B10001-	B20001-
2	07000-12015	. . O-RING	6	B10001-	B20001-
3	07000-12018	. . O-RING	5	B10001-	B20001-
4	07000-12021	. . O-RING	1	B10001-	B20001-
5	07000-13025	. . O-RING	1	B10001-	B20001-
6	07000-13028	. . O-RING	5	B10001-	B20001-
7	07000-13032	. . O-RING	6	B10001-	B20001-
8	07000-13040	. . O-RING	4	B10001-	B20001-

FIG. Y1662-43A0F MAIN VALVE (1-ACTUATOR) (3/13) (FOR BLIND PLUG OF SAFETY-SUCTION SERVICE VALVE)

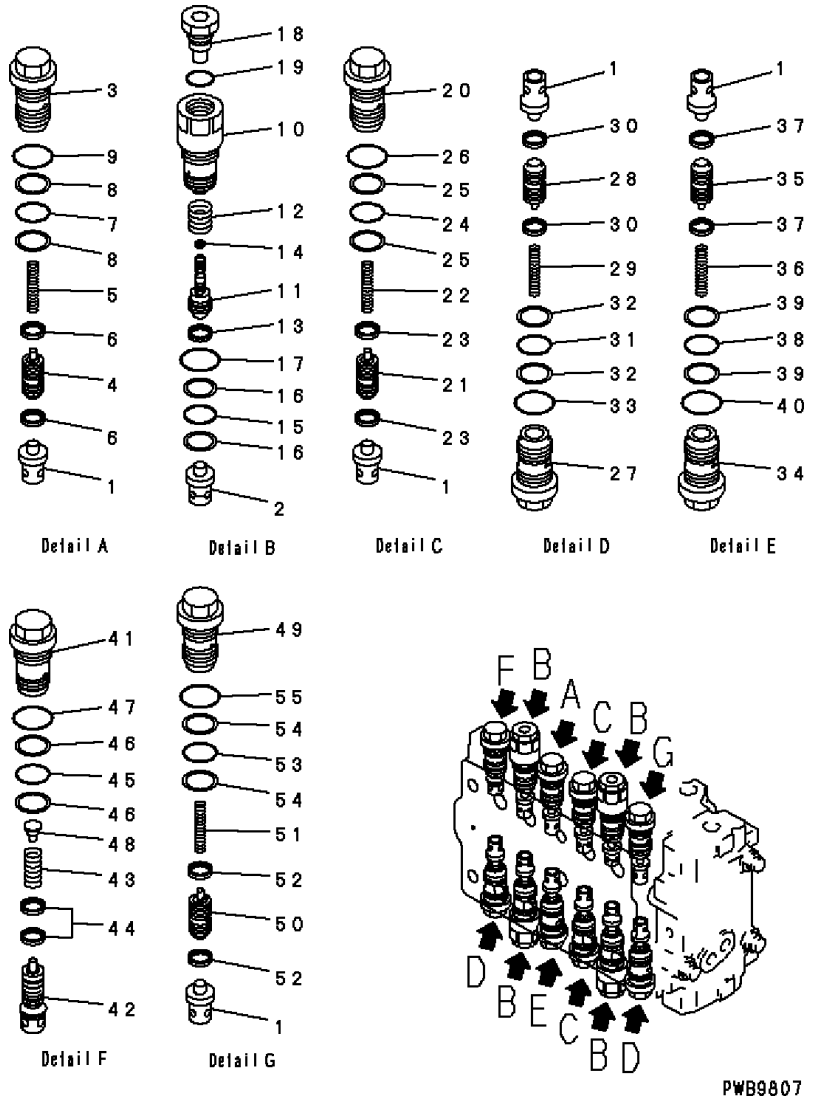

FIG. NO: Y1662-43A0F

INDEX	PART NO.	DESCRIPTION	Q'TY	SERIAL NO. PC200-6B	SERIAL NO. PC200LC-6B
	(723-47-13802)	CONTROL VALVE	1	B10001-	B20001-
		THESE ASSEMBLIES CONSIST OF ALL PARTS SHOWN IN FIGS.Y1662-41A0F TO Y1662-53A0F .			
	☆	. BODY SUB ASS'Y	1	B10001-	B20001-
1	723-46-41110	. . VALVE	7	B10001-	B20001-
2	723-46-41120	. . VALVE	4	B10001-	B20001-
	723-46-40100	. . VALVE ASS'Y	1	B10001-	B20001-
3	☆	. . . SLEEVE	1	B10001-	B20001-
4	☆	. . . PISTON SUB ASS'Y	1	B10001-	B20001-
5	☆	. . . SPRING	1	B10001-	B20001-
6	☆	. . . SEAL	2	B10001-	B20001-
7	700-93-11320	. . . O-RING	1	B10001-	B20001-
8	723-46-41950	. . . RING	2	B10001-	B20001-
9	07002-13634	. . . O-RING	1	B10001-	B20001-
	723-46-40702	. . VALVE ASS'Y	4	B10001-	B20001-
10	☆	. . . SLEEVE	1	B10001-	B20001-
11	☆	. . . PISTON	1	B10001-	B20001-
12	☆	. . . SPRING	1	B10001-	B20001-
13	☆	. . . SEAL	1	B10001-	B20001-
14	☆	. . . SEAL	1	B10001-	B20001-
15	700-93-11320	. . . O-RING	1	B10001-	B20001-
16	723-46-41950	. . . RING	2	B10001-	B20001-
17	07002-13634	. . . O-RING	1	B10001-	B20001-
18	723-46-42981	. . . PLUG	1	B10001-	B20001-
19	07002-12434	. . . O-RING	1	B10001-	B20001-
	723-46-41100	. . VALVE ASS'Y	2	B10001-	B20001-
20	☆	. . . SLEEVE	1	B10001-	B20001-
21	☆	. . . PISTON SUB ASS'Y	1	B10001-	B20001-
22	☆	. . . SPRING	1	B10001-	B20001-
23	☆	. . . SEAL	2	B10001-	B20001-
24	700-93-11320	. . . O-RING	1	B10001-	B20001-
25	723-46-41950	. . . RING	2	B10001-	B20001-
26	07002-13634	. . . O-RING	1	B10001-	B20001-
	723-46-45100	. . VALVE ASS'Y	2	B10001-	B20001-
27	☆	. . . SLEEVE	1	B10001-	B20001-
28	☆	. . . PISTON SUB ASS'Y	1	B10001-	B20001-
29	☆	. . . SPRING	1	B10001-	B20001-
30	☆	. . . SEAL	2	B10001-	B20001-
31	700-93-11320	. . . O-RING	1	B10001-	B20001-
32	723-46-41950	. . . RING	2	B10001-	B20001-
33	07002-13634	. . . O-RING	1	B10001-	B20001-
	723-46-46101	. . VALVE ASS'Y	1	B10001-	B20001-
34	☆	. . . SLEEVE	1	B10001-	B20001-
35	☆	. . . PISTON SUB ASS'Y	1	B10001-	B20001-
36	☆	. . . SPRING	1	B10001-	B20001-
37	☆	. . . SEAL	2	B10001-	B20001-
38	700-93-11320	. . . O-RING	1	B10001-	B20001-
39	723-46-41950	. . . RING	2	B10001-	B20001-
40	07002-13634	. . . O-RING	1	B10001-	B20001-
	723-46-43200	. . VALVE ASS'Y	1	B10001-	B20001-
41	☆	. . . SLEEVE	1	B10001-	B20001-
42	☆	. . . VALVE SUB ASS'Y	1	B10001-	B20001-
43	☆	. . . SPRING	1	B10001-	B20001-
44	☆	. . . SEAL	2	B10001-	B20001-

FIG. Y1662-43A0F MAIN VALVE (1-ACTUATOR) (3/13) (FOR BLIND PLUG OF SAFETY-SUCTION SERVICE VALVE)

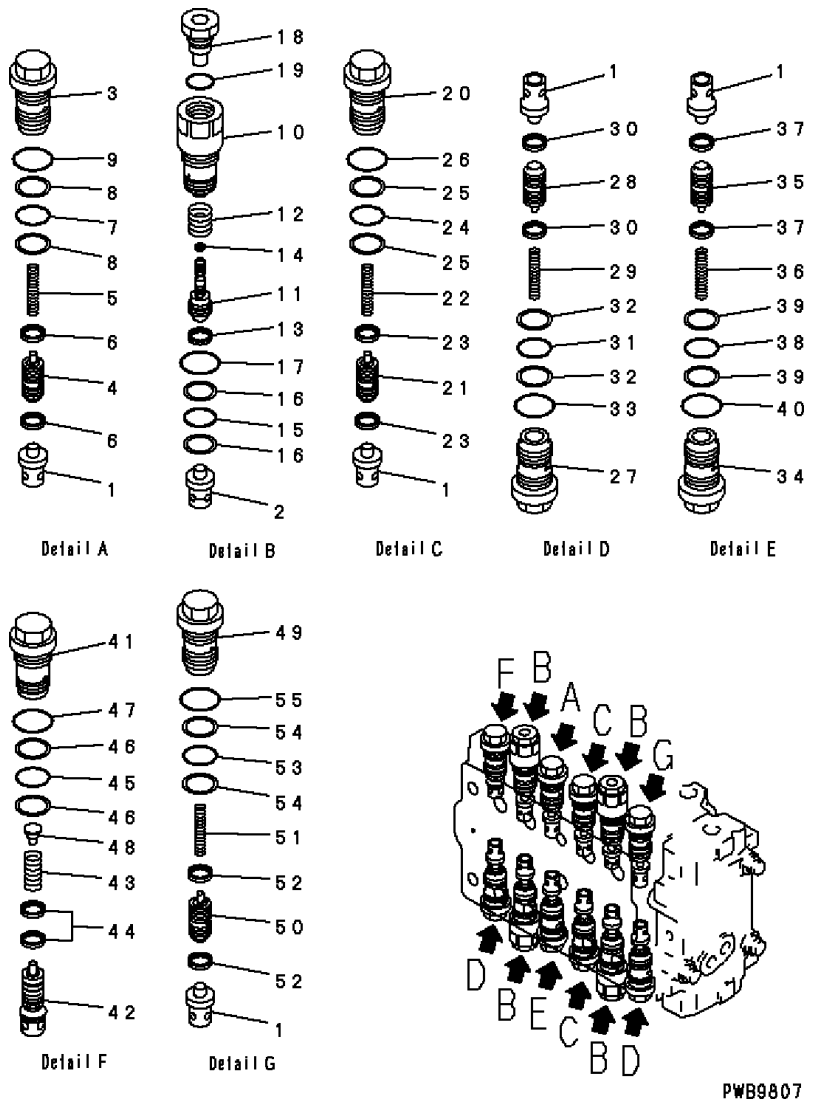

FIG. NO: Y1662-43A0F

INDEX	PART NO.	DESCRIPTION	Q'TY	SERIAL NO. PC200-6B	SERIAL NO. PC200LC-6B
45	700-93-11320	. . . O-RING	1	B10001-	B20001-
46	723-46-41950	. . . RING	2	B10001-	B20001-
47	07002-13634	. . . O-RING	1	B10001-	B20001-
48	723-46-41980	. . . RETAINER	1	B10001-	B20001-
	723-46-46300	. . VALVE ASS'Y	1	B10001-	B20001-
49	☆	. . . SLEEVE	1	B10001-	B20001-
50	☆	. . . PISTON SUB ASS'Y	1	B10001-	B20001-
51	☆	. . . SPRING	1	B10001-	B20001-
52	☆	. . . SEAL	2	B10001-	B20001-
53	700-93-11320	. . . O-RING	1	B10001-	B20001-
54	723-46-41950	. . . RING	2	B10001-	B20001-
55	07002-13634	. . . O-RING	1	B10001-	B20001-

FIG. Y1662-44A0F MAIN VALVE (1-ACTUATOR) (4/13) (FOR BLIND PLUG OF SAFETY-SUCTION SERVICE VALVE)

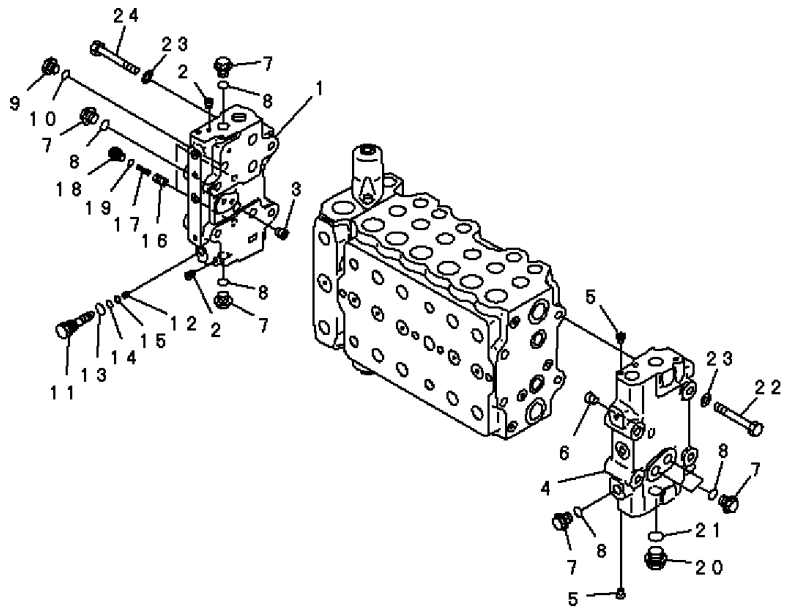

PWB9818

FIG. NO: Y1662-44A0F

INDEX	PART NO.	DESCRIPTION	Q'TY	SERIAL NO. PC200-6B	SERIAL NO. PC200LC-6B
	(723-47-13802)	CONTROL VALVE	1	B10001-	B20001-
		THESE ASSEMBLIES CONSIST OF ALL PARTS SHOWN IN FIGS.Y1662-41A0F TO Y1662-53A0F .			
	723-46-00640	. COVER ASS'Y	1	B10001-	B20001-
1	☆	. . COVER, A	1	B10001-	B20001-
2	☆	. . PLUG	6	B10001-	B20001-
3	☆	. . PLUG	1	B10001-	B20001-
	723-46-00620	. COVER ASS'Y	1	B10001-	B20001-
4	☆	. . COVER, B	1	B10001-	B20001-
5	☆	. . PLUG	2	B10001-	B20001-
6	☆	. . PLUG	1	B10001-	B20001-
7	☆	. PLUG	7	B10001-	B20001-
8	07002-11823	. O-RING	7	B10001-	B20001-
9	708-8H-11530	. PLUG	1	B10001-	B20001-
10	07002-11423	. O-RING	1	B10001-	B20001-
	723-46-15100	. PLUG ASS'Y	1	B10001-	B20001-
11	☆	. . PLUG	1	B10001-	B20001-
12	☆	. . SCREW	1	B10001-	B20001-
13	07002-11423	. . O-RING	1	B10001-	B20001-
14	07000-11007	. . O-RING	1	B10001-	B20001-
15	07001-01007	. . RING, BACK-UP	1	B10001-	B20001-
16	723-46-15190	. VALVE	2	B10001-	B20001-
17	723-46-14140	. SPRING	2	B10001-	B20001-
18	708-8E-16160	. PLUG	2	B10001-	B20001-
19	07002-11023	. O-RING	2	B10001-	B20001-
20	709-74-91860	. PLUG	1	B10001-	B20001-
21	07002-12434	. O-RING	1	B10001-	B20001-
22	01010-61490	. BOLT	4	B10001-	B20001-
23	01643-31445	. WASHER	8	B10001-	B20001-
24	01011-61455	. BOLT	4	B10001-	B20001-

FIG. Y1662-45A0F MAIN VALVE (1-ACTUATOR) (5/13) (FOR BLIND PLUG OF SAFETY-SUCTION SERVICE VALVE)

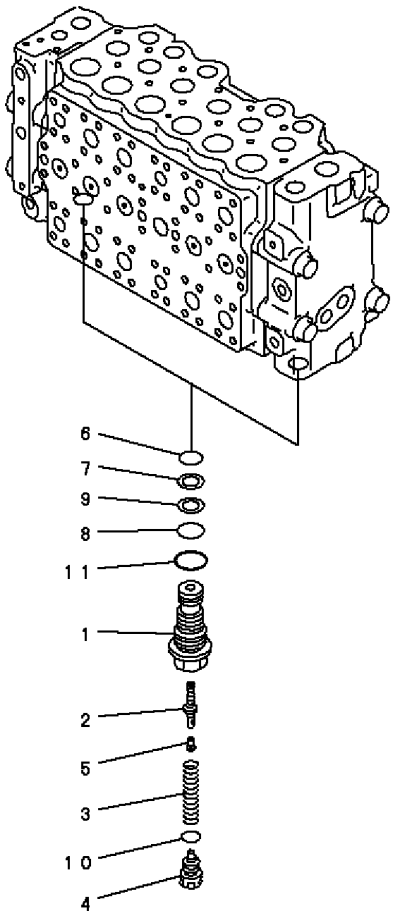

PEB5332

FIG. NO: Y1662-45A0F

INDEX	PART NO.	DESCRIPTION	Q'TY	SERIAL NO. PC200-6B	SERIAL NO. PC200LC-6B
	(723-47-13802)	CONTROL VALVE ..... THESE ASSEMBLIES CONSIST OF ALL PARTS SHOWN IN FIGS.Y1662-41A0F TO Y1662-53A0F .	1	B10001-	B20001-
	723-40-56302	. UNLOAD VALVE ASS'Y	2	B10001-	B20001-
1	☆	. . SLEEVE	1	B10001-	B20001-
2	☆	. . VALVE	1	B10001-	B20001-
3	☆	. . SPRING	1	B10001-	B20001-
4	☆	. . PLUG	1	B10001-	B20001-
5	☆	. . PLUG	1	B10001-	B20001-
6	07000-12014	. . O-RING	1	B10001-	B20001-
7	723-40-56350	. . RING	1	B10001-	B20001-
8	07000-12016	. . O-RING	1	B10001-	B20001-
9	723-60-22230	. . RING, BACK-UP	1	B10001-	B20001-
10	☆	. . O-RING	1	B10001-	B20001-
11	07002-12434	. . O-RING	1	B10001-	B20001-

FIG. Y1662-46A0F MAIN VALVE (1-ACTUATOR) (6/13) (FOR BLIND PLUG OF SAFETY-SUCTION SERVICE VALVE)

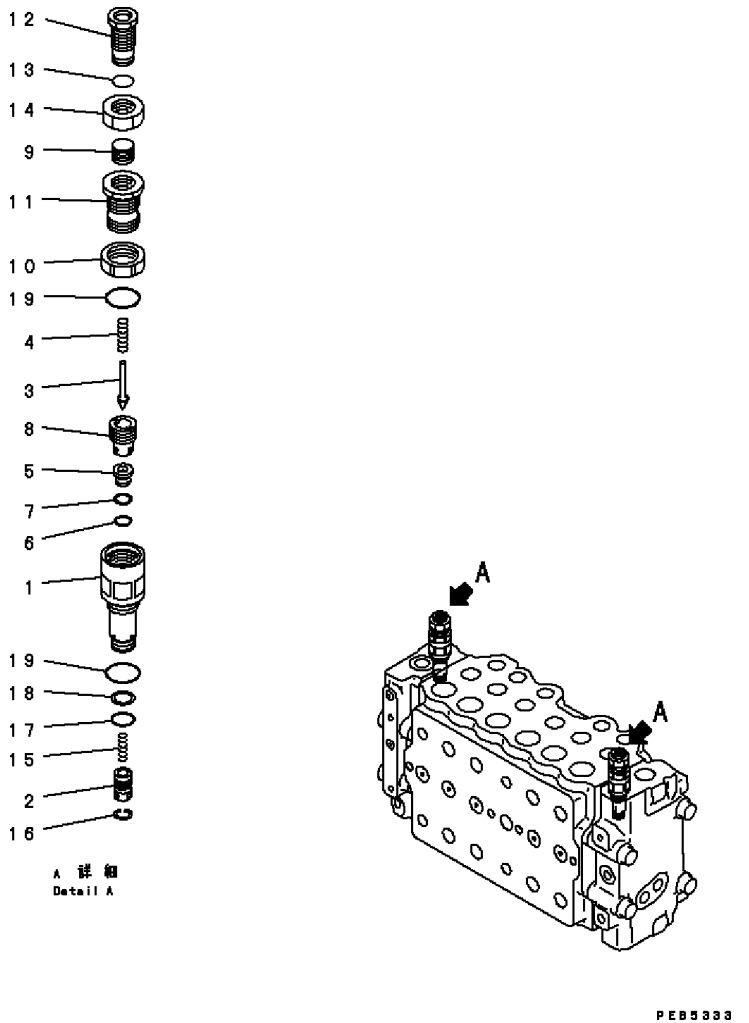

FIG. NO: Y1662-46A0F

INDEX	PART NO.	DESCRIPTION	Q'TY	SERIAL NO. PC200-6B	SERIAL NO. PC200LC-6B
	(723-47-13802)	CONTROL VALVE	1	B10001-	B20001-
		THESE ASSEMBLIES CONSIST OF ALL PARTS SHOWN IN FIGS.Y1662-41A0F TO Y1662-53A0F .			
	723-40-51401	. RELIEF VALVE ASS'Y	2	B10001-	B20001-
1	☆	. . SLEEVE	1	B10001-	B20001-
2	☆	. . VALVE	1	B10001-	B20001-
3	☆	. . POPPET	1	B10001-	B20001-
4	☆	. . SPRING	1	B10001-	B20001-
5	☆	. . SEAT	1	B10001-	B20001-
6	☆	. . O-RING	1	B10001-	B20001-
7	☆	. . RING	1	B10001-	B20001-
8	☆	. . HOLDER	1	B10001-	B20001-
9	☆	. . RETAINER	1	B10001-	B20001-
10	☆	. . NUT	1	B10001-	B20001-
11	☆	. . HOLDER	1	B10001-	B20001-
12	☆	. . PLUG	1	B10001-	B20001-
13	☆	. . O-RING	1	B10001-	B20001-
14	☆	. . NUT	1	B10001-	B20001-
15	☆	. . SPRING	1	B10001-	B20001-
16	☆	. . RING	1	B10001-	B20001-
17	700-22-11410	. . O-RING	1	B10001-	B20001-
18	700-80-64220	. . RING	1	B10001-	B20001-
19	07002-12434	. . O-RING	2	B10001-	B20001-

FIG. Y1662-47A0F MAIN VALVE (1-ACTUATOR) (7/13) (FOR BLIND PLUG OF SAFETY-SUCTION SERVICE VALVE)

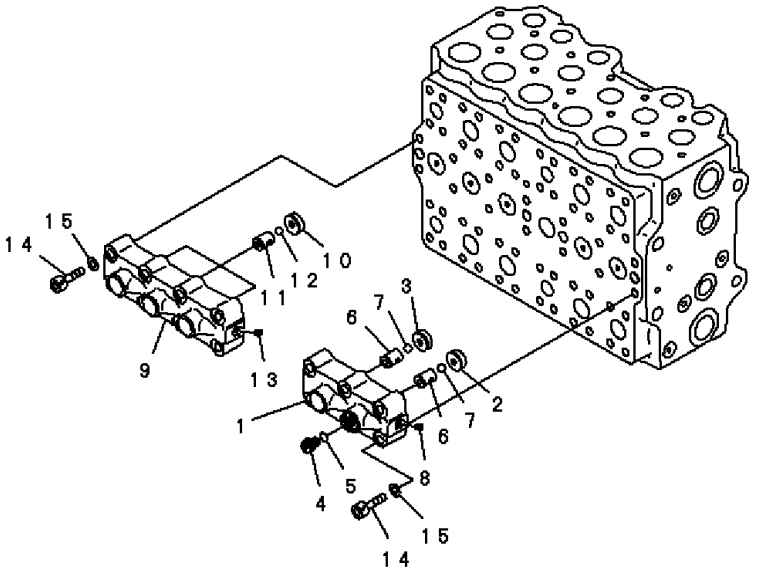

PEB5334

FIG. NO: Y1662-47A0F

INDEX	PART NO.	DESCRIPTION	Q'TY	SERIAL NO. PC200-6B	SERIAL NO. PC200LC-6B
	(723-47-13802)	CONTROL VALVE	1	B10001-	B20001-
		THESE ASSEMBLIES CONSIST OF ALL PARTS SHOWN IN FIGS.Y1662-41A0F TO Y1662-53A0F .			
	723-40-66402	. VALVE ASS'Y	1	B10001-	B20001-
1	☆	. . CASE	1	B10001-	B20001-
2	☆	. . SEAT	1	B10001-	B20001-
3	☆	. . SEAT	1	B10001-	B20001-
4	708-8H-11530	. . PLUG	1	B10001-	B20001-
5	07002-11423	. . O-RING	1	B10001-	B20001-
6	☆	. . SEAT	2	B10001-	B20001-
7	☆	. . BALL	2	B10001-	B20001-
8	☆	. . PLUG	1	B10001-	B20001-
	723-40-66200	. VALVE ASS'Y	1	B10001-	B20001-
9	☆	. . CASE	1	B10001-	B20001-
10	☆	. . SEAT	3	B10001-	B20001-
11	☆	. . SEAT	3	B10001-	B20001-
12	☆	. . BALL	3	B10001-	B20001-
13	☆	. . PLUG	1	B10001-	B20001-
14	01252-61050	. BOLT	14	B10001-	B20001-
15	01643-51032	. WASHER	14	B10001-	B20001-

FIG. Y1662-48A0F MAIN VALVE (1-ACTUATOR) (8/13) (FOR BLIND PLUG OF SAFETY-SUCTION SERVICE VALVE)

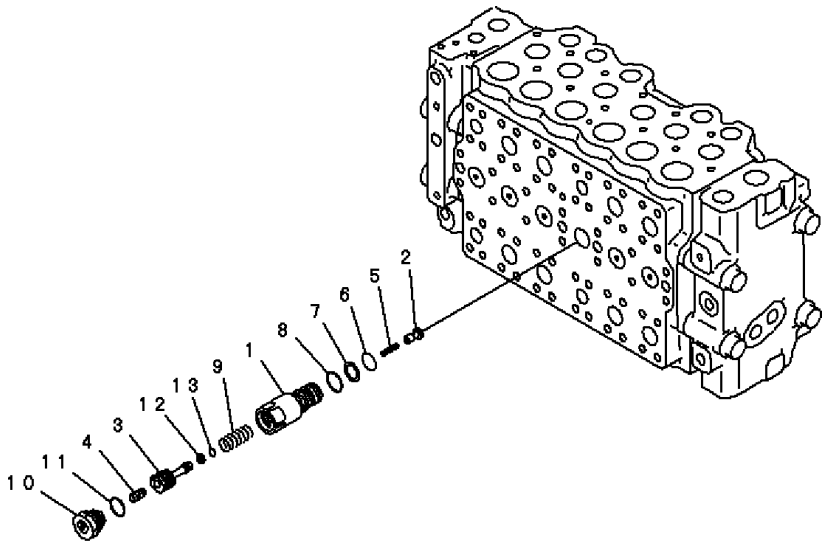

PEB5335

FIG. NO: Y1662-48A0F

INDEX	PART NO.	DESCRIPTION	Q'TY	SERIAL NO. PC200-6B	SERIAL NO. PC200LC-6B
	(723-47-13802)	CONTROL VALVE	1	B10001-	B20001-
		THESE ASSEMBLIES CONSIST OF ALL PARTS SHOWN IN FIGS.Y1662-41A0F TO Y1662-53A0F .			
	723-40-60101	. VALVE ASS'Y	1	B10001-	B20001-
1	☆	. . SLEEVE	1	B10001-	B20001-
2	☆	. . VALVE	1	B10001-	B20001-
3	☆	. . PISTON	1	B10001-	B20001-
4	☆	. . PISTON	1	B10001-	B20001-
5	☆	. . SPRING	1	B10001-	B20001-
6	07000-12020	. . O-RING	1	B10001-	B20001-
7	07001-02020	. . RING, BACK-UP	1	B10001-	B20001-
8	709-25-11390	. . O-RING	1	B10001-	B20001-
9	☆	. . SPRING	1	B10001-	B20001-
10	☆	. . PLUG	1	B10001-	B20001-
11	☆	. . O-RING	1	B10001-	B20001-
12	☆	. . SEAL	1	B10001-	B20001-
13	☆	. . O-RING	1	B10001-	B20001-

FIG. Y1662-49A0F MAIN VALVE (1-ACTUATOR) (9/13) (FOR BLIND PLUG OF SAFETY-SUCTION SERVICE VALVE)

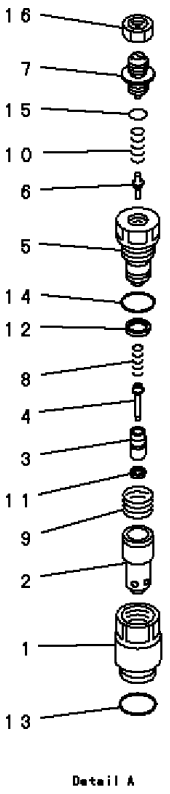

Detail A

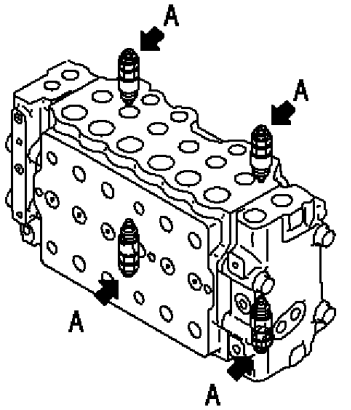

PEB5336

FIG. NO: Y1662-49A0F

INDEX	PART NO.	DESCRIPTION	Q'TY	SERIAL NO. PC200-6B	SERIAL NO. PC200LC-6B
	(723-47-13802)	CONTROL VALVE	1	B10001-	B20001-
		THESE ASSEMBLIES CONSIST OF ALL PARTS SHOWN IN FIGS.Y1662-41A0F TO Y1662-53A0F .			
	709-70-74302	. VALVE ASS'Y, SUCTION AND SAFETY	4	B10001-	B20001-
1	☆	. . SLEEVE	1	B10001-	B20001-
2	☆	. . SLEEVE	1	B10001-	B20001-
3	☆	. . POPPET	1	B10001-	B20001-
4	☆	. . PISTON	1	B10001-	B20001-
5	☆	. . PLUG	1	B10001-	B20001-
6	☆	. . POPPET	1	B10001-	B20001-
7	☆	. . SCREW	1	B10001-	B20001-
8	☆	. . SPRING	1	B10001-	B20001-
9	☆	. . SPRING	1	B10001-	B20001-
10	☆	. . SPRING	1	B10001-	B20001-
11	☆	. . SEAL	1	B10001-	B20001-
12	☆	. . SEAL	1	B10001-	B20001-
13	709-25-11390	. . O-RING	1	B10001-	B20001-
14	07002-02434	. . O-RING	1	B10001-	B20001-
15	07000-02011	. . O-RING	1	B10001-	B20001-
16	☆	. . NUT	1	B10001-	B20001-

FIG. Y1662-50A0F MAIN VALVE (1-ACTUATOR) (10/13) (FOR BLIND PLUG OF SAFETY-SUCTION SERVICE VALVE)

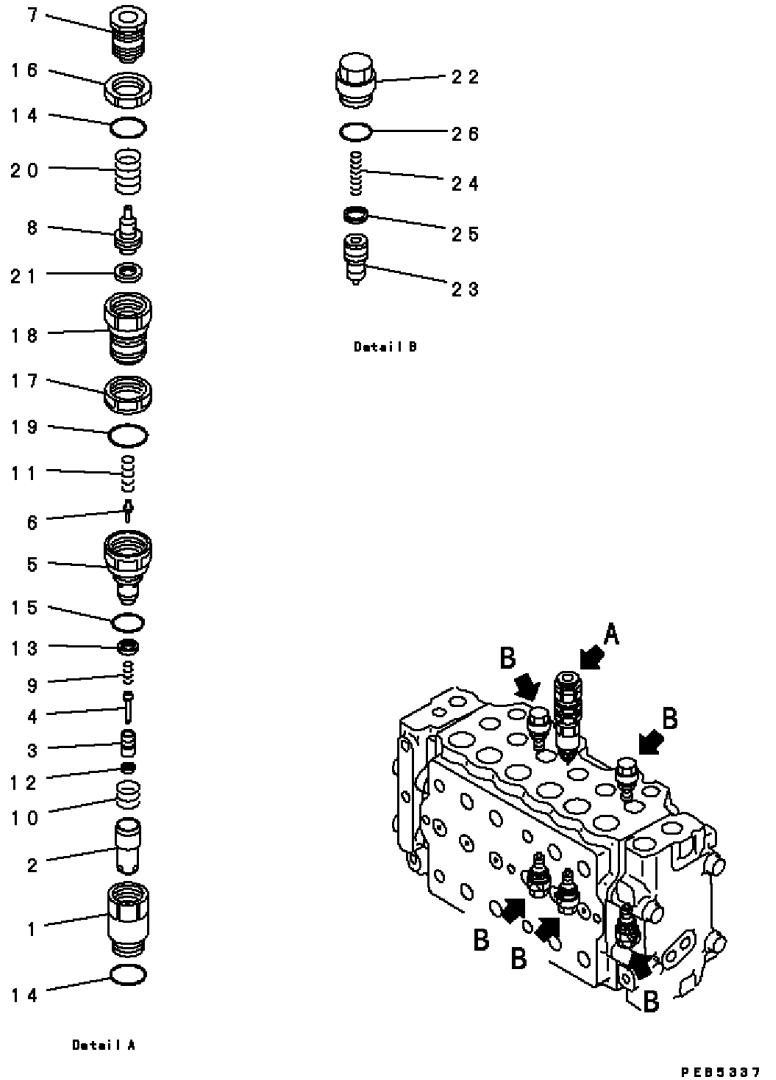

FIG. NO: Y1662-50A0F

INDEX	PART NO.	DESCRIPTION	Q'TY	SERIAL NO. PC200-6B	SERIAL NO. PC200LC-6B
	(723-47-13802)	CONTROL VALVE	1	B10001-	B20001-
		THESE ASSEMBLIES CONSIST OF ALL PARTS SHOWN IN FIGS.Y1662-41A0F TO Y1662-53A0F .			
	723-40-90200	. VALVE ASS'Y, SUCTION AND SAFETY	1	B10001-	B20001-
1	☆	. . SLEEVE	1	B10001-	B20001-
2	☆	. . SLEEVE	1	B10001-	B20001-
3	☆	. . POPPET	1	B10001-	B20001-
4	☆	. . PISTON	1	B10001-	B20001-
5	☆	. . SLEEVE	1	B10001-	B20001-
6	☆	. . POPPET	1	B10001-	B20001-
7	☆	. . UNION	1	B10001-	B20001-
8	☆	. . PISTON	1	B10001-	B20001-
9	☆	. . SPRING	1	B10001-	B20001-
10	☆	. . SPRING	1	B10001-	B20001-
11	☆	. . SPRING	1	B10001-	B20001-
12	☆	. . SEAL	1	B10001-	B20001-
13	☆	. . SEAL	1	B10001-	B20001-
14	709-25-11390	. . O-RING	2	B10001-	B20001-
15	07002-02434	. . O-RING	1	B10001-	B20001-
16	☆	. . NUT	1	B10001-	B20001-
17	☆	. . NUT	1	B10001-	B20001-
18	☆	. . HOLDER	1	B10001-	B20001-
19	07002-03034	. . O-RING	1	B10001-	B20001-
20	☆	. . SPRING	1	B10001-	B20001-
21	☆	. . SEAL	1	B10001-	B20001-
	723-40-85100	. VALVE ASS'Y, SUCTION	5	B10001-	B20001-
22	☆	. . SLEEVE	1	B10001-	B20001-
23	☆	. . VALVE	1	B10001-	B20001-
24	☆	. . SPRING	1	B10001-	B20001-
25	☆	. . SEAL	1	B10001-	B20001-
26	709-25-11390	. . O-RING	1	B10001-	B20001-

FIG. Y1662-51A0F MAIN VALVE (1-ACTUATOR) (11/13) (FOR BLIND PLUG OF SAFETY-SUCTION SERVICE VALVE)

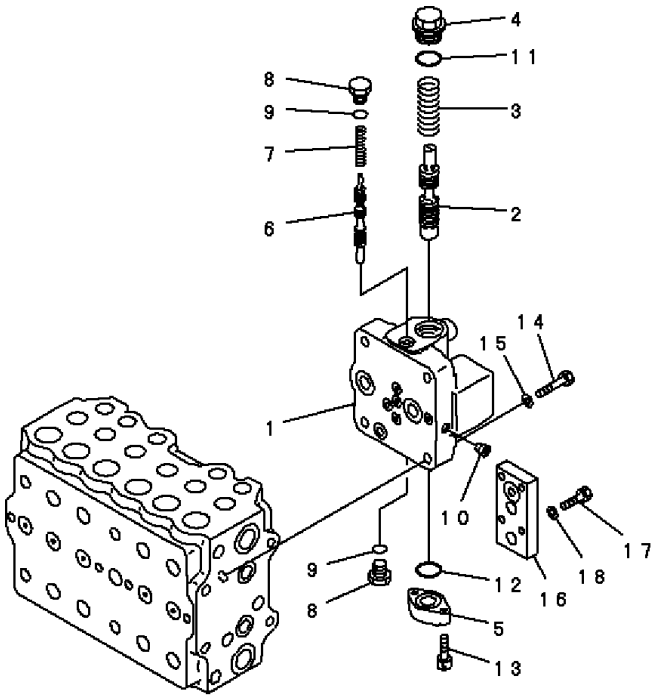

PEB5336

FIG. NO: Y1662-51A0F

INDEX	PART NO.	DESCRIPTION	Q'TY	SERIAL NO. PC200-6B	SERIAL NO. PC200LC-6B
	(723-47-13802)	CONTROL VALVE	1	B10001-	B20001-
		THESE ASSEMBLIES CONSIST OF ALL PARTS SHOWN IN FIGS.Y1662-41A0F TO Y1662-53A0F .			
	723-40-70100	. VALVE ASS'Y	1	B10001-	B20001-
1	☆	. . BODY	1	B10001-	B20001-
2	☆	. . SPOOL	1	B10001-	B20001-
3	723-40-71160	. . SPRING	1	B10001-	B20001-
4	723-40-71140	. . PLUG	1	B10001-	B20001-
5	723-40-71150	. . PLATE	1	B10001-	B20001-
6	☆	. . SPOOL	1	B10001-	B20001-
7	723-40-71170	. . SPRING	1	B10001-	B20001-
8	07040-11812	. . PLUG	2	B10001-	B20001-
9	07002-11823	. . O-RING	2	B10001-	B20001-
10	☆	. . PLUG	3	B10001-	B20001-
11	07002-13634	. . O-RING	1	B10001-	B20001-
12	07000-13032	. . O-RING	1	B10001-	B20001-
13	01252-30830	. . BOLT	2	B10001-	B20001-
14	01010-61460	. BOLT	4	B10001-	B20001-
15	01643-31445	. WASHER	4	B10001-	B20001-
16	723-46-15280	. PLATE	1	B10001-	B20001-
17	01010-81040	. BOLT	4	B10001-	B20001-
18	01643-31032	. WASHER	4	B10001-	B20001-

FIG. Y1662-52A0F MAIN VALVE (1-ACTUATOR) (12/13) (FOR BLIND PLUG OF SAFETY-SUCTION SERVICE VALVE)

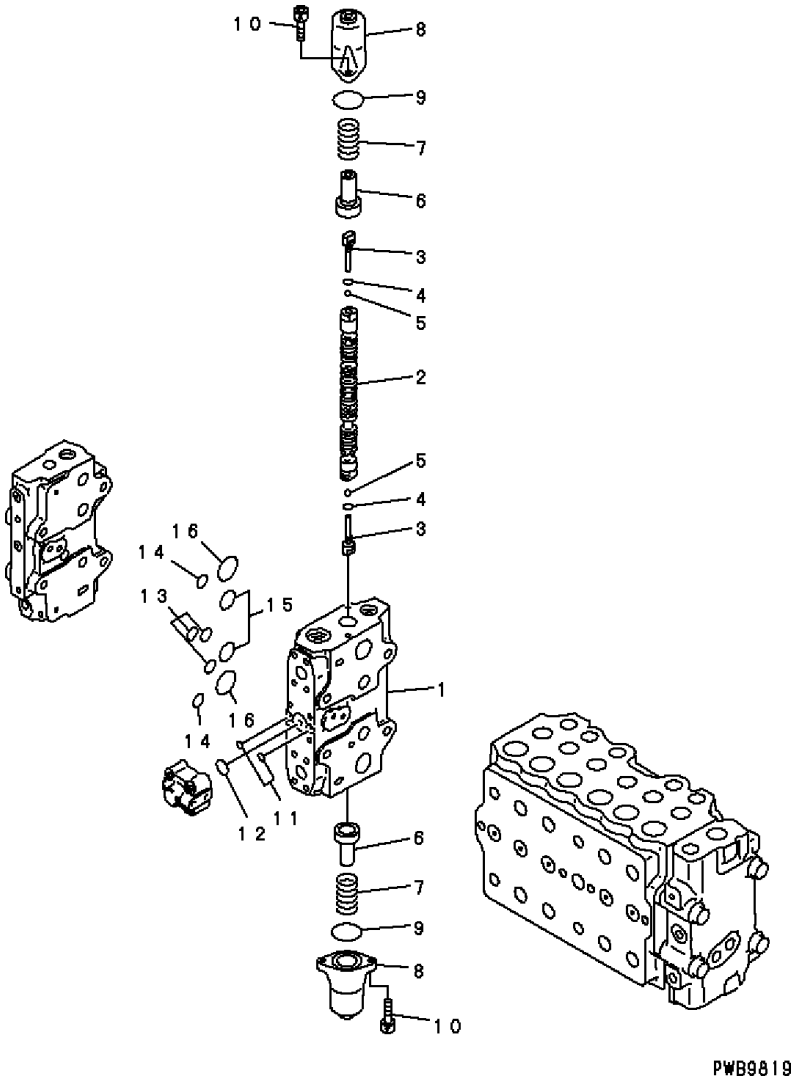

FIG. NO: Y1662-52A0F

INDEX	PART NO.	DESCRIPTION	Q'TY	SERIAL NO. PC200-6B	SERIAL NO. PC200LC-6B
	(723-47-13802)	CONTROL VALVE	1	B10001-	B20001-
		THESE ASSEMBLIES CONSIST OF ALL PARTS SHOWN IN FIGS.Y1662-41A0F TO Y1662-53A0F .			
	☆	. BODY SUB ASS'Y	1	B10001-	B20001-
1	☆	. . BLOCK, VALVE	1	B10001-	B20001-
2	☆	. . SPOOL	1	B10001-	B20001-
3	723-46-15130	. . PLUG	2	B10001-	B20001-
4	07002-10823	. . O-RING	2	B10001-	B20001-
5	708-7T-16460	. . BALL	2	B10001-	B20001-
6	723-46-15120	. . RETAINER	2	B10001-	B20001-
7	723-46-14110	. . SPRING	2	B10001-	B20001-
8	723-46-15110	. . CASE	2	B10001-	B20001-
9	07430-71380	. . O-RING	2	B10001-	B20001-
10	01252-30820	. . BOLT	4	B10001-	B20001-
11	07000-11009	. . O-RING	2	B10001-	B20001-
12	07000-12021	. . O-RING	1	B10001-	B20001-
13	07000-12015	. . O-RING	3	B10001-	B20001-
14	07000-12018	. . O-RING	2	B10001-	B20001-
15	07000-13032	. . O-RING	2	B10001-	B20001-
16	07000-03040	. . O-RING	2	B10001-	B20001-

FIG. Y1662-53A0F MAIN VALVE (1-ACTUATOR) (13/13) (FOR BLIND PLUG OF SAFETY-SUCTION SERVICE VALVE)

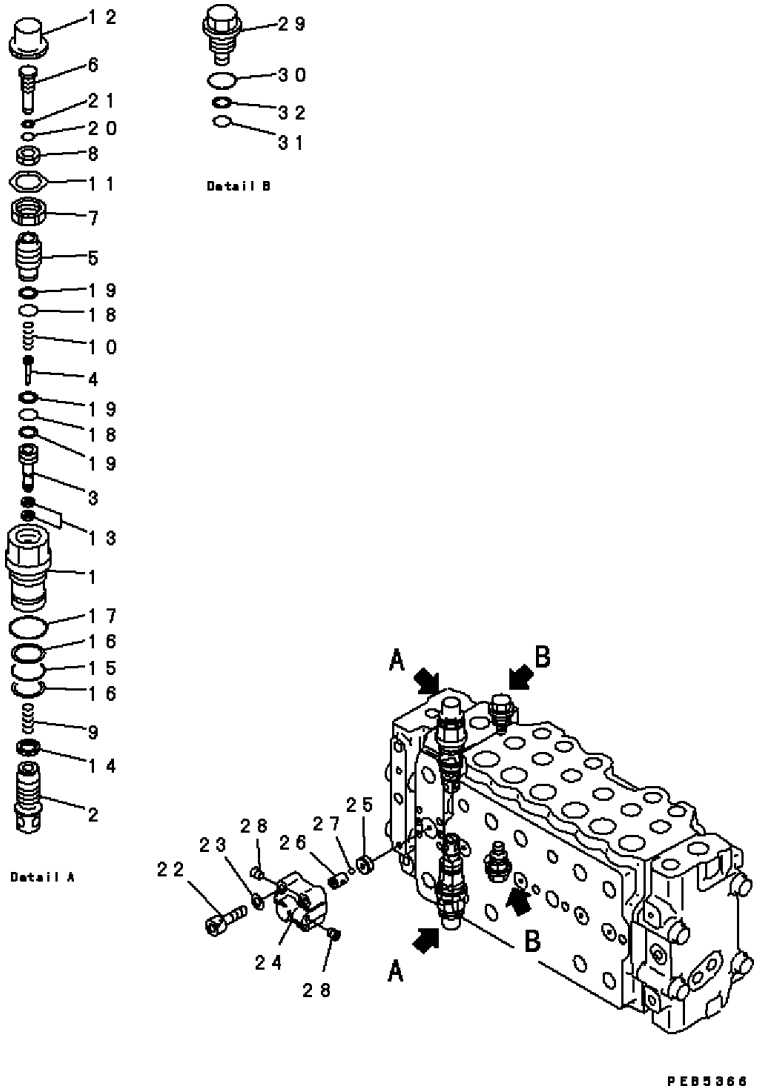

FIG. NO: Y1662-53A0F

INDEX	PART NO.	DESCRIPTION	Q'TY	SERIAL NO. PC200-6B	SERIAL NO. PC200LC-6B
	(723-47-13802)	CONTROL VALVE	1	B10001-	B20001-
		THESE ASSEMBLIES CONSIST OF ALL PARTS SHOWN IN FIGS.Y1662-41A0F TO Y1662-53A0F .			
	☆	. BODY SUB ASS'Y	1	B10001-	B20001-
	723-46-48100	. . VALVE ASS'Y	2	B10001-	B20001-
1	☆	. . . SLEEVE	1	B10001-	B20001-
2	☆	. . . VALVE	1	B10001-	B20001-
3	☆	. . . SEAT	1	B10001-	B20001-
4	☆	. . . POPPET	1	B10001-	B20001-
5	☆	. . . PLUG	1	B10001-	B20001-
6	☆	. . . SCREW	1	B10001-	B20001-
7	☆	. . . NUT	1	B10001-	B20001-
8	☆	. . . NUT	1	B10001-	B20001-
9	☆	. . . SPRING	1	B10001-	B20001-
10	☆	. . . SPRING	1	B10001-	B20001-
11	☆	. . . PLATE	1	B10001-	B20001-
12	☆	. . . CAP	1	B10001-	B20001-
13	☆	. . . SEAL	2	B10001-	B20001-
14	☆	. . . SEAL	1	B10001-	B20001-
15	700-93-11320	. . . O-RING	1	B10001-	B20001-
16	723-46-41950	. . . RING	2	B10001-	B20001-
17	07002-13634	. . . O-RING	1	B10001-	B20001-
18	☆	. . . O-RING	2	B10001-	B20001-
19	☆	. . . RING	3	B10001-	B20001-
20	☆	. . . O-RING	1	B10001-	B20001-
21	☆	. . . RING, BACK-UP	1	B10001-	B20001-
22	01252-60845	. . BOLT	4	B10001-	B20001-
23	01643-50823	. . WASHER	4	B10001-	B20001-
	723-40-66300	. VALVE ASS'Y	1	B10001-	B20001-
24	☆	. . CASE	1	B10001-	B20001-
25	☆	. . SEAT	1	B10001-	B20001-
26	☆	. . SEAT	1	B10001-	B20001-
27	☆	. . BALL	1	B10001-	B20001-
28	☆	. . PLUG	2	B10001-	B20001-
29	709-74-91510	. PLUG	2	B10001-	B20001-
30	709-25-11390	. O-RING	2	B10001-	B20001-
31	07000-11009	. O-RING	2	B10001-	B20001-
32	07001-01009	. RING, BACK-UP	2	B10001-	B20001-

FIG. Y1669-01A0A SERVICE VALVE (1/2)

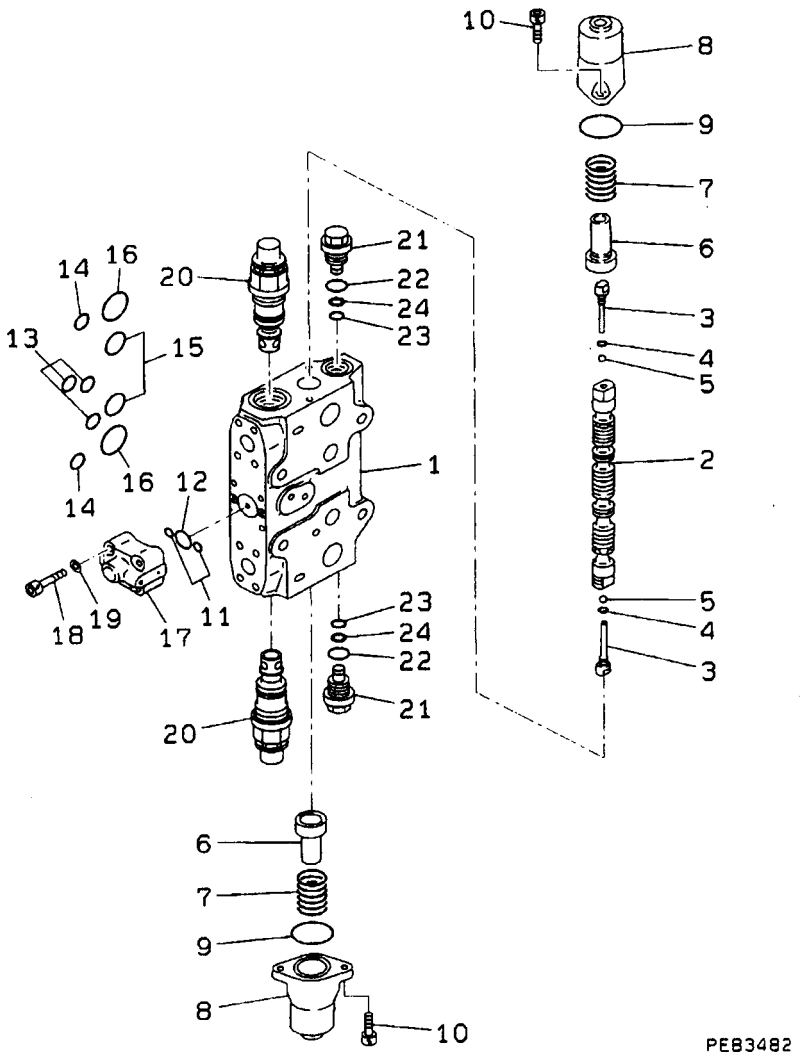

FIG. NO: Y1669-01A0A

INDEX	PART NO.	DESCRIPTION	Q'TY	SERIAL NO. PC200-6B	SERIAL NO. PC200LC-6B
	723-41-05300	VALVE ASS'Y ..... THIS ASSEMBLY CONSISTS OF ALL PARTS SHOWN IN FIGS.Y0640-01A0A AND Y0640-02A0 A.	1	B10001-	B20001-
1	☆	. BLOCK, VALVE	1	B10001-	B20001-
2	☆	. SPOOL	1	B10001-	B20001-
3	723-46-15130	. PLUG	2	B10001-	B20001-
4	07002-10823	. O-RING	2	B10001-	B20001-
5	708-7T-16460	. BALL	2	B10001-	B20001-
6	723-46-15120	. RETAINER	2	B10001-	B20001-
7	723-46-14110	. SPRING	2	B10001-	B20001-
8	723-46-15110	. CASE	2	B10001-	B20001-
9	07430-71380	. O-RING	2	B10001-	B20001-
10	01252-30820	. BOLT	4	B10001-	B20001-
11	07000-11009	. O-RING	2	B10001-	B20001-
12	07000-12021	. O-RING	1	B10001-	B20001-
13	07000-12015	. O-RING	3	B10001-	B20001-
14	07000-12018	. O-RING	2	B10001-	B20001-
15	07000-13032	. O-RING	2	B10001-	B20001-
16	07000-03040	. O-RING	2	B10001-	B20001-
17	(723-40-66300)	. VALVE ASS'Y	1	B10001-	B20001-
18	01252-30845	. BOLT	4	B10001-	B20001-
19	01643-50823	. WASHER	4	B10001-	B20001-
20	(723-46-48100)	. VALVE ASS'Y	2	B10001-	B20001-
21	709-74-91510	. PLUG	2	B10001-	B20001-
22	709-25-11390	. O-RING	2	B10001-	B20001-
23	07000-11009	. O-RING	2	B10001-	B20001-
24	07001-01009	. RING, BACK-UP	2	B10001-	B20001-

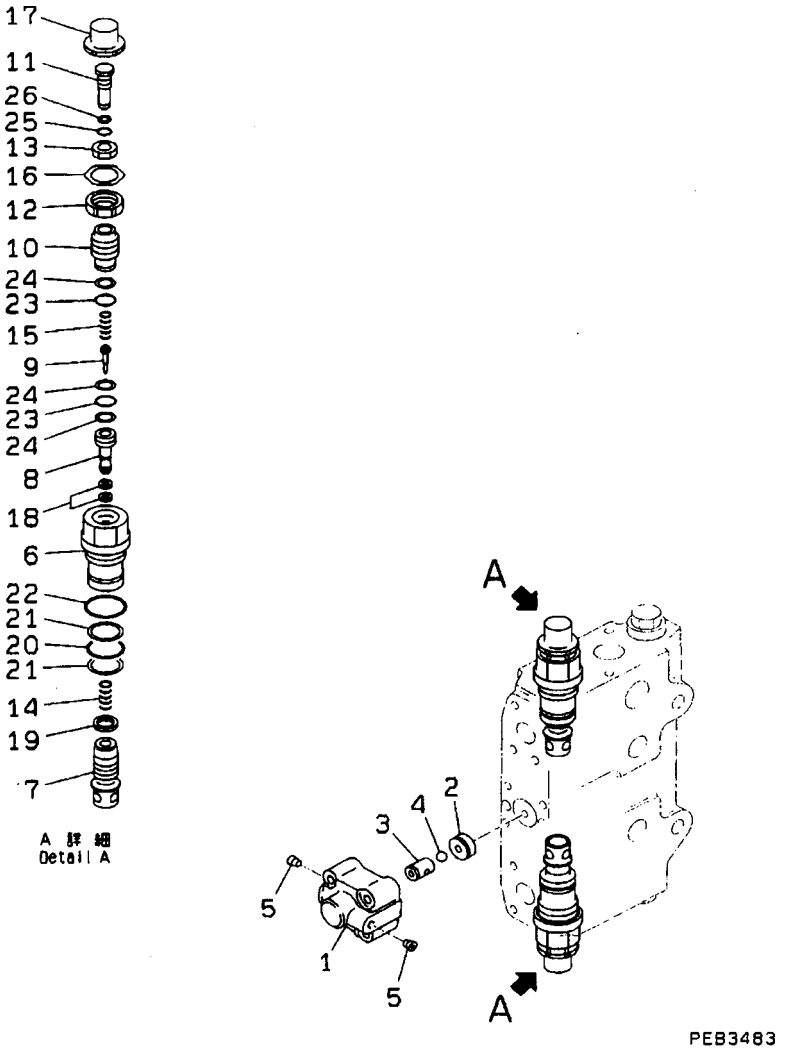

INDEX	PART NO.	DESCRIPTION	Q'TY	SERIAL NO. PC200-6B	SERIAL NO. PC200LC-6B
	723-41-05300	VALVE ASS'Y	1	B10001-	B20001-
		THIS ASSEMBLY CONSISTS OF ALL PARTS SHOWN IN FIGS.Y0640-01A0A AND Y0640-02A0A.			
	723-40-66300	. VALVE ASS'Y	1	B10001-	B20001-
1	☆	. . CASE	1	B10001-	B20001-
2	☆	. . SEAT	1	B10001-	B20001-
3	☆	. . SEAT	1	B10001-	B20001-
4	☆	. . BALL	1	B10001-	B20001-
5	☆	. . PLUG	2	B10001-	B20001-
	723-46-48100	. VALVE ASS'Y	2	B10001-	B20001-
6	☆	. . SLEEVE	1	B10001-	B20001-
7	☆	. . VALVE	1	B10001-	B20001-
8	☆	. . SEAT	1	B10001-	B20001-
9	☆	. . POPPET	1	B10001-	B20001-
10	☆	. . PLUG	1	B10001-	B20001-
11	☆	. . SCREW	1	B10001-	B20001-
12	☆	. . NUT	1	B10001-	B20001-
13	☆	. . NUT	1	B10001-	B20001-
14	☆	. . SPRING	1	B10001-	B20001-
15	☆	. . SPRING	1	B10001-	B20001-
16	☆	. . PLATE	1	B10001-	B20001-
17	☆	. . CAP	1	B10001-	B20001-
18	☆	. . SEAL	2	B10001-	B20001-
19	☆	. . SEAL	1	B10001-	B20001-
20	700-93-11320	. . O-RING	1	B10001-	B20001-
21	723-46-41950	. . RING	2	B10001-	B20001-
22	07002-13634	. . O-RING	1	B10001-	B20001-
23	☆	. . O-RING	2	B10001-	B20001-
24	☆	. . RING	3	B10001-	B20001-
25	☆	. . O-RING	1	B10001-	B20001-
26	☆	. . RING, BACK-UP	1	B10001-	B20001-

FIG. Y1670-01A0E PPC VALVE (FOR TRAVEL)

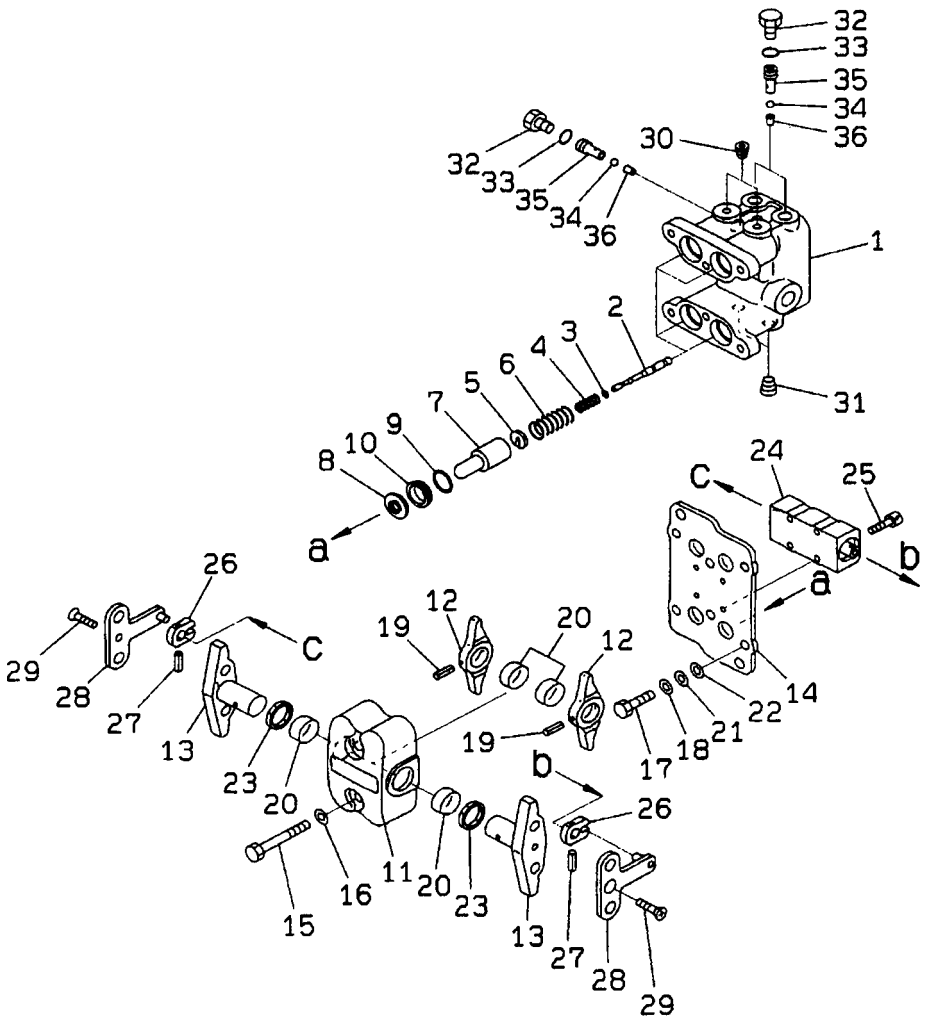

FIG. NO: Y1670-01A0E

INDEX	PART NO.	DESCRIPTION	Q'TY	SERIAL NO. PC200-6B	SERIAL NO. PC200LC-6B
	702-16-01540	PILOT VALVE	1	B10001-	B20001-
1	☆	. BODY, VALVE	1	B10001-	B20001-
2	☆	. VALVE	4	B10001-	B20001-
3	702-16-51140	. SHIM 0.30MM, 0.3MM	4	B10001-	B20001-
4	702-16-53420	. SPRING	4	B10001-	B20001-
5	702-16-53140	. RETAINER	4	B10001-	B20001-
6	702-16-54420	. SPRING	4	B10001-	B20001-
7	702-16-53170	. PISTON	4	B10001-	B20001-
8	702-16-51270	. SEAL	4	B10001-	B20001-
9	07000-02020	. O-RING	4	B10001-	B20001-
10	702-16-54170	. COLLAR	4	B10001-	B20001-
11	702-16-54310	. CASE	1	B10001-	B20001-
12	☆	. LEVER	2	B10001-	B20001-
13	☆	. SHAFT	2	B10001-	B20001-
14	☆	. PLATE	1	B10001-	B20001-
15	01010-80855	. BOLT	2	B10001-	B20001-
16	01643-30823	. WASHER	2	B10001-	B20001-
17	01010-80816	. BOLT	4	B10001-	B20001-
18	702-16-54331	. WASHER, 1.60MM, 1.6MM	4	B10001-	B20001-
19	04025-00432	. PIN, SPRING	2	B10001-	B20001-
20	702-16-54430	. BUSHING	4	B10001-	B20001-
21	702-16-54341	. WASHER, 1.30MM, 1.3MM	4	B10001-	B20001-
22	702-16-54351	. WASHER, 1.00MM, 1.0MM	4	B10001-	B20001-
23	702-16-54280	. SEAL, DUST	2	B10001-	B20001-
24	702-16-54500	. DAMPER ASS'Y	1	B10001-	B20001-
25	01252-30525	. BOLT	4	B10001-	B20001-
26	702-16-54510	. PLATE	2	B10001-	B20001-
27	04025-00420	. PIN, SPRING	2	B10001-	B20001-
28	☆	. LEVER	2	B10001-	B20001-
29	01224-40612	. SCREW	2	B10001-	B20001-
30	☆	. PLUG	2	B10001-	B20001-
31	☆	. PLUG	2	B10001-	B20001-
32	07040-11209	. PLUG	3	B10001-	B20001-
33	07002-11223	. O-RING	3	B10001-	B20001-
34	700-84-11730	. BALL	3	B10001-	B20001-
35	702-16-55940	. PLUG	3	B10001-	B20001-
36	702-16-55950	. SEAT	3	B10001-	B20001-

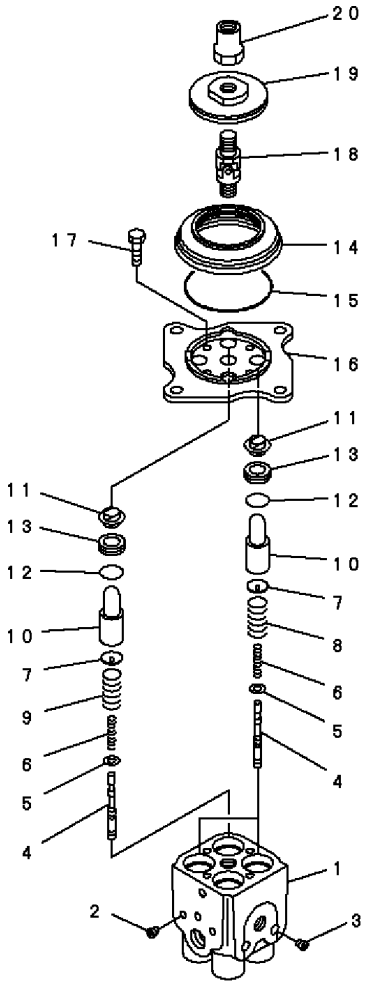

PWB9838

INDEX	PART NO.	DESCRIPTION	Q'TY	SERIAL NO. PC200-6B	SERIAL NO. PC200LC-6B
	702-16-01051	PILOT VALVE	1	B10001-	B20001-
1	☆	. BODY, VALVE	1	B10001-	B20001-
2	☆	. PLUG	2	B10001-	B20001-
3	☆	. PLUG	2	B10001-	B20001-
4	☆	. VALVE	4	B10001-	B20001-
5	702-16-51140	. SHIM, 0.30MM	4	B10001-	B20001-
6	702-16-53420	. SPRING	4	B10001-	B20001-
7	702-16-53140	. RETAINER	4	B10001-	B20001-
8	702-16-53470	. SPRING	2	B10001-	B20001-
9	702-16-53590	. SPRING	2	B10001-	B20001-
10	702-16-53170	. PISTON	4	B10001-	B20001-
11	702-16-51270	. SEAL	4	B10001-	B20001-
12	07000-12020	. O-RING	4	B10001-	B20001-
13	702-16-54170	. COLLAR	4	B10001-	B20001-
14	702-16-53190	. BOOT	1	B10001-	B20001-
15	07000-02070	. O-RING	1	B10001-	B20001-
16	702-16-53210	. PLATE	1	B10001-	B20001-
17	01010-80620	. BOLT	4	B10001-	B20001-
18	702-16-51240	. JOINT	1	B10001-	B20001-
19	702-16-53980	. DISC	1	B10001-	B20001-
20	702-16-53230	. NUT	1	B10001-	B20001-

FIG. Y1670-21A0 PPC VALVE (FOR ATTACHMENT)

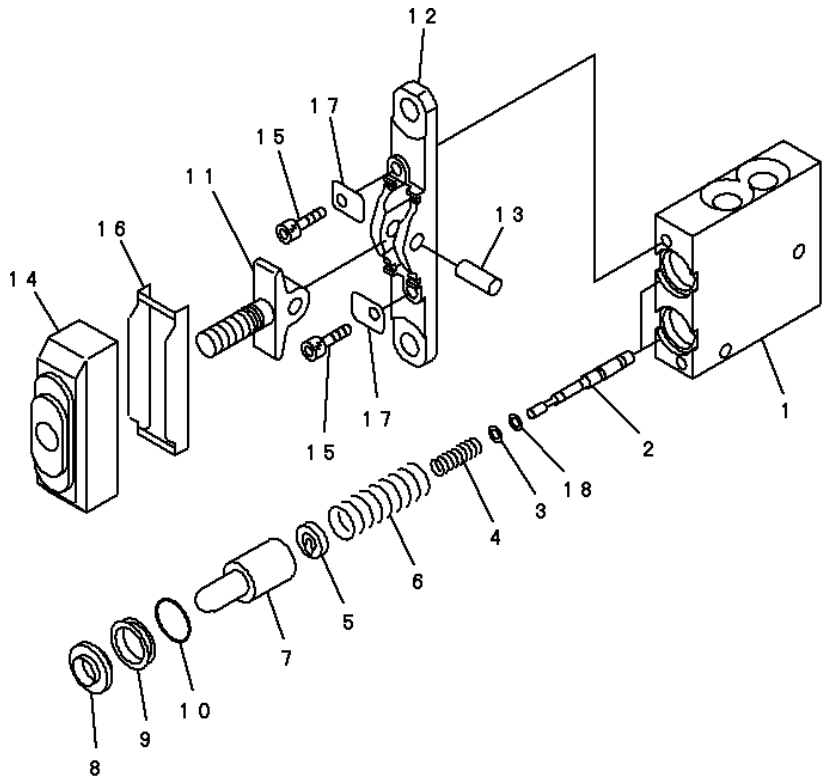

PDB4542

FIG. NO: Y1670-21A0

INDEX	PART NO.	DESCRIPTION	Q'TY	SERIAL NO. PC200-6B	SERIAL NO. PC200LC-6B
	702-16-01230	PILOT VALVE	1	B10001-	B20001-
1	☆	. BODY,VALVE	1	B10001-	B20001-
2	☆	. VALVE	2	B10001-	B20001-
3	702-16-51140	. SHIM, 0.30MM	2	B10001-	B20001-
4	702-16-54550	. SPRING	2	B10001-	B20001-
5	702-16-54570	. RETAINER	2	B10001-	B20001-
6	702-16-54560	. SPRING	2	B10001-	B20001-
7	702-16-53170	. PISTON	2	B10001-	B20001-
8	702-16-51270	. SEAL	2	B10001-	B20001-
9	702-16-54580	. COLLAR	2	B10001-	B20001-
10	702-16-54590	. O-RING	2	B10001-	B20001-
11	☆	. LEVER	1	B10001-	B20001-
12	☆	. PLATE	1	B10001-	B20001-
13	☆	. SHAFT	1	B10001-	B20001-
14	702-16-54640	. BOOT	1	B10001-	B20001-
15	01252-30625	. BOLT	2	B10001-	B20001-
16	702-16-54660	. PLATE	1	B10001-	B20001-
17	702-16-54650	. PLATE	2	B10001-	B20001-
18	702-16-54670	. SHIM, 0.20MM	4	B10001-	B20001-

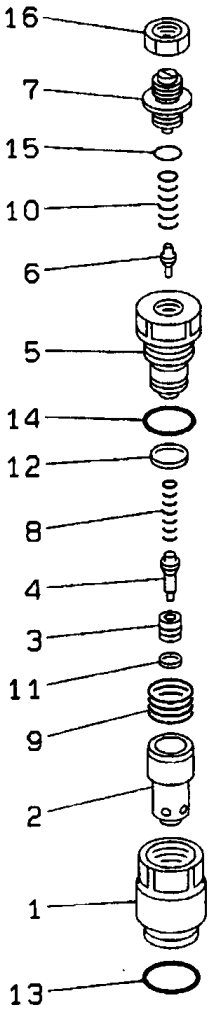

INDEX	PART NO.	DESCRIPTION	Q'TY	SERIAL NO. PC200-6B	SERIAL NO. PC200LC-6B
	709-70-74800	VALVE ASS'Y	1	B10001-	B20001-
1	☆	. SLEEVE	1	B10001-	B20001-
2	☆	. SLEEVE	1	B10001-	B20001-
3	☆	. POPPET	1	B10001-	B20001-
4	☆	. PISTON	1	B10001-	B20001-
5	☆	. PLUG	1	B10001-	B20001-
6	☆	. POPPET	1	B10001-	B20001-
7	☆	. SCREW	1	B10001-	B20001-
8	☆	. SPRING	1	B10001-	B20001-
9	☆	. SPRING	1	B10001-	B20001-
10	☆	. SPRING	1	B10001-	B20001-
11	☆	. SEAL	1	B10001-	B20001-
12	☆	. SEAL	1	B10001-	B20001-
13	709-25-11390	. O-RING	1	B10001-	B20001-
14	☆	. O-RING	1	B10001-	B20001-
15	☆	. O-RING	1	B10001-	B20001-
16	☆	. NUT	1	B10001-	B20001-

FIG. Y1675-01A0 LOCK VALVE

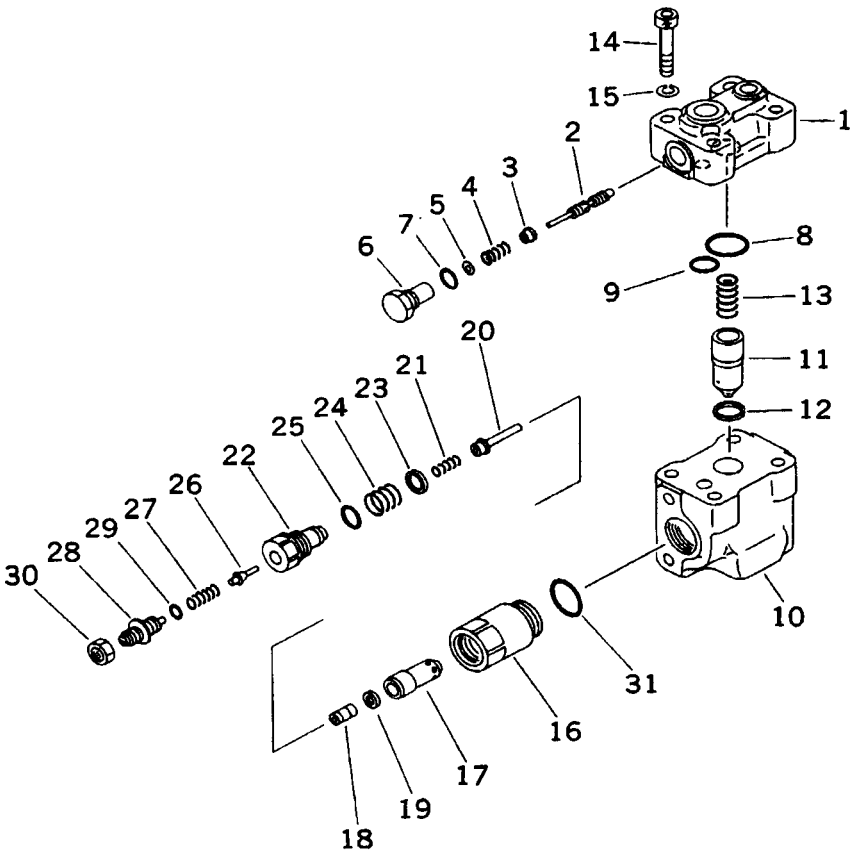

FIG. NO: Y1675-01A0

INDEX	PART NO.	DESCRIPTION	Q'TY	SERIAL NO. PC200-6B	SERIAL NO. PC200LC-6B
	702-21-04220	LOCK VALVE ASS'Y	1	B10001-	B20001-
1	☆	. BODY	1	B10001-	B20001-
2	☆	. SPOOL	1	B10001-	B20001-
3	702-21-31350	. SEAT	1	B10001-	B20001-
4	702-21-31231	. SPRING	1	B10001-	B20001-
5	702-21-31360	. SPACER	1	B10001-	B20001-
6	702-21-31241	. PLUG	1	B10001-	B20001-
7	07002-01823	. O-RING	1	B10001-	B20001-
8	07000-13030	. O-RING	1	B10001-	B20001-
9	07000-02020	. O-RING	1	B10001-	B20001-
10	☆	. BODY	1	B10001-	B20001-
11	702-21-35141	. VALVE, CHECK	1	B10001-	B20001-
12	702-21-35130	. SEAL	1	B10001-	B20001-
13	702-21-35120	. SPRING	1	B10001-	B20001-
14	706-73-40330	. BOLT	4	B10001-	B20001-
15	01602-21030	. WASHER	4	B10001-	B20001-
	709-70-74302	. VALVE ASS'Y, SUCTION AND SAFETY	1	B10001-	B20001-
16	709-70-71112	. . SLEEVE	1	B10001-	B20001-
17	☆	. . SLEEVE	1	B10001-	B20001-
18	☆	. . POPPET	1	B10001-	B20001-
19	☆	. . SEAL	1	B10001-	B20001-
20	☆	. . PISTON	1	B10001-	B20001-
21	☆	. . SPRING	1	B10001-	B20001-
22	☆	. . PLUG	1	B10001-	B20001-
23	☆	. . SEAL	1	B10001-	B20001-
24	☆	. . SPRING	1	B10001-	B20001-
25	07002-02434	. . O-RING	1	B10001-	B20001-
26	☆	. . POPPET	1	B10001-	B20001-
27	☆	. . SPRING	1	B10001-	B20001-
28	☆	. . SCREW	1	B10001-	B20001-
29	☆	. . O-RING	1	B10001-	B20001-
30	☆	. . NUT	1	B10001-	B20001-
31	709-25-11390	. . O-RING	1	B10001-	B20001-

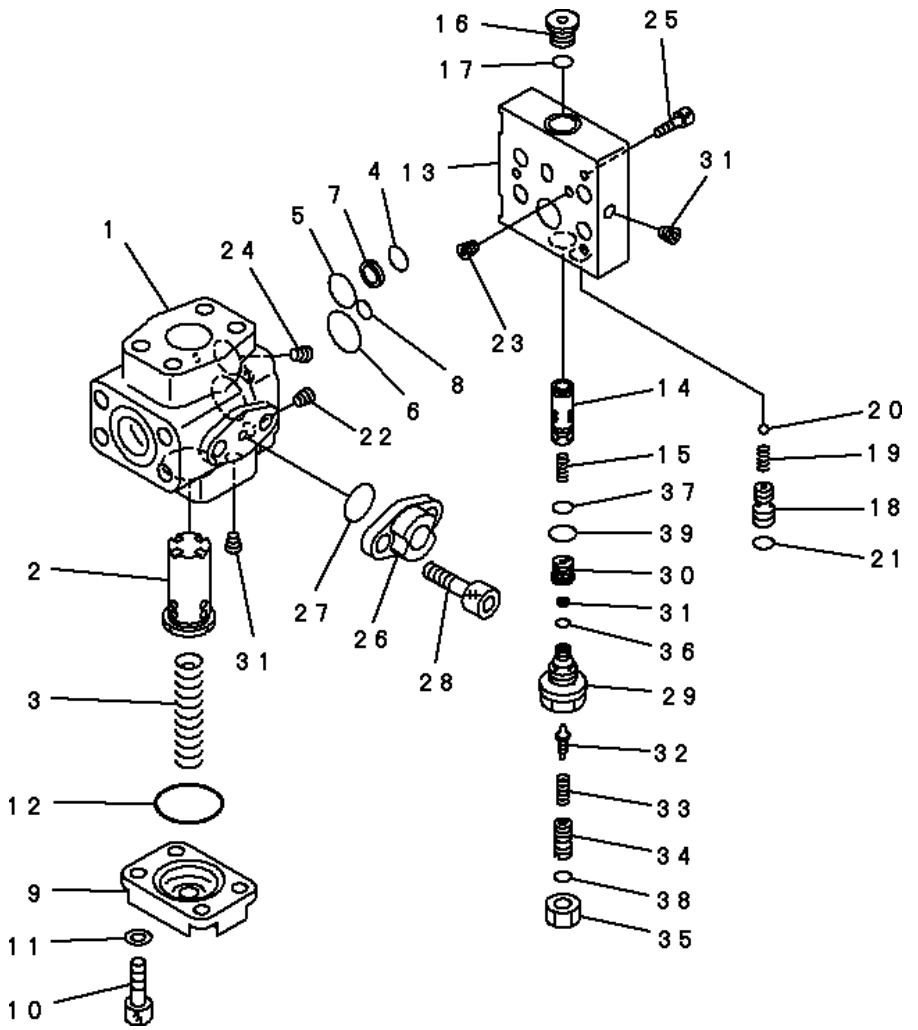

INDEX	PART NO.	DESCRIPTION	Q'TY	SERIAL NO. PC200-6B	SERIAL NO. PC200LC-6B
	702-21-09147	VALVE ASS'Y	1	B10001-	B20001-
1	☆	. BLOCK	1	B10001-	B20001-
2	702-21-55310	. VALVE	1	B10001-	B20001-
3	702-21-55460	. SPRING	1	B10001-	B20001-
4	702-21-55420	. O-RING	1	B10001-	B20001-
5	702-21-55520	. O-RING	1	B10001-	B20001-
6	702-21-55440	. O-RING	1	B10001-	B20001-
7	702-21-53120	. FILTER	1	B10001-	B20001-
8	07000-11009	. O-RING	1	B10001-	B20001-
9	702-21-55410	. PLATE	1	B10001-	B20001-
10	01252-60820	. BOLT	4	B10001-	B20001-
11	01643-50823	. WASHER	4	B10001-	B20001-
12	702-21-55530	. O-RING	1	B10001-	B20001-
13	☆	. BLOCK	1	B10001-	B20001-
14	☆	. SPOOL	1	B10001-	B20001-
15	702-21-55640	. SPRING	1	B10001-	B20001-
16	702-21-55620	. PLUG	1	B10001-	B20001-
17	07002-11423	. O-RING	1	B10001-	B20001-
18	702-21-55710	. SEAT	1	B10001-	B20001-
19	702-21-55720	. SPRING	1	B10001-	B20001-
20	04260-00793	. BALL	1	B10001-	B20001-
21	07000-11009	. O-RING	1	B10001-	B20001-
22	☆	. PLUG	3	B10001-	B20001-
23	702-21-55670	. ORIFICE	1	B10001-	B20001-
24	702-21-55470	. ORIFICE	1	B10001-	B20001-
25	01252-60520	. BOLT	3	B10001-	B20001-
26	702-21-55480	. FRANGE	1	B10001-	B20001-
27	07000-12020	. O-RING	1	B10001-	B20001-
28	01252-61025	. BOLT	2	B10001-	B20001-
	702-21-55100	. VALVE ASS'Y	1	B10001-	B20001-
29	☆	. . SLEEVE	1	B10001-	B20001-
30	☆	. . COLLAR	1	B10001-	B20001-
31	☆	. . FILTER	1	B10001-	B20001-
32	☆	. . POPPET	1	B10001-	B20001-
33	☆	. . SPRING	1	B10001-	B20001-
34	☆	. . SCREW	1	B10001-	B20001-
35	☆	. . NUT	1	B10001-	B20001-
36	☆	. . O-RING	1	B10001-	B20001-
37	702-16-53920	. . O-RING	1	B10001-	B20001-
38	☆	. . O-RING	1	B10001-	B20001-
39	07002-11623	. . O-RING	1	B10001-	B20001-

FIG. Y1977-01A0 HEATER ASS'Y (2000 KCAL) (FOR CAR HEATER)

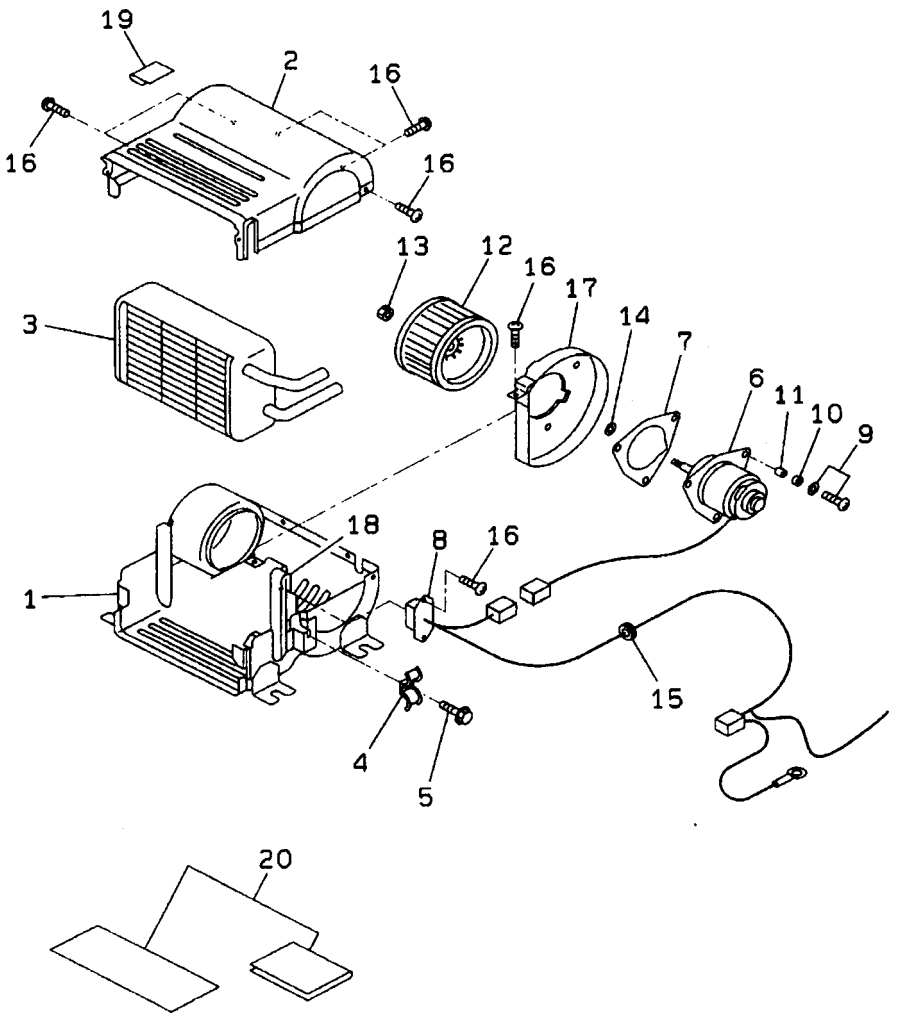

FIG. NO: Y1977-01A0

INDEX	PART NO.	DESCRIPTION	Q'TY	SERIAL NO. PC200-6B	SERIAL NO. PC200LC-6B
	20Y-977-2120	HEATER ASS'Y	1	B10001-	B20001-
1	ND116460-5540	. CASE, LOWER	1	B10001-	B20001-
2	ND116460-5550	. CASE, UPPER	1	B10001-	B20001-
3	ND116410-2841	. RADIATOR	1	B10001-	B20001-
4	ND146681-7711	. CLAMP	1	B10001-	B20001-
5	ND91570-06141	. BOLT	1	B10001-	B20001-
6	ND062500-3731	. MOTOR	1	B10001-	B20001-
7	ND062852-0030	. CUSHION, RUBBER	1	B10001-	B20001-
8	ND146810-3230	. RESISTOR, BLOWER	1	B10001-	B20001-
9	ND949007-0240	. SCREW AND WASHER	3	B10001-	B20001-
10	ND949194-0040	. PLATE	3	B10001-	B20001-
11	ND949197-0180	. RUBBER, RUBBER	3	B10001-	B20001-
12	ND116221-0461	. FAN, BLOWER	1	B10001-	B20001-
13	ND949056-2230	. NUT	1	B10001-	B20001-
14	ND949011-7650	. WASHER	1	B10001-	B20001-
15	ND949321-2631	. GROMMET	1	B10001-	B20001-
16	ND949001-1821	. SCREW	7	B10001-	B20001-
17	ND146640-3461	. PLATE	1	B10001-	B20001-
18	ND146659-1350	. PACKING	1	B10001-	B20001-
19	ND116253-0440	. GUIDE	1	B10001-	B20001-
20	ND017300-0790	. ACCESSORY ASS'Y	1	B10001-	B20001-

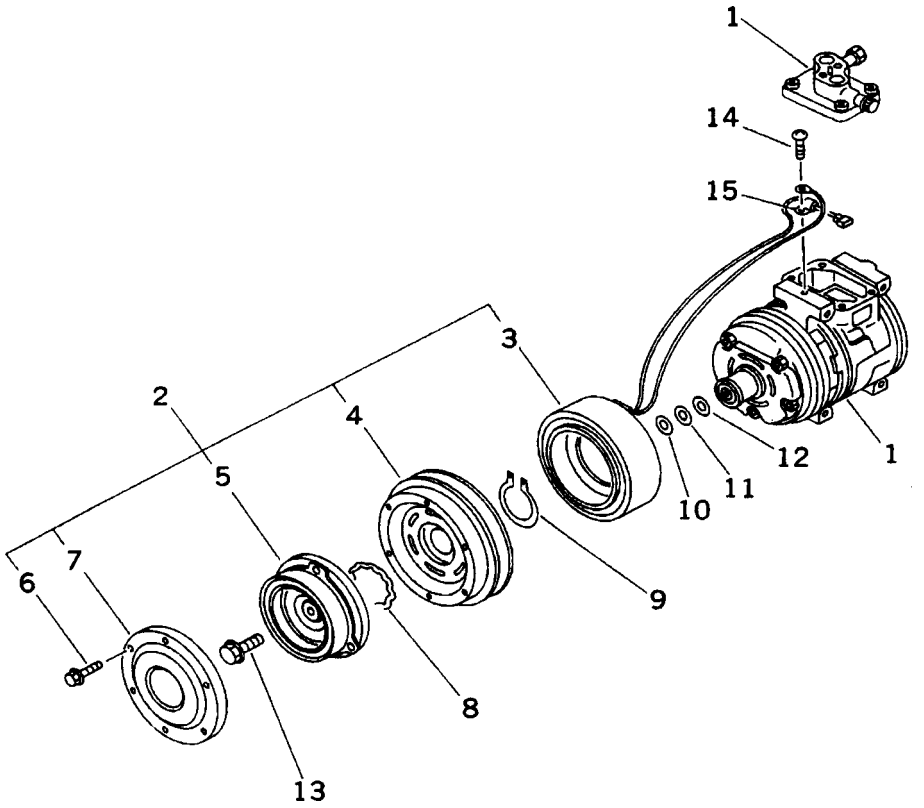

INDEX	PART NO.	DESCRIPTION	Q'TY	SERIAL NO. PC200-6B	SERIAL NO. PC200LC-6B
	20Y-979-3111	AIR COMPRESSOR ASS'Y	1	B10001-	B20001-
1	ND447200-0243	. COMPRESSOR ASS'Y	1	B10001-	B20001-
2	ND447300-1440	. CLUTCH ASS'Y	1	B10001-	B20001-
3	ND047310-7240	. . STATOR	1	B10001-	B20001-
4	ND047350-7130	. . ROTOR	1	B10001-	B20001-
5	ND447410-0010	. . HUB	1	B10001-	B20001-
	ND447410-0020	. . HUB	1	B10001-	B20001-
6	ND949047-2950	. . BOLT	6	B10001-	B20001-
7	ND047372-0660	. . COVER	1	B10001-	B20001-
8	ND949070-1360	. RING, SNAP	1	B10001-	B20001-
9	ND949070-0640	. RING, SNAP	1	B10001-	B20001-
10	ND949013-7480	. WASHER	1	B10001-	B20001-
11	ND949013-7500	. WASHER	1	B10001-	B20001-
12	ND949013-7510	. WASHER	1	B10001-	B20001-
13	ND949048-0430	. BOLT	1	B10001-	B20001-
14	ND91310-05081	. SCREW	1	B10001-	B20001-
15	ND146691-4470	. CLAMP	1	B10001-	B20001-

FIG. Y1979-11A0C UNIT ASS'Y (COOLING) (FOR AIR CONDITIONER)

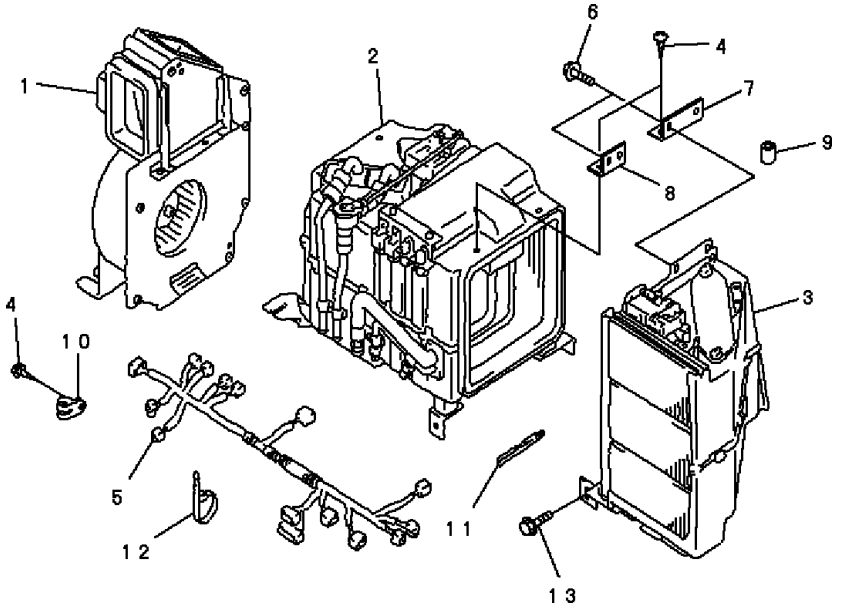

FIG. NO: Y1979-11A0C

INDEX	PART NO.	DESCRIPTION	Q'TY	SERIAL NO. PC200-6B	SERIAL NO. PC200LC-6B
	20Y-979-3711	UNIT ASS'Y	1	B10001-	B20001-
1	(ND116300-4551)	. BLOWER ASS'Y	1	B10001-	B20001-
2	(ND445800-9054)	. CORE UNIT ASS'Y	1	B10001-	B20001-
3	(ND146340-0471)	. FILTER BOX ASS'Y	1	B10001-	B20001-
4	ND90930-06141	. SCREW	5	B10001-	B20001-
5	ND246460-1511	. WIRING HARNESS	1	B10001-	B20001-
6	417-963-3180	. BOLT	5	B10001-	B20001-
7	ND017660-3970	. BRACKET	1	B10001-	B20001-
8	ND017660-3980	. BRACKET	1	B10001-	B20001-
9	195-979-4160	. BUSHING	1	B10001-	B20001-
10	ND146681-9131	. CLAMP	1	B10001-	B20001-
11	ND146691-2790	. CLAMP	1	B10001-	B20001-
12	ND040031-0110	. BAND	6	B10001-	B20001-
13	ND949047-1270	. BOLT	1	B10001-	B20001-

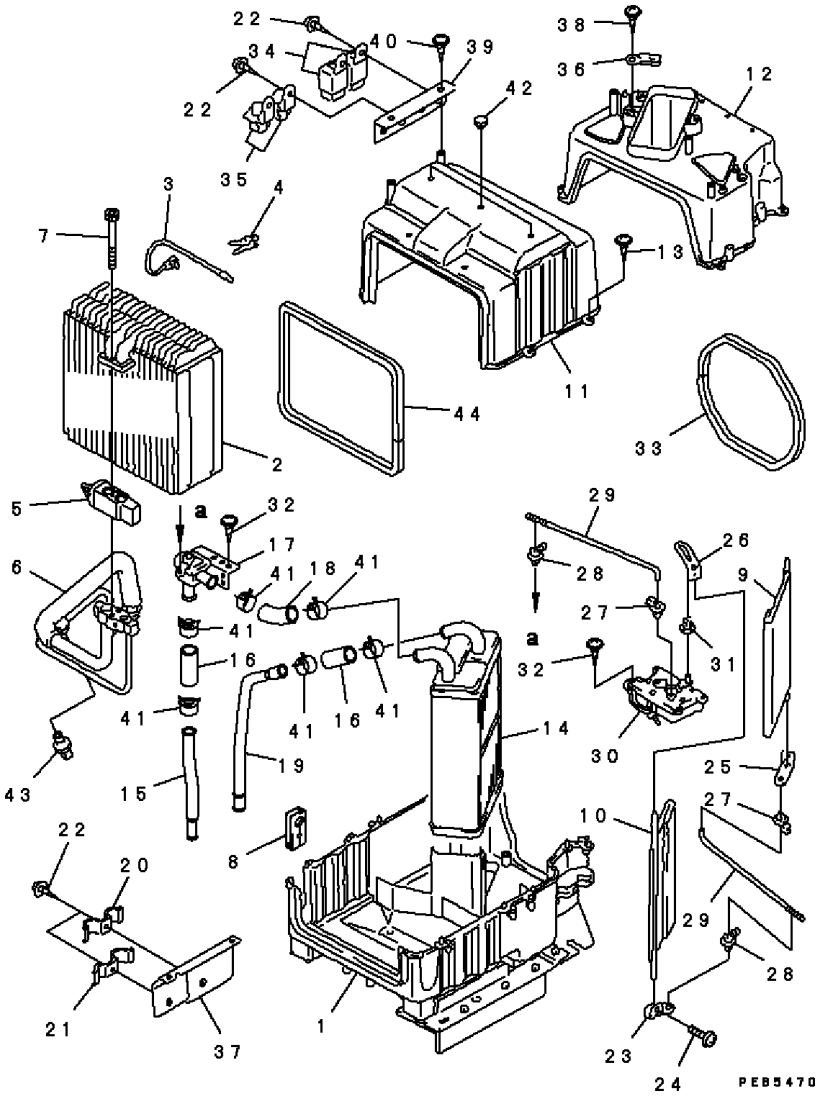

INDEX	PART NO.	DESCRIPTION	Q'TY	SERIAL NO. PC200-6B	SERIAL NO. PC200LC-6B
	ND445800-9054	CORE UNIT ASS'Y	1	B10001-	B20001-
1	ND245420-4093	. CASE	1	B10001-	B20001-
2	ND447600-0651	. EVAPORATOR	1	B10001-	B20001-
	ND949142-0030	. . O-RING	2	B10001-	B20001-
3	ND077500-2580	. THERMISTOR	1	B10001-	B20001-
4	ND246690-2840	. CLAMP	1	B10001-	B20001-
5	ND447500-1031	. VALVE	1	B10001-	B20001-
6	ND446870-1990	. TUBE	1	B10001-	B20001-
	ND949142-0030	. . O-RING	1	B10001-	B20001-
	ND949142-0010	. . O-RING	1	B10001-	B20001-
7	ND949046-2150	. BOLT	2	B10001-	B20001-
8	ND146984-5680	. GROMMET	1	B10001-	B20001-
9	ND116730-0490	. DOOR ASS'Y	1	B10001-	B20001-
10	ND116730-0500	. DOOR ASS'Y	1	B10001-	B20001-
11	ND245420-4020	. CASE ASS'Y	1	B10001-	B20001-
12	ND116452-6060	. CASE	1	B10001-	B20001-
13	ND949001-1730	. SCREW	11	B10001-	B20001-
14	ND116420-2781	. CORE ASS'Y	1	B10001-	B20001-
15	ND116427-5920	. PIPE	1	B10001-	B20001-
16	195-979-4841	. HOSE	2	B10001-	B20001-
17	ND113600-9301	. VALVE ASS'Y	1	B10001-	B20001-
18	ND017265-5480	. HOSE	1	B10001-	B20001-
19	ND116427-5930	. PIPE	1	B10001-	B20001-
20	ND246780-4220	. CLAMP	1	B10001-	B20001-
21	ND246780-4000	. CLAMP	1	B10001-	B20001-
22	ND949001-2690	. SCREW	6	B10001-	B20001-
23	ND017732-3041	. LEVER	1	B10001-	B20001-
24	ND91370-03081	. SCREW	3	B10001-	B20001-
25	ND017732-3060	. LEVER	1	B10001-	B20001-
26	ND017732-4600	. LEVER	1	B10001-	B20001-
27	17M-911-3330	. BUSHING	2	B10001-	B20001-
28	17M-911-3290	. CLAMP	2	B10001-	B20001-
29	ND116662-3780	. SHAFT	2	B10001-	B20001-
30	ND063700-6390	. SERVO MOTOR ASS'Y	1	B10001-	B20001-
31	195-Z11-6280	. BUSHING	1	B10001-	B20001-
32	ND90930-05201	. SCREW	4	B10001-	B20001-
33	ND146668-4880	. PACKING	1	B10001-	B20001-
34	ND056700-8170	. RELAY ASS'Y	2	B10001-	B20001-
35	20Y-979-2680	. RELAY	2	B10001-	B20001-
	ND056700-6630	. . RELAY	1	B10001-	B20001-
36	ND017660-3490	. BRACKET	1	B10001-	B20001-
37	ND146525-3990	. BRACKET	1	B10001-	B20001-
38	ND90930-05121	. SCREW	1	B10001-	B20001-
39	ND146525-4000	. BRACKET	1	B10001-	B20001-
40	ND90930-06141	. SCREW	2	B10001-	B20001-
41	ND949351-0720	. CLAMP	6	B10001-	B20001-
42	ND246690-5150	. CLAMP	3	B10001-	B20001-
43	ND443440-0030	. SWITCH	1	B10001-	B20001-
	ND949142-0160	. . O-RING	1	B10001-	B20001-
	ND949142-0040	. . O-RING	1	B10001-	B20001-
44	ND146668-2030	. PACKING	1	B10001-	B20001-

FIG. Y1979-31A0C BLOWER ASS'Y (FOR AIR CONDITIONER)

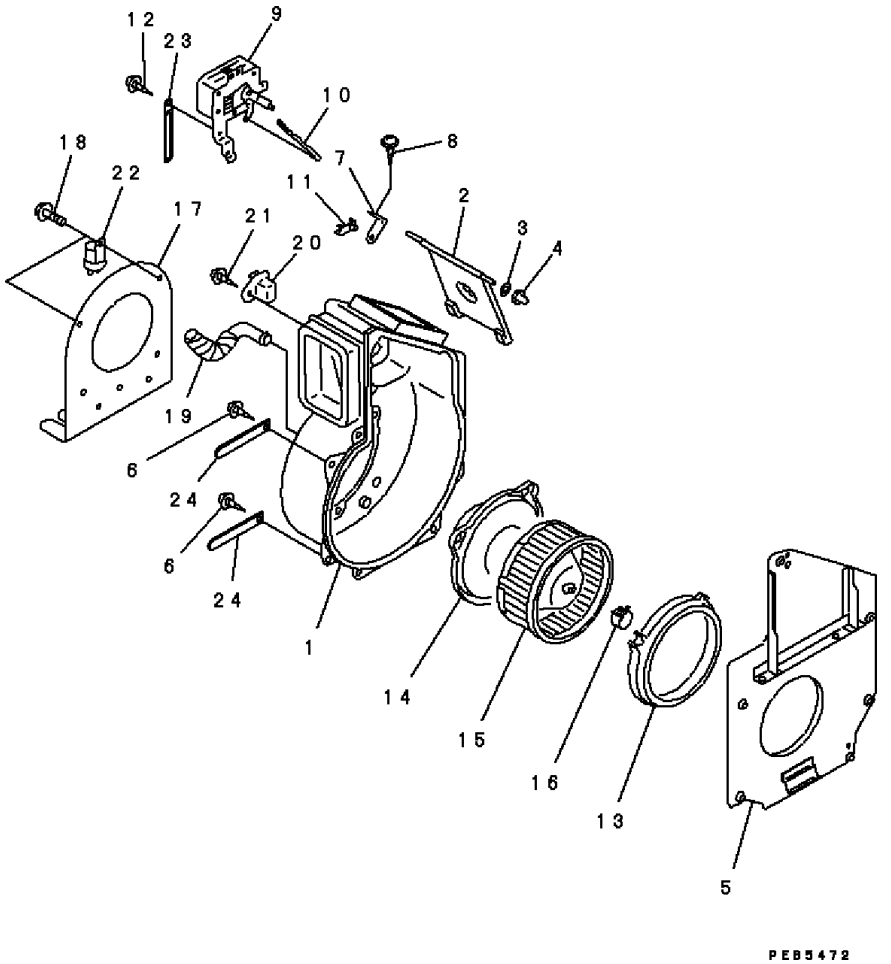

FIG. NO: Y1979-31A0C

INDEX	PART NO.	DESCRIPTION	Q'TY	SERIAL NO. PC200-6B	SERIAL NO. PC200LC-6B
	ND116300-4551	BLOWER ASS'Y	1	B10001-	B20001-
1	ND116250-4061	. CASE	1	B10001-	B20001-
2	ND116730-0600	. DOOR ASS'Y	1	B10001-	B20001-
3	ND949013-3690	. WASHER	1	B10001-	B20001-
4	ND016657-0311	. INSERT	1	B10001-	B20001-
5	ND116290-0780	. FLANGE	1	B10001-	B20001-
6	ND949001-2690	. SCREW	6	B10001-	B20001-
7	ND017732-3721	. LEVER	1	B10001-	B20001-
8	ND91370-03081	. SCREW	1	B10001-	B20001-
9	ND063700-6270	. MOTOR	1	B10001-	B20001-
10	ND116662-1880	. SHAFT	1	B10001-	B20001-
11	17M-911-3290	. CLAMP	1	B10001-	B20001-
12	ND90930-05161	. SCREW	3	B10001-	B20001-
13	ND146622-6880	. PACKING	1	B10001-	B20001-
14	ND116340-3320	. MOTOR ASS'Y	1	B10001-	B20001-
15	ND116221-0960	. . FAN	1	B10001-	B20001-
16	ND017231-2370	. . CLAMP	1	B10001-	B20001-
17	ND246611-9990	. BRACKET	1	B10001-	B20001-
18	ND949047-2370	. BOLT	3	B10001-	B20001-
19	ND146651-1850	. PIPE	1	B10001-	B20001-
20	ND246810-1250	. RESISTOR	1	B10001-	B20001-
21	ND90930-04161	. SCREW	1	B10001-	B20001-
22	ND058700-2801	. RELAY	1	B10001-	B20001-
23	ND146691-2790	. CLAMP	2	B10001-	B20001-
24	ND146690-0640	. CLAMP	2	B10001-	B20001-

FIG. Y1979-41A0C FILTER BOX ASS'Y (FOR AIR CONDITIONER)

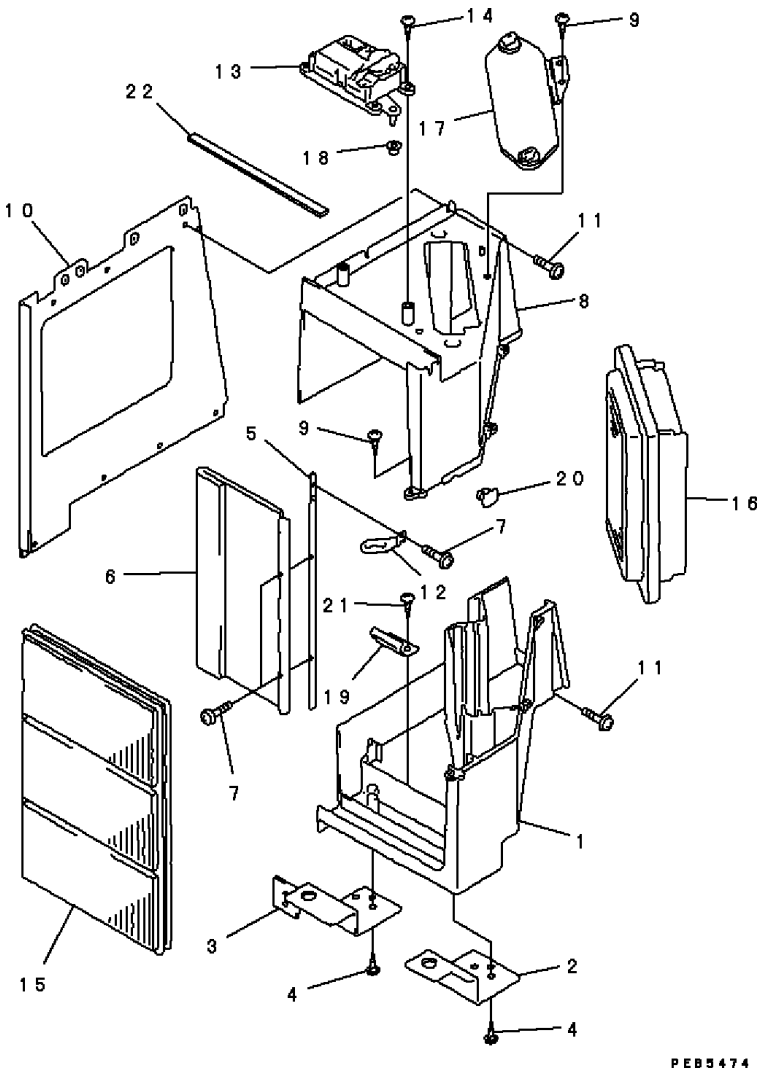

FIG. NO: Y1979-41A0C

INDEX	PART NO.	DESCRIPTION	Q'TY	SERIAL NO. PC200-6B	SERIAL NO. PC200LC-6B
	ND146340-0471	FILTER BOX ASS'Y	1	B10001-	B20001-
1	ND017321-3090	. CASE	1	B10001-	B20001-
2	ND146525-5231	. BRACKET	1	B10001-	B20001-
3	ND146525-5221	. BRACKET	1	B10001-	B20001-
4	ND90930-06141	. SCREW	4	B10001-	B20001-
5	ND116662-4280	. SHAFT	1	B10001-	B20001-
6	ND116650-7130	. DOOR ASS'Y	1	B10001-	B20001-
7	ND91310-03081	. SCREW	3	B10001-	B20001-
8	ND017321-3080	. CASE	1	B10001-	B20001-
9	ND949001-1730	. SCREW	5	B10001-	B20001-
10	ND017321-3100	. CASE	1	B10001-	B20001-
11	ND949007-1380	. SCREW	7	B10001-	B20001-
12	ND017732-4910	. LEVER	1	B10001-	B20001-
13	ND063700-5731	. SERVO MOTOR ASS'Y	1	B10001-	B20001-
14	ND90930-05208	. SCREW	3	B10001-	B20001-
15	20Y-979-3380	. FILTER	1	B10001-	B20001-
16	569-07-61190	. ELEMENT	1	B10001-	B20001-
17	ND146370-6470	. COVER ASS'Y	1	B10001-	B20001-
18	195-Z11-6280	. BUSHING	1	B10001-	B20001-
19	ND146525-5210	. BRACKET	1	B10001-	B20001-
20	ND146625-7620	. BUSHING	1	B10001-	B20001-
21	ND90930-05101	. SCREW	1	B10001-	B20001-
22	ND14668-9080	. PACKING	1	B10001-	B20001-

FIG. Y1979-61A0 BOX ASS'Y (AIR DAMPER CASE) (FOR AIR CONDITIONER)

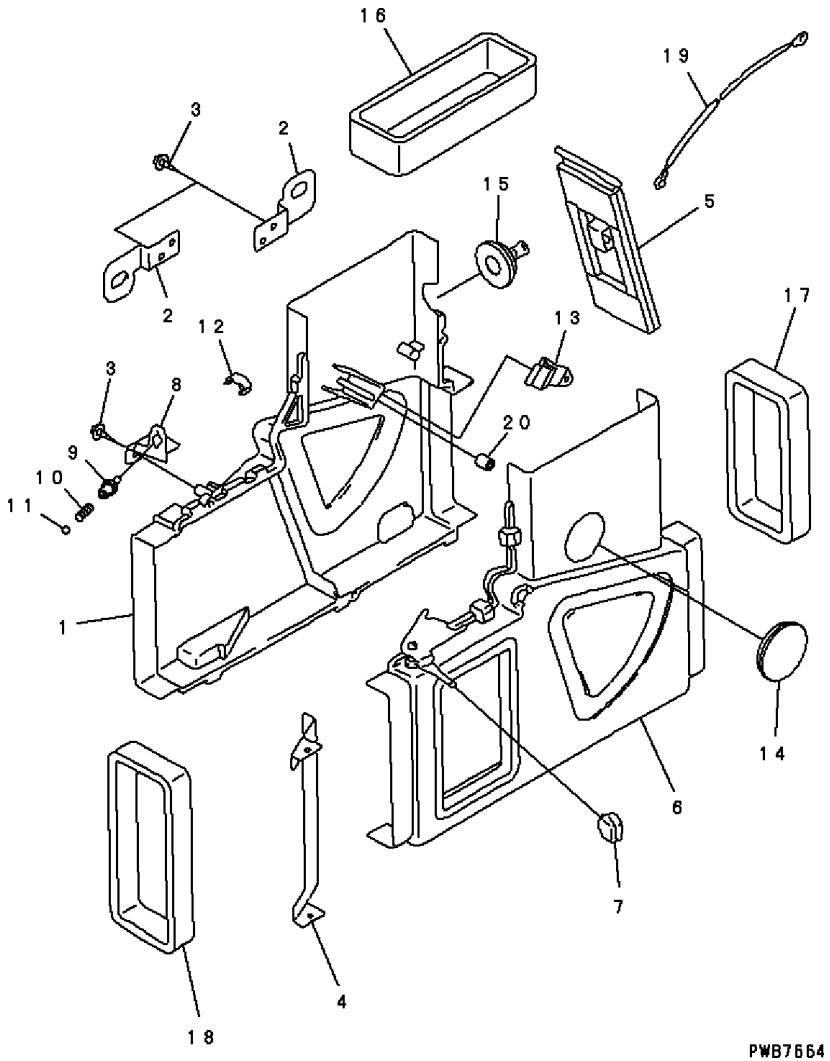

FIG. NO: Y1979-61A0

INDEX	PART NO.	DESCRIPTION	Q'TY	SERIAL NO. PC200-6B	SERIAL NO. PC200LC-6B
	20Y-979-2130	BOX ASS'Y	1	B10001-	B20001-
1	ND017321-2300	. CASE	1	B10001-	B20001-
2	ND017361-0830	. PARTS, AIR DUCT	2	B10001-	B20001-
3	ND90930-05161	. SCREW	3	B10001-	B20001-
4	ND017361-0840	. PARTS, AIR DUCT	1	B10001-	B20001-
5	ND116650-2950	. DAMPER	1	B10001-	B20001-
6	ND017320-1400	. CASE	1	B10001-	B20001-
7	ND017770-0280	. KNOB	1	B10001-	B20001-
8	ND017361-0850	. PARTS, AIR DUCT	1	B10001-	B20001-
9	ND116593-0160	. COVER	1	B10001-	B20001-
10	ND116633-1550	. SPRING	1	B10001-	B20001-
11	ND949120-0090	. BALL	1	B10001-	B20001-
12	ND116632-0171	. SPRING	7	B10001-	B20001-
13	ND017212-0870	. CLAMP	1	B10001-	B20001-
14	ND949321-1770	. GROMMET	1	B10001-	B20001-
15	ND949321-9430	. GROMMET	1	B10001-	B20001-
16	ND146648-8080	. PACKING	1	B10001-	B20001-
17	ND146648-8090	. PACKING	1	B10001-	B20001-
18	ND146648-8100	. PACKING	1	B10001-	B20001-
19	ND017740-9760	. CABLE, CONTROL	1	B10001-	B20001-
20	ND146625-0930	. BUSHING	1	B10001-	B20001-

NUMERICAL INDEX

PARTS Nº	FIG. Nº	INDEX
ND016657-0311	Y1979-31A0C	4
ND017212-0870	Y1979-61A0	13
ND017231-2370	Y1979-31A0C	16
ND017265-5480	Y1979-21A0C	18
ND017300-0790	Y1977-01A0	20
ND017320-1400	Y1979-61A0	6
ND017321-2300	Y1979-61A0	1
ND017321-3080	Y1979-41A0C	8
ND017321-3090	Y1979-41A0C	1
ND017321-3100	Y1979-41A0C	10
ND017361-0830	Y1979-61A0	2
ND017361-0840	Y1979-61A0	4
ND017361-0850	Y1979-61A0	8
ND017660-3490	Y1979-21A0C	36
ND017660-3970	Y1979-11A0C	7
ND017660-3980	Y1979-11A0C	8
ND017732-3041	Y1979-21A0C	23
ND017732-3060	Y1979-21A0C	25
ND017732-3721	Y1979-31A0C	7
ND017732-4600	Y1979-21A0C	26
ND017732-4910	Y1979-41A0C	12
ND017740-9760	Y1979-61A0	19
ND017770-0280	Y1979-61A0	7
ND028062-0130	B0900-01A0B	29
ND028062-5790	B0900-01A0B	43
ND028063-0030	B0900-01A0B	28
ND028065-0250	B0900-01A0B	20
ND028099-3270	B0900-01A0B	5
ND028099-5090	B0900-01A0B	13
ND028099-5100	B0900-01A0B	14
ND028100-5410	B0900-01A0B	1
ND028200-5250	B0900-01A0B	2
ND028300-6551	B0900-01A0B	5
ND028300-6751	B0900-01A0B	6
ND028306-0070	B0900-01A0B	27
ND028327-0171	B0900-01A0B	35
ND028371-3200	B0900-01A0B	38
ND028371-3210	B0900-01A0B	26
ND028381-0071	B0900-01A0B	10
ND028501-7711	B0900-01A0B	23
ND028510-0880	B0900-01A0B	21
ND028520-0011	B0900-01A0B	22
ND028530-1090	B0900-01A0B	40
ND028530-1100	B0900-01A0B	41
ND028901-0361	B0900-01A0B	37
ND040031-0110	Y1979-11A0C	12
ND047310-7240	Y1979-01A0	3
ND047350-7130	Y1979-01A0	4
ND047372-0660	Y1979-01A0	7
ND053404-0240	B0900-01A0B	16
ND053480-7560	B0900-01A0B	18
ND053505-0290	B0900-01A0B	17
ND053660-0443	B0900-01A0B	15
ND056700-6630	Y1979-21A0C	35
ND056700-8170	Y1979-21A0C	34
ND058700-2801	Y1979-31A0C	22
ND062500-3731	Y1977-01A0	6
ND062852-0030	Y1977-01A0	7
ND063700-5731	Y1979-41A0C	13
ND063700-6270	Y1979-31A0C	9
ND063700-6390	Y1979-21A0C	30
ND077500-2580	Y1979-21A0C	3
ND113600-9301	Y1979-21A0C	17
ND116221-0461	Y1977-01A0	12
ND116221-0960	Y1979-31A0C	15
ND116250-4061	Y1979-31A0C	1
ND116253-0440	Y1977-01A0	19
ND116290-0780	Y1979-31A0C	5
ND116300-4551	Y1979-11A0C	1
ND116300-4551	Y1979-31A0C	1
ND116340-3320	Y1979-31A0C	14
ND116410-2841	Y1977-01A0	3
ND116420-2781	Y1979-21A0C	14
ND116427-5920	Y1979-21A0C	15
ND116427-5930	Y1979-21A0C	19
ND116452-6060	Y1979-21A0C	12
ND116460-5540	Y1977-01A0	1
ND116460-5550	Y1977-01A0	2
ND116593-0160	Y1979-61A0	9
ND116632-0171	Y1979-61A0	12
ND116633-1550	Y1979-61A0	10
ND116650-2950	Y1979-61A0	5
ND116650-7130	Y1979-41A0C	6
ND116662-1880	Y1979-31A0C	10
ND116662-3780	Y1979-21A0C	29
ND116662-4280	Y1979-41A0C	5
ND116730-0490	Y1979-21A0C	9
ND116730-0500	Y1979-21A0C	10
ND116730-0600	Y1979-31A0C	2
ND128401-5621	B0900-01A0B	11
ND146340-0471	Y1979-11A0C	3
ND146340-0471	Y1979-41A0C	1
ND146370-6470	Y1979-41A0C	17
ND146525-3990	Y1979-21A0C	37
ND146525-4000	Y1979-21A0C	39
ND146525-5210	Y1979-41A0C	19
ND146525-5221	Y1979-41A0C	3
ND146525-5231	Y1979-41A0C	2
ND146622-6880	Y1979-31A0C	13
ND146625-0930	Y1979-61A0	20
ND146625-7620	Y1979-41A0C	20
ND146640-3461	Y1977-01A0	17
ND146648-8080	Y1979-61A0	16
ND146648-8090	Y1979-61A0	17
ND146648-8100	Y1979-61A0	18
ND146651-1850	Y1979-31A0C	19
ND146659-1350	Y1977-01A0	18
ND146668-2030	Y1979-21A0C	44
ND146668-4880	Y1979-21A0C	33
ND14668-9080	Y1979-41A0C	22
ND146681-7711	Y1977-01A0	4
ND146681-9131	Y1979-11A0C	10
ND146690-0640	Y1979-31A0C	24
ND146691-2790	Y1979-11A0C	11
ND146691-2790	Y1979-31A0C	23
ND146691-4470	Y1979-01A0	15
ND146810-3230	Y1977-01A0	8
ND146984-5680	Y1979-21A0C	8
ND153400-2600	B0900-01A0B	12
ND245420-4020	Y1979-21A0C	11
ND245420-4093	Y1979-21A0C	1
ND246460-1511	Y1979-11A0C	5
ND246611-9990	Y1979-31A0C	17
ND246690-2840	Y1979-21A0C	4
ND246690-5150	Y1979-21A0C	42
ND246780-4000	Y1979-21A0C	21
ND246780-4220	Y1979-21A0C	20
ND246810-1250	Y1979-31A0C	20
ND443440-0030	Y1979-21A0C	43
ND445800-9054	Y1979-11A0C	2
ND445800-9054	Y1979-21A0C	1
ND446870-1990	Y1979-21A0C	6
ND447200-0243	Y1979-01A0	1
ND447300-1440	Y1979-01A0	2
ND447410-0010	Y1979-01A0	5
ND447410-0020	Y1979-01A0	6
ND447500-1031	Y1979-21A0C	5
ND447600-0651	Y1979-21A0C	2
ND90170-10061	B0900-01A0B	44
ND90200-06241	B0900-01A0B	46
ND90258-10001	B0900-01A0B	36
ND90801-10050	B0900-01A0B	31
ND90801-20470	B0900-01A0B	45
ND90930-04161	Y1979-31A0C	21
ND90930-05101	Y1979-41A0C	21
ND90930-05121	Y1979-21A0C	38
ND90930-05161	Y1979-31A0C	12
ND90930-05161	Y1979-61A0	3
ND90930-05201	Y1979-21A0C	32
ND90930-05208	Y1979-41A0C	14

PARTS Nº	FIG. Nº	INDEX
ND90930-06141	Y1979-11A0C	4
ND90930-06141	Y1979-21A0C	40
ND90930-06141	Y1979-41A0C	4
ND91310-03081	Y1979-41A0C	7
ND91310-05081	Y1979-01A0	14
ND91370-03081	Y1979-21A0C	24
ND91370-03081	Y1979-31A0C	8
ND91570-06141	Y1977-01A0	5
ND949001-1730	Y1979-21A0C	13
ND949001-1730	Y1979-41A0C	9
ND949001-1821	Y1977-01A0	16
ND949001-2690	Y1979-21A0C	22
ND949001-2690	Y1979-31A0C	6
ND949006-4720	B0900-01A0B	33
ND949007-0240	Y1977-01A0	9
ND949007-1380	Y1979-41A0C	11
ND949007-6530	B0900-01A0B	39
ND949007-6850	B0900-01A0B	42
ND949011-7650	Y1977-01A0	14
ND949013-3690	Y1979-31A0C	3
ND949013-7480	Y1979-01A0	10
ND949013-7500	Y1979-01A0	11
ND949013-7510	Y1979-01A0	12
ND949042-3680	B0900-01A0B	30
ND949042-3690	B0900-01A0B	32
ND949046-2150	Y1979-21A0C	7
ND949047-1270	Y1979-11A0C	13
ND949047-2370	Y1979-31A0C	18
ND949047-2950	Y1979-01A0	6
ND949047-4440	B0900-01A0B	19
ND949048-0430	Y1979-01A0	13
ND949056-2230	Y1977-01A0	13
ND949056-4480	B0900-01A0B	34
ND949070-0640	Y1979-01A0	9
ND949070-1360	Y1979-01A0	8
ND949100-1920	B0900-01A0B	8
ND949100-3161	B0900-01A0B	3
ND949100-3540	B0900-01A0B	4
ND949100-4500	B0900-01A0B	7
ND949100-5290	B0900-01A0B	3
ND949120-0090	Y1979-61A0	11
ND949120-0240	B0900-01A0B	24
ND949142-0010	Y1979-21A0C	6
ND949142-0030	Y1979-21A0C	2
ND949142-0030	Y1979-21A0C	6
ND949142-0040	Y1979-21A0C	43
ND949142-0160	Y1979-21A0C	43
ND949170-4040	B0900-01A0B	9
ND949170-4070	B0900-01A0B	25
ND949194-0040	Y1977-01A0	10
ND949197-0180	Y1977-01A0	11
ND949321-1770	Y1979-61A0	14
ND949321-2631	Y1977-01A0	15
ND949321-9430	Y1979-61A0	15
ND949351-0720	Y1979-21A0C	41
01010-31218	K0210-01A1D	18
01010-31675	R0300-01A0	13
01010-31675	R0300-02A0	12
01010-50616	K0350-01A0	3
01010-50835	Y1627-01A0	12
01010-51035	Y1620-41A1C	32
01010-51040	Y1620-41A1C	35
01010-51220	K0180-01A1B	22
01010-51220	K0180-01A2B	22
01010-51225	H0312-01A0	26
01010-51225	K0350-01A0	5
01010-51230	M1210-01A0C	6
01010-51450	Y1600-02A0C	11
01010-61460	Y1662-11A0G	14
01010-61460	Y1662-51A0F	14
01010-61490	Y1662-04A0G	22
01010-61490	Y1662-44A0F	22
01010-61655	R0120-01A0	17
01010-61660	P1210-01A0A	37
01010-61670	P1210-01A0A	37
01010-62050	R1200-01A0	2
01010-62050	R1200-01A0	2
01010-62055	T1510-01F1C	9
01010-62055	T1510-01F3C	9
01010-80612	B0500-01A0A	14
01010-80612	D0100-01A0	6
01010-80612	M1130-01A0D	12
01010-80612	M1140-01A0B	5
01010-80616	B0400-01A0A	18
01010-80616	M1130-01A0D	22
01010-80616	M1140-01A0B	15
01010-80620	E0200-01A0	23
01010-80620	Y1670-11A0	17
01010-80625	K0700-02A0C	18
01010-80816	K0110-01A0A	2
01010-80816	K1110-04A0	34
01010-80816	K1110-04A0	42
01010-80816	K1110-07A0A	23
01010-80816	Y1670-01A0E	17
01010-80816	A5.06	3
01010-80820	C0100-03A0A	7
01010-80820	E0200-01A0	20
01010-80820	K1110-03A0	16
01010-80820	K1110-04A0	26
01010-80820	K1110-06A0	15
01010-80820	K1110-12A0A	2
01010-80820	K1110-12A0A	24
01010-80820	K1110-13A0A	19
01010-80820	K1530-01A0B	14
01010-80825	E0410-01A0	3
01010-80830	E0200-01A0	5
01010-80830	K1110-04A0	8
01010-80850	E0200-03A0	30
01010-80855	Y1670-01A0E	15
01010-80885	K0700-01A0B	19
01010-80895	K0700-01A0B	21
01010-81016	E0200-03A0	34
01010-81016	E0200-03A0	37
01010-81016	E0200-06A0	9
01010-81016	K1110-11A0A	26
01010-81016	K1110-11A2B	26
01010-81016	K1110-21A4A	10
01010-81016	N1110-01A0	11
01010-81020	B0600-01A0A	2
01010-81020	C0100-03A0A	11
01010-81020	C0310-01A9	8
01010-81020	C0310-02A0	11
01010-81020	D0200-01A0	50
01010-81020	D0200-02A0	36
01010-81020	E0200-01A0	17
01010-81020	K0210-13A8	14
01010-81020	K0700-01A1A	2
01010-81020	K0700-01A1A	8
01010-81020	K1110-01A0E	6
01010-81020	K1110-01A0E	9
01010-81020	K1110-11A0A	23
01010-81020	K1110-11A2B	23
01010-81020	K1110-17A1A	2
01010-81020	K1110-17B0	2
01010-81020	K1110-17B0	5
01010-81020	K1110-17B0	14
01010-81020	P1210-01A0A	9
01010-81020	Y0270-01A0A	9
01010-81020	Y1620-41A0C	35
01010-81025	B0500-01A0A	7
01010-81025	C0100-01A7A	7
01010-81025	C0100-01A7A	27
01010-81025	C0100-01A7C	7
01010-81025	C0100-01A7C	27
01010-81025	C0100-01A7C	29
01010-81025	C0100-01A7C	33
01010-81025	C0100-01A7D	7
01010-81025	C0100-01A7D	31
01010-81025	C0100-01A7E	7
01010-81025	C0100-01A7E	31

PARTS Nº	FIG. Nº	INDEX
01010-81025	C0100-01A7E	34
01010-81025	C0100-01A7E	37
01010-81025	C0100-02A0A	7
01010-81025	C0310-01A3	2
01010-81025	C0310-01A6	5
01010-81025	C0310-02A0	2
01010-81025	C0310-02A0	5
01010-81025	C0310-02A0	8
01010-81025	D0200-02A0	42
01010-81025	E0200-02A0	19
01010-81025	E0200-04A0	5
01010-81025	E0200-05A0	2
01010-81025	E0200-05A0	6
01010-81025	H1270-01A0	8
01010-81025	H1270-03A0	8
01010-81025	H1310-01A0	9
01010-81025	K0210-15A2A	2
01010-81025	K0700-01A0B	4
01010-81025	K0700-01A0B	7
01010-81025	K0700-01A0B	25
01010-81025	K0700-01A1A	21
01010-81025	K0700-03A0C	6
01010-81025	K0700-03A0C	12
01010-81025	K1110-03A0	26
01010-81025	K1110-04A0	31
01010-81025	K1110-04A0	36
01010-81025	K1110-04A0	39
01010-81025	K1110-06A0	25
01010-81025	K1110-07A0A	2
01010-81025	K1110-07A0A	13
01010-81025	K1110-07A0A	20
01010-81025	K1110-10A0	13
01010-81025	K1110-10A0	29
01010-81025	K1110-10A0	32
01010-81025	K1110-10A2	13
01010-81025	K1110-10A2	29
01010-81025	M1130-01A0D	36
01010-81025	M1210-01A0C	21
01010-81025	M1210-01A0C	24
01010-81025	R0300-01A0	10
01010-81025	R0300-02A0	11
01010-81025	T1200-05A7	13
01010-81025	T1200-05B9	13
01010-81025	T1200-05C1	13
01010-81030	B0300-01A1B	8
01010-81030	D0200-01A0	5
01010-81030	D0200-01A0	11
01010-81030	D0200-02A0	5
01010-81030	H0330-02A0	6
01010-81030	H0330-02A1	6

PARTS Nº	FIG. Nº	INDEX
01010-81030	K1110-07A0A	13
01010-81030	K1110-10A0	2
01010-81030	K1110-10A2	2
01010-81030	K1530-01A0B	12
01010-81035	B0300-01A1B	2
01010-81035	B0400-01A0A	8
01010-81035	K0700-01A0B	14
01010-81035	K1120-01A0D	2
01010-81035	K1120-01A0D	5
01010-81035	Y1620-01A0C	35
01010-81035	Y1620-11A0C	40
01010-81035	Y1620-41A0C	32
01010-81040	B0300-01A1B	4
01010-81040	B0300-01A1B	11
01010-81040	B0400-01A0A	5
01010-81040	H0210-01A0	8
01010-81040	H0330-01A0	3
01010-81040	H1240-01A0	2
01010-81040	H1270-01A0	8A
01010-81040	H1270-03A0	8A
01010-81040	H1270-08A0	16
01010-81040	K1530-01A0B	13
01010-81040	Y1662-11A0G	17
01010-81040	Y1662-51A0F	17
01010-81045	K0160-01A0B	2
01010-81045	K1110-11A0A	30
01010-81045	K1110-11A0A	39
01010-81045	K1110-11A2B	30
01010-81045	K1110-11A2B	39
01010-81045	N1210-01A1A	8
01010-81045	T1200-05A7	13A
01010-81045	T1200-05B9	13A
01010-81045	T1200-05C1	13A
01010-81045	Y0260-01A0C	5
01010-81065	K1540-01A1C	2
01010-81070	H0330-01A0	11
01010-81080	H0312-01A0	28
01010-81080	N1220-01A0D	13
01010-81080	Y1620-11A0C	35
01010-81095	H1270-08A0	7
01010-81095	H1831-01A0	14
01010-81220	E0200-06A0	7
01010-81220	M1510-01A2B	7
01010-81220	T1110-04A0B	7
01010-81220	T1110-04A0B	10
01010-81220	T1110-10A0B	3A
01010-81225	B0500-01A0A	11
01010-81225	C0100-01A7A	16
01010-81225	C0100-01A7C	16
01010-81225	C0100-01A7D	16

PARTS Nº	FIG. Nº	INDEX
01010-81225	C0100-01A7D	20
01010-81225	C0100-01A7E	16
01010-81225	C0100-01A7E	20
01010-81225	D0200-01A0	14
01010-81225	D0200-01A0	25
01010-81225	D0200-01A0	44
01010-81225	D0200-02A0	8
01010-81225	D0200-02A0	18
01010-81225	D0200-02A0	31
01010-81225	E0200-01A0	8
01010-81225	E0200-01A0	14
01010-81225	E0200-02A0	7
01010-81225	E0200-02A0	10
01010-81225	E0200-02A0	13
01010-81225	E0200-02A0	28
01010-81225	E0200-02A0	31
01010-81225	E0200-02A0	34
01010-81225	E0200-02A0	37
01010-81225	E0200-02A0	41
01010-81225	E0200-02A0	44
01010-81225	E0200-02A0	47
01010-81225	E0200-03A0	3
01010-81225	E0200-03A0	6
01010-81225	E0200-03A0	9
01010-81225	E0200-03A0	12
01010-81225	E0200-03A0	16
01010-81225	E0200-03A0	23
01010-81225	E0200-03A0	40
01010-81225	E0200-04A0	8
01010-81225	E0200-04A0	11
01010-81225	E0200-05A0	8
01010-81225	E0200-05A0	11
01010-81225	H0110-01A0	33
01010-81225	H0120-03A0	34
01010-81225	H0330-01A0	8
01010-81225	H0340-01A0	5
01010-81225	H1810-01A0D	4
01010-81225	H1831-02A0	20
01010-81225	H1831-02A0	26
01010-81225	K0120-01A0A	2
01010-81225	K0180-01A2B	22
01010-81225	K0700-02A0C	13
01010-81225	K1110-10A0	29
01010-81225	K1110-10A0	32
01010-81225	K1110-10A2	29
01010-81225	K1520-01A0D	9
01010-81225	K1520-01A0D	13
01010-81225	K1520-01A0D	11B
01010-81225	K1520-01A2	9
01010-81225	K1520-01A2	11B

PARTS Nº	FIG. Nº	INDEX
01010-81225	K1540-01A1C	20
01010-81225	M1810-02A0C	20
01010-81225	M1810-02A0C	23
01010-81225	R0120-01A0	5
01010-81225	R0120-01A0	15
01010-81225	T1110-05A1B	15
01010-81225	T1200-05A7	23
01010-81225	T1200-05B9	23
01010-81225	T1200-05C1	23
01010-81230	B0400-01A0A	2
01010-81230	E0200-03A0	19
01010-81230	E0200-06A0	5
01010-81230	H0110-01A0	22
01010-81230	H0120-03A0	7
01010-81230	H0330-02A0	16
01010-81230	H0330-02A1	16
01010-81230	H1240-01A0	4
01010-81230	H1270-01A8A	5
01010-81230	H1270-07A0	5
01010-81230	H1270-07A0	22
01010-81230	H1831-02A0	23
01010-81230	H1840-02A1A	7
01010-81230	J1110-01A0E	4
01010-81230	K0700-01A1A	14
01010-81230	K0700-01A1A	24
01010-81230	K0700-02A0C	8
01010-81230	K0700-03A0C	2
01010-81230	K1520-01A0D	2
01010-81230	K1520-01A0D	6
01010-81230	K1520-01A2	2
01010-81230	K1520-01A2	6
01010-81230	M1110-01A0B	18
01010-81230	M1110-02A0	18
01010-81230	M1120-01A0C	3
01010-81230	M1120-01A0C	6
01010-81230	M1120-01A0C	8
01010-81230	M1130-01A0D	19
01010-81230	M1130-01A0D	25
01010-81230	M1130-01A0D	33
01010-81230	M1130-02A0B	1
01010-81230	M1130-02A0B	4
01010-81230	M1130-02A0B	6
01010-81230	M1140-01A0B	12
01010-81230	M1140-01A0B	18
01010-81230	M1140-01A0B	25
01010-81230	M1150-01A0C	12
01010-81230	M1150-01A0C	15
01010-81230	M1150-01A0C	17
01010-81230	M1150-01A0C	19
01010-81230	M1150-01A0C	22

PARTS Nº	FIG. Nº	INDEX
01010-81230	M1150-01A0C	25
01010-81230	M1150-01A0C	27
01010-81230	M1150-01A0C	32
01010-81230	M1150-01A0C	34
01010-81230	M1150-01A0C	38
01010-81230	M1150-01A0C	41
01010-81230	M1160-01A0C	3
01010-81230	M1160-01A0C	6
01010-81230	M1160-01A0C	8
01010-81230	M1210-01A0C	4
01010-81230	M1210-01A0C	28
01010-81230	M1210-01A0C	30
01010-81230	M1220-01A0E	10
01010-81230	M1220-01A0E	13
01010-81230	M1810-01A0E	12
01010-81230	M1810-01A0E	14
01010-81230	M1810-02A0C	1
01010-81230	M1810-02A0C	3
01010-81230	M1810-02A0C	6
01010-81230	M1810-02A0C	8
01010-81230	M1810-02A0C	14
01010-81230	M1810-02A0C	16
01010-81230	M1810-02A0C	27
01010-81230	N1220-01A0D	16
01010-81230	P1210-01A0A	40
01010-81230	T1110-02A0	10
01010-81230	T1110-03A0B	15
01010-81230	T1110-03A0B	35
01010-81230	T1110-03A0B	44
01010-81230	T1110-05A1B	2
01010-81230	T1110-05A1B	7
01010-81230	T1110-10A0B	4
01010-81230	T1200-01A0	12
01010-81230	T1200-01A0	16
01010-81230	T1200-01A0C	12
01010-81230	T1200-01A0C	16
01010-81230	T1200-01A1	12
01010-81230	T1200-01A1	16
01010-81230	T1200-01A1C	12
01010-81230	T1200-01A1C	16
01010-81230	T1200-01A2	12
01010-81230	T1200-01A2	16
01010-81230	T1200-01A3	12
01010-81230	T1200-01A3	16
01010-81230	T1200-01C5	12
01010-81230	T1200-01C5	16
01010-81230	T1200-01C7	15
01010-81230	T1200-01C7	19
01010-81230	T1200-05A7	7
01010-81230	T1200-05A7	25

PARTS Nº	FIG. Nº	INDEX
01010-81230	T1200-05A7	31
01010-81230	T1200-05B9	7
01010-81230	T1200-05B9	25
01010-81230	T1200-05B9	31
01010-81230	T1200-05C1	7
01010-81230	T1200-05C1	25
01010-81235	H0120-03A0	10
01010-81235	H0311-01A0	5
01010-81235	H1210-02A0	14
01010-81235	H1210-02A0	18
01010-81235	H1220-01A0	21
01010-81235	H1220-02A0	21
01010-81235	H1270-01A8A	2
01010-81235	H1270-06A0	4
01010-81235	H1270-06A1C	4
01010-81235	J1310-01A0E	10
01010-81235	K0210-14A1A	5
01010-81235	M1130-01A0D	5
01010-81235	M1130-01A0D	14
01010-81235	M1140-01A0B	7
01010-81235	M1310-01A0	2
01010-81235	M1810-01A0E	2
01010-81235	M1810-01A0E	5
01010-81235	N1310-01A0	19
01010-81235	T1110-02A0	4
01010-81240	H0320-01A0	5
01010-81240	H0320-01A0	7
01010-81240	H0320-01A0	11
01010-81240	H0320-01A0	15
01010-81240	H1270-07A0	9
01010-81245	E0200-01A0	12
01010-81245	E0200-02A0	16
01010-81245	E0200-02A0	23
01010-81250	E0200-02A0	4
01010-81250	H0330-03A0	3
01010-81250	H0330-03A1	8
01010-81250	K0700-01A1A	17
01010-81250	K0700-02A0C	11
01010-81250	K0700-03A0C	4A
01010-81260	D0200-01A0	43
01010-81260	D0200-02A0	30
01010-81260	H0330-03A1	21
01010-81260	H1270-07A0	23
01010-81260	H1833-01A0E	2
01010-81265	B0000-01A0A	3
01010-81265	B0000-01A0A	7
01010-81275	H0330-03A1	17
01010-81275	H1270-07A0	2
01010-81275	H1270-07A0	12
01010-81280	K0210-14A1A	1

PARTS Nº	FIG. Nº	INDEX
01010-81435	K0700-01A0B	17
01010-81635	C0100-03A0A	14
01010-81635	C0100-03A0A	15
01010-81635	D0100-01A0	11
01010-81635	H0110-01A0	46
01010-81640	H1270-07A0	28
01010-81640	J1310-01A0E	3
01010-81650	H0120-03A0	4
01010-81650	H1270-06A0	8
01010-81650	H1270-06A1C	8
01010-81655	H0120-03A0	2
01010-81655	H1270-07A0	26
01010-81660	H1270-07A0	7
01010-81670	H1270-07A0	20
01010-81670	Y1620-01A0C	15
01010-81670	Y1620-41A0C	15
01010-81670	Y1620-41A1C	15
01010-81875	Y1620-11A0C	13
01010-82060	N1210-01A1A	40
01010-82460	T1510-01D1	4
01010-D1025	K1110-10A0	7
01010-D1025	K1110-10A0	26
01010-D1025	K1110-10A2	7
01010-D1025	K1110-10A2	26
01010-D1045	K1110-10A0	22
01010-D1045	K1110-10A0	22
01010-D1045	K1110-10A0	24
01010-D1045	K1110-10A2	22
01010-D1045	K1110-10A2	22
01010-D1045	K1110-10A2	24
01011-61455	Y1662-04A0G	24
01011-61455	Y1662-44A0F	24
01011-81020	B0700-01A0A	11
01011-81250	H0330-03A1	13
01011-81450	Y0260-01A0C	30
01011-81465	N1210-01A1A	35
01016-51040	K1110-04A0	23
01016-51250	C0100-03A0A	18
01016-81295	C0100-03A0A	18
01023-10408	K0210-11A1B	10
01023-10408	K0210-11A2B	10
01023-10408	K0210-12D8	9
01023-10408	K0210-12D8	13
01023-10510	K0210-11A1B	12
01023-10510	K0210-11A1B	14
01023-10510	K0210-11A1B	28
01023-10510	K0210-11A1B	32
01023-10510	K0210-11A2B	12
01023-10510	K0210-11A2B	14
01023-10510	K0210-11A2B	28
01023-10510	K0210-11A2B	31
01023-10510	K0210-12D8	3
01023-10510	K0210-12D8	4
01023-10510	K0210-13A8	5
01023-10612	K0210-07A0B	9
01023-10616	K0210-05A0D	27
01023-10616	K0210-02A0B	12
01023-10625	K0210-10A1F	12
01023-20416	K1110-10A0	19
01023-20416	K1110-10A2	19
01023-20512	M1810-01A0E	11
01023-70416	K0210-02A0B	16
01023-70416	K0210-02A0B	18
01050-51220	E0200-03A0	26
01220-40412	H0110-01A0	44
01220-40420	K0210-06A0	18
01220-40420	K0210-06A0	24
01220-40512	K0210-09A0B	7
01220-40608	K0210-13A8	3
01220-70620	K0210-06A0	10
01224-40612	Y1670-01A0E	29
01224-40616	M1210-01A0C	27
01225-70612	K0210-02A0B	39
01235-50306	K0210-06A0	7
01240-00616	K0210-09A0B	2
01240-00816	K0210-05A0D	35
01240-00820	K0210-09A0B	23
01240-01025	K0210-07A0B	14
01252-30525	Y1670-01A0E	25
01252-30625	Y1670-21A0	15
01252-30820	Y1662-12A0G	10
01252-30820	Y1662-52A0F	10
01252-30820	Y1669-01A0A	10
01252-30830	Y1662-11A0G	13
01252-30830	Y1662-51A0F	13
01252-30845	Y1662-14A0G	1
01252-30845	Y1669-01A0A	18
01252-30865	Y1600-10A0C	7
01252-40410	K0210-11A1B	36
01252-40410	K0210-11A2B	35
01252-40612	H0110-01A0	25
01252-40620	K1740-01A0C	14
01252-40820	K0110-01A0A	3
01252-40820	K0110-01A0A	3
01252-41025	H1270-08A0	2
01252-41025	K1110-03A0	28
01252-41025	K1110-06A0	27
01252-41025	M1420-01A0	3
01252-50635	K0210-02A0B	21
01252-60520	Y1679-01A0A	25
01252-60820	Y1662-01A0G	46
01252-60820	Y1662-41A0F	46
01252-60820	Y1679-01A0A	10
01252-60825	Y1640-03A1C	23
01252-60845	Y1662-53A0F	22
01252-60860	Y1662-01A0G	47
01252-60860	Y1662-41A0F	47
01252-61025	Y1679-01A0A	28
01252-61050	Y1662-07A0G	14
01252-61050	Y1662-47A0F	14
01252-61230	Y1600-04A0C	3
01252-61230	Y1600-07A0C	3
01252-61235	Y1641-01A0A	21
01252-61445	Y1600-04A0C	11
01252-61445	Y1600-07A0C	11
01252-61445	Y1640-02A1C	2
01252-70516	H0110-01A0	39
01310-01216	Y1620-01A0C	24
01310-01216	Y1620-11A0C	22
01310-01216	Y1620-41A0C	23
01310-01216	Y1620-41A1C	23
01370-00412	K0210-13A8	11
01370-00412	K1740-01A0C	10
01370-00508	M1510-01A2B	6
01370-00512	K0210-11A1B	4
01370-00512	K0210-11A1B	6
01370-00512	K0210-11A1B	8
01370-00512	K0210-11A1B	20
01370-00512	K0210-11A2B	4
01370-00512	K0210-11A2B	6
01370-00512	K0210-11A2B	8
01370-00512	K0210-11A2B	20
01370-00512	K0210-12D8	11
01370-00512	K0700-01A1A	5
01370-00620	K0210-02A0B	44
01370-10308	K1110-03A0	2
01370-10308	K1110-06A0	2
01370-10412	K0210-07A0B	6
01370-10520	K0210-06A0	13
01370-20308	K0180-01A1B	4
01370-20308	K0180-01A1B	13
01370-20308	K0180-01A2B	4
01370-20308	K0180-01A2B	13
01434-10616	C0100-01A7A	20
01434-10616	C0100-01A7C	20
01434-10616	C0100-01A7D	24
01434-10616	C0100-01A7E	24
01435-00610	K0210-10A1F	16
01435-00610	K0210-10A1F	18
01435-00610	K0210-10A1F	20

PARTS Nº	FIG. Nº	INDEX
01435-00610	K0210-10A1F	24
01435-00630	K0210-10A1F	28
01435-00630	K0700-02A0C	20
01435-00820	K0210-10A1F	22
01435-00820	K0210-10A1F	32
01435-00880	K0210-10A1F	26
01435-00890	B0700-01A0A	6
01435-01016	K0210-10A1F	14
01435-01025	B0300-01A0A	8
01435-01025	C0200-01A0	4
01435-01025	C0200-02A0	11
01435-01025	C0200-02A0	16
01435-01030	C0200-02A0	9
01435-01040	Y1620-01A0C	31
01435-01040	Y1620-11A0C	33
01435-01040	Y1620-41A0C	28
01435-01040	Y1620-41A1C	28
01435-01055	Y1620-01A0C	30
01435-01055	Y1620-11A0C	32
01435-01055	Y1620-41A0C	27
01435-01055	Y1620-41A1C	27
01435-01235	B0300-01A0A	6
01435-20816	C0100-01A7A	24
01435-20816	C0100-01A7C	24
01435-20816	C0100-01A7D	28
01435-20816	C0100-01A7E	28
01435-20830	C0200-01A0	2
01435-21014	B0700-01A0A	5
01435-21014	B0700-01A0A	10
01435-21255	B0300-01A1B	14
01435-30610	K0210-05A0D	31
01435-30610	K0210-06A0	2
01435-30616	K0210-01A1D	10
01435-30640	K0210-05A0D	21
01435-30816	K0210-07A0B	10
01435-30816	K0210-02A0B	8
01435-30820	K0180-01A1B	25
01435-30820	K0180-01A2B	25
01435-30820	K0210-01A1D	3
01435-30820	K0210-01A1D	8
01435-30820	K0210-02A0B	25
01435-30820	K0210-02A0B	27
01435-30820	K0210-02A0B	34
01435-30820	K0210-02A0B	47
01435-30830	K0180-01A1B	24
01435-30830	K0180-01A2B	24
01435-31020	K0210-01A1D	6
01435-31025	K0210-01A1D	5
01435-31225	K0210-08A0A	16
01436-01210	C0200-02A0	13
01580-00806	H0330-02A0	12
01580-00806	H0330-02A1	12
01580-10605	K1110-04A0	19
01580-11008	C0200-02A0	19
01580-11008	K0210-01A1D	17
01580-11008	K0210-02A0B	10
01580-11008	M1130-01A0D	39
01580-11008	M1140-01A0B	24
01580-11008	R1100-01A0A	7
01580-11008	R1100-01A2A	7
01580-11210	M1110-01A0B	5
01580-11210	M1110-02A0	5
01580-11613	K0210-14A1A	3
01580-11613	K1120-01A0D	8
01580-12016	T1125-01A0	5
01580-12016	T1200-02A0C	13
01580-12016	T1200-02A0C	16
01580-12016	T1200-02A0C	19
01580-12016	T1200-02A1	13
01580-12016	T1200-02A1	16
01580-12016	T1200-02A1	19
01580-12419	T1510-01D1	5
01582-11008	B0400-01A0A	14
01582-11008	K1110-07A0A	5
01582-11008	K1110-07A0A	8
01582-11008	K1110-07A0A	16
01582-11008	Y1600-10A0C	11
01582-11411	E0200-06A0	2
01583-11408	K1530-01A0B	3
01583-11811	Y1600-09A0C	26
01583-51408	Y1600-10A0C	18
01584-00504	K0180-01A1B	8
01584-00504	K0180-01A1B	17
01584-00504	K0180-01A2B	8
01584-00504	K0180-01A2B	17
01584-00605	K0210-09A0B	5
01584-00806	K0210-05A0D	23
01584-01008	K0210-09A0B	18
01593-31008	B0400-01A0A	12
01594-01008	B0300-01A0A	3
01599-01011	H0320-01A0	18
01599-01011	H1270-01A8A	9
01599-01011	H1270-02A0	10
01599-01011	H1270-07A0	32
01599-01011	H1270-08A0	19
01599-01011	H1831-01A0	20
01599-01011	K0700-01A0B	10
01599-01011	K1110-04A0	13
01599-01011	N1220-01A0D	19
01599-01011	Y1620-01A0C	38
01599-01011	Y1620-11A0C	44
01601-00307	K0210-06A0	8
01601-20410	K0210-06A0	19
01601-20410	K0210-11A1B	37
01601-20410	K0210-11A2B	36
01601-20513	H0110-01A0	40
01601-20513	K0210-09A0B	9
01602-21030	B0400-01A0A	9
01602-21030	K0160-01A0B	3
01602-21030	Y1675-01A0	15
01640-20816	K1110-07A0A	12
01641-20405	K0210-06A0	20
01641-20508	K0210-09A0B	8
01641-20508	K0700-01A1A	6
01641-20608	B0500-01A0A	15
01641-20608	H0110-01A0	26
01641-20608	K0210-06A0	11
01641-20608	K0210-13A8	4
01641-21223	K0210-10A1F	3
01641-21626	N1310-01A0	16
01641-50608	K0210-02A0B	22
01642-20405	K0700-01A1A	30
01642-20405	K1110-17B0	10
01643-30623	B0400-01A0A	19
01643-30623	D0100-01A0	7
01643-30623	E0200-01A0	24
01643-30623	K0210-02A0B	45
01643-30623	K0350-01A0	4
01643-30623	K0700-02A0C	18A
01643-30623	M1130-01A0D	13
01643-30623	M1130-01A0D	23
01643-30623	M1140-01A0B	6
01643-30623	M1140-01A0B	16
01643-30623	M1220-01A0E	2
01643-30823	C0100-01A7A	21
01643-30823	C0100-01A7C	21
01643-30823	C0100-01A7D	25
01643-30823	C0100-01A7E	25
01643-30823	C0100-03A0A	8
01643-30823	D0200-02A0	43
01643-30823	E0200-01A0	6
01643-30823	E0200-01A0	21
01643-30823	E0200-03A0	31
01643-30823	E0410-01A0	4
01643-30823	K0110-01A0A	4
01643-30823	K0110-01A0A	4
01643-30823	K0700-01A0B	20
01643-30823	K0700-01A0B	22
01643-30823	K1110-03A0	17
01643-30823	K1110-04A0	9

PARTS Nº	FIG. Nº	INDEX
01643-30823	K1110-04A0	27
01643-30823	K1110-04A0	35
01643-30823	K1110-04A0	43
01643-30823	K1110-06A0	16
01643-30823	K1110-07A0A	24
01643-30823	K1110-12A0A	3
01643-30823	K1110-12A0A	25
01643-30823	K1110-13A0A	20
01643-30823	K1530-01A0B	15
01643-30823	Y1627-01A0	13
01643-30823	Y1670-01A0E	16
01643-30823	A5.06	4
01643-31032	B0300-01A1B	3
01643-31032	B0300-01A1B	5
01643-31032	B0300-01A1B	9
01643-31032	B0300-01A1B	12
01643-31032	B0400-01A0A	6
01643-31032	B0400-01A0A	16
01643-31032	B0500-01A0A	8
01643-31032	B0600-01A0A	3
01643-31032	B0700-01A0A	14
01643-31032	C0100-01A7A	8
01643-31032	C0100-01A7A	28
01643-31032	C0100-01A7C	8
01643-31032	C0100-01A7C	28
01643-31032	C0100-01A7C	30
01643-31032	C0100-01A7C	34
01643-31032	C0100-01A7D	8
01643-31032	C0100-01A7D	32
01643-31032	C0100-01A7E	8
01643-31032	C0100-01A7E	32
01643-31032	C0100-01A7E	35
01643-31032	C0100-01A7E	38
01643-31032	C0100-02A0A	8
01643-31032	C0100-03A0A	12
01643-31032	C0310-01A10	9
01643-31032	C0310-01A4	3
01643-31032	C0310-01A7	6
01643-31032	C0310-02A0	3
01643-31032	C0310-02A0	6
01643-31032	C0310-02A0	9
01643-31032	C0310-02A0	12
01643-31032	D0200-01A0	6
01643-31032	D0200-01A0	12
01643-31032	D0200-01A0	51
01643-31032	D0200-02A0	6
01643-31032	D0200-02A0	37
01643-31032	E0200-01A0	18
01643-31032	E0200-02A0	20
01643-31032	E0200-03A0	35

PARTS Nº	FIG. Nº	INDEX
01643-31032	E0200-03A0	38
01643-31032	E0200-04A0	6
01643-31032	E0200-05A0	3
01643-31032	E0200-05A0	7
01643-31032	E0200-06A0	10
01643-31032	H0210-01A0	9
01643-31032	H0312-01A0	29
01643-31032	H0320-01A0	19
01643-31032	H0330-01A0	4
01643-31032	H0330-01A0	12
01643-31032	H0330-02A0	7
01643-31032	H0330-02A1	7
01643-31032	H1240-01A0	3
01643-31032	H1270-01A0	9
01643-31032	H1270-01A8A	10
01643-31032	H1270-02A0	11
01643-31032	H1270-03A0	9
01643-31032	H1270-07A0	33
01643-31032	H1270-08A0	8
01643-31032	H1270-08A0	20
01643-31032	H1310-01A0	10
01643-31032	H1831-01A0	15
01643-31032	H1831-01A0	21
01643-31032	K0160-01A0B	4
01643-31032	K0180-01A2B	23
01643-31032	K0210-13A8	15
01643-31032	K0210-15A2A	3
01643-31032	K0700-01A0B	5
01643-31032	K0700-01A0B	8
01643-31032	K0700-01A0B	11
01643-31032	K0700-01A0B	15
01643-31032	K0700-01A0B	26
01643-31032	K0700-01A1A	3
01643-31032	K0700-01A1A	9
01643-31032	K0700-01A1A	22
01643-31032	K0700-03A0C	7
01643-31032	K0700-03A0C	13
01643-31032	K1110-01A0E	7
01643-31032	K1110-01A0E	10
01643-31032	K1110-03A0	27
01643-31032	K1110-04A0	14
01643-31032	K1110-04A0	24
01643-31032	K1110-04A0	32
01643-31032	K1110-04A0	37
01643-31032	K1110-04A0	40
01643-31032	K1110-06A0	26
01643-31032	K1110-07A0A	3
01643-31032	K1110-07A0A	6
01643-31032	K1110-07A0A	9
01643-31032	K1110-07A0A	14

PARTS Nº	FIG. Nº	INDEX
01643-31032	K1110-07A0A	14
01643-31032	K1110-07A0A	17
01643-31032	K1110-07A0A	21
01643-31032	K1110-10A0	3
01643-31032	K1110-10A0	14
01643-31032	K1110-10A0	30
01643-31032	K1110-10A0	33
01643-31032	K1110-10A2	3
01643-31032	K1110-10A2	14
01643-31032	K1110-10A2	30
01643-31032	K1110-11A0A	24
01643-31032	K1110-11A0A	27
01643-31032	K1110-11A0A	31
01643-31032	K1110-11A0A	40
01643-31032	K1110-11A2B	24
01643-31032	K1110-11A2B	27
01643-31032	K1110-11A2B	31
01643-31032	K1110-11A2B	40
01643-31032	K1110-17A1A	3
01643-31032	K1110-17B0	3
01643-31032	K1110-17B0	6
01643-31032	K1110-17B0	15
01643-31032	K1110-21A4A	11
01643-31032	K1120-01A0D	3
01643-31032	K1120-01A0D	6
01643-31032	K1530-01A0B	16
01643-31032	K1540-01A1C	3
01643-31032	K1540-01A1C	21
01643-31032	M1130-01A0D	37
01643-31032	M1210-01A0C	22
01643-31032	M1210-01A0C	25
01643-31032	N1110-01A0	12
01643-31032	N1210-01A1A	9
01643-31032	N1220-01A0D	20
01643-31032	R1100-01A0A	8
01643-31032	R1100-01A2A	8
01643-31032	T1200-05A7	13B
01643-31032	T1200-05B9	13B
01643-31032	T1200-05C1	13B
01643-31032	Y0260-01A0C	6
01643-31032	Y1620-01A0C	39
01643-31032	Y1620-11A0C	36
01643-31032	Y1620-11A0C	45
01643-31032	Y1620-41A0C	36
01643-31032	Y1620-41A1C	36
01643-31032	Y1662-11A0G	18
01643-31032	Y1662-51A0F	18
01643-31232	B0000-01A0A	4
01643-31232	B0000-01A0A	8
01643-31232	B0400-01A0A	3

PARTS Nº	FIG. Nº	INDEX
01643-31232	B0500-01A0A	12
01643-31232	C0100-01A7A	17
01643-31232	C0100-01A7C	17
01643-31232	C0100-01A7D	17
01643-31232	C0100-01A7D	21
01643-31232	C0100-01A7E	17
01643-31232	C0100-01A7E	21
01643-31232	C0100-03A0A	19
01643-31232	D0200-01A0	15
01643-31232	D0200-01A0	26
01643-31232	D0200-01A0	45
01643-31232	D0200-02A0	9
01643-31232	D0200-02A0	19
01643-31232	D0200-02A0	32
01643-31232	E0100-01A11	6
01643-31232	E0200-01A0	9
01643-31232	E0200-01A0	13
01643-31232	E0200-01A0	15
01643-31232	E0200-02A0	5
01643-31232	E0200-02A0	8
01643-31232	E0200-02A0	11
01643-31232	E0200-02A0	14
01643-31232	E0200-02A0	17
01643-31232	E0200-02A0	24
01643-31232	E0200-02A0	29
01643-31232	E0200-02A0	32
01643-31232	E0200-02A0	35
01643-31232	E0200-02A0	38
01643-31232	E0200-02A0	42
01643-31232	E0200-02A0	45
01643-31232	E0200-02A0	48
01643-31232	E0200-03A0	4
01643-31232	E0200-03A0	7
01643-31232	E0200-03A0	10
01643-31232	E0200-03A0	13
01643-31232	E0200-03A0	17
01643-31232	E0200-03A0	20
01643-31232	E0200-03A0	24
01643-31232	E0200-03A0	27
01643-31232	E0200-03A0	41
01643-31232	E0200-04A0	9
01643-31232	E0200-04A0	12
01643-31232	E0200-05A0	9
01643-31232	E0200-05A0	12
01643-31232	E0200-06A0	6
01643-31232	H0110-01A0	23
01643-31232	H0110-01A0	34
01643-31232	H0120-03A0	8
01643-31232	H0120-03A0	11
01643-31232	H0120-03A0	35

PARTS Nº	FIG. Nº	INDEX
01643-31232	H0311-01A0	6
01643-31232	H0312-01A0	27
01643-31232	H0320-01A0	6
01643-31232	H0320-01A0	8
01643-31232	H0320-01A0	12
01643-31232	H0320-01A0	16
01643-31232	H0330-01A0	9
01643-31232	H0330-02A0	17
01643-31232	H0330-02A1	17
01643-31232	H0330-03A0	4
01643-31232	H0330-03A1	9
01643-31232	H0330-03A1	14
01643-31232	H0330-03A1	18
01643-31232	H0330-03A1	22
01643-31232	H0340-01A0	6
01643-31232	H1210-02A0	15
01643-31232	H1240-01A0	5
01643-31232	H1270-01A8A	3
01643-31232	H1270-06A0	5
01643-31232	H1270-06A1C	5
01643-31232	H1270-07A0	3
01643-31232	H1270-07A0	10
01643-31232	H1270-07A0	13
01643-31232	H1270-07A0	24
01643-31232	H1810-01A0D	5
01643-31232	H1831-02A0	21
01643-31232	H1831-02A0	24
01643-31232	H1831-02A0	27
01643-31232	H1833-01A0E	3
01643-31232	H1840-02A1A	8
01643-31232	J1110-01A0E	5
01643-31232	J1310-01A0E	11
01643-31232	K0120-01A0A	3
01643-31232	K0180-01A1B	23
01643-31232	K0180-01A2B	23
01643-31232	K0210-14A1A	2
01643-31232	K0210-14A1A	6
01643-31232	K0350-01A0	6
01643-31232	K0700-01A1A	15
01643-31232	K0700-01A1A	18
01643-31232	K0700-01A1A	25
01643-31232	K0700-02A0C	9
01643-31232	K0700-02A0C	12
01643-31232	K0700-02A0C	14
01643-31232	K0700-03A0C	3
01643-31232	K0700-03A0C	4B
01643-31232	K1110-10A0	30
01643-31232	K1110-10A0	33
01643-31232	K1110-10A2	30
01643-31232	K1520-01A0D	3

PARTS Nº	FIG. Nº	INDEX
01643-31232	K1520-01A0D	7
01643-31232	K1520-01A0D	10
01643-31232	K1520-01A0D	14
01643-31232	K1520-01A0D	11C
01643-31232	K1520-01A2	3
01643-31232	K1520-01A2	7
01643-31232	K1520-01A2	10
01643-31232	K1520-01A2	11C
01643-31232	M1110-01A0B	6
01643-31232	M1110-01A0B	19
01643-31232	M1110-02A0	6
01643-31232	M1110-02A0	19
01643-31232	M1120-01A0C	4
01643-31232	M1120-01A0C	7
01643-31232	M1120-01A0C	9
01643-31232	M1130-01A0D	6
01643-31232	M1130-01A0D	15
01643-31232	M1130-01A0D	20
01643-31232	M1130-01A0D	26
01643-31232	M1130-01A0D	34
01643-31232	M1130-02A0B	2
01643-31232	M1130-02A0B	5
01643-31232	M1130-02A0B	7
01643-31232	M1140-01A0B	8
01643-31232	M1140-01A0B	13
01643-31232	M1140-01A0B	19
01643-31232	M1140-01A0B	26
01643-31232	M1150-01A0C	16
01643-31232	M1150-01A0C	18
01643-31232	M1150-01A0C	20
01643-31232	M1150-01A0C	23
01643-31232	M1150-01A0C	26
01643-31232	M1150-01A0C	28
01643-31232	M1150-01A0C	33
01643-31232	M1150-01A0C	39
01643-31232	M1150-01A0C	42
01643-31232	M1160-01A0C	7
01643-31232	M1160-01A0C	9
01643-31232	M1210-01A0C	7
01643-31232	M1210-01A0C	31
01643-31232	M1220-01A0E	11
01643-31232	M1310-01A0	3
01643-31232	M1510-01A2B	8
01643-31232	M1810-01A0E	3
01643-31232	M1810-01A0E	6
01643-31232	M1810-01A0E	13
01643-31232	M1810-01A0E	15
01643-31232	M1810-02A0C	2
01643-31232	M1810-02A0C	4
01643-31232	M1810-02A0C	7

PARTS Nº	FIG. Nº	INDEX
01643-31232	M1810-02A0C	9
01643-31232	M1810-02A0C	15
01643-31232	M1810-02A0C	17
01643-31232	M1810-02A0C	21
01643-31232	M1810-02A0C	24
01643-31232	M1810-02A0C	28
01643-31232	N1220-01A0D	17
01643-31232	N1310-01A0	20
01643-31232	P1210-01A0A	41
01643-31232	R0120-01A0	6
01643-31232	R0120-01A0	16
01643-31232	T1110-02A0	5
01643-31232	T1110-02A0	11
01643-31232	T1110-04A0B	8
01643-31232	T1110-04A0B	11
01643-31232	T1110-05A1B	3
01643-31232	T1110-10A0B	5
01643-31232	T1110-10A0B	3B
01643-31232	T1200-01A0	13
01643-31232	T1200-01A0	17
01643-31232	T1200-01A0C	13
01643-31232	T1200-01A0C	17
01643-31232	T1200-01A1	13
01643-31232	T1200-01A1	17
01643-31232	T1200-01A1C	13
01643-31232	T1200-01A1C	17
01643-31232	T1200-01A2	13
01643-31232	T1200-01A2	17
01643-31232	T1200-01A3	13
01643-31232	T1200-01A3	17
01643-31232	T1200-01C5	13
01643-31232	T1200-01C5	17
01643-31232	T1200-01C7	16
01643-31232	T1200-01C7	20
01643-31232	T1200-05A7	8
01643-31232	T1200-05A7	26
01643-31232	T1200-05B9	8
01643-31232	T1200-05B9	26
01643-31232	T1200-05C1	8
01643-31232	T1200-05C1	26
01643-31445	E0200-06A0	3
01643-31445	K0700-01A0B	18
01643-31445	N1210-01A1A	36
01643-31445	Y0260-01A0C	31
01643-31445	Y1662-04A0G	23
01643-31445	Y1662-11A0G	15
01643-31445	Y1662-44A0F	23
01643-31445	Y1662-51A0F	15
01643-31445	Y1600-02A0C	12
01643-31645	B0100-01A0A	10
01643-31645	B0100-01A0A	12
01643-31645	C0100-03A0A	16
01643-31645	D0100-01A0	12
01643-31645	H0110-01A0	47
01643-31645	H0120-03A0	3
01643-31645	H0120-03A0	5
01643-31645	H1270-06A0	9
01643-31645	H1270-06A1C	9
01643-31645	H1270-07A0	8
01643-31645	H1270-07A0	21
01643-31645	H1270-07A0	27
01643-31645	H1270-07A0	29
01643-31645	J1310-01A0E	4
01643-31645	K0210-14A1A	4
01643-31645	K1120-01A0D	9
01643-31645	P1210-01A0A	31
01643-31645	P1210-01A0A	38
01643-31645	R0120-01A0	18
01643-31645	R0300-01A0	14
01643-31645	R0300-02A0	13
01643-31645	Y0270-01A0A	31
01643-31845	R0200-01A0A	12
01643-31845	R0200-01A2A	12
01643-31845	R0200-01A2A	12
01643-32060	N1110-01A0	5
01643-32060	N1110-01A0	15
01643-32060	N1210-01A1A	41
01643-32060	R1200-01A0	3
01643-32060	R1200-01A0	3
01643-32060	T1510-01F1C	10
01643-32060	T1510-01F3C	10
01643-32460	T1510-01D1	6
01643-50823	Y1662-14A0G	2
01643-50823	Y1662-53A0F	23
01643-50823	Y1669-01A0A	19
01643-50823	Y1679-01A0A	11
01643-51032	H0120-03A0	15
01643-51032	H0120-03A0	18
01643-51032	H0120-03A0	27
01643-51032	H0120-05A0	6
01643-51032	H0312-01A0	6
01643-51032	H0312-01A0	15
01643-51032	H0312-01A0	23
01643-51032	H1210-01A0	5
01643-51032	H1210-01A0	8
01643-51032	H1210-01A0	11
01643-51032	H1210-01A0	14
01643-51032	H1210-02A0	4
01643-51032	H1210-02A0	7
01643-51032	H1210-02A0	12
01643-51032	H1210-03A0	5
01643-51032	H1220-01A0	4
01643-51032	H1220-01A0	9
01643-51032	H1220-01A0	13
01643-51032	H1220-01A0	18
01643-51032	H1220-02A0	5
01643-51032	H1220-02A0	10
01643-51032	H1220-02A0	13
01643-51032	H1220-02A0	18
01643-51032	H1270-02A0	7
01643-51032	H1270-02A0	14
01643-51032	H1270-02A0	17
01643-51032	H1270-04A0	6
01643-51032	H1270-04A0	9
01643-51032	H1270-04A0	12
01643-51032	H1270-06A0	16
01643-51032	H1270-06A1C	15
01643-51032	H1270-08A0	13
01643-51032	H1270-08A0	17
01643-51032	H1270-08A0	25
01643-51032	H1340-01A0	7
01643-51032	K1110-03A0	29
01643-51032	K1110-06A0	28
01643-51032	N1220-01A0D	7
01643-51032	N1220-01A0D	14
01643-51032	N1310-01A0	13
01643-51032	P1120-01A1A	3
01643-51032	T1110-03A0B	4
01643-51032	T1110-03A0B	8
01643-51032	T1110-03A0B	20
01643-51032	T1110-03A0B	25
01643-51032	T1110-03A0B	30
01643-51032	T1110-03A0B	39
01643-51032	T1110-05A1B	11
01643-51032	T1200-01A2	23
01643-51032	T1200-01A3	23
01643-51032	T1200-01C5	23
01643-51032	T1200-01C7	26
01643-51032	T1200-03A0	5
01643-51032	T1200-05A7	5
01643-51032	T1200-05A7	21
01643-51032	T1200-05A7	35
01643-51032	T1200-05B9	5
01643-51032	T1200-05B9	21
01643-51032	T1200-05B9	35
01643-51032	T1200-05C1	5
01643-51032	T1200-05C1	21
01643-51032	Y1620-01A0C	36
01643-51032	Y1620-11A0C	41
01643-51032	Y1620-41A0C	33

PARTS Nº	FIG. Nº	INDEX
01643-51032	Y1620-41A1C	33
01643-51032	Y1662-07A0G	15
01643-51032	Y1662-47A0F	15
01643-51645	Y1620-01A0C	16
01643-51645	Y1620-41A0C	16
01643-51645	Y1620-41A1C	16
01643-71032	K1110-10A0	23
01643-71032	K1110-10A0	23
01643-71032	K1110-10A0	25
01643-71032	K1110-10A0	27
01643-71032	K1110-10A2	23
01643-71032	K1110-10A2	23
01643-71032	K1110-10A2	25
01643-71032	K1110-10A2	27
01803-02430	T1510-02A1	4
04010-00519	K1110-04A0	7
04020-01228	B0000-01A0A	10
04020-01228	Y1600-02A0C	6
04020-01228	Y1600-04A0C	1
04020-01228	Y1600-07A0C	1
04020-01228	Y1641-01A0A	31
04020-01842	N1110-01A0	6
04025-00324	Y1641-02A0A	31
04025-00412	H1270-01A0	10
04025-00412	H1270-03A0	10
04025-00412	T1200-05A7	12
04025-00412	T1200-05B9	12
04025-00412	T1200-05C1	12
04025-00420	Y1670-01A0E	27
04025-00432	Y1670-01A0E	19
04025-00532	K0210-13A8	2
04050-02015	H0330-02A0	13
04050-02015	H0330-02A1	13
04050-11612	K1110-04A0	21
04050-11612	K1110-04A0	29
04050-11612	M1220-01A0E	3
04050-12022	B0400-01A0A	13
04050-13020	M1210-01A0C	20
04050-13022	M1110-01A0B	17
04050-13022	M1110-02A0	17
04050-14025	N1310-01A0	18
04052-10530	K0210-01A1D	13
04052-10833	K0210-05A0D	33
04052-11664	N1310-01A0	17
04064-04518	R0120-01A0	10
04064-04518	Y1640-02A1C	10
04064-07525	N1210-01A1A	22
04064-07525	Y0260-01A0C	19
04064-08530	Y1627-01A0	9
04065-04818	Y1600-03A0C	11
04065-04818	Y1600-06A0C	8
04065-04818	Y1641-02A0A	14
04065-05220	C0200-02A0	6
04065-06220	Y1640-02A1C	13
04065-06825	Y1600-03A0C	7
04065-07225	Y1641-02A0A	7
04120-21739	K0700-03A0C	11
04121-21744	V0100-01A0A	7
04205-10520	K0210-01A1D	12
04205-10618	K1110-04A0	20
04205-10618	K1110-04A0	28
04205-11038	M1210-01A0C	19
04205-11230	M1110-01A0B	16
04205-11230	M1110-02A0	16
04211-20634	K1110-04A0	18
04252-21061	B0400-01A0A	11
04256-41020	B0400-01A0A	15
04260-00635	Y1620-11A0C	28
04260-00793	Y1679-01A0A	20
04418-13060	U0100-01A5C	24
04418-13060	U0100-01A5D	24
04434-51010	A5.06	2
04434-51210	B0700-01A0A	4
04434-51210	B0700-01A0A	9
04434-51312	H1831-02A0	19
04434-51312	K1520-01A0D	12
04434-51408	K1110-03A0	15
04434-51408	K1110-06A0	14
04434-51512	H0120-03A0	37
04434-51712	T1110-04A0B	9
04434-51910	K0700-02A0C	15
04434-52112	K0700-01A1A	20
04434-52112	K0700-01A1A	23
04434-52112	K0700-03A0C	5
04434-52711	K1110-21A4A	9
04434-52712	E0200-02A0	27
04434-52712	H0120-03A0	33
04434-52712	H0330-01A0	7
04434-52712	H0340-01A0	4
04434-53212	H1831-02A0	22
04434-53411	K1110-12A0A	22
04434-53411	K1110-13A0A	18
04435-51612	K1540-01A1C	19
04435-51812	H1810-01A0D	3
04435-51912	D0200-01A0	41
04435-51912	D0200-02A0	28
04435-51912	D0200-02A0	34
04530-01018	Y1600-01A0C	7
04530-01222	Y1600-05A0C	5
06000-06004	C0200-02A0	4
06000-06004	A8.03	34
06000-06205	A8.03	26
06002-32010	R0300-01A0	2
06037-06305	A8.03	27
06124-02020	K1110-04A0	5
07000-01007	C0100-01A7A	4
07000-01007	C0100-01A7C	4
07000-01007	C0100-01A7D	4
07000-01007	C0100-01A7E	4
07000-02011	K1530-01A0B	17
07000-02011	Y1662-09A0G	15
07000-02011	Y1662-49A0F	15
07000-02015	K1110-11A0A	19
07000-02015	K1110-11A2B	19
07000-02015	K1110-12A0A	21
07000-02015	K1110-13A0A	17
07000-02018	K1110-11A0A	17
07000-02018	K1110-11A2B	17
07000-02018	K1110-12A0A	19
07000-02018	K1110-13A0A	15
07000-02020	Y1670-01A0E	9
07000-02020	Y1675-01A0	9
07000-02055	H0330-02A0	15
07000-02055	H0330-02A1	15
07000-02060	R0110-01A0	5
07000-02070	Y1670-11A0	15
07000-02075	R0300-01A0	12
07000-02085	H0311-01A0	4
07000-02115	Y1627-01A0	11
07000-03038	H0330-01A0	13
07000-03040	Y1662-12A0G	16
07000-03040	Y1662-52A0F	16
07000-03040	Y1669-01A0A	16
07000-03042	Y1640-03A1C	21
07000-03050	H1270-05A0	5
07000-05180	H0110-01A0	21
07000-05180	H0110-01A0	32
07000-05180	V0100-01A0A	9
07000-05240	N1210-01A1A	39
07000-11005	Y1662-01A0G	13
07000-11005	Y1662-41A0F	13
07000-11007	Y1640-03A1C	22
07000-11007	Y1662-04A0G	14
07000-11007	Y1662-44A0F	14
07000-11009	Y1641-01A0A	20
07000-11009	Y1641-01A0A	30
07000-11009	Y1662-12A0G	11
07000-11009	Y1662-52A0F	11
07000-11009	Y1662-53A0F	31
07000-11009	Y1669-01A0A	11

PARTS Nº	FIG. Nº	INDEX
07000-11009	Y1669-01A0A	23
07000-11009	Y1679-01A0A	8
07000-11009	Y1679-01A0A	21
07000-11223	V0100-01A0A	10
07000-12012	Y1662-02A0G	1
07000-12012	Y1662-42A0F	1
07000-12014	H1270-05A0	7
07000-12014	Y1662-05A0G	6
07000-12014	Y1662-45A0F	6
07000-12015	Y1662-02A0G	2
07000-12015	Y1662-12A0G	13
07000-12015	Y1662-42A0F	2
07000-12015	Y1662-52A0F	13
07000-12015	Y1669-01A0A	13
07000-12016	Y1662-05A0G	8
07000-12016	Y1662-45A0F	8
07000-12018	Y1662-02A0G	3
07000-12018	Y1662-12A0G	14
07000-12018	Y1662-42A0F	3
07000-12018	Y1662-52A0F	14
07000-12018	Y1669-01A0A	14
07000-12020	Y1640-01A1C	13
07000-12020	Y1662-08A0G	6
07000-12020	Y1662-48A0F	6
07000-12020	Y1670-11A0	12
07000-12020	Y1679-01A0A	27
07000-12021	Y1662-02A0G	4
07000-12021	Y1662-12A0G	12
07000-12021	Y1662-42A0F	4
07000-12021	Y1662-52A0F	12
07000-12021	Y1669-01A0A	12
07000-12060	H0330-02A0	5
07000-12060	H0330-02A1	5
07000-12060	R0300-02A0	9
07000-12115	H1270-05A0	6
07000-12145	Y1640-02A1C	28
07000-13025	H1210-03A0	2
07000-13025	H1220-01A0	15
07000-13025	H1220-02A0	7
07000-13025	H1220-02A0	15
07000-13025	H1310-01A0	2
07000-13025	H1310-01A0	5
07000-13025	K1110-18A0A	3
07000-13025	P1120-01A1A	11
07000-13025	P1120-01A1A	15
07000-13025	T1110-03A0B	17
07000-13025	T1200-01A2	20
07000-13025	T1200-01A3	20
07000-13025	T1200-01C5	20
07000-13025	T1200-01C7	23

PARTS Nº	FIG. Nº	INDEX
07000-13025	T1200-03A0	2
07000-13025	Y1662-02A0G	5
07000-13025	Y1662-42A0F	5
07000-13028	Y1662-02A0G	6
07000-13028	Y1662-42A0F	6
07000-13030	H1210-01A0	6
07000-13030	H1210-02A0	8
07000-13030	T1110-03A0B	37
07000-13030	Y0163-51A0C	1
07000-13030	Y0163-51A0C	2
07000-13030	Y0163-51A0C	3
07000-13030	Y0163-51A0C	4
07000-13030	Y1620-01A0C	32
07000-13030	Y1620-11A0C	34
07000-13030	Y1620-41A0C	29
07000-13030	Y1620-41A1C	29
07000-13030	Y1675-01A0	8
07000-13032	H1220-01A0	6
07000-13032	H1270-08A0	10
07000-13032	H1270-08A0	22
07000-13032	T1110-03A0B	22
07000-13032	T1200-05A7	14
07000-13032	T1200-05B9	14
07000-13032	T1200-05C1	14
07000-13032	Y1662-02A0G	7
07000-13032	Y1662-11A0G	12
07000-13032	Y1662-12A0G	15
07000-13032	Y1662-42A0F	7
07000-13032	Y1662-51A0F	12
07000-13032	Y1662-52A0F	15
07000-13032	Y1669-01A0A	15
07000-13035	H1270-02A0	5
07000-13035	H1270-04A0	4
07000-13035	T1110-05A1B	9
07000-13035	T1200-05A7	19
07000-13035	T1200-05A7	33
07000-13035	T1200-05B9	19
07000-13035	T1200-05B9	33
07000-13035	T1200-05C1	19
07000-13035	Y0163-51A0C	2
07000-13035	Y1620-11A0C	37
07000-13038	H0330-01A0	2
07000-13038	T1200-05A7	16
07000-13038	T1200-05B9	16
07000-13038	T1200-05C1	16
07000-13040	Y1641-01A0A	18
07000-13040	Y1662-02A0G	8
07000-13040	Y1662-42A0F	8
07000-13042	H1270-01A0	3
07000-13042	H1270-03A0	3

PARTS Nº	FIG. Nº	INDEX
07000-13045	H0320-01A0	14
07000-13048	H0320-01A0	2
07000-13048	H0320-01A0	4
07000-13048	H0320-01A0	10
07000-13048	H1270-01A0	5
07000-13048	H1270-03A0	5
07000-13050	D0100-01A0	5
07000-15070	Y0163-51A0C	3
07000-15070	Y1620-41A0C	22
07000-15075	Y0163-51A0C	4
07000-15075	Y1620-01A0C	22
07000-15075	Y1620-41A1C	22
07000-15085	Y0163-51A0C	2
07000-15085	Y1620-11A0C	20
07000-15090	Y1627-01A0	3
07000-15105	Y0163-51A0C	3
07000-15105	Y1620-41A0C	12
07000-15110	Y0163-51A0C	1
07000-15110	Y1620-01A0C	12
07000-15110	Y1620-01A0C	27
07000-15115	Y0163-51A0C	4
07000-15115	Y1620-41A1C	12
07000-15125	Y0163-51A0C	2
07000-15125	Y1620-11A0C	10
07000-15125	Y1620-11A0C	27
07000-15175	Y0163-51A0C	1
07000-A5165	Y1600-02A0C	5
07000-B1009	Y1600-09A0C	14
07000-B1009	Y1600-04A0C	2
07000-B1009	Y1600-07A0C	2
07000-B2010	Y1600-02A0C	7
07000-B2010	Y1600-09A0C	24
07000-B2011	Y1600-10A0C	16
07000-B2012	Y1600-02A0C	8
07000-B2014	Y1600-02A0C	9
07000-B3040	Y1600-04A0C	8
07000-B3040	Y1600-07A0C	8
07000-F2020	Y1640-03A1C	10
07001-01005	Y1662-01A0G	14
07001-01005	Y1662-41A0F	14
07001-01007	Y1662-04A0G	15
07001-01007	Y1662-44A0F	15
07001-01009	Y1662-53A0F	32
07001-01009	Y1669-01A0A	24
07001-02010	Y1600-09A0C	25
07001-02020	Y1640-03A1C	11
07001-02020	Y1662-08A0G	7
07001-02020	Y1662-48A0F	7
07001-03032	T1200-05A7	15
07001-03032	T1200-05B9	15

PARTS Nº	FIG. Nº	INDEX
07001-03032	T1200-05C1	15
07001-03038	T1200-05A7	17
07001-03038	T1200-05B9	17
07001-03038	T1200-05C1	17
07001-03040	Y1600-04A0C	9
07001-03040	Y1600-07A0C	9
07001-03042	H1270-01A0	4
07001-03042	H1270-03A0	4
07001-03048	H1270-01A0	6
07001-03048	H1270-03A0	6
07002-01223	H0210-01A0	7
07002-01423	H0110-01A0	15
07002-01423	H1240-01A0	7
07002-01423	H1833-01A0E	13
07002-01423	K1110-10A0	12
07002-01423	K1110-10A2	12
07002-01423	K1110-11A0A	21
07002-01423	K1110-11A0A	34
07002-01423	K1110-11A0A	37
07002-01423	K1110-11A0A	43
07002-01423	K1110-11A0A	46
07002-01423	K1110-11A2B	21
07002-01423	K1110-11A2B	34
07002-01423	K1110-11A2B	37
07002-01423	K1110-11A2B	43
07002-01423	K1110-11A2B	46
07002-01423	K1110-12A0A	5
07002-01423	K1110-12A0A	7
07002-01423	K1540-01A1C	8
07002-01423	K1540-01A1C	12
07002-01423	K1540-01A1C	16
07002-01423	N1220-01A0D	4
07002-01423	N1310-01A0	7
07002-01423	P1120-01A1A	9
07002-01423	Y1640-03A1C	20
07002-01823	Y1675-01A0	7
07002-02034	H0110-01A0	11
07002-02034	H0110-01A0	13
07002-02034	H1240-01A0	9
07002-02034	K1110-04A0	16
07002-02034	P1120-01A1A	7
07002-02434	H0110-01A0	5
07002-02434	H0110-01A0	7
07002-02434	H0110-01A0	9
07002-02434	H0210-01A0	5
07002-02434	H0330-03A0	2
07002-02434	H0330-03A1	2
07002-02434	H0340-01A0	8
07002-02434	H1270-02A0	3
07002-02434	N1220-01A0D	2

PARTS Nº	FIG. Nº	INDEX
07002-02434	N1220-01A0D	9
07002-02434	N1310-01A0	10
07002-02434	P1210-01A0A	34
07002-02434	Y0270-01A0A	34
07002-02434	Y1662-09A0G	14
07002-02434	Y1662-10A0G	15
07002-02434	Y1662-49A0F	14
07002-02434	Y1662-50A0F	15
07002-02434	Y1675-01A0	25
07002-03034	Y1662-10A0G	19
07002-03034	Y1662-50A0F	19
07002-04234	D0200-02A0	40
07002-10823	Y1662-01A0G	10
07002-10823	Y1662-12A0G	4
07002-10823	Y1662-41A0F	10
07002-10823	Y1662-52A0F	4
07002-10823	Y1669-01A0A	4
07002-11023	H0312-01A0	9
07002-11023	H0312-01A0	18
07002-11023	Y1641-01A0A	28
07002-11023	Y1662-01A0G	12
07002-11023	Y1662-04A0G	19
07002-11023	Y1662-41A0F	12
07002-11023	Y1662-44A0F	19
07002-11223	H0120-01A0	24
07002-11223	H0120-02A0	24
07002-11223	Y1670-01A0E	33
07002-11423	H0120-01A0	8
07002-11423	H0120-01A0	10
07002-11423	H0120-01A0	12
07002-11423	H0120-01A0	14
07002-11423	H0120-01A0	16
07002-11423	H0120-01A0	21
07002-11423	H0120-01A0	22
07002-11423	H0120-01A0	26
07002-11423	H0120-01A0	28
07002-11423	H0120-01A0	33
07002-11423	H0120-01A0	38
07002-11423	H0120-01A0	41
07002-11423	H0120-01A0	43
07002-11423	H0120-02A0	8
07002-11423	H0120-02A0	10
07002-11423	H0120-02A0	12
07002-11423	H0120-02A0	14
07002-11423	H0120-02A0	16
07002-11423	H0120-02A0	21
07002-11423	H0120-02A0	22
07002-11423	H0120-02A0	26

PARTS Nº	FIG. Nº	INDEX
07002-11423	H0120-02A0	28
07002-11423	H0120-02A0	33
07002-11423	H0120-02A0	34
07002-11423	H0120-02A0	36
07002-11423	H0120-02A0	38
07002-11423	H0120-02A0	42
07002-11423	H0120-02A0	44
07002-11423	H0120-03A0	22
07002-11423	H0120-03A0	24
07002-11423	H0210-01A0	11
07002-11423	H0210-01A0	13
07002-11423	H0210-01A0	15
07002-11423	H1831-01A0	5
07002-11423	H1831-01A0	13
07002-11423	H1833-01A0E	7
07002-11423	H1833-01A0E	14
07002-11423	N1310-01A0	5
07002-11423	Y1640-01A1C	9
07002-11423	Y1641-01A0A	12
07002-11423	Y1662-01A0G	53
07002-11423	Y1662-04A0G	10
07002-11423	Y1662-04A0G	13
07002-11423	Y1662-07A0G	5
07002-11423	Y1662-41A0F	53
07002-11423	Y1662-44A0F	10
07002-11423	Y1662-44A0F	13
07002-11423	Y1662-47A0F	5
07002-11423	Y1679-01A0A	17
07002-11623	Y1679-01A0A	39
07002-11823	H0120-04A0	2
07002-11823	H0120-05A0	2
07002-11823	Y1641-01A0A	25
07002-11823	Y1662-04A0G	8
07002-11823	Y1662-11A0G	9
07002-11823	Y1662-44A0F	8
07002-11823	Y1662-51A0F	9
07002-12034	H1831-01A0	7
07002-12034	H1831-01A0	9
07002-12034	H1831-01A0	11
07002-12034	H1831-01A0	18
07002-12034	Y0163-51A0C	2
07002-12034	Y1620-11A0C	29D
07002-12434	H0120-03A0	20
07002-12434	H1270-01A0	12
07002-12434	H1270-03A0	12
07002-12434	N1310-01A0	3
07002-12434	V0100-01A0A	11
07002-12434	Y1627-01A0	7
07002-12434	Y1640-01A1C	7
07002-12434	Y1640-03A1C	14

PARTS Nº	FIG. Nº	INDEX
07002-12434	Y1662-03A0G	19
07002-12434	Y1662-04A0G	21
07002-12434	Y1662-05A0G	11
07002-12434	Y1662-06A0G	19
07002-12434	Y1662-43A0F	19
07002-12434	Y1662-44A0F	21
07002-12434	Y1662-45A0F	11
07002-12434	Y1662-46A0F	19
07002-13034	Y1640-03A1C	12
07002-13334	H0330-03A1	4
07002-13334	H1270-04A0	2
07002-13334	Y1640-01A1C	17
07002-13634	Y1662-03A0G	9
07002-13634	Y1662-03A0G	17
07002-13634	Y1662-03A0G	26
07002-13634	Y1662-03A0G	33
07002-13634	Y1662-03A0G	40
07002-13634	Y1662-03A0G	47
07002-13634	Y1662-03A0G	55
07002-13634	Y1662-11A0G	11
07002-13634	Y1662-13A0G	17
07002-13634	Y1662-13A0G	17
07002-13634	Y1662-43A0F	9
07002-13634	Y1662-43A0F	17
07002-13634	Y1662-43A0F	26
07002-13634	Y1662-43A0F	33
07002-13634	Y1662-43A0F	40
07002-13634	Y1662-43A0F	47
07002-13634	Y1662-43A0F	55
07002-13634	Y1662-51A0F	11
07002-13634	Y1662-53A0F	17
07002-13634	Y1669-02A0A	22
07002-14234	H1270-06A0	2
07002-14234	H1270-06A0	7
07002-14234	H1270-06A1C	2
07002-14234	H1270-06A1C	7
07005-00812	A6.03	4
07005-01212	A5.01.5	3
07005-01212	A5.19	4
07005-01212	A6.04	6
07005-01412	D0200-01A0	3
07005-01412	D0200-01A0	8
07005-01412	D0200-01A0	19
07005-01412	D0200-01A0	30
07005-01412	D0200-02A0	2
07005-01412	D0200-02A0	13
07005-01412	A6.07	1
07005-02216	V0100-01A0A	7A
07005-03016	H0210-01A0	3
07020-00000	N1110-01A0	13
07020-00000	T1110-04A0B	1
07020-00000	T1110-10A0B	6
07020-00000	T1200-01A0	6
07020-00000	T1200-01A0C	6
07020-00000	T1200-01A1	6
07020-00000	T1200-01A1C	6
07020-00000	T1200-01A2	6
07020-00000	T1200-01A3	6
07020-00000	T1200-01C5	6
07020-00000	T1200-01C7	9
07020-00000	T1200-02A0C	4
07020-00000	T1200-02A0C	5
07020-00000	T1200-02A1	4
07020-00000	T1200-02A1	5
07020-00000	V0100-01A0A	12
07020-00000	Y1620-41A0C	24
07020-00000	Y1620-41A1C	24
07020-00675	V0100-01A0A	13
07020-00900	T1200-01A0	5
07020-00900	T1200-01A0C	5
07020-00900	T1200-01A1	5
07020-00900	T1200-01A1C	5
07020-00900	T1200-01A2	5
07020-00900	T1200-01A3	5
07020-00900	T1200-01C5	5
07020-00900	T1200-01C7	8
07020-00900	V0100-01A0A	14
07020-00900	Y1620-11A0C	24
07020-00900	Y1620-41A0C	25
07020-00900	Y1620-41A1C	25
07030-03034	H0210-01A0	2
07040-11007	H0312-01A0	8
07040-11007	H0312-01A0	17
07040-11007	Y1600-10A0C	5
07040-11209	H0210-01A0	6
07040-11209	Y1670-01A0E	32
07040-11812	Y1662-11A0G	8
07040-11812	Y1662-51A0F	8
07040-12412	H0210-01A0	4
07040-12414	H1270-01A0	11
07040-12414	H1270-03A0	11
07040-12414	Y1600-05A0C	13
07042-30108	N1210-01A1A	3
07042-30108	Y0260-01A0C	33
07042-30415	Y0260-01A0C	34
07042-30617	Y0260-01A0C	32
07043-20108	Y1627-01A0	5
07044-12412	H0110-01A0	4
07044-12412	P1210-01A0A	33
07044-12412	Y0270-01A0A	33
07044-12412	Y1600-01A0C	3
07044-12412	Y1600-05A0C	3
07046-22216	A8.03	28
07046-44516	C0200-02A0	7
07046-44516	A8.03	35
07049-01012	H0120-01A0	2
07049-01012	H0120-02A0	2
07049-01012	H1240-01A0	10
07049-01012	P1210-01A0A	32
07049-01012	Y0270-01A0A	32
07049-01215	H1270-01A0	13
07052-31624	R0110-01A0	4
07058-00001	D0200-02A0	39
07094-10620	H0330-03A1	10
07094-11024	H0330-03A1	15
07095-00628	H0330-03A1	11
07095-00628	H1310-01A0	8
07095-01035	H0330-03A1	16
07096-00204	H0120-01A0	39
07096-00204	H0120-02A0	39
07096-00214	H1810-01A0D	1
07096-00221	H0120-03A0	31
07097-21014	T1200-05A7	1
07097-21014	T1200-05B9	1
07098-00607	H1340-01A0	1
07098-00621	P1120-01A1A	10
07098-00623	P1120-01A1A	10
07098-01009	H1270-08A0	9
07099-21012	H1270-06A0	12
07102-20220	P1120-01A1A	21
07102-20222	P1120-01A1A	21
07102-20420	P1120-01A1A	18
07102-20422	P1120-01A1A	18
07102-20504	H0340-01A0	1
07102-20517	H1831-02A0	16
07102-20604	H1270-06A0	10
07102-20604	H1270-06A1C	10
07102-20612	H0340-01A0	3
07102-20614	H0330-01A0	5
07102-21003	H1270-06A0	11
07102-21003	H1270-06A1C	11
07102-21015	H0330-03A1	5
07145-00070	Y0163-51A0C	1
07145-00070	Y0163-51A0C	3
07145-00070	Y0163-51A0C	4
07145-00070	Y1620-01A0C	3
07145-00070	Y1620-41A0C	3
07145-00070	Y1620-41A1C	3
07145-00080	Y0163-51A0C	1
07145-00080	Y0163-51A0C	2

PARTS Nº	FIG. Nº	INDEX
07145-00080	Y1620-01A0C	6
07145-00080	Y1620-11A0C	3
07145-00090	T1110-01A0	12
07145-00090	T1110-01A1B	9
07145-00090	T1110-01A2C	12
07145-00090	T1110-10A0B	1
07145-00090	T1200-01A0	7
07145-00090	T1200-01A0C	7
07145-00090	T1200-01A1	7
07145-00090	T1200-01A1C	7
07145-00090	T1200-01A2	7
07145-00090	T1200-01A3	7
07145-00090	T1200-01C5	7
07145-00090	T1200-01C7	10
07155-00720	R0120-01A0	8
07179-13094	Y1620-41A0C	8
07179-13099	Y1620-01A0C	8
07179-13099	Y1620-41A1C	8
07179-13109	Y1620-11A0C	6
07206-31014	D0200-01A0	4
07206-31014	D0200-01A0	9
07206-31014	D0200-01A0	20
07206-31014	D0200-01A0	31
07206-31014	D0200-02A0	3
07206-31014	D0200-02A0	14
07214-50813	N1110-01A0	7
07221-20210	H0120-05A0	8
07222-00210	H0120-05A0	7
07230-20210	H0120-01A0	25
07230-20210	H0120-01A0	32
07230-20210	H0120-01A0	42
07230-20210	H0120-02A0	25
07230-20210	H0120-02A0	32
07230-20210	H0120-02A0	43
07230-20210	H1831-01A0	3
07230-20210	K1110-10A0	11
07230-20210	K1110-10A2	11
07230-20210	K1110-11A0A	35
07230-20210	K1110-11A0A	36
07230-20210	K1110-11A0A	44
07230-20210	K1110-11A0A	45
07230-20210	K1110-11A2B	35
07230-20210	K1110-11A2B	44
07230-20210	K1110-12A0A	6
07230-20210	P1120-01A1A	8
07230-20422	P1120-01A1A	6
07230-20522	N1310-01A0	2
07230-20628	H0110-01A0	6
07235-10210	H0120-01A0	6
07235-10210	H0120-01A0	13
07235-10210	H0120-01A0	37
07235-10210	H0120-01A0	40
07235-10210	H0120-02A0	6
07235-10210	H0120-02A0	13
07235-10210	H0120-02A0	37
07235-10210	H0120-02A0	40
07235-10210	H0120-03A0	21
07235-10210	H0120-03A0	23
07235-10210	H0210-01A0	12
07235-10210	H1240-01A0	6
07235-10210	K1110-11A0A	20
07235-10210	K1110-11A0A	33
07235-10210	K1110-11A0A	42
07235-10210	K1110-11A2B	20
07235-10210	K1110-11A2B	33
07235-10210	K1110-11A2B	42
07235-10210	K1110-12A0A	4
07235-10210	Y1600-10A0C	9
07235-10311	K1110-11A0A	32
07235-10311	K1110-11A0A	41
07235-10311	K1110-11A2B	32
07235-10311	K1110-11A2B	41
07235-10315	H0110-01A0	10
07235-10315	H1240-01A0	8
07235-10315	H1831-01A0	8
07235-10315	K1110-04A0	15
07235-10628	H0330-03A0	1
07235-10628	H0330-03A1	1
07235-10628	H0340-01A0	7
07235-10628	H1270-02A0	2
07235-11034	H0330-03A1	3
07236-10210	H0110-01A0	14
07236-10210	N1220-01A0D	3
07236-10210	N1310-01A0	4
07236-10315	H0110-01A0	12
07236-10522	H0110-01A0	8
07236-10628	N1220-01A0D	8
07236-11034	H1270-04A0	1
07260-08732	H0311-01A0	1
07260-20950	B0100-01A0A	14
07281-00197	D0200-01A0	22
07281-00197	D0200-01A0	28
07281-00197	D0200-01A0	39
07281-00197	D0200-02A0	26
07281-00197	N1210-01A1A	34
07281-00419	K0700-01A0B	1
07281-00419	K1110-17A1A	9
07282-02793	Y1620-41A0C	34
07283-22738	H1270-08A0	18
07283-22738	N1220-01A0D	18
07283-22738	Y1620-01A0C	37
07283-22738	Y1620-11A0C	43
07283-23442	H1270-02A0	9
07283-23442	K1110-04A0	12
07283-23450	H1831-01A0	19
07283-24346	H0320-01A0	17
07283-26155	K0700-01A0B	9
07283-32738	H1270-01A8A	8
07283-32738	H1270-07A0	31
07285-00125	A8.07.1	8
07285-00155	B0100-01A0A	15
07285-00155	H0110-01A0	41
07288-00831	D0200-01A0	33
07288-00831	D0200-02A0	20
07288-01203	D0200-01A0	27
07288-01205	D0200-01A0	35
07288-01206	D0200-02A0	22
07288-01214	D0200-01A0	21
07288-01219	D0200-02A0	15
07288-01229	D0200-01A0	34
07288-01229	D0200-02A0	21
07289-00055	C0100-02A0A	2
07289-00055	C0100-02A0A	4
07289-00070	C0100-02A0A	5
07289-00105	H0311-01A0	2
07289-00120	B0200-01A1C	6
07371-30640	H0312-01A0	21
07371-30640	H1210-02A0	2
07371-30640	H1210-02A0	10
07371-30640	H1210-03A0	3
07371-30640	H1220-01A0	16
07371-30640	H1220-02A0	8
07371-30640	H1220-02A0	16
07371-30640	H1340-01A0	5
07371-30640	N1220-01A0D	5
07371-30640	N1310-01A0	11
07371-30640	P1120-01A1A	1
07371-30640	T1110-03A0B	2
07371-30640	T1110-03A0B	18
07371-30640	T1110-03A0B	28
07371-30640	T1200-01A2	21
07371-30640	T1200-01A3	21
07371-30640	T1200-01C5	21
07371-30640	T1200-01C7	24
07371-30640	T1200-03A0	3
07371-31049	H0120-03A0	16
07371-31049	H0120-03A0	25
07371-31049	H0312-01A0	7
07371-31049	H0312-01A0	16
07371-31049	H1220-01A0	7

PARTS Nº	FIG. Nº	INDEX
07371-31049	H1270-02A0	12
07371-31049	H1270-02A0	15
07371-31049	H1270-04A0	7
07371-31049	H1270-04A0	10
07371-31049	H1270-06A0	14
07371-31049	H1270-06A1C	13
07371-31049	H1270-08A0	11
07371-31049	H1270-08A0	23
07371-31049	T1110-03A0B	6
07371-31049	T1110-03A0B	23
07371-31049	T1200-05A7	3
07371-31049	T1200-05B9	3
07371-31049	T1200-05C1	3
07372-21035	H0120-03A0	17
07372-21035	H0120-03A0	26
07372-21035	H0312-01A0	22
07372-21035	H1210-02A0	3
07372-21035	H1210-02A0	11
07372-21035	H1210-03A0	4
07372-21035	H1220-01A0	8
07372-21035	H1220-01A0	17
07372-21035	H1220-02A0	4
07372-21035	H1220-02A0	9
07372-21035	H1220-02A0	12
07372-21035	H1220-02A0	17
07372-21035	H1270-02A0	6
07372-21035	H1270-02A0	13
07372-21035	H1270-02A0	16
07372-21035	H1270-04A0	5
07372-21035	H1270-04A0	8
07372-21035	H1270-04A0	11
07372-21035	H1270-06A0	15
07372-21035	H1270-06A1C	14
07372-21035	H1270-08A0	12
07372-21035	H1270-08A0	24
07372-21035	H1340-01A0	6
07372-21035	N1220-01A0D	6
07372-21035	N1310-01A0	12
07372-21035	P1120-01A1A	2
07372-21035	T1110-03A0B	3
07372-21035	T1110-03A0B	7
07372-21035	T1110-03A0B	19
07372-21035	T1110-03A0B	24
07372-21035	T1110-03A0B	29
07372-21035	T1110-03A0B	38
07372-21035	T1200-01A2	22
07372-21035	T1200-01A3	22
07372-21035	T1200-01C5	22
07372-21035	T1200-01C7	25
07372-21035	T1200-03A0	4

PARTS Nº	FIG. Nº	INDEX
07372-21035	T1200-05A7	4
07372-21035	T1200-05B9	4
07372-21035	T1200-05C1	4
07372-21040	H0120-05A0	5
07372-21040	H1210-01A0	4
07372-21040	H1210-01A0	7
07372-21040	H1210-01A0	10
07372-21040	H1210-01A0	13
07372-21040	H1220-01A0	3
07372-21040	H1220-01A0	12
07372-21040	T1110-05A1B	10
07372-21040	T1200-05A7	20
07372-21040	T1200-05A7	34
07372-21040	T1200-05B9	20
07372-21040	T1200-05B9	34
07372-21040	T1200-05C1	20
07372-21045	H1210-02A0	6
07372-21060	H1210-02A0	5
07378-10600	T1200-01A2	19
07378-10600	T1200-01A3	19
07378-10600	T1200-01C5	19
07378-10600	T1200-01C7	22
07378-11000	H1270-06A1C	12
07430-71380	Y1662-01A0G	45
07430-71380	Y1662-12A0G	9
07430-71380	Y1662-41A0F	45
07430-71380	Y1662-52A0F	9
07430-71380	Y1669-01A0A	9
07700-40240	D0200-01A0	17
07700-40240	D0200-02A0	11
07700-50240	D0100-01A0	2
07750-01628	Y1620-11A0C	29B
07950-10450	V0300-01A0C	8
07950-90403	V0300-01A0C	10
07951-11400	V0300-01A0C	9
07959-20001	R0120-01A0	13
08000-00000	E0100-01A3	1A
08000-00001	E0100-01A4	1B
08017-30701	K0210-10A1F	33
08017-32801	K1110-17A1A	7
08017-32807	K1110-11A0A	1
08017-32807	K1110-11A2B	1
08017-32807	K1110-12A0A	8
08017-32807	K1110-13A0A	1
08028-43030	E0100-01A10	5
08028-43030	E0200-01A0	16
08028-43030	E0200-04A0	1
08028-43030	E0200-06A0	8
08028-43045	E0200-04A0	2
08034-00310	K1110-03A0	19

PARTS Nº	FIG. Nº	INDEX
08034-00310	K1110-06A0	18
08034-00414	H1840-02A1A	9
08034-00519	D0200-01A0	23
08034-00519	D0200-01A0	36
08034-00519	D0200-02A0	16
08034-00519	D0200-02A0	23
08034-00519	H0120-03A0	36
08034-00519	H0330-03A1	7
08034-00519	H0340-01A0	2
08034-00519	H1831-02A0	28
08034-00519	H1831-02A0	33
08034-00519	H1840-03A1D	3
08034-00519	K0700-01A0B	27
08034-00519	K0700-02A0C	16
08034-00519	K0700-02A0C	22
08034-00519	K0700-03A0C	10
08034-00519	K1110-03A0	18
08034-00519	K1110-06A0	17
08034-00519	K1110-11A0A	15
08034-00519	K1110-11A2B	15
08034-00519	K1110-12A0A	9
08034-00519	K1110-13A0A	2
08034-00519	K1110-13A0A	26
08034-00519	K1110-17A1A	6
08034-00519	K1110-21A4A	5
08034-00519	K1520-01A0D	11
08034-00519	K1520-01A2	11
08034-00519	K1520-01A2	12
08034-00519	K1540-01A1C	22
08034-00536	H0330-01A0	6
08034-00536	H1831-02A0	1
08034-00536	H1840-01A1H	8
08034-00536	H1840-01A1H	19
08034-00536	H1840-02A1A	1
08034-00536	H1840-02A1A	5
08034-00536	K0210-15A2A	4
08034-00536	K0700-01A1A	26
08034-00536	K0700-02A0C	17
08034-00536	K0700-03A0C	9
08034-00536	K1110-11A0A	2
08034-00536	K1110-11A0A	28
08034-00536	K1110-11A2B	2
08034-00536	K1110-11A2B	28
08034-00536	K1110-17A1A	17
08034-00536	K1110-21A4A	12
08034-00536	P1120-01A1A	5
08034-00536	P1120-01A1A	13
08034-00536	P1120-01A1A	17
08034-00536	P1120-01A1A	20
08034-00536	P1120-01A1A	23

PARTS Nº	FIG. Nº	INDEX
08034-00834	B0200-01A1C	8
08034-00834	D0200-01A0	38
08034-00834	D0200-02A0	25
08034-20414	K0210-12D8	8
08034-20414	T1110-04A0B	16
08036-00814	B0500-01A0A	10
08036-00814	E0200-03A0	5
08036-00814	K1110-01A0E	5
08036-00814	N1110-01A0	10
08036-00814	T1110-04A0B	6
08036-01014	B0500-01A0A	6
08036-01014	B0500-01A0A	9
08036-01014	E0200-02A0	12
08036-01014	E0200-03A0	8
08036-01014	E0200-04A0	7
08036-01414	D0200-01A0	49
08036-01414	D0200-02A0	35
08036-01414	E0200-02A0	46
08036-01414	E0200-03A0	15
08036-01414	E0200-03A0	36
08036-01414	K1110-04A0	30
08036-01414	K1520-01A0D	4
08036-01414	K1520-01A0D	8
08036-01414	K1520-01A2	4
08036-01414	K1520-01A2	8
08036-01814	D0200-01A0	32
08036-01814	E0200-02A0	36
08036-01814	E0200-02A0	39
08036-01814	E0200-02A0	43
08036-01814	E0200-03A0	11
08036-01814	E0200-03A0	14
08036-01814	E0200-03A0	18
08036-01814	E0200-03A0	39
08036-01814	E0200-04A0	10
08036-02514	E0200-02A0	33
08036-02514	E0200-02A0	40
08036-02514	E0200-03A0	22
08036-02514	K1520-01A0D	5
08036-02514	K1520-01A2	5
08036-10810	E0410-01A0	5
08036-10814	E0200-03A0	33
08037-01008	K0210-06A0	15
08037-01610	K0210-06A0	25
08037-01610	K0210-02A0B	38
08038-00035	E0200-01A0	2
08038-00519	E0200-01A0	3
08038-00519	E0200-01A0	25
08038-00519	E0200-03A0	1
08038-02027	E0200-01A0	22
08038-06031	E0200-01A0	26

PARTS Nº	FIG. Nº	INDEX
08038-06031	E0200-04A0	4
08038-10519	B0500-01A0A	3
08038-10525	B0500-01A0A	4
08038-22511	E0100-01A9	4
08038-22511	E0200-04A0	3
08041-01000	K0210-10A1F	6
08041-01500	K0210-10A1F	7
08041-02000	K0210-10A1F	8
08044-11500	K0210-10A1F	5
08051-00801	K0210-06A0	16
08051-00801	K0210-10A1F	30
08051-00801	K0210-01A1D	15
08051-00801	K0210-02A0B	32
08053-01510	E0200-03A0	32
08053-01510	K0700-02A0C	19
08053-01512	E0200-03A0	2
08053-01512	E0200-03A0	21
08053-01512	E0200-05A0	10
08053-01512	K1110-01A0E	8
08053-01512	K1540-01A1C	4
08056-10881	K1730-01A0	2
08074-40000	K0210-02A0B	29
08086-20000	K0210-11A1B	25
08086-20000	K0210-11A2B	25
08088-30000	E0200-01A0	4
08141-02400	K0210-06A0	17
08160-62420	E0410-01A0	1
08160-62430	E0410-01A0	2
08910-10000	K0180-01A1B	6
08910-10000	K0180-01A1B	15
08910-10000	K0180-01A2B	6
08910-10000	K0180-01A2B	15
08912-00000	K0210-06A0	23
09002-01417	V0300-01A0C	3
09002-03032	V0300-01A0C	4
09007-00836	V0300-01A0C	11
09019-08035	V0300-01A0C	2
09021-01219	V0300-01A0C	12
09021-01422	V0300-01A0C	13
09021-01928	V0300-01A0C	14
09021-02436	V0300-01A0C	15
09021-03044	V0300-01A0C	16
09022-00150	V0300-01A0C	17
09023-00300	V0300-01A0C	18
09024-00300	V0300-01A0C	19
09033-00190	V0300-01A0C	5
09039-00150	V0300-01A0C	6
09055-10390	V0300-01A0C	7
09056-04613	V0300-01A0C	1
09059-00800	V0100-01A0A	1

PARTS Nº	FIG. Nº	INDEX
09133-A3281	U0100-01A5C	6
09133-A3281	U0100-01A5D	6
09134-A1681	U0100-01A5C	7
09134-A1681	U0100-01A5D	7
09244-02496	T1510-01F0	7
09244-02496	T1510-01F1	7
09244-02496	T1510-01F1C	7
09244-02496	T1510-01F3C	7
09244-02496	T1510-01F5C	7
09304-10835	K1110-04A0	25
09370-00070	R0120-01A0	9
09409-10001	K0160-01A0B	1
09414-11053	K0210-11A1B	2
09414-11053	K0210-11A2B	2
09415-01610	K0210-01A1D	14
09480-10100	K0700-01A1A	27
09480-10100	K0700-03A0C	8
09480-10100	K1110-17A1A	16
09480-10100	K1110-17B0	16
09483-00425	K0700-01A1A	12
09483-00425	K1110-17B0	12
09483-00433	K0700-01A1A	11
09483-00433	K1110-17B0	11
09601-10050	U0100-01A5C	23
09601-10050	U0100-01A5D	23
09651-A0641	U0100-01A5C	8
09651-A0641	U0100-01A5D	8
09653-A0481	U0100-01A5C	9
09653-A0481	U0100-01A5D	9
09654-A0641	U0100-01A5C	10
09654-A0641	U0100-01A5D	10
09657-A0881	U0100-01A5C	11
09657-A0881	U0100-01A5D	11
09659-A057B	U0100-01A5C	12
09659-A057B	U0100-01A5D	12
09667-A0481	U0100-01A5C	13
09667-A0481	U0100-01A5D	13
09685-00001	U0100-01A5C	1
09685-00001	U0100-01A5D	1
09690-B0315	U0100-01A5C	4
09690-B0315	U0100-01A5D	4
09690-B1000	U0150-01A2	1
09690-B1000	U0510-01A0	1
09690-B1120	U0150-01A2	2
09690-M0063	U0100-01A5C	3
09690-M0063	U0100-01A5D	3
09801-A0641	U0100-01A5C	14
09801-A0641	U0100-01A5D	14
09803-A0481	U0100-01A5C	15
09803-A0481	U0100-01A5D	15

PARTS Nº	FIG. Nº	INDEX
09805-A0881	U0100-01A5C	16
09805-A0881	U0100-01A5D	16
09805-C0481	U0100-01A5C	17
09805-C0481	U0100-01A5D	17
09808-A0881	U0100-01A5C	18
09808-A0881	U0100-01A5D	18
09960-61012	U0100-01A5C	36
09960-61012	U0100-01A5D	36
101-30-00130	R0300-02A0	7
101-30-00140	R0300-02A0	8
103-04-22150	D0200-01A0	16
103-04-22150	D0200-02A0	10
110-30-00085	R0300-02A0	7
112-32-11211	N1210-01A1A	19
112-32-11211	Y0260-01A0C	16
113-43-31380	Y1600-04A0C	12
113-43-31380	Y1600-07A0C	12
113-899-7950	E0200-02A0	2
113-899-7950	E0200-02A0	9
113-899-7950	E0200-02A0	15
113-899-7950	E0200-02A0	18
113-899-7950	E0200-05A0	5
124-01-55360	A13.02.2	5
124-01-55380	A13.02	2
124-01-55430	A13.02.2	7
124-01-55440	A13.02.2	8
124-01-55450	A13.02.2	3
124-01-55470	A13.02	3
124-01-55480	A13.02.2	1
124-01-55490	A13.02.3	6
124-01-55530	A6.04	3
124-01-55540	A9.01	11
12R-60-11230	H0110-01A0	30
12R-60-11300	H0110-01A0	18
135-A90-1970	D0200-02A0	46
140-999-9360	D0100-01A0	10
141-06-11220	D0200-01A0	24
141-06-11220	D0200-02A0	17
141-06-11220	H1831-02A0	25
141-06-11220	K0700-01A1A	13
141-06-11220	K0700-01A1A	16
141-06-11220	K0700-02A0C	7
141-06-11220	K0700-03A0C	1
141-06-11220	K0700-03A0C	4
141-06-11220	K1110-17B0	13
141-30-35140	R0300-01A0	7
141-30-35150	R0300-01A0	8
142-03-11160	D0200-01A0	42
142-03-11160	D0200-02A0	29
144-873-0310	P1210-01A0A	3
144-873-0310	Y0270-01A0A	3
144-947-3490	E0200-01A0	11
144-947-3490	E0200-02A0	3
144-947-3490	E0200-02A0	22
14X-43-12110	K1530-01A0B	11
14X-43-14840	K1540-01A1C	13
14X-911-1330	K0210-08A0A	15
14X-911-1740	K0210-09A0B	14
150-27-00264	P1210-01A0A	2
150-27-00264	Y0270-01A0A	2
150-27-00330	P1210-01A0A	1
150-27-00330	Y0270-01A0A	2
154-04-12531	D0200-02A0	41
154-32-31220	R0500-01A2	9
154-32-31220	R0500-01A2	18
154-32-31220	R0500-01A3	9
154-32-31220	R0500-01A3	18
154-32-61170	R0200-01A2A	6
154-54-23260	U0100-01A5C	27
154-54-23260	U0100-01A5D	27
154-61-16570	K0210-02A0B	28
175-09-11111	M1520-01A0	1
175-54-34170	M1150-01A0C	13
175-54-34170	M1150-01A0C	35
175-54-34170	M1160-01A0C	4
175-54-34170	M1210-01A0C	5
175-54-34170	M1210-01A0C	29
175-54-34170	M1220-01A0E	12
175-61-17240	H0330-03A1	12
176-32-11210	T1510-02A1	3
176-911-4180	E0200-01A0	10
17A-60-11310	H0110-01A0	35
17M-49-15260	H0330-03A1	19
17M-911-2670	K0210-06A0	14
17M-911-3290	Y1979-21A0C	28
17M-911-3290	Y1979-31A0C	11
17M-911-3330	Y1979-21A0C	27
195-03-11570	D0100-01A0	14
195-03-13241	N1210-01A1A	32
195-33-11220	K0700-01A1A	19
195-33-11220	K0700-02A0C	10
195-33-11220	K0700-03A0C	4C
195-57-11530	M1810-01A0E	10
195-63-92190	Y0163-51A0C	3
195-63-92190	Y1620-41A0C	9
195-979-4160	Y1979-11A0C	9
195-979-4841	Y1979-21A0C	16
195-979-8590	K0350-01A0	9
195-Z11-1690	K0210-09A0B	3
195-Z11-6280	Y1979-21A0C	31
195-Z11-6280	Y1979-41A0C	18
198-54-41982	M1130-01A0D	9
198-54-41982	M1140-01A0B	3
198-911-5530	K1110-03A0	25
198-911-5530	K1110-06A0	24
201-03-29160	T1200-05A7	13C
201-03-29160	T1200-05B9	13C
201-03-29160	T1200-05C1	13C
201-60-11390	H0120-01A0	4
201-60-11390	H0120-02A0	4
201-60-11390	H1833-01A0E	5
201-60-11390	H1833-01A0E	11
201-60-11390	K1540-01A1C	6
201-60-11390	K1540-01A1C	10
201-60-11390	K1540-01A1C	14
201-62-72570	K1110-11A0A	25
201-62-72570	K1110-11A2B	25
203-00-51170	U0100-01A5C	26
203-00-51170	U0100-01A5D	26
203-03-41410	C0100-01A7A	5
203-03-41410	C0100-01A7C	5
203-03-41410	C0100-01A7D	5
203-03-41410	C0100-01A7E	5
203-03-56650	C0100-03A0A	6
203-06-56230	K0210-10A1F	23
203-06-59320	E0200-01A0	19
203-43-51620	K1110-10A0	4
203-43-51620	K1110-10A2	4
203-43-61310	K1110-10A0	1
203-43-61310	K1110-10A2	1
203-43-61510	K1530-01A0B	5
203-43-61520	K1530-01A0B	2
203-54-56630	M1220-01A0E	9
203-54-56960	B0300-01A1B	6
203-54-56970	K1110-10A0	8
203-54-56970	K1110-10A2	8
203-54-62180	M1130-01A0D	2
203-54-62180	M1130-01A0D	8
203-54-62180	M1140-01A0B	2
203-60-31100	H0110-01A0	2
203-60-31160	H0110-01A0	3
203-60-61140	H0110-01A0	31
203-60-62220	Y1600-10A0C	8
203-62-52260	H1831-02A0	9
203-62-52270	H1831-02A0	5
203-62-52280	H0120-03A0	28
203-62-52280	H1840-01A1H	13
203-62-52290	H1831-02A0	7
203-62-52290	H1831-02A0	11
203-62-52310	H1831-02A0	2
203-62-52310	H1840-01A1H	1
203-62-52330	H1840-03A1D	2
203-62-52340	K1110-11A0A	11
203-62-52340	K1110-11A2B	11
203-62-52340	K1110-21A4A	3
203-62-52350	H1831-02A0	4
203-62-52350	K1110-21A4A	4
203-62-62632	H1840-01A1H	2
203-62-63220	K1110-13A0A	24
203-62-63281	H1840-03A1D	1
203-62-63691	H1833-01A0E	1
203-977-4130	B0700-01A0A	12
203-979-6281	K0700-01A0B	2
205-00-73360	U0100-01A5C	2
205-00-73360	U0100-01A5D	2
205-03-62660	C0100-01A7A	3
205-03-62660	C0100-01A7C	3
205-03-62660	C0100-01A7D	3
205-03-62660	C0100-01A7E	3
205-03-71271	C0100-03A0A	1
205-03-71330	H0330-03A1	20
205-03-71532	C0100-03A0A	2
205-03-71540	C0100-03A0A	2
205-04-62140	D0200-01A0	18
205-04-71141	D0100-01A0	8
205-06-71173	E0100-01A6	2
205-06-71180	E0100-01A8	3
205-06-71550	K0210-06A0	21
205-25-71152	N1110-01A0	2
205-25-71280	N1110-01A0	3
205-26-71620	N1210-01A1A	33
205-30-71171	R1100-01A0A	3
205-30-71171	R1100-01A2A	3
205-30-71181	J1110-01A0E	2
205-30-71181	R1100-01A0A	5
205-30-71181	R1100-01A2A	5
205-30-71191	J1110-01A0E	3
205-30-71191	R1100-01A0A	6
205-30-71191	R1100-01A2A	6
205-30-72170	R0120-01A0	14
205-30-76190	R0110-01A0	9
205-30-76260	R0200-01A0A	4
205-30-76260	R0200-01A2A	4
205-54-51250	K0210-07A0B	5
205-54-51970	M1130-01A0D	21
205-54-51970	M1140-01A0B	14
205-54-53550	M1130-01A0D	11
205-54-53550	M1140-01A0B	4
205-54-63310	K0210-02A0B	24
205-54-68440	M1210-01A0C	26
205-54-71840	K0210-09A0B	15
205-60-22282	H0330-02A0	8
205-60-51360	H0330-02A0	11
205-60-51360	H0330-02A1	11
205-60-71290	H0330-02A0	8
205-60-71290	H0330-02A1	8
205-62-53780	D0200-01A0	37
205-62-53780	D0200-02A0	24
205-62-53780	K0700-02A0C	21
205-62-55780	H0330-03A1	6
205-62-72140	P1120-01A1A	22
205-62-72240	P1120-01A1A	12
205-62-72240	P1120-01A1A	16
205-62-72240	P1120-01A1A	19
205-62-73430	T1110-01A0	10
205-62-73430	T1110-01A2C	10
205-62-73430	T1110-03A0B	13
205-62-74190	H0120-01A0	23
205-62-74190	H0120-02A0	23
205-62-74740	H0312-01A0	5
205-62-74740	H0312-01A0	14
205-63-03101	Y1620-01A0C	1
205-63-03122	Y1620-11A0C	1
205-63-03131	Y1620-41A0C	1
205-63-03140	Y1620-41A1C	1
205-63-51121	Y1620-01A0C	4
205-63-51141	Y1620-01A0C	1
205-63-51171	Y1620-01A0C	28
205-63-53592	Y1620-01A0C	33
205-63-61121	Y1620-11A0C	4
205-63-61142	Y1620-11A0C	1
205-63-61171	Y1620-11A0C	30
205-63-71121	Y1620-41A0C	4
205-63-71141	Y1620-41A0C	1
205-63-71171	Y1620-41A0C	26
205-63-71520	Y1620-41A1C	4
205-63-71540	Y1620-41A1C	1
205-63-71570	Y1620-41A1C	26
205-63-X3101	T1120-01A0	1
205-63-X3101	Y1620-01A0C	G-1
205-63-X3111	T1120-01A0	2
205-63-X3111	Y1620-01A0C	G-2
205-63-X3122	T1140-01A0	1
205-63-X3122	Y1620-11A0C	G-1
205-63-X3131	T1200-01A0	18
205-63-X3131	T1200-01A0C	18
205-63-X3131	T1200-01A2	18
205-63-X3131	T1200-01A3	18
205-63-X3131	T1200-01C5	18
205-63-X3131	T1200-01C7	21
205-63-X3131	Y1620-41A0C	G-1
205-63-X3140	T1200-01A1	18
205-63-X3140	T1200-01A1C	18
205-63-X3140	Y1620-41A1C	G-1
205-70-00100	T1510-01F1C	11
205-70-00100	T1510-01F3C	11
205-70-19570	T1510-01F0	6
205-70-19570	T1510-01F1	6
205-70-19570	T1510-01F1C	6
205-70-19570	T1510-01F3C	6
205-70-19570	T1510-01F5C	6
205-70-51390	T1110-04A0B	13
205-70-51530	T1110-02A0	8
205-70-51530	T1200-03A0	10
205-70-62140	T1200-02A0C	7
205-70-62150	T1200-01A0	9
205-70-62150	T1200-01A0C	9
205-70-62150	T1200-01A1	9
205-70-62150	T1200-01A1C	9
205-70-62150	T1200-01A2	9
205-70-62150	T1200-01A3	9
205-70-62150	T1200-01C5	9
205-70-62150	T1200-01C7	12
205-70-65680	T1110-02A0	1
205-70-66580	J1310-01A0E	9
205-70-66580	T1110-02A0	9
205-70-66580	T1200-01A0	11
205-70-66580	T1200-01A0	15
205-70-66580	T1200-01A0C	11
205-70-66580	T1200-01A0C	15
205-70-66580	T1200-01A1	11
205-70-66580	T1200-01A1	15
205-70-66580	T1200-01A1C	11
205-70-66580	T1200-01A1C	15
205-70-66580	T1200-01A2	11
205-70-66580	T1200-01A2	15
205-70-66580	T1200-01A3	11
205-70-66580	T1200-01A3	15
205-70-66580	T1200-01C5	11
205-70-66580	T1200-01C5	15
205-70-66580	T1200-01C7	14
205-70-66580	T1200-01C7	18
205-70-67150	T1200-02A0C	3
205-70-67150	T1200-02A1	3
205-70-69570	T1510-02A3	2
205-70-71190	T1200-01A0	14
205-70-71190	T1200-01A0C	14
205-70-71190	T1200-01A1	14
205-70-71190	T1200-01A1C	14
205-70-71190	T1200-01A2	14

PARTS Nº	FIG. Nº	INDEX
205-70-71190	T1200-01A3	14
205-70-71190	T1200-01C5	14
205-70-71190	T1200-01C7	17
205-70-71210	J1310-01A0E	8
205-70-71310	T1110-02A0	3
205-70-71360	Y1620-01A0C	2
205-70-72130	T1200-01A0	4
205-70-72130	T1200-01A0C	4
205-70-72130	T1200-01A1	4
205-70-72130	T1200-01A1C	4
205-70-72130	T1200-01A2	4
205-70-72130	T1200-01A3	4
205-70-72130	T1200-01C5	4
205-70-72130	T1200-01C7	7
205-70-72180	T1200-01A0	2
205-70-72180	T1200-01A0C	2
205-70-72180	T1200-01A1	2
205-70-72180	T1200-01A1C	2
205-70-72180	T1200-01A2	2
205-70-72180	T1200-01A3	2
205-70-72180	T1200-01C5	2
205-70-72180	T1200-01C7	5
205-70-73130	T1200-02A0C	8
205-70-73130	T1200-02A1	8
205-70-73160	T1200-02A0C	11
205-70-73160	T1200-02A1	11
205-70-73180	T1200-02A0C	2
205-70-73180	T1200-02A1	2
205-70-73190	T1200-02A0C	12
205-70-73190	T1200-02A0C	15
205-70-73190	T1200-02A1	12
205-70-73190	T1200-02A1	15
205-70-73190	T1510-01D1	8
205-70-73270	T1200-02A0C	14
205-70-73270	T1200-02A0C	17
205-70-73270	T1200-02A1	14
205-70-73270	T1200-02A1	17
205-70-73280	T1200-03A0	8
205-70-73290	T1290-01A0C	1
205-70-74180	T1510-02A1	1
205-70-74190	T1510-02A1	2
205-70-74381	T1510-01F1C	12
205-70-74381	T1510-01F3C	12
205-70-74391	T1510-01F1C	8
205-70-74391	T1510-01F3C	8
205-70-74410	T1510-01D1	7
205-929-6120	T1510-01D1	2
205-929-6130	T1510-01D1	3
205-929-B110	T1510-01D1	1
205-970-7680	T1200-05A7	27

PARTS Nº	FIG. Nº	INDEX
205-970-7680	T1200-05B9	27
205-970-7680	T1200-05C1	27
206-01-68220	B0300-01A0A	1
206-03-43340	C0100-03A0A	4
206-03-43340	C0100-03A0A	10
206-03-61410	C0100-01A7D	1
206-03-61410	C0100-01A7E	1
206-06-61130	H1833-01A0E	15
206-06-61130	K1540-01A1C	17
206-30-45262	R0120-01A0	4
206-30-45381	R0120-01A0	3
206-30-55122	R0120-01A0	7
206-30-55150	R0120-01A0	2
206-30-55170	R0120-01A0	11
206-30-65181	R0120-01A0	12
206-60-41221	H0110-01A0	17
206-60-51101	H1831-01A0	1
206-60-51131	H1831-01A0	1
206-60-51140	H1831-01A0	2
206-62-52281	T1110-01A0	6
206-62-52281	T1110-01A2C	6
206-70-51190	T1125-01A0	6
206-70-55160	J1310-01A0E	1
207-04-A1100	D0200-01A0	47
207-06-61210	K0210-12D8	7
207-30-56140	R0110-01A0	2
207-43-61150	K1110-04A0	6
207-43-61160	K1110-07A0A	4
207-43-68121	B0400-01A0A	7
207-46-32220	M1520-01A0	2
207-54-65130	K1120-01A0D	1
207-54-65130	K1120-01A0D	4
207-54-65190	K1110-18A0A	2
207-54-65210	K1110-18A0A	1
207-57-61100	K0110-01A0A	1
207-57-61310	K0120-01A0A	1
207-60-61150	H0110-01A0	28
207-62-31330	T1110-05A1B	6
207-62-31330	T1110-05A1B	14
207-62-31330	T1200-05A7	22
207-62-31330	T1200-05A7	30
207-62-31330	T1200-05B9	22
207-62-31330	T1200-05B9	30
207-62-31330	T1200-05C1	22
207-62-32890	E0200-03A0	29
207-62-56190	H0120-05A0	3
208-06-19170	E0200-02A0	21
208-06-19170	E0200-02A0	25
208-06-19170	E0200-02A0	26
208-06-19170	K1520-01A0D	11A

PARTS Nº	FIG. Nº	INDEX
208-06-19170	K1520-01A2	11A
208-26-11611	H0120-01A0	7
208-26-11611	H0120-02A0	7
208-26-11611	H1831-01A0	12
208-26-11611	N1310-01A0	6
208-62-17550	H0120-01A0	9
208-62-17550	H0120-01A0	27
208-62-17550	H0120-02A0	9
208-62-17550	H0120-02A0	27
208-62-17550	H1831-01A0	4
208-62-17550	K1110-11A2B	36
208-62-17550	K1110-11A2B	45
208-62-38370	C0100-02A0A	6
208-62-53120	N1310-01A0	9
209-04-13130	D0100-01A0	9
209-62-14430	N1310-01A0	14
209-62-52560	N1310-01A0	15
209-72-12230	K1740-01A0C	15
20B-27-11210	Y1600-05A0C	6
20B-27-11210	Y1641-01A0A	13
20D-54-41390	K0210-05A0D	21A
20D-62-17860	Y1620-11A0C	31
20F-61-12460	H0120-01A0	15
20F-61-12460	H0120-02A0	15
20F-61-12460	H0120-02A0	41
20G-26-11240	N1210-01A1A	14
20G-26-11240	Y0260-01A0C	11
20N-62-31250	K1530-01A0B	8
20T-54-75250	K0210-05A0D	7
20U-62-22280	K1530-01A0B	9
20Y-00-21111	U0100-01A5C	29
20Y-00-21111	U0100-01A5D	29
20Y-00-21161	U0100-01A5C	32
20Y-00-21161	U0100-01A5D	32
20Y-00-22450	U0100-01A5C	37
20Y-00-22450	U0100-01A5D	37
20Y-00-22780	U0100-01A5C	6
20Y-00-22781	U0100-01A5C	5
20Y-00-22781	U0100-01A5D	5
20Y-00-22880	K0210-14A1A	8
20Y-00-22890	U0100-01A5C	28
20Y-00-22890	U0100-01A5D	28
20Y-00-B1110	U0100-01A5C	34
20Y-00-B1110	U0100-01A5D	34
20Y-00-B1120	U0100-01A5C	19
20Y-00-B1120	U0100-01A5D	19
20Y-00-B1130	U0100-01A5C	21
20Y-00-B1130	U0100-01A5D	21
20Y-00-B1140	U0100-01A5C	22
20Y-00-B1140	U0100-01A5D	22

PARTS Nº	FIG. Nº	INDEX
20Y-00-B1150	U0100-01A5C	30
20Y-00-B1150	U0100-01A5D	30
20Y-00-B1160	U0100-01A5C	35
20Y-00-B1160	U0100-01A5D	35
20Y-00-B1170	U0300-01A7	1
20Y-00-B1180	U0550-01A1	1
20Y-00-B1210	U0100-01A5C	20
20Y-00-B1210	U0100-01A5D	20
20Y-00-B1220	U0100-01A5C	25
20Y-00-B1220	U0100-01A5D	25
20Y-00-B1230	U0100-01A5C	31
20Y-00-B1230	U0100-01A5D	31
20Y-00-B1240	M1420-01A0	5
20Y-01-11141	B0100-01A0A	3
20Y-01-12141	B0100-01A0A	2
20Y-01-12160	B0100-01A0A	6
20Y-01-12180	B0100-01A0A	7
20Y-01-12210	B0100-01A0A	1
20Y-01-12221	B0100-01A0A	5
20Y-01-12250	B0100-01A0A	9
20Y-01-12270	B0100-01A0A	11
20Y-01-12280	B0100-01A0A	8
20Y-01-18280	B0600-01A0A	1
20Y-01-21260	B0000-01A0A	5
20Y-01-21260	B0000-01A0A	9
20Y-01-22111	B0100-01A0A	4
20Y-01-22120	B0000-01A0A	6
20Y-01-22150	B0300-01A1B	7
20Y-01-22190	B0300-01A1B	10
20Y-01-22210	B0300-01A1B	13
20Y-01-22220	B0300-01A1B	1
20Y-01-22230	B0300-01A0A	7
20Y-01-29210	B0200-01A1C	5
20Y-01-29231	B0000-01A0A	1
20Y-01-29241	B0000-01A0A	2
20Y-01-A3210	B0700-01A0A	8
20Y-01-B1110	A1.00	1
20Y-01-B1120	B0700-01A0A	13
20Y-01-B1140	B0300-01A1B	7
20Y-01-B1160	B0300-01A1B	1
20Y-01-K1510	A13.02.1	1
20Y-01-K1520	A13.02.1	2
20Y-01-K1530	A13.02.1	3
20Y-01-K1540	A13.02.1	4
20Y-01-K1550	A13.02.1	5
20Y-01-K1560	A13.02.1	6
20Y-01-K1570	A13.02.1	7
20Y-01-K1580	A13.02.1	8
20Y-01-K1590	A13.02.1	9
20Y-01-K1610	A13.02.1	10

PARTS Nº	FIG. Nº	INDEX
20Y-01-K1620	A13.02.1	11
20Y-01-K1630	A13.02.1	12
20Y-01-K1640	A13.02.1	13
20Y-01-K1650	A13.02.1	14
20Y-01-K1660	A13.02.1	15
20Y-01-K1670	A13.02.1	16
20Y-01-K1680	A13.02.1	17
20Y-01-K1690	A13.02.1	18
20Y-01-K1710	A13.02.1	19
20Y-01-K1720	A13.02.1	20
20Y-01-K1730	A13.02.1	21
20Y-03-11330	C0100-01A7A	6
20Y-03-11330	C0100-01A7C	6
20Y-03-11330	C0100-01A7D	6
20Y-03-11330	C0100-01A7E	6
20Y-03-12470	C0100-01A7D	35
20Y-03-12470	C0100-01A7E	41
20Y-03-12480	C0100-01A7D	36
20Y-03-12480	C0100-01A7E	42
20Y-03-12490	C0100-01A7D	37
20Y-03-12490	C0100-01A7E	43
20Y-03-14110	C0100-01A7A	25
20Y-03-14110	C0100-01A7C	25
20Y-03-14110	C0100-01A7D	29
20Y-03-14110	C0100-01A7E	29
20Y-03-21141	C0100-01A7A	19
20Y-03-21141	C0100-01A7C	19
20Y-03-21141	C0100-01A7D	23
20Y-03-21141	C0100-01A7E	23
20Y-03-21152	C0100-01A7D	11
20Y-03-21152	C0100-01A7E	11
20Y-03-21162	C0100-01A7D	12
20Y-03-21162	C0100-01A7E	12
20Y-03-21171	C0100-03A0A	13
20Y-03-21252	C0100-03A0A	5
20Y-03-21253	C0100-03A0A	5A
20Y-03-21260	C0100-01A7A	30
20Y-03-21260	C0100-01A7C	36
20Y-03-21260	C0100-01A7D	34
20Y-03-21270	C0100-01A7A	29
20Y-03-21270	C0100-01A7C	35
20Y-03-21320	C0100-01A7A	13
20Y-03-21320	C0100-01A7C	13
20Y-03-21320	C0100-01A7D	13
20Y-03-21320	C0100-01A7E	13
20Y-03-21330	C0100-01A7A	15
20Y-03-21330	C0100-01A7C	15
20Y-03-21330	C0100-01A7D	19
20Y-03-21330	C0100-01A7E	19
20Y-03-21340	C0100-01A7D	9

PARTS Nº	FIG. Nº	INDEX
20Y-03-21340	C0100-01A7E	9
20Y-03-21350	C0100-01A7D	10
20Y-03-21350	C0100-01A7E	10
20Y-03-21380	C0100-01A7A	26
20Y-03-21380	C0100-01A7C	26
20Y-03-21380	C0100-01A7D	30
20Y-03-21380	C0100-01A7E	30
20Y-03-21410	C0100-01A7D	14
20Y-03-21410	C0100-01A7E	14
20Y-03-21420	C0100-01A7D	15
20Y-03-21420	C0100-01A7E	15
20Y-03-21430	C0100-01A7A	18
20Y-03-21430	C0100-01A7A	22
20Y-03-21430	C0100-01A7C	18
20Y-03-21430	C0100-01A7C	22
20Y-03-21430	C0100-01A7D	22
20Y-03-21430	C0100-01A7D	26
20Y-03-21430	C0100-01A7E	22
20Y-03-21430	C0100-01A7E	26
20Y-03-21450	C0100-03A0A	3
20Y-03-21460	C0100-03A0A	9
20Y-03-21480	C0100-01A7A	9
20Y-03-21480	C0100-01A7C	9
20Y-03-21481	C0100-01A7A	9
20Y-03-21481	C0100-01A7C	9
20Y-03-21490	C0100-01A7A	10
20Y-03-21490	C0100-01A7C	10
20Y-03-21491	C0100-01A7A	10
20Y-03-21491	C0100-01A7C	10
20Y-03-21631	C0100-01A7A	23
20Y-03-21631	C0100-01A7C	23
20Y-03-21653	C0310-02A0	1
20Y-03-21661	C0310-01A2	1
20Y-03-21661	C0310-02A0	4
20Y-03-21680	K0700-01A0B	24
20Y-03-21710	C0100-01A7A	1
20Y-03-21710	C0100-01A7C	1
20Y-03-21711	C0100-01A7A	1
20Y-03-21711	C0100-01A7C	1
20Y-03-21720	C0100-01A7A	14
20Y-03-21720	C0100-01A7C	14
20Y-03-21750	C0100-01A7A	11
20Y-03-21750	C0100-01A7C	11
20Y-03-21760	C0100-01A7A	12
20Y-03-21760	C0100-01A7C	12
20Y-03-21772	C0310-02A0	7
20Y-03-21890	C0100-02A0A	3
20Y-03-21990	C0310-01A8	7
20Y-03-21990	C0310-02A0	10
20Y-03-22110	C0100-01A7A	2

PARTS Nº	FIG. Nº	INDEX
20Y-03-22110	C0100-01A7C	2
20Y-03-22110	C0100-01A7D	2
20Y-03-22110	C0100-01A7E	2
20Y-03-27120	C0100-01A7D	18
20Y-03-27120	C0100-01A7E	18
20Y-03-27130	C0100-03A0A	20
20Y-03-27140	C0100-01A7D	27
20Y-03-27140	C0100-01A7E	27
20Y-03-27150	C0310-01A5	4
20Y-03-27160	C0310-01A1	1
20Y-03-27160	C0310-02A0	4
20Y-03-27170	C0100-02A0A	1
20Y-03-27180	C0100-02A0A	3
20Y-03-27190	C0100-03A0A	21
20Y-03-28292	C0100-02A0A	1
20Y-03-K1260	C0100-01A7E	40
20Y-03-K1260	C0100-03A0A	13
20Y-03-K1280	C0100-01A7D	33
20Y-03-K1280	C0100-01A7E	39
20Y-04-11160	D0100-01A0	3
20Y-04-21151	D0200-01A0	40
20Y-04-21151	D0200-02A0	27
20Y-04-21211	D0200-01A0	13
20Y-04-21211	D0200-02A0	7
20Y-04-21431	D0100-01A0	1
20Y-04-21550	D0100-01A0	13
20Y-04-21630	D0200-01A0	2
20Y-04-21630	D0200-01A0	10
20Y-04-21630	D0200-01A0	29
20Y-04-21630	D0200-02A0	4
20Y-04-21630	D0200-02A0	12
20Y-04-B1130	D0100-01A0	1
20Y-04-B1140	D0200-02A0	38
20Y-06-15240	C0100-03A0A	1
20Y-06-21240	E0200-02A0	6
20Y-06-21251	K0210-15A2A	1
20Y-06-21310	T1110-04A0B	15
20Y-06-21330	K1540-01A1C	18
20Y-06-21350	K1110-03A0	14
20Y-06-21350	K1110-06A0	13
20Y-06-21361	K1110-01A0E	4
20Y-06-21460	K0210-10A1F	10
20Y-06-21532	E0200-02A0	30
20Y-06-21551	T1110-10A0B	3
20Y-06-21561	E0200-05A0	1
20Y-06-21612	K0350-01A0	2
20Y-06-21692	E0200-06A0	4
20Y-06-21710	H1833-01A0E	16
20Y-06-21751	K1110-03A0	13
20Y-06-22520	K0350-01A0	7
20Y-06-22740	K0210-12D8	1
20Y-06-22852	E0200-01A0	7
20Y-06-22860	E0200-01A0	1
20Y-06-22872	E0200-01A0	27
20Y-06-23211	K0210-11A1B	29
20Y-06-23211	K0210-11A2B	29
20Y-06-23320	K0210-13A8	1
20Y-06-23421	K0210-11A1B	24
20Y-06-23421	K0210-11A2B	24
20Y-06-23431	K0210-11A1B	21
20Y-06-23431	K0210-11A2B	21
20Y-06-23441	K0210-11A1B	22
20Y-06-23441	K0210-11A2B	22
20Y-06-23461	K0210-11A2B	33
20Y-06-23471	K0210-11A1B	26
20Y-06-23471	K0210-11A2B	26
20Y-06-23521	K0210-10A1F	31
20Y-06-23710	K0210-11A1B	3
20Y-06-23710	K0210-11A2B	3
20Y-06-23720	K0210-11A1B	5
20Y-06-23720	K0210-11A2B	5
20Y-06-23730	K0210-11A1B	7
20Y-06-23730	K0210-11A2B	7
20Y-06-23740	K0210-11A1B	9
20Y-06-23740	K0210-11A2B	9
20Y-06-23750	K0210-11A1B	11
20Y-06-23750	K0210-11A2B	11
20Y-06-23760	K0210-11A1B	13
20Y-06-23760	K0210-11A2B	13
20Y-06-23770	K0210-11A1B	15
20Y-06-23770	K0210-11A2B	15
20Y-06-23780	K0210-13A8	6
20Y-06-23790	K0210-11A1B	17
20Y-06-23790	K0210-11A2B	17
20Y-06-23810	K0210-11A1B	19
20Y-06-23810	K0210-11A2B	19
20Y-06-23820	K0210-11A1B	27
20Y-06-23820	K0210-11A2B	27
20Y-06-23840	K0210-11A1B	33
20Y-06-23840	K0210-11A1B	34
20Y-06-23840	K0210-11A2B	32
20Y-06-23860	K0210-12D8	5
20Y-06-23890	K0210-12D8	2
20Y-06-23910	K0210-12D8	10
20Y-06-23920	K0210-12D8	12
20Y-06-23940	K0210-11A1B	1
20Y-06-23940	K0210-11A2B	1
20Y-06-23950	K0210-11A1B	23
20Y-06-23950	K0210-11A2B	23
20Y-06-23960	K0210-10A1F	11
20Y-06-24121	K0210-10A1F	2
20Y-06-24130	K0210-10A1F	9
20Y-06-24220	K0210-10A1F	29
20Y-06-24270	K0700-01A1A	10
20Y-06-24270	K1110-17B0	7
20Y-06-24470	K1730-01A0	1
20Y-06-24811	E0200-02A0	1
20Y-06-24840	E0100-01A2	1
20Y-06-25110	K0210-10A1F	1
20Y-06-25130	K0210-10A1F	27
20Y-06-25310	E0200-06A0	1
20Y-06-25310	T1110-10A0B	2
20Y-06-27160	E0200-03A0	25
20Y-06-27170	E0200-03A0	28
20Y-06-27751	K0210-10A1F	4
20Y-06-27880	K0210-12D8	6
20Y-06-B1110	B0500-01A0A	1
20Y-06-B1120	B0500-01A0A	2
20Y-06-B1130	E0100-01A1	1
20Y-06-B1140	E0100-01A5	2
20Y-06-B1150	E0100-01A7	3
20Y-06-K2570	K1730-01A0	1
20Y-25-11270	N1110-01A0	9
20Y-25-11270	T1110-10A0B	10
20Y-25-11290	N1110-01A0	4
20Y-25-21122	N1110-01A0	8
20Y-25-21200	N1110-01A0	1
20Y-25-21220	N1110-01A0	14
20Y-26-00151	Y0260-01A0C	1
20Y-26-21141	N1210-01A1A	11
20Y-26-21141	Y0260-01A0C	8
20Y-26-21240	N1210-01A1A	18
20Y-26-21240	Y0260-01A0C	15
20Y-26-21280	N1210-01A1A	26
20Y-26-21280	Y0260-01A0C	23
20Y-26-21340	N1210-01A1A	37
20Y-26-22110	N1210-01A1A	30
20Y-26-22110	Y0260-01A0C	27
20Y-26-22120	N1210-01A1A	25
20Y-26-22120	Y0260-01A0C	22
20Y-26-22131	N1210-01A1A	21
20Y-26-22131	Y0260-01A0C	18
20Y-26-22141	N1210-01A1A	13
20Y-26-22141	Y0260-01A0C	10
20Y-26-22151	N1210-01A1A	20
20Y-26-22151	Y0260-01A0C	17
20Y-26-22160	N1210-01A1A	24
20Y-26-22160	Y0260-01A0C	21
20Y-26-22170	N1210-01A1A	12
20Y-26-22170	Y0260-01A0C	9

PARTS Nº	FIG. Nº	INDEX
20Y-26-22191	N1210-01A1A	7
20Y-26-22191	Y0260-01A0C	4
20Y-26-22210	N1210-01A1A	4
20Y-26-22210	Y0260-01A0C	1
20Y-26-22220	N1210-01A1A	23
20Y-26-22220	Y0260-01A0C	20
20Y-26-22230	N1210-01A1A	31
20Y-26-22230	Y0260-01A0C	28
20Y-26-22240	N1210-01A1A	28
20Y-26-22240	Y0260-01A0C	25
20Y-26-22250	N1210-01A1A	16
20Y-26-22250	Y0260-01A0C	13
20Y-26-22260	N1210-01A1A	38
20Y-26-22270	N1210-01A1A	2
20Y-26-22330	N1210-01A1A	5
20Y-26-22330	Y0260-01A0C	2
20Y-26-22340	N1210-01A1A	6
20Y-26-22340	Y0260-01A0C	3
20Y-26-22410	Y0260-01A0C	29
20Y-26-22420	N1210-01A1A	10
20Y-26-22420	Y0260-01A0C	7
20Y-27-00202	Y0270-01A0A	1
20Y-27-11561	P1210-01A0A	36
20Y-27-11561	Y0270-01A0A	36
20Y-27-11581	P1210-01A0A	35
20Y-27-11581	Y0270-01A0A	35
20Y-27-13281	P1210-01A0A	30
20Y-27-13281	Y0270-01A0A	30
20Y-27-13310	P1210-01A0A	16
20Y-27-13310	Y0270-01A0A	16
20Y-27-21220	P1210-01A0A	24
20Y-27-21220	Y0270-01A0A	24
20Y-27-21230	P1210-01A0A	14
20Y-27-21230	Y0270-01A0A	14
20Y-27-21240	N1210-01A1A	15
20Y-27-21240	N1210-01A1A	27
20Y-27-21240	P1210-01A0A	23
20Y-27-21240	Y0260-01A0C	12
20Y-27-21240	Y0260-01A0C	24
20Y-27-21240	Y0270-01A0A	23
20Y-27-21250	P1210-01A0A	13
20Y-27-21250	Y0270-01A0A	13
20Y-27-21280	N1210-01A1A	17
20Y-27-21280	N1210-01A1A	29
20Y-27-21280	P1210-01A0A	25
20Y-27-21280	Y0260-01A0C	14
20Y-27-21280	Y0260-01A0C	26
20Y-27-21280	Y0270-01A0A	25
20Y-27-21290	P1210-01A0A	15
20Y-27-21290	Y0270-01A0A	15
20Y-27-21310	P1210-01A0A	27
20Y-27-21310	Y0270-01A0A	27
20Y-27-22110	P1210-01A0A	26
20Y-27-22110	Y0270-01A0A	26
20Y-27-22120	P1210-01A0A	21
20Y-27-22120	Y0270-01A0A	21
20Y-27-22130	P1210-01A0A	17
20Y-27-22130	Y0270-01A0A	17
20Y-27-22140	P1210-01A0A	11
20Y-27-22140	Y0270-01A0A	11
20Y-27-22150	P1210-01A0A	19
20Y-27-22150	Y0270-01A0A	19
20Y-27-22160	P1210-01A0A	20
20Y-27-22170	P1210-01A0A	10
20Y-27-22170	Y0270-01A0A	10
20Y-27-22181	P1210-01A0A	4
20Y-27-22181	Y0270-01A0A	4
20Y-27-22190	P1210-01A0A	29
20Y-27-22190	Y0270-01A0A	29
20Y-27-22210	P1210-01A0A	22
20Y-27-22210	Y0270-01A0A	22
20Y-27-22220	P1210-01A0A	12
20Y-27-22220	Y0270-01A0A	12
20Y-27-22230	P1210-01A0A	5
20Y-27-22230	Y0270-01A0A	5
20Y-27-22240	P1210-01A0A	18
20Y-27-22240	Y0270-01A0A	18
20Y-27-22250	P1210-01A0A	28
20Y-27-22250	Y0270-01A0A	28
20Y-27-22261	P1210-01A0A	7
20Y-27-22261	Y0270-01A0A	7
20Y-27-22270	P1210-01A0A	8
20Y-27-22270	Y0270-01A0A	8
20Y-27-22280	P1210-01A0A	6
20Y-27-22280	Y0270-01A0A	6
20Y-30-00014	R0200-01A0A	1
20Y-30-00015	R0200-01A2A	1
20Y-30-00022	R0300-01A0	
20Y-30-00030	R0110-01A0	1
20Y-30-00041	R0200-01A0A	5
20Y-30-00051	R0200-01A0A	5
20Y-30-00061	R0200-01A0A	6
20Y-30-00070	R0300-01A0	4
20Y-30-00080	R0300-01A0	4
20Y-30-00090	R0300-01A0	5
20Y-30-00100	R0110-01A0	6
20Y-30-00110	R0110-01A0	6
20Y-30-00120	R0110-01A0	7
20Y-30-11312	R1200-01A0	1
20Y-30-11312	R1200-01A0	1
20Y-30-11340	R0200-01A0A	11
20Y-30-11340	R0200-01A2A	11
20Y-30-11340	R0200-01A2A	11
20Y-30-11370	R1100-01A0A	9
20Y-30-11370	R1100-01A2A	9
20Y-30-11420	P1210-01A0A	39
20Y-30-12110	R0120-01A0	11
20Y-30-13120	R0110-01A0	1
20Y-30-13130	R0110-01A0	3
20Y-30-13150	R0110-01A0	8
20Y-30-15121	R0300-01A0	6
20Y-30-15131	R0300-01A0	3
20Y-30-15140	R0300-01A0	9
20Y-30-15221	R0300-01A0	1
20Y-30-16130	R0200-01A0A	3
20Y-30-16170	R0200-01A0A	10
20Y-30-16170	R0200-01A2A	10
20Y-30-16330	R0200-01A0A	8
20Y-30-16330	R0200-01A2A	8
20Y-30-16330	R0300-01A0	11
20Y-30-16330	R0300-02A0	10
20Y-30-16410	R0200-01A0A	1
20Y-30-16411	R0200-01A2A	1
20Y-30-16430	R0200-01A0A	7
20Y-30-16440	R0200-01A0A	9
20Y-30-16450	R0200-01A0A	2
20Y-30-21150	R1100-01A0A	4
20Y-30-21151	R1100-01A0A	4
20Y-30-21151	R1100-01A2A	4
20Y-30-21190	P1210-01A0A	39
20Y-30-21411	R1100-01A0A	1
20Y-30-21N60	R1100-01A0A	2
20Y-30-21N61	R1100-01A0A	2
20Y-30-21N61	R1100-01A2A	2
20Y-30-22113	R0120-01A0	1
20Y-30-22122	R0120-01A0	12
20Y-30-B1110	R1100-01A0A	1
20Y-30-B1111	R1100-01A0A	1
20Y-30-B2110	R1100-01A2A	1
20Y-32-01014	R0500-01A2	1
20Y-32-01225	R0500-01A3	1
20Y-32-11123	R0500-01A2	1
20Y-32-11123	R0500-01A2	10
20Y-32-11123	R0500-01A3	1
20Y-32-11123	R0500-01A3	10
20Y-32-11133	R0500-01A2	2
20Y-32-11133	R0500-01A2	11
20Y-32-11133	R0500-01A3	2
20Y-32-11133	R0500-01A3	11

PARTS Nº	FIG. Nº	INDEX
20Y-32-11140	R0500-01A2	5
20Y-32-11140	R0500-01A2	14
20Y-32-11141	R0500-01A3	5
20Y-32-11141	R0500-01A3	14
20Y-32-11150	R0500-01A2	6
20Y-32-11150	R0500-01A2	15
20Y-32-11150	R0500-01A3	6
20Y-32-11150	R0500-01A3	15
20Y-32-11170	R0500-01A2	4
20Y-32-11170	R0500-01A2	13
20Y-32-11171	R0500-01A3	4
20Y-32-11171	R0500-01A3	13
20Y-32-11190	R0500-01A2	20
20Y-32-11190	R0500-01A3	20
20Y-32-11210	R0500-01A2	8
20Y-32-11210	R0500-01A2	17
20Y-32-11210	R0500-01A3	8
20Y-32-11210	R0500-01A3	17
20Y-32-11240	R0500-01A2	3
20Y-32-11240	R0500-01A2	12
20Y-32-11240	R0500-01A3	3
20Y-32-11240	R0500-01A3	12
20Y-32-11260	R0500-01A2	19
20Y-32-11260	R0500-01A3	19
20Y-32-11311	R0500-01A2	7
20Y-32-11311	R0500-01A2	16
20Y-32-11321	R0500-01A3	7
20Y-32-11321	R0500-01A3	16
20Y-43-00010	K1110-03A0	4
20Y-43-00010	K1110-06A0	4
20Y-43-16590	K1110-03A0	11
20Y-43-16590	K1110-06A0	11
20Y-43-21121	K1110-10A0	15
20Y-43-21121	K1110-10A2	15
20Y-43-21131	K1110-10A0	16
20Y-43-21131	K1110-10A2	16
20Y-43-21140	K1110-10A0	5
20Y-43-21140	K1110-10A2	5
20Y-43-21151	K1110-10A0	6
20Y-43-21151	K1110-10A2	6
20Y-43-21161	K1110-10A0	9
20Y-43-21161	K1110-10A2	9
20Y-43-21180	K1110-10A0	20
20Y-43-21180	K1110-10A2	20
20Y-43-21190	K1110-10A0	21
20Y-43-21190	K1110-10A2	21
20Y-43-21231	K1110-10A0	17
20Y-43-21231	K1110-10A2	17
20Y-43-21241	K1110-10A0	18
20Y-43-21241	K1110-10A2	18

PARTS Nº	FIG. Nº	INDEX
20Y-43-21260	K1110-10A0	6A
20Y-43-21260	K1110-10A2	6A
20Y-43-21372	K1110-04A0	1
20Y-43-21382	K1110-07A0A	1
20Y-43-21613	K1110-03A0	1
20Y-43-21621	K1110-06A0	1
20Y-43-21651	K1110-03A0	20
20Y-43-21651	K1110-06A0	19
20Y-43-21831	K1110-01A0E	2
20Y-43-21841	K1110-01A0E	3
20Y-43-21871	K1110-04A0	38
20Y-43-21883	K1110-07A0A	19
20Y-43-21892	K1110-04A0	3
20Y-43-21920	K1110-04A0	4
20Y-43-21931	K1110-04A0	17
20Y-43-21940	K1110-04A0	10
20Y-43-21950	K1110-04A0	2
20Y-43-21960	K1110-04A0	41
20Y-43-21970	K1110-07A0A	22
20Y-43-21980	K1110-04A0	33
20Y-43-22111	K1110-03A0	20
20Y-43-22111	K1110-06A0	19
20Y-43-22121	K1110-03A0	10
20Y-43-22121	K1110-06A0	10
20Y-43-22131	K1110-03A0	21
20Y-43-22131	K1110-06A0	20
20Y-43-22152	K1110-03A0	12
20Y-43-22161	K1110-06A0	12
20Y-43-22211	K1110-03A0	1
20Y-43-22221	K1110-06A0	1
20Y-43-22233	K1110-03A0	2
20Y-43-22241	K1110-06A0	2
20Y-43-22250	K1110-03A0	6
20Y-43-22250	K1110-06A0	6
20Y-43-22261	K1110-03A0	7
20Y-43-22261	K1110-06A0	7
20Y-43-22310	K1110-03A0	22
20Y-43-22310	K1110-06A0	21
20Y-43-22320	K1110-07A0A	10
20Y-43-22320	K1110-07A0A	18
20Y-43-22330	K1110-04A0	22
20Y-43-22370	K1110-03A0	8
20Y-43-22370	K1110-06A0	8
20Y-43-22381	K1110-03A0	3
20Y-43-22390	K1110-06A0	3
20Y-43-22421	K1110-03A0	4
20Y-43-22421	K1110-06A0	4
20Y-43-22441	K1110-03A0	5
20Y-43-22441	K1110-06A0	5
20Y-43-22451	K1110-03A0	12

PARTS Nº	FIG. Nº	INDEX
20Y-43-22470	K1110-03A0	23
20Y-43-22470	K1110-06A0	22
20Y-43-22480	K1110-03A0	24
20Y-43-22480	K1110-06A0	23
20Y-43-22540	K1110-07A0A	11
20Y-43-22670	K1110-07A0A	15
20Y-43-22680	K1110-07A0A	7
20Y-43-23370	B0400-01A0A	1
20Y-43-23381	B0400-01A0A	17
20Y-43-23470	B0400-01A0A	10
20Y-46-11270	M1510-01A2B	5
20Y-46-11410	M1520-01A0	3
20Y-46-21520	N1110-01A0	6A
20Y-46-21611	J1110-01A0E	1
20Y-46-21890	J1110-01A0E	7
20Y-46-24141	M1510-01A2B	2
20Y-46-24142	M1510-01A2B	2
20Y-46-24391	M1510-01A2B	3
20Y-46-24392	M1510-01A2B	3
20Y-46-24490	M1510-01A2B	4
20Y-46-24491	M1510-01A2B	4
20Y-54-00515	K0210-08A0A	1
20Y-54-00515	K0210-09A0B	1
20Y-54-11611	K0210-01A1D	16
20Y-54-11611	M1130-01A0D	38
20Y-54-11611	M1140-01A0B	23
20Y-54-12320	M1150-01A0C	40
20Y-54-12550	M1150-01A0C	14
20Y-54-12550	M1150-01A0C	21
20Y-54-12550	M1810-01A0E	16
20Y-54-12550	M1810-02A0C	5
20Y-54-12550	M1810-02A0C	10
20Y-54-12550	M1810-02A0C	18
20Y-54-12920	M1130-01A0D	35
20Y-54-13180	K0210-08A0A	10
20Y-54-13322	K0210-08A0A	6
20Y-54-13480	K0210-14A1A	7
20Y-54-14280	K0210-02A0B	14
20Y-54-14290	K0210-02A0B	9
20Y-54-14310	K0210-02A0B	13
20Y-54-14352	K0210-08A0A	4
20Y-54-14560	K0210-09A0B	20
20Y-54-14590	K0210-05A0D	26
20Y-54-14590	K0210-02A0B	11
20Y-54-14721	K0210-02A0B	33
20Y-54-18690	K0210-05A0D	25
20Y-54-18690	K0210-07A0B	4
20Y-54-19920	M1210-01A0C	9
20Y-54-19930	M1210-01A0C	8
20Y-54-23870	M1310-01A0	1

PARTS Nº	FIG. Nº	INDEX
20Y-54-25170	K1110-10A0	34
20Y-54-25210	M1130-02A0B	3
20Y-54-25211	M1130-02A0B	3
20Y-54-25230	M1150-01A0C	8
20Y-54-25231	M1150-01A0C	8
20Y-54-25240	M1150-01A0C	9
20Y-54-25241	M1150-01A0C	9
20Y-54-25250	M1150-01A0C	10
20Y-54-25251	M1150-01A0C	10
20Y-54-25260	M1150-01A0C	11
20Y-54-25261	M1150-01A0C	11
20Y-54-25270	M1150-01A0C	29
20Y-54-25311	M1130-01A0D	17
20Y-54-25321	M1120-01A0C	1
20Y-54-25331	M1120-01A0C	5
20Y-54-25351	M1130-01A0D	40
20Y-54-25361	M1130-01A0D	42
20Y-54-25371	M1160-01A0C	5
20Y-54-25381	M1110-01A0B	11
20Y-54-25381	M1110-02A0	11
20Y-54-25392	M1150-01A0C	3
20Y-54-25411	M1140-01A0B	10
20Y-54-25451	M1210-01A0C	10
20Y-54-25461	M1160-01A0C	1
20Y-54-25481	M1210-01A0C	1
20Y-54-25511	M1150-01A0C	7
20Y-54-25570	M1150-01A0C	30
20Y-54-25571	M1150-01A0C	30
20Y-54-25580	M1150-01A0C	31
20Y-54-25581	M1150-01A0C	31
20Y-54-25680	M1110-01A0B	9
20Y-54-25720	M1210-01A0C	2
20Y-54-25721	M1210-01A0C	2
20Y-54-25730	M1210-01A0C	3
20Y-54-25731	M1210-01A0C	3
20Y-54-25821	K1110-01A0E	1
20Y-54-25823	K1110-01A0E	1
20Y-54-25850	M1210-01A0C	12
20Y-54-25911	M1130-01A0D	7
20Y-54-25921	M1140-01A0B	1
20Y-54-26190	M1810-02A0C	12
20Y-54-26211	M1150-01A0C	1
20Y-54-26221	M1150-01A0C	24
20Y-54-26233	M1150-01A0C	2
20Y-54-26240	M1810-01A0E	1
20Y-54-26242	M1810-01A0E	1
20Y-54-26250	M1810-01A0E	4
20Y-54-26251	M1810-01A0E	4
20Y-54-26260	M1810-02A0C	11
20Y-54-26270	M1810-02A0C	25

PARTS Nº	FIG. Nº	INDEX
20Y-54-26280	M1810-02A0C	13
20Y-54-26360	M1220-01A0E	5
20Y-54-26510	M1210-01A0C	11
20Y-54-27113	M1110-01A0B	1
20Y-54-27123	M1110-01A0B	2
20Y-54-27123	M1110-02A0	2
20Y-54-27131	M1110-01A0B	13
20Y-54-27131	M1110-02A0	13
20Y-54-27141	M1110-01A0B	12
20Y-54-27141	M1110-02A0	12
20Y-54-27172	M1110-01A0B	3
20Y-54-27172	M1110-02A0	3
20Y-54-27182	M1210-01A0C	23
20Y-54-27242	M1110-01A0B	7
20Y-54-27261	M1110-01A0B	8
20Y-54-27261	M1110-02A0	8
20Y-54-27290	M1110-01A0B	15
20Y-54-27290	M1110-02A0	15
20Y-54-27330	M1110-01A0B	4
20Y-54-27330	M1110-02A0	4
20Y-54-27341	M1130-01A0D	32
20Y-54-27370	M1110-01A0B	14
20Y-54-27370	M1110-02A0	14
20Y-54-27511	M1210-01A0C	14
20Y-54-27522	M1210-01A0C	15
20Y-54-27540	M1210-01A0C	13
20Y-54-27551	B0200-01A1C	1
20Y-54-27570	M1150-01A0C	37
20Y-54-27571	M1150-01A0C	37
20Y-54-27590	M1150-01A0C	4
20Y-54-27591	M1150-01A0C	4
20Y-54-27672	H0312-01A0	25
20Y-54-27682	M1150-01A0C	36
20Y-54-27722	M1150-01A0C	6
20Y-54-27963	M1420-01A0	1
20Y-54-27991	M1420-01A0	2
20Y-54-28115	M1130-01A0D	1
20Y-54-28170	M1130-01A0D	18
20Y-54-28170	M1140-01A0B	11
20Y-54-28182	M1130-01A0D	24
20Y-54-28182	M1140-01A0B	17
20Y-54-28191	M1130-01A0D	10
20Y-54-28281	M1130-01A0D	3
20Y-54-28291	M1130-01A0D	16
20Y-54-28291	M1140-01A0B	9
20Y-54-28361	M1140-01A0B	27
20Y-54-28390	M1130-01A0D	4
20Y-54-28543	M1810-01A0E	7
20Y-54-28590	M1810-02A0C	26
20Y-54-28611	M1810-01A0E	9

PARTS Nº	FIG. Nº	INDEX
20Y-54-28672	M1810-01A0E	8
20Y-54-28872	M1810-02A0C	19
20Y-54-28882	M1810-02A0C	22
20Y-54-28911	M1420-01A0	4
20Y-54-28960	J1110-01A0E	6
20Y-54-29194	B0200-01A1C	4
20Y-54-29232	M1130-01A0D	27
20Y-54-29232	M1130-01A0D	28
20Y-54-29232	M1140-01A0B	20
20Y-54-29241	M1130-01A0D	29
20Y-54-29251	M1130-01A0D	30
20Y-54-29251	M1140-01A0B	21
20Y-54-29261	M1130-01A0D	31
20Y-54-29261	M1140-01A0B	22
20Y-54-29271	M1130-01A0D	41
20Y-54-29280	M1120-01A0C	2
20Y-54-29291	M1110-01A0B	10
20Y-54-29291	M1110-02A0	10
20Y-54-29481	M1160-01A0C	2
20Y-54-29613	M1220-01A0E	4
20Y-54-29633	M1220-01A0E	1
20Y-54-29633	M1220-01A0E	1
20Y-54-29660	M1220-01A0E	8
20Y-54-29711	M1220-01A0E	6
20Y-54-29740	M1160-01A0C	10
20Y-54-29991	M1150-01A0C	5
20Y-54-29992	M1150-01A0C	5
20Y-54-35121	K0210-05A0D	1
20Y-54-35132	K0210-05A0D	3
20Y-54-35142	K0210-05A0D	5
20Y-54-35201	K0210-05A0D	8
20Y-54-35290	K0210-07A0B	8
20Y-54-35312	K0210-07A0B	1
20Y-54-35351	K0210-05A0D	2
20Y-54-35362	K0210-05A0D	4
20Y-54-35372	K0210-05A0D	6
20Y-54-35380	K0210-07A0B	11
20Y-54-35470	K0210-07A0B	12
20Y-54-35480	K0210-07A0B	13
20Y-54-35492	K0210-07A0B	7
20Y-54-35550	K0210-05A0D	20
20Y-54-35671	K0210-05A0D	22
20Y-54-35680	K0210-01A1D	2
20Y-54-35690	K0210-09A0B	22
20Y-54-35710	K0210-09A0B	17
20Y-54-35721	K0210-08A0A	12
20Y-54-35731	K0210-08A0A	13
20Y-54-35743	K0210-08A0A	14
20Y-54-35760	K0210-09A0B	19
20Y-54-35771	K0210-09A0B	21

PARTS Nº	FIG. Nº	INDEX
20Y-54-35780	K0210-07A0B	15
20Y-54-35801	K0210-08A0A	2
20Y-54-35811	K0210-08A0A	2
20Y-54-35821	K0210-08A0A	3
20Y-54-35831	K0210-08A0A	5
20Y-54-35840	K0210-08A0A	9
20Y-54-35850	K0210-08A0A	7
20Y-54-35860	K0210-08A0A	8
20Y-54-35870	K0210-08A0A	11
20Y-54-35880	K0210-09A0B	11
20Y-54-35890	K0210-09A0B	13
20Y-54-35910	K0210-09A0B	6
20Y-54-35920	K0210-09A0B	10
20Y-54-35932	K0210-09A0B	4
20Y-54-35941	K0210-09A0B	1
20Y-54-35951	K0210-09A0B	12
20Y-54-35961	K0210-09A0B	16
20Y-54-35982	K0210-01A1D	9
20Y-54-35996	K0210-01A1D	11
20Y-54-36103	K0210-02A0B	35
20Y-54-36113	K0210-02A0B	41
20Y-54-36122	K0210-02A0B	35
20Y-54-36132	K0210-02A0B	36
20Y-54-36142	K0210-02A0B	37
20Y-54-36150	K0210-06A0	22
20Y-54-36150	K0210-02A0B	31
20Y-54-36171	K0210-02A0B	42
20Y-54-36182	K0210-02A0B	46
20Y-54-36211	K0210-02A0B	40
20Y-54-36230	K0210-02A0B	43
20Y-54-36240	K0210-01A1D	4
20Y-54-36280	U0100-01A5C	33
20Y-54-36280	U0100-01A5D	33
20Y-54-36321	K0210-05A0D	24
20Y-54-36331	K0210-05A0D	28
20Y-54-36342	K0210-05A0D	32
20Y-54-36351	K0210-05A0D	29
20Y-54-36360	K0210-05A0D	30
20Y-54-36370	K0210-05A0D	34
20Y-54-36380	K0210-01A1D	7
20Y-54-36420	K0210-07A0B	2
20Y-54-36430	K0210-07A0B	3
20Y-54-36460	K0210-13A8	13
20Y-54-36470	K1740-01A0C	12
20Y-54-36481	K0210-13A8	7
20Y-54-36521	K1110-10A0	28
20Y-54-36521	K1110-10A2	28
20Y-54-36531	K1110-10A0	31
20Y-54-36682	K0310-01A1	1
20Y-54-36683	K0310-01A1	1

PARTS Nº	FIG. Nº	INDEX
20Y-54-36691	K1110-10A0	34
20Y-54-36704	K0210-02A0B	1
20Y-54-36713	K0210-02A0B	1
20Y-54-36721	K0210-13A8	10
20Y-54-36721	K1740-01A0C	9
20Y-54-36731	K0210-13A8	8
20Y-54-36752	K1740-01A0C	1
20Y-54-36771	K1740-01A0C	2
20Y-54-36791	K0210-13A8	12
20Y-54-36791	K1740-01A0C	13
20Y-54-36835	K0210-02A0B	19
20Y-54-36845	K0210-02A0B	20
20Y-54-36882	K1740-01A0C	3
20Y-54-36891	K0210-13A8	9
20Y-54-36891	K1740-01A0C	8
20Y-54-36971	K1740-01A0C	4
20Y-54-36981	K0210-11A1B	16
20Y-54-36981	K0210-11A2B	16
20Y-54-36981	K1740-01A0C	5
20Y-54-37630	K1740-01A0C	11
20Y-54-37810	K0210-02A0B	15
20Y-54-37820	K0210-02A0B	17
20Y-54-38122	K0210-02A0B	2
20Y-54-38132	K0210-02A0B	3
20Y-54-38143	K0210-02A0B	4
20Y-54-38152	K0210-02A0B	5
20Y-54-39152	K0210-02A0B	23
20Y-54-39363	K0210-02A0B	26
20Y-54-39402	K0210-06A0	1
20Y-54-39442	K0210-06A0	3
20Y-54-39450	K0210-06A0	4
20Y-54-39460	K0210-06A0	5
20Y-54-39471	K0210-06A0	9
20Y-54-39480	K0210-06A0	6
20Y-54-39502	K0210-06A0	3
20Y-54-39511	K0210-06A0	12
20Y-54-39590	K0210-02A0B	30
20Y-54-39870	K1120-01A0D	10
20Y-54-39880	K1120-01A0D	11
20Y-54-43130	K0210-02A0B	6
20Y-54-43140	K0210-02A0B	7
20Y-54-B1110	M1110-01A0B	1
20Y-54-B1131	M1110-01A0B	7
20Y-54-B1190	M1130-01A0D	1
20Y-54-B1230	M1220-01A0E	4
20Y-54-B1240	M1220-01A0E	1
20Y-54-B1250	M1210-01A0C	11
20Y-54-B1260	M1110-02A0	7
20Y-54-B1600	M1110-02A0	1
20Y-54-J1170	M1220-01A0E	4

PARTS Nº	FIG. Nº	INDEX
20Y-57-B1110	K0110-01A0A	1
20Y-57-B1120	K0120-01A0A	1
20Y-60-00063	H0110-01A0	1
20Y-60-11410	H1831-01A0	16
20Y-60-11530	H0330-02A0	3
20Y-60-11530	H0330-02A1	3
20Y-60-11750	H1833-01A0E	8
20Y-60-21190	H0110-01A0	42
20Y-60-21240	H0110-01A0	19
20Y-60-21311	H0110-01A0	27
20Y-60-21320	H0110-01A0	29
20Y-60-21340	H0110-01A0	38
20Y-60-21460	H0110-01A0	37
20Y-60-21470	H0110-01A0	36
20Y-60-21510	H0110-01A0	16
20Y-60-21510	V0100-01A0A	8
20Y-60-22181	H0330-02A0	4
20Y-60-22181	H0330-02A1	4
20Y-60-22190	H0120-01A0	17
20Y-60-22190	H0120-02A0	17
20Y-60-22201	H1833-01A0E	8
20Y-60-22210	H0210-01A0	14
20Y-60-22261	H0120-01A0	29
20Y-60-22261	H0120-02A0	29
20Y-60-22270	H0120-01A0	18
20Y-60-22270	H0120-01A0	30
20Y-60-22270	H0120-02A0	18
20Y-60-22270	H0120-02A0	30
20Y-60-22282	H0330-02A1	8
20Y-60-22311	H0330-02A0	9
20Y-60-22311	H0330-02A1	9
20Y-60-22320	H0330-02A0	10
20Y-60-22320	H0330-02A1	10
20Y-60-22331	H0330-02A0	2
20Y-60-22331	H0330-02A1	2
20Y-60-22440	H0120-01A0	19
20Y-60-22440	H0120-02A0	19
20Y-60-22530	H0110-01A0	20
20Y-60-22540	H0110-01A0	45
20Y-60-22550	H0110-01A0	27
20Y-60-22561	H0110-01A0	43
20Y-62-12520	P1120-01A1A	14
20Y-62-12540	P1120-01A1A	14
20Y-62-12590	P1120-01A1A	4
20Y-62-13220	T1110-03A0B	41
20Y-62-13230	H1210-02A0	16
20Y-62-13230	T1110-03A0B	32
20Y-62-13412	T1200-03A0	1
20Y-62-13450	H1210-02A0	19
20Y-62-13450	H1220-01A0	22

PARTS Nº	FIG. Nº	INDEX
20Y-62-13450	H1220-02A0	22
20Y-62-13450	H1270-01A8A	6
20Y-62-13450	H1270-07A0	6
20Y-62-13450	T1110-03A0B	14
20Y-62-13450	T1110-03A0B	34
20Y-62-13450	T1110-03A0B	43
20Y-62-13450	T1110-05A1B	8
20Y-62-13450	T1110-05A1B	16
20Y-62-13450	T1200-05A7	24
20Y-62-13450	T1200-05A7	32
20Y-62-13450	T1200-05B9	24
20Y-62-13450	T1200-05B9	32
20Y-62-13450	T1200-05C1	24
20Y-62-13560	T1110-03A0B	21
20Y-62-13570	T1110-03A0B	16
20Y-62-13580	T1110-03A0B	36
20Y-62-13650	T1110-03A0B	40
20Y-62-13651	H1270-01A8A	4
20Y-62-13651	H1270-07A0	4
20Y-62-13690	T1110-03A0B	9
20Y-62-13710	T1110-03A0B	31
20Y-62-13711	H1220-01A0	20
20Y-62-13711	H1220-02A0	20
20Y-62-13720	T1110-03A0B	10
20Y-62-13740	T1110-03A0B	11
20Y-62-13760	H1210-02A0	17
20Y-62-13760	T1110-01A0	9
20Y-62-13760	T1110-01A2C	9
20Y-62-13760	T1110-03A0B	12
20Y-62-13760	T1110-03A0B	33
20Y-62-13760	T1110-03A0B	42
20Y-62-15651	K1110-04A0	11
20Y-62-15831	K1110-11A0A	29
20Y-62-15831	K1110-11A0A	38
20Y-62-15831	K1110-11A2B	29
20Y-62-15831	K1110-11A2B	38
20Y-62-16630	H1833-01A0E	4
20Y-62-16630	K1540-01A1C	5
20Y-62-17480	H1210-03A0	1
20Y-62-18890	K1110-11A0A	18
20Y-62-18890	K1110-11A2B	18
20Y-62-18890	K1110-12A0A	20
20Y-62-18890	K1110-13A0A	16
20Y-62-18910	K1110-11A0A	16
20Y-62-18910	K1110-11A2B	16
20Y-62-18910	K1110-12A0A	18
20Y-62-18910	K1110-13A0A	14
20Y-62-19560	H0120-01A0	5
20Y-62-19560	H0120-02A0	5
20Y-62-19560	H1833-01A0E	6

PARTS Nº	FIG. Nº	INDEX
20Y-62-19560	H1833-01A0E	12
20Y-62-19560	K1540-01A1C	7
20Y-62-19560	K1540-01A1C	11
20Y-62-19560	K1540-01A1C	15
20Y-62-21131	H1220-01A0	1
20Y-62-21141	H1220-01A0	10
20Y-62-21171	H1220-02A0	1
20Y-62-21182	H1220-02A0	2
20Y-62-21194	H1210-02A0	1
20Y-62-21212	H1210-02A0	9
20Y-62-21223	H1210-01A0	1
20Y-62-21242	H1210-01A0	2
20Y-62-21264	H0120-03A0	9
20Y-62-21280	H1220-01A0	14
20Y-62-21280	H1220-02A0	6
20Y-62-21280	H1220-02A0	14
20Y-62-21290	H1220-01A0	5
20Y-62-21312	H1310-01A0	1
20Y-62-21321	H1310-01A0	4
20Y-62-21335	N1220-01A0D	12
20Y-62-21362	H1310-01A0	7
20Y-62-21421	N1220-01A0D	10
20Y-62-21430	H0312-01A0	12
20Y-62-21442	H0312-01A0	3
20Y-62-21480	H1220-01A0	19
20Y-62-21480	H1220-02A0	19
20Y-62-21510	H0330-01A0	1
20Y-62-21520	H0320-01A0	1
20Y-62-21530	H0320-01A0	3
20Y-62-21540	H0320-01A0	9
20Y-62-21573	H0330-02A0	1
20Y-62-21573	H0330-02A1	1
20Y-62-21590	H0330-02A1	14
20Y-62-21620	N1220-01A0D	1
20Y-62-21631	H0330-01A0	10
20Y-62-21640	H1240-01A0	1
20Y-62-21650	H1210-02A0	13
20Y-62-21660	H0330-02A0	14
20Y-62-21670	H0312-01A0	1
20Y-62-21680	H0312-01A0	10
20Y-62-21692	H0312-01A0	24
20Y-62-21743	N1220-01A0D	15
20Y-62-21750	H0312-01A0	19
20Y-62-21830	H1340-01A0	3
20Y-62-21870	N1310-01A0	8
20Y-62-21890	H1831-02A0	34
20Y-62-21930	H1831-02A0	18
20Y-62-21940	H1831-01A0	10
20Y-62-22160	H0120-01A0	35
20Y-62-22160	H0120-02A0	35

PARTS Nº	FIG. Nº	INDEX
20Y-62-22220	K1540-01A1C	1
20Y-62-22271	H0120-01A0	3
20Y-62-22271	H0120-02A0	3
20Y-62-22271	K1540-01A1C	9
20Y-62-22291	K1520-01A0D	1
20Y-62-22291	K1520-01A2	1
20Y-62-22310	H1831-01A0	17
20Y-62-22410	H1833-01A0E	10
20Y-62-22662	H1840-01A1H	10
20Y-62-22672	H1840-01A1H	3
20Y-62-22722	H1840-01A1H	11
20Y-62-22772	H1840-01A1H	9
20Y-62-22782	H1840-01A1H	4
20Y-62-22790	H1810-01A0D	2
20Y-62-22790	H1831-02A0	13
20Y-62-22790	H1840-01A1H	5
20Y-62-22790	K1110-11A0A	4
20Y-62-22790	K1110-11A0A	10
20Y-62-22790	K1110-11A2B	4
20Y-62-22790	K1110-11A2B	10
20Y-62-22790	K1110-12A0A	10
20Y-62-22790	K1110-13A0A	3
20Y-62-22790	K1110-13A0A	22
20Y-62-22790	K1110-21A4A	6
20Y-62-22810	H0120-03A0	32
20Y-62-22810	H1831-02A0	8
20Y-62-22810	H1831-02A0	10
20Y-62-22810	H1831-02A0	31
20Y-62-22810	H1840-01A1H	14
20Y-62-22810	H1840-02A1A	3
20Y-62-22810	K1110-12A0A	11
20Y-62-22810	K1110-21A4A	7
20Y-62-22820	H0120-03A0	30
20Y-62-22820	H1831-02A0	15
20Y-62-22820	H1831-02A0	32
20Y-62-22820	H1840-01A1H	15
20Y-62-22820	K1110-11A0A	8
20Y-62-22820	K1110-11A0A	12
20Y-62-22820	K1110-11A2B	8
20Y-62-22820	K1110-11A2B	12
20Y-62-22820	K1110-12A0A	12
20Y-62-22820	K1110-13A0A	4
20Y-62-22820	K1110-13A0A	25
20Y-62-22820	K1110-21A4A	8
20Y-62-22830	H1840-01A1H	6
20Y-62-22830	H1840-01A1H	16
20Y-62-22830	K1110-11A0A	14
20Y-62-22830	K1110-11A2B	14
20Y-62-22830	K1110-13A0A	5
20Y-62-22840	H1840-01A1H	7

PARTS Nº	FIG. Nº	INDEX
20Y-62-22840	K1110-13A0A	6
20Y-62-22850	H1831-02A0	6
20Y-62-22850	H1840-01A1H	17
20Y-62-22850	K1110-11A0A	6
20Y-62-22850	K1110-11A2B	6
20Y-62-22850	K1110-13A0A	7
20Y-62-22860	H1831-02A0	3
20Y-62-22860	H1840-01A1H	18
20Y-62-22860	K1110-13A0A	8
20Y-62-22872	K1110-11A0A	9
20Y-62-22872	K1110-11A2B	9
20Y-62-22881	H0120-03A0	29
20Y-62-22890	K1110-13A0A	21
20Y-62-22910	H1831-02A0	30
20Y-62-22910	K1110-13A0A	23
20Y-62-22920	H1831-02A0	14
20Y-62-22951	H1831-02A0	12
20Y-62-22981	H1831-02A0	17
20Y-62-23130	K1110-12A0A	23
20Y-62-23252	K1110-12A0A	13
20Y-62-23262	K1110-12A0A	14
20Y-62-23273	K1110-12A0A	15
20Y-62-23284	K1110-12A0A	16
20Y-62-23312	K1110-13A0A	9
20Y-62-23322	K1110-13A0A	10
20Y-62-23344	K1110-13A0A	11
20Y-62-23362	K1110-12A0A	17
20Y-62-23362	K1110-13A0A	12
20Y-62-23412	K1110-21A4A	1
20Y-62-23422	H1840-02A1A	2
20Y-62-23432	H1840-02A1A	4
20Y-62-23520	H1831-01A0	6
20Y-62-23572	K1110-21A4A	2
20Y-62-23832	H1840-01A1H	12
20Y-62-24180	T1110-01A0	2
20Y-62-24180	T1110-01A2C	2
20Y-62-24190	T1110-01A0	3
20Y-62-24190	T1110-01A2C	3
20Y-62-24211	T1110-01A0	4
20Y-62-24211	T1110-01A2C	4
20Y-62-24240	T1110-01A0	5
20Y-62-24252	T1110-01A1B	2
20Y-62-24262	T1110-01A1B	3
20Y-62-24271	T1110-01A1B	4
20Y-62-24281	T1110-01A1B	6
20Y-62-24291	T1110-01A1B	7
20Y-62-24360	T1110-01A1B	5
20Y-62-24470	T1110-03A0B	5
20Y-62-24480	T1110-03A0B	1
20Y-62-24490	T1110-03A0B	26

PARTS Nº	FIG. Nº	INDEX
20Y-62-24510	T1110-03A0B	27
20Y-62-24520	T1110-05A1B	4
20Y-62-24530	T1110-05A1B	5
20Y-62-24540	T1110-05A1B	12
20Y-62-24550	T1110-05A1B	13
20Y-62-24560	T1110-05A1B	1
20Y-62-24580	Y1620-01A0C	29
20Y-62-25110	H1270-08A0	5
20Y-62-25120	H1270-08A0	1
20Y-62-25131	H1270-08A0	14
20Y-62-25140	H1270-08A0	21
20Y-62-25153	H1270-01A0	1
20Y-62-25161	H1270-03A0	1
20Y-62-25173	H1270-07A0	1
20Y-62-25173	H1270-07A0	11
20Y-62-25183	H1270-07A0	14
20Y-62-25192	H1270-07A0	15
20Y-62-25212	H1270-06A0	3
20Y-62-25212	H1270-06A1C	3
20Y-62-25232	H1270-07A0	25
20Y-62-25241	H1270-08A0	6
20Y-62-25350	H1270-02A0	4
20Y-62-25350	H1270-04A0	3
20Y-62-25360	K1530-01A0B	4
20Y-62-25380	K1530-01A0B	6
20Y-62-25411	K1530-01A0B	7
20Y-62-25740	H1270-01A8A	1
20Y-62-25790	H1270-01A8A	7
20Y-62-25790	H1270-07A0	30
20Y-62-25950	H1270-07A0	16
20Y-62-25960	H1270-07A0	17
20Y-62-25970	H1270-07A0	18
20Y-62-25980	H1270-07A0	19
20Y-62-25990	K1110-11A0A	13
20Y-62-25990	K1110-11A2B	13
20Y-62-26190	K1110-13A0A	13
20Y-62-27121	K1110-11A0A	3
20Y-62-27121	K1110-11A2B	3
20Y-62-27131	K1110-11A0A	5
20Y-62-27131	K1110-11A2B	5
20Y-62-27141	K1110-11A0A	7
20Y-62-27141	K1110-11A2B	7
20Y-62-27192	H0120-03A0	6
20Y-62-27412	H0120-03A0	1
20Y-62-27511	H0320-01A0	13
20Y-62-27651	H0311-01A0	3
20Y-62-27680	H0120-01A0	11
20Y-62-27680	H0120-02A0	11
20Y-62-27770	K1110-11A0A	22
20Y-62-27770	K1110-11A2B	22

PARTS Nº	FIG. Nº	INDEX
20Y-70-00071	T1200-02A0C	1
20Y-70-00320	T1200-01C5	1
20Y-70-00520	T1110-01A0	1
20Y-70-00530	T1110-01A1B	1
20Y-70-11170	T1125-01A0	3
20Y-70-11180	T1110-02A0	6
20Y-70-11180	T1200-01A0	10
20Y-70-11180	T1200-01A0C	10
20Y-70-11180	T1200-01A1	10
20Y-70-11180	T1200-01A1C	10
20Y-70-11180	T1200-01A2	10
20Y-70-11180	T1200-01A3	10
20Y-70-11180	T1200-01C5	10
20Y-70-11180	T1200-01C7	13
20Y-70-11190	J1310-01A0E	2
20Y-70-11290	T1200-03A0	6
20Y-70-11310	T1200-03A0	7
20Y-70-11320	T1200-02A0C	9
20Y-70-11320	T1200-02A1	9
20Y-70-11330	T1200-02A0C	10
20Y-70-11330	T1200-02A1	10
20Y-70-11340	T1110-02A0	7
20Y-70-11340	T1200-03A0	9
20Y-70-11360	T1110-02A0	2
20Y-70-11370	T1125-01A0	2
20Y-70-11380	T1125-01A0	4
20Y-70-11390	T1125-01A0	1
20Y-70-11410	J1310-01A0E	5
20Y-70-11420	J1310-01A0E	6
20Y-70-11430	J1310-01A0E	12
20Y-70-11440	J1310-01A0E	13
20Y-70-11470	J1310-01A0E	7
20Y-70-11520	T1110-04A0B	12
20Y-70-11540	T1110-04A0B	2
20Y-70-11540	T1110-10A0B	7
20Y-70-11641	T1110-01A0	7
20Y-70-11641	T1110-01A2C	7
20Y-70-11650	T1110-01A0	8
20Y-70-11651	T1110-01A2C	8
20Y-70-14122	T1510-01F1C	2
20Y-70-14221	T1510-02A3	1
20Y-70-14520	T1510-01F0	5
20Y-70-14520	T1510-01F1	5
20Y-70-14520	T1510-01F1C	5
20Y-70-14520	T1510-01F3C	5
20Y-70-14520	T1510-01F5C	5
20Y-70-21490	T1110-10A0B	8
20Y-70-21510	T1110-10A0B	9
20Y-70-21520	T1110-04A0B	3
20Y-70-21530	T1110-04A0B	4

PARTS Nº	FIG. Nº	INDEX
20Y-70-21540	T1110-04A0B	5
20Y-70-21550	T1110-04A0B	14
20Y-70-21640	T1110-01A0	11
20Y-70-21640	T1110-01A1B	8
20Y-70-21640	T1110-01A2C	11
20Y-70-22G40	T1200-01A0C	6C
20Y-70-22G40	T1200-01B0	1
20Y-70-22G40	T1200-01C7	4
20Y-70-23220	T1200-01A3	8
20Y-70-23220	T1200-02A1	6
20Y-70-23230	T1200-02A1	7
20Y-70-24131	T1510-01F1C	3
20Y-70-24131	T1510-01F3C	3
20Y-70-24131	T1510-01F5C	3
20Y-70-24141	T1510-01F1C	4
20Y-70-24141	T1510-01F3C	4
20Y-70-24141	T1510-01F5C	4
20Y-70-B0390	T1200-02A1	1
20Y-70-B1340	T1290-01A0C	2
20Y-70-B1350	T1510-01F1C	1
20Y-70-B1A90	T1510-01F0	2
20Y-70-B2A20	T1510-01F0	3
20Y-70-B2A20	T1510-01F1	3
20Y-70-B2A30	T1510-01F0	4
20Y-70-B2A30	T1510-01F1	4
20Y-920-1221	T1510-01F5C	2
20Y-920-1420	T1510-01F1	2
20Y-920-B110	T1510-01F5C	1
20Y-920-B120	T1510-01F3C	1
20Y-920-B130	T1510-01F1	1
20Y-920-B140	T1510-01F0	1
20Y-942-8120	T1110-01A2C	1
20Y-942-8160	T1110-01A2C	5
20Y-944-0012	T1200-01A2	1
20Y-944-0080	T1200-01A0	1
20Y-944-0090	T1200-01A0C	1
20Y-944-0120	T1200-01A1	1
20Y-944-0130	T1200-01A1C	1
20Y-944-B080	T1200-01A3	1
20Y-970-1820	H1270-05A0	4
20Y-970-1981	H1270-02A0	8
20Y-970-2240	H1270-06A0	1
20Y-970-2240	H1270-06A0	6
20Y-970-2240	H1270-06A1C	1
20Y-970-2240	H1270-06A1C	6
20Y-970-2300	T1200-05A7	9
20Y-970-2300	T1200-05B9	9
20Y-970-2300	T1200-05C1	9
20Y-970-2700	H1270-05A0	1
20Y-970-2A10	T1200-01B0	2

PARTS Nº	FIG. Nº	INDEX
20Y-970-2A20	T1200-01B0	3
20Y-970-3180	T1200-05A7	28
20Y-970-3190	T1200-05A7	29
20Y-970-3210	T1200-05A7	18
20Y-970-3210	T1200-05B9	18
20Y-970-3220	T1200-05A7	6
20Y-970-3220	T1200-05B9	6
20Y-970-3220	T1200-05C1	6
20Y-970-3230	T1200-05A7	9
20Y-970-3230	T1200-05B9	9
20Y-970-3230	T1200-05C1	9
20Y-970-3240	T1200-05A7	10
20Y-970-3240	T1200-05B9	10
20Y-970-3240	T1200-05C1	10
20Y-970-3270	T1200-05A7	11
20Y-970-3270	T1200-05B9	11
20Y-970-3270	T1200-05C1	11
20Y-970-3350	H1270-01A0	7
20Y-970-3350	H1270-03A0	7
20Y-970-3390	H1270-01A0	2
20Y-970-3410	H1270-03A0	2
20Y-970-3560	T1200-01A0C	6A
20Y-970-3560	T1200-01A1C	6A
20Y-970-3560	T1200-01B0	4
20Y-970-3570	T1200-01A0C	6B
20Y-970-3570	T1200-01A1C	6B
20Y-970-4580	H1270-01A0	9A
20Y-970-4580	H1270-03A0	9A
20Y-970-4611	T1200-05A7	12A
20Y-970-4611	T1200-05B9	12A
20Y-970-4611	T1200-05C1	12A
20Y-970-6310	T1200-05B9	28
20Y-970-6370	T1200-05C1	1
20Y-970-6380	T1200-05C1	18
20Y-970-6390	T1200-05B9	29
20Y-970-6470	T1200-01C7	2
20Y-970-6480	T1200-01B0	5
20Y-970-6480	T1200-01C7	3
20Y-970-6510	T1200-01C7	1
20Y-973-2682	K0310-01A3	1
20Y-973-2683	K0310-01A3	1
20Y-977-2111	K0700-01A1A	28
20Y-977-2111	K1110-17B0	8
20Y-977-2120	Y1977-01A0	1
20Y-977-2120	K0700-01A1A	1
20Y-977-2120	K1110-17B0	1
20Y-977-2140	K0210-11A2B	30
20Y-977-2150	K0180-01A2B	9
20Y-977-2160	K0700-01A1A	7
20Y-977-2160	K1110-17B0	4

PARTS Nº	FIG. Nº	INDEX
20Y-977-2170	K0700-01A1A	4
20Y-979-2130	Y1979-61A0	1
20Y-979-2130	K0210-10A1F	13
20Y-979-2150	K0180-01A2B	18
20Y-979-2161	K0180-01A1B	9
20Y-979-2161	K0180-01A1B	18
20Y-979-2171	K0210-11A1B	18
20Y-979-2171	K0210-11A2B	18
20Y-979-2171	K1740-01A0C	7
20Y-979-2181	K1110-17A1A	8
20Y-979-2221	K0210-10A1F	15
20Y-979-2231	K0210-10A1F	17
20Y-979-2242	K0210-10A1F	19
20Y-979-2262	K0700-03A0C	14
20Y-979-2271	K0700-03A0C	15
20Y-979-2281	K0180-01A1B	20
20Y-979-2281	K0180-01A2B	20
20Y-979-2290	K0180-01A1B	21
20Y-979-2290	K0180-01A2B	21
20Y-979-2382	K1110-17A1A	14
20Y-979-2391	K1110-17A1A	15
20Y-979-2511	K0180-01A1B	2
20Y-979-2511	K0180-01A2B	2
20Y-979-2541	K0180-01A1B	5
20Y-979-2541	K0180-01A1B	14
20Y-979-2541	K0180-01A2B	5
20Y-979-2541	K0180-01A2B	14
20Y-979-2571	K0180-01A1B	10
20Y-979-2571	K0180-01A2B	10
20Y-979-2581	K0180-01A1B	1
20Y-979-2581	K0180-01A2B	1
20Y-979-2590	K0180-01A1B	11
20Y-979-2590	K0180-01A2B	11
20Y-979-2630	K0180-01A1B	3
20Y-979-2630	K0180-01A1B	12
20Y-979-2630	K0180-01A2B	3
20Y-979-2630	K0180-01A2B	12
20Y-979-2651	K0700-02A0C	3
20Y-979-2671	K0180-01A1B	19
20Y-979-2671	K0180-01A2B	19
20Y-979-2680	Y1979-21A0C	35
20Y-979-2820	C0100-01A7C	32
20Y-979-2820	C0100-01A7E	36
20Y-979-2841	C0100-01A7C	31
20Y-979-2841	C0100-01A7E	33
20Y-979-2851	K0700-01A0B	6
20Y-979-3111	Y1979-01A0	1
20Y-979-3111	K0700-01A0B	12
20Y-979-3120	K0700-01A0B	3
20Y-979-3130	K1110-17A1A	11

PARTS Nº	FIG. Nº	INDEX
20Y-979-3140	K0700-02A0C	2
20Y-979-3150	K0700-02A0C	4
20Y-979-3150	K0700-02A0C	6
20Y-979-3150	K1110-17A1A	13
20Y-979-3170	K0210-11A1B	30
20Y-979-3180	K0210-11A1B	31
20Y-979-3210	K0700-02A0C	5
20Y-979-3330	K1110-17A1A	12
20Y-979-3340	K0180-01A1B	7
20Y-979-3340	K0180-01A1B	16
20Y-979-3340	K0180-01A2B	7
20Y-979-3340	K0180-01A2B	16
20Y-979-3360	K1740-01A0C	6
20Y-979-3380	Y1979-41A0C	15
20Y-979-3411	K0700-01A0B	13
20Y-979-3422	K0700-01A0B	16
20Y-979-3431	K1110-17A1A	10
20Y-979-3441	K0700-02A0C	1
20Y-979-3711	Y1979-11A0C	1
20Y-979-3711	K1110-17A1A	1
20Y-979-3720	K1110-17A1A	4
20Y-979-3730	K1110-17A1A	5
20Y-98-21130	V0300-01A0C	12
20Y-98-21140	V0300-01A0C	20
20Y-98-B1110	V0100-01A0A	15
20Y-98-B1111	V0100-01A0A	15
20Y-98-B1120	V0100-01A0A	16
20Yπ920-1121	T1510-01F3C	2
21K-54-26340	M1210-01A0C	16
21K-54-26351	M1210-01A0C	17
21K-54-26360	M1210-01A0C	18
21K-70-12170	T1200-01A0	3
21K-70-12170	T1200-01A0C	3
21K-70-12170	T1200-01A1	3
21K-70-12170	T1200-01A1C	3
21K-70-12170	T1200-01A2	3
21K-70-12170	T1200-01A3	3
21K-70-12170	T1200-01C5	3
21K-70-12170	T1200-01C7	6
21K-70-12180	T1200-01A0	8
21K-70-12180	T1200-01A0C	8
21K-70-12180	T1200-01A1	8
21K-70-12180	T1200-01A1C	8
21K-70-12180	T1200-01A2	8
21K-70-12180	T1200-01C5	8
21K-70-12180	T1200-01C7	11
21K-70-12180	T1200-02A0C	6
21K-70-12180	Y0163-51A0C	3
21K-70-12180	Y0163-51A0C	4
21K-70-12180	Y1620-41A0C	6
21K-70-12180	Y1620-41A1C	6
21P-62-11590	K1530-01A0B	10
21T-06-11350	K0350-01A0	1
21T-06-73320	E0200-05A0	4
21T-09-11430	H0312-01A0	20
21T-09-11430	H1340-01A0	2
21T-09-11430	H1340-01A0	4
21T-09-11450	H1220-02A0	3
21T-09-11450	H1220-02A0	11
21T-09-11450	H1270-08A0	4
21T-09-11450	N1220-01A0D	11
21T-09-11460	H0120-03A0	13
21T-09-11460	H0312-01A0	2
21T-09-11460	H0312-01A0	4
21T-09-11460	H0312-01A0	11
21T-09-11460	H0312-01A0	13
21T-09-11460	H1210-01A0	3
21T-09-11460	H1210-01A0	9
21T-09-11460	H1210-01A0	12
21T-09-11460	H1220-01A0	2
21T-09-11460	H1220-01A0	11
21T-09-11460	H1270-06A0	13
21T-09-11460	H1270-08A0	15
21T-09-11460	H1310-01A0	3
21T-09-11460	H1310-01A0	6
21T-09-11460	T1200-05A7	2
21T-09-11460	T1200-05B9	2
21T-09-11460	T1200-05C1	2
21T-09-11470	H0120-05A0	4
21T-09-11470	H1270-08A0	3
21T-27-71220	K1120-01A0D	7
21T-38-12270	K0350-01A0	8
21T-54-16150	C0100-03A0A	17
21T-72-23260	K0700-02A0C	15A
21T-72-23270	H1840-02A1A	6
21Y-62-17810	H0120-03A0	19
21Y-62-17810	H0210-01A0	10
22B-30-00030	R0200-01A2A	4
22B-30-16200	R0200-01A2A	5
22T-61-11650	H1831-02A0	29
22U-04-21231	D0100-01A0	8
22U-30-00020	R0300-02A0	1
22U-30-11420	R0200-01A2A	3
22U-30-11430	R0200-01A2A	7
22U-30-11440	R0200-01A2A	9
22U-30-11450	R0200-01A2A	2
22U-30-25110	R0300-02A0	1
22U-30-25120	R0300-02A0	2
22U-30-25130	R0300-02A0	3
22U-30-25140	R0300-02A0	4
22U-30-25150	R0300-02A0	5
22U-30-25160	R0300-02A0	6
22U-43-21111	K1110-10A0	20
22U-43-21111	K1110-10A2	20
22U-43-21121	K1110-10A0	21
22U-43-21121	K1110-10A2	21
22U-43-21130	K1110-10A0	15
22U-43-21130	K1110-10A2	15
22U-43-21140	K1110-10A0	16
22U-43-21140	K1110-10A2	16
22U-43-21150	K1110-10A0	1
22U-43-21150	K1110-10A2	1
22U-43-25110	K1110-10A0	28
22U-43-25110	K1110-10A2	28
22U-54-25120	K1110-10A0	31
23S-62-25850	D0200-01A0	48
362-03-11550	B0500-01A0A	5
362-46-11210	T1200-02A0C	18
362-46-11210	T1200-02A1	18
417-963-3180	Y1979-11A0C	6
421-54-11372	M1220-01A0E	7
565-14-22440	Y1640-02A1C	1
565-44-15380	D0200-02A0	45
569-07-61190	Y1979-41A0C	16
600-311-9101	D0200-01A0	1
600-311-9731	D0200-01A0	7
600-311-9731	D0200-02A0	1
600-411-1280	K1110-03A0	9
600-411-1280	K1110-06A0	9
600-625-7620	C0200-01A0	3
600-815-2170	E0200-01A0	28
600-863-5110	B0900-01A0A	1
6130-12-8610	A3.01.1	2
6131-11-4520	B0200-01A1C	2
6131-12-5920	B0700-01A0A	3
6136-61-1340	C0200-02A0	3
6136-61-1340	A8.03	33
6150-71-7130	B0700-01A0A	2
6151-81-4340	C0200-02A0	17
6151-81-4340	A8.03	37
6204-11-3830	C0200-02A0	18
6204-11-3830	A8.03	38
6204-81-6740	K0700-01A0B	23
6206-11-5850	B0300-01A0A	5
6206-61-3980	C0200-01A0	1
6206-81-6240	C0200-02A0	2
6206-81-6240	A8.03	30
6206-81-6250	C0200-02A0	5
6206-81-6250	A8.03	31
6207-61-3280	A8.03	18

PARTS Nº	FIG. Nº	INDEX
6207-61-3330	A8.03	24
6209-11-5480	B0100-01A0A	13
6210-11-5232	B0300-01A0A	4
6211-11-9790	C0200-02A0	14
6211-11-9790	A8.03	36
6216-34-6270	A8.03	1
6222-11-5940	B0300-01A0A	2
6222-83-6620	C0200-02A0	15
6222-83-6620	A8.03	20
6643-11-4641	B0200-01A1C	3
6731-11-1420	A2.01	1
6731-21-1210	A1.01	9
6731-21-1930	A1.08	1
6731-21-3250	A9.01	16
6731-21-8610	A1.02	5
6731-21-8620	A1.02	5
6731-26-8310	A1.02	5
6731-26-8410	A1.02	5
6731-27-8310	A1.02	5
6731-28-8310	A1.02	5
6731-28-8410	A1.02	5
6731-29-8310	A1.02	5
6731-41-5270	A3.01	4
6731-41-5270	A3.01	8
6731-51-1110	A7.06	2
6731-51-8150	A10.06.3	12
6731-51-8170	A10.06.3	3
6731-51-8220	A10.06.3	4
6731-61-1370	A8.07.3	3
6731-61-1610	A8.07	1
6731-61-2150	A7.05	11
6731-61-3310	A8.03	22
6731-61-3320	A8.03	39
6731-61-4240	A8.03	2
6731-61-4250	A8.03	3
6731-61-4260	A8.03	4
6731-61-4270	A8.03	14
6731-61-4280	A8.03	15
6731-61-4520	A13.02.3	4
6731-61-6260	A8.07.2	1
6731-71-1340	A5.21	1
6731-71-3111	A9.01	13
6731-71-3350	A9.01	14
6731-71-5560	A9.01	11
6731-71-5650	A6.03	6
6731-71-5881	A6.04.1	3
6731-71-5920	A6.04.1	5
6731-71-6550	A5.19	5
6731-81-8120	A5.01.5	5
6731-81-8320	A10.06.3	1
6732-11-1510	B0800-01A0A	1
6732-11-1610	A2.01	12
6732-11-1620	A2.01	13
6732-11-1640	A3.01	14
6732-11-1720	A17.06	2
6732-11-1910	A1.01	13
6732-11-1910	A2.01	4
6732-11-1910	A16.01	1
6732-11-1920	A1.01	19
6732-11-1920	A2.01	11
6732-11-1930	A2.01	3
6732-11-1930	A7.05	3
6732-11-1930	A9.01	5
6732-11-3850	A6.01	10
6732-11-4160	A6.03	3
6732-11-4811	A10.02	2
6732-11-8130	A3.01.1	3
6732-11-8181	V0100-01A0A	2
6732-11-8181	A3.01.1	5
6732-11-8210	V0100-01A0A	3
6732-11-8210	A3.01.1	6
6732-21-1191	A1.01	10
6732-21-1210	A1.01	4
6732-21-1210	A1.01	4
6732-21-1411	A1.01	2
6732-21-1611	A1.01	3
6732-21-1810	A1.01	7
6732-21-1820	A1.01	6
6732-21-1910	A1.01	8
6732-21-1910	A1.01	8
6732-21-1960	A1.01	14
6732-21-3120	A1.01	22
6732-21-3120	A4.03	2
6732-21-3120	A4.03.1	2
6732-21-3190	A15.06	1
6732-21-3220	A15.06	2
6732-21-3380	A9.04	1
6732-21-4111	A16.01	2
6732-21-4120	A16.01	3
6732-21-4130	A16.01	4
6732-21-4150	A16.01	6
6732-21-4160	A16.01	7
6732-21-4170	A16.01	10
6732-21-4180	A16.01	11
6732-21-4200	A16.01	8
6732-21-4220	A16.01	12
6732-21-4260	A16.01	9
6732-21-5160	A5.19	1
6732-21-5160	A7.01	1
6732-21-5160	A13.02.2	2
6732-21-5160	A13.02.3	2
6732-21-5490	A7.02	3
6732-21-5520	A7.02	1
6732-21-5530	A1.01	16
6732-21-5640	A7.02	2
6732-21-6120	A1.01	12
6732-21-6130	A1.01	11
6732-21-6140	A1.01	9
6732-21-6150	A1.02	3
6732-21-6160	A1.01	17
6732-21-6280	A4.03	1
6732-21-6280	A4.03.1	1
6732-21-6610	A7.01	2
6732-21-9310	A9.04	2
6732-21-9920	A1.01	1
6732-31-1211	A1.02	2
6732-31-2300	A1.04	6
6732-31-2420	A1.04	7
6732-31-2420	A1.04	7
6732-31-2420	A1.04	7
6732-31-3101	A1.04	1
6732-31-3111	A1.04	1
6732-31-3131	A1.04	3
6732-31-3310	A1.04	2
6732-31-3410	A1.04	4
6732-31-4100	A16.02	1
6732-31-4110	A16.02	1
6732-31-4120	A16.02	4
6732-31-4130	A16.02	3
6732-31-4180	A16.02	2
6732-31-8120	A1.02.2	1
6732-38-2300	A1.04	6
6732-39-2300	A1.04	6
6732-41-1220	A1.07	5
6732-41-1231	A1.07	3
6732-41-1260	A1.07	4
6732-41-1280	A1.07	2
6732-41-2112	A4.01	1
6732-41-3111	A3.01	15
6732-41-4110	A2.01	9
6732-41-4210	A2.01	10
6732-41-4410	A2.01	6
6732-41-4510	A2.01	7
6732-41-4520	A2.01	5
6732-41-4520	A2.01	5
6732-41-4530	A2.01	8
6732-41-4540	A2.01	8A
6732-41-5120	A3.01	1
6732-41-5130	A3.01	2
6732-41-5160	A3.01	11

PARTS Nº	FIG. Nº	INDEX
6732-41-5170	A3.01	12
6732-41-5180	A3.01	13
6732-41-5200	A3.01	3
6732-41-5210	A3.01	3
6732-41-5400	A3.01	7
6732-41-5410	A3.01	7
6732-41-5440	A3.01	6
6732-41-5440	A3.01	10
6732-51-4420	A7.05	4
6732-51-4431	A7.05	14
6732-51-5130	A9.04	3
6732-51-8150	A10.06.3	5
6732-51-8170	A10.06.3	6
6732-51-8330	A10.06.3	11
6732-61-1110	A8.07.3	2
6732-61-2311	A7.05	13
6732-61-3120	A8.03	7
6732-61-3140	A8.03.1	1
6732-61-3140	A9.01	4
6732-61-3170	A8.03	17
6732-61-3340	A8.03	11
6732-61-3410	A8.03	10
6732-61-3420	A8.03	9
6732-61-3430	A8.03	12
6732-61-3440	A8.03	8
6732-61-3450	A8.03	7
6732-61-3750	A8.03	13
6732-61-4220	A13.02.3	5
6732-61-6120	A8.07.2	2
6732-61-6130	A8.07.2	3
6732-61-6140	A6.04	1
6732-61-6140	A7.05	2
6732-61-6140	A8.07.1	1
6732-61-6171	A8.07.1	9
6732-61-6180	A8.07.1	5
6732-61-6231	A8.07.1	10
6732-61-6240	A8.07.1	6
6732-61-6250	A8.07.1	3
6732-61-6270	A8.07.1	4
6732-61-6280	A8.07.1	7
6732-71-2170	A6.07	2
6732-71-3220	A9.01	2
6732-71-3220	A10.06.3	2
6732-71-3220	A13.02.2	6
6732-71-5620	A6.04.1	4
6732-71-5690	A6.03	5
6732-71-6111	V0100-01A0A	5
6732-71-6230	A6.01	9
6732-71-6230	A6.03	1
6732-71-6240	A6.03	2
6732-71-6320	A6.04	2
6732-71-6510	A5.01.5	1
6732-71-6520	A5.19	2
6732-81-2810	A9.03	1
6732-81-3110	A15.01.1	2
6732-81-3120	A15.01	1
6732-81-3190	A15.01.1	1
6732-81-3430	V0100-01A0A	6
6732-81-3430	A13.02.3	3
6732-81-4610	A10.02	1
6732-81-4620	A10.02	
6732-81-5120	A10.02	3
6732-81-6820	A13.05.1	1
6732-81-8150	A5.01.5	2
6732-81-8220	A11.01.1	1
6732-91-1611	A1.02.2	4
6733-11-3100	A6.01	1
6733-11-4510	A5.01.5	4
6733-71-5520	A9.01	7
6733-71-5680	A15.01.2	1
6733-81-8260	A10.06	13
6733-81-8270	A10.06	12
6733-81-8330	A10.06	10
6733-81-8360	A10.06	8
6733-81-8460	A10.06	11
6733-81-8480	A10.06	16
6734-11-3140	A6.01	2
6734-11-3160	A6.01	6
6734-11-3170	A6.01	4
6734-11-3180	A6.01	7
6734-11-3610	A6.01	5
6734-11-3620	A6.01	5
6734-11-3630	A6.01	5
6734-11-3640	A6.01	5
6734-11-3650	A6.01	5
6734-11-3660	A6.01	5
6734-11-3670	A6.01	5
6734-11-3680	A6.01	5
6734-11-3690	A6.01	5
6734-11-3710	A6.01	5
6734-11-3720	A6.01	5
6734-11-3730	A6.01	5
6734-11-3740	A6.01	5
6734-11-3750	A6.01	5
6734-11-3760	A6.01	5
6734-11-3770	A6.01	5
6734-11-3780	A6.01	5
6734-11-3790	A6.01	5
6734-11-3810	A6.01	5
6734-11-3820	A6.01	5
6734-11-3830	A6.01	5
6734-11-3840	A6.01	5
6734-11-3850	A6.01	5
6734-11-3860	A6.01	5
6734-11-3870	A6.01	5
6734-11-3880	A6.01	5
6734-11-3890	A6.01	5
6734-11-3910	A6.01	5
6734-11-3920	A6.01	5
6734-11-3930	A6.01	5
6734-21-8610	A13.02.2	4
6734-71-1720	A5.19	7
6734-71-5520	A6.03	14
6734-71-5550	A9.01	9
6734-71-5710	A6.03	8
6734-71-5720	A6.03	13
6734-71-6550	A9.01	15
6735-11-1811	A2.01.1	1
6735-11-1910	A8.07.1	2
6735-11-3150	A6.01	1
6735-11-3160	A6.01	3
6735-11-4150	A10.06.1	2
6735-11-5110	A10.06.2	1
6735-11-5530	B0300-01A0A	1
6735-11-5610	B0300-01A0A	9
6735-11-8110	A3.01.1	1
6735-11-8120	A3.01.1	4
6735-21-1910	A1.01	20
6735-21-1940	A1.01	21
6735-21-4190	A16.01	13
6735-21-4270	A16.01	5
6735-21-5151	A17.07	1
6735-21-5220	B0700-01A0A	1
6735-21-5230	B0700-01A0A	7
6735-21-5530	A1.01	15
6735-21-6120	A4.03	4
6735-21-6130	A4.03	3
6735-21-6160	A4.03	5
6735-21-6260	A4.03	6
6735-21-8100	A1.02	4
6735-21-8110	A1.02	4
6735-21-8210	A1.02	6
6735-26-8110	A1.02	4
6735-26-8210	A1.02	6
6735-26-8210	A1.02	6
6735-27-8110	A1.02	4
6735-27-8210	A1.02	6
6735-28-8110	A1.02	4
6735-28-8210	A1.02	6
6735-28-8210	A1.02	6

PARTS Nº	FIG. Nº	INDEX
6735-29-8110	A1.02	4
6735-29-8210	A1.02	6
6735-31-1111	A1.02	1
6735-31-2110	A1.04	5
6735-31-2140	A1.04	5
6735-31-8120	A1.02.2	3
6735-38-2120	A1.04	5
6735-38-2130	A1.04	5
6735-38-2210	A1.04	5
6735-39-2210	A1.04	5
6735-41-1111	A1.07	1
6735-41-5550	A3.01	5
6735-41-5550	A3.01	9
6735-51-1120	A7.06	1
6735-51-5141	V0100-01A0A	4
6735-51-8270	A10.06.3	8
6735-61-2110	A7.05	9
6735-61-2130	A7.05	12
6735-61-2140	A1.02.2	2
6735-61-2140	A7.05	5
6735-61-2160	A7.05	6
6735-61-2190	A7.05	10
6735-61-3260	A1.02.2	5
6735-61-3300	A8.03	22
6735-61-3310	A8.03	23
6735-61-3320	A8.03	25
6735-61-3510	A1.02.2	7
6735-71-3110	A9.01	10
6735-71-3240	A13.02	4
6735-71-5220	A9.01	6
6735-71-5240	A9.01	8
6735-71-5270	A5.19	6
6735-71-5790	A6.03	7
6735-71-5820	A6.03	9
6735-71-5830	A6.03	10
6735-71-5840	A6.03	11
6735-71-5860	A6.03	12
6735-71-5950	A6.03	15
6735-71-5960	A6.03	16
6735-71-5970	A6.03	17
6735-71-5990	A6.03	21
6735-71-6230	A6.04	7
6735-71-6510	A6.04.1	1
6735-71-6530	A6.04	5
6735-71-6540	A6.04	4
6735-72-5110	A6.03	18
6735-72-5120	A6.03	19
6735-72-5130	A6.03	20
6735-72-5140	A6.03	22
6735-72-5150	A6.03	23
6735-81-6110	A13.02	1
6735-81-6110	A13.02.1	1
6735-81-6180	A13.05.1	2
6735-81-6200	C0200-02A0	1
6735-81-6200	A8.03	29
6735-81-6210	C0200-02A0	1
6735-81-6210	A8.03	32
6735-81-6220	C0200-02A0	8
6735-81-6220	A8.03	29
6735-81-6310	C0200-02A0	12
6735-81-6310	A8.03	19
6735-81-6410	C0200-02A0	10
6735-81-6410	A8.03	21
6735-81-8180	A10.06	1
6735-81-8270	A10.06	21
6735-81-8310	A10.06	18
6735-81-8470	A10.06	17
6735-81-8530	A10.06	19
6735-81-8540	A10.06	20
6735-81-8610	A10.06	14
6735-81-8620	A10.06	15
6735-81-9140	A5.06	1
6735-91-1620	A1.02.2	6
6735-K2-3000	A16.01	8
6736-11-1150	A2.01	2
6736-11-1910	A17.06	1
6736-11-3430	A6.01	8
6736-11-5710	A10.06	26
6736-11-5810	A10.06.1	1
6736-18-1310	A2.01	18
6736-19-1310	A2.01	16
6736-19-1410	A2.01	17
6736-19-1430	A2.01	15
6736-19-1440	A2.01	14
6736-21-1400	A1.01	1
6736-21-3210	A8.03	5
6736-21-5310	A8.03	16
6736-26-8100	A1.02	4
6736-27-8100	A1.02	4
6736-28-8100	A1.02	4
6736-29-1410	A1.01	2
6736-29-1420	A1.01	2
6736-29-2110	A1.01	18
6736-29-2110	A1.01	18
6736-29-8100	A1.02	4
6736-31-1100	A1.02	1
6736-31-2420	A1.04	8
6736-36-3400	A1.04	4
6736-37-3400	A1.04	4
6736-38-3400	A1.04	4
6736-39-1140	A1.02	8
6736-39-1220	A1.02	7
6736-39-3400	A1.04	4
6736-41-4110	A2.01	5
6736-41-4210	A2.01	5
6736-41-5110	A3.01	1
6736-51-5140	A7.05	1
6736-51-8130	A10.06.3	9
6736-51-8140	A10.06.3	7
6736-51-8710	A10.06.3	7
6736-51-8720	A10.06	27
6736-51-8730	A10.06.3	10
6736-61-1401	A8.07.3	1
6736-61-5170	A7.05	8
6736-61-5180	A7.05	7
6736-71-5820	A5.19	3
6736-81-6170	A9.01	3
6736-81-6190	A13.02.3	1
6736-81-8250	A10.06	4
6736-81-8280	A10.06	7
6736-81-8320	A10.06	23
6736-81-8360	A10.06	25
6736-81-8370	A10.06	3
6736-81-8380	A10.06	24
6736-81-8390	A10.06	2
6736-81-8430	A10.06	6
6736-81-8440	A10.06	22
6736-81-8470	A10.06	9
6736-81-8480	A10.06	5
6736-81-8730	A8.03	6
6742-01-1390	A1.01	5
6742-01-2350	A9.01	1
6742-01-4060	A1.02	5
6742-01-5157	A6.04.1	2
6995-71-1340	D0200-01A0	46
6995-71-1340	D0200-02A0	33
6995-71-1340	D0200-02A0	44
700-22-11410	Y1662-06A0G	17
700-22-11410	Y1662-46A0F	17
700-80-64220	Y1662-06A0G	18
700-80-64220	Y1662-46A0F	18
700-84-11730	Y1670-01A0E	34
700-93-11320	Y1641-01A0A	19
700-93-11320	Y1662-03A0G	7
700-93-11320	Y1662-03A0G	15
700-93-11320	Y1662-03A0G	24
700-93-11320	Y1662-03A0G	31
700-93-11320	Y1662-03A0G	38
700-93-11320	Y1662-03A0G	45
700-93-11320	Y1662-03A0G	53

PARTS Nº	FIG. Nº	INDEX
700-93-11320	Y1662-13A0G	15
700-93-11320	Y1662-13A0G	15
700-93-11320	Y1662-43A0F	7
700-93-11320	Y1662-43A0F	15
700-93-11320	Y1662-43A0F	24
700-93-11320	Y1662-43A0F	31
700-93-11320	Y1662-43A0F	38
700-93-11320	Y1662-43A0F	45
700-93-11320	Y1662-43A0F	53
700-93-11320	Y1662-53A0F	15
700-93-11320	Y1669-02A0A	20
701-20-61230	H0120-01A0	20
701-20-61230	H0120-01A0	31
701-20-61230	H0120-02A0	20
701-20-61230	H0120-02A0	31
702-15-71130	Y1640-03A1C	18
702-15-71140	Y1640-03A1C	19
702-15-72000	Y1640-03A1C	15
702-16-01051	K1110-12A0A	1
702-16-01051	Y1670-11A0	1
702-16-01230	K1530-01A0B	1
702-16-01230	Y1670-21A0	1
702-16-01540	K1110-10A0	10
702-16-01540	K1110-10A2	10
702-16-01540	Y1670-01A0E	1
702-16-51140	Y1670-01A0E	3
702-16-51140	Y1670-11A0	5
702-16-51140	Y1670-21A0	3
702-16-51240	Y1670-11A0	18
702-16-51270	Y1670-01A0E	8
702-16-51270	Y1670-11A0	11
702-16-51270	Y1670-21A0	8
702-16-53140	Y1670-01A0E	5
702-16-53140	Y1670-11A0	7
702-16-53170	Y1670-01A0E	7
702-16-53170	Y1670-11A0	10
702-16-53170	Y1670-21A0	7
702-16-53190	Y1670-11A0	14
702-16-53210	Y1670-11A0	16
702-16-53230	Y1670-11A0	20
702-16-53420	Y1670-01A0E	4
702-16-53420	Y1670-11A0	6
702-16-53470	Y1670-11A0	8
702-16-53590	Y1670-11A0	9
702-16-53920	Y1679-01A0A	37
702-16-53980	Y1670-11A0	19
702-16-54170	Y1670-01A0E	10
702-16-54170	Y1670-11A0	13
702-16-54280	Y1670-01A0E	23
702-16-54310	Y1670-01A0E	11
702-16-54331	Y1670-01A0E	18
702-16-54341	Y1670-01A0E	21
702-16-54351	Y1670-01A0E	22
702-16-54420	Y1670-01A0E	6
702-16-54430	Y1670-01A0E	20
702-16-54490	Y1662-01A0G	38
702-16-54490	Y1662-01A0G	44
702-16-54490	Y1662-41A0F	38
702-16-54490	Y1662-41A0F	44
702-16-54500	Y1670-01A0E	24
702-16-54510	Y1670-01A0E	26
702-16-54550	Y1670-21A0	4
702-16-54560	Y1670-21A0	6
702-16-54570	Y1670-21A0	5
702-16-54580	Y1670-21A0	9
702-16-54590	Y1670-21A0	10
702-16-54640	Y1670-21A0	14
702-16-54650	Y1670-21A0	17
702-16-54660	Y1670-21A0	16
702-16-54670	Y1670-21A0	18
702-16-55940	Y1670-01A0E	35
702-16-55950	Y1670-01A0E	36
702-21-04220	H1240-01A0	1
702-21-04220	Y1675-01A0	1
702-21-07010	Y1600-10A0C	1
702-21-09147	H0120-03A0	12
702-21-09147	Y1679-01A0A	1
702-21-31231	Y1675-01A0	4
702-21-31241	Y1675-01A0	6
702-21-31350	Y1675-01A0	3
702-21-31360	Y1675-01A0	5
702-21-35120	Y1675-01A0	13
702-21-35130	Y1675-01A0	12
702-21-35141	Y1675-01A0	11
702-21-53120	Y1679-01A0A	7
702-21-55100	Y1679-01A0A	29
702-21-55310	Y1679-01A0A	2
702-21-55410	Y1679-01A0A	9
702-21-55420	Y1679-01A0A	4
702-21-55440	Y1679-01A0A	6
702-21-55460	Y1679-01A0A	3
702-21-55470	Y1679-01A0A	24
702-21-55480	Y1679-01A0A	26
702-21-55520	Y1679-01A0A	5
702-21-55530	Y1679-01A0A	12
702-21-55620	Y1679-01A0A	16
702-21-55640	Y1679-01A0A	15
702-21-55670	Y1679-01A0A	23
702-21-55710	Y1679-01A0A	18
702-21-55720	Y1679-01A0A	19
702-73-02111	Y1641-03A0A	1
702-73-11510	Y1662-01A0G	30
702-73-11510	Y1662-41A0F	30
702-75-01201	Y1640-03A1C	1
703-09-00120	N1310-01A0	1
703-09-33230	N1310-01A0	1
703-09-33230	Y1627-01A0	1
703-09-94210	Y1627-01A0	8
703-09-95320	Y1627-01A0	2
703-09-98610	Y1627-01A0	6
706-73-40330	Y1675-01A0	14
706-75-00150	Y1640-01A1C	2
706-75-01170	N1210-01A1A	1
706-75-01170	Y1640-02A1C	1
706-75-01170	Y1640-03A1C	1
706-75-01170	Y1640-01A1C	1
706-75-03330	Y1640-02A1C	1
706-75-03330	Y1640-01A1C	1
706-75-05020	Y1640-02A1C	20
706-75-05040	Y1640-02A1C	9
706-75-40010	Y1640-01A1C	4
706-75-41110	Y1640-02A1C	19
706-75-42820	Y1640-01A1C	5
706-75-42880	Y1640-02A1C	4
706-75-43110	Y1640-01A1C	1
706-75-43120	Y1640-02A1C	17
706-75-43130	Y1640-02A1C	18
706-75-43160	Y1640-02A1C	22
706-75-43190	Y1640-02A1C	14
706-75-43660	Y1640-02A1C	3
706-75-43720	Y1640-02A1C	12
706-75-43741	Y1640-02A1C	15
706-75-43750	Y1640-02A1C	16
706-75-43810	Y1640-02A1C	5
706-75-74540	Y1640-01A1C	14
706-75-74550	Y1640-01A1C	15
706-75-74850	Y1640-01A1C	16
706-75-92130	Y1640-02A1C	23
706-75-92310	Y1640-02A1C	29
706-75-92340	Y1640-02A1C	24
706-75-92350	Y1640-02A1C	25
706-75-92360	Y1640-02A1C	30
706-75-92380	Y1640-02A1C	26
706-75-92390	Y1640-02A1C	27
706-76-40890	Y1640-02A1C	8
706-77-72170	Y1640-01A1C	6
706-77-72170	Y1640-03A1C	13
706-7E-11260	Y1640-02A1C	6
706-7E-11270	Y1640-02A1C	7
706-7E-11280	Y1640-02A1C	11

PARTS Nº	FIG. Nº	INDEX
706-7G-11290	Y1641-02A0A	5
706-86-51180	Y1662-01A0G	49
706-86-51180	Y1662-41A0F	49
706-86-51180	Y1600-09A0C	28
706-87-40150	Y1600-05A0C	7
707-27-11981	Y1620-41A0C	7
707-27-12921	Y1620-01A0C	7
707-27-12960	Y1620-41A1C	7
707-27-13961	Y1620-11A0C	5
707-35-90360	Y0163-51A0C	3
707-35-90360	Y1620-41A0C	21
707-35-90930	Y0163-51A0C	1
707-35-90930	Y0163-51A0C	4
707-35-90930	Y1620-01A0C	23
707-35-90930	Y1620-41A1C	21
707-35-90960	Y0163-51A0C	2
707-35-90960	Y1620-11A0C	21
707-35-91150	Y0163-51A0C	3
707-35-91150	Y1620-41A0C	13
707-35-91220	Y0163-51A0C	1
707-35-91220	Y0163-51A0C	1
707-35-91220	Y1620-01A0C	13
707-35-91220	Y1620-01A0C	26
707-35-91250	Y0163-51A0C	4
707-35-91250	Y1620-41A1C	13
707-35-91370	Y0163-51A0C	2
707-35-91370	Y1620-11A0C	11
707-35-91370	Y1620-11A0C	26
707-36-11661	Y1620-41A0C	17
707-36-12071	Y1620-01A0C	17
707-36-12670	Y1620-41A1C	17
707-36-13731	Y1620-11A0C	15
707-39-11510	Y0163-51A0C	3
707-39-11510	Y1620-41A0C	19
707-39-12110	Y0163-51A0C	1
707-39-12110	Y1620-01A0C	19
707-39-12530	Y0163-51A0C	4
707-39-12530	Y1620-41A1C	19
707-39-13510	Y0163-51A0C	2
707-39-13510	Y1620-11A0C	17
707-41-11840	Y1620-11A0C	14
707-44-11280	Y0163-51A0C	3
707-44-11280	Y1620-41A0C	18
707-44-11920	Y1620-41A0C	20
707-44-12180	Y0163-51A0C	1
707-44-12180	Y1620-01A0C	18
707-44-12280	Y0163-51A0C	4
707-44-12280	Y1620-41A1C	18
707-44-12911	Y1620-01A0C	20
707-44-12921	Y1620-41A1C	20
707-44-13280	Y0163-51A0C	2
707-44-13280	Y1620-11A0C	16
707-44-13920	Y1620-11A0C	18
707-51-80030	Y0163-51A0C	3
707-51-80030	Y1620-41A0C	11
707-51-80630	Y0163-51A0C	3
707-51-80630	Y1620-41A0C	14
707-51-85030	Y0163-51A0C	1
707-51-85030	Y0163-51A0C	4
707-51-85030	Y1620-01A0C	11
707-51-85030	Y1620-41A1C	11
707-51-85630	Y0163-51A0C	1
707-51-85630	Y0163-51A0C	4
707-51-85630	Y1620-01A0C	14
707-51-85630	Y1620-41A1C	14
707-51-95030	Y0163-51A0C	2
707-51-95030	Y1620-11A0C	9
707-51-95630	Y0163-51A0C	2
707-51-95630	Y1620-11A0C	12
707-52-90560	Y1620-41A0C	10
707-52-90610	Y1620-01A0C	10
707-52-90610	Y1620-41A1C	10
707-52-90720	Y1620-11A0C	8
707-56-85510	Y0163-51A0C	1
707-56-85510	Y0163-51A0C	4
707-56-85510	Y1620-01A0C	9
707-56-85510	Y1620-41A1C	9
707-56-95510	Y0163-51A0C	2
707-56-95510	Y1620-11A0C	7
707-71-32670	Y1620-01A0C	25
707-71-32770	Y1620-11A0C	25
707-71-60230	Y1620-11A0C	23
707-71-60860	Y1620-01A0C	21
707-71-61040	Y1620-11A0C	19
707-71-91270	Y1620-11A0C	29
707-76-70110	Y1620-41A0C	2
707-76-70120	Y1620-41A0C	5
707-76-70160	Y1620-41A1C	2
707-76-70160	Y1620-41A1C	5
707-76-80010	Y1620-01A0C	5
707-76-80010	Y1620-11A0C	2
707-83-13010	Y1620-11A0C	29A
707-87-14070	Y1620-11A0C	29C
707-88-11560	Y1620-11A0C	42
707-88-13590	Y1620-41A1C	34
707-88-87090	Y1620-41A1C	30
707-88-87150	Y1620-41A1C	31
707-88-95320	Y1620-11A0C	39
707-88-95341	Y1620-11A0C	38
707-88-95350	Y1620-41A0C	31
707-88-95370	Y1620-41A0C	30
707-88-96530	Y1620-01A0C	34
707-98-45250	Y0163-51A0C	3
707-99-46270	Y0163-51A0C	1
707-99-46290	Y0163-51A0C	4
707-99-57270	Y0163-51A0C	2
708-1W-25351	Y1600-09A0C	11
708-1W-25550	Y1600-09A0C	20
708-1W-25580	Y1600-09A0C	21
708-1W-25591	Y1600-09A0C	19
708-1W-28910	Y1600-01A0C	4
708-1W-28910	Y1600-05A0C	4
708-1W-28910	Y1600-05A0C	8
708-1W-28910	Y1600-05A0C	14
708-1W-28910	Y1600-09A0C	27
708-1W-28910	Y1600-09A0C	31
708-1W-28920	Y1600-09A0C	13
708-25-12790	Y1600-03A0C	4
708-25-12790	Y1600-06A0C	4
708-25-52860	Y1600-03A0C	5
708-27-12560	H0120-03A0	14
708-2E-05040	Y1600-03A0C	3
708-2E-05040	Y1600-06A0C	3
708-2E-12140	Y1600-08A0C	2
708-2L-00461	H0210-01A0	1
708-2L-00461	Y1600-02A0C	1
708-2L-00461	Y1600-03A0C	1
708-2L-00461	Y1600-04A0C	1
708-2L-00461	Y1600-05A0C	1
708-2L-00461	Y1600-06A0C	1
708-2L-00461	Y1600-07A0C	1
708-2L-00461	Y1600-08A0C	1
708-2L-00461	Y1600-09A0C	1
708-2L-00461	Y1600-10A0C	1
708-2L-00461	Y1600-01A0C	1
708-2L-01442	Y1600-02A0C	1
708-2L-01442	Y1600-03A0C	1
708-2L-01442	Y1600-04A0C	1
708-2L-01442	Y1600-05A0C	1
708-2L-01442	Y1600-06A0C	1
708-2L-01442	Y1600-07A0C	1
708-2L-01442	Y1600-08A0C	1
708-2L-01442	Y1600-01A0C	1
708-2L-04141	Y1600-03A0C	8
708-2L-04151	Y1600-06A0C	5
708-2L-04240	Y1600-01A0C	1
708-2L-04250	Y1600-05A0C	1
708-2L-04291	Y1600-10A0C	2
708-2L-04361	Y1600-03A0C	19
708-2L-04371	Y1600-06A0C	16

PARTS Nº	FIG. Nº	INDEX
708-2L-04420	Y1600-02A0C	1
708-2L-04523	Y1600-09A0C	1
708-2L-04740	Y1600-09A0C	15
708-2L-22130	Y1600-08A0C	1
708-2L-22150	Y1600-03A0C	2
708-2L-22150	Y1600-06A0C	2
708-2L-22160	Y1600-03A0C	6
708-2L-22271	Y1600-02A0C	4
708-2L-23131	Y1600-03A0C	12
708-2L-23131	Y1600-06A0C	9
708-2L-23351	Y1600-03A0C	15
708-2L-23351	Y1600-06A0C	12
708-2L-23360	Y1600-03A0C	16
708-2L-23360	Y1600-06A0C	13
708-2L-23920	Y1600-01A0C	9
708-2L-23920	Y1600-05A0C	10
708-2L-23920	Y1600-10A0C	6
708-2L-23940	Y1600-01A0C	6
708-2L-23940	Y1600-09A0C	10
708-2L-23950	Y1600-01A0C	11
708-2L-23950	Y1600-05A0C	12
708-2L-23950	Y1600-10A0C	10
708-2L-23950	Y1600-10A0C	20
708-2L-23960	Y1600-10A0C	15
708-2L-23970	Y1600-10A0C	4
708-2L-24513	Y1600-04A0C	4
708-2L-24513	Y1600-07A0C	4
708-2L-24522	Y1600-04A0C	10
708-2L-24522	Y1600-07A0C	10
708-2L-24531	Y1600-04A0C	16
708-2L-24531	Y1600-07A0C	16
708-2L-24560	Y1600-04A0C	7
708-2L-24560	Y1600-07A0C	7
708-2L-24570	Y1600-04A0C	6
708-2L-24570	Y1600-07A0C	6
708-2L-24590	Y1600-04A0C	19
708-2L-24590	Y1600-07A0C	19
708-2L-24620	Y1600-04A0C	17
708-2L-24620	Y1600-07A0C	17
708-2L-24630	Y1600-04A0C	15
708-2L-24630	Y1600-07A0C	15
708-2L-24640	Y1600-04A0C	13
708-2L-24640	Y1600-07A0C	13
708-2L-24650	Y1600-04A0C	14
708-2L-24650	Y1600-07A0C	14
708-2L-24660	Y1600-07A0C	18
708-2L-24661	Y1600-04A0C	18
708-2L-24670	Y1600-04A0C	5
708-2L-24670	Y1600-07A0C	5
708-2L-24680	Y1600-09A0C	22
708-2L-24680	Y1600-09A0C	30
708-2L-25480	Y1600-02A0C	10
708-2L-28114	Y1600-09A0C	1
708-2L-28122	Y1600-09A0C	8
708-2L-28190	Y1600-09A0C	5
708-2L-28221	Y1600-09A0C	6
708-2L-28231	Y1600-09A0C	4
708-2L-28253	Y1600-09A0C	3
708-2L-28262	Y1600-09A0C	9
708-2L-28280	Y1600-09A0C	12
708-2L-28380	Y1600-09A0C	7
708-2L-28470	Y1600-09A0C	2
708-2L-28510	Y1600-09A0C	15
708-2L-28540	Y1600-09A0C	17
708-2L-28560	Y1600-09A0C	23
708-2L-28570	Y1600-09A0C	18
708-2L-28620	Y1600-09A0C	16
708-2L-28892	Y1600-09A0C	29
708-2L-29410	Y1600-10A0C	12
708-2L-29420	Y1600-10A0C	13
708-2L-29430	Y1600-10A0C	14
708-2L-29450	Y1600-10A0C	17
708-2L-29460	Y1600-10A0C	19
708-2L-32110	Y1600-03A0C	1
708-2L-32130	Y1600-06A0C	1
708-2L-32260	Y1600-02A0C	3
708-2L-33160	Y1600-03A0C	13
708-2L-33160	Y1600-06A0C	10
708-2L-33310	Y1600-03A0C	18
708-2L-33310	Y1600-06A0C	15
708-2L-33340	Y1600-03A0C	17
708-2L-33340	Y1600-06A0C	14
708-7L-05010	Y1641-02A0A	4
708-7L-12140	Y1641-02A0A	3
708-7L-13140	Y1600-03A0C	14
708-7L-13140	Y1600-06A0C	11
708-7L-13140	Y1641-02A0A	12
708-7T-16460	Y1662-01A0G	15
708-7T-16460	Y1662-12A0G	5
708-7T-16460	Y1662-41A0F	15
708-7T-16460	Y1662-52A0F	5
708-7T-16460	Y1669-01A0A	5
708-8E-16150	Y1600-01A0C	8
708-8E-16150	Y1600-05A0C	9
708-8E-16160	Y1641-01A0A	27
708-8E-16160	Y1662-04A0G	18
708-8E-16160	Y1662-44A0F	18
708-8E-16180	Y1641-01A0A	26
708-8F-00110	P1210-01A0A	1
708-8F-00110	Y0270-01A0A	1
708-8F-00110	Y1641-01A0A	1
708-8F-00110	Y1641-02A0A	1
708-8F-00110	Y1641-03A0A	1
708-8F-04621	Y1641-01A0A	3
708-8F-04640	Y1641-01A0A	1
708-8F-12151	Y1641-02A0A	2
708-8F-12230	Y1641-02A0A	6
708-8F-31210	Y1641-01A0A	32
708-8F-31610	Y1641-01A0A	29
708-8F-32110	Y1641-02A0A	1
708-8F-33150	Y1641-02A0A	13
708-8F-33310	Y1641-02A0A	17
708-8F-33340	Y1641-02A0A	16
708-8F-33350	Y1641-02A0A	15
708-8F-33360	Y1641-02A0A	11
708-8F-33410	Y1641-02A0A	18
708-8F-33710	Y1641-02A0A	19
708-8F-34110	Y1641-01A0A	24
708-8F-34120	Y1641-01A0A	22
708-8F-34141	Y1641-02A0A	20
708-8F-34150	Y1641-02A0A	21
708-8F-34170	Y1641-01A0A	8
708-8F-35110	Y1641-02A0A	22
708-8F-35120	Y1641-02A0A	24
708-8F-35130	Y1641-02A0A	23
708-8F-35140	Y1641-02A0A	25
708-8F-35150	Y1641-02A0A	30
708-8F-35160	Y1641-02A0A	26
708-8F-35170	Y1641-02A0A	27
708-8F-35180	Y1641-02A0A	28
708-8F-35190	Y1641-02A0A	29
708-8F-36311	Y1641-01A0A	17
708-8F-36611	Y1641-01A0A	14
708-8H-11530	Y1600-01A0C	10
708-8H-11530	Y1600-05A0C	11
708-8H-11530	Y1640-01A1C	8
708-8H-11530	Y1641-01A0A	11
708-8H-11530	Y1662-01A0G	52
708-8H-11530	Y1662-04A0G	9
708-8H-11530	Y1662-07A0G	4
708-8H-11530	Y1662-41A0F	52
708-8H-11530	Y1662-44A0F	9
708-8H-11530	Y1662-47A0F	4
708-8H-34180	Y1641-01A0A	10
708-8H-34210	Y1641-01A0A	9
708-8H-36121	Y1641-01A0A	16
709-25-11361	Y1640-01A1C	11
709-25-11390	Y1662-01A0G	28
709-25-11390	Y1662-08A0G	8
709-25-11390	Y1662-09A0G	13
709-25-11390	Y1662-10A0G	14
709-25-11390	Y1662-10A0G	26
709-25-11390	Y1662-41A0F	28
709-25-11390	Y1662-48A0F	8
709-25-11390	Y1662-49A0F	13
709-25-11390	Y1662-50A0F	14
709-25-11390	Y1662-50A0F	26
709-25-11390	Y1662-53A0F	30
709-25-11390	Y1669-01A0A	22
709-25-11390	Y1672-01A0	13
709-25-11390	Y1675-01A0	31
709-25-11640	Y1640-01A1C	12
709-25-11650	Y1640-01A1C	10
709-70-71112	Y1675-01A0	16
709-70-71610	Y1640-03A1C	17
709-70-71610	Y1662-14A0G	18
709-70-74302	Y1662-09A0G	1
709-70-74302	Y1662-49A0F	1
709-70-74302	Y1675-01A0	16
709-70-74600	Y1662-14A0G	8
709-70-74800	H1270-02A0	1
709-70-74800	Y1672-01A0	1
709-74-91510	Y1662-53A0F	29
709-74-91510	Y1669-01A0A	21
709-74-91860	Y1662-04A0G	20
709-74-91860	Y1662-44A0F	20
720-68-19610	Y1600-03A0C	10
720-68-19610	Y1600-06A0C	7
720-68-19870	Y1600-01A0C	5
722-10-91130	Y1641-01A0A	23
723-40-51401	Y1662-06A0G	1
723-40-51401	Y1662-46A0F	1
723-40-56302	Y1662-05A0G	1
723-40-56302	Y1662-45A0F	1
723-40-56350	Y1662-05A0G	7
723-40-56350	Y1662-45A0F	7
723-40-60101	Y1662-08A0G	1
723-40-60101	Y1662-48A0F	1
723-40-66200	Y1662-07A0G	9
723-40-66200	Y1662-47A0F	9
723-40-66300	Y1669-01A0A	17
723-40-66300	Y1662-14A0G	3
723-40-66300	Y1662-53A0F	24
723-40-66300	Y1669-02A0A	1
723-40-66402	Y1662-07A0G	1
723-40-66402	Y1662-47A0F	1
723-40-70100	Y1662-11A0G	1
723-40-70100	Y1662-51A0F	1
723-40-71140	Y1662-11A0G	4
723-40-71140	Y1662-51A0F	4
723-40-71150	Y1662-11A0G	5
723-40-71150	Y1662-51A0F	5
723-40-71160	Y1662-11A0G	3
723-40-71160	Y1662-51A0F	3
723-40-71170	Y1662-11A0G	7
723-40-71170	Y1662-51A0F	7
723-40-85100	Y1662-10A0G	22
723-40-85100	Y1662-50A0F	22
723-40-90200	Y1662-10A0G	1
723-40-90200	Y1662-50A0F	1
723-41-05300	Y1669-01A0A	1
723-41-05300	Y1669-02A0A	1
723-46-00620	Y1662-04A0G	4
723-46-00620	Y1662-44A0F	4
723-46-00640	Y1662-04A0G	1
723-46-00640	Y1662-44A0F	1
723-46-00710	Y1662-01A0G	34
723-46-00710	Y1662-41A0F	34
723-46-00720	Y1662-01A0G	39
723-46-00720	Y1662-41A0F	39
723-46-14110	Y1662-01A0G	21
723-46-14110	Y1662-12A0G	7
723-46-14110	Y1662-41A0F	21
723-46-14110	Y1662-52A0F	7
723-46-14110	Y1669-01A0A	7
723-46-14131	Y1662-01A0G	23
723-46-14131	Y1662-41A0F	23
723-46-14140	Y1662-04A0G	17
723-46-14140	Y1662-44A0F	17
723-46-14150	Y1662-01A0G	51
723-46-14150	Y1662-41A0F	51
723-46-14170	Y1662-01A0G	22
723-46-14170	Y1662-41A0F	22
723-46-14210	Y1662-01A0G	25
723-46-14210	Y1662-41A0F	25
723-46-14220	Y1662-01A0G	26
723-46-14220	Y1662-41A0F	26
723-46-15100	Y1662-04A0G	11
723-46-15100	Y1662-44A0F	11
723-46-15110	Y1662-01A0G	33
723-46-15110	Y1662-12A0G	8
723-46-15110	Y1662-41A0F	33
723-46-15110	Y1662-52A0F	8
723-46-15110	Y1669-01A0A	8
723-46-15120	Y1662-01A0G	16
723-46-15120	Y1662-12A0G	6
723-46-15120	Y1662-41A0F	16
723-46-15120	Y1662-52A0F	6
723-46-15120	Y1669-01A0A	6
723-46-15130	Y1662-12A0G	3
723-46-15130	Y1662-52A0F	3
723-46-15130	Y1669-01A0A	3
723-46-15140	Y1662-01A0G	9
723-46-15140	Y1662-41A0F	9
723-46-15150	Y1662-01A0G	50
723-46-15150	Y1662-41A0F	50
723-46-15190	Y1662-04A0G	16
723-46-15190	Y1662-44A0F	16
723-46-15280	Y1662-11A0G	16
723-46-15280	Y1662-51A0F	16
723-46-15610	Y1662-01A0G	24
723-46-15610	Y1662-41A0F	24
723-46-15620	Y1662-01A0G	17
723-46-15620	Y1662-41A0F	17
723-46-15630	Y1662-01A0G	27
723-46-15630	Y1662-41A0F	27
723-46-15640	Y1662-01A0G	29
723-46-15640	Y1662-41A0F	29
723-46-15650	Y1662-01A0G	8
723-46-15650	Y1662-41A0F	8
723-46-15670	Y1662-01A0G	32
723-46-15670	Y1662-41A0F	32
723-46-15690	Y1662-01A0G	20
723-46-15690	Y1662-41A0F	20
723-46-15770	Y1662-01A0G	31
723-46-15770	Y1662-41A0F	31
723-46-15880	Y1662-01A0G	18
723-46-15880	Y1662-41A0F	18
723-46-16110	Y1662-01A0G	34
723-46-16110	Y1662-01A0G	39
723-46-16110	Y1662-41A0F	34
723-46-16110	Y1662-41A0F	39
723-46-16120	Y1662-01A0G	40
723-46-16120	Y1662-41A0F	40
723-46-16130	Y1662-01A0G	35
723-46-16130	Y1662-41A0F	35
723-46-16140	Y1662-01A0G	41
723-46-16140	Y1662-41A0F	41
723-46-16152	Y1662-01A0G	36
723-46-16152	Y1662-01A0G	42
723-46-16152	Y1662-41A0F	36
723-46-16152	Y1662-41A0F	42
723-46-16160	Y1662-01A0G	19
723-46-16160	Y1662-41A0F	19
723-46-16171	Y1662-01A0G	11
723-46-16171	Y1662-41A0F	11
723-46-16180	Y1662-01A0G	37
723-46-16180	Y1662-01A0G	43
723-46-16180	Y1662-41A0F	37
723-46-16180	Y1662-41A0F	43

PARTS Nº	FIG. Nº	INDEX
723-46-16190	Y1662-01A0G	48
723-46-16190	Y1662-41A0F	48
723-46-40100	Y1662-03A0G	3
723-46-40100	Y1662-43A0F	3
723-46-40702	Y1662-03A0G	10
723-46-40702	Y1662-43A0F	10
723-46-41100	Y1662-03A0G	20
723-46-41100	Y1662-43A0F	20
723-46-41110	Y1662-03A0G	1
723-46-41110	Y1662-43A0F	1
723-46-41120	Y1662-03A0G	2
723-46-41120	Y1662-43A0F	2
723-46-41950	Y1662-03A0G	8
723-46-41950	Y1662-03A0G	16
723-46-41950	Y1662-03A0G	25
723-46-41950	Y1662-03A0G	32
723-46-41950	Y1662-03A0G	39
723-46-41950	Y1662-03A0G	46
723-46-41950	Y1662-03A0G	54
723-46-41950	Y1662-13A0G	16
723-46-41950	Y1662-13A0G	16
723-46-41950	Y1662-43A0F	8
723-46-41950	Y1662-43A0F	16
723-46-41950	Y1662-43A0F	25
723-46-41950	Y1662-43A0F	32
723-46-41950	Y1662-43A0F	39
723-46-41950	Y1662-43A0F	46
723-46-41950	Y1662-43A0F	54
723-46-41950	Y1662-53A0F	16
723-46-41950	Y1669-02A0A	21
723-46-41980	Y1662-03A0G	48
723-46-41980	Y1662-43A0F	48
723-46-42981	Y1662-03A0G	18
723-46-42981	Y1662-43A0F	18
723-46-43200	Y1662-03A0G	41
723-46-43200	Y1662-43A0F	41
723-46-45100	Y1662-03A0G	27
723-46-45100	Y1662-43A0F	27
723-46-46101	Y1662-03A0G	34
723-46-46101	Y1662-43A0F	34
723-46-46300	Y1662-03A0G	49
723-46-46300	Y1662-43A0F	49
723-46-48100	Y1669-01A0A	20
723-46-48100	Y1662-13A0G	1
723-46-48100	Y1662-13A0G	1
723-46-48100	Y1662-53A0F	1
723-46-48100	Y1669-02A0A	6
723-47-13701	H0120-02A0	1
723-47-13701	Y1662-02A0G	1
723-47-13701	Y1662-03A0G	1
723-47-13701	Y1662-04A0G	1
723-47-13701	Y1662-05A0G	1
723-47-13701	Y1662-06A0G	1
723-47-13701	Y1662-07A0G	1
723-47-13701	Y1662-08A0G	1
723-47-13701	Y1662-09A0G	1
723-47-13701	Y1662-10A0G	1
723-47-13701	Y1662-11A0G	1
723-47-13701	Y1662-12A0G	1
723-47-13701	Y1662-13A0G	1
723-47-13701	Y1662-13A0G	1
723-47-13701	Y1662-14A0G	1
723-47-13701	Y1662-01A0G	1
723-47-13802	H0120-01A0	1
723-47-13802	Y1662-42A0F	1
723-47-13802	Y1662-43A0F	1
723-47-13802	Y1662-44A0F	1
723-47-13802	Y1662-45A0F	1
723-47-13802	Y1662-46A0F	1
723-47-13802	Y1662-47A0F	1
723-47-13802	Y1662-48A0F	1
723-47-13802	Y1662-49A0F	1
723-47-13802	Y1662-50A0F	1
723-47-13802	Y1662-51A0F	1
723-47-13802	Y1662-52A0F	1
723-47-13802	Y1662-53A0F	1
723-47-13802	Y1662-41A0F	1
723-60-22230	Y1662-05A0G	9
723-60-22230	Y1662-45A0F	9
7815-11-1010	K0210-13A8	3C
7825-30-1301	K0210-11A1B	35
7825-30-1301	K0210-11A2B	34
7834-21-6000	K0210-10A1F	25
7834-21-7001	K0210-10A1F	25
7834-40-3000	B0400-01A0A	4
7834-77-3001	K0210-13A8	3A
7861-01-1820	K0210-13A8	3B
7861-86-1330	K0700-01A1A	29
7861-86-1330	K1110-17B0	9
7861-91-1420	B0200-01A1C	7
7861-92-1610	H0120-04A0	1
7861-92-1610	H0120-05A0	1
7861-92-2310	B0500-01A0A	16
7861-92-4210	B0500-01A0A	13
7861-92-4210	H0110-01A0	24
7861-92-4210	A15.01.2	2
7861-92-5810	D0100-01A0	4
7861-94-4001	K0210-10A1F	21