https://truckmanualshub.com/

RUTHZIL TRATOR COMERCIAL DE PEÇAS LTDA 11 97083-6812 ROLANDO CITRANGULO

CEAM001200

Operation & Maintenance Manual

KOMATSU

PC200,200LC-6
PC210LC-6
PC220LC-6
PC250LC-6
HYDRAULIC EXCAVATOR

SERIAL NUMBERS

PC200,200LC-6 - A83001
PC210LC-6 - A83001
PC220LC-6 - A83001
PC250LC-6 - A83001

and up

This material is proprietary to Komatsu America International Company and is not to be reproduced, used, or disclosed except in accordance with written authorization from Komatsu America International Company.

It is our policy to improve our products whenever it is possible and practical to do so. We reserve the right to make changes or add improvements at any time without incurring any obligation to install such changes on products sold previously.

Due to this continuous program of research and development, periodic revisions may be made to this publication. It is recommended that customers contact their distributor for information on the latest revision.

December 1996

Copyright 1996 Komatsu America International Company

https://truckmanualshub.com/

⚠ WARNING

Unsafe use of this machine may cause serious injury or death. Operators and maintenance personnel must read this manual before operating or maintaining this machine. This manual should be kept near the machine for reference and periodically reviewed by all personnel who come in contact with it.

CALIFORNIA

Proposition 65 Warning

Diesel engine exhaust and some of its constituents are known to the State of California to cause cancer, birth defects and other reproductive harm.

https://truckmanualshub.com/

1. FORWARD

This manual describes procedures for operation, handling, lubrication, maintenance, checking, and adjustment. It will help the operator and maintenance personnel realize peak performance through effective, economical and safe machine operation and maintenance.

Keep this manual handy and have all personnel read it periodically. If this manual is lost or becomes dirty and can not be read, request a replacement manual from your local distributor.

If you sell the machine, be sure to give this manual to the new owner.

Continuing improvements in the design of this machine can lead to changes in detail, which may not be reflected in this manual. Consult your local distributor or Komatsu America International Company for the latest available information on your machine or for questions regarding information in this manual.

⚠ WARNING

Improper operation and maintenance of this machine can be hazardous and could result in serious injury or death.

Operators and maintenance personnel must read this manual thoroughly before operating or maintaining this machine.

This manual should be kept near the machine for reference and periodically reviewed by all personnel who come across it.

Some actions involved in operation and maintenance can cause a serious accident, if they are not performed in the manner described in this manual.

The procedures and precautions given in this manual apply only to intended uses of the machine. If you use your machine for any unintended uses that are not specifically prohibited, you must be sure that it is safe for you and others. In no event should you or others engage in prohibited uses or actions as described in this manual.

Komatsu America International Company delivers machines that comply with all applicable regulations and standards of the country to which it has been shipped. If this machine has been purchased in another country or purchased from someone in another country, it may lack certain safety features and specifications that are necessary for use in your country. If there is any question about whether your product complies with the applicable standards and regulations of your country, consult your local distributor or Komatsu America International Company before operating the machine.

The description of safety is given in SAFETY INFORMATION on page 0-2 and in SAFETY from page 1-1.

https://truckmanualshub.com/

2. SAFETY INFORMATION

Most accidents are caused by the failure to follow fundamental safety rules for the operation and maintenance of machines.

To avoid accidents, read, understand and follow all precautions and warnings in this manual and on the machine before performing maintenance and machine operations.

To identify safety messages in this manual and on machine product graphics, the following signal words are used.



DANGER - This word is used on safety messages and product graphics where there is a high probability of serious injury or death if the hazard is not avoided. These safety messages and product graphics usually describe precautions that must be taken to avoid the hazard. Failure to avoid this hazard may also result in serious damage to the machine.



WARNING- This word is used on safety messages and product graphics where there is a potentially dangerous situation, which could result in serious injury or death if the hazard is not avoided. These safety messages and product graphics usually describe precautions that must be taken to avoid the hazard. Failure to avoid this hazard may also result in serious damage to the machine.



CAUTION- This word is used on safety messages and product graphics for hazards, which could result in minor or moderate injury if the hazard is not avoided. These safety messages and product graphics might also use this word for hazards where the only result could be damage to the machine.

NOTICE- This word is used for precautions that must be taken to avoid actions, which could shorten the life of the machine.

Safety precautions are described in SAFETY beginning on page 0-1.

Komatsu America International Company cannot predict every circumstance that might involve a potential hazard in operation and maintenance. Therefore the safety message in this manual and on the machine may not include all possible safety precautions. If any procedures or actions not specifically recommended or allowed in this manual are used, you must be sure that you and others can do such procedures and actions safely and without damaging the machine. If you are unsure about the safety of some procedures, contact your local distributor or Komatsu America International Company.

https://truckmanualshub.com/

3. INTRODUCTION

3.1 INTENDED USE

This Komatsu HYDRAULIC EXCAVATOR is designed to be used mainly for the following work:
Digging work
Smoothing work
Ditching work
Loading work

See the section 12.15 WORK POSSIBLE USING HYDRAULIC EXCAVATOR on page 2-75 for further details.

3.2 FEATURES

- This Komatsu HYDRAULIC EXCAVATOR is equipped with various controls based on an advanced electronics system.
  - The monitor panel greatly facilitates daily maintenance and self-diagnosis.
  - Working mode, travel speed and swing priority are selective.
  - Digging and lifting force can be increased by light-touch control. (For details, see operation section.)
- Adjustable wrist control, levers make operations smooth and easy.
- Armrest with vertical adjustment for providing optimum operating posture.
- Air-conditioned operator's cab assures comfortable operation.
- Low noise level and smart urban-style design and coloring.
- Superb operating performance provided by a powerful engine and high performance hydraulic pumps.
- Low fuel consumption controlled by an electronic system provides an environment-friendly machine.

3.3 BREAKING IN A NEW MACHINE

Your Komatsu machine has been thoroughly adjusted and tested before shipment. However, operating the machine under severe conditions at the beginning can adversely affect the performance and shorten the machine life.

Be sure to break in the machine for the initial 100 hours (as indicated by the service meter).

During breaking in:
After starting, let the engine idle for 5 minutes to allow proper engine warm-up prior to actual operation.
Avoid operation with heavy loads or at high speeds.
Avoid sudden starts or acceleration, unnecessarily abrupt stops and sharp steering except in cases of emergency.
Additionally, for the first 20 hours:

- Avoid operating engine for prolonged periods at constant speed (including idle).
- Avoid high speed traveling for periods of more than 5 minutes.

Pay particular attention to oil pressure and temperature indicators, and check coolant and oil levels frequently during break in.

The precautions given in this manual for operating, maintenance, and safety procedures are only those that apply when this product is used for the specified purpose. If the machine is used for a purpose that is not listed in this manual, Komatsu America International Company cannot bear any responsibility for safety. All consideration of safety in such operations is the responsibility of the user.

Operations that are prohibited in this manual must never be carried out under any circumstance.

https://truckmanualshub.com/

4. LOCATION OF PLATES, TABLE TO ENTER SERIAL NO. AND DISTRIBUTOR

4.1 MACHINE SERIAL NO. PLATE POSITION

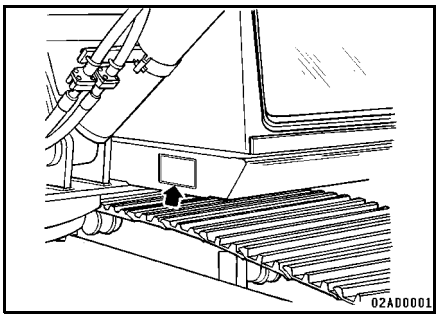

On the front bottom right of the operator's cab

On the main frame centered in front of the swing circle. (The serial number is in the form of **AAXXXXX** where **AA** is a code defining the model and **XXXXX** is the serial number.

4.2 ENGINE SERIAL NO. PLATE POSITION

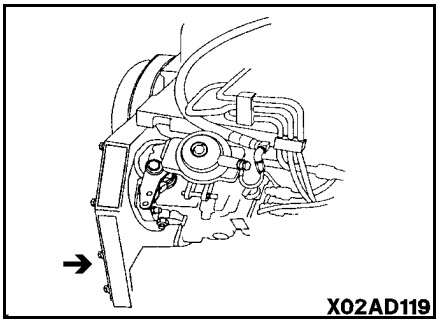

On the counteweight side of the engine gear case cover.

4.3 TABLE TO ENTER SERIAL NO. AND DISTRIBUTOR

Machine serial No.:
Engine serial No.:
Distributor name: Address: Phone: Service personnel for your machine:

REMARKS

https://truckmanualshub.com/

5. CONTENTS

1. FORWARD 0-1

2. SAFETY INFORMATION 0-2

3. INTRODUCTION 0-3
3.1 INTENDED USE 0-3
3.2 FEATURES 0-3
3.3 BREAKING IN A NEW MACHINE 0-3

4. LOCATION OF PLATES, TABLE TO ENTER SERIAL NO. AND DISTRIBUTOR 0-4
4.1 MACHINE SERIAL NO. PLATE POSITION 0-4
4.2 ENGINE SERIAL NO. PLATE POSITION 0-4
4.3 TABLE TO ENTER SERIAL NO. AND DISTRIBUTOR 0-4

5. CONTENTS 0-5

6. GENERAL PRECAUTIONS 0-2

7. PRECAUTIONS DURING OPERATION 0-9
7.1 BEFORE STARTING ENGINE 0-9
7.2 OPERATING MACHINE 0-11
7.3 TRANSPORTATION 0-19
7.4 BATTERY 0-20
7.5 TOWING 0-22
7.6 BUCKET WITH HOOK 0-23
7.6.1 GENERAL PRECAUTIONS 0-23
7.6.2 PRECAUTIONS FOR LIFTING OPERATION 0-24

8. PRECAUTIONS FOR MAINTENANCE 0-25
8.1 BEFORE CARRYING OUT MAINTENANCE 0-25
8.2 DURING MAINTENANCE 0-28

9. POSITION FOR ATTACHING SAFETY LABELS 0-33

10. GENERAL VIEW 2-2
10.1 GENERAL VIEW OF MACHINE 2-2
10.2 GENERAL VIEW OF CONTROLS AND GAUGES 2-3

11. EXPLANATION OF COMPONENTS 2-4
11.1 MACHINE MONITOR 2-4
11.1.1 A. BASIC CHECK ITEMS 2-4
11.1.2 B. CAUTION ITEMS 2-6
11.1.3 C. EMERGENCY STOP ITEMS 2-7
11.1.4 D. METER DISPLAY PORTION 2-8
11.1.5 E: SWITCHES 2-12
11.2 SWITCHES 2-15
11.3 CONTROL LEVERS, PEDALS 2-19
11.4 CEILING WINDOW 2-24
11.5 FRONT WINDOW 2-25
11.6 DOOR LOCK 2-27
11.7 CAP, COVER WITH LOCK 2-28
11.7.1 METHOD OF OPENING AND CLOSING CAP WITH LOCK 2-28
11.7.2 METHOD OF OPENING AND CLOSING COVER WITH LOCK 2-28
11.8 HOT/COOL BOX 2-29
11.9 LUGGAGE BOX 2-29
11.10 ASHTRAY 2-29
11.11 CAB HEATER 2-30
11.12 CAR RADIO 2-32

https://truckmanualshub.com/
11.12.1 EXPLANATION OF COMPONENTS 2-32
11.12.2 LOCATION AND FUNCTION OF CONTROLS 2-32
11.12.3 METHOD OF OPERATION 2-35
11.12.4 PRECAUTIONS WHEN USING 2-36
11.12.5 SPECIFICATIONS 2-36
11.13 FUSE 2-37
11.14 FUSIBLE LINK 2-38
11.15 CONTROLLER 2-38
11.16 TOOL BOX 2-38
11.17 GREASE PUMP HOLDER 2-38
11.18 HANDLING ACCUMULATOR 2-39
11.18.1 METHOD OF RELEASING PRESSURE IN CONTROL CIRCUIT ON MACHINE EQUIPPED WITH ACCUMULATOR 2-39

12. OPERATION 2-40
12.1 CHECK BEFORE STARTING ENGINE 2-40
12.1.1 WALK-AROUND CHECK 2-40
12.1.2 CHECK BEFORE STARTING 2-42
12.1.3 ADJUSTMENT BEFORE OPERATION 2-46
12.1.4 OPERATIONS AND CHECKS BEFORE STARTING ENGINE 2-48
12.2 STARTING ENGINE 2-49
12.2.1 NORMAL STARTING 2-49
12.2.2 STARTING IN COLD WEATHER 2-50
12.3 OPERATIONS AND CHECKS AFTER STARTING ENGINE 2-52
12.3.1 WHEN NORMAL 2-52
12.3.2 IN COLD AREAS 2-54
12.4 MOVING MACHINE 2-57
12.4.1 MOVING MACHINE FORWARD 2-57
12.4.2 MOVING MACHINE BACKWARD 2-58
12.5 STEERING MACHINE 2-60
12.6 STOPPING MACHINE 2-62
12.7 SWINGING 2-63
12.8 OPERATION OF WORK EQUIPMENT 2-64
12.9 HANDLING ACTIVE MODE 2-65
12.10 WORKING MODE SELECTION 2-67
12.11 PROHIBITIONS FOR OPERATION 2-69
12.12 PRECAUTIONS FOR OPERATION 2-71
12.13 PRECAUTIONS WHEN TRAVELING UP OR DOWN HILLS 2-72
12.14 HOW TO ESCAPE FROM MUD 2-74
12.14.1 WHEN ONE SIDE IS STUCK 2-74
12.14.2 WHEN BOTH SIDES ARE STUCK 2-74
12.15 WORK POSSIBLE USING HYDRAULIC EXCAVATOR 2-75
12.15.1 BACKHOE WORK 2-75
12.15.2 SHOVEL WORK 2-75
12.15.3 DITCHING WORK 2-75
12.15.4 LOADING WORK 2-75
12.16 REPLACEMENT AND INVERSION OF BUCKET 2-76
12.16.1 REPLACEMENT 2-76
12.16.2 INVERSION 2-77
12.17 PARKING MACHINE 2-78
12.18 CHECK AFTER FINISHING WORK 2-79
12.19 STOPPING ENGINE 2-80
12.20 CHECK AFTER STOPPING ENGINE 2-81
12.21 LOCKING AND SECURING MACHINE 2-81

13. TRANSPORTATION 2-82

https://truckmanualshub.com/
13.1 LOADING, UNLOADING WORK 2-82
13.2 PRECAUTIONS FOR LOADING 2-84
13.3 PRECAUTIONS FOR TRANSPORTATION 2-85

14. COLD WEATHER OPERATION 2-86
14.1 PRECAUTIONS FOR LOW TEMPERATURE 2-86
14.1.1 FUEL AND LUBRICANTS 2-86
14.1.2 COOLANT 2-86
14.1.3 BATTERY 2-87
14.2 PRECAUTIONS AFTER COMPLETION OF WORK 2-88
14.3 AFTER COLD WEATHER 2-88

15. LONG-TERM STORAGE 2-89
15.1 BEFORE STORAGE 2-89
15.2 DURING STORAGE 2-90
15.3 AFTER STORAGE 2-90
15.4 STARTING MACHINE AFTER LONG-TERM STORAGE 2-90

16. TROUBLESHOOTING 2-91
16.1 PHENOMENA THAT ARE NOT FAILURES 2-91
16.2 METHOD OF TOWING MACHINE 2-91
16.3 METHOD FOR USING LIGHT-WEIGHT TOWING HOLE 2-91
16.4 PRECAUTIONS ON PARTICULAR JOBSITES 2-92
16.5 IF BATTERY IS DISCHARGED 2-92
16.5.1 STARTING ENGINE WITH BOOSTER CABLE 2-93
16.5.2 REMOVAL AND INSTALLATION OF BATTERY 2-95
16.6 OTHER TROUBLE 2-96
16.6.1 ELECTRICAL SYSTEM 2-96
16.6.2 CHASSIS 2-97
16.6.3 ENGINE 2-98
16.6.4 ELECTRONIC CONTROL SYSTEM 2-100

17. GUIDES TO MAINTENANCE 3-2

18. OUTLINES OF SERVICE 3-5
18.1 OUTLINE OF OIL, FUEL, COOLANT 3-5
18.1.1 OIL 3-5
18.1.2 FUEL 3-6
18.1.3 COOLANT 3-6
18.1.4 GREASE 3-7
18.1.5 STORING OIL AND FUEL 3-7
18.1.6 FILTERS 3-7
18.2 OUTLINE OF ELECTRICAL SYSTEM 3-8
18.3 OUTLINE OF HYDRAULIC SYSTEM 3-9

19. WEAR PARTS LIST 3-10

20. USE OF FUEL, COOLANT AND LUBRICANTS ACCORDING TO AMBIENT TEMPERATURE 3-12
20.1 ENGINE OIL SPECIFICATION 3-13
20.1.1 NORMAL OPERATION 3-13
20.1.2 ARCTIC OPERATION 3-13
20.2 DIESEL FUEL SPECIFICATIONS 3-14

21. STANDARD TIGHTENING TORQUES FOR BOLTS AND NUTS 3-15
21.1 INTRODUCTION OF NECESSARY TOOLS 3-15
21.2 TORQUE LIST 3-16

22. PERIODIC REPLACEMENT OF SAFETY CRITICAL PARTS 3-17

23. MAINTENANCE SCHEDULE CHART 3-20
23.1 MAINTENANCE SCHEDULE CHART 3-20
23.2 MAINTENANCE INTERVAL WHEN USING HYDRAULIC BREAKER 3-23

https://truckmanualshub.com/

24. SERVICE PROCEDURE 3-24
24.1 INITIAL 250 HOURS SERVICE 3-24
24.2 WHEN REQUIRED 3-25
24.2.1 CHECK, CLEAN AND REPLACE AIR CLEANER ELEMENT 3-25
24.2.2 CLEAN INSIDE OF COOLING SYSTEM (2 years or 2000 hours whichever occurs first) 3-27
24.2.3 CHECK AND TIGHTEN TRACK SHOE BOLTS 3-31
24.2.4 CHECK AND ADJUST TRACK TENSION 3-32
24.2.5 CHECK ENGINE INTAKE AIR HEATER (ELECTRICAL) 3-34
24.2.6 INSTALLATION OF BUCKET TEETH (ESCO SUPERV ® TYPE) 3-35
24.2.7 REMOVAL OF BUCKET TEETH (ESCO SUPERV ® TYPE) 3-37
24.2.8 ADJUST BUCKET CLEARANCE 3-39
24.2.9 CHECK WINDOW WASHER FLUID LEVEL, ADD FLUID 3-40
24.2.10 CHECK AND ADJUST AIR CONDITIONER 3-41
24.2.11 REPLACE ADDITIONAL BREAKER FILTER ELEMENT 3-42
24.2.12 CLEAN INLINE FILTER (RECTANGULAR HOUSING) 3-43
24.3 CHECK BEFORE STARTING 3-44
24.3.1 CHECK COOLANT LEVEL, ADD COOLANT 3-44
24.3.2 CHECK OIL LEVEL IN ENGINE OIL PAN, ADD OIL 3-44
24.3.3 CHECK FUEL LEVEL, ADD FUEL 3-45
24.3.4 CHECK OIL LEVEL IN HYDRAULIC TANK, ADD OIL 3-46
24.3.5 CHECK AIR CLEANER FOR CLOGGING 3-46
24.3.6 CHECK ELECTRIC WIRING 3-47
24.3.7 CHECK FOR WATER AND SEDIMENT IN FUEL-WATER SEPERATOR 3-47
24.4 EVERY 100 HOURS SERVICE 3-48
24.4.1 LUBRICATING 3-48
24.4.2 CHECK OIL LEVEL IN SWING MACHINERY CASE, ADD OIL 3-50
24.4.3 DRAIN WATER AND SEDIMENT FROM FUEL TANK 3-50
24.5 EVERY 250 HOURS SERVICE 3-51
24.5.1 CHECK OIL LEVEL IN FINAL DRIVE CASE, ADD OIL 3-51
24.5.2 CHECK LEVEL OF BATTERY ELECTROLYTE 3-52
24.5.3 REPLACE HYDRAULIC FILTER ELEMENT 3-53
24.5.4 LUBRICATE SWING CIRCLE 3-54
24.5.5 CHECK FAN BELT TENSION, ADJUST 3-55
24.5.6 CHECK AIR CONDITIONER COMPRESSOR BELT TENSION, ADJUST 3-56
24.6 EVERY 500 HOURS SERVICE 3-57
24.6.1 REPLACE FUEL FILTER CARTRIDGE AND FUEL-WATER SEPERATOR 3-57
24.6.2 CHECK SWING PINION GREASE LEVEL, ADD GREASE 3-59
24.6.3 CLEAN AND INSPECT RADIATOR FINS, OIL COOLER FINS, AFTERCOOLER FINS AND CONDENSER FINS (ONLY FOR MACHINES EQUIPPED WITH AIR CONDITIONER) 3-60
24.6.4 CLEAN INTERNAL AND EXTERNAL AIR FILTERS OF AIR CONDITIONER SYSTEM (ONLY FOR MACHINES EQUIPPED WITH AIR CONDITIONER) 3-61
24.6.5 REPLACE HYDRAULIC TANK BREATHER ELEMENT 3-61
24.6.6 CHANGE OIL IN ENGINE OIL PAN, REPLACE ENGINE OIL FILTER CARTRIDGE 3-62
24.6.7 REPLACE IN-LINE FUEL STRAINER 3-63
24.7 EVERY 1000 HOURS SERVICE 3-64
24.7.1 CHANGE OIL IN SWING MACHINERY CASE 3-64
24.7.2 CHECK OIL LEVEL IN DAMPER CASE, ADD OIL 3-65
24.7.3 CHECK ALL TIGHTENING PARTS OF TURBOCHARGER 3-65
24.7.4 CHECK PLAY OF TURBOCHARGER ROTOR 3-65
24.7.5 CHECK ALTERNATOR BELT TENSIONER BEARING, BELT AND FAN HUB 3-66
24.8 EVERY 2000 HOURS SERVICE 3-67
24.8.1 CHANGE OIL IN FINAL DRIVE CASE 3-67
24.8.2 CLEAN HYDRAULIC TANK STRAINER 3-68
24.8.3 CLEAN, CHECK TURBOCHARGER 3-68
24.8.4 CHECK ALTERNATOR, STARTING MOTOR 3-68
24.8.5 CHECK VIBRATION DAMPER 3-68
24.8.6 CHANGE ANTIFREEZE 3-68
24.8.7 CHECK AND ADJUST VALVE CLEARANCE 3-69
24.9 EVERY 4000 HOURS SERVICE 3-70
24.9.1 CHECK WATER PUMP 3-70
24.10 EVERY 5000 HOURS SERVICE 3-71

https://truckmanualshub.com/

24.10.1 CHANGE OIL IN HYDRAULIC TANK 3-71

25. SPECIFICATIONS 4-2

26. GENERAL PRECAUTIONS 5-2
26.1 PRECAUTIONS RELATED TO SAFETY 5-2
26.2 PRECAUTIONS WHEN INSTALLING ATTACHMENTS 5-3

27. HANDLING BUCKET WITH HOOK 5-4
27.1 CHECK FOR DAMAGE TO BUCKET WITH HOOK 5-4
27.2 PROHIBITED OPERATIONS 5-4
27.3 PRECAUTIONS DURING OPERATIONS 5-4

28. HANDLING AIR CONDITIONER 5-5
28.1 GENERAL LOCATIONS ON CONTROL PANEL 5-5
28.2 PRECAUTIONS WHEN USING AIR CONDITIONER 5-7

29. MACHINES READY FOR ATTACHMENTS 5-8
29.1 EXPLANATION OF COMPONENTS 5-8
29.2 HYDRAULIC CIRCUIT 5-10
29.2.1 CONNECTING HYDRAULIC CIRCUIT 5-11
29.3 ATTACHMENT MOUNTING/DISMOUNTING PROCEDURE 5-12
29.4 OPERATION 5-14
29.5 LONG-TERM STORAGE 5-15
29.6 SPECIFICATIONS 5-15

30. INTRODUCTION OF ATTACHMENTS 5-16
30.1 BUCKET SELECTION 5-16
30.2 BUCKET INSTALLATION COMBINATIONS 5-16
30.3 SELECTION OF TRACK SHOES 5-19
30.4 BACKHOE CONTROL PATTERN CONVERSION 5-20

31. EXTENDING MACHINE SERVICE LIFE 5-21
31.1 HYDRAULIC BREAKER 5-21
31.2 CRUSHER 5-24
31.3 GRAPPLE 5-25
31.4 BUCKET WITH THUMB GRAPPLE 5-26
31.5 ROTATING GRAPPLE 5-27
31.6 SHEAR 5-28
31.7 HYDRAULIC PILE DRIVER 5-29

https://truckmanualshub.com/

SAFETY

WARNING

Read and follow all safety precautions. Failure to do so may result in serious injury or death.

This safety section also contains precautions for optional equipment and attachments.

https://truckmanualshub.com/

1. GENERAL PRECAUTIONS

WARNING: For reasons of safety, always follow these safety precautions.

SAFETY RULES

- ONLY trained and authorized personnel should be allowed to operate and service this machine.
- Follow all safety rules, precautions and instructions when operating or performing maintenance on the machine.
- The owner and/or operator must replace any and all safety and warning product graphics if they are defaced or removed from the machine.
- Think before you act. Careful operators and service personnel are the best insurance against accidents.
- Do not rush. Hurrying can lead to accidents. Haste, carelessness and lack of training are the primary causes of equipment-related injuries.
- The operator must be alert, physically fit and free from the influences of alcohol, drugs and medications that might affect his eyesight, hearing or reactions.
- Safety must always be the operator's most important concern. He must refuse to operate when he knows it is unsafe and consult his supervisor when safety is in doubt.
- When working with another operator or a person on worksite traffic duty, be sure all personnel understand all hand signals that are to be used.

SAFETY FEATURES

- Be sure all guards and covers are in their proper position. Be sure to replace them after servicing the machine. Have guards and covers repaired immediately if damaged.
- Use safety features such as safety lock lever and seat belt properly.
- A seat belt is required by OSHA in almost all applications. DO NOT operate this machine without a seat belt.
- NEVER remove any safety features. ALWAYS keep them in good operating condition.

Safety lock lever → See 12.17 PARKING MACHINE on page 2-78.
Seat belts → See 12.1.3 ADJUSTMENT BEFORE OPERATION on page 2-46.

- Improper use of safety features could result in serious bodily injury or death.
- Be sure the machine has the correct equipment required by local rules and regulations.

https://truckmanualshub.com/

UNAUTHORIZED MODIFICATION

- Any modification made without authorization from Komatsu America International Company can create hazards.
- Before making a modification, consult your local distributor. Komatsu America International Company will not be responsible for any injury or damage caused by any unauthorized modification.

CLOTHING AND PERSONAL PROTECTIVE ITEMS

- Avoid loose clothing, jewelry, and loose long hair. They can catch on controls or in moving parts and cause serious injury or death. Also, do not wear oily clothes because they are flammable.
- Wear a hard hat, safety glasses, safety shoes, mask or gloves when operating or maintaining the machine. Always wear safety goggles, hard hat and heavy gloves if your job involves scattering metal chips or minute materials - this is particularly important when driving pins with a hammer and when cleaning the air cleaner element with compressed air.

Also check that there are no other personnel near the machine.

Driving in pins → See 12.16 REPLACEMENT AND INVERSION OF BUCKET on page 2-76.
Cleaning of air cleaner element → See 24.2.1 CHECK, CLEAN AND REPLACE AIR CLEANER ELEMENTS on page 3-25.

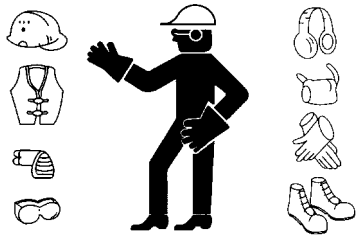

ALWAYS APPLY LOCK WHEN LEAVING OPERATOR'S SEAT

- When standing up from the operator's seat, always place the safety lock lever securely in the LOCK position. If you accidentally touch the travel or equipment levers when they are not locked, the machine or work equipment may move and cause serious injury or damage.
- When leaving the machine, lower the work equipment completely to the ground, set the safety lock lever to the LOCK position, then stop the engine and use the key to lock all the equipment locks. Always take the key with you.

Work equipment posture → See 12.17 PARKING MACHINE on page 2-78.

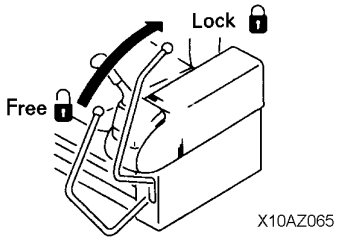

https://truckmanualshub.com/

MOUNTING AND DISMOUNTING

- NEVER jump on or off the machine. NEVER get on or off a moving machine.
- When mounting or dismounting, always face the machine and use the handrails, machine or track frame steps, and track shoes.
- Do not use the machine's controls or hoses as handholds when climbing on or off the machine. Controls and hoses can move and do not provide solid support. Movement of the controls may cause unexpected machine movement and injury.
- Ensure safety by always maintaining at least three-point contact of hands and feet with the handrails, steps or track shoes.
- Always remove any oil or mud from the handrails, steps and track shoes. If they are damaged, repair them and tighten any loose hardware.
- If grasping the door handrail when mounting or dismounting or moving on the track, open and lock the door securely in the open position. Otherwise, the door may move suddenly, causing you to loose balance and fall.

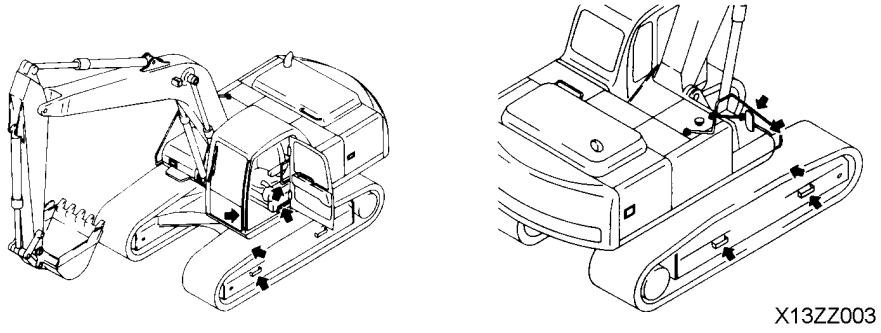

X13ZZ003

FIRE PREVENTION FOR FUEL AND OIL

Fuel, oil, and antifreeze can be ignited by a flame. Fuel is particularly FLAMMABLE and can be HAZARDOUS.

- Keep any flame away from flammable fluids.
- Stop the engine and do not smoke when refueling.
- Tighten all fuel and oil caps securely.
- Refueling and oiling should be made in well ventilated areas.
- Keep oil and fuel in the determined place and do not allow unauthorized persons to enter.

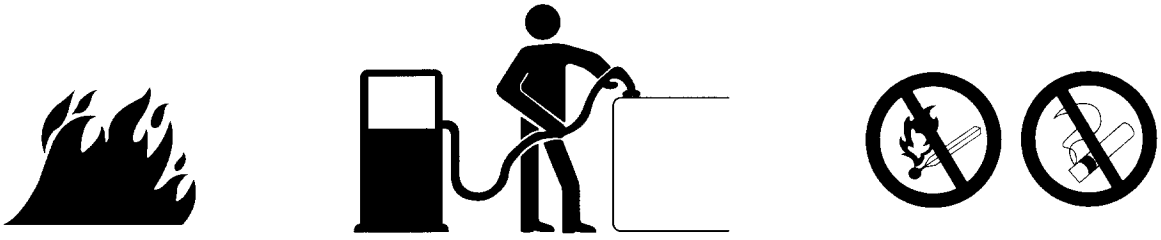

https://truckmanualshub.com/

PRECAUTIONS WHEN HANDLING AT HIGH TEMPERATURES

- Immediately after operations are stopped, the engine coolant, engine oil, and hydraulic oil are at high temperatures, and are still under pressure. Attempting to remove the cap, drain the oil or water, or replace the filters may lead to serious burns. Always wait for the temperature to go down, and follow the specified procedures when carrying out these operations.

- To prevent hot water from spurting out:
  1) Turn engine off.
  2) Allow water to cool.
  3) Slowly loosen cap to relieve pressure before removing.

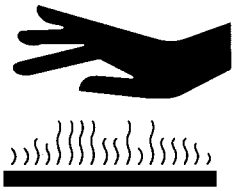

- To prevent hot oil from spurting out:
  1) Turn engine off.
  2) Allow oil to cool.
  3) Slowly loosen cap to relieve pressure before removing.

ASBESTOS DUST HAZARD PREVENTION

Asbestos dust can be HAZARDOUS to your health if it is inhaled.
If you handle materials containing asbestos fibers. follow these guidelines as given below:

- NEVER use compressed air for cleaning.

- Use water for cleaning to keep down the dust.

- Operate the machine with the wind to your back, whenever possible.

- Use an approved respirator if necessary.



CRUSHING OR CUTTING PREVENTION

- Do not enter, or put your hand or arm or any other part of your body between movable parts such as between the work equipment and cylinders, or between the machine and work equipment. If the work equipment is operated, the clearance will change and this may lead to serious damage or personal injury.



https://truckmanualshub.com/

FIRE EXTINGUISHER AND FIRST AID KIT

- Be sure fire extinguishers have been provided and know how to use them.
- Provide a first aid kit at the storage point.
- Know what to do in the event of a fire.
- Be sure you know the phone numbers of persons you should contact in case of an emergency.

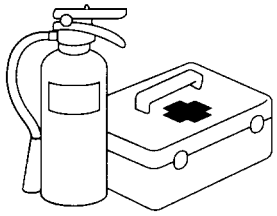

MACHINES WITH ACCUMULATOR

On machines equipped with an accumulator, for a short time after the engine is stopped, the work equipment will lower under its own weight when the work equipment control lever is shifted to LOWER. After the engine is stopped, set the safety lock lever to the lock position and also lock the attachment pedal with the lock pin.

When releasing the pressure inside the work equipment circuit on machines equipped with an accumulator, follow the procedure given in the inspection and maintenance section.
Method of releasing pressure → See 11.18 HANDLING ACCUMULATOR on page 2-39.

The accumulator is filled with high-pressure nitrogen gas, and it is extremely dangerous if it is handled in the wrong way. Always observe the following precautions:
- Never make any hole in the accumulator or expose it to flame or fire.
- Do not weld any boss to the accumulator.
- When carrying out disassembly or maintenance of the accumulator, or when disposing of the accumulator, it is necessary to release the gas from the accumulator. A special air bleed valve is necessary for this operation, so please contact your distributor.

Gas in accumulator → See 11.18 HANDLING ACCUMULATOR on page 2-39.

PRECAUTIONS FOR ATTACHMENTS

- When installing and using an optional attachment, read the instruction manual for the attachment and the information related to attachments in this manual.
- Do not use attachments that are not authorized by your distributor or Komatsu America International Company. Use of unauthorized attachments could create a safety problem and adversely affect the proper operation and useful life of the machine.
- Any injuries, accidents, product failures resulting from the use of unauthorized attachments will not be the responsibility of Komatsu America International Company.

https://truckmanualshub.com/

PROTECTION AGAINST FALLING OR FLYING OBJECTS

If there is any danger of falling or flying objects hitting the operator, install protective guards to protect the operator as required for each particular situation.

- For work with breakers, install a front guard on the windshield. Also, place a laminate coating sheet over the windshield.
- For demolition or shear work, install a front guard on the windshield and a top guard on the cab. Also, place a laminate coating sheet over the windshield.
- For work in mines, tunnel or other places where there is danger of falling rocks, install a FOPS(falling object protective structure). Also, place a laminate coating sheet over the windshield.

The above comments are made with regards to typical working conditions. By all means you should install other guards if required by conditions at your particular site.
For details of safety guards, please contact your distributor.

Also, even for other types of work, if there is any danger of getting hit by falling or flying objects, or of objects entering the operator's cab, select and install a guard that matches the working conditions.

Be sure to close the front window before commencing work.

When carrying out the above operations, make sure to keep all persons other than the operator outside the range of falling or flying objects. Be particularly sure to maintain a proper distance when carrying out shear operations.

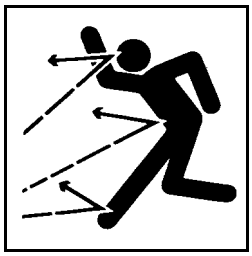



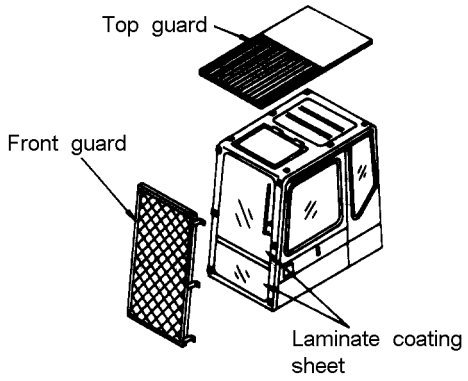

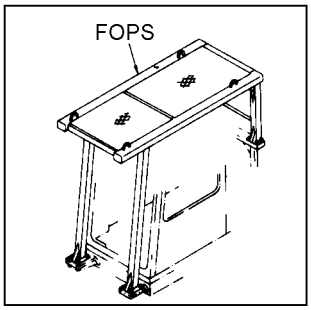

FOPS
(falling object protective structure)

X13BR004

https://truckmanualshub.com/

EMERGENCY EXIT

- When exit by normal means is prevented, in an emergency you can get out through the emergency exit (rear window).
- Pull the ring at the side of the window and remove rubber strip. This will allow you to push out the glass.
- Remove the rear window only when it is used as an emergency escape.

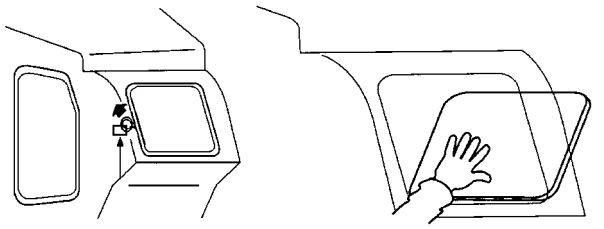

X02ZZ045

https://truckmanualshub.com/

2. PRECAUTIONS DURING OPERATION

WARNING: For reasons of safety, always follow these safety precautions.

2.1 BEFORE STARTING ENGINE

SAFETY AT WORKSITE

- Before entering the operator's compartment, walk completely around the machine and clear the area of personnel and obstructions.
- Before starting the engine, thoroughly check the area for any unusual conditions that could be dangerous.
- Before starting the engine, examine the terrain and soil conditions of the worksite. Determine the best and safest method of operation.
- Make a sloped machine position as horizontal as possible before continuing operations.
- If you need to operate on a street, protect pedestrians and cars by designating a person for worksite traffic duty or by installing barriers around the worksite,
- If water lines, gas lines, telephone lines, and high-voltage electrical lines may be buried under the worksite, contact each utility and identify their locations. Be careful not to sever or cut any of these lines.
- Check the depth and flow of water before operating in water or crossing a river. NEVER be in water which is in excess of the permissible water depth.

Permissible water depth → See 12.12 PRECAUTIONS FOR OPERATION on page 2-71.

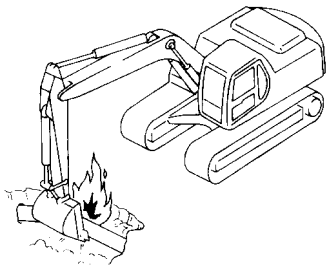

FIRE PREVENTION

- Thoroughly remove wood chips, leaves, paper and other flammable debris that have accumulated in or around the engine compartment. They could cause a fire.
- Check fuel, lubrication, and hydraulic systems for leaks. Have any leaks repaired. Wipe up any excess oil, fuel, or other flammable fluids.

Check point → See 12.1.1 WALK-AROUND CHECK on page 2-40.

- Be sure a fire extinguisher is present and working.



https://truckmanualshub.com/

IN OPERATOR'S CAB

- Do not leave tools, spare parts or personal items lying around in the operator's compartment. They may damage, break or jam the control levers or switches. Always put them in the tool box on the right side of the machine.
- Keep the cab floor, controls, steps and handrails free of oil, grease, snow, and excess dirt.
- Check the seat belt, buckle and hardware for damage or wear. Replace any worn or damaged parts. NEVER use bleach, dye or solvents on the seat belt because this may weaken the webbing and result in personal injury. Clean the seat belt with warm water and a mild detergent.

  ALWAYS use seat belts when operating your machine.

  Seat belts → See 12.1.3 ADJUSTMENT BEFORE OPERATION on page 2-46.
- Do not service the air conditioning system unless you have the proper equipment that complies with all government regulations. It is unlawful to discharge freon into the atmosphere.
- Know the alternate exit routes from the operator's compartment for use in an emergency.

VENTILATION FOR ENCLOSED AREAS

- If it is necessary to start the engine within an enclosed area, provide adequate ventilation. Exhaust fumes from the engine can KILL.



PRECAUTIONS FOR MIRRORS, WINDOWS AND LIGHTS

- Remove all dirt from the surface of the windows and lights to ensure that you can see well.
- Adjust the rear view mirror so that you can see clearly from the operator's seat, and always keep the surface of the mirror clean. If any glass is broken, replace it with a new part.
- Check that the head lamps and working lamps are installed to match the operating conditions. Check also that they light up properly.

https://truckmanualshub.com/

2.2 OPERATING MACHINE

WHEN STARTING ENGINE

- Perform a visual check of the machine before starting the engine. Look for such things as missing protective devices, leaks, improper fluid levels, trash buildup and loose, damaged or missing parts. DO NOT start the engine until any unsafe conditions are corrected.
- Walk around your machine again just before mounting it, checking for people and objects that might be in the way.
- NEVER start the engine if a warning tag has been attached to the control.
- Understand all control functions before starting the engine.
- When starting the engine, sound the horn as an alert
- Start and operate the machine only while seated.
- Do not allow anyone other than the operator to ride in the cab or on the machine body.
- Keep hands and footwear free of grease, water and mud to insure positive control movement.
- Before driving the machine, adjust the seat and fasten the seat belt. Adjust the seat for maximum comfort and control of the machine. Adjust the seat belt to fit snugly and low around the hips to lessen the chance and severity of injury in the event of an accident. Never wear the seat belt across the abdomen.
- Before moving the machine, check the brakes, steering, attachment controls and safety devices such as the travel alarm for proper operation. DO NOT operate the machine until any unsafe conditions have been corrected.

CHECK DIRECTION BEFORE STARTING MACHINE

Before operating the travel lever, check the direction of the track frame. If the sprocket is at the front, the travel lever must be operated in the opposite direction.

Travel operations → See 12.4 MOVING MACHINE on page 2-57.

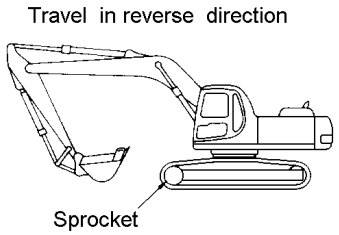

https://truckmanualshub.com/

CHECK THAT NO ONE IS IN AREA BEFORE SWINGING OR TRAVELING IN REVERSE

- Always position a signalman for dangerous areas or places where the view is not clear.
- Make sure that no one comes inside the swing radius or travel path.
- Before starting to move, sound the horn or give a signal to warn people not to come close to the machine.
- There are blind spots behind the machine. Check for objects and personnel behind the machine before traveling in reverse.

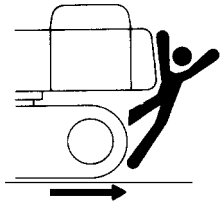



PRECAUTIONS WHEN TRAVELING

- Fold in the work equipment as shown in the diagram below, and keep it at a height of 40 - 50 cm(16 to 20 in) from the ground level before starting to travel.
- When traveling, do not operate the work equipment control levers. If the work equipment control levers have to be operated, never operate them suddenly.
- When traveling on rough ground, travel at low speed, and avoid sudden changes in direction.
- Avoid traveling over obstacles if possible. If the machine has to travel over and obstacle, keep the work equipment as close to the ground as possible and travel at low speed. Ease up to the break over point, pass the balance point slowly and ease down on the other side. Never travel over obstacles which make the machine tilt strongly (10° or more)
- Drive slowly enough to insure complete control. Slow down when traveling in congested areas or on mud, ice or other slippery surfaces. Keep a safe distance away from other vehicles, according to the load and ground conditions.

Travel posture

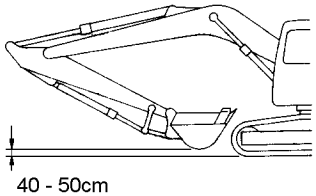

INCORRECT

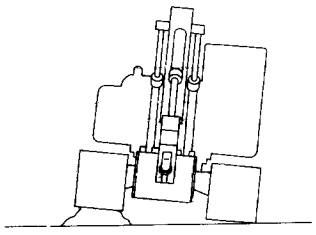

https://truckmanualshub.com/

TRAVELING ON SLOPES

- Traveling on hills, banks or slopes that are steep could result in the machine tipping over or slipping.
- On hills, banks or slopes, carry the bucket closer to the ground. Approximately 20 to 30 cm (8 to 12 in) above the ground. Incase of emergency, quickly lower the bucket to the ground to help the machine stop and prevent it from tipping over.
- Do not turn on slopes or travel across slopes. Always go down to a flat place to perform these operations. **Method of traveling on slopes → See 12.13 PRECAUTIONS WHEN TRAVELING UP OR DOWN HILLS on page 2-72.**
- Do not travel up and down on grass, fallen leaves, and wet steel plates. These materials may allow the machine to slip, if it is traveling sideways. Keep travel speed very low.
- If the engine stops on a slope, place the travel lever at the neutral position and lower the bucket to the ground. Do not operate the steering. There is a danger that the machine will turn under its own weight.

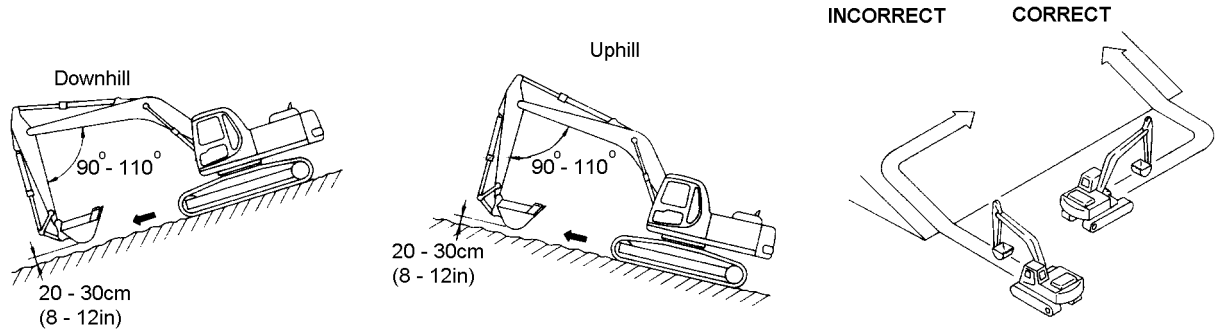

https://truckmanualshub.com/

PROHIBITED OPERATIONS

- Do not dig the work face under an overhang. This may cause the overhang to collapse and fall on top of the machine.

- Do not carry out deep digging under the front of the machine. The ground under the machine may collapse and cause the machine to fall. Take emergencies into consideration and set the travel motor at the rear and the track (undercarriage) at right angles to the road shoulder before digging to enable the machine to move back quickly. If the ground under the machine collapses and there is no time to drive in reverse, do not suddenly raise the arm and boom. In some cases, it may be safer to lower the arm and boom.

- Do not swing the work equipment to the side when it is carrying a heavy load. The stability to the side is less than the stability to the front, so there is a danger that the machine may turn over.

- Limits on use

  To prevent accidents caused by breakage of the work equipment or tipping over of the machine, do not use the machine in excess of its capacity. Always be sure to keep within the maximum specified load and safe angle determined for the machine.

INCORRECT

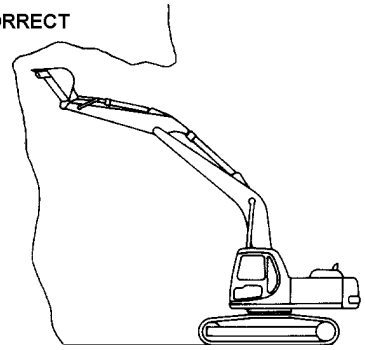

INCORRECT

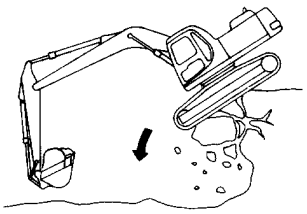

https://truckmanualshub.com/

DO NOT GO CLOSE TO HIGH-VOLTAGE CABLES

- Going close to high-voltage cables can cause electrical shock. Always maintain the safe distance given below between the machine and the electric cable.
- The following actions are effective in preventing accidents:
  1) Wear shoes with rubber or leather soles.
  2) Use a signalman to give a warning if the machine approaches too close to the electric cable.
- If the work equipment should touch the electric cable, the operator should not leave the operator's compartment.
- When carrying out operations near high voltage cables, do not let anyone come close to the machine.
- Check with the electric utility company about the voltage of the cables before starting operations.

Voltage	Min. safety distance	
6.6 kV	3 m	10 ft
33.0 kV	4 m	14 ft
66.0 kV	5 m	17 ft
154.0 kV	8 m	27 ft
275.0 kV	10 m	33 ft

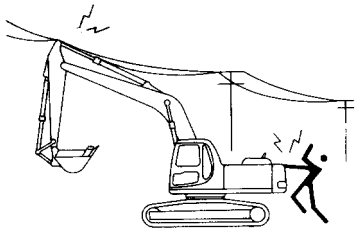

DO NOT HIT WORK EQUIPMENT

- When working in places where there are height limits, such as in tunnels, under bridges, under electric cables, or in garages, be extremely careful not to hit the boom or arm.

ENSURE GOOD VISIBILITY

- When working in dark places, install working lamps and head lamps, and set up lighting in the work area if necessary.
- Stop operations if the visibility is poor, such as in mist, snow, or rain, and wait for the weather to improve to a condition that allows the operation to be carried out safely.

https://truckmanualshub.com/

OPERATE CAREFULLY ON SNOW

- When working on snow or icy roads, even a slight slope may cause the machine to slip to the side, so always travel at low speed and avoid sudden starting, stopping, or turning.
- When there has been heavy snow, the road shoulder and objects placed beside the road are buried in the snow and cannot be seen, so always carry out snow-clearing operations carefully.

WORKING ON LOOSE GROUND

- Avoid operating your machine too close to the edge of cliffs, overhangs, and deep ditches. If these areas collapse, your machine could fall or tip over and result in serious injury or death. Remember that the soil after heavy rain or blasting is weakened in these areas.
- Earth laid on the ground and the soil near ditches are loose. They can collapse under the weight or vibration of your machine.
- Install the HEAD GUARD (FOPS) if working in areas where there is danger of falling rocks and dirt.

OPERATING ON SLOPES

- When working on slopes, there is danger that the machine may lose its balance and turn over when the swing or work equipment are operated. Always carry out these operations carefully.
- Do not swing the work equipment from the uphill side to the downhill side when the bucket is loaded. This operation is dangerous.
  (See the upper diagram on the right.)
- If the machine has to be used on a slope, pile the soil to make a platform that will keep the machine as horizontal as possible.
  (See the lower diagram on the right.)
  Piled soil on slope → See 12.13 PRECAUTIONS WHEN TRAVELING UP OR DOWN HILLS on page 2-72.

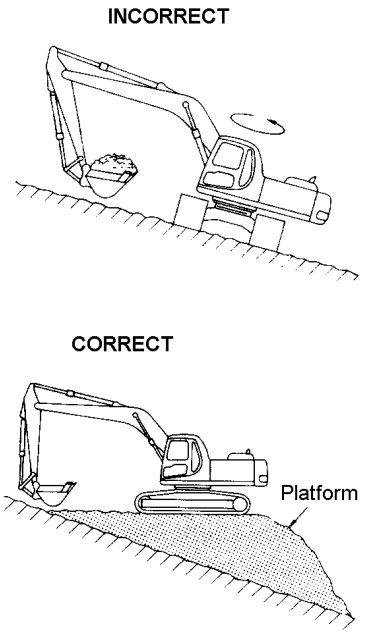

https://truckmanualshub.com/

PARKING THE MACHINE

- Park on level ground whenever possible. If not possible, block the tracks, lower the bucket to the ground and thrust the bucket in the ground.

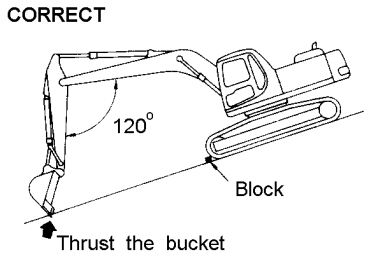

- When parking on public roads, provide fences and signs, such as flags or lights, on the machine to warn passersby to be careful. Be sure that the machine, flags or lights do not obstruct traffic.

Parking procedure → See 12.17 PARKING MACHINE on page 2-78.

- When leaving the machine, lower the work equipment completely to the ground, set the safety lock lever to the LOCK position, then stop the engine and use the key to lock all the equipment.

Always take the key with you.

Work equipment posture → See 12.17 PARKING MACHINE on page 2-78.
Places to lock → See 12.21 LOCKING AND SECURING MACHINE on page 2-81.

Method of locking

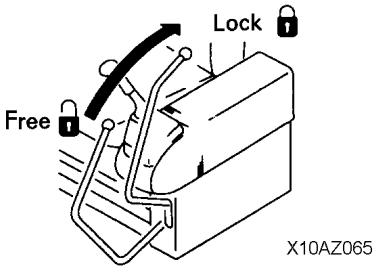

https://truckmanualshub.com/

PRECAUTIONS IS COLD AREAS

- After completing operations, remove all water, snow, or mud stuck to the wiring harness, connectors, switches, or sensors, and cover these parts. If the water freezes, it will cause malfunctions of the machine when it is next used, which may lead to unexpected accidents.
- Carry out the warming-up operation thoroughly. If the machine is not thoroughly warmed up before the control levers are operated, the reaction of the machine will be slow and this may lead to unexpected accidents.
- Operate the control levers to relieve the hydraulic pressure (raise to above the set pressure for the hydraulic circuit and release oil to the hydrauic tank) to warm up the oil in the hydraulic circuit. This ensures good responce fromthe machine and prevents malfunctions.
- If the battery electrolyte is frozen, do not charge the battery or start the engine with a different power source. There is danger that this will ignite the battery. When charging or starting the engine with a different power source, melt the battery electrolyte and check for leakage of the battery electrolyte before starting.

Battery charge rate ➜ see 14.1.3 BATTERY on page 2-87.

https://truckmanualshub.com/

2.3 TRANSPORTATION

LOADING AND UNLOADING

- Loading and unloading the machine always involves potential hazards. EXTREME CAUTION SHOULD BE USED.

  When loading or unloading the machine, run the engine at low idling and travel at low speed.
- Perform loading and unloading on firm, level ground only. Maintain a safe distance from the edge of a road.
- ALWAYS block the wheels of the hauling vehicle and place blocks under both ramps before loading and unloading.
- ALWAYS use ramps of adequate strength. Be sure the ramps are wide and long enough to provide a safe loading slope.
- Be sure that the ramps are securely positioned and fastened, and that the two sides are at the same level as one another.
- Be sure the ramp surface is clean and free of grease, oil, ice and loose materials. Remove dirt from the machine tracks.
- NEVER correct your steering on the ramps. If necessary, drive off of the ramps, correct your position, and climb again.
- Swing the upper structure with extreme care on the trailer to avoid a possible accident caused by body instability.
- After loading, block the machine tracks and secure the machine with tie-downs.

Loading and unloading → See 13 TRANSPORTATION on page 2-82.
Tie-downs → See 13 TRANSPORTATION on page 2-82.

CORRECT

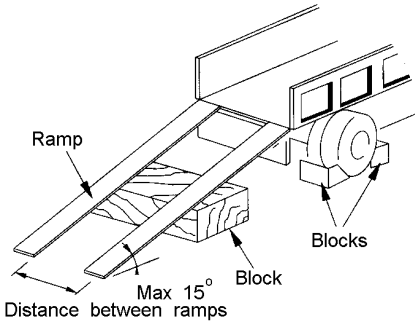

SHIPPING

- When shipping the machine on a hauling vehicle, obey all state and local laws governing the weight, width, and length of a load. Also obey all applicable traffic regulations.
- Determine the shipping route while taking into account the width, height and weight of the load.

https://truckmanualshub.com/

2.4 BATTERY

BATTERY HAZARD PREVENTION

- Battery electrolyte contains sulfuric acid and can quickly burn the skin and eat holes in clothing. If you spill acid on yourself, immediately flush the area with water.
- Battery acid could cause blindness if splashed into the eyes. If acid gets into the eyes, flush them immediately with large quantities of water and see a doctor at once.
- If you accidentally drink acid, drink a large quantity of water or milk, beaten egg or vegetable oil. Call a doctor or poison prevention center immediately.
- When working with batteries. ALWAYS wear safety glasses or goggles.
- Batteries generate hydrogen gas. Hydrogen gas is very EXPLOSIVE, and is easily ignited with a small spark or flame.
- Before working with batteries, stop the engine and turn the starting switch to the OFF position.
- Avoid short-circuiting the battery terminals through accidental contact with metallic objects, such as tools, across the terminals.
- When removing or installing, check which is the positive (+) terminal and negative (—) terminal.
- When cleaning the top surface of the battery, wipe clean with a damp cloth. Never use gasoline, thinner, or any other organic solvent or cleaning agent.
- If the battery electrolyte is frozen, do not charge the battery or start the engine with a different power source. There is a danger this will ignite the battery. When charging or starting the engine with a different power source, melt the battery electrolyte and check for leakage before starting.
- Tighten the battery cap securely.
- Tighten the battery terminals securely. Loosened terminals can generate sparks and lead to an explosion.

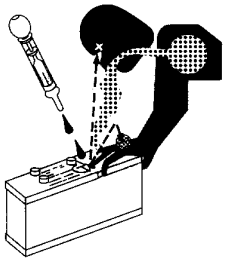

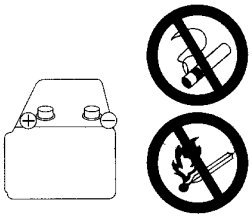



https://truckmanualshub.com/

STARTING WITH BOOSTER CABLES

- ALWAYS wear safety glasses or goggles when starting the machine with booster cables.
- When starting from another machine, do not allow the two machines to touch.
- Be sure to connect the positive (+) cable first when installing the booster cables. Disconnect the ground or negative (—) cable first when removing them.
- If any tool touches between the positive (+) terminal and the chassis, it will cause sparks. This is dangerous, so be sure to work carefully.
- Connect the batteries in parallel: positive to positive and negative to negative.
- When connecting the ground cable to the frame of the machine to be started, be sure to connect it as far as possible from the battery.

Starting with booster cables → See 16.5 IF BATTERY IS DISCHARGED on page 2-92.

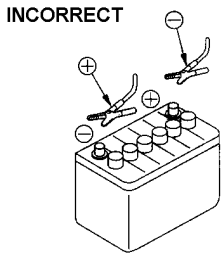

CHARGING BATTERY

If the battery is handled incorrectly when it is being charged, there is a danger that the battery may explode, so follow the instructions with the charger and always observe the following precautions.

- Carry out the charging in a well-ventilated place, and remove the battery caps. This disperses the hydrogen gas and prevents explosions.
- Set the voltage on the charger to match the voltage on the battery to be charged. If the voltage setting is wrong, it will cause the charger to overheat and catch fire, and this may lead to an explosion. Connect the positive ⊕ charging clip to the positive ⊕ terminal of the battery, then connect the negative ⊖ charging clip to the negative ⊖ terminal of the battery. Be sure to tighten both terminals securely.
- If the battery charge is less than 1/10 of the rated charge, and high speed charging is carried out, set the value below the rated capacity of the battery. If there is and excessive flow of charging current, it may cause leakage or evaporation of the electrolyte, which may catch fire and explode.

INCORRECT



https://truckmanualshub.com/

2.5 TOWING

WHEN TOWING, ATTACH WIRE TO FRAME

- Injury or death could result if a disabled machine is towed incorrectly.
- If your machine is towed by another machine, ALWAYS use a wire rope with a sufficient towing capacity.
- NEVER allow a disabled machine to be towed on a slope.
- Do not use a kinked or frayed wire rope.
- Do not straddle the towing cable or wire rope.
- When connecting up a towing machine, do not let anyone enter the area between the towing machine and the equipment being towed.
- Set the towing machine and the towing connection of the equipment being towed in a straight line when connecting it.
- Place pieces of wood between the wire ropes and body to protect them from wear or damage.
- Never tow the machine using a light-duty towing hole.

Towing method → See 16.2 METHOD OF TOWING MACHINE on page 2-91.

CORRECT

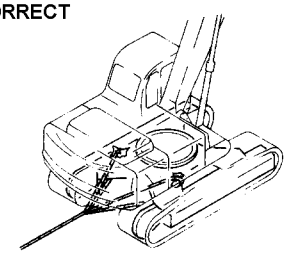

INCORRECT

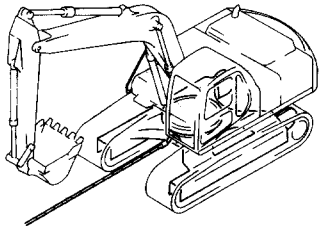

https://truckmanualshub.com/

2.6 BUCKET WITH HOOK

2.6.1 GENERAL PRECAUTIONS

SPECIAL HOOK

- When carrying out lifting work, the special lifting hook is necessary.
- The following operations are prohibited.
  - Lifting loads with a wire rope fitted around the bucket teeth.
  - Lifting loads with the wire rope wrapped directly around the boom or arm.

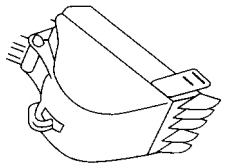

CHECKING HOOK

- When lifting a load, carry out the following checks to confirm that there is no abnormality before starting operations.
  - Check that there are no cracks or deformations in the lifting equipment.
  - Check that there is no abnormality in the stopper device.

HOOKING WIRE ROPE SECURELY TO HOOK

- When performing lifting operation, securely fit the wire rope on the special lifting hook.

PRECAUTIONS FOR MACHINE INSTALLATION

- After carrying out a preliminary inspection of ground conditions, select a flat, solid location. Confirm that the machine can be safely operated without toppling or rolling.

PROHIBITED OPERATIONS OTHER THAN MAIN APPLICATIONS

- When performing lifting operation, never raise or lower a person.

NO PERSONS SHALL BE PERMITTED TO ENTER THE WORKING AREA

- Due to the possible danger of the load failing or of collision with the load, no persons shall access the working area.

OPERATION SUPERVISOR

- Before performing lifting operation, designate an operation supervisor.

Always execute operation according to his instructions.

  - Execute operating methods and procedures under his direction.
  - Select a person responsible for signaling. Operate only on signals given by that person.

HANDLING OF WIRE ROPES

- Wear leather gloves when handling wire rope.
- When using wire rope as a lifting tool, handle it in accordance with the applicable safety regulations regarding your work site.

Prohibited operations → See 27 HANDLING BUCKET WITH HOOK on page 5-4.

https://truckmanualshub.com/

2.6.2 PRECAUTIONS FOR LIFTING OPERATION

GRADUAL LIFTING OPERATION

- When carrying out lifting operations, set the engine low idle and use the L.O. (lifting operation mode).
- Avoid sudden lever movements and engine acceleration.
- Swing speed is three to four times that of movable cranes. Therefore, be especially careful when performing swing operation.

NEVER LEAVE THE OPERATOR'S SEAT

- Never leave the operator's seat while lifting a load.

NEVER CARRY OUT EXCESSIVE OPERATIONS

- Operations exceeding machine performance may result in accident or failure.
- Carry out lifting operation within specified load limits.
- Never carry out operations which may damage the machine such as overload or over-impact-load.
- Never drag a load laterally or longitudinally, or retract the arm. A dangerous situation may result.

INCORRECT

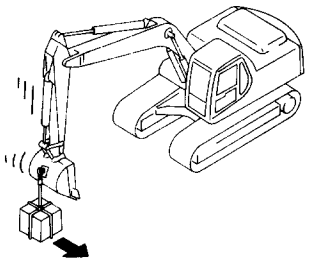

INCORRECT

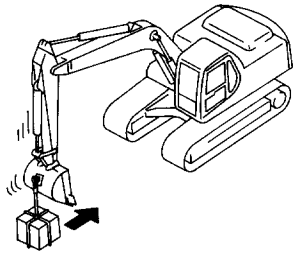

NEVER TRAVEL WHILE LIFTING A LOAD

- Never travel while carrying a load.

OPERATING POSTURE

- If the machine posture is not correct, the wire ropes or ring may detach from the hook. Confirm that the hook angle is correct to avoid this.

https://truckmanualshub.com/

3. PRECAUTIONS FOR MAINTENANCE

WARNING: Failure to follow these safety precautions may lead to a serious accident.

3.1 BEFORE CARRYING OUT MAINTENANCE

WARNING TAG

- If others start the engine or operate the controls while you are performing service or lubrication, you could suffer serious injury or death.
- ALWAYS attach the warning tag to the control lever in the operator's cab to alert others that you are working on the machine. Attach additional warning tags around the machine, if necessary.
- These tags are available from your distributor. (Part No. 09963-03000)



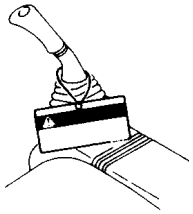

PROPER TOOLS

- Use only tools suited to the task. Using damaged, low quality, faulty, or makeshift tools could cause personal injury.

Tools → See 21.1 INTRODUCTION OF NECESSARY TOOLS on page 3-15.



PERIODIC REPLACEMENT OF SAFETY CRITICAL PARTS

Hoses and other parts of the fuel, hydraulic, and brake system are critical parts for ensuring safety, so they must be replaced periodically.

- Replace these components periodically with new ones, regardless of whether or not they appear to be defective. These components deteriorate over time.
- Replace or repair any such components if any defect is found, even though they have not reached the time specified.

Replacement of safety critical components → See 22 PERIODIC REPLACEMENT OF SAFETY CRITICAL PARTS on page 3-17.

https://truckmanualshub.com/

STOP THE ENGINE BEFORE CARRYING OUT INSPECTION AND MAINTENANCE

- Always stop the machine on firm flat ground and stop the engine before carrying out inspection and maintenance.
- If it is necessary to run the engine when carrying out maintenance, such as when cleaning the inside of the radiator, place the safety lock lever in the LOCK position and carry out the operation with two workers.
- One worker should sit in the operator's seat so that he can stop the engine immediately if necessary. He should also be extremely careful not to touch any lever by mistake. Touch the levers only when they have to be operated.
- The worker carrying out the maintenance should be extremely careful not to touch or get caught in any moving parts.

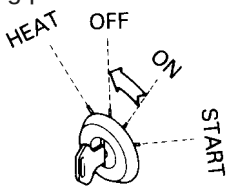

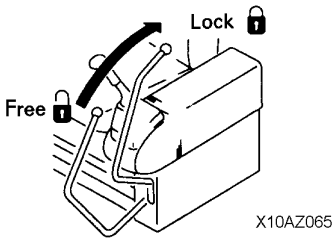

RULES TO FOLLOW WHEN ADDING FUEL OR OIL

- Spilled fuel and oil may cause you to slip, so always wipe it up immediately.
- Always tighten the cap of the fuel and oil fillers securely.
- Never use fuel for washing any parts.
- Always add fuel and oil in a well-ventilated place.



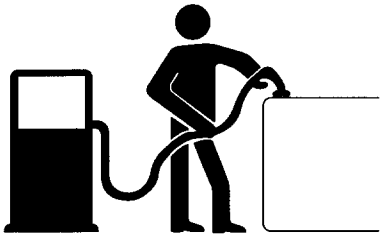

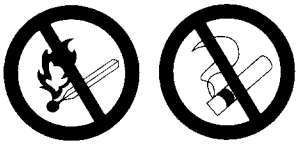

https://truckmanualshub.com/

RADIATOR WATER LEVEL

- If it is necessary to add water to the radiator, stop the engine and allow the engine and radiator to cool down before adding the water.
- Slowly loosen the caps to relieve pressure before removing the caps.

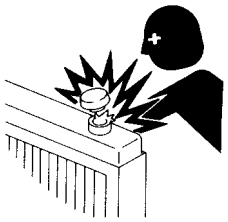

USE OF LIGHTING

- When checking fuel, oil, coolant, or battery electrolyte, always use lighting with anti-explosion specifications. If such lighting equipment is not used, there is danger of explosion.

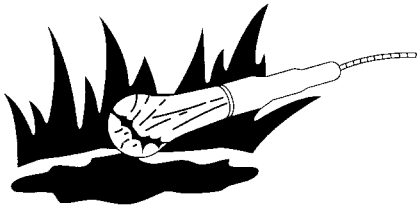

https://truckmanualshub.com/

3.2 DURING MAINTENANCE

PERSONNEL

- Only authorized personnel can service and repair the machine. Extra precaution should be used when grinding, welding, and using a sledge-hammer.

ATTACHMENTS

- Place attachments that have been removed from the machine in a safe place so that they do not fall. If they fall on you or others, serious injury could result.



WORK UNDER THE MACHINE

- Always lower all movable work equipment to the ground or to their lowest position before performing service or repairs under the machine.
- Always block the track shoes of the machine securely.
- Never work under the machine if the machine is poorly supported.



https://truckmanualshub.com/

WORK ON TOP OF MACHINE

- When carrying out maintenance on top of the machine, make sure that the footholds are clean and free of obstructions, and follow the precautions below to prevent yourself from falling.
  - Do not spill oil or grease.
  - Do not leave tools lying around.
  - Mind your step when you are walking.
- Never jump down from the machine. When getting on or off the machine, always use the steps and handrails and maintain three-point contact (both feet and one hand or both hands and one foot) at all times.
- Use protective equipment if necessary.



KEEP THE MACHINE CLEAN

- Spilled oil or grease, or scattered tools or broken pieces are dangerous because they may cause you to slip or trip.

Always keep your machine clean and tidy.

- If water gets into the electrical system, there is danger that the machine may not move or may may move unexpectedly.

Do not use water or steam to clean the sensors, connectors, or the inside of the operator's compartment.

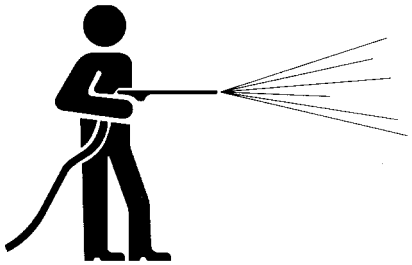

https://truckmanualshub.com/

PRECAUTIONS WITH BATTERY

- When repairing the electrical system or when carrying out electrical welding, remove the negative (—) terminal of the battery to stop the flow of current.

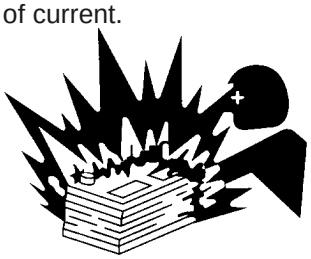

HANDLING HIGH-PRESSURE HOSES

- Do not bend high-pressure hoses or hit them with hard objects. Do not use any bent or cracked piping, tubes or hoses. They may burst during use.
- Always repair any loose or broken fuel hoses or oil hoses. If fuel or oil leaks, it may cause a fire.

PRECAUTIONS WITH HIGH PRESSURE OIL

- Do not forget that the work equipment circuits are always under pressure.
- Do not add oil, drain oil, or carry out maintenance or inspection before completely releasing the internal pressure.
- If oil is leaking under high pressure from small holes, it is dangerous if the jet of high-pressure oil hits your skin or enters your eyes. Always wear safety glasses and thick gloves, and use a piece of cardboard or a sheet of wood to check for oil leakage.
- If you are hit by a jet of high-pressure oil, consult a doctor immediately for medical attention.



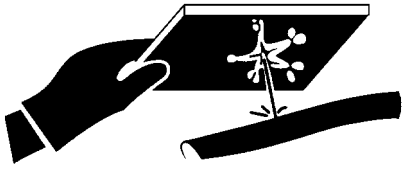

https://truckmanualshub.com/

PRECAUTIONS WHEN CARRYING OUT MAINTENANCE AT HIGH TEMPERATURE OR HIGH PRESSURE

- Immediately after stopping machine operations, the engine cooling water and oil at all parts are at high temperatures and under high pressure.

In this condition, if the radiator cap is removed, or the oil or water are drained, or the filters are replaced, this may result in burns or other injury. Wait for the temperature to go down, then carry out the inspection and maintenance in accordance with the procedures given in this manual.

Cleaning inside of cooling system → see 24.2.2 CLEAN INSIDE OF COOLING SYSTEM on page 3-27.

Checking cooling water level, hydraulic oil level → see 24.3 CHECK BEFORE STARTING on page 3-44.

Checking lubricating oil level, adding oil → see 24.3 CHECK BEFORE STARTING on page 3-44.

Changing oil, replacing filters → see 24.5 EVERY 250 HOURS SERVICE on page 3-51.

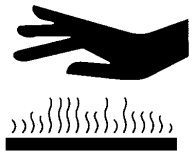

PRECAUTIONS WHEN USING HIGH PRESSURE GREASE TO ADJUST TRACK TENSION

Grease is pumped into the track tension adjustment system under high pressure. If the specified procedure for maintenance is not followed when making adjustments, the plug or grease fitting may fly out and cause damage or personal injury.

- When loosening the grease drain plug, never loosen it more than one turn.
- Never put your face, hands, feet, or any other part of your body directly in front of any grease drain plug or valve.



Adjusting track tension → see 24.2.4 CHECK AND ADJUST TRACK TENSION on page 3-32.

https://truckmanualshub.com/

ROTATING FAN AND BELT

- Keep away from rotating parts and be careful not to let anything get caught in them.

If your body or tools touch the fan blades or fan belt, they may be cut off or sent flying, so never touch any rotating parts.

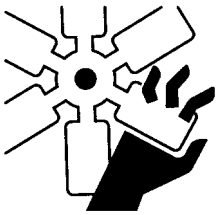

WASTE MATERIALS

- Never dump waste oil in a sewer system, rivers, etc.
- Always put oil drained from your machine in containers. Never drain oil directly on the ground.
- Obey appropriate laws and regulations when disposing of harmful objects such as oil, fuel, coolant, solvent, filters, batteries, and others.

INCORRECT

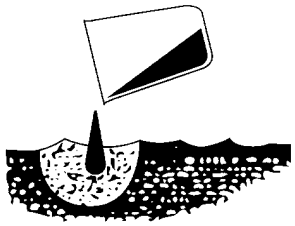

https://truckmanualshub.com/

4. POSITION FOR ATTACHING SAFETY LABELS

Always keep these labels clean. If they are lost or damaged, attach them again or replace them with a new label.

There are other labels in addition to the safety labels listed as follows, so handle them in the same way.

Safety labels may be available in languages other than English. To find out what labels are available, contact your distributor.

POSITION FOR ATTACHING SAFETY LABELS

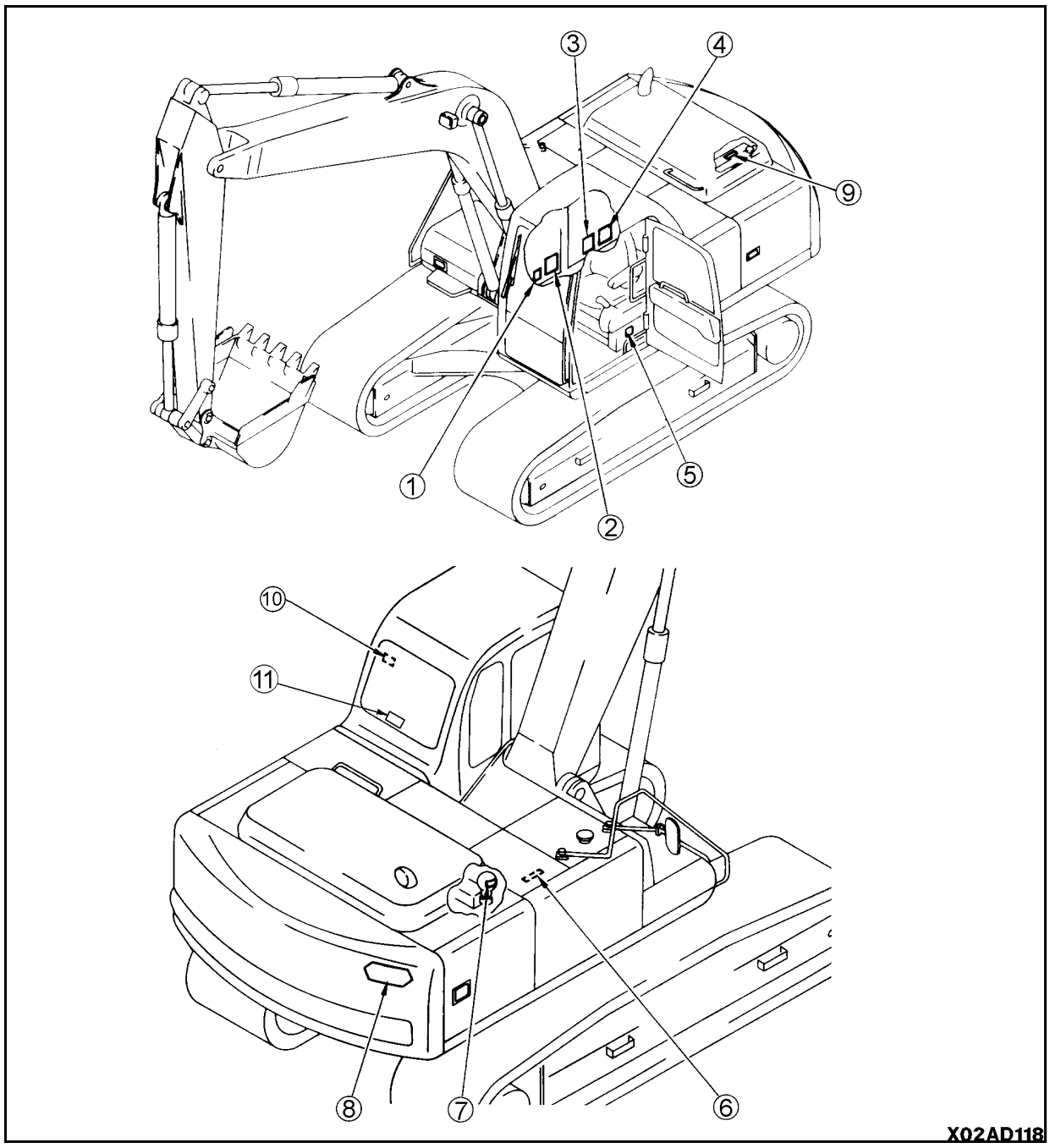

https://truckmanualshub.com/

1. Warnings for leaving operator's seat (203-00-61270)



X02AD093

2. Warnings before operating machine (203-00-61291)

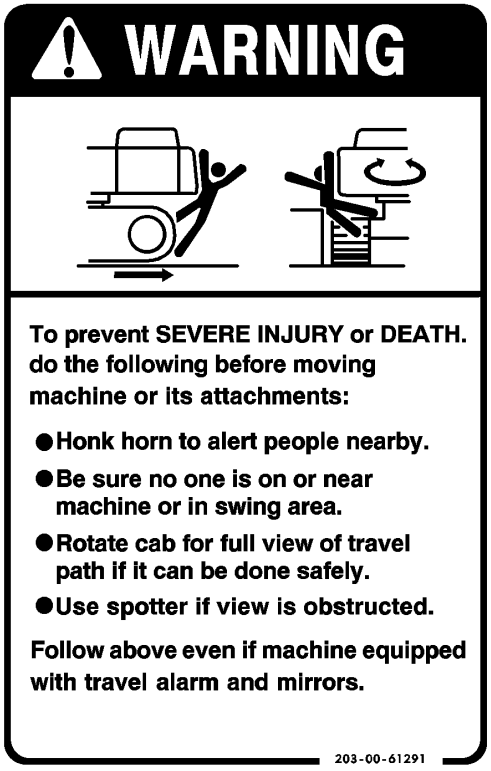

X02AD067

3. Warnings for operation and maintenance (14X-98-11580)

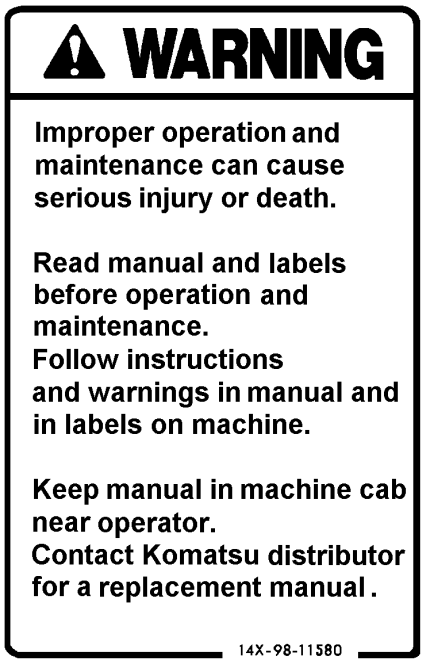

X02AD094

4. Warnings for high voltage (203-00-61310)

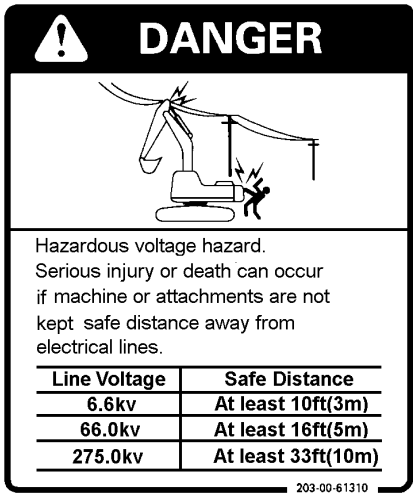

X02AD095

https://truckmanualshub.com/

5. Warnings when adjusting track tension (14X-98-11551)



X02AD096

6. Warnings for hot oil (203-00-61260)

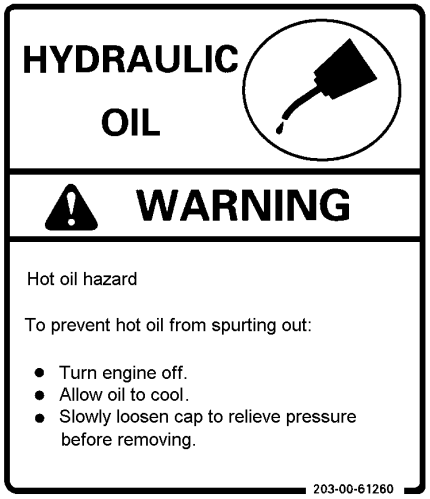

X02AD097

7. Warnings for handling accumulator. (14X-98-11390)



X02AD098

8. Keep off swing area (20Y-00-21270)



X02AD099

https://truckmanualshub.com/

9. Warnings for hot water
(14X-98-11531)



X02AD101

10. Warnings when opening front window
(203-00-61280)



X02AD102

11. Explanation of emergency exit
(20Y-00-22880)

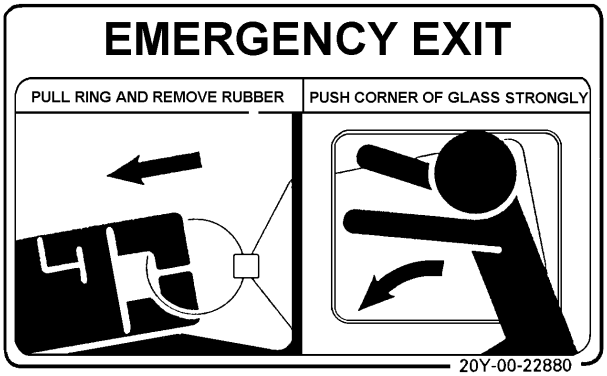

X02AD114

https://truckmanualshub.com/

OPERATION

https://truckmanualshub.com/

10. GENERAL VIEW

10.1 GENERAL VIEW OF MACHINE

If directions are indicated in this manual, they refer to the directions shown by the arrows in the diagram below.

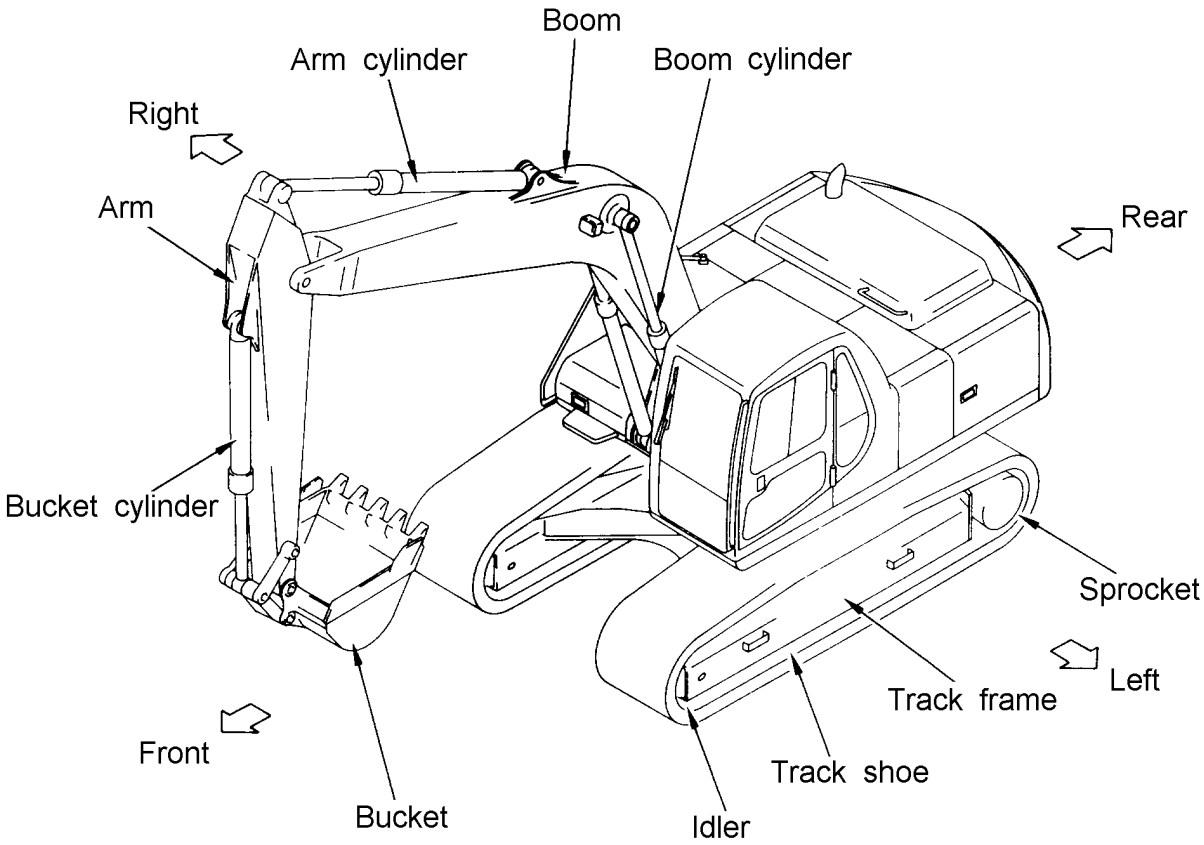

https://truckmanualshub.com/

10.2 GENERAL VIEW OF CONTROLS AND GAUGES

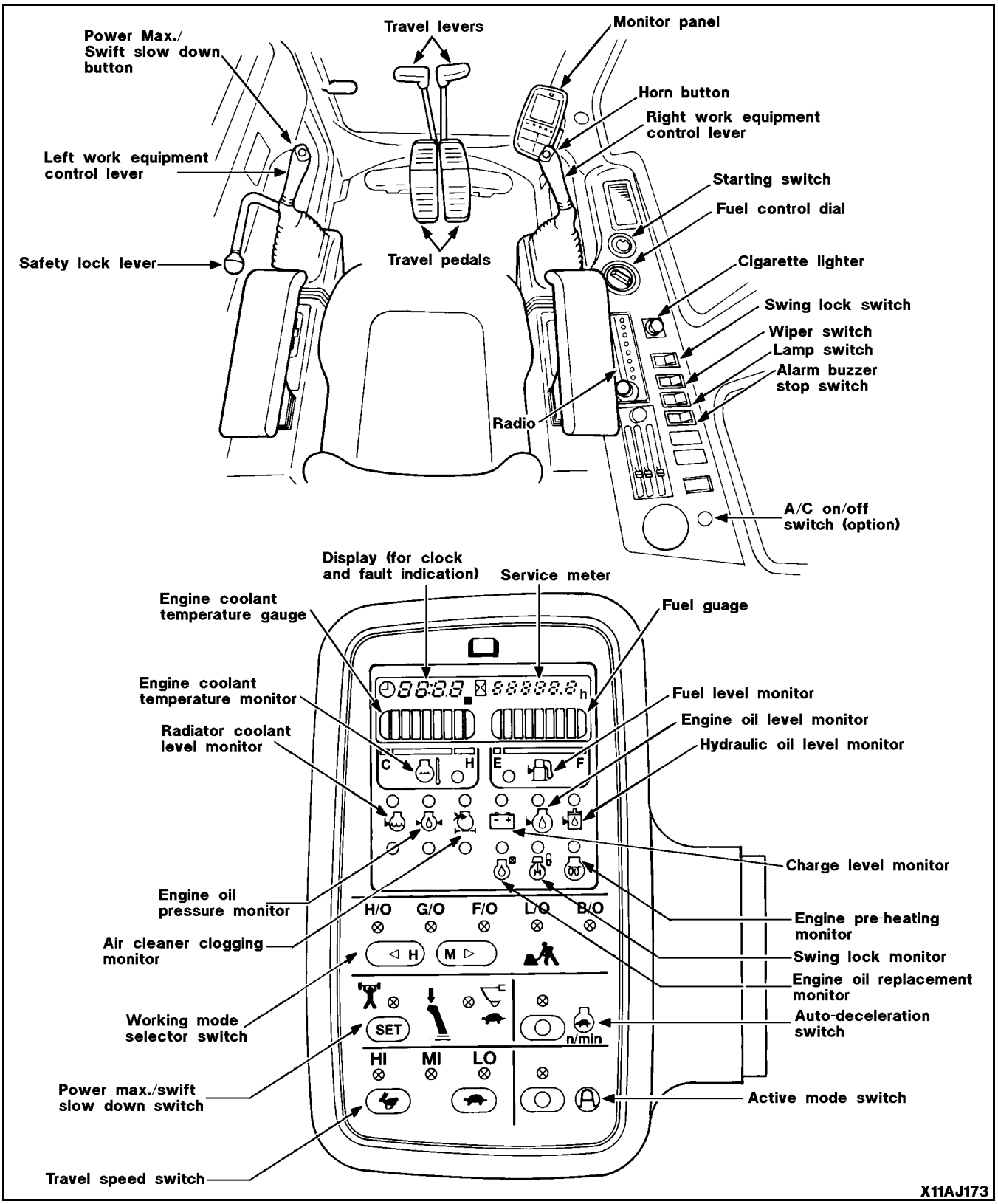

https://truckmanualshub.com/

11. EXPLANATION OF COMPONENTS

The following is an explanation of the devices needed for operating the machine.

To carry out suitable operations correctly and safely, it is important to understand fully the methods of operating the equipment and the meanings of the displays.

11.1 MACHINE MONITOR

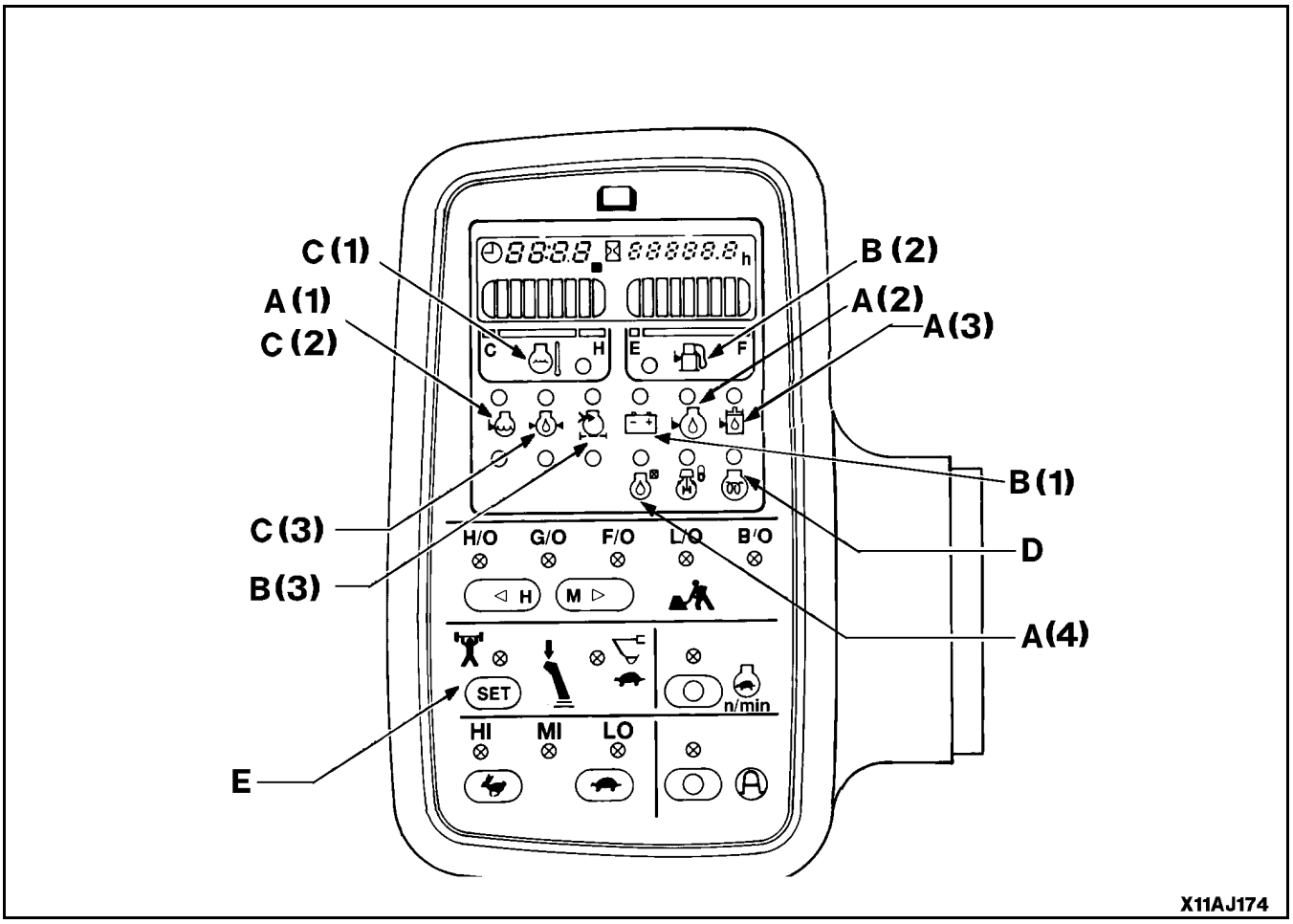

11.1.1 A. BASIC CHECK ITEMS

This displays the basic items that should be checked before starting the engine.

If there is any abnormality, the appropriate monitor lamp will flash.

NOTICE

When carrying out checks before starting, do not simply rely on the monitor. Always refer to the periodic maintenance items or 12 OPERATION on page 2-40 to carry out the checks.

https://truckmanualshub.com/

1. RADIATOR WATER LEVEL

This warns that the radiator cooling level is too low. If the monitor lamp flashes, check the coolant level in the radiator and reserve-tank, and add coolant.

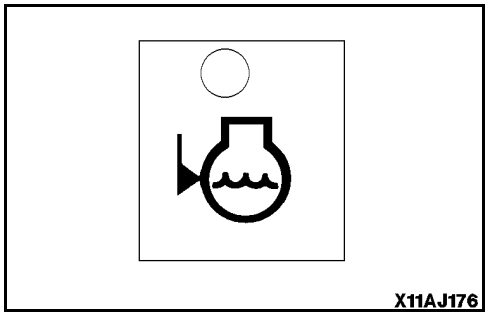
X11AJ176

2. ENGINE OIL LEVEL

This warns that the oil level in the engine oil pan is too low. If the monitor lamp flashes, check the oil level in the engine oil pan, and add oil.

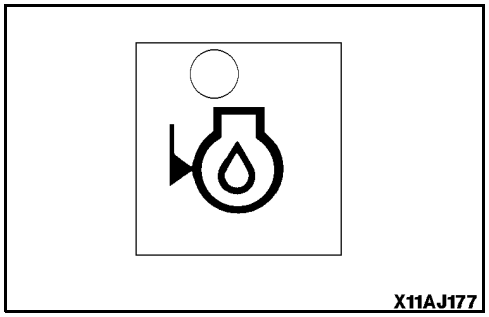
X11AJ177

3. HYDRAULIC OIL LEVEL

This warns that the hydraulic oil level is too low. If the monitor lamp flashes, check the hydraulic oil level, and add oil.

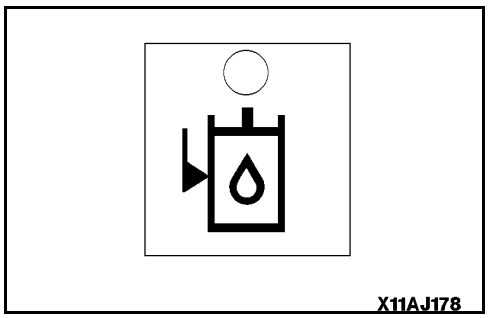
X11AJ178

4. REPLACEMENT OF ENGINE OIL

If the set time (125, 250, 500H) passes after the engine oil is replaced, this lamp lights up. At this time, replace the engine oil.

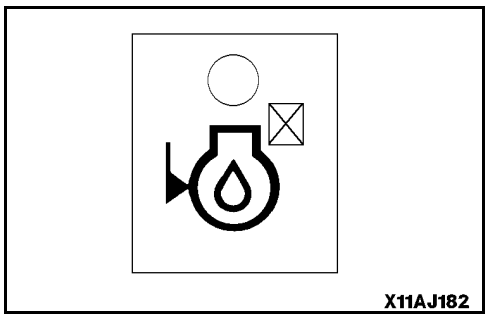
X11AJ182

https://truckmanualshub.com/

11.1.2 B. CAUTION ITEMS

CAUTION

If these monitor items flash, check and repair the appropriate location as soon as possible.

These are items which need to be observed while the engine is running. If any abnormality occurs, items which need to be repaired as soon as possible are displayed. If there is any abnormality, the appropriate monitor lamp will flash to indicate the location of the abnormality.

1. CHARGE LEVEL

This monitor indicates an abnormality in the charging system while the engine is running.

If the monitor lamp flashes, check the alternator belt tension. If a abnormality is not found, see 16.6 OTHER TROUBLE on page 2-96.

REMARK

While the starting switch is ON, the lamp will remain lit and will go off once the engine is started.

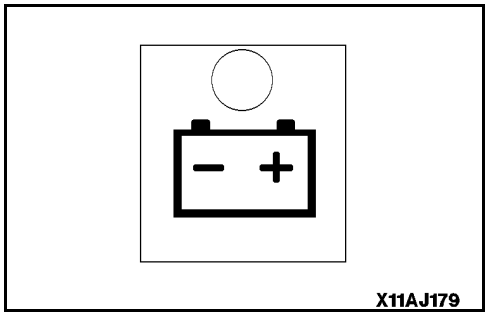

2. FUEL LEVEL

If the fuel drops below 45 liters, the lamp will flash. Top off or fill the fuel tank before this happens.

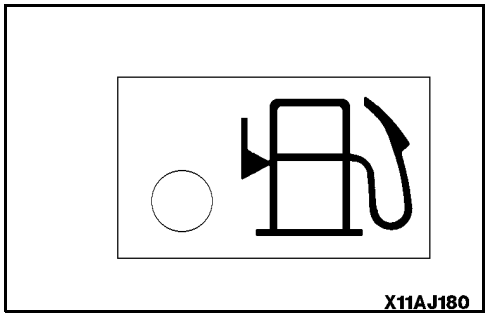

3. AIR CLEANER CLOGGING

This warns that the air cleaner is clogged. If the monitor lamp flashes, stop the engine, then inspect and clean the air cleaner.

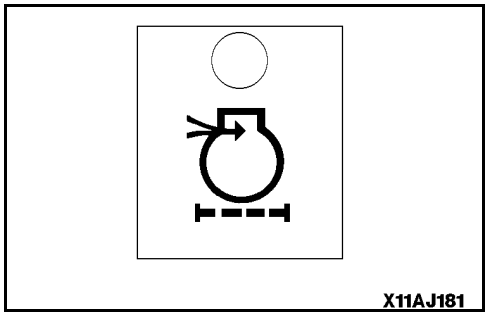

https://truckmanualshub.com/

11.1.3 C. EMERGENCY STOP ITEMS

CAUTION

If these monitor items flash, stop operations immediately, then check and repair the appropriate location.

These items are items which need to be observed while the engine is running. If any abnormality occurs, items which need to be repaired immediately are displayed.
If there is any abnormality, the appropriate monitor lamp will flash to indicate the location of the abnormality and the buzzer will sound.

1. ENGINE WATER TEMPERATURE

If the temperature of the engine cooling water becomes abnormally high, the monitor lamp flashes, and the overheat prevention system is automatically actuated to reduce the engine speed.

Stop operations and run the engine at low idle until the engine coolant temperature gauge enters the green range.
If overheating continues see 16.6.3 ENGINE on page 2-98.

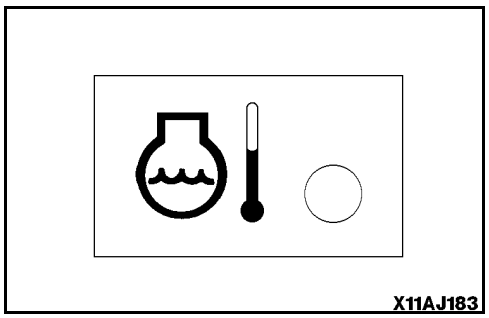
X11AJ183

2. RADIATOR WATER LEVEL

If the radiator coolant level drops, the monitor lamp flashes. Stop the engine, check the radiator coolant level, and add coolant if necessary.

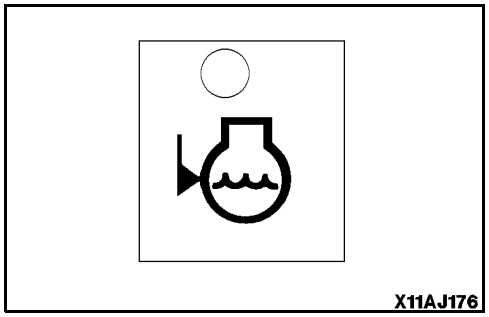
X11AJ176

3. ENGINE OIL PRESSURE

If the engine oil pressure drops below the normal pressure, the monitor lamp flashes. At this time, stop the engine and inspect it according to 16.6.3 ENGINE on page 2-98.

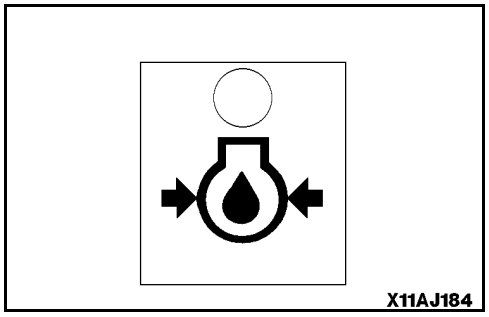
X11AJ184

REMARK

While the starting switch is ON, the lamp remains lit and goes off once the engine is started. When the engine starts, the buzzer may sound for a short time, however, this does not indicate a fault.

https://truckmanualshub.com/

11.1.4 D. METER DISPLAY PORTION

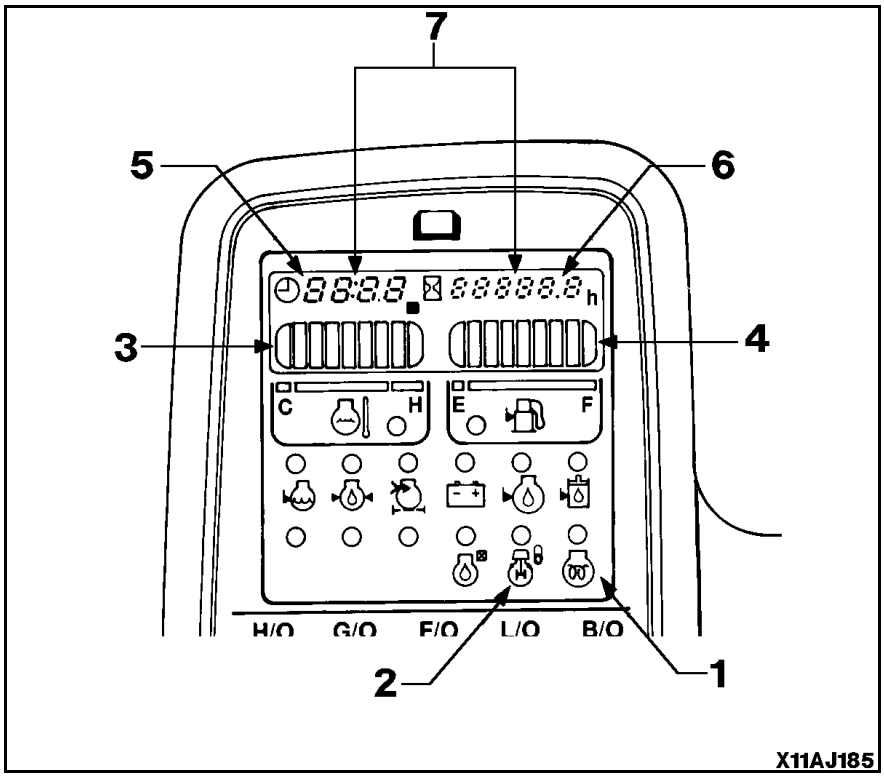

PILOT DISPLAY

When the starting switch is ON, the pilot display lights up when the display items are functioning.

1. ENGINE PRE-HEATING MONITOR

This monitor lamp indicates the pre-heating time required when starting the engine at an ambient temperature below 0°C (32°F).

The monitor lamp lights when the starting switch is turned to the HEAT position and flashes after about 30 seconds to show that the pre-heating is completed. (The monitor lamp will go off after about 10 seconds.)

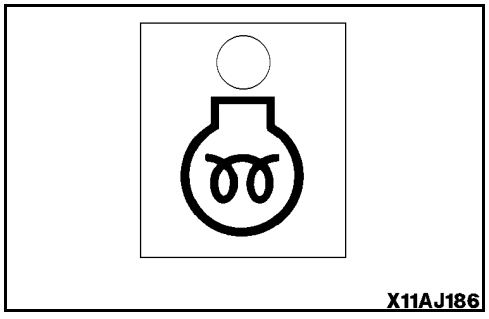

2. SWING LOCK MONITOR

This informs the operator that the swing lock is being actuated.

Actuated: Lights up

When the swing lock switch is turned ON (ACTUATED), the monitor lamp lights up.

When the swing lock override switch is turned on, this monitor lamp flashes.

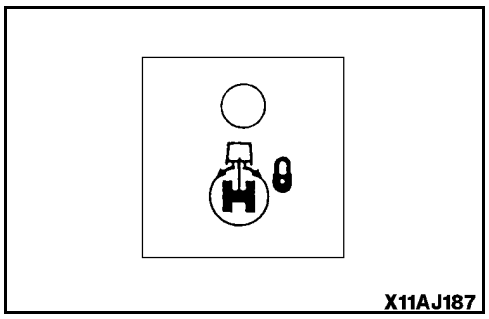

REMARK

A disc brake is installed in the swing motor to mechanically stop motor rotation. The brake is always applied while the swing lock is actuated.

https://truckmanualshub.com/

METERS

3. ENGINE WATER TEMPERATURE GAUGE

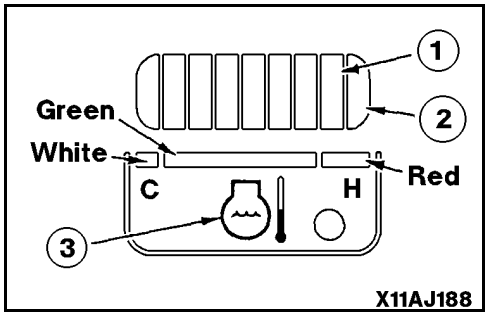

This gauge indicates the engine coolant temperature.
If the temperature is normal during operation, the green range will light up. If the red range lights up during operation, the overheat prevention system will be actuated.

The overheat prevention system acts as follows:
When red range ① lights up:
Output horsepower (engine speed) drops, and engine coolant temperature monitor ③ flashes.
When red range ② lights up:
Engine speed is lowered further to low idle, the engine coolant temperature monitor ③ flashes and the alarm buzzer sounds at the same time.

The overheat prevention system is actuated until the temperature enters the green range.

When red range ② lights, if the engine coolant temperature is reduced and the fuel control dial is turned to the low idling position, the display will be canceled.

4. FUEL GAUGE

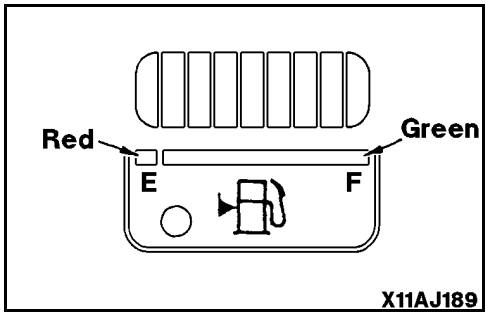

This gauge indicates the amount of fuel in the fuel tank.
If the fuel level is normal during operation, the green range will light up.
If only the red range lights up during operation, there is less than 45 liters of fuel remaining in the tank, so check and add fuel.

After the starting switch is turned ON, the correct level may not be displayed for a moment, but this does not indicate any abnormality.

After stopping the engine, turn the starting switch ON and check that the monitor lamps for items in group's A, B, C and D and the meters light up.

5. DISPLAY

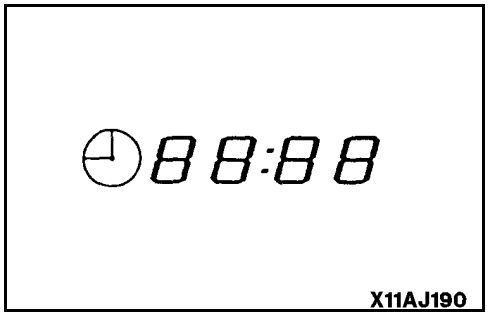

This normally displays the clock time. If any error occurs, it indicates error information while the starting switch is ON.

https://truckmanualshub.com/

Manual setting

1. When the time is displayed, depress clock switch ① until "TIME" flashes.
2. Pressing H switch ② increases hours and pressing M switch ③ increases minutes. If switch ② or ③ is pressed for 2.5 seconds or more, hours or minutes increase continuously.
3. When the correct time is reached, press clock switch ①. This completes clock setting.

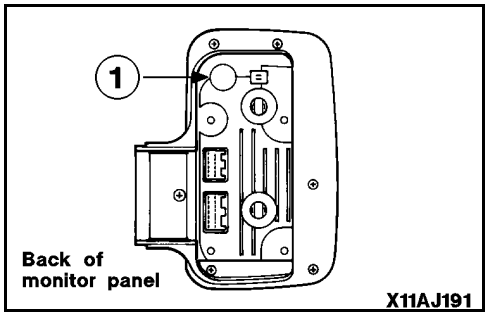

If the machine has a fault, error information appears while the starting switch is ON. The monitor flashes and displays all error indications sequentially.

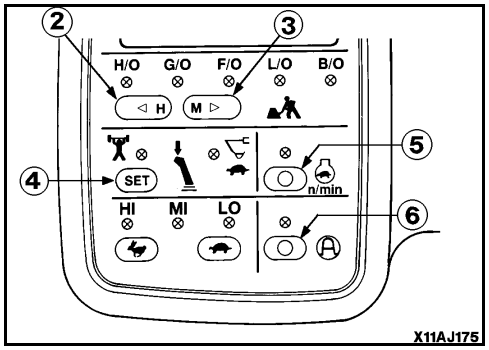

Monitor indications	Error mode
E02	PC-EPC valve system error
E03	Swing brake system error
E05	Governor system error
CALL	Non-operating error

If any of these monitors flashes, see 16.6.4 ELECTRONIC CONTROL SYSTEM on page 2-100.

6. SERVICE METER

This meter shows the total operation hours of the machine. Set the periodic maintenance intervals using this display. The service meter advances while the engine is running - even if the machine is not traveling.

The meter will advance by 1 for each hour of operation regardless of the engine speed.

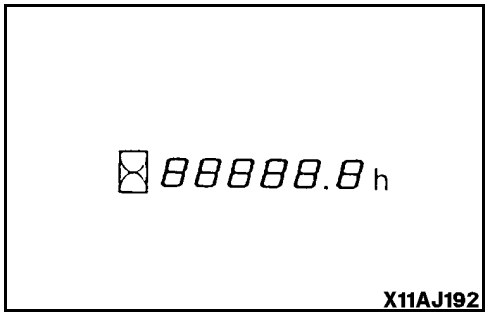

https://truckmanualshub.com/

7. TOP DISPLAY

This display is the clock display and the service meter combined. It is used to display the oil change interval warning and to display the distributor's telephone number. The oil maintenance function notifies the operator when the proper oil exchange interval has been surpassed by lighting the LCD with the service hours elapsed since the last oil change and lighting the LED lamp on the monitor panel.

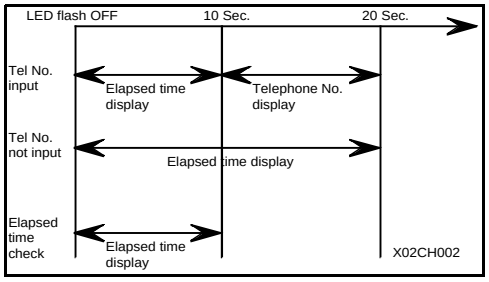

1. To check elapsed time before the warning is displayed, turn the starting switch ON and press the buzzer cancel switch for 2.5 seconds. The elapsed time is shown in the service meter portion of the display.

If the elapsed time equals the set interval - 10 hours, when the starting switch is turned on, the elapsed time is displayed for 10 seconds, then the distributor's telephone number is displayed for 10 seconds. The oil interval LED lamp is also lit. If the distributor's number is not input, the elapsed time is displayed for 20 seconds.

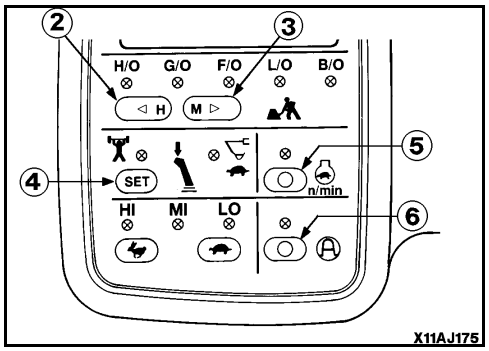

2. The oil exchange interval can be set in the interval set mode. Selectible values are 125H, 250H, 500H, no preset time, and demo mode. The default is no preset time.

To get into the interval set mode, depress the clock switch ① and the active mode switch ⑥ simultaneously for 2.5 seconds. The set interval will be displayed in the clock display portion of the display.

3. While in the interval set mode, pressing the buzzer cancel switch will cycle through the selections, --- ➔ 125 ➔ 250 ➔ 500 ➔ d.

--- indicates no preset time, d indicates demo mode.

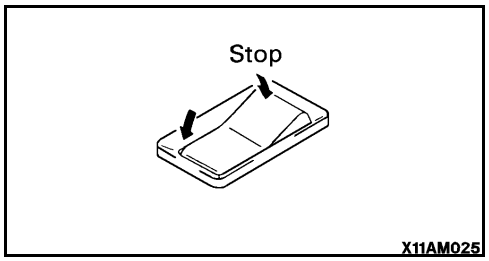

4. To save the oil exchange interval, press the clock switch ① and the active mode switch ⑥ simultaneously for 2.5 seconds.

5. To reset the elapsed time, while displaying the elapsed time, press the buzzer cancel switch for 3 seconds of the 10 seconds of the display. When the elapsed time is reset the monitor displays 0h for 1 second.

6. To set the telephone number in the display, turn the starting switch ON and press the clock switch ① and the auto-decel switch ⑤ simultaneously for 2.5 seconds. Pressing the H switch ② moves the cursor position two positions to the left, pressing the L switch ③ moves the cursor two positions to the right. Two digits will flash. When pressing the clock switch ① and the right travel speed switch ⑦, the right digit of the flashing pair cycles through numbers 0-9. When pressing the clock switch ① and the left travel speed switch ⑧, the left digit of the flashing pair cycles through numbers 0-9 .

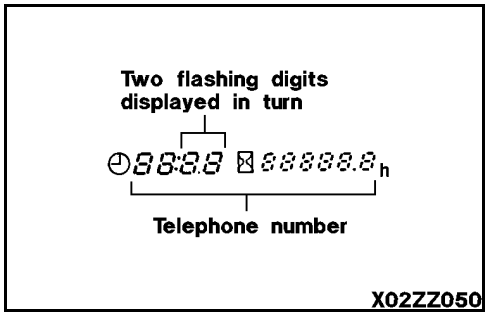

7. To save the telephone number, press the clock switch ① and the auto-decel switch ⑤ simultaneously for 2.5 seconds.

https://truckmanualshub.com/

11.1.5 E: SWITCHES

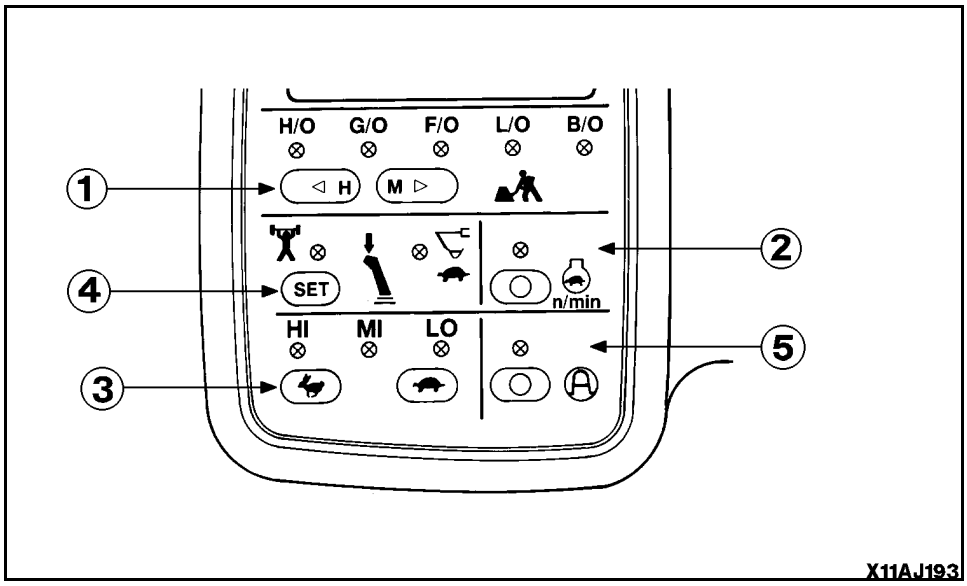

1. WORKING MODE SELECTOR SWITCH (Basic switch)

This switch is used to set the movement or power for the work equipment. By selecting the mode to match the working conditions, it is possible to carry out operations more easily.

H.O. (heavy-duty operation mode) lights up:
This is used for heavy-duty work.

G.O. (general operation mode) lights up:
This is used for ordinary work.

F.O. (finishing operation mode) lights up:
This is used for leveling or grading work.

L.O. (lifting operation mode) lights up:
This is used for fine control operations.

B.O. (breaker operation mode) lights up:
This is used for breaker work.

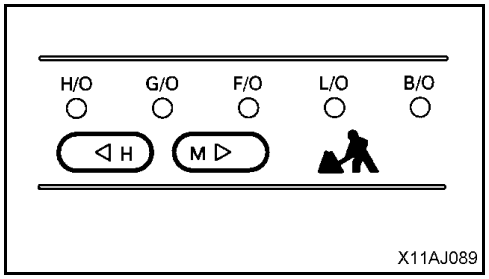

When starting the engine, G.O. (general operation) mode is automatically selected. Each time the switch is pressed, the mode selection changes.

NOTICE

When the breaker is used, never select the H.O.(heavy-duty operation) mode.

REMARK

H switch is also used for setting "hours" in the clock and M switch for setting "minutes". See 11.1.4-5 DISPLAY on page 2-9.

https://truckmanualshub.com/

2. AUTO-DECELERATION SWITCH (Selection switch)

This switch activates the function that automatically lowers the engine speed and reduces fuel consumption when the control lever is at neutral.
ON lights up: Auto-deceleration is actuated.
OFF: Auto-deceleration is canceled.

Each time the switch is pressed, the auto-deceleration is actuated or canceled.

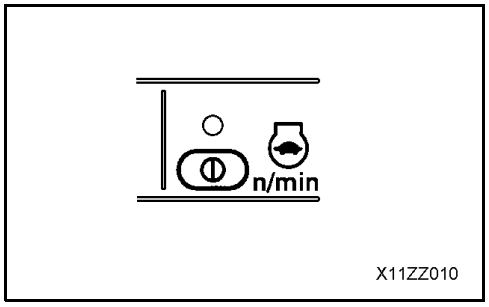

3. TRAVEL SPEED SWITCH

WARNING

If the Hi-Lo switch is operated when the machine is traveling, the machine may deviate even when traveling in a straight line. To prevent this, always stop the machine before operating the travel speed switch.

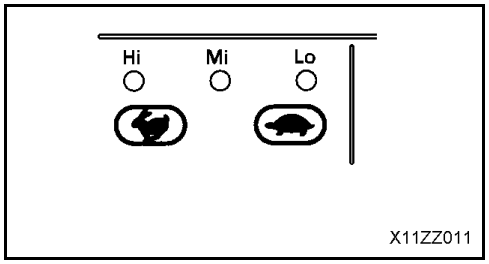

This switch is used to select the three travel speeds.
Lo lights up: Low speed travel
Mi lights up: Mid range speed travel
Hi lights up: High speed travel

When the engine is started, the travel speed is automatically set to Lo.

When traveling in Hi or Mi, the travel speed is automatically switched to low speed travel (Lo) to match the travel surface on soft ground or when traveling uphill, so there is no need to operate this switch. The monitor will continue to indicate Hi or Mi as originally selected.

https://truckmanualshub.com/

4. POWER MAX./SWIFT SLOW-DOWN SWITCH

During operations, the digging power can be increased or the speed reduced by a one-touch operation of the knob button (single click while pushing) on the L.H. work equipment lever.

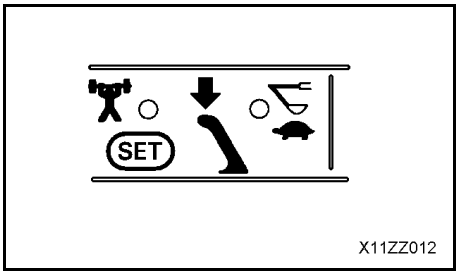

Power max. (power up) lights up:
When the working mode is heavy-duty and general operation mode only, the power can be increased while the knob button is being pressed. The power increase will last only 8.5 sec. even when the knob button is pressed longer. Release the button to reset.

Swift slow-down (speed down) lights up:
When the working mode is in H.O. (heavy-duty operation) or G.O. (general operation mode) only, the speed will be reduced as long as the knob button is being pressed. The machine performance will be equivalent to the L.O. (lifting operation) mode but the work mode settings will remain as selected.

When the engine is started, the power max. lamp lights up. Each time the SET switch is pressed, the mode is switched.

5. ACTIVE MODE SWITCH (SELECTOR SWITCH)

The active mode is effective for quick leveling operations or deep digging and loading operations.
Lamp lights up: Active mode is actuated.
Lamp goes out: Active mode is cancelled.

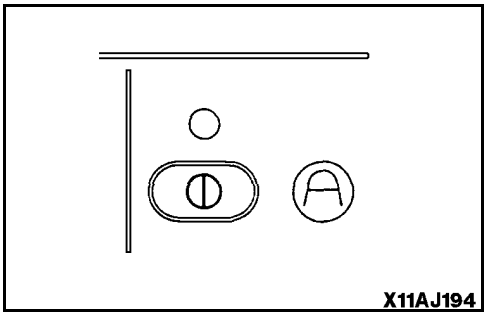

The lamp is off when the engine is started. It is possible to enter the active mode from any working mode (H/O, etc.).

If the active mode is actuated (Lamp lights up), the working mode display does not change (display remains in H/O, etc.). When the active mode is cancelled (Lamp goes out), the system returns to the displayed working mode.

https://truckmanualshub.com/

11.2 SWITCHES

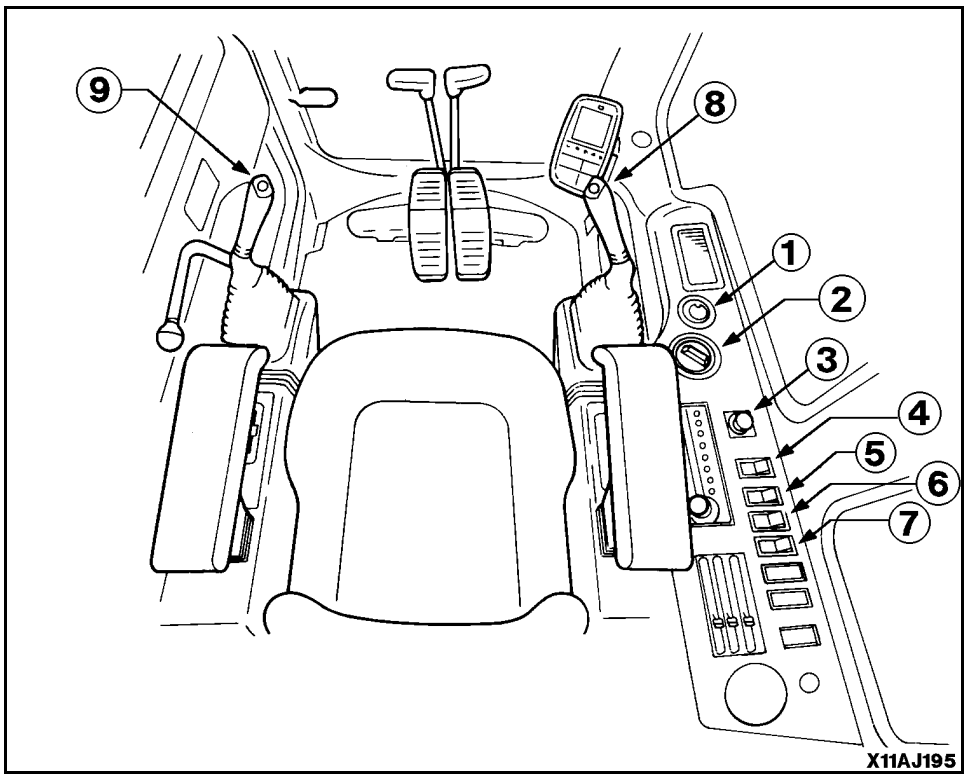

1. STARTING SWITCH

This switch is used to start or stop the engine.

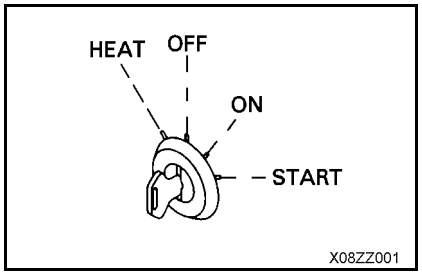

OFF position

The key can be inserted or withdrawn. Except for the cab lamp and clock, the switches for the electrical system are all turned off and the engine is stopped.

ON position

Electric current flows in the charging and lamp circuits. Keep the starting switch key at the ON position while the engine is running.

START position

This is the engine-start position. Keep the key at this position during cranking. Immediately after starting the engine, release the key which will automatically return to the ON position.

HEAT (preheat) position

When starting the engine in winter, set the key to this position. When the key is set to the HEAT position, the pre-heating monitor lights up. Keep the key at this position until the monitor lamp goes off. Immediately after the pre-heating monitor goes off, release the key. The key automatically returns to the OFF position. Then, start the engine by turning the key to the START position.

https://truckmanualshub.com/

2. FUEL CONTROL DIAL
(WITH AUTO-DECELERATION MECHANISM)

This adjusts the engine speed and output.
① Low idling (MIN): Turned fully to the left.
② Full speed (MAX): Turned fully to the right.

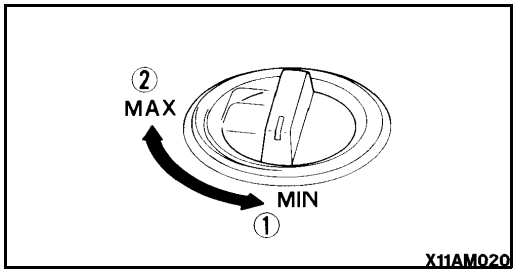

3. CIGARETTE LIGHTER

This is used to light cigarettes. To use, push the lighter in. After a few seconds it will spring back.

Pull out the lighter and light your cigarette.

By removing the cigarette lighter, the socket is available as a power source for electrical accessories (24 V). Max. current is 3.5 A (85 W).

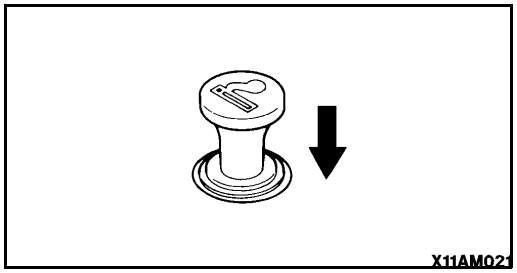

4. SWING LOCK SWITCH

WARNING

- **When the machine is traveling under its own power, or when the swing is not being operated, always set the switch to the ON (ACTUATED) position.**
- **On a slope, the work equipment may swing to the down side even if the swing lock switch is located at the ON position. Be careful concerning this point.**

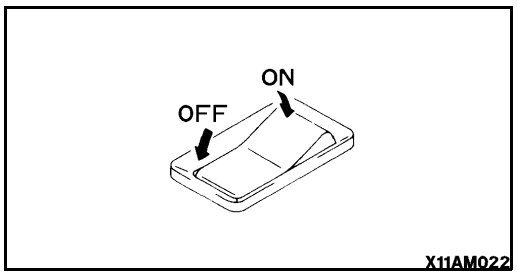

This switch is used to lock the upper structure so that it cannot swing.

ON position (actuated):

The swing lock is always applied, and the upper structure will not swing even if the swing is operated. In this condition, the swing lock lamp lights up.

OFF position (canceled):

The swing lock is applied only when all work equipment control levers are in neutral: when any work equipment control lever is operated, it is canceled.

The swing lock is actuated approx. 4 seconds after all work equipment control levers are placed in neutral.

5. WIPER SWITCH

This switch actuates the front window wiper.
① OFF: The wiper stops.
② ON: The wiper moves continuously.
③ Window washer fluid is sprayed out. When the switch is released, it returns to ②.
④ ON: The wiper moves intermittently.
⑤ Window washer fluid is sprayed out. When the switch is released, it returns to ④.

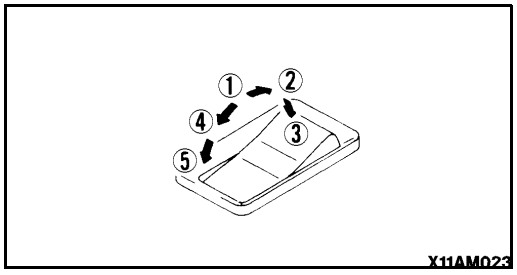

https://truckmanualshub.com/

6. LAMP SWITCH

This switch turns on the head lamp, working lamp and monitor illumination.

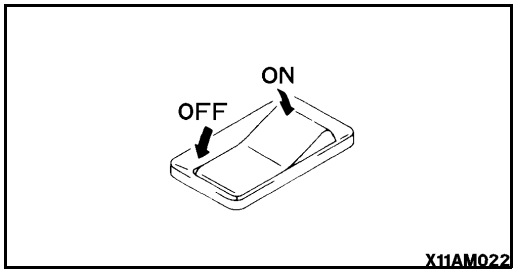

7. ALARM BUZZER CANCEL SWITCH

This is used to temporarily cancel the alarm buzzer when it has sounded to warn of some abnormality in the EMERGENCY STOP ITEMS while the engine is running.

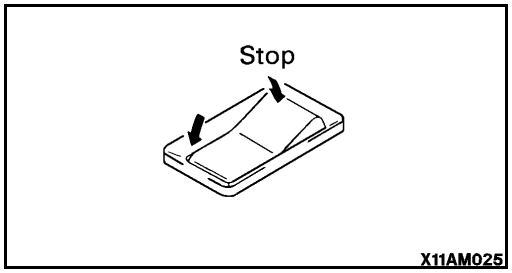

9. HORN BUTTON

When the button at the top of the right work equipment control lever is pressed, the horn will sound.

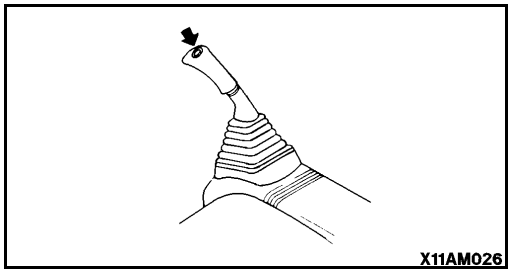

10. KNOB BUTTON

The button at the top of the left work equipment control lever is used to actuate the power max./swift slow-down functions.
Press the button once (single click) and keep it depressed. In the heavy-duty and general operation modes, the power max. function actuates for a max. 8.5 seconds and the swift slow-down function actuates while the button is depressed.

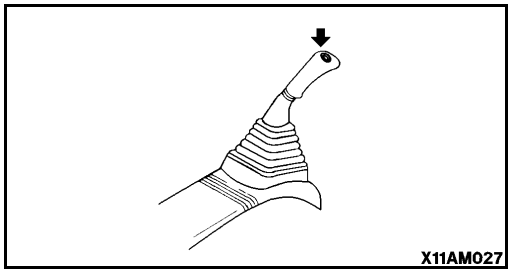

https://truckmanualshub.com/

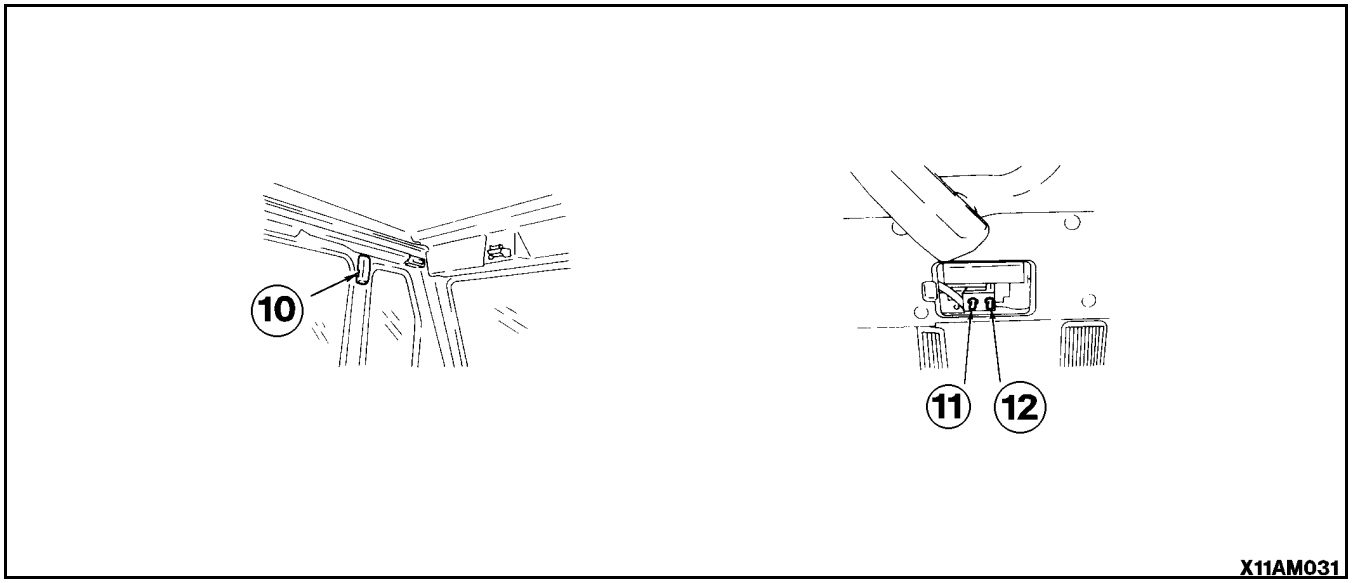

10. CAB LAMP SWITCH

This lights up the cab lamp.

ON position: Lights up

The cab lamp can be turned on even when the starting switch is at the OFF position, so be careful not to leave it on by mistake.

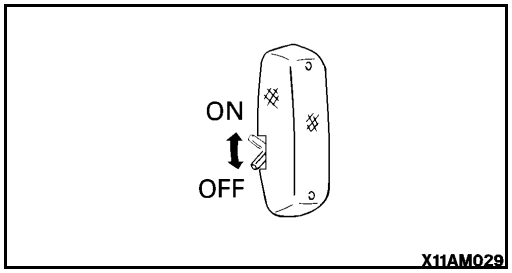

11. PUMP CONTROL OVERRIDE SWITCH

When normal: Switch is down

When abnormal: When the monitor display shows E02 (PC-EPC valve system error), it is possible to carry out operation when this switch is moved up.

The pump control override switch is designed to allow operations to be carried out for a short period when there is an abnormality in the pump control system (PC-EPC valve system error). The abnormality must be repaired immediately.

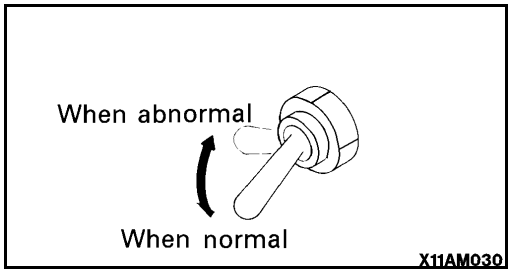

12. SWING LOCK OVERRIDE SWITCH

When normal: Switch is down

When abnormal: When the monitor display shows E03 (swing brake system error), the brake is canceled and it becomes possible to swing the upper structure when the switch is moved up, so normal operations can be carried out. However, the swing brake remains canceled.

The swing lock override switch is designed to allow operations to be carried out for a short period when there is an abnormality is the swing brake electrical system (Swing brake system error). The abnormality must be repaired immediately.

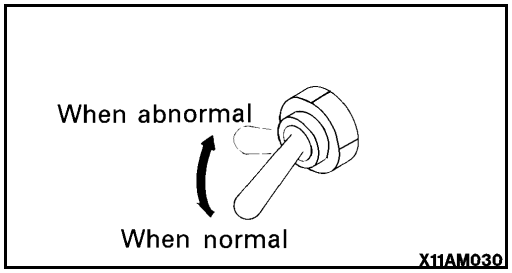

https://truckmanualshub.com/

11.3 CONTROL LEVERS, PEDALS

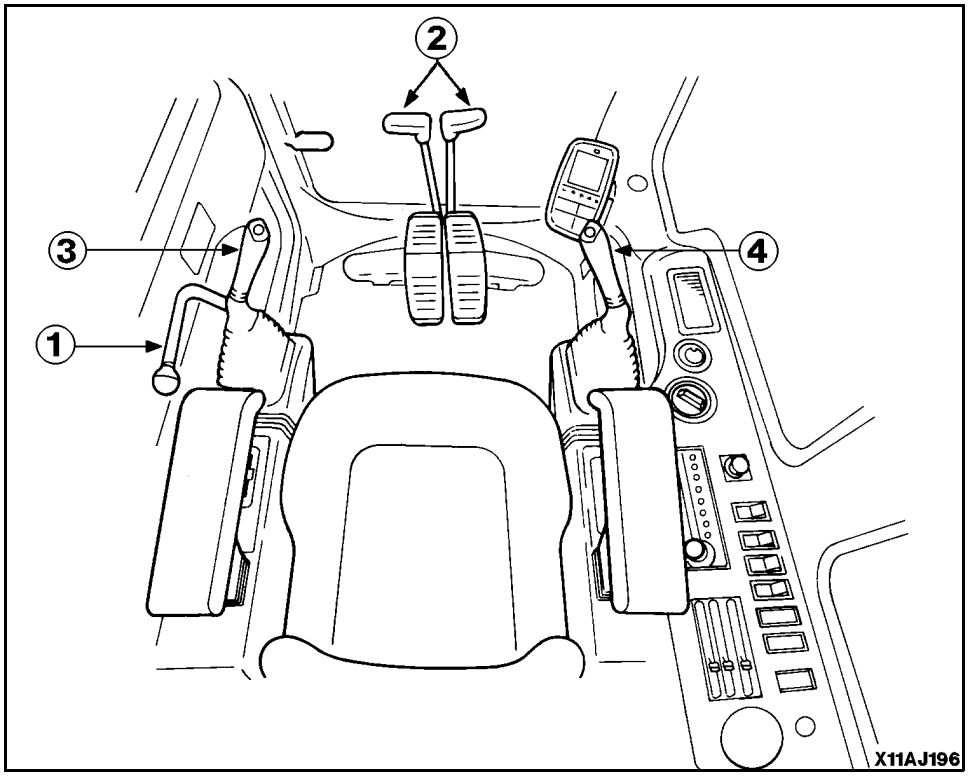

1. SAFETY LOCK LEVER

WARNING

- **When leaving the operator's compartment, set the safety lock lever securely to the LOCK position. If the control levers are not locked, and they are touched by mistake, this may lead to a serious accident.**
  If the safety lock lever is not placed securely in the LOCK position, the control levers may not be properly locked. Check that the situation is as shown in the diagram.

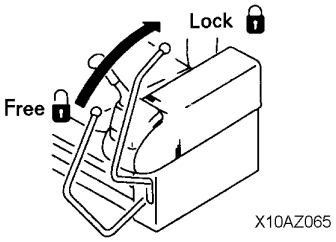

- **When the safety lock lever is raised, take care not to touch the work equipment control lever. If the safety lock lever is not properly locked at the upper position, the work equipment and swing will move, creating a potentially dangerous situation.**
- **When the safety lock lever is lowered, take care not to touch the work equipment control lever.**

https://truckmanualshub.com/

This lever locks the work equipment, swing, travel and attachment controls.

This lock lever is a hydraulic lock, so even if it is in the lock position, the work equipment control lever and travel lever will move, but the work equipment, travel motor, and swing motor will not function.

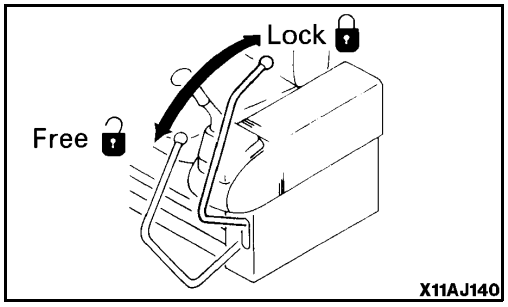

2. TRAVEL LEVERS (WITH PEDAL, AUTO-DECELERATION MECHANISM)

WARNING

- **Do not put your foot on the pedal unless the machine is traveling. If you leave your foot on the pedal and press it by mistake, the machine will move suddenly, and this may lead to a serious accident.**
- **With the track frame facing the rear, the machine will move in the reverse direction by forward traveling and in the forward direction by reverse traveling.**
  When the travel lever is used, check to see if the track frame is facing forward or backward. (If the sprocket is located to the rear, the track frame is facing forward.)

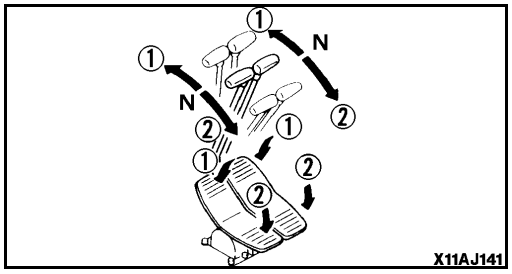

① FORWARD:
The lever is pushed forward
(The pedal is angled forward)
② REVERSE:
The lever is pulled back
(The pedal is angled back)
N NEUTRAL:
The machine stops

( ): This indicates operation of the pedal.

REMARK

Machines equipped with a travel alarm

If the lever is shifted to the forward or reverse position from the neutral position, the alarm sounds to warn that the machine is starting to move.

https://truckmanualshub.com/

3. LEFT WORK EQUIPMENT CONTROL LEVER (with auto-deceleration device)

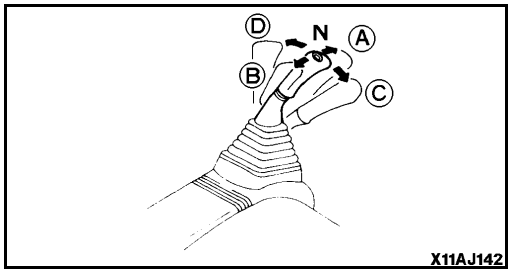

WARNING

If any lever is operated when in the deceleration range, the engine speed will suddenly increase, so be careful when operating the levers.

This lever is used to operate the arm and upper structure.

Arm operation	Swing operation
Ⓐ Arm OUT	Ⓒ Swing to right
Ⓑ Arm IN	Ⓓ Swing to left

N (Neutral)

With the lever in this position, the upper structure and the arm will remain in the position in which they stop.

4. RIGHT WORK EQUIPMENT CONTROL LEVER (with auto-deceleration device)

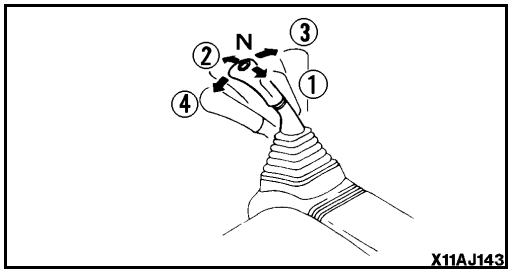

WARNING

If any lever is operated when in the deceleration range, the engine speed will suddenly increase, so be careful when operating the levers.

This lever is used to operate the boom and bucket.

Boom operation	Bucket operation
① RAISE	③ DUMP
② LOWER	④ CURL

N (Neutral)

With the lever in this position, the boom and the bucket will be retained in the position in which they stop.

- When the travel levers and work equipment control levers and are at neutral, even if the fuel control dial is above the mid-range position, the engine speed will drop to a mid-range speed.
  If any of the levers are operated, the engine speed will rise to the speed set by the fuel control dial.
- If all control levers are set to neutral, the engine speed will drop by approx. 100 rpm, and after approx. 4 seconds, the engine speed will drop to the deceleration speed (approx. 1400 rpm)

https://truckmanualshub.com/

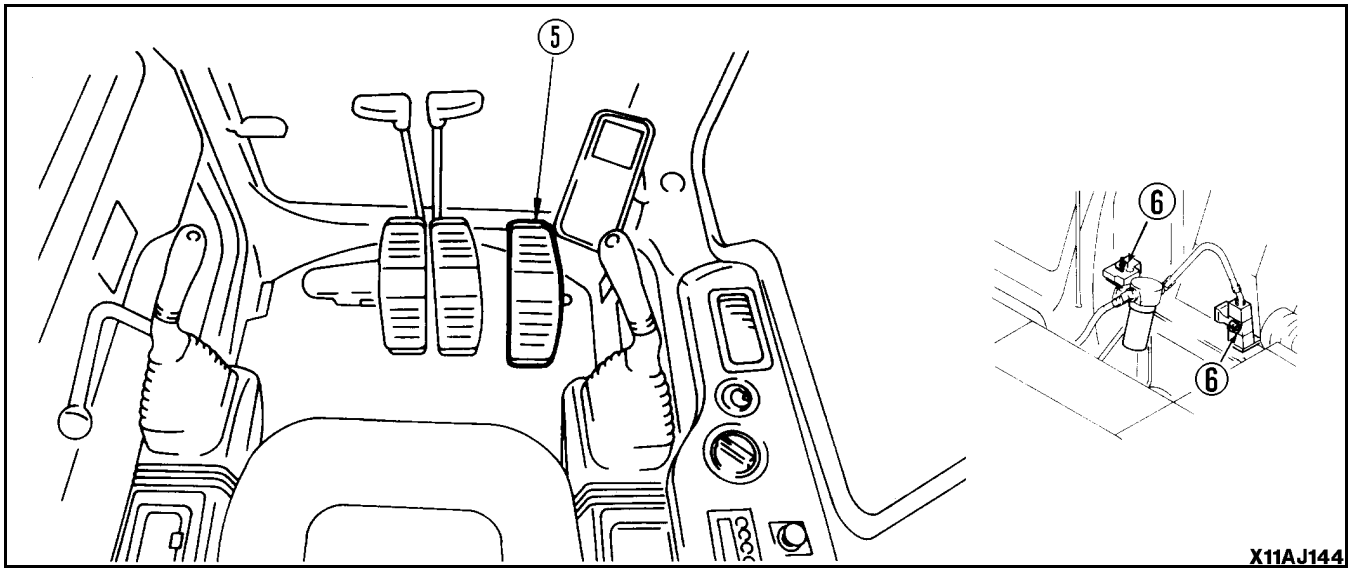

5. ATTACHMENT CONTROL PEDAL

WARNING

Do not put your foot on the pedal except when operating the pedal. If resting your foot on the pedal during operations, and it is depressed by accident, the attachment may move suddenly and cause serious damage or injury.

When breaker is installed

- When the front part of the pedal is depressed, the breaker is actuated.
- The lock pin actuates locking at ①. Position ② is the pedal half stroke position and position ③ is the pedal full stroke position.
- Set the working mode to breaker (B.O.) and set the lock pin at position ③.

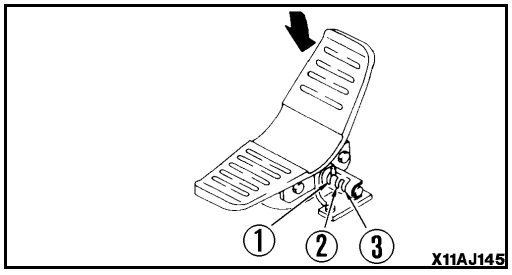

When general attachment is installed

- When the pedal is depressed, the attachment is actuated.
- The lock pin actuates locking at ①. Position ② is the pedal half stroke position and position ③ is the pedal full stroke position.

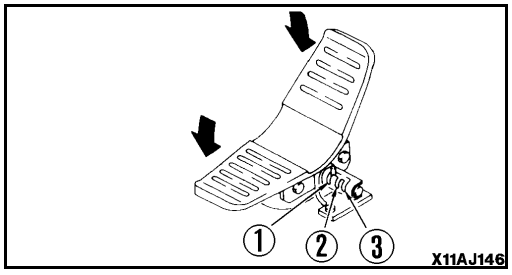

https://truckmanualshub.com/

HYDRAULIC OIL FLOW

When the front part of the pedal is depressed, the hydraulic oil flows into the left-hand work equipment piping. When the rear part of the pedal is depressed, the oil flows into the right-hand work equipment piping. (When equipped with a breaker, depress only the front part of the pedal.)

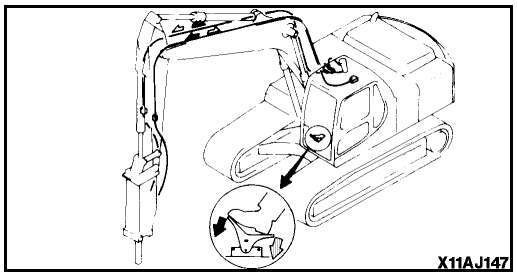

6. SELECTOR VALVES FOR BREAKER AND GENERAL ATTACHMENT (crusher etc.)

WARNING

Do not touch the relief valve.

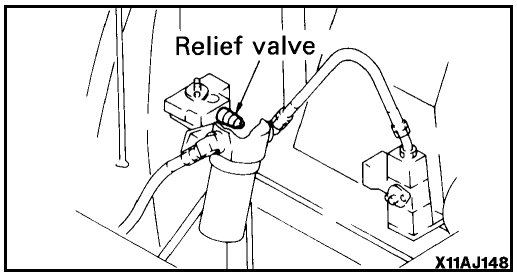

When using the breaker and general attachment (crusher etc.), turn the rotors of 3-way valves ① and ② to change them over according to the following illustration.
(The arrow marks indicating the port direction are stamped on the 3-way valve heads.)

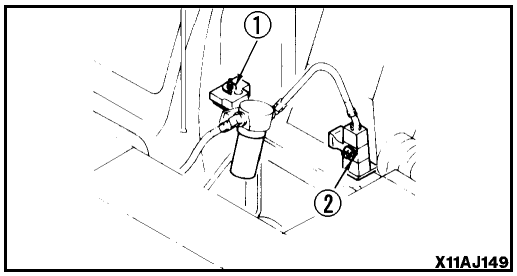

Attachments	Left 3-way valve ①	Right 3-way valve ②
Breaker etc.	Forward direction of machine 	Upper direction of machine 
Crusher etc.	Forward direction of machine 	Upper direction of machine 
When not in use	Forward direction of machine 	Upper direction of machine 

NOTICE

Perform work only after the engine is stopped and the work equipment and machine body are in a stable posture on the ground.

REMARK

For details, see 29 MACHINES READY FOR ATTACHMENTS on page 5-8.

https://truckmanualshub.com/

11.4 CEILING WINDOW

WARNING

When leaving the operator's compartment, set the safety lock securely to the LOCK position.
If the control levers are not locked, and they are touched by mistake, this may lead to a serious accident.

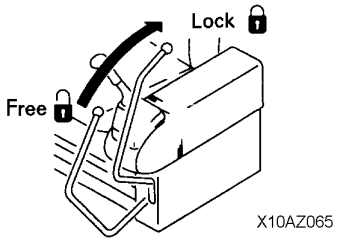

When opening

1. Lock the safety lock lever securely.
2. To open the ceiling window begin by pulling lock ② located on both sides, then push up and open the ceiling window grasping grip ①.

When closing

Close the ceiling window grasping grip ① and lock it with lock ② on both sides. If the locks cannot be latched, open and close the ceiling window again.

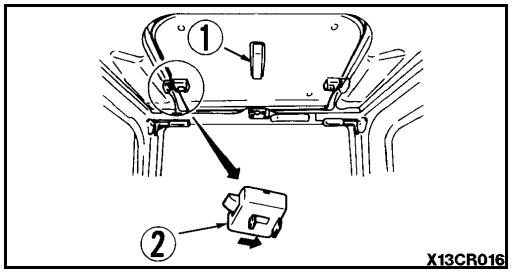

https://truckmanualshub.com/

11.5 FRONT WINDOW

WARNING

When opening the front window, always hold the grip firmly with both hands and pull up. If you use only one hand, your hand may slip and get caught.

It is possible to store (pull up) the front window (top) on the roof of the operator's compartment.

When opening

WARNING

When the front window is open, there is danger that it will fall, so always lock it with the left and right lock pins Ⓐ.

1. Place the work equipment on flat ground and stop the engine.

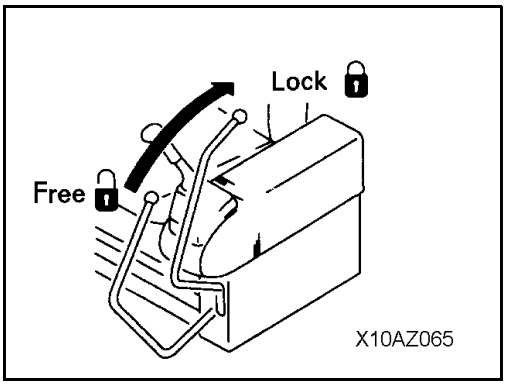

2. Securely lock the safety lock lever.

3. Confirm that the wiper is stored inside the right frame.

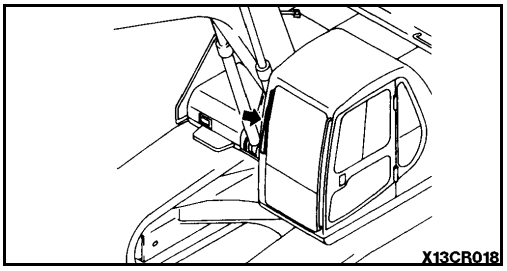

4. Pull lock pins Ⓐ at the top left and right sides of the front window to the inside to release the locks.

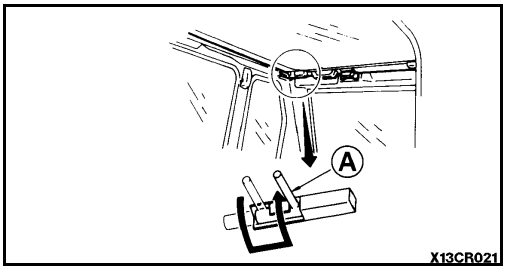

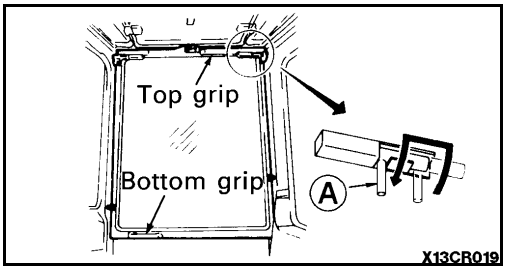

https://truckmanualshub.com/

5. From the inside of the operator's cab, hold the bottom grip with the left hand and the top grip with the right hand, pull up the window, and push it in fully until it is locked by catch Ⓒ.

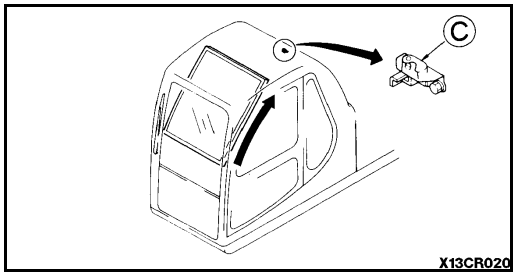

6. Lock with lock pins Ⓐ on the left and right sides.

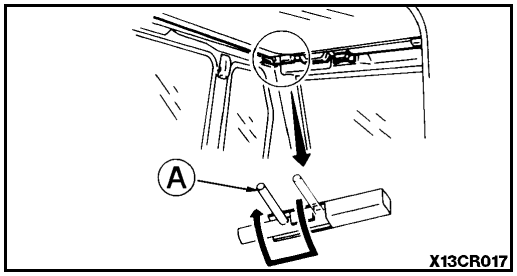

When closing

WARNING

When closing the window, there is danger that it may fall, so be sure to hold the window grips securely and maintain control of the window as it closes. Be careful not to get your hand caught.

1. Place the work equipment on flat ground and stop the engine.
2. Securely lock the safety lock lever.

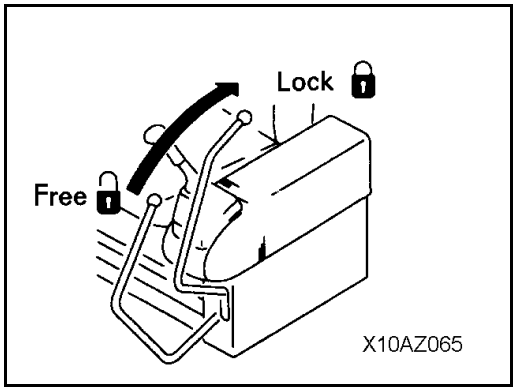

3. Release the lock pin Ⓐ.

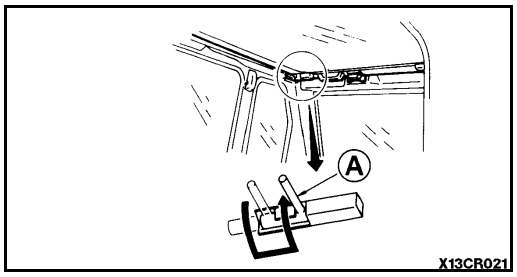

4. Hold the grip at the bottom of the window with your left hand and the grip at the top with your right hand, release the lock of catch Ⓒ with your right thumb, then pull the top grip slowly and lower the front window. When releasing the lock of catch Ⓒ, push release lever Ⓓ in the direction of the arrow to release the lock.

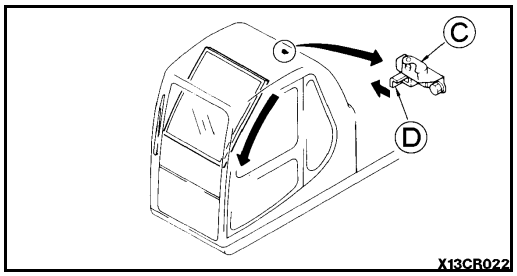

https://truckmanualshub.com/

5. Lock securely with lock pins Ⓐ at the left and right sides.

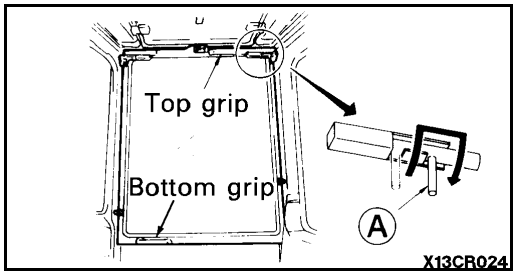

Removing front window (bottom)

With the front window open, remove lock pins Ⓔ, and the bottom part of the front window can be removed.

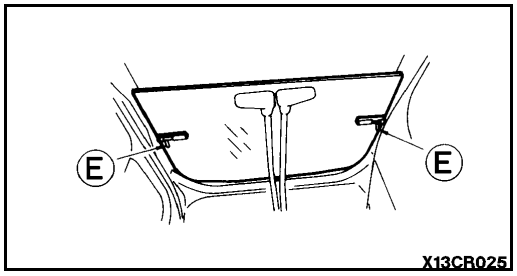

Store the removed bottom part of the front window at the rear of the operator's cab and lock with lock pins Ⓔ.

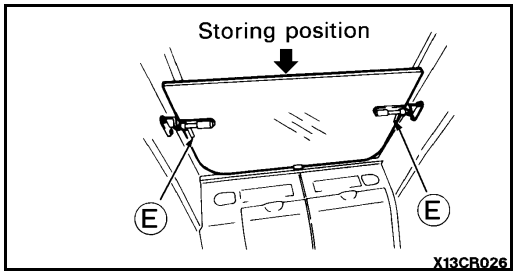

11.6 DOOR LOCK

Use the door lock to hold the door in position after opening it.

1. The door will become fixed in place when it is pressed against catch ①.

2. To release the lock, press knob ② down at the left side of the operator's seat to release the catch.
   When fixing the door, fix it firmly to the catch.

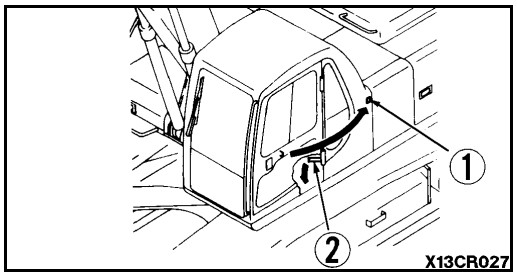

https://truckmanualshub.com/

11.7 CAP, COVER WITH LOCK

The fuel filler, operator's cab, engine hood, battery box cover, right side door and left side door of the machine body are fitted with locks.

Use the starting switch key to lock or unlock these places.

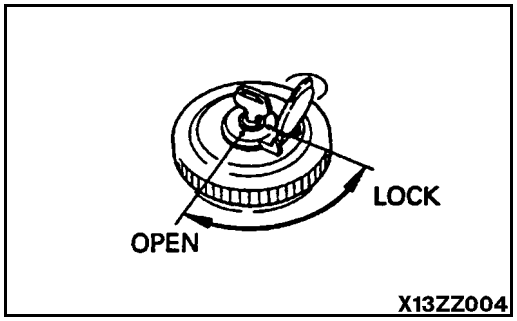

11.7.1 METHOD OF OPENING AND CLOSING CAP WITH LOCK (For the fuel tank filler port)

To open the cap

1. Insert the key into the cap.
2. Turn the key clockwise, align the match on the cap with the rotor groove, then remove the cap.

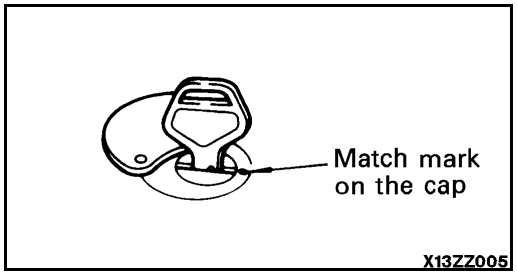

To lock the cap

1. Turn the cap into place.
2. Turn the key counterclockwise and take the key out.

Insert the key as far as it will go. If the key is turned before it is inserted all the way, it may break.

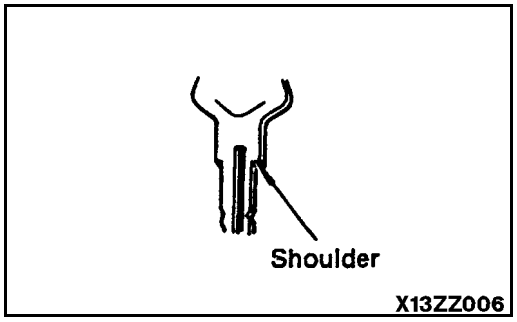

11.7.2 METHOD OF OPENING AND CLOSING COVER WITH LOCK

To open the cover (locked cover)

1. Insert the key.
2. Turn it counterclockwise and open the cover by pulling the cover grip.

To lock the cover

1. Close the cover and insert the key.
2. Turn the key clockwise and take the key out.

Locking the machine see 12.21 LOCKING AND SECURING MACHINE on page 2-81.

https://truckmanualshub.com/

11.8 HOT/COOL BOX

This box is located at the right rear of the operator's seat. In conjunction with the air conditioner, it warms the box during heating and chills it during cooling.

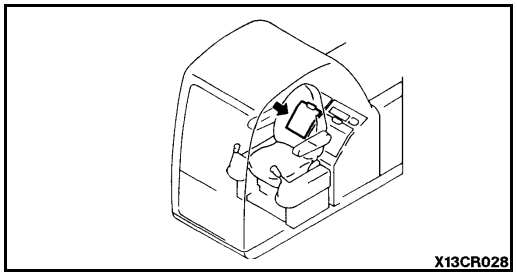

11.9 LUGGAGE BOX

This box is located on the left rear of the operator's seat. Always keep the operation & maintenance manual in this box for easy reading access.

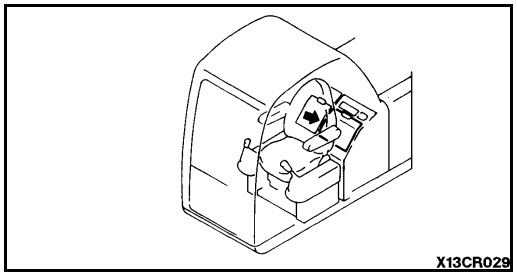

11.10 ASHTRAY

This is on the left side of the operator's seat.

Always make sure that you extinguish the cigarette before closing the lid.

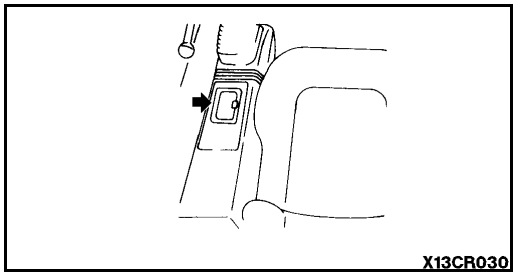

https://truckmanualshub.com/

11.11 CAB HEATER

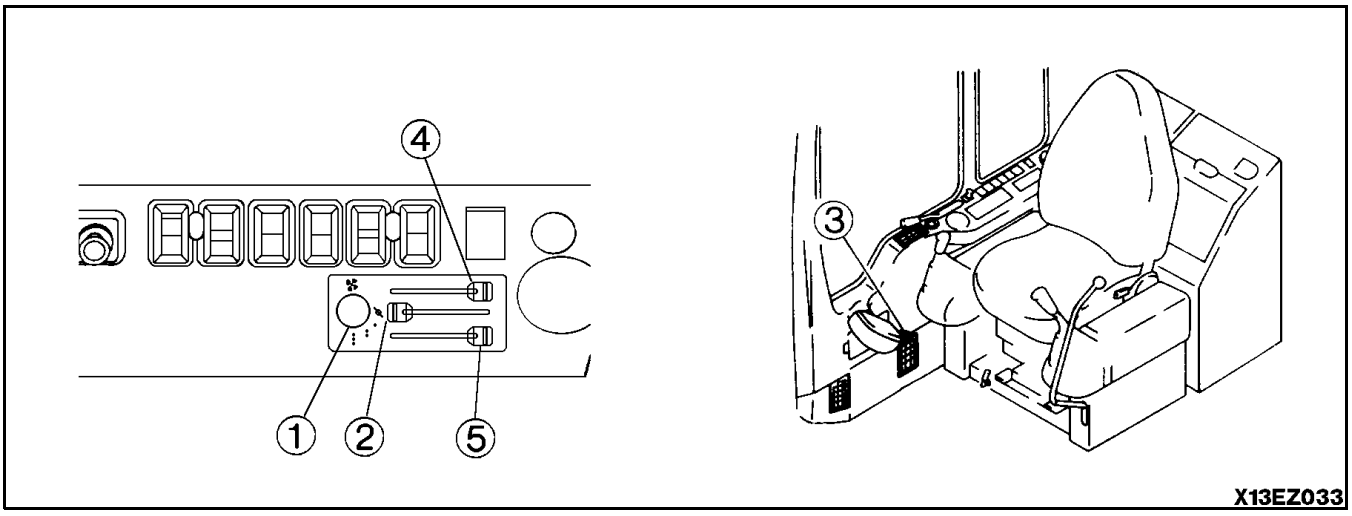

The cab heater utilizes the water heated by the engine. Use the cab heater when the engine coolant is warmed.

1. CAB HEATER FAN SWITCH

This adjusts air-flow in 3 steps.

0: Off
●: Low
●●: Medium
●●●: High

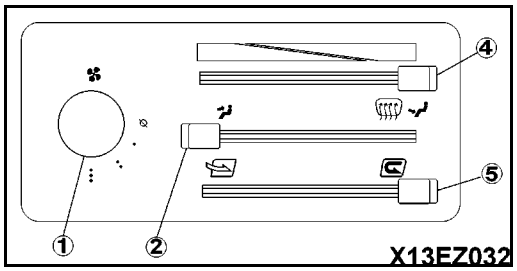

2. AIR OUTLET CHANGE-OVER LEVER

The air outlet is selective according to the purpose.

Purpose	To upper portion of operator	When using the defroster or directing air flow to the feet.
Lever position		
Air outlet		

https://truckmanualshub.com/

3. DEFROSTER CHANGE-OVER LEVER

This lever is used to eliminate condensation produced in winter or the rainy season etc.
Change-over lever forward: Defroster
Change-over lever backward: to operator's feet
Defroster is available when using the air outlet change-over lever in 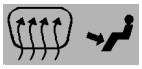

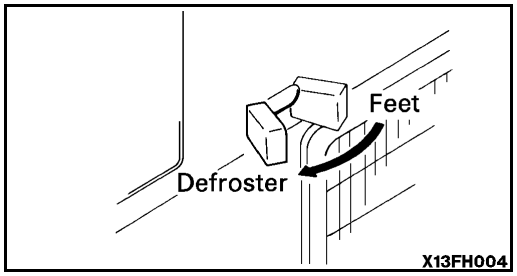

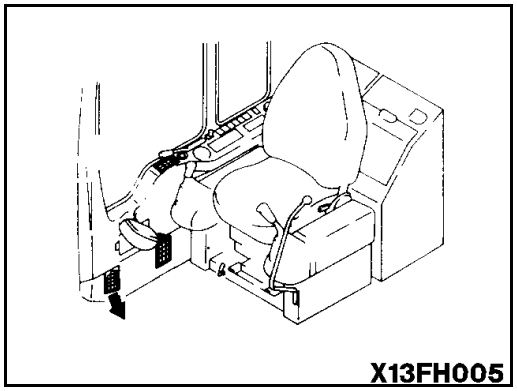

4. TEMPERATURE CONTROL LEVER

This lever adjusts the temperature between high and low continuously.

Purpose	To increase temperature (warmer)	To decrease temperature (cooler)
Lever position	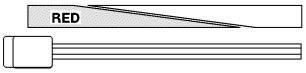	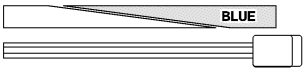

5. External/internal air changeover lever

Changes between internal air circulation and external air intake.

Purpose	External air intake This is used for fresh air intake or to remove condensation on windows.	Internal air circulation This is used when wishing to quickly cool or warm the cab
Lever		

https://truckmanualshub.com/

11.12 CAR RADIO

11.12.1 EXPLANATION OF COMPONENTS

This unit is for use in Latin America and North America.
Because the radio frequency range and spacing is different between Latin America and North America, the tuner settings can be changed by the user. This unit is factory preset to the tuner settings for Latin America. For use in this area, no change is necessary.

Location	Frequency Range	Spacing
Latin America	**AM** 530 ~ 1710 kHz **FM** 87.5 ~ 108 MHZ	5 kHz 0.1 MHZ
North America	**AM** 530 ~ 1710 kHz **FM** 87.5 ~ 107.9 MHZ	10 kHz 0.2 MHZ

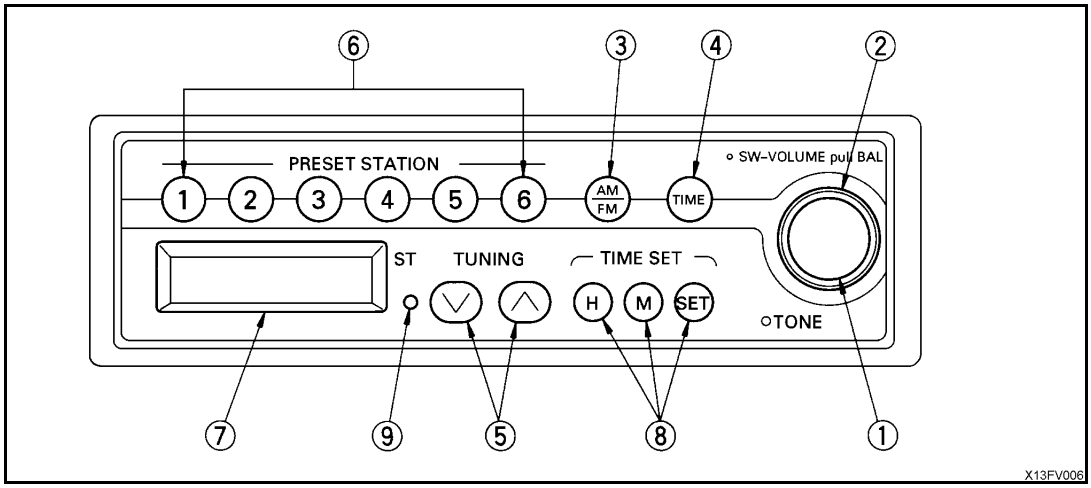

- How to change the tuner settings
  1. Press Power Switch Knob ① to turn on the unit.
  2. Press Preset Button 1 and Preset Button 5 of ⑥ at once.
     With each press, the tuner settings change.
     (Latin America ↔ North America)

  NOTE: If the backup power terminal is not connected, or if the vehicle battery has gone dead, the tuner settings are reset to the normal factory setting (for use in Latin America).

11.12.2 LOCATION AND FUNCTION OF CONTROLS

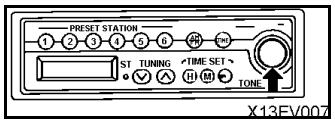

① **POWER SWITCH:** Volume Control Knob (SW-VOLUME)
Balance Control Knob (PULL BAL)

Press this knob to turn on the unit. Frequency will be shown on the display ⑦.
Press it again to turn the unit off.

Turn this knob clockwise to increase the volume level.
Turn this knob counterclockwise to decrease the volume level.

Pull out this knob until it clicks, and turn it to adjust left/right channel balance.
Turn it clockwise to increase the volume of right speaker.
Turn it counterclockwise to decrease the volume level.
After you finish the adjustment, slightly press the knob to return to its original position.
NOTE: If the knob remains in the pulled position, you cannot adjust volume level.

https://truckmanualshub.com/

② **TONE CONTROL KNOB (TONE)**
Turn this knob clockwise to increase the level of treble.
Turn this knob counterclockwise to decrease the level of treble.
For normal tone, set the knob to the center position.

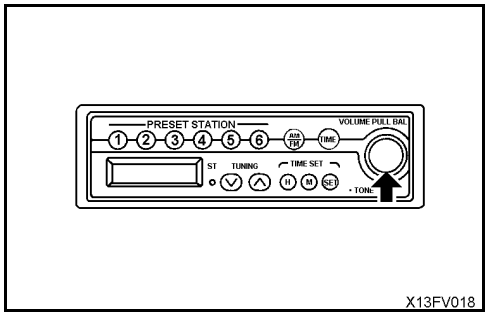

X13FV018

③ **AM/FM SELECTOR BUTTON (AM/FM)**
Press this button to select the desired band.
Each time the button is pressed, it switches AM → FM → AM ...

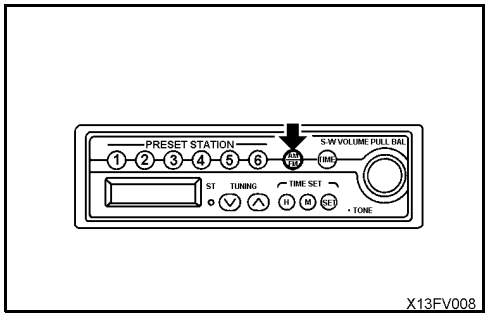

X13FV008

④ **DISPLAY SELECTOR BUTTON (TIME)**
This equipment gives priority to the frequency display. If the button is pressed when the frequency is displayed, display will give the present time for 5 seconds. After 5 seconds pass, the display will automatically return to the frequency display. If any button other than TIME SET (H, M, SET) is pressed within 5 the seconds, the display will return to the frequency display.

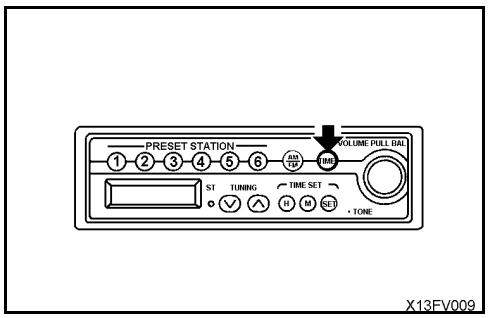

X13FV009

⑤ **TUNING BUTTONS (TUNING)**
MANUAL TUNING (MANUAL)
Use the buttons to change the frequency.
Up button (∧): Each time the button is pressed, the frequency will go up in steps [(FM 0.2 MHZ, AM 10 kHz) North America].
Down button (∨): Each time the button is pressed, the frequency will go down in steps [FM 0.2 MHZ, AM 10 kHz) North America].

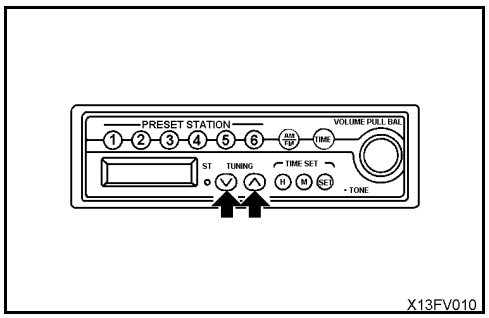

X13FV010

⑥ **PRESET BUTTONS (1, 2, 3, 4, 5, 6) (PRESET STATION)**
If these buttons are set to the frequency of the desired broadcasting station, the station can be selected at a touch. For details of the method of presetting, see 11.12.3 METHOD OF OPERATION on page 2-35

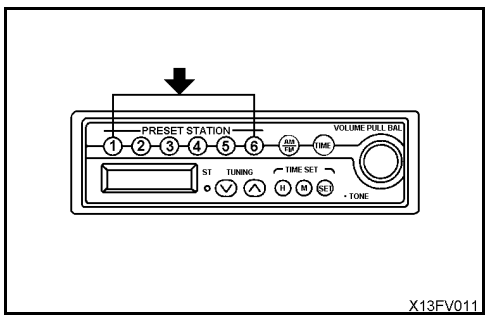

X13FV011

https://truckmanualshub.com/

⑦ **DISPLAY**
The reception band, frequency, preset number, and time are displayed.

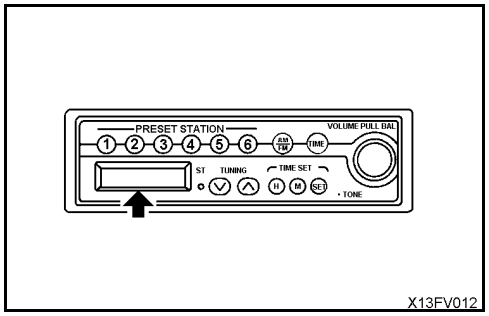

X13FV012

⑧ **TIME CORRECTION BUTTON**
This is used to correct the time.
H : Hour
M : Minute
SET: Sets to start of hour (00 minutes)

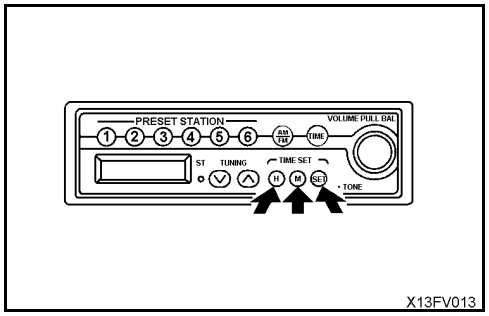

X13FV013

⑨ **STEREO INDICATOR (ST)**
This lamp lights up when stereo broadcasting is picked up when receiving an FM broadcasting station.

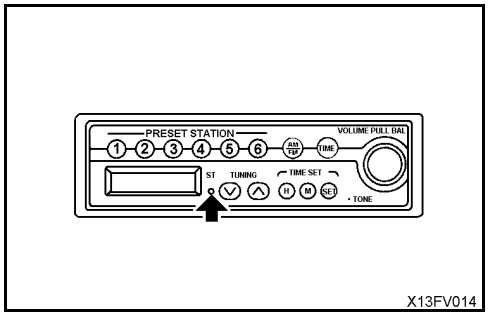

X13FV014

https://truckmanualshub.com/

11.12.3 METHOD OF OPERATION

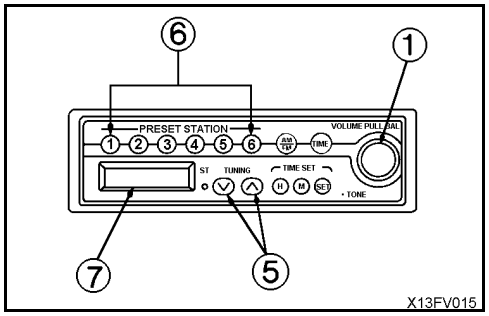

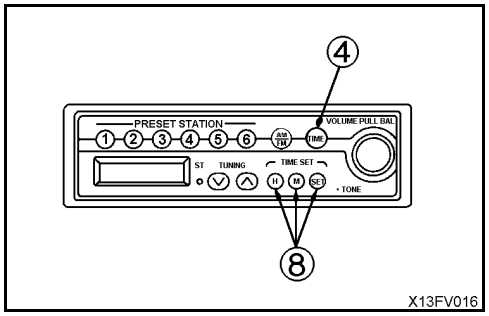

METHOD OF SETTING PRESET BUTTONS

1. Press power switch ① and display the frequency on display ⑦.
2. Turn the tuning button (manual, auto) to adjust to the desired frequency.
3. Select a preset button to use for recording the frequency setting, and keep the button pressed for a least 1.5 seconds. The sound will disappear, but when the setting is recorded, the sound will return and the preset number will appear on display ⑦ to show that the station has been preset.
   After completion of presetting, press preset button ⑥, and release it within approx. 1.5 seconds. The setting will change to the frequency of the broadcasting station recorded for that button. One AM station and one FM station can be recorded for each preset button.

MANUAL TUNING

Press tuning button ⑤ and set to the desired frequency.
Each time the button is pressed, the frequency will move up or down in steps of 10 kHz (AM) or 0.2 MHZ (FM).
∧ button: Move to a higher frequency station.
∨ button: Move to a lower frequency station.
● If the frequency reaches the top or bottom limit, it will automatically change as follows: top limit → bottom limit, or bottom limit → top limit.

AUTOMATIC TUNING

Keep tuning button ⑤ pressed for a least 0.5 seconds. When a broadcasting station is picked up, it will automatically stop. To search for the next station, press tuning button ⑤ again for at least 0.5 seconds.
∧ button: Move to a higher frequency station.
∨ button: Move to a lower frequency station.
● If tuning button ⑤ is pressed during auto tuning, the auto tuning will be canceled and the frequency at the point where it is canceled will be picked up.

SETTING CORRECT TIME

1. Press display selector button ④ to display the time. After 5 seconds, the display will return to the frequency display and the time cannot be corrected. If this happens, press display selector button ④ again.
2. Press time adjustment button ⑧ and adjust the hour and minute.

H button: Adjusts hour (advances one hour each time it is pressed)
M button: Adjusts minute (advances one minute each time it is pressed)

If the H or M button are kept pressed, the time will advance continuously until the button is released.
SET button: Sets to start of hour (when it is pressed, the minute returns to 00). If the minute display is between 0 and 5, and the SET button is pressed, the minute reading will return to 00. If it is pressed when the minute display is between 55 and 59, the minute display will return to 00 and the hour will advance by one (1).

EXAMPLE 10:05 → 10:00
10:55 → 11:00

Press the H, M, and SET buttons to set to the correct time.

https://truckmanualshub.com/

ANTENNA

In areas where the reception is weak or there is interference, extend the antenna mast. If the radio is set to a station with strong radio waves, retract the antenna to set to a weaker station.

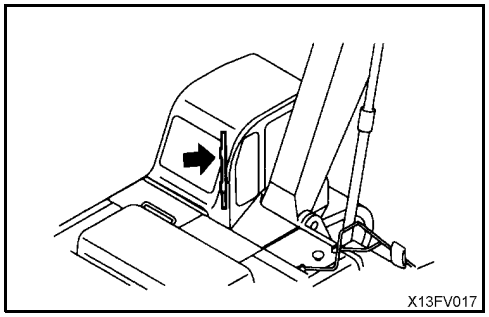

NOTICE

Always retract the antenna before transporting the machine or driving the machine into a work shop or garage.

11.12.4 PRECAUTIONS WHEN USING

- To ensure safety, always keep the sound to a level where it is possible to hear outside sounds during operation.
- If water gets into the speaker case or radio (auto tuning), it may lead to an unexpected failure, so be careful not to get water on the equipment.
- Do not wipe the scales or buttons with benzene, thinner, or any other solvent. Wipe with a soft dry cloth. Use a cloth soaked in alcohol if the equipment is extremely dirty.
- When the battery is replaced, the settings for the preset buttons are all cleared, so set again.

11.12.5 SPECIFICATIONS

Tuning method:	PLL synthesizer method
Reception frequency:	North America
	AM 530 ~ 1710 kHz (in 10 kHz steps)
	FM 87.5 ~ 107.9 MHZ (in 0.2 MHZ steps)
	Latin America
	AM 530 ~ 1710 kHz (in 5 kHz steps)
	FM 87.5 ~ 108.0 MHZ (in 0.1 MHZ steps)
Actual max. sensitivity:	AM 30 dB
	FM 15 dB
Actual max. output:	10 W x 2
Current consumption:	Max. 2 A
External dimensions:	Width 184 mm, Height 56 mm, Depth 116 mm
Weight:	0.65 kg

https://truckmanualshub.com/

11.13 FUSE

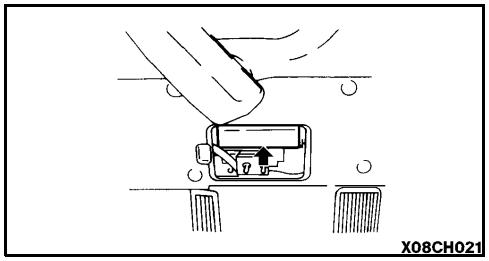

NOTICE

Before replacing a fuse, be sure to turn off the starting switch.

The fuses protect the electrical equipment and wiring from burning out.
If the fuse becomes corroded, or white powder can be seen, or the fuse is loose in the fuse holder, replace the fuse.

Replace a fuse with another of the same capacity.

Fuse capacity and name of circuit

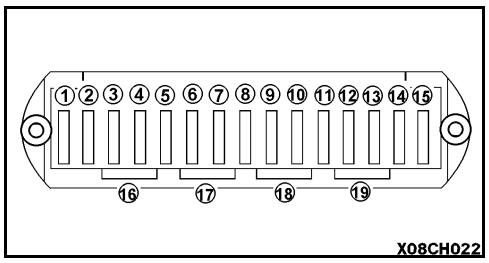

No.	Fuse capacity	Name of circuit
1	10A	Pump controller
2	10A	Solenoid valve
3	20A	Air conditioner (motor)
4	10A	Right head lamp, Working lamp
5	10A	Radio, Cigarette lighter, Air conditioner panel, Heater, Window washer, Left knob button
6	10A	Horn
7	15A	Wiper controller
8	15A	Head lamp, Rear working lamp
9	10A	Travel alarm
10	10A	Key switch signal
11	10A	Spare
12	10A	Spare
13	10A	Alarm buzzer, Monitor
14	10A	Battery relay, Intake air heater, Start signal
15	10A	Cab lamp, Radio (back-up)
16	10A	Spare fuse
17	10A	Spare fuse
18	15A	Spare fuse
19	20A	Spare fuse

https://truckmanualshub.com/

11.14 FUSIBLE LINK

If the starting motor will not rotate when the starting switch is turned ON, a possible cause is disconnection of wire-type fusible link ①. Open the battery box cover on the right side of the machine body to inspect the fusible link and, if necessary, replace it.

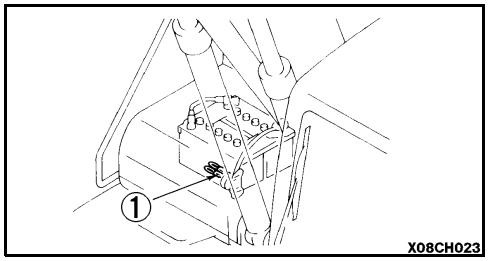

REMARK

A fusible link refers to the large-sized fuse wiring installed in the high current flow portion of the circuit to protect electrical components and wiring from burning, similar to an ordinary fuse.

11.15 CONTROLLER

A combined pump controller and governor controller are provided.

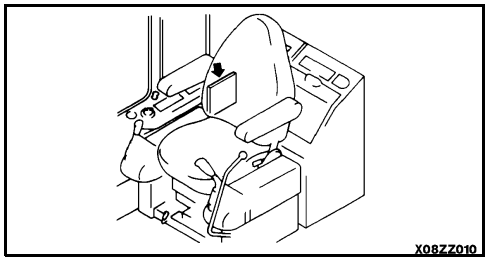

NOTICE

- **Never splash or spill water, mud or drink over the controller as this may cause a fault.**
- **If a fault occurs in the controller, do not attempt repair, but consult your distributor.**

11.16 TOOL BOX

This is used for storing tools.

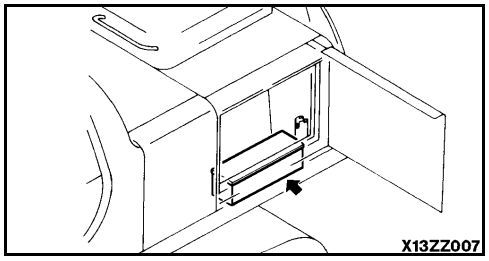

11.17 GREASE PUMP HOLDER

This is inside the left rear door of the machine. Store the grease pump in the holder when it is not being used.

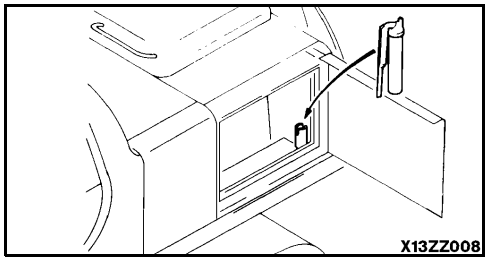

https://truckmanualshub.com/

11.18 HANDLING ACCUMULATOR

WARNING

On machines equipped with an accumulator, for a short time after the engine is stopped, if the work equipment control lever is moved to the LOWER position, the work equipment will move down under its own weight.
After stopping the engine, always place the safety lock lever in the LOCK position and lock the attachment control pedal with the lock pin.
The accumulator is filled with high-pressure nitrogen gas, and it is extremely dangerous if it is handled in the wrong way.
Always observe the following precautions:

- **Never make any hole in the accumulator or expose it to flame or fire.**
- **Do not weld anything to the accumulator.**
- **When disposing of the accumulator, it is necessary to release the gas from the accumulator, so please contact your distributor for assistance.**

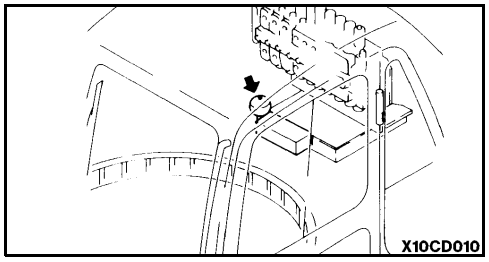

This machine is equipped with the accumulator in the control circuit. The accumulator is a device to store the pressure in the control circuit, and when it is installed, the control circuit can be operated for a short time even after the engine is stopped. Therefore, if the control lever is moved in the direction to lower the work equipment, it is possible for the work equipment to move under its own weight.

The accumulator is installed in the position shown in the diagram on the right.

11.18.1 METHOD OF RELEASING PRESSURE IN CONTROL CIRCUIT ON MACHINE EQUIPPED WITH ACCUMULATOR

1. Place the work equipment on the ground. Close the crusher attachment jaws, etc.

2. Stop the engine.

3. Move the safety lock lever to the free position. Move the work equipment control lever and the attachment control pedal to full stroke back and forth, right and left so as to release the pressure in the control circuit.

4. Move the safety lock lever to the lock position. Lock the control lever and attachment control pedal. The pressure, however, will not be completely released, so when the accumulator is removed in the control circuit, gradually loosen the screws. Never stand in the oil ejection direction.

https://truckmanualshub.com/

12. OPERATION

12.1 CHECK BEFORE STARTING ENGINE

12.1.1 WALK-AROUND CHECK

WARNING

- **Leakage of oil or fuel, or accumulation of flammable material around high temperature parts, such as the engine muffler or turbocharger, may cause a fire. Check carefully, and if any abnormality is found, repair it or contact your distributor.**

Before starting the engine, look around the machine and under the machine to check for loose nuts or bolts, or leakage of oil, fuel, or coolant, and check the condition of the work equipment and hydraulic system. Check also for loose wiring, play, and collection of dust at places which reach high temperatures.

Always carry out the items in this section before starting the engine each day.

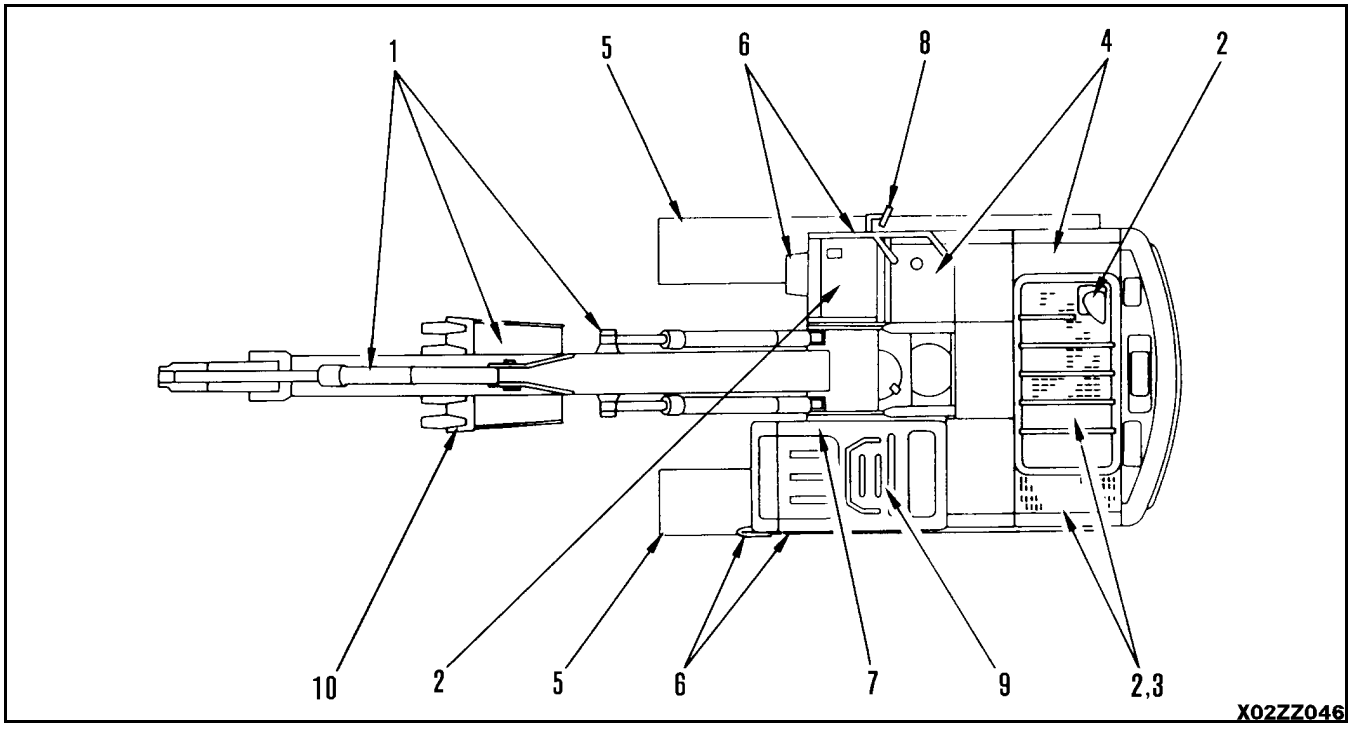

1. **Check for damage, wear, play in work equipment, cylinders, linkage, and hoses**
   Check that there are no cracks, excessive wear, or play in the work equipment, cylinders, linkage, or hoses. If any abnormality is found, repair it.

https://truckmanualshub.com/

2. **Remove dirt and dust from around engine, battery, radiator**
   Check if there is any dirt or dust accumulated around the engine or radiator. Check also if there is any flammable material (dead leaves, twigs, grass, etc.) accumulated around the battery or high temperature engine parts, such as the engine muffler or turbocharger. Remove all such dirt or flammable material.

3. **Check for leakage of water or oil around engine**
   Check that there is no leakage of oil from the engine or leakage of water from the cooling system. If any abnormality is found, repair it.

4. **Check for oil leakage from hydraulic equipment, hydraulic tank, hoses, joints**
   Check that there is no oil leakage. If any abnormality is found, repair the place where the oil is leaking.

5. **Check the undercarriage (track, sprocket, idler, guard) for damage, wear, loose bolts, or leakage of oil from rollers**

6. **Check for damage to handrail, loose bolts**
   Repair any damage and tighten any loose.

7. **Check for damage to gauges, monitor, loose bolts**
   Check that there is no damage to the gauges and monitor in the operator's cab. If any abnormality is found, replace the parts. Clean off any dirt on the surface.

8. **Clean rear view mirror, check for damage**
   Check that there is no damage to the rear view mirror. If it is damaged, replace it with a new mirror. Clean the surface of the mirror and adjust the angle so that the view to the rear can be seen from the operator's seat.

9. **Seat belt and mounting clamps**
   Check that there is no abnormality in the seat belt or mounting clamps. If there is any damage, replace with new parts.

10. **Check bucket with hook for damage**
    Check the hook, catcher and hook foot for damage. If damage is found, contact your distributor for repair.

https://truckmanualshub.com/

12.1.2 CHECK BEFORE STARTING

Always carry out the items in this section before starting the engine each day.

CHECK COOLANT LEVEL, ADD COOLANT

WARNING

Do not open the radiator cap unless necessary. When checking the coolant, always check the radiator reserve tank when the engine is cold.

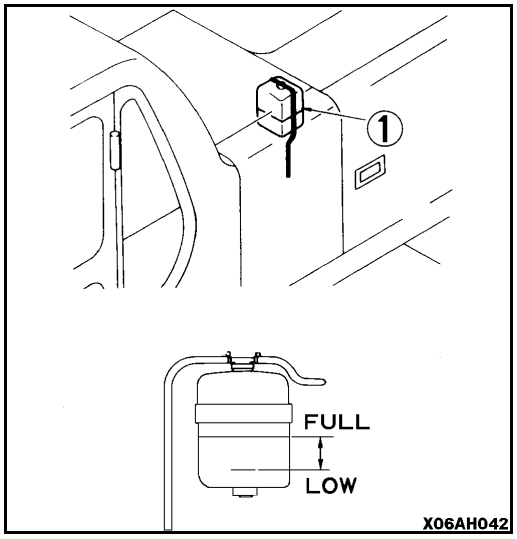

1. Open the rear door on the left side of the machine and check that the coolant level is between the FULL and LOW marks on radiator reserve tank (shown in the diagram on the right). If the coolant level is low, add coolant to the reserve tank ① through the filler. Fill to the FULL level.

2. After adding coolant, tighten the cap securely.

3. If the reserve tank becomes empty, first inspect for coolant leaks and then fill the radiator and the reserve tank with coolant.

CHECK OIL LEVEL IN ENGINE OIL PAN, ADD OIL

1. Open the engine hood.

2. Remove dipstick Ⓖ and wipe the oil off with a cloth.

3. Insert dipstick Ⓖ fully in the oil filler pipe, then take it out again.

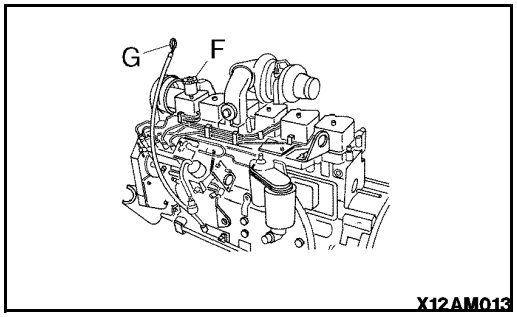

4. The oil level should be between the H and L marks on dipstick Ⓖ.

   If the oil level is below the L mark, add engine oil through oil filler Ⓕ.

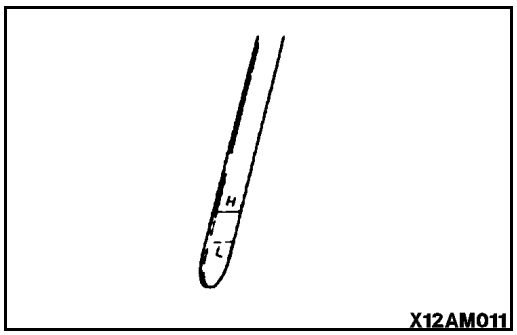

For details of the oil to use, see 20 USE OF FUEL, COOLANT AND LUBRICANTS ACCORDING TO AMBIENT TEMPERATURE on page 3-12.

https://truckmanualshub.com/

5. If the oil is above the H mark, drain the excess engine oil from drain plug Ⓟ, and check the oil level again.

6. If the oil level is correct, tighten the oil filler cap securely and close the engine hood.

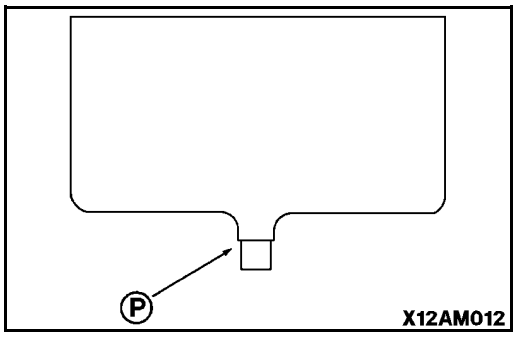

REMARK

When checking the oil level after the engine has been operated, wait for at least 15 minutes after stopping the engine before checking. If the machine is at an angle, make it horizontal before checking.

CHECK FUEL LEVEL, ADD FUEL

WARNING

When adding fuel, never let the fuel overflow. This may cause a fire. If you spill fuel, thoroughly clean up any spillage.

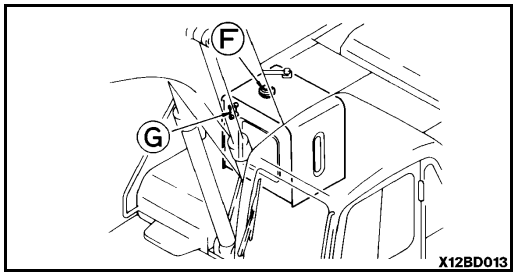

1. Use sight gauge Ⓖ on the front face of the fuel tank to check that the tank is full.

2. If the fuel level is not within the sight gauge, add fuel through filler port Ⓕ while watching sight gauge Ⓖ.

   Fuel capacity: 340 ℓ

For details of the fuel to use, see 20 USE OF FUEL, COOLANT AND LUBRICANTS ACCORDING TO AMBIENT TEMPERATURE on page 3-12.

3. After adding fuel, tighten the cap securely.

REMARK

If breather hole ① on the cap is clogged, the pressure in the tank will drop forming a slight vacuum and fuel will not flow. Clean the hole from time to time.

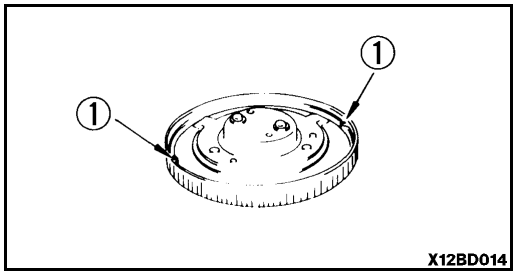

https://truckmanualshub.com/

CHECK OIL LEVEL IN HYDRAULIC TANK, ADD OIL

WARNING

- **When removing the oil filler cap, oil may spurt out, so turn the cap slowly to release the internal pressure before removing the cap.**
- **If oil has been added to above the H mark, stop the engine and wait for the hydraulic oil to cool down, then drain the excess oil from the drain plug Ⓟ.**

1. If the work equipment is not in the position shown in the diagram on the right, start the engine. Run the engine at low speed, retract the arm and bucket cylinders, then lower the boom, set the bucket teeth in contact with the ground, and stop the engine.

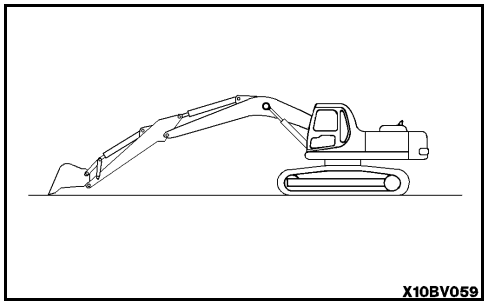
X10BV059

2. Within 15 seconds after stopping the engine, move each control lever (for work equipment and travel) to the full stroke in all directions to release the internal pressure.

3. Open the door on the right side of the machine. Check sight gauge Ⓖ. The oil level is normal if between the H and L marks.

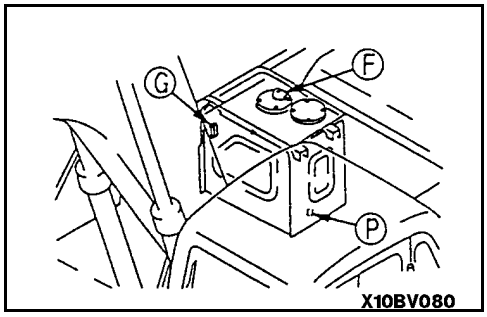

X10BV080

NOTICE

Do not add oil if the level is above the H line. This will damage the hydraulic equipment and cause the oil to spurt out.

4. If the level is below the L mark, remove the upper cover of the hydraulic tank and add oil through oil filler Ⓕ.

For details of the oil to use, see 20 USE OF FUEL, COOLANT AND LUBRICANTS ACCORDING TO AMBIENT TEMPERATURE on page 3-12.

REMARK

The oil level will vary depending upon the oil temperature. Accordingly, use the following as a guide:

- *Before operation: around L level (Oil temperature 10 to 30°C (50 to 86°F))*
- *Normal operation: around H level (Oil temperature 50 to 80°C (122 to 176°F))*

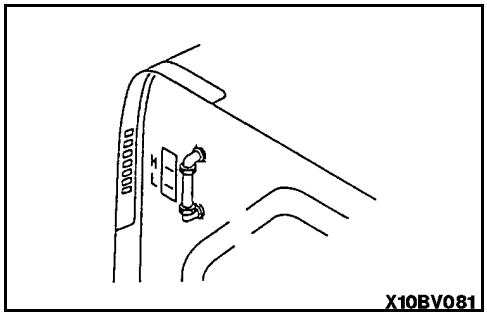
X10BV081

CHECK AIR CLEANER FOR CLOGGING

1. Confirm that the air cleaner monitor does not flash.

2. If it flashes, immediately clean or replace the element.

For details of the method of cleaning the element, see 24.2.1 CHECK, CLEAN AND REPLACE AIR CLEANER ELEMENT on page 3-25.

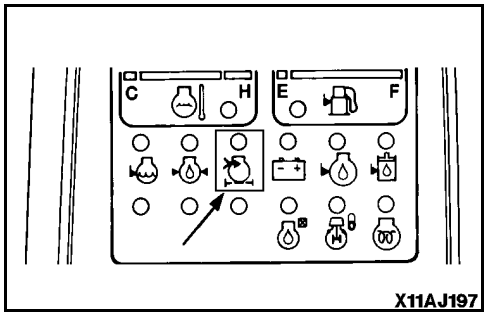

X11AJ197

https://truckmanualshub.com/

CHECK ELECTRIC WIRING

WARNING

If fuses are frequently blown or if there are traces of short circuiting on the electrical wiring, locate the cause and carry out repairs.

Check for damage of the fuse and any sign of disconnection or short circuit in the electric wiring. Check also for loose terminals and tighten any loose parts. Check the following points carefully.

- Battery
- Starting motor
- Alternator

Please contact your distributor for investigation and correction of the cause.

WARNING

Accumulation of flammable material (dead leaves, twigs, grass, etc.) around the battery may cause fire, so always check and remove such material.

When carrying out walk-around checks or checks before starting, always check if there is any accumulation of flammable material around the battery, and remove such flammable material.

CHECK FOR WATER IN PRIMARY FUEL FILTER, DRAIN WATER

A primary fuel filter is fitted on the engine. Drain the water and sediment from the primary filter daily.

Shut off the engine. Use your hand to open the drain valve. Turn the valve counterclockwise approximately 1 ½ to 2 turns until waer flows. Drain the filter sump of water until clear fuel is visible.

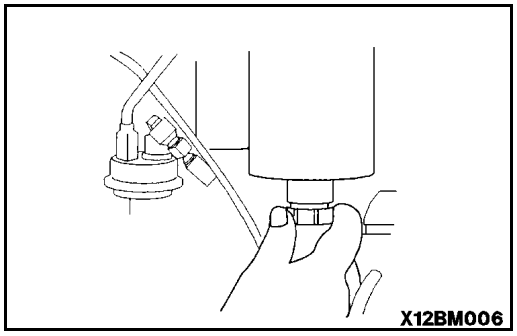

Caution: Do not overtighten the valve. Overtightening can damage the threads.

Turn the valve clockwise to close the drain valve.

https://truckmanualshub.com/

12.1.3 ADJUSTMENT BEFORE OPERATION

OPERATOR'S SEAT

A: Weight Adjustment

For maximum comfort and protection from vibration it is important that the suspension is set correctly for your weight.
Turn the adjuster knob (1) until the indicated weight (seen inside the transparent knob) corresponds to your own weight in kilograms. The optimum adjustment is for the suspension to be in the middle of the vertical stroke ("mid-ride" position) when normally seated

B: Height Adjustment

After adjusting for weight, the seat height and cushion angle may be adjusted by lever (2). Push up to adjust the rear of the seat, and push down to adjust the front of the seat.

C: Backrest Angle Adjustment

Lift lever (3), set backrest to desired angle and release lever.

D: Fore-and-aft Adjustment

Lift control (4), slide seat relative to the side consoles to the desired position. Ensure mechanism is fully engaged after adjustment.

E: Headrest Adjustment

The headrest (5) height is adjusted by sliding up or down, and the angle by pivoting backwards or forwards.

F. Fore-and-aft adjustment of whole seat

Lift lever (6), slide the left and right console along with the operator's seat to the desired position. Ensure mechanism is fully engaged after adjustment.
Adjustment range: 120 mm (4.7 in)

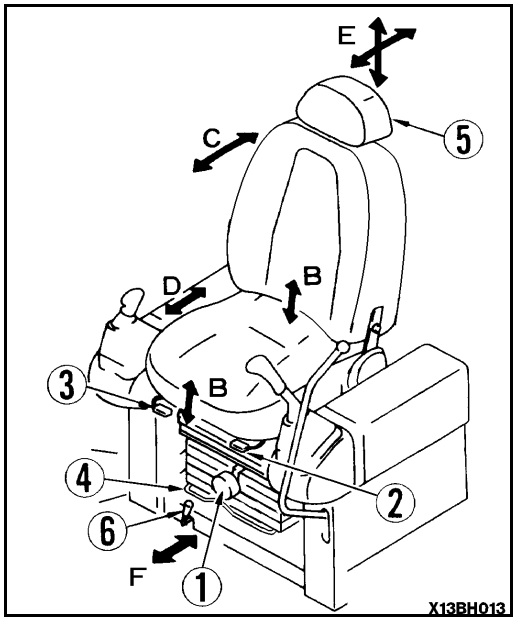

ADJUSTMENT OF ARMREST

To adjust height of armrest loosen bolts (1) and adjust to optimum height.

Adjustment range: 33 mm (1.3 in), 3 stages

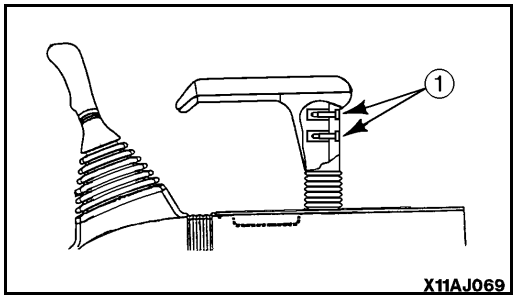

ADJUSTMENT OF MONITOR PANEL ANGLE

Turn the monitor panel so that the operator can view the monitor with ease. When adjusting the angle, the panel should be set to the desired position using both hands. The panel is automatically locked at that position.

Amount of adjustment: 30° (stepless)

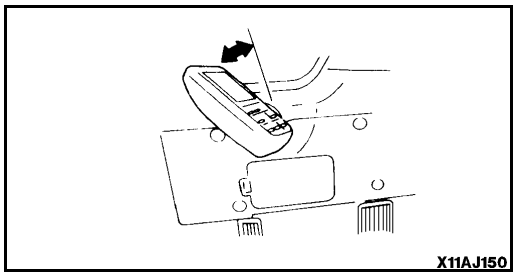

https://truckmanualshub.com/

USING SEAT BELT

WARNING

- **Before fastening the seat belt, inspect the securing brackets and belt for abnormal conditions.**
  Replace any worn or damaged seat belt or the securing brackets.
- **Adjust and fasten the seat belt before operating the machine.**
- **Always use seat belt when operating the machine.**
- **Do not use seat belt with either half of the belt kinked.**

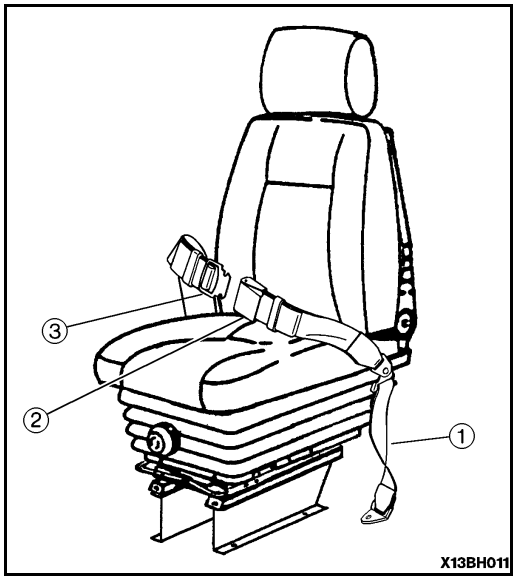

A. FASTENING THE BELT AND REMOVING IT

1. Adjust the seat so that the operator still feels that there is sufficient knee room when fully depressing the pedal while seated, with operator's back against the backrest.
2. For suspension-type seat, adjust tether belt (1) after adjusting the seat position. Install the tether belt while keeping it stretched with the seat vacant. (only for suspension-type seat)
3. After adjusting the seat position, sit in the seat. Grip buckle (2) and tongue (3) in each hand and insert tongue (3) into buckle (2). Confirm by pulling the tongue belt to insure that it is securely locked to the buckle.
4. When removing the belt, raise the tip of the buckle (2) lever to release it.

Fasten belt along your body without kinking it. Adjust the lengths of the belt on both the buckle and the tongue sides so that the buckle is located at the mid-point of the front of your body.

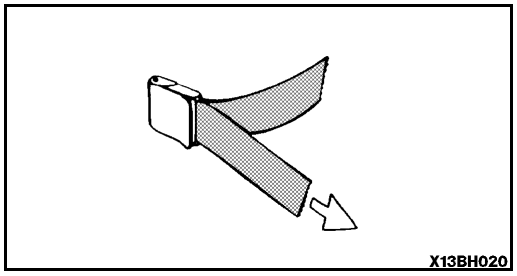

ADJUSTING THE BELT LENGTH

To shorten the belt

Pull the free end of the belt on either the buckle body or tongue side.

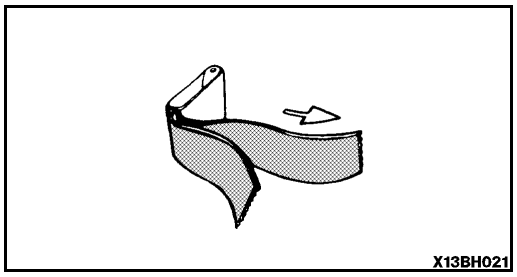

To lengthen the belt

Pull the belt while holding it at a right angle to buckle or tongue.

Inspect bolts and fittings on the chassis for tightness. Retighten and loose bolts to 20 to 29 Nm torque.

If the seat belt is scratched or frayed or if any of the fittings are broken or deformed from long service, replace seat belt immediately.

https://truckmanualshub.com/

12.1.4 OPERATIONS AND CHECKS BEFORE STARTING ENGINE

WARNING

If the control lever is touched by accident, the work equipment or the machine may move suddenly. When leaving the operator's compartment, always set the safety lock lever securely to the LOCK position.

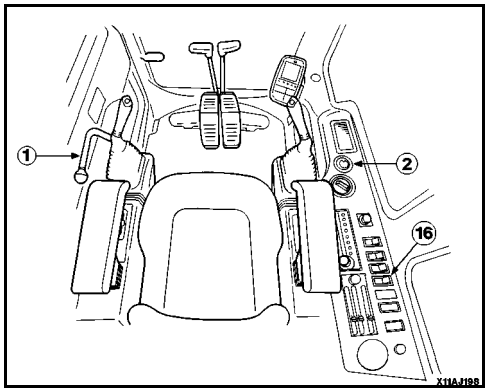

1. Check that safety lock lever ① is at the LOCK position.

2. Check the position of each lever.

Set the control lever to the neutral position.
When starting the engine, never touch the knob button.

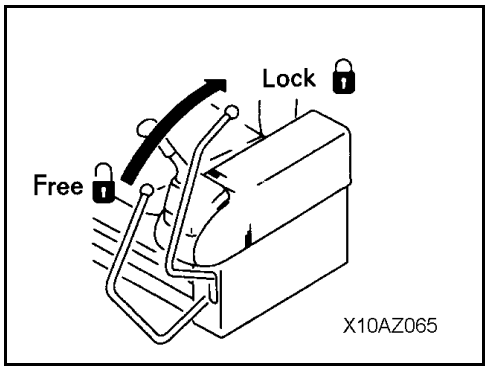

3. Insert the key in starting switch ②, turn the key to the ON position, then carry out the following checks.

(1) The buzzer will sound for approx. 1 sec, and the following monitors and gauges will light up for approx. 3 sec.
- Radiator water level monitor (3)
- Engine oil level monitor (4)
- Hydraulic oil level monitor (5)
- Charge level monitor (6)
- Fuel level monitor (7)
- Engine water temperature monitor (8)
- Engine oil pressure monitor (9)
- Engine water temperature gauge (10)
- Fuel gauge (11)
- Engine pre-heating monitor (12)
- Air cleaner clogging monitor (13)
- Swing lock monitor (14)
- Engine oil replacement monitor (15)

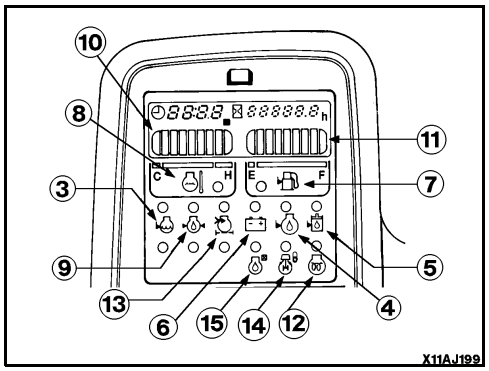

If the monitors or gauges do not light up or the buzzer does not sound, there is probably a broken bulb or disconnection in the monitor wiring, so contact your distributor for repairs.

After approx. 3 sec, the following gauges will remain on and the other monitors will go out.
- Engine water temperature gauge (10)
- Fuel gauge (11)

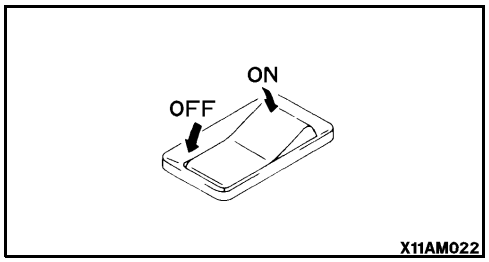

(2) Press lamp switch (16) to turn on the head lamps.
If the lamps do not light up, there is probably a broken bulb or disconnection in the wiring, so contact your distributor for repairs.

https://truckmanualshub.com/

12.2 STARTING ENGINE

12.2.1 NORMAL STARTING

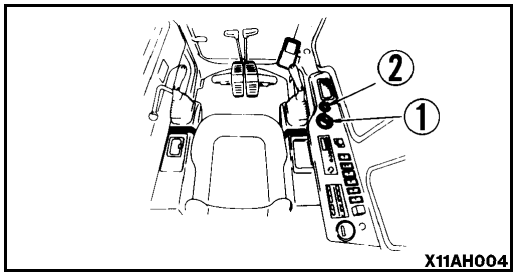

WARNING

Check that there are no persons or obstacles in the surrounding area, then sound the horn and start the engine.

NOTICE

Do not keep the starting motor rotating continuously for more than 20 seconds.
If the engine will not start, wait for at least 2 minutes before trying to start the engine again.

1. Set fuel control dial ① at the low idle (MIN) position.

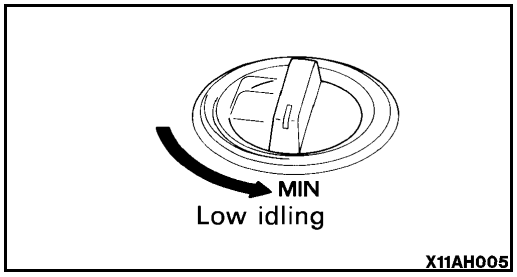

2. Turn the key in starting switch ② to the START position. The engine will start.

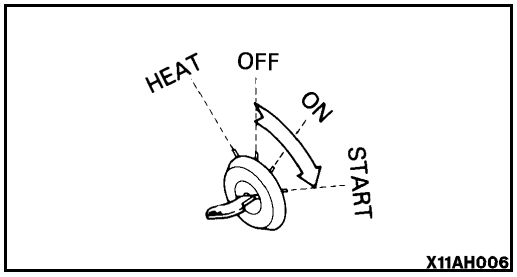

3. When the engine starts, release the key in starting switch ②. The key will return automatically to the ON position.

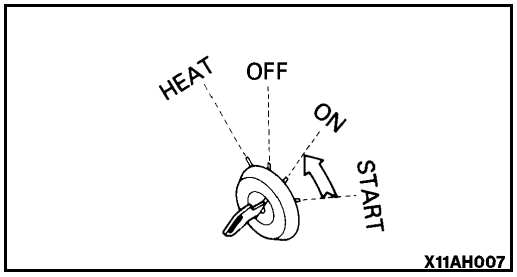

https://truckmanualshub.com/

12.2.2 STARTING IN COLD WEATHER

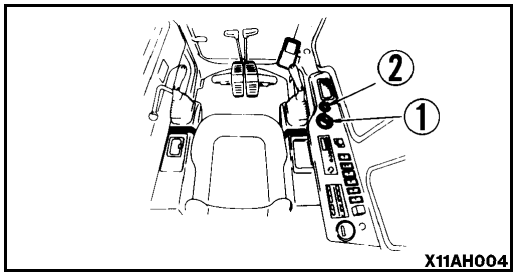

WARNING

- **Check that there are no persons or obstacles in the surrounding area, then sound the horn and start the engine.**
- **Never use starting aid fluids as they may cause explosions.**

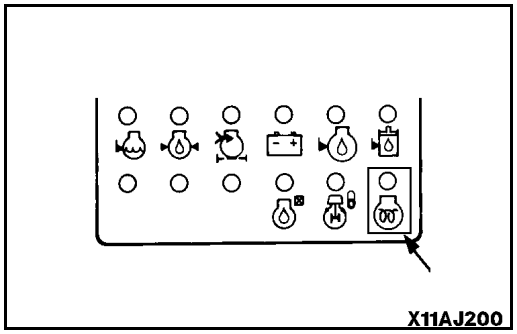

NOTICE

Do not keep the starting motor rotating continuously for more than 20 seconds.
If the engine fails to start, repeat from step 2 and after waiting for about 2 minutes.

When starting in low temperatures, do as follows.

1. Set fuel control dial ① at the low idle (MIN) position.

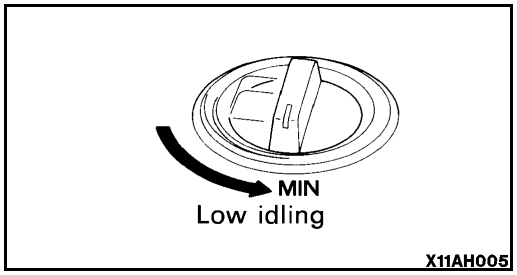

2. Hold the key in starting switch ② at the HEAT position, and check that the preheating monitor ③ lights up.
   After about 30 seconds, preheating monitor lamp will flash for about 10 seconds to indicate that preheating is finished.

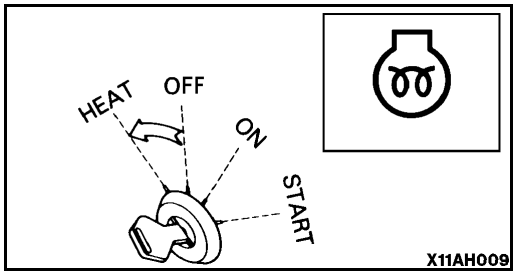

REMARK

The monitor and gauge also light up when the key is at the HEAT position, but this does not indicate any abnormality.

https://truckmanualshub.com/

3. When preheating monitor ③ flashes, turn the key in starting switch ② to the START position to start the engine.

Ambient temperature	Preheating time
Above 0°C (32°F)	—
0 to -10°C (32 to 14°F)	20 seconds
-10 to -20°C (14 to -4°F)	30 seconds

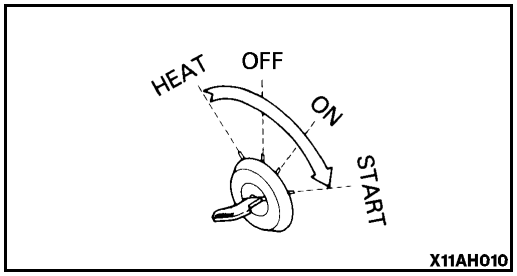

4. When the engine starts, release the key in starting switch ②. The key will return automatically to the ON position.

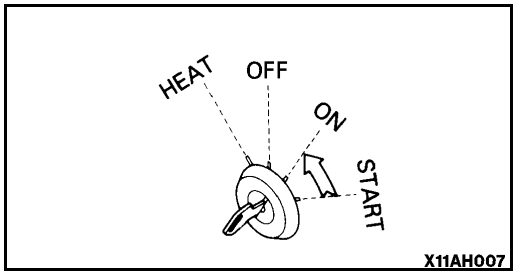

https://truckmanualshub.com/

12.3 OPERATIONS AND CHECKS AFTER STARTING ENGINE

WARNING

- **Emergency stop**
  If there has been any abnormal actuation or trouble, turn the starting switch key to the OFF position.

- **If the work equipment is operated without warming the machine up sufficiently, the response of the work equipment to the movement of the control lever will be slow, and the work equipment may not move as the operator desires, so always carry out the warming-up operation. Particularly in cold areas be sure to carry out the warming-up operation fully.**

12.3.1 WHEN NORMAL

NOTICE

- **When the hydraulic oil is at a low temperature, do not carry out operations or move the levers suddenly. Always carry out the warming-up operation. This will help to extend the machine life.**
- **Do not suddenly accelerate the engine before the warming-up operation is completed.**
  Do not run the engine at low idle or high idle continuously for more than 20 minutes. This will cause leakage of oil from the turbocharger oil supply piping. If it is necessary to idle the engine, apply a load from time to time or run the engine at a mid-range speed.

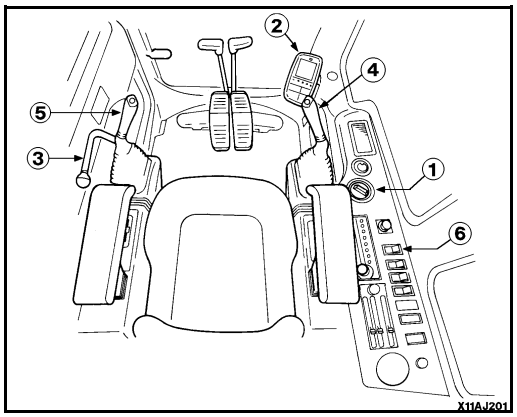

After starting the engine, do not immediately start operations. First, carry out the following operations and checks.

1. Turn fuel control dial ① to the center position between LOW IDLE (MIN) and HIGH IDLE (MAX) and run the engine at medium speed for about 5 minutes with no load.

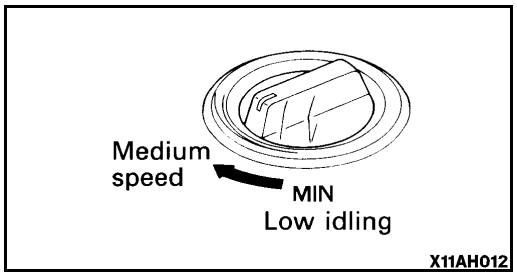

2. While running the engine at medium speed, press working mode switch ② until the heavy-duty operation mode lamp is turned on.

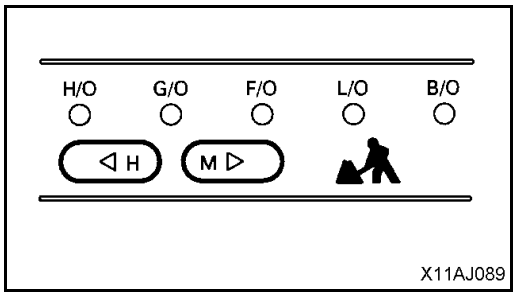

https://truckmanualshub.com/

3. Set the safety lock lever ③ to the FREE position, and raise the bucket from the ground.

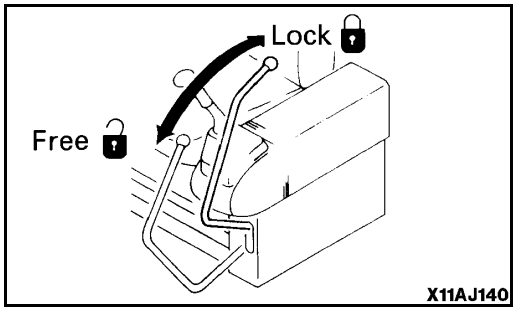

4. Operate bucket control lever ④ and arm control lever ⑤ slowly to move the bucket cylinder and arm cylinder to the end of the stroke.

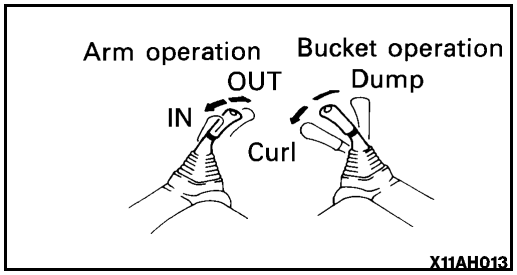

5. Carry out bucket and arm operation for 5 minutes at full stroke, alternating between bucket operation and arm operation at 30 second intervals.
   If the swing lock switch ⑥ is set to the ON (actuated) position and swing control lever ⑤ is operated at full stroke, the oil temperature will be raised faster.

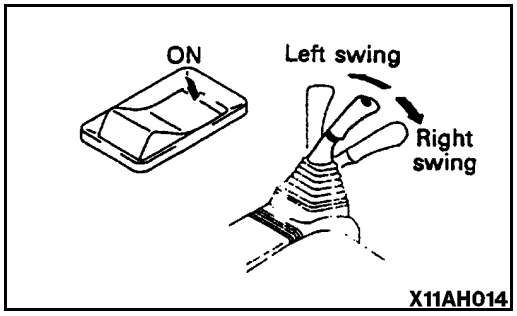

NOTICE

When the work equipment is retracted, take care that it does not interfere with the machine body or ground.

6. After carrying out the warming-up operation, check that each gauge and monitor lamp is in the following condition.

- Engine water temperature gauge (7): Inside green range
- Fuel gauge (8): Inside green range
- Engine water temperature monitor (9): OUT
- Radiator water level monitor (10): OUT
- Engine oil pressure monitor (11): OUT
- Charge level monitor (12): OUT
- Fuel level monitor (13): OUT
- Air cleaner clogging monitor (14) : OUT
- Engine pre-heating monitor (15): OUT
- Engine oil level monitor (16): OUT
- Hydraulic oil level monitor (17):OUT
- Engine oil replacement monitor (18): OUT

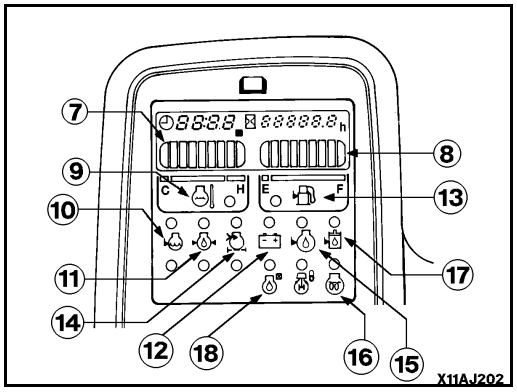

7. Check that there is no abnormal exhaust gas color, noise, or vibration. If any abnormality is found, repair it.

8. Press working mode switch ② on the monitor panel until the lamp of the mode to be used lights up.

https://truckmanualshub.com/

12.3.2 IN COLD AREAS (AUTOMATIC WARMING-UP OPERATION)

When starting the engine in cold areas, carry out the automatic warming-up operation after starting the engine.

When the engine is started, if the engine coolant temperature is low (below 30°C (86°F)), the warming-up operation is carried out automatically.

The automatic warming-up operation is canceled if the engine coolant temperature reaches the specified temperature (30°C (86°F)) or if the warming-up operation is continued for 10 minutes. If the engine coolant temperature or hydraulic oil temperature are low after the automatic warming-up operation, warm the engine up further as follows.

NOTICE

- **When the hydraulic oil is at a low temperature, do not carry out operations or move the levers suddenly. Always carry out the warming-up operation. This will help to extend the machine life.**
- **Do not suddenly accelerate the engine before the warming-up operation is completed.**
  Do not run the engine at low idle or high idle continuously for more than 20 minutes. This will cause lube oil leakage at the turbocharger. If it is necessary to idle the engine, apply a load from time to time or run the engine at a mid-range speed.

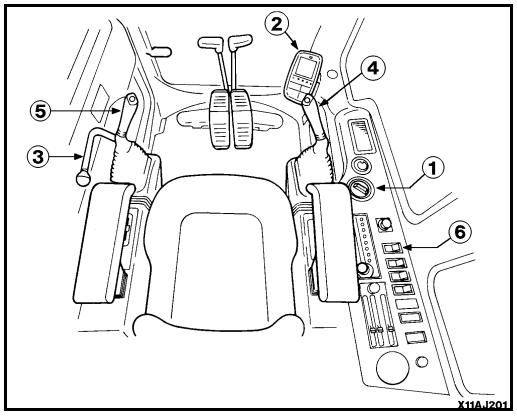

1. Set fuel control dial ① to the low idle (MIN) position and run the engine for about 5 minutes without load.

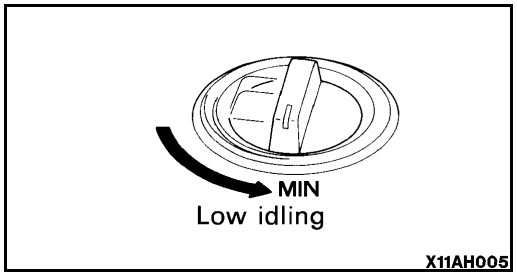

https://truckmanualshub.com/

2. Press working mode switch ② on the monitor panel until the H.0. (heavy-duty operation) mode lamp lights up.

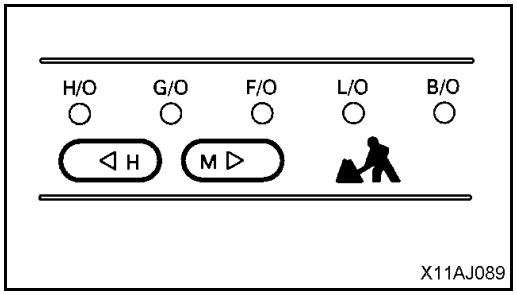

3. Turn fuel control dial ① to the mid-range speed position.

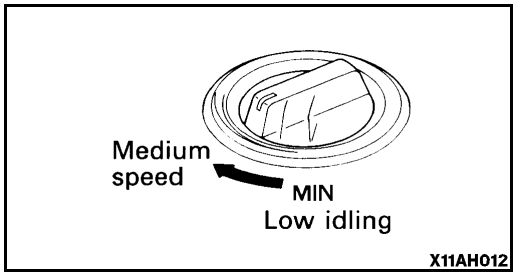

4. Set safety lock lever ③ to the FREE position and raise the bucket from the ground.

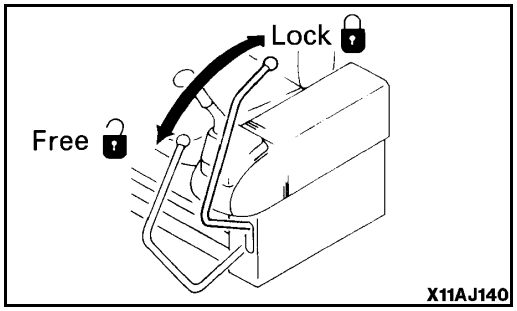

5. Operate bucket control lever ④ and arm control lever ⑤ slowly to move the bucket cylinder and arm cylinder to the end of their stroke.

6. Operate the bucket for 30 seconds and the arm for 30 seconds in turn fully for 5 minutes.

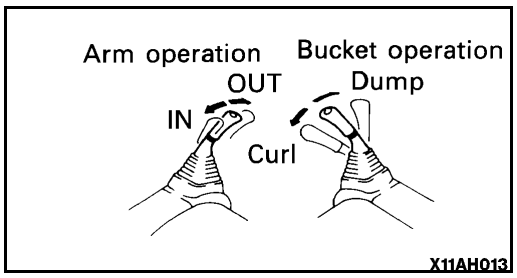

REMARK

Turn swing lock switch ⑥ ON (ACTUATED) and operate the swing lever to make the oil temperature rise faster.

NOTICE

When the work equipment is retracted, take care that it does not interfere with the machine body or ground.

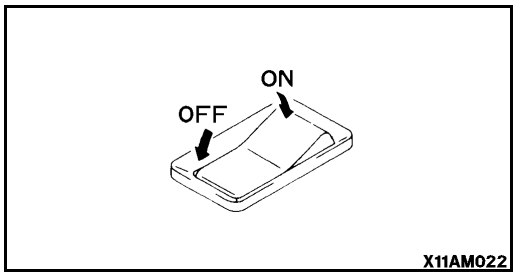

https://truckmanualshub.com/

7. Turn fuel control dial ① to the full speed (MAX) position and carry out the operation in Step 6 for 3 - 5 minutes.

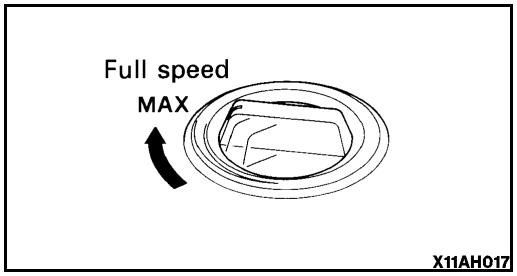

8. Repeat the following operation 3 - 5 times and operate slowly.

- Boom operation RAISE↔ LOWER
- Arm operation IN ↔ OUT
- Bucket operation CURL ↔ DUMP
- Swing operation LEFT ↔ RIGHT
- Travel (Lo) operation FORWARD ↔ REVERSE

REMARK

If the above operation is not carried out, there may be a delay in response when starting or stopping each actuator, so continue the warm-up operation until response becomes normal.

9. Use working mode switch ② on the monitor panel to select the working mode that will match the job at hand.
   For working mode selection, see 12.10 WORKING MODE SELECTION on page 2-67.

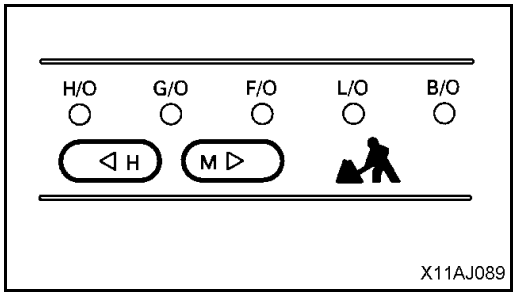

NOTICE

Canceling automatic warming-up operation

If it becomes necessary in an emergency to lower the engine speed to low idle, cancel the automatic warming-up operation as follows.

1. Turn fuel control dial ① to the full speed (MAX) position and hold it for 3 seconds.

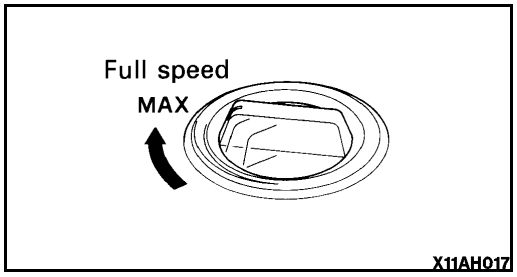

2. When fuel control dial ① is returned to the low idle (MIN) position, the engine speed will drop.

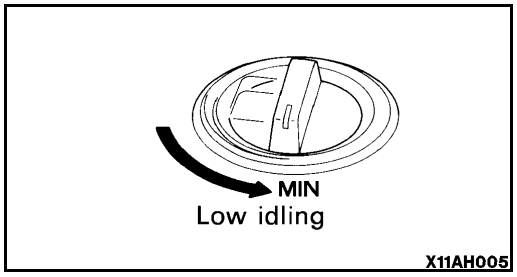

https://truckmanualshub.com/

12.4 MOVING MACHINE

12.4.1 MOVING MACHINE FORWARD

WARNING

- **Before operating the travel levers, check the direction of the track frame. If the sprocket is at the front, the operation of the travel levers is reversed.**
- **When moving, check that the area around the machine is safe, and sound the horn before moving.**
- **Clear all personnel from the machine and the area.**
- **Clear all obstacles from the path of the machine.**
- **If the lever is moved inside the deceleration range, engine speed will rise suddenly. Operate the levers carefully.**

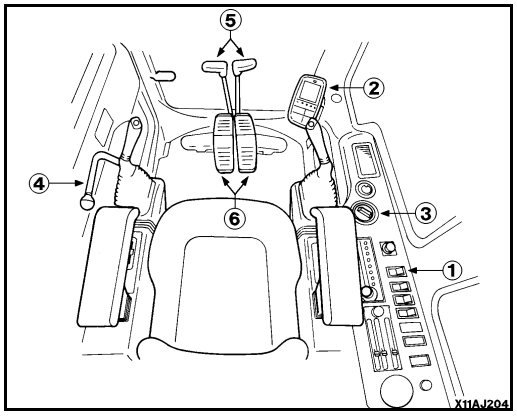

1. Set swing lock switch ① to the ON (actuated) position and confirm that swing lock monitor lamp ② lights up.

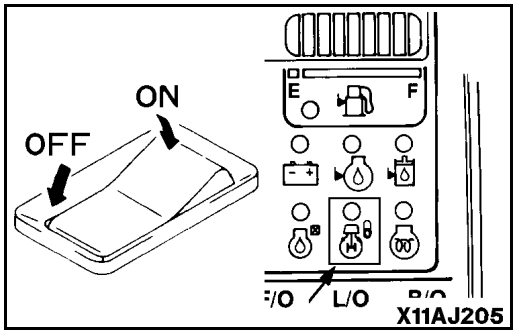

2. Turn fuel control dial ③ towards the full speed position to increase the engine speed.

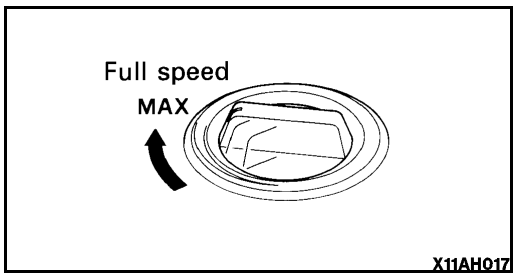

3. Set safety lock lever ④ in the FREE position, fold the work equipment, and raise it 40 - 50 cm (16 to 20 in) from the ground.

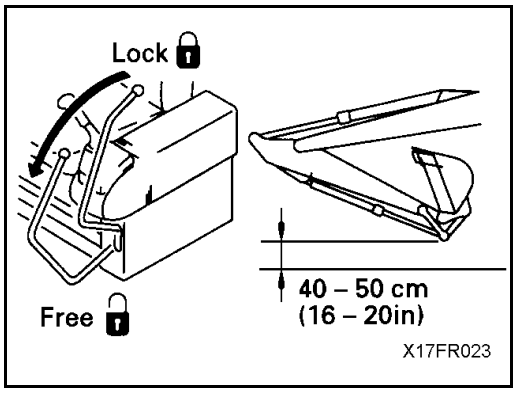

https://truckmanualshub.com/

4. Operate right and left travel levers ⑤ or right and left travel pedals ⑥ as follows.

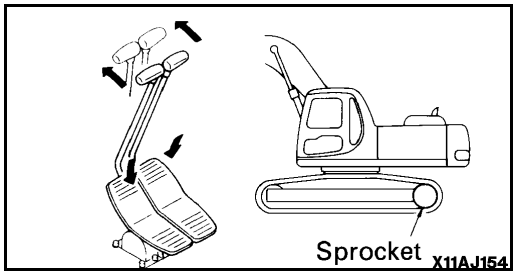

- **When the sprocket is at the rear of the machine**
  Push levers ⑤ forward slowly or depress the front part of pedals ⑥ slowly to move the machine.

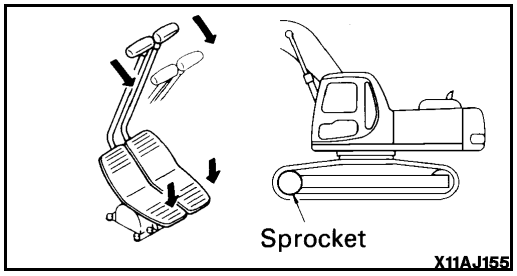

- **When the sprocket is at the front of the machine**
  Pull levers ⑤ backward slowly or depress the rear part of pedals ⑥ slowly to move the machine.

REMARK

Each time the travel levers are operated on machines equipped with the travel alarm, the alarm sounds to warn people in the machine vicinity.

12.4.2 MOVING MACHINE BACKWARD

WARNING

- **Before operating the travel levers, check the direction of the track frame. If the sprocket is at the front, the operation of the travel levers is reversed.**
- **When moving, check that the area around the machine is safe, and sound the horn before moving.**
- **Clear all personnel from the machine and the area.**
- **Clear all obstacles from the path of the machine.**
- **Use extreme care when reversing the machine. Note there is an blind spot behind the machine.**
- **If the lever is moved inside the deceleration range, engine speed will suddenly rise. Operate the levers carefully.**

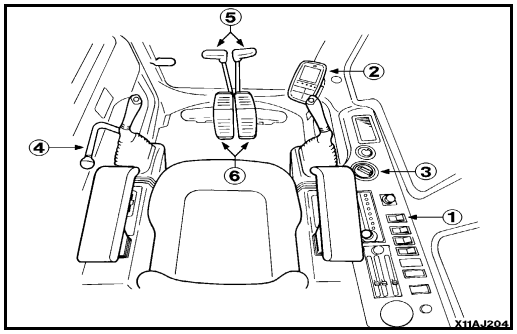

1. Set swing lock switch ① to the ON (actuated) position and confirm that swing lock monitor lamp ② lights up.

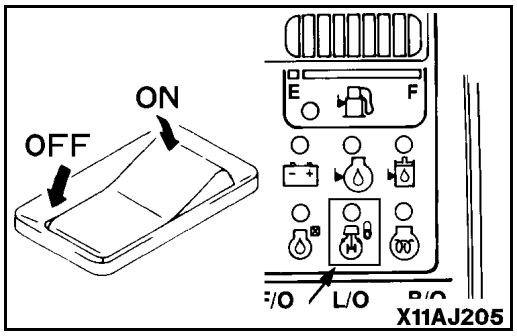

https://truckmanualshub.com/

2. Turn fuel control dial ③ towards the full speed (MAX) position to increase the engine speed.

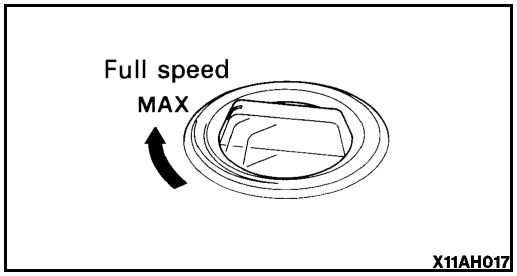

3. Set safety lock lever ④ in the FREE position, fold the work equipment, and raise it 40 - 50 cm (16 to 20 in) from the ground.

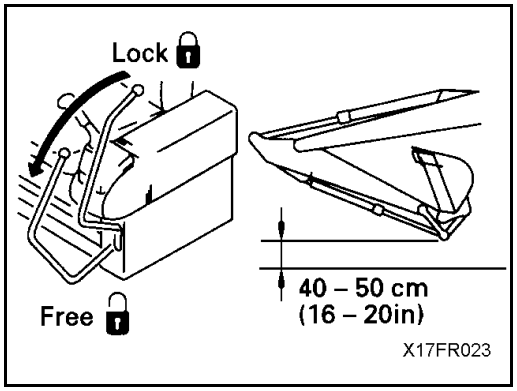

4. Operate right and left travel levers ⑤ or right and left travel pedals ⑥ as follows.

- **When the sprocket is at the rear of the machine**
  Pull levers ⑤ backward slowly or depress the rear part of pedals ⑥ to move the machine.

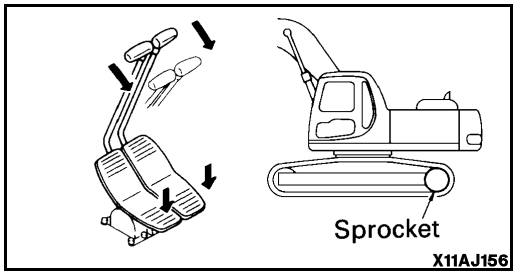

- **When the sprocket is at the front of the machine**
  Push levers ⑤ forward slowly or depress the front part of pedals ⑥ to move the machine.

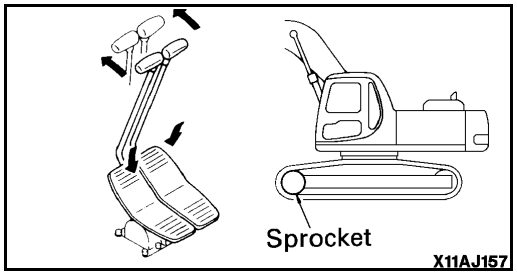

https://truckmanualshub.com/

12.5 STEERING MACHINE

WARNING

Before operating the travel levers, check the position of the sprocket. If the sprocket is at the front, the operation of the travel levers is reversed.

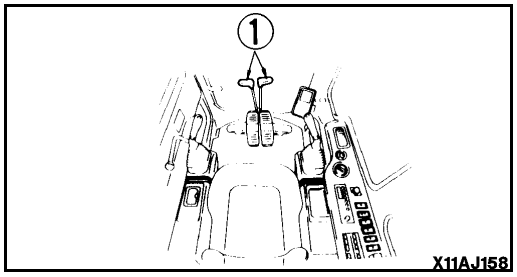

Use the travel levers to change direction.

Avoid sudden changes of direction as much as possible. In particular, when carrying out counter-rotation (spin turn), stop the machine first before turning.

Operate two travel levers ① as follows.

Changing direction of machine when stopped

When turning to the left:

Push the right travel lever forward to travel left when traveling forward; and pull it back to turn left when traveling in reverse.

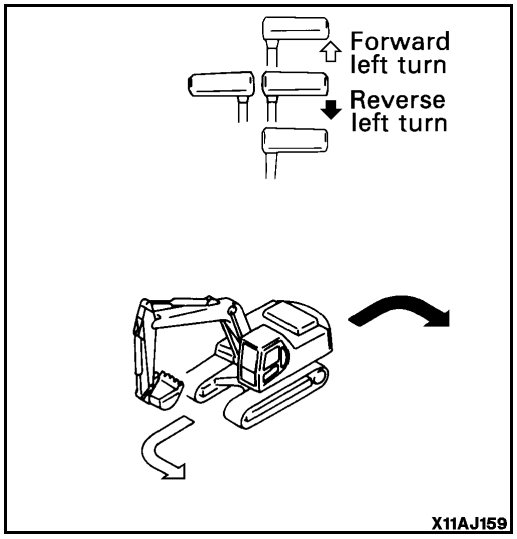

REMARK

When turning to the right, operate the left travel lever in the same way.

Steering when traveling (left and right travel levers both operated in same direction)

When turning to the left:

If the left travel lever is returned to the neutral position, the machine will turn to the left.

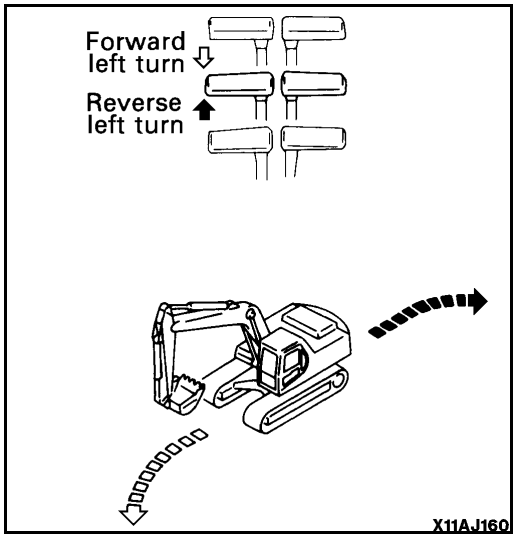

REMARK

When turning to the right, operate the right travel lever in the same way.

https://truckmanualshub.com/

When making counter-rotation turn (spin turn)

When turning left using counter-rotation, pull the left travel lever back and push the right travel lever forward.

REMARK

When turning right using counter-rotation, pull the right travel lever back and push the left travel lever forward.

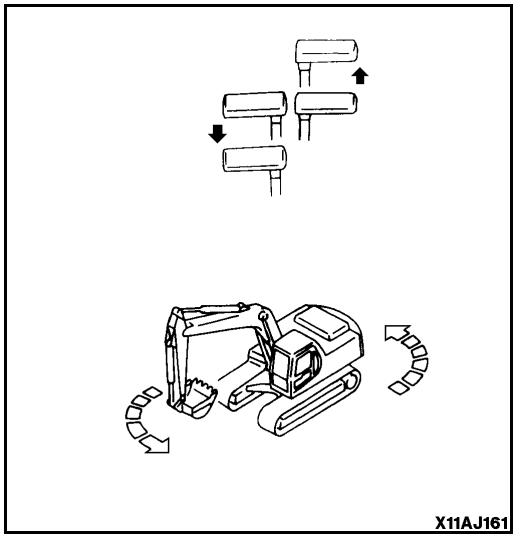

https://truckmanualshub.com/

12.6 STOPPING MACHINE

WARNING

- **Avoid stopping suddenly. Give yourself ample room when stopping.**
- **When stopping the machine, select flat hard ground and avoid dangerous places. If it is unavoidably necessary to park the machine on a slope, insert blocks underneath the track shoes. As an additional safety measure, thrust the bucket into the ground.**
- **If the control lever is touched by accident, the work equipment or the machine may move suddenly, and this may lead to a serious accident. Before leaving the operator's compartment, always set the safety lock lever securely to the LOCK position.**

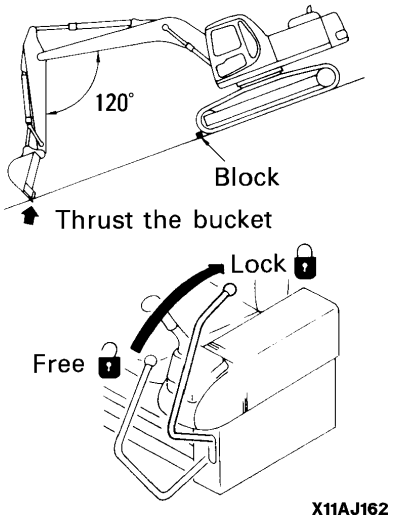

1. Put the left and right travel levers ① in the neutral position, to stop the machine.

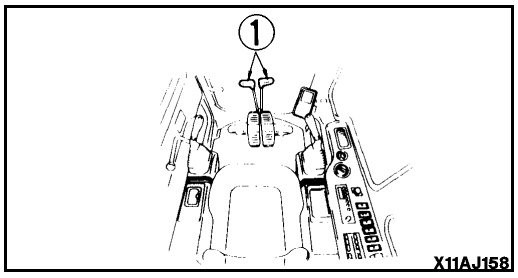

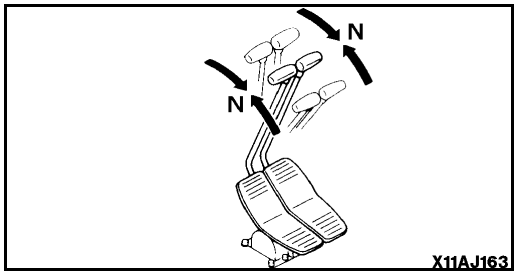

https://truckmanualshub.com/

12.7 SWINGING

WARNING

When operating the swing, check that the area around the machine is safe.

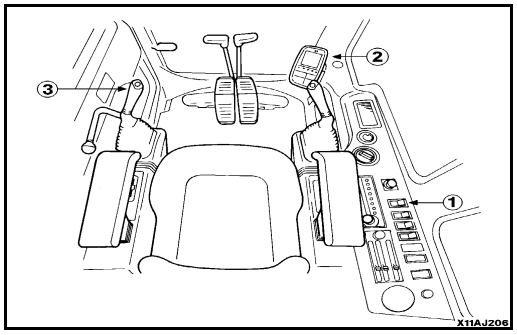

1. Before operating the swing, turn swing lock switch ① OFF (CANCELED).

NOTICE

Check that swing lock monitor ② goes out at the same time.

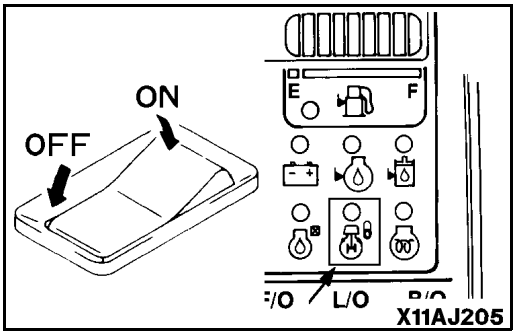

2. Operate left work equipment control lever ③ to swing the upper structure.

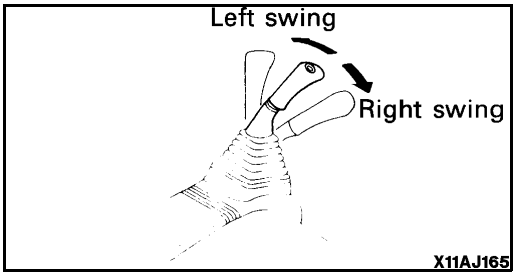

3. When not operating the swing, turn swing lock switch ① ON (ACTUATED).

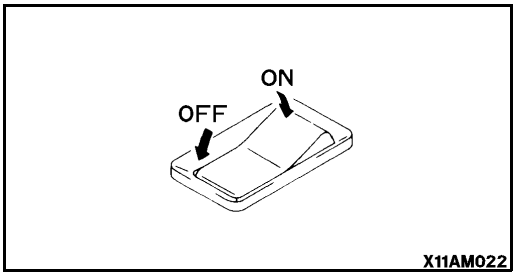

https://truckmanualshub.com/

12.8 OPERATION OF WORK EQUIPMENT

WARNING

If any lever is operated when in the deceleration range, the engine speed will suddenly increase, so be careful when operating the levers.

The work equipment is operated by the left and right work equipment control levers. The left work equipment control lever operates the arm and swing, and the right work equipment control lever operates the boom and bucket.

The movements of the lever and work equipment are as shown in the diagrams on the right. When the levers are released, they automatically return to the neutral position and the work equipment is held in place.

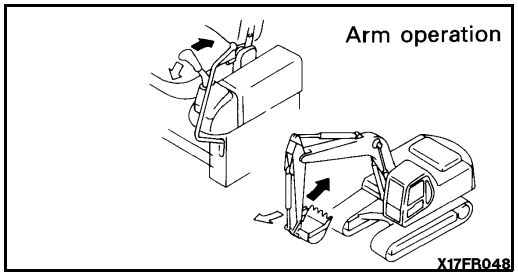

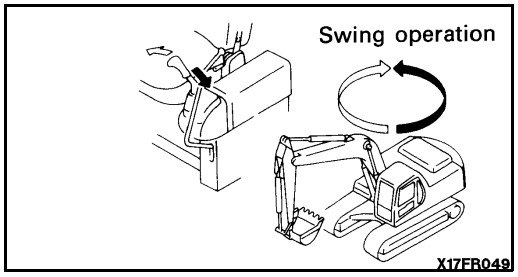

- If the work equipment control lever is returned to the neutral position when the machine is stopped, even if the fuel control dial is set to FULL, the auto-deceleration mechanism will act to reduce the engine speed to a mid-range speed.

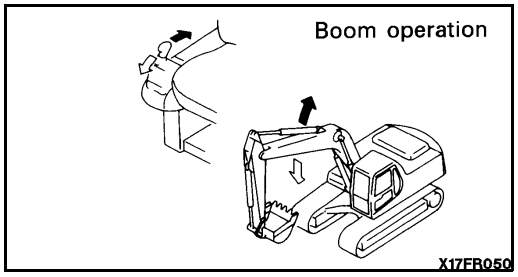

REMARK

If the levers are operated within 15 seconds after stopping the engine, it is possible to lower the work equipment to the ground. In addition, the levers can also be operated to release any remaining pressure inside the hydraulic cylinder circuit and to lower the boom after loading the machine on a trailer.

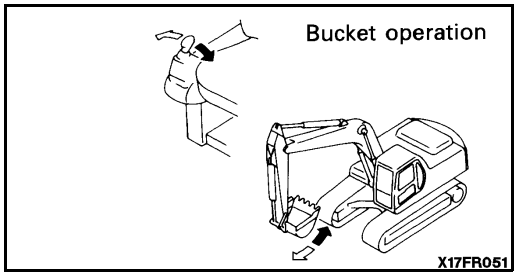

https://truckmanualshub.com/

12.9 HANDLING ACTIVE MODE

Make full use of the active mode to match the purpose and conditions of the operations in order to carry out operations effectively and efficiently.

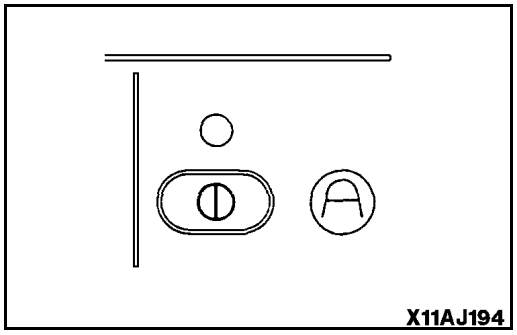

The active mode selector switch can be turned ON in order to provide quick leveling operations and effective deep digging and loading operations.

ON lights up: Active mode ON
ON goes out: Active mode cancelled

The ON lamp is off when the engine is started. If it is turned ON, it is possible to enter the active mode from any working mode.

Even when it is turned ON, the working mode display does not change. When the lamp goes off, the system returns to the original working mode.

Mode	Effective operation	Advantages for operation
Active mode	Digging and loading	The boom lowering speed is increased, so the cycle time for deep digging operation is reduced.
	Leveling	By increasing the arm IN speed and the pump response, the speed of rough leveling (light loads) is increased.

REMARK

- *Use the active mode with the fuel control dial turned to the MAX position. If it is not at the MAX position, it will be impossible to achieve a suitable increase in the work equipment speed.*
- *The active mode includes a load detection function. If a heavy load is applied, the engine speed will drop 200 - 300 rpm to inform the operator that there is a heavy load, but the work equipment power will not drop. (In the active mode or when traveling, the load detection function is actuated.)*
- *Active power-max fuction. When digging deep and loading or under heavy load, use the active power-max function according to the following procedures.*

https://truckmanualshub.com/

1. Turn on the active mode selector switch.
2. While in this condition, press and hold the knob switch of the left-hand work equipment lever once. (single click)
3. Since the machine returns to the normal active mode in 8.5 seconds after the switch is pressed, use the active power-max function effectively for heavy and quick work.

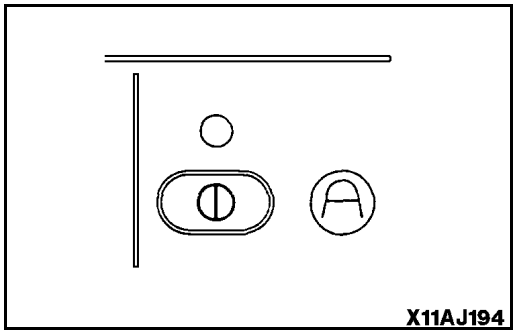

X11AJ194

Function	Suitable work	Advantage on work
Active power-max	Digging and loading (Heavy load) Rock lifting (Heavy load)	Since the digging force of arm and bucket is increased, working speed is increased.

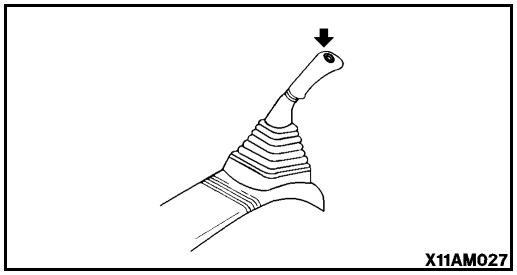
X11AM027

- The load sensing function is installed to the active mode. If the machine is set to the active power-max, however, the load sensing function is turned off and the engine speed remains at full speed to increase the speed of the work equipment.

https://truckmanualshub.com/

12.10 WORKING MODE SELECTION

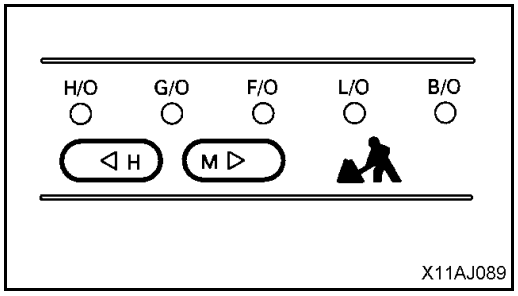

WORKING MODE

The mode selector switches can be used to switch the mode to match the conditions and purpose of work, thereby enabling more efficient operation.
Use the following procedures to make the most effective use of each mode.

When the starting switch is turned ON, the working mode is automatically set to general operation mode (G.O.), so normal work can be carried out without needing to set the mode.

Set to the most effective mode according to the type of work, using the working mode selector switch.

Working mode	Applicable work	Power max. (power up)		Swift slow-down (speed down)	
		Power	Set pressure	Speed	Set pressure
Heavy-duty operation mode (H.O.)	Large amount of digging and loading in a short time	5% up	9% up	40% down	9% up
General operation mode (G.O.)	Normal digging and loading operation	23% up	9% up	30% down	9% up
Finishing operation mode (F.O.)	Finishing, leveling and general hauling operation	—		—	
Lifting operation mode (L.O.)	Aligning, positioning, lifting loads, etc.	—		—	
Breaker operation mode (B.O.)	Breaker operation	—		—	

NOTICE

Never carry out breaker operation in heavy-duty operation mode (H.O.) as this may result in breakage of hydraulic equipment.

https://truckmanualshub.com/

POWER MAX./SWIFT SLOW-DOWN

During operation, power up/speed down of work equipment can be performed by one-touch. Use this function effectively in combination with working mode.

1. When starting switch is turned ON, the power up lamp turns on. When SET switch is pressed once, the speed down lamp turns on and the power up lamp goes out, and when pressed again, the opposite occurs.

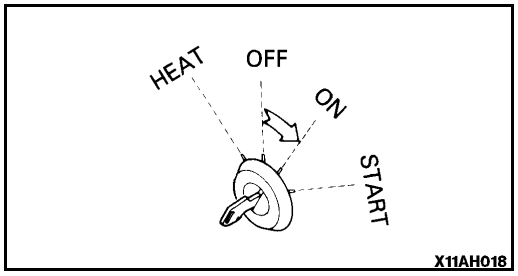

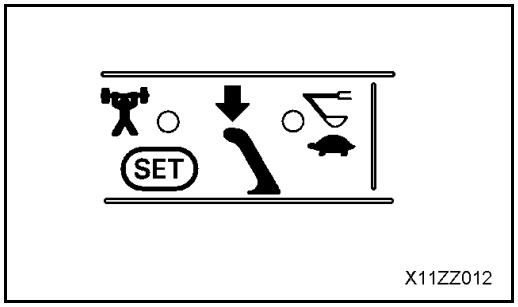

2. When the left knob button is given a single click (keep depressed after initially pressing) power keeps increasing while depressed. However, power up automatically completes after 8.5 seconds.

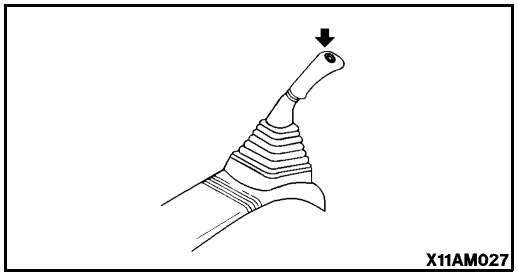

https://truckmanualshub.com/

12.11 PROHIBITIONS FOR OPERATION

WARNING

- **If it is necessary to operate the work equipment control lever when the machine is traveling, stop the machine before operating the work equipment control lever.**
- **If the lever is moved inside the deceleration range, engine speed will suddenly rise. Operate the levers carefully.**
- **Never operate the machine on a rock bed (hard or soft rock).**

Prohibited operations using swing force

Do not use the swing force to compact soil or break earth mounds or walls.
When swinging, do not dig the bucket teeth into the soil.
These operations will damage the work equipment.

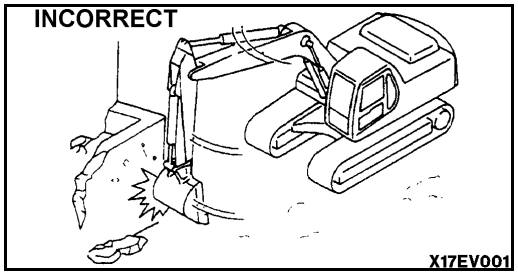

Prohibited operations using travel force

Do not leave the bucket dug into the ground and use the travel force to excavate. This will bring excessive force to bear on the rear of the machine.

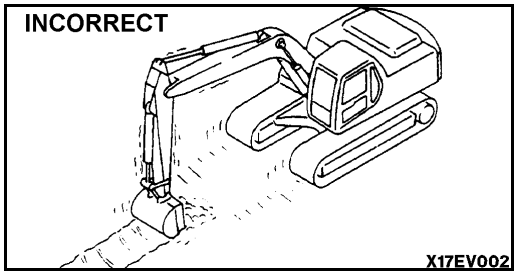

Precautions when operating hydraulic cylinders to end of stroke

If the cylinder is operated to the end of its stroke during operations, force will be brought to bear on the stopper inside the cylinder, and this will reduce the life of the machine. To prevent this, always leave a small safety margin when operating the cylinders.

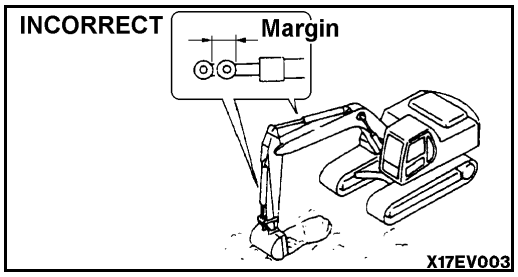

Prohibited operations using dropping force of bucket

Do not use the dropping force of the bucket as a pickaxe, breaker, or pile driver. This will bring excessive force to bear on the rear of the machine, and will not only damage the machine, but is also dangerous.

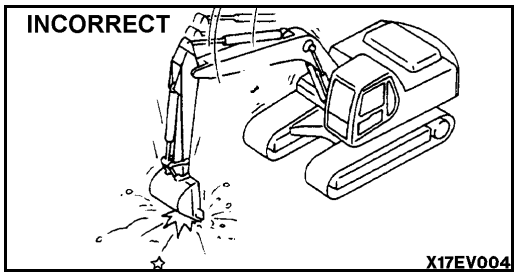

https://truckmanualshub.com/

Prohibited operations using dropping force of machine

Do not use the dropping force of the machine for digging.

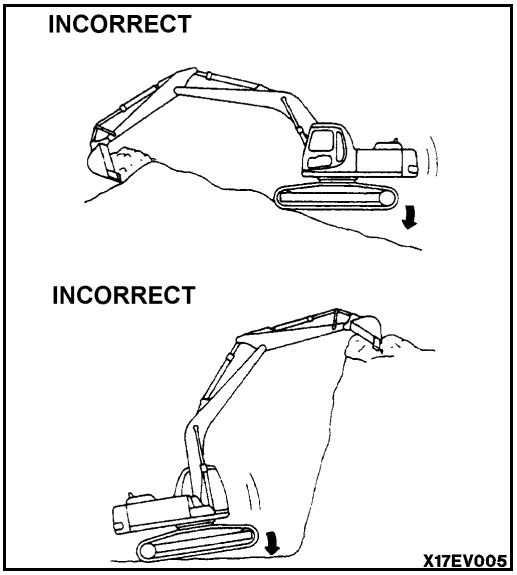

Digging rocky ground

It is better to excavate hard rocky ground after breaking it up by some other means. This not only reduces damage to the machine but makes for better economical use of the machine.

Lifting work

The standard work equipment must not be used for lifting loads. If this machine is to be used for lifting loads, it is necessary to install the specified bucket with hook and use it in accordance with the applicable safety regulations regarding your work site.

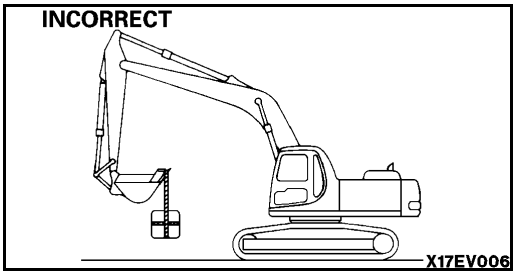

Sudden lever shifting during Hi-speed travel prohibited

① Never carry out sudden lever shifting as this may cause sudden starting.
② Avoid sudden lever shifting from forward to reverse (or vice versa).
③ Avoid sudden lever shifting change such as sudden stopping from near top speed (lever release operation).

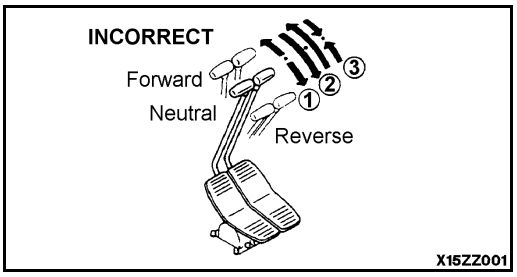

https://truckmanualshub.com/

12.12 PRECAUTIONS FOR OPERATION

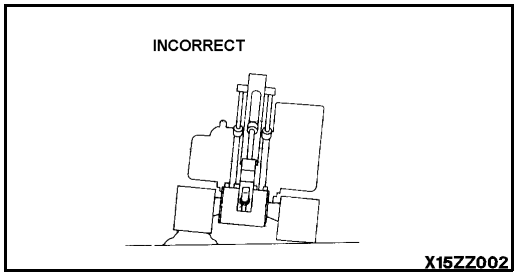

PRECAUTIONS WHEN TRAVELING

When traveling over obstacles such as boulders or tree stumps, the machine (in particular, the undercarriage) is subjected to a large shock, so reduce the travel speed and travel over the obstacle at the center of the tracks. Remove such obstacles or avoid traveling over them as much as possible.

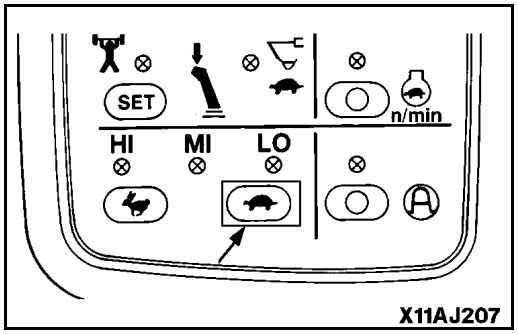

PRECAUTIONS AT Hi-SPEED TRAVEL

On uneven roadbeds such as rock beds or uneven roads with large locks, travel at Mi or Lo speed. When Hi-speed traveling, set the track idlers in the forward direction.

PERMISSIBLE WATER DEPTH

NOTICE

When driving the machine out of water, if the angle of the machine exceeds 15°, the rear of the upper structure will go under water, and water will be thrown up by the radiator fan. This may cause the fan to break.

Be extremely careful when driving the machine out of water.

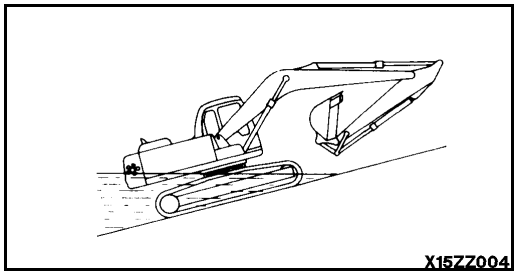

Do not immerse the machine in water by more than the permissible depth (under center of carrier roller ①).

In addition, for parts that have been immersed in water for a long time, pump in grease until the old grease comes out from the bearings. (Around the bucket pins)

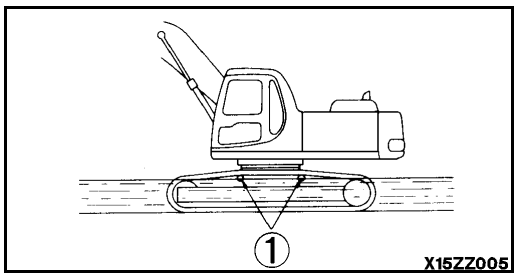

https://truckmanualshub.com/

12.13 PRECAUTIONS WHEN TRAVELING UP OR DOWN HILLS

WARNING

- **When traveling, raise the bucket approx. 20 - 30 cm (8 - 12 in) from the ground.**
  Do not travel downhill in reverse.
- **When traveling over ridges or other obstacles, keep the work equipment close to the ground and travel slowly.**
- **It is dangerous to turn on slopes or to travel across slopes. Always go down to a flat place to perform these operations. It may be longer, but it will ensure safety.**
- **If the machine starts to slide or loses stability, lower the bucket immediately and brake the machine.**
- **Turning or operating the work equipment when working on slopes may cause the machine to lose its balance and turn over, so avoid such operations. It is particularly dangerous to swing downhill when the bucket is loaded.**
  If such operations have to be carried out, pile soil to make a platform on the slope so that the machine can be kept horizontal when operating.
- **Do not travel on slopes of over 30° as there is danger that the machine may overturn.**

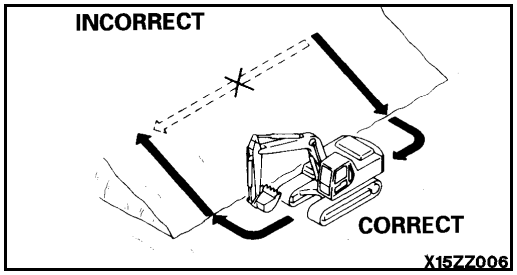

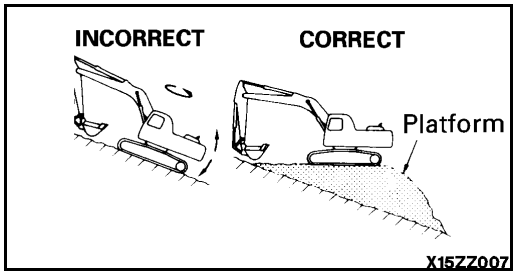

1) When traveling down steep hills, use the travel lever and fuel control dial to keep the travel speed low.
   When traveling down slopes of more than 15°, set the work equipment in the posture shown in the figure on the right, and lower the engine speed.

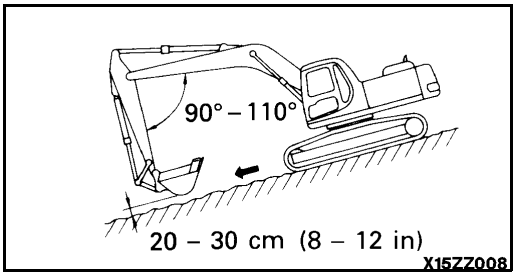

2) When traveling up a steep hill of more than 15°, set the work equipment in the posture shown in the diagram on the right.

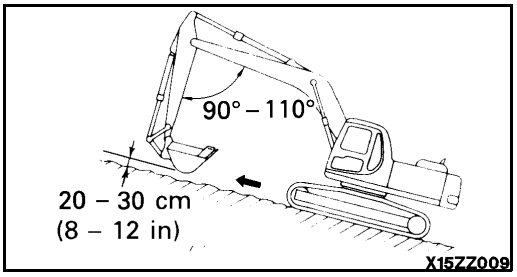

https://truckmanualshub.com/

Braking when traveling downhill
To brake the machine during downhill runs, put the travel lever in the neutral position. This will cause the brake to be automatically applied.

If shoes slip
When traveling uphill, if the shoes slip or it is impossible to travel uphill using the force of the track only, it is possible to use the pulling force of the arm to help the machine travel uphill.

If engine stops
If the engine stops when traveling uphill, move the travel levers to the neutral position, lower the bucket to the ground, stop the machine, then start the engine again.

Precautions on slopes
- If the engine stops when the machine is on a slope, never use the left work equipment control lever to carry out swing operations. The upper structure will swing under its own weight.

- Do not open or close the door on the cab if the machine is on a slope. This may cause a sudden change in the operating force. Always keep the door locked.

https://truckmanualshub.com/

12.14 HOW TO ESCAPE FROM MUD

Always operate carefully to avoid getting stuck in mud. If the machine does get stuck in mud, use the following procedures to get the machine out.

12.14.1 WHEN ONE SIDE IS STUCK

When only one side is stuck in mud, use the bucket to raise the track, then lay boards or logs and drive the machine out. If necessary, put a board under the bucket also.

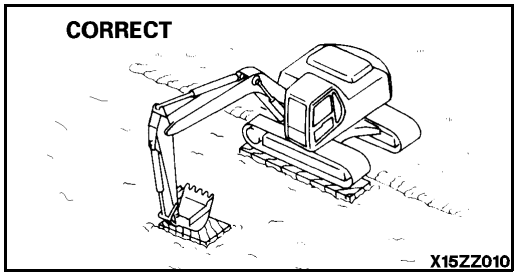

NOTICE

When using the boom or arm to raise the machine, always have the bottom of the bucket in contact with the ground. (Never push with the teeth). The angle between the boom and arm should be 90° to 110°.
The same applies when using an inverted bucket.

12.14.2 WHEN BOTH SIDES ARE STUCK

When the tracks on both sides are stuck in mud and the machine will not move, lay boards as explained above, and dig the bucket into the ground in front. Then pull in the arm as in normal digging operations and put the travel levers in the FORWARD position to pull the machine out.

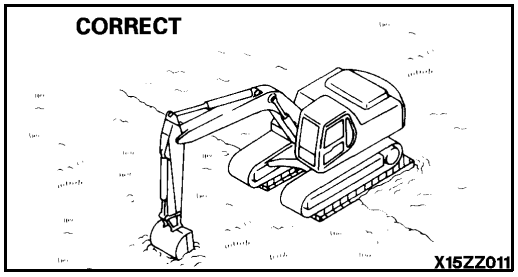

https://truckmanualshub.com/

12.15 WORK POSSIBLE USING HYDRAULIC EXCAVATOR

In addition to the following, it is possible to further increase the range of applications by using various attachments.

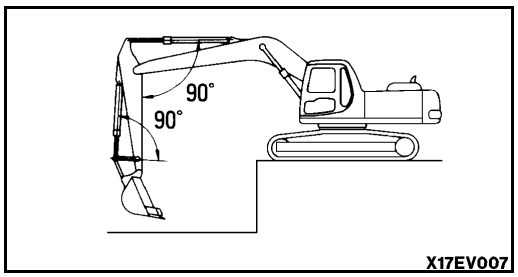

12.15.1 BACKHOE WORK

When conditions of the machine are as shown in the diagram at the right, each cylinders maximum pushing excavation force is obtained when the bucket cylinder and link, arm cylinder and arm are at 90°.

When excavating, use this angle effectively to optimize your work efficiency.

The range for excavating with the arm is from a 45° angle away from the machine to a 30° toward the machine.

There may be some differences depending on the excavation depth, but try to stay within the above range rather than going all the way to the extreme end of the cylinder stroke.

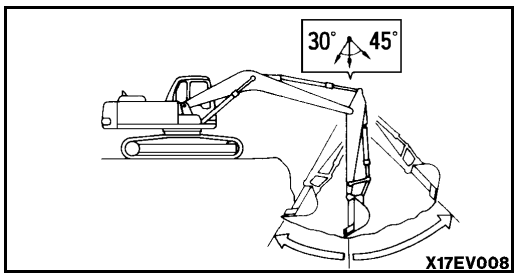

12.15.2 SHOVEL WORK

A shovel is suitable for excavating at a position higher than the machine. Shovel work is performed by attaching the bucket in the inverted direction.

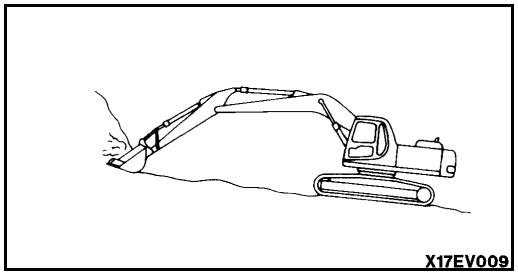

12.15.3 DITCHING WORK

Ditching work can be performed efficiently by attaching a bucket to match the width of the ditch and then setting the tracks parallel to the line of the ditch to be excavated.

To excavate a wide ditch, first dig out both sides and then finally remove the center portion.

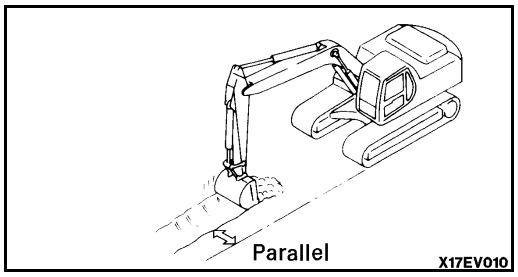

12.15.4 LOADING WORK

In places where the swing angle is small, work efficiency can be enhanced by locating the dump truck in a place easily visible to the operator.

Loading is easier and capacity greater if you begin from the front of the dump truck body than if loading is done from the side.

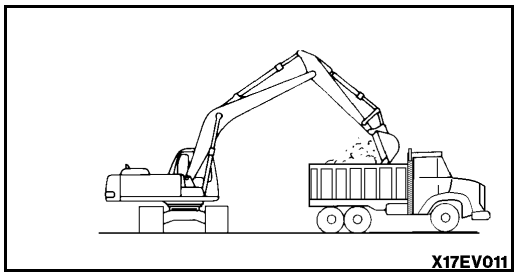

https://truckmanualshub.com/

12.16 REPLACEMENT AND INVERSION OF BUCKET

WARNING

- **When knocking the pin in with a hammer, metal particles may fly and cause serious injury, particularly if they get into your eyes. When carrying out this operation, always wear goggles, helmet, gloves, and other protective equipment.**
- **When the bucket is removed, place it in a stable condition.**

Stop the machine on a firm, flat surface. When performing joint work, make clear signals to each other and work carefully for safety's sake.

12.16.1 REPLACEMENT

1. Place the bucket in contact with a flat surface.

REMARK

When removing the pins, place the bucket so that it is in light contact with the ground. If the bucket is placed on the ground under pressure from the boom and arm, the resistance will be increased and it will be difficult to remove the pins.

2. Remove the retainer bolts and nuts, then remove pins Ⓐ and Ⓑ, and remove the bucket.

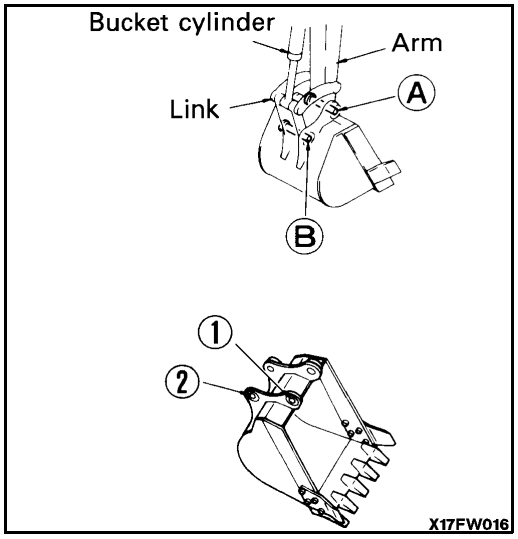

NOTICE

After removing the pins, make sure that they do not become contaminated with sand or mud and that the seals and bushings on both sides do not become damaged.

3. Align the arm with holes ① and the link with holes ② , then coat with grease and install pins Ⓐ and Ⓑ.

REMARK

When installing the bucket, the 0-rings are easily damaged, so install the 0-rings on the boss of the arm end as shown in the diagram. After driving in the pin, move the 0-ring down to the regular groove.

4. Install the retainer bolts and nuts for each pin, then grease the pin.

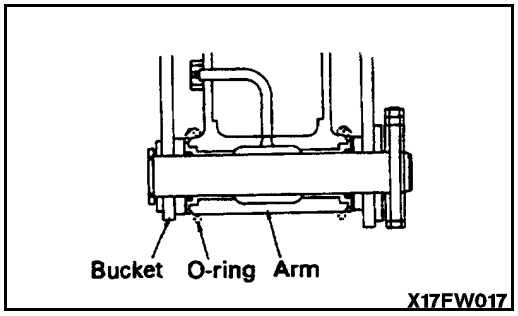

https://truckmanualshub.com/

12.16.2 INVERSION

1. Place the bucket in contact with a flat surface.

REMARK

When removing the pins, place the bucket so that it is in light contact with the ground. If the bucket is placed on the ground under pressure from the boom and arm, the resistance will be increased and it will be difficult to remove the pins.

2. Remove the retainer bolts and nuts, then remove pins Ⓐ and Ⓑ, and remove the bucket.

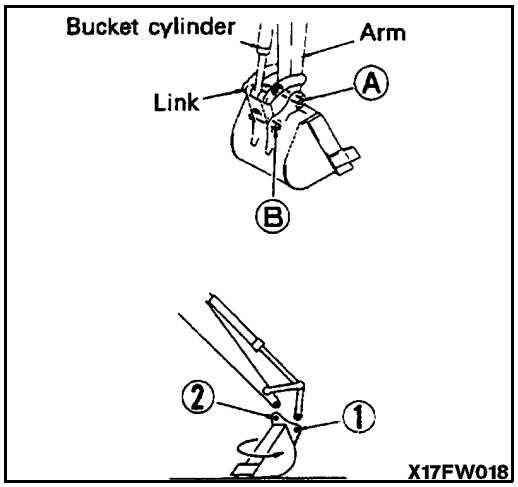

NOTICE

After removing the pins, make sure that they do not become contaminated with sand or mud and that the seals and bushings on both sides do not become damaged.

3. Install the bucket inversely.
   After the bucket is inverted, correct the inclination and direction of the retaining pin holes ① and ② and stabilize the bucket securely.

4. Align the arm with holes ① and the link with holes ②, then coat with grease and install pins Ⓐ, and Ⓑ.

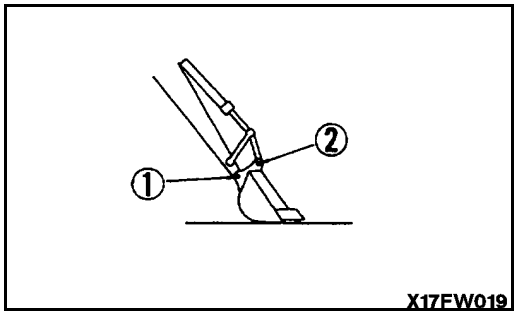

REMARK

When installing the bucket, the 0-rings are easily damaged, so install the 0-rings on the boss of the arm end as shown in the diagram. After driving in the pin, move the 0-ring down to the regular groove.

5. Install the retainer bolts and nuts for each pin, then grease the pin.

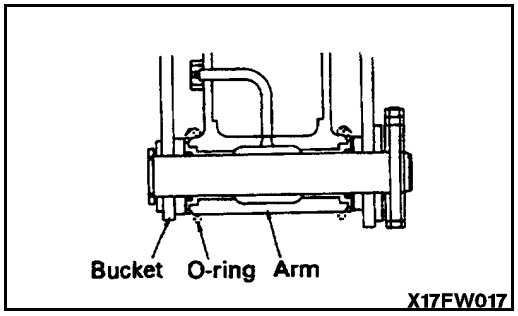

https://truckmanualshub.com/

12.17 PARKING MACHINE

WARNING

- **Avoid stopping suddenly. Give yourself ample room when stopping.**
- **When stopping the machine, select flat hard ground and avoid dangerous places. If it is unavoidably necessary to park the machine on a slope, insert blocks underneath the track shoes. As an additional safety measure, thrust the bucket into the ground.**
- **If the control lever is touched by accident, the work equipment or the machine may move suddenly, and this may lead to a serious accident. Before leaving the operator's compartment, always set the safety lock lever securely to the LOCK position.**

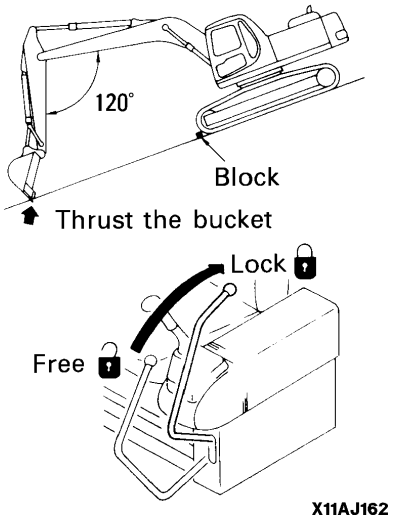

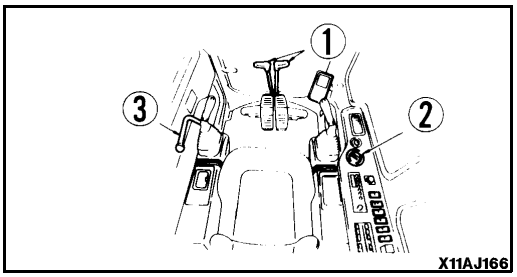

1. Put left and right travel levers ① in the neutral position. The machine stops.

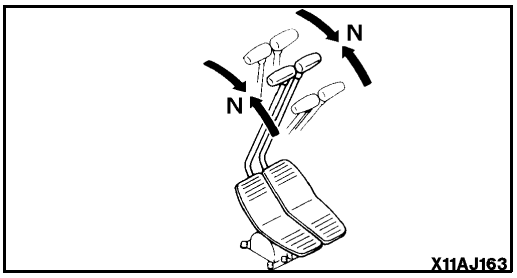

2. Turn fuel control dial ② to lower the engine speed to low idle.

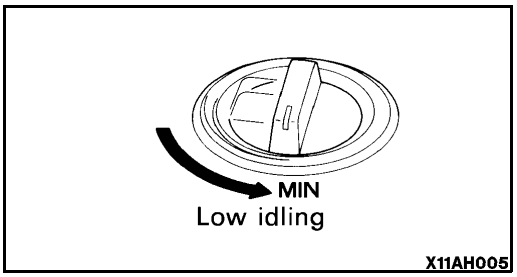

https://truckmanualshub.com/

3. Lower the bucket horizontally until the bottom touches the ground.

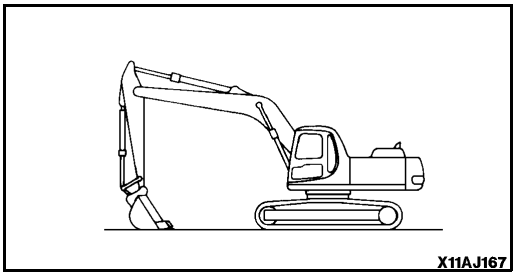

4. Set safety lock lever ③ in the LOCK position.

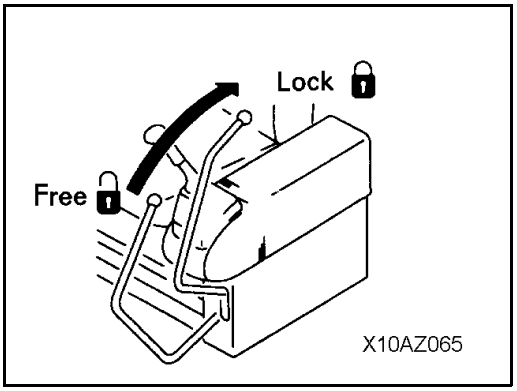

12.18 CHECK AFTER FINISHING WORK

Check the engine water temperature, engine oil pressure and fuel level on the monitor.

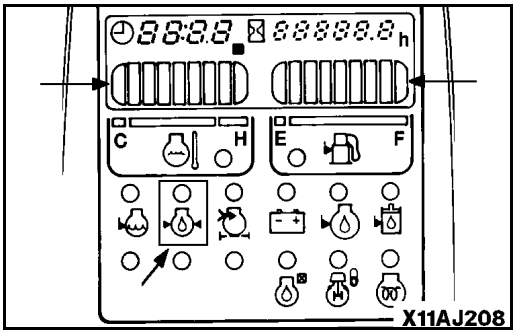

https://truckmanualshub.com/

12.19 STOPPING ENGINE

NOTICE

If the engine is abruptly stopped before it has cooled down, engine life may be greatly shortened. Consequently, do not abruptly stop the engine apart from an emergency.

In particular, if the engine has overheated, do not abruptly stop it but run it at medium speed to allow it to cool gradually, then stop it.

1. Run the engine at low idle speed for about 5 minutes to allow it to gradually cool down.

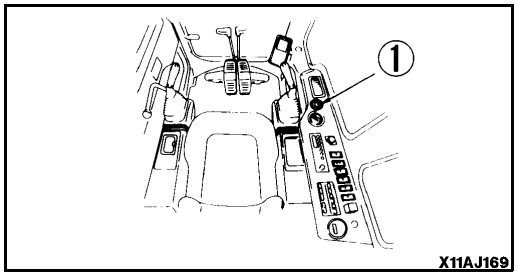

2. Turn the key in starting switch ① to the OFF position and stop the engine.

3. Remove the key from starting switch ①.

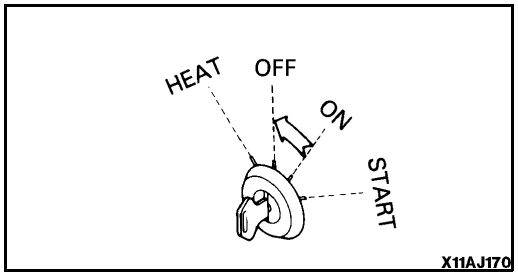

https://truckmanualshub.com/

12.20 CHECK AFTER STOPPING ENGINE

1. Walk around the machine and check the work equipment, paintwork, and undercarriage, and check also for leakage of oil or coolant. If any abnormalities are found, repair them.

2. Fill the fuel tank.

3. Check the engine compartment for flammable debris. Clean out any debris to avoid a fire hazard.

4. Remove any mud stuck to the undercarriage.

12.21 LOCKING AND SECURING MACHINE

Always lock the following places.

① Door of operator's cab

Always remember to close the window.

② Fuel tank filler port

③ Engine hood

④ Battery box cover

⑤ Left side door of the machine

⑥ Right side door of the machine

REMARK

Use the starting switch key to open and close all these places.

To operate locks, see 11.7.2 METHOD OF OPENING AND CLOSING COVER WITH LOCK on page 2-28.

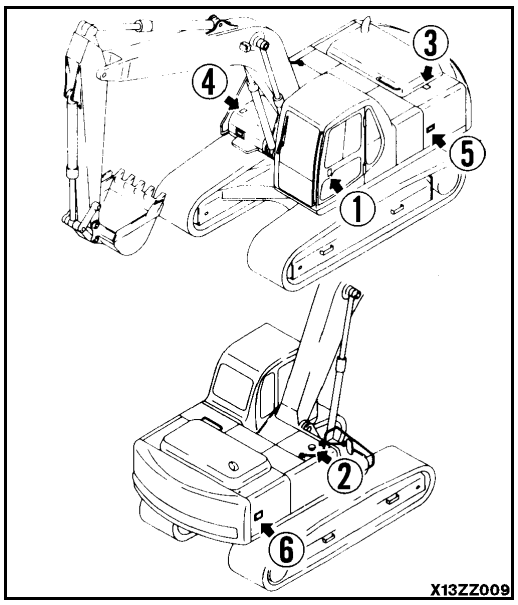

https://truckmanualshub.com/

13. TRANSPORTATION

When transporting the machine, observe all related laws and regulations, and be careful to assure safety.

13.1 LOADING, UNLOADING WORK

WARNING

- **Loading or unloading the machine can be a dangerous operation, so be particularly careful.**
  When loading or unloading the machine, run the engine at low idle and travel at low speed.
- **Make sure the ramp has sufficient width, length and thickness to enable the machine to be safely loaded and unloaded.**
  If the ramp sags appreciably, reinforce it with blocks, etc.
- **When loading and unloading the machine, park the trailer on a flat firm roadbed. Keep a fairly long distance between the road shoulder and the machine.**
- **Remove the mud from the undercarriage to prevent the machine from slipping to the side on slopes.**
  Be sure the ramp surface is clean and free of grease, oil, ice and loose materials.
- **Never steer the machine when on the ramps. If it is necessary to correct the travel direction, drive back off the ramps and realign the machine, then drive on to the ramps again.**
- **When turning the machine on the trailer, the machine's footing is unstable, so carry out the operation slowly.**
- **Always check that the door on the cab is locked, regardless of whether it is open or closed.**
  Do not open or close the door on ramps or on a platform.
  This may cause a sudden change in the operating force.
- **When loading or unloading the machine with the automatic warming-up operation mode, if the automatic warming-up is released, the speed may change suddenly. Avoid loading or unloading during automatic warming-up operation.**

When loading or unloading, always use ramps or a platform and carry out the operations as follows.

1. Properly apply the brakes on the trailer and insert blocks beneath the tires to ensure that it does not move. Then fix the ramps in line with the centers of the trailer and the machine. Be sure that the two sides are at the same level as one another.

   Make the angle of the ramps a maximum of 15°.
   Set the distance between the ramps to match the center of the tracks.

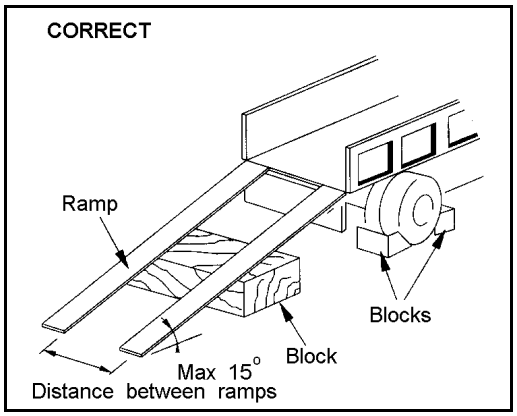

https://truckmanualshub.com/

2. Set the travel speed switch to the Lo position.

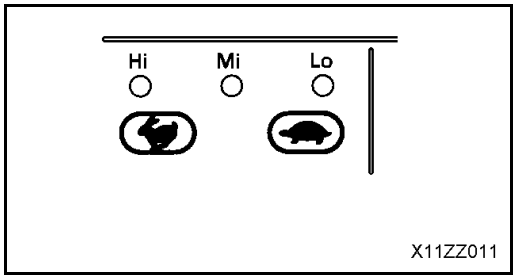

3. Turn the auto-deceleration switch OFF, and return the fuel control dial to reduce the engine speed.

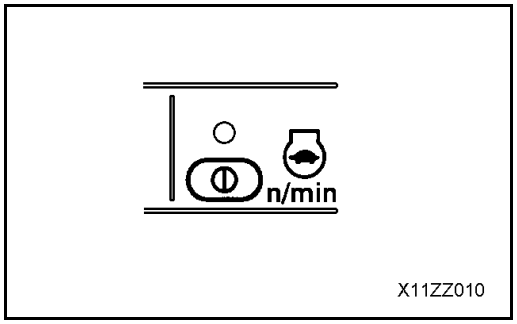

4. Turn the swing lock switch ON to apply the swing lock.

5. Align the machine with the ramps, lower the work equipment as far as possible without letting it hit the trailer, then travel slowly to load or unload the machine.

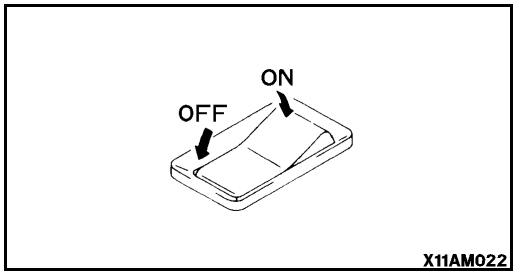

When on the ramps, do not operate any lever other than the travel lever.

6. Load the machine correctly in the specified position on the trailer.

REMARK

When the work equipment is installed, load the machine from the front; when the work equipment is not installed, load the machine from the rear.

https://truckmanualshub.com/

13.2 PRECAUTIONS FOR LOADING

WARNING

When loading the machine, park the trailer on a flat firm roadbed. Keep a fairly long distance between the road shoulder and the machine.

After loading to the specified position, secure the machine as follows.

1. Fully extend the bucket and arm cylinders, then slowly lower the boom.

2. Stop the engine and remove the key from the starting switch.

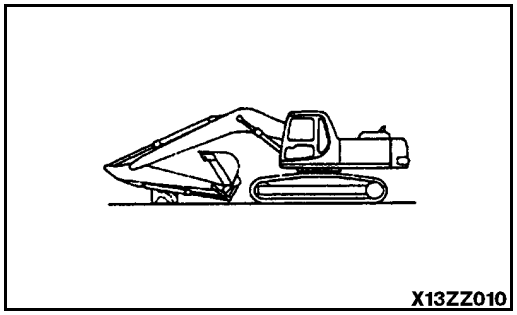
X13ZZ010

3. Lock all the control levers securely with the safety lock lever.

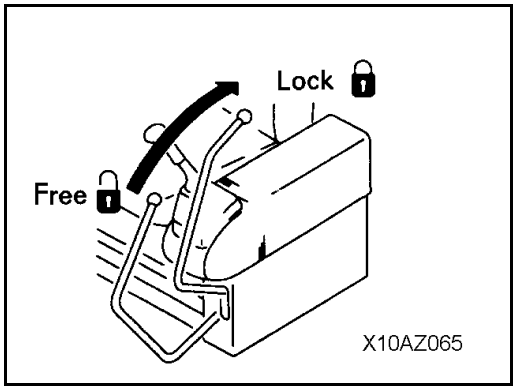

4. When transporting the machine, place rectangular timber underneath the front and rear track shoes to prevent the machine from moving about. Also, hold it down with chains. Be particularly careful to ensure that the machine does not slip sideways.

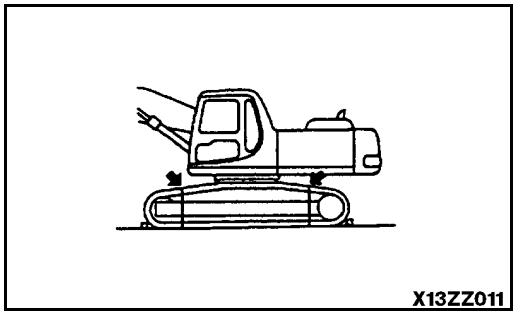
X13ZZ011

NOTICE

When transporting the machine, place rectangular timber under one end of the bucket cylinder to prevent it touching the carrier's surface, thereby saving it from possible damage.

https://truckmanualshub.com/

13.3 PRECAUTIONS FOR TRANSPORTATION

WARNING

- **Determine the route for transporting the machine by taking into account the width, height and weight of the machine.**
- **Always check that the door on the cab is closed and locked before transporting the machine.**

NOTICE

Always retract the cab radio antenna.

Obey all state and local laws governing the weight, width and length of a load. Observe all regulations governing wide loads.

https://truckmanualshub.com/

14. COLD WEATHER OPERATION

14.1 PRECAUTIONS FOR LOW TEMPERATURE

If the temperature becomes low, it becomes difficult to start the engine, and the coolant may freeze, so do as follows.

14.1.1 FUEL AND LUBRICANTS

Change to fuel and oil with low viscosity for all components. For details of the specified viscosity, see 20 USE OF FUEL, COOLANT AND LUBRICANTS ACCORDING TO AMBIENT TEMPERATURE on page 3-12.

14.1.2 COOLANT

WARNING

Keep antifreeze fluid away from an open flame. Never smoke when using antifreeze.

NOTICE

- **Absolutely avoid using any water leak preventing agent irrespective of whether it is used independently or mixed with an antifreeze. Sealer or anti-leak additives will cause plugging problems in the cooling system.**
- **Do not mix types of antifreeze solutions. Mixed solutions make it impossible to determine the protection against freezing.**

For details of the antifreeze mixture when changing the coolant, see 24.2.2 CLEAN INSIDE OF COOLING SYSTEM on page 3-27.

Low silicate ethylene or propylene glycol antifreeze is recommended. The antifreeze should contain no more than 0.1% anhydrous alkali metasilicate. Low silicate antifreeze is recommended to avoid the formation of silica-gel (hydro-gel). This gel formation can occur when the cooling system contains an over concentration of high silicate antifreeze and/or excessive supplemental coolant additive. DO NOT use methanol or alcohol as an antifreeze because of its low boiling point.

REMARK

An antifreeze concentration greater than 68% will adversely affect freeze protection and heat transfer rates. Antifreeze concentrations between 68% and 100% actually have a higher freezing point than a 68% antifreeze concentration and should not be used due to reduced heat transfer rates.

Always check the machine's coolant concentration level and determine its actual freeze protection before each cold season.

https://truckmanualshub.com/

14.1.3 BATTERY

WARNING

- **To avoid gas explosions, do not bring fire or sparks near the battery.**
- **Battery electrolyte is dangerous. If it gets in your eyes or on your skin, wash it off with large amounts of water, and consult a doctor.**

When the ambient temperature drops, the capacity of the battery will also drop. If the battery charge ratio is low, the battery electrolyte may freeze. Maintain the battery charge as close as possible to 100%, and insulate it against cold temperature so that the machine can be started easily the next morning.

REMARK

Measure the specific gravity and calculate the rate of charge from the following conversion table.

Rate of charge	Temperature of fluid			
	20°C (68°F)	0°C (32°F)	-10°C (14°F)	-20°C (-4°F)
100%	1.28	1.29	1.30	1.31
90%	1.26	1.27	1.28	1.29
80%	1.24	1.25	1.26	1.27
75%	1.23	1.24	1.25	1.26

https://truckmanualshub.com/

14.2 PRECAUTIONS AFTER COMPLETION OF WORK

To prevent mud, water, or the undercarriage from freezing and making it impossible for the machine to move on the following morning, always observe the following precautions.

- Mud and water on the machine body should be completely removed. This is to prevent damage to seals caused by mud or dirt getting inside a seal with frozen drops of water.
- Park the machine on hard, dry ground. If this is impossible, park the machine on wooden boards. The boards help protect the tracks from being frozen to the ground so the machine can move the next morning.
- Open the drain valve and drain any water collected in the fuel system to prevent it from freezing.
- After operation in water or mud, remove water from undercarriage as described below, to extend undercarriage service life.

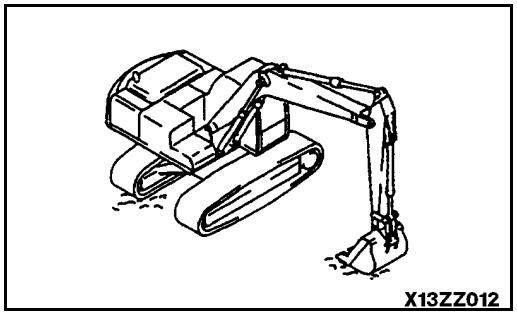

WARNING

Performing idle-running of tracks is potentially dangerous so stay well away from tracks at this time.

1. Swing by 90° with engine at low idle and bring work equipment beside track.

2. Slightly float track by slowly pushing the ground then slowly engage the track to idle-run. Perform this for the opposite track also.

- As the battery capacity drops markedly in low temperatures, cover the battery or remove it from the machine, keep it in a warm place, and install it again the next morning.
- If electrolyte level is found low, add distilled water in the morning before beginning work. Do not add the water after work is completed for the day so as to prevent fluid in the battery from freezing over night.

14.3 AFTER COLD WEATHER

When the season changes and the weather becomes warmer, do as follows.

- Replace the fuel and oil for all components with oil of the viscosity specified.
  For details, see 20 USE OF FUEL, COOLANT AND LUBRICANTS ACCORDING TO AMBIENT TEMPERATURE on page 3-12.

- If for any reason permanent antifreeze cannot be used, and an ethyl glycol base antifreeze (winter, one season type) is used instead, or if no antifreeze is used, drain the cooling system completely, then clean out the inside of the cooling system thoroughly, and fill with fresh coolant.

https://truckmanualshub.com/

15. LONG-TERM STORAGE

15.1 BEFORE STORAGE

NOTICE

To protect cylinder rods when the machine is not being used, set the work equipment in the posture shown in the diagram.
(This prevents rusting of the cylinder rods)

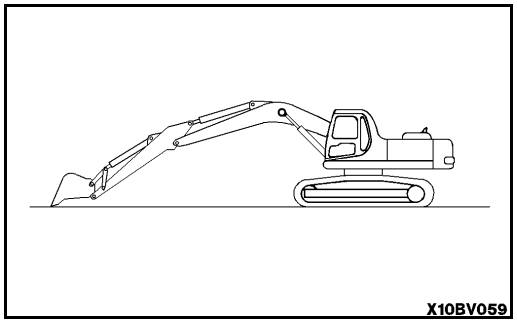

When putting the machine in storage for a long time, do as follows.

- After every part is washed and dried, the machine should be housed in a dry building. Never leave it outdoors.
  In case it is unavoidable to leave it outdoors, park the machine on well-drained concrete and cover it with canvas etc.
- Completely fill the fuel tank, lubricate and change the oil before storage.
- Apply a thin coat of grease to metal surface of the hydraulic piston rods.
- Disconnect the negative terminals of the battery and cover it, or remove it from the machine and store it separately.
- If the ambient temperature is expected to drop below 0°C (32°F), always add antifreeze to the cooling water.
- Lock each control lever and pedal with the lock lever and pedal lock.
- Set the stop valve to the "lock" position on machines ready for attachments. Install the blind plugs to the elbows.
- Set the selector valve to the "When not use" position on machines ready for attachments.

https://truckmanualshub.com/

15.2 DURING STORAGE

WARNING

If it is unavoidably necessary to carry out the rust preventive operation while the machine is indoors, open the doors and windows to improve ventilation and prevent gas poisoning.

Operate the engine and move the machine for a short distance once a month so that a new film of oil will be coated over movable parts and component surfaces. At the same time, also charge the battery.
Also carry out cooler operation in the case of machines equipped with an air conditioner.

15.3 AFTER STORAGE

NOTICE

If the machine is stored without carrying out the monthly rust prevention operation, request your distributor service the machine.

Carry out the following procedure when taking the machine out of long-term storage.

- Wipe off the grease from the hydraulic cylinder rods.
- Add oil and grease to all places.

15.4 STARTING MACHINE AFTER LONG-TERM STORAGE

When starting the machine after a long-term storage, first cancel the automatic warming-up function as follows.

1. Turn the starting switch key to the ON position.
2. Turn the fuel control dial from the low idle (MIN) position to the full (MAX) position, hold it there for 3 seconds, then return it to the low idle (MIN) position and start the engine.

https://truckmanualshub.com/

16. TROUBLESHOOTING

16.1 PHENOMENA THAT ARE NOT FAILURES

Note that the following phenomena are not failures:

1. When the arm is pulled in, the speed of movement will drop momentarily when the arm is more or less vertical.

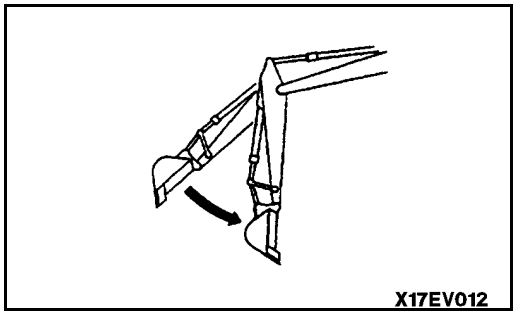

2. The arm speed will drop momentarily when the bucket teeth are more or less horizontal.

3. When starting or stopping the swing, noise will be emitted from the brake valve.

4. When going down a steep slope at low speed, a noise will be emitted from the travel motor.

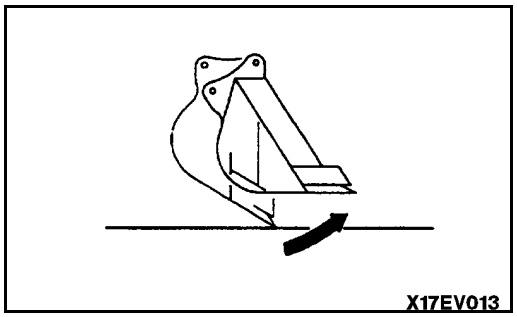

16.2 METHOD OF TOWING MACHINE

WARNING

When towing the machine, use a wire rope that has ample strength for the weight of the machine that is being towed.

If the machine sinks in mud and cannot get out under its own power, or if the drawbar pull of the excavator is being used to tow a heavy object, use a wire rope as shown in the diagram on the right. Place pieces of wood between wire ropes and body to prevent damage to ropes and body.
Never use the light-weight towing hole to tow the machine.

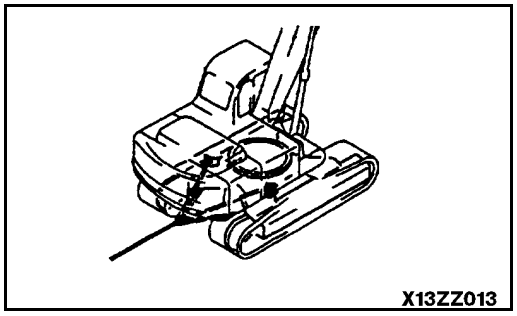

16.3 METHOD FOR USING LIGHT-WEIGHT TOWING HOLE

WARNING

- **A shackle must always be used.**
- **Hold the rope level and direct it straight to the track frame.**
- **Move the machine slowly in the Lo mode.**

The track frame has been opened with a hole to pass a shackle for towing light objects.

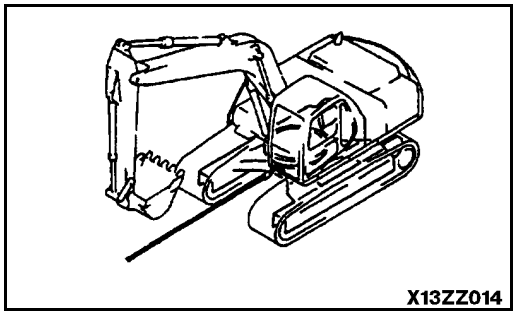

https://truckmanualshub.com/

16.4 PRECAUTIONS ON PARTICULAR JOBSITES

1. When carrying out digging operations in water, if the work equipment mounting pin goes into the water, carry out greasing every time the operation is carried out.

2. For heavy-duty operations and deep digging, carry out greasing of the work equipment mounting pins every time before operation.

After greasing, operate the boom, arm and bucket several times, then grease again.

16.5 IF BATTERY IS DISCHARGED

WARNING

- **When checking or handling the battery, stop the engine and turn the starting switch key to the OFF position before starting.**
- **The battery generates hydrogen gas, so there is danger of explosion. Do not bring lighted cigarettes near the battery, or do anything that will cause sparks.**
- **Battery electrolyte is dilute sulfuric acid, and it will attack your clothes and skin. If it gets on your clothes or on your skin, wash it immediately off with large amounts of water. If it gets in your eyes, wash it out with fresh water and consult a doctor.**
- **When handling the battery, always wear protective goggles.**
- **When removing the battery, first disconnect the cable from the ground (normally, from the negative ⊖ terminal). When installing, install the positive ⊕ terminal first. If a tool touches the cable connecting the positive and the chassis, there is a danger that it will cause sparks.**
- **If the terminals are loose, there is a danger that the defective contact may generate sparks that will cause an explosion. When installing the terminals, install them tightly.**
- **When removing or installing, check which is the positive (+) terminal and negative (-) terminal.**

When removing, disconnect the cable from the ground terminal first.

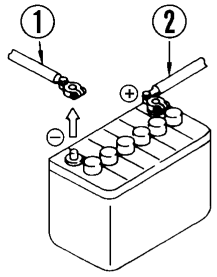

When installing, connect the cable to the positive ⊕ terminal first.

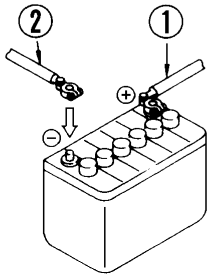

X08AH001

https://truckmanualshub.com/

16.5.1 STARTING ENGINE WITH BOOSTER CABLE

When starting the engine with a booster cable, do as follows:

Precautions when connecting and disconnecting booster cable

WARNING

- **When connecting the cables, never contact the positive ⊕ and negative ⊖ terminals.**
- **When starting the engine with a booster cable, always wear safety glasses.**
- **Be careful not to let the normal machine and problem machine contact each other. This prevents sparks from generating near the battery which could ignite the hydrogen gas given off by the battery. If hydrogen gas explodes, it could cause serious injury.**
- **Make sure that there is no mistake in the booster cable connections. The final connection is to the revolving frame, but sparks will be generated when this is done, so connect to a place as far as possible from the battery. (However, avoid connecting the cable to the work equipment, as conduction is poor.)**
- **Use care when removing the cables from the machine that has been started. Do not allow the cable ends to contact each other or the machine, to avoid hydrogen explosion.**

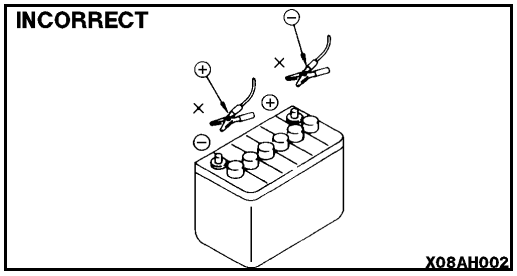

NOTICE

- **The size of the booster cable and clip should be suitable for the battery size.**
- **The battery of the normal machine must be the same capacity as that of the engine to be started.**
- **Check the cables and clips for damage or corrosion.**
- **Make sure that the cables and clips are firmly connected.**

https://truckmanualshub.com/

Connecting the booster cables

Keep the starting switch at the OFF position.

Connect the booster cable as follows, in the order of the numbers marked in the diagram.

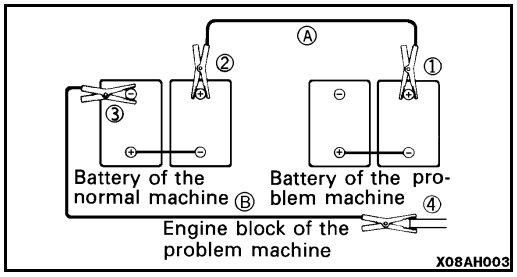

1. Make sure that the starting switches of the normal machine and problem machine are both at the OFF position.
2. Connect one clip of booster cable Ⓐ to the positive ⊕ terminal of the problem machine.
3. Connect the other clip of booster cable Ⓐ to the positive ⊕ terminal of the normal machine.
4. Connect one clip of booster cable Ⓑ to the negative ⊖ terminal of the normal machine.
5. Connect the other clip of booster cable Ⓑ to the engine block of the problem machine.

Starting the engine

1. Make sure the clips are firmly connected to the battery terminals.
2. Start the engine of the normal machine and run it at high idle speed.
3. Turn the starting switch of the problem machine to the START position and start the engine. If the engine doesn't start at first, try again after 2 minutes or so.

Disconnecting the booster cables

After the engine has started, disconnect the booster cables in the reverse order in which they were connected.

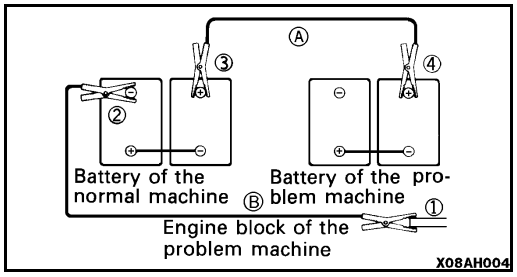

1. Remove one clip of booster cable Ⓑ from the engine block of the problem machine.
2. Remove the other clip of booster cable Ⓑ from the negative ⊖ terminal of the normal machine.
3. Remove one clip of booster cable Ⓐ from the positive ⊕ terminal of the normal machine.
4. Remove the other clip of booster cable Ⓐ from the positive ⊕ terminal of the problem machine.

https://truckmanualshub.com/

16.5.2 REMOVAL AND INSTALLATION OF BATTERY

- When removing the battery, remove the cable from the ground side first (normally the negative ⊖ terminal). If any tool contacts between the positive ⊕ terminal and the chassis, a spark will be caused. This is dangerous.
- When installing, connect the ground cable last.
- Tightening torque for battery holder: 9.8 - 14.7 Nm (1.0 - 1.5 kgm).

https://truckmanualshub.com/

16.6 OTHER TROUBLE

16.6.1 ELECTRICAL SYSTEM

- ( ): Always contact your distributor when dealing with these items.
- In cases of abnormalities or causes which are not listed below, please contact your distributor for repairs.

Problem	Main causes	Remedy
Lamp does not glow brightly even when the engine runs at high speed	● Defective wiring ● Defective adjustment of fan belt tension	(● Check, repair loose terminals, disconnections) ● Adjust fan belt tension For details, see 24.5.5 CHECK FAN BELT TENSION on page 3-55.
Lamp flickers while engine is running		
Charge level monitor does not go out even when engine is running	● Defective alternator ● Defective wiring	(● Replace) (● Check, repair)
Abnormal noise is generated from alternator	● Defective alternator	(● Replace)
Starting motor does not turn when starting switch is turned to ON	● Defective wiring ● Insufficient battery charge	(● Check, repair) ● Charge
Pinion of starting motor keeps going in and out	● Insufficient battery charge	● Charge
Starting motor turns engine sluggishly	● Insufficient battery charge ● Defective starting motor	● Charge (● Replace)
Starting motor disengages before engine starts	● Defective wiring ● Insufficient battery charge	(● Check, repair) ● Charge
Pre-heating monitor does not light	● Defective wiring ● Defective heater relay ● Defective monitor	(● Check, repair) (● Replace) (● Replace)
Oil pressure monitor does not light up when engine is stopped (starting switch at ON position)	● Defective monitor ● Defective caution lamp switch	(● Replace) (● Replace)
Outside of electrical heater is not warm when touched by hand	● Defective wiring ● Disconnection in electric heater ● Defective operation of heater relay switch	(● Check, repair) (● Replace) (● Replace)

https://truckmanualshub.com/

16.6.2 CHASSIS

- ( ): Always contact your distributor when dealing with these items.
- In cases of abnormalities or causes which are not listed below, please contact your distributor for repairs.

Problem	Main causes	Remedy
Speed of travel, swing, boom, arm, bucket are slow	• Lack of hydraulic oil	• Add oil to specified level, see 24.3.4 CHECK OIL LEVEL IN HYDRAULIC TANK, ADD OIL on page 3-46.
Pump generates abnormal noise	• Clogged element in hydraulic tank strainer • Lack of hydraulic oil	• Clean, see 24.8.2 CLEAN HYDRAULIC STRAINER on page 3-68. • Add oil to specified level, see 24.3.4 CHECK OIL LEVEL IN HYDRAULIC TANK, ADD OIL on page 3-46.
Excessive rise in hydraulic oil temperature	• Loose fan belt • Dirty oil cooler • Lack of hydraulic oil	• Adjust fan belt tension, see 24.5.5 CHECK FAN BELT TENSION on page 3-55. • Clean, see 24.6.3 CLEAN AND INSPECT RADIATOR FINS, OIL COOLER FINS, AFTERCOOLER FINS on page 3-60. • Add oil to specified level, see 24.3.4 CHECK OIL LEVEL IN HYDRAULIC TANK, ADD OIL on page 3-46.
Track comes off	• Track too loose	• Adjust track tension, see 24.2.4 CHECK AND ADJUST TRACK TENSION on page 3-32.
Abnormal wear of sprocket		
Boom rises slowly, does not rise	• Lack of hydraulic oil	• Add oil to specified level, see 24.3.4 CHECK OIL LEVEL IN HYDRAULIC TANK, ADD OIL on page 3-46.

https://truckmanualshub.com/

16.6.3 ENGINE

- ( ): Always contact your distributor when dealing with these items.
- In cases of abnormalities or causes which are not listed below, please contact your distributor for repairs.

Problem	Main causes	Remedy
Engine oil pressure monitor lights up	● Engine oil pan oil level is low (sucking in air) ● Clogged oil filter cartridge ● Defective tightening of oil pipe joint, oil leakage from damaged part ● Defective engine oil pressure sensor	● Add oil to specified level, see 24.3.2 CHECK OIL LEVEL IN ENGINE OIL PAN, ADD OIL on page 3-44. ● Replace cartridge, see 24.6.6 CHANGE OIL IN ENGINE OIL PAN, REPLACE OIL FILTER CARTRIDGE on page 3-62. (● Check, repair) (● Replace sensor)
Steam is emitted from top part of radiator (pressure valve)	● Coolant level low, coolant leakage ● Loose fan belt ● Dirt or scale accumulated in cooling system	● Add coolant, repair, see 24.3.1 CHECK COOLANT LEVEL, ADD COOLANT on page 3-44. ● Adjust fan belt tension, see 24.5.5 CHECK FAN BELT TENSION on page 3-55. ● Change coolant, clean inside of cooling system, see 24.2.2 CLEAN INSIDE OF COOLING SYSTEM on page 3-27.
Radiator water level monitor lights up	● Clogged radiator fins or damaged fins ● Defective thermostat ● Loose radiator filler cap (high altitude operation) ● Defective coolant level sensor	● Clean or repair, see 24.6.3 CLEAN AND INSPECT RADIATOR FINS, OIL COOLER FINS, AFTERCOOLER FINS on page 3-60. (● Replace thermostat) ● Tighten cap or replace packing (● Replace sensor)
Engine does not start when starting motor is turned	● Lack of fuel ● Air in fuel system ● Defective fuel injection pump or nozzle ● Starting motor cranks engine sluggishly ● Preheating monitor does not light up ● Defective compression ○ Defective valve clearance ● Defective fuel shut-off solenoid	● Add fuel, see 24.3.3 CHECK FUEL LEVEL, ADD FUEL on page 3-45. ● Repair place where air is sucked in, see 24.6.1 REPLACE FUEL FILTER CARTRIDGE on page 3-57. (● Replace pump or nozzle) ● See 16.6.1 ELECTRICAL SYSTEM on page 2-96. ● See 16.6.1 ELECTRICAL SYSTEM on page 2-96. (○ Adjust valve clearance) ● Replace solenoid

https://truckmanualshub.com/

16.6.3 ENGINE (contd.)

Problem	Main causes	Remedy
Exhaust gas is white or blue	● Too much oil in oil pan ● Improper fuel	● Add oil to specified level, see 24.3.4 CHECK OIL LEVEL IN ENGINE OIL PAN, ADD OIL on page 3-46. ● Change to specified fuel
Exhaust gas occasionally turns black	● Clogged air cleaner element ● Defective nozzle ● Defective compression ● Defective turbocharger	● Clean or replace, see 24.2.1 CHECK, CLEAN AND REPLACE AIR CLEANER ELEMENT on page 3-25. (● Replace nozzle) (● See defective compression above) ● Clean or replace turbocharger
Combustion noise occasionally makes breathing sound	● Defective nozzle	(● Replace nozzle)
Abnormal noise generated (combustion or mechanical)	● Low grade fuel being used ● Overheating ● Damage inside muffler ● Excessive valve clearance	● Change to specified fuel ● Refer to "Radiator water level monitor lights up" as above (● Replace muffler) (● Adjust valve clearance)

https://truckmanualshub.com/

16.6.4 ELECTRONIC CONTROL SYSTEM

If an error code appears on the machine monitor display (normally displays TIME), follow the countermeasure table as shown below in the self-diagnosis.

Machine monitor trouble display

Monitor display	Error mode	Countermeasure
E02	PC-EPC valve system error	If the pump override switch is set to the ON position, operation can be carried out. However, immediately have the PC-EPC valve system inspected by your distributor. (※)
E03	Swing brake system error	Set the swing override switch to the ON position to release the brake. If applying the swing brake, manually operate the swing brake using the swing lock switch. In this case, immediately have the swing brake system inspected by your distributor. (※)
E05	Governor system error	Governor will not execute the control function. Manually operate the governor-lever. To fix the governor lever at the full stroke position, use the retaining bolt holes on bracket. In this case, immediately have the governor system inspected by your distributor.
CALL	Error indicating that operation cannot be continued	Place the machine in a safe posture, then have it inspected immediately by your distributor.
In the case where the monitor will not display error codes and work equipment operation and swing operation cannot be carried out.		Have the machine inspected immediately by your distributor.

(※) For details of operating the pump override switch and the swing override switch, refer to 11.2 SWITCHES on page 2-15.

https://truckmanualshub.com/

MAINTENANCE

https://truckmanualshub.com/

17. GUIDES TO MAINTENANCE

Do not carry out any inspection and maintenance operation that is not given in this manual.
Perform maintenance work on hard, flat ground.

Check service meter:
Check the service meter reading every day to see if the time has come for any necessary maintenance to be carried out.

Komatsu genuine replacement parts:
Use genuine Komatsu parts specified in the Parts Book as replacement parts.

Komatsu America International Company genuine oils:
Use genuine Komatsu oils and grease. Choose oils and grease with proper viscosities specified for ambient temperature.

Always use clean washer fluid:
Use automobile window washer fluid and be careful not to let any dirt get into it.

Always use clean oil and grease:
Use clean oil and grease. Also, keep containers of the oil and grease clean. Keep foreign materials away from oil and grease.

Keeping the machine clean:
Always keep the machine clean. This makes it easier to find parts causing problems. In particular keep grease fittings, breathers and oil level gauges clean and avoid foreign matters from getting in them.

Be careful of hot water and oil:
Draining hot oils and coolants and removing their filters immediately after the engine stops are hazardous. Allow the engine to cool.
If the oil has to be drained when it is cold, warm up the oil to a suitable temperature (approx. 20 - 40°C (68 - 104°F)) before draining it.

Checking foreign materials in drained oil and on filter:
After oil is changed or filters are replaced, check the oil and filters for metallic particles and foreign materials. If large quantities of metallic particles or foreign materials are found, consult your distributor.

Fuel strainer:
If your machine is equipped with a fuel strainer, do not remove it while fueling.

Oil change:
Check or change oils in the places where dust is scarce to keep foreign materials away from oils.

https://truckmanualshub.com/

Warning tag:
Attach the warning tag to the starting switch or other appropriate control lever to avoid someone who is not aware of the circumstances from starting the engine.

Obey precautions:
During machine operation, always obey the precautions on the safety label attached to the machine.

Welding instructions:
- Turn off the engine starting switch.
- Do not apply more than 200 V continuously.
- Connect the grounding cable within 1 m from the area to be welded.
- Avoid seals or bearings from being between the area to be welded and the position of grounding point.
- Do not use the area around the work equipment pins or the hydraulic cylinders as the grounding point.

Fire prevention:
Use nonflammable cleaner or light oil for cleaning parts. Keep flame or lighted cigarette away from light oil.

Clamp faces:
When 0-rings or gaskets are removed, clean the clamp faces and replace the 0-rings and gaskets with new ones. Be sure to properly install 0-rings and gaskets when assembling.

Objects in your pockets:
Keep your pockets free of loose objects which can fall out and drop into the machinery; especially when you work on the machinery while bending over it.

Checking undercarriage:
When working in rocky areas, check for damage to the undercarriage and for looseness, flaws, wear and damaged bolts and nuts. Loosen the track tension a little when working in such areas.

Precautions when washing machine:
- Never spray steam or water directly on the electrical connectors and mechatronics parts.
- Do not allow water to get on the monitors and controllers inside the operator’s cab.
- Never spray steam or water directly at the radiator or oil cooler portions.

https://truckmanualshub.com/

Pre-and post-work checks:
Before starting work in mud, rain, snow or at seashore, check plugs and valves for tightness.
Wash the machine immediately after working to protect components from rusting.
Lubricate components more frequently than usual. Be sure to lubricate work equipment pins daily if they are submerged in water.

Dusty worksites:
When working at dusty worksites, do as follows:
- Inspect the air cleaner clogging monitor to see whether the air cleaner is blocked up. Clean the air cleaner at shorter intervals than specified.
- Clean the radiator core frequently to avoid clogging.
- Clean and replace the fuel filter frequently.
- Clean electrical components, especially the starting motor and alternator, to avoid accumulation of dust.

Avoid mixing oils:
Never mix oils of different brands. If the only oil you have is a different brand from the one that is used in the machine, do not add it in but replace all the oil.

https://truckmanualshub.com/

18. OUTLINES OF SERVICE

- Use genuine Komatsu parts for replacement.
- When changing or adding oil, do not use a different type of oil.
- Unless otherwise specified, the oil and coolant used at the time of shipment from the factory are as shown in the table below.

Item	Kind of fluid
Engine oil pan	SAE 15W-40 API classification CF-4
Swing machinery case Final drive case Damper case	SAE 30 API classification CE
Hydraulic tank	SAE 10W API classification CD
Fuel tank	ASTM D975 No. 2 (However, ASTM D975 No. 1 is used for the winter season (October to March)
Radiator	Ethylene glycol antifreeze 50 / 50 mix with water

18.1 OUTLINE OF OIL, FUEL, COOLANT

18.1.1 OIL

- Oil is used in the engine and work equipment under extremely severe conditions (high temperature, high pressure), and it deteriorates with use.
  Always use oil that matches the grade and temperature for use given in the Operation and Maintenance Manual.
  Even if the oil is not dirty, always replace the oil after the specified interval.
- Oil corresponds to blood in the human body, so always be careful when handling it to prevent any impurities (water, metal particles, dirt, etc.) from entering the system.
  The majority of problems with machines are caused by the entry of such impurities.
  Take particular care not to let any impurities get in when storing or adding oil.
- Never mix oils of different grades or brands.
- Always maintain oil at specified levels.
  Having too much oil or too little oil are both causes of problems.
- If the oil in the work equipment is not clear, there is probably water or air entering the circuit.
  In such cases, please contact your distributor.
- When changing the oil, always replace the related filters at the same time.
- It is recommended that an analysis be made of the oil periodically to check the condition of the machine. For those who wish to use this service, please contact your distributor.

https://truckmanualshub.com/

18.1.2 FUEL

- The fuel pump is a precision instrument, and if fuel containing water or dirt is used, it cannot work properly.
- Be extremely careful not to let impurities get in when storing or adding fuel.
- Always use the fuel specified in the Operation and Maintenance Manual.
  Fuel may congeal depending on the temperature when it is used (particularly in low temperatures below-15°C (5°F)), so it is necessary to change to a fuel that matches the temperature.
- To prevent the moisture in the air from condensing and forming water inside the fuel tank, always fill the fuel tank after completing the day's work.
- Before starting the engine, or when 10 minutes have passed after adding fuel, drain the sediment and water from the fuel tank.
- If the engine runs out of fuel, or if the filters have been replaced, it is necessary to bleed the air from the circuit.

18.1.3 COOLANT

Use water which has a low mineral content. Water used in conjunction with antifreeze should meet the following guidelines.

Total Hardness - Not to exceed 300 parts per million to prevent scale deposits. Water containing dissolved magnesium and calcium (the usual reason for water hardness) above the specified amount will cause scale deposits to develop in the engine.

Chlorides - Not to exceed 100 parts per million to prevent corrosion.

Sulfites - Not to exceed 100 parts per million to prevent corrosion.

- When using anti-freeze, always observe the precautions given in the Operation and Maintenance Manual.
- Komatsu machines are supplied with Komatsu original anti-freeze in the coolant when the machine is shipped. This anti-freeze is effective in preventing corrosion of the cooling system.
  The anti-freeze can be used continuously for two years or 2000 hours. Therefore, it can be used as is even in hot areas.
- Anti-freeze is flammable, so be extremely careful not to expose it to flame or fire.
- The proportion of anti-freeze to water differs according to the ambient temperature.
  For details of the mixing proportions, see 24.2.2 CLEAN INSIDE OF COOLING SYSTEM on page 3-27.
- If the engine overheats, wait for the engine to cool before adding coolant.
- If the coolant level is low, it will cause overheating and will also cause problems with corrosion from the air in the coolant.

https://truckmanualshub.com/

18.1.4 GREASE

- Grease is used to reduce friction and help prevent wear, twisting and noise at the joints.

- The nipples not included in the maintenance section are nipples for overhaul, so they do not need grease.
  If any part becomes stiff after being used for long time, add grease.

- Always wipe off all of the old grease that is pushed out when greasing. Be particularly careful to wipe off the old grease in places where sand or dirt sticking in the grease would cause wear of the rotating parts.

18.1.5 STORING OIL AND FUEL

- Keep indoors to prevent any water, dirt, or other impurities from getting into storage containers.

- When keeping drums for a long period, put the drum on its side so that the filler port of the drum is at the side. (To prevent moisture from being sucked in) Periodically inspect drums for leakage.
  If drums have to be stored outside, cover them with a waterproof sheet or take other measures to protect them.

- To prevent any change in quality during long-term storage, be sure to use in the order of first in - first out (use the oldest oil or fuel first).

18.1.6 FILTERS

- Filters are extremely important safety parts. They prevent impurities in the fluid and air circuits from entering important equipment and causing problems.
  Replace all filters periodically. For details, see 23 MAINTENANCE SCHEDULE CHART on page 3-20.
  However, when working in severe conditions, it is necessary to consider replacing the filters at shorter intervals.

- Never try to clean the filters (cartridge type) and use them again. Always replace with new filters.

- When replacing oil filters, check if any metal particles are stuck to the old filter. If any metal particles are found, please contact your distributor.

- Do not open packs of spare filters until just before they are to be used.

- Always use genuine Komatsu filters.

https://truckmanualshub.com/

18.2 OUTLINE OF ELECTRICAL SYSTEM

- If the wiring gets wet or the insulation is damaged, the electrical system leaks and this could result in a hazardous malfunction of the machine.
- Services relating to the electrical system are (1) check of fan belt tension, (2) check of damage or wear in the fan belt and (3) check of battery fluid level.
- Never remove or disassemble any electric components installed in the machine.
- Never install any electric components other than those specified by Komatsu.
- Be careful to keep the electrical system free of water when washing the machine or when it rains.
- Since the controller for the control system may cause malfunction due to external wave interference, before installing a radio receiver and a walkie-talkie or citizen band, consult your distributor.
- When working on the seashore or any corrosive environment, carefully clean the electrical system to prevent corrosion.
- When installing a cab cooler or any other electrical equipment, connect it to an independent power source connector. The optional power source must never be connected to the fuse, starting switch, or battery relay.

https://truckmanualshub.com/

18.3 OUTLINE OF HYDRAULIC SYSTEM

- During operation and immediately after operation is ended, the temperature of the hydraulic system will remain high. In addition, high hydraulic pressure is applied to the system. Take care when inspecting and maintaining the hydraulic system.
  - Stop the machine on level ground, lower the bucket to the ground, then set so that there is no pressure applied to the cylinder circuit.
  - Always stop the engine.
  - Immediately after operations, the hydraulic oil and lubricating oil are at high temperature and high pressure, so wait for the oil temperature to go down before starting maintenance.
    Even when the temperature goes down, the circuit may still be under internal pressure, so when loosening the plug or screw, or the hose joint, do not stand in front of the part. Loosen it slowly to release the internal pressure before removing it.
  - When carrying out inspection or maintenance of the hydraulic circuit, always bleed the air form the hydraulic tank to remove the internal pressure.

- Periodic maintenance includes the inspection of the hydraulic oil level, replacement of the filter and refilling of hydraulic oil.

- When the high pressure hose, etc. is removed, check the 0-ring for damage. If necessary, replace it.

- After the hydraulic filter element and strainer are cleaned or replaced, or after the hydraulic system is repaired or replaced or the hydraulic piping is removed, bleed air from the hydraulic circuit.

- The accumulator is charged with high-pressure nitrogen gas. Incorrect handling may be dangerous. For the handling procedure, see 11.18 HANDLING ACCUMULATOR on page 2-39.

https://truckmanualshub.com/

19. WEAR PARTS LIST

Wear parts such as filter elements, bucket teeth, etc. are to be replaced at the time of periodic maintenance or before their abrasion limits.
The wear parts should be changed correctly in order to use the machine economically.
For part replacement, genuine Komatsu parts of excellent quality should be used.

Use the parts book to write in the current part number.

The parts in parentheses are to be replaced at the same time.

Item	Part Number	Part Name	Qty.	Replacement frequency
Hydraulic oil filter		Element (O-ring)	1 (1)	Every 250 hours service
Engine oil filter		Cartridge	1	Every 250 hours service
Fuel filter		Cartridge	1	Every 500 hours service
Fuel-water seperator		Cartridge	1	Every 500 hours service
Hydraulic tank breather		Element	1	Every 500 hours service
Air cleaner		Double element	1	When required
Additional filter for breaker		Element (O-ring)	1 (1)	See 23.2 MAINTENANCE INTERVAL WHEN USING HYDRAULIC BREAKER on page 3-23.
Electrical engine air intake heater		Gasket	2	When required
In-line fuel strainer		Strainer	1	Every 500 hours service
Bucket		SuperV Tooth Tooth adapter (pin for SuperV)	- - (1/tooth)	When required
		Left side shroud (bolt) Right side shroud (bolt)	1 (3) 1 (3)	When required

https://truckmanualshub.com/

ADDITIONAL ITEMS

Add items applicable to your machine application.

Item	Part Number	Part Name	Qty.	Replacement frequency

https://truckmanualshub.com/

20. USE OF FUEL, COOLANT AND LUBRICANTS ACCORDING TO AMBIENT TEMPERATURE

PROPER SELECTION OF FUEL, COOLANT AND LUBRICANTS

RESERVOIR	KIND OF FLUID	AMBIENT TEMPERATURE	CAPACITY (ℓ)	
		-22 -30 / -4 -20 / 14 -10 / 32 0 / 50 10 / 68 20 / 86 30 / 104°F 40°C	Specified	Refill
Engine oil pan	Engine oil	SAE 30; SAE 10 W; SAE 10W-30; SAE 15W-40	26.3	24.0
Damper case			0.75	—
Swing machinery case		SAE 30	5.5	5.5
Final drive case (each)			4.4 **PC250LC-6** 10.0	4.2 **PC250LC-6** 9.5
Idler (each)			0.07 - 0.08	0.07 - 0.08
Track roller (each)		SAE 30	0.19 - 0.21	0.19 - 0.21
Carrier roller (each)			0.23 - 0.25	0.23 - .025
Hydraulic system		SAE 10W; SAE 15W-40; SAE 10W-30	**PC200,PC210** 239 **PC220,PC250** 246	166
Fuel tank	Diesel fuel	ASTM D975 No. 2; ASTM D975 No. 1	340	—
All lubrication fittings	Grease	No.2 Multi-purpose lithium grease with 3% molybdenum disulfide	Fill as instructed	
Cooling system	Coolant	See **24.2.2 CLEAN INSIDE OF COOLING SYSTEM** on page 3-27	**PC200,PC210** 22.2 **PC220,PC250** 23.3	—

SPECIFIED CAPACITY: Total amount of oil including oil for components and oil in piping.
REFILL CAPACITY: Amount of oil needed to refill system during normal inspection and maintenance.

ASTM: American Society of Testing and Material
SAE: Society of Automotive Engineers

https://truckmanualshub.com/

20.1 ENGINE OIL SPECIFICATION

20.1.1 NORMAL OPERATION

- Oil performance recommendations are as follows:

The use of a quality engine lubricating oil combined with appropriate oil and filter change intervals are critical factors in maintaining engine performance and durability

SAE 15W-40 multi-viscosity oil meeting the American Petroleum Institute (API) performance classification of CE or CF-4 is recommended.

NOTE: CD or CD/SF oils may be used with the interval given in the maintenance schedule in areas where CE or CF-4 is not yet available.

A sulfated ash limit of 1.0 mass percent is suggested for optimum valve and piston deposit and oil consumption control. The sulfated ash must not exceed 1.85 mass percent. The sulfated ash limit of 1.85 mass percent has been placed on all engine lubricating oils recommended for use in the engine. Higher ash oils can cause valve and/or piston damage and lead to excessive oil consumption.

The API service symbol displays the appropriate oil categories; the lower half may contain words to describe oil energy conserving features. The center section identifies the SAE oil viscosity grade.

- Oil viscosity recommendations are as follows:

The use of multi-graded lubricating oil has been found to improve oil consumption control and improve engine cranking in cold temperatures while maintaining lubrication at high operating temperatures.

While SAE 15W-40 multi-viscosity oil is recommended for most operating climates, refer to the previous chart for oil viscosity recommendations for extreme climates.

NOTE: Single-graded oils may be used if multi-graded oil is not available, but be sure to use oil that matches the temperature in the table.

Special "break-in" lubricating oils are not recommended for a new or rebuilt engine. Use the same type of oil during the "break-in" as specified for normal operation.

Additional information regarding lubricating oil availability throughout the world is available in the "E.M.A. Lubricating Oils Data Book For Heavy Duty Automotive and Industrial Engines." The data book may be ordered from the Engine Manufacturers Association, 401 North Michigan Avenue, Chicago, IL U.S.A. 60611. The telephone number is (312) 644-6610.

20.1.2 ARCTIC OPERATION

If an engine is operated in ambient temperatures consistently below -23°C (-10°F) and there are no provisions to keep the engine warm when it is not in operation, use a synthetic API performance oil classification CE or CF-4 engine oil with adequate low temperature properties such as SAE 5W-20 or 5W-30.

The oil supplier must be responsible for meeting the performance service specifications.

IMPORTANT: The use of a synthetic base oil does not justify extended oil change intervals. Extended oil change intervals can decrease engine life due to factors such as corrosion, deposits and wear.

https://truckmanualshub.com/

20.2 DIESEL FUEL SPECIFICATIONS

⚠ WARNING

- **Do not mix gasoline or alcohol with diesel fuel. This mixture can cause an explosion.**

NOTICE:

Due to the precise tolerances of diesel injection systems, it is extremely important that the fuel be kept clean and free of dirt or water. Dirt or water in the system can cause severe damage to both the injection pump and nozzels.

For normal service above -12°C (+10°F), the use of ASTM Grade No. 2-D diesel fuel with a minimum Cetane number of 40 is recommended. The use of No. 2-D diesel fuel will result in optimum engine performance under most operating conditions. Fuels with Cetane numbers higher than 40 may be needed in high altitudes or extremely low ambient temperatures to prevent misfires and excessive smoke.

At operating temperatures below -12°C (+10°F), use ASTM Grade No. 1-D diesel fuel. The use of lighter fuels can reduce fuel economy.

Where a winterized blend of Grade No. 2-D and No. 1-D fuels is available, it may be substituted for Grade No. 1-D fuel. However, it is the supplier's responsibility to provide the fuel for the anticipated ambient temperature.

Use a low sulfur content fuel having a cloud point that is at lease 10 degrees below the lowest expected fuel temperature. Cloud point is the temperature at which crystals begin to form in the fuel.

The viscosity of the fuel **must** be kept above 1.3 cSt to provide adequate fuel system lubrication.

https://truckmanualshub.com/

21. STANDARD TIGHTENING TORQUES FOR BOLTS AND NUTS

21.1 INTRODUCTION OF NECESSARY TOOLS

The following tools are needed when carrying out maintenance.

No.	Name of tool	Part No.	Remarks
1	Wrench	09002-01417 09002-03032	Applicable width across flats (S_1 - S_2) 14 mm - 17mm 30 mm - 32 mm 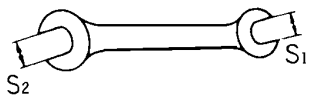
2	Screwdriver	09033-00190	Interchangeable flat-head and cross-head type
3	Socket wrench set	20Y-98-22130	Applicable width across flats 10 mm, 13 mm, 14 mm, 17 mm, 19 mm, 22 mm, 24 mm Extension socket
4	Wrench	09002-03641	Applicable width across flats 36 mm - 41 mm
5	Socket	09021-03044	
6	Hexagon wrench	09007-00836	Applicable width across flats 8 mm
7	Filter wrench	09019-08035	
8	Grease pump	07950-10450	For greasing work
9	Nozzle	07951-11400	
10	Grease cartridge	07950-90403	Lithium base grease
11	Hammer	09039-00150	
12	Pinch bar	09055-10390	
13	Handle	09024-00300	

If any of the above tools are broken, please order them from your distributor.

https://truckmanualshub.com/

21.2 TORQUE LIST

Unless otherwise specified, tighten the metric bolts and nuts to the torque shown in the table.

The tightening torque is determined by the width across the flats ⓑof the nut and bolt.

If it is necessary to replace any nut or bolt, always use a genuine Komatsu part of the same size as the part that was replaced.

Nm (newton meter): 1 Nm ≒ 0.1 kgm
≒ 0.74 lbft

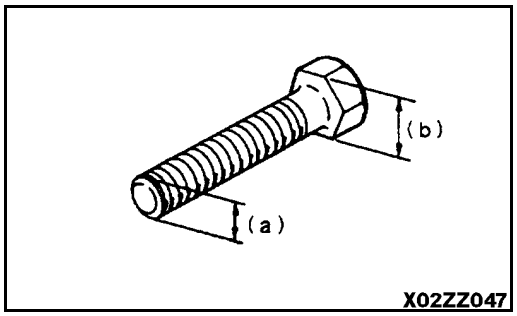

Thread diameter of bolt (mm) (a)	Width across flat (mm) (b)	Ⓣ		Ⓗ
		Nm	kgm	lbft
6	10	13.2 ± 1.4	1.35 ± 0.15	97.3 ± 1.03
8	13	31.4 ± 2.9	3.2 ± 0.3	23.2 ± 2.1
10	17	65.7 ± 6.8	6.7 ± 0.7	48.5 ± 5.0
12	19	112 ± 9.8	11.5 ± 1.0	82.6 ± 7.2
14	22	117 ± 19	18.0 ± 2.0	131 ± 14
16	24	279 ± 29	28.5 ± 3	206 ± 21
18	27	383 ± 39	39 ± 3	282 ± 29
20	30	549 ± 58	56 ± 6	405 ± 43
22	32	745 ± 78	76 ± 8	549 ± 58
24	36	927 ± 98	94.5 ± 10	684 ± 72
27	41	1320 ± 140	135 ± 15	973 ± 100
30	46	1720 ± 190	175 ± 20	1270 ± 140
33	50	2210 ± 240	225 ± 25	1630 ± 180
36	55	2750 ± 290	280 ± 30	2030 ± 210
39	60	3280 ± 340	335 ± 35	2420 ± 250

NOTICE

When tightening panels or other parts having tightening fixtures made of plastic, be careful not to use excessive tightening torque: doing so will damage the plastic parts.

https://truckmanualshub.com/

22. PERIODIC REPLACEMENT OF SAFETY CRITICAL PARTS

To ensure safety at all times when operating or driving the machine, the user of the machine must always carry out periodic maintenance. In addition, to further improve safety, the user should also carry out periodic replacement of the parts given in the table. These parts are particularly closely connected to safety and fire prevention.

With these parts, the material changes as time passes, or they easily wear or deteriorate. However, it is difficult to judge the condition of the parts simply by periodic maintenance, so they should always be replaced after a fixed time has passed, regardless of their condition. This is necessary to ensure that they always maintain their function completely.

However, if these parts show any abnormality before the replacement interval has passed, they should be repaired or replaced immediately.

If the hose clamps show any deterioration, such as deformation or cracking, replace the clamps at the same time as the hoses.

When replacing the hoses, always replace the o-rings, gaskets, and other such parts at the same time.

Ask your distributor to replace the safety critical parts.

SAFETY CRITICAL PARTS

No.	Safety critical parts for periodic replacement	Qty.	Replacement interval
1	Fuel hose (fuel tank - inline strainer)	1	Every 2 years or 4000 hours, whichever comes first
2	Fuel hose (inline strainer - lift pump)	1	
3	Fuel return hose (Fuel injection pump - Fuel tank)	1	
4	Turbocharger lubricating oil hose	1	
5	Pump outlet hose (Pump - Control valve)	2	
6	Work equipment hose (Boom cylinder inlet)	4	
7	Work equipment hose (Bucket cylinder line - Boom foot section)	2	
8	Work equipment hose (Bucket cylinder inlet)	2	
9	Work equipment hose (Arm cylinder line - Boom foot section)	2	
10	Work equipment hose (Arm cylinder inlet)	2	
11	Additional attachment line hose (Boom foot section)	2	
12	Additional attachment line hose (Boom top section)	2	
13	Swing line hose (Swing motor inlet)	2	
14	Main suction hose	1	
15	Heater hose	2	
16	Seat belt (not illustrated)	1	Replace every 3 years

https://truckmanualshub.com/

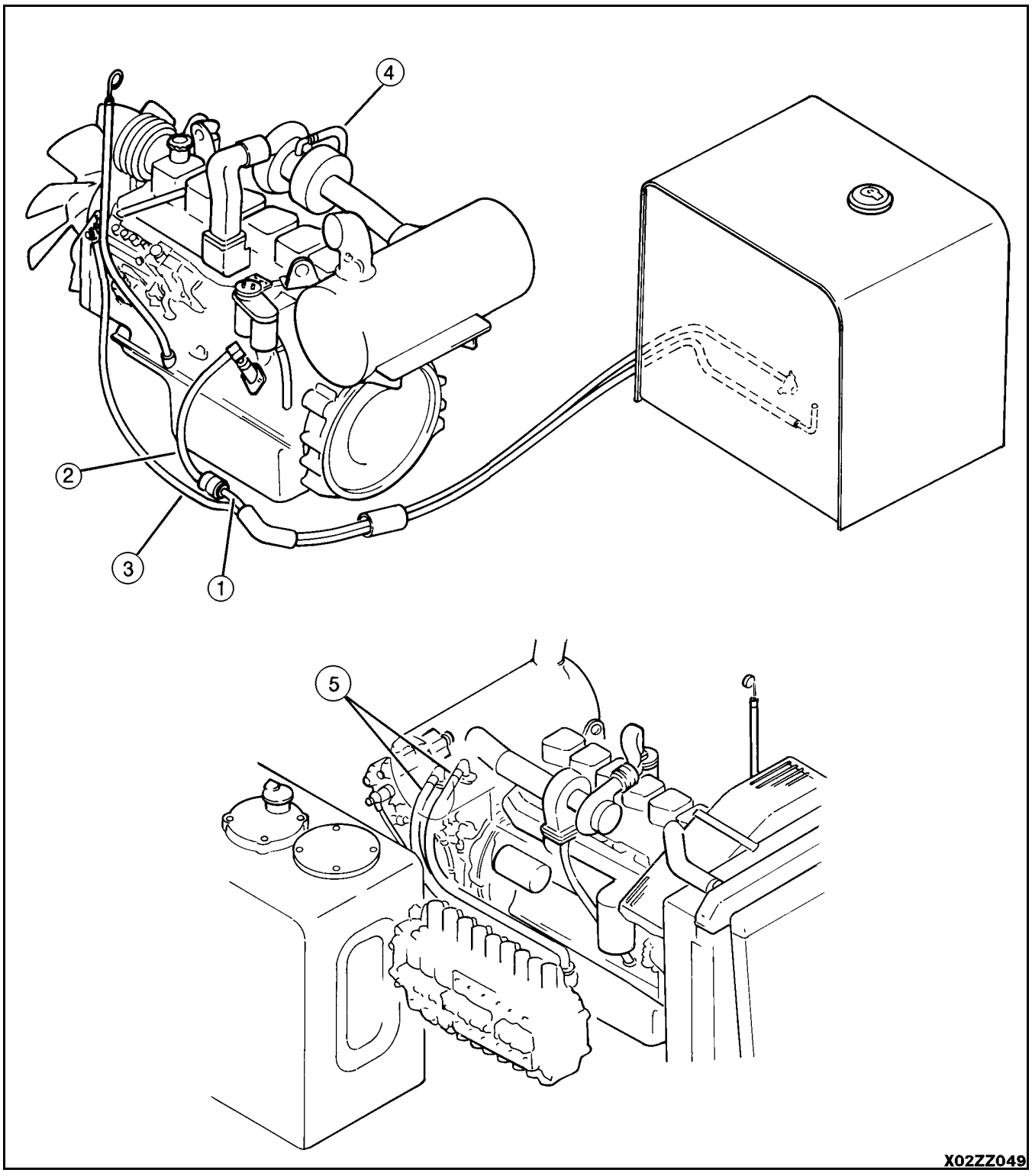

https://truckmanualshub.com/

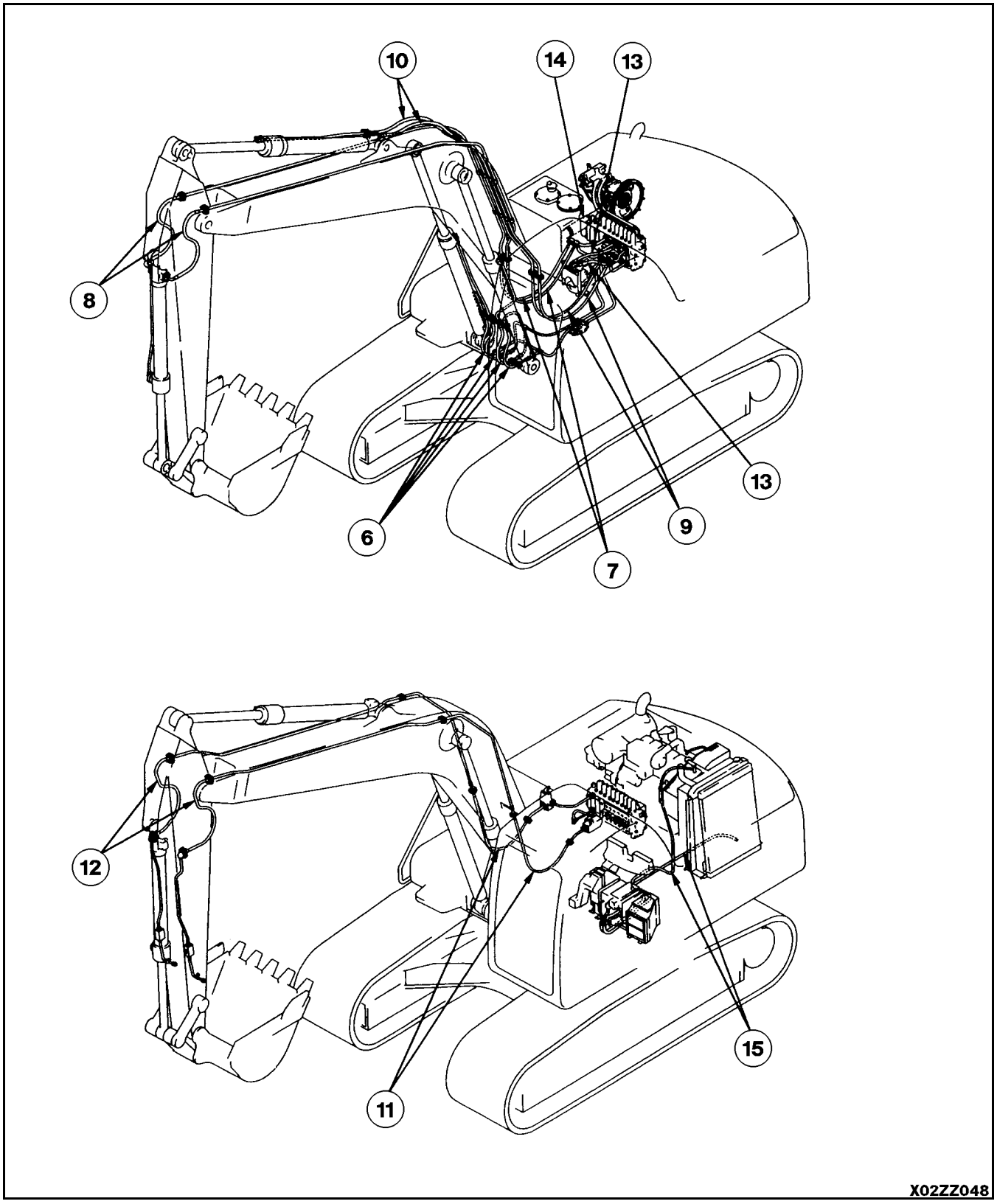

https://truckmanualshub.com/

23. MAINTENANCE SCHEDULE CHART

23.1 MAINTENANCE SCHEDULE CHART

SERVICE ITEM	PAGE
INITIAL 250 HOURS SERVICE (only after the first 250 hours)	
Replace fuel filter cartridge and fuel-water seperator cartridge	3-24
WHEN REQUIRED	
Check, clean and replace air cleaner element	3-25
Clean inside of cooling system (every 2 years or 2000 hours)	3-27
Check and tighten track shoe bolts	3-31
Check and adjust track tension	3-32
Check engine intake air heater (electrical)	3-34
Installation of bucket teeth - SuperV type	3-35
Removal of bucket teeth - SuperV type	3-37
Adjust bucket clearance	3-39
Check window washer fluid level, add fluid	3-40
Check and adjust air conditioner	3-41
Replace additional breaker filter element	3-42
Clean inline filter - Rectangular	3-43
CHECK BEFORE STARTING	
Check coolant level, add coolant	3-44
Check oil level in engine oil pan, add oil	3-44
Check fuel level, add fuel	3-45
Check oil level in hydraulic tank, add oil	3-46
Check for air cleaner clogging	3-46
Check electric wiring	3-47
Check for water and sediment in water-fuel seperator, drain water and sediment	3-47
EVERY 100 HOURS SERVICE	
Lubricating	3-48
● Boom cylinder foot pin (2 points)	3-48
● Boom foot pin (2 points)	3-49
● Boom cylinder rod end (2 points)	3-49

https://truckmanualshub.com/

SERVICE ITEM	PAGE
● Arm cylinder foot pin (1 point)	3-49
● Boom-arm coupling pin (1 point)	3-49
● Arm cylinder rod end (1 point)	3-49
● Bucket cylinder foot pin (1 point)	3-49
● Arm-link coupling pin (1 point)	3-49
● Arm-bucket coupling pin (1 point)	3-49
● Link coupling pin (2 points)	3-49
● Bucket cylinder rod end (1 point)	3-49
● Bucket-link coupling pin (1 point)	3-49
Check oil level in swing machinery case, add oil	3-50
Drain water and sediment from fuel tank	3-50
EVERY 250 HOURS SERVICE	
Check oil level in final drive case, add oil	3-51
Check level of battery electrolyte	3-52
Replace hydraulic filter element	3-53
Lubricate swing circle (2 points); (PC250LC: 3 points)	3-54
Check fan belt tension, adjust	3-55
Check air conditioner compressor belt tension, adjust	3-56
EVERY 500 HOURS SERVICE	
Replace fuel filter cartridge and fuel-water seperator	3-57
Check swing pinion grease level, add grease	3-59
Clean and inspect radiator fins, oil cooler fins, aftercooler fins and condenser fins	3-60
Clean internal and external air filters of air conditioner if machine is equipped with air conditioner	3-61
Replace hydraulic tank breather element	3-61
Change oil in engine oil pan, replace engine oil filter cartridge	3-62
Replace in-line fuel strainer	3-63
EVERY 1000 HOURS SERVICE	
Change oil in swing machinery case	3-64
Check oil level in damper case, add oil	3-65
Check all tightening parts of turbocharger	3-65

https://truckmanualshub.com/

SERVICE ITEM	PAGE
Check play of turbocharger rotor	3-65
Check alternator tension bearing, belt and fan hub	3-66
EVERY 2000 HOURS SERVICE	
Change oil in final drive case	3-67
Clean hydraulic strainer	3-68
Clean, check turbocharger	3-68
Check alternator, starting motor	3-68
Check vibration damper	3-68
Change antifreeze	3-68
Check and adjust valve clearance	3-69
EVERY 4000 HOURS SERVICE	
Check water pump	3-70
EVERY 5000 HOURS SERVICE	
Change oil in hydraulic tank	3-71

https://truckmanualshub.com/

23.2 MAINTENANCE INTERVAL WHEN USING HYDRAULIC BREAKER

For machines equipped with a hydraulic breaker, the hydraulic oil deteriorates faster than for normal bucket digging operations, so set the maintenance intervals as follows.

- Replacing hydraulic element
  On new machines, replace the element after the first 100 to 150 hours, then carry out further replacement of the element according to the table on the right.
- Changing oil in hydraulic tank
  Change the oil according to the table on the right.
- Replacing additional filter element for breaker
  Use a guideline of 250 hours for use of the breaker (operating ratio for the breaker: 50 % or more), and replace the element according to the table on the right.

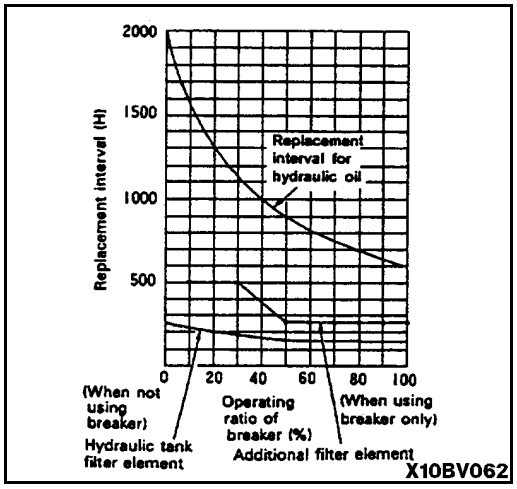

https://truckmanualshub.com/

24. SERVICE PROCEDURE

24.1 INITIAL 250 HOURS SERVICE

Carry out the following maintenance only after the first 250 hours.

- **REPLACE FUEL FILTER CARTRIDGE**

For details of the method of replacing or maintaining, see the sections on EVERY 500 HOURS on page 3-57.

https://truckmanualshub.com/

24.2 WHEN REQUIRED

24.2.1 CHECK, CLEAN AND REPLACE AIR CLEANER ELEMENT

WARNING

- **Never clean or replace the air cleaner element with the engine running.**
- **When using pressurized air to clean the element wear safety glasses or goggles to protect the eyes.**

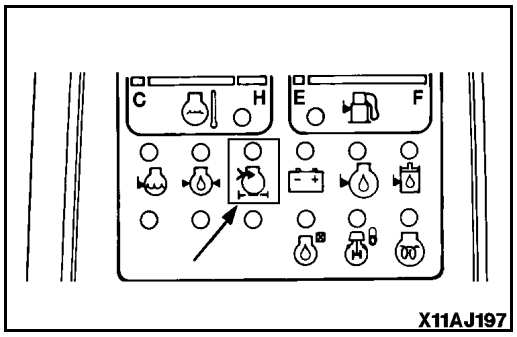

X11AJ197

Checking
If air cleaner clogging monitor ① flashes, clean the air cleaner element.

Cleaning or replacing outer element
1. Open the front door on the left side of the machine, remove wing nut ②and take out element ③
   To prevent entry of dirt and dust, cover the air connector side of the rear end of the air cleaner with a clean cloth and adhesive tape.

2. Clean the air cleaner body interior and the cover.

3. Direct dry compressed air (less than 700 kPa) to element ③ from inside along its folds, then direct it from outside along its folds and again from inside.
   1) Remove one seal from the outer element whenever the outer element has been cleaned.
   2) Replace the outer element which has been cleaned 6 times repeatedly or used throughout a year. Replace the inner element at the same time.
   3) Replace both inner and outer elements when the monitor lamp ① flashes soon after installing the cleaned outer element even though it has not been cleaned 6 times.
   4) Check inner element mounting nuts for looseness and, if necessary, retighten.

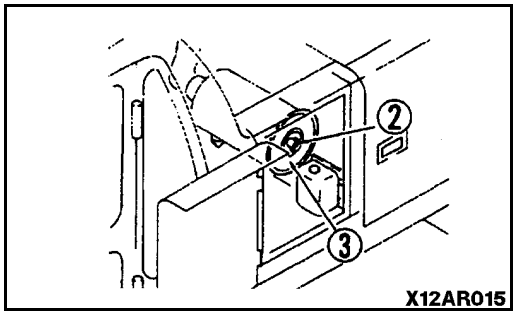

X12AR015

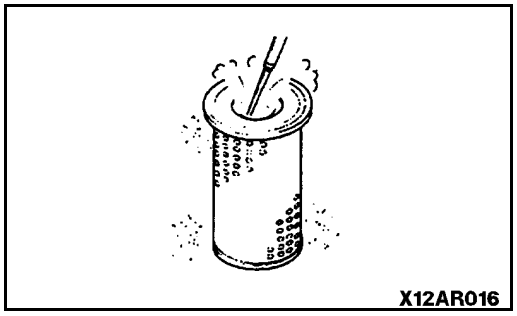
X12AR016

https://truckmanualshub.com/

4. If small holes or thinner parts are found on the element when it is checked with an electric bulb after cleaning replace the element.

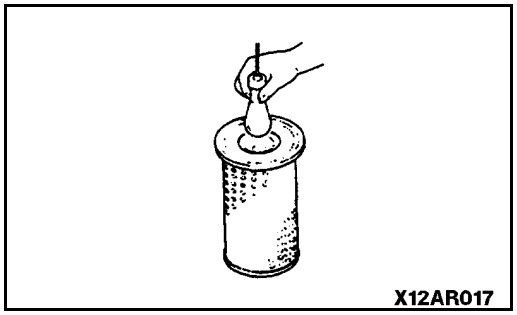
X12AR017

NOTICE

Do not use an element whose folds or gasket or seal are damaged.

When cleaning the element, do not hit it or beat it against something.

5. Remove the cloth and tape used for cover in Step 1.

6. Install the cleaned element and fix it with the wing nut.

7. Replace seal washer ④ or wing nut ② with new parts if they are broken.

8. Remove evacuator valve ⑤ and clean with compressed air.
   After cleaning, install it.

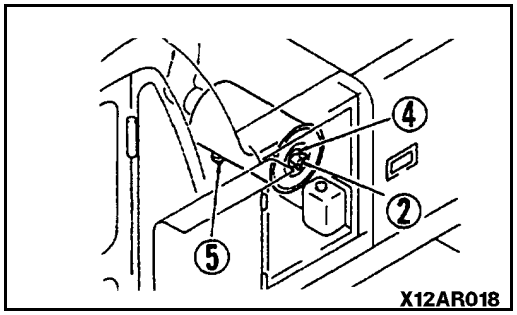

X12AR018

Replacing inner element

1. First remove the cover and the outer element, and then remove the inner element.

2. To prevent dust from getting in, use a clean cloth or tape to cover the air connector (outlet side).

3. Clean the air cleaner body interior, then remove the cover installed in Step 2.

4. Fit a new inner element to the connector and tighten it with nuts.
   Do not clean and reinstall an inner element.

5. Install the outer element and fix it with the wing nut.

https://truckmanualshub.com/

24.2.2 CLEAN INSIDE OF COOLING SYSTEM (2 years or 2000 hours whichever occurs first)

WARNING

- **Soon after the engine has been stopped, the coolant is hot and can cause personal injury. Allow the engine to cool before draining water.**
- **Since cleaning is performed while the engine is running, it is very dangerous to enter the rear side of the machine as the machine may suddenly start moving. If the under cover is left removed, it may interfere with the fan. While the engine is running, never enter the rear side of the machine.**
- **Never remove the radiator cap when the engine is at operating temperature. At operating temperature, the coolant is under pressure. Steam blowing up from the radiator could cause personal injury. Allow the engine to cool until the radiator filler cap is cool enough to touch with your hand. Remove the filler cap slowly to allow pressure to be relieved.**

NOTICE:

Never use water alone in the cooling system because corrosion will occur.

In climates where the temperature is above -37°C (-34°F), use a coolant mixture that contains 50 percent antifreeze. **Antifreeze is essential in any climate.** It broadens the operating temperature range by lowering the coolant freezing point and by raising its boiling point. Do **not** use more than 50 percent antifreeze in the mixture unless additional freeze protection is required. **Never** use more than 68 percent antifreeze under any condition.

An antifreeze concentration greater than 68% will adversely affect freeze protection and heat transfer rates. Antifreeze concentrations between 68% and 100% actually have a higher freezing point than a 68% antifreeze concentration and should not be used due to reduced heat transfer rates.

Low silicate ethylene or propylene glycol antifreeze is recommended. The antifreeze should contain no more than 0.1% anhydrous alkali metasilicate. Low silicate antifreeze is recommended to avoid the formation of silica-gel (hydro-gel). This gel formation can occur when the cooling system contains an over concentration of high silicate antifreeze and/or excessive supplemental coolant additive. DO NOT use methanol or alcohol as an antifreeze because of its low boiling point.

https://truckmanualshub.com/

NOTICE:

Do not mix types of antifreeze solutions. Mixed solutions make it impossible to determine the protection against freezing. Antifreeze containing sealer or anti-leak additives should NOT be used in this system. Sealer or anti-leak additives will cause plugging problems in the cooling system.

Check the solution periodically and at normal operating temperature, to be sure the cooling system has sufficient protection against freezing.

- When deciding the ratio of antifreeze to water, check the lowest temperature in the past, and decide from the mixing rate table given below.
  It is actually better to estimate a temperature about 10°C (18°F) lower when deciding the mixing rate.

Mixing rate of water and antifreeze

The following table shows the approximate percentage of antifreeze solution required for various temperatures.

Approximate Freezing Point	Percentage of Ethylene glycol Antifreeze Concentration by Volume	Specific Gravity at 16°C (60°F)
0°C (+32°F)	0	1.000
-7°C (+20°F)	15	1.025
-12°C (+10°F)	25	1.040
-18°C (0°F)	33	1.053
-23°C (-10°F)	40	1.062
-29°C (-20°F)	45	1.070
-34°C (-30°F)	48	1.074
-40°C (-40°F)	53	1.080
-46°C (-50°F)	56	1.083
-51°C (-60°F)	59	1.088
-57°C (-70°F)	62	1.092
-62°C (-80°F)	65	1.095
-68°C (-90°F)	67	1.097
-69°C (-92°F)	68	1.098

WARNING

Antifreeze is flammable, so keep it away from any flame.

- Use city water for the cooling water.
  For water requirements, see 18.1.3 COOLANT on page 3-6.

WARNING

When removing drain plug, avoid pouring coolant on yourself.

https://truckmanualshub.com/

- Stop the machine on level ground when cleaning or changing the coolant.
- Prepare a container to catch drained coolant: Min 24 ℓ capacity.

1. Turn radiator cap ② slowly to remove it.

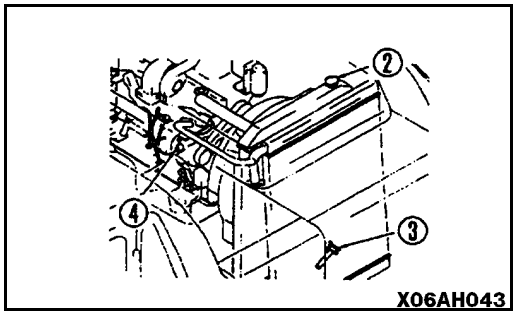

3. Remove the undercover, then set a container to catch the coolant under drain valve ③ and drain plug ④. Open drain valve ③ at the bottom of the radiator to drain the water. Remove drain plug ④ in the cylinder block when draining the water. Open cab heater water valve.

4. After draining the water, close drain valve ③ and drain plug ④, and fill with city water.

5. Open drain valve ③ and drain plug ④ run the engine at low idle, and flush water through the system for 10 minutes.

   When doing this, adjust the speed of filling and draining the water so that the radiator is always full.
   While flushing water through the system, watch carefully that the water inlet hose does not come out of the radiator water filler.

6. After flushing, stop the engine, open drain valve ③ and drain plug ④, then close it again after all the water has drained out.

7. After draining the water, clean with a flushing agent.
   We recommend use of a genuine Komatsu cleaning agent. For details of the cleaning method, see the instructions given with the cleaning agent.

8. After cleaning, open drain valve ③ and drain plug ④ to drain all the cooling water, then close them and fill slowly with clean water.

9. When the water comes up to near the water filler port, open drain valve ③ and drain plug ④, run the engine at low idle, and continue to run water through the system until clean colorless water comes out.

When doing this, adjust the speed of filling and draining the water so that the radiator is always full.

https://truckmanualshub.com/

10. When the water is completely clean, stop the engine, close drain valve ③, wrap the drain plug with seal tape, then close drain plug ④. Close cab heater water valve.

11. Open after-cooler air drain valves ⑥.

12. Install the undercover.

13. Add coolant until it overflows from the coolant filler. When the coolant comes up to near the water filler port, close the after-cooler air drain valves ⑥.

14. To remove the air in the coolant, run for five minutes at low idle, then for another five minutes at high idle. When doing this, leave radiator cap ② off.

15. After draining off the coolant from the reserve tank ⑤, clean the inside of the reserve tank and refill with coolant to between FULL and LOW level.

16. Stop the engine, wait for about three minutes, add coolant up to near the radiator filler port, then tighten cap ②.

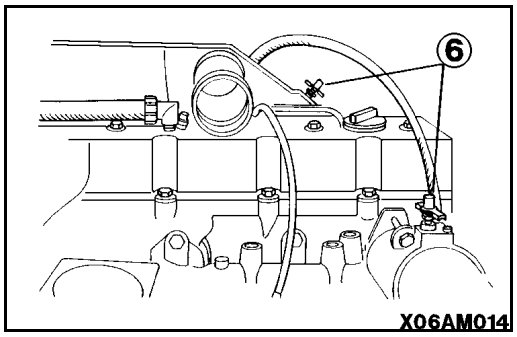

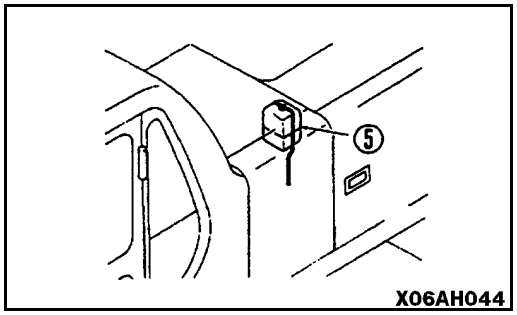

https://truckmanualshub.com/

24.2.3 CHECK AND TIGHTEN TRACK SHOE BOLTS

If the machine is used with track shoe bolts ① loose, they will break, so tighten any loose bolts immediately.

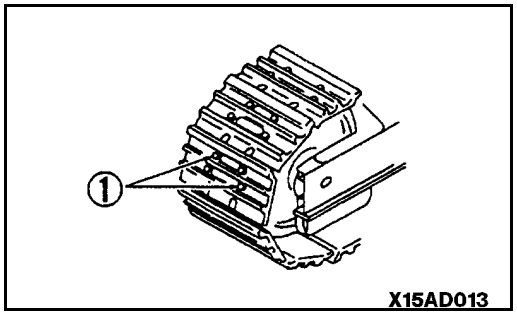

Method for tightening (For PC200, 200LC, 210LC, 220LC)

1. First tighten to a tightening torque of 490 ± 50 Nm (50 ± 5 kgm) then check that the nut and shoe are in close contact with the link's contact surface.

2. After checking, tighten an additional 120° ± 10°.

Method for tightening (For PC250LC)

1. First tighten to a tightening torque of 200 ± 20 Nm (20 ± 2 kgm) then check that the nut and shoe are in close contact with the link's contact surface.

2. After checking, tighten an additional 120° ± 10°.

Order for tightening

Tighten the bolts in the order shown in the diagram on the right. After tightening, check that the nut and shoe are in close contact with the link's mating surface.

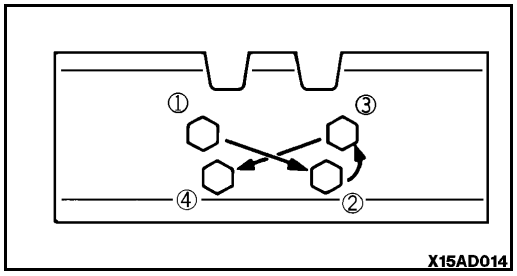

https://truckmanualshub.com/

24.2.4 CHECK AND ADJUST TRACK TENSION

WARNING

Carry out this operation with two workers. The operator must move the machine in accordance with the signals from the other worker. The track tension is checked with the chassis raised, so it is extremely dangerous if the machine is lowered by mistake during the inspection. Never move the machine while anyone is carrying out measurements.

The wear of pins and bushings on the undercarriage will vary with the working conditions and soil properties. It is thus necessary to continually inspect the track tension so as to maintain the standard tension.

Carry out the check and adjustment under the same conditions as when operating (on jobsites where the track becomes clogged with mud, measure with the track clogged with mud).

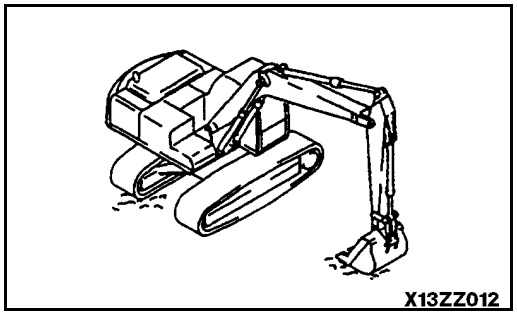
X13ZZ012

Inspection

1. Raise the chassis with the boom and arm.
   When doing this, operate the levers slowly.
2. Measure the clearance between the bottom of the track frame and the top of the track shoe at a position that is safe even if the chassis should come down.

Standard clearance: "S"
PC200, 200LC, 210LC, 220LC: 303 ± 20 mm
PC250LC: 331 ± 20 mm

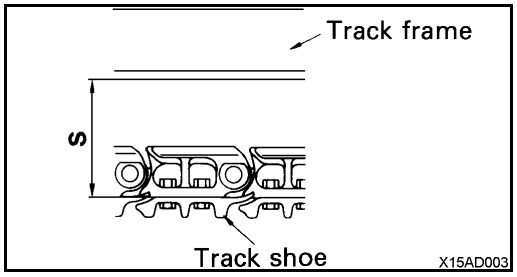

Places to measure
PC200:4th track roller from sprocket
PC200LC:5th track roller from sprocket
PC210LC:5th track roller from sprocket
PC220LC:Between 5th and 6th track roller from sprocket
PC250LC:Between 4th and 5th track roller from sprocket

https://truckmanualshub.com/

If the track tension is not at the standard value, adjust it in the following manner.

Adjustment

WARNING

Grease inside the adjusting mechanism is under high pressure. Grease coming from plug ① under pressure can penetrate the body causing injury or death. For this reason, do not loosen plug ① more than one turn. Do not loosen any part other than plug ①. Furthermore, do not place your face in front of plug ① . If the track tension is not relieved by this procedure, please contact your distributor.

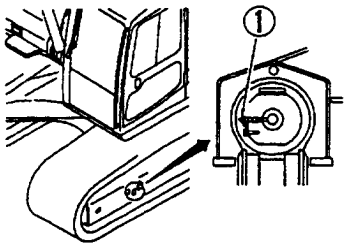

X15AD015

When increasing tension

Prepare a grease gun.

1. Pump in grease through grease fitting ② with a grease gun.
2. To check that the correct tension has been achieved, move the machine backwards and forwards.
3. Check the track tension again, and if the tension is not correct, adjust it again.
4. Continue to pump in grease until S becomes 0 mm. If the tension is still loose, the pin and bushing are excessively worn, so they must be either turned or replaced. Please contact your distributor.

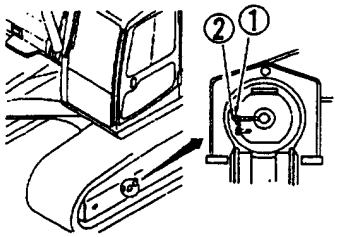

X15AD016

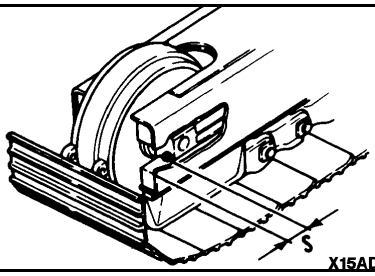

X15AD017

https://truckmanualshub.com/

When loosening tension

WARNING

It is extremely dangerous to release the grease by any method except the procedure given below. If the track tension is not relieved by this procedure, please contact your distributor.

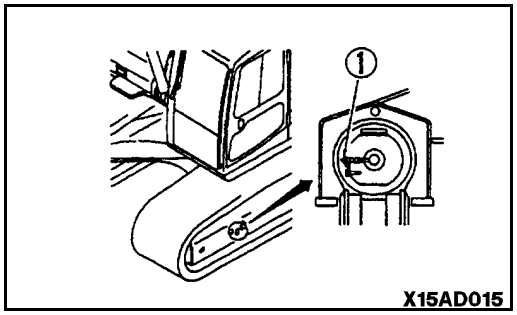

1. Loosen plug ① gradually to release the grease.
2. Turn plug ① a maximum of one turn.
3. If the grease does not come out smoothly, move the machine backwards and forwards a short distance.
4. Tighten plug ①.
5. To check that the correct tension has been achieved, move the machine backwards and forwards.
6. Check the track tension again, and if the tension is not correct, adjust it again.

24.2.5 CHECK ENGINE INTAKE AIR HEATER (ELECTRICAL)

Before the start of the cold season (once a year), contact your distributor to have the engine intake air heater (electrical) checked for dirt or disconnections and repaired if necessary.

https://truckmanualshub.com/

24.2.6 INSTALLATION OF BUCKET TEETH (ESCO SUPERV ® TYPE)

WARNING

It is dangerous if the work equipment moves by mistake when the teeth are being replaced.
Set the work equipment in a stable condition, then stop the engine and apply the safety lock lever securely.

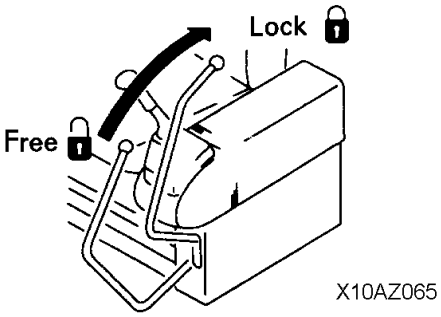

1. Place a block under the bottom of the bucket. Carry out full stroke operation of the control levers within 15 seconds after stopping the engine. After confirming that the work equipment is in a stable condition, lock the safety lock lever.
   Set so that the bottom face of the bucket is horizontal.

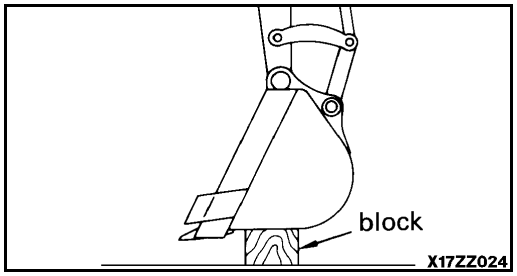

WARNING

- **When installing SuperV® teeth, always work safely and use proper equipment to avoid injury. Wear OSHA-approved hard hat, safety glasses, gloves, and steel-toed shoes. Be sure other people are out of the way; only one person is needed to install SuperV® points.**
- **All struck tools or punches should have a bevel or radius around the striking face that is equal to 1/10th the width of the striking face.**

2. Prepare a Removal Tool or a heavy duty punch and a 1 kg hammer. Clean the adapter nose of any dirt or debris to insure the point will seat fully. Inspect the pin's rubber components for damage. If the rubber is cracked or deformed, replace the pins with new pins.

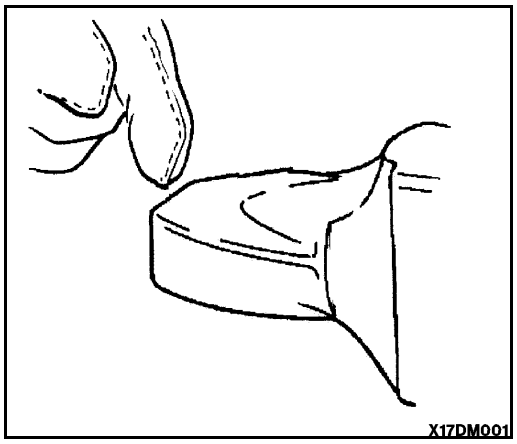

https://truckmanualshub.com/

2. Twist the point on with a quarter turn to contact the rectangular end of the adapter nose.

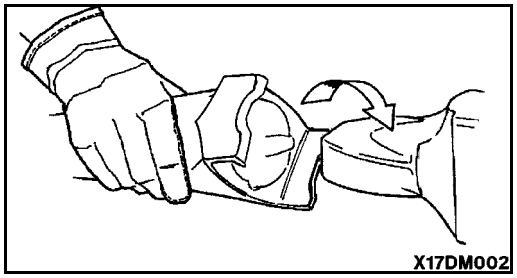

3. Insert the pin with the guide rail facing the back of the adapter. Drive the pin in to seat it fully. The pin should click as the locking mechanism seats on the point ear when fully installed.

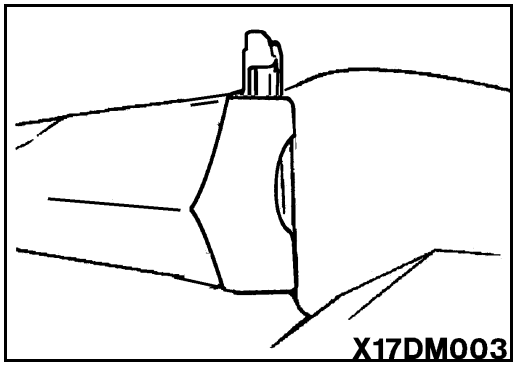

4. Check that the top and the bottom of the pin is flush with the top and bottom of the point ear.

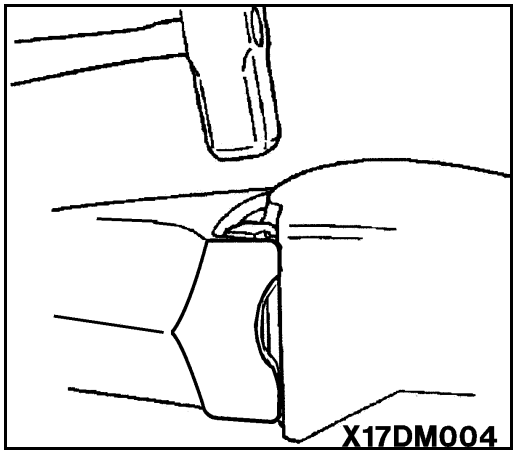

https://truckmanualshub.com/

24.2.7 REMOVAL OF BUCKET TEETH (ESCO SUPERV ® TYPE)

Replace the point before the adapter starts to wear.

WARNING

It is dangerous if the work equipment moves by mistake when the teeth are being replaced.
Set the work equipment in a stable condition, then stop the engine and apply the safety lock lever securely.

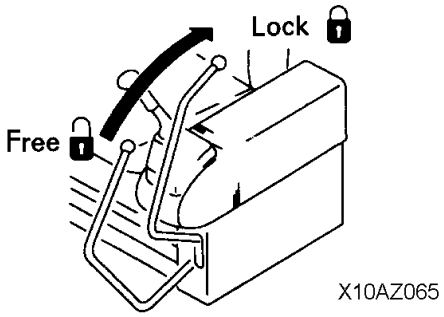

1. Place a block under the bottom of the bucket. Carry out full stroke operation of the control levers within 15 seconds after stopping the engine. After confirming that the work equipment is in a stable condition, lock the safety lock lever.
   Set so that the bottom face of the bucket is horizontal.

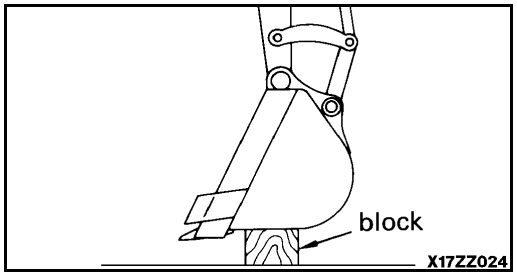

WARNING

- **When installing SuperV® teeth, always work safely and use proper equipment to avoid injury. Wear OSHA-approved hard hat, safety glasses, gloves, and steel-toed shoes. Be sure other people are out of the way; only one person is needed to install SuperV® points.**
- **All struck tools or punches should have a bevel or radius around the striking face that is equal to 1/10th the width of the striking face.**

2. Prepare a Removal Tool or a heavy duty punch and a 1 kg hammer. Hammer the sides of both point ears to loosen fine material which may have been packed around the pin.

https://truckmanualshub.com/

2. Placing the short end of the removal tool against the top of the pin, strike the removal tool with the hammer to initiate removal.

3. Once the pin has begun to disengage, place the long end of the removal tool against the top of the pin and complete the removal by driving the pin out the bottom of the point ear completely clear of the point and adapter.

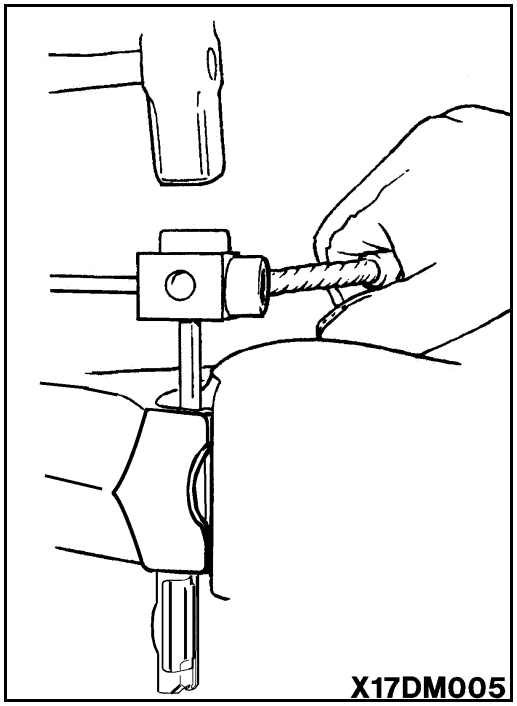

4. Pull the point off the adapter with a quater twist.

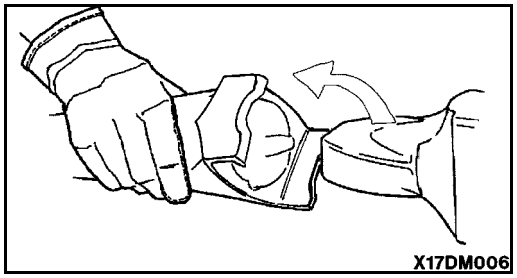

https://truckmanualshub.com/

24.2.8 ADJUST BUCKET CLEARANCE

WARNING

It is dangerous if the work equipment moves by mistake when the clearance is being adjusted.
Set the work equipment in a stable condition, then stop the engine and apply the safety lock lever securely.

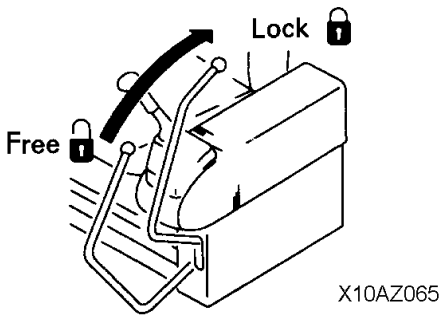

1. Set the work equipment to the position shown in the diagram at right, stop the engine and set the lock lever to the locked position.

2. Shift 0-ring ① of the linkage and measure the amount of play (a). Measurement is easier if you move the bucket to one side or the other so all the play can be measured in one place. (In the diagram this is on the left-hand side) Use a gap (clearance) gauge for easy and accurate measurement.

3. Loosen the four plate fixing bolts of ② and loosen plate ③. Because it uses split shims, you can carry out the operation without removing the bolts entirely.

4. Remove shim ④ corresponding to the amount of play (a) measured above.

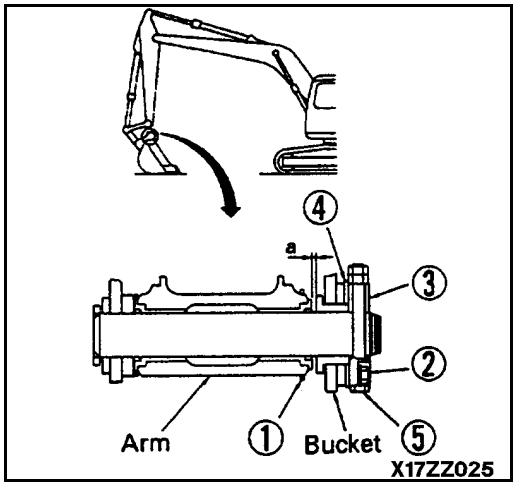

[Example]
In the case of play of 3 mm, remove two 1.0 mm shims and one 0.5 mm shim. Play becomes 0.5 mm. For shim (4), two types of 1.0 mm and 0.5 mm are used.
When play (a) is smaller than one shim, do not carry out any maintenance.

5. Tighten the four bolts ②. If the bolts ② are too stiff to tighten, pull out pin stopper bolt ⑤ for easier tightening.

https://truckmanualshub.com/

24.2.9 CHECK WINDOW WASHER FLUID LEVEL, ADD FLUID

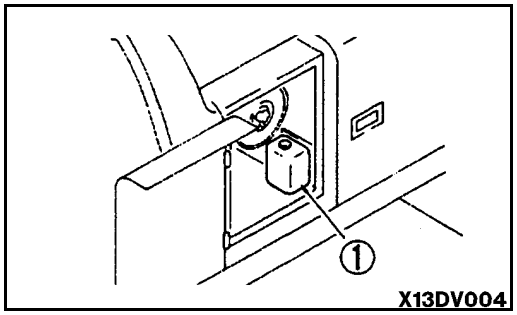

If air is ejected with the window washer fluid, check the fluid level in window washer tank ①. If showing under the level, fill with automobile window washer fluid.

When adding fluid, be careful not to let dirt or dust get in.

- Mixture ratio of pure washer fluid and water

Since the ratio should be varied depending on atmospheric temperature, replenish washer fluid at the following mixture ratio, taking temperature into account.

Operation area and season	Mixture ratio	Freezing temperature
Normal	Pure washer fluid 1/3: water 2/3	-10°C (14°F)
Winter in cold region	Pure washer fluid ½: water ½	-20°C (-4°F)
Winter in extremely cold region	Pure washer fluid	-30°C (-22°F)

Pure washer fluid comes in two types: for -10°C (14°F) (for general use) and for -30°C (-22°F) (cold regions).
Use pure washer fluid according to operation area and season.

https://truckmanualshub.com/

24.2.10 CHECK AND ADJUST AIR CONDITIONER

CHECK LEVEL OF REFRIGERANT (GAS)

WARNING

If the liquid gets into your eyes or on your hands, it may cause loss of sight or frostbite, so never loosen any part of the refrigerant circuit.

If there is a lack of refrigerant, the cooling performance will be poor.

To check refrigerant level, run the engine at 1200 rpm with the fan on high speed and the thermostat set at the coolest level for a minimum of five minutes. Under these conditions, there should be very few bubles in the receiver-drier sight glass.

- Few bubbles in refrigerant flow: Correct
- Many bubbles in refrigerant flow (bubbles continuously pass through): Refrigerant level low
- Colorless, transparent: No refrigerant

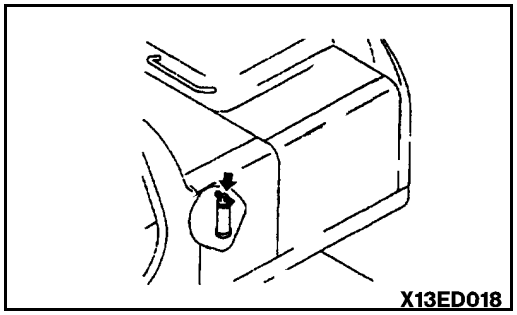

REMARK

When there are many bubbles, the refrigerant gas level is low, so contact your refrigerant dealer to have refrigerant added. If the air conditioner is run with the refrigerant gas level low, it will cause damage to the compressor.

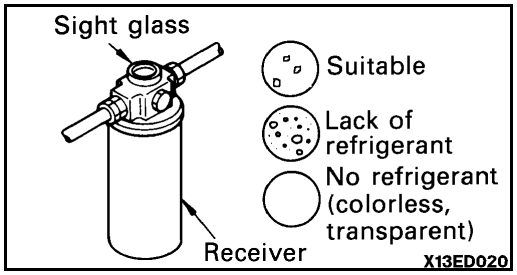

Check in off-season

When not being used for a long period, operate the cooler for 3 to 5 minutes once a month to supply lubricant to each component of the compressor.

Inspection and maintenance items list for cooler

Inspection and maintenance items	Contents	Maintenance interval
Refrigerant (gas)	Filling quantity	Twice a year; spring and autumn
Condenser	Clogging of fin	Every 500 hours
Compressor	Function	Every 4000 hours
V belt	Damage and tension	Every 250 hours
Blower motor and fan	Function (Check for abnormal function)	When required
Control mechanism	Function (Check for normal function)	When required
Piping	Looseness of connections, gas leakage or damage	When required

https://truckmanualshub.com/

24.2.12 CLEAN INLINE FILTER (RECTANGULAR HOUSING)

If the hydraulic system between the pump and inline filter ① has been opened, or if there is any abnormality in the hydraulic equipment, remove the dirt inside the circuit as follows:

1. Disconnect hoses (from main valve to inline filter).

2. Remove and clean filter ②.
   - When cleaning the filter, remove all dirt stuck to the side of the filter.
   - When reassembling the filter, replace o-ring ③ with backup ring ④ at the same time.
   - Reattach hoses. Start the engine and run at low idle for 5 minutes to bleed the air. It is not necessary to operate the control levers to bleed the air.

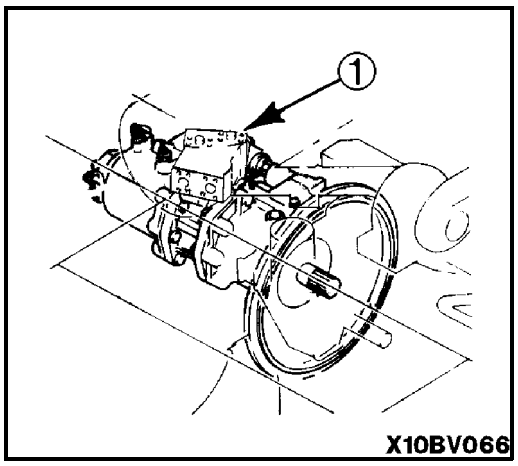

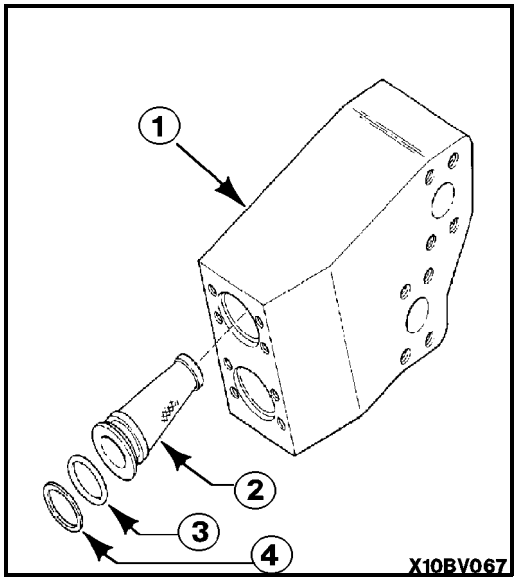

https://truckmanualshub.com/

24.3 CHECK BEFORE STARTING

24.3.1 CHECK COOLANT LEVEL, ADD COOLANT

⚠ WARNING

Do not open the radiator cap unless necessary. When checking the coolant, always check the radiator reserve tank when the engine is cold.

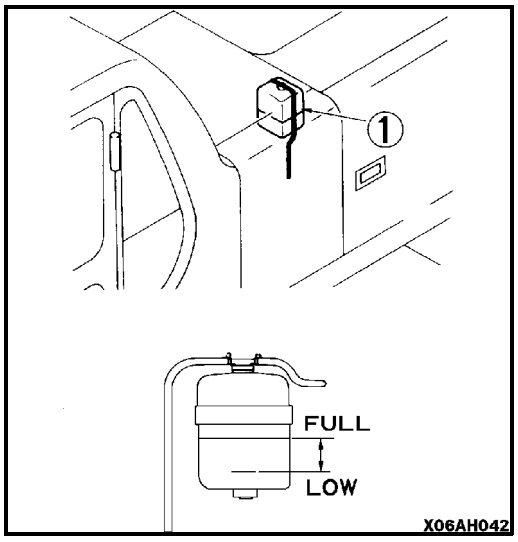

1. Open the rear door on the left side of the machine and check that the coolant level is between the FULL and LOW marks on the radiator reserve tank ① (shown in the diagram on the right). If the coolant level is low, add coolant through the coolant filler of reserve tank ① to the FULL level.
2. After adding coolant, tighten the cap securely.
3. If the reserve tank becomes empty, first inspect for water leaks and then fill the radiator and the reserve tank with coolant.

24.3.2 CHECK OIL LEVEL IN ENGINE OIL PAN, ADD OIL

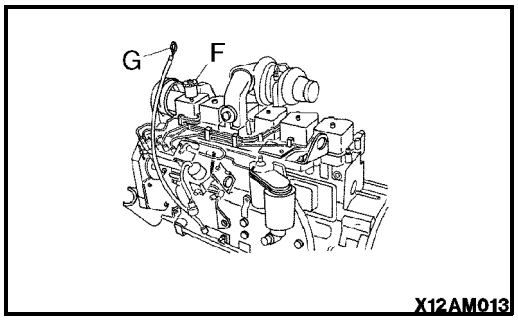

1. Open the engine hood.
2. Remove dipstick Ⓖ and wipe the oil off with a cloth.
3. Insert dipstick Ⓖ fully in the oil filler pipe, then take it out again.
4. The oil level should be between the H and L marks on dipstick Ⓖ.
   If the oil level is below the L mark, add engine oil through oil filler Ⓕ.

For details of the oil to use, see 20 USE OF FUEL, COOLANT AND LUBRICANTS ACCORDING TO AMBIENT TEMPERATURE on page 3-12.

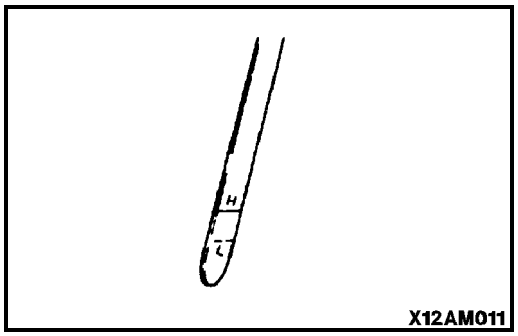

5. If the oil is above the H mark, drain the excess engine oil from drain valve Ⓟ, and check the oil level again.
6. If the oil level is correct, tighten the oil filler cap securely and close the engine hood.

REMARK

When checking the oil level after the engine has been operated, wait for at least 15 minutes after stopping the engine before checking. If the machine is at an angle, make it horizontal before checking.

https://truckmanualshub.com/

24.3.3 CHECK FUEL LEVEL, ADD FUEL

WARNING

When adding fuel, never let the fuel overflow. This may cause a fire. If fuel is spilled, thoroughly clean up any spillage.

1. Use sight gauge Ⓖ on the front face of the fuel tank to check that the tank is full.

2. If the fuel level is not within the sight gauge, add fuel through filler port Ⓕ, while watching sight gauge Ⓖ.

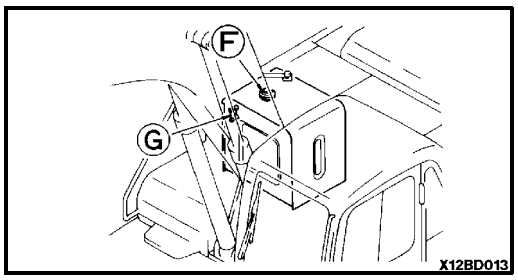

Fuel capacity: 340 l

For details of the fuel to use, see 20 USE OF FUEL, COOLANT AND LUBRICANTS ACCORDING TO AMBIENT TEMPERATURE on page 3-12.

3. After adding fuel, tighten the cap securely.

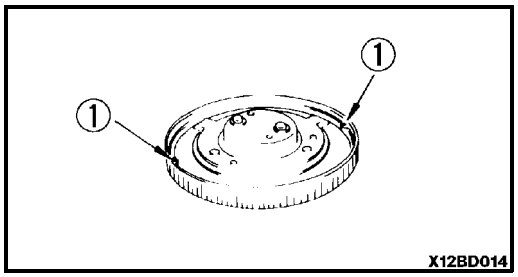

REMARK

If breather hole ① on the cap is clogged, the pressure in the tank will drop forming a slight vacuum and fuel will not flow.
Clean the hole from time to time.

https://truckmanualshub.com/

24.3.4 CHECK OIL LEVEL IN HYDRAULIC TANK, ADD OIL

WARNING

- **When removing the oil filler cap, oil may spurt out, so turn the cap slowly to release the internal pressure before removing the cap.**
- **If oil has been added to above the H mark, stop the engine and wait for the hydraulic oil to cool down, then drain the excess oil from drain plug Ⓟ .**

1. If the work equipment is not in the condition shown in the diagram on the right, start the engine. Run the engine at low speed, retract the arm and bucket cylinders, then lower the boom, set the bucket teeth in contact with the ground, and stop the engine.

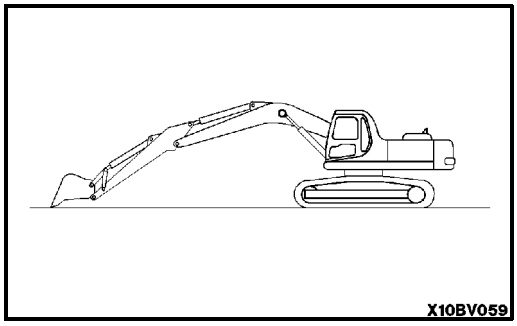
X10BV059

2. Within 15 seconds after stopping the engine, move each control lever (work equipment and travel) to full stroke in all directions to release the internal pressure.

3. Open the door on the right side of the machine. Check sight gauge Ⓖ. The oil level is normal if between the H and L marks.

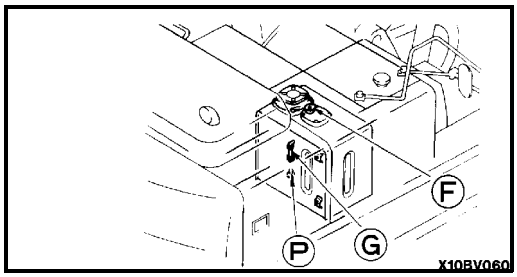

X10BV060

NOTICE

Do not add oil if the level is above the H line. This will damage the hydraulic equipment and cause the oil to spurt out.

4. If the level is below the L mark, remove the upper cover of the hydraulic tank and add oil through oil filler Ⓕ.

For details of the oil to use, see 20 USE OF FUEL, COOLANT AND LUBRICANTS ACCORDING TO AMBIENT TEMPERATURE on page 3-12.

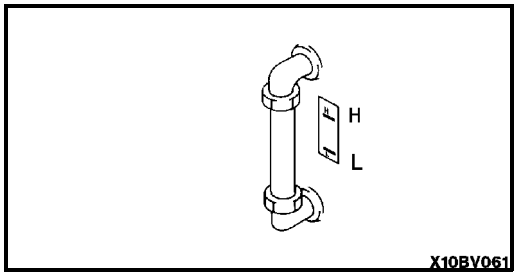

X10BV061

REMARK

The oil level will vary depending upon the oil temperature. Accordingly, use the following as a guide:

- *Before operation: around L level (Oil temperature 10 to 30°C (50 to 86°F))*
- *Normal operation: around H level (Oil temperature 50 to 80°C (122 to 176°F))*

24.3.5 CHECK AIR CLEANER FOR CLOGGING

1. Confirm that the air cleaner clogging monitor does not flash.
2. If it flashes, immediately clean or replace the element.

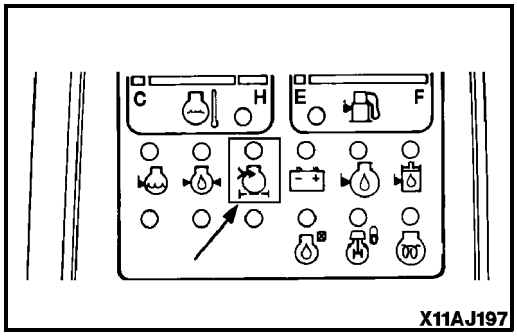

X11AJ197

For details of the method of cleaning the element, see 24.2.1 CHECK, CLEAN AND REPLACE AIR CLEANER ELEMENT on page 3-25.

https://truckmanualshub.com/

24.3.6 CHECK ELECTRIC WIRING

WARNING

If the fuse blows frequently, or there are traces of short circuiting in the electric wiring, always locate and repair the cause.

Check for damage of the fuse and any sign of disconnection or short circuit in the electric wiring. Check also for loose terminals and tighten any loose parts. Check the following points carefully.

- Battery
- Starting motor
- Alternator

Please contact your distributor for investigation and correction of the cause.

WARNING

Accumulation of flammable material (dead leaves, twigs, grass, etc.) around the battery may cause fire, so always check and remove such material.

When carrying out walk-around checks or checks before starting, always check if there is any accumulation of flammable material around the battery and remove it.

24.3.7 CHECK FOR WATER AND SEDIMENT IN FUEL-WATER SEPERATOR

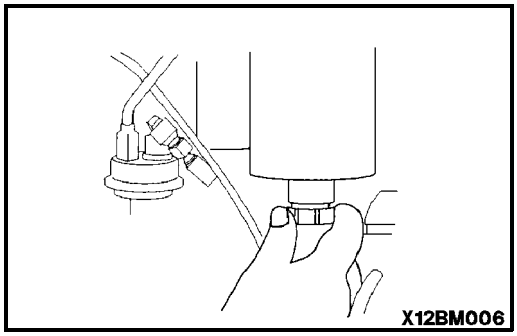

A primary fuel filter is fitted on the engine. Drain the water and sediment from the primary filter daily.

Shut off the engine. Use your hand to open the drain valve. Turn the valve counterclockwise approximately 1 ½ to 2 turns until water flows. Drain the filter sump of water until clear fuel is visible.

Caution: Do not overtighten the valve. Overtightening can damage the threads.

Turn the valve clockwise to close the drain valve.

https://truckmanualshub.com/

24.4 EVERY 100 HOURS SERVICE

24.4.1 LUBRICATING

1. Set the work equipment in the greasing posture below, then lower the work equipment to the ground and stop the engine.

2. Using a grease pump, pump in grease through the grease fittings shown by arrows.

For details of the grease to use, see 20 USE OF FUEL, COOLANT AND LUBRICANTS ACCORDING TO AMBIENT TEMPERATURE on page 3-12.

3. After greasing, wipe off any old grease that was pushed out.

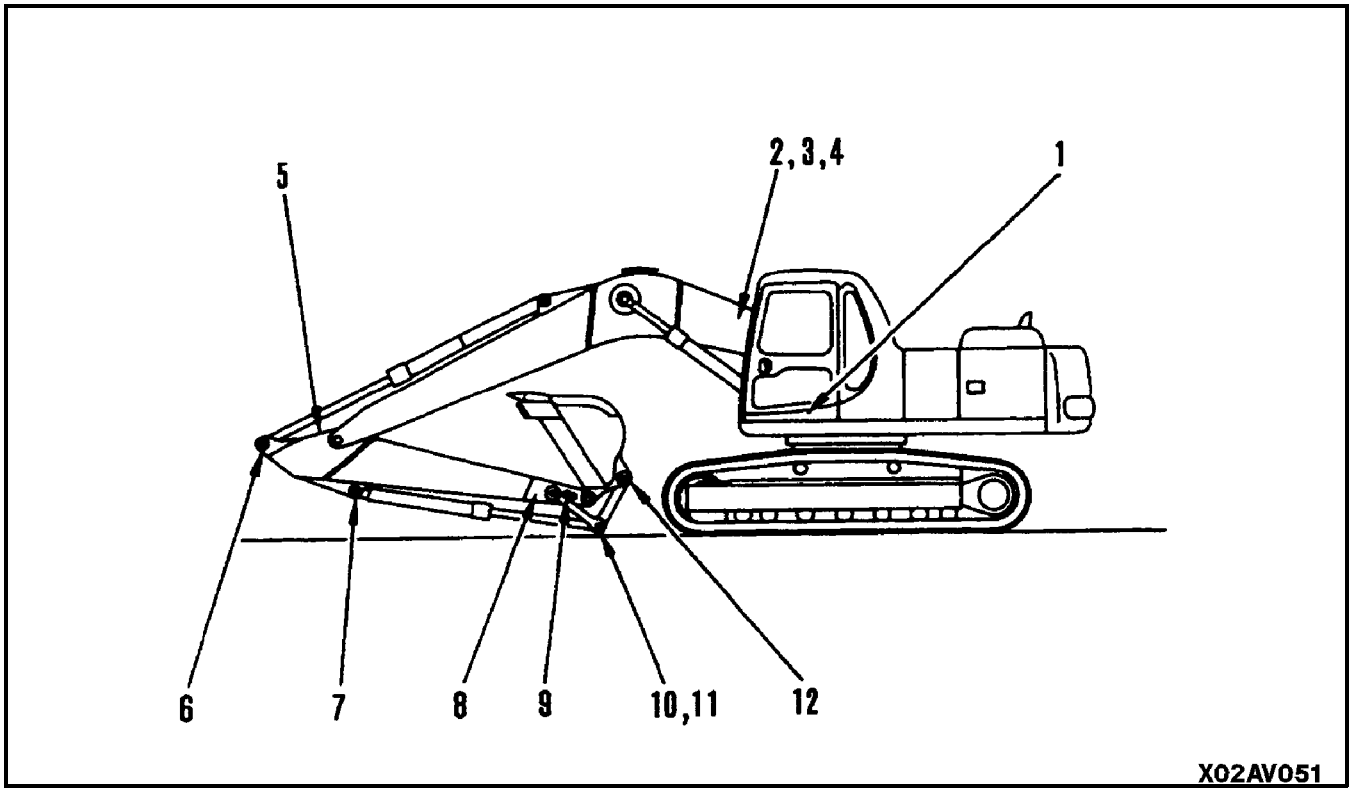

1. Boom cylinder foot pin (2 points)

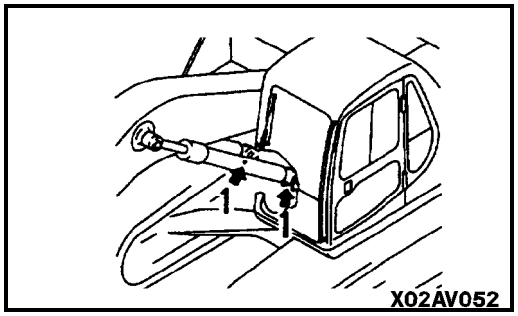

https://truckmanualshub.com/

2. Boom foot pin (2 points)
3. Boom cylinder rod end (2 points)
4. Arm cylinder foot pin (1 point)

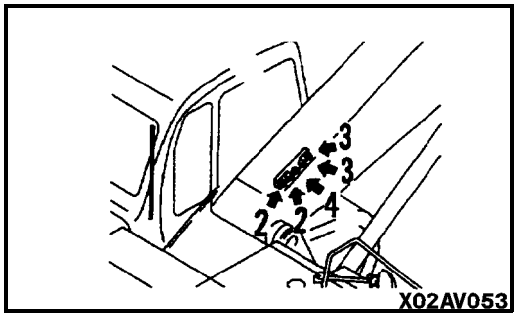

5. Boom-Arm coupling pin (l point)
6. Arm cylinder rod end (1 point)
7. Bucket cylinder foot pin (1 point)

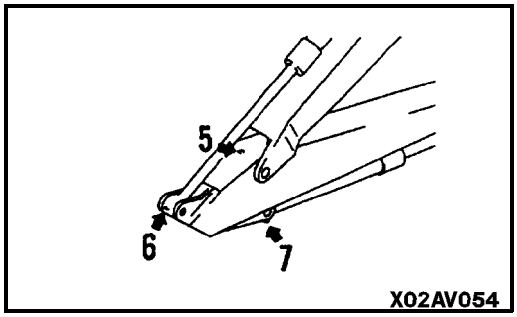

8. Arm-Link coupling pin (1 point)
9. Arm-Bucket coupling pin (1 point)

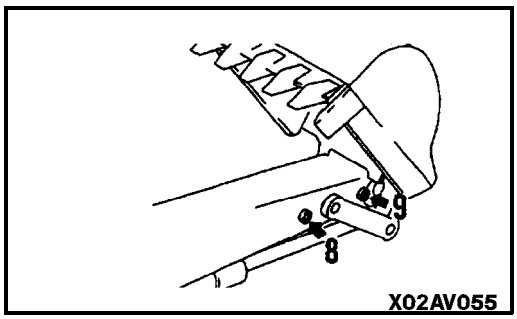

10. Link coupling pin (2 points)
11. Bucket cylinder rod end (1 point)
12. Bucket-Link coupling pin (1 point)

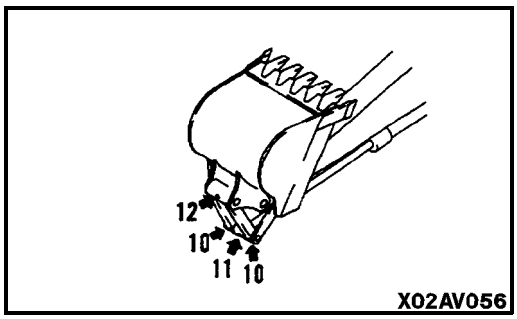

https://truckmanualshub.com/

24.4.2 CHECK OIL LEVEL IN SWING MACHINERY CASE, ADD OIL

WARNING

The oil is at high temperature immediately after the machine has been operated. Wait for the oil to cool down before carrying out this check.

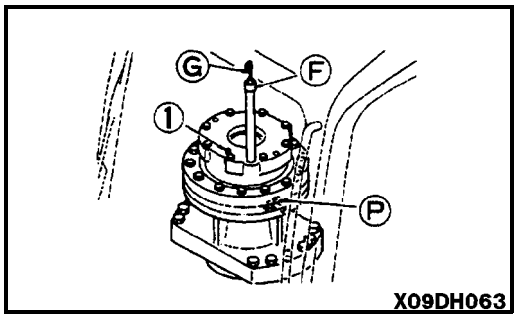

1. Remove dipstick Ⓖ and wipe the oil from the dipstick with a cloth.
2. Insert dipstick Ⓖ fully in the guide.
3. When dipstick Ⓖ is pulled out, if the oil level is between the H and L marks of the gauge, oil level is proper.
4. If the oil does not reach the L mark on dipstick Ⓖ, add engine oil through dipstick insertion hole Ⓕ.
   When refilling, remove bleeding plug ①.

For details of the oil to use, see 20 USE OF FUEL, COOLANT AND LUBRICANTS ACCORDING TO AMBIENT TEMPERATURE on page 3-12.

5. If the oil level exceeds the H mark on the dipstick, loosen drain valve Ⓟ to drain the excess oil.
6. After checking oil level or adding oil, insert the dipstick into the hole and install air bleeding plug ①.

24.4.3 DRAIN WATER AND SEDIMENT FROM FUEL TANK

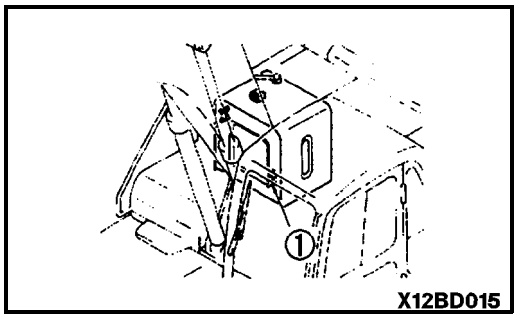

1. Carry out this procedure before operating the machine.
2. Prepare a container to catch the fuel that is drained.
3. Open valve ① at the bottom of the tank and drain the sediment and water that has accumulated at the bottom together with fuel.
   When doing this, be careful not to get fuel on yourself.
4. When only clean fuel comes out, close drain valve ①.

NOTICE

Never use trichlene for washing the inside of the tank.

https://truckmanualshub.com/

24.5 EVERY 250 HOURS SERVICE

24.5.1 CHECK OIL LEVEL IN FINAL DRIVE CASE, ADD OIL

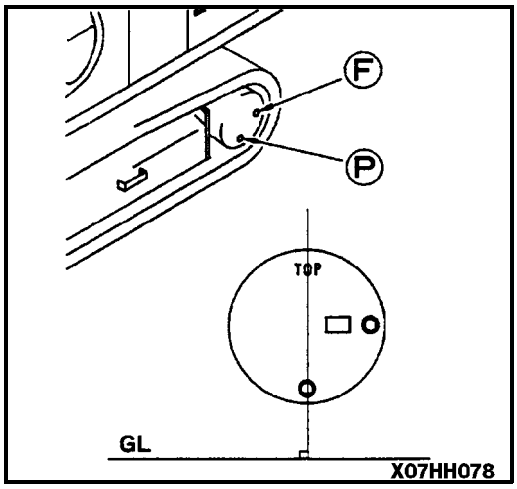

WARNING

- **The oil is at high temperature immediately after the machine has been operated. Wait for the oil to cool down before starting the operation.**
- **If there is still pressure remaining inside the case, the oil or plug may fly out.**
  Loosen the plug slowly to release the pressure.

- Prepare a handle.

1. Set the TOP mark (UP mark for PC250LC) at the top, with the TOP mark (UP mark for PC250LC) and plug Ⓟ perpendicular to the ground surface.

2. Remove plug Ⓕ using the handle. When the oil level reaches a point 10 mm below the bottom of the plug hole, the correct amount of oil has been added.

3. If the oil level is too low, install plug Ⓕ, operate the travel levers, and drive forward or in reverse to rotate the sprocket one turn. Then repeat Step 2 to check again.

4. If the oil level is still too low, add engine oil through the hole in plug Ⓕ until the oil overflows.

For details of the oil to use, see 20 USE OF FUEL, COOLANT AND LUBRICANTS ACCORDING TO AMBIENT TEMPERATURE on page 3-12.

5. After checking, install plug Ⓕ.

https://truckmanualshub.com/

24.5.2 CHECK LEVEL OF BATTERY ELECTROLYTE

WARNING

- **To avoid gas explosions, do not bring fire or sparks near the battery.**
- **Battery electrolyte is dangerous. If it gets in your eyes or on your skin, wash it off with large amounts of water, and consult a doctor.**

Carry out this check before operating the machine.

1. Open the battery box cover on the right side of the machine.
2. Remove cap ①, and check that the electrolyte is at the specified level (10 to 12 mm above the plate). If the electrolyte level is low, add distilled water to the specified level.

If the battery electrolyte is spilled, add dilute sulfuric acid.

3. Clean the air hole in the battery cap, then tighten the cap securely.

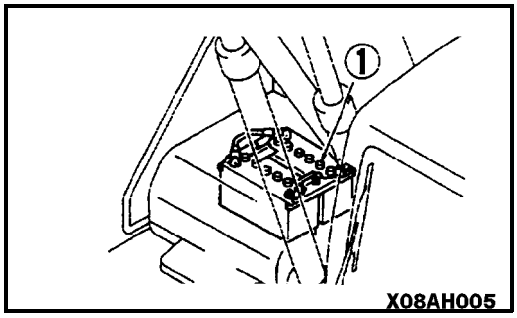

NOTICE

When adding distilled water in cold weather, add it before starting operations in the morning to prevent the electrolyte from freezing.

https://truckmanualshub.com/

24.5.3 REPLACE HYDRAULIC FILTER ELEMENT

WARNING

When removing the oil filler cap, turn it slowly to release the internal pressure before removing it.

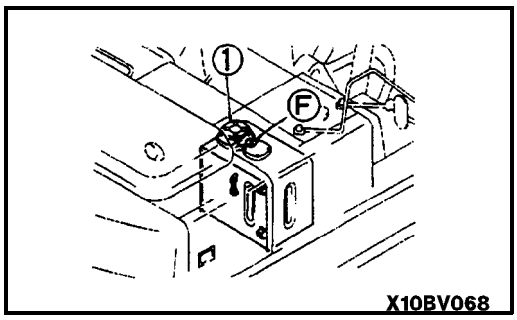

1. Remove the cover over the hydraulic tank.
2. Remove the cap from oil filler Ⓕ, and release the internal pressure.
3. Loosen 4 bolts, then remove cover ①.
   When doing this, the cover may fly out under the force of spring ②, so hold the cover down when removing the bolts.
   Tightening torque: 95.6 ± 12.3 Nm (9.75 ± 1.25 kgm)
4. After removing spring ② and valve ③, take out element ④.
5. Clean the removed parts in diesel oil.
6. Install a new element in the place where old element ④ was installed.
7. Set valve ③ and spring ② on top of the element.
8. Set cover ① in position, push it down by hand, and install the cover with the mounting bolts.
9. Screw in the oil filler cap and install the cover.
10. To bleed the air, start the engine according to 12.2 STARTING ENGINE on page 2-49 and run the engine at low idle for 10 minutes.
11. Stop the engine.

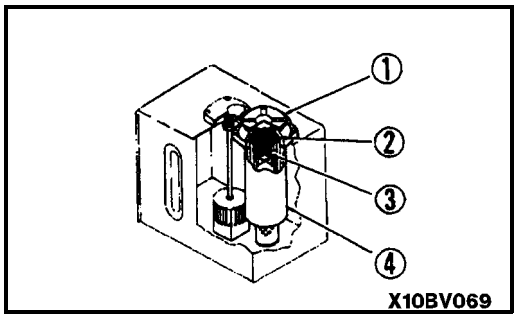

REMARK

After halting work, operate the machine at low idle for more than 5 minutes to eliminate air bubbles in the oil inside the tank.

12. Check for oil leakage and wipe off any spilled oil.

When the hydraulic breaker is installed, the hydraulic oil deteriorates earlier than in normal bucket digging work.
The first element replacement should be at 100 to 150 hours for new machines. Thereafter, replace the element according to the table on the right.
Replace the additional filter element for the breaker approx. every 250 hours (when breaker operating ratio is more than 50%) according to the table on the right. (See 24.2.11 REPLACE ADDITIONAL BREAKER FILTER ELEMENT on page 3-42.)

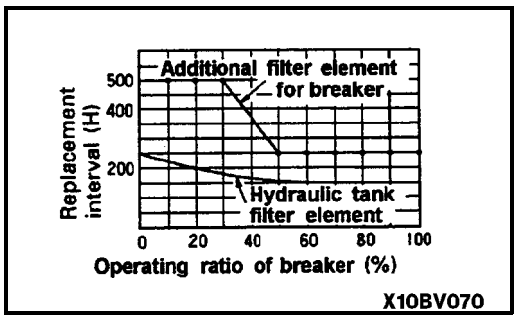

https://truckmanualshub.com/

24.5.4 LUBRICATE SWING CIRCLE
PC200, 200LC, 210LC, 220LC: 2 POINTS
PC250: 3 POINTS

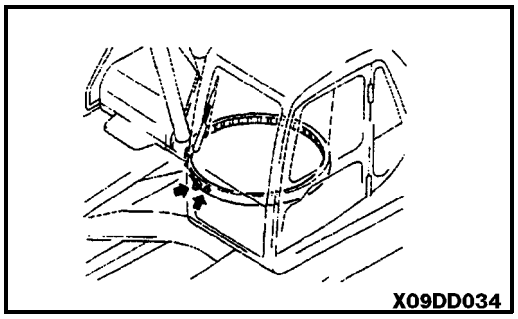

1. Lower the work equipment to the ground.

2. Using a grease gun, pump in grease through the grease fittings shown by arrows.

3. After greasing, wipe off all the old grease that was pushed out.

https://truckmanualshub.com/

24.5.5 CHECK FAN BELT TENSION, ADJUST

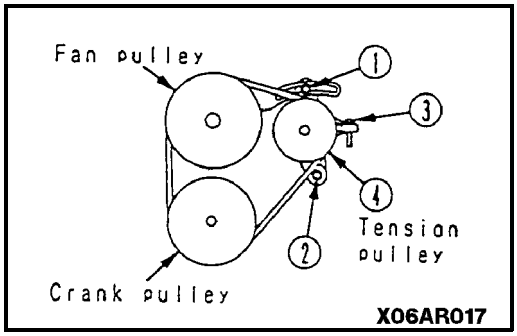

Checking

The belt should normally deflect by about 5 - 6 mm when pressed with the finger (with a force of approximatly 6 kg.) at a point midway between the fan pulley and tension pulley.

Adjusting

1. Loosen bolts and nuts ① and ②.

2. Loosen the lock nut and move tension pulley ④ with adjustment bolt ③ so that the belt deflects about 5 - 6 mm (with a force of approximatly 6kg.).

3. Tighten the bolts and nuts ① and ② to fix tension pulley ④ in position.

4. Check each pulley for damage, wear of the V-groove, and wear of the V-belt. In particular, be sure to check that the V-belt is not touching the bottom of the V-groove.

5. Replace the belt if it has stretched, leaving no allowance for adjustment, or if there is a cut or crack on the belt.

6. When the new belt is set, readjust it after operating for an hour.

https://truckmanualshub.com/

24.5.6 CHECK AIR CONDITIONER COMPRESSOR BELT TENSION, ADJUST

Checking

1. Remove belt guard ①.

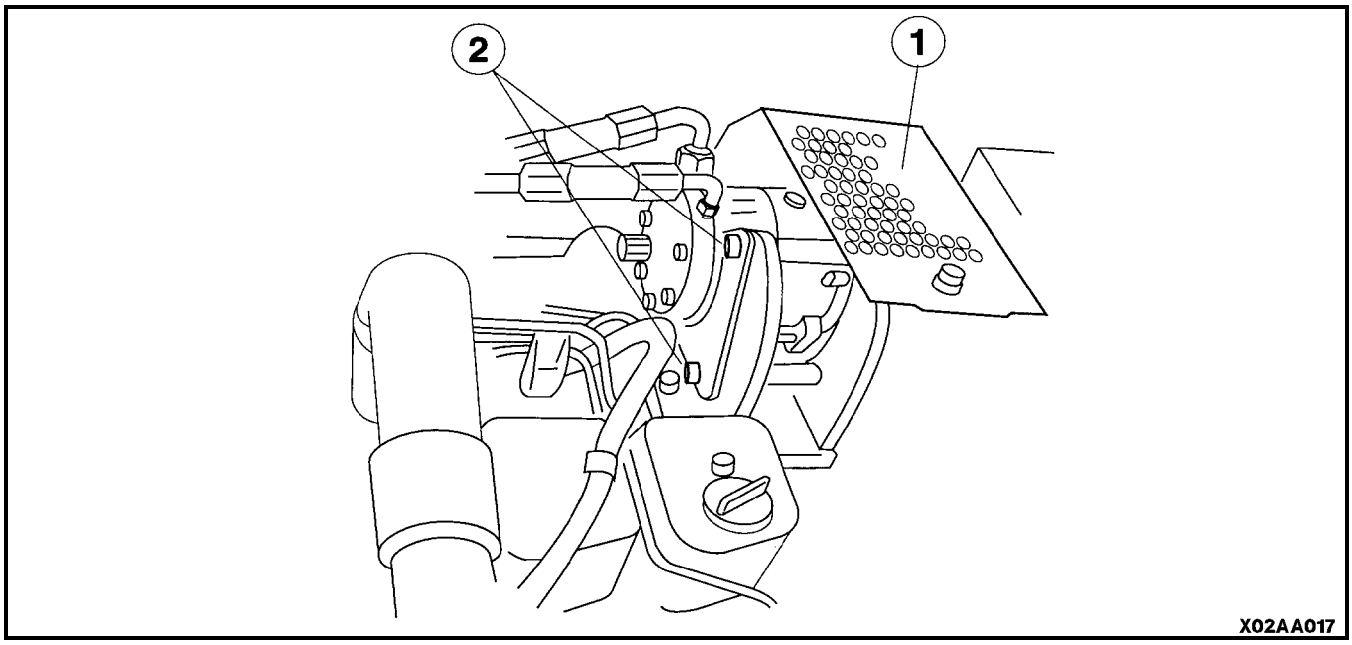

2. Press compressor drive belt midway between fan pulley and compressor pulley. The belt should normally deflect by about 15-18 mm when pressed with the finger (with a force of approx. 6 kg).

ADJUSTING

1. Loosen two nuts and bolts ②.
2. Carefully lever compressor housing as shown to tighten belt within tightness criteria. Tighten lower bolt to hold in position.
3. Tighten upper bolt.
4. Check each pulley for damage, wear of the V-groove and wear of the V-belt. In particular, be sure to check that the V-belt is not touching the bottom of the V-groove.
5. Replace belt if it has stretched, leaving no allowance for adjustment, or if there is a cut or crack on belt.
6. Reinstall belt guard.
7. When the new belt is set, readjust it after operating for one hour.

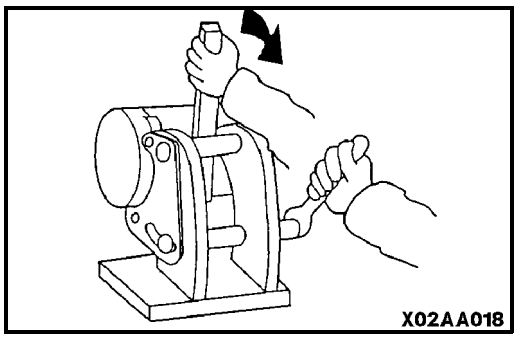

https://truckmanualshub.com/

24.6 EVERY 500 HOURS SERVICE

Maintenance for every 100 and 250 hours should be carried out at the same time.

24.6.1 REPLACE FUEL FILTER CARTRIDGE AND FUEL-WATER SEPERATOR

WARNING

- **Engine is at high temperature immediately after the machine has been operated. Wait for engine to cool down before replacing the filter.**
- **Do not bring fire or sparks near the fuel.**
- **When cranking the engine, confirm all safety procedures for around the engine, as the engine may start.**

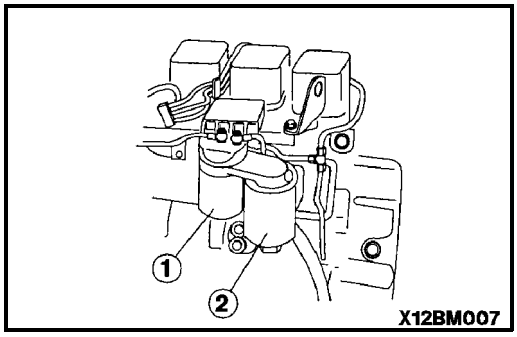

Prepare a filter wrench and a container to catch the fuel.

1. Set the container to catch the fuel under the filter cartridge.
2. Using a filter wrench, turn filter cartridge ① counterclockwise to remove it. Repeat for secondary fuel filter cartridge ②.
3. Clean the filter holder, fill a new filter cartridge with clean fuel, coat the packing surface with engine oil, then install it to the filter holder.
4. When installing, tighten until the packing surface contacts the seal surface of the filter holder, then tighten it up ½ of a turn.

   If the filter cartridge is tightened too far, the packing will be damaged and this will lead to leakage of fuel. If the filter cartridge is too loose, fuel will also leak from the packing, so always tighten to the correct amount.

5. After replacing the fuel filter cartridge, bleed the air.
   Bleed the air according to the following procedures.

https://truckmanualshub.com/

BLEEDING THE FUEL SYSTEM

Controlled venting is provided at the injection pump through the fuel drain manifold. Small amounts of air introduced by changing the filters or injection pump supply line will be vented automatically, if the fuel filter is changed in accordance with the instructions.
However, manual bleeding will be required if:

- The fuel filter is not filled prior to installation.
- The injection pump is replaced.
- The high pressure fuel lines are replaced.

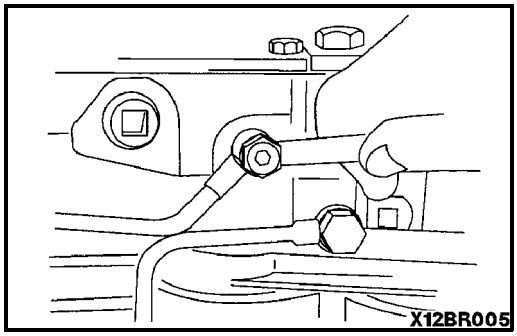

VENTING THE LOW PRESSURE LINES AND FUEL FILTER

1. Open the bleed screw. (wrench size: 10 mm)

2. Operate the hand lever until the fuel flowing from the fitting is free of air.

3. Air/fuel can be pumped from this location with the hand lever on the lift pump if the fuel solenoid valve is energized.

4. Air can be vented from both pumps through the fuel drain manifold line by operating the starting motor.
   When using the starting motor to vent the system, do not engage it for more than 30 seconds at a time; wait (2) minutes between engagements.

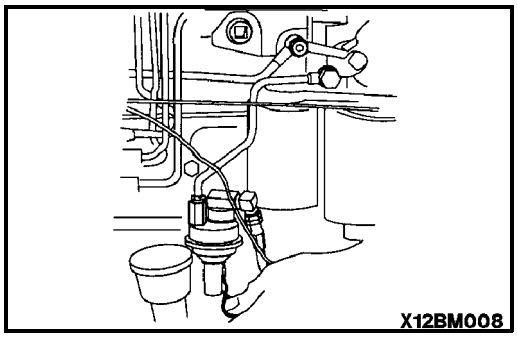

WARNING

It is necessary to put the engine in the "RUN" position. Because the engine may start, be sure to follow all the safety precautions. Use the normal starting procedure.

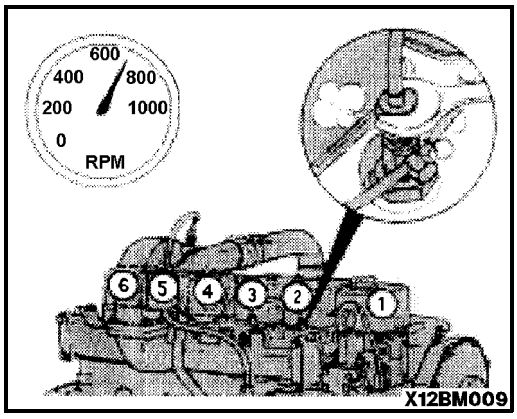

VENTING THE HIGH PRESSURE LINES

Loosen the fittings at the injectors, and crank the engine to allow entrapped air to bleed from the lines. Tighten the fittings to 30 N●m (wrench size: 17 mm).

CAUTION: High pressure could cause penetration of the skin.

WARNING

Do not bleed a hot engine as this could cause fuel to spill onto a hot exhaust manifold creating a danger of fire.
Start the engine and vent one line at a time until the engine runs smoothly.

https://truckmanualshub.com/

24.6.2 CHECK SWING PINION GREASE LEVEL, ADD GREASE

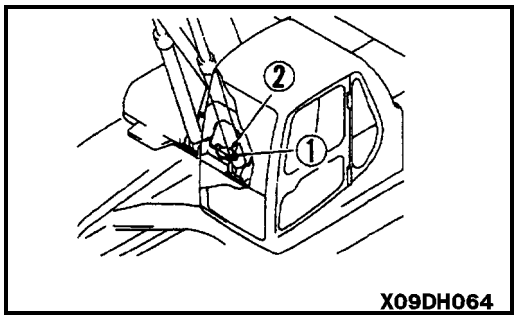

Prepare a scale (ruler).

1. Remove bolts ① (2 bolts) on the top of the revolving frame and remove cover ②.

2. Insert a scale into the grease and check that the height of the grease in the portion where the pinion passes is at least 28 mm (1.1 in). Add more grease if necessary.

3. Check if the grease is milky white. If it is milky white, it is necessary to change the grease. Please contact your distributor.

The total amount of grease is 21 l. (PC250LC-6: 34 l)

4. Install cover ② with bolts ①.

https://truckmanualshub.com/

24.6.3 CLEAN AND INSPECT RADIATOR FINS, OIL COOLER FINS, AFTERCOOLER FINS AND CONDENSER FINS (ONLY FOR MACHINES EQUIPPED WITH AIR CONDITIONER)

WARNING

If compressed air, steam, or water hit your body directly, there is danger of injury. Always wear protective glasses, mask, and safety shoes.

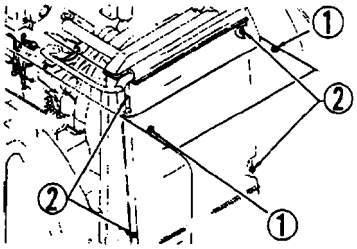

X06AH045

1. Open the engine hood and rear door on the left side of the machine. Loosen bolts ① and remove the radiator front cover.

2. When cleaning radiator fins, remove the four bolts ② fixing the oil cooler to the radiator. Tilt the oil cooler outward, then clean the radiator fins.

3. Blow off mud, dust or leaves clogging the radiator fins, oil cooler fins and aftercooler fins using compressed air.
   At the same time, clean the net in front of the oil cooler.
   Clean the condenser fins on machines equipped with the air conditioner.
   Steam or water may be used instead of compressed air.
   After cleaning, secure the oil cooler with bolts ② and install the cover with bolt ①.

REMARK

The aftercooler is installed only on PC220LC and PC250LC.

4. Check the rubber hose. Replace with a new one if the hose is found to have cracks or to be hardened by aging.
   Further, check hose clamps for looseness.

NOTICE

To prevent damage to the fins, apply compressed air from an appropriate distance. Damaged fins may cause water leakage or overheating. In a dusty site, check the fins daily for blockage, irrespective of the maintenance interval.

https://truckmanualshub.com/

24.6.4 CLEAN INTERNAL AND EXTERNAL AIR FILTERS OF AIR CONDITIONER SYSTEM (ONLY FOR MACHINES EQUIPPED WITH AIR CONDITIONER)

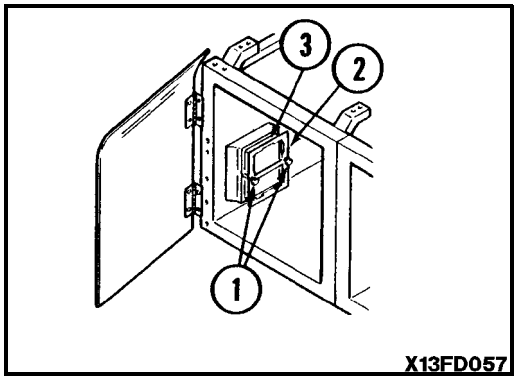

1. Open front left door and remove 2 knobs ① from filter assembly.
2. Remove filter bracket ② and filter ③ from cab. Retain spacers ④.
3. Clean filter ③ using compressed air. If the filters are stained by oil or are very dirty, wash with a neutral detergent. After washing, dry thoroughly, then reinstall.

If a clogged filter cannot be cleaned with air or water, replace with a new one.

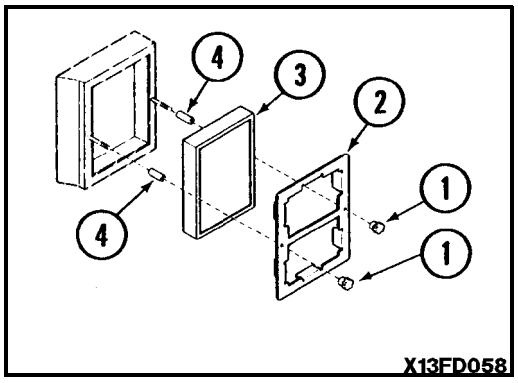

NOTICE

The normal cleaning interval is 500 hours. However, if the filters are used at a dusty site, shorten this interval.

24.6.5 REPLACE HYDRAULIC TANK BREATHER ELEMENT

WARNING

Wait for the oil to cool down before replacing the breather element. When removing the oil filler cap, turn it slowly to release the internal pressure, then remove it carefully.

1. Remove the cover over the hydraulic tank and remove the cap of oil filler Ⓕ.
2. Replace element ① inside the cap with a new one.

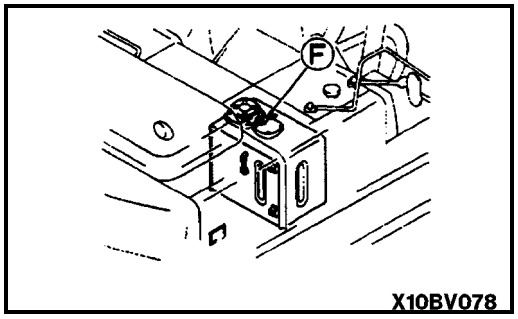

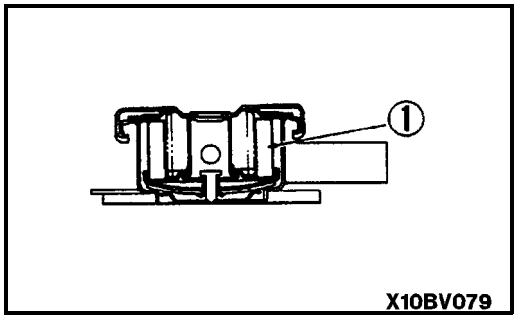

https://truckmanualshub.com/

24.6.6 CHANGE OIL IN ENGINE OIL PAN, REPLACE ENGINE OIL FILTER CARTRIDGE

WARNING

The oil is at high temperature after the engine has been operated, so never change the oil immediately after finishing operations. Wait for the oil to cool down before changing it.

Prepare the following
- Container to catch drained oil: Min 26.3 l capacity
- Refill capacity: 24.0 l
- Filter wrench

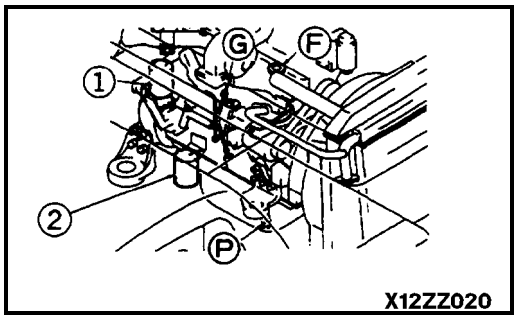

X12ZZ020

1. Place a drain container under drain valve Ⓟ located on the bottom of the machine.

2. Loosen drain valve Ⓟ slowly to avoid getting oil on yourself, and drain the oil.

3. Check the drained oil, and if there are excessive metal particles or foreign material, please contact your distributor.

4. Install drain valve Ⓟ.

5. Open the engine hood. Using the filter wrench from the upper side of the engine, turn filter cartridge ① counterclockwise to remove it.
   In particular, if this operation is carried out immediately after stopping the engine, a large amount of oil will come out, so wait for 10 minutes before starting the operation.

6. Clean the filter holder, coat the packing surface of a new filter cartridge with engine oil (or coat it thinly with grease), then install it to the filter holder.

REMARK

Confirm that no remnants of old packing still adhere to the filter holder as this may result in oil leakage.

7. When installing, tighten until the packing surface contacts the seal surface of the filter holder, then tighten it up further ½ of a turn.

8. After replacing the filter cartridge, add engine oil through oil filler Ⓕ until the oil level is between the H and L marks on dipstick Ⓖ.

For details of the oil to use, see 20 USE OF FUEL, COOLANT AND LUBRICANTS ACCORDING TO AMBIENT TEMPERATURE on page 3-12.

9. Run the engine at low idle for a short time, then stop the engine, and check that the oil level is between the H and L marks on the dipstick. For details, see 24.3 CHECK BEFORE STARTING on page 3-44.

https://truckmanualshub.com/

24.6.7 REPLACE IN-LINE FUEL STRAINER

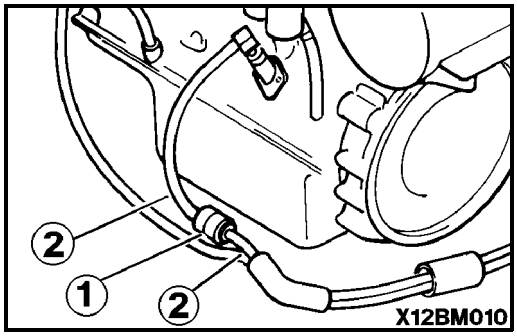

1. Disconnect fuel hoses ② and plug.

2. Remove and discard the in-line fuel strainer ①.

3. Install the new in-line fuel strainer.

Remark

The arrow mark on the strainer indicates the fuel flow direction. Take note of the direction when removing the strainer and orient the arrow on the replacement in the same direction.

Bleed the air in the fuel system using the procedure in 24.6.1 REPLACE FUEL FILTER CARTRIDGE AND FUEL-WATER SEPERATOR on page 3-57.

https://truckmanualshub.com/

24.7 EVERY 1000 HOURS SERVICE

Maintenance for every 100, 250 and 500 hours should be carried out at the same time.

24.7.1 CHANGE OIL IN SWING MACHINERY CASE

WARNING

The oil is at high temperature immediately after the machine has been operated. Wait for the oil to cool down before carrying out maintenance.

- Container to catch drained oil: Min. 5.5 l capacity
- Refill capacity: 5.5 l

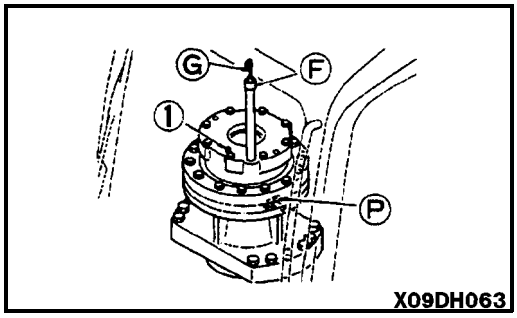

1. Set an oil container under drain valve Ⓟ under the machine body.
2. Loosen drain valve Ⓟ under the body, drain the oil, then tighten the drain valve again.
3. Remove dipstick Ⓖ and bleeding plug ①.
   Add the specified amount of engine oil through gauge hole Ⓕ.

For details of the oil to use, see 20 USE OF FUEL, COOLANT AND LUBRICANTS ACCORDING TO AMBIENT TEMPERATURE on page 3-12.

4. After refilling, install bleeding plug ①.
5. Wipe off oil on the dipstick with a clean cloth.
6. Insert dipstick Ⓖ into the gauge pipe thoroughly and then pull it out again.
7. When the oil level is between the H and L marks, on dipstick Ⓖ it is normal. If the oil does not reach the L mark, add more oil through oil filler Ⓕ.
8. If the oil level exceeds the H mark, drain the excess engine oil from drain valve Ⓟ, and check the oil level again.

https://truckmanualshub.com/

24.7.2 CHECK OIL LEVEL IN DAMPER CASE, ADD OIL

WARNING

The oil is at high temperature immediately after the machine has been operated. Wait for the oil to cool down before carrying out maintenance.

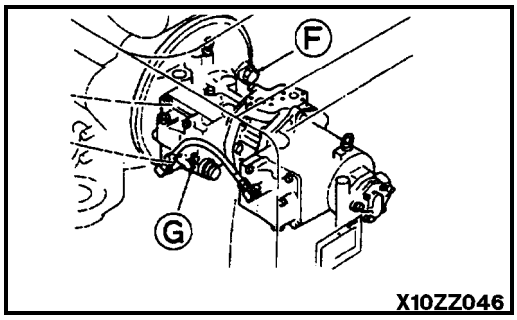

NOTICE

Park the machine on flat ground and stop the engine. After waiting for more than 30 minutes after stopping the engine, check the oil level.

1. Open the door on the right side of the machine.

2. Remove plug Ⓖ and check the oil level. If the oil is up to near the bottom of the plug hole, it is normal.
   If insufficient, remove plug Ⓕ and add oil through the hole of plug Ⓕ up to the bottom of the plug hole Ⓖ.

For details of the oil to use, see 20 USE OF FUEL, COOLANT AND LUBRICANTS ACCORDING TO AMBIENT TEMPERATURE on page 3-12.

NOTICE

If excess oil is supplied, drain it to the specified amount to avoid overheating.

3. Install plugs Ⓖ and Ⓕ.

4. Close the door.

24.7.3 CHECK ALL TIGHTENING PARTS OF TURBOCHARGER

Contact your distributor to have the tightening portions checked.

24.7.4 CHECK PLAY OF TURBOCHARGER ROTOR

Contact your distributor to check the play of the turbocharger rotor.

https://truckmanualshub.com/

24.7.5 CHECK ALTERNATOR BELT TENSIONER BEARING, BELT AND FAN HUB

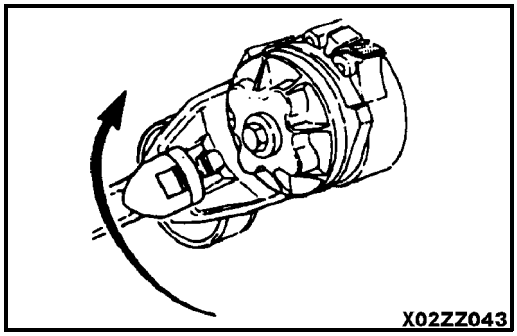

- **Check fan belt**

Remove the drive belt by lifting tensioner using a 3/8 inch square drive wrench to release the tension.

Inspect the belt for damage.

Replace belt if any damage is found.

- **Check tensioner bearing**

With the fan belt removed, rotate the fan hub. The tensioner pulley should spin freely with no rough spots detected under hand pressure.

- Check the tensioner bearing.
- Replace bearing if damaged.
- Check fan hub. With the drive belt removed, rotate fan hub.

  The fan hub should spin freely without excessive end play.

- Check the fan hub bearing.
- Replace bearing if damaged.

https://truckmanualshub.com/

24.8 EVERY 2000 HOURS SERVICE

Maintenance for every 100, 250, 500 and 1000 hours should be carried out at the same time.

24.8.1 CHANGE OIL IN FINAL DRIVE CASE

WARNING

- **The oil is at high temperature immediately after the machine has been operated. Wait for the oil to cool down before carrying out maintenance.**
- **If there is still pressure remaining inside the case, the oil or plug may fly out.**
  Loosen the plug slowly to release the pressure.

Prepare the following.
- Container to catch drained oil: Min. 4.4 l capacity **(PC250LC- 10 l)**
- Refill capacity: 4.2 l **(PC250LC- 9.5 l)**

- Handle

1. Set the TOP mark (UP mark for PC250LC) at the top, with the TOP mark (UP mark for PC250LC) and plug Ⓟ perpendicular to the ground surface.

2. Set a container under plug Ⓟ to catch the oil.

3. Remove plugs Ⓟ and Ⓕ with the handle and drain the oil.

REMARK
Check the 0-rings in the plugs for damage. If necessary, replace with new ones.

4. Screw in plug Ⓟ.

5. Add engine oil through the hole of plug Ⓕ.

For details of the oil to use, see 20 USE OF FUEL, COOLANT AND LUBRICANTS ACCORDING TO AMBIENT TEMPERATURE on page 3-12.

6. When the oil overflows from the hole of plug Ⓕ, install plug Ⓕ. Tightening torque of plugs Ⓟ and Ⓕ: 70 ± 10 Nm

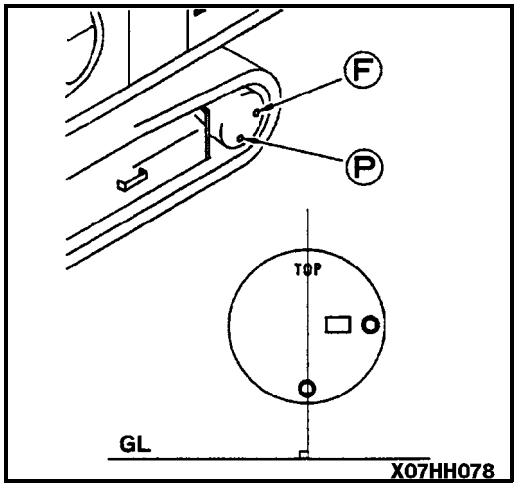

https://truckmanualshub.com/

24.8.2 CLEAN HYDRAULIC TANK STRAINER

1. Loosen 4 bolts, then remove cover ①.
   When doing this, the cover may fly out under the force of spring ②, so push the cover down when removing the bolts.

2. Pull up the top of rod ③, and remove spring ② and strainer ④.

3. Remove the dirt stuck to strainer ④, then wash it in clean diesel oil or flushing oil.
   If strainer ④ is damaged, replace it with a new one.

4. Refit strainer ④ by inserting it into tank projecting part ⑤.

5. Install cover ① with bolts.

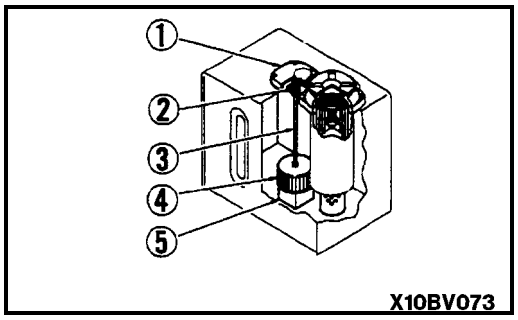

24.8.3 CLEAN, CHECK TURBOCHARGER

Contact your distributor for cleaning or inspection.

24.8.4 CHECK ALTERNATOR, STARTING MOTOR

The brush may be worn, or the bearing may have run out of grease, so contact your distributor for inspection or repair.
If the engine is started frequently, carry out inspection every 1000 hours.

24.8.5 CHECK VIBRATION DAMPER

Check that there are no cracks or peeling in the outside surface of the rubber.
If any cracks or peeling are found, contact your distributor to have the parts replaced.

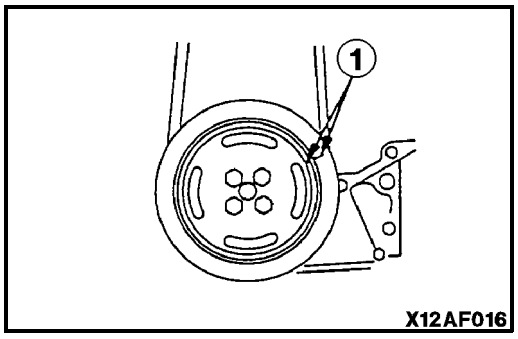

24.8.6 CHANGE ANTIFREEZE

Follow the procedure of 24.2.2 CLEAN INSIDE OF COOLING SYSTEM on page 3-27 for draining and refilling the cooling system.

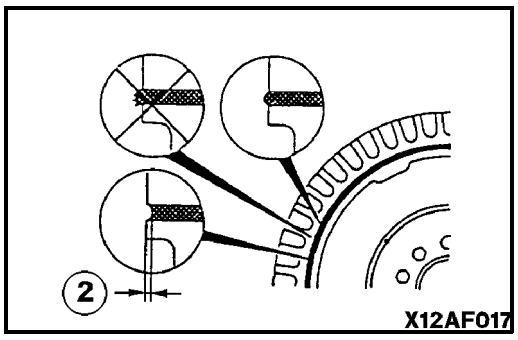

https://truckmanualshub.com/

24.8.7 CHECK AND ADJUST VALVE CLEARANCE

Adjusting the valves

1. Remove the valve covers.

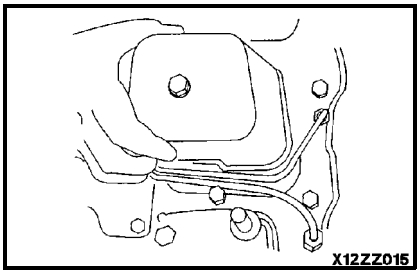

2. Locate top dead center (TDC) for cylinder Number 1 by turning engine slowly while pressing on the engine timing pin Ⓐ.

3. When the pin engages the hole in the crankshaft gear, Cylinder Number 1 is at TDC on the compression stroke.

CAUTION: Be sure to disengage the pin after locating TDC.

Valve clearance: Intake: 0-254 mm
Exhaust: 0-508 mm

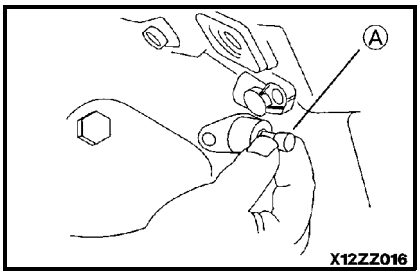

Check/set valves with engine cold - below 60°C (140°F).

NOTE:

The clearance is correct when some resistance is "felt" when the feeler gauge is slipped between the valve stem and the rocker lever.

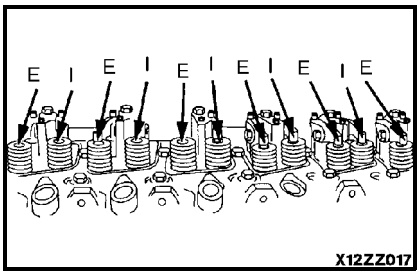

With the engine in TDC position, check and adjust the following valve clearances:

Intake (I) cylinders: 1,2,4
Exhaust (E) cylinders: 1,3,5
Tighten the locknut to 24 N●m and recheck the valve lash.

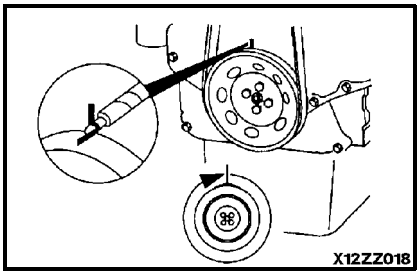

Mark the pulley and rotate the crankshaft 360 Degrees.
Be sure the timing pin is disengaged before rotating.
The timing pin will not engage in this position. With the engine in this position, check and adjust the following valve clearances.

Intake (I) cylinders: 3,5,6
Exhaust (E) cylinders: 2,4,6

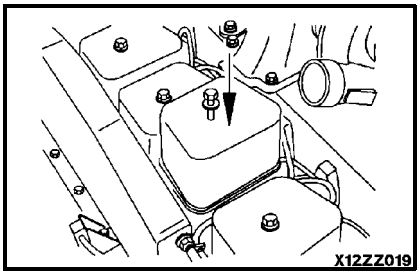

Tighten the locknut to 24 N●m and re-check the valve lash.
Reinstall the valve covers and tighten capscrews to 24 N●m

https://truckmanualshub.com/

24.9 EVERY 4000 HOURS SERVICE

Maintenance for every 100, 250, 500, 1000 and 2000 hours should be carried out at the same time.

24.9.1 CHECK WATER PUMP

Check that there isn't any oil leakage, coolant leakage, or clogging of the drain hole. If any abnormality is found, contact your distributor for disassembly and repair or replacement.

https://truckmanualshub.com/

24.10 EVERY 5000 HOURS SERVICE

Maintenance for every 100, 250, 500 and 1000 hours should be carried out at the same time.

24.10.1 CHANGE OIL IN HYDRAULIC TANK

WARNING

The oil is at high temperature immediately after the machine has been operated. Wait for the oil to cool down before changing the oil. When removing the oil filler cap, turn it slowly to release the internal pressure, then remove it carefully.

Prepare the following.
- Container to catch drained oil: min. 166 l capacity
- Refill, capacity: 166 l
- Prepare a handle for the socket wrench set.

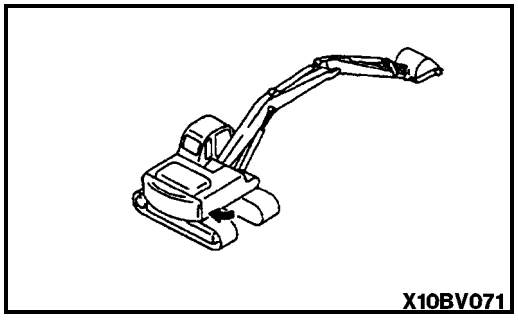
X10BV071

1. Swing the upper structure so that the drain plug under the hydraulic tank comes at the middle of the left or right track.
2. Retract the arm and bucket cylinders to the stroke end, then lower the boom and put the bucket teeth in contact with the ground.
3. Lock the safety lock lever and stop the engine.
4. Remove the cover over the hydraulic tank and remove the cap of oil filler Ⓕ.
5. Set the oil container under the drain plug under the machine. Using the handle, remove drain plug Ⓟ and drain the oil.
   Check the 0-ring installed to plug Ⓟ, and if it is damaged, replace the 0-ring. After draining the oil, tighten drain plug Ⓟ.
   Tightening torque: 69 ± 10 Nm.

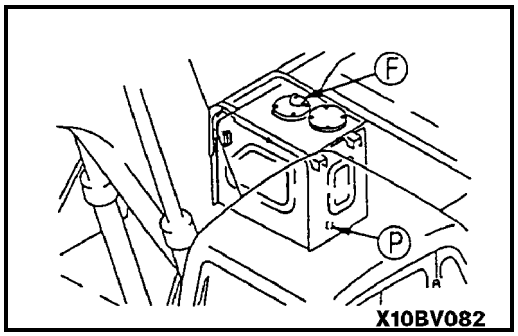

X10BV082

When removing drain plug Ⓟ, be careful not to get oil on yourself.

6. Add the specified amount of engine oil through oil filler port Ⓕ.
   Check that the oil level is between H and L on the sight gauge.

For type of oil to be used, see 20 USE OF FUEL AND LUBRICANTS ACCORDING TO AMBIENT TEMPERATURE on page 3-12.

https://truckmanualshub.com/

NOTICE

When the hydraulic breaker is installed, the hydraulic oil deteriorates earlier than in normal bucket digging work. Therefore, replace the hydraulic oil according to the chart at the right.

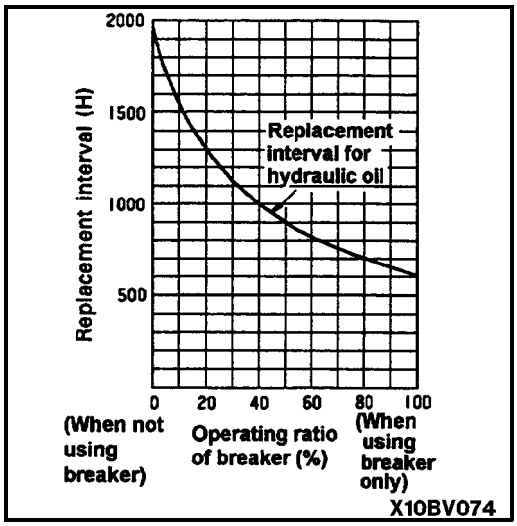

7. After replacing hydraulic oil and cleaning or replacing filter element and strainer, bleed air from the circuit according to the following procedure.

Air bleeding procedure

Follow Steps 1 to 7 to bleed the air.

1. Bleeding air from pump

1) Loosen air bleeding plug ①, and check that oil oozes out from the air bleed plug.

2) If oil does not ooze out from the plug, remove the drain hose from the pump case, and add oil through drain port ② to fill the pump case with hydraulic oil.

   Oil will come out from the drain hose when it is removed, so secure the mouth of the hose at a place higher than the oil level inside the hydraulic tank.

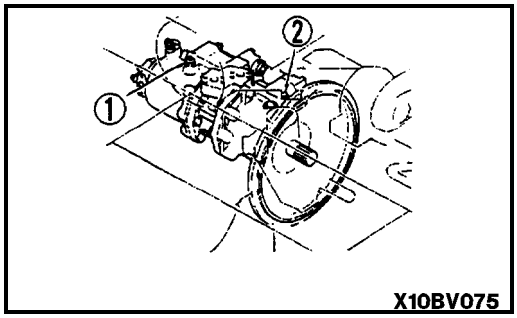

3) After completion of the air bleed operation, tighten air bleeding plug ①, then install the drain hose.

NOTICE

If the drain hose is installed first, oil will spurt out from the hole of plug ①.

If the pump is operated without filling the pump case with hydraulic oil, abnormal heat will be generated and this may lead to premature damage of the pump.

2. Starting engine

Start the engine according to 12.2 STARTING ENGINE on page 2-49. Keep running the engine at low idle for 10 minutes, and continue with the next step.

https://truckmanualshub.com/

3. Bleeding air from cylinders

1) Run the engine at low idle, and extend and retract each cylinder 4 - 5 times without operating it to the end of its stroke.
(Stop approx. 100 mm (4 in) before the end of the stroke)

2) Next, operate each cylinder to the end of its stroke 3 - 4 times.

3) After this, operate each cylinder 4 - 5 times to the end of its stroke to completely bleed the air.

NOTICE

If, at first, the engine is run at high speed or the cylinder is operated to the end of its stroke, the air inside the cylinder may cause damage to the piston packing or other parts.

4. Bleeding air from swing motor

1) Run the engine at low idle, loosen air bleeding plug ① and check that oil oozes out from air bleeding plug ①.

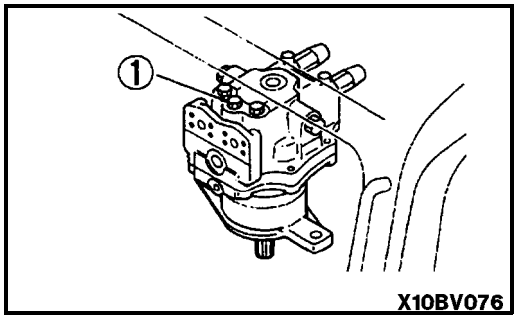

NOTICE

When doing this, do not operate the swing.

2) If oil does not ooze out, stop the engine, remove air bleeding plug ①, fill the motor case with hydraulic oil.

3) After completion of the air bleed operation, tighten air bleeding plug ①.

4) Run the engine at low idle, and swing 2 or more times slowly and uniformly to the left and right.

NOTICE

If the air is not bled from the swing motor, the bearings of the motor may be damaged.

5. Bleeding air from travel motor
(only after draining oil from travel motor case)

1) Run the engine at low idle, loosen air bleeding plug ① and if oil flows out, tighten the air bleed plug.

2) Keep the engine running at low idle, and swing the work equipment 90° to bring it to the side of the track.

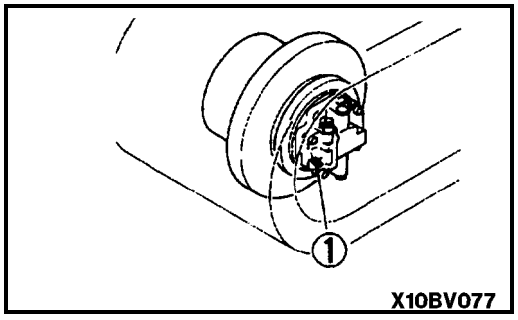

3) Jack up the machine until the track is raised slightly from the ground. Rotate the track under no load for 2 minutes. Repeat this procedure on both the left and right sides, and rotate the track equally both forward and in reverse.

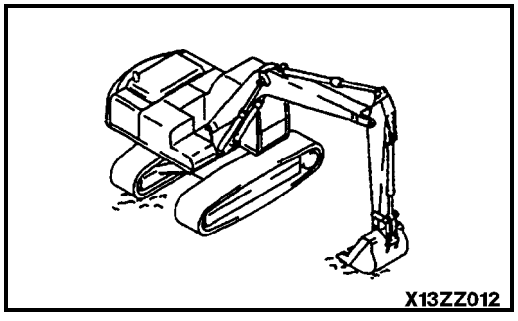

https://truckmanualshub.com/

6. Bleeding air from attachment (if installed)

For machines equipped with attachments such as the breaker, actuate the attachment pedal about 10 times to bleed the air completely from the attachment circuit while running the engine at low idle.

NOTICE

If the attachment bleeding procedure is specified by the manufacturer, bleed the attachment according to such procedure.

7. Operation

1) After completion of bleeding the air, stop the engine, and wait for at least 5 minutes before starting operations. In this way, the air bubbles are removed from the oil inside the hydraulic tank.

2) Check for any leakage of oil, and wipe off any oil that has been spilled.

https://truckmanualshub.com/

SPECIFICATIONS

https://truckmanualshub.com/

25. SPECIFICATIONS

PC200, 200LC-6
PC210LC-6

		PC200-6	PC200LC-6	PC210LC-6
WEIGHT				
● Operating weight (without operator)		20150 kg	21300 kg	23210 kg
Performance				
● Bucket capacity		See 30.2 BUCKET INSTALLATION COMBINATIONS on page 5-16		
● Travel speed	Low speed	3.0 km/h		
	Middle speed	4.1 km/h		
	High speed	5.5 km/h		
● Swing speed		12.4 rpm		
TRACK SHOE				
● Triple grouser shoe (standard)		700mm width		600mm width
ENGINE				
● Model		Komatsu S6D102E-1 diesel engine		
● Flywheel horsepower		99 kW (133 HP)/2000 rpm - net 104 kW (140 HP)/2000 rpm - gross		
● Starting motor		24 V 5.5kW		
● Alternator		24 V 50 A		
● Battery		12 V 170 Ah x 2 pieces		

https://truckmanualshub.com/

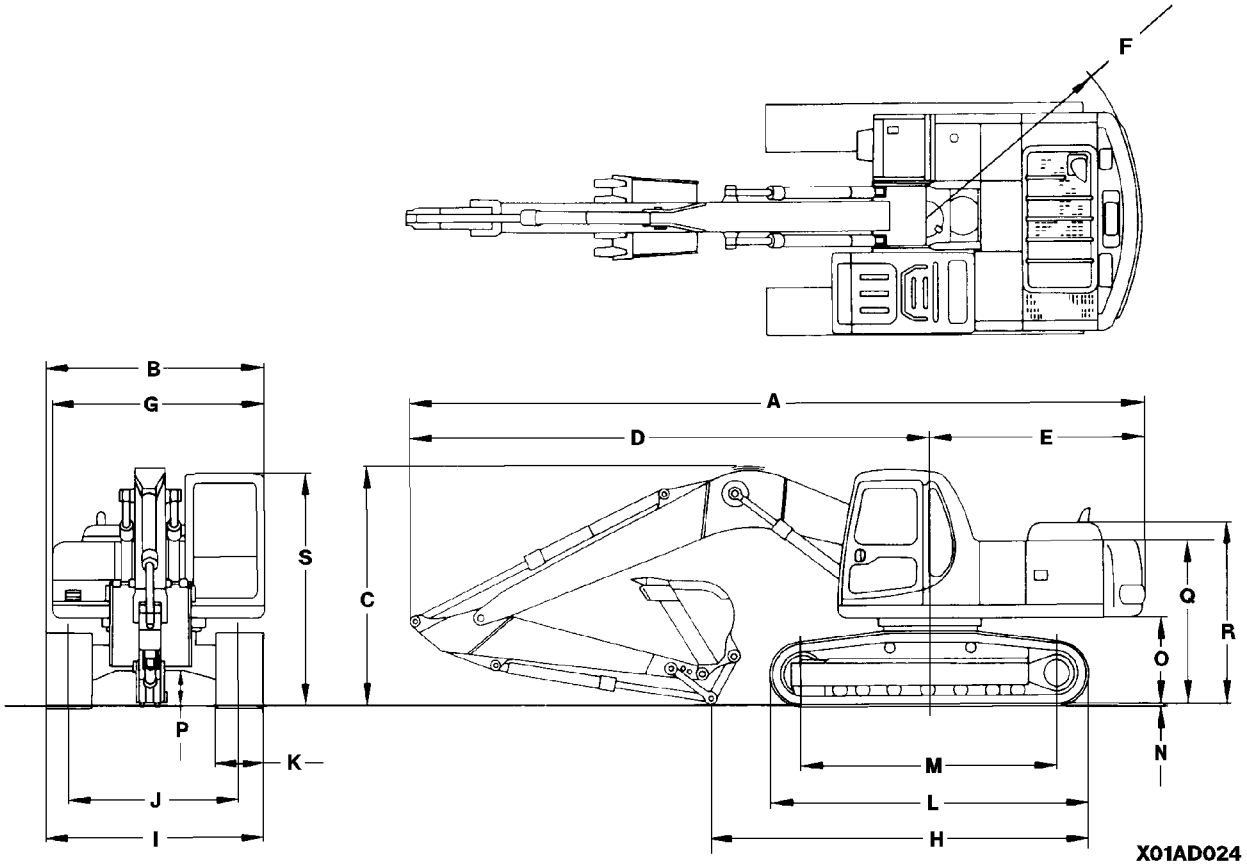

		PC200-6	PC200LC-6	PC210LC-6
A	Overall length	9425mm	9425mm	9515mm
B	Overall width	2850mm	3080mm	2980mm
C	Overall height (to top of boom)	2970mm	2970mm	2970mm
D	Boom swing radius	6685mm	6685mm	6665mm
E	Tail swing radius	2740mm	2740mm	2850mm
F	Counterweight swing radius	2750mm	2750mm	2860mm
G	Width of machine cab	2710mm	2710mm	2710mm
H	Length on ground (transport)	4830mm	5020mm	5020mm
I	Width of crawler	2900mm	3080mm	2980mm
J	Track gauge	2200mm	2380mm	2380mm
K	Shoe width	700mm	700mm	600mm
L	Track length	4080mm	4450mm	4450mm
M	Length of track on ground	3270mm	3640mm	3640mm
N	Grouser height	26mm	26mm	26mm
O	Ground clearance, counterweight	1085mm	1085mm	1085mm
P	Ground clearance, undercarriage	440mm	440mm	440mm
Q	Machine cab height	2020mm	2020mm	2020mm
R	Engine compartment height	2315mm	2315mm	2315mm
S	Operators cab height	2905mm	2905mm	2905mm

https://truckmanualshub.com/

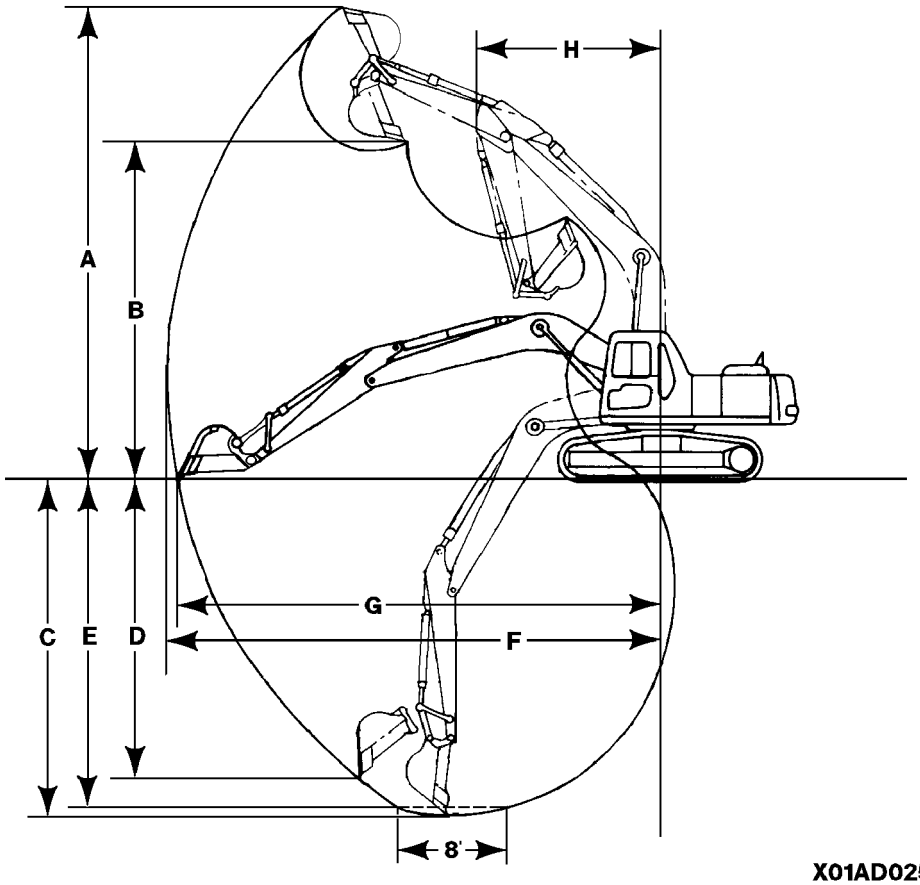

X01AD025

PC200, 200LC-6 PC210LC-6		ARMS			
		1.84m	2.4m	*2.93m	**4.06m
A	MAXIMUM DIGGING HEIGHT	8895 mm	9050 mm	9305 mm	9700 mm
B	MAXIMUM DUMPING HEIGHT	6065 mm	6255 mm	6475 mm	6970 mm
C	MAXIMUM DIGGING DEPTH	5535 mm	6095 mm	6620 mm	7725 mm
D	MAXIMUM VERTICAL WALL DIGGING DEPTH	4965 mm	5315 mm	5980 mm	7075 mm
E	MAXIMUM DIGGING DEPTH OF CUT FOR 8' LEVEL	5160 mm	5840 mm	6435 mm	7590 mm
F	MAXIMUM DIGGING REACH	8915 mm	9395 mm	9875 mm	10880 mm
G	MAXIMUM DIGGING REACH AT GROUND	8720 mm	9205 mm	9700 mm	10705 mm
H	MINIMUM SWING RADIUS	3640 mm	3710 mm	3630 mm	3630 mm
BUCKET DIGGING FORCE***		†14900 kg	12700 kg	12700 kg	12700 kg
ARM CROWD FORCE***		13200 kg	11700 kg	10000 kg	8200 kg

* - **PC210LC-6** available with only this arm
** - 1.13m Extension arm + 2.93 arm
*** - At power max.
† - Optional bucket cylinder is required

https://truckmanualshub.com/

PC220LC-6
PC250LC-6

		PC220LC-6	PC250LC-6
WEIGHT			
● Operating weight (without operator)		24130 kg	27500 kg
Performance			
● Bucket capacity		See 30.2 BUCKET INSTALLATION COMBINATIONS on page 5-16	
● Travel speed	Low speed	3.0 km/h	2.2 km/h
	Middle speed	4.1 km/h	4.1 km/h
	High speed	5.5 km/h	5.1 km/h
● Swing speed		12.4 rpm	
TRACK SHOE			
● Triple grouser shoe (standard)		700mm width	
ENGINE			
● Model		Komatsu SA6D102E-1 diesel engine	
● Flywheel horsepower		117 kW (158 HP)/2100 rpm - net 124 kW (166 HP)/2100 rpm - gross	
● Starting motor		24 V 5.5kW	
● Alternator		24 V 50 A	
● Battery		12 V 170 Ah x 2 pieces	

https://truckmanualshub.com/

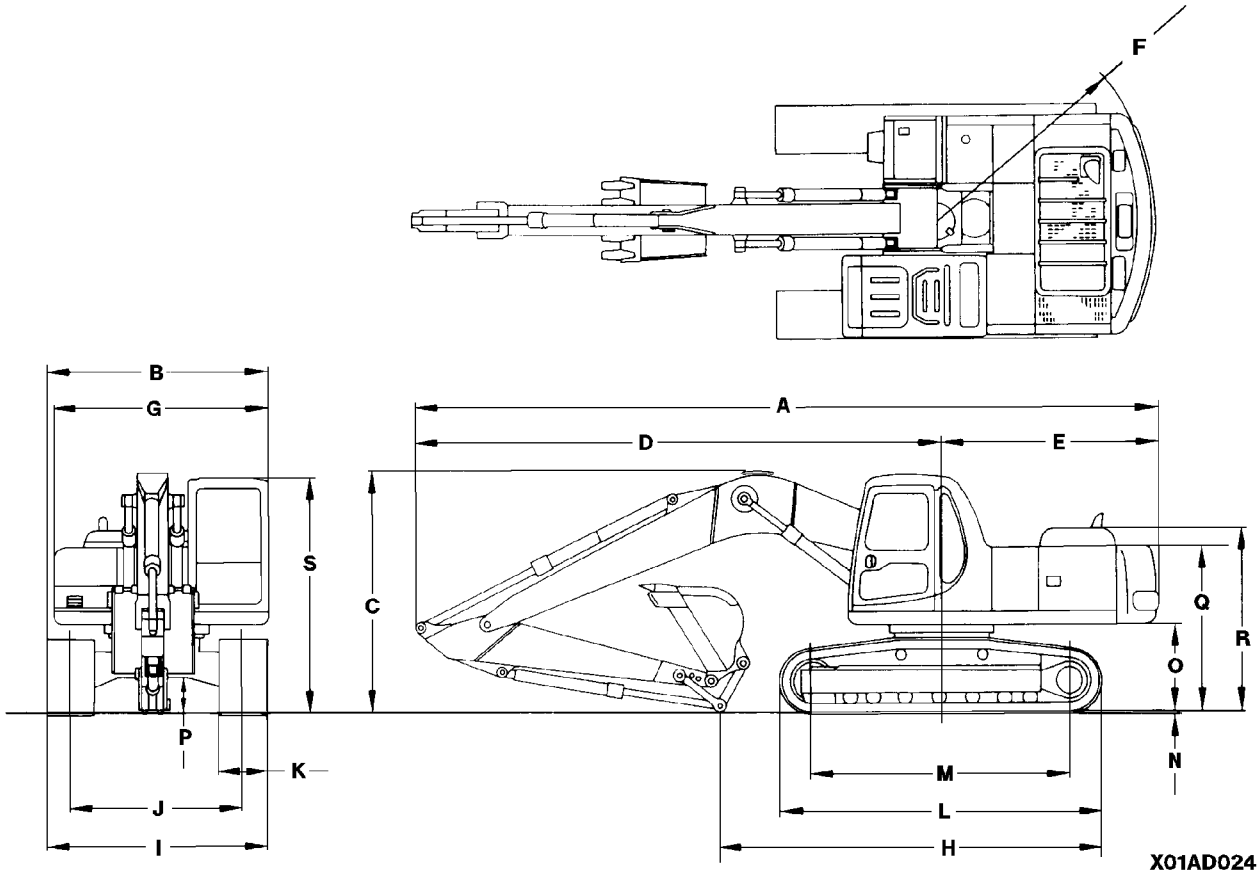

		PC220LC-6	PC250LC-6
A	Overall length	9780mm	9780mm
B	Overall width	3280mm	3290mm
C	Overall height (to top of boom)	3160mm	2350mm
D	Boom swing radius	6930mm	6930mm
E	Tail swing radius	2850mm	2850mm
F	Counterweight swing radius	2860mm	2860mm
G	Width of machine cab	2710mm	2710mm
H	Length on ground (transport)	5390mm	5420mm
I	Width of crawler	3280mm	3290mm
J	Track gauge	2580mm	2590mm
K	Shoe width	700mm	700mm
L	Track length	4640mm	4955mm
M	Length of track on ground	3830mm	4030mm
N	Grouser height	26mm	36mm
O	Ground clearance, counterweight	1085mm	1205mm
P	Ground clearance, undercarriage	440mm	500mm
Q	Machine cab height	2020mm	2140mm
R	Engine compartment height	2315mm	2435mm
S	Operators cab height	2905mm	3020mm

https://truckmanualshub.com/

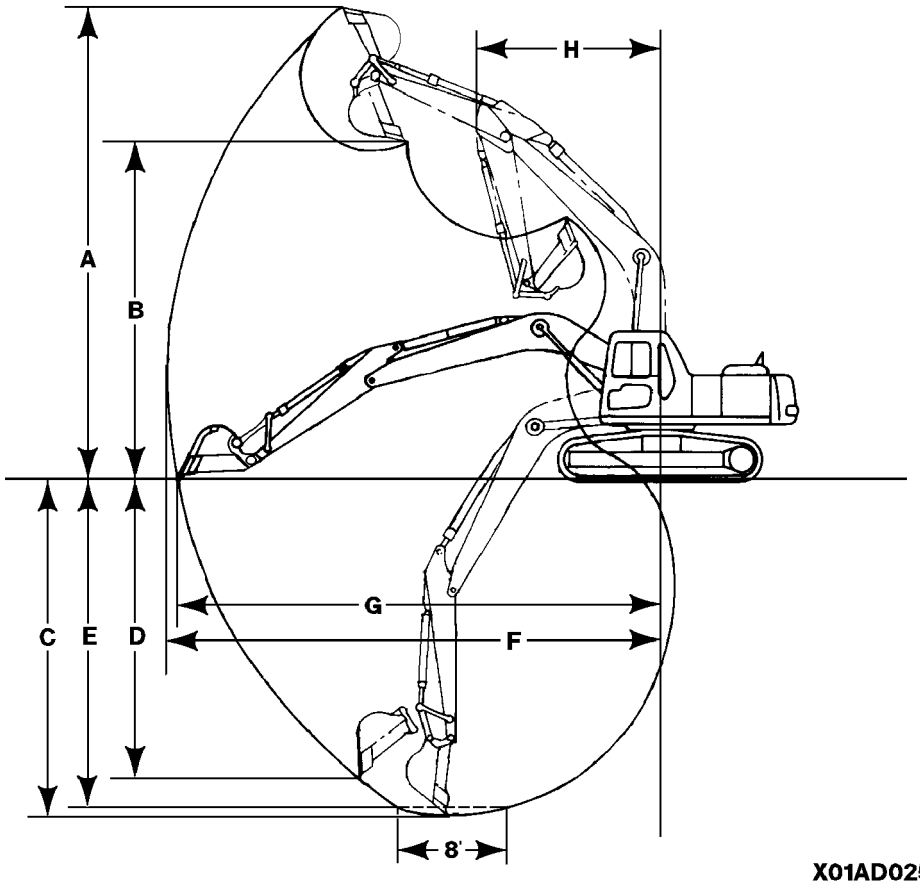

PC220LC-6		ARMS			
		2.0 m	2.5 m	3.05 m	3.5 m
A	MAXIMUM DIGGING HEIGHT	9070 mm	9150 mm	9380 mm	9620 mm
B	MAXIMUM DUMPING HEIGHT	6120 mm	6215 mm	6515 mm	6720 mm
C	MAXIMUM DIGGING DEPTH	5720 mm	6220 mm	6770 mm	7220 mm
D	MAXIMUM VERTICAL WALL DIGGING DEPTH	4955 mm	5455 mm	6005 mm	6455 mm
E	MAXIMUM DIGGING DEPTH OF CUT FOR 8' LEVEL	5550 mm	6170 mm	6440 mm	7210 mm
F	MAXIMUM DIGGING REACH	9285 mm	9655 mm	10180 mm	10625 mm
G	MAXIMUM DIGGING REACH AT GROUND	9090 mm	9470 mm	10000 mm	10460 mm
H	MINIMUM SWING RADIUS	3950 mm	3925 mm	3860 mm	3890 mm
BUCKET DIGGING FORCE*		†16700 kg	14500 kg	14500 kg	14500 kg
ARM CROWD FORCE*		14700 kg	13600 kg	11900 kg	10300 kg

* - At power max.

† - Optional bucket cylinder is required

https://truckmanualshub.com/

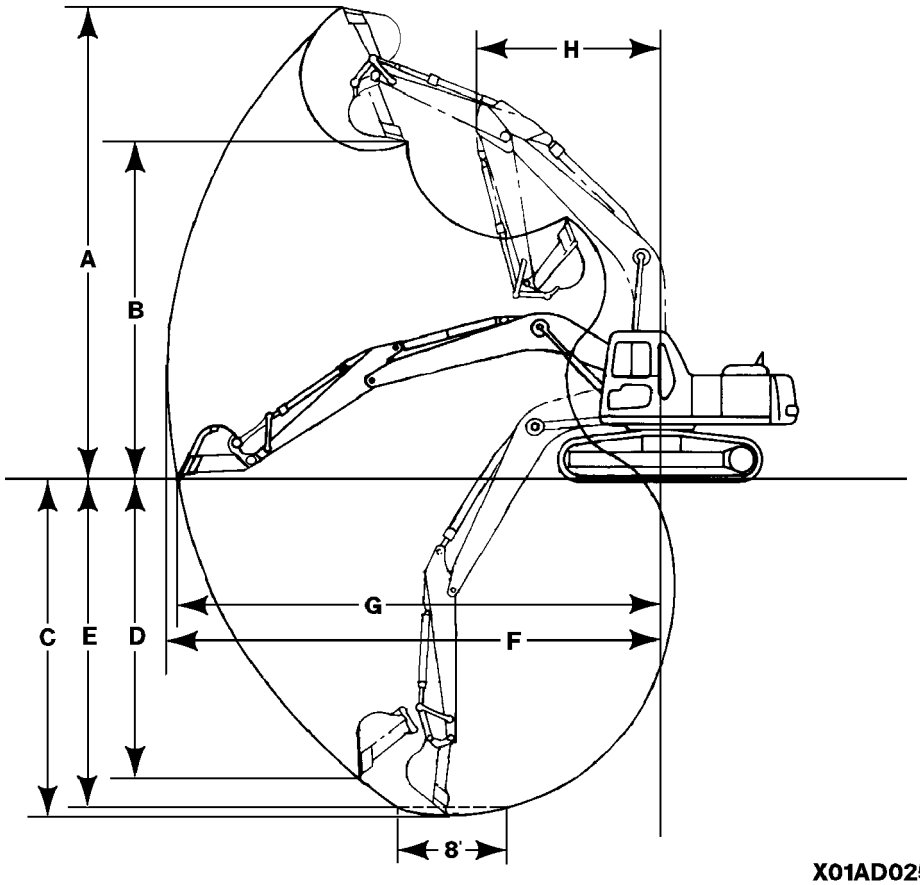

PC250LC-6		ARMS			
		2.0m	2.5m	3.05m	3.5m
A	MAXIMUM DIGGING HEIGHT	9300 mm	9340 mm	9660 mm	9780 mm
B	MAXIMUM DUMPING HEIGHT	6505 mm	6350 mm	6750 mm	7125 mm
C	MAXIMUM DIGGING DEPTH	5610 mm	6105 mm	6650 mm	7105 mm
D	MAXIMUM VERTICAL WALL DIGGING DEPTH	4930 mm	5055 mm	5860 mm	6165 mm
E	MAXIMUM DIGGING DEPTH OF CUT FOR 8' LEVEL	5380 mm	5895 mm	6475 mm	6950 mm
F	MAXIMUM DIGGING REACH	9285 mm	9655 mm	10180 mm	10625 mm
G	MAXIMUM DIGGING REACH AT GROUND	9035 mm	9445 mm	9980 mm	10385 mm
H	MINIMUM SWING RADIUS	3950 mm	3925 mm	3860 mm	3890 mm
BUCKET DIGGING FORCE*		†16700 kg	14500 kg	14500 kg	14500 kg
ARM CROWD FORCE*		14700 kg	13600 kg	11900 kg	10300 kg

* - At power max.

† - Optional bucket cylinder is required

https://truckmanualshub.com/

OPTIONS, ATTACHMENTS

https://truckmanualshub.com/

1. GENERAL PRECAUTIONS

1.1 PRECAUTIONS RELATED TO SAFETY

If attachments or options other than those authorized by Komatsu America International Company are installed, this will not only affect the life of the machine, but will also cause problems with safety.
When installing attachments not listed in this Operation and Maintenance Manual, please contact your distributor first.

If you do not contact Komatsu America International Company, we cannot accept any responsibility for any accident or failure.

WARNING

Precautions for removal and installation operations.
When removing or installing attachments, obey the following precautions and take care to ensure safety during the operation.

- **Carry out the removal and installation operations on a flat, firm ground surface.**
- **When the operation is carried out by two or more workers, determine signals and follow these during the operation.**
- **When carrying heavy objects (more than 25 kg), use a crane.**
- **When removing heavy parts, always support the part before removing it.**
  When lifting such heavy parts with a crane, always pay careful attention to the position of the center of gravity.
- **It is dangerous to carry out operations with the load kept suspended. Always set the load on a stand, and check that it is safe.**
- **When removing or installing attachments, make sure that they are in a stable condition and will not fall over.**
- **Never go under a load suspended from a crane.**
  Always stand in a position that is safe even if the load should fall.

NOTICE

Qualifications are required to operate a crane. Never allow the crane to be operated by an unqualified person.
For details of the removal and installation operations, please contact your distributor.

https://truckmanualshub.com/

1.2 PRECAUTIONS WHEN INSTALLING ATTACHMENTS

WARNING

Long work equipment reduces the stability of the chassis, so if the swing is operated on a slope, or when going down a steep hill, the machine may lose its balance and overturn.
The following operations are particularly dangerous, so never operate the machine in these ways.

- **Going downhill with the work equipment raised**

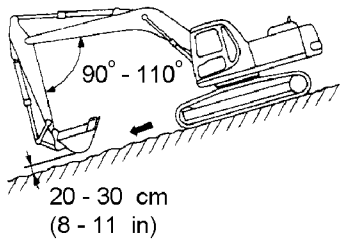

- **Traveling across slopes**

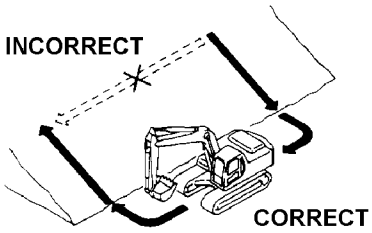

- **Swinging the upper structure on slopes**

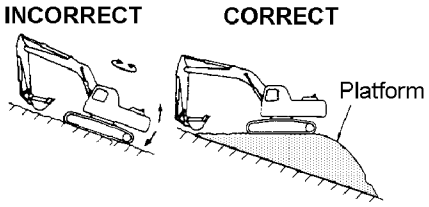

X01AD035

- **If heavy work equipment is installed, the overrun of the swing becomes greater (the distance from the point where the operator operates the control levers to stop the swing to the point where the upper structure stops completely), so there is danger of mistaking the distance and hitting something.**
  Always operate so that there is an ample margin to the stopping point.
  Furthermore, the hydraulic drift also becomes larger (when the work equipment is stopped in mid-air, it will gradually move down under its own weight).

- **Always follow the correct procedure when installing the boom and arm. If the correct procedure is not followed, this may lead to serious damage or injury, so please consult your distributor before carrying out installation.**

If long work equipment is installed, the working range will suddenly become larger, so there is danger of mistaking the distance and hitting something.
Always operate the work equipment so that there is ample space from any obstacles in the area.

https://truckmanualshub.com/

2. HANDLING BUCKET WITH HOOK

2.1 CHECK FOR DAMAGE TO BUCKET WITH HOOK

Check that there is no damage to the hook, stopper, or hook mount. If any abnormality is found, please contact your distributor.

2.2 PROHIBITED OPERATIONS

The standard work equipment must not be used for lifting loads. If this machine is to be used for lifting loads, it is necessary to install the specified bucket with hook and use it in accordance with the applicable safety regulations regarding your work site.

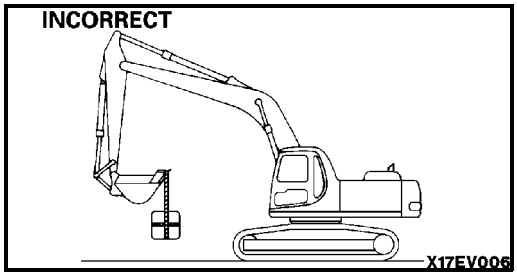

2.3 PRECAUTIONS DURING OPERATIONS

- Always operate in accordance with the safety regulations that are applicable to your work site.
- When carrying out lifting operations, reduce the engine speed and use the lifting operation mode.
- Depending on the posture of the work equipment, there is danger that the wire or load may slip off the hook.
  Always be careful to maintain the correct hook angle to prevent this from happening.
- Never steer the machine while lifting a load.
- If the bucket with hook is turned and used for shovel operations, it will hit the arm during dumping operations, so be careful when using it.
- Suspended loads must not exceed the limit indicated in the LIFTING CAPACITY TABLE located on the right side lower portion of the driver's seat.
- If you wish to install a hook in the future, please contact your distributor.

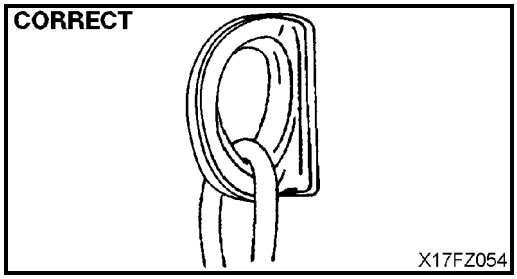

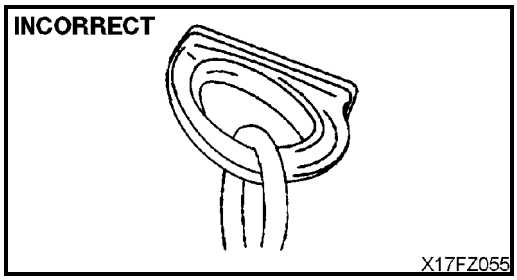

https://truckmanualshub.com/

3. HANDLING AIR CONDITIONER

3.1 GENERAL LOCATIONS ON CONTROL PANEL

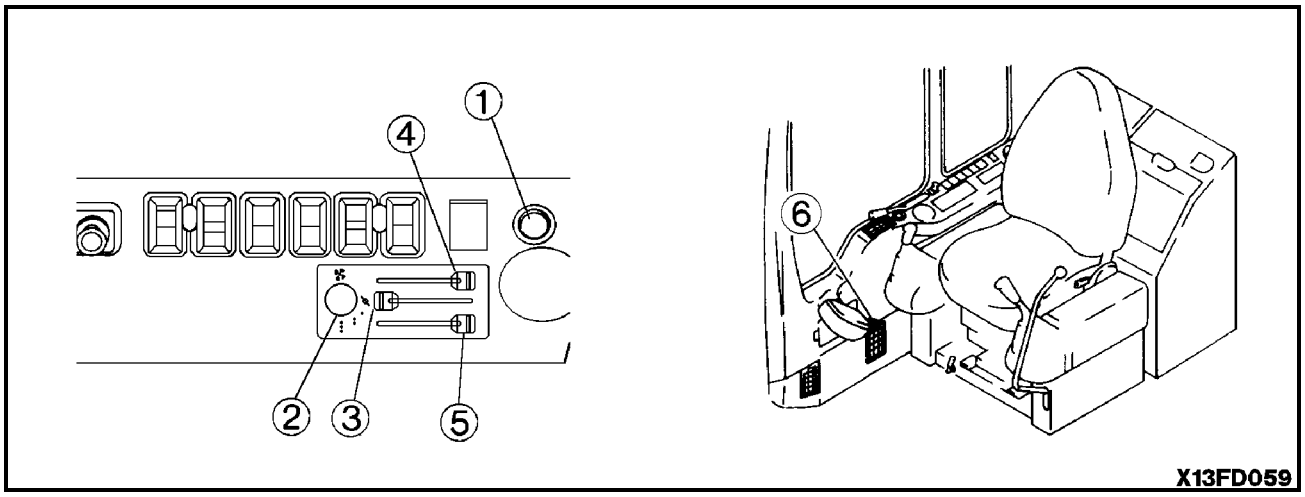

1. AIR CONDITIONER PUSH BUTTON
Depressing this button turns the air conditioning system ON/OFF.

2. CAB FAN SWITCH
This adjusts air-flow to 3 levels.
0: Off
●: Low
●●: Medium
●●●: High

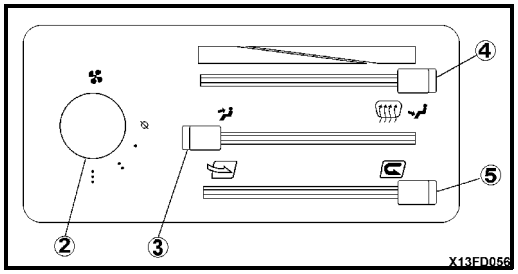

3. AIR OUTLET CHANGE-OVER LEVER
The air outlet is selective according to the purpose.

Purpose	To upper portion of operator	When using the defroster or directing air flow to the feet.
Lever position		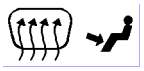
Air outlet	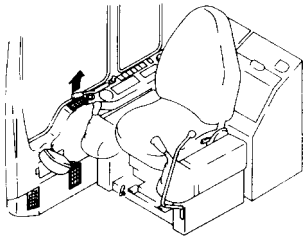	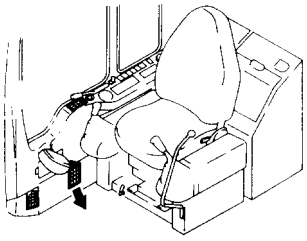

https://truckmanualshub.com/

4. TEMPERATURE CONTROL LEVER

This lever adjusts the temperature between high and low continuously.

Purpose	To increase temperature (warmer)	To decrease temperature (cooler)
Lever position	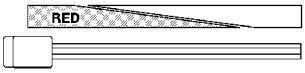	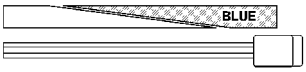

5. External/internal air changeover lever

Changes between internal air circulation and external air intake.

Purpose	External air intake This is used for fresh air intake or to remove condensation on windows.	Internal air circulation This is used when wishing to quickly cool or warm the cab
Lever		

6. DEFROSTER SELECTOR LEVER

This is used to clear the mist from the front glass in cold or rainy conditions.

Selector lever forward: Defroster

Selector lever back: Floor

The defroster can be used when the vent selector panel is at the  position.

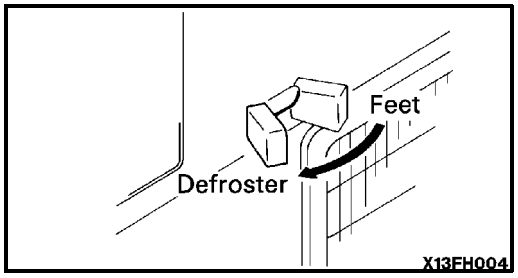

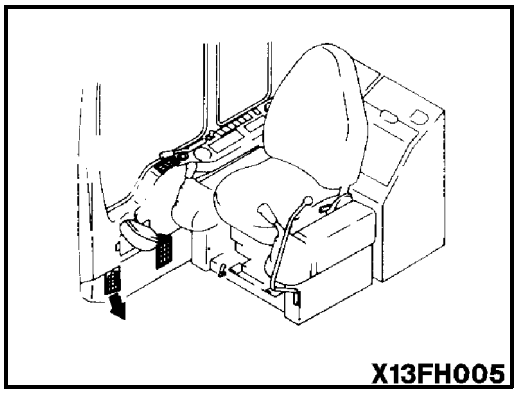

https://truckmanualshub.com/

3.2 PRECAUTIONS WHEN USING AIR CONDITIONER

Carry out ventilation from time to time when using the cooler.

- If you smoke when the cooler is on, the smoke may start to irritate your eyes, so turn the lever to FRESH to remove the smoke while continuing the cooling.

- When running the air conditioner for a long time, turn the lever to the FRESH position once an hour to carry out ventilation and cooling.

Be careful not to make the temperature in the cab too low.

- When the cooler is on, set the temperature so that it feels slightly cool when entering the cab (5 - 6°C lower than the outside temperature). This temperature difference is considered to be the most suitable for your health, so always be careful to adjust the temperature properly.

https://truckmanualshub.com/

4. MACHINES READY FOR ATTACHMENTS

4.1 EXPLANATION OF COMPONENTS

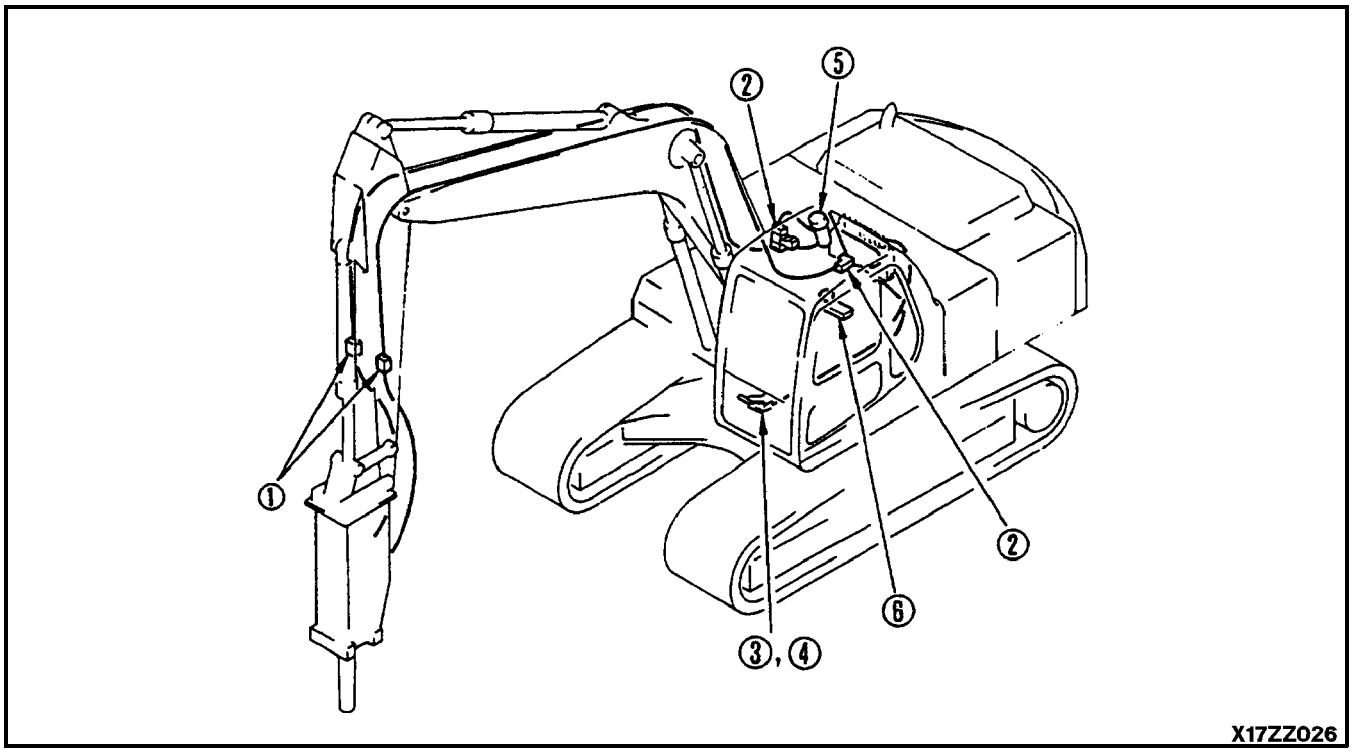

1. STOP VALVE

This valve stops the flow of the hydraulic oil.

① FREE: Hydraulic oil flows

② LOCK: Hydraulic oil stops

Set this valve to the LOCK position when removing or installing attachments.

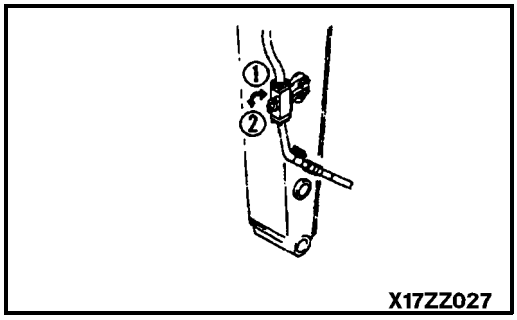

2. SELECTOR VALVE

This switches the flow of the hydraulic oil.

For attachment to be mounted and the direction of left and right 3-way valves ① and ②, see 29.2 HYDRAULIC CIRCUIT on page 5-10.

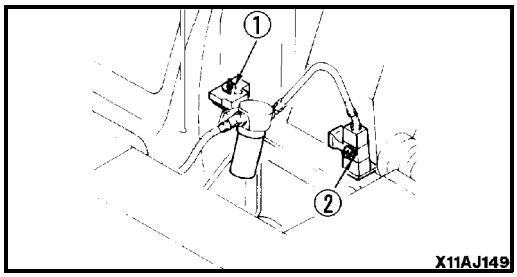

https://truckmanualshub.com/

3. ATTACHMENT CONTROL PANEL

This is used to operate the attachment.

When the operator depresses the pedal at the front, neutral or rear portions, the attachment moves as follows.

Hydraulic breaker

Pedal front ① : actuated
Pedal neutral Ⓝ : stopped
Pedal rear ② : stopped

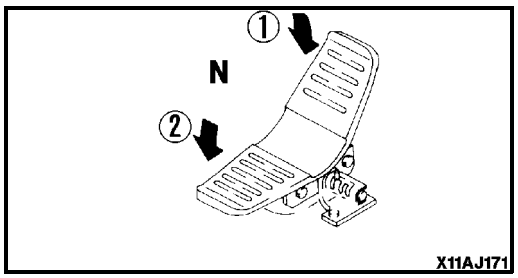

For other attachments, confirm with the manufacturer regarding the relation between pedal operation and attachment movement when the attachment is mounted. Use the attachment only after confirming the above.

4. LOCK PIN

This is used to lock the control pedal.

Position ①: lock

Position ②: pedal half stroke position (flow: about 50%)

Position ③: pedal full stroke position (flow: 100%)

- When the breaker is used, select the breaker operation mode (B.O.) in the monitor and use the pedal at position ③.
- If other attachment is used at lower flow, select position ②. Set the lock pin at the lock position when attachment is not used.

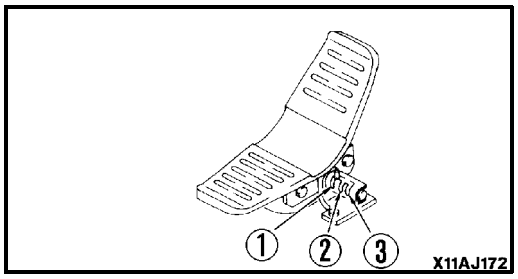

5. ADDITIONAL FILTER FOR BREAKER

This filter prevents degradation of the hydraulic oil when the breaker is used.

Oil flows only when the selector valve is turned to the breaker position. See Change-over hydraulic circuit in 29.2 HYDRAULIC CIRCUIT on page 5-10.

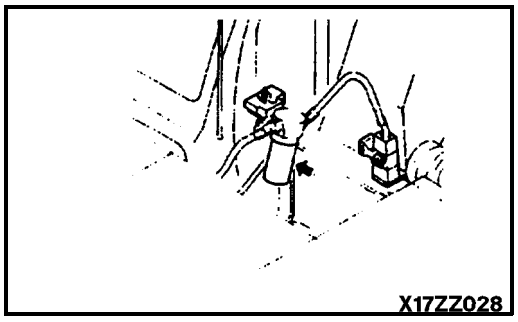

6. ACCUMULATOR

WARNING

The accumulator is filled with high-pressure nitrogen gas, and it is extremely dangerous if it is handled in the wrong way. For handling procedure, see 11.18 HANDLING ACCUMULATOR on page 2-39.

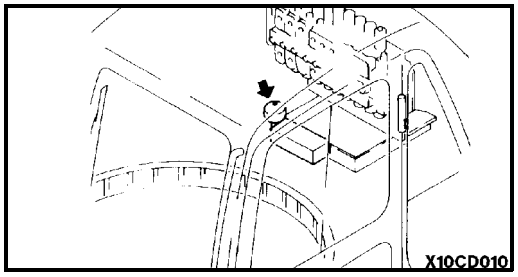

The accumulator is provided to release the pressure remaining in the attachment circuit after stopping the engine. Normally, never touch it.

https://truckmanualshub.com/

4.2 HYDRAULIC CIRCUIT

Change-over hydraulic circuit

When the machine is equipped with an attachment or a bucket, set left and right 3-way valves ① and ② as follows.

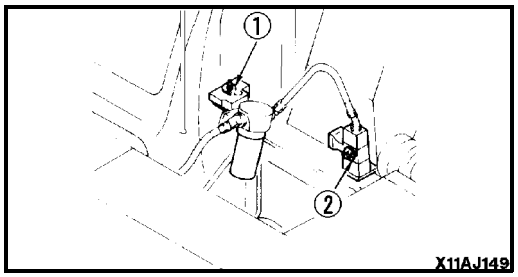

Referring to the following chart, turn the rotors of left and right 3-way valves ① and ② using a wrench to select the attachment to be mounted and the direction of both 3-way valves. (The arrows indicating the port direction are stamped on the 3-way valve heads.)

Attachments	Left 3-way valve ①	Right 3-way valve ②
Breaker etc.	Forward direction of machine 	Upper direction of machine 
Crusher etc.	Forward direction of machine 	Upper direction of machine 
When not in use	Forward direction of machine 	Upper direction of machine 

NOTICE

- **When the machine is equipped with the breaker, connect the return circuit directly to the return filter.**
- **The set pressure of the low pressure safety valve is set to 20600 kPa (210 kg/cm^2) as standard when delivered from the factory.**
  If a breaker by another manufacturer is installed, adjustment is required. Consult your distributor.

https://truckmanualshub.com/

4.2.1 CONNECTING HYDRAULIC CIRCUIT

When connecting the attachment, connect the circuit as follows.

1. Remove blind plugs ① located on the end of the stop valve piping (2 places, left and right).
   Take care not to lose or damage the removed parts.

2. Connect attachment tubes ② supplied by the attachment manufacturer to the end from which the plug was removed in step 1.

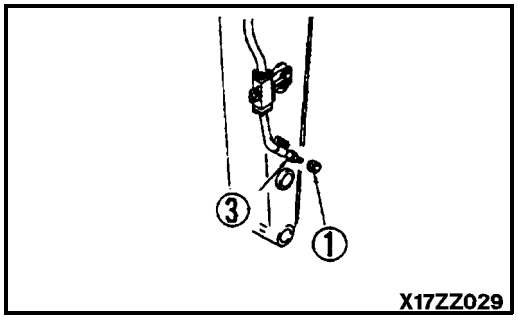

When the machine is shipped from the factory, a 1 inch taper seal hose is installed to tube ③. The procedure used by the attachment manufacturer if an accumulator is added is different, so please consult your distributor.

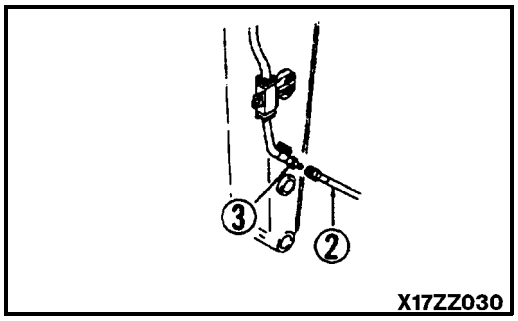

PATH OF OIL

The direction of operation of the pedal and the path of the oil are as shown in the diagram below.

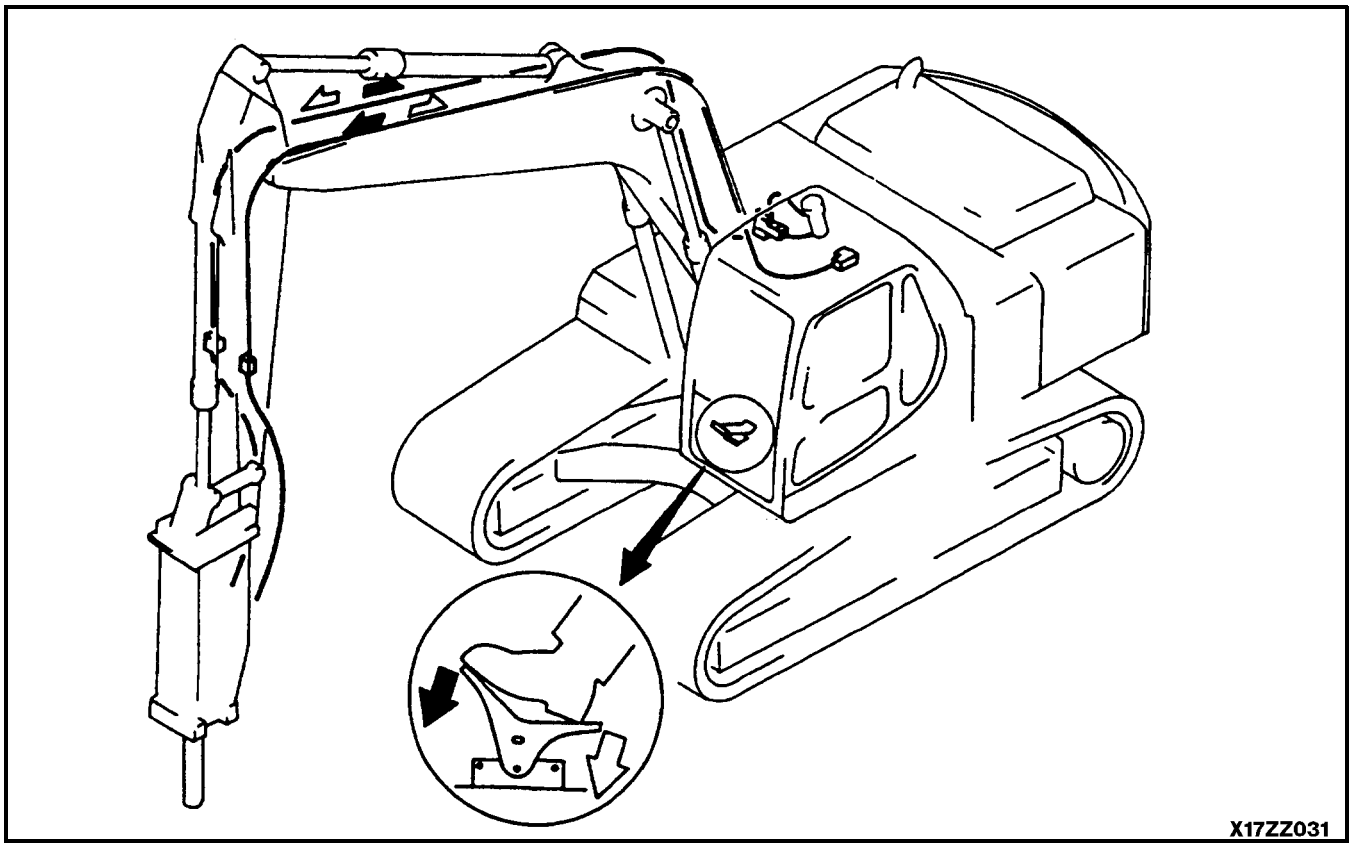

https://truckmanualshub.com/

4.3 ATTACHMENT MOUNTING/DISMOUNTING PROCEDURE

DISMOUNTING PROCEDURE

1. Place the attachment on the ground and stop the engine.

2. After stopping the engine, operate each work equipment control lever and the attachment control pedal back and forth, left and right at full stroke 2 to 3 times to eliminate the internal pressure in the hydraulic circuit.

3. After confirming low oil temperature, turn the rotor of the stop valve connected to the inlet and outlet piping on the arm side face toward the lock side.

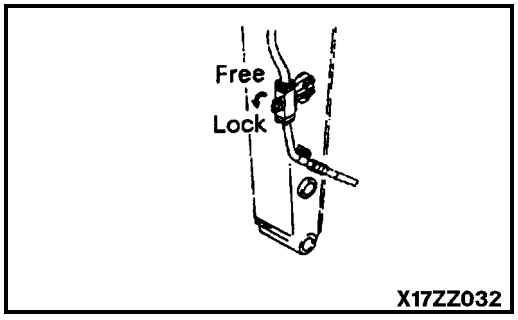

X17ZZ032

4. Remove the hoses on the attachment side. Install the blind plugs to the two outlets.

The blind plugs are used to prevent the attachment from incorrect operation caused by mixing in of foreign matter. After the plugs are correctly installed, store the attachment.

5. Dismount the attachment by removing the retaining pins (2 pins). Then, mount the bucket.

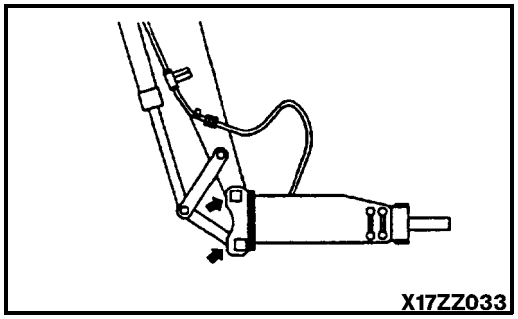
X17ZZ033

For the bucket mounting procedure, see 12.16 REPLACEMENT AND INVERSION OF BUCKET on page 2-76.

6. After the bucket is mounted, check the hydraulic oil level.

https://truckmanualshub.com/

MOUNTING PROCEDURE

1. Remove the bucket.

   For bucket dismounting procedure, see 12.16 REPLACEMENT AND INVERSION OF BUCKET on page 2-76.

2. Place the attachment on a flat place, install pins Ⓐ and Ⓑ to the arm in that order.

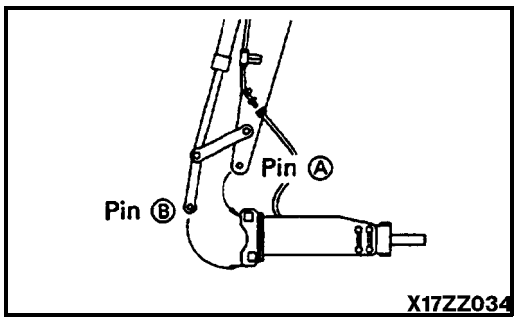

3. After mounting the attachment, stop the engine. Operate each work equipment control lever and the attachment control pedal to full stroke back and forth, right and left to eliminate the internal pressure in the hydraulic circuit.

4. After confirming low oil temperature, remove the blind plug from the outlet and inlet port respectively.

Take care that no dust, mud etc. adheres to the hose mouthpiece portions.
If 0-ring is damaged, replace it with a new one.

5. Turn the rotor of the stop valve connected to the inlet and outlet piping on the arm side face toward the free side.

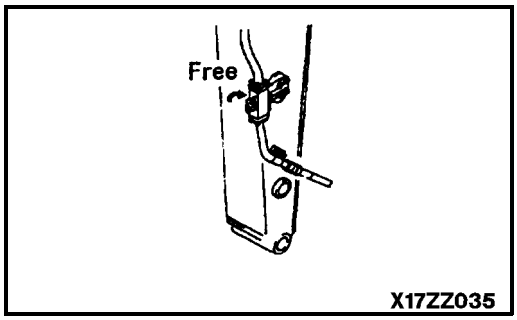

6. Confirm that oil level in the hydraulic oil tank is correct, after mounting the attachment.

https://truckmanualshub.com/

4.4 OPERATION

WARNING

- **If the pedal is operated inside the deceleration range, the engine speed will rise suddenly. Be careful.**
- **If the operator rests his foot on the attachment pedal while operating the machine, if he carelessly depresses the pedal, the attachment may move suddenly and result in serious trouble. Never place your foot on the pedal except when actually performing pedal operation.**

The operation of the attachment is as follows.

WHEN USING BREAKER

When the front portion of the pedal is depressed after the lock pin is set at the free position, the breaker is actuated.
Select the working mode for breaker (B.O.).

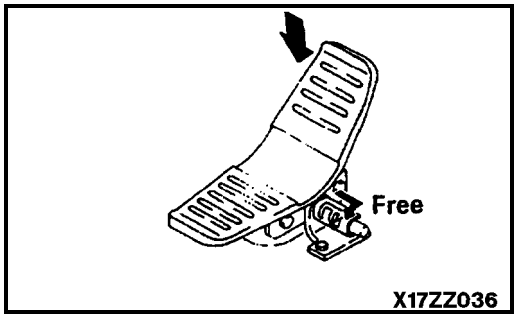

Precautions when using

- Check that the stop valve is at the FREE position.
- Check that the selector valve is at the position for using the breaker.

For details of the oil path, see 29.2 HYDRAULIC CIRCUIT on page 5-10.

- Consult with the attachment manufacturer as to whether the accumulator is required for the attachment circuit or not.
- For other precautions when using the breaker, see the instruction manual provided by the breaker manufacturer.
- When the breaker is used, the hydraulic oil degrades faster than in normal operation. Shorten the maintenance interval of the hydraulic oil and filter element.
  See 23.2 MAINTENANCE INTERVAL WHEN USING HYDRAULIC BREAKER on page 3-23.

https://truckmanualshub.com/

WHEN USING GENERAL ATTACHMENT SUCH AS CRUSHER

When the lock pin is set to the free position and the pedal is depressed at the front or rear portions, the attachment is actuated.

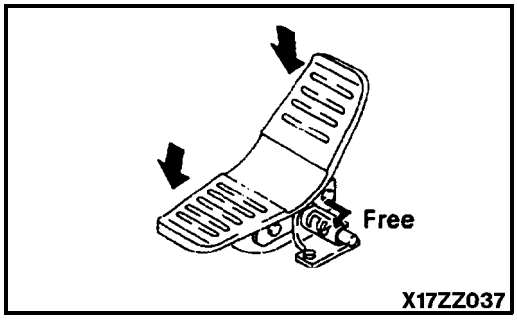

Precautions when using

- Check that the stop valve is at the FREE position.
- Confirm that the selector valve is set to the position for general attachments such as the crusher.

For details of the oil path, see 29.2 HYDRAULIC CIRCUIT on page 5-10.

- For other precautions when using the attachment, see the instruction manual provided by the attachment manufacturer.

29.5 LONG-TERM STORAGE

If the equipment is not to be used for a long period, do as follows.

- Set the stop valve to the LOCK position.
- Install the blind plugs and 0-rings to the valves.
- Set the selector valve to the "when not use" position.
- Lock the lock pin to the lock position.

If the pedal is operated when there is no breaker or general attachment installed, it will cause overheating and other problems.

29.6 SPECIFICATIONS

Hydraulic specifications

- Max. flow when flow is joined:
  191 x 2 liter/min
- Safety valve relief set pressure of service valve:
  27500 kPa (280 kg/cm^2)
- Safety valve cracking pressure of service valve:
  24500 kPa (250 kg/cm^2)
- Low pressure safety valve relief set pressure:
  20500 kPa (210 kg/cm^2)
- Low pressure safety valve cracking pressure:
  15200 kPa (155 kg/cm^2)

Other than these specifications, low pressure safety valve relief set pressure of 24500 kPa (250 kg/cm^2) and low pressure safety valve cracking pressure of 20100 kPa (205 kg/cm^2) are provided. Consult your distributor.

https://truckmanualshub.com/

5. INTRODUCTION OF ATTACHMENTS

5.1 BUCKET SELECTION

Guidelines for matching bucket with application.

STANDARD DUTY PLATE LIP BUCKET

- General purpose
  - Truck loading
  - Mass excavation
  - General excavation in loam soils, sandy soils, or soils containing very little rock

HEAVY DUTY PLATE LIP BUCKET

- General excavation in compacted soils or dense clay
- Excavation in gravel or loosely embedded to moderate rock conditions

HEAVY DUTY CAST LIP BUCKET

- Shot rock conditions
- Tough and abrasive excavating

DITCH CLEANING BUCKET

- General purpose ditch clean out
- Very light excavating in loam or sandy soils

5.2 BUCKET INSTALLATION COMBINATIONS

The following charts list the combination of buckets and arms that are commonly available.

NOTICE

- **When the extension arm is equipped, if the bucket is drawn to the machine body, the arm interferes with the body. Operate the extension arm carefully.**
- **When the boom is fully lowered during oblique digging, the boom interferes with the undercarriage. Operate the boom carefully.**

MATERIAL LOAD LIMITS

- Used with material weights up to 1803 kg/m^3
- Used with material weights up to 1495 kg/m^3

◊ - Used with material weights up to 1198 kg/m^3

X - Not usable

\+ - Light duty applications only

https://truckmanualshub.com/

BACKHOE BUCKET AND ARM COMBINATION CHART
BUCKETS WITH SUPERV ® TEETH

PC200, PC200LC-6, PC210LC-6 (ONLY WITH 2.93 m ARM)

BUCKET TYPE	CAPACITY	WIDTH	WEIGHT	# Teeth	ARMS			
					1.84m **6'0"**	2.41m **7'11"**	2.93m **9'7"**	4.06m **13'4"***
STANDARD PLATE	0.47m^3 **0.62 yd^3**	610 mm **24 in**	511 kg **1126 lb**	4				+
	0.57m^3 **0.75 yd^3**	762 mm **30 in**	581 kg **1281 lb**	4				+
	0.76m^3 **1.00 yd^3**	914 mm **36 in**	638 kg **1405 lb**	5				X
	0.96m^3 **1.25 yd^3**	1067 mm **42 in**	707 kg **1558 lb**	5			◊	X
	1.15m^3 **1.50 yd^3**	1219 mm **48 in**	751 kg **1655 lb**	5			X	X
HEAVY DUTY PLATE	0.47m^3 **0.62 yd^3**	610 mm **24 in**	622 kg **1372 lb**	4				+
	0.57m^3 **0.75 yd^3**	762 mm **30 in**	649 kg **1531 lb**	4				+
	0.76m^3 **1.00 yd^3**	914 mm **36 in**	782 kg **1724 lb**	5				X
	0.96m^3 **1.25 yd^3**	1067 mm **42 in**	853 kg **1881 lb**	5			◊	X
	1.15m^3 **1.50 yd^3**	1219 mm **48 in**	924 kg **2037 lb**	5			X	X
HEAVY DUTY CAST	0.38m^3 **0.50 yd^3**	610 mm **24 in**	806 kg **1776 lb**	3				+
	0.57m^3 **0.75 yd^3**	762 mm **30 in**	935 kg **2062 lb**	4				+
	0.67m^3 **0.88 yd^3**	838 mm **33 in**	964 kg **2125 lb**	4				+
	0.86m^3 **1.12 yd^3**	991 mm **39 in**	1078 kg **2377 lb**	5				+
	1.06m^3 **1.38 yd^3**	1143 mm **45 in**	1169 kg **2577 lb**	5				X
DITCH	0.47m^3 **0.62 yd^3**	1219 mm **48 in**	415 kg **915 lb**	—	+	+	+	+
	0.67m^3 **0.88 yd^3**	1524 mm **60 in**	471 kg **1038 lb**	—	+	+	+	+

https://truckmanualshub.com/

BACKHOE BUCKET AND ARM COMBINATION CHART
BUCKETS WITH SUPERV ® TEETH

PC220LC-6

BUCKET TYPE	CAPACITY	WIDTH	WEIGHT	# Teeth	ARMS			
					2.0m **6'7"**	2.5m **8'2"**	3.05m **10'0"**	3.5m **11'6"**
STANDARD PLATE	0.57m^3 **0.75 yd^3**	610 mm **24 in**	662 kg **1459 lb**	4				
	0.76m^3 **1.00 yd^3**	762 mm **30 in**	737 kg **1625 lb**	4				
	0.96m^3 **1.25 yd^3**	914 mm **36 in**	814 kg **1795 lb**	5				
	1.15m^3 **1.50 yd^3**	1067 mm **42 in**	889 kg **1959 lb**	5				X
	1.34m^3 **1.75 yd^3**	1219 mm **48 in**	947 kg **2088 lb**	5			◊	X
HEAVY DUTY PLATE	0.57m^3 **0.75 yd^3**	610 mm **24 in**	820 kg **1808 lb**	3				
	0.76m^3 **1.00 yd^3**	762 mm **30 in**	932 kg **2055 lb**	4				
	0.96m^3 **1.25 yd^3**	914 mm **36 in**	1017 kg **2241 lb**	4				
	1.15m^3 **1.50 yd^3**	1067 mm **42 in**	1129 kg **2489 lb**	5				X
	1.34m^3 **1.75 yd^3**	1219 mm **48 in**	1214 kg **2677 lb**	5			◊	X
HEAVY DUTY CAST	0.47m^3 **0.62 yd^3**	610 mm **24 in**	820 kg **1808 lb**	3				
	0.67m^3 **0.88 yd^3**	762 mm **30 in**	960 kg **2116 lb**	4				
	0.76m^3 **1.00 yd^3**	838 mm **33 in**	990 kg **2182 lb**	4				
	0.96m^3 **1.25 yd^3**	991 mm **39 in**	1113 kg **2453 lb**	5				
DITCH	0.96m^3 **1.25 yd^3**	1524 mm **60 in**	759 kg **1674 lb**	—	+	+	+	+
	1.15m^3 **1.50 yd^3**	1829 mm **72 in**	792 kg **1747 lb**	—	+	+	+	+

PC250LC-6

BUCKET TYPE	CAPACITY	WIDTH	WEIGHT	# Teeth	ARMS			
					2.0m **6'7"**	2.5m **8'2"**	3.05m **10'0"**	3.5m **11'6"**
STANDARD PLATE	0.76m^3 **1.00 yd^3**	762 mm **30 in**	766 kg **1688 lb**	4				
	1.06m^3 **1.38 yd^3**	914 mm **36 in**	841 kg **1854 lb**	5				
	1.25m^3 **1.63 yd^3**	1067 mm **42 in**	920 kg **2029 lb**	5	+	+	+	X
	1.53m^3 **2.00 yd^3**	1219 mm **48 in**	981 kg **2162 lb**	5	+	+	+	X
HEAVY DUTY PLATE	0.76m^3 **1.00 yd^3**	762 mm **30 in**	986 kg **2173 lb**	4				
	1.06m^3 **1.38 yd^3**	914 mm **36 in**	1079 kg **2378 lb**	4				
	1.25m^3 **1.63 yd^3**	1067 mm **42 in**	1197 kg **2640 lb**	5	+	+	+	X
	1.53m^3 **2.00 yd^3**	1219 mm **48 in**	1290 kg **2845 lb**	5	+	+	+	X
HEAVY DUTY CAST	0.76m^3 **1.00 yd^3**	762 mm **30 in**	1022 kg **2254 lb**	4				
	1.06m^3 **1.38 yd^3**	991 mm **39 in**	1178 kg **2598 lb**	5				
	1.24m^3 **1.62 yd^3**	1143 mm **45 in**	1269 kg **2797 lb**	5	+	+	+	X

https://truckmanualshub.com/

5.3 SELECTION OF TRACK SHOES

Select suitable track shoes to match the operating conditions

METHOD OF SELECTING SHOES

Confirm the category from the list of uses in Table 1, then use Table 2 to select the shoe. Categories B and C are wide shoes, so there are limitations on their use. When using these shoes, check the precautions, then investigate and study fully the conditions of use to confirm that these shoes are suitable.

When selecting the shoe width, select the narrowest shoe possible that will give the required flotation and ground pressure. If a wider shoe than necessary is used, the load on the track will increase, and this will cause the shoes to bend, links to crack, pins to break, shoe bolts to come loose, and various other problems.

Table 1

Category	Use	Precautions when using
A	Rocky ground, river beds, normal soil	● On rough ground with large obstacles such as boulders or fallen trees, travel at low speed.
B	Normal soil, soft ground	● These shoes cannot be used on rough ground where there are large obstacles such as boulders or fallen trees. ● Travel at Hi or Mid speed only on flat ground, and if it is possible to avoid going over obstacles, shift down and travel at half speed in Lo.
C	Extremely soft ground (swampy ground)	● Use the shoes only in places where the machine sinks and it is impossible to use A or B shoes. ● These shoes cannot be used on rough ground where there are large obstacles such as boulders or fallen trees. ● Travel at Hi or Mid speed only on flat ground, and if it is impossible to avoid going over obstacles, shift down and travel at half speed in Lo.

Table 2

Track shoe	PC200-6		PC200LC-6		PC210LC-6	
	Specification	Category	Specification	Category	Specification	Category
600mm triple grouser	Option	A	Option	A	Standard	A
700mm triple grouser	Standard	B	Standard	B	Option	B
800mm triple grouser	Option	C	Option	C	—	—
900mm triple grouser	—	—	Option	C	—	—

Track shoe	PC220LC-6		PC250LC-6	
	Specification	Category	Specification	Category
600mm triple grouser	Option	A	Option	A
700mm triple grouser	Standard	B	Standard	B
800mm triple grouser	Option	C	Option	C

https://truckmanualshub.com/

5.4 BACKHOE CONTROL PATTERN CONVERSION

The work equipment control levers may be changed to a popular backhoe control pattern to fit individual operator's preferences.

Control pattern differences

Arm Dump	←→	Boom down
Arm Excavation	←→	Boom up

This conversion **MUST** be performed by your distributor.

WARNING

- **After converting the excavator control pattern to the backhoe pattern, all operator's and maintenance personnel should make note of the change.**
- **The excavator control pattern label MUST be replaced by the backhoe pattern label 203-916-A730 shown below.**

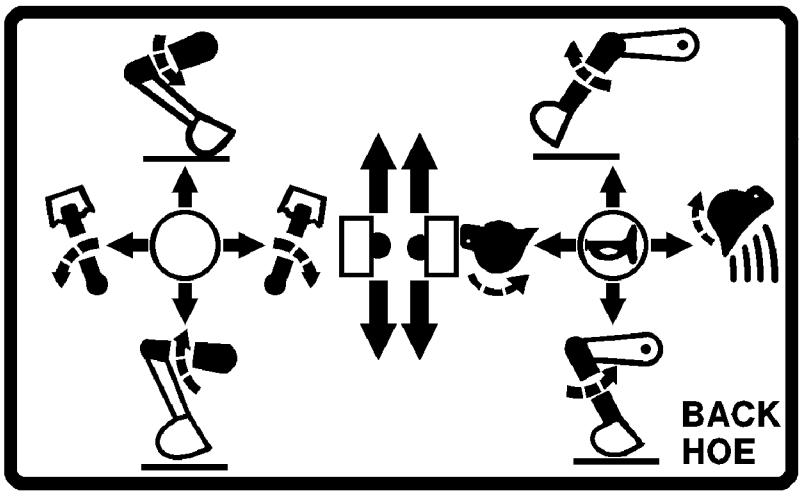

X02AD092

https://truckmanualshub.com/

6. EXTENDING MACHINE SERVICE LIFE

This section describes the necessary precautions to be observed when operating a hydraulic excavator equipped with an attachment.

NOTICE

Select the attachment most suited to the machine body.

- **The machine models to which attachments can be mounted vary. For selection of attachment and machine model, consult your distributor.**

6.1 HYDRAULIC BREAKER

MAIN AREAS OF APPLICATION

Crushed rock
Demolition work
Road construction

This attachment can be used for a wide range of work including demolition of buildings, breaking up of road surfaces, tunnel work, breaking up slag, rock crushing, and breaking operations in quarries.

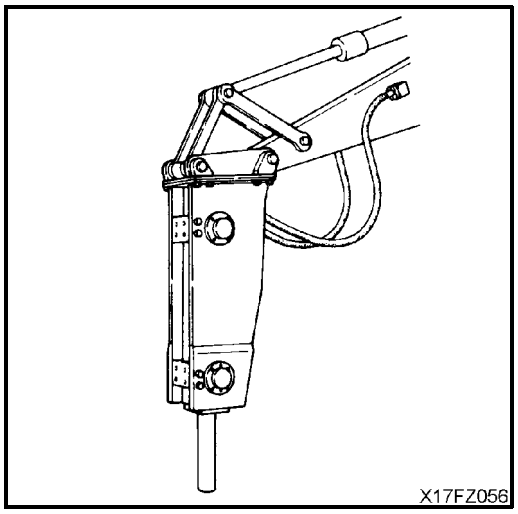

Keep the chisel pushed perpendicularly against the impact surface when carrying out breaking operations.

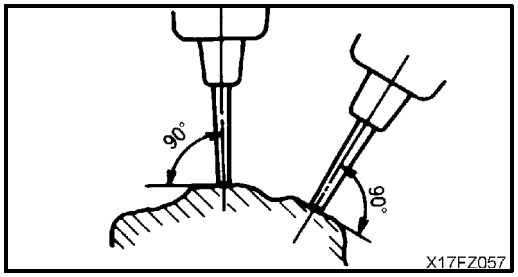

When applying impact, push the chisel against the impact surface and operate so that the chassis rises approx. 5cm (2 in) off the ground. Do not let the machine come further off the ground than is necessary.

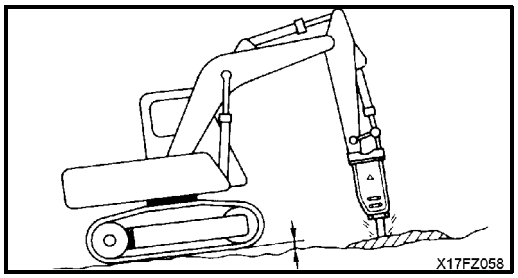

https://truckmanualshub.com/

When applying continuous impact to the same impact surface, if the chisel does not penetrate or break the surface within 1 minute, change the point of impact and carry out breaking operations closer to the edge.

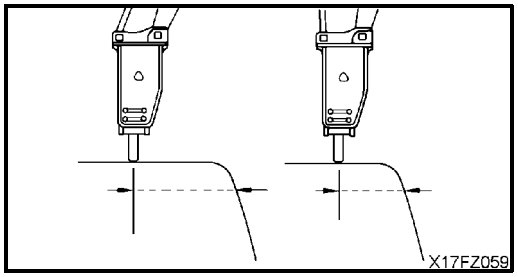

The direction of penetration of the chisel and the direction of the breaker body will gradually move out of line with each other, so always adjust the bucket cylinder to keep them aligned.

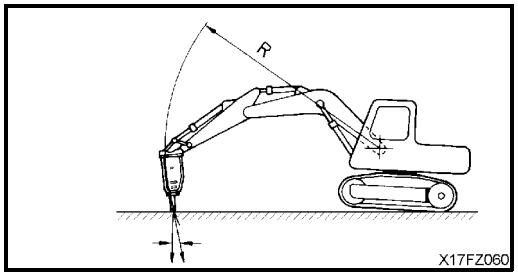

Always keep the chisel pressed against the impact surface properly to prevent using the impact force when there is no resistance.

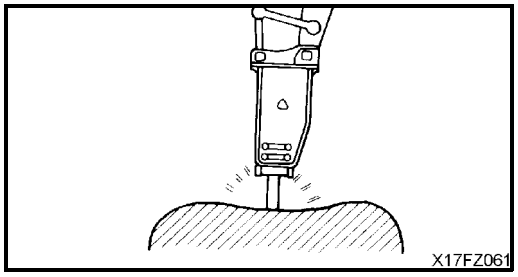

IMPROPER METHODS OF USE

To ensure that the machine has a long life, and to ensure that operations are carried out in safety, do not operate the machine in any of the following ways.

- Do not operate the cylinder to the end of its stroke.
  Always leave approx. 5 cm (2 in) to spare.

Using the mount to gather in pieces of rock

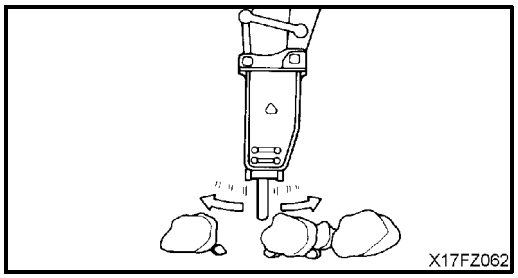

Operations using the swing force

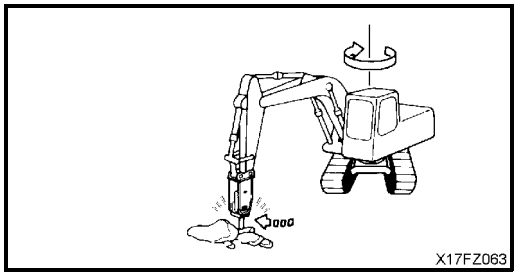

https://truckmanualshub.com/

Moving the chisel while carrying out impacting operations

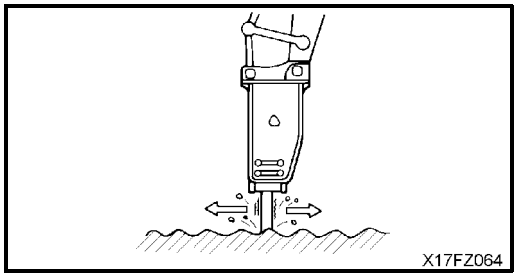

Holding the chisel horizontal or pointed up when carrying out impacting operations

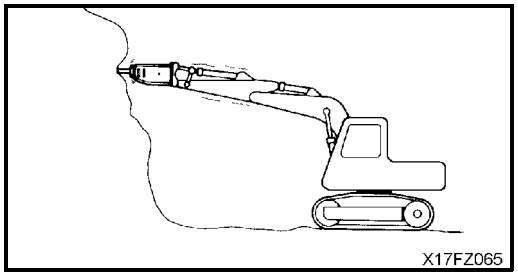

Twisting the chisel when it has penetrated the rock

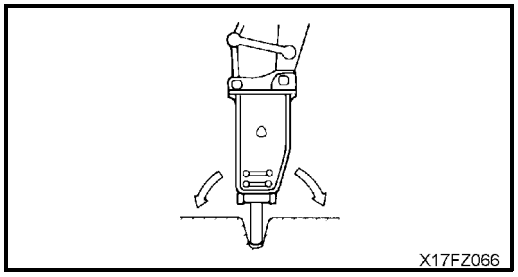

Pecking operations

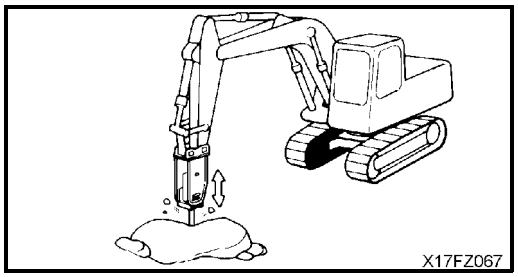

Extending the bucket cylinder fully and thrusting to raise the machine off the ground

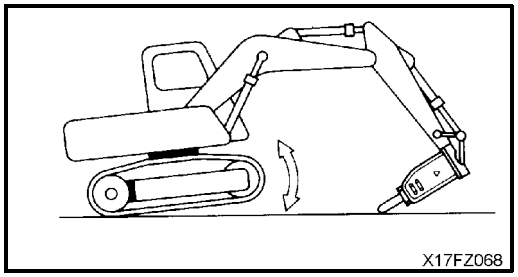

https://truckmanualshub.com/

6.2 CRUSHER

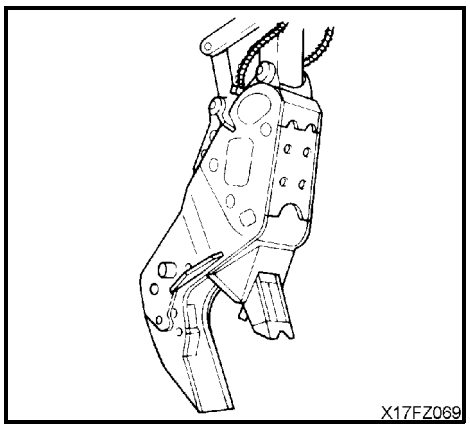

MAIN FIELDS OF APPLICATION

Road repair work
Demolition work

This attachment can be used for a wide range of work including peeling off and crushing pavement roads, demolishing wooden houses and buildings, and crushing foundation and roadbeds.

IMPROPER METHODS OF USE

To ensure that the machine has a long life, and to ensure that operations are carried out in safety, do not operate the machine in any of the following ways.

- Do not operate the cylinder to the end of its stroke.
  Always leave approx. 5 cm (2 in) to spare.

Impact operations using attachment

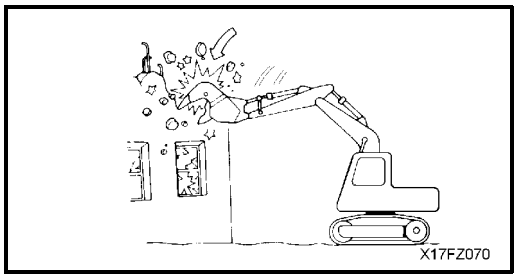

Impact operations using swing force

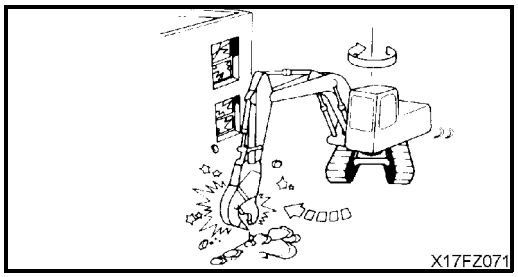

Overloading work equipment during lifting and loading operations

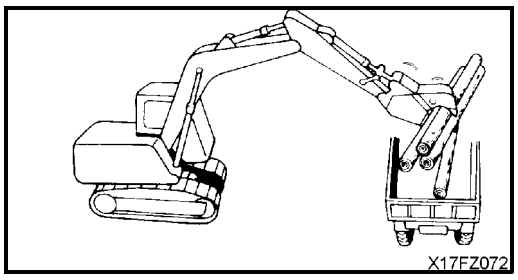

Operations using attachment to grip at an angle

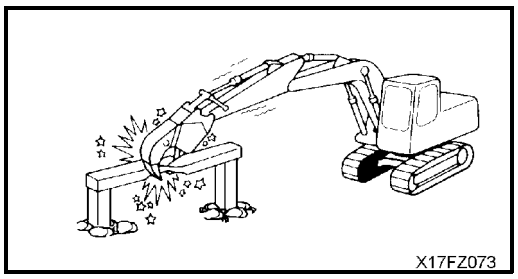

https://truckmanualshub.com/

6.3 GRAPPLE

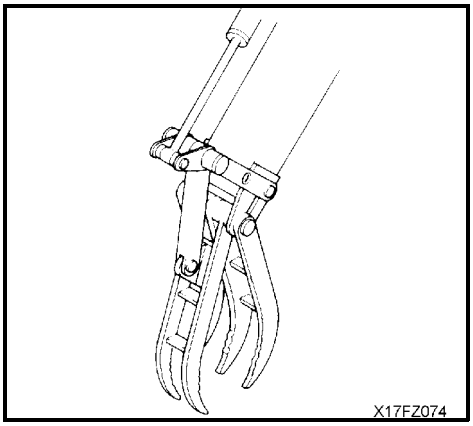

MAIN FIELDS OF APPLICATION

Disposing of industrial waste
Disposing of demolition waste

This can be used for a wide range of work including collecting or loading demolition waste materials and debris, timber, grass etc.

IMPROPER METHODS OF USE

To ensure that the machine has a long life, and to ensure that operations are carried out in safety, do not operate the machine in any of the following ways.

- Do not operate the cylinder to the end of its stroke.
  Always leave approx. 5 cm (2 in) to spare.

Operations using the swing force

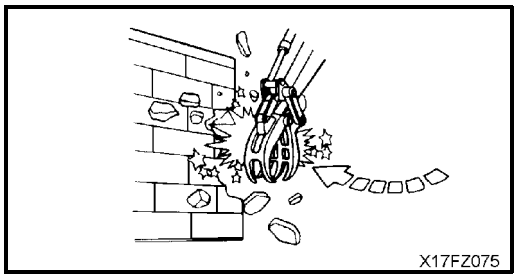

Operations using one side of work equipment

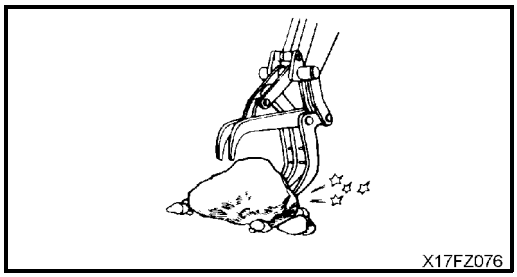

Pushing fork into ground surface to jack up and change direction of machine

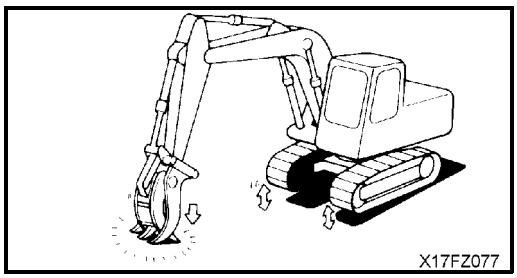

Impact operation with no load

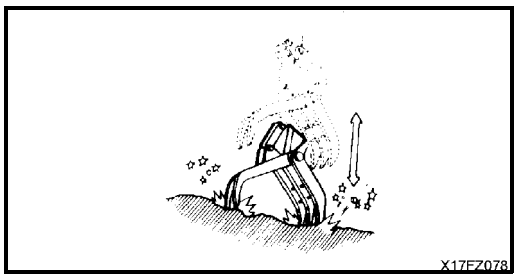

https://truckmanualshub.com/

6.4 BUCKET WITH THUMB GRAPPLE

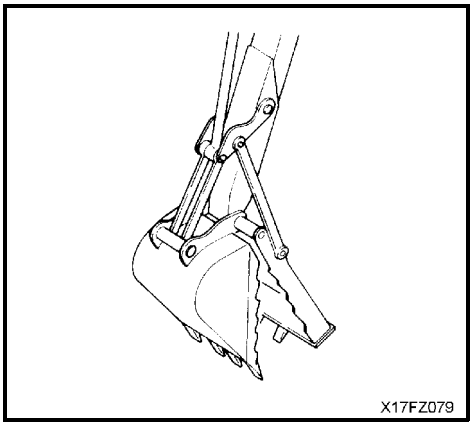

MAIN FIELDS OF APPLICATION

Demolition
Disposing of industrial waste
Forestry

This bucket is widely used for demolition including breaking-up work, grading and digging, clean-up work after natural disasters, dumping industrial waste, and forestry work, etc.

IMPROPER METHODS OF USE

To ensure that the machine has a long life, and to ensure that operations are carried out in safety, do not operate the machine in any of the following ways.

- Do not operate the cylinder to the end of its stroke.
  Always leave approx. 5 cm (2 in) to spare.

Operations using the swing force

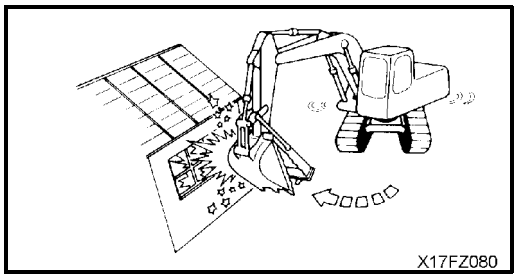

Grabbing a object using only one side of the bucket

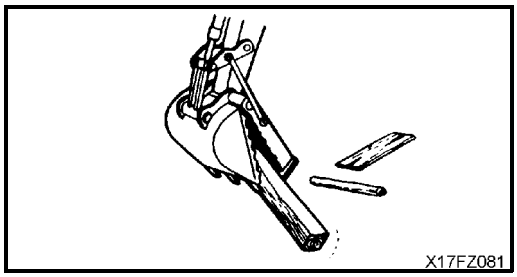

Closing the thumb grapple with the boom and arm fully extended

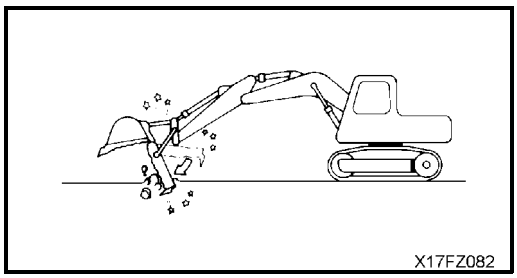

Impact operation with no load

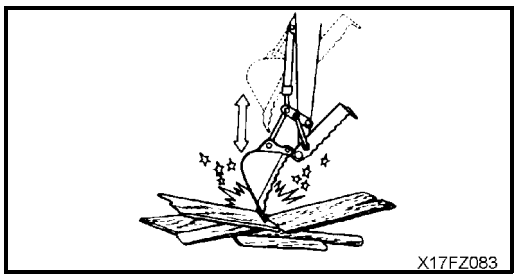

https://truckmanualshub.com/

6.5 ROTATING GRAPPLE

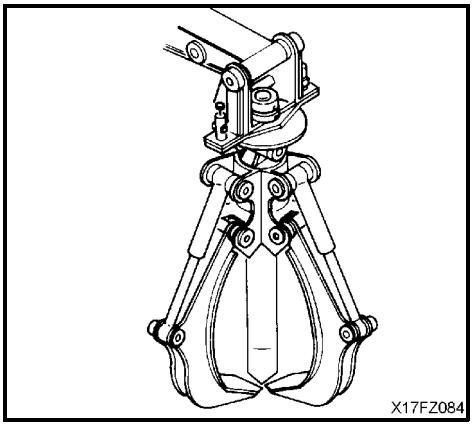

MAIN FIELDS OF APPLICATION

Disposal of rock or debris

This attachment is mounted to the arm end and used to grasp rock, debris etc. by opening and closing the claws (3 to 5) corresponding to the extension and retraction of the hydraulic cylinder.

IMPROPER METHODS OF USE

To ensure that the machine has a long life, and to ensure that operations are carried out in safety, do not operate the machine in any of the following ways.

- Do not operate the cylinder to the end of its stroke.
  Always leave approx. 5 cm (2 in) to spare.

Operations using the swing force

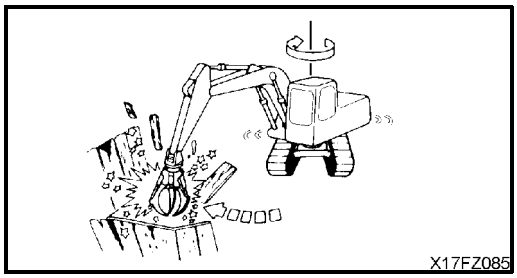

Operations using one side of work equipment

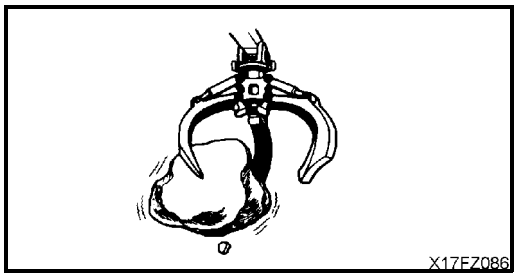

Catching and dragging with claw end

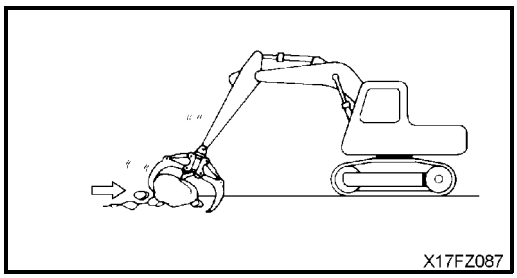

Gouging

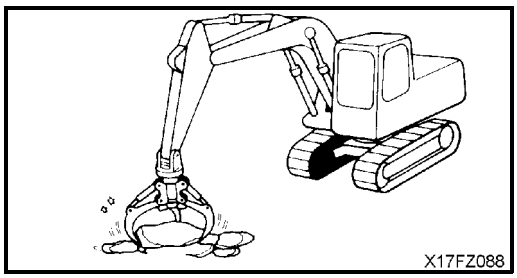

https://truckmanualshub.com/

6.6 SHEAR

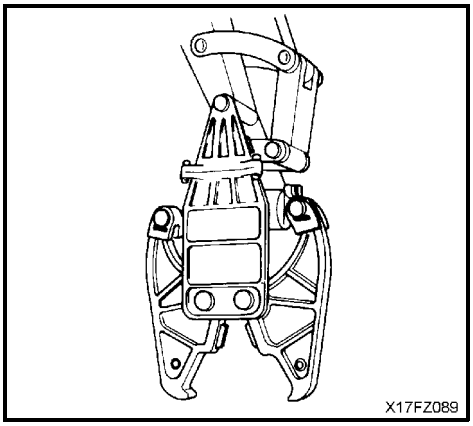

MAIN FIELDS OF APPLICATION

Demolition

Road repair work

This is the optimum attachment for demolition of steel frame reinforced structures, and for crushing of concrete blocks and rock, etc. The unique blade shape provides heavy crushing power.

IMPROPER METHODS OF USE

To ensure that the machine has a long life, and to ensure that operations are carried out in safety, do not operate the machine in any of the following ways.

- Do not operate the cylinder to the end of its stroke.
  Always leave approx. 5 cm (2 in) to spare.

Operations using cutting tip on one side only

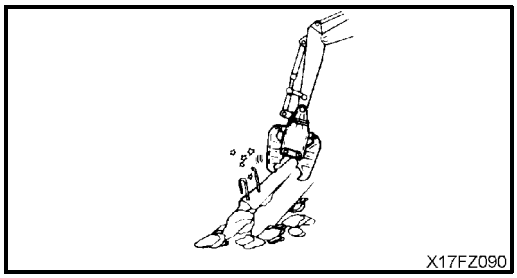

Impact operation with no load

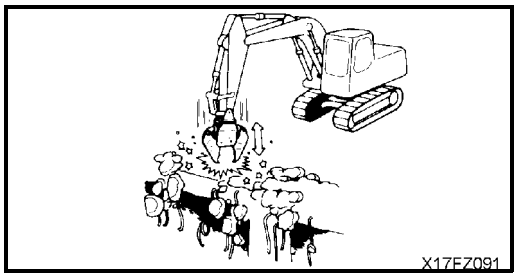

Twisting operations at end of cylinder stroke

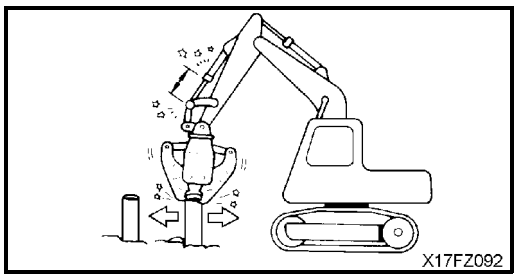

Sudden gripping and breaking operations

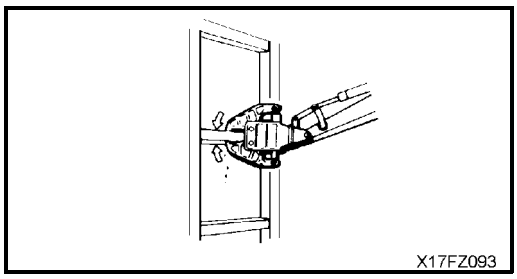

https://truckmanualshub.com/

6.7 HYDRAULIC PILE DRIVER

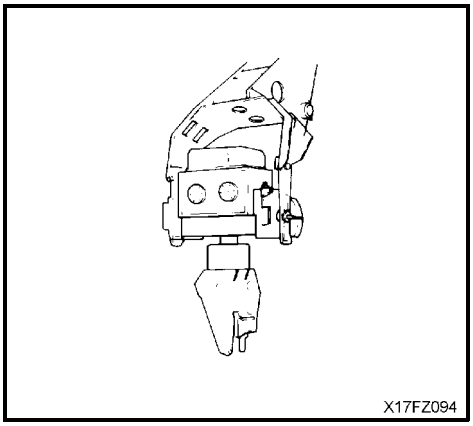

MAIN FIELDS OF APPLICATION

Foundation work
River work
Water supply and sewerage

This is a piling machine employing the hydraulic power source of the excavator. The machine features a long arm and a chuck unit movable by 360°. This facilitates operations such as driving and removing long piles, driving in piles at corners, vertical driving etc.

IMPROPER METHODS OF USE

To ensure that the machine has a long life, and to ensure that operations are carried out in safety, do not operate the machine in any of the following ways.

- Do not operate the cylinder to the end of its stroke.
  Always leave approx. 5 cm (2 in) to spare.

Forward or swing motion while grasping a pile

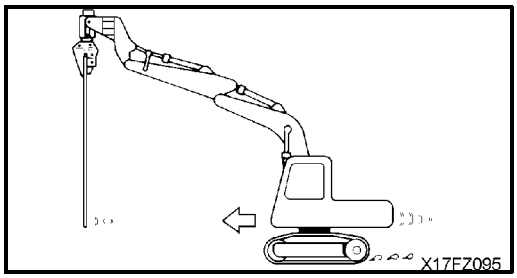

Lifting more than two piles at the same time

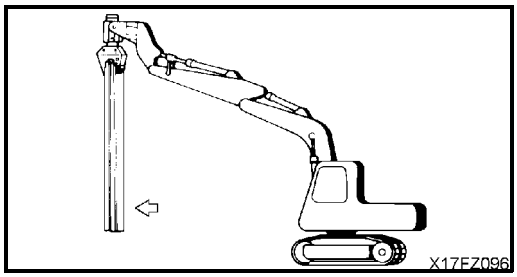

Work other than standard works

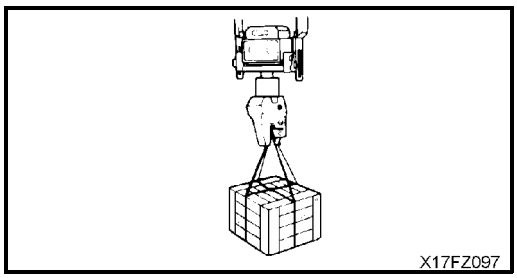

Loading or unloading a machine equipped with hydraulic pile driver

