RUTHZIL TRATOR COMERCIAL DE PEÇAS LTDA 11 97083-6812 ROLANDO CITRANGULO

YEPB200303

KOMATSU

PARTS BOOK

PC200,200LC-7 GALEO
PC210,210LC-7 GALEO

HYDRAULIC EXCAVATOR

MACHINE MODEL	SERIAL No.
PC200-7：	**DBB0001 and up**
PC200LC-7：	**DBE0001 and up**
PC210-7：	**DBF0001 and up**
PC210LC-7：	**DBG0001 and up**

KOMATSU

YEPB200303

PARTS BOOK

PC200-7 GALEO
Serial No. DBB0001 and up
PC200LC-7 GALEO
Serial No. DBE0001 and up
PC210-7 GALEO
Serial No. DBF0001 and up
PC210LC-7 GALEO
Serial No. DBG0001 and up
ENGINE SAA6D102E-2
ENGINE No. 26286069 and up

FOREWORD

When ordering a spare part, specify the part number, part name, and quantity required, and also specify your machine model code, machine serial number, engine serial number and the service meter reading.

This Parts Book describes not only standard items but also optional equipment and attachments. To order a part, please contact your nearest Komatsu distributor.

This Parts Book contains the information and special symbols as follows:

Figure and list	When you open this Parts Book, you will find an illustration on the left page (even-numbered page) for the spare parts group. Each individual part in the group is given an index number. On the right page, the component parts of the group are listed in the order of the index numbers shown on the illustration page. The part number, part name, and applicable machine serial number are given for each part.
FIG. No.	The FIG. No. is the number of the illustration shown on the page. It is not the spare part number. The numbers are not always continuous.
INDEX	This is the same as the index number in the illustration. The parts are listed in index number order.
PART No.	The number given in the PART No. column is the part number for the part shown. It is the code used when ordering that part. It is important that there be no mistake in this code number when ordering.
DESCRIP-TION	This gives the name of part that has the part number listed. The mark "." is put in front of the part name of an assembly part and the item is entered following the assembly. If a part marked with "." is a sub assembly, its components are marked with "..". Example: ELEMENT ASSEMBLY, AIR CLEANER .ELEMENT ASSEMBLY, OUTER ..ELEMENT, OUTER ..NUT, WING ..WASHER
Q'TY (Quantity)	This specifies the number of pieces used for one machine. However, if a part is included in the assembly and/or component, the quantity per such assembly and/or component is specified.
SERIAL No.	Applicable engine serial number is indicated for the engine volume. In the chassis volume, this indicates the machine serial number in which the part is used.
Symbols and codes	Symbols and codes are used in the PART No. and DESCRIPTION columns, and represent the following: ☐ The part specified in the line above can be used instead of this part.

Symbols and codes (Cont'd)

⊡	This part can be used instead of the part specified in the line immediately above.
◆	This part and the part specified in the line immediately above are interchangeable.
■	The part specified in the DESCRIPTION column can be used instead of this part if it is used as a set.
☒	This shows discontinued part. The part specified in the above line is supplied instead.
▼	This shows a discontinued part. The part specified in the DESCRIPTION column is supplied instead as a set.
☆	This part cannot be supplied as an individual part. It is supplied as an assembly.
★	This part cannot be supplied as an individual part. It is supplied as an assembly. However, it is supplied as an individual part by authorized distributors only.
⊙	This indicates a part group. The part marked with this symbol is not considered a supply part.
====	The parts surrounded by this line are components of the part group specified in the above line.
G-1,G-2	These indicate categories of part groups.
KIT	This indicates kit parts. For kit parts, refer to the service kit tables provided in this Parts Book.
△	This indicates a part supplied as semi-finished. It requires additional work before installation.
PAINT(1)	This indicates parts shipped painted with undercoat.
PAINT(2)	This indicates parts supplied with different colors from the original color of your machine.
(A)	This code indicates special parts for cold weather "A" specification (-30°C) machines.
(B)	This indicates special parts for cold weather "B" specification (-50°C) machines.

CONTENTS

FOREWORD		OF- 2
CONTENTS		OC- 1

AA [ENGINE]	FIG NO.	PAGE
CYLINDER HEAD	A1009-01A0	AA- 2
WATER TEMPERATURE SENSOR	A101V-01A1	AA- 4
REAR HANGER	A105P-01A0	AA- 6
HEAD COVER	A111P-01A0	AA- 8
AIR CONNECTOR	A131P-01A1	AA- 10
AIR INTAKE HEATER	A131R-01A0	AA- 12
AIR INLET COVER	A131V-01A0	AA- 14
EXHAUST CONNECTOR CLAMP	A151R-01A0	AA- 16
EXHAUST MANIFOLD GASKET AND BOLT	A151T-01A0	AA- 18
EXHAUST MANIFOLD AND PLUG	A151V-01A0	AA- 20
TURBOCHARGER OIL PIPING	A153T-01A1	AA- 22
TURBOCHARGER OUT CONNECTION	A153V-01A0	AA- 24
TURBOCHARGER MOUNTING	A1539-01A0	AA- 26
HEAT SHIELD	A1570-01A3	AA- 30
MUFFLER AND MOUNTING	A1610-01A0	AA- 32
THERMOSTAT HOUSING	A173P-01A0	AA- 34
THERMOSTAT	A173R-01A1	AA- 36
OIL PRESSURE SWITCH	A201V-01A0	AA- 38
CYLINDER BLOCK	A2019-01A0	AA- 40
FRONT COVER POINTER	A2040-01A0	AA- 42
FRONT COVER	A2049-01A0	AA- 44
CAM FOLLOWER COVER	A206P-01A0	AA- 46
BREATHER HOSE	A2060-01A1	AA- 48
CYLINDER BLOCK BLIND PLUG	A207P-01A0	AA- 50
OIL PAN BOLT	A211R-01A0	AA- 52
OIL LEVEL SENSOR	A211V-01A1	AA- 54
OIL PAN AND SUCTION TUBE	A2119-01A1	AA- 56
OIL LEVEL GAUGE	A219P-01A0	AA- 58
REVOLUTION SENSOR	A221V-01A0	AA- 60
FLYWHEEL HOUSING	A2219-01A0	AA- 62
FLYWHEEL	A223P-01A0	AA- 64
CRANKSHAFT	A2319-01A0	AA- 66
DAMPER	A233P-01A0	AA- 68
PISTON	A2359-01A0	AA- 70
ROCKER ARM	A241P-01A0	AA- 72
TAPPET	A241R-01A0	AA- 74
CAMSHAFT	A2419-01A0	AA- 76
FRONT GEAR TRAIN COVER	A261P-01A0	AA- 78
ACCESSORY PULLEY	A267P-01A1	AA- 80
TACHOMETER DRIVE COVER	A281P-01A0	AA- 82
UNDER PLATE	A283P-01A0	AA- 84
NOISE PANEL CYLINDER BLOCK	A283V-01A0	AA- 86
OIL PUMP	A301P-01A0	AA- 88
OIL FILTER AND PIPING	A311P-01A1	AA- 90
OIL COOLER COVER	A331P-01A1	AA- 92
FUEL INJECTION PUMP	A401P-01A0	AA- 94
BOOST TUBE	A401R-01A0	AA- 96
NOISE PANEL INJECTION PUMP	A401V-01A0	AA- 98
FUEL HOSE JOINT	A4010-01A0	AA-100
FUEL INJECTION PUMP MOUNTING	A408P-01A0	AA-102
FUEL FILTER	A411P-01A1	AA-104
FUEL FILTER PIPING	A411R-01A1	AA-106
FUEL INJECTION PIPING	A411S-01A0	AA-108
CYLINDER BLOCK BLIND COVER AND FUEL FILTER PIPING	A417P-01A1	AA-110
INJECTION NOZZLE	A4219-01A0	AA-112
WATER CONNECTOR PLUG	A501S-01A0	AA-120
WATER PUMP (HARDENING PULLEY)	A5019-01A0	AA-122
ALTERNATOR DRIVE PULLEY	A502P-01A2	AA-124

	FIG NO.	PAGE
COOLING FAN	A5030-01A0	AA-126
FAN SPACER	A504P-01A0	AA-128
ALTERNATOR (35A)	A601P-01A0	AA-130
ALTERNATOR (60A) (OPT)	A601P-01A1	AA-132
ALTERNATOR (35A) (INNER PARTS)	A601P-02A0	AA-134
ALTERNATOR (60A) (INNER PARTS)	A601P-02A1	AA-136
BELT TENSIONER	A601S-01A2	AA-138
ALTERNATOR MOUNTING	A601T-01A0	AA-140
STARTING MOTOR (4.5KW)	A621P-01A0	AA-142
STARTING MOTOR (5.5KW)	A621P-01A1	AA-144
STARTING MOTOR (4.5KW) (INNER PARTS)	A621P-02A0	AA-146
STARTING MOTOR (4.5KW) (INNER PARTS)	A621P-02A0	AA-148
STARTING MOTOR (5.5KW) (INNER PARTS)	A621P-02A1	AA-150
STARTING MOTOR PIPING (4.5KW)	A621S-01A0	AA-154
STARTING MOTOR PIPING (5.5KW)	A621S-01A1	AA-156
REPAIR PARTS (1/4) (CYLINDER HEAD)	A8110-01A0	AA-158
REPAIR PARTS (2/4) (CYLINDER HEAD)	A8110-02A0	AA-160
REPAIR PARTS (3/4) (CRANKSHAFT)	A8110-03A0	AA-162
REPAIR PARTS (4/4) (PISTON)	A8110-04A0	AA-164
CAUTION PLATE (JAPANESE-ENGLISH)	A9810-01A0	AA-166
CAUTION PLATE (FOR REGULATION OF EPA)	A9850-01A1Z	AA-168
MAIN PUMP CONNECTING PARTS	A9999-01A1	AA-170
AIR CLEANER (ORDERING TRANSFERRED PARTS)	B9999-01A8	AA-172
BO [ENGINE RELATED PARTS]		
DAMPER, PUMP AND TUBE	B0000-01A0	BO- 2
ENGINE MOUNT(BRACKET AND CUSHION)	B0100-01A0	BO- 4
ENGINE MOUNT(FILTER REMOTE)	B0100-02A0	BO- 6
AIR CLEANER CONNECTION	B0200-01A0	BO- 8
FUEL CONTROL	B0400-01A0	BO- 10
CORROSION ASS'Y	B0920-01A0	BO- 12
CO [COOLING SYSTEM]		
COOLING (RADIATOR) (WITH AIR CONDITIONER)	C0100-01A0A	CO- 2
COOLING (AFTER COOLER AND CONDENSER) (WITH AIR CONDITIONER)	C0100-02A0	CO- 4
COOLING (PIPING, SUB TANK AND RADIATOR MOUNT) (WITH AIR CONDITIONER)	C0100-03A0	CO- 6
COOLING (AFTER COOLER PIPING) (WITH AIR CONDITIONER)	C0100-04A0	CO- 8
FAN GUARD (WITH AIR CONDITIONER)	C0310-01A0	CO- 10
FAN GUARD (OPT)	C0310-01A1	CO- 12
DO [FUEL TANK AND RELATED PARTS]		
FUEL TANK	D0100-01A0	DO- 2
FUEL LINES	D0200-01A0	DO- 4
FUEL LINES (WATER SEPARATOR+FULE FILTER)	D0200-02A0	DO- 6
EO [ELECTRICAL SYSTEM]		
BATTERY	E0100-01A1	EO- 4
WRING(STARTING HARNESS)	E0200-01A0	EO- 6
WRING (MAIN HARNESS) (HARNESS AND CLIP)	E0200-02A0	EO- 8
WRING (MAIN HARNESS) (CLIP)	E0200-03A0	EO- 12
WRING (MAIN HARNESS) (CLIP)	E0200-04A0	EO- 14
WRING (BATTERY CASE)	E0200-05A0	EO- 16
WRING (WORKING LAMP, FRONT)	E0200-06A0	EO- 18
ADDITIONAL WORK LAMP (OPT)	E0310-01A0	EO- 20
ADDITIONAL WORK LAMP(FOR LEVEL-1 GUARD) (OPT)	E0310-01A1	EO- 22
REAR WORK LAMP (OPT)	E0320-01A0	EO- 24
BEACON (OPT)	E0340-01A0	EO- 26
HORN	E0410-01A0	EO- 28
TRAVEL ALARM (OPT)	E0420-01A0	EO- 30
BATTERY (LARGE CAPACITY)	E0100-01A1	ER- 2
HO [HYDRAULIC SYSTEM]		
HYDRAULIC TANK	H0110-01A0	HO- 2
HYDRAULIC TANK	H0110-01A0	HO- 4
MAIN VALVE(CONNECTING PARTS)	H0120-01A0	HO- 10
MAIN VALVE (OPT) (CONNECTING PARTS) (SPECIAL PIPING FOR BREAKER)	H0120-01A1	HO- 12
MAIN VALVE (ADDITIONAL SERVICE VALVE KIT) (SPECIAL PIPING FOR BREAKER) (OPT)		

	FIG NO.	PAGE
MAIN VALVE(CONNECTING PARTS)	H0120-02A0	HO- 18
MAIN VALVE (VALVE BRACKET)	H0120-03A0	HO- 22
MAIN VALVE (VALVE BRACKET) (SPECIAL PIPING FOR BREAKER) (OPT)	H0120-03A1	HO- 24
MAIN VALVE (SERVICE VALVE PLUG) (SPECIAL PIPING FOR BREAKER) (OPT)	H0120-04A6	HO- 26
MAIN PUMP (CONNECTING PARTS)	H0210-01A0A	HO- 28
SUCTION LINE	H0311-01A0	HO- 32
DELIVERY LINE	H0312-01A0A	HO- 34
OIL COOLER LINE	H0320-01A0	HO- 38
RETURN LINE	H0330-01A0	HO- 40
RETURN LINE (SPECIAL PIPING FOR BREAKER) (OPT)	H0330-01A1	HO- 42
DRAIN LINES	H0340-01A0	HO- 44
BOOM LINE (BOOM LINES)	H1210-01A0	HO- 46
BOOM LINE (BOOM HOSE)	H1210-02A0	HO- 48
ARM AND BUCKET LINE	H1220-01A0	HO- 50
ARM AND BUCKET LINE (OPT) (WITH DRIFT PRIVENTIVE)	H1220-01A1	HO- 52
ATTACHMENT LINES (MAIN L.H.) (SPECIAL PIPING FOR BREAKER) (OPT)	H1270-01A0	HO- 56
RELIEF VALVE (210KG/CM2) (SPECIAL PIPING FOR BREAKER) (OPT)	H1270-01A2	HO- 60
ATTACHMENT LINES (MAIN R.H.) (SPECIAL PIPING FOR BREAKER) (OPT)	H1270-02A0	HO- 66
ATTACHMENT LINES (RETURN) (SPECIAL PIPING FOR BREAKER) (OPT)	H1270-03A0	HO- 68
TRAVEL LINES	H1310-01A0	HO- 72
SWING LINES	H1340-01A0	HO- 74
LS LINES	H1810-01A0	HO- 76
SOLENOID VALVE (VALVE)	H1831-01A0	HO- 78
SOLENOID VALVE (HOSE AND BRACKET)	H1831-02A0	HO- 82
PRESSURE SWITCH	H1833-01A0	HO- 84
PPC MAIN LINE(HOSE)	H1840-01A0	HO- 86
PPC MAIN LINE (BLOCK) (SPECIAL PIPING FOR BREAKER) (OPT)	H1840-02A1	HO- 88
HYDRAULIC TANK (1ACTUATOR) (OPT)	H0110-01A1	H1- 6
HYDRAULIC TANK (1ACTUATOR) (OPT)	H0110-01A1	H1- 8
MAIN VALVE (CONNECTING PARTS) (1 ACTUATOR) (OPT)	H0120-01A1	H1- 12
MAIN VALVE (ADDITIONAL SERVICE VALVE KIT) (1 ACTUATOR) (OPT)	H0120-01A4	H1- 14
MAIN VALVE (ADDITIONAL SERVICE VALVE KIT) (2 ACTUATOR) (OPT)	H0120-01A5	H1- 16
MAIN VALVE (CONNECTING PARTS) (1 ACTUATOR) (OPT)	H0120-02A1	H1- 20
MAIN VALVE (VALVE BRACKET) (1 ACTUATOR) (OPT)	H0120-03A1	H1- 24
MAIN VALVE (SERVICE VALVE PLUG) (1 ACTUATOR) (OPT)	H0120-04A6	H1- 26
RETURN LINE (1ACTUATOR) (OPT)	H0330-01A1	H1- 42
ATTACHMENT LINES (MAIN L. H.) (1 ACTUATOR) (OPT)	H1270-01A0	H1- 56
RELIEF VALVE (280KG/CM2) (FOR SERVICE VALVE) (OPT)	H1270-01A1	H1- 58
RELIEF VALVE (210KG/CM2) (FOR SERVICE VALVE) (OPT)	H1270-01A2	H1- 60
RELIEF VALVE (250KG/CM2) (FOR SERVICE VALVE) (OPT)	H1270-01A3	H1- 62
RELIEF VALVE (175KG/CM2) (FOR SERVICE VALVE) (OPT)	H1270-01A4	H1- 64
ATTACHMENT LINES (MAIN R. H.) (1 ACTUATOR) (OPT)	H1270-02A0	H1- 66
ATTACHMENT LINES (RETURN) (1 ACTUATOR) (OPT)	H1270-03A0	H1- 68
ATTACHMENT LINES (ACCUMULATOR AND SOLENOID VALVE) (1 ACTUATOR) (OPT)	H1270-04A0	H1- 70
SOLENOID VALVE (VALVE) (1 ACTUATOR) (OPT)	H1831-01A1	H1- 80
PPC MAIN LINE (BLOCK) (1 ACTUATOR) (OPT)	H1840-02A1	H1- 88
JO [REVOLVING FRAME AND RELATED PARTS]		
REVOLVING FRAME (COVER AND BRACKET)	J1110-01A0	JO- 2
REVOLVING FRAME (SHEET AND GROMMET)	J1110-02A0	JO- 4
BOOM FOOT PIN	J1310-01A0	JO- 6
KO [OPERATOR'S COMPARTMENT AND CONTROL SYSTEM]		
OPERATOR'S SEAT (SUSPENSION)	K0110-01A2	KO- 4
SEAT BELT (50MM WIDE) (OPT)	K0160-01A0	KO- 8
SEAT BELT (78MM WIDE) (OPT)(GRAMMER OF SEAT)	K0160-01A1	KO- 10
SEAT BELT (50 MMWIDE) (OPT)	K0160-01A2	KO- 12
SEAT REAR COVER (WITH AIR CONDITIONER)	K0180-01A0	KO- 14
LUGGAGE BOX NET	K0190-01A0	KO- 18
TOP GUARD (OPT)	K0220-01A0	KO- 20
FRONT GUARD (HALF) (OPT)	K0230-01A0	KO- 22
FRONT GUARD (FULL) (LEVEL-1) (OPT)	K0230-01A1	KO- 24
FRONT GUARD (FULL) (LEVEL-2) (OPT)	K0230-01A2	KO- 26
FLOOR MAT	K0310-01A0	KO- 30
FLOOR MAT (SPECIAL PIPING FOR BREAKER) (OPT)	K0310-01A1	KO- 32
RAIN VISOR (OPT)	K0320-01A0	KO- 40

	FIG NO.	PAGE
SUN VISOR (OPT)	K0330-01A0	KO- 42
WINDOW WASHER	K0350-01A0	KO- 46
AIR CONDITIONER (COMPRESSOR AND RECEIVER DRYER)	K0700-01A0	KO- 50
AIR CONDITIONER (HOSE)	K0700-02A0	KO- 52
FIRE EXTINGUISHER (ENGLISH) (OPT)	K0830-01A1	KO- 56
FIRST AID BOX (COLD WEATHER A SPEC.) (OPT)	K0840-01A0	KO- 58
OPERATOR'S CAB (CAB)	K1110-01A0	KO- 60
FLOOR FRAME (OPERATOR'S CAB) (FRONT WINDOW)	K1110-02A0	KO- 62
FLOOR FRAME (OPERATOR'S CAB) (FRONT WINDOW)	K1110-02A0	KO- 64
OPERATOR'S CAB (FRONT LOWER WINDOW)	K1110-03A0	KO- 66
OPERATOR'S CAB (ROOF WINDOW)	K1110-04A0	KO- 68
AIR CONDITIONER (DOOR)	K1110-05A0	KO- 70
FLOOR FRAME (OPERATOR'S CAB) (DOOR COCK)	K1110-06A0	KO- 72
FLOOR FRAME (OPERATOR'S CAB) (OPEN LOCK)	K1110-07A0	KO- 74
FLOOR FRAME (OPERATOR'S CAB) (ELECTRICAL) (WIPER AND ROOM LAMP)	K1110-08A0	KO- 76
FLOOR FRAME (OPERATOR'S CAB) (ELECTRICAL)	K1110-09A0	KO- 78
FLOOR FRAME (OPERATOR'S CAB) (ACCESSORIES)	K1110-10A0	KO- 80
FLOOR FRAME (OPERATOR'S CAB) (PLUG BOLT)	K1110-11A0	KO- 82
FLOOR FRAME (OPERATOR'S CAB) (CLAMP AND PLATE)	K1110-12A0	KO- 84
FLOOR FRAME (OPERATOR'S CAB) (MONITOR SYSTEM)	K1110-13A0	KO- 86
FLOOR FRAME (OPERATOR'S CAB) (MONITOR SYSTEM)	K1110-13A0	KO- 86
FLOOR FRAME (OPERATOR'S CAB) (PLATE AND DUCT) (FOR BIG WIND AIE CONDITIONER)	K1110-14A0	KO- 88
FLOOR FRAME (OPERATOR'S CAB) (PARTTION AND FOOT DUCT)	K1110-15A0	KO- 90
FLOOR FRAME (OPERATOR'S CAB) (FLOOR FRAME)	K1110-16A0	KO- 92
FLOOR FRAME (OPERATOR'S CAB) (TRAVEL CONTROL)	K1110-17A0	KO- 94
FLOOR FRAME (FOOT REST) (L.H.)	K1110-18A0	KO- 96
FLOOR FRAME (FOOT REST) (R.H.)	K1110-19A0	KO- 98
FLOOR FRAME (FOOT REST) (R.H.) (SPECIAL PIPING FOR BREAKER) (OPT)	K1110-19A1	KO-100
FLOOR FRAME (OPERATOR'S CAB) (BASE)	K1110-20A0	KO-102
FLOOR FRAME (OPERATOR'S CAB) (SUB PENAL)	K1110-21A0	KO-104
FLOOR FRAME (OPERATOR'S CAB) (HARNESS)	K1110-22A0	KO-106
FLOOR FRAME (OPERATOR'S CAB) (CLAMP AND BOLT)	K1110-23A0	KO-108
FLOOR FRAME	K1110-24A0	KO-110
FLOOR FRAME (LEVER AND VALVE) (L.H.)	K1110-25A0	KO-112
FLOOR FRAME (OPERATOR'S CAB) (CONSOLE) (UPPER) (WITH AIR CONDERDITION AND RADIO) (OPT)	K1110-26A0	KO-114
FLOOR FRAME (CONSOLE) (UPPER)(L.H.) (WITHOUT AIR CONDERDITION AND RADIO) (OPT)	K1110-27A0	KO-116
FLOOR FRAME (OPERATOR'S CAB) (CONSOLE) (LOWER) (L.H.)	K1110-28A0	KO-118
FLOOR FRAME (LEVER AND VALVE) (R.H.)	K1110-29A0	KO-120
FLOOR FRAME (OPERATOR'S CAB) (CONSOLE) (MASTER KEY) (R.H.)	K1110-30A0	KO-122
FLOOR FRAME (OPERATOR'S CAB) (AIR CONDITIONER AND FOOT COVER)	K1110-31A0	KO-124
FLOOR FRAME (OPERATOR'S CAB) (AIR CONDITIONER HOSE)	K1110-32A0	KO-126
FLOOR FRAME (OPERATOR'S CAB) (HEATER HOSE AND CLAMP)	K1110-33A0	KO-128
FLOOR FRAME (PPC) (1/2)	K1110-34A0	KO-132
FLOOR FRAME (PPC) (2/2)	K1110-35A0	KO-134
FLOOR FRAME (PPC CLAMP)	K1110-36A0	KO-136
FLOOR FRAME (OPERATOR'S CAB) (P、T BLOCK AND SEAL)	K1110-37A0	KO-138
FLOOR FRAME (OPERATOR'S CAB) (P、T BLOCK AND SEAL) (SPECIAL PIPING FOR BREAKER)	K1110-37A1	KO-140
FLOOR FRAME (OPERATOR'S CAB) (P、T BLOCK)(WITHOUT AIR CONDITIONER)	K1110-37B5	KO-142
FLOOR FRAME	K1110-38A0	KO-144
FLOOR FRAME (LEVER KNOB)	K1110-39A0	KO-146
FLOOR MOUNT	K1120-01A0	KO-150
SWITCH	K1730-01A0	KO-160
FLOOR MAT (1ACTUATOR) (OPT)	K0310-01A0	K1- 62
FLOOR FRAME (FOOT REST) (R.H.) (1ACTUATOR) (OPT)	K1110-04A1	K1- 86
FLOOR FRAME (FOOT REST) (R.H.) (1ACTUATOR) (OPT)	K1110-04A1	K1- 88
FLOOR FRAME (OPERATOR'S CAB) (P、T BLOCK AND SEAL)(1ACTUATOR)(OPT)	K1110-21A1	K1-134

MO [GUARD]

HOOD	M1110-01A0	MO- 2
FRAME (MACHINE CAB)	M1120-01A0	MO- 4
LEFT SIDE DOOR (MACHINE CAB)	M1130-01A0	MO- 6
LEFT SIDE DOOR (MACHINE CAB)	M1130-01A0	MO- 8
RIGHT SIDE DOOR (MACHINE CAB)	M1140-01A0	MO-10

	FIG NO.	PAGE
PARTITION (MACHINE CAB)	M1150-01A0	MO- 12
PARTITION (MACHINE CAB)	M1150-01A0	MO- 14
PARTITION	M1160-01A0	MO- 16
COVER (MACHINE CAB) (UPPER)	M1210-01A0	MO- 18
RIGHT SIDE CASE	M1220-01A0	MO- 20
HAND RAIL	M1310-01A0	MO- 22
REAR VIEW MIRROR, L.H. (SINGLE) (OPT)	M1410-01A0	MO- 24
REAR VIEW MIRROR, R.H.	M1420-01A0	MO- 26
COUNTER WEIGHT	M1510-01A0	MO- 28
COUNTER WEIGHT MOUNTING	M1520-01A0	MO- 30
UNDER COVER (REVOLVING FRAME) (LEFT SIDE COVER AND TOOL BOX)	M1810-01A0	MO- 32
UNDER COVER (REVOLVING FRAME) (ENGINE ROOM AND TANK)	M1810-02A0	MO- 34
NO [SWING CIRCUIT AND RELATED PARTS]		
SWING CIRCUIT (CONCENTRATED GREASING)	N1110-01A0	NO- 2
SWING MACHINERY	N1210-01A0	NO- 6
SWING MACHINERY	N1210-01A0	NO- 8
SWING MOTOR (CONNECTING PARTS)	N1220-01A0	NO- 14
SWIVEL JOINT (CONNECTING PARTS)	N1310-01A0	NO- 16
PO [TRAVEL AND LOWER PIPING]		
TRAVEL PIPING	P1120-01A0	PO- 2
TRAVEL PIPING	P1120-01A1	PO- 4
FINAL DRIVE	P1210-01A0	PO- 6
FINAL DRIVE	P1210-01A0	PO- 8
RO [UNDER CARRIAGE]		
FRONT IDLER	R0110-01A0	RO- 2
IDLER CUSHION	R0110-02A0	RO- 4
IDLER CUSHION	R0110-02A1	RO- 6
TRACK ROLLER	R0200-01A0	RO- 8
TRACK ROLLER	R0200-01A1	RO- 10
CARRIER ROLLER	R0300-01A0	RO- 12
TRACK SHOE (SWAMP TYPE) (860MM WIDE) (OPT)	R0500-01A0	RO- 14
TRACK SHOE (FLAT TYPE) (610MM WIDE) (OPT)	R0500-01A1	RO- 16
TRACK SHOE (ROADLINER TYPE) (600MM WIDE) (OPT)	R0500-01A2	RO- 18
TRACK SHOE (TRIPLE GROUSER WITH HOLE) (600MM WIDE)	R0500-01A4	RO- 22
TRACK SHOE (TRIPLE GROUSER WITH HOLE) (700MM WIDE) (OPT)	R0500-01A5	RO- 24
TRACK SHOE (TRIPLE GROUSER WITH HOLE) (800MM WIDE) (OPT)	R0500-01A6	RO- 26
TRACK SHOE (TRIPLE GROUSER) (600MM WIDE) (HOLES TO EQUIP WITH CITY PAD) (OPT)	R0500-01A7	RO- 28
TRACK SHOE (SWAMP TYPE) (860MM WIDE) (OPT)	R0500-01A8	RO- 30
TRACK SHOE (TRIPLE GROUSER WITH HOLE) (600MM WIDE)	R0500-01B1	RO- 32
TRACK SHOE (TRIPLE GROUSER WITH HOLE) (700MM WIDE) (OPT)	R0500-01B2	RO- 34
TRACK SHOE (TRIPLE GROUSER WITH HOLE) (800MM WIDE) (OPT)	R0500-01B3	RO- 36
TRACK FRAME	R1100-01A0	RO- 40
TRACK FRAME	R1100-01A1	RO- 42
TRACK FRAME (WITH UNDER COVER) (OPT)	R1100-01A2	RO- 44
TRACK FRAME (WITH UNDER COVER) (OPT)	R1100-01A3	RO- 46
UNDER COVER (FOR TRACK FRAME) (OPT)	R1140-01A0	RO- 52
TRACK ROLLER GUARD (LC)	R1200-01A1	RO- 54
TRACK FULL ROLLER GUARD (OPT)	R1200-01A2	RO- 56
TRACK FULL ROLLER GUARD (OPT)	R1200-01A3	RO- 58
TO [WORK EQUIPMENT]		
BOOM	T1110-01A1	TO- 2
BOOM (TOP PIN AND BOTTOM PIN)	T1110-02A0	TO- 8
BOOM (ARM CYLINDER LINE AND BUCKET CYLINDER LINE)	T1110-03A0	TO- 10
BOOM (ARM CYLINDER LINE AND BUCKET CYLINDER LINE)	T1110-03A0	TO- 12
BOOM (SPECIAL PIPING FOR BREAKER) (ARM CYLINDER LINE AND BUCKET CYLINDER LINE) (OPT)	T1110-03A1	TO- 14
BOOM (SPECIAL PIPING FOR BREAKER) (ARM CYLINDER LINE AND BUCKET CYLINDER LINE) (OPT)	T1110-03A1	TO- 16
BOOM (LUBRICATING LINE AND WORKING LAMP HARNESS)	T1110-04A0A	TO- 18
BOOM (SPECIAL PIPING FOR BREAKER) (FOR ADDITIONAL PIPING) (OPT)	T1110-05A1	TO- 20
BOOM (WORKING LAMP AND BOOM FOOT LUBRICATING)	T1110-06A0	TO- 22
BOOM CYLINDER	T1120-01A0	TO- 24
BOOM PIN	T1125-01A0	TO- 28
ARM CYLINDER	T1140-01A0	TO- 30

	FIG NO.	PAGE
ARM CYLINDER (BLIND PARTS) (FOR COMPONENT)	T1140-01A2	TO- 32
ARM (2.9M)	T1200-01A0	TO- 34
ARM (2.9M)	T1200-01AA	TO- 35a
ARM (2.9M) (SPECIAL PIPING FOR BREAKER) (OPT)	T1200-01A1	TO- 36
ARM (2.4M) (SPECIAL PIPING FOR BREAKER) (OPT)	T1200-01A3	TO- 38
ARM (2.9M) (BUCKET LINK)	T1200-02A0	TO- 40
ARM (2.9M) (BUCKET LINK)	T1200-02A0	TO- 42
ARM (2.4M) (BUCKET LINK) (OPT)	T1200-02A2	TO- 46
ARM (BUCKET CYLINDER HOSE AND SPACER) (2.9M)	T1200-03A0	TO- 48
ARM (2.4M) (BUCKET CYLINDER HOSE AND SPACER) (OPT)	T1200-03A2	TO- 50
ARM (2.9M) (SPECIAL PIPING FOR BREAKER) (OPT)	T1200-04A1	TO- 52
ARM (2.9M) (SPECIAL PIPING FOR BREAKER) (OPT)	T1200-04A1	TO- 54
ARM (2.4M) (SPECIAL PIPING FOR BREAKER) (L.H.) (OPT)	T1200-04A3	TO- 56
ARM (2.4M) (SPECIAL PIPING FOR BREAKER) (R.H.) (OPT)	T1200-05A3	TO- 58
BUCKET LESS	T1290-01A0	TO- 60
CLAMSHELL BUCKET (OPT)	T1510-01A0	TO- 62
CLAMSHELL BUCKET (OPT)	T1510-01A0	TO- 64
BUCKET, 0.5M3 750MM (HORIZONTAL PIN TYPE)	T1510-01A2	TO- 68
RIPPER BUCKET, 0.61M3 950MM	T1510-01A3	TO- 70
SLOPE FINSHING BUCKET (OPT)	T1510-01A4	TO- 72
TRAPEZOIDAL BUCKET (OPT)	T1510-01A5	TO- 74
DITCH CLEANING BUCKET, 0.8M3 1800MM (OPT)	T1510-01A6	TO- 76
SINGLE SHANK RIPPER	T1510-01A7	TO- 78
THREE SHANK RIPPER	T1510-01A8	TO- 80
BUCKET1.0 M3 (HORIZONTAL PIN TYPE) (OPT)	T1510-01B2	TO- 88
BUCKET0.8 M3 (HORIZONTAL PIN TYPE)	T1510-01B5	TO- 94
BUCKET, 0.8M3 (ROCKTYPE) (OPT)	T1510-01B6	TO- 96
1.0M3 NARROW BUCKET (990 mm), 1.0 M3 (HORIZONTAL PIN TYPE) (WITH ADJUSTER) (OPT)	T1510-01B9	TO- 98
BUCKET, 0.9M3 (HORIZONTAL PIN TYPE) (WITH ADJUSTER) (OPT)	T1510-01B9	TO- 100
SIDE CUTTER (FOR BUCKET)	T1510-02A1	TO- 102
BREAKER ADAPTER (FOR KRUPP) (OPT)	T1920-01A0	TO- 104
BREAKER ADAPTER (FOR NIPPON PNEUMATIC) (OPT)	T1920-01A1	TO- 106
BREAKER ADAPTER (FOR FURUKAWA AND ATLAS) (OPT)	T1920-01A2	TO- 108
BREAKER ADAPTER (FOR MATUDA) (OPT)	T1920-01A3	TO-110
BOOM (FOR ADDITIONAL PIPING) (ARM CYLINDER LINE AND BUCKET CYLINDER LINE) (OPT)	T1110-03A1	T1- 14
BOOM (FOR ADDITIONAL PIPING) (ARM CYLINDER LINE AND BUCKET CYLINDER LINE) (OPT)	T1110-03A1	T1- 16
BOOM (ADDITIONAL LINE) (FOR ADDITIONAL PIPING) (OPT)	T1110-05A1	T1- 20
ARM (2.9M) (FOR ADDITIONAL PIPING) (OPT)	T1200-01A1	T1- 36
ARM (2.4M) (FOR ADDITIONAL PIPING) (OPT)	T1200-01A3	T1- 38
ARM (2.9M) (BUCKET LINK) (FOR ADDITIONAL PIPING) (OPT)	T1200-02A1	T1- 44
ARM (2.9M) (ADDITIONAL PIPING) (OPT)	T1200-04A1	T1- 52
ARM (2.9M) (ADDITIONAL PIPING) (OPT)	T1200-04A1	T1- 54
ARM (2.4M) (ADDITIONAL PIPING) (L.H.) (OPT)	T1200-04A3	T1- 56
ARM (2.4M) (ADDITIONAL PIPING) (R.H.) (OPT)	T1200-05A3	T1- 58
ARM (2.9M) (RUSSIAN SPEC.)	T1200-01A0	TR- 34

UO [MARKS AND PLATES]

DECAL AND PLATE (CHINESE PC200-7)	U0100-01A2	UO- 2
DECAL AND PLATE (CHINESE)	U0100-01A3	UO- 4
DECAL AND PLATE (CHINESE) (PC210)	U0100-01A4	UO- 6
DECAL AND PLATE (CHINESE) (PC210LC)	U0100-01A5	UO- 8
LOGO (KOMATSU) (SMALL) (GENERAL)	U0150-01A0	UO- 10
PLATE (BOOM SIDE R.H.) (LOGO MARK)	U0510-01A0	UO- 12
PLATE (LIFTING CAPACITY) (ENGLISH) (OPT)	U0200-01A1	UO- 14
PLATE (LIFTING CAPACITY) (ENGLISH) (OPT)	U0200-01A2	UO- 16
PLATE (BOOM SIDE R.H.) (LOGO MARK)	U0510-01A0	UO- 18
CAUTION PLATE (FOR LV1 GUARD)(FOR EXCEPT JAPAN) (OPT)	U0520-01A0	UO- 20
CAUTION PLATE (FOR LV2 GUARD)(FOR EXCEPT JAPAN) (OPT)	U0520-01A1	UO- 22
PLATE (AIR CLEANER, DOUBLE ELEMENT)	U0550-01A1	UO- 28
PLATE (WITH ACCULATOR) (OPT)	U0580-01A0	UO- 30
DECAL AND PLATE (CHINESE PC200-7)	U0100-01A2	UR- 2
PLATE (AIR CLEANER, DOUBLE ELEMENT)	U0550-01A1	UR- 28

VO [ACCESSORY]

SPARE PARTS	V0100-01A0	VO- 2
CAP AND OVERALL	V0200-01A0	VO- 4

	FIG NO.	PAGE
TOOL KIT	V0300-01A0	VO- 6
WO [MISCELLANEOUS]		
PREVENTIVE MAINTENANCE CLINIC PARTS (OPT)	W0111-01A0	WO- 2
BLIND PARTS (BODY) (OPT)	W1200-01A0	WO- 4
BLIND PARTS (BOOM) (OPT)	W1201-01A0	WO- 8
BLIND PARTS (BOOM) (FOR COMPONENT) (OPT)	W1201-01A2	WO- 12
BLIND PARTS (BOOM CYLINDER) (OPT)	W1202-01A0	WO- 16
BLIND PARTS (ARM) (OPT)	W1203-01A0	WO- 18
BLIND PARTS (BODY) (1 ACTUATOR) (OPT)	W1201-01A1	W1- 6
BLIND PARTS (BOOM) (1 ACTUATOR) (OPT)	W1201-01A1	W1- 10
BLIND PARTS (BOOM) (1 ACTUATOR) (FOR COMPONENT) (OPT)	W1201-01A3	W1- 14
BLIND PARTS (ARM) (1 ACTUATOR) (OPT)	W1203-01A1	W1- 20
YO [SERVICE KIT AND COMPONENT PARTS]		
SWING MACHINERY (SUPPLY ONLY)	Y0260-01A0	YO- 2
FINAL DRIVE (SUPPLY ONLY)	Y0270-01A0	YO- 6
SHOE BOLT AND NUT SERVICE KIT	Y0320-01A0	YO- 8
TRACK LINK ASS'Y (90 SET) (SUPPLY PARTS)	Y0321-01A0	YO- 10
TRACK LINK ASS'Y (98 SET)(SUPPLY PARTS)	Y0321-01A1	YO- 12
AIR CLEANER (INNER PART)	Y1011-01A0	YO- 14
WRING HARNESS (JUNCTION CONNECTOR) (FOR SUPPLY)	Y1061-01A0	YO- 16
MAIN PUMP (1/11)	Y1600-01A0	YO- 18
MAIN PUMP (2/11)	Y1600-02A0	YO- 20
MAIN PUMP (3/11)	Y1600-03A0	YO- 22
MAIN PUMP (4/11)	Y1600-04A0	YO- 24
MAIN PUMP (5/11)	Y1600-05A0	YO- 26
MAIN PUMP (6/11)	Y1600-06A0	YO- 28
MAIN PUMP (7/11)	Y1600-07A0	YO- 30
MAIN PUMP (8/11)	Y1600-08A0	YO- 32
MAIN PUMP (9/11)	Y1600-09A0	YO- 34
MAIN PUMP (10/11)	Y1600-10A0	YO- 36
MAIN PUMP (11/11)	Y1600-11A0	YO- 38
BOOM CYLINDER	Y1620-01A0	YO- 40
BOOM CYLINDER	Y1620-01A0	YO- 42
ARM CYLINDER	Y1620-11A0	YO- 48
ARM CYLINDER	Y1620-11A0	YO- 50
BUCKET CYLINDER	Y1620-41A0	YO- 52
SWIVEL JOINT	Y1627-01A0	YO- 54
SWING MOTOR (1/3)	Y1640-01A0	YO- 56
SWING MOTOR (2/3)	Y1640-02A0	YO- 58
SWING MOTOR (3/3)	Y1640-03A0	YO- 60
TRAVEL MOTOR (1/3)	Y1641-01A0	YO- 62
TRAVEL MOTOR (2/3)	Y1641-02A0	YO- 64
TRAVEL MOTOR (3/3)	Y1641-03A0	YO- 66
MAIN VALVE (1/16)	Y1660-01A0	YO- 68
MAIN VALVE (2/16)	Y1660-02A0	YO- 70
MAIN VALVE (3/16)	Y1660-03A0	YO- 72
MAIN VALVE (4/16)	Y1660-04A0	YO- 74
MAIN VALVE (5/16)	Y1660-05A0	YO- 76
MAIN VALVE (6/16)	Y1660-06A0	YO- 78
MAIN VALVE (6/16)	Y1660-06A0	YO- 80
MAIN VALVE (7/16)	Y1660-07A0	YO- 82
MAIN VALVE (8/16)	Y1660-08A0	YO- 84
MAIN VALVE (9/16)	Y1660-09A0	YO- 86
MAIN VALVE (10/16)	Y1660-10A0	YO- 88
MAIN VALVE (11/16)	Y1660-11A0	YO- 90
MAIN VALVE (12/16)	Y1660-12A0	YO- 92
MAIN VALVE (12/16)	Y1660-12A0	YO- 94
MAIN VALVE (13/16)	Y1660-13A0	YO- 96
MAIN VALVE (14/16)	Y1660-14A0	YO- 98
MAIN VALVE (15/16)	Y1660-15A0	YO-100
MAIN VALVE (16/16)	Y1660-16A0	YO-102
SERVICE VALVE (1/3) (SPECIAL PIPING FOR BREAKER) (OPT)	Y1669-01A0	YO-148
SERVICE VALVE (2/3) (SPECIAL PIPING FOR BREAKER) (OPT)	Y1669-02A0	YO-150
SERVICE VALVE (3/3) (SPECIAL PIPING FOR BREAKER) (OPT)	Y1669-03A0	YO-152

ENGINE

FIG. A1009-01A0 CYLNDER HEAD

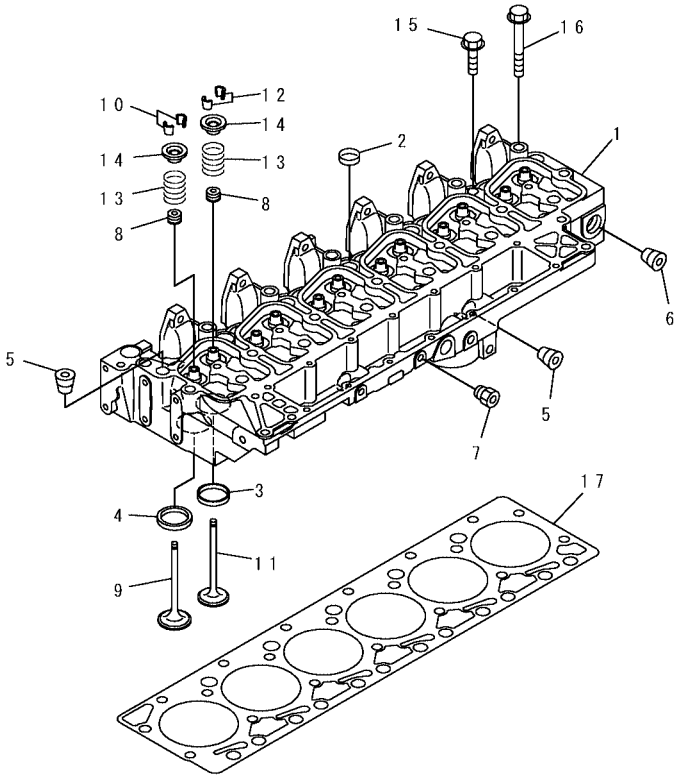

PJ6B436

INDEX	PART NO.	DESCRIPTION	Q'TY	SERIAL NO.
	6731-11-1370	HEAD ASS'Y	1	26274903-
1	☆	. HEAD	1	26274903-
2	6736-11-1150	. PLUG	5	26274903-
3	6732-11-1170	. INSERT,EXHAUST	6	26274903-
4	6732-11-1180	. INSERT,INTAKE	6	26274903-
5	6732-11-1910	. PLUG	5	26274903-
6	6732-11-1920	. PLUG	1	26274903-
7	6732-11-1930	. PLUG	2	26274903-
8	6732-41-4540	SEAL	12	26274903-
	6736-41-4110	INTAKE VALVE ASS'Y	6	26274903-
9	☆	. VALVE	1	26274903-
10	6732-41-4520	. COTTER	2	26274903-
	6736-41-4120	EXHAUST VALVE ASS'Y	6	26274903-
11	☆	. VALVE	1	26274903-
12	6732-41-4520	. COTTER	2	26274903-
13	6732-41-4430	SPRING	12	26274903-
14	6731-41-4510	RETAINER	12	26274903-
15	6732-11-1610	BOLT	6	26274903-
16	6732-11-1620	BOLT	14	26274903-
17	6735-11-1821	GASKET	1	26274903-
		REFER TO FIG. NOS. OF REPAIR PARTS FOR O.S., U.S., AND SERVICE PARTS.		

FIG. A101V-01A1 WATER TEMPERATURE SENSOR

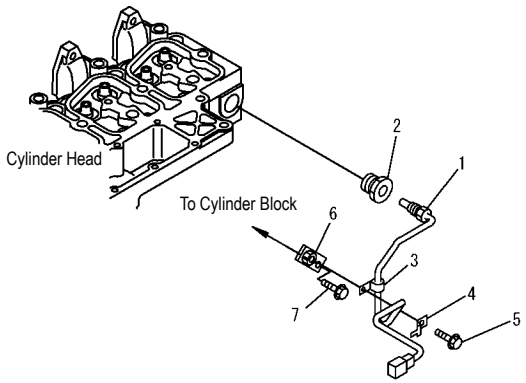

PJ6B404

FIG NO. : A101V-01A1

INDEX	PART NO.	DESCRIPTION	Q'TY	SERIAL NO.
1	7861-93-3320	SENSOR,WATER TEMPERATURE	1	26282903-
2	512-06-11281	ADAPTER	1	26282900-
3	04434-50610	CLIP	1	26282900-
4	08193-20010	CLIP	1	26282903-
5	6734-71-5610	BOLT	1	26282900-
6	6136-11-8510	BRACKET	1	26282900-
7	6732-21-5160	BOLT	1	26282900-

FIG. A105P-01A0 REAR HANGER

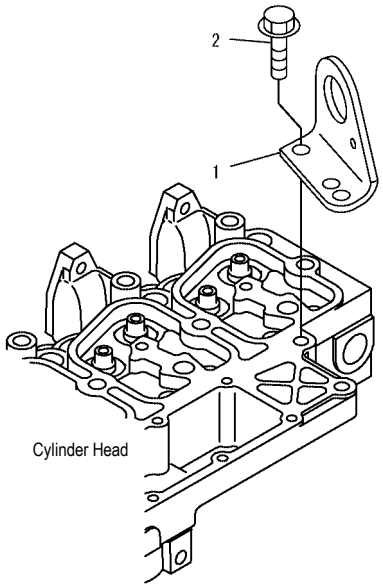

PJ6B415

FIG NO. : A105P-01A0

INDEX	PART NO.	DESCRIPTION	Q'TY	SERIAL NO.
1	6732-11-1710	BRACKET,LIFTING	1	26274903-
2	6732-11-1720	BOLT	2	26274903-

FIG. A111P-01A0 HEAD COVER

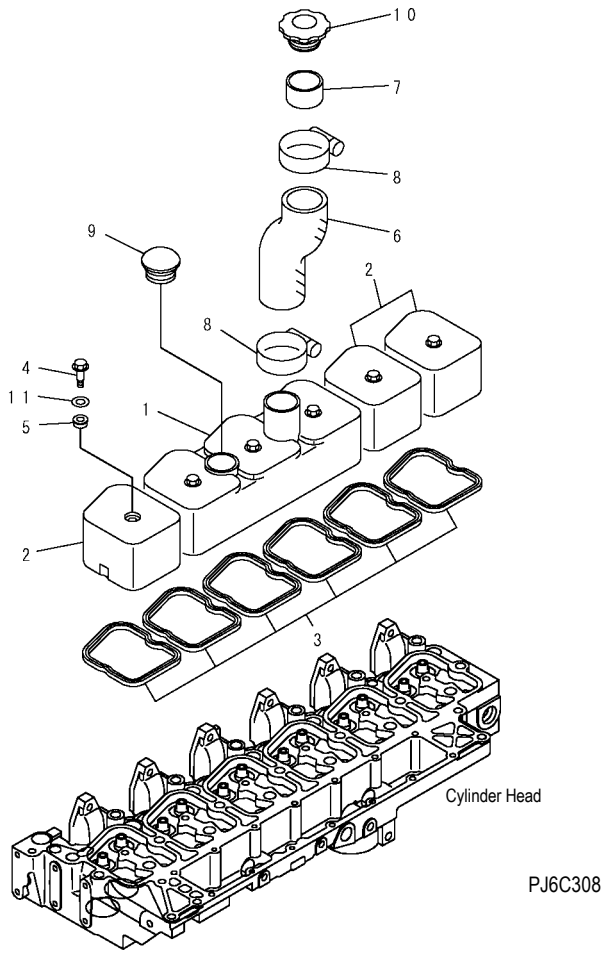

PJ6C308

INDEX	PART NO.	DESCRIPTION	Q'TY	SERIAL NO.
1	6738-11-8110	COVER	1	26274903-
2	6735-11-8120	COVER	3	26274903-
3	6732-11-8181	GASKET	6	26274903-
4	6732-11-8130	BOLT	6	26274903-
5	6732-11-8210	GASKET,SEAL	6	26277761-
6	6130-12-8720	HOSE	1	26274903-
7	6130-12-8630	PIPE	1	26274903-
8	07281-00709	CLAMP	2	26274903-
9	6204-11-8610	CAP	1	26274903-
10	6130-12-8610	CAP	1	26274903-
11	6732-11-8150	WASHER	6	26277761-

FIG. A131P-01A1 AIR CONNECTOR

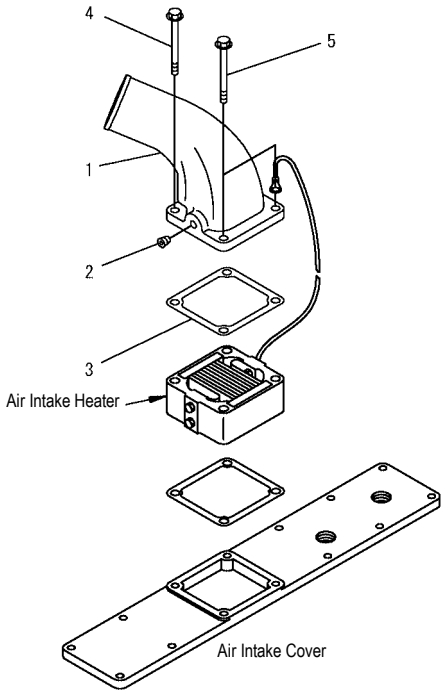

PJ6B412

FIG NO. : A131P-01A1

INDEX	PART NO.	DESCRIPTION	Q'TY	SERIAL NO.
1	6734-11-4150	CONNECTOR	1	26280116-
2	6732-11-1920	PLUG	1	26280116-
3	6732-11-4811	GASKET	1	26280116-
4	6734-11-5210	BOLT	1	26280116-
5	6736-81-8730	BOLT	2	26280116-

FIG. A131R-01A0 AIR INTAKE HEATER

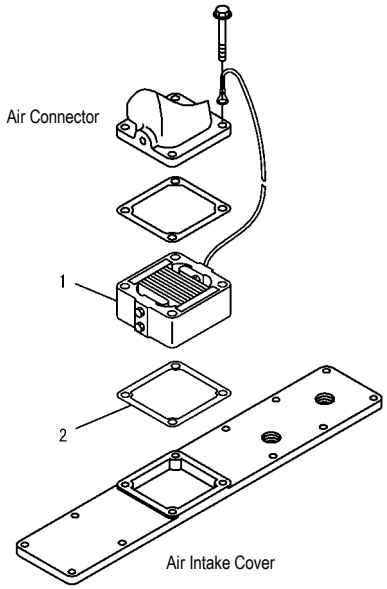

PJ6B399

FIG NO. : A131R-01A0

INDEX	PART NO.	DESCRIPTION	Q'TY	SERIAL NO.
1	6732-81-5120	HEATER ASS'Y	1	26274903-
2	6732-11-4811	GASKET	1	26274903-

FIG. A131V-01A0 AIR INLET COVER

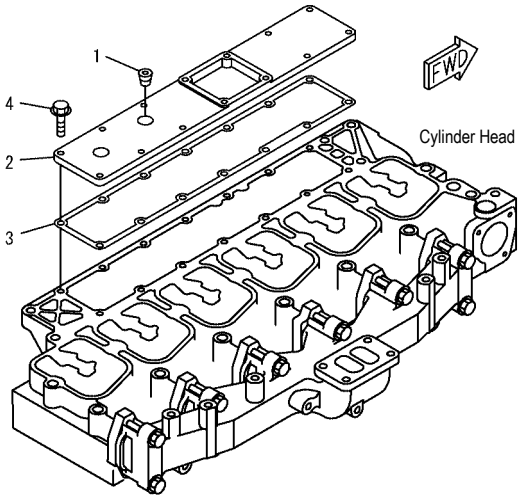

PJ6B414

INDEX	PART NO.	DESCRIPTION	Q'TY	SERIAL NO.
1	6732-11-1910	PLUG	2	26274903-
2	6735-11-4110	COVER, INTAKE	1	26274903-
3	6735-11-4812	GASKET	1	26287624-
4	6732-11-4160	BOLT	8	26274903-

FIG. A151R-01A0 EXHAUST CONNECTOR CLAMP

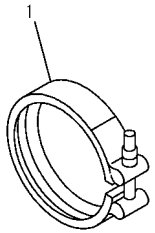

PMD1036

INDEX	PART NO.	DESCRIPTION	Q'TY	SERIAL NO.
1	6732-81-8220	CLAMP	1	26274903-

FIG. A151T-01A0 EXHAUST MANIFOLD GASKET AND BOLT

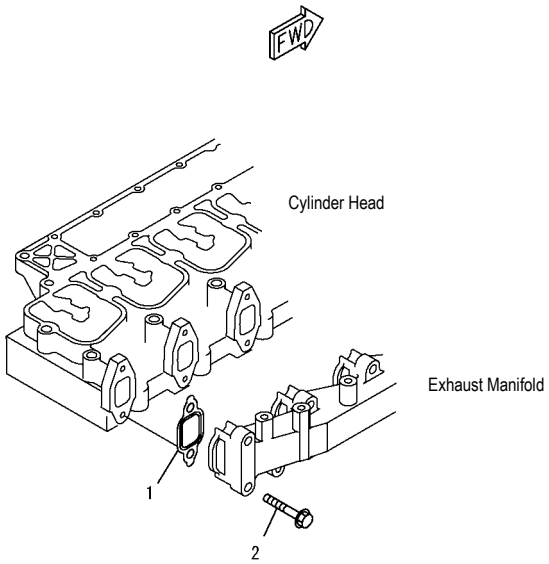

PFD1324

INDEX	PART NO.	DESCRIPTION	Q'TY	SERIAL NO.
1	6736-11-5820	GASKET	6	26274903-
2	6735-11-4150	BOLT	12	26274903-

FIG. A151V-01A0 EXHAUST MANIFOLD AND PLUG

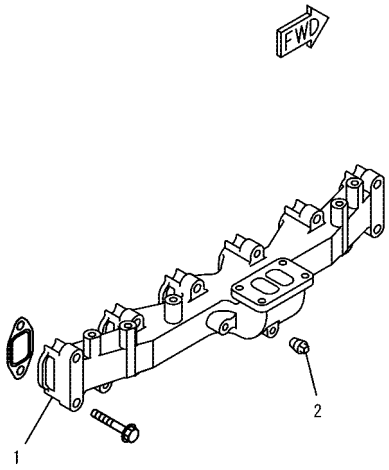

PJ6B423

FIG NO. : A151V-01A0

INDEX	PART NO.	DESCRIPTION	Q'TY	SERIAL NO.
1	6735-11-5120	MANIFOLD,EXHAUST.....	1	26274903-
2	07042-00108	PLUG.....	1	26274903-

FIG. A153T-01A1 TUBOCHARGER OIL PIPING

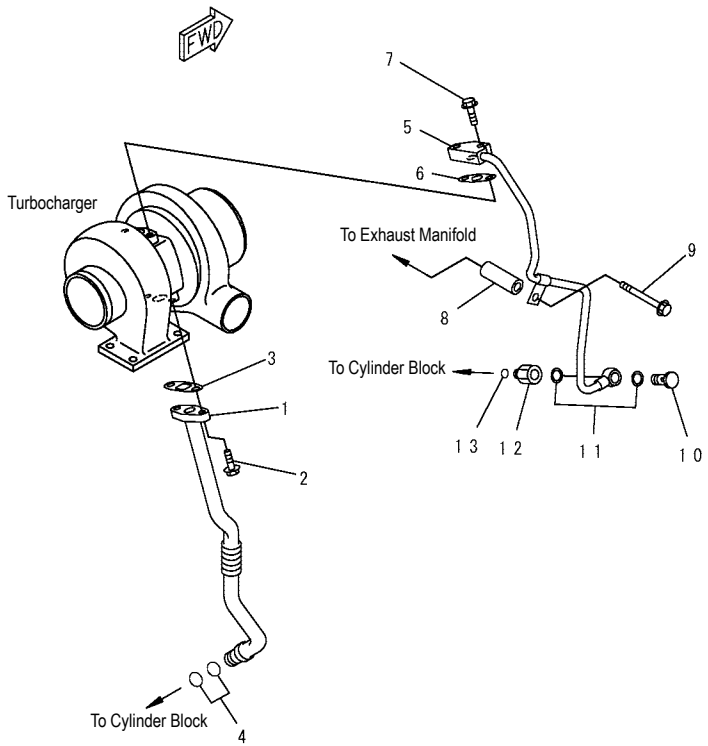

PJ6B424

FIG NO. : A153T-01A1

INDEX	PART NO.	DESCRIPTION	Q'TY	SERIAL NO.
1	6738-81-8410	TUBE, OIL	1	26280116-
2	6732-71-3220	BOLT	2	26280116-
3	6207-51-7690	GASKET	1	26280116-
4	6732-51-8330	O–RING	2	26280116-
5	6738-51-8120	TUBE, OIL	1	26280116-
6	6221-51-8160	GASKET	1	26280116-
7	6735-61-2120	BOLT	2	26280116-
8	6112-23-6971	SPACER	1	26280116-
9	01435-01085	BOLT	1	26280116-
10	6732-71-5620	BOLT, JOINT	1	26280116-
11	07005-01412	GASKET	2	26280116-
12	6732-51-8510	CONNECTOR	1	26280116-
13	6736-51-8710	O–RING	1	26280116-

FIG. A153V-01A0 TURBOCHARGER OUT CONNECTION

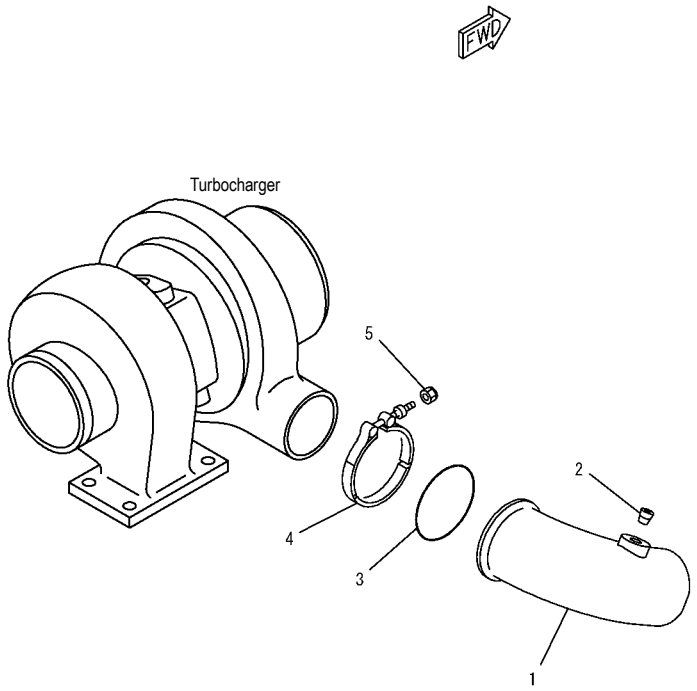

PJ6B413

FIG NO. : A153V-01A0

INDEX	PART NO.	DESCRIPTION	Q'TY	SERIAL NO.
1	6738-11-4320	PLPE, AIR	1	-
2	07043-70108	PLUG	1	26274903-
3	6738-11-4370	O–RING	1	26274903-
4	6738-11-4380	CLAMP	1	26274903-
5	6738-11-4390	NUT	1	26274903-

FIG. A1539-01A0 TURBOCHARGER MOUNTING

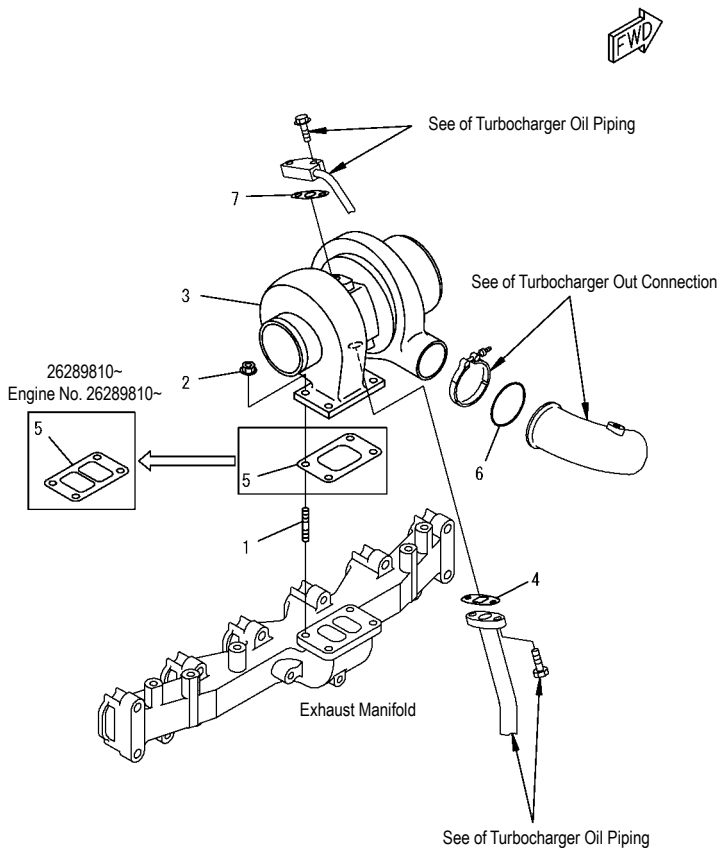

PJ6E331

INDEX	PART NO.	DESCRIPTION	Q'TY	SERIAL NO.
1	6732-81-8810	STUD	4	26274903-
2	6732-81-8820	NUT	4	26274903-
	6738-81-8091	KIT, TURBOCHARGER	1	26285026-
3	☆	. TURBOCHARGER	1	26289810-
4	6207-51-7690	. GASKET	1	26289810-
5	6732-81-8830	. GASKET	1	26289810-
6	6738-11-4370	. O–RING	1	26289810
7	6221-51-8160	. GASKET	1	26289810-

FIG. A1570-01A3 HEAT SHIELD

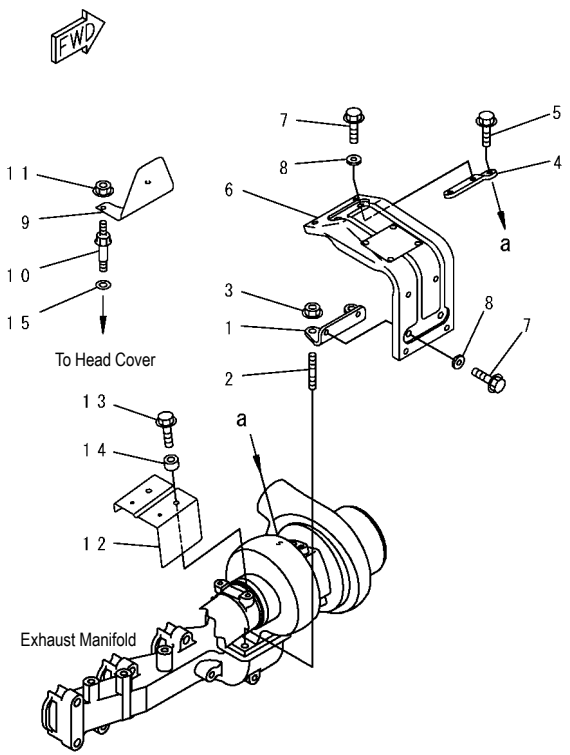

PJ6C732

FIG NO. : A1570-01A3

INDEX	PART NO.	DESCRIPTION	Q'TY	SERIAL NO.
1	6738-81-8450	BRACKET	1	26282900-
2	01140-61035	STUD	2	26282900-
3	6142-12-5850	NUT	2	26282900-
4	6732-81-8430	BRACKET	1	26282900-
5	01435-00814	BOLT	1	26282900-
6	6732-81-8411	COVER	1	26282900-
7	01435-00816	BOLT	4	26282900-
8	6201-81-6560	SPACER	4	26282900-
9	6738-81-8421	COVER	1	26286069-
10	6732-11-8140	BOLT	2	26282900-
11	01584-00806	NUT	2	26282900-
12	6735-81-8740	COVER	1	26282900-
13	01435-00820	BOLT	2	26282900-
14	6131-12-4570	SPACER	2	26282900-
15	154-61-16570	WASHER	2	26286069-

FIG. A1610-01A0 MUFFLER AND MOUNTING

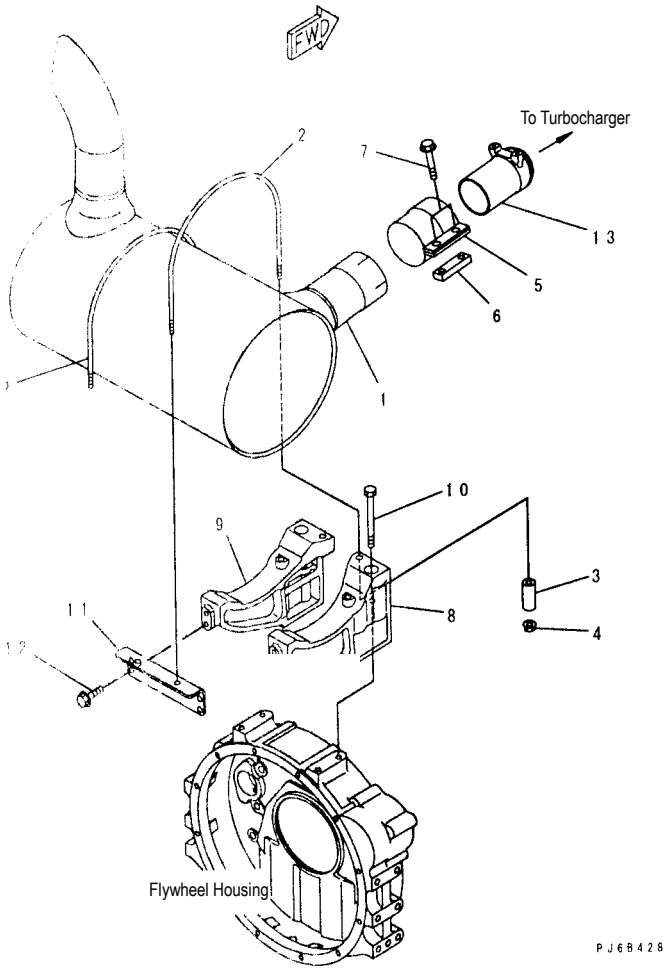

FIG NO. : A1610-01A0

INDEX	PART NO.	DESCRIPTION	Q'TY	SERIAL NO.
1	6738-11-5510	MUFFLER	1	26274903-
2	6738-11-5940	U–BOLT	2	26274903-
3	6134-11-5120	SPACER	2	26274903-
4	01594-01008	NUT	4	26274903-
5	6210-11-5232	CLAMP	1	26274903-
6	6206-11-5850	PLATE	1	26274903-
7	01435-01235	BOLT	2	26274903-
8	6738-11-5310	BRACKET	1	26274903-
9	6738-11-5320	BRACKET	1	26274903-
10	01435-01095	BOLT	4	26274903-
11	6738-11-5330	BRACKET	1	26274903-
12	01435-01020	BOLT	4	26274903-
13	6735-11-5611	TUBE	1	26274903-

FIG A173P-01A0 THERMOSTAT HOUSING

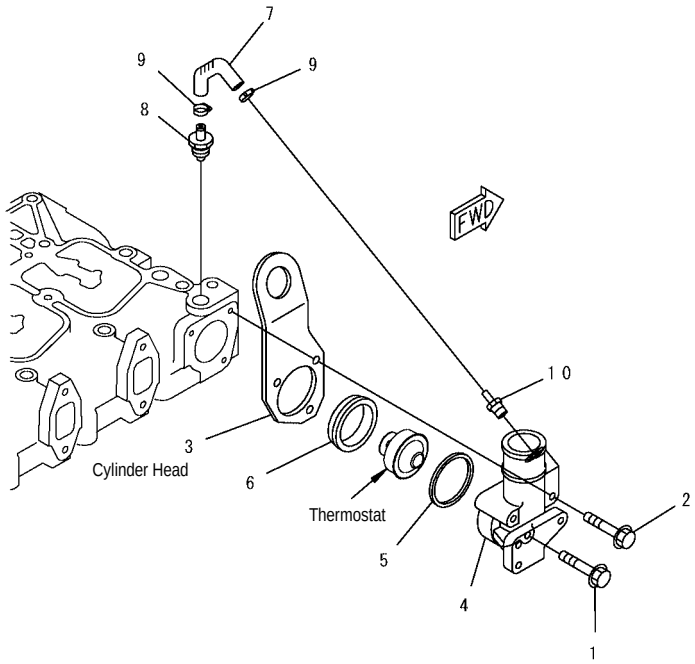

PMD1049

FIG NO. : A173P-01A0

INDEX	PART NO.	DESCRIPTION	Q'TY	SERIAL NO.
1	6732-61-6140	BOLT	1	26274903-
2	6732-61-6180	BOLT	2	26274903-
3	6735-11-1920	BRACKET	1	26274903-
4	6732-61-6231	HOUSING, THERMOSTAT	1	26274903-
5	6732-61-6250	SEAL, RING	1	26274903-
6	6732-61-6240	GASKET	1	26274903-
7	6732-61-6280	HOSE	1	26274903-
8	6732-61-6270	VALVE, CHECK	1	26274903-
9	07285-00125	CLIP	2	26274903-
10	6732-61-6171	COUPLING	1	26274903-

FIG. A173R-01A1 THERMOSTAT

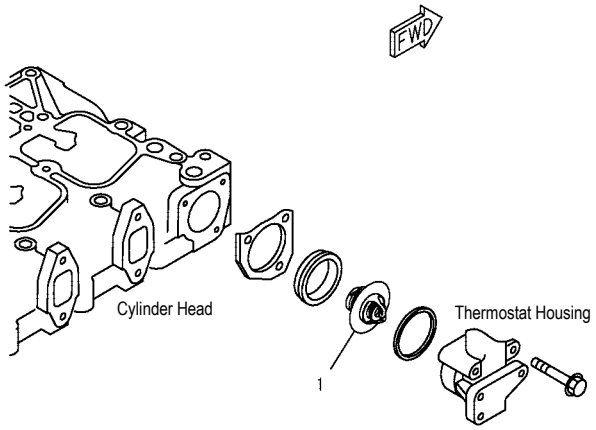

PJ6C418

FIG NO. : A173R-01A1

INDEX	PART NO.	DESCRIPTION	Q'TY	SERIAL NO.
1	6735-61-6471	THERMOSTAT	1	26280498-

FIG. A201V-01A0 OIL PRESSURE SWITCH

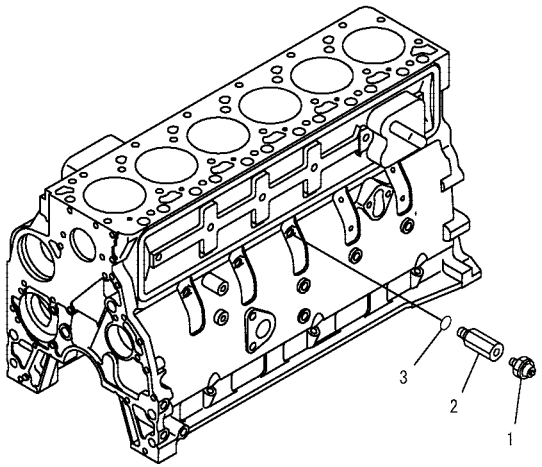

PJ6B403

FIG NO. : A201V-01A0

INDEX	PART NO.	DESCRIPTION	Q'TY	SERIAL NO.
1	08073-10505	SWITCH, OIL PRESSURE.....	1	26274903-
2	6738-81-3170	ADAPTER.....	1	26274903-
3	6215-81-9710	O–RING.....	1	26274903-

FIG. A2019-01A0 CYLINDER BLOCK

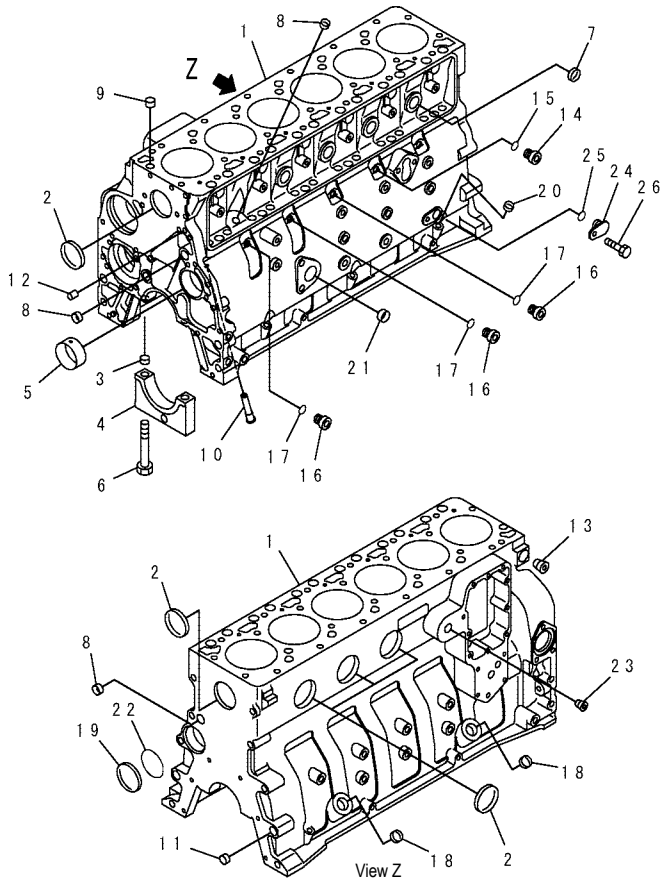

PJ6B438

INDEX	PART NO.	DESCRIPTION	Q'TY	SERIAL NO.
	6731-21-1170	CYLINER BLOCK ASS'Y	1	26274903-
	☆	. BLOCK ASS'Y	1	26274903-
1	☆	.. BLOCK	1	26274903-
2	6732-21-1830	.. PLUG	5	26274903-
3	6732-21-1910	.. RING	14	26274903-
4	△6732-21-1210	.. CAP	7	26274903-
5	6732-21-1411	.. BUSHING	1	26274903-
6	6732-21-1611	.. BOLT	14	26274903-
7	6732-21-1820	.. PLUG	4	26274903-
8	6732-21-1811	.. PLUG	3	26274903-
	6731-21-1210	. BLOCK SERVICE KIT	1	26274903-
9	6732-21-6140	.. RING	2	26274903-
10	6732-21-1191	.. NOZZLE, PISTON COOLING	6	26274903-
11	6732-21-1910	.. RING	2	26274903-
12	6732-21-6120	.. PIN	2	26274903-
13	6732-21-1910	.. PLUG	1	26274903-
	6735-21-1910	.. PLUG ASS'Y	1	26274903-
14	6735-21-1920	... PLUG	1	26274903-
15	6735-21-1930	... O–RING	1	26274903-
	6732-21-1960	.. PLUG	3	26274903-
16	6215-81-9510	... PLUG	1	26274903-
17	6215-81-9710	... O–RING	1	26274903-
18	6735-21-5530	.. PLUG	3	26274903-
19	6732-21-6130	.. PLUG	1	26274903-
20	6732-21-5530	.. PLUG	3	26274903-
21	6732-21-6160	.. PLUG	1	26274903-
22	6732-21-1930	.. O–RING	1	26274903-
23	6732-11-1920	.. PLUG	1	26274903-
	6735-21-1940	.. PLUG	1	26274903-
24	6735-21-1950	... PLUG	1	26274903-
25	6735-21-1960	... O–RING	1	26274903-
26	6732-21-3120	.. BOLT	1	26274903-
		REFER TO FIG. NOS. OF REPAIR PARTS FOR O.S., U.S., AND SERVICE PARTS.		

FIG. A2040-01A0 FRONT COVER POINTER

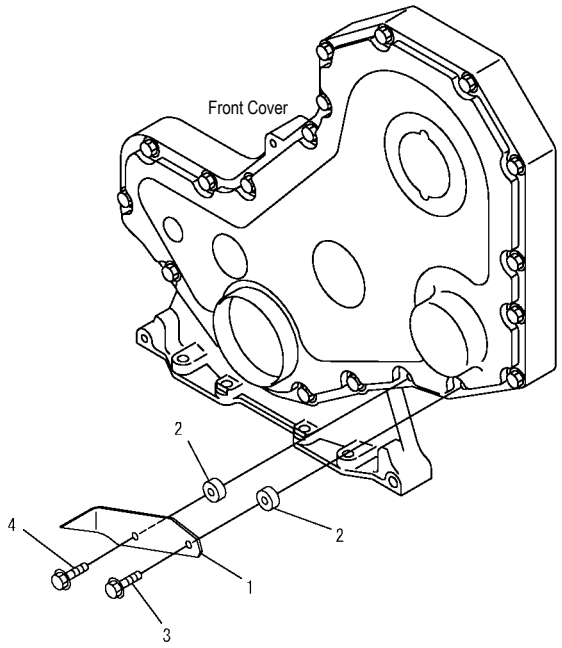

PJ6B429

FIG NO. : A2040-01A0

INDEX	PART NO.	DESCRIPTION	Q'TY	SERIAL NO.
1	6738-21-3910	POINTER	1	26274903-
2	6130-12-1961	SPACER	2	26274903-
3	6732-21-5160	BOLT	1	26274903-
4	6736-21-3230	BOLT	1	26274903-

FIG. A2049-01A0 FRONT COVER

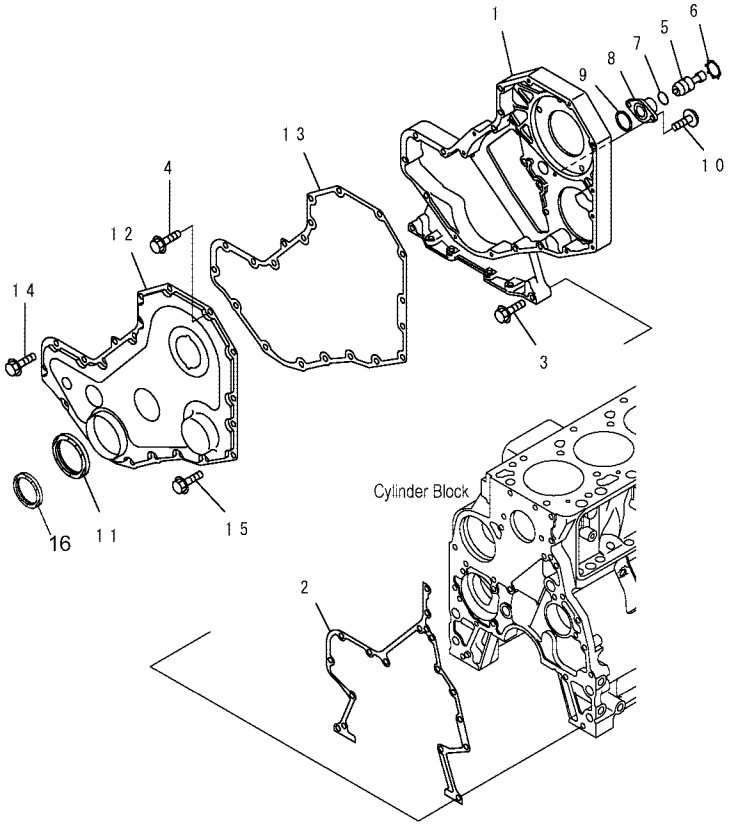

PQD1054

FIG NO. : A2049-01A0

INDEX	PART NO.	DESCRIPTION	Q'TY	SERIAL NO.
1	6738-21-3110	HOUSING, GEAR	1	26274903-
2	6732-21-3811	GASKET	1	26274903-
3	6736-21-3210	BOLT	2	26274903-
4	6736-21-5310	BOLT	5	26274903-
5	6732-21-3140	PIN	1	26274903-
6	6732-21-3150	RING	1	26274903-
7	6732-21-3870	O–RING	1	26274903-
8	6732-21-3180	HOUSING	1	26274903-
9	6732-21-3880	GASKET	1	26274903-
10	6732-21-3160	BOLT	2	26274903-
11	6735-21-3511	SEAL	1	26274903-
12	6735-21-3310	COVER, GEAR	1	26274903-
13	6736-21-3450	GASKET	1	26274903-
14	6736-21-3210	BOLT	9	26274903-
15	6736-21-5310	BOLT	11	26274903-
16	6731-81-8710	SHIELD, DUST	1	26274903-

FIG. A206P-01A0 CAMFOLLOWER COVER

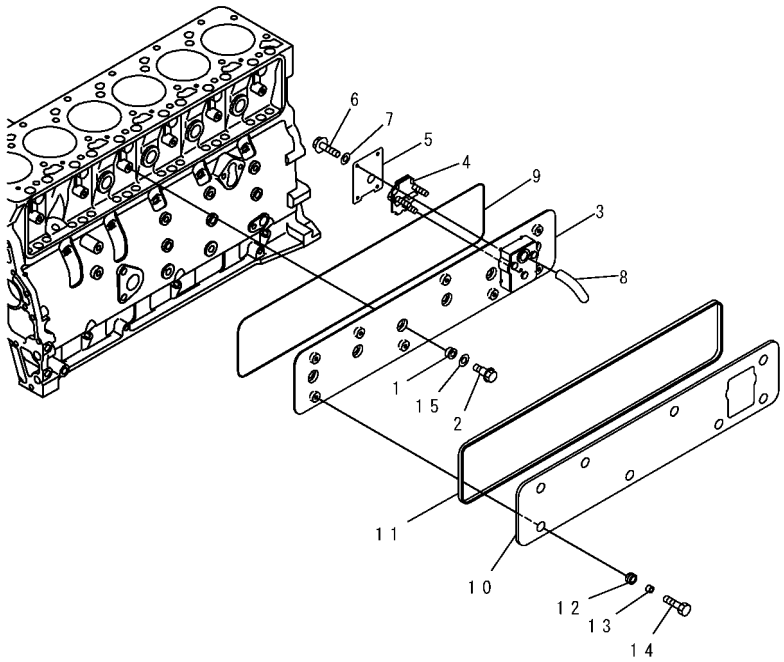

PJ6C310

FIG NO. : A206P-01A0

INDEX	PART NO.	DESCRIPTION	Q'TY	SERIAL NO.
1	6732-11-8210	GASKET, SEAL	6	26277761-
2	6738-21-6280	BOLT	6	26274903-
	6738-21-6100	COVER ASS'Y	1	26274903-
3	☆	. COVER	1	26274903-
4	6738-21-7710	. BREATHER	1	26274903-
5	6738-21-7780	. COVER	1	26274903-
6	01435-00616	. BOLT	4	26274903-
7	01640-20610	. WASHER	4	26274903-
8	6738-21-7810	. TUBE	1	26274903-
9	6738-21-6180	O–RING	1	26274903-
	6738-21-6600	PLATE ASS'Y	1	26274903-
10	☆	. PLATE	1	26274903-
11	6738-21-6650	. GASKET	1	26274903-
12	6738-21-6660	. GASKET	8	26274903-
13	6738-21-6670	. SPACER	8	26274903-
14	6732-71-3220	BOLT	8	26274903-
15	6732-11-8150	WASHER	6	26277761-

FIG. A2060-01A1 BREATHER HOSE

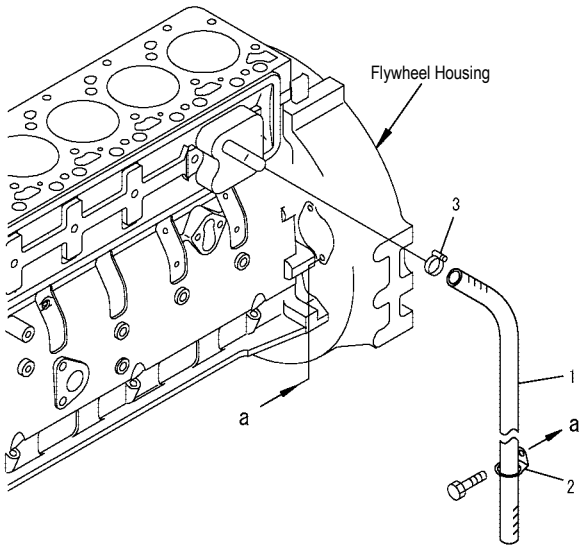

PQD2604

FIG NO. : A2060-01A1

INDEX	PART NO.	DESCRIPTION	Q'TY	SERIAL NO.
1	07286-01971	HOSE	1	26285649-
2	6735-21-4240	CLIP	1	26285649-
3	07285-00220	CLIP	1	26285649-

FIG. A207P-01A0 CYLINDER BLOCK BLIND PLUG

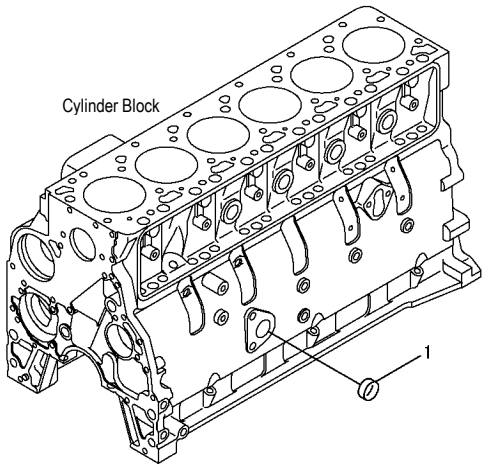

PMD1057

FIG NO. : A207P-01A0

INDEX	PART NO.	DESCRIPTION	Q'TY	SERIAL NO.
1	6732-21-6160	PLUG.....	1	26274903-

FIG. A211R-01A0 OIL PAN BOLT

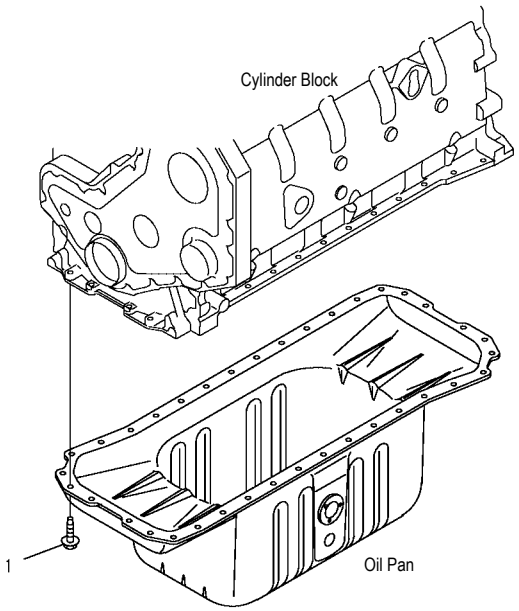

PMD1060

FIG NO. : A211R-01A0

INDEX	PART NO.	DESCRIPTION	Q'TY	SERIAL NO.
1	6732-21-6610	BOLT.....	36	26274903-

FIG. A211V-01A1 OIL LEVEL SENSOR

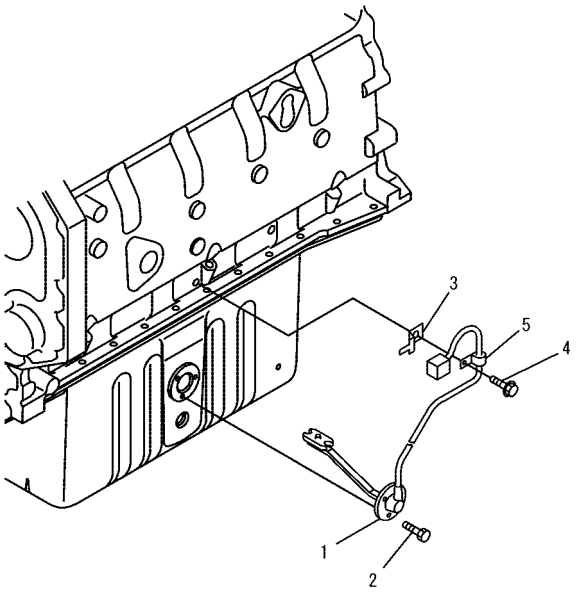

PJ6B421

FIG NO. : A211V-01A1

INDEX	PART NO.	DESCRIPTION	Q'TY	SERIAL NO.
1	7861-93-4210	SENSOR	1	26282903-
2	6733-71-5680	BOLT	3	26282900-
3	08193-20010	CLIP	1	26282903-
4	6216-74-6180	BOLT	1	26282900-
5	04434-50608	CLIP	1	26282900-

FIG. A2119-01A1 OIL PAN AND SUCTION TUBE

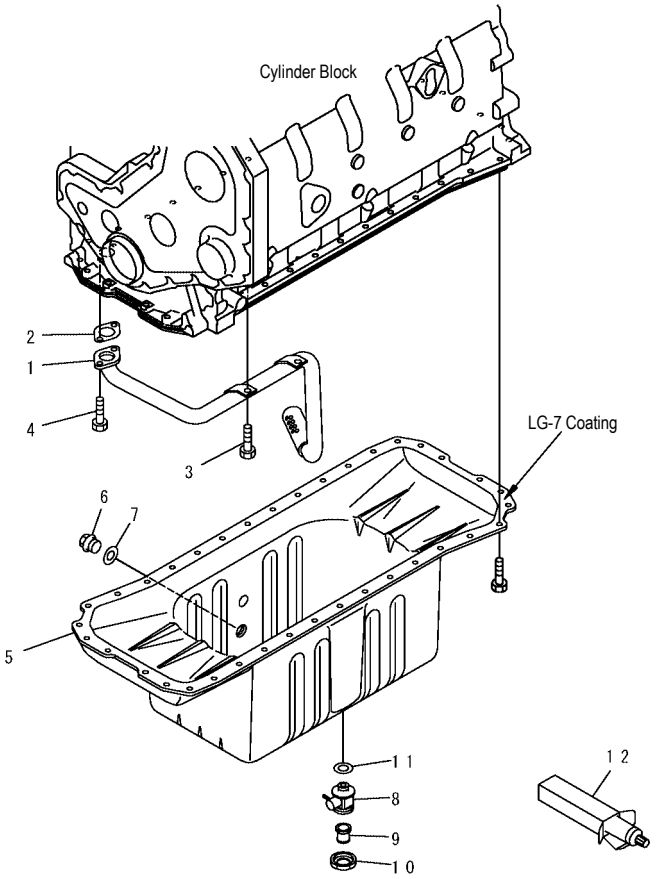

PJ6C700

INDEX	PART NO.	DESCRIPTION	Q'TY	SERIAL NO.
1	6735-51-5521	TUBE, SUCTION	1	26282900-
2	6732-21-5510	GASKET	1	26282900-
3	6732-71-3220	BOLT	2	26282900-
4	6732-21-5160	BOLT	2	26282900-
5	6735-21-5120	PAN, OIL	1	26282900-
6	6204-21-5180	PLUG	1	26282900-
7	07005-02216	GASKET	1	26282900-
	6738-21-5610	COCK ASS'Y	1	26282900-
8	6738-21-5620	. COCK	1	26282900-
9	6738-21-5630	. JOINT	1	26282900-
10	6738-21-5640	. UNION	1	26282900-
11	07005-02216	GASKET	1	26274903-
12	09920-00150	LIQUID GASKET, LG-7,150G	AR	26274903-

FIG. A219P-01A0 OIL LEVEL GAUGE

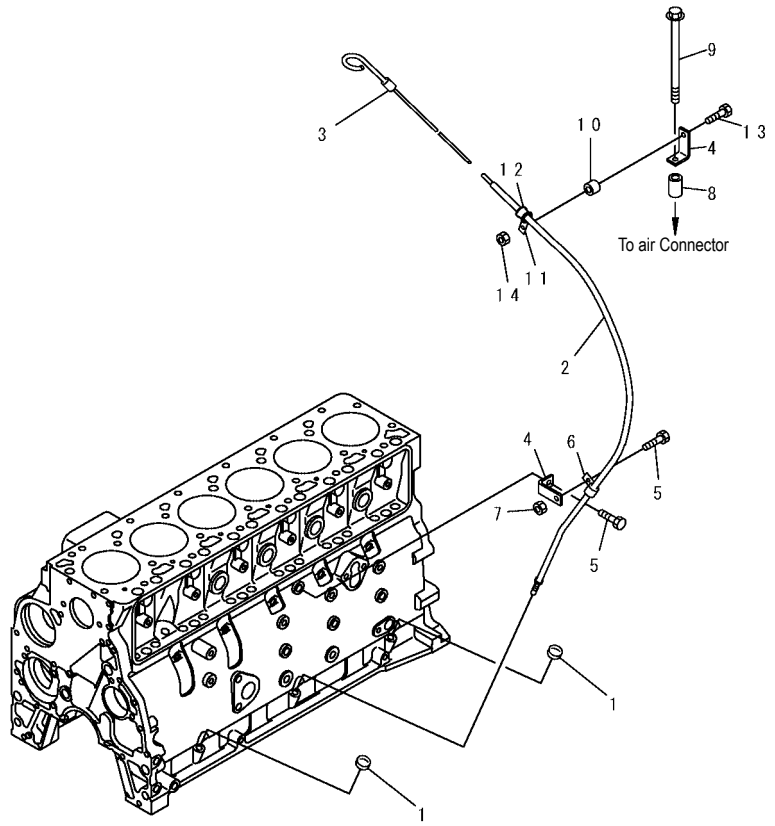

PJ6B418

INDEX	PART NO.	DESCRIPTION	Q'TY	SERIAL NO.
1	6732-21-5530	PLUG	2	26274903-
2	6732-21-5490	GUIDE	1	26274903-
3	6732-21-5641	GAUGE	1	26274903-
4	6205-51-8380	BRACKET	2	26274903-
5	6732-21-3120	BOLT	2	26274903-
6	04434-51208	CLIP	1	26274903-
7	6732-71-3210	NUT	1	26274903-
8	203-54-11170	SPACER	1	26274903-
9	6222-11-4910	BOLT	1	26274903-
10	6141-64-2560	SPACER	1	26274903-
11	04434-51708	CLIP	1	26274903-
12	07095-20211	CUSHION	1	26274903-
13	6732-61-6140	BOLT	1	26274903-
14	6732-71-3210	NUT	1	26274903-

FIG. A221V-01A0 REVOLUTION SENSOR

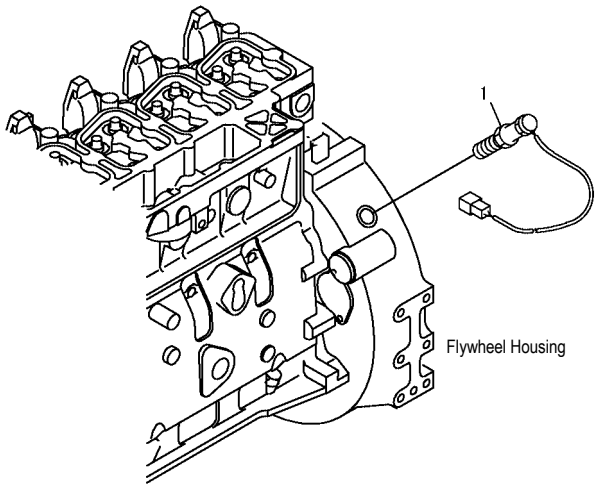

PJ6B402

FIG NO. : A221V-01A0

INDEX	PART NO.	DESCRIPTION	Q'TY	SERIAL NO.
1	7861-93-2310	SENSOR, REVOLUTION.....	1	DBB0001~DBB4708
	7861-93-2311	SENSOR, REVOLUTION.....	1	DBB4709~

FIG. A2219-01A0 FLYWHEEL HOUSING

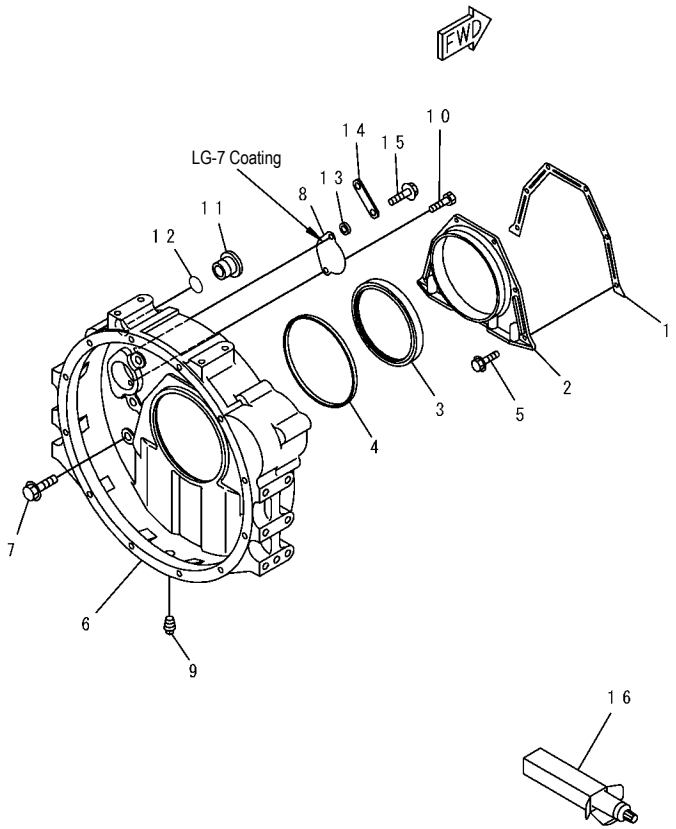

PJ6B440

FIG NO. : A219P-01A0

INDEX	PART NO.	DESCRIPTION	Q'TY	SERIAL NO.
1	6735-21-4191	GASKET	1	26274903-
2	6731-21-4240	COVER, REAR	1	26274903-
3	6736-21-4220	SEAL	1	26274903-
4	6732-21-4170	GASKET	1	26274903-
5	6732-21-4290	BOLT	6	26274903-
6	6732-21-4111	HOUSING, FLYWHEEL	1	26274903-
7	6732-21-4220	BOLT	8	26274903-
8	6732-21-4130	PLATE	1	26274903-
9	02721-00813	PULG	1	26274903-
10	6732-21-4120	BOLT	2	26274903-
11	6732-21-4150	PLUG	1	26274903-
12	6732-21-4161	O–RING	1	26274903-
13	6110-23-6490	SPACER	1	26274903-
14	6301-11-4630	PLATE	1	26274903-
15	6732-21-5160	BOLT	1	26274903-
16	(09920-00150)	LIQUID GASKET, LG-7,150G	AR	26274903-

FIG. A223P-01A0 FLYWHEEL

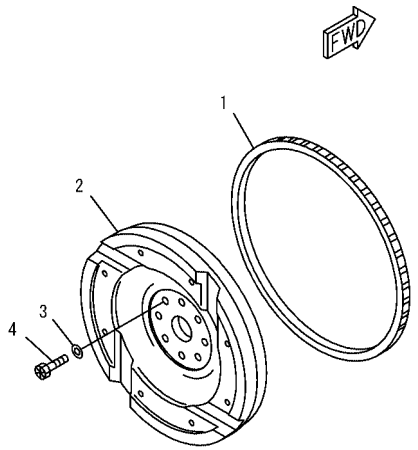

PMD1070

FIG NO. : A223P-01A0

INDEX	PART NO.	DESCRIPTION	Q'TY	SERIAL NO.
	6738-31-4200	FLYWHEEL ASS'Y	1	26274903-
1	6732-31-4180	. GEAR, RING	1	26274903-
2	☆	. FLYWHEEL	1	26274903-
3	6732-31-4120	WASHER	8	26274903-
4	6732-31-4130	BOLT	8	26274903-

FIG. A2319-01A0 CRANKSHAFT

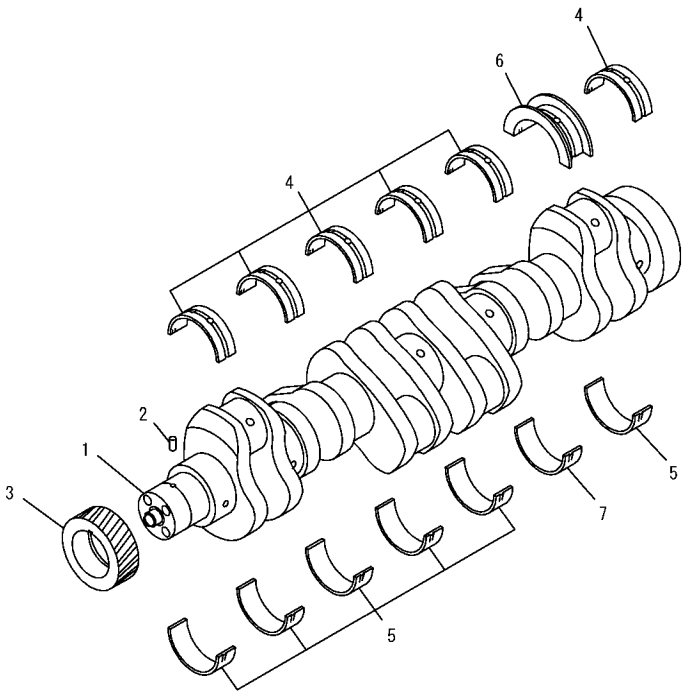

PMD1071

INDEX	PART NO.	DESCRIPTION	Q'TY	SERIAL NO.
	6735-01-1310	CRANKSHAFT ASS'Y	1	26274903-
1	☆	. CRANKSHAFT	1	26274903-
2	6732-21-6150	. PIN	1	26274903-
3	6732-31-1211	. GEAR	1	26274903-
	6736-21-8110	MAIN METAL ASS'Y	6	26274903-
4	☆	. METAL, UPPER	1	26274903-
5	☆	. METAL, LOWER	1	26274903-
	6736-21-8610	THRUST METAL ASS'Y	1	26274903-
6	☆	. METAL, THRUST	1	26274903-
7	☆	. METAL, LOWER	1	26274903-
		REFER TO FIG. NOS. OF REPAIR PARTS FOR O.S., U.S., AND SERVICE PARTS.		

FIG. A233P-01A0 DAMPER

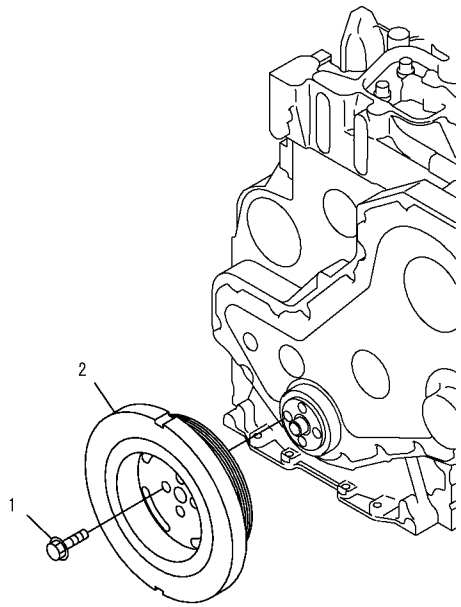

PMD1072

FIG NO. : A233P-01A0

INDEX	PART NO.	DESCRIPTION	Q'TY	SERIAL NO.
1	6732-31-8120	BOLT	4	26274903-
2	6735-31-8120	DAMPER	1	26274903-

FIG. A2359-01A0 PISTON

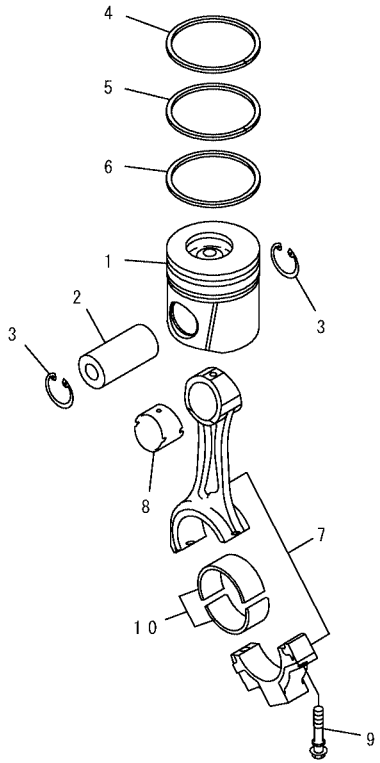

PMD0835

FIG NO. : A2359-01A0

INDEX	PART NO.	DESCRIPTION	Q'TY	SERIAL NO.
1	6738-31-2111	PISTON	6	26292269-
2	6732-31-2410	PIN	6	26274903-
3	6732-31-2420	RING, SNAP	12	26274903-
	6738-31-2031	PISTON RING ASS'Y	6	26292269-
4	☆	.RING, TOP	1	26292269-
5	☆	.RING, SECOND	1	26274903-
6	☆	.RING, OIL	1	26274903-
	6732-31-3101	CONNECTING ROD A	6	26274903-
7	☆	.ROD	1	26274903-
8	6732-31-3131	.BUSHING	1	26274903-
9	6732-31-3310	.BOLT	2	26274903-
10	6732-31-3410	METAL	12	26274903-
		REFER TO FIG. NOS. OF REPAIR PARTS FOR O.S., U.S., AND SERVICE PARTS.		

FIG. A241P-01A0 ROCKER ARM

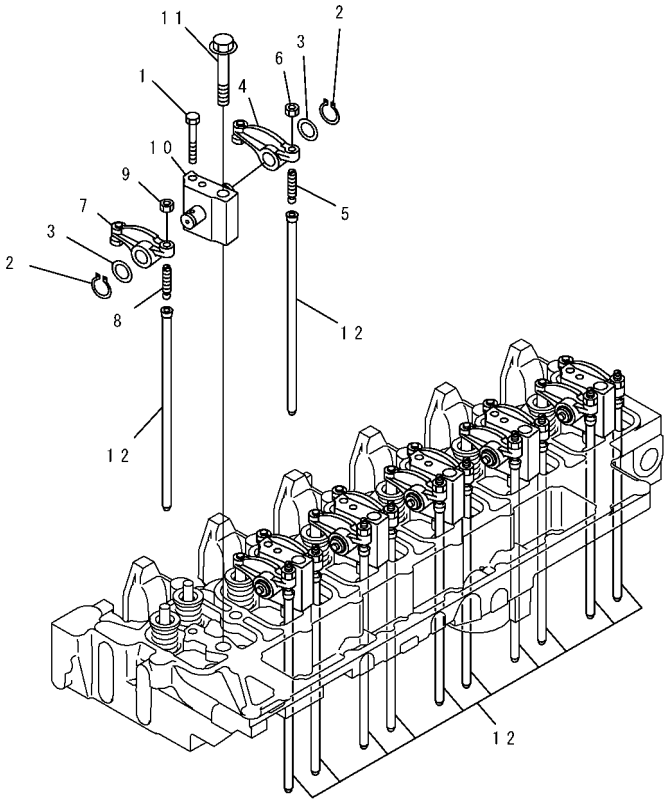

PMD1074

FIG NO. : A241P-01A0

INDEX	PART NO.	DESCRIPTION	Q'TY	SERIAL NO.
1	6732-41-5180	BOLT	6	26274903-
2	6732-41-5170	RING, SNAP	12	26274903-
3	6732-41-5160	WASHER	12	26274903-
4	6732-41-5400	ARM ASS'Y	6	26274903-
5	6731-41-5270	.SCREW	1	26274903-
6	6735-41-5550	.NUT	1	26274903-
7	6732-41-5200	ARM ASS'Y	6	26274903-
8	6731-41-5270	.SCREW	1	26274903-
9	6735-41-5550	.NUT	1	26274903-
10	6736-41-5110	BRACKET ASS'Y	6	26274903-
11	6732-11-1640	BOLT	6	26274903-
12	6732-41-3111	ROD, PUSH	12	26274903-

FIG. A241R-01A0 TAPPET

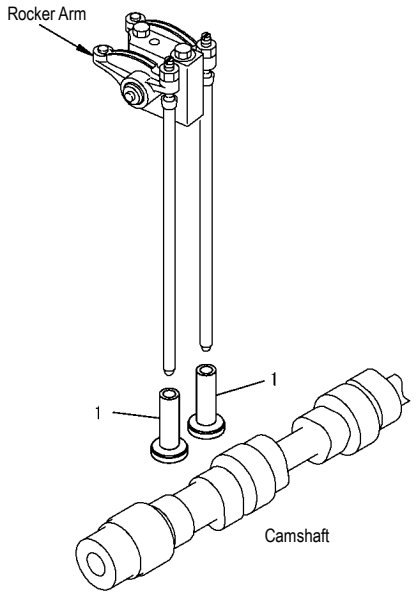

PMD0838

FIG NO. : A241R-01A0

INDEX	PART NO.	DESCRIPTION	Q'TY	SERIAL NO.
1	6732-41-2112	TAPPET.....	12	26274903-

FIG. A2419-01A0 CAMSHAFT

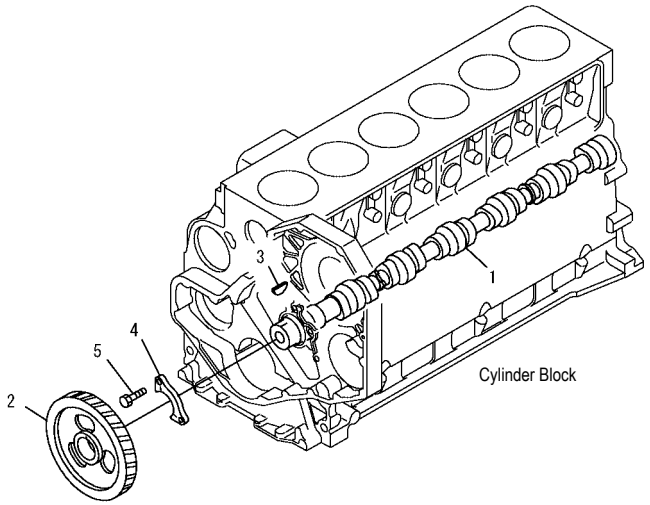

PMD1075

FIG NO. : A2419-01A0

INDEX	PART NO.	DESCRIPTION	Q'TY	SERIAL NO.
1	6735-41-1111	CAMSHAFT	1	26274903-
2	6732-41-1231	GEAR	1	26274903-
3	6732-41-1280	KEY	1	26274903-
4	6732-41-1220	SUPPORT, THRUST	1	26274903-
5	6732-41-1260	BOLT	2	26274903-

FIG. A261P-01A0 FRONT GEAR TRAIN COVER

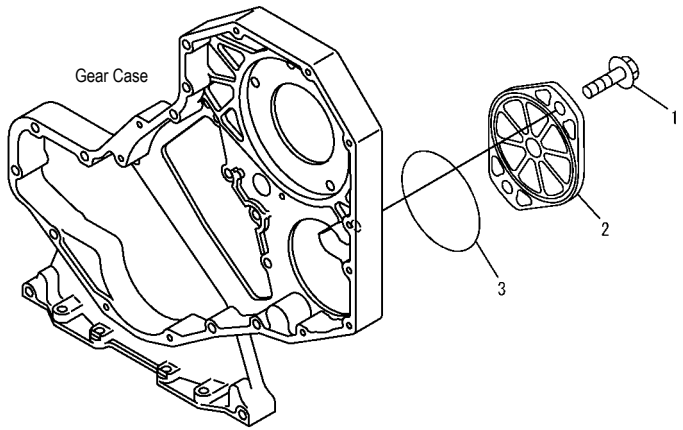

PJD5920

FIG NO. : A261P-01A0

INDEX	PART NO.	DESCRIPTION	Q'TY	SERIAL NO.
1	6732-51-5130	BOLT	2	26274903-
2	6732-21-9330	COVER	1	26274903-
3	07000-72110	O–RING	1	26274903-

FIG. A267P-01A1 ACCESSORY PULLEY

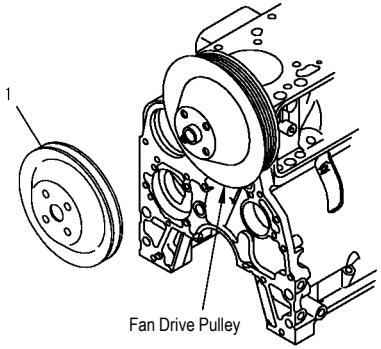

PJ6B398

FIG NO. : A267P-01A1

INDEX	PART NO.	DESCRIPTION	Q'TY	SERIAL NO.
1	6738-91-1510	PULLEY.....	1	26282900-

FIG. A281P-01A0 TACHOMETER DRIVE COVER

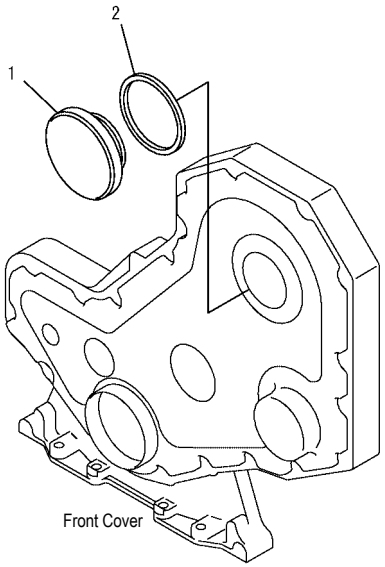

PMD1077

FIG NO. : A281P-01A0

INDEX	PART NO.	DESCRIPTION	Q'TY	SERIAL NO.
1	6732-21-3190	COVER	1	26274903-
2	6732-21-3220	SEAL	1	26274903-

FIG. A283P-01A0 UNDER PLATE

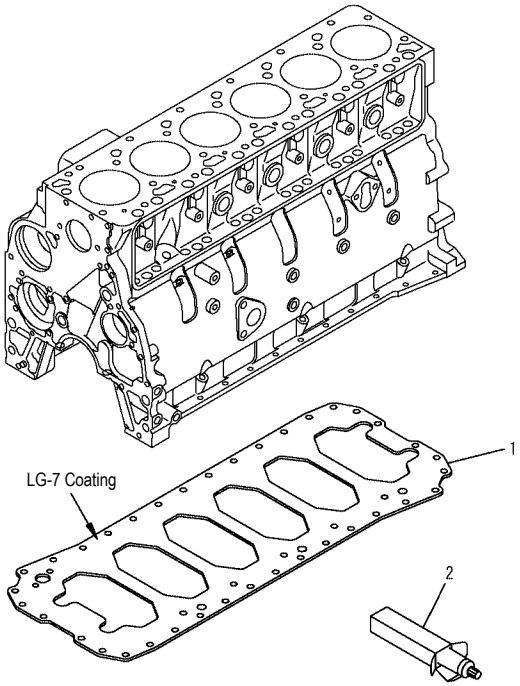

PMD1078

FIG NO. : A283P-01A0

INDEX	PART NO.	DESCRIPTION	Q'TY	SERIAL NO.
1	6735-21-5151	PLATE.....	1	26274903-
2	(09920-00150)	LIQUID GASKET, LG-7, 150G	AR	26274903-

FIG. A283V-01A0 NOISE PANEL CYLINDER BLOCK

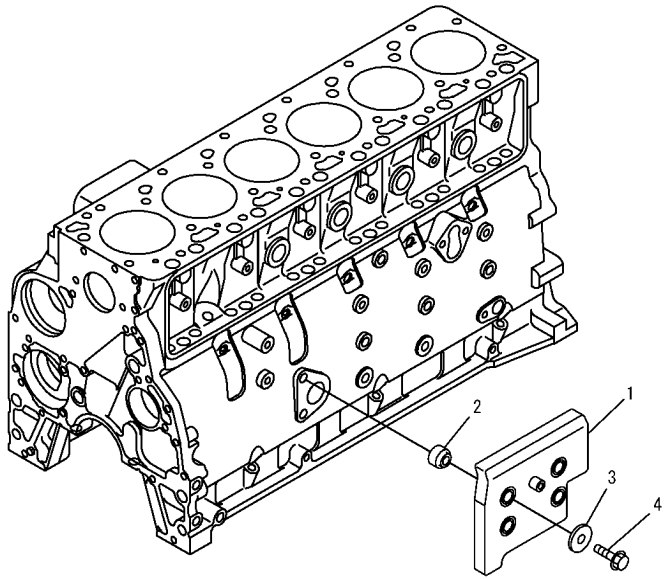

PJ6B419

FIG NO. : A283V-01A0

INDEX	PART NO.	DESCRIPTION	Q'TY	SERIAL NO.
1	6738-21-6810	PANEL	1	26274903-
2	6738-21-6890	SPACER	4	26274903-
3	6144-21-2420	WASHER	4	26274903-
4	01435-01240	BOLT	4	26274903-

FIG. A301P-01A0 OIL PUMP

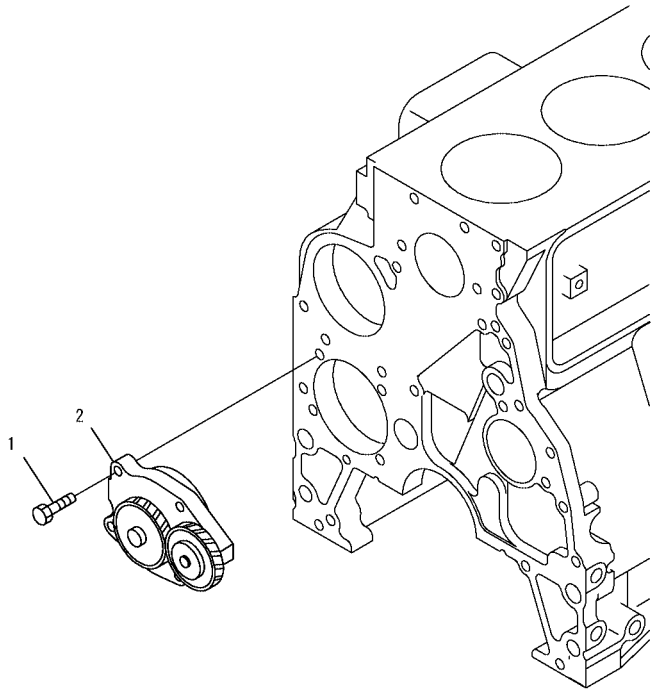

PM35943

FIG NO. : A301P-01A0

INDEX	PART NO.	DESCRIPTION	Q'TY	SERIAL NO.
1	6735-51-1120	BOLT	4	26274903-
2	6731-51-1111	OIL PUMP ASS'Y	1	26274903-

FIG. A311P-01A1 OIL FILTER AND PIPING

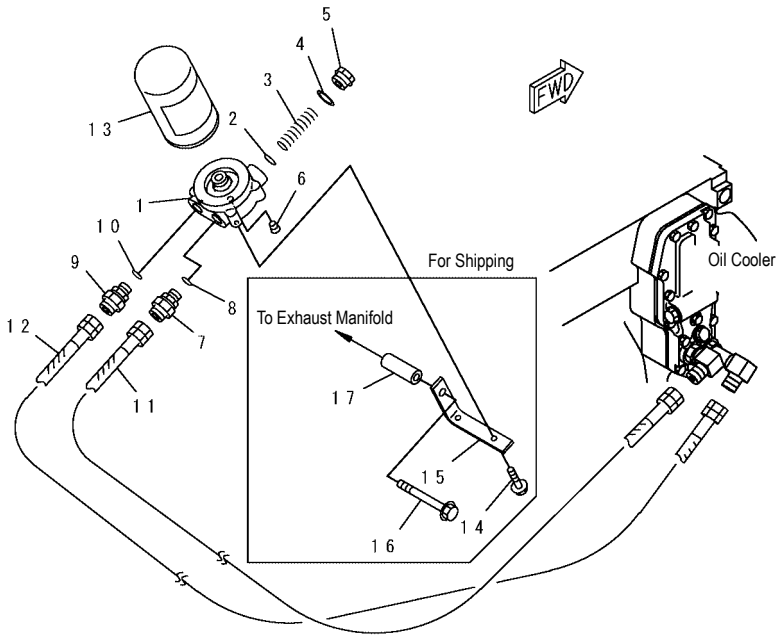

PJ6C701

FIG NO. : A311P-01A1

INDEX	PART NO.	DESCRIPTION	Q'TY	SERIAL NO.
	6731-51-5201	HEAD ASS'Y	1	26282900-
1	6731-51-5211	. HEAD	1	26282900-
2	6162-53-5450	. PACKING	1	26282900-
3	600-211-1870	. SPRING	1	26282900-
4	6162-53-5430	. PACKING	1	26282900-
5	6162-53-5420	. CAP	1	26282900-
6	07043-A0108	. PLUG	1	26282900-
7	6731-51-5260	NIPLE	1	26282900-
8	6731-51-5290	. O–RING	1	26282900-
9	6738-51-5260	NIPPLE	1	26282900-
10	6731-51-5290	. O–RING	1	26282900-
11	6731-51-9930	HOSE	1	26282900-
12	6738-51-9820	HOSE	1	26282900-
13	6736-51-5141	CARTRIDGE	1	26282900-
14	6732-71-3220	BOLT, (FOR SHIPPING)	2	26282900-
15	6738-51-9950	BRACKET, (FOR SHIPP ING)	1	26282900-
16	01435-01095	BOLT, (FOR SHIPPING)	1	26282900-
17	6136-11-5120	SPACER, (FOR SHIPPING)	1	26282900-

FIG. A331P-01A1 OIL COOLER COVER

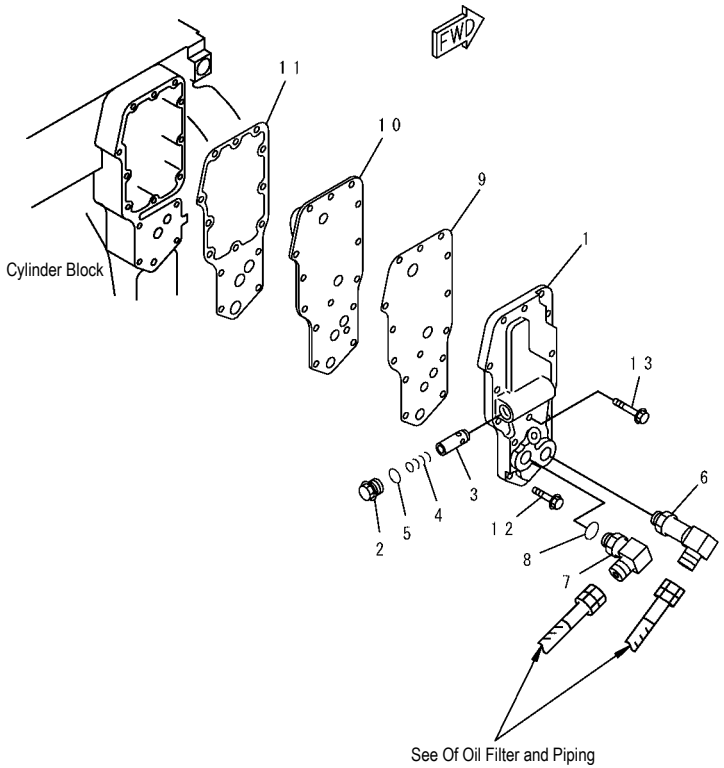

PJ6C702

FIG NO. : A331P-01A1

INDEX	PART NO.	DESCRIPTION	Q'TY	SERIAL NO.
1	6735-61-2220	COVER	1	26282900-
2	6735-61-2140	PLUG	1	26282900-
3	6735-61-2160	PLUNGER	1	26282900-
4	6735-61-2190	SPRING	1	26282900-
5	6732-51-4420	O–RING	1	26282900-
6	6731-51-5250	ELBOW	1	26282900-
7	6738-51-5240	ELBOW	1	26282900-
8	6731-51-5290	. O–RING	1	26282900-
9	6732-51-4432	GASKET	1	26282900-
10	6735-61-2110	COER	1	26282900-
11	6732-61-2311	GASKET	1	26282900-
12	6732-61-6140	BOLT	13	26282900-
13	6735-61-2120	BOLT	1	26282900-

FIG. A401P-01A0 FUEL INJECTION PUMP

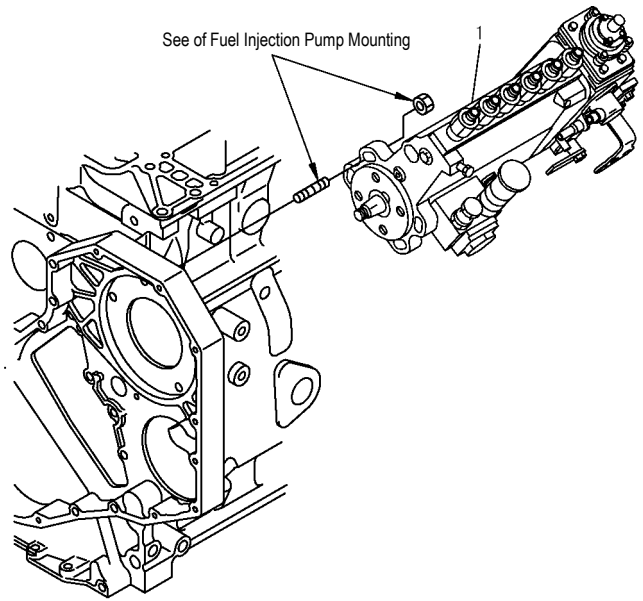

PJ6B408

FIG NO. : A401P-01A0

INDEX	PART NO.	DESCRIPTION	Q'TY	SERIAL NO.
1	6738-71-1110	INJECTION PUMP ASS'Y.....	1	26274903-

FIG. A401R-01A0 BOOST TUBE

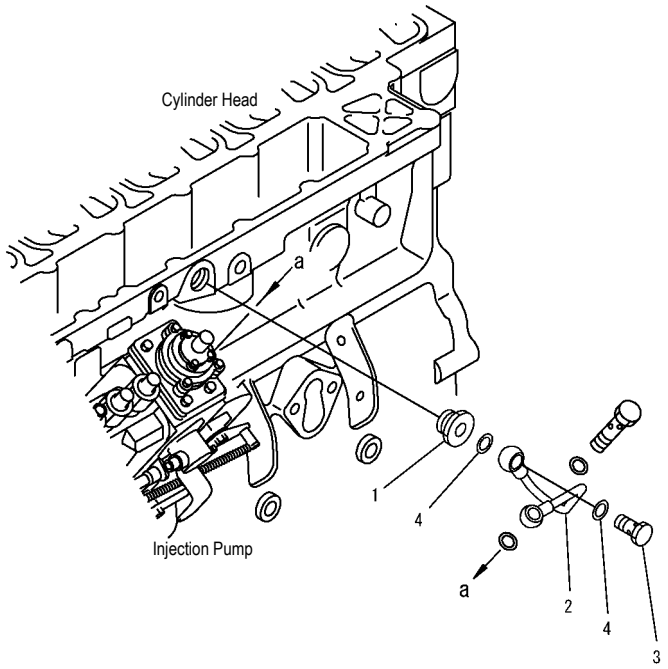

PJ6B405

FIG NO. : A401R-01A0

INDEX	PART NO.	DESCRIPTION	Q'TY	SERIAL NO.
1	6735-71-5460	NIPPLE	1	26274903-
2	6738-71-5450	TUBE	1	26274903-
3	6732-71-6510	BOLT, JOINT	1	26274903-
4	07005-01212	GASKET	2	26274903-

FIG. A401V-01A0 NOISE PANEL INJECTION PUMP

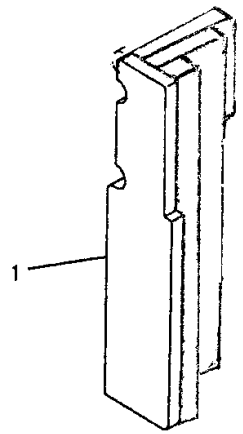

PJ6B420

FIG NO. : A401V-01A0

INDEX	PART NO.	DESCRIPTION	Q'TY	SERIAL NO.
1	6738-21-6710	ISOLATOR.....	1	DBB0001~DBB4708
	6738-21-6711	ISOLATOR.....	1	DBB4709~

FIG. A4010-01A0 FUEL HOSE JOINT

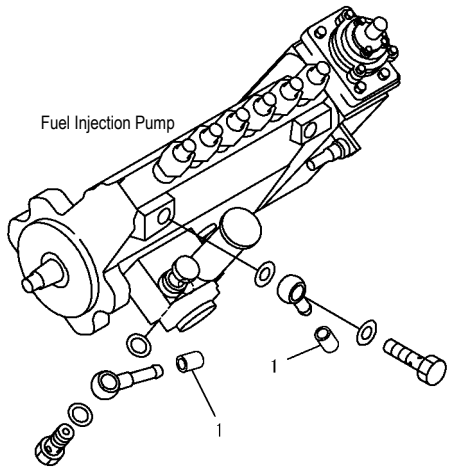

PJ6B431

FIG NO. : A4010-01A0

INDEX	PART NO.	DESCRIPTION	Q'TY	SERIAL NO.
1	6732-71-5740	CAP, (FOR SHIPPING)	2	26274903-

FIG. A408P-01A0 FUEL INJECTION PUMP MOUNTING

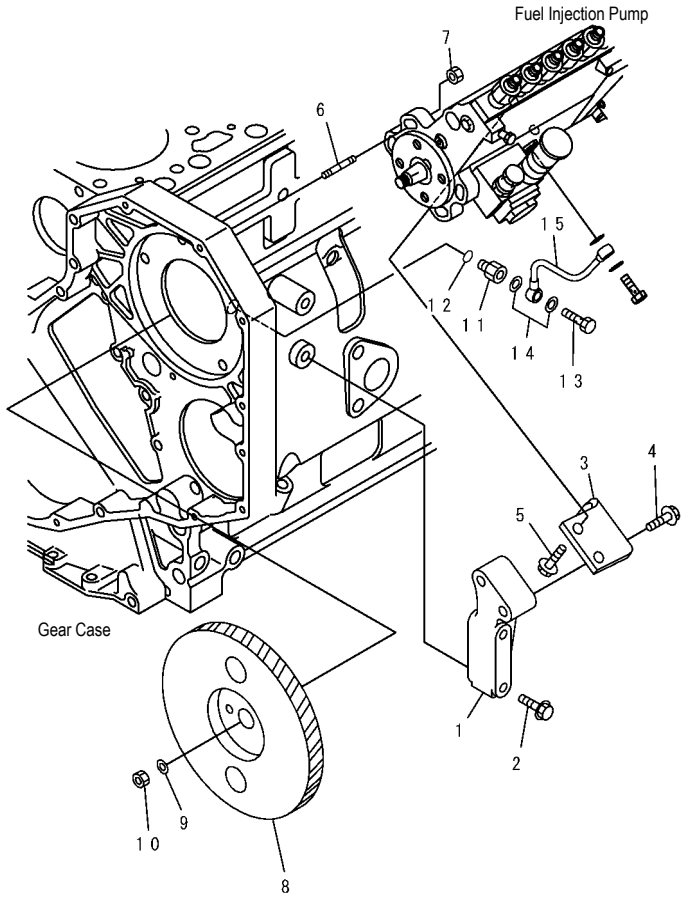

PJ6B409

INDEX	PART NO.	DESCRIPTION	Q'TY	SERIAL NO.
1	6738-71-3620	BRACKET	1	26274903-
2	6732-61-3110	BOLT	2	26274903-
3	6738-71-3610	BRACKET	1	26274903-
4	6735-71-3220	BOLT	2	26274903-
5	6734-71-5610	BOLT	2	26274903-
6	6738-71-3120	STUD	4	26287632-
7	6736-81-6170	NUT	4	26274903-
8	6738-71-3100	GEAR ASS'Y	1	26274903-
9	6130-32-1361	WASHER	1	26274903-
10	01582-01411	NUT	1	26274903-
11	6732-71-5450	NIPPLE	1	26274903-
12	6215-81-9710	O–RING	1	26274903-
13	07206-30710	BOLT, JOINT	1	26274903-
14	07005-01012	GASKET	2	26274903-
15	6735-71-5411	TUBE, OIL	1	26274903-

FIG. A411P-01A1 FUEL FILTER

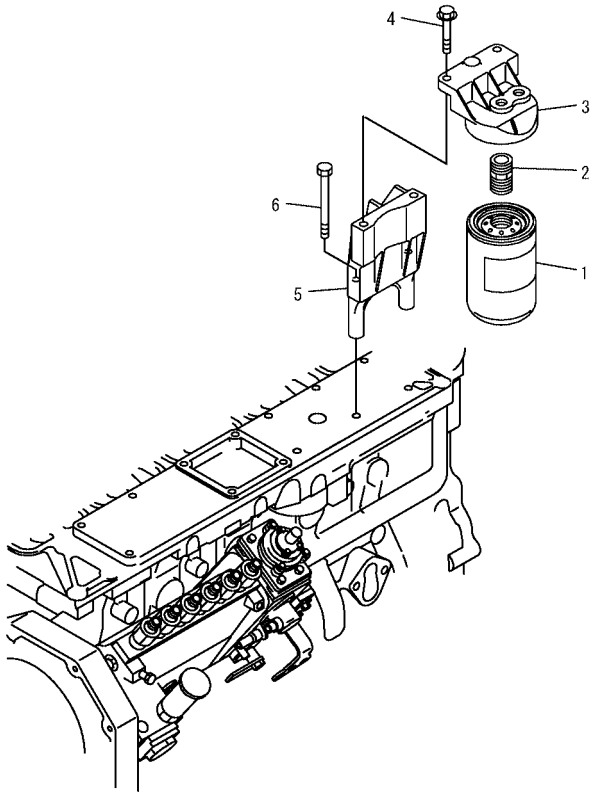

PJ6B406

FIG NO. : A411P-01A1

INDEX	PART NO.	DESCRIPTION	Q'TY	SERIAL NO.
1	6732-71-6111	CARTRIDGE, FUEL	1	26282900-
2	6732-71-6650	ADAPTER	1	26282900-
3	6732-71-6220	HEAD	1	26282900-
4	6732-21-5160	BOLT	2	26282900-
5	6738-71-6720	BRACKET	1	26282900-
6	6742-01-4460	BOLT	3	26282900-

FIG. A411R-01A1 FUEL FILTER PIPING

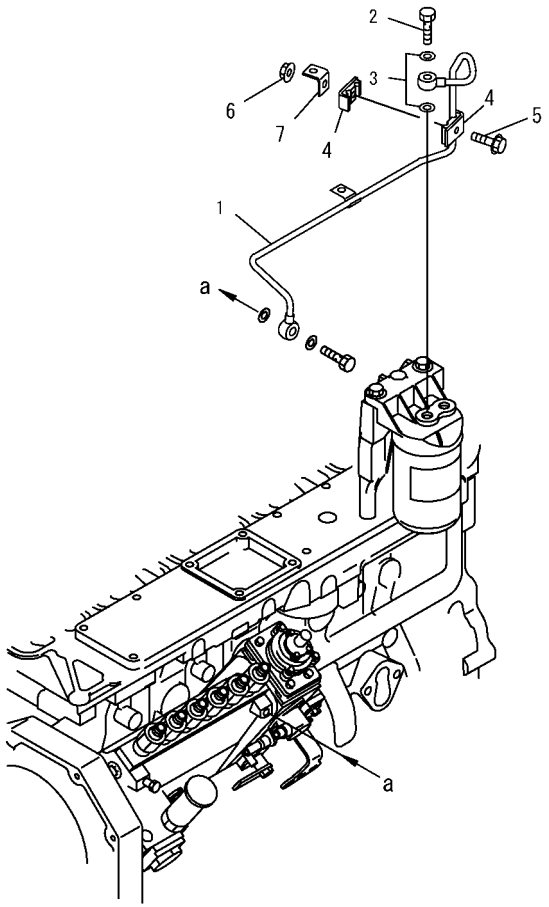

PJ6B407

FIG NO. : A411R-01A1

INDEX	PART NO.	DESCRIPTION	Q'TY	SERIAL NO.
1	6738-71-5640	TUBE	1	26282900-
2	6732-71-6510	BOLT, JOINT	1	26282900-
3	07005-01212	GASKET	2	26282900-
4	6162-75-5820	CLAMP	2	26282900-
5	6742-01-2630	BOLT	1	26282900-
6	6742-01-2660	NUT	1	26282900-
7	6211-21-5490	BRACKET	1	26282900-

FIG. A411S-01A0 FUEL INJECTION PIPING

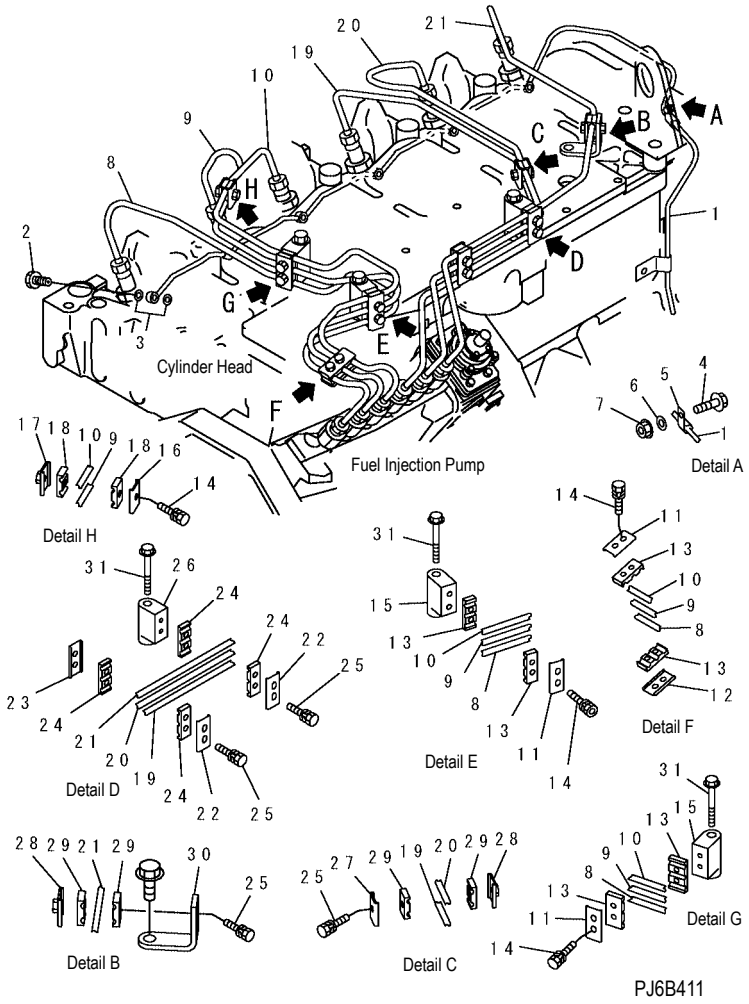

INDEX	PART NO.	DESCRIPTION	Q'TY	SERIAL NO.
1	6738-71-5520	MANIFOLD	1	26274903-
2	6732-71-6240	BOLT, JOINT	6	26274903-
3	6732-71-6260	GASKET	12	26274903-
4	6732-21-5160	BOLT	1	26274903-
5	04434-50508	CLIP	1	26274903-
6	01643-30823	WASHER	1	26274903-
7	6732-71-3210	NUT	1	26274903-
8	6738-71-5110	TUBE, NO.1	1	26274903-
9	6738-71-5120	TUBE, NO.2	1	26274903-
10	6738-71-5130	TUBE, NO.3	1	26274903-
11	6734-71-5710	BRACKET	3	26274903-
12	6735-71-5830	BRACKET	1	26274903-
13	6734-71-5720	ISOLATOR	6	26274903-
14	6734-71-5520	BOLT	7	26274903-
15	6734-71-5741	BRACKET	2	26274903-
16	6735-71-5820	BRACKET	1	26274903-
17	6735-71-5840	BRACE	1	26274903-
18	6735-71-5860	ISOLATOR	2	26274903-
19	6735-71-5643	TUBE, NO.4	1	26274903-
20	6735-71-5653	TUBE, NO.5	1	26274903-
21	6735-71-5663	TUBE, NO.6	1	26274903-
22	6734-71-5710	BRACKET	2	26274903-
23	6735-71-5830	BRACKET	1	26274903-
24	6734-71-5720	ISOLATOR	4	26274903-
25	6734-71-5520	BOLT	6	26274903-
26	6734-71-5741	BRACKET	1	26274903-
27	6735-71-5820	BRACKET	1	26274903-
28	6735-71-5840	BRACE	2	26274903-
29	6735-71-5860	ISOLATOR	4	26274903-
30	6732-71-5760	BRACKET	1	26274903-
31	6734-11-5210	BOLT	3	26274903-

FIG. A417P-01A1 CYLINDER BLOCK BLIND COVER AND FUEL FILTER PIPING

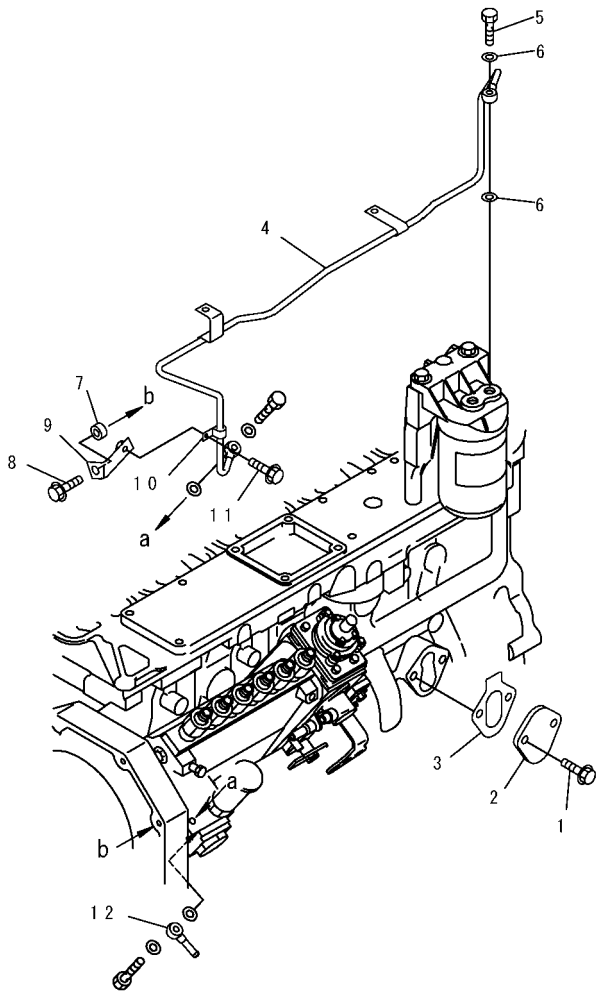

PJ6C313

INDEX	PART NO.	DESCRIPTION	Q'TY	SERIAL NO.
1	6732-71-3220	BOLT	2	26282900-
2	6736-71-5811	PLATE	1	26282900-
3	6735-61-6411	GASKET	1	26282900-
4	6738-71-5630	TUBE	1	26282900-
5	6732-71-6510	BOLT, JOINT	1	26282900-
6	07005-01212	GASKET	2	26282900-
7	6354-81-6310	SPACER	1	26282900-
8	6732-21-6630	BOLT	1	26282900-
9	6736-71-5530	BRACKET	1	26282900-
10	6736-71-5540	CLAMP	1	26282900-
11	6731-71-6270	SCREW	1	26282900-
12	6141-71-1710	JOINT	1	26282900-

FIG. A4219-01A0 INJECTION NOZZLE

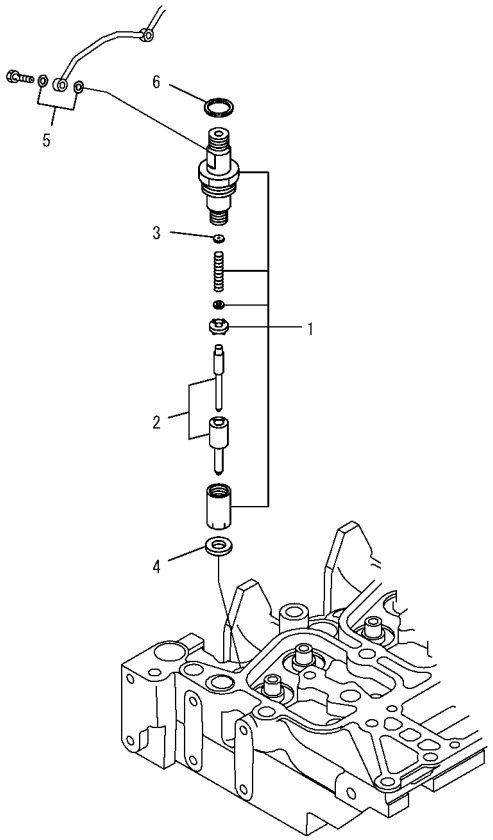

PJD4922

FIG NO. : A4219-01A0

INDEX	PART NO.	DESCRIPTION	Q'TY	SERIAL NO.
	6738-11-3090	KIT, NOZZLE HOLDER	6	26274903-
1	6738-11-3100	. NOZZLE HOLDER ASS'Y	1	26274903-
2	6738-11-3120	.. NOZZLE	1	26274903-
3	6734-11-3610	.. SHIM, 1.00MM	1	26274903-
	6734-11-3620	.. SHIM, 1.04MM	1	26274903-
	6734-11-3630	.. SHIM, 1.08MM	1	26274903-
	6734-11-3640	.. SHIM, 1.10MM	1	26274903-
	6734-11-3650	.. SHIM, 1.14MM	1	26274903-
	6734-11-3660	.. SHIM, 1.18MM	1	26274903-
	6734-11-3670	.. SHIM, 1.20MM	1	26274903-
	6734-11-3680	.. SHIM, 1.24MM	1	26274903-
	6734-11-3690	.. SHIM, 1.28MM	1	26274903-
	6734-11-3710	.. SHIM, 1.30MM	1	26274903-
	6734-11-3720	.. SHIM, 1.34MM	1	26274903-
	6734-11-3730	.. SHIM, 1.38MM	1	26274903-
	6734-11-3740	.. SHIM, 1.40MM	1	26274903-
	6734-11-3750	.. SHIM, 1.44MM	1	26274903-
	6734-11-3760	.. SHIM, 1.48MM	1	26274903-
	6734-11-3770	.. SHIM, 1.50MM	1	26274903-
	6734-11-3780	.. SHIM, 1.54MM	1	26274903-
	6734-11-3790	.. SHIM, 1.58MM	1	26274903-
	6734-11-3810	.. SHIM, 1.60MM	1	26274903-
	6734-11-3820	.. SHIM, 1.64MM	1	26274903-
	6734-11-3830	.. SHIM, 1.68MM	1	26274903-
	6734-11-3840	.. SHIM, 1.70MM	1	26274903-
	6734-11-3850	.. SHIM, 1.74MM	1	26274903-
	6734-11-3860	.. SHIM, 1.78MM	1	26274903-
	6734-11-3870	.. SHIM, 1.80MM	1	26274903-
	6734-11-3880	.. SHIM, 1.84MM	1	26274903-
	6734-11-3890	.. SHIM, 1.88MM	1	26274903-
	6734-11-3910	.. SHIM, 1.90MM	1	26274903-
	6734-11-3920	.. SHIM, 1.94MM	1	26274903-
	6734-11-3930	.. SHIM, 1.98MM	1	26274903-
4	6736-11-3430	.. GASKET	1	26274903-
5	6732-71-6260	. GASKET	2	26274903-
6	6732-11-3850	. SEAL	1	26274903-

FIG. A423V-01A0 FUEL JOINT

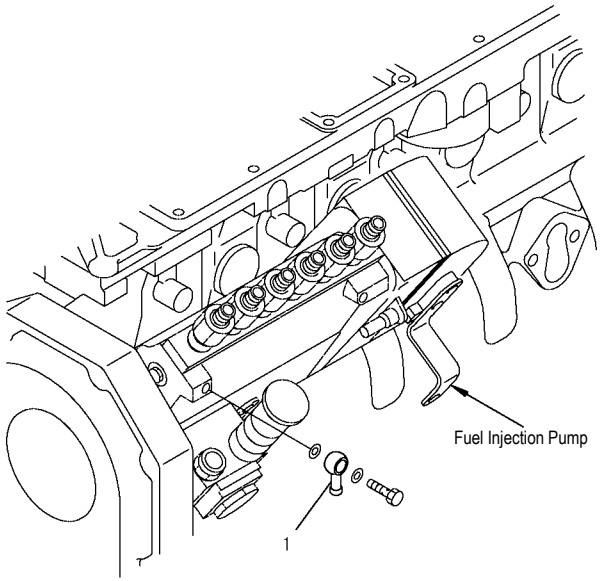

PFD2191

FIG NO. : A423V-01A0

INDEX	PART NO.	DESCRIPTION	Q'TY	SERIAL NO.
1	6144-71-5750	JOINT	1	26274903-

FIG. A501P-01A0 WATER PUMP

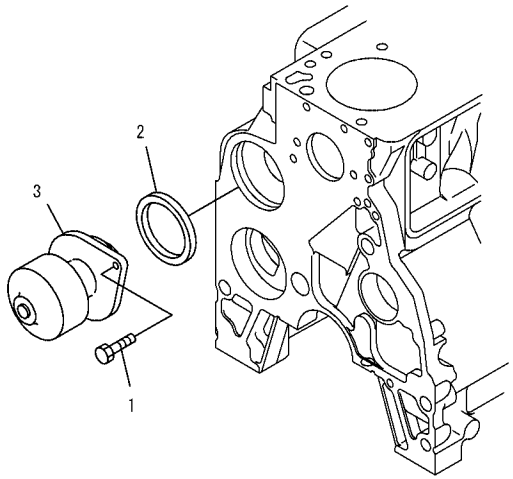

PMD0854

FIG NO. : A501P-01A0

INDEX	PART NO.	DESCRIPTION	Q'TY	SERIAL NO.
1	6732-41-1260	BOLT	2	26274903-
2	6736-61-1520	SEAL	1	26274903-
3	6735-61-1502	WATER PUMP ASS'Y	1	26274903-

FIG. A501R-01A0 WATER CONNECTOR

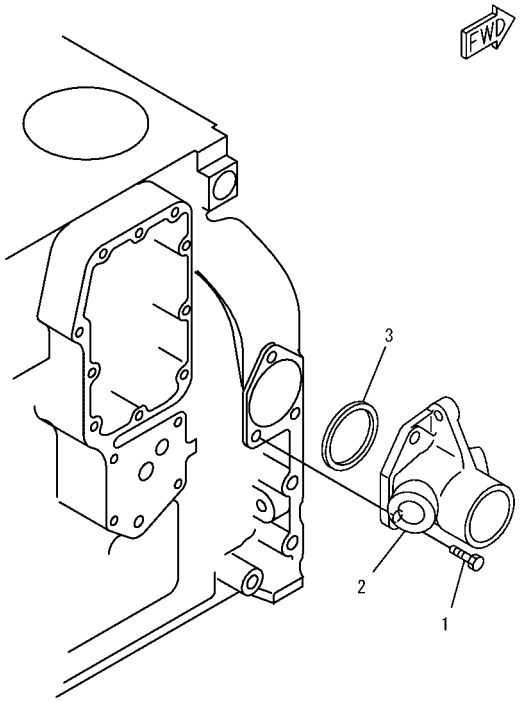

PJ6B426

FIG NO. : A501R-01A0

INDEX	PART NO.	DESCRIPTION	Q'TY	SERIAL NO.
1	6735-71-3220	BOLT	3	26274903-
2	6734-61-6110	CONNECTOR	1	26274903-
3	6732-61-6130	SEAL	1	26274903-

FIG. A501S-01A0 WATER CONNECTOR PLUG

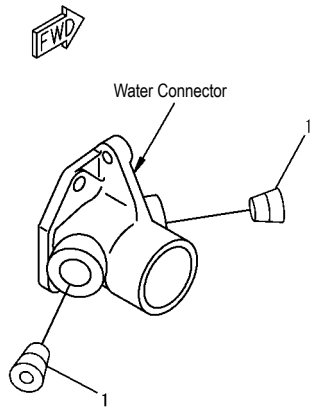

PJ6B427

FIG NO. : A501S-01A0

INDEX	PART NO.	DESCRIPTION	Q'TY	SERIAL NO.
1	6732-11-1910	PLUG.....	2	26274903-

FIG. A5019-01A0 WATER PUMP (HARDENING PULLEY)

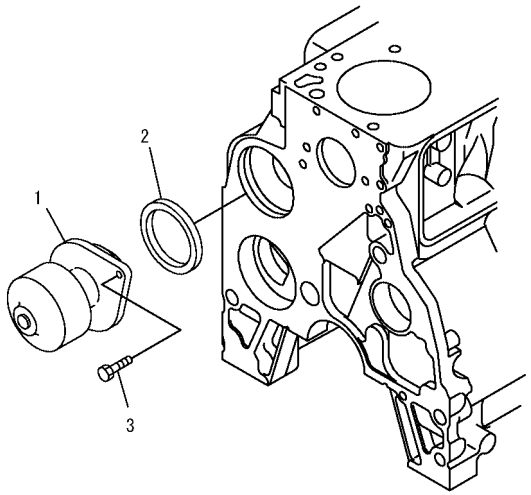

PJ6B451

FIG NO. : A5019-01A0

INDEX	PART NO.	DESCRIPTION	Q'TY	SERIAL NO.
	6736-61-1202	KIT, WATER PUMP	1	26274909-
1	6735-61-1102	. WATER PUMP ASS'Y	1	26274909-
2	6736-61-1520	. SEAL.....	1	26274903-
3	6732-41-1260	BOLT.....	2	26274903-

FIG. A502P-01A2 ALTERNATOR DRIVE PULLEY

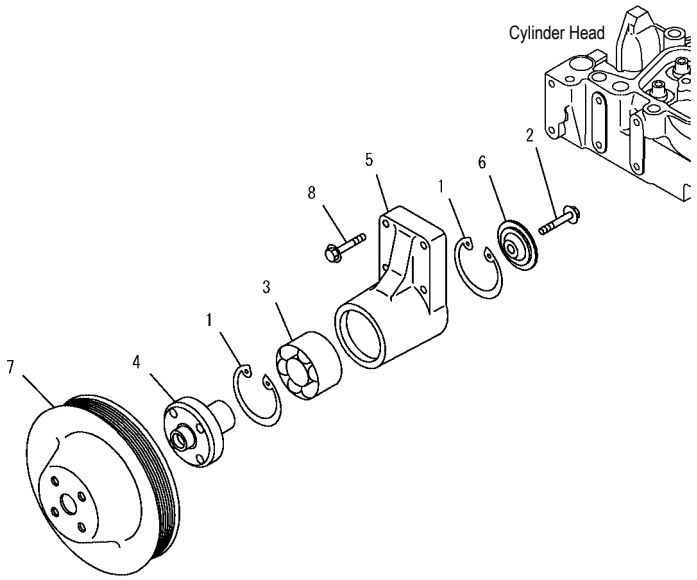

PMD0855

FIG NO. : A502P-01A2

INDEX	PART NO.	DESCRIPTION	Q'TY	SERIAL NO.
	6732-61-3120	SUPPORT ASS'Y	1	26282900-
1	6732-61-3450	. RING, SNAP	2	26282900-
2	6732-61-3440	. BOLT	1	26282900-
3	6732-61-3420	. BEARING, BALL	1	26282900-
4	6732-61-3410	. HUB	1	26282900-
5	☆	. SUPPORT	1	26282900-
6	6732-61-3430	. RETAINER	1	26282900-
7	6738-61-3170	PULLEY	1	26282900-
8	6732-61-3170	BOLT	4	26282900-

FIG. A5030-01A0 COOLING FAN

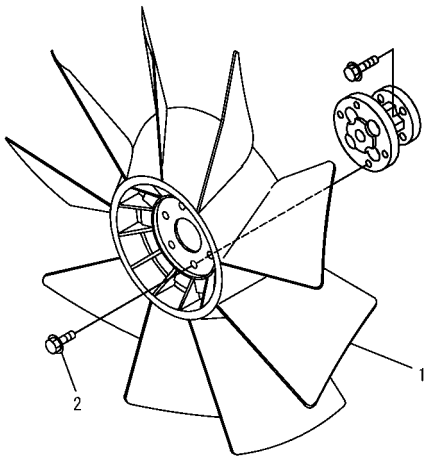

PJ6B432

FIG NO. : A5030-01A0

INDEX	PART NO.	DESCRIPTION	Q'TY	SERIAL NO.
1	600-625-7620	FAN, COOLING.....	1	26274903-
2	01435-01020	BOLT.....	4	26274903-

FIG. A504P-01A0 FAN SPACER

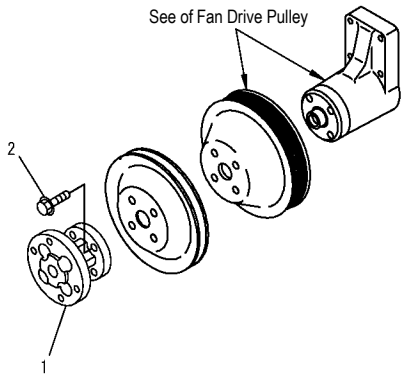

PJ6B422

FIG NO. : A504P-01A0

INDEX	PART NO.	DESCRIPTION	Q'TY	SERIAL NO.
1	6732-61-3610	SPACER	1	26274903-
2	01435-01035	BOLT	4	26274903-

FIG. A601P-01A0 ALTERNATOR (35A)

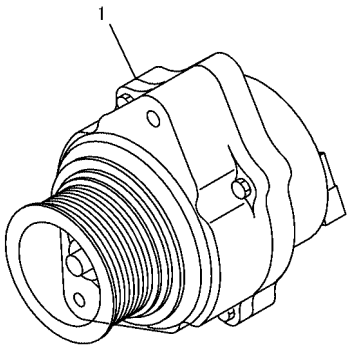

PMD1097

INDEX	PART NO.	DESCRIPTION	Q'TY	SERIAL NO.
1	(600-861-3410)	ALTERNATOR A. (35A), (SEE FIG. A601P-02A0)	1	DBB0001~DBB4708
	600-861-3411	ALTERNATOR A. (35A), (SEE FIG. A601P-02A0)	1	DBB4709~

FIG. A601P-01A1 ALTERNATOR (OPT) (60A)

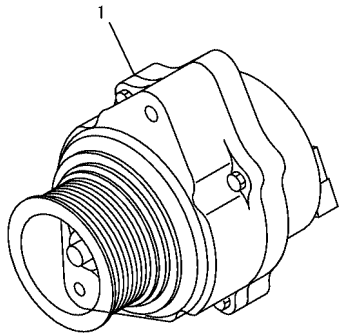

PMD1097

INDEX	PART NO.	DESCRIPTION	Q'TY	SERIAL NO.
1	(600-861-6410)	ALTERNATOR A. (60A), (SEE FIG. A601P-02A1)	1	26274903-

FIG. A601P-02A0 ALTERNATOR (35A) (INNER PARTS)

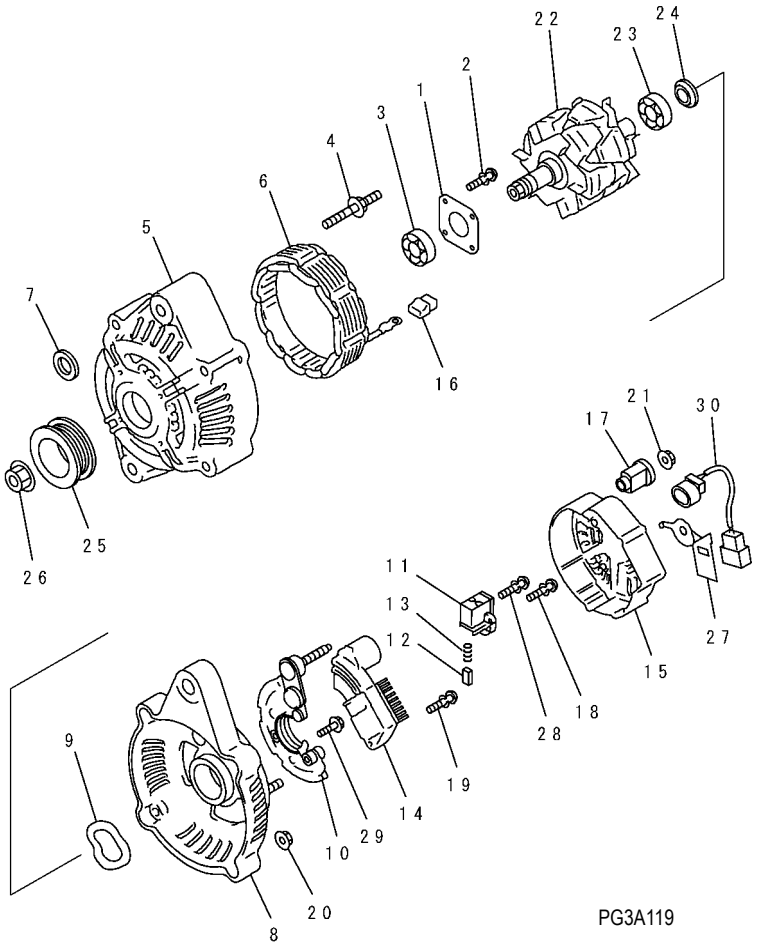

INDEX	PART NO.	DESCRIPTION	Q'TY	SERIAL NO.
	600-861-3410	ALTERNATOR A. (35A)	1	DBB0001~DBB4708
	600-861-3411	THE DENSO PART NUMBER IS THAT ND IS REMOVED FROM KOMATSU PART NUMBER LISTED BELOW	1	DBB4709~
	ND121400-0840	. FRAME ASS'Y	1	DBB0001~
1	ND021411-0450	.. PLATE	1	DBB0001~
2	ND949006-6970	.. SCREW	4	DBB0001~
3	ND949100-3361	.. BEARING, BALL	1	DBB0001~
4	ND949043-2000	.. BOLT, STUD	4	DBB0001~
5	ND021401-3671	.. FRAME	1	DBB0001~
6	ND021100-4360	.. STATOR ASS'Y	1	DBB0001~
7	ND021045-0530	.. COLLAR	1	DBB0001~
8	ND021501-9560	. FRAME, REAR	1	DBB0001~
9	ND021542-0220	.. WASHER	1	DBB0001~
10	ND021580-5060	. HOLDER	1	DBB0001~
	ND021620-2201	. BRUSH HOLDER ASS'Y	1	DBB0001~
11	ND021626-0240	.. BRUSH HOLDER	1	DBB0001~
12	ND021660-0510	.. BRUSH	2	DBB0001~
13	ND949170-6990	.. SPRING	2	DBB0001~
14	ND126000-2310	. REGULATOR ASS'Y	1	DBB0001~
15	ND021551-2910	. COVER, REAR	1	DBB0001~
16	ND021605-1360	. BUSHING	4	DBB0001~
17	ND021605-2490	. BUSHING	1	DBB0001~
18	ND949006-5460	. SCREW	6	DBB0001~
19	ND91310-04251	. SCREW	2	DBB0001~
20	ND949056-2481	. NUT	8	DBB0001~
21	ND949056-1001	. NUT	1	DBB0001~
22	ND021200-4132	. ROTOR ASS'Y	1	DBB0001~
23	ND949100-2790	.. BEARING, BALL	1	DBB0001~
24	ND021506-0070	.. COVER	1	DBB0001~
25	ND021041-8680	. PULLEY	1	DBB0001~
26	ND949056-2520	. NUT	1	DBB0001~
27	ND021751-1990	. CLIP	1	DBB0001~
28	ND949007-7000	. SCREW	1	DBB0001~
29	ND949047-7870	. BOLT	1	DBB0001~
30	ND021700-2680	. WIRE	1	DBB0001~DBB4708

FIG. A601P-02A1 ALTERNATOR (60A) (INNER PARTS)

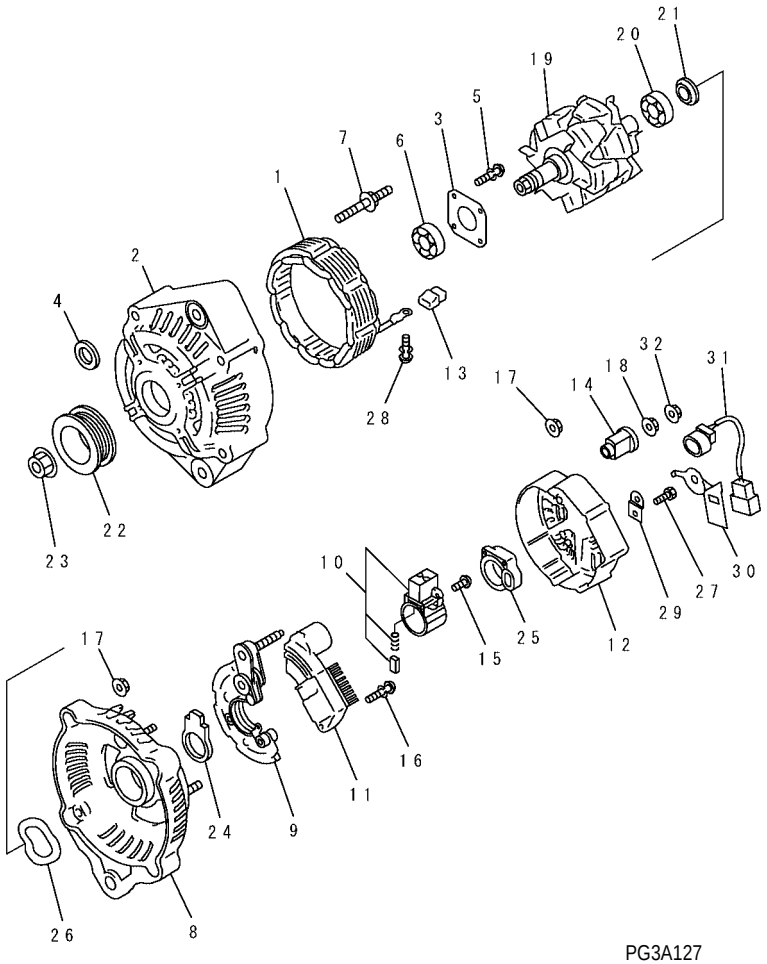

PG3A127

FIG NO. : A601P-02A1

INDEX	PART NO.	DESCRIPTION	Q'TY	SERIAL NO.
	600-861-6410	ALTERNATOR A. (35A)	1	26274903-
		THE DENSO PART NUMBER IS THAT ND IS REMOVED FROM KOMATSU PART NUMBER LISTED BELOW		
	ND121400-0800	. RAME ASS'Y	1	26274903-
1	ND021100-4210	.. TATOR ASS'Y	1	26274903-
2	ND021401-4980	.. FRAME	1	26274903-
3	ND021411-0570	.. PLATE	1	26274903-
4	ND021045-0530	.. COLLAR	1	26274903-
5	ND949006-5590	.. SCREW	4	26274903-
6	ND949100-5010	.. BEARING, BALL	1	26274903-
7	ND949043-2000	.. BOLT, STUD	4	26274903-
8	ND021501-8050	. FRAME, REAR	1	26274903-
9	ND021580-4820	. HOLDER	1	26274903-
10	ND021620-2720	. BRUSH HOLDER ASS'Y	1	26274903-
11	ND126000-2320	. BRUSH HOLDER ASS'Y	1	26274903-
12	ND021551-2480	. COVER	1	26274903-
13	ND021605-1970	. BUSHING	4	26274903-
14	ND021605-2480	. BUSHING	1	26274903-
15	ND949006-5460	. SCREW	3	26274903-
16	ND91310-04251	. SCREW	2	26274903-
	ND949007-5110	. SCREW	2	26274903-
17	ND949056-2481	. NUT	7	26274903-
18	ND949056-3080	. NUT	1	26274903-
19	ND021200-4141	. ROTOR ASS'Y	1	26274903-
20	ND949100-2790	.. BEARING, BALL	1	26274903-
21	ND021506-0070	.. COVER	1	26274903-
22	ND021041-8620	. PULLEY	1	26274903-
23	ND949056-2520	. NUT	1	26274903-
24	ND021626-0190	. SEAL	1	26274903-
25	ND021626-0250	. SEAL	1	26274903-
26	ND021542-0160	. WASHER	1	26274903-
27	ND949006-6401	. SCREW	1	26274903-
28	ND949007-6280	. SCREW	4	26274903-
29	ND021602-5230	. PLATE	1	26274903-
30	ND021751-1990	. CLIP	1	26274903-
31	ND021700-2680	. WIRE	1	26274903-
32	ND92150-06061	. NUT	1	26274903-

FIG. A601S-01A2 BELT TENSIONER

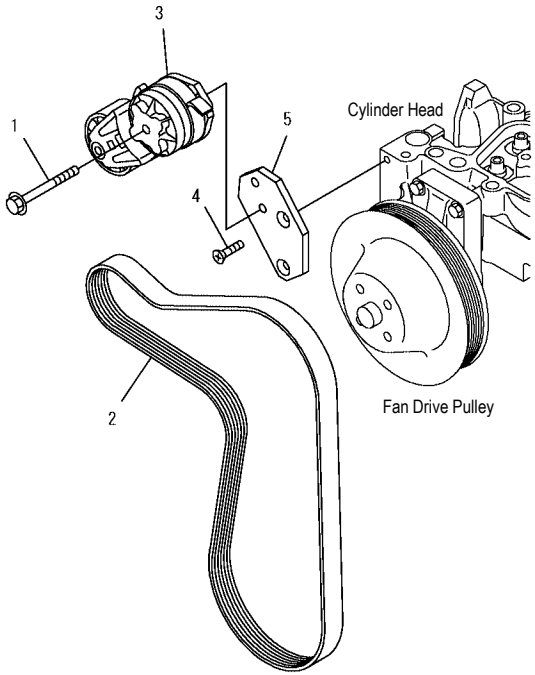

PMD0856

FIG NO. : A601S-01A2

INDEX	PART NO.	DESCRIPTION	Q'TY	SERIAL NO.
1	6732-61-4120	BOLT	1	26282900-
2	6732-61-4170	BELT	1	26282900-
3	6736-61-4110	TENSIONER	1	26282900-
4	6732-61-4220	SCREW	2	26282900-
5	6732-61-3910	PLATE	1	26282900-

FIG. A601T-01A0 ALTERNATOR MOUNTING

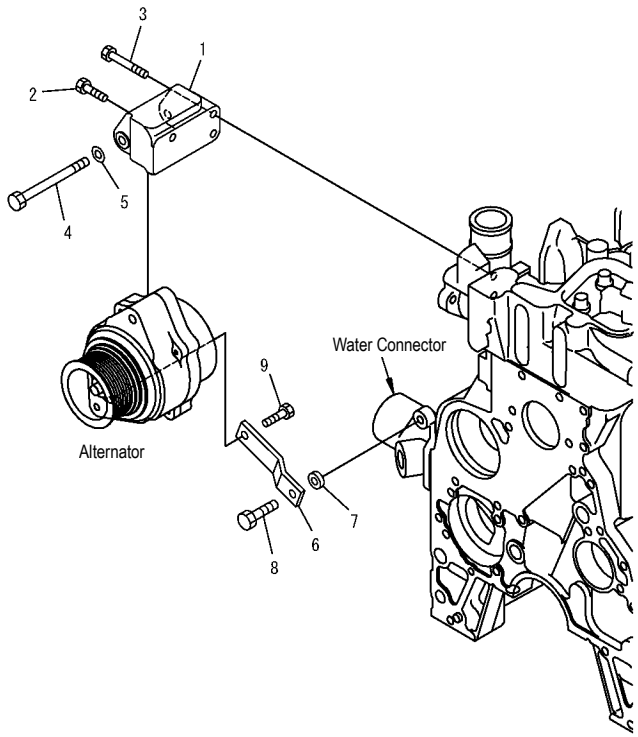

PJ6B401

FIG NO. : A601T-01A0

INDEX	PART NO.	DESCRIPTION	Q'TY	SERIAL NO.
1	6732-81-6611	BRACKET	1	26274903-
2	6732-21-5160	BOLT	1	26274903-
3	6736-21-3210	BOLT	2	26274903-
4	01018-31095	BOLT	1	26274903-
5	01641-01016	WASHER	1	26274903-
6	6732-81-6560	PLATE	1	26274903-
7	6732-81-6690	SPACER	1	26274903-
8	6732-21-5160	BOLT	1	26274903-
9	6732-21-6630	BOLT	1	26274903-

FIG. A621P-01A0 STARTING MOTOR (4.5KW)

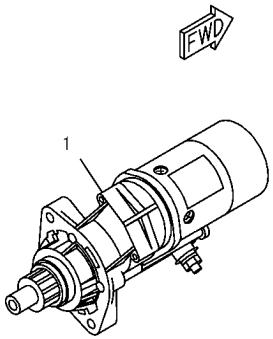

PMD1103

INDEX	PART NO.	DESCRIPTION	Q'TY	SERIAL NO.
1	(600-863-4110)	STARTING MOTOR ASS'Y ..... (4.5KW) (SEE FIG. A621P-02A0)	1	26274903-

FIG. A621P-01A1 STARTING MOTOR (5.5KW)

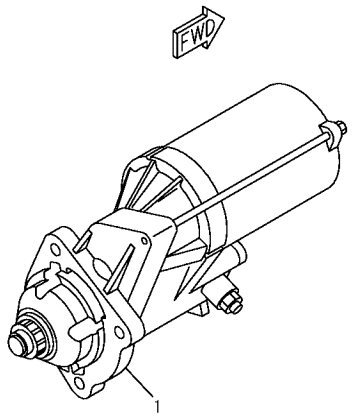

PMD1186

INDEX	PART NO.	DESCRIPTION	Q'TY	SERIAL NO.
1	(600-863-5110)	STARTING MOTOR ASS'Y ..... (5.5KW) (SEE FIG. A621P-02A1)	1	26274903-

FIG. A621P-02A0 STARTING MOTOR (4.5KW) (INNER PARTS)

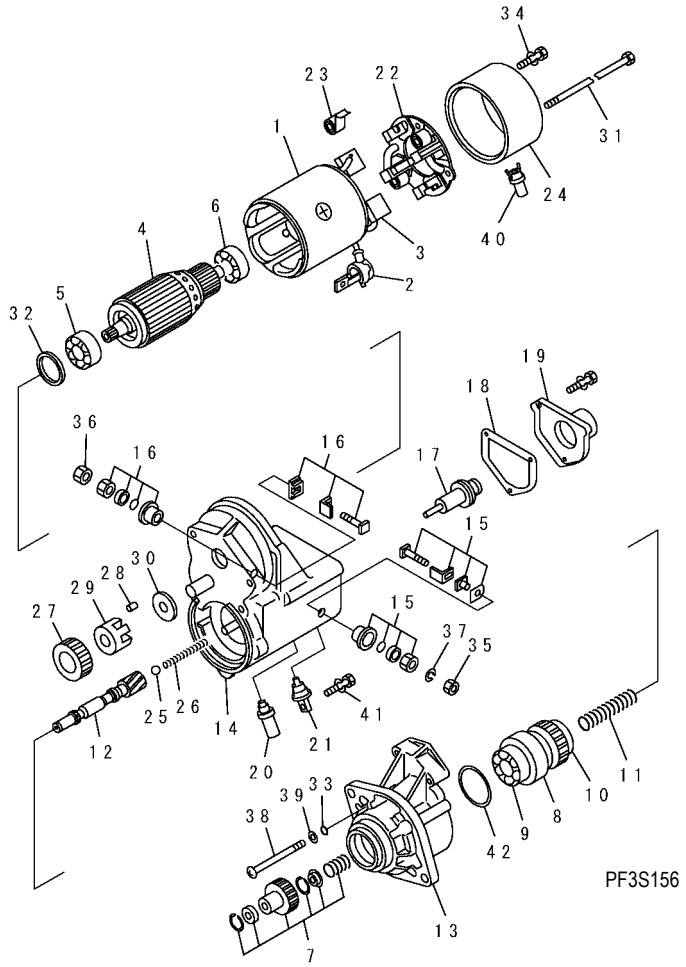

INDEX	PART NO.	DESCRIPTION	Q'TY	SERIAL NO.
	600-863-4110	STARTING MOTOR ASS'Y, (4.5KW)	1	26274903-
		THE DENSO PART NUMBER IS THAT ND IS REMOVED FROM KOMATSU PART NUMBER LISTED BELOW.....		
1	ND028100-2882	. YOKE ASS'Y	1	26274903-
2	ND028062-0130	.. CAP	1	26274903-
3	ND028099-3570	.. STARTER KIT	2	26274903-
4	ND028200-1590	. ARMATURE ASS'Y	1	26274903-
5	ND949100-1930	.. BEARING, BALL	1	26274903-
6	ND949100-1750	.. BEARING, BALL	1	26274903-
	ND028300-6551	. CLUTCH ASS'Y	1	26274903-
7	ND028099-3270	.. STARTER KIT	1	26274903-
8	ND028300-6751	.. CLUTCH ASS'Y	1	26274903-
9	ND949100-4500	... STARING, BALL, FRONT	1	26274903-
10	ND949100-1920	... BEARING, BALL, REAR	1	26274903-
11	ND949170-4040	.. SPRING	1	26274903-
12	ND028381-0071	.. SHAFT	1	26274903-
13	ND228401-0633	. HOUSING ASS'Y	1	26274903-
14	ND153400-2410	. MAGNETIC SWITCHA	1	26274903-
15	ND028099-2790	.. STARTER KIT	1	26274903-
16	ND028099-3160	.. STARTER KIT	1	26274903-
17	ND053660-7170	.. PLUNGER	1	26274903-
18	ND053404-0240	.. GASKET	1	26274903-
19	ND053505-0290	.. COVER	1	26274903-
20	ND053480-0110	.. BOLT	1	26274903-
21	ND028065-0250	.. BUSHING	1	26274903-
22	ND028510-5390	.BRUSH HOLDER ASS'Y	1	26274903-
23	ND949173-0571	.. SPRING	4	26274903-
24	ND028501-8091	. FRAME	1	26274903-
25	ND128961-0010	. BALL	1	26274903-
26	ND949170-4070	. SPRING	1	26274903-
27	ND028371-1500	. PINION	1	26274903-
28	ND028306-0070	. ROLLER	5	26274903-
29	ND028063-0030	. RETAINER	1	26274903-
30	ND028327-0171	. RETAINER	1	26274903-

FIG. A621P-02A0 STARTING MOTOR (4.5KW) (INNER PARTS)

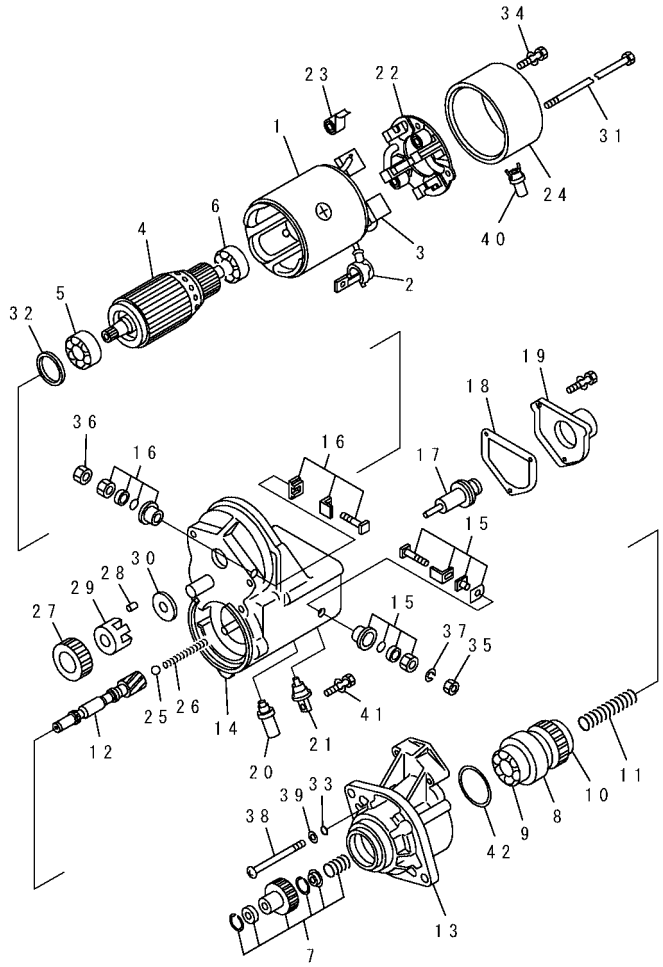

FIG NO. : A621P-02A0

INDEX	PART NO.	DESCRIPTION	Q'TY	SERIAL NO.
31	ND128950-0520	. BOLT	2	26274903-
32	ND949020-0600	. WASHER, FELT	1	26274903-
33	ND90801-10050	. O–RING	3	26274903-
34	ND949007-6530	. SCREW	2	26274903-
35	ND90170-10061	. NUT	1	26274903-
36	ND949056-4480	. NUT	1	26274903-
37	ND90258-10001	. WASHER	1	26274903-
38	ND949006-4720	. SCREW	3	26274903-
39	ND90200-06241	. WASHER	3	26274903-
40	ND028062-5790	. COVER	1	26274903-
41	ND949007-6850	. SCREW	1	26274903-
42	ND028901-5190	. SEAL	1	26274903-

FIG. A621P-02A1 STARTING MOTOR (5.5KW) (INNER PARTS)

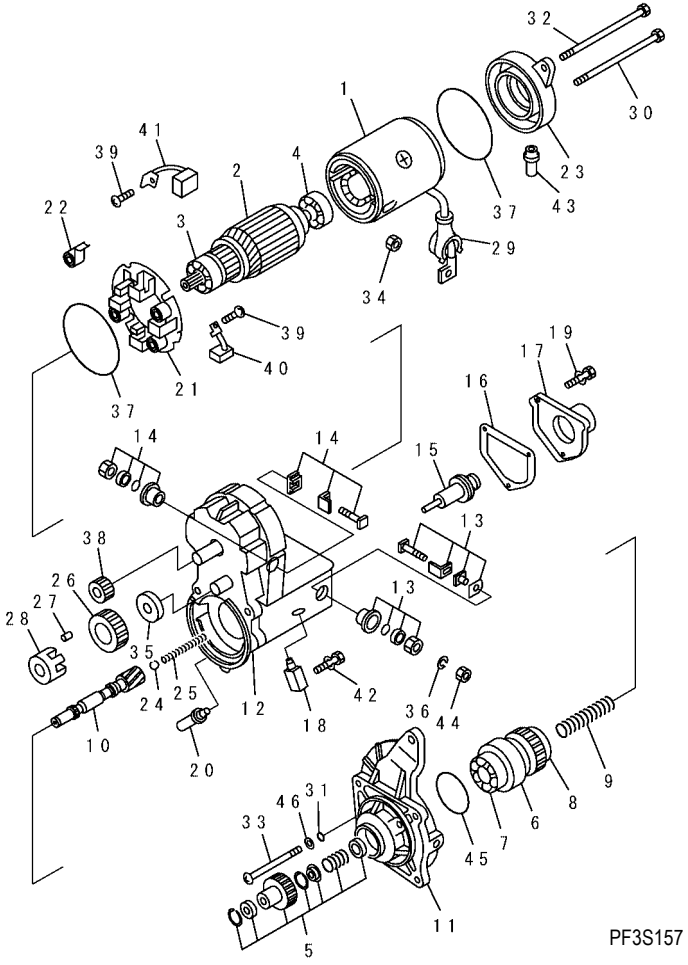

FIG NO. : A621P-02A1

INDEX	PART NO.	DESCRIPTION	Q'TY	SERIAL NO.
	600-863-5110	STARTING MOTOR ASS'Y, (5.5KW)	1	26274903-
		THE DENSO PART NUMBER IS THAT ND IS REMOVED FROM KOMATSU PART NUMBER LISTED BELOW		
1	ND028100-5410	. YOKE ASS'Y	1	26274903-
2	ND028200-5250	. RMATURE ASS'Y	1	26274903-
3	ND949100-3161	.. BEARING, BALL	1	26274903-
	ND949100-5290	.. BEARING, BALL	1	26274903-
4	ND949100-3540	.. BEARING, BALL	1	26274903-
	ND028300-6551	. CLUTCH ASS'Y	1	26274903-
5	ND028099-3270	.. STARTER KIT	1	26274903-
6	ND028300-6751	.. CLUTCH ASS'Y	1	26274903-
7	ND949100-4500	... BEARING, BALL FRONT	1	26274903-
8	ND949100-1920	... BEARING, BALL, REAR	1	26274903-
9	ND949170-4040	.. SPRING	1	26274903-
10	ND028381-0071	.. SHAFT	1	26274903-
11	ND128401-5621	. HOUSING	1	26274903-
12	ND153400-2600	. SWITCH ASS'Y, MAGNETIC	1	26274903-
13	ND028099-5090	.. KIT, STARTER	1	26274903-
14	ND028099-5100	.. KIT, STARTER	1	26274903-
15	ND053660-0443	.. PLUNGER	1	26274903-
16	ND053404-0240	.. GASKET	1	26274903-
17	ND053505-0290	.. COVER, SOLENOID	1	26274903-
18	ND053480-7560	.. BOLT ASS'Y, TERMINAL	1	26274903-
19	ND949047-4440	.. BOLT	3	26274903-
20	ND028065-0250	.. BUSHING, DRAIN	1	26274903-
21	ND028510-0880	. HOLDER ASS'Y, BRUSH	1	26274903-
22	ND028520-0011	.. SPRING, BRUSH	4	26274903-
23	ND028501-7711	. FRAME	1	26274903-
24	ND949120-0240	. BALL, STEEL	1	26274903-
25	ND949170-4070	. SPRING	1	26274903-
26	ND028371-3210	. PINION, STARTER	1	26274903-
27	ND028306-0070	. ROLLER, CLUTCH	5	26274903-
28	ND028063-0030	. RETAINER	1	26274903-
29	ND028062-0130	. CAP	1	26274903-
30	ND949042-3680	. BOLT	1	26274903-

FIG. A621P-02A1 STARTING MOTOR (5.5KW) (INNER PARTS)

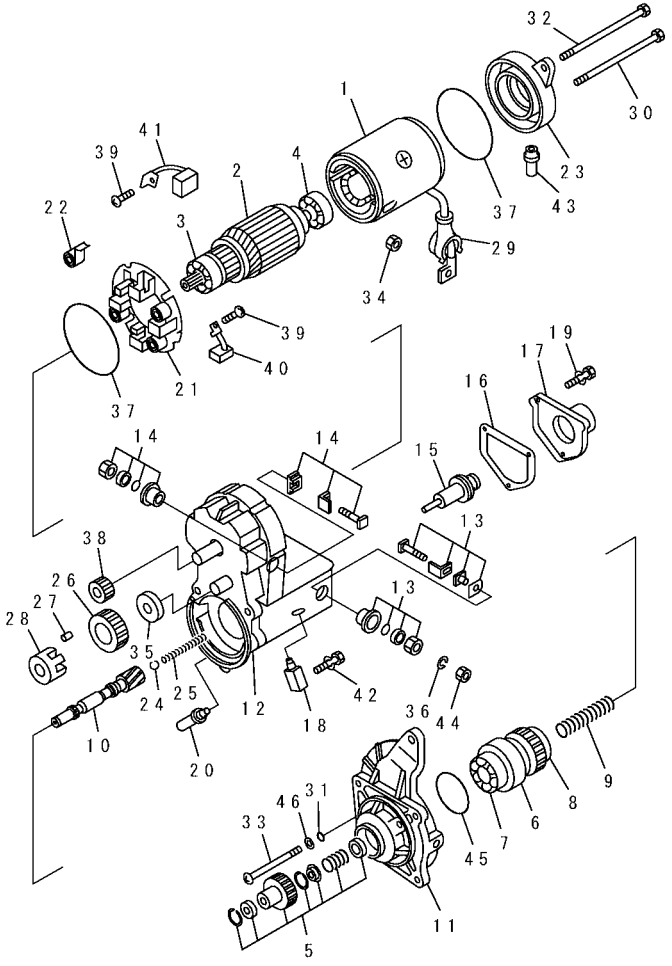

FIG NO. : A621P-02A1

INDEX	PART NO.	DESCRIPTION	Q'TY	SERIAL NO.
31	ND90801-10050	. O–RING	3	26274903-
32	ND949042-3690	. BOLT	1	26274903-
33	ND949006-4720	. SCREW	3	26274903-
34	ND949056-4480	. NUT	1	26274903-
35	ND028327-0171	. RETAINER, SNAP	1	26274903-
36	ND90258-10001	. WASHER, SPRING	1	26274903-
37	ND028901-0361	. SEAL	2	26274903-
38	ND028371-3200	. PINION	1	26274903-
39	ND949007-6530	. SCREW	4	26274903-
40	ND028530-1090	. BRUSH ASS'Y	2	26274903-
41	ND028530-1100	. BRUSH ASS'Y	2	26274903-
42	ND949007-6850	. SCREW	1	26274903-
43	ND028062-5790	. COVER	1	26274903-
44	ND90170-10061	. NUT	1	26274903-
45	ND90801-20470	. O–RING	1	26274903-
46	ND90200-06241	. WASHER	3	26274903-

FIG. A621S-01A0 STARTING MOTOR MOUNTING (4.5KW)

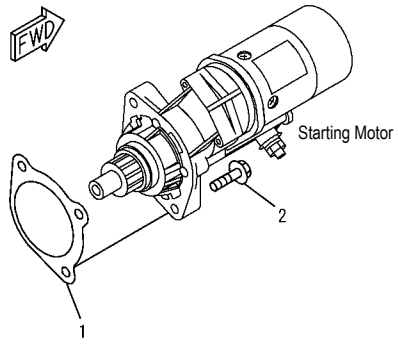

PMD1104

FIG NO. : A621S-01A0

INDEX	PART NO.	DESCRIPTION	Q'TY	SERIAL NO.
1	6732-81-6811	GASKET	1	26274903-
2	01435-01035	BOLT	2	26274903-

FIG. A621S-01A1 STARTING MOTOR MOUNTING (5.5KW)

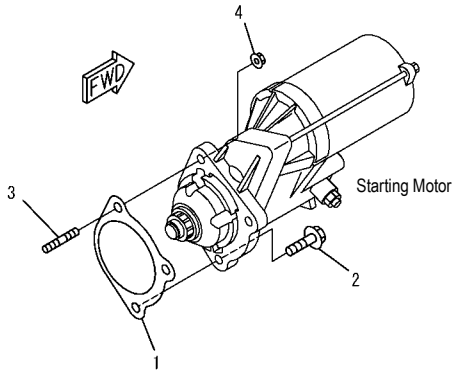

PJD4445

INDEX	PART NO.	DESCRIPTION	Q'TY	SERIAL NO.
1	6732-81-6811	GASKET	1	26274903-
2	01435-01035	BOLT	2	26274903-
3	6735-81-6170	STUD	1	26274903-
4	01584-01008	NUT	1	26274903-

FIG. A8110-01A0 REPAIR PARTS ((1/4) (CYLINDER HEAD)

REPAIR PARTS See subsequent pages for details.

PMD0861

INDEX	PART NO.	DESCRIPTION	Q'TY	SERIAL NO.
1	6736-19-1310	GUIDE, 60.50MM	6	26274903-
2	6736-19-1410	GUIDE, 51.75MM	6	26274903-
3	6736-18-1310	GUIDE	12	26274903-
		OVERSIZE PARTS		
4	6735-11-1870	GASKET, 0.25MM	1	26274903-
	6735-11-1840	GASKET, 0.50MM	1	26274903-

FIG. A8110-02A0 REPAIR PARTS (2/4) (CYLINDER BLOCK)

REPAIR PARTS See subsequent pages for details.

PMD0861

FIG NO. : A8110-02A0

INDEX	PART NO.	DESCRIPTION	Q'TY	SERIAL NO.
		OVERSIZE PARTS		
1	6736-29-1410	BUSHING, CAM, NO.1	1	26274903-
2	6736-29-1420	BUSHING, CAM, NO.2,3,4,5,6,7	1	26274903-
		STANDARD		
3	6736-29-2110	LINER, SALVAGE	6	26274903-

FIG. A8110-03A0 REPAIR PARTS (3/4) (CRANKSHAFT)

REPAIR PARTS See subsequent pages for details.

PMD0861

INDEX	PART NO.	DESCRIPTION	Q'TY	SERIAL NO.
1	6736-39-1220	SLEEVE, WEAR	1	26274903-
2	6736-39-1130	SLEEVE, WET	1	26274903-
		OVERSIZE 0.25MM		
	6735-29-8100	MAIN METAL ASS'Y	6	26274903-
3	☆	. METAL, UPPER	1	26274903-
4	☆	. METAL, LOWER	1	26274903-
	6736-29-8610	THRUST METAL ASS'Y	1	26274903-
5	☆	.METAL, THRUST	1	26274903-
6	☆	.METAL, LOWER	1	26274903-
		OVERSIZE 0.50MM		
	6735-28-8100	MAIN METAL ASS'Y	6	26274903-
3	☆	. METAL, UPPER	1	26274903-
4	☆	. METAL, LOWER	1	26274903-
	6735-28-8200	THRUST METAL ASS'Y	1	26274903-
5	☆	. METAL, THRUST	1	26274903-
6	☆	. METAL, LOWER	1	26274903-
		OVERSIZE 0.75MM		
	6735-27-8100	MAIN METAL ASS'Y	6	26274903-
3	☆	. METAL, UPPER	1	26274903-
4	☆	. METAL, LOWER	1	26274903-
	6736-28-8620	THRUST METAL ASS'Y	1	26274903-
5	☆	. METAL, THRUST	1	26274903-
6	☆	. METAL, LOWER	1	26274903-
		OVERSIZE 1.00MM		
	6735-26-8100	MAIN METAL ASS'Y	6	26274903-
3	☆	. METAL, UPPER	1	26274903-
4	☆	. METAL, LOWER	1	26274903-
	6736-27-8620	THRUST METAL ASS'Y	1	26274903-
5	☆	. METAL, THRUST	1	26274903-
6	☆	. METAL, LOWER	1	26274903-
		OVERSIZE 0.5MM/0.5MM		
	6736-29-8700	THUST METAL ASS'Y	1	26274903-
5	☆	.METAL, THRUST 0.5MM/0.5MM	1	26274903-
6	☆	.METAL, LOWER	1	26274903-
		OVERSIZE 1.0MM/1.0MM		
	6736-28-8700	THRUST METAL ASS'Y	1	26274903-
5	☆	.METAL, THRUST 1.0MM/1.0MM	1	26274903-
6	☆	.METAL, LOWER	1	26274903-

FIG. A8110-04A0 REPAIR PARTS (4/4) (PISTION)

REPAIR PARTS See subsequent pages for details.

PMD0861

INDEX	PART NO.	DESCRIPTION	Q'TY	SERIAL NO.
		OVERSIZE PARTS		
1	6736-39-3400	METAL, 0.25MM	12	26274903-
	6736-38-3400	METAL, 0.50MM	12	26274903-
	6736-37-3400	METAL, 0.75MM	12	26274903-
	6736-36-3400	METAL, 1.00MM	12	26274903-
		OVERSIZE 0.5MM		
	6738-39-2031	PISTON RING ASS'Y	6	26292269-
2	☆	.RING, TOP	1	26292269-
	☆	. RING, TOP	1	26274903-26292268
3	☆	. RING, SECOND	1	26274903-
4	☆	. RING, OIL	1	26274903-
		OVERSIZE 1.0MM		
	6738-38-2031	PISTON RING ASS'Y	6	26292269-
2	☆	. RING, TOP	1	26292269-
	☆	. RING, TOP	1	26274903-26292268
3	☆	. RING, SECOND	1	26274903-
4	☆	. RING, OIL	1	26274903-
		OVERSIZE PARTS		
5	6738-39-2111	PISTON, 0.5MM	6	26292269-
6	6738-38-2111	PISTON, 1.0MM	6	26292269-

FIG. A9810-01A0 CAUTION PLATE (JAPANESE–ENGLISH)

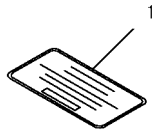

PMD1188

FIG NO. : A9810-01A0

INDEX	PART NO.	DESCRIPTION	Q'TY	SERIAL NO.
1	6738-81-2510	PLATE.....	1	26274903-

FIG. A9850-01A1Z CAUTION PLATE (FOR REGULATION OF EPA)

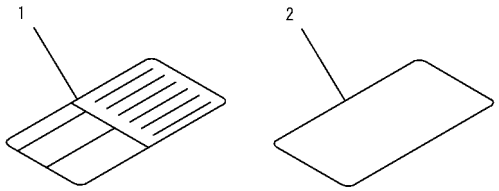

PJ6A211

INDEX	PART NO.	DESCRIPTION	Q'TY	SERIAL NO.
1	6732-81-5870	PLATE	1	26282900-
2	6732-81-2190	DECAL	1	26293535-

FIG. A9999-01A1 MAIN PUMP CONNECTING PARTS

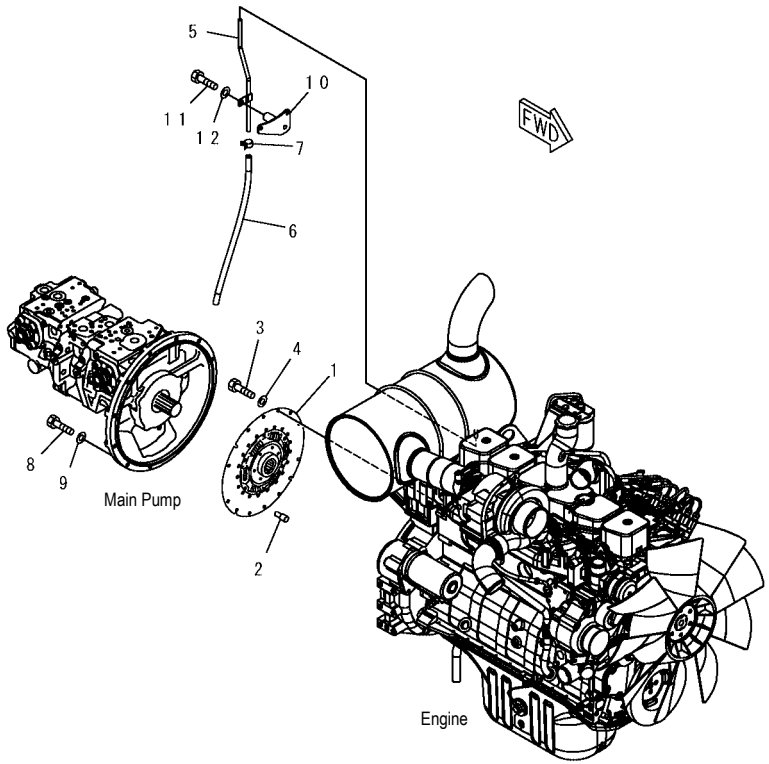

PJ6C734

FIG NO. : A9999-01A1

INDEX	PART NO.	DESCRIPTION	Q'TY	SERIAL NO.
1	22U-01-21310	DISK DAMPER	1	26282900-
2	203-01-51120	PIN	2	26282900-
3	01010-81020	BOLT	8	26282900-
4	01643-31032	WASHER	8	26282900-
5	6209-11-5480	TUBE, MUFFLER DRAIN	1	26282900-
6	07260-20945	HOSE	1	26282900-
7	07285-00155	CLIP	1	26282900-
8	01010-81040	BOLT	10	26282900-
9	01643-31032	WASHER	10	26282900-
10	20Y-62-41572	BRACKET	1	26282900-
11	01010-81045	BOLT	1	26282900-
12	01643-31032	WASHER	1	26282900-

FIG. B9999-01A8 AIR CLEANER (ORDERING TRANSFERRED PARTS)

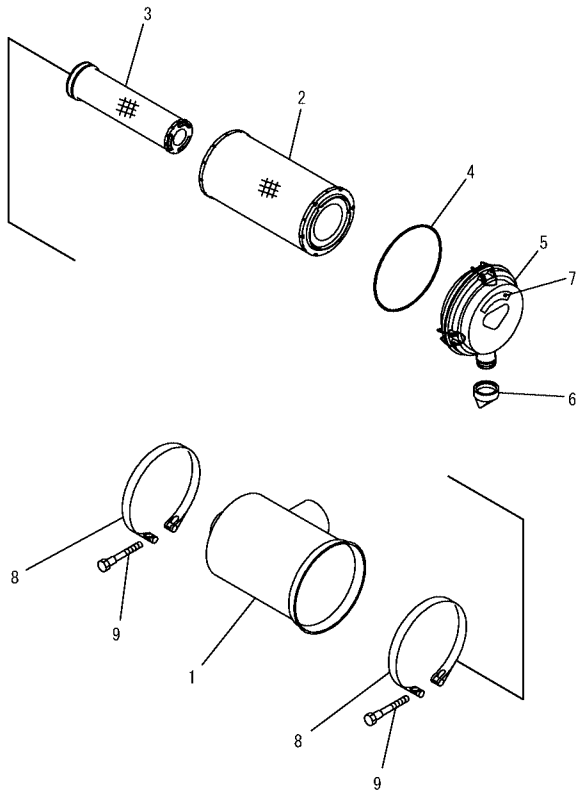

PJ6C749

FIG NO. : B9999-01A8

INDEX	PART NO.	DESCRIPTION	Q'TY	SERIAL NO.
1	6738-81-7310	. BODY	1	26282900-
	600-185-3100	. ELEMENT ASS'Y	1	26282900-
2	☆	. ELEMENT, OUTER	1	26282900-
3	☆	. ELEMENT, INNER	1	26282900-
4	600-184-1370	. O–RING	1	26282900-
	600-184-1310	. COVER ASS'Y	1	26282900-
5	600-184-2810	. PLATE	1	26282900-
6	600-184-1350	. VALVE	1	26282900-
7	20Y-00-D1640	. PLATE, INSTRUCTION	1	26282900-
8	6131-11-4520	BAND ASS'Y	2	26282900-
9	6643-11-4641	BOLT	2	26282900-

ENGINE RELATED PARTS

FIG. B0000-01A0 DAMPER, PUMP AND TUBE

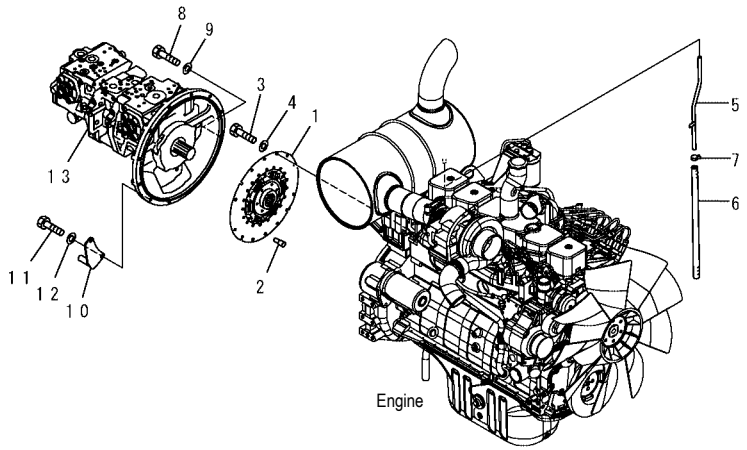

PW1C902

INDEX	PART NO.	DESCRIPTION	Q'TY	SERIAL NO.
1	(22U-01-21310)	DISK DAMPER	1	DBB0001~
2	(203-01-51120)	PIN	2	DBB0001~
3	(01010-81020)	BOLT	8	DBB0001~
4	(01643-31032)	WASHER	8	DBB0001~
5	(6209-11-5480)	TUBE	1	DBB0001~
6	(07260-20945)	HOSE	1	DBB0001~
7	(07285-00155)	CLIP	1	DBB0001~
8	(01010-81040)	BOLT	10	DBB0001~
9	(01643-31032)	WASHER	10	DBB0001~
10	(20Y-62-41572)	BRACKET	1	DBB0001~
11	(01010-81045)	BOLT	2	DBB0001~
12	(01643-31032)	WASHER	2	DBB0001~
13	(708-2L-00300)	PUMP ASS'Y	1	DBB0001~

FIG. B0100-01A0 ENGINE MOUNT (BRACKET AND CUSHION)

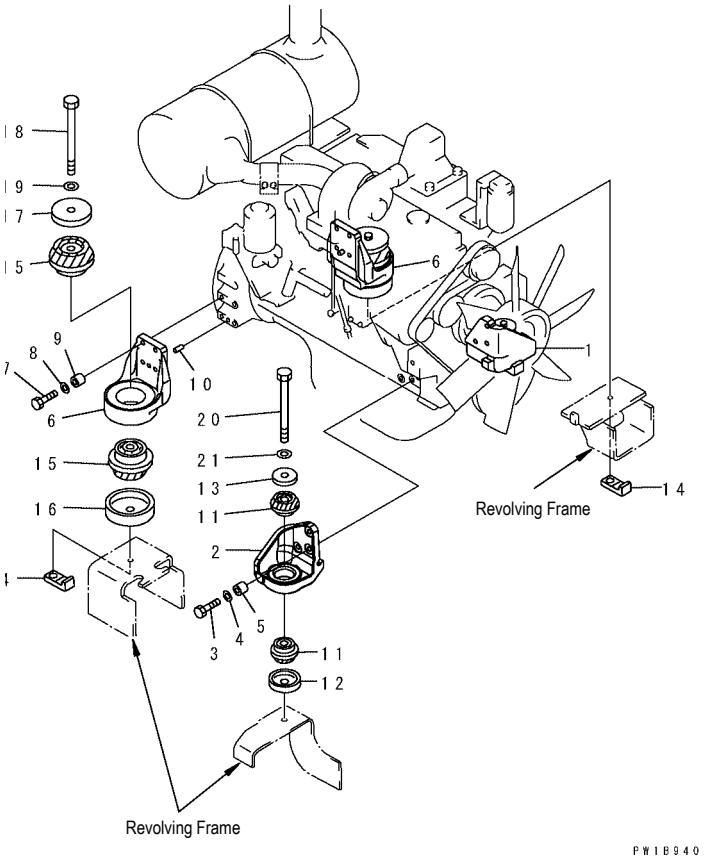

INDEX	PART NO.	DESCRIPTION	Q'TY	SERIAL NO.
1	20Y-01-29231	BRACKET, L. H	1	DBB0001~
2	20Y-01-31220	BRACKET, R. H	1	DBB0001~
3	01010-81265	BOLT	6	DBB0001~
4	01643-31232	WASHER	6	DBB0001~
5	20Y-01-21260	BOSS	6	DBB0001~
6	20Y-01-22121	BRACKET	2	DBB0001~
7	01010-81265	BOLT	8	DBB0001~
8	01643-31232	WASHER	8	DBB0001~
9	20Y-01-21260	BOSS	8	DBB0001~
10	04020-01228	PIN	2	DBB0001~
11	20Y-01-12210	CUSHION	4	DBB0001~
12	20Y-01-12141	STOPPER	2	DBB0001~
13	20Y-01-11141	WASHER	2	DBB0001~
14	20Y-01-22111	NUT	3	DBB0001~
15	20Y-01-12222	CUSHION	4	DBB0001~
16	20Y-01-12161	STOPPER	2	DBB0001~
17	20Y-01-12180	WASHER	2	DBB0001~
18	01011-B1655	BOLT	2	DBB0001~
19	01643-31645	WASHER	2	DBB0001~
20	20Y-01-12270	BOLT	2	DBB0001~
21	01643-31645	WASHER	2	DBB0001~

FIG. B0100-02A0 ENGINE MOUNT (FILTER REMOTE)

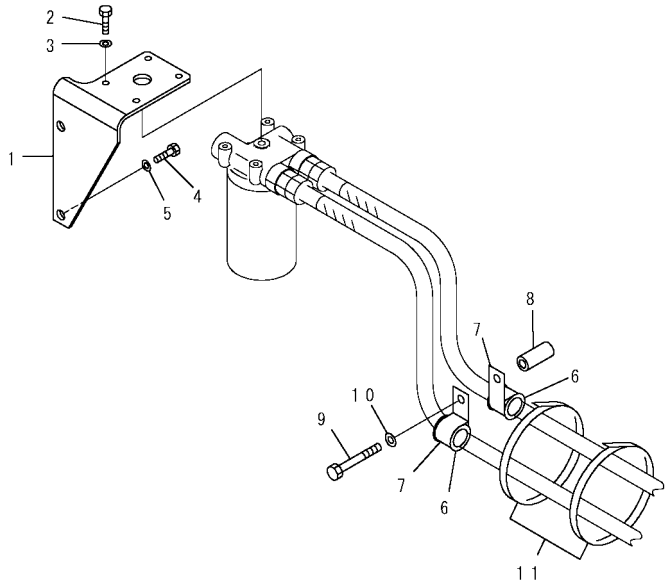

FIG NO. : B0100-02A0

INDEX	PART NO.	DESCRIPTION	Q'TY	SERIAL NO.
1	20Y-01-31161	BRACKET	1	DBB0001~
2	01010-80825	BOLT	4	DBB0001~
3	01643-30823	WASHER	4	DBB0001~
4	01010-81230	BOLT	2	DBB0001~
5	01643-31232	WASHER	2	DBB0001~
6	07095-20627	CUSHION	2	DBB0001~
7	04434-53412	CLIP	2	DBB0001~
8	195-979-5190	COLLAR	1	DBB0001~
9	01010-81275	BOLT	1	DBB0001~
10	01643-31232	WASHER	1	DBB0001~
11	08034-20536	BAND	2	DBB0001~

FIG. B0200-01A0 AIR CLEANER CONNECTION

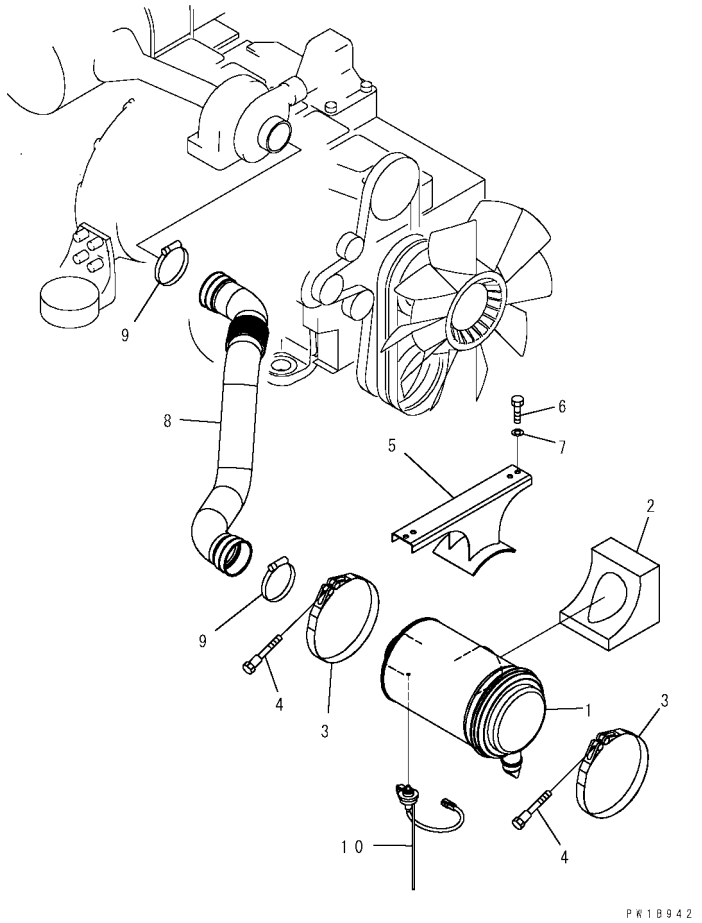

INDEX	PART NO.	DESCRIPTION	Q'TY	SERIAL NO.
1	6738-81-7300	AIR CLEANER	1	DBB0001~
2	20Y-54-63110	SEAL	1	DBB0001~
3	6131-11-4520	BAND ASS'Y	2	DBB0001~
4	6643-11-4641	BOLT	2	DBB0001~
5	20Y-54-61281	FRAME	1	DBB0001~
6	01010-81230	BOLT	4	DBB0001~
7	01643-31232	WASHER	4	DBB0001~
8	20Y-01-31151	HOSE	1	DBB0001~
9	07299-00105	CLAMP	2	DBB0001~
10	7861-93-1420	SENSOR	1	DBB0001~

FIG. BO400-01A0 FUEL CONTROL

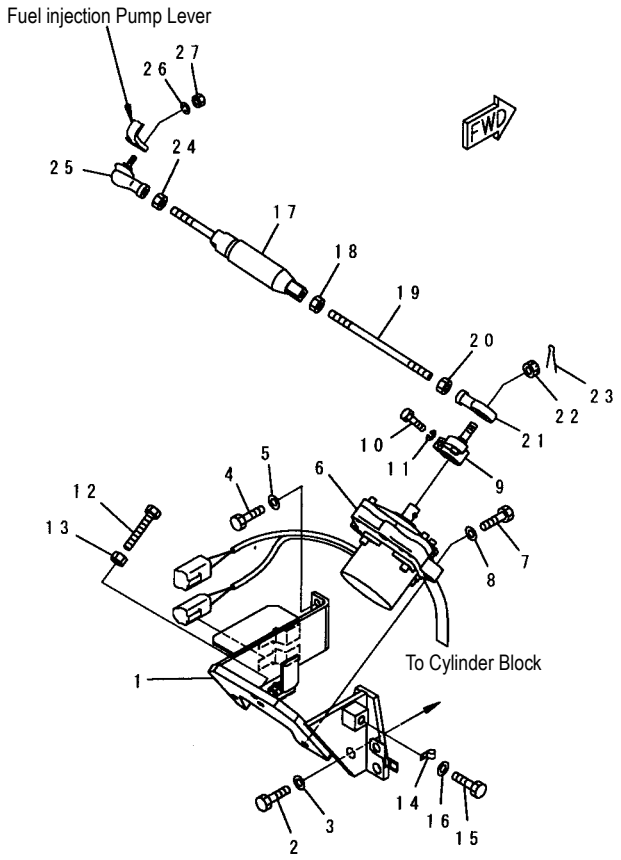

00017688

FIG NO. : BO400-01A0

INDEX	PART NO.	DESCRIPTION	Q'TY	SERIAL NO.
1	20Y-43-31310	BRACKET	1	DBB0001~DBB4708
	20Y-43-31311	BRACKET	1	DBB4709~
2	01010-81230	BOLT	1	DBB0001~
3	01643-31232	WASHER	1	DBB0001~
4	01010-80820	BOLT	2	DBB0001~
5	01643-30823	WASHER	2	DBB0001~
6	7834-41-2000	MOTOR ASS'Y	1	DBB0001~DBB4708
	7834-41-2002	MOTOR ASS'Y	1	DBB4709~
7	01010-81040	BOLT	3	DBB0001~
8	01643-31032	WASHER	3	DBB0001~
9	20Y-43-12143	LEVER	1	DBB0001~
10	01010-81030	BOLT	1	DBB0001~
11	01602-21030	WASHER	1	DBB0001~
12	01016-51070	BOLT	1	DBB0001~
13	01580-11008	NUT	1	DBB0001~
14	04434-50812	CLIP	1	DBB0001~
15	01010-81220	BOLT	1	DBB0001~
16	01643-31232	WASHER	1	DBB0001~
17	20Y-43-23441	SPRING ASS'Y	1	DBB0001~
18	01582-11008	NUT	1	DBB0001~
19	04248-31018	ROD	1	DBB0001~
20	01508-41006	NUT	1	DBB0001~
21	04250-91056	END	1	DBB0001~
22	01593-31008	NUT	1	DBB0001~
23	04050-12018	PIN	1	DBB0001~
24	01582-11008	NUT	1	DBB0001~
25	20Y-43-12180	JOINT	1	DBB0001~
26	01602-20619	WASHER	1	DBB0001~
27	01580-10605	NUT	1	DBB0001~

FIG. B0920-01A0 CORROSION ASS'Y

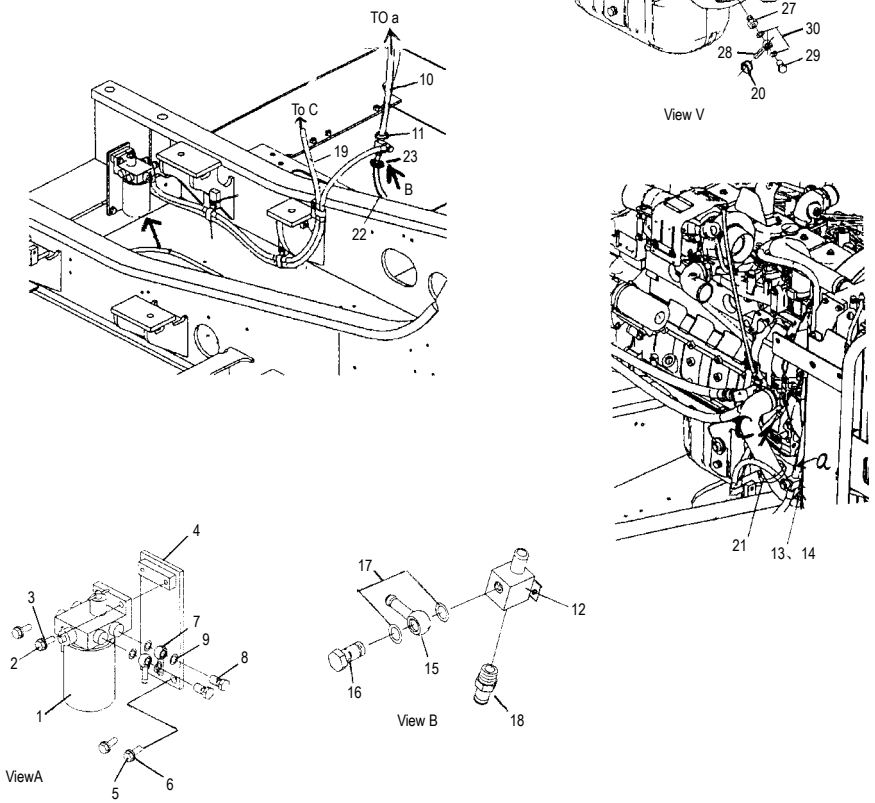

INDEX	PART NO.	DESCRIPTION	Q'TY	SERIAL NO.
1	6738-61-8100	CORROSION ASS'Y	1	DBB0001~
1A	600-411-1191	. CORROSION RESISTING FILTER	1	DBB0001~
2	01010-81030	BOLT	2	DBB0001~
3	01643-31032	WASHER	2	DBB0001~
4	20Y-01-31230	BRACKET	1	DBB0001~
5	01010-81230	BOLT	2	DBB0001~
6	01643-31232	WASHER	2	DBB0001~
7	205-04-62150	JOINT	2	DBB0001~
8	07206-31014	JOINT	2	DBB0001~
9	07005-01412	GASKET	4	DBB0001~
10	09483-10414	HOSE	1	DBB0001~
11	09480-10100	CLAMP	2	DBB0001~
12	20Y-01-31240	BLOCK	1	DBB0001~
13	01010-81025	BOLT	1	DBB0001~
14	01643-31032	WASHER	1	DBB0001~
15	205-04-62150	JOINT	1	DBB0001~
16	07206-31014	JOINT	1	DBB0001~
17	07005-01412	GASKET	2	DBB0001~
18	20T-54-42510	NIPPLE	1	DBB0001~
19	09483-10314	HOSE	1	DBB0001~
20	07281-00197	CLAMP	2	DBB0001~
21	08034-20536	BAND	1	DBB0001~
22	09483-10313	HOSE	1	DBB0001~
23	07281-00197	CLAMP	2	DBB0001~
24	04435-51812	CLIP	3	DBB0001~
25	01010-81230	BOLT	3	DBB0001~
26	01643-31232	WASHER	3	DBB0001~
27	6151-71-5910	NIPPLE	1	DBB0001~
28	205-04-62150	JOINT	1	DBB0001~
29	07206-31014	JOINT	1	DBB0001~
30	0700501412	GASKET	2	DBB0001~

COOLING SYSTEM

FIG. C0100-01A0A COOLING (RADIATOR) (WITH AIR CONDITIONER)

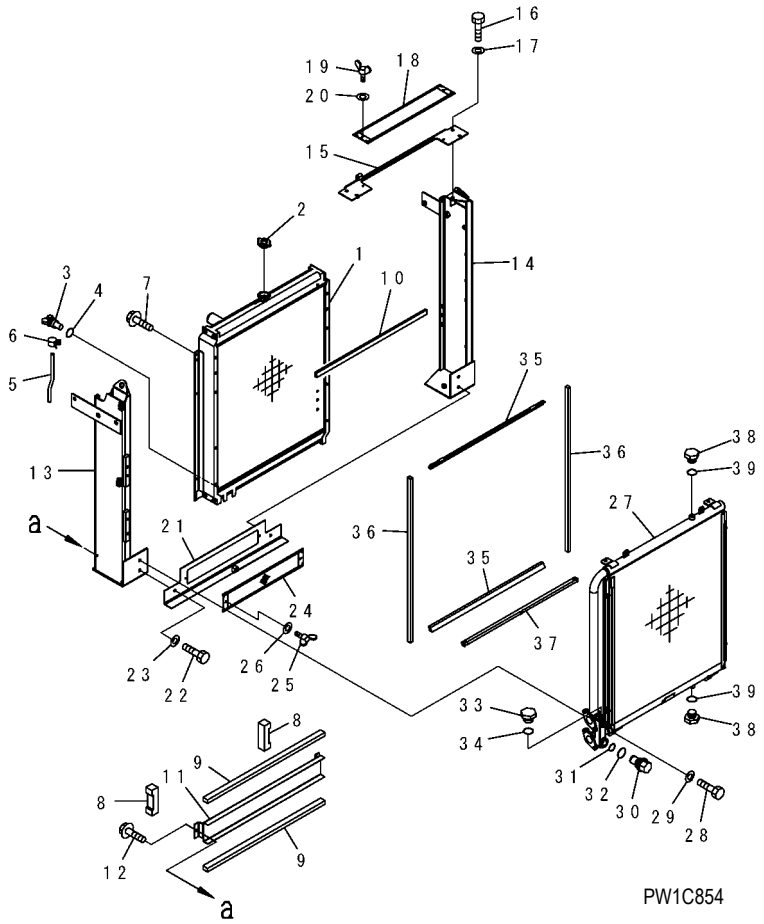

FIG NO. : C0100-01A0A

INDEX	PART NO.	DESCRIPTION	Q'TY	SERIAL NO.
1	20Y-03-31111	RADIATOR CORE ASS' Y	1	DBB0001~
2	20Y-03-22110	CAP	1	DBB0001~
3	20Y-03-21981	PLUG	1	DBB0001~
4	07000-11007	. O–RING	1	DBB0001~
5	203-03-41410	HOSE	1	DBB0001~
6	20Y-03-11330	CLIP	1	DBB0001~
7	01435-20816	BOLT	8	DBB0001~
8	20Y-03-31242	SEAL	2	DBB0001~
9	20Y-03-31252	SEAL	2	DBB0001~
10	20Y-03-31260	SEAL	1	DBB0001~
11	20Y-03-31490	BRACKET	1	DBB0001~
12	01435-20816	BOLT	2	DBB0001~
13	20Y-03-31152	FRAME	1	DBB0001~
14	20Y-03-31162	FRAME	1	DBB0001~
15	20Y-03-31170	FRAME	1	DBB0001~
16	01010-81025	BOLT	1	DBB0001~
17	01643-31032	WASHER	1	DBB0001~
18	22U-03-21191	NET	1	DBB0001~
19	01434-10616	BOLT, WING	2	DBB0001~
20	01643-30623	WASHER	2	DBB0001~
21	20Y-03-31181	PLATE	1	DBB0001~
22	01010-81025	BOLT	2	DBB0001~
23	01643-31032	WASHER	2	DBB0001~
24	20Y-03-31420	NET	1	DBB0001~
25	01434-10616	BOLT, WING	2	DBB0001~
26	01643-30623	WASHER	2	DBB0001~
27	20Y-03-31610	OIL COOLER ASS' Y	1	DBB0001~
28	01010-81030	BOLT	4	DBB0001~
29	01643-31032	WASHER	4	DBB0001~
30	20Y-03-31480	VALVE ASS' Y	1	DBB0001~
31	07000-12020	. O–RING	1	DBB0001~
32	07002-13034	O–RING	1	DBB0001~
33	07040-11812	PLUG	1	DBB0001~
34	07002-11823	O–RING	1	DBB0001~
35	22U-03-21740	SHEET	2	DBB0001~
36	20Y-03-31290	SEAL	2	DBB0001~
37	22U-03-21760	SHEET	1	DBB0001~
38	07040-11409	PLUG	2	DBB0001~
39	07002-11423	O–RING	2	DBB0001~

FIG. CO100-02A0 COOLING (AFTER COOLER AND CONDENSER) (WITH AIR CONDITIONER)

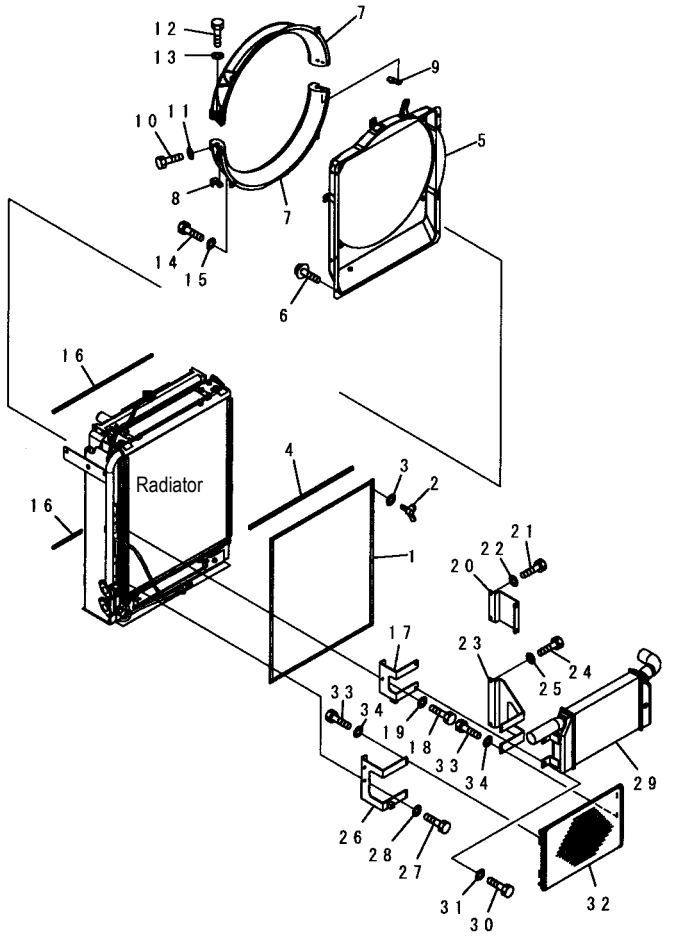

INDEX	PART NO.	DESCRIPTION	Q'TY	SERIAL NO.
1	20Y-03-31140	NET	1	DBB0001~
2	01434-10616	BOLT, WING	2	DBB0001~
3	01643-30623	WASHER	2	DBB0001~
4	20Y-03-31310	SEAL	1	DBB0001~
5	20Y-03-31131	SHROUD	1	DBB0001~
6	01435-20816	BOLT	6	DBB0001~
7	22U-03-21321	SHROUD	2	DBB0001~
8	22U-03-21770	BRACKET	1	DBB0001~
9	22U-03-21780	BRACKET	1	DBB0001~
10	01010-81020	BOLT	2	DBB0001~
11	01643-31032	WASHER	2	DBB0001~
12	01010-81030	BOLT	4	DBB0001~
13	01643-31032	WASHER	4	DBB0001~
14	01010-81020	BOLT	4	DBB0001~
15	203-54-56970	WASHER	4	DBB0001~
16	20Y-03-14110	SEAL	2	DBB0001~
17	20Y-03-31351	BRACKET	1	DBB0001~
18	01010-81020	BOLT	2	DBB0001~
19	01643-31032	WASHER	2	DBB0001~
20	20Y-03-31361	WASHER	1	DBB0001~
21	01010-81025	BOLT	2	DBB0001~
22	01643-31032	WASHER	2	DBB0001~
23	20Y-979-7390	BRACKET	1	DBB0001~
24	01010-81025	BOLT	2	DBB0001~
25	01643-31032	WASHER	2	DBB0001~
26	20Y-979-7380	BRACKET	1	DBB0001~
27	01010-81020	BOLT	2	DBB0001~
28	01643-31032	WASHER	2	DBB0001~
29	6738-61-4110	AFTER COOLER ASS'Y	1	DBB0001~
30	01010-81030	BOLT	4	DBB0001~
31	01643-31032	WASHER	4	DBB0001~
32	20Y-979-6131	CONDENSER ASS'Y	1	DBB0001~DBB4708
	208-979-7520	CONDENSER ASS'Y	1	DBB4709~
33	01010-80616	BOLT	8	DBB0001~
34	01643-30623	WASHER	8	DBB0001~

FIG. C0100-03A0 COOLING (PIPING, SUB TANK AND RADIATOR MOUNT) (WITH AIR CONDITIONER)

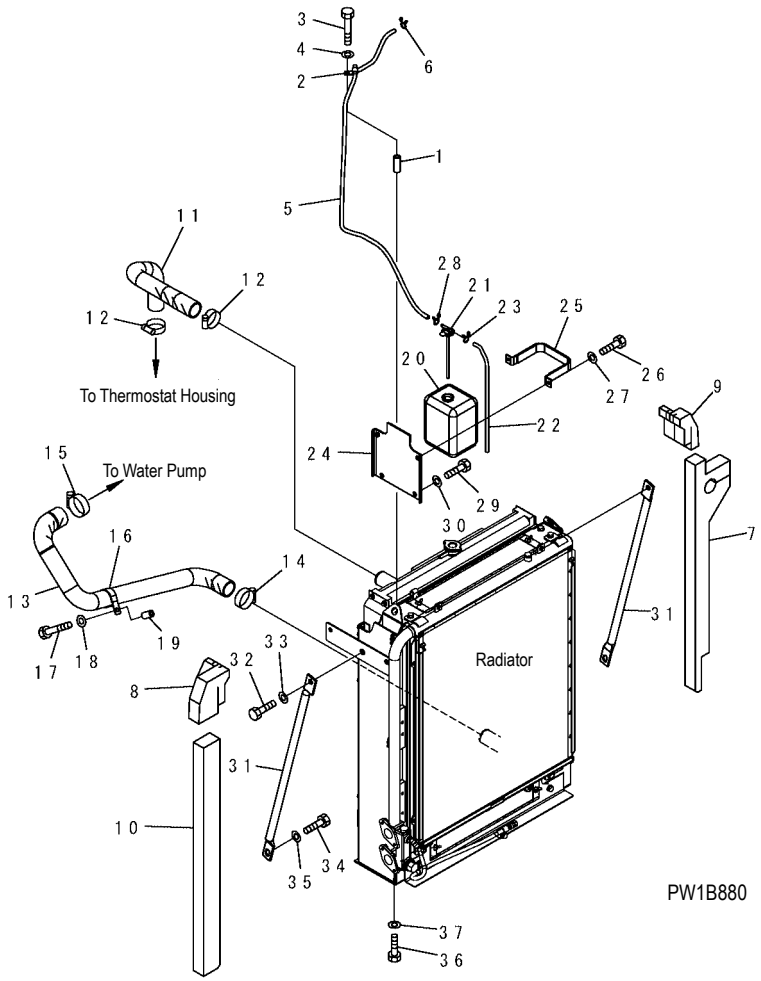

INDEX	PART NO.	DESCRIPTION	Q'TY	SERIAL NO.
1	175-61-17240	COLLAR	1	DBB0001~
2	04434-51210	CLIP	1	DBB0001~
3	01010-81090	BOLT	1	DBB0001~
4	01643-31032	WASHER	1	DBB0001~
5	20Y-03-31470	HOSE	1	DBB0001~
6	206-03-43340	CLIP	1	DBB0001~
7	20Y-03-31331	SEAL	1	DBB0001~
8	20Y-03-31321	SEAL	1	DBB0001~
9	20Y-03-31450	SHEET	1	DBB0001~
10	20Y-03-31460	SHEET	1	DBB0001~
11	20Y-03-31221	HOSE	1	DBB0001~
12	07289-00055	CLAMP	2	DBB0001~
13	20Y-03-31230	HOSE	1	DBB0001~
14	07289-00055	CLAMP	1	DBB0001~
15	07289-00070	CLAMP	1	DBB0001~
16	208-62-38370	CLIP	1	DBB0001~
17	01010-81055	BOLT	1	DBB0001~
18	01643-31032	WASHER	1	DBB0001~
19	22D-62-18450	SPACER	1	DBB0001~
20	20Y-06-15240	TANK ASS' Y	1	DBB0001~
21	205-03-71532	.CAP	1	DBB0001~
	205-03-71540	..PACKING	1	DBB0001~
22	208-03-58290	HOSE	1	DBB0001~
23	206-03-43340	CLIP	1	DBB0001~
24	20Y-03-31341	BRACKET	1	DBB0001~
25	203-03-56650	BRACKET	1	DBB0001~
26	01010-80820	BOLT	2	DBB0001~
27	01643-30823	WASHER	2	DBB0001~
28	206-03-43340	CLIP	1	DBB0001~
29	01010-81225	BOLT	2	DBB0001~
30	01643-31232	WASHER	2	DBB0001~
31	20Y-03-31210	STAY	2	DBB0001~
32	01010-81635	BOLT	2	DBB0001~
33	01643-31645	WASHER	2	DBB0001~
34	01010-81635	BOLT	2	DBB0001~
35	21T-54-16150	WASHER	2	DBB0001~
36	01016-51250	BOLT	4	DBB0001~
37	01643-31232	WASHER	4	DBB0001~

FIG. C0100-04A0 COOLING (AFTER COOLER PIPING) (WITH AIR CONDITIONER)

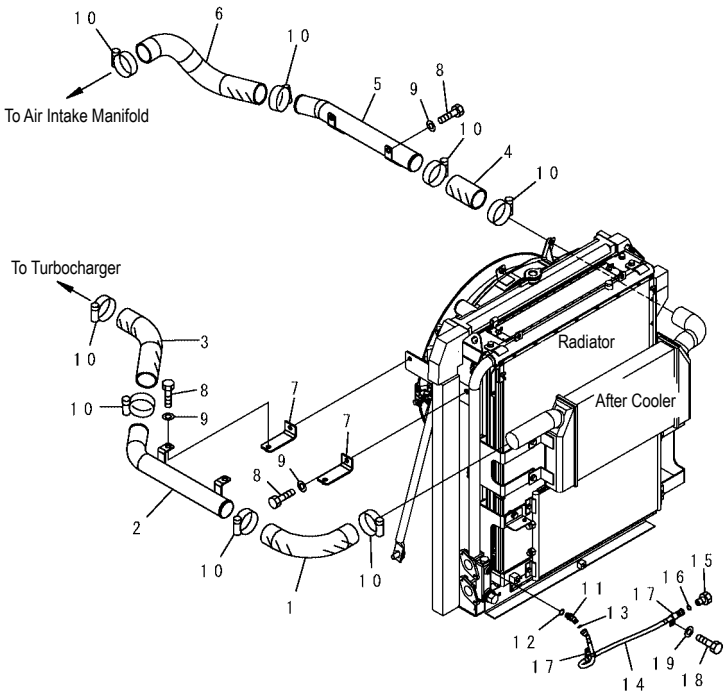

PW1B881

FIG NO. : C0100-04A0

INDEX	PART NO.	DESCRIPTION	Q'TY	SERIAL NO.
1	6738-11-4840	HOSE	1	DBB0001~
2	6738-11-4880	TUBE	1	DBB0001~
3	6738-11-4810	HOSE	1	DBB0001~
4	6738-11-4720	HOSE	1	DBB0001~
5	6738-11-4890	TUBE	1	DBB0001~
6	6738-11-4870	HOSE	1	DBB0001~
7	20Y-01-31131	BRACKET	2	DBB0001~
8	01010-81230	BOLT	6	DBB0001~
9	01643-31232	WASHER	6	DBB0001~
10	07299-00070	CLAMP	8	DBB0001~
11	11Y-62-12240	ELBOW	1	DBB0001~
12	07002-11423	O–RING	1	DBB0001~
13	02896-11008	O–RING	1	DBB0001~
14	02764-002A7	HOSE	1	DBB0001~
15	07376-70210	PLUG	1	DBB0001~
16	02896-11008	O–RING	1	DBB0001~
17	04434-51310	CLIP	2	DBB0001~
18	01010-81025	BOLT	1	DBB0001~
19	01643-31032	WASHER	1	DBB0001~

FIG. C0310-01A0 FAN GUARD (WITH AIR CONDITIONER)

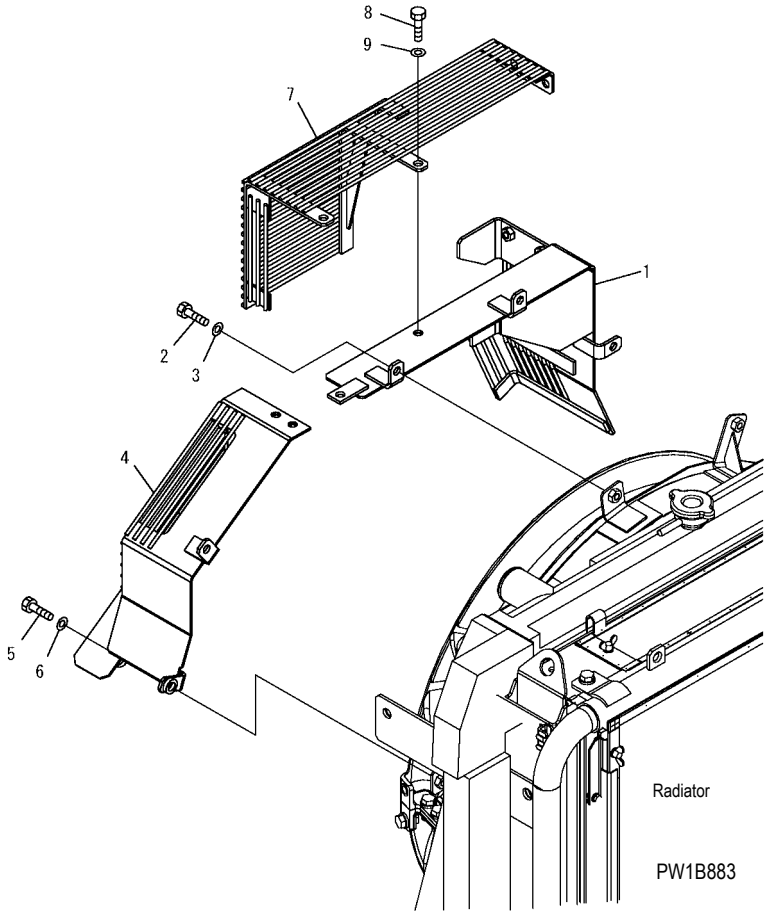

FIG NO. : C0310-01A0

INDEX	PART NO.	DESCRIPTION	Q'TY	SERIAL NO.
1	20Y-03-31382	GUARD	1	DBB0001~
2	01010-81030	BOLT	4	DBB0001~
3	01643-31032	WASHER	4	DBB0001~
4	20Y-03-31392	GUARD	1	DBB0001~
5	01010-81030	BOLT	2	DBB0001~
6	01643-31032	WASHER	2	DBB0001~
7	20Y-03-31372	GUARD	1	DBB0001~
8	01010-81030	BOLT	4	DBB0001~
9	01643-31032	WASHER	4	DBB0001~

FIG. C0310-01A1 FAN GUARD (OPT)

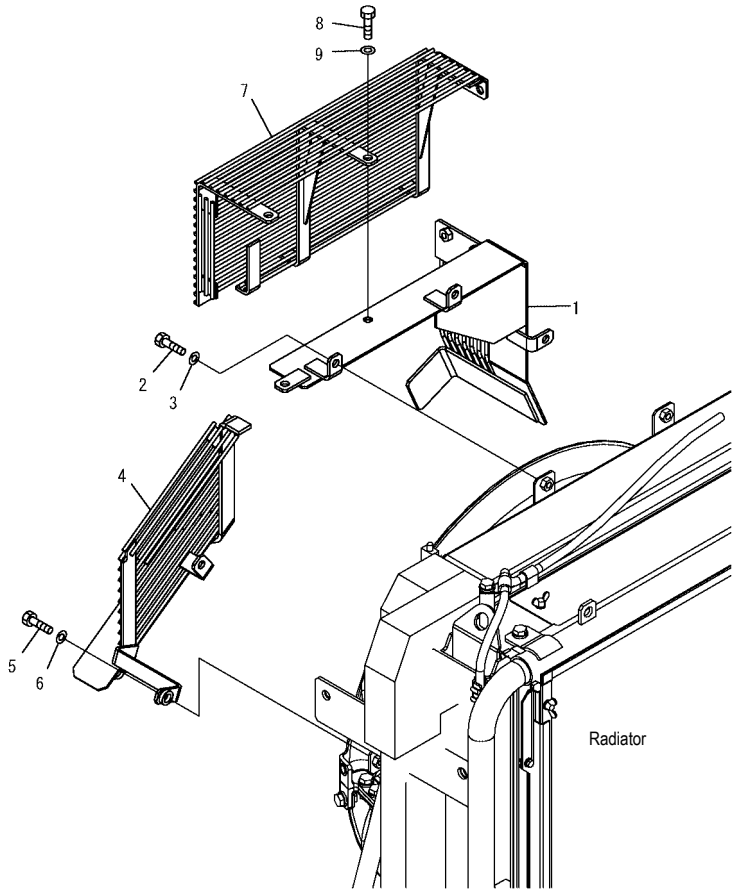

FIG NO. : C0310-01A1

INDEX	PART NO.	DESCRIPTION	Q'TY	SERIAL NO.
1	20Y-03-31520	GUARD	1	DBB0001~
2	01010-81030	BOLT	4	DBB0001~
3	01643-31032	WASHER	4	DBB0001~
4	20Y-03-31392	GUARD	1	DBB0001~
5	01010-81030	BOLT	2	DBB0001~
6	01643-31032	WASHER	2	DBB0001~
7	20Y-03-31510	GUARD	1	DBB0001~
8	01010-81030	BOLT	4	DBB0001~
9	01643-31032	WASHER	4	DBB0001~

FUEL TANK AND RELATED PARTS

FIG. D0100-01A0 FUEL TANK

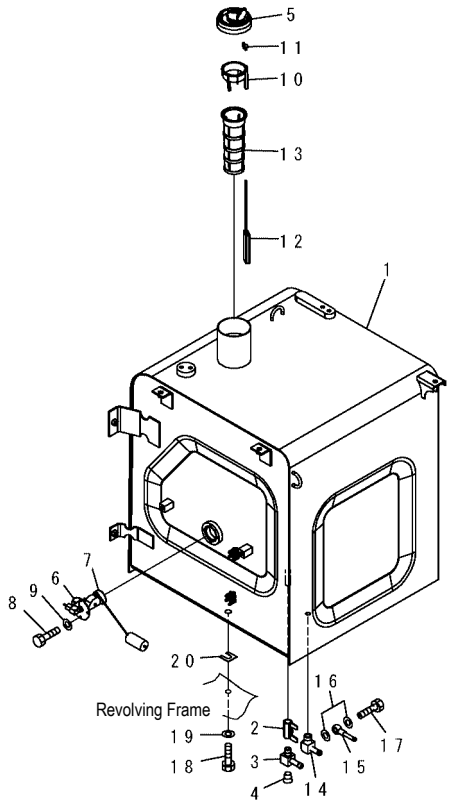

PW1B959

INDEX	PART NO.	DESCRIPTION	Q'TY	SERIAL NO.
1	20Y-04-31222	TANK	1	DBB0001~
2	07700-50240	VALVE	1	DBB0001~
3	22U-04-21120	TEE	1	DBB0001~
4	07043-A0108	PLUG	1	DBB0001~
5	20Y-04-11160	CAP	1	DBB0001~
	20Y-04-11240	. PACKING	1	DBB0001~
6	7861-92-5810	SENSOR	1	DBB0001~
7	07000-13050	O–RING	1	DBB0001~
8	01010-80612	BOLT	4	DBB0001~
9	01643-30623	WASHER	4	DBB0001~
	22U-04-21241	STRAINER ASS'Y	1	DBB0001~
	22U-04-21200	. FLOAT ASS'Y	1	DBB0001~
10	22U-04-21210	.. GUIDE	1	DBB0001~
11	20Y-04-21580	.. CAP	1	DBB0001~
12	22U-04-21220	..FLOAT	1	DBB0001~
13	22U-04-21231	.STRAINER	1	DBB0001~
14	20Y-04-21131	ELBOW	1	DBB0001~
15	20Y-04-21141	TUBE	1	DBB0001~
16	07005-00812	GASKET	2	DBB0001~
17	07206-30508	BOLT	1	DBB0001~
18	01010-81635	BOLT	6	DBB0001~
19	01643-31645	WASHER	6	DBB0001~
20	195-03-11570	SH1M, 1.0MM	6	DBB0001~

FIG. D0200-01A0 FUEL LINES

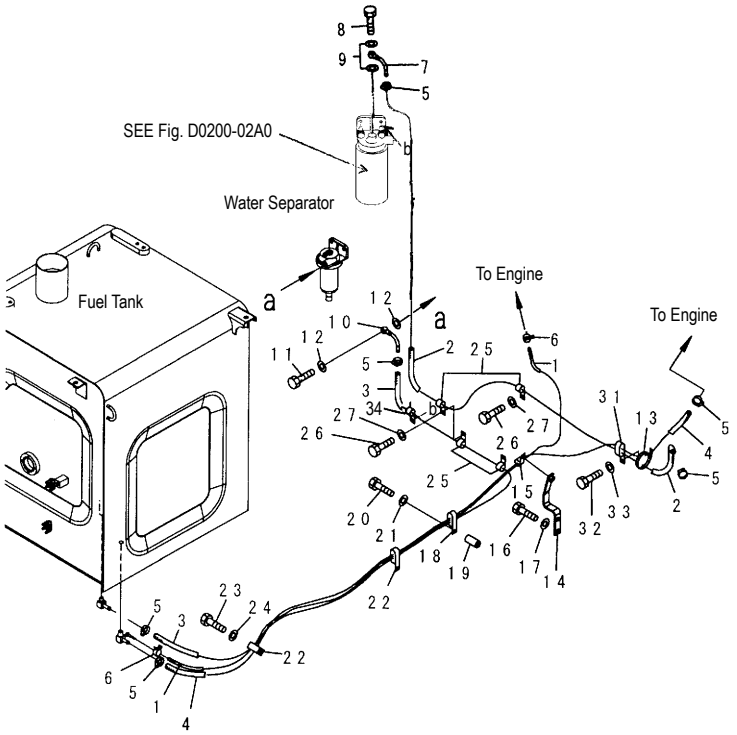

INDEX	PART NO.	DESCRIPTION	Q'TY	SERIAL NO.
	20Y-04-31181	HOSE ASS'Y	1	DBB0001~
1	07270-50422	. HOSE	1	DBB0001~
2	07288-01015	. HOSE	1	DBB0001~
3	07288-01028	. HOSE	1	DBB0001~
4	07288-01029	. HOSE	1	DBB0001~
5	07281-00197	CLAMP	6	DBB0001~
6	07285-00080	CLIP	2	DBB0001~
7	203-04-56150	JOINT	1	DBB0001~
8	07206-31014	BOLT	1	DBB0001~
9	07005-01412	GASKET	2	DBB0001~
10	22U-04-21170	JOINT	1	DBB0001~
11	07206-31014	BOLT	1	DBB0001~
12	07005-01412	GASSKET	2	DBB0001~
13	08034-20536	BAND	1	DBB0001~
14	20Y-04-31120	BRACKET	1	DBB0001~
15	04434-52312	CLIP	1	DBB0001~
16	01010-81225	BOLT	3	DBB0001~
17	01643-31232	WASHER	3	DBB0001~
18	04435-51912	CLIP	1	DBB0001~
19	154-979-1480	COLLAR	1	DBB0001~
20	01010-81275	BOLT	1	DBB0001~
21	01643-31232	WASHER	1	DBB0001~
22	04435-51912	CLIP	2	DBB0001~
23	01010-81225	BOLT	2	DBB0001~
24	01643-31232	WASHER	2	DBB0001~
25	04434-51612	CLIP	4	DBB0001~
26	01010-81225	BOLT	3	DBB0001~
27	01643-31232	WASHER	3	DBB0001~
31	04435-51812	CLIP	1	DBB0001~
32	01010-81220	BOLT	1	DBB0001~
33	01643-31232	WASHER	1	DBB0001~
34	04435-51910	CLIP	1	DBB0001~

FIG NO. : D0200-02A0

FIG. D0200-02A0 FUEL LINES (WATER SEPARATOR+FUEL FILTER)

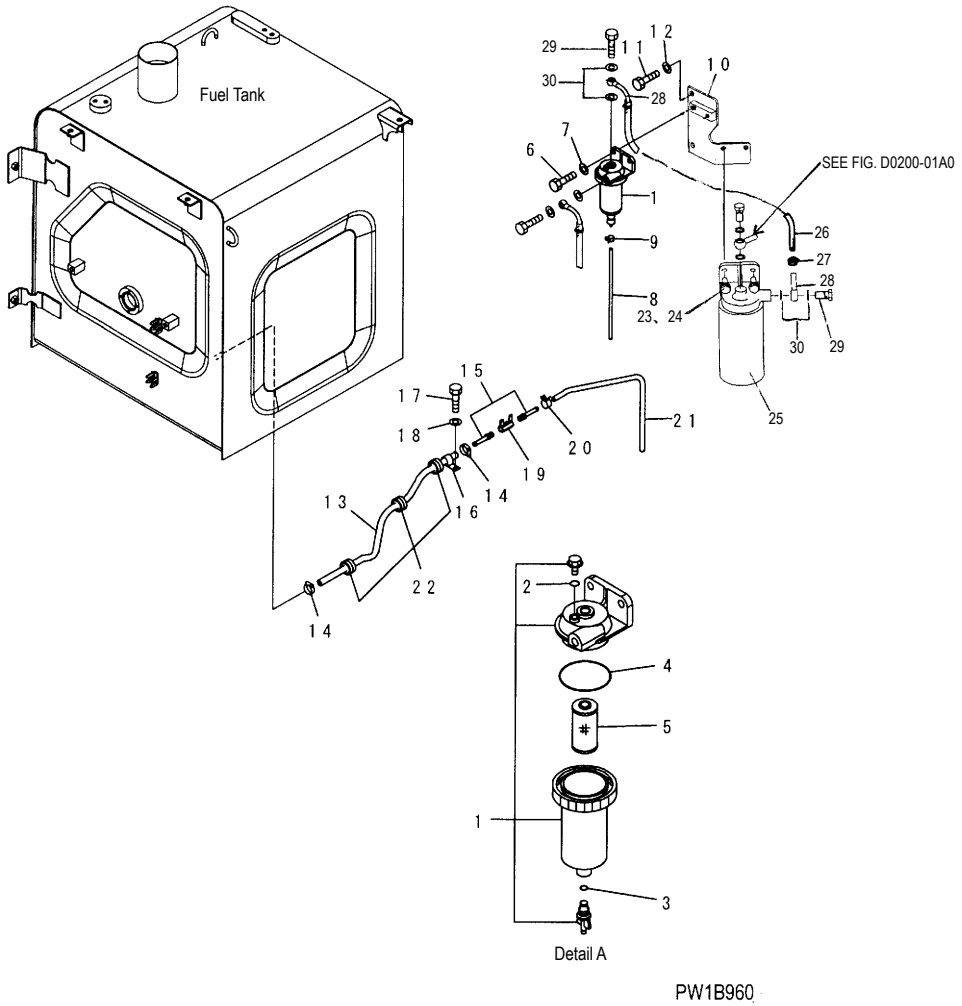

INDEX	PART NO.	DESCRIPTION	Q'TY	SERIAL NO.
1	22U-04-21131	WATER SEPARATOR	1	DBB0001~
2	07000-11006	. O–RING	1	DBB0001~
3	07000-11007	. O–RING	1	DBB0001~
4	07000-12065	. O–RING	1	DBB0001~
5	22U-04-21260	. ELEMENT	1	DBB0001~
6	01010-81025	BOLT	2	DBB0001~
7	01643-31032	WASHER	2	DBB0001~
8	07270-00630	TUBE	1	DBB0001~
9	07285-00080	CLIP	1	DBB0001~
10	20Y-04-31240	BRACKET	1	DBB0001~
11	01010-81225	BOLT	2	DBB0001~
12	01643-31232	WASHER	2	DBB0001~
13	07288-01008	HOSE	1	DBB0001~
14	07281-00197	CLAMP	2	DBB0001~
15	20Y-04-31170	NIPPLE	2	DBB0001~
16	04434-51612	CLIP	1	DBB0001~
17	01010-81225	BOLT	1	DBB0001~
18	01643-31232	WASHER	1	DBB0001~
19	07700-50240	VALVE	1	DBB0001~
20	07285-00115	CLIP	1	DBB0001~
21	07270-01070	TUBE	1	DBB0001~
22	205-977-7310	GROMMET	3	DBB0001~
23	01010-81035	BOLT	2	DBB0001~
24	01643-31032	WASHER	2	DBB0001~
25	600-311-9101	FUEL FILTER	1	DBB0001~
25A	600-311-9121	. FUEL FILTER	1	DBB0001~
26	20Y-04-31190	HOSE	1	DBB0001~
27	07281-00197	CLAMP	2	DBB0001~
28	205-04-62150	JOINT	2	DBB0001~
29	07206-31014	BOLT	2	DBB0001~
30	0700501412	GASKET	4	DBB0001~

ELECTRICAL SYSTEM

FIG. E0100-01A1 BATTERY

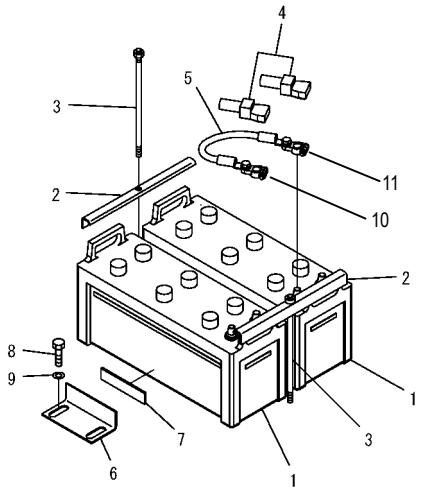

PW1C071

FIG NO. : E0100-01A1

INDEX	PART NO.	DESCRIPTION	Q'TY	SERIAL NO.
1	20Y-06-D1150	BATTERY	2	DBB0001~
2	20Y-06-D1110	CLAMP	2	DBB0001~
3	202-09-11120	BOLT	2	DBB0001~
4	08038-42511	CAP	2	DBB0001~
5	08028-63035	WIRE	1	DBB0001~
6	207-06-61461	BRACKET	1	DBB0001~
7	207-06-51330	. SHEET	1	DBB0001~
8	01010-81225	BOLT	2	DBB0001~
9	01643-31232	WASHER	2	DBB0001~
10	20Y-06-D1160	TERMINAL (+)	2	DBB0001~
11	20Y-06-D1170	TERMINAL (-)	2	DBB0001~

FIG. E0200-01A0 WIRING (STARTING HARNESS)

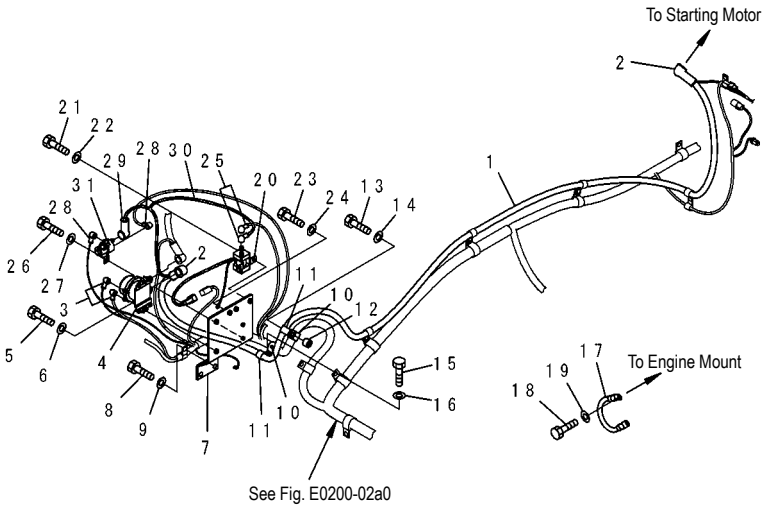

PW1B741

INDEX	PART NO.	DESCRIPTION	Q'TY	SERIAL NO.
1	20Y-06-31620	CABLE	1	DBB0001~
2	08038-00035	CAP	2	DBB0001~
3	08038-00519	CAP	2	DBB0001~
4	08088-30000	BATTERY RELEY	1	DBB0001~
5	01010-80830	BOLT	2	DBB0001~
6	01643-30823	WASHER	2	DBB0001~
7	20Y-06-31640	BRACKET	1	DBB0001~
8	01010-81225	BOLT	2	DBB0001~
9	01643-31232	WASHER	2	DBB0001~
10	04434-52512	CLIP	2	DBB0001~
11	04434-51912	CLIP	2	DBB0001~
12	144-947-3490	SPACER	1	DBB0001~
13	01010-81245	BOLT	1	DBB0001~
14	01643-31232	WASHER	1	DBB0001~
15	01010-81225	BOLT	1	DBB0001~
16	01643-31232	WASHER	1	DBB0001~
17	08028-43030	CABLE	1	DBB0001~
18	01010-81020	BOLT	2	DBB0001~
19	01643-31032	WASHER	2	DBB0001~
20	600-815-8941	SAFE RELAY	1	DBB0001~
21	01010-80820	BOLT	2	DBB0001~
22	01643-30823	WASHER	2	DBB0001~
23	01010-80820	BOLT	1	DBB0001~
24	01643-30823	WASHER	1	DBB0001~
25	08038-00519	CAP	2	DBB0001~
26	01010-80620	BOLT	2	DBB0001~
27	01643-30623	WASHER	2	DBB0001~
28	08038-00519	CAP	2	DBB0001~
29	08038-06031	CAP	1	DBB0001~
30	20Y-06-22872	CABLE	1	DBB0001~
31	600-815-2170	RELAY HEATER	1	DBB0001~

FIG. EO200-02A0 WIRING (MAIN HARNESS) (HARNESS AND CLIP)

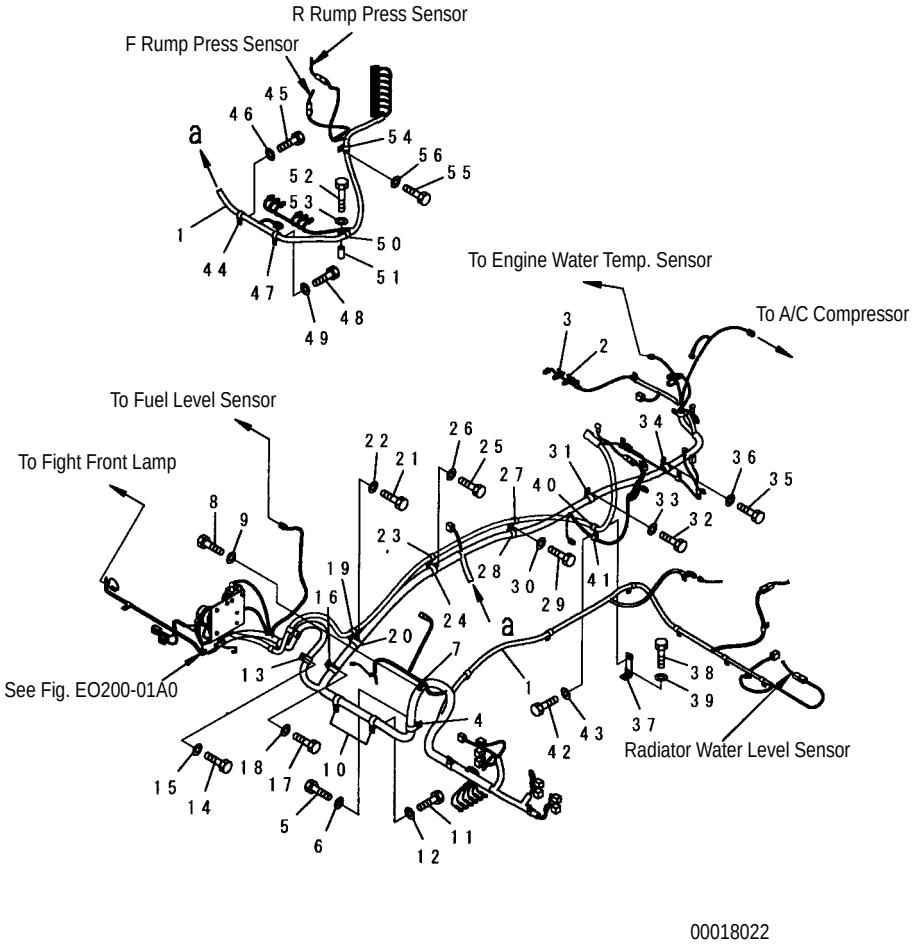

INDEX	PART NO.	DESCRIPTION	Q'TY	SERIAL NO.
1	20Y-06-31611	WIRING HARNESS	1	DBB0001~DBB4708
	20Y-06-31612	WIRING HARNESS	1	DBB4709~
2	20Y-62-22790	. BOLT, WING	1	DBB0001~
3	20Y-62-22830	. BOLT, WING	1	DBB0001~
4	04434-53412	CLIP	1	DBB0001~
5	01010-81225	BOLT	1	DBB0001~
6	01643-31232	WASHER	1	DBB0001~
7	04434-51012	CLIP	1	DBB0001~
8	01010-81225	BOLT	1	DBB0001~
9	01643-31232	WASHER	1	DBB0001~
10	04434-53412	CLIP	2	DBB0001~
11	01010-81225	BOLT	2	DBB0001~
12	01643-31232	WASHER	2	DBB0001~
13	04434-52512	CLIP	1	DBB0001~
14	01010-81225	BOLT	1	DBB0001~
15	01643-31232	WASHER	1	DBB0001~
16	04434-53412	CLIP	1	DBB0001~
17	01010-81225	BOLT	1	DBB0001~
18	01643-31232	WASHER	1	DBB0001~
19	04434-51912	CLIP	1	DBB0001~
20	04434-53412	CLIP	1	DBB0001~
21	01010-81225	BOLT	1	DBB0001~
22	01643-31232	WASHER	1	DBB0001~
23	04434-51912	CLIP	1	DBB0001~
24	04434-53412	CLIP	1	DBB0001~
25	01010-81225	BOLT	1	DBB0001~
26	01643-31232	WASHER	1	DBB0001~
27	04434-51912	GLIP	1	DBB0001~
28	04434-52712	CLIP	1	DBB0001~
29	01010-81225	BOLT	1	DBB0001~
30	01643-31232	WASHER	1	DBB0001~
31	04434-52712	CLIP	1	DBB0001~
32	01010-81225	BOLT	1	DBB0001~
33	01643-31232	WASHER	1	DBB0001~
34	04434-52712	CLIP	1	DBB0001~
35	01010-81225	BOLT	1	DBB0001
36	01643-31232	WASHER	1	DBB0001~
37	203-06-61730	BRACKET	1	DBB0001~
38	01010-81225	BOLT	1	DBB0001~
39	01643-31232	WASHER	1	DBB0001~
40	04434-51912	CLIP	1	DBB0001~

FIG. E0200-03A0 WIRING (MAIN HARNESS) (CLIP) (1/2)

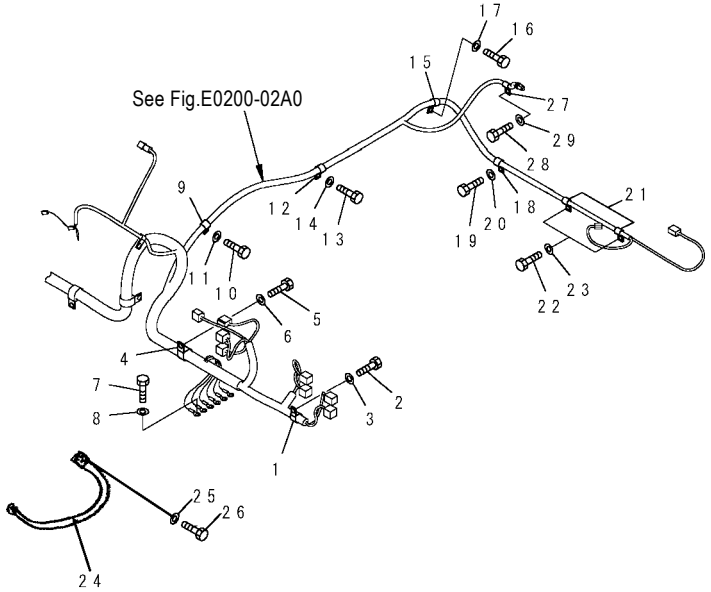

PW1B743

FIG NO. : E0200-03A0

INDEX	PART NO.	DESCRIPTION	Q'TY	SERIAL NO.
1	04434-52312	CLIP	1	DBB0001~
2	01010-81225	BOLT	1	DBB0001~
3	01643-31232	WASHER	1	DBB0001~
4	04434-53412	CLIP	1	DBB0001~
5	01010-81225	BOLT	1	DBB0001~
6	01643-31232	WASHER	1	DBB0001~
7	01010-81020	BOLT	6	DBB0001~
8	01643-31032	WASHER	6	DBB0001~
9	04434-51912	CLIP	1	DBB0001~
10	01010-81225	BOLT	1	DBB0001~
11	01643-31232	WASHER	1	DBB0001~
12	04434-51912	CLIP	1	DBB0001~
13	01010-81225	BOLT	1	DBB0001~
14	01643-31232	WASHER	1	DBB0001~
15	04434-51712	CLIP	1	DBB0001~
16	01010-81225	BOLT	1	DBB0001~
17	01643-31232	WASHER	1	DBB0001~
18	04434-51712	CLIP	1	DBB0001~
19	01010-81225	BOLT	1	DBB0001~
20	01643-31232	WASHER	1	DBB0001~
21	04434-51412	CLIP	2	DBB0001~
22	01010-81225	BOLT	2	DBB0001~
23	01643-31232	WASHER	2	DBB0001~
24	08028-43030	CABLE	1	DBB0001~
25	01010-81016	BOLT	1	DBB0001~
26	01643-31032	WASHER	1	DBB0001~
27	04434-51012	CLIP	1	DBB0001~
28	01010-81225	BOLT	1	DBB0001~
29	01643-31232	WASHER	1	DBB0001~

FIG. E0200-04A0 WIRING (MAIN HARNESS) (CLIP) (2/2)

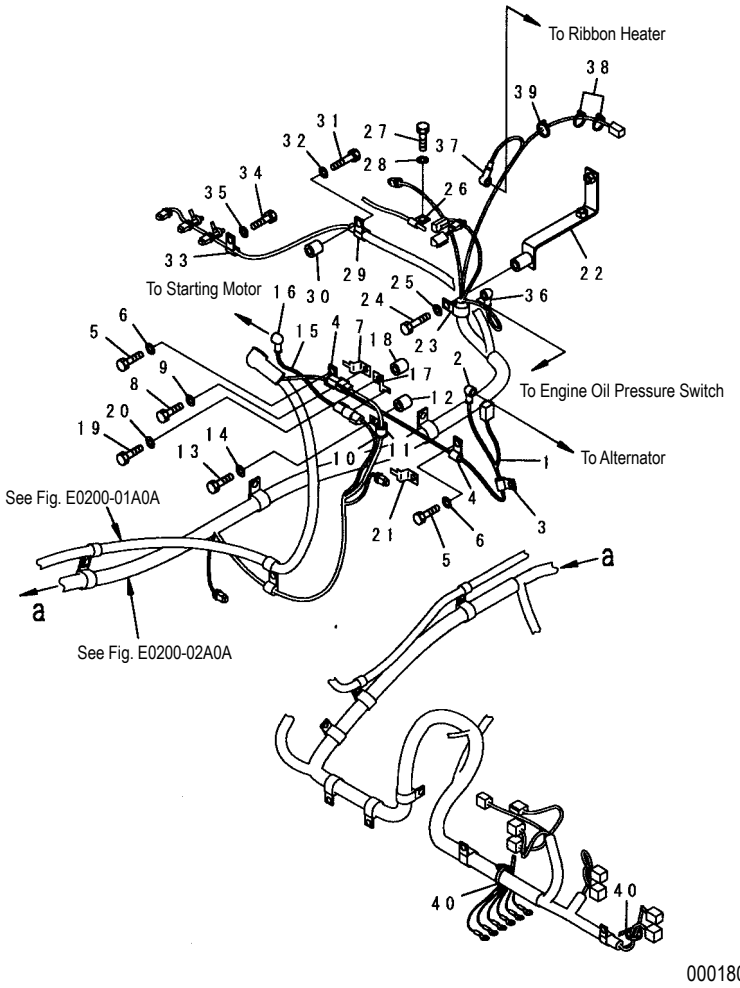

INDEX	PART NO.	DESCRIPTION	Q'TY	SERIAL NO.
1	22U-06-21420	WIRING HARNESS	1	DBB0001~DBB4708
	21K-06-71261	WIRING HARNESS	1	DBB4709~
2	08038-00519	CAP	1	DBB0001~
3	04434-51410	CLIP	2	DBB0001~
4	04434-51012	CLIP	2	DBB0001~
5	01010-81220	BOLT	2	DBB0001~
6	01643-31232	WASHER	1	DBB0001~
7	08053-01512	CLIP	1	DBB0001~
8	01010-81220	BOLT	1	DBB0001~
9	01643-31232	WASHER	1	DBB0001~
10	07095-20211	CUSHION	1	DBB0001~
11	04434-51712	CLIP	1	DBB0001~
12	195-33-11220	SPACER	1	DBB0001~
13	01010-81245	BOLT	1	DBB0001~
14	01643-31232	WASHER	1	DBB0001~
15	20Y-06-31630	CABLE	1	DBB0001~
16	08038-00519	CAP	1	DBB0001~
17	08193-21012	CLIP	1	DBB0001~
18	195-33-11220	SPACER	1	DBB0001~
19	01010-81245	BOLT	1	DBB0001~
20	01643-31232	WASHER	1	DBB0001~
21	08193-21012	CLIP	1	DBB0001~
22	20Y-06-31182	BRACKET	1	DBB0001~
23	04434-52112	CLIP	1	DBB0001~
24	01010-81265	BOLT	1	DBB0001~
25	01643-31232	WASHER	1	DBB0001~
26	04434-50612	CLIP	1	DBB0001~
27	01010-81225	BOLT	1	DBB0001~
28	01643-31232	WASHER	1	DBB0001~
29	04434-51712	CLIP	1	DBB0001~
30	20Y-03-11220	COLLAR	1	DBB0001~
31	01010-81265	BOLT	1	DBB0001~
32	01643-31232	WASHER	1	DBB0001~
33	04434-51712	CLIP	1	DBB0001~
34	01010-81225	BOLT	1	DBB0001~
35	01643-31232	WASHER	1	DBB0001~
36	08038-00519	CAP	1	DBB0001~
37	08038-00519	CAP	1	DBB0001~
38	08034-20536	BAND	2	DBB0001~
39	08034-20536	BAND	1	DBB0001~
40	08034-20536	BAND	2	DBB0001~

FIG. E0200-05A0 WIRING (BATTERY CASE)

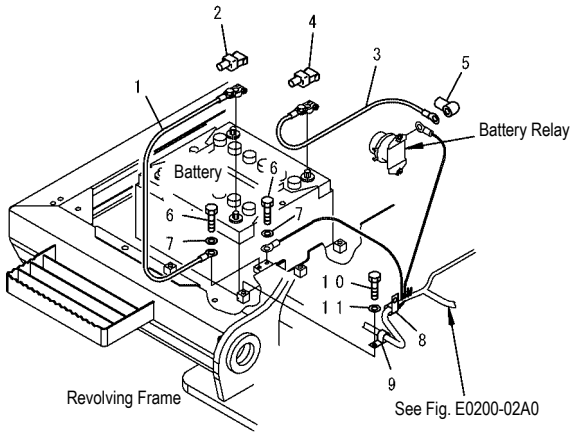

PW1B745

FIG NO. : E0200-05A0

INDEX	PART NO.	DESCRIPTION	Q'TY	SERIAL NO.
1	08028-43030	CABLE	1	DBB0001~
2	08038-22511	CAP	1	DBB0001~
3	08028-CC065	CABLE	1	DBB0001~
4	08038-42511	CAP	1	DBB0001~
5	08038-06031	CAP	1	DBB0001~
6	01010-81025	BOLT	2	DBB0001~
7	01643-31032	WASHER	2	DBB0001~
8	04434-51812	CLIP	1	DBB0001~
9	04434-51012	CLIP	1	DBB0001~
10	01010-81225	BOLT	1	DBB0001~
11	01643-31232	WASHER	1	DBB0001~

FIG. E0200-06A0 WIRING (WORKING LAMP, FRONT)

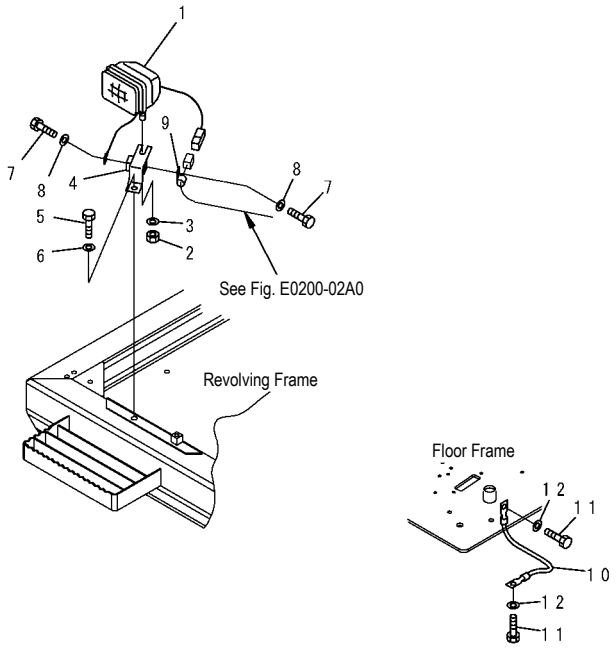

PW1B746

INDEX	PART NO.	DESCRIPTION	Q'TY	SERIAL NO.
1	20Y-06-25310	WORK LAMP ASS'Y	1	DBB0001~
	421-06-23330	. BULB, 70W, 24	1	DBB0001~
2	01582-11411	. NUT	1	DBB0001~
3	01643-31445	. WASHER	1	DBB0001~
4	20Y-06-31680	BRACKET	1	DBB0001~
5	01010-81230	BOLT	1	DBB0001~
6	01643-31232	WASHER	1	DBB0001~
7	01010-81220	BOLT	2	DBB0001~
8	01643-31232	WASHER	2	DBB0001~
9	04434-51012	CLIP	1	DBB0001~
10	08028-43030	CABLE	1	DBB0001~
11	01010-81016	BOLT	2	DBB0001~
12	01643-31032	WASHER	2	DBB0001~

FIG. E0310-01A0 ADDITIONAL WORK LAMP (OPT)

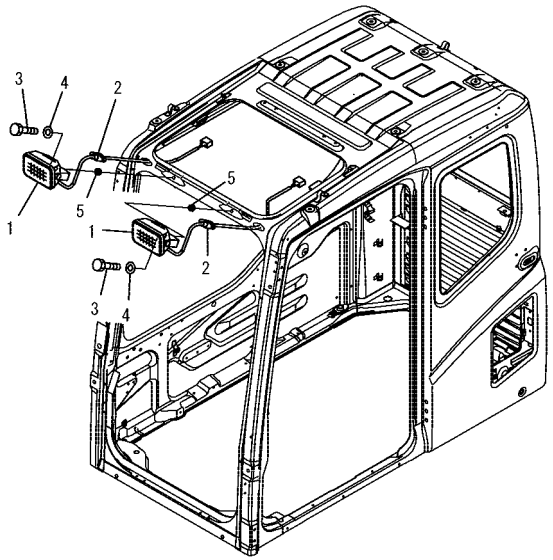

PW1C054

FIG NO. : E0310-01A0

INDEX	PART NO.	DESCRIPTION	Q'TY	SERIAL NO.
1	22B-54-17511	WORK LAMP ASS'Y	2	DBB0001~
2	22B-54-17271	.GROMMET	1	DBB0001~
	421-06-23330	. BULB, 70W, 24V	1	DBB0001~
3	01010-D1030	BOLT	2	DBB0001~
4	01643-71032	WASHER	2	DBB0001~
5	560-43-15220	WASHER	2	DBB0001~

FIG. E0310-01A1 ADDITIONAL WORK LAMP (FOR LEVEL-1 GUARD) (OPT)

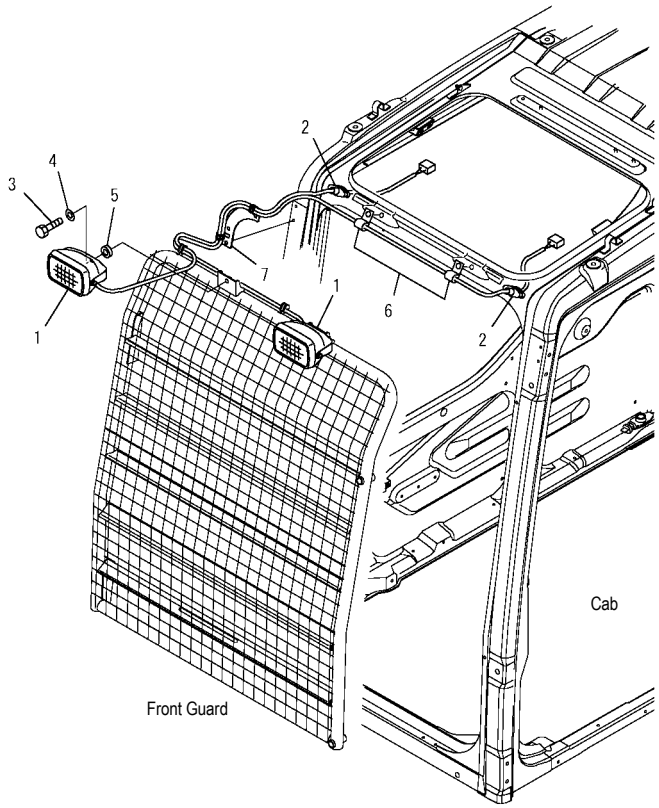

PW1C785

INDEX	PART NO.	DESCRIPTION	Q'TY	SERIAL NO.
1	20Y-54-54490	BORK LAMP ASS'Y	2	DBB0001~
2	22B-54-17271	. GROMMET	1	DBB0001~
	421-06-23330	. BULB, 70W	1	DBB0001~
3	01010-D1016	BOLT	2	DBB0001~
4	01643-71032	WASHER	2	DBB0001~
5	560-43-15220	WASSHER	2	DBB0001~
6	08036-10810	CLIP	2	DBB0001~
7	20Y-54-54480	PLATE	1	DBB0001~

FIG. E0320-01A0 REAR WARK LAMP (OPT)

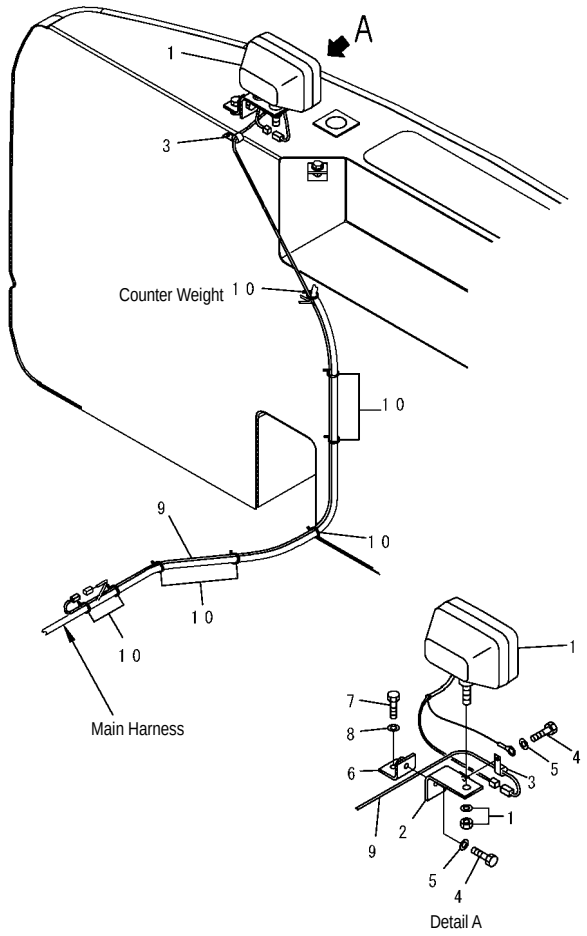

PW1C861

INDEX	PART NO.	DESCRIPTION	Q'TY	SERIAL NO.
1	20Y-06-25310	WORK LAMP ASS'Y	1	DBB0001~
	421-06-23330	.BULB, 70W	1	DBB0001~
2	20Y-06-21551	BRACKET	1	DBB0001~
3	21T-38-12270	CLIP	2	DBB0001~
4	01010-81225	BOLT	2	DBB0001~
5	01643-31232	WASHER	2	DBB0001~
6	20Y-06-21590	BRACKET	1	DBB0001~
7	01010-81225	BOLT	1	DBB0001~
8	01643-31232	WASHER	1	DBB0001~
9	20Y-06-31670	WIRE	1	DBB0001~
10	08034-20536	BAND	8	DBB0001~

FIG. E0340-01A0 BEACON (OPT)

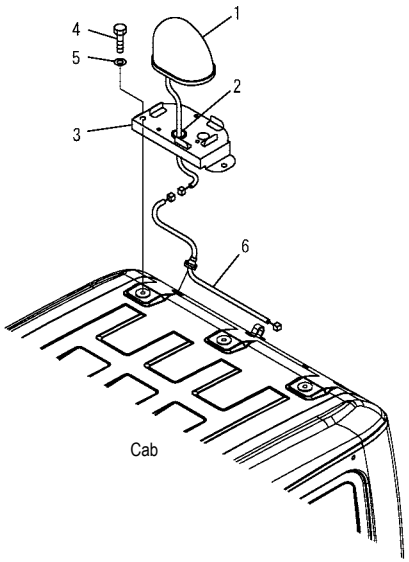

PW1C591

FIG NO. : E0340-01A0

INDEX	PART NO.	DESCRIPTION	Q'TY	SERIAL NO.
1	22B-54-17612	LAMP, BEACON	1	DBB0001~
2	08037-02512	GROMMET	1	DBB0001~
3	20Y-54-51782	BRACKET	1	DBB0001~
4	01010-D1220	BOLT	2	DBB0001~
5	01643-71232	WASHER	2	DBB0001~
6	22B-54-17640	WIRING HARNESS	1	DBB0001~

FIG. E0410-01A0 HORN

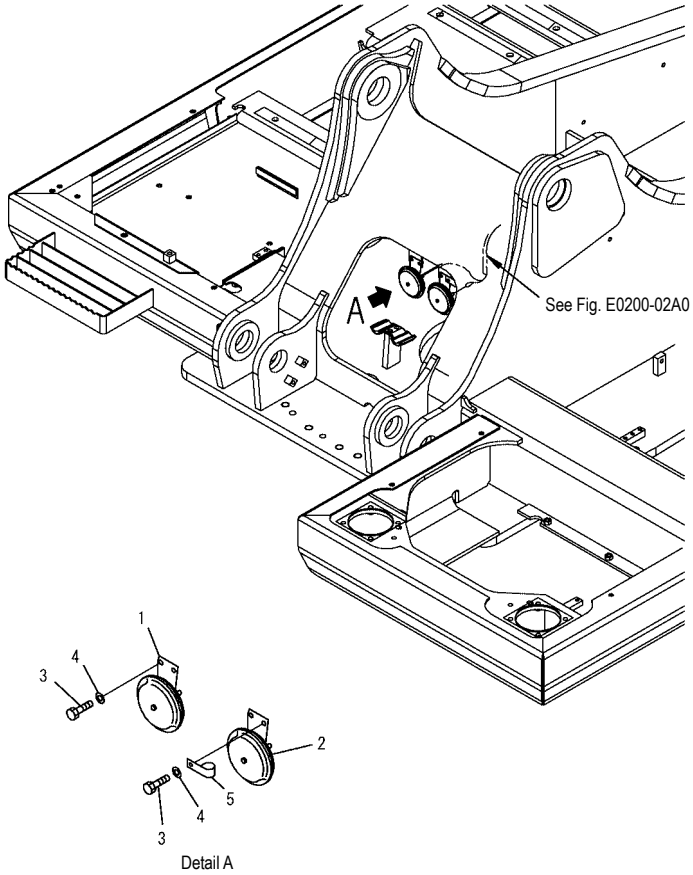

PW1B747

FIG NO. : E0410-01A0

INDEX	PART NO.	DESCRIPTION	Q'TY	SERIAL NO.
1	08160-62420	HORN	1	DBB0001~
2	08160-62430	HORN	1	DBB0001~
3	01010-80825	BOLT	4	DBB0001~
4	01643-30823	WASHER	4	DBB0001~
5	08036-01014	CLIP	1	DBB0001~

FIG. E0420-01A0 TRAVEL ALARM (OPT)

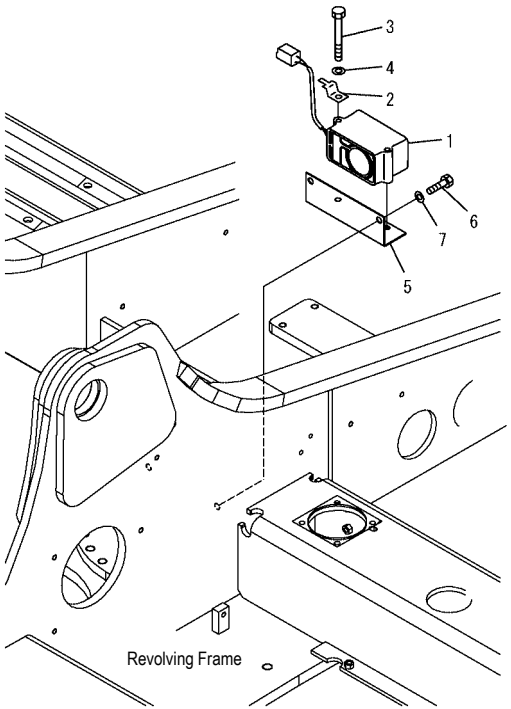

PW1B748

FIG NO. : E0420-01A0

INDEX	PART NO.	DESCRIPTION	Q'TY	SERIAL NO.
1	20Y-06-21730	BUZZER	1	DBB0001~
2	08053-01510	CLIP	1	DBB0001~
3	01011-81000	BOLT	2	DBB0001~
4	01643-31032	WASHER	2	DBB0001~
5	20Y-06-31710	BRACKET	1	DBB0001~
6	01010-81225	BOLT	1	DBB0001~
7	01643-31232	WASHER	1	DBB0001~

FIG. E0100-01A1 BATTERY (LARGE CAPACITY) (For Russia)

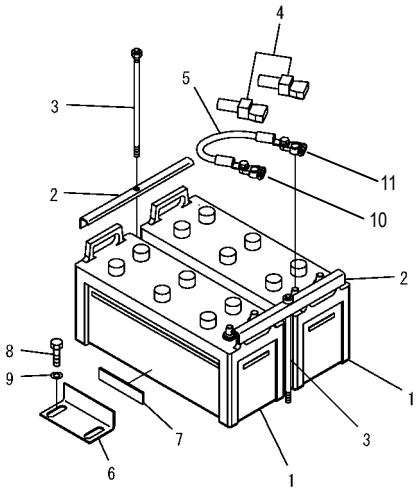

PW1C071

FIG NO. : E0100-01A1

INDEX	PART NO.	DESCRIPTION	Q'TY	SERIAL NO.
1	22U-06-21210	BATTERY	2	DBB0001~
2	20Y-06-D1110	CLAMP	2	DBB0001~
3	202-09-11120	BOLT	2	DBB0001~
4	08038-42511	CAP	2	DBB0001~
5	08028-63035	WIRE	1	DBB0001~
6	207-06-61461	BRACKET	1	DBB0001~
7	207-06-51330	. SHEET	1	DBB0001~
8	01010-81225	BOLT	2	DBB0001~
9	01643-31232	WASHER	2	DBB0001~
10	20Y-06-D1160	TERMINAL (+)	2	DBB0001~
11	20Y-06-D1170	TERMINAL (-)	2	DBB0001~

HYDRAULIC SYSTEM

FIG. H0110-01A0 HYDRAULIC TANK

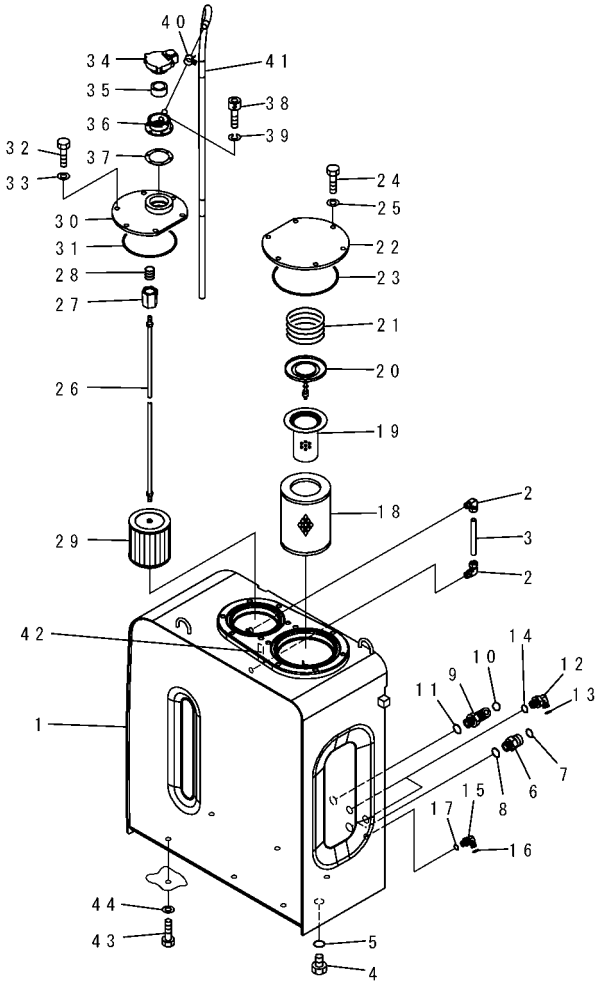

PW1B939

INDEX	PART NO.	DESCRIPTION	Q'TY	SERIAL NO.
1	20Y-60-31111	TANK	1	DBB0001~
2	203-60-31100	ELBOW ASS' Y	2	DBB0001~
3	206-60-31160	TUBE	1	DBB0001~
4	07044-12412	PLUG	1	DBB0001~
5	07002-02434	O–RING	1	DBB0001~
6	02781-00628	UNION	1	DBB0001~
7	02896-11018	O–RING	1	DBB0001~
8	07002-12434	O–RING	1	DBB0001~
9	02782-10522	ELBOW	1	DBB0001~
10	02896-11015	O–RING	1	DBB0001~
11	07002-12434	O–RING	1	DBB0001~
12	02782-10315	ELBOW	2	DBB0001~
13	02896-11009	O–RING	2	DBB0001~
14	07002-12034	O–RING	2	DBB0001~
15	11Y-62-12160	ELBOW	1	DBB0001~
16	02896-11008	O–RING	1	DBB0001~
17	07002-11423	O–RING	1	DBB0001~
18	207-60-71180	ELEMENT	1	DBB0001~
19	20Y-60-31140	STRAINER	1	DBB0001~
20	20Y-60-31131	VALVE ASS' Y	1	DBB0001~
21	20Y-60-21240	SPRING	1	DBB0001~
22	22U-60-21231	COVER	1	DBB0001~
23	07000-15195	O–RING	1	DBB0001~
24	01010-81230	BOLT	6	DBB0001~
25	01643-31232	WASHER	6	DBB0001~
	20Y-60-31171	STRAINER ASS' Y	1	DBB0001~
26	207-60-61150	. ROD ASS' Y	1	DBB0001~
27	20Y-60-21230	.. HOLDER	1	DBB0001~
28	12R-60-11230	.. SPRING	1	DBB0001~
29	22B-60-11160	.STRAINER	1	DBB0001~
30	20Y-60-31161	COVER	1	DBB0001~

FIG. H0110-01A0 HYDRAULIC TANK

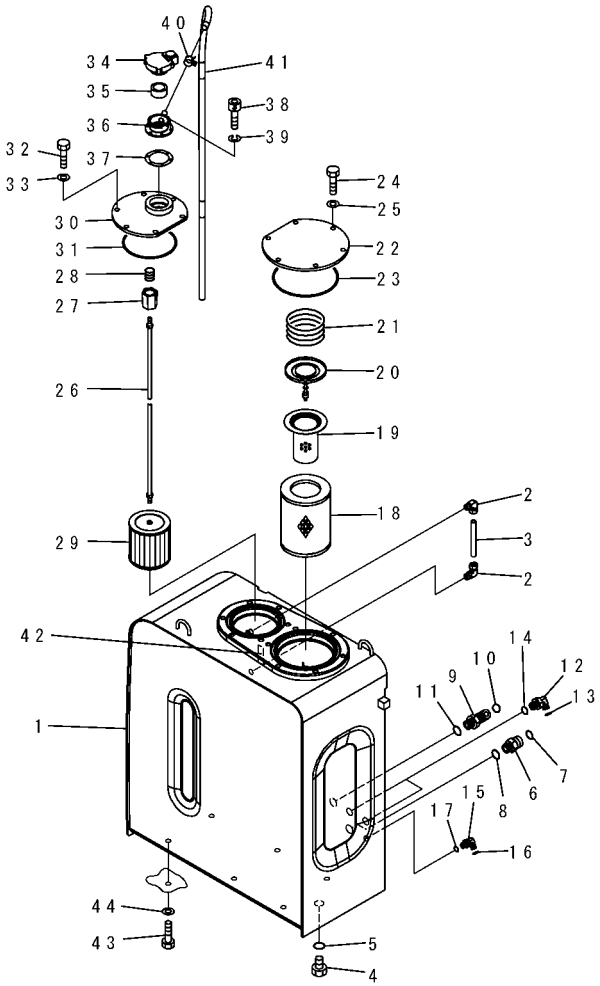

PW1B939

FIG NO. : H0110-01A0

INDEX	PART NO.	DESCRIPTION	Q'TY	SERIAL NO.
31	07000-15160	O–RING	1	DBB0001~
32	01010-81230	BOLT	6	DBB0001~
33	01643-31232	WASHER	6	DBB0001~
34	17A-60-11310	CAP ASS' Y	1	DBB0001~
35	20Y-60-21470	. ELEMENT	1	DBB0001~
36	20Y-60-21460	NECK	1	DBB0001~
37	20Y-60-21340	GASKET	1	DBB0001~
38	01252-70516	BOLT	6	DBB0001~
39	01601-20513	WASHER	6	DBB0001~
40	07285-00155	CLIP	1	DBB0001~
41	07270-61411	TUBE	1	DBB0001~
42	205-00-73360	PLATE, OPERATING	1	DBB0001~
43	01010-81635	BOLT	6	DBB0001~
44	01643-31645	WASHER	6	DBB0001~

FIG. H0120-01A0 MAIN VALVE (CONNECTING PARTS)

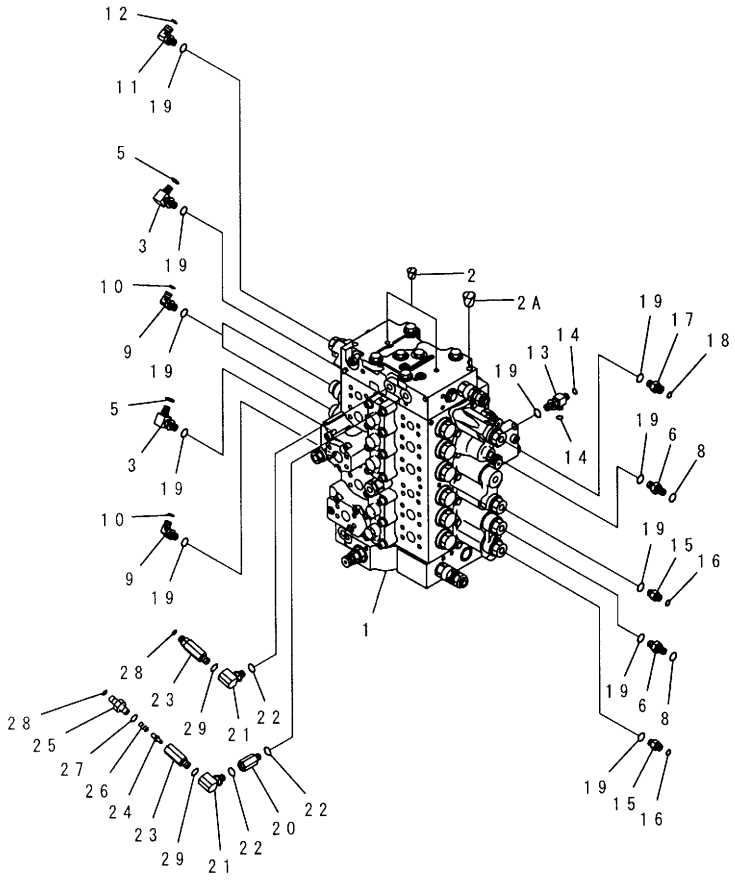

PW1B805

FIG NO. : H0120-01A0

INDEX	PART NO.	DESCRIPTION	Q'TY	SERIAL NO.
1	(723-46-20403)	VALVE ASS' Y	1	DBB0001~
2	07049-01012	PLUG	2	DBB0001~
2A	07049-01215	PLUG	2	DBB0001~
3	20Y-62-45620	ELBOW	2	DBB0001~
5	02896-11008	O–RING	2	DBB0001~
6	20Y-62-45610	NIPPLE	2	DBB0001~
8	02896-11008	O–RING	2	DBB0001~
9	11Y-62-12160	ELBOW	3	DBB0001~
10	02896-11008	O–RING	3	DBB0001~
11	02782-10311	ELBOW	1	DBB0001~
12	02896-11009	O–RING	1	DBB0001~
13	11Y-62-12330	TEE	1	DBB0001~
14	02896-11008	O–RING	2	DBB0001~
15	11Y-62-12130	NIPPLE	2	DBB0001~
16	02896-11008	O–RING	2	DBB0001~
17	11Y-62-12520	NIPPLE	1	DBB0001~
18	02896-11009	O–RING	1	DBB0001~
19	07002-11423	O–RING	12	DBB0001~
20	20Y-62-22160	ADAPTER	1	DBB0001~
21	20F-61-12460	ELBOW	2	DBB0001~
22	07002-11423	O–RING	3	DBB0001~
	20Y-62-41601	VALVE ASS' Y	2	DBB0001~
23	☆	. BODY	1	DBB0001~
24	20Y-60-22270	. POPPET	1	DBB0001~
25	20Y-62-41970	. NIPPLE	1	DBB0001~
26	701-20-61230	. SPRING	1	DBB0001~
27	07002-11423	. O–RING	1	DBB0001~
28	02896-11008	O–RING	2	DBB0001~
29	07002-11423	O–RING	2	DBB0001~

FIG. H0120-01A1 MAIN VALVE (CONNECTING PARTS) (SPECIAL PIPING FOR BREAKER) (OPT)

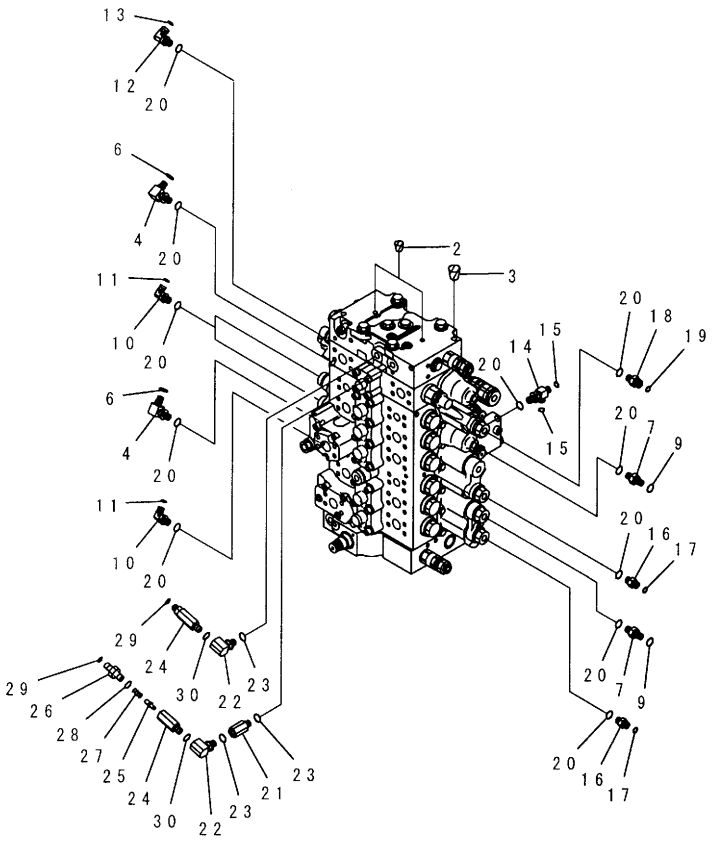

PW1C691

INDEX	PART NO.	DESCRIPTION	Q'TY	SERIAL NO.
2	07049-01012	PLUG	2	DBB0001~
3	07049-01215	PLUG	2	DBB0001~
4	20Y-62-45620	ELBOW	2	DBB0001~
6	02896-11008	O–RING	2	DBB0001~
7	20Y-62-45610	NIPPLE	2	DBB0001~
9	02896-11008	O–RING	2	DBB0001~
10	11Y-62-12160	ELBOW	3	DBB0001~
11	02896-11008	O–RING	3	DBB0001~
12	02782-10311	ELBOW	1	DBB0001~
13	02896-11009	O–RING	1	DBB0001~
14	11Y-62-12330	TEE	1	DBB0001~
15	02896-11008	O–RING	2	DBB0001~
16	11Y-62-12130	NIPPLE	2	DBB0001~
17	02896-11008	O–RING	2	DBB0001~
18	11Y-62-12520	NIPPLE	1	DBB0001~
19	02896-11009	O–RING	1	DBB0001~
20	07002-11423	O–RING	12	DBB0001~
21	20Y-62-22160	ADAPTER	1	DBB0001~
22	20F-61-12460	ELBOW	2	DBB0001~
23	07002-11423	O–RING	3	DBB0001~
	20Y-62-41601	VALVE ASS' Y	2	DBB0001~
24	☆	. BODY	1	DBB0001~
25	20Y-60-22270	. POPPET	1	DBB0001~
26	20Y-62-41970	. NIPPLE	1	DBB0001~
27	701-20-61230	. SPRING	1	DBB0001~
28	07002-11423	.O–RING	1	DBB0001~
29	02896-11008	O–RING	2	DBB0001~
30	07002-11423	O–RING	2	DBB0001~

FIG. H0120-01A4 MAIN VALVE (ADDITIONAL SERVICE VALVE KIT) (SPECIAL PIPING FOR BREAKER) (OPT)

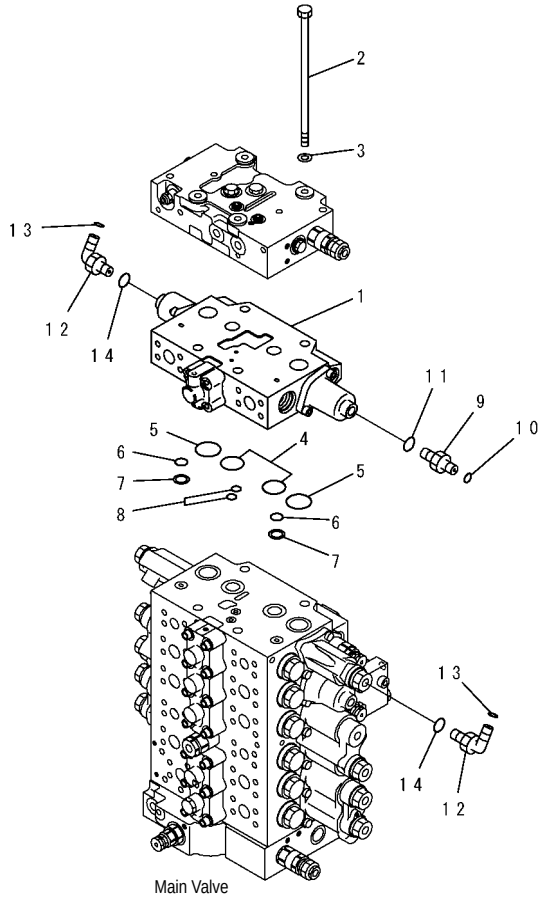

Main Valve

PW1C699

INDEX	PART NO.	DESCRIPTION	Q'TY	SERIAL NO.
1	(723-41-08500)	VALVE ASS' Y, KIT	1	DBB0001~
2	01011-61455	BOLT	4	DBB0001~
3	01643-31445	WASHER	4	DBB0001~
4	(07000-13032)	O–RING	2	DBB0001~
5	(723-46-17510)	O–RING	2	DBB0001~
6	(723-11-19130)	O–RING	2	DBB0001~
7	(723-46-17520)	RING	2	DBB0001~
8	(723-46-17530)	O–RING	2	DBB0001~
9	11Y-62-12130	NIPPLE	1	DBB0001~
10	02896-11008	O–RING	1	DBB0001~
11	07002-11423	O–RING	1	DBB0001~
12	11Y-62-12160	ELBOW	2	DBB0001~
13	02896-11008	O–RING	2	DBB0001~
14	07002-11423	O–RING	2	DBB0001~

FIG. H0120-02A0 MAIN VALVE (CONNECTING PARTS)

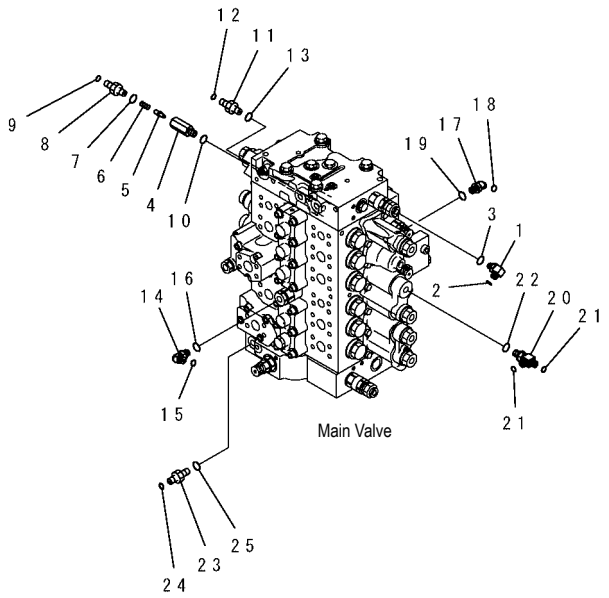

PW1B806

FIG NO. : H0120-02A0

INDEX	PART NO.	DESCRIPTION	Q'TY	SERIAL NO.
1	20Y-62-41920	ELBOW	2	DBB0001~
2	02896-11008	O–RING	2	DBB0001~
3	07002-11223	O–RING	2	DBB0001~
	20Y-62-41700	VALVE ASS' Y	1	DBB0001~
4	☆	.BODY	1	DBB0001~
5	20Y-60-22270	. POPPET	1	DBB0001~
6	701-20-61230	. SPRING	1	DBB0001~
7	07002-11423	. O–RING	1	DBB0001~
8	11Y-62-12130	. NIPPLE	1	DBB0001~
9	02896-11008	O–RING	1	DBB0001~
10	07002-11423	O–RING	1	DBB0001~
11	11Y-62-12130	NIPPLE	1	DBB0001~
12	02896-11008	O–RING	1	DBB0001~
13	07002-11423	O–RING	1	DBB0001~
14	11Y-62-12160	ELBOW	1	DBB0001~
15	02896-11008	O–RING	1	DBB0001~
16	07002-11423	O–RING	1	DBB0001~
17	11Y-62-12240	ELBOW	1	DBB0001~
18	02896-11008	O–RING	1	DBB0001~
19	07002-11423	O–RING	1	DBB0001~
20	11Y-62-12330	TEE	1	DBB0001~
21	02896-11008	O–RING	2	DBB0001~
22	07002-11423	O–RING	1	DBB0001~
23	11Y-62-12130	NIPPLE	1	DBB0001~
24	02896-11008	O–RING	1	BB0001~
25	07002-11423	O–RING	1	DBB0001~

FIG. H0120-03A0 MAIN VALVE (VALVE BRACKET)

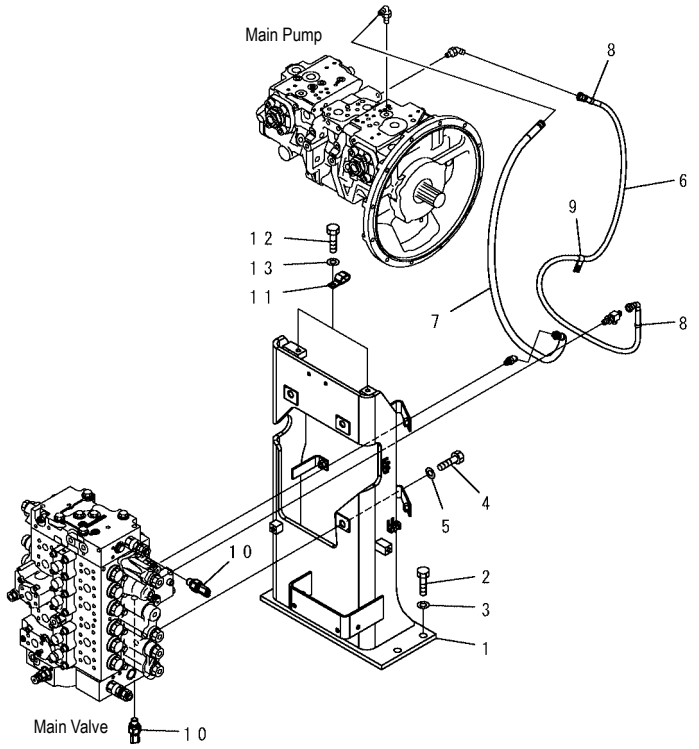

PW1B807

INDEX	PART NO.	DESCRIPTION	Q'TY	SERIAL NO.
1	20Y-62-41112	BRACKET	1	DBB0001~
2	01010-81640	BOLT	6	DBB0001~
3	01643-31645	WASHER	6	DBB0001~
4	01010-81645	BOLT	3	DBB0001~
5	01643-31645	WASHER	3	DBB0001~
6	02761-00217	HOSE	1	DBB0001~
7	02777-00218	HOSE	1	DBB0001~
8	20Y-62-22810	BAND, YELLOW	2	DBB0001~
9	04435-51612	CLIP	1	DBB0001~
10	7861-93-1650	SENSOR	2	DBB0001~
11	04435-51512	CLIP	2	DBB0001~
12	01010-81225	BOLT	2	DBB0001~
13	01643-31232	WASHER	2	DBB0001~

FIG. H0120-03A1 MAIN VALVE (VALVE BRACKET) (SPECIAL PIPING FOR BREAKER) (OPT)

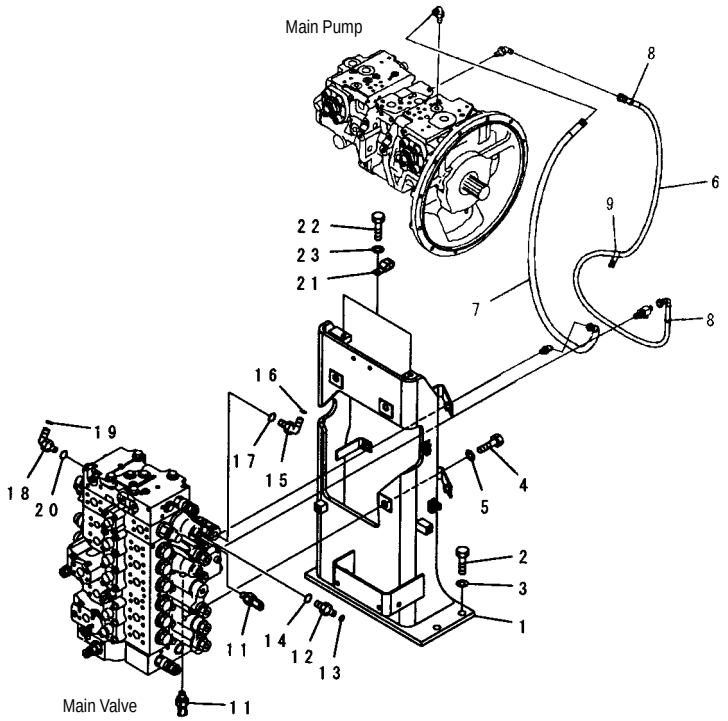

PW1C035

INDEX	PART NO.	DESCRIPTION	Q'TY	SERIAL NO.
1	20Y-62-41112	BRACKET	1	DBB0001~
2	01010-81640	BOLT	6	DBB0001~
3	01643-31645	WASHER	6	DBB0001~
4	01010-81645	BOLT	3	DBB0001~
5	01643-31645	WASHER	3	DBB0001~
6	02761-00217	HOSE	1	DBB0001~
7	02777-00218	HOSE	1	DBB0001~
8	20Y-62-22810	BAND, YELLOW	2	DBB0001~
9	04435-51612	CLIP	1	DBB0001~
11	7861-93-1650	SENSOR	2	DBB0001~
12	11Y-62-12130	NIPPLE	1	DBB0001~
13	02896-11008	O–RING	1	DBB0001~
14	07002-11423	O–RING	1	DBB0001~
15	11Y-62-12160	ELBOW	1	DBB0001~
16	02896-11008	O–RING	1	DBB0001~
17	07002-11423	O–RING	1	DBB0001~
18	11Y-62-12160	ELBOW	1	DBB0001~
19	02896-11008	O–RING	1	DBB0001~
20	07002-11423	O–RING	1	DBB0001~
21	04435-51512	CLIP	4	DBB0001~
22	01010-81225	BOLT	2	DBB0001~
23	01643-31232	WASHER	2	DBB0001~

FIG. H0120-04A6 MAIN VALVE (SERVICE VALVE PLUG) (SPECIAL PIPING FOR BREAKER) (OPT)

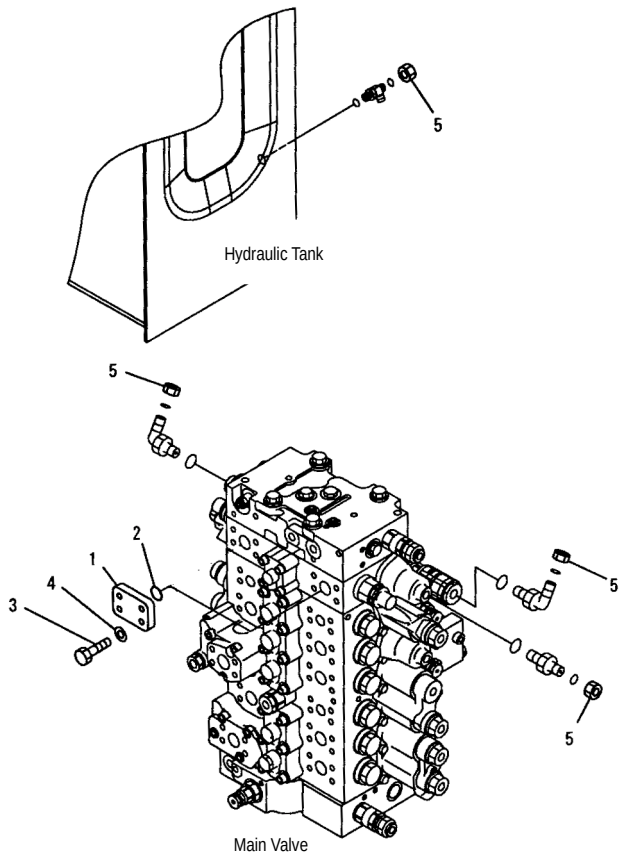

PW1C875

INDEX	PART NO.	DESCRIPTION	Q'TY	SERIAL NO.
1	207-62-56190	FLANGE	1	DBB0001~
2	21T-09-11470	O–RING	1	DBB0001~
3	07372-21040	BOLT	4	DBB0001~
4	01643-51032	WASHER	4	DBB0001~
5	02789-00210	NUT	4	DBB0001~

FIG. H0210-01A0A MAIN PUMP (CONNECTING PARTS)

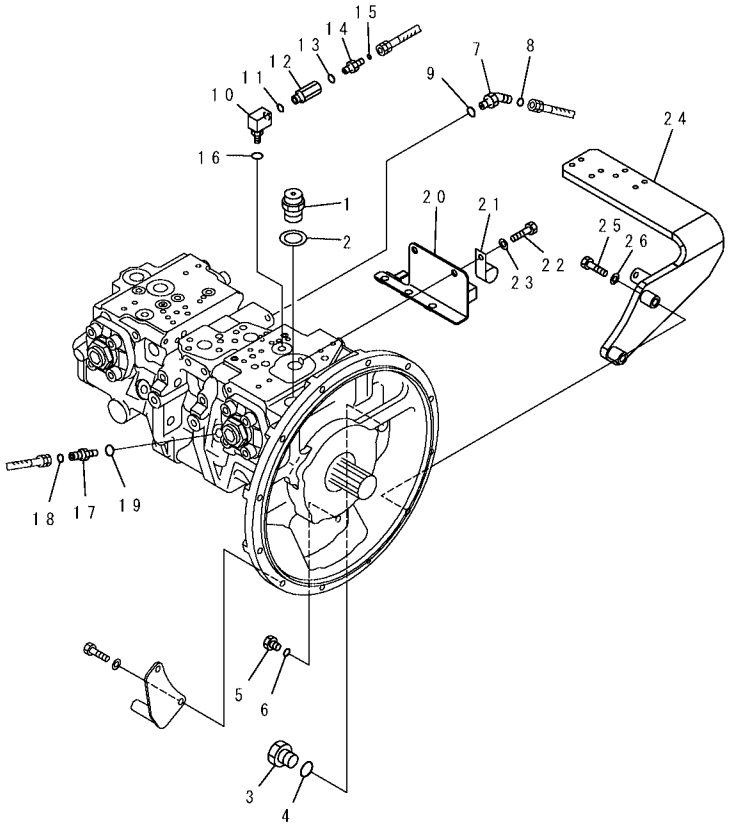

PW1C731

FIG NO. : H0210-01A0A

INDEX	PART NO.	DESCRIPTION	Q'TY	SERIAL NO.
1	07030-03034	BREATHER	1	DBB0001~
2	07005-03016	GASKET	1	DBB0001~
3	07040-12412	PLUG	1	DBB0001~
4	07002-02434	O–RING	1	DBB0001~
5	07040-11209	PLUG	1	DBB0001~
6	07002-11223	O–RING	1	DBB0001~
7	11Y-62-12240	ELBOW	1	DBB0001~
8	02896-11008	O–RING	1	DBB0001~
9	07002-11423	O–RING	1	DBB0001~
10	20F-61-12460	ELBOW	1	DBB0001~
11	07002-11423	O–RING	1	DBB0001~
12	20Y-62-22160	ADAPTER	1	DBB0001~
13	07002-11423	O–RING	1	DBB0001~
14	11Y-62-12130	NIPPLE	1	DBB0001~
15	02896-11008	O–RING	1	DBB0001~
16	07002-11423	O–RING	1	DBB0001~
17	11Y-62-12130	NIPPLE	2	DBB0001~
18	02896-11008	O–RING	2	DBB0001~
19	07002-11423	O–RING	2	DBB0001~
20	20Y-06-31171	BRACKET	1	DBB0001~
21	04434-50810	CLIP	1	DBB0001~
22	01010-81020	BOLT	2	DBB0001~
23	01643-31032	WASHER	2	DBB0001~
24	20Y-62-43860	BRACKET	1	DBB0001~
25	01010-81080	BOLT	2	DBB0001~
26	01643-31032	WASHER	2	DBB0001~

FIG. H0311-01A0 SUCTION LINE

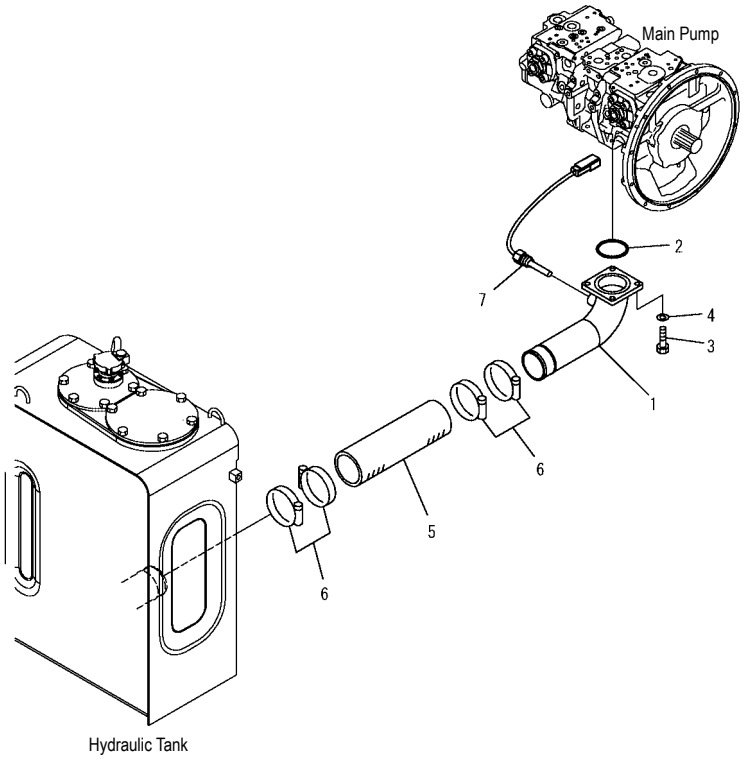

PW1B809

FIG NO. : H0311-01A0

INDEX	PART NO.	DESCRIPTION	Q'TY	SERIAL NO.
1	20Y-62-41321	TUBE	1	DBB0001~
2	07000-12100	O–RING	1	DBB0001~
3	01010-81235	BOLT	4	DBB0001~
4	01643-31232	WASHER	4	DBB0001~
5	07260-08732	HOSE	1	DBB0001~
6	07289-00105	CLAMP	4	DBB0001~
7	7861-93-3320	SENSOR	1	DBB0001~

FIG. H0312-01A0A DELIVERY LINE

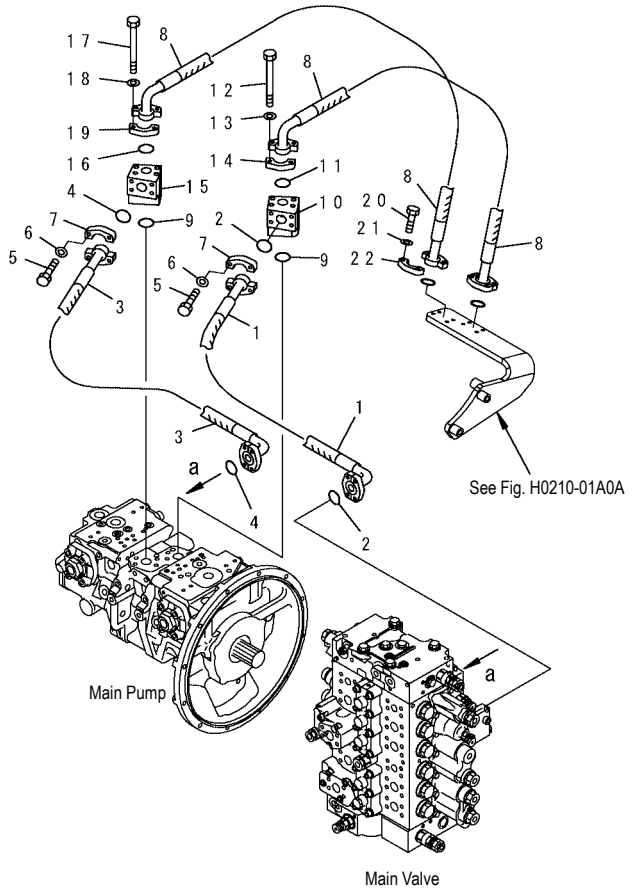

PW1C789

FIG NO. : H0312-01A0A

INDEX	PART NO.	DESCRIPTION	Q'TY	SERIAL NO.
1	20Y-62-43810	HOSE, 990 MM	1	DBB0001~
2	21T-09-11460	O–RING	2	DBB0001~
3	20Y-62-43820	HOSE, 920 MM	1	DBB0001~
4	21T-09-11460	O–RING	2	DBB0001~
5	07372-21035	BOLT	16	DBB0001~
6	01643-51032	WASHER	16	DBB0001~
7	07371-31049	FLANGE	8	DBB0001~
8	20Y-62-43830	HOSE, 740 MM	2	DBB0001~
9	21T-09-11460	O–RING	2	DBB0001~
10	20Y-62-43840	BLOCK	1	DBB0001~
11	21T-09-11460	O–RING	1	DBB0001~
12	417-875-1670	BOLT	4	DBB0001~
13	01643-51032	WASHER	4	DBB0001~
14	07371-31049	FLANGE	2	DBB0001~
15	20Y-62-43850	BLOCK	1	DBB0001~
16	21T-09-11460	O–RING	1	DBB0001~
17	417-875-1670	BOLT	4	DBB0001~
18	01643-51032	WASHER	4	DBB0001~
19	07371-31049	FLANGE	2	DBB0001~
20	07372-21035	BOLT	8	DBB0001~
21	01643-51032	WASHER	8	DBB0001~
22	07371-30640	FLANGE	4	DBB0001~

FIG. H0320-01A0 OIL COOLER LINE

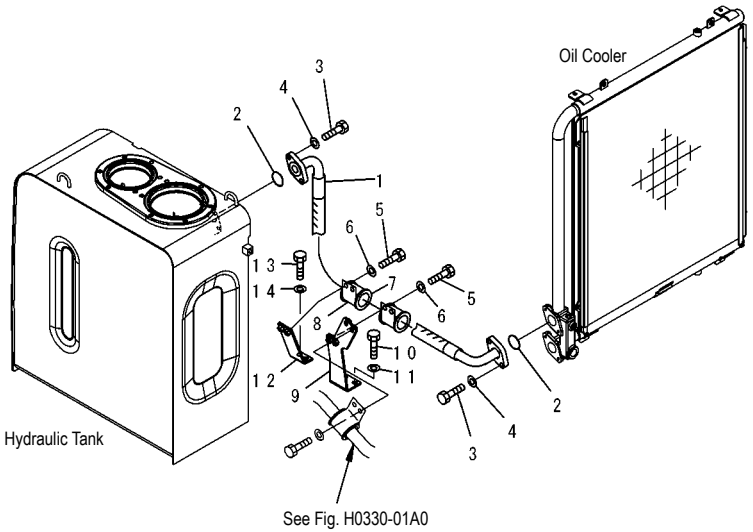

PW1B811

INDEX	PART NO.	DESCRIPTION	Q'TY	SERIAL NO.
1	20Y-62-41271	HOSE	1	DBB0001~
2	07000-13048	O–RING	2	DBB0001~
3	01010-81240	BOLT	4	DBB0001~
4	01643-31232	WASHER	4	DBB0001~
5	01010-81225	BOLT	4	DBB0001~
6	01643-31232	WASHER	4	DBB0001~
7	07095-01449	CUSHION	2	DBB0001~
8	20Y-62-41350	CLAMP	2	DBB0001~
9	20Y-62-41371	BRACKET	1	DBB0001~
10	01010-81225	BOLT	2	DBB0001~
11	01643-31232	WASHER	2	DBB0001~
12	20Y-62-41380	BRACKET	1	DBB0001~
13	01010-81225	BOLT	2	DBB0001~
14	01643-31232	WASHER	2	DBB0001~

FIG. H0330-01A0 RETURN LINE

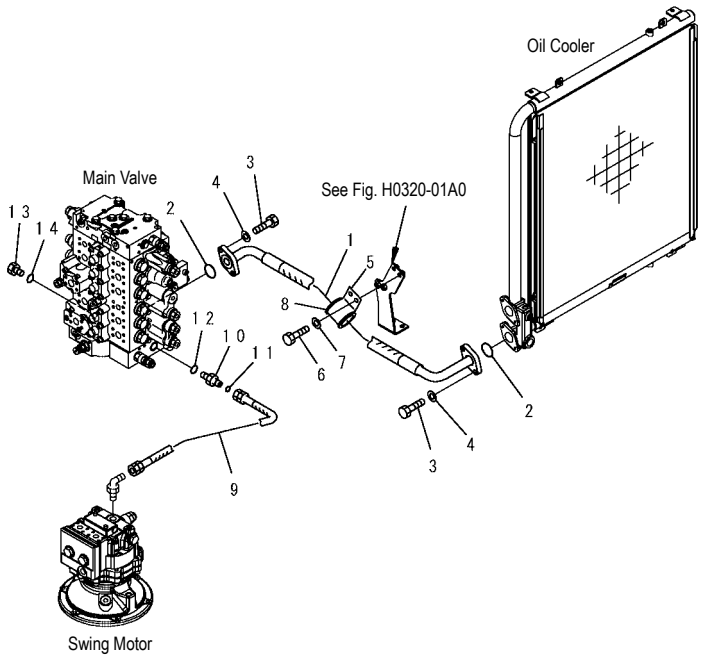

PW1B812

INDEX	PART NO.	DESCRIPTION	Q'TY	SERIAL NO.
1	20Y-62-41261	HOSE	1	DBB0001~
2	07000-13048	O–RING	2	DBB0001~
3	01010-81240	BOLT	4	DBB0001~
4	01643-31232	WASHER	4	DBB0001~
5	20Y-62-41350	CLAMP	1	DBB0001~
6	01010-81225	BOLT	2	DBB0001~
7	01643-31232	WASHER	2	DBB0001~
8	07095-01449	CUSHION	1	DBB0001~DBB4708
	07095-01245	CUSHION	1	DBB4709~
9	02762-00608	HOSE	1	DBB0001~
10	02781-00628	UNION	1	DBB0001~
11	02896-11018	O–RING	1	DBB0001~
12	07002-12434	O–RING	1	DBB0001~
13	07040-12412	PLUG	1	DBB0001~
14	07002-12434	O–RING	1	DBB0001~

FIG. H0330-01A1 RETURN LINE (SPECIAL PIPING FOR BREAKER) (OPT)

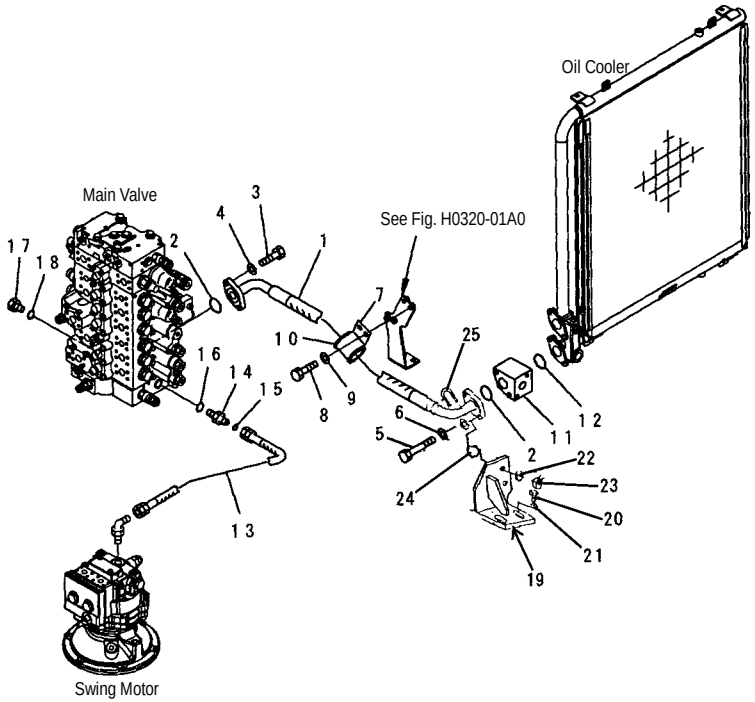

PW1C036

INDEX	PART NO.	DESCRIPTION	Q'TY	SERIAL NO.
1	20Y-62-43390	HOSE, 1100 MM, 1100 MM	1	DBB0001~
2	07000-13048	O–RING	2	DBB0001~
3	01010-81240	BOLT	2	DBB0001~
4	01643-31232	WASHER	2	DBB0001~
5	01011-81220	BOLT	2	DBB0001~
6	01643-31232	WASHER	2	DBB0001~
7	20Y-62-41350	CLAMP	1	DBB0001~
8	01010-81225	BOLT	2	DBB0001~
9	01643-31232	WASHER	2	DBB0001~
10	07095-01449	CUSHION	1	DBB0001~
11	20Y-62-43371	BLOCK	1	DBB0001~
12	07000-13048	O–RING	1	DBB0001~
13	02762-00608	HOSE	1	DBB0001~
14	02781-00628	UNION	1	DBB0001~
15	02896-11018	O–RING	1	DBB0001~
16	07002-12434	O–RING	1	DBB0001~
17	07040-12412	PLUG	1	DBB0001~
18	07002-12434	O–RING	1	DBB0001~
19	20Y-62-44160	BRACKET	1	DBB0001~
20	01010-81235	BOLT	2	DBB0001~
21	175-54-34170	WASHER	2	DBB0001~
22	01643-31032	WASHER	2	DBB0001~
23	01597-01009	NUT	2	DBB0001~
24	07283-34354	CLIP	2	DBB0001~
25	07283-54353	SEAT	2	DBB0001~

FIG. H0340-01A0 DRAIN LINES

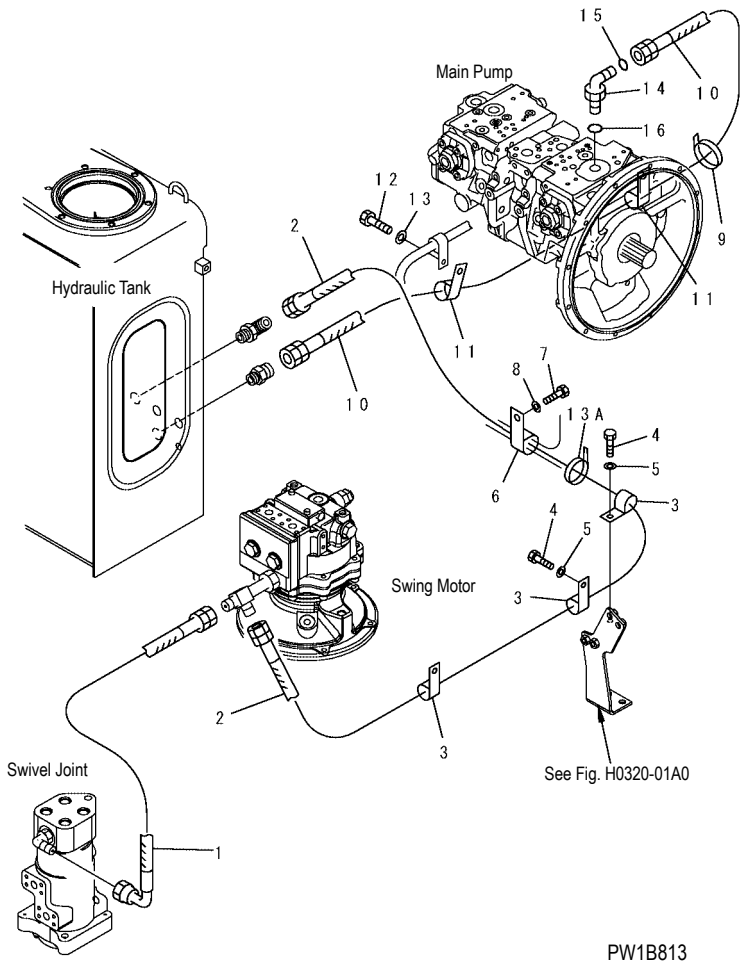

INDEX	PART NO.	DESCRIPTION	Q'TY	SERIAL NO.
1	02763-00508	HOSE, 800 MM	1	DBB0001~
2	20Y-62-42471	HOSE, 2200 MM	1	DBB0001~
3	04434-52312	CLIP	3	DBB0001~
4	01010-81225	BOLT	3	DBB0001~
5	01643-31232	WASHER	3	DBB0001~
6	581-04-2229	CLIP	1	DBB0001~
7	01010-81225	BOLT	1	DBB0001~
8	01643-31232	WASHER	1	DBB0001~
9	08034-20536	BAND	1	DBB0001~
10	20Y-62-43870	HOSE	1	DBB0001~
11	04434-52712	CLIP	2	DBB0001~
12	01010-81225	BOLT	2	DBB0001~
13	01643-31232	WASHER	2	DBB0001~
13A	08034-20536	BAND	1	DBB0001~
14	02782-10628	ELBOW	1	DBB0001~
15	02896-11018	O–RING	1	DBB0001~
16	07002-12434	O–RING	1	DBB0001~

FIG. H1210-01A0 BOOM LINE (BOOM LINES)

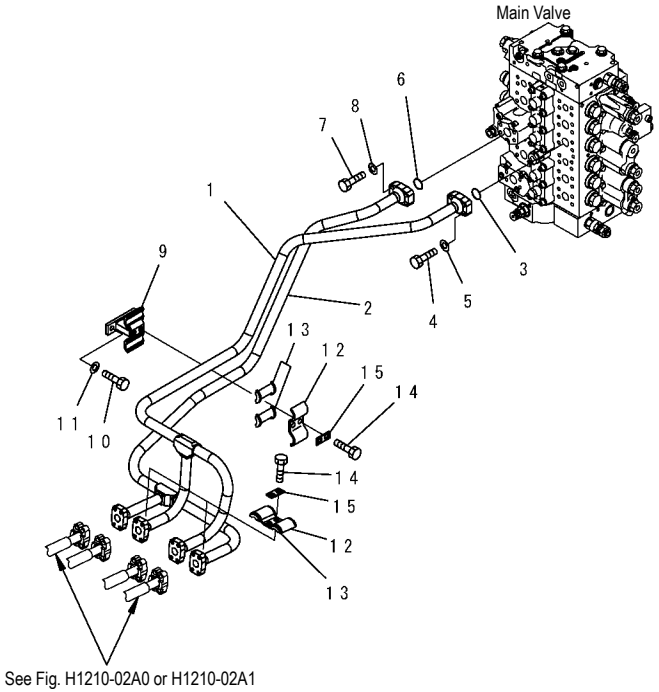

PW1B824

FIG NO. : H1210-01A0

INDEX	PART NO.	DESCRIPTION	Q'TY	SERIAL NO.
1	20Y-62-41140	TUBE	1	DBB0001~
2	20Y-62-41150	TUBE	1	DBB0001~
3	21T-09-11460	O–RING	1	DBB0001~
4	07372-21040	BOLT	4	DBB0001~
5	01643-51032	WASHER	4	DBB0001~
6	21T-09-11460	O–RING	1	DBB0001~
7	07372-21040	BOLT	4	DBB0001~
8	01643-51032	WASHER	4	DBB0001~
9	20Y-62-41281	CLAMP	1	DBB0001~
10	01010-81235	BOLT	2	DBB0001~
11	01643-31232	WASHER	2	DBB0001~
12	20Y-62-13230	CLAMP	3	DBB0001~
13	20Y-62-13760	. SEAT	2	DBB0001~
14	01010-81235	BOLT	6	DBB0001~
15	20Y-62-13450	PLATE	3	DBB0001~

FIG. H1210-02A0 BOOM LINE (BOOM HOSE)

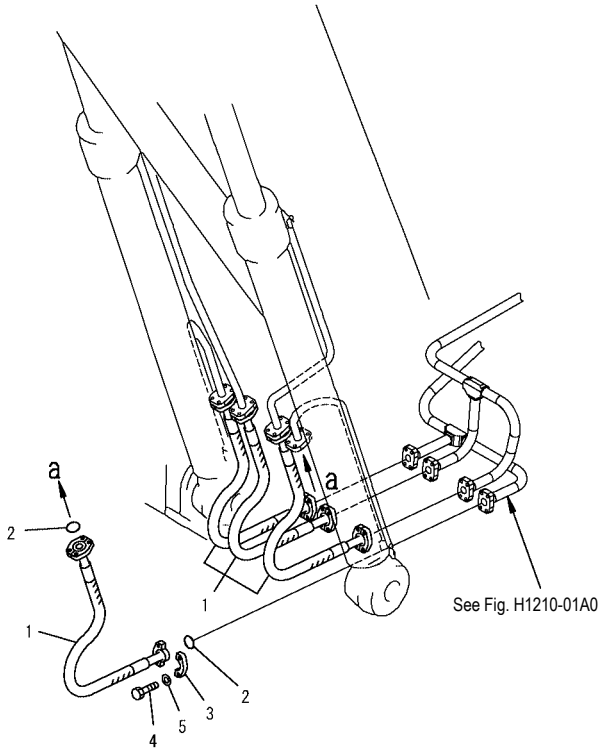

PW1B825

FIG NO. : H1210-02A0

NDEX	PART NO.	DESCRIPTION	Q'TY	SERIAL NO.
1	20Y-62-17480	HOSE, 700 MM	4	DBB0001~
2	07000-13025	O–RING	8	DBB0001~
3	07371-30640	FLANGE	16	DBB0001~
4	07372-21035	BOLT	32	DBB0001~
5	01643-51032	WASHER	32	DBB0001~

FIG. H1220-01A0 ARM AND BUCKET LINE

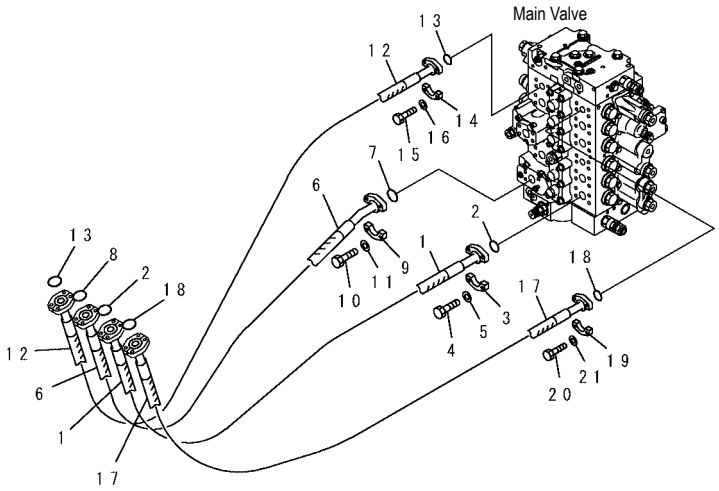

PW1B814

FIG NO. : H1220-01A0

INDEX	PART NO.	DESCRIPTION	Q'TY	SERIAL NO.
1	20Y-62-41171	HOSE	1	DBB0001~
2	21T-09-11460	O–RING	2	DBB0001~
3	07371-31049	FLANGE	2	DBB0001~
4	07372-21035	BOLT	4	DBB0001~
5	01643-51032	WASHER	4	DBB0001~
6	20Y-62-41161	HOSE	1	DBB0001~
7	21T-09-11430	O–RING	1	DBB0001~
8	21T-09-11460	O–RING	1	DBB0001~
9	07371-31049	FLANGE	2	DBB0001~
10	07372-21035	BOLT	4	DBB0001~
11	01643-51032	WASHER	4	DBB0001~
12	20Y-62-41181	HOSE	1	DBB0001~
13	21T-09-11430	O–RING	2	DBB0001~
14	07371-30640	FLANGE	2	DBB0001~
15	07372-21035	BOLT	4	DBB0001~
16	01643-51032	WASHER	4	DBB0001~
17	20Y-62-41181	HOSE	1	DBB0001~
18	21T-09-11430	O–RING	2	DBB0001~
19	07371-30640	FLANGE	2	DBB0001~
20	07372-21035	BOLT	4	DBB0001~
21	01643-51032	WASHER	4	DBB0001~

FIG. H1220-01A1 ARM AND BUCKET LINE (WITH DRIFT PRIVENTIVE) (OPT)

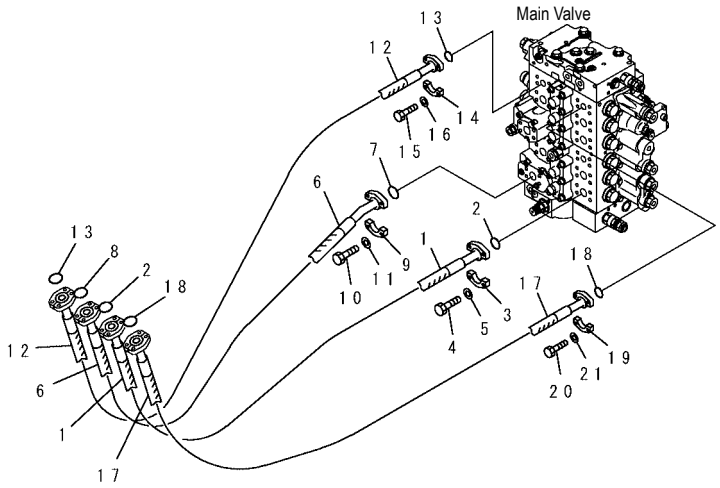

PW1C973

FIG NO. : H1220-01A1

INDEX	PART NO.	DESCRIPTION	Q'TY	SERIAL NO.
1	20Y-62-41171	HOSE	1	DBB0001~
2	21T-09-11460	O–RING	2	DBB0001~
3	07371-31049	FLANGE	2	DBB0001~
4	07372-21035	BOLT	4	DBB0001~
5	01643-51032	WASHER	4	DBB0001~
6	20Y-62-41860	HOSE	1	DBB0001~
7	21T-09-11430	O–RING	1	DBB0001~
8	21T-09-11460	O–RING	1	DBB0001~
9	07371-31049	FLANGE	2	DBB0001~
10	07372-21035	BOLT	4	DBB0001~
11	01643-51032	WASHER	4	DBB0001~
12	20Y-62-41181	HOSE	1	DBB0001~
13	21T-09-11430	O–RING	2	DBB0001~
14	07371-30640	FLANGE	2	DBB0001~
15	07372-21035	BOLT	4	DBB0001~
16	01643-51032	WASHER	4	DBB0001~
17	20Y-62-41181	HOSE	1	DBB0001~
18	21T-09-11430	O–RING	2	DBB0001~
19	07371-30640	FLANGE	2	DBB0001~
20	07372-21035	BOLT	4	DBB0001~
21	01643-51032	WASHER	4	DBB0001~

FIG. H1270-01A0 ATTACHMENT LINES (MAIN L. H.) (SPECIAL PIPING FOR BREAKER) (OPT)

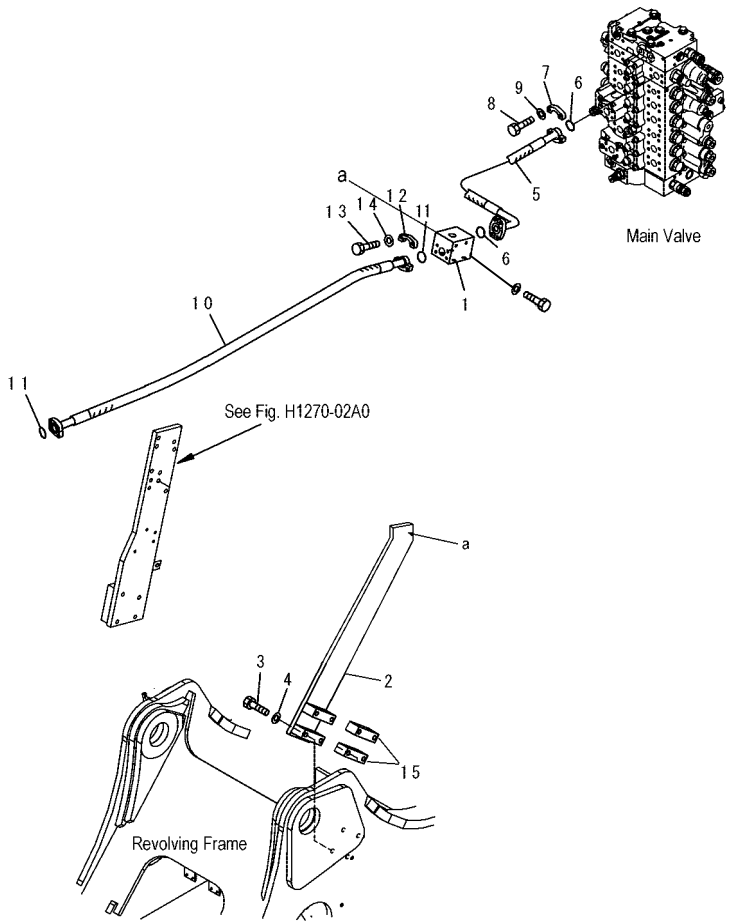

INDEX	PART NO.	DESCRIPTION	Q'TY	SERIAL NO.
1	20Y-62-01970	BLOCK	1	DBB0001~
2	20Y-62-D1960	BRACKET	1	DBB0001~
3	01010-81265	BOLT	4	DBB0001~
4	01643-31232	WASHER	4	DBB0001~
5	07098-01007	HOSE	1	DBB0001~
6	21T-09-11460	O–RING	2	DBB0001~
7	07371-31049	FLANGE	4	DBB0001~
8	07372-21035	BOLT	8	DBB0001~
9	01643-51032	WASHER	8	DBB0001~
10	07097-21016	HOSE	1	DBB0001~
11	07000-13032	O–RING	2	DBB0001~
12	07371-31049	FLANGE	4	DBB0001~
13	07372-21035	BOLT	8	DBB0001~
14	01643-51032	WASHER	8	DBB0001~

FIG. H1270-01A2 RELIEF VALVE (210 KG/CM2) (SPECIAL PIPING FOR BREAKER) (OPT)

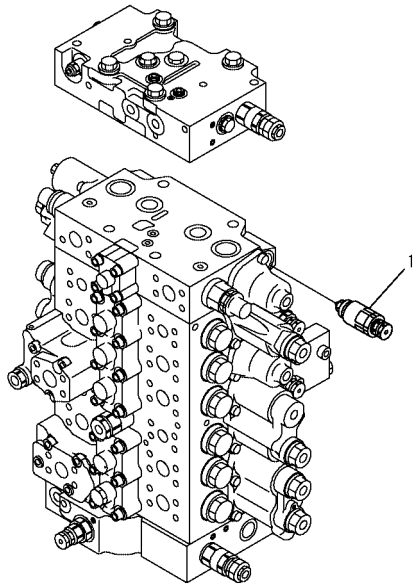

PW1C828

INDEX	PART NO.	DESCRIPTION	Q'TY	SERIAL NO.
1	(723-90-61200)	RELIEF VALVE.....	1	DBB0001~

FIG. H1270-02A0 ATTACHMENT LINES (MAIN R. H.) (SPECIAL PIPING FOR BREAKER) (OPT)

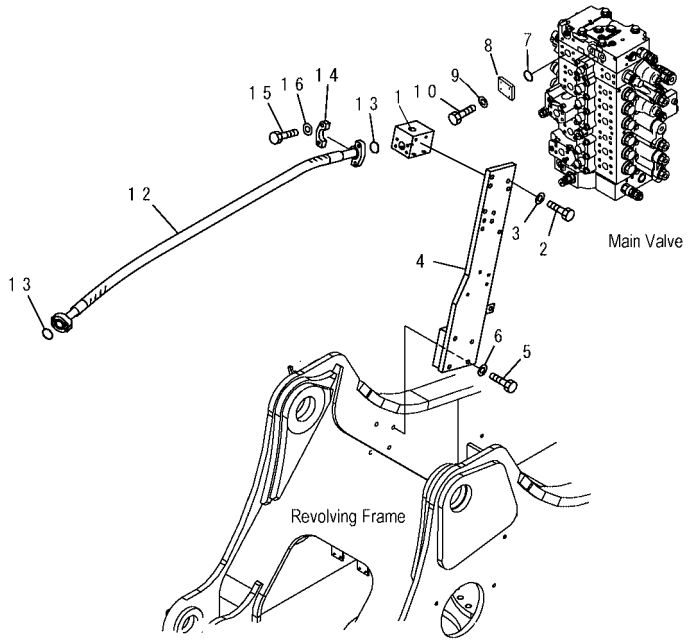

PW1C038

INDEX	PART NO.	DESCRIPTION	Q'TY	SERIAL NO.
1	20Y-62-D1980	VALVE ASS' Y	1	DBB0001~
2	01010-81035	BOLT	3	DBB0001~
3	01643-81232	WASHER	3	DBB0001~
4	20Y-62-43270	BRACKET	1	DBB0001~
5	01010-81285	BOLT	4	DBB0001~
6	01643-31232	WASHER	4	DBB0001~
7	207-62-56190	FLANGE	1	DBB0001~
8	21T-09-11470	O–RING	1	DBB0001~
9	07372-21040	BOLT	1	DBB0001~
10	01643-51032	WASHER	1	DBB0001~
12	07097-21217	HOSE	1	DBB0001~
13	07000-13038	O–RING	2	DBB0001~
14	07371-51260	FLANGE	4	DBB0001~
15	07372-21245	BOLT	8	DBB0001~
16	01643-31232	WASHER	8	DBB0001~

FIG. H1270-03A0 ATTACHMENT LINES (RETURN) (SPECIAL PIPING FOR BREAKER) (OPT)

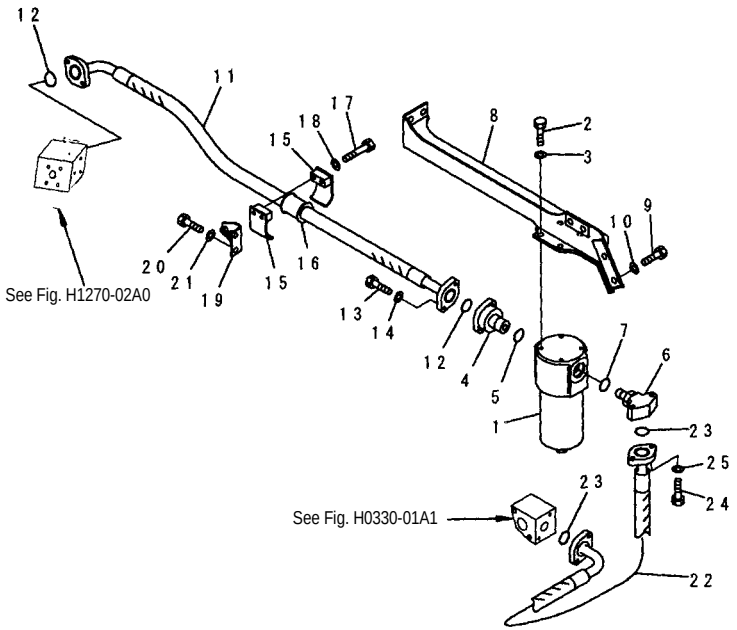

PW1C039

INDEX	PART NO.	DESCRIPTION	Q'TY	SERIAL NO.
1	(20Y-970-2700)	FILTER ASS' Y	1	DBB0001~
2	01010-81230	BOLT	4	DBB0001~
3	01643-31232	WASHER	4	DBB0001~
4	20Y-62-43351	FLANGE	1	DBB0001~
5	07002-14234	O–RING	1	DBB0001~
6	20Y-62-43361	ELBOW	1	DBB0001~
7	07002-14234	O–RING	1	DBB0001~
8	20Y-62-43331	FRAME	1	DBB0001~
9	01010-81230	BOLT	4	DBB0001~
10	01643-31232	WASHER	4	DBB0001~
11	20Y-62-43311	HOSE, 1450 MM	1	DBB0001~
12	07000-13038	O–RING	2	DBB0001~
13	01010-81035	BOLT	4	DBB0001~
14	01643-31032	WASHER	4	DBB0001~
15	07094-11024	CLAMP	2	DBB0001~
16	07095-01038	CUSHION	1	DBB0001~
17	01010-81280	BOLT	2	DBB0001~
18	01643-31232	WASHER	2	DBB0001~
19	20Y-62-43320	BRACKET	1	DBB0001~
20	01010-81225	BOLT	2	DBB0001~
21	01643-31232	WASHER	2	DBB0001~
22	20Y-62-43381	HOSE, 1000 MM	1	DBB0001~
23	07000-13038	O–RING	2	DBB0001~
24	01010-81035	BOLT	4	DBB0001~
25	01643-31032	WASHER	4	DBB0001~

FIG. H1310-01A0 TRAVEL LINES

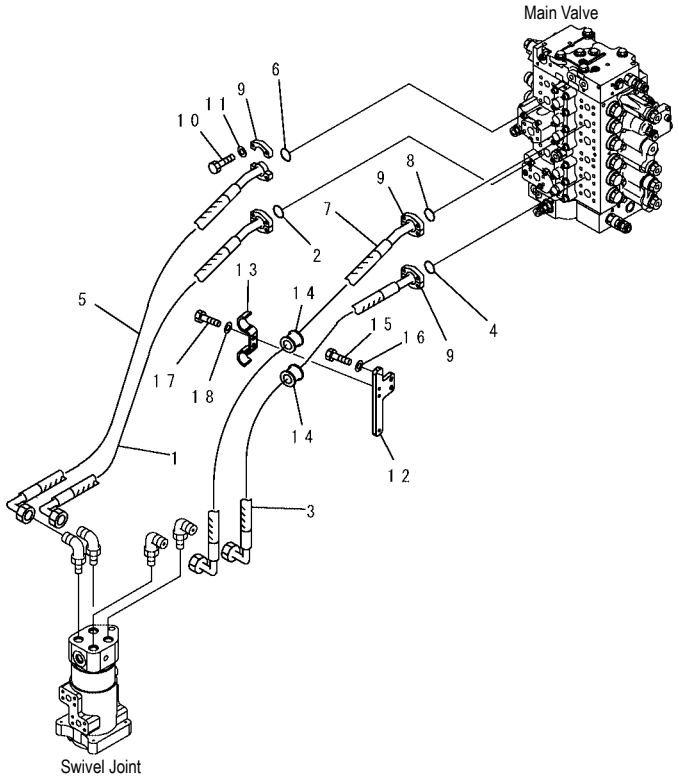

PW1B815

INDEX	PART NO.	DESCRIPTION	Q'TY	SERIAL NO.
1	20Y-62-41191	HOSE, 1100 MM	1	DBB0001~
2	21T-09-11460	O–RING	1	DBB0001~
3	20Y-62-D1810	HOSE, 1270 MM	1	DBB0001~
4	21T-09-11460	O–RING	1	DBB0001~
5	20Y-62-41221	HOSE ,1250 MM	1	DBB0001~
6	21T-09-11460	O–RING	1	DBB0001~
7	20Y-62-D1820	HOSE, 1290 MM	1	DBB0001~
8	21T-09-11460	O–RING	1	DBB0001~
9	07371-31049	FLANGE	8	DBB0001~
10	07372-21035	BOLT	16	DBB0001~
11	01643-51032	WASHER	16	DBB0001~
12	20Y-62-41292	BRACKET	1	DBB0001~
13	206-62-71141	CLAMP	1	DBB0001~
14	07095-00628	CUSHION	2	DBB0001~
15	01010-81030	BOLT	2	DBB0001~
16	01643-31032	WASHER	2	DBB0001~
17	01010-81030	BOLT	2	DBB0001~
18	01643-31032	WASHER	2	DBB0001~

FIG. H1340-01A0 SWING LINES

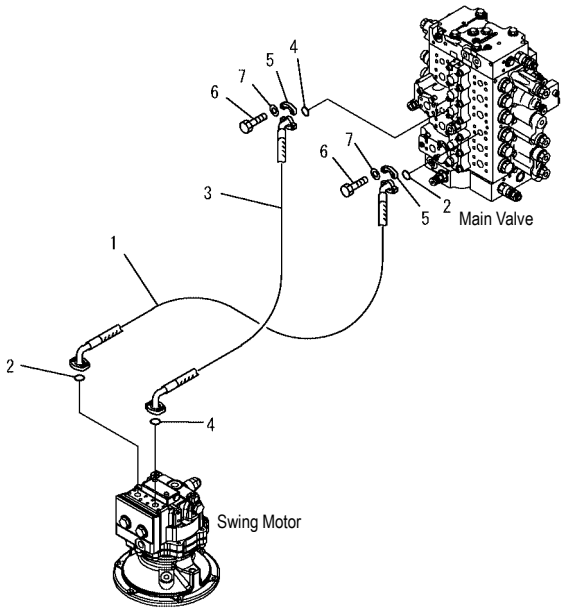

PW1B816

FIG NO. : H1340-01A0

INDEX	PART NO.	DESCRIPTION	Q'TY	SERIAL NO.
1	20Y-62-41242	HOSE, 690 MM	1	DBB0001~
2	21T-09-11430	O–RING	2	DBB0001~
3	20Y-62-41252	HOSE, 650 MM	1	DBB0001~
4	21T-09-11430	O–RING	2	DBB0001~
5	07371-30640	FLANGE	8	DBB0001~
6	07372-21035	BOLT	16	DBB0001~
7	01643-51032	WASHER	16	DBB0001~

FIG. H1810-01A0 LS LINES

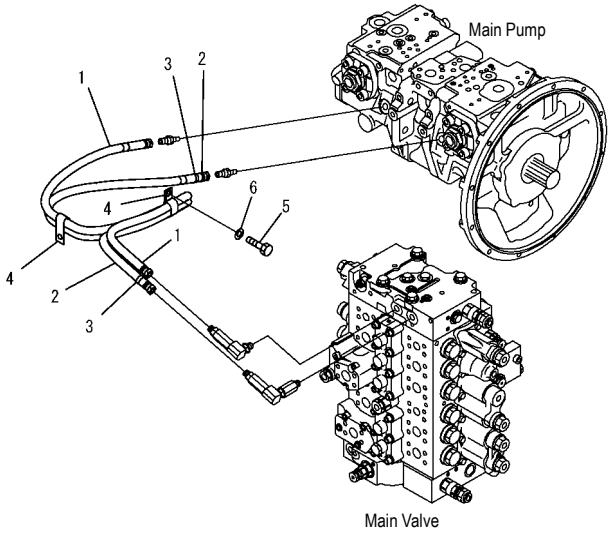

PW1B819

FIG NO. : H1810-01A0

INDEX	PART NO.	DESCRIPTION	Q'TY	SERIAL NO.
1	20Y-62-44420	HOSE	1	DBB0001~
2	20Y-62-44430	HOSE	1	DBB0001~
3	20Y-62-22790	BAND, RED	2	DBB0001~
4	04435-51612	CLIP	2	DBB0001~
5	01010-81225	BOLT	2	DBB0001~
6	01643-31232	WASHER	2	DBB0001~

FIG. H1831-01A0 SOLENOID VALVE (VALVE)

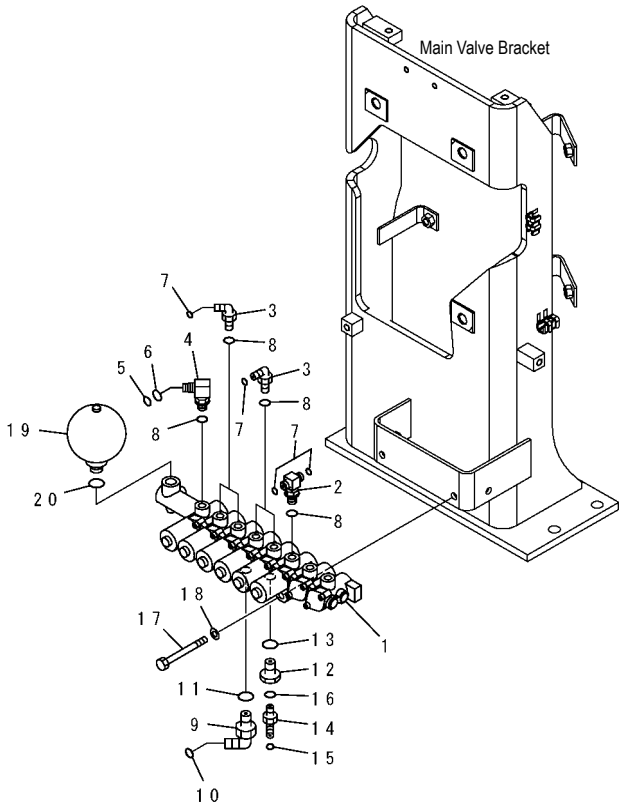

PW1B820

INDEX	PART NO.	DESCRIPTION	Q'TY	SERIAL NO.
1	(20Y-60-31212)	VALVE ASS' Y	1	DBB0001~
2	20Y-62-43690	TEE	1	DBB0001~
3	11Y-62-12160	ELBOW	4	DBB0001~
4	20Y-62-22271	ELBOW	1	DBB0001~
5	201-60-11390	. O–RING	1	DBB0001~
6	20Y-62-19560	. O–RING	1	DBB0001~
7	02896-11008	O–RING	6	DBB0001~
8	07002-11423	O–RING	6	DBB0001~
9	02782-10315	ELBOW	1	DBB0001~
10	02896-11009	O–RING	1	DBB0001~
11	07002-12034	O–RING	1	DBB0001~
12	20Y-62-21940	FILTER ASS' Y	1	DBB0001~
13	07002-12034	O–RING	1	DBB0001~
14	11Y-62-12160	ELBOW	1	DBB0001~
15	02896-11008	O–RING	1	DBB0001~
16	07002-11423	O–RING	1	DBB0001~
17	01010-81095	BOLT	2	DBB0001~
18	01643-31032	WASHER	2	DBB0001~
19	22U-60-21330	ACCUMULATOR	1	DBB0001~
20	07002-12034	O–RING	1	DBB0001~

FIG. H1831-02A0 SOLENOID VALVE (HOSE AND BRACKET)

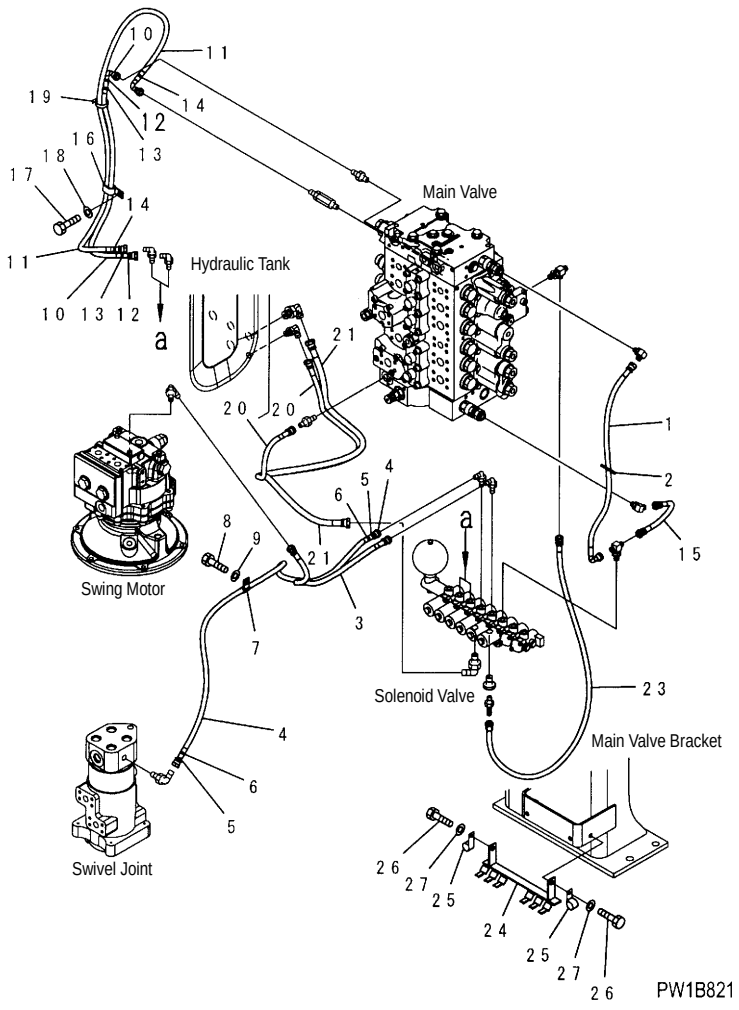

INDEX	PART NO.	DESCRIPTION	Q'TY	SERIAL NO.
1	02761-002A7	HOSE	1	DBB0001~
2	08034-20536	BAND	1	DBB0001~
3	02760-002A5	HOSE	1	DBB0001~
4	02760-00213	HOSE	1	DBB0001~
5	20Y-62-22790	BAND, RED	2	DBB0001~
6	20Y-62-22810	BAND, YELLOW	2	DBB0001~
7	04434-51210	CLIP	1	DBB0001~
8	01010-81030	BOLT	1	DBB0001~
9	01643-31032	WASHER	1	DBB0001~
10	02761-00208	HOSE	1	DBB0001~
11	02761-00213	HOSE	1	DBB0001~
12	20Y-62-22810	BAND, YELLOW	2	DBB0001~
13	20Y-62-22820	BAND, BLUE	2	DBB0001~
14	20Y-62-22860	BAND, BROWN	2	DBB0001~
15	02760-00203	HOSE	1	DBB0001~
16	04435-51512	CLIP	1	DBB0001~
17	01010-81225	BOLT	1	DBB0001~
18	01643-31232	WASHER	1	DBB0001~
19	08034-20536	BAND	2	DBB0001~
20	02760-00211	HOSE	1	DBB0001~
21	02760-00312	HOSE	1	DBB0001~
23	02760-00211	HOSE	1	DBB0001~
24	20Y-06-31162	BRACKET	1	DBB0001~
25	04434-51210	CLIP	2	DBB0001~
26	01010-81025	BOLT	2	DBB0001~
27	01643-31032	WASHER	2	DBB0001~

FIG. H1833-01A0 PRESSURE SWITCH

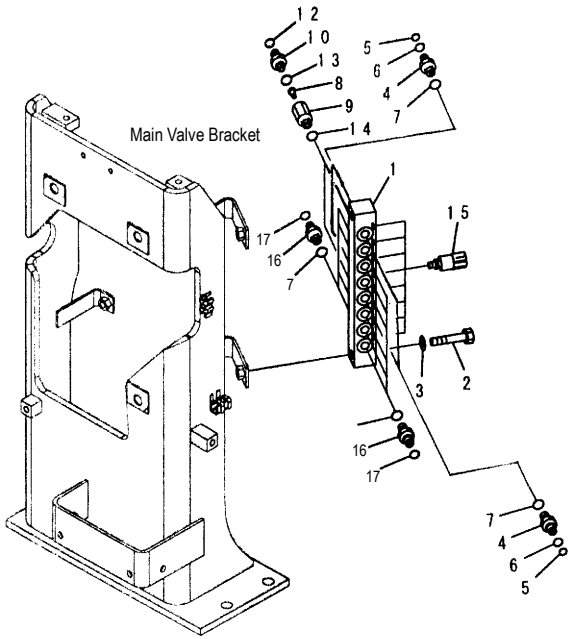

PW1B822

INDEX	PART NO.	DESCRIPTION	Q'TY	SERIAL NO.
1	20Y-62-41550	BLOCK	1	DBB0001~
2	01010-81260	BOLT	2	DBB0001~
3	01643-31232	WASHER	2	DBB0001~
4	20Y-62-16630	NIPPLE	4	DBB0001~
5	201-60-11390	. O–RING	1	DBB0001~
6	20Y-62-19560	. O–RING	1	DBB0001~
7	07002-11423	O–RING	14	DBB0001~
	20Y-60-32300	VALVE ASS' Y	2	DBB0001~
8	20Y-62-41830	.POPPET	1	DBB0001~
9	☆	. BODY	1	DBB0001~
10	21W-62-43930	. NIPPLE	1	DBB0001~
12	02896-11008	O–RING	1	DBB0001~
13	07002-11423	. O–RING	1	DBB0001~
14	07002-11423	O–RING	2	DBB0001~
15	206-06-61130	SWITCH	8	DBB0001~
16	11Y-62-12130	NIPPLE	10	DBB0001~
17	02896-11008	O-RING	10	DBB0001~

FIG. H1840-01A0 PPC MAIN LINE (HOSE)

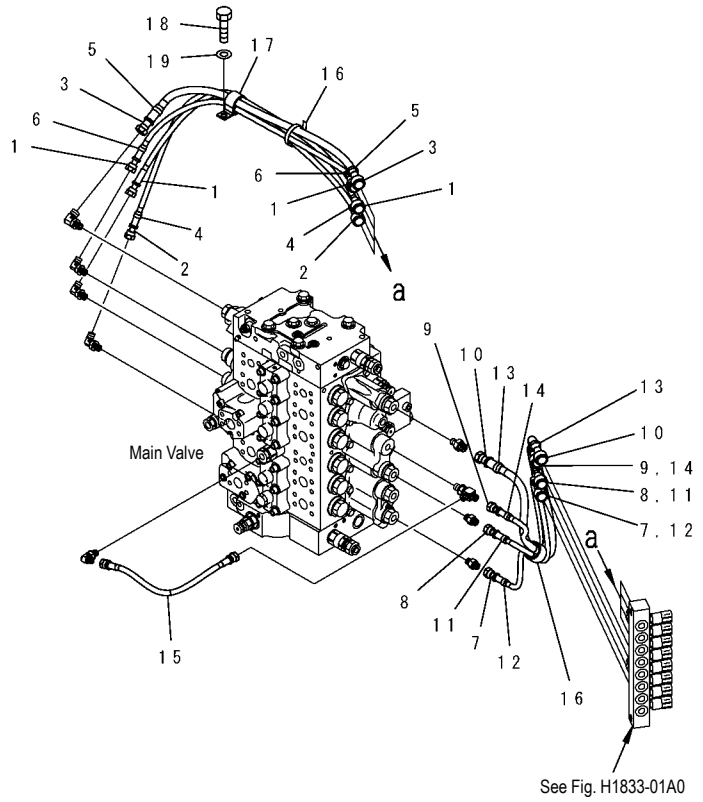

PW1B823

INDEX	PART NO.	DESCRIPTION	Q'TY	SERIAL NO.
1	02760-002A7	HOSE, 750 MM, 750 MM	2	DBB0001~
2	02760-00209	HOSE, 900 MM, 900 MM	1	DBB0001~
3	20Y-62-42530	HOSE, 700 MM, 700 MM	1	DBB0001~
4	20Y-62-22820	BAND, BLUE	2	DBB0001~
5	20Y-62-22830	BAND, WHITE	2	DBB0001~
6	20Y-62-22860	BAND, BROWN	2	DBB0001~
7	02760-00208	HOSE 800 MM, 800 MM	1	DBB0001~
8	02760-002A8	HOSE, 850 MM, 850 MM	1	DBB0001~
9	02760-002A9	HOSE, 950 MM, 950 MM	1	DBB0001~
10	20Y-62-42540	HOSE, 1050 MM, 1050 MM	1	DBB0001~
11	20Y-62-22790	BAND, RED	2	DBB0001~
12	20Y-62-22810	BAND, YELLOW	2	DBB0001~
13	20Y-62-22840	BAND, BLACK	2	DBB0001~
14	20Y-62-22850	BAND, GREEN	2	DBB0001~
15	02760-00204	HOSE	1	DBB0001~
16	08034-20536	BAND	2	DBB0001~
17	113-899-7950	CLIP	1	DBB0001~
18	01010-81225	BOLT	1	DBB0001~
19	01643-31232	WASHER	1	DBB0001~

FIG. H1840-02A1 PPC MAIN LINE (BLOCK) (SPECIAL PIPING FOR BREAKER) (OPT)

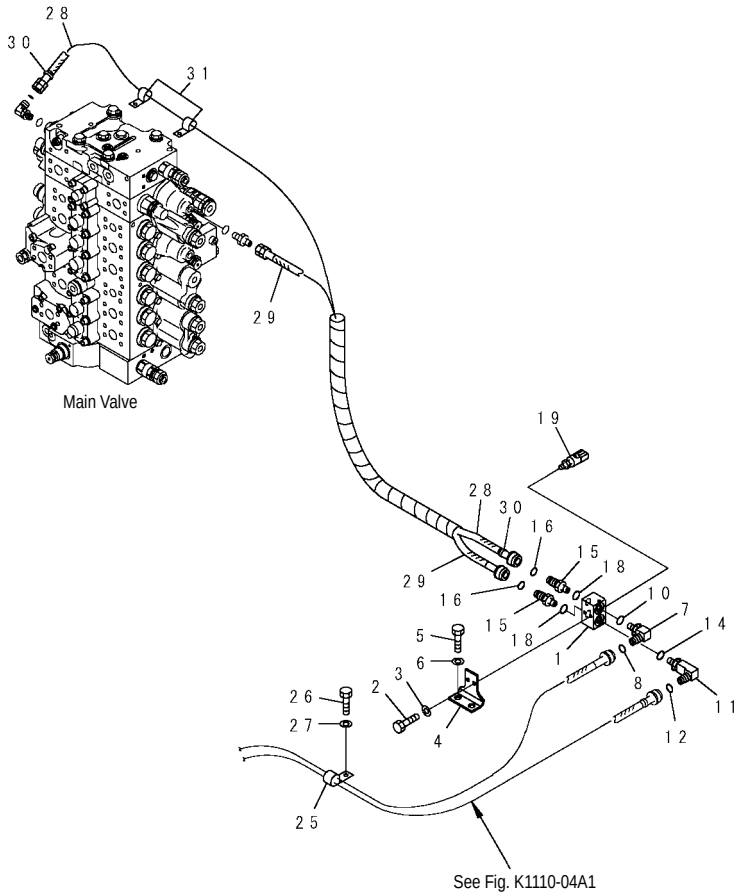

PW1C042

INDEX	PART NO.	DESCRIPTION	Q'TY	SERIAL NO.
1	20Y-62-43430	BLOCK	1	DBB0001~
2	01010-80820	BOLT	2	DBB0001~
3	01643-30823	WASHER	2	DBB0001~
4	20Y-62-43440	BRACKET	1	DBB0001~
5	01010-81025	BOLT	2	DBB0001~
6	01643-31032	WASHER	2	DBB0001~
7	11Y-62-12160	ELBOW	1	DBB0001~
8	02896-11008	O–RING	1	DBB0001~
10	07002-01423	O–RING	1	DBB0001~
11	20Y-62-D1850	ELBOW	1	DBB0001~
12	02896-11008	O–RING	1	DBB0001~
14	07002-01423	O–RING	1	DBB0001~
15	11Y-62-12130	NIPPLE	2	DBB0001~
16	02896-11008	O–RING	2	DBB0001~
18	07002-01423	O–RING	2	DBB0001~
19	206-06-61130	SWITCH	1	DBB0001~
25	04434-51612	CLIP	1	DBB0001~
26	01010-81225	BOLT	1	DBB0001~
27	01643-31232	WASHER	1	DBB0001~
28	02760-00221	HOSE, 2100 MM	1	DBB0001~
29	02760-00214	HOSE, 1400 MM	1	DBB0001~
30	20Y-62-22810	BAND, YELLOW	2	DBB0001~
31	04435-51612	CLIP	2	DBB0001~

FIG. H0110-01A1 HYDRAULIC TANK (1 ACTUATOR) (OPT)

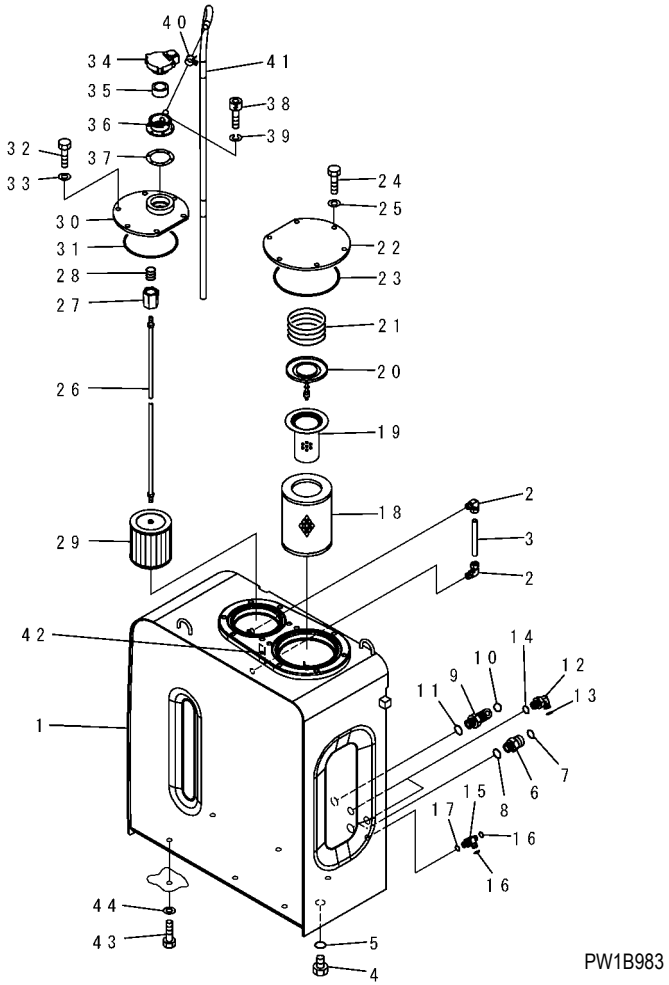

PW1B983

FIG NO. : H0110-01A1

INDEX	PART NO.	DESCRIPTION	Q'TY	SERIAL NO.
1	20Y-60-31111	TANK	1	DBB0001~
2	203-60-31100	ELBOW ASS' Y	2	DBB0001~
3	203-60-31160	TUBE	1	DBB0001~
4	07044-12412	PLUG	1	DBB0001~
5	07002-02434	O–RING	1	DBB0001~
6	02781-00628	UNION	1	DBB0001~
7	02896-11018	O–RING	1	DBB0001~
8	07002-12434	O–RING	1	DBB0001~
9	02782-10522	ELBOW	1	DBB0001~
10	02896-11015	O–RING	1	DBB0001~
11	07002-12434	O–RING	1	DBB0001~
12	02782-10315	ELBOW	2	DBB0001~
13	02896-11009	O–RING	2	DBB0001~
14	07002-12034	O–RING	2	DBB0001~
15	11Y-62-12330	TEE	1	DBB0001~
16	02896-11008	O–RING	2	DBB0001~
17	07002-11423	O–RING	1	DBB0001~
18	207-60-71180	ELEMENT	1	DBB0001~
19	20Y-60-31140	STRAINER	1	DBB0001~
20	20Y-60-31131	VALVE ASS' Y	1	DBB0001~
21	20Y-60-21240	SPRING	1	DBB0001~
22	22U-60-21231	COVER	1	DBB0001~
23	07000-15195	O–RING	1	DBB0001~
24	01010-81230	BOLT	6	DBB0001~
25	01643-31232	WASHER	6	DBB0001~
	20Y-60-31171	STRAINER ASS' Y	1	DBB0001~
26	207-60-61150	. ROD ASS' Y	1	DBB0001~
27	20Y-60-21230	.. HOLDER	1	DBB0001~
28	12R-60-11230	.. SPRING	1	DBB0001~
29	22B-60-11160	. STRAINER	1	DBB0001~
30	20Y-60-31161	COVER	1	DBB0001~

FIG. H0110-01A1 HYDRAULIC TANK (1 ACTUATOR)

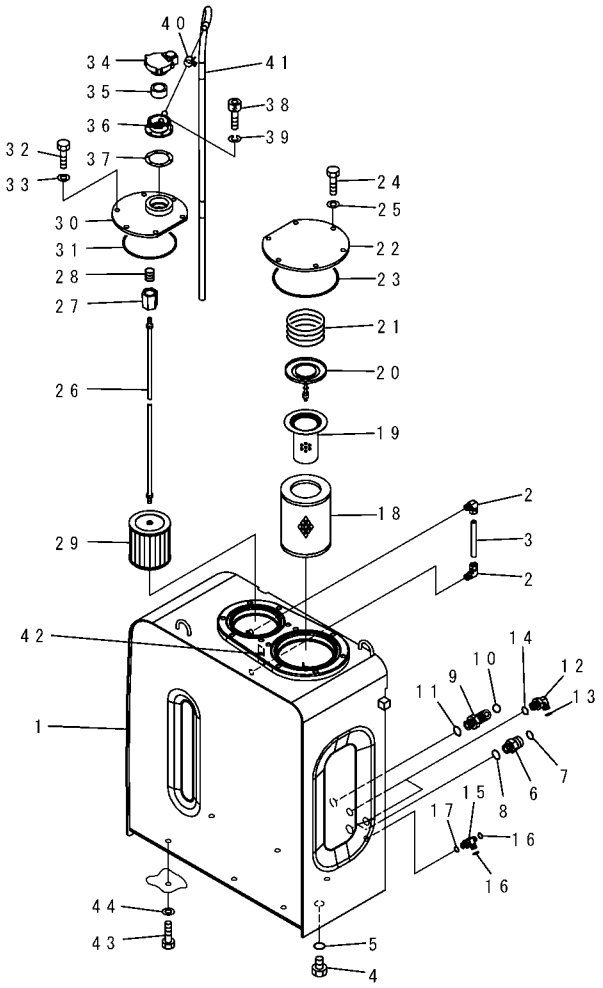

FIG NO. : H0110-01A1

INDEX	PART NO.	DESCRIPTION	Q'TY	SERIAL NO.
31	07000-15160	O–RING	1	DBB0001~
32	01010-81230	BOLT	6	DBB0001~
33	01643-31232	WASHER	6	DBB0001~
34	17A-60-11310	CAP ASS' Y	1	DBB0001~
35	20Y-60-21470	. ELEMENT	1	DBB0001~
36	20Y-60-21460	NECK	1	DBB0001~
37	20Y-60-21340	GASKET	1	DBB0001~
38	01252-70516	BOLT	6	DBB0001~
39	01601-20513	WASHER	6	DBB0001~
40	07285-00155	CLIP	1	DBB0001~
41	07270-61411	TUBE	1	DBB0001~
42	205-00-73360	PLATE, OPERATING	1	DBB0001~
43	01010-81635	BOLT	6	DBB0001~
44	01643-31645	WASHER	6	DBB0001~

FIG. H0120-01A1 MAIN VALVE (CONNECTING PARTS) (1 ACTUATOR) (OPT)

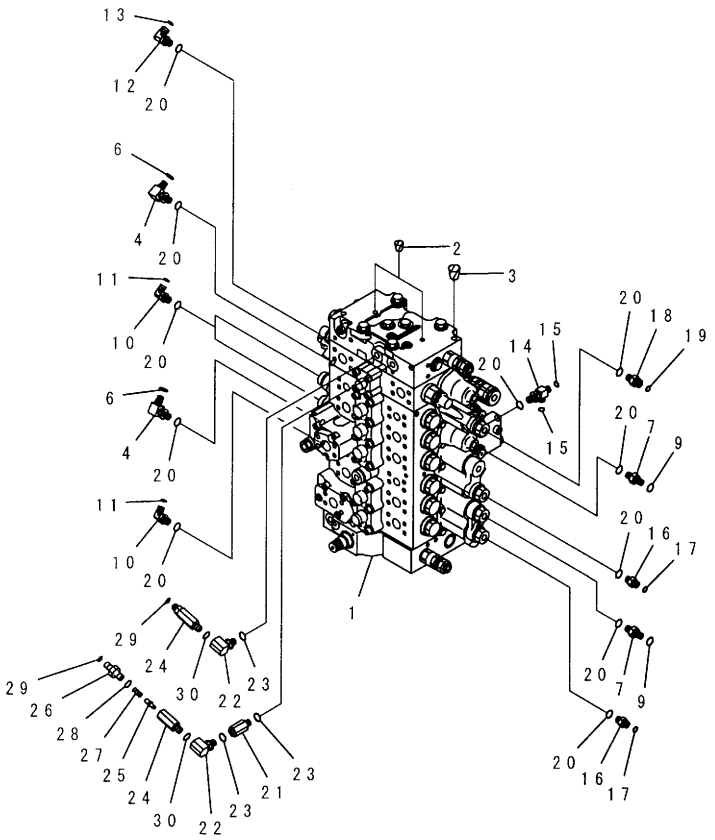

PW1C691

FIG NO. : H0120-01A1

INDEX	PART NO.	DESCRIPTION	Q'TY	SERIAL NO.
1	(723-47-20402)	VALVE ASS' Y	1	DBB0001~
2	07049-01012	PLUG	2	DBB0001~
3	07049-01215	PLUG	2	DBB0001~
4	20Y-62-45620	ELBOW	2	DBB0001~
6	02896-11008	O–RING	2	DBB0001~
7	20Y-62-45610	NIPPLE	2	DBB0001~
9	02896-11008	O–RING	2	DBB0001~
10	11Y-62-12160	ELBOW	3	DBB0001~
11	02896-11008	O–RING	3	DBB0001~
12	02782-10311	ELBOW	1	DBB0001~
13	02896-11009	O–RING	1	DBB0001~
14	11Y-62-12330	TEE	1	DBB0001~
15	02896-11008	O–RING	2	DBB0001~
16	11Y-62-12130	NIPPLE	2	DBB0001~
17	02896-11008	O–RING	2	DBB0001~
18	11Y-62-12520	NIPPLE	1	DBB0001~
19	02896-11009	O–RING	1	DBB0001~
20	07002-11423	O–RING	12	DBB0001~
21	20Y-62-22160	ADAPTER	1	DBB0001~
22	20F-61-12460	ELBOW	2	DBB0001~
23	07002-11423	O–RING	3	DBB0001~
	20Y-62-41601	VALVE ASS' Y	2	DBB0001~
24	☆	. BODY	1	DBB0001~
25	20Y-60-22270	. POPPET	1	DBB0001~
26	20Y-62-41970	. NIPPLE	1	DBB0001~
27	701-20-61230	. PRING	1	DBB0001~
28	07002-11423	. O–RING	1	DBB0001~
29	02896-11008	O–RING	2	DBB0001~
30	07002-11423	O–RING	2	DBB0001~

FIG. H0120-01A4 MAIN VALVE (ADDITIONAL SERVICE VALVE KIT) (1 ACTUATOR) (OPT)

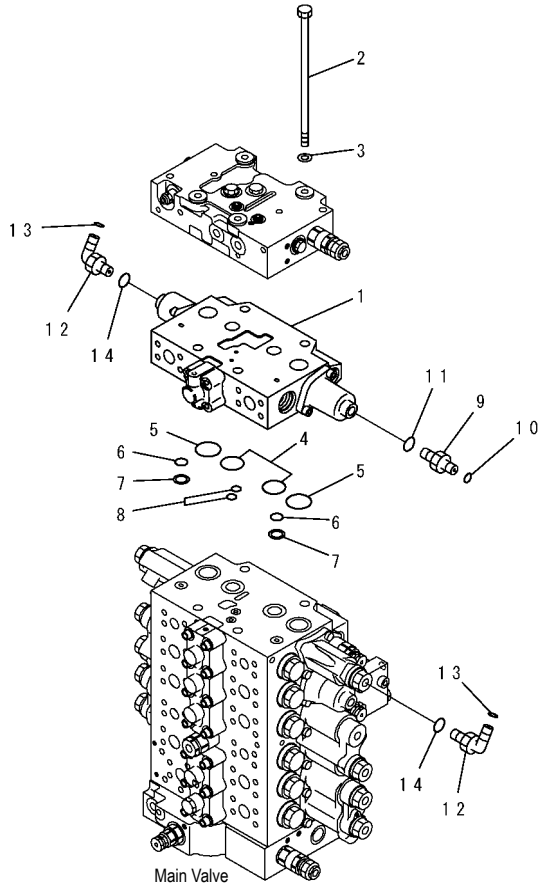

PW1C699

FIG NO. : H0120-01A4

INDEX	PART NO.	DESCRIPTION	Q'TY	SERIAL NO.
1	(723-41-07600)	VALVE ASS' Y, KIT	1	DBB0001~
2	01011-61455	BOLT	4	DBB0001~
3	01643-31445	WASHER	4	DBB0001~
4	(07000-13032)	O–RING	2	DBB0001~
5	(723-46-17510)	O–RING	2	DBB0001~
6	(723-11-19130)	O–RING	2	DBB0001~
7	(723-46-17520)	RING	2	DBB0001~
8	(723-46-17530)	O–RING	2	DBB0001~
9	11Y-62-12130	NIPPLE	1	DBB0001~
10	02896-11008	O–RING	1	DBB0001~
11	07002-11423	O–RING	1	DBB0001~
12	11Y-62-12160	ELBOW	2	DBB0001~
13	02896-11008	O–RING	2	DBB0001~
14	07002-11423	O–RING	2	DBB0001~

FIG. H0120-01A5 MAIN VALVE (ADDITIONAL SERVICE VALVE KIT) (2 ACTUATOR) (OPT)

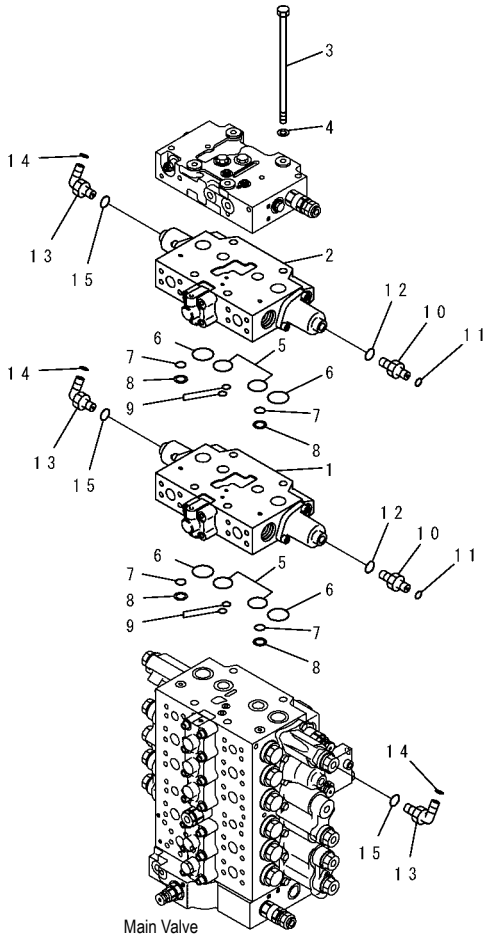

PW1C700

INDEX	PART NO.	DESCRIPTION	Q'TY	SERIAL NO.
1	(723-41-07600)	VALVE ASS' Y, KIT	1	DBB0001~
2	(723-41-07400)	VALVE ASS' Y, KIT	1	DBB0001~
3	723-46-15220	BOLT	4	DBB0001~
4	01643-31445	WASHER	4	DBB0001~
5	(07000-13032)	O–RING	4	DBB0001~
6	(723-46-17510)	O–RING	4	DBB0001~
7	(723-11-19130)	O–RING	4	DBB0001~
8	(723-46-17520)	RING	4	DBB0001~
9	(723-46-17530)	O–RING	4	DBB0001~
10	11Y-62-12130	NIPPLE	2	DBB0001~
11	02896-11008	O–RING	2	DBB0001~
12	07002-11423	O–RING	2	DBB0001~
13	11Y-62-12160	ELBOW	3	DBB0001~
14	02896-11008	O–RING	3	DBB0001~
15	07002-11423	O–RING	3	DBB0001~

FIG. H0120-02A1 MAIN VALVE (CONNECTING PARTS) (1 ACTUATOR) (OPT) (2/2)

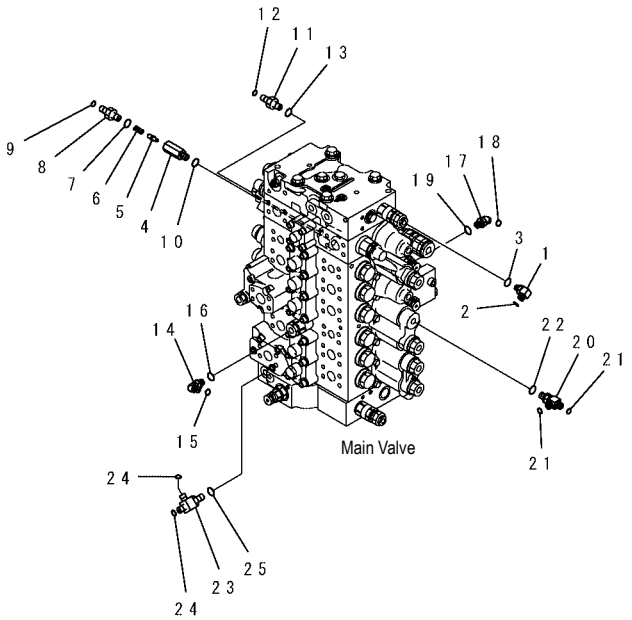

PW1C034

INDEX	PART NO.	DESCRIPTION	Q'TY	SERIAL NO.
1	20Y-62-41920	ELBOW	2	DBB0001~
2	02896-11008	O–RING	2	DBB0001~
3	07002-11223	O–RING	2	DBB0001~
	20Y-62-41700	VALVE ASS' Y	1	DBB0001~
4	20Y-60-22210	. BODY	1	DBB0001~
5	20Y-60-22270	. POPPET	1	DBB0001~
6	701-20-61230	. SPRING	1	DBB0001~
7	07002-11423	. O–RING	1	DBB0001~
8	11Y-62-12130	. NIPPLE	1	DBB0001~
9	02896-11008	O–RING	1	DBB0001~
10	07002-11423	O–RING	1	DBB0001~
11	11Y-62-12130	NIPPLE	1	DBB0001~
12	02896-11008	O–RING	1	DBB0001~
13	07002-11423	O–RING	1	DBB0001~
14	11Y-62-12160	ELBOW	1	DBB0001~
15	02896-11008	O–RING	1	DBB0001~
16	07002-11423	O–RING	1	DBB0001~
17	11Y-62-12240	ELBOW	1	DBB0001~
18	02896-11008	O–RING	1	DBB0001~
19	07002-11423	O–RING	1	DBB0001~
20	11Y-62-12330	TEE	1	DBB0001~
21	02896-11008	O–RING	2	DBB0001~
22	07002-11423	O–RING	1	DBB0001~
23	11Y-62-12330	TEE	1	DBB0001~
24	02896-11008	O–RING	2	DBB0001~
25	07002-11423	O–RING	1	DBB0001~

FIG. H0120-03A1 MAIN VALVE (VALVE BRACKET) (1 ACTUATOR) (OPT)

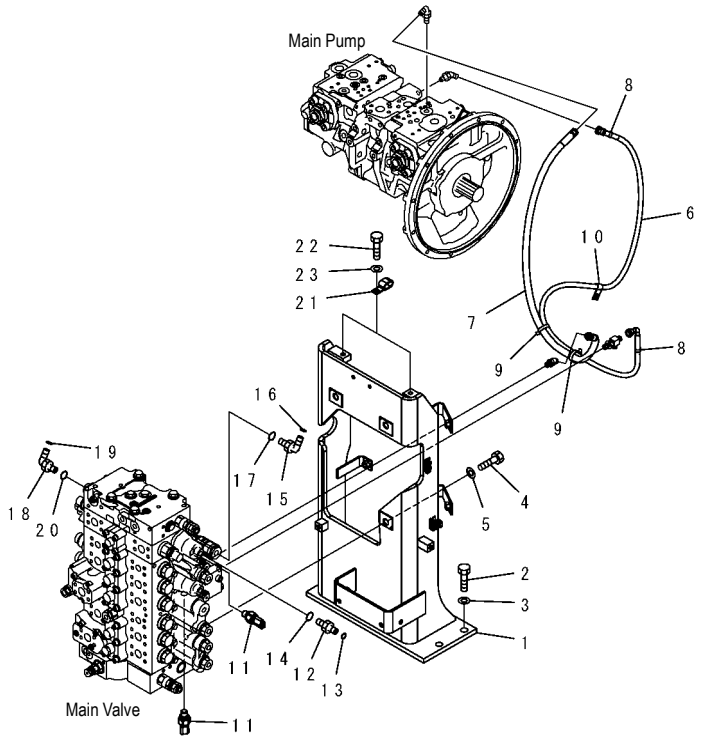

PW1C035

INDEX	PART NO.	DESCRIPTION	Q'TY	SERIAL NO.
1	20Y-62-41112	BRACKET	1	DBB0001~
2	01010-81640	BOLT	6	DBB0001~
3	01643-31645	WASHER	6	DBB0001~
4	01010-81645	BOLT	3	DBB0001~
5	01643-31645	WASHER	3	DBB0001~
6	02761-00217	HOSE	1	DBB0001~
7	02777-00218	HOSE	1	DBB0001~
8	20Y-62-22810	BAND, YELLOW	2	DBB0001~
9	08034-00519	BAND	2	DBB0001~
10	04435-51612	CLIP	1	DBB0001~
11	7861-93-1650	SENSOR	2	DBB0001~
12	11Y-62-12130	NIPPLE	1	DBB0001~
13	02896-11008	O–RING	1	DBB0001~
14	07002-11423	O–RING	1	DBB0001~
15	11Y-62-12160	ELBOW	1	DBB0001~
16	02896-11008	O–RING	1	DBB0001~
17	07002-11423	O–RING	1	DBB0001~
18	11Y-62-12160	ELBOW	1	DBB0001~
19	02896-11008	O–RING	1	DBB0001~
20	07002-11423	O–RING	1	DBB0001~
21	04435-51512	CLIP	4	DBB0001~
22	01010-81225	BOLT	2	DBB0001~
23	01643-31232	WASHER	2	DBB0001~

FIG. H0120-04A6 MAIN VALVE (SERVICE VALVE PLUG) (1 ACTUATOR) (OPT)

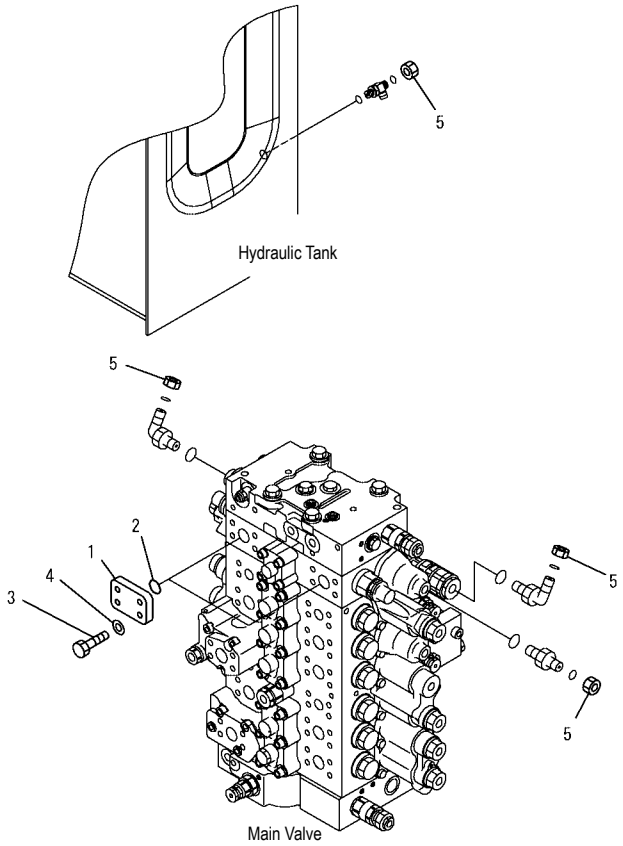

PW1C875

FIG NO. : H0120-04A6

INDEX	PART NO.	DESCRIPTION	Q'TY	SERIAL NO.
1	207-62-56190	FLANGE	2	DBB0001~
2	21T-09-11470	O–RING	2	DBB0001~
3	07372-21040	BOLT	8	DBB0001~
4	01643-51032	WASHER	8	DBB0001~
5	02789-00210	NUT	4	DBB0001~

FIG. H0330-01A1 RETURN LINE (1 ACTUATOR) (OPT)

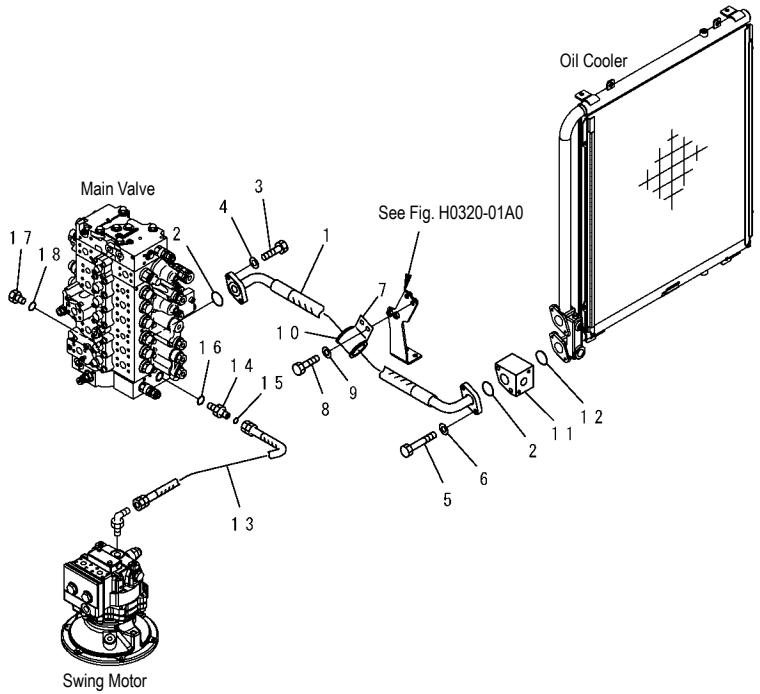

PW1C036

FIG NO. : H0330-01A1

INDEX	PART NO.	DESCRIPTION	Q'TY	SERIAL NO.
1	20Y-62-43390	HOSE, 1100 MM, 1100 MM	1	DBB0001~
2	07000-13048	O–RING	2	DBB0001~
3	01010-81240	BOLT	2	DBB0001~
4	01643-31232	WASHER	2	DBB0001~
5	01011-81220	BOLT	2	DBB0001~
6	01643-31232	WASHER	2	DBB0001~
7	20Y-62-41350	CLAMP	1	DBB0001~
8	01010-81225	BOLT	2	DBB0001~
9	01643-31232	WASHER	2	DBB0001~
10	07095-01449	CUSHION	1	DBB0001~
11	20Y-62-43371	BLOCK	1	DBB0001~
12	07000-13048	O–RING	1	DBB0001~
13	02762-00608	HOSE	1	DBB0001~
14	02781-00628	UNION	1	DBB0001~
15	02896-11018	O–RING	1	DBB0001~
16	07002-12434	O–RING	1	DBB0001~
17	07040-12412	PLUG	1	DBB0001~
18	07002-12434	O–RING	1	DBB0001~

FIG. H1270-01A0 ATTACHMENT LINES (MAIN L. H.) (1 ACTUATOR) (OPT)

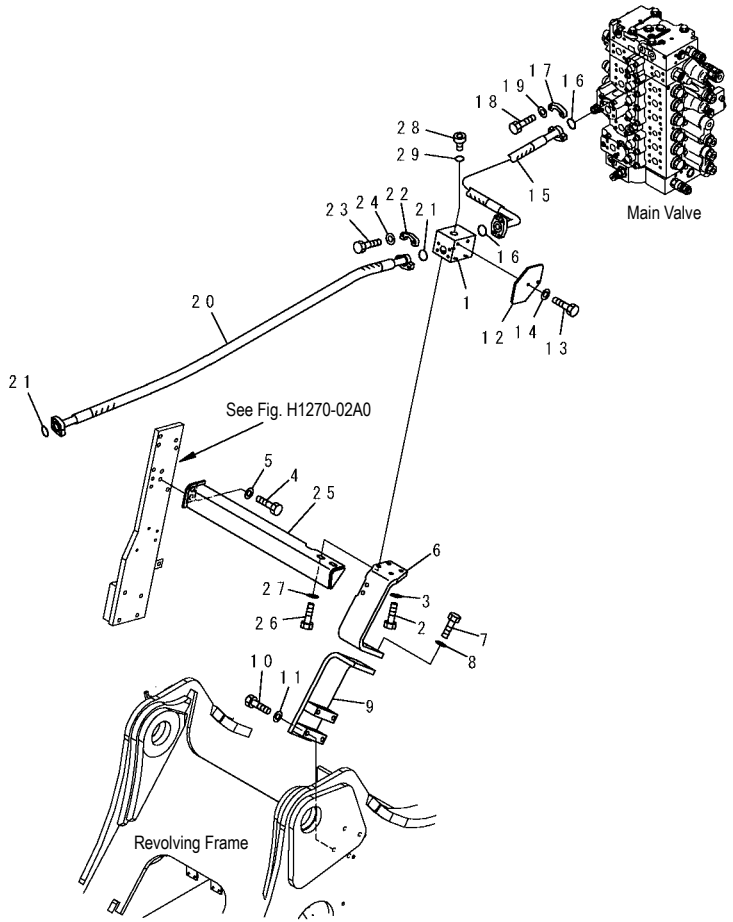

PW1C037

INDEX	PART NO.	DESCRIPTION	Q'TY	SERIAL NO.
1	20Y-62-43210	BLOCK	1	DBB0001~
2	01010-81235	BOLT	2	DBB0001~
3	01643-31232	WASHER	2	DBB0001~
4	01010-81245	BOLT	2	DBB0001~
5	01643-31232	WASHER	2	DBB0001~
6	20Y-62-43221	BRACKET	1	DBB0001~
7	01010-81235	BOLT	4	DBB0001~
8	01643-31232	WASHER	4	DBB0001~
9	20Y-62-43230	BRACKET	1	DBB0001~
10	01010-81285	BOLT	4	DBB0001~
11	01643-31232	WASHER	4	DBB0001~
12	20Y-62-43240	COVER	1	DBB0001~
13	01010-81025	BOLT	2	DBB0001~
14	01643-31032	WASHER	2	DBB0001~
15	07098-01007	HOSE	1	DBB0001~
16	21T-09-11460	O–RING	2	DBB0001~
17	07371-31049	FLANGE	4	DBB0001~
18	07372-21035	BOLT	8	DBB0001~
19	01643-51032	WASHER	8	DBB0001~
20	07097-21016	HOSE	1	DBB0001~
21	07000-13032	O–RING	2	DBB0001~
22	07371-31049	FLANGE	4	DBB0001~
23	07372-21035	BOLT	8	DBB0001~
24	01643-51032	WASHER	8	DBB0001~
25	20Y-62-43262	FRAME	1	DBB0001~
26	01010-81245	BOLT	2	DBB0001~
27	175-54-34170	WASHER	2	DBB0001~
28	07040-12412	PLUG	1	DBB0001~
29	07002-12434	O–RING	1	DBB0001~

FIG. H1270-01A1 RELIEF VALVE (280 KG/CM2) (FOR SERVICE VALVE) (OPT)

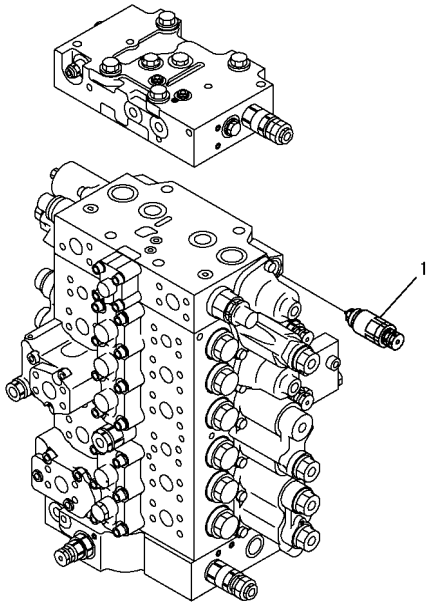

PW1C828

FIG NO. : H1270-01A1

INDEX	PART NO.	DESCRIPTION	Q'TY	SERIAL NO.
1	(723-90-61400)	VALVE ASS' Y	1	DBB0001~

FIG. H1270-01A2 RELIEF VALVE (210 KG/CM2) (FOR SERVICE VALVE) (OPT)

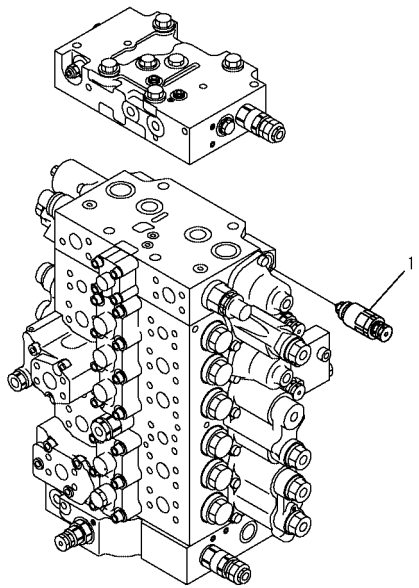

PW1C828

FIG NO. : H1270-01A2

INDEX	PART NO.	DESCRIPTION	Q'TY	SERIAL NO.
1	(723-90-61200)	RELIEF VALVE.....	1	DBB0001~

FIG. H1270-01A3 RELIEF VALVE (250 KG/CM2) (FOR SERVICE VALVE) (OPT)

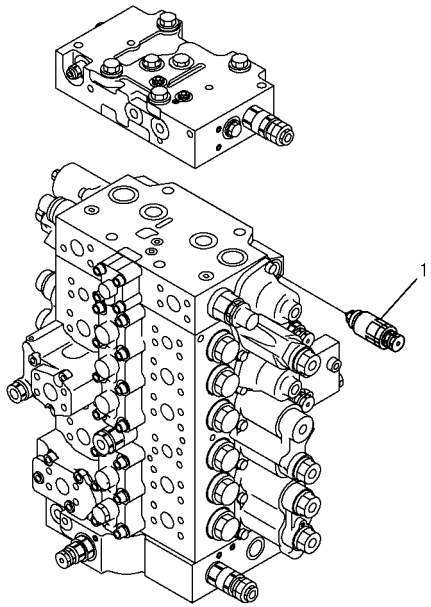

PW1C828

FIG NO. : H1270-01A3

INDEX	PART NO.	DESCRIPTION	Q'TY	SERIAL NO.
1	(723-90-61300)	RELIEF VALVE.....	1	DBB0001~

FIG. H1270-01A4 RELIEF VALVE (175 KG/CM2) (FOR SERVICE VALVE) (OPT)

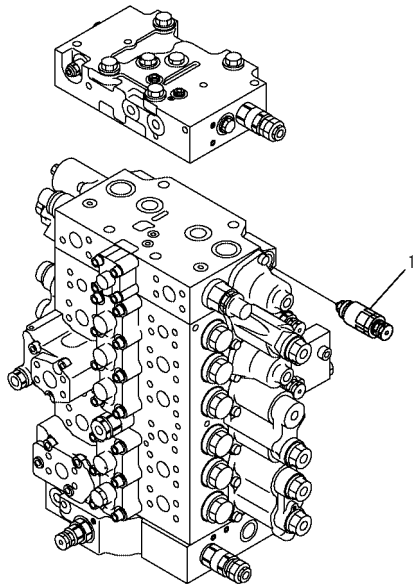

PW1C828

FIG NO. : H1270-01A4

INDEX	PART NO.	DESCRIPTION	Q'TY	SERIAL NO.
1	(723-90-61100)	RELIEF VALVE.....	1	DBB0001~

FIG. H1270-02A0 ATTACHMENT LINES (MAIN R. H.) (1 ACTUATOR) (OPT)

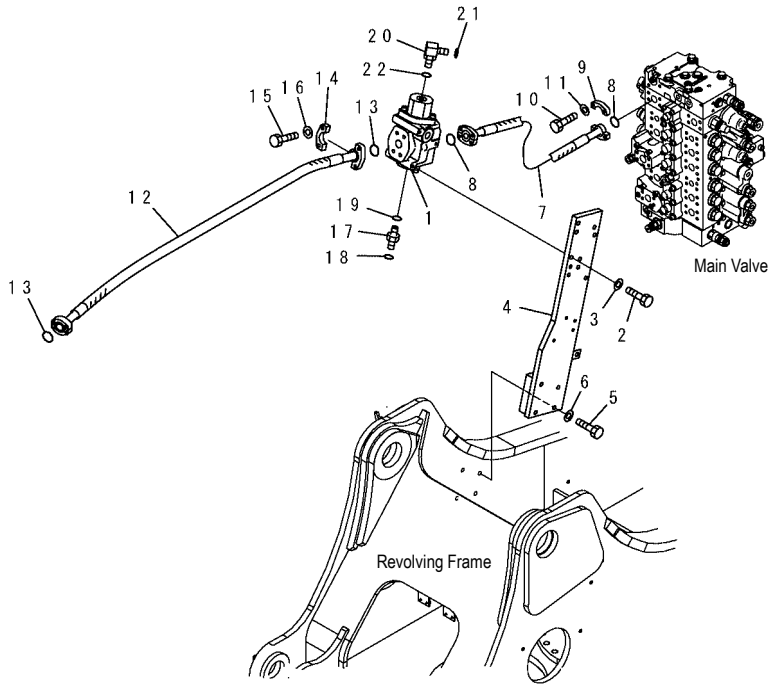

PW1C038

INDEX	PART NO.	DESCRIPTION	Q'TY	SERIAL NO.
1	(702-21-01910)	VALVE ASS' Y	1	DBB0001~
2	01010-81040	BOLT	3	DBB0001~
3	01643-31032	WASHER	3	DBB0001~
4	20Y-62-43270	BRACKET	1	DBB0001~
5	01010-81285	BOLT	4	DBB0001~
6	01643-31232	WASHER	4	DBB0001~
7	07097-01005	HOSE	1	DBB0001~
8	21T-09-11460	O–RING	2	DBB0001~
9	07371-31049	FLANGE	4	DBB0001~
10	07372-21035	BOLT	8	DBB0001~
11	01643-51032	WASHER	8	DBB0001~
12	07097-21217	HOSE	1	DBB0001~
13	07000-13038	O–RING	2	DBB0001~
14	07371-51260	FLANGE	4	DBB0001~
15	07372-21245	BOLT	8	DBB0001~
16	01643-31232	WASHER	8	DBB0001~
17	20Y-62-43460	NIPPLE	1	DBB0001~
18	02896-11008	O–RING	1	DBB0001~
19	07002-02034	O–RING	1	DBB0001~
20	11Y-62-12160	ELBOW	1	DBB0001~
	02782-10210	ELBOW	1	DBB0001~
21	02896-11008	O–RING	1	DBB0001~
22	07002-01423	O–RING	1	DBB0001~

FIG. H1270-03A0 ATTACHMENT LINES (RETURN) (1 ACTUATOR) (OPT)

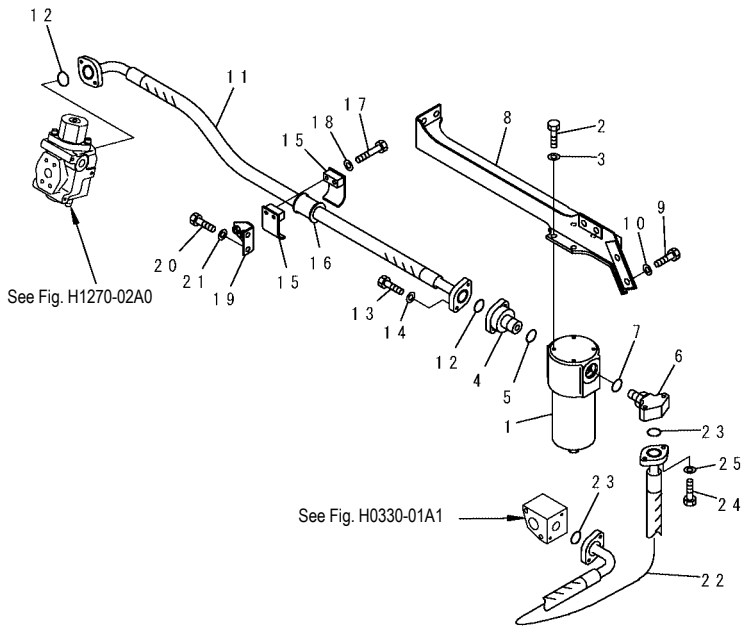

PW1C039

FIG NO. : H1270-03A0

INDEX	PART NO.	DESCRIPTION	Q'TY	SERIAL NO.
1	(20Y-970-2700)	FILTER ASS' Y	1	DBB0001~
2	01010-81230	BOLT	4	DBB0001~
3	01643-31232	WASHER	4	DBB0001~
4	20Y-62-43351	FLANGE	1	DBB0001~
5	07002-14234	O–RING	1	DBB0001~
6	20Y-62-43361	ELBOW	1	DBB0001~
7	07002-14234	O–RING	1	DBB0001~
8	20Y-62-43331	FRAME	1	DBB0001~
9	01010-81230	BOLT	4	DBB0001~
10	01643-31232	WASHER	4	DBB0001~
11	20Y-62-43311	HOSE, 1450 MM	1	DBB0001~
12	07000-13038	O–RING	2	DBB0001~
13	01010-81035	BOLT	4	DBB0001~
14	01643-31032	WASHER	4	DBB0001~
15	07094-11024	CLAMP	2	DBB0001~
16	07095-01038	CUSHION	1	DBB0001~
17	01010-81280	BOLT	2	DBB0001~
18	01643-31232	WASHER	2	DBB0001~
19	20Y-62-43320	BRACKET	1	DBB0001~
20	01010-81225	BOLT	2	DBB0001~
21	01643-31232	WASHER	2	DBB0001~
22	20Y-62-43381	HOSE, 1000 MM	1	DBB0001~
23	07000-13038	O–RING	2	DBB0001~
24	01010-81035	BOLT	4	DBB0001~
25	01643-31032	WASHER	4	DBB0001~

FIG. H1270-04A0 ATTACHMENT LINES (ACCUMULATOR AND SOLENOLD VALVE) (1 ACTUATOR) (OPT)

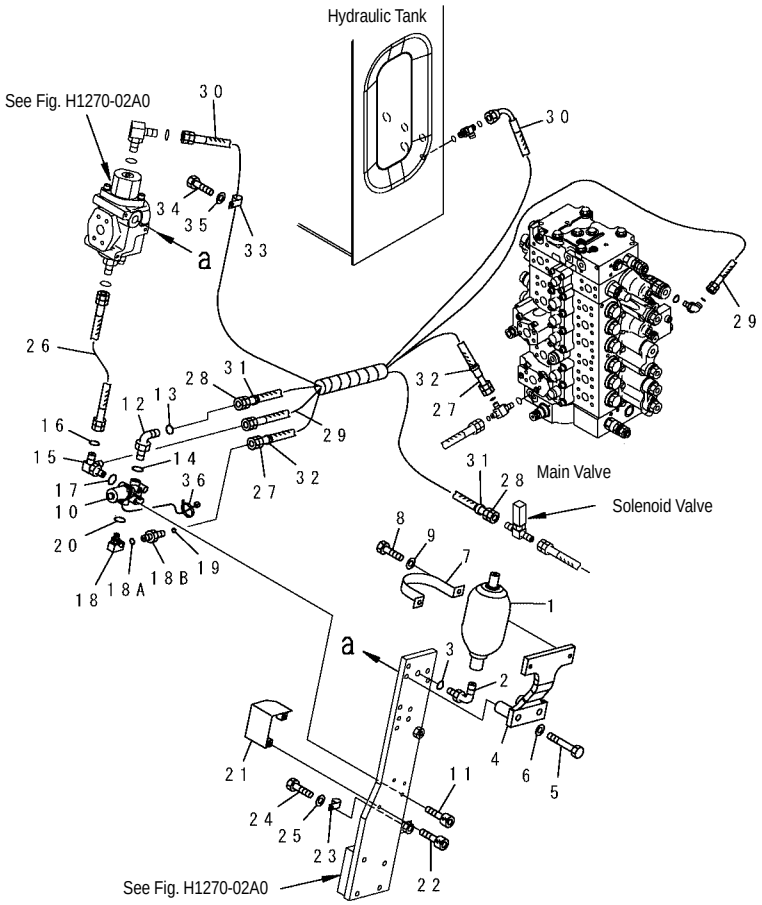

PW1C040

INDEX	PART NO.	DESCRIPTION	Q'TY	SERIAL NO.
1	(20Y-970-6450)	ACCUMULATOR	1	DBB0001~
2	20Y-62-43290	ELBOW	1	DBB0001~
3	07002-12434	O–RING	1	DBB0001~
4	20Y-62-43280	BRACKET	1	DBB0001~
5	01010-81295	BOLT	2	DBB0001~
6	01643-31232	WASHER	2	DBB0001~
7	175-61-51750	PLATE	1	DBB0001~
8	01010-81225	BOLT	2	DBB0001~
9	01643-31232	WASHER	2	DBB0001~
10	(20Y-60-32110)	VALVE ASS' Y	1	DBB0001~
11	01252-80825	BOLT	2	DBB0001~
12	21W-62-43960	ELBOW	1	DBB0001~
13	02896-11008	O–RING	1	DBB0001~
14	07002-01423	O–RING	1	DBB0001~
15	20Y-62-43580	ELBOW	1	DBB0001~
16	02896-11008	O–RING	2	DBB0001~
17	07000-01423	O–RING	1	DBB0001~
18	20F-61-12460	ELBOW	1	DBB0001~
18A	07002-11423	O–RING	1	DBB0001~
18B	11Y-62-12130	NIPPLE	1	DBB0001~
19	02896-11008	O–RING	1	DBB0001~
20	07000-01423	O–RING	1	DBB0001~
21	20Y-62-43530	COVER	1	DBB0001~
22	01252-80825	BOLT	2	DBB0001~
23	04434-50612	CLIP	1	DBB0001~
24	01010-81225	BOLT	1	DBB0001~
25	01643-31232	WASHER	1	DBB0001~
26	21W-62-42240	HOSE	1	DBB0001~
27	02760-002A6	HOSE	1	DBB0001~
28	02760-00212	HOSE	1	DBB0001~
29	02760-00216	HOSE	1	DBB0001~
30	02761-00221	HOSE	1	DBB0001~
31	20Y-62-22790	BAND, RED	2	DBB0001~
32	20Y-62-22820	BAND, BLUE	2	DBB0001~
33	04434-51212	CLIP	1	DBB0001~
34	01010-81225	BOLT	1	DBB0001~
35	01643-31232	WASHER	1	DBB0001~
36	08034-20536	BAND	2	DBB0001~

FIG. H1831-01A1 SOLENOID VALVE (VALVE) (1 ACTUATOR) (OPT)

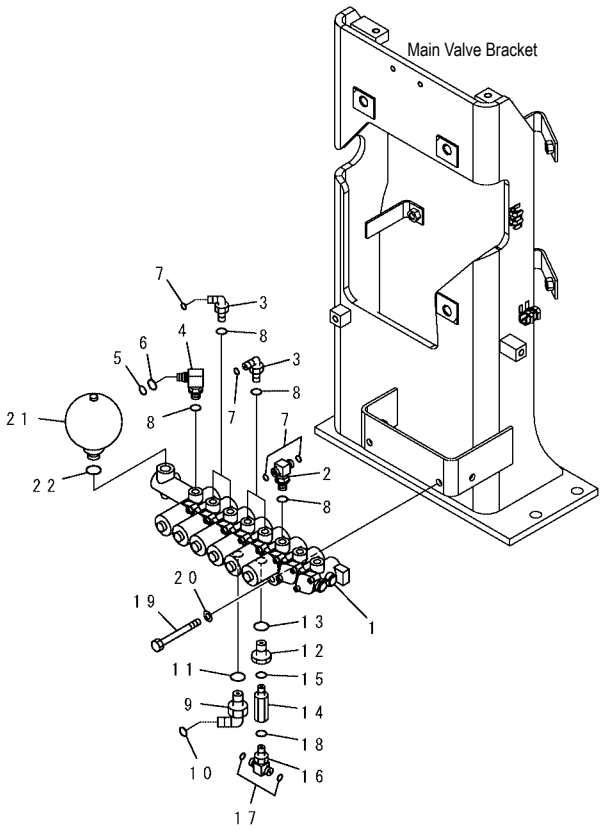

PW1C041

INDEX	PART NO.	DESCRIPTION	Q'TY	SERIAL NO.
1	(20Y-60-31212)	VALVE ASS 'Y	1	DBB0001~
2	20Y-62-43690	TEE	1	DBB0001~
3	11Y-62-12160	ELBOW	4	DBB0001~
4	20Y-62-22271	ELBOW	1	DBB0001~
5	201-60-11390	O–RING	1	DBB0001~
6	20Y-62-19560	O–RING	1	DBB0001~
7	02896-11008	O–RING	6	DBB0001~
8	07002-11423	O–RING	6	DBB0001~
9	02782-10315	ELBOW	1	DBB0001~
10	02896-11009	O–RING	1	DBB0001~
11	07002-12034	O–RING	1	DBB0001~
12	20Y-62-21940	FILTER ASS' Y	1	DBB0001~
13	07002-12034	O–RING	1	DBB0001~
14	20Y-60-22210	BODY	1	DBB0001~
15	07002-11423	O–RING	1	DBB0001~
16	11Y-62-12250	TEE	1	DBB0001~
17	02896-11008	O–RING	2	DBB0001~
18	07002-11423	O–RING	1	DBB0001~
19	01010-81095	BOLT	2	DBB0001~
20	01643-31032	WASHER	2	DBB0001~
21	22U-60-21330	ACCUMULATOR	1	DBB0001~
22	07002-12034	O–RING	1	DBB0001~

FIG. H1840-02A1 PPC MAIN LINE (BLOCK) (1 ACTUATOR) (OPT)

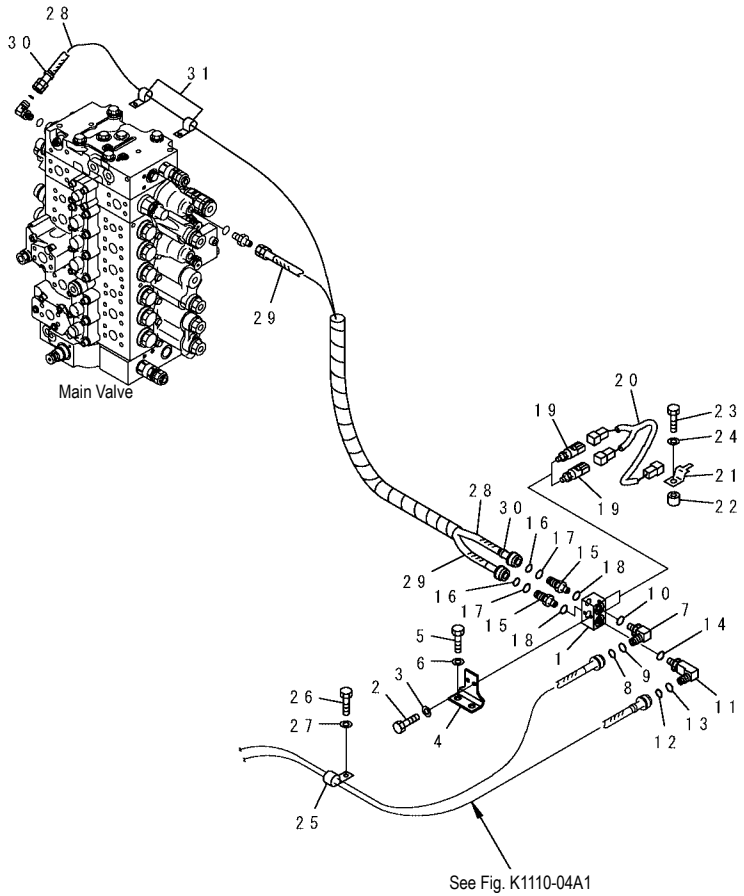

PW1C042

INDEX	PART NO.	DESCRIPTION	Q'TY	SERIAL NO.
1	20Y-62-43430	BLOCK	1	DBB0001~
2	01010-80820	BOLT	2	DBB0001~
3	01643-30823	WASHER	2	DBB0001~
4	20Y-62-43440	BRACKET	1	DBB0001~
5	01010-81025	BOLT	2	DBB0001~
6	01643-31032	WASHER	2	DBB0001~
7	20Y-62-22271	ELBOW	1	DBB0001~
8	201-60-11390	. O–RING	1	DBB0001~
9	20Y-62-19560	. O–RING	1	DBB0001~
10	07002-01423	O–RING	1	DBB0001~
11	14X-43-14840	ELBOW	1	DBB0001~
12	201-60-11390	. O–RING	1	DBB0001~
13	20Y-62-19560	. O–RING	1	DBB0001~
14	07002-01423	O–RING	1	DBB0001~
15	20Y-62-16630	NIPPLE	2	DBB0001~
16	201-60-11390	. O–RING	2	DBB0001~
17	20Y-62-19560	. O–RING	2	DBB0001~
18	07002-01423	O–RING	2	DBB0001~
19	206-06-61130	SWITCH	2	DBB0001~
20	20Y-06-21330	WIRING HARNESS	1	DBB0001~
21	08053-01512	CLIP	1	DBB0001~
22	195-33-11220	SPACER	1	DBB0001~
23	01010-81045	BOLT	1	DBB0001~
24	01643-31032	WASHER	1	DBB0001~
25	04434-51612	CLIP	1	DBB0001~
26	01010-81225	BOLT	1	DBB0001~
27	01643-31232	WASHER	1	DBB0001~
28	20Y-62-43520	HOSE, 2100 MM	1	DBB0001~
29	207-62-72720	HOSE, 1400 MM	1	DBB0001~
30	20Y-62-22810	BAND, YELLOW	2	DBB0001~
31	04435-51612	CLIP	2	DBB0001~

REVOLVING FRAME AND RELATED PARTS

FIG. J1110-01A0 REVOLVING FRAME (COVER AND BRACKET)

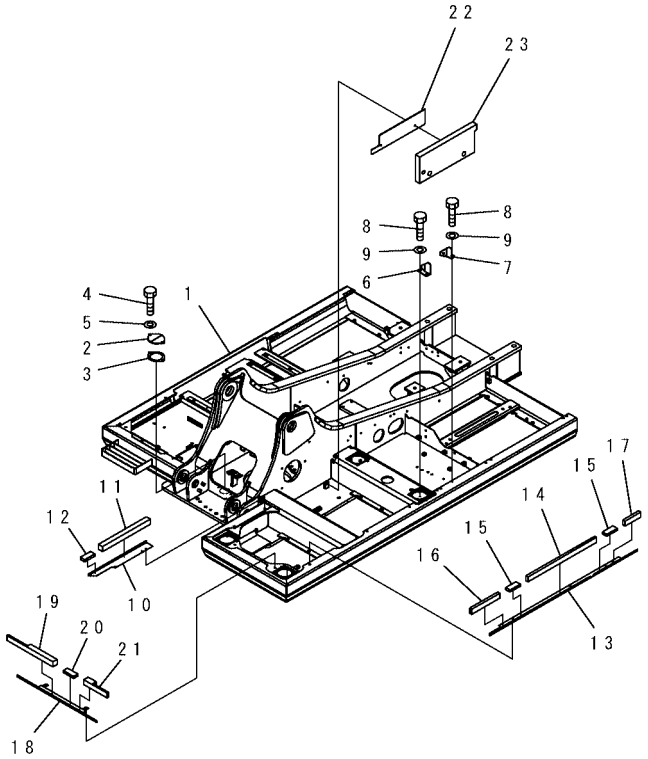

PW1B872

INDEX	PART NO.	DESCRIPTION	Q'TY	SERIAL NO.
1	20Y-46-D1270	FRAME	1	DBB0001~
2	205-30-71181	COVER	1	DBB0001~
3	205-30-71191	GASKET	1	DBB0001~
4	01010-81230	BOLT	2	DBB0001~
5	01643-31232	WASHER	2	DBB0001~
6	20Y-54-61670	BRACKET	1	DBB0001~
7	20Y-54-61680	BRACKET	1	DBB0001~
8	01010-81230	BOLT	4	DBB0001~
9	01643-31232	WASHER	4	DBB0001~
	20Y-46-42411	COVER	1	DBB0001~
10	☆	. COVER	1	DBB0001~
11	20Y-46-42231	. SEAL	1	DBB0001~
12	20Y-46-42460	. SHEET	1	DBB0001~
	20Y-46-42422	COVER	1	DBB0001~
13	☆	. COVER	1	DBB0001~
14	20Y-46-42251	. SEAL	1	DBB0001~
15	20Y-46-42460	. SHEET	2	DBB0001~
16	20Y-46-42470	. SEAL	1	DBB0001~
17	20Y-46-42480	.SEAL	1	DBB0001~
	20Y-46-42431	COVER	1	DBB0001~
18	☆	. COVER	1	DBB0001~
19	20Y-46-42241	. SEAL	1	DBB0001~
20	20Y-46-42460	. SHEET	1	DBB0001~
21	20Y-46-42490	. SEAL	1	DBB0001~
	20Y-46-42440	COVER	1	DBB0001~
22	20Y-46-42381	.COVER	1	DBB0001~
23	20Y-46-42260	. SHEET	1	DBB0001~

FIG. J1110-02A0 REVOLVING FRAME (SHEET AND GROMMET)

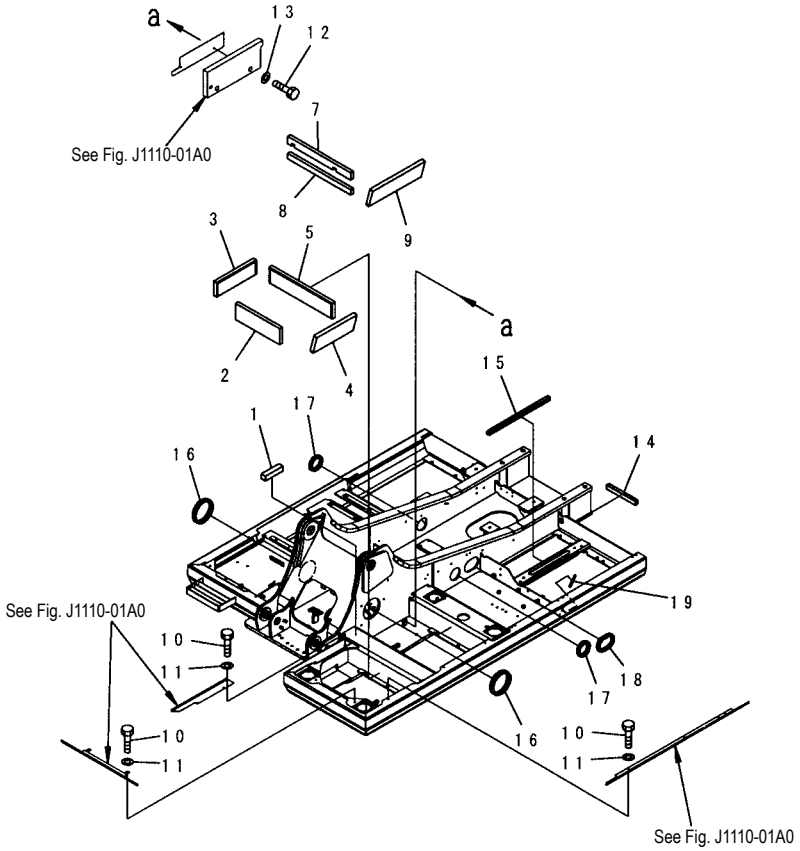

PW1B873

INDEX	PART NO.	DESCRIPTION	Q'TY	SERIAL NO.
1	20Y-46-42210	SEAL	1	DBB0001~
2	20Y-46-D1170	SHEET	1	DBB0001~
3	20Y-46-D1180	SHEET	1	DBB0001~
4	20Y-46-D1190	SHEET	1	DBB0001~
5	20Y-46-D1200	SHEET	1	DBB0001~
7	20Y-46-D1210	SHEET	1	DBB0001~
8	20Y-46-D1220	SHEET	1	DBB0001~
9	20Y-46-D1230	SHEET	1	DBB0001~
10	01010-81035	BOLT	7	DBB0001~
11	01643-31032	WASHER	7	DBB0001~
12	01010-81225	BOLT	2	DBB0001~
13	01643-31232	WASHER	2	DBB0001~
14	20Y-46-21890	SHEET	1	DBB0001~
15	20Y-46-41150	SHEET	1	DBB0001~
16	20Y-46-41170	GROMMET	2	DBB0001~
17	20Y-46-41180	GROMMET	2	DBB0001~
18	20Y-46-41190	GROMMET	1	DBB0001~
19	20Y-46-11281	GROMMET	1	DBB0001~

FIG. J1310-01A0 BOOM FOOT PIN

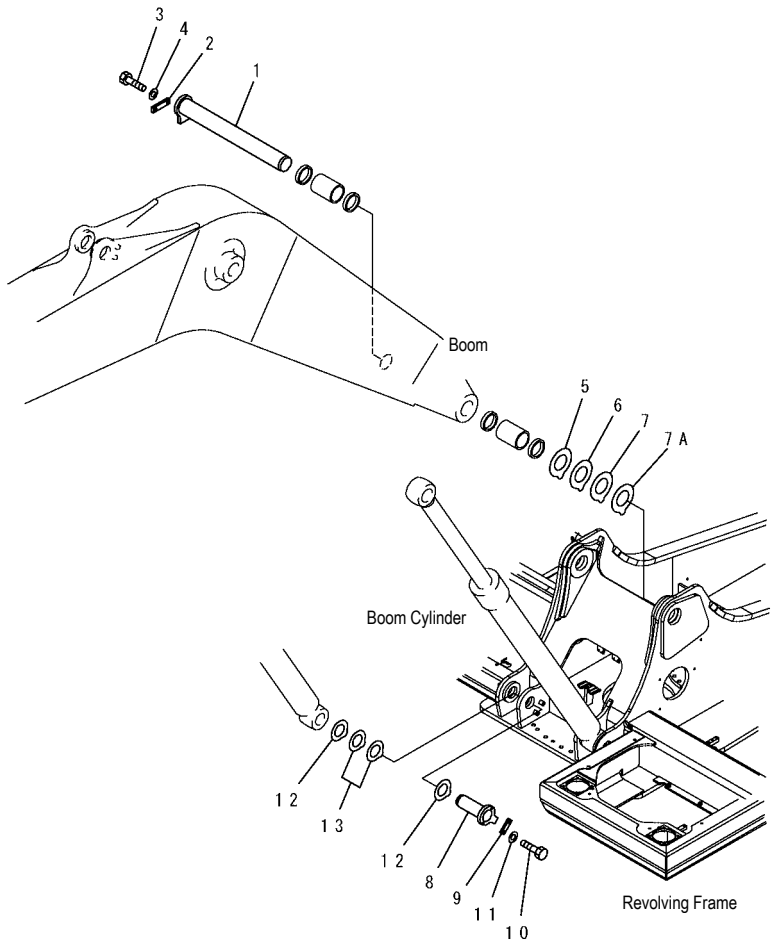

PW1B865

FIG NO. : J1310-01A0

INDEX	PART NO.	DESCRIPTION	Q'TY	SERIAL NO.
1	206-70-55160	PIN	1	DBB0001~
2	20Y-70-11190	PLATE	1	DBB0001~
3	01010-81640	BOLT	2	DBB0001~
4	01643-31645	WASHER	2	DBB0001~
5	20Y-70-31540	SPACER, 2.0MM	3	DBB0001~
6	20Y-70-31550	SPACER, 2.5MM	1	DBB0001~
7	20Y-70-31560	SPACER, 3.0MM	1	DBB0001~
7A	20Y-70-31570	SPACER, 3.5MM	1	DBB0001~
8	205-70-71210	PIN	2	DBB0001~
9	205-70-66580	PLATE	2	DBB0001~
10	01010-81235	BOLT	4	DBB0001~
11	01643-31232	WASHER	4	DBB0001~
12	20Y-70-31380	SPACER, 1.0MM	4	DBB0001~
13	20Y-70-31390	SPACER, 2.0MM	4	DBB0001~

OPERATOR' S COMPARTMENT AND CONTROL SYSTEM

FIG. K0110-01A2 OPERATOR' S SEAT (SUSPENSION)

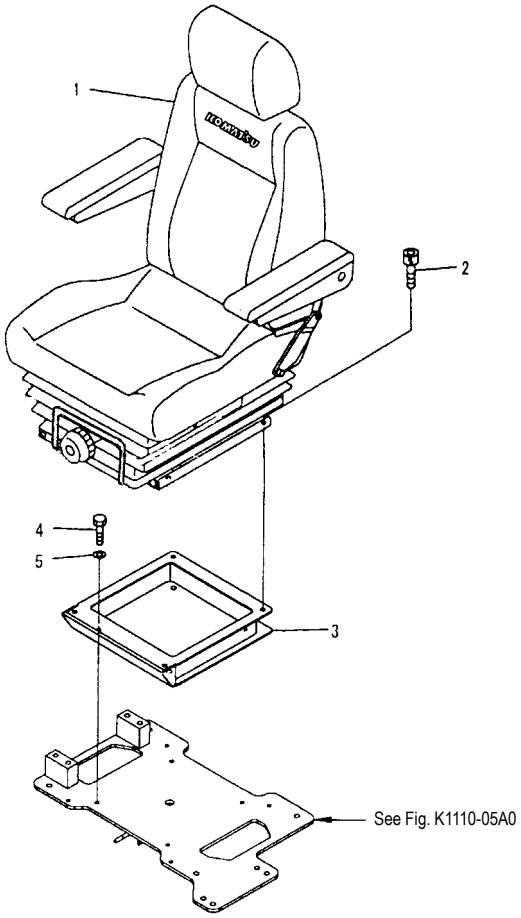

PW1B864

FIG NO. : K0110-01A2

INDEX	PART NO.	DESCRIPTION	Q'TY	SERIAL NO.
1	20Y-57-D1500	SEAT ASS' Y, LEATHER	1	DBH0001~
2	01252-80825	BOLT	4	DBH0001~
3	20Y-57-D1390	BRACKET	1	DBH0001~
4	01010-D0825	BOLT	4	DBH0001~
5	01643-70823	WASHER	4	DBH0001~

FIG. K0160-01A0 SEAT BELT (50MM WIDE)(OPT)

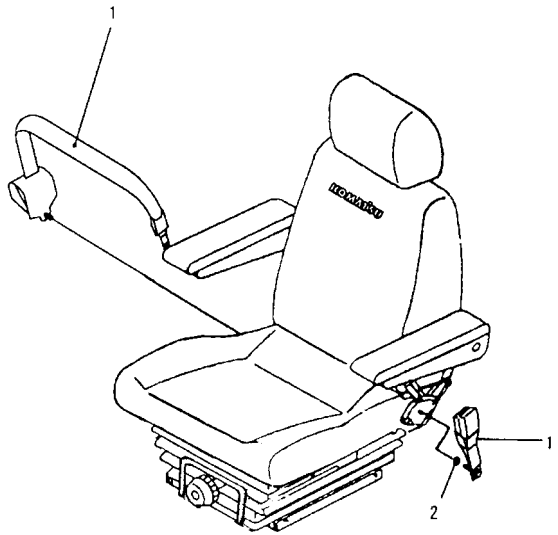

PW1B855

FIG NO. : K0160-01A0

INDEX	PART NO.	DESCRIPTION	Q'TY	SERIAL NO.
1	22B-57-11811	BELT, LAP	1	DBH0001~
2	22B-57-11830	.SPACER	1	DBH0001~

FIG. K0160-01A1 SEAT BELT (78MM WIDE)(OPT) (GRAMMER OF SEAT)

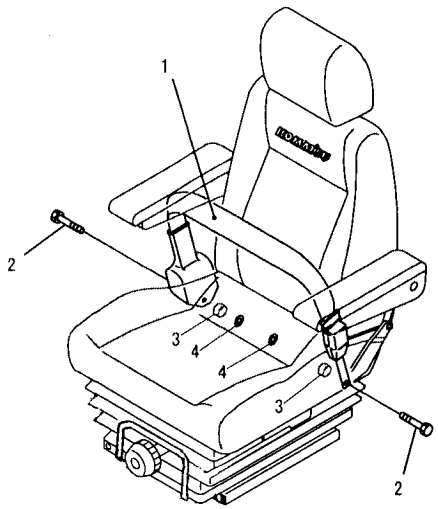

PW1B862

FIG NO. : K0160-01A1

INDEX	PART NO.	DESCRIPTION	Q'TY	SERIAL NO.
1	22B-57-11910	BELT, LAP	1	DBB0001~
2	20Y-57-D1370	. BOLT	2	DBB0001~
3	20Y-57-D1380	. WASHER	2	DBB0001~
4	20Y-57-D1360	NUT	2	DBB0001~

FIG. K0160-01A2 SEAT BELT (50MM WIDE)(OPT)

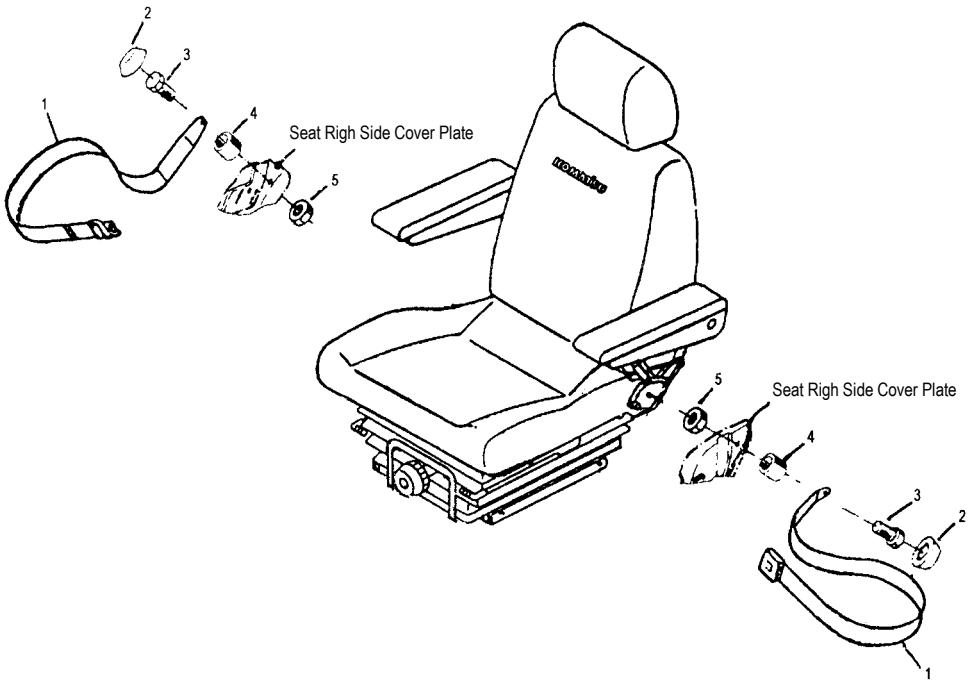

FIG NO. : K0160-01A2

INDEX	PART NO.	DESCRIPTION	Q'TY	SERIAL NO.
1	203-57-61121	SEAT BELT ASS'Y	1	DBB0001~
2	132909(GLM)	CAP	2	DBB0001~
3	01010-81035	BOLT	2	DBB0001~
4	115419(GLM)	SPACE	2	DBB0001~
5	01580-01008	WASHER	2	DBB0001~

FIG. K0180-01A0 SEAT REAR COVER (WITH AIR CONDITIONER)

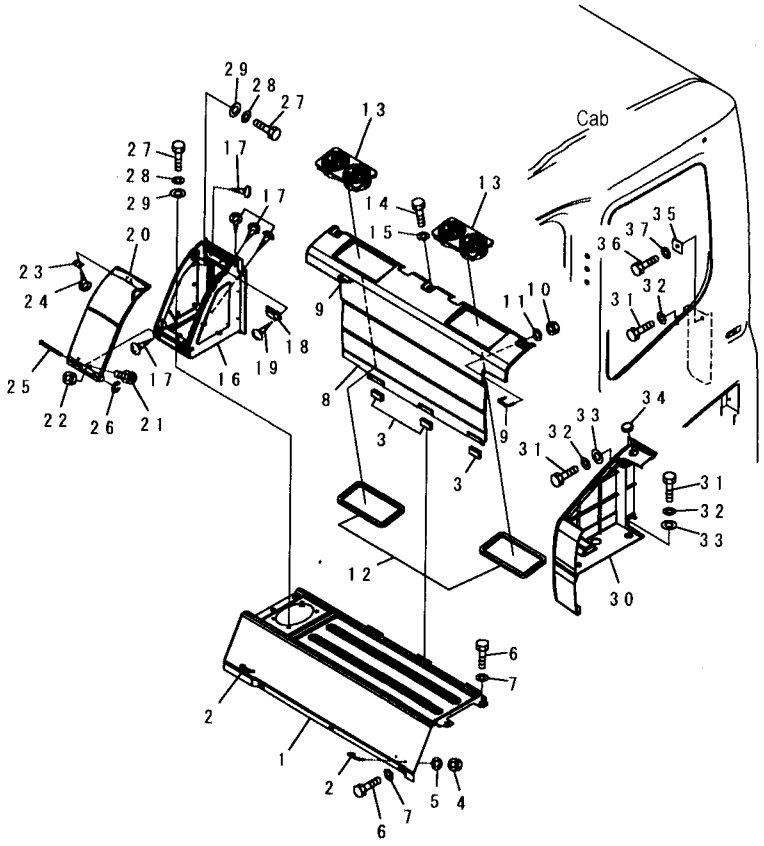

INDEX	PART NO.	DESCRIPTION	Q'TY	SERIAL NO.
	208-53-13610	COVER ASS'Y	1	DBB4709~
1	☆	. COVER	1	DBB4709~
2	208-53-12290	. HOOK	2	DBB4709~
3	208-53-12460	. SEAT	3	DBB4709~
4	01580-10403	. NUT	4	DBB4709~
5	01601-20410	. WASHER	4	DBB4709~
6	01010-D0820	BOLT	7	DBB4709~
7	01643-70823	WASHER	7	DBB4709~
	208-53-13620	COVER	1	DBB4709~
8	☆	. COVER	1	DBB4709~
9	208-53-12290	.. HOOK	2	DBB4709~
10	01580-10403	.. NUT	4	DBB4709~
11	01601-20410	.. WASHER	4	DBB4709~
12	208-53-13710	. SEAL	2	DBB4709~
13	208-979-7560	GRILLE	2	DBB4709~
14	01010-D0820	BOLT	3	DBB4709~
15	01643-70823	WASHER	3	DBB4709~
	208-53-12350	COVER ASS'Y	1	DBB4709~
16	☆	. COVER	1	DBB4709~
17	01370-00408	.. SCREW	10	DBB4709~
18	09452-14503	CATCHER	1	DBB4709~
19	01370-10308	. SCREW	2	DBB4709~
20	208-53-12390	.COVER	1	DBB4709~
21	01023-10406	.. SCREW	2	DBB4709~
22	01580-00403	.. NUT	2	DBB4709~
23	208-53-12410	. PLATE	1	DBB4709~
24	01370-20308	. SCREW	2	DBB4709~
25	208-53-12320	. PIN	1	DBB4709~
26	208-53-12330	. RING	1	DBB4709~
27	01010-D0820	BOLT	5	DBB4709~
28	01643-70823	WASHER	5	DBB4709~
29	01643-71232	WASHER	5	DBB4709~
30	208-53-12730	COVER	1	DBB4709~
31	01010-D0820	BOLT	3	DBB4709~
32	01643-70823	WASHER	3	DBB4709~
33	01643-71232	WASHER	3	DBB4709~
34	09415-02110	CAP	1	DBB4709~
35	208-53-12750	PLATE	1	DBB4709~
36	01010-D0820	BOLT	1	DBB4709~
37	01643-70823	WASHER	1	DBB4709~

FIG. KO190-01A0 LUGGAGE BOX NET

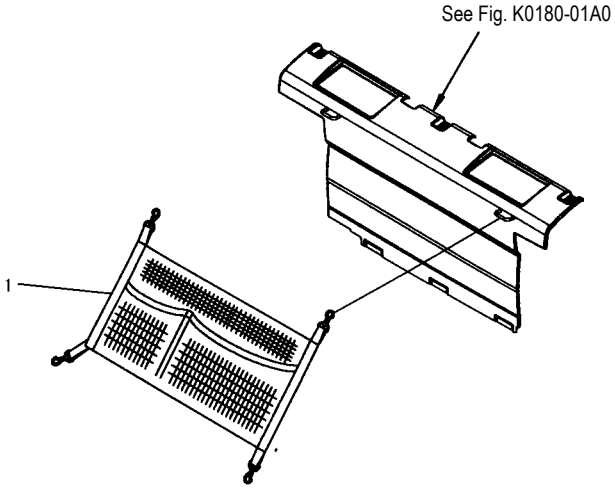

00018555

FIG NO. : KO190-01A0

INDEX	PART NO.	DESCRIPTION	Q'TY	SERIAL NO.
1	208-53-13720	NET.....	1	DBB4709~

FIG. K0220-01A0 TOP GUARD (OPT)

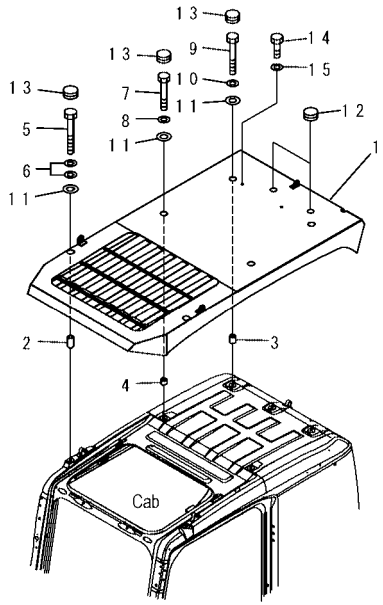

PW1D197

FIG NO. : K0220-01A0

INDEX	PART NO.	DESCRIPTION	Q'TY	SERIAL NO.
1	20Y-954-4211	GUARD	1	DBB0001~
2	20Y-954-4220	PIPE	2	DBB0001~
3	20Y-954-4230	PIPE	2	DBB0001~
4	20Y-954-4240	PIPE	2	DBB0001~
5	01011-81220	BOLT	2	DBB0001~
6	01643-31232	WASHER	4	DBB0001~
7	01010-81280	BOLT	2	DBB0001~
8	01643-31232	WASHER	2	DBB0001~
9	01010-81295	BOLT	2	DBB0001~
10	01643-31232	WASHER	2	DBB0001~
11	130-43-64260	WASHER	6	DBB0001~
12	195-Z11-2970	CAP	6	DBB0001~
13	09415-02512	CAP	2	DBB0001~
14	01010-D1220	BOLT	2	DBB0001~
15	01643-71232	WASHER	2	DBB0001~

FIG. K0230-01A0 FRONT GUARD (HALF) (OPT)

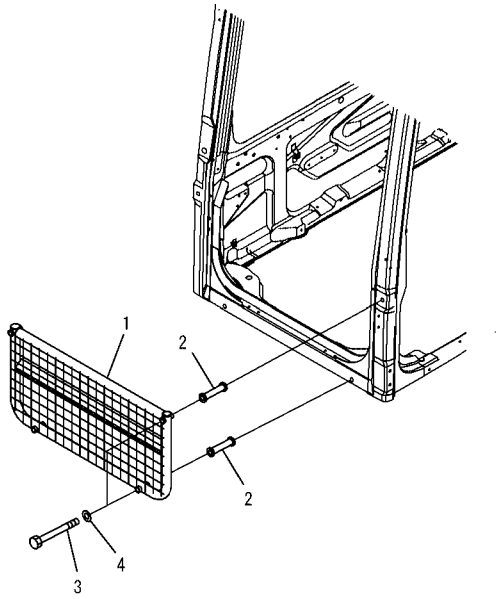

PW1B831

FIG NO. : K0230-01A0

INDEX	PART NO.	DESCRIPTION	Q'TY	SERIAL NO.
1	20Y-954-5140	GUARD, FRONT/HA	1	DBB0001~
2	22B-954-1760	SPACER	4	DBB0001~
3	01011-D1260	BOLT	4	DBB0001~
4	01643-71232	WASHER	4	DBB0001~

FIG. K0230-01A1 FRONT GUARD (FULL) (LEVEL-1) (OPT)

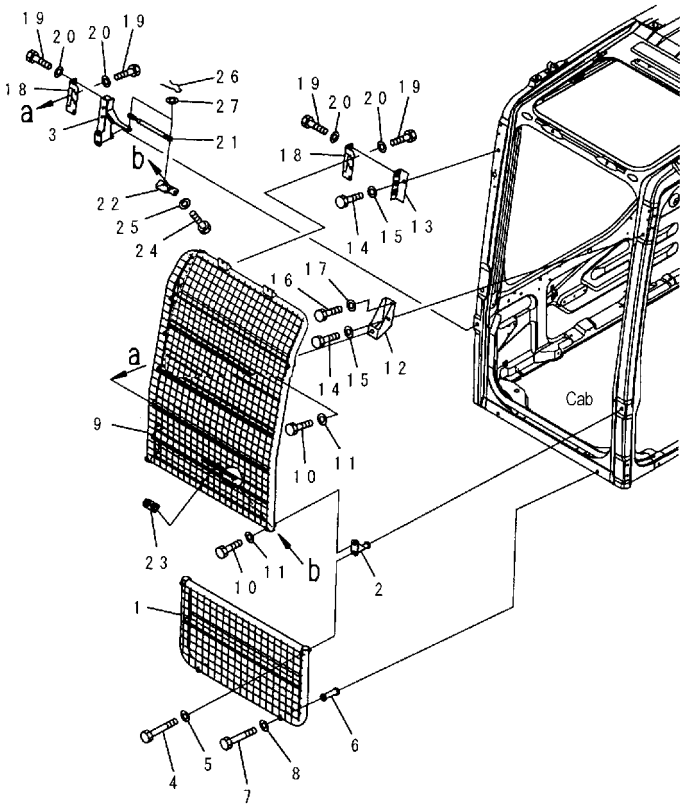

INDEX	PART NO.	DESCRIPTION	Q'TY	SERIAL NO.
1	20Y-954-5140	GUARD, FRONT/HA	1	DBB0001~
2	22B-954-1720	BRACKET	1	DBB0001~
3	20Y-954-5150	BRACKET	1	DBB0001~
4	01011-D1260	BOLT	2	DBB0001~
5	01643-71232	WASHER	2	DBB0001~
6	22B-954-1760	SPACER	2	DBB0001~
7	01011-D1260	BOLT	2	DBB0001~
8	01643-71232	WASHER	2	DBB0001~
9	20Y-954-5161	GUARD	1	DBB0001~
10	01010-D1275	BOLT	2	DBB0001~
11	01643-71232	WASHER	2	DBB0001~
12	20Y-954-5190	BRACKET	1	DBB0001~
13	22B-954-1750	BRACKET	1	DBB0001~
14	01010-D1225	BOLT	2	DBB0001~
15	01643-71232	WASHER	2	DBB0001~
16	01010-D0625	BOLT	1	DBB0001~
17	01643-70623	WASHER	1	DBB0001~
18	14X-911-1330	HINGE	2	DBB0001~
19	01010-D1025	BOLT	12	DBB0001~
20	01643-71032	WASHER	12	DBB0001~
21	20Y-54-36342	GAS SPRING ASS'Y	1	DBB0001~
22	22B-954-1840	PLATE	1	DBB0001~
23	22B-954-1660	PLATE	1	DBB0001~
24	01010-D0820	BOLT	2	DBB0001~
25	01643-70823	WASHER	2	DBB0001~
26	04052-10833	PIN	2	DBB0001~
27	01643-70823	WASHER	2	DBB0001~

FIG. K0230-01A2 FRONT GUARD (FULL) (LEVEL-2) (OPT)

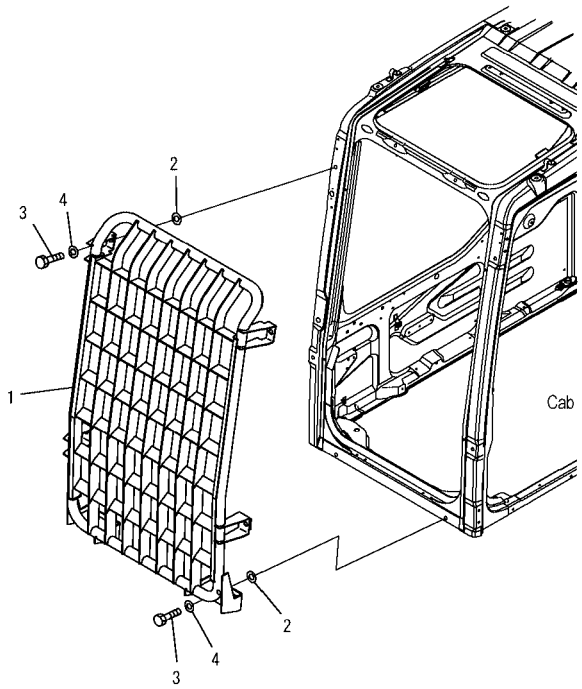

PW1B875

FIG NO. : K0230-01A2

INDEX	PART NO.	DESCRIPTION	Q'TY	SERIAL NO.
1	20Y-954-4310	GUARD	1	DBB0001~
2	130-43-64260	COLLAR	6	DBB0001~
3	01010-D1240	BOLT	6	DBB0001~
4	01643-71232	WASHER	6	DBB0001~

FIG. K0310-01A0 FLOOR MAT

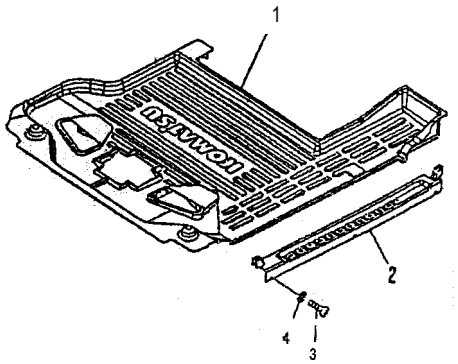

PW1B866

FIG NO. : K0310-01A0

INDEX	PART NO.	DESCRIPTION	Q'TY	SERIAL NO.
1	208-53-12610	FLOOR MAT, STD	1	DBB4709~
2	20Y-54-51952	COVER	1	DBB4709~
3	01245-00616	SCREW	5	DBB4709~
4	01643-70623	WASHER	5	DBB4709~

FIG. K0310-01A1 FLOOR MAT (SPECIAL PIPING FOR BREAKER) (OPT)

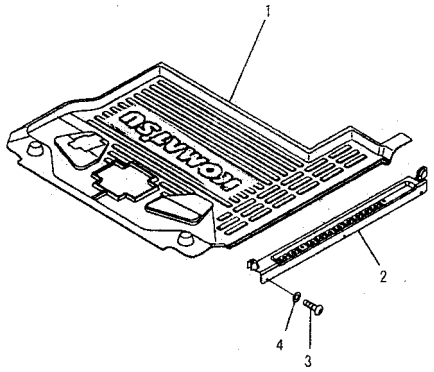

PW1B867

FIG NO. : K0310-01A1

INDEX	PART NO.	DESCRIPTION	Q'TY	SERIAL NO.
1	208-53-12710	FLOOR MAT	1	DBB4709~
2	20Y-54-51952	COVER	1	DBB4709~
3	01245-00612	SCREW	5	DBB4709~
4	01643-70623	WASHER	5	DBB4709~

FIG. K0320-01A0 RAIN VISOR (OPT)

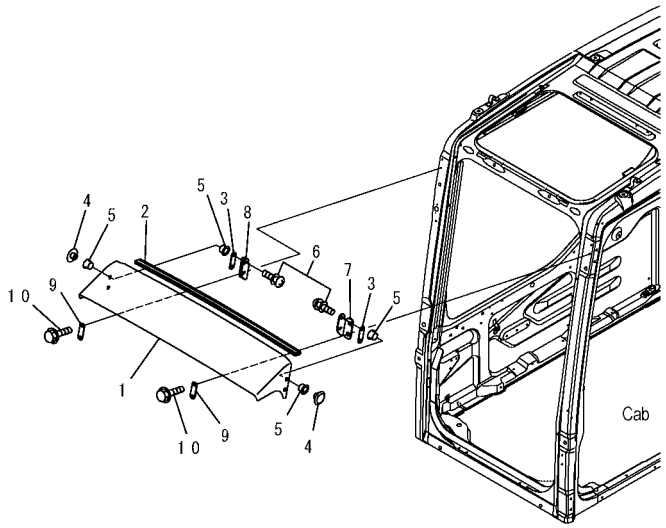

PW1C927

FIG NO. : K0320-01A0

INDEX	PART NO.	DESCRIPTION	Q'TY	SERIAL NO.
1	20Y-54-52552	VISOR	1	DBB0001~
2	20Y-54-52950	. SEAL	1	DBB0001~
3	20Y-54-52530	PLATE	2	DBB0001~
4	205-54-51720	RETAINER	4	DBB0001~
5	205-54-51730	RACKING	8	DBB0001~
6	01023-20612	SCREW	4	DBB0001~
7	20Y-54-52562	PLATE,L.H	1	DBB0001~
8	20Y-54-52572	PLATE,R.H	1	DBB0001~
9	20Y-54-52530	PLATE	2	DBB0001~
10	01435-40616	BOLT	4	DBB0001~

FIG. K0330-01A0 SUN VISOR (OPT)

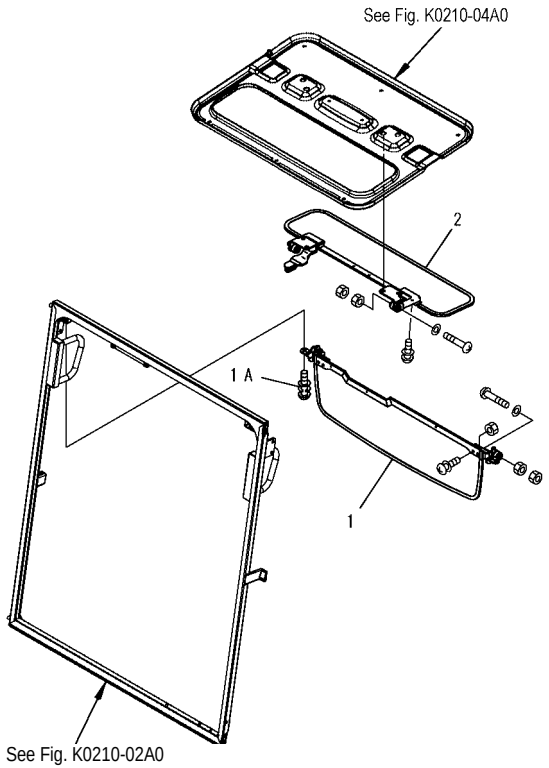

PW1D202

INDEX	PART NO.	DESCRIPTION	Q'TY	SERIAL NO.
1	20Y-54-52510	SUN VISOR, FRONT	1	DBB0001~
	01023-20616	. SCREW, FRONT	4	DBB0001~
	01570-00605	. NUT, FRONT	4	DBB0001~
	01580-00806	. NUT, FRONT	4	DBB0001~
	01641-50812	. WASHER, FRONT	2	DBB0001~
1A	01023-70512	SCREW	4	DBB0001~
2	20Y-54-52521	SUN VISOR	1	DBB0001~
	01023-20616	. SCREW, ROOF	4	DBB0001~
	01245-00816	. SCREW	1	DBB0001~
	01580-00806	. NUT, ROOF	4	DBB0001~
	01641-50812	. WASHER, ROOF	2	DBB0001~
	01643-70823	. WASHER	1	DBB0001~
	01643-71032	. WASHER	1	DBB0001~

FIG. K0350-01A0 WINDOW WASHER

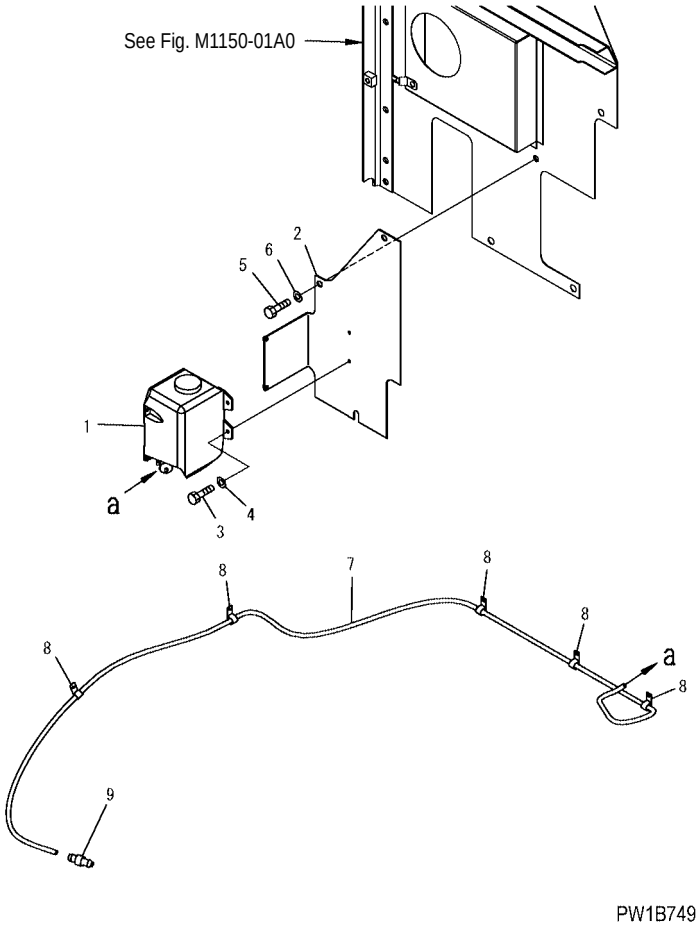

FIG NO. : K0350-01A0

INDEX	PART NO.	DESCRIPTION	Q'TY	SERIAL NO.
1	21T-06-11350	TANK ASS'Y	1	DBB0001~
2	20Y-06-31690	BRACKET	1	DBB0001~
3	01010-80616	BOLT	4	DBB0001~
4	01643-30623	WASHER	4	DBB0001~
5	01010-81225	BOLT	3	DBB0001~
6	01643-31232	WASHER	3	DBB0001~
7	22U-06-11660	HOSE	1	DBB0001~
8	21T-38-12270	CLIP	5	DBB0001~
9	195-979-8590	VALVE	1	DBB0001~

FIG. KO700-01A0 AIR CONDITIONER (COMPRESSOR AND RECEIVER DRYER)

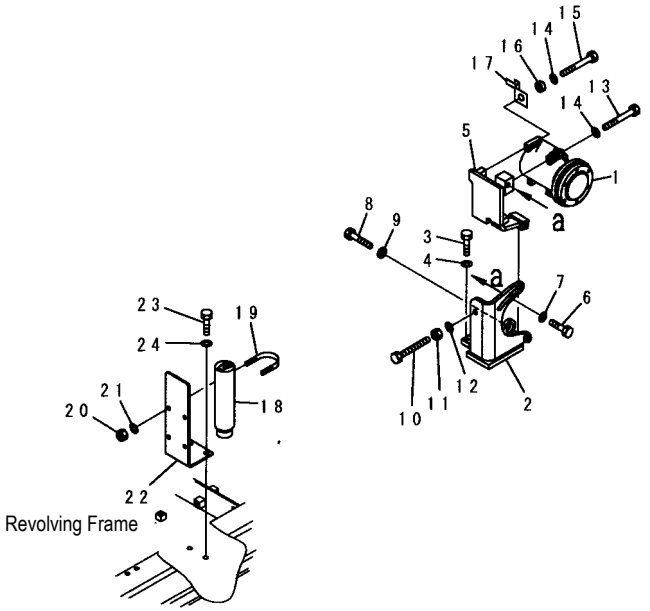

INDEX	PART NO.	DESCRIPTION	Q'TY	SERIAL NO.
1	20Y-979-6121	COMPRESSOR ASS'Y	1	DBB4709~
2	20Y-979-6641	BRACKET	1	DBB4709~
3	01010-81035	BOLT	3	DBB4709~
4	01643-31032	WASHER	3	DBB4709~
5	20Y-979-6612	BRACKET	1	DBB4709~
6	01010-81440	BOLT	1	DBB4709~
7	195-71-32220	WASHER	1	DBB4709~
8	01019-31400	BOLT	1	DBB4709~
9	198-38-12460	SPACER	1	DBB4709~
10	01017-51420	BOLT	1	DBB4709~
11	01580-11411	NUT	1	DBB4709~
12	01643-31445	WASHER	1	DBB4709~
13	01010-80875	BOLT	3	DBB4709~
14	01643-30823	WASHER	4	DBB4709~
15	01010-80885	BOLT	1	DBB4709~
16	6204-81-6740	SPACER	1	DBB4709~
17	08053-01510	CLIP	1	DBB4709~
18	20Y-979-3120	TANK	1	DBB4709~
19	07283-36155	CLIP	2	DBB4709~
20	01597-01009	NUT	4	DBB4709~
21	01643-31032	WASHER	4	DBB4709~
22	20Y-979-6621	PLATE	1	DBB4709~
23	01010-81230	BOLT	2	DBB4709~
24	01643-31232	WASHER	2	DBB4709~

FIG. KO700-02A0 AIR CONDITIONER (HOSE)

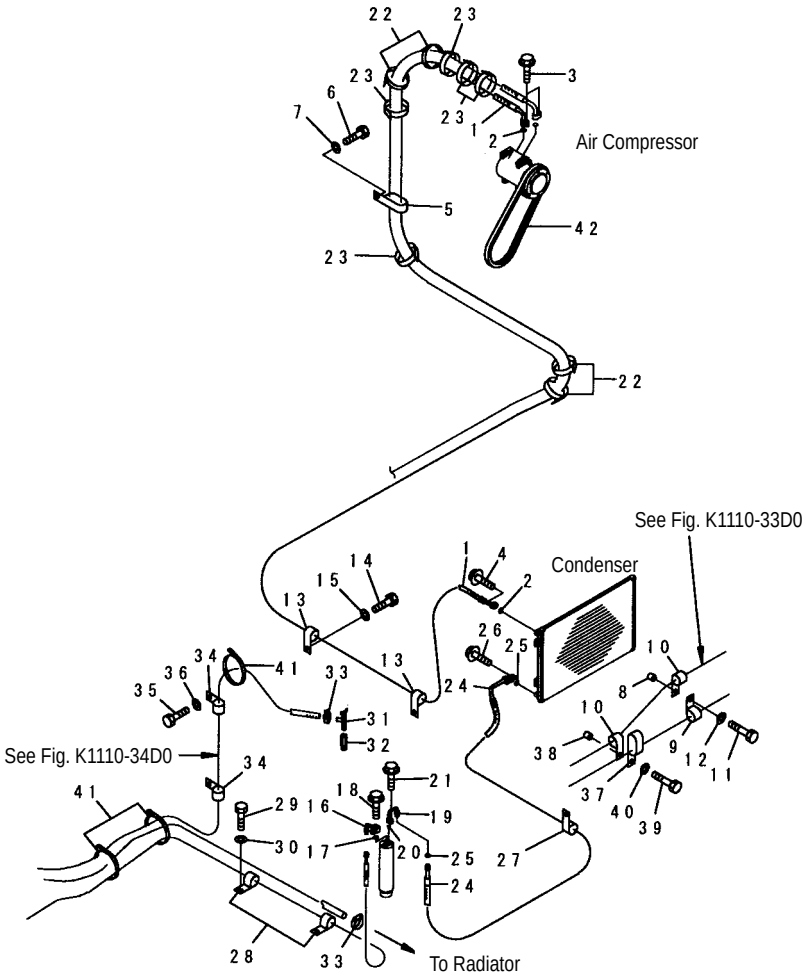

INDEX	PART NO.	DESCRIPTION	Q'TY	SERIAL NO.
1	20Y-979-7321	HOSE	1	DBB4709~
2	20Y-979-3140	. O-RING	2	DBB4709~
3	01435-00630	BOLT	2	DBB4709~
4	01435-00625	BOLT	1	DBB4709~
5	141-06-11220	CLIP	2	DBB4709~
6	01010-81225	BOLT	2	DBB4709~
7	01643-31232	WASHER	2	DBB4709~
8	195-33-11220	SPACER	1	DBB4709~
9	04434-52312	CLIP	1	DBB4709~
10	04434-52712	CLIP	2	DBB4709~
11	01010-81250	BOLT	1	DBB4709~
12	01643-31232	WASHER	1	DBB4709~
13	04434-52312	CLIP	2	DBB4709~
14	01010-81225	BOLT	2	DBB4709~
15	01643-31232	WASHER	2	DBB4709~
16	20Y-979-6650	TUBE	1	DBB4709~
17	20Y-979-3150	O-RING	1	DBB4709~
18	01435-00625	BOLT	1	DBB4709~
19	20Y-979-6542	TUBE	1	DBB4709~
20	20Y-979-3150	. O-RING	1	DBB4709~
21	01435-00625	BOLT	1	DBB4709~
22	08034-20536	BAND	4	DBB4709~
23	08034-20536	BAND	5	DBB4709~
24	20Y-979-7331	HOSE	1	DBB4709~
25	20Y-979-3150	. O-RING	2	DBB4709~
26	01435-00625	BOLT	1	DBB4709~
27	04434-51912	CLIP	1	DBB4709~
28	04434-51910	CLIP	2	DBB4709~
29	01010-81020	BOLT	2	DBB4709~
30	01643-31032	WASHER	2	DBB4709~
31	09482-50000	VALVE	1	DBB4709~
32	6732-11-6130	ADAPTER	1	DBB4709~
33	11Y-09-11160	CLIP	2	DBB4709~
34	04434-521110	CLIP	2	DBB4709~
35	01010-81025	BOLT	2	DBB4709~
36	01643-31032	WASHER	2	DBB4709~
37	141-06-11220	CLIP	1	DBB4709~
38	142-03-11160	SPACER	1	DBB4709~
39	01010-81260	BOLT	1	DBB4709~
40	01643-31232	WASHER	1	DBB4709~
41	08034-20536	BAND	4	DBB4709~
42	04120-21748	V-BELT	1	DBB4709~

FIG. K0830-01A1 FIRE EXTINGUISHER (ENGLISH) (OPT)

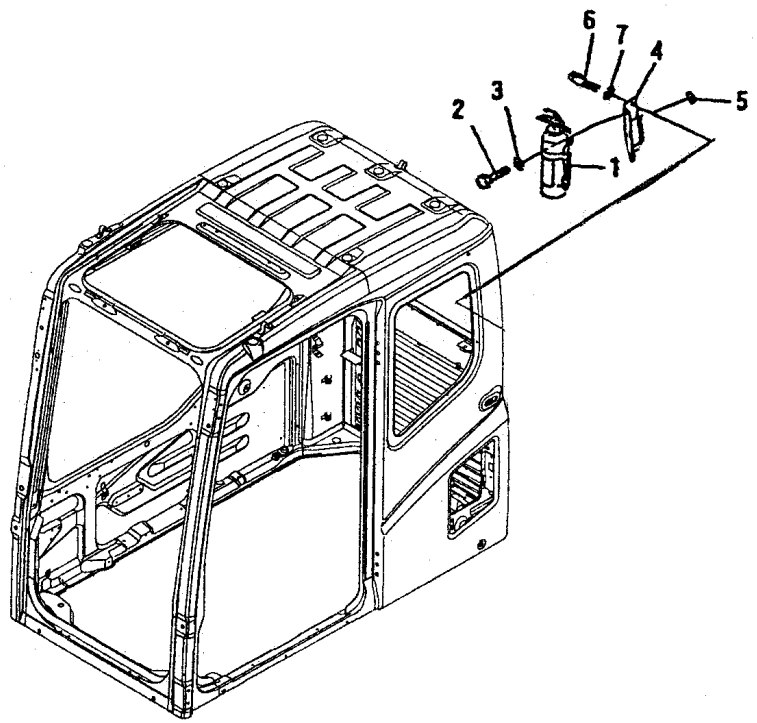

PW1B799

INDEX	PART NO.	DESCRIPTION	Q'TY	SERIAL NO.
1	22B-98-11120	EXTINGUISHER	1	DBB0001~
2	01010-D0816	BOLT	2	DBB0001~
3	01643-70823	WASHER	2	DBB0001~
4	208-53-11730	PLATE	1	DBB4709~
5	208-53-11740	SEAL	1	DBB4709~
6	01010-D0820	BOLT	2	DBB4709~
7	01643-70823	WASHER	2	DBB4709~

FIG. KO840-01A0 FIRST AID BOX (COLD WEATHER A SPEC.)

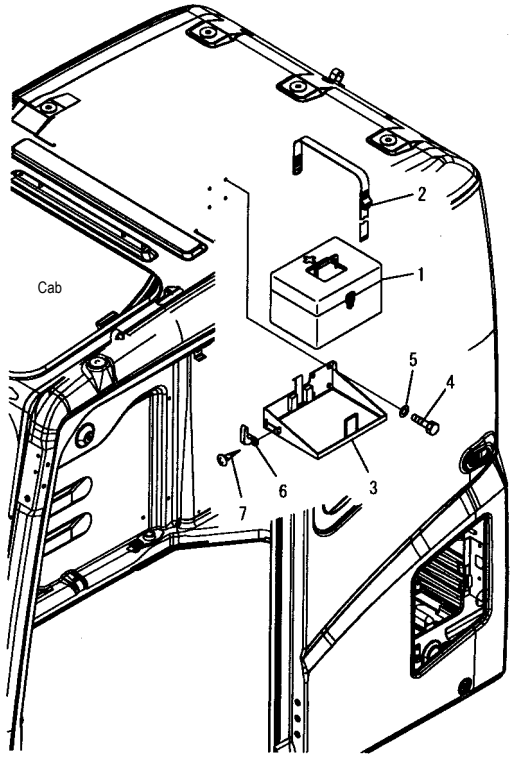

00003638

FIG NO. : K0840-01A0

INDEX	PART NO.	DESCRIPTION	Q'TY	SERIAL NO.
1	195-911-6531	BOX	1	DBB4709~
2	195-911-6562	BAND	1	DBB4709~
3	20Y-54-53370	BRACKET	1	DBB4709~
4	01010-80816	BOLT	4	DBB4709~
5	01643-30823	WASHER	4	DBB4709~
6	205-54-51250	HANGER	1	DBB4709~
7	01370-30412	SCREW	2	DBB4709~

FIG. K1110-01A0 OPERATOR'S CAB (CAB)

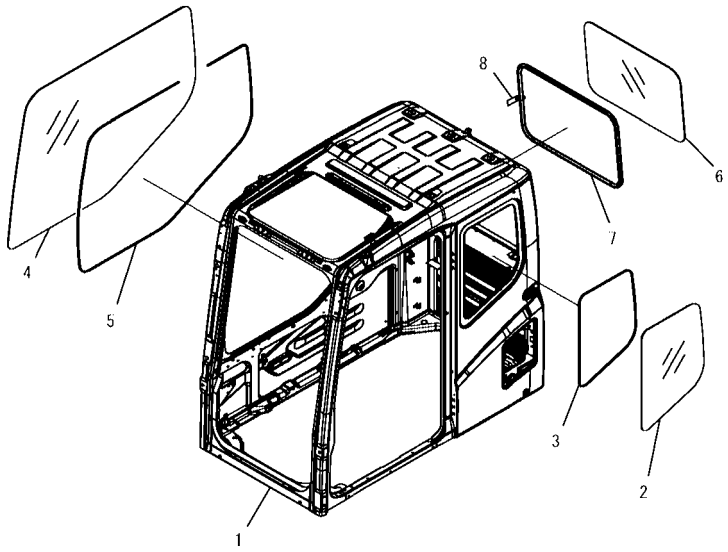

PW1B902

INDEX	PART NO.	DESCRIPTION	Q'TY	SERIAL NO.
	20Y-54-01141	CAB ASS'Y	1	DBB0001~DBB4708
	208-53-00270	CAB ASS'Y	1	DBB4709~
1	☆	. CAB	1	DBB0001~
2	20Y-54-51241	. CLASS, REAR, L.H	1	DBB0001~
3	20Y-54-51261	. SEAL, REAR, L.H	1	DBB0001~
4	20Y-54-51842	. GLASS, R.H	1	DBB0001~
5	20Y-54-51851	. DAM, R.H	1	DBB0001~DBB4708
6	20Y-54-51727	. GLASS, REAR	1	DBB4709~
	208-53-11270	. GLASS, REAR	1	DBB0001~
7	20Y-54-51251	. WEATHER STRIP, REAR	1	DBB0001~
8	20Y-54-75250	. TAG	1	DBB0001~

FIG. K1110-02A0 FLOOR FRAME (OPERATOR'S CAB) (FRONT WINDOW)

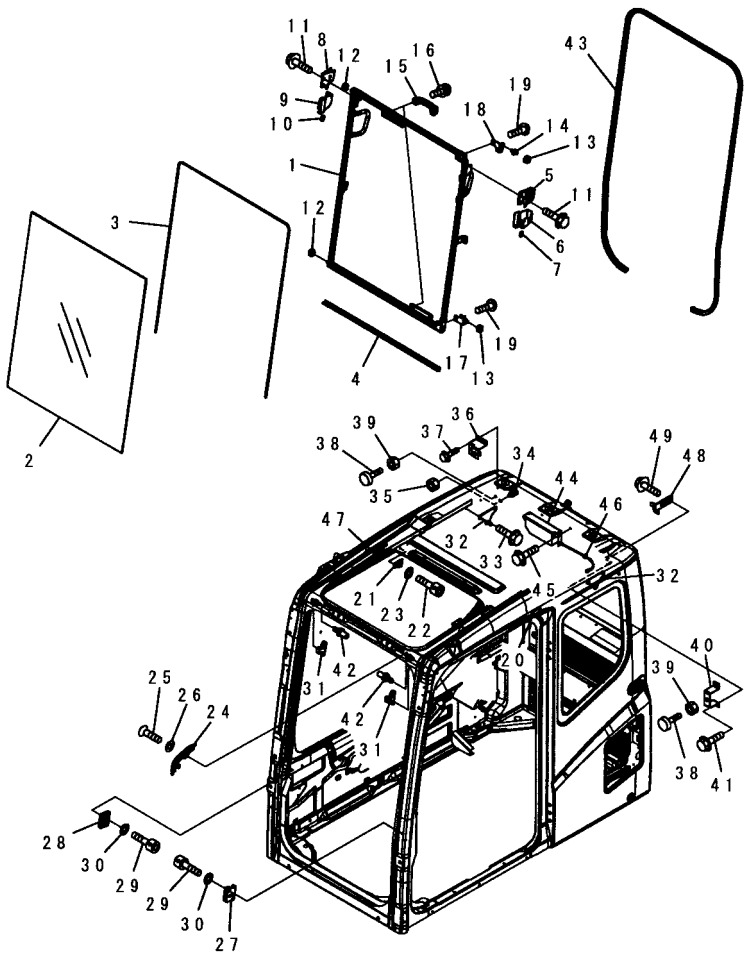

FIG NO. : k1110-02A0

INDEX	PART NO.	DESCRIPTION	Q'TY	SERIAL NO.
	(208-53-00270)	CAB ASS'Y, (KOMTRAX)	1	DBB4709~
	208-53-00020	. FRONT WINDOW ASS'Y	1	DBB4709~
1	208-53-11510	. . FRAME	1	DBB4709~
2	20Y-54-51522	. . GLASS	1	DBB4709~
3	20Y-54-51531	. . SEAL	1	DBB4709~
4	20Y-54-51551	. . SEAL	1	DBB4709~
5	22B-54-15411	. . LOCK ASS'Y	1	DBB4709~
6	22B-54-15440	. . CASE	1	DBB4709~
7	22B-54-15470	. . KNOB	1	DBB4709~
8	22B-54-15421	. . LOCK ASS'Y	1	DBB4709~
9	22B-54-15450	. . CASE	1	DBB4709~
10	22B-54-15480	. . KNOB	1	DBB4709~
11	01435-40812	. . BOLT	4	DBB4709~
12	20Y-54-52621	. . ROLLER	2	DBB4709~
13	20Y-54-52681	. . ROLLER	2	DBB4709~
14	208-53-12690	. . BOLT	1	DBB4709~
15	20Y-54-14590	. . HANDLE	2	DBB4709~
16	01023-10616	. . SCREW	4	DBB4709~
17	208-53-12630	. . BRACKET	1	DBB4709~
18	208-53-12830	. . BRACKET	1	DBB4709~
19	01245-00816	. . SCREW	4	DBB4709~
20	20Y-54-51670	. BRACKET	1	DBB4709~
21	20Y-54-51680	. BRACKET	1	DBB4709~
22	01252-80616	. BOLT	4	DBB4709~
23	01643-70623	. WASHER	4	DBB4709~
24	208-53-11560	. BLOCK	1	DBB4709~
25	01245-00816	. BOLT	2	DBB4709~
26	01643-70823	. WASHER	2	DBB4709~
27	20Y-54-51633	. BLOCK	1	DBB4709~
28	20Y-54-52192	. BLOCK	1	DBB4709~
29	01252-80616	. BOLT	4	DBB4709~
30	01641-50608	. WASHER	4	DBB4709~
31	22B-54-15621	. STOPPER	2	DBB4709~
32	22B-54-15432	. STRIKER	2	DBB4709~
33	01435-40616	. BOLT	4	DBB4709~
34	21J-06-12440	. SWITCH	1	DBB4709~
35	01583-11811	. NUT	1	DBB4709~

FIG. K1110-02A0 FLOOR FRAME (OPERATOR'S CAB) (FRONT WINDOW)

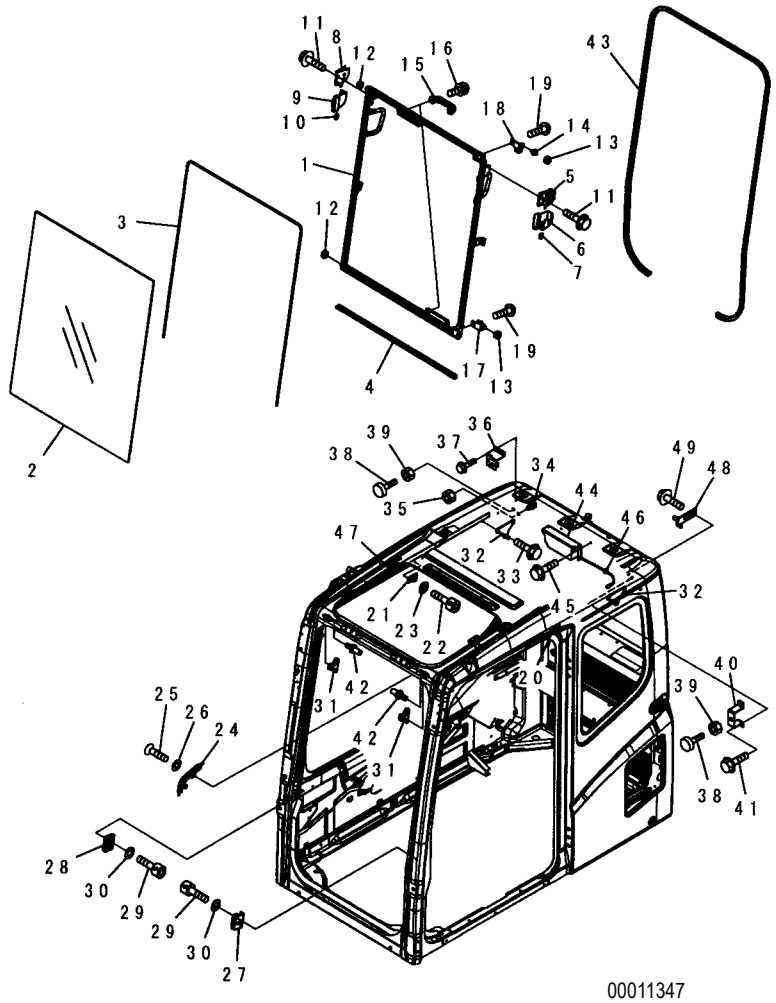

FIG NO. : K1110-02A0

INDEX	PART NO.	DESCRIPTION	Q'TY	SERIAL NO.
36	20Y-54-51880	. BRACKET	1	DBB4709~
37	01435-40616	. BOLT	3	DBB4709~
38	20Y-54-11611	. STOPPER	2	DBB4709~
39	01580-11008	. NUT	2	DBB4709~
40	20Y-54-52491	. .PLATE	1	DBB4709~
41	01435-40616	. .BOLT	2	DBB4709~
42	207-54-51621	. .STRIKER	2	DBB4709~
43	208-53-11540	. .SEAL	1	DBB4709~
44	20Y-54-51591	. .SPRING ASS'Y	1	DBB4709~
45	01435-00616	. .BOLT	2	DBB4709~
46	20Y-54-51640	. HOLDER	1	DBB4709~
47	20Y-54-51420	. SEAL	1	DBB4709~
48	208-53-11470	. BRACKET	1	DBB4709~
49	01435-40616	. BOLT	2	DBB4709~

FIG. K1110-03A0 OPERATOR'S CAB (FRONT LOWER WINDOW)

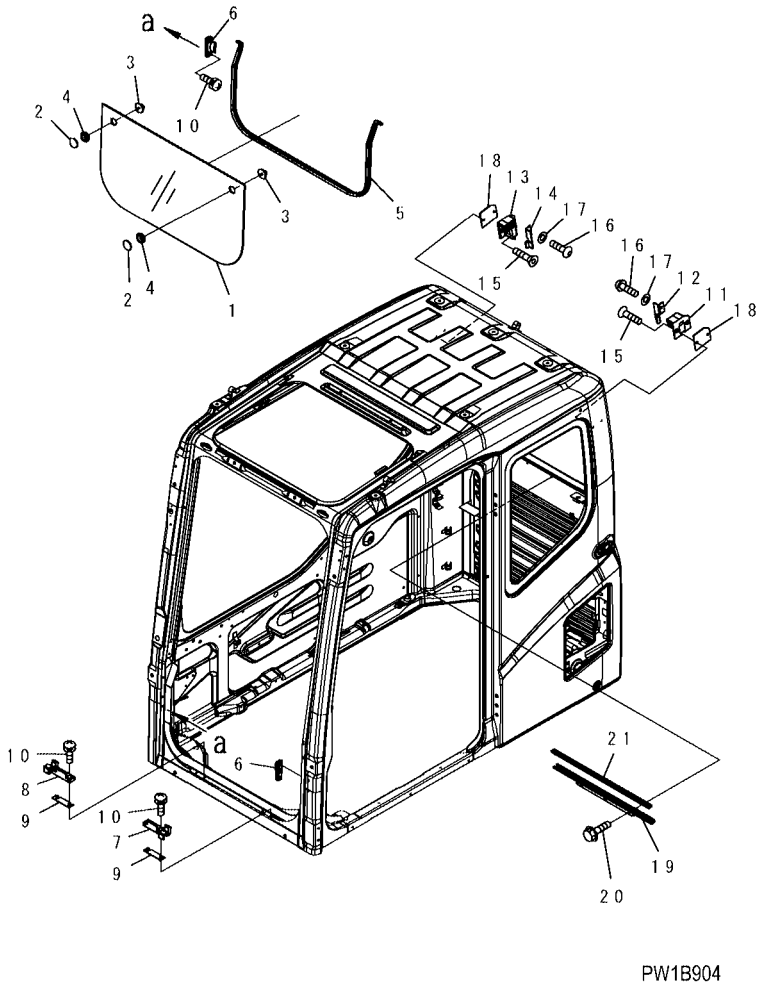

PW1B904

FIG NO. : K1110-03A0

INDEX	PART NO.	DESCRIPTION	Q'TY	SERIAL NO.
	(208-53-00270)	CAB ASS'Y	1	DBB4709~
	20Y-54-51601	. GLASS, FRONT, LOWER	1	DBB0001~
1	☆	.. GLASS, FRONT, LOWER	1	DBB0001~
2	22B-54-15970	.. RETAINER	2	DBB0001~
3	22B-54-15980	.. KNOB	2	DBB0001~
4	08037-02512	.. GROMMET	2	DBB0001~
5	20Y-54-51862	. SEAL, FRONT, LOWER	1	DBB0001~
6	22B-54-15832	. SEAT, GLASS	2	DBB0001~
7	22B-54-15781	. SEAT, L.H	1	DBB0001~
8	22B-54-15791	. SEAT, R.H	1	DBB0001~
9	22B-54-15580	. PLATE	2	DBB0001~
10	01023-20616	. SCREW	8	DBB0001~
11	20Y-54-52161	. LOCK, L.H	1	DBB0001~
12	20Y-54-52361	. BRACKET	1	DBB0001~
13	20Y-54-52171	. LOCK, R.H	1	DBB0001~
14	20Y-54-52371	. BRACKET	1	DBB0001~
15	01240-00620	. SCREW	2	DBB0001~
16	01245-00625	. SCREW	2	DBB0001~
17	01641-50608	. WASHER	2	DBB0001~
18	20Y-54-52380	. PLATE	2	DBB0001~
19	20Y-54-52122	. PLATE, FRONT, LOWER	1	DBB0001~
20	01435-00616	. BOLT	3	DBB0001~
21	20Y-54-52131	. SEAL	1	DBB0001~

FIG. K1110-04A0 OPERATOR'S CAB (ROOF WINDOW)

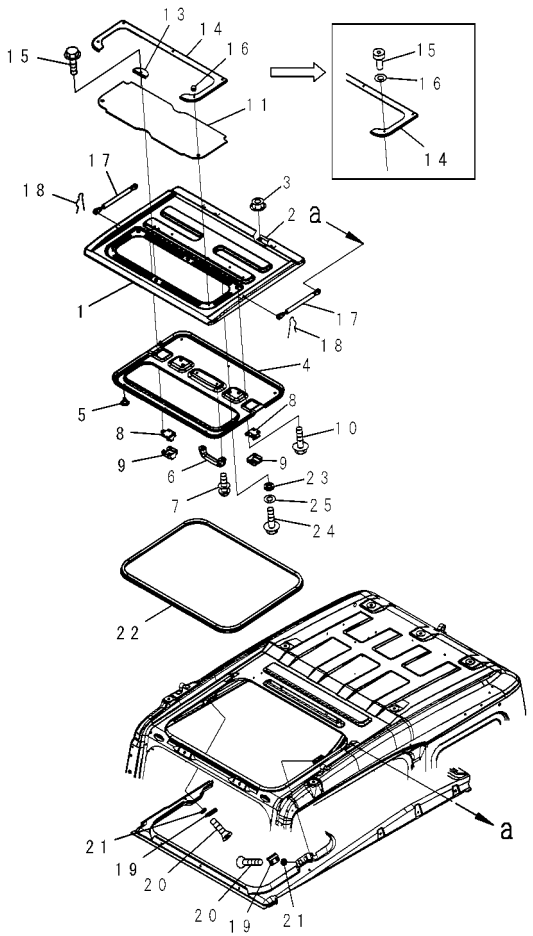

PW1B905

FIG NO. : K1110-04A0

INDEX	PART NO.	DESCRIPTION	Q'TY	SERIAL NO.
	(208-53-00270)	CAB ASS'Y	1	DBB4709~
1	208-53-11710	. ROOF	1	DBB4709~
2	22B-54-15M50	.. HINGE (WELDED)	2	DBB0001~
3	01584-30806	. NUT	4	DBB0001~
4	20Y-54-51922	. COVER	1	DBB0001~
5	20Y-54-18690	. RIVET	6	DBB0001~
6	20Y-54-14590	. HANDLE	1	DBB0001~
7	01023-10616	. SCREW	2	DBB0001~
8	22B-54-15990	. LOCK ASS'Y	2	DBB0001~
9	20Y-54-36360	. COVER	2	DBB0001~
10	01435-40610	. BOLT	8	DBB0001~
11	20Y-54-51744	. CLEAR PLATE	1	DBB0001~
12	20Y-54-51720	. PLATE	1	DBB0001~
13	20Y-54-51733	. PLATE	1	DBB0001~
14	01435-40610	. BOLT	4	DBB0001~
15	01641-51223	. WASHER	2	DBB0001~
16	20Y-54-36342	. GAS SPRING ASS'Y	2	DBB0001~
17	04052-10833	. PIN	4	DBB0001~
18	22U-54-28920	. STRIKER	2	DBB4709~
19	01245-00820	. SCREW	4	DBB4709~
20	20Y-54-52651	. SPACER	4	DBB0001~
21	20Y-54-51760	. SEAL, ROOF	1	DBB0001~
22	20Y-54-52651	. SPACER	4	DBB0001~
23	01245-00620	. SCREW	4	DBB0001~
24	01643-70623	. WASHER	4	DBB0001~

FIG. K1110-05A0 AIR CONDITIONER (DOOR)

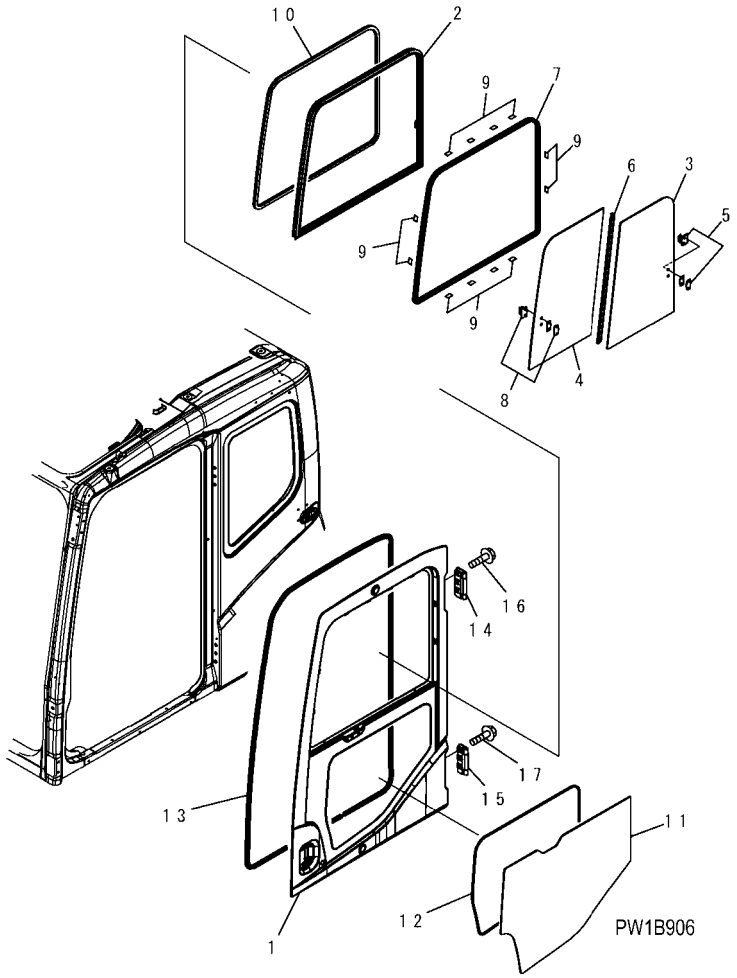

INDEX	PART NO.	DESCRIPTION	Q'TY	SERIAL NO.
	(208-53-00270)	CAB ASS'Y	1	DBB4709~
	208-53-00010	. DOOR ASS'Y	1	DBB4709~
1	☆	.. DOOR	1	DBH0001~
	20Y-54-51401	.. SASH ASS'Y	1	DBB0001~
2	☆	SASH FRAME	1	DBB0001~
3	20Y-54-52840	GLASS	1	DBB0001~
4	20Y-54-52850	GLASS	1	DBB0001~
5	20Y-54-52860	LOCK ASS'Y	1	DBB0001~
6	20Y-54-52870	SEAL	1	DBB0001~
7	20Y-54-52880	SEAL	1	DBB0001~
8	20Y-54-13322	LOCK	1	DBB0001~
9	20Y-54-13180	.. SEAT	12	DBB0001~
10	20Y-54-51470	.. TRIM	1	DBB0001~
11	20Y-54-51451	.. GLASS	1	DBB0001~
12	20Y-54-51461	.. SEAL, DOOR, LOWER	1	DBB0001~
13	20Y-54-51482	.. SEAL, DOOR	1	DBB0001~
14	20Y-54-51330	.. HINGE	1	DBB0001~
15	14X-911-1330	.. HINGE	1	DBB0001~
16	01435-41225	.. BOLT	6	DBB0001~
17	01435-01225	.. BOLT	6	DBB0001~

FIG. K1110-06A0 FLOOR FRAME (OPERATOR'S CAB) (DOOR COCK)

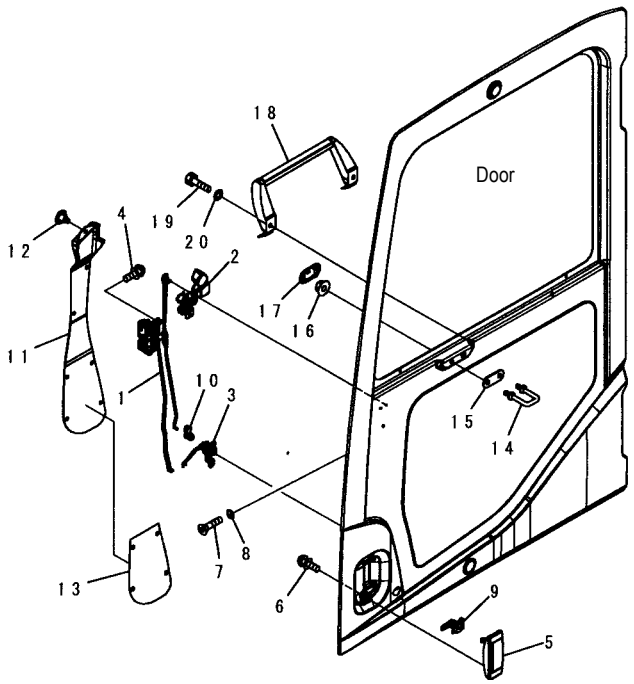

00011351

FIG NO. : K1110-06A0

INDEX	PART NO.	DESCRIPTION	Q'TY	SERIAL NO.
	208-53-02700	CAB ASS'Y (KOMTRAX)	1	DBB4709~
	208-53-00010	. DOOR ASS'Y	1	DBB4709~
1	20Y-54-52200	. .LATCH ASS'Y	1	DBB0001~
2	20Y-54-52300	. .HANDLE ASS'Y	1	DBB0001~
3	20Y-54-52400	. .BELLCRANK ASS'Y	1	DBB0001~
4	01023-10612	. .SCREW	5	DBB0001~
5	20Y-54-52990	. .HANDLE	1	DBB0001~
6	01023-10612	. .SCREW	2	DBB0001~
7	01240-00616	. .SCREW	3	DBB0001~
8	195-Z11-1690	. .WASHER	3	DBB0001~
9	20Y-54-52820	. .LOCK ASS'Y	1	DBB0001~
10	22B-54-16330	. .SNAP	1	DBB4709~
11	20Y-54-51441	. .COVER	1	DBB0001~
12	22B-54-16461	. .RIVET	7	DBB0001~
13	208-53-11320	. .SEAL	1	DBB4709~
14	20Y-54-51321	. STRIKER	1	DBB0001~
15	20Y-54-51341	. PLATE	1	DBB0001~
16	01584-01008	. NUT	2	DBB0001~
17	20Y-54-51490	. .COVER	1	DBB0001~
18	20Y-54-51393	. .GRIP	1	DBB4709~
19	01010-80820	. .BOLT	2	DBB0001~
20	01643-30823	. .WASHER	2	DBB0001~

FIG. K1110-07A0 FLOOR FRAME (OPERATOR'S CAB) (OPEN LOCK)

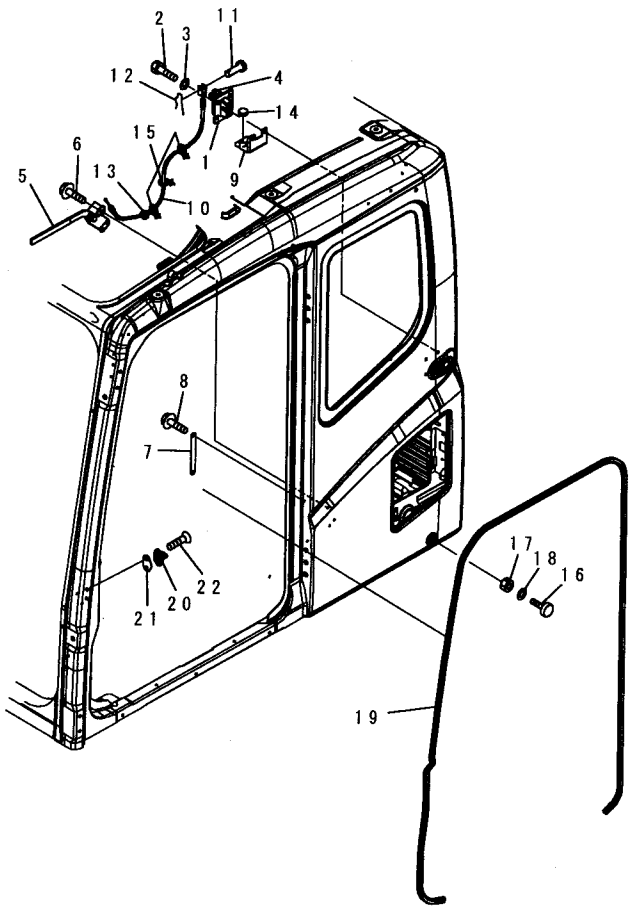

00011352

FIG NO. : K1110-07A0

INDEX	PART NO.	DESCRIPTION	Q'TY	SERIAL NO.
	(208-53-00270)	CAB ASS'Y (KOMTRAX)	1	DBB4709~
1	20Y-54-36380	. LOCK	1	DBB4709~
2	01010-D0820	. BOLT	4	DBB4709~
3	01643-70823	. WASHER	4	DBB4709~
4	20Y-54-51930	. COVER	1	DBB4709~
5	208-53-14540	. LEVER ASS'Y	1	DBB4709~
6	01435-40616	. BOLT	3	DBB4709~
7	208-53-14720	. BRACKET	1	DBB4709~
8	01435-40616	. BOLT	2	DBB4709~
9	208-53-11980	. PLATE	1	DBB4709~
10	208-53-11990	. CABLE	1	DBB4709~
11	04205-10520	. PIN	1	DBB4709~
12	04052-10530	. PIN	1	DBB4709~
13	08037-01610	. GROMMET	1	DBB4709~
14	09415-01610	. CAP	1	DBB4709~
15	08059-00413	. GLIP	3	DBB4709~
16	20Y-54-11611	. STOPPER	2	DBB4709~
17	01580-11008	. NUT	2	DBB4709~
18	01643-31032	. WASHER	2	DBB4709~
19	20Y-54-51910	. TRIM	1	DBB4709~
20	20Y-54-35470	. STRIKER	1	DBB4709~
21	20Y-54-35480	. SHIM	1	DBB4709~
22	01240-01025	. SCREW	2	DBB4709~

FIG. K1110-08A0 FLOOR FRAME (OPERATOR'S CAB) (ELECTRICAL) (WIPER AND ROOM LAMP)

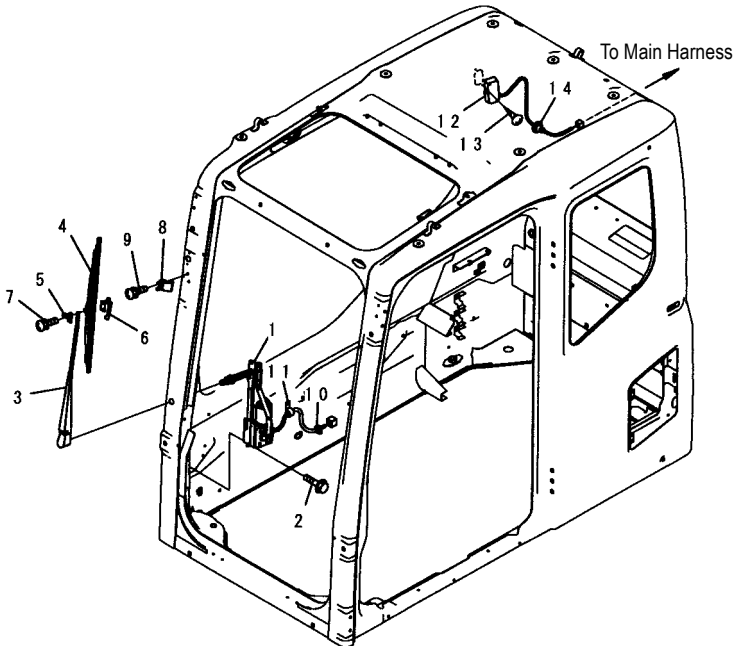

00011353

INDEX	PART NO.	DESCRIPTION	Q'TY	SERIAL NO.
	(208-53-00270)	CAB ASS'Y (KOMTRAX)	1	DBB4709~
1	208-53-12780	. DOOR ASS'Y	1	DBB4709~
2	01435-40616	. BOLT	6	DBB4709~
	20Y-54-52221	. WIPER ASS'Y	1	DBB0001~
3	20Y-54-52350	. ARM	1	DBB0001~
4	20Y-54-39450	. . BLADE	1	DBB0001~
5	20Y-54-39460	. . SLIDER	1	DBB0001~
6	20Y-54-39480	. . PLATE	1	DBB0001~
7	ND949007-2350	. . SCREW AND WASHER	2	DBB0001~
8	20Y-54-52231	. STOPPER	1	DBB0001~
9	01023-20620	. SCREW	1	DBB0001~
10	08034-20414	. BAND	1	DBB4709~
11	08059-00310	. CLIP	1	DBB4709~
12	208-53-12790	. ROOM LAMP	1	DBB4709~
	08116-02410	. . BULB,10W	1	DBB4709~
13	01370-00420	. SCREW	2	DBB4709~
14	08037-11025	. GROMMET	1	DBB4709~

FIG. K1110-09A0 FLOOR FRAME (OPERATOR'S CAB) (ELECTRICAL)

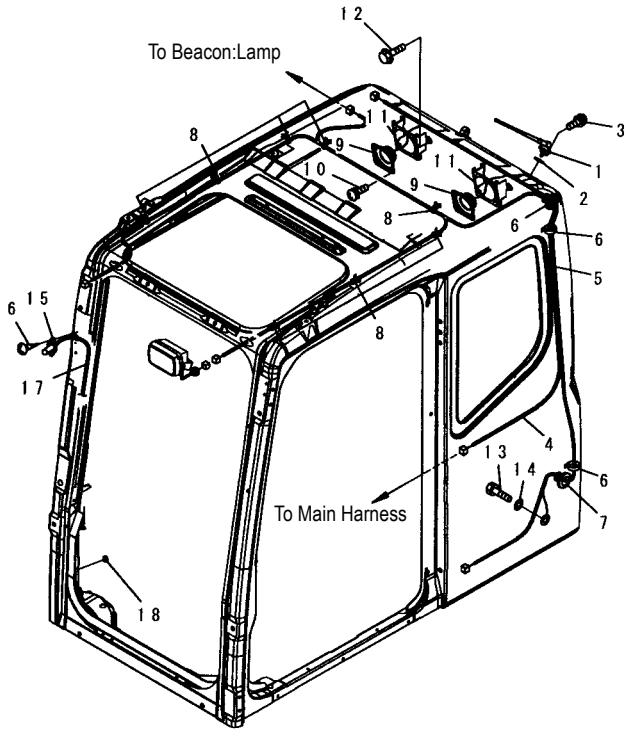

00011354

FIG NO. : K1110-09A0

INDEX	PART NO.	DESCRIPTION	Q'TY	SERIAL NO.
	(208-53-00270)	CAB ASS'Y (KOMTRAX)	1	DBB4709~
1	(198-Z11-4610)	. RUBBER ANTENNA	1	DBB0001~
2	01643-30623	. GROMMET	1	DBB0001~
3	01023-20412	. SCREW	2	DBB0001~
4	20Y-54-52310	. WIRING HARNESS	1	DBB0001~
5	20Y-54-52320	. .WIRING HARNESS	1	DBB0001~
6	08034-20414	. BAND	2	DBB4709~
7	08037-12536	. GROMMET	2	DBB0001~
8	08059-00413	. CLIP	8	DBB0001~
9	08910-10000	. SPEAKER	2	DBB4709~
10	01023-20412	. SCREW	8	DBB4709~
11	208-53-11480	. PLATE	2	DBB4709~
12	01435-40616	. BOLT	6	DBB4709~
13	01010-81020	. BOLT	1	DBB0001~
14	01643-31032	. WASHER	1	DBB0001~
15	20Y-54-39511	. NOZZLE	1	DBB0001~
16	01370-40412	. SCREW	2	DBB0001~
17	17M-911-2670	. HOSE	1	DBB0001~
18	08037-01610	. GROMMET	1	DBB0001~

FIG. K1110-10A0 FLOOR FRAME (OPERATOR'S CAB) (ACCESSORIES)

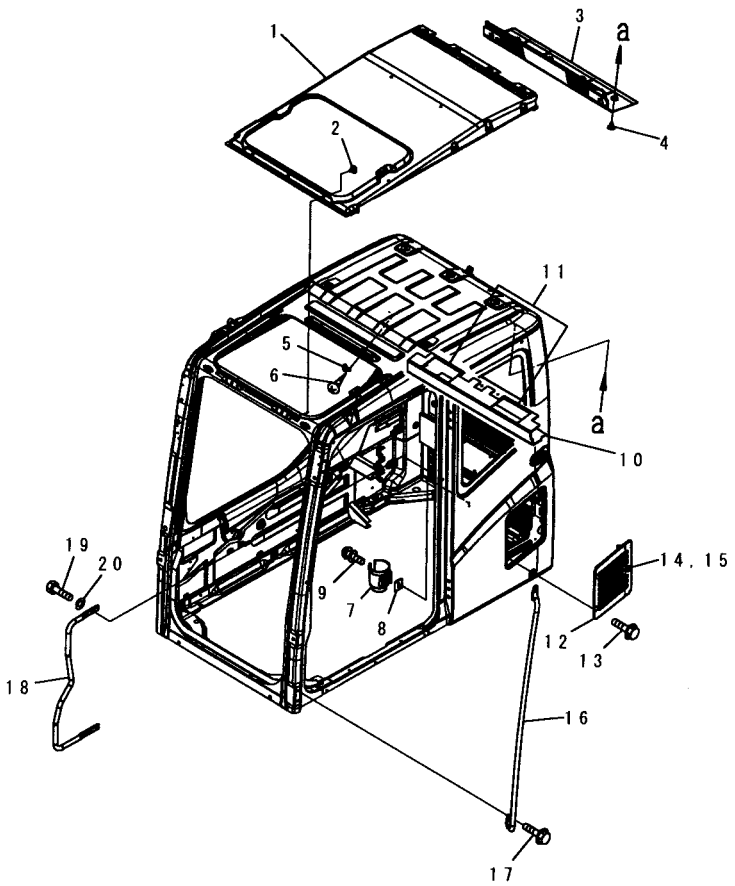

00011355

FIG NO. : K1110-10A0

INDEX	PART NO.	DESCRIPTION	Q'TY	SERIAL NO.
	(208-53-00270)	CAB ASS'Y (KOMTRAX)	1	DBB4709~
1	20Y-54-52412	. COVER	1	DBB4709~
2	20Y-54-18690	. RIVET	15	DBB4709~
3	20Y-54-52423	. LINING	1	DBB4709~
4	20Y-54-18690	. RIVET	8	DBB4709~
5	205-54-51250	. HANGER	1	DBB4709~
6	01370-30412	. SCREW	2	DBB4709~
7	208-53-12991	. HOLDER	1	DBB4709~
8	208-53-12980	. PLATE	1	DBB4709~
9	01023-20616	. SCREW	2	DBB4709~
10	208-53-12470	. SEAL	1	DBB4709~
11	208-53-12810	. SEAT	2	DBB4709~
12	208-53-11750	. COVER	1	DBB4709~
13	01435-40610	. BOLT	4	DBB4709~
14	208-53-11760	. LOCK ASS'Y	1	DBB4709~
15	205-54-76280	. ROTOR ASS'Y	1	DBB4709~
16	20Y-54-51820	. GRIP	1	DBB4709~
17	01435-40820	. BOLT	4	DBB4709~
18	20Y-54-51832	. GRIP	1	DBB4709~
19	01010-D1020	. BOLT	3	DBB4709~
20	01643-71032	. WASHER	3	DBB4709~

FIG. K1110-11A0 FLOOR FRAME (OPERATOR' CAB) (PLUG BOLT)

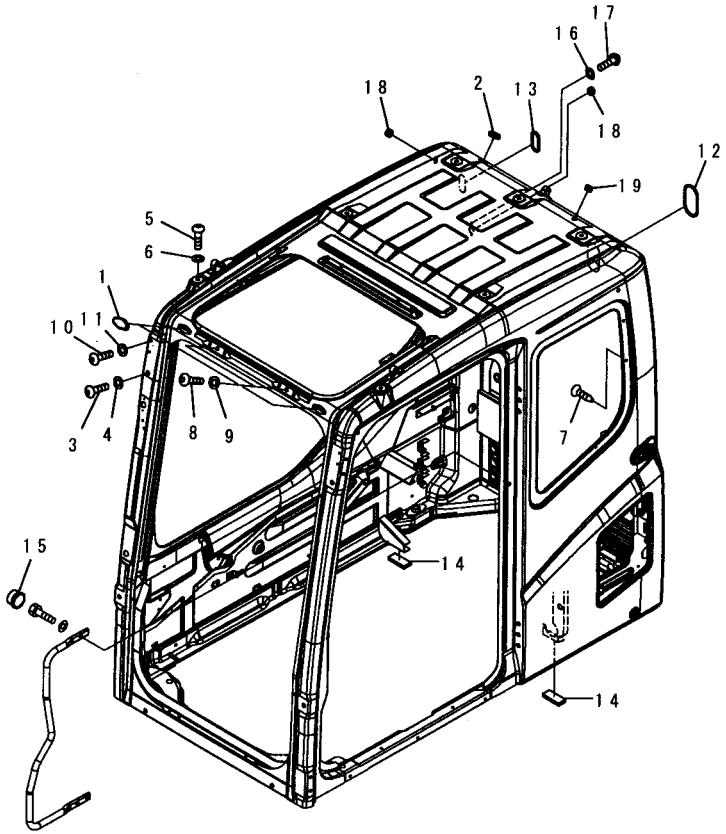

00018342

FIG NO. : K1110-11A0

INDEX	PART NO.	DESCRIPTION	Q'TY	SERIAL NO.
	(208-53-00270)	CAB ASS'Y, (VANDALISM PROTECTION)	1	DBB4709~
1	22B-54-17282	. CAP	2	DBB0001~
2	09415-02512	. CAP	1	DBB0001~
3	01245-01220	. SCREW	6	DBB0001~
4	01643-71232	. WASHER	6	DBB0001~
5	01245-01220	. SCREW	7	DBB0001~
6	01643-71232	. WASHER	7	DBB0001~
7	124-911-5750	. RIVET	2	DBB0001~
8	01245-01016	. SCREW	2	DBB0001~
9	01643-71032	. WASHER	2	DBB0001~
10	01245-00612	. SCREW	4	DBB0001~
11	01643-70623	. WASHER	4	DBB0001~
12	20Y-54-52470	. GROMMET	1	DBB0001~
13	20Y-54-36150	. GROMMET	1	DBB0001~
14	208-53-12580	. SEAL	2	DBB4709~
15	20Y-54-52440	. BRACKET, (FOR SHIPPING)	1	DBB0001~
16	01641-50608	. WASHER	2	DBB0001~
17	01245-00616	. SCREW	2	DBB0001~
18	09415-01008	. CAP	2	DBB4709~
19	09415-01008	. CAP	1	DBB4709~

FIG. K1110-12A0 FLOOR FRAME (OPERATOR'S CAB) (CLAMP AND PLATE)

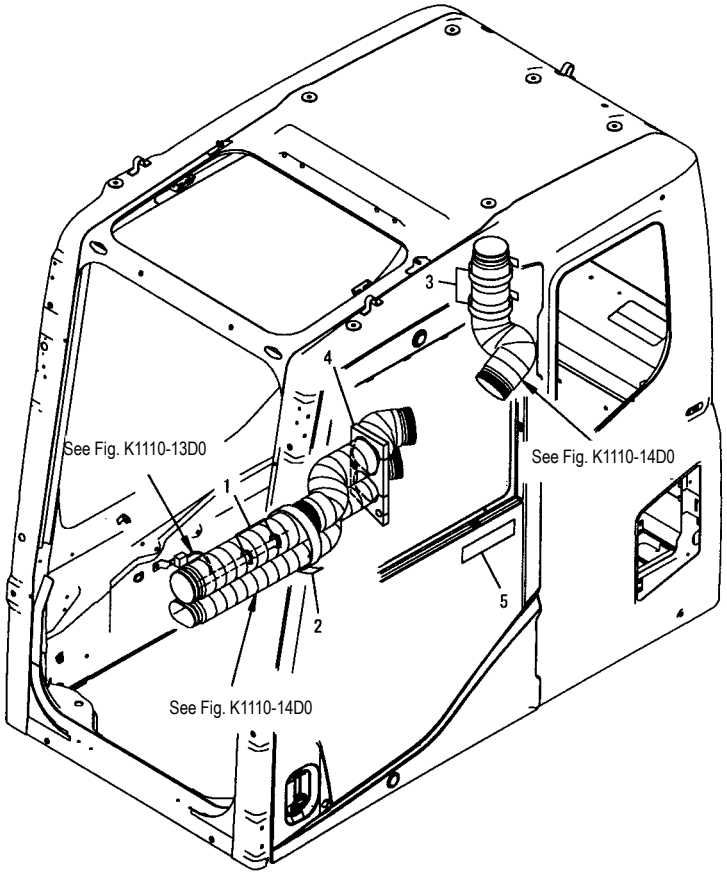

00018129

INDEX	PART NO.	DESCRIPTION	Q'TY	SERIAL NO.
	(208-53-00270)	CAB ASS'Y (KOMTRAX)	1	DBB4709~
1	08034-20414	. BAND	2	DBB4709~
2	08034-20876	. BAND	1	DBB4709~
3	08034-20876	. BAND	2	DBB4709~
4	208-53-12620	. SEAL	1	DBB4709~
5	09970-00230	. PLATE, MARK	1	DBB4709~

FIG. K1110-13A0 FLOOR FRAME (OPERATOR'S CAB) (MONITOR SYSTEM)

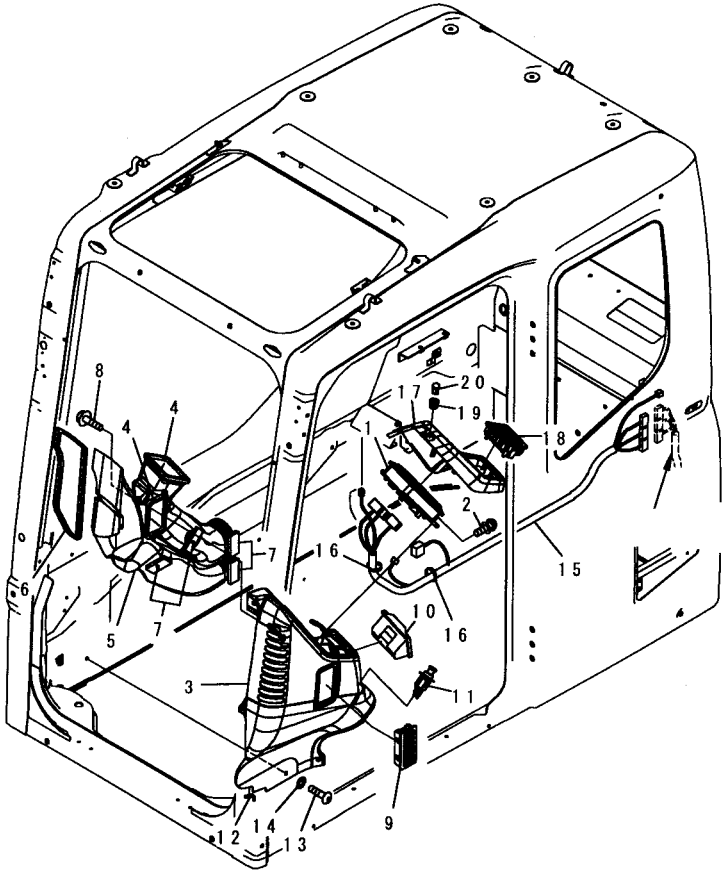

00018130

INDEX	PART NO.	DESCRIPTION	Q'TY	SERIAL NO.
1	(7835-12-3000)	MONITOR	1	DBB0001~
2	01023-10616	SCREW	3	DBB0001~
3	208-53-12152	COVER	1	DBB4709~
4	208-53-11941	SEAL	2	DBB4709~
5	208-53-12310	DUCT	1	DBB4709~
6	208-53-11920	SEAL	1	DBB4709~
7	208-53-12440	SEAL	7	DBB4709~
8	01435-00612	BOLT	2	DBB4709~
9	421-07-33870	GRILLE ASS'Y	1	DBB4709~
10	22U-54-25371	ASHTRAY	1	DBB4709~
11	20Y-06-23472	LIGHTER	1	DBB4709~
12	208-53-11850	GROMMET	1	DBB4709~
13	01245-00816	SCREW	5	DBB4709~
14	01643-70823	WASHER	5	DBB4709~
15	208-53-12920	WIRING HARNESS	1	DBB4709~
16	08034-20876	BAND	2	DBB4709~
17	20Y-54-65580	COVER ASS'Y	1	DBB4709~
18	201-979-7820	GRILLE	1	DBB4709~
19	20Y-54-65310	ADAPTER	1	DBB4709~
20	20Y-979-6161	SENSOR	1	DBB0001~

FIG. K1110-14D0 FLOOR FRAME (OPERATOR'S CAB) (PLATE AND DUCT))

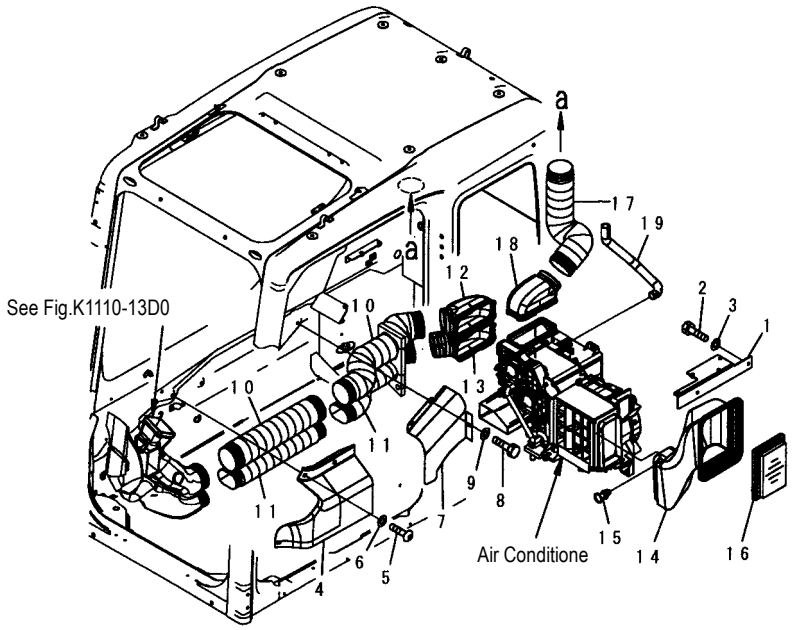

00018131

FIG NO. : K1110-14D0

INDEX	PART NO.	DESCRIPTION	Q'TY	SERIAL NO.
1	208-53-13770	PLATE	1	DBB4709~
2	01010-D0820	BOLT	2	DBB4709~
3	01643-70823	WASHER	2	DBB4709~
4	208-53-12180	COVER	1	DBB4709~
5	01245-00816	SCREW	3	DBB4709~
6	01643-70823	WASHER	3	DBB4709~
7	208-53-12190	COVER	1	DBB4709~
8	01010-00820	BOLT	3	DBB4709~
9	01643-70823	WASHER	3	DBB4709~
10	208-53-12220	DUCT	2	DBB4709~
11	208-53-12260	DUCT	2	DBB4709~
12	208-53-12120	DUCT	1	DBB4709~
13	208-53-12170	DUCT	1	DBB4709~
14	208-53-12520	DUCT	1	DBB4709~
15	208-53-12680	CLIP	1	DBB4709~
16	17M-911-3530	ELEMENT	1	DBB4709~
17	208-53-12220	DUCT	1	DBB4709~
18	208-53-12120	DUCT	1	DBB4709~
19	208-53-12432	HOSE	1	DBB4709~

FIG. K1110-14A0 FLOOR FRAME(OPERATOR'S CAB)(PLATE AND DUCT)(FOR BIG WIND AIR CONDITIONER) (OPT)

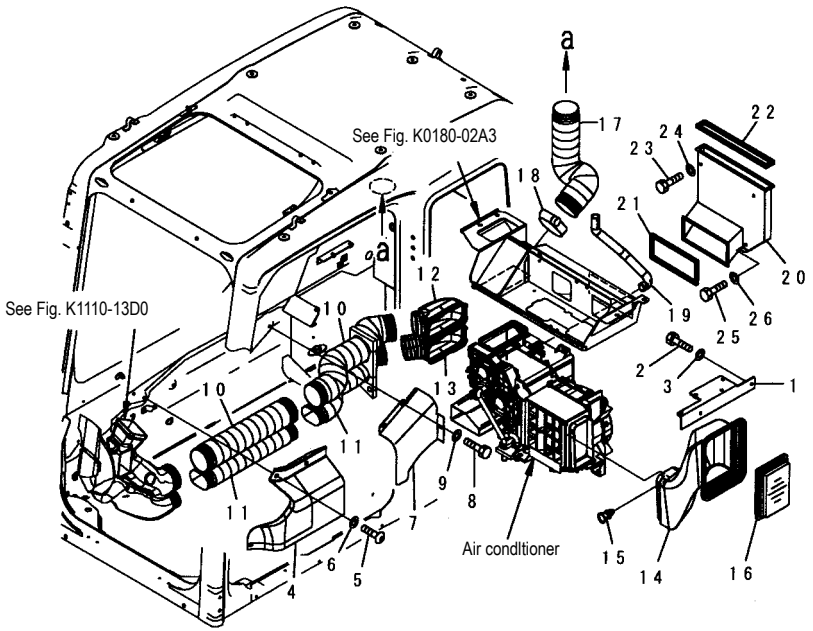

00018549

INDEX	PART NO.	DESCRIPTION	Q'TY	SERIAL NO.
1	208-53-13341	PLATE	1	DBB4709~
2	01010-D0820	BOLT	2	DBB4709~
3	01643-70823	WASHER	2	DBB4709~
4	208-53-12180	COVER	1	DBB4709~
5	01245-00816	SCREW	3	DBB4709~
6	01643-70823	WASHER	3	DBB4709~
7	208-53-12190	COVER	1	DBB4709~
8	01010-D0820	BOLT	3	DBB4709~
9	01643-70823	WASHER	3	DBB4709~
10	208-53-12220	DUCT	2	DBB4709~
11	208-53-12260	DUCT	2	DBB4709~
12	208-53-12120	DUCT	1	DBB4709~
13	208-53-12170	DUCT	1	DBB4709~
14	208-53-12520	DUCT	1	DBB4709~
15	208-53-12680	CLIP	1	DBB4709~
16	17M-911-3530	ELEMENT	1	DBB4709~
17	208-53-12220	DUCT	1	DBB4709~
18	07281-01159	CLAMP	1	DBB4709~
19	208-53-12432	HOSE	1	DBB4709~
20	208-979-7990	DUCT ASS'Y	1	DBB4709~
21	208-979-7970	. SEAL	1	DBB4709~
22	208-979-7980	. SEAL	1	DBB4709~
23	01010-80845	BOLT	3	DBB4709~
24	01643-30823	WASHER	3	DBB4709~
25	01010-80816	BOLT	1	DBB4709~
26	01643-30823	WASHER	1	DBB4709~

FIG. K1110-15A0 FLOOR FRAME (OPERATOR'S CAB) (PARTTION AND FOOT DUCT)

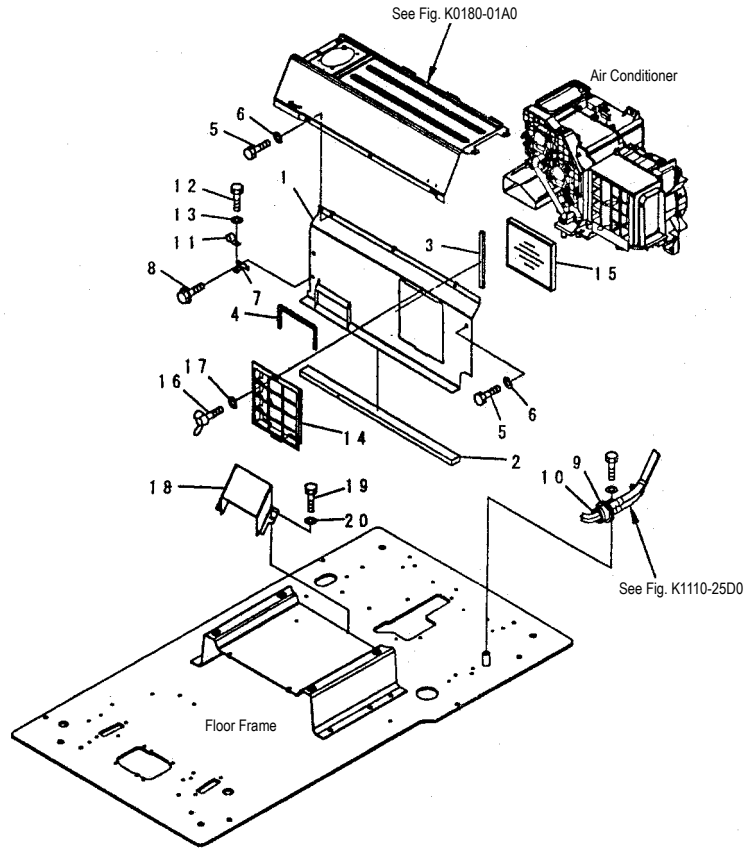

INDEX	PART NO.	DESCRIPTION	Q'TY	SERIAL NO.
1	208-53-12561	BRACKET	1	DBB4709~
2	208-53-11871	SEAL	1	DBB4709~
3	208-53-11890	SEAL	1	DBB4709~
4	208-53-12230	SEAL	1	DBB4709~
5	01010-D0820	BOLT	2	DBB4709~
6	01643-70823	WASHER	2	DBB4709~
7	208-53-11790	PLATE	1	DBB4709~
8	01435-40616	BOLT	2	DBB4709~
9	21T-06-71870	GROMMET	1	DBB4709~
10	08034-00414	BAND	1	DBB4709~
11	04434-51908	CLIP	1	DBB4709~
12	01010-D0820	BOLT	1	DBB4709~
13	01643-70823	WASHER	1	DBB4709~
14	208-979-7530	HOLDER	1	DBB4709~
15	208-979-7620	FILTER	1	DBB4709~
16	20Y-54-65790	BOLT	1	DBB4709~
17	20Y-54-65690	WASHER	1	DBB4709~
18	208-53-12551	DUCT	1	DBB4709~
19	01010-D0820	BOLT	2	DBB4709~
20	01643-70823	WASHER	2	DBB4709~

FIG. K1110-16A0 FLOOR FRAME (OPERATOR'S CAB) (FLOOR FRAME)

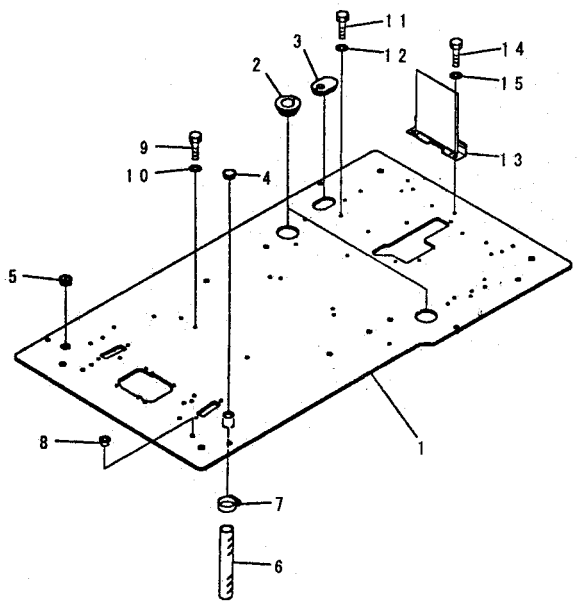

00018136

INDEX	PART NO.	DESCRIPTION	Q'TY	SERIAL NO.
1	208-53-14810	FLOOR FRAME	1	DBB4709~
2	20Y-54-65121	GROMMET	2	DBB0001~
3	208-53-12970	GROMMET	1	DBB4709~
4	22U-54-25581	GROMMET	1	DBB0001~
5	22U-54-25590	GROMMET	1	DBB0001~
6	07286-03828	HOSE	1	DBB0001~
7	07280-04726	CLAMP	1	DBB0001~
8	07048-01310	PLUG	2	DBB0001~
9	01010-81030	BOLT	2	DBB0001~
10	01643-31032	WASHER	2	DBB0001~
11	01010-81016	BOLT	1	DBB4709~
12	01643-31032	WASHER	1	DBB4709~
13	208-53-12891	BRACKET	1	DBB4709~
	22U-06-22661	.BRACKET	1	DBB4709~
14	01010-81020	BOLT	2	DBB4709~
15	01643-31032	WASHER	2	DBB4709~

FIG. K1110-17A0 FLOOR FRAME (OPERATOR'S CAB) (TRAVEL CONTROL)

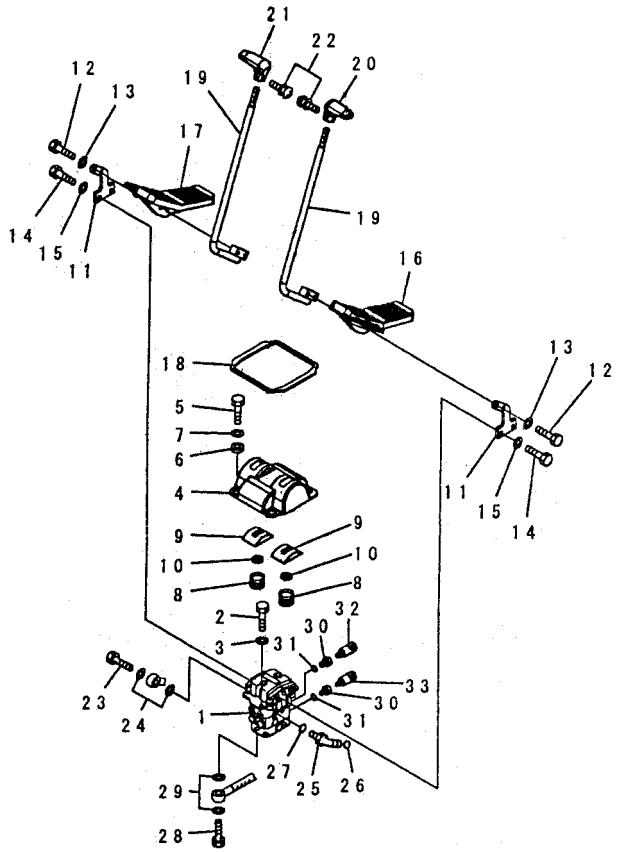

00011365

FIG NO. : K1110-17A0

INDEX	PART NO.	DESCRIPTION	Q'TY	SERIAL NO.
1	702-16-01861	PILOT VALVE	1	DBB0001~DBB4708
	(702-16-04160)	PILOT VALVE	1	DBB4709~
2	01010-81020	BOLT	2	DBB4709~
3	01643-31032	WASHER	2	DBB4709~
4	20Y-43-21151	COVER	1	DBB0001~
5	01010-81020	BOLT	4	DBB4709~
6	20Y-43-21260	COLLAR	4	DBB0001~
7	203-54-56970	WASHER	4	DBB0001~
8	203-43-51620	SPRING	2	DBB0001~
	22U-43-21350	COVER ASS'Y	2	DBB0001~
9	☆	COVER	1	DBB0001~
10	22U-43-21360	SEAL	1	DBB0001~
11	22U-43-21151	LEVER	2	DBB4709~
12	01010-D1045	BOLT	4	DBB0001~
13	01643-71032	WASHER	4	DBB0001~
14	01010-81030	BOLT	4	DBB0001~
15	01643-31032	WASHER	4	DBB0001~
16	22U-43-21111	PEDAL	1	DBB0001~
17	22U-43-21121	PEDAL	1	DBB0001~
18	22U-43-21380	SEAL	1	DBB0001~
19	22U-43-21131	LEVER	2	DBB4709~
20	20Y-43-21231	KNOB	1	DBB0001~
21	20Y-43-21241	KNOB	1	DBB0001~
22	01023-20416	SCREW	2	DBB0001~
23	20Y-62-18910	BOLT	1	DBB0001~
24	07000-12018	O-RING	2	DBB0001~
25	11Y-62-12160	ELBOW	1	DBB0001~
26	02896-11008	O-RING	1	DBB0001~
27	07002-11423	O-RING	1	DBB0001~
28	20Y-62-18890	BOLT	4	DBB0001~
29	07000-12015	O-RING	8	DBB0001~
30	20Y-62-41390	ADAPTER	2	DBB0001~
31	07002-11423	O-RING	2	DBB0001~
32	20Y-06-21710	SWITCH	1	DBB0001~
33	206-06-61130	SWITCH	1	DBB0001~

FIG. K1110-18A0 FLOOR FRAME (FOOT REST) (L. H.)

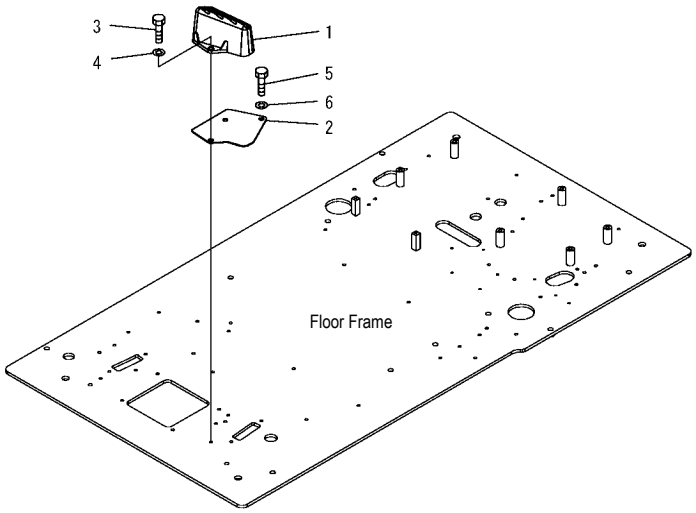

PW1B834

FIG NO. : K1110-18A0

INDEX	PART NO.	DESCRIPTION	Q'TY	SERIAL NO.
1	22U-54-25110	FOOT REST, FOOT, L. H	1	DBB0001~
2	22U-54-25521	PLATE	1	DBB0001~
3	01010-81025	BOLT	2	DBB0001~
4	01643-31032	WASHER	2	DBB0001~
5	01010-81020	BOLT	1	DBB0001~
6	01643-31032	WASHER	1	DBB0001~

FIG. K1110-19A0 FLOOR FRAME (FOOT REST) (R. H.)

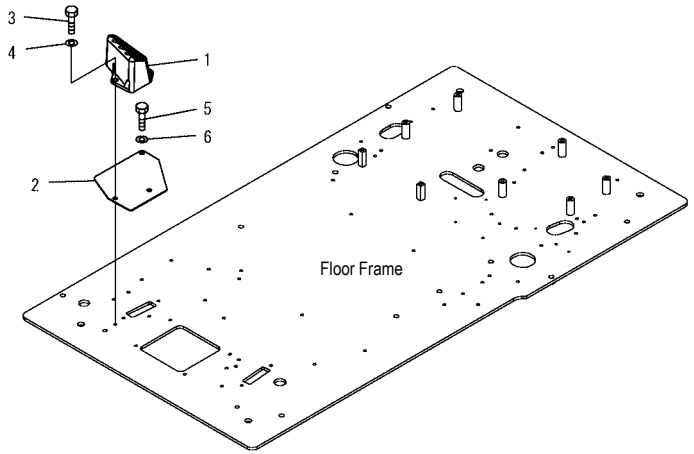

PW1B835

FIG NO. : K1110-19A0

INDEX	PART NO.	DESCRIPTION	Q'TY	SERIAL NO.
1	22U-54-25120	FOOT REST, FOOT, R. H	1	DBB0001~
2	22U-54-25531	PLATE	1	DBB0001~
3	01010-81025	BOLT	2	DBB0001~
4	01643-31032	WASHER	2	DBB0001~
5	01010-81020	BOLT	1	DBB0001~
6	01643-31032	WASHER	1	DBB0001~

FIG. K1110-19A1 FLOOR FRAME(FOOT REST)(R.H.)(SPECIAL PIPING FOR BREAKER)(OPT)

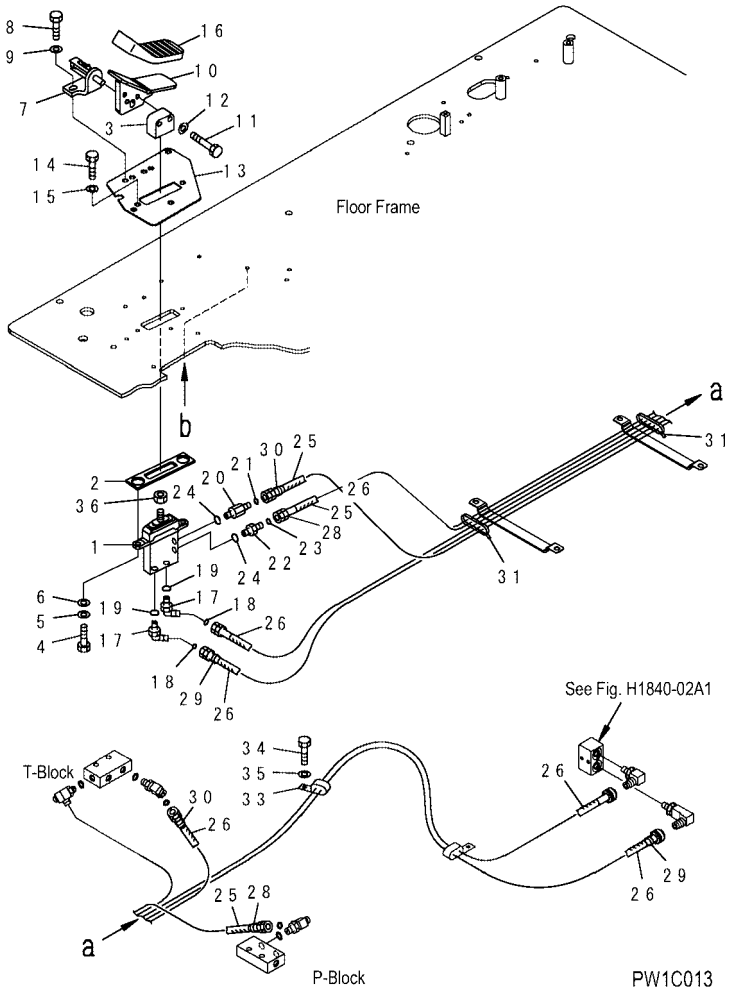

INDEX	PART NO.	DESCRIPTION	Q'TY	SERIAL NO.
1	(702-16-01230)	PILOT VALVE	1	DBB0001~
2	22U-54-25660	SEAL	1	DBB0001~
3	22U-43-21470	SEAL	1	DBB0001~
4	01010-81025	BOLT	2	DBB0001~
5	01643-31032	WASHER	2	DBB0001~
6	01643-31032	WASHER	2	DBB0001~
7	20Y-62-25360	BRACKET	1	DBB0001~
8	01010-D1025	BOLT	2	DBB0001~
9	01643-71032	WASHER	2	DBB0001~
10	20Y-43-31220	PEDAL	1	DBB0001~
11	01010- D1045	BOLT	2	DBB0001~
12	01643-71032	WASHER	2	DBB0001~
13	22U-54-25541	PLATE	1	DBB0001~
14	01010-81020	BOLT	3	DBB0001~
15	01643-31032	WASHER	3	DBB0001~
16	22U-54-25670	CAP	1	DBB0001~
17	21W-62-43980	ELBOW	2	DBB0001~
18	02896-11008	O-RING	2	DBB0001~
19	07000-12011	O-RING	2	DBB0001~
20	20Y-62-43470	NIPPLE	1	DBB0001~
21	02896-11008	O-RING	1	DBB0001~
22	11Y-62-12140	NIPPLE	1	DBB0001~
23	02896-11008	O-RING	1	DBB0001~
24	07000-12011	O-RING	2	DBB0001~
25	02760-00212	HOSE	2	DBB0001~
26	02760-00224	HOSE, 2400 MM	2	DBB0001~
28	20Y-62-22790	BAND, RED	2	DBB0001~
29	20Y-62-22810	BAND, YELLOW	2	DBB0001~
30	20Y-62-22820	BAND, BLUE	2	DBB0001~
31	08034-00519	BAND	2	DBB0001~
33	04435-51210	CLIP	1	DBB0001~
34	01010-81016	BOLT	1	DBB0001~
35	01643-31032	WASHER	1	DBB0001~
36	01583-51408	NUT	1	DBB0001~

FIG. K1110-20A0 FLOOR FRAME (OPERATOR'S CAB) (BASE)

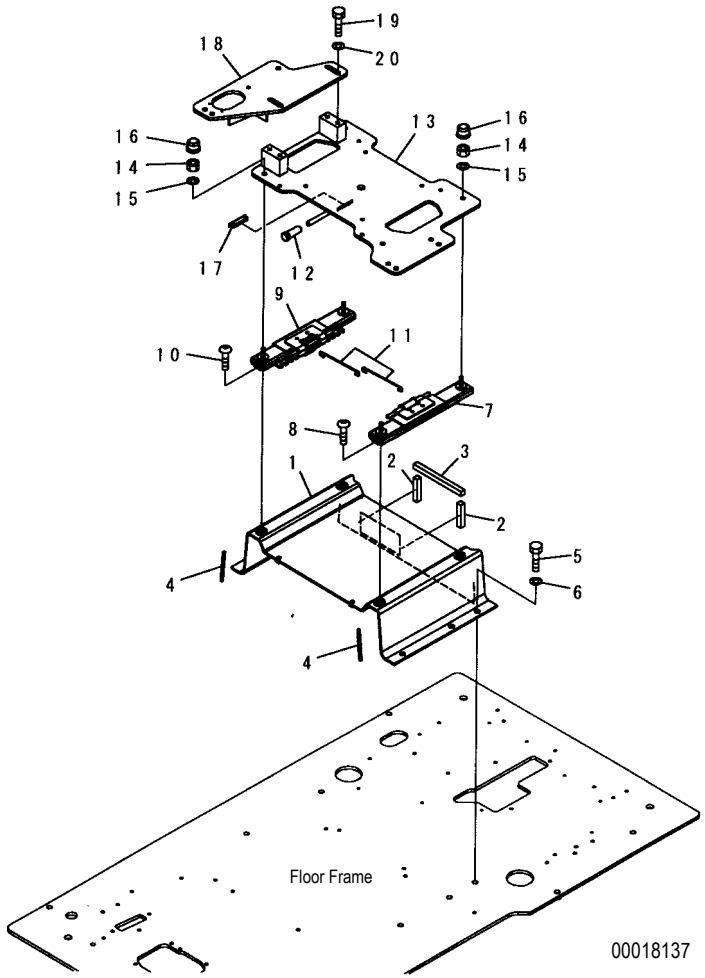

FIG NO. : K1110-20A0

INDEX	PART NO.	DESCRIPTION	Q'TY	SERIAL NO.
1	208-43-71511	FRAME	1	DBB4709~
2	208-43-71520	. FRAME	2	DBB4709~
3	208-43-71530	. FRAME	1	DBB4709~
4	208-43-71540	. ADJUSTER	2	DBB4709~
5	01010-81230	BOLT	5	DBB4709~
6	01643-31232	WASHER	5	DBB4709~
7	208-43-71540	ADJUSTER	1	DBB4709~
8	01245-01025	SCREW	2	DBB4709~
9	208-43-71550	ADJUSTER	1	DBB4709~
10	01245-01025	SCREW	2	DBB4709~
11	22U-43-21260	WIRE	2	DBB4709~
12	22U-43-21390	CAP	1	DBB4709~
13	20Y-43-D1161	FRAME	1	DBB4709~
14	20Y-54-65340	NUT	4	DBB4709~
15	01643-71032	WASHER	4	DBB4709~
16	207-54-66540	CAP	2	DBB4709~
17	20Y-979-6630	CATCHER	1	DBB4709~
18	208-43-71570	FRAME	1	DBB4709~
19	01010-D1230	BOLT	4	DBB4709~
20	22U-64-25170	WASHER	4	DBB4709~

FIG. K1110-21A0 FLOOR FRAME (OPERATOR'S CAB) (SUB PANEL)

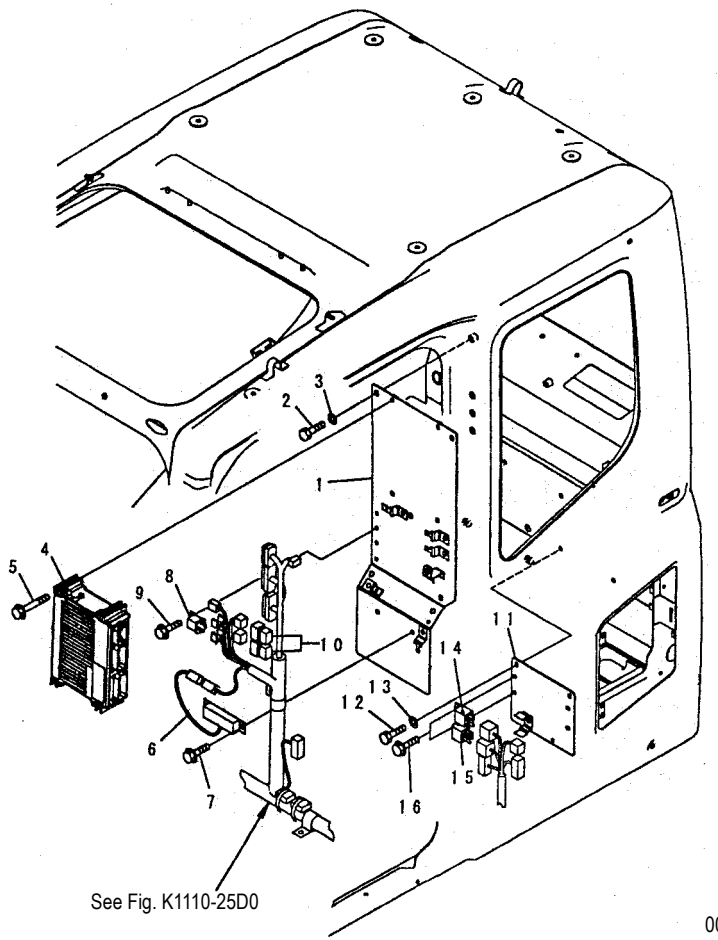

00018133

FIG NO. : K1110-21A0

INDEX	PART NO.	DESCRIPTION	Q'TY	SERIAL NO.
1	208-53-12860	PLATE	1	DBB4709~
2	01010-80816	BOLT	5	DBB4709~
3	01643-30823	WASHER	5	DBB4709~
4	7835-26-1008	GP CONTROLLER	1	DBB0001~DBB4708
	7835-26-1009	GP CONTROLLER	1	DBB4709~
5	01435-00885	BOLT	4	DBB4709~
6	7861-94-3000	RESISTOR	1	DBB4709~
7	01435-00816	BOLT	2	DBB4709~
8	569-06-61960	RELAY	1	DBB4709~
9	01435-00610	BOLT	1	DBB4709~
10	8233-06-3350	DIODE	2	DBB4709~
11	208-53-12880	BRACKET	1	DBB4709~
12	01010-80816	BOLT	2	DBB4709~
13	01643-30823	WASHER	2	DBB4709~
14	198-911-9240	RELAY ASS'Y	1	DBB4709~
15	20Y-979-6771	RELAY	1	DBB4709~
16	01435-00610	BOLT	2	DBB4709~

FIG. K1110-22A0 FLOOR FRAME (OPERATOR'S CAB) (HARNESS)

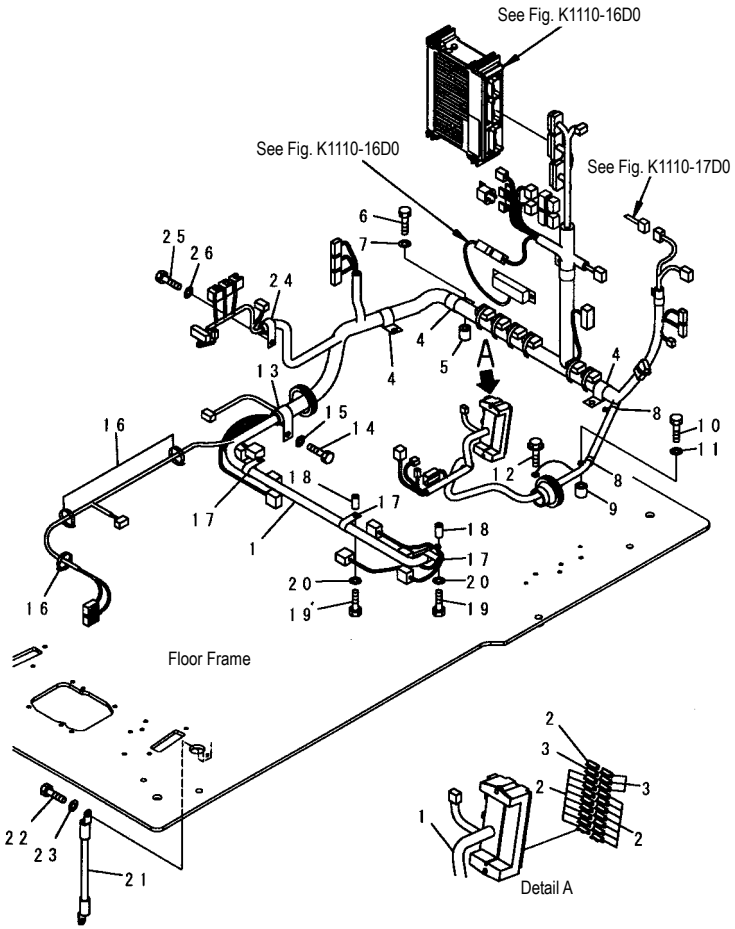

INDEX	PART NO.	DESCRIPTION	Q'TY	SERIAL NO.
1	20Y-06-71510	WIRING HARNESS	1	DBB4709~
2	08041-01000	. FUSE,10A	16	DBB4709~
3	08041-02000	. FUSE, 20A	4	DBB4709~
4	04434-53411	CLIP	3	DBB4709~
5	195-33-11220	SPACER	3	DBB4709~
6	01010-81040	BOLT	3	DBB4709~
7	01643-31032	WASHER	3	DBB4709~
8	04434-51710	CLIP	2	DBB4709~
9	195-33-11220	SPACER	2	DBB4709~
10	01010-81040	BOLT	2	DBB4709~
11	01643-31032	WASHER	2	DBB4709~
12	01435-01016	BOLT	1	DBB4709~
13	04434-53411	CLIP	1	DBB4709~
14	01010-81020	BOLT	1	DBB4709~
15	01643-31032	WASHER	1	DBB4709~
16	08034-20519	BAND	3	DBB4709~
17	04434-52310	CLIP	3	DBB4709~
18	195-33-11220	SPACER	3	DBB4709~
19	01010-81040	BOLT	3	DBB4709~
20	01643-31032	WASHER	3	DBB4709~
21	08028-43030	CABLE	1	DBB4709~
22	01010-81020	BOLT	1	DBB4709~
23	01643-31032	WASHER	1	DBB4709~
24	04434-51910	CLIP	1	DBB4709~
25	01010-81020	BOLT	1	DBB4709~
26	01643-31032	WASHER	1	DBB4709~

FIG. K1110-23A0 FLOOR FRAME (OPERATOR'S CAB) (CLAMP AND BOLT)

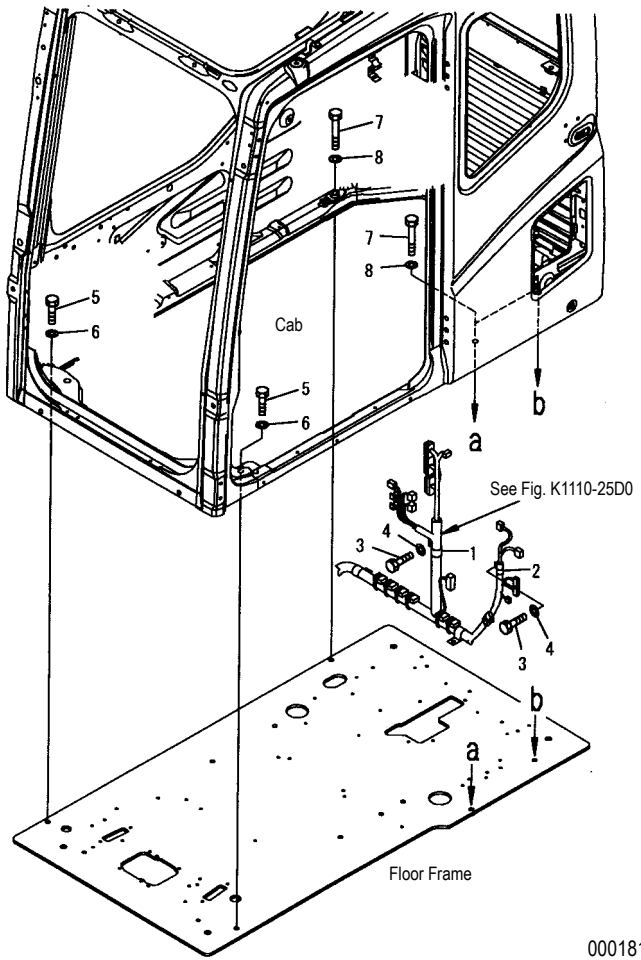

00018135

INDEX	PART NO.	DESCRIPTION	Q'TY	SERIAL NO.
1	04434-53411	CLIP	1	DBB4709~
2	04434-52208	CLIP	1	DBB4709~
3	01010-81020	BOLT	2	DBB4709~
4	01643-31032	WASHER	2	DBB4709~
5	01010-81240	BOLT	2	DBB4709~
6	01643-31232	WASHER	2	DBB4709~
7	01010-81285	BOLT	3	DBB4709~
8	01643-31232	WASHER	3	DBB4709~

FIG. K1110-24A0 FLOOR FRAME

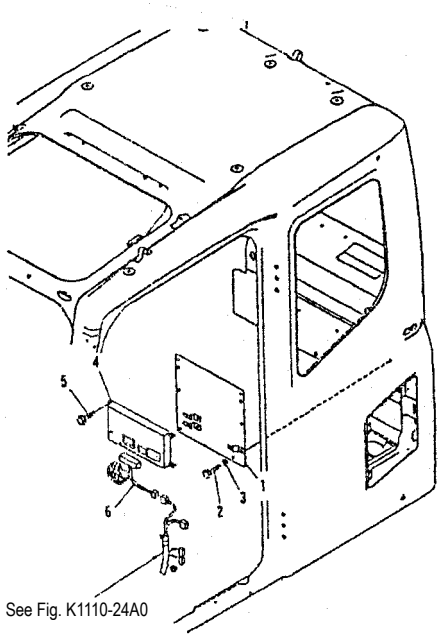

PW1B839

FIG NO. : K1110-24A0

INDEX	PART NO.	DESCRIPTION	Q'TY	SERIAL NO.
1	208-53-12870	PLATE	1	DBB3507~
2	01010-80816	BOLT	4	DBB3507~
3	01643-30823	WASHER	4	DBB3507~
4	7826-22-1000	CONTROLLER TC400	1	DBB3507~
	7826-22-1100	. TC400 CONTROLLER MOD	1	DBB3507~
	7826-22-1500	. GSM MODEM	1	DBB3507~
	7826-22-1510	. SHIM	1	DBB3507~
	7826-22-5830	. PLATE	1	DBB3507~
	7826-22-1260	. SCREW	3	DBB3507~
5	01435-00825	BOLT	4	DBB3507~
6	208-06-71530	WIRING HARNESS	1	DBB3507~

FIG. K1110-25A0 FLOOR FRAME (LEVER AND VALVE) (L. H.)

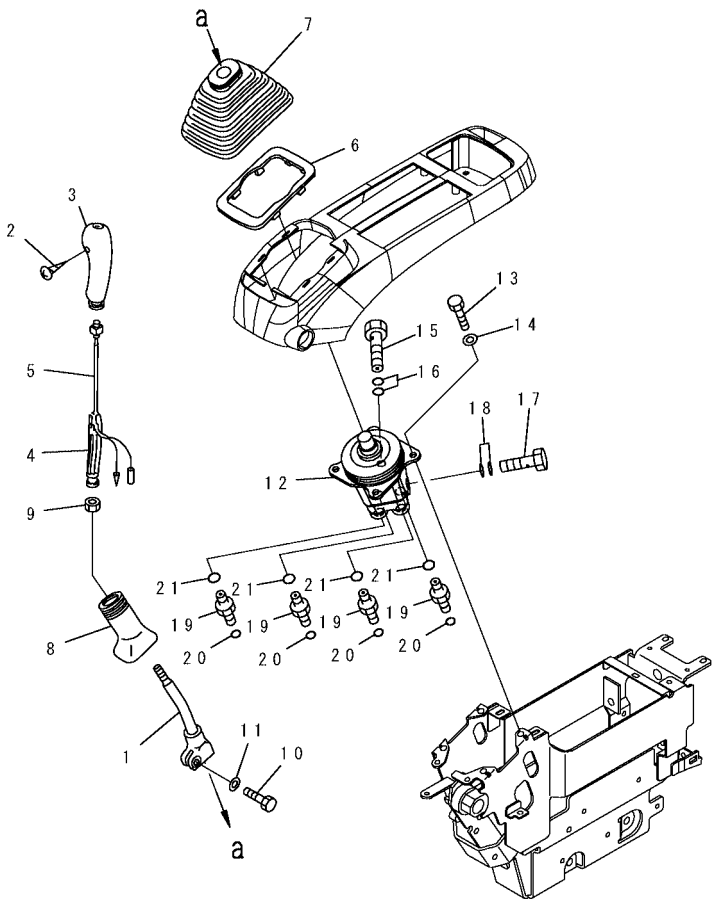

PW1B840

FIG NO. : K1110-25A0

INDEX	PART NO.	DESCRIPTION	Q'TY	SERIAL NO.
1	20Y-43-22211	LEVER, L. H.	1	DBB0001~
	22U-43-21181	KNOB, L. H.	1	DBB0001~
2	01370-10308	. SCREW	1	DBB0001~
3	20Y-43-22381	. KNOB, L. H.	1	DBB0001~
4	20Y-43-22421	. INSERT	1	DBB0001~
5	22U-43-21211	. SWITCH	1	DBB0001~
6	20Y-43-22250	PLATE	1	DBB0001~
7	20Y-43-22261	BOOT	1	DBB0001~
8	20Y-43-22370	BOOT	1	DBB0001~
9	600-411-1280	NUT	1	DBB0001~
10	01252-41025	BOLT	1	DBB0001~
11	01643-51032	WASHER	1	DBB0001~
12	702-16-03910	PILOT VALVE	1	DBB0001~
13	01010-80820	BOLT	4	DBB0001~
14	01643-30823	WASHER	4	DBB0001~
15	20Y-62-18910	BOLT	1	DBB0001~
16	07000-12018	O–RING	2	DBB0001~
17	20Y-62-18890	BOLT	1	DBB0001~
18	07000-12015	O–RING	2	DBB0001~
19	11Y-62-12130	NIPPLE	4	DBB0001~
20	02896-11008	O–RING	4	DBB0001~
21	07002-11423	O–RING	4	DBB0001~

FIG. K1110-26A0 FLOOR FRAME (OPERATOR'S CAB) (CONSOLE) (UPPER) (WITH AIR CONDITIONER AND RADIO) (L.H.)

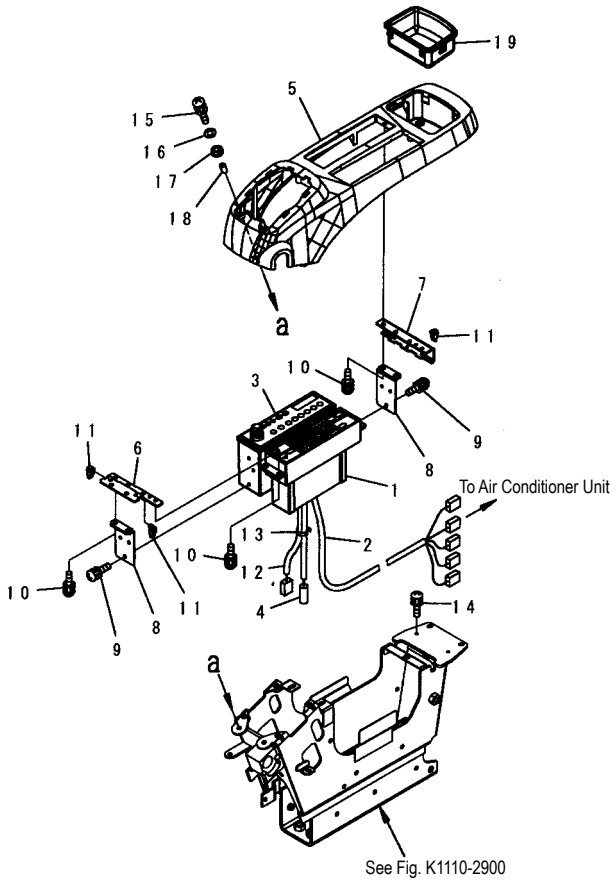

00018140

INDEX	PART NO.	DESCRIPTION	Q'TY	SERIAL NO.
1	20Y-979-6141	PANEL ASS'Y	1	DBB0001~DBB4708
	20Y-979-7630	PANEL ASS'Y	1	DBB4709~
2	20Y-979-6151	WIRING HARNESS	1	DBB0001-DBB4708
	208-979-7550	WIRING HARNESS	1	DBB4709~
3	20Y-06-22730	RADIO	1	DBB0001~
4	08912-51600	CORD	1	DBB0001~
5	22U-43-22210	COVER	1	DBB001~DBB4708
	208-43-71680	COVER	1	DBB4709~
6	22U-43-22220	PLATE	1	DBB0001~
7	22U-43-22230	STAY	1	DBB0001~
8	22U-06-22510	BRACKET	2	DBB0001~
9	01023-60510	SCREW	4	DBB0001~
10	01023-60516	SCREW	10	DBB0001~
11	20Y-06-23770	CLIP	3	DBB0001~
12	22U-06-22350	WIRING HARNESS	1	DBB0001~
13	08034-00310	BAND	1	DBB0001~
14	01023-60620	SCREW	2	DBB0001~
15	01023-60630	SCREW	2	DBB4709~
16	01640-20610	WASHER	2	DBB4709~
17	208-43-71610	CUSHION	2	DBB4709~
18	208-43-71620	PIPE	2	DBB4709~
19	22U-43-22110	TRAY	1	DBB0001~

FIG. K1110-27A0 FLOOR FRAME (CONSOLE) (UPPER) (L.H.)(WITHOUT AIR CONDITIONER AND RADIO) (OPT)

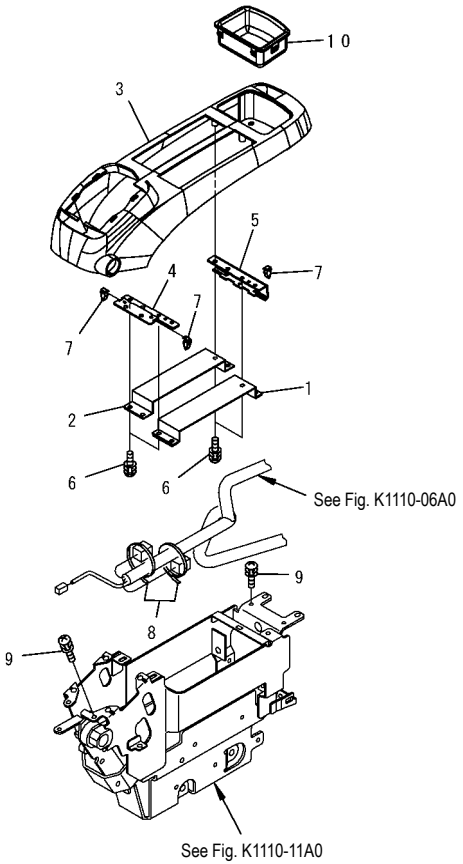

PW1D471

FIG NO. : K1110-27A0

INDEX	PART NO.	DESCRIPTION	Q'TY	SERIAL NO.
1	20Y-43-31460	COVER	1	DBB0001~
2	20Y-43-31470	COVER	1	DBB0001~
3	22U-43-22210	COVER	1	DBB0001~
4	22U-43-22220	PLATE	1	DBB0001~
5	22U-43-22230	STAY	1	DBB0001~
6	01023-60516	SCREW	10	DBB0001~
7	20Y-06-23770	CLIP	3	DBB0001~
8	08034-00414	BAND	2	DBB0001~
9	01023-60620	SCREW	4	DBB0001~
10	22U-43-22110	COVER	1	DBB0001~

FIG. K1110-28A0 FLOOR FRAME (OPERATOR'S CAB) (CONSOLE) (LOWER) (L.H.)

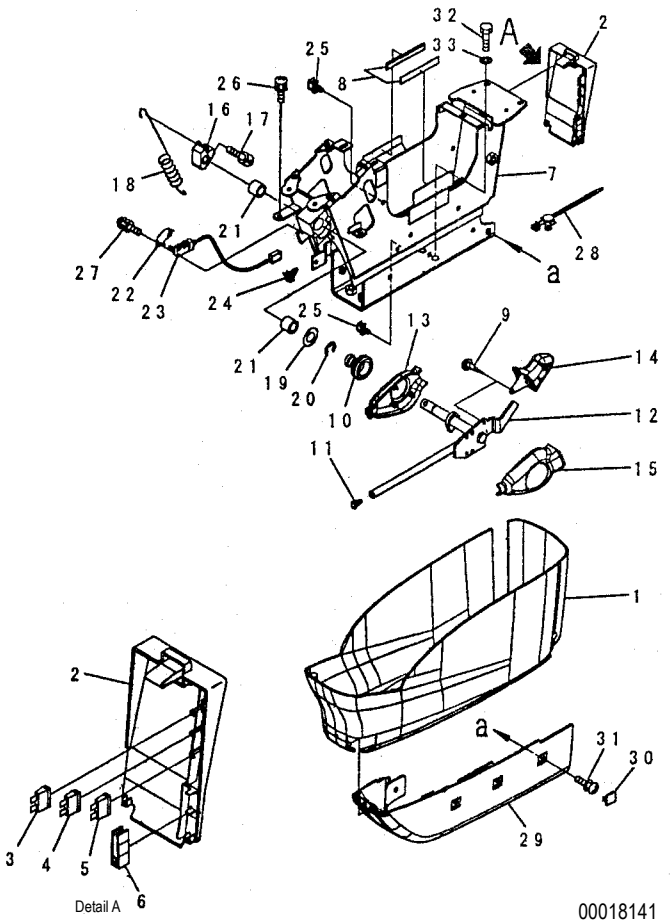

INDEX	PART NO.	DESCRIPTION	Q'TY	SERIAL NO.
1	22U-43-22310	COVER	1	DBB0001~
	22U-43-22320	COVER ASS' Y	1	DBB0001~
2	☆	. COVER	1	DBB0001~
3	08041-01000	. FUSE, 10A	1	DBB0001~
4	08041-02000	. FUSE, 20A	1	DBB0001~
5	08041-02500	. FUSE, 25A	1	DBB0001~
6	22U-43-22340	. PULLER	1	DBB0001~
7	20Y-43-31411	FRAME	1	DBB4709~
8	208-43-71410	. SHEET	2	DBB4709~
9	01370-00410	SCREW	4	DBB0001~
10	08037-11425	GROMMET	1	DBB4709~
11	208-53-12280	CAP	1	DBB4709~
12	20Y-43-31512	LEVER	1	DBB4709~
13	20Y-43-31522	COVER	1	DBB4709~
14	20Y-43-31610	KNOB	1	DBB4709~
15	20Y-43-31621	COVER	1	DBB4709~
16	20Y-43-31432	CAM	1	DBB4709~
17	01252-70816	BOLT	1	DBB4709~
18	20Y-43-31421	SPRING	1	DBB4709~
19	20Y-43-31440	RING	1	DBB4709~
20	20Y-43-31450	RING	1	DBB4709~
21	06124-01616	BEARING	2	DBB4709~
22	22U-06-22490	PLATE	1	DBB4709~
23	22U-06-22360	SWITCH ASS'Y	1	DBB4709~
24	22U-43-22410	CLIP	1	DBB4709~
25	08059-00310	CLIP	2	DBB4709~
26	01023-60616	SCREW	4	DBB4709~
27	01023-60316	SCREW	2	DBB4709~
28	22U-43-22430	CLIP	1	DBB4709~
29	20Y-43-31690	COVER	1	DBB4709~
30	22U-43-22830	CAP	3	DBB4709~
31	01023-20614	SCREW	4	DBB4709~
32	01010-81030	BOLT	4	DBB4709~
33	01643-31032	WASHER	4	DBB4709~

FIG. K1110-29A0 FLOOR FRAME (LEVER AND VALVE) (R.H.)

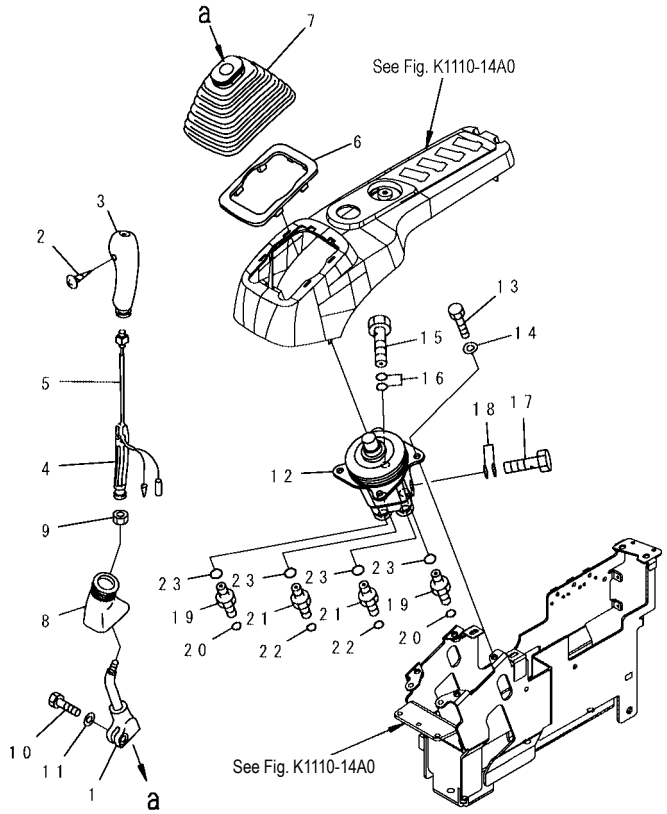

PW1B844

INDEX	PART NO.	DESCRIPTION	Q'TY	SERIAL NO.
1	20Y-43-22221	LEVER, R.H.	1	DBB0001~
	22U-43-21191	KNOB, R.H.	1	DBB0001~
2	01370-10308	. SCREW	1	DBB0001~
3	20Y-43-22390	. KNOB, R.H.	1	DBB0001~
4	20Y-43-22421	. INSERT	1	DBB0001~
5	22U-43-21211	. SWITCH	1	DBB0001~
6	20Y-43-22250	PLATE	1	DBB0001~
7	20Y-43-22261	BOOT	1	DBB0001~
8	20Y-43-22370	BOOT	1	DBB0001~
9	600-411-1280	NUT	1	DBB0001~
10	01252-41025	BOLT	1	DBB0001~
11	01643-51032	WASHER	1	DBB0001~
12	702-16-03910	PILOT VALVE	1	DBB0001~
13	01010-80820	BOLT	4	DBB0001~
14	01643-30823	WASHER	4	DBB0001~
15	20Y-62-18910	BOLT	1	DBB0001~
16	07000-12018	O-RING	2	DBB0001~
17	20Y-62-18890	BOLT	1	DBB0001~
18	07000-12015	O-RING	2	DBB0001~
19	11Y-62-12130	NIPPLE	2	DBB0001~
20	02896-11008	O-RING	2	DBB0001~
21	11Y-62-12520	NIPPLE	2	DBB0001~
22	02896-11009	O-RING	2	DBB0001~
23	07002-11423	O-RING	4	DBB0001~

FIG. K1110-30A0 FLOOR FRAME (OPERATOR'S CAB) (CONSOLE) (MASTER KEY) (R.H.)

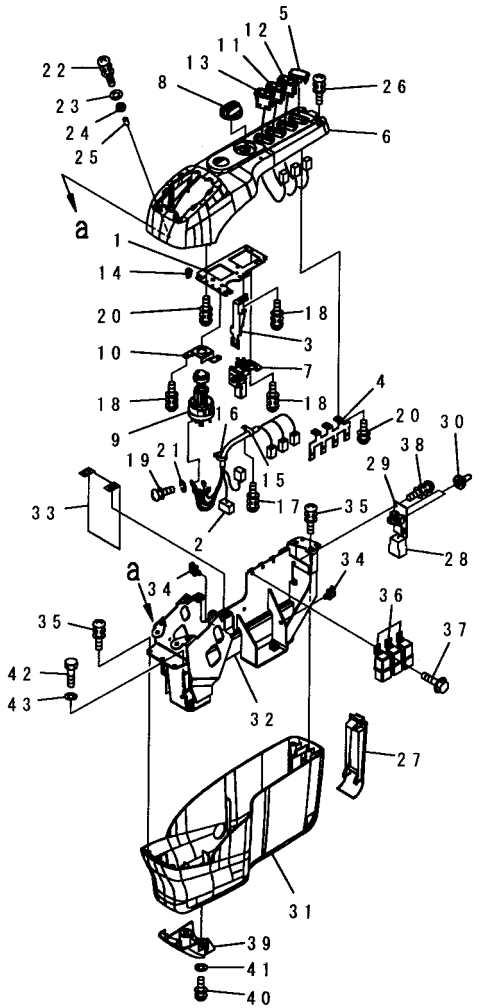

00018143

FIG NO. : K1110-30A0

INDEX	PART NO.	DESCRIPTION	Q'TY	SERIAL NO.
1	22U-43-23111	PLATE	1	DBB0001~
2	22U-06-22330	WIRING HARNESS	1	DBB0001~
3	22U-43-23120	BRACKET	1	DBB0001~
4	22U-43-23130	STAY	1	DBB0001~
5	22U-06-22320	COVER	1	DBB0001~
6	208-43-71690	COVER	1	DBB0001~
7	22U-06-22420	POTENTIOMETER ASS'Y	1	DBB0001~
8	22U-06-22470	KNOB	1	DBB0001~
9	08086-20000	SWITCH	1	DBB0001~
10	22U-06-22480	PLATE	1	DBB0001~
11	22U-06-22190	SWITCH	1	DBB0001~
12	22U-06-22290	SWITCH	1	DBB0001~
13	22U-06-22390	SWITCH	1	DBB0001~
14	22Y-06-23770	CLIP	2	DBB0001~
15	22Y-06-23920	CLAMP	1	DBB0001~
16	08034-10414	BAND	2	DBB0001~
17	01023-60408	SCREW	1	DBB4709~
18	01023-60512	SCREW	6	DBB0001~
19	01023-10508	SCREW	5	DBB0001~
20	01023-10512	SCREW	6	DBB0001~
21	01601-20513	WASHER	5	DBB0001~
22	01023-60630	SCREW	2	DBB4709~
23	01640-20610	WASHER	2	DBB4709~
24	208-43-71610	CUSHION	2	DBB4709~
25	208-43-71620	PIPE	2	DBB4709~
26	01023-70514	SCREW	2	DBB0001~
27	22U-43-23210	COVER	1	DBB0001~
	20Y-06-31320	SWITCH ASS'Y	1	DBB0001~
28	20Y-06-31330	. WIRING HARNESS	1	DBB0001~
29	☆	. PLATE	1	DBB0001~
30	208-43-71420	. CAP	2	DBB0001~
31	22U-43-23230	COVER	1	DBB0001~
32	208-43-71670	FRAME	1	DBB4709~
33	22U-43-23250	SHEET	1	DBB0001~
34	08059-00310	CLIP	2	DBB4709~
35	01023-60616	SCREW	4	DBB0001~
36	569-06-61960	RELAY	3	DBB0001~
37	01435-00612	BOLT	3	DBB0001~
38	01023-60410	SCREW	2	DBB0001~
39	22U-43-23711	COVER	1	DBB0001~
40	01023-10614	SCREW	2	DBB0001~
41	01643-30623	WASHER	2	DBB0001~

FIG. K1110-31A0 FLOOR FRAME (OPERATOR'S CAB) (AIR CONDITIONER AND FOOT COVER)

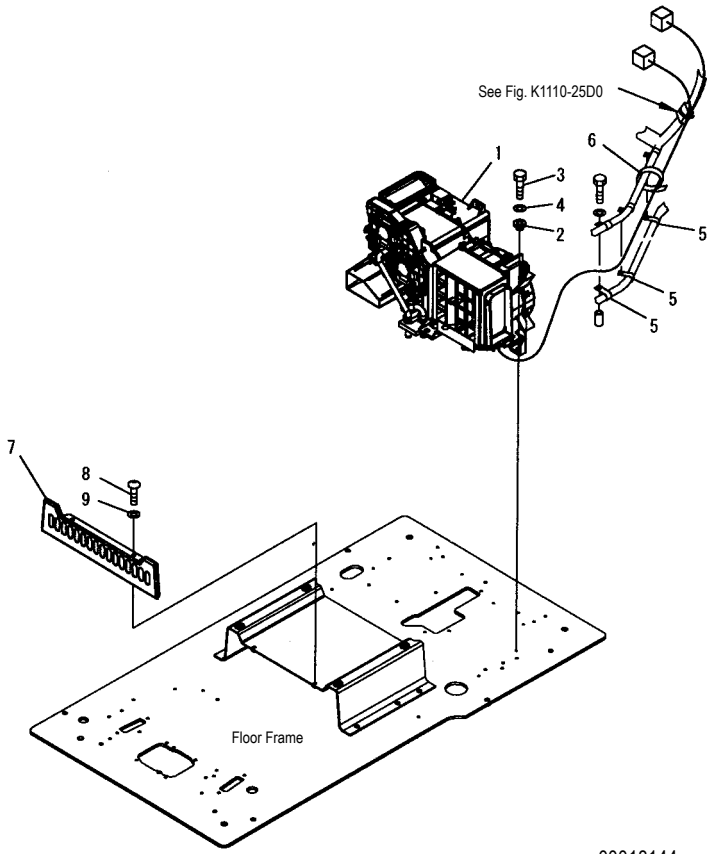

INDEX	PART NO.	DESCRIPTION	Q'TY	SERIAL NO.
1	208-979-7610	AIR COMPRESSOR UNIT	1	DBB4709~
2	208-979-7540	COLLAR	7	DBB4709~
3	01010-80825	BOLT	7	DBB4709~
4	01643-30823	WASHER	7	DBB4709~
5	04434-51410	CLIP	2	DBB4709~
6	08034-20536	BAND	1	DBB4709~
7	208-43-71580	COVER	1	DBB4709~
8	01245-00820	SCREW	2	DBB4709~
9	01643-70823	WASHER	2	DBB4709~

FIG. K1110-32A0 FLOOR FRAME (OPERATOR'S CAB) (AIR CONDITIONER HOSE)

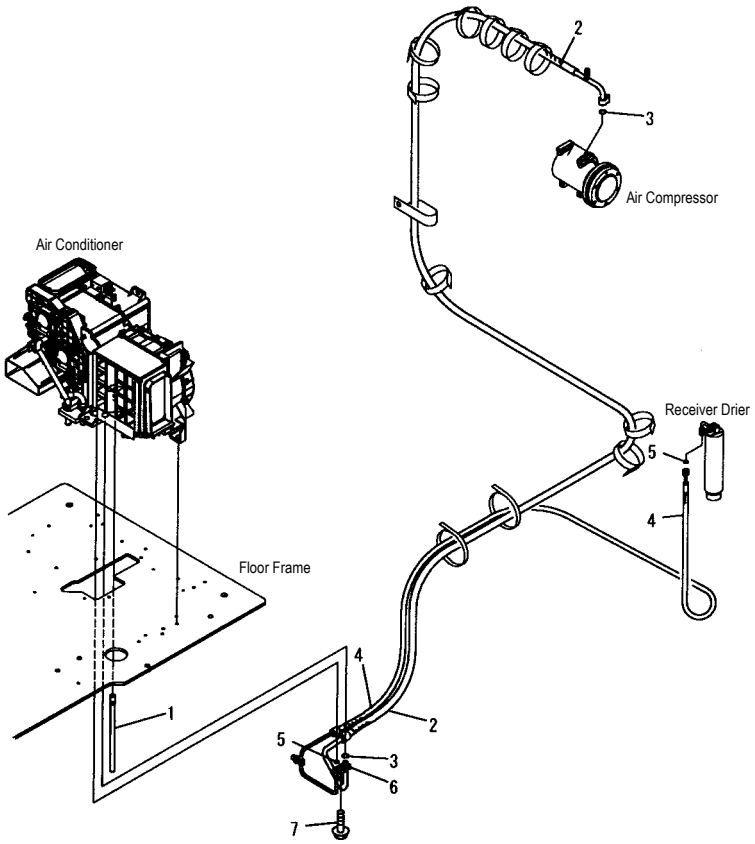

00018145

INDEX	PART NO.	DESCRIPTION	Q'TY	SERIAL NO.
1	208-979-7640	HOSE	1	DBB4709~
2	20Y-979-7351	HOSE	1	DBB4709~
3	20Y-979-3130	. O-RING	2	DBB4709~
4	20Y-979-7341	HOSE	1	DBB4709~
5	20Y-979-3150	. O-RING	2	DBB4709~
6	208-979-7650	CONNECTOR	1	DBB4709~
7	01435-40620	BOLT	1	DBB4709~

FIG. K1110-33A0 FLOOR FRAME (OPERATOR'S CAB) (HEATER HOSE AND CLAMP)

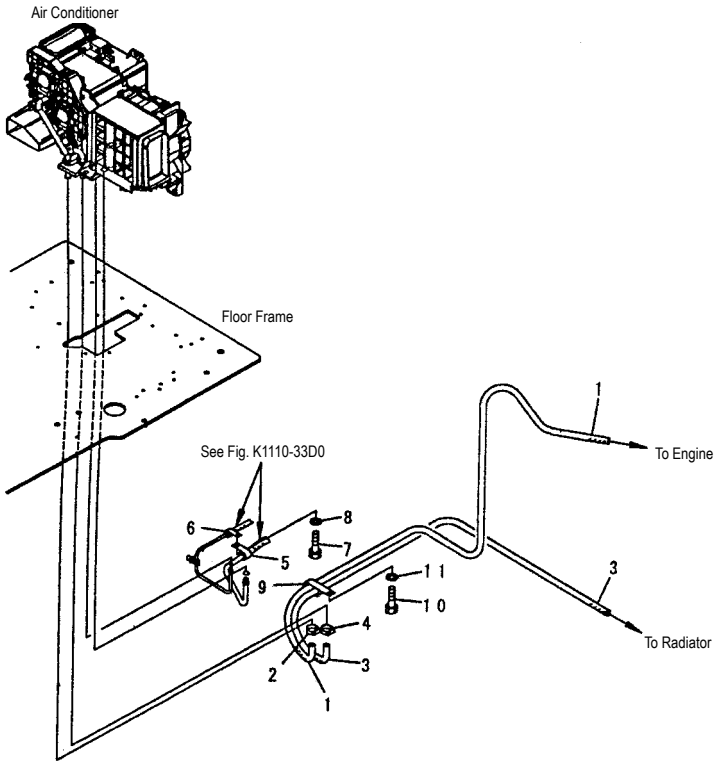

00018146

INDEX	PART NO.	DESCRIPTION	Q'TY	SERIAL NO.
1	20Y-979-7360	HOSE ASS'Y	1	DBB4709~
2	09479-02400	CLAMP	1	DBB4709~
3	20Y-979-7410	HOSE ASS'Y	1	DBB4709~
4	09479-02400	CLAMP	1	DBB4709~
5	04434-52511	CLIP	1	DBB4709~
6	04434-52110	CLIP	1	DBB4709~
7	01010-81020	BOLT	1	DBB4709~
8	01643-31032	WASHER	1	DBB4709~
9	141-06-11220	CLIP	1	DBB4709~
10	01010-81016	BOLT	1	DBB4709~
11	01643-31032	WASHER	1	DBB4709~

FIG. K1110-34A0 FLOOR FRAME (PPC) (1/2)

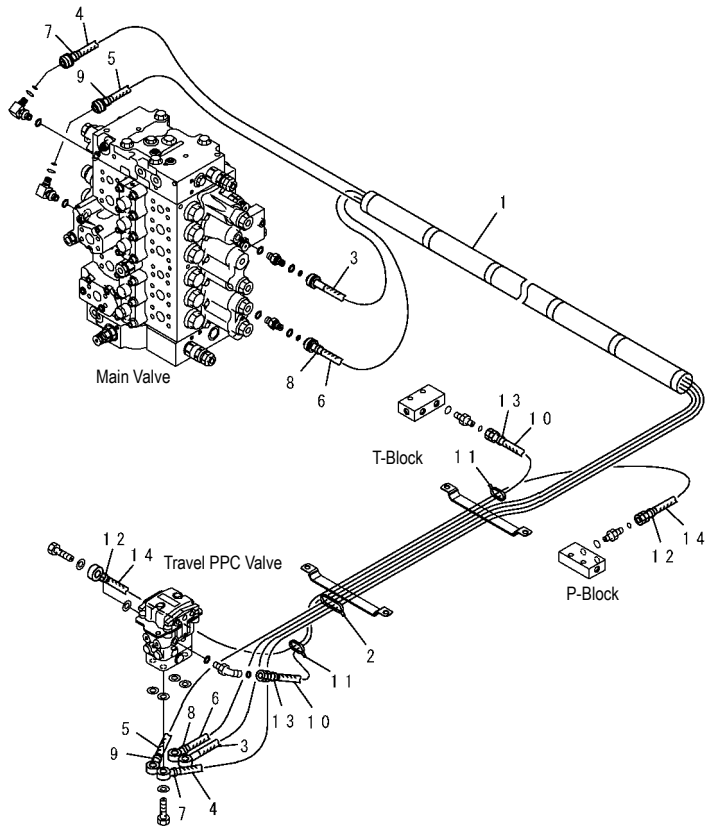

PW1B849

FIG NO. : K1110-34A0

INDEX	PART NO.	DESCRIPTION	Q'TY	SERIAL NO.
1	08017-32810	CONDUIT	1	DBB0001~
2	08034-00536	BAND	1	DBB0001~
3	20Y-62-44260	HOSE, 3050 MM	1	DBB0001~
4	20Y-62-44270	HOSE	1	DBB0001~
5	20Y-62-44240	HOSE	1	DBB0001~
6	20Y-62-44250	HOSE	1	DBB0001~DBB4708
	20Y-62-44630	HOSE	1	DBB4709~
7	20Y-62-22790	BAND, RED	2	DBB0001~
8	20Y-62-22820	BAND, BLUE	2	DBB0001~
9	20Y-62-22850	BAND, GREEN	2	DBB0001~
10	02760-00211	HOSE	1	DBB0001~DBB4708
	02760-002A9	HOSE	1	DBB4709~
11	08034-00519	BAND	2	DBB0001~
12	20Y-62-22790	BAND, RED	2	DBB0001~
13	20Y-62-22820	BAND, BLUE	2	DBB0001~
14	20Y-62-42251	HOSE, 950 MM	1	DBB0001~DBB4708
	20Y-62-44630	HOSE, 950 MM	1	DBB4709~

FIG. K1110-35A0 FLOOR FRAME (PPC) (2/2)

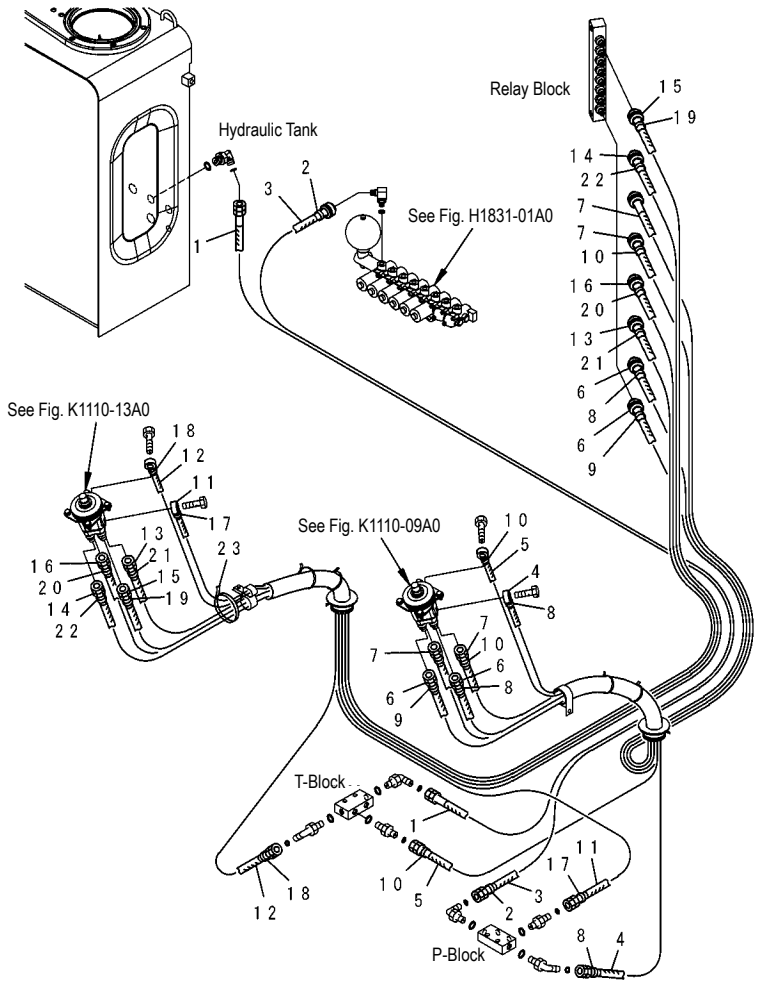

PW1B850

FIG NO. : K1110-35A0

INDEX	PART NO.	DESCRIPTION	Q'TY	SERIAL NO.
1	02760-00334	HOSE	1	DBB0001~DBB4708
	02760-00332	HOSE	1	DBB4709~
2	20Y-62-22790	BAND, RED	2	DBB0001~
3	20Y-62-42320	HOSE, 2300 MM	1	DBB0001~DBB4708
	20Y-62-44620	HOSE, 2650 MM		DBB4709~
4	20Y-62-42230	HOSE, 1350 MM	1	DBB0001~DBB4708
	208-62-72710	HOSE, 1350 MM	1	DBB4709
5	20Y-62-42240	HOSE, 1450 MM	1	DBB0001~DBB4708
	208-62-72780	HOSE, 1450 MM	1	DBB4709~
6	02760-00231	HOSE, 3050 MM	2	DBB0001~
7	02760-00232	HOSE, 3150 MM	2	DBB0001~
8	02760-00332	BAND, RED	4	DBB0001~
9	20Y-62-22810	BAND, YELLOW	2	DBB0001~
10	20Y-62-22820	BAND, BLUE	4	DBB0001~
11	20Y-62-42210	HOSE, 1600 MM	1	DBB0001~DBB4708
	208-62-72870	HOSE, 1600 MM	1	DBB4709~
12	20Y-62-42220	HOSE, 1300 MM	1	DBB0001~DBB4708
	208-62-72860	HOSE, 1300 MM	1	DBB4709~
13	02760-00233	HOSE, 3300 MM	1	DBB0001~
14	02760-00235	HOSE, 3500 MM	1	DBB0001~
15	20Y-62-42550	HOSE, 3500 MM	1	DBB0001~
16	20Y-62-42560	HOSE, 3300 MM	2	DBB0001~
17	20Y-62-22790	BAND, RED	2	DBB0001~
18	20Y-62-22820	BAND, BLUE	2	DBB0001~
19	20Y-62-22830	BAND, WHITE	2	DBB0001~
20	20Y-62-22840	BAND, BLACK	2	DBB0001~
21	20Y-62-22850	BAND, GREEN	2	DBB0001~
22	20Y-62-22860	BAND, BROWN	1	DBB0001~
23	08034-00519	BAND		DBB0001~

FIG. K1110-36A0 FLOOR FRAME (PPC CLAMP)

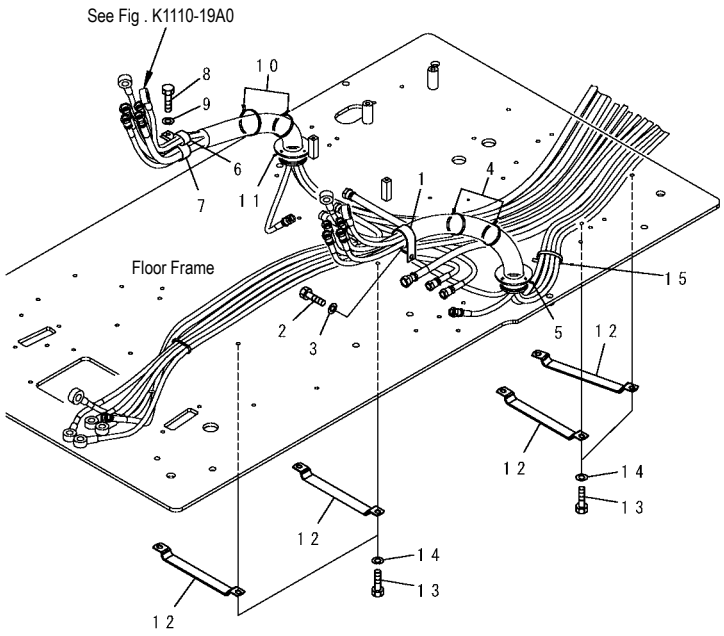

PW1B851

INDEX	PART NO.	DESCRIPTION	Q'TY	SERIAL NO.
1	04434-53211	CLIP	1	DBB0001~
2	01010-81020	BOLT	1	DBB0001~
3	01643-31032	WASHER	1	DBB0001~
4	08034-20536	BAND	2	DBB0001~
5	08034-20536	BAND	1	DBB0001~
6	04435-51310	CLIP	1	DBB0001~
7	04434-53411	CLIP	1	DBB0001~
8	01010-81020	BOLT	1	DBB0001~
9	01643-31032	WASHER	1	DBB0001~
10	08034-20536	BAND	2	DBB0001~
11	08034-20536	BAND	1	DBB0001~
12	20Y-62-27770	CLAMP	4	DBB0001~
13	01010-81016	BOLT	8	DBB0001~
14	01643-31032	WASHER	8	DBB0001~
15	08034-00519	BAND	1	DBB0001~

FIG. K1110-37A0 FLOOR FRAME (OPERATOR'S CAB) (P.T BLOCK AND SEAL)

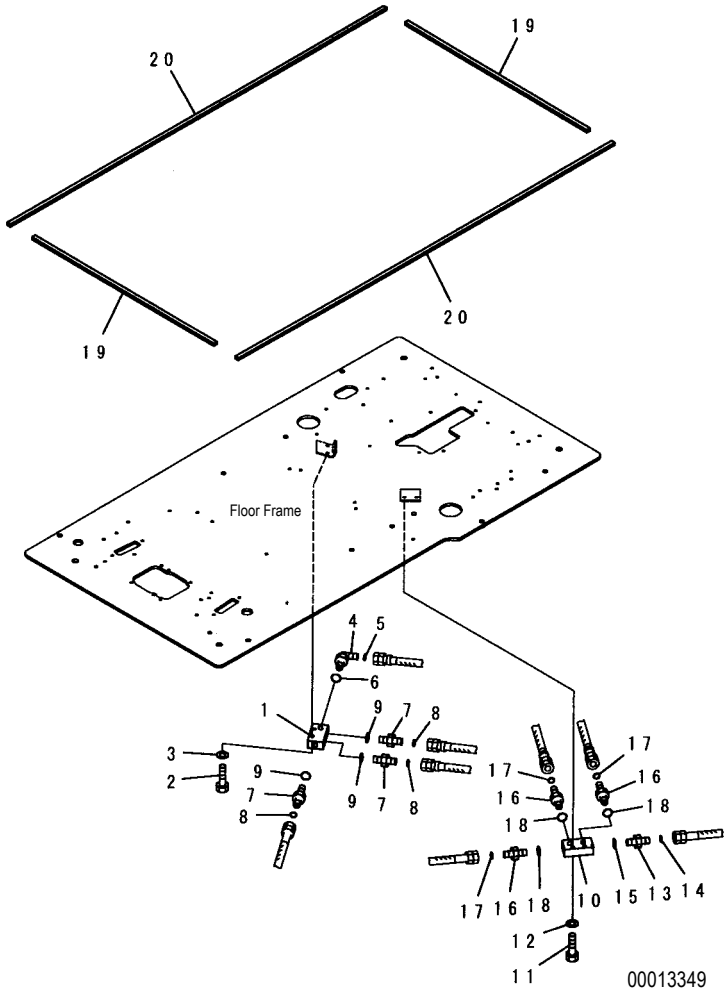

INDEX	PART NO.	DESCRIPTION	Q'TY	SERIAL NO.
1	20Y-62-15831	BLOCK	1	DBB0001~
2	01010-81045	BOLT	2	DBB0001~
3	01643-31032	WASHER	2	DBB0001~
4	02782-10311	ELBOW	1	DBB4709~
5	02896-11009	O-RING	1	DBB0001~
6	07002-11423	O-RING	1	DBB0001~
7	02781-0021D	UNION	3	DBB4709~
8	02896-11008	O-RING	3	DBB4709~
9	07002-11423	O-RING	3	DBB4709~
10	20Y-62-15831	BLOCK	1	DBB0001~
11	01010-81045	BOLT	2	DBB0001~
12	01643-31032	WASHER	2	DBB0001~
13	02781-0031D	UNION	1	DBB4709~
14	02896-11009	O-RING	1	DBB0001~
15	07002-11423	O-RING	1	DBB0001~
16	02781-0021D	UNION	3	DBB4709~
17	002896-11008	O-RING	3	DBB4709~
18	07002-11423	O-RING	3	DBB4709~
19	208-53-11810	SEAL	2	DBB4709~
20	208-53-11820	SEAL	2	DBB4709~

FIG. K1110-37A1 FLOOR FRAME (OPERATOR'S CAB) (P.T BLOCK AND SEAL) (SPECIAL PIPING FOR BREAKER)

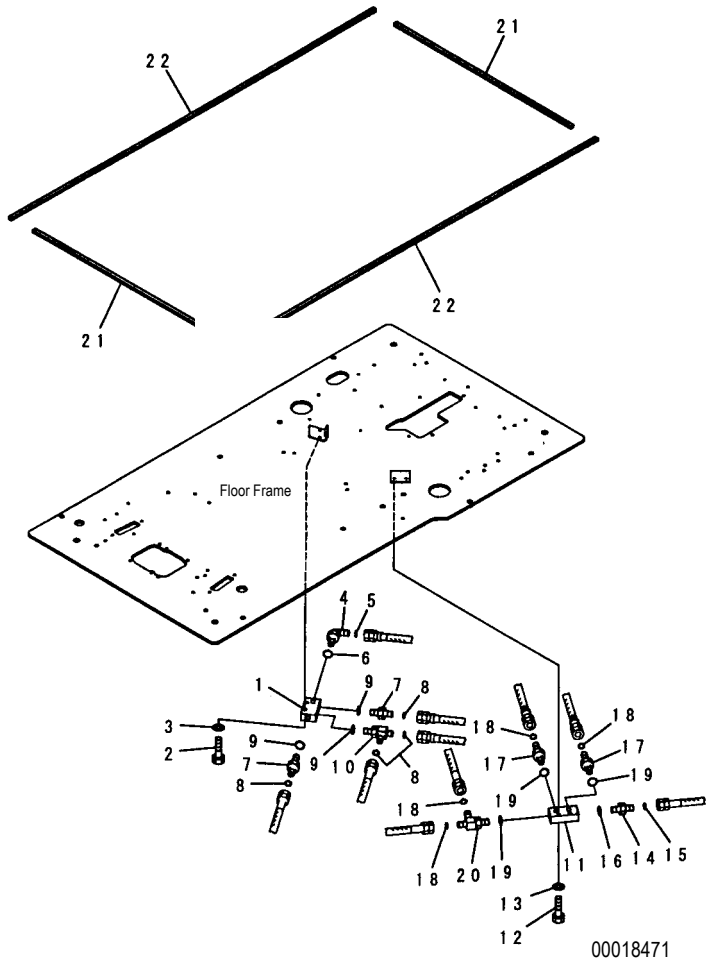

INDEX	PART NO.	DESCRIPTION	Q'TY	SERIAL NO.
1	20Y-62-15831	BLOCK	1	DBB4709~
2	01010-81045	BOLT	2	DBB4709~
3	01643-31032	WASHER	2	DBB4709~
4	02782-10311	ELBOW	1	DBB4709~
5	02896-11009	O-RING	1	DBB4709~
6	07002-11423	O-RING	1	DBB4709~
7	02781-0021D	UNION	2	DBB4709~
8	02896-11008	O-RING	4	DBB4709~
9	07002-11423	O-RING	3	DBB4709~
10	11Y-62-12330	TEE	1	DBB4709~
11	20Y-62-15831	BLOCK	1	DBB4709~
12	01010-81045	BOLT	2	DBB4709~
13	01643-31032	WASHER	2	DBB4709~
14	02781-0031D	UNION	1	DBB4709~
15	02896-11009	O-RING	1	DBB4709~
16	07002-11423	O-RING	1	DBB4709~
17	02781-0021D	UNION	2	DBB4709~
18	02896-11008	O-RING	4	DBB4709~
19	07002-11423	O-RING	3	DBB4709~
20	11Y-62-12330	TEE	1	DBB4709~
21	208-53-11810	SEAL	2	DBB4709~
22	208-53-11820	SEAL	2	DBB4709~

FIG. K1110-37B5 FLOOR FRAME (OPERATOR'S CAB) (P.T BLOCK) (WITHOUT AIR CONDITIONER)

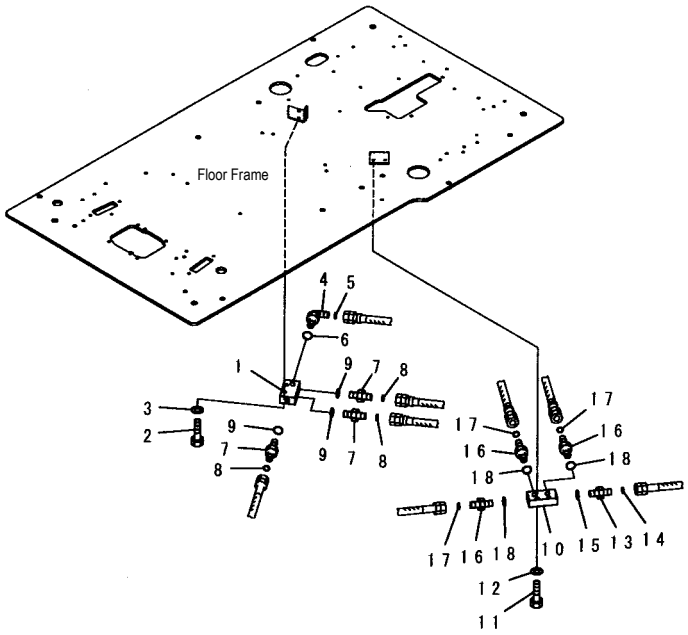

00014602

FIG NO. : K1110-37B5

INDEX	PART NO.	DESCRIPTION	Q'TY	SERIAL NO.
1	20Y-62-15831	BLOCK	1	DBB4709~
2	01010-81045	BOLT	2	DBB4709~
3	01643-31032	WASHER	2	DBB4709~
4	02782-10311	ELBOW	1	DBB4709~
5	02896-11009	O-RING	1	DBB4709~
6	07002-11423	O-RING	1	DBB4709~
7	02781-0021D	UNION	3	DBB4709~
8	02896-11008	O-RING	3	DBB4709~
9	07002-11423	O-RING	3	DBB4709~
10	20Y-62-15831	BLOCK	1	DBB4709~
11	01010-81045	BOLT	2	DBB4709~
12	01643-31032	WASHER	2	DBB4709~
13	02781-0031D	UNION	1	DBB4709~
14	02896-11009	O-RING	1	DBB4709~
15	07002-11423	O-RING	1	DBB4709~
16	02781-0021D	UNION	3	DBB4709~
17	02896-11008	O-RING	3	DBB4709~
18	07002-11423	O-RING	3	DBB4709~

FIG. K1110-38A0 FLOOR FRAME

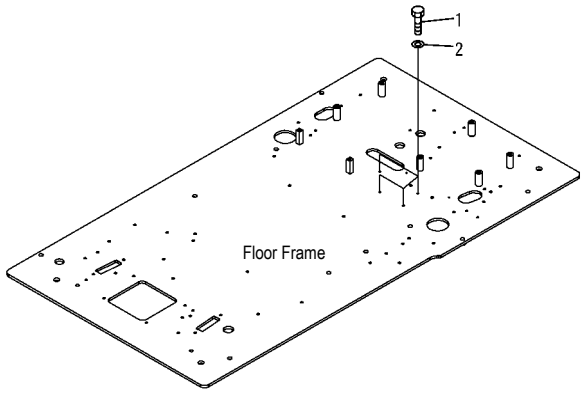

PW1C589

FIG NO. : K1110-38A0

INDEX	PART NO.	DESCRIPTION	Q'TY	SERIAL NO.
1	01010-D0816	BOLT	4	DBB0001~
2	01643-70823	WASHER	4	DBB0001~

FIG. K1110-39A0 FLOOR FRAME (LEVER KNOB)

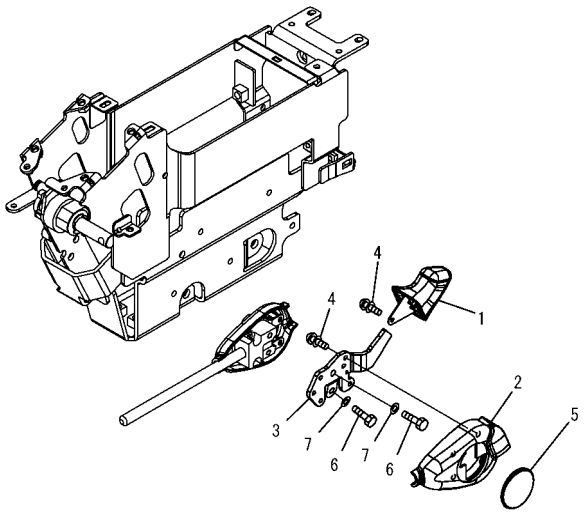

PW1B853

FIG NO. : K1110-39A0

INDEX	PART NO.	DESCRIPTION	Q'TY	SERIAL NO.
	20Y-43-31601	COVER ASS' Y	1	DBB0001~
1	20Y-43-31610	. KNOB	1	DBB0001~
2	20Y-43-31621	. COVER	1	DBB0001~
3	20Y-43-31631	. PLATE	1	DBB4709~
4	01023-60412	. SCREW, SEMS	5	DBB4709~
5	208-53-12280	CAP	1	DBB4709~
6	01010-80616	BOLT	2	DBB0001~
7	01643-30623	WASHER	2	DBB0001~

FIG. K1120-01A0 FLOOR MOUNT

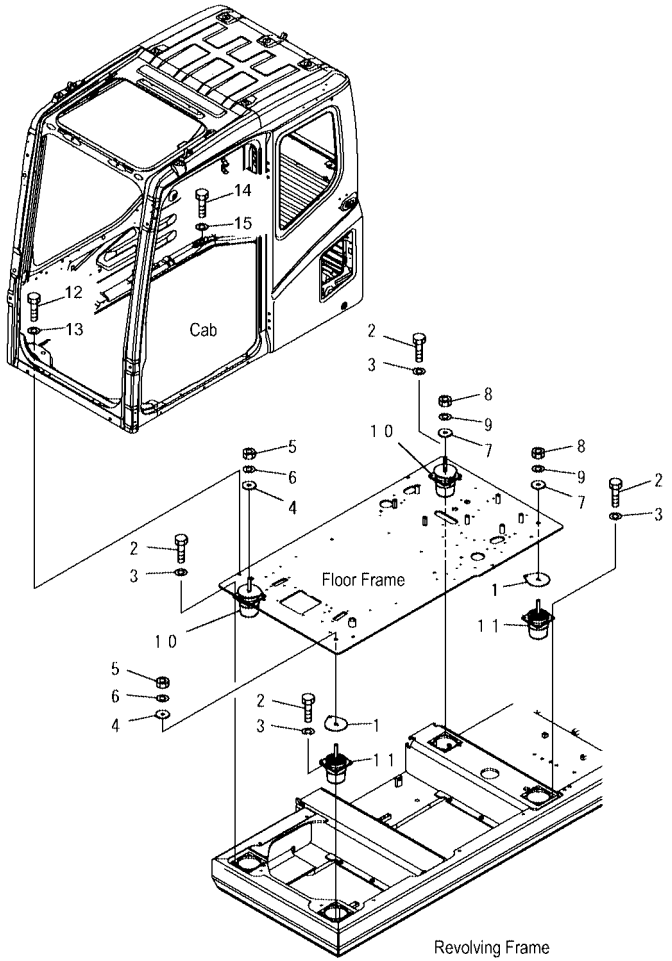

FIG NO. : K1120-01A0

INDEX	PART NO.	DESCRIPTION	Q'TY	SERIAL NO.
1	207-54-65130	SPACER	4	DBB0001~
2	01010-81035	BOLT	16	DBB0001~
3	01643-31032	WASHER	16	DBB0001~
4	113-01-21120	WASHER	2	DBB0001~
5	01580-11613	NUT	2	DBB0001~
6	01643-31645	WASHER	2	DBB0001~
7	21T-27-71220	HOLDER	2	DBB0001~
8	01580-11613	NUT	2	DBB0001~
9	01643-31645	WASHER	2	DBB0001~
10	20Y-54-65810	CUSHION	2	DBB0001~
11	20Y-54-65820	CUSHION	2	DBB0001~
12	01010-81240	BOLT	2	DBB0001~
13	01643-31232	WASHER	2	DBB0001~
14	01010-D1285	BOLT	3	DBB0001~
15	01643-71232	WASHER	3	DBB0001~

FIG. K1730-01A0 SWITCH

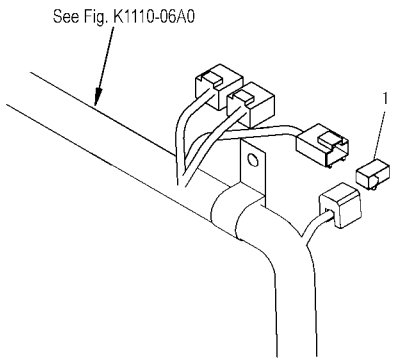

PW1B801

FIG NO. : K1730-01A0

INDEX	PART NO.	DESCRIPTION	Q'TY	SERIAL NO.
1	20Y-06-21421	SWITCH	1	DBB0001~

FIG. K0310-01A1 FLOOR MAT (1 ACTUATOR) (OPT)

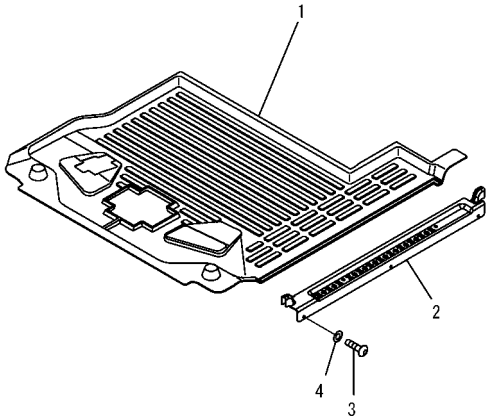

PW1B867

FIG NO. : K0310-01A1

INDEX	PART NO.	DESCRIPTION	Q'TY	SERIAL NO.
1	20Y-54-65710	FLOOR MAT, 1 ATT	1	DBB0001~
2	20Y-54-51952	COVER	1	DBB0001~
3	01245-00612	SCREW	5	DBB0001~
4	01643-70623	WASHER	5	DBB0001~

FIG. K1110-04A1 FLOOR FRAME (FOOT REST) (R. H.) (1 ACTUATOR) (OPT)

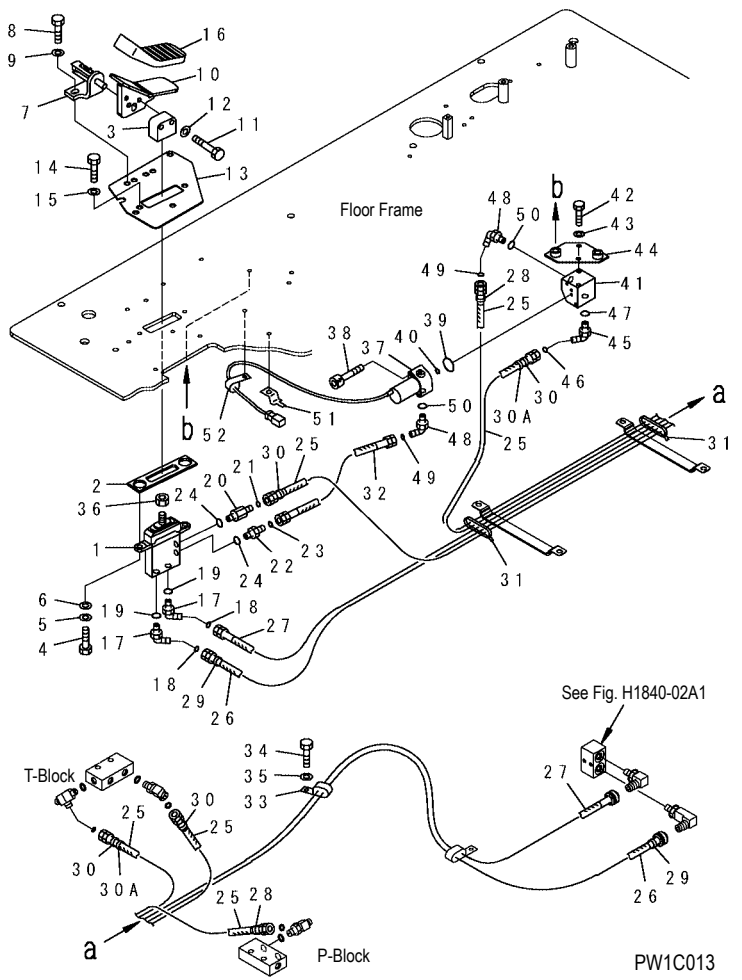

INDEX	PART NO.	DESCRIPTION	Q'TY	SERIAL NO.
1	(702-16-01230)	PILOT VALVE	1	DBB0001~
2	22U-54-25660	SEAL	1	DBB0001~
3	22U-43-21470	SEAL	1	DBB0001~
4	01010-81025	BOLT	2	DBB0001~
5	01643-31032	WASHER	2	DBB0001~
6	01643-31032	WASHER	2	DBB0001~
7	20Y-62-25360	BRACKET	1	DBB0001~
8	01010-D1025	BOLT	2	DBB0001~
9	01643-71032	WASHER	2	DBB0001~
10	20Y-43-31220	PEDAL	1	DBB0001~
11	01010-D1045	BOLT	2	DBB0001~
12	01643-71032	WASHER	2	DBB0001~
13	22U-54-25541	PLATE	1	DBB0001~
14	01010-81020	BOLT	3	DBB0001~
15	01643-31032	WASHER	3	DBB0001~
16	22U-54-25670	CAP	1	DBB0001~
17	21W-62-43980	ELBOW	2	DBB0001~
18	02896-11008	O–RING	2	DBB0001~
19	07000-12011	O–RING	2	DBB0001~
20	20Y-62-43470	NIPPLE	1	DBB0001~
21	02896-11008	O–RING	1	DBB0001~
22	11Y-62-12140	NIPPLE	1	DBB0001~
23	02896-11008	O–RING	1	DBB0001~
24	07000-12011	O–RING	2	DBB0001~
25	02760-00212	HOSE	3	DBB0001~
26	20Y-62-43490	HOSE, 2400 MM	1	DBB0001~
27	20Y-62-43510	HOSE, 2350 MM	1	DBB0001~
28	20Y-62-22790	BAND, RED	2	DBB0001~
29	20Y-62-22810	BAND, YELLOW	2	DBB0001~
30	20Y-62-22820	BAND, BLUE	4	DBB0001~
30A	20Y-62-22830	BAND, WHITE	2	DBB0001~
31	08034-00519	BAND	2	DBB0001~
32	21W-62-42240	HOSE	1	DBB0001~

FIG. K1110-04A1 FLOOR FRAME (FOOT REST) (R. H.) (1 ACTUATOR) (OPT)

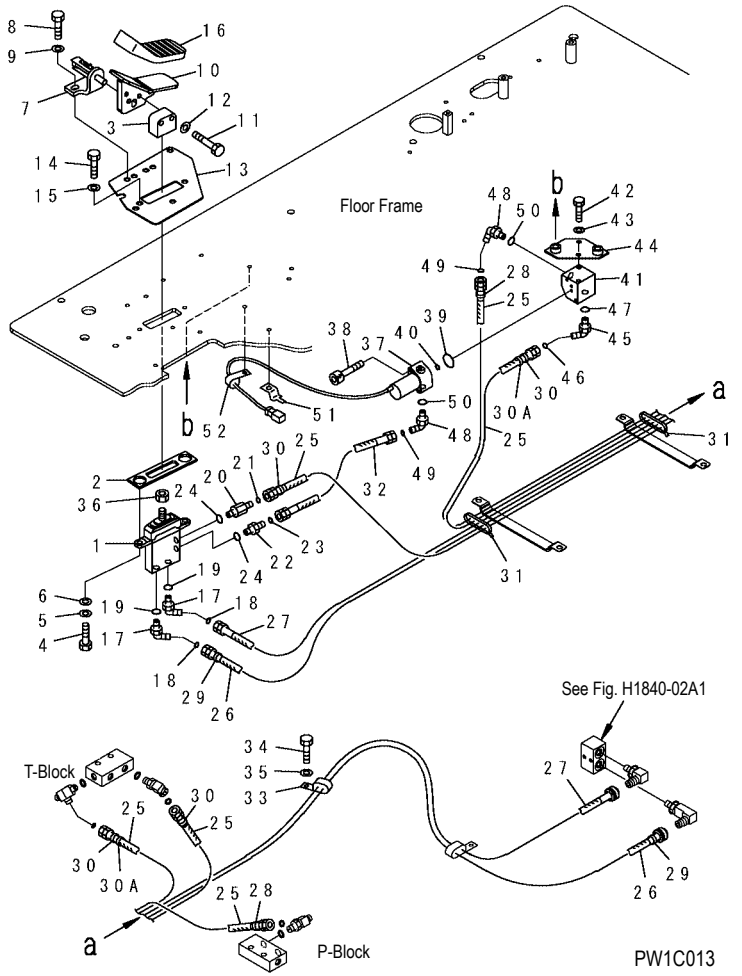

INDEX	PART NO.	DESCRIPTION	Q'TY	SERIAL NO.
33	04435-51210	CLIP	1	DBB0001~
34	01010-81016	BOLT	1	DBB0001~
35	01643-31032	WASHER	1	DBB0001~
36	01583-51408	NUT	1	DBB0001~
37	(702-21-07010)	SOLENOID VALVE, EPC	1	DBB0001~
38	203-60-62220	BOLT	2	DBB0001~
39	700-93-11320	O–RING	1	DBB0001~
40	07000-02011	O–RING	1	DBB0001~
41	20Y-62-43410	BLOCK	1	DBB0001~
42	01010-80820	BOLT	2	DBB0001~
43	01643-30823	WASHER	2	DBB0001~
44	20Y-62-43420	BRACKET	1	DBB0001~
45	11Y-62-12160	ELBOW	1	DBB0001~
46	02896-11008	O–RING	1	DBB0001~
47	07002-11423	O–RING	1	DBB0001~
48	21W-62-43960	ELBOW	2	DBB0001~
49	02896-11008	O–RING	2	DBB0001~
50	07002-11423	O–RING	2	DBB0001~
51	08053-01510	CLIP	1	DBB0001~
52	04434-51010	CLIP	1	DBB0001~

FIG. K1110-21A1 FLOOR FRAME (P, T BLOCK AND SEAL) (1 ACTUATOR) (OPT)

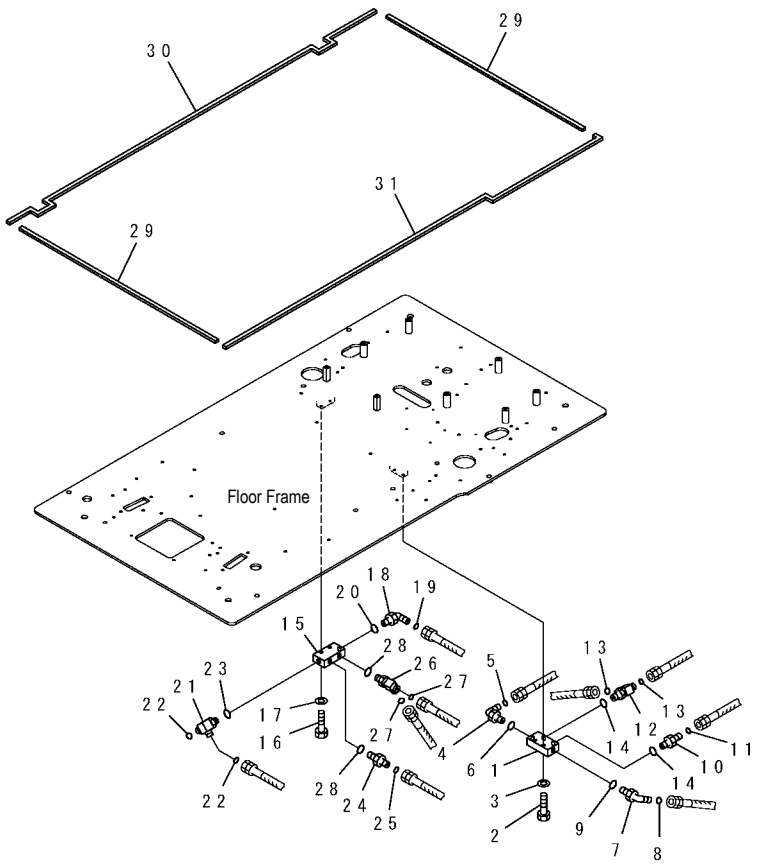

PW1C014

INDEX	PART NO.	DESCRIPTION	Q'TY	SERIAL NO.
1	20Y-62-15831	BLOCK	1	DBB0001~
2	01010-81045	BOLT	2	DBB0001~
3	01643-31032	WASHER	2	DBB0001~
4	21W-62-42490	ELBOW	1	DBB0001~
5	02896-11009	O–RING	1	DBB0001~
6	07002-11423	O–RING	1	DBB0001~
7	11Y-62-12160	ELBOW	1	DBB0001~
8	02896-11008	O–RING	1	DBB0001~
9	07002-11423	O–RING	1	DBB0001~
10	11Y-62-12130	NIPPLE	1	DBB0001~
11	02896-11008	O–RING	1	DBB0001~
12	11Y-62-12330	TEE	1	DBB0001~
13	02896-11008	O–RING	2	DBB0001~
14	07002-11423	O–RING	2	DBB0001~
15	20Y-62-15831	BLOCK	1	DBB0001~
16	01010-81045	BOLT	2	DBB0001~
17	01643-31032	WASHER	2	DBB0001~
18	21W-62-42490	ELBOW	1	DBB0001~
19	02896-11009	O–RING	1	DBB0001~
20	07002-11423	O–RING	1	DBB0001~
21	207-62-72141	ELBOW	1	DBB0001~
22	02896-11008	O–RING	2	DBB0001~
23	07002-11423	O–RING	1	DBB0001~
24	11Y-62-12130	NIPPLE	1	DBB0001~
25	02896-11008	O–RING	1	DBB0001~
26	11Y-62-12330	TEE	1	DBB0001~
27	02896-11008	O–RING	2	DBB0001~
28	07002-11423	O–RING	2	DBB0001~
29	20Y-54-65750	SEAL	2	DBB0001~
30	20Y-54-65760	SEAL	1	DBB0001~
31	20Y-54-65770	SEAL	1	DBB0001~

GUARD

FIG. M1110-01A0 HOOD

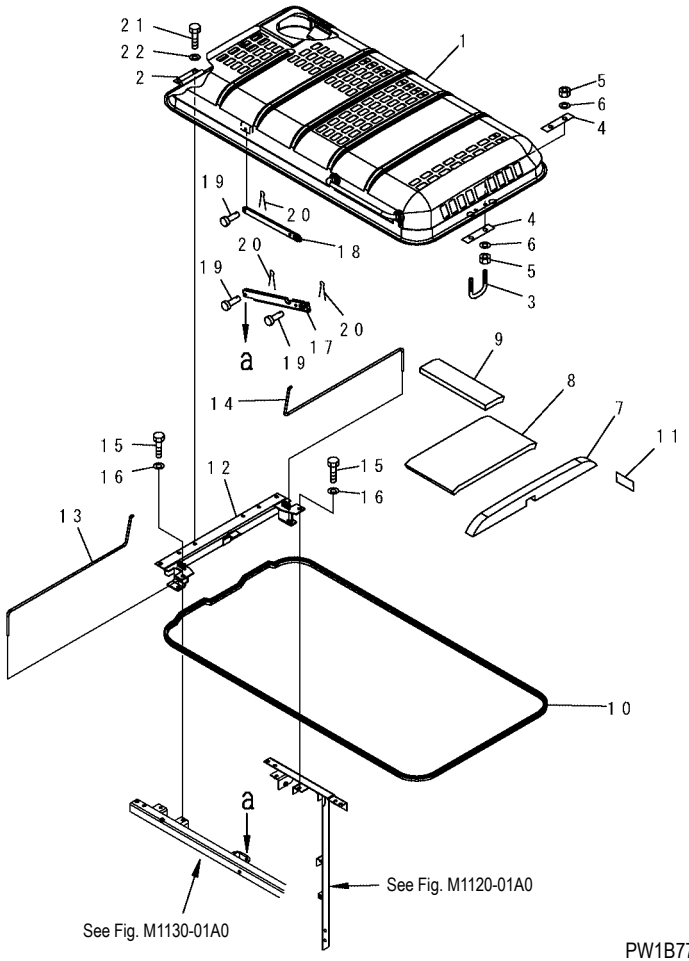

PW1B776

INDEX	PART NO.	DESCRIPTION	Q'TY	SERIAL NO.
1	20Y-54-D1730	HOOD	1	DBB0001~
2	20Y-54-27123	. HINGE (WELDED)	2	DBB0001~
3	20Y-54-27172	U–BOLT	1	DBB0001~
4	20Y-54-27330	PLATE	2	DBB0001~
5	01580-11210	NUT	4	DBB0001~
6	01643-31232	WASHER	4	DBB0001~
7	20Y-54-63122	SHEET	1	DBB0001~
8	20Y-54-61650	SHEET	1	DBB0001~
9	20Y-54-25681	SHEET	1	DBB0001~
10	20Y-54-29291	SEAL	1	DBB0001~
11	22U-54-15190	SHEET	1	DBB0001~
12	20Y-54-61240	FRAME	1	DBB0001~
13	20Y-54-27141	SPRING	1	DBB0001~
14	20Y-54-27131	SPRING	1	DBB0001~
15	01010-81230	BOLT	2	DBB0001~
16	01643-31232	WASHER	2	DBB0001~
17	20Y-54-27370	STAY	1	DBB0001~
18	20Y-54-27290	STAY	1	DBB0001~
19	04205-11230	PIN	3	DBB0001~
20	04050-13022	PIN	3	DBB0001~
21	01010-81230	BOLT	4	DBB0001~
22	01643-31232	WASHER	4	DBB0001~

FIG. M1120-01A0 FRAME (MACHINE CAB)

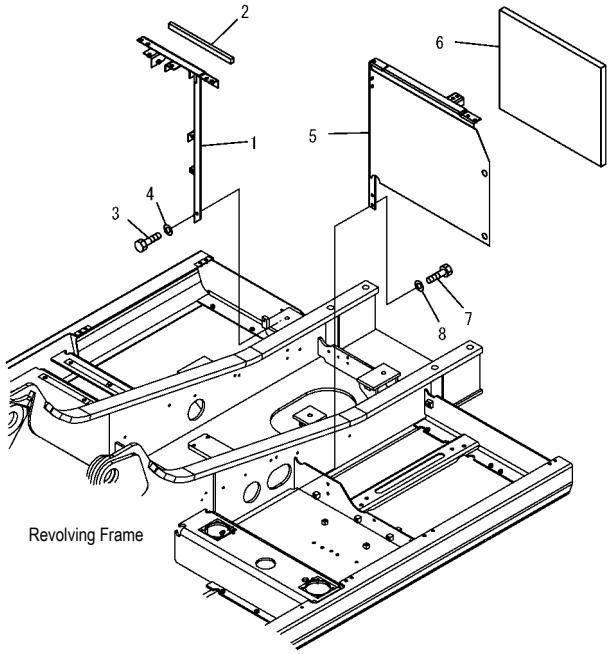

PW1B777

FIG NO. : M1120-01A0

INDEX	PART NO.	DESCRIPTION	Q'TY	SERIAL NO.
1	20Y-54-62210	FRAME	1	DBB0001~
	☆	. FRAME	1	DBB0001~
2	20Y-54-63131	. SHEET	1	DBB0001~
3	01010-81230	BOLT	2	DBB0001~
4	01643-31232	WASHER	2	DBB0001~
	20Y-54-62220	FRAME	1	DBB0001~
5	☆	. FRAME	1	DBB0001~
6	20Y-54-D1810	. SHEET	1	DBB0001~
7	01010-81230	BOLT	2	DBB0001~
8	01643-31232	WASHER	2	DBB0001~

FIG. M1130-01A0 LEFT SIDE DOOR (MACHINE CAB)

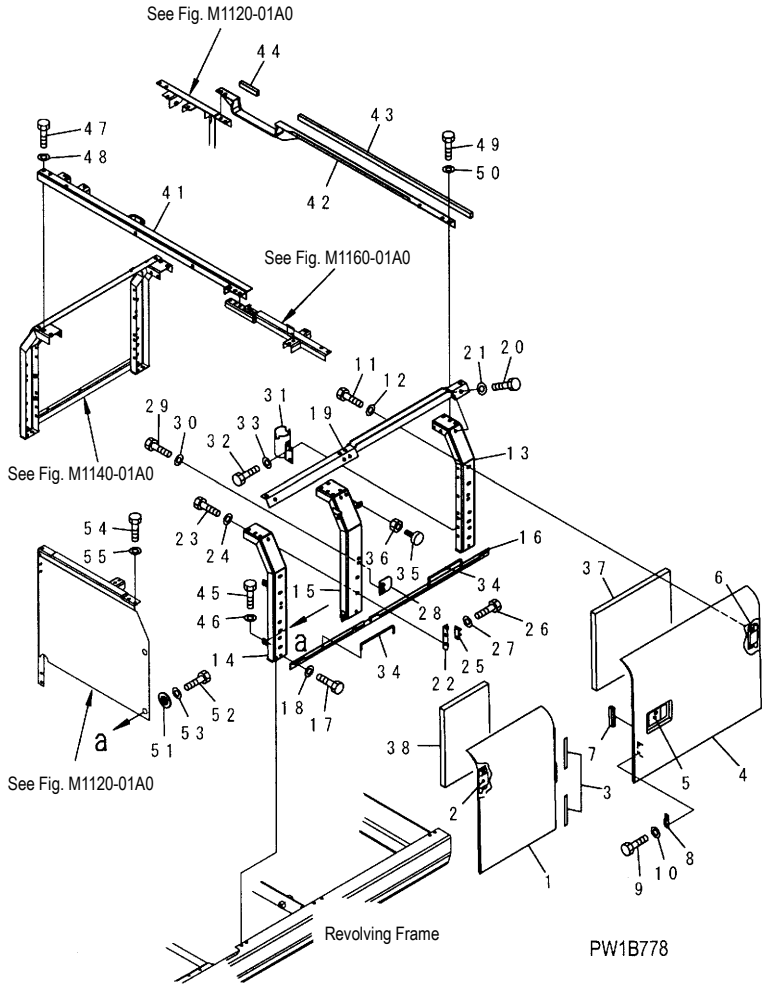

INDEX	PART NO.	DESCRIPTION	Q'TY	SERIAL NO.
1	20Y-54-61143	COVER	1	DBB0001~
2	20Y-54-63410	. HINGE (WELDED)	2	DBB0001~
3	20Y-54-63390	. SHEET	2	DBB0001~
4	20Y-54-61132	COVER	1	DBB0001~
5	198-54-41982	. LOCK ASS' Y	1	DBB0001~
6	20Y-54-63410	. HINGE (WELDED)	2	DBB0001~
7	20Y-54-61482	SHEET	1	DBB0001~
8	205-54-53550	DOVE TAIL	1	DBB0001~
9	01010-80612	BOLT	2	DBB0001~
10	01643-30623	WASHER	2	DBB0001~
11	01010-81230	BOLT	8	DBB0001~
12	01643-31232	WASHER	8	DBB0001~
13	20Y-54-61311	FRAME	1	DBB0001~
14	20Y-54-61322	FRAME	1	DBB0001~
15	20Y-54-61331	FRAME	1	DBB0001~
16	20Y-54-61341	PLATE	1	DBB0001~
17	01010-81225	BOLT	4	DBB0001~
18	01643-31232	WASHER	4	DBB0001~
19	20Y-54-61361	FRAME	1	DBB0001~
20	01010-81230	BOLT	4	DBB0001~
21	01643-31232	WASHER	4	DBB0001~
22	20Y-54-28170	BRACKET	1	DBB0001~
23	01010-81230	BOLT	2	DBB0001~
24	01643-31232	WASHER	2	DBB0001~
25	205-54-51970	DOVE TAIL	1	DBB0001~
26	01010-80616	BOLT	2	DBB0001~
27	01643-30623	WASHER	2	DBB0001~
28	20Y-54-61470	PLATE	1	DBB0001~
29	01010-81230	BOLT	2	DBB0001~
30	01643-31232	WASHER	2	DBB0001~
31	20Y-54-61371	BRACKET	1	DBB0001~
32	01010-81230	BOLT	2	DBB0001~
33	01643-31232	WASHER	2	DBB0001~
34	20Y-54-29231	BAR	2	DBB0001~
35	20Y-54-11611	STOPPER	2	DBB0001~
36	01580-11008	NUT	2	DBB0001~
37	20Y-54-D1761	SHEET	1	DBB0001~
38	20Y-54-D1770	SHEET	1	DBB0001~

FIG. M1130-01A0 LEFT SIDE DOOR (MACHINE CAB)

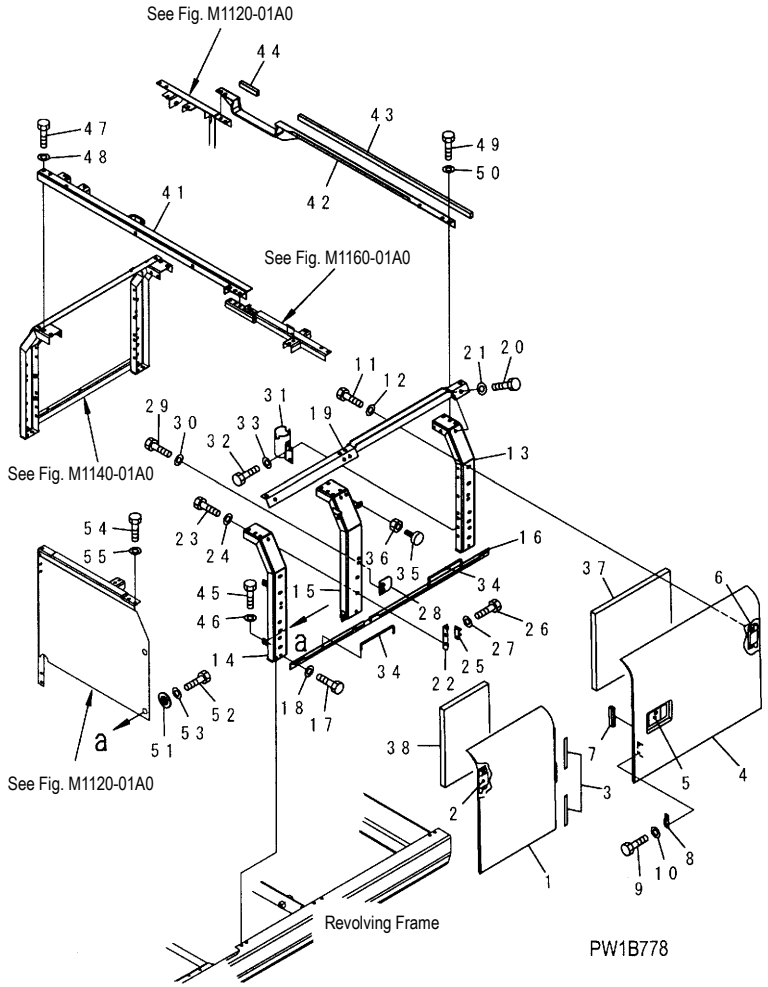

FIG NO. : K1130-01A0

INDEX	PART NO.	DESCRIPTION	Q'TY	SERIAL NO.
41	20Y-54-61221	FRAME	1	DBB0001~
42	20Y-54-61231	FRAME	1	DBB0001~
43	20Y-54-63341	SHEET	1	DBB0001~
44	20Y-54-63351	SHEET	1	DBB0001~
45	01010-81230	BOLT	6	DBB0001~
46	01643-31232	WASHER	6	DBB0001~
47	01010-81230	BOLT	3	DBB0001~
48	01643-31232	WASHER	3	DBB0001~
49	01010-81230	BOLT	3	DBB0001~
50	01643-31232	WASHER	3	DBB0001~
51	20Y-54-12550	COLLAR	2	DBB0001~
52	01010-81225	BOLT	2	DBB0001~
53	01643-31232	WASHER	2	DBB0001~
54	01010-81230	BOLT	2	DBB0001~
55	01643-31232	WASHER	2	DBB0001~

FIG. M1140-01A0 RIGHT SIDE DOOR (MACHINE CAB)

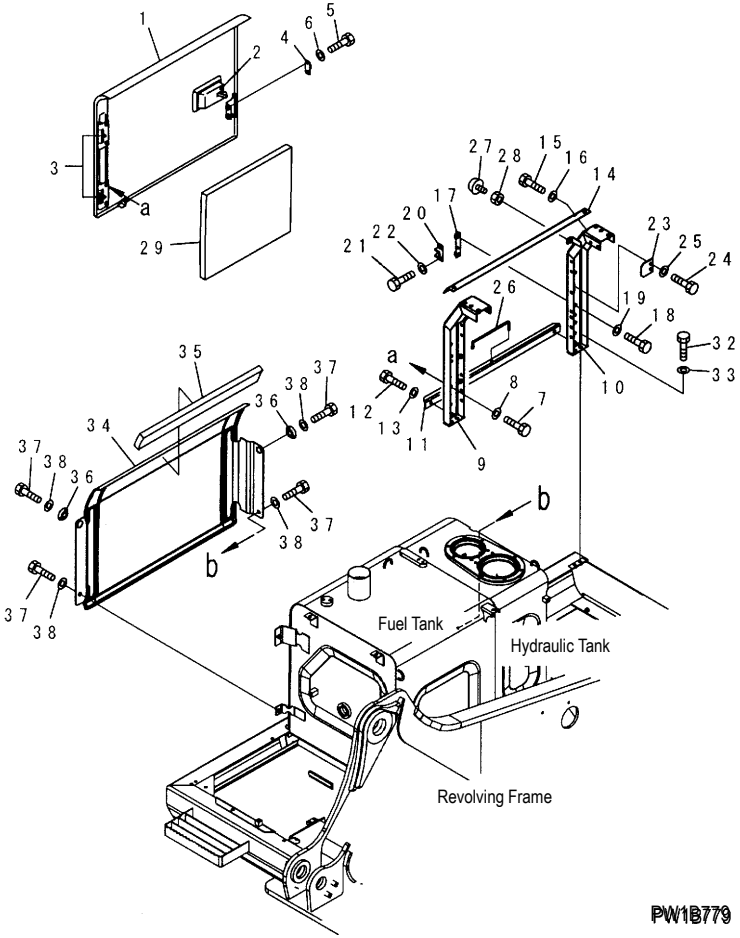

INDEX	PART NO.	DESCRIPTION	Q'TY	SERIAL NO.
1	20Y-54-61132	COVER	1	DBB0001~
2	198-54-41982	. LOCK ASS' Y	1	DBB0001~
3	20Y-54-63410	. HINGE (WELDED)	2	DBB0001~
4	205-54-53550	DOVE TAIL	1	DBB0001~
5	01010-80612	BOLT	2	DBB0001~
6	01643-30623	WASHER	2	DBB0001~
7	01010-81230	BOLT	4	DBB0001~
8	01643-31232	WASHER	4	DBB0001~
9	20Y-54-61411	FRAME	1	DBB0001~
10	20Y-54-61421	FRAME	1	DBB0001~
11	20Y-54-61431	PLATE	1	DBB0001~
12	01010-81225	BOLT	2	DBB0001~
13	01643-31232	WASHER	2	DBB0001~
14	20Y-54-61441	PLATE	1	DBB0001~
15	01010-81230	BOLT	2	DBB0001~
16	01643-31232	WASHER	2	DBB0001~
17	20Y-54-28170	BRACKET	1	DBB0001~
18	01010-81230	BOLT	2	DBB0001~
19	01643-31232	WASHER	2	DBB0001~
20	205-54-51970	DOVE TAIL	1	DBB0001~
21	01010-80616	BOLT	2	DBB0001~
22	01643-30623	WASHER	2	DBB0001~
23	20Y-54-61470	PLATE	1	DBB0001~
24	01010-81230	BOLT	2	DBB0001~
25	01643-31232	WASHER	2	DBB0001~
26	20Y-54-29231	BAR	1	DBB0001~
27	20Y-54-11611	STOPPER	1	DBB0001~
28	01580-11008	NUT	1	DBB0001~
29	20Y-54-D1761	SHEET	1	DBB0001~
32	01010-81230	BOLT	4	DBB0001~
33	01643-31232	WASHER	4	DBB0001~
34	20Y-54-61162	COVER	1	DBB0001~
35	20Y-54-61391	SHEET	1	DBB0001~
36	208-54-57180	COLLAR	2	DBB0001~
37	01010-81230	BOLT	4	DBB0001~
38	01643-31232	WASHER	4	DBB0001~

FIG. M1150-01A0 PARTITION (MACHINE CAB)

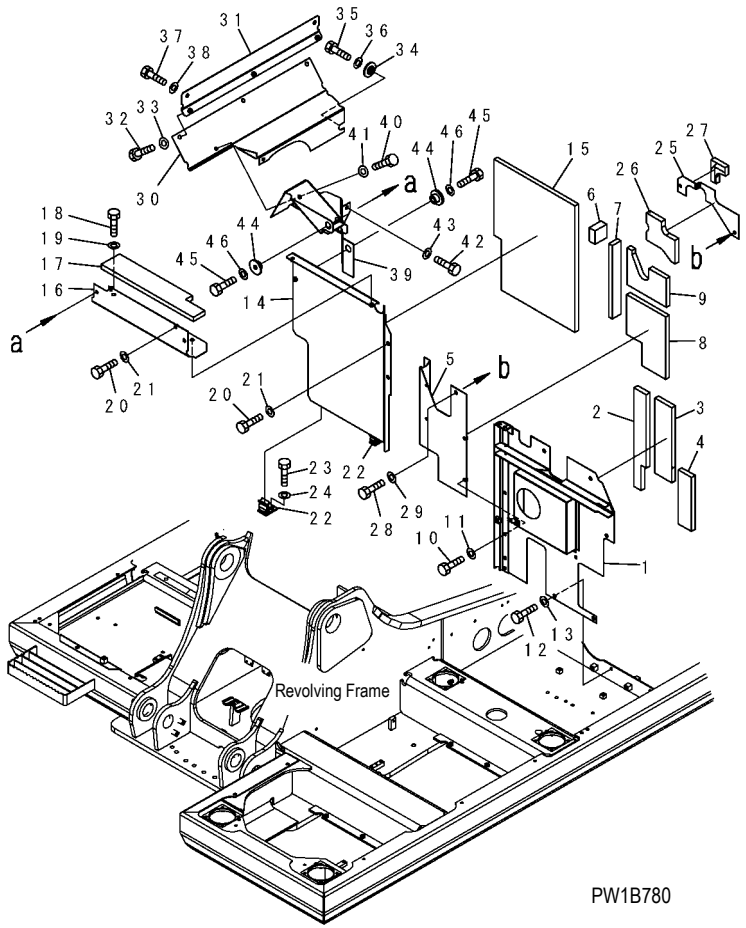

INDEX	PART NO.	DESCRIPTION	Q'TY	SERIAL NO.
	20Y-54-61911	COVER	1	DBB0001~
1	☆	. COVER	1	DBB0001~
2	20Y-54-63161	. SHEET	1	DBB0001~
3	20Y-54-63171	. SHEET	1	DBB0001~
4	20Y-54-63181	. SHEET	1	DBB0001~
	20Y-54-61921	COVER	1	DBB0001~
5	☆	. COVER	1	DBB0001~
6	20Y-54-63290	. SHEET	1	DBB0001~
7	20Y-54-63281	. SHEET	1	DBB0001~
8	20Y-54-63251	. SHEET	1	DBB0001~
9	20Y-54-63241	. SHEET	1	DBB0001~
10	01010-81230	BOLT	2	DBB0001~
11	01643-31232	WASHER	2	DBB0001~
12	01010-81230	BOLT	8	DBB0001~
13	01643-31232	WASHER	8	DBB0001~
	20Y-54-61931	COVER	1	DBB0001~
14	☆	. COVER	1	DBB0001~
15	20Y-54-63211	. SHEET	1	DBB0001~
	20Y-54-61971	COVER	1	DBB0001~
16	☆	. COVER	1	DBB0001~
17	20Y-54-63221	. SHEET	1	DBB0001~
18	01010-81230	BOLT	2	DBB0001~
19	01643-31232	WASHER	2	DBB0001~
20	01010-81230	BOLT	4	DBB0001~
21	01643-31232	WASHER	4	DBB0001~
22	20Y-54-12320	CATCH	2	DBB0001~
23	01010-81225	BOLT	2	DBB0001~
24	01643-31232	WASHER	2	DBB0001~
	20Y-54-61961	COVER	1	DBB0001~
25	☆	. COVER	1	DBB0001~
26	20Y-54-63261	. SHEET	1	DBB0001~
27	20Y-54-63270	. SHEET	1	DBB0001~
28	01010-81230	BOLT	2	DBB0001~
29	01643-31232	WASHER	2	DBB0001~
30	20Y-54-61551	COVER	1	DBB0001~

FIG. M1150-01A0 PARTITION (MACHINE CAB)

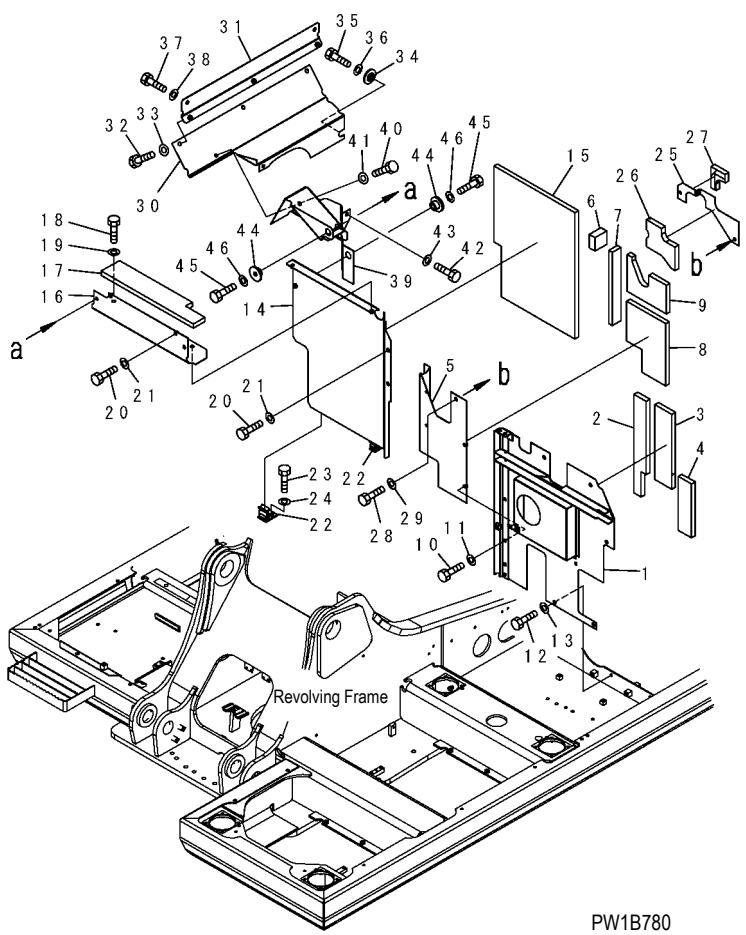

FIG NO. : M1150-01A0

INDEX	PART NO.	DESCRIPTION	Q'TY	SERIAL NO.
31	20Y-54-61591	COVER	1	DBB0001~
32	01010-81230	BOLT	3	DBB0001~
33	01643-31232	WASHER	3	DBB0001~
34	20Y-54-12550	COLLAR	1	DBB0001~
35	01010-81230	BOLT	1	DBB0001~
36	01643-31232	WASHER	1	DBB0001~
37	01010-81230	BOLT	2	DBB0001~
38	01643-31232	WASHER	2	DBB0001~
39	20Y-54-61541	COVER	1	DBB0001~
40	01010-81230	BOLT	1	DBB0001~
41	01643-31232	WASHER	1	DBB0001~
42	01010-81220	BOLT	1	DBB0001~
43	01643-31232	WASHER	1	DBB0001~
44	20Y-54-12550	COLLAR	2	DBB0001~
45	01010-81230	BOLT	2	DBB0001~
46	01643-31232	WASHER	2	DBB0001~

FIG. M1160-01A0 PARTITION

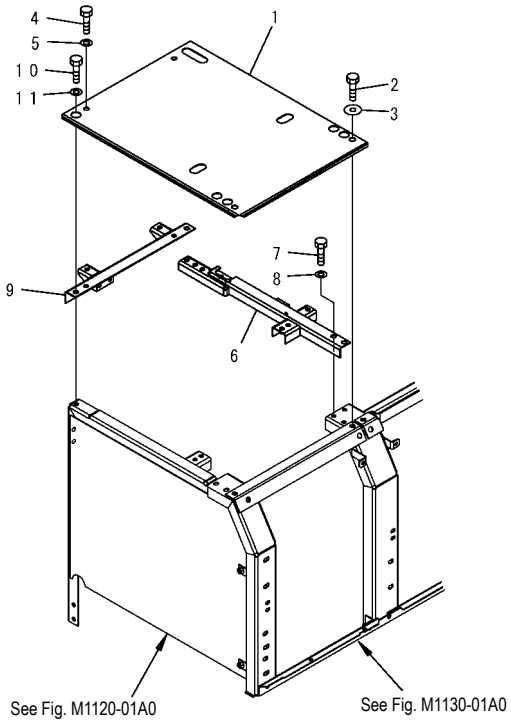

PW1B781

INDEX	PART NO.	DESCRIPTION	Q'TY	SERIAL NO.
1	20Y-54-61711	COVER	1	DBB0001~
2	01010-81230	BOLT	2	DBB0001~
3	175-54-34170	WASHER	2	DBB0001~
4	01010-81230	BOLT	2	DBB0001~
5	01643-31232	WASHER	2	DBB0001~
6	20Y-54-61261	FRAME	1	DBB0001~
7	01010-81230	BOLT	4	DBB0001~
8	01643-31232	WASHER	4	DBB0001~
9	20Y-54-61272	FRAME	1	DBB0001~
10	01010-81230	BOLT	2	DBB0001~
11	01643-31232	WASHER	2	DBB0001~

FIG. M1210-01A0 COVER (MACHINE CAB) (UPPER)

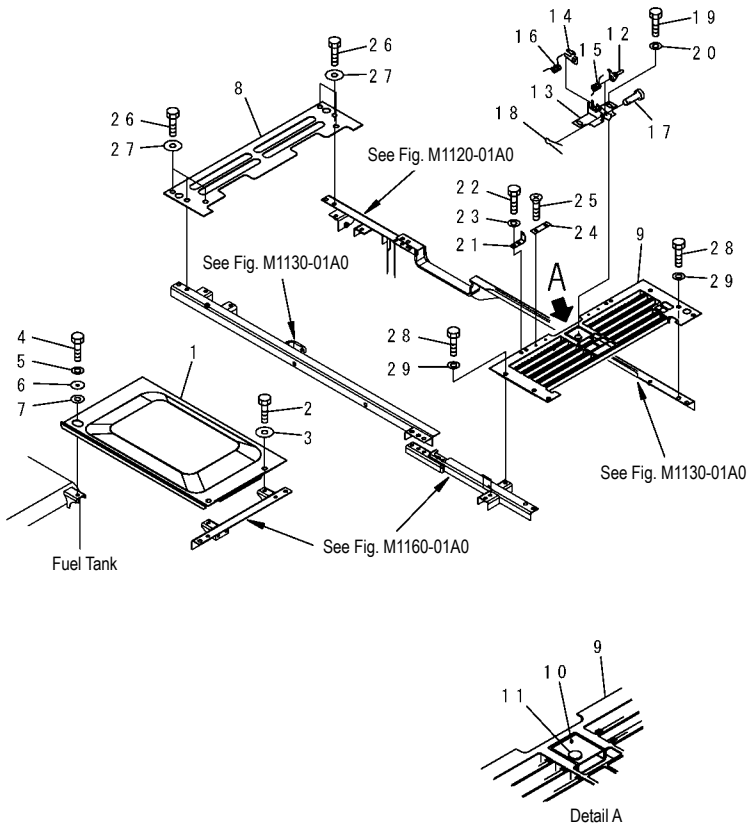

PW1B782

INDEX	PART NO.	DESCRIPTION	Q'TY	SERIAL NO.
1	20Y-54-61721	COVER	1	DBB0001~
2	01010-81230	BOLT	2	DBB0001~
3	175-54-34170	WASHER	2	DBB0001~
4	01010-81230	BOLT	1	DBB0001~
5	01643-31232	WASHER	1	DBB0001~
6	20Y-54-61990	COLLAR	1	DBB0001~
7	20Y-54-61790	PLATE	1	DBB0001~
8	20Y-54-61731	COVER	1	DBB0001~
9	20Y-54-61742	COVER	1	DBB0001~
10	20Y-54-25850	. LOCK	1	DBB0001~
11	20Y-54-27540	.. LOCK ASS' Y	1	DBB0001~
12	20Y-54-27511	PLATE	1	DBB0001~
13	20Y-54-27523	BRACKET	1	DBB0001~
14	21K-54-26341	LEVER	1	DBB0001~
15	21K-54-26351	SPRING	1	DBB0001~
16	20X-54-21460	SPRING	1	DBB0001~
17	04205-11038	PIN	2	DBB0001~
18	04050-13020	PIN	2	DBB0001~
19	01010-81025	BOLT	2	DBB0001~
20	01643-31032	WASHER	2	DBB0001~
21	20Y-54-27182	BRACKET	2	DBB0001~
22	01010-81025	BOLT	4	DBB0001~
23	01643-31032	WASHER	4	DBB0001~
24	205-54-68440	PLATE	2	DBB0001~
25	01224-40616	SCREW	4	DBB0001~
26	01010-81230	BOLT	6	DBB0001~
27	175-54-34170	WASHER	6	DBB0001~
28	01010-81230	BOLT	6	DBB0001~
29	01643-31232	WASHER	6	DBB0001~

FIG. M1220-01A0 RIGHT SIDE CASE

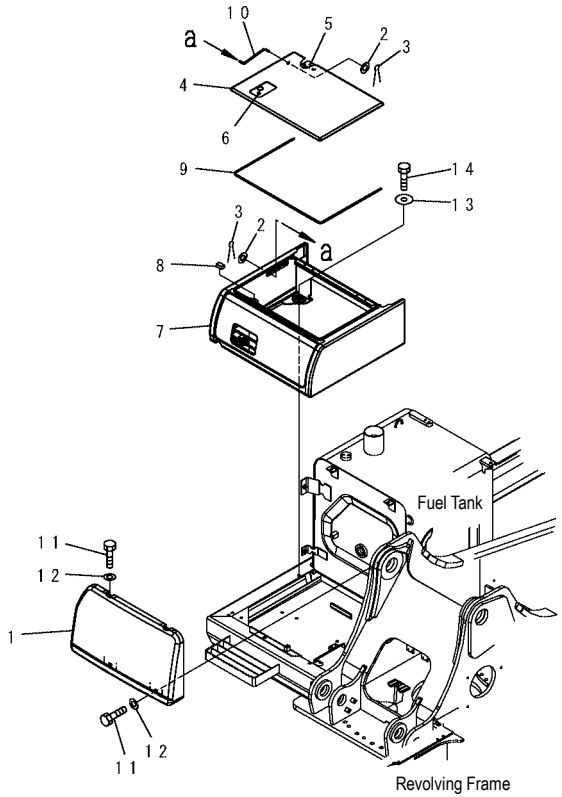

PW1B783

INDEX	PART NO.	DESCRIPTION	Q'TY	SERIAL NO.
1	20Y-54-66131	COVER	1	DBB0001~
2	01643-30623	WASHER	2	DBB0001~
3	04050-11612	PIN	2	DBB0001~
	20Y-54-66111	COVER	1	DBB0001~
4	20Y-54-26360	. COVER	1	DBB0001~
5	20Y-54-29711	.. HINGE	2	DBB0001~
6	421-54-11372	.. LOCK ASS' Y	1	DBB0001~
7	☆	. COVER	1	DBB0001~
8	20Y-54-29680	SHEET	1	DBB0001~
9	20Y-54-29660	SEAL	1	DBB0001~
10	203-54-56630	ROD	1	DBB0001~
11	01010-81230	BOLT	4	DBB0001~
12	01643-31232	WASHER	4	DBB0001~
13	175-54-34170	WASHER	4	DBB0001~
14	01010-81230	BOLT	4	DBB0001~

FIG. M1310-01A0 HAND RAIL

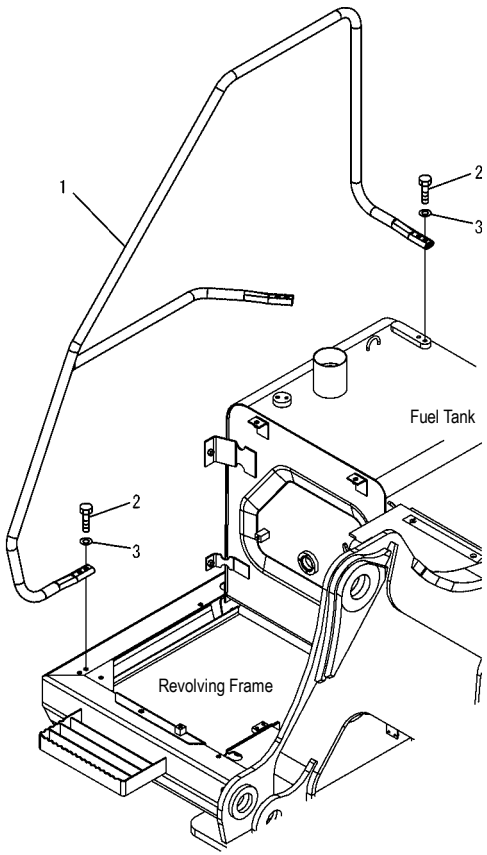

PW1B784

FIG NO. : M1310-01A0

INDEX	PART NO.	DESCRIPTION	Q'TY	SERIAL NO.
1	20Y-54-61611	HAND RAIL	1	DBB0001~
2	01010-81240	BOLT	6	DBB0001~
3	01643-31232	WASHER	6	DBB0001~

FIG. M1410-01A0 REAR VIEW MIRROR, L. H. (SINGLE) (OPT)

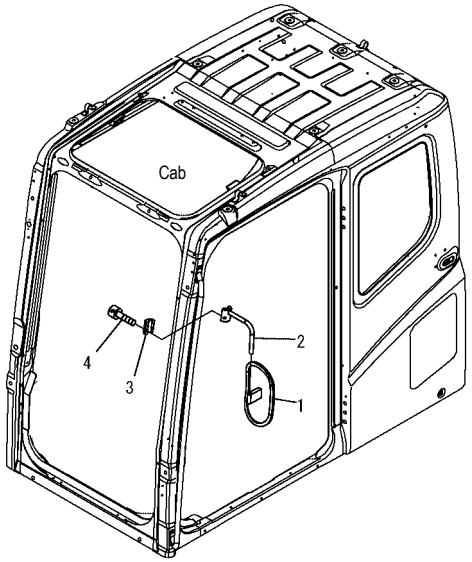

PW1B785

FIG NO. : M1410-01A0

INDEX	PART NO.	DESCRIPTION	Q'TY	SERIAL NO.
1	08174-13118	MIRROR	1	DBB0001~
2	20Y-54-35420	SUPPORT	1	DBB0001~
3	20Y-54-35430	CLAMP	1	DBB0001~
4	01252-41030	BOLT	2	DBB0001~

FIG. M1420-01A0 REAR VIEW MIRROR, R. H.

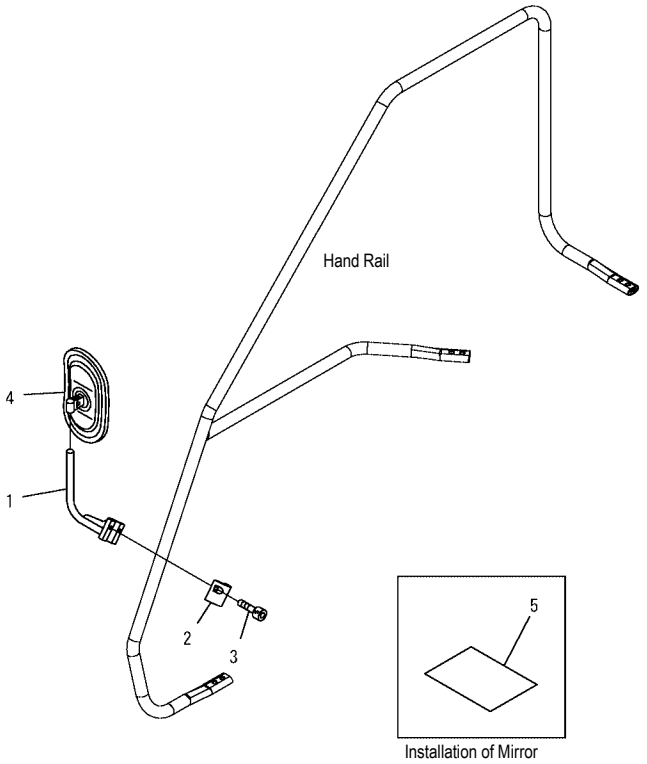

PW1B786

INDEX	PART NO.	DESCRIPTION	Q'TY	SERIAL NO.
1	20Y-54-61621	SUPPORT	1	DBB0001~
2	20Y-54-61630	CLAMP	1	DBB0001~
3	01252-71030	BOLT	2	DBB0001~
4	20Y-54-28911	MIRROR	1	DBB0001~
5	20Y-98-D1170	PLATE	1	DBB0001~

FIG. M1510-01A0 COUNTER WEIGHT

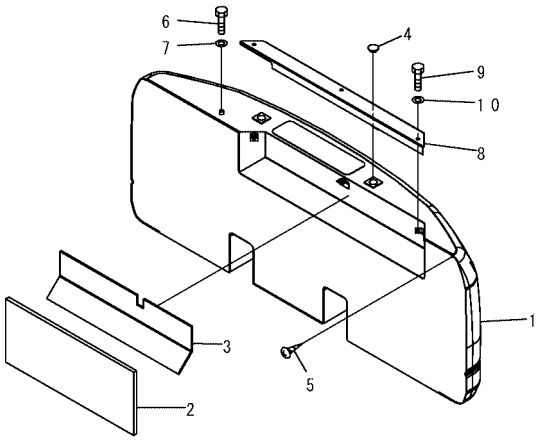

PW1B787

FIG NO. : M1510-01A0

INDEX	PART NO.	DESCRIPTION	Q'TY	SERIAL NO.
	20Y-46-44111	WEIGHT	1	DBB0001~
1	☆	. WEIGHT	1	DBB0001~
2	20Y-46-44171	. SHEET	1	DBB0001~
3	20Y-46-44191	. SHEET	1	DBB0001~
4	20Y-46-11270	CAP	2	DBB0001~
5	01370-00508	SCREW	1	DBB0001~
6	01010-81220	BOLT	1	DBB0001~
7	01643-31232	WASHER	1	DBB0001~
8	20Y-46-44141	COVER	1	DBB0001~
9	01010-81225	BOLT	3	DBB0001~
10	01643-31232	WASHER	3	DBB0001~

FIG. M1520-01A0 COUNTER WEIGHT MOUNTING

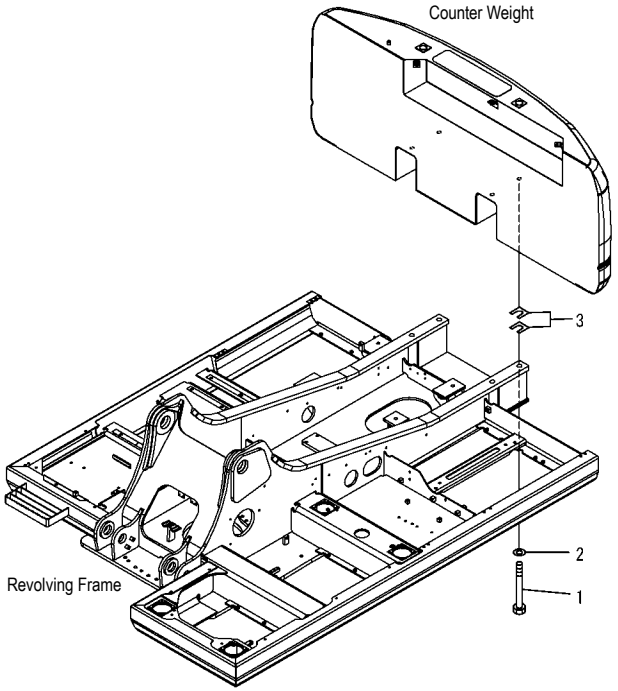

PW1B793

FIG NO. : M1520-01A0

INDEX	PART NO.	DESCRIPTION	Q'TY	SERIAL NO.
1	20Y-46-44250	BOLT	4	DBB0001~
2	207-46-32220	PLATE	4	DBB0001~
3	20Y-46-11410	PLATE, 1.6 MM	2	DBB0001~

FIG. M1810-01A0 UNDER COVER (REVOLVING FRAME) (LEFT SIDE COVER AND TOOL BOX)

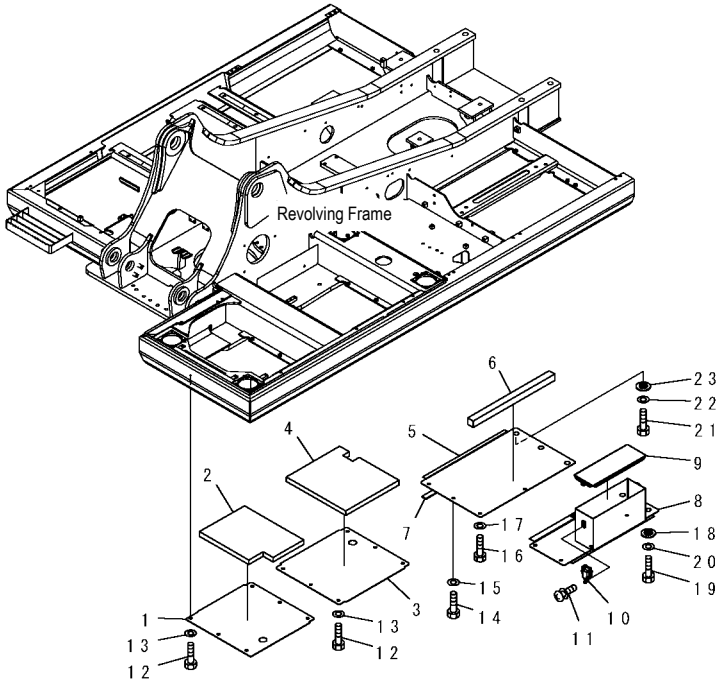

INDEX	PART NO.	DESCRIPTION	Q'TY	SERIAL NO.
	20Y-54-62110	COVER	1	DBB0001~
1	☆	. COVER	1	DBB0001~
2	20Y-54-D1820	. SHEET	1	DBB0001~
	20Y-54-62120	COVER	1	DBB0001~
3	☆	. COVER	1	DBB0001~
4	20Y-54-D1830	. SHEET	1	DBB0001~
5	20Y-54-61852	COVER	1	200143-
6	20Y-54-61861	. SHEET	1	DBB0001~
7	20Y-54-61890	. SHEET	1	DBB0001~
	20Y-54-62140	COVER	1	DBB0001~
8	☆	. COVER	1	DBB0001~
9	22U-54-23620	. COVER	1	DBB0001~
10	195-57-11530	. CATCHER	1	DBB0001~
11	01023-20512	. SCREW	3	DBB0001~
12	01010-81230	BOLT	12	DBB0001~
13	01643-31232	WASHER	12	DBB0001~
14	01010-81230	BOLT	2	DBB0001~
15	01643-31232	WASHER	2	DBB0001~
16	01010-81230	BOLT	2	DBB0001~
17	01643-31232	WASHER	2	DBB0001~
18	20Y-54-12550	COLLAR	2	DBB0001~
19	01010-81230	BOLT	4	DBB0001~
20	01643-31232	WASHER	4	DBB0001~
21	01010-81230	BOLT	3	DBB0001~
22	01643-31232	WASHER	3	DBB0001~
23	20Y-54-12550	COLLAR	3	DBB0001~

FIG. M1810-02A0 UNDER COVER (REVOLVING FRAME) (ENGINE ROOM AND TANK)

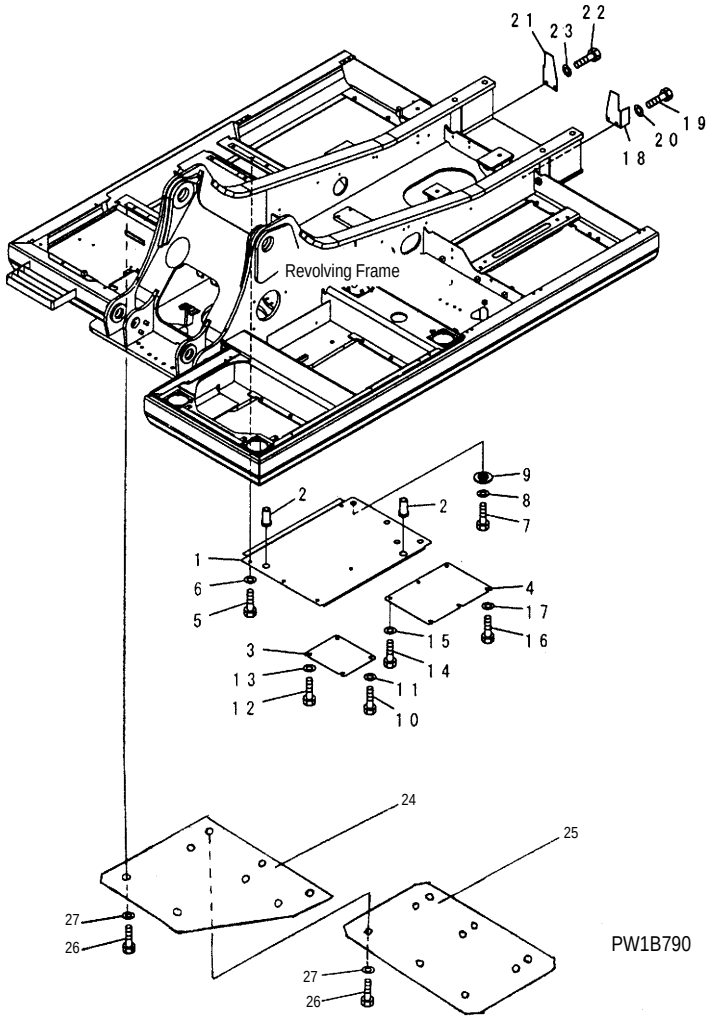

INDEX	PART NO.	DESCRIPTION	Q'TY	SERIAL NO.
	20Y-54-62131	COVER	1	DBB0001~
1	☆	. COVER	1	DBB0001~
2	22U-54-24760	. GROMMET	2	DBB0001~
3	20Y-54-61870	COVER	1	DBB0001~
4	20Y-54-61980	COVER	1	DBB0001~
5	01010-81230	BOLT	3	DBB0001~
6	01643-31232	WASHER	3	DBB0001~
7	01010-81230	BOLT	3	DBB0001~
8	01643-31232	WASHER	3	DBB0001~
9	20Y-54-12550	COLLAR	3	DBB0001~
10	01010-81230	BOLT	2	DBB0001~
11	01643-31232	WASHER	2	DBB0001~
12	01010-81230	BOLT	2	DBB0001~
13	175-54-34170	WASHER	2	DBB0001~
14	01010-81230	BOLT	3	DBB0001~
15	01643-31232	WASHER	3	DBB0001~
16	01010-81230	BOLT	3	DBB0001~
17	175-54-34170	WASHER	3	DBB0001~
18	20Y-54-28872	COVER	1	DBB0001~
19	01010-81225	BOLT	2	DBB0001~
20	01643-31232	WASHER	2	DBB0001~
21	20Y-54-28882	COVER	1	DBB0001~
22	01010-81225	BOLT	2	DBB0001~
23	01643-31232	WASHER	2	DBB0001~
24	20Y-54-62250	COVER	1	DBB0001~
25	20Y-54-62260	COVER	1	DBB0001~
26	01024-81230	BOLT	14	DBB0001~
27	01643-31232	WASHER	14	DBB0001~

SWING CIRCLE AND RELATED PARTS

FIG. N1110-01A0 SWING CIRCLE (CONCENTRATED GREASING)

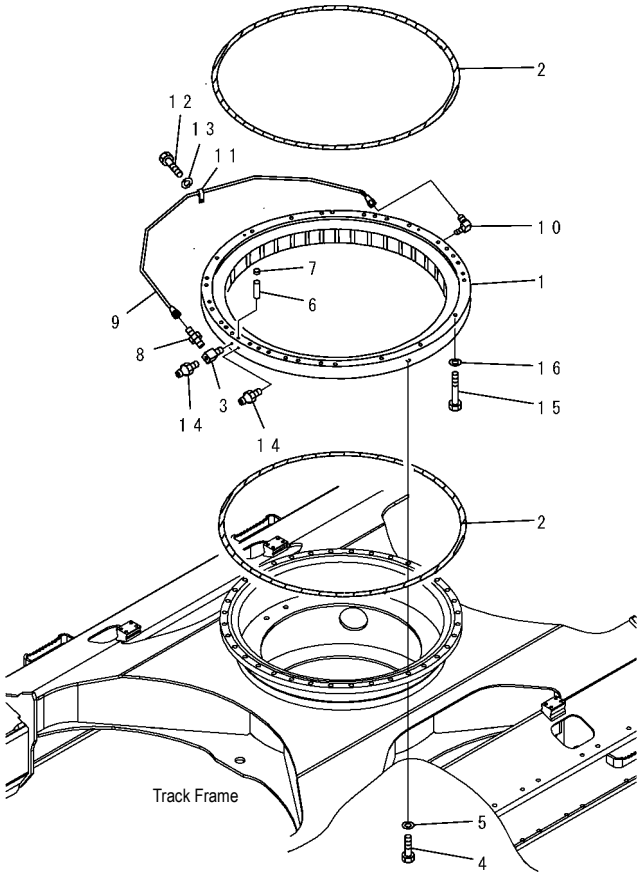

PW1B889

INDEX	PART NO.	DESCRIPTION	Q'TY	SERIAL NO.
1	20Y-25-21200	CIRCLE	1	DBB0001~
2	205-25-71152	. SEAL	2	DBB0001~
3	205-25-71280	. NIPPLE	1	DBB0001~
4	20Y-25-11290	BOLT	36	DBB0001~
5	01643-72060	WASHER	36	DBB0001~
6	04020-01842	PIN	2	DBB0001~
7	20Y-46-21520	CAP	1	DBB0001~
8	07214-50813	CONNECTOR	1	DBB0001~
9	20Y-25-21123	TUBE	1	DBB0001~
10	20Y-25-11270	ELBOW	1	DBB0001~
11	08036-00814	CLIP	1	DBB0001~
12	01010-81016	BOLT	1	DBB0001~
13	01643-31032	WASHER	1	DBB0001~
14	07020-00000	FITTING	2	DBB0001~
15	206-25-61110	BOLT	32	DBB0001~
16	01643-72260	WASHER	32	DBB0001~

FIG. N1210-01A0 SWING MACHINERY

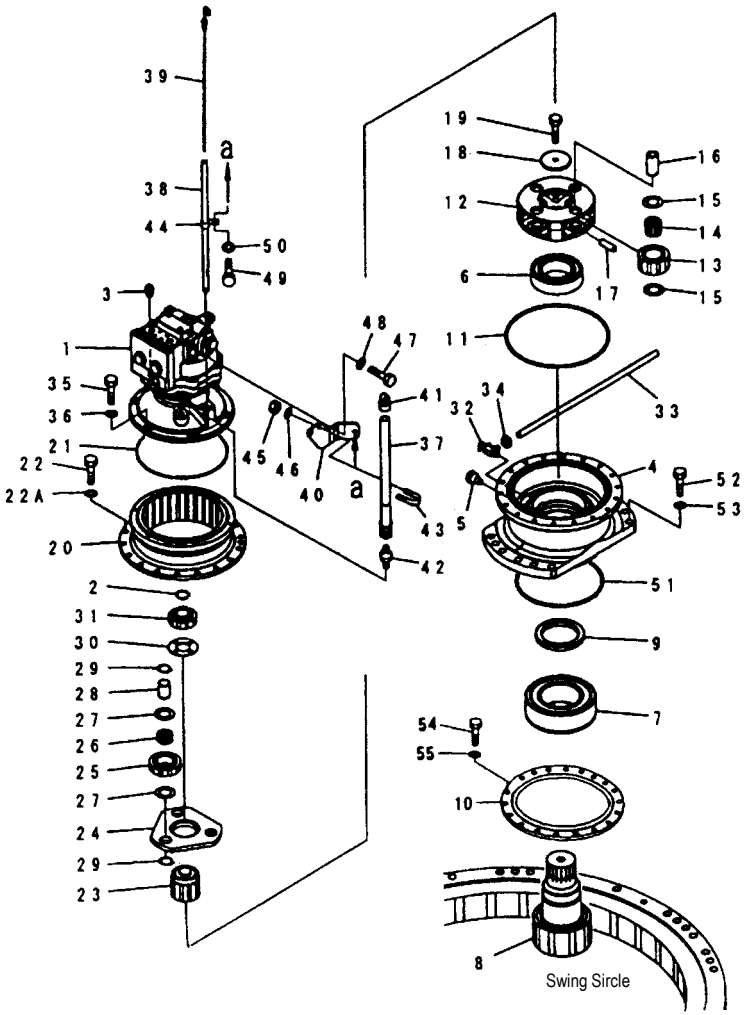

FIG NO. : N1210-01A0

INDEX	PART NO.	DESCRIPTION	Q'TY	SERIAL NO.
1	706-7G-01070	MOTOR ASS' Y	1	DBB0001~
2	22U-26-21280	RING	1	DBB0001~
3	07042-00312	PLUG	1	DBB0001~
4	20Y-26-31110	CASE	1	DBB0001~
5	07029-00000	VALVE	1	DBB0001~
6	20Y-26-22330	BEARING	1	DBB0001~
7	20Y-26-22340	BEARING	1	DBB0001~
8	20Y-26-21142	SHAFT, 15 TEETH	1	DBB0001~
9	20Y-26-22420	SEAL	1	DBB0001~
10	20Y-26-22191	COVER	1	DBB0001~
11	07000-15310	O–RING	1	DBB0001~
12	22U-26-21580	CARRIER	1	DBB0001~
13	22U-26-21540	GEAR	4	DBB0001~
14	20G-26-11240	BEARING	4	DBB0001~DBB4708
	20G-26-11241	BEARING	4	DBB4709~
15	20Y-27-21240	WASHER	8	DBB0001~
16	20Y-26-22250	PIN	4	DBB0001~
17	20Y-27-21280	PIN	4	DBB0001~
18	20Y-26-21240	PLATE	1	DBB0001~
19	112-32-11211	BOLT, SHOE	1	DBB0001~
20	22U-26-21550	GEAR	1	DBB0001~
21	20K-22-11190	O–RING	1	DBB0001~
22	01010-81440	BOLT	18	DBB0001~
22A	01643-31445	WASHER	18	DBB0001~
23	22U-26-21530	GEAR	1	DBB0001~
24	22U-26-21570	CARRIER	1	DBB0001~
25	22U-26-21520	GEAR	3	DBB0001~
26	20Y-26-21281	BEARING	3	DBB0001~
27	22U-26-21230	WASHER, THRUST	6	DBB0001~
28	22U-26-21210	PIN	3	DBB0001~
29	04064-03515	RING	6	DBB0001~
30	22U-26-21250	WASHER, THRUST	1	DBB0001~

FIG. N1210-01A0 SWING MACHINERY

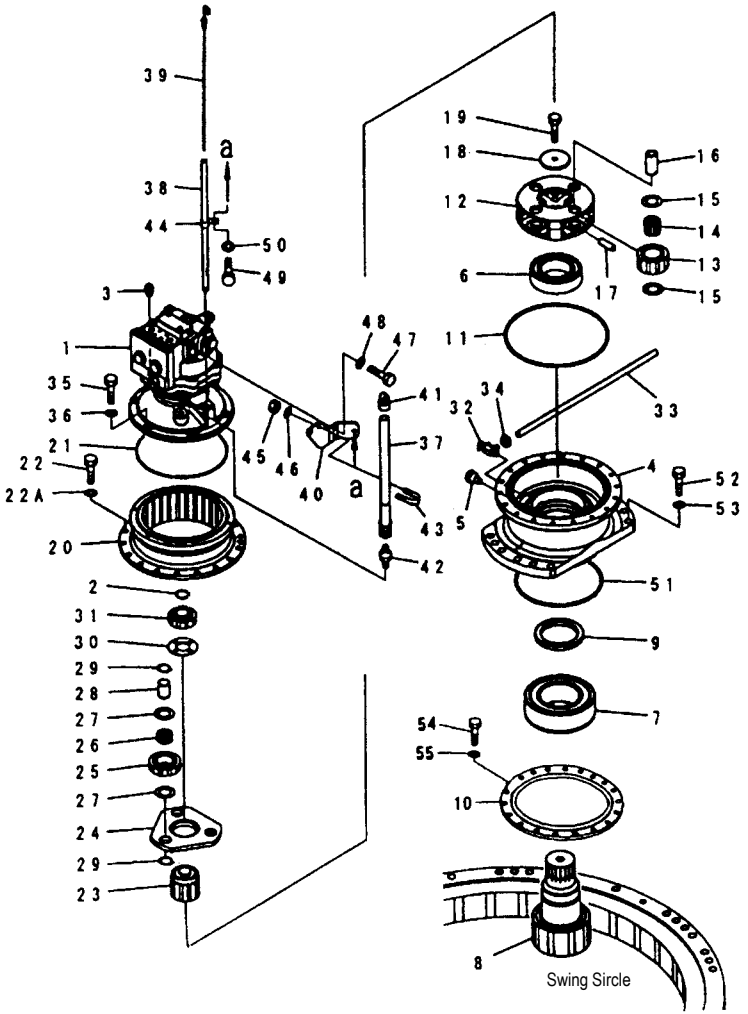

PW1B944

FIG NO. : N1210-01A0

INDEX	PART NO.	DESCRIPTION	Q'TY	SERIAL NO.
31	22U-26-21510	GEAR	1	DBB0001~
32	195-03-13241	VALVE	1	DBB0001~
33	07270-21560	TUBE	1	DBB0001~
34	07281-00197	CLAMP	1	DBB0001~
35	01010-81035	BOLT	6	DBB0001~
36	01643-51032	WASHER	6	DBB0001~
37	20Y-26-31411	TUBE	1	DBB0001~
38	20Y-26-31421	FILLER	1	DBB0001~
39	20Y-26-31431	GAUGE	1	DBB0001~
40	20Y-26-31441	BRACKET	1	DBB0001~
41	22U-26-21460	CAP	1	DBB0001~
42	07238-10630	CONNECTOR	1	DBB0001~
43	07283-32738	CLIP	1	DBB0001~
44	04434-51710	CLIP	1	DBB0001~
45	01597-01009	NUT	2	DBB0001~
46	01643-31032	WASHER	2	DBB0001~
47	01010-81030	BOLT	2	DBB0001~
48	01643-31032	WASHER	2	DBB0001~
49	01010-81025	BOLT	1	DBB0001~
50	01643-31032	WASHER	1	DBB0001~
51	07000-15240	O–RING	1	DBB0001~
52	01010-82060	BOLT	12	DBB0001~
53	01643-32060	WASHER	12	DBB0001~
54	01024-81045	BOLT	12	DBB0001~
55	01643-81032	WASHER	12	DBB0001~

FIG. N1220-01A0 SWING MOTOR (CONNECTING PARTS)

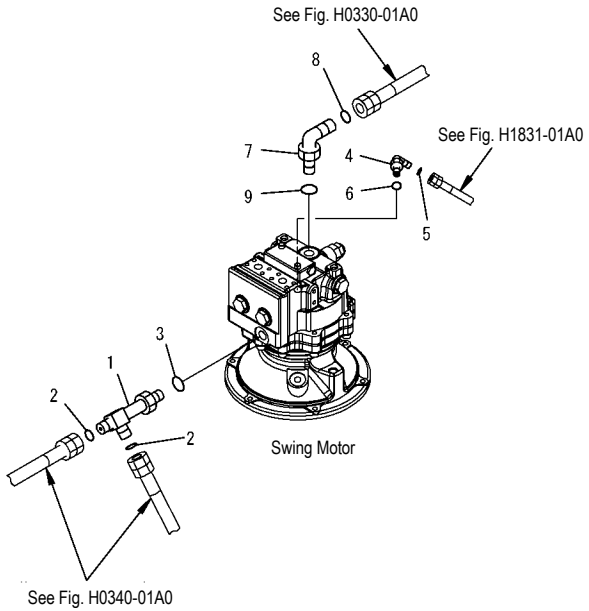

PW1B817

INDEX	PART NO.	DESCRIPTION	Q'TY	SERIAL NO.
1	20Y-62-41940	ELBOW	1	DBB0001~
2	02896-11015	O–RING	2	DBB0001~
3	07002-12434	O–RING	1	DBB0001~
4	11Y-62-12160	ELBOW	1	DBB0001~
5	02896-11008	O–RING	1	DBB0001~
6	07002-11423	O–RING	1	DBB0001~
7	02782-10630	ELBOW	1	DBB0001~
8	02896-11018	O–RING	1	DBB0001~
9	07002-12434	O–RING	1	DBB0001~

FIG. N1310-01A0 SWIVEL JOINT (CONNECTING PARTS)

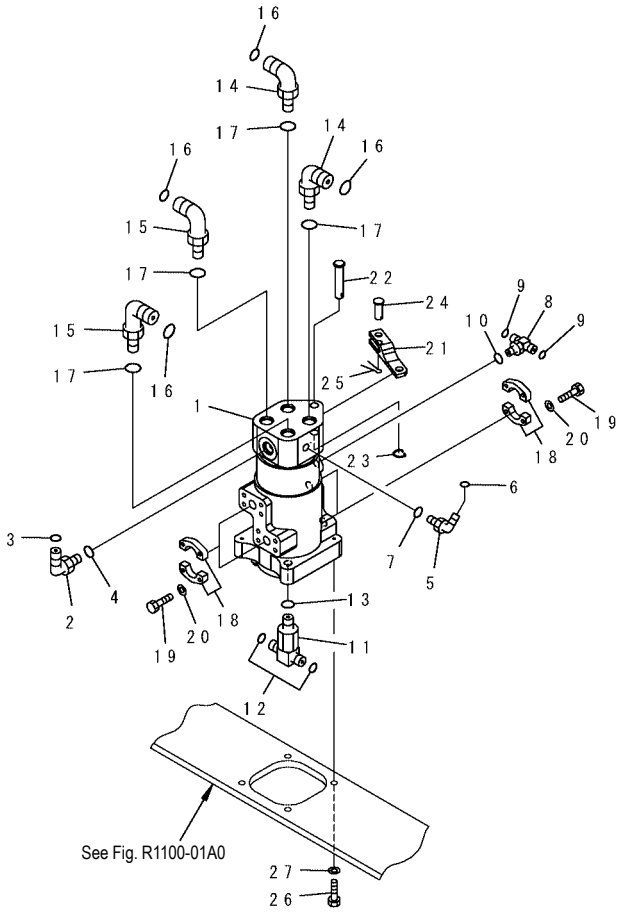

PW1B818

INDEX	PART NO.	DESCRIPTION	Q'TY	SERIAL NO.
1	(703-08-33610)	SWIVEL JOINT ASS' Y	1	DBB0001~
2	02782-10522	ELBOW	1	DBB0001~
3	02896-11015	O–RING	1	DBB0001~
4	07002-12434	O–RING	1	DBB0001~
5	11Y-62-12160	ELBOW	1	DBB0001~
6	02896-11008	O–RING	1	DBB0001~
7	07002-11423	O–RING	1	DBB0001~
8	11Y-62-12250	TEE	1	DBB0001~
9	02896-11008	O–RING	2	DBB0001~
10	07002-11423	O–RING	1	DBB0001~
11	20Y-62-41930	TEE	1	DBB0001~
12	02896-11012	O–RING	2	DBB0001~
13	07002-12434	O–RING	1	DBB0001~
14	02782-10628	ELBOW	2	DBB0001~
15	02782-10630	ELBOW	2	DBB0001~
16	02896-11018	O–RING	4	DBB0001~
17	07002-12434	O–RING	4	DBB0001~
18	07371-30640	FLANGE	8	DBB0001~
19	07372-21035	BOLT	16	DBB0001~
20	01643-51032	WASHER	16	DBB0001~
21	22U-62-21582	BRACKET	1	DBB0001~
22	22U-62-21870	PIN	1	DBB0001~
23	22U-62-24420	PIN	1	DBB0001~
24	04205-11648	PIN	1	DBB0001~
25	04050-14028	PIN	1	DBB0001~
26	01010-81235	BOLT	4	DBB0001~
27	01643-31232	WASHER	4	DBB0001~

TRAVEL AND LOWER PIPING

FIG. P1120-01A0 TRAVEL PIPING

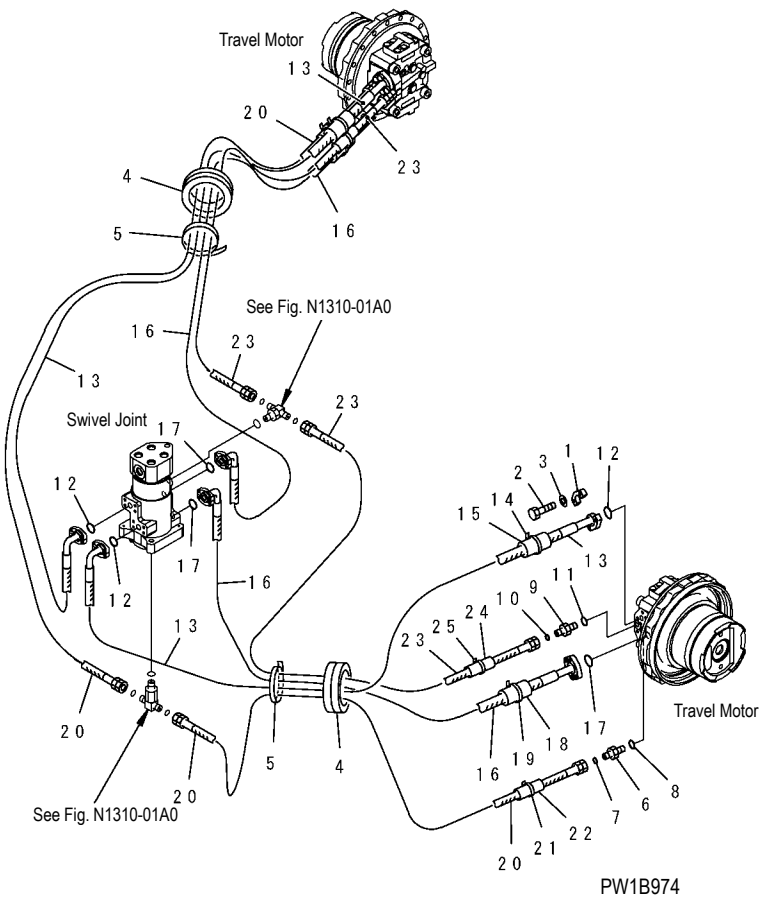

(PC200,210-7)

INDEX	PART NO.	DESCRIPTION	Q'TY	SERIAL NO.
1	07371-30640	FLANGE	8	DBB0001~
2	07372-21035	BOLT	16	DBB0001~
3	01643-51032	WASHER	16	DBB0001~
4	20Y-62-12590	GROMMET	2	DBB0001~
5	08034-20536	BAND	2	DBB0001~
6	02781-00422	UNION	2	DBB0001~
7	02896-11012	O–RING	2	DBB0001~
8	07002-12034	O–RING	2	DBB0001~
9	11Y-62-12130	NIPPLE	2	DBB0001~
10	02896-11008	O–RING	2	DBB0001~
11	07002-11423	O–RING	2	DBB0001~
12	07000-13025	O–RING	4	DBB0001~
13	07098-00622	HOSE	2	DBB0001~
14	08034-00536	BAND	2	DBB0001~
15	205-62-72240	COVER	2	DBB0001~
16	20Y-62-12540	HOSE	2	DBB0001~
17	07000-13025	O–RING	4	DBB0001~
18	205-62-72240	COVER	2	DBB0001~
19	08034-00536	BAND	2	DBB0001~
20	02762-00419	HOSE	2	DBB0001~
21	08034-00536	BAND	2	DBB0001~
22	205-62-72240	COVER	2	DBB0001~
23	02760-00220	HOSE	2	DBB0001~
24	205-62-72140	COVER	2	DBB0001~
25	08034-00536	BAND	2	DBB0001~

FIG. P1120-01A1 TRAVEL PIPING

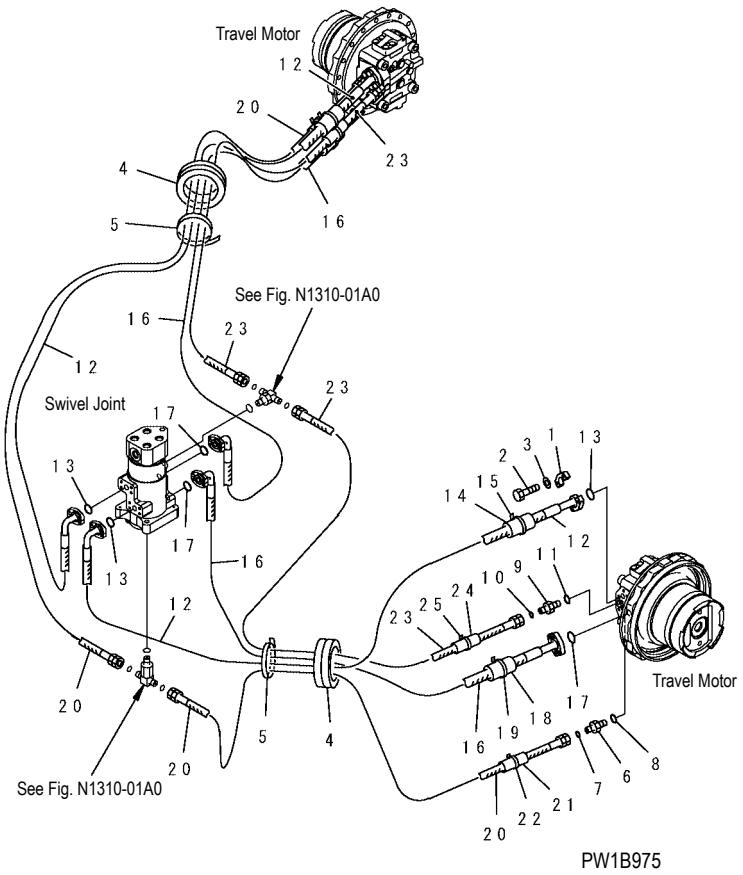

(PC200LC, 210LC-7)

INDEX	PART NO.	DESCRIPTION	Q'TY	SERIAL NO.
1	07371-30640	FLANGE	8	DBE0001~
2	07372-21035	BOLT	16	DBE0001~
3	01643-51032	WASHER	16	DBE0001~
4	20Y-62-12590	GROMMET	2	DBE0001~
5	08034-20536	BAND	2	DBE0001~
6	02781-00422	UNION	2	DBE0001~
7	02896-11012	O–RING	2	DBE0001~
8	07002-12034	O–RING	2	DBE0001~
9	11Y-62-12130	NIPPLE	2	DBE0001~
10	02896-11008	O–RING	2	DBE0001~
11	07002-11423	O–RING	2	DBE0001~
12	07098-00624	HOSE	2	DBE0001~
13	07000-13025	O–RING	4	DBE0001~
14	205-62-72240	COVER	2	DBE0001~
15	08034-00536	BAND	2	DBE0001~
16	20Y-62-12520	HOSE	2	DBE0001~
17	07000-13025	O–RING	4	DBE0001~
18	205-62-72240	COVER	2	DBE0001~
19	08034-00536	BAND	2	DBE0001~
20	02762-00421	HOSE	2	DBE0001~
21	205-62-72240	COVER	2	DBE0001~
22	08034-00536	BAND	2	DBE0001~
23	02760-00222	HOSE	2	DBE0001~
24	205-62-72140	COVER	2	DBE0001~
25	08034-00536	BAND	2	DBE0001~

FIG. P1210-01A0 FINAL DRIVE

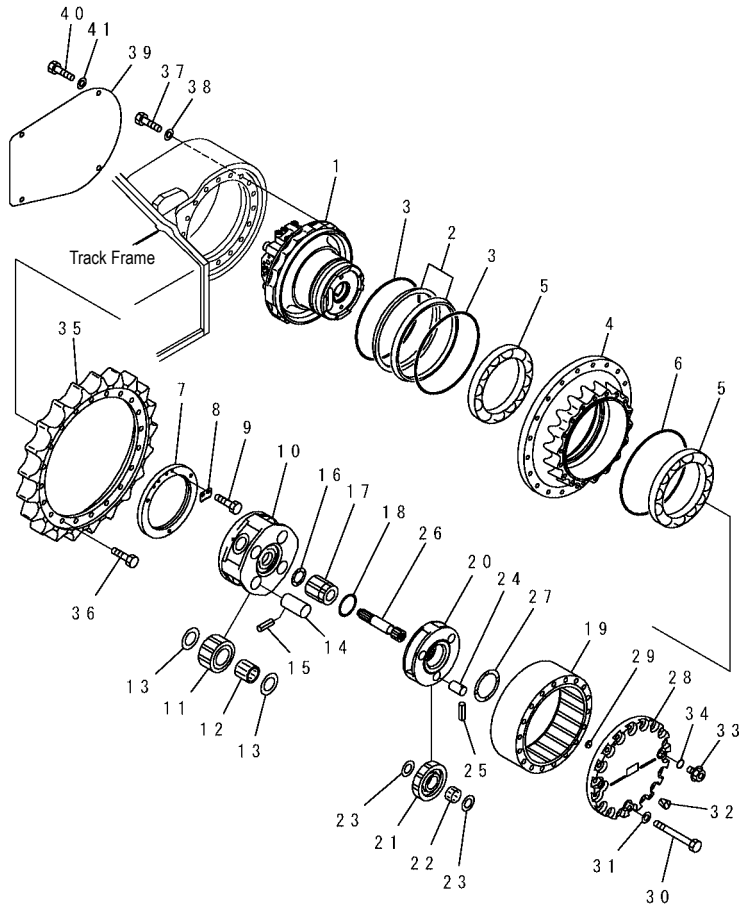

PW1B945

FIG NO. : P1210-01A0

INDEX	PART NO.	DESCRIPTION	Q'TY	SERIAL NO.
	(20Y-27-00432)	FINAL DRIVE ASS' Y	2	DBB0001~
1	708-8F-00171	MOTOR ASS' Y	2	DBB0001~
	150-27-00410	FLOATING SEAL ASS' Y	2	DBB0001~
2	150-27-00264	. SEAL RING ASS' Y	1	DBB0001~
	☆	.. RING	2	DBB0001~
3	14S-27-00110	. O–RING ASS' Y	1	DBB0001~
	☆	.. O–RING	2	DBB0001~
4	20Y-27-31220	HUB	2	DBB0001~
5	20Y-27-22230	BEARING	4	DBB0001~
6	20Y-27-22280	O–RING	2	DBB0001~
7	20Y-27-22261	LOCK	2	DBB0001~
8	20Y-27-22270	LOCK	2	DBB0001~
9	01010-81020	BOLT	4	DBB0001~
10	20Y-27-22170	CARRIER	2	DBB0001~
11	20Y-27-22140	GEAR	8	DBB0001~
12	20Y-27-22220	BEARING	8	DBB0001~
13	20Y-27-21250	WASHER	16	DBB0001~
14	20Y-27-21230	PIN	8	DBB0001~
15	20Y-27-21290	PIN	8	DBB0001~
16	20Y-27-13310	WASHER	2	DBB0001~
17	20Y-27-22130	GEAR	2	DBB0001~
18	20Y-27-22240	WASHER	2	DBB0001~
19	20Y-27-22151	GEAR	2	DBB0001~
20	20Y-27-22160	CARRIER	2	DBB0001~
21	20Y-27-22120	GEAR	6	DBB0001~
22	20Y-27-22210	BEARING	6	DBB0001~
23	20Y-27-21240	WASHER	12	DBB0001~
24	20Y-27-21220	PIN	6	DBB0001~
25	20Y-27-21280	PIN	6	DBB0001~
26	20Y-27-31210	SHAFT	2	DBB0001~
27	20Y-27-21310	WASHER	2	DBB0001~
28	20Y-27-31230	COVER	2	DBB0001~
29	20Y-27-22250	BUTTON	2	DBB0001~
30	20Y-27-13281	BOLT	36	DBB0001~

FIG. P1210-01A0 FINAL DRIVE

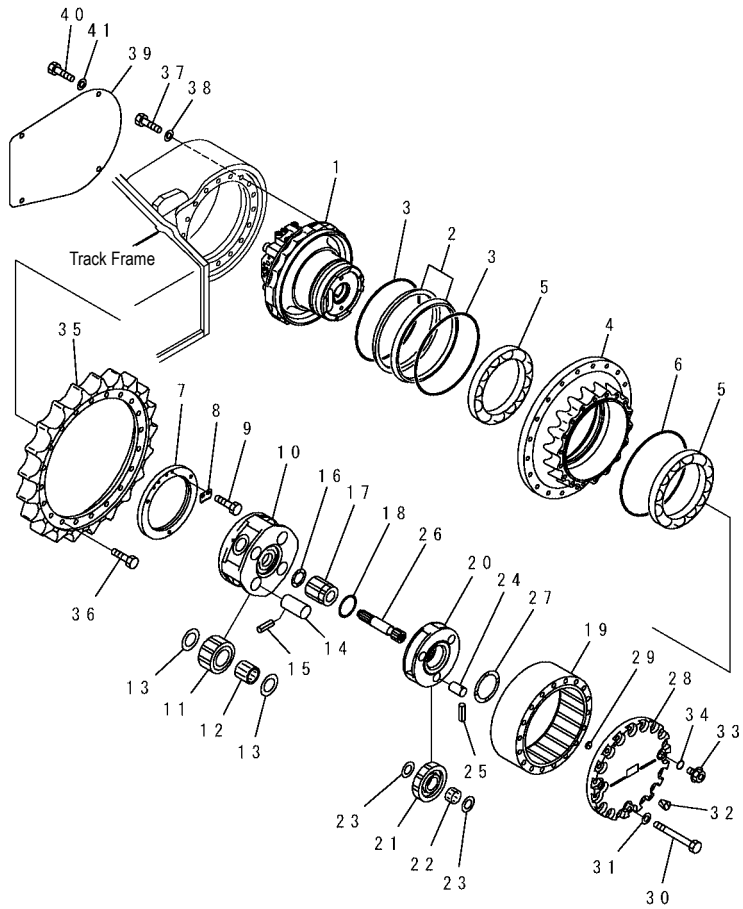

PW1B945

FIG NO. : P1210-01A0

INDEX	PART NO.	DESCRIPTION	Q'TY	SERIAL NO.
31	01643-31645	WASHER	36	DBB0001~
32	07049-01012	PLUG	4	DBB0001~
33	07044-12412	PLUG	6	DBB0001~
34	07002-12434	O–RING	6	DBB0001~
35	20Y-27-11582	SPROCKET	2	DBB0001~
36	20Y-27-11561	BOLT	40	DBB0001~
37	01010-61660	BOLT	36	DBB0001~
38	01643-31645	WASHER	36	DBB0001~
39	20Y-30-21191	COVER	2	DBB0001~
40	01010-81230	BOLT	8	DBB0001~
41	01643-31232	WASHER	8	DBB0001~

UNDER CARRIAGE

FIG. R0110-01A0 FRONT IDLER

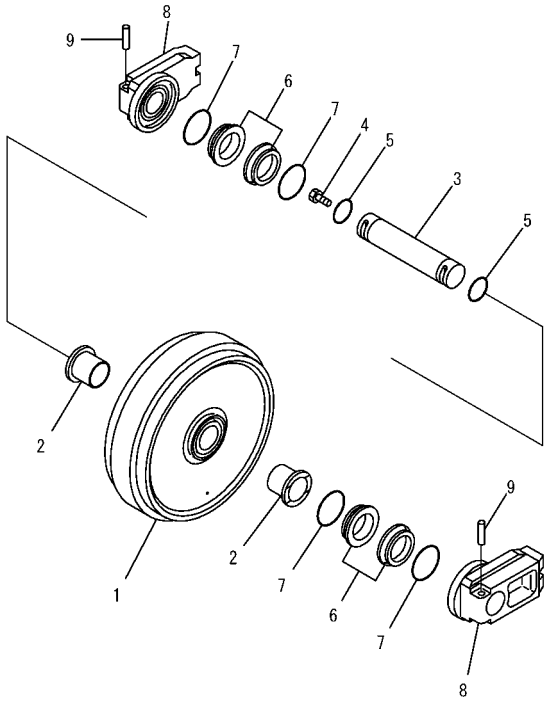

PW1B750

FIG NO. : R0110-01A0

INDEX	PART NO.	DESCRIPTION	Q'TY	SERIAL NO.
	20Y-30-00321	FRONT IDLER ASS' Y	2	DBB0001~
1	20Y-30-33211	. IDLER	1	DBB0001~
2	207-30-56140	. BUSHING	2	DBB0001~
3	20Y-30-13130	. SHAFT	1	DBB0001~
4	07052-31624	. PLUG	1	DBB0001~
5	07000-12060	. O-RING	2	DBB0001~
	20Y-30-00100	.FLOATING SEAL ASS' Y	2	DBB0001~
6	20Y-30-00110	.. SEAL RING ASS' Y	1	DBB0001~
	☆	... RING	2	DBB0001~
7	20Y-30-00120	.. O-RING ASS' Y	1	DBB0001~
	☆	... O-RING	2	DBB0001~
8	20Y-30-13150	. SUPPORT	2	DBB0001~
9	205-30-76190	. PIN	2	DBB0001~

FIG. R0110-02A0 IDLER CUSHION

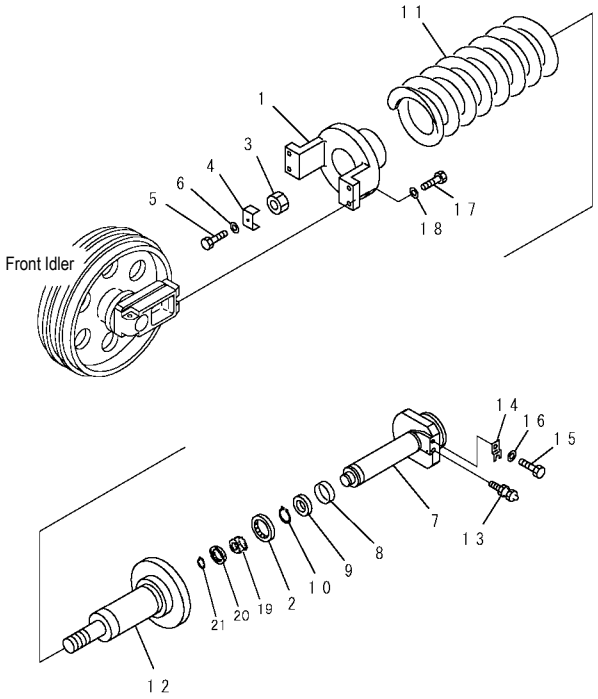

PW19964

FIG NO. : R0110-01A0

INDEX	PART NO.	DESCRIPTION	Q'TY	SERIAL NO.
1	20Y-30-32110	YOKE	2	DBB0001~
2	206-30-55150	SEAL	2	DBB0001~DBB4708
3	206-30-45381	NUT	2	DBB0001~
4	206-30-45262	LOCK	2	DBB0001~
5	01010-81225	BOLT	2	DBB0001~
6	01643-31232	WASHER	2	DBB0001~
7	206-30-72140	SHAFT	2	DBB0001~
8	07155-00720	RING	4	DBB0001~
9	09370-00070	U-PACKING	2	DBB0001~
10	04064-04518	RING	2	DBB0001~
11	20Y-30-12112	SPRING	2	DBB0001~
12	20Y-30-32130	CYLINDER	2	DBB0001~
13	07959-20001	VALVE	2	DBB0001~
14	205-30-72170	PLATE	2	DBB0001~
15	01010-81225	BOLT	2	DBB0001~
16	01643-31232	WASHER	2	DBB0001~
17	01010-61655	BOLT	8	DBB0001~
18	01643-31645	WASHER	8	DBB0001~
19	07177-07030	BUSHING	2	DBB0001~
20	707-56-70540	SEAL	2	DBB0001~
21	04077-00085	RING	2	DBB0001~

FIG. R0110-02A1 IDLER CUSHION

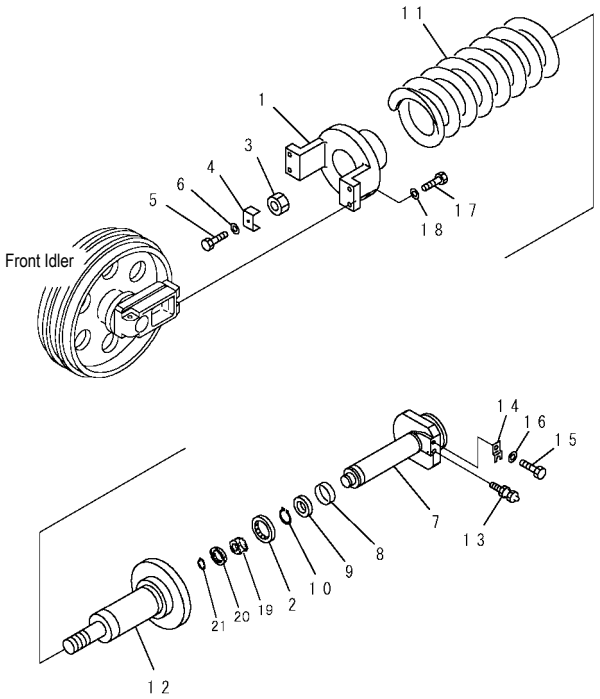

PW19964

(PC200LC, 210LC-7)

INDEX	PART NO.	DESCRIPTION	Q'TY	SERIAL NO.
1	20Y-30-32110	YOKE	2	DBE0001~
2	206-30-55150	SEAL	2	DBE0001~DBE0103
3	206-30-45381	NUT	2	DBE0001~
4	206-30-45262	LOCK	2	DBE0001~
5	01010-81225	BOLT	2	DBE0001~
6	01643-31232	WASHER	2	DBE0001~
7	206-30-72140	SHAFT	2	DBE0001~
8	07155-00720	RING	4	DBE0001~
9	09370-00070	U-PACKING	2	DBE0001~
10	04064-04518	RING	2	DBE0001~
11	206-30-55171	RECOIL SPRING	2	DBE0001~
12	206-30-72130	CYLINDER	2	DBE0001~
13	07959-20001	VALVE	2	DBE0001~
14	205-30-72170	PLATE	2	DBE0001~
15	01010-81225	BOLT	2	DBE0001~
16	01643-31232	WASHER	2	DBE0001~
17	01010-61655	BOLT	8	DBE0001~
18	01643-31645	WASHER	8	DBE0001~
19	07177-07030	BUSHING	2	DBE0001~
20	707-56-70540	SEAL	2	DBE0001~
21	04077-00085	RING	2	DBE0001~

FIG. R0200-01A0 TRACK ROLLER

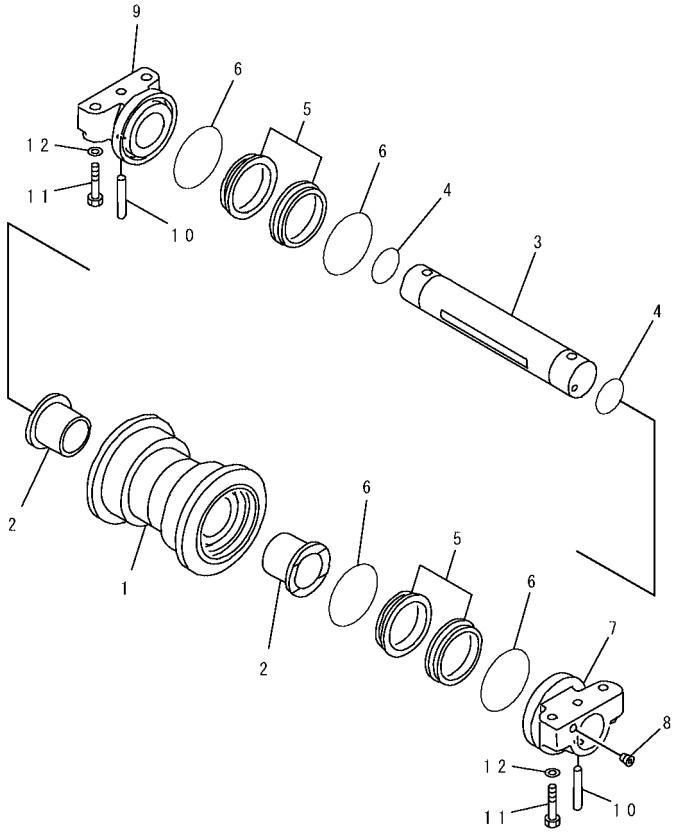

PV14578

(PC200, 210-7)

INDEX	PART NO.	DESCRIPTION	Q'TY	SERIAL NO.
	20Y-30-00016	TRACK ROLLER ASS' Y	14	DBB0001~
1	20Y-30-16411	. ROLLER	1	DBB0001~
2	22U-30-11450	. BUSHING	2	DBB0001~
3	22U-30-11420	. SHAFT	1	DBB0001~
4	205-30-76260	. O-RING	2	DBB0001~
	20Y-30-00430	. FLOATING SEAL ASS' Y	2	DBB0001~
5	☆	.. SEAL	2	DBB0001~
6	20Y-30-16460	.. O-RING	2	DBB0001~
7	22U-30-11430	. COLLAR	1	DBB0001~
8	20Y-30-16330	. PLUG	1	DBB0001~
9	22U-30-11440	. COLLAR	1	DBB0001~
10	20Y-30-16170	. PIN	2	DBB0001~
11	20Y-30-11340	BOLT	56	DBB0001~
12	01643-31845	WASHER	56	DBB0001~

FIG. R0200-01A1 TRACK ROLLER

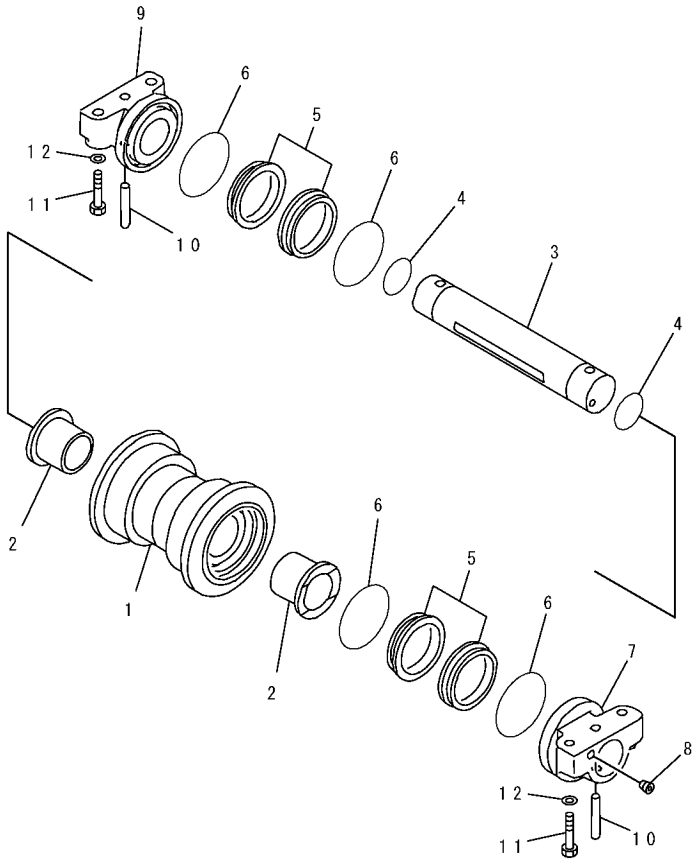

PV14578

(PC200LC, 210LC-7)

INDEX	PART NO.	DESCRIPTION	Q'TY	SERIAL NO.
	20Y-30-00016	TRACK ROLLER ASS' Y	18	DBE0001~
1	20Y-30-16411	. ROLLER	1	DBE0001~
2	22U-30-11450	. BUSHING	2	DBE0001~
3	22U-30-11420	. SHAFT	1	DBE0001~
4	205-30-76260	. O-RING	2	DBE0001~
	20Y-30-00430	. FLOATING SEAL ASS' Y	2	DBE0001~
5	☆	.. SEAL	2	DBE0001~
6	20Y-30-16460	.. O-RING	2	DBE0001~
	22U-30-11430SG	. COLLAR	1	DBE0001~
7	22U-30-11430	. COLLAR	1	DBE0001~
8	20Y-30-16330	. PLUG	1	DBE0001~
	22U-30-11440SG	. COLLAR	1	DBE0001~
9	22U-30-11440	. COLLAR	1	DBE0001~
10	20Y-30-16170	. PIN	2	DBE0001~
11	20Y-30-11340	BOLT	72	DBE0001~
12	01643-31845	WASHER	72	DBE0001~

FIG. R0300-01A0 CARRIER ROLLER

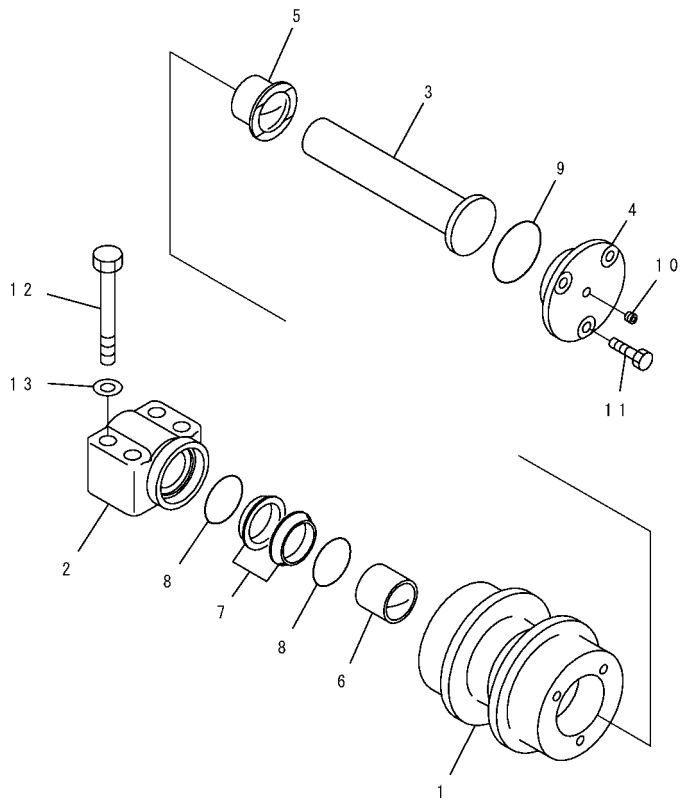

PWL4287

FIG NO. : R0300-01A0

INDEX	PART NO.	DESCRIPTION	Q'TY	SERIAL NO.
	22U-30-00021	CARRIER ROLLER	4	DBB0001~
1	22U-30-25110	. ROLLER	1	DBB0001~
2	22U-30-25120	. SUPPORT	1	DBB0001~
3	22U-30-25130	. SHAFT	1	DBB0001~
4	22U-30-25140	. COVER	1	DBB0001~
5	22U-30-25150	. BUSHING	1	DBB0001~
6	22U-30-25160	. BUSHING	1	DBB0001~
	110-30-00086	. SEAL RING ASS' Y	1	DBB0001~
7	☆	.. SEAL	2	DBB0001~
8	110-30-13250	.. O-RING	2	DBB0001~
9	07000-12060	. O-RING	1	DBB0001~
10	20Y-30-16330	. PLUG	1	DBB0001~
11	01010-81025	. BOLT	3	DBB0001~
12	01010-81485	BOLT	16	DBB0001~
13	01643-31445	WASHER	16	DBB0001~

FIG. R0500-01A0 TRACK SHOE (SWAMP TYPE) (860 mm WIDE) (OPT)

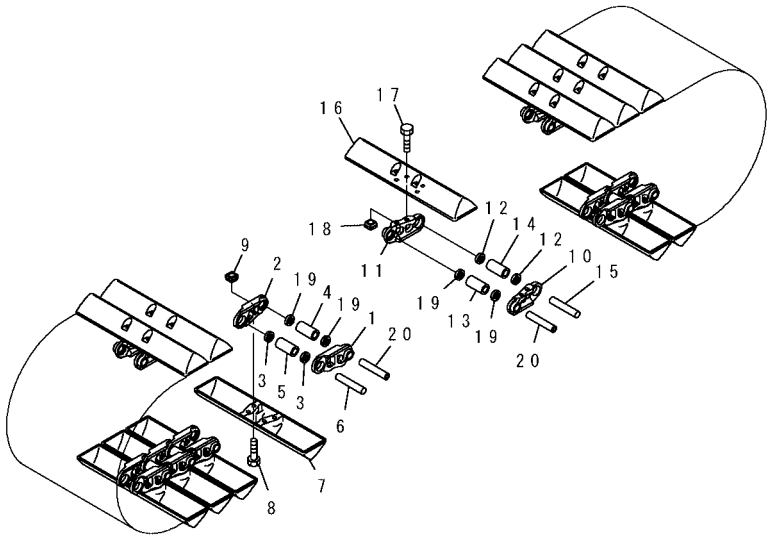

PW1A007

(PC200,210-7)

INDEX	PART NO.	DESCRIPTION	Q'TY	SERIAL NO.
	20Y-32-02060	TRACK SHOE ASS' Y	1	DBB0001~
1	20Y-32-31120	. LIND, L. H	44	DBB0001~
2	20Y-32-31130	. LINK, R. H	44	DBB0001~
3	20Y-32-11240	. SEAL	84	DBB0001~
4	20Y-32-11171	. BUSHING, MASTER	2	DBB0001~
5	20Y-32-11141	. BUSHING, MASTER	42	DBB0001~
6	20Y-32-31150	. PIN	42	DBB0001~
7	20Y-32-11340	. SHOE	44	DBB0001~
8	20Y-32-11230	. BOLT	176	DBB0001~
9	134-32-61221	. NUT	176	DBB0001~
10	20Y-32-31120	. LINK, L. H	46	DBB0001~
11	20Y-32-31130	. LINK, R. H	46	DBB0001~
12	20Y-32-11240	. SEAL	88	DBB0001~
13	20Y-32-11171	. BUSHING, MASTER	2	DBB0001~
14	20Y-32-11141	. BUSHING, REGULAR	44	DBB0001~
15	20Y-32-31150	. PIN	44	DBB0001~
16	20Y-32-11340	. SHOE	46	DBB0001~
17	20Y-32-11230	. SHOE	184	DBB0001~
18	134-32-61221	. BOLT	184	DBB0001~
19	20Y-32-11260	. SEAL	8	DBB0001~
20	20Y-32-31190	. PIN	4	DBB0001~

FIG. R0500-01A1 TRACK SHOE (FLAT TYPE) (610 mm WIDE) (OPT)

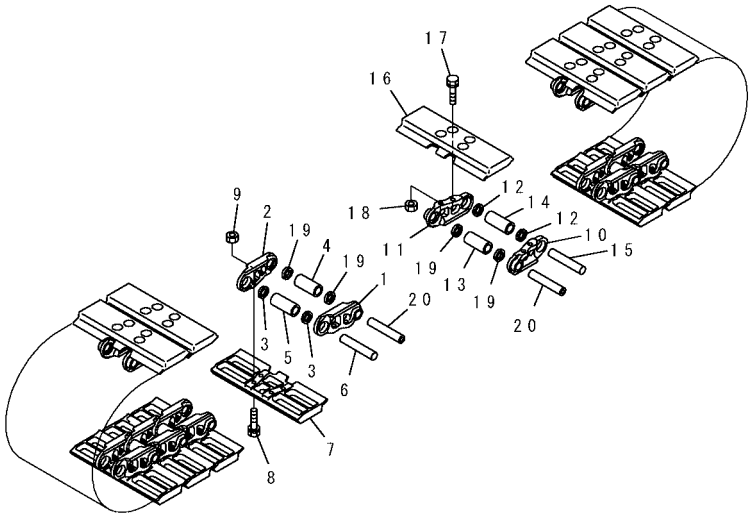

PW1A008

(PC200, 210-7)

INDEX	PART NO.	DESCRIPTION	Q'TY	SERIAL NO.
	20Y-32-02070	TRACK SHOE ASS' Y	1	DBB0001~
1	20Y-32-31120	. LINK, L. H	44	DBB0001~
2	20Y-32-31130	. LINK, R. H	44	DBB0001~
3	20Y-32-11240	. SEAL	84	DBB0001~
4	20Y-32-11171	. BUSHING, MASTER	2	DBB0001~
5	20Y-32-11141	. BUSHING, REGULAR	42	DBB0001~
6	20Y-32-31150	. PIN	42	DBB0001~
7	20Y-32-11350	. SHOE	44	DBB0001~
8	20Y-32-11220	. BOLT, SHOE	176	DBB0001~
9	134-32-61221	. NUT	176	DBB0001~
10	20Y-32-31120	. LINK, L. H	46	DBB0001~
11	20Y-32-31130	. LINK, R. H	46	DBB0001~
12	20Y-32-11240	. SEAL	88	DBB0001~
13	20Y-32-11171	. BUSHING, MASTER	2	DBB0001~
14	20Y-32-11141	. BUSHING, REGULAR	44	DBB0001~
15	20Y-32-31150	. PIN	44	DBB0001~
16	20Y-32-11350	. SHOE	46	DBB0001~
17	20Y-32-11220	. BOLT, SHOE	184	DBB0001~
18	134-32-61221	. NUT	184	DBB0001~
19	20Y-32-11260	. SEAL	8	DBB0001~
20	20Y-32-31190	. PIN	4	DBB0001~

FIG. R0500-01A2 TRACK SHOE (ROADLINER) (600 mm WIDE) (OPT)

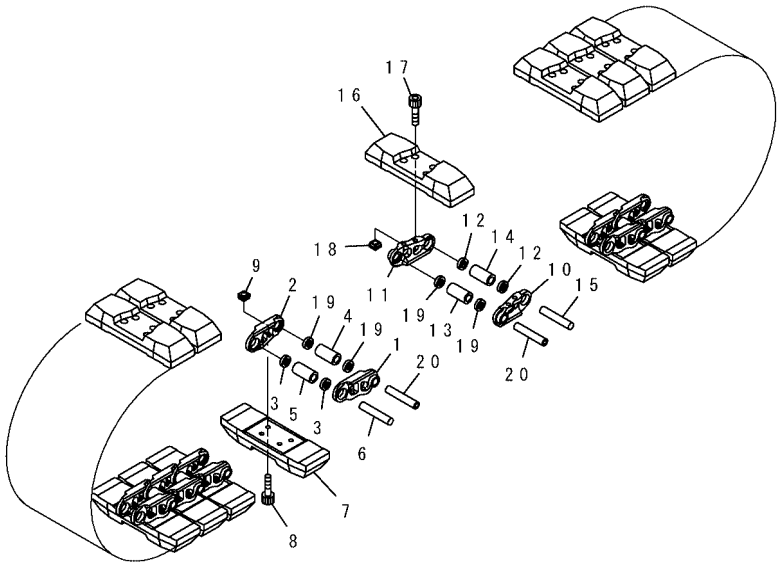

PW1A085

(PC200, 210-7)

INDEX	PART NO.	DESCRIPTION	Q'TY	SERIAL NO.
	20Y-32-02082	TRACK SHOE ASS' Y	1	DBB0001~
1	20Y-32-31120	. LINK, L. H	44	DBB0001~
2	20Y-32-31130	. LINK, R. H	44	DBB0001~
3	20Y-32-11240	. SEAL	84	DBB0001~
4	20Y-32-11171	. BUSHING, MASTER	2	DBB0001~
5	20Y-32-11141	. BUSHING, REGULAR	42	DBB0001~
6	20Y-32-31150	. PIN	42	DBB0001~
7	20Y-32-11510	. SHOE, RUBBER	44	DBB0001~
8	20Y-32-31231	. BOLT, SHOE	176	DBB0001~
9	134-32-61221	. NUT	176	DBB0001~
10	20Y-32-31120	. LINK, L. H	46	DBB0001~
11	20Y-32-31130	. LINK, R. H	46	DBB0001~
12	20Y-32-11240	. SEAL	88	DBB0001~
13	20Y-32-11171	. BUSHING, MASTER	2	DBB0001~
14	20Y-32-11141	. BUSHING, REGULAR	44	DBB0001~
15	20Y-32-31150	. PIN	44	DBB0001~
16	20Y-32-11510	. SHOE, RUBBER	46	DBB0001~
17	20Y-32-31231	. BOLT, SHOE	184	DBB0001~
18	134-32-61221	. NUT	184	DBB0001~
19	20Y-32-11260	. SEAL	8	DBB0001~
20	20Y-32-31190	. PIN	4	DBB0001~

FIG. R0500-01A4 TRACK SHOE (TRIPLE GROUSER WITH HOLE) (600 mm WIDE)

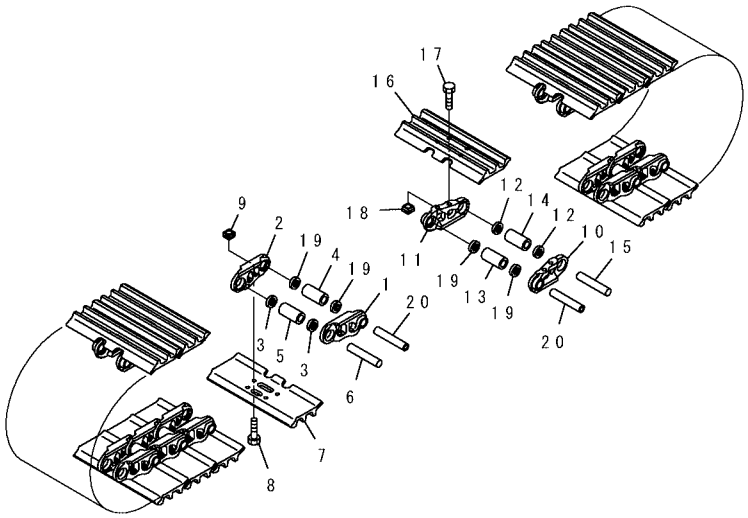

PW1A006

(PC200, 210-7)

INDEX	PART NO.	DESCRIPTION	Q'TY	SERIAL NO.
	20Y-32-02051	TRACK SHOE ASS' Y	1	DBB0001~
1	20Y-32-31120	. LINK, L. H	44	DBB0001~
2	20Y-32-31130	. LINK, R. H	44	DBB0001~
3	20Y-32-11240	. SEAL	84	DBB0001~
4	20Y-32-11171	. BUSHING, MASTER	2	DBB0001~
5	20Y-32-11141	. BUSHING, REGULAR	42	DBB0001~
6	20Y-32-31150	. PIN	42	DBB0001~
7	20Y-32-21110	. SHOE	44	DBB0001~
8	20Y-32-31210	. BOLT, SHOE	176	DBB0001~
9	134-32-61221	. NUT	176	DBB0001~
10	20Y-32-31120	. LINK, L. H	46	DBB0001~
11	20Y-32-31130	. LINK, R. H	46	DBB0001~
12	20Y-32-11240	. SEAL	88	DBB0001~
13	20Y-32-11171	. BUSHING, MASTER	2	DBB0001~
14	20Y-32-11141	. BUSHING, REGULAR	44	DBB0001~
15	20Y-32-31150	. PIN	44	DBB0001~
16	20Y-32-21110	. SHOE	46	DBB0001~
17	20Y-32-31210	. BOLT, SHOE	184	DBB0001~
18	134-32-61221	. NUT	184	DBB0001~
19	20Y-32-11260	. SEAL	8	DBB0001~
20	20Y-32-31190	. PIN	4	DBB0001~

FIG. R0500-01A5 TRACK SHOE (TRIPLE GROUSER WITH HOLE) (700 mm WIDE) (OPT)

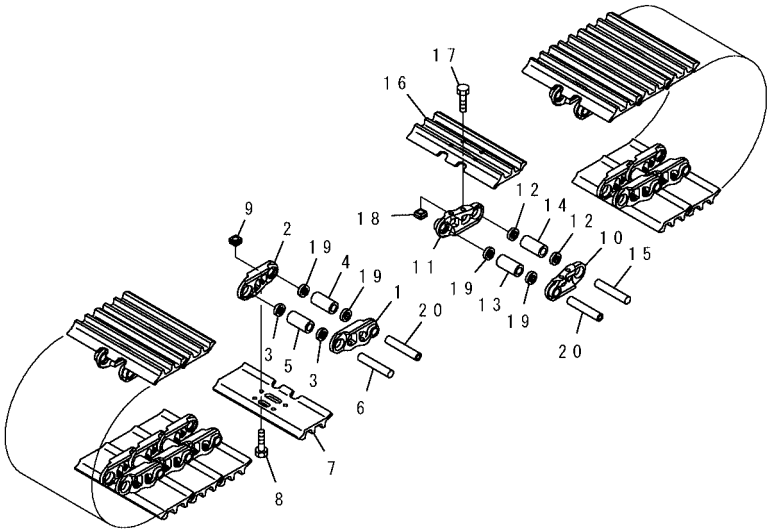

PW1A006

(PC200, 210-7)

INDEX	PART NO.	DESCRIPTION	Q'TY	SERIAL NO.
	20Y-32-02031	TRACK SHOE ASS' Y	1	DBB0001~
1	20Y-32-31120	. LINK, L. H	44	DBB0001~
2	20Y-32-31130	. LINK, R. H	44	DBB0001~
3	20Y-32-11240	. SEAL	84	DBB0001~
4	20Y-32-11171	. BUSHING, MASTER	2	DBB0001~
5	20Y-32-11141	. BUSHING, REGULAR	42	DBB0001~
6	20Y-32-31150	. PIN	42	DBB0001~
7	20Y-32-31310	. SHOE	44	DBB0001~
8	20Y-32-31210	. BOLT, SHOE	176	DBB0001~
9	134-32-61221	. NUT	176	DBB0001~
10	20Y-32-31120	. LINK, L. H	46	DBB0001~
11	20Y-32-31130	. LINK, R. H	46	DBB0001~
12	20Y-32-11240	. SEAL	88	DBB0001~
13	20Y-32-11171	. BUSHING, MASTER	2	DBB0001~
14	20Y-32-11141	. BUSHING, REGULAR	44	DBB0001~
15	20Y-32-31150	. PIN	44	DBB0001~
16	20Y-32-31310	. SHOE	46	DBB0001~
17	20Y-32-31210	. BOLT, SHOE	184	DBB0001~
18	134-32-61221	. NUT	184	DBB0001~
19	20Y-32-11260	. SEAL	8	DBB0001~
20	20Y-32-31190	. PIN	4	DBB0001~

FIG. R0500-01A6 TRACK SHOE (TRIPLE GROUSER WITH HOLE) (800 mm WIDE) (OPT)

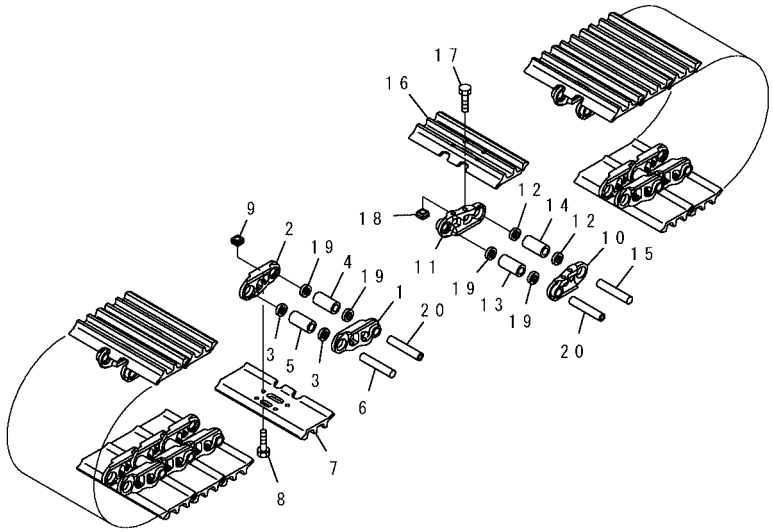

PW1A006

(PC200, 210-7)

INDEX	PART NO.	DESCRIPTION	Q'TY	SERIAL NO.
	20Y-32-02041	TRACK SHOE ASS' Y	1	DBB0001~
1	20Y-32-31120	. LINK, L. H	44	DBB0001~
2	20Y-32-31130	. LINK, R. H	44	DBB0001~
3	20Y-32-11240	. SEAL	84	DBB0001~
4	20Y-32-11171	. BUSHING, MASTER	2	DBB0001~
5	20Y-32-11141	. BUSHING, REGULAR	42	DBB0001~
6	20Y-32-31150	. PIN	42	DBB0001~
7	20Y-32-31320	. SHOE	44	DBB0001~
8	20Y-32-31210	. BOLT, SHOE	176	DBB0001~
9	134-32-61221	. NOT	176	DBB0001~
10	20Y-32-31120	. LINK, L. H	46	DBB0001~
11	20Y-32-31130	. LINK, R. H	46	DBB0001~
12	20Y-32-11240	. SEAL	88	DBB0001~
13	20Y-32-11171	. BUSHING, MASTER	2	DBB0001~
14	20Y-32-11141	. BUSHING, REGULAR	44	DBB0001~
15	20Y-32-31150	. PIN	44	DBB0001~
16	20Y-32-31320	. SHOE	46	DBB0001~
17	20Y-32-31210	. BOLT, SHOE	184	DBB0001~
18	134-32-61221	. NUT	184	DBB0001~
19	20Y-32-11260	. SEAL	8	DBB0001~
20	20Y-32-31190	. PIN	4	DBB0001~

FIG. R0500-01A7 TRACK SHOE (TRIPLE GROUSER) (HOLES TO EQUIP WITH CITY PAD) (OPT)

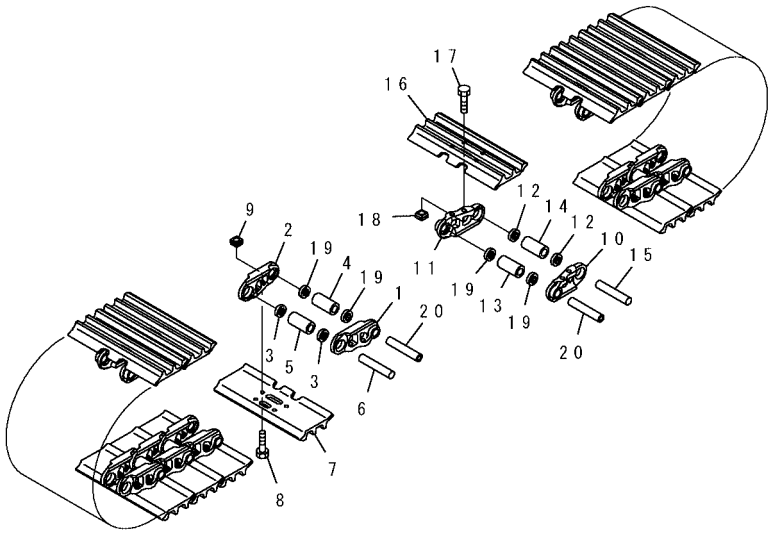

PW1A750

(PC200, 210-7)

INDEX	PART NO.	DESCRIPTION	Q'TY	SERIAL NO.
	20Y-32-02221	TRACK SHOE ASS' Y	1	DBB0001~
1	20Y-32-31120	. LINK, L. H	44	DBB0001~
2	20Y-32-31130	. LINK, R. H	44	DBB0001~
3	20Y-32-11240	. SEAL	84	DBB0001~
4	20Y-32-11171	. BUSHING, MASTER	2	DBB0001~
5	20Y-32-11141	. BUSHING, REGULAR	42	DBB0001~
6	20Y-32-31150	. PIN	42	DBB0001~
7	20Y-32-31110	. SHOE	44	DBB0001~
8	20Y-32-31210	. BOLT, SHOE	176	DBB0001~
9	134-32-61221	. NUT	176	DBB0001~
10	20Y-32-31120	. LINK, L. H	46	DBB0001~
11	20Y-32-31130	. LINK, R. H	46	DBB0001~
12	20Y-32-11240	. SEAL	88	DBB0001~
13	20Y-32-11171	. BUSHING, MASTER	2	DBB0001~
14	20Y-32-11141	. BUSHING, REGULAR	44	DBB0001~
15	20Y-32-31150	. PIN	44	DBB0001~
16	20Y-32-31110	. SHOE	46	DBB0001~
17	20Y-32-31210	. BOLT, SHOE	184	DBB0001~
18	134-32-61221	. NUT	184	DBB0001~
19	20Y-32-11260	. SEAL	8	DBB0001~
20	20Y-32-31190	. PIN	4	DBB0001~

FIG. R0500-01A8 TRACK SHOE (SWAMP TYPE) (860 mm WIDE) (OPT)

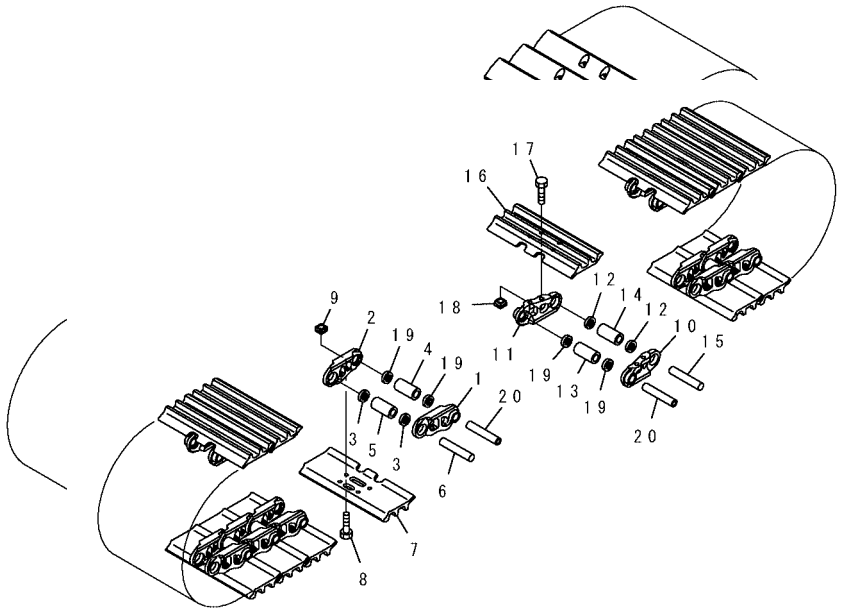

PW1A007

(PC200LC, 210LC-7)

INDEX	PART NO.	DESCRIPTION	Q'TY	SERIAL NO.
	20Y-32-02140	TRACK SHOE ASS' Y	1	DBE0001~
1	20Y-32-31120	. LINK, L. H	48	DBE0001~
2	20Y-32-31130	. LINK, R. H	48	DBE0001~
3	20Y-32-11240	. SEAL	92	DBE0001~
4	20Y-32-11171	. BUSHING, MASTER	2	DBE0001~
5	20Y-32-11141	. BUSHING, REGULAR	46	DBE0001~
6	20Y-32-31150	. PIN	46	DBE0001~
7	20Y-32-11340	. SHOE	48	DBE0001~
8	20Y-32-11230	. BOLT	192	DBE0001~
9	134-32-61221	. NUT	192	DBE0001~
10	20Y-32-31120	. LINK, L. H	50	DBE0001~
11	20Y-32-31130	. LINK, R. H	50	DBE0001~
12	20Y-32-11240	. SEAL	96	DBE0001~
13	20Y-32-11171	. BUSHING, MASTER	2	DBE0001~
14	20Y-32-11141	. BUSHING, REGULAR	48	DBE0001~
15	20Y-32-31150	. PIN	48	DBE0001~
16	20Y-32-11340	. SHOE	50	DBE0001~
17	20Y-32-11230	. BOLT	200	DBE0001~
18	134-32-61221	. NUT	200	DBE0001~
19	20Y-32-11260	. SEAL	8	DBE0001~
20	20Y-32-31190	. PIN	4	DBE0001~

FIG. R0500-01B1 TRACK SHOE (TRIPLE GROUSER WITH HOLE) (600 MM WIDE)

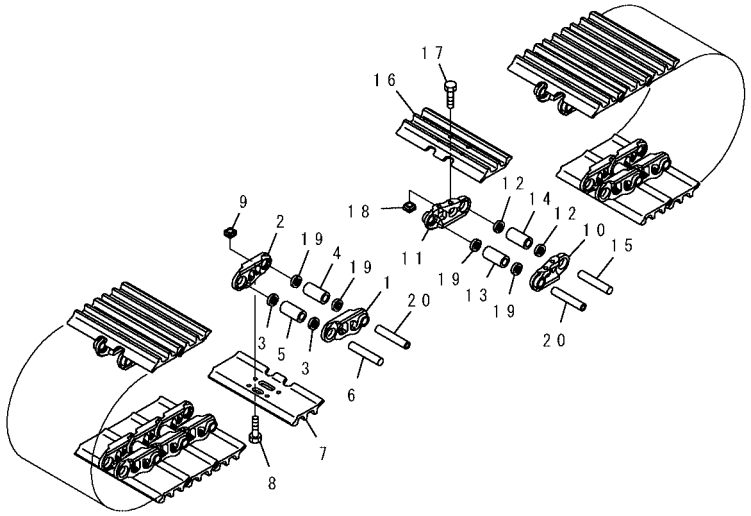

PW1A006

(PC200LC, 210LC-7)

INDEX	PART NO.	DESCRIPTION	Q'TY	SERIAL NO.
	20Y-32-02250	TRACK SHOE ASS' Y	1	DBE0001~
1	20Y-32-31120	. LINK, L. H	48	DBE0001~
2	20Y-32-31130	. LINK, R. H	48	DBE0001~
3	20Y-32-11240	. SEAL	92	DBE0001~
4	20Y-32-11171	. BUSHING, MASTER	2	DBE0001~
5	20Y-32-11141	. BUSHING, REGULAR	46	DBE0001~
6	20Y-32-31150	. PIN	46	DBE0001~
7	20Y-32-21110	. SHOE	48	DBE0001~
8	20Y-32-31210	. BOLT, SHOE	192	DBE0001~
9	134-32-61221	. NUT	192	DBE0001~
10	20Y-32-31120	. LINK, L. H	50	DBE0001~
11	20Y-32-31130	. LINK, R. H	50	DBE0001~
12	20Y-32-11240	. SEAL	96	DBE0001~
13	20Y-32-11171	. BUSHING, MASTER	2	DBE0001~
14	20Y-32-11141	. BUSHING, REGULAR	48	DBE0001~
15	20Y-32-31150	. PIN	48	DBE0001~
16	20Y-32-21110	. SHOE	50	DBE0001~
17	20Y-32-31210	. BOLT, SHOE	200	DBE0001~
18	134-32-61221	. NUT	200	DBE0001~
19	20Y-32-11260	. SEAL	8	DBE0001~
20	20Y-32-31190	. PIN	4	DBE0001~

FIG. R0500-01B2 TRACK SHOE (TRIPLE GROUSER WITH HOLE) (700 MM WIDE) (OPT)

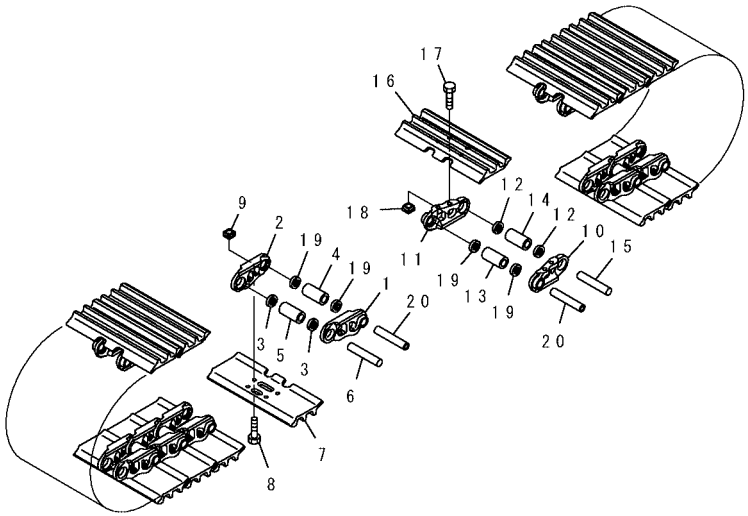

PW1A006

(PC200LC, 210LC-7)

INDEX	PART NO.	DESCRIPTION	Q'TY	SERIAL NO.
	20Y-32-02111	TRACK SHOE ASS' Y	1	DBE0001~
1	20Y-32-31120	. LINK, L. H	48	DBE0001~
2	20Y-32-31130	. LINK, R. H	48	DBE0001~
3	20Y-32-11240	. SEAL	92	DBE0001~
4	20Y-32-11171	. BUSHING, MASTER	2	DBE0001~
5	20Y-32-11141	. BUSHING, REGULAR	46	DBE0001~
6	20Y-32-31150	. PIN	46	DBE0001~
7	20Y-32-31310	. SHOE	48	DBE0001~
8	20Y-32-31210	. BOLT, SHOE	192	DBE0001~
9	134-32-61221	. NUT	192	DBE0001~
10	20Y-32-31120	. LINK, L. H	50	DBE0001~
11	20Y-32-31130	. LINK, R. H	50	DBE0001~
12	20Y-32-11240	. SEAL	96	DBE0001~
13	20Y-32-11171	. BUSHING, MASTER	2	DBE0001~
14	20Y-32-11141	. BUSHING, REGULAR	48	DBE0001~
15	20Y-32-31150	. PIN	48	DBE0001~
16	20Y-32-31310	. SHOE	50	DBE0001~
17	20Y-32-31210	. BOLT, SHOE	200	DBE0001~
18	134-32-61221	. NUT	200	DBE0001~
19	20Y-32-11260	. SEAL	8	DBE0001~
20	20Y-32-31190	. PIN	4	DBE0001~

FIG. R0500-01B3 TRACK SHOE (TRIPLE GROUSER WITH HOLE) (800 MM WIDE) (OPT)

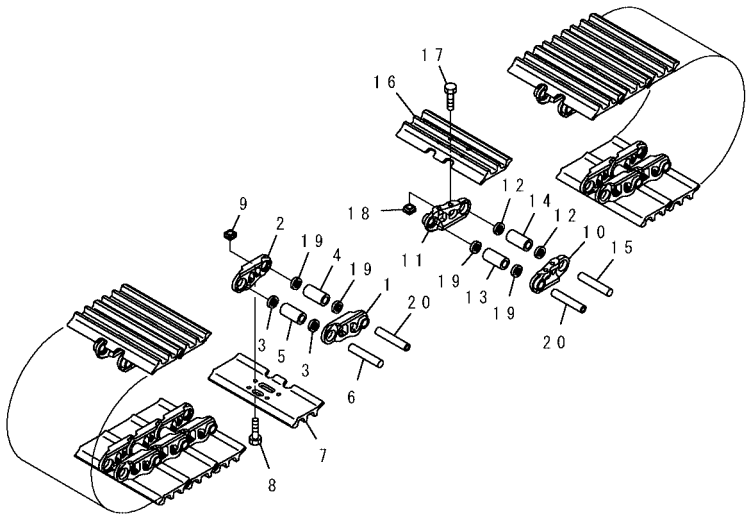

PW1A006

(PC200LC, 210LC-7)

INDEX	PART NO.	DESCRIPTION	Q'TY	SERIAL NO.
	20Y-32-02121	TRACK SHOE ASS' Y	1	DBE0001~
1	20Y-32-31120	. LINK, L. H	48	DBE0001~
2	20Y-32-31130	. LINK, R. H	48	DBE0001~
3	20Y-32-11240	. SEAL	92	DBE0001~
4	20Y-32-11171	. BUSHING, MASTER	2	DBE0001~
5	20Y-32-11141	. BUSHING, REGULAR	46	DBE0001~
6	20Y-32-31150	. PIN	46	DBE0001~
7	20Y-32-31320	. SHOE	48	DBE0001~
8	20Y-32-31210	. BOLT, SHOE	192	DBE0001~
9	134-32-61221	. NUT	192	DBE0001~
10	20Y-32-31120	. LINK, L. H	50	DBE0001~
11	20Y-32-31130	. LINK, R. H	50	DBE0001~
12	20Y-32-11240	. SEAL	96	DBE0001~
13	20Y-32-11171	. BUSHING, MASTER	2	DBE0001~
14	20Y-32-11141	. BUSHING, REGULAR	48	DBE0001~
15	20Y-32-31150	. PIN	48	DBE0001~
16	20Y-32-31320	. SHOE	50	DBE0001~
17	20Y-32-31210	. BOLT, SHOE	200	DBE0001~
18	134-32-61221	. NUT	200	DBE0001~
19	20Y-32-11260	. SEAL	8	DBE0001~
20	20Y-32-31190	. PIN	4	DBE0001~

FIG. R1100-01A0 TRACK FRAME

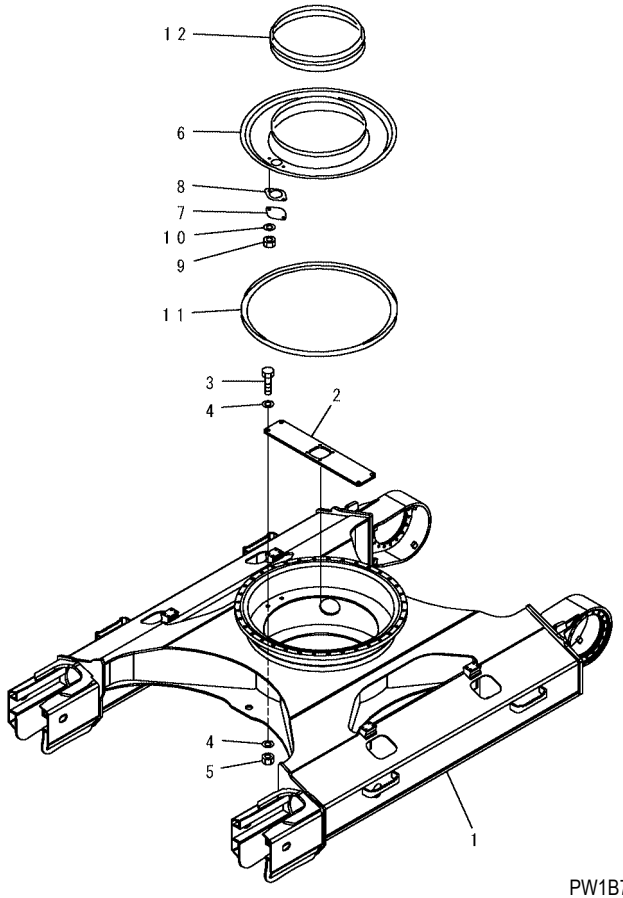

PW1B767

FIG NO. : R1100-01A0

(PC200, 210-7)

INDEX	PART NO.	DESCRIPTION	Q'TY	SERIAL NO.
1	20Y-30-D1340	TRACK FRAME	1	DBB0001~
2	20Y-30-31E81	PLATE	1	DBB0001~
3	01010-82065	BOLT	4	DBB0001~
4	01643-32060	WASHER	8	DBB0001~
5	01580-12016	NUT	4	DBB0001~
6	20Y-30-21151	COVER	1	DBB0001~
7	205-30-71181	COVER	1	DBB0001~
8	205-30-71191	GASKET	1	DBB0001~
9	01580-11008	NUT	2	DBB0001~
10	01643-31032	WASHER	2	DBB0001~
11	20Y-30-11370	SEAL	1	DBB0001~
12	205-30-71171	SEAL	1	DBB0001~

FIG. R1100-01A1 TRACK FRAME

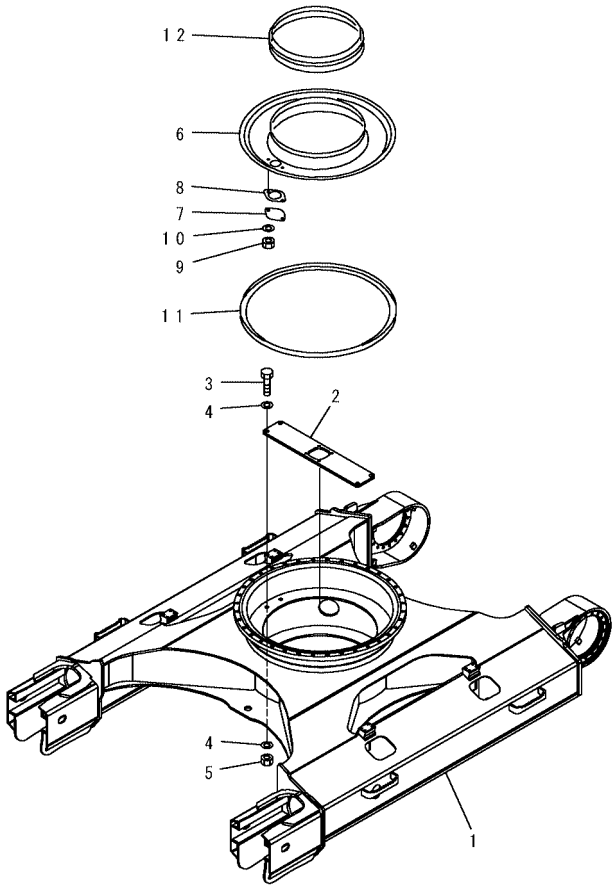

PW1B767

(PC200LC, 210LC-7)

INDEX	PART NO.	DESCRIPTION	Q'TY	SERIAL NO.
1	20Y-30-D1350	TRACK FRAME	1	DBE0001~
2	20Y-30-31E81	PLATE	1	DBE0001~
3	01010-82065	BOLT	4	DBE0001~
4	01643-32060	WASHER	8	DBE0001~
5	01580-12016	NUT	4	DBE0001~
6	20Y-30-21151	COVER	1	DBE0001~
7	205-30-71181	COVER	1	DBE0001~
8	205-30-71191	GASKET	1	DBE0001~
9	01580-11008	NUT	2	DBE0001~
10	01643-31032	WASHER	2	DBE0001~
11	20Y-30-11370	SEAL	1	DBE0001~
12	205-30-71171	SEAL	1	DBE0001~

FIG. R1100-01A2 TRACK FRAME (WITH UNDER COVER) (OPT)

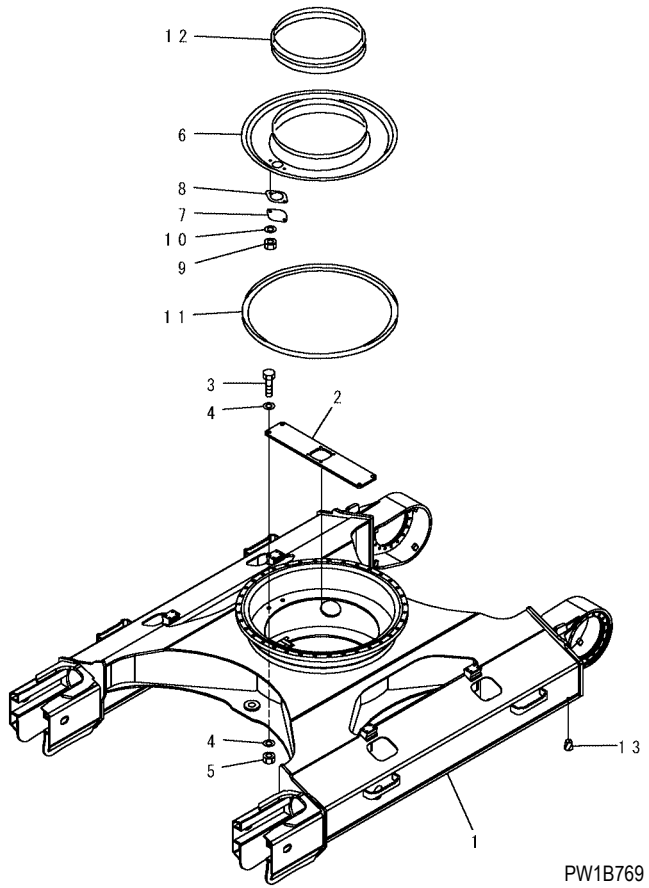

(PC200, 210-7)

INDEX	PART NO.	DESCRIPTION	Q'TY	SERIAL NO.
1	20Y-30-31411	TRACK FRAME	1	DBB0001~
2	20Y-30-31E81	PLATE	1	DBB0001~
3	01010-82065	BOLT	4	DBB0001~
4	01643-32060	WASHER	8	DBB0001~
5	01580-12016	NUT	4	DBB0001~
6	20Y-30-21151	COVER	1	DBB0001~
7	205-30-71181	COVER	1	DBB0001~
8	205-30-71191	GASKET	1	DBB0001~
9	01580-11008	NUT	2	DBB0001~
10	01643-31032	WASHER	2	DBB0001~
11	20Y-30-11370	SEAL	1	DBB0001~
12	205-30-71171	SEAL	1	DBB0001~
13	07049-02025	PLUG	24	DBB0001~

FIG. R1100-01A3 TRACK FRAME (WITH UNDER COVER) (OPT)

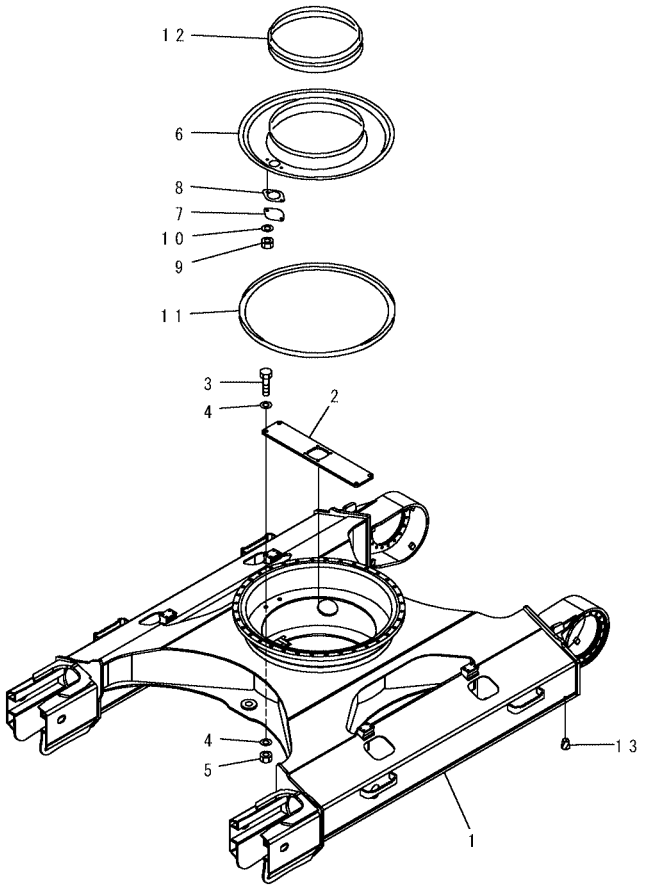

PW1B769

(PC200LC, 210LC-7)

INDEX	PART NO.	DESCRIPTION	Q'TY	SERIAL NO.
1	20Y-30-35410	TRACK FRAME	1	DBE0001~
2	20Y-30-31E81	PLATE	1	DBE0001~
3	01010-82065	BOLT	4	DBE0001~
4	01643-32060	WASHER	8	DBE0001~
5	01580-12016	NUT	4	DBE0001~
6	20Y-30-21151	COVER	1	DBE0001~
7	205-30-71181	COVER	1	DBE0001~
8	205-30-71191	GASKET	1	DBE0001~
9	01580-11008	NUT	2	DBE0001~
10	01643-31032	WASHER	2	DBE0001~
11	20Y-30-11370	SEAL	1	DBE0001~
12	205-30-71171	SEAL	1	DBE0001~
13	07049-02025	PLUG	32	DBE0001~

FIG. R1140-01A0 UNDER COVER (FOR TRACK FRAME) (OPT)

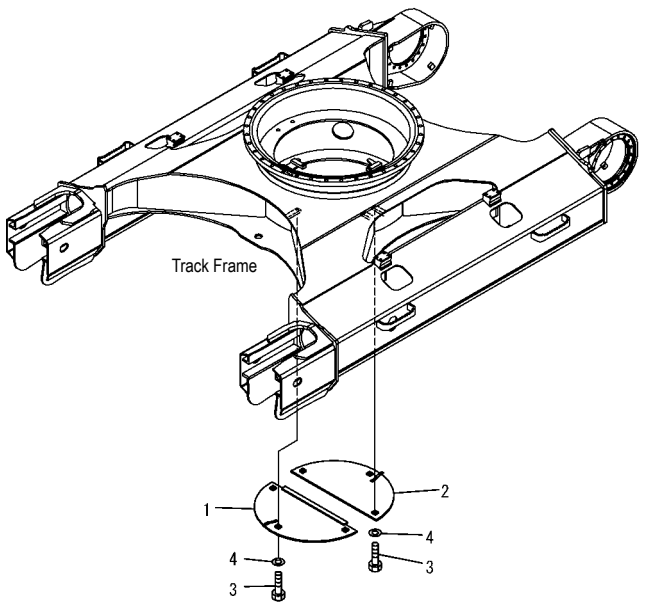

PW1B770

FIG NO. : R1140-01A0

INDEX	PART NO.	DESCRIPTION	Q'TY	SERIAL NO.
1	20Y-973-2220	COVER	1	DBB0001~
2	20Y-973-2230	COVER	1	DBB0001~
3	01010-81235	BOLT	6	DBB0001~
4	01643-31232	WASHER	6	DBB0001~

FIG. R1200-01A1 TRACK ROLLER GUARD

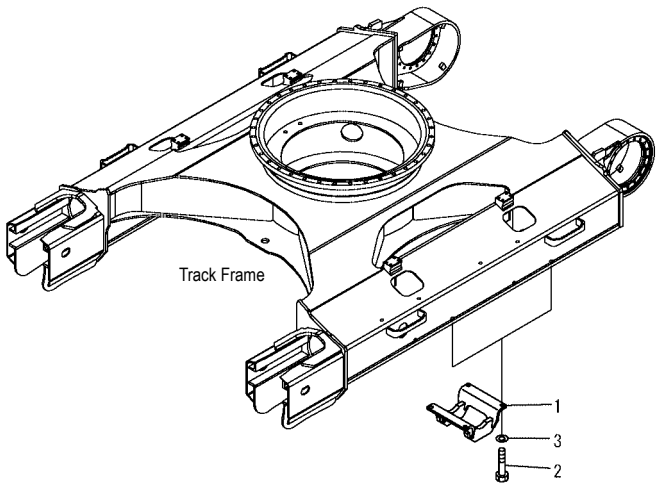

PW1B775

FIG NO. : R1200-01A1

(PC200, 210-7)

INDEX	PART NO.	DESCRIPTION	Q'TY	SERIAL NO.
1	20Y-30-31160	GUARD	4	DBB0001~
2	01010-62050	BOLT	16	DBB0001~
3	01643-32060	WASHER	16	DBB0001~

FIG. R1200-01A2 TRACK FULL ROLLER GUARD (OPT)

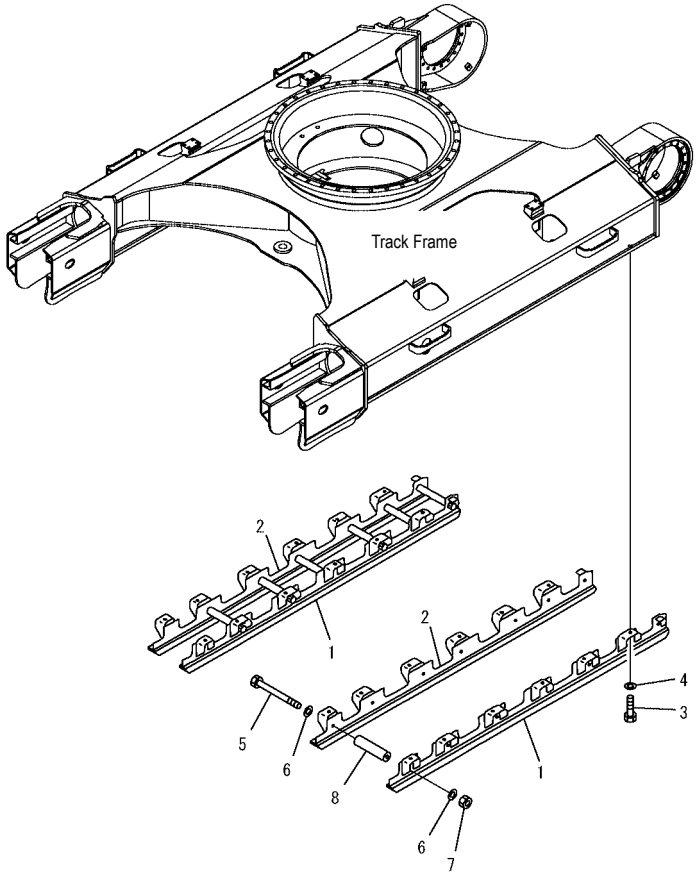

PW1C051

(PC200, 210-7)

INDEX	PART NO.	DESCRIPTION	Q'TY	SERIAL NO.
1	20Y-30-31170	GUARD, L. H	2	DBB0001~
2	20Y-30-31180	GUARD, R. H	2	DBB0001~
3	01010-62050	BOLT	24	DBB0001~
4	01643-32060	WASHER	24	DBB0001~
5	09205-18295	BOLT	14	DBB0001~
6	01643-31845	WASHER	28	DBB0001~
7	01580-11815	NUT	14	DBB0001~
8	20Y-30-23140	COLLAR	14	DBB0001~

FIG. R1200-01A3 TRACK FULL ROLLER GUARD (OPT)

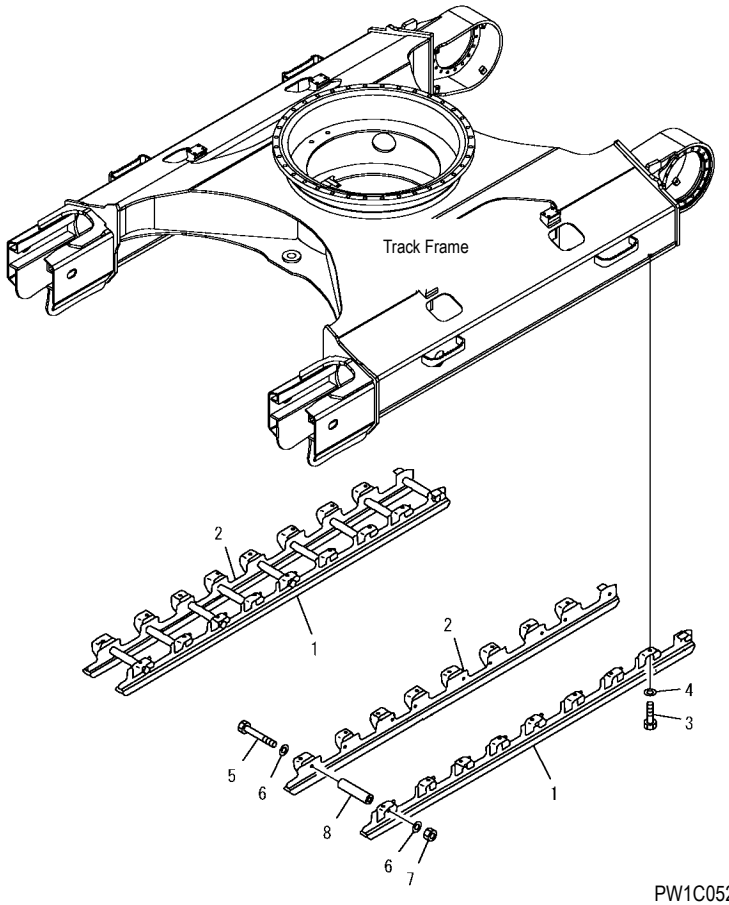

PW1C052

(PC200LC, 210LC-7)

INDEX	PART NO.	DESCRIPTION	Q'TY	SERIAL NO.
1	20Y-30-35170	GUARD, L. H	2	DBE0001~
2	20Y-30-35180	GUARD, R. H	2	DBE0001~
3	01010-62050	BOLT	32	DBE0001~
4	01643-32060	WASHER	32	DBE0001~
5	09205-18295	BOLT	18	DBE0001~
6	01643-31845	WASHER	36	DBE0001~
7	01580-11815	NUT	18	DBE0001~
8	20Y-30-23140	COLLAR	18	DBE0001~

WORK EQUIPMENT

FIG. T1110-01A1 BOOM

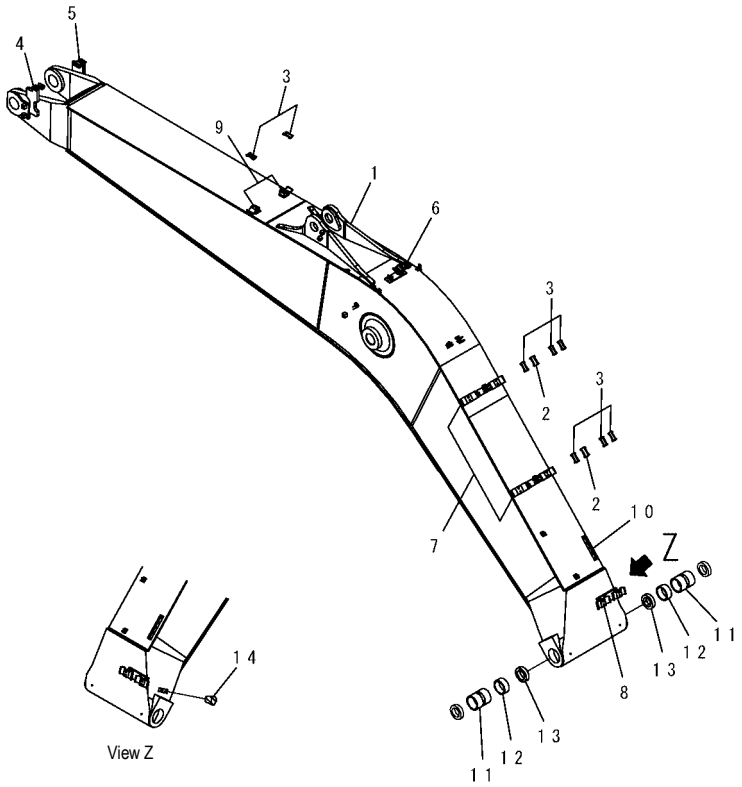

PW1B891

FIG NO. : T1110-01A1

INDEX	PART NO.	DESCRIPTION	Q'TY	SERIAL NO.
	20Y-70-D3200	BOOM	1	DBB0001~DBB4708
	20Y-70-D3201	BOOM	1	DBB4709~
1	20Y-70-D3131	. BOOM	1	DBB0001~DBB4708
	20Y-70-D3132	. BOOM	1	DBB4709~
2	205-62-73430	. SEAT	2	DBB0001~DBB4708
3	20Y-62-13760	. SEAT	8	DBB0001~DBB4708
4	20Y-62-45150	. BRACKET (WELDED)	1	DBB0001~
5	20Y-62-45160	. BRACKET (WELDED)	1	DBB0001~
6	20Y-62-45170	. BRACKET (WELDED)	1	DBB0001~
7	20Y-62-45181	. BRACKET (WELDED)	2	DBB0001~DBB4708
	20Y-62-45182	. BRACKET (WELDED)	2	DBB4709~
8	20Y-62-45210	. BRACKET (WELDED)	1	DBB0001~
9	20Y-62-45371	. BRACKET (WELDED)	2	DBB0001~
10	20Y-70-11651	. SEAT(WELDED)	1	DBB0001~
11	20Y-70-31261	BUSHING	2	DBB0001~
12	20Y-70-31490	BUSHING	2	DBB0001~
13	07145-00090	SEAL	2	DBB0001~
14	07049-01215	PLUG	2	DBB0001~DBB4708

FIG. T1110-02A0 BOOM (TOP PIN AND BOOTOM PIN)

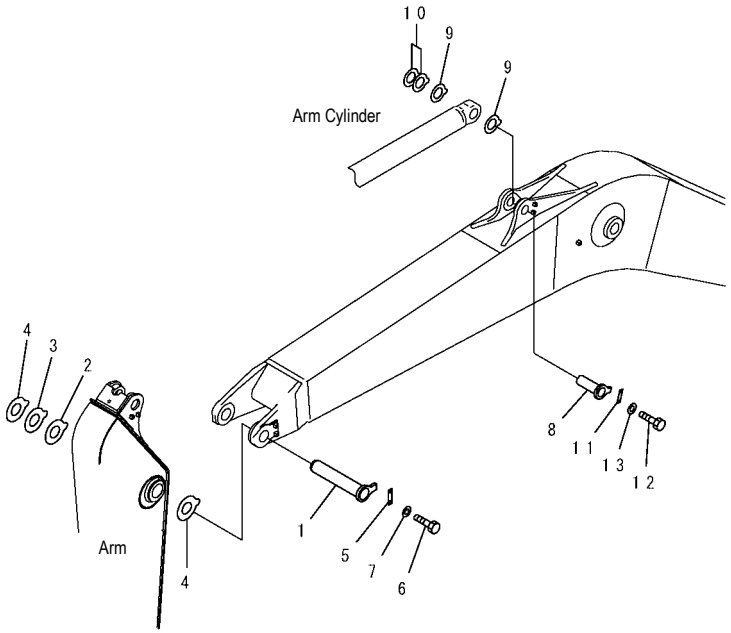

PW1B892

FIG NO. : T1110-02A0

INDEX	PART NO.	DESCRIPTION	Q'TY	SERIAL NO.
1	20Y-70-31251	PIN	1	DBB0001~DBB4708
	20Y-70-31252	PIN	1	DBB4709~
2	20Y-70-31521	SPACER, 2.5 MM	1	DBB0001~
3	20Y-70-31530	SPACER, 3.0 MM	1	DBB0001~
4	20Y-70-31371	SPACER, 2.0 MM	2	DBB0001~
5	205-70-71310	PLATE	1	DBB0001~DBB4708
	205-70-71312	PLATE	1	DBB4709~
6	01010-81235	BOLT	2	DBB0001~
7	01643-31232	WASHER	2	DBB0001~
8	20Y-70-11180	PIN	1	DBB0001~
9	20Y-70-31430	SPACER, 1.0 MM	2	DBB0001~
10	206-70-71450	SPACER, 2.0 MM	2	DBB0001~
11	205-70-66580	PLATE	1	DBB0001~
12	01010-81230	BOLT	2	DBB0001~
13	01643-31232	WASHER	2	DBB0001~

FIG. T1110-03A0 BOOM (ARM CYLINDER LINE AND BUCKET CYLINDER LINE)

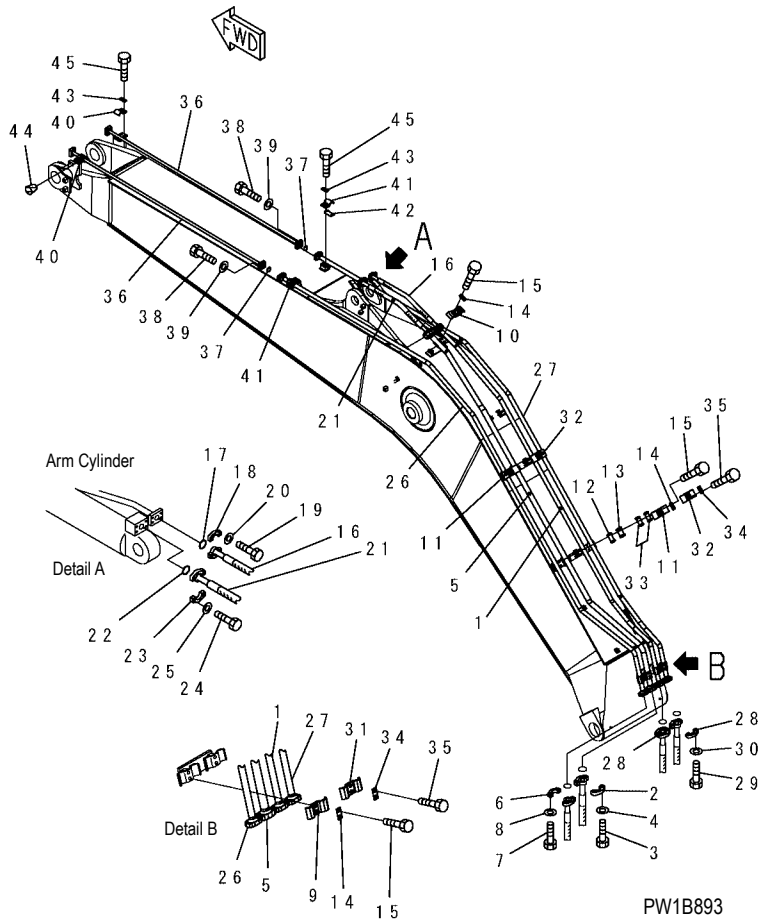

INDEX	PART NO.	DESCRIPTION	Q'TY	SERIAL NO.
1	20Y-62-45120	TUBE	1	DBB0001~
2	07371-30640	FLANGE	2	DBB0001~
3	07372-21035	BOLT	4	DBB0001~
4	01643-51032	WASHER	4	DBB0001~
5	20Y-62-45110	TUBE	1	DBB0001~
6	07371-31049	FLANGE	2	DBB0001~
7	07372-21035	BOLT	4	DBB0001~
8	01643-51032	WASHER	4	DBB0001~
9	20Y-62-13690	CLAMP	1	DBB0001~
10	20Y-62-13720	CLAMP	1	DBB0001~
11	20Y-62-13740	CLAMP	2	DBB0001~DBB4708
	20Y-62-13730	CLAMP	2	DBB4709~
12	20Y-62-13760	. SEAT	2	DBB0001~DBB4708
	20Y-62-13761	. SEAT	2	DBB4709~
13	205-62-73430	. SEAT	2	DBB0001~DBB4708
	205-62-73431	. SEAT	2	DBB4709~
14	20Y-62-13450	PLATE	4	DBB0001~
15	01010-81230	BOLT	8	DBB0001~
16	07074-00607	HOSE	1	DBB0001~
17	07000-13025	O-RING	2	DBB0001~
18	07371-30640	FLANGE	4	DBB0001~
19	07372-21035	BOLT	8	DBB0001~
20	01643-51032	WASHER	8	DBB0001~
21	07074-01007	HOSE	1	DBB0001~
22	07000-13032	O-RING	2	DBB0001~
23	07371-31049	FLANGE	4	DBB0001~
24	07372-21035	BOLT	8	DBB0001~
25	01643-51032	WASHER	8	DBB0001~
26	20Y-62-45130	TUBE	1	DBB0001~
27	20Y-62-45140	TUBE	1	DBB0001~
28	07371-30640	FLANGE	4	DBB0001~
29	07372-21035	BOLT	8	DBB0001~
30	01643-51032	WASHER	8	DBB0001~
31	20Y-62-13710	CLAMP	1	DBB0001~
32	20Y-62-13230	CLAMP	2	DBB0001~DBB4708
	20Y-62-13190	CLAMP	2	DBB4709
33	20Y-62-13760	. SEAT	2	DBB0001~DBB4708
	20Y-62-13761	. SEAT	2	DBB4709
34	20Y-62-13450	PLATE	3	DBB0001~
35	01010-81230	BOLT	6	DBB0001~

FIG. T1110-03A0 BOOM (ARM CYLINDER LINE AND BUCKET CYLINDER LINE)

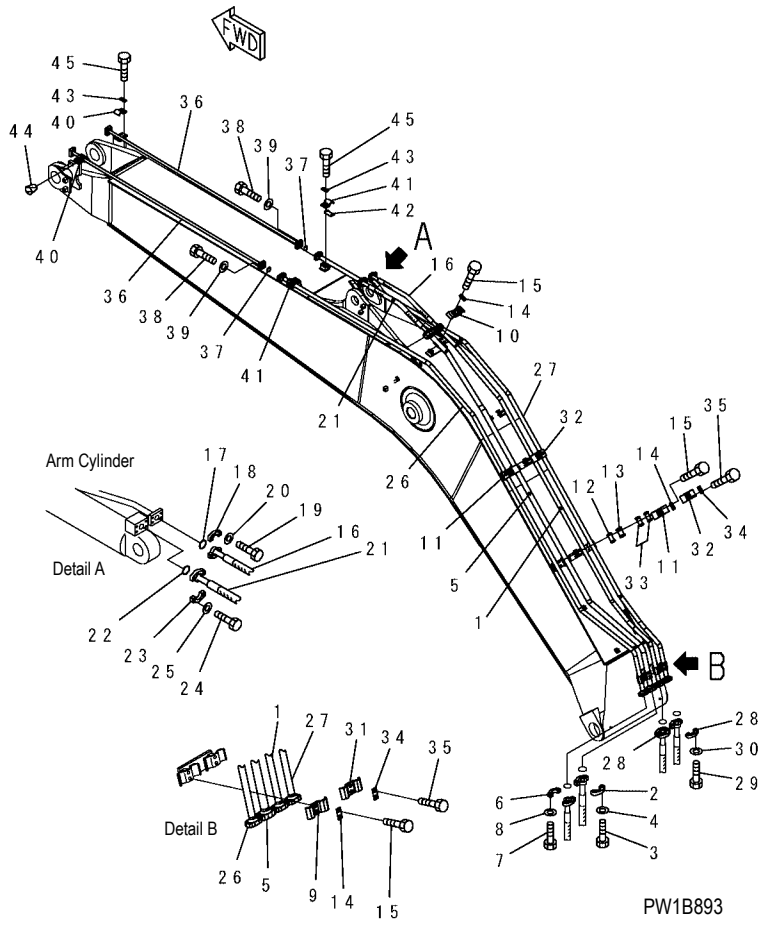

INDEX	PART NO.	DESCRIPTION	Q'TY	SERIAL NO.
36	20Y-62-13580	TUBE	2	DBB0001~
37	07000-13030	O-RING	2	DBB0001~
38	07372-21035	BOLT	8	DBB0001~
39	01643-51032	WASHER	8	DBB0001~
40	20Y-62-13650	CLAMP	2	DBB0001~
41	20Y-62-13220	CLAMP	2	DBB0001~DBB4708
	20Y-62-13180	CLAMP	2	DBB4709~
42	20Y-62-13760	. SEAT	1	DBB0001~DBB4708
	20Y-62-13761	. SEAT	1	DBB4709~
43	20Y-62-13450	PLATE	4	DBB0001~
44	07049-01215	PLUG	4	DBB0001~
45	01010-81230	BOLT	8	DBB0001~

FIG NO. : T1110-03A1

FIG. T1110-03A1 BOOM (FOR ADDITIONAL PIPING) (ARM CYLINDER LINE AND BUCKET CYLINDER LINE) (OPT)

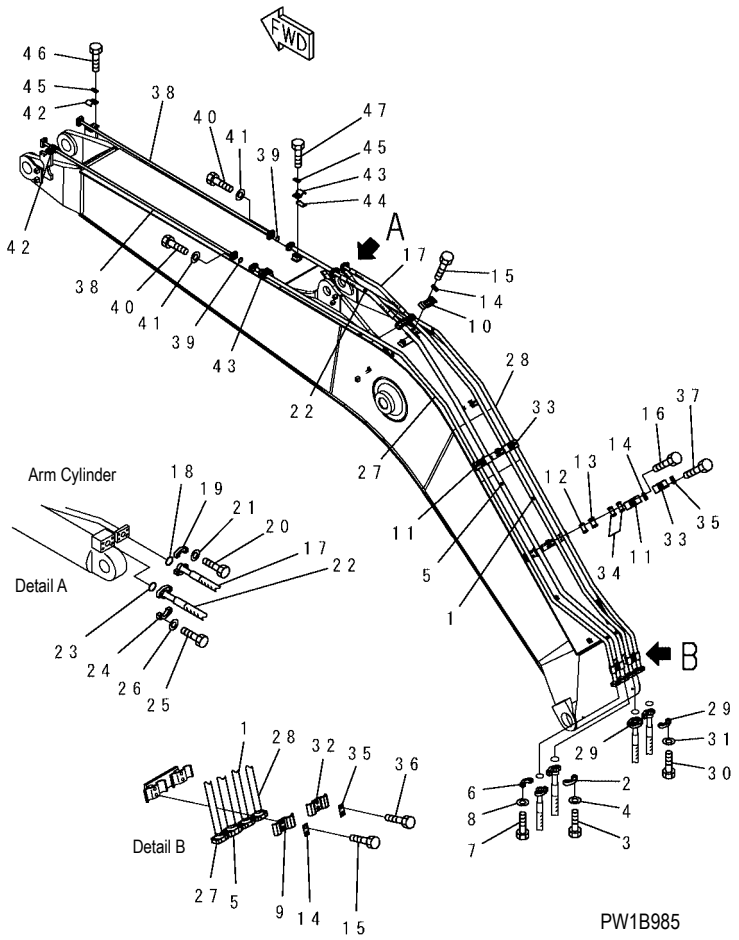

INDEX	PART NO.	DESCRIPTION	Q'TY	SERIAL NO.
1	20Y-62-45120	TUBE	1	DBB0001~
2	07371-30640	FLANGE	2	DBB0001~
3	07372-21035	BOLT	4	DBB0001~
4	01643-51032	WASHER	4	DBB0001~
5	20Y-62-45110	TUBE	1	DBB0001~
6	07371-31049	FLANGE	2	DBB0001~
7	07372-21035	BOLT	4	DBB0001~
8	01643-51032	WASHER	4	DBB0001~
9	20Y-62-13690	CLAMP	1	DBB0001~
10	20Y-62-13720	CLAMP	1	DBB0001~
11	20Y-62-13740	CLAMP	2	DBB0001~
12	20Y-62-13760	. SEAT	1	DBB0001~
13	205-62-73430	. SEAT	1	DBB0001~
14	20Y-62-13450	PLATE	4	DBB0001~
15	01010-81230	BOLT	4	DBB0001~
16	01010-81285	BOLT	4	DBB0001~
17	07074-00607	HOSE	1	DBB0001~
18	07000-13025	O-RING	2	DBB0001~
19	07371-30640	FLANGE	4	DBB0001~
20	07372-21035	BOLT	8	DBB0001~
21	01643-51032	WASHER	8	DBB0001~
22	07074-01007	HOSE	1	DBB0001~
23	07000-13032	O-RING	2	DBB0001~
24	07371-31049	FLANGE	4	DBB0001~
25	07372-21035	BOLT	8	DBB0001~
26	01643-51032	WASHER	8	DBB0001~
27	20Y-62-45130	TUBE	1	DBB0001~
28	20Y-62-45140	TUBE	1	DBB0001~
29	07371-30640	FLANGE	4	DBB0001~
30	07372-21035	BOLT	8	DBB0001~
31	01643-51032	WASHER	8	DBB0001~
32	20Y-62-13710	CLAMP	1	DBB0001~
33	20Y-62-13230	CLAMP	2	DBB0001~
34	20Y-62-13760	. SEAT	1	DBB0001~
35	20Y-62-13450	PLATE	3	DBB0001~
36	01010-81230	BOLT	2	DBB0001~
37	01010-81285	BOLT	4	DBB0001~
38	20Y-62-13580	TUBE	2	DBB0001~
39	07000-13030	O-RING	2	DBB0001~
40	07372-21035	BOLT	8	DBB0001~
41	01643-51032	WASHER	8	DBB0001~
42	20Y-62-13650	CLAMP	2	DBB0001~

FIG. T1110-03A1 BOOM (FOR ADDITIONAL PIPING) (ARM CYLINDER LINE AND BUCKET CYLINDER LINE) (OPT)

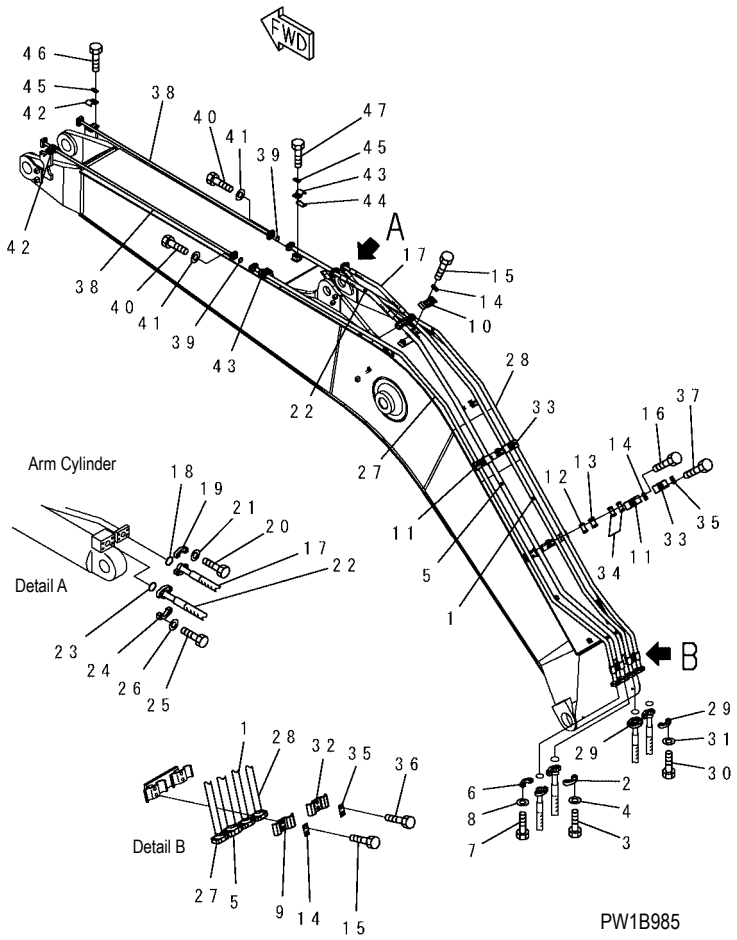

INDEX	PART NO.	DESCRIPTION	Q'TY	SERIAL NO.
43	20Y-62-13220	CLAMP	2	DBB0001~
44	20Y-62-13760	. SEAT	1	DBB0001~
45	20Y-62-13450	PLATE	4	DBB0001~
46	01010-81230	BOLT	4	DBB0001~
47	01010-81285	BOLT	4	DBB0001~

FIG. T1110-04A0A BOOM (LUBRICATING LINE AND WORKING LAMP HARNESS)

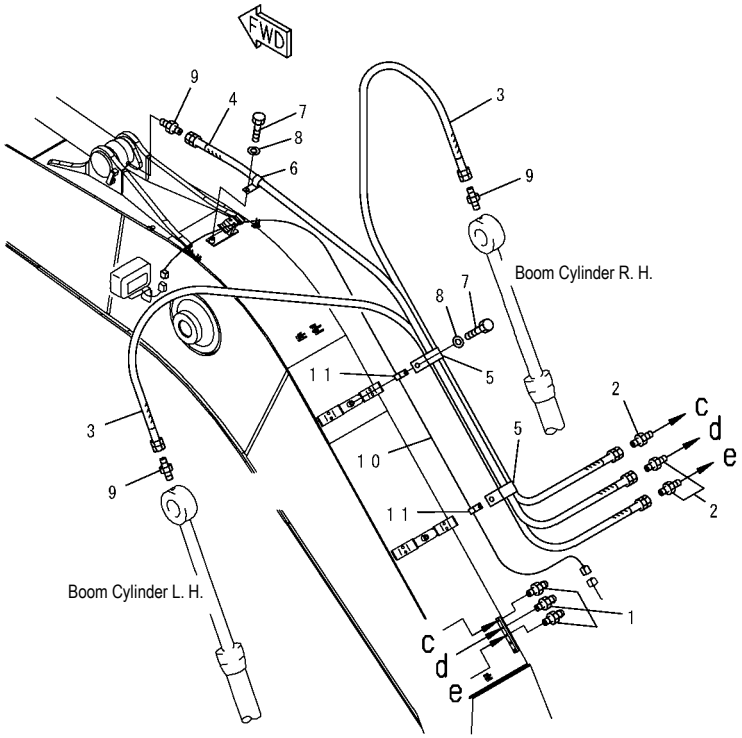

PW1C891

FIG NO. : T1110-04A0A

INDEX	PART NO.	DESCRIPTION	Q'TY	SERIAL NO.
1	07020-00000	FITTING	3	DBB0001~
2	205-70-51390	NIPPLE	3	DBB0001~
3	20Y-70-D3230	HOSE	2	DBB0001~
4	20Y-70-D3240	HOSE	1	DBB0001~
5	04434-52512	CLIP	2	DBB0001~
6	04434-51412	CLIP	1	DBB0001~
7	01010-81220	BOLT	3	DBB0001~
8	01643-31232	WASHER	3	DBB0001~
9	205-70-51390	NIPPLE	3	DBB0001~
10	22U-06-21350	WIRE	1	DBB0001~
11	04434-51012	CLIP	2	DBB0001~

FIG. T1110-05A1 BOOM (ADDITIONAL LINE) (FOR ADDITIONAL PIPING) (OPT)

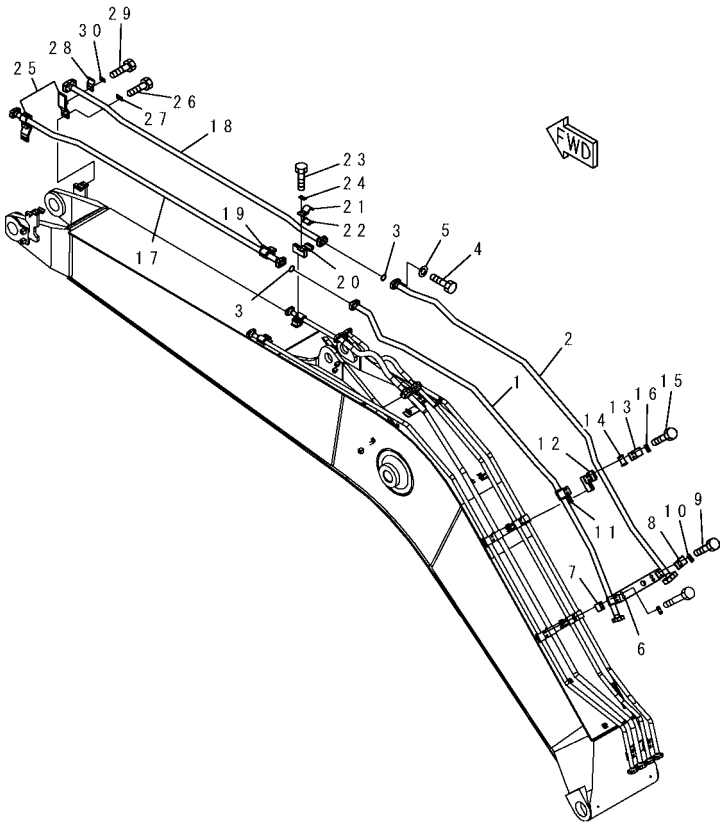

PW1B986

INDEX	PART NO.	DESCRIPTION	Q'TY	SERIAL NO.
1	20Y-62-45221	TUBE	1	DBB0001~
2	20Y-62-45231	TUBE	1	DBB0001~
3	07000-13035	O-RING	2	DBB0001~
4	07372-21040	BOLT	8	DBB0001~
5	01643-51032	WASHER	8	DBB0001~
6	20Y-62-45270	BRACKET	1	DBB0001~
7	20Y-62-45280	PLATE	2	DBB0001~
8	207-62-31330	CLAMP	2	DBB0001~
9	01010-81250	BOLT	4	DBB0001~
10	20Y-62-13450	PLATE	2	DBB0001~
11	20Y-62-45250	BRACKET	1	DBB0001~
12	20Y-62-45260	BRACKET	1	DBB0001~
13	207-62-52430	CLAMP	2	DBB0001~
14	205-62-73430	. SEAT	1	DBB0001~
15	01010-81230	BOLT	4	DBB0001~
16	20Y-62-13450	PLATE	2	DBB0001~
17	20Y-62-45290	TUBE	1	DBB0001~
18	20Y-62-45310	TUBE	1	DBB0001~
19	20Y-62-45250	BRACKET	1	DBB0001~
20	20Y-62-45260	BRACKET	1	DBB0001~
21	207-62-52430	CLAMP	2	DBB0001~
22	205-62-73430	. SEAT	1	DBB0001~
23	01010-81230	BOLT	4	DBB0001~
24	20Y-62-13450	PLATE	2	DBB0001~
25	20Y-62-45380	BRACKET	2	DBB0001~
26	01010-81230	BOLT	4	DBB0001~
27	20Y-62-13450	PLATE	2	DBB0001~
28	207-62-31330	CLAMP	2	DBB0001~
29	01010-81225	BOLT	4	DBB0001~
30	20Y-62-13450	PLATE	2	DBB0001~

FIG. T1110-06A0 BOOM (WORKING LAMP AND BOOM FOOT LUBRICATING)

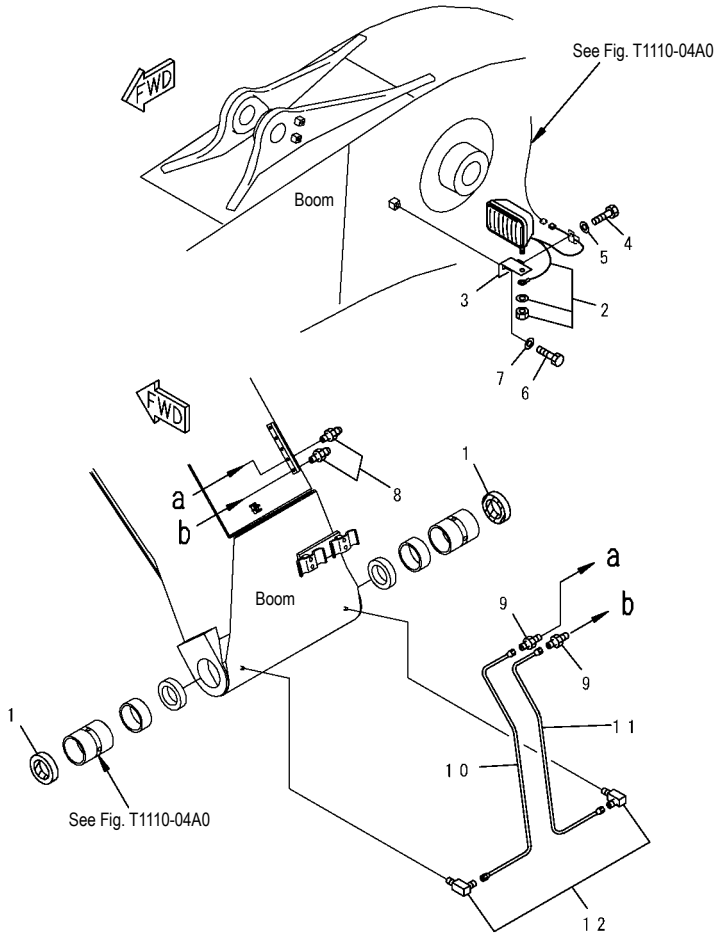

PW1B984

INDEX	PART NO.	DESCRIPTION	Q'TY	SERIAL NO.
1	07145-00090	SEAL	2	DBB0001~
2	20Y-06-25310	WORK LAMP ASS' Y	1	DBB0001~
	421-06-23330	. BULB, 70W	1	DBB0001~
3	20Y-06-21551	BRACKET	1	DBB0001~
4	01010-81220	BOLT	1	DBB0001~
5	01643-31232	WASHER	1	DBB0001~
6	01010-81230	BOLT	1	DBB0001~
7	01643-31232	WASHER	1	DBB0001~
8	07020-00000	FITTING	2	DBB0001~
9	20Y-70-11540	CONNECTOR	2	DBB0001~
10	20Y-70-31310	TUBE	1	DBB0001~
11	20Y-70-31320	TUBE	1	DBB0001~
12	20Y-25-11270	ELBOW	2	DBB0001~

FIG. T1120-01A0 BOOM CYLINDER

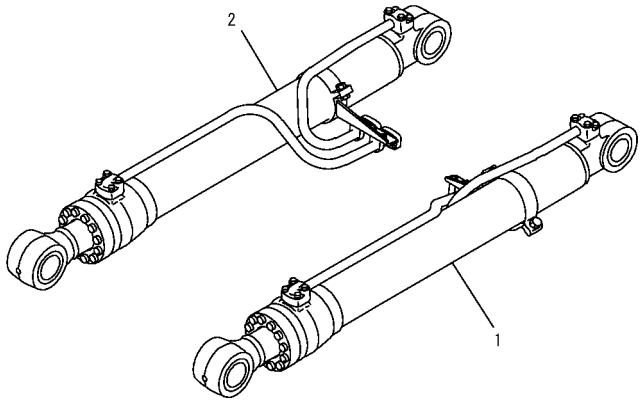

PW1B895

FIG NO. : T1120-01A0

INDEX	PART NO.	DESCRIPTION	Q'TY	SERIAL NO.
1	(⦿707-01-XZ820)	CYLINDER GROUP, L. H (FINAL COAT)	1	DBB0001~
	(⦿707-01-XA960)	CYLINDER GROUP, L. H (UNDER COAT).....	1	DBB0001~
2	(⦿707-01-XZ830)	CYLINDER GROUP, R. H (FINAL COAT).....	1	DBB0001~
	(⦿707-01-XA970)	CYLINDER GROUP, R. H (UNDER COAT).....	1	DBB0001~

FIG. T1125-01A0 BOOM PIN

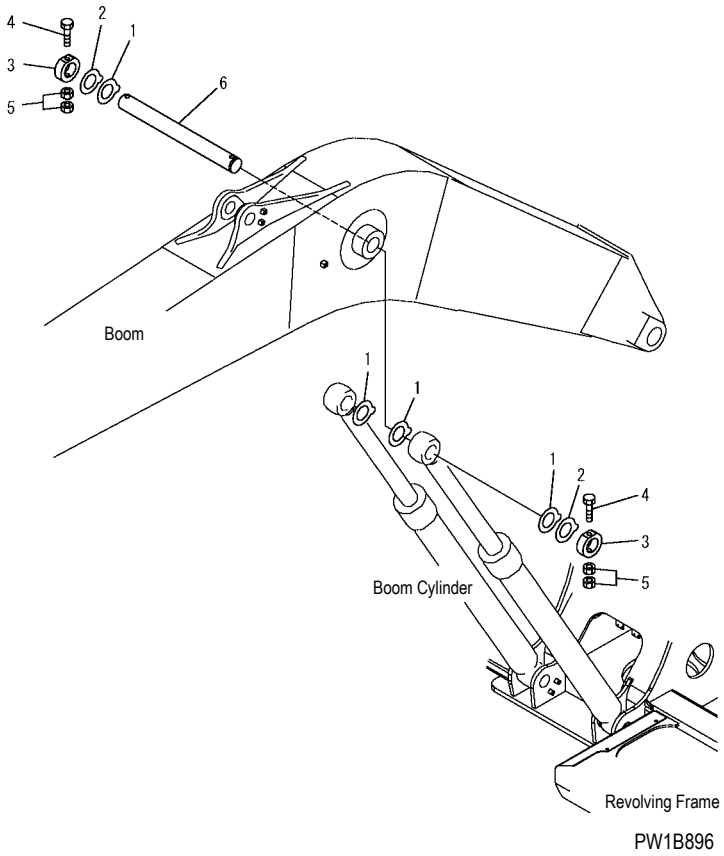

PW1B896

FIG NO. : T1125-01A0

INDEX	PART NO.	DESCRIPTION	Q'TY	SERIAL NO.
1	20Y-70-31430	SPACER, 1.0 MM	4	DBB0001~
2	206-70-71450	SPACER, 2.0 MM	2	DBB0001~
3	20Y-70-11170	PLATE	2	DBB0001~
4	20Y-70-11380	BOLT	2	DBB0001~
5	01580-12016	NUT	4	DBB0001~
6	206-70-51190	PIN	1	DBB0001~

FIG. T1140-01A0 ARM CYLINDER

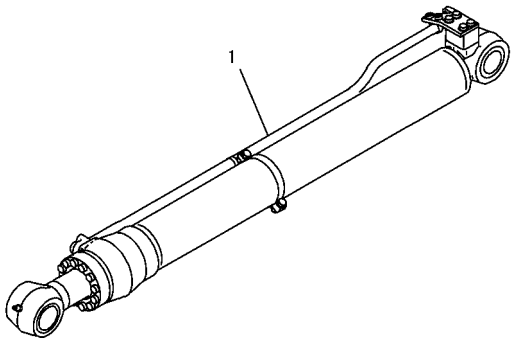

PW1B897

FIG NO. : T1140-01A0

INDEX	PART NO.	DESCRIPTION	Q'TY	SERIAL NO.
1	707-01-XZ841	CYLINDER GROUP (FINAL COAT).....	1	DBB0001~
	(707-01-XA981)	CYLINDER GROUP (UNDER COAT).....	1	DBB0001~
		.		

FIG. T1140-01A2 ARM CYLINDER (BLIND PARTS) (FOR COMPONENT)

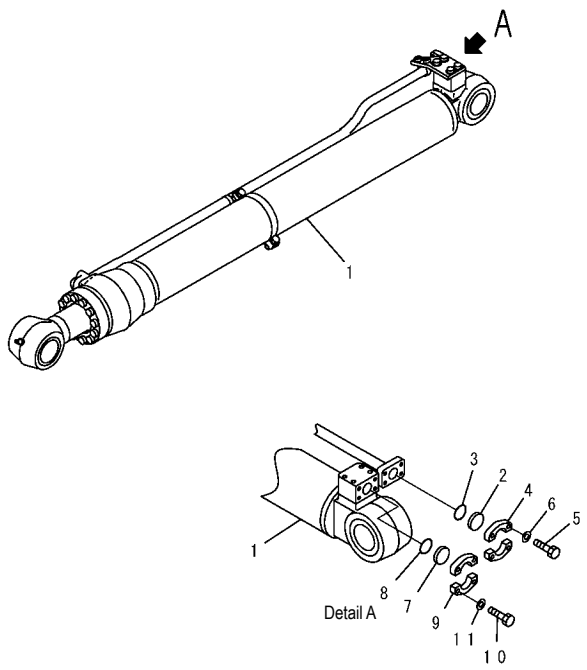

PW1C975

FIG NO. : T1140-01A2

INDEX	PART NO.	DESCRIPTION	Q'TY	SERIAL NO.
1	707-01-XZ841	CYLINDER GROUP (FINAL COAT).....	1	DBB0001~
	(707-01-XA981)	CYLINDER GROUP (UNDER COAT).....	1	DBB0001~
2	07378-10600	HEAD.....	1	DBB0001~
3	07000-13025	O-RING.....	1	DBB0001~
4	07371-30640	FLANGE	2	DBB0001~
5	07372-21035	BOLT.....	4	DBB0001~
6	01643-51032	WASHER.....	4	DBB0001~
7	07378-11000	HEAD.....	1	DBB0001~
8	07000-13032	O-RING.....	1	DBB0001~
9	07371-31049	FLANGE	2	DBB0001~
10	07372-21035	BOLT.....	4	DBB0001~
11	01643-51032	WASHER.....	4	DBB0001~

FIG. T1200-01A0 ARM (2.9m) (PC200, 200LC-7)

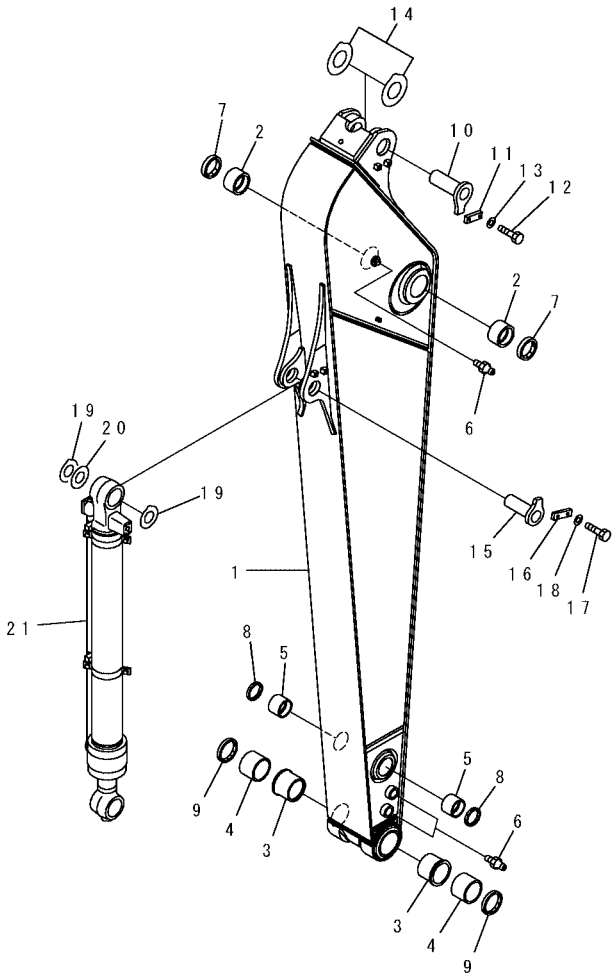

PW1C935

(PC200, 200LC-7)

INDEX	PART NO.	DESCRIPTION	Q'TY	SERIAL NO.
1	20Y-70-D3000	ARM	1	DBB0001~
2	20Y-70-31271	BUSHING	2	DBB0001~
3	20Y-70-32321	BUSHING	2	DBB0001~DBB4708
	20Y-70-32410	BUSHING	2	DBB4709~
4	20Y-70-32331	BUSHING	2	DBB0001~DBB4708
	20Y-70-32410	BUSHING	2	DBB4709~
5	20Y-70-32371	BUSHING	2	DBB0001~DBB4708
	205-70-73180	BUSHING	2	DBB4709~
6	07020-00000	FITTING	3	DBB0001~
7	07145-00090	SEAL	2	DBB0001~
8	20Y-70-23220	SEAL	2	DBB0001~
9	20Y-70-23230	SEAL	2	DBB0001~
10	20Y-70-31160	PIN	1	DBB0001~
11	205-70-66580	PLATE	1	DBB0001~
12	01010-81230	BOLT	2	DBB0001~
13	01643-31232	WASHER	2	DBB0001~
14	20Y-70-31430	SPACER, 1.0 MM	2	DBB0001~
15	205-70-71190	PIN	1	DBB0001~
16	205-70-66580	PLATE	1	DBB0001~
17	01010-81230	BOLT	2	DBB0001~
18	01643-31232	WASHER	2	DBB0001~
19	20Y-70-31380	SPACER, 1.0 MM	2	DBB0001~
20	20Y-70-31390	SPACER, 2.0 MM	2	DBB0001~
21	(⊙707-01-XA991)	CYLINDER GROUP (UNDER COAT)	1	DBB0001~DBB4708
	(⊙707-01-XG481)	CYLINDER GROUP (UNDER COAT)	1	DBB4709~

FIG. T1200-01AA ARM (2.9m) (PC210, 210LC-7)

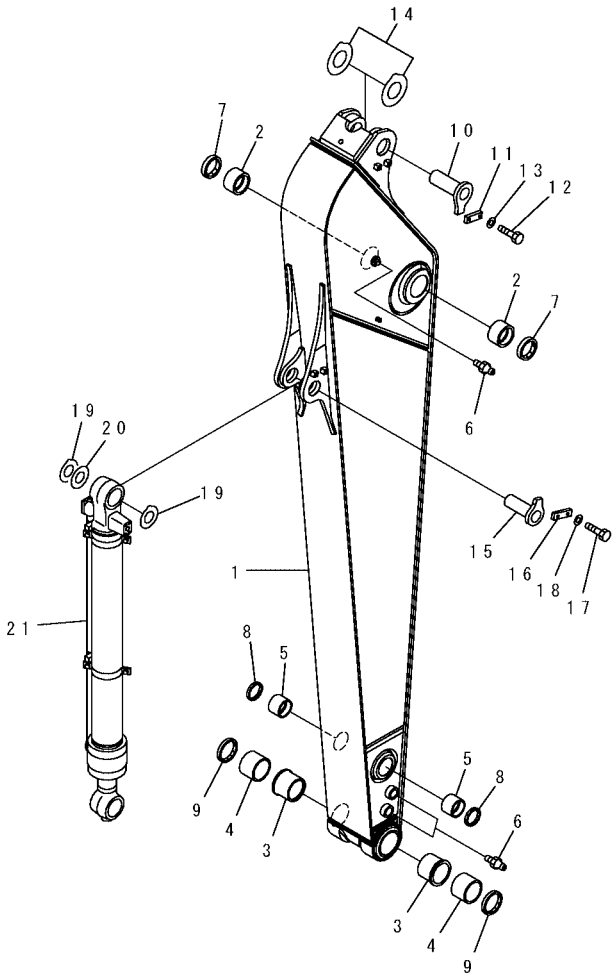

PW1C935

(PC210, 210LC-7)

INDEX	PART NO.	DESCRIPTION	Q'TY	SERIAL NO.
1	20Y-70-32121	ARM	1	DBF0001~
2	20Y-70-31271	BUSHING	2	DBF0001~
3	20Y-70-32321	BUSHING	2	DBF0001~
4	20Y-70-32331	BUSHING	2	DBF0001~
5	20Y-70-32371	BUSHING	2	DBF0001~
6	07020-00000	FITTING	3	DBF0001~
7	07145-00090	SEAL	2	DBF0001~
8	20Y-70-23220	SEAL	2	DBF0001~
9	20Y-70-23230	SEAL	2	DBF0001~
10	20Y-70-31160	PIN	1	DBF0001~
11	205-70-66580	PLATE	1	DBF0001~
12	01010-81230	BOLT	2	DBF0001~
13	01643-31232	WASHER	2	DBF0001~
14	20Y-70-31430	SPACER, 1.0 MM	2	DBF0001~
15	205-70-71190	PIN	1	DBF0001~
16	205-70-66580	PLATE	1	DBF0001~
17	01010-81230	BOLT	2	DBF0001~
18	01643-31232	WASHER	2	DBF0001~
19	20Y-70-31380	SPACER, 1.0 MM	2	DBF0001~
20	20Y-70-31390	SPACER, 2.0 MM	2	DBF0001~
21	(⊙707-01-XZ851)	CYLINDER GROUP (FINAL COAT)	1	DBF0001~
	(⊙707-01-XA991)	CYLINDER GROUP (UNDER COAT)	1	DBF0001~

FIG. T1200-01A1 ARM (2.9M) (FOR ADDITIONAL PIPING) (OPT)

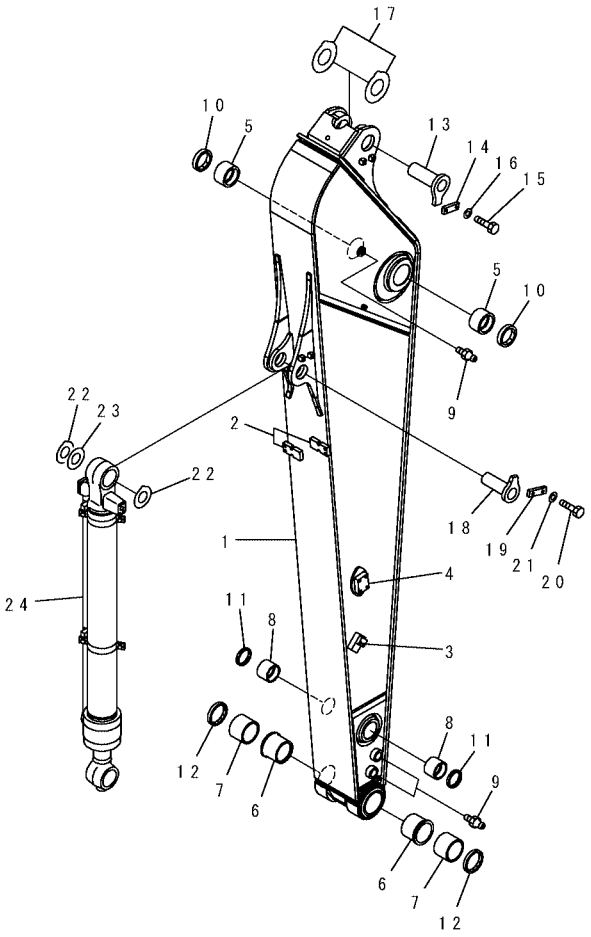

PW1C003

INDEX	PART NO.	DESCRIPTION	Q'TY	SERIAL NO.
	20Y-970-7121	ARM	1	DBB0001~
1	☆	. ARM	1	DBB0001~
2	20Y-70-32E50	. SEAT (WELDED)	2	DBB0001~
3	20Y-970-3560	. BRACKET (WELDED)	2	DBB0001~
4	20Y-970-3570	. BRACKET (WELDED)	2	DBB0001~
5	20Y-70-31271	BUSHING	2	DBB0001~
6	20Y-70-32321	BUSHING	2	DBB0001~
7	20Y-70-32331	BUSHING	2	DBB0001~
8	20Y-70-32371	BUSHING	2	DBB0001~
9	07020-00000	FITTING	3	DBB0001~
10	07145-00090	SEAL	2	DBB0001~
11	20Y-70-23220	SEAL	2	DBB0001~
12	20Y-70-23230	SEAL	2	DBB0001~
13	20Y-70-31160	PIN	1	DBB0001~
14	205-70-66580	PLATE	1	DBB0001~
15	01010-81230	BOLT	2	DBB0001~
16	01643-31232	WASHER	2	DBB0001~
17	20Y-70-31430	SPACER, 1.0 MM	2	DBB0001~
18	205-70-71190	PIN	1	DBB0001~
19	205-70-66580	PLATE	1	DBB0001~
20	01010-81230	BOLT	2	DBB0001~
21	01643-31232	WASHER	2	DBB0001~
22	20Y-70-31380	SPACER, 1.0 MM	2	DBB0001~
23	20Y-70-31390	SPACER, 2.0 MM	2	DBB0001~
24	(⊙707-01-XZ851)	CYLINDER GROUP (FINAL COAT)	1	DBB0001~
	(⊙707-01-XA991)	CYLINDER GROUP (UNDER COAT)	1	DBB0001~

FIG. T1200-01A3 ARM (2.4M) (FOR ADDITIONAL PIPING) (OPT)

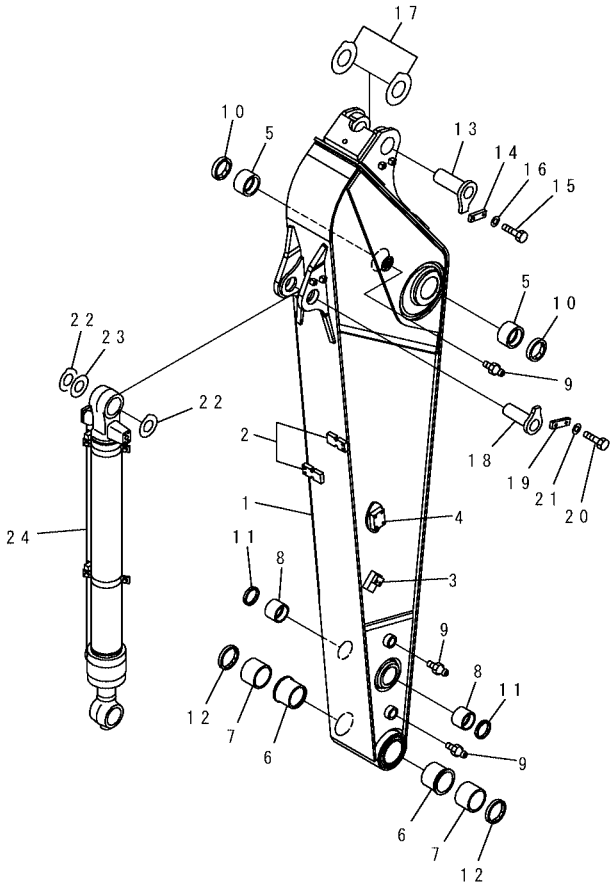

PW1C005

FIG NO. : T1200-01A3

INDEX	PART NO.	DESCRIPTION	Q'TY	SERIAL NO.
	20Y-970-7151	ARM	1	DBB0001~
1	☆	. ARM	1	DBB0001~
2	20Y-70-32E50	. SEAT (WELDED)	2	DBB0001~
3	20Y-970-3560	. BRACKET (WELDED)	2	DBB0001~
4	20Y-970-3570	. BRACKET (WELDED)	2	DBB0001~
5	20Y-70-31271	BUSHING	2	DBB0001~
6	20Y-70-32321	BUSHING	2	DBB0001~
7	20Y-70-32331	BUSHING	2	DBB0001~
8	20Y-70-32371	BUSHING	2	DBB0001~
9	07020-00000	FITTING	2	DBB0001~
10	07145-00090	SEAL	2	DBB0001~
11	20Y-70-23220	SEAL	2	DBB0001~
12	20Y-70-23230	SEAL	2	DBB0001~
13	20Y-70-31160	PIN	1	DBB0001~
14	205-70-66580	PLATE	1	DBB0001~
15	01010-81230	BOLT	2	DBB0001~
16	01643-31232	WASHER	2	DBB0001~
17	20Y-70-31430	SPACER, 1.0 MM	2	DBB0001~
18	205-70-71190	PIN	1	DBB0001~
19	205-70-66580	PLATE	1	DBB0001~
20	01010-81230	BOLT	2	DBB0001~
21	01643-31232	WASHER	2	DBB0001~
22	20Y-70-31380	SPACER, 1.0 MM	2	DBB0001~
23	20Y-70-31390	SPACER, 2.0 MM	2	DBB0001~
24	(⊙707-01-XZ851)	CYLINDER GROUP (FINAL COAT)	1	DBB0001~
	(⊙707-01-XA991)	CYLINDER GROUP (UNDER COAT)	1	DBB0001~

FIG. T1200-02A0 ARM (2.9M) (BUCKET LINK)

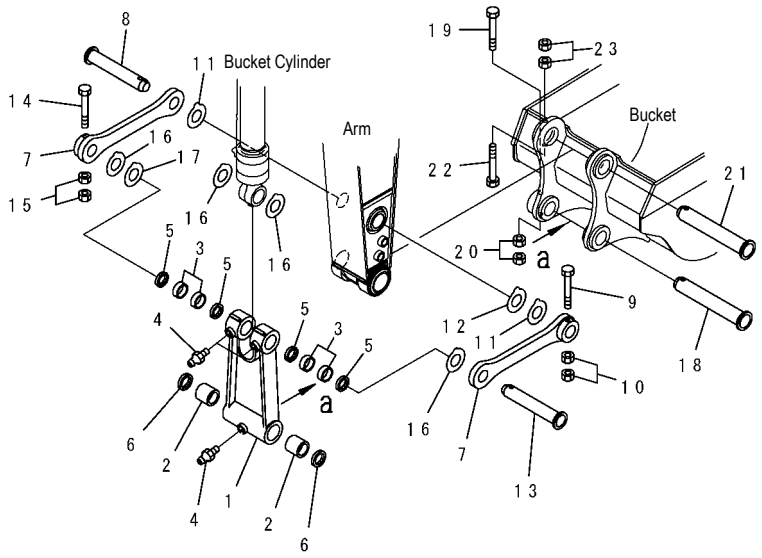

PW1C936

INDEX	PART NO.	DESCRIPTION	Q'TY	SERIAL NO.
1	20Y-70-33111	LINK	1	DBB0001~
2	20Y-70-32351	BUSHING	2	DBB0001~DBB4708
	21K-70-12161	BUSHING	2	DBB4709~
3	20Y-70-32361	BUSHING	4	DBB0001~DBB4708
	205-70-73180	BUSHING	4	DBB4709~
4	07020-00000	FITTING	3	DBB0001~
5	20Y-70-23220	SEAL	4	DBB0001~
6	20Y-70-23230	SEAL	2	DBB0001~
7	205-70-73130	LINK	2	DBB0001~
8	20U-70-21191	PIN	1	DBB0001~
9	20Y-70-D3251	BOLT	1	DBB0001~
10	01580-12016	NUT	2	DBB0001~
11	20Y-70-31450	SPACER, 0.8 MM	1	DBB0001~DBB4708
	20Y-70-11320	SPACER, 0.8 MM	1	DBB4709~
12	20Y-70-31460	SPACER, 1.5 MM	3	DBB0001~DBB4708
	20Y-70-11330	SPACER, 1.5 MM	3	DBB4709~
13	22U-70-21191	PIN	1	DBB0001~
14	205-70-73190	BOLT	1	DBB0001~
15	01580-12016	NUT	2	DBB0001~
16	20Y-70-31440	SPACER, 0.8 MM	1	DBB0001~DBB4708
	20Y-70-11320	SPACER, 0.8 MM	1	DBB4709~
17	20Y-70-31480	SPACER, 1.5 MM	4	DBB0001~DBB4708
	20Y-70-11330	SPACER, 1.5 MM	4	DBB4709~
18	205-70-73270	PIN	1	DBB0001~
19	20Y-70-D3251	BOLT	1	DBB0001~
20	01580-12016	NUT	2	DBB0001~
21	205-70-73270	PIN	1	DBB0001~
22	20Y-70-D3261	BOLT	1	DBB0001~
23	01580-12016	NUT	2	DBB0001~

FIG. T1200-02A0 ARM (2.9M) (BUCKET LINK)

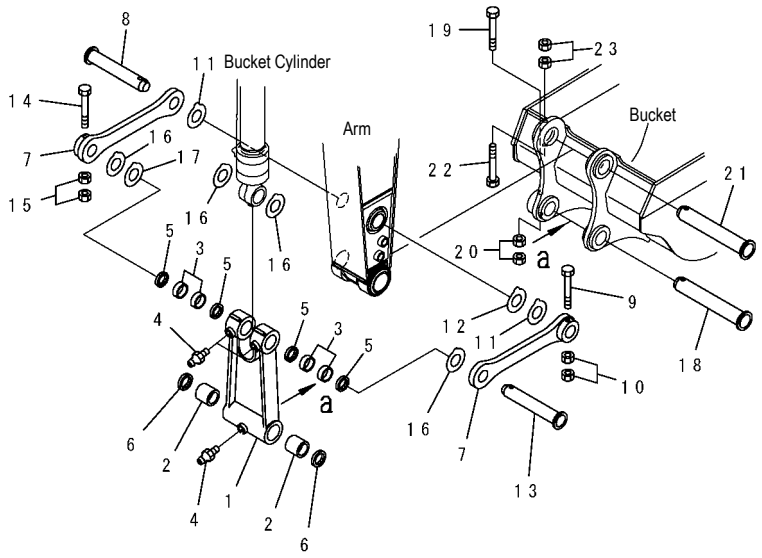

PW1C936

INDEX	PART NO.	DESCRIPTION	Q'TY	SERIAL NO.
1	20Y-70-D2270	LINK	1	DBB0001~
2	20Y-70-32351	BUSHING	2	DBB0001~
3	20Y-70-32361	BUSHING	4	DBB0001~
4	07020-00000	FITTING	3	DBB0001~
5	20Y-70-23220	SEAL	4	DBB0001~
6	20Y-70-23230	SEAL	2	DBB0001~
7	205-70-73130	LINK	2	DBB0001~
8	22U-70-21191	PIN	1	DBB0001~
9	205-70-73190	BOLT	1	DBB0001~DBB4708
	20Y-70-D3251	BOLT	1	DBB4709~
10	01580-12016	NUT	2	DBB0001~
11	20Y-70-31450	SPACER, 1.0 MM	2	DBB0001~
12	20Y-70-31460	SPACER, 2.0 MM	1	DBB0001~
13	22U-70-21191	PIN	1	DBB0001~
14	205-70-73190	BOLT	1	DBB0001~DBB4708
	20Y-70-D3251	BOLT	1	DBB4709~
15	01580-12016	NUT	2	DBB0001~
16	20Y-70-31440	SPACER, 1.0 MM	4	DBB0001~
17	20Y-70-31480	SPACER, 2.0 MM	1	DBB0001~
18	205-70-73270	PIN	1	DBB0001~
19	205-70-73190	BOLT	1	DBB0001~DBB4708
	20Y-70-D3251	BOLT	1	DBB4709~
20	01580-12016	NUT	2	DBB0001~
21	205-70-73270	PIN	1	DBB0001~
22	362-46-11210	BOLT	1	DBB0001~DBB4708
	20Y-70-D3261	BOLT	1	DBB4709~
23	01580-12016	NUT	2	DBB0001~

FIG. T1200-02A2 ARM (2.4M) (BUCKET LINK) (OPT)

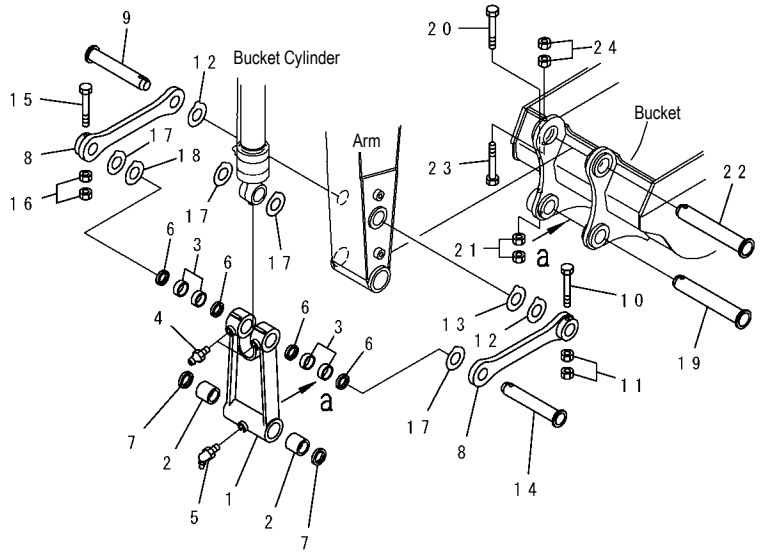

PW1C007

FIG NO. : T1200-02A2

INDEX	PART NO.	DESCRIPTION	Q'TY	SERIAL NO.
1	20Y-70-33111	LINK	1	DBB0001~
2	20Y-70-32351	BUSHING	2	DBB0001~
3	20Y-70-32361	BUSHING	4	DBB0001~
4	07020-00000	FITTING	2	DBB0001~
5	07020-00675	FITTING	1	DBB0001~
6	20Y-70-23220	SEAL	4	DBB0001~
7	20Y-70-23230	SEAL	2	DBB0001~
8	205-70-73130	LINK	2	DBB0001~
9	205-70-73160	PIN	1	DBB0001~
10	205-70-73190	BOLT	1	DBB0001~DBB4708
	20Y-70-D3251	BOLT	1	DBB4709~
11	01580-12016	NUT	2	DBB0001~
12	20Y-70-31450	SPACER, 1.0 MM	2	DBB0001~
13	20Y-70-31460	SPACER, 2.0 MM	1	DBB0001~
14	22U-70-21191	PIN	1	DBB0001~
15	205-70-73190	BOLT	1	DBB0001~DBB4708
	20Y-70-D3251	BOLT	1	DBB4709~
16	01580-12016	NUT	2	DBB0001~
17	20Y-70-31440	SPACER, 1.0 MM	4	DBB0001~
18	20Y-70-31480	SPACER, 2.0 MM	1	DBB0001~
19	205-70-73270	PIN	1	DBB0001~
20	205-70-73190	BOLT	1	DBB0001~DBB4708
	20Y-70-D3251	BOLT	1	DBB4709~
21	01580-12016	NUT	2	DBB0001~
22	205-70-73270	PIN	1	DBB0001~
23	362-46-11210	BOLT	1	DBB0001~DBB4708
	20Y-70-D3261	BOLT	1	DBB4709~
24	01580-12016	NUT	2	DBB0001~

FIG. T1200-03A0 ARM (2.9M) (BUCKET CYLINDER HOSE AND SPACER)

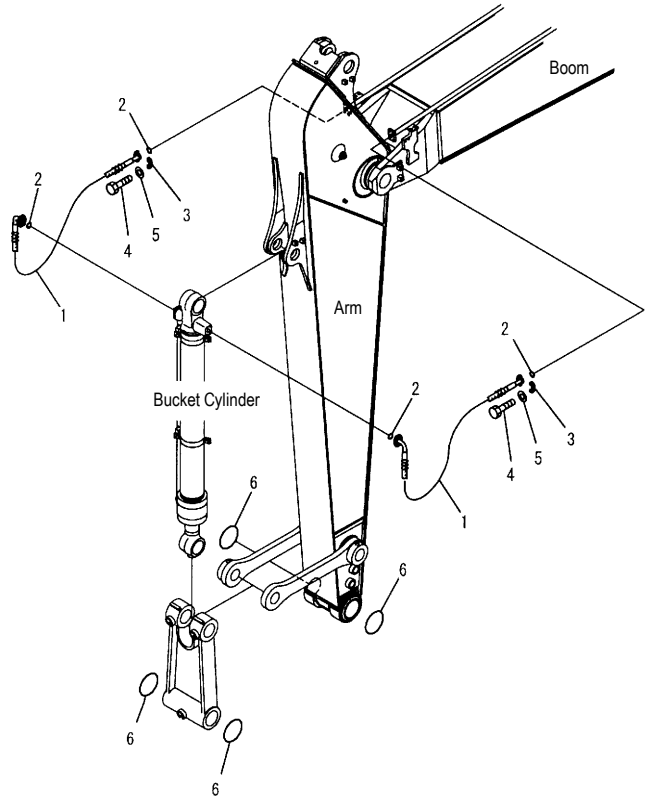

PW1B937

INDEX	PART NO.	DESCRIPTION	Q'TY	SERIAL NO.
1	20Y-62-13412	HOSE	2	DBB0001~
2	07000-13025	O-RING	4	DBB0001~
3	07371-30640	FLANGE	8	DBB0001~
4	07372-21035	BOLT	16	DBB0001~
5	01643-51032	WASHER	16	DBB0001~
6	205-70-73280	O-RING	4	DBB0001~

FIG. T1200-03A2 ARM (2.4M) (BUCKET CYLINDER HOSE AND SPACER) (OPT)

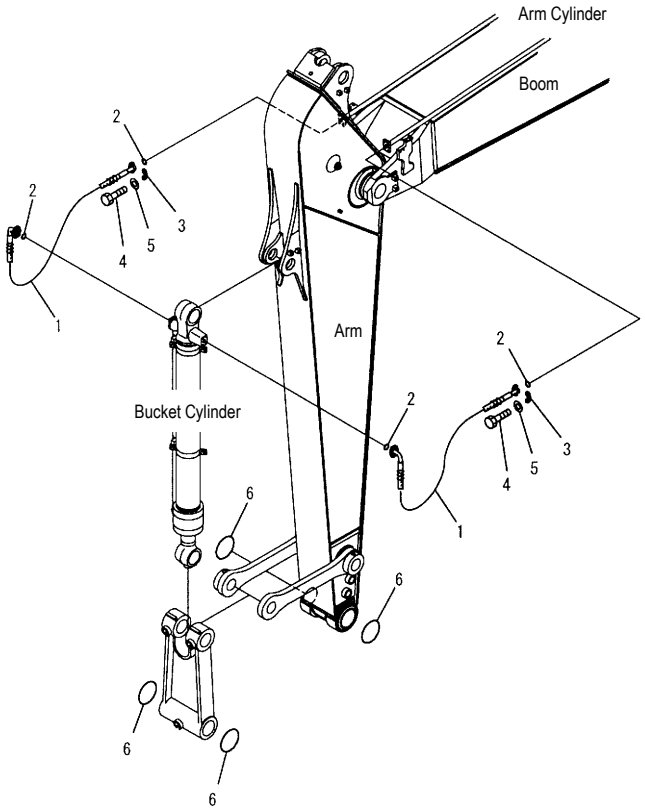

PW1C009

INDEX	PART NO.	DESCRIPTION	Q'TY	SERIAL NO.
1	20Y-62-13412	HOSE	2	DBB0001~
2	07000-13025	O-RING	4	DBB0001~
3	07371-30640	FLANGE	8	DBB0001~
4	07372-21035	BOLT	16	DBB0001~
5	01643-51032	WASHER	16	DBB0001~
6	205-70-73280	O-RING	4	DBB0001~
10	07020-00675	FITTING	1	DBB0001~

FIG. T1200-04A1 ARM (2.9M) (SPECIAL PIPING FOR BREAKER) (OPT)

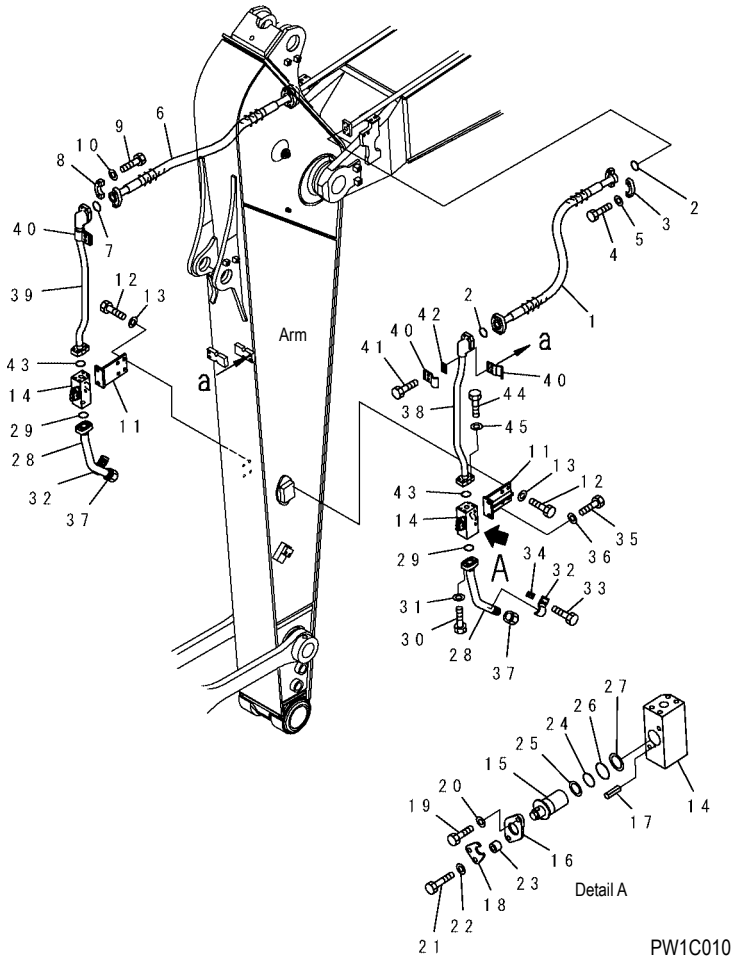

INDEX	PART NO.	DESCRIPTION	Q'TY	SERIAL NO.
1	07097-21015	HOSE	1	DBB0001~
2	21T-09-11460	O-RING	2	DBB0001~
3	07371-31049	FLANGE	4	DBB0001~
4	07372-21035	BOLT	8	DBB0001~
5	01643-51032	WASHER	8	DBB0001~
6	07097-21218	HOSE	1	DBB0001~
7	07000-13038	O-RING	2	DBB0001~
8	07371-51260	FLANGE	4	DBB0001~
9	01010-81245	BOLT	8	DBB0001~
10	01643-31232	WASHER	8	DBB0001~
11	20Y-970-3220	BRACKET	2	DBB0001~
12	01010-81230	BOLT	8	DBB0001~
13	01643-31232	WASHER	8	DBB0001~
	20Y-970-2300	STOP VALVE ASS' Y	2	DBB0001~
14	☆	. BODY	1	DBB0001~
15	20Y-970-3240	. ROTOR	1	DBB0001~
16	20Y-970-3270	. PLATE	1	DBB0001~
17	04025-00412	. PIN	1	DBB0001~
18	20Y-970-4611	. PLATE	1	DBB0001~
19	01010-81025	. BOLT	1	DBB0001~
20	01643-31032	. WASHER	1	DBB0001~
21	01010-81045	. BOLT	1	DBB0001~
22	01643-31032	. WASHER	1	DBB0001~
23	201-03-29160	. SPACER	1	DBB0001~
24	07000-13032	. O-RING	1	DBB0001~
25	07001-03032	. RING	1	DBB0001~
26	07000-13038	. O-RING	1	DBB0001~
27	07001-03038	. RING	1	DBB0001~
28	20Y-62-D2010	TUBE	2	DBB0001~
29	07000-13035	O-RING	2	DBB0001~
30	07372-21040	BOLT	8	DBB0001~
31	01643-51032	WASHER	8	DBB0001~
32	207-62-31330	CLAMP	2	DBB0001~

FIG. T1200-04A1 ARM (2.9M) (ADDITIONAL PIPING) (OPT)

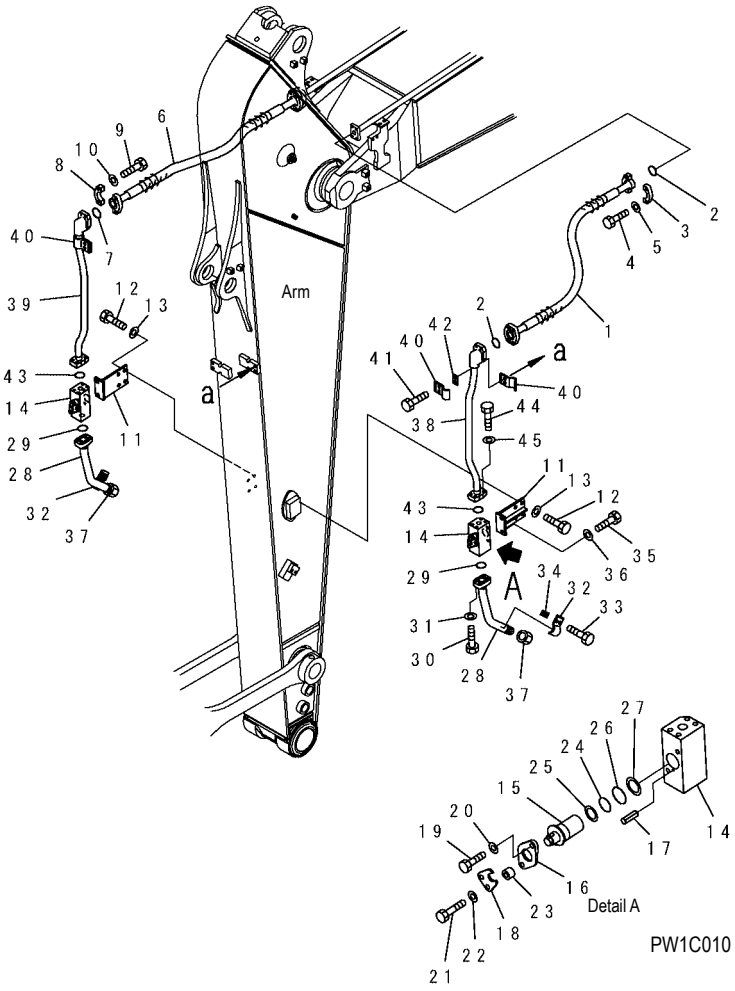

INDEX	PART NO.	DESCRIPTION	Q'TY	SERIAL NO.
33	01010-81225	BOLT	4	DBB0001~
34	20Y-62-13450	PLATE	2	DBB0001~
35	01010-81230	BOLT	4	DBB0001~
36	01643-31232	WASHER	4	DBB0001~
37	205-970-7680	PLUG	2	DBB0001~
38	20Y-62-45340	TUBE	1	DBB0001~
39	20Y-62-45350	TUBE	1	DBB0001~
40	207-62-31330	CLAMP	4	DBB0001~
41	01010-81230	BOLT	4	DBB0001~
42	20Y-62-13450	PLATE	2	DBB0001~
43	07000-13035	O-RING	2	DBB0001~
44	07372-21040	BOLT	8	DBB0001~
45	01643-51032	WASHER	8	DBB0001~

FIG. T1200-04A3 ARM (2.4M) (SPECIAL PIPING FOR BREAKER) (L. H.) (OPT)

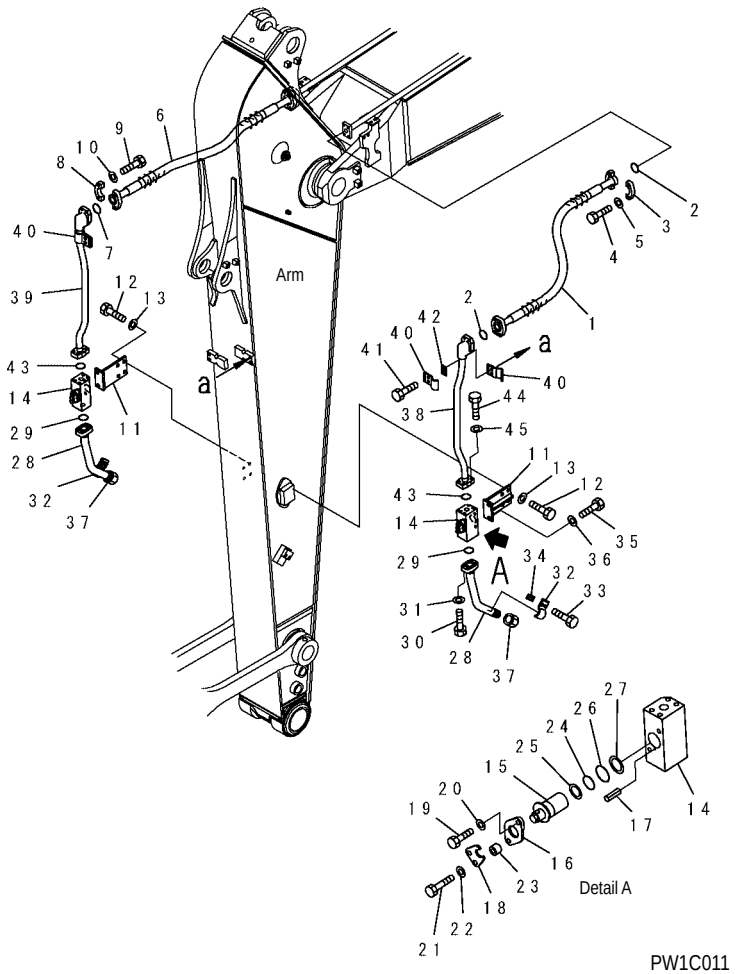

INDEX	PART NO.	DESCRIPTION	Q'TY	SERIAL NO.
1	07097-21015	HOSE	1	DBB0001~
2	21T-09-11460	O-RING	2	DBB0001~
3	07371-31049	FLANGE	4	DBB0001~
4	07372-21035	BOLT	8	DBB0001~
5	01643-51032	WASHER	8	DBB0001~
6	07097-21218	HOSE	1	DBB0001~
7	07000-13038	O-RING	2	DBB0001~
8	07371-51260	FLANGE	4	DBB0001~
9	01010-81245	BOLT	8	DBB0001~
10	01643-31232	WASHER	8	DBB0001~
11	20Y-970-3220	BRACKET	1	DBB0001~
12	01010-81230	BOLT	4	DBB0001~
13	01643-31232	WASHER	4	DBB0001~
	20Y-970-2300	STOP VALVE ASS' Y	1	DBB0001~
14	☆	. BODY	1	DBB0001~
15	20Y-970-3240	. ROTOR	1	DBB0001~
16	20Y-970-3270	. PLATE	1	DBB0001~
17	04025-00412	. PIN	1	DBB0001~
18	20Y-970-4611	. PLATE	1	DBB0001~
19	01010-81025	. BOLT	1	DBB0001~
20	01643-31032	. WASHER	1	DBB0001~
21	01010-81045	. BOLT	1	DBB0001~
22	01643-31032	. WASHER	1	DBB0001~
23	201-03-29160	. SPACER	1	DBB0001~
24	07000-13032	. O-RING	1	DBB0001~
25	07001-03032	. RING	1	DBB0001~
26	07000-13038	. O-RING	1	DBB0001~
27	07001-03038	. RING	1	DBB0001~
28	20Y-62-45360	TUBE	1	DBB0001~
29	07000-13035	O-RING	1	DBB0001~
30	07372-21040	BOLT	4	DBB0001~
31	01643-51032	WASHER	4	DBB0001~
32	207-62-31330	CLAMP	1	DBB0001~
33	01010-81225	BOLT	2	DBB0001~
34	20Y-62-13450	PLATE	1	DBB0001~
35	01010-81230	BOLT	2	DBB0001~
36	01643-31232	WASHER	2	DBB0001~
37	205-970-5770	PLUG	1	DBB0001~

FIG. T1200-05A3 ARM (2.4M) (SPECIAL PIPING FOR BREAKER) (R. H.) (OPT)

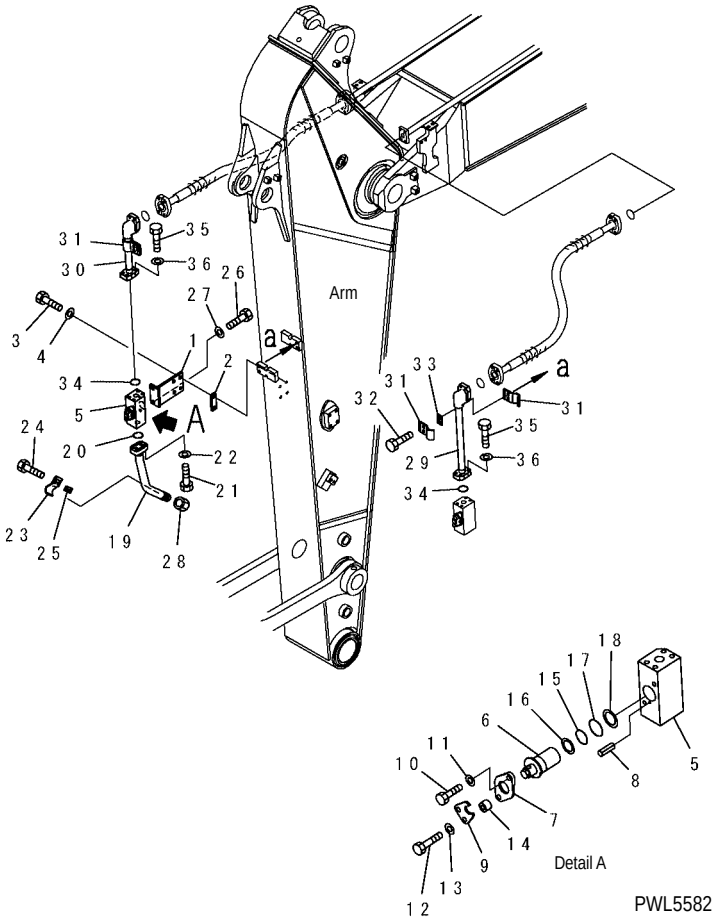

INDEX	PART NO.	DESCRIPTION	Q'TY	SERIAL NO.
1	20Y-970-3220	BRACKET	1	DBB0001~
2	22T-72-11220	PLATE	2	DBB0001~
3	01010-81240	BOLT	1	DBB0001~
4	01643-31232	WASHER	1	DBB0001~
	20Y-970-2300	STOP VALVE ASS' Y	1	DBB0001~
5	☆	. BODY	1	DBB0001~
6	20Y-970-3240	. ROTOR	1	DBB0001~
7	20Y-970-3270	. PLATE	1	DBB0001~
8	04025-00412	. PIN	1	DBB0001~
9	20Y-970-4611	. PLATE	1	DBB0001~
10	01010-81025	. BOLT	1	DBB0001~
11	01643-31032	. WASHER	1	DBB0001~
12	01010-81045	. BOLT	1	DBB0001~
13	01643-31032	. WASHER	1	DBB0001~
14	201-03-29160	. SPACER	1	DBB0001~
15	07000-13032	. O-RING	1	DBB0001~
16	07001-03032	. RING	1	DBB0001~
17	07000-13038	. O-RING	1	DBB0001~
18	07001-03038	. RING	1	DBB0001~
19	20Y-62-45360	TUBE	1	DBB0001~
20	07000-13035	O-RING	1	DBB0001~
21	07372-21040	BOLT	4	DBB0001~
22	01643-51032	WASHER	4	DBB0001~
23	207-62-31330	CLAMP	2	DBB0001~
24	01010-81230	BOLT	2	DBB0001~
25	20Y-62-13450	PLATE	1	DBB0001~
26	01010-81230	BOLT	2	DBB0001~
27	01643-31232	WASHER	2	DBB0001~
28	205-970-5770	PLUG	1	DBB0001~
29	20Y-970-6310	UBE, L. H	1	DBB0001~
30	20Y-970-7160	TUBE	1	DBB0001~
31	207-62-31330	CLAMP	4	DBB0001~
32	01010-81230	BOLT	4	DBB0001~
33	20Y-62-13450	PLATE	2	DBB0001~
34	07000-13035	O-RING	2	DBB0001~
35	07372-21040	BOLT	8	DBB0001~
36	01643-51032	WASHER	8	DBB0001~

FIG. T1290-01A0 BUCKET LESS

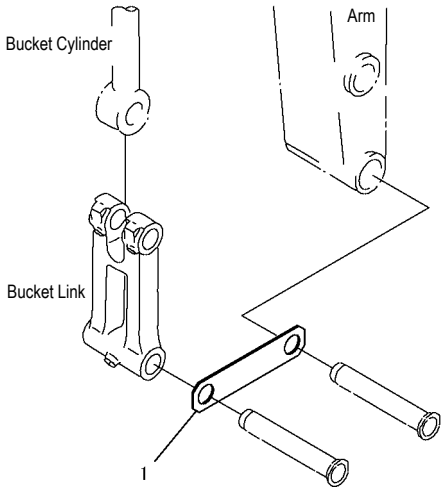

PEB3804

FIG NO. : T1290-01A0

INDEX	PART NO.	DESCRIPTION	Q'TY	SERIAL NO.
1	207-70-33220	LINK.....	1	DBB0001~

FIG. T1510-01A0 CLAMSHELL BUCKET (OPT)

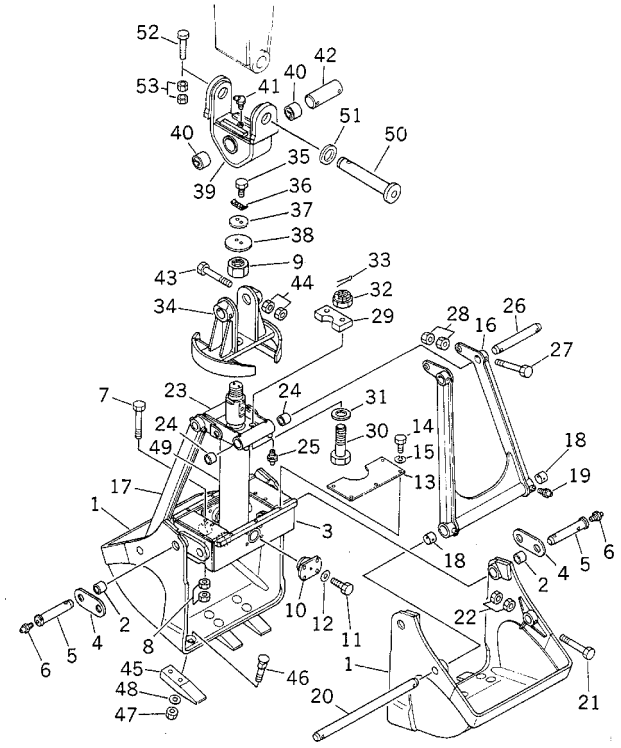

FIG NO. : T1510-01A0

INDEX	PART NO.	DESCRIPTION	Q'TY	SERIAL NO.
1	205-931-1161	SHELL	2	DBB0001~
2	07143-10505	BUSHING	4	DBB0001~
3	205-931-1230	FRAME	1	DBB0001~
4	205-931-1240	PLATE	2	DBB0001~
5	205-931-1250	PIN	4	DBB0001~
6	07020-00000	FITTING	4	DBB0001~
7	01011-81610	BOLT	4	DBB0001~
8	01580-11613	NUT	8	DBB0001~
9	205-931-2140	NUT	1	DBB0001~
10	205-931-1260	CAP	2	DBB0001~
11	01010-81450	BOLT	8	DBB0001~
12	01643-31445	WASHER	8	DBB0001~
13	205-931-1270	COVER	2	DBB0001~
14	01010-81020	BOLT	10	DBB0001~
15	01643-31032	WASHER	10	DBB0001~
16	205-931-1192	ARM	1	DBB0001~
17	205-931-1212	ARM	1	DBB0001~
18	07144-10505	BUSHING	4	DBB0001~
19	07020-00000	FITTING	4	DBB0001~
20	205-931-1220	PIN	2	DBB0001~
21	01011-81630	BOLT	4	DBB0001~
22	01580-11613	NUT	8	DBB0001~
23	205-931-1281	FRAME	1	DBB0001~
24	07144-10505	BUSHING	4	DBB0001~
25	07020-00000	FITTING	4	DBB0001~
26	205-931-1290	PIN	2	DBB0001~
27	01011-81610	BOLT	4	DBB0001~
28	01580-11613	NUT	8	DBB0001~
29	205-931-1310	PLATE	2	DBB0001~
30	01013-83010	BOLT	4	DBB0001~
31	01643-33080	WASHER	4	DBB0001~
32	01590-33033	NUT	4	DBB0001~

FIG. T1510-01A0 CLAMSHELL BUCKET (OPT)

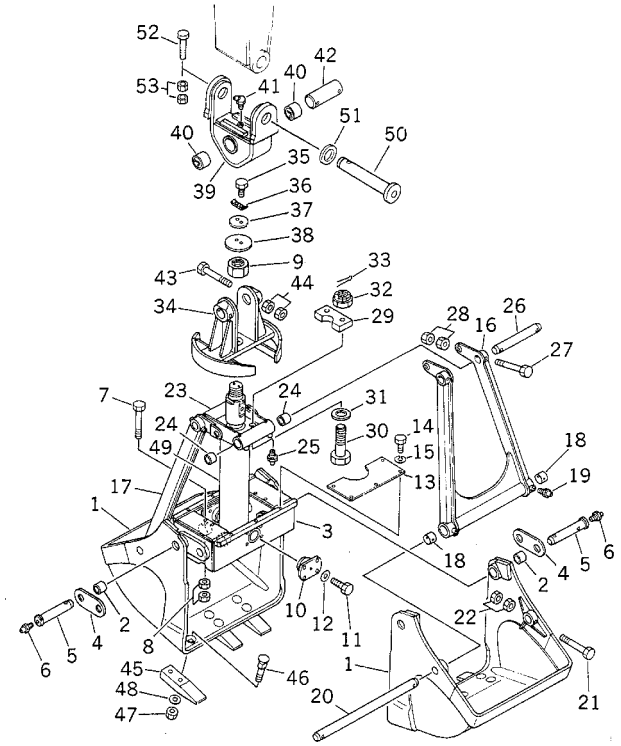

FIG NO. : T1510-01A0

INDEX	PART NO.	DESCRIPTION	Q'TY	SERIAL NO.
33	04050-16055	PIN	4	DBB0001~
34	205-931-1122	HANGER	1	DBB0001~
35	01010-81230	BOLT	2	DBB0001~
36	04081-06012	LOCK	1	DBB0001~
37	205-931-1330	OLDER	1	DBB0001~
38	205-931-1320	PLATE	1	DBB0001~
39	205-931-6110	BRACKET	1	DBB0001~
40	205-931-6150	BUSHING	2	DBB0001~
41	07020-00675	FITTING	1	DBB0001~
42	205-931-1130	PIN	1	DBB0001~
43	01011-81650	BOLT	2	DBB0001~
44	01580-11613	NUT	4	DBB0001~
45	202-931-1180	TOOTH	6	DBB0001~
46	02090-11285	BOLT	12	DBB0001~
47	02290-11219	NUT	12	DBB0001~
48	01643-32060	WASHER	12	DBB0001~
49	205-63-94101	CYLINDER ASS' Y	1	DBB0001~
50	205-70-73270	PIN	1	DBB0001~
51	205-70-74410	COLLAR	1	DBB0001~
52	205-70-73190	BOLT	1	DBB0001~
53	01580-12016	NUT	2	DBB0001~

FIG. T1510-01A2 BUCKET, 0.5M³, 750 MM (HORIZONTAL PIN TYPE)

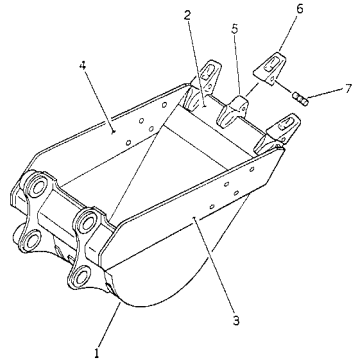

INDEX	PART NO.	DESCRIPTION	Q'TY	SERIAL NO.
1	205-926-7250	BUCKET	1	DBB0001~
2	205-926-7221	. PLATE(WELDED)	1	DBB0001~
3	205-70-74162	. PLATE, L. H (WELDED)	1	DBB0001~
4	205-70-74172	. PLATE, R. H (WELDED)	1	DBB0001~
5	205-939-7120	. ADAPTER (WELDED)	3	DBB0001~
6	205-70-19570	TOOTH	3	DBB0001~
7	09244-02496	PIN	3	DBB0001~

FIG. T1510-01A3 RIPPER BUCKET, 0.61M³, 950 MM

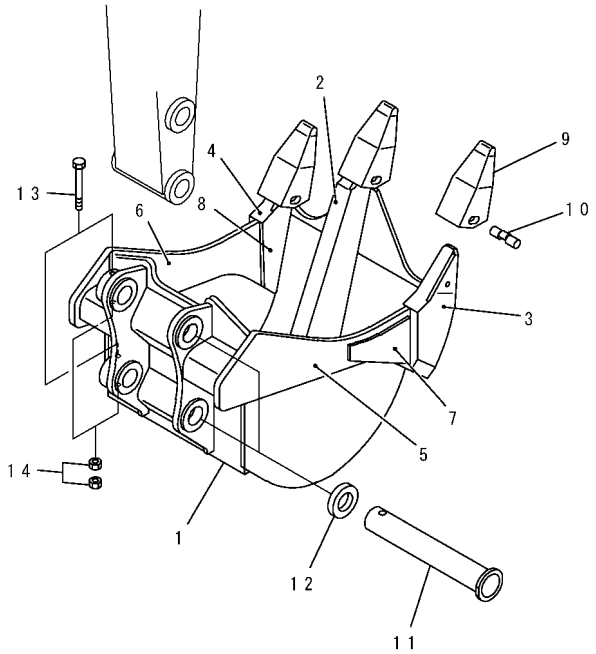

PWL4297

INDEX	PART NO.	DESCRIPTION	Q'TY	SERIAL NO.
1	205-922-6210	BUCKET	1	DBB0001~
2	205-922-1120	. SHANK (WELDED)	1	DBB0001~
3	205-922-1130	. ADAPTER, L. H (WELDED)	1	DBB0001~
4	205-922-1140	. ADAPTER, R. H (WELDED)	1	DBB0001~
5	205-922-1150	. PLATE, L. H (WELDED)	1	DBB0001~
6	205-922-1160	. PLATE, R. H (WELDED)	1	DBB0001~
7	205-922-1170	. PLATE, L. H (WELDED)	1	DBB0001~
8	205-922-1180	. PLATE, R. H (WELDED)	1	DBB0001~
9	175-78-31230	POINT	3	DBB0001~
10	09244-02508	PIN	3	DBB0001~
11	205-70-73270	PIN	1	DBB0001~
12	205-70-74410	COLLAR	1	DBB0001~
13	205-70-73190	BOLT	2	DBB0001~
14	01580-12016	NUT	4	DBB0001~

FIG. T1510-01A4 SLOPE FINISHING BUCKET (OPT)

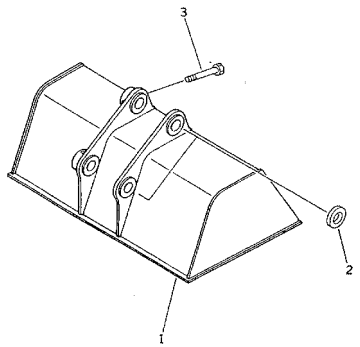

FIG NO. : T1510-01A4

INDEX	PART NO.	DESCRIPTION	Q'TY	SERIAL NO.
1	205-928-6110	BUCKET	1	DBB0001~
2	205-70-74410	COLLAR	2	DBB0001~
3	205-70-73190	BOLT	1	DBB0001~

FIG. T1510-01A5 TRAPEZOIDAL BUCKET (OPT)

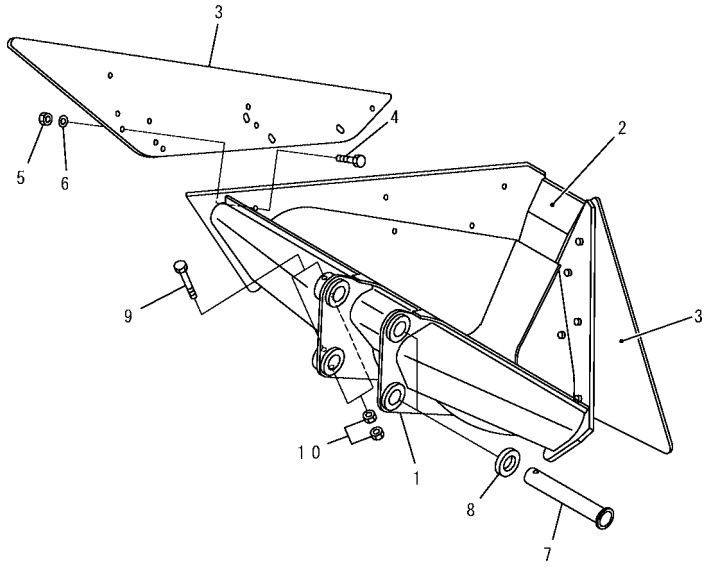

PWL4298

INDEX	PART NO.	DESCRIPTION	Q'TY	SERIAL NO.
1	205-929-6210	BUCKET	1	DBB0001~
2	205-929-6120	. PLATE (WELDED)	1	DBB0001~
3	205-929-6130	PLATE	2	DBB0001~
4	01010-82460	BOLT	12	DBB0001~
5	01580-12419	NUT	12	DBB0001~
6	01643-32460	WASHER	12	DBB0001~
7	205-70-73270	PIN	1	DBB0001~
8	205-70-74410	COLLAR	1	DBB0001~
9	205-70-73190	BOLT	2	DBB0001~
10	01580-12016	NUT	4	DBB0001~

FIG. T1510-01A6 DITCH CLEANING BUCKET, 0.8M³, 1800 MM (OPT)

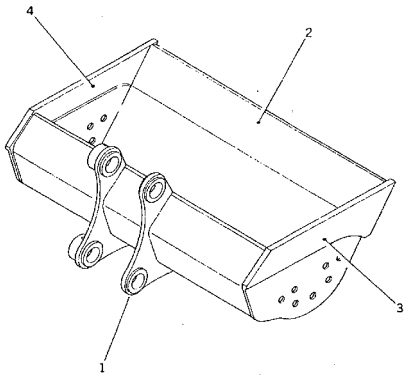

INDEX	PART NO.	DESCRIPTION	Q'TY	SERIAL NO.
1	205-938-7111	BUCKET	1	DBB0001~
2	205-938-6220	. PLATE (WELDED)	1	DBB0001~
3	205-938-6230	. PLATE, L. H (WELDED)	1	DBB0001~
4	205-938-6240	. PLATE, R. H (WELDED)	1	DBB0001~

FIG. T1510-01A7 SINGLE SHANK RIPPER

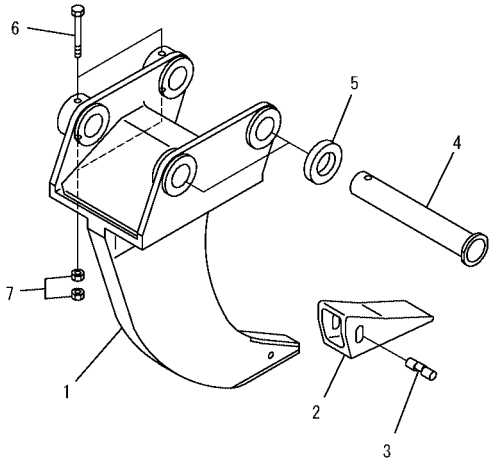

PWL4299

FIG NO. : T1510-01A7

INDEX	PART NO.	DESCRIPTION	Q'TY	SERIAL NO.
	205-950-0012	RIPPER ASS' Y	1	DBB0001~
1	☆	. RIPPER	1	DBB0001~
2	175-78-31230	. POINT	1	DBB0001~
3	09244-02508	. PIN	1	DBB0001~
4	205-70-73270	PIN	1	DBB0001~
5	205-70-74410	COLLAR	1	DBB0001~
6	205-70-73190	BOLT	2	DBB0001~
7	01580-12016	NUT	4	DBB0001~

FIG. T1510-01A8 THREE SHANK RIPPER

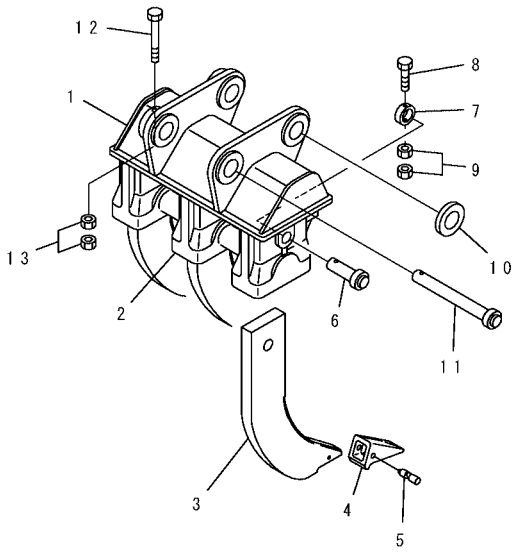

PWL1475

FIG NO. : T1510-01A8

INDEX	PART NO.	DESCRIPTION	Q'TY	SERIAL NO.
	205-951-0013	RIPPER ASS' Y	1	DBB0001~
1	☆	. BRACKET	1	DBB0001~
2	205-951-6120	..HOLDER	3	DBB0001~
	205-951-0020	. SHANK ASS' Y	3	DBB0001~
3	☆	.. SHANK	1	DBB0001~
4	131-78-31190	.. POINT	1	DBB0001~
5	09244-02489	.. PIN	1	DBB0001~
6	205-951-6140	. PIN	1	DBB0001~
7	205-951-6150	. COLLAR	1	DBB0001~
8	01019-11205	. BOLT	1	DBB0001~
9	01580-11210	. NUT	2	DBB0001~
10	205-70-73270	PIN	1	DBB0001~
11	205-70-74410	COLLAR	1	DBB0001~
12	205-70-73190	BOLT	2	DBB0001~
13	01580-12016	NUT	4	DBB0001~

FIG. T1510-01B2 BUCKET, 1.0M³ (HORIZONTAL PIN TYPE) (OPT)

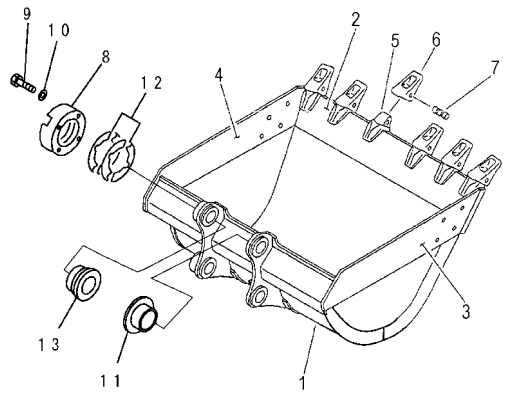

INDEX	PART NO.	DESCRIPTION	Q'TY	SERIAL NO.
1	20Y-920-3530	BUCKET	1	DBB0001~
2	20Y-920-3540	. PLATE (WELDED)	1	DBB0001~
3	20Y-70-34320	. PLATE, L. H (WELDED)	1	DBB0001~
4	20Y-70-34330	. PLATE, R. H (WELDED)	1	DBB0001~
5	20Y-70-14520	. ADAPTER (WELDED)	6	DBB0001~
6	205-70-19570	TOOTH	6	DBB0001~
7	09244-02496	PIN	6	DBB0001~
8	205-70-74391	PLATE	1	DBB0001~
9	01010-62055	BOLT	4	DBB0001~
10	01643-32060	WASHER	4	DBB0001~
11	20Y-70-34221	BUSHING	1	DBB0001~DBB4708
	20Y-70-32420	BUSHING	1	DBB4709~
12	205-70-00100	SHIM ASS' Y	1	DBB0001~
13	20Y-70-34211	BUSHING	1	DBB0001~DBB4708
	205-70-74381	BUSHING	1	DBB4709~
	X990001910	BUCKET UNIT	1	DBB0001~
1	20Y-920-3530	. BUCKET	1	DBB0001~
13	20Y-70-34211	. BUSHING	1	DBB0001~DBB4708
	205-70-74381	. BUSHING	1	DBB4709~

FIG. T1510-01B5 BUCKET, 0.8M³ (HORIZONTAL PIN TYPE)

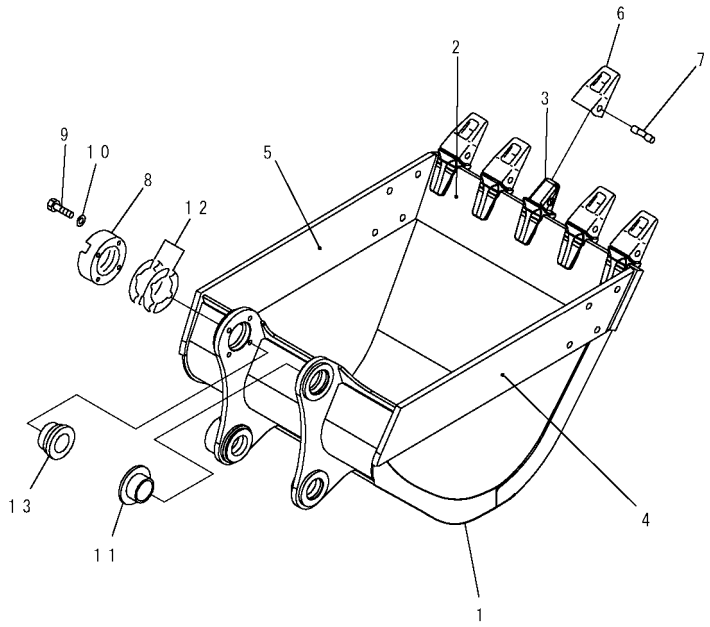

PW1B968

FIG NO. : T1510-01B5

(PC200, 200LC-7)

INDEX	PART NO.	DESCRIPTION	Q'TY	SERIAL NO.
1	20Y-70-34410	BUCKET	1	DBB0001~
2	20Y-70-34420	. PLATE (WELDED)	1	DBB0001~
3	20Y-70-14520	. ADAPTER (WELDED)	5	DBB0001~
4	20Y-70-34121	. PLATE, L. H (WELDED)	1	DBB0001~
5	20Y-70-34131	. PLATE, R. H (WELDED)	1	DBB0001~
6	205-70-19570	TOOTH	5	DBB0001~
7	09244-02496	PIN	5	DBB0001~
8	205-70-74391	PLATE	1	DBB0001~
9	01010-62055	BOLT	4	DBB0001~
10	01643-32060	WASHER	4	DBB0001~
11	20Y-70-34221	BUSHING	1	DBB0001~
12	205-70-00100	SHIM ASS' Y	1	DBB0001~
13	20Y-70-34211	BUSHING	1	DBB0001~
	X990001890	BUCKET UNIT	1	DBB0001~
1	20Y-70-34410	. BUCKET	1	DBB0001~
13	20Y-70-34211	. BUSHING	1	DBB0001

FIG. T1510-01B6 BUCKET, 0.8M³ (ROCKTYPE) (OPT)

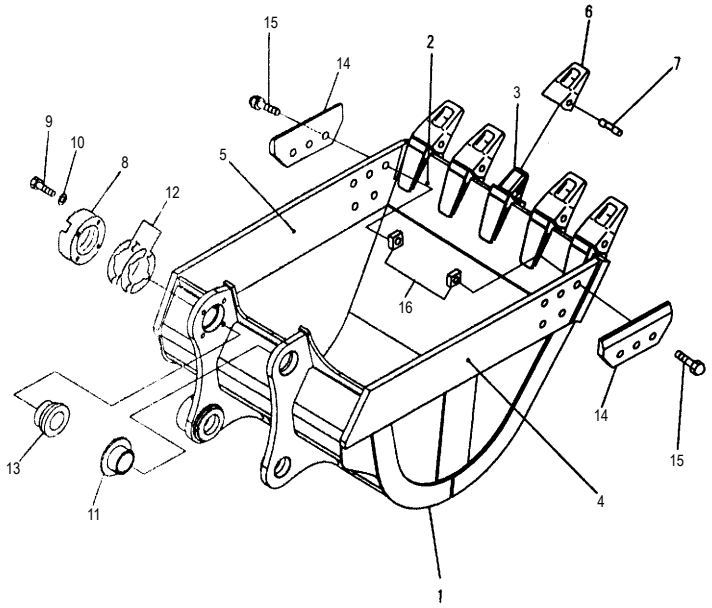

PW1B969

INDEX	PART NO.	DESCRIPTION	Q'TY	SERIAL NO.
1	20Y-934-3210	BUCKET	1	DBB0001~
2	20Y-934-3220	. PLATE (WELDED)	1	DBB0001~
3	20Y-934-2211	. ADAPTER (WELDED)	5	DBB0001~
4	20Y-934-2130	. PLATE, L. H (WELDED)	1	DBB0001~
5	20Y-934-2140	. PLATE, R. H (WELDED)	1	DBB0001~
6	205-70-19570	TOOTH	5	DBB0001~
7	09244-02496	PIN	5	DBB0001~
8	205-70-74391	PLATE	1	DBB0001~
9	01010-62055	BOLT	4	DBB0001~
10	01643-32060	WASHER	4	DBB0001~
11	20Y-70-34221	BUSHING	1	DBB0001~
12	205-70-00100	SHIM ASS' Y	1	DBB0001~
13	20Y-70-34211	BUSHING	1	DBB0001~
14	20Y-934-2150	SHROUD	2	DBB0001~
15	209-32-11234	BOLT	6	DBB0001~
16	195-32-11222	WASHER	6	DBB0001~
	X990001920	BUCKET UNIT	1	DBB0001~
1	20Y-934-3210	. BUCKET	1	DBB0001~
13	20Y-70-34211	. BUSHING	1	DBB0001~

FIG. T1510-01B9 NARROW BUCKET (990 mm), 1.0M³ (HORIZONTAL PIN TYPE) (WITH ADJUSTER) (OPT)

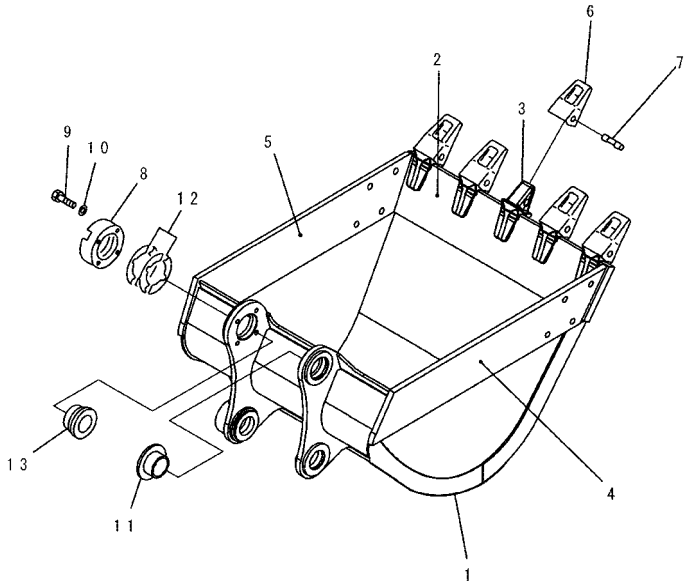

PW1B972

INDEX	PART NO.	DESCRIPTION	Q'TY	SERIAL NO.
1	20Y-70-D8500	BUCKET	1	DBB0001~
2	20Y-70-D8480	. PLATE	1	DBB)0001~
3	20Y-70-14520	. ADAPTER	5	DBB0001~
4	20Y-70-D8470	. PLATE	1	DBB0001~
5	20Y-70-D8460	. PLATE	1	DBB0001~
6	205-70-19570	TOOTH	5	DBB0001~
7	09244-02496	PIN	5	DBB0001~
8	205-70-74391	PLATE	1	DBB0001~
9	01010-62055	BOLT	4	DBB0001~
10	01643-32060	WASHER	4	DBB0001~
11	20Y-70-34221	BUSHING	1	DBB0001~
12	205-70-00100	SHIM ASS' Y	1	DBB0001~
13	20Y-70-34211	BUSHING	1	DBB0001~
	X990001970	BUCKET UNIT	1	DBB0001~
1	20Y-70-D8500	. BUCKET	1	DBB0001~
13	20Y-70-34211	. BUSHING	1	DBB0001~

FIG. T1510-01B9 BUCKET, 0.9M³ (HORIZONTAL PIN TYPE) (WITH ADJUSTER) (OPT)

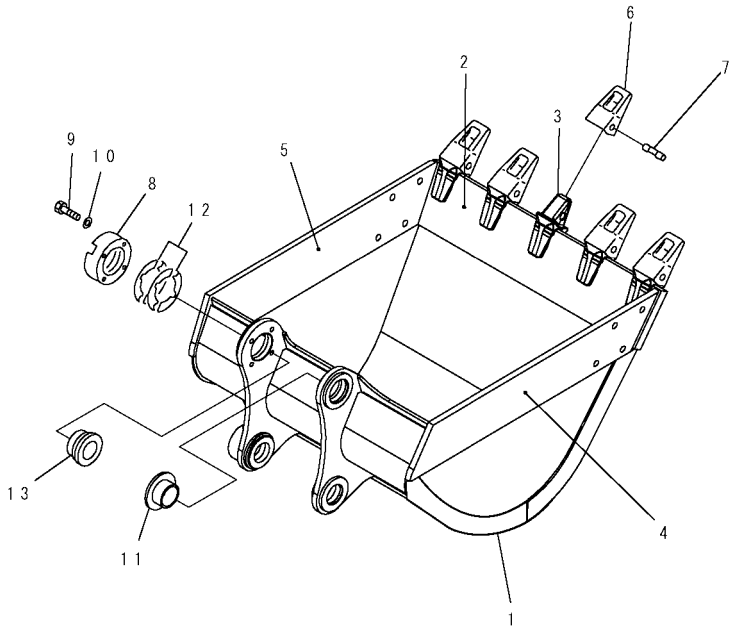

PW1B972

INDEX	PART NO.	DESCRIPTION	Q'TY	SERIAL NO.
1	20Y-920-3510	BUCKET	1	DBB0001~
2	20Y-920-3520	. PLATE	1	DBB0001~
3	20Y-70-14520	. ADAPTER	5	DBB0001~
4	20Y-70-34320	. PLATE	1	DBB0001~
5	20Y-70-34330	. PLATE	1	DBB(0001~
6	205-70-19570	TOOTH	5	DBB0001~
7	09244-02496	PIN	5	DBB0001~
8	205-70-74391	PLATE	1	DBB0001~
9	01010-62055	BOLT	4	DBB0001~
10	01643-32060	WASHER	4	DBB0001~
11	20Y-70-34221	BUSHING	1	DBB0001~
12	205-70-00100	SHIM ASS' Y	1	DBB0001~
13	20Y-70-34211	BUSHING	1	DBB0001~
	X990001900	BUCKET UNIT	1	DBB0001~
1	20Y-920-3510	. BUCKET	1	DBB0001~
13	20Y-70-34211	. BUSHING	1	DBB0001~

FIG. T1510-02A1 SIDE CUTTER (FOR BUCKET)

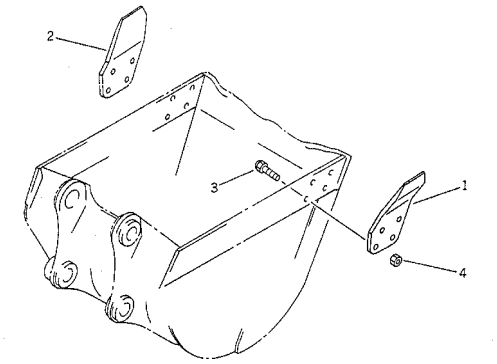

FIG NO. : T1510-02A1

INDEX	PART NO.	DESCRIPTION	Q'TY	SERIAL NO.
1	20Y-70-D1310	CUTTER, L. H	1	DBB0001~
2	20Y-70-D1320	CUTTER, R. H	1	DBB0001~
3	176-32-11210	BOLT, SHOE	8	DBB0001~
4	01803-02430	NUT	8	DBB0001~

FIG. T1920-01A0 BREAKER ADAPTER (FOR KRUPP) (OPT)

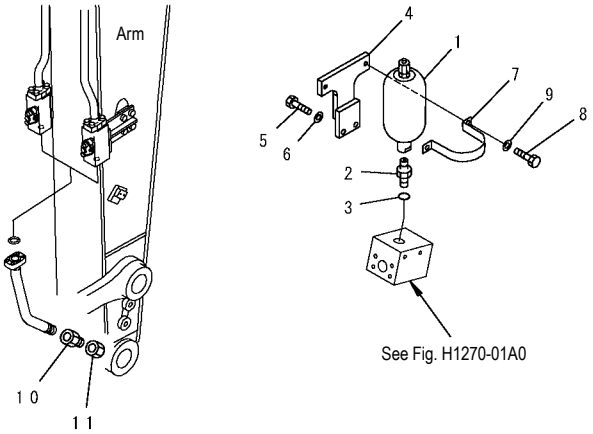

PW1C931

INDEX	PART NO.	DESCRIPTION	Q'TY	SERIAL NO.
1	20Y-970-6440	ACCUMULATOR	1	DBB0001~
	205-970-5560	. O-RING	1	DBB0001~
2	205-970-5550	NIPPLE	1	DBB0001~
3	07002-12434	O-RING	1	DBB0001~
4	20Y-62-43250	BRACKET	1	DBB0001~
5	01010-81235	BOLT	2	DBB0001~
6	01643-31232	WASHER	2	DBB0001~
7	175-61-51750	PLATE	1	DBB0001~
8	01010-81225	BOLT	2	DBB0001~
9	01643-31232	WASHER	2	DBB0001~
10	20Y-970-7130	ADAPTER	2	DBB0001~
11	205-970-7680	PLUG	2	DBB0001~

FIG. T1920-01A1 BREAKER ADAPTER (FOR NIPPON PNEUMATIC) (OPT)

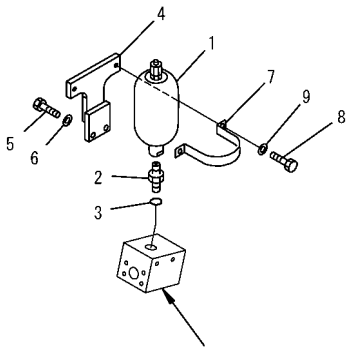

PW1C932

INDEX	PART NO.	DESCRIPTION	Q'TY	SERIAL NO.
1	20Y-970-6440	ACCUMULATOR	1	DBB0001~
	205-970-5560	. O-RING	1	DBB0001~
2	205-970-5550	NIPPLE	1	DBB0001~
3	07002-12434	O-RING	1	DBB0001~
4	20Y-62-43250	BRACKET	1	DBB0001~
5	01010-81235	BOLT	2	DBB0001~
6	01643-31232	WASHER	2	DBB0001~
7	175-61-51750	PLATE	1	DBB0001~
8	01010-81225	BOLT	2	DBB0001~
9	01643-31232	WASHER	2	DBB0001~

FIG. T1920-01A2 BREAKER ADAPTER (FOR FUPUKAWA AND ATLAS) (OPT)

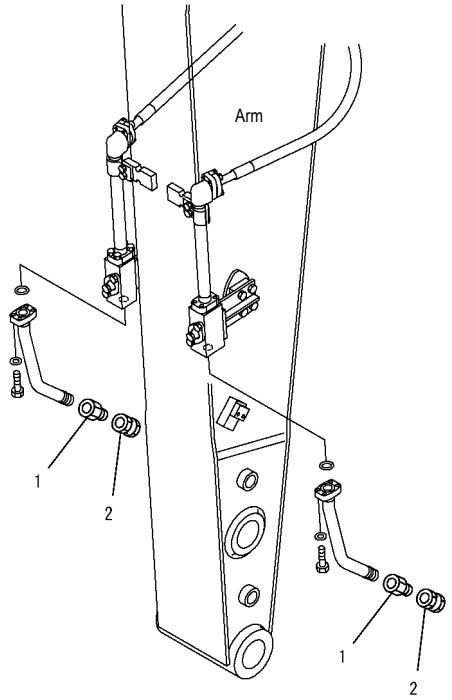

PWB7347

FIG NO. : T1920-01A2

INDEX	PART NO.	DESCRIPTION	Q'TY	SERIAL NO.
1	20Y-970-7130	ADAPTER.....	2	DBB0001~
2	205-970-7680	PLUG.....	2	DBB0001~

FIG. T1920-01A3 BREAKER ADAPTER (FOR MATUDA) (OPT)

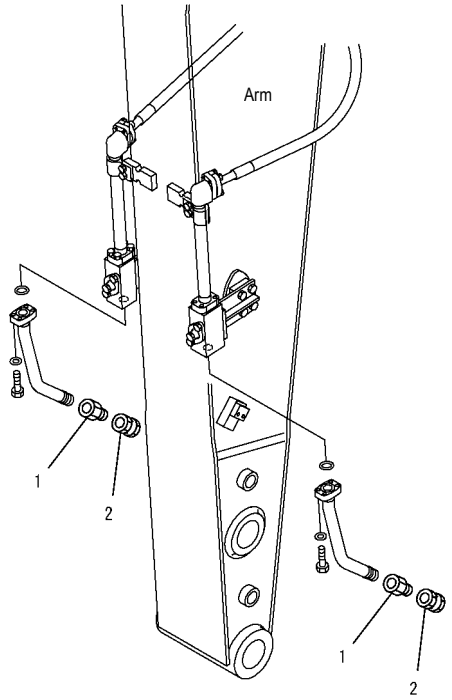

PWB7347

FIG NO. : T1920-01A3

INDEX	PART NO.	DESCRIPTION	Q'TY	SERIAL NO.
1	20Y-970-7140	ADAPTER	2	DBB0001~
2	20Y-970-6550	PLUG	2	DBB0001~

FIG NO. : T1110-03A1

FIG. T1110-03A1 BOOM (FOR ADDITIONAL PIPING) (ARM CYLINDER LINE AND BUCKET CYLINDER LINE) (OPT)

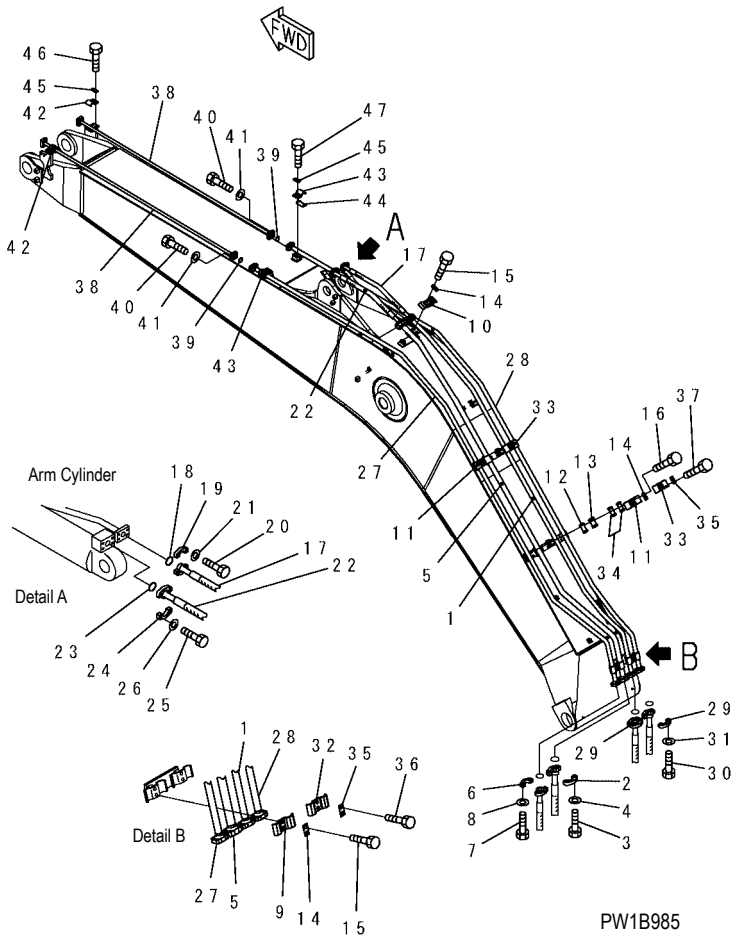

INDEX	PART NO.	DESCRIPTION	Q'TY	SERIAL NO.
1	20Y-62-45120	TUBE	1	DBB0001~
2	07371-30640	FLANGE	2	DBB0001~
3	07372-21035	BOLT	4	DBB0001~
4	01643-51032	WASHER	4	DBB0001~
5	20Y-62-45110	TUBE	1	DBB0001~
6	07371-31049	FLANGE	2	DBB0001~
7	07372-21035	BOLT	4	DBB0001~
8	01643-51032	WASHER	4	DBB0001~
9	20Y-62-13690	CLAMP	1	DBB0001~
10	20Y-62-13720	CLAMP	1	DBB0001~
11	20Y-62-13740	CLAMP	2	DBB0001~
12	20Y-62-13760	. SEAT	1	DBB0001~
13	205-62-73430	. SEAT	1	DBB0001~
14	20Y-62-13450	PLATE	4	DBB0001~
15	01010-81230	BOLT	4	DBB0001~
16	01010-81285	BOLT	4	DBB0001~
17	07074-00607	HOSE	1	DBB0001~
18	07000-13025	O-RING	2	DBB0001~
19	07371-30640	FLANGE	4	DBB0001~
20	07372-21035	BOLT	8	DBB0001~
21	01643-51032	WASHER	8	DBB0001~
22	07074-01007	HOSE	1	DBB0001~
23	07000-13032	O-RING	2	DBB0001~
24	07371-31049	FLANGE	4	DBB0001~
25	07372-21035	BOLT	8	DBB0001~
26	01643-51032	WASHER	8	DBB0001~
27	20Y-62-45130	TUBE	1	DBB0001~
28	20Y-62-45140	TUBE	1	DBB0001~
29	07371-30640	FLANGE	4	DBB0001~
30	07372-21035	BOLT	8	DBB0001~
31	01643-51032	WASHER	8	DBB0001~
32	20Y-62-13710	CLAMP	1	DBB0001~
33	20Y-62-13230	CLAMP	2	DBB0001~
34	20Y-62-13760	. SEAT	1	DBB0001~
35	20Y-62-13450	PLATE	3	DBB0001~
36	01010-81230	BOLT	2	DBB0001~
37	01010-81285	BOLT	4	DBB0001~
38	20Y-62-13580	TUBE	2	DBB0001~
39	07000-13030	O-RING	2	DBB0001~
40	07372-21035	BOLT	8	DBB0001~
41	01643-51032	WASHER	8	DBB0001~
42	20Y-62-13650	CLAMP	2	DBB0001~

FIG. T1110-03A1 BOOM (FOR ADDITIONAL PIPING) (ARM CYLINDER LINE AND BUCKET CYLINDER LINE) (OPT)

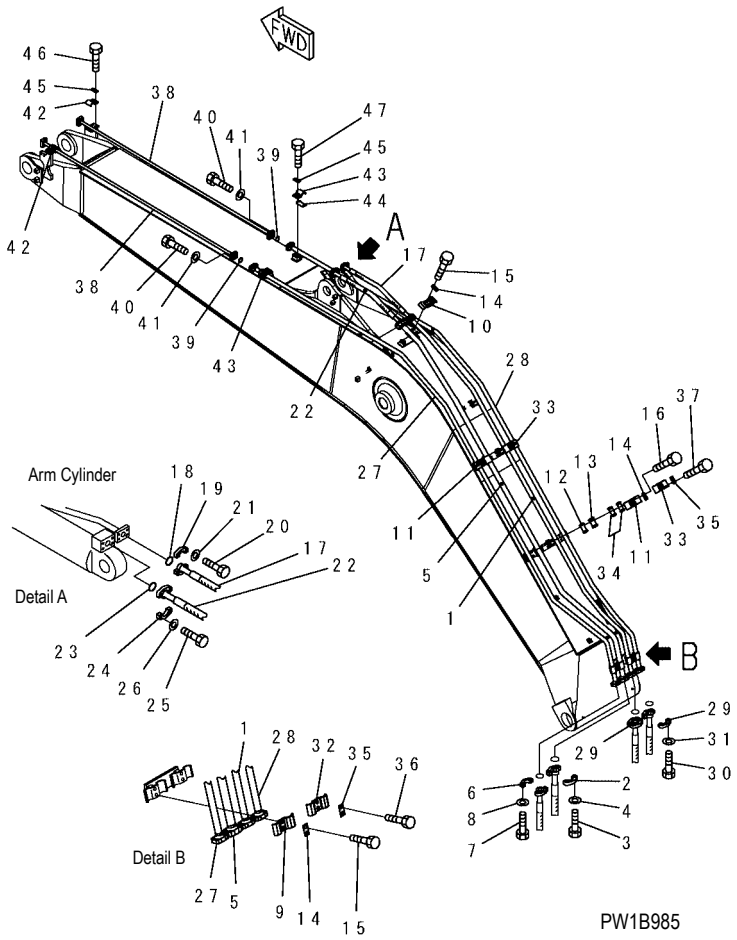

INDEX	PART NO.	DESCRIPTION	Q'TY	SERIAL NO.
43	20Y-62-13220	CLAMP	2	DBB0001~
44	20Y-62-13760	. SEAT	1	DBB0001~
45	20Y-62-13450	PLATE	4	DBB0001~
46	01010-81230	BOLT	4	DBB0001~
47	01010-81285	BOLT	4	DBB0001~

FIG. T1110-05A1 BOOM (ADDITIONAL LINE) (FOR ADDITIONAL PIPING) (OPT)

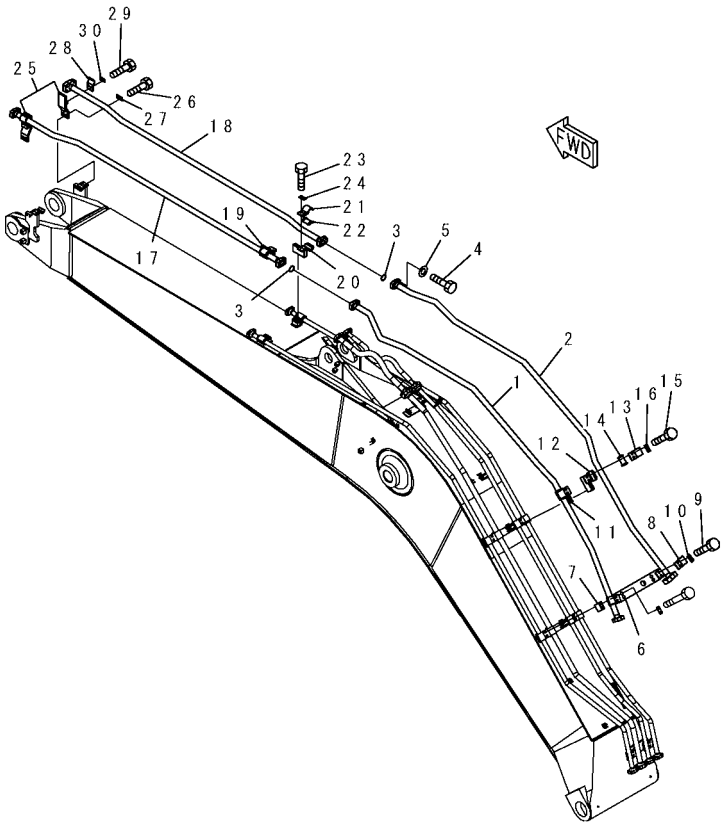

PW1B986

INDEX	PART NO.	DESCRIPTION	Q'TY	SERIAL NO.
1	20Y-62-45221	TUBE	1	DBB0001~
2	20Y-62-45231	TUBE	1	DBB0001~
3	07000-13035	O-RING	2	DBB0001~
4	07372-21040	BOLT	8	DBB0001~
5	01643-51032	WASHER	8	DBB0001~
6	20Y-62-45270	BRACKET	1	DBB0001~
7	20Y-62-45280	PLATE	2	DBB0001~
8	207-62-31330	CLAMP	2	DBB0001~
9	01010-81250	BOLT	4	DBB0001~
10	20Y-62-13450	PLATE	2	DBB0001~
11	20Y-62-45250	BRACKET	1	DBB0001~
12	20Y-62-45260	BRACKET	1	DBB0001~
13	207-62-52430	CLAMP	2	DBB0001~
14	205-62-73430	. SEAT	1	DBB0001~
15	01010-81230	BOLT	4	DBB0001~
16	20Y-62-13450	PLATE	2	DBB0001~
17	20Y-62-45290	TUBE	1	DBB0001~
18	20Y-62-45310	TUBE	1	DBB0001~
19	20Y-62-45250	BRACKET	1	DBB0001~
20	20Y-62-45260	BRACKET	1	DBB0001~
21	207-62-52430	CLAMP	2	DBB0001~
22	205-62-73430	. SEAT	1	DBB0001~
23	01010-81230	BOLT	4	DBB0001~
24	20Y-62-13450	PLATE	2	DBB0001~
25	20Y-62-45380	BRACKET	2	DBB0001~
26	01010-81230	BOLT	4	DBB0001~
27	20Y-62-13450	PLATE	2	DBB0001~
28	207-62-31330	CLAMP	2	DBB0001~
29	01010-81225	BOLT	4	DBB0001~
30	20Y-62-13450	PLATE	2	DBB0001~

FIG. T1200-01A1 ARM (2.9M) (FOR ADDITIONAL PIPING) (OPT)

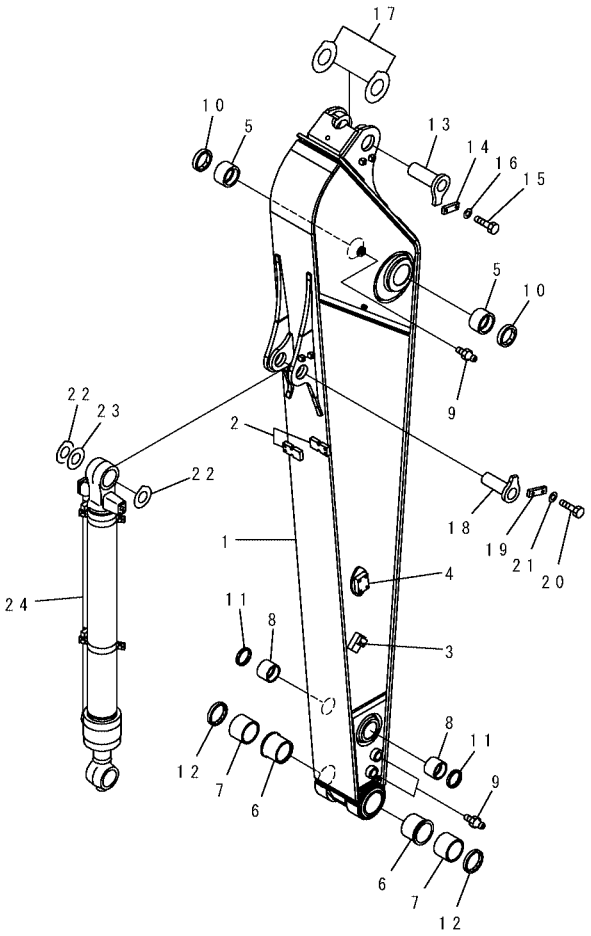

PW1C003

INDEX	PART NO.	DESCRIPTION	Q'TY	SERIAL NO.
	20Y-970-7121	ARM	1	DBB0001~
1	☆	. ARM	1	DBB0001~
2	20Y-70-32E50	. SEAT (WELDED)	2	DBB0001~
3	20Y-970-3560	. BRACKET (WELDED)	2	DBB0001~
4	20Y-970-3570	. BRACKET (WELDED)	2	DBB0001~
5	20Y-70-31271	BUSHING	2	DBB0001~
6	20Y-70-32321	BUSHING	2	DBB0001~
7	20Y-70-32331	BUSHING	2	DBB0001~
8	20Y-70-32371	BUSHING	2	DBB0001~
9	07020-00000	FITTING	3	DBB0001~
10	07145-00090	SEAL	2	DBB0001~
11	20Y-70-23220	SEAL	2	DBB0001~
12	20Y-70-23230	SEAL	2	DBB0001~
13	20Y-70-31160	PIN	1	DBB0001~
14	205-70-66580	PLATE	1	DBB0001~
15	01010-81230	BOLT	2	DBB0001~
16	01643-31232	WASHER	2	DBB0001~
17	20Y-70-31430	SPACER, 1.0 MM	2	DBB0001~
18	205-70-71190	PIN	1	DBB0001~
19	205-70-66580	PLATE	1	DBB0001~
20	01010-81230	BOLT	2	DBB0001~
21	01643-31232	WASHER	2	DBB0001~
22	20Y-70-31380	SPACER, 1.0 MM	2	DBB0001~
23	20Y-70-31390	SPACER, 2.0 MM	2	DBB0001~
24	(⊙707-01-XZ851)	CYLINDER GROUP (FINAL COAT)	1	DBB0001~
	(⊙707-01-XA991)	CYLINDER GROUP (UNDER COAT)	1	DBB0001~

FIG. T1200-01A3 ARM (2.4M) (FOR ADDITIONAL PIPING) (OPT)

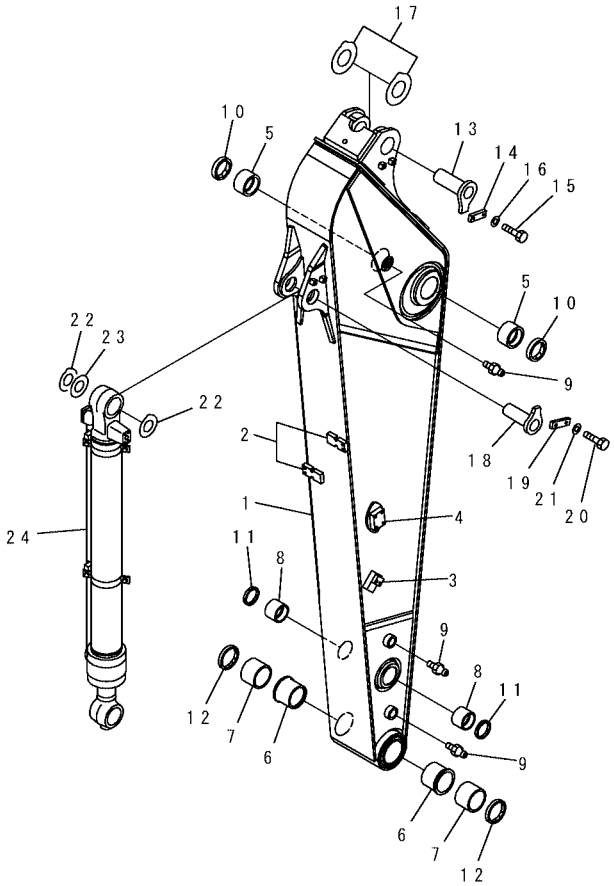

PW1C005

INDEX	PART NO.	DESCRIPTION	Q'TY	SERIAL NO.
	20Y-970-7151	ARM	1	DBB0001~
1	☆	. ARM	1	DBB0001~
2	20Y-70-32E50	. SEAT (WELDED)	2	DBB0001~
3	20Y-970-3560	. BRACKET (WELDED)	2	DBB0001~
4	20Y-970-3570	. BRACKET (WELDED)	2	DBB0001~
5	20Y-70-31271	BUSHING	2	DBB0001~
6	20Y-70-32321	BUSHING	2	DBB0001~
7	20Y-70-32331	BUSHING	2	DBB0001~
8	20Y-70-32371	BUSHING	2	DBB0001~
9	07020-00000	FITTING	2	DBB0001~
10	07145-00090	SEAL	2	DBB0001~
11	20Y-70-23220	SEAL	2	DBB0001~
12	20Y-70-23230	SEAL	2	DBB0001~
13	20Y-70-31160	PIN	1	DBB0001~
14	205-70-66580	PLATE	1	DBB0001~
15	01010-81230	BOLT	2	DBB0001~
16	01643-31232	WASHER	2	DBB0001~
17	20Y-70-31430	SPACER, 1.0 MM	2	DBB0001~
18	205-70-71190	PIN	1	DBB0001~
19	205-70-66580	PLATE	1	DBB0001~
20	01010-81230	BOLT	2	DBB0001~
21	01643-31232	WASHER	2	DBB0001~
22	20Y-70-31380	SPACER, 1.0 MM	2	DBB0001~
23	20Y-70-31390	SPACER, 2.0 MM	2	DBB0001~
24	(⊙707-01-XZ851)	CYLINDER GROUP (FINAL COAT)	1	DBB0001~
	(⊙707-01-XA991)	CYLINDER GROUP (UNDER COAT)	1	DBB0001~

FIG. T1200-02A1 ARM (2.9M) (BUCKET LINK) (FOR ADDITIONAL PIPING) (OPT)

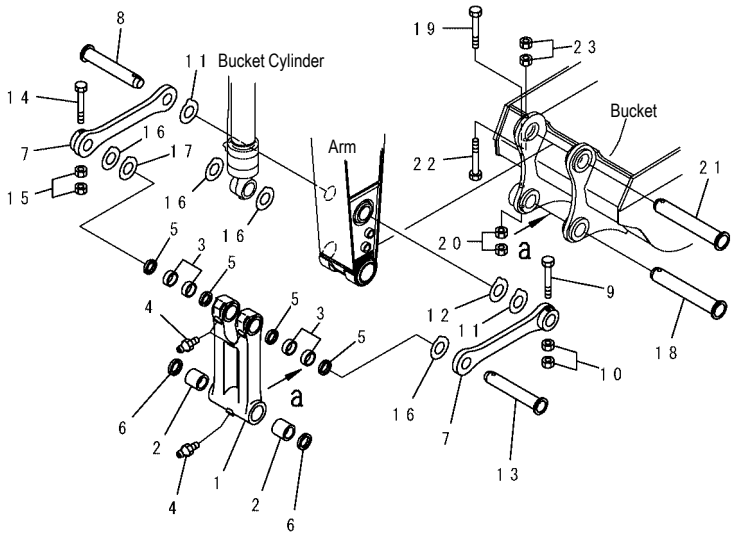

PW1C006

INDEX	PART NO.	DESCRIPTION	Q'TY	SERIAL NO.
1	20Y-70-D2270	LINK	1	DBF0001~
2	20Y-70-32351	BUSHING	2	DBF0001~
3	20Y-70-32361	BUSHING	4	DBF0001~
4	07020-00000	FITTING	3	DBF0001~
5	20Y-70-23220	SEAL	4	DBF0001~
6	20Y-70-23230	SEAL	2	DBF0001~
7	205-70-73130	LINK	2	DBF0001~
8	22U-70-21191	PIN	1	DBF0001~
9	205-70-73190	BOLT	1	DBF0001~
10	01580-12016	NUT	2	DBF0001~
11	20Y-70-31450	SPACER, 1.0 MM	2	DBF0001~
12	20Y-70-31460	SPACER, 2.0 MM	1	DBF0001~
13	22U-70-21191	PIN	1	DBF0001~
14	205-70-73190	BOLT	1	DBF0001~
15	01580-12016	NUT	2	DBF0001~
16	20Y-70-31440	SPACER, 1.0 MM	4	DBF0001~
17	20Y-70-31480	SPACER, 2.0 MM	1	DBF0001~
18	205-70-73270	PIN	1	DBF0001~
19	205-70-73190	BOLT	1	DBF0001~
20	01580-12016	NUT	2	DBF0001~
21	205-70-73270	PIN	1	DBF0001~
22	362-46-11210	BOLT	1	DBF0001~
23	01580-12016	NUT	2	DBF0001~

FIG. T1200-04A1 ARM (2.9M) (ADDITIONAL PIPING) (OPT)

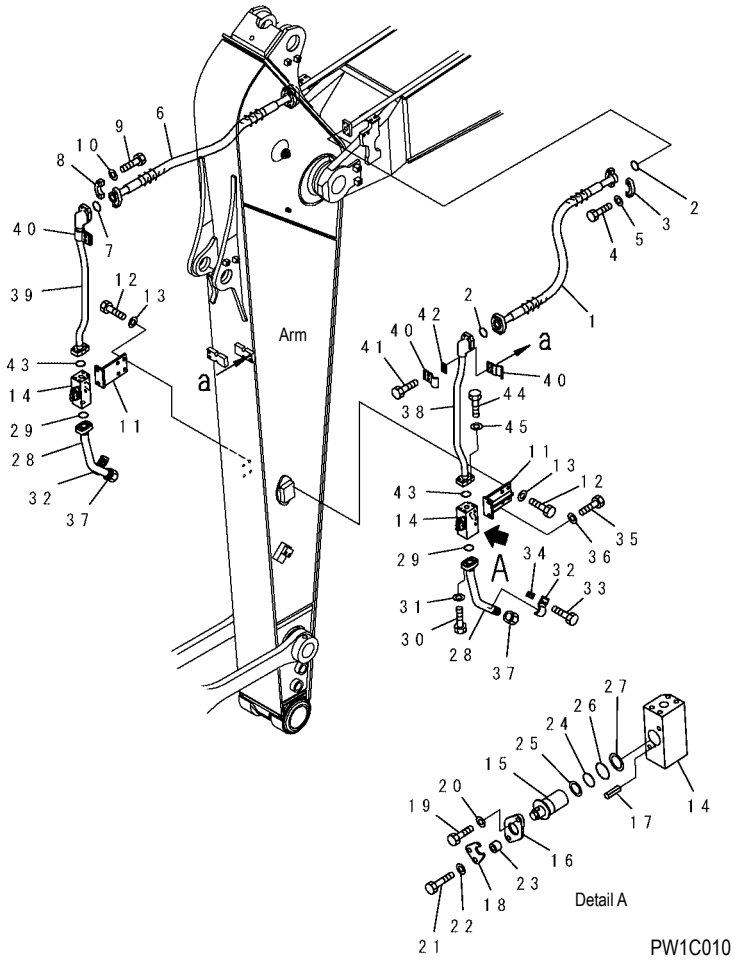

INDEX	PART NO.	DESCRIPTION	Q'TY	SERIAL NO.
1	07097-21015	HOSE	1	DBB0001~
2	21T-09-11460	O-RING	2	DBB0001~
3	07371-31049	FLANGE	4	DBB0001~
4	07372-21035	BOLT	8	DBB0001~
5	01643-51032	WASHER	8	DBB0001~
6	07097-21218	HOSE	1	DBB0001~
7	07000-13038	O-RING	2	DBB0001~
8	07371-51260	FLANGE	4	DBB0001~
9	01010-81245	BOLT	8	DBB0001~
10	01643-31232	WASHER	8	DBB0001~
11	20Y-970-3220	BRACKET	2	DBB0001~
12	01010-81230	BOLT	8	DBB0001~
13	01643-31232	WASHER	8	DBB0001~
	20Y-970-2300	STOP VALVE ASS' Y	2	DBB0001~
14	☆	. BODY	1	DBB0001~
15	20Y-970-3240	. ROTOR	1	DBB0001~
16	20Y-970-3270	. PLATE	1	DBB0001~
17	04025-00412	. PIN	1	DBB0001~
18	20Y-970-4611	. PLATE	1	DBB0001~
19	01010-81025	. BOLT	1	DBB0001~
20	01643-31032	. WASHER	1	DBB0001~
21	01010-81045	. BOLT	1	DBB0001~
22	01643-31032	. WASHER	1	DBB0001~
23	201-03-29160	. SPACER	1	DBB0001~
24	07000-13032	. O-RING	1	DBB0001~
25	07001-03032	. RING	1	DBB0001~
26	07000-13038	. O-RING	1	DBB0001~
27	07001-03038	. RING	1	DBB0001~
28	20Y-62-45360	TUBE	2	DBB0001~
29	07000-13035	O-RING	2	DBB0001~
30	07372-21040	BOLT	8	DBB0001~
31	01643-51032	WASHER	8	DBB0001~
32	207-62-31330	CLAMP	2	DBB0001~

FIG. T1200-04A1 ARM (2.9M) (ADDITIONAL PIPING) (OPT)

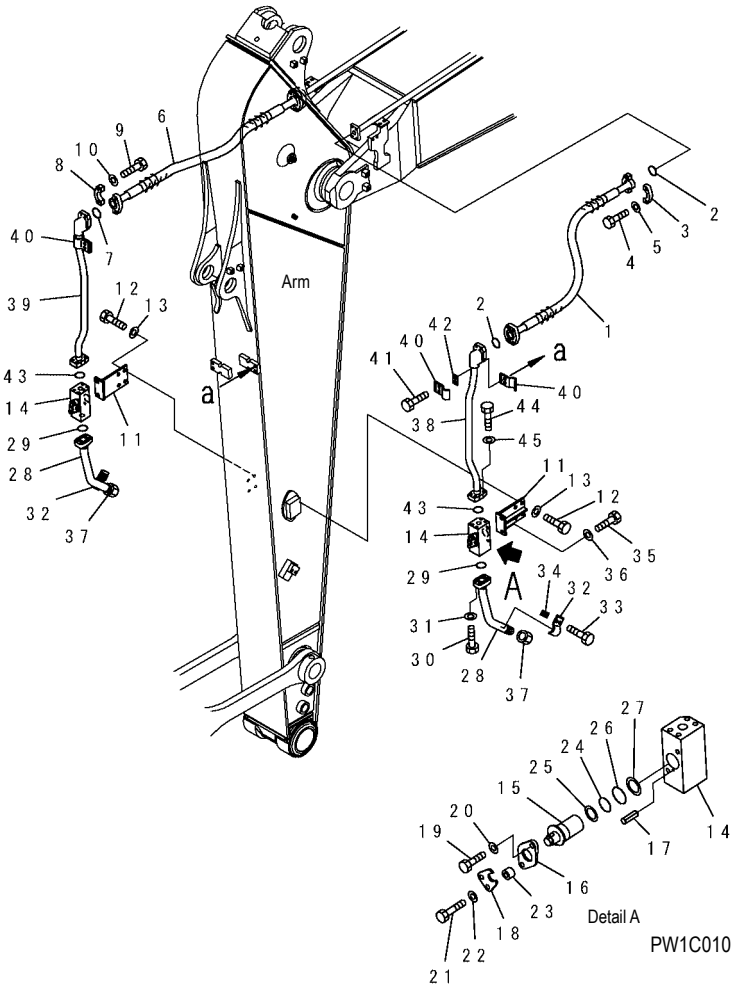

INDEX	PART NO.	DESCRIPTION	Q'TY	SERIAL NO.
33	01010-81225	BOLT	4	DBB0001~
34	20Y-62-13450	PLATE	2	DBB0001~
35	01010-81230	BOLT	4	DBB0001~
36	01643-31232	WASHER	4	DBB0001~
37	205-970-5770	PLUG	2	DBB0001~
38	20Y-62-45340	TUBE	1	DBB0001~
39	20Y-62-45350	TUBE	1	DBB0001~
40	207-62-31330	CLAMP	4	DBB0001~
41	01010-81230	BOLT	4	DBB0001~
42	20Y-62-13450	PLATE	2	DBB0001~
43	07000-13035	O-RING	2	DBB0001~
44	07372-21040	BOLT	8	DBB0001~
45	01643-51032	WASHER	8	DBB0001~

FIG. T1200-04A3 ARM (2.4M) (ADDITIONAL PIPING) (L. H.) (OPT)

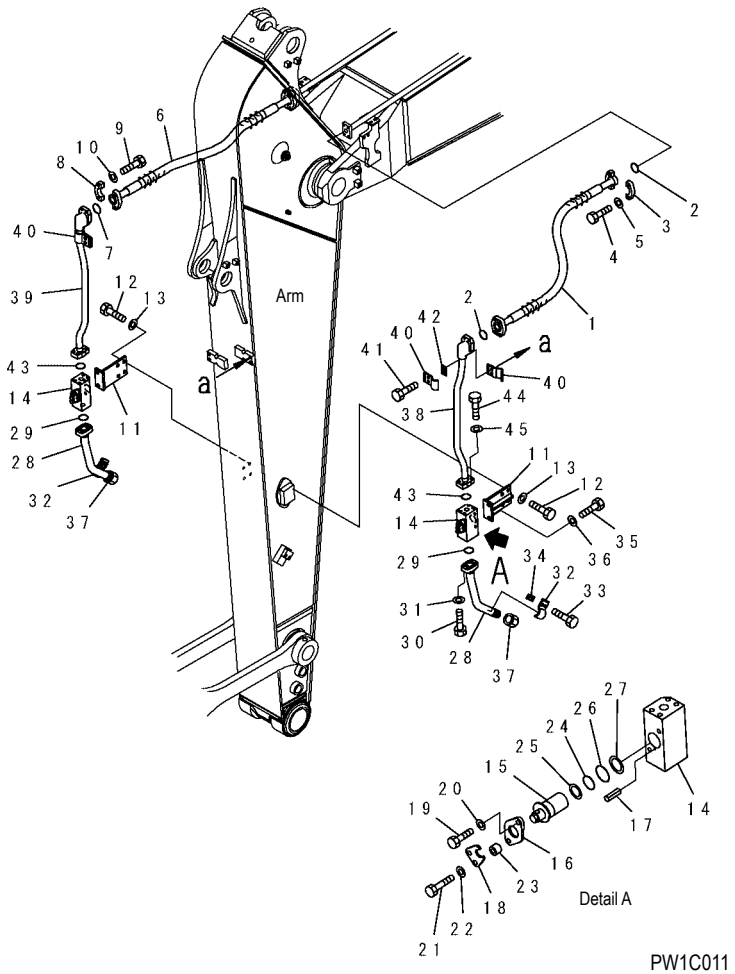

INDEX	PART NO.	DESCRIPTION	Q'TY	SERIAL NO.
1	07097-21015	HOSE	1	DBB0001~
2	21T-09-11460	O-RING	2	DBB0001~
3	07371-31049	FLANGE	4	DBB0001~
4	07372-21035	BOLT	8	DBB0001~
5	01643-51032	WASHER	8	DBB0001~
6	07097-21218	HOSE	1	DBB0001~
7	07000-13038	O-RING	2	DBB0001~
8	07371-51260	FLANGE	4	DBB0001~
9	01010-81245	BOLT	8	DBB0001~
10	01643-31232	WASHER	8	DBB0001~
11	20Y-970-3220	BRACKET	1	DBB0001~
12	01010-81230	BOLT	4	DBB0001~
13	01643-31232	WASHER	4	DBB0001~
	20Y-970-2300	STOP VALVE ASS' Y	1	DBB0001~
14	☆	. BODY	1	DBB0001~
15	20Y-970-3240	. ROTOR	1	DBB0001~
16	20Y-970-3270	. PLATE	1	DBB0001~
17	04025-00412	. PIN	1	DBB0001~
18	20Y-970-4611	. PLATE	1	DBB0001~
19	01010-81025	. BOLT	1	DBB0001~
20	01643-31032	. WASHER	1	DBB0001~
21	01010-81045	. BOLT	1	DBB0001~
22	01643-31032	. WASHER	1	DBB0001~
23	201-03-29160	. SPACER	1	DBB0001~
24	07000-13032	. O-RING	1	DBB0001~
25	07001-03032	. RING	1	DBB0001~
26	07000-13038	. O-RING	1	DBB0001~
27	07001-03038	. RING	1	DBB0001~
28	20Y-62-45360	TUBE	1	DBB0001~
29	07000-13035	O-RING	1	DBB0001~
30	07372-21040	BOLT	4	DBB0001~
31	01643-51032	WASHER	4	DBB0001~
32	207-62-31330	CLAMP	1	DBB0001~
33	01010-81225	BOLT	2	DBB0001~
34	20Y-62-13450	PLATE	1	DBB0001~
35	01010-81230	BOLT	2	DBB0001~
36	01643-31232	WASHER	2	DBB0001~
37	205-970-5770	PLUG	1	DBB0001~

FIG. T1200-05A3 ARM (2.4M) (ADDITIONAL PIPING) (R. H.) (OPT)

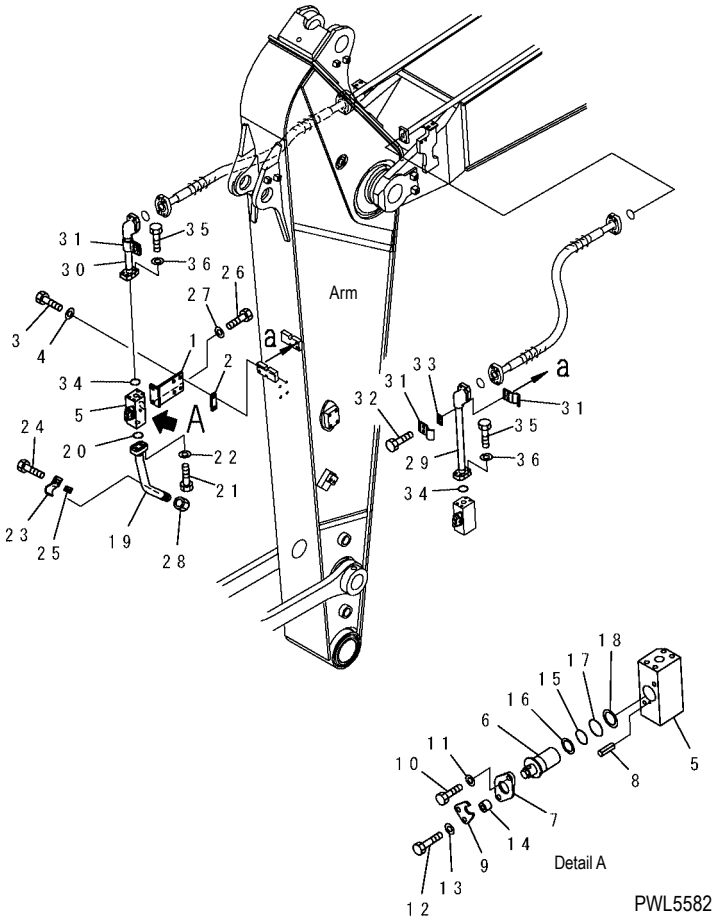

INDEX	PART NO.	DESCRIPTION	Q'TY	SERIAL NO.
1	20Y-970-3220	BRACKET	1	DBB0001~
2	22T-72-11220	PLATE	2	DBB0001~
3	01010-81240	BOLT	1	DBB0001~
4	01643-31232	WASHER	1	DBB0001~
	20Y-970-2300	STOP VALVE ASS' Y	1	DBB0001~
5	☆	. BODY	1	DBB0001~
6	20Y-970-3240	. ROTOR	1	DBB0001~
7	20Y-970-3270	. PLATE	1	DBB0001~
8	04025-00412	. PIN	1	DBB0001~
9	20Y-970-4611	. PLATE	1	DBB0001~
10	01010-81025	. BOLT	1	DBB0001~
11	01643-31032	. WASHER	1	DBB0001~
12	01010-81045	. BOLT	1	DBB0001~
13	01643-31032	. WASHER	1	DBB0001~
14	201-03-29160	. SPACER	1	DBB0001~
15	07000-13032	. O-RING	1	DBB0001~
16	07001-03032	. RING	1	DBB0001~
17	07000-13038	. O-RING	1	DBB0001~
18	07001-03038	. RING	1	DBB0001~
19	20Y-62-45360	TUBE	1	DBB0001~
20	07000-13035	O-RING	1	DBB0001~
21	07372-21040	BOLT	4	DBB0001~
22	01643-51032	WASHER	4	DBB0001~
23	207-62-31330	CLAMP	2	DBB0001~
24	01010-81230	BOLT	2	DBB0001~
25	20Y-62-13450	PLATE	1	DBB0001~
26	01010-81230	BOLT	2	DBB0001~
27	01643-31232	WASHER	2	DBB0001~
28	205-970-5770	PLUG	1	DBB0001~
29	20Y-970-6310	TUBE, L. H	1	DBB0001~
30	20Y-970-7160	TUBE	1	DBB0001~
31	207-62-31330	CLAMP	4	DBB0001~
32	01010-81230	BOLT	4	DBB0001~
33	20Y-62-13450	PLATE	2	DBB0001~
34	07000-13035	O-RING	2	DBB0001~
35	07372-21040	BOLT	8	DBB0001~
36	01643-51032	WASHER	8	DBB0001~

FIG. T1200-01A0 ARM (RUSSIAN SPEC) (2.9m) (PC200, 200LC-7)

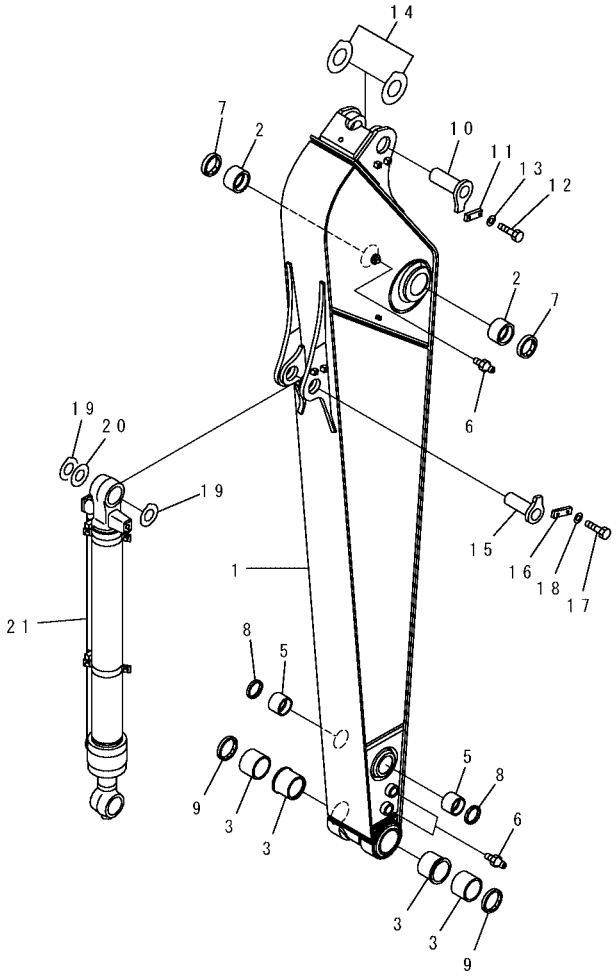

PW1C935

(PC200, 200LC-7)

INDEX	PART NO.	DESCRIPTION	Q'TY	SERIAL NO.
1	20Y-970-D300	ARM	1	DBB0001~
2	20Y-70-31272	BUSHING	2	DBB0001~
3	20Y-70-32410	BUSHING	4	DBB0001~
5	205-70-73180	BUSHING	2	DBB0001~
6	07020-00000	FITTING	3	DBB0001~
7	07145-00090	SEAL	2	DBB0001~
8	20Y-70-23220	SEAL	2	DBB0001~
9	20Y-70-23230	SEAL	2	DBB0001~
10	20Y-70-31160	PIN	1	DBB0001~
11	205-70-66580	PLATE	1	DBB0001~
12	01010-81230	BOLT	2	DBB0001~
13	01643-31232	WASHER	2	DBB0001~
14	20Y-70-31430	SPACER, 1.0 MM	2	DBB0001~
15	205-70-71190	PIN	1	DBB0001~
16	205-70-66580	PLATE	1	DBB0001~
17	01010-81230	BOLT	2	DBB0001~
18	01643-31232	WASHER	2	DBB0001~
19	20Y-70-31380	SPACER, 1.0 MM	2	DBB0001~
20	20Y-70-31390	SPACER, 2.0 MM	2	DBB0001~
21	707-01-XG481	CYLINDER GROUP (UNDER COAT)	1	DBB0001~

MARKS AND PLATES

FIG. U0100-01A2 DECAL AND PLATE (CHINESE)

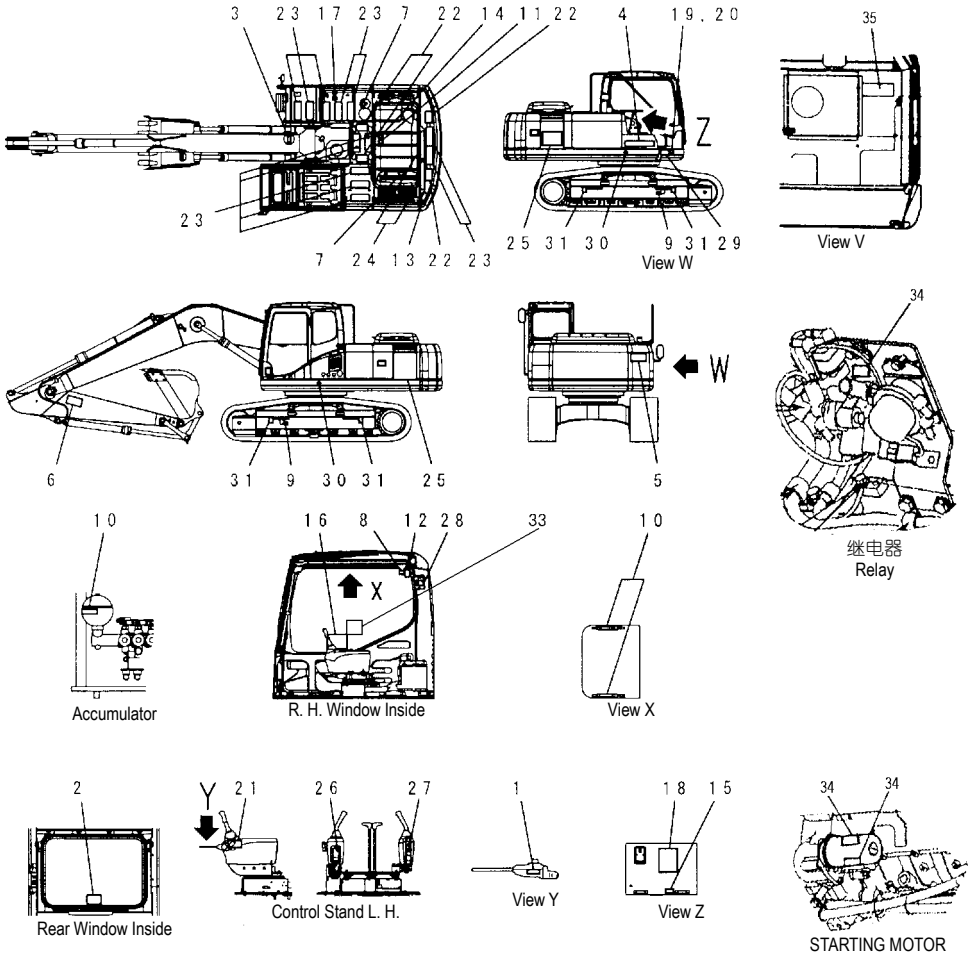

PW1C949

(PC200-7)

INDEX	PART NO.	DESCRIPTION	Q'TY	SERIAL NO.
1	09685-00002	PLATE, OPERATING	1	DBB0001~
2	20Y-00-D1240	PLATE	1	DBB0001~
3	09690-M0063	PLATE, MARK	1	DBB0001~
4	09690-P0630	PLATE, MARK	1	DBB0001~
5	09133-A3281	PLATE, SAFETY	1	DBB0001~
6	09134-A1681	PLATE, CAUTION	2	DBB0001~
7	09653-A0481	PLATE, SAFETY	2	DBB0001~
9	09657-A0881	PLATE, SAFETY	2	DBB0001~
10	09659-A057B	PLATE, SAFETY	3	DBB0001~
11	09667-A0481	PLATE, SAFETY	1	DBB0001~
12	09803-A0481	PLATE, SAFETY	1	DBB0001~
13	09805-A0881	PLATE, SAFETY	1	DBB0001~
14	09805-C0481	PLATE, SAFETY	1	DBB0001~
15	09808-A0881	PLATE, SAFETY	1	DBB0001~
16	20Y-00-31890	PLATE	1	DBB0001~
17	09669-0000E	PLATE, CAUTION	1	DBB0001~
18	20Y-00-31130	PLATE	1	DBB0001~
19	09601-200C1	PLATE, NAME	1	DBB0001~
20	04418-13060	SCREW	4	DBB0001~
21	09963-A1640	TAG	1	DBB0001~
22	203-00-51170	SEAT	4	DBB0001~
23	154-54-23260	SEAT	12	DBB0001~
24	20Y-00-31110	SHEET	2	DBB0001~
25	20Y-00-31120	PLATE	2	DBB0001~
26	20Y-00-31860	PLATE	1	DBB0001~
27	20Y-00-31870	PLATE	1	DBB0001~
28	20Y-00-31880	PLATE	1	DBB0001~
29	20Y-00-31840	PLATE	1	DBB0001~
30	21U-98-D1160	PLATE, MARK	2	DBB0001~
31	21U-98-D1150	PLATE, MARK	4	DBB0001~
32	20Y-00-D1390	PLATE	1	DBB0001~
33	20Y-00-D1400	PLATE	1	DBB0001~
34	09842-A0481	PLATE SAFETY	3	DBB0001~
35	20Y-00-D1460	PLATE	1	DBB0001~

FIG. U0100-01A3 DECAL AND PLATE (CHINESE)

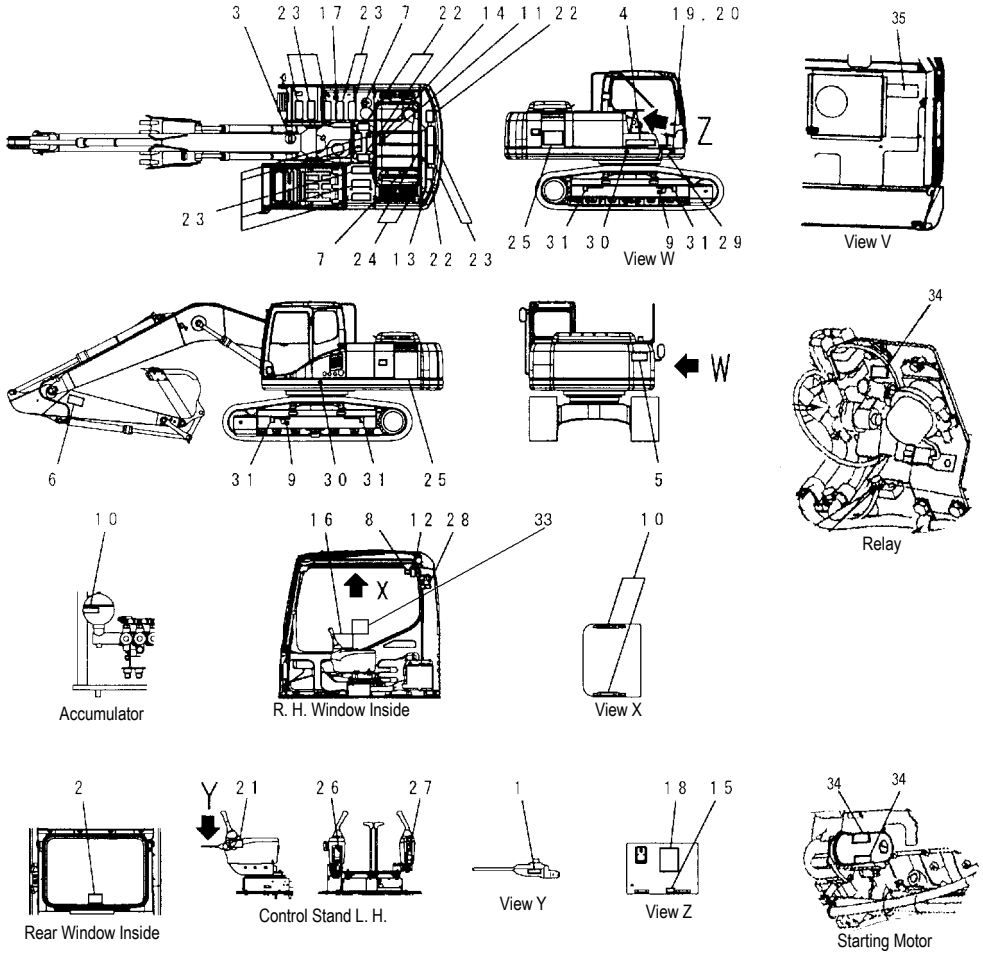

PW1C949

(PC200LC-7)

INDEX	PART NO.	DESCRIPTION	Q'TY	SERIAL NO.
1	09685-00002	PLATE, OPERATING	1	DBE0001~
2	20Y-00-D1240	PLATE	1	DBE0001~
3	09690-M0063	PLATE, MARK	1	DBE0001~
4	09690-P0630	PLATE, MARK	1	DBE0001~
5	09133-A3281	PLATE, SAFETY	1	DBE0001~
6	09134-A1681	PLATE, CAUTION	2	DBE0001~
7	09653-A0481	PLATE, SAFETY	2	DBE0001~
9	09657-A0881	PLATE, SAFETY	2	DBE0001~
10	09659-A057B	PLATE, SAFETY	3	DBE0001~
11	09667-A0481	PLATE, SAFETY, SAFETY	1	DBE0001~
12	09803-A0481	PLATE, SAFETY	1	DBE0001~
13	09805-A0881	PLATE, SAFETY	1	DBE0001~
14	09805-C0481	PLATE, SAFETY, SAFETY	1	DBE0001~
15	09808-A0881	PLATE, SAFETY, SAFETY	1	DBE0001~
16	20Y-00-31890	PLATE	1	DBE0001~
17	09669-0000E	PLATE, CAUTION	1	DBE0001~
18	20Y-00-31130	PLATE	1	DBE0001~
19	09601-200C1	PLATE, NAME	1	DBE0001~
20	04418-13060	SCREW	4	DBE0001~
21	09963-A1640	TAG	1	DBE0001~
22	203-00-51170	SEAT	4	DBE0001~
23	154-54-23260	SEAT	12	DBE0001~
24	20Y-00-31110	SHEET	2	DBE0001~
25	20Y-00-31220	PLATE	2	DBE0001~
26	20Y-00-31860	PLATE	1	DBE0001~
27	20Y-00-31870	PLATE	1	DBE0001~
28	20Y-00-31880	PLATE	1	DBE0001~
29	20Y-00-31840	PLATE	1	DBE0001~
30	21U-98-D1160	PLATE, MARK	2	DBE0001~
31	21U-98-D1150	PLATE, MARK	4	DBE0001~
32	20Y-00-D1390	PLATE	1	DBE0001~
33	20Y-00-D1400	PLATE	1	DBE0001~
34	09842-A0481	PLATE SAFETY	1	DBE0001~
35	20Y-00-D1460	PLATE	1	DBE0001~

FIG. U0100-01A4 DECAL AND PLATE (CHINESE)

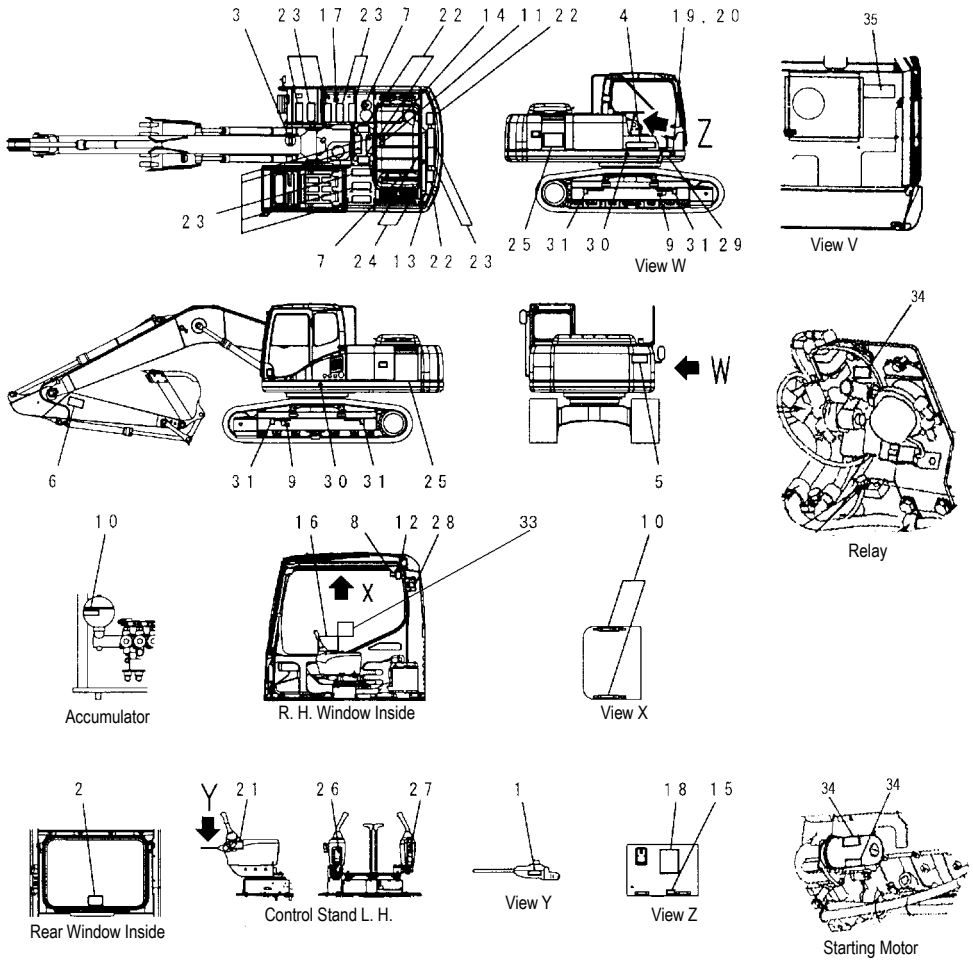

PW1C949

FIG NO. : U0100-01A2

(PC210-7)

INDEX	PART NO.	DESCRIPTION	Q'TY	SERIAL NO.
1	09685-00002	PLATE, OPERATING	1	DBF0001~
2	20Y-00-D1240	PLATE	1	DBF0001~
3	09690-M0063	PLATE, MARK	1	DBF0001~
4	09690-P0630	PLATE, MARK	1	DBF0001~
5	09133-A3281	PLATE, SAFETY	1	DBF0001~
6	09134-A1681	PLATE, CAUTION	2	DBF0001~
7	09653-A0481	PLATE, SAFETY	2	DBF0001~
9	09657-A0881	PLATE, SAFETY	2	DBF0001~
10	09659-A057B	PLATE, SAFETY	3	DBF0001~
11	09667-A0481	PLATE, SAFETY	1	DBF0001~
12	09803-A0481	PLATE, SAFETY	1	DBF0001~
13	09805-A0881	PLATE, SAFETY	1	DBF0001~
14	09805-C0481	PLATE, SAFETY	1	DBF0001~
15	09808-A0881	PLATE, SAFETY	1	DBF0001~
16	20Y-00-31890	PLATE	1	DBF0001~
17	09669-0000E	PLATE, CAUTION	1	DBF0001~
18	20Y-00-31130	PLATE	1	DBF0001~
19	09601-200C1	PLATE, NAME	1	DBF0001~
20	04418-13060	SCREW	4	DBF0001~
21	09963-A1640	TAG	1	DBF0001~
22	203-00-51170	SEAT	4	DBF0001~
23	154-54-23260	SEAT	12	DBF0001~
24	20Y-00-31110	SHEET	2	DBF0001~
25	20Y-00-31230	PLATE	2	DBF0001~
26	20Y-00-31860	PLATE	1	DBF0001~
27	20Y-00-31870	PLATE	1	DBF0001~
28	20Y-00-31880	PLATE	1	DBF0001~
29	20Y-00-31840	PLATE	1	DBF0001~
30	21U-98-D1160	PLATE, MARK	2	DBF0001~
31	21U-98-D1150	PLATE, MARK	4	DBF0001~
32	20Y-00-D1390	PLATE	1	DBF0001~
33	20Y-00-D1400	PLATE	1	DBF0001~
34	09842-A0481	PLATE SAFETY	3	DBF0001~
35	20Y-00-D1460	PLATE	1	DBF0001~

FIG. U0100-01A5 DECAL AND PLATE (CHINESE)

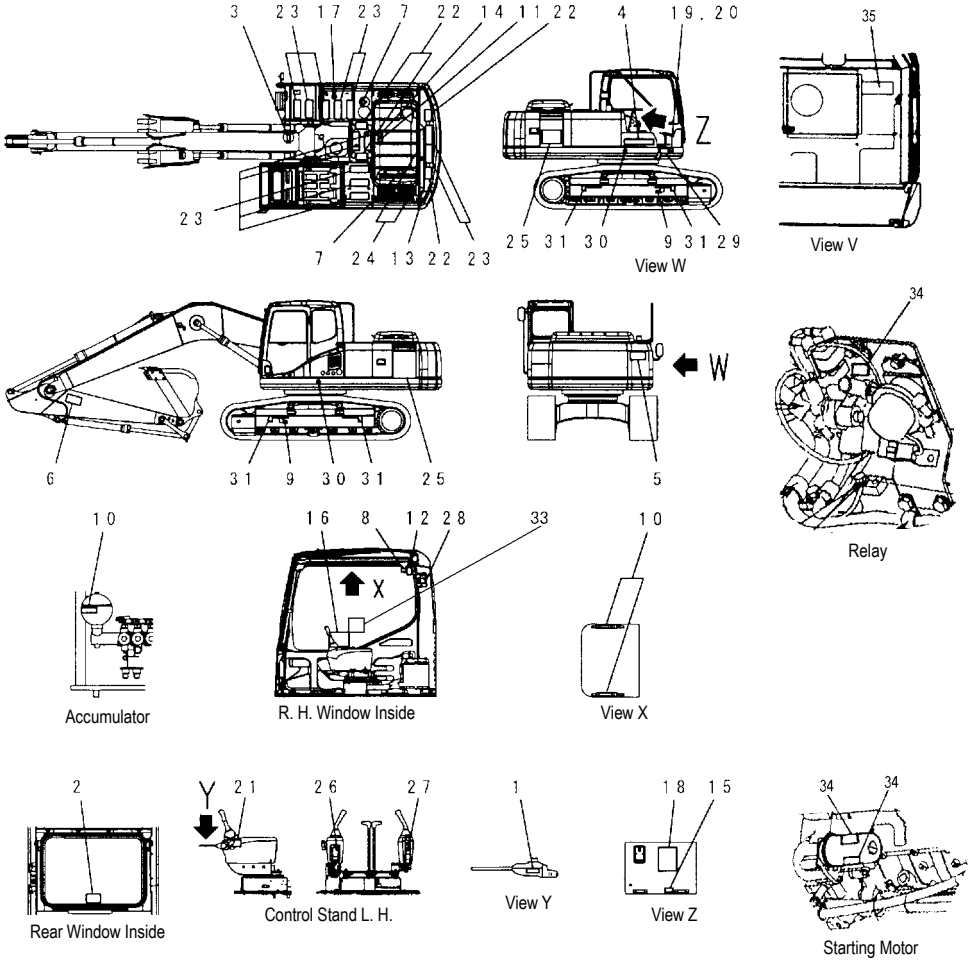

PW1C949

FIG NO. : U0100-01A2

(PC210LC-7)

INDEX	PART NO.	DESCRIPTION	Q'TY	SERIAL NO.
1	09685-00002	PLATE, OPERATING	1	DBG0001~
2	20Y-00-D1240	PLATE	1	DBG0001~
3	09690-M0063	PLATE, MARK	1	DBG0001~
4	09690-P0630	PLATE, MARK	1	DBG0001~
5	09133-A3281	PLATE, SAFETY	1	DBG0001~
6	09134-A1681	PLATE, CAUTION	2	DBG0001~
7	09653-A0481	PLATE, SAFETY	2	DBG0001~
9	09657-A0881	PLATE, SAFETY	2	DBG0001~
10	09659-A057B	PLATE, SAFETY	3	DBG0001~
11	09667-A0481	PLATE, SAFETY	1	DBG0001~
12	09803-A0481	PLATE, SAFETY	1	DBG0001~
13	09805-A0881	PLATE, SAFETY	1	DBG0001~
14	09805-C0481	PLATE, SAFETY	1	DBG0001~
15	09808-A0881	PLATE, SAFETY	1	DBG0001~
16	20Y-00-31890	PLATE	1	DBG0001~
17	09669-0000E	PLATE, CAUTION	1	DBG0001~
18	20Y-00-31130	PLATE	1	DBG0001~
19	09601-200C1	PLATE, NAME	1	DBG0001~
20	04418-13060	SCREW	4	DBG0001~
21	09963-A1640	TAG	1	DBG0001~
22	203-00-51170	SEAT	4	DBG0001~
23	154-54-23260	SEAT	12	DBG0001~
24	20Y-00-31110	SHEET	2	DBG0001~
25	20Y-00-31210	PLATE	2	DBG0001~
26	20Y-00-31860	PLATE	1	DBG0001~
27	20Y-00-31870	PLATE	1	DBG0001~
28	20Y-00-31880	PLATE	1	DBG0001~
29	20Y-00-31840	PLATE	1	DBG0001~
30	21U-98-D1160	PLATE, MARK	2	DBG0001~
31	21U-98-D1150	PLATE, MARK	4	DBG0001~
32	20Y-00-D1390	PLATE	1	DBG0001~
33	20Y-00-D1400	PLATE	1	DBG0001~
34	09842-A0481	PLATE SAFETY	3	DBG0001~
35	20Y-00-D1460	PLATE	1	DBG0001~

FIG. U0150-01A0 LOGO (KOMATSU) (SMALL) (GENERAL)

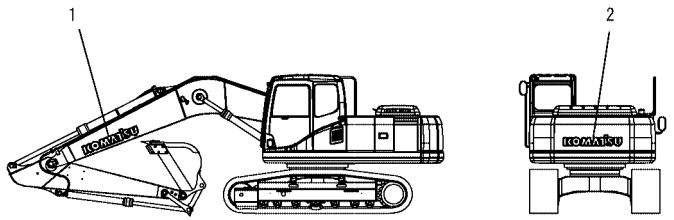

PW1B927

FIG NO. : U0150-01A0

INDEX	PART NO.	DESCRIPTION	Q'TY	SERIAL NO.
1	09690-P1250	PLATE, MARK	2	DBB0001~
2	09690-P1250	PLATE, MARK	1	DBB0001~

FIG. U0510-01A0 PLATE (BOOM SIDE、R.H.) (LOGO MARK)

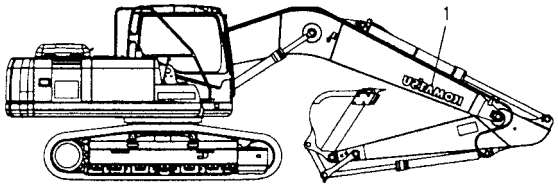

PW1C956

FIG NO. : U0510-01A0

INDEX	PART NO.	DESCRIPTION	Q'TY	SERIAL NO.
1	09690-P1250	PLATE, MARK.....	1	DBB0001~

FIG. U0200-01A1 PLATE (LIFTING CAPACITY) (ENGLISH) (OPT)

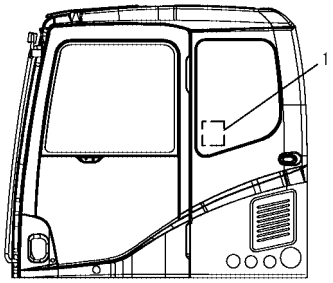

Cab L. H.

PW1C951

FIG NO. : U0200-01A1

INDEX	PART NO.	DESCRIPTION	Q'TY	SERIAL NO.
1	20Y-00-31390	PLATE.....	1	DBB0001~

FIG. U0200-01A2 PLATE (LIFTING CAPACITY) (ENGLISH) (OPT)

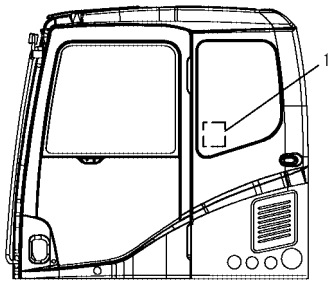

Cab L. H.

PW1C951

FIG NO. : U0200-01A2

INDEX	PART NO.	DESCRIPTION	Q'TY	SERIAL NO.
1	20Y-00-31410	PLATE.....	1	DBE0001~

FIG. U0510-01A0 PLATE (BOOM SIDE、R. H.) (LOGO MARK)

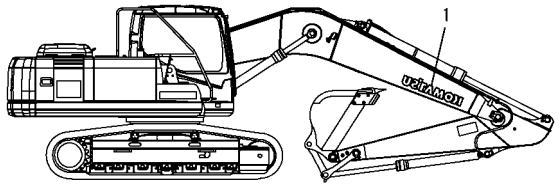

PW1C956

FIG NO. : U0510-01A0

INDEX	PART NO.	DESCRIPTION	Q'TY	SERIAL NO.
1	09690-P1250	PLATE, MARK	1	DBB0001~

FIG. U0520-01A0 CAUTION PLATE (FOR LV1 GUARD) (FOR EXCEPT JAPAN) (OPT)

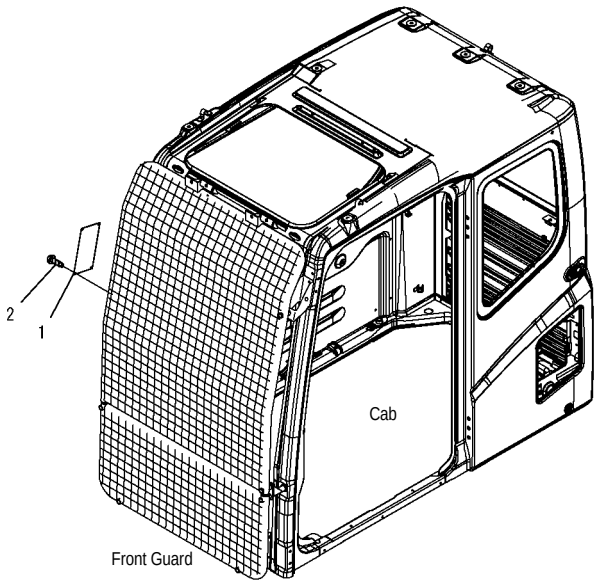

PW1D235

FIG NO. : U0520-01A0

INDEX	PART NO.	DESCRIPTION	Q'TY	SERIAL NO.
1	20Y-00-31610	PLATE	1	DBB0001~
2	04418-13060	SCREW	4	DBB0001~

FIG. U0520-01A1 CAUTION PLATE (FOR LV2 GUARD) (FOR EXCEPT JAPAN) (OPT)

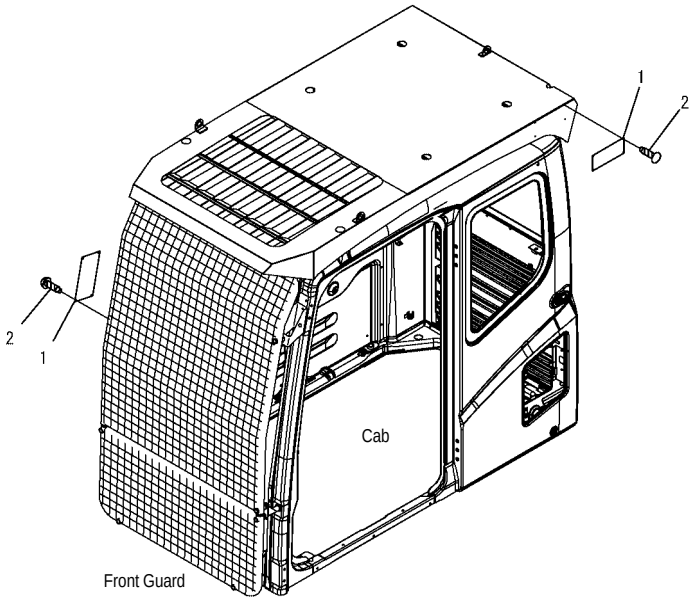

PW1D241

FIG NO. : U0520-01A1

INDEX	PART NO.	DESCRIPTION	Q'TY	SERIAL NO.
1	20Y-00-31610	PLATE	2	DBB0001~
2	04418-13060	SCREW	8	DBB0001~

FIG. U0550-01A1 PLATE (AIR CLEANER, DOUBLE ELEMENT)

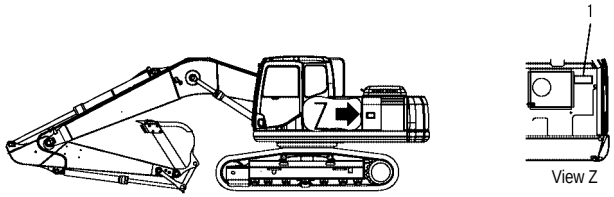

PW1B930

INDEX	PART NO.	DESCRIPTION	Q'TY	SERIAL NO.
1	09637-90163	PLATE, INSTRUCTION.....	1	DBB0001~

FIG. U0580-01A0 PLATE (WITH ACCUMLATOR) (OPT)

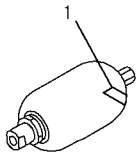

PW1B973

FIG NO. : U0580-01A0

INDEX	PART NO.	DESCRIPTION	Q'TY	SERIAL NO.
1	09659-A057A	PLATE, SAFETY, (JAPANESE)	1	DBB0001~
	09659-A057B	PLATE, SAFETY, (PICTOLIAL)	1	DBB0001~
	09659-53000	PLATE, SAFETY, (ENGLISH) (LETTERING TYPE)	1	DBB0001~

FIG. U0100-01A2 DECAL AND PLATE (CHINESE) (For Russia)

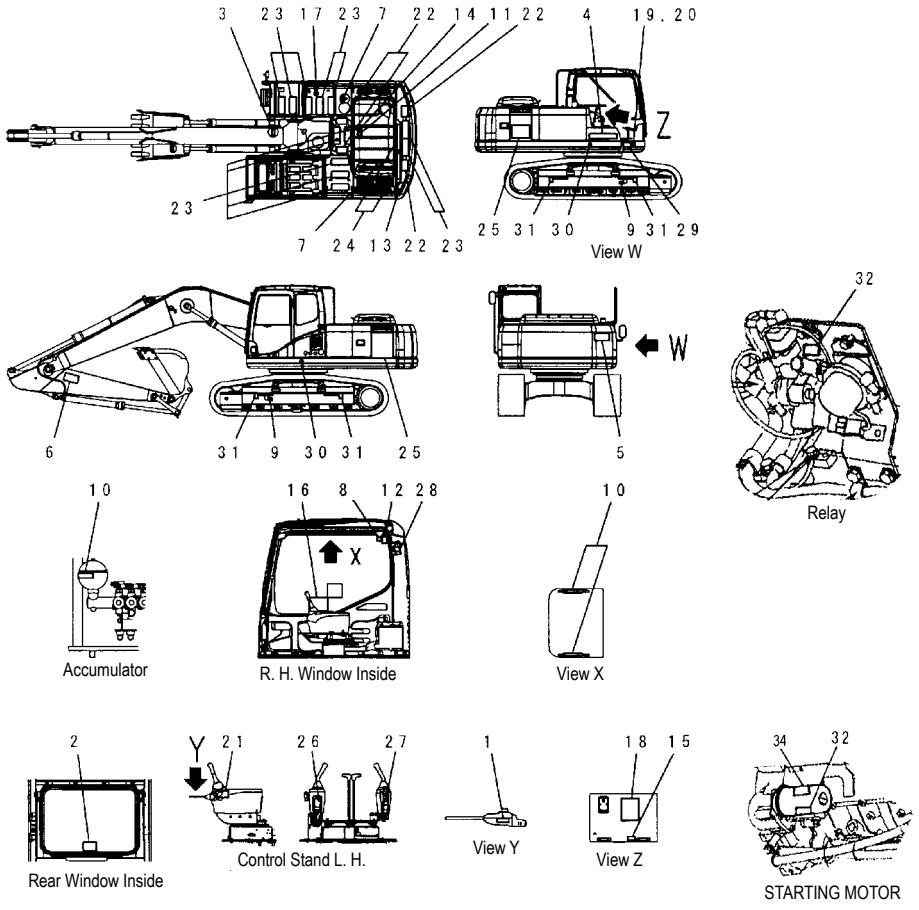

PW1C949

FIG NO. : U0100-01A2

(PC200-7)

INDEX	PART NO.	DESCRIPTION	Q'TY	SERIAL NO.
1	09685-00002	PLATE, OPERATING	1	DBB0001~
2	20Y-00-D1240	PLATE	1	DBB0001~
3	09690-M0063	PLATE, MARK	1	DBB0001~
4	09690-P0630	PLATE, MARK	1	DBB0001~
5	09133-A3281	PLATE, SAFETY	1	DBB0001~
6	09134-A1681	PLATE, CAUTION	2	DBB0001~
7	09653-A0481	PLATE, SAFETY	2	DBB0001~
9	09657-A0881	PLATE, SAFETY	2	DBB0001~
10	09659-A057B	PLATE, SAFETY	3	DBB0001~
11	09667-A0481	PLATE, SAFETY	1	DBB0001~
12	09803-A0481	PLATE, SAFETY	1	DBB0001~
13	09805-A0881	PLATE, SAFETY	1	DBB0001~
14	09805-C0481	PLATE, SAFETY	1	DBB0001~
15	09808-A0881	PLATE, SAFETY	1	DBB0001~
16	20Y-00-31950	PLATE	1	DBB0001~
17	09669-0000E	PLATE, CAUTION	1	DBB0001~
18	20Y-00-31130	PLATE	1	DBB0001~
19	09601-200C1	PLATE, NAME	1	DBB0001~
20	04418-13060	SCREW	4	DBB0001~
21	09963-A1640	TAG	1	DBB0001~
22	203-00-51170	SEAT	4	DBB0001~
23	154-54-23260	SEAT	12	DBB0001~
24	20Y-00-31110	SHEET	2	DBB0001~
25	20Y-00-31120	PLATE	2	DBB0001~
26	20Y-00-31960	PLATE	1	DBB0001~
27	20Y-00-31970	PLATE	1	DBB0001~
28	20Y-00-31980	PLATE	1	DBB0001~
29	20Y-00-31840	PLATE	1	DBB0001~
30	21U-98-D1160	PLATE, MARK	2	DBB0001~
31	21U-98-D1150	PLATE, MARK	4	DBB0001~
32	09842-A0481	PLATE SAFETY	3	DBB0001~

FIG. U0550-01A1 PLATE (AIR CLEANER, DOUBLE ELEMENT) (For Russia)

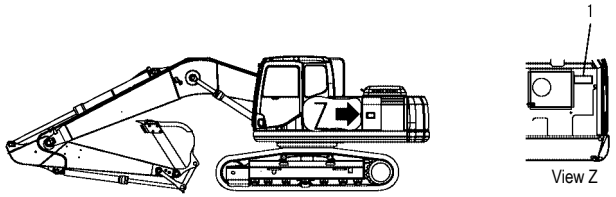

PW1B930

INDEX	PART NO.	DESCRIPTION	Q'TY	SERIAL NO.
1	09637-40163	PLATE, INSTRUCTION.....	1	DBB0001~

ACCESSORY

FIG. V0100-01A0 SPARE PARTS

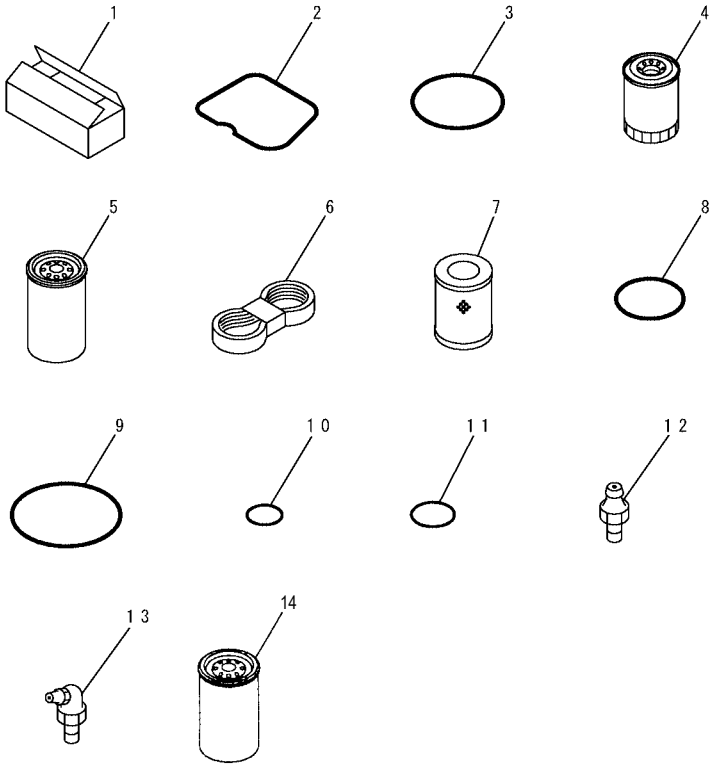

PW1C919

FIG NO. : V0100-01A0

INDEX	PART NO.	DESCRIPTION	Q'TY	SERIAL NO.
1	20Y-00-D1331	BOX	1	DBB0001~
2	6732-11-8181	GASKET	6	DBB0001~
3	6732-11-8210	GASKET	6	DBB0001~
4	6736-51-5142	CARTRIDGE	1	DBB0001~
5	6732-71-6111	CARTRIDGE	1	DBB0001~
6	6732-81-4170	BELT	1	DBB0001~
7	207-60-71180	ELEMENT	1	DBB0001~
8	07000-15160	O-RING	1	DBB0001~
9	07000-15195	O-RING	1	DBB0001~
10	07002-11223	O-RING	1	DBB0001~
11	07002-12434	O-RING	5	DBB0001~
12	07020-00000	FITTING	4	DBB0001~
13	07020-00675	FITTING	4	DBB0001~
14	600-311-9121	CARTRIDGE	1	DBB0001~

FIG. V0200-01A0 CAP AND OVERALL

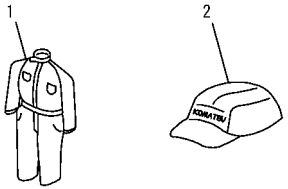

PEB0040

FIG NO. : V0200-01A0

INDEX	PART NO.	DESCRIPTION	Q'TY	SERIAL NO.
	09980-92550	CAP AND OVERALL KIT.....	1	DBB0001~
1	09980-10550	. OVERALL.....	1	DBB0001~
2	09982-20057	. CAP	1	DBB0001~

FIG. V0300-01A0 TOOL KIT

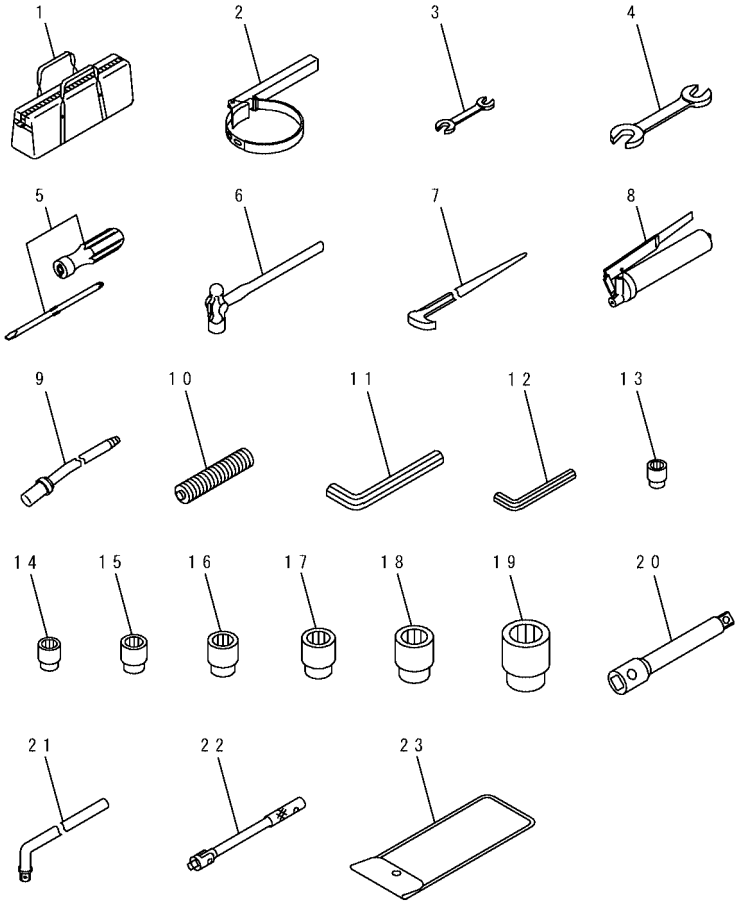

PW1B931

FIG NO. : V0300-01A0

INDEX	PART NO.	DESCRIPTION	Q'TY	SERIAL NO.
1	09056-04613	BAG	1	DBB0001~
2	09019-08035	WRENCH	1	DBB0001~
3	09002-01417	WRENCH, 14 × 17	1	DBB0001~
4	09002-03032	WRENCH, 30 × 32	1	DBB0001~
5	09033-00190	DRIVER	1	DBB0001~
6	09039-00150	HAMMER	1	DBB0001~
7	09055-10390	BAR	1	DBB0001~
	07952-70004	GREASE PUMP ASS' Y	1	DBB0001~
8	07950-10450	. PUMP	1	DBB0001~
9	07951-41017	. NOZZLE	1	DBB0001~
10	07950-90403	CARTRIDGE	1	DBB0001~
11	09007-00836	WRENCH, 8	1	DBB0001~
12	09007-00425	WRENCH, 4	1	DBB0001~
	20Y-98-21130	TOOL KIT	1	DBB0001~
13	09021-01219	. SOCKET, 12	1	DBB0001~
14	09021-01422	. SOCKET, 14	1	DBB0001~
15	09021-01725	. SOCKET, 17	1	DBB0001~
16	09021-01928	. SOCKET, 19	1	DBB0001~
17	09021-02233	. SOCKET, 22	1	DBB0001~
18	09021-02436	. SOCKET, 24	1	DBB0001~
19	09021-03044	. SOCKET, 30	1	DBB0001~
20	09022-00150	. EXTENSION	1	DBB0001~
21	09023-00300	. HANDLE	1	DBB0001~
22	09024-00300	. HANDLE	1	DBB0001~
23	20Y-98-21140	. BAG	1	DBB0001~

MISCELLANEOUS

FIG. W0111-01A0 PREVENTIVE MAINTENANCE CLINIC PARTS (OPT)

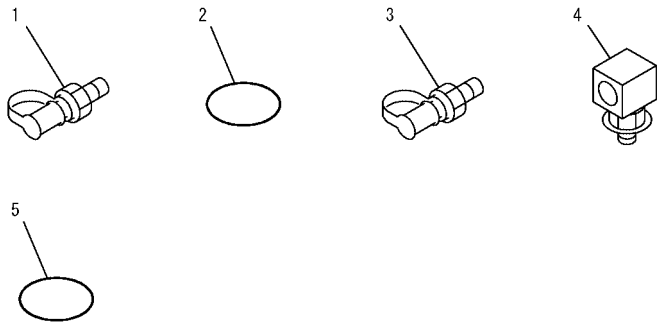

PW1C964

INDEX	PART NO.	DESCRIPTION	Q'TY	SERIAL NO.
1	799-101-5220	NIPPLE	9	DBB0001~
2	07002-11023	O-RING	9	DBB0001~
3	195-49-36120	NIPPLE	1	DBB0001~
4	207-62-72820	ELBOW, SEMS	1	DBB0001~
5	07002-11023	O-RING	1	DBB0001~

FIG. W1200-01A0 BLIND PARTS (BODY) (OPT)

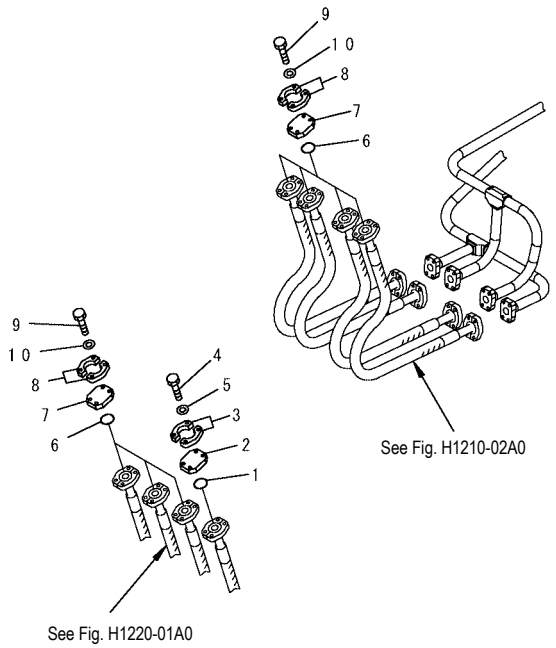

PW1D245

INDEX	PART NO.	DESCRIPTION	Q'TY	SERIAL NO.
1	21T-09-11460	O-RING	1	DBB0001~
2	07379-01044	FLANGE	1	DBB0001~
3	07371-31049	FLANGE	2	DBB0001~
4	07372-21035	BOLT	4	DBB0001~
5	01643-51032	WASHER	4	DBB0001~
6	21T-09-11430	O-RING	7	DBB0001~
7	07379-00640	FLANGE	7	DBB0001~
8	07371-30640	FLANGE	14	DBB0001~
9	07372-21035	BOLT	28	DBB0001~
10	01643-51032	WASHER	28	DBB0001~

FIG. W1201-01A0 BLIND PARTS (BOOM) (OPT)

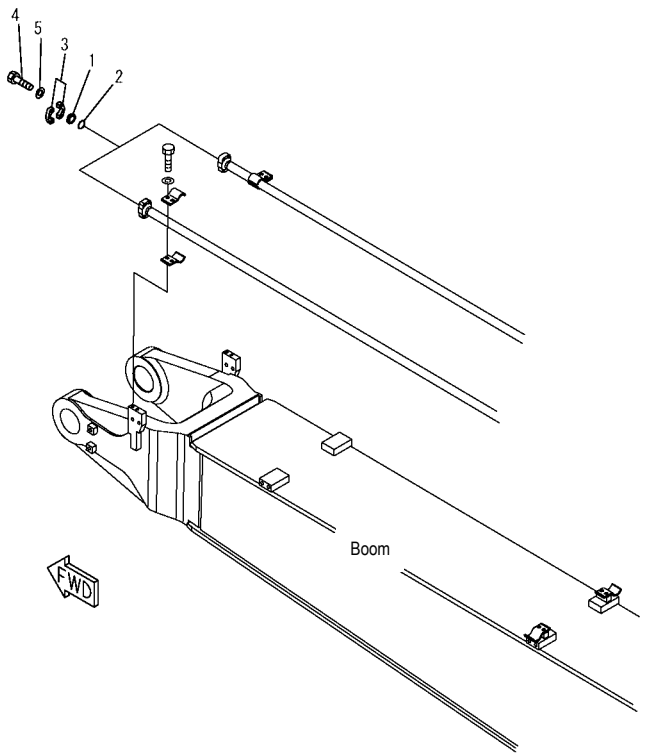

PW1D075

FIG NO. : W1201-01A0

INDEX	PART NO.	DESCRIPTION	Q'TY	SERIAL NO.
1	07378-10600	HEAD	2	DBB0001~
2	07000-13025	O-RING	2	DBB0001~
3	07371-30640	FLANGE	4	DBB0001~
4	07372-21035	BOLT	8	DBB0001~
5	01643-51032	WASHER	8	DBB0001~

FIG. W1201-01A2 BLIND PARTS (BOOM) (FOR COMPONENT) (OPT)

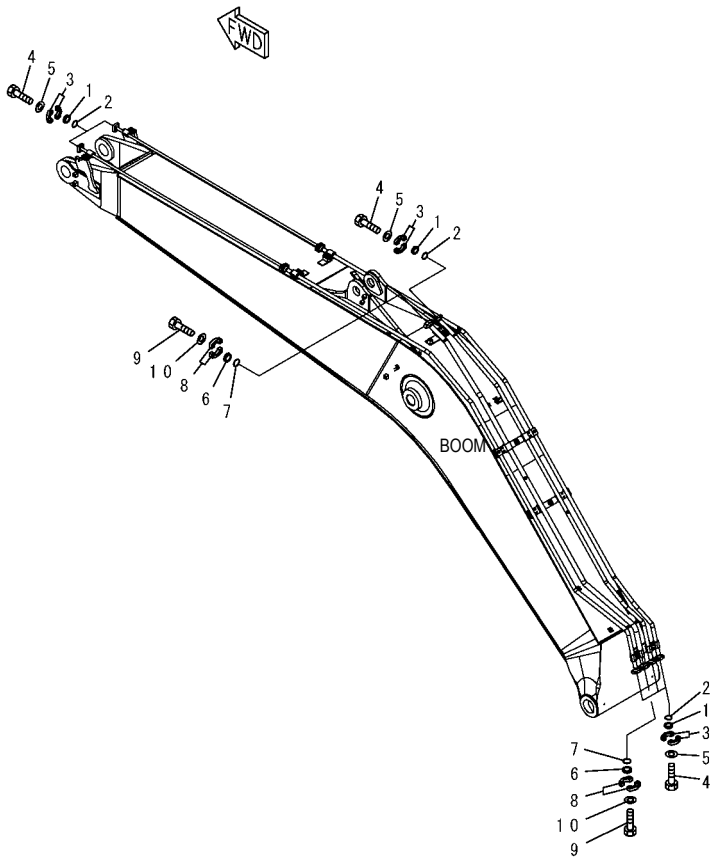

PW1D247

FIG NO. : W1201-01A2

INDEX	PART NO.	DESCRIPTION	Q'TY	SERIAL NO.
1	07378-10600	HEAD	6	DBB0001~
2	07000-13025	O-RING	6	DBB0001~
3	07371-30640	FLANGE	12	DBB0001~
4	07372-21035	BOLT	24	DBB0001~
5	01643-51032	WASHER	24	DBB0001~
6	07378-11000	HEAD	2	DBB0001~
7	07000-13032	O-RING	2	DBB0001~
8	07371-31049	FLANGE	4	DBB0001~
9	07372-21035	BOLT	8	DBB0001~
10	01643-51032	WASHER	8	DBB0001~

FIG. W1202-01A0 BLIND PARTS (BOOM CYLINDER) (OPT)

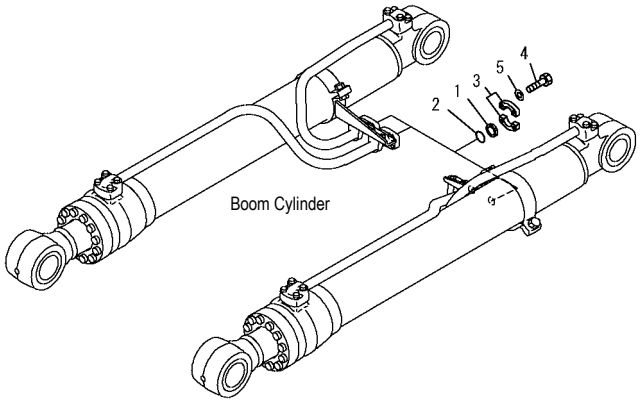

PW1D249

INDEX	PART NO.	DESCRIPTION	Q'TY	SERIAL NO.
1	07378-10600	HEAD	4	DBB0001~
2	07000-13025	O-RING	4	DBB0001~
3	07371-30640	FLANGE	8	DBB0001~
4	07372-21035	BOLT	16	DBB0001~
5	01643-51032	WASHER	16	DBB0001~

FIG. W1203-01A0 BLIND PARTS (ARM) (OPT)

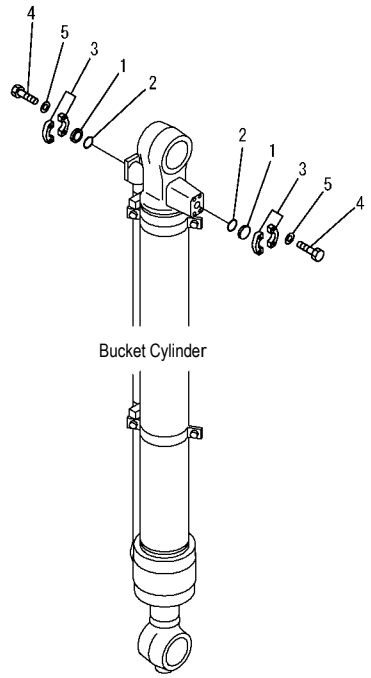

PW1D250

FIG NO. : W1203-01A0

INDEX	PART NO.	DESCRIPTION	Q'TY	SERIAL NO.
1	07378-10600	HEAD	2	DBB0001~
2	07000-13025	O-RING	2	DBB0001~
3	07371-30640	FLANGE	4	DBB0001~
4	07372-21035	BOLT	8	DBB0001~
5	01643-51032	WASHER	8	DBB0001~

FIG. W1200-01A1 BLIND PARTS (BODY) (1 ACTUATOR) (OPT)

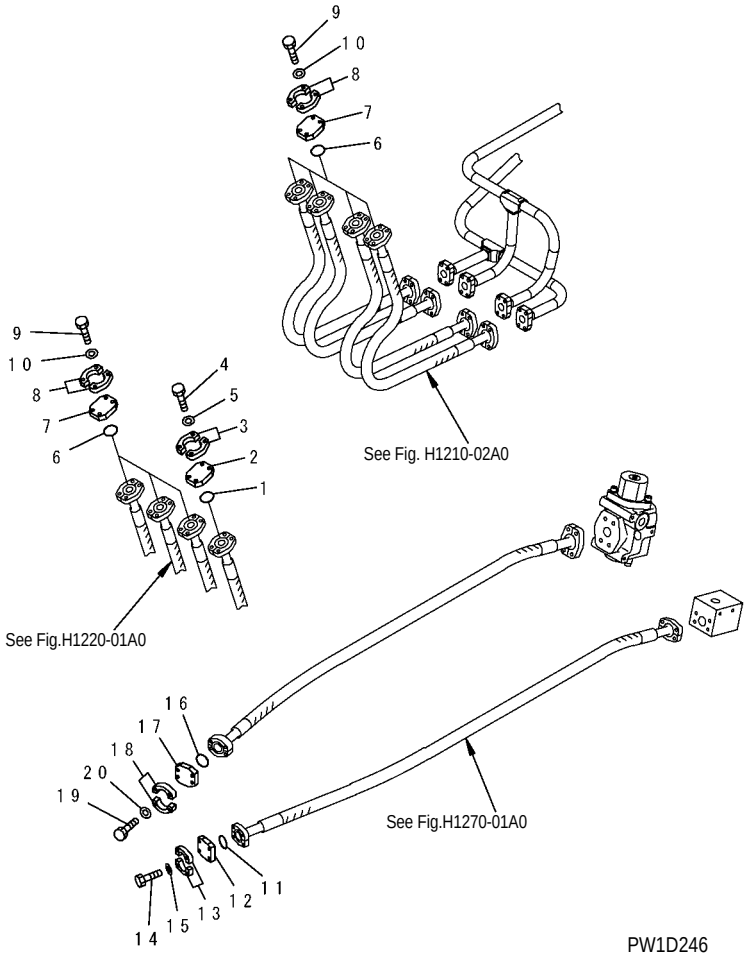

PW1D246

INDEX	PART NO.	DESCRIPTION	Q'TY	SERIAL NO.
1	21T-09-11460	O-RING	1	DBB0001~
2	07379-01044	FLANGE	1	DBB0001~
3	07371-31049	FLANGE	2	DBB0001~
4	07372-21035	BOLT	4	DBB0001~
5	01643-51032	WASHER	4	DBB0001~
6	21T-09-11430	O-RING	7	DBB0001~
7	07379-00640	FLANGE	7	DBB0001~
8	07371-30640	FLANGE	14	DBB0001~
9	07372-21035	BOLT	28	DBB0001~
10	01643-51032	WASHER	28	DBB0001~
11	07000-13032	O-RING	1	DBB0001~
12	07379-01044	FLANGE	1	DBB0001~
13	07371-31049	FLANGE	2	DBB0001~
14	07372-21035	BOLT	4	DBB0001~
15	01643-51032	WASHER	4	DBB0001~
16	07000-13038	O-RING	1	DBB0001~
17	07379-01260	FLANGE	1	DBB0001~
18	07371-51260	FLANGE	2	DBB0001~
19	07372-21245	BOLT	4	DBB0001~
20	01643-51232	WASHER	4	DBB0001~

FIG. W1201-01A1 BLIND PARTS (BOOM) (1 ACTUATOR) (OPT)

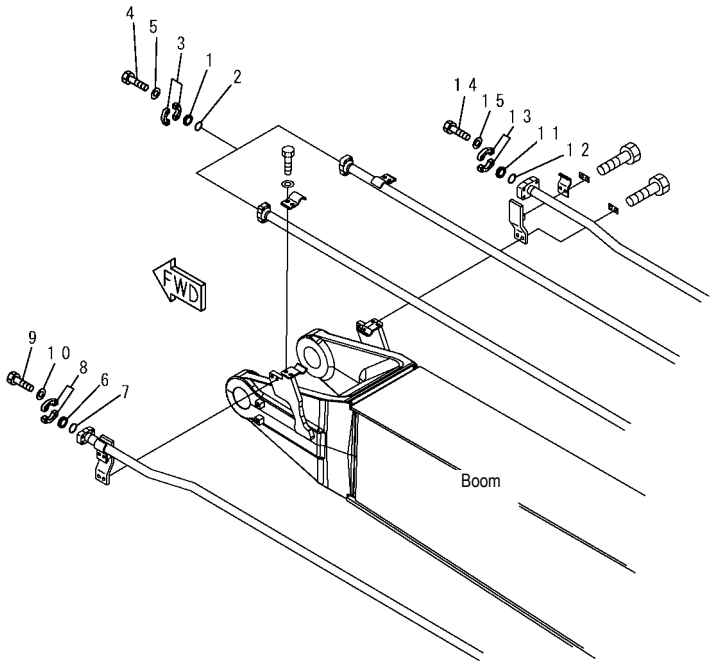

PW1D260

FIG NO. : W1201-01A1

INDEX	PART NO.	DESCRIPTION	Q'TY	SERIAL NO.
1	07378-10600	HEAD	2	DBB0001~
2	07000-13025	O-RING	2	DBB0001~
3	07371-30640	FLANGE	4	DBB0001~
4	07372-21035	BOLT	8	DBB0001~
5	01643-51032	WASHER	8	DBB0001~
6	07378-11000	HEAD	1	DBB0001~
7	07000-13032	O-RING	1	DBB0001~
8	07371-31049	FLANGE	2	DBB0001~
9	07372-21035	BOLT	4	DBB0001~
10	01643-51032	WASHER	4	DBB0001~
11	07378-11210	HEAD	1	DBB0001~
12	07000-13038	O-RING	1	DBB0001~
13	07371-51260	FLANGE	2	DBB0001~
14	01010-81245	BOLT	4	DBB0001~
15	01643-31232	WASHER	4	DBB0001~

FIG. W1201-01A3 BLIND PARTS (BOOM) (1 ACTUATOR) (FOR COMPONENT) (OPT)

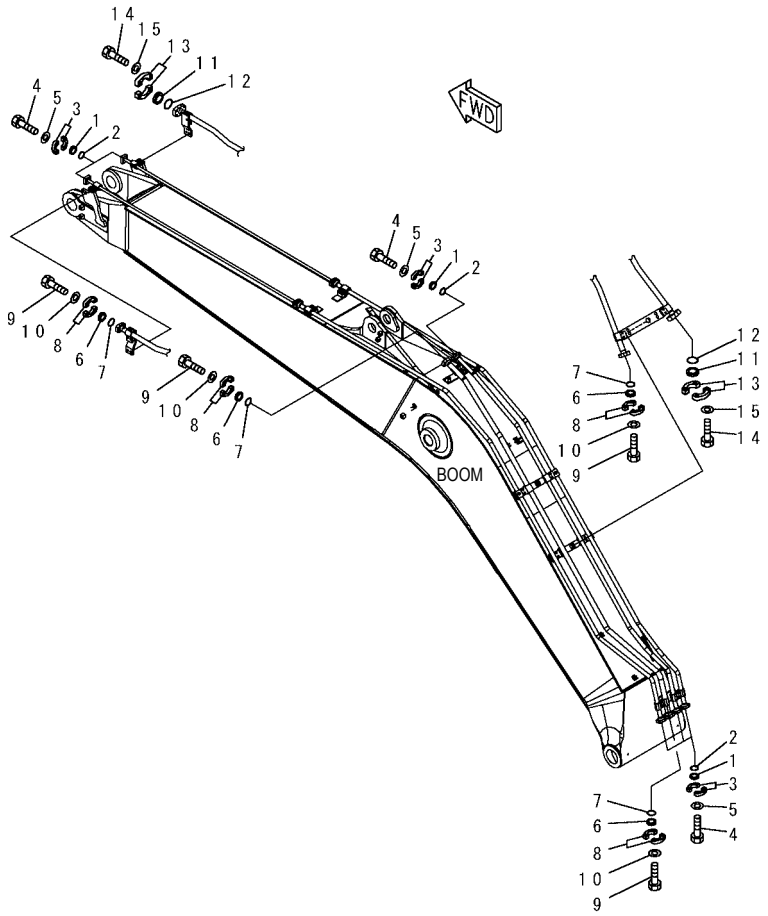

PW1D248

INDEX	PART NO.	DESCRIPTION	Q'TY	SERIAL NO.
1	07378-10600	HEAD	6	DBB0001~
2	07000-13025	O-RING	6	DBB0001~
3	07371-30640	FLANGE	12	DBB0001~
4	07372-21035	BOLT	24	DBB0001~
5	01643-51032	WASHER	24	DBB0001~
6	07378-11000	HEAD	4	DBB0001~
7	07000-13032	O-RING	4	DBB0001~
8	07371-31049	FLANGE	8	DBB0001~
9	07372-21035	BOLT	16	DBB0001~
10	01643-51032	WASHER	16	DBB0001~
11	07378-11210	HEAD	2	DBB0001~
12	07000-13038	O-RING	2	DBB0001~
13	07371-51260	FLANGE	4	DBB0001~
14	01010-81245	BOLT	8	DBB0001~
15	01643-31232	WASHER	8	DBB0001~

FIG. W1203-01A1 BLIND PARTS (ARM) (1 ACTUATOR) (OPT)

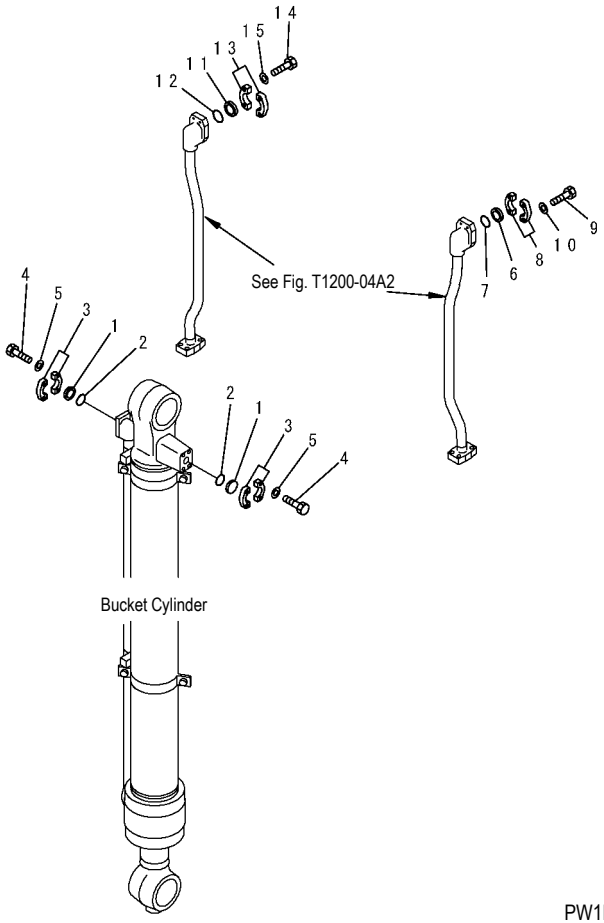

PW1D251

INDEX	PART NO.	DESCRIPTION	Q'TY	SERIAL NO.
1	07378-10600	HEAD	2	DBB0001~
2	07000-13025	O-RING	2	DBB0001~
3	07371-30640	FLANGE	4	DBB0001~
4	07372-21035	BOLT	8	DBB0001~
5	01643-51032	WASHER	8	DBB0001~
6	07378-11000	HEAD	1	DBB0001~
7	07000-13032	O-RING	1	DBB0001~
8	07371-31049	FLANGE	2	DBB0001~
9	07372-21035	BOLT	4	DBB0001~
10	01643-51032	WASHER	4	DBB0001~
11	07378-11210	HEAD	1	DBB0001~
12	07000-13038	O-RING	1	DBB0001~
13	07371-51260	FLANGE	2	DBB0001~
14	01010-81245	BOLT	4	DBB0001~
15	01643-31232	WASHER	4	DBB0001~

SERVICE KIT AND COMPONENT PARTS

FIG. Y0260-01A0 SWING MACHINERY (SUPPLY ONLY)

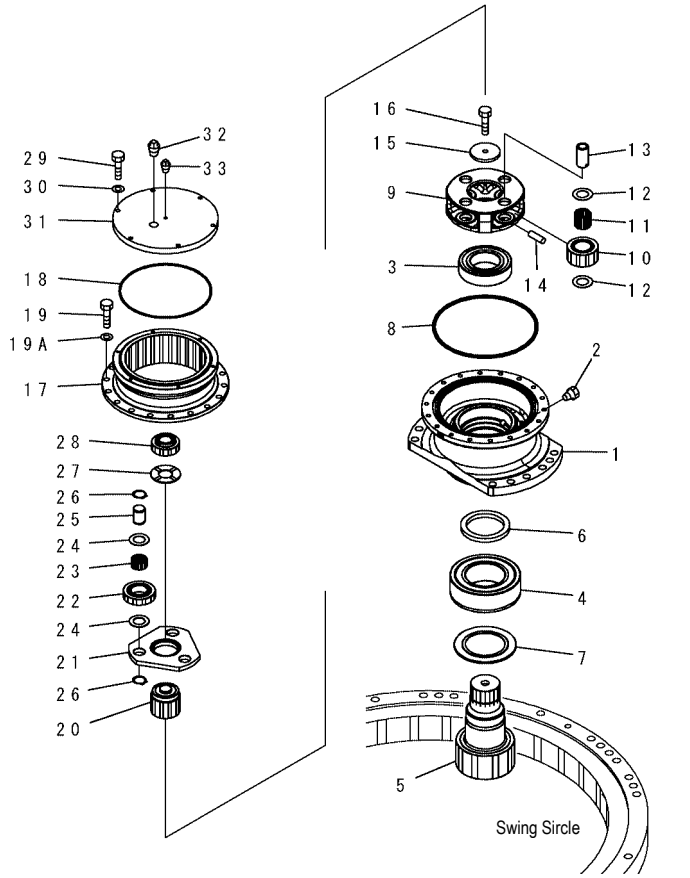

PW1A071

INDEX	PART NO.	DESCRIPTION	Q'TY	SERIAL NO.
	X210703740	SWING MACHINERY A	1	DBB0001~
1	22U-26-21190	. CASE	1	DBB0001~
2	07029-00000	. VALVE	1	DBB0001~
3	20Y-26-22330	. BEARING	1	DBB0001~
4	22U-26-21340	. BEARING	1	DBB0001~
5	22U-26-21560	. SHAFT, 15 TEETH	1	DBB0001~
6	07012-00115	. SEAL	1	DBB0001~
7	22U-26-21270	. SPACER	1	DBB0001~
8	07000-15310	. O-RING	1	DBB0001~
9	22U-26-21580	. CARRIER	1	DBB0001~
10	22U-26-21540	. GEAR	4	DBB0001~
11	20G-26-11240	. BEARING	4	DBB0001~DBB4708
	20G-26-11241	. BEARING	4	DBB4709~
12	20Y-27-21240	. WASHER	8	DBB0001~
13	20Y-26-22250	. PIN	4	DBB0001~
14	20Y-27-21280	. PIN	4	DBB0001~
15	20Y-26-21240	. PLATE	1	DBB0001~
16	112-32-11211	. BOLT, SHOE	1	DBB0001~
17	22U-26-21550	. GEAR	1	DBB0001~
18	20K-22-11190	. O-RING	1	DBB0001~
19	01010-81440	. BOLT	18	DBB0001~
19A	01643-31445	. WASHER	18	DBB0001~
20	22U-26-21530	. GEAR	1	DBB0001~
21	22U-26-21570	. CARRIER	1	DBB0001~
22	22U-26-21520	. GEAR	3	DBB0001~
23	20Y-26-21281	. BEARING	3	DBB0001~
24	22U-26-21230	. WASHER, THRUST	6	DBB0001~
25	22U-26-21210	. PIN	3	DBB0001~
26	04064-03515	. RING	6	DBB0001~
27	22U-26-21250	. WASHER, THRUST	1	DBB0001~
28	22U-26-21510	. GEAR	1	DBB0001~
29	01010-81035	. BOLT	6	DBB0001~
30	01643-51032	. WASHER	6	DBB0001~
31	20Y-26-31510	. COVER	1	DBB0001~
32	07042-30617	. PLUG	1	DBB0001~
33	07042-30108	. PLUG	1	DBB0001~

FIG. Y0270-01A0 FINAL DRIVE (SUPPLY ONLY)

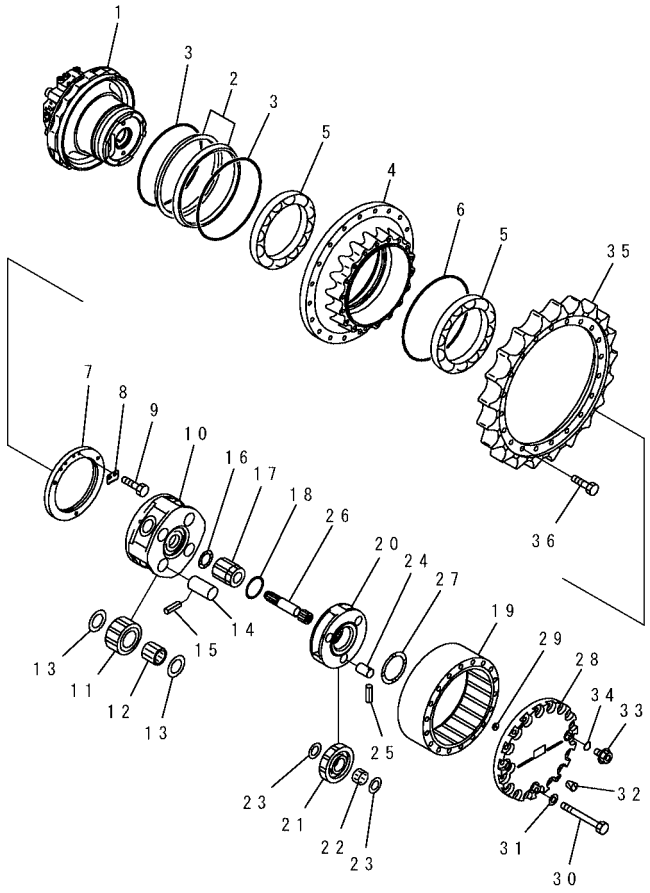

PW1B946

FIG NO. : Y0270-01A0

INDEX	PART NO.	DESCRIPTION	Q'TY	SERIAL NO.
	20Y-27-00432	FINAL DRIVE ASS' Y	2	DBB0001~
1	(708-8F-00171)	. MOTOR ASS' Y	1	DBB0001~
	150-27-00410	. FLOATING SEAL ASS' Y	1	DBB0001~
2	150-27-00264	..SEAL RING ASS' Y	1	DBB0001~
	☆	... RING	2	DBB0001~
3	14S-27-00110	..O-RING ASS' Y	1	DBB0001~
	☆	... O-RING	2	DBB0001~
4	20Y-27-31220	. HUB	1	DBB0001~
5	20Y-27-22230	. BEARING	2	DBB0001~
6	20Y-27-22280	. O-RING	1	DBB0001~
7	20Y-27-22261	. LOCK	1	DBB0001~
8	20Y-27-22270	. LOCK	1	DBB0001~
9	01010-81020	. BOLT	2	DBB0001~
10	20Y-27-22170	. CARRIER	1	DBB0001~
11	20Y-27-22140	. GEAR	4	DBB0001~
12	20Y-27-22220	. BEARING	4	DBB0001~
13	20Y-27-21250	. WASHER	8	DBB0001~
14	20Y-27-21230	. PIN	4	DBB0001~
15	20Y-27-21290	. PIN	4	DBB0001~
16	20Y-27-13310	. WASHER	1	DBB0001~
17	20Y-27-22130	. GEAR	1	DBB0001~
18	20Y-27-22240	. WASHER	1	DBB0001~
19	20Y-27-22151	. GEAR	1	DBB0001~
20	20Y-27-22160	. CARRIER	1	DBB0001~
21	20Y-27-22120	. GEAR	3	DBB0001~
22	20Y-27-22210	. BEARING	3	DBB0001~
23	20Y-27-21240	. WASHER	6	DBB0001~
24	20Y-27-21220	. PIN	3	DBB0001~
25	20Y-27-21280	. PIN	3	DBB0001~
26	20Y-27-31210	. SHAFT	1	DBB0001~
27	20Y-27-21310	. WASHER	1	DBB0001~
28	20Y-27-31230	. COVER	1	DBB0001~
29	20Y-27-22250	. BUTTON	1	DBB0001~
30	20Y-27-13281	. BOLT	18	DBB0001~
31	01643-31645	. WASHER	18	DBB0001~
32	07049-01012	. PLUG	2	DBB0001~
33	07044-12412	. PLUG	3	DBB0001~
34	07002-12434	. O-RING	3	DBB0001~
35	20Y-27-11582	. SPROCKET	1	DBB0001~
36	20Y-27-11561	. BOLT	20	DBB0001~

FIG. Y0320-01A0 SHOE BOLT AND NUT SERVICE KIT

Kit: For details, Please refer to the following page

K01 20Y-32-05070 Shoe bolt and nut repair kit

K02 20Y-32-05041 Shoe bolt and nut repair kit (for wetland)

K03 20Y-32-05051 Shoe bolt and nut repair kit (for flat plate)

K04 20Y-32-05080 Shoe bolt and nut repair kit (for road liner installation)

PW1B856

INDEX	PART NO.	DESCRIPTION	Q'TY	SERIAL NO.
K01	20Y-32-05070	SHOE BOLT AND NUT K	1	DBB0001~
	20Y-32-31210	. BOLT, SHOE	50	DBB0001~
	134-32-61221	. NUT	50	DBB0001~
K02	20Y-32-05041	SHOE BOLT AND NUT K	1	DBB0001~
	20Y-32-11230	. BOLT	50	DBB0001~
	134-32-61221	. NUT	50	DBB0001~
K03	20Y-32-05051	SHOE BOLT AND NUT K	1	DBB0001~
	20Y-32-11220	. BOLT, SHOE	50	DBB0001~
	134-32-61221	. NUT	50	DBB0001~
K04	20Y-32-05080	SHOE BOLT AND NUT K	1	DBB0001~
	20Y-32-31231	. BOLT, SHOE	50	DBB0001~
	134-32-61221	. NUT	50	DBB0001~

FIG. Y0321-01A0 TRACK LINK ASS'Y (90 SET) (SUPPLY PARTS)

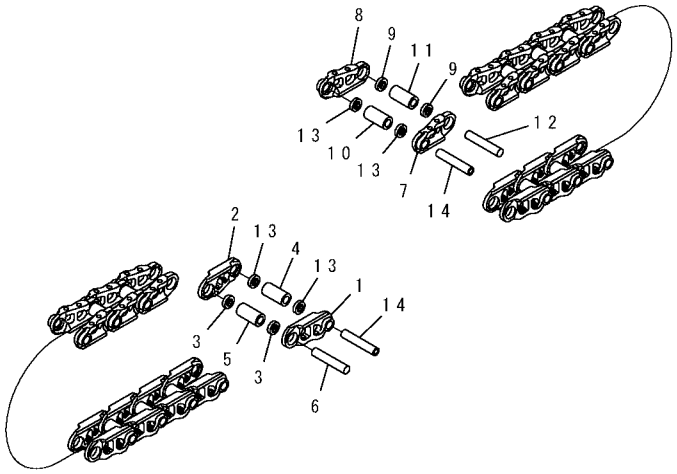

PW1A010

(PC200, 210-7)

INDEX	PART NO.	DESCRIPTION	Q'TY	SERIAL NO.
	20Y-32-00300	TRACK LINK ASS' Y	1	DBB0001~
1	20Y-32-31120	. LINK, TRACK, L. H.	44	DBB0001~
2	20Y-32-31130	. LINK, TRACK, R. H.	44	DBB0001~
3	20Y-32-11240	. SEAL	84	DBB0001~
4	20Y-32-11171	. BUSHING, MASTER	2	DBB0001~
5	20Y-32-11141	. BUSHING, REGULAR	42	DBB0001~
6	20Y-32-31150	. PIN	42	DBB0001~
7	20Y-32-31120	. LINK, TRACK, L. H.	46	DBB0001~
8	20Y-32-31130	. LINK, TRACK, R. H.	46	DBB0001~
9	20Y-32-11240	. SEAL	88	DBB0001~
10	20Y-32-11171	. BUSHING, MASTER	2	DBB0001~
11	20Y-32-11141	. BUSHING, REGULAR	44	DBB0001~
12	20Y-32-31150	. PIN	44	DBB0001~
13	20Y-32-11260	. SEAL	8	DBB0001~
14	20Y-32-31190	. PIN	4	DBB0001~

FIG. Y0321-01A1 TRACK LINK ASS'Y (98 SET) (SUPPLY PARTS) (PC200LC, 210LC-7)

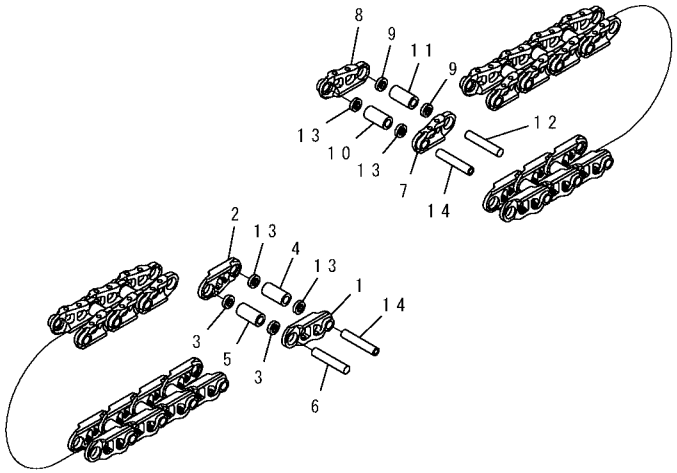

PW1A010

(PC200LC, 210LC-7)

INDEX	PART NO.	DESCRIPTION	Q'TY	SERIAL NO.
	20Y-32-00310	TRACK LINK ASS' Y	1	DBE0001~
1	20Y-32-31120	. LINK, TRACK, L. H.	48	DBE0001~
2	20Y-32-31130	. LINK, TRACK, R. H.	48	DBE0001~
3	20Y-32-11240	. SEAL	92	DBE0001~
4	20Y-32-11171	. BUSHING, MASTER	2	DBE0001~
5	20Y-32-11141	. BUSHING, REGULAR	46	DBE0001~
6	20Y-32-31150	. PIN	46	DBE0001~
7	20Y-32-31120	. LINK, TRACK, L. H.	50	DBE0001~
8	20Y-32-31130	. LINK, TRACK, R. H.	50	DBE0001~
9	20Y-32-11240	. SEAL	96	DBE0001~
10	20Y-32-11171	. BUSHING, MASTER	2	DBE0001~
11	20Y-32-11141	. BUSHING, REGULAR	48	DBE0001~
12	20Y-32-31150	. PIN	48	DBE0001~
13	20Y-32-11260	. SEAL	8	DBE0001~
14	20Y-32-31190	. PIN	4	DBE0001~

FIG. Y1011-01A0 AIR CLEANER (INNER PART)

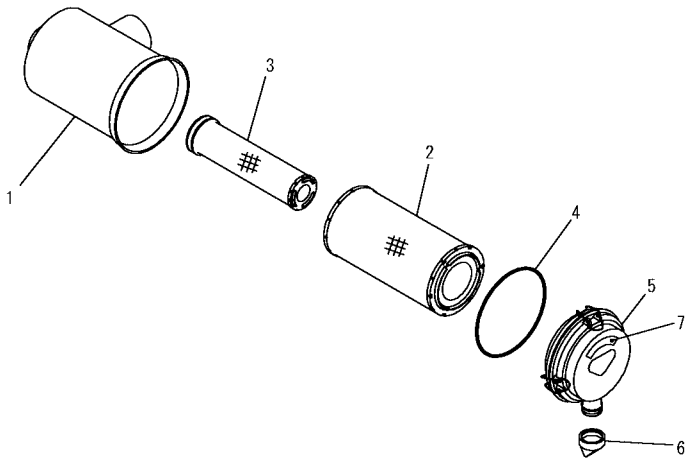

PJ1D888

FIG NO. : Y1011-01A0

INDEX	PART NO.	DESCRIPTION	Q'TY	SERIAL NO.
	6738-81-7300	AIR CLEANER	1	DBB0001~
1	6738-81-7310	. BODY	1	DBB0001~
	600-185-3100	. ELEMENT ASS' Y	1	DBB0001~
2	600-185-3110	.. ELEMENT	1	DBB0001~
3	600-185-3120	.. ELEMENT	1	DBB0001~
4	600-184-1370	.. O-RING	1	DBB0001~
5	600-184-1310	. COVER ASS' Y	1	DBB0001~
	600-184-2810	.. PLATE	1	DBB0001~
6	600-184-1350	. VALVE	1	DBB0001~
7	600-181-1930	. PLATE, INSTRUCTION	1	DBB0001~

FIG. Y1061-01A0 WIRING HARNESS (JUNCTION CONNECTOR) (FOR SUPPLY)

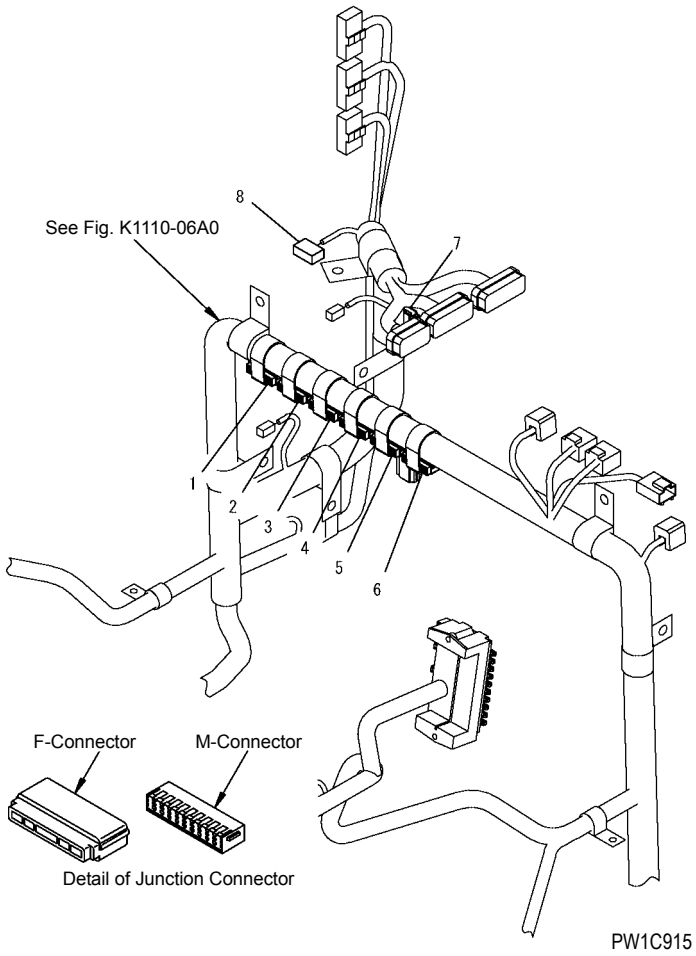

INDEX	PART NO.	DESCRIPTION	Q'TY	SERIAL NO.
	(20Y-06-31110)	WIRING HARNESS	1	DBB0001~
1	☆	JUNCTION CONNECTOR, BLACK (CN-J01	1	DBB0001~
	HM6400-0012	.. F-CONNECTOR, BLACK (CN-J02)	1	DBB0001~
	HM6409-0071	.. M-CONNECTOR, BLACK	1	DBB0001~
2	☆	. JUNCTION CONNECTOR, BLACK (CN-J02)	1	DBB0001~
	HM6400-0012	.. F-CONNECTOR, BLACK	1	DBB0001~
	HM6409-0071	.. M-CONNECTOR, BLACK	1	DBB0001~
3	☆	. JUNCTION CONNECTOR, ORANGE (CN-J03)	1	DBB0001~
	HM6400-0013	.. F-CONNECTOR, GREEN	1	DBB0001~
	HM6409-0072	.. M-CONNECTOR, GREEN	1	DBB0001~
4	☆	. JUNCTION CONNECTOR, GREEN (CN-J04)	1	DBB0001~
	HM6400-0013	.. F-CONNECTOR, GREEN	1	DBB0001~
	HM6409-0072	.. M-CONNECTOR, GREEN	1	DBB0001~
5	☆	. JUNCTION CONNECTOR, PINK (CN-J05)	1	DBB0001~
	HM6440-0129	.. F-CONNECTOR, PINK	1	DBB0001~
	HM6440-0128	.. M-CONNECTOR, PINK	1	DBB0001~
6	☆	. JUNCTION CONNECTOR, ORANGE (CN-J06)	1	DBB0001~
	HM6400-0016	.. F-CONNECTOR, ORANGE	1	DBB0001~
	HM6409-0075	.. M-CONNECTOR, ORANGE	1	DBB0001~
7	☆	. JUNCTION CONNECTOR, ORANGE (CN-J07)	1	DBB0001~
	HM6400-0016	.. F-CONNECTOR, ORANGE	1	DBB0001~
	HM6409-0075	.. M-CONNECTOR, ORANGE	1	DBB0001~
8	☆	. JUNCTION CONNECTOR, PINK (CN-J08)	1	DBB0001~
	HM6440-0129	.. F-CONNECTOR, PINK	1	DBB0001~
	HM6440-0128	.. M-CONNECTOR, PINK	1	DBB0001~

FIG. Y1600-01A0 MAIN PUMP (1/11)

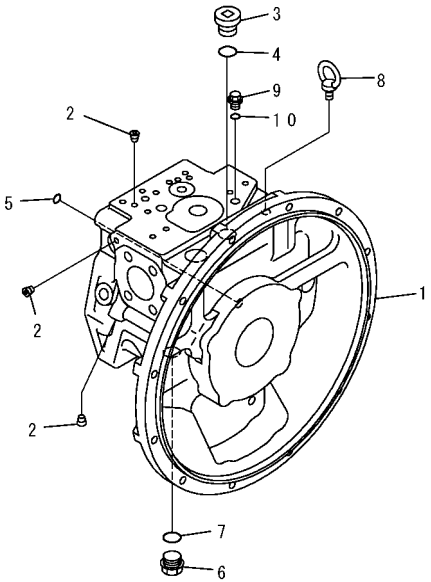

PW5A025

FIG NO. : Y1600-01A0

INDEX	PART NO.	DESCRIPTION	Q'TY	SERIAL NO.
	708-2L-00300	PUMP ASS' Y	1	DBB0001~
		THIS ASSEMBLY CONSISTS OF ALL PARTS SHOWN IN FIGS. Y1600-01A0 TO Y1600-11A0		
	708-2L-01301	. PUMP SUB ASS' Y	1	DBB0001~
	(★708-2L-06111)	.. CASE ASS' Y, FRONT	1	DBB0001~
1	☆	... CASE, FRONT	1	DBB0001~
2	☆	... PLUG	32	DBB0001~
3	07040-12414	.. PLUG	1	DBB0001~
4	708-1W-28910	.. O-RING	1	DBB0001~
5	(★07000-B1009)	.. O-RING	1	DBB0001~
6	07044-12412	.. PLUG	1	DBB0001~
7	708-1W-28910	.. O-RING	1	DBB0001~
8	04530-01222	.. BOLT, EYE	1	DBB0001~
9	708-8E-16150	.. PLUG	2	DBB0001~
10	708-2L-23920	.. O-RING	2	DBB0001~

FIG. Y1600-02A0 MAIN PUMP (2/11)

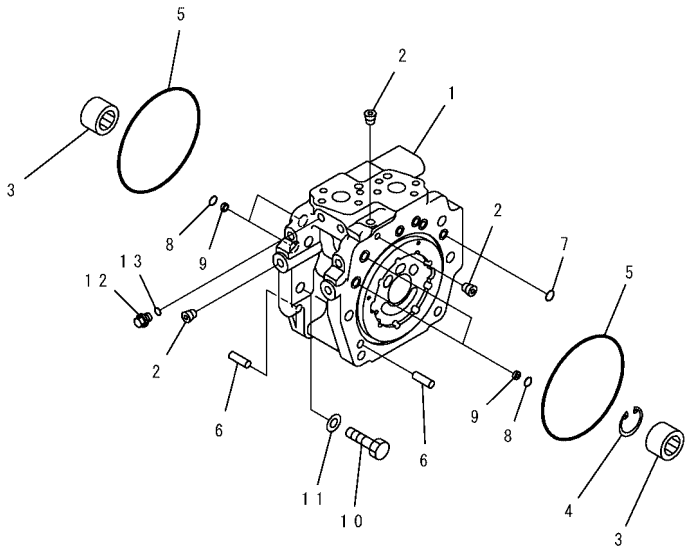

PW5A026

FIG NO. : Y1600-02A0

INDEX	PART NO.	DESCRIPTION	Q'TY	SERIAL NO.
	(708-2L-00300)	PUMP	1	DBB0001~
		THIS ASSEMBLY CONSISTS OF ALL PARTS SHOWN IN FIGS. Y1600-01A0 TO Y1600-11A0.....		
	(708-2L-01301)	. PUMP SUB ASS' Y.....	1	DBB0001~
	(★708-2L-06121)	.. CAP ASS' Y, END.....	1	DBB0001~
1	☆	... CAP, END.....	1	DBB0001~
2	☆	... PLUG.....	15	DBB0001~
3	(★708-2L-32260)	.. BEARING	2	DBB0001~
4	(★708-2L-22271)	.. PING, SNAP.....	1	DBB0001~
5	(★07000-A5165)	.. O-RING.....	2	DBB0001~
6	(★04020-01228)	.. PIN.....	2	DBB0001~
7	(★07000-B2012)	.. O-RING.....	7	DBB0001~
8	(★07000-B2014)	.. O-RING.....	4	DBB0001~
9	(★708-2L-25480)	.. FILTER.....	4	DBB0001~
10	(★01010-61450)	.. BOLT.....	12	DBB0001~
11	(★01643-31445)	.. WASHER.....	12	DBB0001~
12	708-8E-16150	.. PLUG.....	3	DBB0001~
13	708-2L-23920	.. O-RING.....	3	DBB0001~

FIG. Y1600-03A0 MAIN PUMP (3/11)

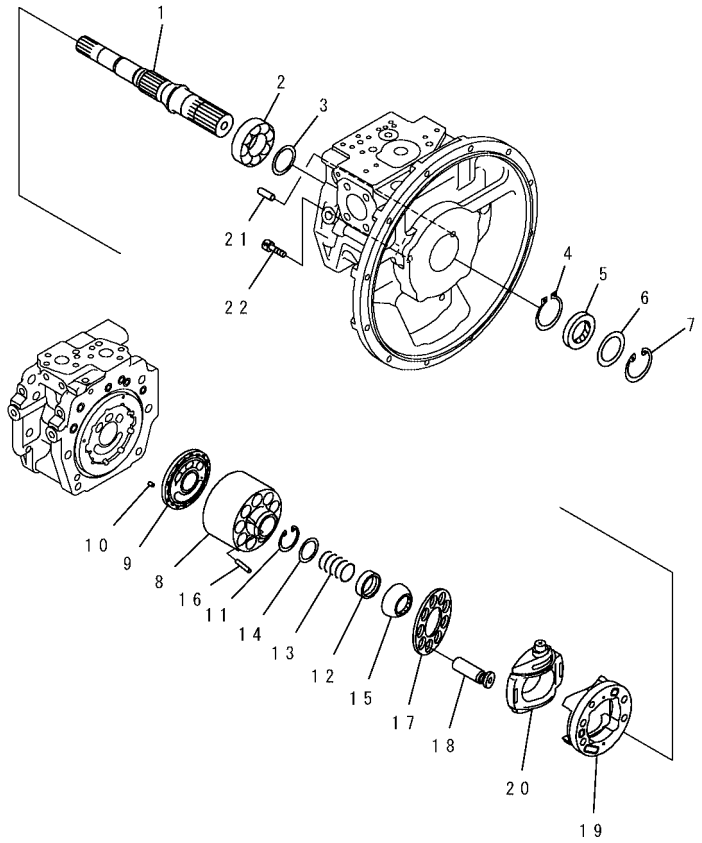

PW5A027

INDEX	PART NO.	DESCRIPTION	Q'TY	SERIAL NO.
	(708-2L-00300)	PUMP ASS' Y	1	DBB0001~
		THIS ASSEMBLY CONSISTS OF ALL PARTS SHOWN IN FIGS. Y1600-01A0 TO Y1600-11A0		
	(708-2L-01301)	. PUMP SUB ASS' Y	1	DBB0001~
1	(★708-2L-32110)	.. SHAFT, FRONT	1	DBB0001~
2	(★708-2L-32150)	.. BEARING	1	DBB0001~
3	(★708-2E-05040)	.. WASHER KIT	1	DBB0001~
4	(★708-25-12790)	.. RING, SNAP	1	DBB0001~
5	708-25-52861	.. SEAL, OIL	1	DBB0001~
6	708-2L-22160	.. SPACER	1	DBB0001~
7	04065-06825	.. RING, SNAP	1	DBB0001~
	(★708-2L-06170)	.. BLOCK ASS' Y, FRONT	1	DBB0001~
8	☆	... BLOCK, CYLINDER	1	DBB0001~
9	☆	... PLATE, VALVE	1	DBB0001~
10	(★720-68-19610)	.. PIN	1	DBB0001~
11	(★04065-04818)	.. RING, SNAP	1	DBB0001~
12	(★708-2L-23131)	.. SEAT	1	DBB0001~
13	(★708-2L-33160)	.. SPRING	1	DBB0001~
14	(★708-7L-13140)	.. SEAT	1	DBB0001~
15	(★708-2L-23351)	.. GUIDE, RETAINER	1	DBB0001~
16	(★708-2L-23360)	.. PIN	3	DBB0001~
17	(★708-2L-33350)	.. RETAINER, SHOE	1	DBB0001~
18	(★708-2L-33310)	.. PISTON SUB ASS' Y	9	DBB0001~
	(★708-2L-06190)	.. CRADLE ASS'Y	1	DBB0001~
19	☆	... CRADLE	1	DBB0001~
20	☆	... CAM, ROCKER	1	DBB0001~
21	(★04020-01228)	.. PIN	1	DBB0001~
22	(★01252-61230)	.. BOLT	4	DBB0001~

FIG. Y1600-04A0 MAIN PUMP (4/11)

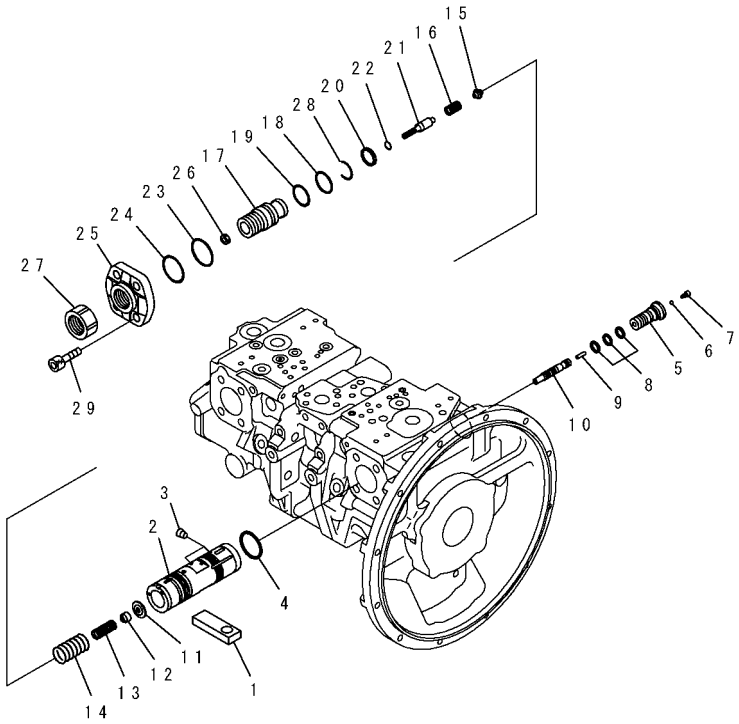

PW5A028

FIG NO. : Y1600-04A0

INDEX	PART NO.	DESCRIPTION	Q'TY	SERIAL NO.
	(708-2L-00300)	PUMP ASS' Y	1	DBB0001~
		THIS ASSEMBLY CONSISTS OF ALL PARTS SHOWN IN FIGS. Y1600-01A0 TO Y1600-11A0		
	(708-2L-01301)	. PUMP SUB ASS' Y	1	DBB0001~
1	(★708-2L-34120)	.. SLIDER	1	DBB0001~
	(★708-2L-06610)	.. VALVE ASS' Y, PC	1	DBB0001~
	(★708-2L-06520)	... PISTON ASS' Y, SERVO	1	DBB0001~
2	☆	.... PISTON, SERVO	1	DBB0001~
3	☆	.... SCREW	9	DBB0001~
4	(★708-2L-35680)	... SEAL	1	DBB0001~
5	(★708-2L-35621)	... PLUG	1	DBB0001~
6	(★708-2L-35760)	... BALL	1	DBB0001~
7	(★708-2L-35770)	... PLUG	1	DBB0001~
8	(★708-2L-35690)	... SEAL	3	DBB0001~
9	(★708-2L-35170)	... PIN	1	DBB0001~
10	(★708-2L-35860)	... SPOOL	1	DBB0001~
11	(★708-2L-35630)	... RETAINER	1	DBB0001~
12	(★708-2L-35641)	... SEAT	1	DBB0001~
13	(★708-2L-35720)	... SPRING	1	DBB0001~
14	(★708-2L-35730)	... SPRING	1	DBB0001~
15	(★708-2L-35650)	... SEAT	1	DBB0001~
16	(★708-2L-35740)	... SPRING	1	DBB0001~
17	(★708-2L-34250)	... SCREW	1	DBB0001~
18	(★07000-B3034)	... O-RING	1	DBB0001~
19	(★07001-03034)	... RING	1	DBB0001~
20	(★708-2L-35710)	... SEAL	1	DBB0001~
21	(★708-2L-35660)	... PLUG	1	DBB0001~
22	(★07000-B2010)	... O-RING	1	DBB0001~
23	(★07000-B3045)	... O-RING	1	DBB0001~
24	(★708-2L-35750)	... RING	1	DBB0001~
25	(★708-2L-34230)	... COVER	1	DBB0001~
26	(★01580-10806)	... NUT	1	DBB0001~
27	(★708-2L-35870)	... NUT	1	DBB0001~
28	(★708-2L-35670)	... RING, WIRE	1	DBB0001~
29	(★01252-61440)	.. BOLT	4	DBB0001~

FIG. Y1600-05A0 MAIN PUMP (5/11)

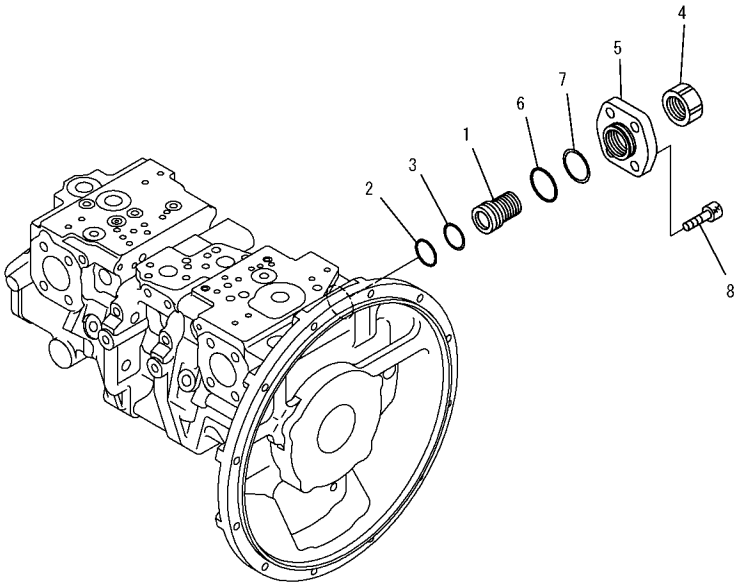

PW5A029

FIG NO. : Y1600-05A0

INDEX	PART NO.	DESCRIPTION	Q'TY	SERIAL NO.
	(708-2L-00300)	PUMP ASS' Y	1	DBB0001~
		THIS ASSEMBLY CONSISTS OF ALL PARTS		
		SHOWN IN FIGS. Y1600-01A0 TO Y1600-11A0		
	(708-2L-01301)	. PUMP SUB ASS' Y	1	DBB0001~
	(★708-2L-06530)	.. COVER ASS' Y	1	DBB0001~
1	(★708-2L-34270)	... SCREW	1	DBB0001~
2	(★07000-B3034)	... O-RING	1	DBB0001~
3	(★708-2L-35210)	... RING	1	DBB0001~
4	(★708-2L-35870)	... NUT	1	DBB0001~
5	(★708-2L-34260)	... COVER	1	DBB0001~
6	(★07000-B3045)	... O-RING	1	DBB0001~
7	(★708-2L-35750)	... RING	1	DBB0001~
8	(★01252-61440)	.. BOLT	4	DBB0001~

FIG. Y1600-06A0 MAIN PUMP (6/11)

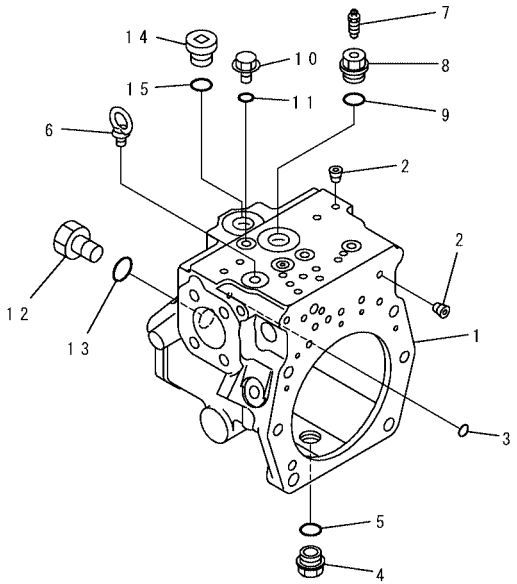

PW5A030

FIG NO. : Y1600-06A0

INDEX	PART NO.	DESCRIPTION	Q'TY	SERIAL NO.
	(708-2L-00300)	PUMP ASS' Y	1	DBB0001~
		THIS ASSEMBLY CONSISTS OF ALL PARTS SHOWN IN FIGS. Y1600-01A0 TO Y1600-11A0		
	(708-2L-01301)	. PUMP SUB ASS' Y	1	DBB0001~
	(★708-2L-06211)	.. CASE ASS' Y, REAR	1	DBB0001~
1	☆	... CASE, REAR	1	DBB0001~
2	☆	... PLUG	35	DBB0001~
3	(★07000-B1009)	.. O-RING	1	DBB0001~
4	07044-12412	.. PLUG	1	DBB0001~
5	708-1W-28910	.. O-RING	1	DBB0001~
6	04530-01222	.. BOLT, EYE	1	DBB0001~
7	20B-27-11210	.. BLEEDER	1	DBB0001~
8	706-87-40150	.. PLUG	1	DBB0001~
9	708-1W-28910	.. O-RING	1	DBB0001~
10	708-8E-16150	.. PLUG	4	DBB0001~
11	708-2L-23920	.. O-RING	4	DBB0001~
12	723-26-15230	.. PLUG	1	DBB0001~
13	708-1W-28910	.. O-RING	1	DBB0001~
14	07040-12414	.. PLUG	1	DBB0001~
15	708-1W-28910	.. O-RING	1	DBB0001~

FIG. Y1600-07A0 MAIN PUMP (7/11)

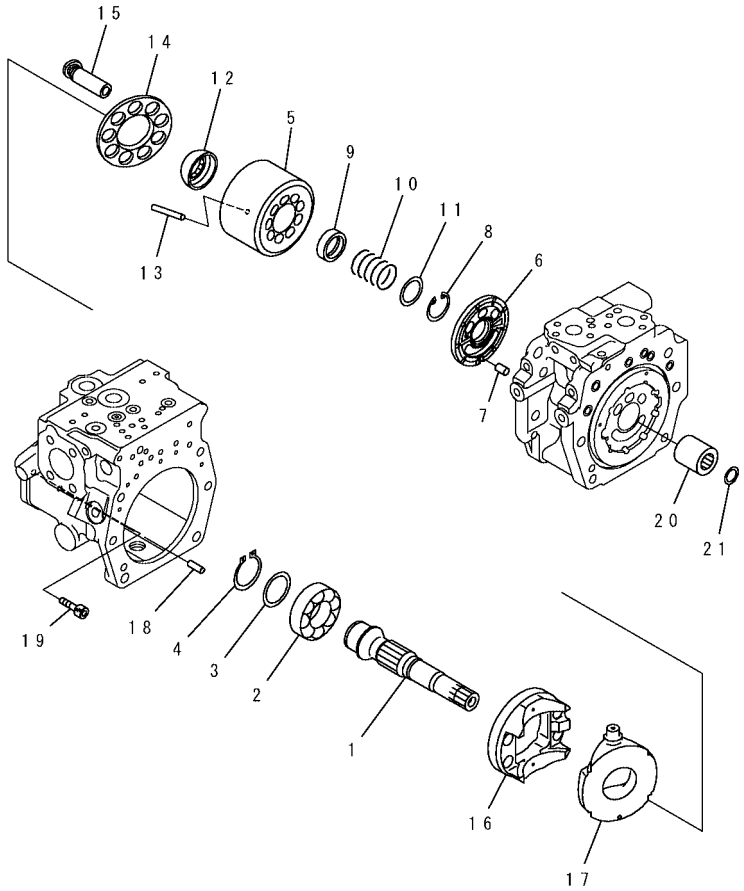

PW5A031

INDEX	PART NO.	DESCRIPTION	Q'TY	SERIAL NO.
	(708-2L-00300)	PUMP ASS' Y	1	DBB0001~
		THIS ASSEMBLY CONSISTS OF ALL PARTS SHOWN IN FIGS. Y1600-01A0 TO Y1600-11A0		
	(708-2L-01301)	. PUMP SUB ASS' Y	1	DBB0001~
1	(★708-2L-32130)	.. SHAFT, REAR	1	DBB0001~
2	(★708-2L-32150)	.. BEARING	1	DBB0001~
3	(★708-2E-05040)	.. WASHER KIT	1	DBB0001~
4	(★708-25-12790)	.. RING, SNAP	1	DBB0001~
	(★708-2L-06180)	.. BLOCK ASS'Y, REAR	1	DBB0001~
5	☆	... BLOCK, CYLINDER	1	DBB0001~
6	☆	... PLATE, VALVE	1	DBB0001~
7	(★720-68-19610)	.. PIN	1	DBB0001~
8	(★04065-04818)	.. RING, SNAP	1	DBB0001~
9	(★708-2L-23131)	.. SEAT	1	DBB0001~
10	(★708-2L-33160)	.. SPRING	1	DBB0001~
11	(★708-7L-13140)	.. SEAT	1	DBB0001~
12	(★708-2L-23351)	.. GUIDE, RETAINER	1	DBB0001~
13	(★708-2L-23360)	.. PIN	3	DBB0001~
14	(★708-2L-33350)	.. RETAINER, SHOE	1	DBB0001~
15	(★708-2L-33310)	.. PISTON SUB ASS' Y	9	DBB0001~
	(★708-2L-06190)	.. CRADLE ASS' Y	1	DBB0001~
16	☆	... CRADLE	1	DBB0001~
17	☆	... CAM, ROCKER	1	DBB0001~
18	(★04020-01228)	.. PIN	1	DBB0001~
19	(★01252-61230)	.. BOLT	4	DBB0001~
20	(★708-2L-22130)	.. COUPLING	1	DBB0001~
21	(★708-2E-12140)	.. RING	1	DBB0001~

FIG. Y1600-08A0 MAIN PUMP (8/11)

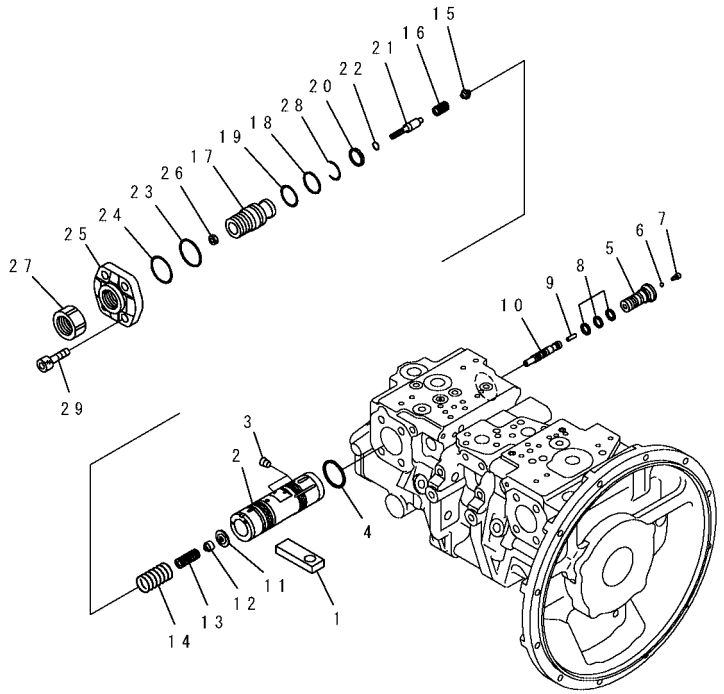

PW5A032

FIG NO. : Y1600-08A0

INDEX	PART NO.	DESCRIPTION	Q'TY	SERIAL NO.
	(708-2L-00300)	PUMP ASS' Y	1	DBB0001~
		THIS ASSEMBLY CONSISTS OF ALL PARTS SHOWN IN FIGS. Y1600-01A0 TO Y1600-11A0		
	(708-2L-01301)	. PUMP SUB ASS' Y	1	DBB0001~
1	(★708-2L-34120)	.. SLIDER	1	DBB0001~
	(★708-2L-06610)	.. VALVE ASS' Y, PC	1	DBB0001~
	(★708-2L-06520)	... PISTON ASS' Y, SERVO	1	DBB0001~
2	☆	.... PISTON, SERVO	1	DBB0001~
3	☆	.... SCREW	9	DBB0001~
4	(★708-2L-35680)	... SEAL	1	DBB0001~
5	(★708-2L-35621)	... PLUG	1	DBB0001~
6	(★708-2L-35760)	... BALL	1	DBB0001~
7	(★708-2L-35770)	... PLUG	1	DBB0001~
8	(★708-2L-35690)	... SEAL	3	DBB0001~
9	(★708-2L-35170)	... PIN	1	DBB0001~
10	(★708-2L-35860)	... SPOOL	1	DBB0001~
11	(★708-2L-35630)	... RETAINER	1	DBB0001~
12	(★708-2L-35641)	... SEAT	1	DBB0001~
13	(★708-2L-35720)	... SPRING	1	DBB0001~
14	(★708-2L-35730)	... SPRING	1	DBB0001~
15	(★708-2L-35650)	... SEAT	1	DBB0001~
16	(★708-2L-35740)	... SPRING	1	DBB0001~
17	(★708-2L-34250)	... SCREW	1	DBB0001~
18	(★07000-B3034)	... O-RING	1	DBB0001~
19	(★07001-03034)	... RING	1	DBB0001~
20	(★708-2L-35710)	... SEAL	1	DBB0001~
21	(★708-2L-35660)	... PLUG	1	DBB0001~
22	(★07000-B2010)	... O-RING	1	DBB0001~
23	(★07000-B3045)	... O-RING	1	DBB0001~
24	(★708-2L-35750)	... RING	1	DBB0001~
25	(★708-2L-34230)	... COVER	1	DBB0001~
26	(★01580-10806)	... NUT	1	DBB0001~
27	(★708-2L-35870)	... NUT	1	DBB0001~
28	(★708-2L-35670)	... RING, WIRE	1	DBB0001~
29	(★01252-61440)	.. BOLT	4	DBB0001~

FIG. Y1600-09A0 MAIN PUMP (9/11)

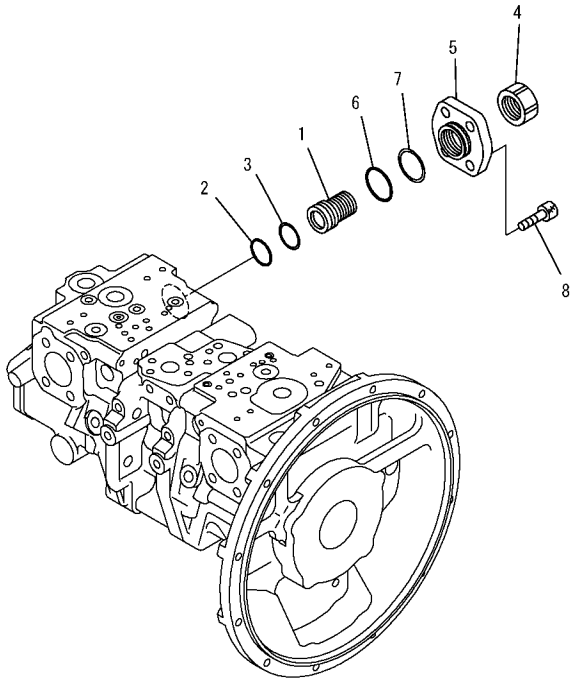

PW5A033

FIG NO. : Y1600-09A0

INDEX	PART NO.	DESCRIPTION	Q'TY	SERIAL NO.
	(708-2L-00300)	PUMP ASS' Y	1	DBB0001~
		THIS ASSEMBLY CONSISTS OF ALL PARTS SHOWN IN FIGS. Y1600-01A0 TO Y1600-11A0.....		
	(708-2L-01301)	. PUMP SUB ASS' Y.....	1	DBB0001~
	(★708-2L-06530)	.. COVER ASS' Y.....	1	DBB0001~
1	(★708-2L-34270)	... SCREW	1	DBB0001~
2	(★07000-B3034)	... O-RING.....	1	DBB0001~
3	(★708-2L-35210)	... RING.....	1	DBB0001~
4	(★708-2L-35870)	... NUT	1	DBB0001~
5	(★708-2L-34260)	... COVER.....	1	DBB0001~
6	(★07000-B3045)	... O-RING.....	1	DBB0001~
7	(★708-2L-35750)	... RING.....	1	DBB0001~
8	(★01252-61440)	.. BOLT.....	4	DBB0001~

FIG. Y1600-10A0 MAIN PUMP (10/11)

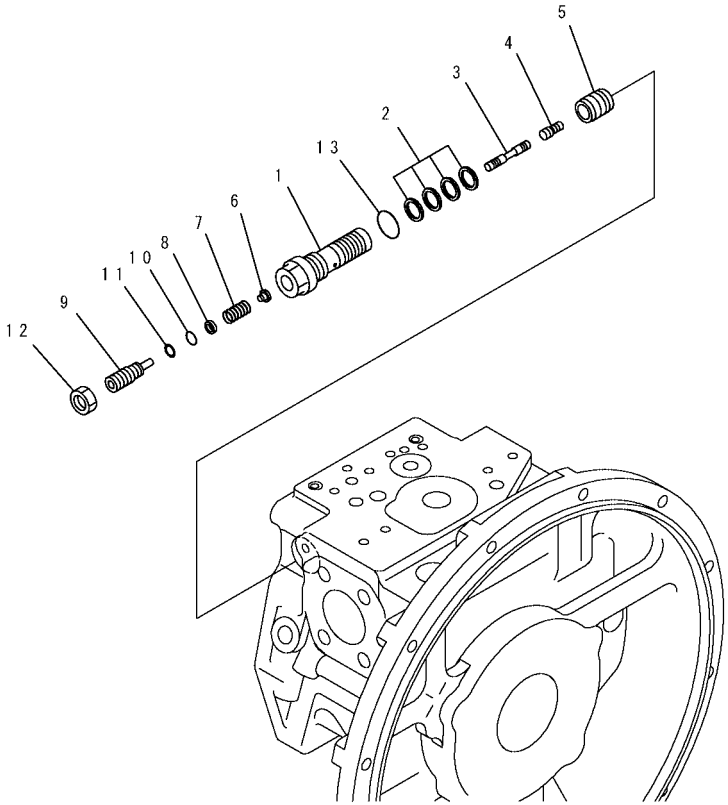

PW5A034

FIG NO. : Y1600-10A0

INDEX	PART NO.	DESCRIPTION	Q'TY	SERIAL NO.
	(708-2L-00300)	PUMP ASS' Y	1	DBB0001~
		THIS ASSEMBLY CONSISTS OF ALL PARTS SHOWN IN FIGS. Y1600-01A0 TO Y1600-11A0		
	708-2L-06710	. VALVE ASS' Y, LS	2	DBB0001~
1	(★708-2L-35311)	.. SLEEVE	1	DBB0001~
2	708-2L-24680	.. SEAL	4	DBB0001~
3	(★708-2L-35430)	.. SPOOL	1	DBB0001~
4	(★708-2L-28540)	.. PISTON	1	DBB0001~
5	(★708-2L-35360)	.. SLEEVE	1	DBB0001~
6	(★708-2L-35331)	.. SEAT	1	DBB0001~
7	(★708-2L-35410)	.. SPRING	1	DBB0001~
8	(★708-2L-35341)	.. SEAT	1	DBB0001~
9	(★708-2L-35351)	.. PLUG	1	DBB0001~
10	(★07000-B1009)	.. O-RING	1	DBB0001~
11	(★07001-01009)	.. RING, BACK-UP	1	DBB0001~
12	01583-11408	.. NUT	1	DBB0001~
13	708-1W-28910	.. O-RING	1	DBB0001~

FIG. Y1600-11A0 MAIN PUMP (11/11)

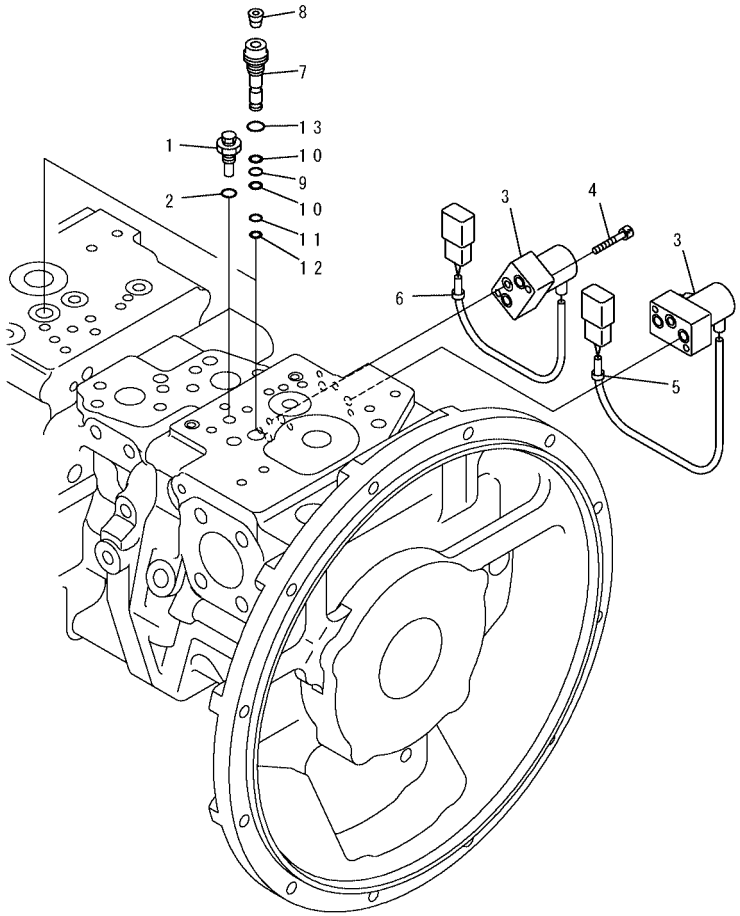

PW5A093

FIG NO. : Y1600-11A0

INDEX	PART NO.	DESCRIPTION	Q'TY	SERIAL NO.
	(708-2L-00300)	PUMP ASS' Y	1	DBB0001~
		THIS ASSEMBLY CONSISTS OF ALL PARTS SHOWN IN FIGS. Y1600-01A0 TO Y1600-11A0		
1	708-2L-35530	. PLUG	1	DBB0001~
2	708-2L-23920	. O-RING	1	DBB0001~
3	702-21-55901	. PILOT VALVE	2	DBB0001~
4	01252-60635	. BOLT	4	DBB0001~
5	20Y-62-22790	. BAND, RED	1	DBB0001~
6	20Y-62-22830	. BAND, WHITE	1	DBB0001~
	708-2L-06821	. PLUG SUB ASS' Y	2	DBB0001~
7	(★708-2L-35921)	.. PLUG	1	DBB0001~
8	☆	.. PLUG	1	DBB0001~
9	07000-B1008	.. O-RING	1	DBB0001~
10	07001-01008	.. RING	2	DBB0001~
11	07000-B1007	.. O-RING	1	DBB0001~
12	07001-01007	.. RING, BACK-UP	1	DBB0001~
13	708-2L-23950	.. O-RING	1	DBB0001~

FIG. Y1620-01A0 BOOM CYLINDER

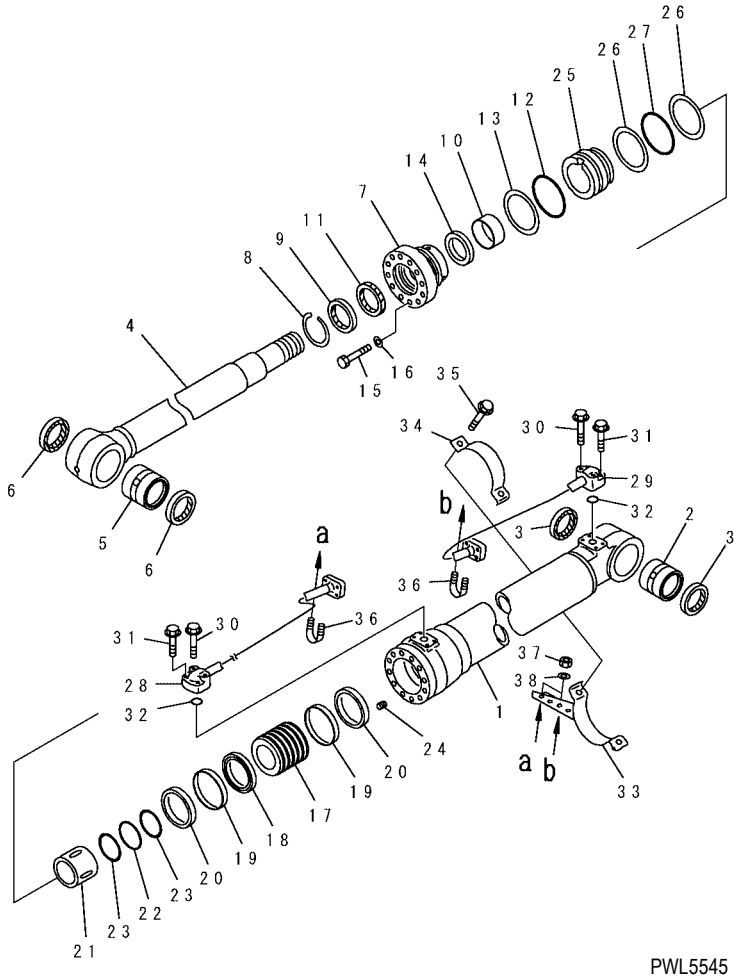

INDEX	PART NO.	DESCRIPTION	Q'TY	SERIAL NO.
G-1	(⦿707-01-XZ820)	CYLINDER GROUP, L. H. (FINAL COAT)	1	DBB0001~
	(⦿707-01-XA960)	CYLINDER GROUP, L. H. (UNDER COAT)	1	DBB0001~
G-2	(⦿707-01-XZ830)	CYLINDER GROUP, R. H. (FINAL COAT)	1	DBB0001~
	(⦿707-01-XA970)	CYLINDER GROUP, R. H. (UNDER COAT)	1	DBB0001~
		==========		
	707-01-XA290	CYLINDER ASS' Y	1	DBB0001~
	707-13-12260	. CYLINDER	1	DBB0001~
1	707-76-70651	. BUSHING	1	DBB0001~
2	07145-00070	. SEAL, DUST (KIT)	2	DBB0001~
3	707-58-85221	. ROD, PISTON	1	DBB0001~
4	707-76-80431	. BUSHING	1	DBB0001~
5	07145-00080	. SEAL, DUST (KIT)	2	DBB0001~
6	707-27-12921	. HEAD, CYLINDER	1	DBB0001~
7	07179-13099	. RING, SNAP	1	DBB0001~
8	707-56-85510	. SEAL, DUST (KIT)	1	DBB0001~
9	707-52-90610	. BUSHING	1	DBB0001~
10	707-51-85030	. PACKING, ROD (KIT)	1	DBB0001~
11	07000-15110	. O-RING (KIT)	1	DBB0001~
12	707-35-91220	. PING, BACK-UP (KIT)	1	DBB0001~
13	707-51-85640	. RING, BUFFER (KIT)	1	DBB0001~
14	01010-81670	. BOLT	12	DBB0001~
15	01643-51645	. WASHER	12	DBB0001~
16	707-36-12851	. PISTON	1	DBB0001~
17	707-44-12180	. RING, PISTON (KIT)	1	DBB0001~
18	707-39-12140	. RING, WEAR (KIT)	2	DBB0001~
19	707-44-12911	. RING	2	DBB0001~
20	707-71-70800	. PLUNGER	1	DBB0001~
21	07000-15075	. O-RING (KIT)	1	DBB0001~
22	707-35-90930	. RING, BACK-UP (KIT)	2	DBB0001~
23	01310-01216	. SCREW	1	DBB0001~
24	707-71-34621	. COLLAR	1	DBB0001~
25	707-35-91220	. RING, BACK-UP (KIT)	2	DBB0001~
26	07000-15110	. O-RING (KIT)	1	DBB0001~
27	707-86-66250	TUBE, L. H.	1	DBB0001~
28	707-86-66260	TUBE, R. H.	1	DBB0001~

FIG. Y1620-01A0 BOOM CYLINDER

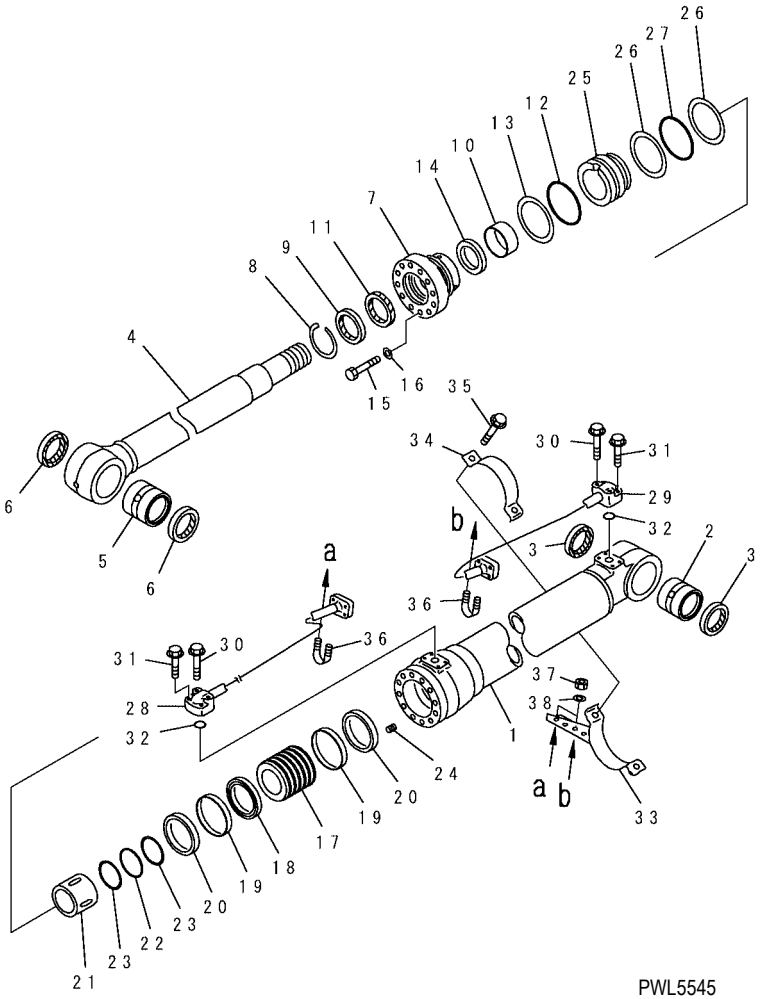

INDEX	PART NO.	DESCRIPTION	Q'TY	SERIAL NO.
29	20Y-62-24580	TUBE, L. H.	1	DBB0001~
	20Y-62-24610	TUBE, R. H.	1	DBB0001~
30	01435-01055	BOLT	4	DBB0001~
31	01435-01040	BOLT	4	DBB0001~
32	07000-13030	O-RING (KIT)	2	DBB0001~
33	707-88-22550	BRACKET, L. H.	1	DBB0001~
	707-88-22560	BRACKET, R. H.	1	DBB0001~
34	707-88-21251	BAND	1	DBB0001~
35	01435-01030	BOLT	2	DBB0001~
36	07283-22738	CLIP	2	DBB0001~
37	01599-01011	NUT	4	DBB0001~
38	01643-31032	WASHER	4	DBB0001~
		==========		
	707-99-46130	SERVICE KIT	2	DBB0001~

FIG. Y1620-11A0 ARM CYLINDER

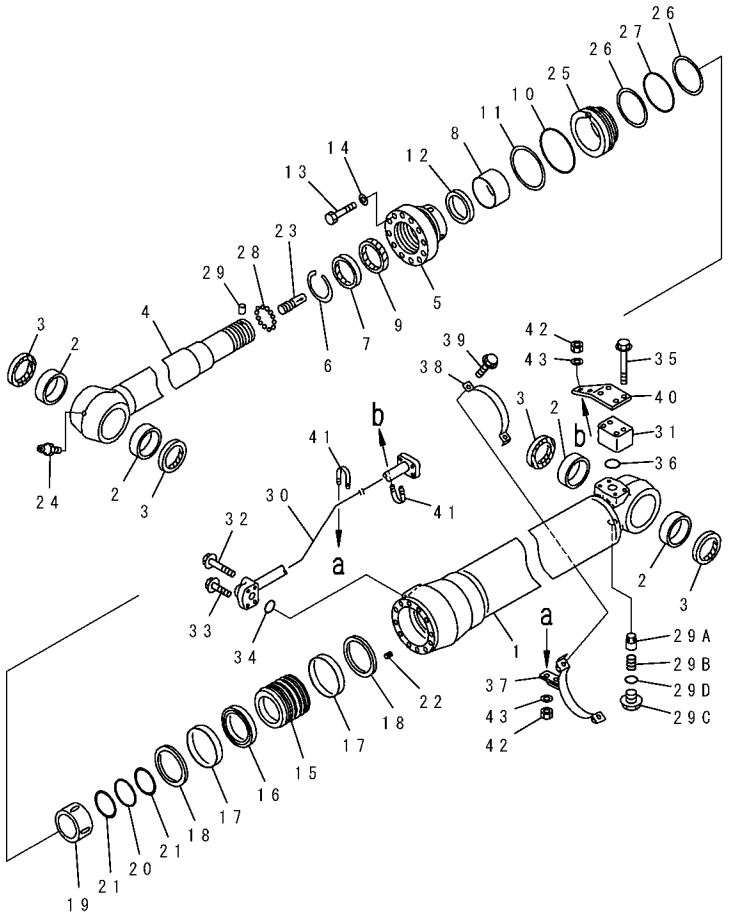

FIG NO. : Y1620-11A0

INDEX	PART NO.	DESCRIPTION	Q'TY	SERIAL NO.
G-1	(⊙707-01-XZ841)	CYLINDER GROUP (FINAL COAT).....	1	DBB0001~
	(⊙707-01-XA981)	CYLINDER GROUP (UNDER COAT).....	1	DBB0001~
		==========		
	707-01-XA311	CYLINDER ASS' Y	1	DBB0001~
1	707-13-13540	. CYLINDER	1	DBB0001~
2	707-76-80470	. BUSHING	4	DBB0001~
3	07145-00080	. SEAL, DUST (KIT).....	4	DBB0001~
4	707-58-95161	. ROD, PISTON	1	DBB0001~
5	707-27-13961	. HEAD, CYLINDER	1	DBB0001~
6	07179-13109	. RING, SNAP.....	1	DBB0001~
7	707-56-95510	. EAL, DUST (KIT).....	1	DBB0001~
8	707-52-90720	. BUSHING	1	DBB0001~
9	707-51-95030	. PACKING, ROD (KIT)	1	DBB0001~
10	07000-15125	. O-RING (KIT).....	1	DBB0001~
11	707-35-91370	. RING, BACK-UP (KIT)	1	DBB0001~
12	707-51-95640	. RING, BUFFER (KIT).....	1	DBB0001~
13	01010-81875	. BOLT.....	12	DBB0001~
14	707-41-11840	. WASHER.....	12	DBB0001~
15	707-36-13771	. PISTON	1	DBB0001~
16	707-44-13280	. RING, PISTON (KIT).....	1	DBB0001~
17	707-39-13530	. RING, WEAR (KIT).....	2	DBB0001~
18	707-44-13920	. RING.....	2	DBB0001~
19	707-71-61070	. PLUNGER	1	DBB0001~
20	07000-15085	. O-RING (KIT).....	1	DBB0001~
21	707-35-90960	. RING, BACK-UP (KIT)	2	DBB0001~
22	01310-01216	. SCREW	1	DBB0001~
23	707-71-70270	. PLUNGER	1	DBB0001~
24	07020-00000	. FITTING, GREASE	1	DBB0001~
25	707-71-32770	. COLLAR	1	DBB0001~
26	707-35-91370	. RING, BACK-UP (KIT)	2	DBB0001~
27	07000-15125	. O-RING (KIT).....	1	DBB0001~
28	04260-00635	. BALL.....	12	DBB0001~
29	707-71-91270	. CAP	1	DBB0001~
29A	707-83-13010	. VALVE.....	1	DBB0001~
29B	07750-01628	. SPRING.....	1	DBB0001~
29C	707-87-14070	. PLUG.....	1	DBB0001~
29D	07002-12034	. O-RING (KIT).....	1	DBB0001~

FIG. Y1620-11A0 ARM CYLINDER

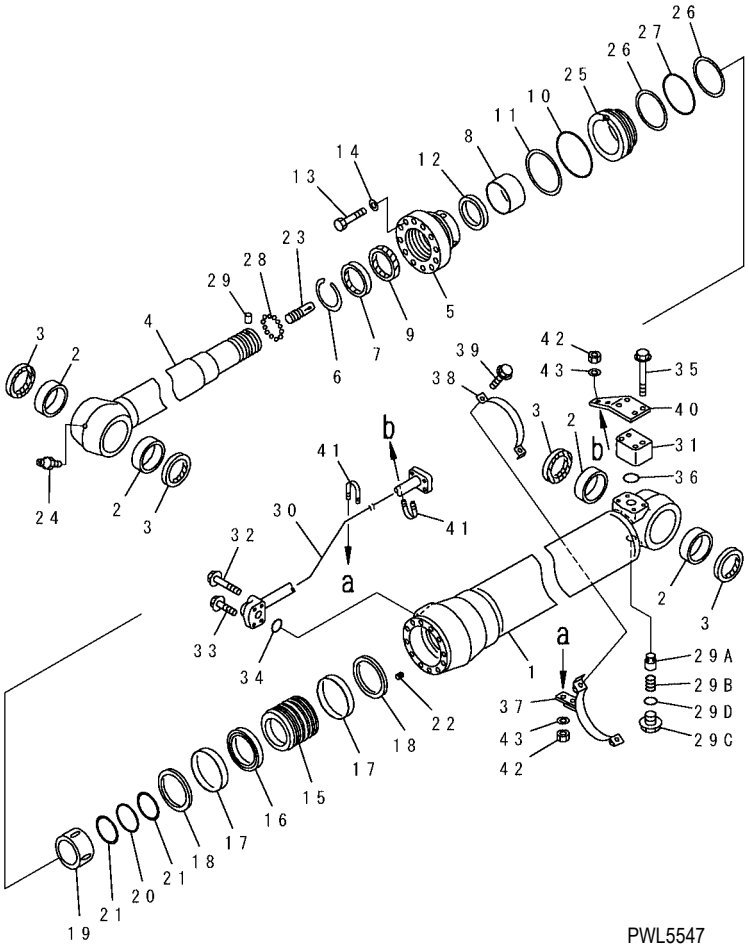

INDEX	PART NO.	DESCRIPTION	Q'TY	SERIAL NO.
30	707-86-66270	TUBE	1	DBB0001~
31	20D-62-17860	ELBOW	1	DBB0001~
32	01435-01055	BOLT	2	DBB0001~
33	01435-01040	BOLT	2	DBB0001~
34	07000-13030	O-RING (KIT)	1	DBB0001~
35	01435-01075	BOLT	4	DBB0001~
36	07000-13035	O-RING (KIT)	1	DBB0001~
37	707-88-22530	BRACKET	1	DBB0001~
38	707-88-21261	BAND	1	DBB0001~
39	01435-01030	BOLT	2	DBB0001~
40	707-88-11560	PLATE	1	DBB0001~
41	07283-22738	CLIP	2	DBB0001~
42	01599-01011	NUT	4	DBB0001~
43	01643-31032	WASHER	4	DBB0001~
		==========		
	707-99-57160	SERVICE KIT	1	DBB0001~

FIG. Y1620-41A0 BUCKET CYLINDER

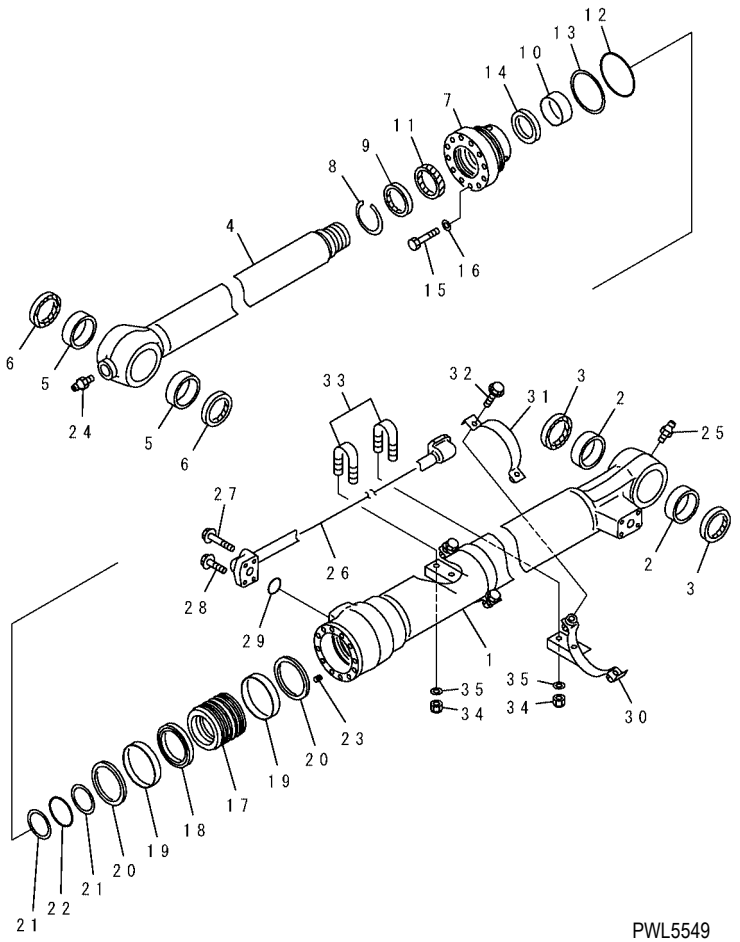

INDEX	PART NO.	DESCRIPTION	Q'TY	SERIAL NO.
G-1	(⊙707-01-XZ851)	CYLINDER GROUP (FINAL COAT)	1	DBB0001~
	(⊙707-01-XA991)	CYLINDER GROUP (UNDER COAT)	1	DBB0001~
		==========		
	707-01-XA320	CYLINDER ASS' Y	1	DBB0001~
1	707-13-11560	. CYLINDER	1	DBB0001~
2	707-76-70690	. BUSHING	2	DBB0001~
3	07145-00070	. SEAL, BUST (KIT)	2	DBB0001~
4	707-58-80651	. ROD, PISTON	1	DBB0001~
5	707-76-70690	. BUSHING	2	DBB0001~
6	20Y-70-23220	. SEAL, DUST (KIT)	2	DBB0001~
7	707-27-11981	. HEAD, CYLINDER	1	DBB0001~
8	07179-13094	. RING, SNAP	1	DBB0001~
9	195-63-92190	. SEAL, DUST (KIT)	1	DBB0001~
10	707-52-90560	. BUSHING	1	DBB0001~
11	707-51-80030	. PACKING, ROD (KIT)	1	DBB0001~
12	07000-15105	. O-RING (KIT)	1	DBB0001~
13	707-35-91150	. RING, BACK-UP (KIT)	1	DBB0001~
14	707-51-80640	. RING, BUFFER (KIT)	1	DBB0001~
15	01010-81670	. BOLT	12	DBB0001~
16	01643-51645	. WASHER	12	DBB0001~
17	707-36-11851	. PISTON	1	DBB0001~
18	707-44-11280	. RING, PISTON (KIT)	1	DBB0001~
19	707-39-11530	. RING, WEAR (KIT)	2	DBB0001~
20	707-44-11920	. RING	2	DBB0001~
21	707-35-90360	. RING(KIT)	2	DBB0001~
22	07000-15070	. O-RING (KIT)	1	DBB0001~
23	01310-01216	. SCREW	1	DBB0001~
24	07020-00000	. FITTING, GREASE	1	DBB0001~
25	07020-00000	. FITTING, GREASE	1	DBB0001~
26	707-86-66280	TUBE	1	DBB0001~
27	01435-01055	BOLT	2	DBB0001~
28	01435-01040	BOLT	2	DBB0001~
29	07000-13030	O-RING (KIT)	1	DBB0001~
30	707-88-22570	BRACKET	2	DBB0001~
31	707-88-21271	BAND	2	DBB0001~
32	01435-01030	BOLT	4	DBB0001~
33	07283-22738	CLIP	2	DBB0001~
34	01599-01011	NUT	4	DBB0001~
35	01643-31032	WASHER	4	DBB0001~
		==========		
	707-99-45230	SERVICE KIT	1	DBB0001~

FIG. Y1627-01A0 SWIVEL JOINT

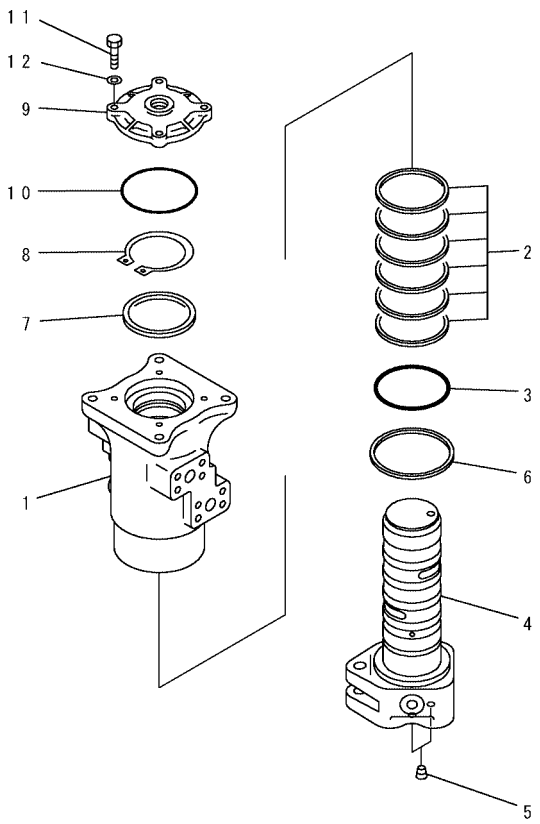

PWL5220

FIG NO. : Y1627-01A0

INDEX	PART NO.	DESCRIPTION	Q'TY	SERIAL NO.
	703-08-33610	SWIVEL JOINT ASS' Y	1	DBB0001~
1	☆	. ROTOR	1	DBB0001~
2	703-08-95620	. SEAL	6	DBB0001~
3	07000-15080	. O-RING	1	DBB0001~
4	☆	. SHAFT	1	DBB0001~
5	703-13-98930	.. PLUG	2	DBB0001~
6	703-09-98130	. SEAL	1	DBB0001~
7	703-08-94510	. RING	1	DBB0001~
8	04064-07525	. RING, SNAP	1	DBB0001~
9	☆	. COVER	1	DBB0001~
10	07000-12105	. O-RING	1	DBB0001~
11	01010-80835	. BOLT	4	DBB0001~
12	01643-30823	. WASHER	4	DBB0001~

FIG. Y1640-01A0 SWING MOTOR (1/3)

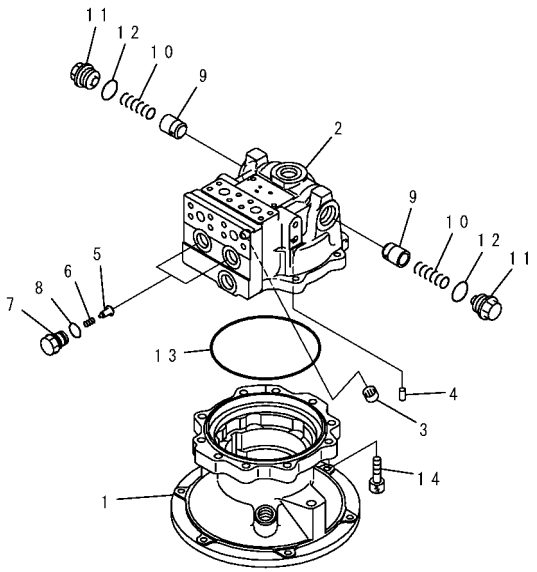

PW5S042

FIG NO. : Y1640-01A0

INDEX	PART NO	ESCRIPTION	Q'TY	SERIAL NO
	706-7G-01070	MOTOR ASS' Y	1	DBB0001~
		THIS ASSEMBLY CONSISTS OF ALL PARTS SHOWN IN FIGS. Y1640-01A0 TO Y1640-03A0.		
	706-7G-03050	. MOTOR SUB ASS'Y	1	DBB0001~
1	(★706-7G-41111)	.. CASE.....	1	DBB0001~
2	(★706-7G-71130)	.. HOUSING.....	1	DBB0001~
3	(★706-7G-40010)	.. BEARING	1	DBB0001~
4	(★706-75-42820)	.. PIN, DOWEL	1	DBB0001~
5	709-25-11650	.. VALVE, CHECK.....	2	DBB0001~
6	709-25-11361	.. SPRING.....	2	DBB0001~
7	709-25-11640	.. PLUG.....	2	DBB0001~
8	07000-12020	.. O-RING.....	2	DBB0001~
9	706-75-74540	.. VALVE.....	2	DBB0001~
10	706-7G-71550	.. SPRING.....	2	DBB0001~
11	706-75-74850	.. PLUG.....	2	DBB0001~
12	07002-13334	.. O-RING.....	2	DBB0001~
13	(★706-75-42370)	.. O-RING.....	1	DBB0001~
14	01252-61245	.. BOLT.....	10	DBB0001~

FIG. Y1640-02A0 SWING MOTOR (2/3)

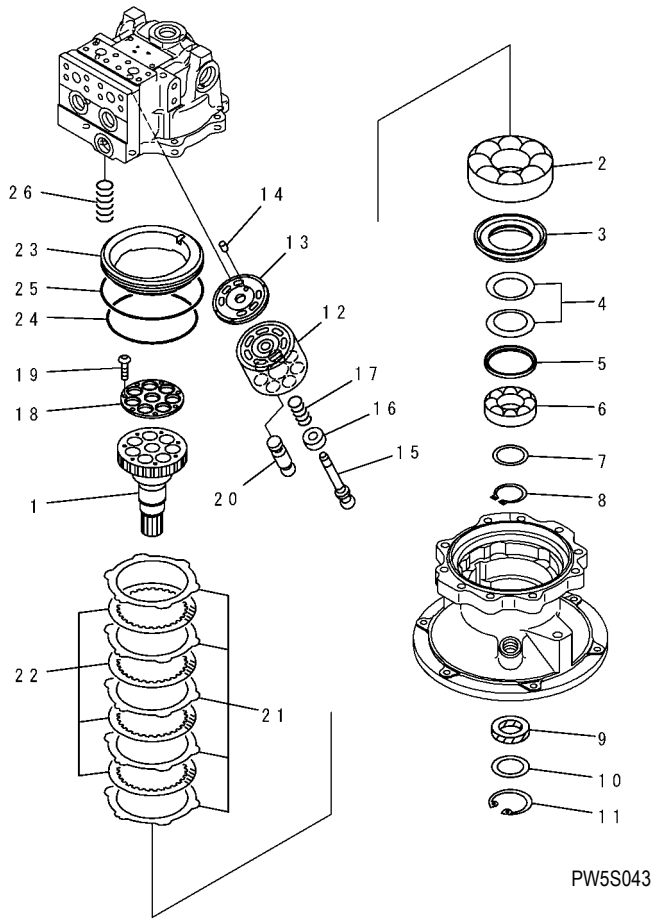

INDEX	PART NO	ESCRIPTION	Q'TY	SERIAL NO
	(706-7G-01070)	MOTOR ASS' Y	1	DBB0001~
		THIS ASSEMBLY CONSISTS OF ALL PARTS SHOWN IN FIGS. Y1640-01A0 TO Y1640-03A0		
	(706-7G-03050)	. MOTOR SUB ASS'Y	1	DBB0001~
1	(★706-7G-41610)	.. SHAFT, DRIVE	1	DBB0001~
2	(★706-75-42880)	.. BEARING	1	DBB0001~
3	(★706-75-43810)	.. SPACER	1	DBB0001~
4	(★706-7E-11260)	.. SPRING	2	DBB0001~
5	(★706-7E-11270)	.. SEAT	1	DBB0001~
6	(★706-76-40890)	.. BEARING	1	DBB0001~
7	(★706-75-05040)	.. SPACER KIT	1	DBB0001~
8	04064-04518	.. RING, SNAP	1	DBB0001~
9	706-7E-11280	.. SEAL, OIL	1	DBB0001~
10	706-75-43720	.. SPACER	1	DBB0001~
11	04065-06220	.. RING	1	DBB0001~
12	(★706-7G-41210)	.. BLOCK, CYLINDER	1	DBB0001~
13	(★706-7G-41710)	.. PLATE, VALVE	1	DBB0001~
14	(★706-75-43750)	.. PIN, DOWEL	1	DBB0001~
15	(★706-7G-41120)	.. SHAFT, CENTER	1	DBB0001~
16	(★706-7G-41130)	.. RING, CENTER	1	DBB0001~
17	(★706-7G-41140)	.. SPRING	1	DBB0001~
	(★706-7G-05010)	.. RETAINER KIT	1	DBB0001~
18	☆	…RETAINER	1	DBB0001~
19	☆	…SCREW	7	DBB0001~
20	(★706-7G-41160)	.. PISTON SUB ASS'Y	7	DBB0001~
21	(★706-7G-91340)	.. PLATE	5	DBB0001~
22	(★706-7G-91350)	.. DISC	4	DBB0001~
23	(★706-7G-91110)	.. PISTON, BRAKE	1	DBB0001~
24	(★706-77-40370)	.. O-RING	1	DBB0001~
25	(★708-8F-31610)	.. O-RING	1	DBB0001~
26	(★706-7G-91360)	.. SPRING	6	DBB0001~

FIG. Y1640-03A0 SWING MOTOR (3/3)

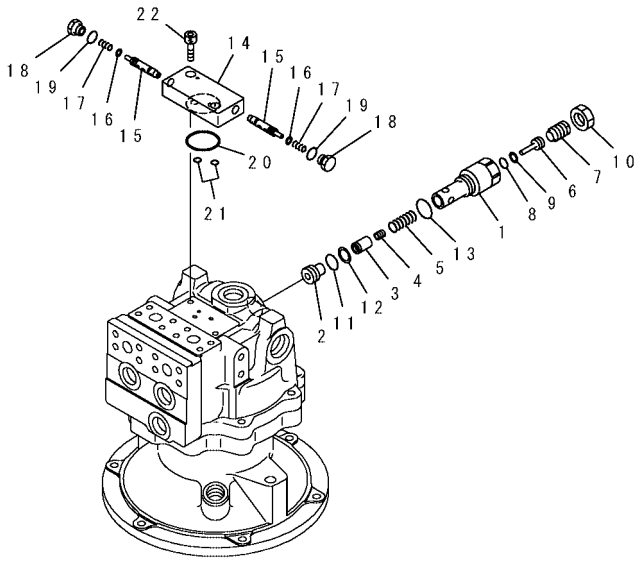

PW5S044

FIG NO. : Y1640-03A0

INDEX	PART NO	ESCRIPTION	Q'TY	SERIAL NO
	(706-7G-01070)	MOTOR ASS'Y	1	DBB0001~
		THIS ASSEMBLY CONSISTS OF ALL PARTS SHOWN IN FIGS. Y1640-01A0 TO Y1640-03A0		
	702-75-01250	. VALVE ASS'Y, SAFETY	1	DBB0001~
1	☆	.. SLEEVE	1	DBB0001~
2	☆	.. SEAT, VALVE	1	DBB0001~
3	☆	.. VALVE	1	DBB0001~
4	☆	.. PISTON	1	DBB0001~
5	☆	.. SPRING	1	DBB0001~
6	☆	.. ROD	1	DBB0001~
7	☆	.. SCREW	1	DBB0001~
8	☆	.. O-RING	1	DBB0001~
9	☆	.. RING, BACK-UP	1	DBB0001~
10	☆	.. NUT	1	DBB0001~
11	07000-F2020	.. O-RING	1	DBB0001~
12	07001-02020	.. RING, BACK-UP	1	DBB0001~
13	07002-13034	.. O-RING	1	DBB0001~
	702-15-77000	. VALVE ASS'Y	1	DBB0001~
14	☆	.. BODY	1	DBB0001~
15	☆	.. SPOOL	2	DBB0001~
16	709-70-71610	.. SEAL	2	DBB0001~
17	702-15-71130	.. SPRING	2	DBB0001~
18	702-15-71140	.. PLUG	2	DBB0001~
19	07002-01423	.. O-RING	2	DBB0001~
20	07000-03042	. O-RING	1	DBB0001~
21	07000-11009	. O-RING	2	DBB0001~
22	01252-60825	. BOLT	2	DBB0001~

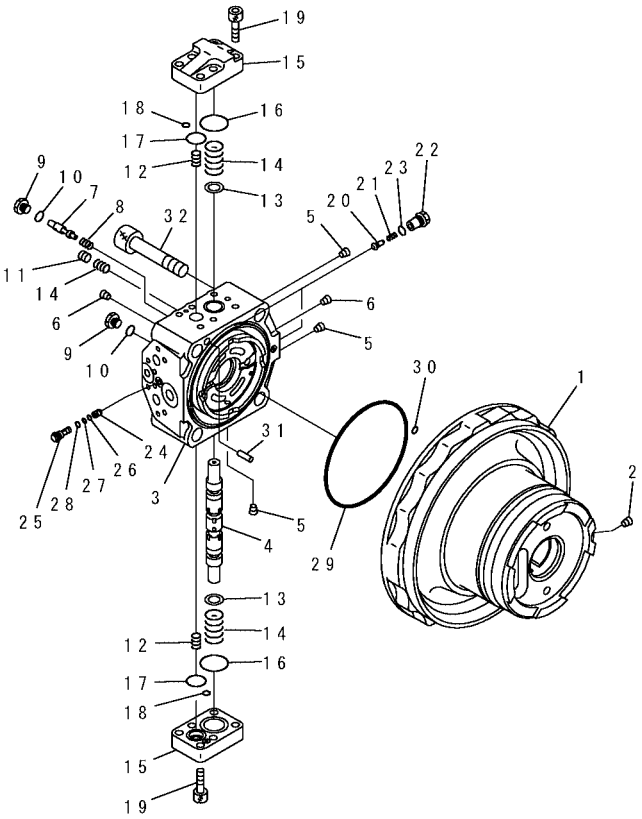

PW5S045

INDEX	PART NO.	DESCRIPTION	Q'TY	SERIAL NO.
	708-8F-00171	MOTOR ASS' Y	1	DBB0001~
		THIS ASSEMBLY CONSISTS OF ALL PARTS SHOWN IN FIGS. Y1641-01A0 TO Y1641-03A0.		
	(★708-8F-04660)	. CASE SUB ASS' Y	1	DBB0001~
1	☆	.. CASE, MOTOR	1	DBB0001~
2	☆	.. PLUG	1	DBB0001~
	(★708-8F-04180)	. END COVER SUB ASS' Y	1	DBB0001~
3	☆	.. COVER, END	1	DBB0001~
4	☆	.. SPOOL	1	DBB0001~
5	☆	.. PLUG	3	DBB0001~
6	☆	.. PLUG	2	DBB0001~
7	☆	.. SPOOL	1	DBB0001~
8	(★708-8F-34220)	.. SPRING	1	DBB0001~
9	708-8H-11530	. PLUG	3	DBB0001~
10	07002-11423	. O-RING	3	DBB0001~
11	20B-27-11210	. BLEEDER	1	DBB0001~
12	708-8F-36611	. SPRING	2	DBB0001~
13	☆	. RING	2	DBB0001~
14	708-8H-36121	. SPRING	2	DBB0001~
15	708-8F-36311	. COVER	2	DBB0001~
16	07000-13040	. O-RING	2	DBB0001~
17	700-93-11320	. O-RING	2	DBB0001~
18	07000-11009	. O-RING	2	DBB0001~
19	01252-61235	. BOLT	12	DBB0001~
20	708-8F-34120	. VALVE	2	DBB0001~
21	722-10-91130	. SPRING	2	DBB0001~
22	708-8F-34110	. PLUG	2	DBB0001~
23	07002-11823	. O-RING	2	DBB0001~
24	708-8E-16180	. VALVE	1	DBB0001~
25	708-8F-31650	. PLUG	1	DBB0001~
26	07000-11006	. O-RING	1	DBB0001~
27	07001-01006	. RING	1	DBB0001~
28	07002-11223	. O-RING	1	DBB0001~
29	708-8F-31610	. O-RING	1	DBB0001~
30	07000-11009	. O-RING	1	DBB0001~
31	(★04020-01228)	. PIN	1	DBB0001~
32	708-8F-31210	. BOLT	4	DBB0001~

FIG. Y1641-02A0 TRAVEL MOTOR (2/3)

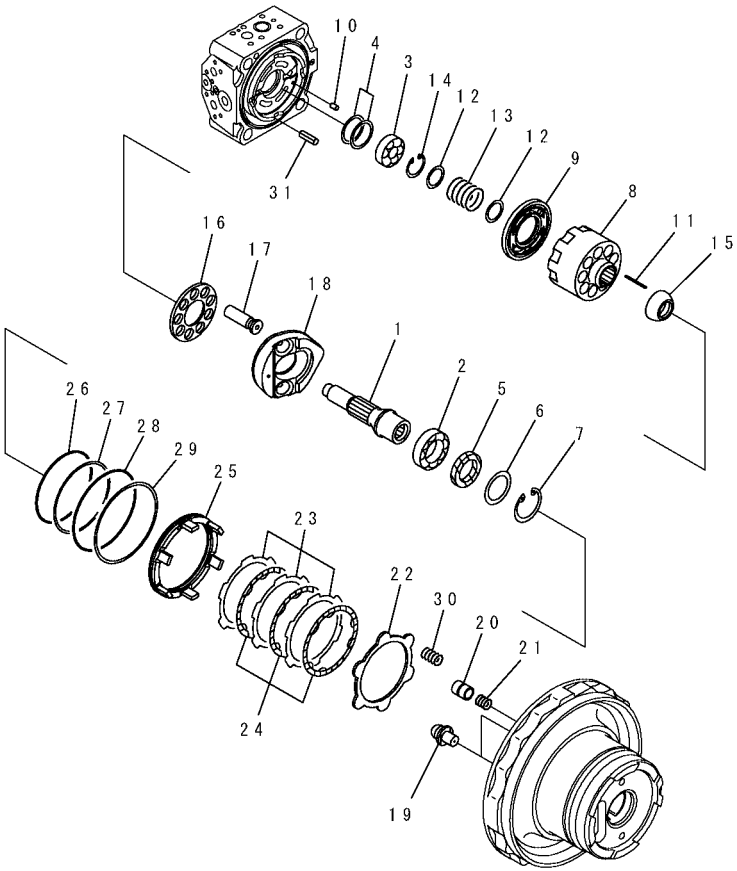

PDB3485

INDEX	PART NO.	DESCRIPTION	Q'TY	SERIAL NO.
	(708-8F-00171)	MOTOR ASS' Y	1	DBB0001~
		THIS ASSEMBLY CONSISTS OF ALL PARTS SHOWN IN FIGS. Y1641-01A0 TO Y1641-03A0.		
1	(★708-8F-32121)	. SHAFT	1	DBB0001~
2	(★708-8F-12151)	. BEARING	1	DBB0001~
3	(★708-7L-12140)	. BEARING	1	DBB0001~
4	(★708-7L-05010)	. SPACER KIT	1	DBB0001~
5	706-7G-11291	. SEAL, OIL	1	DBB0001~
6	708-8F-12230	. SPACER, 3.2 MM	1	DBB0001~
7	04065-07225	. RING	1	DBB0001~
8	☆	. BLOCK, CYLINDER	1	DBB0001~
9	☆	. PLATE, VALVE	1	DBB0001~
10	☆	. PIN	1	DBB0001~
11	(★708-8F-33360)	. PIN	3	DBB0001~
12	(★708-7L-13140)	. SEAT	2	DBB0001~
13	(★708-8F-33160)	. SPRING	1	DBB0001~
14	(★04065-04818)	. RING, SNAP	1	DBB0001~
15	(★708-8F-33350)	. GUIDE, RETAINER	1	DBB0001~
16	(★708-8F-33340)	. RETAINER, SHOE	1	DBB0001~
17	(★708-8F-33310)	. PISTON	9	DBB0001~
18	(★708-8F-33480)	. CAM, ROCKER	1	DBB0001~
19	(★708-8F-33710)	. BALL, RETAINER	2	DBB0001~
20	(★708-8F-34141)	. PISTON	1	DBB0001~
21	(★708-8F-34150)	. SPRING	1	DBB0001~
22	(★708-8F-35110)	. PLATE	1	DBB0001~
23	(★708-8F-35130)	. PLATE	3	DBB0001~
24	(★708-8F-35120)	. DISC	3	DBB0001~
25	(★708-8F-35140)	. PISTON, BRAKE	1	DBB0001~
26	(★708-8F-35160)	. O-RING	1	DBB0001~
27	(★708-8F-35170)	. RING, BACK-UP	1	DBB0001~
28	(★708-8F-35180)	. O-RING	1	DBB0001~
29	(★708-8F-35190)	. RING, BACK-UP	1	DBB0001~
30	(★708-8F-35150)	. SPRING	6	DBB0001~
31	(★04025-00324)	. PIN, SPRING	1	DBB0001~

FIG. Y1641-03A0 TRAVEL MOTOR (3/3)

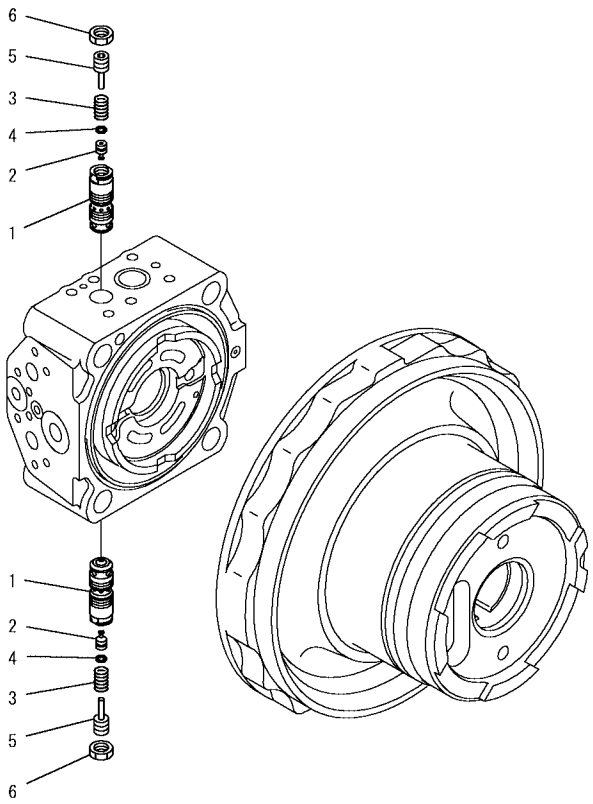

PDB3486

INDEX	PART NO.	DESCRIPTION	Q'TY	SERIAL NO.
	(708-8F-00171)	MOTOR ASS' Y	1	DBB0001~
		THIS ASSEMBLY CONSISTS OF ALL PARTS SHOWN IN FIGS. Y1641-01A0 TO Y1641-03A0.		
	702-73-02112	. VALVE ASS' Y, SAFETY.....	2	DBB0001~
1	☆	.. SLEEVE.....	1	DBB0001~
2	☆	.. VALVE.....	1	DBB0001~
3	☆	.. SPRING.....	1	DBB0001~
4	☆	.. SEAL.....	1	DBB0001~
5	☆	.. SCREW	1	DBB0001~
6	☆	.. NUT	1	DBB0001~

FIG. Y1660-01A0 MAIN VALVE (1/16)

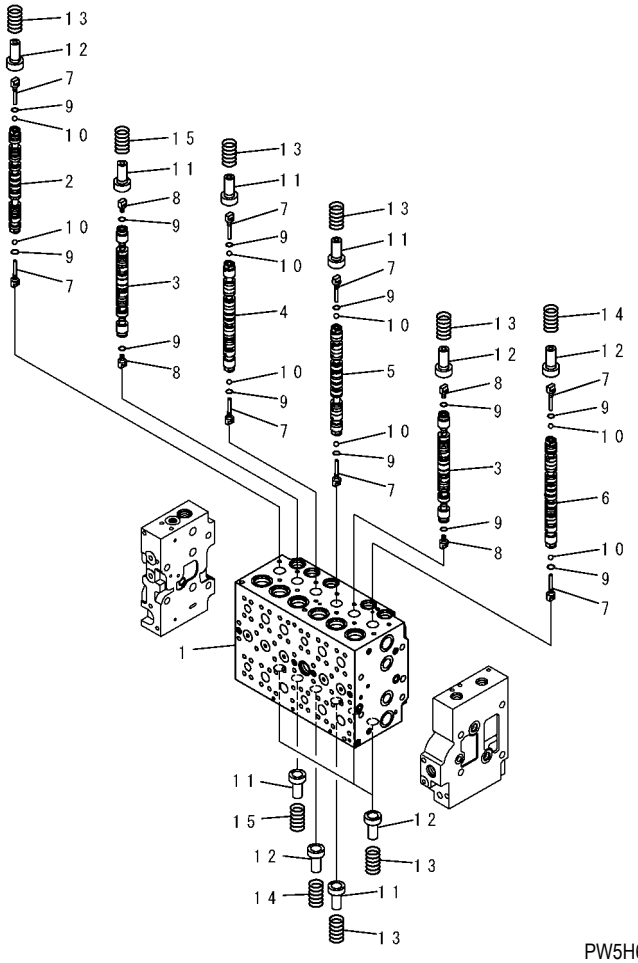

FIG NO. : Y1660-01A0

INDEX	PART NO.	DESCRIPTION	Q'TY	SERIAL NO.
	723-46-20403	VALVE ASS' Y	1	DBB0001~
		THIS ASSEMBLY CONSISTS OF ALL PARTS SHOWN IN FIGS. Y1660-01A0 TO Y1660-16A0.		
	☆	. BODY SUB ASS' Y	1	DBB0001~
1	☆	.. BLOCK, VALVE	1	DBB0001~
2	☆	.. SPOOL	1	DBB0001~
3	☆	.. SPOOL	2	DBB0001~
4	☆	.. SPOOL	1	DBB0001~
5	☆	.. SPOOL	1	DBB0001~
6	☆	.. SPOOL	1	DBB0001~
7	723-46-15130	.. PLUG	8	DBB0001~
8	723-46-15140	.. PLUG	4	DBB0001~
9	07002-10823	.. O-RING	12	DBB0001~
10	708-7T-16460	.. BALL	8	DBB0001~
11	723-46-15120	.. RETAINER	5	DBB0001~
12	723-46-15690	.. RETAINER	7	DBB0001~
13	723-46-14110	.. SPRING	8	DBB0001~
14	723-46-14270	.. SPRING	2	DBB0001~
15	723-46-14131	.. SPRING	2	DBB0001~

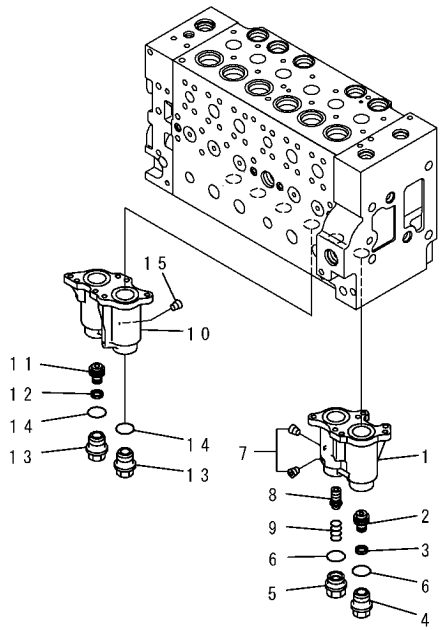

PW5H646

INDEX	PART NO.	DESCRIPTION	Q'TY	SERIAL NO.
	(723-46-20403)	VALVE ASS' Y	1	DBB0001~
		THIS ASSEMBLY CONSISTS OF ALL PARTS SHOWN IN FIGS. Y1660-01A0 TO Y1660-16A0		
	☆	. BODY SUB ASS' Y	1	DBB0001~
	723-46-18300	.. CASE SUB ASS' Y	1	DBB0001~
1	☆	... CASE	1	DBB0001~
2	☆	... PISTON	1	DBB0001~
3	☆	... SEAL	1	DBB0001~
4	723-46-15630	... PLUG	1	DBB0001~
5	723-46-17340	... PLUG	1	DBB0001~
6	07000-13024	... O-RING	2	DBB0001~
7	☆	... SCREW	3	DBB0001~
8	723-46-17320	... SPOOL	1	DBB0001~
9	723-46-17330	... SPRING	1	DBB0001~
	723-46-18100	.. CASE SUB ASS' Y	1	DBB0001~
10	☆	... CASE	1	DBB0001~
11	☆	... PISTON	1	DBB0001~
12	☆	... SEAL	1	DBB0001~
13	723-46-15630	... PLUG	2	DBB0001~
14	07000-13024	... O-RING	2	DBB0001~
15	☆	... SCREW	1	DBB0001~

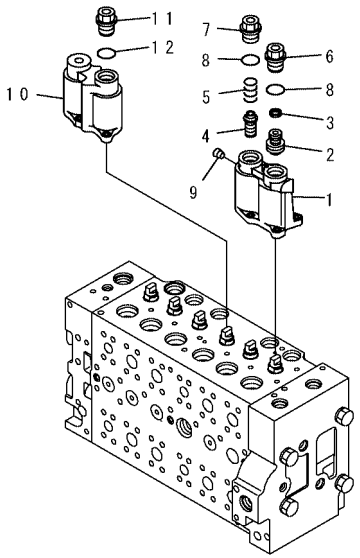

PW5H647

INDEX	PART NO.	DESCRIPTION	Q'TY	SERIAL NO.
	(723-46-20403)	VALE ASS' Y	1	DBB0001~
		THIS ASSEMBLY CONSISTS OF ALL PARTS SHOWN IN FIGS. Y1660-01A0 TO Y1660-16A0.		
	☆	. BODY SUB ASS' Y	1	DBB0001~
	723-46-18400	.. CASE SUB ASS' Y	1	DBB0001~
1	☆	... CASE	1	DBB0001~
2	☆	... PISTON	1	DBB0001~
3	☆	... SEAL	1	DBB0001~
4	723-46-17320	... SPOOL	1	DBB0001~
5	723-46-17330	... SPRING	1	DBB0001~
6	723-46-15630	... PLUG	1	DBB0001~
7	723-46-17340	... PLUG	1	DBB0001~
8	07000-13024	... O-RING	2	DBB0001~
9	☆	... SCREW	3	DBB0001~
	723-46-18200	.. CASE SUB ASS' Y	1	DBB0001~
10	☆	... CASE	1	DBB0001~
11	723-46-15630	... PLUG	1	DBB0001~
12	07000-13024	... O-RING	1	DBB0001~

FIG. Y1660-04A0 MAIN VALVE (4/16)

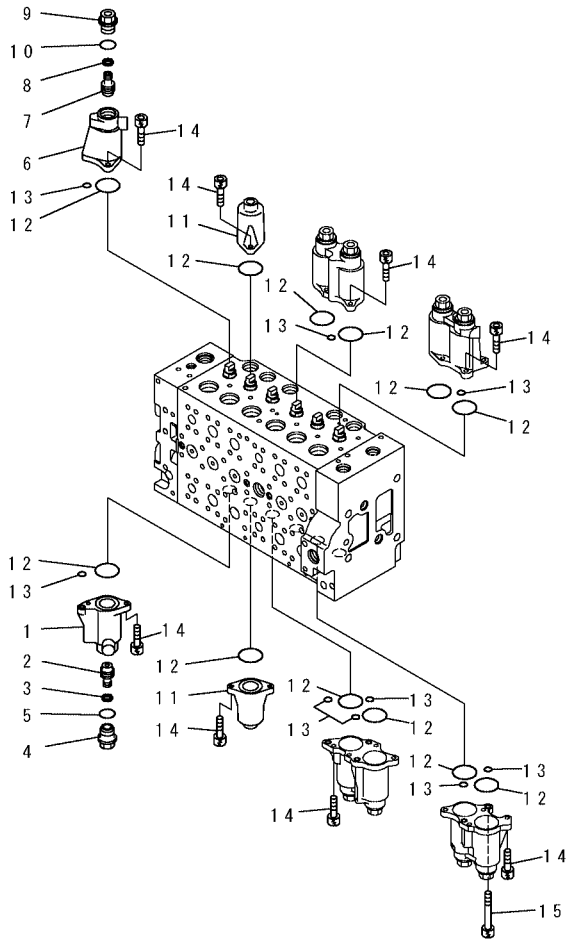

PW5H648

INDEX	PART NO.	DESCRIPTION	Q'TY	SERIAL NO.
	(723-46-20403)	VALVE ASS' Y	1	DBB0001~
		THIS ASSEMBLY CONSISTS OF ALL PARTS SHOWN IN FIGS. Y1660-01A0 TO Y1660-16A0.		
	☆	. BODY SUB ASS' Y	1	DBB0001~
	723-46-18500	.. CASE SUB ASS' Y	1	DBB0001~
1	☆	... CASE	1	DBB0001~
2	☆	... PISTON	1	DBB0001~
3	☆	... SEAL	1	DBB0001~
4	723-46-15630	... PLUG	1	DBB0001~
5	07000-13024	... O-RING	1	DBB0001~
	723-46-18600	.. CASE SUB ASS' Y	1	DBB0001~
6	☆	... CASE	1	DBB0001~
7	☆	... PISTON	1	DBB0001~
8	☆	... SEAL	1	DBB0001~
9	723-46-15630	... PLUG	1	DBB0001~
10	07000-13024	... O-RING	1	DBB0001~
11	723-46-15111	.. CASE	2	DBB0001~
12	07430-71380	.. O-RING	12	DBB0001~
13	702-16-53920	.. O-RING	9	DBB0001~
14	01252-60820	.. BOLT	22	DBB0001~
15	723-46-17350	.. BOLT	2	DBB0001~

FIG. Y1660-05A0 MAIN VALVE (5/16)

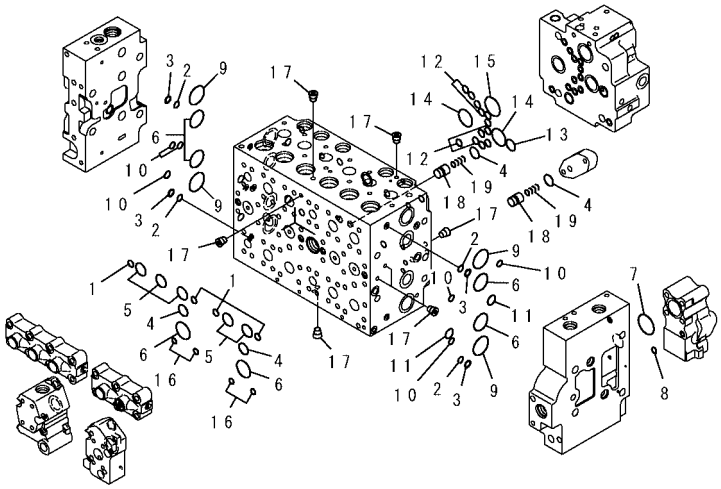

PW5H649

FIG NO. : Y1660-05A0

INDEX	PART NO.	DESCRIPTION	Q'TY	SERIAL NO.
	(723-46-20403)	VALVE ASS' Y	1	DBB0001~
		THIS ASSEMBLY CONSISTS OF ALL PARTS SHOWN IN FIGS. Y1660-01A0 TO Y1660-16A0.		
	☆	. BODY SUB ASS' Y	1	DBB0001~
1	07000-12012	.. O-RING	4	DBB0001~
2	723-11-19130	.. O-RING	4	DBB0001~
3	723-46-17520	.. RING, BACK-UP	4	DBB0001~
4	07000-12021	.. O-RING	4	DBB0001~
5	07000-13028	.. O-RING	5	DBB0001~
6	07000-13032	.. O-RING	6	DBB0001~
7	07000-13038	.. O-RING	1	DBB0001~
8	07000-11010	.. O-RING	1	DBB0001~
9	723-46-17510	.. O-RING	4	DBB0001~
10	723-46-17530	.. O-RING	6	DBB0001~
11	723-11-18150	.. O-RING	2	DBB0001~
12	07000-12012	.. O-RING	12	DBB0001~
13	07000-12021	.. O-RING	1	DBB0001~
14	07000-13032	.. O-RING	2	DBB0001~
15	07000-13036	.. O-RING	1	DBB0001~
16	702-16-53920	.. O-RING	4	DBB0001~
17	☆	..PLUG	17	DBB0001~
18	723-46-15150	. VALVE	2	DBB0001~
19	723-46-14150	. SPRING	2	DBB0001~

FIG. Y1660-06A0 MAIN VALVE (6/16)

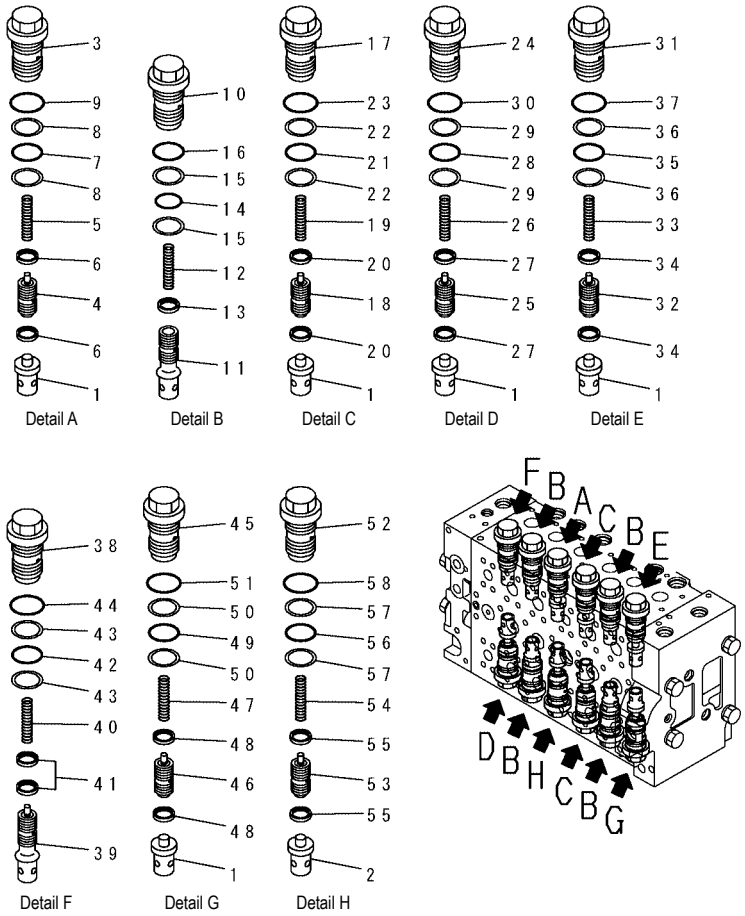

PW5H650

FIG NO. : Y1660-06A0

INDEX	PART NO.	DESCRIPTION	Q'TY	SERIAL NO.
	(723-46-20403)	VALVE ASS' Y	1	DBB0001~
		THIS ASSEMBLY CONSISTS OF ALL PARTS SHOWN IN FIGS. Y1660-01A0 TO Y1660-16A0.		
	☆	. BODY SUB ASS' Y	1	DBB0001~
1	723-46-41110	.. VALVE	6	DBB0001~
2	723-46-41120	.. VALVE	1	DBB0001~
	723-46-40100	.. VALVE ASS' Y	1	DBB0001~
3	☆	... SLEEVE	1	DBB0001~
4	☆	... PISTON SUB ASS' Y	1	DBB0001~
5	☆	... SPRING	1	DBB0001~
6	☆	... SEAL	2	DBB0001~
7	700-93-11320	... O-RING	1	DBB0001~
8	723-46-41950	... RING	2	DBB0001~
9	07002-13634	... O-RING	1	DBB0001~
	723-46-42700	.. ALVE ASS' Y	4	DBB0001~
10	☆	... SLEEVE	1	DBB0001~
11	☆	... VALVE	1	DBB0001~
12	☆	... SPRING	1	DBB0001~
13	☆	... SEAL	1	DBB0001~
14	700-93-11320	... O-RING	1	DBB0001~
15	723-46-41950	... RING	2	DBB0001~
16	07002-13634	... O-RING	1	DBB0001~
	723-46-41100	.. VALVE ASS' Y	2	DBB0001~
17	☆	... SLEEVE	1	DBB0001~
18	☆	... PISTON SUB ASS' Y	1	DBB0001~
19	☆	... SPRING	1	DBB0001~
20	☆	... SEAL	2	DBB0001~
21	700-93-11320	... O-RING	1	DBB0001~
22	723-46-41950	... RING	2	DBB0001~
23	07002-13634	... O-RING	1	DBB0001~
	723-46-45100	.. VALVE ASS' Y	1	DBB0001~
24	☆	... SLEEVE	1	DBB0001~
25	☆	... PISTON SUB ASS' Y	1	DBB0001~
26	☆	... SPRING	1	DBB0001~
27	☆	... SEAL	2	DBB0001~
28	700-93-11320	... O-RING	1	DBB0001~
29	723-46-41950	... RING	2	DBB0001~
30	07002-13634	... O-RING	1	DBB0001~

FIG. Y1660-06A0 MAIN VALVE (6/16)

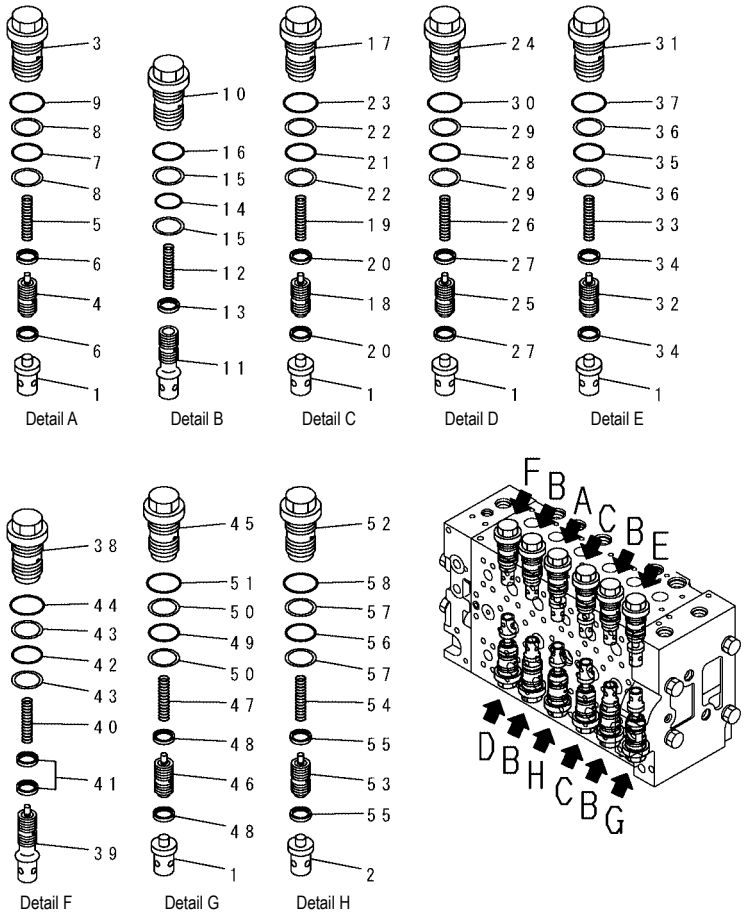

PW5H650

INDEX	PART NO.	DESCRIPTION	Q'TY	SERIAL NO.
	723-46-46300	.. VALVE ASS' Y	1	DBB0001~
31	☆	... SLEEVE	1	DBB0001~
32	☆	... PISTON SUB ASS' Y	1	DBB0001~
33	☆	... SPRING	1	DBB0001~
34	☆	... SEAL	2	DBB0001~
35	700-93-11320	... O-RING	1	DBB0001~
36	723-46-41950	... RING	2	DBB0001~
37	07002-13634	... O-RING	1	DBB0001~
	723-46-43400	.. VALVE ASS' Y	1	DBB0001~
38	☆	... SLEEVE	1	DBB0001~
39	☆	... VALVE SUB ASS' Y	1	DBB0001~
40	☆	... SPRING	1	DBB0001~
41	☆	... SEAL	2	DBB0001~
42	700-93-11320	... O-RING	1	DBB0001~
43	723-46-41950	... RING	2	DBB0001~
44	07002-13634	... O-RING	1	DBB0001~
	723-46-43100	.. VALVE ASS' Y	1	DBB0001~
45	☆	... SPRING	1	DBB0001~
46	☆	... PISTON SUB ASS' Y	1	DBB0001~
47	☆	... SPRING	1	DBB0001~
48	☆	... SEAL	2	DBB0001~
49	700-93-11320	... O-RING	1	DBB0001~
50	723-46-41950	... RING	2	DBB0001~
51	07002-13634	... O-RING	1	DBB0001~
	723-46-46101	.. VALVE ASS' Y	1	DBB0001~
52	☆	... SLEEVE	1	DBB0001~
53	☆	... PISTON SUB ASS' Y	1	DBB0001~
54	☆	... SPRING	1	DBB0001~
55	☆	... SEAL	2	DBB0001~
56	700-93-11320	... O-RING	1	DBB0001~
57	723-46-41950	... RING	2	DBB0001~
58	07002-13634	... O-RING	1	DBB0001~

FIG. Y1660-07A0 MAIN VALVE (7/16)

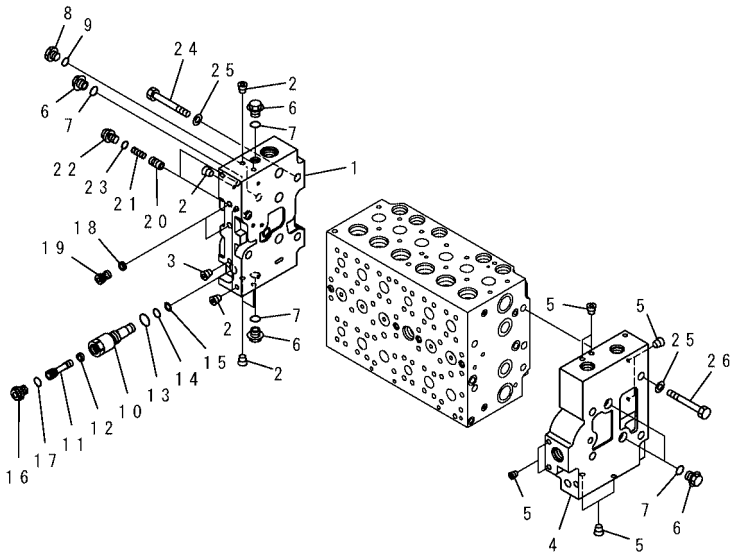

PW5H277

FIG NO. : Y1660-07A0

INDEX	PART NO.	DESCRIPTION	Q'TY	SERIAL NO.
	(723-46-20403)	VALVE ASS' Y	1	DBB0001~
		THIS ASSEMBLY CONSISTS OF ALL PARTS SHOWN IN FIGS. Y1660-01A0 TO Y1660-16A0.		
	723-46-00750	. COVER ASS' Y	1	DBB0001~
1	☆	.. COVER, A	1	DBB0001~
2	☆	.. PLUG	7	DBB0001~
3	☆	.. PLUG	1	DBB0001~
	723-46-00742	. COVER ASS' Y	1	DBB0001~
4	☆	.. COVER, B	1	DBB0001~
5	☆	.. PLUG	8	DBB0001~
6	723-46-15180	. PLUG	5	DBB0001~
7	07002-11823	. O-RING	5	DBB0001~
8	708-8H-11530	. PLUG	1	DBB0001~
9	07002-11423	. O-RING	1	DBB0001~
	723-46-17600	. PLUG ASS' Y	1	DBB0001~
10	723-46-17610	.. SLEEVE	1	DBB0001~
11	723-46-17640	.. PLUG	1	DBB0001~
12	702-21-55760	.. FILTER	1	DBB0001~
13	07002-11423	.. O-RING	1	DBB0001~
14	07000-11007	.. O-RING	1	DBB0001~
15	07001-01007	.. RING, BACK-UP	1	DBB0001~
16	708-8E-16160	.. PLUG	1	DBB0001~
17	07002-11023	.. O-RING	1	DBB0001~
18	723-40-82220	. FILTER	2	DBB0001~
19	723-46-17550	. PLUG	2	DBB0001~
20	723-46-15190	. VALVE	2	DBB0001~
21	723-46-14140	. SPRING	2	DBB0001~
22	708-8E-16160	. PLUG	2	DBB0001~
23	07002-11023	. O-RING	2	DBB0001~
24	01010-61490	. BOLT	4	DBB0001~
25	01643-31445	. WASHER	8	DBB0001~
26	01010-61490	. BOLT	4	DBB0001~

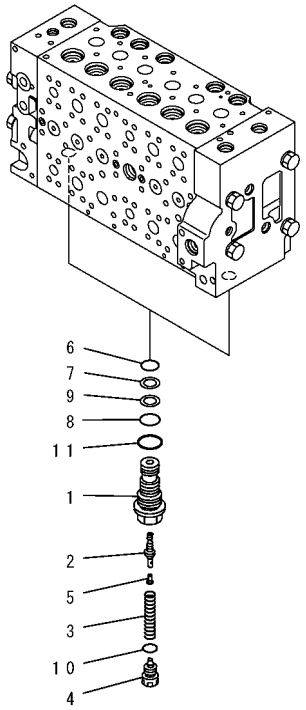

PW5H278

INDEX	PART NO.	DESCRIPTION	Q'TY	SERIAL NO.
	(723-46-20403)	VALVE ASS' Y	1	DBB0001~
		THIS ASSEMBLY CONSISTS OF ALL PARTS SHOWN IN FIGS. Y1660-01A0 TO Y1660-16A0.		
	723-40-56302	. UNLOAD VALVE ASS' Y	2	DBB0001~
1	☆	.. SLEEVE.....	1	DBB0001~
2	☆	.. VALVE.....	1	DBB0001~
3	☆	.. SPRING.....	1	DBB0001~
4	☆	.. PLUG.....	1	DBB0001~
5	☆	.. PLUG.....	1	DBB0001~
6	07000-12014	.. O-RING.....	1	DBB0001~
7	723-40-56350	.. RING.....	1	DBB0001~
8	07000-12016	.. O-RING.....	1	DBB0001~
9	723-60-22230	.. RING, BACK-UP	1	DBB0001~
10	☆	.. O-RING.....	1	DBB0001~
11	07002-12434	.. O-RING.....	1	DBB0001~

FIG. Y1660-09A0 MAIN VALVE (9/16)

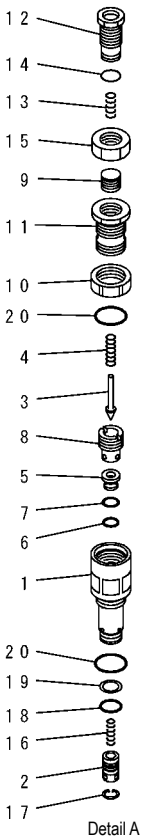

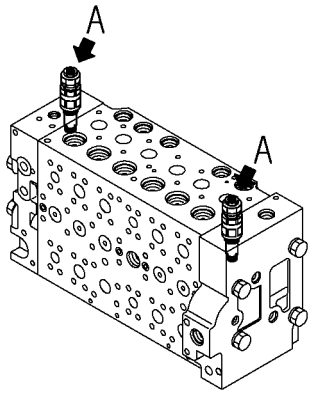

PW5H279

INDEX	PART NO.	DESCRIPTION	Q'TY	SERIAL NO.
	(723-46-20403)	VALVE ASS' Y	1	DBB0001~
		THIS ASSEMBLY CONSISTS OF ALL PARTS SHOWN IN FIGS. Y1660-01A0 TO Y1660-16A0.		
	723-40-91101	. VALVE ASS' Y, RELIEF	2	DBB0001~
1	☆	.. SLEEVE	1	DBB0001~
2	☆	.. VALVE	1	DBB0001~
3	☆	.. POPPET	1	DBB0001~
4	☆	.. SPRING	1	DBB0001~
5	☆	.. SEAT	1	DBB0001~
6	☆	.. O-RING	1	DBB0001~
7	☆	.. RING	1	DBB0001~
8	☆	.. HOLDER	1	DBB0001~
9	☆	.. RETAINER	1	DBB0001~
10	☆	NUT	1	DBB0001~
11	☆	.. HOLDER	1	DBB0001~
12	☆	.. PLUG	1	DBB0001~
13	☆	.. SPRING	1	DBB0001~
14	☆	.. O-RING	1	DBB0001~
15	☆	.. NUT	1	DBB0001~
16	☆	.. SPRING	1	DBB0001~
17	☆	.. RING	1	DBB0001~
18	700-22-11410	.. O-RING	1	DBB0001~
19	700-80-64220	.. RING	1	DBB0001~
20	07002-12434	.. O-RING	2	DBB0001~

FIG. Y1660-10A0 MAIN VALVE (10/16)

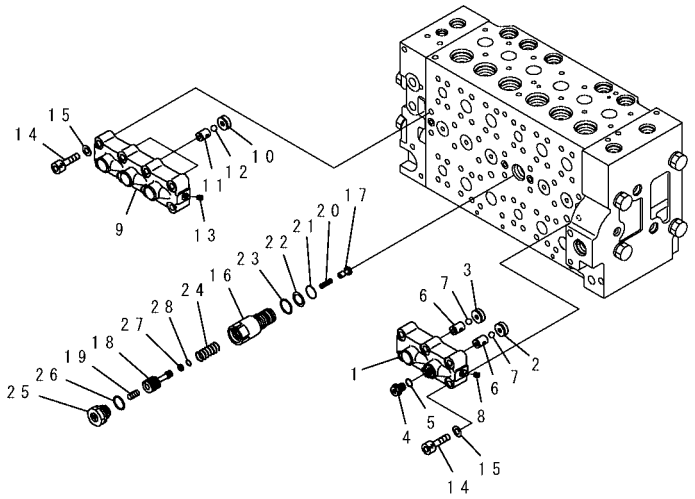

PW5H280

FIG NO. : Y1660-10A0

INDEX	PART NO.	DESCRIPTION	Q'TY	SERIAL NO.
	(723-46-20403)	VALVE ASS' Y	1	DBB0001~
		THIS ASSEMBLY CONSISTS OF ALL PARTS SHOWN IN FIGS. Y1660-01A0 TO Y1660-16A0.		
	723-40-66701	. VALVE ASS' Y	1	DBB0001~
1	☆	.. CASE	1	DBB0001~
2	☆	.. SEAT	1	DBB0001~
3	☆	.. SEAT	1	DBB0001~
4	708-8H-11530	.. PLUG	1	DBB0001~
5	07002-11423	.. O-RING	1	DBB0001~
6	☆	.. SEAT	2	DBB0001~
7	☆	.. BALL	2	DBB0001~
8	☆	.. PLUG	1	DBB0001~
	723-40-66601	. VALVE ASS' Y	1	DBB0001~
9	☆	.. CASE	1	DBB0001~
10	☆	.. SEAT	3	DBB0001~
11	☆	.. SEAT	3	DBB0001~
12	☆	.. BALL	3	DBB0001~
13	☆	.. PLUG	1	DBB0001~
14	01252-61050	.. BOLT	14	DBB0001~
15	01643-51032	.. WASHER	14	DBB0001~
	723-40-60101	. VALVE ASS' Y	1	DBB0001~
16	☆	.. SLEEVE	1	DBB0001~
17	☆	.. VALVE	1	DBB0001~
18	☆	.. PISTON	1	DBB0001~
19	☆	.. PISTON	1	DBB0001~
20	☆	.. SPRING	1	DBB0001~
21	07000-12020	.. O-RING	1	DBB0001~
22	07001-02020	.. RING, BACK-UP	1	DBB0001~
23	709-25-11390	.. O-RING	1	DBB0001~
24	☆	.. SPRING	1	DBB0001~
25	☆	.. PLUG	1	DBB0001~
26	☆	.. O-RING	1	DBB0001~
27	☆	.. SEAL	1	DBB0001~
28	☆	.. O-RING	1	DBB0001~

FIG. Y1660-11A0 MAIN VALVE (11/16)

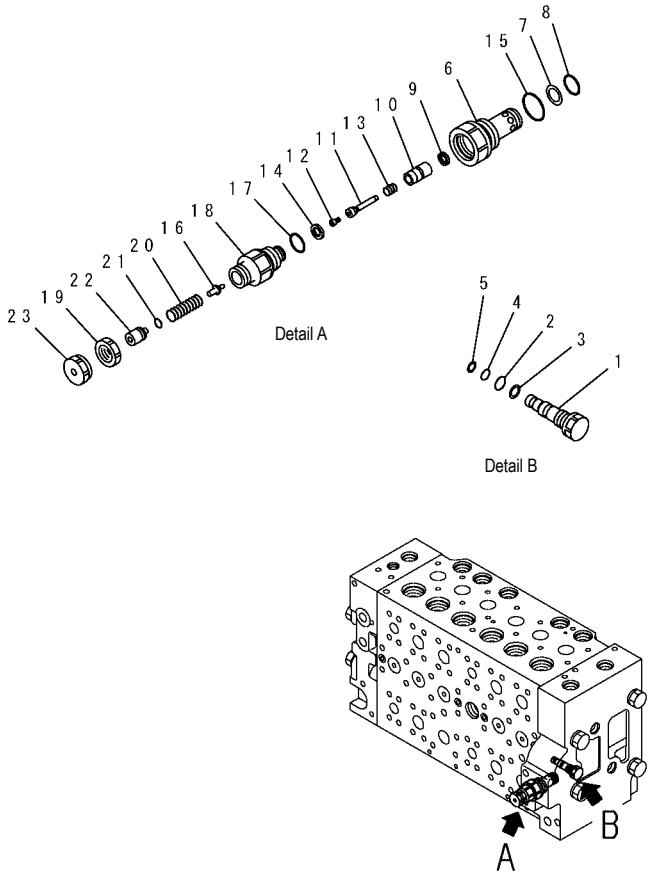

PW5H281

INDEX	PART NO.	DESCRIPTION	Q'TY	SERIAL NO.
	(723-46-20403)	VALVE ASS' Y	1	DBB0001~
		THIS ASSEMBLY CONSISTS OF ALL PARTS SHOWN IN FIGS. Y1660-01A0 TO Y1660-16A0.		
	723-46-17701	. PLUG ASS' Y	1	DBB0001~
1	723-46-17711	.. PLUG	1	DBB0001~
2	07000-11009	.. O-RING	1	DBB0001~
3	07001-01009	.. RING, BACK-UP	1	DBB0001~
4	07000-11007	.. O-RING	1	DBB0001~
5	07001-01007	.. RING, BACK-UP	1	DBB0001~
	723-40-91500	. VALVE ASS' Y, RELIEF	1	DBB0001~
6	☆	.. SLEEVE	1	DBB0001~
7	700-80-64220	.. RING	1	DBB0001~
8	700-22-11410	.. O-RING	1	DBB0001~
9	☆	.. SEAL	1	DBB0001~
10	☆	.. POPPET	1	DBB0001~
11	☆	.. PISTON	1	DBB0001~
12	☆	.. SEAT	1	DBB0001~
13	☆	.. SPRING	1	DBB0001~
14	☆	.. SEAL	1	DBB0001~
15	709-25-11390	.. O-RING	1	DBB0001~
16	☆	.. POPPET	1	DBB0001~
17	☆	.. O-RING	1	DBB0001~
18	☆	.. PLUG	1	DBB0001~
19	☆	.. NUT	1	DBB0001~
20	☆	.. SPRING	1	DBB0001~
21	☆	.. O-RING	1	DBB0001~
22	☆	.. SPACER	1	DBB0001~
23	☆	.. NUT	1	DBB0001~

FIG. Y1660-12A0 MAIN VALVE (12/16)

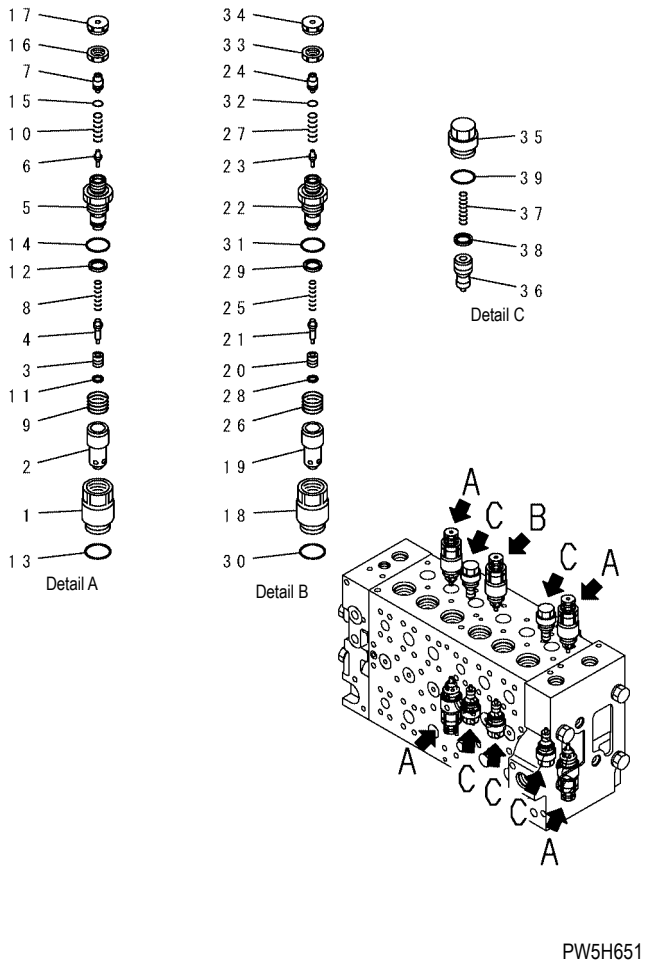

PW5H651

INDEX	PART NO.	DESCRIPTION	Q'TY	SERIAL NO.
	(723-46-20403)	VALVE ASS' Y	1	DBB0001~
		THIS ASSEMBLY CONSISTS OF ALL PARTS SHOWN IN FIGS. Y1660-01A0 TO Y1660-16A0.		
	723-40-91200	. VALVE ASS' Y SUCTION AND SAFETY	4	DBB0001~
1	☆	.. SLEEVE	1	DBB0001~
2	☆	.. SLEEVE	1	DBB0001~
3	☆	.. POPPET	1	DBB0001~
4	☆	.. PISTON	1	DBB0001~
5	☆	.. PLUG	1	DBB0001~
6	☆	.. POPPET	1	DBB0001~
7	☆	.. SPACER	1	DBB0001~
8	☆	.. SPRING	1	DBB0001~
9	☆	.. SPRING	1	DBB0001~
10	☆	.. SPRING	1	DBB0001~
11	☆	.. SEAL	1	DBB0001~
12	☆	.. SEAL	1	DBB0001~
13	709-25-11390	.. O-RING	1	DBB0001~
14	☆	.. O-RING	1	DBB0001~
15	☆	.. O-RING	1	DBB0001~
16	☆	.. NUT	1	DBB0001~
17	☆	.. NUT	1	DBB0001~
	723-90-61600	. VALVE ASS' Y, SUCTION AND SAFETY	1	DBB0001~
18	☆	.. SLEEVE	1	DBB0001~
19	☆	.. SLEEVE	1	DBB0001~
20	☆	.. POPPET	1	DBB0001~
21	☆	.. PISTON	1	DBB0001~
22	☆	.. PLUG	1	DBB0001~
23	☆	.. POPPET	1	DBB0001~
24	☆	.. SPACER	1	DBB0001~
25	☆	.. SPRING	1	DBB0001~
26	☆	.. SPRING	1	DBB0001~
27	☆	.. SPRING	1	DBB0001~
28	☆	.. SEAL	1	DBB0001~
29	☆	.. SEAL	1	DBB0001~
30	07000-13024	.. O-RING	1	DBB0001~

FIG. Y1660-12A0 MAIN VALVE (12/16)

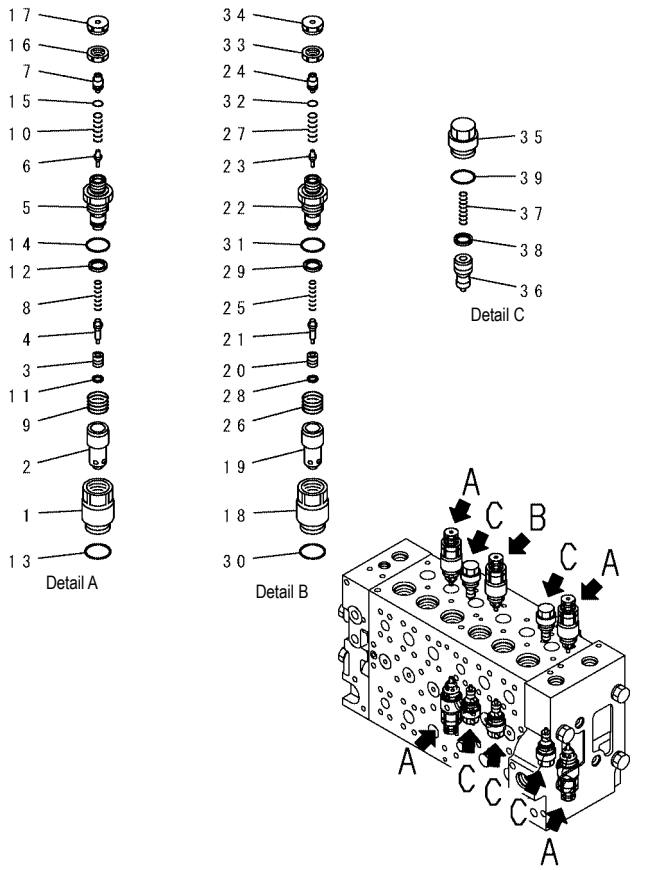

PW5H651

FIG NO. : Y1660-12A0

INDEX	PART NO.	DESCRIPTION	Q'TY	SERIAL NO.
31	☆	.. O-RING	1	DBB0001~
32	☆	.. O-RING	1	DBB0001~
33	☆	.. NUT	1	DBB0001~
34	☆	.. NUT	1	DBB0001~
	723-40-85100	. VALVE ASS' Y, SUCTION	5	DBB0001~
35	☆	.. SLEEVE	1	DBB0001~
36	☆	.. VALVE	1	DBB0001~
37	☆	.. SPRING	1	DBB0001~
38	☆	.. SEAL	1	DBB0001~
39	709-25-11390	.. O-RING	1	DBB0001~

FIG. Y1660-13A0 MAIN VALVE (13/16)

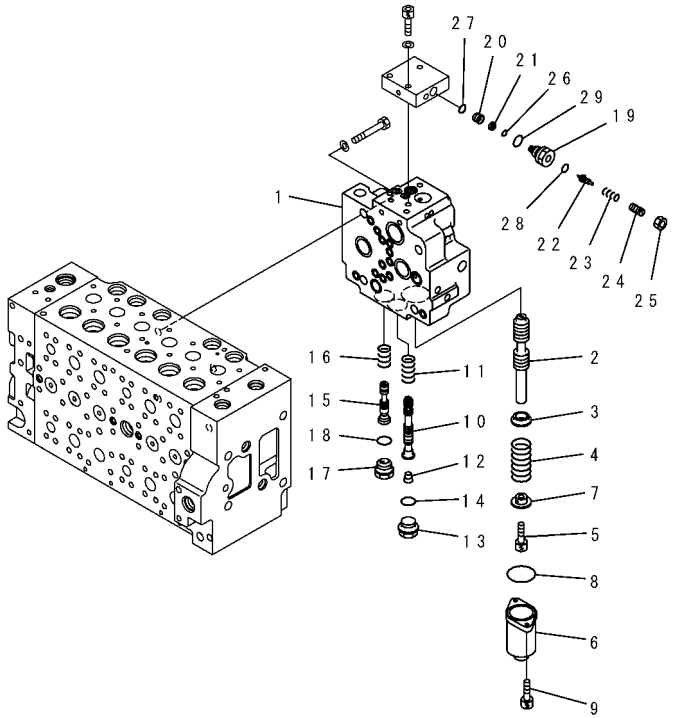

PW5H283

FIG NO. : Y1660-13A0

INDEX	PART NO.	DESCRIPTION	Q'TY	SERIAL NO.
	(723-46-20403)	VALVE ASS'Y	1	DBB0001~
		THIS ASSEMBLY CONSISTS OF ALL PARTS SHOWN IN FIGS. Y1660-01A0 TO Y1660-16A0.		
	723-40-71102	. VALVE ASS'Y	1	DBB0001~
1	☆	.. BODY	1	DBB0001~
2	☆	.. SPOOL	1	DBB0001~
3	723-40-71330	.. RETAINER	1	DBB0001~
4	723-40-71340	.. SPRING	1	DBB0001~
5	01252-60816	.. BOLT	1	DBB0001~
6	723-46-15111	.. CASE	1	DBB0001~
7	723-40-71350	.. RETAINER	1	DBB0001~
8	07430-71380	.. O-RING	1	DBB0001~
9	01252-60820	.. BOLT	2	DBB0001~
10	☆	.. SPOOL	1	DBB0001~
11	723-40-71440	.. SPRING	1	DBB0001~
12	☆	.. PLUG	1	DBB0001~
13	709-74-91860	.. PLUG	1	DBB0001~
14	07002-12434	.. O-RING	1	DBB0001~
15	☆	.. SPOOL	1	DBB0001~
16	723-40-71390	.. SPRING	1	DBB0001~
17	723-40-61150	.. PLUG	1	DBB0001~
18	07002-12434	.. O-RING	1	DBB0001~
	☆	.. VALVE ASS'Y, RELIEF	1	DBB0001~
19	☆	... SLEEVE	1	DBB0001~
20	702-21-55750	... COLLAR	1	DBB0001~
21	702-21-55760	... FILTER	1	DBB0001~
22	☆	... POPPET	1	DBB0001~
23	☆	... SPRING	1	DBB0001~
24	☆	... SCREW	1	DBB0001~
25	☆	... NUT	1	DBB0001~
26	723-11-19660	... O-RING	1	DBB0001~
27	702-16-53920	... O-RING	1	DBB0001~
28	☆	... O-RING	1	DBB0001~
29	07002-11623	... O-RING	1	DBB0001~

FIG. Y1660-14A0 MAIN VALVE (14/16)

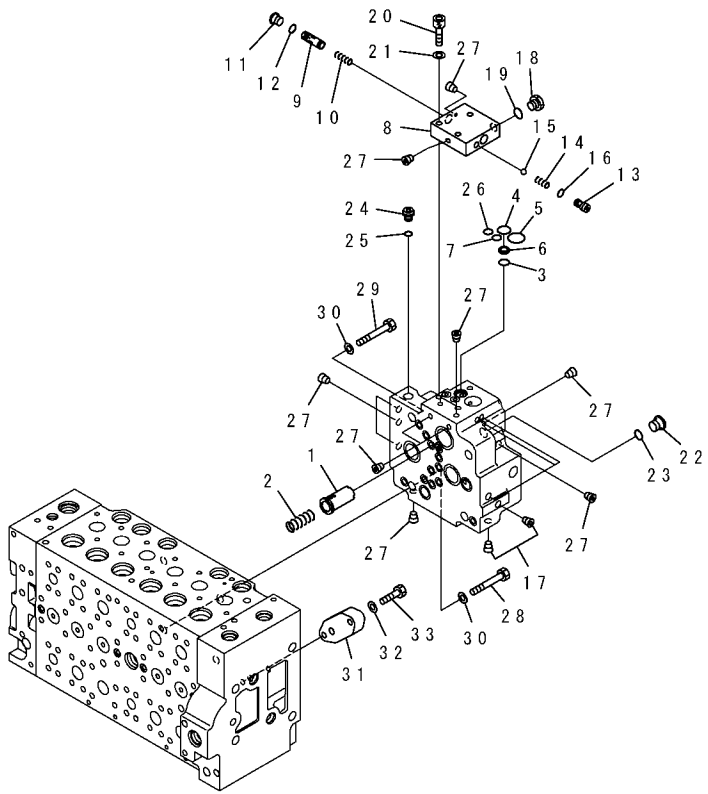

PW5H652

FIG NO. : Y1660-14A0

INDEX	PART NO.	DESCRIPTION	Q'TY	SERIAL NO.
	(723-46-20403)	VALVE ASS'Y	1	DBB0001~
		THIS ASSEMBLY CONSISTS OF ALL PARTS SHOWN IN FIGS. Y1660-01A0 TO Y1660-16A0.		
	(723-40-71102)	. VALVE ASS'Y	1	DBB0001~
1	723-40-71430	.. VALVE	1	DBB0001~
2	702-21-55460	.. SPRING	1	DBB0001~
3	702-21-55420	.. O-RING	1	DBB0001~
4	702-21-55520	.. O-RING	1	DBB0001~
5	702-21-55440	.. O-RING	1	DBB0001~
6	702-21-53120	.. FILTER	1	DBB0001~
7	07000-12011	.. O-RING	1	DBB0001~
8	☆	.. BLOCK	1	DBB0001~
9	☆	.. SPOOL	1	DBB0001~
10	☆	.. SPRING	1	DBB0001~
11	702-21-55620	.. PLUG	1	DBB0001~
12	07002-11423	.. O-RING	1	DBB0001~
13	702-21-55710	.. SEAT	1	DBB0001~
14	702-21-55720	.. SPRING	1	DBB0001~
15	04260-00793	.. BALL	1	DBB0001~
16	07000-11009	.. O-RING	1	DBB0001~
17	☆	.. PLUG	2	DBB0001~
18	708-8H-11530	.. PLUG	1	DBB0001~
19	07002-11423	.. O-RING	1	DBB0001~
20	01252-61040	.. BOLT	3	DBB0001~
21	01643-51032	.. WASHER	3	DBB0001~
22	702-21-55620	.. PLUG	1	DBB0001~
23	07002-11423	.. O-RING	1	DBB0001~
24	708-8E-16160	.. PLUG	1	DBB0001~
25	07002-11023	.. O-RING	1	DBB0001~
26	07000-12011	.. O-RING	1	DBB0001~
27	☆	.. PLUG	15	DBB0001~
28	01010-61470	. BOLT	3	DBB0001~
29	01010-61460	. BOLT	1	DBB0001~
30	01643-31445	. WASHER	4	DBB0001~
31	723-46-17560	. PLATE	1	DBB0001~
32	01643-51032	. WASHER	2	DBB0001~
33	01010-81040	. BOLT	2	DBB0001~

FIG. Y1660-15A0 MAIN VALVE (15/16)

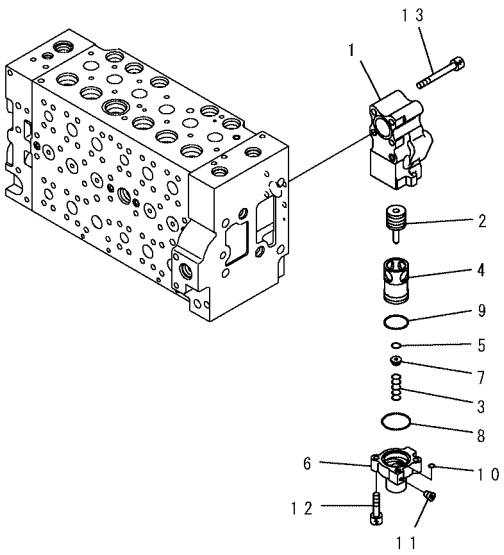

PW5H285

FIG NO. : Y1660-15A0

INDEX	PART NO.	DESCRIPTION	Q'TY	SERIAL NO.
	(723-46-20403)	VALVE ASS'Y	1	DBB0001~
		THIS ASSEMBLY CONSISTS OF ALL PARTS SHOWN IN FIGS. Y1660-01A0 TO Y1660-16A0.		
	723-40-87200	. VALVE ASS'Y	1	DBB0001~
1	723-40-87110	.. BODY	1	DBB0001~
2	723-40-87240	.. SPOOL	1	DBB0001~
3	723-40-87260	.. SPRING	1	DBB0001~
4	☆	.. SLEEVE	1	DBB0001~
5	☆	.. SEAL	1	DBB0001~
6	☆	.. CASE	1	DBB0001~
7	723-40-87250	.. RETAINER	1	DBB0001~
8	723-40-87170	.. O-RING	1	DBB0001~
9	07000-13035	.. O-RING	1	DBB0001~
10	07000-11007	.. O-RING	1	DBB0001~
11	☆	.. SCREW	1	DBB0001~
12	01252-60830	.. BOLT	2	DBB0001~
13	01252-61075	. BOLT	4	DBB0001~

FIG. Y1660-16A0 MAIN VALVE (16/16)

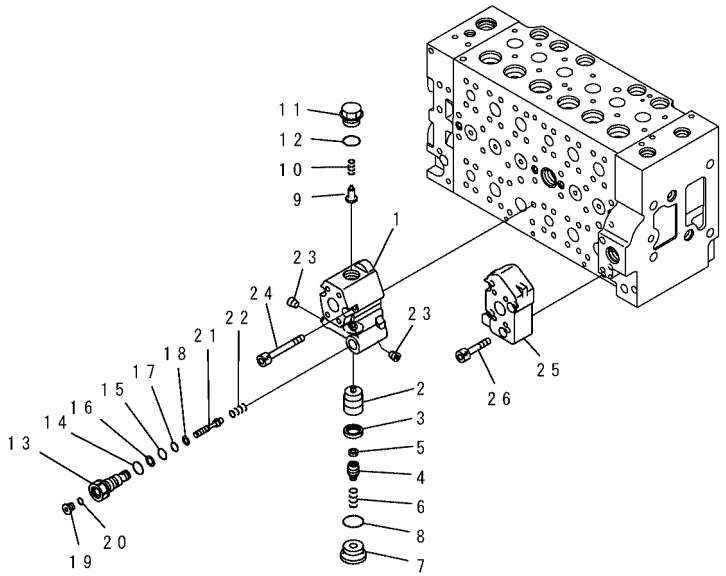

PW5H286

FIG NO. : Y1660-16A0

INDEX	PART NO.	DESCRIPTION	Q'TY	SERIAL NO.
	(723-46-20403)	VALVE ASS'Y	1	DBB0001~
		THIS ASSEMBLY CONSISTS OF ALL PARTS SHOWN IN FIGS. Y1660-01A0 TO Y1660-16A0.		
	723-40-82500	. VALVE ASS'Y	1	DBB0001~
1	☆	.. BODY	1	DBB0001~
2	☆	.. VALVE	1	DBB0001~
3	☆	.. SEAL	1	DBB0001~
4	723-40-82210	.. PLUG	1	DBB0001~
5	723-40-82220	.. FILTER	1	DBB0001~
6	723-40-82140	.. SPRING	1	DBB0001~
7	723-40-82150	.. PLUG	1	DBB0001~
8	07002-13334	.. O-RING	1	DBB0001~
9	709-25-11650	.. VALVE, CHECK	1	DBB0001~
10	709-25-11361	.. SPRING	1	DBB0001~
11	723-40-82161	.. PLUG	1	DBB0001~
12	07000-13024	.. O-RING	1	DBB0001~
13	☆	.. PLUG	1	DBB0001~
14	07002-11823	.. O-RING	1	DBB0001~
15	07000-12011	.. O-RING	1	DBB0001~
16	07001-02011	.. RING	1	DBB0001~
17	07000-11010	.. O-RING	1	DBB0001~
18	07001-01010	.. RING	1	DBB0001~
19	723-11-18190	.. PLUG	1	DBB0001~
20	07002-11023	.. O-RING	1	DBB0001~
21	☆	.. PISTON	1	DBB0001~
22	723-40-82290	.. SPRING	1	DBB0001~
23	☆	.. SCREW	2	DBB0001~
24	01252-61075	. BOLT	4	DBB0001~
25	723-46-17570	. BLOCK	1	DBB0001~
26	01252-61045	. BOLT	4	DBB0001~

FIG. Y1669-01A0 SERVICE VALVE (1/3) (SPECIAL PIPING FOR BREAKER) (OPT)

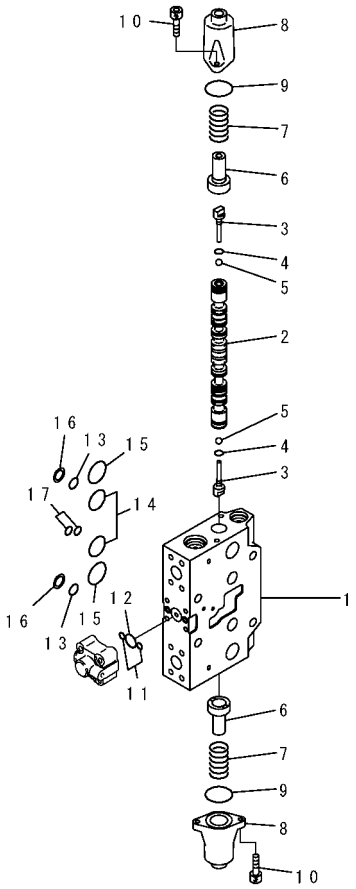

PW5H791

INDEX	PART NO.	DESCRIPTION	Q'TY	SERIAL NO.
	723-41-08500	VALVE ASS'Y	1	DBB0001~
		THIS ASSEMBLY CONSISTS OF ALL PARTS SHOWN IN FIGS. Y1669-01A0 TO Y1669-03A0.		
	☆	. BODY SUB ASS'Y	1	DBB0001~
1	☆	.. BLOCK, VALVE	1	DBB0001~
2	☆	...SPOOL	1	DBB0001~
3	723-46-15130	.. PLUG	2	DBB0001~
4	07002-10823	.. O-RING	2	DBB0001~
5	708-7T-16460	.. BALL	2	DBB0001~
6	723-46-15120	.. RETAINER	2	DBB0001~
7	723-46-14110	.. SPRING	2	DBB0001~
8	723-46-15111	.. CASE	2	DBB0001~
9	07430-71380	.. O-RING	2	DBB0001~
10	01252-60820	.. BOLT	4	DBB0001~
11	07000-11009	.. O-RING	2	DBB0001~
12	07000-12021	.. O-RING	1	DBB0001~
13	723-11-19130	.. O-RING	2	DBB0001~
14	07000-13032	.. O-RING	2	DBB0001~
15	723-46-17510	.. O-RING	2	DBB0001~
16	723-46-17520	.. RING, BACK-UP	2	DBB0001~
17	723-46-17530	.. O-RING	2	DBB0001~

FIG. Y1669-02A0 SERVICE VALVE (2/3) (SPECIAL PIPING FOR BREAKER) (OPT)

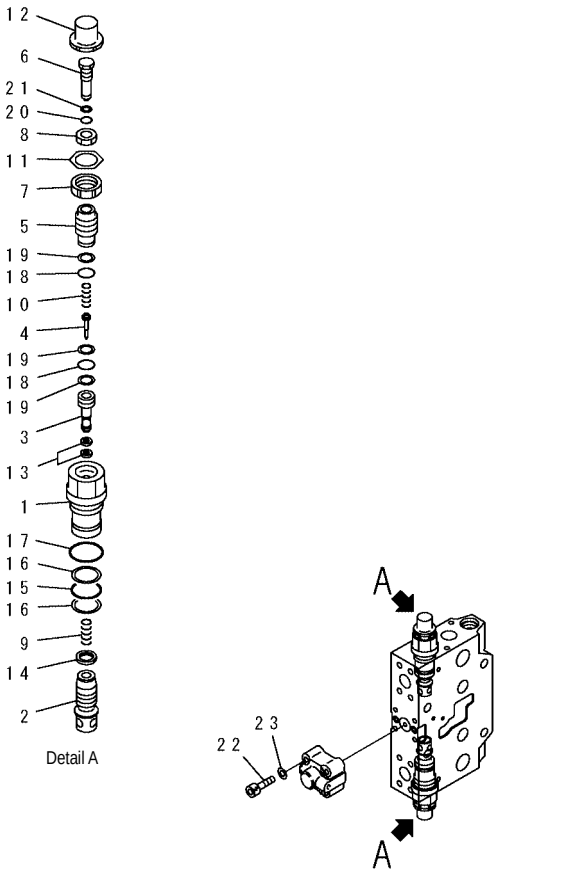

PW5H792

INDEX	PART NO.	DESCRIPTION	Q'TY	SERIAL NO.
	(723-41-08500)	VALVE ASS'Y	1	DBB0001~
		THIS ASSEMBLY CONSISTS OF ALL PARTS SHOWN IN FIGS. Y1669-01A0 TO Y1669-03A0.		
	☆	. BODY SUB ASS'Y	1	DBB0001~
	723-46-48100	.. VALVE ASS'Y	2	DBB0001~
1	☆	... SLEEVE	1	DBB0001~
2	☆	... VALVE	1	DBB0001~
3	☆	... SEAT	1	DBB0001~
4	☆	... POPPET	1	DBB0001~
5	☆	... PLUG	1	DBB0001~
6	☆	... SCREW	1	DBB0001~
7	☆	... NUT	1	DBB0001~
8	☆	... NUT	1	DBB0001~
9	☆	... SPRING	1	DBB0001~
10	☆	... SPRING	1	DBB0001~
11	☆	... PLATE	1	DBB0001~
12	☆	... CAP	1	DBB0001~
13	☆	... SEAL	2	DBB0001~
14	☆	... SEAL	1	DBB0001~
15	700-93-11320	... O-RING	1	DBB0001~
16	723-46-41950	... RING	2	DBB0001~
17	07002-13634	... O-RING	1	DBB0001~
18	☆	... O-RING	2	DBB0001~
19	☆	... RING	3	DBB0001~
20	☆	... O-RING	1	DBB0001~
21	☆	... RING, BACK-UP	1	DBB0001~
22	01252-60845	.. BOLT	4	DBB0001~
23	01643-50823	.. WASHER	4	DBB0001~

FIG. Y1669-03A0 SERVICE VALVE (3/3) (SPECIAL PIPING FOR BREAKER) (OPT)

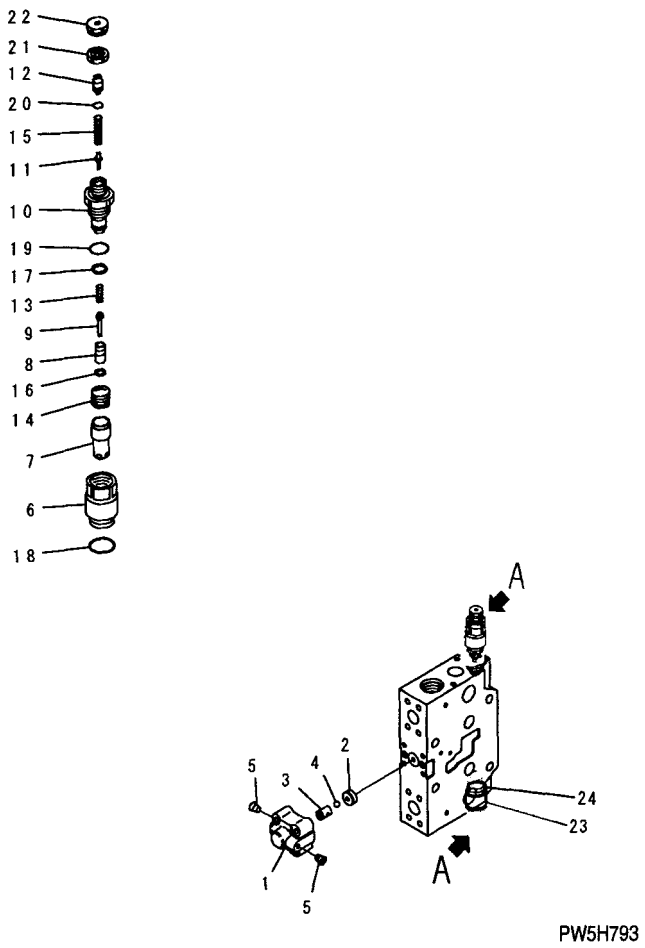

INDEX	PART NO.	DESCRIPTION	Q'TY	SERIAL NO.
	(723-41-08500)	VALVE ASS'Y	1	DBB0001~
		THIS ASSEMBLY CONSISTS OF ALL PARTS SHOWN IN FIGS. Y1669-01A0 TO Y1669-03A0.		
	723-40-66300	. VALVE ASS'Y	1	DBB0001~
1	☆	.. CASE	1	DBB0001~
2	☆	.. SEAT	1	DBB0001~
3	☆	.. SEAT	1	DBB0001~
4	☆	.. BALL	1	DBB0001~
5	☆	.. PLUG	2	DBB0001~
	723-90-61200	. VALVE ASS'Y, SUCTION AND SAFETY	1	DBB0001~
6	☆	.. SLEEVE	1	DBB0001~
7	☆	.. SLEEVE	1	DBB0001~
8	☆	.. POPPET	1	DBB0001~
9	☆	.. PISTON	1	DBB0001~
10	☆	.. PLUG	1	DBB0001~
11	☆	.. POPPET	1	DBB0001~
12	☆	.. SPACER	1	DBB0001~
13	☆	.. SPRING	1	DBB0001~
14	☆	.. SPRING	1	DBB0001~
15	☆	.. SPRING	1	DBB0001~
16	☆	.. SEAL	1	DBB0001~
17	☆	.. SEAL	1	DBB0001~
18	07000-13024	.. O-RING	1	DBB0001~
19	☆	.. O-RING	1	DBB0001~
20	☆	.. O-RING	1	DBB0001~
21	☆	.. NUT	1	DBB0001~
22	☆	.. NUT	1	DBB0001~
23	20Y-62-D1930	BOLT	1	DBB0001~
24	07002-13024	O-RING	1	DBB0001~
		..		

FIG. Y1669-11A0 SERVICE VALVE (1/3)(OPT)

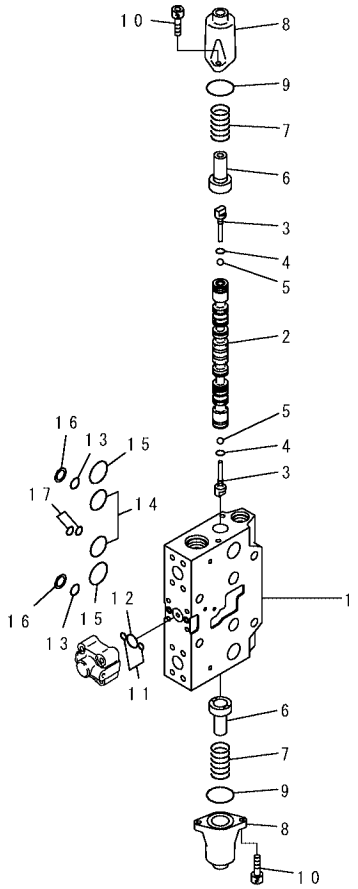

PW5H791

FIG NO. : Y1669-11A0

INDEX	PART NO.	DESCRIPTION	Q'TY	SERIAL NO.
	723-41-07400	VALVE ASS'Y	1	DBB0001~
		THIS ASSEMBLY CONSISTS OF ALL PARTS SHOWN IN FIGS. Y1669-01A0 TO Y1669-03A0.		
	☆	. BODY SUB ASS'Y	1	DBB0001~
1	☆	.. BLOCK, VALVE	1	DBB0001~
2	☆	.. SPOOL	1	DBB0001~
3	723-46-15130	.. PLUG	2	DBB0001~
4	07002-10823	.. O-RING	2	DBB0001~
5	708-7T-16460	.. BALL	2	DBB0001~
6	723-46-15120	.. RETAINER	2	DBB0001~
7	723-46-14110	.. SPRING	2	DBB0001~
8	723-46-15111	.. CASE	2	DBB0001~
9	07430-71380	.. O-RING	2	DBB0001~
10	01252-60820	.. BOLT	4	DBB0001~
11	07000-11009	.. O-RING	2	DBB0001~
12	07000-12021	.. O-RING	1	DBB0001~
13	723-11-19130	.. O-RING	2	DBB0001~
14	07000-13032	.. O-RING	2	DBB0001~
15	723-46-17510	.. O-RING	2	DBB0001~
16	723-46-17520	.. RING, BACK-UP	2	DBB0001~
17	723-46-17530	.. O-RING	2	DBB0001~

FIG. Y1669-12A0 SERVICE VALVE (2/3)(OPT)

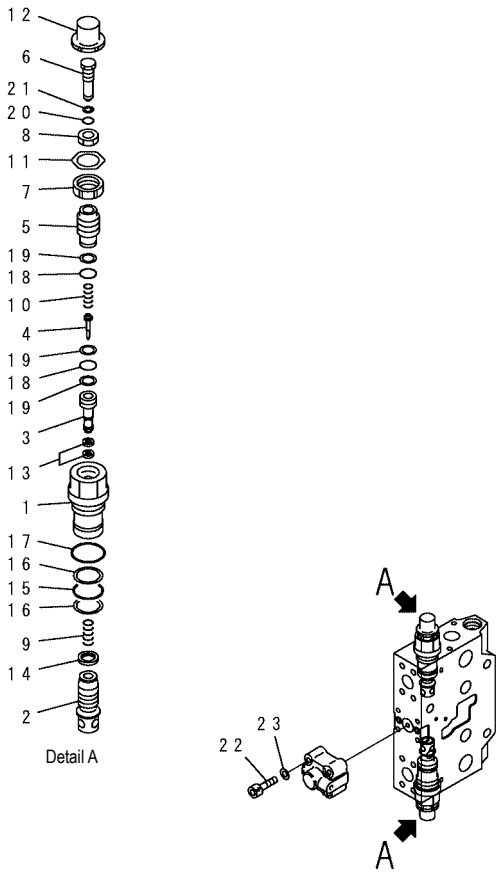

PW5H792

INDEX	PART NO.	DESCRIPTION	Q'TY	SERIAL NO.
	(723-41-07400)	VALVE ASS'Y	1	DBB0001~
		THIS ASSEMBLY CONSISTS OF ALL PARTS SHOWN IN FIGS. Y1669-01A0 TO Y1669-03A0.		
	☆	. BODY SUB ASS'Y	1	DBB0001~
	723-46-48100	.. VALVE ASS'Y	2	DBB0001~
1	☆	... SLEEVE	1	DBB0001~
2	☆	... VALVE	1	DBB0001~
3	☆	... SEAT	1	DBB0001~
4	☆	... POPPET	1	DBB0001~
5	☆	... PLUG	1	DBB0001~
6	☆	... SCREW	1	DBB0001~
7	☆	... NUT	1	DBB0001~
8	☆	... NUT	1	DBB0001~
9	☆	... SPRING	1	DBB0001~
10	☆	... SPRING	1	DBB0001~
11	☆	... PLATE	1	DBB0001~
12	☆	... CAP	1	DBB0001~
13	☆	... SEAL	2	DBB0001~
14	☆	... SEAL	1	DBB0001~
15	700-93-11320	... O-RING	1	DBB0001~
16	723-46-41950	... RING	2	DBB0001~
17	07002-13634	... O-RING	1	DBB0001~
18	☆	... O-RING	2	DBB0001~
19	☆	... RING	3	DBB0001~
20	☆	... O-RING	1	DBB0001~
21	☆	... RING, BACK-UP	1	DBB0001~
22	01252-60845	.. BOLT	4	DBB0001~
23	01643-50823	.. WASHER	4	DBB0001~

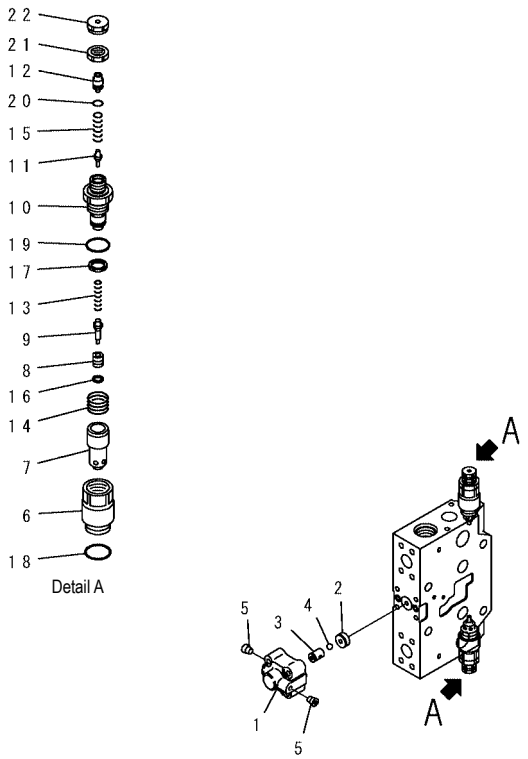

PW5H794

INDEX	PART NO.	DESCRIPTION	Q'TY	SERIAL NO.
	(723-41-07400)	VALVE ASS'Y	1	DBB0001~
		THIS ASSEMBLY CONSISTS OF ALL PARTS SHOWN IN FIGS. Y1669-01A0 TO Y1669-03A0.		
	723-46-66300	. VALVE ASS'Y	1	DBB0001~
1	☆	.. CASE	1	DBB0001~
2	☆	.. SEAT	1	DBB0001~
3	☆	.. SEAT	1	DBB0001~
4	☆	.. BALL	1	DBB0001~
5	☆	.. PLUG	2	DBB0001~
	723-90-61400	. VALVE ASS'Y, SUCTION AND SAFETY	2	DBB0001~
6	☆	.. SLEEVE	1	DBB0001~
7	☆	.. SLEEVE	1	DBB0001~
8	☆	.. POPPET	1	DBB0001~
9	☆	.. PISTON	1	DBB0001~
10	☆	.. JPLUG	1	DBB0001~
11	☆	.. POPPET	1	DBB0001~
12	☆	.. SPACER	1	DBB0001~
13	☆	.. SPRING	1	DBB0001~
14	☆	.. SPRING	1	DBB0001~
15	☆	.. SPRING	1	DBB0001~
16	☆	.. SEAL	1	DBB0001~
17	☆	.. SEAL	1	DBB0001~
18	07000-13024	.. O-RING	1	DBB0001~
19	☆	.. O-RING	1	DBB0001~
20	☆	.. O-RING	1	DBB0001~
21	☆	.. NUT	1	DBB0001~
22	☆	.. NUT	1	DBB0001~

FIG. Y1670-01A0 PPC VALVE (FOR TRAVEL) 1/2)

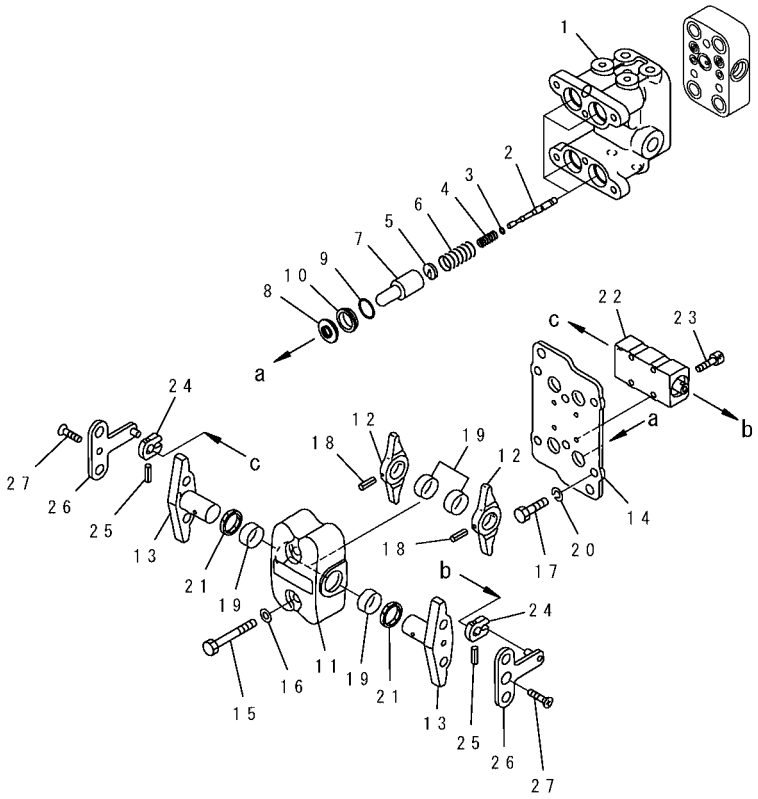

PW5X034

FIG NO. : Y1670-01A0

INDEX	PART NO.	DESCRIPTION	Q'TY	SERIAL NO.
	702-16-01861	PILOT VALVE	1	DBB0001~
		THIS ASSEMBLY CONSISTS OF ALL PARTS SHOWN IN FIGS. Y1670-01A0 TO Y1670-02A.		
1	☆	. BODY, VALVE	1	DBB0001~
2	☆	. VALVE	4	DBB0001~
3	702-16-51140	. SHIM, 0.30MM	4	DBB0001~
4	702-16-53420	. SPRING	4	DBB0001~
5	702-16-53140	. RETAINER	4	DBB0001~
6	702-16-54420	. SPRING	4	DBB0001~
7	702-16-53170	. PISTON	4	DBB0001~
8	702-16-51270	. SEAL	4	DBB0001~
9	07000-12020	. O-RING	4	DBB0001~
10	702-16-54170	. COLLAR	4	DBB0001~
11	702-16-54311	. CASE	1	DBB0001~
12	☆	. LEVER	2	DBB0001~
13	☆	. SHAFT	2	DBB0001~
14	☆	. PLATE	1	DBB0001~
15	01010-80855	. BOLT	2	DBB0001~
16	01643-30823	. WASHER	2	DBB0001~
17	01010-80816	. BOLT	4	DBB0001~
18	04025-00432	. PIN, SPRING	2	DBB0001~
19	702-16-54430	. BUSHING	4	DBB0001~
20	702-16-54331	. WASHER, 1.60MM	4	DBB0001~
	702-16-54341	. WASHER, 1.30MM	4	DBB0001~
	702-16-54351	. WASHER, 1.00MM	4	DBB0001~
21	702-16-54280	. SEAL, DUST	2	DBB0001~
22	(★702-16-54506)	. DAMPER ASS'Y	1	DBB0001~
23	01252-60525	. BOLT	4	DBB0001~
24	702-16-54511	. PLATE	2	DBB0001~
25	04025-00420	. PIN, SPRING	2	DBB0001~
26	702-16-54520	. LEVER	2	DBB0001~
27	01224-40612	. SCREW	2	DBB0001~

FIG. Y1670-02A0 PPC VALVE (FOR TRAVEL) (2/2)

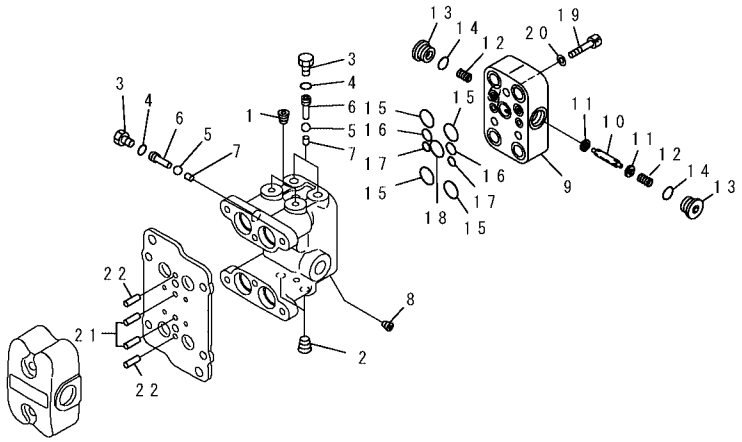

PW5X035

INDEX	PART NO.	DESCRIPTION	Q'TY	SERIAL NO.
	(702-16-01861)	PILOT VALVE	1	DBB0001~
		THIS ASSEMBLY CONSISTS OF ALL PARTS SHOWN IN FIGS. Y1670-01A0 TO Y1670-02A.		
1	☆	. PLUG	2	DBB0001~
2	☆	. PLUG	2	DBB0001~
3	07040-11209	. PLUG	3	DBB0001~
4	07002-11223	. O-RING	3	DBB0001~
5	700-84-11730	. BALL	3	DBB0001~
6	702-16-55940	. PLUG	3	DBB0001~
7	702-16-55950	. SEAT	3	DBB0001~
8	☆	. SCREW	2	DBB0001~
9	☆	. BODY, VALVE	1	DBB0001~
10	☆	. SPOOL	1	DBB0001~
11	702-16-57440	. RETAINER	2	DBB0001~
12	702-16-57450	. SPRING	2	DBB0001~
13	723-11-15110	. PLUG	2	DBB0001~
14	07002-11623	. O-RING	2	DBB0001~
15	07000-12015	. O-RING	4	DBB0001~
16	07000-11010	. O-RING	2	DBB0001~
17	07000-11007	. O-RING	2	DBB0001~
18	700-22-11410	. O-RING	1	DBB0001~
19	01252-60835	. BOLT	3	DBB0001~
20	01643-50823	. WASHER	3	DBB0001~
21	04022-04016	. PIN, DOWEL	2	DBB0001~
22	04022-04010	. PIN, DOWEL	2	DBB0001~

FIG. Y1670-11A0 PPC VALVE (FOR WORK EQUIPMENT)

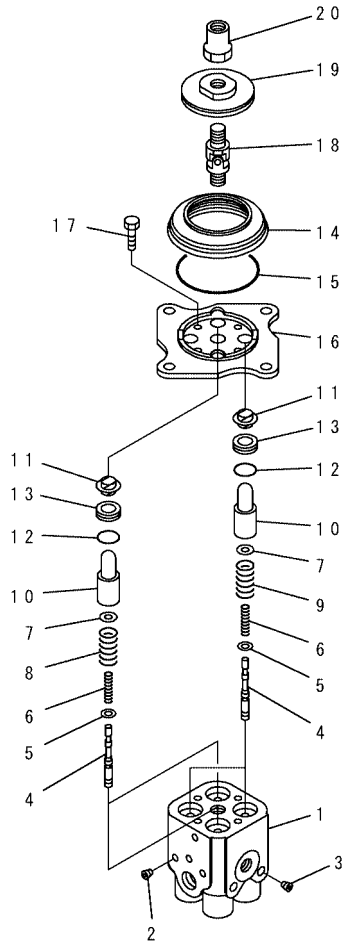

PW5X036

INDEX	PART NO.	DESCRIPTION	Q'TY	SERIAL NO.
	702-16-03910	PILOT VALVE	1	DBB0001~
1	☆	. BODY, VALVE	1	
2	☆	. PLUG	2	
3	☆	. PLUG	2	DBB0001~
4	☆	. VALVE	4	DBB0001~
5	702-16-51140	. SHIM, 0.30MM	4	DBB0001~
6	702-16-53420	. SPRING	4	DBB0001~
7	702-16-53140	. RETAINER	4	DBB0001~
8	702-16-53470	. SPRING	2	DBB0001~
9	702-16-53590	. SPRING	2	DBB0001~
10	702-16-53170	. PISTON	4	DBB0001~
11	702-16-51270	. SEAL	4	DBB0001~
12	07000-12020	. O-RING	4	DBB0001~
13	702-16-54170	. COLLAR	4	DBB0001~
14	702-16-53190	. BOOT	1	DBB0001~
15	07000-02070	. O-RING	1	DBB0001~
16	702-16-53210	. PLATE	4	DBB0001~
17	01010-80620	. BOLT	1	DBB0001~
18	702-16-51240	. JOINT	1	DBB0001~
19	702-16-53980	. DISC	1	DBB0001~
20	702-16-53230	. NUT	1	DBB0001~

FIG. Y1670-21A0 PPC VALVE (FOR ATTACHMENT)(OPT)

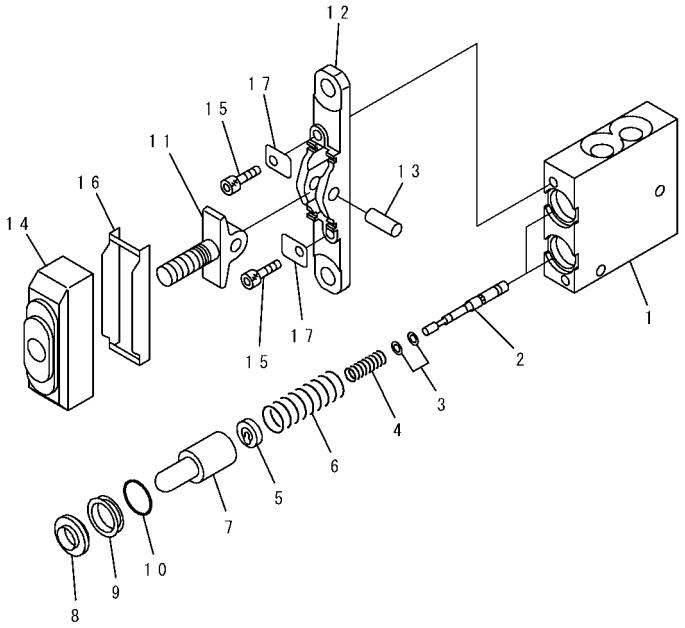

PWB8954

FIG NO. : Y1670-21A0

INDEX	PART NO.	DESCRIPTION	Q'TY	SERIAL NO.
	702-16-01230	PILOT VALVE	1	DBB0001~
1	☆	. BODY, VALVE	1	DBB0001~
2	☆	. VALVE	2	DBB0001~
3	702-16-51140	. SHIM, 0.30MM	2	DBB0001~
	702-16-54670	. SHIM, 0.20MM	4	DBB0001~
4	702-16-54550	. SPRING	2	DBB0001~
5	702-16-54571	. RETAINER	2	DBB0001~
6	702-16-54560	. SPRING	2	DBB0001~
7	702-16-53170	. PISTON	2	DBB0001~
8	702-16-51270	. SEAL	2	DBB0001~
9	702-16-54580	. COLLAR	2	DBB0001~
10	702-16-54590	. O-RING	2	DBB0001~
11	☆	. LEVER	1	DBB0001~
12	☆	. PLATE	1	DBB0001~
13	☆	. SHAFT	1	DBB0001~
14	702-16-54641	. BOOT	1	DBB0001~
15	01252-30625	. BOLT	2	DBB0001~
16	702-16-54660	. PLATE	1	DBB0001~
17	702-16-54650	. PLATE	2	DBB0001~

FIG. Y1671-01A0 EPC VALVE(OPT)

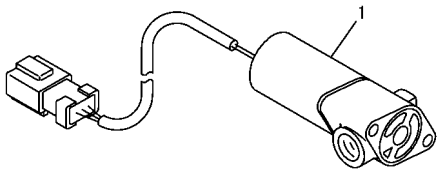

PT19821

FIG NO. : Y1671-01A0

INDEX	PART NO.	DESCRIPTION	Q'TY	SERIAL NO.
1	702-21-07010	SOLENOID VALVE.....	1	DBB0001~

FIG. Y1675-01A0 LOCK VALVE(OPT)

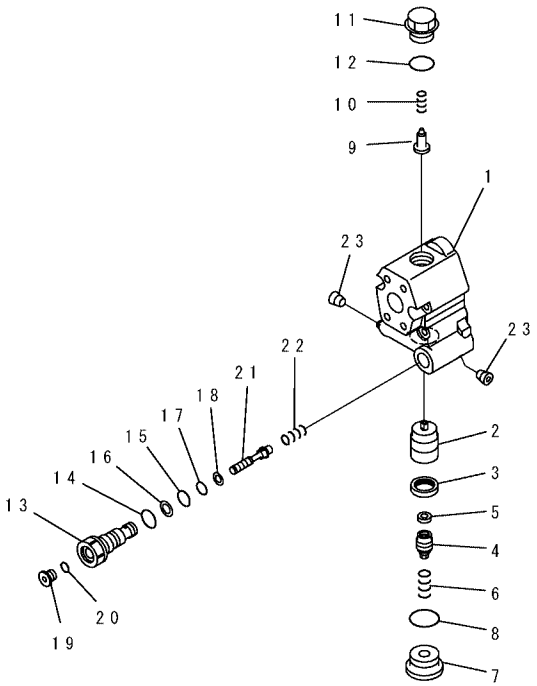

PW5X037

FIG NO. : Y1675-01A0

INDEX	PART NO.	DESCRIPTION	Q'TY	SERIAL NO.
	723-40-82600	VALVE ASS'Y	1	DBB0001~
1	☆	. BODY	1	DBB0001~
2	☆	. VALVE	1	DBB0001~
3	☆	. SEAL	1	DBB0001~
4	723-40-82210	. PLUG	1	DBB0001~
5	723-40-82220	. FILTER	1	DBB0001~
6	723-40-82140	. SPRING	1	DBB0001~
7	723-40-82150	. PLUG	1	DBB0001~
8	07002-13334	. O-RING	1	DBB0001~
9	709-25-11650	. VALVE, CHECK	1	DBB0001~
10	709-25-11361	. SPRING	1	DBB0001~
11	723-40-82161	. PLUG	1	DBB0001~
12	07000-13024	. O-RING	1	DBB0001~
13	☆	. PLUG	1	DBB0001~
14	07002-11823	. O-RING	1	DBB0001~
15	07000-12011	. O-RING	1	DBB0001~
16	07001-02011	. RING, BACK-UP	1	DBB0001~
17	07000-11010	. O-RING	1	DBB0001~
18	07001-01010	. RING	1	DBB0001~
19	723-11-18190	. PLUG	1	DBB0001~
20	07002-11023	. O-RING	1	DBB0001~
21	☆	. PISTON	1	DBB0001~
22	723-40-82290	. SPRING	1	DBB0001~
23	☆	. SCREW	2	DBB0001~

FIG. Y1851-01A0 FILTER (INNER PARTS)(OPT)

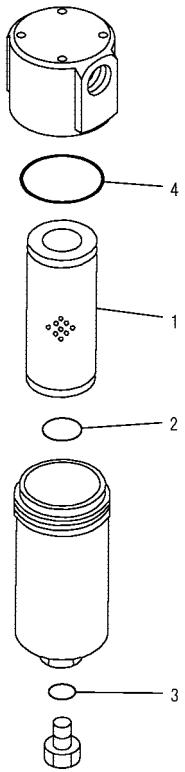

PW1C043

FIG NO. : Y1851-01A0

INDEX	PART NO.	DESCRIPTION	Q'TY	SERIAL NO.
	20Y-970-2700	FILTER ASS'Y	1	DBB0001~
1	20Y-970-1820	. ELEMENT	1	DBB0001~
2	07000-13050	.. O-RING	1	DBB0001~
3	07000-12014	. O-RING	1	DBB0001~
4	07000-12115	. O-RING	1	DBB0001~

FIG. Y1860-01A0 SOLENOID VALVE (INNER PARTS)

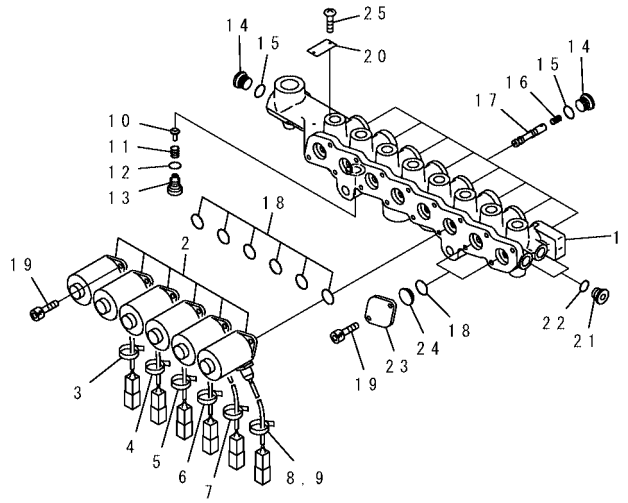

PW1C000

INDEX	PART NO.	DESCRIPTION	Q'TY	SERIAL NO.
	20Y-60-31212	VALVE ASS'Y	1	DBB0001~
1	☆	. BLOCK	1	DBB0001~
2	20Y-60-32120	. SOLENOID ASS'Y	6	DBB0001~
3	NY07207-11700	. TUBE	1	DBB0001~
4	NY07529-10200	. TUBE	1	DBB0001~
5	NY07529-10300	. TUBE	1	DBB0001~
6	NY07529-10400	. TUBE	1	DBB0001~
7	NY07529-10500	. TUBE	1	DBB0001~
8	NY07529-10600	. TUBE	1	DBB0001~
9	NY89103-00090	. BAND	6	DBB0001~
10	NY05062-1170A	. PLUNGER	1	DBB0001~
11	NY05062-11800	. SPRING	1	DBB0001~
12	NY86711-01010	. O-RING	1	DBB0001~
13	NY06277-1320A	. PLUG	1	DBB0001~
14	NY80000-02200	. PLUG	9	DBB0001~
15	NY86711-02011	. O-RING	9	DBB0001~
16	NY06339-10200	. SPRING	8	DBB0001~
17	NY07493-10200	. SPOOL	8	DBB0001~
18	07000-12016	. O-RING	8	DBB0001~
19	NY81446-05012	. BOLT	16	DBB0001~
20	NY09000-11400	. PLATE	1	DBB0001~
21	NY80000-02100	. PLUG	3	DBB0001~
22	NY86711-01008	. O-RING	3	DBB0001~
23	NY07926-10100	. PLATE	2	DBB0001~
24	NY01720-10600	. STOPPER	2	DBB0001~
25	NY84110-00248	. SCREW	2	DBB0001~

FIG. Y1861-01A0 SOLENOID VALVE (INNER PARTS)(OPT)

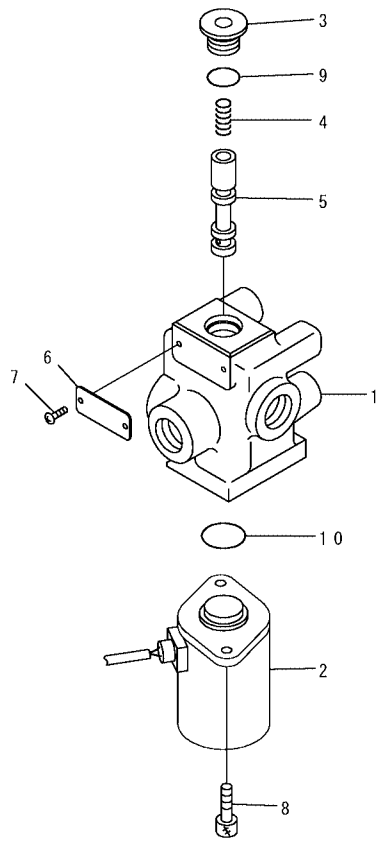

PW1C025

FIG NO. : Y1861-01A0

INDEX	PART NO.	DESCRIPTION	Q'TY	SERIAL NO.
	20Y-60-32110	VALVE ASS'Y	1	DBB0001~
1	☆	. BLOCK	1	DBB0001~
2	20Y-60-32120	. SOLENOID ASS'Y	1	DBB0001~
3	NY08000-02200	. PLUG	1	DBB0001~
4	NY06339-10200	. SPRING	1	DBB0001~
5	NY07493-10200	. SPOOL	1	DBB0001~
6	NY09000-11400	. PLATE	1	DBB0001~
7	NY84110-00264	. SCREW	2	DBB0001~
8	NY81446-05010	. BOLT	2	DBB0001~
9	NY86711-02011	. O-RING	1	DBB0001~
10	07000-12016	. O-RING	1	DBB0001~

FIG. Y1979-01A0 COMPRESSOR ASS'Y (FOR AIR CONDITIONER)

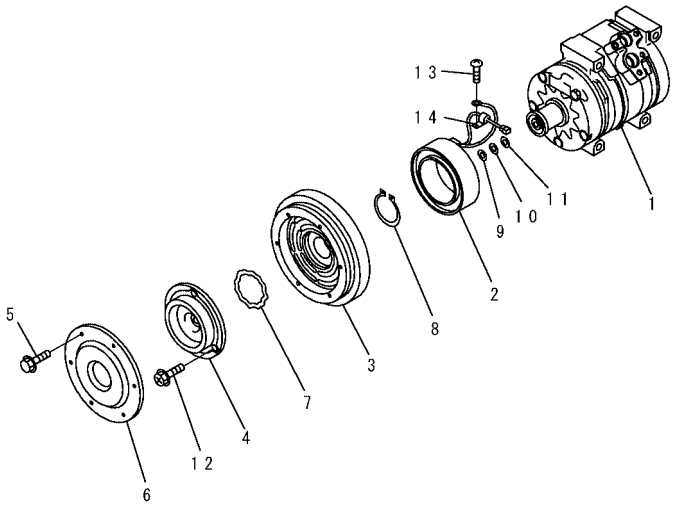

PW1D039

FIG NO. : Y1979-01A0

INDEX	PART NO.	DESCRIPTION	Q'TY	SERIAL NO.
	20Y-979-6121	COMPRESSOR ASS'Y	1	DBB0001~
1	ND447220-4051	. COMPRESSOR ASS'Y	1	DBB0001~
	ND247300-0510	. CLUTCH ASS'Y, MAGNET	1	DBB0001~
2	ND047310-7240	.. STATOR, MAGNET CLUTCH	1	DBB0001~
3	☆	.. ROTOR, MAGNET CLUTCH	1	DBB0001~
4	ND047410-1570	.. HUB, CLUTCH	1	DBB0001~
	ND047410-1580	.. HUB, CLUTCH	1	DBB0001~
5	ND949047-2950	.. BOLT, WASHER	6	DBB0001~
6	ND047372-0660	.. COVER, DUST	1	DBB0001~
7	ND949070-1360	. RING, SNAP	1	DBB0001~
	ND949070-0640	. RING, SNAP	1	DBB0001~
8	ND949070-1390	. RING, SNAP	1	DBB0001~
9	ND949013-7480	. WASHER, 0.1MM, PLATE	1	DBB0001~
10	ND949013-7500	. WASHER, 0.3MM, PLATE	1	DBB0001~
11	ND949013-7510	. WASHER, 0.5MM, PLATE	1	DBB0001~
12	ND949048-0430	. BOLT, WASHER HEAD	1	DBB0001~
13	ND91310-05081	. SCREW, WASHER	1	DBB0001~
14	ND146691-4470	. CLAMP	1	DBB0001~

FIG. Y1979-11A0 UNIT ASS'Y (FOR AIR CONDITIONER)

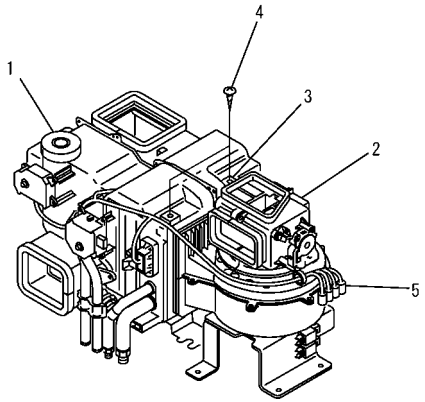

PW1D040

FIG NO. : Y1979-11A0

INDEX	PART NO.	DESCRIPTION	Q'TY	SERIAL NO.
	20Y-979-6111	UNIT ASS'Y	1	DBB0001~DBB4708
1	(ND448800-5222)	. UNIT ASS'Y, COOLING	1	DBB0001~DBB4708
2	(ND117200-0843)	. BLOWER ASS'Y	1	DBB0001~DBB4708
3	ND146525-6041	. BRACKET, PARTS	2	DBB0001~DBB4708
4	ND90930-06141	. SCREW, TAPPING	2	DBB0001~DBB4708
5	ND246460-9451	. HARNESS SUB ASS'Y, AIR CONDITIONER	1	DBB0001~DBB4708

FIG. Y1979-21A0 UNIT ASS'Y (COOLING) (FOR AIR CONDITIONER)

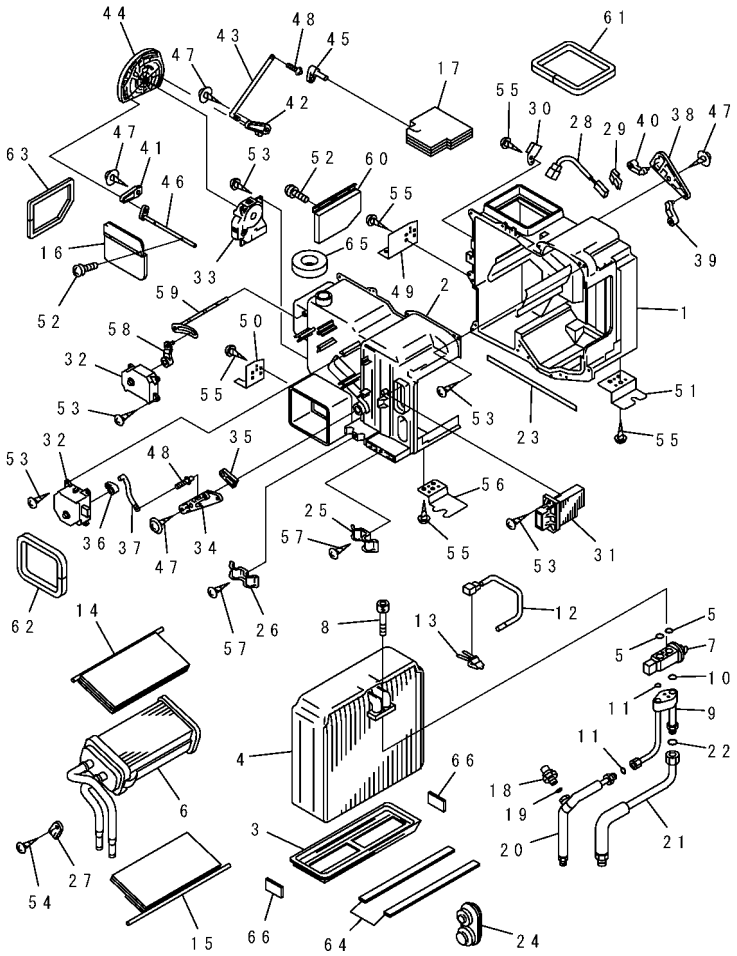

FIG NO. : Y1979-21A0

INDEX	PART NO.	DESCRIPTION	Q'TY	SERIAL NO.
	ND448800-5222	UNIT ASS'Y, COOLING	1	DBB0001~DBB4708
1	ND245450-2221	. CASE, COOLING	1	DBB0001~DBB4708
2	ND245450-1721	. CASE, COOLING	1	DBB0001~DBB4708
3	ND116569-5010	. PLATE	1	DBB0001~DBB4708
4	ND447600-4970	. EVAPORATOR	1	DBB0001~DBB4708
5	ND949142-0030	.. O-RING	2	DBB0001~DBB4708
6	ND116120-7990	. CORE ASS'Y, HEATER	1	DBB0001~DBB4708
7	ND447500-1390	. VALVE, EXPANSION	1	DBB0001~DBB4708
8	ND949046-2150	. BOLT	2	DBB0001~DBB4708
9	ND446870-5650	. TUBE, ACCESSORY	1	DBB0001~DBB4708
10	ND949142-0030	.. O-RING	1	DBB0001~DBB4708
11	ND949142-0010	.. O-RING	2	DBB0001~DBB4708
12	ND077500-0710	. THERMISTOR	1	DBB0001~DBB4708
13	ND246690-2840	. CLAMP	2	DBB0001~DBB4708
14	ND116650-8800	. DOOR ASS'Y	1	DBB0001~DBB4708
15	ND116650-8820	. DOOR ASS'Y	1	DBB0001~DBB4708
16	ND116650-8840	. DOOR ASS'Y	1	DBB0001~DBB4708
17	ND116640-4652	. DAMPER ASS'Y	1	DBB0001~DBB4708
18	ND443440-0030	. SWITCH, PRESSURE	1	DBB0001~DBB4708
19	ND949142-0040	.. O-RING	1	DBB0001~DBB4708
20	ND446830-3880	. TUBE	1	DBB0001~DBB4708
21	ND446810-9520	. TUBE, SUCTION	1	DBB0001~DBB4708
22	ND949142-0030	.. O-RING	1	DBB0001~DBB4708
23	ND146678-4930	. PACKING	1	DBB0001~DBB4708
24	ND949321-9940	. GROMMET	1	DBB0001~DBB4708
25	ND246770-6990	. CLAMP, PIPING	1	DBB0001~DBB4708
26	ND017231-1400	. CLAMP	1	DBB0001~DBB4708
27	ND017660-3490	. BRACKET	1	DBB0001~DBB4708
28	ND170400-4310	. SENSOR ASS'Y, THERMO	1	DBB0001~DBB4708
29	ND146690-6020	. CLAMP	1	DBB0001~DBB4708
30	ND246634-6010	. BRACKET	1	DBB0001~DBB4708
31	ND499300-2051	. I. C. POWER	1	DBB0001~DBB4708
32	ND063700-7200	. SERVO MOTOR ASS'Y	2	DBB0001~DBB4708

FIG. Y1979-21A0 UNIT ASS'Y (FOR AIR CONDITIONER)

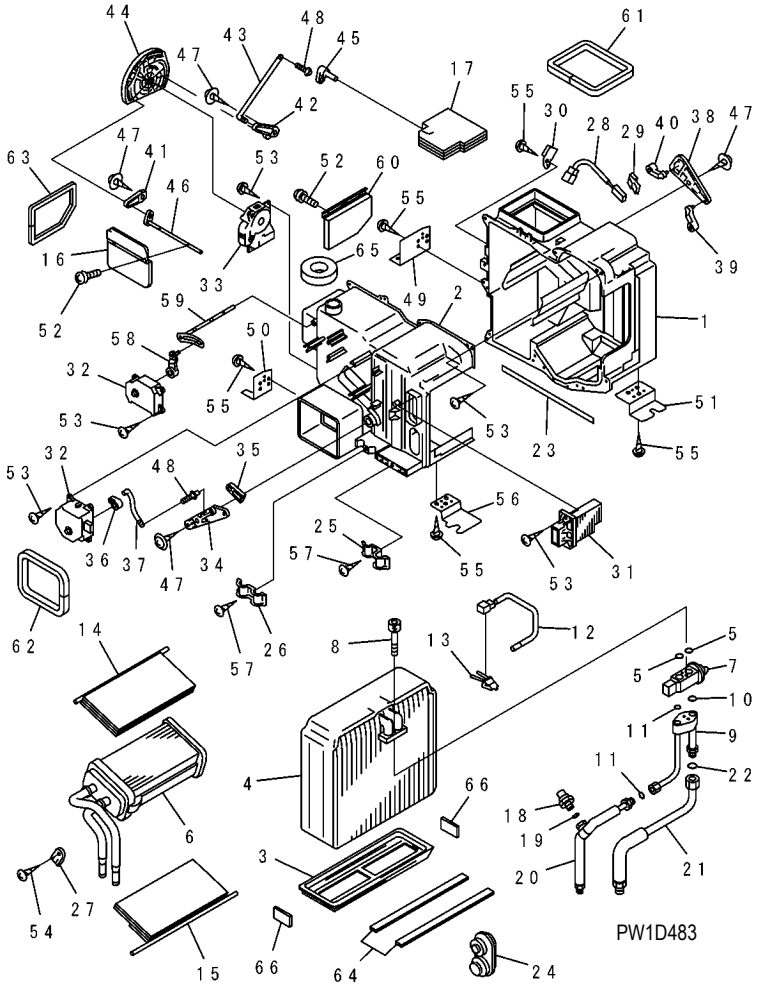

FIG NO. : Y1979-21A0

INDEX	PART NO.	DESCRIPTION	Q'TY	SERIAL NO.
33	ND063700-7210	. SERVO MOTOR ASS'Y	1	DBB0001~DBB4708
34	ND116569-5020	. PLATE	1	DBB0001~DBB4708
35	ND116682-0930	. LEVER	1	DBB0001~DBB4708
36	ND116682-0960	. LEVER	1	DBB0001~DBB4708
37	ND116662-4850	. SHAFT	1	DBB0001~DBB4708
38	ND116569-5030	. PLATE	1	DBB0001~DBB4708
39	ND116682-0940	. LEVER	1	DBB0001~DBB4708
40	ND116682-0951	. LEVER	1	DBB0001~DBB4708
41	ND116569-5041	. PLATE	1	DBB0001~DBB4708
42	ND116569-5051	. PLATE	1	DBB0001~DBB4708
43	ND116662-4860	. SHAFT	1	DBB0001~DBB4708
44	ND116569-5062	. PLATE	1	DBB0001~DBB4708
45	ND116682-0920	. LEVER	1	DBB0001~DBB4708
46	ND116682-0910	. LEVER	1	DBB0001~DBB4708
47	ND949008-0460	. SCREW, TAPPING	4	DBB0001~DBB4708
48	17M-911-3290	. CLAMP	2	DBB0001~DBB4708
49	ND146535-1311	. BRACKET	1	DBB0001~DBB4708
50	ND146535-0411	. BRACKET	1	DBB0001~DBB4708
51	ND146525-6070	. BRACKET	1	DBB0001~DBB4708
52	ND91310-03081	. SCREW, WASHER	4	DBB0001~DBB4708
53	ND949001-1730	. SCREW, TAPPING	23	DBB0001~DBB4708
54	ND90930-05121	. SCREW, TAPPING	1	DBB0001~DBB4708
55	ND90930-06141	. SCREW, TAPPING	8	DBB0001~DBB4708
56	ND146535-0421	. BRACKET	1	DBB0001~DBB4708
57	ND90930-05161	. SCREW, TAPPING	2	DBB0001~DBB4708
58	ND116682-3440	. LEVER	1	DBB0001~DBB4708
59	ND017730-8380	. LEVER, CONTROL	1	DBB0001~DBB4708
60	ND116660-2770	. DOOR ASS'Y	1	DBB0001~DBB4708
61	ND146698-6930	. PACKING	1	DBB0001~DBB4708
62	ND146698-6950	. PACKING	1	DBB0001~DBB4708
63	ND146698-8480	. PACKING	1	DBB0001~DBB4708
64	ND146637-5650	. PACKING	2	DBB0001~DBB4708
65	ND146647-0712	. PACKING	1	DBB0001~DBB4708
66	ND146647-3880	. PACKING	2	DBB0001~DBB4708

FIG. Y1979-31A0 BLOWER ASS'Y (FOR AIR CONDITIONER)

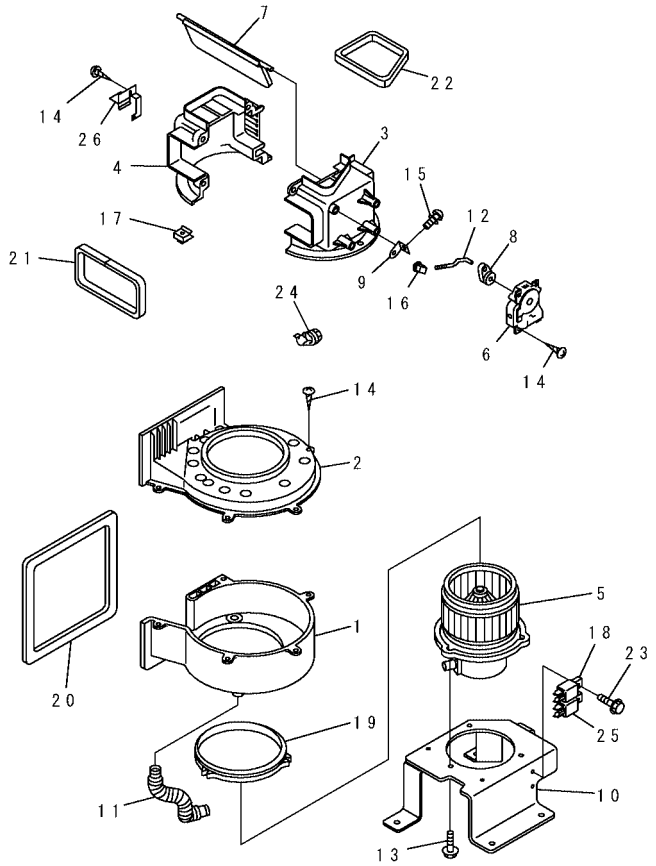

PW1D484

INDEX	PART NO.	DESCRIPTION	Q'TY	SERIAL NO.
	ND117200-0843	BLOWER ASS'Y	1	DBB0001~DBB4708
1	ND116241-3220	. CASE, BLOWER	1	DBB0001~DBB4708
2	ND116241-3230	. CASE, BLOWER	1	DBB0001~DBB4708
3	ND017321-3202	. CASE, AIR DAMPER	1	DBB0001~DBB4708
4	ND017321-3212	. CASE, AIR DAMPER	1	DBB0001~DBB4708
5	ND116340-3860	. MOTOR ASS'Y, FAN	1	DBB0001~DBB4708
6	ND063700-7210	. SERVO MOTOR ASS'Y	1	DBB0001~DBB4708
7	ND116660-4680	. DOOR ASS'Y	1	DBB0001~DBB4708
8	ND116682-0980	. LOVER	1	DBB0001~DBB4708
9	ND116682-0970	. LEVER	1	DBB0001~DBB4708
10	ND146535-1320	. BRACKET	1	DBB0001~DBB4708
11	205-979-7260	. PIPE	1	DBB0001~DBB4708
12	ND116662-7120	. SHAFT	1	DBB0001~DBB4708
13	ND949047-2370	. BOLT, WASHER	3	DBB0001~DBB4708
14	ND949001-1730	. SCREW, TAPPING	17	DBB0001~DBB4708
15	ND91370-03081	. SCREW, WASHER	1	DBB0001~DBB4708
16	17M-911-3290	. CLAMP	1	DBB0001~DBB4708
17	ND949057-0190	. NUT, PLATE	1	DBB0001~DBB4708
18	ND056700-8170	. RELAY ASS'Y	1	DBB0001~DBB4708
19	ND146622-6880	. PACKING	1	DBB0001~DBB4708
20	ND146678-4901	. PACKING	1	DBB0001~DBB4708
21	ND146678-5060	. PACKING	1	DBB0001~DBB4708
22	ND146647-0790	. PACKING	1	DBB0001~DBB4708
23	ND91570-06141	. BOLT, WASHER	2	DBB0001~DBB4708
24	ND146625-4450	. BUSH	1	DBB0001~DBB4708
25	ND056800-3130	. RELAY ASS'Y	1	DBB0001~DBB4708
26	ND146530-9530	. BRACKET ASS'Y	1	DBB0001~DBB4708

FIG. Y1979-41A0 CONDENSER ASS'Y (FOR AIR CONDITIONER)

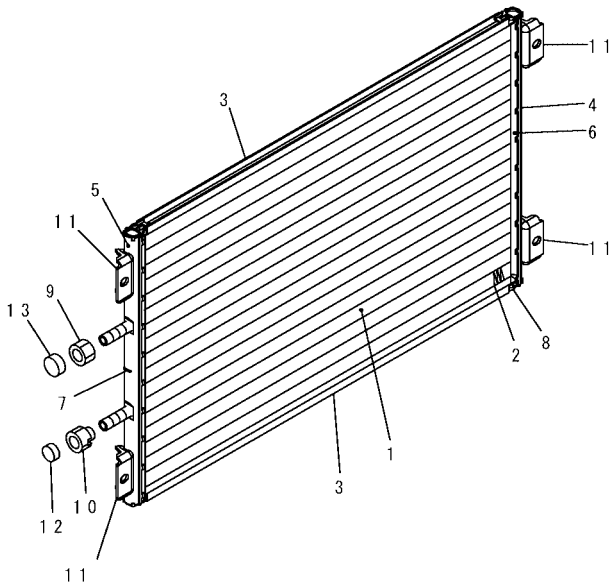

PW1D041

INDEX	PART NO.	DESCRIPTION	Q'TY	SERIAL NO.
	20Y-979-6131	CONDENSER ASS'Y	1	DBB0001~DBB4708
1	ND7930-591100	. TUBE	36	DBB0001~DBB4708
2	ND7922-571450	. FIN	37	DBB0001~DBB4708
3	ND047761-2760	. SIDE PLATE	2	DBB0001~DBB4708
4	ND047762-0540	. TANK	1	DBB0001~DBB4708
5	ND047762-3000	. TANK	1	DBB0001~DBB4708
6	ND7935-163610	. PLATE	2	DBB0001~DBB4708
7	ND047764-0021	. PLATE, SEPARATOR	1	DBB0001~DBB4708
8	ND047765-0020	. CAP	4	DBB0001~DBB4708
9	ND445013-0811	. UNION, HALF	1	DBB0001~DBB4708
10	ND445013-0521	. UNION, HALF	1	DBB0001~DBB4708
11	ND047782-3720	. BRACKET	4	DBB0001~DBB4708
12	ND445021-0060	. PLUG	1	DBB0001~DBB4708
13	ND445021-0070	. PLUG	1	DBB0001~DBB4708

FIG. Y1662-01A0 MAIN VALVE (1-ACTUATOR) (1/19)(OPT)

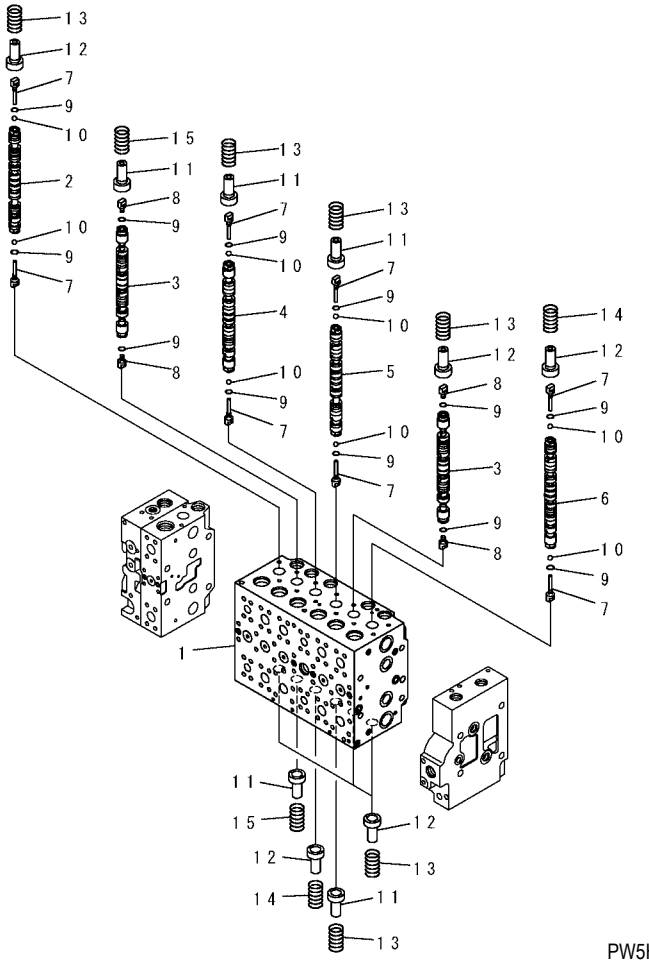

INDEX	PART NO.	DESCRIPTION	Q'TY	SERIAL NO.
	723-47-20402	VALVE ASS'Y	1	DBB0001~
		THIS ASSEMBLY CONSISTS OF ALL PARTS SHOWN IN FIGS. Y1662-01A0 TO Y1662-19A0.		
	☆	. BODY SUB ASS'Y	1	DBB0001~
1	☆	.. BLOCK, VALVE	1	DBB0001~
2	☆	.. SPOOL	1	DBB0001~
3	☆	.. SPOOL	2	DBB0001~
4	☆	.. SPOOL	1	DBB0001~
5	☆	.. SPOOL	1	DBB0001~
6	☆	.. SPOOL	1	DBB0001~
7	723-46-15130	.. PLUG	8	DBB0001~
8	723-46-15140	.. PLUG	4	DBB0001~
9	07002-10823	.. O-RING	12	DBB0001~
10	708-7T-16460	.. BALL	8	DBB0001~
11	723-46-15120	.. RETAINER	5	DBB0001~
12	723-46-15690	.. RETAINER	7	DBB0001~
13	723-46-14110	.. SPRING	8	DBB0001~
14	723-46-14270	.. SPRING	2	DBB0001~
15	723-46-14131	.. SPRING	2	DBB0001~

FIG. Y1662-02A0 MAIN VALVE (1-ACTUATOR) (2/19)(OPT)

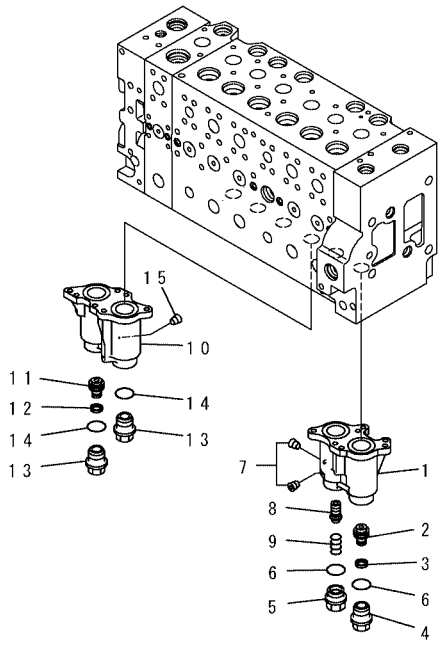

PW5H654

FIG NO. : Y1662-02A0

INDEX	PART NO.	DESCRIPTION	Q'TY	SERIAL NO.
	(723-47-20402)	VALVE ASS'Y	1	DBB0001~
		THIS ASSEMBLY CONSISTS OF ALL PARTS SHOWN IN FIGS. Y1662-01A0 TO Y1662-19A0.		
	☆	. BODY SUB ASS'Y	1	DBB0001~
	723-46-18300	.. CASE SUB ASS'Y	1	DBB0001~
1	☆	... CASE	1	DBB0001~
2	☆	... PISTON	1	DBB0001~
3	☆	... SEAL	1	DBB0001~
4	723-46-15630	... PLUG	1	DBB0001~
5	723-46-17340	... PLUG	1	DBB0001~
6	07000-13024	... O-RING	2	DBB0001~
7	☆	... SCREW	3	DBB0001~
8	723-46-17320	... SPOOL	1	DBB0001~
9	723-46-17330	... SPRING	1	DBB0001~
	723-46-18100	.. CASE SUB ASS'Y	1	DBB0001~
10	☆	... CASE	1	DBB0001~
11	☆	... PISTON	1	DBB0001~
12	☆	... SEAL	1	DBB0001~
13	723-46-15630	... PLUG	2	DBB0001~
14	07000-13024	... O-RING	2	DBB0001~
15	☆	... SCREW	1	DBB0001~

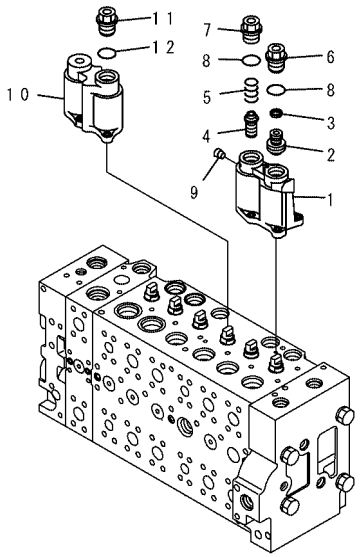

PW5H655

INDEX	PART NO.	DESCRIPTION	Q'TY	SERIAL NO.
	(723-47-20402)	VALVE ASS'Y	1	DBB0001~
		THIS ASSEMBLY CONSISTS OF ALL PARTS SHOWN IN FIGS. Y1662-01A0 TO Y1662-19A0.		
	☆	. BODY SUB ASS'Y	1	DBB0001~
	723-46-18400	.. CASE SUB ASS'Y	1	DBB0001~
1	☆	... CASE	1	DBB0001~
2	☆	... PISTON	1	DBB0001~
3	☆	... SEAL	1	DBB0001~
4	723-46-17320	... SPOOL	1	DBB0001~
5	723-46-17330	... SPRING	1	DBB0001~
6	723-46-15630	... PLUG	1	DBB0001~
7	723-46-17340	... PLUG	1	DBB0001~
8	07000-13024	... O-RING	2	DBB0001~
9	☆	... SCREW	3	DBB0001~
	723-46-18200	.. CASE SUB ASS'Y	1	DBB0001~
10	☆	... CASE	1	DBB0001~
11	723-46-15630	... PLUG	1	DBB0001~
12	07000-13024	... O-RING	1	DBB0001~

FIG. Y1662-04A0 MAIN VALVE (1-ACTUATOR) (4/19)(OPT)

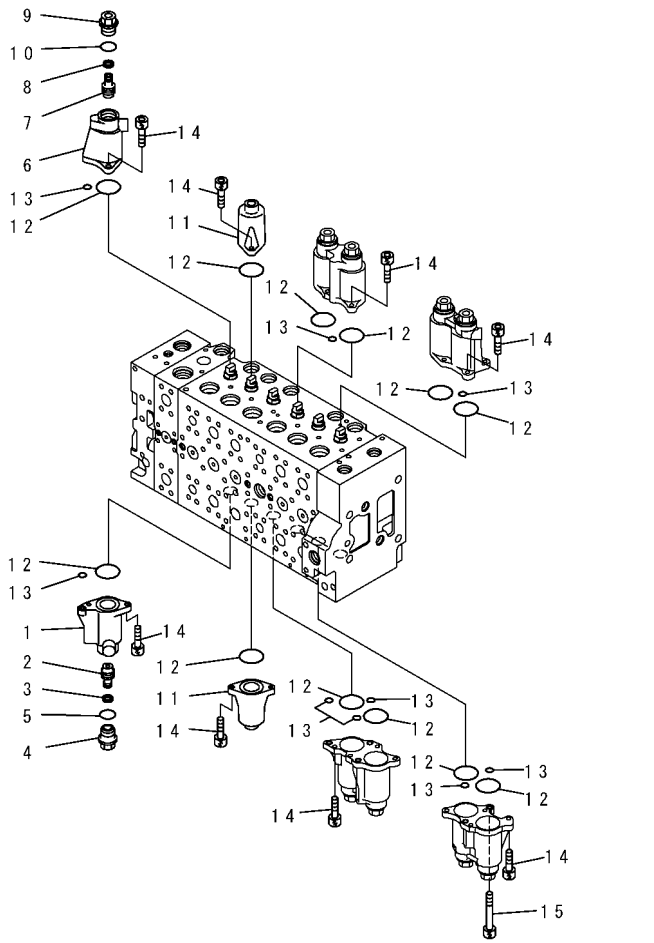

FIG NO. : Y1662-04A0

INDEX	PART NO.	DESCRIPTION	Q'TY	SERIAL NO.
	(723-47-20402)	VALVE ASS'Y	1	DBB0001~
		THIS ASSEMBLY CONSISTS OF ALL PARTS SHOWN IN FIGS. Y1662-01A0 TO Y1662-19A0.		
	☆	. BODY SUB ASS'Y	1	DBB0001~
	723-46-18500	.. CASE SUB ASS'Y	1	DBB0001~
1	☆	... CASE	1	DBB0001~
2	☆	... PISTON	1	DBB0001~
3	☆	... SEAL	1	DBB0001~
4	723-46-15630	... PLUG	1	DBB0001~
5	07000-13024	... O-RING	1	DBB0001~
	723-46-18600	.. CASE SUB ASS'Y	1	DBB0001~
6	☆	... CASE	1	DBB0001~
7	☆	... PISTON	1	DBB0001~
8	☆	... SEAL	1	DBB0001~
9	723-46-15630	... PLUG	1	DBB0001~
10	07000-13024	... O-RING	1	DBB0001~
11	723-46-15111	.. CASE	2	DBB0001~
12	07430-71380	.. O-RING	12	DBB0001~
13	702-16-53920	.. O-RING	9	DBB0001~
14	01252-60820	.. BOLT	22	DBB0001~
15	723-46-17350	.. BOLT	2	DBB0001~

FIG. Y1662-05A0 MAIN VALVE (1-ACTUATOR) (5/19)(OPT)

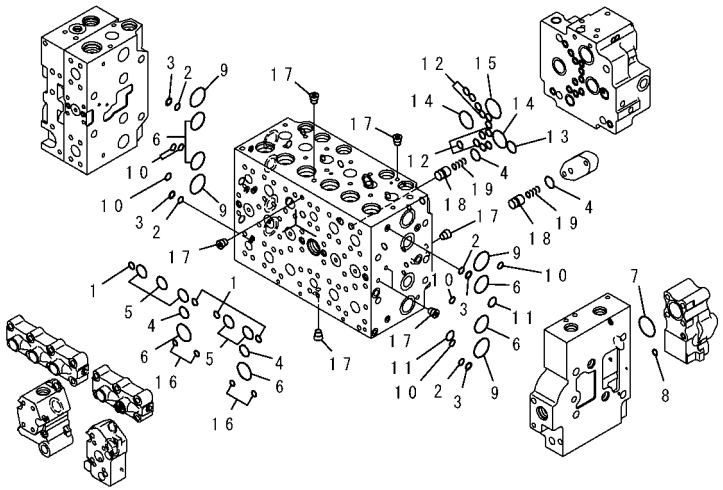

PW5H657

FIG NO. : Y1662-05A0

INDEX	PART NO.	DESCRIPTION	Q'TY	SERIAL NO.
	(723-47-20402)	VALVE ASS'Y	1	DBB0001~
		THIS ASSEMBLY CONSISTS OF ALL PARTS SHOWN IN FIGS. Y1662-01A0 TO Y1662-19A0.		
	☆	. BODY SUB ASS'Y	1	DBB0001~
1	07000-12012	.. O-RING	4	DBB0001~
2	723-11-19130	.. O-RING	4	DBB0001~
3	723-46-17520	.. RING, BACK-UP	4	DBB0001~
4	07000-12021	.. O-RING	4	DBB0001~
5	07000-13028	.. O-RING	5	DBB0001~
6	07000-13032	.. O-RING	6	DBB0001~
7	07000-13038	.. O-RING	1	DBB0001~
8	07000-11010	.. O-RING	1	DBB0001~
9	723-46-17510	.. O-RING	4	DBB0001~
10	723-46-17530	.. O-RING	6	DBB0001~
11	723-11-18150	.. O-RING	2	DBB0001~
12	07000-12012	.. O-RING	12	DBB0001~
13	07000-12021	.. O-RING	1	DBB0001~
14	07000-13032	.. O-RING	2	DBB0001~
15	07000-13036	.. O-RING	1	DBB0001~
16	702-16-53920	.. O-RING	4	DBB0001~
17	☆	.. PLUG	17	DBB0001~
18	723-46-15150	.. VALVE	2	DBB0001~
19	723-46-14150	.. SPRING	2	DBB0001~

FIG. Y1662-06A0 MAIN VALVE (1-ACTUATOR) (6/19)(OPT)

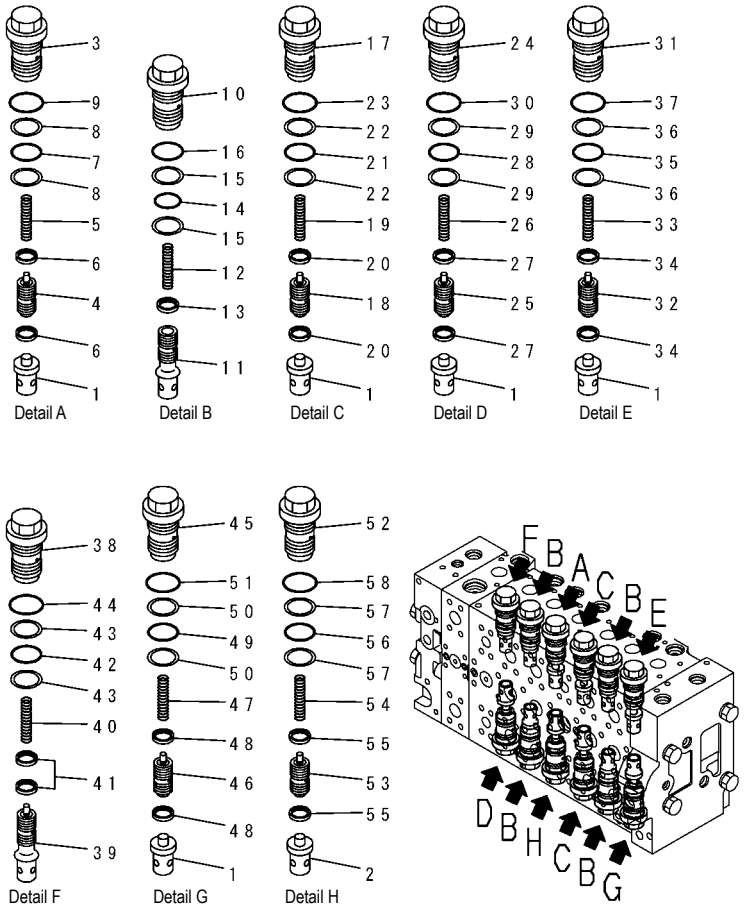

PW5H658

INDEX	PART NO.	DESCRIPTION	Q'TY	SERIAL NO.
	(723-47-20402)	VALVE ASS'Y	1	DBB0001~
		THIS ASSEMBLY CONSISTS OF ALL PARTS SHOWN IN FIGS. Y1662-01A0 TO Y1662-19A0.		
	☆	. BODY SUB ASS'Y	1	DBB0001~
1	723-46-41110	.. VALVE	6	DBB0001~
2	723-46-41120	.. VALVE	1	DBB0001~
	723-46-40100	.. VALVE ASS'Y	1	DBB0001~
3	☆	... SLEEVE	1	DBB0001~
4	☆	... PISTON SUB ASS'Y	1	DBB0001~
5	☆	... SPRING	1	DBB0001~
6	☆	... SEAL	2	DBB0001~
7	700-93-11320	... O-RING	1	DBB0001~
8	723-46-41950	... RING	2	DBB0001~
9	07002-13634	... O-RING	1	DBB0001~
	723-46-42700	.. VALVE ASS'Y	4	DBB0001~
10	☆	.. SLEEVE	1	DBB0001~
11	☆	... VALVE	1	DBB0001~
12	☆	... SPRING	1	DBB0001~
13	☆	... SEAL	1	DBB0001~
14	700-93-11320	... O-RING	1	DBB0001~
15	723-46-41950	... RING	2	DBB0001~
16	07002-13634	... O-RING	1	DBB0001~
	723-46-41100	.. VALVE ASS'Y	2	DBB0001~
17	☆	... SLEEVE	1	DBB0001~
18	☆	... PISTON SUB ASS'Y	1	DBB0001~
19	☆	... SPRING	1	DBB0001~
20	☆	... SEAL	2	DBB0001~
21	700-93-11320	... O-RING	1	DBB0001~
22	723-46-41950	... RING	2	DBB0001~
23	07002-13634	... O-RING	1	DBB0001~
	723-46-45100	.. VALVE ASS'Y	1	DBB0001~
24	☆	... SLEEVE	1	DBB0001~
25	☆	... PISTON SUB ASS'Y	1	DBB0001~
26	☆	... SPRING	1	DBB0001~
27	☆	... SEAL	2	DBB0001~
28	700-93-11320	... O-RING	1	DBB0001~
29	723-46-41950	... VALVE ASS'Y	2	DBB0001~
30	07002-13634	... SLEEVE	1	DBB0001~

FIG. Y1662-06A0 MAIN VALVE (1-ACTUATOR) (6/19)(OPT)

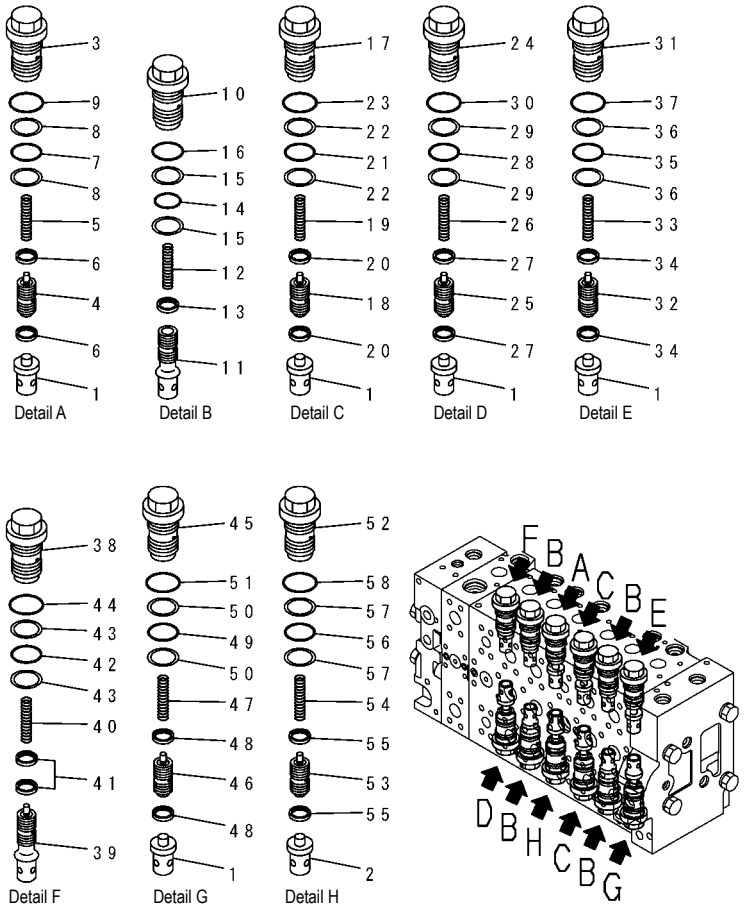

PW5H658

INDEX	PART NO.	DESCRIPTION	Q'TY	SERIAL NO.
	723-46-46300	.. VALVE ASS'Y	1	DBB0001~
31	☆	... SLEEVE	1	DBB0001~
32	☆	... PISTON SUB ASS'Y	1	DBB0001~
33	☆	... SPRING	1	DBB0001~
34	☆	... SEAL	2	DBB0001~
35	700-93-11320	... O-RING	1	DBB0001~
36	723-46-41950	... RING	2	DBB0001~
37	07002-13634	... O-RING	1	DBB0001~
	723-46-43400	.. VALVE ASS'Y	1	DBB0001~
38	☆	... SLEEVE	1	DBB0001~
39	☆	... VALVE SUB ASS'Y	1	DBB0001~
40	☆	... SPRING	1	DBB0001~
41	☆	... SEAL	2	DBB0001~
42	700-93-11320	... O-RING	1	DBB0001~
43	723-46-41950	... RING	2	DBB0001~
44	07002-13634	... O-RING	1	DBB0001~
	723-46-43100	.. VALVE ASS'Y	1	DBB0001~
45	☆	... SLEEVE	1	DBB0001~
46	☆	... PISTON SUB ASS'Y	1	DBB0001~
47	☆	... SPRING	1	DBB0001~
48	☆	... SEAL	2	DBB0001~
49	700-93-11320	... O-RING	1	DBB0001~
50	723-46-41950	... RING	2	DBB0001~
51	07002-13634	... O-RING	1	DBB0001~
	723-46-46101	.. VALVE ASS'Y	1	DBB0001~
52	☆	... SLEEVE	1	DBB0001~
53	☆	... PISTON SUB ASS'Y	1	DBB0001~
54	☆	... SPRING	1	DBB0001~
55	☆	... SEAL	2	DBB0001~
56	700-93-11320	... O-RING	1	DBB0001~
57	723-46-41950	... RING	2	DBB0001~
58	07002-13634	... O-RING	1	DBB0001~

FIG. Y1662-07A0 MAIN VALVE (1-ACTUATOR) (7/19)(OPT)

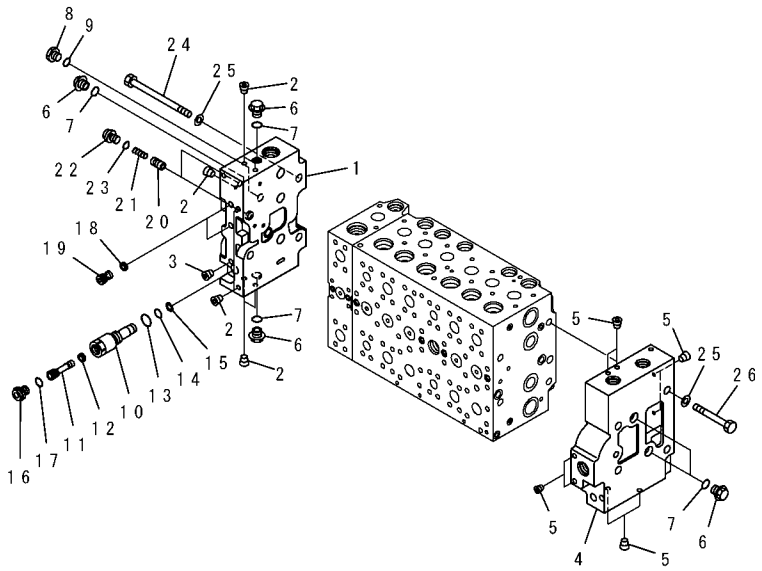

PW5H293

FIG NO. : Y1662-07A0

INDEX	PART NO.	DESCRIPTION	Q'TY	SERIAL NO.
	(723-47-20402)	VALVE ASS'Y	1	DBB0001~
		THIS ASSEMBLY CONSISTS OF ALL PARTS SHOWN IN FIGS. Y1662-01A0 TO Y1662-19A0.		
	723-46-00750	. COVER ASS'Y	1	DBB0001~
1	☆	.. COVER, A	1	DBB0001~
2	☆	.. PLUG	7	DBB0001~
3	☆	.. PLUG	1	DBB0001~
	723-46-00742	. COVER ASS'Y	1	DBB0001~
4	☆	.. COVER, B	1	DBB0001~
5	☆	.. PLUG	8	DBB0001~
6	723-46-15180	. PLUG	5	DBB0001~
7	07002-11823	. O-RING	5	DBB0001~
8	708-8H-11530	. RING	1	DBB0001~
9	07002-11423	. O-RING	1	DBB0001~
	723-46-17600	. PLUG ASS'Y	1	DBB0001~
10	723-46-17610	.. SLEEVE	1	DBB0001~
11	723-46-17640	.. PLUG	1	DBB0001~
12	702-21-55760	.. FILTER	1	DBB0001~
13	07002-11423	.. O-RING	1	DBB0001~
14	07000-11007	.. O-RING	1	DBB0001~
15	07001-01007	.. RING, BACK-UP	1	DBB0001~
16	708-8E-16160	.. PLUG	1	DBB0001~
17	07002-11023	.. O-RING	1	DBB0001~
18	723-40-82220	. FILTER	2	DBB0001~
19	723-46-17550	. PLUG	2	DBB0001~
20	723-46-15190	. VALVE	2	DBB0001~
21	723-46-14140	. SPRING	2	DBB0001~
22	708-8E-16160	. PLUG	2	DBB0001~
23	07002-11023	. O-RING	2	DBB0001~
24	01011-61455	. BOLT	4	DBB0001~
25	01643-31445	. WASHER	8	DBB0001~
26	01010-61490	. BOLT	4	DBB0001~

FIG. Y1662-08A0 MAIN VALVE (1-ACTUATOR) (8/19)(OPT)

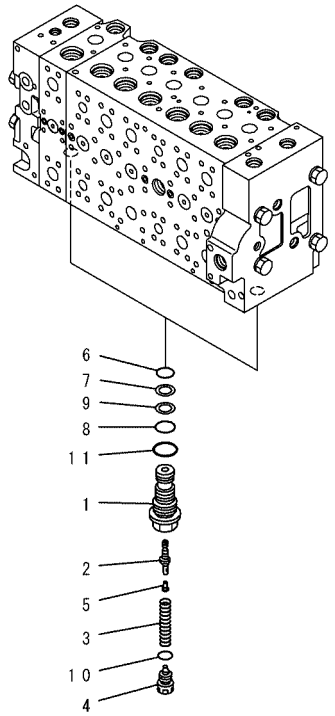

PW5H294

FIG NO. : Y1662-08A0

INDEX	PART NO.	DESCRIPTION	Q'TY	SERIAL NO.
	(723-47-20402)	VALVE ASS'Y	1	DBB0001~
		THIS ASSEMBLY CONSISTS OF ALL PARTS SHOWN IN FIGS. Y1662-01A0 TO Y1662-19A0.		
	723-40-56302	. UNLOAD VALVE ASS'Y	2	DBB0001~
1	☆	.. SLEEVE.....	1	DBB0001~
2	☆	.. VALVE.....	1	DBB0001~
3	☆	.. SPRING.....	1	DBB0001~
4	☆	.. PLUG.....	1	DBB0001~
5	☆	.. PLUG.....	1	DBB0001~
6	07000-12014	.. O-RING.....	1	DBB0001~
7	723-40-56350	.. RING.....	1	DBB0001~
8	07000-12016	.. O-RING.....	1	DBB0001~
9	723-60-22230	.. RING, BACK-UP	1	DBB0001~
10	☆	.. O-RING.....	1	DBB0001~
11	07002-12434	.. O-RING.....	1	DBB0001~

FIG. Y1662-09A0 MAIN VALVE (1-ACTUATOR) (9/19)(OPT)

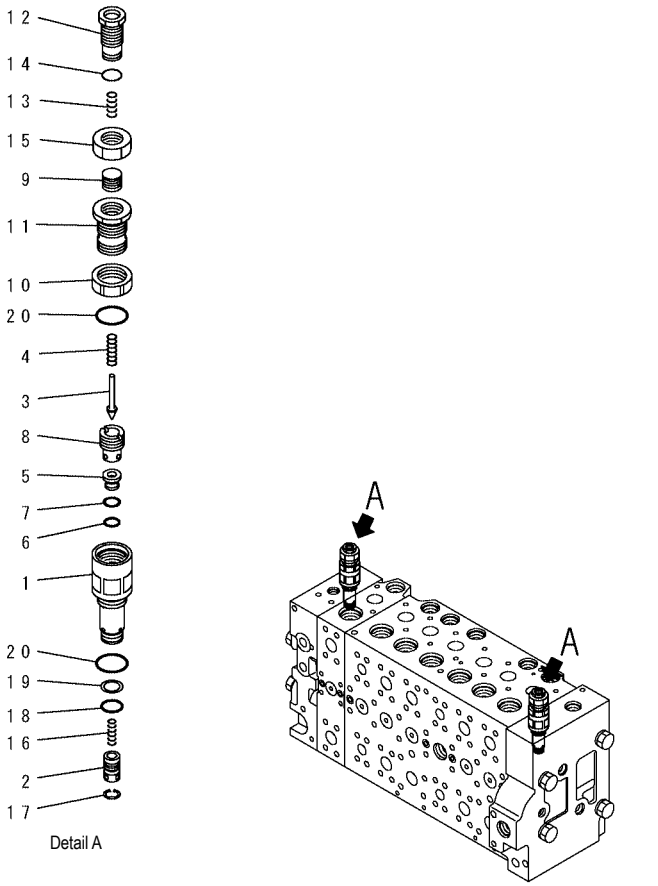

PW5H295

INDEX	PART NO.	DESCRIPTION	Q'TY	SERIAL NO.
	(723-47-20402)	VALVE ASS'Y ..... THIS ASSEMBLY CONSISTS OF ALL PARTS SHOWN IN FIGS. Y1662-01A0 TO Y1662-19A0.	1	DBB0001~
	723-40-91101	. VALVE ASS'Y, RELIEF	2	DBB0001~
1	☆	.. SLEEVE.....	1	DBB0001~
2	☆	.. VALVE.....	1	DBB0001~
3	☆	.. POPPET	1	DBB0001~
4	☆	.. SPRING.....	1	DBB0001~
5	☆	.. SEAT.....	1	DBB0001~
6	☆	.. O-RING.....	1	DBB0001~
7	☆	.. RING.....	1	DBB0001~
8	☆	.. HOLDER.....	1	DBB0001~
9	☆	.. RETAINER.....	1	DBB0001~
10	☆	.. NUT	1	DBB0001~
11	☆	.. HOLDER.....	1	DBB0001~
12	☆	.. PLUG.....	1	DBB0001~
13	☆	.. SPRING.....	1	DBB0001~
14	☆	.. O-RING.....	1	DBB0001~
15	☆	.. NUT	1	DBB0001~
16	☆	.. SPRING.....	1	DBB0001~
17	☆	.. RING.....	1	DBB0001~
18	700-22-11410	.. O-RING.....	1	DBB0001~
19	700-80-64220	.. RING.....	1	DBB0001~
20	07002-12434	.. O-RING.....	2	DBB0001~

FIG. Y1662-10A0 MAIN VALVE (1-ACTUATOR) (10/19)(OPT)

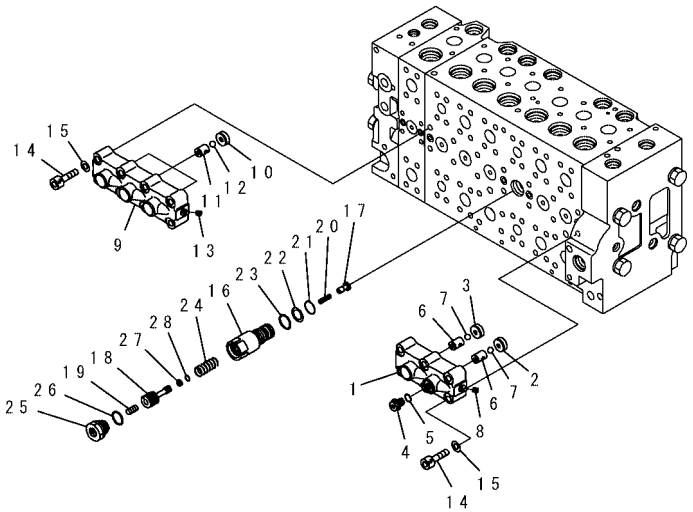

PW5H296

INDEX	PART NO.	DESCRIPTION	Q'TY	SERIAL NO.
	(723-47-20402)	VALVE ASS'Y	1	DBB0001~
		THIS ASSEMBLY CONSISTS OF ALL PARTS SHOWN IN FIGS. Y1662-01A0 TO Y1662-19A0.		
	723-40-66701	. VALVE ASS'Y	1	DBB0001~
1	☆	.. CASE	1	DBB0001~
2	☆	.. SEAT	1	DBB0001~
3	☆	.. SEAT	1	DBB0001~
4	708-8H-11530	.. PLUG	1	DBB0001~
5	07002-11423	.. O-RING	1	DBB0001~
6	☆	.. SEAT	2	DBB0001~
7	☆	.. BALL	2	DBB0001~
8	☆	.. PLUG	1	DBB0001~
	723-40-66601	. VALVE ASS'Y	1	DBB0001~
9	☆	.. CASE	1	DBB0001~
10	☆	.. SEAT	3	DBB0001~
11	☆	.. SEAT	3	DBB0001~
12	☆	.. BALL	3	DBB0001~
13	☆	.. PLUG	1	DBB0001~
14	01252-61050	.. BOLT	14	DBB0001~
15	01643-51032	.. WASHER	14	DBB0001~
	723-40-60101	. VALVE ASS'Y	1	DBB0001~
16	☆	.. SLEEVE	1	DBB0001~
17	☆	.. VALVE	1	DBB0001~
18	☆	.. PISTON	1	DBB0001~
19	☆	.. PISTON	1	DBB0001~
20	☆	.. SPRING	1	DBB0001~
21	07000-12020	.. O-RING	1	DBB0001~
22	07001-02020	.. RING, BACK-UP	1	DBB0001~
23	709-25-11390	.. O-RING	1	DBB0001~
24	☆	.. SPRING	1	DBB0001~
25	☆	.. PLUG	1	DBB0001~
26	☆	.. O-RING	1	DBB0001~
27	☆	.. SEAL	1	DBB0001~
28	☆	.. O-RING	1	DBB0001~

FIG. Y1662-11A0 MAIN VALVE (1-ACTUATOR) (11/19)(OPT)

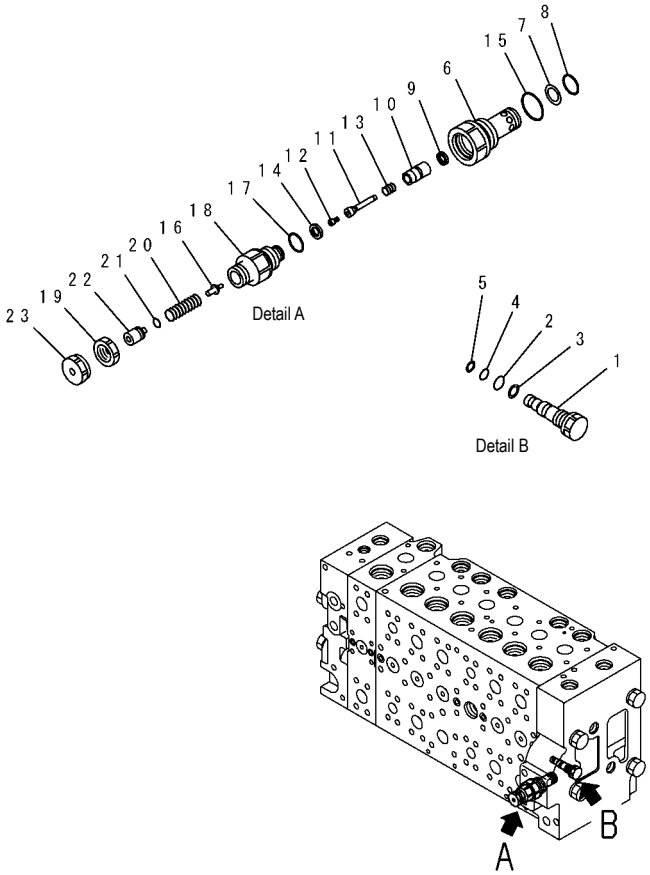

PW5H297

INDEX	PART NO.	DESCRIPTION	Q'TY	SERIAL NO.
	(723-47-20402)	VALVE ASS'Y	1	DBB0001~
		THIS ASSEMBLY CONSISTS OF ALL PARTS SHOWN IN FIGS. Y1662-01A0 TO Y1662-19A0.		
	723-46-17701	. PLUG ASS'Y	1	DBB0001~
1	723-46-17711	.. PLUG	1	DBB0001~
2	07000-11009	.. O-RING	1	DBB0001~
3	07001-01009	.. RING, BACK-UP	1	DBB0001~
4	07000-11007	.. O-RING	1	DBB0001~
5	07001-01007	.. RING, BACK-UP	1	DBB0001~
	723-40-91500	. VALVE ASS'Y, RELIEF	1	DBB0001~
6	☆	.. SLEEVE	1	DBB0001~
7	700-80-64220	.. RING	1	DBB0001~
8	700-22-11410	.. O-RING	1	DBB0001~
9	☆	.. SEAL	1	DBB0001~
10	☆	.. POPPET	1	DBB0001~
11	☆	.. PISTON	1	DBB0001~
12	☆	.. SEAT	1	DBB0001~
13	☆	.. SPRING	1	DBB0001~
14	☆	.. SEAL	1	DBB0001~
15	709-25-11390	.. O-RING	1	DBB0001~
16	☆	.. POPPET	1	DBB0001~
17	☆	.. O-RING	1	DBB0001~
18	☆	.. PLUG	1	DBB0001~
19	☆	.. NUT	1	DBB0001~
20	☆	.. SPRING	1	DBB0001~
21	☆	.. O-RING	1	DBB0001~
22	☆	.. SPACER	1	DBB0001~
23	☆	.. NUT	1	DBB0001~

FIG. Y1662-12A0 MAIN VALVE (1-ACTUATOR) (12/19)(OPT)

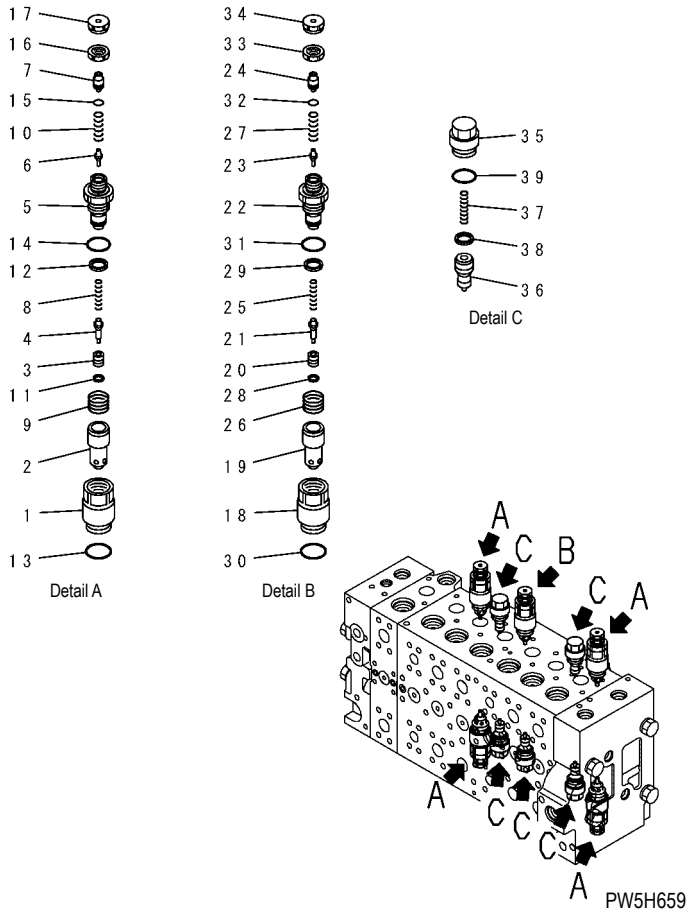

INDEX	PART NO.	DESCRIPTION	Q'TY	SERIAL NO.
	(723-47-20402)	VALVE ASS'Y	1	DBB0001~
		THIS ASSEMBLY CONSISTS OF ALL PARTS SHOWN IN FIGS. Y1662-01A0 TO Y1662-19A0.		
	723-40-91200	. VALVE ASS'Y, SUCTION AND SAFETY	4	DBB0001~
1	☆	.. SLEEVE.....	1	DBB0001~
2	☆	.. SLEEVE.....	1	DBB0001~
3	☆	.. POPPET	1	DBB0001~
4	☆	.. PISTON	1	DBB0001~
5	☆	.. PLUG.....	1	DBB0001~
6	☆	.. POPPET	1	DBB0001~
7	☆	.. SPACER.....	1	DBB0001~
8	☆	.. SPRING.....	1	DBB0001~
9	☆	.. SPRING.....	1	DBB0001~
10	☆	.. SPRING.....	1	DBB0001~
11	☆	.. SEAL.....	1	DBB0001~
12	☆	.. SEAL.....	1	DBB0001~
13	709-25-11390	.. O-RING.....	1	DBB0001~
14	☆	.. O-RING.....	1	DBB0001~
15	☆	.. O-RING.....	1	DBB0001~
16	☆	.. NUT	1	DBB0001~
17	☆	.. NUT	1	DBB0001~
	723-90-61600	. VALVE ASS'Y, SUCTION AND SAFETY	1	DBB0001~
18	☆	.. SLEEVE.....	1	DBB0001~
19	☆	.. SLEEVE.....	1	DBB0001~
20	☆	.. POPPET	1	DBB0001~
21	☆	.. PISTON	1	DBB0001~
22	☆	.. PLUG.....	1	DBB0001~
23	☆	.. POPPET	1	DBB0001~
24	☆	.. SPACER.....	1	DBB0001~
25	☆	.. SPRING.....	1	DBB0001~
26	☆	.. SPRING.....	1	DBB0001~
27	☆	.. SPRING.....	1	DBB0001~
28	☆	.. SEAL.....	1	DBB0001~
29	☆	.. SEAL.....	1	DBB0001~
30	07000-13024	.. O-RING.....	1	DBB0001~
31	☆	.. O-RING.....	1	DBB0001~
32	☆	.. O-RING.....	1	DBB0001~
33	☆	.. NUT	1	DBB0001~
34	☆	.. NUT	1	DBB0001~

FIG. Y1662-12A0 MAIN VALVE (1-ACTUATOR) (12/19)(OPT)

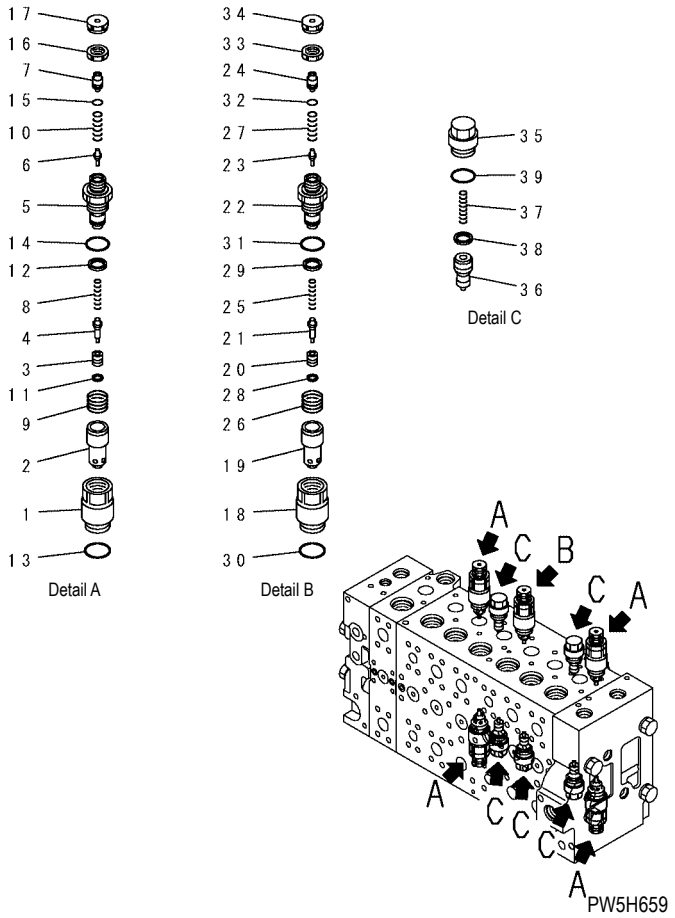

INDEX	PART NO.	DESCRIPTION	Q'TY	SERIAL NO.
	723-40-85100	. VALVE ASS'Y, SUCTION	5	DBB0001~
35	☆	.. SLEEVE	1	DBB0001~
36	☆	.. VALVE	1	DBB0001~
37	☆	.. SPRING	1	DBB0001~
38	☆	.. SEAL	1	DBB0001~
39	709-25-11390	.. O-RING	1	DBB0001~

FIG. Y1662-13A0 MAIN VALVE (1-ACTUATOR) (13/19)(OPT)

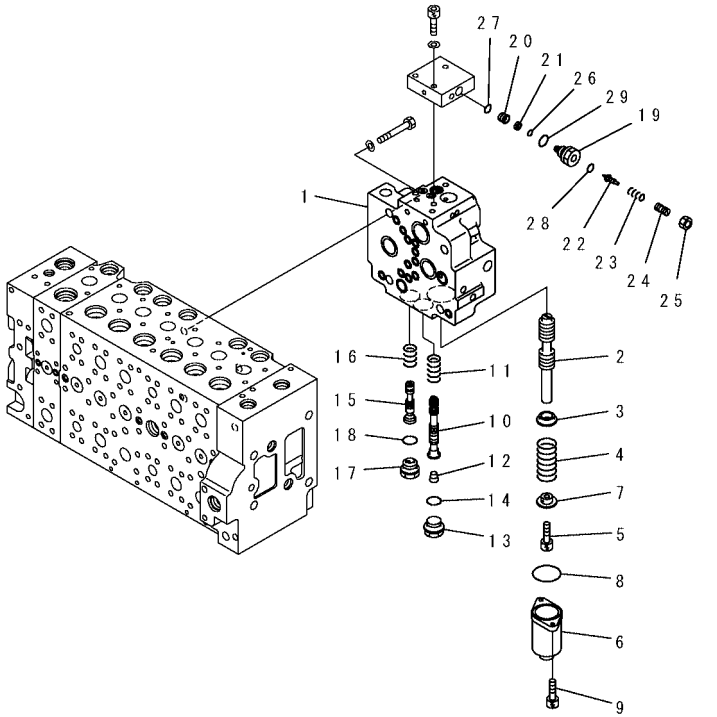

PW5H299

INDEX	PART NO.	DESCRIPTION	Q'TY	SERIAL NO.
	(723-47-20402)	VALVE ASS'Y	1	DBB0001~
		THIS ASSEMBLY CONSISTS OF ALL PARTS SHOWN IN FIGS. Y1662-01A0 TO Y1662-19A0.		
	723-40-71102	. VALVE ASS'Y	1	DBB0001~
1	☆	.. BODY	1	DBB0001~
2	☆	.. SPOOL	1	DBB0001~
3	723-40-71330	.. RETAINER	1	DBB0001~
4	723-40-71340	.. SPRING	1	DBB0001~
5	01252-60816	.. BOLT	1	DBB0001~
6	723-46-15111	.. CASE	1	DBB0001~
7	723-40-71350	.. RETAINER	1	DBB0001~
8	07430-71380	.. O-RING	1	DBB0001~
9	01252-60820	.. BOLT	2	DBB0001~
10	☆	.. SPOOL	1	DBB0001~
11	723-40-71440	.. SPRING	1	DBB0001~
12	☆	.. PLUG	1	DBB0001~
13	709-74-91860	.. PLUG	1	DBB0001~
14	07002-12434	.. O-RING	1	DBB0001~
15	☆	.. SPOOL	1	DBB0001~
16	723-40-71390	.. SPRING	1	DBB0001~
17	723-40-61150	.. PLUG	1	DBB0001~
18	07002-12434	.. O-RING	1	DBB0001~
	☆	.. VALVE ASS'Y, RELIEF	1	DBB0001~
19	☆	... SLEEVE	1	DBB0001~
20	702-21-55750	... COLLAR	1	DBB0001~
21	702-21-55760	... FILTER	1	DBB0001~
22	☆	... POPPET	1	DBB0001~
23	☆	... SPRING	1	DBB0001~
24	☆	... SCREW	1	DBB0001~
25	☆	... NUT	1	DBB0001~
26	723-11-19660	... O-RING	1	DBB0001~
27	702-16-53920	... O-RING	1	DBB0001~
28	☆	... O-RING	1	DBB0001~
29	07002-11623	... O-RING	1	DBB0001~

FIG. Y1662-14A0 MAIN VALVE (1-ACTUATOR) (14/19)(OPT)

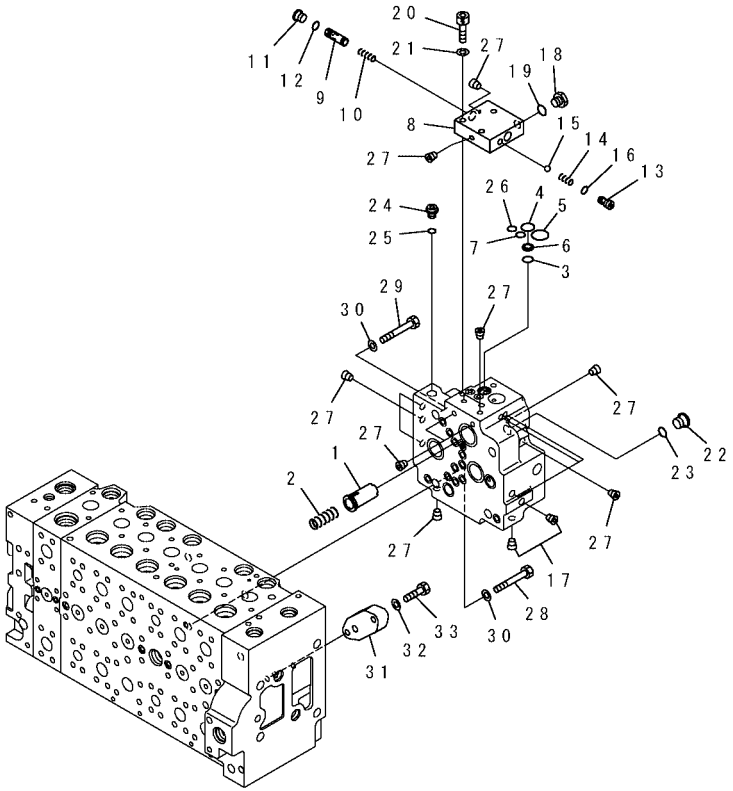

PW5H660

FIG NO. : Y1662-14A0

INDEX	PART NO.	DESCRIPTION	Q'TY	SERIAL NO.
	(723-47-20402)	VALVE ASS'Y	1	DBB0001~
		THIS ASSEMBLY CONSISTS OF ALL PARTS SHOWN IN FIGS. Y1662-01A0 TO Y1662-19A0.		
	(723-40-71102)	. VALVE ASS'Y	1	DBB0001~
1	723-40-71430	.. VALVE	1	DBB0001~
2	702-21-55460	.. SPRING	1	DBB0001~
3	702-21-55420	.. O-RING	1	DBB0001~
4	702-21-55520	.. O-RING	1	DBB0001~
5	702-21-55440	.. O-RING	1	DBB0001~
6	702-21-53120	.. FILTER	1	DBB0001~
7	07000-12011	.. O-RING	1	DBB0001~
8	☆	.. BLOCK	1	DBB0001~
9	☆	.. SPOOL	1	DBB0001~
10	☆	.. SPRING	1	DBB0001~
11	702-21-55620	.. PLUG	1	DBB0001~
12	07002-11423	.. O-RING	1	DBB0001~
13	702-21-55710	.. SEAT	1	DBB0001~
14	702-21-55720	.. SPRING	1	DBB0001~
15	04260-00793	.. BALL	1	DBB0001~
16	07000-11009	.. O-RING	1	DBB0001~
17	☆	.. PLUG	2	DBB0001~
18	708-8H-11530	.. PLUG	1	DBB0001~
19	07002-11423	.. O-RING	1	DBB0001~
20	01252-61040	.. BOLT	3	DBB0001~
21	01643-51032	.. WASHER	3	DBB0001~
22	702-21-55620	.. PLUG	1	DBB0001~
23	07002-11423	.. O-RING	1	DBB0001~
24	708-8E-16160	.. PLUG	1	DBB0001~
25	07002-11023	.. O-RING	1	DBB0001~
26	07000-12011	.. O-RING	1	DBB0001~
27	☆	.. PLUG	15	DBB0001~
28	01010-61470	. BOLT	3	DBB0001~
29	01010-61460	. BOLT	1	DBB0001~
30	01643-31445	. WASHER	4	DBB0001~
31	723-46-17560	. PLATE	1	DBB0001~
32	01643-51032	. WASHER	2	DBB0001~
33	01010-81040	. BOLT	2	DBB0001~

FIG. Y1662-15A0 MAIN VALVE (1-ACTUATOR) (15/19)(OPT)

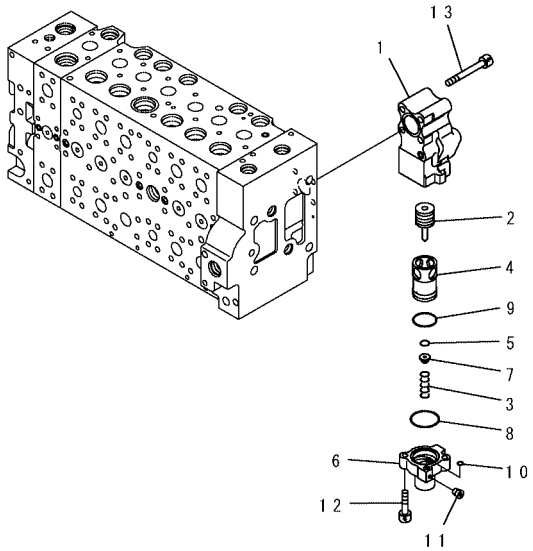

PW5H301

INDEX	PART NO.	DESCRIPTION	Q'TY	SERIAL NO.
	(723-47-20402)	VALVE ASS'Y	1	DBB0001~
		THIS ASSEMBLY CONSISTS OF ALL PARTS SHOWN IN FIGS. Y1662-01A0 TO Y1662-19A0.		
	723-40-87200	. VALVE ASS'Y	1	DBB0001~
1	723-40-87110	.. BODY	1	DBB0001~
2	723-40-87240	.. SPOOL	1	DBB0001~
3	723-40-87260	.. SPRING	1	DBB0001~
4	☆	.. SLEEVE	1	DBB0001~
5	☆	.. SEAL	1	DBB0001~
6	☆	.. CASE	1	DBB0001~
7	723-40-87250	.. RETAINER	1	DBB0001~
8	723-40-87170	.. O-RING	1	DBB0001~
9	07000-13035	.. O-RING	1	DBB0001~
10	07000-11007	.. O-RING	1	DBB0001~
11	☆	.. SCREW	1	DBB0001~
12	01252-60830	.. BOLT	2	DBB0001~
13	01252-61075	. BOLT	4	DBB0001~

FIG. Y1662-16A0 MAIN VALVE (1-ACTUATOR) (16/19)(OPT)

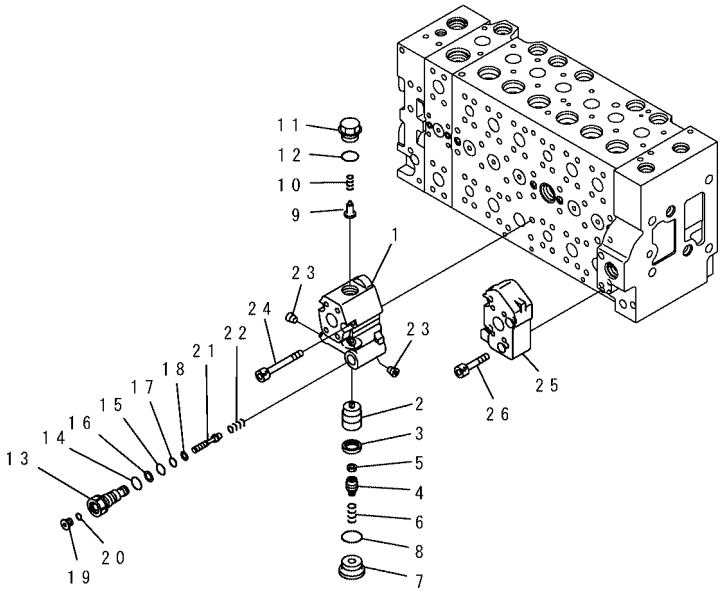

PW5H302

INDEX	PART NO.	DESCRIPTION	Q'TY	SERIAL NO.
	(723-47-20402)	VALVE ASS'Y	1	DBB0001~
		THIS ASSEMBLY CONSISTS OF ALL PARTS SHOWN IN FIGS. Y1662-01A0 TO Y1662-19A0.		
	723-40-82500	. VALVE ASS'Y	1	DBB0001~
1	☆	.. BODY	1	DBB0001~
2	☆	.. VALVE	1	DBB0001~
3	☆	.. SEAL	1	DBB0001~
4	723-40-82210	.. PLUG	1	DBB0001~
5	723-40-82220	.. FILTER	1	DBB0001~
6	723-40-82140	.. SPRING	1	DBB0001~
7	723-40-82150	.. PLUG	1	DBB0001~
8	07002-13334	.. O-RING	1	DBB0001~
9	709-25-11650	.. VALVE, CHECK	1	DBB0001~
10	709-25-11361	.. SPRING	1	DBB0001~
11	723-40-82161	.. PLUG	1	DBB0001~
12	07000-13024	.. O-RING	1	DBB0001~
13	☆	.. PLUG	1	DBB0001~
14	07002-11823	.. O-RING	1	DBB0001~
15	07000-12011	.. O-RING	1	DBB0001~
16	07001-02011	.. RING	1	DBB0001~
17	07000-11010	.. O-RING	1	DBB0001~
18	07001-01010	.. RING	1	DBB0001~
19	723-11-18190	.. PLUG	1	DBB0001~
20	07002-11023	.. O-RING	1	DBB0001~
21	☆	.. PISTON	1	DBB0001~
22	723-40-82290	.. SPRING	1	DBB0001~
23	☆	.. SCREW	2	DBB0001~
24	01252-61075	. BOLT	4	DBB0001~
25	723-46-17570	. BLOCK	1	DBB0001~
26	01252-61045	. BOLT	4	DBB0001~

FIG. Y1662-17A0 MAIN VALVE (1-ACTUATOR) (17/19)(OPT)

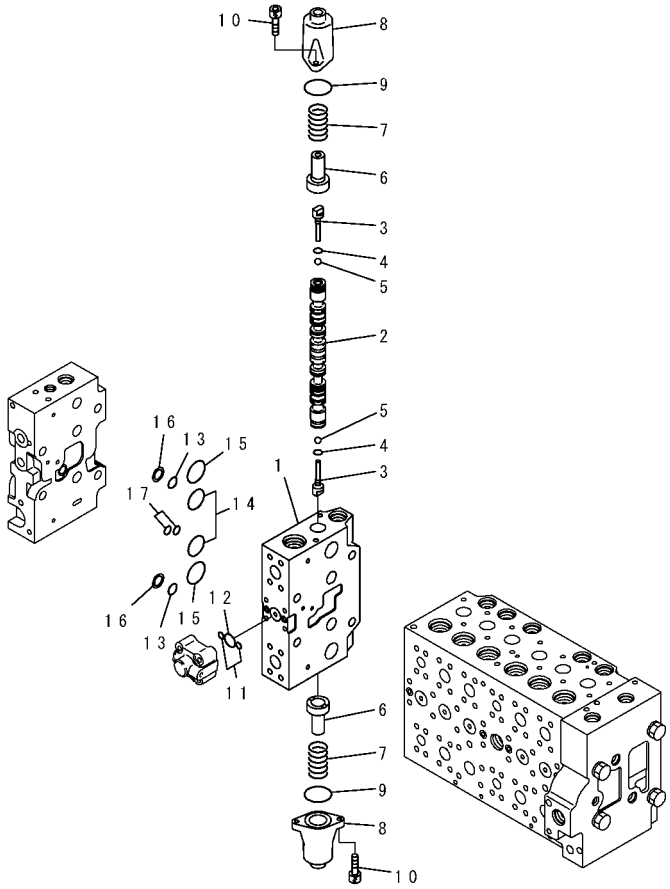

PW5H303

INDEX	PART NO.	DESCRIPTION	Q'TY	SERIAL NO.
	(723-47-20402)	VALVE SAA'Y	1	DBB0001~
		THIS ASSEMBLY CONSISTS OF ALL PARTS SHOWN IN FIGS. Y1662-01A0 TO Y1662-19A0.		
	☆	. BODY SUB ASS'Y	1	DBB0001~
1	☆	.. BLOCK, VALVE	1	DBB0001~
2	☆	.. SPOOL	1	DBB0001~
3	723-46-15130	.. PLUG	2	DBB0001~
4	07002-10823	.. O-RING	2	DBB0001~
5	708-7T-16460	.. BALL	2	DBB0001~
6	723-46-15120	.. RETAINER	2	DBB0001~
7	723-46-14110	.. SPRING	2	DBB0001~
8	723-46-15111	.. CASE	2	DBB0001~
9	07430-71380	.. O-RING	2	DBB0001~
10	01252-60820	.. BOLT	4	DBB0001~
11	07000-11009	.. O-RING	2	DBB0001~
12	07000-12021	.. O-RING	1	DBB0001~
13	723-11-19130	.. O-RING	2	DBB0001~
14	07000-13032	.. O-RING	2	DBB0001~
15	723-46-17510	.. O-RING	2	DBB0001~
16	723-46-17520	.. RING, BACK-UP	2	DBB0001~
17	723-46-17530	.. O-RING	2	DBB0001~

FIG. Y1662-18A0 MAIN VALVE (1-ACTUATOR) (18/19)(OPT)

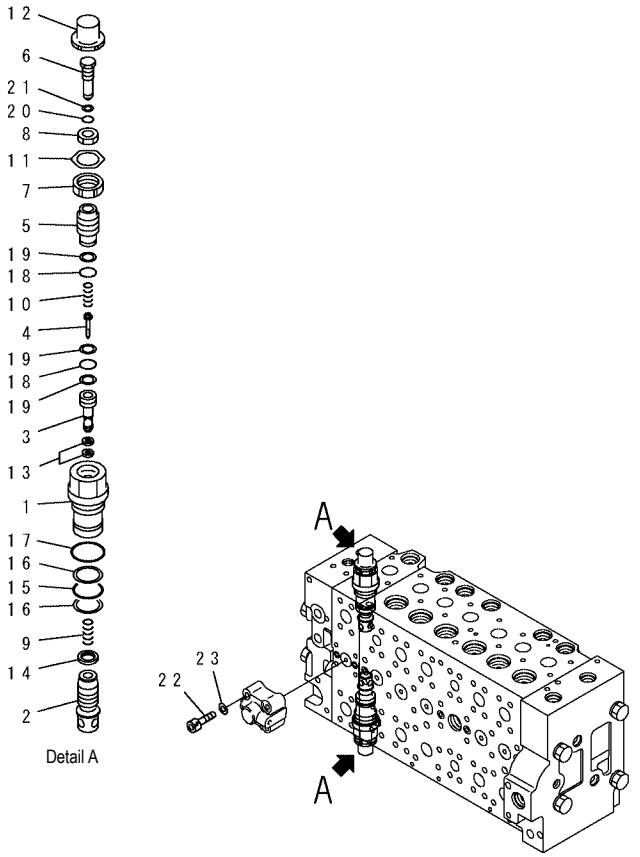

INDEX	PART NO.	DESCRIPTION	Q'TY	SERIAL NO.
	(723-47-20402)	VALVE ASS'Y	1	DBB0001~
		THIS ASSEMBLY CONSISTS OF ALL PARTS SHOWN IN FIGS. Y1662-01A0 TO Y1662-19A0.		
	☆	. BODY SUB ASS'Y	1	DBB0001~
	723-46-48100	.. VALVE ASS'Y	2	DBB0001~
1	☆	... SLEEVE	1	DBB0001~
2	☆	... VALVE	1	DBB0001~
3	☆	... SEAT	1	DBB0001~
4	☆	... POPPET	1	DBB0001~
5	☆	... PLUG	1	DBB0001~
6	☆	... SCREW	1	DBB0001~
7	☆	... NUT	1	DBB0001~
8	☆	... NUT	1	DBB0001~
9	☆	... SPRING	1	DBB0001~
10	☆	... SPRING	1	DBB0001~
11	☆	... PLATE	1	DBB0001~
12	☆	... CAP	1	DBB0001~
13	☆	... SEAL	2	DBB0001~
14	☆	... SEAL	1	DBB0001~
15	700-93-11320	... O-RING	1	DBB0001~
16	723-46-41950	... RING	2	DBB0001~
17	07002-13634	... O-RING	1	DBB0001~
18	☆	... O-RING	2	DBB0001~
19	☆	... RING	3	DBB0001~
20	☆	... O-RING	1	DBB0001~
21	☆	... RING, BACK-UP	1	DBB0001~
22	01252-60845	.. BOLT	4	DBB0001~
23	01643-50823	.. WSHER	4	DBB0001~

FIG. Y1662-19A0 MAIN VALVE (1-ACTUATOR) (19/19)(OPT)

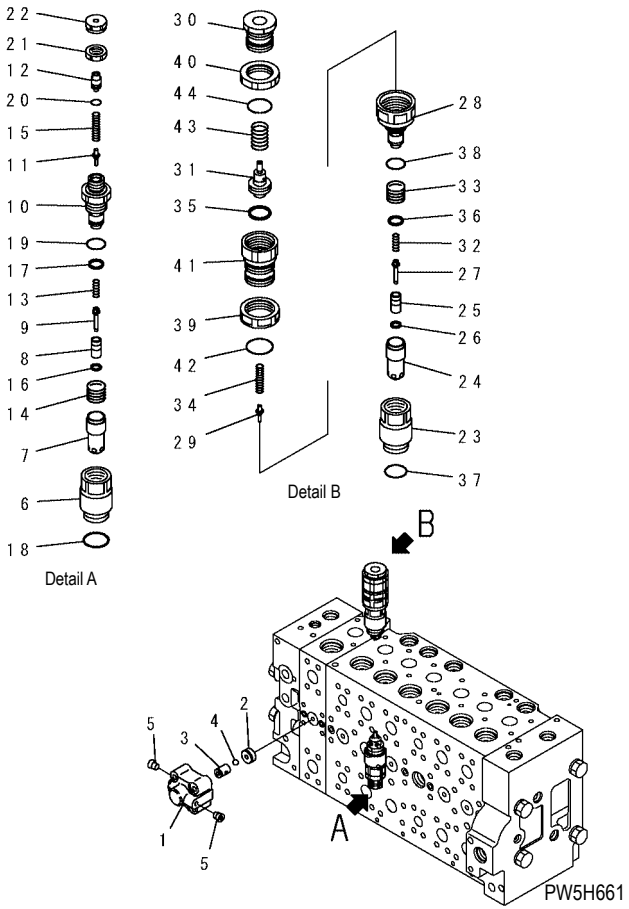

INDEX	PART NO.	DESCRIPTION	Q'TY	SERIAL NO.
	(723-47-20402)	VALVE ASS'Y	1	DBB0001~
		THIS ASSEMBLY CONSISTS OF ALL PARTS SHOWN IN FIGS. Y1662-01A0 TO Y1662-19A0.		
	723-40-66300	. VALVE ASS'Y	1	DBB0001~
1	☆	.. CASE	1	DBB0001~
2	☆	.. SEAT	1	DBB0001~
3	☆	.. SEAT	1	DBB0001~
4	☆	.. BALL	1	DBB0001~
5	☆	.. PLUG	2	DBB0001~
	723-40-91300	. VALVE ASS'Y, SUCTION AND SAFETY	1	DBB0001~
6	☆	.. SLEEVE	1	DBB0001~
7	☆	.. SLEEVE	1	DBB0001~
8	☆	.. POPPET	1	DBB0001~
9	☆	.. PISTON	1	DBB0001~
10	☆	.. PLUG	1	DBB0001~
11	☆	.. POPPET	1	DBB0001~
12	☆	.. SPACER	1	DBB0001~
13	☆	.. SPRING	1	DBB0001~
14	☆	.. SPRING	1	DBB0001~
15	☆	.. SPRING	1	DBB0001~
16	☆	.. SEAL	1	DBB0001~
17	☆	.. SEAL	1	DBB0001~
18	709-25-11390	.. O-RING	1	DBB0001~
19	☆	.. O-RING	1	DBB0001~
20	☆	.. O-RING	1	DBB0001~
21	☆	.. NUT	1	DBB0001~
22	☆	.. NUT	1	DBB0001~
	723-90-76101	. VALVE ASS'Y, SUCTION AND SAFETY	1	DBB0001~
23	☆	.. SLEEVE	1	DBB0001~
24	☆	.. SLEEVE	1	DBB0001~
25	☆	.. POPPET	1	DBB0001~
26	☆	.. SEAL	1	DBB0001~
27	☆	.. PISTON	1	DBB0001~
28	☆	.. SLEEVE	1	DBB0001~
29	☆	.. POPPET	1	DBB0001~
30	☆	.. UNION	1	DBB0001~

FIG. Y1662-19A0 MAIN VALVE (1-ACTUATOR) (19/19)(OPT)

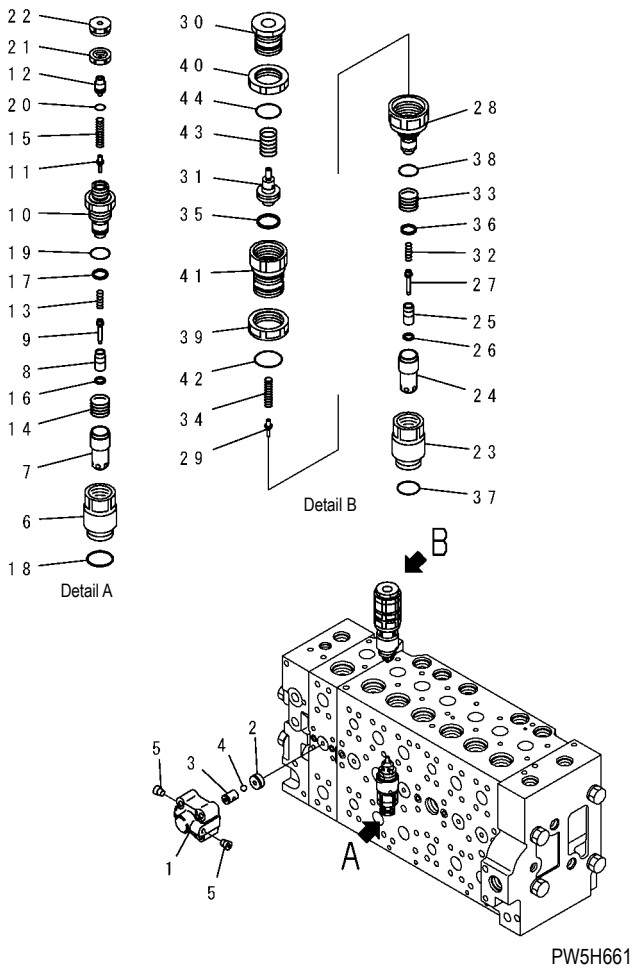

INDEX	PART NO.	DESCRIPTION	Q'TY	SERIAL NO.
31	☆	.. PISTON	1	DBB0001~
32	☆	.. SPRING	1	DBB0001~
33	☆	.. SPRING	1	DBB0001~
34	☆	.. SPRING	1	DBB0001~
35	☆	.. SEAL	1	DBB0001~
36	☆	.. SEAL	1	DBB0001~
37	07000-13024	.. O-RING	1	DBB0001~
38	☆	.. O-RING	1	DBB0001~
39	☆	.. NUT	1	DBB0001~
40	☆	.. NUT	1	DBB0001~
41	☆	.. HOLDER	1	DBB0001~
42	☆	.. O-RING	1	DBB0001~
43	☆	.. SPRING	1	DBB0001~
44	☆	.. O-RING	1	DBB0001~

FIG. Y1669-01A0 SERVICE VALVE (1/3)(OPT)

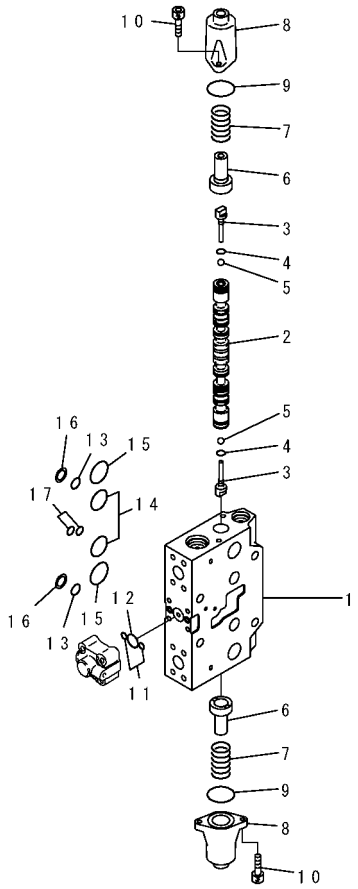

PW5H791

INDEX	PART NO.	DESCRIPTION	Q'TY	SERIAL NO.
	723-41-07600	VALVE ASS'Y	1	DBB0001~
		THIS ASSEMBLY CONSISTS OF ALL PARTS SHOWN IN FIGS. Y1669-01A0 TO Y1669-03A0.		
	☆	. BODY SUB ASS'Y	1	DBB0001~
1	☆	.. BLOCK, VALVE	1	DBB0001~
2	☆	.. SPOOL	1	DBB0001~
3	723-46-15130	.. PLUG	2	DBB0001~
4	07002-10823	.. O-RING	2	DBB0001~
5	708-7T-16460	.. BALL	2	DBB0001~
6	723-46-15120	.. RETAINER	2	DBB0001~
7	723-46-14110	.. SPRING	2	DBB0001~
8	723-46-15111	.. CASE	2	DBB0001~
9	07430-71380	.. O-RING	2	DBB0001~
10	01252-60820	.. BOLT	4	DBB0001~
11	07000-11009	.. O-RING	2	DBB0001~
12	07000-12021	.. O-RING	1	DBB0001~
13	723-11-19130	.. O-RING	2	DBB0001~
14	07000-13032	.. O-RING	2	DBB0001~
15	723-46-17510	.. O-RING	2	DBB0001~
16	723-46-17520	.. RING, BACK-UP	2	DBB0001~
17	723-46-17530	.. O-RING	2	DBB0001~

FIG. Y1669-02A0 SERVICE VALVE (2/3)(OPT)

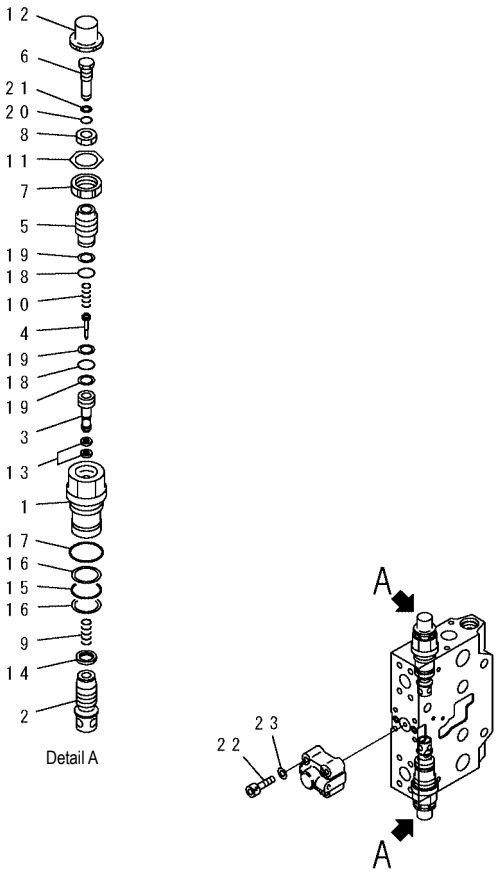

PW5H792

INDEX	PART NO.	DESCRIPTION	Q'TY	SERIAL NO.
	(723-41-07600)	VALVE ASS'Y	1	DBB0001~
		THIS ASSEMBLY CONSISTS OF ALL PARTS SHOWN IN FIGS. Y1669-01A0 TO Y1669-03A0.		
	☆	. BODY SUB ASS'Y	1	DBB0001~
	723-46-48100	.. VALVE ASS'Y	2	DBB0001~
1	☆	... SLEEVE	1	DBB0001~
2	☆	... VALVE	1	DBB0001~
3	☆	... SEAT	1	DBB0001~
4	☆	... POPPET	1	DBB0001~
5	☆	... PLUG	1	DBB0001~
6	☆	... SCREW	1	DBB0001~
7	☆	... NUT	1	DBB0001~
8	☆	... NUT	1	DBB0001~
9	☆	... SPRING	1	DBB0001~
10	☆	... SPRING	1	DBB0001~
11	☆	... PLATE	1	DBB0001~
12	☆	... CAP	1	DBB0001~
13	☆	... SEAL	2	DBB0001~
14	☆	... SEAL	1	DBB0001~
15	700-93-11320	... O-RING	1	DBB0001~
16	723-46-41950	... RING	2	DBB0001~
17	07002-13634	... O-RING	1	DBB0001~
18	☆	... O-RING	2	DBB0001~
19	☆	... RING	3	DBB0001~
20	☆	... O-RING	1	DBB0001~
21	☆	... RING, BACK-UP	1	DBB0001~
22	01252-60845	.. BOLT	4	DBB0001~
23	01643-50823	.. WASHER	4	DBB0001~

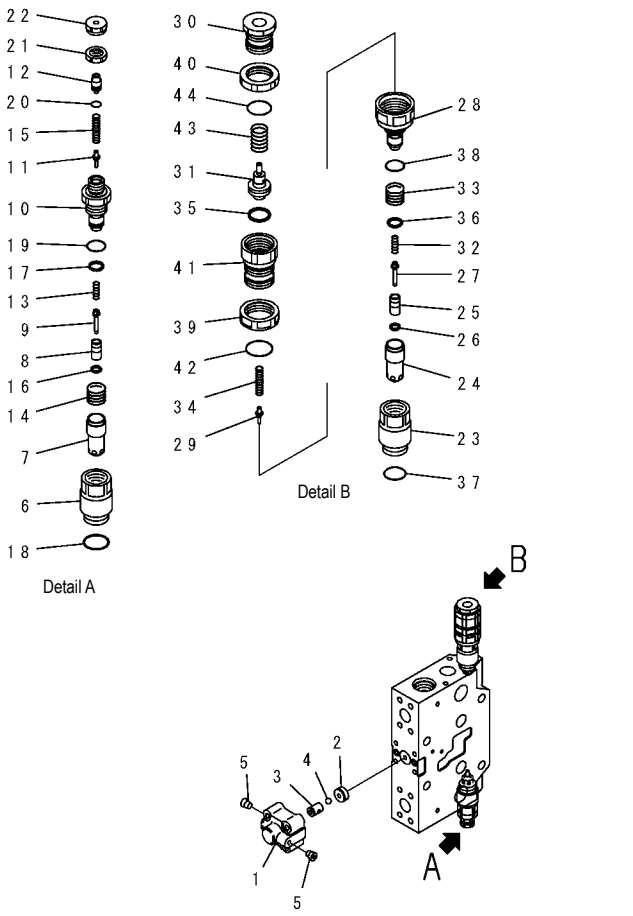

PW5H793

INDEX	PART NO.	DESCRIPTION	Q'TY	SERIAL NO.
	(723-41-07600)	VALVE ASS'Y	1	DBB0001~
		THIS ASSEMBLY CONSISTS OF ALL PARTS SHOWN IN FIGS. Y1669-01A0 TO Y1669-03A0.		
	723-40-66300	. VALVE ASS'Y	1	DBB0001~
1	☆	.. CASE	1	DBB0001~
2	☆	.. SEAT	1	DBB0001~
3	☆	.. SEAT	1	DBB0001~
4	☆	.. BALL	1	DBB0001~
5	☆	.. PLUG	2	DBB0001~
	723-90-61400	. VALVE ASS'Y, SUCTION AND SAFETY	1	DBB0001~
6	☆	.. SLEEVE	1	DBB0001~
7	☆	.. SLEEVE	1	DBB0001~
8	☆	.. POPPET	1	DBB0001~
9	☆	.. PISTON	1	DBB0001~
10	☆	.. PLUG	1	DBB0001~
11	☆	.. POPPET	1	DBB0001~
12	☆	.. SPACER	1	DBB0001~
13	☆	.. SPRING	1	DBB0001~
14	☆	.. SPRING	1	DBB0001~
15	☆	.. SPRING	1	DBB0001~
16	☆	.. SEAL	1	DBB0001~
17	☆	.. SEAL	1	DBB0001~
18	07000-13024	.. O-RING	1	DBB0001~
19	☆	.. O-RING	1	DBB0001~
20	☆	.. O-RING	1	DBB0001~
21	☆	.. NUT	1	DBB0001~
22	☆	.. NUT	1	DBB0001~
	723-90-76101	. VALVE ASS'Y, SUCTION AND SAFETY	1	DBB0001~
23	☆	.. SLEEVE	1	DBB0001~
24	☆	.. SLEEVE	1	DBB0001~
25	☆	.. POPPET	1	DBB0001~
26	☆	.. SEAL	1	DBB0001~
27	☆	.. PISTON	1	DBB0001~
28	☆	.. SLEEVE	1	DBB0001~
29	☆	.. POPPET	1	DBB0001~
30	☆	.. UNION	1	DBB0001~

FIG. Y1679-01A0 SELECTOR VALVE(OPT)

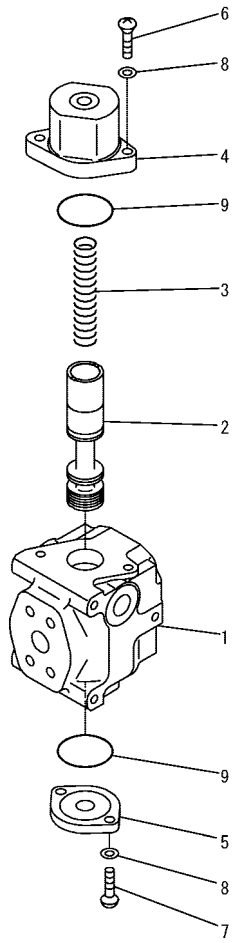

PW5X053

FIG NO. : Y1679-01A0

INDEX	PART NO.	DESCRIPTION	Q'TY	SERIAL NO.
	702-21-01910	VALVE ASS'Y	1	DBB0001~
1	☆	. BLOCK	1	DBB0001~
2	☆	. SPOOL	1	DBB0001~
3	702-21-11930	. SPRING	1	DBB0001~
4	702-21-11940	. CASE	1	DBB0001~
5	709-10-91240	. FLANGE	1	DBB0001~
6	01252-61040	. BOLT	2	DBB0001~
7	01252-61030	. BOLT	2	DBB0001~
8	01643-51032	. WASHER	4	DBB0001~
9	07000-12055	. O-RING	2	DBB0001~

FIG. Y1840-01A0 ACCUMULATOR (AL300-1) (INNER PARTS)(OPT)

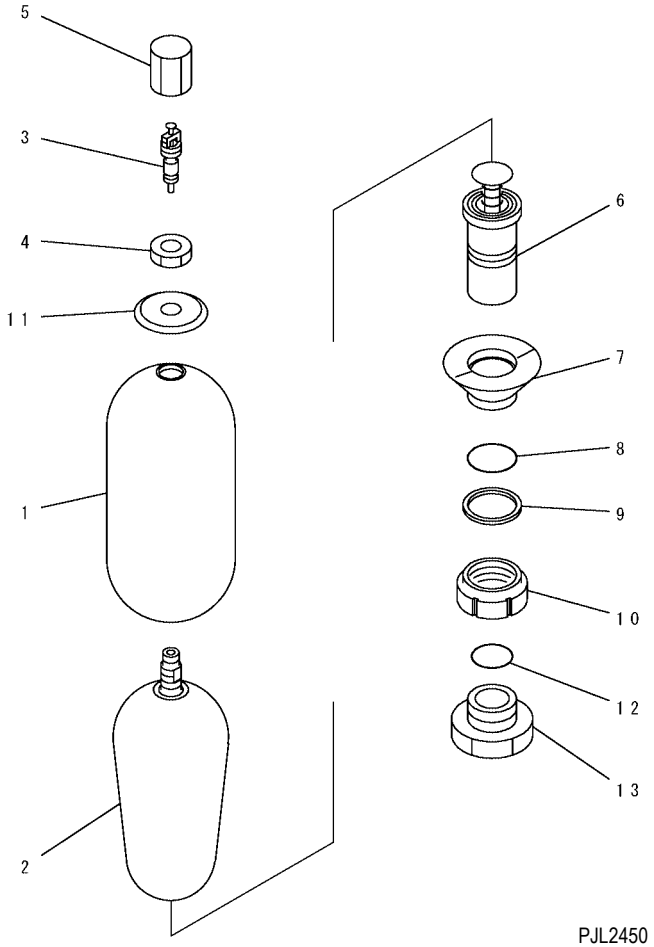

FIG NO. : Y1840-01A0

INDEX	PART NO.	DESCRIPTION	Q'TY	SERIAL NO.
	20Y-970-6450	ACCUMULATOR	1	DBB0001~
1	☆	. SHELL	1	DBB0001~
	NFEB3401 A1	. BLADDER ASS'Y	1	DBB0001~
2	NFEB3026 A1	.. BLADDER	1	DBB0001~
3	NFEB4475 Z0	.. CORE	1	DBB0001~
4	☆	. NUT	1	DBB0001~
5	☆	. CAP	1	DBB0001~
6	NFEB0427 Z0	. BODY ASS'Y	1	DBB0001~
7	NFEB4477 Z0	. RING	1	DBB0001~
8	☆	. O-RING (K1)	1	DBB0001~
9	☆	. BACK-UP RING (K1)	1	DBB0001~
10	☆	. RING	1	DBB0001~
11	☆	. PLATE	1	DBB0001~
12	205-970-5560	. O-RING (K1)	1	DBB0001~
13	☆	. BUSHING	1	DBB0001~
		SERVICE KIT		
K1	NFEB1601 P8	SEAL KIT	1	DBB0001~
	205-970-5560	. O-RING	1	DBB0001~

NUMERICAL INDEX

PARTS NO.	FIG NO.	INDEX	PAGE
HM6400-0012	Y1061-01A0	1	YO- 17
HM6400-0012	Y1061-01A0	2	YO- 17
HM6400-0013	Y1061-01A0	3	YO- 17
HM6400-0013	Y1061-01A0	4	YO- 17
HM6400-0016	Y1061-01A0	6	YO- 17
HM6400-0016	Y1061-01A0	7	YO- 17
HM6409-0071	Y1061-01A0	1	YO- 17
HM6409-0071	Y1061-01A0	2	YO- 17
HM6409-0072	Y1061-01A0	3	YO- 17
HM6409-0072	Y1061-01A0	4	YO- 17
HM6409-0075	Y1061-01A0	6	YO- 17
HM6409-0075	Y1061-01A0	7	YO- 17
HM6440-0128	Y1061-01A0	5	YO- 17
HM6440-0128	Y1061-01A0	8	YO- 17
HM6440-0129	Y1061-01A0	5	YO- 17
HM6440-0129	Y1061-01A0	8	YO- 17
ND017231-1400	Y1979-21A0	26	YO- 189
ND017321-3202	Y1979-31A0	3	YO- 193
ND017321-3212	Y1979-31A0	4	YO- 193
ND017660-3490	Y1979-21A0	27	YO- 189
ND017730-8380	Y1979-21A0	59	YO- 191
ND021041-8620	A601P-02A1	22	AA- 137
ND021041-8680	A601P-02A0	25	AA- 135
ND021045-0530	A601P-02A0	7	AA- 135
ND021045-0530	A601P-02A1	4	AA- 137
ND021100-4210	A601P-02A1	1	AA- 137
ND021100-4360	A601P-02A0	6	AA- 135
ND021200-4132	A601P-02A0	22	AA- 135
ND021200-4141	A601P-02A1	19	AA- 137
ND021401-3671	A601P-02A0	5	AA- 135
ND021401-4980	A601P-02A1	2	AA- 137
ND021411-0450	A601P-02A0	1	AA- 135
ND021411-0570	A601P-02A1	3	AA- 137
ND021501-8050	A601P-02A1	8	AA- 137
ND021501-9560	A601P-02A0	8	AA- 135
ND021506-0070	A601P-02A0	24	AA- 135
ND021506-0070	A601P-02A1	21	AA- 137
ND021542-0160	A601P-02A1	26	AA- 137
ND021542-0220	A601P-02A0	9	AA- 135
ND021551-2480	A601P-02A1	12	AA- 137
ND021551-2910	A601P-02A0	15	AA- 135
ND021580-4820	A601P-02A1	9	AA- 137
ND021580-5060	A601P-02A0	10	AA- 135
ND021602-5230	A601P-02A1	29	AA- 137
ND021605-1360	A601P-02A0	16	AA- 135
ND021605-1970	A601P-02A1	13	AA- 137
ND021605-2480	A601P-02A1	14	AA- 137
ND021605-2490	A601P-02A0	17	AA- 135
ND021620-2201	A601P-02A0	10	AA- 135
ND021620-2720	A601P-02A1	10	AA- 137

PARTS NO.	FIG NO.	INDEX	PAGE
ND021626-0190	A601P-02A1	24	AA- 137
ND021626-0240	A601P-02A0	11	AA- 135
ND021626-0250	A601P-02A1	25	AA- 137
ND021660-0510	A601P-02A0	12	AA- 135
ND021700-2680	A601P-02A0	30	AA- 135
ND021700-2680	A601P-02A1	31	AA- 137
ND021751-1990	A601P-02A0	27	AA- 135
ND021751-1990	A601P-02A1	30	AA- 137
ND028062-0130	A621P-02A0	2	AA- 147
ND028062-0130	A621P-02A1	29	AA- 151
ND028062-5790	A621P-02A0	40	AA- 149
ND028062-5790	A621P-02A1	43	AA- 153
ND028063-0030	A621P-02A0	29	AA- 147
ND028063-0030	A621P-02A1	28	AA- 151
ND028065-0250	A621P-02A0	21	AA- 147
ND028065-0250	A621P-02A1	20	AA- 151
ND028099-2790	A621P-02A0	15	AA- 147
ND028099-3160	A621P-02A0	16	AA- 147
ND028099-3270	A621P-02A0	7	AA- 147
ND028099-3270	A621P-02A1	5	AA- 151
ND028099-3570	A621P-02A0	3	AA- 147
ND028099-5090	A621P-02A1	13	AA- 151
ND028099-5100	A621P-02A1	14	AA- 151
ND028100-2882	A621P-02A0	1	AA- 147
ND028100-5410	A621P-02A1	1	AA- 151
ND028200-1590	A621P-02A0	4	AA- 147
ND028200-5250	A621P-02A1	2	AA- 151
ND028300-6551	A621P-02A0	6	AA- 147
ND028300-6551	A621P-02A1	4	AA- 151
ND028300-6751	A621P-02A0	8	AA- 147
ND028300-6751	A621P-02A1	6	AA- 151
ND028306-0070	A621P-02A0	28	AA- 147
ND028306-0070	A621P-02A1	27	AA- 151
ND028327-0171	A621P-02A0	30	AA- 147
ND028327-0171	A621P-02A1	35	AA- 153
ND028371-1500	A621P-02A0	27	AA- 147
ND028371-3200	A621P-02A1	38	AA- 153
ND028371-3210	A621P-02A1	26	AA- 151
ND028381-0071	A621P-02A0	12	AA- 147
ND028381-0071	A621P-02A1	10	AA- 151
ND028501-7711	A621P-02A1	23	AA- 151
ND028501-8091	A621P-02A0	24	AA- 147
ND028510-0880	A621P-02A1	21	AA- 151
ND028510-5390	A621P-02A0	22	AA- 147
ND028520-0011	A621P-02A1	22	AA- 151
ND028530-1090	A621P-02A0	40	AA- 153
ND028530-1100	A621P-02A1	41	AA- 153
ND028901-0361	A621P-02A1	37	AA- 153
ND028901-5190	A621P-02A0	42	AA- 149
ND047310-7240	Y1979-01A0	2	YO- 185

PARTS NO.	FIG NO.	INDEX	PAGE
ND047372-0660	Y1979-01A0	6	YO- 185
ND047410-1570	Y1979-01A0	4	YO- 185
ND047410-1580	Y1979-01A0	4	YO- 185
ND047761-2760	Y1979-41A0	3	YO- 195
ND047762-0540	Y1979-41A0	4	YO- 195
ND047762-3000	Y1979-41A0	5	YO- 195
ND047764-0021	Y1979-41A0	7	YO- 195
ND047765-0020	Y1979-41A0	8	YO- 195
ND047782-3720	Y1979-41A0	11	YO- 195
ND053404-0240	A621P-02A0	18	AA- 147
ND053404-0240	A621P-02A1	16	AA- 151
ND053480-0110	A621P-02A0	20	AA- 147
ND053480-7560	A621P-02A1	18	AA- 151
ND053505-0290	A621P-02A0	19	AA- 147
ND053505-0290	A621P-02A1	17	AA- 151
ND053660-0443	A621P-02A1	15	AA- 151
ND053660-7170	A621P-02A0	17	AA- 147
ND056700-8170	Y1979-31A0	18	YO- 193
ND056800-3130	Y1979-31A0	25	YO- 193
ND063700-7200	Y1979-21A0	32	YO- 189
ND063700-7210	Y1979-21A0	33	YO- 191
ND063700-7210	Y1979-31A0	6	YO- 193
ND077500-0710	Y1979-21A0	12	YO- 189
ND116120-7990	Y1979-21A0	6	YO- 189
ND116241-3220	Y1979-31A0	1	YO- 193
ND116241-3230	Y1979-31A0	2	YO- 193
ND116340-3860	Y1979-31A0	5	YO- 193
ND116569-5010	Y1979-21A0	3	YO- 189
ND116569-5020	Y1979-21A0	34	YO- 191
ND116569-5030	Y1979-21A0	38	YO- 191
ND116569-5041	Y1979-21A0	41	YO- 191
ND116569-5051	Y1979-21A0	42	YO- 191
ND116569-5062	Y1979-21A0	44	YO- 191
ND116640-4652	Y1979-21A0	17	YO- 189
ND116650-8800	Y1979-21A0	14	YO- 189
ND116650-8820	Y1979-21A0	15	YO- 189
ND116650-8840	Y1979-21A0	16	YO- 189
ND116660-2770	Y1979-21A0	60	YO- 191
ND116660-4680	Y1979-31A0	7	YO- 193
ND116662-4850	Y1979-21A0	37	YO- 191
ND116662-4860	Y1979-21A0	43	YO- 191
ND116662-7120	Y1979-31A0	12	YO- 193
ND116682-0910	Y1979-21A0	46	YO- 191
ND116682-0920	Y1979-21A0	45	YO- 191
ND116682-0930	Y1979-21A0	35	YO- 191
ND116682-0940	Y1979-21A0	39	YO- 191
ND116682-0951	Y1979-21A0	40	YO- 191
ND116682-0960	Y1979-21A0	36	YO- 191
ND116682-0970	Y1979-31A0	9	YO- 193
ND116682-0980	Y1979-31A0	8	YO- 193

PARTS NO.	FIG NO.	INDEX	PAGE
ND116682-3440	Y1979-21A0	58	YO- 191
ND117200-0843	Y1979-11A0	2	YO- 187
ND117200-0843	Y1979-31A0	1	YO- 193
ND121400-0800	A601P-02A1	1	AA- 137
ND121400-0840	A601P-02A0	1	AA- 135
ND126000-2310	A601P-02A0	14	AA- 135
ND126000-2320	A601P-02A1	11	AA- 137
ND128401-5621	A621P-02A1	11	AA- 151
ND128950-0520	A621P-02A0	31	AA- 149
ND128961-0010	A621P-02A0	25	AA- 147
ND146525-6041	Y1979-11A0	3	YO- 187
ND146525-6070	Y1979-21A0	51	YO- 191
ND146530-9530	Y1979-31A0	26	YO- 193
ND146535-0411	Y1979-21A0	50	YO- 191
ND146535-0421	Y1979-21A0	56	YO- 191
ND146535-1311	Y1979-21A0	49	YO- 191
ND146535-1320	Y1979-31A0	10	YO- 193
ND146622-6880	Y1979-31A0	19	YO- 193
ND146625-4450	Y1979-31A0	24	YO- 193
ND146637-5650	Y1979-21A0	64	YO- 191
ND146647-0712	Y1979-21A0	65	YO- 191
ND146647-0790	Y1979-31A0	22	YO- 193
ND146647-3880	Y1979-21A0	66	YO- 191
ND146678-4901	Y1979-31A0	20	YO- 193
ND146678-4930	Y1979-21A0	23	YO- 189
ND146678-5060	Y1979-31A0	21	YO- 193
ND146690-6020	Y1979-21A0	29	YO- 189
ND146691-4470	Y1979-01A0	14	YO- 185
ND146698-6930	Y1979-21A0	61	YO- 191
ND146698-6950	Y1979-21A0	62	YO- 191
ND146698-8480	Y1979-21A0	63	YO- 191
ND153400-2410	A621P-02A0	14	AA- 147
ND153400-2600	A621P-02A1	12	AA- 151
ND170400-4310	Y1979-21A0	28	YO- 189
ND228401-0633	A621P-02A0	13	AA- 147
ND245450-1721	Y1979-21A0	2	YO- 189
ND245450-2221	Y1979-21A0	1	YO- 189
ND246460-9451	Y1979-11A0	5	YO- 187
ND246634-6010	Y1979-21A0	30	YO- 189
ND246690-2840	Y1979-21A0	13	YO- 189
ND246770-6990	Y1979-21A0	25	YO- 189
ND247300-0510	Y1979-01A0	1	YO- 185
ND443440-0030	Y1979-21A0	18	YO- 189
ND445013-0521	Y1979-41A0	10	YO- 195
ND445013-0811	Y1979-41A0	9	YO- 195
ND445021-0060	Y1979-41A0	12	YO- 195
ND445021-0070	Y1979-41A0	13	YO- 195
ND446810-9520	Y1979-21A0	21	YO- 189
ND446830-3880	Y1979-21A0	20	YO- 189
ND446870-5650	Y1979-21A0	9	YO- 189

PARTS NO.	FIG NO.	INDEX	PAGE
ND447220-4051	Y1979-01A0	1	YO- 185
ND447500-1390	Y1979-21A0	7	YO- 189
ND447600-4970	Y1979-21A0	4	YO- 189
ND448800-5222	Y1979-11A0	1	YO- 187
ND448800-5222	Y1979-21A0	1	YO- 189
ND499300-2051	Y1979-21A0	31	YO- 189
ND7922-571450	Y1979-41A0	2	YO- 195
ND7930-591100	Y1979-41A0	1	YO- 195
ND7935-163610	Y1979-41A0	6	YO- 195
ND90170-10061	A621P-02A0	35	AA- 149
ND90170-10061	A621P-02A1	44	AA- 153
ND90200-06241	A621P-02A0	39	AA- 149
ND90200-06241	A621P-02A1	46	AA- 153
ND90258-10001	A621P-02A0	37	AA- 149
ND90258-10001	A621P-02A1	36	AA- 153
ND90801-10050	A621P-02A0	33	AA- 149
ND90801-10050	A621P-02A1	31	AA- 153
ND90801-20470	A621P-02A1	45	AA- 153
ND90930-05121	Y1979-21A0	54	YO- 191
ND90930-05161	Y1979-21A0	57	YO- 191
ND90930-06141	Y1979-11A0	4	YO- 187
ND90930-06141	Y1979-21A0	55	YO- 191
ND91310-03081	Y1979-21A0	52	YO- 191
ND91310-04251	A601P-02A0	19	AA- 135
ND91310-04251	A601P-02A1	16	AA- 137
ND91310-05081	Y1979-01A0	13	YO- 185
ND91370-03081	Y1979-31A0	15	YO- 193
ND91570-06141	Y1979-31A0	23	YO- 193
ND92150-06061	A601P-02A1	32	AA- 137
ND949001-1730	Y1979-21A0	53	YO- 191
ND949001-1730	Y1979-31A0	14	YO- 193
ND949006-4720	A621P-02A0	38	AA- 149
ND949006-4720	A621P-02A1	33	AA- 153
ND949006-5460	A601P-02A0	18	AA- 135
ND949006-5460	A601P-02A1	15	AA- 137
ND949006-5590	A601P-02A1	5	AA- 137
ND949006-6401	A601P-02A1	27	AA- 137
ND949006-6970	A601P-02A0	2	AA- 135
ND949007-2350	K1110-08A0	7	KO- 77
ND949007-5110	A601P-02A1	16	AA- 137
ND949007-6280	A601P-02A1	28	AA- 137
ND949007-6530	A621P-02A0	34	AA- 149
ND949007-6530	A621P-02A1	39	AA- 153
ND949007-6850	A621P-02A0	41	AA- 149
ND949007-6850	A621P-02A1	42	AA- 153
ND949007-7000	A601P-02A0	28	AA- 135
ND949008-0460	Y1979-21A0	47	YO- 191
ND949013-7480	Y1979-01A0	9	YO- 185
ND949013-7500	Y1979-01A0	10	YO- 185
ND949013-7510	Y1979-01A0	11	YO- 185

PARTS NO.	FIG NO.	INDEX	PAGE
ND949020-0600	A621P-02A0	32	AA- 149
ND949042-3680	A621P-02A1	30	AA- 151
ND949042-3690	A621P-02A1	32	AA- 153
ND949043-2000	A601P-02A0	4	AA- 135
ND949043-2000	A601P-02A1	7	AA- 137
ND949046-2150	Y1979-21A0	8	YO- 189
ND949047-2370	Y1979-31A0	13	YO- 193
ND949047-2950	Y1979-01A0	5	YO- 185
ND949047-4440	A621P-02A1	19	AA- 151
ND949047-7870	A601P-02A0	29	AA- 135
ND949048-0430	Y1979-01A0	12	YO- 185
ND949056-1001	A601P-02A0	21	AA- 135
ND949056-2481	A601P-02A0	20	AA- 135
ND949056-2481	A601P-02A1	17	AA- 137
ND949056-2520	A601P-02A0	26	AA- 135
ND949056-2520	A601P-02A1	23	AA- 137
ND949056-3080	A601P-02A1	18	AA- 137
ND949056-4480	A621P-02A0	36	AA- 149
ND949056-4480	A621P-02A1	34	AA- 153
ND949057-0190	Y1979-31A0	17	YO- 193
ND949070-0640	Y1979-01A0	7	YO- 185
ND949070-1360	Y1979-01A0	7	YO- 185
ND949070-1390	Y1979-01A0	8	YO- 185
ND949100-1750	A621P-02A0	6	AA- 147
ND949100-1920	A621P-02A0	10	AA- 147
ND949100-1920	A621P-02A1	8	AA- 151
ND949100-1930	A621P-02A0	5	AA- 147
ND949100-2790	A601P-02A0	23	AA- 135
ND949100-2790	A601P-02A1	20	AA- 137
ND949100-3161	A621P-02A1	3	AA- 151
ND949100-3361	A601P-02A0	3	AA- 135
ND949100-3540	A621P-02A1	4	AA- 151
ND949100-4500	A621P-02A0	9	AA- 147
ND949100-4500	A621P-02A1	7	AA- 151
ND949100-5010	A601P-02A1	6	AA- 137
ND949100-5290	A621P-02A1	3	AA- 151
ND949120-0240	A621P-02A1	24	AA- 151
ND949142-0010	Y1979-21A0	11	YO- 189
ND949142-0030	Y1979-21A0	5	YO- 189
ND949142-0030	Y1979-21A0	10	YO- 189
ND949142-0030	Y1979-21A0	22	YO- 189
ND949142-0040	Y1979-21A0	19	YO- 189
ND949170-4040	A621P-02A0	11	AA- 147
ND949170-4040	A621P-02A1	9	AA- 151
ND949170-4070	A621P-02A0	26	AA- 147
ND949170-4070	A621P-02A1	25	AA- 151
ND949170-6990	A601P-02A0	13	AA- 135
ND949173-0571	A621P-02A0	23	AA- 147
ND949321-9940	Y1979-21A0	24	YO- 189
NFEB0427 Z0	Y1840-01A0	6	Y1- 177

PARTS NO.	FIG NO.	INDEX	PAGE
NFEB1601 P8	Y1840-01A0	K1	Y1- 177
NFEB3026 A1	Y1840-01A0	2	Y1- 177
NFEB3401 A1	Y1840-01A0	1	Y1- 177
NFEB4475 Z0	Y1840-01A0	3	Y1- 177
NFEB4477 Z0	Y1840-01A0	7	Y1- 177
NY01720-10600	Y1860-01A0	24	YO- 181
NY05062-1170A	Y1860-01A0	10	YO- 181
NY05062-11800	Y1860-01A0	11	YO- 181
NY06277-1320A	Y1860-01A0	13	YO- 181
NY06339-10200	Y1860-01A0	16	YO- 181
NY06339-10200	Y1861-01A0	4	YO- 183
NY07207-11700	Y1860-01A0	3	YO- 181
NY07493-10200	Y1860-01A0	17	YO- 181
NY07493-10200	Y1861-01A0	5	YO- 183
NY07529-10200	Y1860-01A0	4	YO- 181
NY07529-10300	Y1860-01A0	5	YO- 181
NY07529-10400	Y1860-01A0	6	YO- 181
NY07529-10500	Y1860-01A0	7	YO- 181
NY07529-10600	Y1860-01A0	8	YO- 181
NY07926-10100	Y1860-01A0	23	YO- 181
NY08000-02200	Y1861-01A0	3	YO- 183
NY09000-11400	Y1860-01A0	20	YO- 181
NY09000-11400	Y1861-01A0	6	YO- 183
NY80000-02100	Y1860-01A0	21	YO- 181
NY80000-02200	Y1860-01A0	14	YO- 181
NY81446-05010	Y1861-01A0	8	YO- 183
NY81446-05012	Y1860-01A0	19	YO- 181
NY84110-00248	Y1860-01A0	25	YO- 181
NY84110-00264	Y1861-01A0	7	YO- 183
NY86711-01008	Y1860-01A0	22	YO- 181
NY86711-01010	Y1860-01A0	12	YO- 181
NY86711-02011	Y1860-01A0	15	YO- 181
NY86711-02011	Y1861-01A0	9	YO- 183
NY89103-00090	Y1860-01A0	9	YO- 181
X210703740	Y0260-01A0	1	YO- 3
X990001890	T1510-01B5	13	TO- 95
X990001900	T1510-01B9	13	TO- 101
X990001910	T1510-01B2	13	TO- 89
X990001920	T1510-01B6	16	TO- 97
X990001970	T1510-01B9	13	TO- 99
002896-11008	K1110-37A0	17	KO-139
01010-D0625	K0230-01A1	16	KO- 25
01010-D0816	K0830-01A1	2	KO- 57
01010-D0816	K1110-38A0	1	KO- 145
01010-D0820	K0180-01A0	6	KO- 15
01010-D0820	K0180-01A0	14	KO- 15
01010-D0820	K0180-01A0	27	KO- 15
01010-D0820	K0180-01A0	31	KO- 15
01010-D0820	K0180-01A0	36	KO- 15
01010-D0820	K0230-01A1	24	KO- 25

PARTS NO.	FIG NO.	INDEX	PAGE
01010-D0820	K0830-01A1	6	KO- 57
01010-D0820	K1110-07A0	2	KO- 77
01010-D0820	K1110-14D0	2	KO- 89
01010-D0820	K1110-14A0	2	KO- 89a
01010-D0820	K1110-14A0	8	KO- 89a
01010-D0820	K1110-15A0	5	KO- 91
01010-D0820	K1110-15A0	12	KO- 91
01010-D0820	K1110-15A0	19	KO- 91
01010-D0825	K0110-01A2	4	KO- 5
01010-D1016	E0310-01A1	3	EO- 23
01010-D1020	K1110-10A0	19	KO- 81
01010-D1025	K0230-01A1	19	KO- 25
01010-D1025	K1110-19A1	8	KO- 101
01010-D1025	K1110-04A1	8	K1- 87
01010-D1030	E0310-01A0	3	EO- 21
01010-D1045	K1110-17A0	12	KO- 95
01010- D1045	K1110-19A1	11	KO- 101
01010-D1045	K1110-04A1	11	K1- 87
01010-D1220	E0340-01A0	4	EO- 27
01010-D1220	K0220-01A0	14	KO- 21
01010-D1225	K0230-01A1	14	KO- 25
01010-D1230	K1110-20A0	19	KO- 103
01010-D1240	K0230-01A2	3	KO- 27
01010-D1275	K0230-01A1	10	KO- 25
01010-D1285	K1120-01A0	14	KO- 151
01010-00820	K1110-14D0	8	KO- 89
01010-61450	Y1600-02A0	10	YO- 21
01010-61460	Y1660-14A0	29	YO- 99
01010-61460	Y1662-14A0	29	Y1- 135
01010-61470	Y1660-14A0	28	YO- 99
01010-61470	Y1662-14A0	28	Y1-1 35
01010-61490	Y1660-07A0	24	YO- 83
01010-61490	Y1660-07A0	26	YO- 83
01010-61490	Y1662-07A0	26	Y1- 119
01010-61655	R0110-01A0	17	RO- 5
01010-61655	R0110-02A1	17	RO- 7
01010-61660	P1210-01A0	37	PO- 9
01010-62050	R1200-01A1	2	RO- 55
01010-62050	R1200-01A2	3	RO- 57
01010-62050	R1200-01A3	3	RO- 59
01010-62055	T1510-01B2	9	TO- 89
01010-62055	T1510-01B5	9	TO- 95
01010-62055	T1510-01B6	9	TO- 97
01010-62055	T1510-01B9	9	TO- 99
01010-62055	T1510-01B9	9	TO- 101
01010-80612	D0100-01A0	8	DO- 3
01010-80612	M1130-01A0	9	MO- 7
01010-80612	M1140-01A0	5	MO- 11
01010-80616	CO100-02A0	33	CO- 5
01010-80616	K0350-01A0	3	KO- 47

PARTS NO.	FIG NO.	INDEX	PAGE
01010-80616	K1110-39A0	6	KO- 147
01010-80616	M1130-01A0	26	MO- 7
01010-80616	M1140-01A0	21	MO- 11
01010-80620	E0200-01A0	26	EO- 7
01010-80620	Y1670-11A0	17	YO- 167
01010-80816	K0840-01A0	4	KO- 59
01010-80816	K1110-14A0	25	KO- 89a
01010-80816	K1110-21A0	2	KO- 105
01010-80816	K1110-21A0	12	KO- 105
01010-80816	K1110-24A0	2	KO- 111
01010-80816	Y1670-01A0	17	YO- 163
01010-80820	BO400-01A0	4	BO- 11
01010-80820	C0100-03A0	26	CO - 7
01010-80820	E0200-01A0	21	EO- 7
01010-80820	E0200-01A0	23	EO- 7
01010-80820	H1840-02A1	2	HO- 89
01010-80820	H1840-02A1	2	H1- 89
01010-80820	K1110-06A0	19	KO- 73
01010-80820	K1110-25A13	13	KO- 113
01010-80820	K1110-28A0	13	KO- 121
01010-80820	K1110-04A1	42	K1- 89
01010-80825	B0100-02A0	2	BO - 7
01010-80825	E0410-01A0	3	EO- 29
01010-80825	K1110-31A0	3	KO- 125
01010-80830	E0200-01A0	5	EO- 7
01010-80835	Y1627-01A0	11	YO- 55
01010-80845	K1110-14A0	23	KO- 89a
01010-80855	Y1670-01A0	15	YO- 163
01010-80875	KO700-01A0	13	KO- 51
01010-80885	KO700-01A0	15	KO- 51
01010-81016	E0200-03A0	25	EO- 13
01010-81016	E0200-06A0	11	EO- 19
01010-81016	K1110-16A0	11	KO- 93
01010-81016	K1110-19A1	34	KO- 101
01010-81016	K1110-33A0	10	KO- 129
01010-81016	K1110-36A0	13	KO- 137
01010-81016	K1110-04A1	34	K1- 89
01010-81016	N1110-01A0	12	NO- 3
01010-81020	A9999-01A1	3	AA- 171
01010-81020	B0000-01A0	3	BO - 3
01010-81020	CO100-02A0	10	CO- 5
01010-81020	CO100-02A0	14	CO- 5
01010-81020	CO100-02A0	18	CO- 5
01010-81020	CO100-02A0	27	CO- 5
01010-81020	E0200-01A0	18	EO- 7
01010-81020	E0200-03A0	7	EO- 13
01010-81020	H0210-01A0A	22	HO- 29
01010-81020	KO700-02A0	29	KO- 53
01010-81020	K1110-09A0	13	KO- 79
01010-81020	K1110-16A0	14	KO- 93

PARTS NO.	FIG NO.	INDEX	PAGE
01010-81020	K1110-17A0	2	KO- 95
01010-81020	K1110-17A0	5	KO- 95
01010-81020	K1110-18A0	5	KO- 97
01010-81020	K1110-19A0	5	KO- 99
01010-81020	K1110-19A1	14	KO- 101
01010-81020	K1110-22A0	14	KO- 107
01010-81020	K1110-22A0	22	KO- 107
01010-81020	K1110-22A0	25	KO- 107
01010-81020	K1110-23A0	3	KO- 109
01010-81020	K1110-33A0	7	KO- 129
01010-81020	K1110-36A0	2	KO- 137
01010-81020	K1110-36A0	8	KO- 137
01010-81020	K1110-04A1	14	K1- 87
01010-81020	P1210-01A0	9	PO- 7
01010-81020	T1510-01A0	14	TO- 63
01010-81020	Y0270-01A0	9	YO- 7
01010-81025	B0920-01A0	13	BO - 13
01010-81025	C0100-01A0A	16	CO - 3
01010-81025	C0100-01A0A	22	CO - 3
01010-81025	CO100-02A0	21	CO- 5
01010-81025	CO100-02A0	24	CO- 5
01010-81025	C0100-04A0	18	CO - 9
01010-81025	D0200-02A0	6	DO- 7
01010-81025	E0200-05A0	6	EO- 17
01010-81025	H1831-02A0	26	HO- 83
01010-81025	H1840-02A1	5	HO- 89
01010-81025	H1270-01A0	13	H1- 57
01010-81025	H1840-02A1	5	H1- 89
01010-81025	KO700-02A0	35	KO- 53
01010-81025	K1110-18A0	3	KO- 97
01010-81025	K1110-19A0	3	KO- 99
01010-81025	K1110-19A1	4	KO- 101
01010-81025	K1110-04A1	4	K1- 87
01010-81025	M1210-01A0	19	MO- 19
01010-81025	M1210-01A0	22	MO- 19
01010-81025	N1210-01A0	49	NO- 9
01010-81025	R0300-01A0	11	RO- 13
01010-81025	T1200-04A1	19	TO- 53
01010-81025	T1200-04A3	19	TO- 57
01010-81025	T1200-05A3	10	TO- 59
01010-81025	T1200-04A1	19	T1- 53
01010-81025	T1200-04A3	19	T1- 57
01010-81025	T1200-05A3	10	T1- 59
01010-81030	BO400-01A0	10	BO- 11
01010-81030	B0920-01A0	2	BO - 13
01010-81030	C0100-01A0A	28	CO - 3
01010-81030	CO100-02A0	12	CO- 5
01010-81030	CO100-02A0	30	CO- 5
01010-81030	C0310-01A0	2	CO - 11
01010-81030	C0310-01A0	5	CO - 11

PARTS NO.	FIG NO.	INDEX	PAGE
01010-81030	C0310-01A0	8	CO - 11
01010-81030	C0310-01A1	2	CO - 13
01010-81030	C0310-01A1	5	CO - 13
01010-81030	C0310-01A1	8	CO - 13
01010-81030	H1310-01A0	15	HO- 73
01010-81030	H1310-01A0	17	HO- 73
01010-81030	H1831-02A0	8	HO- 83
01010-81030	K1110-16A0	9	KO- 93
01010-81030	K1110-17A0	14	KO- 95
01010-81030	K1110-28A0	32	KO- 119
01010-81030	N1210-01A0	47	NO- 9
01010-81035	D0200-02A0	23	DO- 7
01010-81035	H1270-02A0	2	HO- 67
01010-81035	H1270-03A0	13	HO- 69
01010-81035	H1270-03A0	24	HO- 69
01010-81035	H1270-03A0	13	H1- 69
01010-81035	H1270-03A0	24	H1- 69
01010-81035	J1110-02A0	10	JO- 5
01010-81035	K0160-01A2	3	KO- 13
01010-81035	KO700-01A0	3	KO- 51
01010-81035	K1120-01A0	2	KO- 151
01010-81035	N1210-01A0	35	NO- 9
01010-81035	Y0260-01A0	29	YO- 3
01010-81040	A9999-01A1	8	AA- 171
01010-81040	B0000-01A0	8	BO - 3
01010-81040	BO400-01A0	7	BO- 11
01010-81040	H1270-02A0	2	H1- 67
01010-81040	K1110-22A0	6	KO- 107
01010-81040	K1110-22A0	10	KO- 107
01010-81040	K1110-22A0	19	KO- 107
01010-81040	Y1660-14A0	33	YO- 99
01010-81040	Y1662-14A0	33	Y1- 135
01010-81045	A9999-01A1	11	AA- 171
01010-81045	B0000-01A0	11	BO - 3
01010-81045	H1840-02A1	23	H1- 89
01010-81045	K1110-37A0	2	KO- 139
01010-81045	K1110-37A0	11	KO- 139
01010-81045	K1110-37A1	2	KO- 141
01010-81045	K1110-37A1	12	KO- 141
01010-81045	K1110-37B5	2	KO- 143
01010-81045	K1110-37B5	11	KO- 143
01010-81045	K1110-21A2	2	K1- 136
01010-81045	K1110-21A16	16	K1- 150
01010-81045	T1200-04A1	21	TO- 53
01010-81045	T1200-04A3	21	TO- 57
01010-81045	T1200-05A3	12	TO- 59
01010-81045	T1200-04A1	21	T1- 53
01010-81045	T1200-04A3	21	T1- 57
01010-81045	T1200-05A3	12	T1- 59
01010-81055	C0100-03A0	17	CO - 7

PARTS NO.	FIG NO.	INDEX	PAGE
01010-81080	H0210-01A0A	25	HO- 29
01010-81090	C0100-03A0	3	CO - 7
01010-81095	H1831-01A0	17	HO- 79
01010-81095	H1831-01A1	19	H1- 81
01010-81220	BO400-01A0	15	BO- 11
01010-81220	D0200-01A0	32	DO- 5
01010-81220	E0200-04A0	5	EO- 15
01010-81220	E0200-04A0	8	EO- 15
01010-81220	E0200-06A0	7	EO- 19
01010-81220	M1150-01A0	42	MO- 15
01010-81220	M1510-01A0	6	MO- 29
01010-81220	T1110-04A0A	7	TO- 19
01010-81220	T1110-06A0	4	TO- 23
01010-81225	C0100-03A0	29	CO - 7
01010-81225	D0200-01A0	16	DO- 5
01010-81225	D0200-01A0	23	DO- 5
01010-81225	D0200-01A0	26	DO- 5
01010-81225	D0200-02A0	11	DO- 7
01010-81225	D0200-02A0	17	DO- 7
01010-81225	E0100-01A1	8	EO- 5
01010-81225	E0200-01A0	8	EO- 7
01010-81225	E0200-01A0	15	EO- 7
01010-81225	EO200-02A0	5	EO- 9
01010-81225	EO200-02A0	8	EO- 9
01010-81225	EO200-02A0	11	EO- 9
01010-81225	EO200-02A0	14	EO- 9
01010-81225	EO200-02A0	17	EO- 9
01010-81225	EO200-02A0	21	EO- 9
01010-81225	EO200-02A0	25	EO- 9
01010-81225	EO200-02A0	29	EO- 9
01010-81225	EO200-02A0	32	EO- 9
01010-81225	EO200-02A0	35	EO- 9
01010-81225	EO200-02A0	38	EO- 9
01010-81225	E0200-03A0	2	EO- 13
01010-81225	E0200-03A0	5	EO- 13
01010-81225	E0200-03A0	10	EO- 13
01010-81225	E0200-03A0	13	EO- 13
01010-81225	E0200-03A0	16	EO- 13
01010-81225	E0200-03A0	19	EO- 13
01010-81225	E0200-03A0	22	EO- 13
01010-81225	E0200-03A0	28	EO- 13
01010-81225	E0200-04A0	27	EO- 15
01010-81225	E0200-04A0	34	EO- 15
01010-81225	E0200-05A0	10	EO- 17
01010-81225	E0320-01A0	4	EO- 25
01010-81225	E0320-01A0	7	EO- 25
01010-81225	E0420-01A0	6	EO- 31
01010-81225	E0100-01A1	8	ER- 3
01010-81225	H0120-03A0	12	HO- 23
01010-81225	H0120-03A1	22	HO- 25

PARTS NO.	FIG NO.	INDEX	PAGE
01010-81225	H0320-01A0	5	HO- 39
01010-81225	H0320-01A0	10	HO- 39
01010-81225	H0320-01A0	13	HO- 39
01010-81225	H0330-01A0	6	HO- 41
01010-81225	H0330-01A1	8	HO- 43
01010-81225	H0340-01A0	4	HO- 45
01010-81225	H0340-01A0	7	HO- 45
01010-81225	H0340-01A0	12	HO- 45
01010-81225	H1270-03A0	20	HO- 69
01010-81225	H1810-01A0	5	HO- 77
01010-81225	H1831-02A0	17	HO- 83
01010-81225	H1840-01A0	18	HO- 87
01010-81225	H1840-02A1	26	HO- 89
01010-81225	H0120-03A1	22	H1- 25
01010-81225	H0330-01A1	8	H1- 43
01010-81225	H1270-03A0	20	H1- 69
01010-81225	H1270-04A0	8	H1- 71
01010-81225	H1270-04A0	24	H1- 71
01010-81225	H1270-04A0	34	H1- 71
01010-81225	H1840-02A1	26	H1- 89
01010-81225	J1110-02A0	12	JO- 5
01010-81225	K0350-01A0	5	KO- 47
01010-81225	KO700-02A0	6	KO- 53
01010-81225	KO700-02A0	14	KO- 53
01010-81225	M1130-01A0	17	MO- 7
01010-81225	K1130-01A0	52	MO- 9
01010-81225	M1140-01A0	12	MO- 11
01010-81225	M1150-01A0	23	MO- 13
01010-81225	M1510-01A0	9	MO- 29
01010-81225	M1810-02A0	19	MO- 35
01010-81225	M1810-02A0	22	MO- 35
01010-81225	R0110-01A0	5	RO- 5
01010-81225	R0110-01A0	15	RO- 5
01010-81225	R0110-02A1	5	RO- 7
01010-81225	R0110-02A1	15	RO- 7
01010-81225	T1110-05A1	29	TO- 21
01010-81225	T1200-04A1	33	TO- 55
01010-81225	T1200-04A3	33	TO- 57
01010-81225	T1920-01A0	8	TO- 105
01010-81225	T1920-01A1	8	TO- 107
01010-81225	T1110-05A1	29	T1- 21
01010-81225	T1200-04A1	33	T1- 55
01010-81225	T1200-04A3	33	T1- 57
01010-81230	B0100-02A0	4	BO - 7
01010-81230	B0200-01A0	6	BO - 9
01010-81230	BO400-01A0	2	BO- 11
01010-81230	B0920-01A0	5	BO - 13
01010-81230	B0920-01A0	25	BO - 13
01010-81230	C0100-04A0	8	CO - 9
01010-81230	E0200-06A0	5	EO- 19

PARTS NO.	FIG NO.	INDEX	PAGE
01010-81230	H0110-01A0	24	HO- 3
01010-81230	H0110-01A0	32	HO- 5
01010-81230	H1270-03A0	2	HO- 69
01010-81230	H1270-03A0	9	HO- 69
01010-81230	H0110-01A1	24	H1- 7
01010-81230	H0110-01A1	32	H1- 9
01010-81230	H1270-03A0	2	H1- 69
01010-81230	H1270-03A0	9	H1- 69
01010-81230	J1110-01A0	4	JO- 3
01010-81230	J1110-01A0	8	JO- 3
01010-81230	KO700-01A0	23	KO- 51
01010-81230	K1110-20A0	5	KO- 103
01010-81230	M1110-01A0	15	MO- 3
01010-81230	M1110-01A0	21	MO- 3
01010-81230	M1120-01A0	3	MO- 5
01010-81230	M1120-01A0	7	MO- 5
01010-81230	M1130-01A0	11	MO- 7
01010-81230	M1130-01A0	20	MO- 7
01010-81230	M1130-01A0	23	MO- 7
01010-81230	M1130-01A0	29	MO- 7
01010-81230	M1130-01A0	32	MO- 7
01010-81230	K1130-01A0	45	MO- 9
01010-81230	K1130-01A0	47	MO- 9
01010-81230	K1130-01A0	49	MO- 9
01010-81230	K1130-01A0	54	MO- 9
01010-81230	M1140-01A0	7	MO- 11
01010-81230	M1140-01A0	15	MO- 11
01010-81230	M1140-01A0	18	MO- 11
01010-81230	M1140-01A0	24	MO- 11
01010-81230	M1140-01A0	32	MO- 11
01010-81230	M1140-01A0	37	MO- 11
01010-81230	M1150-01A0	10	MO- 13
01010-81230	M1150-01A0	12	MO- 13
01010-81230	M1150-01A0	18	MO- 13
01010-81230	M1150-01A0	20	MO- 13
01010-81230	M1150-01A0	28	MO- 13
01010-81230	M1150-01A0	32	MO- 15
01010-81230	M1150-01A0	35	MO- 15
01010-81230	M1150-01A0	37	MO- 15
01010-81230	M1150-01A0	40	MO- 15
01010-81230	M1150-01A0	45	MO- 15
01010-81230	M1160-01A0	2	MO- 17
01010-81230	M1160-01A0	4	MO- 17
01010-81230	M1160-01A0	7	MO- 17
01010-81230	M1160-01A0	10	MO- 17
01010-81230	M1210-01A0	2	MO- 19
01010-81230	M1210-01A0	4	MO- 19
01010-81230	M1210-01A0	26	MO- 19
01010-81230	M1210-01A0	28	MO- 19
01010-81230	M1220-01A0	11	MO- 21

PARTS NO.	FIG NO.	INDEX	PAGE
01010-81230	M1220-01A0	14	MO- 21
01010-81230	M1810-01A0	12	MO- 33
01010-81230	M1810-01A0	14	MO- 33
01010-81230	M1810-01A0	16	MO- 33
01010-81230	M1810-01A0	19	MO- 33
01010-81230	M1810-01A0	21	MO- 33
01010-81230	M1810-02A0	5	MO- 35
01010-81230	M1810-02A0	7	MO- 35
01010-81230	M1810-02A0	10	MO- 35
01010-81230	M1810-02A0	12	MO- 35
01010-81230	M1810-02A0	14	MO- 35
01010-81230	M1810-02A0	16	MO- 35
01010-81230	P1210-01A0	40	PO- 9
01010-81230	T1110-02A0	12	TO- 9
01010-81230	T1110-03A0	15	TO- 11
01010-81230	T1110-03A0	35	TO- 11
01010-81230	T1110-03A0	45	TO- 13
01010-81230	T1110-03A1	15	TO- 15
01010-81230	T1110-03A1	36	TO- 15
01010-81230	T1110-03A1	46	TO- 17
01010-81230	T1110-05A1	15	TO- 21
01010-81230	T1110-05A1	23	TO- 21
01010-81230	T1110-05A1	26	TO- 21
01010-81230	T1110-06A0	6	TO- 23
01010-81230	T1200-01A0	12	TO- 35
01010-81230	T1200-01A0	17	TO- 35
01010-81230	T1200-01AA	12	TO- 35b
01010-81230	T1200-01AA	17	TO- 35b
01010-81230	T1200-01A1	15	TO- 37
01010-81230	T1200-01A1	20	TO- 37
01010-81230	T1200-01A3	15	TO- 39
01010-81230	T1200-01A3	20	TO- 39
01010-81230	T1200-04A1	12	TO- 53
01010-81230	T1200-04A1	35	TO- 55
01010-81230	T1200-04A1	41	TO- 55
01010-81230	T1200-04A3	12	TO- 57
01010-81230	T1200-04A3	35	TO- 57
01010-81230	T1200-05A3	24	TO- 59
01010-81230	T1200-05A3	26	TO- 59
01010-81230	T1200-05A3	32	TO- 59
01010-81230	T1510-01A0	35	TO- 65
01010-81230	T1110-03A1	15	T1- 15
01010-81230	T1110-03A1	36	T1- 15
01010-81230	T1110-03A1	46	T1- 17
01010-81230	T1110-05A1	15	T1- 21
01010-81230	T1110-05A1	23	T1- 21
01010-81230	T1110-05A1	26	T1- 21
01010-81230	T1200-01A1	15	T1- 37
01010-81230	T1200-01A1	20	T1- 37
01010-81230	T1200-01A3	15	T1- 39

PARTS NO.	FIG NO.	INDEX	PAGE
01010-81230	T1200-01A3	20	T1- 39
01010-81230	T1200-04A1	12	T1- 53
01010-81230	T1200-04A1	35	T1- 55
01010-81230	T1200-04A1	41	T1- 55
01010-81230	T1200-04A3	12	T1- 57
01010-81230	T1200-04A3	35	T1- 57
01010-81230	T1200-05A3	24	T1- 59
01010-81230	T1200-05A3	26	T1- 59
01010-81230	T1200-05A3	32	T1- 59
01010-81230	T1200-01A0	12	TR- 35
01010-81230	T1200-01A0	17	TR- 35
01010-81235	H0311-01A0	3	HO- 33
01010-81235	H0330-01A1	20	HO- 43
01010-81235	H1210-01A0	10	HO- 47
01010-81235	H1210-01A0	14	HO- 47
01010-81235	H1270-01A0	2	H1- 57
01010-81235	H1270-01A0	7	H1- 57
01010-81235	J1310-01A0	10	JO- 7
01010-81235	N1310-01A0	26	NO- 17
01010-81235	R1140-01A0	3	RO- 53
01010-81235	T1110-02A0	6	TO- 9
01010-81235	T1920-01A0	5	TO- 105
01010-81235	T1920-01A1	5	TO- 107
01010-81240	H0320-01A0	3	HO- 39
01010-81240	H0330-01A0	3	HO- 41
01010-81240	H0330-01A1	3	HO- 43
01010-81240	H0330-01A1	3	H1- 43
01010-81240	K1110-23A0	5	KO- 109
01010-81240	K1120-01A0	12	KO- 151
01010-81240	M1310-01A0	2	MO- 23
01010-81240	T1200-05A3	3	TO- 59
01010-81240	T1200-05A3	3	T1- 59
01010-81245	E0200-01A0	13	EO- 7
01010-81245	E0200-04A0	13	EO- 15
01010-81245	E0200-04A0	19	EO- 15
01010-81245	H1270-01A0	4	H1- 57
01010-81245	H1270-01A0	26	H1- 57
01010-81245	T1200-04A1	9	TO- 53
01010-81245	T1200-04A3	9	TO- 57
01010-81245	T1200-04A1	9	T1- 53
01010-81245	T1200-04A3	9	T1- 57
01010-81245	W1201-01A1	14	W1- 11
01010-81245	W1201-01A16	14	W1- 15
01010-81245	W1203-01A1	14	W1- 21
01010-81250	KO700-02A0	11	KO- 53
01010-81250	T1110-05A1	9	TO- 21
01010-81250	T1110-05A1	9	T1- 21
01010-81260	H1833-01A0	2	HO- 85
01010-81260	KO700-02A0	39	KO- 53
01010-81265	B0100-01A0	3	BO - 5

PARTS NO.	FIG NO.	INDEX	PAGE
01010-81265	B0100-01A0	7	BO- 5
01010-81265	E0200-04A0	24	EO- 15
01010-81265	E0200-04A0	31	EO- 15
01010-81265	H1270-01A0	3	HO- 57
01010-81275	B0100-02A0	9	BO- 7
01010-81275	D0200-01A0	20	DO- 5
01010-81280	H1270-03A0	17	HO- 69
01010-81280	H1270-03A0	17	H1- 69
01010-81280	K0220-01A0	7	KO- 21
01010-81285	H1270-02A0	5	HO- 67
01010-81285	H1270-01A0	10	H1- 57
01010-81285	H1270-02A0	5	H1- 67
01010-81285	K1110-23A0	7	KO- 109
01010-81285	T1110-03A1	16	TO- 15
01010-81285	T1110-03A1	37	TO- 15
01010-81285	T1110-03A1	47	TO- 17
01010-81285	T1110-03A1	16	T1- 15
01010-81285	T1110-03A1	37	T1- 15
01010-81285	T1110-03A1	47	T1- 17
01010-81295	H1270-04A0	5	H1- 71
01010-81295	K0220-01A0	9	KO- 21
01010-81440	KO700-01A0	6	KO- 51
01010-81440	N1210-01A0	22	NO- 7
01010-81440	Y0260-01A0	19	YO- 3
01010-81450	T1510-01A0	11	TO- 63
01010-81485	R0300-01A0	12	RO- 13
01010-81635	C0100-03A0	32	CO- 7
01010-81635	C0100-03A0	34	CO- 7
01010-81635	D0100-01A0	18	DO- 3
01010-81635	H0110-01A0	43	HO- 5
01010-81635	H0110-01A1	43	H1- 9
01010-81640	H0120-03A0	2	HO- 23
01010-81640	H0120-03A1	2	HO- 25
01010-81640	H0120-03A1	2	H1- 25
01010-81640	J1310-01A0	3	JO- 7
01010-81645	H0120-03A0	4	HO- 23
01010-81645	H0120-03A1	4	HO- 25
01010-81645	H0120-03A1	4	H1- 25
01010-81670	Y1620-01A0	15	YO- 41
01010-81670	Y1620-41A0	15	YO- 53
01010-81875	Y1620-11A0	13	YO- 49
01010-82060	N1210-01A0	52	NO- 9
01010-82065	R1100-01A0	3	RO- 41
01010-82065	R1100-01A1	3	RO- 43
01010-82065	R1100-01A2	3	RO- 45
01010-82065	R1100-01A3	3	RO- 47
01010-82460	T1510-01A5	4	TO- 75
01011-B1655	B0100-01A0	18	BO- 5
01011-D1260	K0230-01A0	3	KO- 23
01011-D1260	K0230-01A1	4	KO- 25

PARTS NO.	FIG NO.	INDEX	PAGE
01011-D1260	K0230-01A1	7	KO- 25
01011-61455	H0120-01A4	2	HO- 15
01011-61455	H0120-01A4	2	H1- 15
01011-61455	Y1662-07A0	24	Y1- 119
01011-81000	E0420-01A0	3	EO- 31
01011-81220	H0330-01A1	5	HO- 43
01011-81220	H0330-01A1	5	H1- 43
01011-81220	K0220-01A0	5	KO- 21
01011-81610	T1510-01A0	7	TO- 63
01011-81610	T1510-01A0	27	TO- 63
01011-81630	T1510-01A0	21	TO- 63
01011-81650	T1510-01A0	43	TO- 65
01013-83010	T1510-01A0	30	TO- 63
01016-51070	BO400-01A0	12	BO- 11
01016-51250	C0100-03A0	36	CO- 7
01017-51420	KO700-01A0	10	KO- 51
01018-31095	A601T-01A0	4	AA- 141
01019-11205	T1510-01A8	8	TO- 81
01019-31400	KO700-01A0	8	KO- 51
01023-10406	K0180-01A0	21	KO- 15
01023-10508	K1110-30A0	19	KO- 123
01023-10512	K1110-30A0	20	KO- 123
01023-10612	K1110-06A0	4	KO- 73
01023-10612	K1110-06A0	6	KO- 73
01023-10614	K1110-30A0	40	KO- 123
01023-10616	k1110-02A0	16	KO- 61
01023-10616	K1110-04A0	7	KO- 69
01023-10616	K1110-13A0	2	KO- 87
01023-20412	K1110-09A0	3	KO- 79
01023-20412	K1110-09A0	10	KO- 79
01023-20416	K1110-17A0	22	KO- 95
01023-20512	M1810-01A0	11	MO- 33
01023-20612	K0320-01A0	6	KO- 41
01023-20614	K1110-28A0	31	KO- 119
01023-20616	K0330-01A0	1	KO- 43
01023-20616	K0330-01A0	2	KO- 43
01023-20616	K1110-03A0	10	KO- 67
01023-20616	K1110-10A0	9	KO- 81
01023-20620	K1110-08A0	9	KO- 77
01023-60316	K1110-28A0	27	KO- 119
01023-60408	K1110-30A0	17	KO- 123
01023-60410	K1110-30A0	38	KO- 123
01023-60412	K1110-39A0	4	KO- 147
01023-60510	K110-26A0	9	KO- 115
01023-60512	K1110-30A0	18	KO- 123
01023-60516	K110-26A0	10	KO- 115
01023-60516	K1110-27A0	6	KO- 117
01023-60616	K1110-28A0	26	KO- 119
01023-60616	K1110-30A0	35	KO- 123
01023-60620	K110-26A0	14	KO- 115

PARTS NO.	FIG NO.	INDEX	PAGE
01023-60620	K1110-27A0	9	KO- 117
01023-60630	K110-26A0	15	KO- 115
01023-60630	K1110-30A0	22	KO- 123
01023-70512	K0330-01A0	1A	KO- 43
01023-70514	K1110-30A0	26	KO- 123
01024-81045	N1210-01A0	54	NO- 9
01024-81230	M1810-02A0	26	MO- 35
01140-61035	A1570-01A3	2	AA- 31
01224-40612	Y1670-01A0	27	YO- 163
01224-40616	M1210-01A0	25	MO- 19
01240-00616	K1110-06A0	7	KO- 73
01240-00620	K1110-03A0	15	KO- 67
01240-01025	K1110-07A0	22	KO- 97
01245-00612	K0310-01A1	3	KO- 33
01245-00612	K1110-11A0	10	KO- 83
01245-00612	K0310-01A1	3	K1- 63
01245-00616	K0310-01A0	3	KO- 31
01245-00616	K1110-11A0	17	KO- 83
01245-00620	K1110-04A0	23	KO- 69
01245-00625	K1110-03A0	16	KO- 67
01245-00816	K0330-01A0	2	KO- 43
01245-00816	k1110-02A0	19	KO- 61
01245-00816	k1110-02A0	25	KO- 61
01245-00816	K1110-13A0	13	KO- 87
01245-00816	K1110-14D0	5	KO- 89
01245-00816	K1110-14A0	5	KO- 89a
01245-00820	K1110-04A0	19	KO- 69
01245-00820	K1110-31A0	8	KO- 125
01245-01016	K1110-11A0	8	KO- 83
01245-01025	K1110-20A0	8	KO- 103
01245-01025	K1110-20A0	10	KO- 103
01245-01220	K1110-11A0	3	KO- 83
01245-01220	K1110-11A0	5	KO- 83
01252-30625	Y1670-21A0	15	YO- 169
01252-41025	K1110-25A10	10	KO- 113
01252-41025	K1110-28A0	10	KO- 121
01252-41030	M1410-01A0	4	MO- 25
01252-60525	Y1670-01A0	23	YO- 163
01252-60635	Y1600-11A0	4	YO- 39
01252-60816	Y1660-13A0	5	YO- 97
01252-60816	Y1662-13A0	5	Y1- 133
01252-60820	Y1660-04A0	14	YO- 75
01252-60820	Y1660-13A0	9	YO- 97
01252-60820	Y1669-01A0	10	YO- 149
01252-60820	Y1669-11A0	10	YO- 157
01252-60820	Y1662-04A0	14	Y1- 111
01252-60820	Y1662-13A0	9	Y1- 133
01252-60820	Y1662-17A0	10	Y1- 141
01252-60820	Y1669-01A0	10	Y1- 149
01252-60825	Y1640-03A0	22	YO- 61

PARTS NO.	FIG NO.	INDEX	PAGE
01252-60830	Y1660-15A0	12	YO- 101
01252-60830	Y1662-15A0	12	Y1- 137
01252-60835	Y1670-02A0	19	YO- 165
01252-60845	Y1669-02A0	22	YO- 151
01252-60845	Y1669-12A0	22	YO- 159
01252-60845	Y1662-18A0	22	Y1- 143
01252-60845	Y1669-02A0	22	Y1- 151
01252-61030	Y1679-01A0	7	Y1- 175
01252-61040	Y1660-14A0	20	YO- 99
01252-61040	Y1662-14A0	20	Y1- 135
01252-61040	Y1679-01A0	6	Y1- 175
01252-61045	Y1660-16A0	26	YO- 103
01252-61045	Y1662-16A0	26	Y1- 139
01252-61050	Y1660-10A0	14	YO- 89
01252-61050	Y1662-10A0	14	Y1- 125
01252-61075	Y1660-15A0	13	YO- 101
01252-61075	Y1660-16A0	24	YO- 103
01252-61075	Y1662-15A0	13	Y1- 137
01252-61075	Y1662-16A0	24	Y1- 139
01252-61230	Y1600-03A0	22	YO- 23
01252-61230	Y1600-07A0	19	YO- 31
01252-61235	Y1641-01A0	19	YO- 63
01252-61245	Y1640-01A0	14	YO- 57
01252-61440	Y1600-04A0	29	YO- 25
01252-61440	Y1600-05A0	8	YO- 27
01252-61440	Y1600-08A0	29	YO- 33
01252-61440	Y1600-09A0	8	YO- 35
01252-70516	H0110-01A0	38	HO- 5
01252-70516	H0110-01A1	38	H1- 9
01252-70816	K1110-28A0	17	KO- 119
01252-71030	M1420-01A0	3	MO- 27
01252-80616	k1110-02A0	22	KO- 61
01252-80616	k1110-02A0	29	KO- 61
01252-80825	H1270-04A0	11	H1- 71
01252-80825	H1270-04A0	22	H1- 71
01252-80825	K0110-01A2	2	KO- 5
01310-01216	Y1620-01A0	24	YO- 41
01310-01216	Y1620-11A0	22	YO- 49
01310-01216	Y1620-41A0	23	YO- 53
01370-00408	K0180-01A0	17	KO- 15
01370-00410	K1110-28A0	9	KO- 119
01370-00420	K1110-08A0	13	KO- 77
01370-00508	M1510-01A0	5	MO- 29
01370-10308	K0180-01A0	19	KO- 15
01370-10308	K1110-25A2	2	KO- 113
01370-10308	K1110-28A0	2	KO- 121
01370-20308	K0180-01A0	24	KO- 15
01370-30412	K0840-01A0	7	KO- 59
01370-30412	K1110-10A0	6	KO- 81
01370-40412	K1110-09A0	16	KO- 79

PARTS NO.	FIG NO.	INDEX	PAGE
01434-10616	C0100-01A0A	19	CO- 3
01434-10616	C0100-01A0A	25	CO- 3
01434-10616	CO100-02A0	2	CO- 5
01435-00610	K1110-21A0	9	KO- 105
01435-00610	K1110-21A0	16	KO- 105
01435-00612	K1110-13A0	8	KO- 87
01435-00612	K1110-30A0	37	KO- 123
01435-00616	A206P-01A0	6	AA- 47
01435-00616	K1110-02A0	45	KO- 65
01435-00616	K1110-03A0	20	KO- 67
01435-00625	KO700-02A0	4	KO- 53
01435-00625	KO700-02A0	18	KO- 53
01435-00625	KO700-02A0	21	KO- 53
01435-00625	KO700-02A0	26	KO- 53
01435-00630	KO700-02A0	3	KO- 53
01435-00814	A1570-01A3	5	AA- 31
01435-00816	A1570-01A3	7	AA- 31
01435-00816	K1110-21A0	7	KO- 105
01435-00820	A1570-01A3	13	AA- 31
01435-00825	K1110-24A0	5	KO- 111
01435-00885	K1110-21A0	5	KO- 105
01435-01016	K1110-22A0	12	KO- 107
01435-01020	A1610-01A0	12	AA- 33
01435-01020	A5030-01A0	2	AA- 127
01435-01030	Y1620-01A0	35	YO- 43
01435-01030	Y1620-11A0	39	YO- 51
01435-01030	Y1620-41A0	32	YO- 53
01435-01035	A504P-01A0	2	AA- 129
01435-01035	A621S-01A0	2	AA- 155
01435-01035	A621S-01A1	2	AA- 157
01435-01040	Y1620-01A0	31	YO- 43
01435-01040	Y1620-11A0	33	YO- 51
01435-01040	Y1620-41A0	28	YO- 53
01435-01055	Y1620-01A0	30	YO- 43
01435-01055	Y1620-11A0	32	YO- 51
01435-01055	Y1620-41A0	27	YO- 53
01435-01075	Y1620-11A0	35	YO- 51
01435-01085	A153T-01A1	9	AA- 23
01435-01095	A1610-01A0	10	AA- 33
01435-01095	A311P-01A1	16	AA- 91
01435-01225	K1110-05A0	17	KO- 71
01435-01235	A1610-01A0	7	AA- 33
01435-01240	A283V-01A0	4	AA- 87
01435-20816	C0100-01A0A	7	CO- 3
01435-20816	C0100-01A0A	12	CO- 3
01435-20816	CO100-02A0	6	CO- 5
01435-40610	K1110-04A0	10	KO- 69
01435-40610	K1110-04A0	14	KO- 69
01435-40610	K1110-10A0	13	KO- 81
01435-40616	K0320-01A0	10	KO- 41

PARTS NO.	FIG NO.	INDEX	PAGE
01435-40616	k1110-02A0	33	KO- 61
01435-40616	K1110-02A0	37	KO- 65
01435-40616	K1110-02A0	41	KO- 65
01435-40616	K1110-02A0	49	KO- 65
01435-40616	K1110-07A0	6	KO- 81
01435-40616	K1110-07A0	8	KO- 83
01435-40616	K1110-08A0	2	KO- 77
01435-40616	K1110-09A0	12	KO- 79
01435-40616	K1110-15A0	8	KO- 91
01435-40620	K1110-32A0	7	KO- 127
01435-40812	k1110-02A0	11	KO- 61
01435-40820	K1110-10A0	17	KO- 81
01435-41225	K1110-05A0	16	KO- 71
01508-41006	BO400-01A0	20	BO- 11
01570-00605	K0330-01A0	1	KO- 43
01580-00403	K0180-01A0	22	KO- 15
01580-00806	K0330-01A0	1	KO- 43
01580-00806	K0330-01A0	2	KO- 43
01580-01008	K0160-01A2	5	KO- 13
01580-10403	K0180-01A0	4	KO- 15
01580-10403	K0180-01A0	10	KO- 15
01580-10605	BO400-01A0	27	BO- 11
01580-10806	Y1600-04A0	26	YO- 25
01580-10806	Y1600-08A0	26	YO- 33
01580-11008	BO400-01A0	13	BO- 11
01580-11008	K1110-02A0	39	KO- 65
01580-11008	K1110-07A0	17	KO- 92
01580-11008	M1130-01A0	36	MO- 7
01580-11008	M1140-01A0	28	MO- 11
01580-11008	R1100-01A0	9	RO- 41
01580-11008	R1100-01A1	9	RO- 43
01580-11008	R1100-01A2	9	RO- 45
01580-11008	R1100-01A3	9	RO- 47
01580-11210	M1110-01A0	5	MO- 3
01580-11210	T1510-01A8	9	TO- 81
01580-11411	KO700-01A0	11	KO- 51
01580-11613	K1120-01A0	5	KO- 151
01580-11613	K1120-01A0	8	KO- 151
01580-11613	T1510-01A0	8	TO- 63
01580-11613	T1510-01A0	22	TO- 63
01580-11613	T1510-01A0	28	TO- 63
01580-11613	T1510-01A0	44	TO- 65
01580-11815	R1200-01A2	7	RO- 57
01580-11815	R1200-01A3	7	RO- 59
01580-12016	R1100-01A0	5	RO- 41
01580-12016	R1100-01A1	5	RO- 43
01580-12016	R1100-01A2	5	RO- 45
01580-12016	R1100-01A3	5	RO- 47
01580-12016	T1125-01A0	5	TO- 29
01580-12016	T1200-02A0	10	TO- 41

PARTS NO.	FIG NO.	INDEX	PAGE
01580-12016	T1200-02A0	15	TO- 41
01580-12016	T1200-02A0	20	TO- 41
01580-12016	T1200-02A0	23	TO- 41
01580-12016	T1200-02A0	10	TO- 43
01580-12016	T1200-02A0	15	TO- 43
01580-12016	T1200-02A0	20	TO- 43
01580-12016	T1200-02A0	23	TO- 43
01580-12016	T1200-02A2	11	TO- 47
01580-12016	T1200-02A2	16	TO- 47
01580-12016	T1200-02A2	21	TO- 47
01580-12016	T1200-02A2	24	TO- 47
01580-12016	T1510-01A0	53	TO- 65
01580-12016	T1510-01A3	14	TO- 71
01580-12016	T1510-01A5	10	TO- 75
01580-12016	T1510-01A7	7	TO- 79
01580-12016	T1510-01A8	13	TO- 81
01580-12016	T1200-02A1	10	T1- 45
01580-12016	T1200-02A1	15	T1- 45
01580-12016	T1200-02A1	20	T1- 45
01580-12016	T1200-02A1	23	T1- 45
01580-12419	T1510-01A5	5	TO- 75
01582-01411	A408P-01A0	10	AA- 103
01582-11008	BO400-01A0	18	BO- 11
01582-11008	BO400-01A0	24	BO- 11
01582-11411	E0200-06A0	2	EO- 19
01583-11408	Y1600-10A0	12	YO- 37
01583-11811	k1110-02A0	35	KO- 61
01583-51408	K1110-19A1	36	KO- 101
01583-51408	K1110-04A1	36	K1- 89
01584-00806	A1570-01A3	11	AA- 31
01584-01008	A621S-01A1	4	AA- 157
01584-01008	K1110-06A0	16	KO- 73
01584-30806	K1110-04A0	3	KO- 69
01590-33033	T1510-01A0	32	TO- 63
01593-31008	BO400-01A0	22	BO- 11
01594-01008	A1610-01A0	4	AA- 33
01597-01009	H0330-01A1	23	HO- 43
01597-01009	KO700-01A0	20	KO- 51
01597-01009	N1210-01A0	45	NO- 9
01599-01011	Y1620-01A0	37	YO- 43
01599-01011	Y1620-11A0	42	YO- 51
01599-01011	Y1620-41A0	34	YO- 53
01601-20410	K0180-01A0	5	KO- 15
01601-20410	K0180-01A0	11	KO- 15
01601-20513	H0110-01A0	39	HO- 5
01601-20513	H0110-01A1	39	H1- 9
01601-20513	K1110-30A0	21	KO- 123
01602-20619	BO400-01A0	26	BO- 11
01602-21030	BO400-01A0	11	BO- 11
01640-20610	A206P-01A0	7	AA- 47

PARTS NO.	FIG NO.	INDEX	PAGE
01640-20610	K110-26A0	16	KO- 115
01640-20610	K1110-30A0	23	KO- 123
01641-01016	A601T-01A0	5	AA- 141
01641-50608	k1110-02A0	30	KO- 61
01641-50608	K1110-03A0	17	KO- 67
01641-50608	K1110-11A0	16	KO- 83
01641-50812	K0330-01A0	1	KO- 43
01641-50812	K0330-01A0	2	KO- 43
01641-51223	K1110-04A0	15	KO- 69
01643-30623	C0100-01A0A	20	CO- 3
01643-30623	C0100-01A0A	26	CO- 3
01643-30623	CO100-02A0	3	CO- 5
01643-30623	CO100-02A0	34	CO- 5
01643-30623	D0100-01A0	9	DO- 3
01643-30623	E0200-01A0	27	EO- 7
01643-30623	K0350-01A0	4	KO- 47
01643-30623	K1110-09A0	2	KO- 79
01643-30623	K1110-30A0	41	KO- 123
01643-30623	K1110-39A0	7	KO- 147
01643-30623	M1130-01A0	10	MO- 7
01643-30623	M1130-01A0	27	MO- 7
01643-30623	M1140-01A0	6	MO- 11
01643-30623	M1140-01A0	22	MO- 11
01643-30623	M1220-01A0	2	MO- 21
01643-30823	A411S-01A0	6	AA- 109
01643-30823	B0100-02A0	3	BO- 7
01643-30823	BO400-01A0	5	BO- 11
01643-30823	C0100-03A0	27	CO- 7
01643-30823	E0200-01A0	6	EO- 7
01643-30823	E0200-01A0	22	EO- 7
01643-30823	E0200-01A0	24	EO- 7
01643-30823	E0410-01A0	4	EO- 29
01643-30823	H1840-02A1	3	HO- 89
01643-30823	H1840-02A1	3	H1- 89
01643-30823	KO700-01A0	14	KO- 51
01643-30823	K0840-01A0	5	KO- 59
01643-30823	K1110-06A0	20	KO- 73
01643-30823	K1110-14A0	24	KO- 89a
01643-30823	K1110-14A0	26	KO- 89a
01643-30823	K1110-21A0	3	KO- 105
01643-30823	K1110-21A0	13	KO- 105
01643-30823	K1110-24A0	3	KO- 111
01643-30823	K1110-25A14	14	KO- 113
01643-30823	K1110-28A0	14	KO- 121
01643-30823	K1110-31A0	4	KO- 125
01643-30823	K1110-04A1	43	K1- 89
01643-30823	Y1627-01A0	12	YO- 55
01643-30823	Y1670-01A0	16	YO- 163
01643-31032	A9999-01A1	4	AA- 171
01643-31032	A9999-01A1	9	AA- 171

PARTS NO.	FIG NO.	INDEX	PAGE
01643-31032	A9999-01A1	12	AA- 171
01643-31032	B0000-01A0	4	BO - 3
01643-31032	B0000-01A0	9	BO - 3
01643-31032	B0000-01A0	12	BO - 3
01643-31032	BO400-01A0	8	BO- 11
01643-31032	B0920-01A0	3	BO - 13
01643-31032	B0920-01A0	14	BO - 13
01643-31032	C0100-01A0A	17	CO - 3
01643-31032	C0100-01A0A	23	CO - 3
01643-31032	C0100-01A0A	29	CO - 3
01643-31032	CO100-02A0	11	CO- 5
01643-31032	CO100-02A0	13	CO- 5
01643-31032	CO100-02A0	19	CO- 5
01643-31032	CO100-02A0	22	CO- 5
01643-31032	CO100-02A0	25	CO- 5
01643-31032	CO100-02A0	28	CO- 5
01643-31032	CO100-02A0	31	CO- 5
01643-31032	C0100-03A0	4	CO - 7
01643-31032	C0100-03A0	18	CO - 7
01643-31032	C0100-04A0	19	CO - 9
01643-31032	C0310-01A0	3	CO - 11
01643-31032	C0310-01A0	6	CO - 11
01643-31032	C0310-01A0	9	CO - 11
01643-31032	C0310-01A1	3	CO - 13
01643-31032	C0310-01A1	6	CO - 13
01643-31032	C0310-01A1	9	CO - 13
01643-31032	D0200-02A0	7	DO- 7
01643-31032	D0200-02A0	24	DO- 7
01643-31032	E0200-01A0	19	EO- 7
01643-31032	E0200-03A0	8	EO- 13
01643-31032	E0200-03A0	26	EO- 13
01643-31032	E0200-05A0	7	EO- 17
01643-31032	E0200-06A0	12	EO- 19
01643-31032	E0420-01A0	4	EO- 31
01643-31032	H0210-01A0A	23	HO- 29
01643-31032	H0210-01A0A	26	HO- 29
01643-31032	H0330-01A1	22	HO- 43
01643-31032	H1270-03A0	14	HO- 69
01643-31032	H1270-03A0	25	HO- 69
01643-31032	H1310-01A0	16	HO- 73
01643-31032	H1310-01A0	18	HO- 73
01643-31032	H1831-01A0	18	HO- 79
01643-31032	H1831-02A0	9	HO- 83
01643-31032	H1831-02A0	27	HO- 83
01643-31032	H1840-02A1	6	HO- 89
01643-31032	H1270-01A0	14	H1- 57
01643-31032	H1270-02A0	3	H1- 67
01643-31032	H1270-03A0	14	H1- 69
01643-31032	H1270-03A0	25	H1- 69
01643-31032	H1831-01A1	20	H1- 81

PARTS NO.	FIG NO.	INDEX	PAGE
01643-31032	H1840-02A1	6	H1- 89
01643-31032	H1840-02A1	24	H1- 89
01643-31032	J1110-02A0	11	JO- 5
01643-31032	KO700-01A0	4	KO- 51
01643-31032	KO700-01A0	21	KO- 51
01643-31032	KO700-02A0	30	KO- 53
01643-31032	KO700-02A0	36	KO- 53
01643-31032	K1110-07A0	18	KO- 93
01643-31032	K1110-09A0	14	KO- 79
01643-31032	K1110-16A0	10	KO- 93
01643-31032	K1110-16A0	12	KO- 93
01643-31032	K1110-16A0	15	KO- 93
01643-31032	K1110-17A0	3	KO- 95
01643-31032	K1110-17A0	15	KO- 95
01643-31032	K1110-18A0	4	KO- 97
01643-31032	K1110-18A0	6	KO- 97
01643-31032	K1110-19A0	4	KO- 99
01643-31032	K1110-19A0	6	KO- 99
01643-31032	K1110-19A1	5	KO- 101
01643-31032	K1110-19A1	6	KO- 101
01643-31032	K1110-19A1	15	KO- 101
01643-31032	K1110-19A1	35	KO- 101
01643-31032	K1110-22A0	7	KO- 107
01643-31032	K1110-22A0	11	KO- 107
01643-31032	K1110-22A0	15	KO- 107
01643-31032	K1110-22A0	20	KO- 107
01643-31032	K1110-22A0	23	KO- 107
01643-31032	K1110-22A0	26	KO- 107
01643-31032	K1110-23A0	4	KO- 109
01643-31032	K1110-28A0	33	KO- 119
01643-31032	K1110-33A0	8	KO- 129
01643-31032	K1110-33A0	11	KO- 129
01643-31032	K1110-36A0	3	KO- 137
01643-31032	K1110-36A0	9	KO- 137
01643-31032	K1110-36A0	14	KO- 137
01643-31032	K1110-37A0	3	KO- 139
01643-31032	K1110-37A0	12	KO- 139
01643-31032	K1110-37A1	3	KO- 141
01643-31032	K1110-37A1	13	KO- 141
01643-31032	K1110-37B5	3	KO- 143
01643-31032	K1110-37B5	12	KO- 143
01643-31032	K1120-01A0	3	KO- 151
01643-31032	K1110-04A1	5	K1- 87
01643-31032	K1110-04A1	6	K1- 87
01643-31032	K1110-04A1	15	K1- 87
01643-31032	K1110-04A1	35	K1- 89
01643-31032	K1110-21A3	3	K1- 137
01643-31032	K1110-21A17	17	K1- 151
01643-31032	M1210-01A0	20	MO- 19
01643-31032	M1210-01A0	23	MO- 19

PARTS NO.	FIG NO.	INDEX	PAGE
01643-31032	N1110-01A0	13	NO- 3
01643-31032	N1210-01A0	46	NO- 9
01643-31032	N1210-01A0	48	NO- 9
01643-31032	N1210-01A0	50	NO- 9
01643-31032	R1100-01A0	10	RO- 41
01643-31032	R1100-01A1	10	RO- 43
01643-31032	R1100-01A2	10	RO- 45
01643-31032	R1100-01A3	10	RO- 47
01643-31032	T1200-04A1	20	TO- 53
01643-31032	T1200-04A1	22	TO- 53
01643-31032	T1200-04A3	20	TO- 57
01643-31032	T1200-04A3	22	TO- 57
01643-31032	T1200-05A3	11	TO- 59
01643-31032	T1200-05A3	13	TO- 59
01643-31032	T1510-01A0	15	TO- 63
01643-31032	T1200-04A1	20	T1- 53
01643-31032	T1200-04A1	22	T1- 53
01643-31032	T1200-04A3	20	T1- 57
01643-31032	T1200-04A3	22	T1- 57
01643-31032	T1200-05A3	11	T1- 59
01643-31032	T1200-05A3	13	T1- 59
01643-31032	Y1620-01A0	38	YO- 43
01643-31032	Y1620-11A0	43	YO- 51
01643-31032	Y1620-41A0	35	YO- 53
01643-31232	B0100-01A0	4	BO - 5
01643-31232	B0100-01A0	8	BO - 5
01643-31232	B0100-02A0	5	BO - 7
01643-31232	B0100-02A0	10	BO - 7
01643-31232	B0200-01A0	7	BO - 9
01643-31232	BO400-01A0	3	BO- 11
01643-31232	BO400-01A0	16	BO- 11
01643-31232	B0920-01A0	6	BO - 13
01643-31232	B0920-01A0	26	BO - 13
01643-31232	C0100-03A0	30	CO - 7
01643-31232	C0100-03A0	37	CO - 7
01643-31232	C0100-04A0	9	CO - 9
01643-31232	D0200-01A0	17	DO- 5
01643-31232	D0200-01A0	21	DO- 5
01643-31232	D0200-01A0	24	DO- 5
01643-31232	D0200-01A0	27	DO- 5
01643-31232	D0200-01A0	33	DO- 5
01643-31232	D0200-02A0	12	DO- 7
01643-31232	D0200-02A0	18	DO- 7
01643-31232	E0100-01A1	9	EO- 5
01643-31232	E0200-01A0	9	EO- 7
01643-31232	E0200-01A0	14	EO- 7
01643-31232	E0200-01A0	16	EO- 7
01643-31232	EO200-02A0	6	EO- 9
01643-31232	EO200-02A0	9	EO- 9
01643-31232	EO200-02A0	12	EO- 9

PARTS NO.	FIG NO.	INDEX	PAGE
01643-31232	EO200-02A0	15	EO- 9
01643-31232	EO200-02A0	18	EO- 9
01643-31232	EO200-02A0	22	EO- 9
01643-31232	EO200-02A0	26	EO- 9
01643-31232	EO200-02A0	30	EO- 9
01643-31232	EO200-02A0	33	EO- 9
01643-31232	EO200-02A0	36	EO- 9
01643-31232	EO200-02A0	39	EO- 9
01643-31232	E0200-03A0	3	EO- 13
01643-31232	E0200-03A0	6	EO- 13
01643-31232	E0200-03A0	11	EO- 13
01643-31232	E0200-03A0	14	EO- 13
01643-31232	E0200-03A0	17	EO- 13
01643-31232	E0200-03A0	20	EO- 13
01643-31232	E0200-03A0	23	EO- 13
01643-31232	E0200-03A0	29	EO- 13
01643-31232	E0200-04A0	6	EO- 15
01643-31232	E0200-04A0	9	EO- 15
01643-31232	E0200-04A0	14	EO- 15
01643-31232	E0200-04A0	20	EO- 15
01643-31232	E0200-04A0	25	EO- 15
01643-31232	E0200-04A0	28	EO- 15
01643-31232	E0200-04A0	32	EO- 15
01643-31232	E0200-04A0	35	EO- 15
01643-31232	E0200-05A0	11	EO- 17
01643-31232	E0200-06A0	6	EO- 19
01643-31232	E0200-06A0	8	EO- 19
01643-31232	E0320-01A0	5	EO- 25
01643-31232	E0320-01A0	8	EO- 25
01643-31232	E0420-01A0	7	EO- 31
01643-31232	E0100-01A1	9	ER- 3
01643-31232	H0110-01A0	25	HO- 3
01643-31232	H0110-01A0	33	HO- 5
01643-31232	H0120-03A0	13	HO- 23
01643-31232	H0120-03A1	23	HO- 25
01643-31232	H0311-01A0	4	HO- 33
01643-31232	H0320-01A0	4	HO- 39
01643-31232	H0320-01A0	6	HO- 39
01643-31232	H0320-01A0	11	HO- 39
01643-31232	H0320-01A0	14	HO- 39
01643-31232	H0330-01A0	4	HO- 41
01643-31232	H0330-01A0	7	HO- 41
01643-31232	H0330-01A1	4	HO- 43
01643-31232	H0330-01A1	6	HO- 43
01643-31232	H0330-01A1	9	HO- 43
01643-31232	H0340-01A0	5	HO- 45
01643-31232	H0340-01A0	8	HO- 45
01643-31232	H0340-01A0	13	HO- 45
01643-31232	H1210-01A0	11	HO- 47
01643-31232	H1270-01A0	4	HO- 57

PARTS NO.	FIG NO.	INDEX	PAGE
01643-31232	H1270-02A0	6	HO- 67
01643-31232	H1270-02A0	16	HO- 67
01643-31232	H1270-03A0	3	HO- 69
01643-31232	H1270-03A0	10	HO- 69
01643-31232	H1270-03A0	18	HO- 69
01643-31232	H1270-03A0	21	HO- 69
01643-31232	H1810-01A0	6	HO- 77
01643-31232	H1831-02A0	18	HO- 83
01643-31232	H1833-01A0	3	HO- 85
01643-31232	H1840-01A0	19	HO- 87
01643-31232	H1840-02A1	27	HO- 89
01643-31232	H0110-01A1	25	H1- 7
01643-31232	H0110-01A1	33	H1- 9
01643-31232	H0120-03A1	23	H1- 25
01643-31232	H0330-01A1	4	H1- 43
01643-31232	H0330-01A1	6	H1- 43
01643-31232	H0330-01A1	9	H1- 43
01643-31232	H1270-01A0	3	H1- 57
01643-31232	H1270-01A0	5	H1- 57
01643-31232	H1270-01A0	8	H1- 57
01643-31232	H1270-01A0	11	H1- 57
01643-31232	H1270-02A0	6	H1- 67
01643-31232	H1270-02A0	16	H1- 67
01643-31232	H1270-03A0	3	H1- 69
01643-31232	H1270-03A0	10	H1- 69
01643-31232	H1270-03A0	18	H1- 69
01643-31232	H1270-03A0	21	H1- 69
01643-31232	H1270-04A0	6	H1- 71
01643-31232	H1270-04A0	9	H1- 71
01643-31232	H1270-04A0	25	H1- 71
01643-31232	H1270-04A0	35	H1- 71
01643-31232	H1840-02A1	27	H1- 89
01643-31232	J1110-01A0	5	JO- 3
01643-31232	J1110-01A0	9	JO- 3
01643-31232	J1110-02A0	13	JO- 5
01643-31232	J1310-01A0	11	JO- 7
01643-31232	K0220-01A0	6	KO- 21
01643-31232	K0220-01A0	8	KO- 21
01643-31232	K0220-01A0	10	KO- 21
01643-31232	K0350-01A0	6	KO- 47
01643-31232	KO700-01A0	24	KO- 51
01643-31232	KO700-02A0	7	KO- 53
01643-31232	KO700-02A0	12	KO- 53
01643-31232	KO700-02A0	15	KO- 53
01643-31232	KO700-02A0	40	KO- 53
01643-31232	K1110-20A0	6	KO- 103
01643-31232	K1110-23A0	6	KO- 109
01643-31232	K1110-23A0	8	KO- 109
01643-31232	K1120-01A0	13	KO- 151
01643-31232	M1110-01A0	6	MO- 3

PARTS NO.	FIG NO.	INDEX	PAGE
01643-31232	M1110-01A0	16	MO- 3
01643-31232	M1110-01A0	22	MO- 3
01643-31232	M1120-01A0	4	MO- 5
01643-31232	M1120-01A0	8	MO- 5
01643-31232	M1130-01A0	12	MO- 7
01643-31232	M1130-01A0	18	MO- 7
01643-31232	M1130-01A0	21	MO- 7
01643-31232	M1130-01A0	24	MO- 7
01643-31232	M1130-01A0	30	MO- 7
01643-31232	M1130-01A0	33	MO- 7
01643-31232	K1130-01A0	46	MO- 9
01643-31232	K1130-01A0	48	MO- 9
01643-31232	K1130-01A0	50	MO- 9
01643-31232	K1130-01A0	53	MO- 9
01643-31232	K1130-01A0	55	MO- 9
01643-31232	M1140-01A0	8	MO- 11
01643-31232	M1140-01A0	13	MO- 11
01643-31232	M1140-01A0	16	MO- 11
01643-31232	M1140-01A0	19	MO- 11
01643-31232	M1140-01A0	25	MO- 11
01643-31232	M1140-01A0	33	MO- 11
01643-31232	M1140-01A0	38	MO- 11
01643-31232	M1150-01A0	11	MO- 13
01643-31232	M1150-01A0	13	MO- 13
01643-31232	M1150-01A0	19	MO- 13
01643-31232	M1150-01A0	21	MO- 13
01643-31232	M1150-01A0	24	MO- 13
01643-31232	M1150-01A0	29	MO- 13
01643-31232	M1150-01A0	33	MO- 15
01643-31232	M1150-01A0	36	MO- 15
01643-31232	M1150-01A0	38	MO- 15
01643-31232	M1150-01A0	41	MO- 15
01643-31232	M1150-01A0	43	MO- 15
01643-31232	M1150-01A0	46	MO- 15
01643-31232	M1160-01A0	5	MO- 17
01643-31232	M1160-01A0	8	MO- 17
01643-31232	M1160-01A0	11	MO- 17
01643-31232	M1210-01A0	5	MO- 19
01643-31232	M1210-01A0	29	MO- 19
01643-31232	M1220-01A0	12	MO- 21
01643-31232	M1310-01A0	3	MO- 23
01643-31232	M1510-01A0	7	MO- 29
01643-31232	M1510-01A0	10	MO- 29
01643-31232	M1810-01A0	13	MO- 33
01643-31232	M1810-01A0	15	MO- 33
01643-31232	M1810-01A0	17	MO- 33
01643-31232	M1810-01A0	20	MO- 33
01643-31232	M1810-01A0	22	MO- 33
01643-31232	M1810-02A0	6	MO- 35
01643-31232	M1810-02A0	8	MO- 35

PARTS NO.	FIG NO.	INDEX	PAGE
01643-31232	M1810-02A0	11	MO- 35
01643-31232	M1810-02A0	15	MO- 35
01643-31232	M1810-02A0	20	MO- 35
01643-31232	M1810-02A0	23	MO- 35
01643-31232	M1810-02A0	27	MO- 35
01643-31232	N1310-01A0	27	NO- 17
01643-31232	P1210-01A0	41	PO- 9
01643-31232	R0110-01A0	6	RO- 5
01643-31232	R0110-01A0	16	RO- 5
01643-31232	R0110-02A1	6	RO- 7
01643-31232	R0110-02A1	16	RO- 7
01643-31232	R1140-01A0	4	RO- 53
01643-31232	T1110-02A0	7	TO- 9
01643-31232	T1110-02A0	13	TO- 9
01643-31232	T1110-04A0A	8	TO- 19
01643-31232	T1110-06A0	5	TO- 23
01643-31232	T1110-06A0	7	TO- 23
01643-31232	T1200-01A0	13	TO- 35
01643-31232	T1200-01A0	18	TO- 35
01643-31232	T1200-01AA	13	TO- 35b
01643-31232	T1200-01AA	18	TO- 35b
01643-31232	T1200-01A1	16	TO- 37
01643-31232	T1200-01A1	21	TO- 37
01643-31232	T1200-01A3	16	TO- 39
01643-31232	T1200-01A3	21	TO- 39
01643-31232	T1200-04A1	10	TO- 53
01643-31232	T1200-04A1	13	TO- 53
01643-31232	T1200-04A1	36	TO- 55
01643-31232	T1200-04A3	10	TO- 57
01643-31232	T1200-04A3	13	TO- 57
01643-31232	T1200-04A3	36	TO- 57
01643-31232	T1200-05A3	4	TO- 59
01643-31232	T1200-05A3	27	TO- 59
01643-31232	T1920-01A0	6	TO- 105
01643-31232	T1920-01A0	9	TO- 105
01643-31232	T1920-01A1	6	TO- 107
01643-31232	T1920-01A1	9	TO- 107
01643-31232	T1200-01A1	16	T1- 37
01643-31232	T1200-01A1	21	T1- 37
01643-31232	T1200-01A3	16	T1- 39
01643-31232	T1200-01A3	21	T1- 39
01643-31232	T1200-04A1	10	T1- 53
01643-31232	T1200-04A1	13	T1- 53
01643-31232	T1200-04A1	36	T1- 55
01643-31232	T1200-04A3	10	T1- 57
01643-31232	T1200-04A3	13	T1- 57
01643-31232	T1200-04A3	36	T1- 57
01643-31232	T1200-05A3	4	T1- 59
01643-31232	T1200-05A3	27	T1- 59
01643-31232	T1200-01A0	13	TR- 35

PARTS NO.	FIG NO.	INDEX	PAGE
01643-31232	T1200-01A0	18	TR- 35
01643-31232	W1201-01A1	15	W1- 11
01643-31232	W1201-01A17	15	W1- 15
01643-31232	W1203-01A1	15	W1- 21
01643-31445	E0200-06A0	3	EO- 19
01643-31445	H0120-01A4	3	HO- 15
01643-31445	H0120-01A4	3	H1- 15
01643-31445	H0120-01A5	4	H1- 17
01643-31445	KO700-01A0	12	KO- 51
01643-31445	N1210-01A0	22A	NO- 7
01643-31445	R0300-01A0	13	RO- 13
01643-31445	T1510-01A0	12	TO- 63
01643-31445	Y0260-01A0	19A	YO- 3
01643-31445	Y1600-02A0	11	YO- 21
01643-31445	Y1660-07A0	25	YO- 83
01643-31445	Y1660-14A0	30	YO- 99
01643-31445	Y1662-07A0	25	Y1- 119
01643-31445	Y1662-14A0	30	Y1- 135
01643-31645	B0100-01A0	19	BO - 5
01643-31645	B0100-01A0	21	BO - 5
01643-31645	C0100-03A0	33	CO - 7
01643-31645	D0100-01A0	19	DO- 3
01643-31645	H0110-01A0	44	HO- 5
01643-31645	H0120-03A0	3	HO- 23
01643-31645	H0120-03A0	5	HO- 23
01643-31645	H0120-03A1	3	HO- 25
01643-31645	H0120-03A1	5	HO- 25
01643-31645	H0110-01A1	44	H1- 9
01643-31645	H0120-03A1	3	H1- 25
01643-31645	H0120-03A1	5	H1- 25
01643-31645	J1310-01A0	4	JO- 7
01643-31645	K1120-01A0	6	KO- 151
01643-31645	K1120-01A0	9	KO- 151
01643-31645	P1210-01A0	31	PO- 9
01643-31645	P1210-01A0	38	PO- 9
01643-31645	R0110-01A0	18	RO- 5
01643-31645	R0110-02A1	18	RO- 7
01643-31645	Y0270-01A0	31	YO- 7
01643-31845	R0200-01A0	12	RO- 9
01643-31845	R0200-01A1	12	RO- 11
01643-31845	R1200-01A2	6	RO- 57
01643-31845	R1200-01A3	6	RO- 59
01643-32060	N1210-01A0	53	NO- 9
01643-32060	R1100-01A0	4	RO- 41
01643-32060	R1100-01A1	4	RO- 43
01643-32060	R1100-01A2	4	RO- 45
01643-32060	R1100-01A3	4	RO- 47
01643-32060	R1200-01A1	3	RO- 55
01643-32060	R1200-01A2	4	RO- 57
01643-32060	R1200-01A3	4	RO- 59

PARTS NO.	FIG NO.	INDEX	PAGE
01643-32060	T1510-01A0	48	TO- 65
01643-32060	T1510-01B2	10	TO- 89
01643-32060	T1510-01B5	10	TO- 95
01643-32060	T1510-01B6	10	TO- 97
01643-32060	T1510-01B9	10	TO- 99
01643-32060	T1510-01B9	10	TO- 101
01643-32460	T1510-01A5	6	TO- 75
01643-33080	T1510-01A0	31	TO- 63
01643-50823	Y1669-02A0	23	YO- 151
01643-50823	Y1669-12A0	23	YO- 159
01643-50823	Y1670-02A0	20	YO- 165
01643-50823	Y1662-18A0	23	Y1- 143
01643-50823	Y1669-02A0	23	Y1- 151
01643-51032	H0120-04A6	4	HO- 27
01643-51032	H0312-01A0A	6	HO- 35
01643-51032	H0312-01A0A	13	HO- 35
01643-51032	H0312-01A0A	18	HO- 35
01643-51032	H0312-01A0A	21	HO- 35
01643-51032	H1210-01A0	5	HO- 47
01643-51032	H1210-01A0	8	HO- 47
01643-51032	H1210-02A0	5	HO- 49
01643-51032	H1220-01A0	5	HO- 51
01643-51032	H1220-01A0	11	HO- 51
01643-51032	H1220-01A0	16	HO- 51
01643-51032	H1220-01A0	21	HO- 51
01643-51032	H1220-01A1	5	HO- 53
01643-51032	H1220-01A1	11	HO- 53
01643-51032	H1220-01A1	16	HO- 53
01643-51032	H1220-01A1	21	HO- 53
01643-51032	H1270-01A0	9	HO- 57
01643-51032	H1270-01A0	14	HO- 57
01643-51032	H1270-02A0	10	HO- 67
01643-51032	H1310-01A0	11	HO- 73
01643-51032	H1340-01A0	7	HO- 75
01643-51032	H0120-04A6	4	H1- 27
01643-51032	H1270-01A0	19	H1- 57
01643-51032	H1270-01A0	24	H1- 57
01643-51032	H1270-02A0	11	H1- 67
01643-51032	K1110-25A11	11	KO- 113
01643-51032	K1110-28A0	11	KO- 121
01643-51032	N1210-01A0	36	NO- 9
01643-51032	N1310-01A0	20	NO- 17
01643-51032	P1120-01A0	3	PO- 3
01643-51032	P1120-01A1	3	PO- 5
01643-51032	T1110-03A0	4	TO- 11
01643-51032	T1110-03A0	8	TO- 11
01643-51032	T1110-03A0	20	TO- 11
01643-51032	T1110-03A0	25	TO- 11
01643-51032	T1110-03A0	30	TO- 11
01643-51032	T1110-03A0	39	TO- 13

PARTS NO.	FIG NO.	INDEX	PAGE
01643-51032	T1110-03A1	4	TO- 15
01643-51032	T1110-03A1	8	TO- 15
01643-51032	T1110-03A1	21	TO- 15
01643-51032	T1110-03A1	26	TO- 15
01643-51032	T1110-03A1	31	TO- 15
01643-51032	T1110-03A1	41	TO- 15
01643-51032	T1110-05A1	5	TO- 21
01643-51032	T1140-01A2	6	TO- 33
01643-51032	T1140-01A2	11	TO- 33
01643-51032	T1200-03A0	5	TO- 49
01643-51032	T1200-03A2	5	TO- 51
01643-51032	T1200-04A1	5	TO- 53
01643-51032	T1200-04A1	31	TO- 53
01643-51032	T1200-04A1	45	TO- 55
01643-51032	T1200-04A3	5	TO- 57
01643-51032	T1200-04A3	31	TO- 57
01643-51032	T1200-05A3	22	TO- 59
01643-51032	T1200-05A3	36	TO- 59
01643-51032	T1110-03A1	4	T1- 15
01643-51032	T1110-03A1	8	T1- 15
01643-51032	T1110-03A1	21	T1- 15
01643-51032	T1110-03A1	26	T1- 15
01643-51032	T1110-03A1	31	T1- 15
01643-51032	T1110-03A1	41	T1- 15
01643-51032	T1110-05A1	5	T1- 21
01643-51032	T1200-04A1	5	T1- 53
01643-51032	T1200-04A1	31	T1- 53
01643-51032	T1200-04A1	45	T1- 55
01643-51032	T1200-04A3	5	T1- 57
01643-51032	T1200-04A3	31	T1- 57
01643-51032	T1200-05A3	22	T1- 59
01643-51032	T1200-05A3	36	T1- 59
01643-51032	W1200-01A0	5	WO- 5
01643-51032	W1200-01A0	10	WO- 5
01643-51032	W1201-01A0	5	WO- 9
01643-51032	W1201-01A2	5	WO- 13
01643-51032	W1201-01A2	10	WO- 13
01643-51032	W1202-01A0	5	WO- 17
01643-51032	W1203-01A0	5	WO- 19
01643-51032	W1200-01A1	5	W1- 7
01643-51032	W1200-01A1	10	W1- 7
01643-51032	W1200-01A1	15	W1- 7
01643-51032	W1201-01A1	5	W1- 11
01643-51032	W1201-01A1	10	W1- 11
01643-51032	W1201-01A7	5	W1- 15
01643-51032	W1201-01A12	10	W1- 15
01643-51032	W1203-01A1	5	W1- 21
01643-51032	W1203-01A1	10	W1- 21
01643-51032	Y0260-01A0	30	YO- 3
01643-51032	Y1660-10A0	15	YO- 89

PARTS NO.	FIG NO.	INDEX	PAGE
01643-51032	Y1660-14A0	21	YO- 99
01643-51032	Y1660-14A0	32	YO- 99
01643-51032	Y1662-10A0	15	Y1- 125
01643-51032	Y1662-14A0	21	Y1- 135
01643-51032	Y1662-14A0	32	Y1- 135
01643-51032	Y1679-01A0	8	Y1- 175
01643-51232	W1200-01A1	20	W1- 7
01643-51645	Y1620-01A0	16	YO- 41
01643-51645	Y1620-41A0	16	YO- 53
01643-70623	K0230-01A1	17	KO- 25
01643-70623	K0310-01A0	4	KO- 31
01643-70623	K0310-01A1	4	KO- 33
01643-70623	k1110-02A0	23	KO- 61
01643-70623	K1110-04A0	24	KO- 69
01643-70623	K1110-11A0	11	KO- 83
01643-70623	K0310-01A1	4	K1- 63
01643-70823	K0110-01A2	5	KO- 5
01643-70823	K0180-01A0	7	KO- 15
01643-70823	K0180-01A0	15	KO- 15
01643-70823	K0180-01A0	28	KO- 15
01643-70823	K0180-01A0	32	KO- 15
01643-70823	K0180-01A0	37	KO- 15
01643-70823	K0230-01A1	25	KO- 25
01643-70823	K0230-01A1	27	KO- 25
01643-70823	K0330-01A0	2	KO- 43
01643-70823	K0830-01A1	3	KO- 57
01643-70823	K0830-01A1	7	KO- 57
01643-70823	k1110-02A0	26	KO- 61
01643-70823	K1110-07A0	3	KO- 78
01643-70823	K1110-13A0	14	KO- 87
01643-70823	K1110-14D0	3	KO- 89
01643-70823	K1110-14D0	6	KO- 89
01643-70823	K1110-14D0	9	KO- 89
01643-70823	K1110-14A0	3	KO- 89a
01643-70823	K1110-14A0	6	KO- 89a
01643-70823	K1110-14A0	9	KO- 89a
01643-70823	K1110-15A0	6	KO- 91
01643-70823	K1110-15A0	13	KO- 91
01643-70823	K1110-15A0	20	KO- 91
01643-70823	K1110-31A0	9	KO- 125
01643-70823	K1110-38A0	2	KO- 145
01643-71032	E0310-01A0	4	EO- 21
01643-71032	E0310-01A1	4	EO- 23
01643-71032	K0230-01A1	20	KO- 25
01643-71032	K0330-01A0	2	KO- 43
01643-71032	K1110-10A0	20	KO- 81
01643-71032	K1110-11A0	9	KO- 83
01643-71032	K1110-17A0	13	KO- 95
01643-71032	K1110-19A1	9	KO- 101
01643-71032	K1110-19A1	12	KO- 101

PARTS NO.	FIG NO.	INDEX	PAGE
01643-71032	K1110-20A0	15	KO- 103
01643-71032	K1110-04A1	9	K1- 87
01643-71032	K1110-04A1	12	K1- 87
01643-71232	E0340-01A0	5	EO- 27
01643-71232	K0180-01A0	29	KO- 15
01643-71232	K0180-01A0	33	KO- 15
01643-71232	K0220-01A0	15	KO- 21
01643-71232	K0230-01A0	4	KO- 23
01643-71232	K0230-01A1	5	KO- 25
01643-71232	K0230-01A1	8	KO- 25
01643-71232	K0230-01A1	11	KO- 25
01643-71232	K0230-01A1	15	KO- 25
01643-71232	K0230-01A2	4	KO- 27
01643-71232	K1110-11A0	4	KO- 83
01643-71232	K1110-11A0	6	KO- 83
01643-71232	K1120-01A0	15	KO- 151
01643-72060	N1110-01A0	5	NO- 3
01643-72260	N1110-01A0	16	NO- 3
01643-81032	N1210-01A0	55	NO- 9
01643-81232	H1270-02A0	3	HO- 67
01803-02430	T1510-02A1	4	TO- 103
02090-11285	T1510-01A0	46	TO- 65
02290-11219	T1510-01A0	47	TO- 65
02721-00813	A219P-01A0	9	AA- 63
02760-00203	H1831-02A0	15	HO- 83
02760-00204	H1840-01A0	15	HO- 87
02760-00208	H1840-01A0	7	HO- 87
02760-00209	H1840-01A0	2	HO- 87
02760-00211	H1831-02A0	20	HO- 83
02760-00211	H1831-02A0	23	HO- 83
02760-00211	K1110-34A0	10	KO- 133
02760-00212	H1270-04A0	28	H1- 71
02760-00212	K1110-19A1	25	KO- 101
02760-00212	K1110-04A1	25	K1- 87
02760-00213	H1831-02A0	4	HO- 83
02760-00214	H1840-02A1	29	HO- 89
02760-00216	H1270-04A0	29	H1- 71
02760-00220	P1120-01A0	23	PO- 3
02760-00221	H1840-02A1	28	HO- 89
02760-00222	P1120-01A1	23	PO- 5
02760-00224	K1110-19A1	26	KO- 101
02760-00231	K1110-35A0	6	KO- 135
02760-00232	K1110-35A0	7	KO- 135
02760-00233	K1110-35A0	13	KO- 135
02760-00235	K1110-35A0	14	KO- 135
02760-002A5	H1831-02A0	3	HO- 83
02760-002A6	H1270-04A0	27	H1- 71
02760-002A7	H1840-01A0	1	HO- 87
02760-002A8	H1840-01A0	8	HO- 87
02760-002A9	H1840-01A0	9	HO- 87

PARTS NO.	FIG NO.	INDEX	PAGE
02760-002A9	K1110-34A0	10	KO- 133
02760-00312	H1831-02A0	21	HO- 83
02760-00332	K1110-35A0	1	KO- 135
02760-00332	K1110-35A0	8	KO- 135
02760-00334	K1110-35A0	1	KO- 135
02761-00208	H1831-02A0	10	HO- 83
02761-002A7	H1831-02A0	1	HO- 83
02761-00213	H1831-02A0	11	HO- 83
02761-00217	H0120-03A0	6	HO- 23
02761-00217	H0120-03A1	6	HO- 25
02761-00217	H0120-03A1	6	H1- 25
02761-00221	H1270-04A0	30	H1- 71
02762-00419	P1120-01A0	20	PO- 3
02762-00421	P1120-01A1	20	PO- 5
02762-00608	H0330-01A0	9	HO- 41
02762-00608	H0330-01A1	13	HO- 43
02762-00608	H0330-01A1	13	H1- 43
02763-00508	H0340-01A0	1	HO- 45
02764-002A7	C0100-04A0	14	CO - 9
02777-00218	H0120-03A0	7	HO- 23
02777-00218	H0120-03A1	7	HO- 25
02777-00218	H0120-03A1	7	H1- 25
02781-0021D	K1110-37A0	7	KO- 139
02781-0021D	K1110-37A0	16	KO- 139
02781-0021D	K1110-37A1	7	KO- 141
02781-0021D	K1110-37A1	17	KO- 141
02781-0021D	K1110-37B5	7	KO- 143
02781-0021D	K1110-37B5	16	KO- 143
02781-0031D	K1110-37A0	13	KO- 139
02781-0031D	K1110-37A1	14	KO- 141
02781-0031D	K1110-37B5	13	KO- 143
02781-00422	P1120-01A0	6	PO- 3
02781-00422	P1120-01A1	6	PO- 5
02781-00628	H0110-01A0	6	HO- 3
02781-00628	H0330-01A0	10	HO- 41
02781-00628	H0330-01A1	14	HO- 43
02781-00628	H0110-01A1	6	H1- 7
02781-00628	H0330-01A1	14	H1- 43
02782-10210	H1270-02A0	20	H1- 67
02782-10311	H0120-01A0	11	HO- 11
02782-10311	H0120-01A1	12	HO- 13
02782-10311	H0120-01A1	12	H1- 13
02782-10311	K1110-37A0	4	KO- 139
02782-10311	K1110-37A1	4	KO- 141
02782-10311	K1110-37B5	4	KO- 143
02782-10315	H0110-01A0	12	HO- 3
02782-10315	H1831-01A0	9	HO- 79
02782-10315	H0110-01A1	12	H1- 7
02782-10315	H1831-01A1	9	H1- 81
02782-10522	H0110-01A0	9	HO- 3

PARTS NO.	FIG NO.	INDEX	PAGE
02782-10522	H0110-01A1	9	H1- 7
02782-10522	N1310-01A0	2	NO- 17
02782-10628	H0340-01A0	14	HO- 45
02782-10628	N1310-01A0	14	NO- 17
02782-10630	N1220-01A0	7	NO- 15
02782-10630	N1310-01A0	15	NO- 17
02789-00210	H0120-04A6	5	HO- 27
02789-00210	H0120-04A6	5	H1- 27
02896-11008	C0100-04A0	13	CO - 9
02896-11008	C0100-04A0	16	CO - 9
02896-11008	H0110-01A0	16	HO- 3
02896-11008	H0120-01A0	5	HO- 11
02896-11008	H0120-01A0	8	HO- 11
02896-11008	H0120-01A0	10	HO- 11
02896-11008	H0120-01A0	14	HO- 11
02896-11008	H0120-01A0	16	HO- 11
02896-11008	H0120-01A0	28	HO- 11
02896-11008	H0120-01A1	6	HO- 13
02896-11008	H0120-01A1	9	HO- 13
02896-11008	H0120-01A1	11	HO- 13
02896-11008	H0120-01A1	15	HO- 13
02896-11008	H0120-01A1	17	HO- 13
02896-11008	H0120-01A1	29	HO- 13
02896-11008	H0120-01A4	10	HO- 15
02896-11008	H0120-01A4	13	HO- 15
02896-11008	H0120-02A0	2	HO- 19
02896-11008	H0120-02A0	9	HO- 19
02896-11008	H0120-02A0	12	HO- 19
02896-11008	H0120-02A0	15	HO- 19
02896-11008	H0120-02A0	18	HO- 19
02896-11008	H0120-02A0	21	HO- 19
02896-11008	H0120-02A0	24	HO- 19
02896-11008	H0120-03A1	13	HO- 25
02896-11008	H0120-03A1	16	HO- 25
02896-11008	H0120-03A1	19	HO- 25
02896-11008	H0210-01A0A	8	HO- 29
02896-11008	H0210-01A0A	15	HO- 29
02896-11008	H0210-01A0A	18	HO- 29
02896-11008	H1831-01A0	7	HO- 79
02896-11008	H1831-01A0	15	HO- 79
02896-11008	H1833-01A0	12	HO- 85
02896-11008	H1833-01A0	17	HO- 85
02896-11008	H1840-02A1	8	HO- 89
02896-11008	H1840-02A1	12	HO- 89
02896-11008	H1840-02A1	16	HO- 89
02896-11008	H0110-01A1	16	H1- 7
02896-11008	H0120-01A1	6	H1- 13
02896-11008	H0120-01A1	9	H1- 13
02896-11008	H0120-01A1	11	H1- 13
02896-11008	H0120-01A1	15	H1- 13

PARTS NO.	FIG NO.	INDEX	PAGE
02896-11008	H0120-01A1	17	H1- 13
02896-11008	H0120-01A1	29	H1- 13
02896-11008	H0120-01A4	10	H1- 15
02896-11008	H0120-01A4	13	H1- 15
02896-11008	H0120-01A5	11	H1- 17
02896-11008	H0120-01A5	14	H1- 17
02896-11008	H0120-02A1	2	H1- 21
02896-11008	H0120-02A1	9	H1- 21
02896-11008	H0120-02A1	12	H1- 21
02896-11008	H0120-02A1	15	H1- 21
02896-11008	H0120-02A1	18	H1- 21
02896-11008	H0120-02A1	21	H1- 21
02896-11008	H0120-02A1	24	H1- 21
02896-11008	H0120-03A1	13	H1- 25
02896-11008	H0120-03A1	16	H1- 25
02896-11008	H0120-03A1	19	H1- 25
02896-11008	H1270-02A0	18	H1- 67
02896-11008	H1270-02A0	21	H1- 67
02896-11008	H1270-04A0	13	H1- 71
02896-11008	H1270-04A0	16	H1- 71
02896-11008	H1270-04A0	19	H1- 71
02896-11008	H1831-01A1	7	H1- 81
02896-11008	H1831-01A1	17	H1- 81
02896-11008	K1110-17A0	26	KO- 95
02896-11008	K1110-19A1	18	KO- 101
02896-11008	K1110-19A1	21	KO- 101
02896-11008	K1110-19A1	23	KO- 101
02896-11008	K1110-25A20	20	KO- 113
02896-11008	K1110-28A0	20	KO- 121
02896-11008	K1110-37A0	8	KO- 139
02896-11008	K1110-37A1	8	KO- 141
02896-11008	K1110-37A1	18	KO- 141
02896-11008	K1110-37B5	8	KO- 143
02896-11008	K1110-37B5	17	KO- 143
02896-11008	K1110-04A1	18	K1- 87
02896-11008	K1110-04A1	21	K1- 87
02896-11008	K1110-04A1	23	K1- 87
02896-11008	K1110-04A1	46	K1- 89
02896-11008	K1110-04A1	49	K1- 89
02896-11008	K1110-21A8	8	K1- 142
02896-11008	K1110-21A11	11	K1- 145
02896-11008	K1110-21A13	13	K1- 147
02896-11008	K1110-21A22	22	K1- 156
02896-11008	K1110-21A25	25	K1- 159
02896-11008	K1110-21A27	27	K1- 161
02896-11008	N1220-01A0	5	NO- 15
02896-11008	N1310-01A0	6	NO- 17
02896-11008	N1310-01A0	9	NO- 17
02896-11008	P1120-01A0	10	PO- 3
02896-11008	P1120-01A1	10	PO- 5

PARTS NO.	FIG NO.	INDEX	PAGE
02896-11009	H0110-01A0	13	HO- 3
02896-11009	H0120-01A0	12	HO- 11
02896-11009	H0120-01A0	18	HO- 11
02896-11009	H0120-01A1	13	HO- 13
02896-11009	H0120-01A1	19	HO- 13
02896-11009	H1831-01A0	10	HO- 79
02896-11009	H0110-01A1	13	H1- 7
02896-11009	H0120-01A1	13	H1- 13
02896-11009	H0120-01A1	19	H1- 13
02896-11009	H1831-01A1	10	H1- 81
02896-11009	K1110-28A0	22	KO- 121
02896-11009	K1110-37A0	5	KO- 139
02896-11009	K1110-37A0	14	KO- 139
02896-11009	K1110-37A1	5	KO- 141
02896-11009	K1110-37A1	15	KO- 141
02896-11009	K1110-37B5	5	KO- 143
02896-11009	K1110-37B5	14	KO- 143
02896-11009	K1110-21A5	5	K1- 139
02896-11009	K1110-21A19	19	K1- 153
02896-11012	N1310-01A0	12	NO- 17
02896-11012	P1120-01A0	7	PO- 3
02896-11012	P1120-01A1	7	PO- 5
02896-11015	H0110-01A0	10	HO- 3
02896-11015	H0110-01A1	10	H1- 7
02896-11015	N1220-01A0	2	NO- 15
02896-11015	N1310-01A0	3	NO- 17
02896-11018	H0110-01A0	7	HO- 3
02896-11018	H0330-01A0	11	HO- 41
02896-11018	H0330-01A1	15	HO- 43
02896-11018	H0340-01A0	15	HO- 45
02896-11018	H0110-01A1	7	H1- 7
02896-11018	H0330-01A1	15	H1- 43
02896-11018	N1220-01A0	8	NO- 15
02896-11018	N1310-01A0	16	NO- 17
04020-01228	B0100-01A0	10	BO - 5
04020-01228	Y1600-02A0	6	YO- 21
04020-01228	Y1600-03A0	21	YO- 23
04020-01228	Y1600-07A0	18	YO- 31
04020-01228	Y1641-01A0	31	YO- 63
04020-01842	N1110-01A0	6	NO- 3
04022-04010	Y1670-02A0	22	YO- 165
04022-04016	Y1670-02A0	21	YO- 165
04025-00324	Y1641-02A0	31	YO- 65
04025-00412	T1200-04A1	17	TO- 53
04025-00412	T1200-04A3	17	TO- 57
04025-00412	T1200-05A3	8	TO- 59
04025-00412	T1200-04A1	17	T1- 53
04025-00412	T1200-04A3	17	T1- 57
04025-00412	T1200-05A3	8	T1- 59
04025-00420	Y1670-01A0	25	YO- 163

PARTS NO.	FIG NO.	INDEX	PAGE
04025-00432	Y1670-01A0	18	YO- 163
04050-11612	M1220-01A0	3	MO- 21
04050-12018	BO400-01A0	23	BO- 11
04050-13020	M1210-01A0	18	MO- 19
04050-13022	M1110-01A0	20	MO- 3
04050-14028	N1310-01A0	25	NO- 17
04050-16055	T1510-01A0	33	TO- 65
04052-10530	K1110-07A0	12	KO- 87
04052-10833	K0230-01A1	26	KO- 25
04052-10833	K1110-04A0	17	KO- 69
04064-03515	N1210-01A0	29	NO- 7
04064-03515	Y0260-01A0	26	YO- 3
04064-04518	R0110-01A0	10	RO- 5
04064-04518	R0110-02A1	10	RO- 7
04064-04518	Y1640-02A0	8	YO- 59
04064-07525	Y1627-01A0	8	YO- 55
04065-04818	Y1600-03A0	11	YO- 23
04065-04818	Y1600-07A0	8	YO- 31
04065-04818	Y1641-02A0	14	YO- 65
04065-06220	Y1640-02A0	11	YO- 59
04065-06825	Y1600-03A0	7	YO- 23
04065-07225	Y1641-02A0	7	YO- 65
04077-00085	R0110-01A0	21	RO- 5
04077-00085	R0110-02A1	21	RO- 7
04081-06012	T1510-01A0	36	TO- 65
04120-21748	KO700-02A0	42	KO- 53
04205-10520	K1110-07A0	11	KO- 86
04205-11038	M1210-01A0	17	MO- 19
04205-11230	M1110-01A0	19	MO- 3
04205-11648	N1310-01A0	24	NO- 17
04248-31018	BO400-01A0	19	BO- 11
04250-91056	BO400-01A0	21	BO- 11
04260-00635	Y1620-11A0	28	YO- 49
04260-00793	Y1660-14A0	15	YO- 99
04260-00793	Y1662-14A0	15	Y1- 135
04418-13060	U0100-01A2	20	UO- 3
04418-13060	U0100-01A3	20	UO- 5
04418-13060	U0100-01A2	20	UO- 7
04418-13060	U0100-01A20	20	UO- 9
04418-13060	U0520-01A0	2	UO- 21
04418-13060	U0520-01A1	2	UO- 23
04418-13060	U0100-01A2	20	UR- 3
04434-50508	A411S-01A0	5	AA- 109
04434-50608	A211V-01A1	5	AA- 55
04434-50610	A101V-01A1	3	AA- 5
04434-50612	E0200-04A0	26	EO- 15
04434-50612	H1270-04A0	23	H1- 71
04434-50810	H0210-01A0A	21	HO- 29
04434-50812	BO400-01A0	14	BO- 11
04434-51010	K1110-04A1	52	K1- 89

PARTS NO.	FIG NO.	INDEX	PAGE
04434-51012	EO200-02A0	7	EO- 9
04434-51012	E0200-03A0	27	EO- 13
04434-51012	E0200-04A0	4	EO- 15
04434-51012	E0200-05A0	9	EO- 17
04434-51012	E0200-06A0	9	EO- 19
04434-51012	T1110-04A0A	11	TO- 19
04434-51208	A219P-01A0	6	AA- 59
04434-51210	C0100-03A0	2	CO - 7
04434-51210	H1831-02A0	7	HO- 83
04434-51210	H1831-02A0	25	HO- 83
04434-51212	H1270-04A0	33	H1- 71
04434-51310	C0100-04A0	17	CO - 9
04434-51410	E0200-04A0	3	EO- 15
04434-51410	K1110-31A0	5	KO- 125
04434-51412	E0200-03A0	21	EO- 13
04434-51412	T1110-04A0A	6	TO- 19
04434-51612	D0200-01A0	25	DO- 5
04434-51612	D0200-02A0	16	DO- 7
04434-51612	H1840-02A1	25	HO- 89
04434-51612	H1840-02A1	25	H1- 89
04434-51708	A219P-01A0	11	AA- 59
04434-51710	K1110-22A0	8	KO- 107
04434-51710	N1210-01A0	44	NO- 9
04434-51712	E0200-03A0	15	EO- 13
04434-51712	E0200-03A0	18	EO- 13
04434-51712	E0200-04A0	11	EO- 15
04434-51712	E0200-04A0	29	EO- 15
04434-51712	E0200-04A0	33	EO- 15
04434-51812	E0200-05A0	8	EO- 17
04434-51908	K1110-15A0	11	KO- 91
04434-51910	KO700-02A0	28	KO- 53
04434-51910	K1110-22A0	24	KO- 107
04434-51912	E0200-01A0	11	EO- 7
04434-51912	EO200-02A0	19	EO- 9
04434-51912	EO200-02A0	23	EO- 9
04434-51912	EO200-02A0	27	EO- 9
04434-51912	EO200-02A0	40	EO- 9
04434-51912	E0200-03A0	9	EO- 13
04434-51912	E0200-03A0	12	EO- 13
04434-51912	KO700-02A0	27	KO- 53
04434-52110	K1110-33A0	6	KO- 129
04434-521110	KO700-02A0	34	KO- 53
04434-52112	E0200-04A0	23	EO- 15
04434-52208	K1110-23A0	2	KO- 109
04434-52310	K1110-22A0	17	KO- 107
04434-52312	D0200-01A0	15	DO- 5
04434-52312	E0200-03A0	1	EO- 13
04434-52312	H0340-01A0	3	HO- 45
04434-52312	KO700-02A0	9	KO- 53
04434-52312	KO700-02A0	13	KO- 53

PARTS NO.	FIG NO.	INDEX	PAGE
04434-52511	K1110-33A0	5	KO- 129
04434-52512	E0200-01A0	10	EO- 7
04434-52512	EO200-02A0	13	EO- 9
04434-52512	T1110-04A0A	5	TO- 19
04434-52712	EO200-02A0	28	EO- 9
04434-52712	EO200-02A0	31	EO- 9
04434-52712	EO200-02A0	34	EO- 9
04434-52712	H0340-01A0	11	HO- 45
04434-52712	KO700-02A0	10	KO- 53
04434-53211	K1110-36A0	1	KO- 137
04434-53411	K1110-22A0	4	KO- 107
04434-53411	K1110-22A0	13	KO- 107
04434-53411	K1110-23A0	1	KO- 109
04434-53411	K1110-36A0	7	KO- 137
04434-53412	B0100-02A0	7	BO - 7
04434-53412	EO200-02A0	4	EO- 9
04434-53412	EO200-02A0	10	EO- 9
04434-53412	EO200-02A0	16	EO- 9
04434-53412	EO200-02A0	20	EO- 9
04434-53412	EO200-02A0	24	EO- 9
04434-53412	E0200-03A0	4	EO- 13
04435-51210	K1110-19A1	33	KO- 101
04435-51210	K1110-04A1	33	K1- 89
04435-51310	K1110-36A0	6	KO- 137
04435-51512	H0120-03A0	11	HO- 23
04435-51512	H0120-03A1	21	HO- 25
04435-51512	H1831-02A0	16	HO- 83
04435-51512	H0120-03A1	21	H1- 25
04435-51612	H0120-03A0	9	HO- 23
04435-51612	H0120-03A1	9	HO- 25
04435-51612	H1810-01A0	4	HO- 77
04435-51612	H1840-02A1	31	HO- 89
04435-51612	H0120-03A1	10	H1- 25
04435-51612	H1840-02A1	31	H1- 89
04435-51812	B0920-01A0	24	BO - 13
04435-51812	D0200-01A0	31	DO- 5
04435-51910	D0200-01A0	34	DO- 5
04435-51912	D0200-01A0	18	DO- 5
04435-51912	D0200-01A0	22	DO- 5
04530-01222	Y1600-01A0	8	YO- 19
04530-01222	Y1600-06A0	6	YO- 29
06124-01616	K1110-28A0	21	KO- 119
07000-A5165	Y1600-02A0	5	YO- 21
07000-B1007	Y1600-11A0	11	YO- 39
07000-B1008	Y1600-11A0	9	YO- 39
07000-B1009	Y1600-01A0	5	YO- 19
07000-B1009	Y1600-06A0	3	YO- 29
07000-B1009	Y1600-10A0	10	YO- 37
07000-B2010	Y1600-04A0	22	YO- 25
07000-B2010	Y1600-08A0	22	YO- 33

PARTS NO.	FIG NO.	INDEX	PAGE
07000-B2012	Y1600-02A0	7	YO- 21
07000-B2014	Y1600-02A0	8	YO- 21
07000-B3034	Y1600-04A0	18	YO- 25
07000-B3034	Y1600-05A0	2	YO- 27
07000-B3034	Y1600-08A0	18	YO- 33
07000-B3034	Y1600-09A0	2	YO- 35
07000-B3045	Y1600-04A0	23	YO- 25
07000-B3045	Y1600-05A0	6	YO- 27
07000-B3045	Y1600-08A0	23	YO- 33
07000-B3045	Y1600-09A0	6	YO- 35
07000-F2020	Y1640-03A0	11	YO- 61
07000-01423	H1270-04A0	17	H1- 71
07000-01423	H1270-04A0	20	H1- 71
07000-02011	K1110-04A1	40	K1- 89
07000-02070	Y1670-11A0	15	YO- 167
07000-03042	Y1640-03A0	20	YO- 61
07000-11006	D0200-02A0	2	DO- 7
07000-11006	Y1641-01A0	26	YO- 63
07000-11007	C0100-01A0A	4	CO - 3
07000-11007	D0200-02A0	3	DO- 7
07000-11007	Y1660-07A0	14	YO- 83
07000-11007	Y1660-11A0	4	YO- 91
07000-11007	Y1660-15A0	10	YO- 101
07000-11007	Y1670-02A0	17	YO- 165
07000-11007	Y1662-07A0	14	Y1- 119
07000-11007	Y1662-11A0	4	Y1- 127
07000-11007	Y1662-15A0	10	Y1- 137
07000-11009	Y1640-03A0	21	YO- 61
07000-11009	Y1641-01A0	18	YO- 63
07000-11009	Y1641-01A0	30	YO- 63
07000-11009	Y1660-11A0	2	YO- 91
07000-11009	Y1660-14A0	16	YO- 99
07000-11009	Y1669-01A0	11	YO- 149
07000-11009	Y1669-11A0	11	YO- 157
07000-11009	Y1662-11A0	2	Y1- 127
07000-11009	Y1662-14A0	16	Y1- 135
07000-11009	Y1662-17A0	11	Y1- 141
07000-11009	Y1669-01A0	11	Y1- 149
07000-11010	Y1660-05A0	8	YO- 77
07000-11010	Y1660-16A0	17	YO- 103
07000-11010	Y1670-02A0	16	YO- 165
07000-11010	Y1675-01A0	17	YO- 173
07000-11010	Y1662-05A0	8	Y1- 113
07000-11010	Y1662-16A0	17	Y1- 139
07000-12011	K1110-19A1	19	KO- 101
07000-12011	K1110-19A1	24	KO- 101
07000-12011	K1110-04A1	19	K1- 87
07000-12011	K1110-04A1	24	K1- 87
07000-12011	Y1660-14A0	7	YO- 99
07000-12011	Y1660-14A0	26	YO- 99

PARTS NO.	FIG NO.	INDEX	PAGE
07000-12011	Y1660-16A0	15	YO- 103
07000-12011	Y1675-01A0	15	YO- 173
07000-12011	Y1662-14A0	7	Y1- 135
07000-12011	Y1662-14A0	26	Y1- 135
07000-12011	Y1662-16A0	15	Y1 - 139
07000-12012	Y1660-05A0	1	YO- 77
07000-12012	Y1660-05A0	12	YO- 77
07000-12012	Y1662-05A0	1	Y1- 113
07000-12012	Y1662-05A0	12	Y1- 113
07000-12014	Y1660-08A0	6	YO- 85
07000-12014	Y1851-01A0	3	YO- 179
07000-12014	Y1662-08A0	6	Y1- 121
07000-12015	K1110-17A0	29	KO- 95
07000-12015	K1110-25A18	18	KO- 113
07000-12015	K1110-28A0	18	KO- 121
07000-12015	Y1670-02A0	15	YO- 165
07000-12016	Y1660-08A0	8	YO- 85
07000-12016	Y1860-01A0	18	YO- 181
07000-12016	Y1861-01A0	10	YO- 183
07000-12016	Y1662-08A0	8	Y1- 121
07000-12018	K1110-17A0	24	KO- 95
07000-12018	K1110-25A16	16	KO- 113
07000-12018	K1110-28A0	16	KO- 121
07000-12020	C0100-01A0A	31	CO - 3
07000-12020	Y1640-01A0	8	YO- 57
07000-12020	Y1660-10A0	21	YO- 89
07000-12020	Y1670-01A0	9	YO- 163
07000-12020	Y1670-11A0	12	YO- 167
07000-12020	Y1662-10A0	21	Y1- 125
07000-12021	Y1660-05A0	4	YO- 77
07000-12021	Y1660-05A0	13	YO- 77
07000-12021	Y1669-01A0	12	YO- 149
07000-12021	Y1669-11A0	12	YO- 157
07000-12021	Y1662-05A0	4	Y1- 113
07000-12021	Y1662-05A0	13	Y1- 113
07000-12021	Y1662-17A0	12	Y1- 141
07000-12021	Y1669-01A0	12	Y1- 149
07000-12055	Y1679-01A0	9	Y1- 175
07000-12060	R0110-01A0	5	RO- 3
07000-12060	R0300-01A0	9	RO- 13
07000-12065	D0200-02A0	4	DO- 7
07000-12100	H0311-01A0	2	HO- 33
07000-12105	Y1627-01A0	10	YO- 55
07000-12115	Y1851-01A0	4	YO- 179
07000-13024	Y1660-02A0	6	YO- 71
07000-13024	Y1660-02A0	14	YO- 71
07000-13024	Y1660-03A0	8	YO- 73
07000-13024	Y1660-03A0	12	YO- 73
07000-13024	Y1660-04A0	5	YO- 75
07000-13024	Y1660-04A0	10	YO- 75

PARTS NO.	FIG NO.	INDEX	PAGE
07000-13024	Y1660-12A0	30	YO- 93
07000-13024	Y1660-16A0	12	YO- 103
07000-13024	Y1669-03A0	18	YO- 153
07000-13024	Y1669-13A0	18	YO- 161
07000-13024	Y1675-01A0	12	YO- 173
07000-13024	Y1662-02A0	6	Y1- 107
07000-13024	Y1662-02A0	14	Y1- 107
07000-13024	Y1662-03A0	8	Y1- 109
07000-13024	Y1662-03A0	12	Y1- 109
07000-13024	Y1662-04A0	5	Y1- 111
07000-13024	Y1662-04A0	10	Y1- 111
07000-13024	Y1662-12A0	30	Y1- 129
07000-13024	Y1662-16A0	12	Y1- 139
07000-13024	Y1662-19A0	37	Y1- 147
07000-13024	Y1669-03A0	18	Y1- 153
07000-13025	H1210-02A0	2	HO- 49
07000-13025	P1120-01A0	12	PO- 3
07000-13025	P1120-01A0	17	PO- 3
07000-13025	P1120-01A1	13	PO- 5
07000-13025	P1120-01A1	17	PO- 5
07000-13025	T1110-03A0	17	TO- 11
07000-13025	T1110-03A1	18	TO- 15
07000-13025	T1140-01A2	3	TO- 33
07000-13025	T1200-03A0	2	TO- 49
07000-13025	T1200-03A2	2	TO- 51
07000-13025	T1110-03A1	18	T1- 15
07000-13025	W1201-01A0	2	WO- 9
07000-13025	W1201-01A2	2	WO- 13
07000-13025	W1202-01A0	2	WO- 17
07000-13025	W1203-01A0	2	WO- 19
07000-13025	W1201-01A1	2	W1- 11
07000-13025	W1201-01A4	2	W1- 15
07000-13025	W1203-01A1	2	W1- 21
07000-13028	Y1660-05A0	5	YO- 77
07000-13028	Y1662-05A0	5	Y1- 113
07000-13030	T1110-03A0	37	TO- 13
07000-13030	T1110-03A1	39	TO- 15
07000-13030	T1110-03A1	39	T1- 15
07000-13030	Y1620-01A0	32	YO- 43
07000-13030	Y1620-11A0	34	YO- 51
07000-13030	Y1620-41A0	29	YO- 53
07000-13032	H0120-01A4	4	HO- 15
07000-13032	H1270-01A0	11	HO- 57
07000-13032	H0120-01A4	4	H1- 15
07000-13032	H0120-01A5	5	H1- 17
07000-13032	H1270-01A0	21	H1- 57
07000-13032	T1110-03A0	22	TO- 11
07000-13032	T1110-03A1	23	TO- 15
07000-13032	T1140-01A2	8	TO- 33
07000-13032	T1200-04A1	24	TO- 53

PARTS NO.	FIG NO.	INDEX	PAGE
07000-13032	T1200-04A3	24	TO- 57
07000-13032	T1200-05A3	15	TO- 59
07000-13032	T1110-03A1	23	T1- 15
07000-13032	T1200-04A1	24	T1- 53
07000-13032	T1200-04A3	24	T1- 57
07000-13032	T1200-05A3	15	T1- 59
07000-13032	W1201-01A2	7	WO- 13
07000-13032	W1200-01A1	11	W1- 7
07000-13032	W1201-01A1	7	W1- 11
07000-13032	W1201-01A9	7	W1- 15
07000-13032	W1203-01A1	7	W1- 21
07000-13032	Y1660-05A0	6	YO- 77
07000-13032	Y1660-05A0	14	YO- 77
07000-13032	Y1669-01A0	14	YO- 149
07000-13032	Y1669-11A0	14	YO- 157
07000-13032	Y1662-05A0	6	Y1- 113
07000-13032	Y1662-05A0	14	Y1- 113
07000-13032	Y1662-17A0	14	Y1- 141
07000-13032	Y1669-01A0	14	Y1- 149
07000-13035	T1110-05A1	3	TO- 21
07000-13035	T1200-04A1	29	TO- 53
07000-13035	T1200-04A1	43	TO- 55
07000-13035	T1200-04A3	29	TO- 57
07000-13035	T1200-05A3	20	TO- 59
07000-13035	T1200-05A3	34	TO- 59
07000-13035	T1110-05A1	3	T1- 21
07000-13035	T1200-04A1	29	T1- 53
07000-13035	T1200-04A1	43	T1- 55
07000-13035	T1200-04A3	29	T1- 57
07000-13035	T1200-05A3	20	T1- 59
07000-13035	T1200-05A3	34	T1- 59
07000-13035	Y1620-11A0	36	YO- 51
07000-13035	Y1660-15A0	9	YO- 101
07000-13035	Y1662-15A0	9	Y1- 137
07000-13036	Y1660-05A0	15	YO- 77
07000-13036	Y1662-05A0	15	Y1- 113
07000-13038	H1270-02A0	13	HO- 67
07000-13038	H1270-03A0	12	HO- 69
07000-13038	H1270-03A0	23	HO- 69
07000-13038	H1270-02A0	13	H1- 67
07000-13038	H1270-03A0	12	H1- 69
07000-13038	H1270-03A0	23	H1- 69
07000-13038	T1200-04A1	7	TO- 53
07000-13038	T1200-04A1	26	TO- 53
07000-13038	T1200-04A3	7	TO- 57
07000-13038	T1200-04A3	26	TO- 57
07000-13038	T1200-05A3	17	TO- 59
07000-13038	T1200-04A1	7	T1- 53
07000-13038	T1200-04A1	26	T1- 53
07000-13038	T1200-04A3	7	T1- 57

PARTS NO.	FIG NO.	INDEX	PAGE
07000-13038	T1200-04A3	26	T1- 57
07000-13038	T1200-05A3	17	T1- 59
07000-13038	W1200-01A1	16	W1- 7
07000-13038	W1201-01A1	12	W1- 11
07000-13038	W1201-01A14	12	W1- 15
07000-13038	W1203-01A1	12	W1- 21
07000-13038	Y1660-05A0	7	YO- 77
07000-13038	Y1662-05A0	7	Y1- 113
07000-13040	Y1641-01A0	16	YO- 63
07000-13048	H0320-01A0	2	HO- 39
07000-13048	H0330-01A0	2	HO- 41
07000-13048	H0330-01A1	2	HO- 43
07000-13048	H0330-01A1	12	HO- 43
07000-13048	H0330-01A1	2	H1- 43
07000-13048	H0330-01A1	12	H1- 43
07000-13050	D0100-01A0	7	DO- 3
07000-13050	Y1851-01A0	2	YO- 179
07000-15070	Y1620-41A0	22	YO- 53
07000-15075	Y1620-01A0	22	YO- 41
07000-15080	Y1627-01A0	3	YO- 55
07000-15085	Y1620-11A0	20	YO- 49
07000-15105	Y1620-41A0	12	YO- 53
07000-15110	Y1620-01A0	12	YO- 41
07000-15110	Y1620-01A0	27	YO- 41
07000-15125	Y1620-11A0	10	YO- 49
07000-15125	Y1620-11A0	27	YO- 49
07000-15160	H0110-01A0	31	HO- 5
07000-15160	H0110-01A1	31	H1- 9
07000-15160	V0100-01A0	8	VO- 3
07000-15195	H0110-01A0	23	HO- 3
07000-15195	H0110-01A1	23	H1- 7
07000-15195	V0100-01A0	9	VO- 3
07000-15240	N1210-01A0	51	NO- 9
07000-15310	N1210-01A0	11	NO- 7
07000-15310	Y0260-01A0	8	YO- 3
07000-72110	A261P-01A0	3	AA- 79
07001-01006	Y1641-01A0	27	YO- 63
07001-01007	Y1600-11A0	12	YO- 39
07001-01007	Y1660-07A0	15	YO- 83
07001-01007	Y1660-11A0	5	YO- 91
07001-01007	Y1662-07A0	15	Y1- 119
07001-01007	Y1662-11A0	5	Y1- 127
07001-01008	Y1600-11A0	10	YO- 39
07001-01009	Y1600-10A0	11	YO- 37
07001-01009	Y1660-11A0	3	YO- 91
07001-01009	Y1662-11A0	3	Y1- 127
07001-01010	Y1660-16A0	18	YO- 103
07001-01010	Y1675-01A0	18	YO- 173
07001-01010	Y1662-16A0	18	Y1- 139
07001-02011	Y1660-16A0	16	YO- 103

PARTS NO.	FIG NO.	INDEX	PAGE
07001-02011	Y1675-01A0	16	YO- 173
07001-02011	Y1662-16A0	16	Y1- 139
07001-02020	Y1640-03A0	12	YO- 61
07001-02020	Y1660-10A0	22	YO- 89
07001-02020	Y1662-10A0	22	Y1- 125
07001-03032	T1200-04A1	25	TO- 53
07001-03032	T1200-04A3	25	TO- 57
07001-03032	T1200-05A3	16	TO- 59
07001-03032	T1200-04A1	25	T1- 53
07001-03032	T1200-04A3	25	T1- 57
07001-03032	T1200-05A3	16	T1- 59
07001-03034	Y1600-04A0	19	YO- 25
07001-03034	Y1600-08A0	19	YO- 33
07001-03038	T1200-04A1	27	TO- 53
07001-03038	T1200-04A3	27	TO- 57
07001-03038	T1200-05A3	18	TO- 59
07001-03038	T1200-04A1	27	T1- 53
07001-03038	T1200-04A3	27	T1- 57
07001-03038	T1200-05A3	18	T1- 59
07002-01423	H1840-02A1	10	HO- 89
07002-01423	H1840-02A1	14	HO- 89
07002-01423	H1840-02A1	18	HO- 89
07002-01423	H1270-02A0	22	H1- 67
07002-01423	H1270-04A0	14	H1- 71
07002-01423	H1840-02A1	10	H1- 89
07002-01423	H1840-02A1	14	H1- 89
07002-01423	H1840-02A1	18	H1- 89
07002-01423	Y1640-03A0	19	YO- 61
07002-02034	H1270-02A0	19	H1- 67
07002-02434	H0110-01A0	5	HO- 3
07002-02434	H0210-01A0A	4	HO- 29
07002-02434	H0110-01A1	5	H1- 7
07002-10823	Y1660-01A0	9	YO- 69
07002-10823	Y1669-01A0	4	YO- 149
07002-10823	Y1669-11A0	4	YO- 157
07002-10823	Y1662-01A0	9	Y1- 105
07002-10823	Y1662-17A0	4	Y1- 141
07002-10823	Y1669-01A0	4	Y1- 149
07002-11023	W0111-01A0	2	WO- 3
07002-11023	W0111-01A0	5	WO- 3
07002-11023	Y1660-07A0	17	YO- 83
07002-11023	Y1660-07A0	23	YO- 83
07002-11023	Y1660-14A0	25	YO- 99
07002-11023	Y1660-16A0	20	YO- 103
07002-11023	Y1675-01A0	20	YO- 173
07002-11023	Y1662-07A0	17	Y1- 119
07002-11023	Y1662-07A0	23	Y1- 119
07002-11023	Y1662-14A0	25	Y1- 135
07002-11023	Y1662-16A0	20	Y1- 139
07002-11223	H0120-02A0	3	HO- 19

PARTS NO.	FIG NO.	INDEX	PAGE
07002-11223	H0210-01A0A	6	HO- 29
07002-11223	H0120-02A1	3	H1- 21
07002-11223	V0100-01A0	10	VO- 3
07002-11223	Y1641-01A0	28	YO- 63
07002-11223	Y1670-02A0	4	YO- 165
07002-11423	C0100-01A0A	39	CO - 3
07002-11423	C0100-04A0	12	CO - 9
07002-11423	H0110-01A0	17	HO- 3
07002-11423	H0120-01A0	19	HO- 11
07002-11423	H0120-01A0	22	HO- 11
07002-11423	H0120-01A0	27	HO- 11
07002-11423	H0120-01A0	29	HO- 11
07002-11423	H0120-01A1	20	HO- 13
07002-11423	H0120-01A1	23	HO- 13
07002-11423	H0120-01A1	28	HO- 13
07002-11423	H0120-01A1	30	HO- 13
07002-11423	H0120-01A4	11	HO- 15
07002-11423	H0120-01A4	14	HO- 15
07002-11423	H0120-02A0	7	HO- 19
07002-11423	H0120-02A0	10	HO- 19
07002-11423	H0120-02A0	13	HO- 19
07002-11423	H0120-02A0	16	HO- 19
07002-11423	H0120-02A0	19	HO- 19
07002-11423	H0120-02A0	22	HO- 19
07002-11423	H0120-02A0	25	HO- 19
07002-11423	H0120-03A1	14	HO- 25
07002-11423	H0120-03A1	17	HO- 25
07002-11423	H0120-03A1	20	HO- 25
07002-11423	H0210-01A0A	9	HO- 29
07002-11423	H0210-01A0A	11	HO- 29
07002-11423	H0210-01A0A	13	HO- 29
07002-11423	H0210-01A0A	16	HO- 29
07002-11423	H0210-01A0A	19	HO- 29
07002-11423	H1831-01A0	8	HO- 79
07002-11423	H1831-01A0	16	HO- 79
07002-11423	H1833-01A0	7	HO- 85
07002-11423	H1833-01A0	13	HO- 85
07002-11423	H1833-01A0	14	HO- 85
07002-11423	H0110-01A1	17	H1- 7
07002-11423	H0120-01A1	20	H1- 13
07002-11423	H0120-01A1	23	H1- 13
07002-11423	H0120-01A1	28	H1- 13
07002-11423	H0120-01A1	30	H1- 13
07002-11423	H0120-01A4	11	H1- 15
07002-11423	H0120-01A4	14	H1- 15
07002-11423	H0120-01A5	12	H1- 17
07002-11423	H0120-01A5	15	H1- 17
07002-11423	H0120-02A1	7	H1- 21
07002-11423	H0120-02A1	10	H1- 21
07002-11423	H0120-02A1	13	H1- 21

PARTS NO.	FIG NO.	INDEX	PAGE
07002-11423	H0120-02A1	16	H1- 21
07002-11423	H0120-02A1	19	H1- 21
07002-11423	H0120-02A1	22	H1- 21
07002-11423	H0120-02A1	25	H1- 21
07002-11423	H0120-03A1	14	H1- 25
07002-11423	H0120-03A1	17	H1- 25
07002-11423	H0120-03A1	20	H1- 25
07002-11423	H1270-04A0	18A	H1- 71
07002-11423	H1831-01A1	8	H1- 81
07002-11423	H1831-01A1	15	H1- 81
07002-11423	H1831-01A1	18	H1- 81
07002-11423	K1110-17A0	27	KO- 95
07002-11423	K1110-17A0	31	KO- 95
07002-11423	K1110-25A21	21	KO- 113
07002-11423	K1110-28A0	23	KO- 121
07002-11423	K1110-37A0	6	KO- 139
07002-11423	K1110-37A0	9	KO- 139
07002-11423	K1110-37A0	15	KO- 139
07002-11423	K1110-37A0	18	KO- 139
07002-11423	K1110-37A1	6	KO- 141
07002-11423	K1110-37A1	9	KO- 141
07002-11423	K1110-37A1	16	KO- 141
07002-11423	K1110-37A1	19	KO- 141
07002-11423	K1110-37B5	6	KO- 143
07002-11423	K1110-37B5	9	KO- 143
07002-11423	K1110-37B5	15	KO- 143
07002-11423	K1110-37B5	18	KO- 143
07002-11423	K1110-04A1	47	K1- 89
07002-11423	K1110-04A1	50	K1- 89
07002-11423	K1110-21A6	6	K1- 140
07002-11423	K1110-21A9	9	K1- 143
07002-11423	K1110-21A14	14	K1- 148
07002-11423	K1110-21A20	20	K1- 154
07002-11423	K1110-21A23	23	K1- 157
07002-11423	K1110-21A28	28	K1- 162
07002-11423	N1220-01A0	6	NO- 15
07002-11423	N1310-01A0	7	NO- 17
07002-11423	N1310-01A0	10	NO- 17
07002-11423	P1120-01A0	11	PO- 3
07002-11423	P1120-01A1	11	PO- 5
07002-11423	Y1641-01A0	10	YO- 63
07002-11423	Y1660-07A0	9	YO- 83
07002-11423	Y1660-07A0	13	YO- 83
07002-11423	Y1660-10A0	5	YO- 89
07002-11423	Y1660-14A0	12	YO- 99
07002-11423	Y1660-14A0	19	YO- 99
07002-11423	Y1660-14A0	23	YO- 99
07002-11423	Y1662-07A0	9	Y1- 119
07002-11423	Y1662-07A0	13	Y1- 119
07002-11423	Y1662-10A0	5	Y1- 125

PARTS NO.	FIG NO.	INDEX	PAGE
07002-11423	Y1662-14A0	12	Y1- 135
07002-11423	Y1662-14A0	19	Y1- 135
07002-11423	Y1662-14A0	23	Y1- 135
07002-11623	Y1660-13A0	29	YO- 97
07002-11623	Y1670-02A0	14	YO- 165
07002-11623	Y1662-13A0	29	Y1- 133
07002-11823	C0100-01A0A	34	CO - 3
07002-11823	Y1641-01A0	23	YO- 63
07002-11823	Y1660-07A0	7	YO- 83
07002-11823	Y1660-16A0	14	YO- 103
07002-11823	Y1675-01A0	14	YO- 173
07002-11823	Y1662-07A0	7	Y1- 119
07002-11823	Y1662-16A0	14	Y1- 139
07002-12034	H0110-01A0	14	HO- 3
07002-12034	H1831-01A0	11	HO- 79
07002-12034	H1831-01A0	13	HO- 79
07002-12034	H1831-01A0	20	HO- 79
07002-12034	H0110-01A1	14	H1- 7
07002-12034	H1831-01A1	11	H1- 81
07002-12034	H1831-01A1	13	H1- 81
07002-12034	H1831-01A1	22	H1- 81
07002-12034	P1120-01A0	8	PO- 3
07002-12034	P1120-01A1	8	PO- 5
07002-12034	Y1620-11A0	29D	YO- 49
07002-12434	H0110-01A0	8	HO- 3
07002-12434	H0110-01A0	11	HO- 3
07002-12434	H0330-01A0	12	HO- 41
07002-12434	H0330-01A0	14	HO- 41
07002-12434	H0330-01A1	16	HO- 43
07002-12434	H0330-01A1	18	HO- 43
07002-12434	H0340-01A0	16	HO- 45
07002-12434	H0110-01A1	8	H1- 7
07002-12434	H0110-01A1	11	H1- 7
07002-12434	H0330-01A1	16	H1- 43
07002-12434	H0330-01A1	18	H1- 43
07002-12434	H1270-01A0	29	H1- 57
07002-12434	H1270-04A0	3	H1- 71
07002-12434	N1220-01A0	3	NO- 15
07002-12434	N1220-01A0	9	NO- 15
07002-12434	N1310-01A0	4	NO- 17
07002-12434	N1310-01A0	13	NO- 17
07002-12434	N1310-01A0	17	NO- 17
07002-12434	P1210-01A0	34	PO- 9
07002-12434	T1920-01A0	3	TO- 105
07002-12434	T1920-01A1	3	TO- 107
07002-12434	V0100-01A0	11	VO- 3
07002-12434	Y0270-01A0	34	YO- 7
07002-12434	Y1660-08A0	11	YO- 85
07002-12434	Y1660-09A0	20	YO- 87
07002-12434	Y1660-13A0	14	YO- 97

PARTS NO.	FIG NO.	INDEX	PAGE
07002-12434	Y1660-13A0	18	YO- 97
07002-12434	Y1662-08A0	11	Y1- 121
07002-12434	Y1662-09A0	20	Y1- 123
07002-12434	Y1662-13A0	14	Y1- 133
07002-12434	Y1662-13A0	18	Y1- 133
07002-13024	Y1669-03A0	24	YO- 153
07002-13034	C0100-01A0A	32	CO - 3
07002-13034	Y1640-03A0	13	YO- 61
07002-13334	Y1640-01A0	12	YO- 57
07002-13334	Y1660-16A0	8	YO- 103
07002-13334	Y1675-01A0	8	YO- 173
07002-13334	Y1662-16A0	8	Y1- 139
07002-13634	Y1660-06A0	9	YO- 79
07002-13634	Y1660-06A0	16	YO- 79
07002-13634	Y1660-06A0	23	YO- 79
07002-13634	Y1660-06A0	30	YO- 79
07002-13634	Y1660-06A0	37	YO- 81
07002-13634	Y1660-06A0	44	YO- 81
07002-13634	Y1660-06A0	51	YO- 81
07002-13634	Y1660-06A0	58	YO- 81
07002-13634	Y1669-02A0	17	YO- 151
07002-13634	Y1669-12A0	17	YO- 159
07002-13634	Y1662-06A0	9	Y1- 115
07002-13634	Y1662-06A0	16	Y1- 115
07002-13634	Y1662-06A0	23	Y1- 115
07002-13634	Y1662-06A0	30	Y1- 115
07002-13634	Y1662-06A0	37	Y1- 117
07002-13634	Y1662-06A0	44	Y1- 117
07002-13634	Y1662-06A0	51	Y1- 117
07002-13634	Y1662-06A0	58	Y1- 117
07002-13634	Y1662-18A0	17	Y1- 143
07002-13634	Y1669-02A0	17	Y1- 151
07002-14234	H1270-03A0	5	HO- 69
07002-14234	H1270-03A0	7	HO- 69
07002-14234	H1270-03A0	5	H1- 69
07002-14234	H1270-03A0	7	H1- 69
07005-00812	D0100-01A0	16	DO- 3
07005-01012	A408P-01A0	14	AA- 103
07005-01212	A401R-01A0	4	AA- 97
07005-01212	A411R-01A1	3	AA- 107
07005-01212	A417P-01A1	6	AA- 111
07005-01412	A153T-01A1	11	AA- 23
07005-01412	B0920-01A0	9	BO - 13
07005-01412	B0920-01A0	17	BO - 13
07005-01412	D0200-01A0	9	DO- 5
07005-01412	D0200-01A0	12	DO- 5
07005-02216	A2119-01A1	7	AA- 57
07005-02216	A2119-01A1	11	AA- 57
07005-03016	H0210-01A0A	2	HO- 29
07012-00115	Y0260-01A0	6	YO- 3

PARTS NO.	FIG NO.	INDEX	PAGE
07020-00000	N1110-01A0	14	NO- 3
07020-00000	T1110-04A0A	1	TO- 19
07020-00000	T1110-06A0	8	TO- 23
07020-00000	T1200-01A0	6	TO- 35
07020-00000	T1200-01AA	6	TO- 35b
07020-00000	T1200-01A1	9	TO- 37
07020-00000	T1200-01A3	9	TO- 39
07020-00000	T1200-02A0	4	TO- 41
07020-00000	T1200-02A0	4	TO- 43
07020-00000	T1200-02A2	4	TO- 47
07020-00000	T1510-01A0	6	TO- 63
07020-00000	T1510-01A0	19	TO- 63
07020-00000	T1510-01A0	25	TO- 63
07020-00000	T1200-01A1	9	T1- 37
07020-00000	T1200-01A3	9	T1- 39
07020-00000	T1200-02A1	4	T1- 45
07020-00000	T1200-01A0	6	TR- 35
07020-00000	V0100-01A0	12	VO- 3
07020-00000	Y1620-11A0	24	YO- 49
07020-00000	Y1620-41A0	24	YO- 53
07020-00000	Y1620-41A0	25	YO- 53
07020-00675	T1200-02A2	5	TO- 47
07020-00675	T1200-03A2	10	TO- 51
07020-00675	T1510-01A0	41	TO- 65
07020-00675	V0100-01A0	13	VO- 3
07029-00000	N1210-01A0	5	NO- 7
07029-00000	Y0260-01A0	2	YO- 3
07030-03034	H0210-01A0A	1	HO- 29
07040-11209	H0210-01A0A	5	HO- 29
07040-11209	Y1670-02A0	3	YO- 165
07040-11409	C0100-01A0A	38	CO - 3
07040-11812	C0100-01A0A	33	CO - 3
07040-12412	H0210-01A0A	3	HO- 29
07040-12412	H0330-01A0	13	HO- 41
07040-12412	H0330-01A1	17	HO- 43
07040-12412	H0330-01A1	17	H1- 43
07040-12412	H1270-01A0	28	H1- 57
07040-12414	Y1600-01A0	3	YO- 19
07040-12414	Y1600-06A0	14	YO- 29
07042-00108	A151V-01A0	2	AA- 21
07042-00312	N1210-01A0	3	NO- 7
07042-30108	Y0260-01A0	33	YO- 3
07042-30617	Y0260-01A0	32	YO- 3
07043-70108	A153V-01A0	2	AA- 25
07043-A0108	A311P-01A1	6	AA- 91
07043-A0108	D0100-01A0	4	DO- 3
07044-12412	H0110-01A0	4	HO- 3
07044-12412	H0110-01A1	4	H1- 7
07044-12412	P1210-01A0	33	PO- 9
07044-12412	Y0270-01A0	33	YO- 7

PARTS NO.	FIG NO.	INDEX	PAGE
07044-12412	Y1600-01A0	6	YO- 19
07044-12412	Y1600-06A0	4	YO- 29
07048-01310	K1110-16A0	8	KO- 93
07049-01012	H0120-01A0	2	HO- 11
07049-01012	H0120-01A1	2	HO- 13
07049-01012	H0120-01A1	2	H1- 13
07049-01012	P1210-01A0	32	PO- 9
07049-01012	Y0270-01A0	32	YO- 7
07049-01215	H0120-01A0	2A	HO- 11
07049-01215	H0120-01A1	3	HO- 13
07049-01215	H0120-01A1	3	H1- 13
07049-01215	T1110-01A1	14	TO- 3
07049-01215	T1110-03A0	44	TO- 13
07049-02025	R1100-01A2	13	RO- 45
07049-02025	R1100-01A3	13	RO- 47
07052-31624	R0110-01A0	4	RO- 3
07074-00607	T1110-03A0	16	TO- 11
07074-00607	T1110-03A1	17	TO- 15
07074-00607	T1110-03A1	17	T1- 15
07074-01007	T1110-03A0	21	TO- 11
07074-01007	T1110-03A1	22	TO- 15
07074-01007	T1110-03A1	22	T1- 15
07094-11024	H1270-03A0	15	HO- 69
07094-11024	H1270-03A0	15	H1- 69
07095-00628	H1310-01A0	14	HO- 73
07095-01038	H1270-03A0	16	HO- 69
07095-01038	H1270-03A0	16	H1- 69
07095-01245	H0330-01A0	8	HO- 41
07095-01449	H0320-01A0	7	HO- 39
07095-01449	H0330-01A0	8	HO- 41
07095-01449	H0330-01A0	10	HO- 43
07095-01449	H0330-01A1	10	H1- 43
07095-20211	A219P-01A0	12	AA- 59
07095-20211	E0200-04A0	10	EO- 15
07095-20627	B0100-02A0	6	BO - 7
07097-01005	H1270-02A0	7	H1- 67
07097-21015	T1200-04A1	1	TO- 53
07097-21015	T1200-04A3	1	TO- 57
07097-21015	T1200-04A1	1	T1- 53
07097-21015	T1200-04A3	1	T1- 57
07097-21016	H1270-01A0	10	HO- 57
07097-21016	H1270-01A0	20	H1- 57
07097-21217	H1270-02A0	12	HO- 67
07097-21217	H1270-02A0	12	H1- 67
07097-21218	T1200-04A1	6	TO- 53
07097-21218	T1200-04A3	6	TO- 57
07097-21218	T1200-04A1	6	T1- 53
07097-21218	T1200-04A3	6	T1- 57
07098-00622	P1120-01A0	13	PO- 3
07098-00624	P1120-01A1	12	PO- 5
07098-01007	H1270-01A0	5	HO- 57
07098-01007	H1270-01A0	15	H1- 57
07143-10505	T1510-01A0	2	TO- 63
07144-10505	T1510-01A0	18	TO- 63
07144-10505	T1510-01A0	24	TO- 63
07145-00070	Y1620-01A0	3	YO- 41
07145-00070	Y1620-41A0	3	YO- 53
07145-00080	Y1620-01A0	6	YO- 41
07145-00080	Y1620-11A0	3	YO- 49
07145-00090	T1110-01A1	13	TO- 3
07145-00090	T1110-06A0	1	TO- 23
07145-00090	T1200-01A0	7	TO- 35
07145-00090	T1200-01AA	7	TO- 35b
07145-00090	T1200-01A1	10	TO- 37
07145-00090	T1200-01A3	10	TO- 39
07145-00090	T1200-01A1	10	T1- 37
07145-00090	T1200-01A3	10	T1- 39
07145-00090	T1200-01A0	7	TR- 35
07155-00720	R0110-01A0	8	RO- 5
07155-00720	R0110-02A1	8	RO- 7
07177-07030	R0110-01A0	19	RO- 5
07177-07030	R0110-02A1	19	RO- 7
07179-13094	Y1620-41A0	8	YO- 53
07179-13099	Y1620-01A0	8	YO- 41
07179-13109	Y1620-11A0	6	YO- 49
07206-30508	D0100-01A0	17	DO- 3
07206-30710	A408P-01A0	13	AA- 103
07206-31014	B0920-01A0	8	BO - 13
07206-31014	B0920-01A0	16	BO - 13
07206-31014	B0920-01A0	29	BO - 13
07206-31014	D0200-01A0	8	DO- 5
07206-31014	D0200-01A0	11	DO- 5
07206-31014	D0200-02A0	29	DO- 7
07214-50813	N1110-01A0	8	NO- 3
07238-10630	N1210-01A0	42	NO- 9
07260-08732	H0311-01A0	5	HO- 33
07260-20945	A9999-01A1	6	AA- 171
07260-20945	B0000-01A0	6	BO - 3
07270-00630	D0200-02A0	8	DO- 7
07270-01070	D0200-02A0	21	DO- 7
07270-21560	N1210-01A0	33	NO- 9
07270-50422	D0200-01A0	1	DO- 5
07270-61411	H0110-01A0	41	HO- 5
07270-61411	H0110-01A1	41	H1- 9
07280-04726	K1110-16A0	7	KO- 93
07281-00197	B0920-01A0	20	BO - 13
07281-00197	B0920-01A0	23	BO - 13
07281-00197	D0200-01A0	5	DO- 5
07281-00197	D0200-02A0	14	DO- 7
07281-00197	D0200-02A0	27	DO- 7

PARTS NO.	FIG NO.	INDEX	PAGE
07281-00197	N1210-01A0	34	NO- 9
07281-00709	A111P-01A0	8	AA- 9
07281-01159	K1110-14A0	18	KO- 89a
07283-22738	Y1620-01A0	36	YO- 43
07283-22738	Y1620-11A0	41	YO- 51
07283-22738	Y1620-41A0	33	YO- 53
07283-32738	N1210-01A0	43	NO- 9
07283-34354	H0330-01A1	24	HO- 43
07283-36155	KO700-01A0	19	KO- 51
07283-54353	H0330-01A1	25	HO- 43
07285-00080	D0200-01A0	6	DO- 5
07285-00080	D0200-02A0	9	DO- 7
07285-00115	D0200-02A0	20	DO- 7
07285-00125	A173P-01A0	9	AA- 35
07285-0015	B0000-01A0	7	BO - 3
07285-00155	A9999-01A1	7	AA- 171
07285-00155	H0110-01A0	40	HO- 5
07285-00155	H0110-01A1	40	H1- 9
07285-00220	A2060-01A1	3	AA- 49
07286-01971	A2060-01A1	1	AA- 49
07286-03828	K1110-16A0	6	KO- 93
07288-01008	D0200-02A0	13	DO- 7
07288-01015	D0200-01A0	2	DO- 5
07288-01028	D0200-01A0	3	DO- 5
07288-01029	D0200-01A0	4	DO- 5
07289-00055	C0100-03A0	12	CO - 7
07289-00055	C0100-03A0	14	CO - 7
07289-00070	C0100-03A0	15	CO - 7
07289-00105	H0311-01A0	6	HO- 33
07299-00070	C0100-04A0	10	CO - 9
07299-00105	B0200-01A0	9	BO - 9
07371-30640	H0312-01A0A	22	HO- 35
07371-30640	H1210-02A0	3	HO- 49
07371-30640	H1220-01A0	14	HO- 51
07371-30640	H1220-01A0	19	HO- 51
07371-30640	H1220-01A1	14	HO- 53
07371-30640	H1220-01A1	19	HO- 53
07371-30640	H1340-01A0	5	HO- 75
07371-30640	N1310-01A0	18	NO- 17
07371-30640	P1120-01A0	1	PO- 3
07371-30640	P1120-01A1	1	PO- 5
07371-30640	T1110-03A0	2	TO- 11
07371-30640	T1110-03A0	18	TO- 11
07371-30640	T1110-03A0	28	TO- 11
07371-30640	T1110-03A1	2	TO- 15
07371-30640	T1110-03A1	19	TO- 15
07371-30640	T1110-03A1	29	TO- 15
07371-30640	T1140-01A2	4	TO- 33
07371-30640	T1200-03A0	3	TO- 49
07371-30640	T1200-03A2	3	TO- 51

PARTS NO.	FIG NO.	INDEX	PAGE
07371-30640	T1110-03A1	2	T1- 15
07371-30640	T1110-03A1	19	T1- 15
07371-30640	T1110-03A1	29	T1- 15
07371-30640	W1200-01A0	8	WO- 5
07371-30640	W1201-01A0	3	WO- 9
07371-30640	W1201-01A2	3	WO- 13
07371-30640	W1202-01A0	3	WO- 17
07371-30640	W1203-01A0	3	WO- 19
07371-30640	W1200-01A1	8	W1- 7
07371-30640	W1201-01A1	3	W1- 11
07371-30640	W1201-01A5	3	W1- 15
07371-30640	W1203-01A1	3	W1- 21
07371-31049	H0312-01A0A	7	HO- 35
07371-31049	H0312-01A0A	14	HO- 35
07371-31049	H0312-01A0A	19	HO- 35
07371-31049	H1220-01A0	3	HO- 51
07371-31049	H1220-01A0	9	HO- 51
07371-31049	H1220-01A1	3	HO- 53
07371-31049	H1220-01A1	9	HO- 53
07371-31049	H1270-01A0	7	HO- 57
07371-31049	H1270-01A0	12	HO- 57
07371-31049	H1310-01A0	9	HO- 73
07371-31049	H1270-01A0	17	H1- 57
07371-31049	H1270-01A0	22	H1- 57
07371-31049	H1270-02A0	9	H1- 67
07371-31049	T1110-03A0	6	TO- 11
07371-31049	T1110-03A0	23	TO- 11
07371-31049	T1110-03A1	6	TO- 15
07371-31049	T1110-03A1	24	TO- 15
07371-31049	T1140-01A2	9	TO- 33
07371-31049	T1200-04A1	3	TO- 53
07371-31049	T1200-04A3	3	TO- 57
07371-31049	T1110-03A1	6	T1- 15
07371-31049	T1110-03A1	24	T1- 15
07371-31049	T1200-04A1	3	T1- 53
07371-31049	T1200-04A3	3	T1- 57
07371-31049	W1200-01A0	3	WO- 5
07371-31049	W1201-01A2	8	WO- 13
07371-31049	W1200-01A1	3	W1- 7
07371-31049	W1200-01A1	13	W1- 7
07371-31049	W1201-01A1	8	W1- 11
07371-31049	W1201-01A10	8	W1- 15
07371-31049	W1203-01A1	8	W1- 21
07371-51260	H1270-02A0	14	HO- 67
07371-51260	H1270-02A0	14	H1- 67
07371-51260	T1200-04A1	8	TO- 53
07371-51260	T1200-04A3	8	TO- 57
07371-51260	T1200-04A1	8	T1- 53
07371-51260	T1200-04A3	8	T1- 57
07371-51260	W1200-01A1	18	W1- 7

PARTS NO.	FIG NO.	INDEX	PAGE
07371-51260	W1201-01A1	13	W1- 11
07371-51260	W1201-01A15	13	W1- 15
07371-51260	W1203-01A1	13	W1- 21
07372-21035	H0312-01A0A	5	HO- 35
07372-21035	H0312-01A0A	20	HO- 35
07372-21035	H1210-02A0	4	HO- 49
07372-21035	H1220-01A0	4	HO- 51
07372-21035	H1220-01A0	10	HO- 51
07372-21035	H1220-01A0	15	HO- 51
07372-21035	H1220-01A0	20	HO- 51
07372-21035	H1220-01A1	4	HO- 53
07372-21035	H1220-01A1	10	HO- 53
07372-21035	H1220-01A1	15	HO- 53
07372-21035	H1220-01A1	20	HO- 53
07372-21035	H1270-01A0	8	HO- 57
07372-21035	H1270-01A0	13	HO- 57
07372-21035	H1310-01A0	10	HO- 73
07372-21035	H1340-01A0	6	HO- 75
07372-21035	H1270-01A0	18	H1- 57
07372-21035	H1270-01A0	23	H1- 57
07372-21035	H1270-02A0	10	H1- 67
07372-21035	N1310-01A0	19	NO- 17
07372-21035	P1120-01A0	2	PO- 3
07372-21035	P1120-01A1	2	PO- 5
07372-21035	T1110-03A0	3	TO- 11
07372-21035	T1110-03A0	7	TO- 11
07372-21035	T1110-03A0	19	TO- 11
07372-21035	T1110-03A0	24	TO- 11
07372-21035	T1110-03A0	29	TO- 11
07372-21035	T1110-03A0	38	TO- 13
07372-21035	T1110-03A1	3	TO- 15
07372-21035	T1110-03A1	7	TO- 15
07372-21035	T1110-03A1	20	TO- 15
07372-21035	T1110-03A1	25	TO- 15
07372-21035	T1110-03A1	30	TO- 15
07372-21035	T1110-03A1	40	TO- 15
07372-21035	T1140-01A2	5	TO- 33
07372-21035	T1140-01A2	10	TO- 33
07372-21035	T1200-03A0	4	TO- 49
07372-21035	T1200-03A2	4	TO- 51
07372-21035	T1200-04A1	4	TO- 53
07372-21035	T1200-04A3	4	TO- 57
07372-21035	T1110-03A1	3	T1- 15
07372-21035	T1110-03A1	7	T1- 15
07372-21035	T1110-03A1	20	T1- 15
07372-21035	T1110-03A1	25	T1- 15
07372-21035	T1110-03A1	30	T1- 15
07372-21035	T1110-03A1	40	T1- 15
07372-21035	T1200-04A1	4	T1- 53
07372-21035	T1200-04A3	4	T1- 57

PARTS NO.	FIG NO.	INDEX	PAGE
07372-21035	W1200-01A0	4	WO- 5
07372-21035	W1200-01A0	9	WO- 5
07372-21035	W1201-01A0	4	WO- 9
07372-21035	W1201-01A2	4	WO- 13
07372-21035	W1201-01A2	9	WO- 13
07372-21035	W1202-01A0	4	WO- 17
07372-21035	W1203-01A0	4	WO- 19
07372-21035	W1200-01A1	4	W1- 7
07372-21035	W1200-01A1	9	W1- 7
07372-21035	W1200-01A1	14	W1- 7
07372-21035	W1201-01A1	4	W1- 11
07372-21035	W1201-01A1	9	W1- 11
07372-21035	W1201-01A6	4	W1- 15
07372-21035	W1201-01A11	9	W1- 15
07372-21035	W1203-01A1	4	W1- 21
07372-21035	W1203-01A1	9	W1- 21
07372-21040	H0120-04A6	3	HO- 27
07372-21040	H1210-01A0	4	HO- 47
07372-21040	H1210-01A0	7	HO- 47
07372-21040	H1270-02A0	9	HO- 67
07372-21040	H0120-04A6	3	H1- 27
07372-21040	T1110-05A1	4	TO- 21
07372-21040	T1200-04A1	30	TO- 53
07372-21040	T1200-04A1	44	TO- 55
07372-21040	T1200-04A3	30	TO- 57
07372-21040	T1200-05A3	21	TO- 59
07372-21040	T1200-05A3	35	TO- 59
07372-21040	T1110-05A1	4	T1- 21
07372-21040	T1200-04A1	30	T1- 53
07372-21040	T1200-04A1	44	T1- 55
07372-21040	T1200-04A3	30	T1- 57
07372-21040	T1200-05A3	21	T1- 59
07372-21040	T1200-05A3	35	T1- 59
07372-21245	H1270-02A0	15	HO- 67
07372-21245	H1270-02A0	15	H1- 67
07372-21245	W1200-01A1	19	W1- 7
07376-70210	C0100-04A0	15	CO - 9
07378-10600	T1140-01A2	2	TO- 33
07378-10600	W1201-01A0	1	WO- 9
07378-10600	W1201-01A2	1	WO- 13
07378-10600	W1202-01A0	1	WO- 17
07378-10600	W1203-01A0	1	WO- 19
07378-10600	W1201-01A1	1	W1- 11
07378-10600	W1201-01A3	1	W1- 15
07378-10600	W1203-01A1	1	W1- 21
07378-11000	T1140-01A2	7	TO- 33
07378-11000	W1201-01A2	6	WO- 13
07378-11000	W1201-01A1	6	W1- 11
07378-11000	W1201-01A8	6	W1- 15
07378-11000	W1203-01A1	6	W1- 21

PARTS NO.	FIG NO.	INDEX	PAGE
07378-11210	W1201-01A1	11	W1- 11
07378-11210	W1201-01A13	11	W1- 15
07378-11210	W1203-01A1	11	W1- 21
07379-00640	W1200-01A0	7	WO- 5
07379-00640	W1200-01A1	7	W1- 7
07379-01044	W1200-01A0	2	WO- 5
07379-01044	W1200-01A1	2	W1- 7
07379-01044	W1200-01A1	12	W1- 7
07379-01260	W1200-01A1	17	W1- 7
07430-71380	Y1660-04A0	12	YO- 75
07430-71380	Y1660-13A0	8	YO- 97
07430-71380	Y1669-01A0	9	YO- 149
07430-71380	Y1669-11A0	9	YO- 157
07430-71380	Y1662-04A0	12	Y1- 111
07430-71380	Y1662-13A0	8	Y1- 133
07430-71380	Y1662-17A0	9	Y1- 141
07430-71380	Y1669-01A0	9	Y1- 149
07700-50240	D0100-01A0	2	DO- 3
07700-50240	D0200-02A0	19	DO- 7
07750-01628	Y1620-11A0	29B	YO- 49
07950-10450	V0300-01A0	8	VO- 7
07950-90403	V0300-01A0	10	VO- 7
07951-41017	V0300-01A0	9	VO- 7
07952-70004	V0300-01A0	7	VO- 7
07959-20001	R0110-01A0	13	RO- 5
07959-20001	R0110-02A1	13	RO- 7
08017-32810	K1110-34A0	1	KO- 133
08028-CC065	E0200-05A0	3	EO- 17
08028-43030	E0200-01A0	17	EO- 7
08028-43030	E0200-03A0	24	EO- 13
08028-43030	E0200-05A0	1	EO- 17
08028-43030	E0200-06A0	10	EO- 19
08028-43030	K1110-22A0	21	KO- 107
08028-63035	E0100-01A1	5	EO- 5
08028-63035	E0100-01A1	5	ER- 3
08034-00310	K110-26A0	13	KO- 115
08034-00414	K1110-15A0	10	KO- 91
08034-00414	K1110-27A0	8	KO- 117
08034-00519	H0120-03A1	9	H1- 25
08034-00519	K1110-19A1	31	KO- 101
08034-00519	K1110-34A0	11	KO- 133
08034-00519	K1110-35A0	23	KO- 135
08034-00519	K1110-36A0	15	KO- 137
08034-00519	K1110-04A1	31	K1- 87
08034-00536	K1110-34A0	2	KO- 133
08034-00536	P1120-01A0	14	PO- 3
08034-00536	P1120-01A0	19	PO- 3
08034-00536	P1120-01A0	21	PO- 3
08034-00536	P1120-01A0	25	PO- 3
08034-00536	P1120-01A1	15	PO- 5

PARTS NO.	FIG NO.	INDEX	PAGE
08034-00536	P1120-01A1	19	PO- 5
08034-00536	P1120-01A1	22	PO- 5
08034-00536	P1120-01A1	25	PO- 5
08034-10414	K1110-30A0	16	KO- 123
08034-20414	K1110-08A0	10	KO- 77
08034-20414	K1110-09A0	6	KO- 79
08034-20414	K1110-12A0	1	KO- 85
08034-20519	K1110-22A0	16	KO- 107
08034-20536	B0100-02A0	11	BO - 7
08034-20536	B0920-01A0	21	BO - 13
08034-20536	D0200-01A0	13	DO- 5
08034-20536	E0200-04A0	38	EO- 15
08034-20536	E0200-04A0	39	EO- 15
08034-20536	E0200-04A0	40	EO- 15
08034-20536	E0320-01A0	10	EO- 25
08034-20536	H0340-01A0	9	HO- 45
08034-20536	H0340-01A0	13A	HO- 45
08034-20536	H1831-02A0	2	HO- 83
08034-20536	H1831-02A0	19	HO- 83
08034-20536	H1840-01A0	16	HO- 87
08034-20536	H1270-04A0	36	H1- 71
08034-20536	KO700-02A0	22	KO- 53
08034-20536	KO700-02A0	23	KO- 53
08034-20536	KO700-02A0	41	KO- 53
08034-20536	K1110-31A0	6	KO- 125
08034-20536	K1110-36A0	4	KO- 137
08034-20536	K1110-36A0	5	KO- 137
08034-20536	K1110-36A0	10	KO- 137
08034-20536	K1110-36A0	11	KO- 137
08034-20536	P1120-01A0	5	PO- 3
08034-20536	P1120-01A1	5	PO- 5
08034-20876	K1110-12A0	2	KO- 85
08034-20876	K1110-12A0	3	KO- 85
08034-20876	K1110-13A0	16	KO- 87
08036-00814	N1110-01A0	11	NO- 3
08036-01014	E0410-01A0	5	EO- 29
08036-10810	E0310-01A1	6	EO- 23
08037-01610	K1110-07A0	13	KO- 88
08037-01610	K1110-09A0	18	KO- 79
08037-02512	E0340-01A0	2	EO- 27
08037-02512	K1110-03A0	4	KO- 67
08037-11025	K1110-08A0	14	KO- 77
08037-11425	K1110-28A0	10	KO- 119
08037-12536	K1110-09A0	7	KO- 79
08038-00035	E0200-01A0	2	EO- 7
08038-00519	E0200-01A0	3	EO- 7
08038-00519	E0200-01A0	25	EO- 7
08038-00519	E0200-01A0	28	EO- 7
08038-00519	E0200-04A0	2	EO- 15
08038-00519	E0200-04A0	16	EO- 15

PARTS NO.	FIG NO.	INDEX	PAGE
08038-00519	E0200-04A0	36	EO- 15
08038-00519	E0200-04A0	37	EO- 15
08038-06031	E0200-01A0	29	EO- 7
08038-06031	E0200-05A0	5	EO- 17
08038-22511	E0200-05A0	2	EO- 17
08038-42511	E0100-01A1	4	EO- 5
08038-42511	E0200-05A0	4	EO- 17
08038-42511	E0100-01A1	4	ER- 3
08041-01000	K1110-22A0	2	KO- 107
08041-01000	K1110-28A0	3	KO- 119
08041-02000	K1110-22A0	3	KO- 107
08041-02000	K1110-28A0	4	KO- 119
08041-02500	K1110-28A0	5	KO- 119
08053-01510	E0420-01A0	2	EO- 31
08053-01510	KO700-01A0	17	KO- 51
08053-01510	K1110-04A1	51	K1- 89
08053-01512	E0200-04A0	7	EO- 15
08053-01512	H1840-02A1	21	H1- 89
08059-00310	K1110-08A0	11	KO- 77
08059-00310	K1110-28A0	25	KO- 119
08059-00310	K1110-30A0	34	KO- 123
08059-00413	K1110-07A0	15	KO- 90
08059-00413	K1110-09A0	8	KO- 79
08073-10505	A201V-01A0	1	AA- 39
08086-20000	K1110-30A0	9	KO- 123
08088-30000	E0200-01A0	4	EO- 7
08116-02410	K1110-08A0	12	KO- 77
08160-62420	E0410-01A0	1	EO- 29
08160-62430	E0410-01A0	2	EO- 29
08174-13118	M1410-01A0	1	MO- 25
08193-20010	A101V-01A1	4	AA- 5
08193-20010	A211V-01A1	3	AA- 55
08193-21012	E0200-04A0	17	EO- 15
08193-21012	E0200-04A0	21	EO- 15
08910-10000	K1110-09A0	9	KO- 79
08912-51600	K110-26A0	4	KO- 115
09002-01417	V0300-01A0	3	VO- 7
09002-03032	V0300-01A0	4	VO- 7
09007-00425	V0300-01A0	12	VO- 7
09007-00836	V0300-01A0	11	VO- 7
09019-08035	V0300-01A0	2	VO- 7
09021-01219	V0300-01A0	13	VO- 7
09021-01422	V0300-01A0	14	VO- 7
09021-01725	V0300-01A0	15	VO- 7
09021-01928	V0300-01A0	16	VO- 7
09021-02233	V0300-01A0	17	VO- 7
09021-02436	V0300-01A0	18	VO- 7
09021-03044	V0300-01A0	19	VO- 7
09022-00150	V0300-01A0	20	VO- 7
09023-00300	V0300-01A0	21	VO- 7

PARTS NO.	FIG NO.	INDEX	PAGE
09024-00300	V0300-01A0	22	VO- 7
09033-00190	V0300-01A0	5	VO- 7
09039-00150	V0300-01A0	6	VO- 7
09055-10390	V0300-01A0	7	VO- 7
09056-04613	V0300-01A0	1	VO- 7
09133-A3281	U0100-01A2	5	UO- 3
09133-A3281	U0100-01A3	5	UO- 5
09133-A3281	U0100-01A2	5	UO- 7
09133-A3281	U0100-01A6	5	UO- 9
09133-A3281	U0100-01A2	5	UR- 3
09134-A1681	U0100-01A2	6	UO- 3
09134-A1681	U0100-01A3	6	UO- 5
09134-A1681	U0100-01A2	6	UO- 7
09134-A1681	U0100-01A7	6	UO- 9
09134-A1681	U0100-01A2	6	UR- 3
09205-18295	R1200-01A2	5	RO- 57
09205-18295	R1200-01A3	5	RO- 59
09244-02489	T1510-01A8	5	TO- 81
09244-02496	T1510-01A2	7	TO- 69
09244-02496	T1510-01B2	7	TO- 89
09244-02496	T1510-01B5	7	TO- 95
09244-02496	T1510-01B6	7	TO- 97
09244-02496	T1510-01B9	7	TO- 99
09244-02496	T1510-01B9	7	TO- 101
09244-02508	T1510-01A3	10	TO- 71
09244-02508	T1510-01A7	3	TO- 79
09370-00070	R0110-01A0	9	RO- 5
09370-00070	R0110-02A1	9	RO- 7
09415-01008	K1110-11A0	18	KO- 83
09415-01008	K1110-11A0	19	KO- 83
09415-01610	K1110-07A0	14	KO- 89
09415-02110	K0180-01A0	34	KO- 15
09415-02512	K0220-01A0	13	KO- 21
09415-02512	K1110-11A0	2	KO- 83
09452-14503	K0180-01A0	18	KO- 15
09479-02400	K1110-33A0	2	KO- 129
09479-02400	K1110-33A0	4	KO- 129
09480-10100	B0920-01A0	11	BO - 13
09482-50000	KO700-02A0	31	KO- 53
09483-10313	B0920-01A0	22	BO - 13
09483-10314	B0920-01A0	19	BO - 13
09483-10414	B0920-01A0	10	BO - 13
09601-200C1	U0100-01A2	19	UO- 3
09601-200C1	U0100-01A3	19	UO- 5
09601-200C1	U0100-01A2	19	UO- 7
09601-200C1	U0100-01A19	19	UO- 9
09601-200C1	U0100-01A2	19	UR- 3
09637-40163	U0550-01A1	1	UR- 29
09637-90163	U0550-01A1	1	UO- 29
09653-A0481	U0100-01A2	7	UO- 3

PARTS NO.	FIG NO.	INDEX	PAGE
09653-A0481	U0100-01A3	7	UO- 5
09653-A0481	U0100-01A2	7	UO- 7
09653-A0481	U0100-01A8	7	UO- 9
09653-A0481	U0100-01A2	7	UR- 3
09657-A0881	U0100-01A2	9	UO- 3
09657-A0881	U0100-01A3	9	UO- 5
09657-A0881	U0100-01A2	9	UO- 7
09657-A0881	U0100-01A9	9	UO- 9
09657-A0881	U0100-01A2	9	UR- 3
09659-A057A	U0580-01A0	1	UO- 31
09659-A057B	U0100-01A2	10	UO- 3
09659-A057B	U0100-01A3	10	UO- 5
09659-A057B	U0100-01A2	10	UO- 7
09659-A057B	U0100-01A10	10	UO- 9
09659-A057B	U0580-01A0	1	UO- 31
09659-A057B	U0100-01A2	10	UR- 3
09659-53000	U0580-01A0	1	UO- 31
09667-A0481	U0100-01A2	11	UO- 3
09667-A0481	U0100-01A3	11	UO- 5
09667-A0481	U0100-01A2	11	UO- 7
09667-A0481	U0100-01A11	11	UO- 9
09667-A0481	U0100-01A2	11	UR- 3
09669-0000E	U0100-01A2	17	UO- 3
09669-0000E	U0100-01A3	17	UO- 5
09669-0000E	U0100-01A2	17	UO- 7
09669-0000E	U0100-01A17	17	UO- 9
09669-0000E	U0100-01A2	17	UR- 3
09685-00002	U0100-01A2	1	UO- 3
09685-00002	U0100-01A3	1	UO- 5
09685-00002	U0100-01A2	1	UO- 7
09685-00002	U0100-01A2	1	UO- 9
09685-00002	U0100-01A2	1	UR- 3
09690-M0063	U0100-01A2	3	UO- 3
09690-M0063	U0100-01A3	3	UO- 5
09690-M0063	U0100-01A2	3	UO- 7
09690-M0063	U0100-01A4	3	UO- 9
09690-M0063	U0100-01A2	3	UR- 3
09690-P0630	U0100-01A2	4	UO- 3
09690-P0630	U0100-01A3	4	UO- 5
09690-P0630	U0100-01A2	4	UO- 7
09690-P0630	U0100-01A5	4	UO- 9
09690-P0630	U0100-01A2	4	UR- 3
09690-P1250	U0150-01A0	1	UO- 11
09690-P1250	U0150-01A0	2	UO- 11
09690-P1250	U0510-01A0	1	UO- 13
09690-P1250	U0510-01A0	1	UO- 19
09803-A0481	U0100-01A2	12	UO- 3
09803-A0481	U0100-01A3	12	UO- 5
09803-A0481	U0100-01A2	12	UO- 7
09803-A0481	U0100-01A12	12	UO- 9

PARTS NO.	FIG NO.	INDEX	PAGE
09803-A0481	U0100-01A2	12	UR- 3
09805-A0881	U0100-01A2	13	UO- 3
09805-A0881	U0100-01A3	13	UO- 5
09805-A0881	U0100-01A2	13	UO- 7
09805-A0881	U0100-01A13	13	UO- 9
09805-A0881	U0100-01A2	13	UR- 3
09805-C0481	U0100-01A2	14	UO- 3
09805-C0481	U0100-01A3	14	UO- 5
09805-C0481	U0100-01A2	14	UO- 7
09805-C0481	U0100-01A14	14	UO- 9
09805-C0481	U0100-01A2	14	UR- 3
09808-A0881	U0100-01A2	15	UO- 3
09808-A0881	U0100-01A3	15	UO- 5
09808-A0881	U0100-01A2	15	UO- 7
09808-A0881	U0100-01A15	15	UO- 9
09808-A0881	U0100-01A2	15	UR- 3
09842-A0481	U0100-01A2	34	UO- 3
09842-A0481	U0100-01A3	34	UO- 5
09842-A0481	U0100-01A2	34	UO- 7
09842-A0481	U0100-01A34	34	UO- 9
09842-A0481	U0100-01A2	32	UR- 3
09920-00150	A2119-01A1	12	AA- 57
09920-00150	A219P-01A0	16	AA- 63
09920-00150	A283P-01A0	2	AA- 85
09963-A1640	U0100-01A2	21	UO- 3
09963-A1640	U0100-01A3	21	UO- 5
09963-A1640	U0100-01A2	21	UO- 7
09963-A1640	U0100-01A21	21	UO- 9
09963-A1640	U0100-01A2	21	UR- 3
09970-00230	K1110-12A0	5	KO- 85
09980-10550	V0200-01A0	1	VO- 5
09980-92550	V0200-01A0	1	VO- 5
09982-20057	V0200-01A0	2	VO- 5
11Y-09-11160	KO700-02A0	33	KO- 53
11Y-62-12130	H0120-01A0	15	HO- 11
11Y-62-12130	H0120-01A1	16	HO- 13
11Y-62-12130	H0120-01A4	9	HO- 15
11Y-62-12130	H0120-02A0	8	HO- 19
11Y-62-12130	H0120-02A0	11	HO- 19
11Y-62-12130	H0120-02A0	23	HO- 19
11Y-62-12130	H0120-03A1	12	HO- 25
11Y-62-12130	H0210-01A0A	14	HO- 29
11Y-62-12130	H0210-01A0A	17	HO- 29
11Y-62-12130	H1833-01A0	16	HO- 85
11Y-62-12130	H1840-02A1	15	HO- 89
11Y-62-12130	H0120-01A1	16	H1- 13
11Y-62-12130	H0120-01A4	9	H1- 15
11Y-62-12130	H0120-01A5	10	H1- 17
11Y-62-12130	H0120-02A1	8	H1- 21
11Y-62-12130	H0120-02A1	11	H1- 21

PARTS NO.	FIG NO.	INDEX	PAGE
11Y-62-12130	H0120-03A1	12	H1- 25
11Y-62-12130	H1270-04A0	18B	H1- 71
11Y-62-12130	K1110-25A19	19	KO- 113
11Y-62-12130	K1110-28A0	19	KO- 121
11Y-62-12130	K1110-21A10	10	K1- 144
11Y-62-12130	K1110-21A24	24	K1- 158
11Y-62-12130	P1120-01A0	9	PO- 3
11Y-62-12130	P1120-01A1	9	PO- 5
11Y-62-12140	K1110-19A1	22	KO- 101
11Y-62-12140	K1110-04A1	22	K1- 87
11Y-62-12160	H0110-01A0	15	HO- 3
11Y-62-12160	H0120-01A0	9	HO- 11
11Y-62-12160	H0120-01A1	10	HO- 13
11Y-62-12160	H0120-01A4	12	HO- 15
11Y-62-12160	H0120-02A0	14	HO- 19
11Y-62-12160	H0120-03A1	15	HO- 25
11Y-62-12160	H0120-03A1	18	HO- 25
11Y-62-12160	H1831-01A0	3	HO- 79
11Y-62-12160	H1831-01A0	14	HO- 79
11Y-62-12160	H1840-02A1	7	HO- 89
11Y-62-12160	H0120-01A1	10	H1- 13
11Y-62-12160	H0120-01A4	12	H1- 15
11Y-62-12160	H0120-01A5	13	H1- 17
11Y-62-12160	H0120-02A1	14	H1- 21
11Y-62-12160	H0120-03A1	15	H1- 25
11Y-62-12160	H0120-03A1	18	H1- 25
11Y-62-12160	H1270-02A0	20	H1- 67
11Y-62-12160	H1831-01A1	3	H1- 81
11Y-62-12160	K1110-17A0	25	KO- 95
11Y-62-12160	K1110-04A1	45	K1- 89
11Y-62-12160	K1110-21A7	7	K1- 141
11Y-62-12160	N1220-01A0	4	NO- 15
11Y-62-12160	N1310-01A0	5	NO- 17
11Y-62-12240	C0100-04A0	11	CO - 9
11Y-62-12240	H0120-02A0	17	HO- 19
11Y-62-12240	H0210-01A0A	7	HO- 29
11Y-62-12240	H0120-02A1	17	H1- 21
11Y-62-12250	H1831-01A1	16	H1- 81
11Y-62-12250	N1310-01A0	8	NO- 17
11Y-62-12330	H0120-01A0	13	HO- 11
11Y-62-12330	H0120-01A1	14	HO- 13
11Y-62-12330	H0120-02A0	20	HO- 19
11Y-62-12330	H0110-01A1	15	H1- 7
11Y-62-12330	H0120-01A1	14	H1- 13
11Y-62-12330	H0120-02A1	20	H1- 21
11Y-62-12330	H0120-02A1	23	H1- 21
11Y-62-12330	K1110-37A1	10	KO- 141
11Y-62-12330	K1110-37A1	20	KO- 141
11Y-62-12330	K1110-21A12	12	K1- 146
11Y-62-12330	K1110-21A26	26	K1- 160
11Y-62-12520	H0120-01A0	17	HO- 11
11Y-62-12520	H0120-01A1	18	HO- 13
11Y-62-12520	H0120-01A1	18	H1- 13
11Y-62-12520	K1110-28A0	21	KO- 121
110-30-00086	R0300-01A0	6	RO- 13
110-30-13250	R0300-01A0	8	RO- 13
112-32-11211	N1210-01A0	19	NO- 7
112-32-11211	Y0260-01A0	16	YO- 3
113-01-21120	K1120-01A0	4	KO- 151
113-899-7950	H1840-01A0	17	HO- 87
115419GLM	K0160-01A2	4	KO- 13
12R-60-11230	H0110-01A0	28	HO- 3
12R-60-11230	H0110-01A1	28	H1- 7
124-911-5750	K1110-11A0	7	KO- 83
130-43-64260	K0220-01A0	11	KO- 21
130-43-64260	K0230-01A2	2	KO- 27
131-78-31190	T1510-01A8	4	TO- 81
132909GLM	K0160-01A2	2	KO- 13
134-32-61221	R0500-01A0	9	RO- 15
134-32-61221	R0500-01A0	18	RO- 15
134-32-61221	R0500-01A1	9	RO- 17
134-32-61221	R0500-01A1	18	RO- 17
134-32-61221	R0500-01A2	9	RO- 19
134-32-61221	R0500-01A2	18	RO- 19
134-32-61221	R0500-01A4	9	RO- 23
134-32-61221	R0500-01A4	18	RO- 23
134-32-61221	R0500-01A5	9	RO- 25
134-32-61221	R0500-01A5	18	RO- 25
134-32-61221	R0500-01A6	9	RO- 27
134-32-61221	R0500-01A6	18	RO- 27
134-32-61221	R0500-01A7	9	RO- 29
134-32-61221	R0500-01A7	18	RO- 29
134-32-61221	R0500-01A8	9	RO- 31
134-32-61221	R0500-01A8	18	RO- 31
134-32-61221	R0500-01B1	9	RO- 33
134-32-61221	R0500-01B1	18	RO- 33
134-32-61221	R0500-01B2	9	RO- 35
134-32-61221	R0500-01B2	18	RO- 35
134-32-61221	R0500-01B3	9	RO- 37
134-32-61221	R0500-01B3	18	RO- 37
134-32-61221	Y0320-01A0	K01	YO- 9
134-32-61221	Y0320-01A0	K02	YO- 9
134-32-61221	Y0320-01A0	K03	YO- 9
134-32-61221	Y0320-01A0	K04	YO- 9
14S-27-00110	P1210-01A0	3	PO- 7
14S-27-00110	Y0270-01A0	3	YO- 7
14X-43-14840	H1840-02A1	11	H1- 89
14X-911-1330	K0230-01A1	18	KO- 25
14X-911-1330	K1110-05A0	15	KO- 71
141-06-11220	KO700-02A0	5	KO- 53

PARTS NO.	FIG NO.	INDEX	PAGE
141-06-11220	KO700-02A0	37	KO- 53
141-06-11220	K1110-33A0	9	KO- 129
142-03-11160	KO700-02A0	38	KO- 53
144-947-3490	E0200-01A0	12	EO- 7
150-27-00264	P1210-01A0	2	PO- 7
150-27-00264	Y0270-01A0	2	YO- 7
150-27-00410	P1210-01A0	1	PO- 7
150-27-00410	Y0270-01A0	1	YO- 7
154-54-23260	U0100-01A2	23	UO- 3
154-54-23260	U0100-01A3	23	UO- 5
154-54-23260	U0100-01A2	23	UO- 7
154-54-23260	U0100-01A23	23	UO- 9
154-54-23260	U0100-01A2	23	UR- 3
154-61-16570	A1570-01A3	15	AA- 31
154-979-1480	D0200-01A0	19	DO- 5
17A-60-11310	H0110-01A0	34	HO- 5
17A-60-11310	H0110-01A1	34	H1- 9
17M-911-2670	K1110-09A0	17	KO- 79
17M-911-3290	Y1979-21A0	48	YO- 191
17M-911-3290	Y1979-31A0	16	YO- 193
17M-911-3530	K1110-14D0	16	KO- 89
17M-911-3530	K1110-14A0	16	KO- 89a
175-54-34170	H0330-01A1	21	HO- 43
175-54-34170	H1270-01A0	27	H1- 57
175-54-34170	M1160-01A0	3	MO- 17
175-54-34170	M1210-01A0	3	MO- 19
175-54-34170	M1210-01A0	27	MO- 19
175-54-34170	M1220-01A0	13	MO- 21
175-54-34170	M1810-02A0	13	MO- 35
175-54-34170	M1810-02A0	17	MO- 35
175-61-17240	C0100-03A0	1	CO - 7
175-61-51750	H1270-04A0	7	H1- 71
175-61-51750	T1920-01A0	7	TO- 105
175-61-51750	T1920-01A1	7	TO- 107
175-78-31230	T1510-01A3	9	TO- 71
175-78-31230	T1510-01A7	2	TO- 79
176-32-11210	T1510-02A1	3	TO- 103
195-03-11570	D0100-01A0	20	DO- 3
195-03-13241	N1210-01A0	32	NO- 9
195-Z11-1690	K1110-06A0	8	KO- 73
195-32-11222	T1510-01B6	16	TO- 97
195-33-11220	E0200-04A0	12	EO- 15
195-33-11220	E0200-04A0	18	EO- 15
195-33-11220	H1840-02A1	22	H1- 89
195-33-11220	KO700-02A0	8	KO- 53
195-33-11220	K1110-22A0	5	KO- 107
195-33-11220	K1110-22A0	9	KO- 107
195-33-11220	K1110-22A0	18	KO- 107
195-49-36120	W0111-01A0	3	WO- 3
195-57-11530	M1810-01A0	10	MO- 33

PARTS NO.	FIG NO.	INDEX	PAGE
195-63-92190	Y1620-41A0	9	YO- 53
195-71-32220	KO700-01A0	7	KO- 51
195-911-6531	K0840-01A0	1	KO- 59
195-911-6562	K0840-01A0	2	KO- 59
195-979-5190	B0100-02A0	8	BO - 7
195-979-8590	K0350-01A0	9	KO- 47
195-Z11-2970	K0220-01A0	12	KO- 21
198-38-12460	KO700-01A0	9	KO- 51
198-54-41982	M1130-01A0	5	MO- 7
198-54-41982	M1140-01A0	2	MO- 11
198-911-9240	K1110-21A0	14	KO- 105
198-Z11-4610	K1110-09A0	1	KO- 79
20B-27-11210	Y1600-06A0	7	YO- 29
20B-27-11210	Y1641-01A0	11	YO- 63
20D-62-17860	Y1620-11A0	31	YO- 51
20F-61-12460	H0120-01A0	21	HO- 11
20F-61-12460	H0120-01A1	22	HO- 13
20F-61-12460	H0210-01A0A	10	HO- 29
20F-61-12460	H0120-01A1	22	H1- 13
20F-61-12460	H1270-04A0	18	H1- 71
20G-26-11240	N1210-01A0	14	NO- 7
20G-26-11240	Y0260-01A0	11	YO- 3
20G-26-11241	N1210-01A0	14	NO- 7
20G-26-11241	Y0260-01A0	11	YO- 3
20K-22-11190	N1210-01A0	21	NO- 7
20K-22-11190	Y0260-01A0	18	YO- 3
20T-54-42510	B0920-01A0	18	BO - 13
20U-70-21191	T1200-02A0	8	TO- 41
20X-54-21460	M1210-01A0	16	MO- 19
20Y-00-D1240	U0100-01A2	2	UO- 3
20Y-00-D1240	U0100-01A3	2	UO- 5
20Y-00-D1240	U0100-01A2	2	UO- 7
20Y-00-D1240	U0100-01A3	2	UO- 9
20Y-00-D1240	U0100-01A2	2	UR- 3
20Y-00-D1331	V0100-01A0	1	VO- 3
20Y-00-D1390	U0100-01A2	32	UO- 3
20Y-00-D1390	U0100-01A3	32	UO- 5
20Y-00-D1390	U0100-01A2	32	UO- 7
20Y-00-D1390	U0100-01A32	32	UO- 9
20Y-00-D1400	U0100-01A2	33	UO- 3
20Y-00-D1400	U0100-01A3	33	UO- 5
20Y-00-D1400	U0100-01A2	33	UO- 7
20Y-00-D1400	U0100-01A33	33	UO- 9
20Y-00-D1460	U0100-01A2	35	UO- 3
20Y-00-D1460	U0100-01A3	35	UO- 5
20Y-00-D1460	U0100-01A2	35	UO- 7
20Y-00-D1460	U0100-01A35	35	UO- 9
20Y-00-D1640	B9999-01A8	7	AA- 173
20Y-00-31110	U0100-01A2	24	UO- 3
20Y-00-31110	U0100-01A3	24	UO- 5

PARTS NO.	FIG NO.	INDEX	PAGE
20Y-00-31110	U0100-01A2	24	UO- 7
20Y-00-31110	U0100-01A24	24	UO- 9
20Y-00-31110	U0100-01A2	24	UR- 3
20Y-00-31120	U0100-01A2	25	UO- 3
20Y-00-31120	U0100-01A2	25	UR- 3
20Y-00-31130	U0100-01A2	18	UO- 3
20Y-00-31130	U0100-01A3	18	UO- 5
20Y-00-31130	U0100-01A2	18	UO- 7
20Y-00-31130	U0100-01A18	18	UO- 9
20Y-00-31130	U0100-01A2	18	UR- 3
20Y-00-31210	U0100-01A25	25	UO- 9
20Y-00-31220	U0100-01A3	25	UO- 5
20Y-00-31230	U0100-01A2	25	UO- 7
20Y-00-31390	U0200-01A1	1	UO- 15
20Y-00-31410	U0200-01A2	1	UO- 17
20Y-00-31610	U0520-01A0	1	UO- 21
20Y-00-31610	U0520-01A1	1	UO- 23
20Y-00-31840	U0100-01A2	29	UO- 3
20Y-00-31840	U0100-01A3	29	UO- 5
20Y-00-31840	U0100-01A2	29	UO- 7
20Y-00-31840	U0100-01A29	29	UO- 9
20Y-00-31840	U0100-01A2	29	UR- 3
20Y-00-31860	U0100-01A2	26	UO- 3
20Y-00-31860	U0100-01A3	26	UO- 5
20Y-00-31860	U0100-01A2	26	UO- 7
20Y-00-31860	U0100-01A26	26	UO- 9
20Y-00-31870	U0100-01A2	27	UO- 3
20Y-00-31870	U0100-01A3	27	UO- 5
20Y-00-31870	U0100-01A2	27	UO- 7
20Y-00-31870	U0100-01A27	27	UO- 9
20Y-00-31880	U0100-01A2	28	UO- 3
20Y-00-31880	U0100-01A3	28	UO- 5
20Y-00-31880	U0100-01A2	28	UO- 7
20Y-00-31880	U0100-01A28	28	UO- 9
20Y-00-31890	U0100-01A2	16	UO- 3
20Y-00-31890	U0100-01A3	16	UO- 5
20Y-00-31890	U0100-01A2	16	UO- 7
20Y-00-31890	U0100-01A16	16	UO- 9
20Y-00-31950	U0100-01A2	16	UR- 3
20Y-00-31960	U0100-01A2	26	UR- 3
20Y-00-31970	U0100-01A2	27	UR- 3
20Y-00-31980	U0100-01A2	28	UR- 3
20Y-01-11141	B0100-01A0	13	BO - 5
20Y-01-12141	B0100-01A0	12	BO - 5
20Y-01-12161	B0100-01A0	16	BO - 5
20Y-01-12180	B0100-01A0	17	BO - 5
20Y-01-12210	B0100-01A0	11	BO - 5
20Y-01-12222	B0100-01A0	15	BO - 5
20Y-01-12270	B0100-01A0	20	BO - 5
20Y-01-21260	B0100-01A0	5	BO - 5

PARTS NO.	FIG NO.	INDEX	PAGE
20Y-01-21260	B0100-01A0	9	BO - 5
20Y-01-22111	B0100-01A0	14	BO - 5
20Y-01-22121	B0100-01A0	6	BO - 5
20Y-01-29231	B0100-01A0	1	BO - 5
20Y-01-31131	C0100-04A0	7	CO - 9
20Y-01-31151	B0200-01A0	8	BO - 9
20Y-01-31161	B0100-02A0	1	BO - 7
20Y-01-31220	B0100-01A0	2	BO - 5
20Y-01-31230	B0920-01A0	4	BO - 13
20Y-01-31240	B0920-01A0	12	BO - 13
20Y-03-11220	E0200-04A0	30	EO- 15
20Y-03-11330	C0100-01A0A	6	CO - 3
20Y-03-14110	CO100-02A0	16	CO- 5
20Y-03-21981	C0100-01A0A	3	CO - 3
20Y-03-22110	C0100-01A0A	2	CO - 3
20Y-03-31111	C0100-01A0A	1	CO - 3
20Y-03-31131	CO100-02A0	5	CO- 5
20Y-03-31140	CO100-02A0	1	CO- 5
20Y-03-31152	C0100-01A0A	13	CO - 3
20Y-03-31162	C0100-01A0A	14	CO - 3
20Y-03-31170	C0100-01A0A	15	CO - 3
20Y-03-31181	C0100-01A0A	21	CO - 3
20Y-03-31210	C0100-03A0	31	CO - 7
20Y-03-31221	C0100-03A0	11	CO - 7
20Y-03-31230	C0100-03A0	13	CO - 7
20Y-03-31242	C0100-01A0A	8	CO - 3
20Y-03-31252	C0100-01A0A	9	CO - 3
20Y-03-31260	C0100-01A0A	10	CO - 3
20Y-03-31290	C0100-01A0A	36	CO - 3
20Y-03-31310	CO100-02A0	4	CO- 5
20Y-03-31321	C0100-03A0	8	CO - 7
20Y-03-31331	C0100-03A0	7	CO - 7
20Y-03-31341	C0100-03A0	24	CO - 7
20Y-03-31351	CO100-02A0	17	CO- 5
20Y-03-31361	CO100-02A0	20	CO- 5
20Y-03-31372	C0310-01A0	7	CO - 11
20Y-03-31382	C0310-01A0	1	CO - 11
20Y-03-31392	C0310-01A0	4	CO - 11
20Y-03-31392	C0310-01A1	4	CO - 13
20Y-03-31420	C0100-01A0A	24	CO - 3
20Y-03-31450	C0100-03A0	9	CO - 7
20Y-03-31460	C0100-03A0	10	CO - 7
20Y-03-31470	C0100-03A0	5	CO - 7
20Y-03-31480	C0100-01A0A	30	CO - 3
20Y-03-31490	C0100-01A0A	11	CO - 3
20Y-03-31510	C0310-01A1	7	CO - 13
20Y-03-31520	C0310-01A1	1	CO - 13
20Y-03-31610	C0100-01A0A	27	CO - 3
20Y-04-11160	D0100-01A0	5	DO- 3
20Y-04-11240	D0100-01A0	5	DO- 3

PARTS NO.	FIG NO.	INDEX	PAGE
20Y-04-21131	D0100-01A0	14	DO- 3
20Y-04-21141	D0100-01A0	15	DO- 3
20Y-04-21580	D0100-01A0	11	DO- 3
20Y-04-31120	D0200-01A0	14	DO- 5
20Y-04-31170	D0200-02A0	15	DO- 7
20Y-04-31181	D0200-01A0	1	DO- 5
20Y-04-31190	D0200-02A0	26	DO- 7
20Y-04-31222	D0100-01A0	1	DO- 3
20Y-04-31240	D0200-02A0	10	DO- 7
20Y-06-D1110	E0100-01A1	2	EO- 5
20Y-06-D1110	E0100-01A1	2	ER- 3
20Y-06-D1150	E0100-01A1	1	EO- 5
20Y-06-D1160	E0100-01A1	10	EO- 5
20Y-06-D1160	E0100-01A1	10	ER- 3
20Y-06-D1170	E0100-01A1	11	EO- 5
20Y-06-D1170	E0100-01A1	11	ER- 3
20Y-06-15240	C0100-03A0	20	CO - 7
20Y-06-21330	H1840-02A1	20	H1- 89
20Y-06-21421	K1730-01A0	1	KO- 161
20Y-06-21551	E0320-01A0	2	EO- 25
20Y-06-21551	T1110-06A0	3	TO- 23
20Y-06-21590	E0320-01A0	6	EO- 25
20Y-06-21710	K1110-17A0	32	KO- 95
20Y-06-21730	E0420-01A0	1	EO- 31
20Y-06-22730	K110-26A0	3	KO- 115
20Y-06-22872	E0200-01A0	30	EO- 7
20Y-06-23472	K1110-13A0	11	KO- 87
20Y-06-23770	K110-26A0	11	KO- 115
20Y-06-23770	K1110-27A0	7	KO- 117
20Y-06-25310	E0200-06A0	1	EO- 19
20Y-06-25310	E0320-01A0	1	EO- 25
20Y-06-25310	T1110-06A0	2	TO- 23
20Y-06-31110	Y1061-01A0	1	YO- 17
20Y-06-31162	H1831-02A0	24	HO- 83
20Y-06-31171	H0210-01A0A	20	HO- 29
20Y-06-31182	E0200-04A0	22	EO- 15
20Y-06-31320	K1110-30A0	27	KO- 123
20Y-06-31330	K1110-30A0	28	KO- 123
20Y-06-31611	EO200-02A0	1	EO- 9
20Y-06-31612	EO200-02A0	1	EO- 9
20Y-06-31620	E0200-01A0	1	EO- 7
20Y-06-31630	E0200-04A0	15	EO- 15
20Y-06-31640	E0200-01A0	7	EO- 7
20Y-06-31670	E0320-01A0	9	EO- 25
20Y-06-31680	E0200-06A0	4	EO- 19
20Y-06-31690	K0350-01A0	2	KO- 47
20Y-06-31710	E0420-01A0	5	EO- 31
20Y-06-71510	K1110-22A0	1	KO- 107
20Y-25-11270	N1110-01A0	10	NO- 3
20Y-25-11270	T1110-06A0	12	TO- 23

PARTS NO.	FIG NO.	INDEX	PAGE
20Y-25-11290	N1110-01A0	4	NO- 3
20Y-25-21123	N1110-01A0	9	NO- 3
20Y-25-21200	N1110-01A0	1	NO- 3
20Y-26-21142	N1210-01A0	8	NO- 7
20Y-26-21240	N1210-01A0	18	NO- 7
20Y-26-21240	Y0260-01A0	15	YO- 3
20Y-26-21281	N1210-01A0	26	NO- 7
20Y-26-21281	Y0260-01A0	23	YO- 3
20Y-26-22191	N1210-01A0	10	NO- 7
20Y-26-22250	N1210-01A0	16	NO- 7
20Y-26-22250	Y0260-01A0	13	YO- 3
20Y-26-22330	N1210-01A0	6	NO- 7
20Y-26-22330	Y0260-01A0	3	YO- 3
20Y-26-22340	N1210-01A0	7	NO- 7
20Y-26-22420	N1210-01A0	9	NO- 7
20Y-26-31110	N1210-01A0	4	NO- 7
20Y-26-31411	N1210-01A0	37	NO- 9
20Y-26-31421	N1210-01A0	38	NO- 9
20Y-26-31431	N1210-01A0	39	NO- 9
20Y-26-31441	N1210-01A0	40	NO- 9
20Y-26-31510	Y0260-01A0	31	YO- 3
20Y-27-00432	P1210-01A0	1	PO- 7
20Y-27-00432	Y0270-01A0	1	YO- 7
20Y-27-11561	P1210-01A0	36	PO- 9
20Y-27-11561	Y0270-01A0	36	YO- 7
20Y-27-11582	P1210-01A0	35	PO- 9
20Y-27-11582	Y0270-01A0	35	YO- 7
20Y-27-13281	P1210-01A0	30	PO- 7
20Y-27-13281	Y0270-01A0	30	YO- 7
20Y-27-13310	P1210-01A0	16	PO- 7
20Y-27-13310	Y0270-01A0	16	YO- 7
20Y-27-21220	P1210-01A0	24	PO- 7
20Y-27-21220	Y0270-01A0	24	YO- 7
20Y-27-21230	P1210-01A0	14	PO- 7
20Y-27-21230	Y0270-01A0	14	YO- 7
20Y-27-21240	N1210-01A0	15	NO- 7
20Y-27-21240	P1210-01A0	23	PO- 7
20Y-27-21240	Y0260-01A0	12	YO- 3
20Y-27-21240	Y0270-01A0	23	YO- 7
20Y-27-21250	P1210-01A0	13	PO- 7
20Y-27-21250	Y0270-01A0	13	YO- 7
20Y-27-21280	N1210-01A0	17	NO- 7
20Y-27-21280	P1210-01A0	25	PO- 7
20Y-27-21280	Y0260-01A0	14	YO- 3
20Y-27-21280	Y0270-01A0	25	YO- 7
20Y-27-21290	P1210-01A0	15	PO- 7
20Y-27-21290	Y0270-01A0	15	YO- 7
20Y-27-21310	P1210-01A0	27	PO- 7
20Y-27-21310	Y0270-01A0	27	YO- 7
20Y-27-22120	P1210-01A0	21	PO- 7

PARTS NO.	FIG NO.	INDEX	PAGE
20Y-27-22120	Y0270-01A0	21	YO- 7
20Y-27-22130	P1210-01A0	17	PO- 7
20Y-27-22130	Y0270-01A0	17	YO- 7
20Y-27-22140	P1210-01A0	11	PO- 7
20Y-27-22140	Y0270-01A0	11	YO- 7
20Y-27-22151	P1210-01A0	19	PO- 7
20Y-27-22151	Y0270-01A0	19	YO- 7
20Y-27-22160	P1210-01A0	20	PO- 7
20Y-27-22160	Y0270-01A0	20	YO- 7
20Y-27-22170	P1210-01A0	10	PO- 7
20Y-27-22170	Y0270-01A0	10	YO- 7
20Y-27-22210	P1210-01A0	22	PO- 7
20Y-27-22210	Y0270-01A0	22	YO- 7
20Y-27-22220	P1210-01A0	12	PO- 7
20Y-27-22220	Y0270-01A0	12	YO- 7
20Y-27-22230	P1210-01A0	5	PO- 7
20Y-27-22230	Y0270-01A0	5	YO- 7
20Y-27-22240	P1210-01A0	18	PO- 7
20Y-27-22240	Y0270-01A0	18	YO- 7
20Y-27-22250	P1210-01A0	29	PO- 7
20Y-27-22250	Y0270-01A0	29	YO- 7
20Y-27-22261	P1210-01A0	7	PO- 7
20Y-27-22261	Y0270-01A0	7	YO- 7
20Y-27-22270	P1210-01A0	8	PO- 7
20Y-27-22270	Y0270-01A0	8	YO- 7
20Y-27-22280	P1210-01A0	6	PO- 7
20Y-27-22280	Y0270-01A0	6	YO- 7
20Y-27-31210	P1210-01A0	26	PO- 7
20Y-27-31210	Y0270-01A0	26	YO- 7
20Y-27-31220	P1210-01A0	4	PO- 7
20Y-27-31220	Y0270-01A0	4	YO- 7
20Y-27-31230	P1210-01A0	28	PO- 7
20Y-27-31230	Y0270-01A0	28	YO- 7
20Y-30-D1340	R1100-01A0	1	RO- 41
20Y-30-D1350	R1100-01A1	1	RO- 43
20Y-30-00016	R0200-01A0	1	RO- 9
20Y-30-00016	R0200-01A1	1	RO- 11
20Y-30-00100	R0110-01A0	5	RO- 3
20Y-30-00110	R0110-01A0	6	RO- 3
20Y-30-00120	R0110-01A0	7	RO- 3
20Y-30-00321	R0110-01A0	1	RO- 3
20Y-30-00430	R0200-01A0	4	RO- 9
20Y-30-00430	R0200-01A1	4	RO- 11
20Y-30-11340	R0200-01A0	11	RO- 9
20Y-30-11340	R0200-01A1	11	RO- 11
20Y-30-11370	R1100-01A0	11	RO- 41
20Y-30-11370	R1100-01A1	11	RO- 43
20Y-30-11370	R1100-01A2	11	RO- 45
20Y-30-11370	R1100-01A3	11	RO- 47
20Y-30-12112	R0110-01A0	11	RO- 5

PARTS NO.	FIG NO.	INDEX	PAGE
20Y-30-13130	R0110-01A0	3	RO- 3
20Y-30-13150	R0110-01A0	8	RO- 3
20Y-30-16170	R0200-01A0	10	RO- 9
20Y-30-16170	R0200-01A1	10	RO- 11
20Y-30-16330	R0200-01A0	8	RO- 9
20Y-30-16330	R0200-01A1	8	RO- 11
20Y-30-16330	R0300-01A0	10	RO- 13
20Y-30-16411	R0200-01A0	1	RO- 9
20Y-30-16411	R0200-01A1	1	RO- 11
20Y-30-16460	R0200-01A0	6	RO- 9
20Y-30-16460	R0200-01A1	6	RO- 11
20Y-30-21151	R1100-01A0	6	RO- 41
20Y-30-21151	R1100-01A1	6	RO- 43
20Y-30-21151	R1100-01A2	6	RO- 45
20Y-30-21151	R1100-01A3	6	RO- 47
20Y-30-21191	P1210-01A0	39	PO- 9
20Y-30-23140	R1200-01A2	8	RO- 57
20Y-30-23140	R1200-01A3	8	RO- 59
20Y-30-31E81	R1100-01A0	2	RO- 41
20Y-30-31E81	R1100-01A1	2	RO- 43
20Y-30-31E81	R1100-01A2	2	RO- 45
20Y-30-31E81	R1100-01A3	2	RO- 47
20Y-30-31160	R1200-01A1	1	RO- 55
20Y-30-31170	R1200-01A2	1	RO- 57
20Y-30-31180	R1200-01A2	2	RO- 57
20Y-30-31411	R1100-01A2	1	RO- 45
20Y-30-32110	R0110-01A0	1	RO- 5
20Y-30-32110	R0110-02A1	1	RO- 7
20Y-30-32130	R0110-01A0	12	RO- 5
20Y-30-33211	R0110-01A0	1	RO- 3
20Y-30-35170	R1200-01A3	1	RO- 59
20Y-30-35180	R1200-01A3	2	RO- 59
20Y-30-35410	R1100-01A3	1	RO- 47
20Y-32-00300	Y0321-01A0	1	YO- 11
20Y-32-00310	Y0321-01A1	1	YO- 13
20Y-32-02031	R0500-01A5	1	RO- 25
20Y-32-02041	R0500-01A6	1	RO- 27
20Y-32-02051	R0500-01A4	1	RO- 23
20Y-32-02060	R0500-01A0	1	RO- 15
20Y-32-02070	R0500-01A1	1	RO- 17
20Y-32-02082	R0500-01A2	1	RO- 19
20Y-32-02111	R0500-01B2	1	RO- 35
20Y-32-02121	R0500-01B3	1	RO- 37
20Y-32-02140	R0500-01A8	1	RO- 31
20Y-32-02221	R0500-01A7	1	RO- 29
20Y-32-02250	R0500-01B1	1	RO- 33
20Y-32-05041	Y0320-01A0	K02	YO- 9
20Y-32-05051	Y0320-01A0	K03	YO- 9
20Y-32-05070	Y0320-01A0	K01	YO- 9
20Y-32-05080	Y0320-01A0	K04	YO- 9

PARTS NO.	FIG NO.	INDEX	PAGE
20Y-32-11141	R0500-01A0	5	RO- 15
20Y-32-11141	R0500-01A0	14	RO- 15
20Y-32-11141	R0500-01A1	5	RO- 17
20Y-32-11141	R0500-01A1	14	RO- 17
20Y-32-11141	R0500-01A2	5	RO- 19
20Y-32-11141	R0500-01A2	14	RO- 19
20Y-32-11141	R0500-01A4	5	RO- 23
20Y-32-11141	R0500-01A4	14	RO- 23
20Y-32-11141	R0500-01A5	5	RO- 25
20Y-32-11141	R0500-01A5	14	RO- 25
20Y-32-11141	R0500-01A6	5	RO- 27
20Y-32-11141	R0500-01A6	14	RO- 27
20Y-32-11141	R0500-01A7	5	RO- 29
20Y-32-11141	R0500-01A7	14	RO- 29
20Y-32-11141	R0500-01A8	5	RO- 31
20Y-32-11141	R0500-01A8	14	RO- 31
20Y-32-11141	R0500-01B1	5	RO- 33
20Y-32-11141	R0500-01B1	14	RO- 33
20Y-32-11141	R0500-01B2	5	RO- 35
20Y-32-11141	R0500-01B2	14	RO- 35
20Y-32-11141	R0500-01B3	5	RO- 37
20Y-32-11141	R0500-01B3	14	RO- 37
20Y-32-11141	Y0321-01A0	5	YO- 11
20Y-32-11141	Y0321-01A0	11	YO- 11
20Y-32-11141	Y0321-01A1	5	YO- 13
20Y-32-11141	Y0321-01A1	11	YO- 13
20Y-32-11171	R0500-01A0	4	RO- 15
20Y-32-11171	R0500-01A0	13	RO- 15
20Y-32-11171	R0500-01A1	4	RO- 17
20Y-32-11171	R0500-01A1	13	RO- 17
20Y-32-11171	R0500-01A2	4	RO- 19
20Y-32-11171	R0500-01A2	13	RO- 19
20Y-32-11171	R0500-01A4	4	RO- 23
20Y-32-11171	R0500-01A4	13	RO- 23
20Y-32-11171	R0500-01A5	4	RO- 25
20Y-32-11171	R0500-01A5	13	RO- 25
20Y-32-11171	R0500-01A6	4	RO- 27
20Y-32-11171	R0500-01A6	13	RO- 27
20Y-32-11171	R0500-01A7	4	RO- 29
20Y-32-11171	R0500-01A7	13	RO- 29
20Y-32-11171	R0500-01A8	4	RO- 31
20Y-32-11171	R0500-01A8	13	RO- 31
20Y-32-11171	R0500-01B1	4	RO- 33
20Y-32-11171	R0500-01B1	13	RO- 33
20Y-32-11171	R0500-01B2	4	RO- 35
20Y-32-11171	R0500-01B2	13	RO- 35
20Y-32-11171	R0500-01B3	4	RO- 37
20Y-32-11171	R0500-01B3	13	RO- 37
20Y-32-11171	Y0321-01A0	4	YO- 11
20Y-32-11171	Y0321-01A0	10	YO- 11

PARTS NO.	FIG NO.	INDEX	PAGE
20Y-32-11171	Y0321-01A1	4	YO- 13
20Y-32-11171	Y0321-01A1	10	YO- 13
20Y-32-11220	R0500-01A1	8	RO- 17
20Y-32-11220	R0500-01A1	17	RO- 17
20Y-32-11220	Y0320-01A0	K03	YO- 9
20Y-32-11230	R0500-01A0	8	RO- 15
20Y-32-11230	R0500-01A0	17	RO- 15
20Y-32-11230	R0500-01A8	8	RO- 31
20Y-32-11230	R0500-01A8	17	RO- 31
20Y-32-11230	Y0320-01A0	K02	YO- 9
20Y-32-11240	R0500-01A0	3	RO- 15
20Y-32-11240	R0500-01A0	12	RO- 15
20Y-32-11240	R0500-01A1	3	RO- 17
20Y-32-11240	R0500-01A1	12	RO- 17
20Y-32-11240	R0500-01A2	3	RO- 19
20Y-32-11240	R0500-01A2	12	RO- 19
20Y-32-11240	R0500-01A4	3	RO- 23
20Y-32-11240	R0500-01A4	12	RO- 23
20Y-32-11240	R0500-01A5	3	RO- 25
20Y-32-11240	R0500-01A5	12	RO- 25
20Y-32-11240	R0500-01A6	3	RO- 27
20Y-32-11240	R0500-01A6	12	RO- 27
20Y-32-11240	R0500-01A7	3	RO- 29
20Y-32-11240	R0500-01A7	12	RO- 29
20Y-32-11240	R0500-01A8	3	RO- 31
20Y-32-11240	R0500-01A8	12	RO- 31
20Y-32-11240	R0500-01B1	3	RO- 33
20Y-32-11240	R0500-01B1	12	RO- 33
20Y-32-11240	R0500-01B2	3	RO- 35
20Y-32-11240	R0500-01B2	12	RO- 35
20Y-32-11240	R0500-01B3	3	RO- 37
20Y-32-11240	R0500-01B3	12	RO- 37
20Y-32-11240	Y0321-01A0	3	YO- 11
20Y-32-11240	Y0321-01A0	9	YO- 11
20Y-32-11240	Y0321-01A1	3	YO- 13
20Y-32-11240	Y0321-01A1	9	YO- 13
20Y-32-11260	R0500-01A0	19	RO- 15
20Y-32-11260	R0500-01A1	19	RO- 17
20Y-32-11260	R0500-01A2	19	RO- 19
20Y-32-11260	R0500-01A4	19	RO- 23
20Y-32-11260	R0500-01A5	19	RO- 25
20Y-32-11260	R0500-01A6	19	RO- 27
20Y-32-11260	R0500-01A7	19	RO- 29
20Y-32-11260	R0500-01A8	19	RO- 31
20Y-32-11260	R0500-01B1	19	RO- 33
20Y-32-11260	R0500-01B2	19	RO- 35
20Y-32-11260	R0500-01B3	19	RO- 37
20Y-32-11260	Y0321-01A0	13	YO- 11
20Y-32-11260	Y0321-01A1	13	YO- 13
20Y-32-11340	R0500-01A0	7	RO- 15

PARTS NO.	FIG NO.	INDEX	PAGE
20Y-32-11340	R0500-01A0	16	RO- 15
20Y-32-11340	R0500-01A8	7	RO- 31
20Y-32-11340	R0500-01A8	16	RO- 31
20Y-32-11350	R0500-01A1	7	RO- 17
20Y-32-11350	R0500-01A1	16	RO- 17
20Y-32-11510	R0500-01A2	7	RO- 19
20Y-32-11510	R0500-01A2	16	RO- 19
20Y-32-21110	R0500-01A4	7	RO- 23
20Y-32-21110	R0500-01A4	16	RO- 23
20Y-32-21110	R0500-01B1	7	RO- 33
20Y-32-21110	R0500-01B1	16	RO- 33
20Y-32-31110	R0500-01A7	7	RO- 29
20Y-32-31110	R0500-01A7	16	RO- 29
20Y-32-31120	R0500-01A0	1	RO- 15
20Y-32-31120	R0500-01A0	10	RO- 15
20Y-32-31120	R0500-01A1	1	RO- 17
20Y-32-31120	R0500-01A1	10	RO- 17
20Y-32-31120	R0500-01A2	1	RO- 19
20Y-32-31120	R0500-01A2	10	RO- 19
20Y-32-31120	R0500-01A4	1	RO- 23
20Y-32-31120	R0500-01A4	10	RO- 23
20Y-32-31120	R0500-01A5	1	RO- 25
20Y-32-31120	R0500-01A5	10	RO- 25
20Y-32-31120	R0500-01A6	1	RO- 27
20Y-32-31120	R0500-01A6	10	RO- 27
20Y-32-31120	R0500-01A7	1	RO- 29
20Y-32-31120	R0500-01A7	10	RO- 29
20Y-32-31120	R0500-01A8	1	RO- 31
20Y-32-31120	R0500-01A8	10	RO- 31
20Y-32-31120	R0500-01B1	1	RO- 33
20Y-32-31120	R0500-01B1	10	RO- 33
20Y-32-31120	R0500-01B2	1	RO- 35
20Y-32-31120	R0500-01B2	10	RO- 35
20Y-32-31120	R0500-01B3	1	RO- 37
20Y-32-31120	R0500-01B3	10	RO- 37
20Y-32-31120	Y0321-01A0	1	YO- 11
20Y-32-31120	Y0321-01A0	7	YO- 11
20Y-32-31120	Y0321-01A1	1	YO- 13
20Y-32-31120	Y0321-01A1	7	YO- 13
20Y-32-31130	R0500-01A0	2	RO- 15
20Y-32-31130	R0500-01A0	11	RO- 15
20Y-32-31130	R0500-01A1	2	RO- 17
20Y-32-31130	R0500-01A1	11	RO- 17
20Y-32-31130	R0500-01A2	2	RO- 19
20Y-32-31130	R0500-01A2	11	RO- 19
20Y-32-31130	R0500-01A4	2	RO- 23
20Y-32-31130	R0500-01A4	11	RO- 23
20Y-32-31130	R0500-01A5	2	RO- 25
20Y-32-31130	R0500-01A5	11	RO- 25
20Y-32-31130	R0500-01A6	2	RO- 27

PARTS NO.	FIG NO.	INDEX	PAGE
20Y-32-31130	R0500-01A6	11	RO- 27
20Y-32-31130	R0500-01A7	2	RO- 29
20Y-32-31130	R0500-01A7	11	RO- 29
20Y-32-31130	R0500-01A8	2	RO- 31
20Y-32-31130	R0500-01A8	11	RO- 31
20Y-32-31130	R0500-01B1	2	RO- 33
20Y-32-31130	R0500-01B1	11	RO- 33
20Y-32-31130	R0500-01B2	2	RO- 35
20Y-32-31130	R0500-01B2	11	RO- 35
20Y-32-31130	R0500-01B3	2	RO- 37
20Y-32-31130	R0500-01B3	11	RO- 37
20Y-32-31130	Y0321-01A0	2	YO- 11
20Y-32-31130	Y0321-01A0	8	YO- 11
20Y-32-31130	Y0321-01A1	2	YO- 13
20Y-32-31130	Y0321-01A1	8	YO- 13
20Y-32-31150	R0500-01A0	6	RO- 15
20Y-32-31150	R0500-01A0	15	RO- 15
20Y-32-31150	R0500-01A1	6	RO- 17
20Y-32-31150	R0500-01A1	15	RO- 17
20Y-32-31150	R0500-01A2	6	RO- 19
20Y-32-31150	R0500-01A2	15	RO- 19
20Y-32-31150	R0500-01A4	6	RO- 23
20Y-32-31150	R0500-01A4	15	RO- 23
20Y-32-31150	R0500-01A5	6	RO- 25
20Y-32-31150	R0500-01A5	15	RO- 25
20Y-32-31150	R0500-01A6	6	RO- 27
20Y-32-31150	R0500-01A6	15	RO- 27
20Y-32-31150	R0500-01A7	6	RO- 29
20Y-32-31150	R0500-01A7	15	RO- 29
20Y-32-31150	R0500-01A8	6	RO- 31
20Y-32-31150	R0500-01A8	15	RO- 31
20Y-32-31150	R0500-01B1	6	RO- 33
20Y-32-31150	R0500-01B1	15	RO- 33
20Y-32-31150	R0500-01B2	6	RO- 35
20Y-32-31150	R0500-01B2	15	RO- 35
20Y-32-31150	R0500-01B3	6	RO- 37
20Y-32-31150	R0500-01B3	15	RO- 37
20Y-32-31150	Y0321-01A0	6	YO- 11
20Y-32-31150	Y0321-01A0	12	YO- 11
20Y-32-31150	Y0321-01A1	6	YO- 13
20Y-32-31150	Y0321-01A1	12	YO- 13
20Y-32-31190	R0500-01A0	20	RO- 15
20Y-32-31190	R0500-01A1	20	RO- 17
20Y-32-31190	R0500-01A2	20	RO- 19
20Y-32-31190	R0500-01A4	20	RO- 23
20Y-32-31190	R0500-01A5	20	RO- 25
20Y-32-31190	R0500-01A6	20	RO- 27
20Y-32-31190	R0500-01A7	20	RO- 29
20Y-32-31190	R0500-01A8	20	RO- 31
20Y-32-31190	R0500-01B1	20	RO- 33

PARTS NO.	FIG NO.	INDEX	PAGE
20Y-32-31190	R0500-01B2	20	RO- 35
20Y-32-31190	R0500-01B3	20	RO- 37
20Y-32-31190	Y0321-01A0	14	YO- 11
20Y-32-31190	Y0321-01A1	14	YO- 13
20Y-32-31210	R0500-01A4	8	RO- 23
20Y-32-31210	R0500-01A4	17	RO- 23
20Y-32-31210	R0500-01A5	8	RO- 25
20Y-32-31210	R0500-01A5	17	RO- 25
20Y-32-31210	R0500-01A6	8	RO- 27
20Y-32-31210	R0500-01A6	17	RO- 27
20Y-32-31210	R0500-01A7	8	RO- 29
20Y-32-31210	R0500-01A7	17	RO- 29
20Y-32-31210	R0500-01B1	8	RO- 33
20Y-32-31210	R0500-01B1	17	RO- 33
20Y-32-31210	R0500-01B2	8	RO- 35
20Y-32-31210	R0500-01B2	17	RO- 35
20Y-32-31210	R0500-01B3	8	RO- 37
20Y-32-31210	R0500-01B3	17	RO- 37
20Y-32-31210	Y0320-01A0	K01	YO- 9
20Y-32-31231	R0500-01A2	8	RO- 19
20Y-32-31231	R0500-01A2	17	RO- 19
20Y-32-31231	Y0320-01A0	K04	YO- 9
20Y-32-31310	R0500-01A5	7	RO- 25
20Y-32-31310	R0500-01A5	16	RO- 25
20Y-32-31310	R0500-01B2	7	RO- 35
20Y-32-31310	R0500-01B2	16	RO- 35
20Y-32-31320	R0500-01A6	7	RO- 27
20Y-32-31320	R0500-01A6	16	RO- 27
20Y-32-31320	R0500-01B3	7	RO- 37
20Y-32-31320	R0500-01B3	16	RO- 37
20Y-43-D1161	K1110-20A0	13	KO- 103
20Y-43-12143	BO400-01A0	9	BO- 11
20Y-43-12180	BO400-01A0	25	BO- 11
20Y-43-21151	K1110-17A0	4	KO- 95
20Y-43-21231	K1110-17A0	20	KO- 95
20Y-43-21241	K1110-17A0	21	KO- 95
20Y-43-21260	K1110-17A0	6	KO- 95
20Y-43-22211	K1110-25A0	1	KO- 113
20Y-43-22221	K1110-28A0	1	KO- 121
20Y-43-22250	K1110-25A6	6	KO- 113
20Y-43-22250	K1110-28A0	6	KO- 121
20Y-43-22261	K1110-25A7	7	KO- 113
20Y-43-22261	K1110-28A0	7	KO- 121
20Y-43-22370	K1110-25A8	8	KO- 113
20Y-43-22370	K1110-28A0	8	KO- 121
20Y-43-22381	K1110-25A3	3	KO- 113
20Y-43-22390	K1110-28A0	3	KO- 121
20Y-43-22421	K1110-25A4	4	KO- 113
20Y-43-22421	K1110-28A0	4	KO- 121
20Y-43-23441	BO400-01A0	17	BO- 11

PARTS NO.	FIG NO.	INDEX	PAGE
20Y-43-31220	K1110-19A1	10	KO- 101
20Y-43-31220	K1110-04A1	10	K1- 87
20Y-43-31310	BO400-01A0	1	BO- 11
20Y-43-31311	BO400-01A0	1	BO- 11
20Y-43-31411	K1110-28A0	7	KO- 119
20Y-43-31421	K1110-28A0	18	KO- 119
20Y-43-31432	K1110-28A0	16	KO- 119
20Y-43-31440	K1110-28A0	19	KO- 119
20Y-43-31450	K1110-28A0	20	KO- 119
20Y-43-31460	K1110-27A0	1	KO- 117
20Y-43-31470	K1110-27A0	2	KO- 117
20Y-43-31512	K1110-28A0	12	KO- 119
20Y-43-31522	K1110-28A0	13	KO- 119
20Y-43-31601	K1110-39A0	1	KO- 147
20Y-43-31610	K1110-28A0	14	KO- 119
20Y-43-31610	K1110-39A0	1	KO- 147
20Y-43-31621	K1110-28A0	15	KO- 119
20Y-43-31621	K1110-39A0	2	KO- 147
20Y-43-31631	K1110-39A0	3	KO- 147
20Y-43-31690	K1110-28A0	29	KO- 119
20Y-46-D1170	J1110-02A0	2	JO- 5
20Y-46-D1180	J1110-02A0	3	JO- 5
20Y-46-D1190	J1110-02A0	4	JO- 5
20Y-46-D1200	J1110-02A0	5	JO- 5
20Y-46-D1210	J1110-02A0	7	JO- 5
20Y-46-D1220	J1110-02A0	8	JO- 5
20Y-46-D1230	J1110-02A0	9	JO- 5
20Y-46-D1270	J1110-01A0	1	JO- 3
20Y-46-11270	M1510-01A0	4	MO- 29
20Y-46-11281	J1110-02A0	19	JO- 5
20Y-46-11410	M1520-01A0	3	MO- 31
20Y-46-21520	N1110-01A0	7	NO- 3
20Y-46-21890	J1110-02A0	14	JO- 5
20Y-46-41150	J1110-02A0	15	JO- 5
20Y-46-41170	J1110-02A0	16	JO- 5
20Y-46-41180	J1110-02A0	17	JO- 5
20Y-46-41190	J1110-02A0	18	JO- 5
20Y-46-42210	J1110-02A0	1	JO- 5
20Y-46-42231	J1110-01A0	11	JO- 3
20Y-46-42241	J1110-01A0	19	JO- 3
20Y-46-42251	J1110-01A0	14	JO- 3
20Y-46-42260	J1110-01A0	23	JO- 3
20Y-46-42381	J1110-01A0	22	JO- 3
20Y-46-42411	J1110-01A0	9	JO- 3
20Y-46-42422	J1110-01A0	12	JO- 3
20Y-46-42431	J1110-01A0	17	JO- 3
20Y-46-42440	J1110-01A0	21	JO- 3
20Y-46-42460	J1110-01A0	12	JO- 3
20Y-46-42460	J1110-01A0	15	JO- 3
20Y-46-42460	J1110-01A0	20	JO- 3

PARTS NO.	FIG NO.	INDEX	PAGE
20Y-46-42470	J1110-01A0	16	JO- 3
20Y-46-42480	J1110-01A0	17	JO- 3
20Y-46-42490	J1110-01A0	21	JO- 3
20Y-46-44111	M1510-01A0	1	MO- 29
20Y-46-44141	M1510-01A0	8	MO- 29
20Y-46-44171	M1510-01A0	2	MO- 29
20Y-46-44191	M1510-01A0	3	MO- 29
20Y-46-44250	M1520-01A0	1	MO- 31
20Y-54-D1730	M1110-01A0	1	MO- 3
20Y-54-D1761	M1130-01A0	37	MO- 7
20Y-54-D1761	M1140-01A0	29	MO- 11
20Y-54-D1770	M1130-01A0	38	MO- 7
20Y-54-D1810	M1120-01A0	6	MO- 5
20Y-54-D1820	M1810-01A0	2	MO- 33
20Y-54-D1830	M1810-01A0	4	MO- 33
20Y-54-01141	K1110-01A0	1	KO- 61
20Y-54-11611	K1110-02A0	38	KO- 65
20Y-54-11611	K1110-07A0	16	KO- 91
20Y-54-11611	M1130-01A0	35	MO- 7
20Y-54-11611	M1140-01A0	27	MO- 11
20Y-54-12320	M1150-01A0	22	MO- 13
20Y-54-12550	K1130-01A0	51	MO- 9
20Y-54-12550	M1150-01A0	34	MO- 15
20Y-54-12550	M1150-01A0	44	MO- 15
20Y-54-12550	M1810-01A0	18	MO- 33
20Y-54-12550	M1810-01A0	23	MO- 33
20Y-54-12550	M1810-02A0	9	MO- 35
20Y-54-13180	K1110-05A0	9	KO- 71
20Y-54-13322	K1110-05A0	8	KO- 71
20Y-54-14590	k1110-02A0	15	KO- 61
20Y-54-14590	K1110-04A0	6	KO- 69
20Y-54-18690	K1110-04A0	5	KO- 69
20Y-54-18690	K1110-10A0	2	KO- 81
20Y-54-18690	K1110-10A0	4	KO- 81
20Y-54-25681	M1110-01A0	9	MO- 3
20Y-54-25850	M1210-01A0	10	MO- 19
20Y-54-26360	M1220-01A0	4	MO- 21
20Y-54-27123	M1110-01A0	2	MO- 3
20Y-54-27131	M1110-01A0	14	MO- 3
20Y-54-27141	M1110-01A0	13	MO- 3
20Y-54-27172	M1110-01A0	3	MO- 3
20Y-54-27182	M1210-01A0	21	MO- 19
20Y-54-27290	M1110-01A0	18	MO- 3
20Y-54-27330	M1110-01A0	4	MO- 3
20Y-54-27370	M1110-01A0	17	MO- 3
20Y-54-27511	M1210-01A0	12	MO- 19
20Y-54-27523	M1210-01A0	13	MO- 19
20Y-54-27540	M1210-01A0	11	MO- 19
20Y-54-28170	M1130-01A0	22	MO- 7
20Y-54-28170	M1140-01A0	17	MO- 11

PARTS NO.	FIG NO.	INDEX	PAGE
20Y-54-28872	M1810-02A0	18	MO- 35
20Y-54-28882	M1810-02A0	21	MO- 35
20Y-54-28911	M1420-01A0	4	MO- 27
20Y-54-29231	M1130-01A0	34	MO- 7
20Y-54-29231	M1140-01A0	26	MO- 11
20Y-54-29291	M1110-01A0	10	MO- 3
20Y-54-29660	M1220-01A0	9	MO- 21
20Y-54-29680	M1220-01A0	8	MO- 21
20Y-54-29711	M1220-01A0	5	MO- 21
20Y-54-35420	M1410-01A0	2	MO- 25
20Y-54-35430	M1410-01A0	3	MO- 25
20Y-54-35470	K1110-07A0	20	KO- 95
20Y-54-35480	K1110-07A0	21	KO- 96
20Y-54-36150	K1110-11A0	13	KO- 83
20Y-54-36342	K0230-01A1	21	KO- 25
20Y-54-36342	K1110-04A0	16	KO- 69
20Y-54-36360	K1110-04A0	9	KO- 69
20Y-54-36380	K1110-07A0	1	KO- 76
20Y-54-39450	K1110-08A0	4	KO- 77
20Y-54-39460	K1110-08A0	5	KO- 77
20Y-54-39480	K1110-08A0	6	KO- 77
20Y-54-39511	K1110-09A0	15	KO- 79
20Y-54-51241	K1110-01A0	2	KO- 61
20Y-54-51251	K1110-01A0	7	KO- 61
20Y-54-51261	K1110-01A0	3	KO- 61
20Y-54-51321	K1110-06A0	14	KO- 73
20Y-54-51330	K1110-05A0	14	KO- 71
20Y-54-51341	K1110-06A0	15	KO- 73
20Y-54-51393	K1110-06A0	18	KO- 73
20Y-54-51401	K1110-05A0	1	KO- 71
20Y-54-51420	K1110-02A0	47	KO- 65
20Y-54-51441	K1110-06A0	11	KO- 73
20Y-54-51451	K1110-05A0	11	KO- 71
20Y-54-51461	K1110-05A0	12	KO- 71
20Y-54-51470	K1110-05A0	10	KO- 71
20Y-54-51482	K1110-05A0	13	KO- 71
20Y-54-51490	K1110-06A0	17	KO- 73
20Y-54-51522	k1110-02A0	2	KO- 61
20Y-54-51531	k1110-02A0	3	KO- 61
20Y-54-51551	k1110-02A0	4	KO- 61
20Y-54-51591	K1110-02A0	44	KO- 65
20Y-54-51601	K1110-03A0	1	KO- 67
20Y-54-51633	k1110-02A0	27	KO- 61
20Y-54-51640	K1110-02A0	46	KO- 65
20Y-54-51670	k1110-02A0	20	KO- 61
20Y-54-51680	k1110-02A0	21	KO- 61
20Y-54-51720	K1110-04A0	12	KO- 69
20Y-54-51727	K1110-01A0	6	KO- 61
20Y-54-51733	K1110-04A0	13	KO- 69
20Y-54-51744	K1110-04A0	11	KO- 69

PARTS NO.	FIG NO.	INDEX	PAGE
20Y-54-51760	K1110-04A0	21	KO- 69
20Y-54-51782	E0340-01A0	3	EO- 27
20Y-54-51820	K1110-10A0	16	KO- 81
20Y-54-51832	K1110-10A0	18	KO- 81
20Y-54-51842	K1110-01A0	4	KO- 61
20Y-54-51851	K1110-01A0	5	KO- 61
20Y-54-51862	K1110-03A0	5	KO- 67
20Y-54-51880	K1110-02A0	36	KO- 65
20Y-54-51910	K1110-07A0	19	KO- 94
20Y-54-51922	K1110-04A0	4	KO- 69
20Y-54-51930	K1110-07A0	4	KO- 79
20Y-54-51952	K0310-01A0	2	KO- 31
20Y-54-51952	K0310-01A1	2	KO- 33
20Y-54-51952	K0310-01A1	2	K1- 63
20Y-54-52122	K1110-03A0	19	KO- 67
20Y-54-52131	K1110-03A0	21	KO- 67
20Y-54-52161	K1110-03A0	11	KO- 67
20Y-54-52171	K1110-03A0	13	KO- 67
20Y-54-52192	k1110-02A0	28	KO- 61
20Y-54-52200	K1110-06A0	1	KO- 73
20Y-54-52221	K1110-08A0	2	KO- 77
20Y-54-52231	K1110-08A0	8	KO- 77
20Y-54-52300	K1110-06A0	2	KO- 73
20Y-54-52310	K1110-09A0	4	KO- 79
20Y-54-52320	K1110-09A0	5	KO- 79
20Y-54-52350	K1110-08A0	3	KO- 77
20Y-54-52361	K1110-03A0	12	KO- 67
20Y-54-52371	K1110-03A0	14	KO- 67
20Y-54-52380	K1110-03A0	18	KO- 67
20Y-54-52400	K1110-06A0	3	KO- 73
20Y-54-52412	K1110-10A0	1	KO- 81
20Y-54-52423	K1110-10A0	3	KO- 81
20Y-54-52440	K1110-11A0	15	KO- 83
20Y-54-52470	K1110-11A0	12	KO- 83
20Y-54-52491	K1110-02A0	40	KO- 65
20Y-54-52510	K0330-01A0	1	KO- 43
20Y-54-52521	K0330-01A0	2	KO- 43
20Y-54-52530	K0320-01A0	3	KO- 41
20Y-54-52530	K0320-01A0	9	KO- 41
20Y-54-52552	K0320-01A0	1	KO- 41
20Y-54-52562	K0320-01A0	7	KO- 41
20Y-54-52572	K0320-01A0	8	KO- 41
20Y-54-52621	k1110-02A0	12	KO- 61
20Y-54-52651	K1110-04A0	20	KO- 69
20Y-54-52651	K1110-04A0	22	KO- 69
20Y-54-52681	k1110-02A0	13	KO- 61
20Y-54-52820	K1110-06A0	9	KO- 73
20Y-54-52840	K1110-05A0	3	KO- 71
20Y-54-52850	K1110-05A0	4	KO- 71
20Y-54-52860	K1110-05A0	5	KO- 71

PARTS NO.	FIG NO.	INDEX	PAGE
20Y-54-52870	K1110-05A0	6	KO- 71
20Y-54-52880	K1110-05A0	7	KO- 71
20Y-54-52950	K0320-01A0	2	KO- 41
20Y-54-52990	K1110-06A0	5	KO- 73
20Y-54-53370	K0840-01A0	3	KO- 59
20Y-54-54480	E0310-01A1	7	EO- 23
20Y-54-54490	E0310-01A1	1	EO- 23
20Y-54-61132	M1130-01A0	4	MO- 7
20Y-54-61132	M1140-01A0	1	MO- 11
20Y-54-61143	M1130-01A0	1	MO- 7
20Y-54-61162	M1140-01A0	34	MO- 11
20Y-54-61221	K1130-01A0	41	MO- 9
20Y-54-61231	K1130-01A0	42	MO- 9
20Y-54-61240	M1110-01A0	12	MO- 3
20Y-54-61261	M1160-01A0	6	MO- 17
20Y-54-61272	M1160-01A0	9	MO- 17
20Y-54-61281	B0200-01A0	5	BO - 9
20Y-54-61311	M1130-01A0	13	MO- 7
20Y-54-61322	M1130-01A0	14	MO- 7
20Y-54-61331	M1130-01A0	15	MO- 7
20Y-54-61341	M1130-01A0	16	MO- 7
20Y-54-61361	M1130-01A0	19	MO- 7
20Y-54-61371	M1130-01A0	31	MO- 7
20Y-54-61391	M1140-01A0	35	MO- 11
20Y-54-61411	M1140-01A0	9	MO- 11
20Y-54-61421	M1140-01A0	10	MO- 11
20Y-54-61431	M1140-01A0	11	MO- 11
20Y-54-61441	M1140-01A0	14	MO- 11
20Y-54-61470	M1130-01A0	28	MO- 7
20Y-54-61470	M1140-01A0	23	MO- 11
20Y-54-61482	M1130-01A0	7	MO- 7
20Y-54-61541	M1150-01A0	39	MO- 15
20Y-54-61551	M1150-01A0	30	MO- 13
20Y-54-61591	M1150-01A0	31	MO- 15
20Y-54-61611	M1310-01A0	1	MO- 23
20Y-54-61621	M1420-01A0	1	MO- 27
20Y-54-61630	M1420-01A0	2	MO- 27
20Y-54-61650	M1110-01A0	8	MO- 3
20Y-54-61670	J1110-01A0	6	JO- 3
20Y-54-61680	J1110-01A0	7	JO- 3
20Y-54-61711	M1160-01A0	1	MO- 17
20Y-54-61721	M1210-01A0	1	MO- 19
20Y-54-61731	M1210-01A0	8	MO- 19
20Y-54-61742	M1210-01A0	9	MO- 19
20Y-54-61790	M1210-01A0	7	MO- 19
20Y-54-61852	M1810-01A0	5	MO- 33
20Y-54-61861	M1810-01A0	6	MO- 33
20Y-54-61870	M1810-02A0	3	MO- 35
20Y-54-61890	M1810-01A0	7	MO- 33
20Y-54-61911	M1150-01A0	1	MO- 13

PARTS NO.	FIG NO.	INDEX	PAGE
20Y-54-61921	M1150-01A0	4	MO- 13
20Y-54-61931	M1150-01A0	13	MO- 13
20Y-54-61961	M1150-01A0	24	MO- 13
20Y-54-61971	M1150-01A0	15	MO- 13
20Y-54-61980	M1810-02A0	4	MO- 35
20Y-54-61990	M1210-01A0	6	MO- 19
20Y-54-62110	M1810-01A0	1	MO- 33
20Y-54-62120	M1810-01A0	2	MO- 33
20Y-54-62131	M1810-02A0	1	MO- 35
20Y-54-62140	M1810-01A0	7	MO- 33
20Y-54-62210	M1120-01A0	1	MO- 5
20Y-54-62220	M1120-01A0	4	MO- 5
20Y-54-62250	M1810-02A0	24	MO- 35
20Y-54-62260	M1810-02A0	25	MO- 35
20Y-54-63110	B0200-01A0	2	BO - 9
20Y-54-63122	M1110-01A0	7	MO- 3
20Y-54-63131	M1120-01A0	2	MO- 5
20Y-54-63161	M1150-01A0	2	MO- 13
20Y-54-63171	M1150-01A0	3	MO- 13
20Y-54-63181	M1150-01A0	4	MO- 13
20Y-54-63211	M1150-01A0	15	MO- 13
20Y-54-63221	M1150-01A0	17	MO- 13
20Y-54-63241	M1150-01A0	9	MO- 13
20Y-54-63251	M1150-01A0	8	MO- 13
20Y-54-63261	M1150-01A0	26	MO- 13
20Y-54-63270	M1150-01A0	27	MO- 13
20Y-54-63281	M1150-01A0	7	MO- 13
20Y-54-63290	M1150-01A0	6	MO- 13
20Y-54-63341	K1130-01A0	43	MO- 9
20Y-54-63351	K1130-01A0	44	MO- 9
20Y-54-63390	M1130-01A0	3	MO- 7
20Y-54-63410	M1130-01A0	2	MO- 7
20Y-54-63410	M1130-01A0	6	MO- 7
20Y-54-63410	M1140-01A0	3	MO- 11
20Y-54-65121	K1110-16A0	2	KO- 93
20Y-54-65310	K1110-13A0	19	KO- 87
20Y-54-65340	K1110-20A0	14	KO- 103
20Y-54-65580	K1110-13A0	17	KO- 87
20Y-54-65690	K1110-15A0	17	KO- 91
20Y-54-65710	K0310-01A1	1	K1- 63
20Y-54-65750	K1110-21A29	29	K1- 163
20Y-54-65760	K1110-21A30	30	K1- 164
20Y-54-65770	K1110-21A31	31	K1- 165
20Y-54-65790	K1110-15A0	16	KO- 91
20Y-54-65810	K1120-01A0	10	KO- 151
20Y-54-65820	K1120-01A0	11	KO- 151
20Y-54-66111	M1220-01A0	3	MO- 21
20Y-54-66131	M1220-01A0	1	MO- 21
20Y-54-75250	K1110-01A0	8	KO- 61
20Y-57-D1360	K0160-01A1	4	KO- 11

PARTS NO.	FIG NO.	INDEX	PAGE
20Y-57-D1370	K0160-01A1	2	KO- 11
20Y-57-D1380	K0160-01A1	3	KO- 11
20Y-57-D1390	K0110-01A2	3	KO- 5
20Y-57-D1500	K0110-01A2	1	KO- 5
20Y-60-21230	H0110-01A0	27	HO- 3
20Y-60-21230	H0110-01A1	27	H1- 7
20Y-60-21240	H0110-01A0	21	HO- 3
20Y-60-21240	H0110-01A1	21	H1- 7
20Y-60-21340	H0110-01A0	37	HO- 5
20Y-60-21340	H0110-01A1	37	H1- 9
20Y-60-21460	H0110-01A0	36	HO- 5
20Y-60-21460	H0110-01A1	36	H1- 9
20Y-60-21470	H0110-01A0	35	HO- 5
20Y-60-21470	H0110-01A1	35	H1- 9
20Y-60-22210	H0120-02A1	4	H1- 21
20Y-60-22210	H1831-01A1	14	H1- 81
20Y-60-22270	H0120-01A0	24	HO- 11
20Y-60-22270	H0120-01A1	25	HO- 13
20Y-60-22270	H0120-02A0	5	HO- 19
20Y-60-22270	H0120-01A1	25	H1- 13
20Y-60-22270	H0120-02A1	5	H1- 21
20Y-60-31111	H0110-01A0	1	HO- 3
20Y-60-31111	H0110-01A1	1	H1- 7
20Y-60-31131	H0110-01A0	20	HO- 3
20Y-60-31131	H0110-01A1	20	H1- 7
20Y-60-31140	H0110-01A0	19	HO- 3
20Y-60-31140	H0110-01A1	19	H1- 7
20Y-60-31161	H0110-01A0	30	HO- 3
20Y-60-31161	H0110-01A1	30	H1- 7
20Y-60-31171	H0110-01A0	25	HO- 3
20Y-60-31171	H0110-01A1	25	H1- 7
20Y-60-31212	H1831-01A0	1	HO- 79
20Y-60-31212	H1831-01A1	1	H1- 81
20Y-60-31212	Y1860-01A0	1	YO- 181
20Y-60-32110	H1270-04A0	10	H1- 71
20Y-60-32110	Y1861-01A0	1	YO- 183
20Y-60-32120	Y1860-01A0	2	YO- 181
20Y-60-32120	Y1861-01A0	2	YO- 183
20Y-60-32300	H1833-01A0	7	HO- 85
20Y-62-D1810	H1310-01A0	3	HO- 73
20Y-62-D1820	H1310-01A0	7	HO- 73
20Y-62-D1850	H1840-02A1	11	HO- 89
20Y-62-D1930	Y1669-03A0	23	YO- 153
20Y-62-D1960	H1270-01A0	2	HO- 57
20Y-62-D1980	H1270-02A0	1	HO- 67
20Y-62-D2010	T1200-04A1	28	TO- 53
20Y-62-01970	H1270-01A0	1	HO- 57
20Y-62-12520	P1120-01A1	16	PO- 5
20Y-62-12540	P1120-01A0	16	PO- 3
20Y-62-12590	P1120-01A0	4	PO- 3

PARTS NO.	FIG NO.	INDEX	PAGE
20Y-62-12590	P1120-01A1	4	PO- 5
20Y-62-13180	T1110-03A0	41	TO- 13
20Y-62-13190	T1110-03A0	32	TO- 11
20Y-62-13220	T1110-03A0	41	TO- 13
20Y-62-13220	T1110-03A1	43	TO- 17
20Y-62-13220	T1110-03A1	43	T1- 17
20Y-62-13230	H1210-01A0	12	HO- 47
20Y-62-13230	T1110-03A0	32	TO- 11
20Y-62-13230	T1110-03A1	33	TO- 15
20Y-62-13230	T1110-03A1	33	T1- 15
20Y-62-13412	T1200-03A0	1	TO- 49
20Y-62-13412	T1200-03A2	1	TO- 51
20Y-62-13450	H1210-01A0	15	HO- 47
20Y-62-13450	T1110-03A0	14	TO- 11
20Y-62-13450	T1110-03A0	34	TO- 11
20Y-62-13450	T1110-03A0	43	TO- 13
20Y-62-13450	T1110-03A1	14	TO- 15
20Y-62-13450	T1110-03A1	35	TO- 15
20Y-62-13450	T1110-03A1	45	TO- 17
20Y-62-13450	T1110-05A1	10	TO- 21
20Y-62-13450	T1110-05A1	16	TO- 21
20Y-62-13450	T1110-05A1	24	TO- 21
20Y-62-13450	T1110-05A1	27	TO- 21
20Y-62-13450	T1110-05A1	30	TO- 21
20Y-62-13450	T1200-04A1	34	TO- 55
20Y-62-13450	T1200-04A1	42	TO- 55
20Y-62-13450	T1200-04A3	34	TO- 57
20Y-62-13450	T1200-05A3	25	TO- 59
20Y-62-13450	T1200-05A3	33	TO- 59
20Y-62-13450	T1110-03A1	14	T1- 15
20Y-62-13450	T1110-03A1	35	T1- 15
20Y-62-13450	T1110-03A1	45	T1- 17
20Y-62-13450	T1110-05A1	10	T1- 21
20Y-62-13450	T1110-05A1	16	T1- 21
20Y-62-13450	T1110-05A1	24	T1- 21
20Y-62-13450	T1110-05A1	27	T1- 21
20Y-62-13450	T1110-05A1	30	T1- 21
20Y-62-13450	T1200-04A1	34	T1- 55
20Y-62-13450	T1200-04A1	42	T1- 55
20Y-62-13450	T1200-04A3	34	T1- 57
20Y-62-13450	T1200-05A3	25	T1- 59
20Y-62-13450	T1200-05A3	33	T1- 59
20Y-62-13580	T1110-03A0	36	TO- 13
20Y-62-13580	T1110-03A1	38	TO- 15
20Y-62-13580	T1110-03A1	38	T1- 15
20Y-62-13650	T1110-03A0	40	TO- 13
20Y-62-13650	T1110-03A1	42	TO- 15
20Y-62-13650	T1110-03A1	42	T1- 15
20Y-62-13690	T1110-03A0	9	TO- 11
20Y-62-13690	T1110-03A1	9	TO- 15

PARTS NO.	FIG NO.	INDEX	PAGE
20Y-62-13690	T1110-03A1	9	T1- 15
20Y-62-13710	T1110-03A0	31	TO- 11
20Y-62-13710	T1110-03A1	32	TO- 15
20Y-62-13710	T1110-03A1	32	T1- 15
20Y-62-13720	T1110-03A0	10	TO- 11
20Y-62-13720	T1110-03A1	10	TO- 15
20Y-62-13720	T1110-03A1	10	T1- 15
20Y-62-13730	T1110-03A0	11	TO- 11
20Y-62-13740	T1110-03A0	11	TO- 11
20Y-62-13740	T1110-03A1	11	TO- 15
20Y-62-13740	T1110-03A1	11	T1- 15
20Y-62-13760	H1210-01A0	13	HO- 47
20Y-62-13760	T1110-01A1	3	TO- 3
20Y-62-13760	T1110-03A0	12	TO- 11
20Y-62-13760	T1110-03A0	33	TO- 11
20Y-62-13760	T1110-03A0	42	TO- 13
20Y-62-13760	T1110-03A1	12	TO- 15
20Y-62-13760	T1110-03A1	34	TO- 15
20Y-62-13760	T1110-03A1	44	TO- 17
20Y-62-13760	T1110-03A1	12	T1- 15
20Y-62-13760	T1110-03A1	34	T1- 15
20Y-62-13760	T1110-03A1	44	T1- 17
20Y-62-13761	T1110-03A0	12	TO- 11
20Y-62-13761	T1110-03A0	33	TO- 11
20Y-62-13761	T1110-03A0	42	TO- 13
20Y-62-15831	K1110-37A0	1	KO- 139
20Y-62-15831	K1110-37A0	10	KO- 139
20Y-62-15831	K1110-37A1	1	KO- 141
20Y-62-15831	K1110-37A1	11	KO- 141
20Y-62-15831	K1110-37B5	1	KO- 143
20Y-62-15831	K1110-37B5	10	KO- 143
20Y-62-15831	K1110-21A1	1	K1- 135
20Y-62-15831	K1110-21A15	15	K1- 149
20Y-62-16630	H1833-01A0	4	HO- 85
20Y-62-16630	H1840-02A1	15	H1- 89
20Y-62-17480	H1210-02A0	1	HO- 49
20Y-62-18890	K1110-17A0	28	KO- 95
20Y-62-18890	K1110-25A17	17	KO- 113
20Y-62-18890	K1110-28A0	17	KO- 121
20Y-62-18910	K1110-17A0	23	KO- 95
20Y-62-18910	K1110-25A15	15	KO- 113
20Y-62-18910	K1110-28A0	15	KO- 121
20Y-62-19560	H1831-01A0	6	HO- 79
20Y-62-19560	H1833-01A0	6	HO- 85
20Y-62-19560	H1831-01A1	6	H1- 81
20Y-62-19560	H1840-02A1	9	H1- 89
20Y-62-19560	H1840-02A1	13	H1- 89
20Y-62-19560	H1840-02A1	17	H1- 89
20Y-62-21940	H1831-01A0	12	HO- 79
20Y-62-21940	H1831-01A1	12	H1- 81

PARTS NO.	FIG NO.	INDEX	PAGE
20Y-62-22160	H0120-01A0	20	HO- 11
20Y-62-22160	H0120-01A1	21	HO- 13
20Y-62-22160	H0210-01A0A	12	HO- 29
20Y-62-22160	H0120-01A1	21	H1- 13
20Y-62-22271	H1831-01A0	4	HO- 79
20Y-62-22271	H1831-01A1	4	H1- 81
20Y-62-22271	H1840-02A1	7	H1- 89
20Y-62-22790	EO200-02A0	2	EO- 9
20Y-62-22790	H1810-01A0	3	HO- 77
20Y-62-22790	H1831-02A0	5	HO- 83
20Y-62-22790	H1840-01A0	11	HO- 87
20Y-62-22790	H1270-04A0	31	H1- 71
20Y-62-22790	K1110-19A1	28	KO- 101
20Y-62-22790	K1110-34A0	7	KO- 133
20Y-62-22790	K1110-34A0	12	KO- 133
20Y-62-22790	K1110-35A0	2	KO- 135
20Y-62-22790	K1110-35A0	17	KO- 135
20Y-62-22790	K1110-04A1	28	K1- 87
20Y-62-22790	Y1600-11A0	5	YO- 39
20Y-62-22810	H0120-03A0	8	HO- 23
20Y-62-22810	H0120-03A1	8	HO- 25
20Y-62-22810	H1831-02A0	6	HO- 83
20Y-62-22810	H1831-02A0	12	HO- 83
20Y-62-22810	H1840-01A0	12	HO- 87
20Y-62-22810	H1840-02A1	30	HO- 89
20Y-62-22810	H0120-03A1	8	H1- 25
20Y-62-22810	H1840-02A1	30	H1- 89
20Y-62-22810	K1110-19A1	29	KO- 101
20Y-62-22810	K1110-35A0	9	KO- 135
20Y-62-22810	K1110-04A1	29	K1- 87
20Y-62-22820	H1831-02A0	13	HO- 83
20Y-62-22820	H1840-01A0	4	HO- 87
20Y-62-22820	H1270-04A0	32	H1- 71
20Y-62-22820	K1110-19A1	30	KO- 101
20Y-62-22820	K1110-34A0	8	KO- 133
20Y-62-22820	K1110-34A0	13	KO- 133
20Y-62-22820	K1110-35A0	10	KO- 135
20Y-62-22820	K1110-35A0	18	KO- 135
20Y-62-22820	K1110-04A1	30	K1- 87
20Y-62-22830	EO200-02A0	3	EO- 9
20Y-62-22830	H1840-01A0	5	HO- 87
20Y-62-22830	K1110-35A0	19	KO- 135
20Y-62-22830	K1110-04A1	30A	K1- 87
20Y-62-22830	Y1600-11A0	6	YO- 39
20Y-62-22840	H1840-01A0	13	HO- 87
20Y-62-22840	K1110-35A0	20	KO- 135
20Y-62-22850	H1840-01A0	14	HO- 87
20Y-62-22850	K1110-34A0	9	KO- 133
20Y-62-22850	K1110-35A0	21	KO- 135
20Y-62-22860	H1831-02A0	14	HO- 83

PARTS NO.	FIG NO.	INDEX	PAGE
20Y-62-22860	H1840-01A0	6	HO- 87
20Y-62-22860	K1110-35A0	22	KO- 135
20Y-62-24580	Y1620-01A0	29	YO- 43
20Y-62-24610	Y1620-01A0	29	YO- 43
20Y-62-25360	K1110-19A1	7	KO- 101
20Y-62-25360	K1110-04A1	7	K1- 87
20Y-62-27770	K1110-36A0	12	KO- 137
20Y-62-41112	H0120-03A0	1	HO- 23
20Y-62-41112	H0120-03A1	1	HO- 25
20Y-62-41112	H0120-03A1	1	H1- 25
20Y-62-41140	H1210-01A0	1	HO- 47
20Y-62-41150	H1210-01A0	2	HO- 47
20Y-62-41161	H1220-01A0	6	HO- 51
20Y-62-41171	H1220-01A0	1	HO- 51
20Y-62-41171	H1220-01A1	1	HO- 53
20Y-62-41181	H1220-01A0	12	HO- 51
20Y-62-41181	H1220-01A0	17	HO- 51
20Y-62-41181	H1220-01A1	12	HO- 53
20Y-62-41181	H1220-01A1	17	HO- 53
20Y-62-41191	H1310-01A0	1	HO- 73
20Y-62-41221	H1310-01A0	5	HO- 73
20Y-62-41242	H1340-01A0	1	HO- 75
20Y-62-41252	H1340-01A0	3	HO- 75
20Y-62-41261	H0330-01A0	1	HO- 41
20Y-62-41271	H0320-01A0	1	HO- 39
20Y-62-41281	H1210-01A0	9	HO- 47
20Y-62-41292	H1310-01A0	12	HO- 73
20Y-62-41321	H0311-01A0	1	HO- 33
20Y-62-41350	H0320-01A0	8	HO- 39
20Y-62-41350	H0330-01A0	5	HO- 41
20Y-62-41350	H0330-01A1	7	HO- 43
20Y-62-41350	H0330-01A1	7	H1- 43
20Y-62-41371	H0320-01A0	9	HO- 39
20Y-62-41380	H0320-01A0	12	HO- 39
20Y-62-41390	K1110-17A0	30	KO- 95
20Y-62-41550	H1833-01A0	1	HO- 85
20Y-62-41572	A9999-01A1	10	AA- 171
20Y-62-41572	B0000-01A0	10	BO - 3
20Y-62-41601	H0120-01A0	22	HO- 11
20Y-62-41601	H0120-01A1	23	HO- 13
20Y-62-41601	H0120-01A1	23	H1- 13
20Y-62-41700	H0120-02A0	3	HO- 19
20Y-62-41700	H0120-02A1	3	H1- 21
20Y-62-41830	H1833-01A0	8	HO- 85
20Y-62-41860	H1220-01A1	6	HO- 53
20Y-62-41920	H0120-02A0	1	HO- 19
20Y-62-41920	H0120-02A1	1	H1- 21
20Y-62-41930	N1310-01A0	11	NO- 17
20Y-62-41940	N1220-01A0	1	NO- 15
20Y-62-41970	H0120-01A0	25	HO- 11

PARTS NO.	FIG NO.	INDEX	PAGE
20Y-62-41970	H0120-01A1	26	HO- 13
20Y-62-41970	H0120-01A1	26	H1- 13
20Y-62-42210	K1110-35A0	11	KO- 135
20Y-62-42220	K1110-35A0	12	KO- 135
20Y-62-42230	K1110-35A0	4	KO- 135
20Y-62-42240	K1110-35A0	5	KO- 135
20Y-62-42251	K1110-34A0	14	KO- 133
20Y-62-42320	K1110-35A0	3	KO- 135
20Y-62-42471	H0340-01A0	2	HO- 45
20Y-62-42530	H1840-01A0	3	HO- 87
20Y-62-42540	H1840-01A0	10	HO- 87
20Y-62-42550	K1110-35A0	15	KO- 135
20Y-62-42560	K1110-35A0	16	KO- 135
20Y-62-43210	H1270-01A0	1	H1- 57
20Y-62-43221	H1270-01A0	6	H1- 57
20Y-62-43230	H1270-01A0	9	H1- 57
20Y-62-43240	H1270-01A0	12	H1- 57
20Y-62-43250	T1920-01A0	4	TO- 105
20Y-62-43250	T1920-01A1	4	TO- 107
20Y-62-43262	H1270-01A0	25	H1- 57
20Y-62-43270	H1270-02A0	4	HO- 67
20Y-62-43270	H1270-02A0	4	H1- 67
20Y-62-43280	H1270-04A0	4	H1- 71
20Y-62-43290	H1270-04A0	2	H1- 71
20Y-62-43311	H1270-03A0	11	HO- 69
20Y-62-43311	H1270-03A0	11	H1- 69
20Y-62-43320	H1270-03A0	19	HO- 69
20Y-62-43320	H1270-03A0	19	H1- 69
20Y-62-43331	H1270-03A0	8	HO- 69
20Y-62-43331	H1270-03A0	8	H1- 69
20Y-62-43351	H1270-03A0	4	HO- 69
20Y-62-43351	H1270-03A0	4	H1- 69
20Y-62-43361	H1270-03A0	6	HO- 69
20Y-62-43361	H1270-03A0	6	H1- 69
20Y-62-43371	H0330-01A1	11	HO- 43
20Y-62-43371	H0330-01A1	11	H1- 43
20Y-62-43381	H1270-03A0	22	HO- 69
20Y-62-43381	H1270-03A0	22	H1- 69
20Y-62-43390	H0330-01A1	1	HO- 43
20Y-62-43390	H0330-01A1	1	H1- 43
20Y-62-43410	K1110-04A1	41	K1- 89
20Y-62-43420	K1110-04A1	44	K1- 89
20Y-62-43430	H1840-02A1	1	HO- 89
20Y-62-43430	H1840-02A1	1	H1- 89
20Y-62-43440	H1840-02A1	4	HO- 89
20Y-62-43440	H1840-02A1	4	H1- 89
20Y-62-43460	H1270-02A0	17	H1- 67
20Y-62-43470	K1110-19A1	20	KO- 101
20Y-62-43470	K1110-04A1	20	K1- 87
20Y-62-43490	K1110-04A1	26	K1- 87

PARTS NO.	FIG NO.	INDEX	PAGE
20Y-62-43510	K1110-04A1	27	K1- 87
20Y-62-43520	H1840-02A1	28	H1- 89
20Y-62-43530	H1270-04A0	21	H1- 71
20Y-62-43580	H1270-04A0	15	H1- 71
20Y-62-43690	H1831-01A0	2	HO- 79
20Y-62-43690	H1831-01A1	2	H1- 81
20Y-62-43810	H0312-01A0A	1	HO- 35
20Y-62-43820	H0312-01A0A	3	HO- 35
20Y-62-43830	H0312-01A0A	8	HO- 35
20Y-62-43840	H0312-01A0A	10	HO- 35
20Y-62-43850	H0312-01A0A	15	HO- 35
20Y-62-43860	H0210-01A0A	24	HO- 29
20Y-62-43870	H0340-01A0	10	HO- 45
20Y-62-44160	H0330-01A1	19	HO- 43
20Y-62-44240	K1110-34A0	5	KO- 133
20Y-62-44250	K1110-34A0	6	KO- 133
20Y-62-44260	K1110-34A0	3	KO- 133
20Y-62-44270	K1110-34A0	4	KO- 133
20Y-62-44420	H1810-01A0	1	HO- 77
20Y-62-44430	H1810-01A0	2	HO- 77
20Y-62-44620	K1110-35A0	3	KO- 135
20Y-62-44630	K1110-34A0	6	KO- 133
20Y-62-44630	K1110-34A0	14	KO- 133
20Y-62-45110	T1110-03A0	5	TO- 11
20Y-62-45110	T1110-03A1	5	TO- 15
20Y-62-45110	T1110-03A1	5	T1- 15
20Y-62-45120	T1110-03A0	1	TO- 11
20Y-62-45120	T1110-03A1	1	TO- 15
20Y-62-45120	T1110-03A1	1	T1- 15
20Y-62-45130	T1110-03A0	26	TO- 11
20Y-62-45130	T1110-03A1	27	TO- 15
20Y-62-45130	T1110-03A1	27	T1- 15
20Y-62-45140	T1110-03A0	27	TO- 11
20Y-62-45140	T1110-03A1	28	TO- 15
20Y-62-45140	T1110-03A1	28	T1- 15
20Y-62-45150	T1110-01A1	4	TO- 3
20Y-62-45160	T1110-01A1	5	TO- 3
20Y-62-45170	T1110-01A1	6	TO- 3
20Y-62-45181	T1110-01A1	7	TO- 3
20Y-62-45182	T1110-01A1	7	TO- 3
20Y-62-45210	T1110-01A1	8	TO- 3
20Y-62-45221	T1110-05A1	1	TO- 21
20Y-62-45221	T1110-05A1	1	T1- 21
20Y-62-45231	T1110-05A1	2	TO- 21
20Y-62-45231	T1110-05A1	2	T1- 21
20Y-62-45250	T1110-05A1	11	TO- 21
20Y-62-45250	T1110-05A1	19	TO- 21
20Y-62-45250	T1110-05A1	11	T1- 21
20Y-62-45250	T1110-05A1	19	T1- 21
20Y-62-45260	T1110-05A1	12	TO- 21

PARTS NO.	FIG NO.	INDEX	PAGE
20Y-62-45260	T1110-05A1	20	TO- 21
20Y-62-45260	T1110-05A1	12	T1- 21
20Y-62-45260	T1110-05A1	20	T1- 21
20Y-62-45270	T1110-05A1	6	TO- 21
20Y-62-45270	T1110-05A1	6	T1- 21
20Y-62-45280	T1110-05A1	7	TO- 21
20Y-62-45280	T1110-05A1	7	T1- 21
20Y-62-45290	T1110-05A1	17	TO- 21
20Y-62-45290	T1110-05A1	17	T1- 21
20Y-62-45310	T1110-05A1	18	TO- 21
20Y-62-45310	T1110-05A1	18	T1- 21
20Y-62-45340	T1200-04A1	38	TO- 55
20Y-62-45340	T1200-04A1	38	T1- 55
20Y-62-45350	T1200-04A1	39	TO- 55
20Y-62-45350	T1200-04A1	39	T1- 55
20Y-62-45360	T1200-04A3	28	TO- 57
20Y-62-45360	T1200-05A3	19	TO- 59
20Y-62-45360	T1200-04A1	28	T1- 53
20Y-62-45360	T1200-04A3	28	T1- 57
20Y-62-45360	T1200-05A3	19	T1- 59
20Y-62-45371	T1110-01A1	9	TO- 3
20Y-62-45380	T1110-05A1	25	TO- 21
20Y-62-45380	T1110-05A1	25	T1- 21
20Y-62-45610	H0120-01A0	6	HO- 11
20Y-62-45610	H0120-01A1	7	HO- 13
20Y-62-45610	H0120-01A1	7	H1- 13
20Y-62-45620	H0120-01A0	3	HO- 11
20Y-62-45620	H0120-01A1	4	HO- 13
20Y-62-45620	H0120-01A1	4	H1- 13
20Y-70-D1310	T1510-02A1	1	TO- 103
20Y-70-D1320	T1510-02A1	2	TO- 103
20Y-70-D2270	T1200-02A0	1	TO- 43
20Y-70-D2270	T1200-02A1	1	T1- 45
20Y-70-D3000	T1200-01A0	1	TO- 35
20Y-70-D3131	T1110-01A1	1	TO- 3
20Y-70-D3132	T1110-01A1	1	TO- 3
20Y-70-D3200	T1110-01A1	1	TO- 3
20Y-70-D3201	T1110-01A1	1	TO- 3
20Y-70-D3230	T1110-04A0A	3	TO- 19
20Y-70-D3240	T1110-04A0A	4	TO- 19
20Y-70-D3251	T1200-02A0	9	TO- 41
20Y-70-D3251	T1200-02A0	19	TO- 41
20Y-70-D3251	T1200-02A0	9	TO- 43
20Y-70-D3251	T1200-02A0	14	TO- 43
20Y-70-D3251	T1200-02A0	19	TO- 43
20Y-70-D3251	T1200-02A2	10	TO- 47
20Y-70-D3251	T1200-02A2	15	TO- 47
20Y-70-D3251	T1200-02A2	20	TO- 47
20Y-70-D3261	T1200-02A0	22	TO- 41
20Y-70-D3261	T1200-02A0	22	TO- 43

PARTS NO.	FIG NO.	INDEX	PAGE
20Y-70-D3261	T1200-02A2	23	TO- 47
20Y-70-D8460	T1510-01B9	5	TO- 99
20Y-70-D8470	T1510-01B9	4	TO- 99
20Y-70-D8480	T1510-01B9	2	TO- 99
20Y-70-D8500	T1510-01B9	1	TO- 99
20Y-70-D8500	T1510-01B9	1	TO- 99
20Y-70-11170	T1125-01A0	3	TO- 29
20Y-70-11180	T1110-02A0	8	TO- 9
20Y-70-11190	J1310-01A0	2	JO- 7
20Y-70-11320	T1200-02A0	11	TO- 41
20Y-70-11320	T1200-02A0	16	TO- 41
20Y-70-11330	T1200-02A0	12	TO- 41
20Y-70-11330	T1200-02A0	17	TO- 41
20Y-70-11380	T1125-01A0	4	TO- 29
20Y-70-11540	T1110-06A0	9	TO- 23
20Y-70-11651	T1110-01A1	10	TO- 3
20Y-70-14520	T1510-01B2	5	TO- 89
20Y-70-14520	T1510-01B5	3	TO- 95
20Y-70-14520	T1510-01B9	3	TO- 99
20Y-70-14520	T1510-01B9	3	TO- 101
20Y-70-23220	T1200-01A0	8	TO- 35
20Y-70-23220	T1200-01AA	8	TO- 35b
20Y-70-23220	T1200-01A1	11	TO- 37
20Y-70-23220	T1200-01A3	11	TO- 39
20Y-70-23220	T1200-02A0	5	TO- 41
20Y-70-23220	T1200-02A0	5	TO- 43
20Y-70-23220	T1200-02A2	6	TO- 47
20Y-70-23220	T1200-01A1	11	T1- 37
20Y-70-23220	T1200-01A3	11	T1- 39
20Y-70-23220	T1200-02A1	5	T1- 45
20Y-70-23220	T1200-01A0	8	TR- 35
20Y-70-23220	Y1620-41A0	6	YO- 53
20Y-70-23230	T1200-01A0	9	TO- 35
20Y-70-23230	T1200-01AA	9	TO- 35b
20Y-70-23230	T1200-01A1	12	TO- 37
20Y-70-23230	T1200-01A3	12	TO- 39
20Y-70-23230	T1200-02A0	6	TO- 41
20Y-70-23230	T1200-02A0	6	TO- 43
20Y-70-23230	T1200-02A2	7	TO- 47
20Y-70-23230	T1200-01A1	12	T1- 37
20Y-70-23230	T1200-01A3	12	T1- 39
20Y-70-23230	T1200-02A1	6	T1- 45
20Y-70-23230	T1200-01A0	9	TR- 35
20Y-70-31160	T1200-01A0	10	TO- 35
20Y-70-31160	T1200-01AA	10	TO- 35b
20Y-70-31160	T1200-01A1	13	TO- 37
20Y-70-31160	T1200-01A3	13	TO- 39
20Y-70-31160	T1200-01A1	13	T1- 37
20Y-70-31160	T1200-01A3	13	T1- 39
20Y-70-31160	T1200-01A0	10	TR- 35

PARTS NO.	FIG NO.	INDEX	PAGE
20Y-70-31251	T1110-02A0	1	TO- 9
20Y-70-31252	T1110-02A0	1	TO- 9
20Y-70-31261	T1110-01A1	11	TO- 3
20Y-70-31271	T1200-01A0	2	TO- 35
20Y-70-31271	T1200-01AA	2	TO- 35b
20Y-70-31271	T1200-01A1	5	TO- 37
20Y-70-31271	T1200-01A3	5	TO- 39
20Y-70-31271	T1200-01A1	5	T1- 37
20Y-70-31271	T1200-01A3	5	T1- 39
20Y-70-31272	T1200-01A0	2	TR- 35
20Y-70-31310	T1110-06A0	10	TO- 23
20Y-70-31320	T1110-06A0	11	TO- 23
20Y-70-31371	T1110-02A0	4	TO- 9
20Y-70-31380	J1310-01A0	12	JO- 7
20Y-70-31380	T1200-01A0	19	TO- 35
20Y-70-31380	T1200-01AA	19	TO- 35b
20Y-70-31380	T1200-01A1	22	TO- 37
20Y-70-31380	T1200-01A3	22	TO- 39
20Y-70-31380	T1200-01A1	22	T1- 37
20Y-70-31380	T1200-01A3	22	T1- 39
20Y-70-31380	T1200-01A0	19	TR- 35
20Y-70-31390	J1310-01A0	13	JO- 7
20Y-70-31390	T1200-01A0	20	TO- 35
20Y-70-31390	T1200-01AA	20	TO- 35b
20Y-70-31390	T1200-01A1	23	TO- 37
20Y-70-31390	T1200-01A3	23	TO- 39
20Y-70-31390	T1200-01A1	23	T1- 37
20Y-70-31390	T1200-01A3	23	T1- 39
20Y-70-31390	T1200-01A0	20	TR- 35
20Y-70-31430	T1110-02A0	9	TO- 9
20Y-70-31430	T1125-01A0	1	TO- 29
20Y-70-31430	T1200-01A0	14	TO- 35
20Y-70-31430	T1200-01AA	14	TO- 35b
20Y-70-31430	T1200-01A1	17	TO- 37
20Y-70-31430	T1200-01A3	17	TO- 39
20Y-70-31430	T1200-01A1	17	T1- 37
20Y-70-31430	T1200-01A3	17	T1- 39
20Y-70-31430	T1200-01A0	14	TR- 35
20Y-70-31440	T1200-02A0	16	TO- 41
20Y-70-31440	T1200-02A0	16	TO- 43
20Y-70-31440	T1200-02A2	17	TO- 47
20Y-70-31440	T1200-02A1	16	T1- 45
20Y-70-31450	T1200-02A0	11	TO- 41
20Y-70-31450	T1200-02A0	11	TO- 43
20Y-70-31450	T1200-02A2	12	TO- 47
20Y-70-31450	T1200-02A1	11	T1- 45
20Y-70-31460	T1200-02A0	12	TO- 41
20Y-70-31460	T1200-02A0	12	TO- 43
20Y-70-31460	T1200-02A2	13	TO- 47
20Y-70-31460	T1200-02A1	12	T1- 45

PARTS NO.	FIG NO.	INDEX	PAGE
20Y-70-31480	T1200-02A0	17	TO- 41
20Y-70-31480	T1200-02A0	17	TO- 43
20Y-70-31480	T1200-02A2	18	TO- 47
20Y-70-31480	T1200-02A1	17	T1- 45
20Y-70-31490	T1110-01A1	12	TO- 3
20Y-70-31521	T1110-02A0	2	TO- 9
20Y-70-31530	T1110-02A0	3	TO- 9
20Y-70-31540	J1310-01A0	5	JO- 7
20Y-70-31550	J1310-01A0	6	JO- 7
20Y-70-31560	J1310-01A0	7	JO- 7
20Y-70-31570	J1310-01A0	7A	JO- 7
20Y-70-32E50	T1200-01A1	2	TO- 37
20Y-70-32E50	T1200-01A3	2	TO- 39
20Y-70-32E50	T1200-01A1	2	T1- 37
20Y-70-32E50	T1200-01A3	2	T1- 39
20Y-70-32121	T1200-01AA	1	TO- 35b
20Y-70-32321	T1200-01A0	3	TO- 35
20Y-70-32321	T1200-01AA	3	TO- 35b
20Y-70-32321	T1200-01A1	6	TO- 37
20Y-70-32321	T1200-01A3	6	TO- 39
20Y-70-32321	T1200-01A1	6	T1- 37
20Y-70-32321	T1200-01A3	6	T1- 39
20Y-70-32331	T1200-01A0	4	TO- 35
20Y-70-32331	T1200-01AA	4	TO- 35b
20Y-70-32331	T1200-01A1	7	TO- 37
20Y-70-32331	T1200-01A3	7	TO- 39
20Y-70-32331	T1200-01A1	7	T1- 37
20Y-70-32331	T1200-01A3	7	T1- 39
20Y-70-32351	T1200-02A0	2	TO- 41
20Y-70-32351	T1200-02A0	2	TO- 43
20Y-70-32351	T1200-02A2	2	TO- 47
20Y-70-32351	T1200-02A1	2	T1- 45
20Y-70-32361	T1200-02A0	3	TO- 41
20Y-70-32361	T1200-02A0	3	TO- 43
20Y-70-32361	T1200-02A2	3	TO- 47
20Y-70-32361	T1200-02A1	3	T1- 45
20Y-70-32371	T1200-01A0	5	TO- 35
20Y-70-32371	T1200-01AA	5	TO- 35b
20Y-70-32371	T1200-01A1	8	TO- 37
20Y-70-32371	T1200-01A3	8	TO- 39
20Y-70-32371	T1200-01A1	8	T1- 37
20Y-70-32371	T1200-01A3	8	T1- 39
20Y-70-32410	T1200-01A0	3	TO- 35
20Y-70-32410	T1200-01A0	4	TO- 35
20Y-70-32410	T1200-01A0	3	TR- 35
20Y-70-32420	T1510-01B2	11	TO- 89
20Y-70-33111	T1200-02A0	1	TO- 41
20Y-70-33111	T1200-02A2	1	TO- 47
20Y-70-34121	T1510-01B5	4	TO- 95
20Y-70-34131	T1510-01B5	5	TO- 95

PARTS NO.	FIG NO.	INDEX	PAGE
20Y-70-34211	T1510-01B2	13	TO- 89
20Y-70-34211	T1510-01B2	13	TO- 89
20Y-70-34211	T1510-01B5	13	TO- 95
20Y-70-34211	T1510-01B5	13	TO- 95
20Y-70-34211	T1510-01B6	13	TO- 97
20Y-70-34211	T1510-01B6	13	TO- 97
20Y-70-34211	T1510-01B9	13	TO- 99
20Y-70-34211	T1510-01B9	13	TO- 99
20Y-70-34211	T1510-01B9	13	TO- 101
20Y-70-34211	T1510-01B9	13	TO- 101
20Y-70-34221	T1510-01B2	11	TO- 89
20Y-70-34221	T1510-01B5	11	TO- 95
20Y-70-34221	T1510-01B6	11	TO- 97
20Y-70-34221	T1510-01B9	11	TO- 99
20Y-70-34221	T1510-01B9	11	TO- 101
20Y-70-34320	T1510-01B2	3	TO- 89
20Y-70-34320	T1510-01B9	4	TO- 101
20Y-70-34330	T1510-01B2	4	TO- 89
20Y-70-34330	T1510-01B9	5	TO- 101
20Y-70-34410	T1510-01B5	1	TO- 95
20Y-70-34410	T1510-01B5	1	TO- 95
20Y-70-34420	T1510-01B5	2	TO- 95
20Y-920-3510	T1510-01B9	1	TO- 101
20Y-920-3510	T1510-01B9	1	TO- 101
20Y-920-3520	T1510-01B9	2	TO- 101
20Y-920-3530	T1510-01B2	1	TO- 89
20Y-920-3530	T1510-01B2	1	TO- 89
20Y-920-3540	T1510-01B2	2	TO- 89
20Y-934-2130	T1510-01B6	4	TO- 97
20Y-934-2140	T1510-01B6	5	TO- 97
20Y-934-2150	T1510-01B6	14	TO- 97
20Y-934-2211	T1510-01B6	3	TO- 97
20Y-934-3210	T1510-01B6	1	TO- 97
20Y-934-3210	T1510-01B6	1	TO- 97
20Y-934-3220	T1510-01B6	2	TO- 97
20Y-954-4211	K0220-01A0	1	KO- 21
20Y-954-4220	K0220-01A0	2	KO- 21
20Y-954-4230	K0220-01A0	3	KO- 21
20Y-954-4240	K0220-01A0	4	KO- 21
20Y-954-4310	K0230-01A2	1	KO- 27
20Y-954-5140	K0230-01A0	1	KO- 23
20Y-954-5140	K0230-01A1	1	KO- 25
20Y-954-5150	K0230-01A1	3	KO- 25
20Y-954-5161	K0230-01A1	9	KO- 25
20Y-954-5190	K0230-01A1	12	KO- 25
20Y-970-1820	Y1851-01A0	1	YO- 179
20Y-970-2300	T1200-04A1	13	TO- 53
20Y-970-2300	T1200-04A3	13	TO- 57
20Y-970-2300	T1200-05A3	4	TO- 59
20Y-970-2300	T1200-04A1	13	T1- 53

PARTS NO.	FIG NO.	INDEX	PAGE
20Y-970-2300	T1200-04A3	13	T1- 57
20Y-970-2300	T1200-05A3	4	T1- 59
20Y-970-2700	H1270-03A0	1	HO- 69
20Y-970-2700	H1270-03A0	1	H1- 69
20Y-970-2700	Y1851-01A0	1	YO- 179
20Y-970-3220	T1200-04A1	11	TO- 53
20Y-970-3220	T1200-04A3	11	TO- 57
20Y-970-3220	T1200-05A3	1	TO- 59
20Y-970-3220	T1200-04A1	11	T1- 53
20Y-970-3220	T1200-04A3	11	T1- 57
20Y-970-3220	T1200-05A3	1	T1- 59
20Y-970-3240	T1200-04A1	15	TO- 53
20Y-970-3240	T1200-04A3	15	TO- 57
20Y-970-3240	T1200-05A3	6	TO- 59
20Y-970-3240	T1200-04A1	15	T1- 53
20Y-970-3240	T1200-04A3	15	T1- 57
20Y-970-3240	T1200-05A3	6	T1- 59
20Y-970-3270	T1200-04A1	16	TO- 53
20Y-970-3270	T1200-04A3	16	TO- 57
20Y-970-3270	T1200-05A3	7	TO- 59
20Y-970-3270	T1200-04A1	16	T1- 53
20Y-970-3270	T1200-04A3	16	T1- 57
20Y-970-3270	T1200-05A3	7	T1- 59
20Y-970-3560	T1200-01A1	3	TO- 37
20Y-970-3560	T1200-01A3	3	TO- 39
20Y-970-3560	T1200-01A1	3	T1- 37
20Y-970-3560	T1200-01A3	3	T1- 39
20Y-970-3570	T1200-01A1	4	TO- 37
20Y-970-3570	T1200-01A3	4	TO- 39
20Y-970-3570	T1200-01A1	4	T1- 37
20Y-970-3570	T1200-01A3	4	T1- 39
20Y-970-4611	T1200-04A1	18	TO- 53
20Y-970-4611	T1200-04A3	18	TO- 57
20Y-970-4611	T1200-05A3	9	TO- 59
20Y-970-4611	T1200-04A1	18	T1- 53
20Y-970-4611	T1200-04A3	18	T1- 57
20Y-970-4611	T1200-05A3	9	T1- 59
20Y-970-6310	T1200-05A3	29	TO- 59
20Y-970-6310	T1200-05A3	29	T1- 59
20Y-970-6440	T1920-01A0	1	TO- 105
20Y-970-6440	T1920-01A1	1	TO- 107
20Y-970-6450	H1270-04A0	1	H1- 71
20Y-970-6450	Y1840-01A0	1	Y1- 177
20Y-970-6550	T1920-01A3	2	TO- 111
20Y-970-7121	T1200-01A1	1	TO- 37
20Y-970-7121	T1200-01A1	1	T1- 37
20Y-970-7130	T1920-01A0	10	TO- 105
20Y-970-7130	T1920-01A2	1	TO- 109
20Y-970-7140	T1920-01A3	1	TO- 111
20Y-970-7151	T1200-01A3	1	TO- 39

PARTS NO.	FIG NO.	INDEX	PAGE
20Y-970-7151	T1200-01A3	1	T1- 39
20Y-970-7160	T1200-05A3	30	TO- 59
20Y-970-7160	T1200-05A3	30	T1- 59
20Y-970-D300	T1200-01A0	1	TR- 35
20Y-973-2220	R1140-01A0	1	RO- 53
20Y-973-2230	R1140-01A0	2	RO- 53
20Y-979-3120	KO700-01A0	18	KO- 51
20Y-979-3130	K1110-32A0	3	KO- 127
20Y-979-3140	KO700-02A0	2	KO- 53
20Y-979-3150	KO700-02A0	17	KO- 53
20Y-979-3150	KO700-02A0	20	KO- 53
20Y-979-3150	KO700-02A0	25	KO- 53
20Y-979-3150	K1110-32A0	5	KO- 127
20Y-979-6111	Y1979-11A0	1	YO- 187
20Y-979-6121	KO700-01A0	1	KO- 51
20Y-979-6121	Y1979-01A0	1	YO- 185
20Y-979-6131	CO100-02A0	32	CO- 5
20Y-979-6131	Y1979-41A0	1	YO- 195
20Y-979-6141	K110-26A0	1	KO- 115
20Y-979-6151	K110-26A0	2	KO- 115
20Y-979-6161	K1110-13A0	20	KO- 87
20Y-979-6542	KO700-02A0	19	KO- 53
20Y-979-6612	KO700-01A0	5	KO- 51
20Y-979-6621	KO700-01A0	22	KO- 51
20Y-979-6630	K1110-20A0	17	KO- 103
20Y-979-6641	KO700-01A0	2	KO- 51
20Y-979-6650	KO700-02A0	16	KO- 53
20Y-979-6771	K1110-21A0	15	KO- 105
20Y-979-7321	KO700-02A0	1	KO- 53
20Y-979-7331	KO700-02A0	24	KO- 53
20Y-979-7341	K1110-32A0	4	KO- 127
20Y-979-7351	K1110-32A0	2	KO- 127
20Y-979-7360	K1110-33A0	1	KO- 129
20Y-979-7380	CO100-02A0	26	CO- 5
20Y-979-7390	CO100-02A0	23	CO- 5
20Y-979-7410	K1110-33A0	3	KO- 129
20Y-979-7630	K110-26A0	1	KO- 115
20Y-98-21130	V0300-01A0	12	VO- 7
20Y-98-21140	V0300-01A0	23	VO- 7
20Y-98-D1170	M1420-01A0	5	MO- 27
201-03-29160	T1200-04A1	23	TO- 53
201-03-29160	T1200-04A3	23	TO- 57
201-03-29160	T1200-05A3	14	TO- 59
201-03-29160	T1200-04A1	23	T1- 53
201-03-29160	T1200-04A3	23	T1- 57
201-03-29160	T1200-05A3	14	T1- 59
201-60-11390	H1831-01A0	5	HO- 79
201-60-11390	H1833-01A0	5	HO- 85
201-60-11390	H1831-01A1	5	H1- 81
201-60-11390	H1840-02A1	8	H1- 89

PARTS NO.	FIG NO.	INDEX	PAGE
201-60-11390	H1840-02A1	12	H1- 89
201-60-11390	H1840-02A1	16	H1- 89
201-979-7820	K1110-13A0	18	KO- 87
202-09-11120	E0100-01A1	3	EO- 5
202-09-11120	E0100-01A1	3	ER- 3
202-931-1180	T1510-01A0	45	TO- 65
203-00-51170	U0100-01A2	22	UO- 3
203-00-51170	U0100-01A3	22	UO- 5
203-00-51170	U0100-01A2	22	UO- 7
203-00-51170	U0100-01A22	22	UO- 9
203-00-51170	U0100-01A2	22	UR- 3
203-01-51120	A9999-01A1	2	AA- 171
203-01-51120	B0000-01A0	2	BO - 3
203-03-41410	C0100-01A0A	5	CO - 3
203-03-56650	C0100-03A0	25	CO - 7
203-04-56150	D0200-01A0	7	DO- 5
203-06-61730	EO200-02A0	37	EO- 9
203-43-51620	K1110-17A0	8	KO- 95
203-54-11170	A219P-01A0	8	AA- 59
203-54-56630	M1220-01A0	10	MO- 21
203-54-56970	CO100-02A0	15	CO- 5
203-54-56970	K1110-17A0	7	KO- 95
203-57-61121	K0160-01A2	1	KO- 13
203-60-31100	H0110-01A0	2	HO- 3
203-60-31100	H0110-01A1	2	H1- 7
203-60-31160	H0110-01A1	3	H1- 7
203-60-62220	K1110-04A1	38	K1- 89
205-00-73360	H0110-01A0	42	HO- 5
205-00-73360	H0110-01A1	42	H1- 9
205-03-71532	C0100-03A0	21	CO - 7
205-03-71540	C0100-03A0	21	CO - 7
205-04-62150	B0920-01A0	7	BO - 13
205-04-62150	B0920-01A0	15	BO - 13
205-04-62150	B0920-01A0	28	BO - 13
205-04-62150	D0200-02A0	28	DO- 7
205-25-71152	N1110-01A0	2	NO- 3
205-25-71280	N1110-01A0	3	NO- 3
205-30-71171	R1100-01A0	12	RO- 41
205-30-71171	R1100-01A1	12	RO- 43
205-30-71171	R1100-01A2	12	RO- 45
205-30-71171	R1100-01A3	12	RO- 47
205-30-71181	J1110-01A0	2	JO- 3
205-30-71181	R1100-01A0	7	RO- 41
205-30-71181	R1100-01A1	7	RO- 43
205-30-71181	R1100-01A2	7	RO- 45
205-30-71181	R1100-01A3	7	RO- 47
205-30-71191	J1110-01A0	3	JO- 3
205-30-71191	R1100-01A0	8	RO- 41
205-30-71191	R1100-01A1	8	RO- 43
205-30-71191	R1100-01A2	8	RO- 45

PARTS NO.	FIG NO.	INDEX	PAGE
205-30-71191	R1100-01A3	8	RO- 47
205-30-72170	R0110-01A0	14	RO- 5
205-30-72170	R0110-02A1	14	RO- 7
205-30-76190	R0110-01A0	9	RO- 3
205-30-76260	R0200-01A0	4	RO- 9
205-30-76260	R0200-01A1	4	RO- 11
205-54-51250	K0840-01A0	6	KO- 59
205-54-51250	K1110-10A0	5	KO- 81
205-54-51720	K0320-01A0	4	KO- 41
205-54-51730	K0320-01A0	5	KO- 41
205-54-51970	M1130-01A0	25	MO- 7
205-54-51970	M1140-01A0	20	MO- 11
205-54-53550	M1130-01A0	8	MO- 7
205-54-53550	M1140-01A0	4	MO- 11
205-54-68440	M1210-01A0	24	MO- 19
205-54-76280	K1110-10A0	15	KO- 81
205-62-72140	P1120-01A0	24	PO- 3
205-62-72140	P1120-01A1	24	PO- 5
205-62-72240	P1120-01A0	15	PO- 3
205-62-72240	P1120-01A0	18	PO- 3
205-62-72240	P1120-01A0	22	PO- 3
205-62-72240	P1120-01A1	14	PO- 5
205-62-72240	P1120-01A1	18	PO- 5
205-62-72240	P1120-01A1	21	PO- 5
205-62-73430	T1110-01A1	2	TO- 3
205-62-73430	T1110-03A0	13	TO- 11
205-62-73430	T1110-03A1	13	TO- 15
205-62-73430	T1110-05A1	14	TO- 21
205-62-73430	T1110-05A1	22	TO- 21
205-62-73430	T1110-03A1	13	T1- 15
205-62-73430	T1110-05A1	14	T1- 21
205-62-73430	T1110-05A1	22	T1- 21
205-62-73431	T1110-03A0	13	TO- 11
205-63-94101	T1510-01A0	49	TO- 65
205-70-00100	T1510-01B2	12	TO- 89
205-70-00100	T1510-01B5	12	TO- 95
205-70-00100	T1510-01B6	12	TO- 97
205-70-00100	T1510-01B9	12	TO- 99
205-70-00100	T1510-01B9	12	TO- 101
205-70-19570	T1510-01A2	6	TO- 69
205-70-19570	T1510-01B2	6	TO- 89
205-70-19570	T1510-01B5	6	TO- 95
205-70-19570	T1510-01B6	6	TO- 97
205-70-19570	T1510-01B9	6	TO- 99
205-70-19570	T1510-01B9	6	TO- 101
205-70-51390	T1110-04A0A	2	TO- 19
205-70-51390	T1110-04A0A	9	TO- 19
205-70-66580	J1310-01A0	9	JO- 7
205-70-66580	T1110-02A0	11	TO- 9
205-70-66580	T1200-01A0	11	TO- 35
205-70-66580	T1200-01A0	16	TO- 35
205-70-66580	T1200-01AA	11	TO- 35b
205-70-66580	T1200-01AA	16	TO- 35b
205-70-66580	T1200-01A1	14	TO- 37
205-70-66580	T1200-01A1	19	TO- 37
205-70-66580	T1200-01A3	14	TO- 39
205-70-66580	T1200-01A3	19	TO- 39
205-70-66580	T1200-01A1	14	T1- 37
205-70-66580	T1200-01A1	19	T1- 37
205-70-66580	T1200-01A3	14	T1- 39
205-70-66580	T1200-01A3	19	T1- 39
205-70-66580	T1200-01A0	11	TR- 35
205-70-66580	T1200-01A0	16	TR- 35
205-70-71190	T1200-01A0	15	TO- 35
205-70-71190	T1200-01AA	15	TO- 35b
205-70-71190	T1200-01A1	18	TO- 37
205-70-71190	T1200-01A3	18	TO- 39
205-70-71190	T1200-01A1	18	T1- 37
205-70-71190	T1200-01A3	18	T1- 39
205-70-71190	T1200-01A0	15	TR- 35
205-70-71210	J1310-01A0	8	JO- 7
205-70-71310	T1110-02A0	5	TO- 9
205-70-71312	T1110-02A0	5	TO- 9
205-70-73130	T1200-02A0	7	TO- 41
205-70-73130	T1200-02A0	7	TO- 43
205-70-73130	T1200-02A2	8	TO- 47
205-70-73130	T1200-02A1	7	T1- 45
205-70-73160	T1200-02A2	9	TO- 47
205-70-73180	T1200-01A0	5	TO- 35
205-70-73180	T1200-02A0	3	TO- 41
205-70-73180	T1200-01A0	5	TR- 35
205-70-73190	T1200-02A0	14	TO- 41
205-70-73190	T1200-02A0	9	TO- 43
205-70-73190	T1200-02A0	14	TO- 43
205-70-73190	T1200-02A0	19	TO- 43
205-70-73190	T1200-02A2	10	TO- 47
205-70-73190	T1200-02A2	15	TO- 47
205-70-73190	T1200-02A2	20	TO- 47
205-70-73190	T1510-01A0	52	TO- 65
205-70-73190	T1510-01A3	13	TO- 71
205-70-73190	T1510-01A4	3	TO- 73
205-70-73190	T1510-01A5	9	TO- 75
205-70-73190	T1510-01A7	6	TO- 79
205-70-73190	T1510-01A8	12	TO- 81
205-70-73190	T1200-02A1	9	T1- 45
205-70-73190	T1200-02A1	14	T1- 45
205-70-73190	T1200-02A1	19	T1- 45
205-70-73270	T1200-02A0	18	TO- 41
205-70-73270	T1200-02A0	21	TO- 41
205-70-73270	T1200-02A0	18	TO- 43

PARTS NO.	FIG NO.	INDEX	PAGE
205-70-73270	T1200-02A0	21	TO- 43
205-70-73270	T1200-02A2	19	TO- 47
205-70-73270	T1200-02A2	22	TO- 47
205-70-73270	T1510-01A0	50	TO- 65
205-70-73270	T1510-01A3	11	TO- 71
205-70-73270	T1510-01A5	7	TO- 75
205-70-73270	T1510-01A7	4	TO- 79
205-70-73270	T1510-01A8	10	TO- 81
205-70-73270	T1200-02A1	18	T1- 45
205-70-73270	T1200-02A1	21	T1- 45
205-70-73280	T1200-03A0	6	TO- 49
205-70-73280	T1200-03A2	6	TO- 51
205-70-74162	T1510-01A2	3	TO- 69
205-70-74172	T1510-01A2	4	TO- 69
205-70-74381	T1510-01B2	13	TO- 89
205-70-74381	T1510-01B2	13	TO- 89
205-70-74391	T1510-01B2	8	TO- 89
205-70-74391	T1510-01B5	8	TO- 95
205-70-74391	T1510-01B6	8	TO- 97
205-70-74391	T1510-01B9	8	TO- 99
205-70-74391	T1510-01B9	8	TO- 101
205-70-74410	T1510-01A0	51	TO- 65
205-70-74410	T1510-01A3	12	TO- 71
205-70-74410	T1510-01A4	2	TO- 73
205-70-74410	T1510-01A5	8	TO- 75
205-70-74410	T1510-01A7	5	TO- 79
205-70-74410	T1510-01A8	11	TO- 81
205-922-1120	T1510-01A3	2	TO- 71
205-922-1130	T1510-01A3	3	TO- 71
205-922-1140	T1510-01A3	4	TO- 71
205-922-1150	T1510-01A3	5	TO- 71
205-922-1160	T1510-01A3	6	TO- 71
205-922-1170	T1510-01A3	7	TO- 71
205-922-1180	T1510-01A3	8	TO- 71
205-922-6210	T1510-01A3	1	TO- 71
205-926-7221	T1510-01A2	2	TO- 69
205-926-7250	T1510-01A2	1	TO- 69
205-928-6110	T1510-01A4	1	TO- 73
205-929-6120	T1510-01A5	2	TO- 75
205-929-6130	T1510-01A5	3	TO- 75
205-929-6210	T1510-01A5	1	TO- 75
205-931-1122	T1510-01A0	34	TO- 65
205-931-1130	T1510-01A0	42	TO- 65
205-931-1161	T1510-01A0	1	TO- 63
205-931-1192	T1510-01A0	16	TO- 63
205-931-1212	T1510-01A0	17	TO- 63
205-931-1220	T1510-01A0	20	TO- 63
205-931-1230	T1510-01A0	3	TO- 63
205-931-1240	T1510-01A0	4	TO- 63
205-931-1250	T1510-01A0	5	TO- 63

PARTS NO.	FIG NO.	INDEX	PAGE
205-931-1260	T1510-01A0	10	TO- 63
205-931-1270	T1510-01A0	13	TO- 63
205-931-1281	T1510-01A0	23	TO- 63
205-931-1290	T1510-01A0	26	TO- 63
205-931-1310	T1510-01A0	29	TO- 63
205-931-1320	T1510-01A0	38	TO- 65
205-931-1330	T1510-01A0	37	TO- 65
205-931-2140	T1510-01A0	9	TO- 63
205-931-6110	T1510-01A0	39	TO- 65
205-931-6150	T1510-01A0	40	TO- 65
205-938-6220	T1510-01A6	2	TO- 77
205-938-6230	T1510-01A6	3	TO- 77
205-938-6240	T1510-01A6	4	TO- 77
205-938-7111	T1510-01A6	1	TO- 77
205-939-7120	T1510-01A2	5	TO- 69
205-950-0012	T1510-01A7	1	TO- 79
205-951-0013	T1510-01A8	1	TO- 81
205-951-0020	T1510-01A8	1	TO- 81
205-951-6120	T1510-01A8	2	TO- 81
205-951-6140	T1510-01A8	6	TO- 81
205-951-6150	T1510-01A8	7	TO- 81
205-970-5550	T1920-01A0	2	TO- 105
205-970-5550	T1920-01A1	2	TO- 107
205-970-5560	T1920-01A0	1	TO- 105
205-970-5560	T1920-01A1	1	TO- 107
205-970-5560	Y1840-01A0	12	Y1- 177
205-970-5560	Y1840-01A0	K1	Y1- 177
205-970-5770	T1200-04A3	37	TO- 57
205-970-5770	T1200-05A3	28	TO- 59
205-970-5770	T1200-04A1	37	T1- 55
205-970-5770	T1200-04A3	37	T1- 57
205-970-5770	T1200-05A3	28	T1- 59
205-970-7680	T1200-04A1	37	TO- 55
205-970-7680	T1920-01A0	11	TO- 105
205-970-7680	T1920-01A2	2	TO- 109
205-977-7310	D0200-02A0	22	DO- 7
205-979-7260	Y1979-31A0	11	YO- 193
206-03-43340	C0100-03A0	6	CO - 7
206-03-43340	C0100-03A0	23	CO - 7
206-03-43340	C0100-03A0	28	CO - 7
206-06-61130	H1833-01A0	15	HO- 85
206-06-61130	H1840-02A1	19	HO- 89
206-06-61130	H1840-02A1	19	H1- 89
206-06-61130	K1110-17A0	33	KO- 95
206-25-61110	N1110-01A0	15	NO- 3
206-30-45262	R0110-01A0	4	RO- 5
206-30-45262	R0110-02A1	4	RO- 7
206-30-45381	R0110-01A0	3	RO- 5
206-30-45381	R0110-02A1	3	RO- 7
206-30-55150	R0110-01A0	2	RO- 5

PARTS NO.	FIG NO.	INDEX	PAGE
206-30-55150	R0110-02A1	2	RO- 7
206-30-55171	R0110-02A1	11	RO- 7
206-30-72130	R0110-02A1	12	RO- 7
206-30-72140	R0110-01A0	7	RO- 5
206-30-72140	R0110-02A1	7	RO- 7
206-60-31160	H0110-01A0	3	HO- 3
206-62-71141	H1310-01A0	13	HO- 73
206-70-51190	T1125-01A0	6	TO- 29
206-70-55160	J1310-01A0	1	JO- 7
206-70-71450	T1110-02A0	10	TO- 9
206-70-71450	T1125-01A0	2	TO- 29
207-06-51330	E0100-01A1	7	EO- 5
207-06-51330	E0100-01A1	7	ER- 3
207-06-61461	E0100-01A1	6	EO- 5
207-06-61461	E0100-01A1	6	ER- 3
207-30-56140	R0110-01A0	2	RO- 3
207-46-32220	M1520-01A0	2	MO- 31
207-54-51621	K1110-02A0	42	KO- 65
207-54-65130	K1120-01A0	1	KO- 151
207-54-66540	K1110-20A0	16	KO- 103
207-60-61150	H0110-01A0	26	HO- 3
207-60-61150	H0110-01A1	26	H1- 7
207-60-71180	H0110-01A0	18	HO- 3
207-60-71180	H0110-01A1	18	H1- 7
207-60-71180	V0100-01A0	7	VO- 3
207-62-31330	T1110-05A1	8	TO- 21
207-62-31330	T1110-05A1	28	TO- 21
207-62-31330	T1200-04A1	32	TO- 53
207-62-31330	T1200-04A1	40	TO- 55
207-62-31330	T1200-04A3	32	TO- 57
207-62-31330	T1200-05A3	23	TO- 59
207-62-31330	T1200-05A3	31	TO- 59
207-62-31330	T1110-05A1	8	T1- 21
207-62-31330	T1110-05A1	28	T1- 21
207-62-31330	T1200-04A1	32	T1- 53
207-62-31330	T1200-04A1	40	T1- 55
207-62-31330	T1200-04A3	32	T1- 57
207-62-31330	T1200-05A3	23	T1- 59
207-62-31330	T1200-05A3	31	T1- 59
207-62-52430	T1110-05A1	13	TO- 21
207-62-52430	T1110-05A1	21	TO- 21
207-62-52430	T1110-05A1	13	T1- 21
207-62-52430	T1110-05A1	21	T1- 21
207-62-56190	H0120-04A6	1	HO- 27
207-62-56190	H1270-02A0	7	HO- 67
207-62-56190	H0120-04A6	1	H1- 27
207-62-72141	K1110-21A21	21	K1- 155
207-62-72720	H1840-02A1	29	H1- 89
207-62-72820	W0111-01A0	4	WO- 3
207-70-33220	T1290-01A0	1	TO- 61

PARTS NO.	FIG NO.	INDEX	PAGE
208-03-58290	C0100-03A0	22	CO - 7
208-06-71530	K1110-24A0	6	KO- 111
208-43-71410	K1110-28A0	8	KO- 119
208-43-71420	K1110-30A0	30	KO- 123
208-43-71511	K1110-20A0	1	KO- 103
208-43-71520	K1110-20A0	2	KO- 103
208-43-71530	K1110-20A0	3	KO- 103
208-43-71540	K1110-20A0	4	KO- 103
208-43-71540	K1110-20A0	7	KO- 103
208-43-71550	K1110-20A0	9	KO- 103
208-43-71570	K1110-20A0	18	KO- 103
208-43-71580	K1110-31A0	7	KO- 125
208-43-71610	K110-26A0	17	KO- 115
208-43-71610	K1110-30A0	24	KO- 123
208-43-71620	K110-26A0	18	KO- 115
208-43-71620	K1110-30A0	25	KO- 123
208-43-71670	K1110-30A0	32	KO- 123
208-43-71680	K110-26A0	5	KO- 115
208-43-71690	K1110-30A0	6	KO- 123
208-53-00010	K1110-05A0	1	KO- 71
208-53-00010	K1110-06A0	1	KO- 73
208-53-00020	k1110-02A0	1	KO- 61
208-53-00270	K1110-01A0	1	KO- 61
208-53-00270	k1110-02A0	1	KO- 61
208-53-00270	K1110-03A0	1	KO- 67
208-53-00270	K1110-04A0	1	KO- 69
208-53-00270	K1110-05A0	1	KO- 71
208-53-00270	K1110-07A0	1	KO- 75
208-53-00270	K1110-08A0	1	KO- 77
208-53-00270	K1110-09A0	1	KO- 79
208-53-00270	K1110-10A0	1	KO- 81
208-53-00270	K1110-11A0	1	KO- 83
208-53-00270	K1110-12A0	1	KO- 85
208-53-0270	K1110-06A0	1	KO- 73
208-53-11270	K1110-01A0	6	KO- 61
208-53-11320	K1110-06A0	13	KO- 73
208-53-11470	K1110-02A0	48	KO- 65
208-53-11480	K1110-09A0	11	KO- 79
208-53-11510	k1110-02A0	1	KO- 61
208-53-11540	K1110-02A0	43	KO- 65
208-53-11560	k1110-02A0	24	KO- 61
208-53-11710	K1110-04A0	1	KO- 69
208-53-11730	K0830-01A1	4	KO- 57
208-53-11740	K0830-01A1	5	KO- 57
208-53-11750	K1110-10A0	12	KO- 81
208-53-11760	K1110-10A0	14	KO- 81
208-53-11790	K1110-15A0	7	KO- 91
208-53-11810	K1110-37A0	19	KO- 139
208-53-11810	K1110-37A1	21	KO- 141
208-53-11820	K1110-37A0	20	KO- 139

PARTS NO.	FIG NO.	INDEX	PAGE
208-53-11820	K1110-37A1	22	KO- 141
208-53-11850	K1110-13A0	12	KO- 87
208-53-11871	K1110-15A0	2	KO- 91
208-53-11890	K1110-15A0	3	KO- 91
208-53-11920	K1110-13A0	6	KO- 87
208-53-11941	K1110-13A0	4	KO- 87
208-53-11980	K1110-07A0	9	KO- 84
208-53-11990	K1110-07A0	10	KO- 85
208-53-12120	K1110-14D0	12	KO- 89
208-53-12120	K1110-14D0	18	KO- 89
208-53-12120	K1110-14A0	12	KO- 89a
208-53-12152	K1110-13A0	3	KO- 87
208-53-12170	K1110-14D0	13	KO- 89
208-53-12170	K1110-14A0	13	KO- 89a
208-53-12180	K1110-14D0	4	KO- 89
208-53-12180	K1110-14A0	4	KO- 89a
208-53-12190	K1110-14D0	7	KO- 89
208-53-12190	K1110-14A0	7	KO- 89a
208-53-12220	K1110-14D0	10	KO- 89
208-53-12220	K1110-14D0	17	KO- 89
208-53-12220	K1110-14A0	10	KO- 89a
208-53-12220	K1110-14A0	17	KO- 89a
208-53-12230	K1110-15A0	4	KO- 91
208-53-12260	K1110-14D0	11	KO- 89
208-53-12260	K1110-14A0	11	KO- 89a
208-53-12280	K1110-28A0	11	KO- 119
208-53-12280	K1110-39A0	5	KO- 147
208-53-12290	K0180-01A0	2	KO- 15
208-53-12290	K0180-01A0	9	KO- 15
208-53-12310	K1110-13A0	5	KO- 87
208-53-12320	K0180-01A0	25	KO- 15
208-53-12330	K0180-01A0	26	KO- 15
208-53-12350	K0180-01A0	15	KO- 15
208-53-12390	K0180-01A0	20	KO- 15
208-53-12410	K0180-01A0	23	KO- 15
208-53-12432	K1110-14D0	19	KO- 89
208-53-12432	K1110-14A0	19	KO- 89a
208-53-12440	K1110-13A0	7	KO- 87
208-53-12460	K0180-01A0	3	KO- 15
208-53-12470	K1110-10A0	10	KO- 81
208-53-12520	K1110-14D0	14	KO- 89
208-53-12520	K1110-14A0	14	KO- 89a
208-53-12551	K1110-15A0	18	KO- 91
208-53-12561	K1110-15A0	1	KO- 91
208-53-12580	K1110-11A0	14	KO- 83
208-53-12610	K0310-01A0	1	KO- 31
208-53-12620	K1110-12A0	4	KO- 85
208-53-12630	k1110-02A0	17	KO- 61
208-53-12680	K1110-14D0	15	KO- 89
208-53-12680	K1110-14A0	15	KO- 89a
208-53-12690	k1110-02A0	14	KO- 61
208-53-12710	K0310-01A1	1	KO- 33
208-53-12730	K0180-01A0	30	KO- 15
208-53-12750	K0180-01A0	35	KO- 15
208-53-12780	K1110-08A0	1	KO- 77
208-53-12790	K1110-08A0	12	KO- 77
208-53-12810	K1110-10A0	11	KO- 81
208-53-12830	k1110-02A0	18	KO- 61
208-53-12860	K1110-21A0	1	KO- 105
208-53-12870	K1110-24A0	1	KO- 111
208-53-12880	K1110-21A0	11	KO- 105
208-53-12891	K1110-16A0	13	KO- 93
208-53-12920	K1110-13A0	15	KO- 87
208-53-12970	K1110-16A0	3	KO- 93
208-53-12980	K1110-10A0	8	KO- 81
208-53-12991	K1110-10A0	7	KO- 81
208-53-13341	K1110-14A0	1	KO- 89a
208-53-13610	K0180-01A0	1	KO- 15
208-53-13620	K0180-01A0	7	KO- 15
208-53-13710	K0180-01A0	12	KO- 15
208-53-13720	KO190-01A0	1	KO- 19
208-53-13770	K1110-14D0	1	KO- 89
208-53-14540	K1110-07A0	5	KO- 80
208-53-14720	K1110-07A0	7	KO- 82
208-53-14810	K1110-16A0	1	KO- 93
208-54-57180	M1140-01A0	36	MO- 11
208-62-38370	C0100-03A0	16	CO - 7
208-62-72710	K1110-35A0	4	KO- 135
208-62-72780	K1110-35A0	5	KO- 135
208-62-72860	K1110-35A0	12	KO- 135
208-62-72870	K1110-35A0	11	KO- 135
208-979-7520	CO100-02A0	32	CO- 5
208-979-7530	K1110-15A0	14	KO- 91
208-979-7540	K1110-31A0	2	KO- 125
208-979-7550	K110-26A0	2	KO- 115
208-979-7560	K0180-01A0	13	KO- 15
208-979-7610	K1110-31A0	1	KO- 125
208-979-7620	K1110-15A0	15	KO- 91
208-979-7640	K1110-32A0	1	KO- 127
208-979-7650	K1110-32A0	6	KO- 127
208-979-7970	K1110-14A0	21	KO- 89a
208-979-7980	K1110-14A0	22	KO- 89a
208-979-7990	K1110-14A0	20	KO- 89a
209-32-11234	T1510-01B6	15	TO- 97
21J-06-12440	k1110-02A0	34	KO- 61
21K-06-71261	E0200-04A0	1	EO- 15
21K-54-26341	M1210-01A0	14	MO- 19
21K-54-26351	M1210-01A0	15	MO- 19
21K-70-12161	T1200-02A0	2	TO- 41
21T-06-11350	K0350-01A0	1	KO- 47

PARTS NO.	FIG NO.	INDEX	PAGE
21T-06-71870	K1110-15A0	9	KO- 91
21T-09-11430	H1220-01A0	7	HO- 51
21T-09-11430	H1220-01A0	13	HO- 51
21T-09-11430	H1220-01A0	18	HO- 51
21T-09-11430	H1220-01A1	7	HO- 53
21T-09-11430	H1220-01A1	13	HO- 53
21T-09-11430	H1220-01A1	18	HO- 53
21T-09-11430	H1340-01A0	2	HO- 75
21T-09-11430	H1340-01A0	4	HO- 75
21T-09-11430	W1200-01A0	6	WO- 5
21T-09-11430	W1200-01A1	6	W1- 7
21T-09-11460	H0312-01A0A	2	HO- 35
21T-09-11460	H0312-01A0A	4	HO- 35
21T-09-11460	H0312-01A0A	9	HO- 35
21T-09-11460	H0312-01A0A	11	HO- 35
21T-09-11460	H0312-01A0A	16	HO- 35
21T-09-11460	H1210-01A0	3	HO- 47
21T-09-11460	H1210-01A0	6	HO- 47
21T-09-11460	H1220-01A0	2	HO- 51
21T-09-11460	H1220-01A0	8	HO- 51
21T-09-11460	H1220-01A1	2	HO- 53
21T-09-11460	H1220-01A1	8	HO- 53
21T-09-11460	H1270-01A0	6	HO- 57
21T-09-11460	H1310-01A0	2	HO- 73
21T-09-11460	H1310-01A0	4	HO- 73
21T-09-11460	H1310-01A0	6	HO- 73
21T-09-11460	H1310-01A0	8	HO- 73
21T-09-11460	H1270-01A0	16	H1- 57
21T-09-11460	H1270-02A0	8	H1- 67
21T-09-11460	T1200-04A1	2	TO- 53
21T-09-11460	T1200-04A3	2	TO- 57
21T-09-11460	T1200-04A1	2	T1- 53
21T-09-11460	T1200-04A3	2	T1- 57
21T-09-11460	W1200-01A0	1	WO- 5
21T-09-11460	W1200-01A1	1	W1- 7
21T-09-11470	H0120-04A6	2	HO- 27
21T-09-11470	H1270-02A0	8	HO- 67
21T-09-11470	H0120-04A6	2	H1- 27
21T-27-71220	K1120-01A0	7	KO- 151
21T-38-12270	E0320-01A0	3	EO- 25
21T-38-12270	K0350-01A0	8	KO- 47
21T-54-16150	C0100-03A0	35	CO - 7
21U-98-D1150	U0100-01A2	31	UO- 3
21U-98-D1150	U0100-01A3	31	UO- 5
21U-98-D1150	U0100-01A2	31	UO- 7
21U-98-D1150	U0100-01A31	31	UO- 9
21U-98-D1150	U0100-01A2	31	UR- 3
21U-98-D1160	U0100-01A2	30	UO- 3
21U-98-D1160	U0100-01A3	30	UO- 5
21U-98-D1160	U0100-01A2	30	UO- 7
21U-98-D1160	U0100-01A30	30	UO- 9
21U-98-D1160	U0100-01A2	30	UR- 3
21W-62-42240	H1270-04A0	26	H1- 71
21W-62-42240	K1110-04A1	32	K1- 87
21W-62-42490	K1110-21A4	4	K1- 138
21W-62-42490	K1110-21A18	18	K1- 152
21W-62-43930	H1833-01A0	10	HO- 85
21W-62-43960	H1270-04A0	12	H1- 71
21W-62-43960	K1110-04A1	48	K1- 89
21W-62-43980	K1110-19A1	17	KO- 101
21W-62-43980	K1110-04A1	17	K1- 87
22B-54-15411	k1110-02A0	5	KO- 61
22B-54-15421	k1110-02A0	8	KO- 61
22B-54-15432	k1110-02A0	32	KO- 61
22B-54-15440	k1110-02A0	6	KO- 61
22B-54-15450	k1110-02A0	9	KO- 61
22B-54-15470	k1110-02A0	7	KO- 61
22B-54-15480	k1110-02A0	10	KO- 61
22B-54-15580	K1110-03A0	9	KO- 67
22B-54-15621	k1110-02A0	31	KO- 61
22B-54-15781	K1110-03A0	7	KO- 67
22B-54-15791	K1110-03A0	8	KO- 67
22B-54-15832	K1110-03A0	6	KO- 67
22B-54-15970	K1110-03A0	2	KO- 67
22B-54-15980	K1110-03A0	3	KO- 67
22B-54-15990	K1110-04A0	8	KO- 69
22B-54-15M50	K1110-04A0	2	KO- 69
22B-54-16330	K1110-06A0	10	KO- 73
22B-54-16461	K1110-06A0	12	KO- 73
22B-54-17271	E0310-01A0	2	EO- 21
22B-54-17271	E0310-01A1	2	EO- 23
22B-54-17282	K1110-11A0	1	KO- 83
22B-54-17511	E0310-01A0	1	EO- 21
22B-54-17612	E0340-01A0	1	EO- 27
22B-54-17640	E0340-01A0	6	EO- 27
22B-57-11811	K0160-01A0	1	KO- 9
22B-57-11830	K0160-01A0	2	KO- 9
22B-57-11910	K0160-01A1	1	KO- 11
22B-60-11160	H0110-01A0	29	HO- 3
22B-60-11160	H0110-01A1	29	H1- 7
22B-954-1660	K0230-01A1	23	KO- 25
22B-954-1720	K0230-01A1	2	KO- 25
22B-954-1750	K0230-01A1	13	KO- 25
22B-954-1760	K0230-01A0	2	KO- 23
22B-954-1760	K0230-01A1	6	KO- 25
22B-954-1840	K0230-01A1	22	KO- 25
22B-98-11120	K0830-01A1	1	KO- 57
22D-62-18450	C0100-03A0	19	CO - 7
22T-72-11220	T1200-05A3	2	TO- 59
22T-72-11220	T1200-05A3	2	T1- 59

PARTS NO.	FIG NO.	INDEX	PAGE
22U-01-21310	A9999-01A1	1	AA- 171
22U-01-21310	B0000-01A0	1	BO - 3
22U-03-21191	C0100-01A0A	18	CO - 3
22U-03-21321	CO100-02A0	7	CO- 5
22U-03-21740	C0100-01A0A	35	CO - 3
22U-03-21760	C0100-01A0A	37	CO - 3
22U-03-21770	CO100-02A0	8	CO- 5
22U-03-21780	CO100-02A0	9	CO- 5
22U-04-21120	D0100-01A0	3	DO- 3
22U-04-21131	D0200-02A0	1	DO- 7
22U-04-21170	D0200-01A0	10	DO- 5
22U-04-21200	D0100-01A0	9	DO- 3
22U-04-21210	D0100-01A0	10	DO- 3
22U-04-21220	D0100-01A0	12	DO- 3
22U-04-21231	D0100-01A0	13	DO- 3
22U-04-21241	D0100-01A0	9	DO- 3
22U-04-21260	D0200-02A0	5	DO- 7
22U-06-11660	K0350-01A0	7	KO- 47
22U-06-21210	E0100-01A1	1	ER- 3
22U-06-21350	T1110-04A0A	10	TO- 19
22U-06-21420	E0200-04A0	1	EO- 15
22U-06-22190	K1110-30A0	11	KO- 123
22U-06-22290	K1110-30A0	12	KO- 123
22U-06-22320	K1110-30A0	5	KO- 123
22U-06-22330	K1110-30A0	2	KO- 123
22U-06-22350	K110-26A0	12	KO- 115
22U-06-22360	K1110-28A0	23	KO- 119
22U-06-22390	K1110-30A0	13	KO- 123
22U-06-22420	K1110-30A0	7	KO- 123
22U-06-22470	K1110-30A0	8	KO- 123
22U-06-22480	K1110-30A0	10	KO- 123
22U-06-22490	K1110-28A0	22	KO- 119
22U-06-22510	K110-26A0	8	KO- 115
22U-06-22661	K1110-16A0	13	KO- 93
22U-26-21190	Y0260-01A0	1	YO- 3
22U-26-21210	N1210-01A0	28	NO- 7
22U-26-21210	Y0260-01A0	25	YO- 3
22U-26-21230	N1210-01A0	27	NO- 7
22U-26-21230	Y0260-01A0	24	YO- 3
22U-26-21250	N1210-01A0	30	NO- 7
22U-26-21250	Y0260-01A0	27	YO- 3
22U-26-21270	Y0260-01A0	7	YO- 3
22U-26-21280	N1210-01A0	2	NO- 7
22U-26-21340	Y0260-01A0	4	YO- 3
22U-26-21460	N1210-01A0	41	NO- 9
22U-26-21510	N1210-01A0	31	NO- 9
22U-26-21510	Y0260-01A0	28	YO- 3
22U-26-21520	N1210-01A0	25	NO- 7
22U-26-21520	Y0260-01A0	22	YO- 3
22U-26-21530	N1210-01A0	23	NO- 7

PARTS NO.	FIG NO.	INDEX	PAGE
22U-26-21530	Y0260-01A0	20	YO- 3
22U-26-21540	N1210-01A0	13	NO- 7
22U-26-21540	Y0260-01A0	10	YO- 3
22U-26-21550	N1210-01A0	20	NO- 7
22U-26-21550	Y0260-01A0	17	YO- 3
22U-26-21560	Y0260-01A0	5	YO- 3
22U-26-21570	N1210-01A0	24	NO- 7
22U-26-21570	Y0260-01A0	21	YO- 3
22U-26-21580	N1210-01A0	12	NO- 7
22U-26-21580	Y0260-01A0	9	YO- 3
22U-30-00021	R0300-01A0	1	RO- 13
22U-30-11420	R0200-01A0	3	RO- 9
22U-30-11420	R0200-01A1	3	RO- 11
22U-30-11430SG	R0200-01A1	6	RO- 11
22U-30-11430	R0200-01A0	7	RO- 9
22U-30-11430	R0200-01A1	7	RO- 11
22U-30-11440SG	R0200-01A1	8	RO- 11
22U-30-11440	R0200-01A0	9	RO- 9
22U-30-11440	R0200-01A1	9	RO- 11
22U-30-11450	R0200-01A0	2	RO- 9
22U-30-11450	R0200-01A1	2	RO- 11
22U-30-25110	R0300-01A0	1	RO- 13
22U-30-25120	R0300-01A0	2	RO- 13
22U-30-25130	R0300-01A0	3	RO- 13
22U-30-25140	R0300-01A0	4	RO- 13
22U-30-25150	R0300-01A0	5	RO- 13
22U-30-25160	R0300-01A0	6	RO- 13
22U-43-21111	K1110-17A0	16	KO- 95
22U-43-21121	K1110-17A0	17	KO- 95
22U-43-21131	K1110-17A0	19	KO- 95
22U-43-21151	K1110-17A0	11	KO- 95
22U-43-21181	K1110-25A1	1	KO- 113
22U-43-21191	K1110-28A0		KO- 121
22U-43-21211	K1110-25A5	5	KO- 113
22U-43-21211	K1110-28A0	5	KO- 121
22U-43-21260	K1110-20A0	11	KO- 103
22U-43-21350	K1110-17A0	8	KO- 95
22U-43-21360	K1110-17A0	10	KO- 95
22U-43-21380	K1110-17A0	18	KO- 95
22U-43-21390	K1110-20A0	12	KO- 103
22U-43-21470	K1110-19A1	3	KO- 101
22U-43-21470	K1110-04A1	3	K1- 87
22U-43-22110	K110-26A0	19	KO- 115
22U-43-22110	K1110-27A0	10	KO- 117
22U-43-22210	K110-26A0	5	KO- 115
22U-43-22210	K1110-27A0	3	KO- 117
22U-43-22220	K110-26A0	6	KO- 115
22U-43-22220	K1110-27A0	4	KO- 117
22U-43-22230	K110-26A0	7	KO- 115
22U-43-22230	K1110-27A0	5	KO- 117

PARTS NO.	FIG NO.	INDEX	PAGE
22U-43-22310	K1110-28A0	1	KO- 119
22U-43-22320	K1110-28A0	1	KO- 119
22U-43-22340	K1110-28A0	6	KO- 119
22U-43-22410	K1110-28A0	24	KO- 119
22U-43-22430	K1110-28A0	28	KO- 119
22U-43-22830	K1110-28A0	30	KO- 119
22U-43-23111	K1110-30A0	1	KO- 123
22U-43-23120	K1110-30A0	3	KO- 123
22U-43-23130	K1110-30A0	4	KO- 123
22U-43-23210	K1110-30A0	27	KO- 123
22U-43-23230	K1110-30A0	31	KO- 123
22U-43-23250	K1110-30A0	33	KO- 123
22U-43-23711	K1110-30A0	39	KO- 123
22U-54-15190	M1110-01A0	11	MO- 3
22U-54-23620	M1810-01A0	9	MO- 33
22U-54-24760	M1810-02A0	2	MO- 35
22U-54-25110	K1110-18A0	1	KO- 97
22U-54-25120	K1110-19A0	1	KO- 99
22U-54-25371	K1110-13A0	10	KO- 87
22U-54-25521	K1110-18A0	2	KO- 97
22U-54-25531	K1110-19A0	2	KO- 99
22U-54-25541	K1110-19A1	13	KO- 101
22U-54-25541	K1110-04A1	13	K1- 87
22U-54-25581	K1110-16A0	4	KO- 93
22U-54-25590	K1110-16A0	5	KO- 93
22U-54-25660	K1110-19A1	2	KO- 101
22U-54-25660	K1110-04A1	2	K1- 87
22U-54-25670	K1110-19A1	16	KO- 101
22U-54-25670	K1110-04A1	16	K1- 87
22U-54-28920	K1110-04A0	18	KO- 69
22U-60-21231	H0110-01A0	22	HO- 3
22U-60-21231	H0110-01A1	22	H1- 7
22U-60-21330	H1831-01A0	19	HO- 79
22U-60-21330	H1831-01A1	21	H1- 81
22U-62-21582	N1310-01A0	21	NO- 17
22U-62-21870	N1310-01A0	22	NO- 17
22U-62-24420	N1310-01A0	23	NO- 17
22U-64-25170	K1110-20A0	20	KO- 103
22U-70-21191	T1200-02A0	13	TO- 41
22U-70-21191	T1200-02A0	8	TO- 43
22U-70-21191	T1200-02A0	13	TO- 43
22U-70-21191	T1200-02A2	14	TO- 47
22U-70-21191	T1200-02A1	8	T1- 45
22U-70-21191	T1200-02A1	13	T1- 45
22Y-06-23770	K1110-30A0	14	KO- 123
22Y-06-23920	K1110-30A0	15	KO- 123
362-46-11210	T1200-02A0	22	TO- 43
362-46-11210	T1200-02A2	23	TO- 47
362-46-11210	T1200-02A1	22	T1- 45
417-875-1670	H0312-01A0A	12	HO- 35

PARTS NO.	FIG NO.	INDEX	PAGE
417-875-1670	H0312-01A0A	17	HO- 35
421-06-23330	E0200-06A0	1	EO- 19
421-06-23330	E0310-01A0	2	EO- 21
421-06-23330	E0310-01A1	2	EO- 23
421-06-23330	E0320-01A0	1	EO- 25
421-06-23330	T1110-06A0	2	TO- 23
421-07-33870	K1110-13A0	9	KO- 87
421-54-11372	M1220-01A0	6	MO- 21
512-06-11281	A101V-01A1	2	AA- 5
560-43-15220	E0310-01A0	5	EO- 21
560-43-15220	E0310-01A1	5	EO- 23
569-06-61960	K1110-21A0	8	KO- 105
569-06-61960	K1110-30A0	36	KO- 123
581-04-2229	H0340-01A0	6	HO- 45
600-181-1930	Y1011-01A0	7	YO- 15
600-184-1310	B9999-01A8	4	AA- 173
600-184-1310	Y1011-01A0	5	YO- 15
600-184-1350	B9999-01A8	6	AA- 173
600-184-1350	Y1011-01A0	6	YO- 15
600-184-1370	B9999-01A8	4	AA- 173
600-184-1370	Y1011-01A0	4	YO- 15
600-184-2810	B9999-01A8	5	AA- 173
600-184-2810	Y1011-01A0	5	YO- 15
600-185-3100	B9999-01A8	1	AA- 173
600-185-3100	Y1011-01A0	1	YO- 15
600-185-3110	Y1011-01A0	2	YO- 15
600-185-3120	Y1011-01A0	3	YO- 15
600-211-1870	A311P-01A1	3	AA- 91
600-311-9101	D0200-02A0	25	DO- 7
600-311-9121	D0200-02A0	25A	DO- 7
600-311-9121	V0100-01A0	14	VO- 3
600-411-1191	B0920-01A0	1A	BO - 13
600-411-1280	K1110-25A9	9	KO- 113
600-411-1280	K1110-28A0	9	KO- 121
600-625-7620	A5030-01A0	1	AA- 127
600-815-2170	E0200-01A0	31	EO- 7
600-815-8941	E0200-01A0	20	EO- 7
600-861-3410	A601P-01A0	1	AA- 131
600-861-3410	A601P-02A0	1	AA- 135
600-861-3411	A601P-01A0	1	AA- 131
600-861-3411	A601P-02A0	1	AA- 135
600-861-6410	A601P-01A1	1	AA- 133
600-861-6410	A601P-02A1	1	AA- 137
600-863-4110	A621P-01A0	1	AA- 143
600-863-4110	A621P-02A0	1	AA- 147
600-863-5110	A621P-01A1	1	AA- 145
600-863-5110	A621P-02A1	1	AA- 151
6110-23-6490	A219P-01A0	13	AA- 63
6112-23-6971	A153T-01A1	8	AA- 23
6130-12-1961	A2040-01A0	2	AA- 43

PARTS NO.	FIG NO.	INDEX	PAGE
6130-12-8610	A111P-01A0	10	AA- 9
6130-12-8630	A111P-01A0	7	AA- 9
6130-12-8720	A111P-01A0	6	AA- 9
6130-32-1361	A408P-01A0	9	AA- 103
6131-11-4520	B9999-01A8	8	AA- 173
6131-11-4520	B0200-01A0	3	BO - 9
6131-12-4570	A1570-01A3	14	AA- 31
6134-11-5120	A1610-01A0	3	AA- 33
6136-11-5120	A311P-01A1	17	AA- 91
6136-11-8510	A101V-01A1	6	AA- 5
6141-64-2560	A219P-01A0	10	AA- 59
6141-71-1710	A417P-01A1	12	AA- 111
6142-12-5850	A1570-01A3	3	AA- 31
6144-21-2420	A283V-01A0	3	AA- 87
6144-71-5750	A423V-01A0	1	AA- 115
6151-71-5910	B0920-01A0	27	BO - 13
6162-53-5420	A311P-01A1	5	AA- 91
6162-53-5430	A311P-01A1	4	AA- 91
6162-53-5450	A311P-01A1	2	AA- 91
6162-75-5820	A411R-01A1	4	AA- 107
6201-81-6560	A1570-01A3	8	AA- 31
6204-11-8610	A111P-01A0	9	AA- 9
6204-21-5180	A2119-01A1	6	AA- 57
6204-81-6740	KO700-01A0	16	KO- 51
6205-51-8380	A219P-01A0	4	AA- 59
6206-11-5850	A1610-01A0	6	AA- 33
6207-51-7690	A153T-01A1	3	AA- 23
6207-51-7690	A1539-01A0	4	AA- 27
6209-11-5480	A9999-01A1	5	AA- 171
6209-11-5480	B0000-01A0	5	BO - 3
6210-11-5232	A1610-01A0	5	AA- 33
6211-21-5490	A411R-01A1	7	AA- 107
6215-81-9510	A2019-01A0	16	AA- 41
6215-81-9710	A201V-01A0	3	AA- 39
6215-81-9710	A2019-01A0	17	AA- 41
6215-81-9710	A408P-01A0	12	AA- 103
6216-74-6180	A211V-01A1	4	AA- 55
6221-51-8160	A153T-01A1	6	AA- 23
6221-51-8160	A1539-01A0	7	AA- 27
6222-11-4910	A219P-01A0	9	AA- 59
6301-11-4630	A219P-01A0	14	AA- 63
6354-81-6310	A417P-01A1	7	AA- 111
6643-11-4641	B9999-01A8	9	AA- 173
6643-11-4641	B0200-01A0	4	BO - 9
6731-11-1370	A1009-01A0	1	AA- 3
6731-21-1170	A2019-01A0	1	AA- 41
6731-21-1210	A2019-01A0	8	AA- 41
6731-21-4240	A219P-01A0	2	AA- 63
6731-41-4510	A1009-01A0	14	AA- 3
6731-41-5270	A241P-01A0	5	AA- 73

PARTS NO.	FIG NO.	INDEX	PAGE
6731-41-5270	A241P-01A0	8	AA- 73
6731-51-1111	A301P-01A0	2	AA- 89
6731-51-5201	A311P-01A1	1	AA- 91
6731-51-5211	A311P-01A1	1	AA- 91
6731-51-5250	A331P-01A1	6	AA- 93
6731-51-5260	A311P-01A1	7	AA- 91
6731-51-5290	A311P-01A1	8	AA- 91
6731-51-5290	A311P-01A1	10	AA- 91
6731-51-5290	A331P-01A1	8	AA- 93
6731-51-9930	A311P-01A1	11	AA- 91
6731-71-6270	A417P-01A1	11	AA- 111
6731-81-8710	A2049-01A0	16	AA- 45
6732-11-1170	A1009-01A0	3	AA- 3
6732-11-1180	A1009-01A0	4	AA- 3
6732-11-1610	A1009-01A0	15	AA- 3
6732-11-1620	A1009-01A0	16	AA- 3
6732-11-1640	A241P-01A0	11	AA- 73
6732-11-1710	A105P-01A0	1	AA- 7
6732-11-1720	A105P-01A0	2	AA- 7
6732-11-1910	A1009-01A0	5	AA- 3
6732-11-1910	A131V-01A0	1	AA- 15
6732-11-1910	A501S-01A0	1	AA- 121
6732-11-1920	A1009-01A0	6	AA- 3
6732-11-1920	A131P-01A1	2	AA- 11
6732-11-1920	A2019-01A0	23	AA- 41
6732-11-1930	A1009-01A0	7	AA- 3
6732-11-3850	A4219-01A0	5	AA- 113
6732-11-4160	A131V-01A0	4	AA- 15
6732-11-4811	A131P-01A1	3	AA- 11
6732-11-4811	A131R-01A0	2	AA- 13
6732-11-6130	KO700-02A0	32	KO- 53
6732-11-8130	A111P-01A0	4	AA- 9
6732-11-8140	A1570-01A3	10	AA- 31
6732-11-8150	A111P-01A0	11	AA- 9
6732-11-8150	A206P-01A0	15	AA- 47
6732-11-8181	A111P-01A0	3	AA- 9
6732-11-8181	V0100-01A0	2	VO- 3
6732-11-8210	A111P-01A0	5	AA- 9
6732-11-8210	A206P-01A0	1	AA- 47
6732-11-8210	V0100-01A0	3	VO- 3
6732-21-1191	A2019-01A0	10	AA- 41
6732-21-1210	A2019-01A0	4	AA- 41
6732-21-1411	A2019-01A0	5	AA- 41
6732-21-1611	A2019-01A0	6	AA- 41
6732-21-1811	A2019-01A0	8	AA- 41
6732-21-1820	A2019-01A0	7	AA- 41
6732-21-1830	A2019-01A0	2	AA- 41
6732-21-1910	A2019-01A0	3	AA- 41
6732-21-1910	A2019-01A0	11	AA- 41
6732-21-1910	A2019-01A0	13	AA- 41

PARTS NO.	FIG NO.	INDEX	PAGE
6732-21-1930	A2019-01A0	22	AA- 41
6732-21-1960	A2019-01A0	15	AA- 41
6732-21-3120	A2019-01A0	26	AA- 41
6732-21-3120	A219P-01A0	5	AA- 59
6732-21-3140	A2049-01A0	5	AA- 45
6732-21-3150	A2049-01A0	6	AA- 45
6732-21-3160	A2049-01A0	10	AA- 45
6732-21-3180	A2049-01A0	8	AA- 45
6732-21-3190	A281P-01A0	1	AA- 83
6732-21-3220	A281P-01A0	2	AA- 83
6732-21-3811	A2049-01A0	2	AA- 45
6732-21-3870	A2049-01A0	7	AA- 45
6732-21-3880	A2049-01A0	9	AA- 45
6732-21-4111	A219P-01A0	6	AA- 63
6732-21-4120	A219P-01A0	10	AA- 63
6732-21-4130	A219P-01A0	8	AA- 63
6732-21-4150	A219P-01A0	11	AA- 63
6732-21-4161	A219P-01A0	12	AA- 63
6732-21-4170	A219P-01A0	4	AA- 63
6732-21-4220	A219P-01A0	7	AA- 63
6732-21-4290	A219P-01A0	5	AA- 63
6732-21-5160	A101V-01A1	7	AA- 5
6732-21-5160	A2040-01A0	3	AA- 43
6732-21-5160	A2119-01A1	4	AA- 57
6732-21-5160	A219P-01A0	15	AA- 63
6732-21-5160	A411P-01A1	4	AA- 105
6732-21-5160	A411S-01A0	4	AA- 109
6732-21-5160	A601T-01A0	2	AA- 141
6732-21-5160	A601T-01A0	8	AA- 141
6732-21-5490	A219P-01A0	2	AA- 59
6732-21-5510	A2119-01A1	2	AA- 57
6732-21-5530	A2019-01A0	20	AA- 41
6732-21-5530	A219P-01A0	1	AA- 59
6732-21-5641	A219P-01A0	3	AA- 59
6732-21-6120	A2019-01A0	12	AA- 41
6732-21-6130	A2019-01A0	19	AA- 41
6732-21-6140	A2019-01A0	9	AA- 41
6732-21-6150	A2319-01A0	2	AA- 67
6732-21-6160	A2019-01A0	21	AA- 41
6732-21-6160	A207P-01A0	1	AA- 51
6732-21-6610	A211R-01A0	1	AA- 53
6732-21-6630	A417P-01A1	8	AA- 111
6732-21-6630	A601T-01A0	9	AA- 141
6732-21-9330	A261P-01A0	2	AA- 79
6732-31-1211	A2319-01A0	3	AA- 67
6732-31-2410	A2359-01A0	2	AA- 71
6732-31-2420	A2359-01A0	3	AA- 71
6732-31-3101	A2359-01A0	6	AA- 71
6732-31-3131	A2359-01A0	8	AA- 71
6732-31-3310	A2359-01A0	9	AA- 71
6732-31-3410	A2359-01A0	10	AA- 71
6732-31-4120	A223P-01A0	3	AA- 65
6732-31-4130	A223P-01A0	4	AA- 65
6732-31-4180	A223P-01A0	1	AA- 65
6732-31-8120	A233P-01A0	1	AA- 69
6732-41-1220	A2419-01A0	4	AA- 77
6732-41-1231	A2419-01A0	2	AA- 77
6732-41-1260	A2419-01A0	5	AA- 77
6732-41-1260	A501P-01A0	1	AA- 117
6732-41-1260	A5019-01A0	3	AA- 123
6732-41-1280	A2419-01A0	3	AA- 77
6732-41-2112	A241R-01A0	1	AA- 75
6732-41-3111	A241P-01A0	12	AA- 73
6732-41-4430	A1009-01A0	13	AA- 3
6732-41-4520	A1009-01A0	10	AA- 3
6732-41-4520	A1009-01A0	12	AA- 3
6732-41-4540	A1009-01A0	8	AA- 3
6732-41-5160	A241P-01A0	3	AA- 73
6732-41-5170	A241P-01A0	2	AA- 73
6732-41-5180	A241P-01A0	1	AA- 73
6732-41-5200	A241P-01A0	7	AA- 73
6732-41-5400	A241P-01A0	4	AA- 73
6732-51-4420	A331P-01A1	5	AA- 93
6732-51-4432	A331P-01A1	9	AA- 93
6732-51-5130	A261P-01A0	1	AA- 79
6732-51-8330	A153T-01A1	4	AA- 23
6732-51-8510	A153T-01A1	12	AA- 23
6732-61-2311	A331P-01A1	11	AA- 93
6732-61-3110	A408P-01A0	2	AA- 103
6732-61-3120	A502P-01A2	1	AA- 125
6732-61-3170	A502P-01A2	8	AA- 125
6732-61-3410	A502P-01A2	4	AA- 125
6732-61-3420	A502P-01A2	3	AA- 125
6732-61-3430	A502P-01A2	6	AA- 125
6732-61-3440	A502P-01A2	2	AA- 125
6732-61-3450	A502P-01A2	1	AA- 125
6732-61-3610	A504P-01A0	1	AA- 129
6732-61-3910	A601S-01A2	5	AA- 139
6732-61-4120	A601S-01A2	1	AA- 139
6732-61-4170	A601S-01A2	2	AA- 139
6732-61-4220	A601S-01A2	4	AA- 139
6732-61-6130	A501R-01A0	3	AA- 119
6732-61-6140	A173P-01A0	1	AA- 35
6732-61-6140	A219P-01A0	13	AA- 59
6732-61-6140	A331P-01A1	12	AA- 93
6732-61-6171	A173P-01A0	10	AA- 35
6732-61-6180	A173P-01A0	2	AA- 35
6732-61-6231	A173P-01A0	4	AA- 35
6732-61-6240	A173P-01A0	6	AA- 35
6732-61-6250	A173P-01A0	5	AA- 35

PARTS NO.	FIG NO.	INDEX	PAGE
6732-61-6270	A173P-01A0	8	AA- 35
6732-61-6280	A173P-01A0	7	AA- 35
6732-71-3210	A219P-01A0	7	AA- 59
6732-71-3210	A219P-01A0	14	AA- 59
6732-71-3210	A411S-01A0	7	AA- 109
6732-71-3220	A153T-01A1	2	AA- 23
6732-71-3220	A206P-01A0	14	AA- 47
6732-71-3220	A2119-01A1	3	AA- 57
6732-71-3220	A311P-01A1	14	AA- 91
6732-71-3220	A417P-01A1	1	AA- 111
6732-71-5450	A408P-01A0	11	AA- 103
6732-71-5620	A153T-01A1	10	AA- 23
6732-71-5740	A4010-01A0	1	AA- 101
6732-71-5760	A411S-01A0	30	AA- 109
6732-71-6111	A411P-01A1	1	AA- 105
6732-71-6111	V0100-01A0	5	VO- 3
6732-71-6220	A411P-01A1	3	AA- 105
6732-71-6240	A411S-01A0	2	AA- 109
6732-71-6260	A411S-01A0	3	AA- 109
6732-71-6260	A4219-01A0	4	AA- 113
6732-71-6510	A401R-01A0	3	AA- 97
6732-71-6510	A411R-01A1	2	AA- 107
6732-71-6510	A417P-01A1	5	AA- 111
6732-71-6650	A411P-01A1	2	AA- 105
6732-81-2190	A9850-01A1Z	2	AA- 169
6732-81-4170	V0100-01A0	6	VO- 3
6732-81-5120	A131R-01A0	1	AA- 13
6732-81-5870	A9850-01A1Z	1	AA- 169
6732-81-6560	A601T-01A0	6	AA- 141
6732-81-6611	A601T-01A0	1	AA- 141
6732-81-6690	A601T-01A0	7	AA- 141
6732-81-6811	A621S-01A0	1	AA- 155
6732-81-6811	A621S-01A1	1	AA- 157
6732-81-8220	A151R-01A0	1	AA- 17
6732-81-8411	A1570-01A3	6	AA- 31
6732-81-8430	A1570-01A3	4	AA- 31
6732-81-8810	A1539-01A0	1	AA- 27
6732-81-8820	A1539-01A0	2	AA- 27
6732-81-8830	A1539-01A0	5	AA- 27
6733-71-5680	A211V-01A1	2	AA- 55
6734-11-3610	A4219-01A0	3	AA- 113
6734-11-3620	A4219-01A0	3	AA- 113
6734-11-3630	A4219-01A0	3	AA- 113
6734-11-3640	A4219-01A0	3	AA- 113
6734-11-3650	A4219-01A0	3	AA- 113
6734-11-3660	A4219-01A0	3	AA- 113
6734-11-3670	A4219-01A0	3	AA- 113
6734-11-3680	A4219-01A0	3	AA- 113
6734-11-3690	A4219-01A0	3	AA- 113
6734-11-3710	A4219-01A0	3	AA- 113

PARTS NO.	FIG NO.	INDEX	PAGE
6734-11-3720	A4219-01A0	3	AA- 113
6734-11-3730	A4219-01A0	3	AA- 113
6734-11-3740	A4219-01A0	3	AA- 113
6734-11-3750	A4219-01A0	3	AA- 113
6734-11-3760	A4219-01A0	3	AA- 113
6734-11-3770	A4219-01A0	3	AA- 113
6734-11-3780	A4219-01A0	3	AA- 113
6734-11-3790	A4219-01A0	3	AA- 113
6734-11-3810	A4219-01A0	3	AA- 113
6734-11-3820	A4219-01A0	3	AA- 113
6734-11-3830	A4219-01A0	3	AA- 113
6734-11-3840	A4219-01A0	3	AA- 113
6734-11-3850	A4219-01A0	3	AA- 113
6734-11-3860	A4219-01A0	3	AA- 113
6734-11-3870	A4219-01A0	3	AA- 113
6734-11-3880	A4219-01A0	3	AA- 113
6734-11-3890	A4219-01A0	3	AA- 113
6734-11-3910	A4219-01A0	3	AA- 113
6734-11-3920	A4219-01A0	3	AA- 113
6734-11-3930	A4219-01A0	3	AA- 113
6734-11-4150	A131P-01A1	1	AA- 11
6734-11-5210	A131P-01A1	4	AA- 11
6734-11-5210	A411S-01A0	31	AA- 109
6734-61-6110	A501R-01A0	2	AA- 119
6734-71-5520	A411S-01A0	14	AA- 109
6734-71-5520	A411S-01A0	25	AA- 109
6734-71-5610	A101V-01A1	5	AA- 5
6734-71-5610	A408P-01A0	5	AA- 103
6734-71-5710	A411S-01A0	11	AA- 109
6734-71-5710	A411S-01A0	22	AA- 109
6734-71-5720	A411S-01A0	13	AA- 109
6734-71-5720	A411S-01A0	24	AA- 109
6734-71-5741	A411S-01A0	15	AA- 109
6734-71-5741	A411S-01A0	26	AA- 109
6735-01-1310	A2319-01A0	1	AA- 67
6735-11-1821	A1009-01A0	17	AA- 3
6735-11-1840	A8110-01A0	4	AA- 159
6735-11-1870	A8110-01A0	4	AA- 159
6735-11-1920	A173P-01A0	3	AA- 35
6735-11-4110	A131V-01A0	2	AA- 15
6735-11-4150	A151T-01A0	2	AA- 19
6735-11-4812	A131V-01A0	3	AA- 15
6735-11-5120	A151V-01A0	1	AA- 21
6735-11-5611	A1610-01A0	13	AA- 33
6735-11-8120	A111P-01A0	2	AA- 9
6735-21-1910	A2019-01A0	13	AA- 41
6735-21-1920	A2019-01A0	14	AA- 41
6735-21-1930	A2019-01A0	15	AA- 41
6735-21-1940	A2019-01A0	23	AA- 41
6735-21-1950	A2019-01A0	24	AA- 41

PARTS NO.	FIG NO.	INDEX	PAGE
6735-21-1960	A2019-01A0	25	AA- 41
6735-21-3310	A2049-01A0	12	AA- 45
6735-21-3511	A2049-01A0	11	AA- 45
6735-21-4191	A219P-01A0	1	AA- 63
6735-21-4240	A2060-01A1	2	AA- 49
6735-21-5120	A2119-01A1	5	AA- 57
6735-21-5151	A283P-01A0	1	AA- 85
6735-21-5530	A2019-01A0	18	AA- 41
6735-26-8100	A8110-03A0	6	AA- 163
6735-27-8100	A8110-03A0	6	AA- 163
6735-28-8100	A8110-03A0	6	AA- 163
6735-28-8200	A8110-03A0	4	AA- 163
6735-29-8100	A8110-03A0	2	AA- 163
6735-31-8120	A233P-01A0	2	AA- 69
6735-41-1111	A2419-01A0	1	AA- 77
6735-41-5550	A241P-01A0	6	AA- 73
6735-41-5550	A241P-01A0	9	AA- 73
6735-51-1120	A301P-01A0	1	AA- 89
6735-51-5521	A2119-01A1	1	AA- 57
6735-61-1102	A5019-01A0	1	AA- 123
6735-61-1502	A501P-01A0	3	AA- 117
6735-61-2110	A331P-01A1	10	AA- 93
6735-61-2120	A153T-01A1	7	AA- 23
6735-61-2120	A331P-01A1	13	AA- 93
6735-61-2140	A331P-01A1	2	AA- 93
6735-61-2160	A331P-01A1	3	AA- 93
6735-61-2190	A331P-01A1	4	AA- 93
6735-61-2220	A331P-01A1	1	AA- 93
6735-61-6411	A417P-01A1	3	AA- 111
6735-61-6471	A173R-01A1	1	AA- 37
6735-71-3220	A408P-01A0	4	AA- 103
6735-71-3220	A501R-01A0	1	AA- 119
6735-71-5411	A408P-01A0	15	AA- 103
6735-71-5460	A401R-01A0	1	AA- 97
6735-71-5643	A411S-01A0	19	AA- 109
6735-71-5653	A411S-01A0	20	AA- 109
6735-71-5663	A411S-01A0	21	AA- 109
6735-71-5820	A411S-01A0	16	AA- 109
6735-71-5820	A411S-01A0	27	AA- 109
6735-71-5830	A411S-01A0	12	AA- 109
6735-71-5830	A411S-01A0	23	AA- 109
6735-71-5840	A411S-01A0	17	AA- 109
6735-71-5840	A411S-01A0	28	AA- 109
6735-71-5860	A411S-01A0	18	AA- 109
6735-71-5860	A411S-01A0	29	AA- 109
6735-81-6170	A621S-01A1	3	AA- 157
6735-81-8740	A1570-01A3	12	AA- 31
6736-11-1150	A1009-01A0	2	AA- 3
6736-11-3430	A4219-01A0	3	AA- 113
6736-11-5820	A151T-01A0	1	AA- 19

PARTS NO.	FIG NO.	INDEX	PAGE
6736-18-1310	A8110-01A0	3	AA- 159
6736-19-1310	A8110-01A0	1	AA- 159
6736-19-1410	A8110-01A0	2	AA- 159
6736-21-3210	A2049-01A0	3	AA- 45
6736-21-3210	A2049-01A0	14	AA- 45
6736-21-3210	A601T-01A0	3	AA- 141
6736-21-3230	A2040-01A0	4	AA- 43
6736-21-3450	A2049-01A0	13	AA- 45
6736-21-4220	A219P-01A0	3	AA- 63
6736-21-5310	A2049-01A0	4	AA- 45
6736-21-5310	A2049-01A0	15	AA- 45
6736-21-8110	A2319-01A0	3	AA- 67
6736-21-8610	A2319-01A0	5	AA- 67
6736-27-8620	A8110-03A0	4	AA- 163
6736-28-8620	A8110-03A0	4	AA- 163
6736-28-8700	A8110-03A0	6	AA- 163
6736-29-1410	A8110-02A0	1	AA- 161
6736-29-1420	A8110-02A0	2	AA- 161
6736-29-2110	A8110-02A0	3	AA- 161
6736-29-8610	A8110-03A0	4	AA- 163
6736-29-8700	A8110-03A0	6	AA- 163
6736-36-3400	A8110-04A0	1	AA- 165
6736-37-3400	A8110-04A0	1	AA- 165
6736-38-3400	A8110-04A0	1	AA- 165
6736-39-1130	A8110-03A0	2	AA- 163
6736-39-1220	A8110-03A0	1	AA- 163
6736-39-3400	A8110-04A0	1	AA- 165
6736-41-4110	A1009-01A0	8	AA- 3
6736-41-4120	A1009-01A0	10	AA- 3
6736-41-5110	A241P-01A0	10	AA- 73
6736-51-5141	A311P-01A1	13	AA- 91
6736-51-5142	V0100-01A0	4	VO- 3
6736-51-8710	A153T-01A1	13	AA- 23
6736-61-1202	A5019-01A0	1	AA- 123
6736-61-1520	A501P-01A0	2	AA- 117
6736-61-1520	A5019-01A0	2	AA- 123
6736-61-4110	A601S-01A2	3	AA- 139
6736-71-5530	A417P-01A1	9	AA- 111
6736-71-5540	A417P-01A1	10	AA- 111
6736-71-5811	A417P-01A1	2	AA- 111
6736-81-6170	A408P-01A0	7	AA- 103
6736-81-8730	A131P-01A1	5	AA- 11
6738-11-3090	A4219-01A0	1	AA- 113
6738-11-3100	A4219-01A0	1	AA- 113
6738-11-3120	A4219-01A0	2	AA- 113
6738-11-4320	A153V-01A0	1	AA- 25
6738-11-4370	A153V-01A0	3	AA- 25
6738-11-4370	A1539-01A0	6	AA- 27
6738-11-4380	A153V-01A0	4	AA- 25
6738-11-4390	A153V-01A0	5	AA- 25

PARTS NO.	FIG NO.	INDEX	PAGE
6738-11-4720	C0100-04A0	4	CO- 9
6738-11-4810	C0100-04A0	3	CO- 9
6738-11-4840	C0100-04A0	1	CO- 9
6738-11-4870	C0100-04A0	6	CO- 9
6738-11-4880	C0100-04A0	2	CO- 9
6738-11-4890	C0100-04A0	5	CO- 9
6738-11-5310	A1610-01A0	8	AA- 33
6738-11-5320	A1610-01A0	9	AA- 33
6738-11-5330	A1610-01A0	11	AA- 33
6738-11-5510	A1610-01A0	1	AA- 33
6738-11-5940	A1610-01A0	2	AA- 33
6738-11-8110	A111P-01A0	1	AA- 9
6738-21-3110	A2049-01A0	1	AA- 45
6738-21-3910	A2040-01A0	1	AA- 43
6738-21-5610	A2119-01A1	7	AA- 57
6738-21-5620	A2119-01A1	8	AA- 57
6738-21-5630	A2119-01A1	9	AA- 57
6738-21-5640	A2119-01A1	10	AA- 57
6738-21-6100	A206P-01A0	2	AA- 47
6738-21-6180	A206P-01A0	9	AA- 47
6738-21-6280	A206P-01A0	2	AA- 47
6738-21-6600	A206P-01A0	9	AA- 47
6738-21-6650	A206P-01A0	11	AA- 47
6738-21-6660	A206P-01A0	12	AA- 47
6738-21-6670	A206P-01A0	13	AA- 47
6738-21-6710	A401V-01A0	1	AA- 99
6738-21-6711	A401V-01A0	1	AA- 99
6738-21-6810	A283V-01A0	1	AA- 87
6738-21-6890	A283V-01A0	2	AA- 87
6738-21-7710	A206P-01A0	4	AA- 47
6738-21-7780	A206P-01A0	5	AA- 47
6738-21-7810	A206P-01A0	8	AA- 47
6738-31-2031	A2359-01A0	3	AA- 71
6738-31-2111	A2359-01A0	1	AA- 71
6738-31-4200	A223P-01A0	1	AA- 65
6738-38-2031	A8110-04A0	4	AA- 165
6738-38-2111	A8110-04A0	6	AA- 165
6738-39-2031	A8110-04A0	1	AA- 165
6738-39-2111	A8110-04A0	5	AA- 165
6738-51-5240	A331P-01A1	7	AA- 93
6738-51-5260	A311P-01A1	9	AA- 91
6738-51-8120	A153T-01A1	5	AA- 23
6738-51-9820	A311P-01A1	12	AA- 91
6738-51-9950	A311P-01A1	15	AA- 91
6738-61-3170	A502P-01A2	7	AA- 125
6738-61-4110	CO100-02A0	29	CO- 5
6738-61-8100	B0920-01A0	1	BO- 13
6738-71-1110	6738-71-1110	1	AA- 95
6738-71-3100	A408P-01A0	8	AA- 103
6738-71-3120	A408P-01A0	6	AA- 103

PARTS NO.	FIG NO.	INDEX	PAGE
6738-71-3610	A408P-01A0	3	AA- 103
6738-71-3620	A408P-01A0	1	AA- 103
6738-71-5110	A411S-01A0	8	AA- 109
6738-71-5120	A411S-01A0	9	AA- 109
6738-71-5130	A411S-01A0	10	AA- 109
6738-71-5450	A401R-01A0	2	AA- 97
6738-71-5520	A411S-01A0	1	AA- 109
6738-71-5630	A417P-01A1	4	AA- 111
6738-71-5640	A411R-01A1	1	AA- 107
6738-71-6720	A411P-01A1	5	AA- 105
6738-81-2510	A9810-01A0	1	AA- 167
6738-81-3170	A201V-01A0	2	AA- 39
6738-81-7300	B0200-01A0	1	BO- 9
6738-81-7300	Y1011-01A0	1	YO- 15
6738-81-7310	B9999-01A8	1	AA- 173
6738-81-7310	Y1011-01A0	1	YO- 15
6738-81-8091	A1539-01A0	2	AA- 27
6738-81-8410	A153T-01A1	1	AA- 23
6738-81-8421	A1570-01A3	9	AA- 31
6738-81-8450	A1570-01A3	1	AA- 31
6738-91-1510	A267P-01A1	1	AA- 81
6742-01-2630	A411R-01A1	5	AA- 107
6742-01-2660	A411R-01A1	6	AA- 107
6742-01-4460	A411P-01A1	6	AA- 105
700501412	B0920-01A0	30	BO- 13
700501412	D0200-02A0	30	DO- 7
700-22-11410	Y1660-09A0	18	YO- 87
700-22-11410	Y1660-11A0	8	YO- 91
700-22-11410	Y1670-02A0	18	YO- 165
700-22-11410	Y1662-09A0	18	Y1- 123
700-22-11410	Y1662-11A0	8	Y1- 127
700-80-64220	Y1660-09A0	19	YO- 87
700-80-64220	Y1660-11A0	7	YO- 91
700-80-64220	Y1662-09A0	19	Y1- 123
700-80-64220	Y1662-11A0	7	Y1- 127
700-84-11730	Y1670-02A0	5	YO- 165
700-93-11320	K1110-04A1	39	K1- 89
700-93-11320	Y1641-01A0	17	YO- 63
700-93-11320	Y1660-06A0	7	YO- 79
700-93-11320	Y1660-06A0	14	YO- 79
700-93-11320	Y1660-06A0	21	YO- 79
700-93-11320	Y1660-06A0	28	YO- 79
700-93-11320	Y1660-06A0	35	YO- 81
700-93-11320	Y1660-06A0	42	YO- 81
700-93-11320	Y1660-06A0	49	YO- 81
700-93-11320	Y1660-06A0	56	YO- 81
700-93-11320	Y1669-02A0	15	YO- 151
700-93-11320	Y1669-12A0	15	YO- 159
700-93-11320	Y1662-06A0	7	Y1- 115
700-93-11320	Y1662-06A0	14	Y1- 115

PARTS NO.	FIG NO.	INDEX	PAGE
700-93-11320	Y1662-06A0	21	Y1- 115
700-93-11320	Y1662-06A0	28	Y1- 115
700-93-11320	Y1662-06A0	35	Y1- 117
700-93-11320	Y1662-06A0	42	Y1- 117
700-93-11320	Y1662-06A0	49	Y1- 117
700-93-11320	Y1662-06A0	56	Y1- 117
700-93-11320	Y1662-18A0	15	Y1- 143
700-93-11320	Y1669-02A0	15	Y1- 151
701-20-61230	H0120-01A0	26	HO- 11
701-20-61230	H0120-01A1	27	HO- 13
701-20-61230	H0120-02A0	6	HO- 19
701-20-61230	H0120-01A1	27	H1- 13
701-20-61230	H0120-02A1	6	H1- 21
702-15-71130	Y1640-03A0	17	YO- 61
702-15-71140	Y1640-03A0	18	YO- 61
702-15-77000	Y1640-03A0	13	YO- 61
702-16-01230	K1110-19A1	1	KO- 101
702-16-01230	K1110-04A1	1	K1- 87
702-16-01230	Y1670-21A0	1	YO- 169
702-16-01861	K1110-17A0	1	KO- 95
702-16-01861	Y1670-01A0	1	YO- 163
702-16-01861	Y1670-02A0	1	YO- 165
702-16-03910	K1110-25A12	12	KO- 113
702-16-03910	K1110-28A0	12	KO- 121
702-16-03910	Y1670-11A0	1	YO- 167
702-16-04160	K1110-17A0	1	KO- 95
702-16-51140	Y1670-01A0	3	YO- 163
702-16-51140	Y1670-11A0	5	YO- 167
702-16-51140	Y1670-21A0	3	YO- 169
702-16-51240	Y1670-11A0	18	YO- 167
702-16-51270	Y1670-01A0	8	YO- 163
702-16-51270	Y1670-11A0	11	YO- 167
702-16-51270	Y1670-21A0	8	YO- 169
702-16-53140	Y1670-01A0	5	YO- 163
702-16-53140	Y1670-11A0	7	YO- 167
702-16-53170	Y1670-01A0	7	YO- 163
702-16-53170	Y1670-11A0	10	YO- 167
702-16-53170	Y1670-21A0	7	YO- 169
702-16-53190	Y1670-11A0	14	YO- 167
702-16-53210	Y1670-11A0	16	YO- 167
702-16-53230	Y1670-11A0	20	YO- 167
702-16-53420	Y1670-01A0	4	YO- 163
702-16-53420	Y1670-11A0	6	YO- 167
702-16-53470	Y1670-11A0	8	YO- 167
702-16-53590	Y1670-11A0	9	YO- 167
702-16-53920	Y1660-04A0	13	YO- 75
702-16-53920	Y1660-05A0	16	YO- 77
702-16-53920	Y1660-13A0	27	YO- 97
702-16-53920	Y1662-04A0	13	Y1- 111
702-16-53920	Y1662-05A0	16	Y1- 113

PARTS NO.	FIG NO.	INDEX	PAGE
702-16-53920	Y1662-13A0	27	Y1- 133
702-16-53980	Y1670-11A0	19	YO- 167
702-16-54170	Y1670-01A0	10	YO- 163
702-16-54170	Y1670-11A0	13	YO- 167
702-16-54280	Y1670-01A0	21	YO- 163
702-16-54311	Y1670-01A0	11	YO- 163
702-16-54331	Y1670-01A0	20	YO- 163
702-16-54341	Y1670-01A0	20	YO- 163
702-16-54351	Y1670-01A0	20	YO- 163
702-16-54420	Y1670-01A0	6	YO- 163
702-16-54430	Y1670-01A0	19	YO- 163
702-16-54506	Y1670-01A0	22	YO- 163
702-16-54511	Y1670-01A0	24	YO- 163
702-16-54520	Y1670-01A0	26	YO- 163
702-16-54550	Y1670-21A0	4	YO- 169
702-16-54560	Y1670-21A0	6	YO- 169
702-16-54571	Y1670-21A0	5	YO- 169
702-16-54580	Y1670-21A0	9	YO- 169
702-16-54590	Y1670-21A0	10	YO- 169
702-16-54641	Y1670-21A0	14	YO- 169
702-16-54650	Y1670-21A0	17	YO- 169
702-16-54660	Y1670-21A0	16	YO- 169
702-16-54670	Y1670-21A0	3	YO- 169
702-16-55940	Y1670-02A0	6	YO- 165
702-16-55950	Y1670-02A0	7	YO- 165
702-16-57440	Y1670-02A0	11	YO- 165
702-16-57450	Y1670-02A0	12	YO- 165
702-21-01910	H1270-02A0	1	H1- 67
702-21-01910	Y1679-01A0	1	Y1- 175
702-21-07010	K1110-04A1	37	K1- 89
702-21-07010	Y1671-01A0	1	YO- 171
702-21-11930	Y1679-01A0	3	Y1- 175
702-21-11940	Y1679-01A0	4	Y1- 175
702-21-53120	Y1660-14A0	6	YO- 99
702-21-53120	Y1662-14A0	6	Y1- 135
702-21-55420	Y1660-14A0	3	YO- 99
702-21-55420	Y1662-14A0	3	Y1- 135
702-21-55440	Y1660-14A0	5	YO- 99
702-21-55440	Y1662-14A0	5	Y1- 135
702-21-55460	Y1660-14A0	2	YO- 99
702-21-55460	Y1662-14A0	2	Y1- 135
702-21-55520	Y1660-14A0	4	YO- 99
702-21-55520	Y1662-14A0	4	Y1- 135
702-21-55620	Y1660-14A0	11	YO- 99
702-21-55620	Y1660-14A0	22	YO- 99
702-21-55620	Y1662-14A0	11	Y1- 135
702-21-55620	Y1662-14A0	22	Y1- 135
702-21-55710	Y1660-14A0	13	YO- 99
702-21-55710	Y1662-14A0	13	Y1- 135
702-21-55720	Y1660-14A0	14	YO- 99

PARTS NO.	FIG NO.	INDEX	PAGE
702-21-55720	Y1662-14A0	14	Y1- 135
702-21-55750	Y1660-13A0	20	YO- 97
702-21-55750	Y1662-13A0	20	Y1- 133
702-21-55760	Y1660-07A0	12	YO- 83
702-21-55760	Y1660-13A0	21	YO- 97
702-21-55760	Y1662-07A0	12	Y1- 119
702-21-55760	Y1662-13A0	21	Y1- 133
702-21-55901	Y1600-11A0	3	YO- 39
702-73-02112	Y1641-03A0	1	YO- 67
702-75-01250	Y1640-03A0	1	YO- 61
703-08-33610	N1310-01A0	1	NO- 17
703-08-33610	Y1627-01A0	1	YO- 55
703-08-94510	Y1627-01A0	7	YO- 55
703-08-95620	Y1627-01A0	2	YO- 55
703-09-98130	Y1627-01A0	6	YO- 55
703-13-98930	Y1627-01A0	5	YO- 55
706-75-05040	Y1640-02A0	7	YO- 59
706-75-42370	Y1640-01A0	13	YO- 57
706-75-42880	Y1640-02A0	2	YO- 59
706-75-43810	Y1640-02A0	3	YO- 59
706-76-40890	Y1640-02A0	6	YO- 59
706-77-40370	Y1640-02A0	24	YO- 59
706-7E-11260	Y1640-02A0	4	YO- 59
706-7E-11270	Y1640-02A0	5	YO- 59
706-7E-11280	Y1640-02A0	9	YO- 59
706-7G-01070	N1210-01A0	1	NO- 7
706-7G-01070	Y1640-01A0	1	YO- 57
706-7G-01070	Y1640-02A0	1	YO- 59
706-7G-01070	Y1640-03A0	1	YO- 61
706-7G-03050	Y1640-01A0	1	YO- 57
706-7G-03050	Y1640-02A0	1	YO- 59
706-7G-05010	Y1640-02A0	17	YO- 59
706-7G-11291	Y1641-02A0	5	YO- 65
706-7G-40010	Y1640-01A0	3	YO- 57
706-7G-41111	Y1640-01A0	1	YO- 57
706-7G-41120	Y1640-02A0	15	YO- 59
706-7G-41130	Y1640-02A0	16	YO- 59
706-7G-41140	Y1640-02A0	17	YO- 59
706-7G-41160	Y1640-02A0	20	YO- 59
706-7G-41210	Y1640-02A0	12	YO- 59
706-7G-41610	Y1640-02A0	1	YO- 59
706-7G-41710	Y1640-02A0	13	YO- 59
706-7G-71130	Y1640-01A0	2	YO- 57
706-7G-71550	Y1640-01A0	10	YO- 57
706-7G-91110	Y1640-02A0	23	YO- 59
706-7G-91340	Y1640-02A0	21	YO- 59
706-7G-91350	Y1640-02A0	22	YO- 59
706-7G-91360	Y1640-02A0	26	YO- 59
708-8F-31610	Y1640-02A0	25	YO- 59
706-75-42820	Y1640-01A0	4	YO- 57

ARTS NO.	IG NO.	INDEX	PAGE
706-75-43720	Y1640-02A0	10	YO- 59
706-75-43750	Y1640-02A0	14	YO- 59
706-75-74540	Y1640-01A0	9	YO- 57
706-75-74850	Y1640-01A0	11	YO- 57
706-87-40150	Y1600-06A0	8	YO- 29
707-01-XA290	Y1620-01A0	1	YO- 41
707-01-XA311	Y1620-11A0	1	YO- 49
707-01-XA320	Y1620-41A0	1	YO- 53
707-01-XA960	T1120-01A0	1	TO- 25
707-01-XA960	Y1620-01A0	G-1	YO- 41
707-01-XA970	T1120-01A0	2	TO- 25
707-01-XA970	Y1620-01A0	G-2	YO- 41
707-01-XA981	T1140-01A0	1	TO- 31
707-01-XA981	T1140-01A2	1	TO- 33
707-01-XA981	Y1620-11A0	G-1	YO- 49
707-01-XA991	T1200-01A0	21	TO- 35
707-01-XA991	T1200-01AA	21	TO- 35b
707-01-XA991	T1200-01A1	24	TO- 37
707-01-XA991	T1200-01A3	24	TO- 39
707-01-XA991	T1200-01A1	24	T1- 37
707-01-XA991	T1200-01A3	24	T1- 39
707-01-XA991	Y1620-41A0	G-1	YO- 53
707-01-XG481	T1200-01A0	21	TO- 35
707-01-XG481	T1200-01A0	21	TR- 35
707-01-XZ820	T1120-01A0	1	TO- 25
707-01-XZ820	Y1620-01A0	G-1	YO- 41
707-01-XZ830	T1120-01A0	2	TO- 25
707-01-XZ830	Y1620-01A0	G-2	YO- 41
707-01-XZ841	T1140-01A0	1	TO- 31
707-01-XZ841	T1140-01A2	1	TO- 33
707-01-XZ841	Y1620-11A0	G-1	YO- 49
707-01-XZ851	T1200-01AA	21	TO- 35b
707-01-XZ851	T1200-01A1	24	TO- 37
707-01-XZ851	T1200-01A3	24	TO- 39
707-01-XZ851	T1200-01A1	24	T1- 37
707-01-XZ851	T1200-01A3	24	T1- 39
707-01-XZ851	Y1620-41A0	G-1	YO- 53
707-13-11560	Y1620-41A0	1	YO- 53
707-13-12260	Y1620-01A0	1	YO- 41
707-13-13540	Y1620-11A0	1	YO- 49
707-27-11981	Y1620-41A0	7	YO- 53
707-27-12921	Y1620-01A0	7	YO- 41
707-27-13961	Y1620-11A0	5	YO- 49
707-35-90360	Y1620-41A0	21	YO- 53
707-35-90930	Y1620-01A0	23	YO- 41
707-35-90960	Y1620-11A0	21	YO- 49
707-35-91150	Y1620-41A0	13	YO- 53
707-35-91220	Y1620-01A0	13	YO- 41
707-35-91220	Y1620-01A0	26	YO- 41
707-35-91370	Y1620-11A0	11	YO- 49

PARTS NO.	FIG NO.	INDEX	PAGE
707-35-91370	Y1620-11A0	26	YO- 49
707-36-11851	Y1620-41A0	17	YO- 53
707-36-12851	Y1620-01A0	17	YO- 41
707-36-13771	Y1620-11A0	15	YO- 49
707-39-11530	Y1620-41A0	19	YO- 53
707-39-12140	Y1620-01A0	19	YO- 41
707-39-13530	Y1620-11A0	17	YO- 49
707-41-11840	Y1620-11A0	14	YO- 49
707-44-11280	Y1620-41A0	18	YO- 53
707-44-11920	Y1620-41A0	20	YO- 53
707-44-12180	Y1620-01A0	18	YO- 41
707-44-12911	Y1620-01A0	20	YO- 41
707-44-13280	Y1620-11A0	16	YO- 49
707-44-13920	Y1620-11A0	18	YO- 49
707-51-80030	Y1620-41A0	11	YO- 53
707-51-80640	Y1620-41A0	14	YO- 53
707-51-85030	Y1620-01A0	11	YO- 41
707-51-85640	Y1620-01A0	14	YO- 41
707-51-95030	Y1620-11A0	9	YO- 49
707-51-95640	Y1620-11A0	12	YO- 49
707-52-90560	Y1620-41A0	10	YO- 53
707-52-90610	Y1620-01A0	10	YO- 41
707-52-90720	Y1620-11A0	8	YO- 49
707-56-70540	R0110-01A0	20	RO- 5
707-56-70540	R0110-02A1	20	RO- 7
707-56-85510	Y1620-01A0	9	YO- 41
707-56-95510	Y1620-11A0	7	YO- 49
707-58-80651	Y1620-41A0	4	YO- 53
707-58-85221	Y1620-01A0	4	YO- 41
707-58-95161	Y1620-11A0	4	YO- 49
707-71-32770	Y1620-11A0	25	YO- 49
707-71-34621	Y1620-01A0	25	YO- 41
707-71-61070	Y1620-11A0	19	YO- 49
707-71-70270	Y1620-11A0	23	YO- 49
707-71-70800	Y1620-01A0	21	YO- 41
707-71-91270	Y1620-11A0	29	YO- 49
707-76-70651	Y1620-01A0	2	YO- 41
707-76-70690	Y1620-41A0	2	YO- 53
707-76-70690	Y1620-41A0	5	YO- 53
707-76-80431	Y1620-01A0	5	YO- 41
707-76-80470	Y1620-11A0	2	YO- 49
707-83-13010	Y1620-11A0	29A	YO- 49
707-86-66250	Y1620-01A0	28	YO- 41
707-86-66260	Y1620-01A0	28	YO- 41
707-86-66270	Y1620-11A0	30	YO- 51
707-86-66280	Y1620-41A0	26	YO- 53
707-87-14070	Y1620-11A0	29C	YO- 49
707-88-11560	Y1620-11A0	40	YO- 51
707-88-21251	Y1620-01A0	34	YO- 43
707-88-21261	Y1620-11A0	38	YO- 51

PARTS NO.	FIG NO.	INDEX	PAGE
707-88-21271	Y1620-41A0	31	YO- 53
707-88-22530	Y1620-11A0	37	YO- 51
707-88-22550	Y1620-01A0	33	YO- 43
707-88-22560	Y1620-01A0	33	YO- 43
707-88-22570	Y1620-41A0	30	YO- 53
707-99-45230	Y1620-41A0	35	YO- 53
707-99-46130	Y1620-01A0	38	YO- 43
707-99-57160	Y1620-11A0	43	YO- 51
708-1W-28910	Y1600-01A0	4	YO- 19
708-1W-28910	Y1600-01A0	7	YO- 19
708-1W-28910	Y1600-06A0	5	YO- 29
708-1W-28910	Y1600-06A0	9	YO- 29
708-1W-28910	Y1600-06A0	13	YO- 29
708-1W-28910	Y1600-06A0	15	YO- 29
708-1W-28910	Y1600-10A0	13	YO- 37
708-2E-05040	Y1600-03A0	3	YO- 23
708-2E-05040	Y1600-07A0	3	YO- 31
708-2E-12140	Y1600-07A0	21	YO- 31
708-2L-00300	B0000-01A0	13	BO - 3
708-2L-00300	Y1600-01A0	1	YO- 19
708-2L-00300	Y1600-02A0	1	YO- 21
708-2L-00300	Y1600-03A0	1	YO- 23
708-2L-00300	Y1600-04A0	1	YO- 25
708-2L-00300	Y1600-05A0	1	YO- 27
708-2L-00300	Y1600-06A0	1	YO- 29
708-2L-00300	Y1600-07A0	1	YO- 31
708-2L-00300	Y1600-08A0	1	YO- 33
708-2L-00300	Y1600-09A0	1	YO- 35
708-2L-00300	Y1600-10A0	1	YO- 37
708-2L-00300	Y1600-11A0	1	YO- 39
708-2L-0130	Y1600-05A0	1	YO- 27
708-2L-01301	Y1600-01A0	1	YO- 19
708-2L-01301	Y1600-02A0	1	YO- 21
708-2L-01301	Y1600-03A0	1	YO- 23
708-2L-01301	Y1600-04A0	1	YO- 25
708-2L-01301	Y1600-06A0	1	YO- 29
708-2L-01301	Y1600-07A0	1	YO- 31
708-2L-01301	Y1600-08A0	1	YO- 33
708-2L-01301	Y1600-09A0	1	YO- 35
708-2L-06111	Y1600-01A0	1	YO- 19
708-2L-06121	Y1600-02A0	1	YO- 21
708-2L-06170	Y1600-03A0	7	YO- 23
708-2L-06180	Y1600-07A0	4	YO- 31
708-2L-06190	Y1600-03A0	18	YO- 23
708-2L-06190	Y1600-07A0	15	YO- 31
708-2L-06211	Y1600-06A0	1	YO- 29
708-2L-06520	Y1600-04A0	1	YO- 25
708-2L-06520	Y1600-08A0	1	YO- 33
708-2L-06530	Y1600-05A0	1	YO- 27
708-2L-06530	Y1600-09A0	1	YO- 35

PARTS NO.	FIG NO.	INDEX	PAGE
708-2L-06610	Y1600-04A0	1	YO- 25
708-2L-06610	Y1600-08A0	1	YO- 33
708-2L-06710	Y1600-10A0	1	YO- 37
708-2L-06821	Y1600-11A0	6	YO- 39
708-2L-22130	Y1600-07A0	20	YO- 31
708-2L-22160	Y1600-03A0	6	YO- 23
708-2L-22271	Y1600-02A0	4	YO- 21
708-2L-23131	Y1600-03A0	12	YO- 23
708-2L-23131	Y1600-07A0	9	YO- 31
708-2L-23351	Y1600-03A0	15	YO- 23
708-2L-23351	Y1600-07A0	12	YO- 31
708-2L-23360	Y1600-03A0	16	YO- 23
708-2L-23360	Y1600-07A0	13	YO- 31
708-2L-23920	Y1600-01A0	10	YO- 19
708-2L-23920	Y1600-02A0	13	YO- 21
708-2L-23920	Y1600-06A0	11	YO- 29
708-2L-23920	Y1600-11A0	2	YO- 39
708-2L-23950	Y1600-11A0	13	YO- 39
708-2L-24680	Y1600-10A0	2	YO- 37
708-2L-25480	Y1600-02A0	9	YO- 21
708-2L-28540	Y1600-10A0	4	YO- 37
708-2L-32110	Y1600-03A0	1	YO- 23
708-2L-32130	Y1600-07A0	1	YO- 31
708-2L-32150	Y1600-03A0	2	YO- 23
708-2L-32150	Y1600-07A0	2	YO- 31
708-2L-32260	Y1600-02A0	3	YO- 21
708-2L-33160	Y1600-03A0	13	YO- 23
708-2L-33160	Y1600-07A0	10	YO- 31
708-2L-33310	Y1600-03A0	18	YO- 23
708-2L-33310	Y1600-07A0	15	YO- 31
708-2L-33350	Y1600-03A0	17	YO- 23
708-2L-33350	Y1600-07A0	14	YO- 31
708-2L-34120	Y1600-04A0	1	YO- 25
708-2L-34120	Y1600-08A0	1	YO- 33
708-2L-34230	Y1600-04A0	25	YO- 25
708-2L-34230	Y1600-08A0	25	YO- 33
708-2L-34250	Y1600-04A0	17	YO- 25
708-2L-34250	Y1600-08A0	17	YO- 33
708-2L-34260	Y1600-05A0	5	YO- 27
708-2L-34260	Y1600-09A0	5	YO- 35
708-2L-34270	Y1600-05A0	1	YO- 27
708-2L-34270	Y1600-09A0	1	YO- 35
708-2L-35170	Y1600-04A0	9	YO- 25
708-2L-35170	Y1600-08A0	9	YO- 33
708-2L-35210	Y1600-05A0	3	YO- 27
708-2L-35210	Y1600-09A0	3	YO- 35
708-2L-35311	Y1600-10A0	1	YO- 37
708-2L-35331	Y1600-10A0	6	YO- 37
708-2L-35341	Y1600-10A0	8	YO- 37
708-2L-35351	Y1600-10A0	9	YO- 37
708-2L-35360	Y1600-10A0	5	YO- 37
708-2L-35410	Y1600-10A0	7	YO- 37
708-2L-35430	Y1600-10A0	3	YO- 37
708-2L-35530	Y1600-11A0	1	YO- 39
708-2L-35621	Y1600-04A0	5	YO- 25
708-2L-35621	Y1600-08A0	5	YO- 33
708-2L-35630	Y1600-04A0	11	YO- 25
708-2L-35630	Y1600-08A0	11	YO- 33
708-2L-35641	Y1600-04A0	12	YO- 25
708-2L-35641	Y1600-08A0	12	YO- 33
708-2L-35650	Y1600-04A0	15	YO- 25
708-2L-35650	Y1600-08A0	15	YO- 33
708-2L-35660	Y1600-04A0	21	YO- 25
708-2L-35660	Y1600-08A0	21	YO- 33
708-2L-35670	Y1600-04A0	28	YO- 25
708-2L-35670	Y1600-08A0	28	YO- 33
708-2L-35680	Y1600-04A0	4	YO- 25
708-2L-35680	Y1600-08A0	4	YO- 33
708-2L-35690	Y1600-04A0	8	YO- 25
708-2L-35690	Y1600-08A0	8	YO- 33
708-2L-35710	Y1600-04A0	20	YO- 25
708-2L-35710	Y1600-08A0	20	YO- 33
708-2L-35720	Y1600-04A0	13	YO- 25
708-2L-35720	Y1600-08A0	13	YO- 33
708-2L-35730	Y1600-04A0	14	YO- 25
708-2L-35730	Y1600-08A0	14	YO- 33
708-2L-35740	Y1600-04A0	16	YO- 25
708-2L-35740	Y1600-08A0	16	YO- 33
708-2L-35750	Y1600-04A0	24	YO- 25
708-2L-35750	Y1600-05A0	7	YO- 27
708-2L-35750	Y1600-08A0	24	YO- 33
708-2L-35750	Y1600-09A0	7	YO- 35
708-2L-35760	Y1600-04A0	6	YO- 25
708-2L-35760	Y1600-08A0	6	YO- 33
708-2L-35770	Y1600-04A0	7	YO- 25
708-2L-35770	Y1600-08A0	7	YO- 33
708-2L-35860	Y1600-04A0	10	YO- 25
708-2L-35860	Y1600-08A0	10	YO- 33
708-2L-35870	Y1600-04A0	27	YO- 25
708-2L-35870	Y1600-05A0	4	YO- 27
708-2L-35870	Y1600-08A0	27	YO- 33
708-2L-35870	Y1600-09A0	4	YO- 35
708-2L-35921	Y1600-11A0	7	YO- 39
708-25-12790	Y1600-03A0	4	YO- 23
708-25-12790	Y1600-07A0	4	YO- 31
708-25-52861	Y1600-03A0	5	YO- 23
708-7L-05010	Y1641-02A0	4	YO- 65
708-7L-12140	Y1641-02A0	3	YO- 65
708-7L-13140	Y1600-03A0	14	YO- 23
708-7L-13140	Y1600-07A0	11	YO- 31

PARTS NO.	FIG NO.	INDEX	PAGE
708-7L-13140	Y1641-02A0	12	YO- 65
708-7T-16460	Y1660-01A0	10	YO- 69
708-7T-16460	Y1669-01A0	5	YO- 149
708-7T-16460	Y1669-11A0	5	YO- 157
708-7T-16460	Y1662-01A0	10	Y1- 105
708-7T-16460	Y1662-17A0	5	Y1- 141
708-7T-16460	Y1669-01A0	5	Y1- 149
708-8E-16150	Y1600-01A0	9	YO- 19
708-8E-16150	Y1600-02A0	12	YO- 21
708-8E-16150	Y1600-06A0	10	YO- 29
708-8E-16160	Y1660-07A0	16	YO- 83
708-8E-16160	Y1660-07A0	22	YO- 83
708-8E-16160	Y1660-14A0	24	YO- 99
708-8E-16160	Y1662-07A0	16	Y1- 119
708-8E-16160	Y1662-07A0	22	Y1- 119
708-8E-16160	Y1662-14A0	24	Y1- 135
708-8E-16180	Y1641-01A0	24	YO- 63
708-8F-00171	P1210-01A0	1	PO- 7
708-8F-00171	Y0270-01A0	1	YO- 7
708-8F-00171	Y1641-01A0	1	YO- 63
708-8F-00171	Y1641-02A0	1	YO- 65
708-8F-00171	Y1641-03A0	1	YO- 67
708-8F-04180	Y1641-01A0	2	YO- 63
708-8F-04660	Y1641-01A0	1	YO- 63
708-8F-12151	Y1641-02A0	2	YO- 65
708-8F-12230	Y1641-02A0	6	YO- 65
708-8F-31210	Y1641-01A0	32	YO- 63
708-8F-31610	Y1641-01A0	29	YO- 63
708-8F-31650	Y1641-01A0	25	YO- 63
708-8F-32121	Y1641-02A0	1	YO- 65
708-8F-33160	Y1641-02A0	13	YO- 65
708-8F-33310	Y1641-02A0	17	YO- 65
708-8F-33340	Y1641-02A0	16	YO- 65
708-8F-33350	Y1641-02A0	15	YO- 65
708-8F-33360	Y1641-02A0	11	YO- 65
708-8F-33480	Y1641-02A0	18	YO- 65
708-8F-33710	Y1641-02A0	19	YO- 65
708-8F-34110	Y1641-01A0	22	YO- 63
708-8F-34120	Y1641-01A0	20	YO- 63
708-8F-34141	Y1641-02A0	20	YO- 65
708-8F-34150	Y1641-02A0	21	YO- 65
708-8F-34220	Y1641-01A0	8	YO- 63
708-8F-35110	Y1641-02A0	22	YO- 65
708-8F-35120	Y1641-02A0	24	YO- 65
708-8F-35130	Y1641-02A0	23	YO- 65
708-8F-35140	Y1641-02A0	25	YO- 65
708-8F-35150	Y1641-02A0	30	YO- 65
708-8F-35160	Y1641-02A0	26	YO- 65
708-8F-35170	Y1641-02A0	27	YO- 65
708-8F-35180	Y1641-02A0	28	YO- 65
708-8F-35190	Y1641-02A0	29	YO- 65
708-8F-36311	Y1641-01A0	15	YO- 63
708-8F-36611	Y1641-01A0	12	YO- 63
708-8H-11530	Y1641-01A0	9	YO- 63
708-8H-11530	Y1660-07A0	8	YO- 83
708-8H-11530	Y1660-10A0	4	YO- 89
708-8H-11530	Y1660-14A0	18	YO- 99
708-8H-11530	Y1662-07A0	8	Y1- 119
708-8H-11530	Y1662-10A0	4	Y1- 125
708-8H-11530	Y1662-14A0	18	Y1- 135
708-8H-36121	Y1641-01A0	14	YO- 63
709-10-91240	Y1679-01A0	5	Y1- 175
709-25-11361	Y1640-01A0	6	YO- 57
709-25-11361	Y1660-16A0	10	YO- 103
709-25-11361	Y1675-01A0	10	YO- 173
709-25-11361	Y1662-16A0	10	Y1- 139
709-25-11390	Y1660-10A0	23	YO- 89
709-25-11390	Y1660-11A0	15	YO- 91
709-25-11390	Y1660-12A0	13	YO- 93
709-25-11390	Y1660-12A0	39	YO- 95
709-25-11390	Y1662-10A0	23	Y1- 125
709-25-11390	Y1662-11A0	15	Y1- 127
709-25-11390	Y1662-12A0	13	Y1- 129
709-25-11390	Y1662-12A0	39	Y1- 131
709-25-11390	Y1662-19A0	18	Y1- 145
709-25-11640	Y1640-01A0	7	YO- 57
709-25-11650	Y1640-01A0	5	YO- 57
709-25-11650	Y1660-16A0	9	YO- 103
709-25-11650	Y1675-01A0	9	YO- 173
709-25-11650	Y1662-16A0	9	Y1- 139
709-70-71610	Y1640-03A0	16	YO- 61
709-74-91860	Y1660-13A0	13	YO- 97
709-74-91860	Y1662-13A0	13	Y1- 133
720-68-19610	Y1600-03A0	10	YO- 23
720-68-19610	Y1600-07A0	7	YO- 31
722-10-91130	Y1641-01A0	21	YO- 63
723-11-15110	Y1670-02A0	13	YO- 165
723-11-18150	Y1660-05A0	11	YO- 77
723-11-18150	Y1662-05A0	11	Y1- 113
723-11-18190	Y1660-16A0	19	YO- 103
723-11-18190	Y1675-01A0	19	YO- 173
723-11-18190	Y1662-16A0	19	Y1- 139
723-11-19130	H0120-01A4	6	HO- 15
723-11-19130	H0120-01A4	6	H1- 15
723-11-19130	H0120-01A5	7	H1- 17
723-11-19130	Y1660-05A0	2	YO- 77
723-11-19130	Y1669-01A0	13	YO- 149
723-11-19130	Y1669-11A0	13	YO- 157
723-11-19130	Y1662-05A0	2	Y1- 113
723-11-19130	Y1662-17A0	13	Y1- 141

PARTS NO.	FIG NO.	INDEX	PAGE
723-11-19130	Y1669-01A0	13	Y1- 149
723-11-19660	Y1660-13A0	26	YO- 97
723-11-19660	Y1662-13A0	26	Y1- 133
723-26-15230	Y1600-06A0	12	YO- 29
723-40-56302	Y1660-08A0	1	YO- 85
723-40-56302	Y1662-08A0	1	Y1- 121
723-40-56350	Y1660-08A0	7	YO- 85
723-40-56350	Y1662-08A0	7	Y1- 121
723-40-60101	Y1660-10A0	15	YO- 89
723-40-60101	Y1662-10A0	15	Y1- 125
723-40-61150	Y1660-13A0	17	YO- 97
723-40-61150	Y1662-13A0	17	Y1- 133
723-40-66300	Y1669-03A0	1	YO- 153
723-40-66300	Y1662-19A0	1	Y1- 145
723-40-66300	Y1669-03A0	1	Y1- 153
723-40-66601	Y1660-10A0	8	YO- 89
723-40-66601	Y1662-10A0	8	Y1- 125
723-40-66701	Y1660-10A0	1	YO- 89
723-40-66701	Y1662-10A0	1	Y1- 125
723-40-71102	Y1660-13A0	1	YO- 97
723-40-71102	Y1660-14A0	1	YO- 99
723-40-71102	Y1662-13A0	1	Y1- 133
723-40-71102	Y1662-14A0	1	Y1- 135
723-40-71330	Y1660-13A0	3	YO- 97
723-40-71330	Y1662-13A0	3	Y1- 133
723-40-71340	Y1660-13A0	4	YO- 97
723-40-71340	Y1662-13A0	4	Y1- 133
723-40-71350	Y1660-13A0	7	YO- 97
723-40-71350	Y1662-13A0	7	Y1- 133
723-40-71390	Y1660-13A0	16	YO- 97
723-40-71390	Y1662-13A0	16	Y1- 133
723-40-71430	Y1660-14A0	1	YO- 99
723-40-71430	Y1662-14A0	1	Y1- 135
723-40-71440	Y1660-13A0	11	YO- 97
723-40-71440	Y1662-13A0	11	Y1- 133
723-40-82140	Y1660-16A0	6	YO- 103
723-40-82140	Y1675-01A0	6	YO- 173
723-40-82140	Y1662-16A0	6	Y1- 139
723-40-82150	Y1660-16A0	7	YO- 103
723-40-82150	Y1675-01A0	7	YO- 173
723-40-82150	Y1662-16A0	7	Y1- 139
723-40-82161	Y1660-16A0	11	YO- 103
723-40-82161	Y1675-01A0	11	YO- 173
723-40-82161	Y1662-16A0	11	Y1- 139
723-40-82210	Y1660-16A0	4	YO- 103
723-40-82210	Y1675-01A0	4	YO- 173
723-40-82210	Y1662-16A0	4	Y1- 139
723-40-82220	Y1660-07A0	18	YO- 83
723-40-82220	Y1660-16A0	5	YO- 103
723-40-82220	Y1675-01A0	5	YO- 173

PARTS NO.	FIG NO.	INDEX	PAGE
723-40-82220	Y1662-07A0	18	Y1- 119
723-40-82220	Y1662-16A0	5	Y1- 139
723-40-82290	Y1660-16A0	22	YO- 103
723-40-82290	Y1675-01A0	22	YO- 173
723-40-82290	Y1662-16A0	22	Y1- 139
723-40-82500	Y1660-16A0	1	YO- 103
723-40-82500	Y1662-16A0	1	Y1- 139
723-40-82600	Y1675-01A0	1	YO- 173
723-40-85100	Y1660-12A0	34	YO- 95
723-40-85100	Y1662-12A0	35	Y1- 131
723-40-87110	Y1660-15A0	1	YO- 101
723-40-87110	Y1662-15A0	1	Y1- 137
723-40-87170	Y1660-15A0	8	YO- 101
723-40-87170	Y1662-15A0	8	Y1- 137
723-40-87200	Y1660-15A0	1	YO- 101
723-40-87200	Y1662-15A0	1	Y1- 137
723-40-87240	Y1660-15A0	2	YO- 101
723-40-87240	Y1662-15A0	2	Y1- 137
723-40-87250	Y1660-15A0	7	YO- 101
723-40-87250	Y1662-15A0	7	Y1- 137
723-40-87260	Y1660-15A0	3	YO- 101
723-40-87260	Y1662-15A0	3	Y1- 137
723-40-91101	Y1660-09A0	1	YO- 87
723-40-91101	Y1662-09A0	1	Y1- 123
723-40-91200	Y1660-12A0	1	YO- 93
723-40-91200	Y1662-12A0	1	Y1- 129
723-40-91300	Y1662-19A0	5	Y1- 145
723-40-91500	Y1660-11A0	5	YO- 91
723-40-91500	Y1662-11A0	5	Y1- 127
723-41-07400	H0120-01A5	2	H1- 17
723-41-07400	Y1669-11A0	1	YO- 157
723-41-07400	Y1669-12A0	1	YO- 159
723-41-07400	Y1669-13A0	1	YO- 161
723-41-07600	H0120-01A4	1	H1- 15
723-41-07600	H0120-01A5	1	H1- 17
723-41-07600	Y1669-01A0	1	Y1- 149
723-41-07600	Y1669-02A0	1	Y1- 151
723-41-07600	Y1669-03A0	1	Y1- 153
723-41-08500	H0120-01A4	1	HO- 15
723-41-08500	Y1669-01A0	1	YO- 149
723-41-08500	Y1669-02A0	1	YO- 151
723-41-08500	Y1669-03A0	1	YO- 153
723-46-00742	Y1660-07A0	3	YO- 83
723-46-00742	Y1662-07A0	3	Y1- 119
723-46-00750	Y1660-07A0	1	YO- 83
723-46-00750	Y1662-07A0	1	Y1- 119
723-46-14110	Y1660-01A0	13	YO- 69
723-46-14110	Y1669-01A0	7	YO- 149
723-46-14110	Y1669-11A0	7	YO- 157
723-46-14110	Y1662-01A0	13	Y1- 105

PARTS NO.	FIG NO.	INDEX	PAGE
723-46-14110	Y1662-17A0	7	Y1- 141
723-46-14110	Y1669-01A0	7	Y1- 149
723-46-14131	Y1660-01A0	15	YO- 69
723-46-14131	Y1662-01A0	15	Y1- 105
723-46-14140	Y1660-07A0	21	YO- 83
723-46-14140	Y1662-07A0	21	Y1- 119
723-46-14150	Y1660-05A0	19	YO- 77
723-46-14150	Y1662-05A0	19	Y1- 113
723-46-14270	Y1660-01A0	14	YO- 69
723-46-14270	Y1662-01A0	14	Y1- 105
723-46-15111	Y1660-04A0	11	YO- 75
723-46-15111	Y1660-13A0	6	YO- 97
723-46-15111	Y1669-01A0	8	YO- 149
723-46-15111	Y1669-11A0	8	YO- 157
723-46-15111	Y1662-04A0	11	Y1- 111
723-46-15111	Y1662-13A0	6	Y1- 133
723-46-15111	Y1662-17A0	8	Y1- 141
723-46-15111	Y1669-01A0	8	Y1- 149
723-46-15120	Y1660-01A0	11	YO- 69
723-46-15120	Y1669-01A0	6	YO- 149
723-46-15120	Y1669-11A0	6	YO- 157
723-46-15120	Y1662-01A0	11	Y1- 105
723-46-15120	Y1662-17A0	6	Y1- 141
723-46-15120	Y1669-01A0	6	Y1- 149
723-46-15130	Y1660-01A0	7	YO- 69
723-46-15130	Y1669-01A0	3	YO- 149
723-46-15130	Y1669-11A0	3	YO- 157
723-46-15130	Y1662-01A0	7	Y1- 105
723-46-15130	Y1662-17A0	3	Y1- 141
723-46-15130	Y1669-01A0	3	Y1- 149
723-46-15140	Y1660-01A0	8	YO- 69
723-46-15140	Y1662-01A0	8	Y1- 105
723-46-15150	Y1660-05A0	18	YO- 77
723-46-15150	Y1662-05A0	18	Y1- 113
723-46-15180	Y1660-07A0	6	YO- 83
723-46-15180	Y1662-07A0	6	Y1- 119
723-46-15190	Y1660-07A0	20	YO- 83
723-46-15190	Y1662-07A0	20	Y1- 119
723-46-15220	H0120-01A5	3	H1- 17
723-46-15630	Y1660-02A0	4	YO- 71
723-46-15630	Y1660-02A0	13	YO- 71
723-46-15630	Y1660-03A0	6	YO- 73
723-46-15630	Y1660-03A0	11	YO- 73
723-46-15630	Y1660-04A0	4	YO- 75
723-46-15630	Y1660-04A0	9	YO- 75
723-46-15630	Y1662-02A0	4	Y1- 107
723-46-15630	Y1662-02A0	13	Y1- 107
723-46-15630	Y1662-03A0	6	Y1- 109
723-46-15630	Y1662-03A0	11	Y1- 109
723-46-15630	Y1662-04A0	4	Y1- 111

PARTS NO.	FIG NO.	INDEX	PAGE
723-46-15630	Y1662-04A0	9	Y1- 111
723-46-15690	Y1660-01A0	12	YO- 69
723-46-15690	Y1662-01A0	12	Y1- 105
723-46-17320	Y1660-02A0	8	YO- 71
723-46-17320	Y1660-03A0	4	YO- 73
723-46-17320	Y1662-02A0	8	Y1- 107
723-46-17320	Y1662-03A0	4	Y1- 109
723-46-17330	Y1660-02A0	9	YO- 71
723-46-17330	Y1660-03A0	5	YO- 73
723-46-17330	Y1662-02A0	9	Y1- 107
723-46-17330	Y1662-03A0	5	Y1- 109
723-46-17340	Y1660-02A0	5	YO- 71
723-46-17340	Y1660-03A0	7	YO- 73
723-46-17340	Y1662-02A0	5	Y1- 107
723-46-17340	Y1662-03A0	7	Y1- 109
723-46-17350	Y1660-04A0	15	YO- 75
723-46-17350	Y1662-04A0	15	Y1- 111
723-46-17510	H0120-01A4	5	HO- 15
723-46-17510	H0120-01A4	5	H1- 15
723-46-17510	H0120-01A5	6	H1- 17
723-46-17510	Y1660-05A0	9	YO- 77
723-46-17510	Y1669-01A0	15	YO- 149
723-46-17510	Y1669-11A0	15	YO- 157
723-46-17510	Y1662-05A0	9	Y1- 113
723-46-17510	Y1662-17A0	15	Y1- 141
723-46-17510	Y1669-01A0	15	Y1- 149
723-46-17520	H0120-01A4	7	HO- 15
723-46-17520	H0120-01A4	7	H1- 15
723-46-17520	H0120-01A5	8	H1- 17
723-46-17520	Y1660-05A0	3	YO- 77
723-46-17520	Y1669-01A0	16	YO- 149
723-46-17520	Y1669-11A0	16	YO- 157
723-46-17520	Y1662-05A0	3	Y1- 113
723-46-17520	Y1662-17A0	16	Y1- 141
723-46-17520	Y1669-01A0	16	Y1- 149
723-46-17530	H0120-01A4	8	HO- 15
723-46-17530	H0120-01A4	8	H1- 15
723-46-17530	H0120-01A5	9	H1- 17
723-46-17530	Y1660-05A0	10	YO- 77
723-46-17530	Y1669-01A0	17	YO- 149
723-46-17530	Y1669-11A0	17	YO- 157
723-46-17530	Y1662-05A0	10	Y1- 113
723-46-17530	Y1662-17A0	17	Y1- 141
723-46-17530	Y1669-01A0	17	Y1- 149
723-46-17550	Y1660-07A0	19	YO- 83
723-46-17550	Y1662-07A0	19	Y1- 119
723-46-17560	Y1660-14A0	31	YO- 99
723-46-17560	Y1662-14A0	31	Y1- 135
723-46-17570	Y1660-16A0	25	YO- 103
723-46-17570	Y1662-16A0	25	Y1- 139

PARTS NO.	FIG NO.	INDEX	PAGE
723-46-17600	Y1660-07A0	9	YO- 83
723-46-17600	Y1662-07A0	9	Y1- 119
723-46-17610	Y1660-07A0	10	YO- 83
723-46-17610	Y1662-07A0	10	Y1- 119
723-46-17640	Y1660-07A0	11	YO- 83
723-46-17640	Y1662-07A0	11	Y1- 119
723-46-17701	Y1660-11A0	1	YO- 91
723-46-17701	Y1662-11A0	1	Y1- 127
723-46-17711	Y1660-11A0	1	YO- 91
723-46-17711	Y1662-11A0	1	Y1- 127
723-46-18100	Y1660-02A0	9	YO- 71
723-46-18100	Y1662-02A0	9	Y1- 107
723-46-18200	Y1660-03A0	9	YO- 73
723-46-18200	Y1662-03A0	9	Y1- 109
723-46-18300	Y1660-02A0	1	YO- 71
723-46-18300	Y1662-02A0	1	Y1- 107
723-46-18400	Y1660-03A0	1	YO- 73
723-46-18400	Y1662-03A0	1	Y1- 109
723-46-18500	Y1660-04A0	1	YO- 75
723-46-18500	Y1662-04A0	1	Y1- 111
723-46-18600	Y1660-04A0	5	YO- 75
723-46-18600	Y1662-04A0	5	Y1- 111
723-46-20403	H0120-01A0	1	HO- 11
723-46-20403	Y1660-01A0	1	YO- 69
723-46-20403	Y1660-02A0	1	YO- 71
723-46-20403	Y1660-03A0	1	YO- 73
723-46-20403	Y1660-04A0	1	YO- 75
723-46-20403	Y1660-05A0	1	YO- 77
723-46-20403	Y1660-06A0	1	YO- 79
723-46-20403	Y1660-07A0	1	YO- 83
723-46-20403	Y1660-08A0	1	YO- 85
723-46-20403	Y1660-09A0	1	YO- 87
723-46-20403	Y1660-10A0	1	YO- 89
723-46-20403	Y1660-11A0	1	YO- 91
723-46-20403	Y1660-12A0	1	YO- 93
723-46-20403	Y1660-13A0	1	YO- 97
723-46-20403	Y1660-14A0	1	YO- 99
723-46-20403	Y1660-15A0	1	YO- 101
723-46-20403	Y1660-16A0	1	YO- 103
723-46-40100	Y1660-06A0	2	YO- 79
723-46-40100	Y1662-06A0	2	Y1- 115
723-46-41100	Y1660-06A0	16	YO- 79
723-46-41100	Y1662-06A0	16	Y1- 115
723-46-41110	Y1660-06A0	1	YO- 79
723-46-41110	Y1662-06A0	1	Y1- 115
723-46-41120	Y1660-06A0	2	YO- 79
723-46-41120	Y1662-06A0	2	Y1- 115
723-46-41950	Y1660-06A0	8	YO- 79
723-46-41950	Y1660-06A0	15	YO- 79
723-46-41950	Y1660-06A0	22	YO- 79

PARTS NO.	FIG NO.	INDEX	PAGE
723-46-41950	Y1660-06A0	29	YO- 79
723-46-41950	Y1660-06A0	36	YO- 81
723-46-41950	Y1660-06A0	43	YO- 81
723-46-41950	Y1660-06A0	50	YO- 81
723-46-41950	Y1660-06A0	57	YO- 81
723-46-41950	Y1669-02A0	16	YO- 151
723-46-41950	Y1669-12A0	16	YO- 159
723-46-41950	Y1662-06A0	8	Y1- 115
723-46-41950	Y1662-06A0	15	Y1- 115
723-46-41950	Y1662-06A0	22	Y1- 115
723-46-41950	Y1662-06A0	29	Y1- 115
723-46-41950	Y1662-06A0	36	Y1- 117
723-46-41950	Y1662-06A0	43	Y1- 117
723-46-41950	Y1662-06A0	50	Y1- 117
723-46-41950	Y1662-06A0	57	Y1- 117
723-46-41950	Y1662-18A0	16	Y1- 143
723-46-41950	Y1669-02A0	16	Y1- 151
723-46-42700	Y1660-06A0	9	YO- 79
723-46-42700	Y1662-06A0	9	Y1- 115
723-46-43100	Y1660-06A0	44	YO- 81
723-46-43100	Y1662-06A0	44	Y1- 117
723-46-43400	Y1660-06A0	37	YO- 81
723-46-43400	Y1662-06A0	37	Y1- 117
723-46-45100	Y1660-06A0	23	YO- 79
723-46-45100	Y1662-06A0	23	Y1- 115
723-46-46101	Y1660-06A0	51	YO- 81
723-46-46101	Y1662-06A0	51	Y1- 117
723-46-46300	Y1660-06A0	31	YO- 81
723-46-46300	Y1662-06A0	31	Y1- 117
723-46-48100	Y1669-02A0	1	YO- 151
723-46-48100	Y1669-12A0	1	YO- 159
723-46-48100	Y1662-18A0	1	Y1- 143
723-46-48100	Y1669-02A0	1	Y1- 151
723-46-66300	Y1669-13A0	1	YO- 161
723-47-20402	H0120-01A1	1	H1- 13
723-47-20402	Y1662-01A0	1	Y1- 105
723-47-20402	Y1662-02A0	1	Y1- 107
723-47-20402	Y1662-03A0	1	Y1- 109
723-47-20402	Y1662-04A0	1	Y1- 111
723-47-20402	Y1662-05A0	1	Y1- 113
723-47-20402	Y1662-06A0	1	Y1- 115
723-47-20402	Y1662-07A0	1	Y1 119
723-47-20402	Y1662-08A0	1	Y1- 121
723-47-20402	Y1662-09A0	1	Y1- 123
723-47-20402	Y1662-10A0	1	Y1- 125
723-47-20402	Y1662-11A0	1	Y1- 127
723-47-20402	Y1662-12A0	1	Y1- 129
723-47-20402	Y1662-13A0	1	Y1- 133
723-47-20402	Y1662-14A0	1	Y1- 135
723-47-20402	Y1662-15A0	1	Y1- 137

PARTS NO.	FIG NO.	INDEX	PAGE
723-47-20402	Y1662-16A0	1	Y1- 139
723-47-20402	Y1662-17A0	1	Y1- 141
723-47-20402	Y1662-18A0	1	Y1- 143
723-47-20402	Y1662-19A0	1	Y1- 145
723-60-22230	Y1660-08A0	9	YO- 85
723-60-22230	Y1662-08A0	9	Y1- 121
723-90-61100	H1270-01A4	1	H1- 65
723-90-61200	H1270-01A2	1	HO- 61
723-90-61200	H1270-01A2	1	H1- 61
723-90-61200	Y1669-03A0	5	YO- 153
723-90-61300	H1270-01A3	1	H1- 63
723-90-61400	H1270-01A1	1	H1- 59
723-90-61400	Y1669-13A0	5	YO- 161
723-90-61400	Y1669-03A0	5	Y1- 153
723-90-61600	Y1660-12A0	17	YO- 93
723-90-61600	Y1662-12A0	17	Y1- 129
723-90-76101	Y1662-19A0	22	Y1- 145
723-90-76101	Y1669-03A0	22	Y1- 153
7826-22-1000	K1110-24A0	4	KO- 111
7826-22-1100	K1110-24A0	4	KO- 111
7826-22-1260	K1110-24A0	4	KO- 111
7826-22-1500	K1110-24A0	4	KO- 111
7826-22-1510	K1110-24A0	4	KO- 111
7826-22-5830	K1110-24A0	4	KO- 111
7834-41-2000	BO400-01A0	6	BO- 11
7834-41-2002	BO400-01A0	6	BO- 11
7835-12-3000	K1110-13A0	1	KO- 87
7835-26-1008	K1110-21A0	4	KO- 105
7835-26-1009	K1110-21A0	4	KO- 105
7861-92-5810	D0100-01A0	6	DO- 3
7861-93-1420	B0200-01A0	10	BO - 9
7861-93-1650	H0120-03A0	10	HO- 23
7861-93-1650	H0120-03A1	11	HO- 25
7861-93-1650	H0120-03A1	11	H1- 25
7861-93-2310	A221V-01A0	1	AA- 61
7861-93-2311	A221V-01A0	1	AA- 61
7861-93-3320	A101V-01A1	1	AA- 5
7861-93-3320	H0311-01A0	7	HO- 33
7861-93-4210	A211V-01A1	1	AA- 55
7861-94-3000	K1110-21A0	6	KO- 105
799-101-5220	W0111-01A0	1	WO- 3
8233-06-3350	K1110-21A0	10	KO- 105

PARTS NO.	FIG NO.	INDEX	PAGE

KOMATSU

Printed in P.R. China
2004 - 10(02)S