RUTHZIL TRATOR COMERCIAL DE PEÇAS LTDA 11 97083-6812 ROLANDO CITRANGULO

LEPBP2M801

Parts Book

KOMATSU

HYDRAULIC
EXCAVATOR

PC2000-8

SERIAL NUMBERS: PC2000-8 J10001 and up

KOMATSU

LEPBP2M801

PARTS BOOK

PC2000-8

Serial No. J10001 and up

ENGINE SAA12V140E-3

Engine No. 503621 and up

FOREWORD

When ordering a spare part, specially the part number, part name, and quantity required, and also specify your machine model code, machine serial number, engine serial number and the service meter reading.

This Parts Book describes not only standard items but also optional equipment and attachments. To order a part, please contact your nearest Komatsu distributor.

This Parts Book contains the information and special symbols as follows :

Figure And List	When you open this Parts Book, you will find and illustration on the left page (even-numbered page) for the spare parts group. Each individual part in the group is given an index number. On the right page, the component parts of the group are listed in the order of the index numbers shown on the illustration page. The part number, part name, and applicable machine serial number are given for each part.
Ref.	The Ref. is the number of the illustration shown on the page. It is not the spare part number. The numbers are not always contionous.
item	This the same as the item number in the illustration. The parts are listed in item number order.
Part No.	The number given in the Part No. Column is the part number for the part shown. It is the code used when ordering that part. It is important that there be no mistake in this code number when ordering.
Description	This gives the name of part that has the part number listed. The mark . Is put in front of the part name of an assembly part and the item is entered following the assembly. If a part marked with . Is a sub assembly, its components are marked with .. Example : ELEMENT ASSEMBLY, AIR CLEANER .ELEMENT ASSEMBLY, OUTER ..ELEMENT, OUTER ..NUT, WING ..WASHER
Qty (Quantity)	This specifies the number of pieces used for one machine. However, if a part is included in the assembly and/or component is specified.
Options	Applicable engine serial number is indcated for the engine volume, in the chassis volume, this indicates the machine serial number in which the part is ud.

Symbols and codes	Symbols and codes used in the PART No. and DESCRIPTION columns,and represent the following:

A2	The part specified in the line above can be used instead of this part.
B2	This shows a discontinued part. The part specified in the DESCRIPTION column is supplied instead as a set.
C2	This part cannot be supplied as individual part. It is supplied as an assembly. It, however, is supplied as an individual part by authorized distributors only.
A3	This part can be used instead of the part specified in the line immediately above.
C3	This indicates a part supplied as semi-finished . It requires additional work before installation.
A1	The part and the part specified in the line immediately above are interchangable.
B1	This shows a discontinued part. The part specified in the above line is supplied instead.
C1	This part cannot be supplied as individual part. It is supplied as an assembly.
KIT	This indicates kit parts. For kit parts, refere to the service kit pages provided in this Parts Book.
A4	The part specified in the DESCRIPTION column can be used instead of this part if it is used as a set.

PC2000-8 QF-2

CONTENTS

QF-2 Foreword.....
QC-1 Contents.....

Page Reference Title

[ENGINE]

010010 A1010-A7B4 CYLINDER HEAD.....
010015 A1010-A7B4 CYLINDER HEAD.....
010020 A1110-A7A6 HEAD COVER.....
010030 A1310-A7E8 AIR INTAKE MANIFOLD.....
010040 A1310-B7E8 AIR INTAKE CONNECTION AND SENSOR.....
010050 A1510-A7C5 EXHAUST MANIFOLD.....
010060 A1530-A7C3 TURBOCHARGER AND LUBRICATING OIL PIPING.....
010070 A1530-B7C3 TURBOCHARGER WATER PIPING.....
010080 A1530-C7C3 TURBOCHARGER (INNER PARTS) (1/2).....
010090 A1530-C8C4 TURBOCHARGER (INNER PARTS) (2/2).....
010100 A1570-A7A7 HEAT SHIELD.....
010110 A1610-A7B9 EXHAUST ELBOW MOUNTING.....
010120 A1730-A7C6 THERMOSTAT AND THERMOSTAT HOUSING.....
010130 A2010-A7C6 CYLINDER BLOCK.....
010140 A2011-A7B9 CYLINDER BLOCK (BLIND COVER AND SENSOR).....
010150 A2040-A7B4 FRONT COVER.....
010160 A2041-A7E4 FRONT GEAR TRAIN CASE (ACCESSORY PARTS).....
010170 A2041-B7E4 FRONT GEAR TRAIN CASE (BREATHER AND BLOWBY SENSOR).....
010180 A2050-A7A3 IDLE GEARS.....
010190 A2060-A7A1 CAM FOLLOWER COVER.....
010200 A2070-A7B5 ENGINE OIL FILLER.....
010210 A2070-A7B9 ENGINE OIL FILLER (EXTREMELY BAD FUEL AND POOR FUEL).....

010220 A2110-A7F9 ENGINE OIL PAN MOUNTING (OIL PAN).....
010230 A2110-B7F9 ENGINE OIL PAN MOUNTING (OIL LEVEL SENSOR).....
010235 A2110-B7G6 ENGINE OIL PAN MOUNTING (OIL LEVEL SENSOR)(FOR FUEL ARRANGEMENT).....
010240 A2110-C7F9 ENGINE OIL PAN MOUNTING (BAD AND POOR FUEL ARRANGEMENT).....
010250 A2110-D8F9 ENGINE OIL PAN MOUNTING (SECTION TUBE).....
010360 A2110-C7G8 OIL PAN HEATER (POOR FUEL ARANGGEMENT).....
010370 A2110-C7G9 OIL PAN HEATER (COLD TERRAIN SPEC).....
010380 A2210-A7D1 FLYWHEEL HOUSING.....
010390 A2230-A7B5 FLYWHEEL.....
010400 A2250-A7C4 ENGINE SUPPORT.....
010410 A2310-A7A4 CRANKSHAFT.....
010420 A2330-A7A1 VIBRATION DAMPER.....
010430 A2350-A7B5 PISTON.....
010440 A2330-A7A1 DAMPER.....
010445 A2370-01A0 COOLING FAN DRIVE PULLEY.....
010450 A2410-A7A7 CAMSHAFT.....
010460 A2411-A7A5 CAMFOLLOWER.....
010470 A2411-B7A5 ROCKER ARM.....
010480 A3010-A7A6 ENGINE OIL PUMP.....
010490 A3110-A7D6 ENGINE OIL FILLER (OIL FILTER).....
010500 A3110-B7D6 ENGINE OIL FILLER (ADAPTER).....
010510 A3310-A7C4 ENGINE OIL COOLER.....
010520 A4010-D7F7 FUEL SUPPLY PUMP(INNER PARTS,LHS).....
010521 A4010-D7F7 FUEL SUPPLY PUMP(INNER PARTS,LHS).....
010530 A4010-E7G7 FUEL SUPPLY PUMP(INNER PARTS)(FEED PUMP, LHS).....
010540 A4010-G7H8 FUEL SUPPLY PUMP(MOUNTING)(1/2).....
010550 A4010-G8H9 FUEL SUPPLY PUMP(INNER PARTS,RHS).....
010551 A4010-G8H9 FUEL SUPPLY PUMP(INNER PARTS,RHS).....
010561 A4010-G9H9 FUEL SUPPLY PUMP(INNER PARTS)(FEED PUMP, RHS).....
010571 A4010-H1J1 FUEL SUPPLY PUMP(MOUNTING)(2/2).....
010580 A4010-H1G1 FUEL SUPPLY, COMMOM RAIL LHS.....
010590 A4010-H2G1 FUEL SUPPLY, COMMOM RAIL RHS.....
010600 A4010-H3G1 FUEL SUPPLY PUMP, COMMON RAIL MOUNTING PARTS.....
010610 A4060-01A0 FUEL SUPPLY PUMP LUBRICATOR.....
010620 A4080-01A0 FUEL SUPPLY PUMP DRIVE.....

Page	Reference	Title
010630	A4010-A7A6	FUEL SUPPLY PUMP BRACKET
010640	A4040-A7B1	FUEL SUPPLY PUMP BRACKET(EXTRA POOR FUEL ARRANGEMENT)
010650	A4710-A7D7	FUEL INJECTION CONTROLLER
010660	A4710-A7E3	FUEL INJECTION CONTROLLER(EXTRA POOR FUEL ARRANGEMENT)
010670	A4210-A7C5	FUEL INJECTION NOZZLE
010680	A4050-A7A5	FUEL INJECTION PIPING(COMMON RAIL)
010690	A4050-B7A5	FUEL INJECTION PIPING(BRACKET AND CLAMP)
010700	A4050-C7A5	FUEL INJECTION PIPING(INJECTION PIPING COVER)
010710	A4050-D7A5	FUEL INJECTION PIPING(SUPPLY PUMP TO COMMOM RAIL)
010720	A4110-A7E4	FUEL PIPING(LHS BANK)
010721	A4110-A7E5	FUEL PIPING(LHS BANK)
010730	A4110-B7E4	FUEL PIPING(RHS BANK)
010731	A4110-B7E4	FUEL PIPING(RHS BANK)
010740	A4110-C7E4	FUEL PIPING(PRIMING PUMP, LHS BANK)
010750	A4110-D7E4	FUEL PIPING(PRIMING PUMP, RHS BANK)
010760	E4110-E7E4	FUEL PIPING(FUEL FILTER)
010770	A4110-A7E9	FUEL PIPING(POOR FUEL ARRANGEMENT)(RHS BANK)
010780	A4110-B7E9	FUEL PIPING(POOR FUEL ARRANGEMENT)(LHS BANK)
010790	A4110-C7F2	FUEL PIPING(POOR FUEL ARRANGEMENT)(FUEL FILTER RHS BANK)
010800	A4110-D7F2	FUEL PIPING(POOR FUEL ARRANGEMENT)(FUEL FILTER LHS BANK)
010810	A4110-E7F2	FUEL PIPING(POOR FUEL ARRANGEMENT)(AIR VENT RHS)
010820	A4110-F7E9	FUEL PIPING(POOR FUEL ARRANGEMENT)(AIR VENT LHS)
010830	A4110-G7E9	FUEL PIPING(POOR FUEL ARRANGEMENT)(FUEL PRIMING PUMP)
010840	A4230-A7C7	FUEL RETURN
010850	A4230-A7C8	FUEL RETURN(POOR FUEL ARRANGEMENT)
010860	A4119-A7A2	FUEL FILTER CARTRIGDE(SERVICE ONLY)
010870	A4119-A7A3	FUEL FILTER CARTRIGDE(SERVICE ONLY)(FOR POOR FUEL ARRANGEMENT)
010880	A5010-A7E6	WATER PUMP(HARD WATER AREA ARRANGEMENT)
010890	A5010-B7F4	WATER PUMP(HARD WATER AREA ARRANGEMENT)(AIR VENT,WATER OUT)
010900	A5010-A7E8	WATER PUMP(WATER PUMP)
010910	A5010-B7E6	WATER PUMP(AIR VENT AND WATER OUTLET TUBE)
010920	A5210-A7A1	CORROSION RESISTOR
010930	A6030-A7B4	ALTERNATOR DRIVE(FOR 90A)
010940	A6010-C7B9	ALTERNATOR(FOR 90A)(INNER PARTS)
010950	A6010-A7C8	ALTERNATOR(FOR 90A)(MOUNTING PARTS)(1/2)
010960	A6010-A7C9	ALTERNATOR(FOR 90A)(MOUNTING PARTS)(2/2)
010970	A6010-B7D1	ALTERNATOR(FOR 90A)(WIRING HARNESS)
010980	A6010-C7D1	ALTERNATOR(FOR 90A)(POOR FUEL ARRANGEMENT)(INNER PARTS)
010990	A6010-A7D1	ALTERNATOR(FOR 90A)(POOR FUEL ARRANGEMENT)(MOUNTING PARTS)(1/2)
011000	A6010-B7D2	ALTERNATOR(FOR 90A)(POOR FEUL ARRANGEMENT)(HARNESS)
011010	A6010-B7D3	ALTERNATOR(FOR 90A)(POOR FUEL ARRANGEMENT)(MOUNTING PARTS)(2/2)
011020	A6210-A7A6	STARTER MOTOT(11KW)
011030	A6810-A7C6	ELECTRIC WIRING(INJECTOR HARNESS)
011040	A6810-B7C6	ELECTRIC WIRING(MAIN HARNESS)(LHS)
011041	A6810-B7C6	ELECTRIC WIRING(MAIN HARNESS)(LHS)
011051	A6810-C7C6	ELECTRIC WIRING(MAIN HARNESS)(RHS)
011052	A6810-C7C6	ELECTRIC WIRING(MAIN HARNESS)(RHS)
011060	A6810-D7C6	ELECTRIC WIRING(HEATER UNIT HARNESS)
011070	A6810-D8C6	ELECTRIC WIRING (INJECTOR HARNESS)(POOR FUEL ARRANGEMENT)
011080	A6810-D9C6	ELECTRIC WIRING(MAIN HARNESS)(LHS)(POOR FUEL ARRANGEMENT)
011081	A6810-D9C6	ELECTRIC WIRING(MAIN HARNESS)(LHS)(POOR FUEL ARRANGEMENT)
011090	A6810-E1C6	ELECTRIC WIRING(MAIN LINE)(RHS)
011091	A6810-E1C6	ELECTRIC WIRING(MAIN LINE)(RHS)
011100	A6810-E2C6	ELECTRIC WIRING(HEATER UNIT HARNESS)
011110	A9810-A7H4	NAME AND COUTION PLATES
011120	A9810-A8H4	NAME PLATE AND COUTION PLATE

[ENGINE RELATED PARTS]

Page	Reference	Title
030010	B0100-01A0	ENGINE MOUNTING
030020	B0100-02A0	ENGINE MOUNTING(WITHOUT SERVICE CENTER)
030030	B0100-02A1	ENGINE MOUNTING(SERVICE CENTER, HOSE)
030040	B0300-01A0	AIR INTAKE AND EXHAUST(AIR CLEANER AND PRE-CLEANER)
030050	B0300-02A0	INTAKE AND EXHAUST(INTAKE)(HOSE)
030060	B0300-02A1	INTAKE AND EXHAUST(INTAKE)(PRE-CLEANER COVER)
030070	B0300-03A0	INTAKE AND EXHAUST(EXHAUST)(MUFFLER)
030080	B0300-04A0	INTAKE AND EXHAUST(EXHAUST)(TUBE)
030090	B0300-05A0	INTAKE AND EXHAUST(EXHAUST)(PIPE AND HOSE)
030100	B0300-06A0	INTAKE AND EXHAUST(DUST INDICATOR)
030110	B0600-01A0	POWER TAKE OFF(P.T.O. ASS'Y)
030111	B0600-01A0	POWER TAKE OFF(P.T.O. ASS'Y)

PC2000-8 QC-2

Page	Reference	Title
030120	B0600-02A0	POWER TAKE OFF(OIL GAUGE).....
030130	B0600-03A0	POWER TAKE OFF(SUCTION PIPING).....
030140	B0600-04A0	POWER TAKE OFF(PIPING)(DELIVERY LINES).....
030150	B0600-05A0	POWER TAKE OFF(PIPING)(LUBRICATION AND FLYWHEEL LINES).....
030160	B0600-06A0	POWER TAKE OFF(PIPING)(DRAIN LINES).....
030170	B0600-07A0	POWER TAKE OFF(COUPLING).....
030180	B0600-08A0	POWER TAKE OFF(P.T.O. ASS'Y)(SERVICE CENTER).....
030181	B0600-08A0	POWER TAKE OFF(P.T.O. ASS'Y)(SERVICE CENTER).....
030190	B0600-09A0	POWER TAKE OFF(SERVICE CENTER)(DRAIN PIPING).....

[COOLING SYSTEM]

060010	C0100-01A0	COOLING(RADIATOR)(SHROUD).....
060020	C0100-02A0	COOLING(RADIATOR)(RADIATOR).....
060030	C0100-03A0	COOLING(RADIATOR)(AFTER COOLER AND ISOLATOR).....
060040	C0100-04A0	COOLING(RADIATOR)(RADIATOR MOUNT).....
060050	C0100-05A0	COOLING(RADIATOR)(MOTOR AND FAN).....
060055	C0100-05A1	COOLING (RADIATOR)(MOTOR AND FAN)(INNER PARTS)(1/3).....
060056	C0100-05A2	COOLING (RADIATOR)(MOTOR AND FAN)(INNER PARTS)(2/3).....
060057	C0100-05A3	COOLING (RADIATOR)(MOTOR AND FAN)(INNER PARTS)(3/3).....
060060	C0100-06A0	COOLING(RADIATOR)(FAN GUARD).....
060070	C0100-07A0	COOLING(RADIATOR)(SUB TANK).....
060080	C0100-08A0	COOLING(RADIATOR)(COVER).....
060090	C0100-09A0	COOLING(RADIATOR)(PIPING)(LOWER)(1/4).....
060100	C0100-10A0	COOLING(RADIATOR)(PIPING)(UPPER)(2/4).....
060110	C0100-11A0	COOLING(RADIATOR)(PIPING)(BYPAS)(3/4).....
060120	C0100-12A0	COOLING(RADIATOR)(PIPING)(AIR)(4/4).....
060130	C0100-13A0	COOLING(OIL COOLER)(OIL COOLER ASS'Y).....
060140	C0100-14A0	COOLING(OIL COOLER)(MOTOR AND FAN).....
060145	C0100-14A1	COOLING (OIL COOLER)(MOTOR AND FAN)(1/3).....
060146	C0100-14A2	COOLING (OIL COOLER)(MOTOR AND FAN)(2/3).....
060147	C0100-14A3	COOLING (OIL COOLER)(MOTOR AND FAN)(3/3).....
060150	C0100-15A0	COOLING(OIL COOLER)(FAN GUARD).....
060160	C0100-16A0	COOLING(OIL COOLER)(WIND BRAKE).....
060170	C0100-16A0	COOLING(RADIATOR)(PIPING)(SERVICE CENTER).....

[FUEL TANK AND RELATED PARTS]

090010	D0100-01A0	FUEL TANK.....
090020	D0100-01A1	FUEL TANK(WITH FUEL QUICK CHARGE)(SERVICE CENTER).....
090030	D0100-01A2	FUEL TANK(WITH HANDRAIL).....
090040	D0100-01A3	FUEL TANK(WITH QUICK CHARGE AND HANDRAIL).....
090050	D0200-01A0	FUEL PIPING(REVO FUEL LINE)(FUEL SUPPLY LINES).....
090060	D0200-02A0	FUEL LINES(REVO FUEL LINE)(FUEL RETURN SPIIL LINES).....
090070	D0200-03A0	FUEL LINES(REVO FUEL LINE)(FUEL DRAIN LINES).....
090080	D0200-04A0	FUEL LINES(FUEL PIPING)(1/3)(ADDITIONAL FILTER).....
090081	D0200-04A0	FUEL LINES(FUEL PIPING)(1/3)(ADDITIONAL FILTER).....
090090	D0200-05A0	FUEL LINES(FUEL PIPING)(2/3)(ADDITIONAL FILTER).....
090100	D0200-06A0	FUEL LINES(FUEL PIPING)(3/3)(ADDITIONAL FILTER).....
090110	D0200-07A0	FUEL LINES(FUEL RETURN LINES)(1/2).....
090120	D0200-08A0	FUEL LINES(FUEL RETURN LINES)(2/2).....
090130	D0200-09A0	FUEL LINES(FUEL SPILL LINES)(FOR ADDITIONAL FILTER).....
090140	D0200-10A0	FUEL LINES(ADDITIONAL FILTER AND PUMP SWITCH).....
090150	D0200-11A0	FUEL LINES(EMERGENCY CUT CONTROL CABLE).....
090151	D0200-11A0	FUEL LINES(EMERGENCY CUT CONTROL CABLE).....
090160	D0200-12A0	FUEL LINES(FUEL LINES)(WITH QUICK CHARGER)(1/2).....
090165	D0200-12A9	FUEL LINES(FUEL LINES)(SERVICE CENTER).....
090170	D0200-13A0	FUEL LINES(FUEL LINES)(WITH QUICK CHARGER)(2/2).....
090171	D0200-13A0	FUEL LINES(FUEL LINES)(WITH QUICK CHARGER)(2/2).....
090180	D0200-14A0	FUEL LINES(HARNESS)(WITH QUICK CHARGER).....

[ELECTRICAL SYSTEM]

120010	E0110-01A0	BATTERY(WET)(LARGE CAPACITY).....
120020	E0110-01A1	BATTERY(WET).....
120030	E0200-01A0	ELECTRICAL SYSTEM(CAB BASE)(WORKING LAMP).....
120035	E0200-01A1	ELECTRICAL SYSTEM(CAB BASE)(WORKING LAMP)(HID LAMP).....
120040	E0200-02A0	ELECTRICAL SYSTEM(WIRING HARNESS AND BRACKET).....
120050	E0200-03A0	ELECTRICAL SYSTEM(PIPING BREAKER AND SWITCH).....
120060	E0200-04A0	ELECTRICAL SYSTEM(CLIP AND GROMMET).....
120061	E0200-04A0	ELECTRICAL SYSTEM(CLIP AND GROMMET).....
120070	E0200-05A0	ELECTRICAL SYSTEM(CLIP AND BOLT MOUNT).....
120080	E0200-06A0	ELECTRICAL SYSTEM(BRACKET AND CLIP).....
120090	E0200-07A0	ELECTRICAL SYSTEM(CLIP AND CAB SIDE).....
120100	E0200-08A0	ELECTRICAL SYSTEM(HARNESS,CLIP AND WORKING LAMP).....

PC2000-8 QC-3

Page	Reference	Title
120110	E0200-09A0	ELECTRICAL SYSTEM(WINDOW WASHER TANK).....
120120	E0200-10A0	ELECTRICAL SYSTEM(WORKING LAMP L.H).....
120130	E0200-11A0	ELECTRICAL SYSTEM(BRACKET AND CLIP).....
120140	E0200-12A0	ELECTRICAL SYSTEM(CAB BASE).....
120150	E0200-13A0	ELECTRICAL SYSTEM(MACHINE CAB)(L.H)(CASE).....
120160	E0200-14A0	ELECTRICAL SYSTEM(MACHINE CAB)(L.H)(CABLE).....
120165	E0200-14A1	ELECTRICAL SYSTEM(MACHINE CAB)(L.H)(ISOLATOR).....
120170	E0200-15A0	ELECTRICAL SYSTEM(WIRING HARNESS AND CLIP).....
120175	E0200-15A1	ELECTRICAL SYSTEM(MACHINE CAB)(L.H)(ISOLATOR CABLE).....
120180	E0200-16A0	ELECTRICAL SYSTEM(BRACKET).....
120185	E0200-16A1	ELECTRICAL SYSTEM(MACHINE CAB)(L.H)(ISOLATOR CABLE)(CLAMP, 1/3).....
120186	E0200-16A1	ELECTRICAL SYSTEM(MACHINE CAB)(L.H)(ISOLATOR CABLE)(CLAMP, 1/3).....
120190	E0200-17A0	ELECTRICAL SYSTEM(WORKING LAMP).....
120191	E0200-17A0	ELECTRICAL SYSTEM(WORKING LAMP).....
120195	E0200-17A1	ELECTRICAL SYSTEM(MACHINE CAB)(L.H)(ISOLATOR CABLE)(CLAMP 2/3).....
120200	E0200-18A0	ELECTRICAL SYSTEM(CONDENSER MOUNTING).....
120205	E0200-18A1	ELECTRICAL SYSTEM(MACHINE CAB)(L.H)(ISOLATOR CABLE)(CLAMP 3/3).....
120210	E0200-19A0	ELECTRICAL SYSTEM(FRAME WIRING HARNESS).....
120215	E0200-19A1	ELECTRICAL SYSTEM(MACHINE CAB)(L.H)(JUMP START RECEPTACKLE).
120220	E0200-20A0	ELECTRICAL SYSTEM(VALVE WIRING HARNESS).....
120230	E0200-22A0	ELECTRICAL SYSTEM(HYDRAULIC TANK WIRING HARNESS).....
120240	E0200-23A0	ELECTRICAL SYSTEM(WORKING LAMP).....
120250	E0200-24A0	ELECTRICAL SYSTEM(WIRING HARNESS).....
120260	E0200-25A0	ELECTRICAL SYSTEM(CLIP)(1/2).....
120270	E0200-26A0	ELECTRICAL SYSTEM(CLIP)(2/2).....
120280	E0200-27A0	ELECTRICAL SYSTEM(BRACKET).....
120290	E0200-28A0	ELECTRICAL SYSTEM(ENGINE SIDE CLIP).....
120291	E0200-28A0	ELECTRICAL SYSTEM(ENGINE SIDE CLIP).....
120300	E0200-29A0	ELECTRICAL SYSTEM(ROOM LAMP).....
120310	E0200-30A0	ELECTRICAL SYSTEM(CLIP COOLING SIDE).....
120320	E0200-31A0	ELECTRICAL SYSTEM(ROOM LAMP AND SWITCH).....
120330	E0200-32A0	ELECTRICAL SYSTEM(ENGINE STOP SWITCH REAR).....
120340	E0200-33A0	ELECTRICAL SYSTEM(ENGINE STOP SWITCH FRONT).....
120350	E0200-34A0	ELECTRICAL SYSTEM(BLIND PARTS).....
120360	E0201-01A0	BEACON.....
120370	E0201-02A0	ADDITIONAL FUSE TERMINAL.....
120380	E0202-01A0	ADDITIONAL OPTION HARNESS(1/2).....
120390	E0202-02A0	ADDITIONAL OPTION HARNESS(2/2).....
120400	E0202-03A0	ADDITIONAL OPTION HARNESS(ADDITIONAL EMERGENCY SWITCH)(1/3).
120410	E0202-04A0	ADDITIONAL OPTION HARNESS(ADDITIONAL EMERGENCY SWITCH)(2/3).
120411	E0202-04A0	ADDITIONAL OPTION HARNESS(ADDITIONAL EMERGENCY SWITCH)(2/3).
120420	E0202-05A0	ADDITIONAL OPTION HARNESS(ADDITIONAL EMERGENCY SWITCH)(3/3).
120430	E0250-01A0	CONTROLLER (VHMS).....
120440	E0250-01A1	CONTROLLER(VHMS AND ORBCOM).....
120450	E0250-01A4	CONTROLLER(VHMS)(HOT AREA ARRANGEMENT).....
120460	E0250-01A5	CONTROLLER(VHMS AND ORBCOM)(HIGH ALTITUDE ARRANGEMENT).....
120470	E0320-01A0	BACK LAMP(WITH BACK MONITOR).....
120480	E0320-02A0	ADDITIONAL REAR WORKING LAMP.....
120490	E0410-01A0	HORN.....
120500	E0420-01A0	TRAVEL ALARM.....
120510	E0450-01A0	BACK MONITOR (CAMERA).....
120520	E0450-02A0	BACK MONITOR(TERMINAL BOX).....
120530	E0450-03A0	BACK MONITOR(HARNESS)(1/2).....
120540	E0450-04A0	BACK MONITOR(HARNESS)(2/2).....
120541	E0450-04A0	BACK MONITOR(HARNESS)(2/2).....

[AIR SYSTEM]

150010	G1010-01A0	AUTO GREASE PIPING(LUBRICATION PIPING) (1/4).....
150020	G1010-02A0	AUTO GREASE PIPING(LUBRICATION PIPING) (2/4).....
150030	G1010-03A0	AUTO GREASE PIPING(LUBRICATION PIPING) (3/4).....
150040	G1010-04A0	AUTO GREASE PIPING(LUBRICATION PIPING) (4/4).....
150050	G1010-05A0	AUTO GREASE PIPING(SWING CIRCLE LUBRICATION) (1/2).....
150060	G1010-06A0	AUTO GREASE PIPING(SWING CIRCLE LUBRICATION) (2/2).....

[HYDRAULIC SYSTEM]

180010	H0110-01A0	HYDRAULIC TANK(TANK WITH CAP LOCK)).....
180015	H0110-01A1	HYDRAULIC TANK(SANDY TERRAIN SPECIFICATION).....
180020	H0110-02A0	HYDRAULIC TANK(RETURN FILTER).....
180030	H0110-03A0	HYDRAULIC TANK(WITH CAP LOCK)(BLOCK).....

PC2000-8 QC-4

Page	Reference	Title
180040	H0110-04A0	HYDRAULIC TANK(WITH CAP LOCK)(TUBE)(1/2).....
180050	H0110-05A0	HYDRAULIC TANK(WITH CAP LOCK)(TUBE)(2/2).....
180060	H0110-06A0	HYDRAULIC TANK(WITH CAP LOCK)(SWITCH AND SENSOR).....
180070	H0120-01A0	MAIN VALVE(CONTROL VALVE).....
180080	H0120-02A0	MAIN VALVE(JOINT PARTS)(L.H)(1/2).....
180090	H0120-03A0	MAIN VALVE(JOINT PARTS)(L.H)(2/2).....
180100	H0120-04A0	MAIN VALVE(JOINT PARTS)(R.H)(1/2).....
180110	H0120-05A0	MAIN VALVE(JOINT PARTS)(R.H)(2/2).....
180120	H0120-06A0	MAIN VALVE(SENSOR AND BOLT).....
180130	H0210-01A0	NO.1 MAIN PUMP (INNER PARTS)(1/8).....
180131	H0210-02A0	NO.1 MAIN PUMP (INNER PARTS)(2/8).....
180132	H0210-03A0	NO.1 MAIN PUMP (INNER PARTS)(3/8).....
180133	H0210-04A0	NO.1 MAIN PUMP (INNER PARTS)(4/8).....
180134	H0210-05A0	NO.1 MAIN PUMP (INNER PARTS)(5/8).....
180135	H0210-06A0	NO.1 MAIN PUMP (INNER PARTS)(6/8).....
180136	H0210-07A0	NO.1 MAIN PUMP (INNER PARTS)(7/8).....
180137	H0210-08A0	NO.1 MAIN PUMP (INNER PARTS)(8/8).....
180138	H0210-09A0	NO.1 MAIN PUMP (PUMP MOUNTING).....
180140	H0220-01A0	NO.2 MAIN PUMP (INNER PARTS)(1/8).....
180141	H0220-02A0	NO.2 MAIN PUMP (INNER PARTS)(2/8).....
180142	H0220-03A0	NO.2 MAIN PUMP (INNER PARTS)(3/8).....
180143	H0220-04A0	NO.2 MAIN PUMP (INNER PARTS)(4/8).....
180144	H0220-05A0	NO.2 MAIN PUMP (INNER PARTS)(5/8).....
180145	H0220-06A0	NO.2 MAIN PUMP (INNER PARTS)(6/8).....
180146	H0220-07A0	NO.2 MAIN PUMP (INNER PARTS)(7/8).....
180147	H0220-08A0	NO.2 MAIN PUMP (INNER PARTS)(8/8).....
180148	H0220-09A0	NO.2 PUMP, PUMP MOUNTING.....
180149	H0230-01A0	FAN PUMP (INNER PARTS)(1/12).....
180150	H0230-01A1	FAN PUMP (INNER PARTS)(2/12).....
180151	H0230-01A2	FAN PUMP (INNER PARTS)(3/12).....
180152	H0230-01A3	FAN PUMP (INNER PARTS)(4/12).....
180153	H0230-01A4	FAN PUMP (INNER PARTS)(5/12).....
180154	H0230-01A5	FAN PUMP (INNER PARTS)(6/12).....
180155	H0230-01A6	FAN PUMP (INNER PARTS)(7/12).....
180156	H0230-01A7	FAN PUMP (INNER PARTS)(8/12).....
180157	H0230-01A8	FAN PUMP (INNER PARTS)(9/12).....
180158	H0230-01A9	FAN PUMP (INNSER PARTS)(10/12).....
180159	H0230-01A10	FAN PUMP (INNER PARTS)(11/12).....
180160	H0230-01A11	FAN PUMP (INNER PARTS)(12/12).....
180161	H0230-02A0	FAN PUMP.....
180165	H0311-01A0	SUCTION PIPING.....
180170	H0311-01A1	SUCTION PIPING(ENGINE SIDE).....
180175	H0311-02A0	SUCTION PIPING (SERVICE CENTER)(FUEL TANK TO MAIN PUMP).....
180177	H0311-02A1	SUCTION PIPING (SERVICE CENTER)(ENGINE SIDE).....
180180	H0311-02A3	SUCTION PIPING(HYDRAULIC LINE)(SERVICE CENTER).....
180190	H0312-01A0	DELIVERY PIPING(PUMP TO BLOCK).....
180200	H0312-02A0	DELIVERY PIPING(BRANCH).....
180210	H0312-03A0	DELIVERY PIPING(FAN LINE)(DELIVERY).....
180211	H0312-03A0	DELIVERY PIPING(FAN LINE)(DELIVERY).....
180220	H0312-04A0	DELIVERY PIPING(FAN LINE)(RETURN).....
180230	H0312-05A0	DELIVERY PIPING(FAN LINE)(DRAIN)(1/2).....
180240	H0312-06A0	DELIVERY PIPING(FAN LINE)(DRAIN)(2/2).....
180250	H0312-06A0	DELIVERY PIPING(FAN LINE)(SEAL)(J10001-J10002).....
180251	H0312-06A0	DELIVERY PIPING (FAN LINE)(SEAL)(J10003~).....
180260	H0312-08A0	DELIVERY PIPING(BLOCK TO MAIN VALVE).....
180270	H0320-01A0	OIL COOLER PIPING(1/2).....
180280	H0320-02A0	OIL COOLER PIPING(2/2).....
180290	H0330-01A0	RETURN LINES(SWING).....
180300	H0330-02A1	RETURN LINES(MAIN VALVE).....
180301	H0330-02A2	RETURN LINES (MAIN VALVE)(INNER PARTS).....
180302	H0330-02A3	RETURN LINES (PPC VALVE MOUNTING).....
180310	H0330-03A0	RETURN LINES(FILTER).....
180320	H0340-01A0	DRAIN LINES(FILTER)(INSIDE OF POWER CONTAINER).....
180330	H0340-02A0	DRAIN LINES(PIPING)(INSIDE OF POWER CONTAINER)(1/2).....
180340	H0340-03A0	DRAIN LINES(PIPING)(INSIDE OF POWER CONTAINER)(2/2).....
180350	H0340-04A0	DRAIN LINES(FILTER AND PIPING)(REVOLVING FRAME SIDE).....
180351	H0340-04A0	DRAIN LINES(FILTER AND PIPING)(REVOLVING FRAME SIDE).....
180360	H0340-05A0	DRAIN PIPING(MOTOR PIPING).....
180370	H0340-06A0	DRAIN PIPING(PIPING)(REVOLVING FRAME SIDE).....
180380	H0350-01A0	PPC LOCK LINES(CHECK VALVE AND ACCUMULATOR).....
180390	H0350-02A0	PPC LOCK LINES(LOCK VALVE).....

PC2000-8 QC-5

Page	Reference	Title
180400	H0350-03A0	PPC LOCK LINES(BLOCK).....
180410	H0350-04A0	PPC LOCK LINES(PIPING).....
180420	H1210-01A0	BOOM LINES(MAIN VALVE SIDE).....
180430	H1210-02A0	BOOM LINES(L.H).....
180440	H1210-03A0	BOOM LINES(R.H).....
180450	H1221-01A0	ARM LINES(PIPING).....
180460	H1221-02A0	ARM LINES(BRACKET).....
180470	H1222-01A0	BUCKET LINES.....
180480	H1310-01A0	TRAVEL LINES(TUBE).....
180490	H1310-02A0	TRAVEL LINES(HOSE).....
180500	H1320-01A0	STRAIGHT TRAVEL LINES.....
180502	H1320-02A0	STRAIGHT TRAVEL PIPING, SHUTTLE VALVE.....
180505	H1320-03A0	STRAIGHT TRAVEL PIPING, VALVE RELATED PARTS.....
180510	H1340-01A0	SWING LINES.....
180520	H1831-01A0	SOLENOID VALVE(VALVE).....
180525	H1831-01A1	SOLENOID VALVE(VALVE)(INNER PARTS).....
180530	H1831-02A0	SOLENOID VALVE(SOLENOID VALVE FOR SWING PARTKING BRAKE).....
180540	H1831-03A0	SOLENOID VALVE(BUCKET HI CANCLE SOLENOID VALVE).....
180545	H1831-03A1	SOLENOID VALVE(BUCKET HI CANCLE SOLENOID VALVE)(INNER PARTS)
180550	H1832-01A0	SOLENOID VALVE LINE(1/3).....
180560	H1832-02A0	SOLENOID VALVE LINE(2/3).....
180570	H1832-03A0	SOLENOID VALVE LINE(3/3).....
180580	H1833-01A0	SHUTTLE VALVE(SHUTTLE VALVE).....
180585	H1833-01A1	SHUTTLE VALVE(RELATED PARTS).....
180590	H1833-02A0	SHUTTLE VALVE(PPC CUT OFF VALVE)(1/2).....
180595	H1833-03A0	SHUTTLE VALVE CIRCUIT (PPC VALVE MOUNTING)(1/2).....
180600	H1833-04A0	SHUTTLE VALVE(PPC CUT OFF VALVE)(2/2).....
180605	H1833-05A0	SHUTTLE VALVE CIRCUIT, PPC VALVE MOUNTING(2/2).....
180610	H1833-06A0	SHUTTLE VALVE(PILOT VALVE)(L.H).....
180620	H1833-07A0	SHUTTLE VALVE(PILOT VALVE)(R.H).....
180630	H1835-01A0	PPC LINE JOINT(PIPING)(1/2).....
180640	H1835-02A0	PPC LINE JOINT(PIPING)(2/2).....
180650	H1835-03A0	PPC LINE JOINT(JOINT).....
180660	H1840-01A0	PPC MAIN LINE(BLOCK).....
180670	H1840-02A0	PPC MAIN LINES(HOSE)(FRONT SIDE)(1/2).....
180680	H1840-03A0	PPC MAIN LINES(HOSE)(FRONT SIDE)(2/2).....
180690	H1840-04A0	PPC MAIN LINE(HOSE)(REAR SIDE)(1/3).....
180700	H1840-05A0	PPC MAIN LINE(HOSE)(REAR SIDE)(2/3).....
180710	H1840-06A0	PPC MAIN LINE(HOSE)(REAR SIDE)(3/3).....
180720	H1840-08A0	PPC MAIN LINE(HOSE)(OTHER)(1/2).....
180730	H1840-09A0	PPC MAIN LINE(HOSE)(OTHER)(2/2).....
180740	H1841-01A0	PPC PUMP RETURN LINES(TUBE).....
180750	H1841-02A0	PPC PUMP RETURN LINES(HOSE)(1/2).....
180751	H1841-02A0	PPC PUMP RETURN LINES(HOSE)(1/2).....
180760	H1841-03A0	PPC PUMP RETURN LINES(HOSE)(2/2).....
180770	H1842-01A0	PPC TRAVELN LINES.....
180780	H1843-01A0	PPC WORK LINES(PIPING)(1/2).....
180790	H1843-02A0	PPC WORK LINES(PIPING)(2/2).....
180800	H1843-03A0	PPC WORK LINES(VALVE).....
180805	H1843-04A0	PPC WORK LINES (INNER PARTS).....
180810	H1850-01A0	HYDRAULIC LADDER LINE(DELIVERY LINE).....
180820	H1850-02A0	HYDRAULIC LADDER LINE(DRAIN LINE).....
180830	H1830-03A0	HYDRAULIC LADDER LINE(CYLINDER LINE).....
180840	H1850-04A0	HYDRAULIC LADDER LINE(VALVE).....
180841	H1850-04A0	HYDRAULIC LADDER LINE(VALVE).....

[MAIN FRAME AND RELATED PARTS]

210010	J1110-01A0	REVOLVING FRAME.....
210020	J1110-01A1	REVOLVING FRAME.....
210030	J1310-01A0	BOOM FOOT PIN.....

[OPERATORS COMPARTMENT AND CONTROL SYSTEM]

240010	K0210-01A0	OPERATOR'S CAB(CAB AND DOOR).....
240020	K0210-02A0	OPERATOR'S CAB(WINDOW SASH).....
240030	K0210-03A0	OPERATOR'S CAB(GLASS WINDOWS).....
240040	K0210-04A0	OPERATOR'S CAB(FLOOR COVER).....
240050	K0210-05A0	OPERATOR'S CAB(ACCESSORY PARTS).....
240060	K0210-06A0	OPERATOR'S CAB(COVER)(1/2).....
240070	K0210-07A0	OPERATOR'S CAB(COVER)(2/2).....
240080	K0210-08A0	OPERATOR'S CAB(CURTAIN)(1/3).....
240090	K0210-09A0	OPERATOR'S CAB(CURTAIN)(2/3).....
240100	K0210-10A0	OPERATOR'S CAB(CURTAIN)(3/3).....

Page	Reference	Title
240110	K0210-11A0	OPERATOR'S CAB(GROMMET).....
240120	K0210-12A0	OPERATOR'S CAB(ROOM LAMP,SPEAKER,ANTENNA AND STEP LIGHT)....
240130	K0210-13A0	OPERATOR'S CAB(HARNESS)(1/2).....
240140	K0210-14A0	OPERATOR'S CAB(HARNESS)(2/2).....
240150	K0210-15A0	OPERATOR'S CAB(AIR CONDITIONER AND CONTROLLER HARNESS).....
240160	K0210-16A0	OPERATOR'S CAB(BUZZER COVER).....
240170	K0210-17A0	OPERATOR'S CAB(MONITOR).....
240180	K0210-18A0	OPERATOR'S CAB(CONTROLLER).....
240190	K0210-19A0	OPERATOR'S CAB(WIPER).....
240200	K0210-20A0	OPERATOR'S CAB(OUTER COVER AND LOCK ASSEMBLY).....
240210	K0210-21A0	OPERATOR'S CAB(SEAT).....
240220	K0210-22A0	OPERATOR'S CAB(SUB SEAT).....
240230	K0210-23A0	OPERATOR'S CAB(SEAT BELT).....
240240	K0210-24A0	OPERATOR'S CAB(FLOOR MAT).....
240250	K0210-25A0	OPERATOR'S CAB(AIR CONDITIONER UNIT).....
240251	K0210-25A0	OPERATOR'S CAB(AIR CONDITIONER UNIT).....
240260	K0210-26A0	OPERATOR'S CAB(AIR CONDITIONER UNIT MOUNTING).....
240270	K0210-27A0	OPERATOR'S CAB(AIR CONDITIONER DUCT).....
240280	K0210-28A0	OPERATOR'S CAB(AIR CONDITIONER DUCT,METAL)(1/2).....
240290	K0210-29A0	OPERATOR'S CAB(AIR CONDITIONER DUCT,METAL)(2/2).....
240300	K0210-30A0	OPERATOR'S CAB(AIR CONDITONER PIPING).....
240310	K0210-31A0	OPERATOR'S CAB(GRILLE).....
240320	K0210-32A0	OPERATOR'S CAB(AIR CONDITIONER FILTER).....
240330	K0210-33A0	OPERATOR'S CAB(FIRE EXTINGUISHER).....
240340	K0210-34A0	OPERATOR'S CAB(FIRST AID BOX).....
240350	K0210-35A0	OPERATOR'S CAB(SEAT STAND).....
240360	K0210-36A0	OPERATOR'S CAB(CONSOLE BOX) LHS (1/2).....
240370	K0210-37A0	OPERATOR'S CAB(CONSOLE BOX) LHS (2/2).....
240380	K0210-38A0	OPERATOR'S CAB(FLOOR,LEVER,LHS).....
240390	K0210-39A0	OPERATOR'S CAB(CONSOLE BOX,RHS) (1/2).....
240391	K0210-39A0	OPERATOR'S CAB(CONSOLE BOX,RHS) (1/2).....
240400	K0210-40A0	OPERATOR'S CAB(FLOOR,LEVER,RHS).....
240410	K0210-41A0	OPERATOR'S CAB(MOUNTING PARTS).....
240420	K0210-42A0	OPERATOR'S CAB(HOSE).....
240430	K0210-43A0	OPERATOR'S CAB(JOINT PARTS).....
240440	K0210-44A0	OPERATOR'S CAB(PPC VALVE)(INNER PART).....
240450	K0210-45A0	OPERATOR'S CAB(CONTROL VALVE RELATED PARTS).....
240460	K0210-46A0	OPERATOR'S CAB(CONTROL STAND).....
240470	K0210-47A0	OPERATOR'S CAB(SWITCH AND PLATE).....
240480	K0210-48A0	OPERATOR'S CAB(EMERGENCY SWITCH).....
240490	K0210-49A0	OPERATOR'S CAB(FLOOR,PPC VALVE FOR TRAVEL).....
240500	K0210-50A0	OPERATOR'S CAB(TRAVEL PIPING).....
240510	K0210-51A0	OPERATOR'S CAB(FOOT REST).....
240520	K0210-52A0	OPERATOR'S CAB(PPC VALVE PIPING).....
240530	K0210-53A0	OPERATOR'S CAB(MIRROR AND ANTENNA).....
240540	K0210-54A0	OPERATOR'S CAB(RADIO).....
240550	K0210-55A0	OPERATOR'S CAB(SWITCH PANEL).....
240560	K0210-56A0	OPERATOR'S CAB(REAR CAMERA).....
240570	K0710-01A0	AIR CONDITIONER(COMPRESSOR).....
240580	K0710-02A0	AIR CONDITIONER(BELT COVER).....
240590	K0710-03A0	AIR CONDITIONER(HOSE)(INSIDE OF POWER CONTAINER).....
240600	K0710-04A0	AIR CONDITIONER(HOSE)(HEATER).....
240610	K0710-05A0	AIR CONDITIONER(HOSE)(MACHINE CAB)(1/3).....
240620	K0710-06A0	AIR CONDITIONER(HOSE)(MACHINE CAB)(2/3).....
240630	K0710-07A0	AIR CONDITIONER(HOSE)(MACHINE CAB)(3/3).....
240640	K0710-08A0	AIR CONDITIONER(HEATER HOSE)(MACHINE CAB).....
240645	K0710-08A1	AIR CONDITIONER(HEATER HOSE)(MACHINE CAB FOR LOADER).....
240650	K0710-09A0	AIR CONDITIONER(DRAIN PIPING).....
240655	K0710-10A0	AIR CONDITIONER(INNER PARTS).....
240660	K1120-01A0	FLOOR FRAME MOUNTS.....
240670	K1120-01A1	FLOOR FRAME MOUNTS(FRONT GUARD).....
240680	K1921-01A0	CAB MOUNTS(BASE).....
240685	K1921-01A1	CAB MOUNTS(BASE)(WITH FIXED EMERGENCY LADDER).....
240687	K1921-01A3	CAB MOUNTS(BASE)(WITH FIXED EMERGENCY LADDER)(HYDRAULIC LADDER).....
240690	K1921-02A0	CAB MOUNTS(STEP AND HANDRAIL).....
240695	K1921-02A1	CAB MOUNTS(STEP)(WITH FIXED EMERGENCY LADDER).....
240696	K1921-02A1	CAB MOUNTS(STEP)(WITH FIXED EMERGENCY LADDER).....
240700	K1921-03A0	CAB MOUNTS(COVER).....

[GUARD]

270010	M1110-01A0	HOOD(FRONT COVER)(1/2).....

PC2000-8 QC-7

Page	Reference	Title
270020	M1110-02A0	HOOD(FRONT COVER)(2/2)
270030	M1110-03A0	HOOD(COVER)(REAR)(1/3)
270031	M1110-03A0	HOOD(COVER)(REAR)(1/3)
270040	M1110-04A0	HOOD(COVER)(REAR)(2/3)
270041	M1110-04A0	HOOD(COVER)(REAR)(2/3)
270050	M1110-05A0	HOOD(COVER)(REAR)(3/3)
270060	M1110-06A0	HOOD(COVER)(LHS)
270070	M1110-07A0	HOOD(COVER)(RHS)
270080	M1110-08A0	HOOD(COVER)(UPPER)
270081	M1110-08A0	HOOD(COVER)(UPPER)
270090	M1110-09A0	HOOD(DUCT)
270100	M1110-10A0	HOOD(COVER)
270110	M1110-11A0	HOOD(FRAME)
270120	M1110-12A0	HOOD(HOOD)
270130	M1120-01A0	CONTAINER BASE FRAME
270140	M1130-01A0	LEFT SIDE COVER(POWER ASSIST LADDER)(LHS)(COVER AND HANDRAIL)
270145	M1130-01A1	LEFT SIDE COVER(LHS)(COVER AND HANDRAIL)
270150	M1130-02A0	LEFT SIDE COVER(POWER ASSIST LADDER)(LHS,DECK)
270160	M1130-03A0	LEFT SIDE COVER(POWER ASSIST LADDER)(LHS,CASE)
270170	M1130-04A0	LEFT SIDE COVER(POWER ASSIST LADDER)(LHS,LADDER)
270180	M1130-05A0	LEFT SIDE COVER(CONDENSER BOX)
270190	M1130-06A0	LEFT SIDE COVER(POWER ASSIST LADDER)(LHS, COVER)
270200	M1130-07A0	LEFT SIDE COVER(POWER ASSIST LADDER)(LHS,LADDER FRAME)
270210	M1130-08A0	LEFT SIDE COVER(POWER ASSIST LADDER)(LHS,LADDER WEIGHT)
270220	M1130-09A0	LEFT SIDE COVER(POWER ASSIST LADDER)(LHS,SLIDE LADDER)
270224	M1130-09A1	LEFT SIDE COVER(LADDER CYLINDER SERVICE KIT)
270230	M1130-10A0	LEFT SIDE COVER(LADDER)(LUBRICATION LINE)(FOR LADDER)
270240	M1130-11A0	LEFT SIDE COVER(LADDER)(HARNESS)(FOR HYDRAULIC LADDER)
270250	M1130-12A0	LEFT SIDE COVER(LADDER)(HYDRAULIC PIPING)
270260	M1130-07A1	LEFT SIDE COVER(LADDER)(LADDER FRAME)
270270	M1130-08A1	LEFT SIDE COVER(LADDER)(LADDER WEIGHT)
270271	M1130-08A1	LEFT SIDE COVER(LADDER)(LADDER WEIGHT)
270280	M1130-09A2	LEFT SIDE COVER(POWER ASSIST LADDER)(LHS SLIDE LADDER)
270290	M1130-10A1	LEFT SIDE COVER(POWER ASSIST LADDER)(LHS WIRING)
270291	M1130-10A1	LEFT SIDE COVER(POWER ASSIST LADDER)(LHS WIRING)

PC2000-8 QC-8

Page	Reference	Title
270300	M1130-11A1	LEFT SIDE COVER(LADDER)(SIDE STEP)
270310	M1130-12A1	LEFT SIDE COVER(LADDER)(LHS SWITCH)
270320	M1130-13A0	LEFT SIDE COVER(LADDER)(LHS CABLE AND STOPPER)
270330	M1140-01A0	RIGHT SIDE COVER(RHS COUNTERWEIGHT)
270340	M1140-02A0	RIGHT SIDE COVER(RHS CONTAINER SIDE)
270350	M1140-03A0	RIGHT SIDE COVER(RHS FUEL TANK RELATED PARTS)
270360	M1140-04A0	RIGHT SIDE COVER(RHS FUEL TANK SIDE)
270370	M1140-05A0	RIGHT SIDE COVER(RHS FUEL TANK SIDE)
270380	M1140-06A0	RIGHT SIDE COVER(RHS CLAMP)
270390	M1140-07A0	RIGHT SIDE COVER(RHS CHAIN)
270400	M1150-01A0	PARTITION COVER(FRAME)
270410	M1150-02A0	PARTITION COVER(COVER)
270420	M1210-01A0	COVER(BRACKET)
270430	M1210-02A0	COVER(DRUM)
270431	M1210-02A0	COVER(DRUM)
270440	M1210-03A0	COVER(HYDRAULIC TANK COVER)
270450	M1210-04A0	COVER(STEP)
270460	M1210-05A0	COVER(HANDRAIL AND FUEL TANK COVER)
270470	M1420-01A0	REARVIEW MIRROR(RELATED PARTS)
270480	M1420-02A0	REARVIEW MIRROR(RHS)
270490	M1420-03A0	REARVIEW MIRROR(LHS)
270500	M1510-01A0	COUNTERWEIGHT
270510	M1810-01A0	UNDER COVER(DOOR)
270520	M1810-02A0	UNDER COVER(POWER TAKE OFF SECTION)
270530	M1810-03A0	UNDER COVER(PUMP SECTION)
270540	M1810-04A0	UNDER COVER(OIL PAN SECTION)
270550	M1810-05A0	UNDER COVER(WITH DECK GUARD)(UNDER COVER)

[SWING CIRCLE AND RELATED PARTS]

300010	N1110-01A0	SWING CIRCLE
300020	N1210-01A0	SWING MACHINERY,FRONT(1/2)
300030	N1210-02A0	SWING MACHINERY(WITHOUT SERVICE CENTER)(FRONT)(2/2)
300040	N1210-03A0	SWING MACHINERY,REAR (1/2)
300050	N1210-04A0	SWING MACHINERY(WITHOUT SERVICE CENTER)(REAR)(2/2)
300060	N1210-05A0	SWING MACHINERY,MOUNTING BOLT

Page	Reference	Title
300070	N1210-06A0	SWING MACHINERY,SERVICE CENTER,GREASE SHUT OFF VALVE,FRONT (2/2)
300080	N1210-07A0	SWING MACHINERY,SERVICE CENTER,GREASE SHUT OFF VALVE,REAR (2/2)
300090	N1210-08A0	SWING MACHINERY,SERVICE CENTER,GREASE SHUT OFF VALVE
300100	N1210-09A0	SWING MACHINERY,SUPPLY PARTS (1/2)
300110	N1210-10A0	SWING MACHINERY,SUPPLY PARTS (2/2)
300120	N1220-01A1	SWING MOTOR,INNER PARTS,SWING MOTOR,FRONT (1/3)
300130	N1220-01A2	SWING MOTOR,INNER PARTS,SWING MOTOR,FRONT (2/3)
300140	N1220-01A3	SWING MOTOR,INNER PARTS,SWING MOTOR,FRONT (3/3)
300150	N1220-01A4	SWING MOTOR(FRONT)
300160	N1220-01A5	SWING MOTOR,INNER PARTS,SWING MOTOR,REAR (1/3)
300170	N1220-01A6	SWING MOTOR,INNER PARTS,SWING MOTOR,REAR (2/3)
300180	N1220-01A7	SWING MOTOR,INNER PARTS,SWING MOTOR,REAR (3/3)
300190	N1220-01A8	SWING MOTOR,RELATED PARTS,REAR
300200	N1310-01A1	SWIVEL JOINT,INNER PARTS
300210	N1310-01A2	SWIVEL JOINT,RELATED PARTS
300211	N1310-01A2	SWIVEL JOINT,RELATED PARTS

[TRAVEL AND LOWER SYSTEM]

330010	P1120-01A0	TRAVEL PIPING,HOSE (1/3)
330020	P1120-02A0	TRAVEL PIPING,HOSE (2/3)
330030	P1120-03A0	TRAVEL PIPING,HOSE (3/3)
330040	P1140-01A1	HYDRAULIC IDLER CUSHION (HIC) PIPING,ACCUMULATOR
330050	P1140-01A2	HYDRAULIC IDLER CUSHION (HIC) PIPING,REDUCING VALVE TO ACCUMULATOR
330060	P1140-01A3	HYDRAULIC IDLER CUSHION (HIC) PIPING, RELIEF VALVE (1/2)
330070	P1140-01A4	HYDRAULIC IDLER CUSHION (HIC) PIPING,INNER PARTS,RELIEF VALVE
330080	P1140-01A5	HYDRAULIC IDLER CUSHION (HIC) PIPING, RELIEF VALVE (2/2)
330090	P1140-01A6	HYDRAULIC IDLER CUSHION (HIC) PIPING,LHS
330100	P1140-01A7	HYDRAULIC IDLER CUSHION (HIC) PIPING,RHS
330110	P1140-01A8	HYDRAULIC IDLER CUSHION (HIC) PIPING,REDUCING VALVE
330120	P1210-01A1	FINAL DRIVE,LHS (1/2)
330130	P1210-01A2	FINAL DRIVE,LHS (2/2)
330140	P1210-01A3	FINAL DRIVE,INNER PARTS,TRAVEL MOTOR,LHS (1/3)
330150	P1210-01A4	FINAL DRIVE,INNER PARTS,TRAVEL MOTOR,LHS (2/3)
330160	P1210-01A5	FINAL DRIVE,INNER PARTS,TRAVEL MOTOR,LHS (3/3)
330170	P1210-01A6	FINAL DRIVE,TRAVEL MOTOR LHS, RELATED PARTS
330180	P1210-01A7	FINAL DRIVE,RHS (1/2)
330190	P1210-01A8	FINAL DRIVE,RHS (2/2)
330200	P1210-01A9	FINAL DRIVE,INNER PARTS,TRAVEL MOTOR,RHS (1/3)
330210	P1210-01A10	FINAL DRIVE,INNER PARTS,TRAVEL MOTOR,RHS (2/3)
330220	P1210-01A11	FINAL DRIVE,INNER PARTS,TRAVEL MOTOR,RHS (3/3)
330230	P1210-01A12	FINAL DRIVE,TRAVEL MOTOR RHS,RELATED PARTS
330240	P1210-01A13	FINAL DRIVE,PLUG BOLT

[UNDER CARRIAGE]

360010	R0120-01A1	IDLER CUSHION,FRONT IDLER,LHS
360020	R0120-01A2	IDLER CUSHION,LHS
360030	R0120-01A3	IDLER CUSHION,FRONT IDLER,RHS
360040	R0120-01A4	IDLER CUSHION,RHS
360050	R0200-01A1	TRACK ROLLER
360060	R0300-01A1	CARRIER ROLLER
360070	R0500-01A1	TRACK SHOE ASSEMBLY, DOUBLE GROUSER SHOE,810MM
360080	R0500-01A2	TRACK SHOE ASSEMBLY,TRIPLE GROUSER SHOE, 1010MM
360090	R0501-01A1	TRACK LINK ASSEMBLY
360100	R1110-01A1	TRACK FRAME
360110	R1110-02A1	TRACK FRAME(COVER)(WITH UNDER COVER)
360120	R1120-01A1	TRACK FRAME
360130	R1140-01A1	TRACK FRAME UNDER COVER
360140	R1150-01A1	TRAVEL MOTOR GUARD
360150	R1160-01A1	TRAVEL MOTOR GUARD
360160	R1170-01A1	STEP
360170	R1200-01A1	TRACK ROLLER GUARD
360180	R1200-02A1	TRACK ROLLER GUARD, FULL ROLLER GUARD

[WORK EQUIPMENT]

390010	T1110-01A1	BOOM(8700MM)(BOOM)
390020	T1110-01A2	BOOM,PIN

PC2000-8 QC-9

Page	Reference	Title
390030	T1110-01A3	BOOM,LUBRICATION (1/3)
390040	T1110-01A4	BOOM,LUBRICATION (2/3)
390050	T1110-01A5	BOOM,LUBRICATION (3/3)
390060	T1110-01A6	BOOM,WORKING LAMP
390070	T1110-01A7	BOOM,ARM CYLINDER PIPING (1/2)
390080	T1110-01A8	BOOM,ARM CYLINDER PIPING (2/2)
390081	T1110-01A8	BOOM,ARM CYLINDER PIPING (2/2)
390090	T1110-01A9	BOOM,BUCKET CYLINDER PIPING (1/2)
390100	T1110-01A10	BOOM,BUCKET CYLINDER PIPING (2/2)
390110	T1110-01A11	BOOM,HOSE
390120	T1110-01A12	BOOM,BLIND PARTS
390130	T1110-02A1	BOOM,HEAVY DUTY BOOM (BOOM)
390140	T1120-01A1	BOOM CYLINDER,LHS
390141	T1120-01A1	BOOM CYLINDER,LHS
390150	T1120-01A2	BOOM CYLINDER,RHS
390151	T1120-01A2	BOOM CYLINDER,RHS
390160	T1120-01A3	BOOM CYLINDER(O-RING)
390170	T1130-01A1	BOOM CYLINDER PIPING
390180	T1140-01A1	ARM CYLINDER,LHS
390181	T1140-01A1	ARM CYLINDER,LHS
390190	T1140-01A2	ARM CYLINDER,RHS
390191	T1140-01A2	ARM CYLINDER,RHS
390200	T1140-01A3	ARM CYLINDER (0-RING)
390210	T1210-01A1	ARM (ARM)
390220	T1210-01A2	ARM,LUBRICATION PIPING (1/3)
390230	T1210-01A3	ARM,LUBRICATION PIPING (2/3)
390231	T1210-01A3	ARM,LUBRICATION PIPING (2/3)
390240	T1210-01A4	ARM,LUBRICATION PIPING (3/3)
390250	T1210-01A5	ARM,COVER
390260	T1210-01A6	ARM,BUCKET CYLINDER HOSE
390270	T1220-01A1	BUCKET CYLINDER,LHS
390271	T1220-01A1	BUCKET CYLINDER,LHS
390280	T1220-01A2	BUCKET CYLINDER,RHS
390281	T1220-01A2	BUCKET CYLINDER,RHS

PC2000-8 QC-10

Page	Reference	Title
390290	T1230-01A1	BUCKET LINKAGE,LINK
390291	T1230-01A1	BUCKET LINKAGE,LINK
390300	T1230-01A2	BUCKET LINKAGE,LUBRICATION PIPING
390310	T1230-01A3	BUCKET LINKAGE,INNER PARTS,DISTRIBUTOR VALVE,LHS
390320	T1230-01A4	BUCKET LINKAGE,INNER PARTS,DISTRIBUTOR VALVE,RHS
390330	T1230-01A5	BUCKET LINKAGE,DISTRIBUTOR VALVE,RELATED PARTS
390340	T1510-02A1	BUCKET,12M3 BUCKET,HORIZONTAL PIN TYPE,BUCKET
390350	T1510-04A1	BUCKET,14M3 BUCKET,HORIZONTAL PIN TYPE,BUCKET
390360	T1510-03A1	BUCKET,14M3 BUCKET,HORIZONTAL PIN TYPE,BUCKET
390370	T1930-02A1	PARTS FOR LESS BUCKET

[MARKS AND PLATES]

420010	U0100-01A1	OPERATING AND CAUTION PLATE
420020	U0100-01A2	MARKS AND PALTE(TAG PLATE)
420030	U0100-01A3	ANTI SLIP
420040	U0202-01A0	COOLAT DECAL
420050	U0205-01A0	CAUTION PLATE(WITH VHMS)
420060	U0210-01A0	LIFTING CAPACITY CHART
420070	U0300-01A0	MARKS PLATE(INDONESIAN-ENGLISH)
420080	U0510-01A0	MARKS AND PLATES
420090	U0550-01A0	NAME PLATE(AIR CLEANER)(INDONESIAN-ENGLISH)
420100	U0710-01A0	NAME PLATE AND WARNING DECAL(INDONESIAN-ENGLISH)(1/2)
420110	U0710-02A0	NAME PLATE AND WARNING DECAL(INDONESIAN-ENGLISH)(2/2)
420120	U0710-03A0	NAME PLATE AND WARNING DECAL(ADDITIONAL EMERGENCY)
420125	U0710-03A1	NAME PLATE AND WARNING DECAL CENTER SERVICE(INDONESIA-ENGLISH)(1/2)
420130	U0710-04A0	NAME PLATE AND WARNING DECAL CENTER SERVICE(INDONESIA-ENGLISH)(2/2)

[ACCESSORY]

450010	V0100-01A0	SPARE PARTS
450020	V0200-02A0	CAP AND OVERALL
450030	V0300-03A0	TOOL

[MISSCELENOUS]

480010	W0111-01A1	PREVENTIVE MAINTENANCE SERVICE CONNECTORS
480060	W1114-01A1	SERVICE CENTER,ARM

Page	Reference	Title
480070	W1114-01A2	SERVICE CENTER,FRAME (1/2).....
480080	W1114-01A3	SERVICE CENTER,SERVICE CENTER,GREASE SHUT OFF VALVE.....
480090	W1114-01A4	SERVICE CENTER,FRAME (2/2).....
480100	W1114-01A5	SERVICE CENTER,SERVICE CENTER,GREASE SHUT OFF VALVE.....
480110	W1114-01A6	SERVICE CENTER,LUBRICATION PIPING.....
480120	W1114-01A7	SERVICE CENTER,HYDRAULIC PIPING.....
480130	W1114-01A8	SERVICE CENTER,GUARD MOUNT.....
480140	W1114-01A9	SERVICE CENTER,HARNESS.....
480150	W1114-01A10	SERVICE CENTER,FRAME PIPING.....
480160	W1114-01A11	SERVICE CENTER,SWITCH VALVE.....
480161	W1114-01A11	SERVICE CENTER,SWITCH VALVE.....
480170	W1114-02A3	SERVICE CENTER,SERVICE CENTER,SERVICE BOARD.....
480180	W1114-02A5	SERVICE CENTER,SERVICE CENTER,CONNECTING PARTS.....
480190	W1117-02A1	GREASE PUMP,AUTO GREASING SYSTEM,HYDRAULIC MOTOR PIPING.....
480200	W1117-02A2A	GREASE PUMP,AUTO GREASING SYSTEM,PUMP.....
480210	W1117-02A3	GREASE PUMP,AUTO GREASING SYSTEM,INNER PARTS,REEL.....
480220	W1117-02A4	GREASE PUMP,AUTO GREASING SYSTEM,REEL RELATED PARTS.....
480230	W1117-02A5	GREASE PUMP,AUTO GREASING SYSTEM,INNER PARTS,GREASE GUN.....
480240	W1117-02A6	GREASE PUMP,AUTO GREASING SYSTEM,GREASE GUN,RELATED PARTS...
480250	W1117-04A1	GREASE PUMP,HYDRAULIC PIPING.....
480260	W1117-04A2A	GREASE PUMP, PUMP (1/2).....
480270	W1117-04A3	GREASE PUMP, PUMP (2/2).....
480280	W1117-04A4	GREASE PUMP,PRE-CLEANER AND GREASE GUN BRACKET (1/2).....
480290	W1117-04A5	GREASE PUMP,GREASE PUMP.....
480300	W1117-04A6	GREASE PUMP,PRE-CLEANER AND GREASE GUN BRACKET (2/2).....
480310	W1117-04A7	GREASE PUMP,AUTO GREASING SYSTEM,SERVICE CENTER (1/2).....
480320	W1117-04A8	GREASE PUMP,AUTO GREASING SYSTEM,SERVICE CENTER (2/2).....
480330	W1117-06A7	GREASE PUMP,AUTO GREASING SYSTEM,SERVICE CENTER GUARD.....
480340	W1117-06A8	GREASE PUMP,AUTO GREASING SYSTEM,SERVICE CENTER,PIPING.....
480350	W1117-06A9A	GREASE PUMP,OVER LOAD ALARM.....
480360	W1117-05A7	GREASE PUMP,CENTER GUARD.....
480380	W1200-01A1	REGISTRATION FORMS FOR VEHICLE HEALTH MONITORING SYSTEM (VHMS).....
480390	W9970-02A1	PARTS FOR MACHINE TRANSPORTATION.....
480400	W9970-03A1	PARTS FOR MACHINE TRANSPORTATION,LADDER.....

[SERVICE KIT]

Page	Reference	Title
510010	Y0100-01A0	KIT (1/2).....
510020	Y0100-02A1	KIT (2/2).....

ENGINE

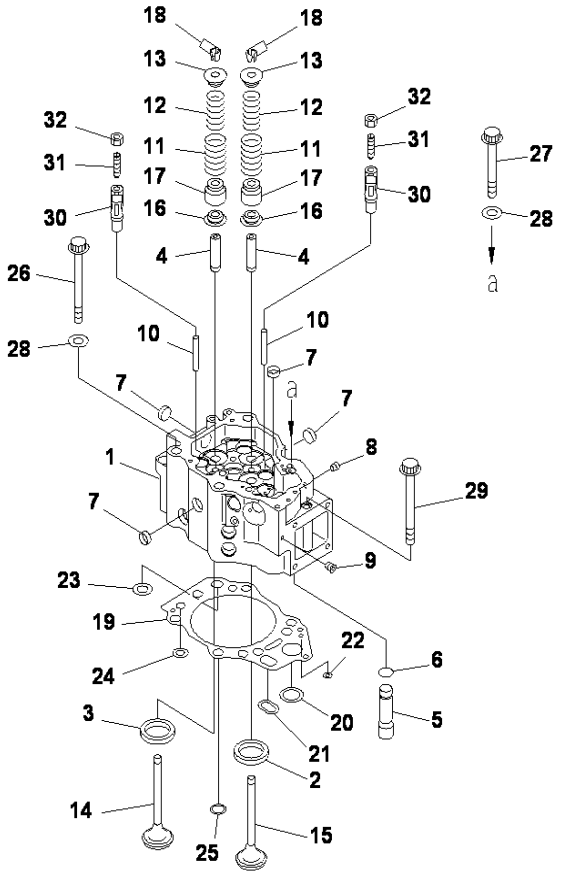

CYLINDER HEAD

INDEX	CD	PART NO.	DESCRIPTION	QTY	SERIAL NO.
		6219-11-1100	CYLINDER HEAD ASS'Y.....	12	503621-UP
1	C1		.HEAD.....	1	503621-UP
2		6216-11-1330	.Insert, Intake Valve, Standard.....	2	503621-UP
		6216-19-1330	.Oversize 0.25mm.....	2	503621-UP
		6216-18-1330	.Oversize 0.50mm.....	2	503621-UP
		6216-17-1330	.Oversize 0.75mm.....	2	503621-UP
		6216-16-1330	.Oversize 1.00mm.....	2	503621-UP
3		6217-11-1321	.Insert,Exhaust Valve,Standard.....	2	503621-UP
		6217-19-1321	.Oversize 0.25mm.....	2	503621-UP
		6217-18-1321	.Oversize 0.50mm.....	2	503621-UP
		6217-17-1321	.Oversize 0.75mm.....	2	503621-UP
		6217-16-1321	.Oversize 1.00mm.....	2	503621-UP
4		6217-11-1441	.Guide, Valve.....	4	503621-UP
5		6210-11-1150	.Pipe.....	1	503621-UP
6		07000-73025	.O-ring.....	1	503621-UP
7		6162-13-1150	.Plug, Expansion.....	13	503621-UP
8		07043-50108	.Plug, Taper.....	1	503621-UP
9		708-21-12541	.Plug.....	2	503621-UP
10		6210-11-1140	Guide, Crosshead.....	24	503621-UP
11		6210-41-4430	Spring, Outer.....	48	503621-UP
12		6210-41-4440	Spring, Inner.....	48	503621-UP
13		6210-41-4510	Seat, Spring ,Upper.....	48	503621-UP
14		6215-41-4220	Valve, Exhaust.....	24	503621-UP
15		6217-41-4110	Valve, Intake.....	24	503621-UP
16		6217-41-4531	Seat, Spring, Lower.....	48	503621-UP
17		6217-41-4540	Seal, Valve stem.....	48	503621-UP
18		6136-41-4520	Cotter.....	96	503621-UP
19		6210-17-1814	Gasket, Head, Standard.....	12	503621-UP
		6210-19-1814	Gasket,Head,Oversize 0.40mm.....	12	503621-UP
20		6210-11-1820	.Grommet, Oil, Standard.....	1	503621-UP
		6210-19-1820	.Grommet, Oil, Oversize 0.40mm.....	1	503621-UP
21		6210-11-1831	.Grommet, Oil, Standard.....	1	503621-UP
		6210-19-1831	.Grommet, Oil, Oversize 0.40mm.....	1	503621-UP
22		6210-11-1840	.Grommet, Oil, Standard.....	1	503621-UP
		6210-19-1840	.Grommet, Oil, Oversize 0.40mm.....	1	503621-UP
23		6210-11-1962	.Grommet, Water, Standard.....	1	503621-UP
		6210-19-1962	.Grommet,Water,Oversize 0.40mm.....	1	503621-UP
24	C1		.GROMMET,WATER,STANDARD.....	4	503621-UP
	C1		.Grommet, Oil, Oversize 0.40mm.....	4	503621-UP
25		6210-11-1940	.Grommet, Water, Standard.....	4	503621-UP
		6210-11-1940	.Grommet, Water, Standard.....	4	503621-UP
26		6217-11-1610	Bolt.....	36	503621-UP
27		6217-11-1620	Bolt.....	36	503621-UP
28		01643-51645	Washer.....	72	503621-UP
29		01438-01020	Bolt.....	12	503621-UP
30		6210-41-5620	Crosshead.....	24	503621-UP

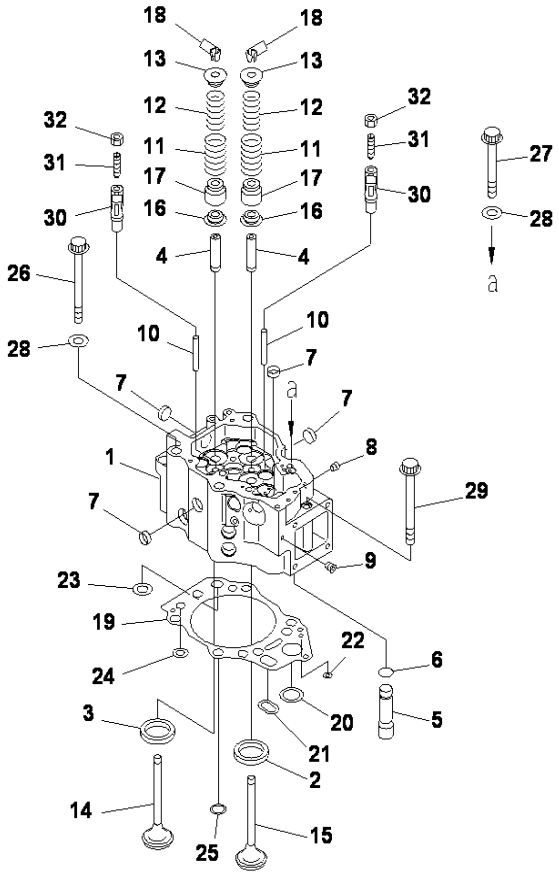

SAA12V140E-3 S/N 503621-UP

CYLINDER HEAD

INDEX	CD	PART NO.	DESCRIPTION	QTY	SERIAL NO.
31		6210-41-5641	Screw.....	24	503621-UP
32		6162-43-5630	Nut, Lock.....	24	503621-UP

Ref :A1010-A7B4 Page :010015

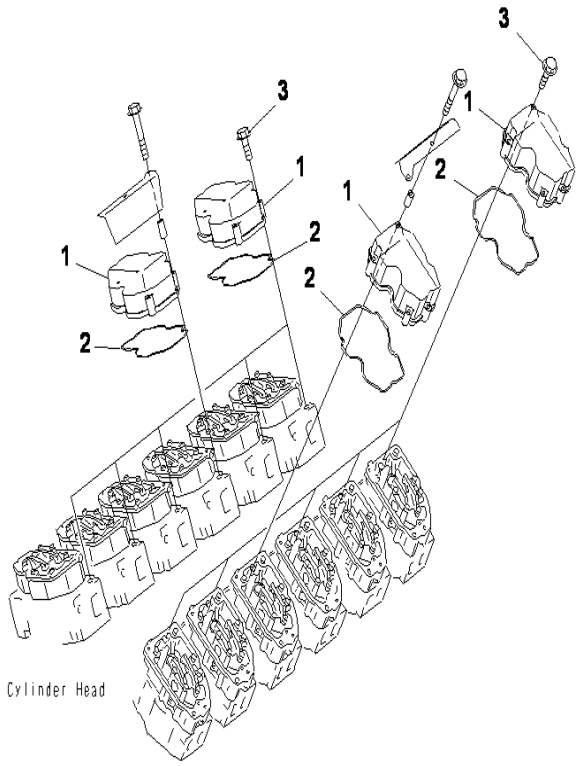

SAA12V140E-3 S/N 503621-UP

HEAD COVER

INDEX	CD	PART NO.	DESCRIPTION	QTY	SERIAL NO.
		6217-11-8100	Cover Assembly.....	12	503621-UP
1		6217-11-8110	.Cover.....	1	503621-UP
2		6217-11-8830	.Gasket.....	1	503621-UP
3		01435-00855	Bolt.....	32	503621-UP

Ref :A1110-A7A6 Page :010020

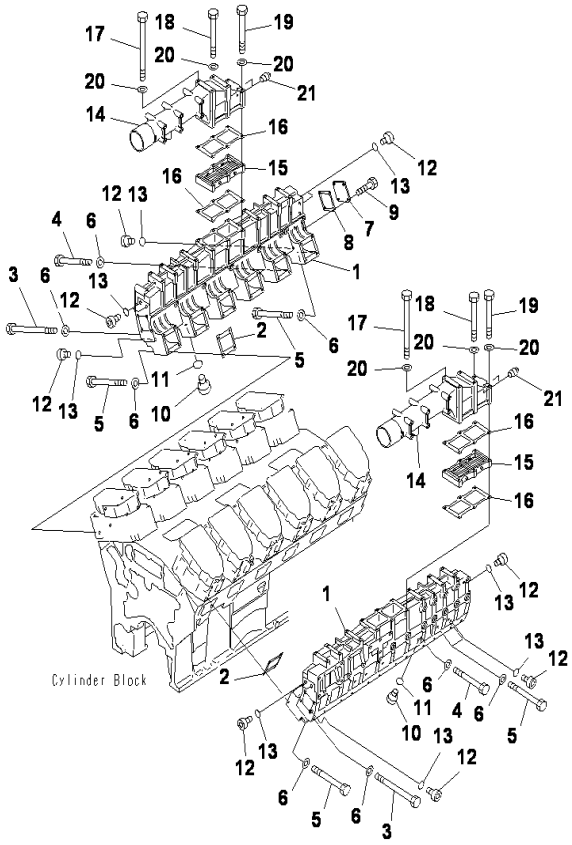

SAA12V140E-3 S/N 503621-UP

AIR INTAKE MANIFOLD

INDEX	CD	PART NO.	DESCRIPTION	QTY	SERIAL NO.
1		6219-11-4111	Manifold, Air Intake	2	503621-UP
2		6210-11-4811	Gasket	12	503621-UP
3		01011-81085	Bolt	24	503621-UP
4		01011-81000	Bolt	16	503621-UP
5		01011-81020	Bolt	8	503621-UP
6		01643-31032	Washer	48	503621-UP
7		6216-11-8210	Plate	1	503621-UP
8		6216-11-8220	Gasket	1	503621-UP
9		01010-81025	Bolt	4	503621-UP
10		6215-81-9510	Plug	2	503621-UP
11		6215-81-9710	O-ring	2	503621-UP
12		6215-81-9520	Plug	11	503621-UP
13		6215-81-9720	O-ring	11	503621-UP
14		6219-11-6310	Connector, Air	2	503621-UP
15		600-81-54280	Heater	2	503621-UP
16		6211-11-4821	Gasket	4	503621-UP
17		6162-13-6530	Bolt	4	503621-UP
18		6165-71-6180	Bolt	4	503621-UP
19		01011-81045	Bolt	4	503621-UP
20		01643-31032	Washer	14	503621-UP
21		07042-70108	Plug	4	503621-UP

Ref :A1310-A7E8 Page :010030

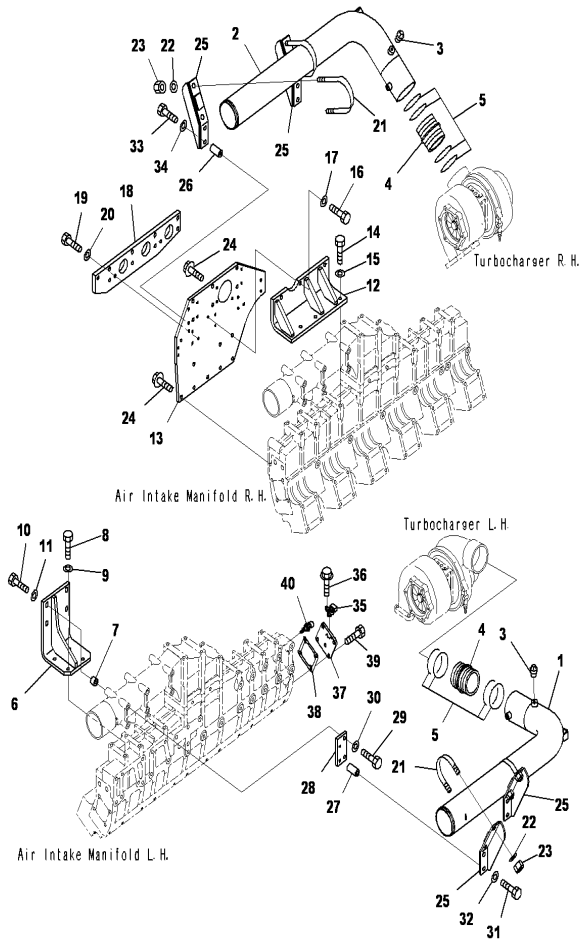

SAA12V140E-3 S/N 503621-UP

AIR INTAKE CONNECTION AND SENSOR

INDEX	CD	PART NO.	DESCRIPTION	QTY	SERIAL NO.
1		6219-11-8210	Tube,LHS	1	503621-UP
2		6219-11-8220	Tube,RHS	1	503621-UP
3		07042-70108	Plug	2	503621-UP
4		6211-11-4410	Connector	2	503621-UP
5		02895-77075	O-ring	8	503621-UP
6		6219-11-8140	Bracket	1	503621-UP
7		6631-11-5630	Spacer	4	503621-UP
8		01010-81030	Bolt	4	503621-UP
9		01643-31032	Washer	4	503621-UP
10		01010-81045	Bolt	4	503621-UP
11		01643-31032	Washer	4	503621-UP
12		6219-11-8170	Bracket	1	503621-UP
13		6219-11-8110	Plate	1	503621-UP
14		01010-81035	Bolt	3	503621-UP
15		01643-31032	Washer	3	503621-UP
16		01010-81030	Bolt	3	503621-UP
17		01643-31032	Washer	3	503621-UP
18		6219-11-8190	Spacer	1	503621-UP
19		01010-81020	Bolt	2	503621-UP
20		01643-31032	Washer	2	503621-UP
21		07283-31087	Clip, Pipe	4	503621-UP
22		01643-31232	Washer	8	503621-UP
23		01597-01211	Nut	8	503621-UP
24		01435-01025	Bolt	14	503621-UP
25		6219-11-8130	Bracket	4	503621-UP
26		6150-81-6920	Spacer	4	503621-UP
27		6166-11-5391	Spacer	4	503621-UP
28		6219-11-8120	Bracket	2	503621-UP
29		01010-81030	Bolt	4	503621-UP
30		01643-31032	Washer	4	503621-UP
31		01010-81065	Bolt	4	503621-UP
32		01643-31032	Washer	4	503621-UP
33		01010-81055	Bolt	4	503621-UP
34		01643-31032	Washer	4	503621-UP
35		626-18-12700	Sensor Assembly	1	503621-UP
		6261-81-2710	.Sensor	1	503621-UP
		6261-81-2720	.O-ring	1	503621-UP
36		01435-00616	Bolt	2	503621-UP
37		6219-81-8940	Block	1	503621-UP
38		6216-11-8220	Gasket	1	503621-UP
39		01010-81025	Bolt	3	503621-UP
40		6560-61-7300	Sensor Assembly	1	503621-UP
		6560-61-7310	.Sensor	1	503621-UP
		6735-21-1930	.O-ring	1	503621-UP

Ref :A1310-B7E8 Page :010040

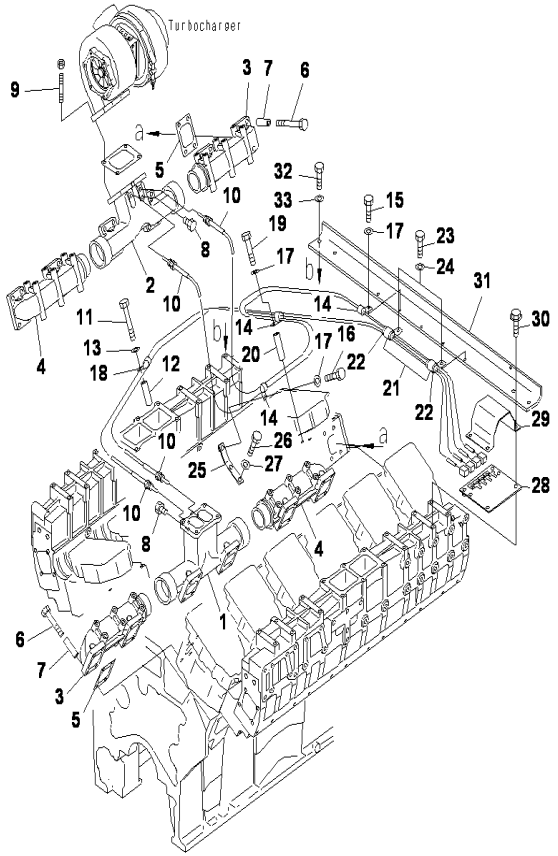

SAA12V140E-3 S/N 503621-UP

EXHAUST MANIFOLD

INDEX	CD	PART NO.	DESCRIPTION	QTY	SERIAL NO.
1		6215-11-5171	Manifold,RHS	1	503621-UP
2		6215-11-5181	Manifold,LHS	1	503621-UP
3		6215-11-5110	Manifold	2	503621-UP
4		6215-11-5130	Manifold	2	503621-UP
5		6218-11-5880	Gasket	12	503621-UP
6		01020-11095	Bolt	48	503621-UP
7		6215-11-5720	Spacer	48	503621-UP
8		6215-11-5920	Plug	2	503621-UP
9		6151-11-8550	Stud	4	503621-UP
10		6162-15-8181	Sensor	4	503621-UP
11		6138-11-4870	Bolt	1	503621-UP
12		6240-51-8770	Spacer	1	503621-UP
13		01643-30823	Washer	1	503621-UP
14		6210-51-8320	Clip	3	503621-UP
15		01010-81030	BOLT	1	503621-UP
16		01010-81025	BOLT	1	503621-UP
17		01643-31032	WASHER	3	503621-UP
18		6210-51-8310	CLIP	3	503621-UP
19		01011-81000	Bolt	1	503621-UP
20		6240-21-7470	Spacer	1	503621-UP
21		6151-51-8540	Clip	2	503621-UP
22		6219-81-8350	Tube	2	503621-UP
23		01010-81020	Bolt	2	503621-UP
24		01643-31032	Washer	2	503621-UP
25		6219-81-8370	Bracket	1	503621-UP
26		01010-E1045	Bolt	2	503621-UP
27		01643-31032	Washer	2	503621-UP
28		6219-81-8240	Plate	1	503621-UP
29		6212-81-4132	Cover	1	503621-UP
30		01435-01025	Bolt	4	503621-UP
31		6219-81-4190	Bracket	1	503621-UP
32		01010-81030	Bolt	4	503621-UP
33		01643-31032	Washer	4	503621-UP

Ref :A1510-A7C5 Page :010050

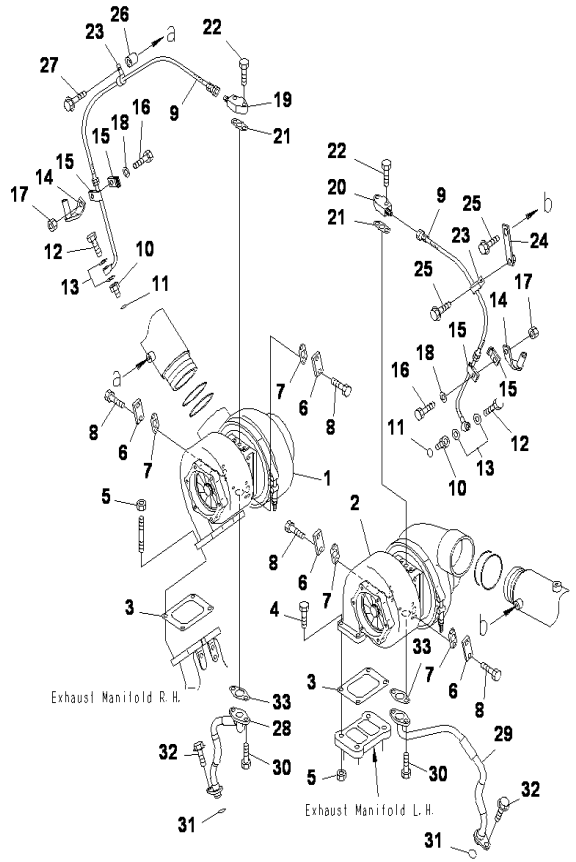

SAA12V140E-3 S/N 503621-UP

TURBOCHARGER AND LUBRICATING OIL PIPING

INDEX	CD	PART NO.	DESCRIPTION	QTY	SERIAL NO.
1		(6505-67-5070)	TURBOCHARGER ASS'Y, R.H.	1	503621-UP
2		(6505-67-5080)	TURBOCHARGER ASS'Y, L.H.	1	503621-UP
3		6218-11-5830	Gasket	2	503621-UP
4		6138-13-4510	Bolt	4	503621-UP
5		6114-11-5590	Nut	8	503621-UP
6		6164-62-8230	Plate	4	503621-UP
7		6164-62-8241	Gasket	4	503621-UP
8		01010-E1020	Bolt	8	503621-UP
9		6219-51-8150	Hose, Supply	2	503621-UP
10		6162-73-4670	Nipple	2	503621-UP
11		07002-21423	O-ring	2	503621-UP
12		07206-31014	Bolt, Joint	2	503621-UP
13		07005-01412	Seal, Washer	4	503621-UP
14		6219-51-8160	Bracket	2	503621-UP
15		6934-52-6810	Clamp	4	503621-UP
16		01435-01040	Bolt	2	503621-UP
17		01584-01008	Nut	2	503621-UP
18		6164-51-8611	Flange,RHS	1	503621-UP
19		6164-51-8621	Flange,LHS	1	503621-UP
20		6151-51-8161	Gasket	2	503621-UP
21		01010-81035	Bolt	4	503621-UP
22		6151-53-8280	Clip	2	503621-UP
23		6212-65-6390	Plate	1	503621-UP
24		01435-01020	Bolt	1	503621-UP
25		01435-01016	Bolt	1	503621-UP
26		6128-21-6730	Spacer	1	503621-UP
27		01435-01040	Bolt	1	503621-UP
28		6219-51-8110	Tube,RHS	1	503621-UP
29		6219-51-8120	Tube,LHS	1	503621-UP
30		01010-81025	Bolt	4	503621-UP
31		07000-72021	O-ring	2	503621-UP
32		01435-01020	Bolt	2	503621-UP
33		6151-51-8151	Gasket	2	503621-UP

Ref :A1530-A7C3 Page :010060

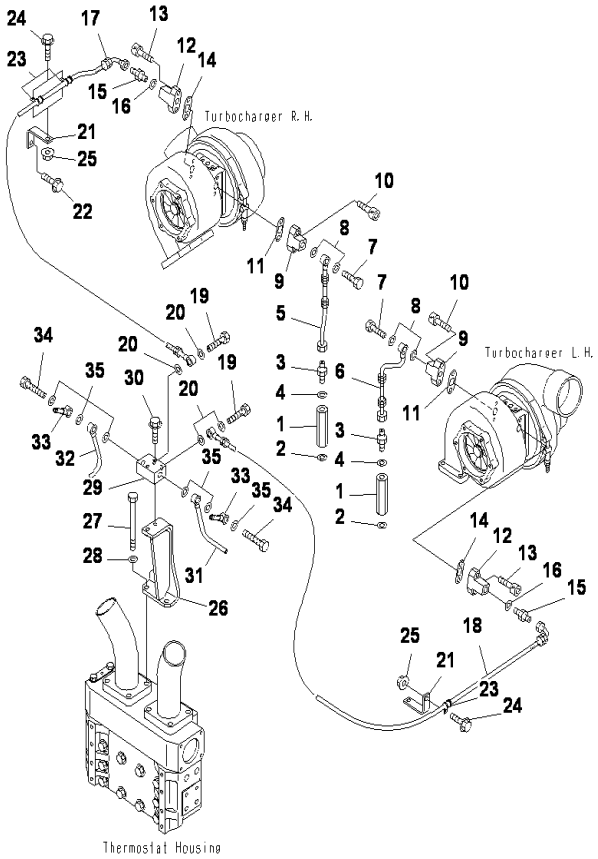

SAA12V140E-3 S/N 503621-UP

TURBOCHARGER WATER PIPING

INDEX	CD	PART NO.	DESCRIPTION	QTY	SERIAL NO.
1		6215-61-8610	Joint, Water	2	503621-UP
2		07003-02026	Gasket	2	503621-UP
3		07211-51016	Union	2	503621-UP
4		07003-01621	Gasket	2	503621-UP
5		6219-61-8320	Tube,RHS	1	503621-UP
6		6219-61-8330	Tube,LHS	1	503621-UP
7		07206-31014	Bolt, Joint	2	503621-UP
8		07003-01419	Gasket	4	503621-UP
9		6162-63-8570	Joint, Inlet	2	503621-UP
10		01252-61035	Bolt	4	503621-UP
11		6164-62-8241	Gasket	2	503621-UP
12		6261-61-8680	Joint,Outlet	2	503621-UP
13		01252-61035	Bolt	4	503621-UP
14		6164-62-8241	Gasket	2	503621-UP
15		07212-50814	Nipple	2	503621-UP
16		07003-01419	Gasket	2	503621-UP
17		6215-61-8480	Tube,RHS	1	503621-UP
18		6215-61-8470	Tube,LHS	1	503621-UP
19		07206-31014	Bolt, Joint	2	503621-UP
20		07003-01419	Gasket	4	503621-UP
21		6151-81-5960	Bracket	3	503621-UP
22		01435-01020	Bolt	2	503621-UP
23		6151-51-8540	Clip	3	503621-UP
24		01435-01016	Bolt	3	503621-UP
25		01584-01008	Nut	3	503621-UP
26		6219-61-8390	Bracket, Tower	1	503621-UP
27		01011-81045	Bolt	2	503621-UP
28		01643-31032	Washer	2	503621-UP
29		6215-61-8450	Joint, Washer	1	503621-UP
30		01435-00850	Bolt	2	503621-UP
31		6219-61-8370	Tube,LHS	1	503621-UP
32		6219-61-8380	Tube,RHS	1	503621-UP
33		6141-71-1710	Joint	2	503621-UP
34		6127-71-5710	Bolt, Joint	2	503621-UP
35		07003-01419	Gasket	6	503621-UP

Ref :A1530-B7C3 Page :010070

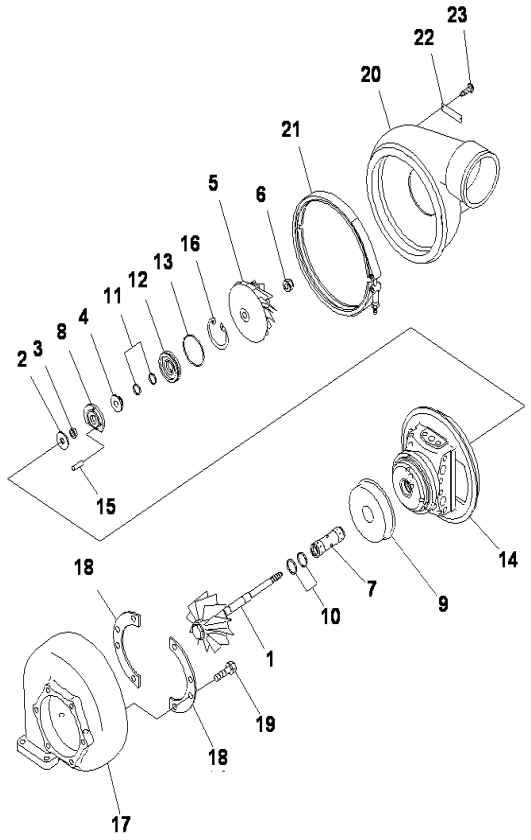

SAA12V140E-3 S/N 503621-UP

TURBOCHARGER (INNER PARTS) (1/2)

INDEX	CD	PART NO.	DESCRIPTION	QTY	SERIAL NO.
		6505-67-5070	Turbocharger,RHS	1	503621-UP
		6505-67-5910	.Core Assembly,LHS	1	503621-UP
1	C1		..ROTOR	1	503621-UP
2	C1		..PLATE,COLLAR	1	503621-UP
3	C1		..SPACER,COLLAR	1	503621-UP
4	C1		..FLINGER	1	503621-UP
5	C1		..IMPELLER	1	503621-UP
6	C1		..NUT	1	503621-UP
7	C1		..BEARING	1	503621-UP
8	C1		..BEARING	1	503621-UP
9	C1		..SHELD	1	503621-UP
10	C1		..RING	2	503621-UP
11	C1		..RING	2	503621-UP
12	C1		..INSERT	1	503621-UP
13	C1		..O-RING	1	503621-UP
14	C1		..HOUSING,CENTER	1	503621-UP
15	C1		..PIN,DOWEL	1	503621-UP
16	C1		..RING,SNAP	1	503621-UP
17		6505-61-4470	.Housing, Turbine	1	503621-UP
18		6505-11-0520	.Plate	2	503621-UP
19		01020-01016	.Bolt	8	503621-UP
20		6505-61-2160	.Housing	1	503621-UP
21		6505-11-0450	.V-band	1	503621-UP
22		6505-99-9011	.Plate, Name	1	503621-UP
23		04418-02550	.Screw	2	503621-UP

Ref :A1530-C7C3 Page :010080

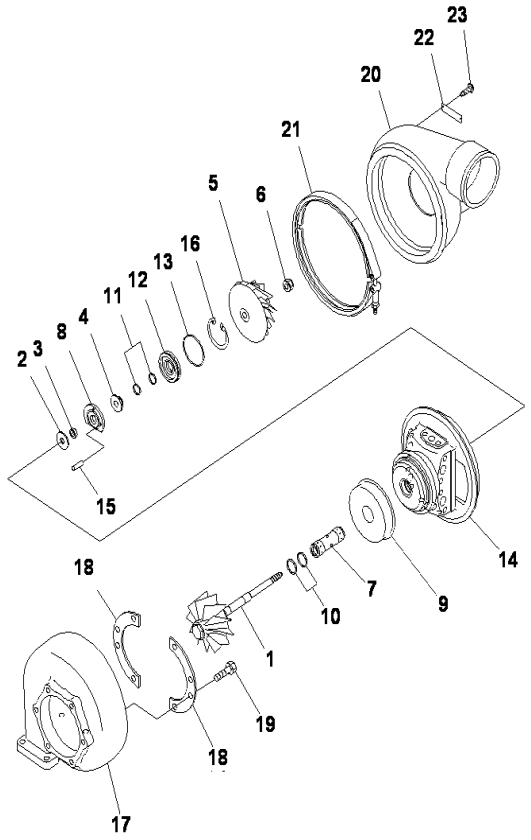

SAA12V140E-3 S/N 503621-UP

TURBOCHARGER (INNER PARTS) (2/2)

INDEX	CD	PART NO.	DESCRIPTION	QTY	SERIAL NO.
		6505-67-5080	Turbocharger.....	1	503621-UP
		6505-67-5910	.Core Assembly,LHS.....	1	503621-UP
1	C1		..ROTOR.....	1	503621-UP
2	C1		..PLATE,COLLAR.....	1	503621-UP
3	C1		..SPACER,COLLAR.....	1	503621-UP
4	C1		..FLINGER.....	1	503621-UP
5	C1		..IMPELLER.....	1	503621-UP
6	C1		..NUT.....	1	503621-UP
7	C1		..BEARING.....	1	503621-UP
8	C1		..BEARING.....	1	503621-UP
9	C1		..SHELD.....	1	503621-UP
10	C1		..RING.....	2	503621-UP
11	C1		..RING.....	2	503621-UP
12	C1		..INSERT.....	1	503621-UP
13	C1		..O-RING.....	1	503621-UP
14	C1		..HOUSING,CENTER.....	1	503621-UP
15	C1		..PIN,DOWEL.....	1	503621-UP
16	C1		..RING,SNAP.....	1	503621-UP
17		6505-61-4470	.Housing, Turbine.....	1	503621-UP
18		6505-11-0520	.Plate.....	2	503621-UP
19		01020-01016	.Bolt.....	8	503621-UP
20		6505-61-2160	.Housing.....	1	503621-UP
21		6505-11-0450	.V-band.....	1	503621-UP
22		6505-99-9011	.Plate, Name.....	1	503621-UP
23		04418-02550	.Screw.....	2	503621-UP

Ref :A1530-C8C4 Page :010090

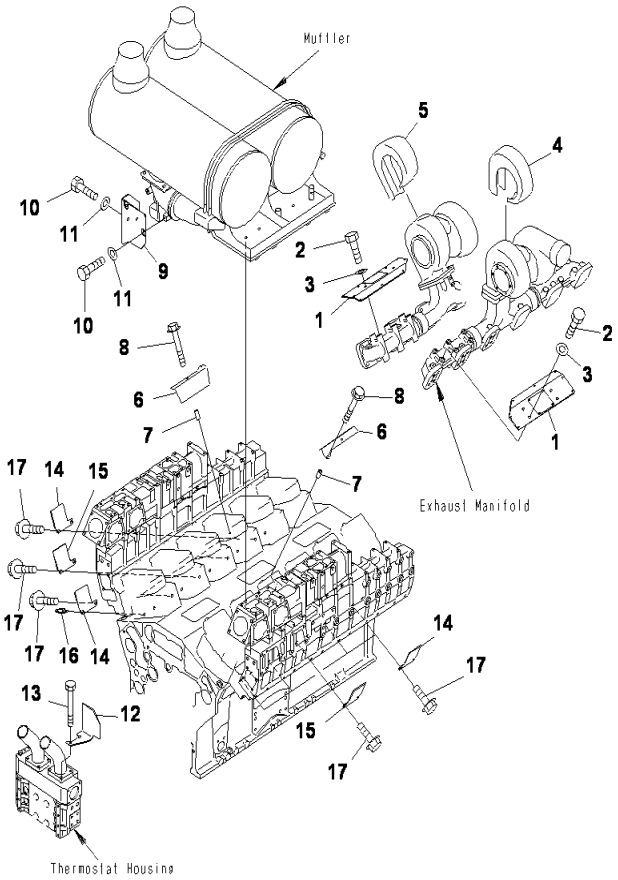

SAA12V140E-3 S/N 503621-UP

HEAT SHIELD

INDEX	CD	PART NO.	DESCRIPTION	QTY	SERIAL NO.
1		6219-11-5780	Cover	2	503621-UP
2		01010-E1040	Bolt	8	503621-UP
3		01643-31032	Washer	8	503621-UP
4		6261-11-8280	Cover,LHS	1	503621-UP
5		6219-11-8240	Cover,RHS	1	503621-UP
6		6219-11-5790	Plate	2	503621-UP
7		6137-71-3750	Spacer	4	503621-UP
8		01435-00895	Bolt	4	503621-UP
9		6219-11-5760	Cover	1	503621-UP
10		01010-E1016	Bolt	4	503621-UP
11		01643-31032	Washer	4	503621-UP
12		6219-81-6460	Cover	1	503621-UP
13		01011-81035	Bolt	2	503621-UP
14		6219-21-6410	Plate	8	503621-UP
15		6219-21-6420	Plate	2	503621-UP
16		6219-21-6450	Bolt	1	503621-UP
17		01435-01025	Bolt	19	503621-UP

Ref :A1570-A7A7 Page :010100

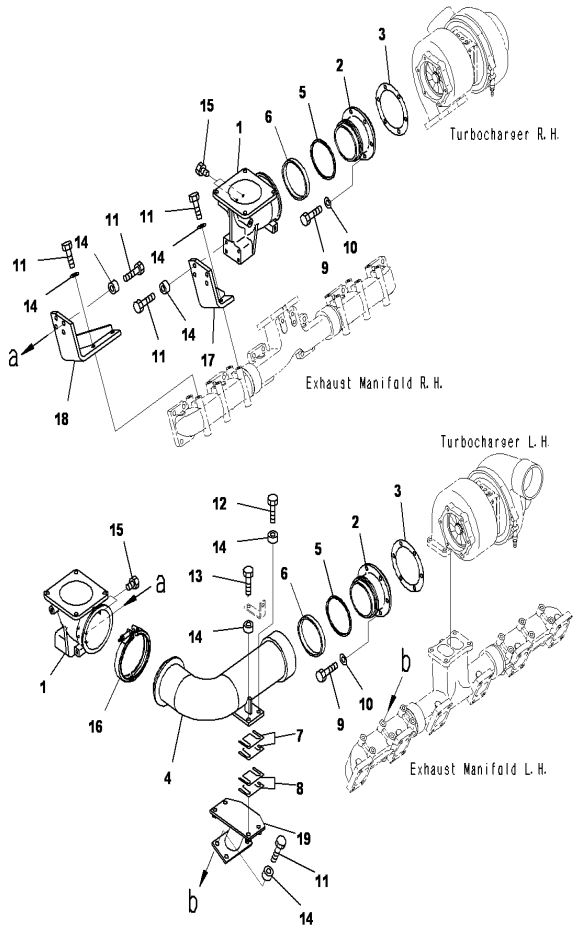

SAA12V140E-3 S/N 503621-UP

EXHAUST ELBOW MOUNTING

INDEX	CD	PART NO.	DESCRIPTION	QTY	SERIAL NO.
1		6219-11-5880	ELBOW	2	503621-UP
2		6219-11-5890	CONNECTOR	2	503621-UP
3		6212-11-5940	GASKET	1	503621-UP
4		6219-11-5860	CONNECTOR	1	503621-UP
5		6933-11-5140	SEAL RING	2	503621-UP
6		6933-11-5150	SEAL	2	503621-UP
7		6215-11-5980	Shim, T=0.5mm	4	503621-UP
8		6215-11-5990	Shim, T=1.0mm	8	503621-UP
9		01020-11025	Bolt, Stainless	12	503621-UP
10		01643-31032	WASHER	12	503621-UP
11		01010-E1045	BOLT	18	503621-UP
12		01010-E1050	BOLT	3	503621-UP
13		01010-E1055	BOLT	1	503621-UP
14		6631-11-5630	SPACER	22	503621-UP
15		6215-11-5920	Plug	4	503621-UP
16		6215-91-1170	CLAMP	1	503621-UP
17		6219-11-5840	BRACKET	1	503621-UP
18		6219-11-5850	BRACKET	1	503621-UP
19		6219-11-5830	BRACKET	1	503621-UP

Ref :A1610-A7B9 Page :010110

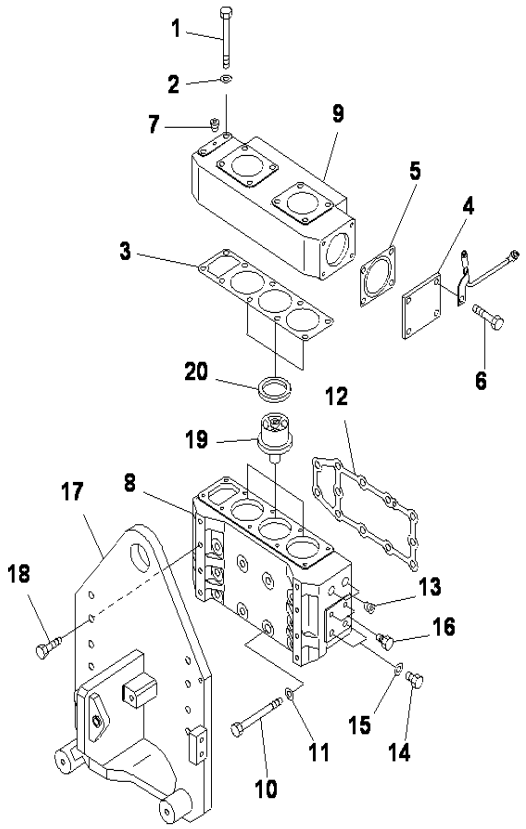

SAA12V140E-3 S/N 503621-UP

THERMOSTAT AND THERMOSTAT HOUSING

INDEX	CD	PART NO.	DESCRIPTION	QTY	SERIAL NO.
1		01011-81015	BOLT	2	503621-UP
2		01643-31032	WASHER	2	503621-UP
3		6215-11-6820	GASKET (K1)	1	503621-UP
4		6215-11-6150	PLATE	1	503621-UP
5		6215-11-6831	GASKET (K1)	1	503621-UP
6		01010-81025	BOLT	3	503621-UP
7		02720-40204	PLUG	1	503621-UP
8		6219-11-6110	HOUSING,THERMOSTAT	1	503621-UP
9		6215-11-6120	CASE,THERMOSTAT	1	503621-UP
10		01011-81220	BOLT	12	503621-UP
11		01643-31232	WASHER	12	503621-UP
12		6215-11-6810	GASKET (K1)	1	503621-UP
13		07043-70415	PLUG	2	503621-UP
14		07040-11409	PLUG	2	503621-UP
15		07005-01412	GASKET (K1)	2	503621-UP
16		287-35-11470	PLUG	2	503621-UP
17		6219-21-8760	BRACKET	1	503621-UP
18		01010-81240	BOLT	8	503621-UP
19		600-421-6630	THERMOSTAT	3	503621-UP
20		6162-13-6440	SEAL,THERMOSTAT (K1)	3	503621-UP

Ref :A1730-A7C6 Page :010120

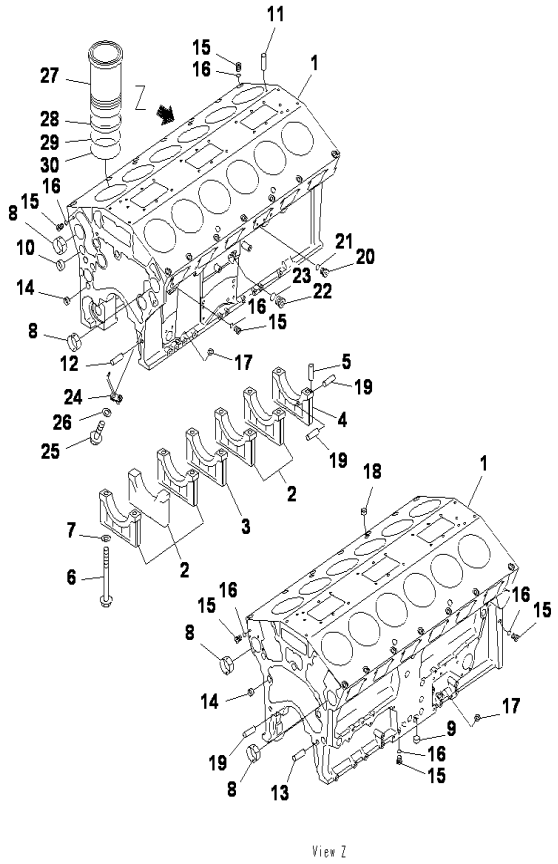

View Z

SAA12V140E-3 S/N 503621-UP

CYLINDER BLOCK

INDEX	CD	PART NO.	DESCRIPTION	QTY	SERIAL NO.
		6219-21-1200	Cylinder Block Assembly.....	1	503621-UP
	C1		.Block subassembly.....	1	503621-UP
1	C1		..Block cylinder.....	1	503621-UP
2	C1		..Cap.....	5	503621-UP
3	C1		..Cap.....	1	503621-UP
4	C1		..Cap.....	1	503621-UP
5		04020-00820	..Pin, Dowel.....	2	503621-UP
6		6215-21-1710	..Bolt, Main Cap.....	14	503621-UP
7		01643-32460	..Washer.....	14	503621-UP
8		6210-21-1491	..Bushing, Camshaft.....	14	503621-UP
9		6210-81-9210	..Plug, Expansion, Expansion.....	2	503621-UP
10		07046-44016	..Plug.....	2	503621-UP
11		04020-00820	.Pin, Dowel.....	24	503621-UP
12		04020-01434	.Pin, Dowel.....	2	503621-UP
13		6127-21-1160	.Pin, Dowel.....	2	503621-UP
14		6210-81-9210	.Plug, Expansion, Expansion.....	10	503621-UP
15		6215-81-9510	.Plug.....	18	503621-UP
16		6215-81-9710	.O-ring.....	18	503621-UP
17		07046-42010	.Plug.....	1	503621-UP
18		07046-42516	.Plug.....	2	503621-UP
19		6210-21-1390	.Pin, Metal Thrust.....	6	503621-UP
20		6215-81-9520	.Plug.....	3	503621-UP
21		6215-81-9720	.O-ring.....	3	503621-UP
22		6215-81-9540	.Plug.....	1	503621-UP
23		6215-81-9740	.O-ring.....	1	503621-UP
24		6219-21-1950	Nozzle Assembly.....	12	503621-UP
25		01437-01025	Bolt.....	12	503621-UP
26		01643-51032	Washer.....	12	503621-UP
27		6211-22-2220	Liner, Cylinder.....	6	503621-UP
28		6210-21-2270	Seal, Crevice.....	12	503621-UP
29		6210-21-2240	O-ring, Center.....	12	503621-UP
30		6210-21-2230	O-ring, Lower.....	12	503621-UP

Ref :A2010-A7C6 Page :010130

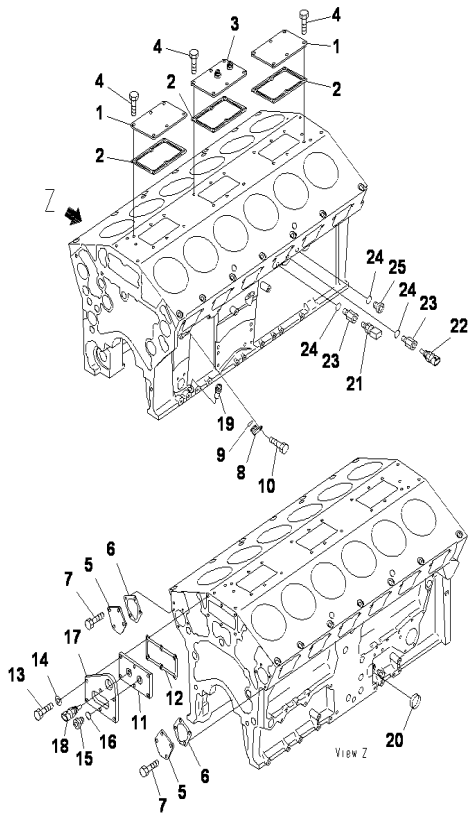

SAA12V140E-3 S/N 503621-UP

CYLINDER BLOCK (BLIND COVER AND SENSOR)

INDEX	CD	PART NO.	DESCRIPTION	QTY	SERIAL NO.
1		6215-21-1610	Cover,Upper	2	503621-UP
2		6215-21-1682	Gasket	3	503621-UP
3		6219-61-8310	Cover, With Connector	1	503621-UP
4		01010-81225	Bolt	18	503621-UP
5		6215-21-6460	Cover	2	503621-UP
6		6215-21-6480	Gasket	2	503621-UP
7		01010-81225	Bolt	8	503621-UP
8		6217-21-1940	Cover	1	503621-UP
9		6215-61-6630	O-ring	1	503621-UP
10		01010-81020	Bolt	1	503621-UP
11		6219-21-1910	Cover	1	503621-UP
12		6215-21-1970	Gasket	1	503621-UP
13		01010-81250	Bolt	5	503621-UP
14		01643-31232	Washer	5	503621-UP
15		6215-81-9520	Plug	1	503621-UP
16		6215-81-9720	O-ring	1	503621-UP
17		6219-21-8770	Plate	1	503621-UP
18		6261-81-6901	Sensor Assembly, Water Tempe	1	503621-UP
		6216-84-9740	.Seal	1	503621-UP
19		6215-21-5490	Bushing	1	503621-UP
20		6215-21-9210	Plug	1	503621-UP
21		6219-81-1961	Sensor Assembly	1	503621-UP
22		6261-81-6901	Sensor Assembly	1	503621-UP
		6216-84-9740	.Seal	1	503621-UP
23		6162-73-4690	Nipple	2	503621-UP
24		6215-81-9720	O-ring	3	503621-UP
25		6215-81-9520	Plug	1	503621-UP

Ref :A2011-A7B9 Page :010140

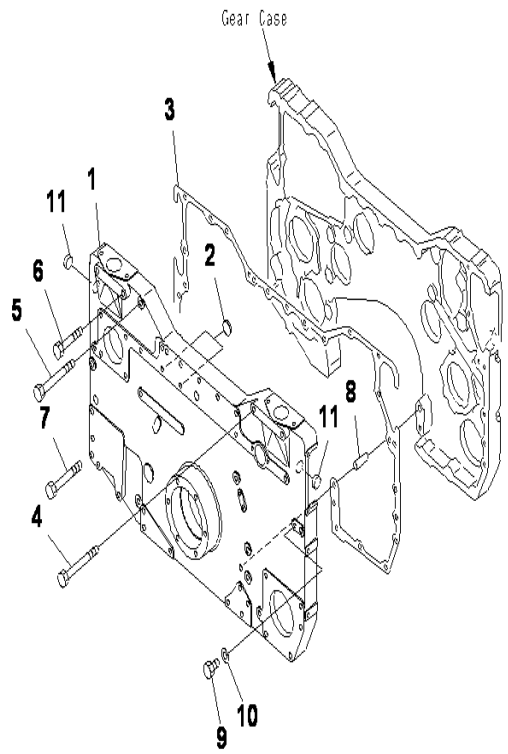

SAA12V140E-3 S/N 503621-UP

FRONT COVER

INDEX	CD	PART NO.	DESCRIPTION	QTY	SERIAL NO.
1		6215-21-3134	Cover, Gear Case.....	1	503621-UP
2		07046-11816	Plug, Expansion.....	10	503621-UP
3		6215-21-3811	Gasket.....	1	503621-UP
4		01011-81245	Bolt.....	1	503621-UP
5		01011-81230	Bolt.....	9	503621-UP
6		01010-81290	Bolt.....	3	503621-UP
7		01010-81275	Bolt.....	7	503621-UP
8		04020-01434	Pin, Dowel.....	2	503621-UP
9		07040-11007	Plug.....	1	503621-UP
10		07005-01012	Seal, Washer.....	1	503621-UP
11		07046-42816	Plug.....	2	503621-UP

Ref :A2040-A7B4 Page :010150

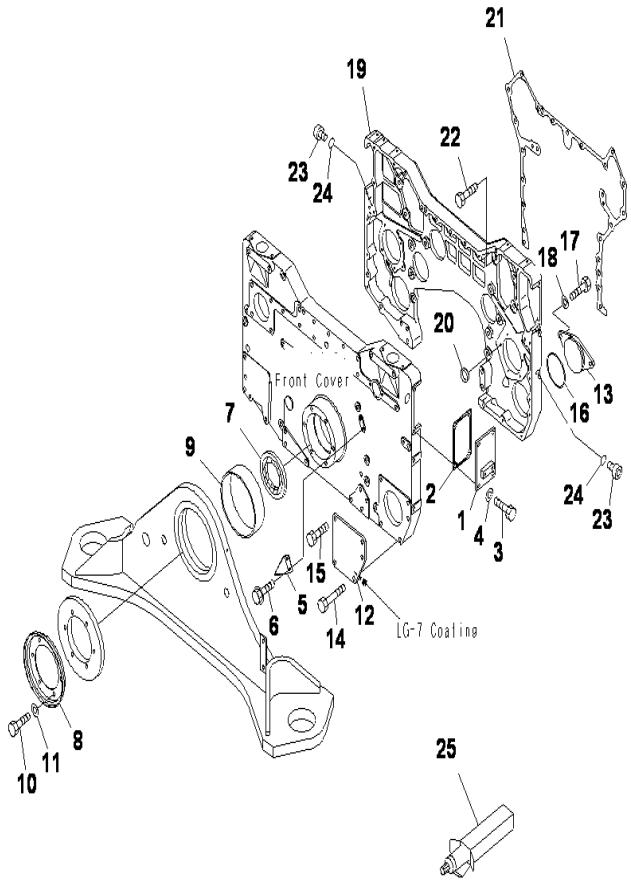

SAA12V140E-3 S/N 503621-UP

FRONT GEAR TRAIN CASE (ACCESSORY PARTS)

INDEX	CD	PART NO.	DESCRIPTION	QTY	SERIAL NO.
1		6219-21-1820	Plate	1	503621-UP
2		6215-81-6190	Gasket	1	503621-UP
3		01010-81025	Bolt	1	503621-UP
4		01643-31032	Washer	1	503621-UP
5		6215-21-3350	Pointer	1	503621-UP
6		01435-00610	Bolt	2	503621-UP
7		6245-21-3121	Seal	1	503621-UP
8		6219-21-3510	Cover, Dust	1	503621-UP
9		6215-21-3190	Sleeve	1	503621-UP
10		01010-81245	Bolt	6	503621-UP
11		01643-31232	Washer	6	503621-UP
12		6215-21-1850	Cover, Accessory	1	503621-UP
13		6219-21-1810	Cover, Accessory	1	503621-UP
14		01010-81285	Bolt	4	503621-UP
15		01010-81225	Bolt	1	503621-UP
16		07000-72100	O-ring	1	503621-UP
17		01010-81230	Bolt	2	503621-UP
18		01643-31232	Washer	2	503621-UP
19		6219-21-3110	Case, Gear	1	503621-UP
20		07046-11816	Plug, Expansion	10	503621-UP
21		6215-21-3821	Gasket	1	503621-UP
22		01010-81230	Bolt	13	503621-UP
23		6215-81-9510	Plug	4	503621-UP
24		6215-81-9710	O-ring	4	503621-UP
25		09920-00150	Liquid gasket, LG-7, 150G		503621-UP

Ref :A2041-A7E4 Page :010160

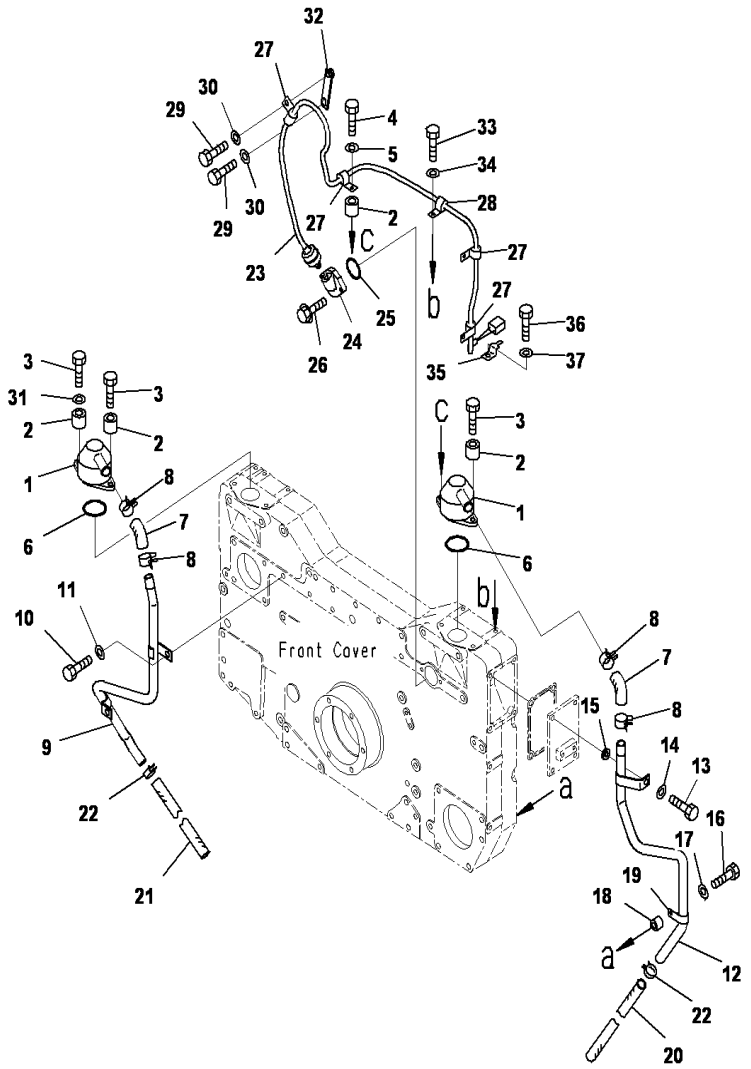

SAA12V140E-3 S/N 503621-UP

FRONT GEAR TRAIN CASE (BREATHER AND BLOWBY SENSOR)

INDEX	CD	PART NO.	DESCRIPTION	QTY	SERIAL NO.
1		6210-21-8711	Breather	2	503621-UP
2		6631-11-5630	Spacer	4	503621-UP
3		01010-81040	Bolt	3	503621-UP
4		01010-81045	Bolt	1	503621-UP
5		01643-31032	Washer	1	503621-UP
6		07000-72060	O-ring	2	503621-UP
7		6130-61-6611	Hose	2	503621-UP
8		07285-00260	Clip, Hose	4	503621-UP
9		6215-21-8610	Tube,RHS	1	503621-UP
10		01010-81220	Bolt	1	503621-UP
11		01643-31232	Washer	1	503621-UP
12		6215-21-8620	Tube,LHS	1	503621-UP
13		01010-81035	Bolt	1	503621-UP
14		01643-31032	Washer	1	503621-UP
15		6110-23-6490	Spacer	1	503621-UP
16		01010-81245	Bolt	1	503621-UP
17		01643-31232	Washer	1	503621-UP
18		6127-92-1250	Spacer	1	503621-UP
19		04434-52112	Clip	1	503621-UP
20		07287-01914	Hose	1	503621-UP
21		07287-01916	Hose	1	503621-UP
22		07285-00220	Clip	2	503621-UP
23		6218-81-4111	Sensor Assembly, Blowby	1	503621-UP
24		6215-11-6320	Connector	1	503621-UP
25		07000-03050	O-ring	1	503621-UP
26		01435-00620	Bolt	2	503621-UP
27		6000-51-2100	Clip	4	503621-UP
28		6000-51-3100	Clip	1	503621-UP
29		01010-81020	Bolt	2	503621-UP
30		01643-31032	Washer	2	503621-UP
31		01643-31032	Washer	2	503621-UP
32		6212-65-6390	Plate	1	503621-UP
33		01010-81225	Bolt	1	503621-UP
34		01643-31232	Washer	1	503621-UP
35		08193-20010	Clip	1	503621-UP
36		01010-81016	Bolt	1	503621-UP
37		01643-31032	Washer	1	503621-UP

Ref :A2041-B7E4 Page :010170

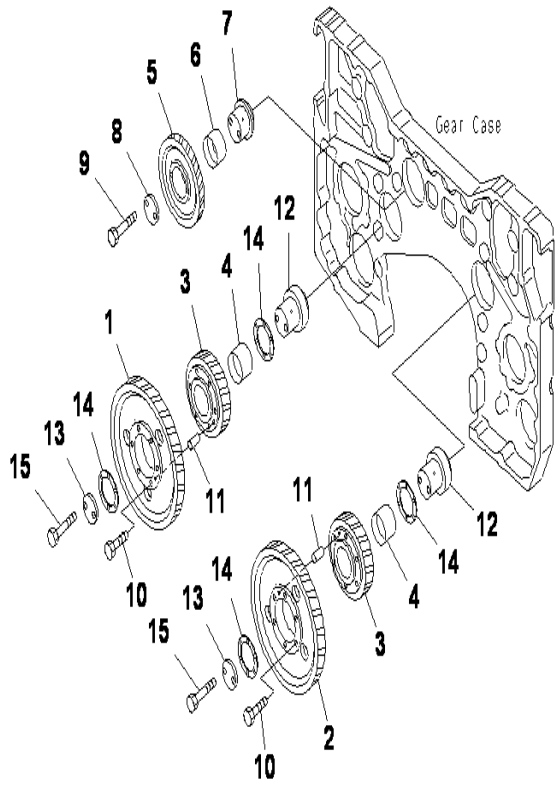

SAA12V140E-3 S/N 503621-UP

IDLE GEARS

INDEX	CD	PART NO.	DESCRIPTION	QTY	SERIAL NO.
1		6215-31-6160	Gear,RHS	1	503621-UP
2		6215-31-6120	Gear,LHS	1	503621-UP
		6215-31-6100	Gear Assembly, Idle	2	503621-UP
3	C1		.Gear	1	503621-UP
4		6212-31-6130	.Bushing	1	503621-UP
		6215-31-6500	Gear Assembly, Idle	1	503621-UP
5	C1		.Gear	1	503621-UP
6		6212-31-6130	.Bushing	1	503621-UP
7		6215-31-6420	Shaft	1	503621-UP
8		6215-31-6460	Plate	1	503621-UP
9		01010-81280	Bolt	2	503621-UP
10		01010-81040	Bolt	12	503621-UP
11		6127-21-1260	Pin, Dowel	2	503621-UP
12		6215-31-6431	Shaft	2	503621-UP
13		6215-31-6470	Plate	2	503621-UP
14		6215-31-6131	Bearing, Thrust, Thrust	4	503621-UP
15		01011-81210	Bolt	4	503621-UP

Ref :A2050-A7A3 Page :010180

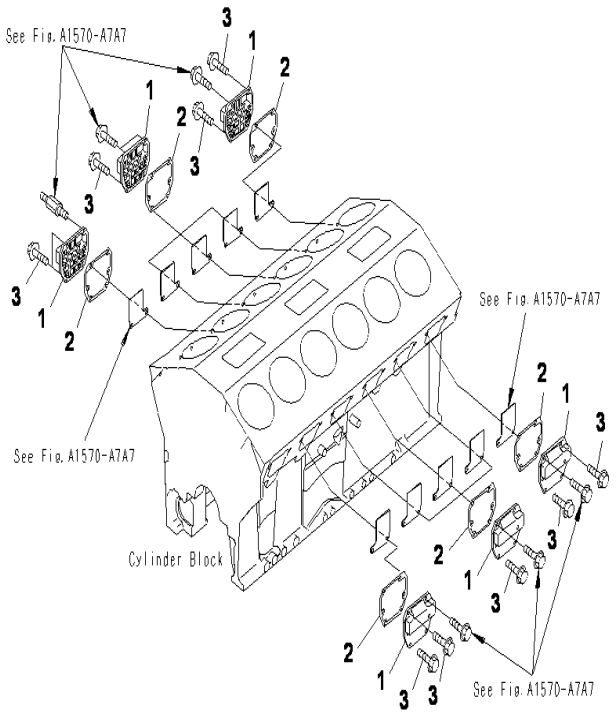

SAA12V140E-3 S/N 503621-UP

CAM FOLLOWER COVER

INDEX	CD	PART NO.	DESCRIPTION	QTY	SERIAL NO.
1		6215-21-6420	Cover.....	12	503621-UP
2		6215-21-6431	Gasket.....	12	503621-UP
3		6215-21-6450	Bolt.....	50	503621-UP

Ref :A2060-A7A1 Page :010190

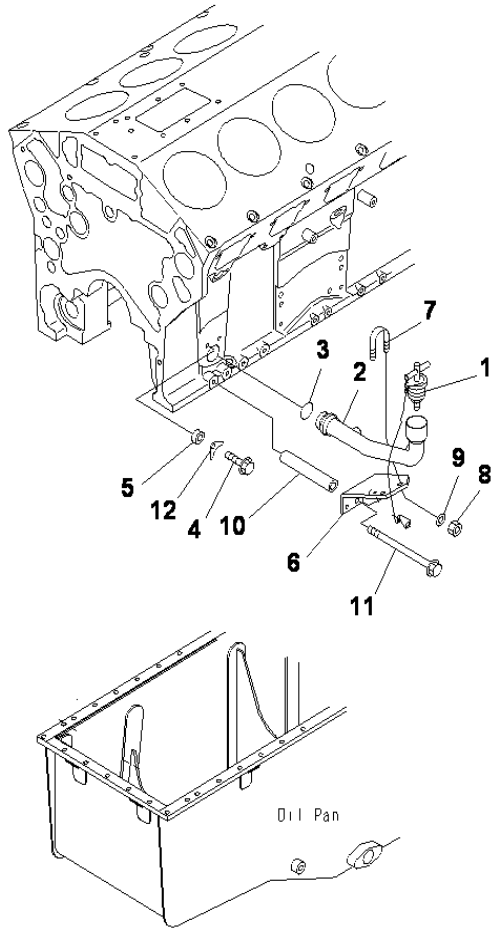

SAA12V140E-3 S/N 503621-UP

ENGINE OIL FILLER

INDEX	CD	PART NO.	DESCRIPTION	QTY	SERIAL NO.
1		07025-00100	Cap, Oil Filler	1	503621-UP
2		6219-21-7510	Filler, Oil	1	503621-UP
3		07000-E3038	O-ring	1	503621-UP
4		01435-01025	Bolt	1	503621-UP
5		4178-23-1460	Spacer	1	503621-UP
6		6219-21-7530	Bracket	1	503621-UP
7		07283-34346	Clip	1	503621-UP
8		01597-01009	Nut	2	503621-UP
9		01643-31032	Washer	3	503621-UP
10		6217-11-9690	Spacer	2	503621-UP
11		01436-01045	Bolt	2	503621-UP
12		6215-21-7260	Plate, Stopper	1	503621-UP

Ref :A2070-A7B5 Page :010200

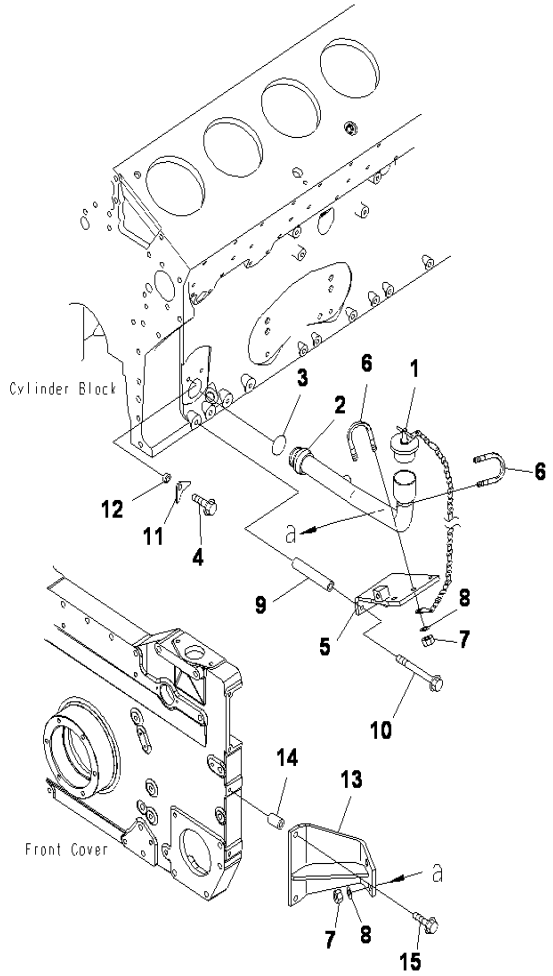

SAA12V140E-3 S/N 503621-UP

ENGINE OIL FILLER (EXTREMELY BAD FUEL AND POOR FUEL)

INDEX	CD	PART NO.	DESCRIPTION	QTY	SERIAL NO.
1		07025-00100	Cap, Oil Filler.....	1	503621-UP
2		6219-21-7520	Filler, Oil.....	1	503621-UP
3		07000-E3038	O-ring.....	1	503621-UP
4		01435-01025	Bolt.....	1	503621-UP
5		6219-21-7550	Bracket.....	1	503621-UP
6		07283-34346	Clip.....	2	503621-UP
7		01597-01009	Nut.....	4	503621-UP
8		01643-31032	Washer.....	4	503621-UP
9		6217-11-9690	Spacer.....	2	503621-UP
10		01436-01045	Bolt.....	1	503621-UP
11		6215-21-7260	Plate.....	1	503621-UP
12		4178-23-1460	Spacer.....	1	503621-UP
13		6219-21-7540	Bracket.....	1	503621-UP
14		6144-11-5630	Spacer.....	2	503621-UP
15		01435-01060	Bolt.....	2	503621-UP

Ref :A2070-A7B9 Page :010210

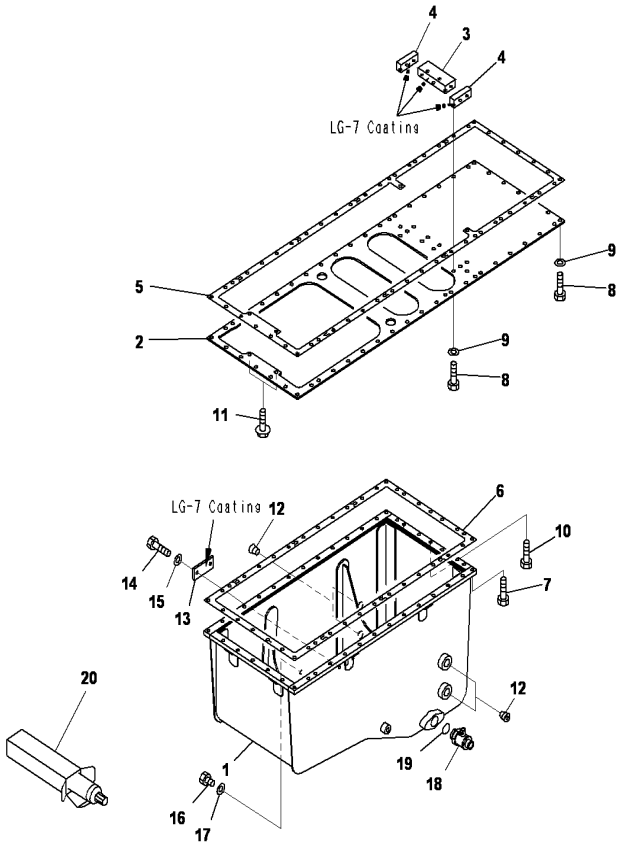

SAA12V140E-3 S/N 503621-UP

ENGINE OIL PAN MOUNTING (OIL PAN)

INDEX	CD	PART NO.	DESCRIPTION	QTY	SERIAL NO.
1		6219-21-5110	Pan, Oil	1	503621-UP
2		6215-21-5121	Plate, Under	1	503621-UP
3		6215-21-5130	Plate	1	503621-UP
4		6215-21-5140	Plate	2	503621-UP
5		6215-21-5811	Gasket	1	503621-UP
6		6215-21-5820	Gasket	1	503621-UP
7		01010-81040	BOLT	35	503621-UP
8		01010-81025	BOLT	26	503621-UP
9		01643-31032	WASHER	26	503621-UP
10		01010-81035	BOLT	5	503621-UP
11		01435-01020	BOLT	2	503621-UP
12		02720-41616	Plug	4	503621-UP
13		6215-21-5160	Cover	1	503621-UP
14		01010-81025	BOLT	2	503621-UP
15		01643-31032	WASHER	2	503621-UP
16		07040-11409	PLUG	1	503621-UP
17		07005-01412	GASKET	1	503621-UP
18		21T-01-31490	Valve, Drain	1	503621-UP
19		07002-23634	O-RING	1	503621-UP
20		09920-00150	Liquid gasket, LG-7, 150G		503621-UP

Ref :A2110-A7F9 Page :010220

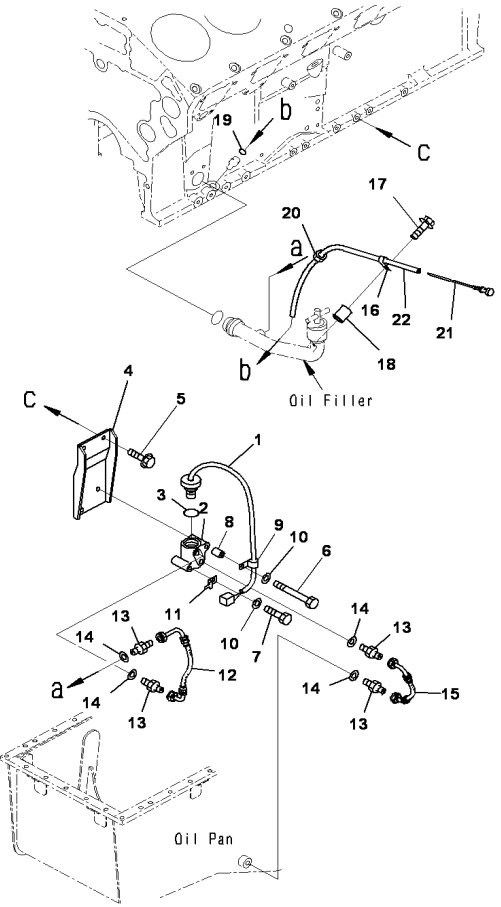

SAA12V140E-3 S/N 503621-UP

ENGINE OIL PAN MOUNTING (OIL LEVEL SENSOR)

INDEX	CD	PART NO.	DESCRIPTION	QTY	SERIAL NO.
1		7861-93-4550	Sensor	1	503621-UP
2		6219-81-8620	Case	1	503621-UP
3		07002-23634	O-RING	1	503621-UP
4		6219-51-2210	Bracket	1	503621-UP
5		01435-01020	BOLT	2	503621-UP
6		01011-81015	BOLT	1	503621-UP
7		01010-81085	BOLT	1	503621-UP
8		6166-11-5391	Spacer	1	503621-UP
9		600-051-2050	Clip	1	503621-UP
10		01643-31032	WASHER	2	503621-UP
11		08193-20010	CLIP	1	503621-UP
12		6219-51-2270	Hose	1	503621-UP
13		6219-51-2290	Joint	4	503621-UP
14		07005-01412	GASKET	4	503621-UP
15		6219-51-2280	Hose	1	503621-UP
16		04434-51310	CLIP	1	503621-UP
17		01435-01040	BOLT	1	503621-UP
18		6643-21-6550	Collar	1	503621-UP
19		07000-72012	O-RING	1	503621-UP
20		07201-61527	NUT	1	503621-UP
21		6219-21-5321	Gauge, Oil Level	1	503621-UP
22		6219-21-5410	Guide, Oil Gauge	1	503621-UP

Ref :A2110-B7F9 Page :010230

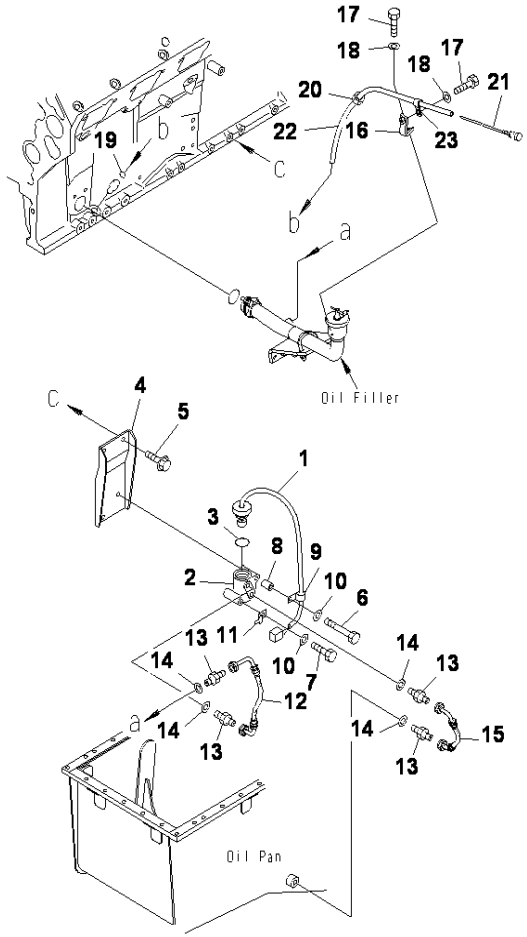

SAA12V140E-3 S/N 503621-UP

ENGINE OIL PAN MOUNTING (OIL LEVEL SENSOR)(FOR FUEL ARRANGEMENT)

INDEX	CD	PART NO.	DESCRIPTION	QTY	SERIAL NO.
1		7861-93-4550	SENSOR,OIL LEVEL	1	503621-UP
2		6219-81-8620	CASE	1	503621-UP
3		07002-23634	O-RING	1	503621-UP
4		6219-51-2210	BRACKET	1	503621-UP
5		01435-01020	BOLT	2	503621-UP
6		01011-81015	BOLT	1	503621-UP
7		01010-81085	BOLT	1	503621-UP
8		6166-11-5391	SPACER	1	503621-UP
9		6000-51-2050	CLIP	1	503621-UP
10		01643-31032	WASHER	2	503621-UP
11		08193-20010	CLIP	1	503621-UP
12		6219-51-2270	HOSE	1	503621-UP
13		6219-51-2290	JOINT	4	503621-UP
14		07005-01412	GASKET	4	503621-UP
15		6219-51-2280	HOSE	1	503621-UP
16		6219-21-5460	BRACKET	1	503621-UP
17		01010-81025	BOLT	2	503621-UP
18		01643-31032	WASHER	2	503621-UP
19		07000-72012	O-RING	1	503621-UP
20		07201-61527	NUT	1	503621-UP
21		6219-21-5321	GAUGE,OIL LEVEL	1	503621-UP
22		6219-21-5410	GUIDE,OIL GAUGE	1	503621-UP
23		04434-51310	CLIP	1	503621-UP

Ref :A2110-B7G6 Page :010235

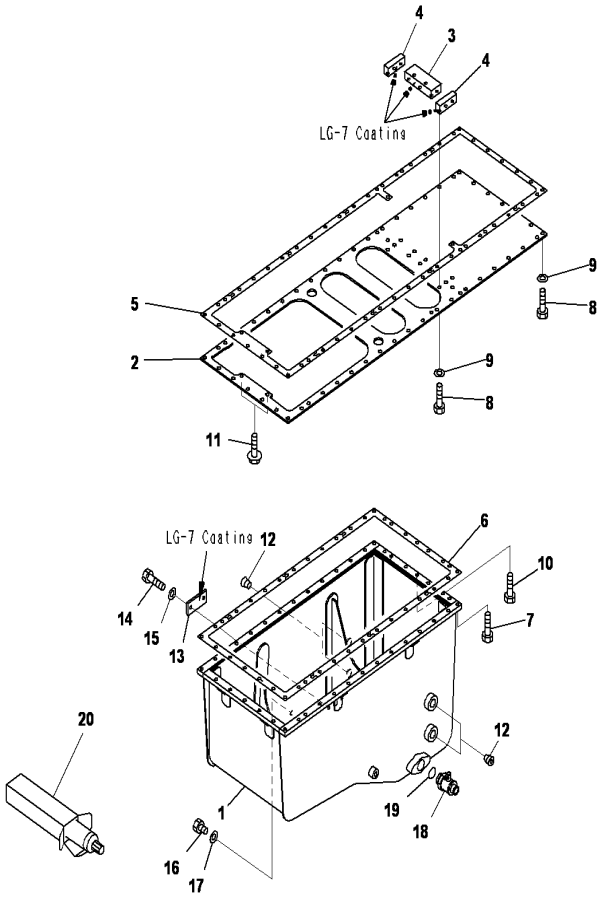

SAA12V140E-3 S/N 503621-UP

ENGINE OIL PAN MOUNTING (BAD AND POOR FUEL ARRANGEMENT)

INDEX	CD	PART NO.	DESCRIPTION	QTY	SERIAL NO.
1		6219-21-5110	Pan, Oil	1	503621-UP
2		6215-21-5121	Plate, Under	1	503621-UP
3		6215-21-5130	Plate	1	503621-UP
4		6215-21-5140	Plate	2	503621-UP
5		6215-21-5811	Gasket	1	503621-UP
6		6215-21-5820	Gasket	1	503621-UP
7		01010-81040	BOLT	35	503621-UP
8		01010-81025	BOLT	26	503621-UP
9		01643-31032	WASHER	26	503621-UP
10		01010-81035	BOLT	5	503621-UP
11		01435-01020	BOLT	2	503621-UP
12		02720-41616	PLUG	4	503621-UP
13		6215-21-5160	Cover	1	503621-UP
14		01010-81025	BOLT	2	503621-UP
15		01643-31032	WASHER	2	503621-UP
16		07040-11409	PLUG	1	503621-UP
17		07005-01412	GASKET	1	503621-UP
18		21T-01-31490	Valve, Drain	1	503621-UP
19		07002-23634	O-RING	1	503621-UP
20		09920-00150	Liquid gasket, LG-7, 150G		503621-UP

Ref :A2110-C7F9 Page :010240

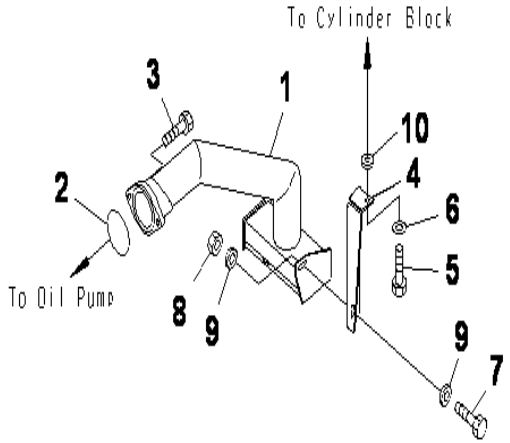

SAA12V140E-3 S/N 503621-UP

ENGINE OIL PAN MOUNTING (SECTION TUBE)

INDEX	CD	PART NO.	DESCRIPTION	QTY	SERIAL NO.
1		6219-51-6310	Tube, suction.....	1	503621-UP
2		07000-E2080	O-ring.....	1	503621-UP
3		01010-81235	BOLT.....	2	503621-UP
4		6219-51-6210	Bracket.....	1	503621-UP
5		01010-81030	Bolt.....	1	503621-UP
6		01643-31032	WASHER.....	1	503621-UP
7		01010-81030	BOLT.....	1	503621-UP
8		01580-01008	NUT.....	1	503621-UP
9		6110-23-6490	SPACER.....	2	503621-UP
10		6141-25-3770	Washer.....	1	503621-UP

Ref :A2110-D8F9 Page :010250

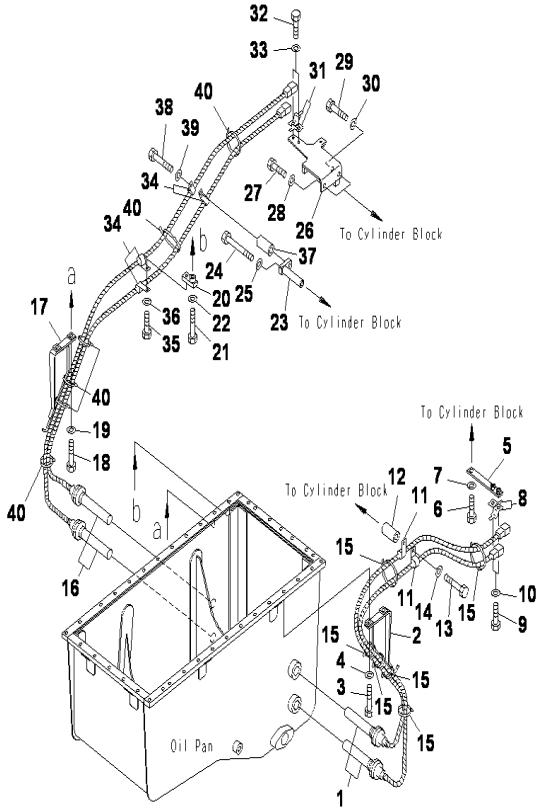

SAA12V140E-3 S/N 503621-UP

OIL PAN HEATER (POOR FUEL ARANGGEMENT)

INDEX	CD	PART NO.	DESCRIPTION	QTY	SERIAL NO.
1		600-815-9370	Heater, Oil Pan.....	2	503621-UP
2		6219-61-7821	Bracket.....	1	503621-UP
3		01010-81055	BOLT.....	2	503621-UP
4		01643-31032	WASHER.....	2	503621-UP
5		6219-81-5340	Bracket.....	1	503621-UP
6		01010-81035	BOLT.....	1	503621-UP
7		01643-31032	WASHER.....	1	503621-UP
8		08193-20010	CLIP.....	2	503621-UP
9		01010-81025	BOLT.....	2	503621-UP
10		01643-31032	Washer.....	2	503621-UP
11		600-051-2080	Clip.....	2	503621-UP
12		6691-21-6670	Spacer.....	1	503621-UP
13		01010-81065	BOLT.....	1	503621-UP
14		01643-31032	WASHER.....	1	503621-UP
15		6218-81-8480	Band.....	6	503621-UP
16		600-815-9370	Heater, Oil Pan.....	2	503621-UP
17		6219-61-7821	Bracket.....	1	503621-UP
18		01010-81055	BOLT.....	2	503621-UP
19		01643-31032	WASHER.....	2	503621-UP
20		6219-81-5320	Bracket.....	1	503621-UP
21		01010-81065	BOLT.....	1	503621-UP
22		01643-31032	WASHER.....	1	503621-UP
23		6219-81-5310	Bracket.....	1	503621-UP
24		01011-81030	Bolt.....	1	503621-UP
25		01643-31032	WASHER.....	1	503621-UP
26		6219-81-5350	Bracket.....	1	503621-UP
27		01010-81025	BOLT.....	1	503621-UP
28		01643-31032	WASHER.....	1	503621-UP
29		01010-81055	BOLT.....	1	503621-UP
30		01643-31032	WASHER.....	1	503621-UP
31		08193-20010	CLIP.....	2	503621-UP
32		01010-81025	BOLT.....	2	503621-UP
33		01643-31032	WASHER.....	2	503621-UP
34		600-051-2080	Clip.....	4	503621-UP
35		01010-81025	BOLT.....	1	503621-UP
36		01643-31032	WASHER.....	1	503621-UP
37		6206-81-6830	Spacer.....	1	503621-UP
38		01010-81075	BOLT.....	1	503621-UP
39		01643-31032	WASHER.....	1	503621-UP
40		6218-81-8480	Band.....	6	503621-UP

Ref :A2110-C7G8 Page :010360

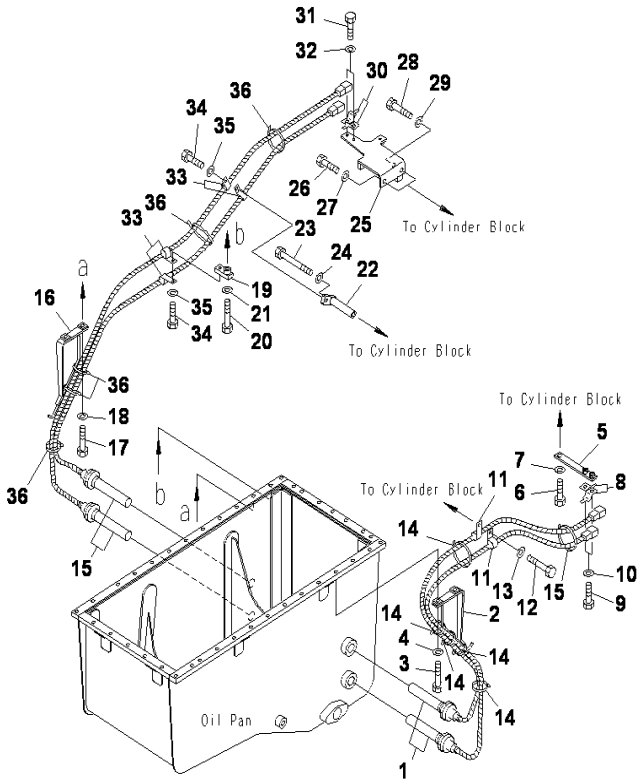

SAA12V140E-3 S/N 503621-UP

OIL PAN HEATER (COLD TERRAIN SPEC)

INDEX	CD	PART NO.	DESCRIPTION	QTY	SERIAL NO.
1		600-815-9370	Heater, Oil Pan	2	503621-UP
2		6219-61-7821	Bracket	1	503621-UP
3		01010-81055	Bolt	2	503621-UP
4		01643-31032	Washer	2	503621-UP
5		6219-81-5340	Bracket	1	503621-UP
6		01010-81035	Bolt	1	503621-UP
7		01643-31032	Washer	1	503621-UP
8		08193-20010	Clip	2	503621-UP
9		01010-81025	Bolt	2	503621-UP
10		01643-31032	Washer	2	503621-UP
11		600-051-2080	Clip	2	503621-UP
12		01010-81030	Bolt	1	503621-UP
13		01643-31032	Washer	1	503621-UP
14		6218-81-8480	Band	6	503621-UP
15		600-815-9370	Heater, Oil Pan	2	503621-UP
16		6219-61-7821	Bracket	1	503621-UP
17		01010-81055	Bolt	2	503621-UP
18		01643-31032	Washer	2	503621-UP
19		6219-81-5320	Bracket	1	503621-UP
20		01010-81065	Bolt	1	503621-UP
21		01643-31032	Washer	1	503621-UP
22		6219-81-5310	Bracket	1	503621-UP
23		01011-81030	Bolt	1	503621-UP
24		01643-31032	Washer	1	503621-UP
25		6219-81-5350	Bracket	1	503621-UP
26		01010-81025	Bolt	1	503621-UP
27		01643-31032	Washer	1	503621-UP
28		01010-81055	BOLT	1	503621-UP
29		01643-31032	Washer	1	503621-UP
30		08193-20010	Clip	2	503621-UP
31		01010-81025	Bolt	2	503621-UP
32		01643-31032	Washer	2	503621-UP
33		6000512080	Clip	4	503621-UP
34		01010-81020	Bolt	2	503621-UP
35		01643-31032	Washer	2	503621-UP
36		6218-81-8480	Band	5	503621-UP

Ref :A2110-C7G9 Page :010370

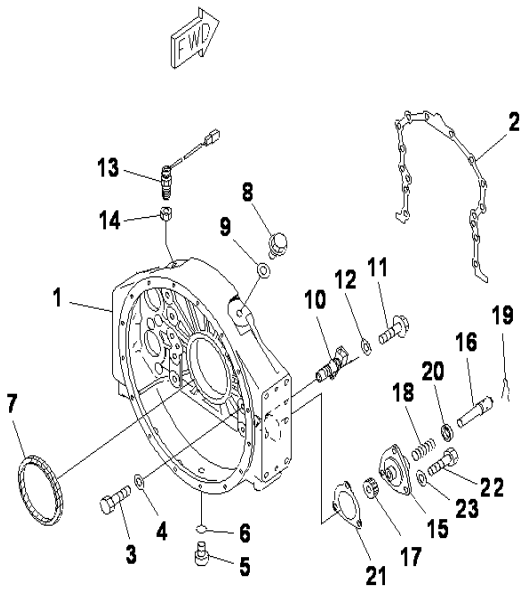

SAA12V140E-3 S/N 503621-UP

FLYWHEEL HOUSING

INDEX	CD	PART NO.	DESCRIPTION	QTY	SERIAL NO.
1		6219-21-4110	Housing	1	503621-UP
2		6215-21-4810	Gasket	1	503621-UP
3		01010-61865	Bolt	14	503621-UP
4		01643-31845	Washer	14	503621-UP
5		07040-13316	Plug	1	503621-UP
6		07002-23334	O-ring	1	503621-UP
7		6219-21-4240	Seal, Oil	1	503621-UP
8		6136-51-4140	Plug	2	503621-UP
9		07005-02216	Gasket	2	503621-UP
10		6261-81-2902	Sensor Assembly,Speed	1	503621-UP
		6261-81-2911	.Sensor	1	503621-UP
		6271-81-9220	.O-ring	1	503621-UP
11		01010-80820	Bolt	1	503621-UP
12		01643-30823	Washer	1	503621-UP
13		7861-93-2330	Sensor	1	503621-UP
14		01583-02213	Nut	1	503621-UP
		6162-23-4500	Gear Assembly	1	503621-UP
15	C1		.Case	1	503621-UP
16	C1		.Shaft	1	503621-UP
17	C1		.Gear	1	503621-UP
18	C1		.Spring	1	503621-UP
19		6162-23-4531	.Pin, snap	1	503621-UP
20	C1		.Seal, dust	1	503621-UP
21		6162-23-4941	Gasket	1	503621-UP
22		01010-81030	Bolt	3	503621-UP
23		01643-31032	Washer	3	503621-UP

Ref :A2210-A7D1 Page :010380

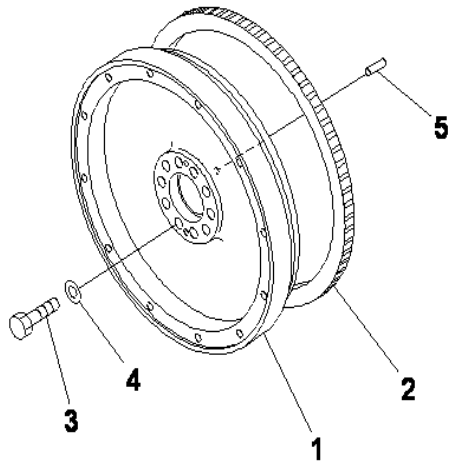

SAA12V140E-3 S/N 503621-UP

FLYWHEEL

INDEX	CD	PART NO.	DESCRIPTION	QTY	SERIAL NO.
		6219-31-4300	Flywheel Assembly.....	1	503621-UP
1			.Flywheel.....	1	503621-UP
2		6645-31-1321	.Gear, Ring.....	1	503621-UP
3		01050-32080	Bolt.....	10	503621-UP
4		6127-11-1620	Washer.....	10	503621-UP
5		04020-01228	Pin, Dowel.....	1	503621-UP

Ref :A2230-A7B5 Page :010390

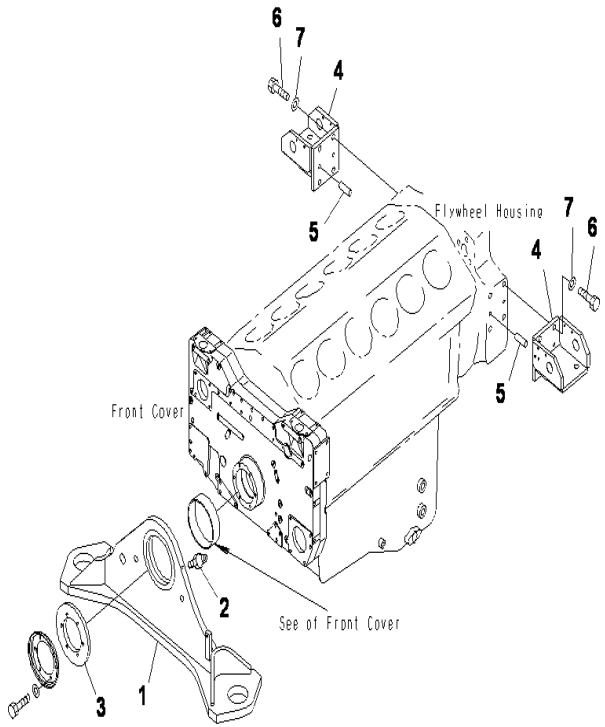

SAA12V140E-3 S/N 503621-UP

ENGINE SUPPORT

INDEX	CD	PART NO.	DESCRIPTION	QTY	SERIAL NO.
1		21T-01-31111	Bracket,Front.....	1	503621-UP
2		07020-00000	Fitting, Grease.....	1	503621-UP
3		6215-21-3180	Plate.....	1	503621-UP
4		6215-2L-3310	Bracket,Rear.....	2	503621-UP
5		04020-01434	Pin, Dowel.....	8	503621-UP
6		01010-62050	Bolt.....	8	503621-UP
7		01643-32060	Washer.....	8	503621-UP

Ref :A2250-A7C4 Page :010400

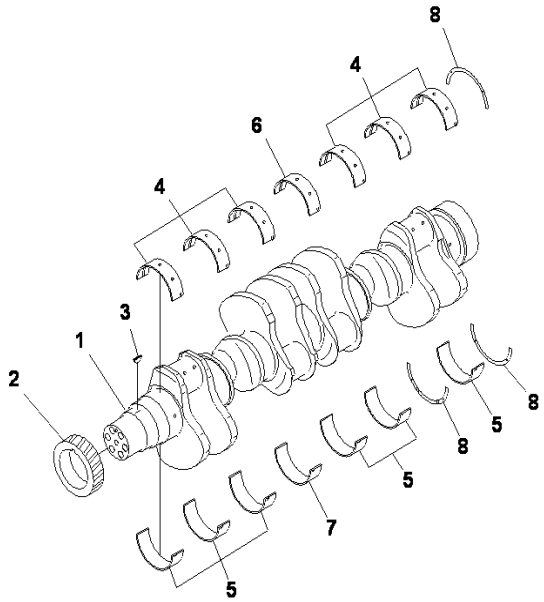

SAA12V140E-3 S/N 503621-UP

CRANKSHAFT

INDEX	CD	PART NO.	DESCRIPTION	QTY	SERIAL NO.
		6219-31-1100	Crankshaft Assembly.....	1	503621-UP
1	C1		.Crankshaft.....	1	503621-UP
2		6215-31-1140	.Gear.....	1	503621-UP
3		04010-00728	.Key.....	1	503621-UP
		6215-21-8000	Main Metal Assembly.....	1	503621-UP
		6215-21-8011	.Main Metal No.1,2,3,5,6,7,Std.....	6	503621-UP
			Standard.....		503621-UP
		6215-29-8011	.Main Metal N0.1.2.3.5.6.7.....	6	503621-UP
		6215-28-8011	.Main Metal Assembly, No.1.2.3.5.6.7.....	6	503621-UP
		6215-27-8011	.Main Metal Assembly,N0.1.2.3.4.5.6.7.....	6	503621-UP
		6215-26-8011	.Main Metal Assembly,N0.1.2.3.4.5.6.7.....	6	503621-UP
4	C1		..Metal, Upper, Standard, Upper.....	1	503621-UP
	C1		..Metal, Upper,UNDERSIZE 0.25MM.....	1	503621-UP
	C1		..METAL UP UNDERSIZE .0.50mm, Upper.....	1	503621-UP
	C2		..METAL UP UNDERSIZE .0.75mm, Upper.....	1	503621-UP
	C2		..METAL UP UNDERSIZE .1.00mm, Upper.....	1	503621-UP
5	C1		..Metal, Lower, Standard, Lower.....	1	503621-UP
	C1		..METAL UNDERSIZE 0.25mm, Lower.....	1	503621-UP
	C1		..METAL UNDERSIZE 0.50mm, Lower.....	1	503621-UP
	C1		..METAL UNDERSIZE 0.75mm, Lower.....	1	503621-UP
	C1		..METAL UNDERSIZE 1.00mm, Lower.....	1	503621-UP
		6215-21-8021	..MAIN METAL No.4, Standard.....	1	503621-UP
		6215-29-8021	.MAIN METAL Undersize 0.25mm.....	1	503621-UP
		6215-28-8021	..MAIN METAL Undersize 0.50mm.....	1	503621-UP
		6215-27-8021	..MAIN METAL Undersize 0.75mm.....	1	503621-UP
		6215-26-8021	.Undersize 1.00mm.....	1	503621-UP
6	C1		..Metal, Upper, Standard, Upper.....	1	503621-UP
	C1		.. UPPER, Undersize 0.25mm, Upper.....	1	503621-UP
	C1		.. UPPER, Undersize 0.50mm, Upper.....	1	503621-UP
	C1		.. UPPER, Undersize 0.75mm, Upper.....	1	503621-UP
	C1		.. UPPER, Undersize 1.00mm, Upper.....	1	503621-UP
7	C1		.Metal, Lower, Standard, Lower.....	1	503621-UP
	C1		..LOWER, Undersize 0.25mm, Lower.....	1	503621-UP
	C1		..LOWER, Undersize 0.50mm, Lower.....	1	503621-UP
	C1		..LOWER, Undersize 0.75mm, Lower.....	1	503621-UP
	C1		..LOWER, Undersize 1.00mm, Lower.....	1	503621-UP
8		6215-21-8050	.Standard, Thrust.....	1	503621-UP
		6215-29-8050	.Oversize 0.25mm, Thrust.....	1	503621-UP
		6215-28-8050	.Oversize 0.50mm, Thrust.....	1	503621-UP
		6215-27-8050	.Oversize 0.75mm, Thrust.....	1	503621-UP
		6215-26-8050	.Oversize 1.00mm, Thrust.....	1	503621-UP
	C1		..Thrust, Standard, Thrust.....	3	503621-UP
	C1		..Oversize 0.25mm, Thrust.....	3	503621-UP
	C1		..Oversize 0.50mm, Thrust.....	3	503621-UP
	C1		..Oversize 0.75mm, Thrust.....	3	503621-UP
	C1		..Oversize 1.00mm, Thrust.....	3	503621-UP

Ref :A2310-A7A4 Page :010410

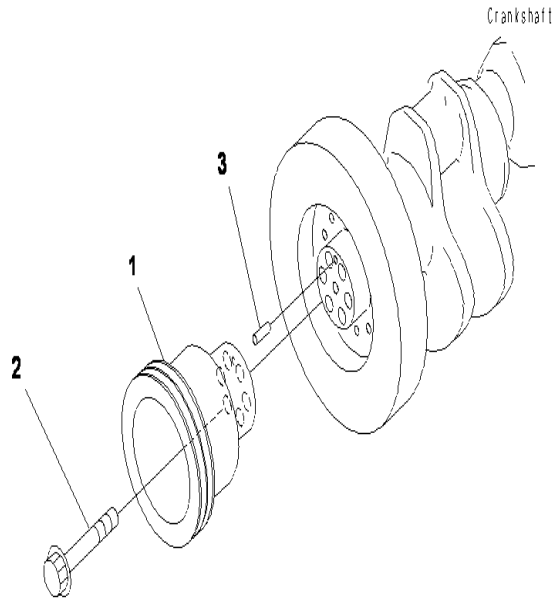

SAA12V140E-3 S/N 503621-UP

VIBRATION DAMPER

INDEX	CD	PART NO.	DESCRIPTION	QTY	SERIAL NO.
1		6215-31-8200	Damper.....	1	503621-UP
2		01010-81235	Bolt.....	12	503621-UP
3		01643-31232	Washer.....	12	503621-UP
4		04020-01024	Pin, Dowel.....	1	503621-UP

Ref :A2330-A7A1 Page :010420

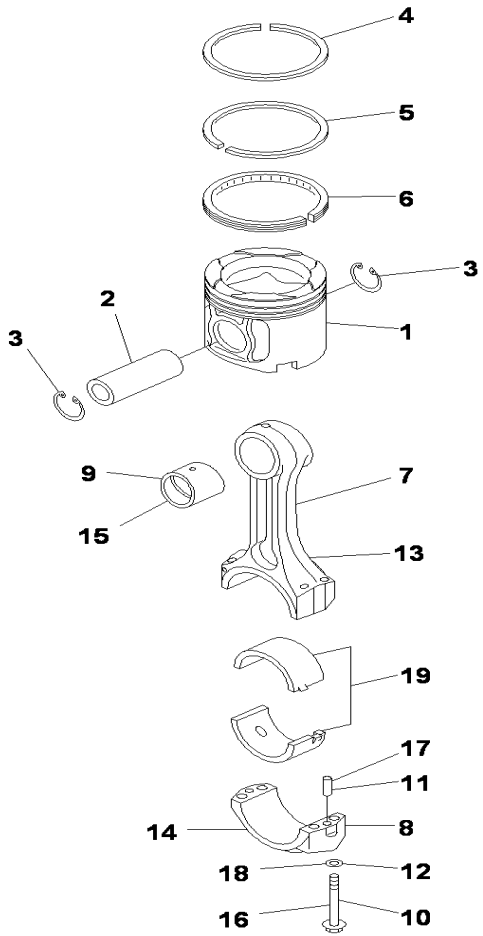

SAA12V140E-3 S/N 503621-UP

PISTON

INDEX	CD	PART NO.	DESCRIPTION	QTY	SERIAL NO.
1		6219-31-2110	Piston	6	503621-UP
2		6211-31-2410	Pin	12	503621-UP
3		04065-05220	Ring, Snap	24	503621-UP
		6261-31-2030	Piston Ring Assembly	12	503621-UP
4	C1		.Ring	1	503621-UP
5	C1		.Ring	1	503621-UP
6	C1		.Ring	1	503621-UP
		6219-31-3100	Rod Assembly,RHS	6	503621-UP
7	C1		.Rod Connecting LHS	1	503621-UP
8	C1		.Cap Lhs	1	503621-UP
9		6261-31-3140	.Bushing,RHS	1	503621-UP
10		6215-31-3310	.Bolt,RHS	4	503621-UP
11		02400-10413	.Pin, Dowel,RHS	2	503621-UP
12		6215-31-3330	.Washer	4	503621-UP
		6219-31-3200	Rod Assembly	6	503621-UP
13	C1		.Rod Connecting LHS	1	503621-UP
14	C1		.Cap Lhs	1	503621-UP
15		6261-31-3140	.Bushing,LHS	1	503621-UP
16		6215-31-3310	.Bolt,LHS	4	503621-UP
17		02400-10413	.Pin, Dowel,LHS	2	503621-UP
18		6215-31-3330	.Washer,LHS	4	503621-UP
19		6215-31-3060	Metal Assembly, Standard	12	503621-UP
	C1		.Metal, Standard	2	503621-UP
		6215-39-3060	Metal Ass'y Undersize 0.25mm	12	503621-UP
	C1		.Metal, Undersize0.25mm	2	503621-UP
		6215-38-3060	Metal Ass'y Undersize 0.50mm	12	503621-UP
	C1		.Metal, Undersize 5.00mm	2	503621-UP
		6215-37-3060	Metal Ass'y Undersize 0.75mm	12	503621-UP
	C1		.Metal, Undersize 0.75mm	2	503621-UP
		6215-36-3060	Metal Ass'y Undersize 1.00mm	12	503621-UP
	C1		.Metal, Undersize 1.00mm	2	503621-UP

Ref :A2350-A7B5 Page :010430

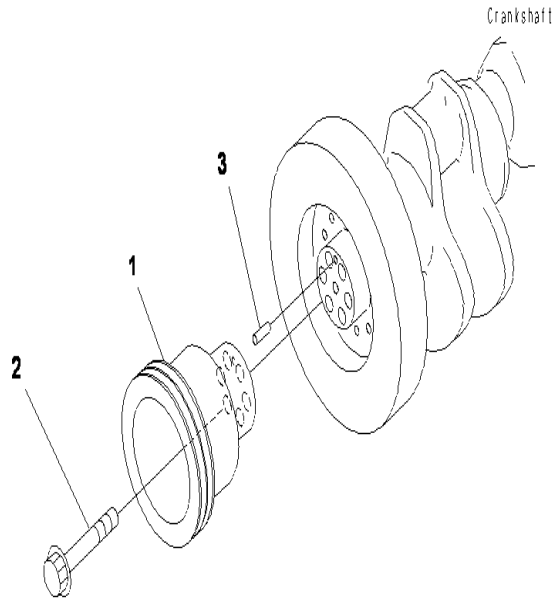

SAA12V140E-3 S/N 503621-UP

DAMPER

INDEX	CD	PART NO.	DESCRIPTION	QTY	SERIAL NO.
1		6219-31-1510	PULLEY	1	503621-UP
2		6162-33-5321	BOLT	6	503621-UP
3		04020-01024	PIN	1	503621-UP

Ref :A2330-A7A1 Page :010440

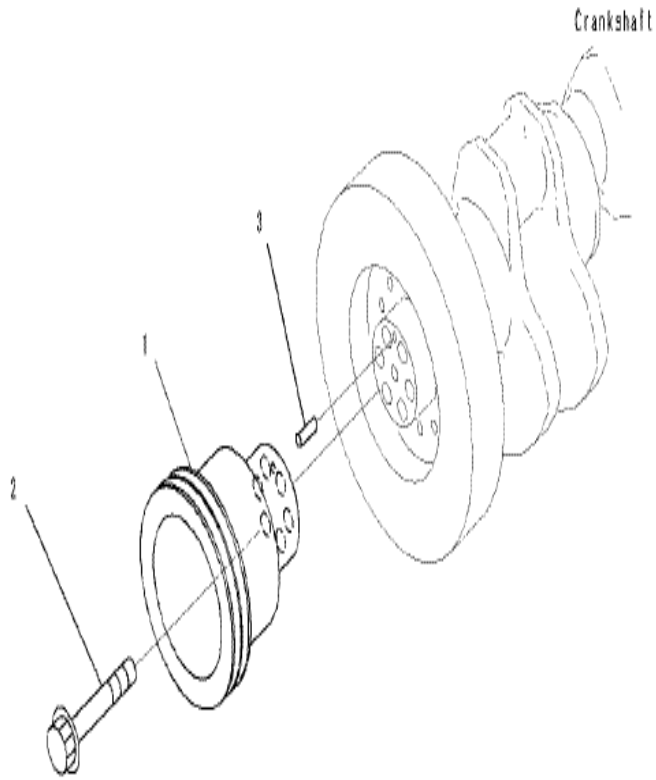

SAA12V140E-3 S/N 503621-UP

COOLING FAN DRIVE PULLEY

INDEX	CD	PART NO.	DESCRIPTION	QTY	SERIAL NO.
1		6219-31-1510	PULLEY.....	1	503621-UP
2		6162-33-5321	BOLT.....	6	503621-UP
3		04020-01024	PIN.....	1	503621-UP

Ref :A2370-01A0 Page :010445

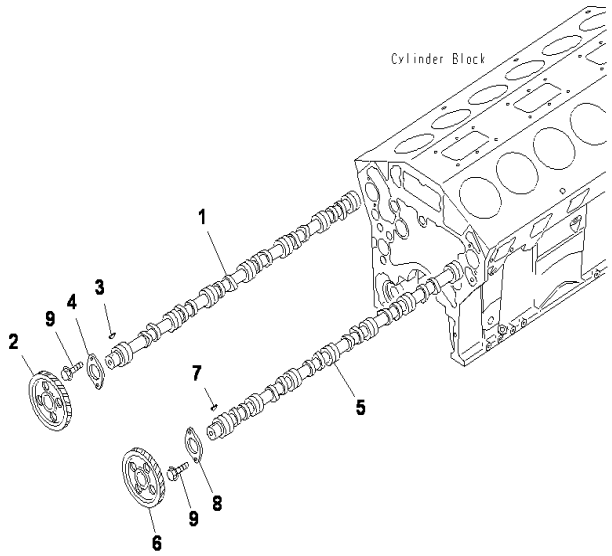

SAA12V140E-3 S/N 503621-UP

CAMSHAFT

INDEX	CD	PART NO.	DESCRIPTION	QTY	SERIAL NO.
		6215-41-1100	Camshaft Assembly,RHS.....	1	503621-UP
1	C1		.Camshaft, RHS.....	1	503621-UP
2		6215-41-1130	.Gear,RHS.....	1	503621-UP
3		04010-00725	.Key, Woodruff.....	1	503621-UP
4		6210-41-1131	.Plate, Thrust.....	1	503621-UP
		6215-41-1200	Camshaft Assembly,RHS,LHS.....	1	503621-UP
5	C1		.Camshaft, LHS.....	1	503621-UP
6		6210-41-1120	.Gear,LHS.....	1	503621-UP
7		04010-00725	.Key, Woodruff.....	1	503621-UP
8		6210-41-1131	.Plate, Thrust.....	1	503621-UP
9		01437-01220	Bolt.....	4	503621-UP

Ref :A2410-A7A7 Page :010450

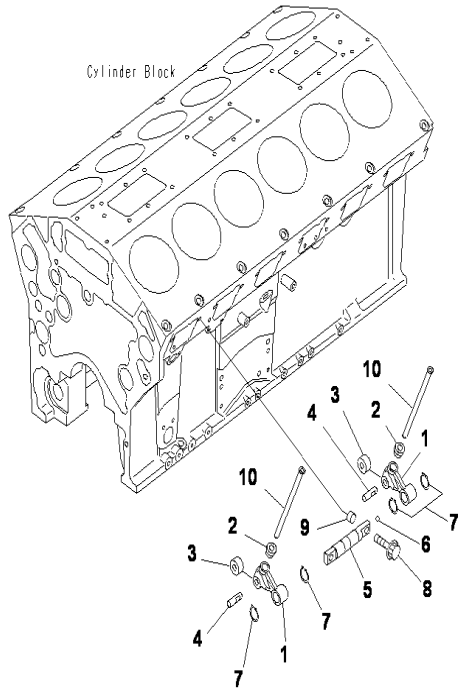

SAA12V140E-3 S/N 503621-UP

CAMFOLLOWER

INDEX	CD	PART NO.	DESCRIPTION	QTY	SERIAL NO.
		6210-41-2320	Lever Assembly.....	24	503621-UP
1	C1		.Lever.....	1	503621-UP
2	C1		.socket.....	1	503621-UP
3	C1		.Roller.....	1	503621-UP
4	C1		.Pin, roller.....	1	503621-UP
		6210-412400	Shaft Assembly.....	12	503621-UP
5	C1		.Shaft.....	1	503621-UP
6	C1		.Ball.....	1	503621-UP
7		04064-02212	Ring, Snap.....	48	503621-UP
8		6210-41-2450	Bolt.....	24	503621-UP
9		6210-41-2431	Pin, Dowel.....	24	503621-UP
10		6210-41-3120	Rod ,Push.....	24	503621-UP

Ref :A2411-A7A5 Page :010460

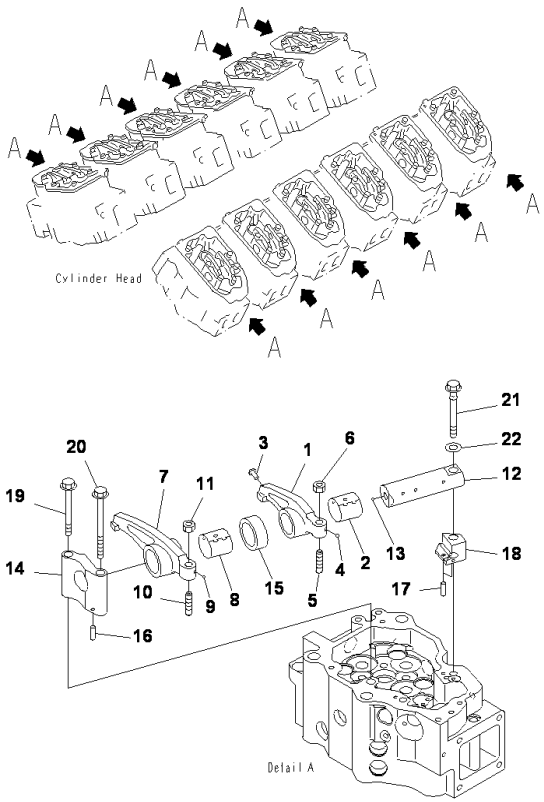

SAA12V140E-3 S/N 503621-UP

ROCKER ARM

INDEX	CD	PART NO.	DESCRIPTION	QTY	SERIAL NO.
		6261-41-5040	Rocker Arm Assembly.....	12	503621-UP
		6261-41-5400	.Arm Assembly.....	1	503621-UP
1	C1		..Arm Assembly, rocker.....	1	503621-UP
2		6261-41-5420	..Bushing.....	1	503621-UP
3		6162-43-5340	..Rivet.....	1	503621-UP
4		04260-00317	..Ball, Steel.....	1	503621-UP
5		6217-41-5550	.Screw.....	1	503621-UP
6		01582-01008	.Nut.....	1	503621-UP
		6261-41-5050	Rocker Arm Assembly.....	12	503621-UP
		6261-41-5500	.Arm Assembly.....	1	503621-UP
7	C1		..Arm.....	1	503621-UP
8		6261-41-5520	..Bushing.....	1	503621-UP
9		04260-00317	..Ball, Steel.....	1	503621-UP
10		6217-41-5550	.Screw.....	1	503621-UP
11		01582-01008	.Nut.....	1	503621-UP
		6934-42-5300	Shaft Assembly.....	12	503621-UP
12	C1		.Assembly.....	1	503621-UP
13		04260-00635	.Ball, Steel.....	1	503621-UP
14		6261-41-5530	Bracket.....	12	503621-UP
15		6210-41-5440	Collar.....	12	503621-UP
16		04020-00514	Pin, Dowel, Dowel.....	12	503621-UP
17		04020-00514	Pin, Dowel, Dowel.....	24	503621-UP
18		6217-41-5540	Spacer.....	12	503621-UP
19		6217-41-5570	Bolt.....	12	503621-UP
20		6217-41-5560	Bolt.....	12	503621-UP
21		6217-81-8311	Bolt.....	12	503621-UP
22		01643-51232	Washer.....	12	503621-UP

Ref :A2411-B7A5 Page :010470

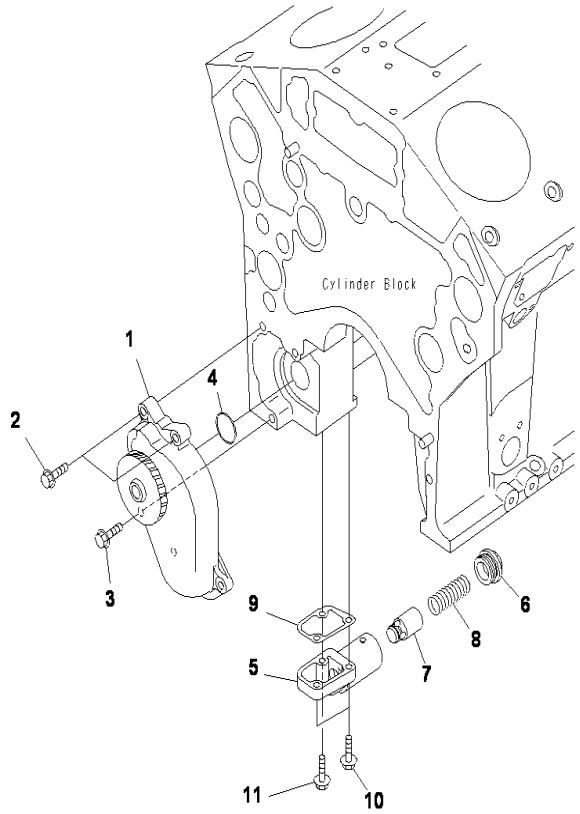

SAA12V140E-3 S/N 503621-UP

ENGINE OIL PUMP

INDEX	CD	PART NO.	DESCRIPTION	QTY	SERIAL NO.
1		6219-51-1000	Pump Assembly.....	1	503621-UP
2		01437-01245	Bolt.....	2	503621-UP
3		01437-01280	Bolt.....	1	503621-UP
4		07000-E3050	O-ring.....	1	503621-UP
		6219-51-2700	Valve Assembly.....	1	503621-UP
5	C1		.BODY.....	1	503621-UP
6		6219-51-2740	.Plug.....	1	503621-UP
7		6219-51-2730	.Valve.....	1	503621-UP
8		6219-51-2750	.Spring.....	1	503621-UP
9		6215-51-1780	Gasket.....	1	503621-UP
10		01437-01030	Bolt.....	2	503621-UP
11		01437-01060	Bolt.....	1	503621-UP

Ref :A3010-A7A6 Page :010480

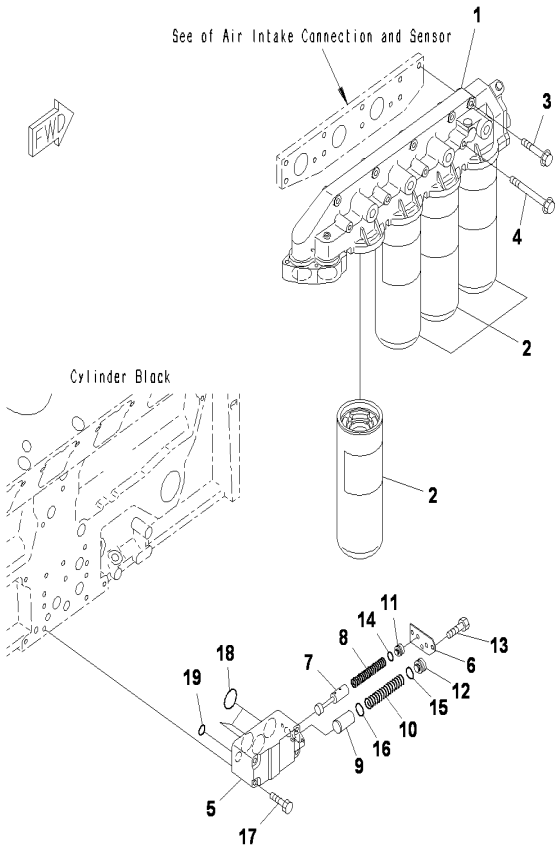

SAA12V140E-3 S/N 503621-UP

ENGINE OIL FILLER (OIL FILTER)

INDEX	CD	PART NO.	DESCRIPTION	QTY	SERIAL NO.
1		6216-54-6431	Head Assembly, Oil Filter.....	1	503621-UP
2		600-211-1340	Cartridge.....	4	503621-UP
3		01435-01075	Bolt.....	5	503621-UP
4		01436-01020	Bolt.....	4	503621-UP
		6215-51-5601	Valve Assembly.....	1	503621-UP
5		6215-51-5511	.Body.....	1	503621-UP
6		6215-51-5540	.Cover.....	1	503621-UP
7		6215-51-5550	.Valve.....	1	503621-UP
8		6215-51-5560	.Spring.....	1	503621-UP
9		6215-51-1730	.Valve.....	1	503621-UP
10		6215-51-1791	.Spring.....	1	503621-UP
11		6215-51-5571	.Plug.....	1	503621-UP
12		6215-51-5591	.Plug.....	1	503621-UP
13		01010-80812	.Bolt.....	3	503621-UP
14		07000-72018	.O-ring.....	1	503621-UP
15		07000-73022	.O-ring.....	1	503621-UP
16		11T-27-11190	.Shim, T=1.0mm.....	1	503621-UP
17		01010-81090	Bolt.....	4	503621-UP
18		07000-73038	O-ring.....	3	503621-UP
19		07000-72018	O-ring.....	1	503621-UP

Ref :A3110-A7D6 Page :010490

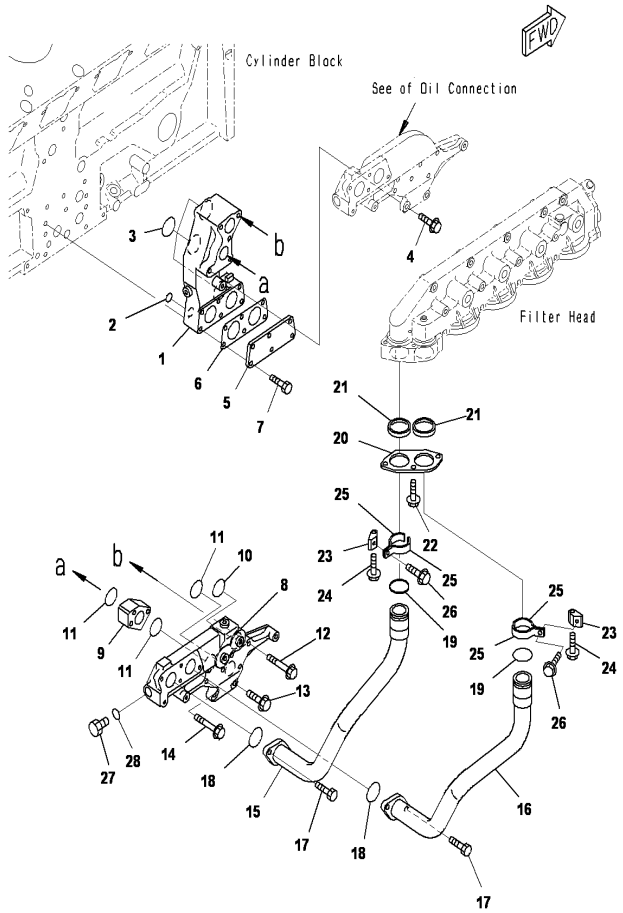

SAA12V140E-3 S/N 503621-UP

ENGINE OIL FILLER (ADAPTER)

INDEX	CD	PART NO.	DESCRIPTION	QTY	SERIAL NO.
1		6219-51-5110	Connector	1	503621-UP
2		07000-72018	O-ring	1	503621-UP
3		07000-73042	O-ring	3	503621-UP
4		01436-01025	Bolt	1	503621-UP
5		6215-51-5481	Cover	1	503621-UP
6		6215-51-5490	Gasket	1	503621-UP
7		01010-81080	Bolt	6	503621-UP
8		6219-51-5100	Connector Assembly	1	503621-UP
		6219-51-5120	.Connector	1	503621-UP
		07043-70108	.Plug	4	503621-UP
9		6219-51-5150	Spacer	1	503621-UP
10		07000-73045	O-ring	1	503621-UP
11		07000-73040	O-ring	3	503621-UP
12		01436-01050	Bolt	5	503621-UP
13		01435-01035	Bolt	1	503621-UP
14		01435-01095	Bolt	1	503621-UP
15		6219-51-5710	Tube	1	503621-UP
16		6219-51-5720	Tube	1	503621-UP
17		01010-81030	Bolt	4	503621-UP
18		07000-73045	O-ring	2	503621-UP
19		6219-51-5610	O-ring	2	503621-UP
20		6215-51-5650	Plate	1	503621-UP
21		6219-51-5620	Grommet	2	503621-UP
22		01435-01025	Bolt	1	503621-UP
23		6219-51-5830	Plate	2	503621-UP
24		01435-01055	Bolt	2	503621-UP
25		6165-61-6791	Clamp	4	503621-UP
26		01435-00820	Bolt	2	503621-UP
27		07040-12012	Plug	1	503621-UP
28		07002-22034	O-ring	1	503621-UP

Ref :A3110-B7D6 Page :010500

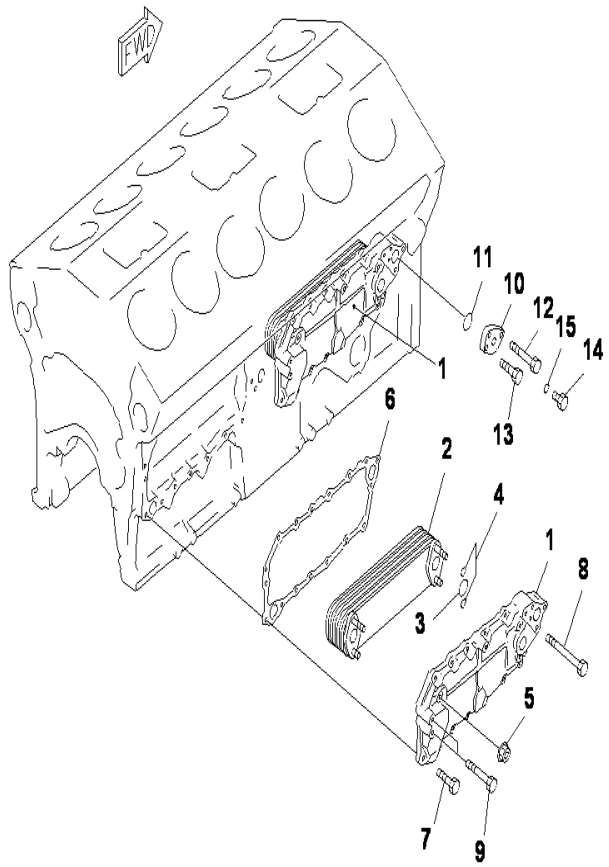

SAA12V140E-3 S/N 503621-UP

ENGINE OIL COOLER

INDEX	CD	PART NO.	DESCRIPTION	QTY	SERIAL NO.
1		6215-61-2113	Cover	2	503621-UP
2		600-651-1610	Element	2	503621-UP
3		6210-61-2520	O-ring	4	503621-UP
4		07000-A2016	O-ring	8	503621-UP
5		6215-61-2580	Nut	8	503621-UP
6		6215-61-2810	Gasket	2	503621-UP
7		01010-81030	Bolt	24	503621-UP
8		01010-81065	Bolt	2	503621-UP
9		01010-81075	Bolt	4	503621-UP
10		6215-61-2171	Cover	1	503621-UP
11		07000-73040	O-ring	1	503621-UP
12		01010-81085	Bolt	2	503621-UP
13		01010-81030	Bolt	1	503621-UP
14		07040-11409	Plug	1	503621-UP
15		07002-21423	O-ring	1	503621-UP

Ref :A3310-A7C4 Page :010510

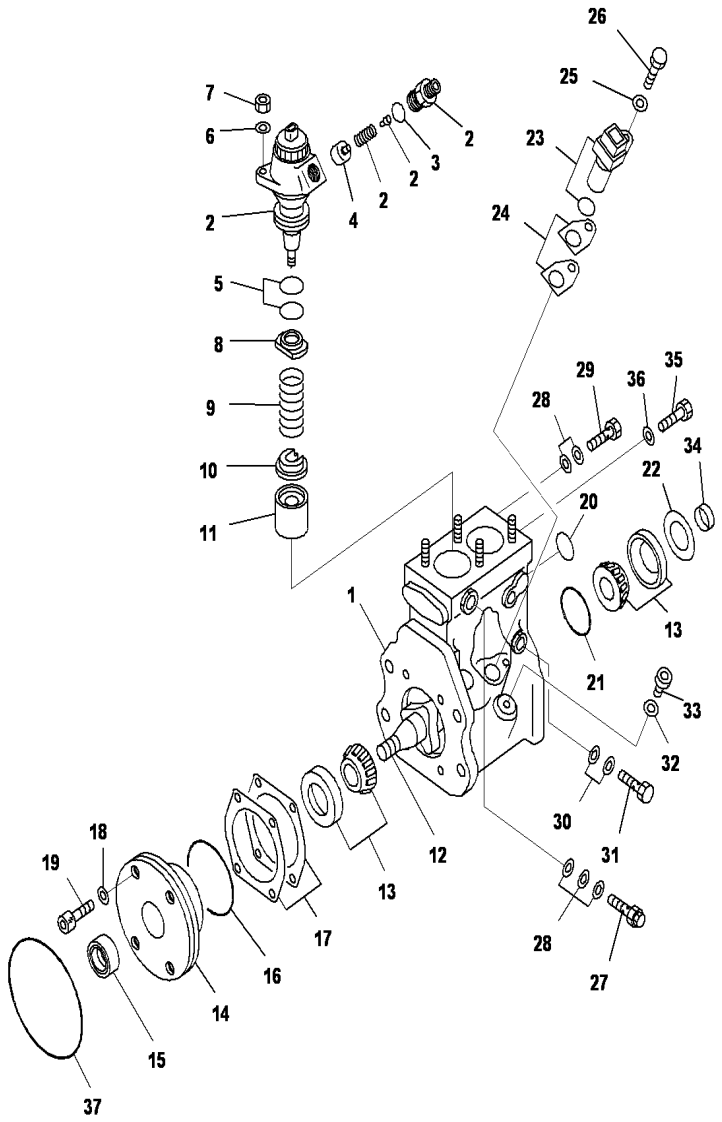

SAA12V140E-3 S/N 503621-UP

FUEL SUPPLY PUMP(INNER PARTS,LHS)

INDEX	CD	PART NO.	DESCRIPTION	QTY	SERIAL NO.
		6219-71-1101	Pump Assembly.....	1	503621-UP
		6219-71-1111	.Pump, Supply.....	1	503621-UP
	C2	ND094100-0512	..Body Assembly.....	1	503621-UP
1	C2	ND094110-0230	...Housing Assembly.....	1	503621-UP
2	C2	ND094040-0380	...Element Assembly.....	2	503621-UP
3	C2	ND094086-0090	....O-ring.....	2	503621-UP
4	C2	ND094140-0040	....Valve Assembly.....	2	503621-UP
5	C2	ND094086-0100	...O-ring.....	4	503621-UP
6	C2	ND949013-5880	...Washer.....	4	503621-UP
7	C2	ND921560-8081	...Nut.....	4	503621-UP
8	C2	ND094162-0031	...Seat, Spring, Upper.....	2	503621-UP
9	C2	ND094164-0030	...Spring, Plunger.....	2	503621-UP
10	C2	ND094165-0031	...Seat, Spring, Lower.....	2	503621-UP
11	C2	ND094170-0110	...Tappet Assembly.....	2	503621-UP
12	C2	ND094191-0590	...Camshaft.....	1	503621-UP
13	C2	ND949101-0250	...Bearing, Roller.....	2	503621-UP
14	C2	ND094104-0160	...Cover, Bearing.....	1	503621-UP
15	C2	ND949150-3200	...Seal, Oil.....	1	503621-UP
16	C2	ND094086-0150	...O-ring.....	1	503621-UP
17	C2	ND094095-0330	...Shim, T=0.05mm.....		503621-UP
	C2	ND094095-0340	...Shim, T=0.10mm.....		503621-UP
	C2	ND094095-0350	...Shim, T=0.20mm.....		503621-UP
	C2	ND094095-0360	...Shim, T=0.30mm.....		503621-UP
	C2	ND094095-0370	...Shim, T=0.50mm.....		503621-UP
18	C2	ND094092-0010	...Washer.....	4	503621-UP
19	C2	ND949044-3320	...Bolt.....	4	503621-UP
20	C2	ND094086-0160	...O-ring.....	1	503621-UP
21	C2	ND094086-0170	...O-ring.....	1	503621-UP
22	C2	ND094093-0090	...Shim, T=0.40mm.....		503621-UP
	C2	ND094093-0100	...Shim, T=0.60mm.....		503621-UP
	C2	ND094093-0110	...Shim, T=0.80mm.....		503621-UP
	C2	ND094093-0120	...Shim, T=1.00mm.....		503621-UP
23	C2	ND949979-1300	...Sensor Assembly.....	1	503621-UP
	C2	ND949140-6310	....O-ring.....	1	503621-UP
24	C2	ND094096-0050	...Shim, T=0.15mm.....		503621-UP
	C2	ND094096-0060	...Shim, T=0.20mm.....		503621-UP
	C2	ND094096-0070	...Shim, T=0.25mm.....		503621-UP
	C2	ND094096-0080	...Shim, T=0.40mm.....		503621-UP
25	C2	ND902000-6081	...Washer.....	1	503621-UP
26		ND901070-6161	...Bolt.....	1	503621-UP
27		ND090310-0500	...Valve Assembly, Overflow.....	1	503621-UP
28		ND090222-0070	...Washer.....	5	503621-UP
29		ND949180-0310	...Screw.....	1	503621-UP
30		ND090222-0120	...Washer.....	2	503621-UP
31		ND949180-0060	...Screw.....	1	503621-UP

Ref :A4010-D7F7 Page :010520

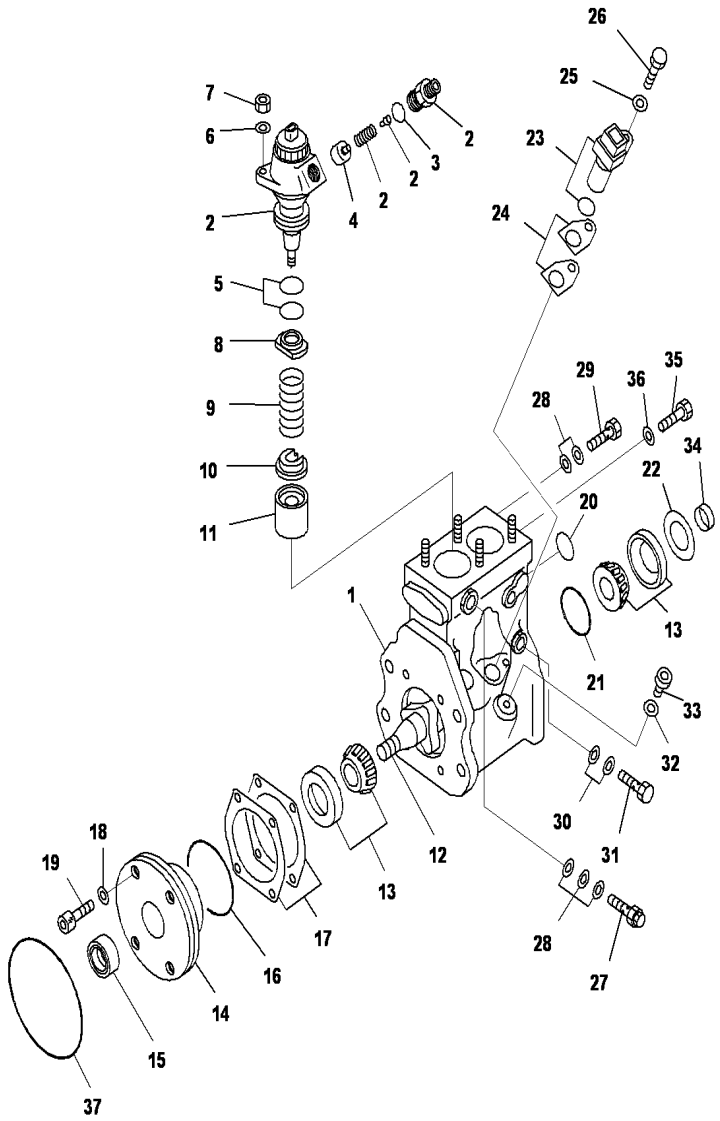

SAA12V140E-3 S/N 503621-UP

FUEL SUPPLY PUMP(INNER PARTS,LHS)

INDEX	CD	PART NO.	DESCRIPTION	QTY	SERIAL NO.
32		ND949018-0350	...Washer	1	503621-UP
33		ND090317-0480	...Plug, Screw	1	503621-UP
34	C2	ND090207-0100	...Ring	1	503621-UP
35		ND090244-0010	...Screw	1	503621-UP
36		ND949010-3020	...Washer	1	503621-UP
37		ND094086-0210	..O-ring	1	503621-UP

Ref :A4010-D7F7 Page :010521

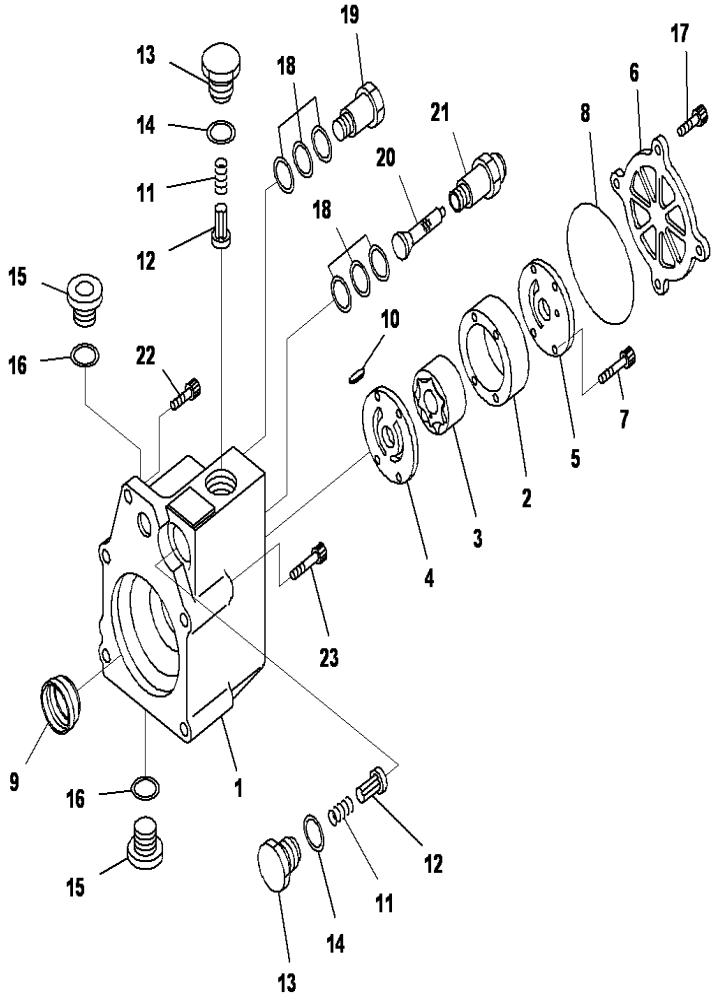

SAA12V140E-3 S/N 503621-UP

FUEL SUPPLY PUMP(INNER PARTS)(FEED PUMP, LHS)

INDEX	CD	PART NO.	DESCRIPTION	QTY	SERIAL NO.
		6219-71-1101	Pump Assembly.....	1	503621-UP
	C2	ND094200-0430	.Pump Assembly, Feed.....	1	503621-UP
1	C2	ND094210-0090	..Housing Assembly.....	1	503621-UP
2	C2	ND094231-0060	..Case.....	1	503621-UP
3	C2	ND094230-0080	..Pump Subassembly.....	1	503621-UP
4	C2	ND094241-0040	..Plate.....	1	503621-UP
5	C2	ND094244-0040	..Plate.....	1	503621-UP
6	C2	ND094251-0050	..Cover.....	1	503621-UP
7	C2	ND094082-0040	..Screw.....	4	503621-UP
8	C2	ND094086-0200	..O-ring.....	1	503621-UP
9	C2	ND094087-0050	..Seal, Oil.....	1	503621-UP
10	C2	ND094205-0060	..Key.....	1	503621-UP
11		ND092124-0010	..Spring, Check Valve.....	2	503621-UP
12		ND092121-0011	..Valve, Check.....	2	503621-UP
13	C2	ND092126-0010	..Plug, Chamber.....	2	503621-UP
14		ND092125-0010	..Gasket.....	2	503621-UP
15	C2	ND090317-0060	..Plug, Screw.....	2	503621-UP
16	C2	ND949018-1500	..Washer, T=1.0mm.....	2	503621-UP
17	C2	ND949044-3320	..Bolt.....	4	503621-UP
18		ND090222-0070	..Washer.....	6	503621-UP
19		ND090310-0490	..Valve, Overflow.....	1	503621-UP
20		ND092220-0040	..Filter.....	1	503621-UP
21		ND092223-0042	..Screw.....	1	503621-UP
22	C2	ND949044-3320	.Bolt.....	1	503621-UP
23		ND096449-0070	.Bolt, Socet.....	4	503621-UP

Ref :A4010-E7G7 Page :010530

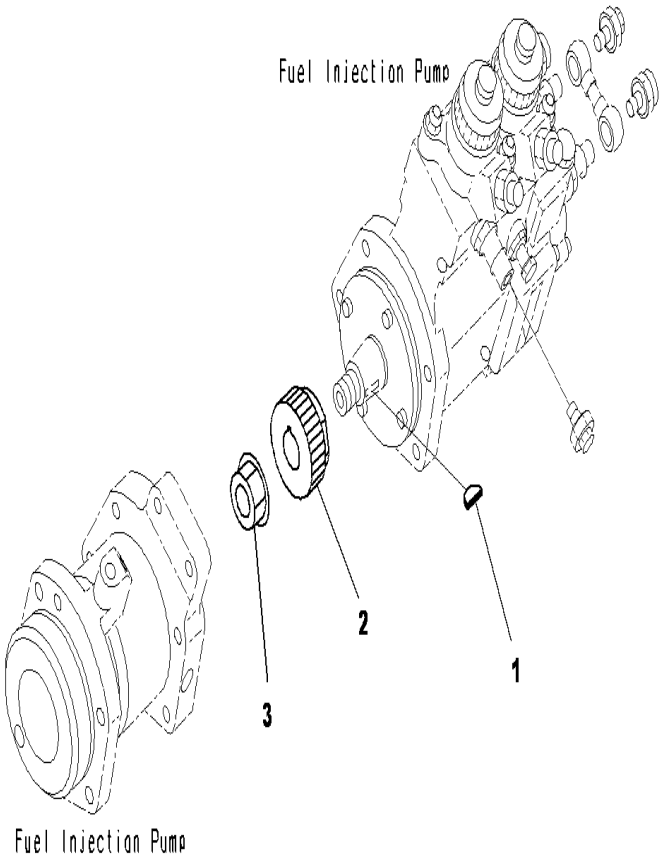

SAA12V140E-3 S/N 503621-UP

FUEL SUPPLY PUMP(MOUNTING)(1/2)

INDEX	CD	PART NO.	DESCRIPTION	QTY	SERIAL NO.
		6219-71-1101	Pump Assembly.....	1	503621-UP
1		04010-00519	.Key, Woodruff.....	1	503621-UP
2		6219-71-3140	.Coupling.....	1	503621-UP
3		6219-71-3150	.Nut.....	1	503621-UP

Ref :A4010-G7H8 Page :010540

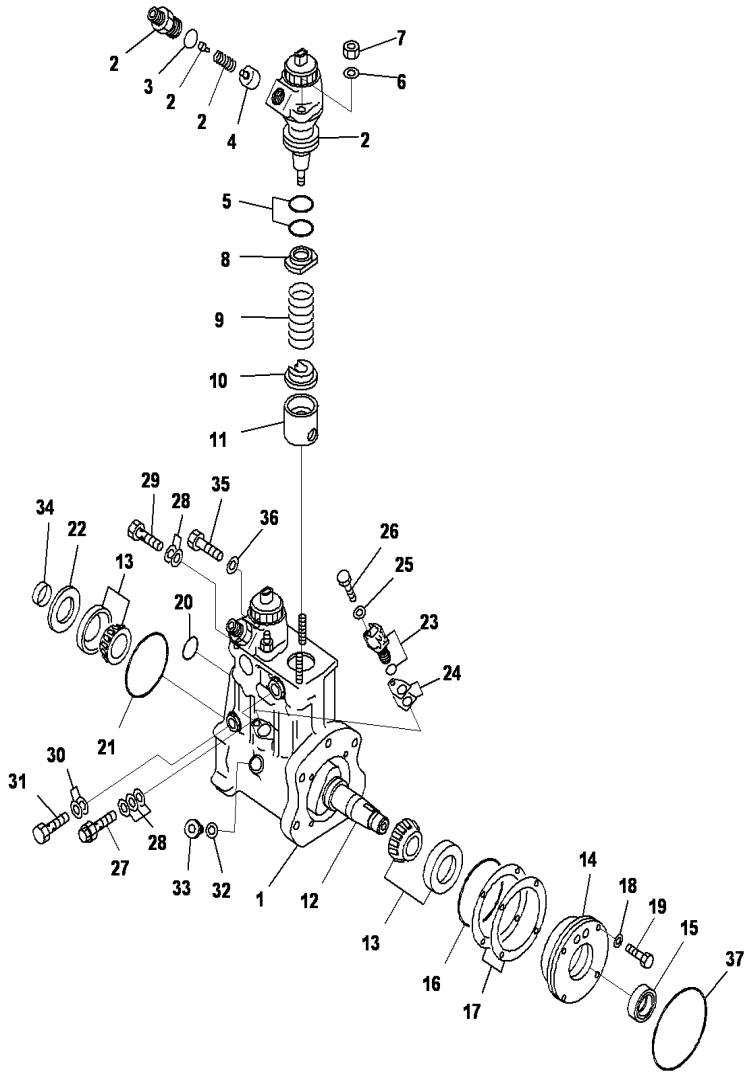

SAA12V140E-3 S/N 503621-UP

FUEL SUPPLY PUMP(INNER PARTS,RHS)

INDEX	CD	PART NO.	DESCRIPTION	QTY	SERIAL NO.
		6219-71-1201	Pump Assembly,RHS.....	1	503621-UP
		6219-71-1121	.Pump, Supply.....	1	503621-UP
	C2	ND094100-0522	..Body Assembly.....	1	503621-UP
1	C2	ND094110-0270	...Housing Assembly.....	1	503621-UP
2	C2	ND094040-0380	...Element Assembly.....	2	503621-UP
3	C2	ND094086-0090	....O-ring.....	2	503621-UP
4	C2	ND094140-0040	....Valve Assembly.....	2	503621-UP
5	C2	ND094086-0100	...O-ring.....	4	503621-UP
6	C2	ND949013-5880	...Washer.....	4	503621-UP
7	C2	ND921560-8081	...Nut.....	4	503621-UP
8	C2	ND094162-0031	...Seat, Spring, Upper.....	2	503621-UP
9	C2	ND094164-0030	...Spring, Plunger.....	2	503621-UP
10	C2	ND094165-0031	...Seat, Spring, Lower.....	2	503621-UP
11	C2	ND094170-0110	...Tappet Assembly.....	2	503621-UP
12	C2	ND094191-0571	...Camshaft.....	1	503621-UP
13	C2	ND949101-0250	...Bearing, Roller.....	2	503621-UP
14	C2	ND094104-0160	...Cover, Bearing.....	1	503621-UP
15	C2	ND949150-3200	...Seal, Oil.....	1	503621-UP
16	C2	ND094086-0150	...O-ring.....	1	503621-UP
17	C2	ND094095-0330	...Shim, T=0.05mm.....		503621-UP
	C2	ND094095-0340	...Shim, T=0.10mm.....		503621-UP
	C2	ND094095-0350	...Shim, T=0.20mm.....		503621-UP
	C2	ND094095-0360	...Shim, T=0.30mm.....		503621-UP
	C2	ND094095-0370	...Shim, T=0.50mm.....		503621-UP
18	C2	ND094092-0010	...Washer.....	4	503621-UP
19	C2	ND949044-3320	...Bolt.....	4	503621-UP
20	C2	ND094086-0160	...O-ring.....	1	503621-UP
21	C2	ND094086-0170	...O-ring.....	1	503621-UP
22	C2	ND094093-0090	...Shim, T=0.40mm.....		503621-UP
	C2	ND094093-0100	...Shim, T=0.60mm.....		503621-UP
	C2	ND094093-0110	...Shim, T=0.80mm.....		503621-UP
	C2	ND094093-0120	...Shim, T=1.00mm.....		503621-UP
23	C2	ND949979-1300	...Sensor Assembly.....	1	503621-UP
	C2	ND949140-6310	....O-ring.....	1	503621-UP
24	C2	ND094096-0050	...Shim, T=0.15mm.....		503621-UP
	C2	ND094096-0060	...Shim, T=0.20mm.....		503621-UP
	C2	ND094096-0070	...Shim, T=0.25mm.....		503621-UP
	C2	ND094096-0080	...Shim, T=0.40mm.....		503621-UP
25	C2	ND902000-6081	...Washer.....	1	503621-UP
26	C2	ND901070-6161	...Bolt.....	1	503621-UP
27		ND090310-0500	...Valve Assembly, Overflow.....	1	503621-UP
28		ND090222-0070	...Washer.....	5	503621-UP
29		ND949180-0310	...Screw.....	1	503621-UP
30		ND090222-0120	...Washer.....	2	503621-UP
31		ND949180-0060	...Screw.....	1	503621-UP

Ref :A4010-G8H9 Page :010550

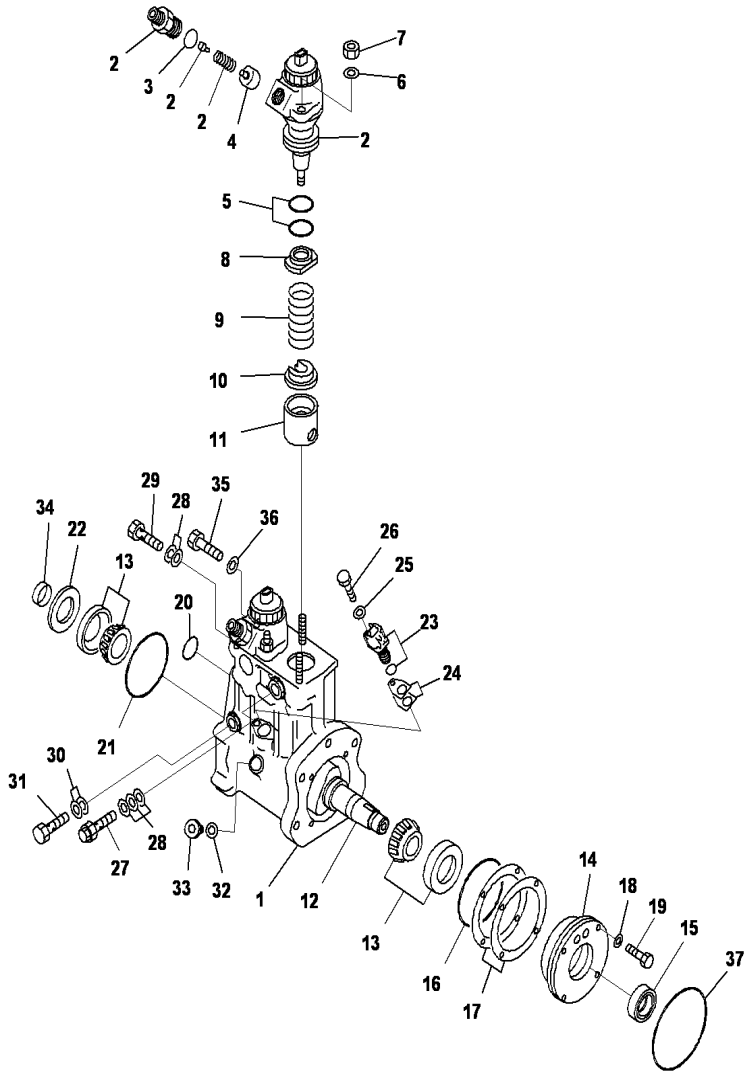

SAA12V140E-3 S/N 503621-UP

FUEL SUPPLY PUMP(INNER PARTS,RHS)

INDEX	CD	PART NO.	DESCRIPTION	QTY	SERIAL NO.
32		ND949018-0350	...Washer	1	503621-UP
33		ND090317-0480	...Plug, Screw	1	503621-UP
34	C2	ND090207-0100	...Ring	1	503621-UP
35		ND090244-0010	...Screw	1	503621-UP
36		ND949010-3020	...Washer	1	503621-UP
37		ND094086-0210	..O-ring	1	503621-UP

Ref :A4010-G8H9 Page :010551

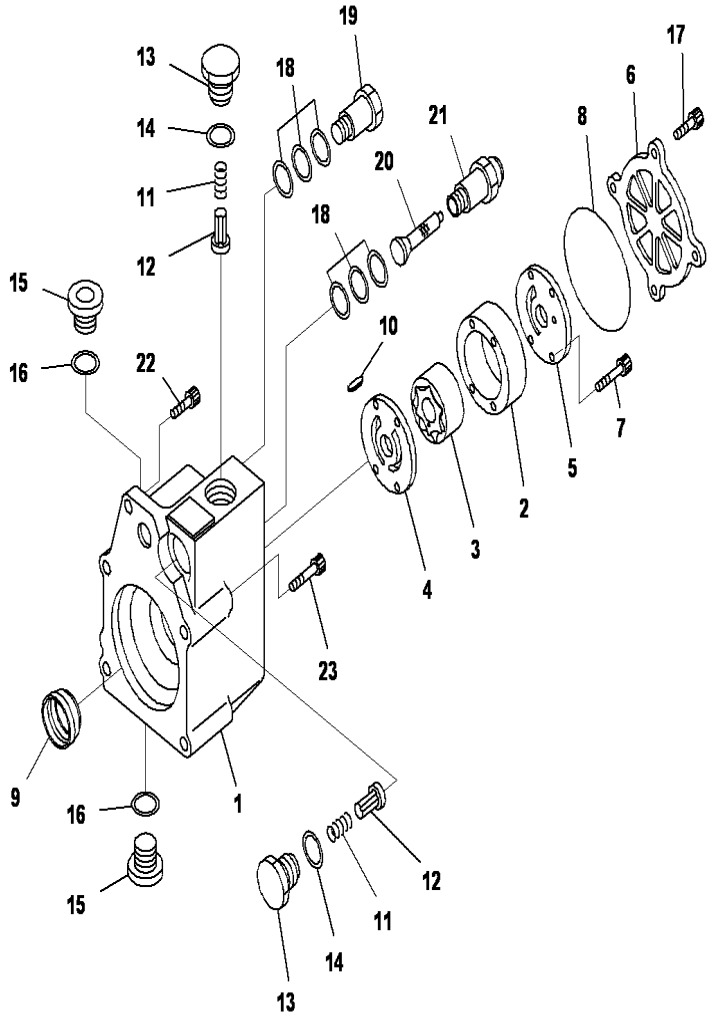

SAA12V140E-3 S/N 503621-UP

FUEL SUPPLY PUMP(INNER PARTS)(FEED PUMP, RHS)

INDEX	CD	PART NO.	DESCRIPTION	QTY	SERIAL NO.
		6219-71-1201	Pump Assembly,RHS	1	503621-UP
		ND094200-0430	.Pump Assembly, Feed	1	503621-UP
1	C2	ND094210-0090	..Housing Assembly	1	503621-UP
2	C2	ND094231-0060	..Case	1	503621-UP
3	C2	ND094230-0080	..Pump Subassembly	1	503621-UP
4	C2	ND094241-0040	..Plate	1	503621-UP
5	C2	ND094244-0040	..Plate	1	503621-UP
6	C2	ND094251-0050	..Cover	1	503621-UP
7	C2	ND094082-0040	..Screw	4	503621-UP
8	C2	ND094086-0200	..O-ring	1	503621-UP
9	C2	ND094087-0050	..Seal, Oil	1	503621-UP
10	C2	ND094205-0060	..Key	1	503621-UP
11		ND092124-0010	..Spring, Check Valve	2	503621-UP
12		ND092121-0011	..Valve, Check	2	503621-UP
13	C2	ND092126-0010	..Plug, Chamber	2	503621-UP
14		ND092125-0010	..Gasket	2	503621-UP
15	C2	ND090317-0060	..Plug, Screw		503621-UP
16	C2	ND949018-1500	..Washer, T=1.0mm	2	503621-UP
17	C2	ND9490443320	..Bolt	4	503621-UP
18		ND090222-0070	..Washer	6	503621-UP
19		ND090310-0490	..Valve, Overflow	1	503621-UP
20		ND092220-0040	..Filter	1	503621-UP
21		ND092223-0042	..Screw	1	503621-UP
22	C2	ND949044-3320	.Bolt	1	503621-UP
23		ND096449-0070	.Bolt, Socet	4	503621-UP

Ref :A4010-G9H9 Page :010561

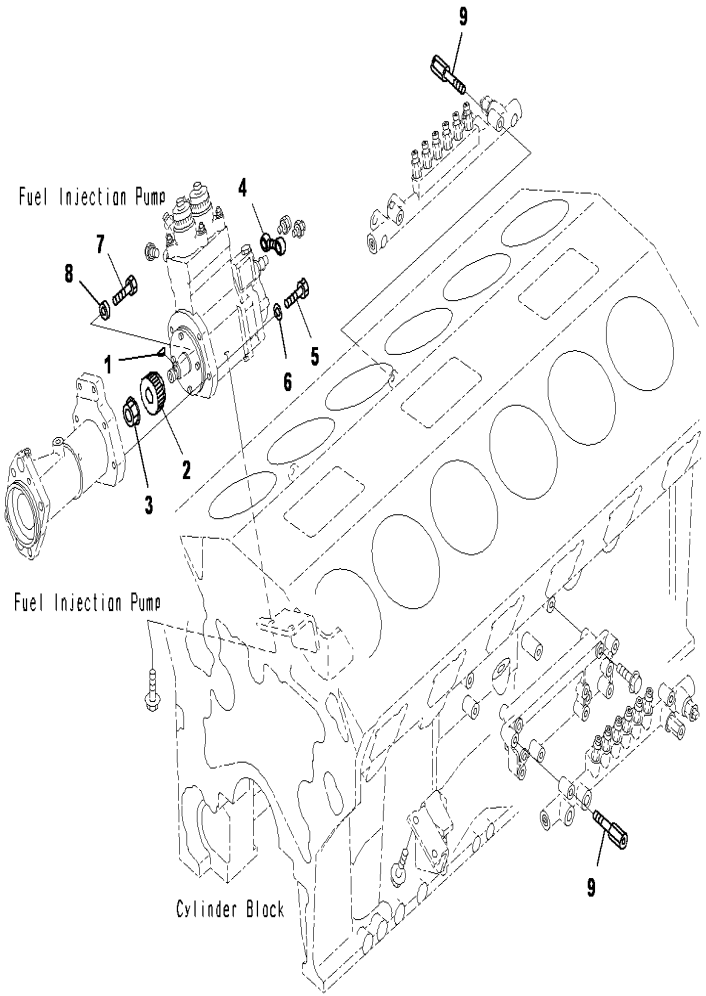

SAA12V140E-3 S/N 503621-UP

FUEL SUPPLY PUMP(MOUNTING)(2/2)

INDEX	CD	PART NO.	DESCRIPTION	QTY	SERIAL NO.
		621-97-11201	Pump Assembly,RHS.....	1	503621-UP
1		04010-00519	.Key, Woodruff.....	1	503621-UP
2		6219-71-3140	.Coupling.....	1	503621-UP
3		6219-71-3150	.Nut.....	1	503621-UP
4		6217-71-5910	Tube.....	2	503621-UP
5		01010-81035	Bolt.....	6	503621-UP
6		01643-31032	Washer.....	6	503621-UP
7		6934-72-3980	Bolt.....	2	503621-UP
8		6151-71-2980	Spacer.....	2	503621-UP
9		6217-71-5251	Bolt.....	4	503621-UP

Ref :A4010-H1J1 Page :010571

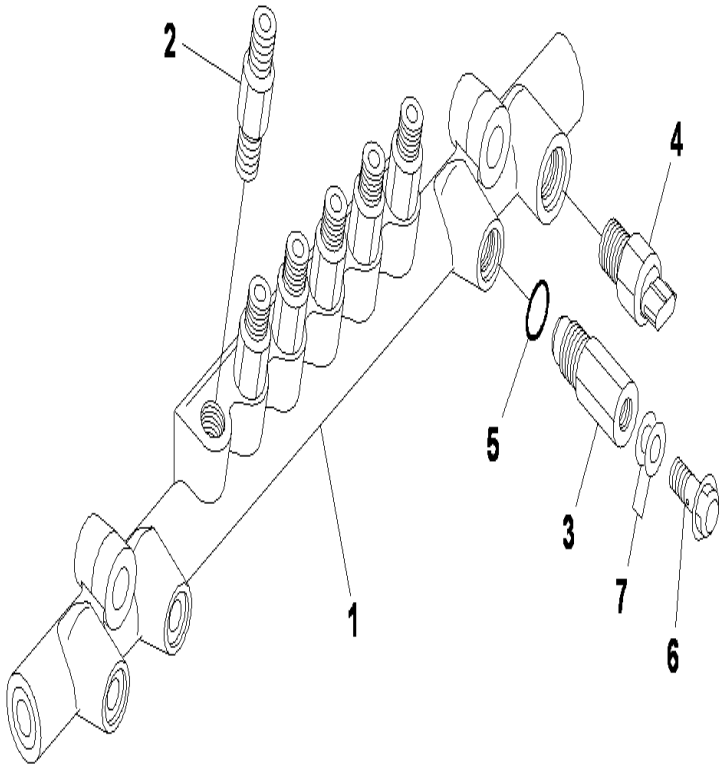

SAA12V140E-3 S/N 503621-UP

FUEL SUPPLY, COMMOM RAIL LHS

INDEX	CD	PART NO.	DESCRIPTION	QTY	SERIAL NO.
1		6219-71-1210	Common Rail Assembly,LHS.....	1	503621-UP
2		ND095400-0310	.Limiter Assembly, Fuel Flow.....	6	503621-UP
3		ND095420-0150	.Limiter.....	1	503621-UP
4		ND499000-6160	.Sensor Assembly, Fuel Pressure.....	1	503621-UP
5		ND095444-0020	.Ring.....	1	503621-UP
6		ND095438-0090	.Bolt, Joint.....	1	503621-UP
7		ND949010-2530	.Gasket.....	2	503621-UP

Ref :A4010-H1G1 Page :010580

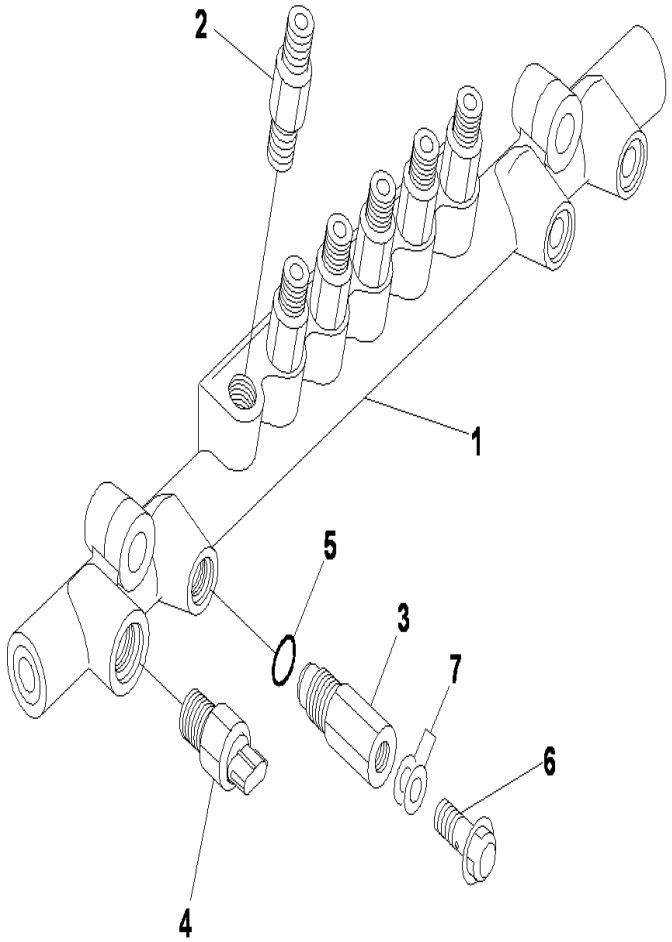

SAA12V140E-3 S/N 503621-UP

FUEL SUPPLY, COMMOM RAIL RHS

INDEX	CD	PART NO.	DESCRIPTION	QTY	SERIAL NO.
1		6219-71-1220	Common Rail Assembly,RHS.....	1	503621-UP
2		ND095400-0310	.Limiter Assembly, Fuel Flow.....	6	503621-UP
3		ND095420-0150	.Limiter.....	1	503621-UP
4		ND499000-6160	.Sensor Assembly, Fuel Pressure.....	1	503621-UP
5		ND095444-0020	.Ring.....	1	503621-UP
6		ND095438-0090	.Bolt, Joint.....	1	503621-UP
7		ND949010-2530	.Gasket.....	2	503621-UP

Ref :A4010-H2G1 Page :010590

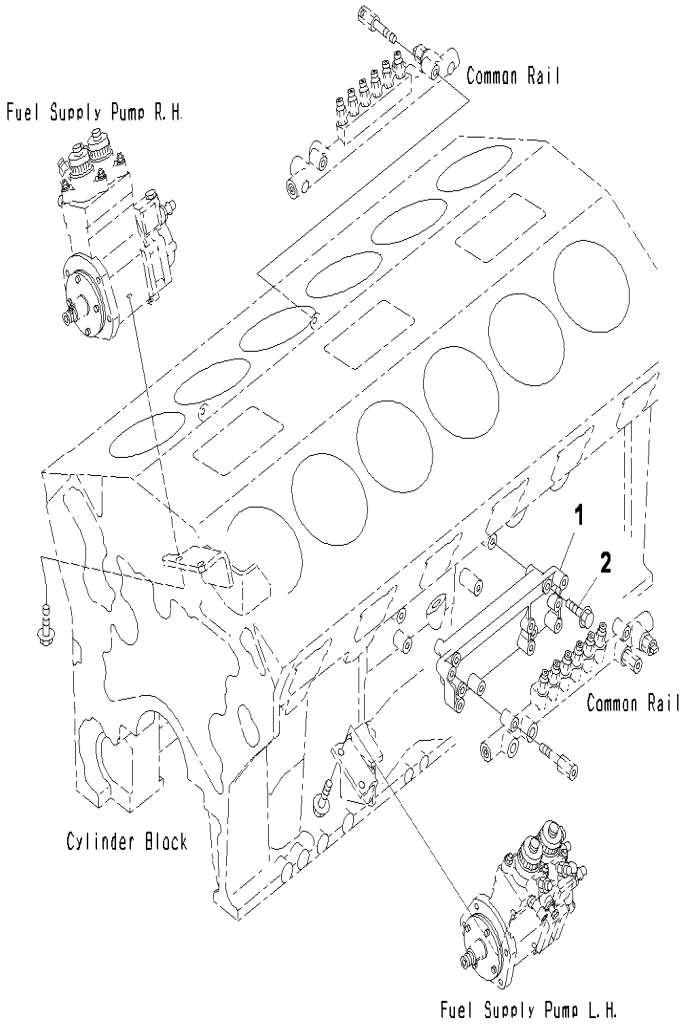

SAA12V140E-3 S/N 503621-UP

FUEL SUPPLY PUMP, COMMON RAIL MOUNTING PARTS

INDEX	CD	PART NO.	DESCRIPTION	QTY	SERIAL NO.
1		6219-71-4410	Bracket.....	1	503621-UP
2		01435-01070	Bolt.....	4	503621-UP

Ref :A4010-H3G1 Page :010600

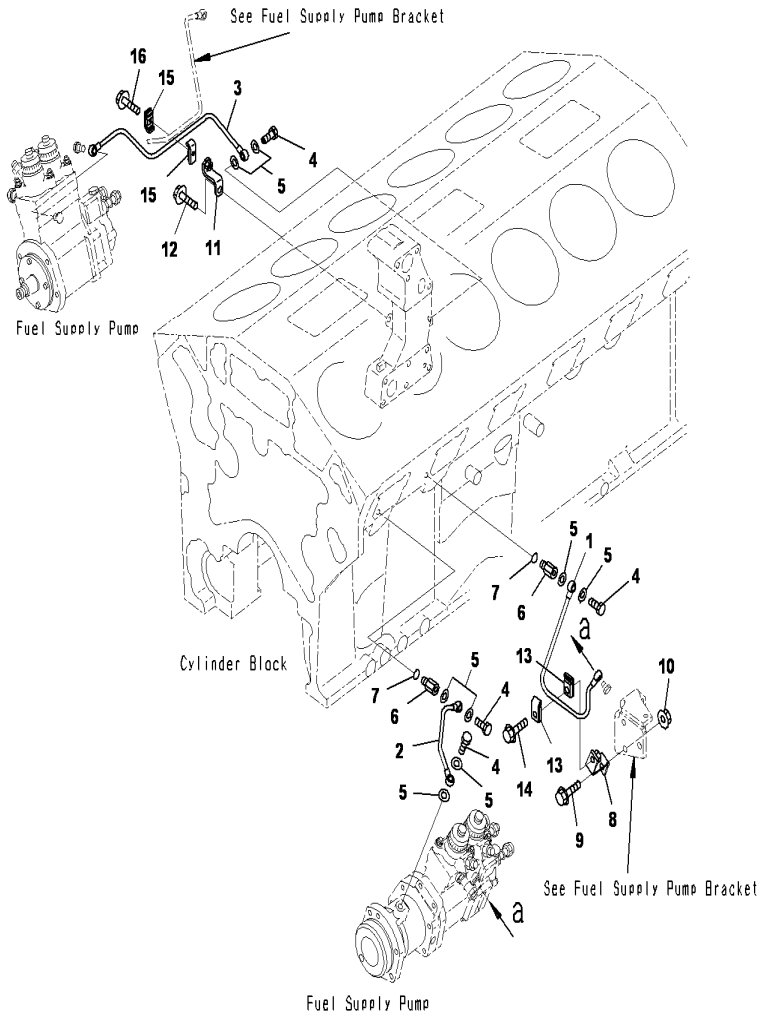

FUEL SUPPLY PUMP LUBRICATOR

INDEX	CD	PART NO.	DESCRIPTION	QTY	SERIAL NO.
1		6219-71-5820	Tube	1	503621-UP
2		6219-71-5830	Tube	1	503621-UP
3		6219-71-5810	Tube	1	503621-UP
4		6934-72-7190	Bolt, Joint	4	503621-UP
5		07005-01012	Seal, Washer	8	503621-UP
6		6212-65-8860	Adapter	2	503621-UP
7		6215-81-9720	O-ring	2	503621-UP
8		6219-71-4530	Bracket	1	503621-UP
9		01435-01030	Bolt	1	503621-UP
10		01584-01008	Nut	1	503621-UP
11		6219-71-5360	Bracket	1	503621-UP
12		01435-01020	Bolt	1	503621-UP
13		6934-72-5660	Clamp	2	503621-UP
14		01435-01040	Bolt	1	503621-UP
15		6217-71-6650	Clamp	2	503621-UP
16		01435-00635	Bolt	1	503621-UP

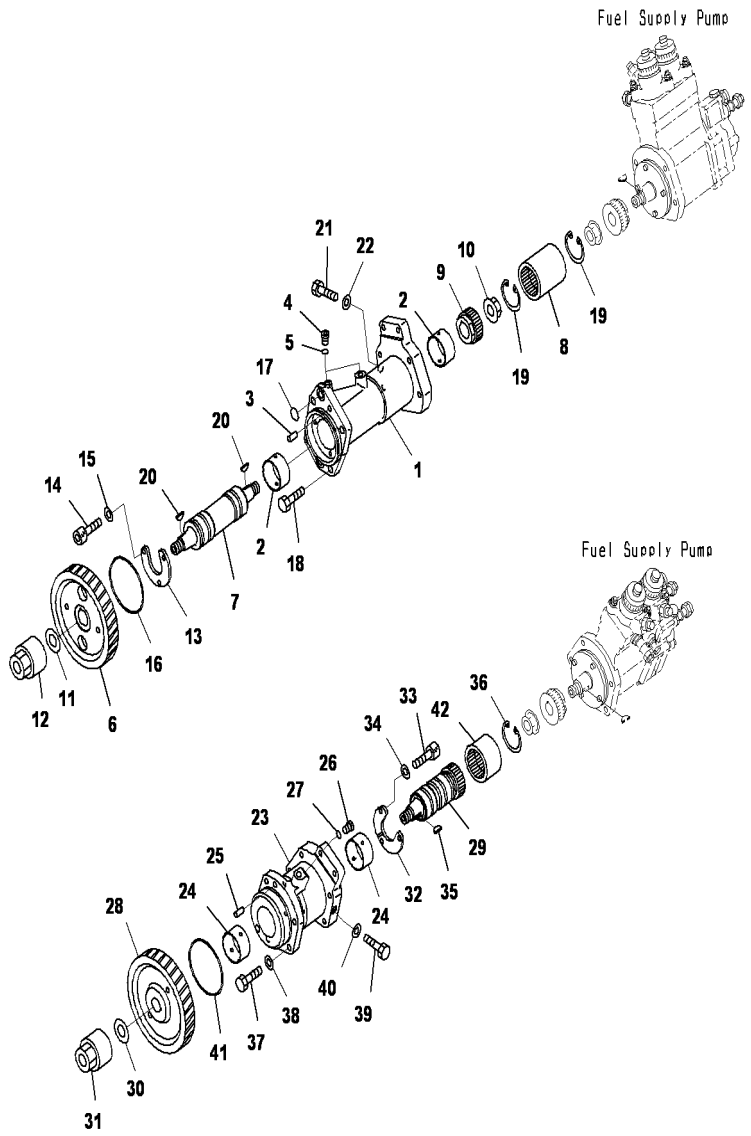

SAA12V140E-3 S/N 503621-UP

FUEL SUPPLY PUMP DRIVE

INDEX	CD	PART NO.	DESCRIPTION	QTY	SERIAL NO.
		6219-71-3100	Housing Assembly	1	503621-UP
1	C1		.HOUSING	1	503621-UP
2		6210-21-1790	.Bushing	2	503621-UP
3		6553-71-3720	.Shaft	1	503621-UP
4		6215-81-9510	.Plug	2	503621-UP
5		6215-81-9710	.O-ring	2	503621-UP
6		6265-71-3310	Gear, Injection Drive	1	503621-UP
7		6265-71-3120	Shaft,RHS	1	503621-UP
8		6219-71-3130	Coupling	1	503621-UP
9		6219-71-3140	Coupling	1	503621-UP
10		6219-71-3150	Nut	1	503621-UP
11		205-25-71270	Washer	1	503621-UP
12		6265-71-9580	Nut	1	503621-UP
13		6219-71-3160	Plate, Thrust	1	503621-UP
14		01252-30820	Bolt, Hexagon Socket Head	3	503621-UP
15		6215-71-3170	Washer	3	503621-UP
16		07000-72100	O-ring	1	503621-UP
17		07000-72020	O-ring	2	503621-UP
18		01010-81230	Bolt	4	503621-UP
19		04065-05520	Ring, Snap, for Hole Side	2	503621-UP
20		04010-00519	Key, Woodruff	2	503621-UP
21		6219-71-3170	Bolt	1	503621-UP
22		07005-00612	Seal, Washer	1	503621-UP
		6219-71-3200	Housing Assembly	1	503621-UP
23	C1		.HOUSING	1	503621-UP
24		6210-21-1790	.Bushing	2	503621-UP
25		6553-71-3720	.Shaft	1	503621-UP
26		6215-81-9510	.Plug	1	503621-UP
27		6215-81-9710	.O-ring	1	503621-UP
28		6265-71-3320	Gear, Injection Drive	1	503621-UP
29		6265-71-3220	Shaft,LHS	1	503621-UP
30		205-25-71270	Washer	1	503621-UP
31		6265-71-9580	Nut	1	503621-UP
32		6219-71-3160	Plate	1	503621-UP
33		01252-30820	Bolt, Hexagon Socket Head	3	503621-UP
34		621-57-13170	Washer	3	503621-UP
35		04010-00519	Key, Woodruff	1	503621-UP
36		04065-05520	Ring, Snap, for Hole Side	1	503621-UP
37		01010-81035	Bolt	4	503621-UP
38		01643-31032	Washer	4	503621-UP
39		6219-71-3170	Bolt	1	503621-UP
40		07005-00612	Seal, Washer	1	503621-UP
41		6219-71-3280	O-ring	1	503621-UP
42		6219-71-3230	Coupling	1	503621-UP

Ref :A4080-01A0 Page :010620

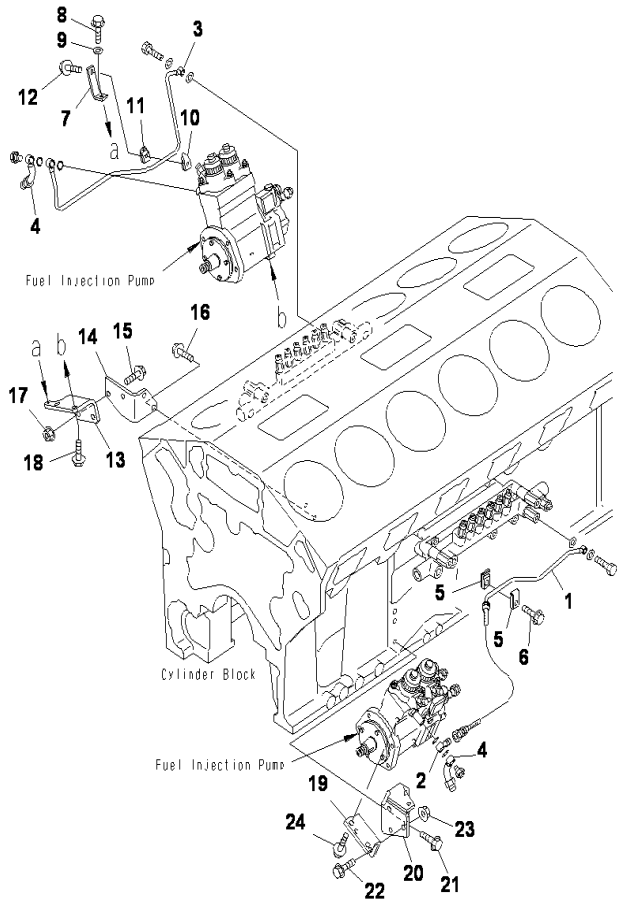

SAA12V140E-3 S/N 503621-UP

FUEL SUPPLY PUMP BRACKET

INDEX	CD	PART NO.	DESCRIPTION	QTY	SERIAL NO.
1		6219-71-5150	Tube,LHS	1	503621-UP
2		6934-71-5950	Joint	1	503621-UP
3		6219-71-5110	Tube,RHS	1	503621-UP
4		6219-71-8120	Tube	2	503621-UP
5		6934-72-5660	Clamp, Half	2	503621-UP
6		01435-01035	Bolt	1	503621-UP
7		6219714370	Bracket	1	503621-UP
8		01435-00620	Bolt	1	503621-UP
9		01643-30623	Washer	1	503621-UP
10		6217-71-6660	Clamp, Half	1	503621-UP
11		6217-71-6670	Clamp, Half	1	503621-UP
12		01435-00630	Bolt	1	503621-UP
13		6219-71-4380	Bracket	1	503621-UP
14		6219-71-4390	Bracket	1	503621-UP
15		01435-01030	BOLT	2	503621-UP
16		01435-01025	Bolt	2	503621-UP
17		01584-01008	Nut	2	503621-UP
18		01435-01220	Bolt	2	503621-UP
19		6219-71-4480	Bracket	1	503621-UP
20		6219-71-4491	Bracket	1	503621-UP
21		01435-01025	Bolt	2	503621-UP
22		01435-01030	Bolt	2	503621-UP
23		01584-01008	Nut	2	503621-UP
24		01435-01220	Bolt	2	503621-UP

Ref :A4010-A7A6 Page :010630

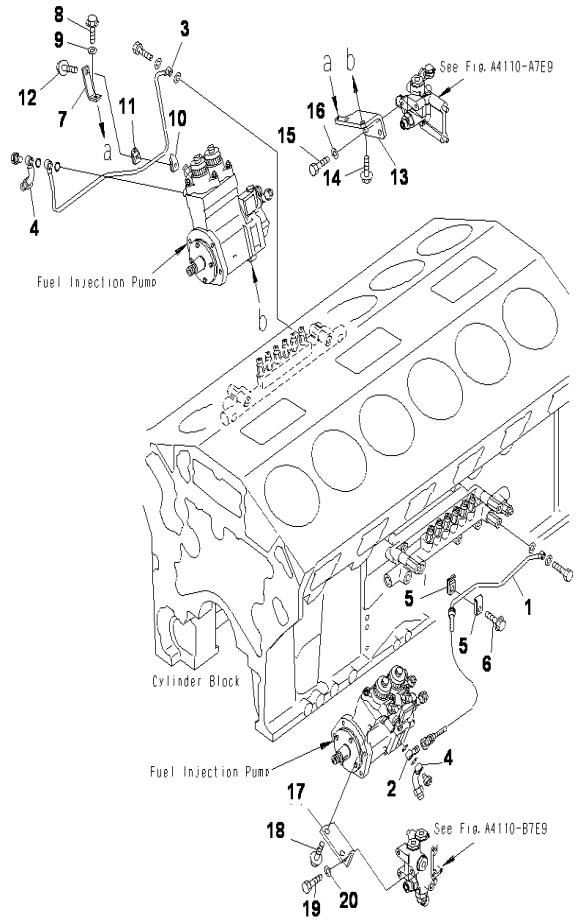

SAA12V140E-3 S/N 503621-UP

FUEL SUPPLY PUMP BRACKET(EXTRA POOR FUEL ARRANGEMENT)

INDEX	CD	PART NO.	DESCRIPTION	QTY	SERIAL NO.
1		6219-71-5150	Tube,LHS	1	503621-UP
2		6934-71-5950	Joint	1	503621-UP
3		6219-71-5110	Tube,RHS	1	503621-UP
4		6219-71-8120	Tube, Over Flow	2	503621-UP
5		6934-72-5660	Clamp, Half	2	503621-UP
6		01435-01035	Bolt	1	503621-UP
7		6219-71-4370	Bracket	1	503621-UP
8		01435-00620	Bolt	1	503621-UP
9		01643-30623	Washer	1	503621-UP
10		6217-71-6660	Clamp, Half	1	503621-UP
11		6217-71-6670	Clamp, Half	1	503621-UP
12		01435-00630	Bolt	1	503621-UP
13		6219-71-4380	Bracket,RHS	1	503621-UP
14		01435-01220	Bolt	2	503621-UP
15		01010-81030	Bolt	2	503621-UP
16		01643-31032	Washer	2	503621-UP
17		6219-71-4480	Bracket,LHS	1	503621-UP
18		01435-01220	Bolt	2	503621-UP
19		01010-81030	Bolt	2	503621-UP
20		01643-31032	Washer	2	503621-UP

Ref :A4040-A7B1 Page :010640

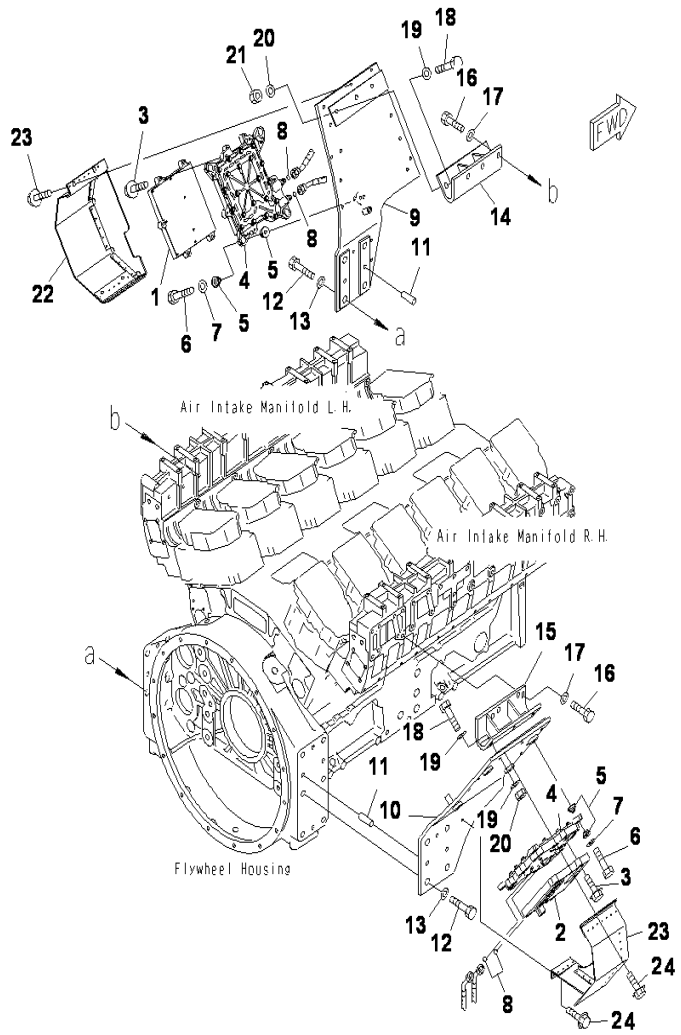

SAA12V140E-3 S/N 503621-UP

FUEL INJECTION CONTROLLER

INDEX	CD	PART NO.	DESCRIPTION	QTY	SERIAL NO.
1		600-464-1300	Controller Assembly,LHS.....	1	503621-UP
2		600-464-1370	Controller Assembly,RHS.....	1	503621-UP
3		01435-00845	Bolt.....	10	503621-UP
4		6261-81-7100	Cooler, Fuel.....	2	503621-UP
5		6251-81-7210	Cushion.....	16	503621-UP
6		01010-81050	Bolt.....	8	503621-UP
7		01643-31032	Washer.....	8	503621-UP
8		02896-11012	O-ring.....	4	503621-UP
9		6219-81-1110	Bracket,LHS.....	1	503621-UP
10		6219-81-1120	Bracket,RHS.....	1	503621-UP
11		04020-01434	Pin, Dowel.....	4	503621-UP
12		01010-62055	Bolt.....	8	503621-UP
13		01643-32060	Washer.....	8	503621-UP
14		6219-81-1130	Bracket.....	1	503621-UP
15		6219-81-1140	Bracket.....	1	503621-UP
16		01010-81030	Bolt.....	7	503621-UP
17		01643-31032	Washer.....	7	503621-UP
18		01010-81050	Bolt.....	6	503621-UP
19		01643-31032	Washer.....	6	503621-UP
20		01643-31032	Washer.....	6	503621-UP
21		01580-11008	Nut.....	6	503621-UP
22		6219-81-1150	Cover,LHS.....	1	503621-UP
23		6219-81-1160	Cover,RHS.....	1	503621-UP
24		01435-00820	Bolt.....	8	503621-UP

Ref :A4710-A7D7 Page :010650

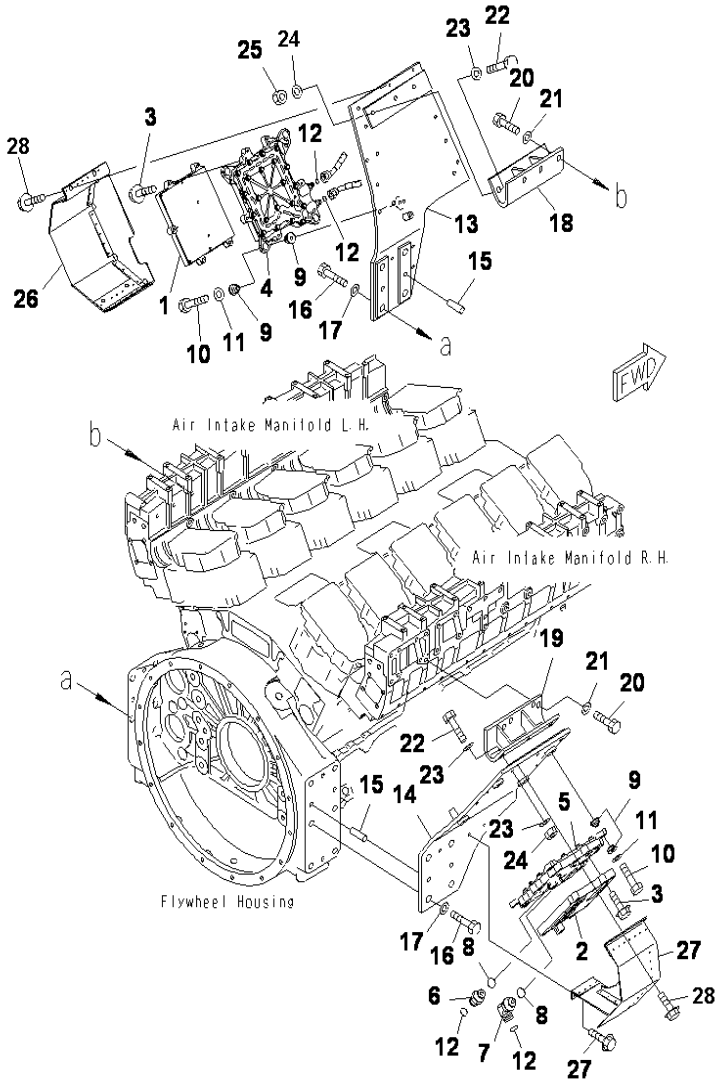

SAA12V140E-3 S/N 503621-UP

FUEL INJECTION CONTROLLER(EXTRA POOR FUEL ARRANGEMENT)

INDEX	CD	PART NO.	DESCRIPTION	QTY	SERIAL NO.
1		600-464-1300	Controller Assembly,LHS	1	503621-UP
2		600-464-1370	Controller Assembly,RHS	1	503621-UP
3		01435-00845	Bolt	10	503621-UP
4		6261-81-7100	Cooler,LHS	1	503621-UP
		6261-81-7120	.Cover	1	503621-UP
		6261-81-7110	.Case	1	503621-UP
		6261-81-7130	.O-ring	1	503621-UP
		01435-00825	.Bolt	21	503621-UP
		02781-00420	.Union	2	503621-UP
		07002-11823	.O-ring	2	503621-UP
5		6219-81-7100	Cooler,RHS	1	503621-UP
6		02781-00420	Union	1	503621-UP
7		02782-10420	Elbow	1	503621-UP
8		07002-11823	O-ring	2	503621-UP
9		6251-81-7210	Cushion	16	503621-UP
10		01010-81050	Bolt	8	503621-UP
11		01643-31032	Washer	8	503621-UP
12		02896-11012	O-ring	3	503621-UP
13		6219-81-1110	Bracket,LHS	1	503621-UP
14		6219-81-1120	Bracket,RHS	1	503621-UP
15		04020-01434	Pin, Dowel	4	503621-UP
16		01010-62055	Bolt	8	503621-UP
17		01643-32060	Washer	8	503621-UP
18		6219-81-1130	Bracket,LHS	1	503621-UP
19		6219-81-1140	Bracket,RHS	1	503621-UP
20		01010-81030	Bolt	7	503621-UP
21		01643-31032	Washer	7	503621-UP
22		01010-81050	Bolt	6	503621-UP
23		01643-31032	Washer	6	503621-UP
24		01643-31032	Washer	6	503621-UP
25		01580-11008	Nut	6	503621-UP
26		6219-81-1150	Cover,LHS	1	503621-UP
27		6219-81-1160	Cover,RHS	1	503621-UP
28		01435-00820	Bolt	8	503621-UP

Ref :A4710-A7E3 Page :010660

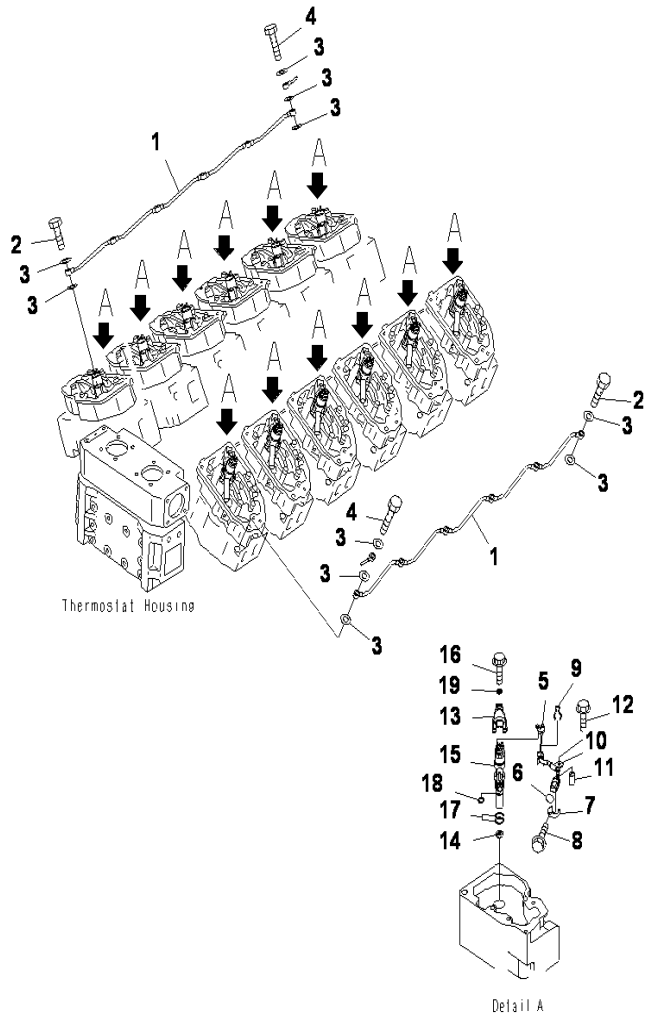

SAA12V140E-3 S/N 503621-UP

FUEL INJECTION NOZZLE

INDEX	CD	PART NO.	DESCRIPTION	QTY	SERIAL NO.
1		6219-71-7110	Tube	2	503621-UP
2		6934-72-7190	Bolt, Joint	10	503621-UP
3		07005-01012	Seal, Washer	25	503621-UP
4		6215-11-6560	Bolt, Joint	2	503621-UP
5		6261-81-9280	Wiring Harness	12	503621-UP
6		07000-E2018	O-ring	12	503621-UP
7		6219-71-5320	Plate	12	503621-UP
8		01435-00610	Bolt	12	503621-UP
9		6217-71-5340	Clamp	12	503621-UP
10		6217-71-1150	Clamp	12	503621-UP
11		6217-71-1170	Spacer	12	503621-UP
12		01435-00635	Bolt	12	503621-UP
13		6217-71-1161	Holder	12	503621-UP
14		6261-71-6150	Gasket	12	503621-UP
15		6219-11-3100	Injector	12	503621-UP
16		01437-01070	Bolt	12	503621-UP
17		6219-71-1150	O-ring	24	503621-UP
18		6219-71-1160	O-ring	12	503621-UP
19		6217-71-1140	Washer	12	503621-UP

Ref :A4210-A7C5 Page :010670

L. H. Bank

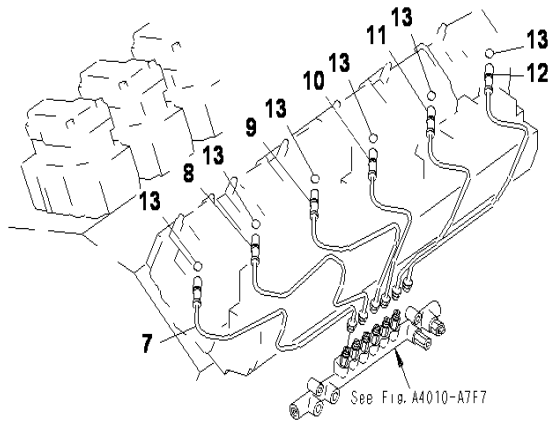

R. H. Bank

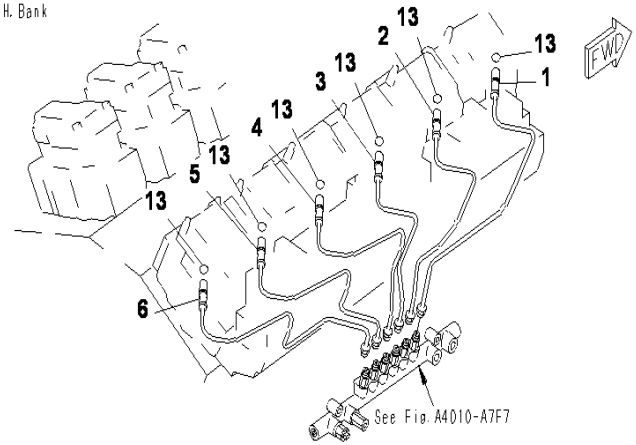

SAA12V140E-3 S/N 503621-UP

FUEL INJECTION PIPING(COMMON RAIL)

INDEX	CD	PART NO.	DESCRIPTION	QTY	SERIAL NO.
1		6219-71-4111	Tube, Injection, No.1, RHS.....	1	503621-UP
2		6219-71-4121	Tube, Injection, No.2, RHS.....	1	503621-UP
3		6219-71-4131	Tube, Injection, No.3, RHS.....	1	503621-UP
4		6219-71-4141	Tube, Injection, No.4, RHS.....	1	503621-UP
5		6219-71-4151	Tube, Injection, No.5, RHS.....	1	503621-UP
6		6219-71-4161	Tube, Injection, No.6, RHS.....	1	503621-UP
7		6219-71-4211	Tube, Injection, No.1, LHS.....	1	503621-UP
8		6219-71-4221	Tube, Injection, No.2, LHS.....	1	503621-UP
9		6219-71-4231	Tube, Injection, No.3, LHS.....	1	503621-UP
10		6219-71-4241	Tube, Injection, No.4, LHS.....	1	503621-UP
11		6219-71-4251	Tube, Injection, No.5, LHS.....	1	503621-UP
12		6219-71-4261	Tube, Injection, No.6, LHS.....	1	503621-UP
13		07000-E2015	O-ring.....	12	503621-UP

Ref :A4050-A7A5 Page :010680

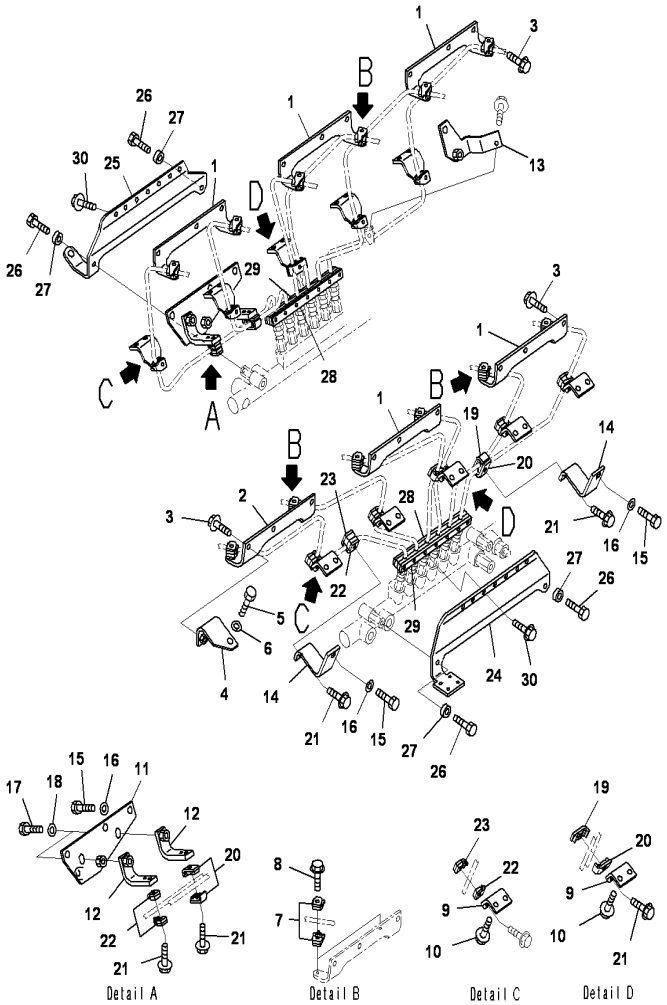

SAA12V140E-3 S/N 503621-UP

FUEL INJECTION PIPING(BRACKET AND CLAMP)

INDEX	CD	PART NO.	DESCRIPTION	QTY	SERIAL NO.
1		6219-71-5410	Bracket	5	503621-UP
2		6219-71-5480	Bracket	1	503621-UP
3		01435-00820	Bolt	13	503621-UP
4		6219-71-4680	Bracket	1	503621-UP
5		01010-81025	Bolt	1	503621-UP
6		01643-31032	Washer	1	503621-UP
7		6261-71-6670	Clamp	24	503621-UP
8		01435-00630	Bolt	12	503621-UP
9		6219-71-5420	Bracket	10	503621-UP
10		01435-00820	Bolt	20	503621-UP
11		6219-71-5451	Bracket	1	503621-UP
12		6219-71-5330	Bracket	2	503621-UP
13		6219-71-8130	Bracket	1	503621-UP
14		6219-71-5430	Bracket	2	503621-UP
15		01010-81025	Bolt	4	503621-UP
16		01643-31032	Washer	4	503621-UP
17		01010-81030	BOLT	2	503621-UP
18		01643-31032	Washer	2	503621-UP
19		6217-71-6640	Clamp	3	503621-UP
20		6217-71-6650	Clamp	5	503621-UP
21		01435-00630	Bolt	15	503621-UP
22		6217-71-6670	Clamp	12	503621-UP
23		6217-71-6660	Clamp	10	503621-UP
24		6219-71-4590	Bracket	1	503621-UP
25		6219-71-4360	Bracket	1	503621-UP
26		01010-80825	Bolt	4	503621-UP
27		6130-12-1961	Spacer	4	503621-UP
28		6217-71-5261	Clamp	2	503621-UP
29		6217-71-5761	Clamp	2	503621-UP
30		01435-00635	Bolt	14	503621-UP

Ref :A4050-B7A5 Page :010690

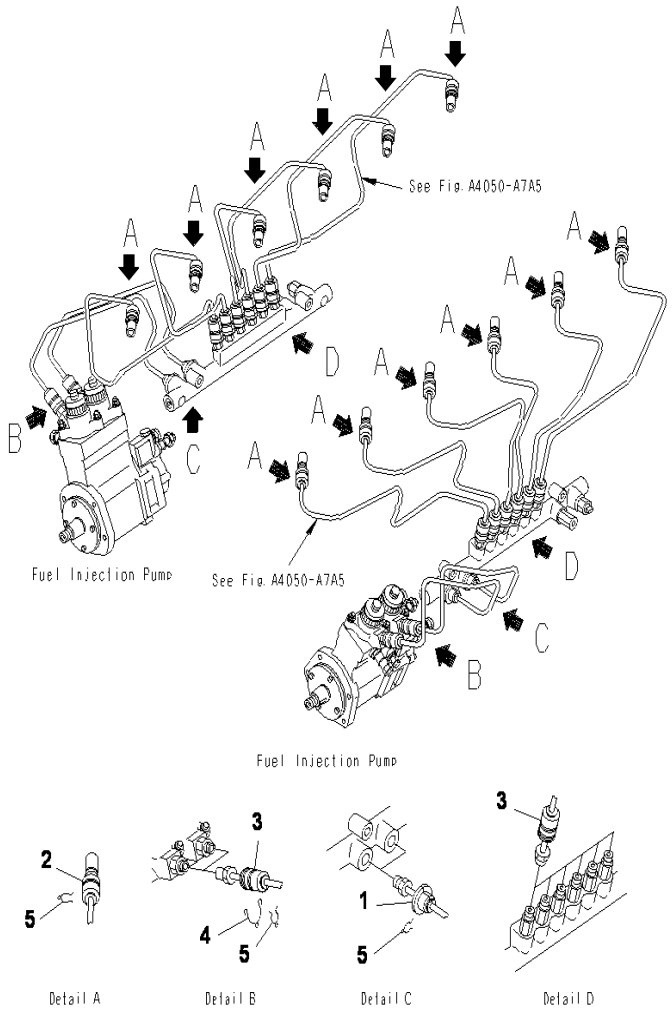

SAA12V140E-3 S/N 503621-UP

FUEL INJECTION PIPING(INJECTION PIPING COVER)

INDEX	CD	PART NO.	DESCRIPTION	QTY	SERIAL NO.
1		6217-71-9780	Cap	4	503621-UP
2		6217-71-9770	Cap	12	503621-UP
3		6217-71-9791	Cover	16	503621-UP
4		6156-71-9730	Clip	4	503621-UP
5		6217-71-5770	Clamp	20	503621-UP

Ref :A4050-C7A5 Page :010700

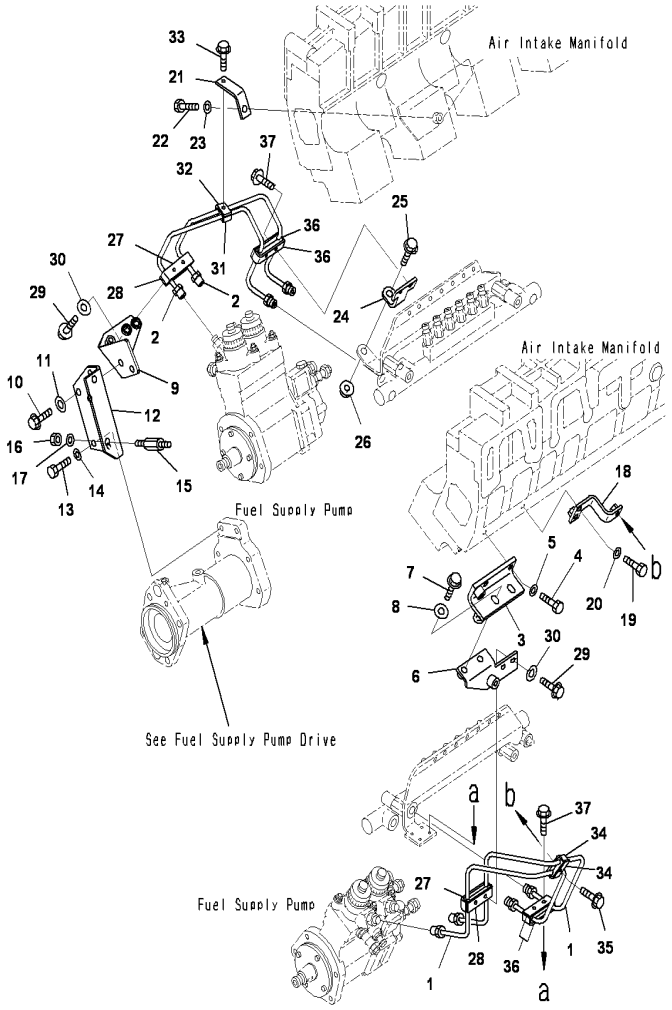

SAA12V140E-3 S/N 503621-UP

FUEL INJECTION PIPING(SUPPLY PUMP TO COMMOM RAIL)

INDEX	CD	PART NO.	DESCRIPTION	QTY	SERIAL NO.
1		6219-71-5141	Tube, Supply, LHS	2	503621-UP
2		6219-71-5121	Tube, Supply, RHS	2	503621-UP
3		6219-71-4550	Bracket	1	503621-UP
4		01010-81030	Bolt	2	503621-UP
5		01643-31032	Washer	2	503621-UP
6		6219-71-4470	Bracket	1	503621-UP
7		01010-81030	Bolt	2	503621-UP
8		01643-31032	Washer	2	503621-UP
9		6219-71-4350	Bracket	1	503621-UP
10		01010-81025	Bolt	2	503621-UP
11		01643-31032	Washer	2	503621-UP
12		6219-71-4340	Bracket	1	503621-UP
13		01010-81025	Bolt	2	503621-UP
14		01643-31032	Washer	2	503621-UP
15		6215-71-4921	Bolt	1	503621-UP
16		01580-11008	Nut	2	503621-UP
17		01643-31032	Washer	2	503621-UP
18		6219-71-5490	Bracket	1	503621-UP
19		01010-81025	Bolt	1	503621-UP
20		01643-31032	Washer	1	503621-UP
21		6219-71-5350	Bracket	1	503621-UP
22		01010-81025	Bolt	1	503621-UP
23		01643-31032	Washer	1	503621-UP
24		6217-71-5281	Bracket	1	503621-UP
25		01435-01025	Bolt	1	503621-UP
26		01584-01008	Nut	1	503621-UP
27		6217-71-5171	Clamp	2	503621-UP
28		6217-71-5211	CLAMP	2	503621-UP
29		01435-00640	BOLT	4	503621-UP
30		01643-30823	Washer	4	503621-UP
31		6217-71-6640	Clamp	1	503621-UP
32		6217-71-6650	Clamp	1	503621-UP
33		01435-00630	Bolt	1	503621-UP
34		6166-85-6721	Clamp	2	503621-UP
35		01435-00840	Bolt	1	503621-UP
36		6217-71-5211	Clamp	4	503621-UP
37		01435-00630	Bolt	4	503621-UP

Ref :A4050-D7A5 Page :010710

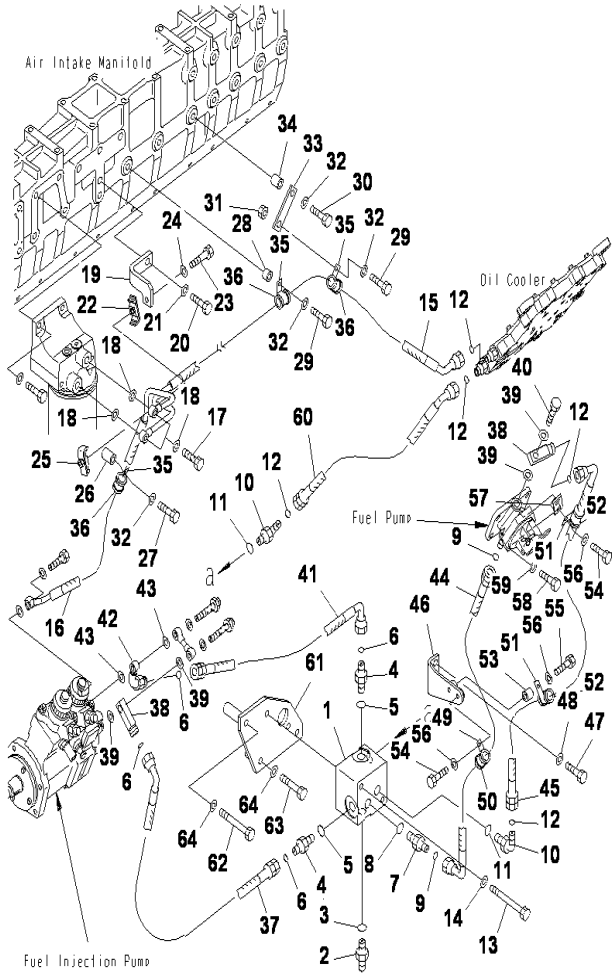

SAA12V140E-3 S/N 503621-UP

FUEL PIPING(LHS BANK)

INDEX	CD	PART NO.	DESCRIPTION	QTY	SERIAL NO.
1		6219-71-6500	Block Assembly, Fuel	1	503621-UP
2		02781-00516	Union	1	503621-UP
3		07002-12034	O-ring	1	503621-UP
4		02781-00422	Union	2	503621-UP
5		07002-12034	O-ring	2	503621-UP
6		02896-11012	O-ring	4	503621-UP
7		02781-00315	Union	1	503621-UP
8		07002-12034	O-ring	1	503621-UP
9		02896-11009	O-ring	2	503621-UP
10		02782-10422	Elbow	2	503621-UP
11		07002-12034	O-ring	2	503621-UP
12		02896-11012	O-ring	5	503621-UP
13		01011-81000	Bolt	2	503621-UP
14		6219-71-6580	Bracket	1	503621-UP
15		01010-81090	Bolt	1	503621-UP
16		01643-31032	Washer	1	503621-UP
17		01010-81060	Bolt	2	503621-UP
18		01643-31032	Washer	2	503621-UP
19		01643-31032	Washer	2	503621-UP
20		6219-71-6330	Hose	1	503621-UP
21		6219-71-6340	Hose	1	503621-UP
22		07206-31014	Bolt, Joint	2	503621-UP
23		07005-01412	Seal, Washer	4	503621-UP
24		6219-71-6370	Bracket	1	503621-UP
25		01010-81230	Bolt	1	503621-UP
26		01643-31232	Washer	1	503621-UP
27		6166-75-6821	Clamp, half	1	503621-UP
28		01010-80845	Bolt	1	503621-UP
29		01643-30823	Washer	1	503621-UP
30		6261-51-9481	Clamp, half	1	503621-UP
31		6166-11-5391	Spacer	1	503621-UP
32		01010-81055	Bolt	1	503621-UP
33		01643-31032	Washer	1	503621-UP
34		6162-63-3910	Spacer	1	503621-UP
35		01010-81045	Bolt	1	503621-UP
36		01643-31032	Washer	1	503621-UP
37		01010-81020	Bolt	1	503621-UP
38		01643-31032	WASHER	1	503621-UP
39		01010-81035	Bolt	1	503621-UP
40		01643-31032	Washer	1	503621-UP
41		01584-01008	Nut	1	503621-UP
42		6162-73-4540	Stay	1	503621-UP
43		6210-11-5820	Spacer	1	503621-UP
44		04434-52511	Clip	3	503621-UP
45		07095-20318	CUSHION	3	503621-UP

Ref :A4110-A7E4 Page :010720

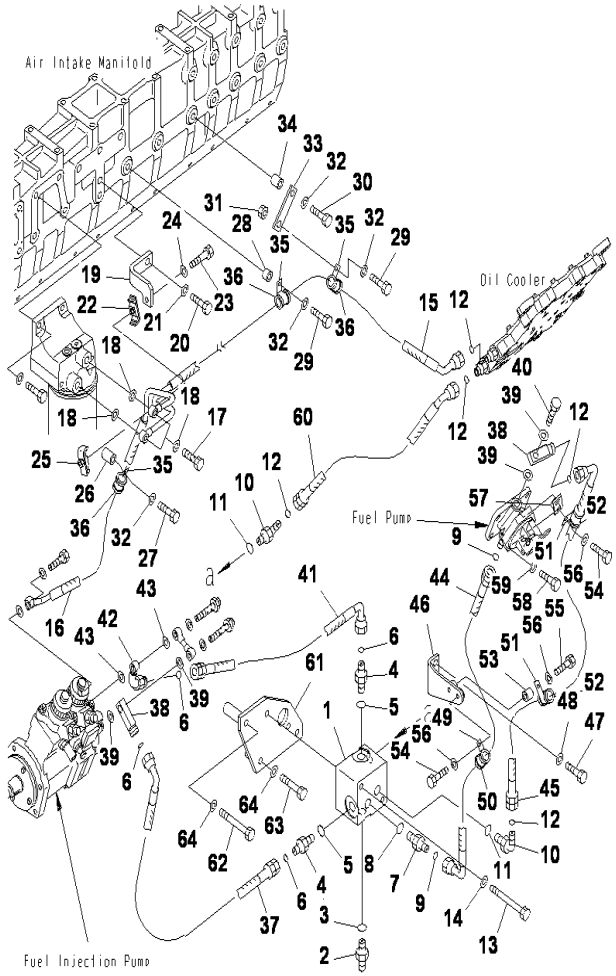

SAA12V140E-3 S/N 503621-UP

FUEL PIPING(LHS BANK)

INDEX	CD	PART NO.	DESCRIPTION	QTY	SERIAL NO.
46		02763-00404	Hose, Face Seal Type.....	1	503621-UP
47		6156-71-5380	Joint.....	1	503621-UP
48		02763-004A3	Hose, Face Seal Type.....	1	503621-UP
49		6219-71-8140	Joint.....	1	503621-UP
50		02763-003A4	Hose, Face Seal Type.....	1	503621-UP
51		02763-004A5	Hose, Face Seal Type.....	1	503621-UP
52		6219-71-6350	Bracket.....	1	503621-UP
53		01010-81025	Bolt.....	3	503621-UP
54		01643-31032	Washer.....	3	503621-UP
55		04434-52110	Clip.....	1	503621-UP
56		07095-20314	Cushion.....	1	503621-UP
57		04434-52711	Clip.....	2	503621-UP
58		07095-20419	Cushion.....	2	503621-UP
59		01010-81020	Bolt.....	1	503621-UP
60		01643-31032	Washer.....	1	503621-UP
61		6219-71-6660	Bracket.....	1	503621-UP
62		01010-81030	Bolt.....	1	503621-UP
63		01643-31032	Washer.....	1	503621-UP
64		02764-004A4	Hose, Face Seal Type.....	1	503621-UP

Ref :A4110-A7E5 Page :010721

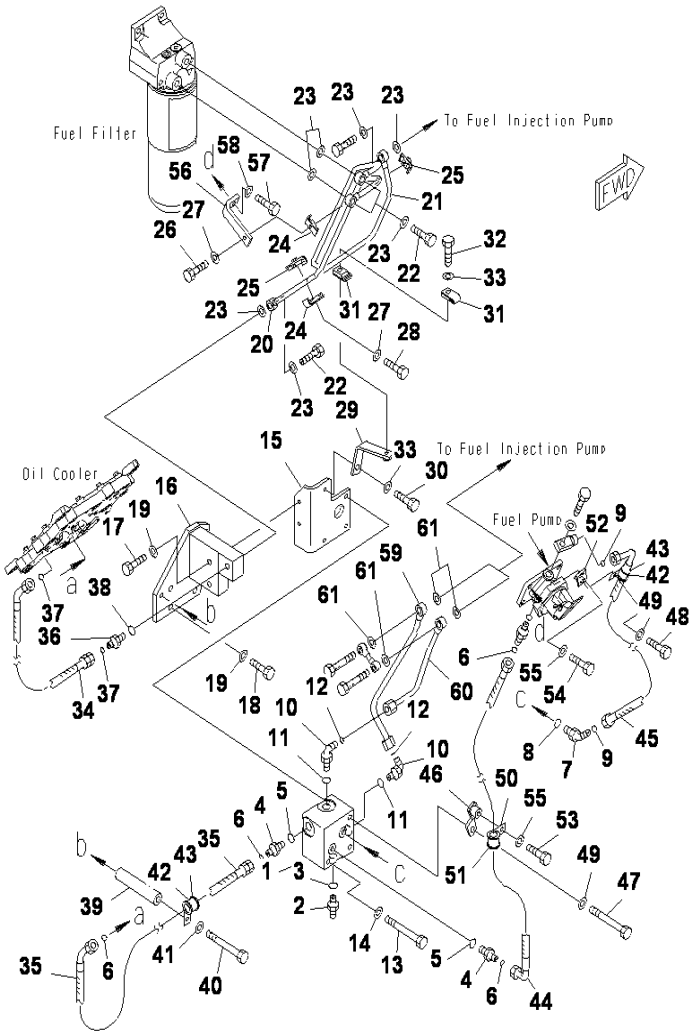

SAA12V140E-3 S/N 503621-UP

FUEL PIPING(RHS BANK)

INDEX	CD	PART NO.	DESCRIPTION	QTY	SERIAL NO.
1		6219-71-6600	Block Assembly	1	503621-UP
2		02781-00516	Union	1	503621-UP
3		07002-12034	O-ring	1	503621-UP
4		02781-00422	Union	1	503621-UP
5		07002-12034	O-ring	1	503621-UP
6		02896-11012	O-ring	2	503621-UP
7		02781-00315	Union	1	503621-UP
8		07002-12034	O-ring	1	503621-UP
9		02896-11009	O-ring	2	503621-UP
10		02782-10422	Elbow	2	503621-UP
11		07002-12034	O-ring	2	503621-UP
12		02896-11012	O-ring	2	503621-UP
13		01011-81000	Bolt	2	503621-UP
14		01643-31032	Washer	2	503621-UP
15		6219-71-6650	Bracket	1	503621-UP
16		6219-71-6450	Bracket	1	503621-UP
17		01010-81060	Bolt	2	503621-UP
18		01643-31032	Washer	2	503621-UP
19		01010-81030	Bolt	4	503621-UP
20		01643-31032	Washer	4	503621-UP
21		6219-71-6430	Tube	1	503621-UP
22		6219-71-6440	Tube	1	503621-UP
23		07206-31014	Bolt, Joint	3	503621-UP
24		07005-01412	Seal, Washer	6	503621-UP
25		6166-75-6821	Clamp, half	2	503621-UP
26		6261-51-9481	Clamp, half	2	503621-UP
27		01010-80845	Bolt	1	503621-UP
28		01643-30823	Washer	1	503621-UP
29		01010-80835	Bolt	1	503621-UP
30		01643-30823	Washer	1	503621-UP
31		6219-71-6640	Bracket	1	503621-UP
32		01010-81020	Bolt	1	503621-UP
33		01643-31032	Washer	1	503621-UP
34		6934-52-6810	Clamp	2	503621-UP
35		01010-81040	Bolt	1	503621-UP
36		01643-31032	Washer	1	503621-UP
37		02764-00404	Hose, Face Seal Type	1	503621-UP
38		02764-00406	Hose, Face Seal Type	1	503621-UP
39		02781-00420	Union	1	503621-UP
40		02896-11012	O-ring	2	503621-UP
41		07002-11823	O-ring	1	503621-UP
42		6206-81-9870	Spacer	1	503621-UP
43		01011-81030	Bolt	1	503621-UP
44		01643-31032	Washer	1	503621-UP
45		04434-52711	CLIP	2	503621-UP

Ref :A4110-B7E4 Page :010730

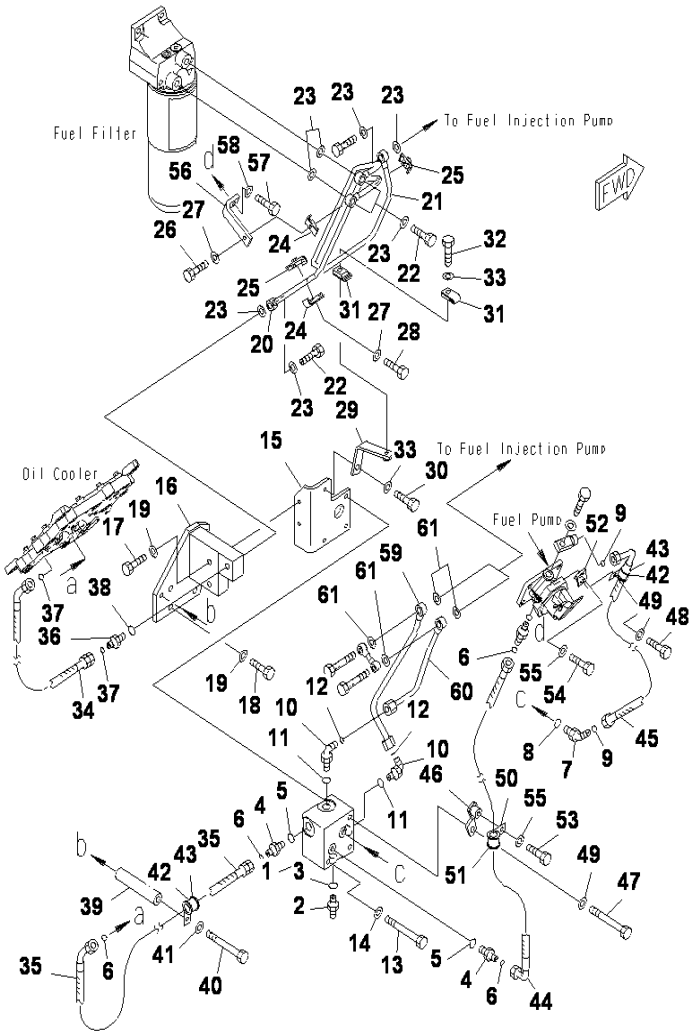

SAA12V140E-3 S/N 503621-UP

FUEL PIPING(RHS BANK)

INDEX	CD	PART NO.	DESCRIPTION	QTY	SERIAL NO.
46		07095-20419	Cushion	2	503621-UP
47		02763-003A4	Hose, Face Seal Type	1	503621-UP
48		02763-004A5	Hose, Face Seal Type	1	503621-UP
49		6219-71-6630	Bracket	1	503621-UP
50		01011-81005	Bolt	1	503621-UP
51		01010-81020	Bolt	1	503621-UP
52		01643-31032	Washer	1	503621-UP
53		01643-31032	Washer	1	503621-UP
54		04434-52110	Clip	1	503621-UP
55		07095-20314	Cushion	1	503621-UP
56		6219-71-6660	Bracket	1	503621-UP
57		01010-81020	Bolt	1	503621-UP
58		01643-31032	Washer	1	503621-UP
59		01010-81030	Bolt	1	503621-UP
60		01643-31032	Washer	1	503621-UP
61		6219-71-6480	Bracket	1	503621-UP
62		01010-81035	Bolt	1	503621-UP
63		01643-31032	Washer	1	503621-UP
64		6219-71-6560	Tube	1	503621-UP
65		6219-71-6670	Tube	1	503621-UP

Ref :A4110-B7E4 Page :010731

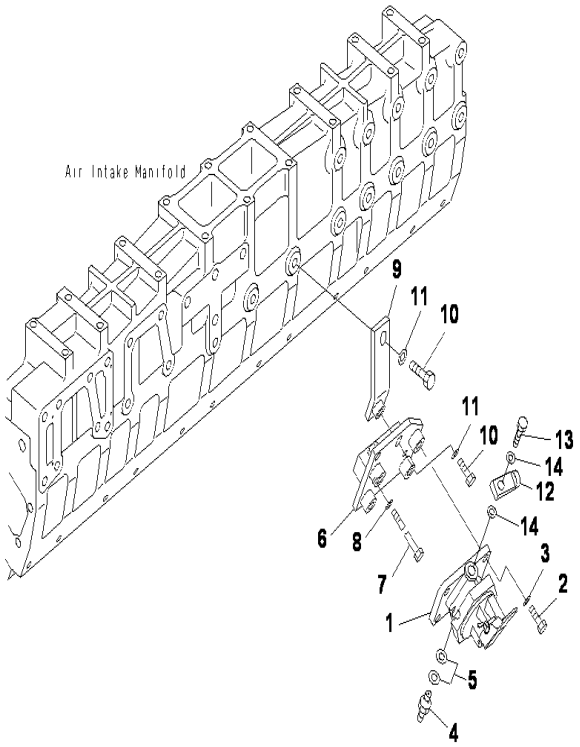

SAA12V140E-3 S/N 503621-UP

FUEL PIPING(PRIMING PUMP, LHS BANK)

INDEX	CD	PART NO.	DESCRIPTION	QTY	SERIAL NO.
1		6217-71-8210	Pump, Feed	1	503621-UP
2		01010-81025	Bolt	3	503621-UP
3		01643-31032	Washer	3	503621-UP
4		02781-0031D	Union	1	503621-UP
5		07005-01412	Seal, Washer	1	503621-UP
6		6219-71-6390	Bracket	1	503621-UP
7		6162-13-6540	Bolt	2	503621-UP
8		01643-31032	Washer	2	503621-UP
9		6219-71-5280	Bracket	1	503621-UP
10		01010-81030	Bolt	2	503621-UP
11		01643-31032	Washer	2	503621-UP
12		6156-71-5380	Joint	1	503621-UP
13		07206-31014	Bolt, Joint	1	503621-UP
14		07005-01412	Seal, Washer	2	503621-UP

Ref :A4110-C7E4 Page :010740

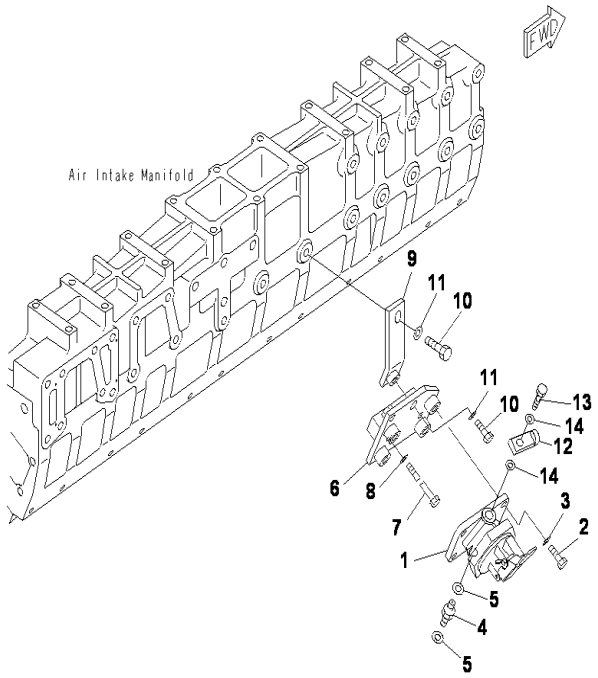

SAA12V140E-3 S/N 503621-UP

FUEL PIPING(PRIMING PUMP, RHS BANK)

INDEX	CD	PART NO.	DESCRIPTION	QTY	SERIAL NO.
1		6217-71-8210	Pump, Feed	1	503621-UP
2		01010-81025	Bolt	3	503621-UP
3		01643-31032	Washer	3	503621-UP
4		02781-0031D	Union	1	503621-UP
5		07005-01412	Seal, Washer	1	503621-UP
6		6219-71-6390	Bracket	1	503621-UP
7		6162-13-6540	Bolt	2	503621-UP
8		01643-31032	Washer	2	503621-UP
9		6219-71-5290	Bracket	1	503621-UP
10		01010-81030	Bolt	2	503621-UP
11		01643-31032	Washer	2	503621-UP
12		6156-71-5380	Joint	1	503621-UP
13		07206-31014	Bolt, Joint	1	503621-UP
14		07005-01412	Seal, Washer	2	503621-UP

Ref :A4110-D7E4 Page :010750

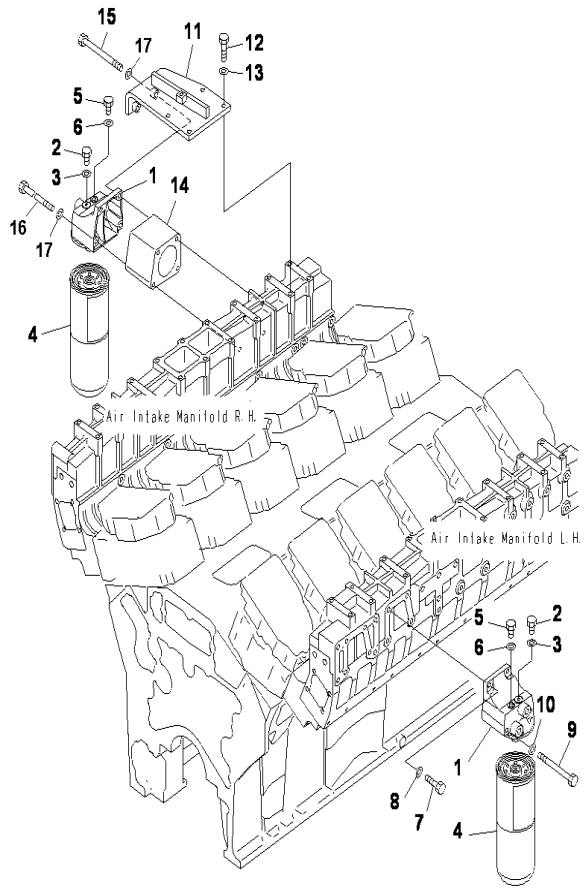

SAA12V140E-3 S/N 503621-UP

FUEL PIPING(FUEL FILTER)

INDEX	CD	PART NO.	DESCRIPTION	QTY	SERIAL NO.
		6219-71-6700	Head Assembly.....	2	503621-UP
1		6219-71-6710	.Head.....	1	503621-UP
2		6110-73-6231	.Plug.....	1	503621-UP
3		07005-00812	.Gasket.....	1	503621-UP
4	C1		Cartridge(1-5/8).....	2	503621-UP
5		07040-11209	Plug.....	2	503621-UP
6		07005-01212	Seal, Washer.....	2	503621-UP
7		01010-81035	Bolt.....	2	503621-UP
8		01643-31032	Washer.....	2	503621-UP
9		01011-81015	Bolt.....	2	503621-UP
10		01643-31032	Washer.....	2	503621-UP
11		6219-71-6610	Bracket.....	1	503621-UP
12		01010-81030	Bolt.....	4	503621-UP
13		01643-31032	Washer.....	4	503621-UP
14		6219-71-6490	Spacer.....	1	503621-UP
15		01011-81070	Bolt.....	2	503621-UP
16		6162-13-6540	Bolt.....	2	503621-UP
17		01643-31032	Washer.....	4	503621-UP

Ref :E4110-E7E4 Page :010760

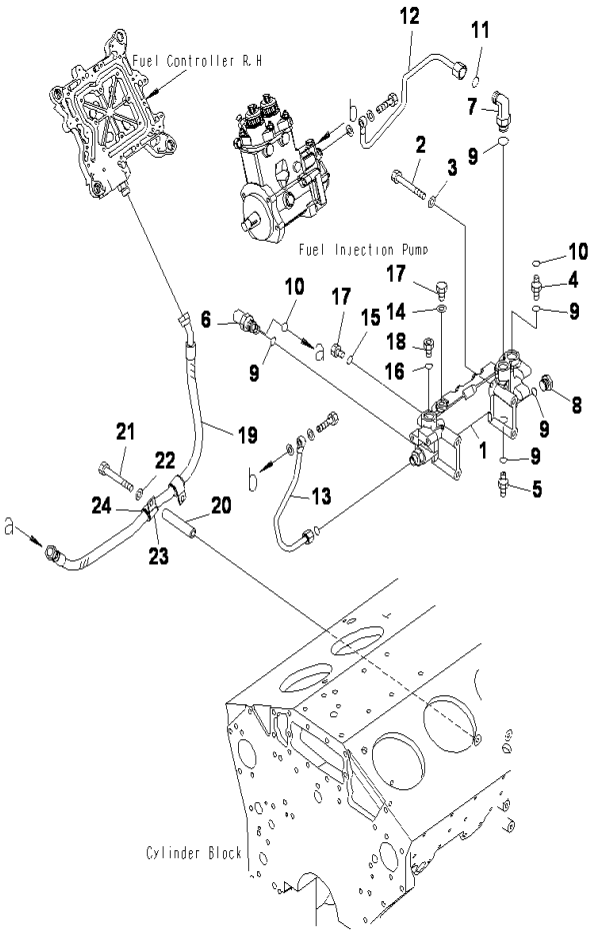

SAA12V140E-3 S/N 503621-UP

FUEL PIPING(POOR FUEL ARRANGEMENT)(RHS BANK)

INDEX	CD	PART NO.	DESCRIPTION	QTY	SERIAL NO.
1		6219-71-7610	BLOCK		503621-UP
2		01011-81005	Bolt	4	503621-UP
3		01643-31032	Washer	4	503621-UP
4		02781-0042A	Joint	2	503621-UP
5		02781-00522	Union	1	503621-UP
6		02782-10425	Elbow	1	503621-UP
7		02782-1052A	Elbow	1	503621-UP
8		02782-10426	Elbow	1	503621-UP
9		07002-12434	O-ring	6	503621-UP
10		02896-11012	O-ring	3	503621-UP
11		02896-11015	O-ring	1	503621-UP
12		6219-71-6850	Tube	1	503621-UP
13		6219-71-6870	Tube	1	503621-UP
14		07005-01412	Seal, Washer	2	503621-UP
15		07002-11423	O-ring	1	503621-UP
16		07002-12434	O-ring	2	503621-UP
17		07040-11409	Plug	3	503621-UP
18		07040-12412	Plug	2	503621-UP
19		02764-00409	Hose, Face Seal Type	1	503621-UP
20		6206-81-9870	Spacer	2	503621-UP
21		01011-81030	Bolt	2	503621-UP
22		01643-31032	Washer	2	503621-UP
23		04434-52511	Clip	2	503621-UP
24		07095-20318	Cushion	2	503621-UP

Ref :A4110-A7E9 Page :010770

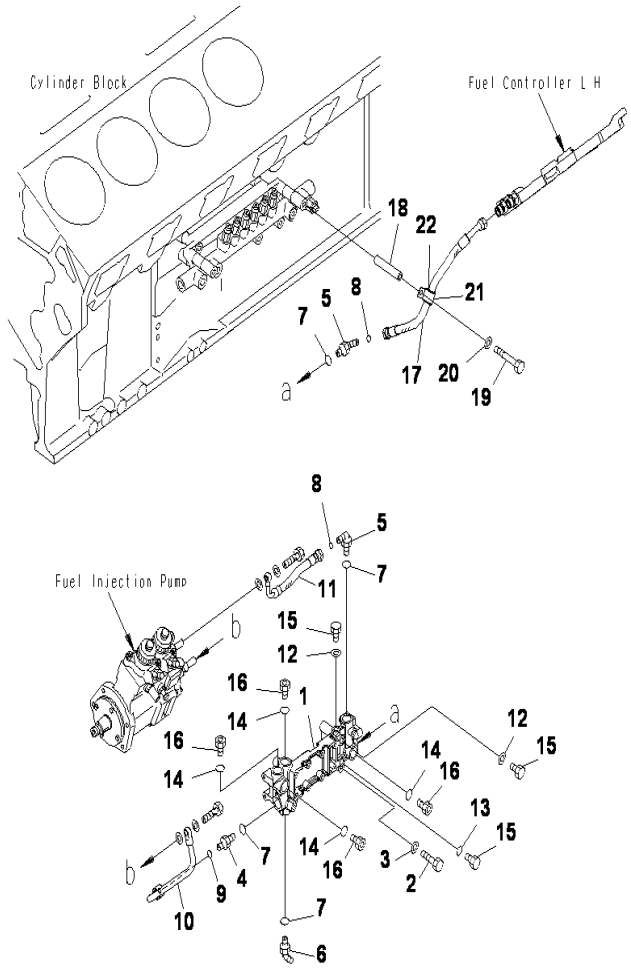

SAA12V140E-3 S/N 503621-UP

FUEL PIPING(POOR FUEL ARRANGEMENT)(LHS BANK)

INDEX	CD	PART NO.	DESCRIPTION	QTY	SERIAL NO.
1		6219-71-7610	Block	1	503621-UP
2		01011-81005	Bolt	4	503621-UP
3		01643-31032	Washer	4	503621-UP
4		02781-00522	Union	1	503621-UP
5		02782-10425	Elbow	2	503621-UP
6		02783-10522	Elbow	1	503621-UP
7		07002-12434	O-ring	4	503621-UP
8		02896-11012	O-ring	2	503621-UP
9		02896-11015	O-ring	1	503621-UP
10		6219-71-7630	Tube	1	503621-UP
11		6219-71-7640	Tube	1	503621-UP
12		07005-01412	Seal, Washer	2	503621-UP
13		07002-11423	O-ring	1	503621-UP
14		07002-12434	O-ring	4	503621-UP
15		07040-11409	Plug	3	503621-UP
16		07040-12412	Plug	4	503621-UP
17		02764-004A5	Hose, Face Seal Type	1	503621-UP
18		6152-11-9990	Spacer	1	503621-UP
19		01011-81060	Bolt	1	503621-UP
20		01643-31032	Washer	1	503621-UP
21		04434-52511	Clip	1	503621-UP
22		07095-20318	Cushion	1	503621-UP

Ref :A4110-B7E9 Page :010780

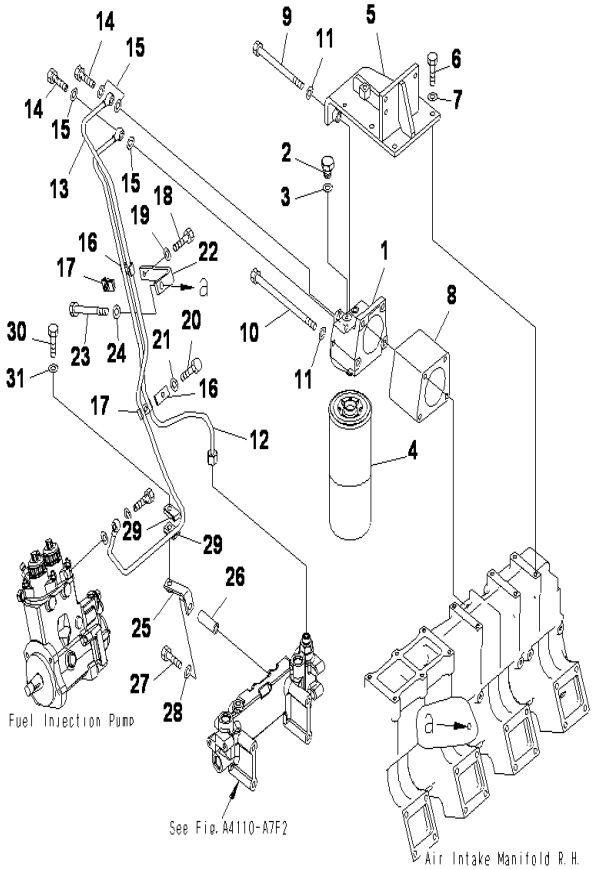

SAA12V140E-3 S/N 503621-UP

FUEL PIPING(POOR FUEL ARRANGEMENT)(FUEL FILTER RHS BANK)

INDEX	CD	PART NO.	DESCRIPTION	QTY	SERIAL NO.
		6219-71-6700	Head Assembly.....	1	503621-UP
1		6219-71-6710	.Head.....	1	503621-UP
2		6110-73-6231	.Plug.....	1	503621-UP
3		07005-00812	.Gasket.....	1	503621-UP
4	C1		Cartridge(1-5/8).....	1	503621-UP
5		6219-71-8180	Bracket.....	1	503621-UP
6		01010-81030	Bolt.....	4	503621-UP
7		01643-31032	Washer.....	4	503621-UP
8		6219-71-6490	Spacer.....	1	503621-UP
9		01011-81070	Bolt.....	2	503621-UP
10		6162-13-6540	Bolt.....	2	503621-UP
11		01643-31032	Washer.....	4	503621-UP
12		6219-71-8280	Tube.....	1	503621-UP
13		6219-71-6440	Tube.....	1	503621-UP
14		07206-31014	Bolt, Joint.....	2	503621-UP
15		07005-01412	Seal, Washer.....	4	503621-UP
16		6166-75-6821	Clamp, half.....	2	503621-UP
17		6261-51-9481	Clamp, half.....	2	503621-UP
18		01010-80845	Bolt.....	1	503621-UP
19		01643-30823	Washer.....	1	503621-UP
20		01010-80835	Bolt.....	1	503621-UP
21		01643-30823	Washer.....	1	503621-UP
22		6219-71-6780	Bracket.....	1	503621-UP
23		01011-81095	Bolt.....	1	503621-UP
24		01643-31032	Washer.....	1	503621-UP
25		6219-71-8370	Bracket.....	1	503621-UP
26		6112-23-6971	Spacer.....	1	503621-UP
27		01010-81085	Bolt.....	1	503621-UP
28		01643-31032	Washer.....	1	503621-UP
29		6934-52-6810	Clamp.....	2	503621-UP
30		01010-81040	Bolt.....	1	503621-UP
31		01643-31032	Washer.....	1	503621-UP

Ref :A4110-C7F2 Page :010790

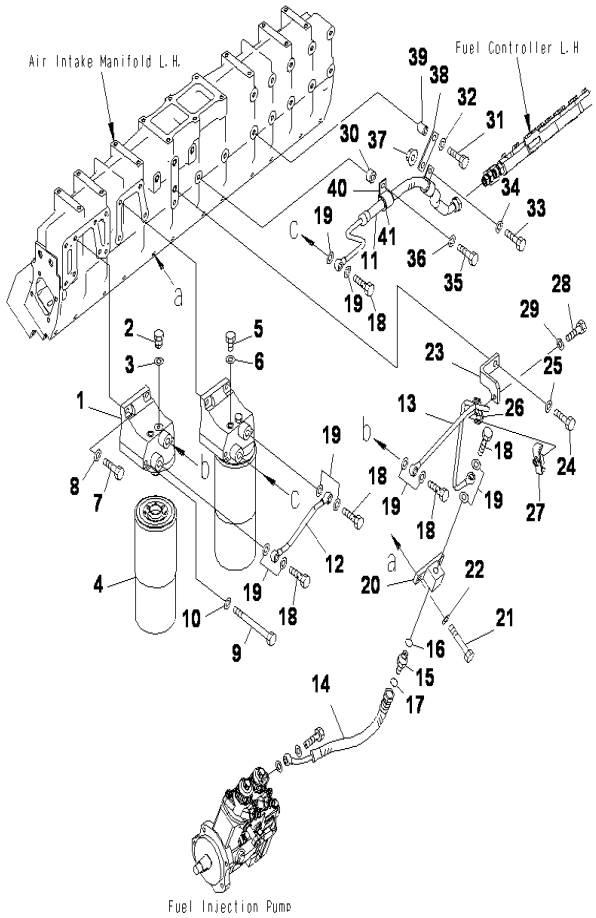

SAA12V140E-3 S/N 503621-UP

FUEL PIPING(POOR FUEL ARRANGEMENT)(FUEL FILTER LHS BANK)

INDEX	CD	PART NO.	DESCRIPTION	QTY	SERIAL NO.
		6219-71-6700	Head Assembly	2	503621-UP
1		6219-71-6710	.Head	1	503621-UP
2		6110-73-6231	.Plug	1	503621-UP
3		07005-00812	.Gasket	1	503621-UP
4		600-311-3550	Cartridge (1-5/8)	2	503621-UP
5		07040-11209	Plug	1	503621-UP
6		07005-01212	Seal, Washer	1	503621-UP
7		6934-72-3980	Bolt	4	503621-UP
8		6132-21-4630	Spacer	4	503621-UP
9		01011-81015	Bolt	4	503621-UP
10		01643-31032	Washer	4	503621-UP
11		6219-71-6330	Hose	1	503621-UP
12		6219-71-6730	Tube	1	503621-UP
13		6219-71-8250	Tube	1	503621-UP
14		6219-71-8260	Hose	1	503621-UP
15		02781-00422	Union	1	503621-UP
16		07002-12034	O-ring	1	503621-UP
17		02896-11012	O-ring	1	503621-UP
18		07206-31014	Bolt, Joint	5	503621-UP
19		07005-01412	Seal, Washer	10	503621-UP
20		6219-71-8270	Joint	1	503621-UP
21		01011-81095	Bolt	2	503621-UP
22		01643-31032	Washer	2	503621-UP
23		6219-71-6370	Bracket	1	503621-UP
24		01010-81230	Bolt	1	503621-UP
25		01643-31232	Washer	1	503621-UP
26		6166-75-6821	Clamp, half	1	503621-UP
27		6261-51-9481	Clamp, half	1	503621-UP
28		01010-80845	Bolt	1	503621-UP
29		01643-30823	Washer	1	503621-UP
30		6162-63-3910	Spacer	1	503621-UP
31		01010-81045	Bolt	1	503621-UP
32		01643-31032	Washer	1	503621-UP
33		01010-81020	Bolt	1	503621-UP
34		01643-31032	Washer	1	503621-UP
35		01010-81035	BOLT	1	503621-UP
36		01643-31032	Washer	2	503621-UP
37		01584-01008	Nut	1	503621-UP
38		6162-73-4540	Stay	1	503621-UP
39		6210-11-5820	Spacer	1	503621-UP
40		04434-52511	Clip	2	503621-UP
41		07095-20318	Cushion	2	503621-UP

Ref :A4110-D7F2 Page :010800

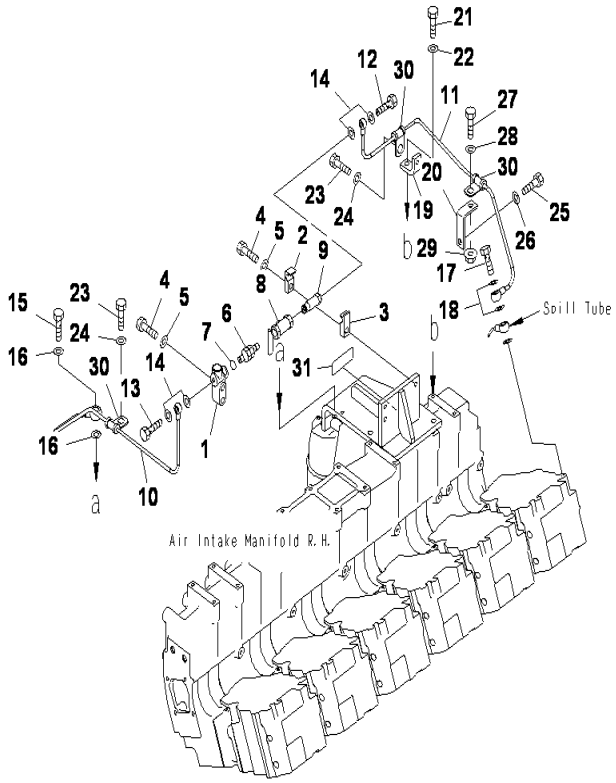

SAA12V140E-3 S/N 503621-UP

FUEL PIPING(POOR FUEL ARRANGEMENT)(AIR VENT RHS)

INDEX	CD	PART NO.	DESCRIPTION	QTY	SERIAL NO.
1		6261-71-7180	Block	1	503621-UP
2		6240-71-6530	Clamp	1	503621-UP
3		6240-71-6540	Clamp	1	503621-UP
4		01010-81045	Bolt	3	503621-UP
5		01643-31032	Washer	3	503621-UP
6		205-62-74690	Nipple	1	503621-UP
7		07002-11423	O-ring	1	503621-UP
8		6128-81-4810	Valve	1	503621-UP
9		6245-71-6180	Bolt	1	503621-UP
10		6219-71-7430	Tube	1	503621-UP
11		6219-71-7440	Tube	1	503621-UP
12		07206-30508	Bolt, Joint	1	503621-UP
13		6245-71-5960	Bolt	1	503621-UP
14		07005-00812	Gasket	4	503621-UP
15		07206-30812	Bolt, Joint	1	503621-UP
16		07005-01212	Seal, Washer	2	503621-UP
17		6215-11-6560	Bolt, Joint	1	503621-UP
18		07005-01012	Seal, Washer	2	503621-UP
19		6217-11-9770	Bracket	1	503621-UP
20		6261-21-5920	Bracket	1	503621-UP
21		01010-81040	Bolt	1	503621-UP
22		01643-31032	Washer	1	503621-UP
23		01010-81020	Bolt	2	503621-UP
24		01643-31032	Washer	2	503621-UP
25		01010-81035	Bolt	1	503621-UP
26		01643-31032	Washer	1	503621-UP
27		01010-81025	Bolt	1	503621-UP
28		01643-31032	Washer	1	503621-UP
29		01584-01008	Nut	1	503621-UP
30		6245-71-5950	Clip	3	503621-UP
31		6245-81-9420	Plate	1	503621-UP

Ref :A4110-E7F2 Page :010810

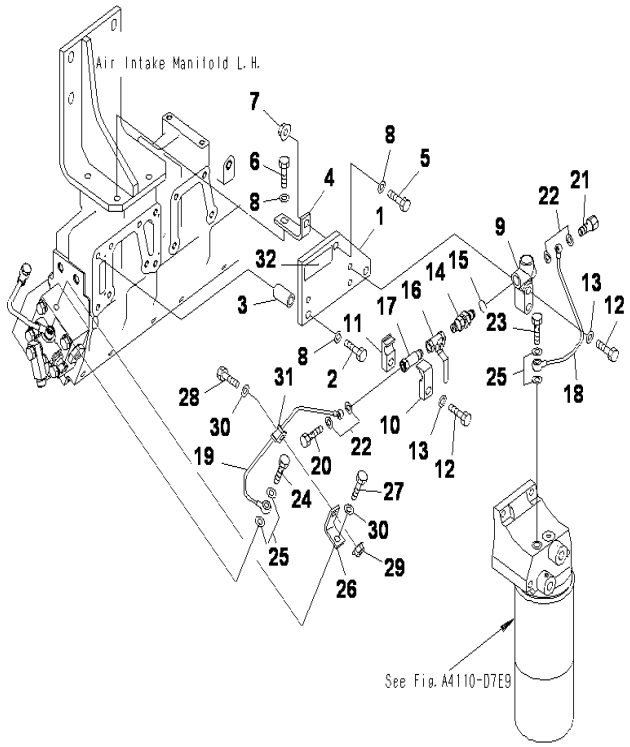

SAA12V140E-3 S/N 503621-UP

FUEL PIPING(POOR FUEL ARRANGEMENT)(AIR VENT LHS)

INDEX	CD	PART NO.	DESCRIPTION	QTY	SERIAL NO.
1		6219-71-7370	Plate	1	503621-UP
2		01010-81070	Bolt	2	503621-UP
3		6142-22-4640	Spacer	2	503621-UP
4		6210-21-5480	Plate	1	503621-UP
5		01010-81035	Bolt	1	503621-UP
6		01010-81040	Bolt	1	503621-UP
7		01584-01008	Nut	1	503621-UP
8		01643-31032	Washer	4	503621-UP
9		6261-71-7180	Block	1	503621-UP
10		6240-71-6530	Clamp	1	503621-UP
11		6240-71-6540	Clamp	1	503621-UP
12		01010-81045	Bolt	3	503621-UP
13		01643-31032	Washer	3	503621-UP
14		2056-27-4690	Nipple	1	503621-UP
15		07002-11423	O-ring	1	503621-UP
16		6128-81-4810	Valve	1	503621-UP
17		6245-71-6180	Bolt	1	503621-UP
18		6219-71-7360	Tube	1	503621-UP
19		6219-71-7350	Tube	1	503621-UP
20		07206-30508	Bolt, Joint	1	503621-UP
21		6245-71-5960	Bolt	1	503621-UP
22		07005-00812	Gasket	4	503621-UP
23		07206-30812	Bolt, Joint	1	503621-UP
24		6354-71-5560	Bolt, Joint	1	503621-UP
25		07005-01212	Seal, Washer	4	503621-UP
26		6210-81-5540	Bracket	1	503621-UP
27		01010-81030	Bolt	1	503621-UP
28		01010-81025	Bolt	1	503621-UP
29		01584-01008	Nut	1	503621-UP
30		01643-31032	Washer	2	503621-UP
31		6245-71-5950	Clip	1	503621-UP
32		6245-81-9420	PLATE	1	503621-UP

Ref :A4110-F7E9 Page :010820

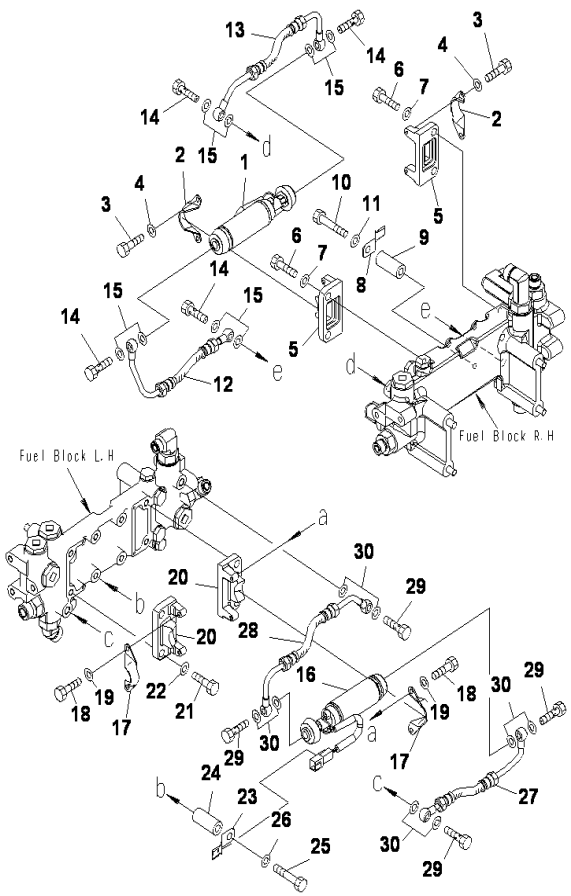

SAA12V140E-3 S/N 503621-UP

FUEL PIPING(POOR FUEL ARRANGEMENT)(FUEL PRIMING PUMP)

INDEX	CD	PART NO.	DESCRIPTION	QTY	SERIAL NO.
1		6245-71-8110	Pump Assembly, Priming.....	1	503621-UP
2		6245-71-5680	Bracket.....	2	503621-UP
3		01010-80616	Bolt.....	4	503621-UP
4		01643-30623	Washer.....	4	503621-UP
5		6219-71-8600	Block.....	2	503621-UP
6		01010-81030	Bolt.....	4	503621-UP
7		01643-31032	Washer.....	4	503621-UP
8		08193-20010	Clip.....	1	503621-UP
9		6152-21-6590	Spacer.....	1	503621-UP
10		01010-81065	Bolt.....	1	503621-UP
11		01643-31032	Washer.....	1	503621-UP
12		6219-71-6820	Hose.....	1	503621-UP
13		6219-71-6830	Hose.....	1	503621-UP
14		07206-30812	Bolt, Joint.....	4	503621-UP
15		07005-01212	Seal, Washer.....	8	503621-UP
16		6245-71-8110	Pump Assembly, Priming.....	1	503621-UP
17		6245-71-5680	Bracket.....	2	503621-UP
18		01010-80616	Bolt.....	4	503621-UP
19		01643-30623	Washer.....	4	503621-UP
20		6219-71-8600	Block.....	2	503621-UP
21		01010-81030	Bolt.....	4	503621-UP
22		01643-31032	Washer.....	4	503621-UP
23		08193-20010	Clip.....	1	503621-UP
24		6152-21-6590	Spacer.....	1	503621-UP
25		01010-81065	Bolt.....	1	503621-UP
26		01643-31032	Washer.....	1	503621-UP
27		6219-71-6820	Hose.....	1	503621-UP
28		6219-71-6830	Hose.....	1	503621-UP
29		07206-30812	Bolt, Joint.....	4	503621-UP
30		07005-01212	Seal, Washer.....	8	503621-UP

Ref :A4110-G7E9 Page :010830

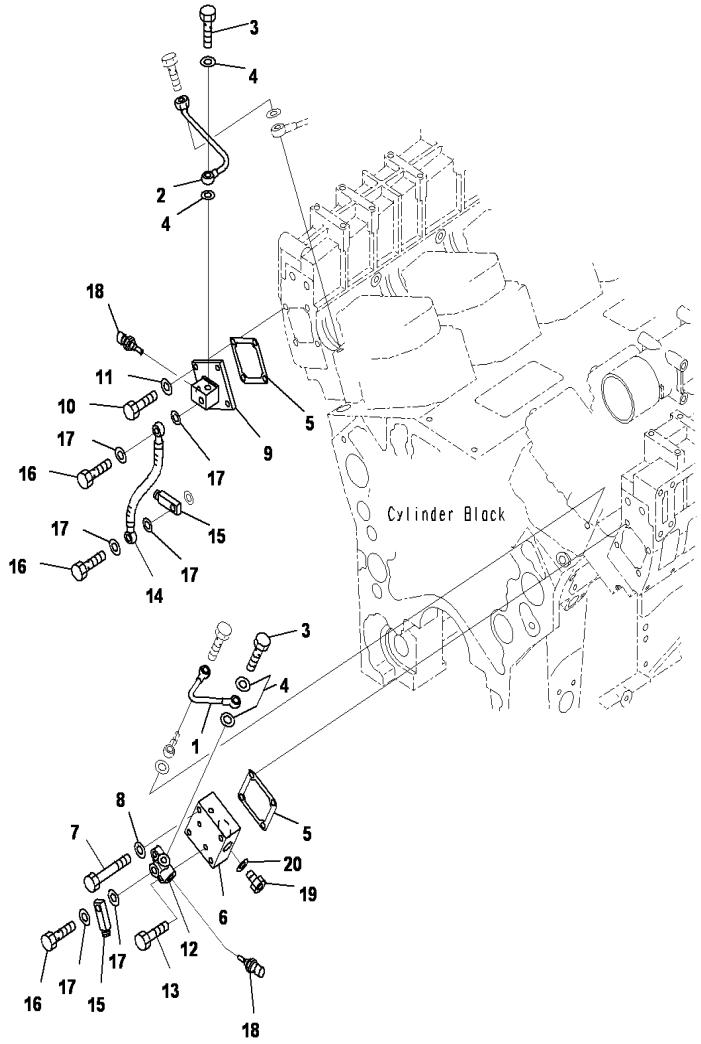

SAA12V140E-3 S/N 503621-UP

FUEL RETURN

INDEX	CD	PART NO.	DESCRIPTION	QTY	SERIAL NO.
1		6219-71-6510	Tube	1	503621-UP
2		6219-71-6520	Tube	1	503621-UP
3		07206-30812	Bolt, Joint	2	503621-UP
4		07005-01212	Seal, Washer	4	503621-UP
5		6216-11-8220	Gasket	2	503621-UP
6		6219-71-6682	Block, Fuel	1	503621-UP
7		01010-81065	Bolt	4	503621-UP
8		01643-31032	Washer	4	503621-UP
9		6219-71-6540	Block	1	503621-UP
10		01010-81030	Bolt	4	503621-UP
11		01643-31032	Washer	4	503621-UP
12		6219-71-8810	Block	1	503621-UP
13		01010-81030	Bolt	2	503621-UP
14		07271-01420	Hose, Joint	1	503621-UP
15		6156-71-5370	Joint	2	503621-UP
16		07206-31014	Bolt, Joint	4	503621-UP
17		07005-01412	Seal, Washer	8	503621-UP
18		6261-81-6901	Sensor Assembly	2	503621-UP
19		07040-12412	Plug	1	503621-UP
20		07005-02416	Gasket	1	503621-UP

Ref :A4230-A7C7 Page :010840

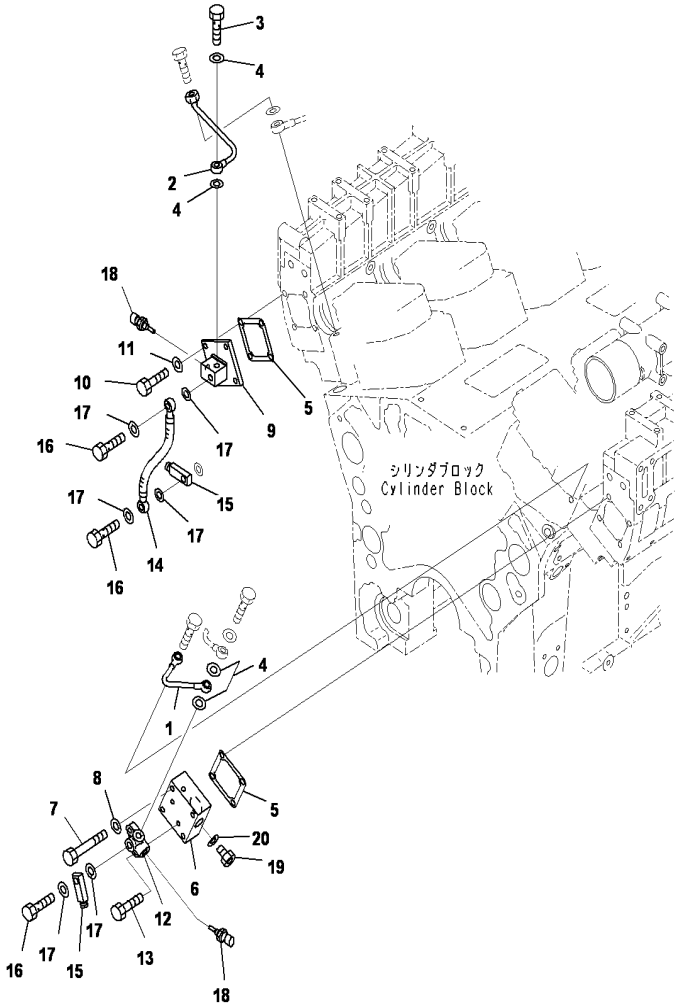

SAA12V140E-3 S/N 503621-UP

FUEL RETURN(POOR FUEL ARRANGEMENT)

INDEX	CD	PART NO.	DESCRIPTION	QTY	SERIAL NO.
1		6219-71-6510	Tube	1	503621-UP
2		6219-71-6520	Tube	1	503621-UP
3		07206-30812	Bolt, Joint	1	503621-UP
4		07005-01212	Seal, Washer	4	503621-UP
5		6216-11-8220	Gasket	2	503621-UP
6		6219-71-6682	Block, Fuel	1	503621-UP
7		01010-81065	Bolt	4	503621-UP
8		01643-31032	Washer	4	503621-UP
9		6219-71-6540	Block	1	503621-UP
10		01010-81030	Bolt	4	503621-UP
11		01643-31032	Washer	4	503621-UP
12		6219-71-8810	Block	1	503621-UP
13		01010-81030	Bolt	2	503621-UP
14		07271-01420	Hose, Joint	1	503621-UP
15		6156-71-5370	Joint	2	503621-UP
16		07206-31014	Bolt, Joint	4	503621-UP
17		07005-01412	Seal, Washer	8	503621-UP
18		6261-81-6901	Sensor Assembly	2	503621-UP
19		07040-12412	Plug	1	503621-UP
20		07005-02416	Gasket	1	503621-UP

Ref :A4230-A7C8 Page :010850

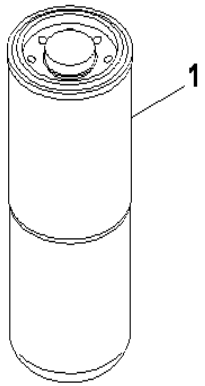

SAA12V140E-3 S/N 503621-UP

FUEL FILTER CARTRIGDE(SERVICE ONLY)

INDEX	CD	PART NO.	DESCRIPTION	QTY	SERIAL NO.
1		600-319-3550	Cartridge (1-5/8), Fuel.....	2	503621-UP

Ref :A4119-A7A2 Page :010860

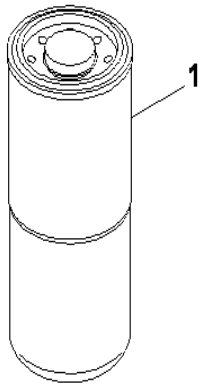

SAA12V140E-3 S/N 503621-UP

FUEL FILTER CARTRIGDE(SERVICE ONLY)(FOR POOR FUEL ARRANGEMENT)

INDEX	CD	PART NO.	DESCRIPTION	QTY	SERIAL NO.
1		600-319-3550	Cartridge (1-5/8), Fuel.....	3	503621-UP

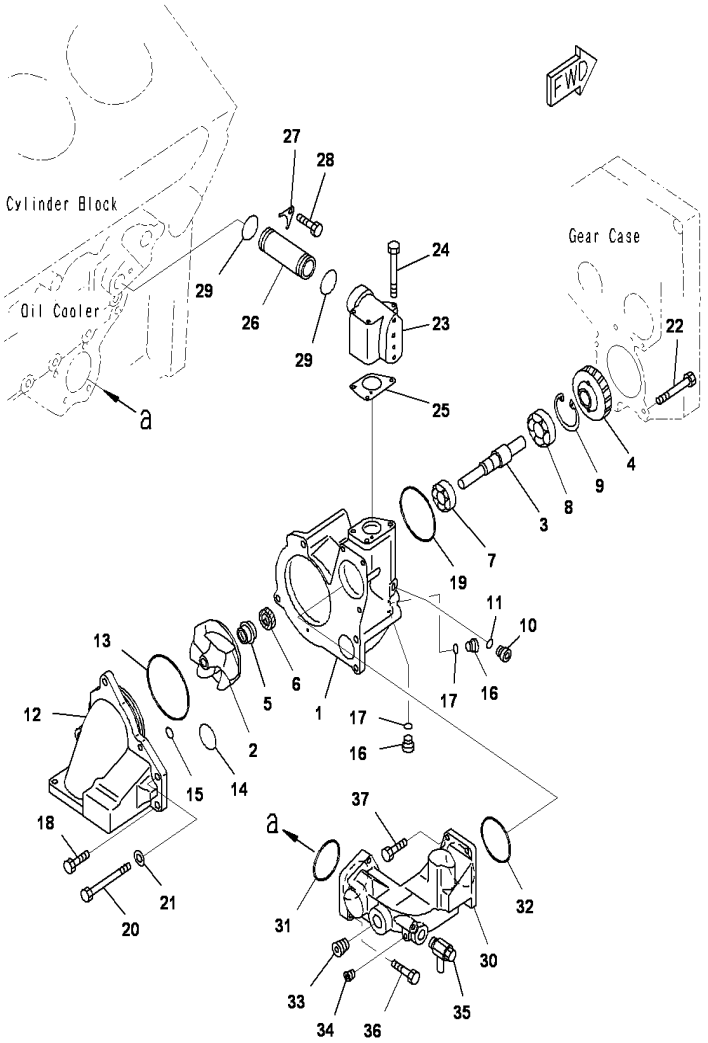

SAA12V140E-3 S/N 503621-UP

WATER PUMP(HARD WATER AREA ARRANGEMENT)

INDEX	CD	PART NO.	DESCRIPTION	QTY	SERIAL NO.
		6219-61-1100	Water Pump Assembly	1	503621-UP
1	C1		.Body	1	503621-UP
2		6219-61-1470	.Impeller	1	503621-UP
3		6219-61-1230	.Shaft	1	503621-UP
4		6215-61-1160	.Gear	1	503621-UP
5		6166-61-1511	.Seal	1	503621-UP
6		6150-61-1510	.Seal, Oil, Oil	1	503621-UP
7		06330-06206	.Bearing, Ball	1	503621-UP
8		06340-06306	.Bearing, Ball	1	503621-UP
9		6162-63-1440	.Ring, Snap	1	503621-UP
10		6215-81-9520	.Plug	1	503621-UP
11		6215-81-9720	.O-ring	1	503621-UP
12		6219-61-1120	.Housing	1	503621-UP
13		07000-G2140	.O-ring	1	503621-UP
14		07000-A2060	.O-ring	1	503621-UP
15		07000-A2016	.O-ring	1	503621-UP
16		6215-81-9520	.Plug	2	503621-UP
17		6215-81-9720	.O-ring	2	503621-UP
18		01010-81230	.Bolt	2	503621-UP
19		07000-72100	O-ring	1	503621-UP
20		01011-81265	Bolt	2	503621-UP
21		01643-31232	Washer	2	503621-UP
22		01011-81210	Bolt	2	503621-UP
23		6215-61-7510	Connector	1	503621-UP
24		01011-81010	Bolt	3	503621-UP
25		6215-61-6531	Gasket	1	503621-UP
26		6215-61-7521	Pipe	1	503621-UP
27		6215-61-6520	Plate	1	503621-UP
28		01010-81020	Bolt	1	503621-UP
29		07000-G3045	O-ring	2	503621-UP
30		6219-61-6310	Connector	1	503621-UP
31		07000-G2080	O-ring	1	503621-UP
32		07000-G2090	O-ring	1	503621-UP
33		07043-70617	Plug	1	503621-UP
34		07043-70108	Plug	1	503621-UP
35		07730-50004	Valve, Drain	1	503621-UP
36		01010-81040	Bolt	3	503621-UP
37		01010-81030	Bolt	3	503621-UP

Ref :A5010-A7E6 Page :010880

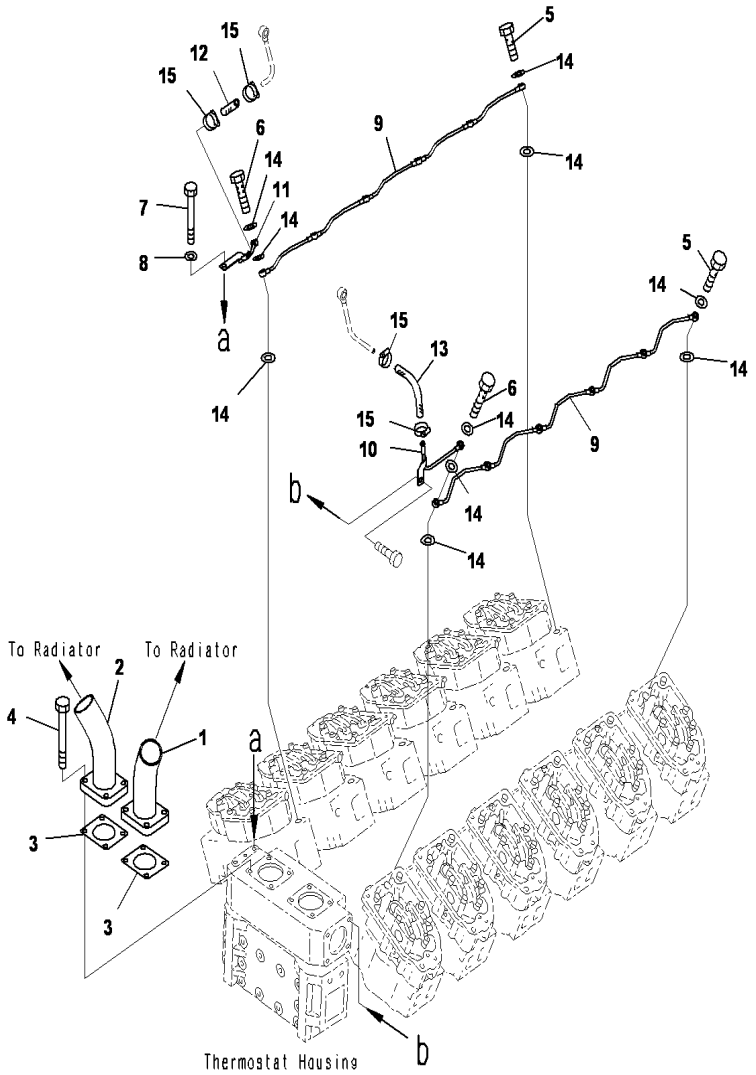

SAA12V140E-3 S/N 503621-UP

WATER PUMP(HARD WATER AREA ARRANGEMENT)(AIR VENT,WATER OUT)

INDEX	CD	PART NO.	DESCRIPTION	QTY	SERIAL NO.
1		6215-11-6180	Tube,LHS	1	503621-UP
2		6215-11-6190	Tube,RHS	1	503621-UP
3		6215-11-6831	Gasket	2	503621-UP
4		01011-81030	Bolt	6	503621-UP
5		07206-30710	Bolt, Joint	10	503621-UP
6		6215-11-6560	Bolt, Joint	2	503621-UP
7		01010-81030	Bolt	1	503621-UP
8		01643-31032	Washer	1	503621-UP
9		6219-11-6510	Tube, Air	2	503621-UP
10		6219-61-6570	Tube,LHS	1	503621-UP
11		6219-61-6580	Tube,RHS	1	503621-UP
12		6219-61-6710	Hose,RHS	1	503621-UP
13		6219-61-6720	Hose,LHS	1	503621-UP
14		07003-01015	Gasket	26	503621-UP
15		07281-00197	Clamp	4	503621-UP

Ref :A5010-B7F4 Page :010890

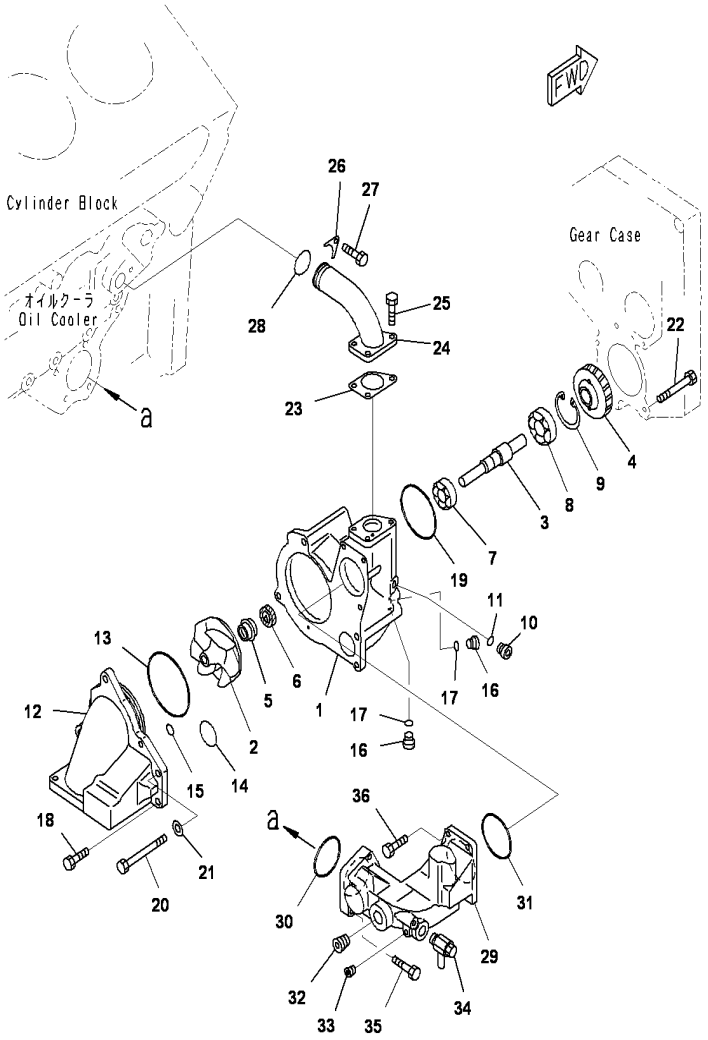

SAA12V140E-3 S/N 503621-UP

WATER PUMP(WATER PUMP)

INDEX	CD	PART NO.	DESCRIPTION	QTY	SERIAL NO.
		6219-61-1100	Water Pump Assembly.....	1	503621-UP
1		6219-61-1330	.Body.....	1	503621-UP
2		6219-61-1470	.Impeller.....	1	503621-UP
3		6219-61-1230	.Shaft.....	1	503621-UP
4		6215-61-1160	.Gear.....	1	503621-UP
5		6166-61-1511	.Seal.....	1	503621-UP
6		6150-61-1510	.Seal, Oil, Oil.....	1	503621-UP
7		06330-06206	.Bearing, Ball.....	1	503621-UP
8		06340-06306	.Bearing, Ball.....	1	503621-UP
9		6162-63-1440	.Ring, Snap.....	1	503621-UP
10		6215-81-9520	.Plug.....	1	503621-UP
11		6215-81-9720	.O-ring.....	1	503621-UP
12		6219-61-1120	.Housing.....	1	503621-UP
13		07000-G2140	.O-ring.....	1	503621-UP
14		07000-A2060	.O-ring.....	1	503621-UP
15		07000-A2016	.O-ring.....	1	503621-UP
16		6215-81-9520	.Plug.....	2	503621-UP
17		6215-81-9720	.O-ring.....	2	503621-UP
18		01010-81230	.Bolt.....	2	503621-UP
19		07000-72100	O-ring.....	1	503621-UP
20		01011-81265	Bolt.....	2	503621-UP
21		01643-31232	Washer.....	2	503621-UP
22		01011-81210	Bolt.....	2	503621-UP
23		6215-61-6531	Gasket.....	1	503621-UP
24		6215-61-6510	Tube.....	1	503621-UP
25		01010-81025	Bolt.....	3	503621-UP
26		6215-61-6520	Plate.....	1	503621-UP
27		01010-81020	Bolt.....	1	503621-UP
28		07000-G3045	O-ring.....	1	503621-UP
29		6219-61-6310	Connector.....	1	503621-UP
30		07000-G2080	O-ring.....	1	503621-UP
31		07000-G2090	O-ring.....	1	503621-UP
32		07043-70617	Plug.....	1	503621-UP
33		07043-70108	PLUG.....	1	503621-UP
34		07730-50004	Valve, Drain.....	1	503621-UP
35		01010-81040	Bolt.....	3	503621-UP
36		01010-81030	Bolt.....	3	503621-UP

Ref :A5010-A7E8 Page :010900

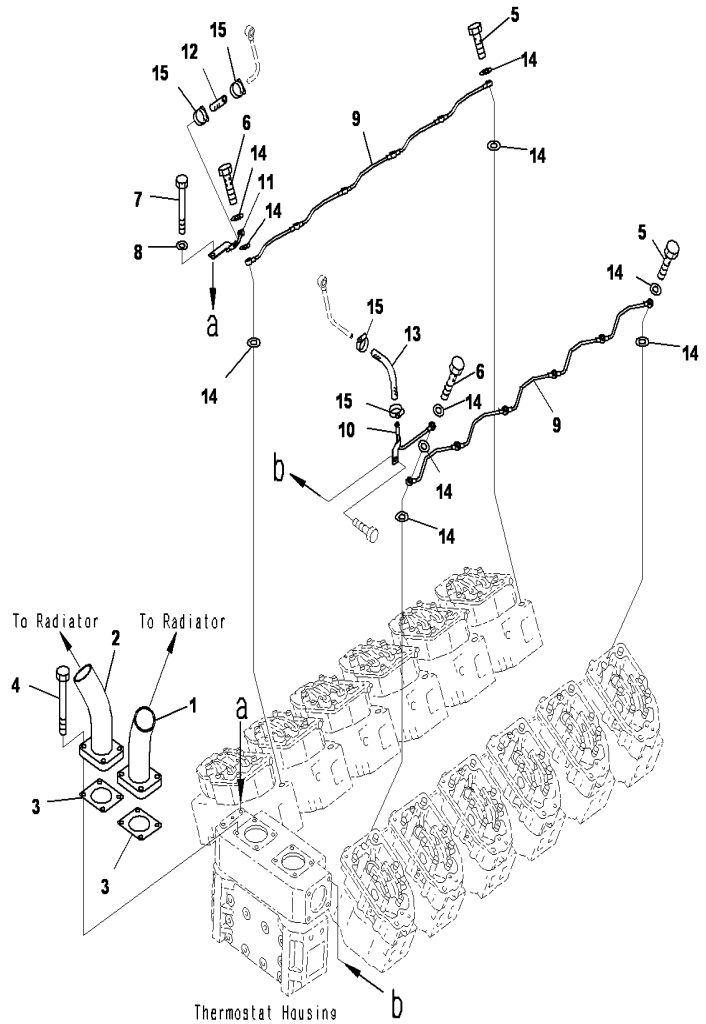

SAA12V140E-3 S/N 503621-UP

WATER PUMP(AIR VENT AND WATER OUTLET TUBE)

INDEX	CD	PART NO.	DESCRIPTION	QTY	SERIAL NO.
1		6215-11-6180	Tube,LHS	1	503621-UP
2		6215-11-6190	Tube,RHS	1	503621-UP
3		6215-11-6831	Gasket	2	503621-UP
4		01011-81030	Bolt	6	503621-UP
5		07206-30710	Bolt, Joint	10	503621-UP
6		6215-11-6560	Bolt, Joint	2	503621-UP
7		01010-81030	Bolt	1	503621-UP
8		01643-31032	Washer	1	503621-UP
9		6219-11-6510	Tube, Air	2	503621-UP
10		6219-61-6570	Tube,LHS	1	503621-UP
11		6219-61-6580	Tube,RHS	1	503621-UP
12		6219-61-6710	Hose,RHS	1	503621-UP
13		6219-61-6720	Hose,LHS	1	503621-UP
14		07003-01015	Gasket	26	503621-UP
15		07281-00197	Clamp	4	503621-UP

Ref :A5010-B7E6 Page :010910

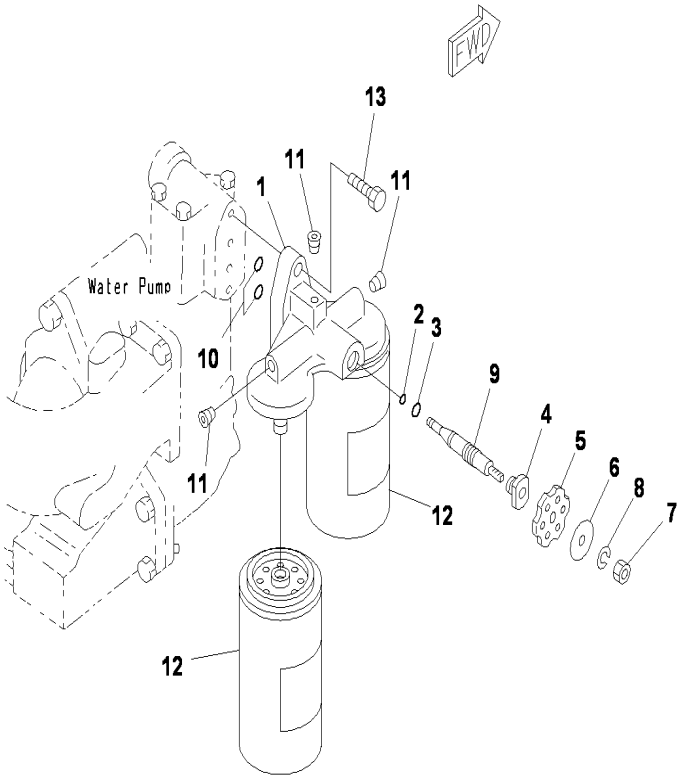

SAA12V140E-3 S/N 503621-UP

CORROSION RESISTOR

INDEX	CD	PART NO.	DESCRIPTION	QTY	SERIAL NO.
		600-411-1602	Corrosion Resistor Assembly.....	1	503621-UP
		600-411-1610	.Head Assembly.....	1	503621-UP
1	C1		..Head.....	1	503621-UP
2		07000-01006	..O-ring.....	1	503621-UP
3		07000-02014	..O-ring.....	1	503621-UP
4		600-411-1250	..Plug.....	1	503621-UP
5		600-411-1240	..Handle.....	1	503621-UP
6		600-411-1260	..Plate.....	1	503621-UP
7		600-411-1280	..Nut.....	1	503621-UP
8		600-411-1290	..Washer.....	1	503621-UP
9		600-411-1231	..Valve.....	1	503621-UP
10		600-411-1670	..O-ring.....	1	503621-UP
11		07043-00108	..Plug, Taper.....	1	503621-UP
12		600-411-1171	.Cartridge.....	2	503621-UP
13		01010-81035	BOLT.....	2	503621-UP

Ref :A5210-A7A1 Page :010920

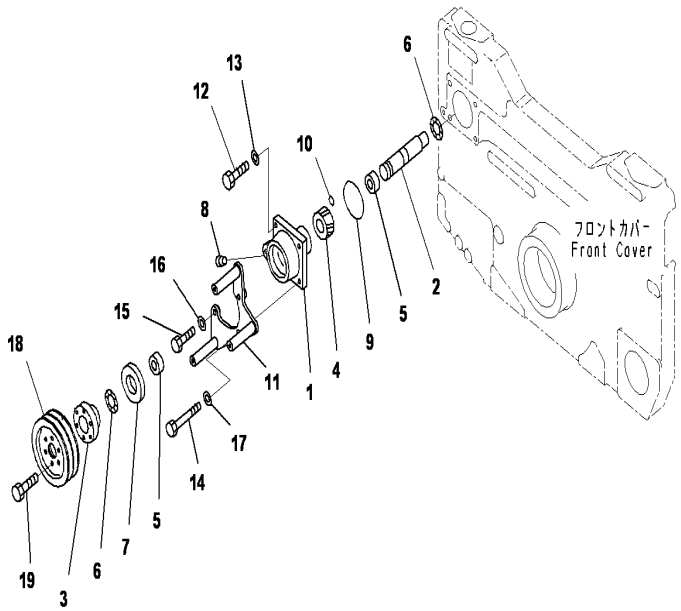

SAA12V140E-3 S/N 503621-UP

ALTERNATOR DRIVE(FOR 90A)

INDEX	CD	PART NO.	DESCRIPTION	QTY	SERIAL NO.
		6215-21-3402	Accessory Driver Assembly.....	1	503621-UP
1		6215-21-3411	.Housing, Drive.....	1	503621-UP
2		6215-21-3421	.Shaft.....	1	503621-UP
3		6215-21-3430	.Hub.....	1	503621-UP
4		6215-21-3441	.Gear.....	1	503621-UP
5		6127-31-6221	.Bushing.....	2	503621-UP
6		6127-31-6261	.Bearing, Thrust.....	2	503621-UP
7		6215-21-3481	.Seal, Oil.....	1	503621-UP
8		6732-21-1960	.Plug Assembly.....	1	503621-UP
		6215-81-9510	..Plug.....	1	503621-UP
		6215-81-9710	..O-ring.....	1	503621-UP
9		07000-72100	O-ring.....	1	503621-UP
10		07000-72016	O-ring.....	1	503621-UP
11		6219-81-6120	Bracket.....	1	503621-UP
12		01010-81290	Bolt.....	1	503621-UP
13		01643-31232	Washer.....	1	503621-UP
14		01011-81220	Bolt.....	1	503621-UP
15		01010-81260	Bolt.....	2	503621-UP
16		01643-31232	Washer.....	2	503621-UP
17		01643-31232	Washer.....	1	503621-UP
18		6219-81-6150	Pulley.....	1	503621-UP
19		01010-80816	Bolt.....	6	503621-UP

Ref :A6030-A7B4 Page :010930

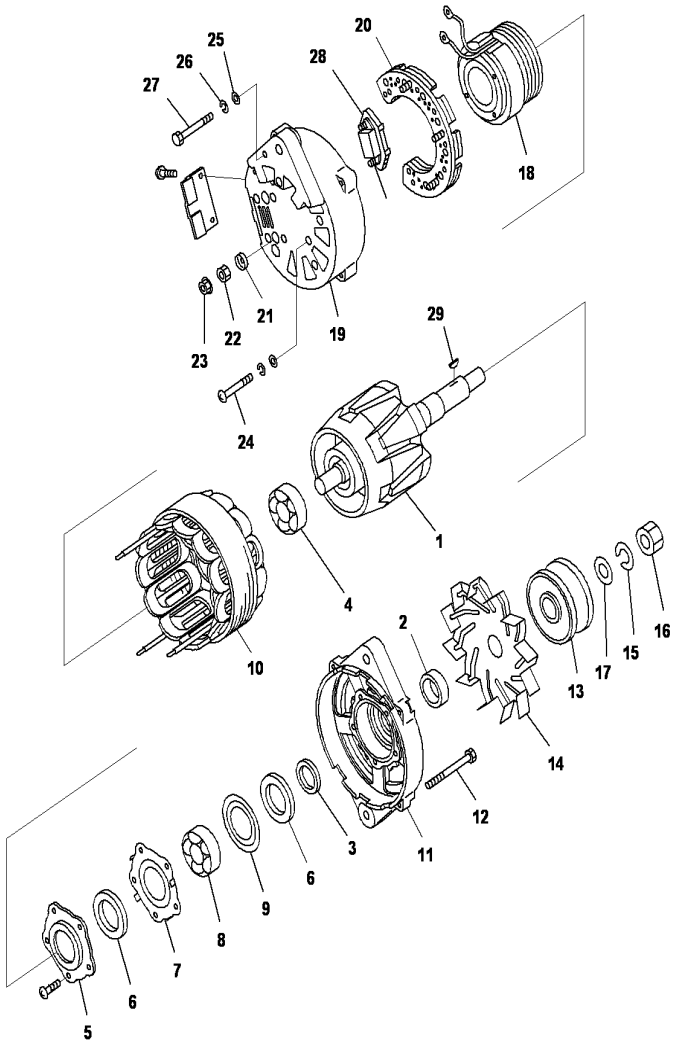

SAA12V140E-3 S/N 503621-UP

ALTERNATOR(FOR 90A)(INNER PARTS)

INDEX	CD	PART NO.	DESCRIPTION	QTY	SERIAL NO.
		600-825-9330	Alternator Assembly, 90Amp.....	2	503621-UP
1		KD035100-0310	.Rotor Assembly.....	1	503621-UP
2		KD133923-0890	.Collar.....	1	503621-UP
3		KD133923-0030	.Collar.....	1	503621-UP
4		KD009201-0770	.Bearing, Ball.....	1	503621-UP
5		KD035926-0080	.Retainer.....	1	503621-UP
6		KD035951-0080	.Packing.....	2	503621-UP
7		KD133926-0660	.Retainer.....	1	503621-UP
8		KD009201-0760	.Bearing, Ball.....	1	503621-UP
9		KD133926-0790	.Retainer.....	1	503621-UP
10		KD035200-0320	.Stator Assembly.....	1	503621-UP
11		KD035300-0200	.Bracket Assembly.....	1	503621-UP
12		KD000830-8802	.Bolt.....	4	503621-UP
13		KD035411-0950	.Pulley.....	1	503621-UP
14		KD035421-0190	.Fan.....	1	503621-UP
15		KD103352-2002	.Washer, Spring.....	1	503621-UP
16		KD002802-2022	.Nut.....	1	503621-UP
17		KD135921-0010	.Washer.....	1	503621-UP
18		KD035120-0250	.Coil Assembly, Field.....	1	503621-UP
		KD035700-0760	.Bracket Assembly.....	1	503621-UP
19		KD035710-0890	..Bracket.....	1	503621-UP
20		KD035730-0162	..Rectifier Assembly.....	1	503621-UP
21		KD035943-0210	..Bushing.....	1	503621-UP
22		KD033902-0090	..Nut.....	1	503621-UP
23		KD033902-0080	..Nut.....	6	503621-UP
24		KD100200-6452	..Screw.....	4	503621-UP
25		KD103350-6012	..Washer.....	5	503621-UP
26		KD103350-6002	..Washer, Spring.....	5	503621-UP
27		KD000800-6142	..Bolt.....	1	503621-UP
28		KD735719-0181	..Regulator Assembly.....	1	503621-UP
29		KD101460-4160	.Key.....	1	503621-UP

Ref :A6010-C7B9 Page :010940

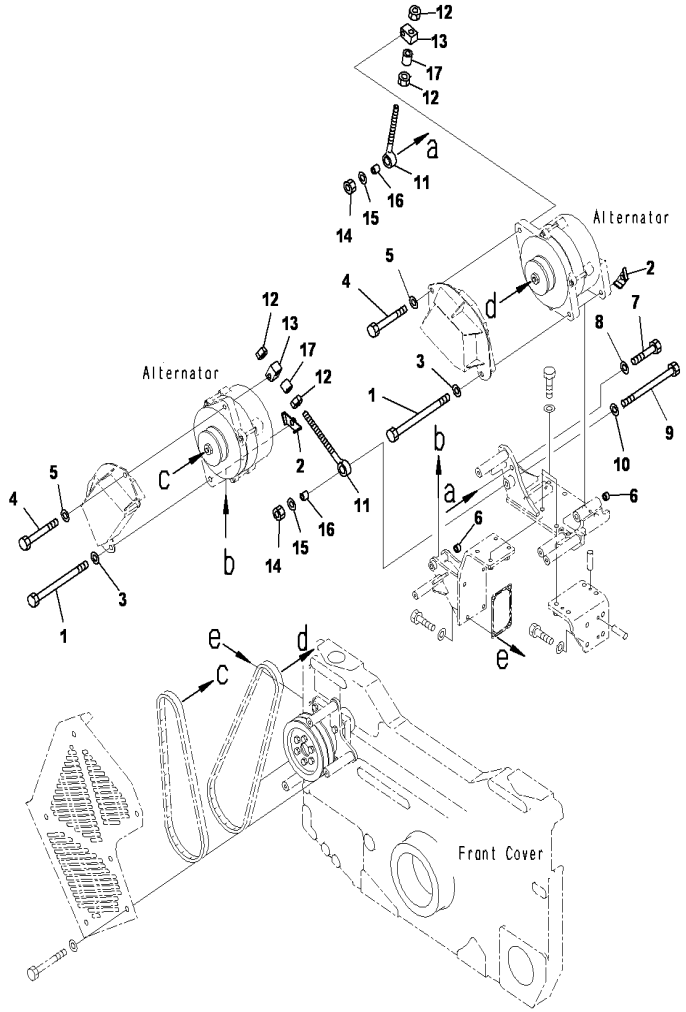

SAA12V140E-3 S/N 503621-UP

ALTERNATOR(FOR 90A)(MOUNTING PARTS)(1/2)

INDEX	CD	PART NO.	DESCRIPTION	QTY	SERIAL NO.
1		6217-81-6840	Bolt	2	503621-UP
2		6261-81-6890	Bracket	2	503621-UP
3		01640-21323	Washer	2	503621-UP
4		01050-51255	Bolt	2	503621-UP
5		01643-31232	Washer	2	503621-UP
6		6151-71-9710	Spacer	2	503621-UP
7		01010-81260	Bolt	1	503621-UP
8		01643-31232	Washer	1	503621-UP
9		01010-81285	Bolt	1	503621-UP
10		01643-31232	Washer	1	503621-UP
11		6215-81-6131	Rod	2	503621-UP
12		01580-11411	Nut	4	503621-UP
13		6215-81-6141	Plate	2	503621-UP
14		01580-11210	Nut	2	503621-UP
15		01643-31232	Washer	2	503621-UP
16		6215-81-6150	Pin	2	503621-UP
17		6130-22-3940	Spacer	2	503621-UP

Ref :A6010-A7C8 Page :010950

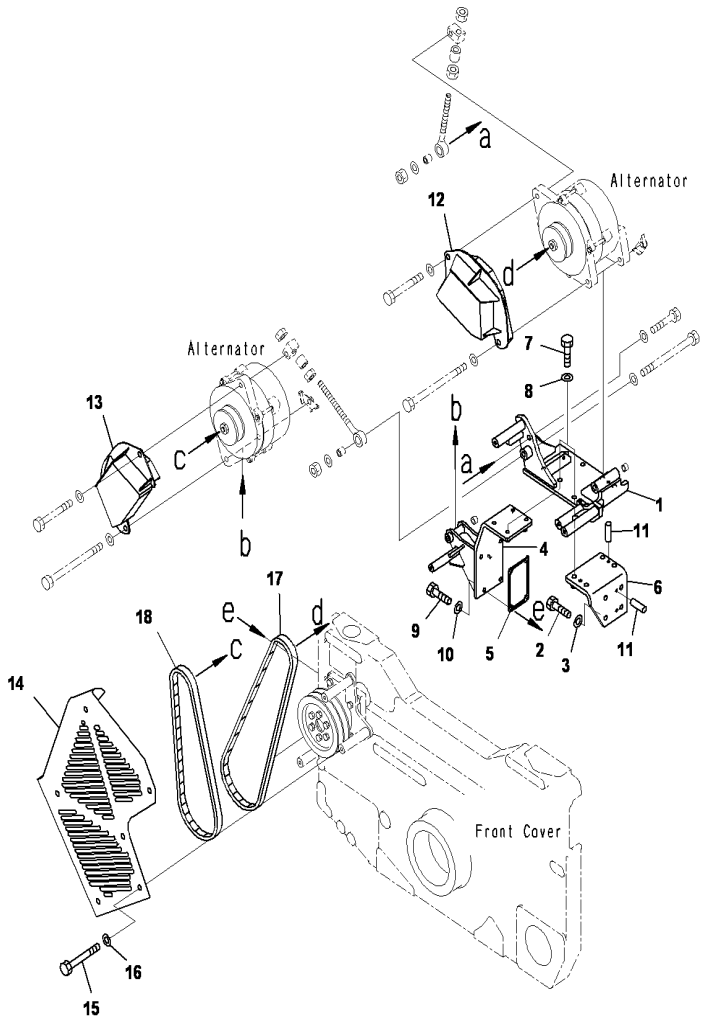

SAA12V140E-3 S/N 503621-UP

ALTERNATOR(FOR 90A)(MOUNTING PARTS)(2/2)

INDEX	CD	PART NO.	DESCRIPTION	QTY	SERIAL NO.
1		6219-81-6130	Bracket	1	503621-UP
2		01010-81030	Bolt	4	503621-UP
3		01643-31032	Washer	4	503621-UP
4		6219-81-6140	Bracket	1	503621-UP
5		6215-81-6190	Gasket	1	503621-UP
6		6219-81-6110	Bracket	1	503621-UP
7		01010-81035	Bolt	8	503621-UP
8		01643-31032	Washer	8	503621-UP
9		01010-81030	Bolt	4	503621-UP
10		01643-31032	Washer	4	503621-UP
11		04020-00820	Pin, Dowel	4	503621-UP
12		6219-81-6220	Cover	1	503621-UP
13		6219-81-6230	Cover	1	503621-UP
14		6219-81-6210	Bracket	1	503621-UP
15		01010-81025	Bolt	6	503621-UP
16		01643-31032	Washer	6	503621-UP
17		6219-81-6760	V-belt	1	503621-UP
18		6219-81-6750	V-belt	1	503621-UP

Ref :A6010-A7C9 Page :010960

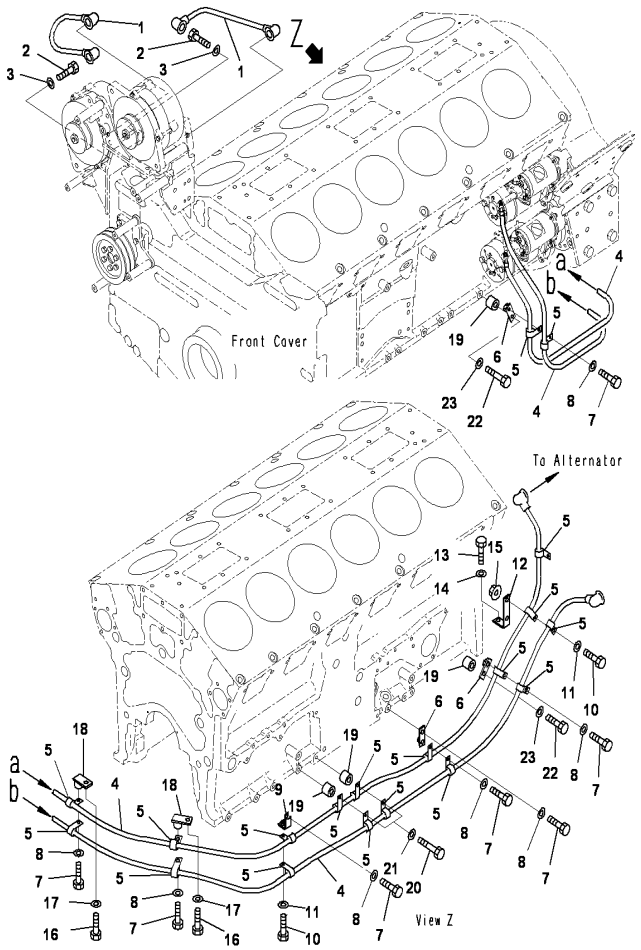

SAA12V140E-3 S/N 503621-UP

ALTERNATOR(FOR 90A)(WIRING HARNESS)

INDEX	CD	PART NO.	DESCRIPTION	QTY	SERIAL NO.
1		6219-81-8170	Wire	2	503621-UP
2		01010-81020	Bolt	2	503621-UP
3		01643-31032	Washer	2	503621-UP
4		6219-81-8160	Wire	2	503621-UP
5		6000512180	Clip	21	503621-UP
6		6212-85-2440	Bracket	3	503621-UP
7		01010-81020	Bolt	7	503621-UP
8		01643-31032	Washer	7	503621-UP
9		6215-51-5870	Bracket	1	503621-UP
10		01010-81025	Bolt	3	503621-UP
11		01643-31032	Washer	3	503621-UP
12		6240-81-5440	Bracket	1	503621-UP
13		01010-81035	Bolt	1	503621-UP
14		01643-31032	Washer	1	503621-UP
15		01584-01008	Nut	1	503621-UP
16		01010-81030	Bolt	3	503621-UP
17		01643-31032	Washer	3	503621-UP
18		6217-21-4810	Plate	1	503621-UP
19		6210-11-5820	Spacer	3	503621-UP
20		01010-81055	Bolt	3	503621-UP
21		01643-31032	Washer	3	503621-UP
22		01010-81045	Bolt	1	503621-UP
23		01643-31032	Washer	1	503621-UP

Ref :A6010-B7D1 Page :010970

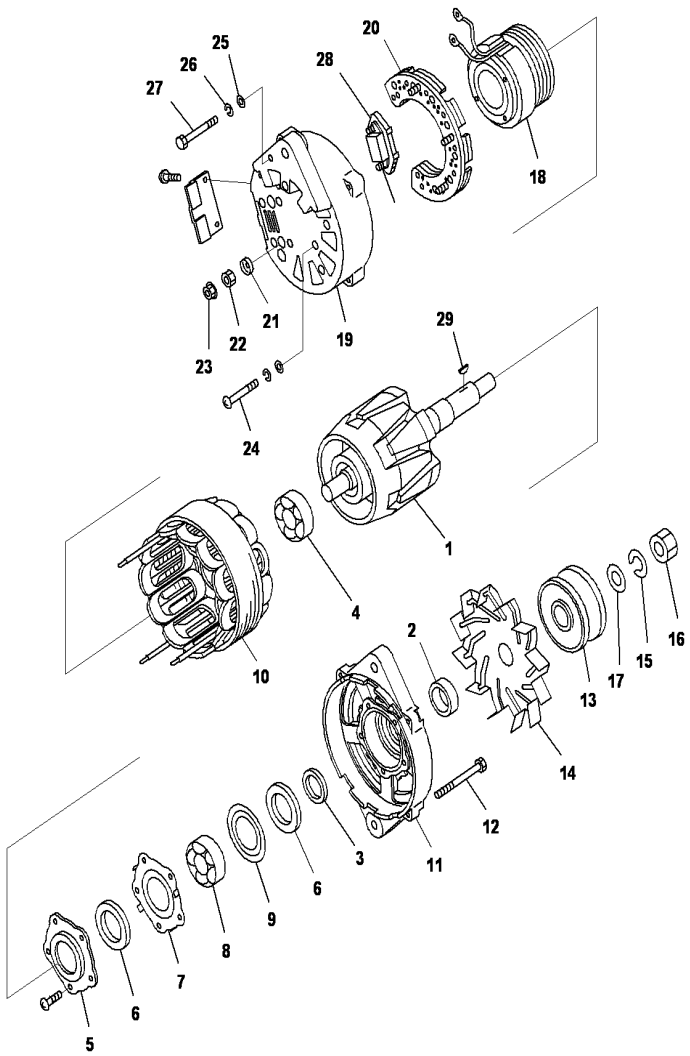

SAA12V140E-3 S/N 503621-UP

ALTERNATOR(FOR 90A)(POOR FUEL ARRANGEMENT)(INNER PARTS)

INDEX	CD	PART NO.	DESCRIPTION	QTY	SERIAL NO.
		600-825-9330	Alternator Assembly, 90Amp.....	2	503621-UP
1		KD035100-0310	.Rotor Assembly.....	1	503621-UP
2		KD133923-0890	.Collar.....		503621-UP
3		KD133923-0030	.Collar.....	1	503621-UP
4		KD009201-0770	.Bearing, Ball.....	1	503621-UP
5		KD035926-0080	.Retainer.....	1	503621-UP
6		KD035951-0080	.Packing.....	2	503621-UP
7		KD133926-0660	.Retainer.....	1	503621-UP
8		KD009201-0760	.Bearing, Ball.....	1	503621-UP
9		KD133926-0790	.Retainer.....	1	503621-UP
10		KD035200-0320	.Stator Assembly.....	1	503621-UP
11		KD035300-0200	.Bracket Assembly.....	1	503621-UP
12		KD000830-8802	.Bolt.....	4	503621-UP
13		KD035411-0950	.Pulley.....	1	503621-UP
14		KD035421-0190	.Fan.....	1	503621-UP
15		KD103352-2002	.Washer, Spring.....	1	503621-UP
16		KD002802-2022	.Nut.....	1	503621-UP
17		KD135921-0010	.Washer.....	1	503621-UP
18		KD035120-0250	.Coil Assembly, Field.....	1	503621-UP
		KD035700-0760	.Bracket Assembly.....	1	503621-UP
19		KD035710-0890	..Bracket.....	1	503621-UP
20		KD035730-0162	..Rectifier Assembly.....	1	503621-UP
21		KD035943-0210	..Bushing.....	1	503621-UP
22		KD033902-0090	..Nut.....	1	503621-UP
23		KD033902-0080	..Nut.....	6	503621-UP
24		KD100200-6452	..Screw.....	4	503621-UP
25		KD103350-6012	..Washer.....	5	503621-UP
26		KD103350-6002	..Washer, Spring.....	5	503621-UP
27		KD000800-6142	..Bolt.....	1	503621-UP
28		KD735719-0181	..Regulator Assembly.....	1	503621-UP
29		KD101460-4160	.Key.....	1	503621-UP

Ref :A6010-C7D1 Page :010980

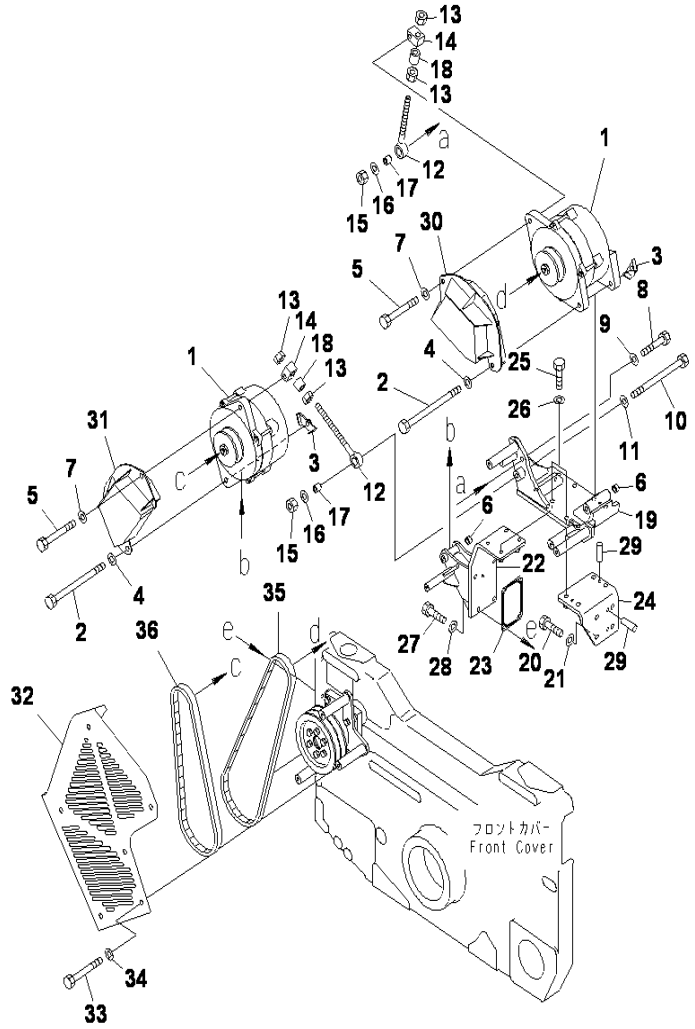

SAA12V140E-3 S/N 503621-UP

ALTERNATOR(FOR 90A)(POOR FUEL ARRANGEMENT)(MOUNTING PARTS)(1/2)

INDEX	CD	PART NO.	DESCRIPTION	QTY	SERIAL NO.
1		6217-81-6840	Bolt	2	503621-UP
2		6261-81-6890	Bracket	2	503621-UP
3		01640-21323	Washer	4	503621-UP
4		01050-51255	Bolt	2	503621-UP
5		6151-71-9710	Spacer	2	503621-UP
6		01643-31232	Washer	2	503621-UP
7		01010-81260	Bolt	1	503621-UP
8		01643-31232	Washer	1	503621-UP
9		01010-81285	Bolt	1	503621-UP
10		01643-31232	Washer	1	503621-UP
11		6215-81-6131	Rod	2	503621-UP
12		01580-11411	Nut	4	503621-UP
13		6215-81-6141	Plate	2	503621-UP
14		01580-11210	Nut	2	503621-UP
15		01643-31232	Washer	2	503621-UP
16		6215-81-6150	Pin	2	503621-UP
17		6130-22-3940	Spacer	2	503621-UP

Ref :A6010-A7D1 Page :010990

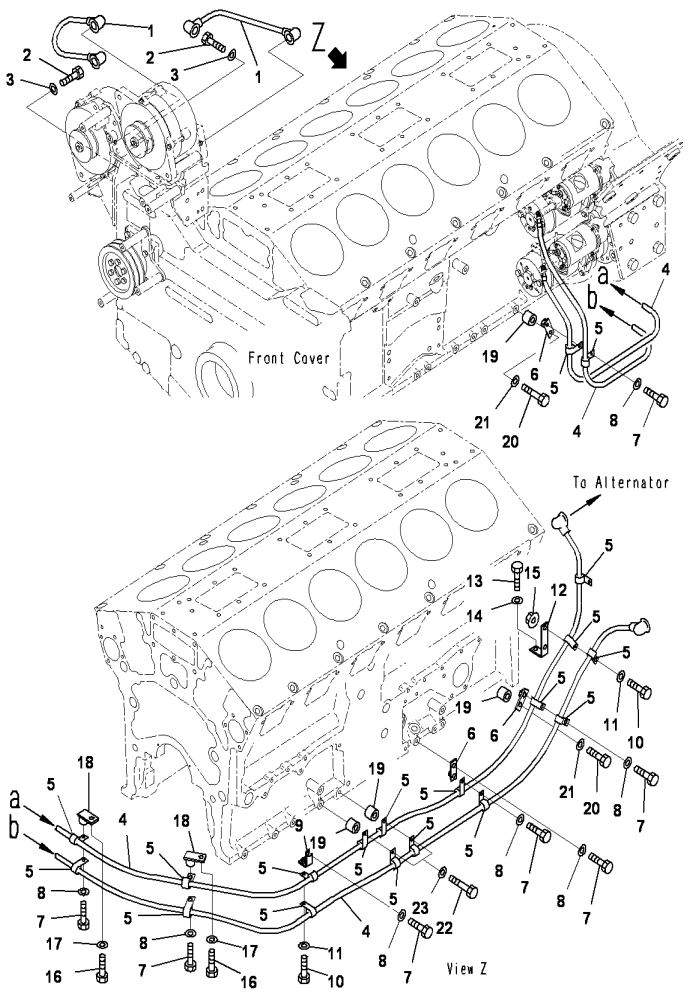

SAA12V140E-3 S/N 503621-UP

ALTERNATOR(FOR 90A)(POOR FEUL ARRANGEMENT)(HARNESS)

INDEX	CD	PART NO.	DESCRIPTION	QTY	SERIAL NO.
1		6219-81-8170	Wire	2	503621-UP
2		01010-81020	Bolt	2	503621-UP
3		01643-31032	Washer	2	503621-UP
4		6219-81-8160	Wire	2	503621-UP
5		600-051-2180	Clip	21	503621-UP
6		6212-85-2440	Bracket	3	503621-UP
7		01010-81020	Bolt	7	503621-UP
8		01643-31032	Washer	7	503621-UP
9		6215-51-5870	Bracket	1	503621-UP
10		01010-81025	Bolt	3	503621-UP
11		01643-31032	Washer	3	503621-UP
12		6240-81-5440	Bracket	1	503621-UP
13		01010-81035	Bolt	1	503621-UP
14		01643-31032	Washer	1	503621-UP
15		01584-01008	Nut	1	503621-UP
16		01010-81030	Bolt	3	503621-UP
17		01643-31032	Washer	3	503621-UP
18		6217-21-4810	Plate	1	503621-UP
19		6210-11-5820	SPACER	3	503621-UP
20		01010-81045	Bolt	4	503621-UP
21		01643-31032	Washer	4	503621-UP
22		01010-81055	Bolt	1	503621-UP
23		01643-31032	Washer	1	503621-UP

Ref :A6010-B7D2 Page :011000

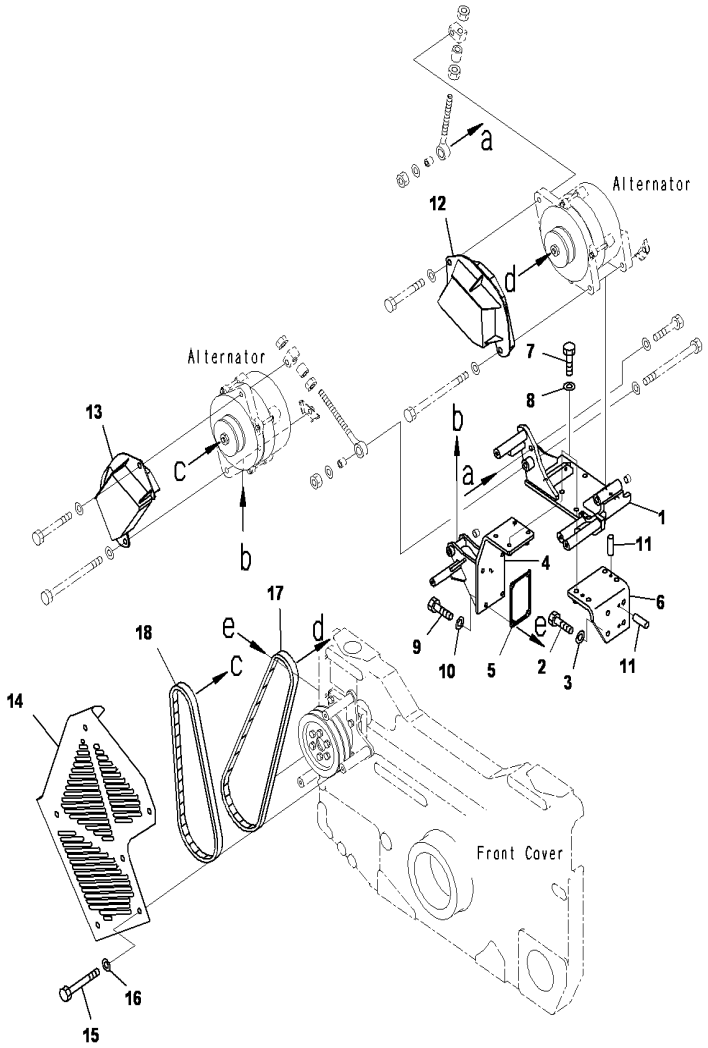

SAA12V140E-3 S/N 503621-UP

ALTERNATOR(FOR 90A)(POOR FUEL ARRANGEMENT)(MOUNTING PARTS)(2/2)

INDEX	CD	PART NO.	DESCRIPTION	QTY	SERIAL NO.
1		6219-81-6130	Bracket	1	503621-UP
2		01010-81030	Bolt	4	503621-UP
3		01643-31032	Washer	4	503621-UP
4		6219-81-6140	Bracket	1	503621-UP
5		6215-81-6190	Gasket	1	503621-UP
6		6219-81-6110	Bracket	1	503621-UP
7		01010-81035	Bolt	8	503621-UP
8		01643-31032	Washer	8	503621-UP
9		01010-81030	Bolt	4	503621-UP
10		01643-31032	Washer	4	503621-UP
11		04020-00820	Pin, Dowel	4	503621-UP
12		6219-81-6220	Cover	1	503621-UP
13		6219-81-6230	Cover	1	503621-UP
14		6219-81-6210	Bracket	1	503621-UP
15		01010-81025	Bolt	6	503621-UP
16		01643-31032	Washer	6	503621-UP
17		6219-81-6760	V-belt	1	503621-UP
18		6219-81-6750	V-belt	1	503621-UP

Ref :A6010-B7D3 Page :011010

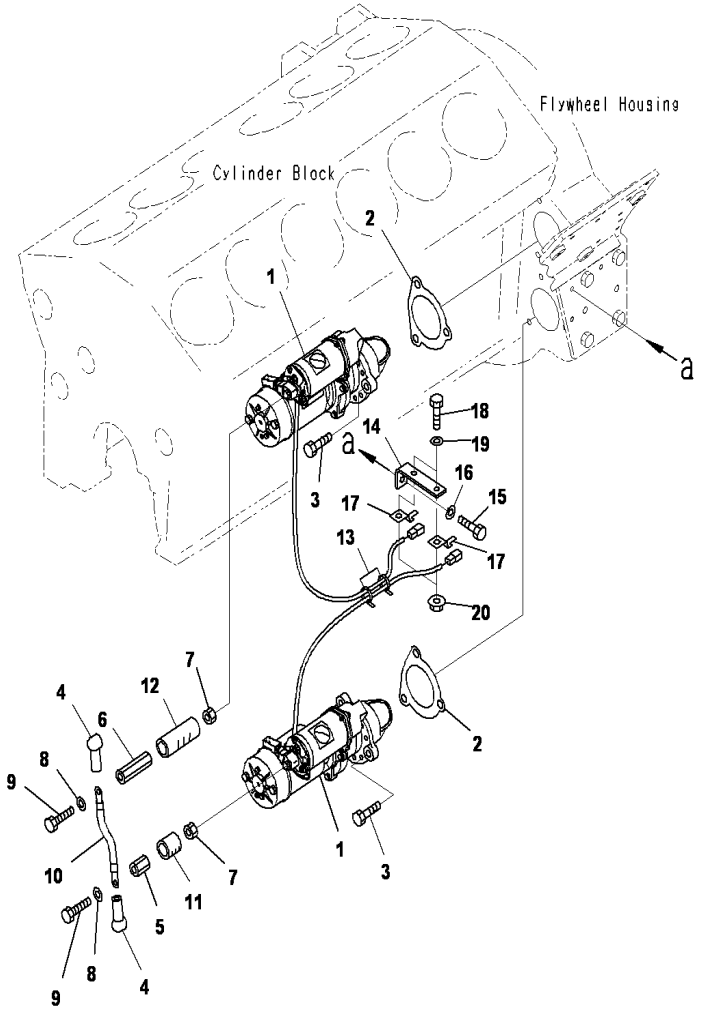

SAA12V140E-3 S/N 503621-UP

STARTER MOTOT(11KW)

INDEX	CD	PART NO.	DESCRIPTION	QTY	SERIAL NO.
1		600-813-9910	Starting Motor Assembly.....	2	503621-UP
2		6221-81-6810	Gasket.....	2	503621-UP
3		01010-61640	Bolt.....	6	503621-UP
4		1540-61-3130	Cap, Terminal.....	2	503621-UP
5		6215-81-6250	Spacer.....	1	503621-UP
6		6219-81-6480	Spacer.....	1	503621-UP
7		01582-01008	Nut.....	2	503621-UP
8		01640-21016	Washer.....	2	503621-UP
9		01050-31020	Bolt.....	2	503621-UP
10		08028-73025	Cable, Ground.....	1	503621-UP
11		07286-01903	Hose.....	1	503621-UP
12		07286-01906	Hose.....	1	503621-UP
13		6218-81-8480	Band.....	2	503621-UP
14		6240-11-4460	Bracket.....	1	503621-UP
15		01010-81025	Bolt.....	1	503621-UP
16		01643-31032	Washer.....	1	503621-UP
17		08193-20010	Clip.....	2	503621-UP
18		01010-81025	Bolt.....	2	503621-UP
19		01643-31032	Washer.....	2	503621-UP
20		01584-01008	Nut.....	2	503621-UP

Ref :A6210-A7A6 Page :011020

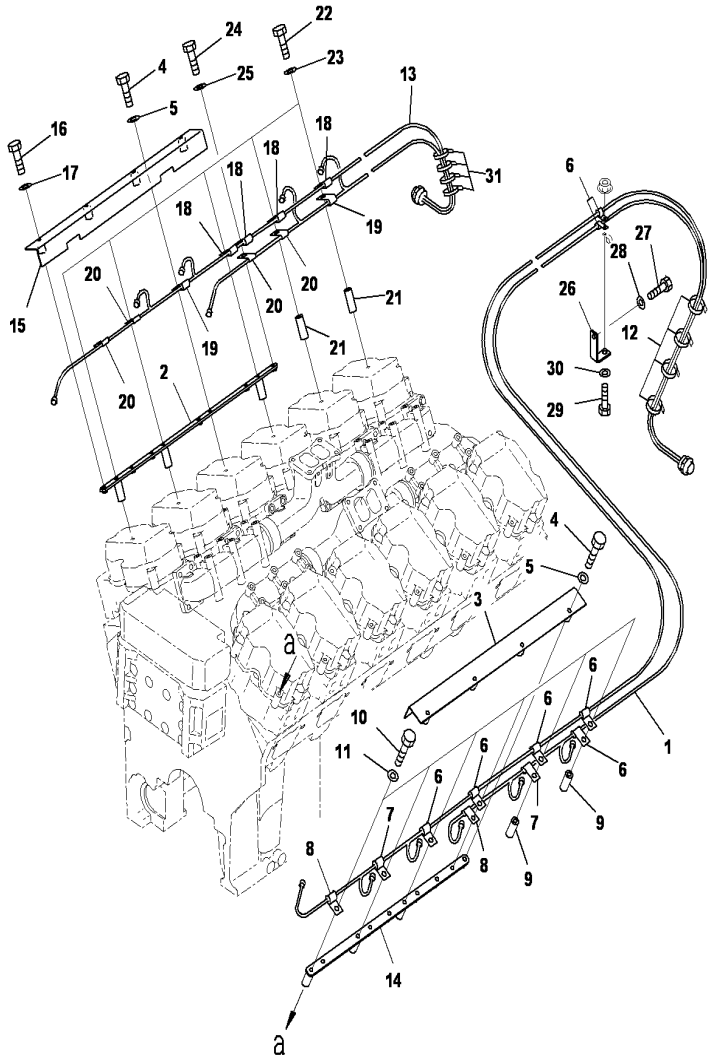

SAA12V140E-3 S/N 503621-UP

ELECTRIC WIRING(INJECTOR HARNESS)

INDEX	CD	PART NO.	DESCRIPTION	QTY	SERIAL NO.
1		6219-81-8710	Wiring Harness,LHS	1	503621-UP
2		6219-81-8590	Plate	1	503621-UP
3		6219-11-5770	Cover	1	503621-UP
4		01010-80850	Bolt	4	503621-UP
5		01643-30823	Washer	4	503621-UP
6		600-051-2120	Clip	6	503621-UP
7		600-051-2100	Clip	2	503621-UP
8		600-051-2080	Clip	2	503621-UP
9		6150-81-6940	Spacer	2	503621-UP
10		01010-80875	Bolt	6	503621-UP
11		01643-30823	Washer	6	503621-UP
12		6218-81-8480	Band	4	503621-UP
13		6219-81-8720	Wiring Harness,RHS	1	503621-UP
14		6219-81-8580	Bracket	1	503621-UP
15		6219-11-5770	Cover	1	503621-UP
16		01010-80850	Bolt	4	503621-UP
17		01643-30823	Washer	4	503621-UP
18		600-051-2120	Clip	4	503621-UP
19		600-051-2100	Clip	2	503621-UP
20		600-051-2080	Clip	4	503621-UP
21		6150-81-6940	Spacer	2	503621-UP
22		01010-80875	Bolt	6	503621-UP
23		01643-30823	Washer	6	503621-UP
24		01010-80820	Bolt	1	503621-UP
25		01643-30823	Washer	1	503621-UP
26		6207-65-8410	Stay	1	503621-UP
27		01010-81020	Bolt	1	503621-UP
28		01643-31032	Washer	1	503621-UP
29		01010-81025	Bolt	1	503621-UP
30		01643-31032	Washer	1	503621-UP
31		6218-81-8480	Band	4	503621-UP

Ref :A6810-A7C6 Page :011030

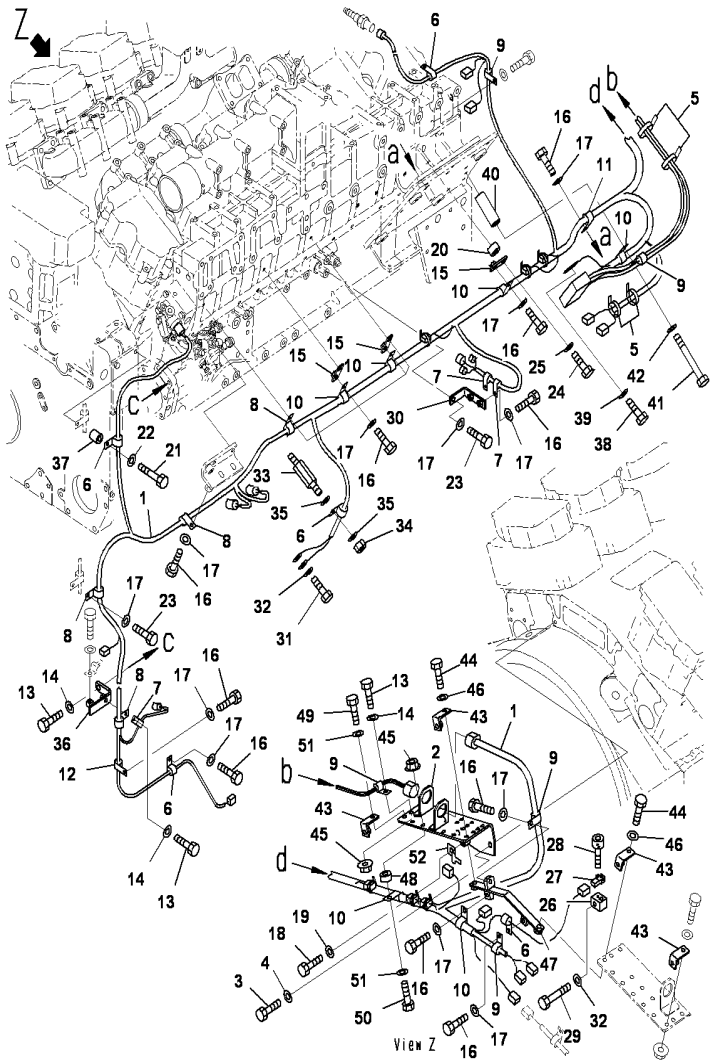

SAA12V140E-3 S/N 503621-UP

ELECTRIC WIRING(MAIN HARNESS)(LHS)

INDEX	CD	PART NO.	DESCRIPTION	QTY	SERIAL NO.
1		6219-81-8111	Wiring Harness	1	503621-UP
2		6219-81-8210	Bracket	1	503621-UP
3		01010-81225	Bolt	3	503621-UP
4		01643-31232	Washer	3	503621-UP
5		6218-81-8480	Band	15	503621-UP
6		600-051-2060	Clip	4	503621-UP
7		600-051-2080	Clip	4	503621-UP
8		600-051-2140	Clip	4	503621-UP
9		600-051-2160	Clip	5	503621-UP
10		600-051-2180	Clip	6	503621-UP
11		600-051-2260	Clip	2	503621-UP
12		600-051-3100	Clip	1	503621-UP
13		01010-81025	Bolt	6	503621-UP
14		01643-31032	Washer	6	503621-UP
15		6212-85-2440	Bracket	3	503621-UP
16		01010-81020	Bolt	12	503621-UP
17		01643-31032	Washer	17	503621-UP
18		01010-81016	Bolt	2	503621-UP
19		01643-31032	Washer	2	503621-UP
20		6131-12-5920	Spacer	1	503621-UP
21		01010-81050	Bolt	2	503621-UP
22		01643-31032	Washer	1	503621-UP
23		01010-81030	Bolt	4	503621-UP
24		01010-81035	Bolt	6	503621-UP
25		01643-31032	Washer	6	503621-UP
26		6219-81-8360	Bracket	1	503621-UP
27		6261-81-2600	Sensor	1	503621-UP
28		01252-60516	Bolt	1	503621-UP
29		01010-81275	Bolt	1	503621-UP
30		6219-81-8450	Plate	1	503621-UP
31		01010-81220	Bolt	1	503621-UP
32		01643-31232	Washer	2	503621-UP
33		6215-71-4921	Bolt	1	503621-UP
34		01580-11008	Nut	1	503621-UP
35		01643-31032	Washer	2	503621-UP
36		6219-81-8280	Bracket	1	503621-UP
37		6210-11-5820	Spacer	1	503621-UP
38		01010-80816	Bolt	2	503621-UP
39		01643-30823	Washer	2	503621-UP
40		6136-11-5120	Spacer	1	503621-UP
41		01010-81090	Bolt	1	503621-UP
42		01643-31032	Washer	1	503621-UP
43		6215-51-5870	Bracket	4	503621-UP
44		01010-81030	Bolt	4	503621-UP
45		01584-01008	Nut	4	503621-UP

Ref :A6810-B7C6 Page :011040

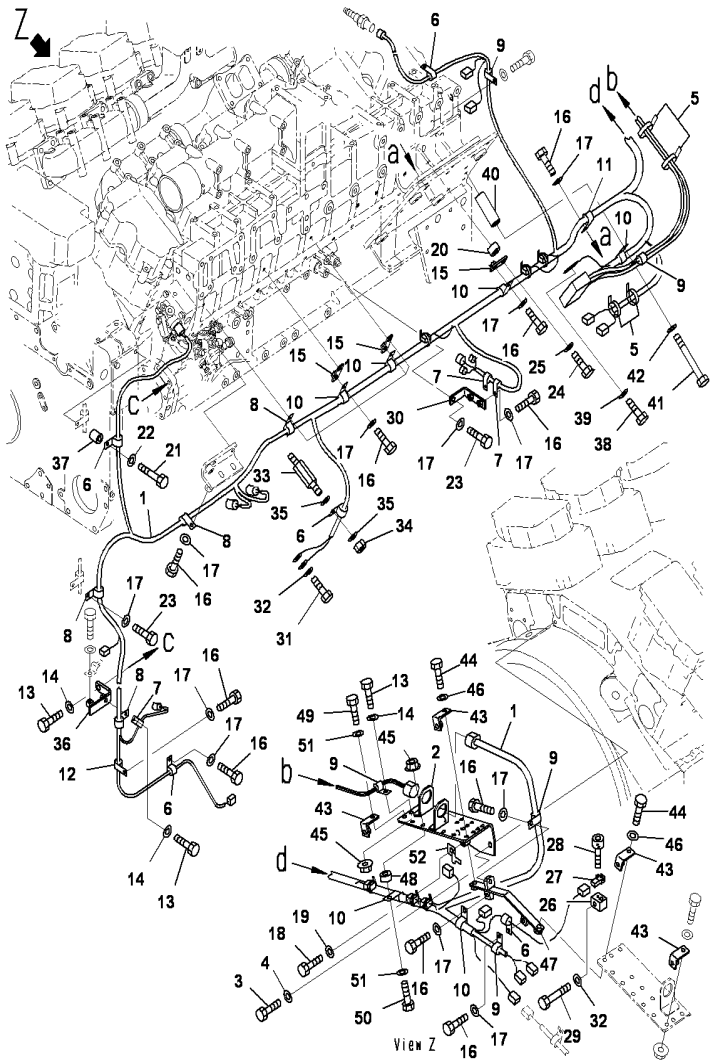

SAA12V140E-3 S/N 503621-UP

ELECTRIC WIRING(MAIN HARNESS)(LHS)

INDEX	CD	PART NO.	DESCRIPTION	QTY	SERIAL NO.
46		01643-31032	Washer	4	503621-UP
47		6219-81-8390	Bracket	1	503621-UP
48		6131-12-5920	Spacer	1	503621-UP
49		01010-81025	Bolt	1	503621-UP
50		01010-81035	Bolt	1	503621-UP
51		01643-31032	Washer	2	503621-UP
52		08193-20010	Clip	1	503621-UP

Ref :A6810-B7C6 Page :011041

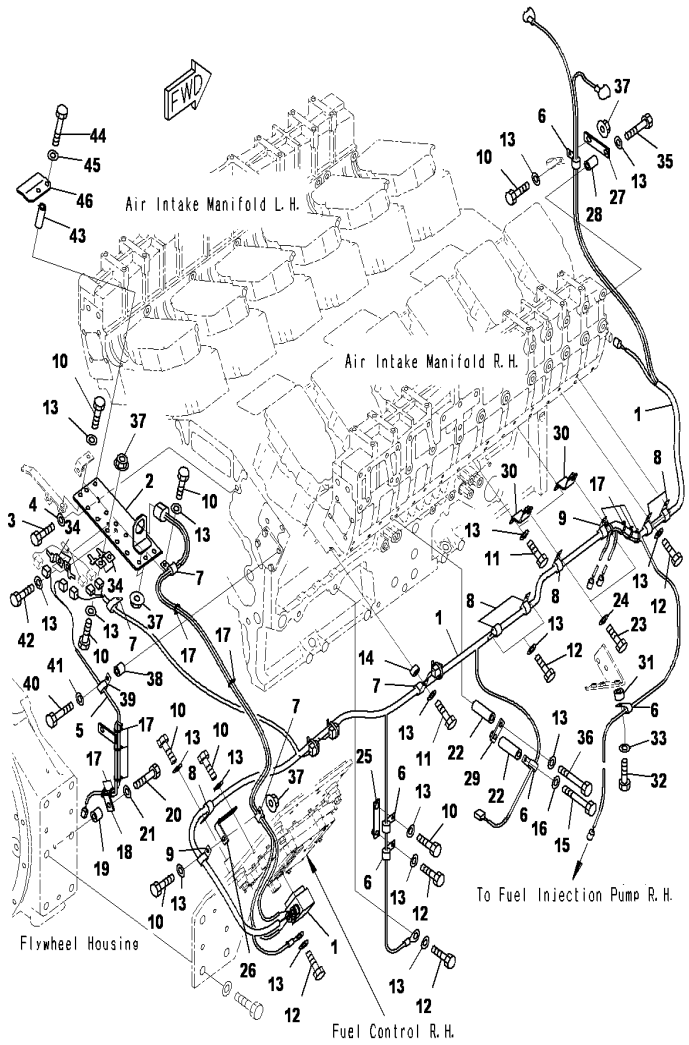

SAA12V140E-3 S/N 503621-UP

ELECTRIC WIRING(MAIN HARNESS)(RHS)

INDEX	CD	PART NO.	DESCRIPTION	QTY	SERIAL NO.
1		6219-81-8121	Wiring Harness	1	503621-UP
2		6219-81-8220	Bracket	1	503621-UP
3		01010-81225	Bolt	3	503621-UP
4		01643-31232	Washer	3	503621-UP
5		6219-81-8130	Wiring Harness	1	503621-UP
6		600-051-2060	Clip	6	503621-UP
7		600-051-2160	Clip	3	503621-UP
8		600-051-2140	Clip	6	503621-UP
9		600-051-2180	Clip	1	503621-UP
10		01010-81025	Bolt	9	503621-UP
11		01010-81030	Bolt	4	503621-UP
12		01010-81020	Bolt	12	503621-UP
13		01643-31032	Washer	21	503621-UP
14		6131-12-5920	Spacer	1	503621-UP
15		01010-81085	Bolt	1	503621-UP
16		01643-31032	Washer	2	503621-UP
17		6218-81-8480	Band	12	503621-UP
18		6219-81-7860	Bracket	1	503621-UP
19		6152-11-4970	Spacer	2	503621-UP
20		01010-81045	Bolt	2	503621-UP
21		01643-31032	Washer	2	503621-UP
22		6204-81-9560	Spacer	2	503621-UP
23		01010-81016	Bolt	2	503621-UP
24		01643-31032	Washer	1	503621-UP
25		6212-65-6390	Plate	1	503621-UP
26		6207-65-8410	Stay	1	503621-UP
27		6152-15-4660	Plate	1	503621-UP
28		6166-11-5391	Spacer	1	503621-UP
29		6212-85-2440	Bracket	1	503621-UP
30		6219-81-7851	Bracket	2	503621-UP
31		6131-12-5920	Spacer	1	503621-UP
32		01010-81035	Bolt	1	503621-UP
33		01643-31032	Washer	1	503621-UP
34		08193-20010	Clip	4	503621-UP
35		01010-81060	Bolt	1	503621-UP
36		01011-81000	Bolt	1	503621-UP
37		01584-01008	Nut	5	503621-UP
38		6144-85-6680	Spacer	1	503621-UP
39		600-051-3120	Clip	1	503621-UP
40		01010-81255	Bolt	1	503621-UP
41		01643-31232	Washer	1	503621-UP
42		01010-81016	Bolt	2	503621-UP
43		6164-91-6290	Spacer	2	503621-UP
44		01010-81085	Bolt	2	503621-UP
45		01643-31032	Washer	2	503621-UP

Ref :A6810-C7C6 Page :011051

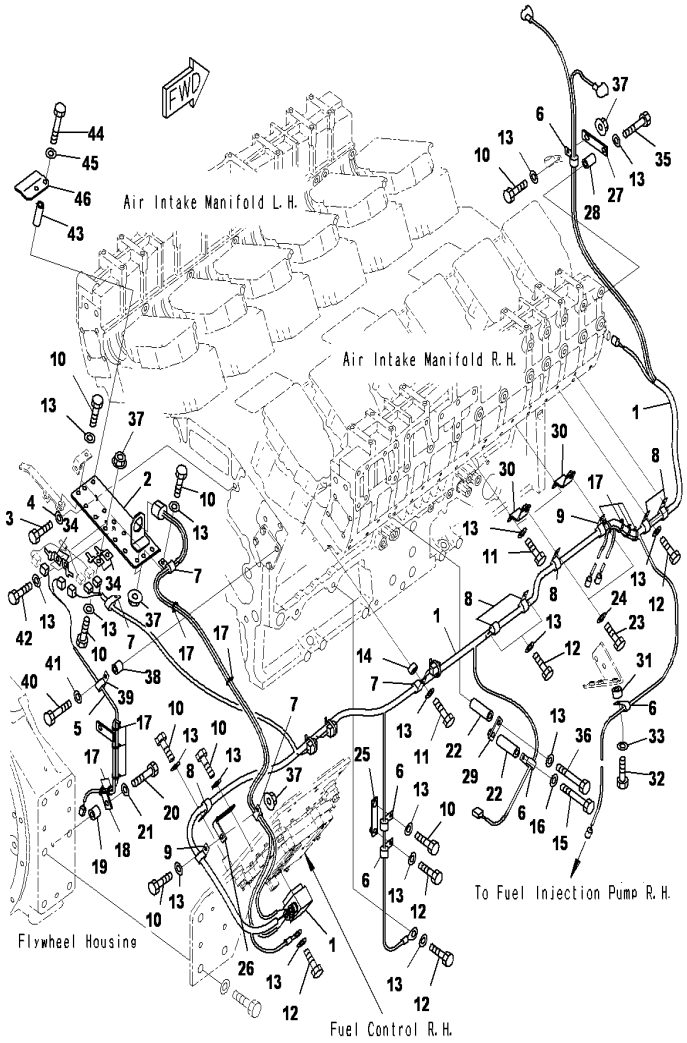

SAA12V140E-3 S/N 503621-UP

ELECTRIC WIRING(MAIN HARNESS)(RHS)

INDEX	CD	PART NO.	DESCRIPTION	QTY	SERIAL NO.
46		6219-81-8780	Cover.....	1	503621-UP

Ref :A6810-C7C6 Page :011052

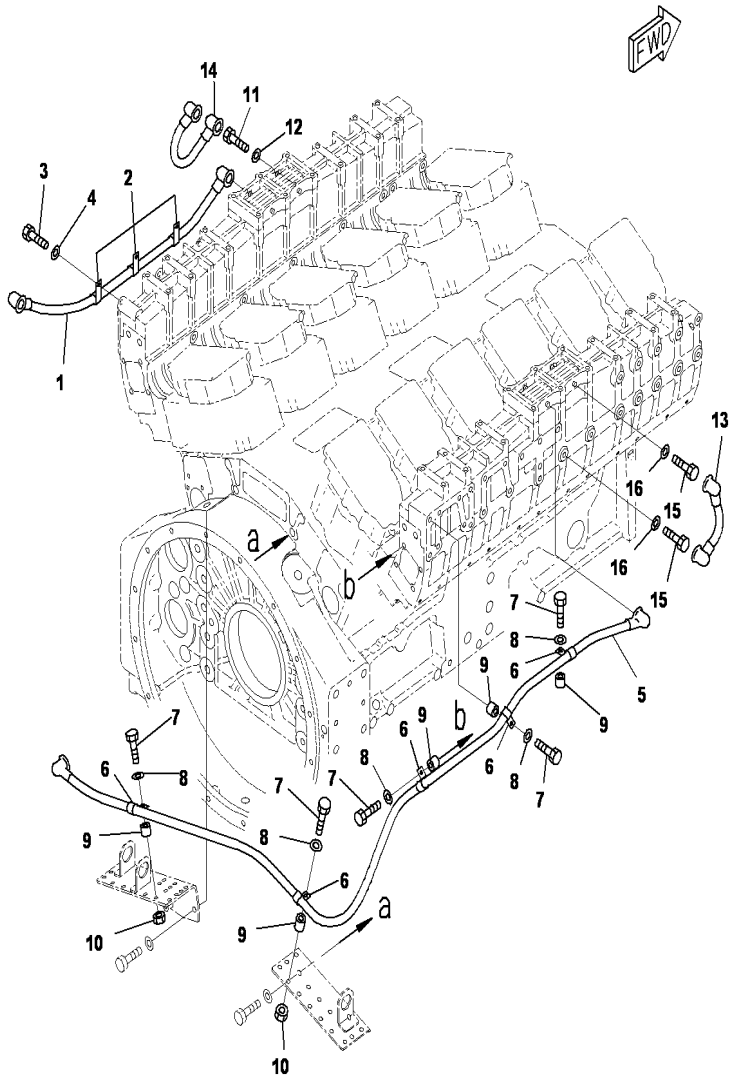

SAA12V140E-3 S/N 503621-UP

ELECTRIC WIRING(HEATER UNIT HARNESS)

INDEX	CD	PART NO.	DESCRIPTION	QTY	SERIAL NO.
1		6219-81-8520	Wire	1	503621-UP
2		600-051-2120	Clip	3	503621-UP
3		01010-81020	Bolt	3	503621-UP
4		01643-31032	Washer	3	503621-UP
5		6219-81-8530	Wire	1	503621-UP
6		600-051-2120	Clip	7	503621-UP
7		01010-81045	Bolt	7	503621-UP
8		01643-31032	Washer	7	503621-UP
9		6210-11-5820	Spacer	7	503621-UP
10		01584-01008	Nut	4	503621-UP
11		01010-81220	Bolt	1	503621-UP
12		01643-31232	Washer	1	503621-UP
13		6219-81-8180	Wire	1	503621-UP
14		6219-81-8380	Wire	1	503621-UP
15		01010-81020	Bolt	2	503621-UP
16		01643-31032	Washer	2	503621-UP

Ref :A6810-D7C6 Page :011060

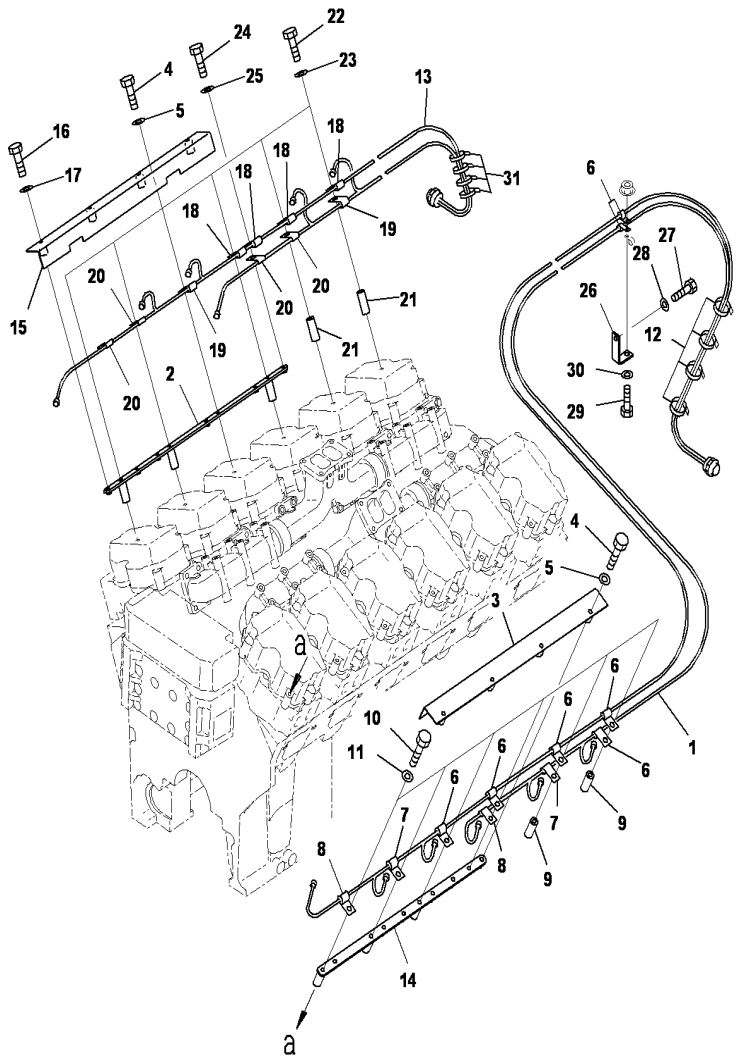

SAA12V140E-3 S/N 503621-UP

ELECTRIC WIRING (INJECTOR HARNESS)(POOR FUEL ARRANGEMENT)

INDEX	CD	PART NO.	DESCRIPTION	QTY	SERIAL NO.
1		6219-81-8710	Wiring Harness,LHS	1	503621-UP
2		6219-81-8590	Plate	1	503621-UP
3		6219-11-5770	Cover	1	503621-UP
4		01010-80850	Bolt	4	503621-UP
5		01643-30823	Washer	4	503621-UP
6		600-051-2120	Clip	6	503621-UP
7		600-051-2100	Clip	2	503621-UP
8		600-051-2080	Clip	2	503621-UP
9		6150-81-6940	Spacer	2	503621-UP
10		01010-80875	Bolt	6	503621-UP
11		01643-30823	Washer	6	503621-UP
12		6218-81-8480	Band	4	503621-UP
13		6219-81-8720	Wiring Harness,RHS	1	503621-UP
14		6219-81-8580	Bracket	1	503621-UP
15		6219-11-5770	Cover	1	503621-UP
16		01010-80850	Bolt	4	503621-UP
17		01643-30823	Washer	4	503621-UP
18		600-051-2120	Clip	4	503621-UP
19		600-051-2100	Clip	2	503621-UP
20		600-051-2080	Clip	4	503621-UP
21		6150-81-6940	Spacer	2	503621-UP
22		01010-80875	Bolt	6	503621-UP
23		01643-30823	Washer	6	503621-UP
24		01010-80820	Bolt	1	503621-UP
25		01643-30823	Washer	1	503621-UP
26		6207-65-8410	Stay	1	503621-UP
27		01010-81020	Bolt	1	503621-UP
28		01643-31032	Washer	1	503621-UP
29		01010-81025	Bolt	1	503621-UP
30		01643-31032	Washer	1	503621-UP
31		6218-81-8480	Band	4	503621-UP

Ref :A6810-D8C6 Page :011070

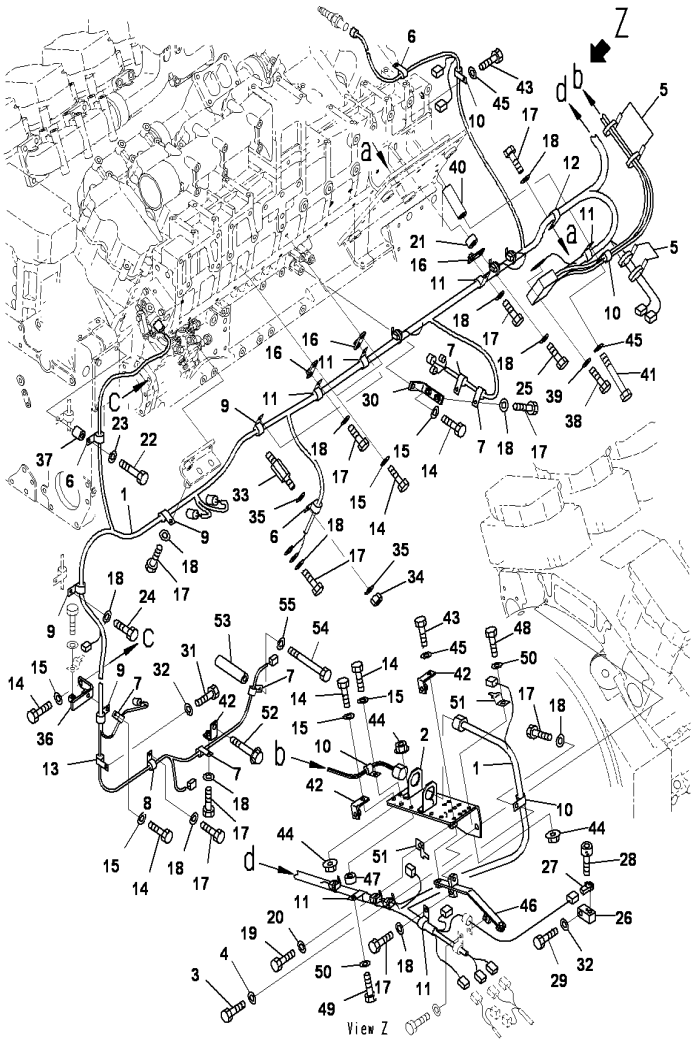

SAA12V140E-3 S/N 503621-UP

ELECTRIC WIRING(MAIN HARNESS)(LHS)(POOR FUEL ARRANGEMENT)

INDEX	CD	PART NO.	DESCRIPTION	QTY	SERIAL NO.
1		6219-81-8760	Wiring Harness	1	503621-UP
2		6219-81-8210	Bracket	1	503621-UP
3		01010-81225	Bolt	3	503621-UP
4		01643-31232	Washer	3	503621-UP
5		6218-81-8480	Band	15	503621-UP
6		600-051-2060	Clip	4	503621-UP
7		600-051-2080	Clip	6	503621-UP
8		600-051-2100	Clip	1	503621-UP
9		600-051-2140	Clip	4	503621-UP
10		600-051-2160	Clip	5	503621-UP
11		600-051-2180	Clip	7	503621-UP
12		600-051-2260	Clip	1	503621-UP
13		600-051-3100	Clip	1	503621-UP
14		01010-81025	Bolt	6	503621-UP
15		01643-31032	Washer	6	503621-UP
16		6212-85-2440	Bracket	3	503621-UP
17		01010-81020	Bolt	12	503621-UP
18		01643-31032	Washer	17	503621-UP
19		01010-81016	Bolt	2	503621-UP
20		01643-31032	Washer	2	503621-UP
21		6131-12-5920	Spacer	1	503621-UP
22		01010-81050	Bolt	2	503621-UP
23		01643-31032	Washer	1	503621-UP
24		01010-81030	Bolt	4	503621-UP
25		01010-81035	Bolt	6	503621-UP
26		6219-81-8360	Bracket	1	503621-UP
27		6261-81-2600	Sensor	1	503621-UP
28		01252-60516	Bolt	1	503621-UP
29		01010-81275	Bolt	1	503621-UP
30		6219-81-8450	Plate	1	503621-UP
31		01010-81220	Bolt	1	503621-UP
32		01643-31232	Washer	2	503621-UP
33		6215-71-4921	Bolt	1	503621-UP
34		01580-11008	Nut	1	503621-UP
35		01643-31032	Washer	2	503621-UP
36		6219-81-8280	Bracket	1	503621-UP
37		6210-11-5820	Spacer	1	503621-UP
38		01010-80816	Bolt	2	503621-UP
39		01643-30823	Washer	2	503621-UP
40		6136-11-5120	Spacer	1	503621-UP
41		01010-81090	Bolt	1	503621-UP
42		6215-51-5870	Bracket	4	503621-UP
43		01010-81030	Bolt	4	503621-UP
44		01584-01008	Nut	5	503621-UP
45		01643-31032	Washer	4	503621-UP

Ref :A6810-D9C6 Page :011080

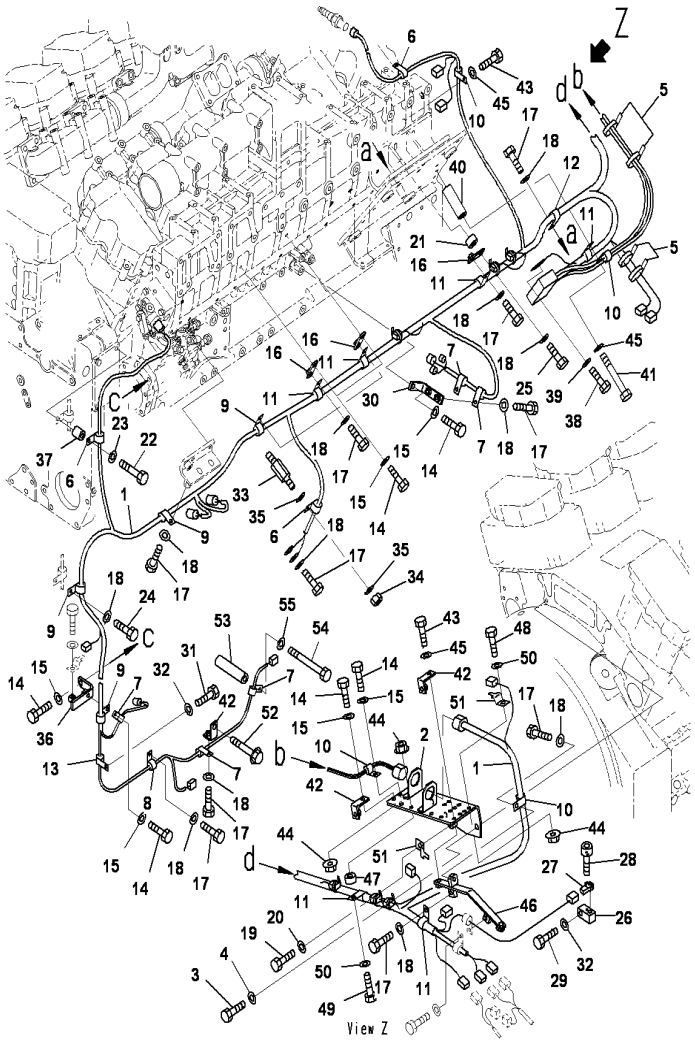

SAA12V140E-3 S/N 503621-UP

ELECTRIC WIRING(MAIN HARNESS)(LHS)(POOR FUEL ARRANGEMENT)

INDEX	CD	PART NO.	DESCRIPTION	QTY	SERIAL NO.
46		6219-81-8390	Bracket	1	503621-UP
47		6131-12-5920	Spacer	1	503621-UP
48		01010-81025	Bolt	1	503621-UP
49		01010-81035	Bolt	1	503621-UP
50		01643-31032	Washer	2	503621-UP
51		08193-20010	Clip	2	503621-UP
52		01436-01050	Bolt	1	503621-UP
53		6215-71-6190	Spacer	1	503621-UP
54		01011-81015	Bolt	1	503621-UP
55		01643-31032	Washer	1	503621-UP

Ref :A6810-D9C6 Page :011081

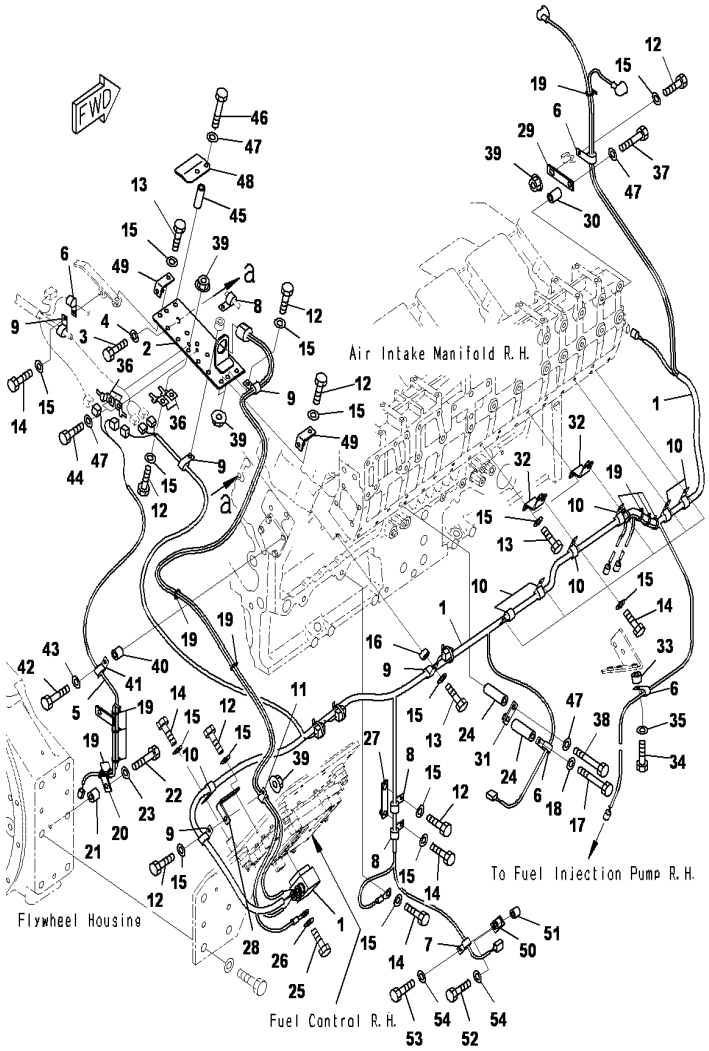

SAA12V140E-3 S/N 503621-UP

ELECTRIC WIRING(MAIN LINE)(RHS)

INDEX	CD	PART NO.	DESCRIPTION	QTY	SERIAL NO.
1		6219-81-8770	Wiring Harness	1	503621-UP
2		6219-81-8220	Bracket	1	503621-UP
3		01010-81225	Bolt	3	503621-UP
4		01643-31232	Washer	3	503621-UP
5		6219-81-8130	Wiring Harness	1	503621-UP
6		600-051-2060	Clip	4	503621-UP
7		600-051-2080	Clip	1	503621-UP
8		600-051-2100	Clip	3	503621-UP
9		600-051-2160	Clip	5	503621-UP
10		600-051-2140	Clip	7	503621-UP
11		600-051-2180	Clip	1	503621-UP
12		01010-81025	Bolt	8	503621-UP
13		01010-81030	Bolt	4	503621-UP
14		01010-81020	Bolt	10	503621-UP
15		01643-31032	Washer	22	503621-UP
16		6131-12-5920	Spacer	1	503621-UP
17		01010-81085	Bolt	1	503621-UP
18		01643-31032	Washer	1	503621-UP
19		6218-81-8480	Band	12	503621-UP
20		6219-81-7860	Bracket	1	503621-UP
21		6152-11-4970	Spacer	2	503621-UP
22		01010-81045	Bolt	2	503621-UP
23		01643-31032	Washer	2	503621-UP
24		6204-81-9560	Spacer	2	503621-UP
25		01010-80816	Bolt	1	503621-UP
26		01643-30823	Washer	1	503621-UP
27		6212-65-6390	Plate	1	503621-UP
28		6207-65-8410	Stay	1	503621-UP
29		6152-15-4660	Plate	1	503621-UP
30		6166-11-5391	Spacer	1	503621-UP
31		6212-85-2440	Bracket	1	503621-UP
32		6219-81-7851	Bracket	2	503621-UP
33		6131-12-5920	Spacer	1	503621-UP
34		01010-81035	Bolt	1	503621-UP
35		01643-31032	Washer	1	503621-UP
36		08193-20010	Clip	4	503621-UP
37		01010-81060	Bolt	1	503621-UP
38		01011-81000	Bolt	1	503621-UP
39		01584-01008	Nut	6	503621-UP
40		6144-85-6680	Spacer	1	503621-UP
41		600-051-3120	Clip	1	503621-UP
42		01010-81255	Bolt	1	503621-UP
43		01643-31232	Washer	1	503621-UP
44		01010-81016	Bolt	2	503621-UP
45		6164-91-6290	Spacer	2	503621-UP

Ref :A6810-E1C6 Page :011090

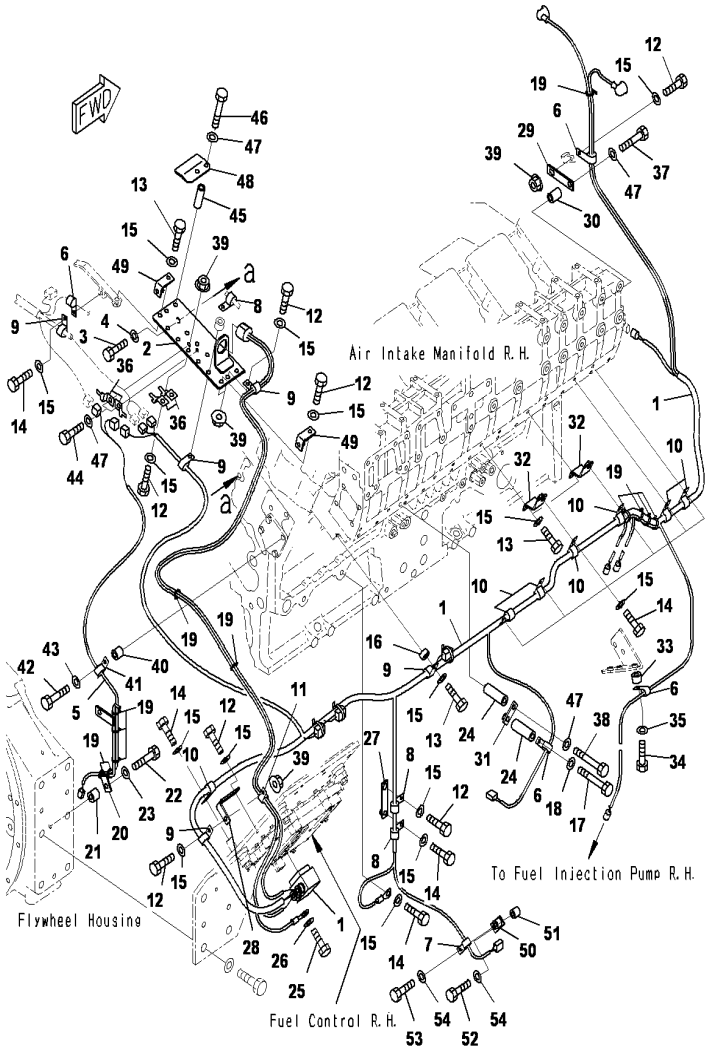

SAA12V140E-3 S/N 503621-UP

ELECTRIC WIRING(MAIN LINE)(RHS)

INDEX	CD	PART NO.	DESCRIPTION	QTY	SERIAL NO.
46		01010-81085	Bolt	2	503621-UP
47		01643-31032	Washer	6	503621-UP
48		6219-81-8780	Cover	1	503621-UP
49		6215-51-5870	Bracket	2	503621-UP
50		426-06-11570	Bracket	1	503621-UP
51		6152-11-4970	Spacer	1	503621-UP
52		01010-81040	Bolt	1	503621-UP
53		01010-81016	Bolt	1	503621-UP
54		01643-31032	Washer	2	503621-UP

Ref :A6810-E1C6 Page :011091

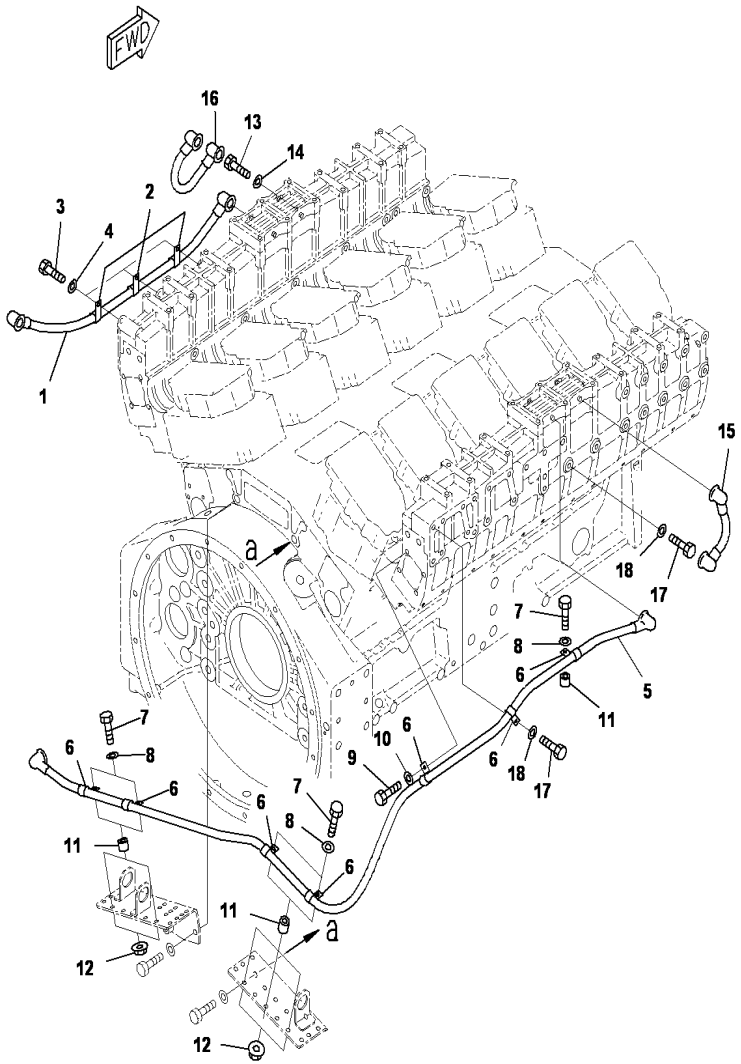

SAA12V140E-3 S/N 503621-UP

ELECTRIC WIRING(HEATER UNIT HARNESS)

INDEX	CD	PART NO.	DESCRIPTION	QTY	SERIAL NO.
1		6219-81-8520	Wire	1	503621-UP
2		600-051-2120	Clip	3	503621-UP
3		01010-81020	Bolt	3	503621-UP
4		01643-31032	Washer	3	503621-UP
5		6219-81-8530	Wire	1	503621-UP
6		600-051-2120	Clip	7	503621-UP
7		01010-81045	Bolt	5	503621-UP
8		01643-31032	Washer	5	503621-UP
9		01010-81035	Bolt	1	503621-UP
10		01643-31032	Washer	1	503621-UP
11		6210-11-5820	Spacer	5	503621-UP
12		01584-01008	Nut	4	503621-UP
13		01010-81220	Bolt	1	503621-UP
14		01643-31232	Washer	1	503621-UP
15		6219-81-8180	Wire	1	503621-UP
16		6219-81-8380	Wire	1	503621-UP
17		01010-81020	Bolt	2	503621-UP
18		01643-31032	Washer	2	503621-UP

Ref :A6810-E2C6 Page :011100

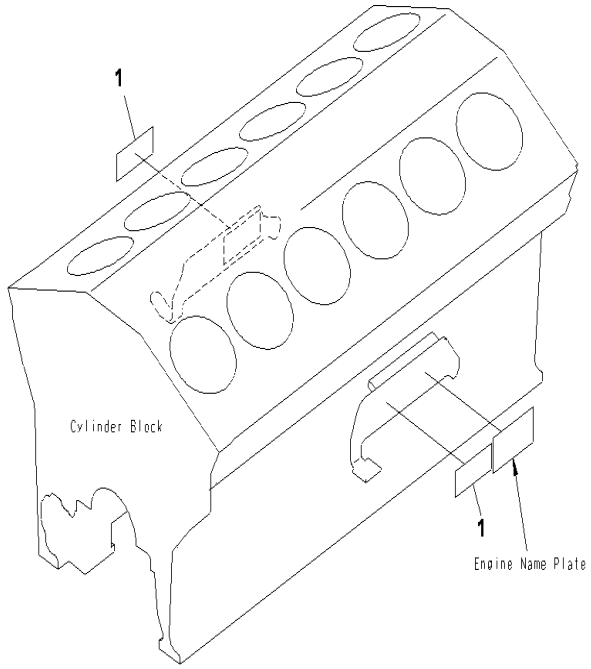

SAA12V140E-3 S/N 503621-UP

NAME AND COUTION PLATES

INDEX	CD	PART NO.	DESCRIPTION	QTY	SERIAL NO.
1		6217-71-9331	Plate, Caution, Warning.....	2	503621-UP

Ref :A9810-A7H4 Page :011110

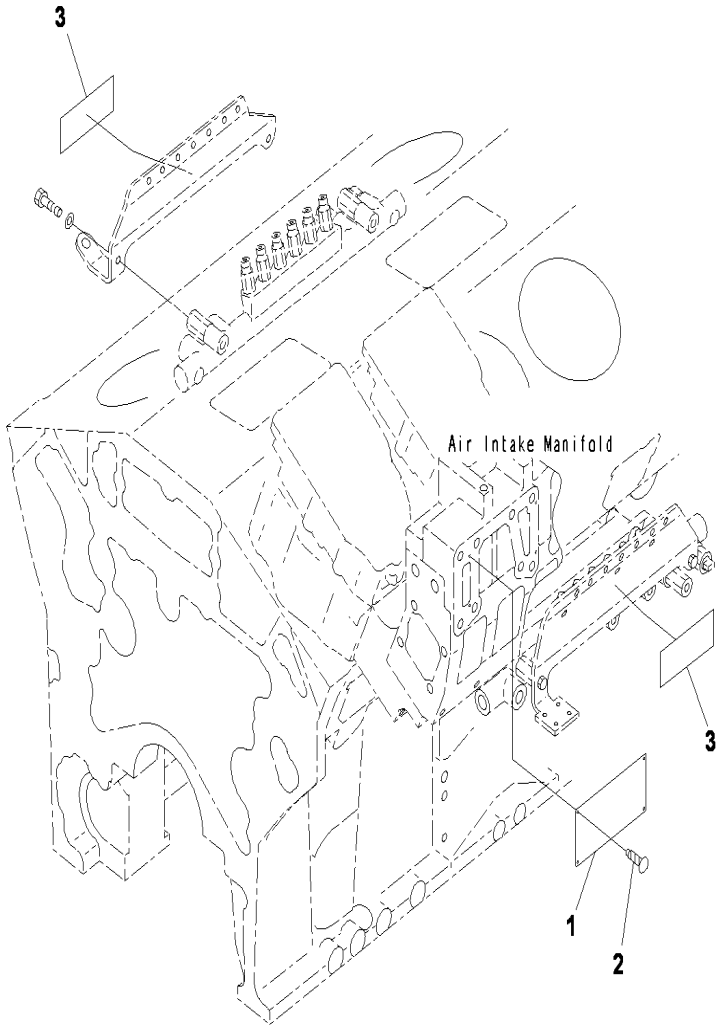

SAA12V140E-3 S/N 503621-UP

NAME PLATE AND COUTION PLATE

INDEX	CD	PART NO.	DESCRIPTION	QTY	SERIAL NO.
1		600-023-2140	Plate, Name (Limited Supply).....	1	503621-UP
2		04418-03060	Screw.....	4	503621-UP
3		6217-71-9331	Plate, Caution.....	1	503621-UP

Ref :A9810-A8H4 Page :011120

ENGINE RELATED PARTS

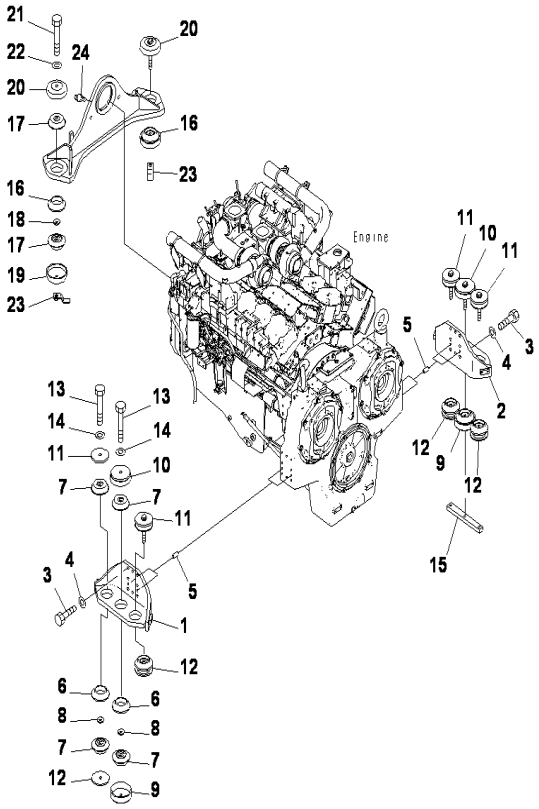

PC2000-8 S/N J10001-UP

ENGINE MOUNTING

INDEX	CD	PART NO.	DESCRIPTION	QTY	SERIAL NO.
1		21T-01-31120	BRACKET	1	J10001-UP
		21T-01-31130	BRACKET	1	J10001-UP
3		01010-82070	BOLT	16	J10001-UP
4		15R-70-16370	WASHER	16	J10001-UP
5		04020-01842	DOWEL PIN	4	J10001-UP
6		21T-01-11210	COLLAR	6	J10001-UP
7		21N-01-11120	CUSHION	12	J10001-UP
8		21T-01-11220	COLLAR	6	J10001-UP
9		21T-01-31160	STOPPER	2	J10001-UP
10		21T-01-31170	STOPPER	2	J10001-UP
11		21T-01-11180	WASHER	4	J10001-UP
12		21T-01-11190	WASHER	4	J10001-UP
13		208-01-11181	BOLT	6	J10001-UP
14		01643-32460	WASHER	6	J10001-UP
15		21T-01-31140	PLATE	1	J10001-UP
16		21T-01-11210	COLLAR	2	J10001-UP
17		21N-01-11120	CUSHION	4	J10001-UP
18		21T-01-11220	COLLAR	2	J10001-UP
19		21N-01-37120SG	STOPPER	2	J10001-UP
20		21N-01-37130SG	STOPPER	2	J10001-UP
21		234-97-71750	BOLT	2	J10001-UP
22		01643-32460	WASHER	2	J10001-UP
23		21T-01-67330	PLATE	2	J10001-UP
24		07020-00000	FITTING	1	J10001-UP

Ref :B0100-01A0 Page :030010

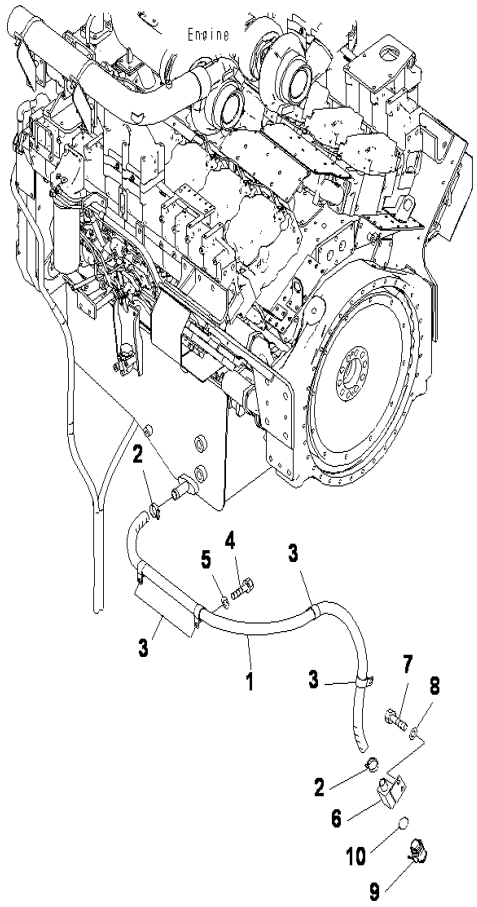

PC2000-8 S/N J10001-UP

ENGINE MOUNTING(WITHOUT SERVICE CENTER)

INDEX	CD	PART NO.	DESCRIPTION	QTY	SERIAL NO.
1		07261-22619	HOSE	1	J10001-UP
2		07281-00419	CLAMP	2	J10001-UP
3		281-01-13180	CLIP	4	J10001-UP
4		01010-81225	BOLT	4	J10001-UP
5		01643-31232	WASHER	4	J10001-UP
6		21T-01-31481	BRACKET	1	J10001-UP
7		01010-81225	BOLT	2	J10001-UP
8		01643-31232	WASHER	2	J10001-UP
9		21T-01-31490	VALVE	1	J10001-UP
10		07002-23634	O-RING	1	J10001-UP

Ref :B0100-02A0 Page :030020

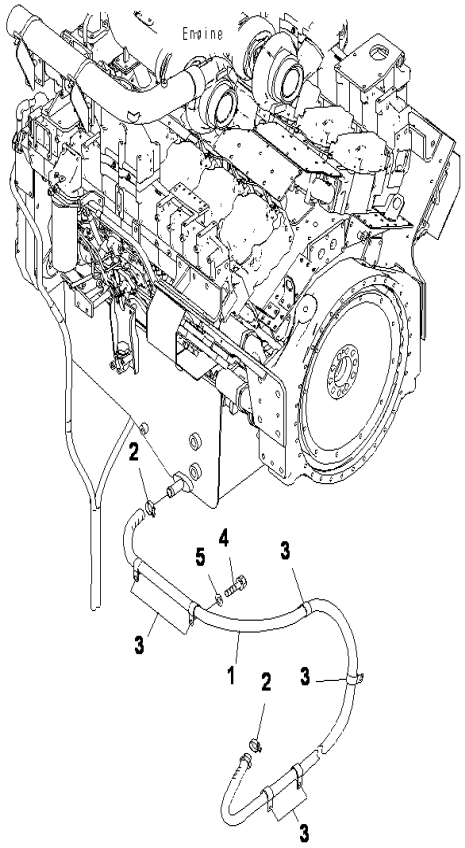

PC2000-8 S/N J10001-UP

ENGINE MOUNTING(SERVICE CENTER, HOSE)

INDEX	CD	PART NO.	DESCRIPTION	QTY	SERIAL NO.
1		21T-98-31320	HOSE	1	J10001-UP
2		07281-00419	CLAMP	2	J10001-UP
3		281-01-13180	CLIP	6	J10001-UP
4		01010-81225	BOLT	6	J10001-UP
5		01643-31232	WASHER	6	J10001-UP

Ref :B0100-02A1 Page :030030

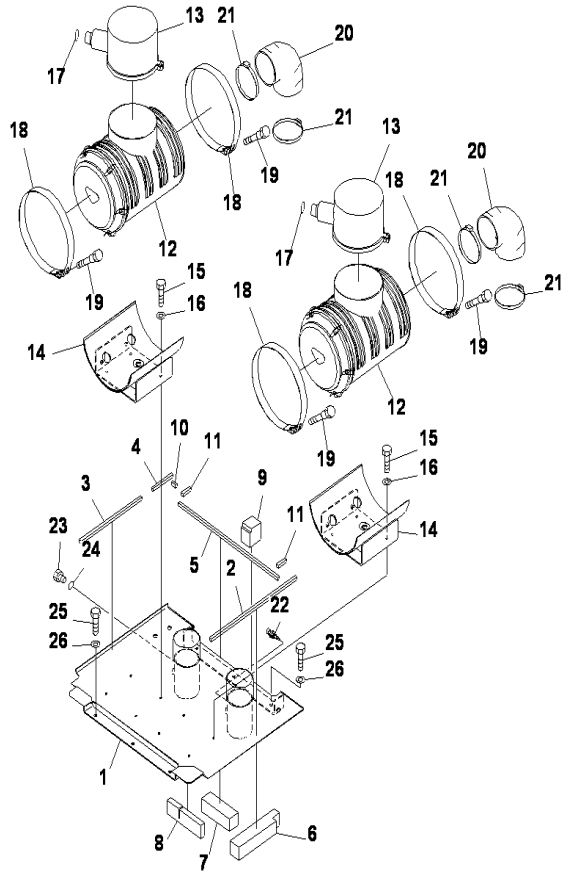

AIR INTAKE AND EXHAUST(AIR CLEANER AND PRE-CLEANER)

INDEX	CD	PART NO.	DESCRIPTION	QTY	SERIAL NO.
1		21T-01-31382	BRACKET	1	J10001-UP
2		21T-01-31410	.SHEET	1	J10001-UP
3		21T-01-31420	.SHEET	1	J10001-UP
4		21T-01-31430	.SHEET	1	J10001-UP
5		21T-01-31440	.SHEET	1	J10001-UP
6		21T-01-31450	.SHEET	1	J10001-UP
7		21T-01-31460	.SHEET	1	J10001-UP
8		21T-01-31510	.SHEET	1	J10001-UP
9		21T-01-31520	.SHEET	1	J10001-UP
10		21T-54-36820	.SHEET	1	J10001-UP
11		21T-54-36930	.SHEET	2	J10001-UP
12		6240-81-7402	AIR CLEANER ASS	2	J10001-UP
13		600-18-37521	AIR CLEANER	2	J10001-UP
14		21T-01-31711	BRACKET	2	J10001-UP
15		01010-81025	BOLT	8	J10001-UP
16		01643-31032	WASHER	8	J10001-UP
17		07000-A5050	O-RING	2	J10001-UP
18		6240-11-9910	BAND	4	J10001-UP
19		6643-11-4641	BOLT	4	J10001-UP
20		561-02-12150	ELBOW	2	J10001-UP
21		07289-00170	CLAMP	4	J10001-UP
22		6560-61-7300	SENSOR,INTAKE A	1	J10001-UP
		6560-61-7310	.SENSOR,TEMP	1	J10001-UP
		6735-21-1930	.O-RING	2	J10001-UP
23		07040-11409	PLUG	1	J10001-UP
24		07002-61423	O-RING	1	J10001-UP
25		01010-81235	BOLT	6	J10001-UP
26		01643-31232	WASHER	6	J10001-UP

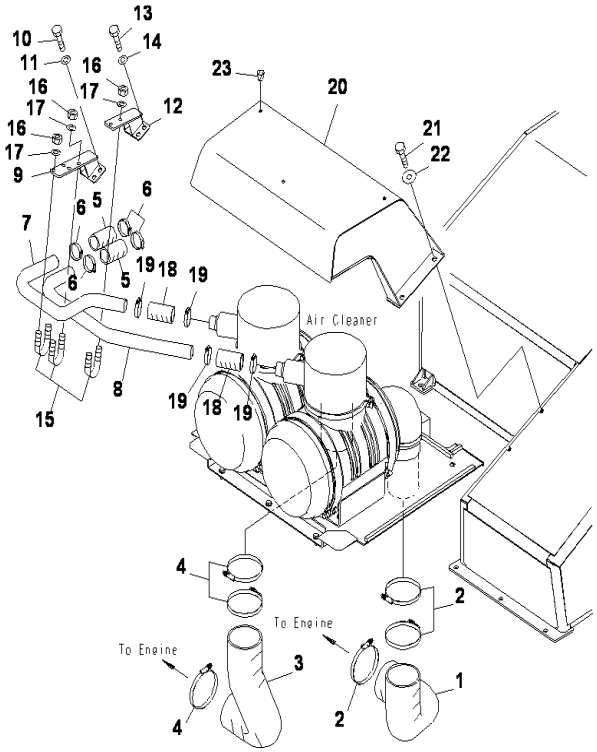

PC2000-8 S/N J10001-UP

INTAKE AND EXHAUST(INTAKE)(HOSE)

INDEX	CD	PART NO.	DESCRIPTION	QTY	SERIAL NO.
1		21T-01-31221	HOSE	1	J10001-UP
2		07299-00160	CLAMP	3	J10001-UP
3		21T-01-31231	HOSE	1	J10001-UP
4		07299-00160	CLAMP	3	J10001-UP
5		6130-12-8620	HOSE	2	J10001-UP
6		07281-00709	CLAMP	4	J10001-UP
7		21T-01-31251	TUBE	1	J10001-UP
8		21T-01-31261	TUBE	1	J10001-UP
9		21T-01-31291	BRACKET	1	J10001-UP
10		01010-81230	BOLT	2	J10001-UP
11		01643-31232	WASHER	2	J10001-UP
12		21T-01-31560	BRACKET	1	J10001-UP
13		01010-81230	BOLT	2	J10001-UP
14		01643-31232	WASHER	2	J10001-UP
15		07283-35150	CLIP	3	J10001-UP
16		01597-01009	NUT	6	J10001-UP
17		01643-31032	WASHER	6	J10001-UP
18		6130-12-8620	HOSE	2	J10001-UP
19		07281-00709	CLAMP	4	J10001-UP
20		21T-54-32841	COVER	1	J10001-UP
21		01010-81235	BOLT	4	J10001-UP
22		175-54-34170	WASHER	4	J10001-UP
23		07049-01215	PLUG	3	J10001-UP

Ref :B0300-02A0 Page :030050

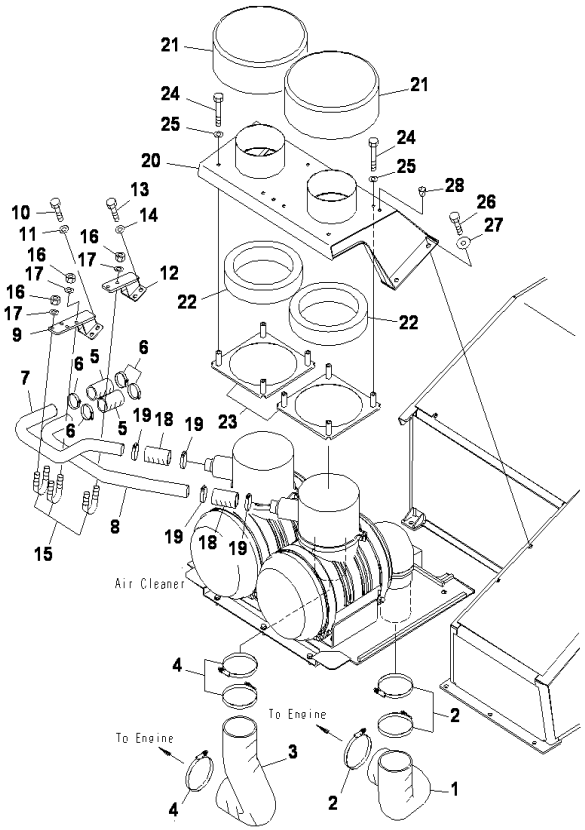

PC2000-8 S/N J10001-UP

INTAKE AND EXHAUST(INTAKE)(PRE-CLEANER COVER)

INDEX	CD	PART NO.	DESCRIPTION	QTY	SERIAL NO.
1		21T-01-31221	HOSE	1	J10001-UP
2		07299-00160	CLAMP	3	J10001-UP
3		21T-01-31231	HOSE	1	J10001-UP
4		07299-00160	CLAMP	3	J10001-UP
5		6130-12-8620	HOSE	2	J10001-UP
6		07281-00709	CLAMP	4	J10001-UP
7		21T-01-31251	TUBE	1	J10001-UP
8		21T-01-31261	TUBE	1	J10001-UP
9		21T-01-31291	BRACKET	1	J10001-UP
10		01010-81230	BOLT	2	J10001-UP
11		01643-31232	WASHER	2	J10001-UP
12		21T-01-31560	BRACKET	1	J10001-UP
13		01010-81230	BOLT	2	J10001-UP
14		01643-31232	WASHER	2	J10001-UP
15		07283-35150	CLIP	3	J10001-UP
16		01597-01009	NUT	6	J10001-UP
17		01643-31032	WASHER	6	J10001-UP
18		6130-12-8620	HOSE	2	J10001-UP
19		07281-00709	CLAMP	4	J10001-UP
20		21T-54-32940	COVER	1	J10001-UP
21		195-01-35210	PRECLEANER	2	J10001-UP
22		21T-01-31530	SEAL	2	J10001-UP
23		21T-01-31540	PLATE	2	J10001-UP
24		01010-81285	BOLT	8	J10001-UP
25		01643-31232	WASHER	8	J10001-UP
26		01010-81235	BOLT	4	J10001-UP
27		175-54-34170	WASHER	4	J10001-UP
28		07049-01215	PLUG	3	J10001-UP

Ref :B0300-02A1 Page :030060

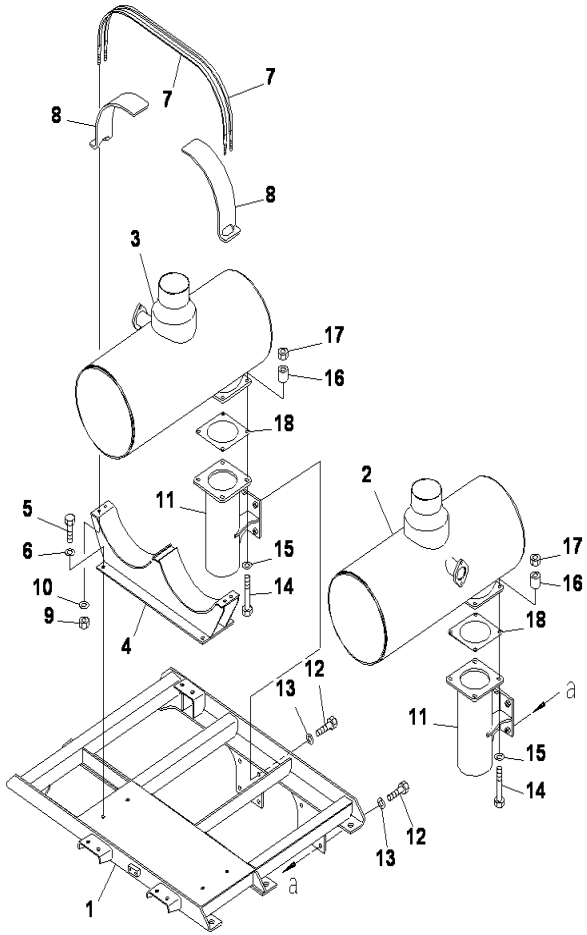

PC2000-8 S/N J10001-UP

INTAKE AND EXHAUST(EXHAUST)(MUFFLER)

INDEX	CD	PART NO.	DESCRIPTION	QTY	SERIAL NO.
1		21T-01-31391	BRACKET	1	J10001-UP
2		6219-11-5210	MUFFLER	1	J10001-UP
3		6219-11-5220	MUFFLER	1	J10001-UP
4		21T-01-31211	BRACKET	1	J10001-UP
5		01010-81230	BOLT	4	J10001-UP
6		01643-31232	WASHER	4	J10001-UP
7		6215-11-5220	BAND	2	J10001-UP
8		21T-01-31590	PLATE	2	J10001-UP
9		6215-11-5740	NUT	4	J10001-UP
10		01643-31032	WASHER	4	J10001-UP
11		21T-01-31240	PIPE	2	J10001-UP
12		01010-81235	BOLT	8	J10001-UP
13		01643-31232	WASHER	8	J10001-UP
14		01010-E1055	BOLT	8	J10001-UP
15		01643-31032	WASHER	8	J10001-UP
16		6631-11-5630	SPACER	8	J10001-UP
17		01580-11008	NUT	8	J10001-UP
18		6211-11-5890	GASKET	2	J10001-UP

Ref :B0300-03A0 Page :030070

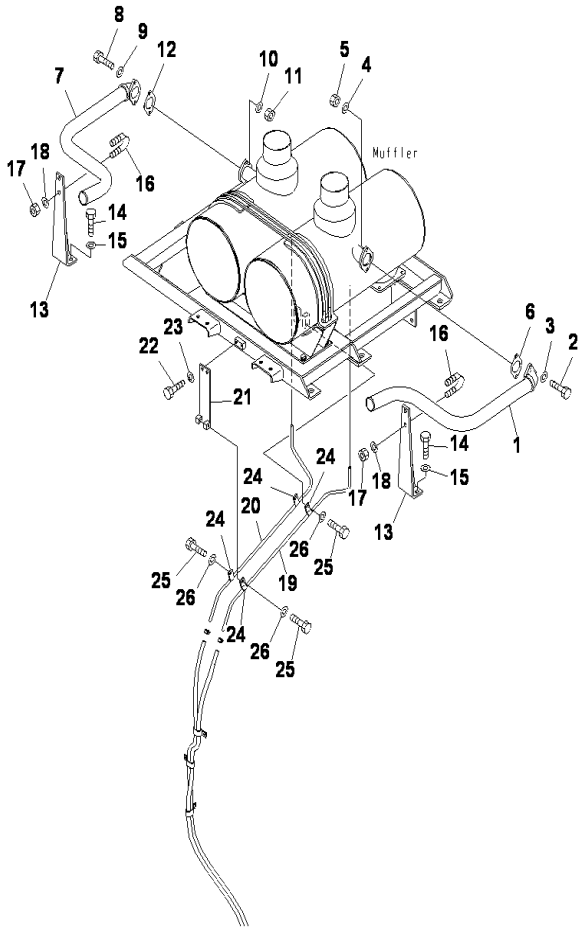

PC2000-8 S/N J10001-UP

INTAKE AND EXHAUST(EXHAUST)(TUBE)

INDEX	CD	PART NO.	DESCRIPTION	QTY	SERIAL NO.
1		21T-01-31271	TUBE	1	J10001-UP
2		01010-81040	BOLT	2	J10001-UP
3		01643-31032	WASHER	2	J10001-UP
4		01643-31032	WASHER	2	J10001-UP
5		01580-11008	NUT	2	J10001-UP
6		6162-13-5611	GASKET	1	J10001-UP
7		21T-01-31281	TUBE	1	J10001-UP
8		01010-81040	BOLT	2	J10001-UP
9		01643-31032	WASHER	2	J10001-UP
10		01643-31032	WASHER	2	J10001-UP
11		01580-11008	NUT	2	J10001-UP
12		6162-13-5611	GASKET	1	J10001-UP
13		21T-01-31311	BRACKET	2	J10001-UP
14		01010-81230	BOLT	4	J10001-UP
15		01643-31232	WASHER	4	J10001-UP
16		07283-35150	CLIP	2	J10001-UP
17		01597-01009	NUT	4	J10001-UP
18		01643-31032	WASHER	4	J10001-UP
19		21T-01-31340	TUBE	1	J10001-UP
20		21T-01-31350	TUBE	1	J10001-UP
21		21T-01-31360	BRACKET	1	J10001-UP
22		01010-81020	BOLT	2	J10001-UP
23		01643-31032	WASHER	2	J10001-UP
24		6162-13-5660	CLAMP	4	J10001-UP
25		01010-81020	BOLT	4	J10001-UP
26		01643-31032	WASHER	4	J10001-UP

Ref :B0300-04A0 Page :030080

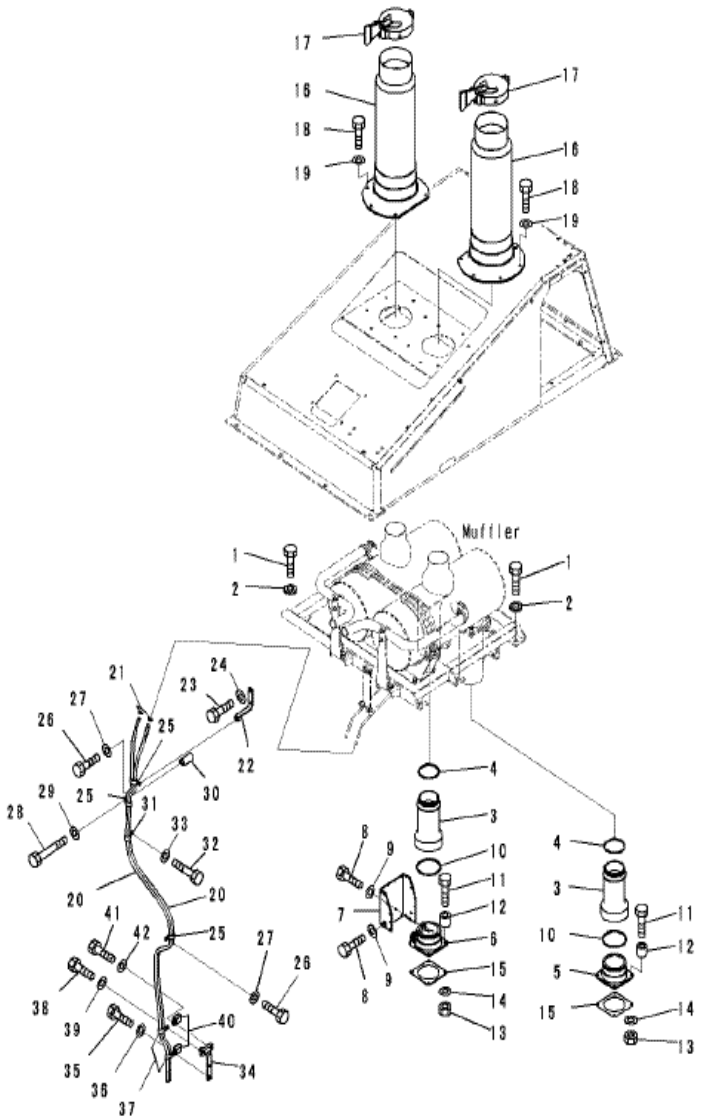

PC2000-8 S/N J10001-UP

INTAKE AND EXHAUST(EXHAUST)(PIPE AND HOSE)

INDEX	CD	PART NO.	DESCRIPTION	QTY	SERIAL NO.
1		01010-81650	BOLT	6	J10001-UP
2		21T-72-12620	WASHER	6	J10001-UP
3		21T-01-67182	PIPE	2	J10001-UP
4		21T-01-67450	SEAL-RING	2	J10001-UP
5		21T-01-67321	PIPE	1	J10001-UP
6		21T-01-31570	PIPE	1	J10001-UP
7		21T-01-31580	COVER	1	J10001-UP
8		01010-81020	BOLT	4	J10001-UP
9		01643-31032	WASHER	4	J10001-UP
10		6128-81-2830	SEAL-RING	2	J10001-UP
11		01010-E1055	BOLT	8	J10001-UP
12		6631-11-5630	SPACER	8	J10001-UP
13		01580-11008	NUT	8	J10001-UP
14		01643-31032	WASHER	8	J10001-UP
15		6211-11-5890	GASKET	2	J10001-UP
16		21M-01-18130	TAIL PIPE	2	J10001-UP
17		6162-14-5640	RAIN CAP	2	J10001-UP
18		01010-81230	BOLT	12	J10001-UP
19		01643-31232	WASHER	12	J10001-UP
20		07261-20929	HOSE	2	J10001-UP
21		07285-00150	CLIP	2	J10001-UP
22		21T-01-31371	BRACKET	1	J10001-UP
23		01010-81025	BOLT	2	J10001-UP
24		01643-31032	WASHER	2	J10001-UP
25		04435-51710	CLIP	3	J10001-UP
26		01010-81020	BOLT	2	J10001-UP
27		01643-31032	WASHER	2	J10001-UP
28		01010-81070	BOLT	1	J10001-UP
29		01643-31032	WASHER	1	J10001-UP
30		175-40-22540	SPACER	1	J10001-UP
31		04435-51712	CLIP	1	J10001-UP
32		01010-81225	BOLT	1	J10001-UP
33		01643-31232	WASHER	1	J10001-UP
34		21T-68-32441	BRACKET	1	J10001-UP
35		01010-81225	BOLT	2	J10001-UP
36		01643-31232	WASHER	2	J10001-UP
37		04435-51712	CLIP	2	J10001-UP
38		01010-81225	BOLT	1	J10001-UP
39		01643-31232	WASHER	1	J10001-UP
40		176-91-14170	CLIP	2	J10001-UP
41		01010-81225	BOLT	1	J10001-UP
42		01643-31232	WASHER	1	J10001-UP

Ref :B0300-05A0 Page :030090

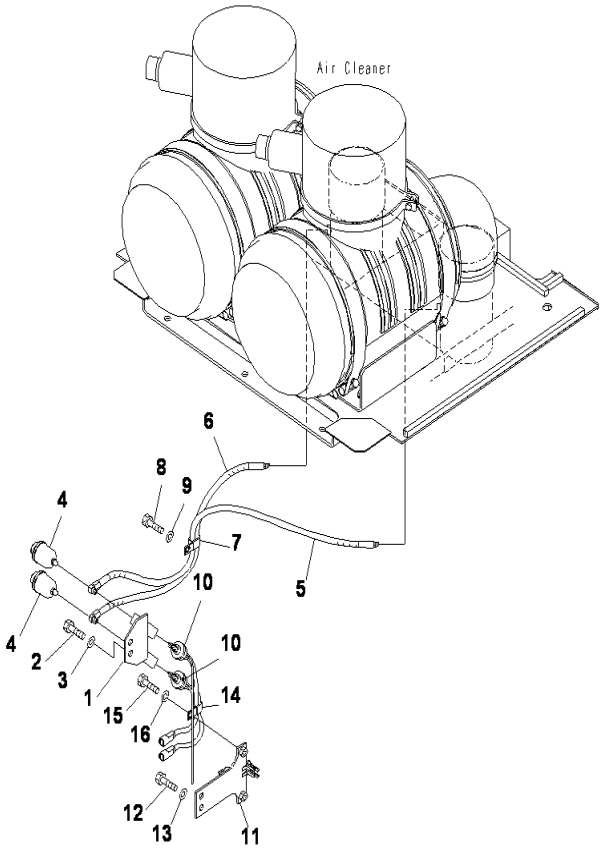

PC2000-8 S/N J10001-UP

INTAKE AND EXHAUST(DUST INDICATOR)

INDEX	CD	PART NO.	DESCRIPTION	QTY	SERIAL NO.
1		21T-01-31320	BRACKET	1	J10001-UP
2		01010-81225	BOLT	2	J10001-UP
3		01643-31232	WASHER	2	J10001-UP
4		08672-01000	DUST INDICATOR	2	J10001-UP
5		08671-50130	HOSE	1	J10001-UP
6		08671-50090	HOSE	1	J10001-UP
7		04435-51412	CLIP	1	J10001-UP
8		01010-81225	BOLT	1	J10001-UP
9		01643-31232	WASHER	1	J10001-UP
10		7861-93-1422	SENSOR	2	J10002-UP
		7861-93-1421	SENSOR	2	J10001-J10001
11		21T-01-31331	BRACKET	1	J10001-UP
12		01010-81230	BOLT	2	J10001-UP
13		01643-31232	WASHER	2	J10001-UP
14		04435-51012	CLIP	1	J10001-UP
15		01010-81225	BOLT	1	J10001-UP
16		01643-31232	WASHER	1	J10001-UP

Ref :B0300-06A0 Page :030100

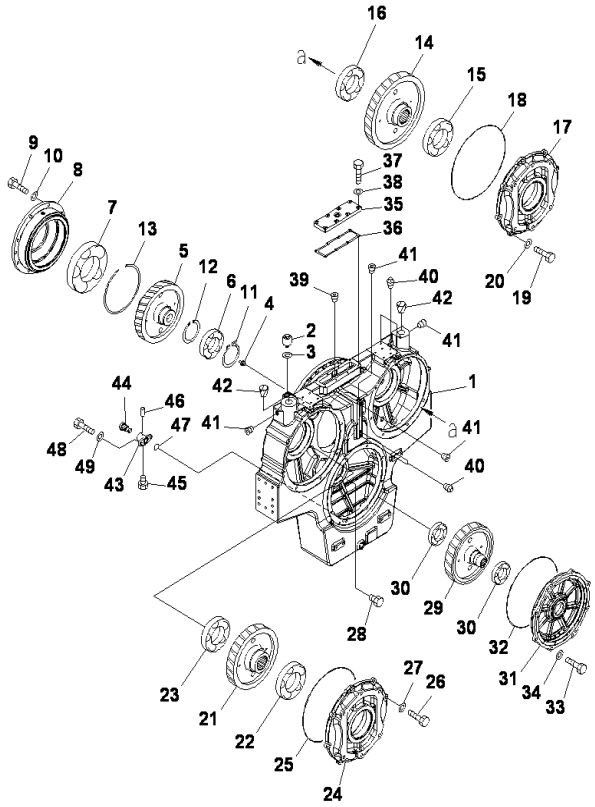

POWER TAKE OFF(P.T.O. ASS'Y)

INDEX	CD	PART NO.	DESCRIPTION	QTY	SERIAL NO.
		21T-38-00160	PTO A.....	1	J10001-UP
1		21T-38-31151	.CASE.....	1	J10001-UP
2		07030-03034	.BREATHER.....	1	J10001-UP
3		07005-03016	.GASKET.....	1	J10001-UP
4		209-38-11270	.NIPPLE.....	1	J10001-UP
5		21T-38-31160	.GEAR.....	1	J10001-UP
6		21T-09-31110	.BEARING.....	1	J10001-UP
7		21T-09-31120	.BEARING.....	1	J10001-UP
8		21T-38-31121	.CAGE.....	1	J10001-UP
9		01010-81650	.BOLT.....	8	J10001-UP
10		01643-31645	.WASHER.....	8	J10001-UP
11		04064-01030	.SNAPRING.....	1	J10001-UP
12		04071-00180	.RING,SNAP.....	1	J10001-UP
13		21T-26-11270	.SNAP RING.....	1	J10001-UP
14		21T-38-31170	.GEAR.....	1	J10001-UP
15		21T-09-31130	.BEARING.....	1	J10001-UP
16		21T-09-31140	.BEARING.....	1	J10001-UP
17		21T-38-31131	.CAGE.....	1	J10001-UP
18		07000-75470	.O-RING.....	1	J10001-UP
19		01010-81650	.BOLT.....	8	J10001-UP
20		01643-31645	.WASHER.....	8	J10001-UP
21		21T-38-31180	.GEAR.....	1	J10001-UP
22		21T-09-31130	.BEARING.....	1	J10001-UP
23		21T-09-31140	.BEARING.....	1	J10001-UP
24		21T-38-31131	.CAGE.....	1	J10001-UP
25		07000-75470	.O-RING.....	1	J10001-UP
26		01010-81650	.BOLT.....	8	J10001-UP
27		01643-31645	.WASHER.....	8	J10001-UP
28		21T-38-31411	.PLUG.....	1	J10001-UP
29		21T-38-31190	.GEAR.....	1	J10001-UP
30		21T-09-31150	.BEARING.....	2	J10001-UP
31		21T-38-31141	.CAGE.....	1	J10001-UP
32		07000-75445	.O-RING.....	1	J10001-UP
33		01010-81650	.BOLT.....	8	J10001-UP
34		01643-31645	.WASHER.....	8	J10001-UP
35		21T-38-31331	.PLATE.....	1	J10001-UP
36		21T-38-31240	.GASKET.....	1	J10001-UP
37		01010-81040	.BOLT.....	8	J10001-UP
38		01643-31032	.WASHER.....	8	J10001-UP
39		07043-30211	.PLUG.....	1	J10001-UP
40		07042-30108	.PLUG.....	8	J10001-UP
41		07043-30312	.PLUG.....	4	J10001-UP
42		07049-04860	.PLUG.....	2	J10001-UP
		6693-22-5600	.VALVE ASS,Y.....	1	J10001-UP
43	C1		..BODY.....	1	J10001-UP

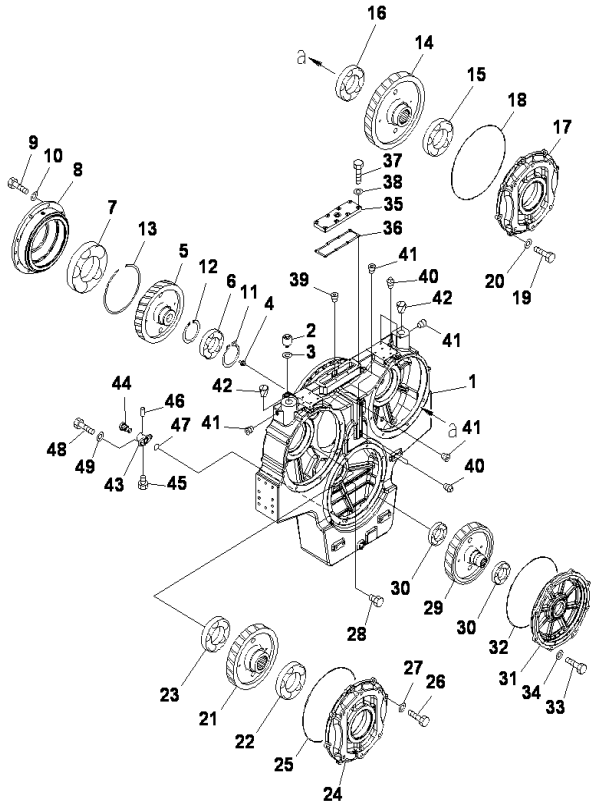

POWER TAKE OFF(P.T.O. ASS'Y)

INDEX	CD	PART NO.	DESCRIPTION	QTY	SERIAL NO.
44		6693-22-5620	..VALVE.....	1	J10001-UP
45		07040-02412	..PLUG.....	1	J10001-UP
46		04020-00514	..PIN.....	1	J10001-UP
47		07000-E3028	.O-RING.....	1	J10001-UP
48		01010-81030	.BOLT.....	2	J10001-UP
49		01643-31032	.WASHER.....	2	J10001-UP

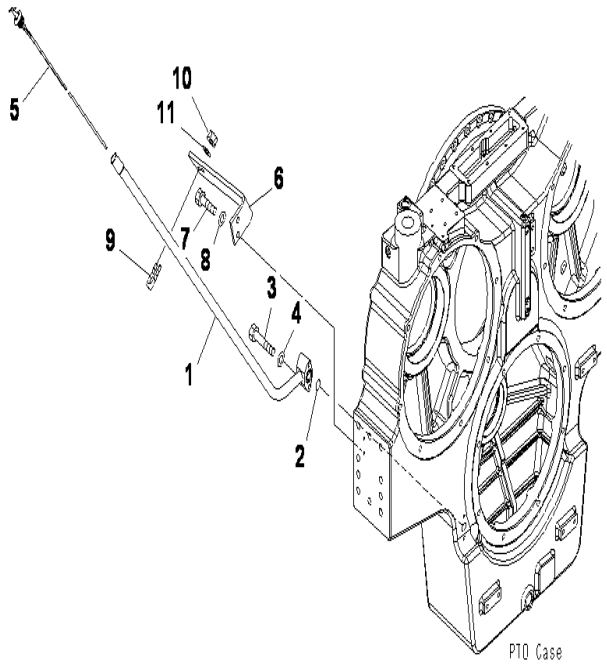

PC2000-8 S/N J10001-UP

POWER TAKE OFF(OIL GAUGE)

INDEX	CD	PART NO.	DESCRIPTION	QTY	SERIAL NO.
1		21T-38-31321	TUBE	1	J10001-UP
2		07000-E3028	O-RING	1	J10001-UP
3		01010-81065	BOLT	2	J10001-UP
4		01643-31032	WASHER	2	J10001-UP
5		21T-38-31450	GAUGE	1	J10001-UP
6		21T-38-31341	BRACKET	1	J10001-UP
7		01010-81235	BOLT	3	J10001-UP
8		01643-31232	WASHER	3	J10001-UP
9		07283-22738	CLIP	1	J10001-UP
10		01597-01009	NUT	2	J10001-UP
11		01643-31032	WASHER	2	J10001-UP

Ref :B0600-02A0 Page :030120

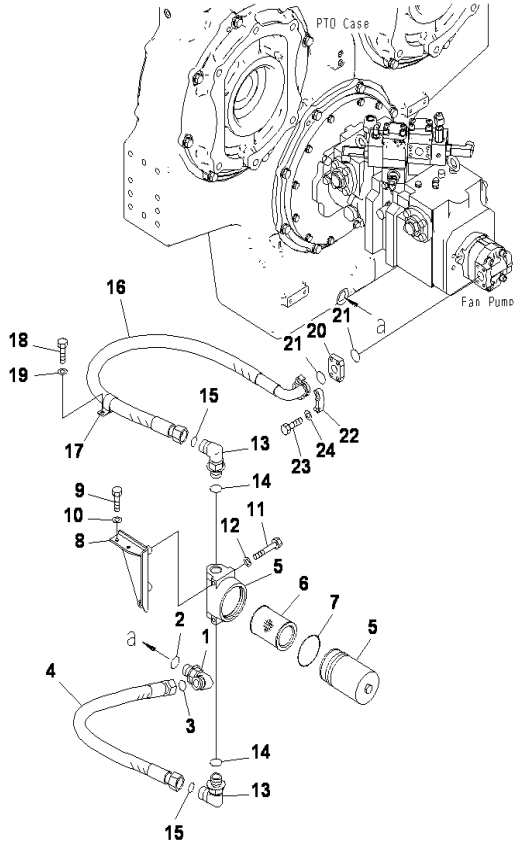

PC2000-8 S/N J10001-UP

POWER TAKE OFF(SUCTION PIPING)

INDEX	CD	PART NO.	DESCRIPTION	QTY	SERIAL NO.
1		21W-62-42640	ELBOW	1	J10001-UP
2		07002-23334	O-RING	1	J10001-UP
3		21T-09-31160	O-RING	1	J10001-UP
4		207-62-72510	HOSE	1	J10001-UP
5		21T-38-31350	FILTER ASSY	1	J10001-UP
6		21T-38-31360	.ELEMENT	1	J10001-UP
7		07000-F2090	.O-RING	1	J10001-UP
8		21T-38-31421	BRACKET	1	J10001-UP
9		01010-81035	BOLT	2	J10001-UP
10		01643-31032	WASHER	2	J10001-UP
11		01011-81000	BOLT	2	J10001-UP
12		01643-31032	WASHER	2	J10001-UP
13		21W-62-42640	ELBOW	2	J10001-UP
14		07002-23334	O-RING	2	J10001-UP
15		21T-09-31160	O-RING	2	J10001-UP
16		21T-38-31380	HOSE	1	J10001-UP
17		113-89-97950	CLIP	1	J10001-UP
18		01010-81225	BOLT	1	J10001-UP
19		01643-31232	WASHER	1	J10001-UP
20		21T-38-31370	FLANGE	1	J10001-UP
21		07000-E3032	O-RING	2	J10001-UP
22		07371-31049	FLANGE	2	J10001-UP
23		07372-21050	BOLT	4	J10001-UP
24		01643-31032	WASHER	4	J10001-UP

Ref :B0600-03A0 Page :030130

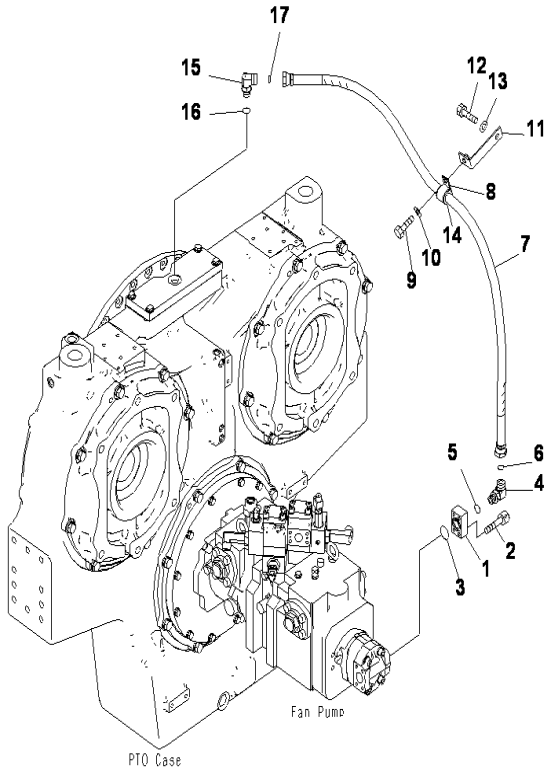

PC2000-8 S/N J10001-UP

POWER TAKE OFF(PIPING)(DELIVERY LINES)

INDEX	CD	PART NO.	DESCRIPTION	QTY	SERIAL NO.
1		21N-62-31920	FLANGE	1	J10001-UP
2		01252-70835	BOLT	4	J10001-UP
3		07000-E3030	O-RING	1	J10001-UP
4		02782-10516	ELBOW	1	J10001-UP
5		07002-22034	O-RING	1	J10001-UP
6		02896-21015	O-RING	1	J10001-UP
7		02762-00514	HOSE	1	J10001-UP
8		04434-53412	CLIP	1	J10001-UP
9		01010-81225	BOLT	1	J10001-UP
10		01643-31232	WASHER	1	J10001-UP
11		17A-61-13391	BRACKET	1	J10001-UP
12		01010-81225	BOLT	1	J10001-UP
13		01643-31232	WASHER	1	J10001-UP
14		07095-20522	CUSHION	1	J10001-UP
15		02782-10516	ELBOW	1	J10001-UP
16		07002-22034	O-RING	1	J10001-UP
17		02896-21015	O-RING	1	J10001-UP

Ref :B0600-04A0 Page :030140

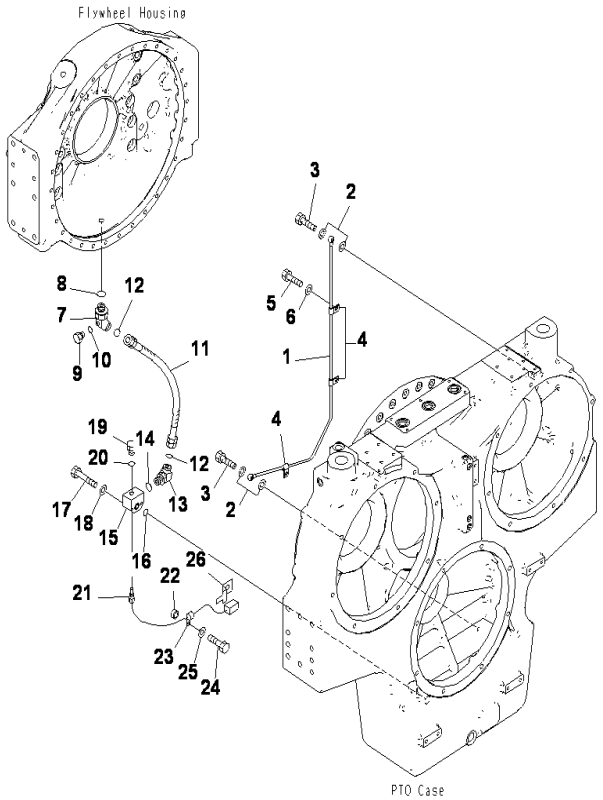

PC2000-8 S/N J10001-UP

POWER TAKE OFF(PIPING)(LUBRICATION AND FLYWHEEL LINES)

INDEX	CD	PART NO.	DESCRIPTION	QTY	SERIAL NO.
1		21T-38-31310	TUBE	1	J10001-UP
2		07005-01212	GASKET	4	J10001-UP
3		07206-30812	JOINT	2	J10001-UP
4		04434-50808	CLIP	3	J10001-UP
5		01010-80816	BOLT	3	J10001-UP
6		01643-30823	WASHER	3	J10001-UP
7		124-62-61110	ELBOW	1	J10001-UP
8		07002-23334	O-RING	1	J10001-UP
9		07040-11007	PLUG	1	J10001-UP
10		07002-21023	O-RING	1	J10001-UP
11		21T-38-31440	HOSE	1	J10001-UP
12		21T-09-31160	O-RING	2	J10001-UP
13		207-62-71410	ELBOW	1	J10001-UP
14		07002-23334	O-RING	1	J10001-UP
15		21T-38-31460	BLOCK	1	J10001-UP
16		07000-E3028	O-RING	1	J10001-UP
17		01010-81085	BOLT	2	J10001-UP
18		01643-31032	WASHER	2	J10001-UP
19		07040-12412	PLUG	1	J10001-UP
20		07002-22434	O-RING	1	J10001-UP
21		7861-93-3500	SENSOR TEMP	1	J10001-UP
22		198-43-15310	COLLAR, T=10MM	1	J10001-UP
23		04434-51012	CLIP	1	J10001-UP
24		01010-81235	BOLT	1	J10001-UP
25		01643-31232	WASHER	1	J10001-UP
26		08193-20012	CLIP	1	J10001-UP

Ref :B0600-05A0 Page :030150

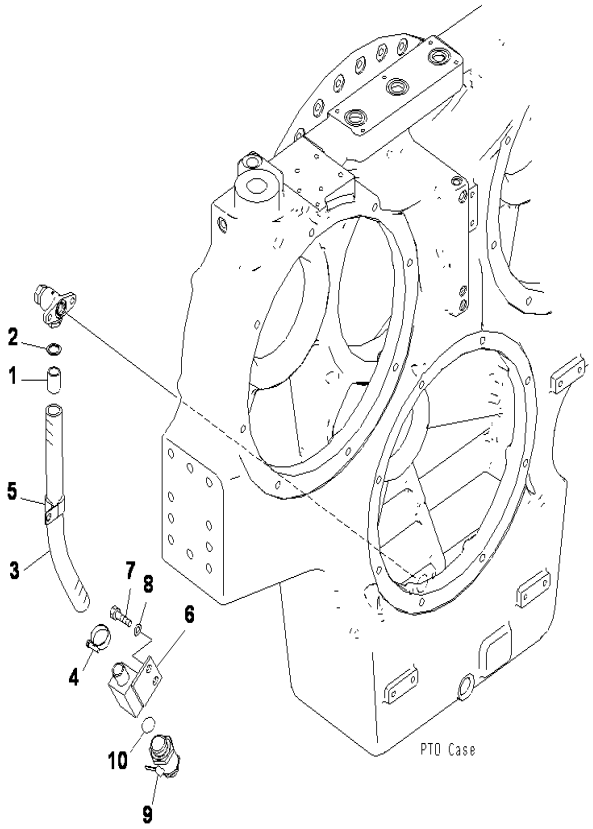

PC2000-8 S/N J10001-UP

POWER TAKE OFF(PIPING)(DRAIN LINES)

INDEX	CD	PART NO.	DESCRIPTION	QTY	SERIAL NO.
1		21T-01-31471	JOINT	1	J10001-UP
2		07005-02416	GASKET	1	J10001-UP
3		07260-22650	HOSE	1	J10001-UP
4		07281-00419	CLAMP	2	J10001-UP
5		281-01-13180	CLIP	1	J10001-UP
6		21T-01-31481	BRACKET	1	J10001-UP
7		01010-81225	BOLT	2	J10001-UP
8		01643-31232	WASHER	2	J10001-UP
9		21T-01-31490	VALVE	1	J10001-UP
10		07002-23634	O-RING	1	J10001-UP

Ref :B0600-06A0 Page :030160

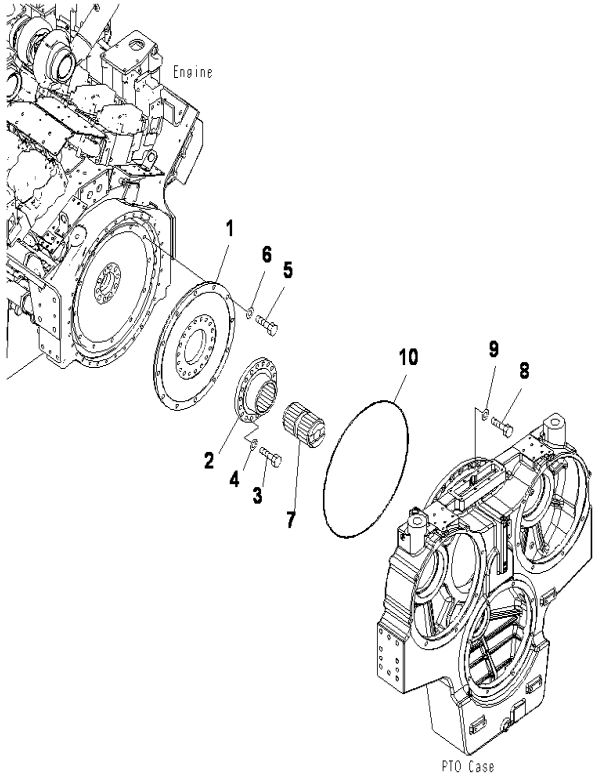

PC2000-8 S/N J10001-UP

POWER TAKE OFF(COUPLING)

INDEX	CD	PART NO.	DESCRIPTION	QTY	SERIAL NO.
1		21T-38-31230	PLATE	1	J10001-UP
2		21T-38-31220	COUPLING	1	J10001-UP
3		01010-81650	BOLT	18	J10001-UP
4		01643-31645	WASHER	18	J10001-UP
5		01010-81650	BOLT	12	J10001-UP
6		01643-31645	WASHER	12	J10001-UP
7		21T3831210	SHAFT	1	J10001-UP
8		01010-81260	BOLT	32	J10001-UP
9		01643-31232	WASHER	32	J10001-UP
10		198-22-69640	O-RING	1	J10001-UP

Ref :B0600-07A0 Page :030170

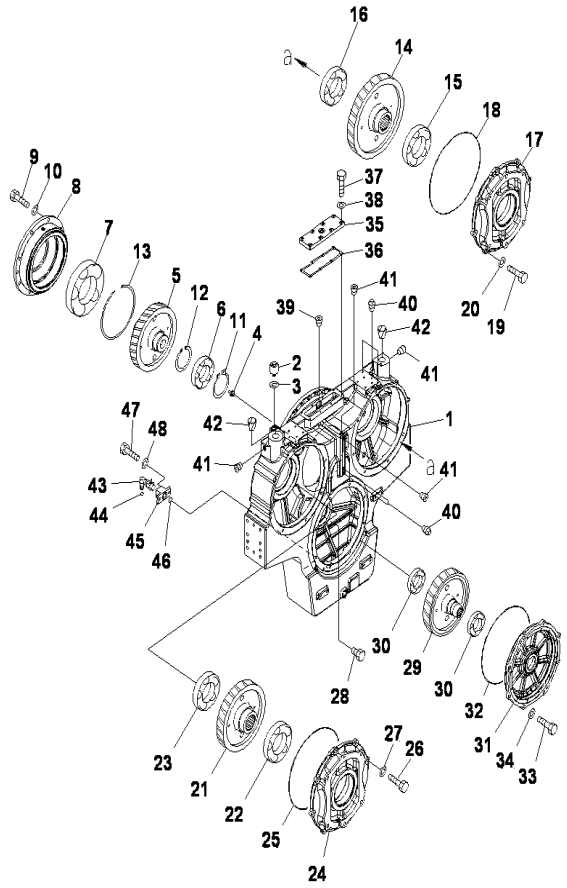

PC2000-8 S/N J10001-UP

POWER TAKE OFF(P.T.O. ASS'Y)(SERVICE CENTER)

INDEX	CD	PART NO.	DESCRIPTION	QTY	SERIAL NO.
		21T-38-00170	PTO A	1	J10001-UP
1		21T-38-31151	.CASE	1	J10001-UP
2		07030-03034	.BREATHER	1	J10001-UP
3		07005-03016	.GASKET	1	J10001-UP
4		209-38-11270	.NIPPLE	1	J10001-UP
5		21T-38-31160	.GEAR	1	J10001-UP
6		21T-09-31110	.BEARING	1	J10001-UP
7		21T-09-31120	.BEARING	1	J10001-UP
8		21T-38-31121	.CAGE	1	J10001-UP
9		01010-81650	.BOLT	8	J10001-UP
10		01643-31645	.WASHER	8	J10001-UP
11		04064-01030	.SNAPRING	1	J10001-UP
12		04071-00180	.RING,SNAP	1	J10001-UP
13		21T-26-11270	.SNAP RING	1	J10001-UP
14		21T-38-31170	.GEAR	1	J10001-UP
15		21T-09-31130	.BEARING	1	J10001-UP
16		21T-09-31140	.BEARING	1	J10001-UP
17		21T-38-31131	.CAGE	1	J10001-UP
18		07000-75470	.O-RING	1	J10001-UP
19		01010-81650	.BOLT	8	J10001-UP
20		01643-31645	.WASHER	8	J10001-UP
21		21T-38-31180	.GEAR	1	J10001-UP
22		21T-09-31130	.BEARING	1	J10001-UP
23		21T-09-31140	.BEARING	1	J10001-UP
24		21T-38-31131	.CAGE	1	J10001-UP
25		07000-75470	.O-RING	1	J10001-UP
26		01010-81650	.BOLT	8	J10001-UP
27		01643-31645	.WASHER	8	J10001-UP
28		21T-38-31411	.PLUG	1	J10001-UP
29		21T-38-31190	.GEAR	1	J10001-UP
30		21T-09-31150	.BEARING	2	J10001-UP
31		21T-38-31141	.CAGE	1	J10001-UP
32		07000-75445	.O-RING	1	J10001-UP
33		01010-81650	.BOLT	8	J10001-UP
34		01643-31645	.WASHER	8	J10001-UP
35		21T-38-31331	.PLATE	1	J10001-UP
36		21T-38-31240	.GASKET	1	J10001-UP
37		01010-81040	.BOLT	8	J10001-UP
38		01643-31032	.WASHER	8	J10001-UP
39		07043-30211	.PLUG	1	J10001-UP
40		07042-30108	.PLUG	8	J10001-UP
41		07043-30312	.PLUG	4	J10001-UP
42		07049-04860	.PLUG	2	J10001-UP
43		07705-11400	.VALVE ASS'Y	1	J10001-UP
44		07002-22434	.O-RING	1	J10001-UP

Ref :B0600-08A0 Page :030180

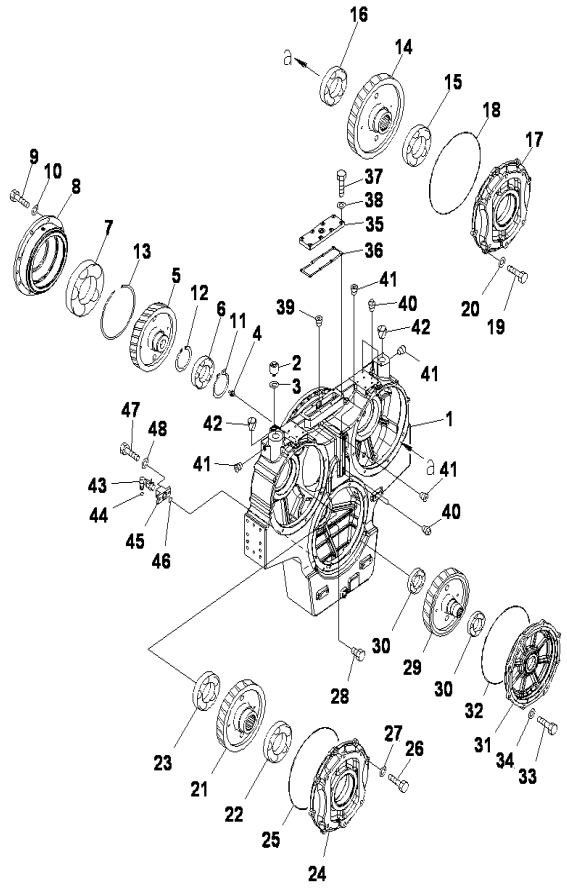

PC2000-8 S/N J10001-UP

POWER TAKE OFF(P.T.O. ASS'Y)(SERVICE CENTER)

INDEX	CD	PART NO.	DESCRIPTION	QTY	SERIAL NO.
45		21T-98-31393	.BODY.....	1	J10001-UP
46		07000-E3028	.O-RING.....	1	J10001-UP
47		01010-81030	.BOLT.....	2	J10001-UP
48		01643-31032	.WASHER.....	2	J10001-UP

Ref :B0600-08A0 Page :030181

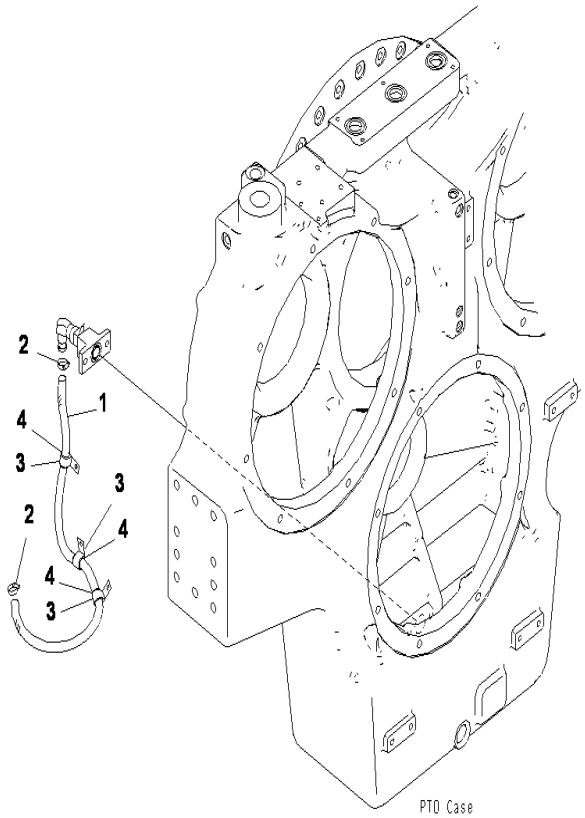

PC2000-8 S/N J10001-UP

POWER TAKE OFF(SERVICE CENTER)(DRAIN PIPING)

INDEX	CD	PART NO.	DESCRIPTION	QTY	SERIAL NO.
1		07261-21415	HOSE	1	J10001-UP
2		07281-00259	CLAMP	2	J10001-UP
3		04434-53212	CLIP	3	J10001-UP
4		07095-20523	CUSHION	3	J10001-UP

Ref :B0600-09A0 Page :030190

COOLING SYSTEM

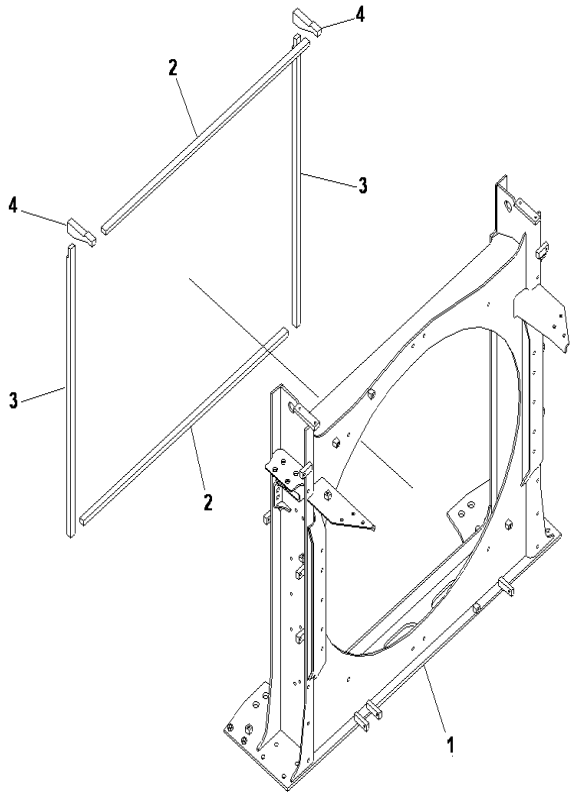

PC2000-8 S/N J10001-UP

COOLING(RADIATOR)(SHROUD)

INDEX	CD	PART NO.	DESCRIPTION	QTY	SERIAL NO.
1		21T-03-31112	SHROUD.....	1	J10001-UP
2		21T-03-31430	.SHEET.....	2	J10001-UP
3		21T-03-31440	.SHEET.....	2	J10001-UP
4		21T-03-31570	.SHEET.....	2	J10001-UP

Ref :C0100-01A0 Page :060010

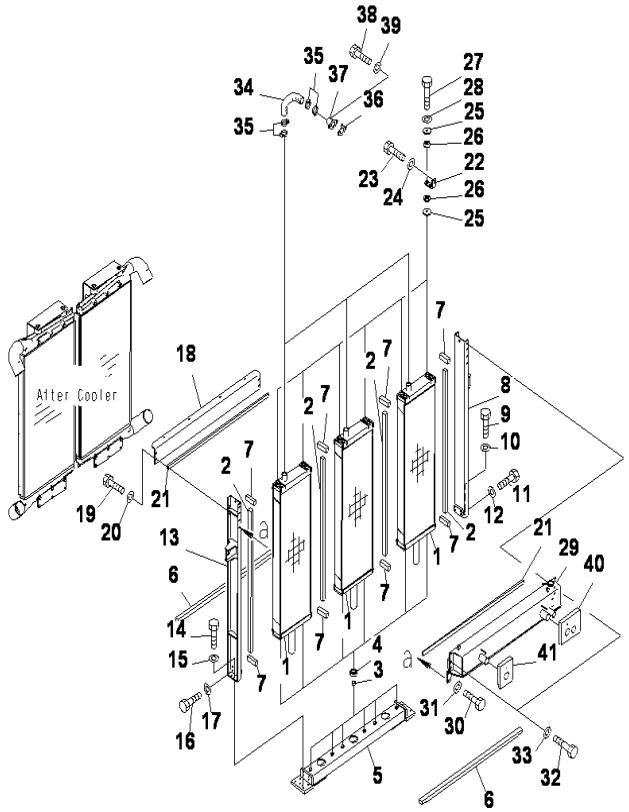

PC2000-8 S/N J10001-UP

COOLING(RADIATOR)(RADIATOR)

INDEX	CD	PART NO.	DESCRIPTION	QTY	SERIAL NO.
1		21T-03-31711	RADIATOR	3	J10001-UP
2		21T-03-31850	SEAL	4	J10001-UP
3		22B-03-12590	CUSHION	6	J10001-UP
4		209-03-41280	CUSHION	6	J10001-UP
5		21T-03-31721	BRACKET	1	J10001-UP
6		21T-03-31931	SEAL	2	J10001-UP
7		21T-03-31860	SEAL	8	J10001-UP
8		21T-03-31731	BRACKET	1	J10001-UP
9		01010-81235	BOLT	2	J10001-UP
10		01643-31232	WASHER	2	J10001-UP
11		01010-81250	BOLT	4	J10001-UP
12		01643-31232	WASHER	4	J10001-UP
13		21T-03-31741	BRACKET	1	J10001-UP
14		01010-81235	BOLT	2	J10001-UP
15		01643-31232	WASHER	2	J10001-UP
16		01010-81250	BOLT	4	J10001-UP
17		01643-31232	WASHER	4	J10001-UP
18		21T-03-31791	BRACKET	1	J10001-UP
19		01010-81235	BOLT	4	J10001-UP
20		01643-31232	WASHER	4	J10001-UP
21		21T-03-31840	SEAL	2	J10001-UP
22		21T-03-31821	BRACKET	6	J10001-UP
23		01010-81030	BOLT	12	J10001-UP
24		01643-31032	WASHER	12	J10001-UP
25		207-03-75590	PLATE	24	J10001-UP
26		21T-03-32440	CUSHION	24	J10001-UP
27		01010-81055	BOLT	12	J10001-UP
28		01643-31032	WASHER	12	J10001-UP
29		21T-03-31751	TANK	1	J10001-UP
30		01010-81235	BOLT	4	J10001-UP
31		01643-31232	WASHER	4	J10001-UP
32		01010-81265	BOLT	4	J10001-UP
33		01643-31232	WASHER	4	J10001-UP
34		209-03-41340	HOSE	3	J10001-UP
35		07289-00055	CLAMP	12	J10001-UP
36		209-03-42320	GASKET	3	J10001-UP
37		209-03-42310	TUBE	3	J10001-UP
38		01010-81020	BOLT	6	J10001-UP
39		01643-31032	WASHER	6	J10001-UP
40		21T-03-32212	SHEET	1	J10001-UP
41		21T-03-32641	SHEET	1	J10001-UP

Ref :C0100-02A0 Page :060020

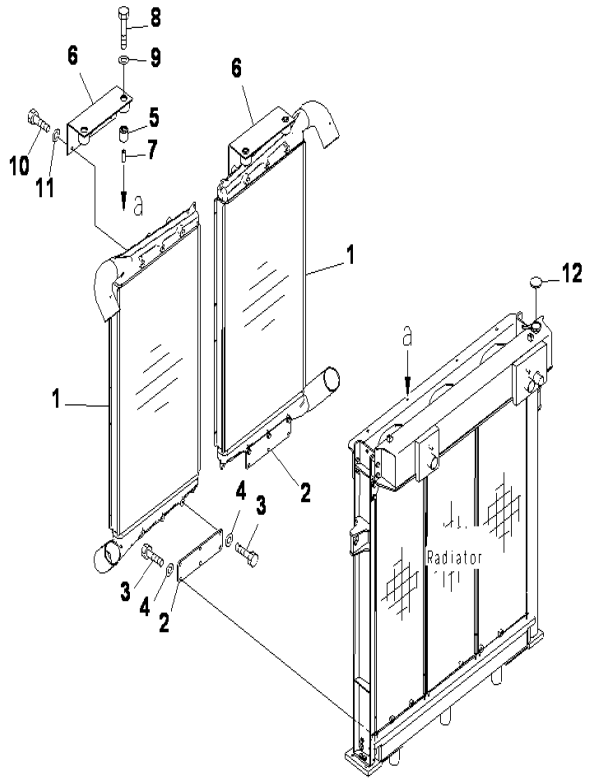

PC2000-8 S/N J10001-UP

COOLING(RADIATOR)(AFTER COOLER AND ISOLATOR)

INDEX	CD	PART NO.	DESCRIPTION	QTY	SERIAL NO.
1		21T-03-31160	AFTER COOLER AS.....	2	J10001-UP
2		21T-03-31921	PLATE.....	2	J10001-UP
3		01010-81225	BOLT.....	12	J10001-UP
4		01643-31232	WASHER.....	12	J10001-UP
		21T-03-31891	ISOLATOR ASS'Y.....	2	J10001-UP
5		198-03-22290	.ISOLATOR.....	2	J10001-UP
6		21T-03-31911	.BRACKET.....	1	J10001-UP
7		21N-03-37960	SPACER.....	4	J10001-UP
8		01010-81280	BOLT.....	4	J10001-UP
9		175-54-34170	WASHER.....	4	J10001-UP
10		01010-81225	BOLT.....	6	J10001-UP
11		01643-31232	WASHER.....	6	J10001-UP
12		561-03-6A510	CAP.....	1	J10001-UP

Ref :C0100-03A0 Page :060030

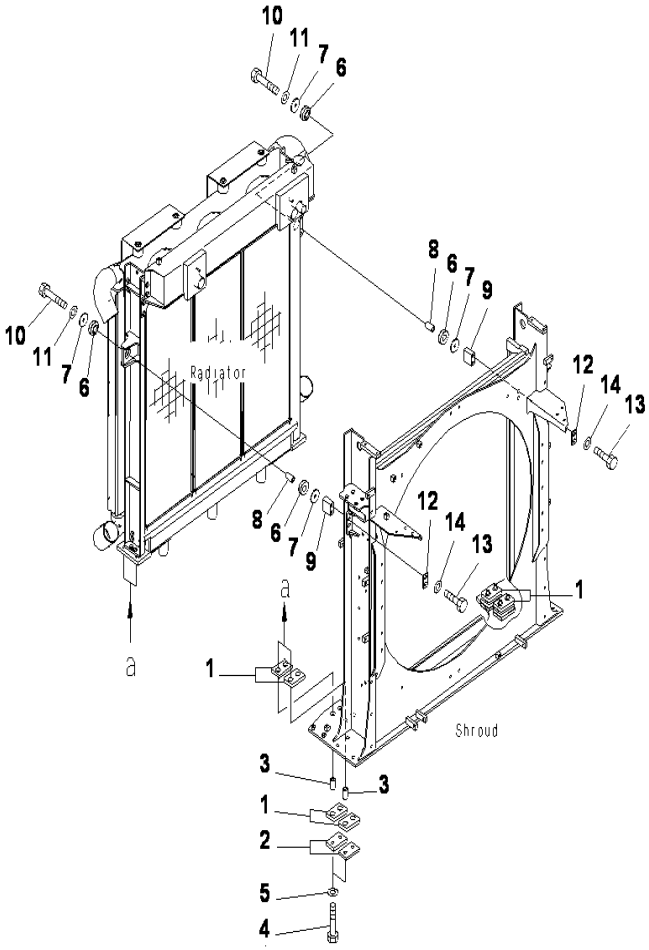

PC2000-8 S/N J10001-UP

COOLING(RADIATOR)(RADIATOR MOUNT)

INDEX	CD	PART NO.	DESCRIPTION	QTY	SERIAL NO.
1		209-03-42710	CUSHION	8	J10001-UP
2		21T-03-31990	PLATE	4	J10001-UP
3		209-03-42730	COLLAR	8	J10001-UP
4		01011-81600	BOLT	8	J10001-UP
5		01643-31645	WASHER	8	J10001-UP
6		566-54-12212	CUSHION	4	J10001-UP
7		565-54-12841	WASHER	4	J10001-UP
8		569-03-12190	BUSHING	2	J10001-UP
9		21T-03-31190	PLATE	2	J10001-UP
10		01011-81600	BOLT	2	J10001-UP
11		01643-31645	WASHER	2	J10001-UP
12		21T-03-31180	PLATE	2	J10001-UP
13		01010-81650	BOLT	4	J10001-UP
14		01643-31645	WASHER	4	J10001-UP

Ref :C0100-04A0 Page :060040

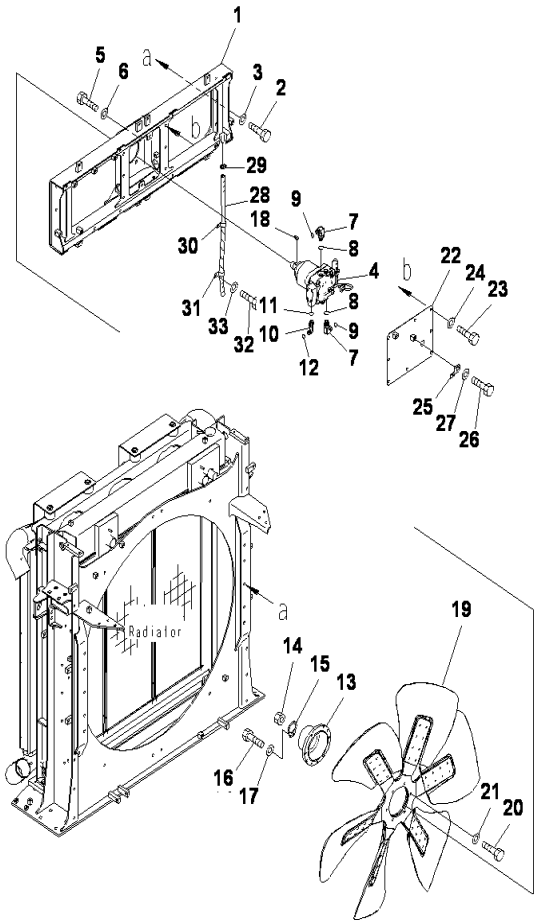

COOLING(RADIATOR)(MOTOR AND FAN)

INDEX	CD	PART NO.	DESCRIPTION	QTY	SERIAL NO.
1		21T-03-31122	BRACKET	1	J10003-UP
		21T-03-31121	BRACKET	1	J10001-J10002
2		01010-81235	BOLT	6	J10001-UP
3		01643-31232	WASHER	6	J10001-UP
4		(708-7W-00130)	MOTOR A.PC800	1	J10001-UP
5		01643-31645	WASHER	4	J10001-UP
6		01010-81640	BOLT	4	J10001-UP
7		02782-1062A	ELBOW	2	J10001-UP
8		07002-62434	O-RING	2	J10001-UP
9		02896-61018	O-RING	2	J10001-UP
10		02782-10423	ELBOW	1	J10001-UP
11		07002-62034	O-RING	1	J10001-UP
12		02896-61012	O-RING	1	J10001-UP
13		21M-03-22250	BOSS	1	J10001-UP
14		01583-13621	NUT	1	J10001-UP
15		01660-03650	LOCK	1	J10001-UP
16		01010-81020	BOLT	1	J10001-UP
17		01643-31032	WASHER	1	J10001-UP
18		04010-01032	KEY	1	J10001-UP
19		600-645-7450	FAN	1	J10001-UP
20		01010-81240	BOLT	6	J10001-UP
21		01643-31232	WASHER	6	J10001-UP
22		21T-03-31662	COVER	1	J10003-UP
		21T-03-31661	COVER	1	J10001-J10002
23		01010-81230	BOLT	8	J10001-UP
24		01643-31232	WASHER	8	J10001-UP
25		08193-20012	CLIP	1	J10001-UP
26		01010-81225	BOLT	1	J10001-UP
27		01643-31232	WASHER	1	J10001-UP
28		21T-03-32690	HOSE	1	J10001-UP
29		07281-00359	CLAMP	1	J10001-UP
30		04434-52712	CLIP	1	J10001-UP
31		04434-53212	CLIP	1	J10001-UP
32		01010-81225	BOLT	2	J10001-UP
33		01643-31232	WASHER	2	J10001-UP

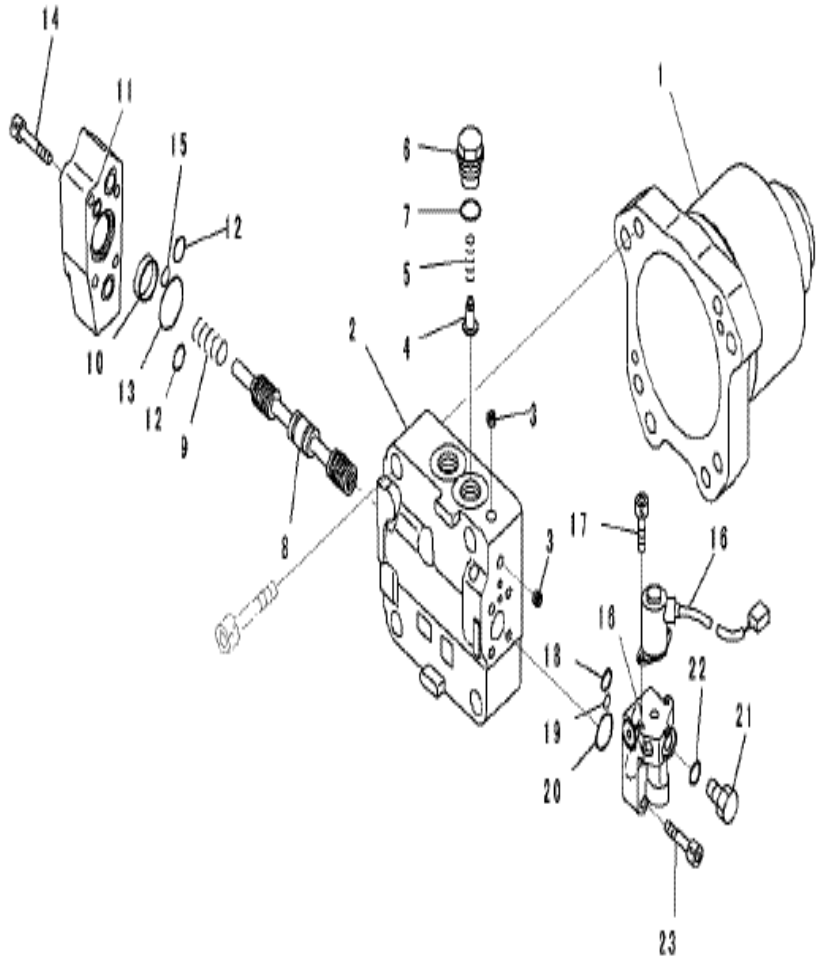

PC2000-8 S/N J10001-UP

COOLING (RADIATOR)(MOTOR AND FAN)(INNER PARTS)(1/3)

INDEX	CD	PART NO.	DESCRIPTION	QTY	SERIAL NO.
		708-7W-00130	MOTOR ASSEMBLY.....	1	J10001-UP
1	C2	708-7W-11180	.CASE.....	1	J10001-UP
	C2	708-7W-01050	.COVER SUB ASSEMBLY.....	1	J10001-UP
2	C1		..COVER.....	1	J10001-UP
3	C1		..PLUG.....	3	J10001-UP
4	C2	709-25-11650	.CHECK VALVE.....	1	J10001-UP
5	C2	709-25-11361	.SPRING.....	1	J10001-UP
6	C2	708-7S-21610	.PLUG.....	1	J10001-UP
7		07002-22434	.O-RING.....	1	J10001-UP
8	C1		.SPOOL.....	1	J10001-UP
9	C2	708-7W-18150	.SPRING.....	1	J10001-UP
10	C2	708-7W-18160	.SPACER.....	1	J10001-UP
11	C2	708-7W-18170	.COVER.....	1	J10001-UP
12		07000-F2016	.O-RING.....	2	J10001-UP
13		07000-F2035	.O-RING.....	1	J10001-UP
14		01252-60845	.BOLT.....	4	J10001-UP
15		07000-F2010	.O-RING.....	1	J10001-UP
16		708-7W-01070	.PILOT.....	1	J10001-UP
17		01252-60616	..BOLT.....	2	J10001-UP
18		708-7S-18360	..O-RING.....	1	J10001-UP
19		07000-F1008	..O-RING.....	1	J10001-UP
20		708-7S-18230	..O-RING.....	1	J10001-UP
21		07040-11007	..PLUG.....	1	J10001-UP
22		07002-21023	..O-RING.....	1	J10001-UP
23		01252-60835	.BOLT.....	4	J10001-UP

Ref :C0100-05A1 Page :060055

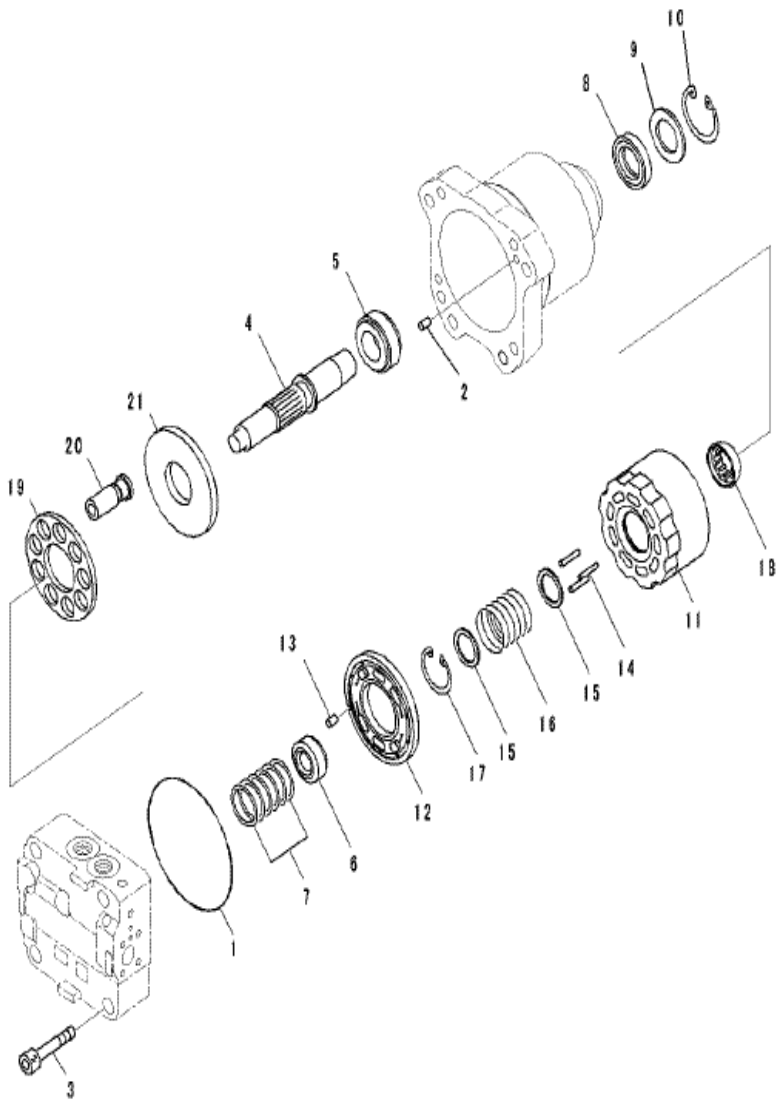

PC2000-8 S/N J10001-UP

COOLING (RADIATOR)(MOTOR AND FAN)(INNER PARTS)(2/3)

INDEX	CD	PART NO.	DESCRIPTION	QTY	SERIAL NO.
		708-7W-00130	MOTOR ASSEMBLY.....	1	J10001-UP
1		708-7W-11920	.O-RING.....	1	J10001-UP
2		04020-01024	.PIN.....	2	J10001-UP
3		01252-61480	.BOLT.....	4	J10001-UP
4	C2	708-7W-12130	.SHAFT.....	1	J10001-UP
5	C2	708-7W-12140	.BEARING.....	1	J10001-UP
6	C2	708-7W-12150	.BEARING.....	1	J10001-UP
7	C2	708-7L-05010	.SPACER KIT.....	1	J10001-UP
	C1		..SPACER, T=1.5MM.....	1	J10001-UP
	C1		..SPACER, T=1.6MM.....	1	J10001-UP
	C1		..SPACER, T=1.7MM.....	1	J10001-UP
	C1		..SPACER, T=1.8MM.....	1	J10001-UP
	C1		..SPACER, T=1.9MM.....	1	J10001-UP
	C1		..SPACER, T=2.0MM.....	1	J10001-UP
8	C2	708-25-52861	.OIL SEAL.....	1	J10001-UP
9	C2	708-2L-22160	.SPACER.....	1	J10001-UP
10		04065-06825	.RING.....	1	J10001-UP
11	C2	708-8F-33121	.CYLINDER BLOCK.....	1	J10001-UP
12	C2	708-8F-33230	.PLATE,VALVE.....	1	J10001-UP
13	C2	720-68-19610	.PIN.....	1	J10001-UP
14	C2	708-8F-33360	.PIN.....	3	J10001-UP
15	C2	708-7L-13140	.SEAT.....	2	J10001-UP
16	C2	708-8F-33160	.SPRING.....	1	J10001-UP
17		04065-04818	.RING.....	1	J10001-UP
18	C2	708-8F-33350	.RETAINER,GUIDE.....	1	J10001-UP
19	C2	708-2L-33350	.RETAINER,SHOE.....	1	J10001-UP
20	C2	708-8F-33310	.PISTON SUB A.....	9	J10001-UP
21	C2	708-7F-13420	.PLATE, THRUST.....	1	J10001-UP

Ref :C0100-05A2 Page :060056

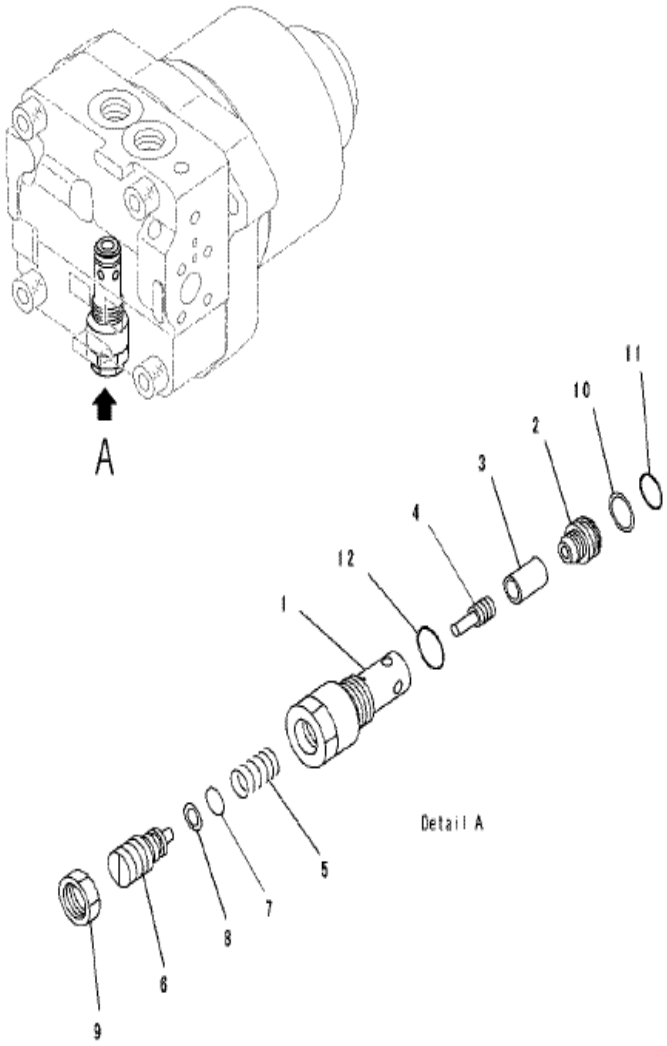

PC2000-8 S/N J10001-UP

COOLING (RADIATOR)(MOTOR AND FAN)(INNER PARTS)(3/3)

INDEX	CD	PART NO.	DESCRIPTION	QTY	SERIAL NO.
		708-7W-00130	MOTOR ASSEMBLY.....	1	J10001-UP
		702-73-01660	.VALVE, RELIEF.....	1	J10001-UP
1	C2	702-73-11810	..SLEEVE.....	1	J10001-UP
2	C2	702-73-11820	..SEAT,VALVE.....	1	J10001-UP
3	C2	702-73-11830	..VALVE.....	1	J10001-UP
4	C2	706-75-75280	..PISTON.....	1	J10001-UP
5	C2	702-73-11840	..SPRING.....	1	J10001-UP
6	C2	702-73-11850	..SCREW.....	1	J10001-UP
7	C2	07000-22010	..O-RING.....	1	J10001-UP
8	C2	07001-02010	..RING.....	1	J10001-UP
9	C2	702-73-11860	..NUT.....	1	J10001-UP
10		723-60-22230	..RING,BACK UP.....	1	J10001-UP
11		07000-F2016	..O-RING.....	1	J10001-UP
12		07002-22434	..O-RING.....	1	J10001-UP

Ref :C0100-05A3 Page :060057

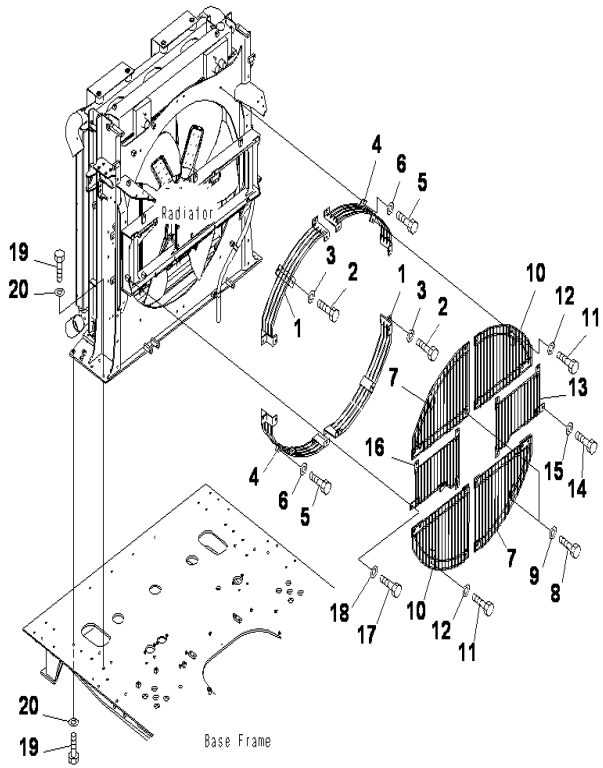

PC2000-8 S/N J10001-UP

COOLING(RADIATOR)(FAN GUARD)

INDEX	CD	PART NO.	DESCRIPTION	QTY	SERIAL NO.
1		21T-03-31611	GUARD	2	J10001-UP
2		01010-81230	BOLT	6	J10001-UP
3		01643-31232	WASHER	6	J10001-UP
4		21T-03-31671	GUARD	2	J10001-UP
5		01010-81230	BOLT	6	J10001-UP
6		01643-31232	WASHER	6	J10001-UP
7		21T-03-31623	GUARD	2	J10001-UP
8		01010-81230	BOLT	10	J10001-UP
9		01643-31232	WASHER	10	J10001-UP
10		21T-03-31683	GUARD	2	J10001-UP
11		01010-81230	BOLT	10	J10001-UP
12		01643-31232	WASHER	10	J10001-UP
13		21T-03-31642	GUARD	1	J10001-UP
14		01010-81230	BOLT	4	J10001-UP
15		01643-31232	WASHER	4	J10001-UP
16		21T-03-31632	GUARD	1	J10001-UP
17		01010-81230	BOLT	4	J10001-UP
18		01643-31232	WASHER	4	J10001-UP
19		01010-81655	BOLT	12	J10001-UP
20		01643-31645	WASHER	12	J10001-UP

Ref :C0100-06A0 Page :060060

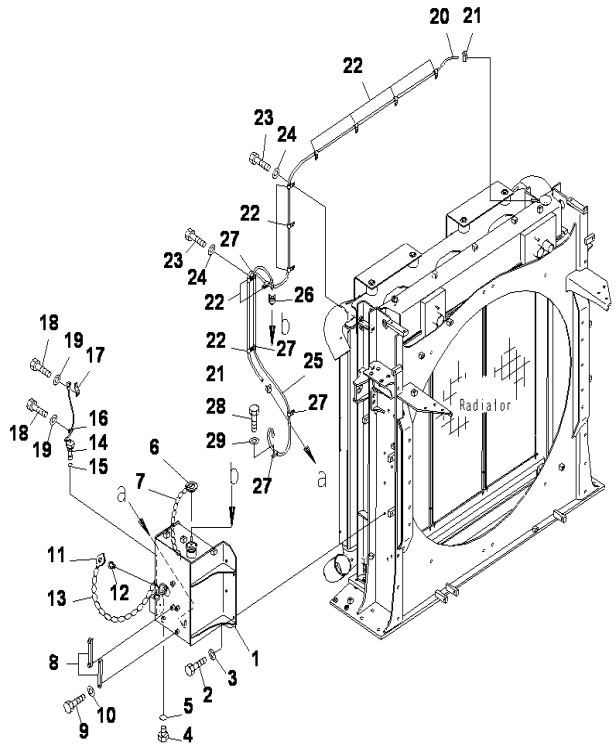

PC2000-8 S/N J10001-UP

COOLING(RADIATOR)(SUB TANK)

INDEX	CD	PART NO.	DESCRIPTION	QTY	SERIAL NO.
1		21T-03-31411	TANK	1	J10001-UP
2		01010-81235	BOLT	5	J10001-UP
3		01643-31232	WASHER	5	J10001-UP
4		07040-11409	PLUG	1	J10001-UP
5		07002-61423	O-RING	1	J10001-UP
6		110-03-11341	PRESSURE VALVE	1	J10001-UP
7		21T-03-32480	CHAIN	1	J10001-UP
8		195-03-61550	GAUGE	2	J10001-UP
9		20N-60-41360	.BOLT	2	J10001-UP
10		20N-60-41371	.GASKET	4	J10001-UP
11		195-03-41390	CAP	1	J10001-UP
12		195-03-41420	STRAINER	1	J10001-UP
13		21T-03-32480	CHAIN	1	J10001-UP
14		7861-93-4520	SENSOR	1	J10001-UP
15		07002-63634	O-RING	1	J10001-UP
16		04434-50612	CLIP	1	J10001-UP
17		08193-20012	CLIP	1	J10001-UP
18		01010-81225	BOLT	2	J10001-UP
19		01643-31232	WASHER	2	J10001-UP
20		21T-03-64330	HOSE	1	J10001-UP
21		07285-00110	CLIP	2	J10001-UP
22		04434-51212	CLIP	10	J10001-UP
23		01010-81225	BOLT	10	J10001-UP
24		01643-31232	WASHER	10	J10001-UP
25		21T-03-31450	HOSE	1	J10001-UP
26		07285-00110	CLIP	1	J10001-UP
27		04434-51212	CLIP	4	J10001-UP
28		01010-81225	BOLT	2	J10001-UP
29		01643-31232	WASHER	2	J10001-UP

Ref :C0100-07A0 Page :060070

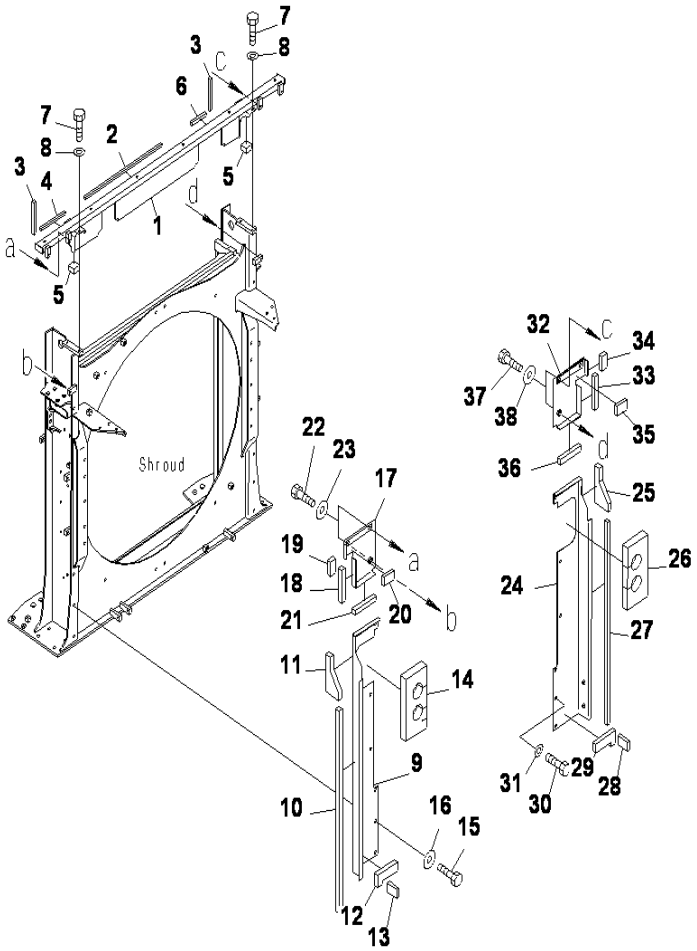

PC2000-8 S/N J10001-UP

COOLING(RADIATOR)(COVER)

INDEX	CD	PART NO.	DESCRIPTION	QTY	SERIAL NO.
1		21T-03-32111	BRACKET	1	J10001-UP
2		21T-03-32231	.SHEET	1	J10001-UP
3		21T-03-32240	.SHEET	2	J10001-UP
4		21T-03-32251	.SHEET	1	J10001-UP
5		21T-03-32470	.SHEET	2	J10001-UP
6		21T-03-32610	.SHEET	1	J10001-UP
7		01010-81225	BOLT	4	J10001-UP
8		01643-31232	WASHER	4	J10001-UP
9		21T-03-32121	COVER	1	J10001-UP
10		21T-03-32270	.SHEET	1	J10001-UP
11		21T-03-32280	.SHEET	1	J10001-UP
12		21T-03-32291	.SHEET	1	J10001-UP
13		21T-03-32380	.SHEET	1	J10001-UP
14		21T-03-32460	.SHEET	1	J10001-UP
15		01010-81235	BOLT	6	J10001-UP
16		175-54-34170	WASHER	6	J10001-UP
17		21T-03-32131	COVER	1	J10001-UP
18		21T-03-32360	.SHEET	1	J10001-UP
19		21T-03-32370	.SHEET	1	J10001-UP
20		21T-03-32380	.SHEET	1	J10001-UP
21		21T-03-32390	.SHEET	1	J10001-UP
22		01010-81235	BOLT	3	J10001-UP
23		175-54-34170	WASHER	3	J10001-UP
24		21T-03-32141	COVER	1	J10001-UP
25		21T-03-32190	.SHEET	1	J10001-UP
26		21T-03-32261	.SHEET	1	J10001-UP
27		21T-03-32350	.SHEET	1	J10001-UP
28		21T-03-32380	.SHEET	1	J10001-UP
29		21T-03-32620	.SHEET	1	J10001-UP
30		01010-81235	BOLT	6	J10001-UP
31		01643-31232	WASHER	6	J10001-UP
32		21T-03-32151	COVER	1	J10001-UP
33		21T-03-32360	.SHEET	1	J10001-UP
34		21T-03-32370	.SHEET	1	J10001-UP
35		21T-03-32380	.SHEET	1	J10001-UP
36		21T-03-32390	.SHEET	1	J10001-UP
37		01010-81235	BOLT	3	J10001-UP
38		175-54-34170	WASHER	3	J10001-UP

Ref :C0100-08A0 Page :060080

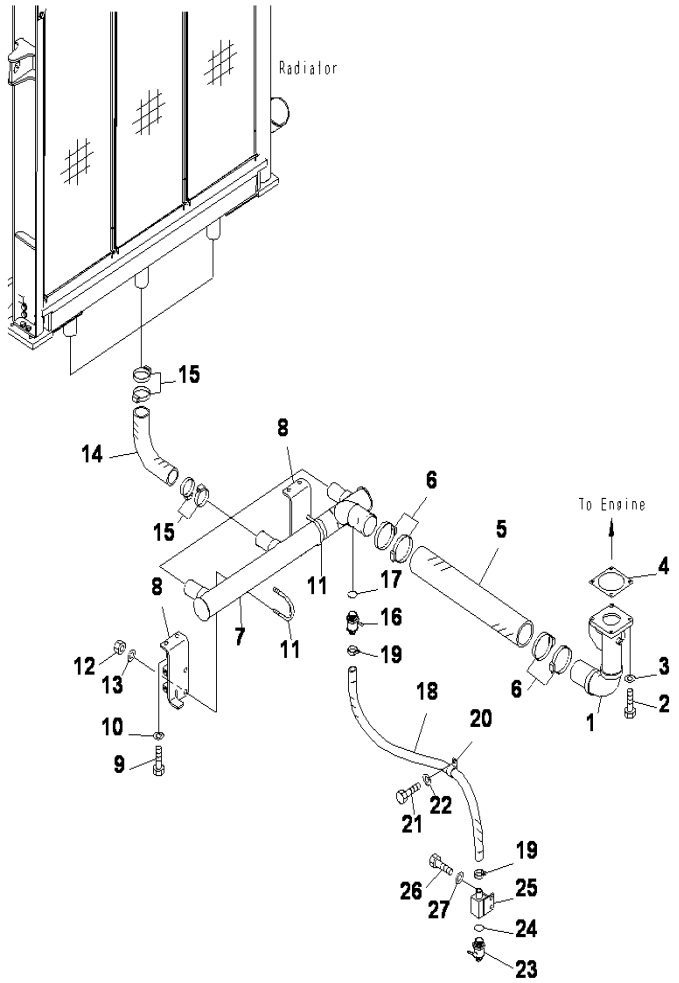

COOLING(RADIATOR)(PIPING)(LOWER)(1/4)

INDEX	CD	PART NO.	DESCRIPTION	QTY	SERIAL NO.
1		21T-03-31473	TUBE	1	J10013-UP
		21T-03-31472	TUBE	1	J10001-J10012
2		01010-81240	BOLT	4	J10001-UP
3		01643-31232	WASHER	4	J10001-UP
4		198-03-55411	GASKET	1	J10001-UP
5		21T-03-31491	HOSE	1	J10001-UP
6		07289-00105	CLAMP	4	J10001-UP
7		21T-03-32410	TUBE	1	J10001-UP
8		21T-03-32421	BRACKET	2	J10001-UP
9		01010-81230	BOLT	4	J10001-UP
10		01643-31232	WASHER	4	J10001-UP
11		07283-38973	CLIP	2	J10001-UP
12		01643-31232	WASHER	4	J10001-UP
13		01597-01211	NUT	4	J10001-UP
14		21T-03-32430	HOSE	3	J10001-UP
15		07289-00070	CLAMP	12	J10001-UP
16		21T-01-31490	VALVE	1	J10001-UP
17		07002-63634	O-RING	1	J10001-UP
18		07261-22612	HOSE	1	J10001-UP
19		07281-00419	CLAMP	2	J10001-UP
20		281-01-13180	CLIP	1	J10001-UP
21		01010-81220	BOLT	1	J10001-UP
22		01643-31232	WASHER	1	J10001-UP
23		21T-01-31490	VALVE	1	J10001-UP
24		07002-63634	O-RING	1	J10001-UP
25		21T-01-31481	BRACKET	1	J10001-UP
26		01010-81225	BOLT	2	J10001-UP
27		01643-31232	WASHER	2	J10001-UP

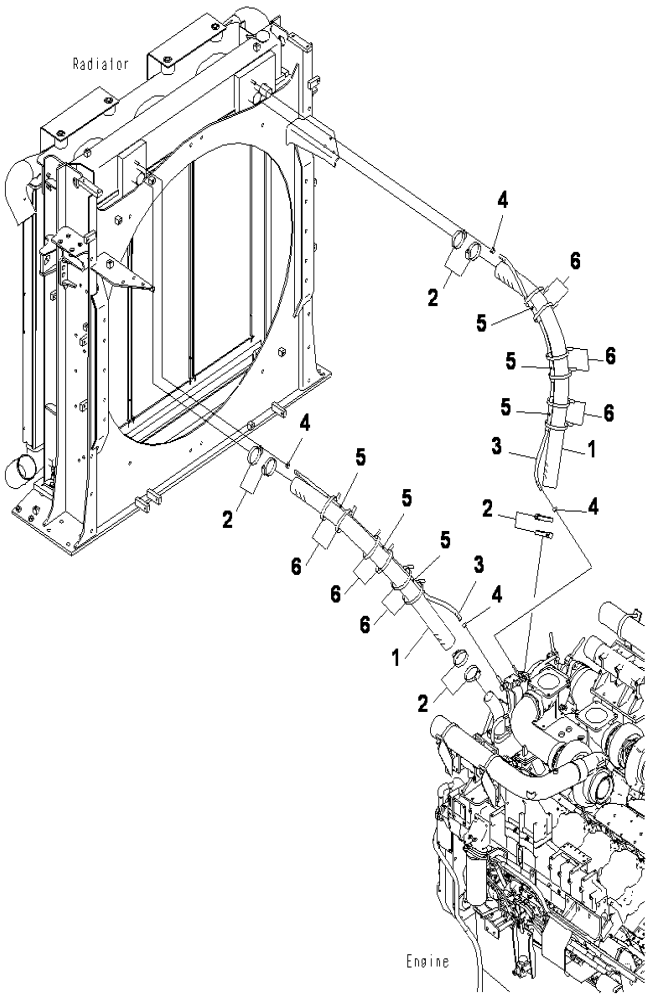

PC2000-8 S/N J10001-UP

COOLING(RADIATOR)(PIPING)(UPPER)(2/4)

INDEX	CD	PART NO.	DESCRIPTION	QTY	SERIAL NO.
1		21T-03-31391	HOSE	2	J10001-UP
2		07289-00080	CLAMP	8	J10001-UP
3		21T-03-31690	HOSE	2	J10001-UP
4		11Y-09-11140	CLIP	4	J10001-UP
5		205-62-72140	COVER	6	J10001-UP
6		21T-03-32650	BAND	12	J10001-UP

Ref :C0100-10A0 Page :060100

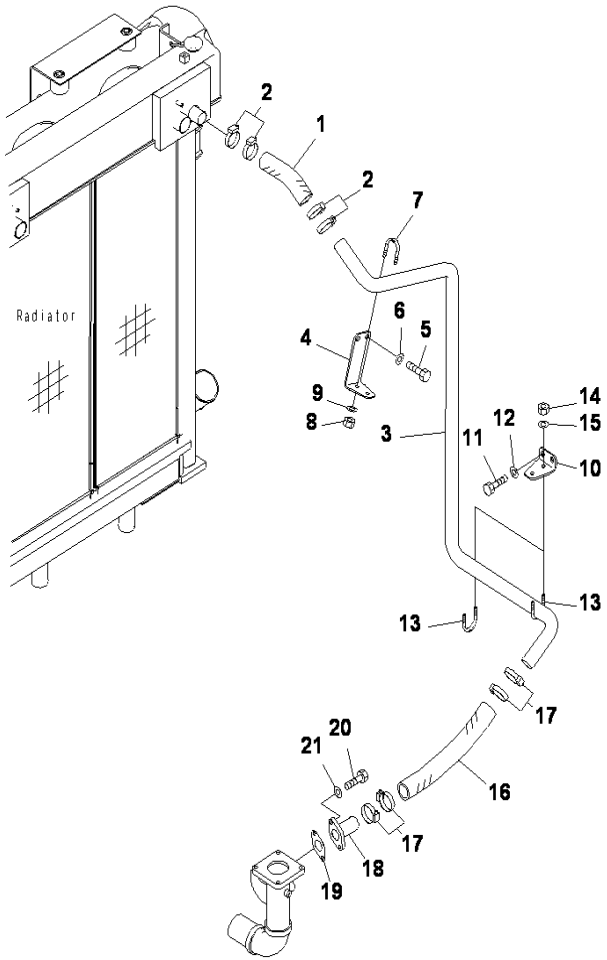

COOLING(RADIATOR)(PIPING)(BYPAS)(3/4)

INDEX	CD	PART NO.	DESCRIPTION	QTY	SERIAL NO.
1		21T-03-32590	HOSE	1	J10001-UP
2		07289-00055	CLAMP	4	J10001-UP
3		21T-03-32541	TUBE	1	J10001-UP
4		21T-03-32511	PLATE	1	J10001-UP
5		01010-81235	BOLT	2	J10001-UP
6		01643-31232	WASHER	2	J10001-UP
7		07283-34949	CLIP	1	J10001-UP
8		01597-01009	NUT	2	J10001-UP
9		01643-31032	WASHER	2	J10001-UP
10		21T-03-32521	PLATE	2	J10001-UP
11		01010-81225	BOLT	4	J10001-UP
12		01643-31232	WASHER	4	J10001-UP
13		07283-34949	CLIP	2	J10001-UP
14		01597-01009	NUT	4	J10001-UP
15		01643-31032	WASHER	4	J10001-UP
16		07260-04750	HOSE	1	J10001-UP
17		07289-00055	CLAMP	4	J10001-UP
18		21T-03-32531	FLANGE	1	J10001-UP
19		07343-24808	GASKET	1	J10001-UP
20		01010-81235	BOLT	2	J10001-UP
21		01643-31232	WASHER	2	J10001-UP

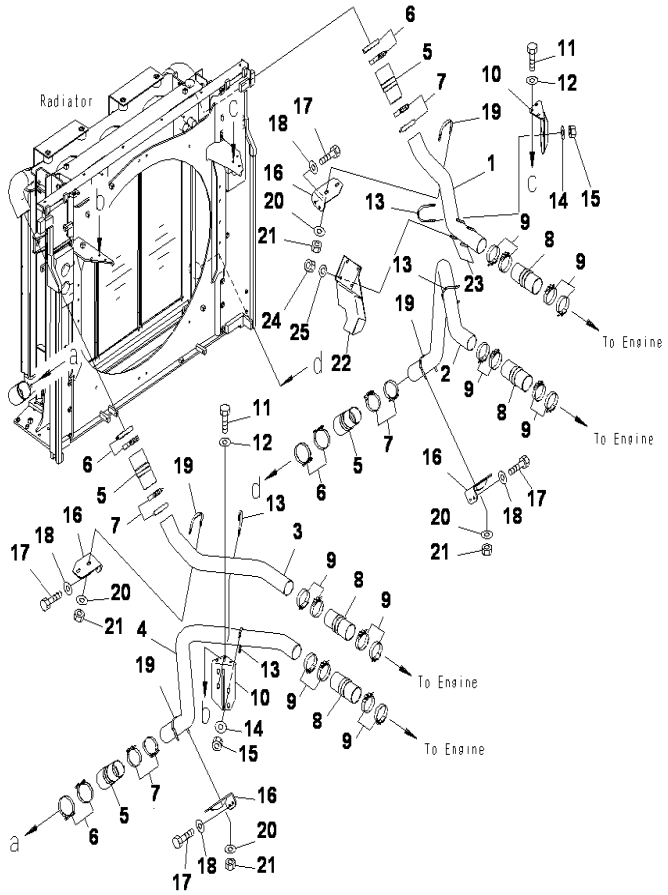

PC2000-8 S/N J10001-UP

COOLING(RADIATOR)(PIPING)(AIR)(4/4)

INDEX	CD	PART NO.	DESCRIPTION	QTY	SERIAL NO.
1		21T-03-31311	TUBE	1	J10001-UP
2		21T-03-31321	TUBE	1	J10001-UP
3		21T-03-31331	TUBE	1	J10001-UP
4		21T-03-31341	TUBE	1	J10001-UP
5		195-03-64451	HOSE	4	J10001-UP
6		208-62-73910	CLAMP	8	J10001-UP
7		20Y-62-51671	CLAMP	8	J10001-UP
8		195-03-64441	HOSE	4	J10001-UP
9		20Y-62-51671	CLAMP	16	J10001-UP
10		21T-03-31362	BRACKET	2	J10001-UP
11		01010-81235	BOLT	6	J10001-UP
12		175-54-34170	WASHER	6	J10001-UP
13		07283-31079	CLIP	4	J10001-UP
14		175-54-34170	WASHER	8	J10001-UP
15		01597-01211	NUT	8	J10001-UP
16		21T-03-31352	BRACKET	4	J10001-UP
17		01010-81235	BOLT	8	J10001-UP
18		175-54-34170	WASHER	8	J10001-UP
19		07283-31079	CLIP	4	J10001-UP
20		175-54-34170	WASHER	8	J10001-UP
21		01597-01211	NUT	8	J10001-UP
22		21T-03-32490	DUCT	1	J10001-UP
23		07283-31079	CLIP	2	J10001-UP
24		01597-01211	NUT	4	J10001-UP
25		01643-31232	WASHER	4	J10001-UP

Ref :C0100-12A0 Page :060120

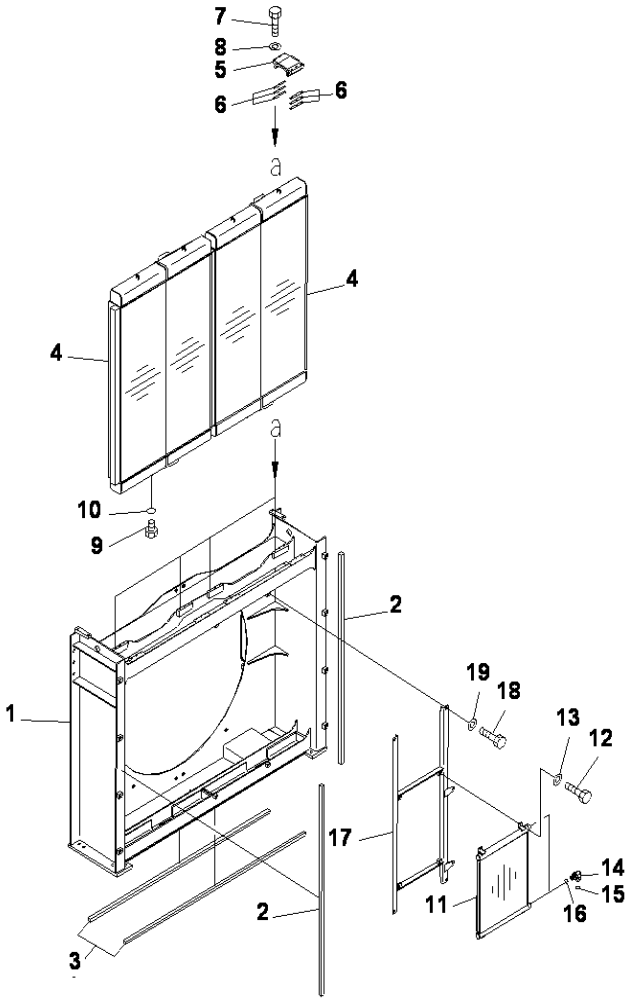

PC2000-8 S/N J10001-UP

COOLING(OIL COOLER)(OIL COOLER ASS'Y)

INDEX	CD	PART NO.	DESCRIPTION	QTY	SERIAL NO.
1		21T-03-31211	SHROUD	1	J10001-UP
2		21T-03-31550	.SHEET	2	J10001-UP
3		21T-03-31561	.SHEET	2	J10001-UP
4		21T-03-31240	OIL COOLER ASS'Y	2	J10001-UP
5		21T-03-31271	CLAMP	4	J10001-UP
6		21T-03-31280	SHIM	40	J10001-UP
7		01010-81050	BOLT	24	J10001-UP
8		01643-31032	WASHER	24	J10001-UP
9		07040-12412	PLUG	2	J10001-UP
10		07002-62434	O-RING	2	J10001-UP
11		21T-03-31260	OIL COOLER ASS'Y	1	J10001-UP
12		01010-81030	BOLT	4	J10001-UP
13		01643-31032	WASHER	4	J10001-UP
14		02782-10516	ELBOW	2	J10001-UP
15		02896-61015	O-RING	2	J10001-UP
16		07002-62034	O-RING	2	J10001-UP
17		21T-03-31232	BRACKET	1	J10001-UP
18		01010-81230	BOLT	4	J10001-UP
19		01643-31232	WASHER	4	J10001-UP

Ref :C0100-13A0 Page :060130

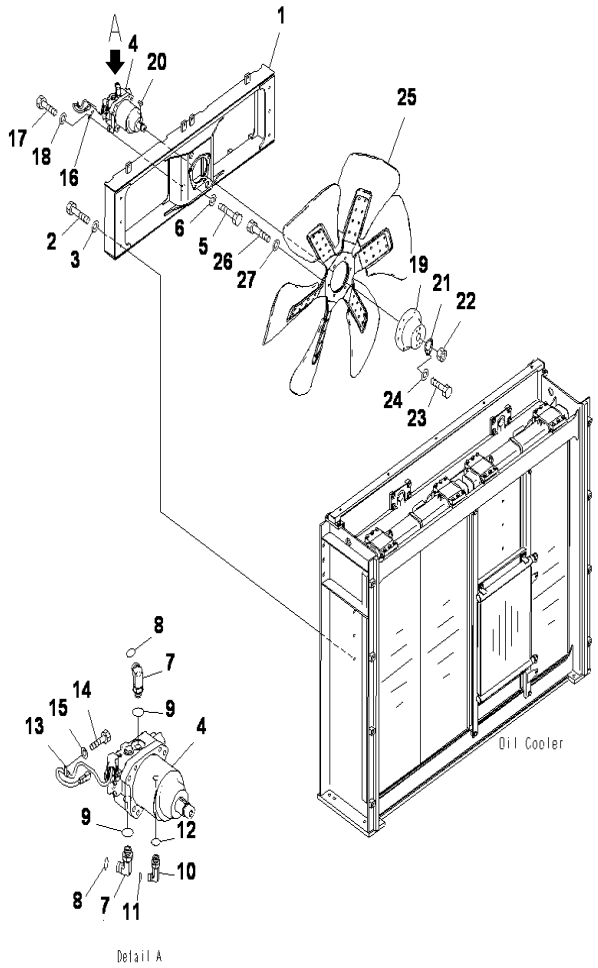

COOLING(OIL COOLER)(MOTOR AND FAN)

INDEX	CD	PART NO.	DESCRIPTION	QTY	SERIAL NO.
1		21T-03-31221	BRACKET	1	J10001-UP
2		01010-81235	BOLT	6	J10001-UP
3		01643-31232	WASHER	6	J10001-UP
4		(708-7W-00160)	MOTOR A.PC2000	1	J10001-UP
5		01010-81640	BOLT	4	J10001-UP
6		01643-31645	WASHER	4	J10001-UP
7		02782-1062A	ELBOW	2	J10001-UP
8		02896-61018	O-RING	2	J10001-UP
9		07002-62434	O-RING	2	J10001-UP
10		02782-10423	ELBOW	1	J10001-UP
11		02896-61012	O-RING	1	J10001-UP
12		07002-62034	O-RING	1	J10001-UP
13		04434-51012	CLIP	1	J10001-UP
14		01010-81220	BOLT	1	J10001-UP
15		01643-31232	WASHER	1	J10001-UP
16		08193-20012	CLIP	1	J10001-UP
17		01010-81225	BOLT	1	J10001-UP
18		01643-31232	WASHER	1	J10001-UP
19		21M-03-22250	BOSS	1	J10001-UP
20		04010-01032	KEY	1	J10001-UP
21		01660-03650	LOCK	1	J10001-UP
22		01583-13621	NUT	1	J10001-UP
23		01010-81020	BOLT	1	J10001-UP
24		01643-31032	WASHER	1	J10001-UP
25		600-645-7450	FAN	1	J10001-UP
26		01010-81240	BOLT	6	J10001-UP
27		01643-31232	WASHER	6	J10001-UP

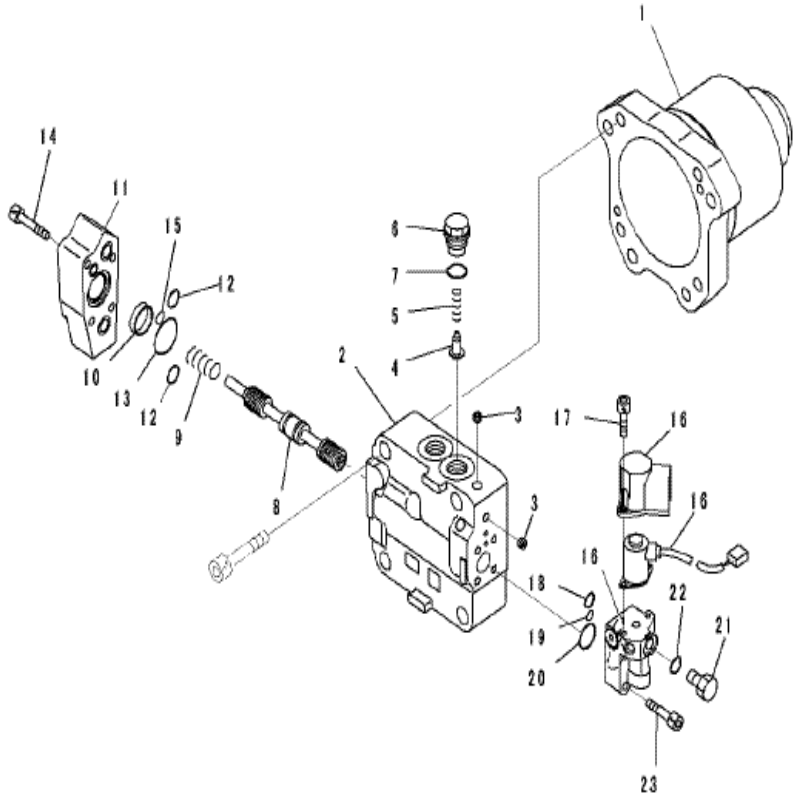

PC2000-8 S/N J10001-UP

COOLING (OIL COOLER)(MOTOR AND FAN)(1/3)

INDEX	CD	PART NO.	DESCRIPTION	QTY	SERIAL NO.
		708-7W-00160	MOTOR ASSEMBLY.....	1	J10001-UP
1	C2	708-7W-11180	.CASE.....	1	J10001-UP
	C2	708-7W-01050	.COVER SUB ASSEMBLY.....	1	J10001-UP
2	C1		..COVER.....	1	J10001-UP
3	C1		..PLUG.....	3	J10001-UP
4	C2	709-25-11650	.CHECK VALVE.....	1	J10001-UP
5	C2	709-25-11361	.SPRING.....	1	J10001-UP
6		708-7S-21610	.PLUG.....	1	J10001-UP
7		07002-22434	.O-RING.....	1	J10001-UP
8	C1		.SPOOL.....	1	J10001-UP
9	C2	708-7W-18150	.SPRING.....	1	J10001-UP
10	C2	708-7W-18160	.SPACER.....	1	J10001-UP
11	C2	708-7W-18170	.COVER.....	1	J10001-UP
12		07000-F2016	.O-RING.....	2	J10001-UP
13		07000-F2035	.O-RING.....	1	J10001-UP
14		01252-60845	.BOLT.....	4	J10001-UP
15		07000-F2010	.O-RING.....	1	J10001-UP
16		708-7S-01330	.VALVE ASSEMBLY, PILOT.....	1	J10001-UP
17		01252-60616	..BOLT.....	2	J10001-UP
18		708-7S-18360	..O-RING.....	1	J10001-UP
19		07000-F1008	..O-RING.....	1	J10001-UP
20		708-7S-18230	..O-RING.....	1	J10001-UP
21		07040-11007	..PLUG.....	1	J10001-UP
22		07002-21023	..O-RING.....	1	J10001-UP
23		01252-60835	.BOLT.....	4	J10001-UP

Ref :C0100-14A1 Page :060145

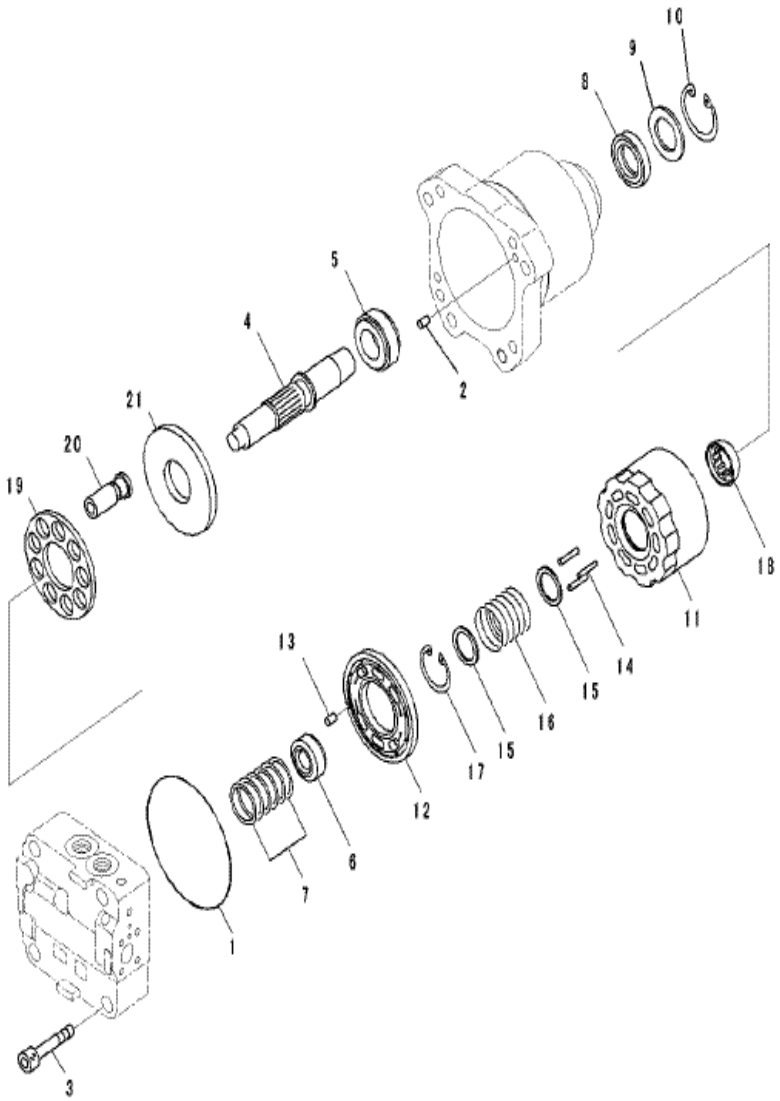

PC2000-8 S/N J10001-UP

COOLING (OIL COOLER)(MOTOR AND FAN)(2/3)

INDEX	CD	PART NO.	DESCRIPTION	QTY	SERIAL NO.
		708-7W-00160	MOTOR ASSEMBLY.....	1	J10001-UP
1		708-7W-11920	.O-RING.....	1	J10001-UP
2		04020-01024	.PIN.....	2	J10001-UP
3		01252-61480	.BOLT.....	4	J10001-UP
4	C2	708-7W-12130	.SHAFT.....	1	J10001-UP
5	C2	708-7W-12140	.BEARING.....	1	J10001-UP
6	C2	708-7W-12150	.BEARING.....	1	J10001-UP
7	C2	708-7L-05010	.SPACER KIT.....	1	J10001-UP
	C1		..SPACER, T=1.5MM.....	1	J10001-UP
	C1		..SPACER, T=1.6MM.....	1	J10001-UP
	C1		..SPACER, T=1.7MM.....	1	J10001-UP
	C1		..SPACER, T=1.8MM.....	1	J10001-UP
	C1		..SPACER, T=1.9MM.....	1	J10001-UP
	C1		..SPACER, T=2.0MM.....	1	J10001-UP
8	C2	708-25-52861	.OIL SEAL.....	1	J10001-UP
9	C2	708-2L-22160	.SPACER.....	1	J10001-UP
10		04065-06825	.RING.....	1	J10001-UP
11	C2	708-8F-33121	.CYLINDER BLOCK.....	1	J10001-UP
12	C2	708-8F-33230	.PLATE,VALVE.....	1	J10001-UP
13	C2	720-68-19610	.PIN.....	1	J10001-UP
14	C2	708-8F-33360	.PIN.....	3	J10001-UP
15	C2	708-7L-13140	.SEAT.....	2	J10001-UP
16	C2	708-8F-33160	.SPRING.....	1	J10001-UP
17		04065-04818	.RING.....	1	J10001-UP
18	C2	708-8F-33350	.RETAINER,GUIDE.....	1	J10001-UP
19	C2	708-2L-33350	.RETAINER,SHOE.....	1	J10001-UP
20	C2	708-8F-33310	.PISTON SUB A.....	9	J10001-UP
21	C2	708-7F-13420	.PLATE, THRUST.....	1	J10001-UP

Ref :C0100-14A2 Page :060146

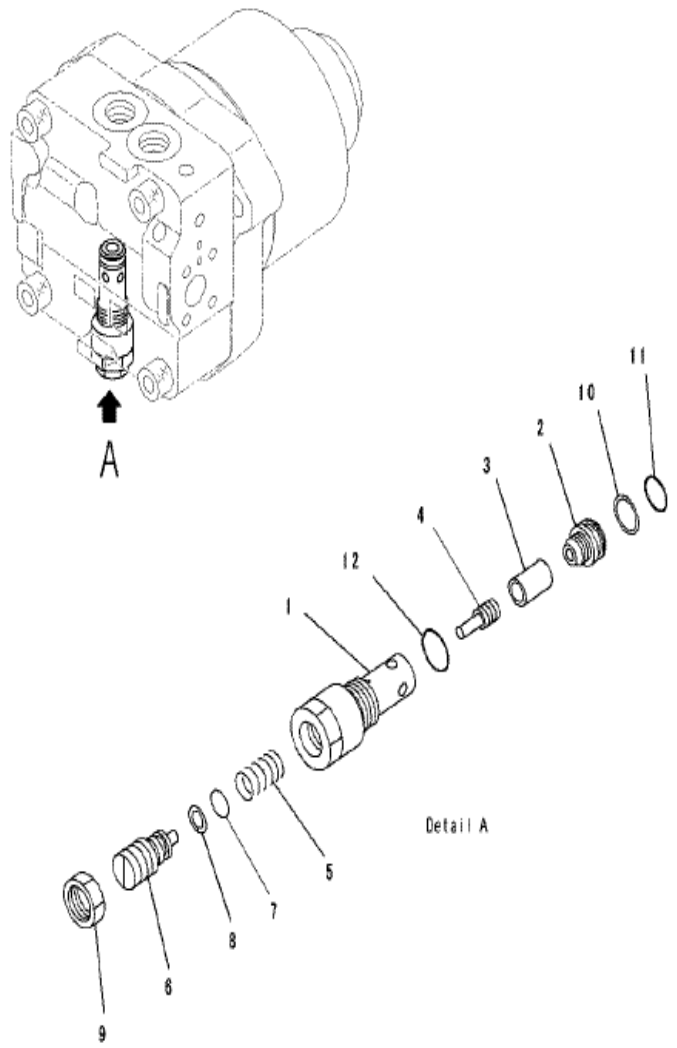

PC2000-8 S/N J10001-UP

COOLING (OIL COOLER)(MOTOR AND FAN)(3/3)

INDEX	CD	PART NO.	DESCRIPTION	QTY	SERIAL NO.
		708-7W-00160	MOTOR ASSEMBLY.....	1	J10001-UP
		702-73-01660	.VALVE, RELIEF.....	1	J10001-UP
1	C2	702-73-11810	..SLEEVE.....	1	J10001-UP
2	C2	702-73-11820	..SEAT,VALVE.....	1	J10001-UP
3	C2	702-73-11830	..VALVE.....	1	J10001-UP
4	C2	706-75-75280	..PISTON.....	1	J10001-UP
5	C2	702-73-11840	SPRING.....	1	J10001-UP
6	C2	702-73-11850	..SCREW.....	1	J10001-UP
7	C2	07000-22010	..O-RING.....	1	J10001-UP
8	C2	07001-02010	..RING.....	1	J10001-UP
9	C2	702-73-11860	..NUT.....	1	J10001-UP
10		723-60-22230	..RING,BACK UP.....	1	J10001-UP
11		07000-F2016	..O-RING.....	1	J10001-UP
12		07002-22434	..O-RING.....	1	J10001-UP

Ref :C0100-14A3 Page :060147

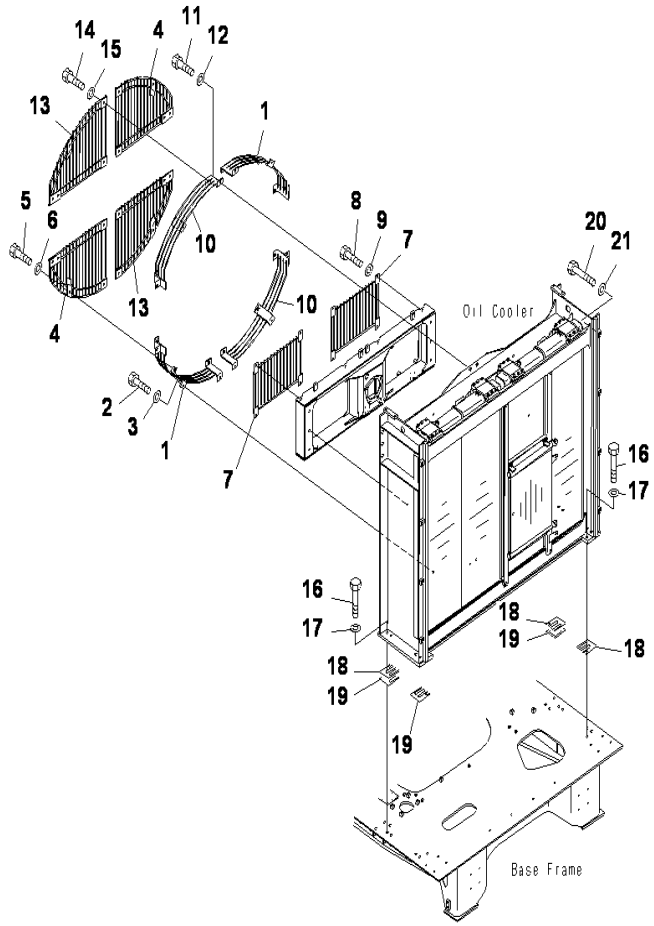

COOLING(OIL COOLER)(FAN GUARD)

INDEX	CD	PART NO.	DESCRIPTION	QTY	SERIAL NO.
1		21T-03-31611	GUARD	2	J10001-UP
2		01010-81230	BOLT	6	J10001-UP
3		01643-31232	WASHER	6	J10001-UP
4		21T-03-31623	GUARD	2	J10001-UP
5		01010-81230	BOLT	10	J10001-UP
6		01643-31232	WASHER	10	J10001-UP
7		21T-03-31652	GUARD	2	J10001-UP
8		01010-81230	BOLT	8	J10001-UP
9		01643-31232	WASHER	8	J10001-UP
10		21T-03-31671	GUARD	2	J10001-UP
11		01010-81230	BOLT	6	J10001-UP
12		01643-31232	WASHER	6	J10001-UP
13		21T-03-31683	GUARD	2	J10001-UP
14		01010-81230	BOLT	10	J10001-UP
15		01643-31232	WASHER	10	J10001-UP
16		01010-81660	BOLT	12	J10001-UP
17		01643-31645	WASHER	12	J10001-UP
18		21T-03-31970	SHIM	2	J10001-UP
19		21T-03-31980	SHIM	4	J10001-UP
20		01010-81260	BOLT	8	J10001-UP
21		175-54-34170	WASHER	8	J10008-UP
		01643-31232	WASHER	8	J10001-J10007

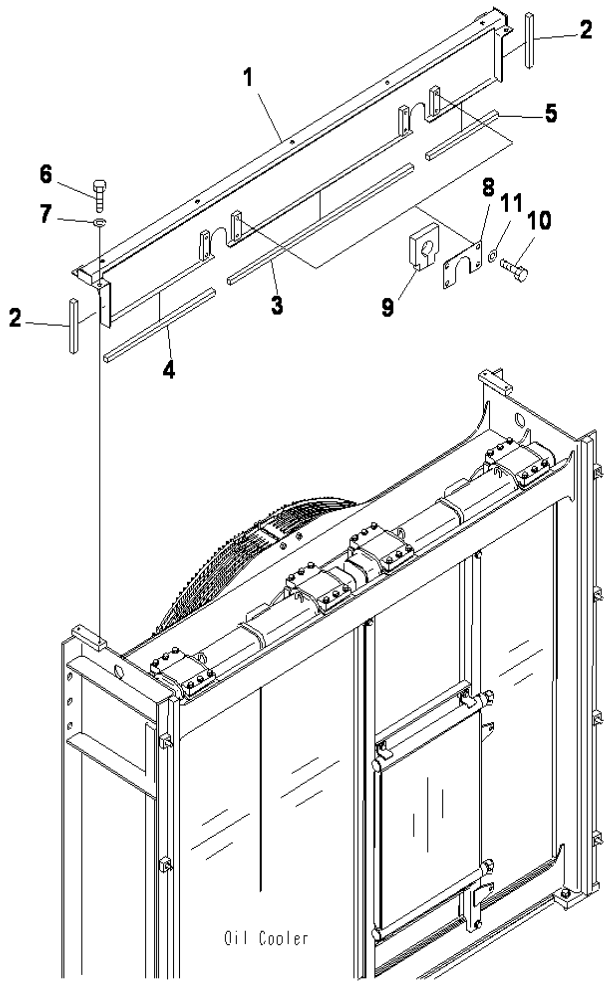

PC2000-8 S/N J10001-UP

COOLING(OIL COOLER)(WIND BRAKE)

INDEX	CD	PART NO.	DESCRIPTION	QTY	SERIAL NO.
1		21T-03-32161	BRACKET	1	J10001-UP
2		21T-03-32240	.SHEET	2	J10001-UP
3		21T-03-32321	.SHEET	1	J10001-UP
4		21T-03-32331	.SHEET	1	J10001-UP
5		21T-03-32341	.SHEET	1	J10001-UP
6		01010-81225	BOLT	4	J10001-UP
7		01643-31232	WASHER	4	J10001-UP
8		21T-03-32630	BRACKET	2	J10001-UP
9		21T-03-32311	.SHEET	1	J10001-UP
10		01010-81220	BOLT	8	J10001-UP
11		01643-31232	WASHER	8	J10001-UP

Ref :C0100-16A0 Page :060160

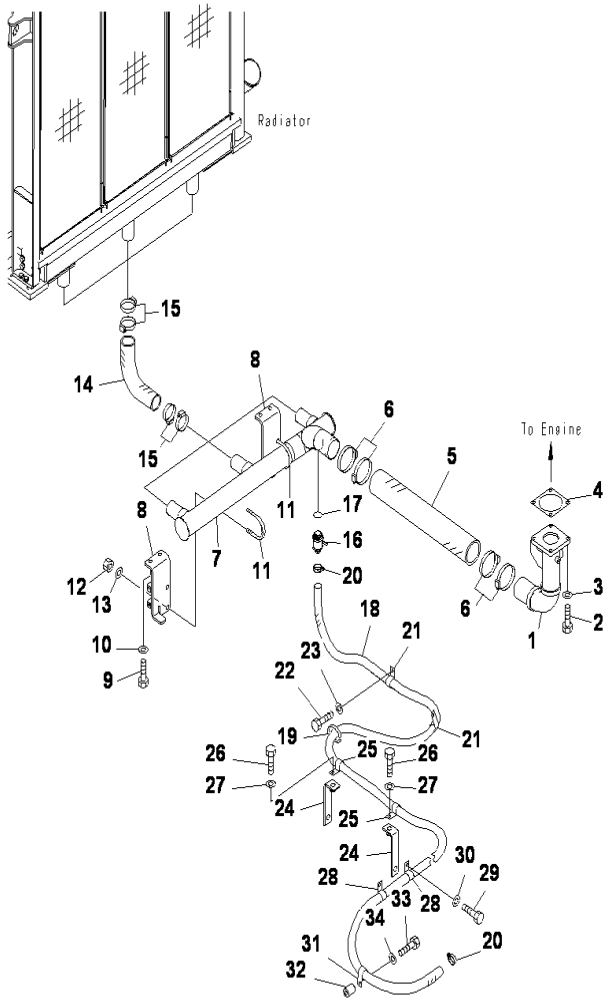

COOLING(RADIATOR)(PIPING)(SERVICE CENTER)

INDEX	CD	PART NO.	DESCRIPTION	QTY	SERIAL NO.
1		21T-03-31473	TUBE	1	J10013-UP
		21T-03-31472	TUBE	1	J10001-J10012
2		01010-81240	BOLT	4	J10001-UP
3		01643-31232	WASHER	4	J10001-UP
4		198-03-55411	GASKET	1	J10001-UP
5		21T-03-31491	HOSE	1	J10001-UP
6		07289-00105	CLAMP	4	J10001-UP
7		21T-03-32410	TUBE	1	J10001-UP
8		21T-03-32421	BRACKET	2	J10001-UP
9		01010-81230	BOLT	4	J10001-UP
10		01643-31232	WASHER	4	J10001-UP
11		07283-38973	CLIP	2	J10001-UP
12		01643-31232	WASHER	4	J10001-UP
13		01597-01211	NUT	4	J10001-UP
14		21T-03-32430	HOSE	3	J10001-UP
15		07289-00070	CLAMP	12	J10001-UP
16		21T-01-31490	VALVE	1	J10001-UP
17		07002-63634	O-RING	1	J10001-UP
18		07261-22639	HOSE	1	J10001-UP
19		08034-20876	BAND	1	J10001-UP
20		07281-00419	CLAMP	2	J10001-UP
21		281-01-13180	CLIP	2	J10001-UP
22		01010-81225	BOLT	2	J10001-UP
23		01643-31232	WASHER	2	J10001-UP
24		17A-61-13391	BRACKET	2	J10001-UP
25		281-01-13180	CLIP	2	J10001-UP
26		01010-81225	BOLT	4	J10001-UP
27		01643-31232	WASHER	4	J10001-UP
28		281-01-13180	CLIP	2	J10001-UP
29		01010-81225	BOLT	2	J10001-UP
30		01643-31232	WASHER	2	J10001-UP
31		281-01-13180	CLIP	1	J10001-UP
32		195-33-11220	SPACER	1	J10001-UP
33		01010-81250	BOLT	1	J10001-UP
34		01643-31232	WASHER	1	J10001-UP

FUEL TANK AND RELATED PARTS

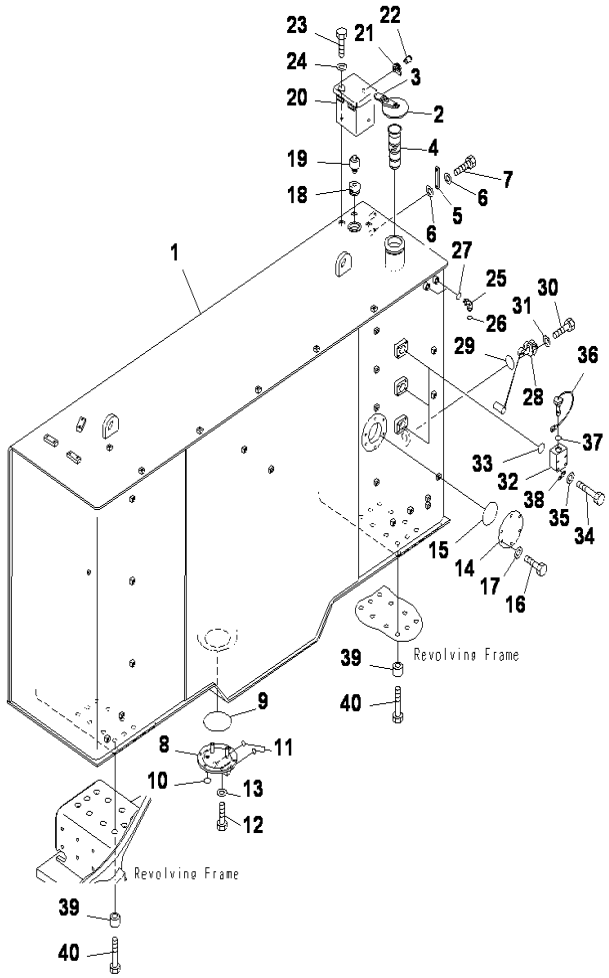

PC2000-8 S/N J10001-UP

FUEL TANK

INDEX	CD	PART NO.	DESCRIPTION	QTY	SERIAL NO.
1		21T-04-31112	FUEL TANK	1	J10001-UP
2		17A-04-41411	CAP	1	J10001-UP
3		09460-00000	LOCK	1	J10001-UP
4		07056-18422	STRAINER	1	J10001-UP
5		20Y-04-21220	GAUGE	1	J10001-UP
6		20N-60-41371	.GASKET	4	J10001-UP
7		20N-60-41360	.BOLT	2	J10001-UP
8		21T-04-31121	FLANGE	1	J10001-UP
9		07000-B5170	O-RING	1	J10001-UP
10		02896-61012	O-RING	1	J10001-UP
11		07002-62034	O-RING	2	J10001-UP
12		01010-81235	BOLT	6	J10001-UP
13		01643-31232	WASHER	6	J10001-UP
14		21T-04-31861	COVER	1	J10001-UP
15		07000-B2135	O-RING	1	J10001-UP
16		01010-81230	BOLT	6	J10001-UP
17		01643-31232	WASHER	6	J10001-UP
18		21T-04-31190	CONNECTOR	1	J10001-UP
19		21T-04-31980	BREATHER	1	J10001-UP
20		21T-04-31141	COVER	1	J10001-UP
21		205-60-71220	LOCK ASSY	1	J10001-UP
22		205-54-76280	.ROTOR	1	J10001-UP
23		01010-81220	BOLT	3	J10001-UP
24		01643-31232	WASHER	3	J10001-UP
25		02782-10516	ELBOW	2	J10001-UP
26		02896-61015	O-RING	2	J10001-UP
27		07002-62034	O-RING	2	J10001-UP
28		7861-93-5810	SENSOR	1	J10001-UP
29		07000-B3050	O-RING	1	J10001-UP
30		01010-80612	BOLT	4	J10001-UP
31		01643-30623	WASHER	4	J10001-UP
32		21T-60-31460	BLOCK	3	J10001-UP
33		07000-B2055	O-RING	3	J10001-UP
34		01010-81075	BOLT	12	J10001-UP
35		01643-31032	WASHER	12	J10001-UP
36		7861-93-4520	SENSOR	3	J10001-UP
37		07002-63634	O-RING	3	J10001-UP
38		08193-21012	CLIP	3	J10001-UP
39		21T-26-11460	WASHER	20	J10001-UP
40		01011-83010	BOLT	20	J10001-UP

Ref :D0100-01A0 Page :090010

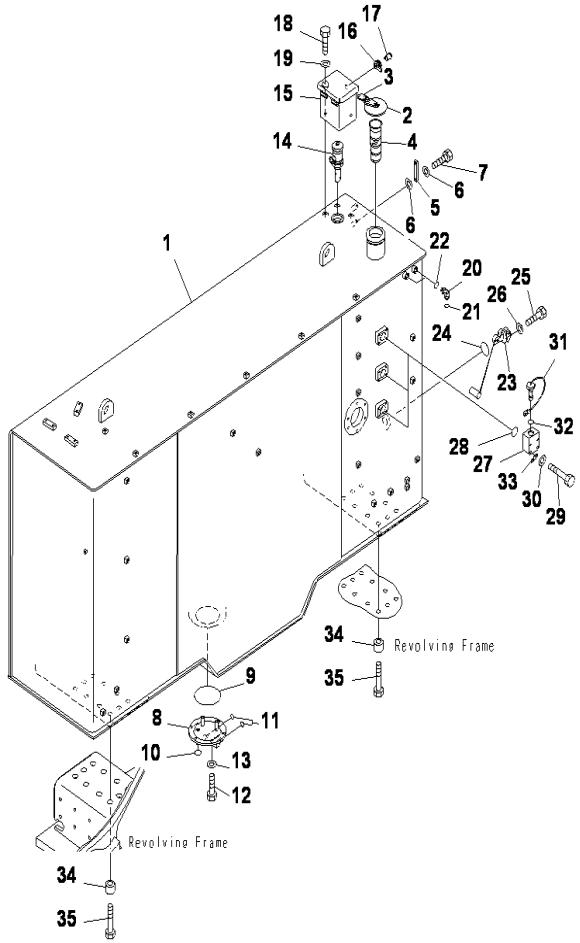

FUEL TANK(WITH FUEL QUICK CHARGE)(SERVICE CENTER)

INDEX	CD	PART NO.	DESCRIPTION	QTY	SERIAL NO.
1		21T-04-31112	FUEL TANK	1	J10001-UP
2		17A-04-41411	CAP	1	J10001-UP
3		09460-00000	LOCK	1	J10001-UP
4		07056-18422	STRAINER	1	J10001-UP
5		20Y-04-21220	GAUGE	1	J10001-UP
6		20N-60-41371	.GASKET	4	J10001-UP
7		20N-60-41360	.BOLT	2	J10001-UP
8		21T-04-31121	FLANGE	1	J10001-UP
9		07000-B5170	O-RING	1	J10001-UP
10		02896-61012	O-RING	1	J10001-UP
11		07002-62034	O-RING	2	J10001-UP
12		01010-81235	BOLT	6	J10001-UP
13		01643-31232	WASHER	6	J10001-UP
14		21T-04-31130	VENT A'SSY	1	J10001-UP
15		21T-04-31141	COVER	1	J10001-UP
16		205-60-71220	LOCK ASSY	1	J10001-UP
17		205-54-76280	.ROTOR	1	J10001-UP
18		01010-81220	BOLT	3	J10001-UP
19		01643-31232	WASHER	3	J10001-UP
20		02782-10516	ELBOW	2	J10001-UP
21		02896-61015	O-RING	2	J10001-UP
22		07002-62034	O-RING	2	J10001-UP
23		7861-93-5810	SENSOR	1	J10001-UP
24		07000-B3050	O-RING	1	J10001-UP
25		01010-80612	BOLT	4	J10001-UP
26		01643-30623	WASHER	4	J10001-UP
27		21T-60-31460	BLOCK	3	J10001-UP
28		07000-B2055	O-RING	3	J10001-UP
29		01010-81075	BOLT	12	J10001-UP
30		01643-31032	WASHER	12	J10001-UP
31		7861-93-4520	SENSOR	3	J10001-UP
32		07002-63634	O-RING	3	J10001-UP
33		08193-21012	CLIP	3	J10001-UP
34		21T-26-11460	WASHER	20	J10001-UP
35		01011-83010	BOLT	20	J10001-UP

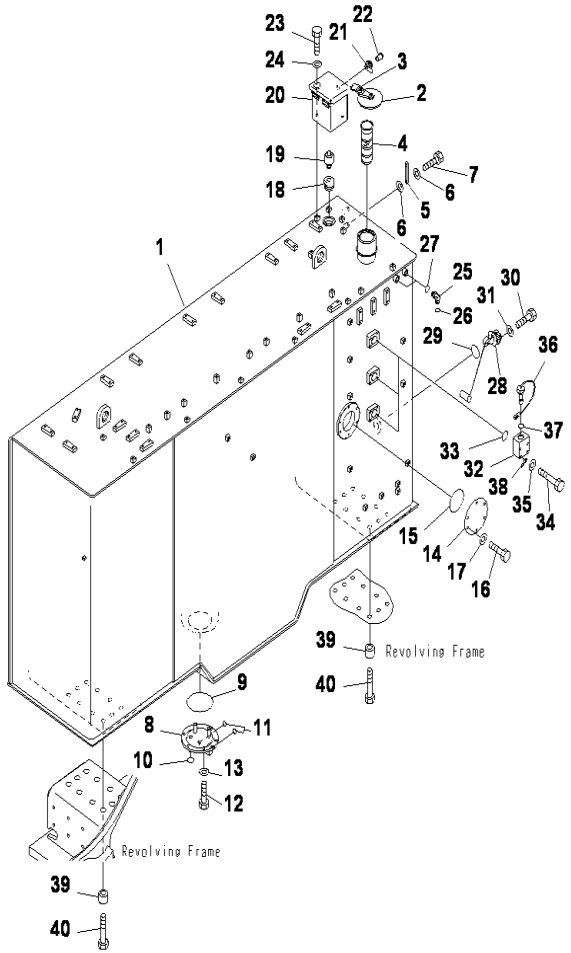

PC2000-8 S/N J10001-UP

FUEL TANK(WITH HANDRAIL)

INDEX	CD	PART NO.	DESCRIPTION	QTY	SERIAL NO.
1		21T-04-32610	TANK	1	J10001-UP
2		17A-04-41411	CAP	1	J10001-UP
3		09460-00000	LOCK	1	J10001-UP
4		07056-18422	STRAINER	1	J10001-UP
5		20Y-04-21220	GAUGE	1	J10001-UP
6		20N-60-41371	.GASKET	4	J10001-UP
7		20N-60-41360	.BOLT	2	J10001-UP
8		21T-04-31121	FLANGE	1	J10001-UP
9		07000-B5170	O-RING	1	J10001-UP
10		02896-61012	O-RING	1	J10001-UP
11		07002-62034	O-RING	2	J10001-UP
12		01010-81235	BOLT	6	J10001-UP
13		01643-31232	WASHER	6	J10001-UP
14		21T-04-31861	COVER	1	J10001-UP
15		07000-B2135	O-RING	1	J10001-UP
16		01010-81230	BOLT	6	J10001-UP
17		01643-31232	WASHER	6	J10001-UP
18		21T-04-31190	CONNECTOR	1	J10001-UP
19		21T-04-31980	BREATHER	1	J10001-UP
20		21T-04-31141	COVER	1	J10001-UP
21		205-60-71220	LOCK ASSY	1	J10001-UP
22		205-54-76280	.ROTOR	1	J10001-UP
23		01010-81220	BOLT	3	J10001-UP
24		01643-31232	WASHER	3	J10001-UP
25		02782-10516	ELBOW	2	J10001-UP
26		02896-61015	O-RING	2	J10001-UP
27		07002-62034	O-RING	2	J10001-UP
28		7861-93-5810	SENSOR	1	J10001-UP
29		07000-B3050	O-RING	1	J10001-UP
30		01010-80612	BOLT	4	J10001-UP
31		01643-30623	WASHER	4	J10001-UP
32		21T-60-31460	BLOCK	3	J10001-UP
33		07000-B2055	O-RING	3	J10001-UP
34		01010-81075	BOLT	12	J10001-UP
35		01643-31032	WASHER	12	J10001-UP
36		7861-93-4520	SENSOR	3	J10001-UP
37		07002-63634	O-RING	3	J10001-UP
38		08193-21012	CLIP	3	J10001-UP
39		21T-26-11460	WASHER	20	J10001-UP
40		01011-83010	BOLT	20	J10001-UP

Ref :D0100-01A2 Page :090030

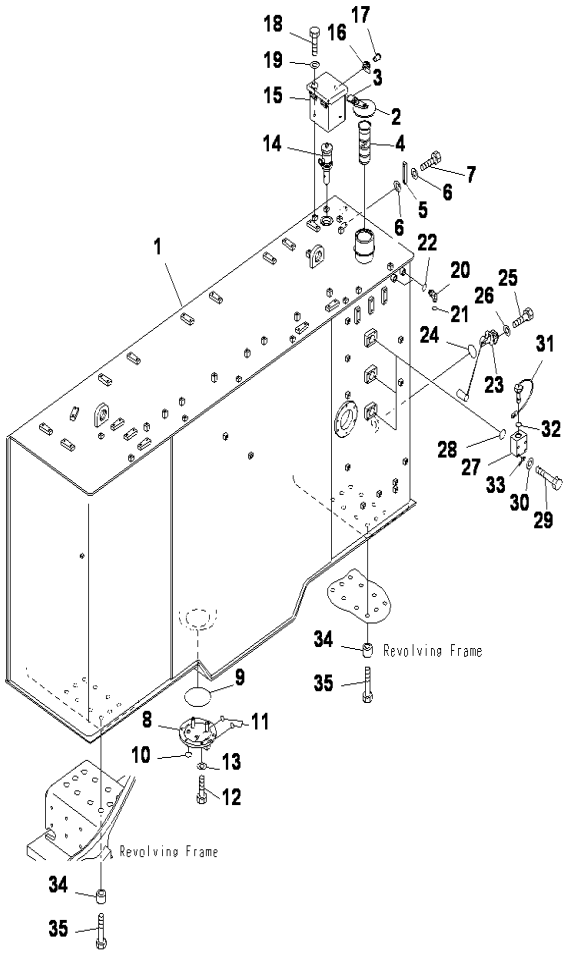

FUEL TANK(WITH QUICK CHARGE AND HANDRAIL)

INDEX	CD	PART NO.	DESCRIPTION	QTY	SERIAL NO.
1		21T-04-32610	TANK	1	J10001-UP
2		17A-04-41411	CAP	1	J10001-UP
3		09460-00000	LOCK	1	J10001-UP
4		07056-18422	STRAINER	1	J10001-UP
5		20Y-04-21220	GAUGE	1	J10001-UP
6		20N-60-41371	.GASKET	4	J10001-UP
7		20N-60-41360	.BOLT	2	J10001-UP
8		21T-04-31121	FLANGE	1	J10001-UP
9		07000-B5170	O-RING	1	J10001-UP
10		02896-61012	O-RING	1	J10001-UP
11		07002-62034	O-RING	2	J10001-UP
12		01010-81235	BOLT	6	J10001-UP
13		01643-31232	WASHER	6	J10001-UP
14		21T-04-31130	VENT A'SSY	1	J10001-UP
15		21T-04-31141	COVER	1	J10001-UP
16		205-60-71220	LOCK ASSY	1	J10001-UP
17		205-54-76280	.ROTOR	1	J10001-UP
18		01010-81220	BOLT	3	J10001-UP
19		01643-31232	WASHER	3	J10001-UP
20		02782-10516	ELBOW	2	J10001-UP
21		02896-61015	O-RING	2	J10001-UP
22		07002-62034	O-RING	2	J10001-UP
23		7861-93-5810	SENSOR	1	J10001-UP
24		07000-B3050	O-RING	1	J10001-UP
25		01010-80612	BOLT	4	J10001-UP
26		01643-30623	WASHER	4	J10001-UP
27		21T-60-31460	BLOCK	3	J10001-UP
28		07000-B2055	O-RING	3	J10001-UP
29		01010-81075	BOLT	12	J10001-UP
30		01643-31032	WASHER	12	J10001-UP
31		7861-93-4520	SENSOR	3	J10001-UP
32		07002-63634	O-RING	3	J10001-UP
33		08193-21012	CLIP	3	J10001-UP
34		21T-26-11460	WASHER	20	J10001-UP
35		01011-83010	BOLT	20	J10001-UP

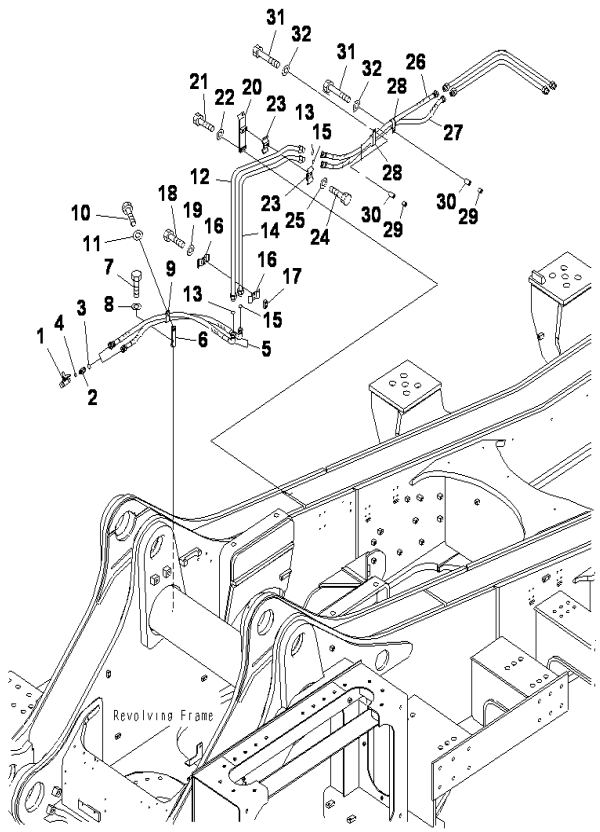

PC2000-8 S/N J10001-UP

FUEL PIPING(REVO FUEL LINE)(FUEL SUPPLY LINES)

INDEX	CD	PART NO.	DESCRIPTION	QTY	SERIAL NO.
1		20Y-62-15651	VALVE	2	J10001-UP
2		56B-43-17370	NIPPLE	2	J10001-UP
3		07002-62034	O-RING	2	J10001-UP
4		02896-61018	O-RING	2	J10001-UP
5		02763-00611	HOSE	2	J10001-UP
6		21T-04-71320	BRACKET	1	J10001-UP
7		01010-81225	BOLT	1	J10001-UP
8		01643-31232	WASHER	1	J10001-UP
9		0443-552712	CLIP	1	J10001-UP
10		01010-81225	BOLT	1	J10001-UP
11		01643-31232	WASHER	1	J10001-UP
12		21T-04-31910	TUBE	1	J10001-UP
13		02896-61018	O-RING	2	J10001-UP
14		21T-04-31920	TUBE	1	J10001-UP
15		02896-61018	O-RING	2	J10001-UP
16		20Y-62-13711	CLAMP	2	J10001-UP
17		21T-04-31671	SEAT	1	J10001-UP
18		01010-81250	BOLT	2	J10001-UP
19		01643-31232	WASHER	2	J10001-UP
20		21T-04-31661	BRACKET	1	J10001-UP
21		01010-81235	BOLT	2	J10001-UP
22		01643-31232	WASHER	2	J10001-UP
23		20Y-62-13711	CLAMP	2	J10001-UP
24		01010-81230	BOLT	2	J10001-UP
25		01643-31232	WASHER	2	J10001-UP
26		02762-00611	HOSE	1	J10001-UP
27		21T-04-32280	HOSE	1	J10001-UP
28		04435-52712	CLIP	2	J10001-UP
29		195-33-11220	SPACER	2	J10001-UP
30		205-03-71331	COLLAR	2	J10001-UP
31		01010-81290	BOLT	2	J10001-UP
32		01643-31232	WASHER	2	J10001-UP

Ref :D0200-01A0 Page :090050

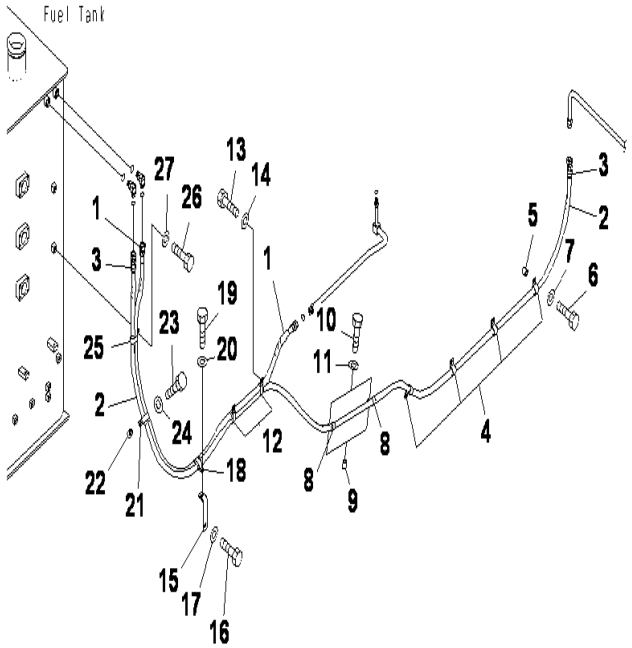

PC2000-8 S/N J10001-UP

FUEL LINES(REVO FUEL LINE)(FUEL RETURN SPIIL LINES)

INDEX	CD	PART NO.	DESCRIPTION	QTY	SERIAL NO.
1		02762-00522	HOSE	1	J10001-UP
2		02762-00551	HOSE	1	J10001-UP
3		20Y-62-22790	BAND (RED)	2	J10001-UP
4		04434-52512	CLIP	4	J10001-UP
5		195-33-11220	SPACER	4	J10001-UP
6		01010-81250	BOLT	4	J10001-UP
7		01643-31232	WASHER	4	J10001-UP
8		04434-52312	CLIP	2	J10001-UP
9		195-33-11220	SPACER	2	J10001-UP
10		01010-81250	BOLT	2	J10001-UP
11		01643-31232	WASHER	2	J10001-UP
12		04435-52512	CLIP	2	J10001-UP
13		01010-81220	BOLT	1	J10001-UP
14		01643-31232	WASHER	1	J10001-UP
15		17A-61-13391	BRACKET	1	J10001-UP
16		01010-81225	BOLT	1	J10001-UP
17		01643-31232	WASHER	1	J10001-UP
18		04435-52512	CLIP	1	J10001-UP
19		01010-81225	BOLT	1	J10001-UP
20		01643-31232	WASHER	1	J10001-UP
21		04435-52512	CLIP	1	J10001-UP
22		195-33-11220	SPACER	1	J10001-UP
23		01010-81250	BOLT	1	J10001-UP
24		01643-31232	WASHER	1	J10001-UP
25		04435-52512	CLIP	1	J10001-UP
26		01010-81220	BOLT	1	J10001-UP
27		01643-31232	WASHER	1	J10001-UP

Ref :D0200-02A0 Page :090060

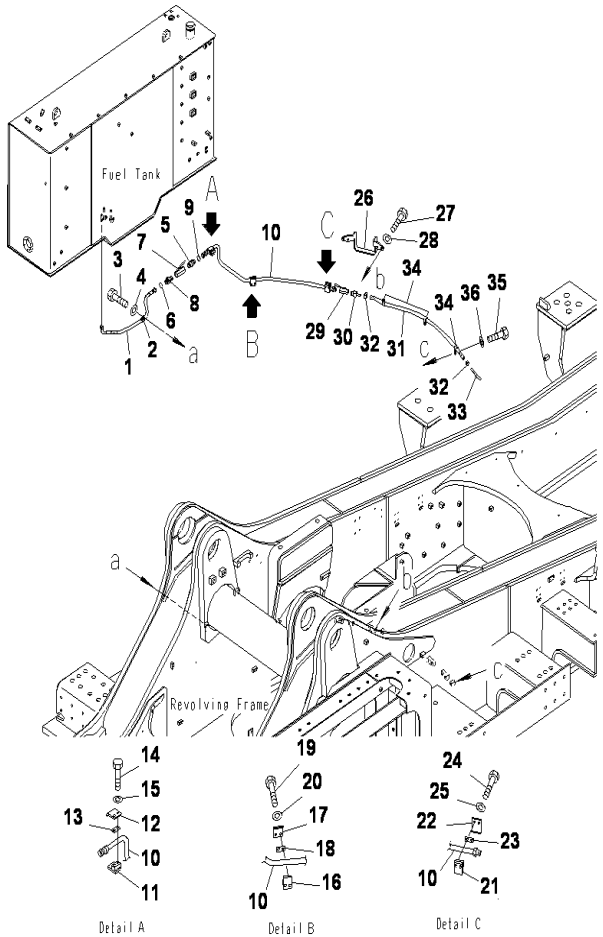

PC2000-8 S/N J10001-UP

FUEL LINES(REVO FUEL LINE)(FUEL DRAIN LINES)

INDEX	CD	PART NO.	DESCRIPTION	QTY	SERIAL NO.
1		02763-004A7	HOSE	1	J10001-UP
2		04434-51912	CLIP	1	J10001-UP
3		01010-81225	BOLT	1	J10001-UP
4		01643-31232	WASHER	1	J10001-UP
5		8255-62-4590	CONNECTOR	1	J10001-UP
6		02896-61012	O-RING	1	J10001-UP
7		07700-40460	VALVE	1	J10001-UP
8		8255-62-4590	CONNECTOR	1	J10001-UP
9		02896-61012	O-RING	1	J10001-UP
10		21T-04-31341	TUBE	1	J10001-UP
11		203-97-35720	SEAT	1	J10001-UP
12		203-97-35660	CLAMP	1	J10001-UP
13		21T-04-31620	PLATE	1	J10001-UP
14		01010-81055	BOLT	2	J10001-UP
15		01643-31032	WASHER	2	J10001-UP
16		203-97-35720	SEAT	1	J10001-UP
17		203-97-35660	CLAMP	1	J10001-UP
18		21T-04-31620	PLATE	1	J10001-UP
19		01010-81055	BOLT	2	J10001-UP
20		01643-31032	WASHER	2	J10001-UP
21		203-97-35720	SEAT	1	J10001-UP
22		203-97-35660	CLAMP	1	J10001-UP
23		21T-04-31620	PLATE	1	J10001-UP
24		01010-81055	BOLT	2	J10001-UP
25		01643-31032	WASHER	2	J10001-UP
26		21T-04-31880	PLATE	1	J10001-UP
27		01010-81230	BOLT	4	J10001-UP
28		01643-31232	WASHER	4	J10001-UP
29		07700-40460	VALVE	1	J10001-UP
30		21T-04-11750	NIPPLE	1	J10001-UP
31		07261-21411	HOSE	1	J10001-UP
32		09479-02400	CLAMP	2	J10001-UP
33		21T-04-11710	TUBE	1	J10001-UP
34		04434-52312	CLIP	4	J10001-UP
35		01010-81225	BOLT	4	J10001-UP
36		01643-31232	WASHER	4	J10001-UP

Ref :D0200-03A0 Page :090070

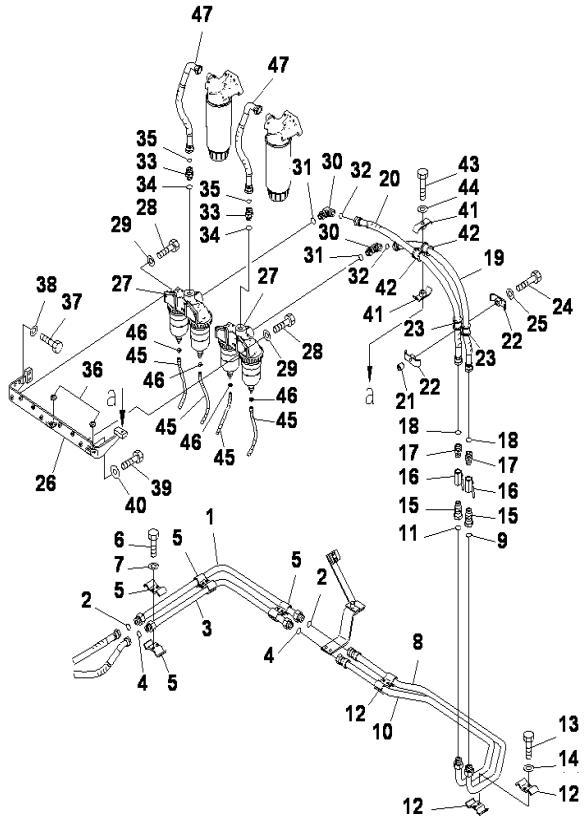

PC2000-8 S/N J10001-UP

FUEL LINES(FUEL PIPING)(1/3)(ADDITIONAL FILTER)

INDEX	CD	PART NO.	DESCRIPTION	QTY	SERIAL NO.
1		21T-04-31212	TUBE	1	J10001-UP
2		02896-61018	O-RING	2	J10001-UP
3		21T-04-31391	TUBE	1	J10001-UP
4		02896-61018	O-RING	2	J10001-UP
5		20Y-62-13711	CLAMP	6	J10001-UP
6		01010-81230	BOLT	6	J10001-UP
7		01643-31232	WASHER	6	J10001-UP
8		21T-04-31222	TUBE	1	J10001-UP
9		02896-61018	O-RING	1	J10001-UP
10		21T-04-31681	TUBE	1	J10001-UP
11		02896-61018	O-RING	1	J10001-UP
12		20Y-62-13711	CLAMP	4	J10001-UP
13		01010-81230	BOLT	4	J10001-UP
14		01643-31232	WASHER	4	J10001-UP
15		21T-04-32270	JOINT	2	J10001-UP
16		07700-40661	VALVE	2	J10001-UP
17		21N-04-41232	UNION	2	J10001-UP
18		02896-61018	O-RING	2	J10001-UP
19		02762-00609	HOSE	1	J10001-UP
20		02762-00611	HOSE	1	J10001-UP
21		195-33-11220	SPACER	1	J10001-UP
22		07094-30518	CLAMP	2	J10001-UP
23		07095-00526	CUSHION	2	J10001-UP
24		01010-81290	BOLT	1	J10001-UP
25		01643-31232	WASHER	1	J10001-UP
26		21T-04-32221	BRACKET	1	J10001-UP
27		600-311-9330	WATER SEPARATOR	2	J10001-UP
28		01010-81035	BOLT	8	J10001-UP
29		01643-31032	WASHER	8	J10001-UP
30		02782-10628	ELBOW	2	J10001-UP
31		07002-62434	O-RING	2	J10001-UP
32		02896-61018	O-RING	2	J10001-UP
33		02781-00628	UNION	2	J10001-UP
34		07002-62434	O-RING	2	J10001-UP
35		02896-61018	O-RING	2	J10001-UP
36		08037-01610	GROMMET	2	J10001-UP
37		01010-81230	BOLT	2	J10001-UP
38		01643-31232	WASHER	2	J10001-UP
39		01010-81235	BOLT	1	J10001-UP
40		175-54-34170	WASHER	1	J10001-UP
41		07094-30518	CLAMP	2	J10001-UP
42		07095-00526	CUSHION	2	J10001-UP
43		01010-81265	BOLT	1	J10001-UP
44		01643-31232	WASHER	1	J10001-UP
45		07286-00825	HOSE	4	J10001-UP

Ref :D0200-04A0 Page :090080

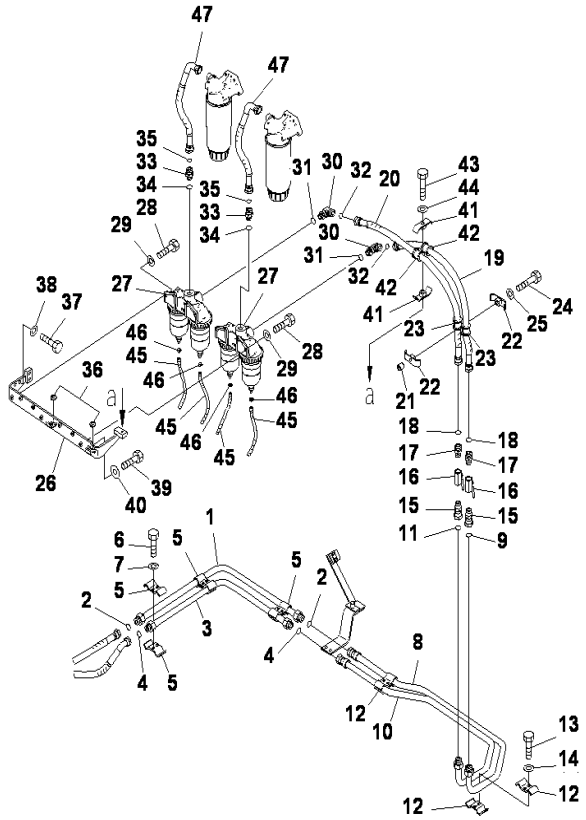

PC2000-8 S/N J10001-UP

FUEL LINES(FUEL PIPING)(1/3)(ADDITIONAL FILTER)

INDEX	CD	PART NO.	DESCRIPTION	QTY	SERIAL NO.
46		07285-00125	CLIP	4	J10001-UP
47		02763-006A4	HOSE	2	J10001-UP

Ref :D0200-04A0 Page :090081

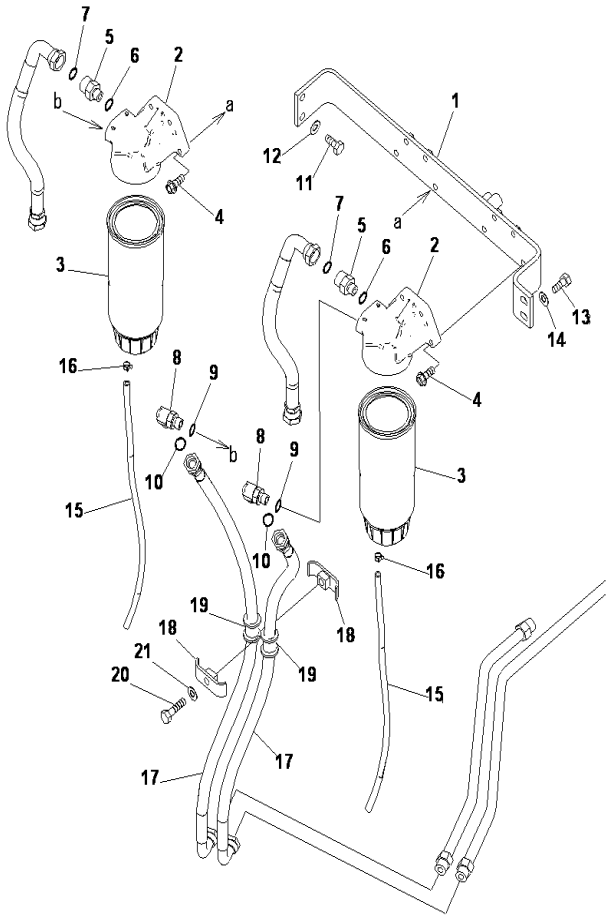

PC2000-8 S/N J10001-UP

FUEL LINES(FUEL PIPING)(2/3)(ADDITIONAL FILTER)

INDEX	CD	PART NO.	DESCRIPTION	QTY	SERIAL NO.
1		21T-04-32210	BRACKET	1	J10001-UP
2		6261-71-6430	HEAD	2	J10001-UP
3		600-311-4500	FILTER,CARTRIDG	2	J10001-UP
4		01435-01040	BOLT	8	J10001-UP
5		56B-43-17370	NIPPLE	2	J10001-UP
6		07002-62034	O-RING	2	J10001-UP
7		02896-61018	O-RING	2	J10001-UP
8		02782-10516	ELBOW	2	J10001-UP
9		07002-62034	O-RING	2	J10001-UP
10		02896-61015	O-RING	2	J10001-UP
11		01010-81230	BOLT	2	J10001-UP
12		01643-31232	WASHER	2	J10001-UP
13		01010-81235	BOLT	2	J10001-UP
14		175-54-34170	WASHER	2	J10001-UP
15		07286-00863	HOSE	2	J10001-UP
16		07285-00125	CLIP	2	J10001-UP
17		02763-00512	HOSE	2	J10001-UP
18		07094-30417	CLAMP	2	J10001-UP
19		07095-00421	CUSHION	2	J10001-UP
20		01010-81265	BOLT	1	J10001-UP
21		01643-31232	WASHER	1	J10001-UP

Ref :D0200-05A0 Page :090090

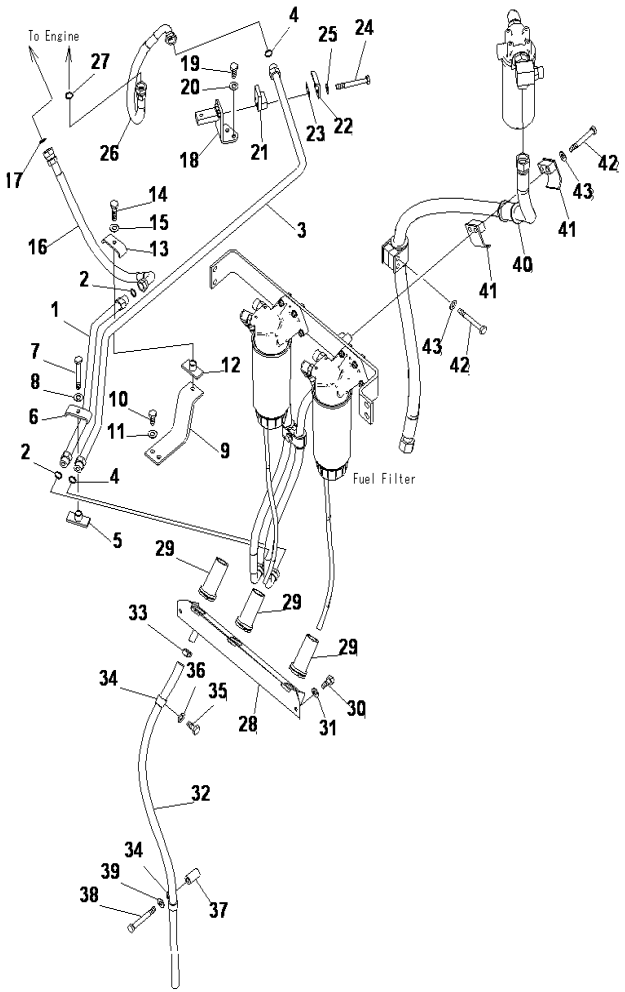

PC2000-8 S/N J10001-UP

FUEL LINES(FUEL PIPING)(3/3)(ADDITIONAL FILTER)

INDEX	CD	PART NO.	DESCRIPTION	QTY	SERIAL NO.
1		21T-04-31231	TUBE	1	J10001-UP
2		02896-61015	O-RING	2	J10001-UP
3		21T-04-31241	TUBE	1	J10001-UP
4		02896-61015	O-RING	2	J10001-UP
5		21T-04-31630	CLAMP	1	J10001-UP
6		201-62-21880	CLAMP	1	J10001-UP
7		01010-81050	BOLT	1	J10001-UP
8		01643-31032	WASHER	1	J10001-UP
9		21T-04-31431	BRACKET	1	J10001-UP
10		01010-81045	BOLT	2	J10001-UP
11		01643-31032	WASHER	2	J10001-UP
12		21T-04-31630	CLAMP	1	J10001-UP
13		201-62-21880	CLAMP	1	J10001-UP
14		01010-81060	BOLT	1	J10001-UP
15		01643-31032	WASHER	1	J10001-UP
16		02763-005A6	HOSE	1	J10001-UP
17		02896-61015	O-RING	1	J10001-UP
18		21T-04-31461	BRACKET	1	J10001-UP
19		01010-81025	BOLT	2	J10001-UP
20		01643-31032	WASHER	2	J10001-UP
21		203-97-35720	SEAT	1	J10001-UP
22		203-97-35660	CLAMP	1	J10001-UP
23		21T-04-31620	PLATE	1	J10001-UP
24		01010-81065	BOLT	2	J10001-UP
25		01643-31032	WASHER	2	J10001-UP
26		02763-00506	HOSE	1	J10001-UP
27		02896-61015	O-RING	1	J10001-UP
28		21T-04-32231	CASE,BOX	1	J10001-UP
29		22U-54-24760	GROMMET	3	J10001-UP
30		01010-81020	BOLT	2	J10001-UP
31		01643-31032	WASHER	2	J10001-UP
32		07287-01913	HOSE	1	J10001-UP
33		07285-00220	CLIP	1	J10001-UP
34		04434-52312	CLIP	2	J10001-UP
35		01010-81225	BOLT	1	J10001-UP
36		01643-31232	WASHER	1	J10001-UP
37		205-03-71331	COLLAR	1	J10001-UP
38		01010-81270	BOLT	1	J10001-UP
39		01643-31232	WASHER	1	J10001-UP
40		07095-01033	CUSHION	1	J10001-UP
41		07094-11024	CLAMP	2	J10001-UP
42		01010-81280	BOLT	4	J10001-UP
43		01643-31232	WASHER	4	J10001-UP

Ref :D0200-06A0 Page :090100

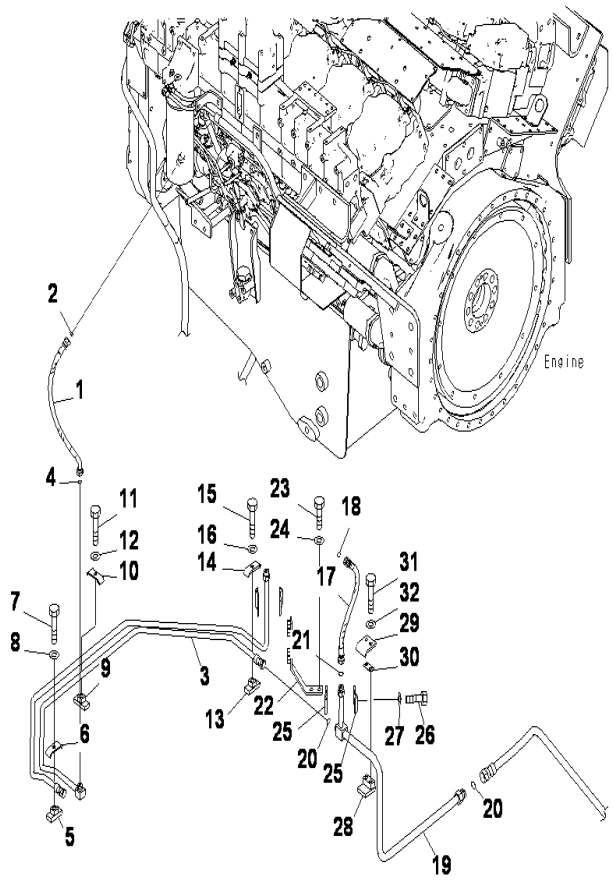

FUEL LINES(FUEL RETURN LINES)(1/2)

INDEX	CD	PART NO.	DESCRIPTION	QTY	SERIAL NO.
1		02764-003A4	HOSE	1	J10001-UP
2		02896-61009	O-RING	1	J10001-UP
3		21T-04-31310	TUBE	1	J10001-UP
4		02896-61009	O-RING	1	J10001-UP
5		8255-62-1330	SEAT	1	J10001-UP
6		130-62-71350	CLAMP	1	J10001-UP
7		01010-81050	BOLT	1	J10001-UP
8		01643-31032	WASHER	1	J10001-UP
9		8255-62-1330	SEAT	1	J10001-UP
10		130-62-71350	CLAMP	1	J10001-UP
11		01010-81065	BOLT	1	J10001-UP
12		01643-31032	WASHER	1	J10001-UP
13		825-56-21330	SEAT	1	J10001-UP
14		130-62-71350	CLAMP	1	J10001-UP
15		01010-81050	BOLT	1	J10001-UP
16		01643-31032	WASHER	1	J10001-UP
17		02762-003A3	HOSE	1	J10001-UP
18		02896-61009	O-RING	1	J10001-UP
19		21T-04-31290	TUBE	1	J10001-UP
20		02896-61009	O-RING	2	J10001-UP
21		02896-61015	O-RING	1	J10001-UP
22		21T-04-31470	BRACKET	1	J10001-UP
23		01010-81020	BOLT	2	J10001-UP
24		01643-31032	WASHER	2	J10001-UP
25		20Y-96-62310	CLAMP	2	J10001-UP
26		01010-81235	BOLT	2	J10001-UP
27		01643-31232	WASHER	2	J10001-UP
28		203-97-35720	SEAT	1	J10001-UP
29		203-97-35660	CLAMP	1	J10001-UP
30		21T-04-31620	PLATE	1	J10001-UP
31		01010-81055	BOLT	2	J10001-UP
32		01643-31032	WASHER	2	J10001-UP

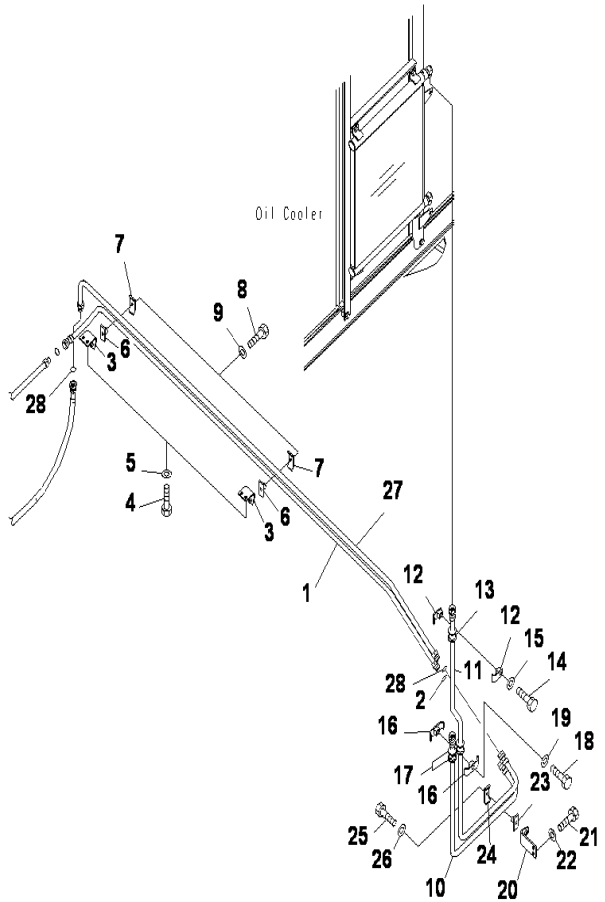

FUEL LINES(FUEL RETURN LINES)(2/2)

INDEX	CD	PART NO.	DESCRIPTION	QTY	SERIAL NO.
1		21T-04-31280	TUBE	1	J10001-UP
2		02896-61015	O-RING	1	J10001-UP
3		21T-04-31440	BRACKET	2	J10001-UP
4		01010-81020	BOLT	4	J10001-UP
5		01643-31032	WASHER	4	J10001-UP
6		21T-04-31630	CLAMP	2	J10001-UP
7		201-62-21880	CLAMP	2	J10001-UP
8		01010-81055	BOLT	2	J10001-UP
9		01643-31032	WASHER	2	J10001-UP
10		21T-04-31320	TUBE	1	J10001-UP
11		21T-04-31330	TUBE	1	J10001-UP
12		07094-10417	CLAMP	2	J10001-UP
13		07095-00421	CUSHION	1	J10001-UP
14		01010-81265	BOLT	1	J10001-UP
15		01643-31232	WASHER	1	J10001-UP
16		07094-30417	CLAMP	2	J10001-UP
17		07095-00421	CUSHION	2	J10001-UP
18		01010-81265	BOLT	1	J10001-UP
19		01643-31232	WASHER	1	J10001-UP
20		21T-04-31450	BRACKET	1	J10001-UP
21		01010-81020	BOLT	2	J10001-UP
22		01643-31032	WASHER	2	J10001-UP
23		21T-04-31630	CLAMP	1	J10001-UP
24		201-62-21880	CLAMP	1	J10001-UP
25		01010-81055	BOLT	1	J10001-UP
26		01643-31032	WASHER	1	J10001-UP
27		21T-04-31270	TUBE	1	J10001-UP
28		02896-61015	O-RING	2	J10001-UP

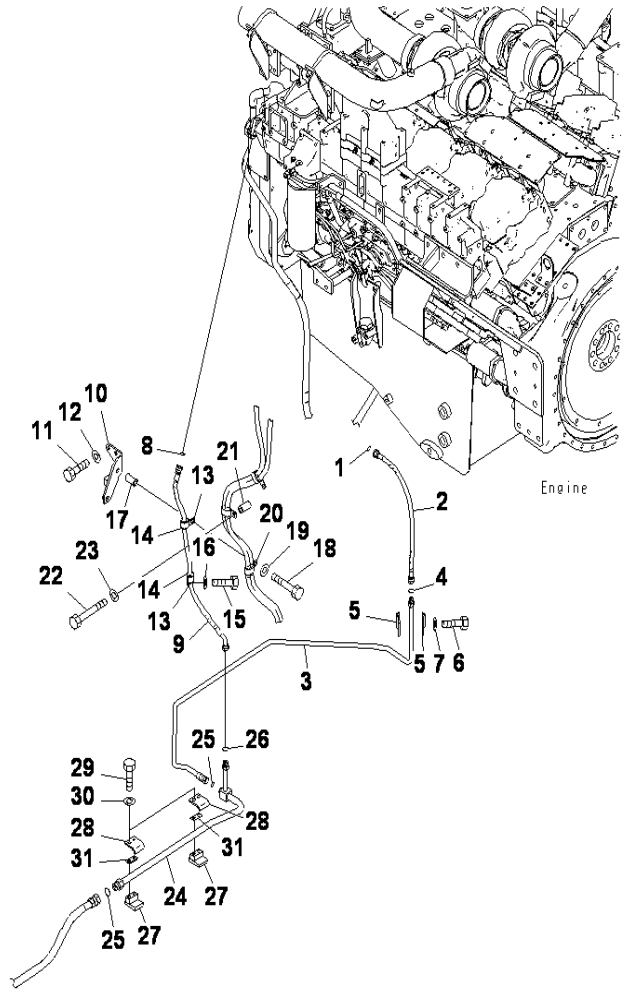

FUEL LINES(FUEL SPILL LINES)(FOR ADDITIONAL FILTER)

INDEX	CD	PART NO.	DESCRIPTION	QTY	SERIAL NO.
1		02896-21009	O-RING	1	J10001-UP
2		02762-00305	HOSE	1	J10001-UP
3		21T-04-31260	TUBE	1	J10001-UP
4		02896-61009	O-RING	1	J10001-UP
5		20Y-96-62310	CLAMP	2	J10001-UP
6		01010-81235	BOLT	2	J10001-UP
7		01643-31232	WASHER	2	J10001-UP
8		02896-21009	O-RING	1	J10001-UP
9		02764-003A7	HOSE	1	J10001-UP
10		21T-04-31491	BRACKET	1	J10001-UP
11		01010-81025	BOLT	2	J10001-UP
12		01643-31032	WASHER	2	J10001-UP
13		04434-52110	CLIP	2	J10001-UP
14		07095-20314	CUSHION	2	J10001-UP
15		01010-81225	BOLT	1	J10001-UP
16		01643-31232	WASHER	1	J10001-UP
17		205-03-71331	COLLAR	1	J10001-UP
18		01010-81270	BOLT	1	J10001-UP
19		01643-31232	WASHER	1	J10001-UP
20		04435-51712	CLIP	1	J10001-UP
21		205-03-71331	COLLAR	1	J10001-UP
22		01011-81015	BOLT	1	J10001-UP
23		01643-31032	WASHER	1	J10001-UP
24		21T-04-31251	TUBE	1	J10001-UP
25		02896-61009	O-RING	2	J10001-UP
26		02896-61015	O-RING	1	J10001-UP
27		203-97-35720	SEAT	2	J10001-UP
28		203-97-35660	CLAMP	2	J10001-UP
29		01010-81055	BOLT	4	J10001-UP
30		01643-31032	WASHER	4	J10001-UP
31		21T-04-31620	PLATE	2	J10001-UP

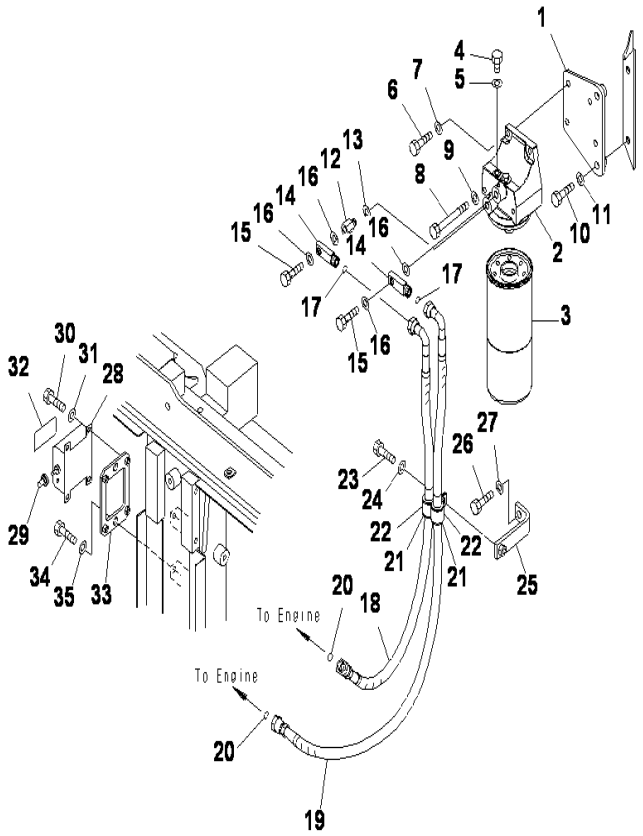

PC2000-8 S/N J10001-UP

FUEL LINES(ADDITIONAL FILTER AND PUMP SWITCH)

INDEX	CD	PART NO.	DESCRIPTION	QTY	SERIAL NO.
1		21T-04-32260	BRACKET	1	J10001-UP
2		6219-71-6700	HEAD ASSY	1	J10001-UP
3		600-311-3550	CARTRIDGE	1	J10001-UP
4		07040-11209	PLUG	1	J10001-UP
5		07005-01212	GASKET	1	J10001-UP
6		01010-81040	BOLT	2	J10001-UP
7		01643-31032	WASHER	2	J10001-UP
8		01011-81020	BOLT	2	J10001-UP
9		01643-31032	WASHER	2	J10001-UP
10		01010-81245	BOLT	2	J10001-UP
11		01643-31232	WASHER	2	J10001-UP
12		6162-73-4670	NIPPLE	1	J10001-UP
13		07005-01412	GASKET	1	J10001-UP
14		6156-71-5380	JOINT	2	J10001-UP
15		07206-31014	JOINT	2	J10001-UP
16		07005-01412	GASKET	4	J10001-UP
17		02896-61012	O-RING	2	J10001-UP
18		02763-004A9	HOSE	1	J10001-UP
19		02763-00412	HOSE	1	J10001-UP
20		02896-61012	O-RING	2	J10001-UP
21		07095-20418	CUSHION	2	J10001-UP
22		04434-52712	CLIP	2	J10001-UP
23		01010-81230	BOLT	1	J10001-UP
24		01643-31232	WASHER	1	J10001-UP
25		198-61-44320	BRACKET	1	J10001-UP
26		01010-81230	BOLT	1	J10001-UP
27		01643-31232	WASHER	1	J10001-UP
28		600-815-9471	SWITCH,TIMER	1	J10001-UP
29		08504-10000	CAP	1	J10001-UP
30		01010-80820	BOLT	4	J10001-UP
31		01643-30823	WASHER	4	J10001-UP
32		6245-81-9410	PLATE	1	J10001-UP
33		21T-06-33650	BRACKET	1	J10001-UP
34		01010-81225	BOLT	2	J10001-UP
35		01643-31232	WASHER	2	J10001-UP

Ref :D0200-10A0 Page :090140

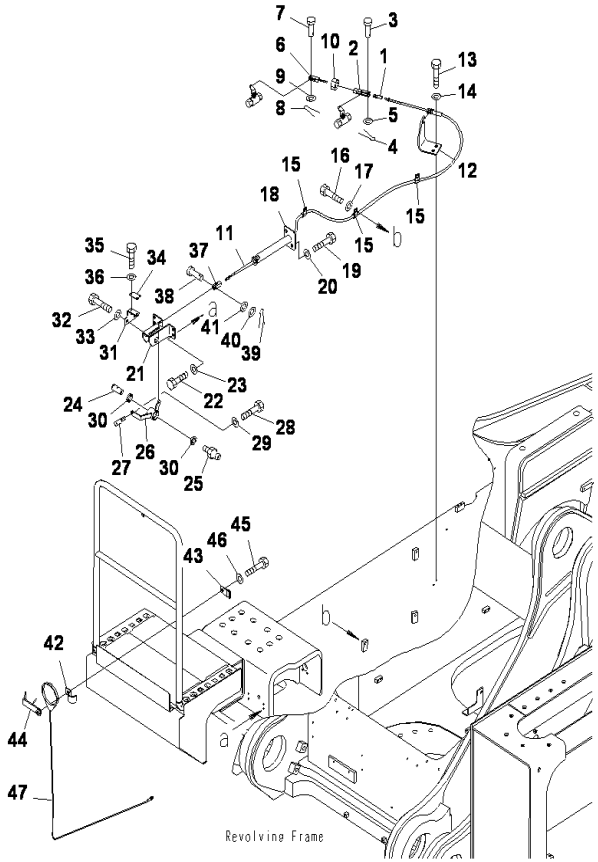

PC2000-8 S/N J10001-UP

FUEL LINES(EMERGENCY CUT CONTROL CABLE)

INDEX	CD	PART NO.	DESCRIPTION	QTY	SERIAL NO.
1		04216-20630	JOINT	1	J10001-UP
2		21T-04-67150	JOINT	1	J10001-UP
3		04205-10620	PIN	2	J10001-UP
4		04050-11612	COTTER PIN	2	J10001-UP
5		01640-20610	WASHER	2	J10001-UP
6		04244-50605	ROD	1	J10001-UP
7		04205-10620	PIN	1	J10001-UP
8		04050-11612	COTTER PIN	1	J10001-UP
9		01640-20610	WASHER	1	J10001-UP
10		01580-00605	NUT	1	J10001-UP
11		21T-04-31691	CABLE	1	J10001-UP
12		21T-04-31550	BRACKET	1	J10001-UP
13		01010-81230	BOLT	2	J10001-UP
14		01643-31232	WASHER	2	J10001-UP
15		04434-51212	CLIP	3	J10001-UP
16		01010-81225	BOLT	3	J10001-UP
17		01643-31232	WASHER	3	J10001-UP
18		21T-04-31970	BRACKET	1	J10001-UP
19		01010-81225	BOLT	3	J10001-UP
20		01643-31232	WASHER	3	J10001-UP
21		21T-54-33382	BRACKET	1	J10001-UP
22		01010-81225	BOLT	4	J10001-UP
23		01643-31232	WASHER	4	J10001-UP
24		21T-04-31950	PIN	1	J10001-UP
25		07020-00001	FITTING	1	J10001-UP
26		21T-54-32973	LEVER	1	J10001-UP
27		09305-00800	KNOB	1	J10001-UP
28		01010-80830	BOLT	1	J10001-UP
29		01643-30823	WASHER	1	J10001-UP
30		06122-02504	BEARING SEAL	2	J10001-UP
31		21T-54-32990	BRACKET	1	J10001-UP
32		01010-81025	BOLT	2	J10001-UP
33		01643-31032	WASHER	2	J10001-UP
34		21T-54-32980	PLATE	1	J10001-UP
35		01010-80612	BOLT	2	J10001-UP
36		01640-20610	WASHER	2	J10001-UP
37		04211-20634	YOKE	1	J10001-UP
38		04205-10628	PIN	1	J10001-UP
39		04050-11612	COTTER PIN	1	J10001-UP
40		01640-20610	WASHER	1	J10001-UP
41		01640-20610	WASHER	1	J10001-UP
42		21T-54-33340	CLAMP	1	J10001-UP
43		21T-54-33170	CLAMP	1	J10001-UP
44		21T-04-32171	BRACKET	1	J10001-UP
45		01010-81230	BOLT	1	J10001-UP

Ref :D0200-11A0 Page :090150

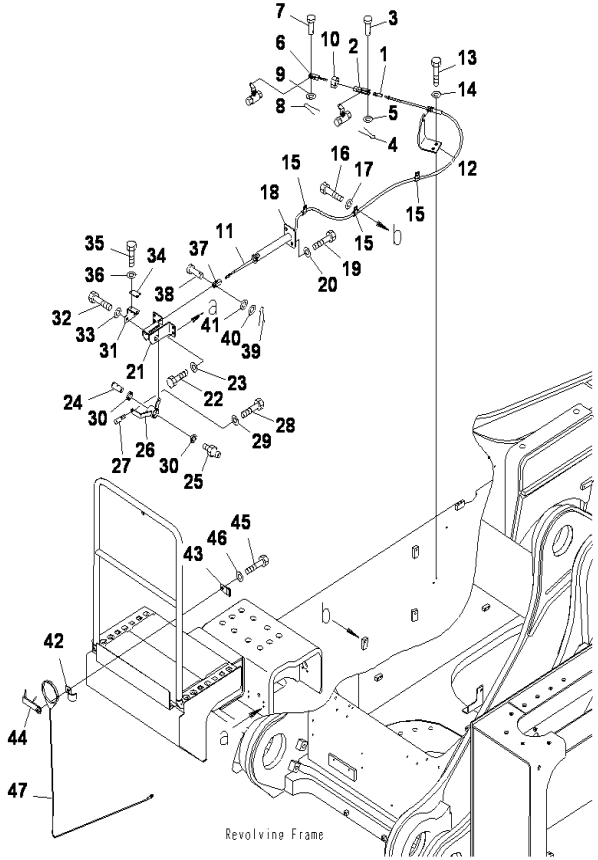

PC2000-8 S/N J10001-UP

FUEL LINES(EMERGENCY CUT CONTROL CABLE)

INDEX	CD	PART NO.	DESCRIPTION	QTY	SERIAL NO.
46		01643-31232	WASHER.....	1	J10001-UP
47		21T-04-32180	WIRE ROPE.....	1	J10001-UP

Ref :D0200-11A0 Page :090151

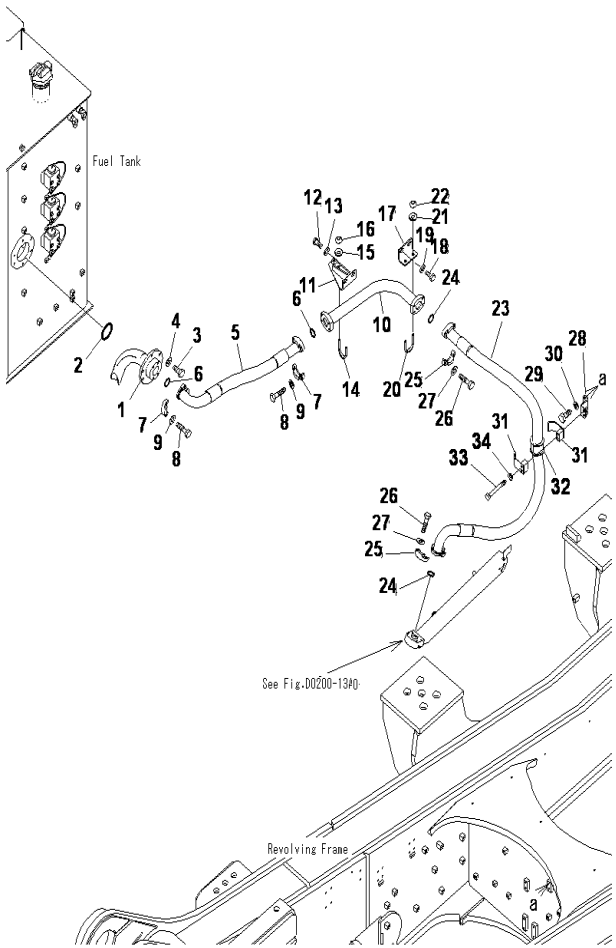

PC2000-8 S/N J10001-UP

FUEL LINES(FUEL LINES)(WITH QUICK CHARGER)(1/2)

INDEX	CD	PART NO.	DESCRIPTION	QTY	SERIAL NO.
1		21T-04-31851	FLANGE	1	J10001-UP
2		07000-B2135	O-RING	1	J10001-UP
3		01010-81235	BOLT	6	J10001-UP
4		01643-31232	WASHER	6	J10001-UP
5		07298-020A8	HOSE	1	J10001-UP
6		07000-B2060	O-RING	2	J10001-UP
7		07371-32076	FLANGE	4	J10001-UP
8		07372-21240	BOLT	8	J10001-UP
9		01643-51232	WASHER	8	J10001-UP
10		21T-04-31750	TUBE	1	J10001-UP
11		21T0431760	BRACKET	1	J10001-UP
12		01010-81225	BOLT	2	J10001-UP
13		175-54-34170	WASHER	2	J10001-UP
14		07283-36155	CLIP	1	J10001-UP
15		01643-31032	WASHER	2	J10001-UP
16		01597-01009	NUT	2	J10001-UP
17		21T-04-31840	PLATE	1	J10001-UP
18		01010-81225	BOLT	2	J10001-UP
19		175-54-34170	WASHER	2	J10001-UP
20		07283-36155	CLIP	1	J10001-UP
21		01643-31032	WASHER	2	J10001-UP
22		01597-01009	NUT	2	J10001-UP
23		21T-04-32530	HOSE	1	J10001-UP
24		07000-B2060	O-RING	2	J10001-UP
25		07371-32076	FLANGE	4	J10001-UP
26		07372-21240	BOLT	8	J10001-UP
27		01643-51232	WASHER	8	J10001-UP
28		21T-04-32431	BRACKET	1	J10001-UP
29		01010-81225	BOLT	2	J10001-UP
30		01643-31232	WASHER	2	J10001-UP
31		42C-16-11510	CLAMP	2	J10001-UP
32		07095-02062	CUSHION	1	J10001-UP
33		01011-81210	BOLT	2	J10001-UP
34		01643-31232	WASHER	2	J10001-UP

Ref :D0200-12A0 Page :090160

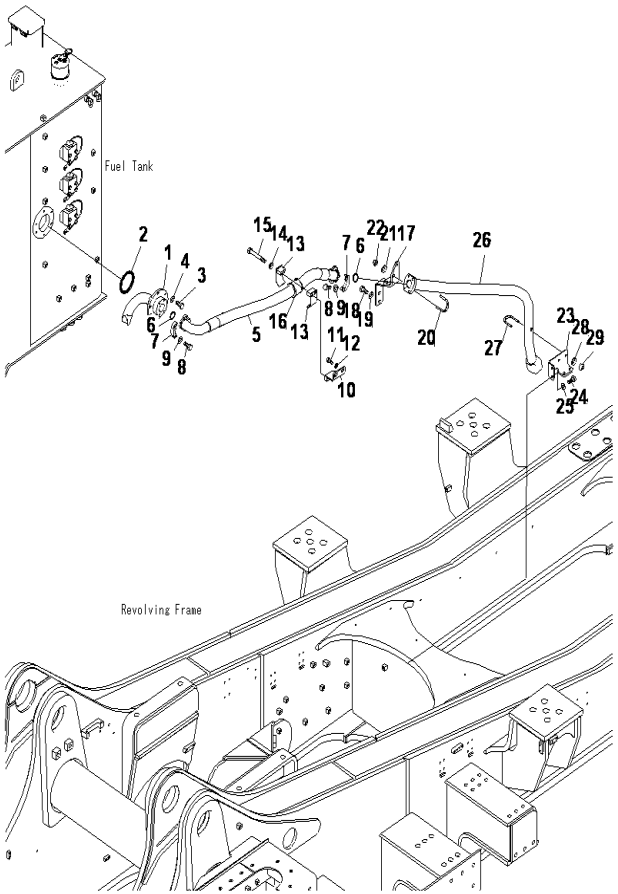

FUEL LINES(FUEL LINES)(SERVICE CENTER)

INDEX	CD	PART NO.	DESCRIPTION	QTY	SERIAL NO.
1		21T-04-31851	FLANGE	1	J10001-UP
2		07000-B2135	O-RING	1	J10001-UP
3		01010-81235	BOLT	6	J10001-UP
4		01643-31232	WASHER	6	J10001-UP
5		07298-02014	HOSE	1	J10001-UP
6		07000-B2060	O-RING	2	J10001-UP
7		07371-32076	FLANGE	4	J10001-UP
8		07372-21240	BOLT	8	J10001-UP
9		01643-51232	WASHER	8	J10001-UP
10		21T-04-32570	BRACKET	1	J10001-UP
11		01010-81225	BOLT	2	J10001-UP
12		175-54-34170	WASHER	2	J10001-UP
13		42C-16-11510	CLAMP	2	J10001-UP
14		01643-31232	WASHER	2	J10001-UP
15		01011-81210	BOLT	2	J10001-UP
16		07095-02062	CUSHION	1	J10001-UP
17		21T-04-32560	BRACKET	1	J10001-UP
18		01010-81235	BOLT	2	J10001-UP
19		175-54-34170	WASHER	2	J10001-UP
20		07283-36155	CLIP	1	J10001-UP
21		01643-31032	WASHER	2	J10001-UP
22		01597-01009	NUT	2	J10001-UP
23		21T-04-32581	BRACKET	1	J10001-UP
24		01010-81235	BOLT	2	J10001-UP
25		175-54-34170	WASHER	2	J10001-UP
26		21T-04-32551	TUBE	1	J10001-UP
27		07283-36155	CLIP	1	J10001-UP
28		01643-31032	WASHER	2	J10001-UP
29		01597-01009	NUT	2	J10001-UP

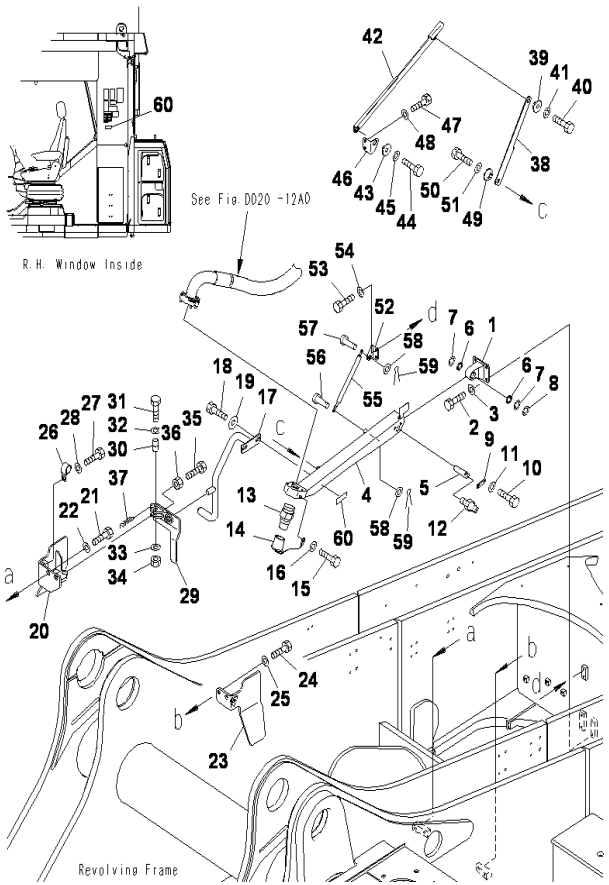

PC2000-8 S/N J10001-UP

FUEL LINES(FUEL LINES)(WITH QUICK CHARGER)(2/2)

INDEX	CD	PART NO.	DESCRIPTION	QTY	SERIAL NO.
1		21T-04-32361	BRACKET	1	J10001-UP
2		01010-81225	BOLT	4	J10001-UP
3		01643-31232	WASHER	4	J10001-UP
4		21T-04-32311	LEVER	1	J10001-UP
5		21T-04-32351	PIN	1	J10001-UP
6		06122-02504	BEARING SEAL	2	J10001-UP
7		21T-04-32480	PLATE	2	J10001-UP
8		21T-04-32490	PLATE	1	J10001-UP
9		04082-00110	LOCK	1	J10001-UP
10		01010-81025	BOLT	2	J10001-UP
11		01643-31032	WASHER	2	J10001-UP
12		07020-00001	FITTING	1	J10001-UP
13		21T-04-31770	RECEIVER	1	J10001-UP
14		566-98-15300	CAP ASS'Y	1	J10001-UP
15		01010-80610	BOLT	1	J10001-UP
16		01643-30623	WASHER	1	J10001-UP
17		21T-04-32471	BRACKET	1	J10001-UP
18		01010-81230	BOLT	2	J10001-UP
19		175-54-34170	WASHER	2	J10001-UP
20		21T-04-32371	BRACKET	1	J10001-UP
21		01010-81635	BOLT	2	J10001-UP
22		01643-31645	WASHER	2	J10001-UP
23		21T-04-32451	BRACKET	1	J10001-UP
24		01010-81635	BOLT	2	J10001-UP
25		01643-31645	WASHER	2	J10001-UP
26		04434-52312	CLIP	1	J10001-UP
27		01010-81220	BOLT	1	J10001-UP
28		01643-31232	WASHER	1	J10001-UP
29		21T-04-32381	BRACKET	1	J10001-UP
30		21T-04-32390	COLLAR	1	J10001-UP
31		01010-81255	BOLT	1	J10001-UP
32		01643-31232	WASHER	1	J10001-UP
33		01643-31232	WASHER	1	J10001-UP
34		01580-01210	NUT	1	J10001-UP
35		01016-50840	BOLT	1	J10001-UP
36		01580-00806	NUT	1	J10001-UP
37		203-54-42661	SPRING	1	J10001-UP
38		21T-04-32330	PLATE	1	J10001-UP
39		175-03-32580	COLLAR	1	J10001-UP
40		01010-81250	BOLT	1	J10001-UP
41		01643-31232	WASHER	1	J10001-UP
42		21T-04-32320	BRACKET	1	J10001-UP
43		175-03-32580	COLLAR	1	J10001-UP
44		01010-81235	BOLT	1	J10001-UP
45		01643-31232	WASHER	1	J10001-UP

Ref :D0200-13A0 Page :090170

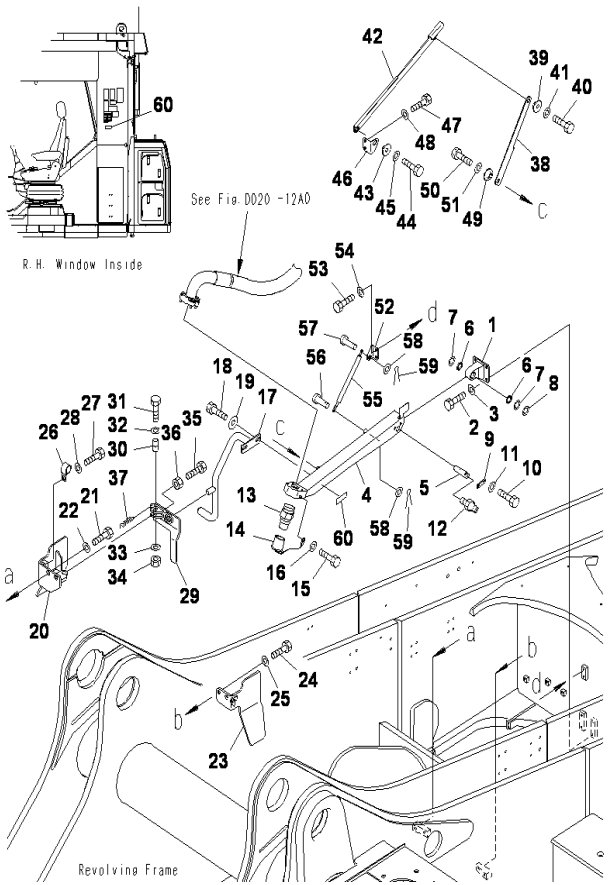

FUEL LINES(FUEL LINES)(WITH QUICK CHARGER)(2/2)

INDEX	CD	PART NO.	DESCRIPTION	QTY	SERIAL NO.
46		21T-04-32440	PLATE	1	J10001-UP
47		01010-81225	BOLT	2	J10001-UP
48		01643-31232	WASHER	2	J10001-UP
49		175-03-32580	COLLAR	1	J10001-UP
50		01010-81235	BOLT	1	J10001-UP
51		01643-31232	WASHER	1	J10001-UP
52		21T-04-32410	BRACKET	1	J10001-UP
53		01010-81225	BOLT	2	J10001-UP
54		01643-31232	WASHER	2	J10001-UP
55		21T-04-32340	SHOCK ABSORBER	1	J10001-UP
56		04205-10835	PIN	1	J10001-UP
57		04205-10820	PIN	1	J10001-UP
58		01643-30823	WASHER	2	J10001-UP
59		04050-11612	COTTER PIN	2	J10001-UP
60		21T-00-32450	PLATE	2	J10001-UP

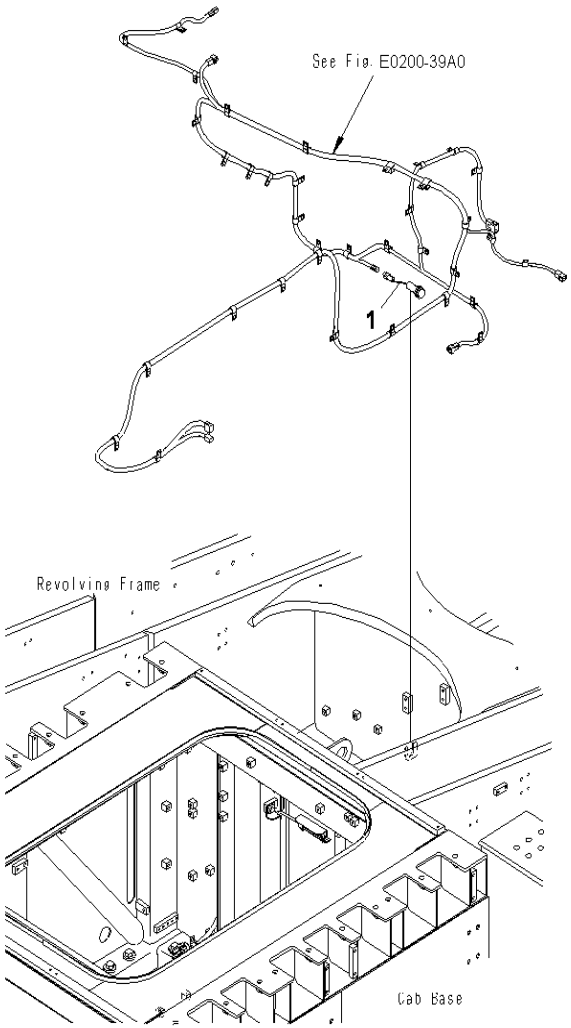

PC2000-8 S/N J10001-UP

FUEL LINES(HARNESS)(WITH QUICK CHARGER)

INDEX	CD	PART NO.	DESCRIPTION	QTY	SERIAL NO.
1		56B-06-15610	SWITCH.....	1	J10001-UP

Ref :D0200-14A0 Page :090180

ELECTRICAL SYSTEM

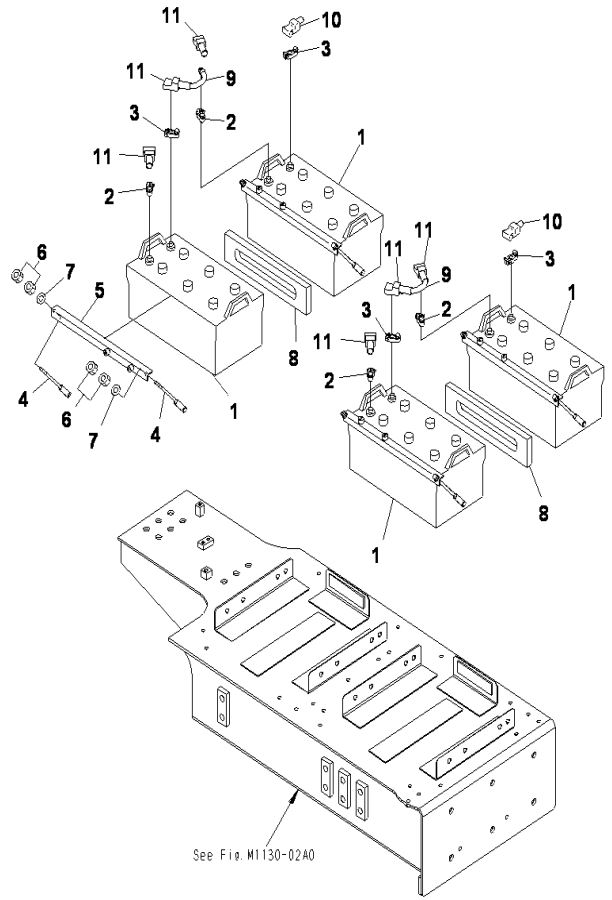

PC2000-8 S/N J10001-UP

BATTERY(WET)(LARGE CAPACITY)

INDEX	CD	PART NO.	DESCRIPTION	QTY	SERIAL NO.
1		08000-02221	BATTERY N200	4	J10001-UP
2		08000-00000	.TERMINAL, (+)	1	J10001-UP
3		08000-00001	.TERMINAL, (-)	1	J10001-UP
4		08006-40255	ROD	4	J10001-UP
5		08005-52056	HOLDER	2	J10001-UP
6		01580-11008	NUT	8	J10001-UP
7		01640-21016	WASHER	4	J10001-UP
8		154-06-13262	SEAT	2	J10001-UP
9		080-28-75005	CABLE	2	J10001-UP
10		08038-22511	CAP	2	J10001-UP
11		08038-42511	CAP	6	J10001-UP

Ref :E0110-01A0 Page :120010

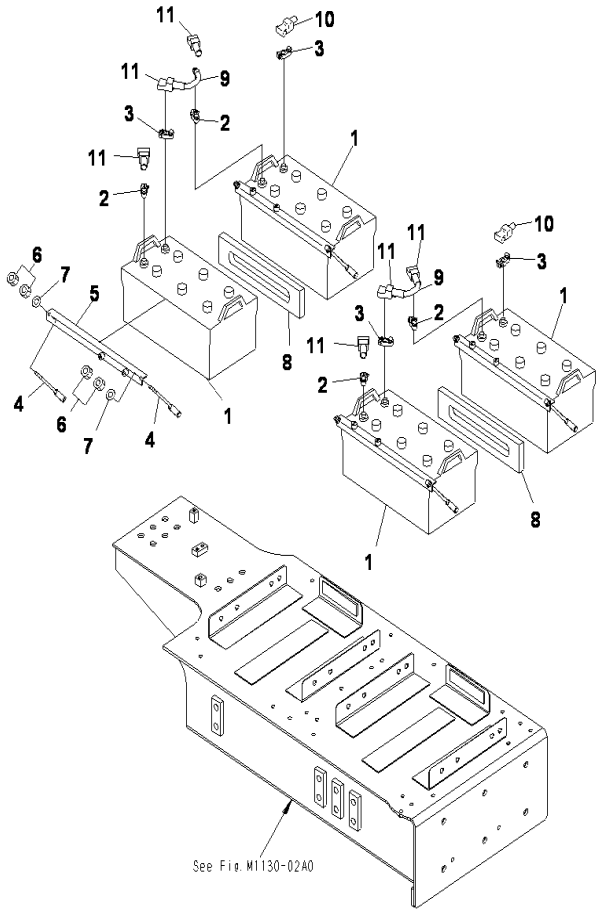

PC2000-8 S/N J10001-UP

BATTERY(WET)

INDEX	CD	PART NO.	DESCRIPTION	QTY	SERIAL NO.
1		08000-3222Z	BATTERY WET [19.....	4	J10001-UP
2		08000-00000	.TERMINAL, (+).....	1	J10001-UP
3		08000-00001	.TERMINAL, (-).....	1	J10001-UP
4		08006-40255	ROD.....	8	J10001-UP
5		08005-52056	HOLDER.....	4	J10001-UP
6		01580-11008	NUT.....	16	J10001-UP
7		01640-21016	WASHER.....	8	J10001-UP
8		154-06-13262	SEAT.....	2	J10001-UP
9		08028-75005	CABLE.....	2	J10001-UP
10		08038-22511	CAP.....	2	J10001-UP
11		08038-42511	CAP.....	6	J10001-UP

Ref :E0110-01A1 Page :120020

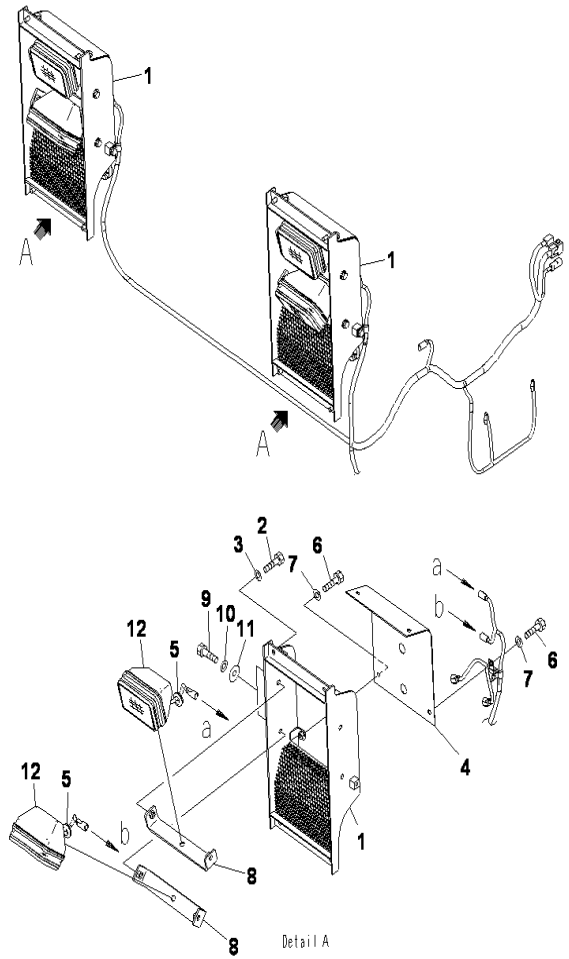

PC2000-8 S/N J10001-UP

ELECTRICAL SYSTEM(CAB BASE)(WORKING LAMP)

INDEX	CD	PART NO.	DESCRIPTION	QTY	SERIAL NO.
1		21T-06-32511	BRACKET	2	J10001-UP
2		01010-81225	BOLT	8	J10001-UP
3		01643-31232	WASHER	8	J10001-UP
4		21T-06-32590	BRACKET	2	J10001-UP
5		207-54-16860	GROMMET	4	J10001-UP
6		01010-81220	BOLT	8	J10001-UP
7		01643-31232	WASHER	8	J10001-UP
8		21T-06-32520	BRACKET	4	J10001-UP
9		01010-81235	BOLT	8	J10001-UP
10		01643-31232	WASHER	8	J10001-UP
11		175-01-31230	WASHER	10	J10001-UP
12		21T-06-32810	WORK LAMP A	4	J10001-UP
		421-06-23330	.BULB	1	J10001-UP

Ref :E0200-01A0 Page :120030

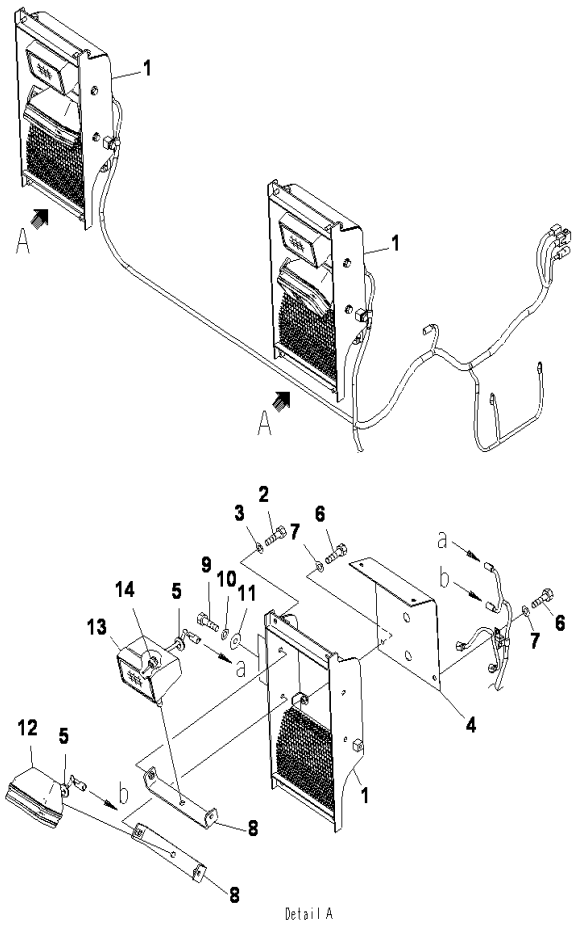

PC2000-8 S/N J10001-UP

ELECTRICAL SYSTEM(CAB BASE)(WORKING LAMP)(HID LAMP)

INDEX	CD	PART NO.	DESCRIPTION	QTY	SERIAL NO.
1		21T-06-32511	BRACKET	2	J10001-UP
2		01010-81225	BOLT	8	J10001-UP
3		01643-31232	WASHER	8	J10001-UP
4		21T-06-32590	BRACKET	2	J10001-UP
5		207-54-16860	GROMMET	4	J10001-UP
6		01010-81220	BOLT	8	J10001-UP
7		01643-31232	WASHER	8	J10001-UP
8		21T-06-32520	BRACKET	4	J10001-UP
9		01010-81235	BOLT	8	J10001-UP
10		01643-31232	WASHER	8	J10001-UP
11		175-01-31230	WASHER	10	J10001-UP
12		21T-06-32810	WORK LAMP A	2	J10001-UP
		421-06-23330	.BULB, 70WATT	1	J10001-UP
13		21T-06-33980	WORK LAMP ASS'Y	2	J10001-UP
14		21T-06-33970	.BULB, 24/42WAT	1	J10001-UP

Ref :E0200-01A1 Page :120035

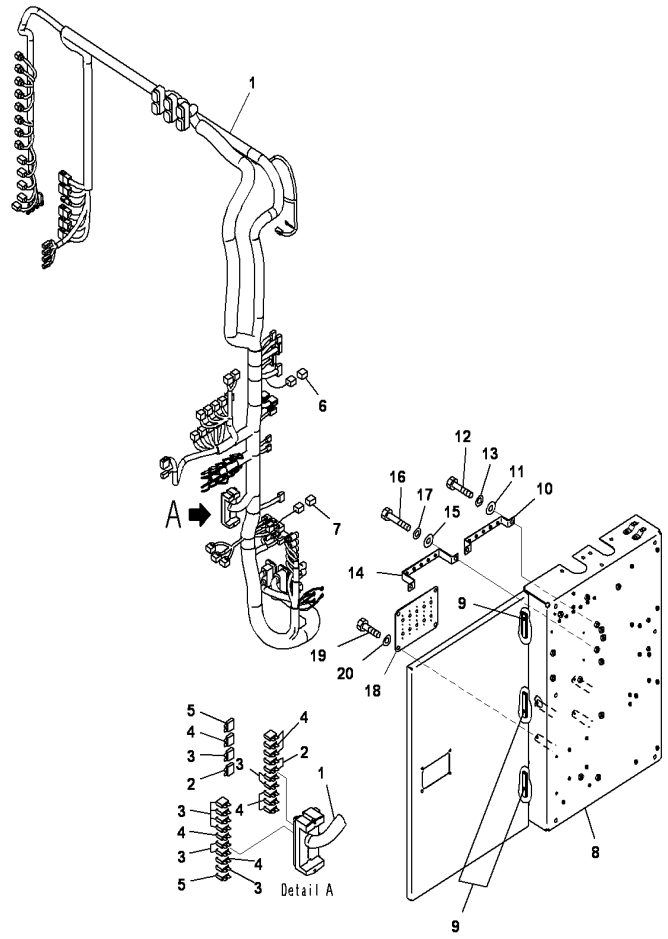

ELECTRICAL SYSTEM(WIRING HARNESS AND BRACKET)

INDEX	CD	PART NO.	DESCRIPTION	QTY	SERIAL NO.
1		21T-06-34172	WIRING HARNESS	1	J10001-UP
2		08041-00500	.FUSE, 5A	3	J10001-UP
3		08041-01000	.FUSE, 10A	10	J10001-UP
4		08041-02000	.FUSE, 20A	9	J10001-UP
5		08041-03000	.FUSE, 30A	2	J10001-UP
6		19M-06-31720	.RESISTOR	1	J10001-UP
7		21J-06-13661	.DIODE	1	J10001-UP
8		21T-06-31815	CASE	1	J10001-UP
9		142-54-13640	.HINGE	3	J10001-UP
10		21T-06-32561	BRACKET	1	J10001-UP
11		198-33-12380	WASHER	2	J10001-UP
12		01010-81235	BOLT	2	J10001-UP
13		01643-31232	WASHER	2	J10001-UP
14		21T-06-32581	BRACKET	1	J10001-UP
15		195-33-11220	SPACER	2	J10001-UP
16		01010-81245	BOLT	2	J10001-UP
17		01643-31232	WASHER	2	J10001-UP
18		21T-06-32570	PLATE	1	J10001-UP
19		01010-81220	BOLT	4	J10001-UP
20		01643-31232	WASHER	4	J10001-UP

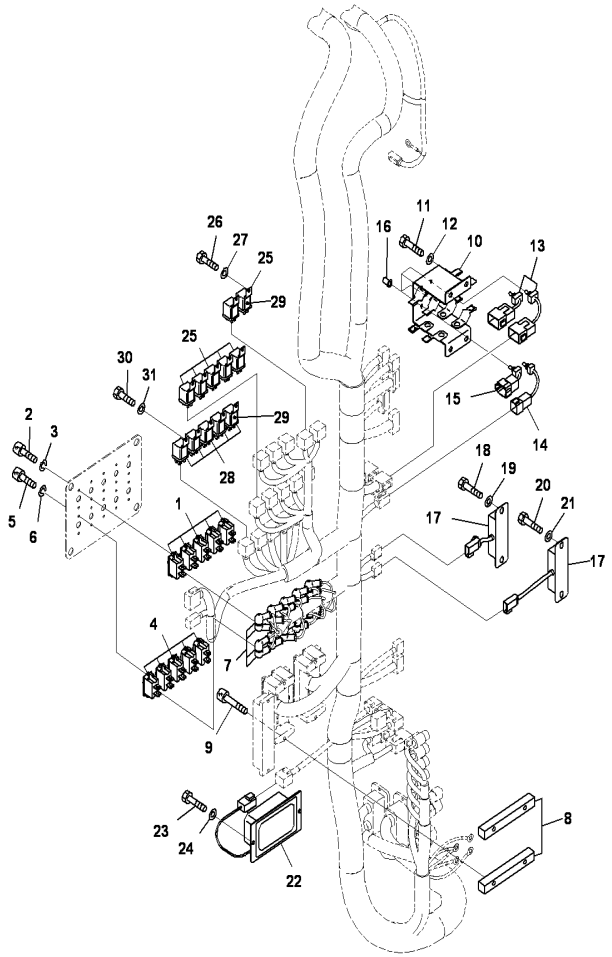

ELECTRICAL SYSTEM(PIPING BREAKER AND SWITCH)

INDEX	CD	PART NO.	DESCRIPTION	QTY	SERIAL NO.
1		209-06-77350	CIRCUIT BREAKER	5	J10001-UP
2		01252-70410	BOLT	10	J10001-UP
3		01601-20410	WASHER	10	J10001-UP
4		209-06-77460	CIRCUIT BREAKER	5	J10001-UP
5		01252-70410	BOLT	10	J10001-UP
6		01601-20410	WASHER	10	J10001-UP
7		08038-00519	CAP	20	J10001-UP
8		21T-06-32970	PLATE	2	J10001-UP
9		01252-60645	BOLT	4	J10001-UP
10		21T-06-32390	BRACKET	2	J10001-UP
11		01010-80816	BOLT	4	J10001-UP
12		01643-30823	WASHER	4	J10001-UP
13		21T-06-33310	SWITCH ASS'Y	2	J10001-UP
14		21T-06-33320	SWITCH ASS'Y	1	J10001-UP
15		21T-06-33330	SWITCH ASS'Y	1	J10001-UP
16		208-43-71420	CAP	4	J10001-UP
17		7861-94-3000	RESISTOR	2	J10001-UP
18		01010-80820	BOLT	2	J10001-UP
19		01643-30823	WASHER	2	J10001-UP
20		01010-80812	BOLT	2	J10001-UP
21		01643-30823	WASHER	2	J10001-UP
22		22U-06-22250	CONVERTER	1	J10001-UP
23		01010-80612	BOLT	2	J10001-UP
24		01643-30623	WASHER	2	J10001-UP
25		569-06-61960	RELAY	7	J10001-UP
26		01010-80612	BOLT	7	J10001-UP
27		01643-30623	WASHER	7	J10001-UP
28		569-06-61970	RELAY	5	J10001-UP
29		287-06-16420	BRACKET	12	J10001-UP
30		01010-80612	BOLT	5	J10001-UP
31		01643-30623	WASHER	5	J10001-UP

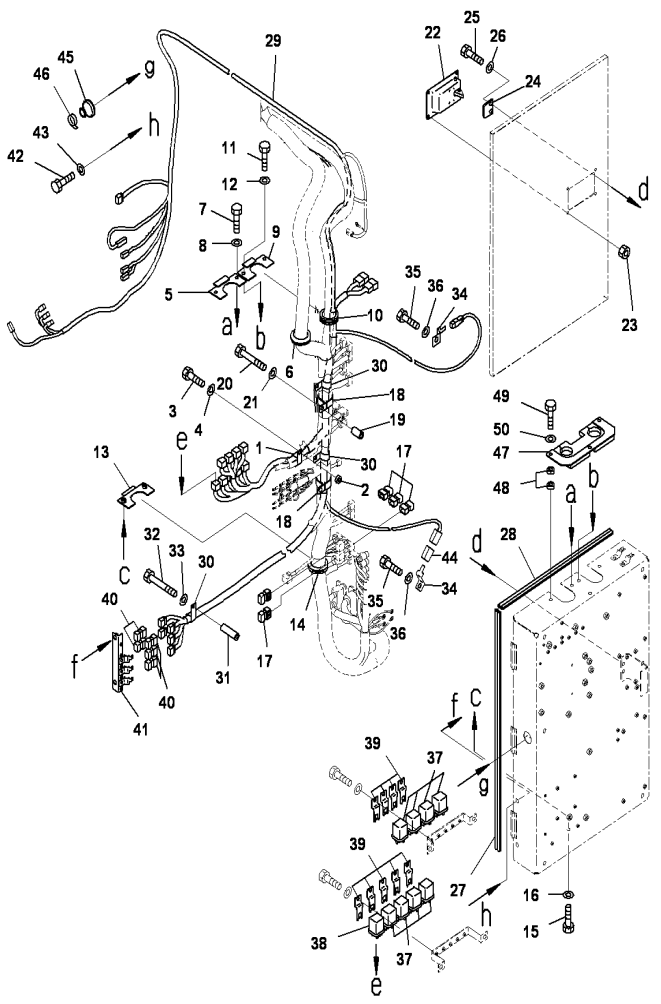

PC2000-8 S/N J10001-UP

ELECTRICAL SYSTEM(CLIP AND GROMMET)

INDEX	CD	PART NO.	DESCRIPTION	QTY	SERIAL NO.
1		04434-53412	CLIP	1	J10001-UP
2		198-43-15310	COLLAR	1	J10001-UP
3		01010-81230	BOLT	1	J10001-UP
4		01643-31232	WASHER	1	J10001-UP
5		21T-06-32732	PLATE	1	J10001-UP
6		21Y-06-11290	GROMMET	1	J10001-UP
7		01010-81020	BOLT	1	J10001-UP
8		01643-31032	WASHER	1	J10001-UP
9		21T-06-32723	PLATE	1	J10001-UP
10		21Y-06-11290	GROMMET	1	J10001-UP
11		01010-81020	BOLT	1	J10001-UP
12		01643-31032	WASHER	1	J10001-UP
13		21T-06-32732	PLATE	1	J10001-UP
14		21Y-06-11290	GROMMET	1	J10001-UP
15		01010-81020	BOLT	2	J10001-UP
16		01643-31032	WASHER	2	J10001-UP
17		823-30-63350	DIODE	5	J10001-UP
18		20Y-62-15960	COVER	2	J10001-UP
19		205-03-71331	COLLAR	2	J10001-UP
20		01010-81270	BOLT	2	J10001-UP
21		01643-31232	WASHER	2	J10001-UP
22		21T-54-69450	LOCK (R.H)	1	J10001-UP
23		01580-00806	NUT	4	J10001-UP
24		21T-54-73211	PLATE	1	J10001-UP
25		01010-81025	BOLT	2	J10001-UP
26		01643-31032	WASHER	2	J10001-UP
27		21T-06-33182	SEAL	2	J10001-UP
28		21T-06-35530	SEAL	2	J10001-UP
29		21T-06-34432	WIRING HARNESS	1	J10001-UP
30		04434-52712	CLIP	3	J10001-UP
31		581-60-17860	SPACER	1	J10001-UP
32		01011-81200	BOLT	1	J10001-UP
33		01643-31232	WASHER	1	J10001-UP
34		08193-20012	CLIP	2	J10001-UP
35		01010-81220	BOLT	2	J10001-UP
36		01643-31232	WASHER	2	J10001-UP
37		569-06-61960	RELAY	8	J10001-UP
38		569-06-61970	RELAY	1	J10001-UP
39		287-06-16420	BRACKET	9	J10001-UP
40		823-30-63350	DIODE	5	J10001-UP
41		21T-06-34481	BRACKET	1	J10001-UP
42		01010-81220	BOLT	2	J10001-UP
43		01643-31232	WASHER	2	J10001-UP
44		21T-06-31910	CONNECTOR	1	J10001-UP
45		21X-54-39380	GROMMET	1	J10001-UP

Ref :E0200-04A0 Page :120060

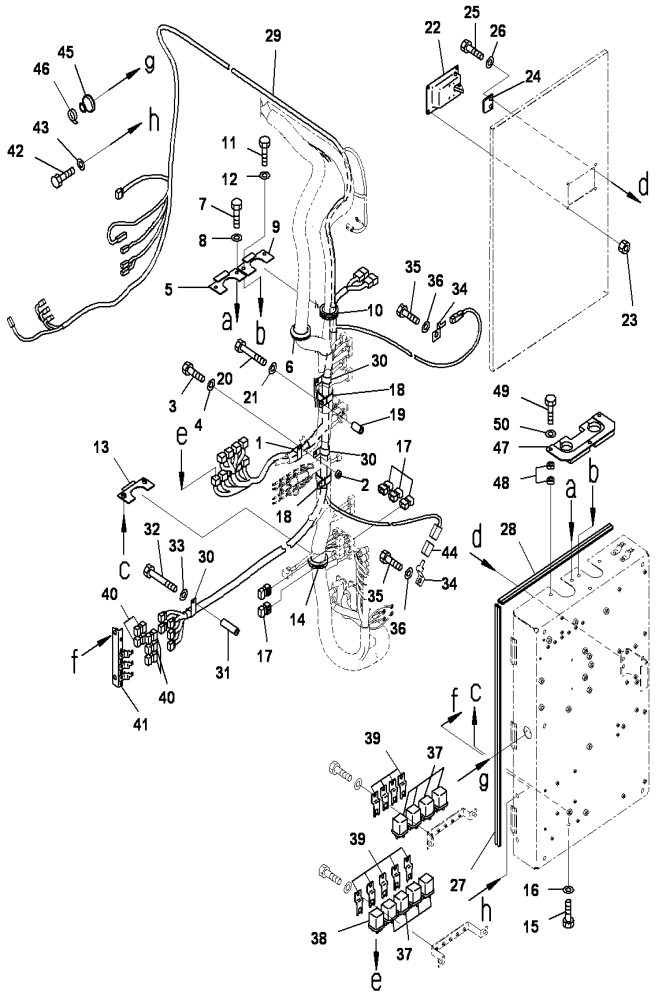

ELECTRICAL SYSTEM(CLIP AND GROMMET)

INDEX	CD	PART NO.	DESCRIPTION	QTY	SERIAL NO.
46		08034-20519	BAND	1	J10001-UP
47		21T-06-35511	BRACKET	1	J10001-UP
48		198-43-15310	COLLAR	6	J10001-UP
49		01010-81040	BOLT	3	J10001-UP
50		01643-31032	WASHER	3	J10001-UP

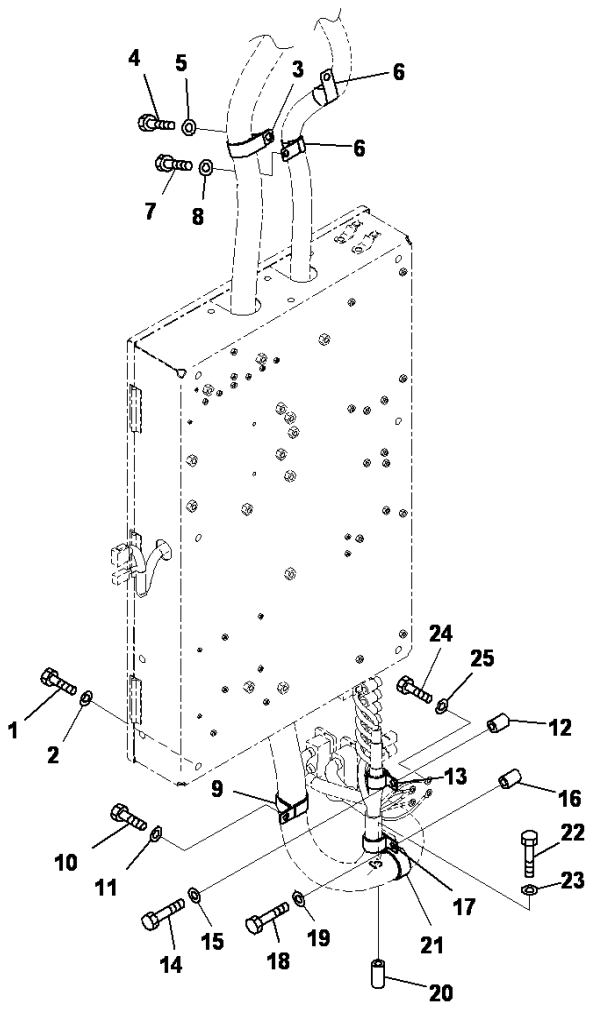

PC2000-8 S/N J10001-UP

ELECTRICAL SYSTEM(CLIP AND BOLT MOUNT)

INDEX	CD	PART NO.	DESCRIPTION	QTY	SERIAL NO.
1		01010-81220	BOLT	6	J10001-UP
2		01643-31232	WASHER	6	J10001-UP
3		21T-06-11950	CLIP	1	J10001-UP
4		01010-81225	BOLT	1	J10001-UP
5		01643-31232	WASHER	1	J10001-UP
6		581-04-22290	CLIP	2	J10001-UP
7		01010-81220	BOLT	2	J10001-UP
8		01643-31232	WASHER	2	J10001-UP
9		20Y-62-15960	CLIP	1	J10001-UP
10		01010-81225	BOLT	1	J10001-UP
11		01643-31232	WASHER	1	J10001-UP
12		20Y-03-11220	COLLAR	1	J10001-UP
13		04434-52712	CLIP	1	J10001-UP
14		01010-81255	BOLT	1	J10001-UP
15		01643-31232	WASHER	1	J10001-UP
16		20Y-03-11220	COLLAR	1	J10001-UP
17		04434-53412	CLIP	1	J10001-UP
18		01010-81255	BOLT	1	J10001-UP
19		01643-31232	WASHER	1	J10001-UP
20		154-97-91480	COLLAR	1	J10001-UP
21		20Y-62-15960	CLIP	1	J10001-UP
22		01010-81275	BOLT	1	J10001-UP
23		01643-31232	WASHER	1	J10001-UP
24		01010-80812	BOLT	4	J10001-UP
25		01643-30823	WASHER	4	J10001-UP

Ref :E0200-05A0 Page :120070

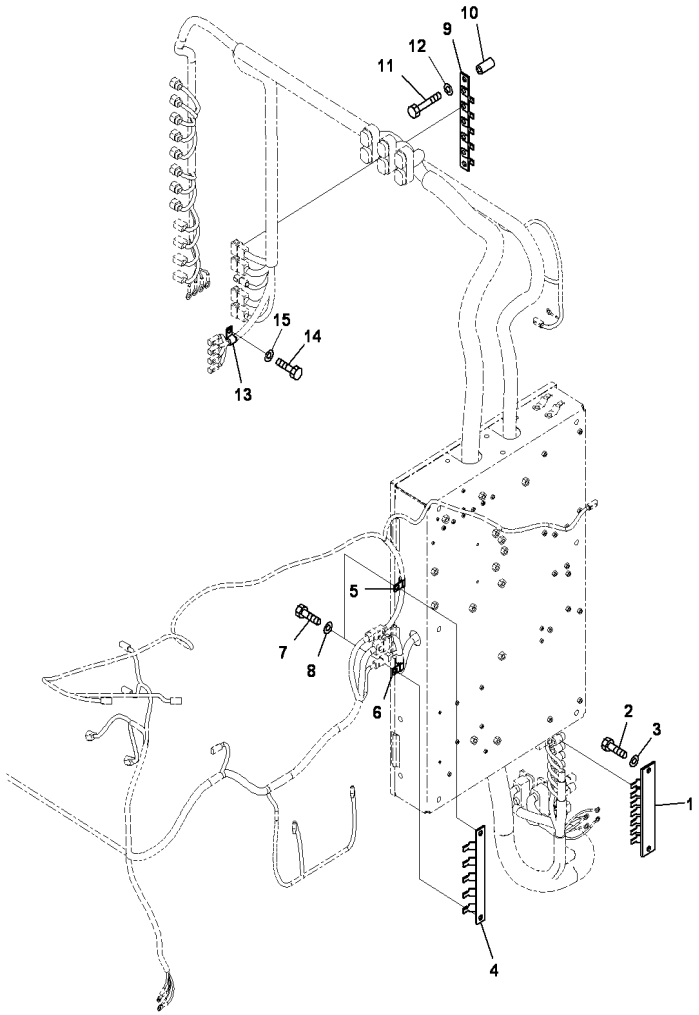

PC2000-8 S/N J10001-UP

ELECTRICAL SYSTEM(BRACKET AND CLIP)

INDEX	CD	PART NO.	DESCRIPTION	QTY	SERIAL NO.
1		21T-06-33520	BRACKET	1	J10001-UP
2		01010-81225	BOLT	2	J10001-UP
3		01643-31232	WASHER	2	J10001-UP
4		21T-06-33530	BRACKET	1	J10001-UP
5		04434-51012	CLIP	1	J10001-UP
6		04434-51912	CLIP	1	J10001-UP
7		01010-81225	BOLT	2	J10001-UP
8		01643-31232	WASHER	2	J10001-UP
9		21T-06-33531	BRACKET	1	J10001-UP
10		154-97-91480	COLLAR	2	J10001-UP
11		01010-81275	BOLT	2	J10001-UP
12		01643-31232	WASHER	2	J10001-UP
13		04434-51412	CLIP	1	J10001-UP
14		01010-81220	BOLT	1	J10001-UP
15		01643-31232	WASHER	1	J10001-UP

Ref :E0200-06A0 Page :120080

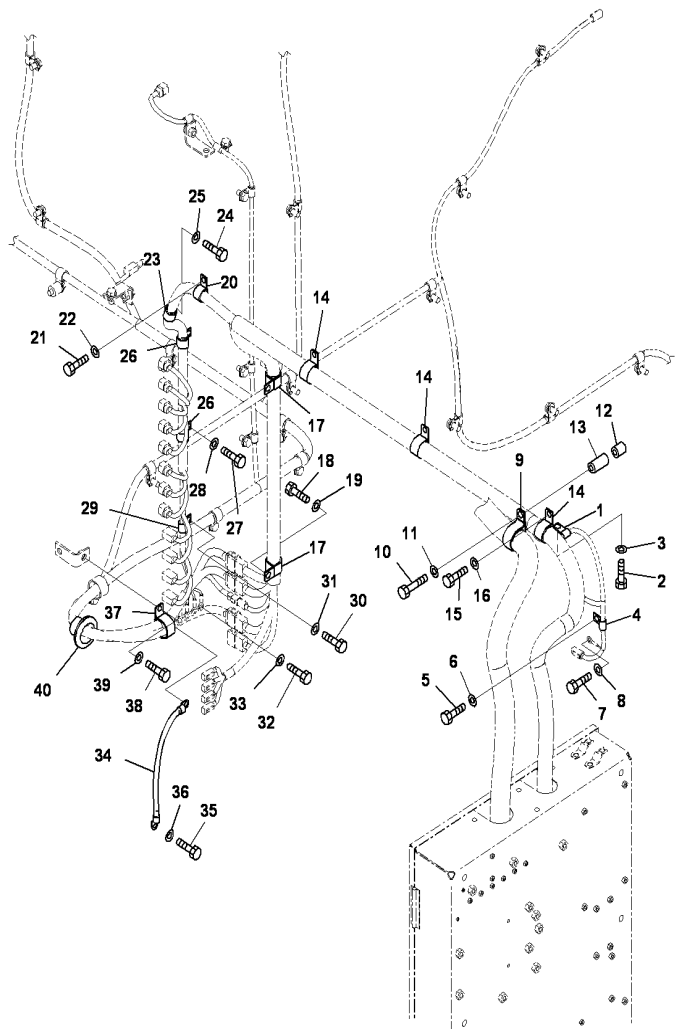

ELECTRICAL SYSTEM(CLIP AND CAB SIDE)

INDEX	CD	PART NO.	DESCRIPTION	QTY	SERIAL NO.
1		04434-51012	CLIP	1	J10001-UP
2		01010-81220	BOLT	1	J10001-UP
3		01643-31232	WASHER	1	J10001-UP
4		04434-51012	CLIP	1	J10001-UP
5		01010-81220	BOLT	1	J10001-UP
6		01643-31232	WASHER	1	J10001-UP
7		01010-80812	BOLT	1	J10001-UP
8		01643-30823	WASHER	1	J10001-UP
9		21T-06-11950	CLIP	2	J10001-UP
10		01010-81275	BOLT	2	J10001-UP
11		01643-31232	WASHER	2	J10001-UP
12		195-33-11220	SPACER	2	J10001-UP
13		175-40-22540	SPACER	2	J10001-UP
14		581-04-22290	CLIP	3	J10001-UP
15		01010-81225	BOLT	3	J10001-UP
16		01643-31232	WASHER	3	J10001-UP
17		04434-53412	CLIP	2	J10001-UP
18		01010-81220	BOLT	2	J10001-UP
19		01643-31232	WASHER	2	J10001-UP
20		04434-52312	CLIP	1	J10001-UP
21		01010-81225	BOLT	1	J10001-UP
22		01643-31232	WASHER	1	J10001-UP
23		04434-52312	CLIP	1	J10001-UP
24		01010-81225	BOLT	1	J10001-UP
25		01643-31232	WASHER	1	J10001-UP
26		04434-52312	CLIP	2	J10001-UP
27		01010-81220	BOLT	2	J10001-UP
28		01643-31232	WASHER	2	J10001-UP
29		04434-51412	CLIP	1	J10001-UP
30		01010-81220	BOLT	1	J10001-UP
31		01643-31232	WASHER	1	J10001-UP
32		01010-81020	BOLT	4	J10001-UP
33		01643-31032	WASHER	4	J10001-UP
34		08028-52035	CABLE	1	J10001-UP
35		01010-81020	BOLT	2	J10001-UP
36		01643-31032	WASHER	2	J10001-UP
37		208-06-19170	CLIP	1	J10001-UP
38		01010-81220	BOLT	1	J10001-UP
39		01643-31232	WASHER	1	J10001-UP
40		21T-06-71870	GROMMET	1	J10001-UP

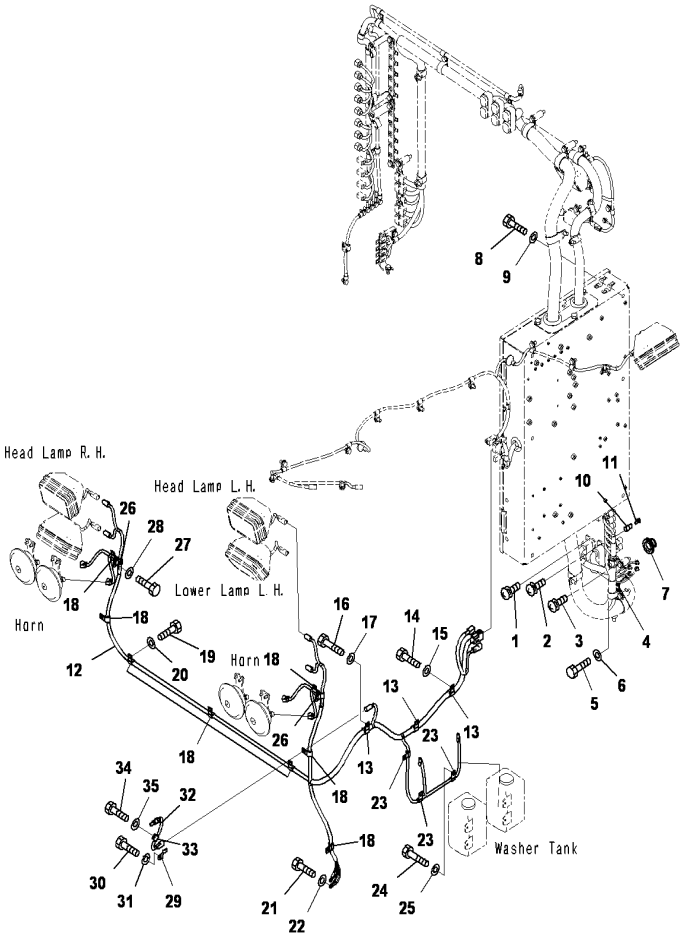

PC2000-8 S/N J10001-UP

ELECTRICAL SYSTEM(HARNESS,CLIP AND WORKING LAMP)

INDEX	CD	PART NO.	DESCRIPTION	QTY	SERIAL NO.
1		01023-10420	SCREW	4	J10001-UP
2		01023-10420	SCREW	4	J10001-UP
3		01023-10420	SCREW	2	J10001-UP
4		20Y-62-15960	CLIP	1	J10001-UP
5		01010-81220	BOLT	1	J10001-UP
6		01643-31232	WASHER	1	J10001-UP
7		21T-06-71870	GROMMET	1	J10001-UP
8		01010-81220	BOLT	6	J10001-UP
9		01643-31232	WASHER	6	J10001-UP
10		08192-51900	CONNECTER	1	J10001-UP
11		08191-00760	PLUG	1	J10001-UP
12		21T-06-32181	WIRING HARNESS	1	J10001-UP
13		04434-51912	CLIP	3	J10001-UP
14		01010-81220	BOLT	2	J10001-UP
15		01643-31232	WASHER	2	J10001-UP
16		01010-81225	BOLT	1	J10001-UP
17		01643-31232	WASHER	1	J10001-UP
18		04434-51412	CLIP	8	J10001-UP
19		01010-81220	BOLT	6	J10001-UP
20		01643-31232	WASHER	6	J10001-UP
21		01010-80820	BOLT	2	J10001-UP
22		01643-30823	WASHER	2	J10001-UP
23		04434-51012	CLIP	3	J10001-UP
24		01010-81225	BOLT	3	J10001-UP
25		01643-31232	WASHER	3	J10001-UP
26		04434-51012	CLIP	2	J10001-UP
27		01010-81220	BOLT	2	J10001-UP
28		01643-31232	WASHER	2	J10001-UP
29		08193-21012	CLIP	1	J10001-UP
30		01010-81220	BOLT	1	J10001-UP
31		01643-31232	WASHER	1	J10001-UP
32		7861-93-3510	SENSOR TEMP	1	J10001-UP
33		04434-51012	CLIP	1	J10001-UP
34		01010-81220	BOLT	1	J10001-UP
35		01643-31232	WASHER	1	J10001-UP

Ref :E0200-08A0 Page :120100

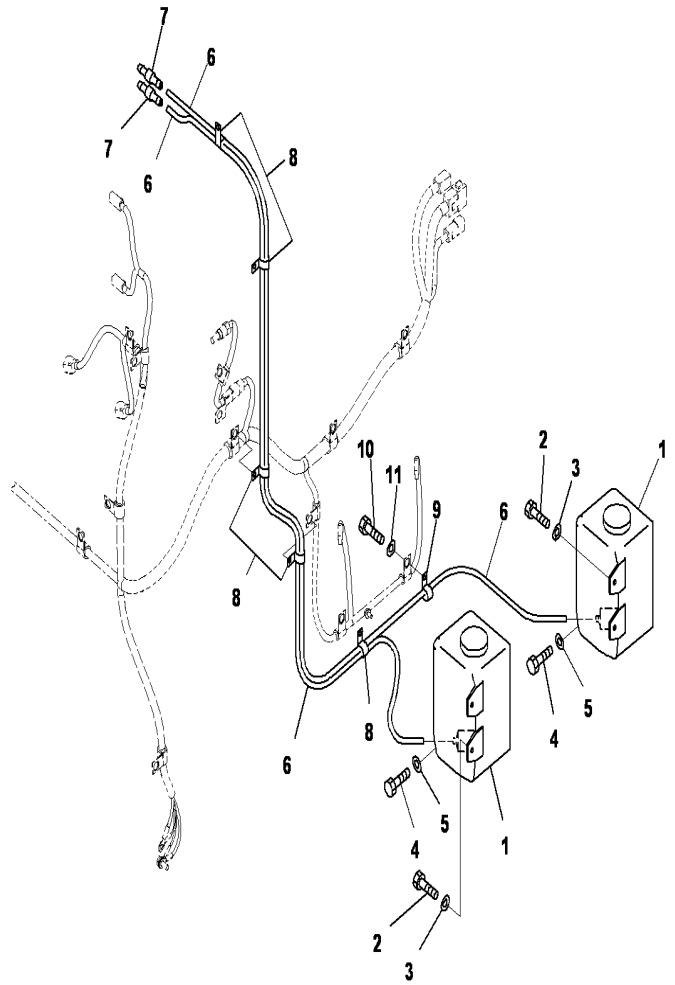

PC2000-8 S/N J10001-UP

ELECTRICAL SYSTEM(WINDOW WASHER TANK)

INDEX	CD	PART NO.	DESCRIPTION	QTY	SERIAL NO.
1		21T-06-11350	WASHER ASS'Y	2	J10001-UP
2		01010-80612	BOLT	4	J10001-UP
3		01643-30623	WASHER	4	J10001-UP
4		01010-80616	BOLT	4	J10001-UP
5		01643-30623	WASHER	4	J10001-UP
6		22U-06-11660	HOSE	2	J10001-UP
7		207-06-61490	VALVE	2	J10001-UP
8		04434-51012	CLIP	5	J10001-UP
9		04434-50812	CLIP	1	J10001-UP
10		01010-81220	BOLT	1	J10001-UP
11		01643-31232	WASHER	1	J10001-UP

Ref :E0200-09A0 Page :120110

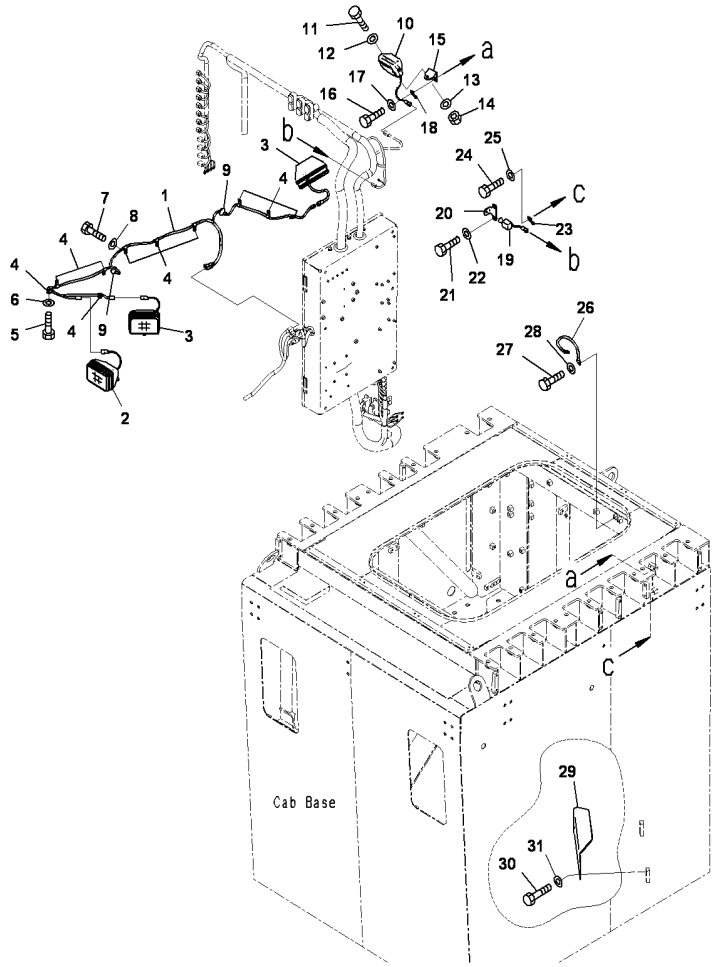

PC2000-8 S/N J10001-UP

ELECTRICAL SYSTEM(WORKING LAMP L.H)

INDEX	CD	PART NO.	DESCRIPTION	QTY	SERIAL NO.
1		21T-06-32312	WIRING HARNESS	1	J10001-UP
2		21T-06-32820	WORK LAMP ASS'Y	1	J10001-UP
		421-06-23330	.BULB, 70WATT	1	J10001-UP
3		21T-06-32810	WORK LAMP ASS'Y	2	J10001-UP
		421-06-23330	.BULB, 70WATT	1	J10001-UP
4		04434-51012	CLIP	10	J10001-UP
5		01010-81220	BOLT	10	J10001-UP
6		01643-31232	WASHER	10	J10001-UP
7		01010-81225	BOLT	1	J10001-UP
8		01643-31232	WASHER	1	J10001-UP
9		21T-54-71980	GROMMET	2	J10001-UP
10		20Y-06-41940	WORK LAMP ASSY	1	J10001-UP
		421-06-23330	.BULB, 70WATT	1	J10001-UP
11		01010-81225	BOLT	1	J10001-UP
12		01643-31232	WASHER	1	J10001-UP
13		01643-31232	WASHER	1	J10001-UP
14		01580-11210	NUT	1	J10001-UP
15		21T-06-32751	BRACKET	1	J10001-UP
16		01010-81225	BOLT	2	J10001-UP
17		01643-31232	WASHER	2	J10001-UP
18		08193-21012	CLIP	1	J10001-UP
19		21T-06-32831	SWITCH	1	J10001-UP
20		21T-06-32441	BRACKET	1	J10001-UP
21		01010-81225	BOLT	2	J10001-UP
22		01643-31232	WASHER	2	J10001-UP
23		08193-21012	CLIP	1	J10001-UP
24		01010-81220	BOLT	1	J10001-UP
25		01643-31232	WASHER	1	J10001-UP
26		08028-52040	CABLE	1	J10001-UP
27		01010-81020	BOLT	2	J10001-UP
28		01643-31032	WASHER	2	J10001-UP
29		21T-06-33350	PLATE	1	J10001-UP
30		01010-81230	BOLT	2	J10001-UP
31		01643-31232	WASHER	2	J10001-UP

Ref :E0200-10A0 Page :120120

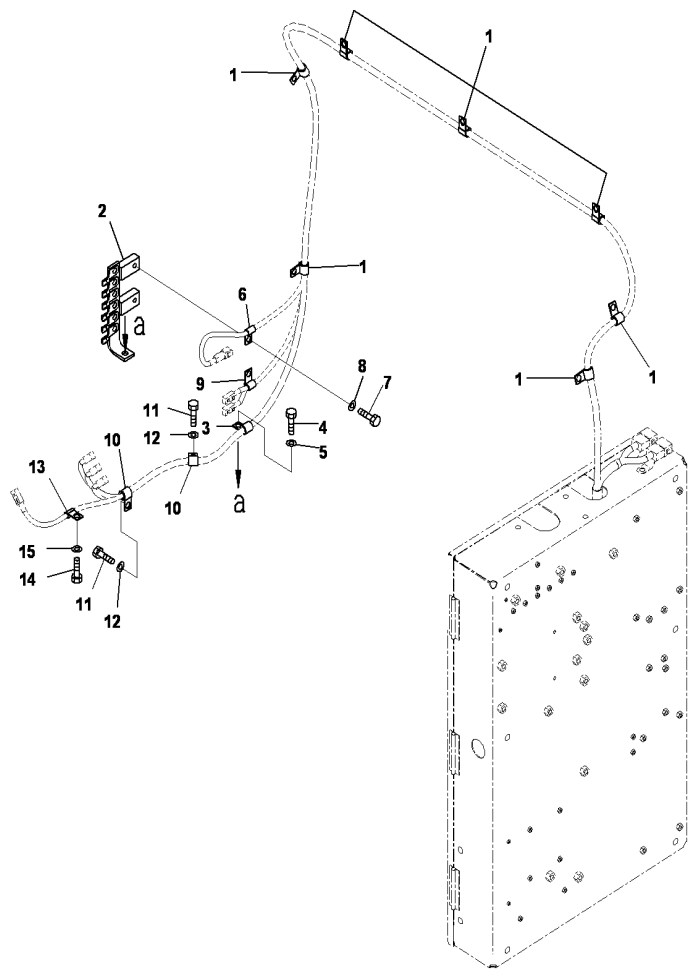

PC2000-8 S/N J10001-UP

ELECTRICAL SYSTEM(BRACKET AND CLIP)

INDEX	CD	PART NO.	DESCRIPTION	QTY	SERIAL NO.
1		04434-51912	CLIP	7	J10001-UP
2		21T0634310	BRAKCET	1	J10001-UP
3		04434-51912	CLIP	1	J10001-UP
4		01010-81230	BOLT	1	J10001-UP
5		01643-31232	WASHER	1	J10001-UP
6		04434-50812	CLIP	1	J10001-UP
7		01010-81220	BOLT	1	J10001-UP
8		01643-31232	WASHER	1	J10001-UP
9		04434-51012	CLIP	1	J10001-UP
10		04434-51412	CLIP	2	J10001-UP
11		01010-81220	BOLT	2	J10001-UP
12		01643-31232	WASHER	2	J10001-UP
13		04434-50812	CLIP	1	J10001-UP
14		01010-81220	BOLT	1	J10001-UP
15		01643-31232	WASHER	1	J10001-UP

Ref :E0200-11A0 Page :120130

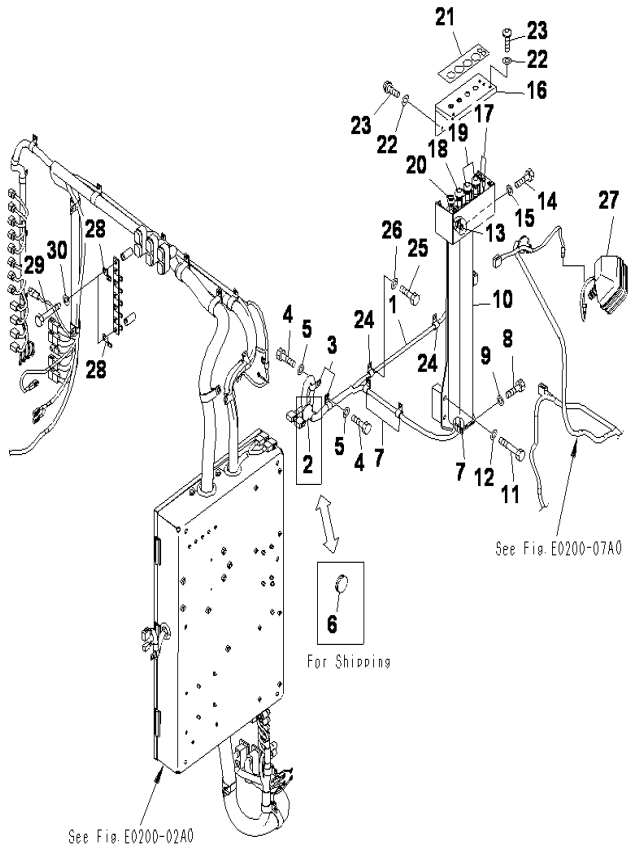

PC2000-8 S/N J10001-UP

ELECTRICAL SYSTEM(CAB BASE)

INDEX	CD	PART NO.	DESCRIPTION	QTY	SERIAL NO.
1		21T-06-34411	WIRING HARNESS	1	J10001-UP
2		08037-12536	.GROMMET	1	J10001-UP
3		04434-51912	CLIP	2	J10001-UP
4		01010-81225	BOLT	2	J10001-UP
5		01643-31232	WASHER	2	J10001-UP
6		14X-54-32310	CAP	1	J10001-UP
7		04434-51712	CLIP	3	J10001-UP
8		01010-81225	BOLT	3	J10001-UP
9		01643-31232	WASHER	3	J10001-UP
10		21T-53-32961	BRACKET	1	J10001-UP
11		01010-81285	BOLT	4	J10001-UP
12		01643-31232	WASHER	4	J10001-UP
13		04434-51712	CLIP	1	J10001-UP
14		01010-81225	BOLT	1	J10001-UP
15		01643-31232	WASHER	1	J10001-UP
		21T-06-34552	SWITCH PANEL ASS'Y	1	J10001-UP
16		21T-06-34582	.PLATE	1	J10001-UP
17		21T-06-34611	.LED ASS'Y (RED)	2	J10001-UP
		21T-06-35280	..LED	2	J10001-UP
		08033-10630	..TUBE	2	J10001-UP
18		21T-06-34620	.SWITCH	1	J10001-UP
		21T-06-34650	..SWITCH	1	J10001-UP
		822-10-61670	...CAP, GREEN	1	J10001-UP
19		21T-06-34630	.SWITCH	2	J10001-UP
		21T-06-34660	..SWITCH	2	J10001-UP
		822-10-61650	...CAP,YELLOW	2	J10001-UP
20		21T-06-34640	.SWITCH	1	J10001-UP
		21T-06-34670	..SWITCH	1	J10001-UP
21		21T-00-32481	PLATE	1	J10001-UP
22		01643-70823	WASHER	6	J10001-UP
23		01245-00816	SCREW	6	J10001-UP
24		04434-51412	CLIP	2	J10001-UP
25		01010-81225	BOLT	2	J10001-UP
26		01643-31232	WASHER	2	J10001-UP
27		21T-06-32810	WORK LAMP ASS'Y	1	J10001-UP
		421-06-23330	.BULB, 70WATT	1	J10001-UP
28		08193-20012	CLIP	2	J10001-UP
29		01010-81275	BOLT	2	J10001-UP
30		01643-31232	WASHER	2	J10001-UP

Ref :E0200-12A0 Page :120140

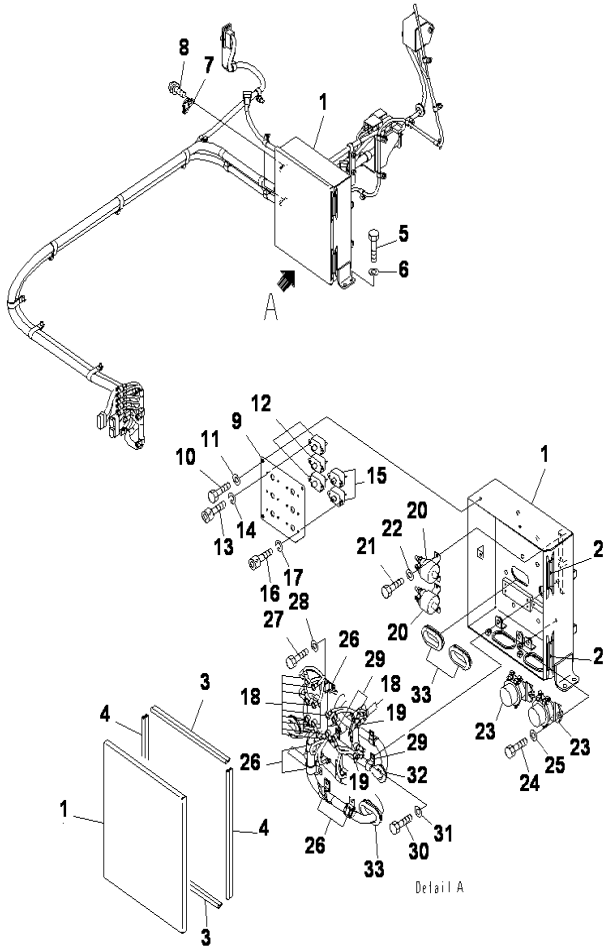

PC2000-8 S/N J10001-UP

ELECTRICAL SYSTEM(MACHINE CAB)(L.H)(CASE)

INDEX	CD	PART NO.	DESCRIPTION	QTY	SERIAL NO.
1		21T-06-32534	CASE	1	J10001-UP
2		142-54-13640	.HINGE	2	J10001-UP
3		21T-06-35420	SEAL	2	J10001-UP
4		21T-06-35430	SEAL	2	J10001-UP
5		01010-81230	BOLT	4	J10001-UP
6		01643-31232	WASHER	4	J10001-UP
7		195-57-11530	CATCH CLIP	2	J10001-UP
8		01023-10510	SCREW	6	J10001-UP
9		21T0632540	PLATE	1	J10001-UP
10		01010-80816	BOLT	3	J10001-UP
11		01643-30823	WASHER	3	J10001-UP
12		21T-06-33190	BREAKER	3	J10001-UP
13		01252-70612	BOLT	6	J10001-UP
14		01602-20619	WASHER	6	J10001-UP
15		1980662840	CIRCUIT BREAKER	2	J10001-UP
16		0125270612	BOLT	4	J10001-UP
17		01602-20619	WASHER	4	J10001-UP
18		08038-02027	CAP	16	J10001-UP
19		08038-00519	CAP	2	J10001-UP
20		600-815-2690	SWITCH,HEATER	2	J10001-UP
21		01010-80816	BOLT	4	J10001-UP
22		01643-30823	WASHER	4	J10001-UP
23		08088-40000	SWITCH	2	J10001-UP
24		01010-80820	BOLT	4	J10001-UP
25		01643-30823	WASHER	4	J10001-UP
26		04434-52712	CLIP	5	J10001-UP
27		01010-81220	BOLT	5	J10001-UP
28		01643-31232	WASHER	5	J10001-UP
29		04434-52312	CLIP	4	J10001-UP
30		01010-81220	BOLT	4	J10001-UP
31		01643-31232	WASHER	4	J10001-UP
32		08037-03614	GROMMET	1	J10001-UP
33		150-95-27160	GROMMET	3	J10001-UP

Ref :E0200-13A0 Page :120150

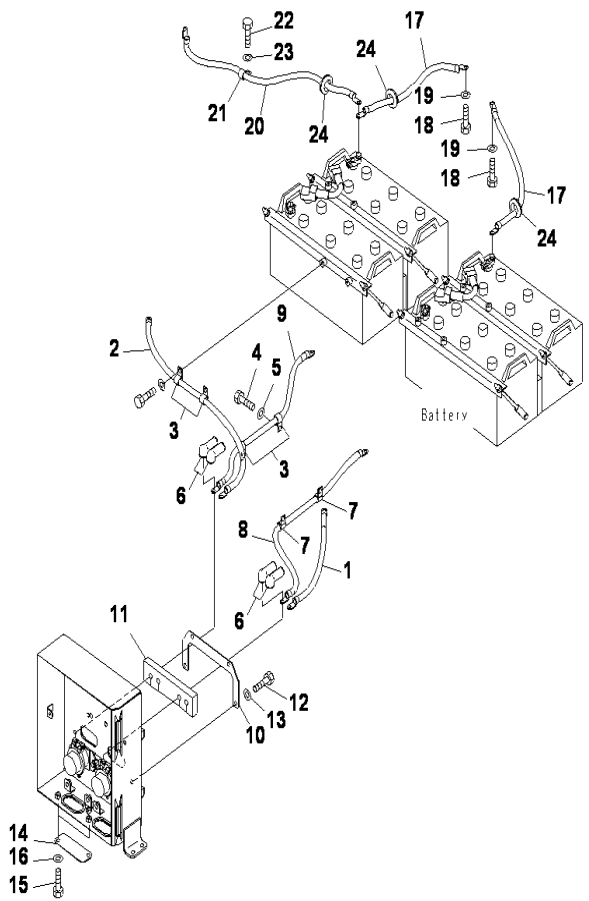

PC2000-8 S/N J10001-UP

ELECTRICAL SYSTEM(MACHINE CAB)(L.H)(CABLE)

INDEX	CD	PART NO.	DESCRIPTION	QTY	SERIAL NO.
1		08028-HE045	CABLE	1	J10001-UP
2		08028-HE100	CABLE	1	J10001-UP
3		04434-51912	CLIP	4	J10001-UP
4		01010-81225	BOLT	2	J10001-UP
5		01643-31232	WASHER	2	J10001-UP
6		08038-10035	CAP	4	J10001-UP
7		04434-51912	CLIP	2	J10001-UP
8		08028-HE095	CABLE	1	J10001-UP
9		08028-HE085	CABLE	1	J10001-UP
10		21T-06-35471	BRACKET	1	J10001-UP
11		21T-06-35481	.SHEET	1	J10001-UP
12		01010-81220	BOLT	4	J10001-UP
13		01643-31232	WASHER	4	J10001-UP
14		21T-06-35440NK	PLATE	2	J10001-UP
15		01010-81220	BOLT	4	J10001-UP
16		01643-31232	WASHER	4	J10001-UP
17		08028-55065	WIRE	2	J10001-UP
18		01010-81020	BOLT	2	J10001-UP
19		01643-31032	WASHER	2	J10001-UP
20		08028-55100	CABLE	1	J10001-UP
21		04434-51912	CLIP	1	J10001-UP
22		01010-81225	BOLT	1	J10001-UP
23		01643-31232	WASHER	1	J10001-UP
24		08037-03614	GROMMET	3	J10001-UP

Ref :E0200-14A0 Page :120160

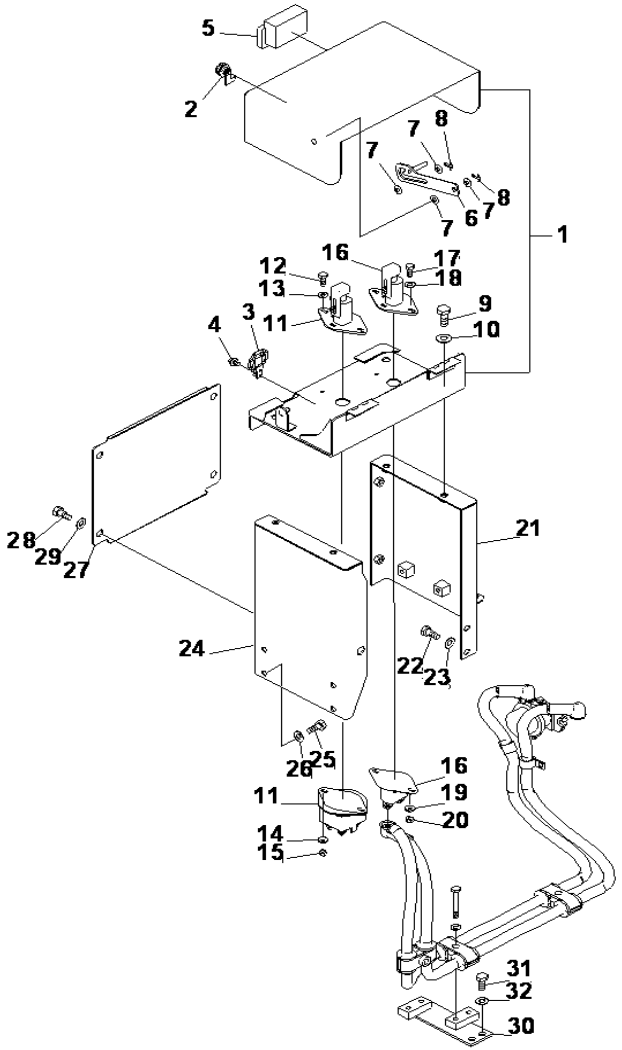

ELECTRICAL SYSTEM(MACHINE CAB)(L.H)(ISOLATOR)

INDEX	CD	PART NO.	DESCRIPTION	QTY	SERIAL NO.
1		21T-06-31121	CASE	1	J10001-UP
		09455-13016	.HINGE	2	J10001-UP
2		21T-53-31930	LOCK ASS'Y	1	J10001-UP
		205-54-76280	.ROTOR	1	J10001-UP
3		195-57-11530	CATCH CLIP	1	J10001-UP
4		01023-10510	SCREW	3	J10001-UP
5		209-54-12280	HANDLE	1	J10001-UP
6		21T-06-35211	PLATE	1	J10001-UP
7		01640-21016	WASHER	4	J10001-UP
8		04050-13020	COTTER PIN	2	J10001-UP
9		01010-81230	BOLT	4	J10001-UP
10		01643-31232	WASHER	4	J10001-UP
11		198-06-73171	BATTERY ISOLATOR	1	J10001-UP
12		01010-80620	BOLT	2	J10001-UP
13		01643-30623	WASHER	2	J10001-UP
14		01643-30623	WASHER	2	J10001-UP
15		01580-10605	NUT	2	J10001-UP
16		198-06-73180	STARTER ISOLATOR	1	J10001-UP
17		01010-80620	BOLT	2	J10001-UP
18		01643-30623	WASHER	2	J10001-UP
19		01643-30623	WASHER	2	J10001-UP
20		01580-10605	NUT	2	J10001-UP
21		21T-06-34811	COVER,(L.H)	1	J10001-UP
22		01010-81225	BOLT	2	J10001-UP
23		01643-31232	WASHER	2	J10001-UP
24		21T-06-34821	COVER,(R.H)	1	J10001-UP
25		01010-81225	BOLT	4	J10001-UP
26		01643-31232	WASHER	4	J10001-UP
27		21T-06-34830	PLATE	1	J10001-UP
28		01010-81225	BOLT	4	J10001-UP
29		01643-31232	WASHER	4	J10001-UP
30		21T-06-31290	BRACKET	1	J10001-UP
31		01010-81225	BOLT	2	J10001-UP
32		01643-31232	WASHER	2	J10001-UP

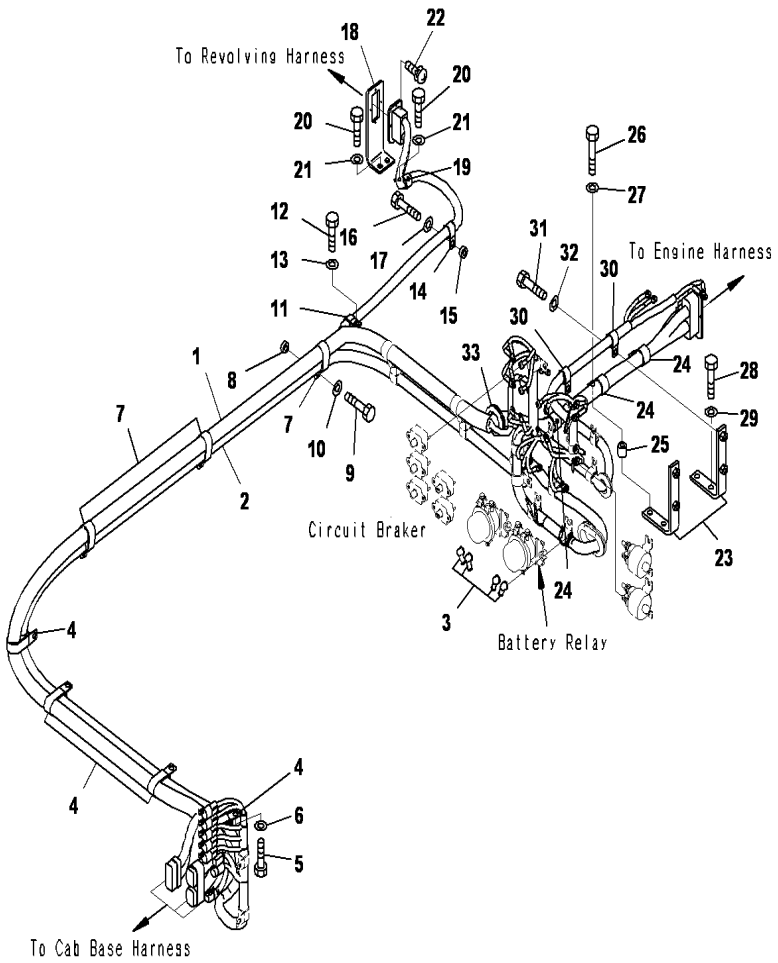

PC2000-8 S/N J10001-UP

ELECTRICAL SYSTEM(WIRING HARNESS AND CLIP)

INDEX	CD	PART NO.	DESCRIPTION	QTY	SERIAL NO.
1		21T-06-34231	WIRING HARNESS	1	J10001-UP
2		21T-06-32212	WIRING HARNESS	1	J10001-UP
3		08038-10519	CAP	4	J10001-UP
4		156-91-14190	CLIP	4	J10001-UP
5		01010-81220	BOLT	4	J10001-UP
6		01643-31232	WASHER	4	J10001-UP
7		156-91-14190	CLIP	3	J10001-UP
8		198-43-15310	COLLAR	3	J10001-UP
9		01010-81235	BOLT	3	J10001-UP
10		01643-31232	WASHER	3	J10001-UP
11		04434-53212	CLIP	1	J10001-UP
12		01010-81220	BOLT	1	J10001-UP
13		01643-31232	WASHER	1	J10001-UP
14		04434-52312	CLIP	1	J10001-UP
15		198-43-15310	COLLAR	1	J10001-UP
16		01010-81235	BOLT	1	J10001-UP
17		01643-31232	WASHER	1	J10001-UP
18		21T-06-33510NK	BRACKET	1	J10001-UP
19		04434-52312	CLIP	1	J10001-UP
20		01010-81225	BOLT	2	J10001-UP
21		01643-31232	WASHER	2	J10001-UP
22		01023-10420	SCREW	4	J10001-UP
23		21T-06-33581	BRACKET	2	J10001-UP
24		04434-53412	CLIP	2	J10001-UP
25		195-33-11220	SPACER	2	J10001-UP
26		01010-81260	BOLT	2	J10001-UP
27		01643-31232	WASHER	2	J10001-UP
28		01010-81235	BOLT	2	J10001-UP
29		01643-31232	WASHER	2	J10001-UP
30		04434-52312	CLIP	2	J10001-UP
31		01010-81230	BOLT	2	J10001-UP
32		01643-31232	WASHER	2	J10001-UP
33		21T-06-73320	GROMET	1	J10001-UP

Ref :E0200-15A0 Page :120170

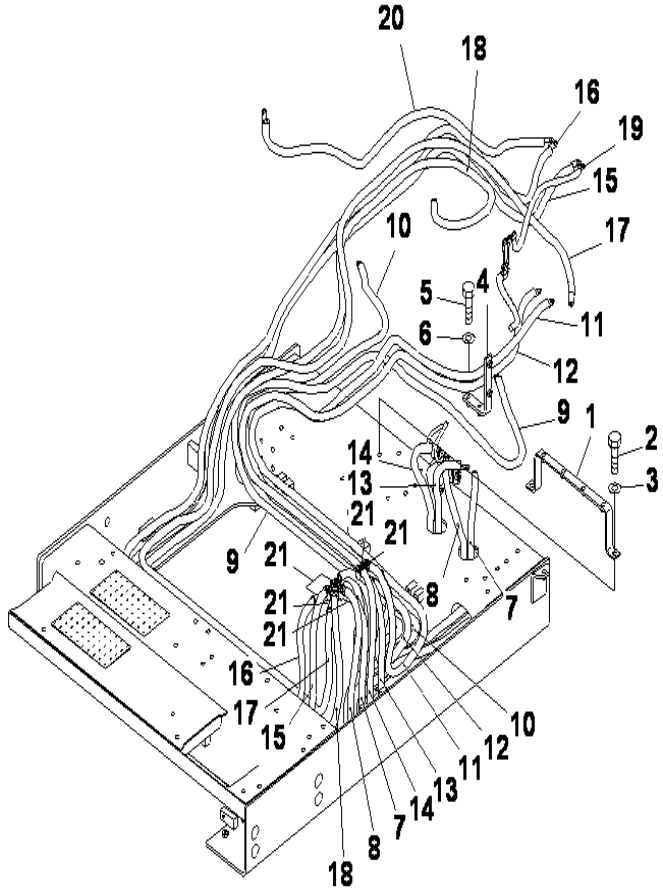

PC2000-8 S/N J10001-UP

ELECTRICAL SYSTEM(MACHINE CAB)(L.H)(ISOLATOR CABLE)

INDEX	CD	PART NO.	DESCRIPTION	QTY	SERIAL NO.
1		21T-06-31210	BRACKET	1	J10001-UP
2		01010-81230	BOLT	2	J10001-UP
3		01643-31232	WASHER	2	J10001-UP
4		21T-06-33582	BRACKET	1	J10001-UP
5		01010-81230	BOLT	2	J10001-UP
6		01643-31232	WASHER	2	J10001-UP
7		21T-06-35112	CABLE	1	J10001-UP
8		21T-06-35122	CABLE	1	J10001-UP
9		21T-06-35132	CABLE	1	J10001-UP
10		21T-06-35142	CABLE	1	J10001-UP
11		21T-06-35152	CABLE	1	J10001-UP
12		21T-06-35162	CABLE	1	J10001-UP
13		21T-06-35172	CABLE	1	J10001-UP
14		21T-06-35182	CABLE	1	J10001-UP
15		21T-06-35222	CABLE	1	J10001-UP
16		21T-06-35232	CABLE	1	J10001-UP
17		21T-06-35242	CABLE	1	J10001-UP
18		21T-06-35252	CABLE	1	J10001-UP
19		08028-FE055	CABLE	1	J10001-UP
20		08028-FE175	CABLE	1	J10001-UP
21		08038-10035	CAP	6	J10001-UP

Ref :E0200-15A1 Page :120175

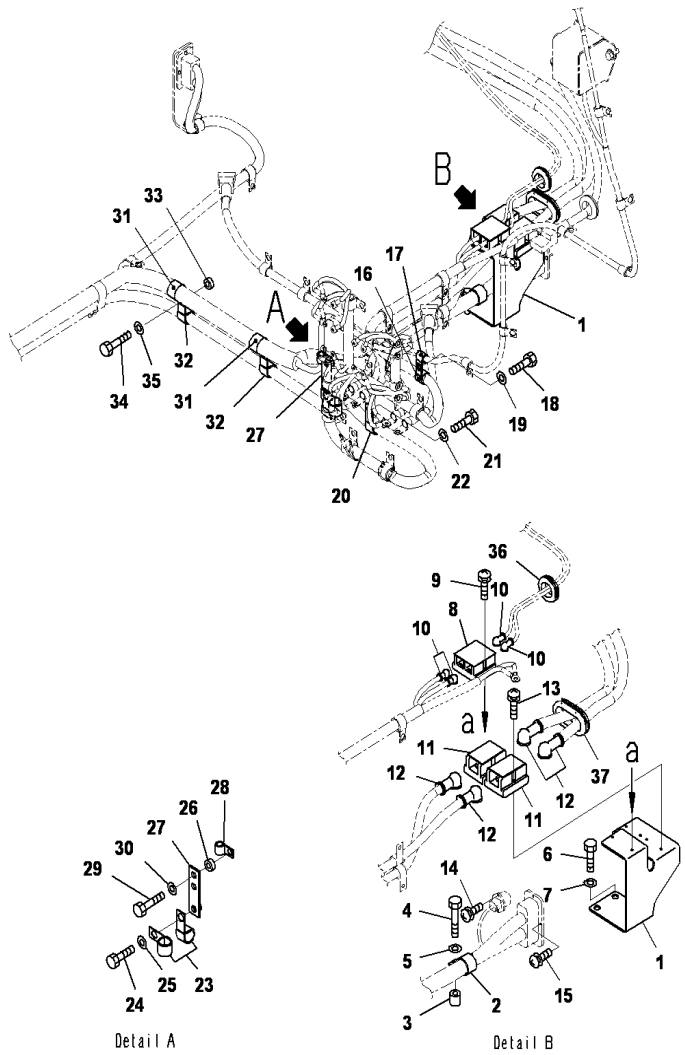

PC2000-8 S/N J10001-UP

ELECTRICAL SYSTEM(BRACKET)

INDEX	CD	PART NO.	DESCRIPTION	QTY	SERIAL NO.
1		21T-06-33560	BRACKET	1	J10001-UP
2		04434-53412	CLIP	1	J10001-UP
3		195-33-11220	SPACER	1	J10001-UP
4		01010-81255	BOLT	1	J10001-UP
5		01643-31232	WASHER	1	J10001-UP
6		01010-81230	BOLT	1	J10001-UP
7		01643-31232	WASHER	1	J10001-UP
8		21T-06-33220	TERMINAL	1	J10001-UP
9		01023-10530	SCREW	2	J10001-UP
10		08038-04030	CAP	4	J10001-UP
11		21T0612540	TERMINAL	2	J10001-UP
12		08038-10035	CAP	4	J10001-UP
13		0102310530	SCREW	4	J10001-UP
14		01023-10420	SCREW	2	J10001-UP
15		01023-10420	SCREW	4	J10001-UP
16		04434-52312	CLIP	1	J10001-UP
17		04434-51412	CLIP	1	J10001-UP
18		01010-81220	BOLT	1	J10001-UP
19		01643-31232	WASHER	1	J10001-UP
20		175-06-25150	CLIP	1	J10001-UP
21		01010-81220	BOLT	1	J10001-UP
22		01643-31232	WASHER	1	J10001-UP
23		175-06-25150	CLIP	2	J10001-UP
24		01010-81225	BOLT	1	J10001-UP
25		01643-31232	WASHER	1	J10001-UP
26		198-43-15310	COLLAR	1	J10001-UP
27		198-61-61850	PLATE	1	J10001-UP
28		04434-51412	CLIP	1	J10001-UP
29		01010-81240	BOLT	1	J10001-UP
30		01643-31232	WASHER	1	J10001-UP
31		04434-53412	CLIP	2	J10001-UP
32		175-06-25150	CLIP	2	J10001-UP
33		198-43-15310	COLLAR	2	J10001-UP
34		01010-81240	BOLT	2	J10001-UP
35		01643-31232	WASHER	2	J10001-UP
36		21T-06-35410	GROMMET	1	J10001-UP
37		21T-06-35490	GROMMET	1	J10001-UP

Ref :E0200-16A0 Page :120180

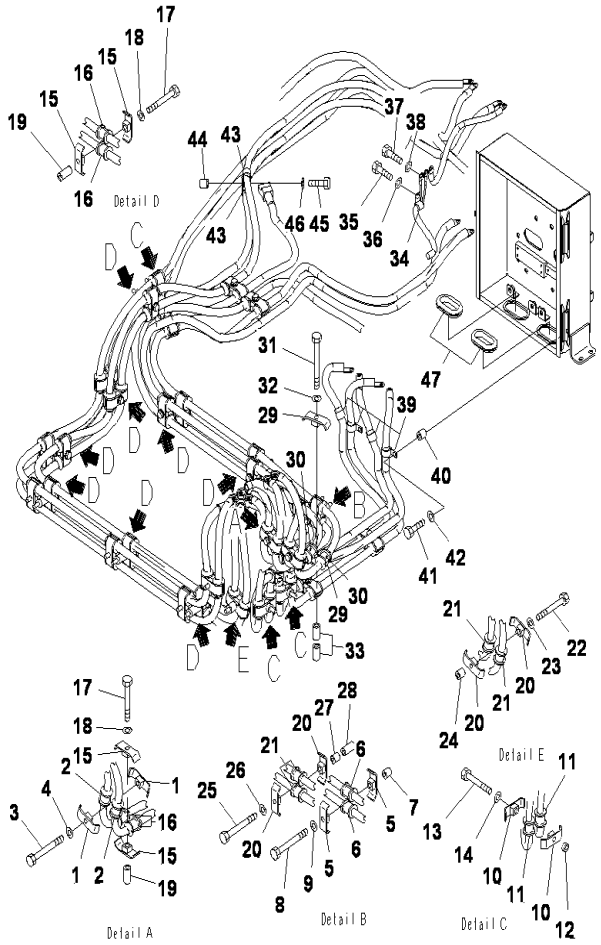

PC2000-8 S/N J10001-UP

ELECTRICAL SYSTEM(MACHINE CAB)(L.H)(ISOLATOR CABLE)(CLAMP, 1/3)

INDEX	CD	PART NO.	DESCRIPTION	QTY	SERIAL NO.
1		07094-30417	CLAMP	32	J10001-UP
2		07095-00423	CUSHION	32	J10001-UP
3		01010-81265	BOLT	16	J10001-UP
4		01643-31232	WASHER	16	J10001-UP
5		07094-30417	CLAMP	2	J10001-UP
6		07095-00423	CUSHION	2	J10001-UP
7		195-33-11220	SPACER	1	J10001-UP
8		01010-81290	BOLT	1	J10001-UP
9		01643-31232	WASHER	1	J10001-UP
10		07094-30417	CLAMP	6	J10001-UP
11		07095-00423	CUSHION	6	J10001-UP
12		198-43-15310	COLLAR	3	J10001-UP
13		01010-81280	BOLT	3	J10001-UP
14		01643-31232	WASHER	3	J10001-UP
15		07094-30417	CLAMP	18	J10001-UP
16		07095-00423	CUSHION	18	J10001-UP
17		01011-81215	BOLT	9	J10001-UP
18		01643-31232	WASHER	9	J10001-UP
19		175-40-22540	SPACER	9	J10001-UP
20		07094-30417	CLAMP	4	J10001-UP
21		07095-00423	CUSHION	4	J10001-UP
22		01010-81290	BOLT	1	J10001-UP
23		01643-31232	WASHER	1	J10001-UP
24		195-33-11220	SPACER	1	J10001-UP
25		01011-81240	BOLT	1	J10001-UP
26		01643-31232	WASHER	1	J10001-UP
27		195-33-11220	SPACER	1	J10001-UP
28		175-40-22540	SPACER	1	J10001-UP
29		07094-30417	CLAMP	2	J10001-UP
30		07095-00423	CUSHION	2	J10001-UP
31		01011-81250	BOLT	1	J10001-UP
32		01643-31232	WASHER	1	J10001-UP
33		205-03-71331	COLLAR	2	J10001-UP
34		04434-51712	CLIP	1	J10001-UP
35		01010-81220	BOLT	1	J10001-UP
36		01643-31232	WASHER	1	J10001-UP
37		01010-81020	BOLT	3	J10001-UP
38		01643-31032	WASHER	3	J10001-UP
39		04434-52312	CLIP	4	J10001-UP
40		195-33-11220	SPACER	4	J10001-UP
41		01010-81245	BOLT	4	J10001-UP
42		01643-31232	WASHER	4	J10001-UP
43		04434-52312	CLIP	2	J10001-UP
44		195-33-11220	SPACER	1	J10001-UP
45		01010-81245	BOLT	1	J10001-UP

Ref :E0200-16A1 Page :120185

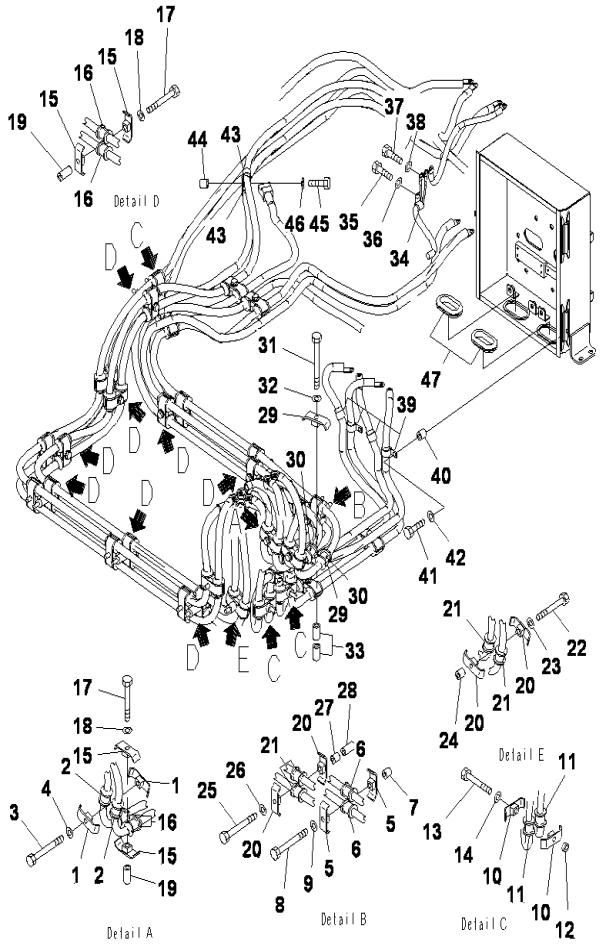

PC2000-8 S/N J10001-UP

ELECTRICAL SYSTEM(MACHINE CAB)(L.H)(ISOLATOR CABLE)(CLAMP, 1/3)

INDEX	CD	PART NO.	DESCRIPTION	QTY	SERIAL NO.
46		01643-31232	WASHER	1	J10001-UP
47		150-95-27160	GROMMET	2	J10001-UP

Ref :E0200-16A1 Page :120186

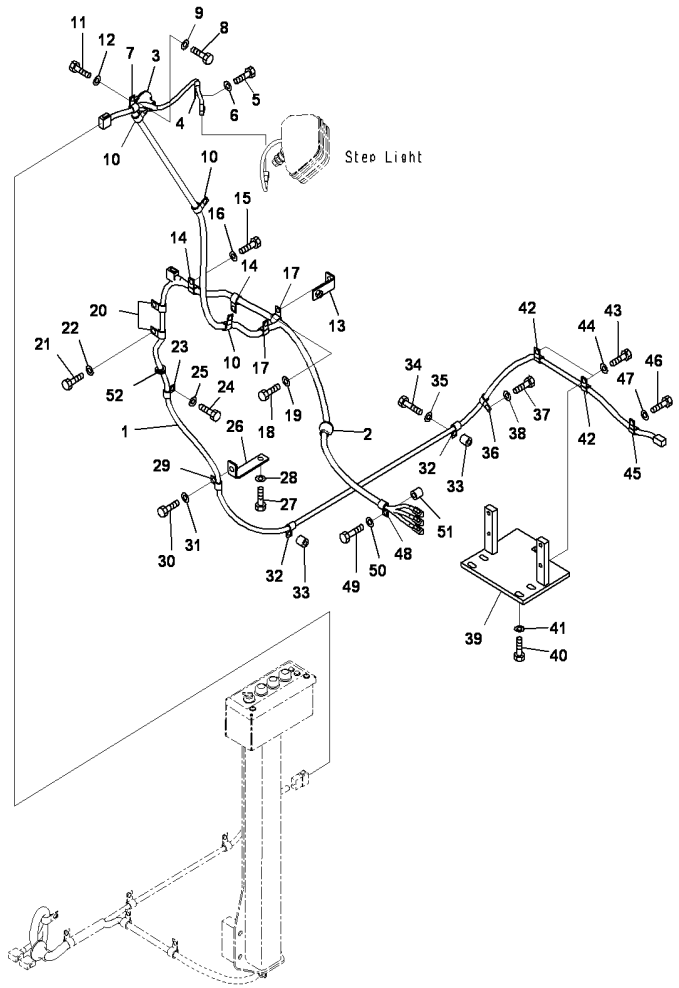

PC2000-8 S/N J10001-UP

ELECTRICAL SYSTEM(WORKING LAMP)

INDEX	CD	PART NO.	DESCRIPTION	QTY	SERIAL NO.
1		21T-06-34442	WIRING HARNESS	1	J10001-UP
2		08037-11825	.GROMMET	1	J10001-UP
3		08037-12536	.GROMMET	1	J10001-UP
4		04434-51012	CLIP	1	J10001-UP
5		01010-81225	BOLT	1	J10001-UP
6		01643-31232	WASHER	1	J10001-UP
7		04434-51412	CLIP	1	J10001-UP
8		01010-81225	BOLT	1	J10001-UP
9		01643-31232	WASHER	1	J10001-UP
10		04434-51712	CLIP	3	J10001-UP
11		01010-81225	BOLT	3	J10001-UP
12		01643-31232	WASHER	3	J10001-UP
13		203-04-62110	BRACKET	1	J10001-UP
14		04434-51712	CLIP	2	J10001-UP
15		01010-81225	BOLT	2	J10001-UP
16		01643-31232	WASHER	2	J10001-UP
17		04434-51712	CLIP	2	J10001-UP
18		01010-81220	BOLT	2	J10001-UP
19		01643-31232	WASHER	2	J10001-UP
20		04434-51412	CLIP	2	J10001-UP
21		01010-81225	BOLT	1	J10001-UP
22		01643-31232	WASHER	1	J10001-UP
23		04434-51412	CLIP	1	J10001-UP
24		01010-81225	BOLT	1	J10001-UP
25		01643-31232	WASHER	1	J10001-UP
26		17A-61-13391	BRACKET	1	J10001-UP
27		01010-81230	BOLT	1	J10001-UP
28		01643-31232	WASHER	1	J10001-UP
29		04434-51412	CLIP	1	J10001-UP
30		01010-81225	BOLT	1	J10001-UP
31		01643-31232	WASHER	1	J10001-UP
32		04434-51412	CLIP	2	J10001-UP
33		195-33-11220	SPACER	2	J10001-UP
34		01010-81245	BOLT	2	J10001-UP
35		01643-31232	WASHER	2	J10001-UP
36		04434-51412	CLIP	1	J10001-UP
37		01010-81220	BOLT	1	J10001-UP
38		01643-31232	WASHER	1	J10001-UP
39		21T-06-34851	BRACKET	1	J10001-UP
40		01010-81230	BOLT	4	J10001-UP
41		01643-31232	WASHER	4	J10001-UP
42		04434-51412	CLIP	2	J10001-UP
43		01010-81220	BOLT	2	J10001-UP
44		01643-31232	WASHER	2	J10001-UP
45		04434-51412	CLIP	1	J10001-UP

Ref :E0200-17A0 Page :120190

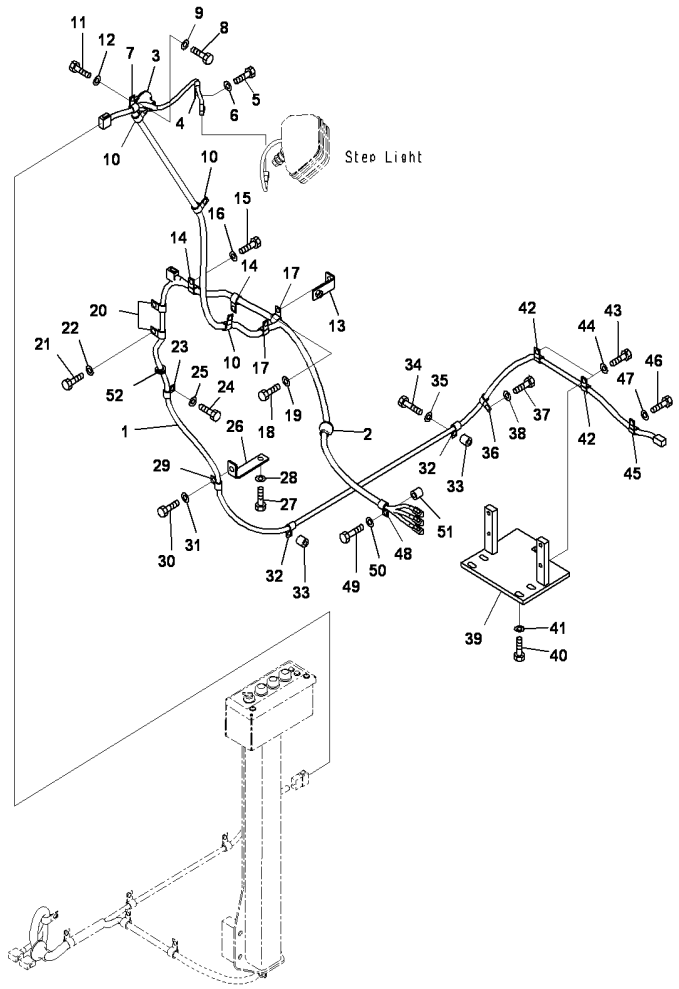

PC2000-8 S/N J10001-UP

ELECTRICAL SYSTEM(WORKING LAMP)

INDEX	CD	PART NO.	DESCRIPTION	QTY	SERIAL NO.
46		01010-81225	BOLT	1	J10001-UP
47		01643-31232	WASHER	1	J10001-UP
48		04434-51712	CLIP	1	J10001-UP
49		01010-81245	BOLT	1	J10001-UP
50		01643-31232	WASHER	1	J10001-UP
51		195-33-11220	SPACER	1	J10001-UP
52		08037-03620	GROMMET	1	J10001-UP

Ref :E0200-17A0 Page :120191

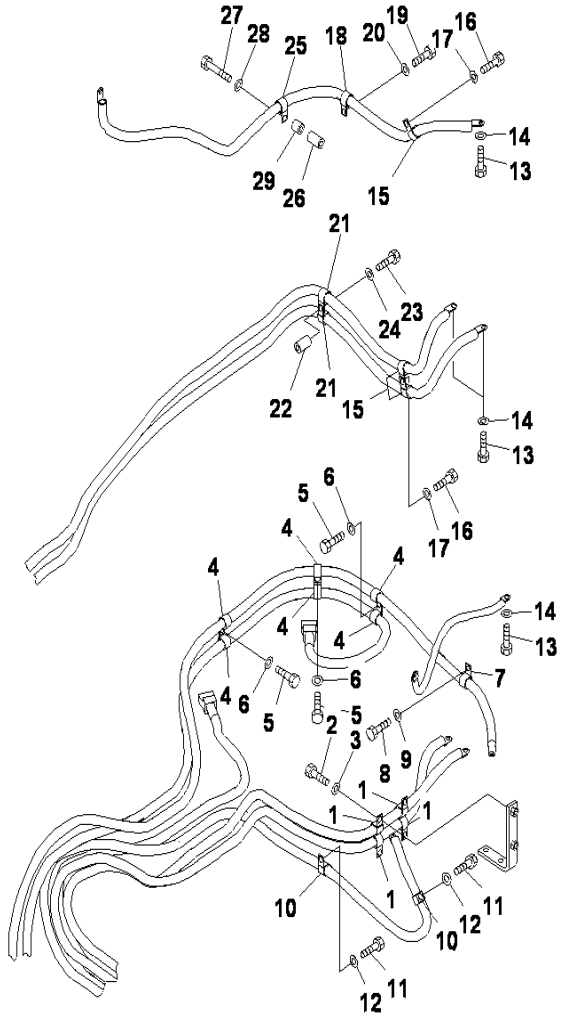

PC2000-8 S/N J10001-UP

ELECTRICAL SYSTEM(MACHINE CAB)(L.H)(ISOLATOR CABLE)(CLAMP 2/3)

INDEX	CD	PART NO.	DESCRIPTION	QTY	SERIAL NO.
1		04434-52312	CLIP	4	J10001-UP
2		01010-81225	BOLT	4	J10001-UP
3		01643-31232	WASHER	4	J10001-UP
4		04434-52312	CLIP	6	J10001-UP
5		01010-81220	BOLT	3	J10001-UP
6		01643-31232	WASHER	3	J10001-UP
7		04434-52312	CLIP	1	J10001-UP
8		01010-81220	BOLT	1	J10001-UP
9		01643-31232	WASHER	1	J10001-UP
10		04434-52312	CLIP	2	J10001-UP
11		01010-81220	BOLT	2	J10001-UP
12		01643-31232	WASHER	2	J10001-UP
13		01010-81020	BOLT	4	J10001-UP
14		01643-31032	WASHER	4	J10001-UP
15		04434-52312	CLIP	3	J10001-UP
16		01010-81220	BOLT	2	J10001-UP
17		01643-31232	WASHER	2	J10001-UP
18		04434-52312	CLIP	1	J10001-UP
19		01010-81220	BOLT	1	J10001-UP
20		01643-31232	WASHER	1	J10001-UP
21		04434-52312	CLIP	2	J10001-UP
22		205-03-71331	COLLAR	1	J10001-UP
23		01010-81265	BOLT	1	J10001-UP
24		01643-31232	WASHER	1	J10001-UP
25		04434-52312	CLIP	1	J10001-UP
26		205-03-71331	COLLAR	1	J10001-UP
27		01010-81290	BOLT	1	J10001-UP
28		01643-31232	WASHER	1	J10001-UP
29		195-33-11220	SPACER	1	J10001-UP

Ref :E0200-17A1 Page :120195

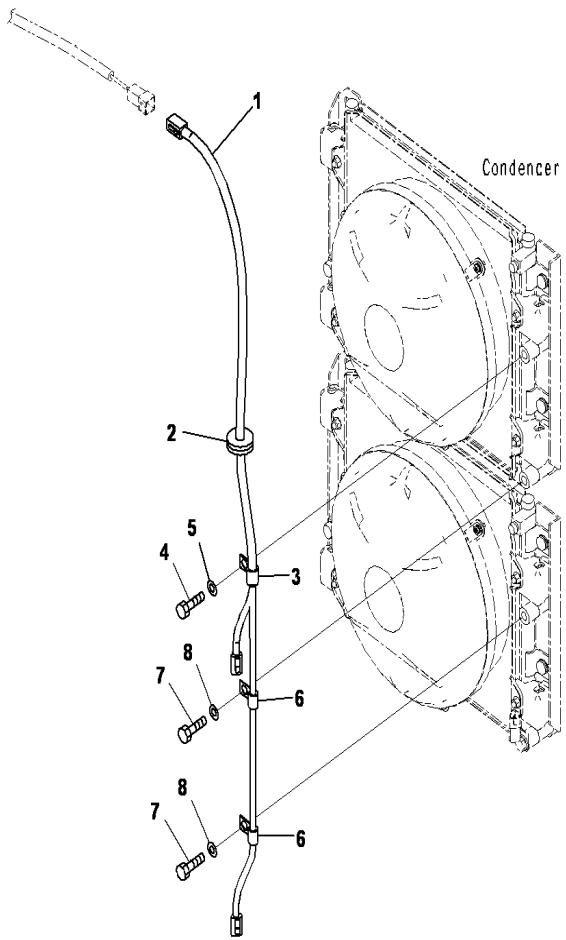

PC2000-8 S/N J10001-UP

ELECTRICAL SYSTEM(CONDENSER MOUNTING)

INDEX	CD	PART NO.	DESCRIPTION	QTY	SERIAL NO.
1		21T-06-32371	WIRING HARNESS	1	J10001-UP
2		142-06-13451	CAP	1	J10001-UP
3		04434-51412	CLIP	1	J10001-UP
4		01010-81225	BOLT	1	J10001-UP
5		01643-31232	WASHER	1	J10001-UP
6		04434-51012	CLIP	2	J10001-UP
7		01010-81225	BOLT	2	J10001-UP
8		01643-31232	WASHER	2	J10001-UP

Ref :E0200-18A0 Page :120200

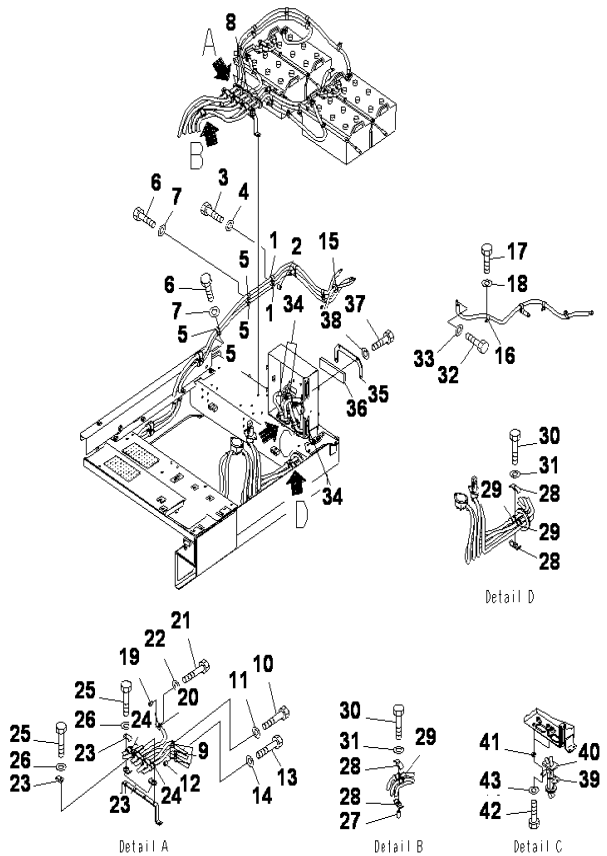

PC2000-8 S/N J10001-UP

ELECTRICAL SYSTEM(MACHINE CAB)(L.H)(ISOLATOR CABLE)(CLAMP 3/3)

INDEX	CD	PART NO.	DESCRIPTION	QTY	SERIAL NO.
1		04434-52312	CLIP	2	J10001-UP
2		195-33-11220	SPACER	1	J10001-UP
3		01010-81250	BOLT	1	J10001-UP
4		01643-31232	WASHER	1	J10001-UP
5		04434-52312	CLIP	4	J10001-UP
6		01010-81220	BOLT	2	J10001-UP
7		01643-31232	WASHER	2	J10001-UP
8		150-95-27160	GROMMET	3	J10001-UP
9		04434-52312	CLIP	3	J10001-UP
10		01010-81245	BOLT	1	J10001-UP
11		01643-31232	WASHER	1	J10001-UP
12		195-33-11220	SPACER	2	J10001-UP
13		01010-81250	BOLT	1	J10001-UP
14		01643-31232	WASHER	1	J10001-UP
15		08037-03614	GROMMET	1	J10001-UP
16		04434-52312	CLIP	1	J10001-UP
17		01010-81225	BOLT	1	J10001-UP
18		01643-31232	WASHER	1	J10001-UP
19		195-33-11220	SPACER	1	J10001-UP
20		04434-52312	CLIP	1	J10001-UP
21		01010-81245	BOLT	1	J10001-UP
22		01643-31232	WASHER	1	J10001-UP
23		07094-10417	CLAMP	4	J10001-UP
24		07095-00423	CUSHION	2	J10001-UP
25		01010-81265	BOLT	2	J10001-UP
26		01643-31232	WASHER	2	J10001-UP
27		205-03-71331	COLLAR	2	J10001-UP
28		07094-30417	CLAMP	4	J10001-UP
29		07095-00423	CUSHION	4	J10001-UP
30		01011-81205	BOLT	2	J10001-UP
31		01643-31232	WASHER	2	J10001-UP
32		01010-81025	BOLT	1	J10001-UP
33		01643-31032	WASHER	1	J10001-UP
34		08038-10035	CAP	4	J10001-UP
35		21T-06-35360	BRACKET	1	J10001-UP
36		21T-06-35550	.SHEET	1	J10001-UP
37		01010-81220	BOLT	4	J10001-UP
38		01643-31232	WASHER	4	J10001-UP
39		21T-06-35450	BRACKET	2	J10001-UP
40		21T-06-35460	.SHEET	1	J10001-UP
41		198-43-15310	COLLAR	4	J10001-UP
42		01010-81230	BOLT	4	J10001-UP
43		01643-31232	WASHER	4	J10001-UP

Ref :E0200-18A1 Page :120205

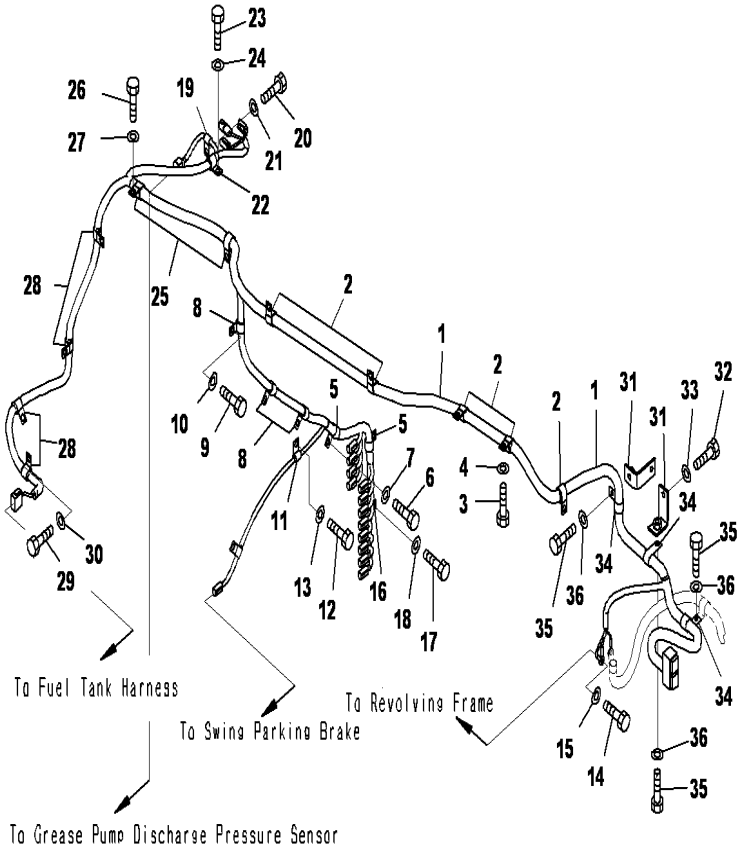

PC2000-8 S/N J10001-UP

ELECTRICAL SYSTEM(FRAME WIRING HARNESS)

INDEX	CD	PART NO.	DESCRIPTION	QTY	SERIAL NO.
1		21T-06-34241	WIRING HARNESS	1	J10001-UP
2		04434-52312	CLIP	8	J10001-UP
3		01010-81220	BOLT	8	J10001-UP
4		01643-31232	WASHER	8	J10001-UP
5		04434-51712	CLIP	2	J10001-UP
6		01010-81220	BOLT	2	J10001-UP
7		01643-31232	WASHER	2	J10001-UP
8		04434-51912	CLIP	3	J10001-UP
9		01010-81220	BOLT	3	J10001-UP
10		01643-31232	WASHER	3	J10001-UP
11		04434-51012	CLIP	2	J10001-UP
12		01010-81220	BOLT	2	J10001-UP
13		01643-31232	WASHER	2	J10001-UP
14		01010-81016	BOLT	2	J10001-UP
15		01643-31032	WASHER	2	J10001-UP
16		04434-51412	CLIP	1	J10001-UP
17		01010-81220	BOLT	1	J10001-UP
18		01643-31232	WASHER	1	J10001-UP
19		04434-51012	CLIP	1	J10001-UP
20		01010-81220	BOLT	1	J10001-UP
21		01643-31232	WASHER	1	J10001-UP
22		04434-51712	CLIP	1	J10001-UP
23		01010-81220	BOLT	1	J10001-UP
24		01643-31232	WASHER	1	J10001-UP
25		04434-52312	CLIP	2	J10001-UP
26		01010-81220	BOLT	2	J10001-UP
27		01643-31232	WASHER	2	J10001-UP
28		04434-51912	CLIP	4	J10001-UP
29		01010-81220	BOLT	4	J10001-UP
30		01643-31232	WASHER	4	J10001-UP
31		207-979-6180	BRACKET	2	J10001-UP
32		01010-81220	BOLT	1	J10001-UP
33		01643-31232	WASHER	1	J10001-UP
34		04434-52312	CLIP	3	J10001-UP
35		01010-81220	BOLT	3	J10001-UP
36		01643-31232	WASHER	3	J10001-UP

Ref :E0200-19A0 Page :120210

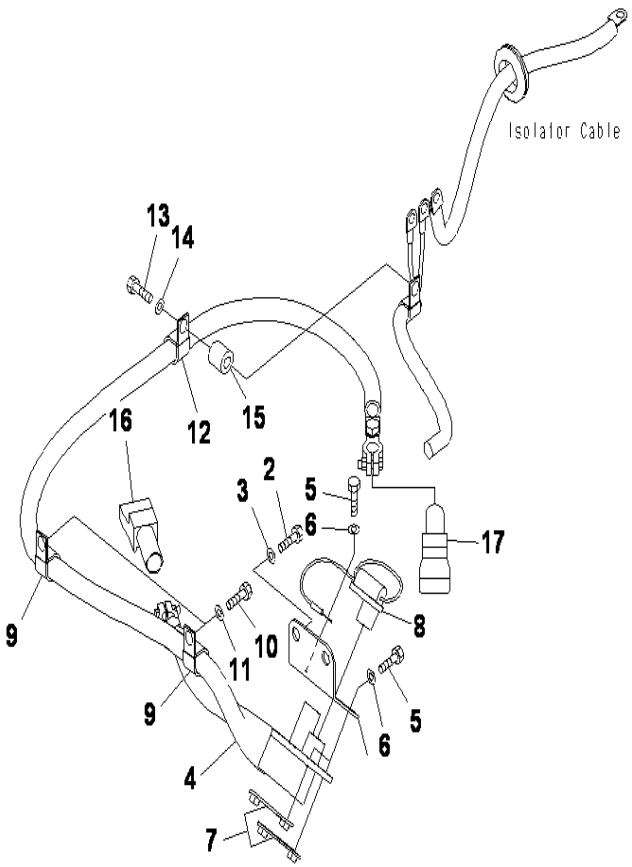

PC2000-8 S/N J10001-UP

ELECTRICAL SYSTEM(MACHINE CAB)(L.H)(JUMP START RECEPTACKLE)

INDEX	CD	PART NO.	DESCRIPTION	QTY	SERIAL NO.
1		21T-06-34842	BRACKET	1	J10001-UP
2		01010-81225	BOLT	2	J10001-UP
3		01643-31232	WASHER	2	J10001-UP
4		21T-06-34871	WIRING HARNESS	1	J10001-UP
5		01010-80825	BOLT	4	J10001-UP
6		01643-30823	WASHER	4	J10001-UP
7		195-06-48320	BRACKET	2	J10001-UP
8		195-06-48340	CAP	1	J10001-UP
9		04434-52312	CLIP	2	J10001-UP
10		01010-81220	BOLT	2	J10001-UP
11		01643-31232	WASHER	2	J10001-UP
12		04434-52312	CLIP	1	J10001-UP
13		01010-81245	BOLT	1	J10001-UP
14		01643-31232	WASHER	1	J10001-UP
15		195-33-11220	SPACER	1	J10001-UP
16		08038-42511	CAP	1	J10001-UP
17		08038-22511	CAP	1	J10001-UP

Ref :E0200-19A1 Page :120215

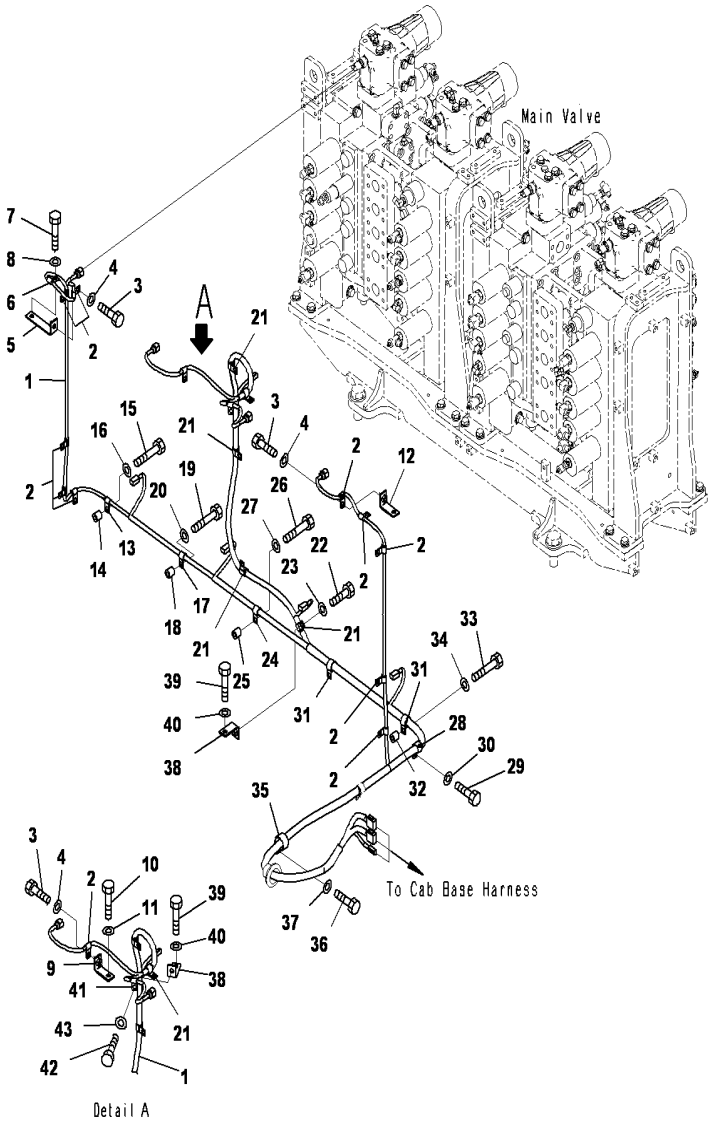

PC2000-8 S/N J10001-UP

ELECTRICAL SYSTEM(VALVE WIRING HARNESS)

INDEX	CD	PART NO.	DESCRIPTION	QTY	SERIAL NO.
1		21T-06-32282	WIRING HARNESS	1	J10001-UP
2		04434-51012	CLIP	11	J10001-UP
3		01010-81220	BOLT	11	J10001-UP
4		01643-31232	WASHER	11	J10001-UP
5		17A-61-13391	BRACKET	1	J10001-UP
6		04434-51012	CLIP	1	J10001-UP
7		01010-81225	BOLT	1	J10001-UP
8		01643-31232	WASHER	1	J10001-UP
9		207-979-6180	BRACKET	1	J10001-UP
10		01010-81225	BOLT	1	J10001-UP
11		01643-31232	WASHER	1	J10001-UP
12		207-979-6180	BRACKET	1	J10001-UP
13		04434-51012	CLIP	1	J10001-UP
14		195-33-11220	SPACER	1	J10001-UP
15		01010-81240	BOLT	1	J10001-UP
16		01643-31232	WASHER	1	J10001-UP
17		04434-51412	CLIP	1	J10001-UP
18		195-33-11220	SPACER	1	J10001-UP
19		01010-81240	BOLT	1	J10001-UP
20		01643-31232	WASHER	1	J10001-UP
21		04434-51712	CLIP	4	J10001-UP
22		01010-81220	BOLT	4	J10001-UP
23		01643-31232	WASHER	4	J10001-UP
24		04434-51712	CLIP	1	J10001-UP
25		195-33-11220	SPACER	1	J10001-UP
26		01010-81240	BOLT	1	J10001-UP
27		01643-31232	WASHER	1	J10001-UP
28		04434-52312	CLIP	2	J10001-UP
29		01010-81220	BOLT	2	J10001-UP
30		01643-31232	WASHER	2	J10001-UP
31		04434-52312	CLIP	2	J10001-UP
32		195-33-11220	SPACER	2	J10001-UP
33		01010-81240	BOLT	2	J10001-UP
34		01643-31232	WASHER	2	J10001-UP
35		208-06-19170	CLIP	1	J10001-UP
36		01010-81220	BOLT	1	J10001-UP
37		01643-31232	WASHER	1	J10001-UP
38		207-979-6180	BRACKET	2	J10001-UP
39		01010-81225	BOLT	2	J10001-UP
40		01643-31232	WASHER	2	J10001-UP
41		04434-51012	CLIP	1	J10001-UP
42		01010-81220	BOLT	1	J10001-UP
43		01643-31232	WASHER	1	J10001-UP

Ref :E0200-20A0 Page :120220

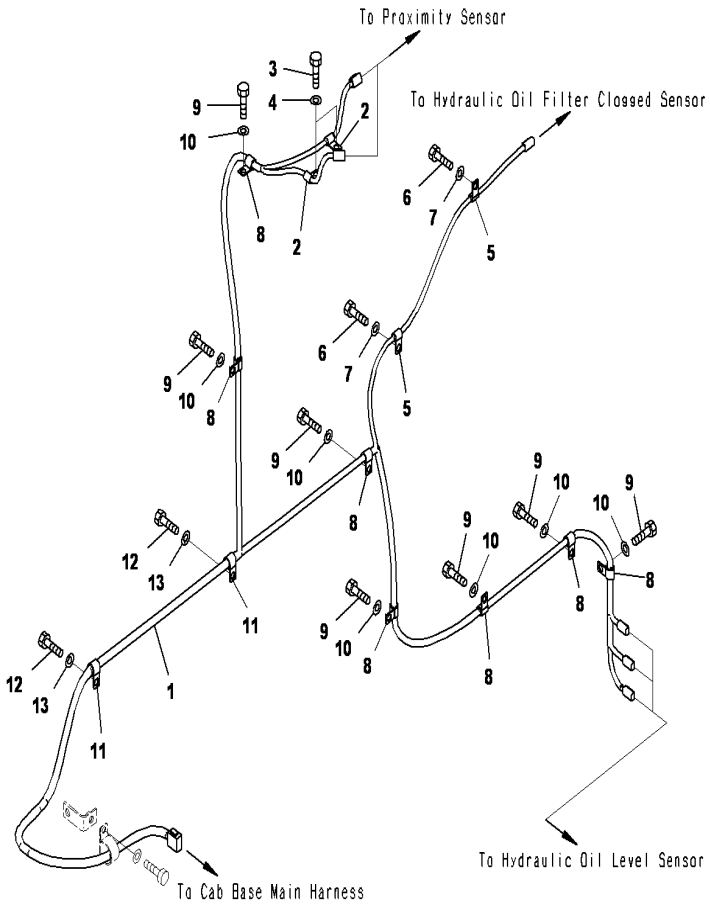

PC2000-8 S/N J10001-UP

ELECTRICAL SYSTEM(HYDRAULIC TANK WIRING HARNESS)

INDEX	CD	PART NO.	DESCRIPTION	QTY	SERIAL NO.
1		21T-06-32272	WIRING HARNESS.....	1	J10001-UP
2		04434-51012	CLIP.....	2	J10001-UP
3		01010-81220	BOLT.....	2	J10001-UP
4		01643-31232	WASHER.....	2	J10001-UP
5		04434-51012	CLIP.....	2	J10001-UP
6		01010-81225	BOLT.....	2	J10001-UP
7		01643-31232	WASHER.....	2	J10001-UP
8		04434-51412	CLIP.....	7	J10001-UP
9		01010-81225	BOLT.....	7	J10001-UP
10		01643-31232	WASHER.....	7	J10001-UP
11		04434-51712	CLIP.....	2	J10001-UP
12		01010-81225	BOLT.....	2	J10001-UP
13		01643-31232	WASHER.....	2	J10001-UP

Ref :E0200-22A0 Page :120230

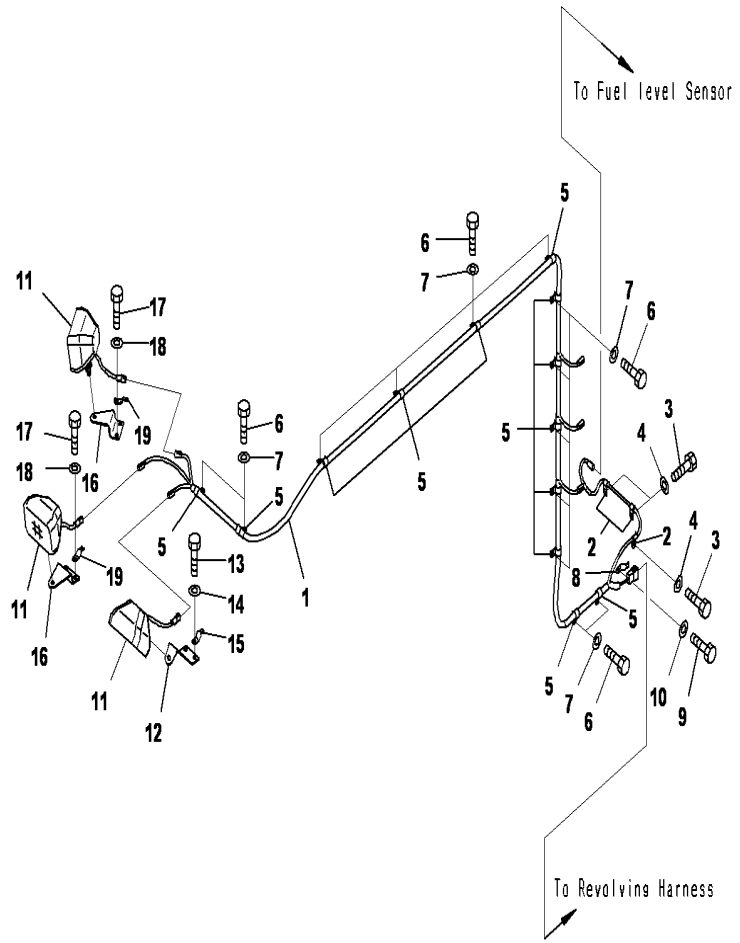

PC2000-8 S/N J10001-UP

ELECTRICAL SYSTEM(WORKING LAMP)

INDEX	CD	PART NO.	DESCRIPTION	QTY	SERIAL NO.
1		21T-06-32292	WIRING HARNESS	1	J10001-UP
2		04434-51012	CLIP	3	J10001-UP
3		01010-81220	BOLT	3	J10001-UP
4		01643-31232	WASHER	3	J10001-UP
5		04434-51912	CLIP	13	J10001-UP
6		01010-81220	BOLT	13	J10001-UP
7		01643-31232	WASHER	13	J10001-UP
8		08193-21012	CLIP	1	J10001-UP
9		01010-81220	BOLT	1	J10001-UP
10		01643-31232	WASHER	1	J10001-UP
11		22B-06-11690	LAMP ASS'Y	3	J10001-UP
12		21T-06-32410	BRACKET	1	J10001-UP
13		01010-81225	BOLT	2	J10001-UP
14		01643-31232	WASHER	2	J10001-UP
15		08193-21012	CLIP	1	J10001-UP
16		21T-06-32420	BRACKET	2	J10001-UP
17		01010-81225	BOLT	4	J10001-UP
18		01643-31232	WASHER	4	J10001-UP
19		08193-21012	CLIP	2	J10001-UP

Ref :E0200-23A0 Page :120240

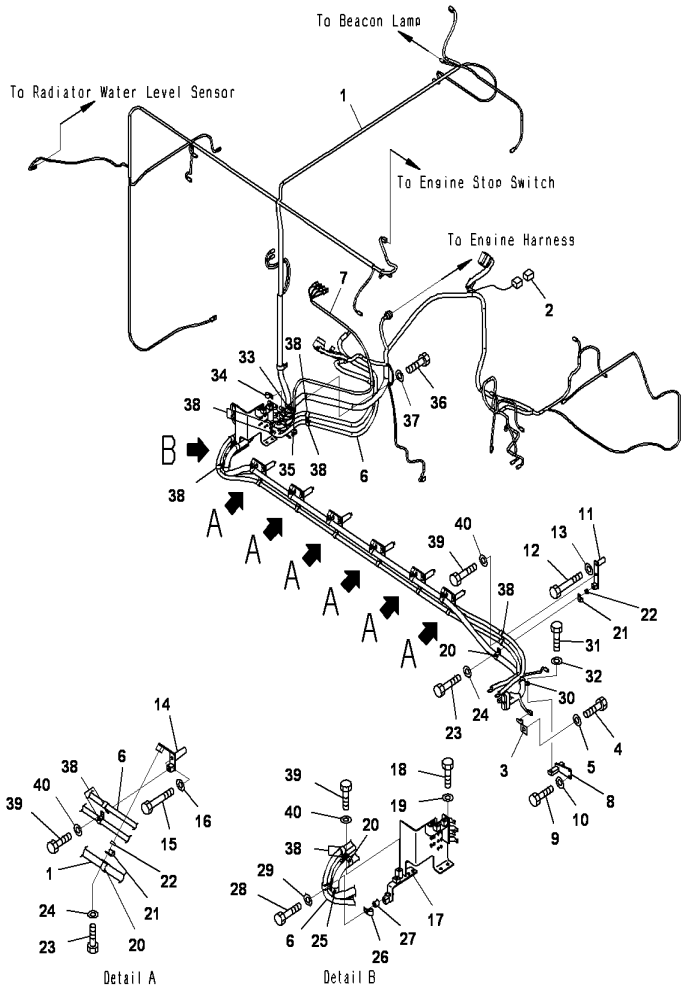

PC2000-8 S/N J10001-UP

ELECTRICAL SYSTEM(WIRING HARNESS)

INDEX	CD	PART NO.	DESCRIPTION	QTY	SERIAL NO.
1		21T-06-32265	WIRING HARNESS	1	J10001-UP
2		19M-06-31720	RESISTOR	1	J10001-UP
3		08192-21012	CLIP	1	J10001-UP
4		01010-81220	BOLT	1	J10001-UP
5		01643-31232	WASHER	1	J10001-UP
6		08028-HE510	CABLE	2	J10001-UP
7		21T-06-32351	WIRING HARNESS	1	J10001-UP
8		21T-06-32840	BRACKET	1	J10001-UP
9		01010-81225	BOLT	2	J10001-UP
10		01643-31232	WASHER	2	J10001-UP
11		21T-06-32650	BRACKET	1	J10001-UP
12		01010-81295	BOLT	1	J10001-UP
13		01643-31232	WASHER	1	J10001-UP
14		21T-06-32490	BRACKET	6	J10001-UP
15		01011-81210	BOLT	6	J10001-UP
16		01643-31232	WASHER	6	J10001-UP
17		21T-06-33551	BRACKET	1	J10001-UP
18		01010-81225	BOLT	4	J10001-UP
19		01643-31232	WASHER	4	J10001-UP
20		04434-53412	CLIP	8	J10001-UP
21		04434-51912	CLIP	8	J10001-UP
22		198-43-15310	COLLAR	8	J10001-UP
23		01010-81235	BOLT	8	J10001-UP
24		01643-31232	WASHER	8	J10001-UP
25		04434-53412	CLIP	1	J10001-UP
26		04434-51912	CLIP	1	J10001-UP
27		195-33-11220	SPACER	1	J10001-UP
28		01010-81250	BOLT	1	J10001-UP
29		01643-31232	WASHER	1	J10001-UP
30		04434-53412	CLIP	1	J10001-UP
31		01010-81225	BOLT	1	J10001-UP
32		01643-31232	WASHER	1	J10001-UP
33		04434-53412	CLIP	1	J10001-UP
34		04434-51912	CLIP	1	J10001-UP
35		04434-51712	CLIP	1	J10001-UP
36		01010-81225	BOLT	1	J10001-UP
37		01643-31232	WASHER	1	J10001-UP
38		04434-52312	CLIP	22	J10001-UP
39		01010-81220	BOLT	11	J10001-UP
40		01643-31232	WASHER	11	J10001-UP

Ref :E0200-24A0 Page :120250

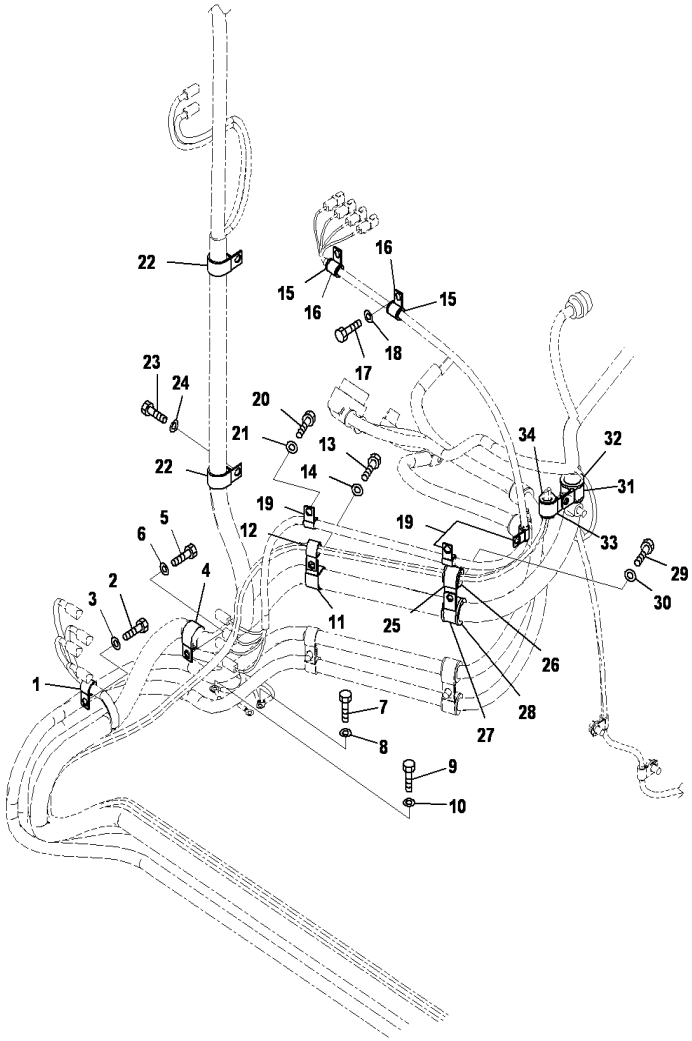

ELECTRICAL SYSTEM(CLIP)(1/2)

INDEX	CD	PART NO.	DESCRIPTION	QTY	SERIAL NO.
1		04434-51712	CLIP	1	J10001-UP
2		01010-81225	BOLT	1	J10001-UP
3		01643-31232	WASHER	1	J10001-UP
4		04434-53212	CLIP	1	J10001-UP
5		01010-81225	BOLT	1	J10001-UP
6		01643-31232	WASHER	1	J10001-UP
7		01010-80816	BOLT	2	J10001-UP
8		01643-30823	WASHER	2	J10001-UP
9		01010-81020	BOLT	2	J10001-UP
10		01643-31032	WASHER	2	J10001-UP
11		04434-53412	CLIP	1	J10001-UP
12		04434-51912	CLIP	1	J10001-UP
13		01010-81225	BOLT	1	J10001-UP
14		01643-31232	WASHER	1	J10001-UP
15		198-06-53560	CUSHION	2	J10001-UP
16		04434-52512	CLIP	2	J10001-UP
17		01010-81225	BOLT	2	J10001-UP
18		01643-31232	WASHER	2	J10001-UP
19		04434-51712	CLIP	3	J10001-UP
20		01010-81225	BOLT	3	J10001-UP
21		01643-31232	WASHER	3	J10001-UP
22		04434-52712	CLIP	2	J10001-UP
23		01010-81220	BOLT	2	J10001-UP
24		01643-31232	WASHER	2	J10001-UP
25		04434-52712	CLIP	1	J10001-UP
26		198-06-53580	CUSHION	1	J10001-UP
27		208-06-19170	CLIP	1	J10001-UP
28		566-61-49810	INSULATOR	1	J10001-UP
29		01010-81225	BOLT	1	J10001-UP
30		01643-31232	WASHER	1	J10001-UP
31		208-06-19170	CLIP	1	J10001-UP
32		566-61-49810	INSULATOR	1	J10001-UP
33		04434-52712	CLIP	1	J10001-UP
34		198-06-53580	CUSHION	1	J10001-UP

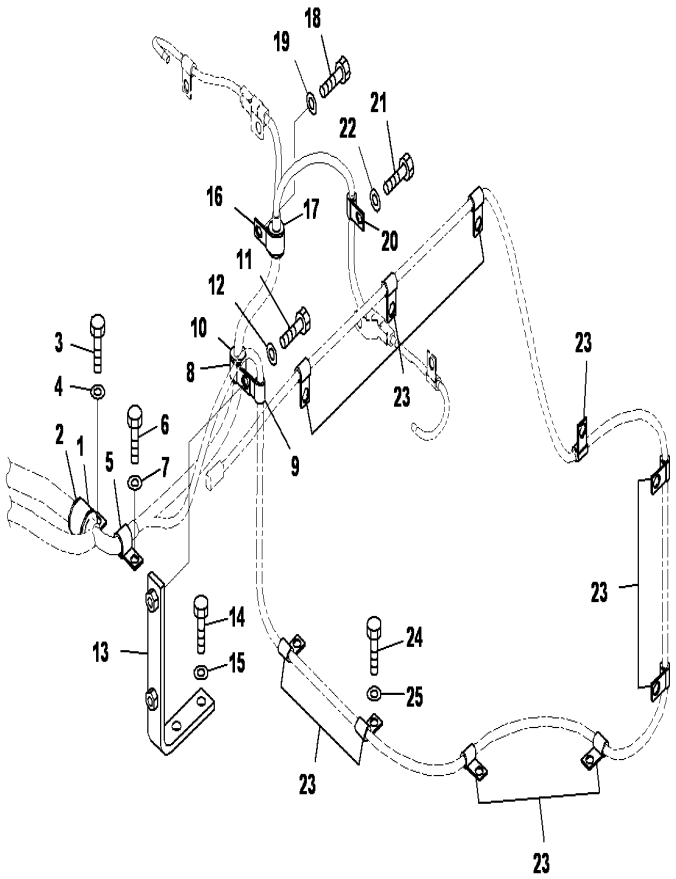

PC2000-8 S/N J10001-UP

ELECTRICAL SYSTEM(CLIP)(2/2)

INDEX	CD	PART NO.	DESCRIPTION	QTY	SERIAL NO.
1		04434-53212	CLIP	1	J10001-UP
2		198-06-53610	CUSHION	1	J10001-UP
3		01010-81220	BOLT	1	J10001-UP
4		01643-31232	WASHER	1	J10001-UP
5		04434-51712	CLIP	1	J10001-UP
6		01010-81220	BOLT	1	J10001-UP
7		01643-31232	WASHER	1	J10001-UP
8		04434-52112	CLIP	1	J10001-UP
9		04434-51012	CLIP	1	J10001-UP
10		198-06-53550	CUSHION	1	J10001-UP
11		01010-81230	BOLT	2	J10001-UP
12		01643-31232	WASHER	2	J10001-UP
13		21T0632470	BRACKET	1	J10001-UP
14		01010-81230	BOLT	1	J10001-UP
15		01643-31232	WASHER	1	J10001-UP
16		04434-52110	CLIP	1	J10001-UP
17		198-06-53550	CUSHION	1	J10001-UP
18		01010-81020	BOLT	1	J10001-UP
19		01643-31032	WASHER	1	J10001-UP
20		04434-51010	CLIP	1	J10001-UP
21		01010-81020	BOLT	1	J10001-UP
22		01643-31032	WASHER	1	J10001-UP
23		04434-51012	CLIP	10	J10001-UP
24		01010-81220	BOLT	10	J10001-UP
25		01643-31232	WASHER	10	J10001-UP

Ref :E0200-26A0 Page :120270

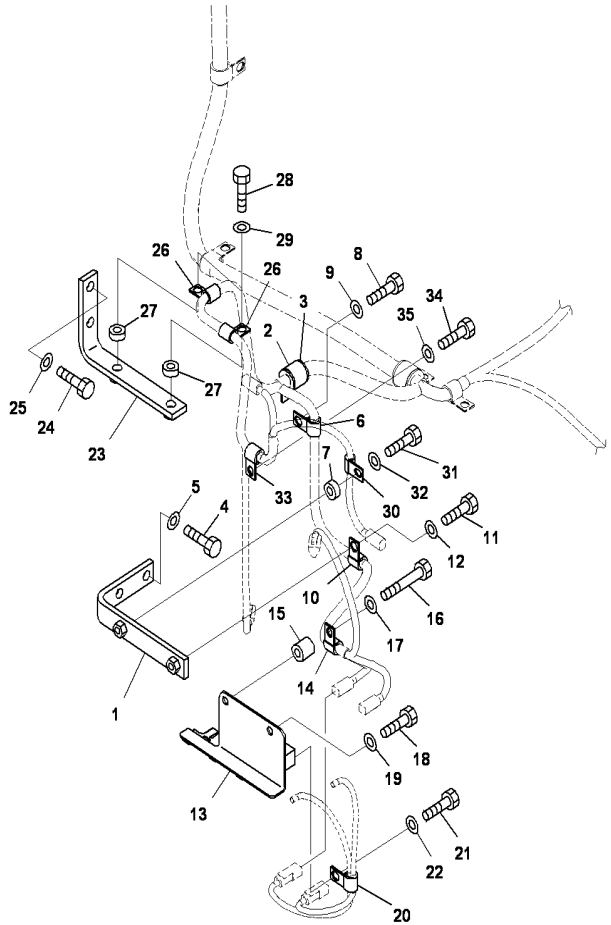

ELECTRICAL SYSTEM(BRACKET)

INDEX	CD	PART NO.	DESCRIPTION	QTY	SERIAL NO.
1		21T-06-32470	BRACKET	1	J10001-UP
2		04434-52712	CLIP	1	J10001-UP
3		198-06-53580	CUSHION	1	J10001-UP
4		01010-81230	BOLT	2	J10001-UP
5		01643-31232	WASHER	2	J10001-UP
6		04434-51412	CLIP	1	J10001-UP
7		198-43-15310	COLLAR	1	J10001-UP
8		01010-81235	BOLT	1	J10001-UP
9		01643-31232	WASHER	1	J10001-UP
10		04434-51412	CLIP	1	J10001-UP
11		01010-81230	BOLT	1	J10001-UP
12		01643-31232	WASHER	1	J10001-UP
13		20Y-06-31171	BRACKET	1	J10001-UP
14		04434-51410	CLIP	1	J10001-UP
15		195-33-11220	SPACER	1	J10001-UP
16		01010-81050	BOLT	1	J10001-UP
17		01643-31032	WASHER	1	J10001-UP
18		01010-81225	BOLT	1	J10001-UP
19		01643-31232	WASHER	1	J10001-UP
20		04434-51412	CLIP	1	J10001-UP
21		01010-81020	BOLT	1	J10001-UP
22		01643-31032	WASHER	1	J10001-UP
23		21T-06-32470	BRACKET	1	J10001-UP
24		01010-81230	BOLT	2	J10001-UP
25		01643-31232	WASHER	2	J10001-UP
26		04434-51712	CLIP	2	J10001-UP
27		198-43-15310	COLLAR	2	J10001-UP
28		01010-81235	BOLT	2	J10001-UP
29		01643-31232	WASHER	2	J10001-UP
30		04434-51010	CLIP	1	J10001-UP
31		01010-81020	BOLT	1	J10001-UP
32		01643-31032	WASHER	1	J10001-UP
33		04434-51410	CLIP	1	J10001-UP
34		01010-81020	BOLT	1	J10001-UP
35		01643-31032	WASHER	1	J10001-UP

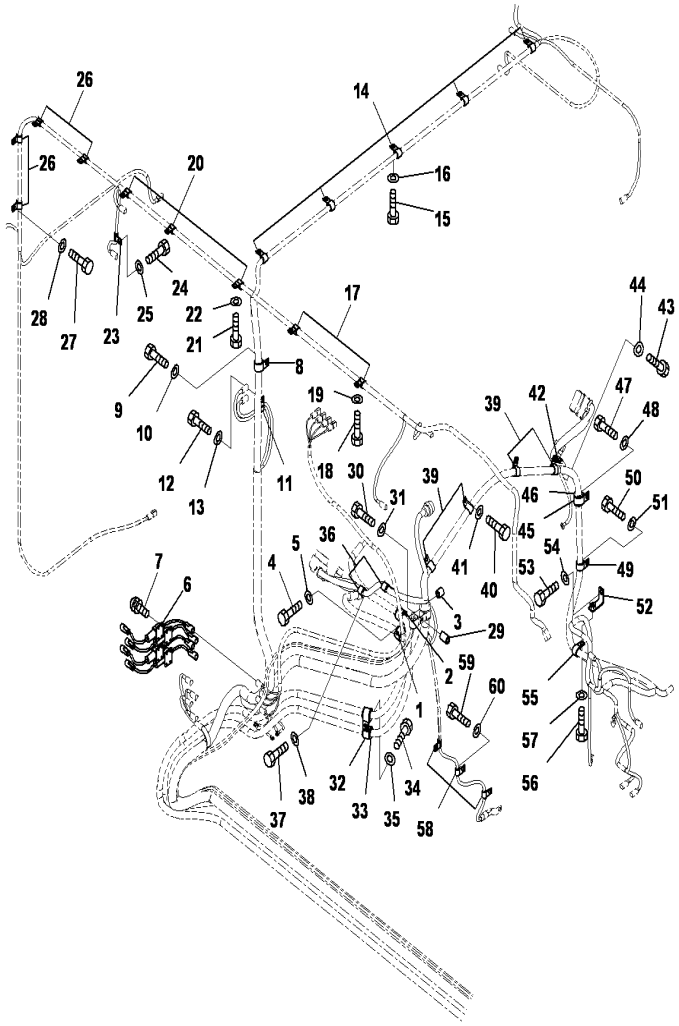

ELECTRICAL SYSTEM(ENGINE SIDE CLIP)

INDEX	CD	PART NO.	DESCRIPTION	QTY	SERIAL NO.
1		04434-53211	CLIP	2	J10001-UP
2		07095-20523	CUSHION	2	J10001-UP
3		195-33-11220	SPACER	1	J10001-UP
4		01010-81050	BOLT	2	J10001-UP
5		01643-31032	WASHER	2	J10001-UP
6		6215-81-8150	AMPLIFIER	4	J10001-UP
7		01023-10616	SCREW	8	J10001-UP
8		04434-52712	CLIP	1	J10001-UP
9		01010-81220	BOLT	1	J10001-UP
10		01643-31232	WASHER	1	J10001-UP
11		04435-51012	CLIP	1	J10001-UP
12		01010-81225	BOLT	1	J10001-UP
13		01643-31232	WASHER	1	J10001-UP
14		04434-51712	CLIP	5	J10001-UP
15		01010-81220	BOLT	5	J10001-UP
16		01643-31232	WASHER	5	J10001-UP
17		04434-51912	CLIP	2	J10001-UP
18		01010-81220	BOLT	2	J10001-UP
19		01643-31232	WASHER	2	J10001-UP
20		04434-51712	CLIP	3	J10001-UP
21		01010-81220	BOLT	1	J10001-UP
22		01643-31232	WASHER	1	J10001-UP
23		04434-51012	CLIP	1	J10001-UP
24		01010-81220	BOLT	1	J10001-UP
25		01643-31232	WASHER	1	J10001-UP
26		04434-51012	CLIP	4	J10001-UP
27		01010-81220	BOLT	4	J10001-UP
28		01643-31232	WASHER	4	J10001-UP
29		20Y-03-11220	COLLAR	1	J10001-UP
30		01010-81260	BOLT	1	J10001-UP
31		01643-31232	WASHER	1	J10001-UP
32		04434-53212	CLIP	2	J10001-UP
33		198-06-53610	CUSHION	2	J10001-UP
34		01010-81220	BOLT	1	J10001-UP
35		01643-31232	WASHER	1	J10001-UP
36		04434-51912	CLIP	2	J10001-UP
37		01010-81220	BOLT	2	J10001-UP
38		01643-31232	WASHER	2	J10001-UP
39		04434-52312	CLIP	4	J10001-UP
40		01010-81025	BOLT	4	J10001-UP
41		01643-31032	WASHER	4	J10001-UP
42		04434-51912	CLIP	1	J10001-UP
43		01010-81220	BOLT	1	J10001-UP
44		01643-31232	WASHER	1	J10001-UP
45		04434-53212	CLIP	1	J10001-UP

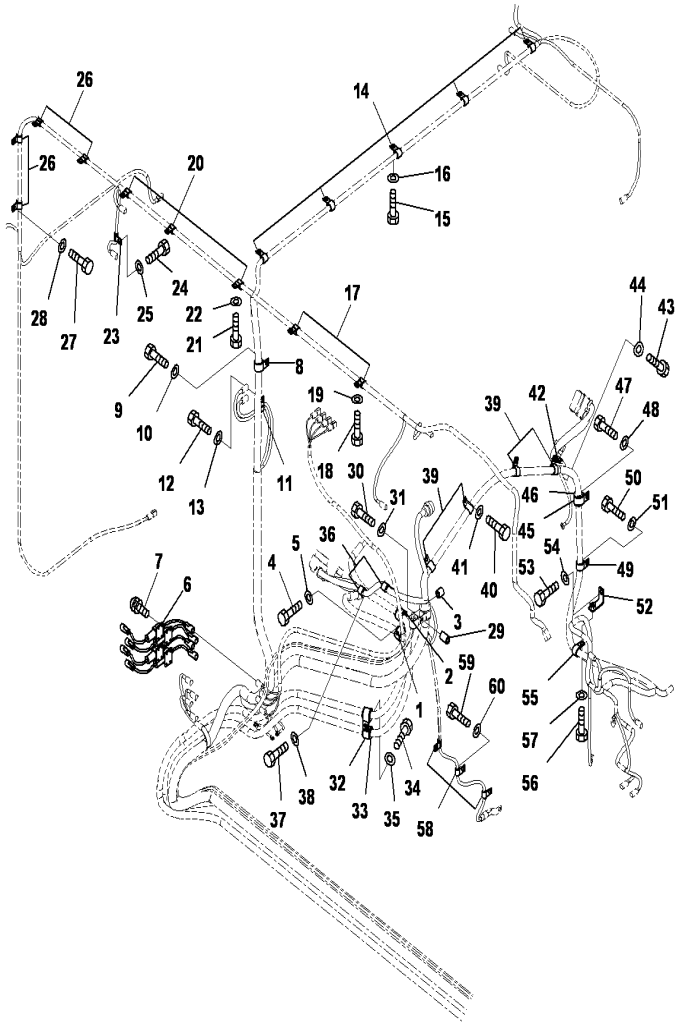

ELECTRICAL SYSTEM(ENGINE SIDE CLIP)

INDEX	CD	PART NO.	DESCRIPTION	QTY	SERIAL NO.
46		07095-20523	CUSHION	1	J10001-UP
47		01010-81225	BOLT	1	J10001-UP
48		01643-31232	WASHER	1	J10001-UP
49		04434-52312	CLIP	1	J10001-UP
50		01010-81225	BOLT	1	J10001-UP
51		01643-31232	WASHER	1	J10001-UP
52		2076251270	BRACKET	1	J10001-UP
53		01010-81225	BOLT	1	J10001-UP
54		01643-31232	WASHER	1	J10001-UP
55		04434-52312	CLIP	1	J10001-UP
56		01010-81220	BOLT	1	J10001-UP
57		01643-31232	WASHER	1	J10001-UP
58		04434-51012	CLIP	3	J10001-UP
59		01010-81220	BOLT	3	J10001-UP
60		01643-31232	WASHER	3	J10001-UP

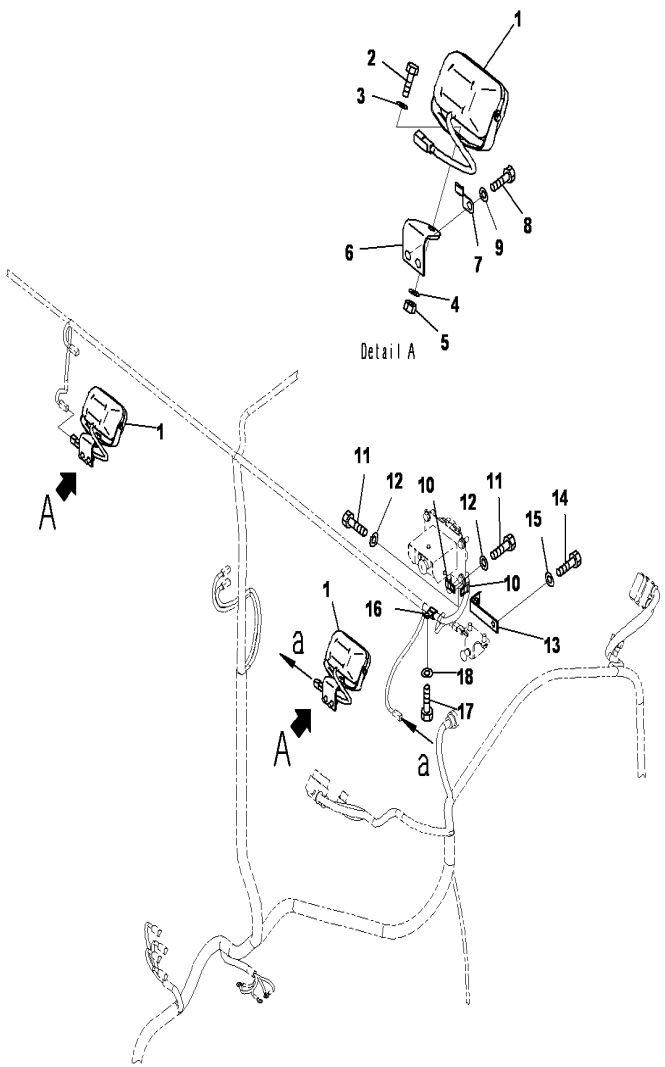

PC2000-8 S/N J10001-UP

ELECTRICAL SYSTEM(ROOM LAMP)

INDEX	CD	PART NO.	DESCRIPTION	QTY	SERIAL NO.
1		20Y-06-41940	WORK LAMP ASSY	2	J10001-UP
		421-06-23330	.BULB, 70WATT	1	J10001-UP
2		01010-81225	BOLT	1	J10001-UP
3		01643-31232	WASHER	1	J10001-UP
4		01643-31232	WASHER	1	J10001-UP
5		01580-11210	NUT	1	J10001-UP
6		21T-06-32751	BRACKET	2	J10001-UP
7		08193-21012	CLIP	2	J10001-UP
8		01010-81220	BOLT	4	J10001-UP
9		01643-31232	WASHER	4	J10001-UP
10		04434-51412	CLIP	2	J10001-UP
11		01010-81220	BOLT	2	J10001-UP
12		01643-31232	WASHER	2	J10001-UP
13		17A-61-13391	BRACKET	1	J10001-UP
14		01010-81225	BOLT	1	J10001-UP
15		01643-31232	WASHER	1	J10001-UP
16		04434-51712	CLIP	1	J10001-UP
17		01010-81220	BOLT	1	J10001-UP
18		01643-31232	WASHER	1	J10001-UP

Ref :E0200-29A0 Page :120300

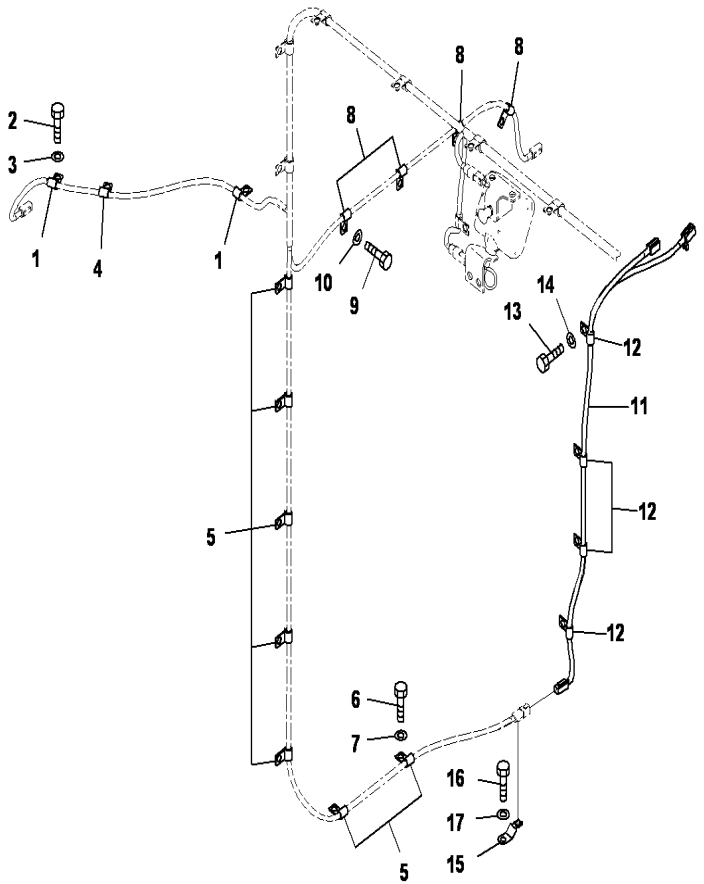

PC2000-8 S/N J10001-UP

ELECTRICAL SYSTEM(CLIP COOLING SIDE)

INDEX	CD	PART NO.	DESCRIPTION	QTY	SERIAL NO.
1		04434-51012	CLIP	2	J10001-UP
2		01010-81220	BOLT	2	J10001-UP
3		01643-31232	WASHER	2	J10001-UP
4		04434-51012	CLIP	1	J10001-UP
5		04434-51012	CLIP	7	J10001-UP
6		01010-81220	BOLT	7	J10001-UP
7		01643-31232	WASHER	7	J10001-UP
8		04434-51012	CLIP	4	J10001-UP
9		01010-81220	BOLT	4	J10001-UP
10		01643-31232	WASHER	4	J10001-UP
11		21T0632381	WIRING HARNESS	1	J10001-UP
12		04434-51012	CLIP	4	J10001-UP
13		01010-81220	BOLT	4	J10001-UP
14		01643-31232	WASHER	4	J10001-UP
15		08193-21012	CLIP	1	J10001-UP
16		01010-81220	BOLT	1	J10001-UP
17		01643-31232	WASHER	1	J10001-UP

Ref :E0200-30A0 Page :120310

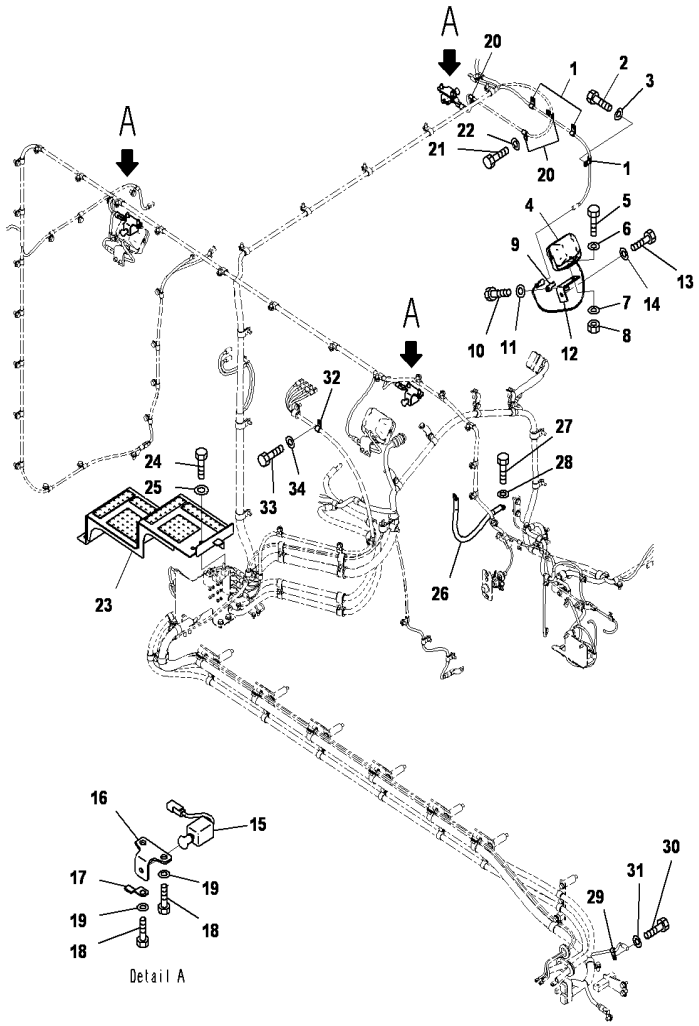

PC2000-8 S/N J10001-UP

ELECTRICAL SYSTEM(ROOM LAMP AND SWITCH)

INDEX	CD	PART NO.	DESCRIPTION	QTY	SERIAL NO.
1		04434-51012	CLIP	3	J10001-UP
2		01010-81220	BOLT	3	J10001-UP
3		01643-31232	WASHER	3	J10001-UP
4		20Y-06-41940	WORK LAMP ASSY	1	J10001-UP
		421-06-23330	.BULB, 70WATT	1	J10001-UP
5		01010-81225	BOLT	1	J10001-UP
6		01643-31232	WASHER	1	J10001-UP
7		01643-31232	WASHER	1	J10001-UP
8		01580-11210	NUT	1	J10001-UP
9		08193-21012	CLIP	1	J10001-UP
10		01010-81220	BOLT	1	J10001-UP
11		01643-31232	WASHER	1	J10001-UP
12		20Y-06-21551	BRACKET	1	J10001-UP
13		01010-81225	BOLT	1	J10001-UP
14		01643-31232	WASHER	1	J10001-UP
15		21T-06-32831	SWITCH	3	J10001-UP
16		21T-06-32441	BRACKET	3	J10001-UP
17		08193-21012	CLIP	3	J10001-UP
18		01010-81225	BOLT	6	J10001-UP
19		01643-31232	WASHER	6	J10001-UP
20		04434-51012	CLIP	3	J10001-UP
21		01010-81220	BOLT	3	J10001-UP
22		01643-31232	WASHER	3	J10001-UP
23		21T-06-33641	COVER	1	J10001-UP
24		01010-81225	BOLT	4	J10001-UP
25		175-54-34170	WASHER	4	J10001-UP
26		21T-06-33491	CABLE	1	J10001-UP
27		01010-81020	BOLT	2	J10001-UP
28		01643-31032	WASHER	2	J10001-UP
29		04434-51012	CLIP	1	J10001-UP
30		01010-81225	BOLT	1	J10001-UP
31		01643-31232	WASHER	1	J10001-UP
32		04434-51412	CLIP	1	J10001-UP
33		01010-81220	BOLT	1	J10001-UP
34		01643-31232	WASHER	1	J10001-UP

Ref :E0200-31A0 Page :120320

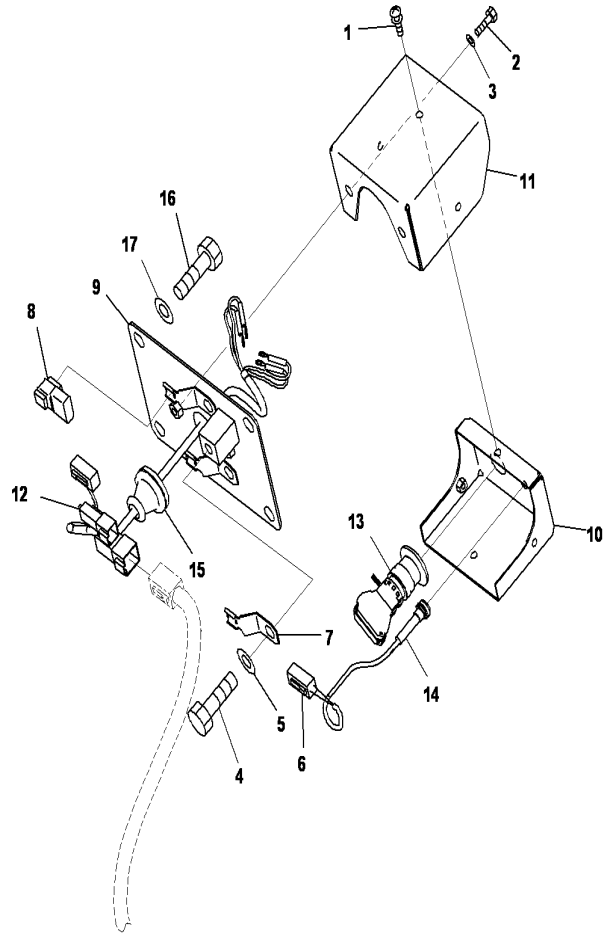

PC2000-8 S/N J10001-UP

ELECTRICAL SYSTEM(ENGINE STOP SWITCH REAR)

INDEX	CD	PART NO.	DESCRIPTION	QTY	SERIAL NO.
		21T-06-35390	PANEL ASS'Y	1	J10001-UP
1		01023-10612	.SCREW	3	J10001-UP
2		01010-80816	.BOLT	2	J10001-UP
3		01643-30823	.WASHER	2	J10001-UP
4		01010-81225	.BOLT	1	J10001-UP
5		01643-31232	.WASHER	1	J10001-UP
6		08192-12930	.CONNECTOR	1	J10001-UP
7		08193-20012	.CLIP	1	J10001-UP
8		21J-06-13661	.DIODE	1	J10001-UP
9		21T-06-32762	.BRACKET	1	J10001-UP
10		21T-06-32772	.COVER	1	J10001-UP
11		21T-06-32780	.COVER	1	J10001-UP
12		21T-06-33292	.WIRING HARNESS	1	J10001-UP
13		21T-06-34450	.SWITCH	1	J10001-UP
14		21T-06-34690	.LED ASS'Y	1	J10001-UP
15		21T-54-71980	.GROMMET	1	J10001-UP
16		01010-D1230	BOLT	4	J10001-UP
17		01643-71232	WASHER	4	J10001-UP

Ref :E0200-32A0 Page :120330

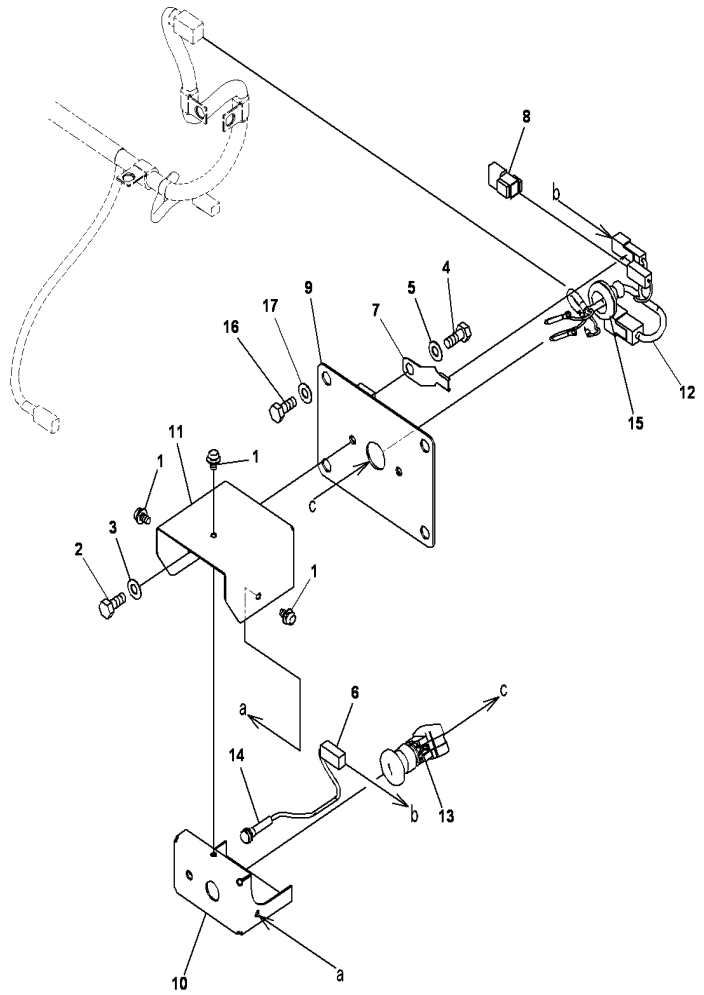

PC2000-8 S/N J10001-UP

ELECTRICAL SYSTEM(ENGINE STOP SWITCH FRONT)

INDEX	CD	PART NO.	DESCRIPTION	QTY	SERIAL NO.
		21T-06-35390	PANEL ASS'Y	1	J10001-UP
1		01023-10612	.SCREW	3	J10001-UP
2		01010-80816	.BOLT	2	J10001-UP
3		01643-30823	.WASHER	2	J10001-UP
4		01010-81225	.BOLT	1	J10001-UP
5		01643-31232	.WASHER	1	J10001-UP
6		08192-12930	.CONNECTOR	1	J10001-UP
7		08193-20012	.CLIP	1	J10001-UP
8		21J-06-13661	.DIODE	1	J10001-UP
9		21T-06-32762	.BRACKET	1	J10001-UP
10		21T-06-32772	.COVER	1	J10001-UP
11		21T-06-32780	.COVER	1	J10001-UP
12		21T-06-33292	.WIRING HARNESS	1	J10001-UP
13		21T-06-34450	.SWITCH	1	J10001-UP
14		21T-06-34690	.LED ASS'Y	1	J10001-UP
15		21T-54-71980	.GROMMET	1	J10001-UP
16		01010-D1230	BOLT	4	J10001-UP
17		01643-71232	WASHER	4	J10001-UP

Ref :E0200-33A0 Page :120340

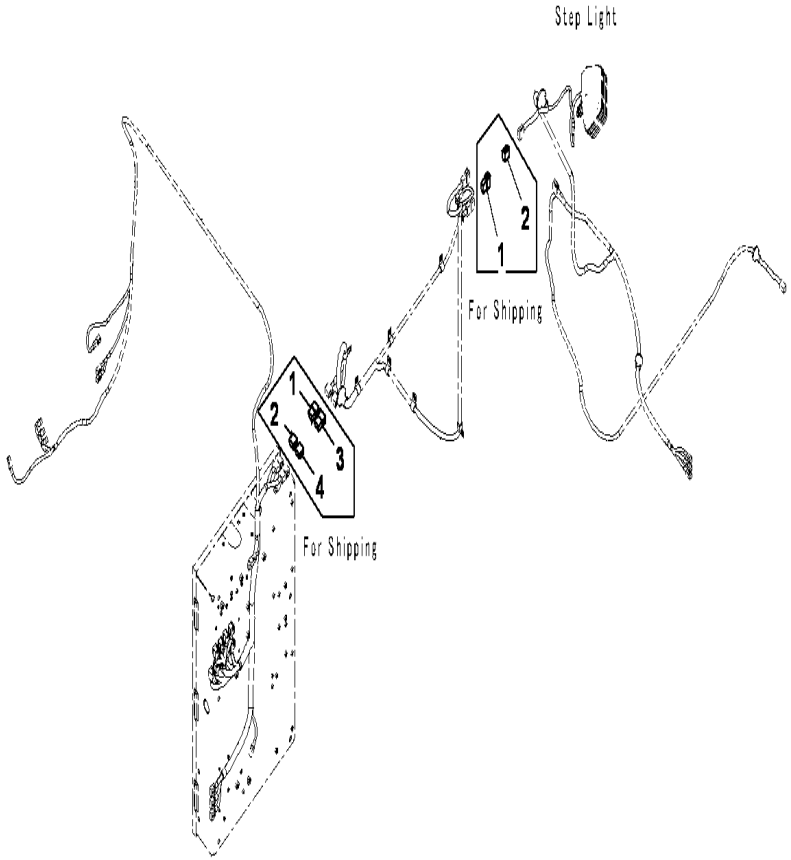

PC2000-8 S/N J10001-UP

ELECTRICAL SYSTEM(BLIND PARTS)

INDEX	CD	PART NO.	DESCRIPTION	QTY	SERIAL NO.
1		21T-06-31830	CONNECTOR.....	2	J10001-UP
2		21T-06-31930	CONNECTOR.....	2	J10001-UP
3		21T-06-31840	CONNECTOR.....	1	J10001-UP
4		21T-06-31940	CONNECTOR.....	1	J10001-UP

Ref :E0200-34A0 Page :120350

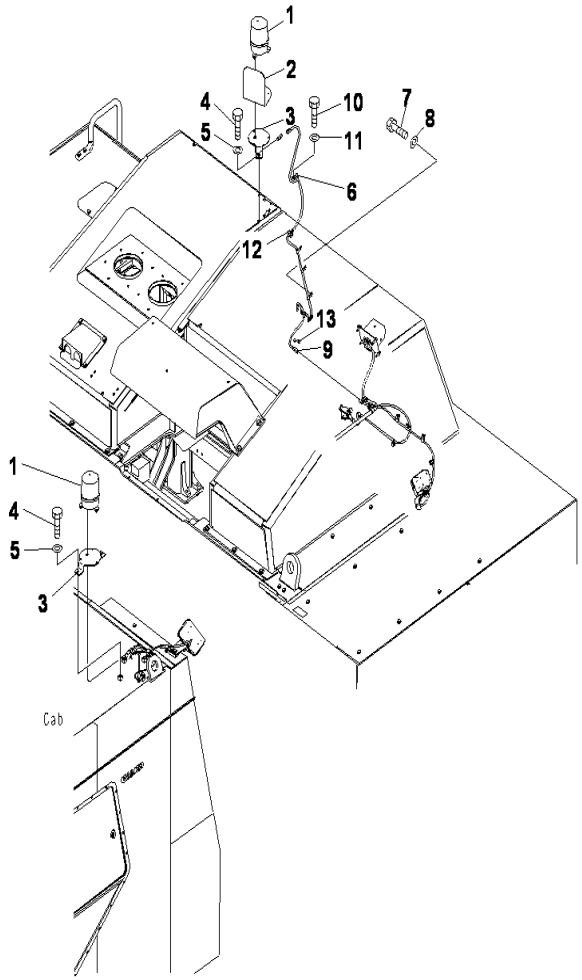

PC2000-8 S/N J10001-UP

BEACON

INDEX	CD	PART NO.	DESCRIPTION	QTY	SERIAL NO.
1		8295-06-1480	LAMP,BEACON.....	2	J10001-UP
		08154-12400	.LAMP, 35WATT.....	2	J10001-UP
2		21T-06-33610	PLATE.....	1	J10001-UP
3		21T-06-17430	BRACKET.....	2	J10001-UP
4		01010-81225	BOLT.....	4	J10001-UP
5		01643-31232	WASHER.....	4	J10001-UP
6		04434-51012	CLIP.....	6	J10001-UP
7		01010-81220	BOLT.....	6	J10001-UP
8		01643-31232	WASHER.....	6	J10001-UP
9		21T-06-32340	WIRING HARNESS.....	1	J10001-UP
10		01010-81220	BOLT.....	1	J10001-UP
11		01643-31232	WASHER.....	1	J10001-UP
12		21T-54-71980	GROMMET.....	1	J10001-UP
13		08193-21012	CLIP.....	1	J10001-UP

Ref :E0201-01A0 Page :120360

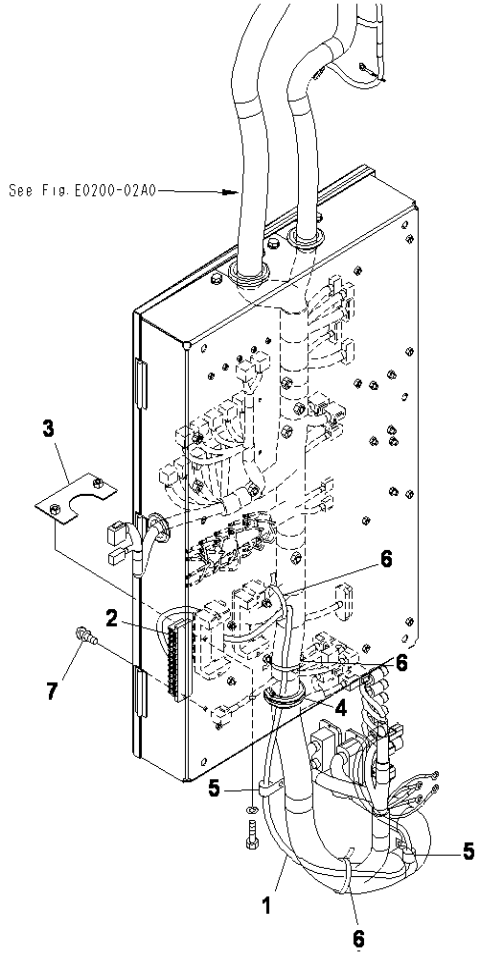

PC2000-8 S/N J10001-UP

ADDITIONAL FUSE TERMINAL

INDEX	CD	PART NO.	DESCRIPTION	QTY	SERIAL NO.
1		21T-06-33370	WIRING HARNESS.....	1	J10001-UP
2		21T-06-67880	.BLOCK.....	1	J10001-UP
3		21T-06-33380	PLATE.....	1	J10001-UP
4		21T-06-33390	GROMMET.....	1	J10001-UP
5		04434-51012	CLIP.....	2	J10001-UP
6		08034-20536	BAND.....	3	J10001-UP
7		01023-10416	SCREW.....	2	J10001-UP

Ref :E0201-02A0 Page :120370

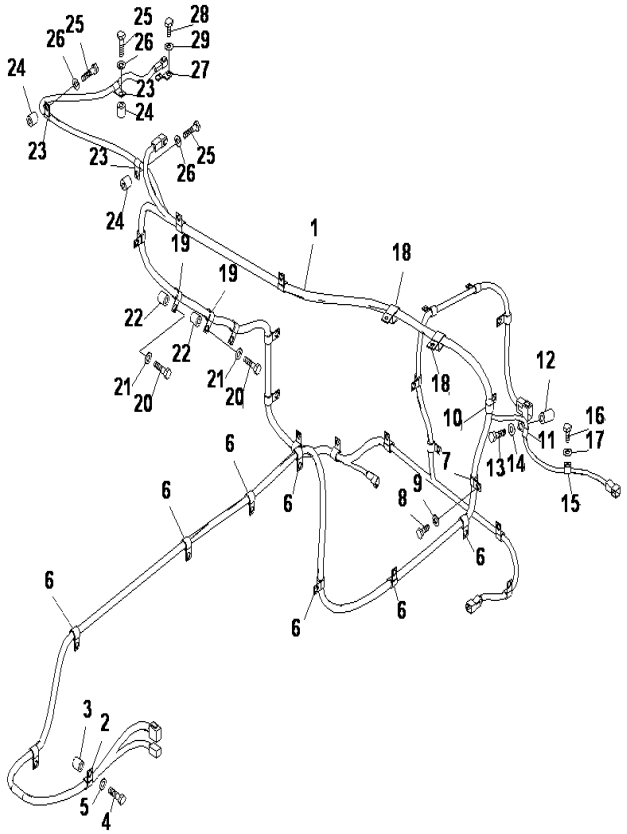

PC2000-8 S/N J10001-UP

ADDITIONAL OPTION HARNESS(1/2)

INDEX	CD	PART NO.	DESCRIPTION	QTY	SERIAL NO.
1		21T-06-34931	WIRING HARNESS	1	J10001-UP
2		04434-51712	CLIP	1	J10001-UP
3		195-33-11220	SPACER	1	J10001-UP
4		01010-81250	BOLT	1	J10001-UP
5		01643-31232	WASHER	1	J10001-UP
6		04434-51712	CLIP	7	J10001-UP
7		04434-51712	CLIP	1	J10001-UP
8		01010-81225	BOLT	1	J10001-UP
9		01643-31232	WASHER	1	J10001-UP
10		04434-51912	CLIP	1	J10001-UP
11		04434-51012	CLIP	1	J10001-UP
12		205-03-71331	COLLAR	1	J10001-UP
13		01010-81265	BOLT	1	J10001-UP
14		01643-31232	WASHER	1	J10001-UP
15		04434-51012	CLIP	1	J10001-UP
16		01010-81220	BOLT	1	J10001-UP
17		01643-31232	WASHER	1	J10001-UP
18		141-06-11220	CLIP	2	J10001-UP
19		04434-51912	CLIP	2	J10001-UP
20		01010-81245	BOLT	2	J10001-UP
21		01643-31232	WASHER	2	J10001-UP
22		195-33-11220	SPACER	2	J10001-UP
23		04434-51012	CLIP	3	J10001-UP
24		195-33-11220	SPACER	3	J10001-UP
25		01010-81245	BOLT	3	J10001-UP
26		01643-31232	WASHER	3	J10001-UP
27		08193-20012	CLIP	1	J10001-UP
28		01010-81220	BOLT	1	J10001-UP
29		01643-31232	WASHER	1	J10001-UP

Ref :E0202-01A0 Page :120380

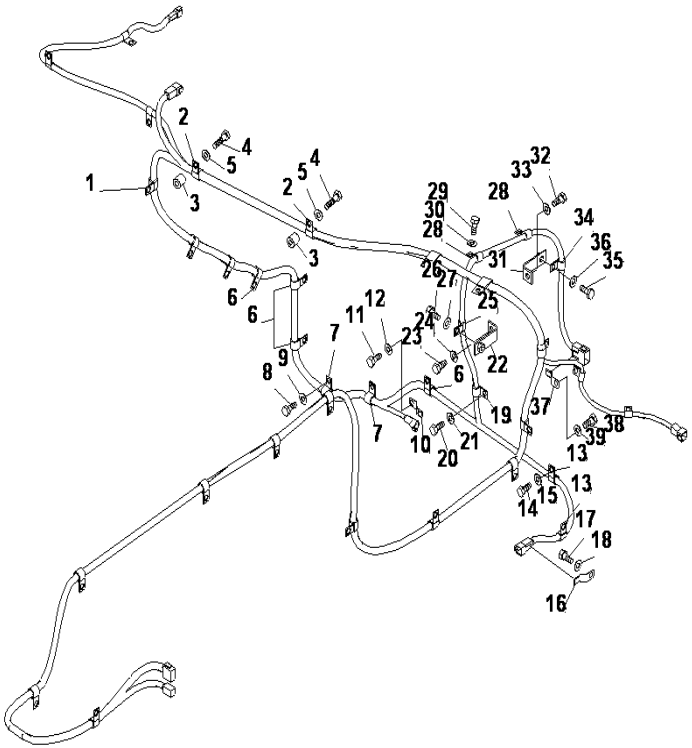

PC2000-8 S/N J10001-UP

ADDITIONAL OPTION HARNESS(2/2)

INDEX	CD	PART NO.	DESCRIPTION	QTY	SERIAL NO.
1		04434-51712	CLIP	1	J10001-UP
2		04434-51712	CLIP	2	J10001-UP
3		195-33-11220	SPACER	2	J10001-UP
4		01010-81245	BOLT	2	J10001-UP
5		01643-31232	WASHER	2	J10001-UP
6		04434-51712	CLIP	3	J10001-UP
7		04434-51712	CLIP	3	J10001-UP
8		01010-81220	BOLT	3	J10001-UP
9		01643-31232	WASHER	3	J10001-UP
10		08193-20012	CLIP	1	J10001-UP
11		01010-81220	BOLT	1	J10001-UP
12		01643-31232	WASHER	1	J10001-UP
13		04434-51412	CLIP	2	J10001-UP
14		01010-81220	BOLT	2	J10001-UP
15		01643-31232	WASHER	2	J10001-UP
16		08193-20012	CLIP	1	J10001-UP
17		01010-81220	BOLT	1	J10001-UP
18		01643-31232	WASHER	1	J10001-UP
19		04434-51412	CLIP	1	J10001-UP
20		01010-81220	BOLT	1	J10001-UP
21		01643-31232	WASHER	1	J10001-UP
22		203-04-62110	BRACKET	1	J10001-UP
23		01010-81230	BOLT	1	J10001-UP
24		01643-31232	WASHER	1	J10001-UP
25		04434-51412	CLIP	1	J10001-UP
26		01010-81230	BOLT	1	J10001-UP
27		01643-31232	WASHER	1	J10001-UP
28		04434-51412	CLIP	2	J10001-UP
29		01010-81220	BOLT	2	J10001-UP
30		01643-31232	WASHER	2	J10001-UP
31		203-04-62110	BRACKET	1	J10001-UP
32		01010-81230	BOLT	1	J10001-UP
33		01643-31232	WASHER	1	J10001-UP
34		04434-51412	CLIP	1	J10001-UP
35		01010-81230	BOLT	1	J10001-UP
36		01643-31232	WASHER	1	J10001-UP
37		08193-20012	CLIP	1	J10001-UP
38		01010-81220	BOLT	1	J10001-UP
39		01643-31232	WASHER	1	J10001-UP

Ref :E0202-02A0 Page :120390

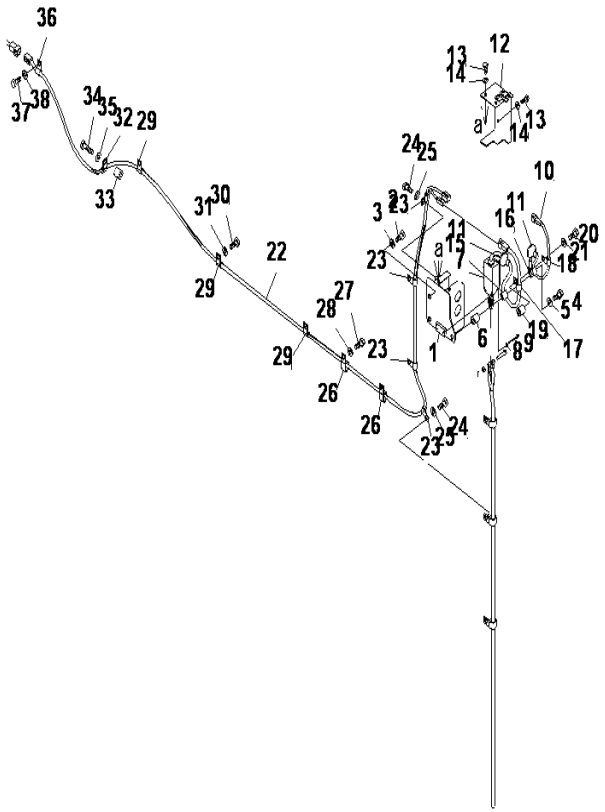

PC2000-8 S/N J10001-UP

ADDITIONAL OPTION HARNESS(ADDITIONAL EMERGENCY SWITCH)(1/3)

INDEX	CD	PART NO.	DESCRIPTION	QTY	SERIAL NO.
1		21T-06-34731	BRACKET	1	J10001-UP
2		01010-81225	BOLT	2	J10001-UP
3		01643-31232	WASHER	2	J10001-UP
4		01010-81250	BOLT	1	J10001-UP
5		01643-31232	WASHER	1	J10001-UP
6		195-33-11220	SPACER	1	J10001-UP
7		21T-06-34712	SWITCH A	1	J10001-UP
8		01601-20513	WASHER	4	J10001-UP
9		01252-70535	BOLT	4	J10001-UP
10		21T-06-35332	LED ASS'Y	1	J10001-UP
11		21T-54-71980	GROMMET	2	J10001-UP
12		21T-06-34761	COVER	1	J10001-UP
13		01010-80816	BOLT	3	J10001-UP
14		01643-30823	WASHER	3	J10001-UP
15		04434-51212	CLIP	1	J10001-UP
16		04434-50812	CLIP	1	J10001-UP
17		04434-51412	CLIP	1	J10001-UP
18		04434-50812	CLIP	1	J10001-UP
19		195-33-11220	SPACER	1	J10001-UP
20		01010-81250	BOLT	1	J10001-UP
21		01643-31232	WASHER	1	J10001-UP
22		21T-06-34941	WIRING HARNESS	1	J10001-UP
23		04434-51012	CLIP	4	J10001-UP
24		01010-81220	BOLT	4	J10001-UP
25		01643-31232	WASHER	4	J10001-UP
26		04435-51412	CLIP	2	J10001-UP
27		01010-81220	BOLT	2	J10001-UP
28		01643-31232	WASHER	2	J10001-UP
29		04434-51012	CLIP	3	J10001-UP
30		01010-81220	BOLT	3	J10001-UP
31		01643-31232	WASHER	3	J10001-UP
32		04434-51012	CLIP	1	J10001-UP
33		195-33-11220	SPACER	1	J10001-UP
34		01010-81245	BOLT	1	J10001-UP
35		01643-31232	WASHER	1	J10001-UP
36		04434-51012	CLIP	1	J10001-UP
37		01010-81220	BOLT	1	J10001-UP
38		01643-31232	WASHER	1	J10001-UP

Ref :E0202-03A0 Page :120400

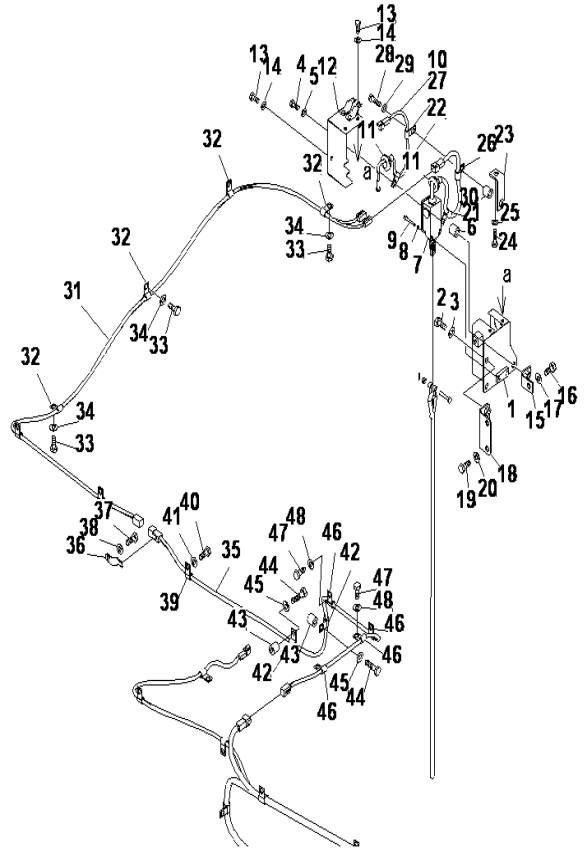

PC2000-8 S/N J10001-UP

ADDITIONAL OPTION HARNESS(ADDITIONAL EMERGENCY SWITCH)(2/3)

INDEX	CD	PART NO.	DESCRIPTION	QTY	SERIAL NO.
1		21T-06-34731	BRACKET	1	J10001-UP
2		01010-81225	BOLT	2	J10001-UP
3		01643-31232	WASHER	2	J10001-UP
4		01010-81250	BOLT	1	J10001-UP
5		01643-31232	WASHER	1	J10001-UP
6		195-33-11220	SPACER	1	J10001-UP
7		21T-06-34712	SWITCH ASS'Y	1	J10001-UP
8		01601-20513	WASHER	4	J10001-UP
9		01252-70535	BOLT	4	J10001-UP
10		21T-06-35332	LED A	1	J10001-UP
11		21T-54-71980	GROMMET	2	J10001-UP
12		21T-06-34761	COVER	1	J10001-UP
13		01010-80816	BOLT	3	J10001-UP
14		01643-30823	WASHER	3	J10001-UP
15		17M-49-15260	BRACKET	1	J10001-UP
16		01010-81225	BOLT	1	J10001-UP
17		01643-31232	WASHER	1	J10001-UP
18		21T-03-32730	BRACKET	1	J10001-UP
19		01010-81225	BOLT	2	J10001-UP
20		01643-31232	WASHER	2	J10001-UP
21		04434-51212	CLIP	1	J10001-UP
22		04434-50812	CLIP	1	J10001-UP
23		203-04-62110	BRACKET	1	J10001-UP
24		01010-81225	BOLT	1	J10001-UP
25		01643-31232	WASHER	1	J10001-UP
26		04434-51412	CLIP	1	J10001-UP
27		04434-50812	CLIP	1	J10001-UP
28		01010-81250	BOLT	1	J10001-UP
29		01643-31232	WASHER	1	J10001-UP
30		195-33-11220	SPACER	1	J10001-UP
31		21T-06-34971	WIRING HARNESS	1	J10001-UP
32		04434-51012	CLIP	4	J10001-UP
33		01010-81220	BOLT	4	J10001-UP
34		01643-31232	WASHER	4	J10001-UP
35		21T-06-34991	WIRING HARNESS	1	J10001-UP
36		08193-20012	CLIP	1	J10001-UP
37		01010-81220	BOLT	1	J10001-UP
38		01643-31232	WASHER	1	J10001-UP
39		04434-51012	CLIP	1	J10001-UP
40		01010-81220	BOLT	1	J10001-UP
41		01643-31232	WASHER	1	J10001-UP
42		04434-51012	CLIP	2	J10001-UP
43		195-33-11220	SPACER	2	J10001-UP
44		01010-81245	BOLT	2	J10001-UP
45		01643-31232	WASHER	2	J10001-UP

Ref :E0202-04A0 Page :120410

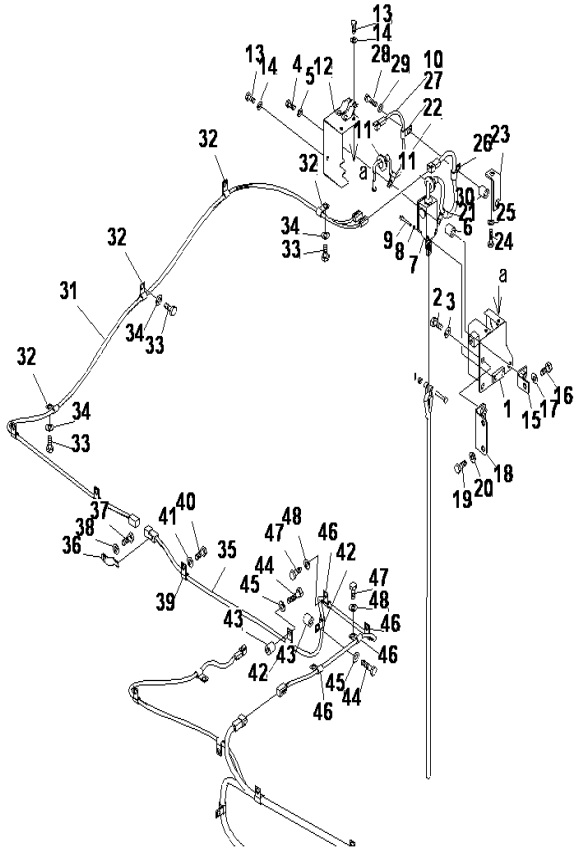

ADDITIONAL OPTION HARNESS(ADDITIONAL EMERGENCY SWITCH)(2/3)

INDEX	CD	PART NO.	DESCRIPTION	QTY	SERIAL NO.
46		04434-51012	CLIP	4	J10001-UP
47		01010-81220	BOLT	4	J10001-UP
48		01643-31232	WASHER	4	J10001-UP

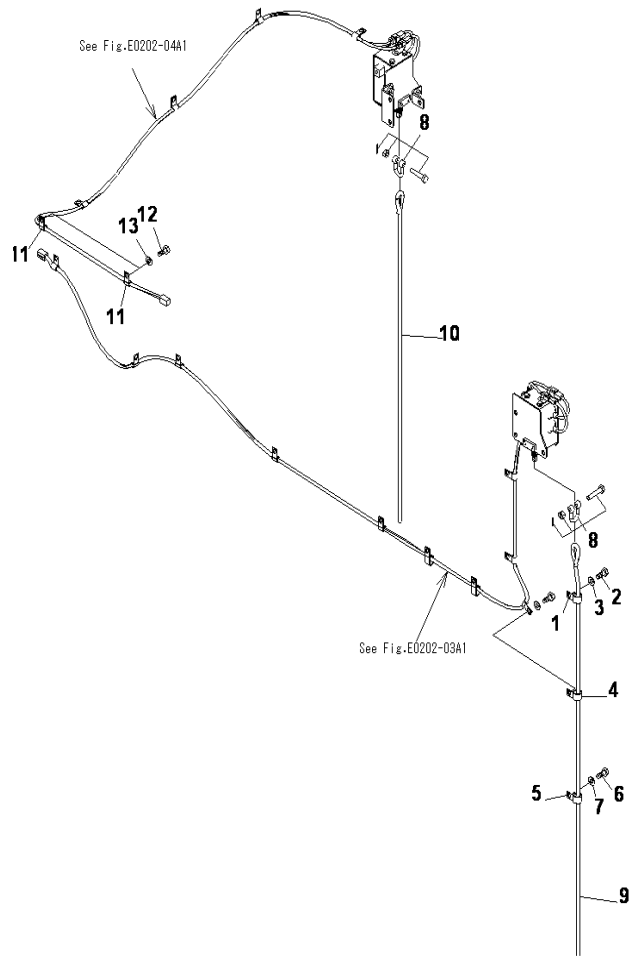

PC2000-8 S/N J10001-UP

ADDITIONAL OPTION HARNESS(ADDITIONAL EMERGENCY SWITCH)(3/3)

INDEX	CD	PART NO.	DESCRIPTION	QTY	SERIAL NO.
1		04434-51912	CLIP	1	J10001-UP
2		01010-81220	BOLT	1	J10001-UP
3		01643-31232	WASHER	1	J10001-UP
4		04434-51912	CLIP	1	J10001-UP
5		04434-51912	CLIP	1	J10001-UP
6		01010-81220	BOLT	1	J10001-UP
7		01643-31232	WASHER	1	J10001-UP
8		21T-06-31170	SHACKLE	2	J10001-UP
9		21T-06-31131	ROPE(RED)	1	J10001-UP
10		21T-06-31141	ROPE(RED)	1	J10001-UP
11		04434-51012	CLIP	2	J10001-UP
12		01010-81220	BOLT	2	J10001-UP
13		01643-31232	WASHER	2	J10001-UP

Ref :E0202-05A0 Page :120420

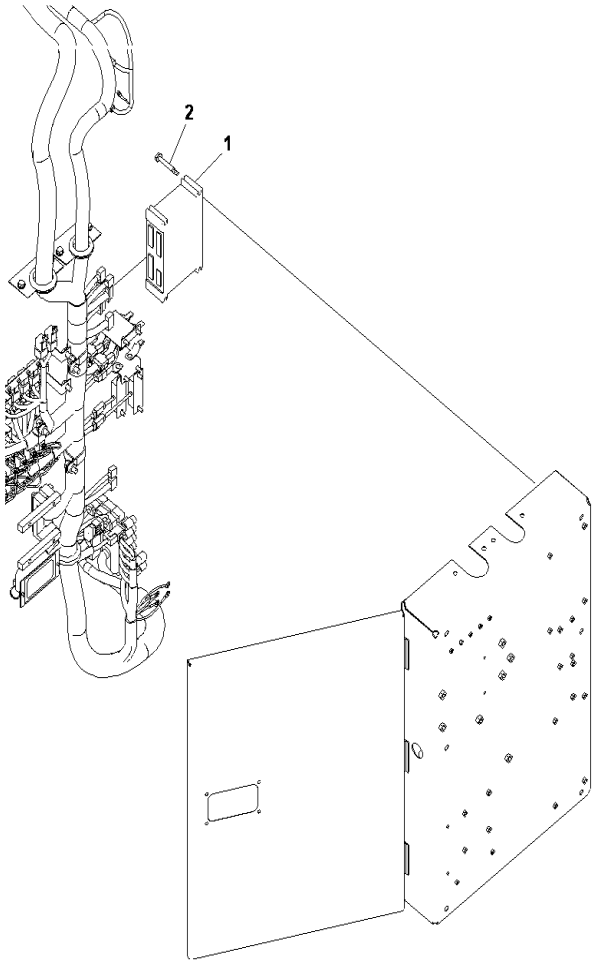

PC2000-8 S/N J10001-UP

CONTROLLER (VHMS)

INDEX	CD	PART NO.	DESCRIPTION	QTY	SERIAL NO.
1		7826-11-7502	CONTROLLER,VHMS.....	1	J10001-UP
2		01435-00880	BOLT.....	4	J10001-UP

Ref :E0250-01A0 Page :120430

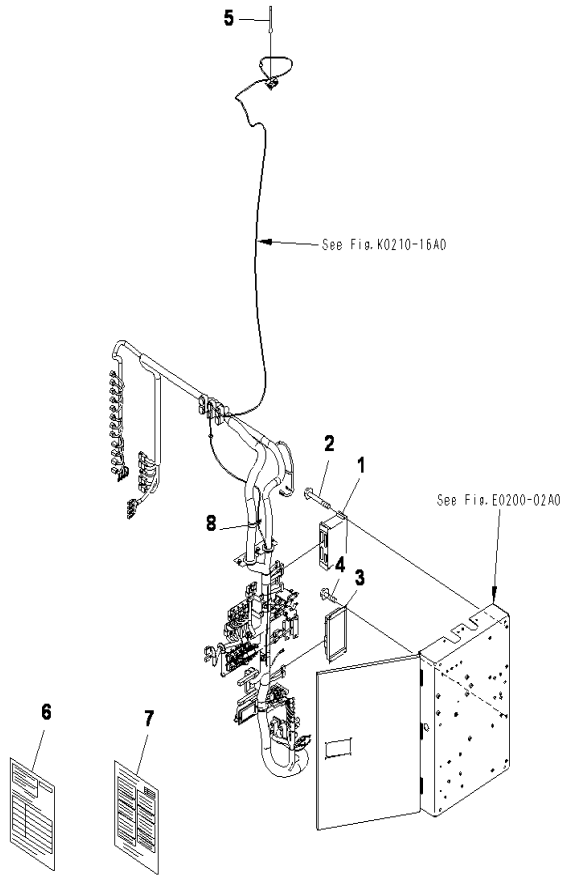

PC2000-8 S/N J10001-UP

CONTROLLER(VHMS AND ORBCOM)

INDEX	CD	PART NO.	DESCRIPTION	QTY	SERIAL NO.
1		7826-11-7502	CONTROLLER,VHMS	1	J10001-UP
2		01435-00880	BOLT	4	J10001-UP
3		7826-12-2502	CONTROLLER,TC30	1	J10001-UP
4		01435-00820	BOLT	4	J10001-UP
5		8A13-10-2100	ANTENNA	1	J10001-UP
6		21T-00-64511	PLATE	1	J10001-UP
7		21T-00-64520	PLATE	1	J10001-UP
8		21T-38-12270	CLIP	1	J10001-UP

Ref :E0250-01A1 Page :120440

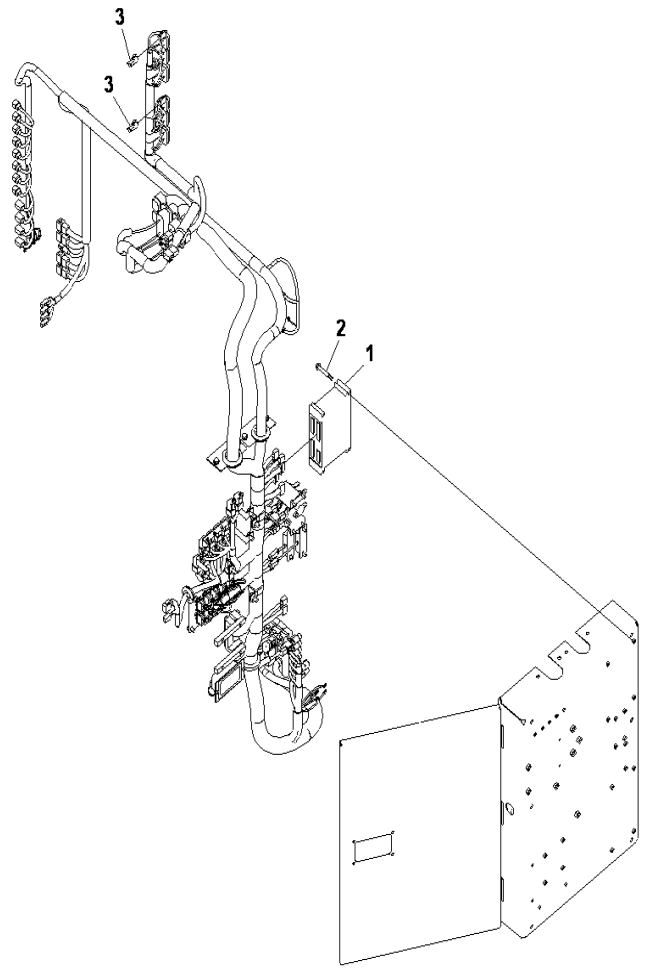

PC2000-8 S/N J10001-UP

CONTROLLER(VHMS)(HOT AREA ARRANGEMENT)

INDEX	CD	PART NO.	DESCRIPTION	QTY	SERIAL NO.
1		7826-11-7502	CONTROLLER,VHMS	1	J10001-UP
2		01435-00880	BOLT	4	J10001-UP
3		21T-06-33910	CONNECTOR	2	J10001-UP

Ref :E0250-01A4 Page :120450

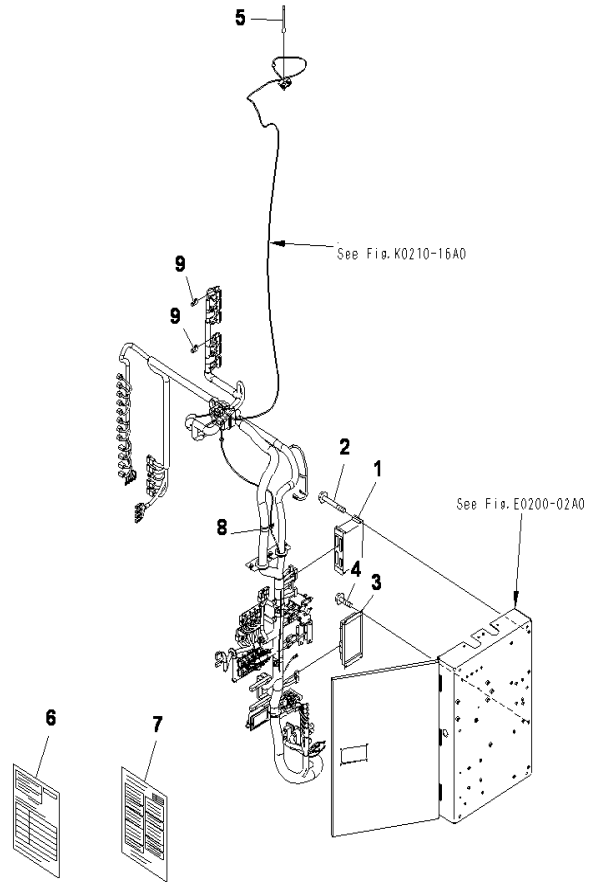

PC2000-8 S/N J10001-UP

CONTROLLER(VHMS AND ORBCOM)(HIGH ALTITUDE ARRANGEMENT)

INDEX	CD	PART NO.	DESCRIPTION	QTY	SERIAL NO.
1		7826-11-7502	CONTROLLER,VHMS.....	1	J10001-UP
2		01435-00880	BOLT.....	4	J10001-UP
3		7826-12-2502	CONTROLLER,TC30.....	1	J10001-UP
4		01435-00820	BOLT.....	4	J10001-UP
5		8A13-10-2100	ANTENNA.SAT.....	1	J10001-UP
6		21T-00-64511	PLATE.....	1	J10001-UP
7		21T-00-64520	PLATE.....	1	J10001-UP
8		21T-38-12270	CLIP.....	1	J10001-UP
9		21T-06-33910	CONNECTOR.....	2	J10001-UP

Ref :E0250-01A5 Page :120460

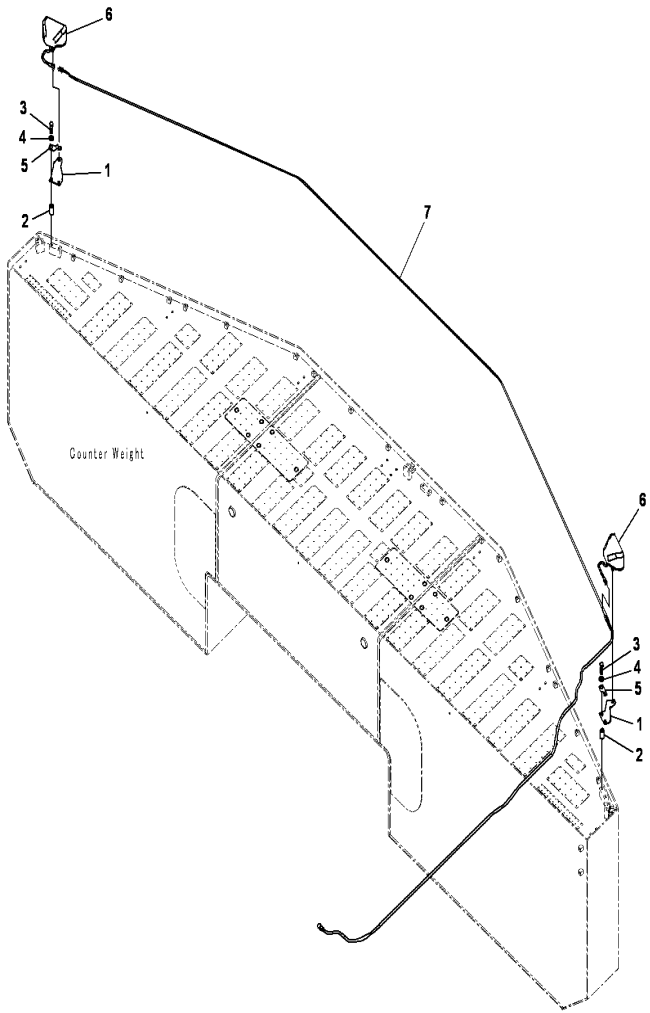

PC2000-8 S/N J10001-UP

BACK LAMP(WITH BACK MONITOR)

INDEX	CD	PART NO.	DESCRIPTION	QTY	SERIAL NO.
1		21T-06-33360	BRACKET.....	2	J10001-UP
2		205-03-71331	COLLAR.....	4	J10001-UP
3		01010-81265	BOLT.....	4	J10001-UP
4		01643-31232	WASHER.....	4	J10001-UP
5		08193-21012	CLIP.....	2	J10001-UP
6		21T-06-32810	WORK LAMP ASS'Y.....	2	J10001-UP
		421-06-23330	.BULB, 70WATT.....	1	J10001-UP
7		21T-06-32980	WIRING HARNESS.....	1	J10001-UP

Ref :E0320-01A0 Page :120470

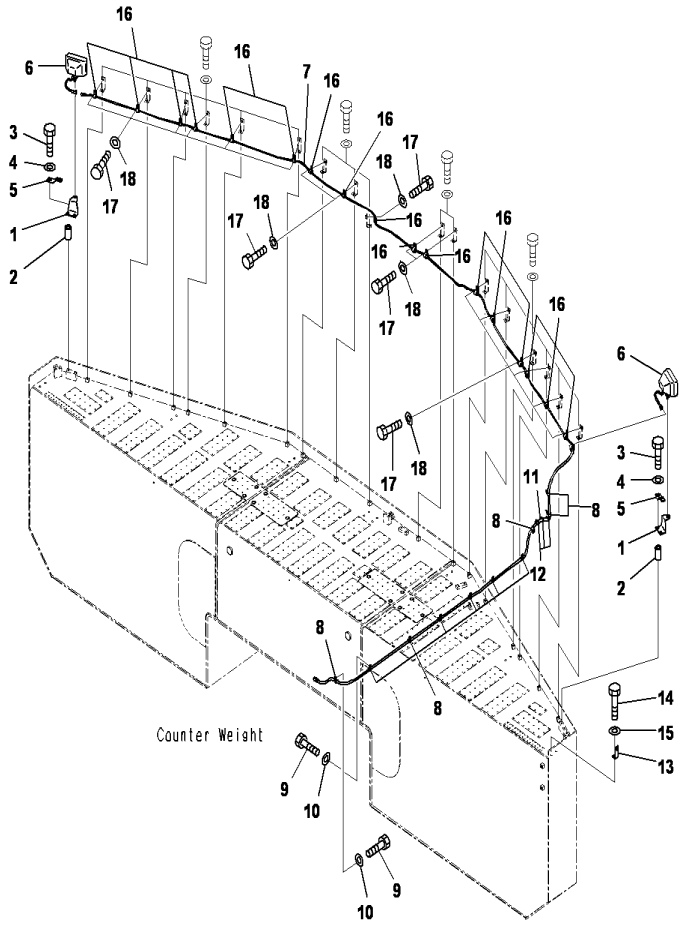

PC2000-8 S/N J10001-UP

ADDITIONAL REAR WORKING LAMP

INDEX	CD	PART NO.	DESCRIPTION	QTY	SERIAL NO.
1		21T-06-33360	BRACKET	2	J10001-UP
2		205-03-71331	COLLAR	4	J10001-UP
3		01010-81265	BOLT	4	J10001-UP
4		01643-31232	WASHER	4	J10001-UP
5		08193-21012	CLIP	2	J10001-UP
6		21T-06-32810	WORK LAMP ASS'Y	2	J10001-UP
		421-06-23330	.BULB, 70WATT	1	J10001-UP
7		21T-06-32980	WIRING HARNESS	1	J10001-UP
8		04434-51412	CLIP	10	J10001-UP
9		01010-81225	BOLT	10	J10001-UP
10		01643-31232	WASHER	10	J10001-UP
11		203-62-52210	RUBBER	1	J10001-UP
12		08034-20823	BAND	3	J10001-UP
13		203-04-62110	BRACKET	1	J10001-UP
14		01010-81255	BOLT	1	J10001-UP
15		01643-31232	WASHER	1	J10001-UP
16		04434-51012	CLIP	17	J10001-UP
17		01010-81225	BOLT	17	J10001-UP
18		01643-31232	WASHER	17	J10001-UP

Ref :E0320-02A0 Page :120480

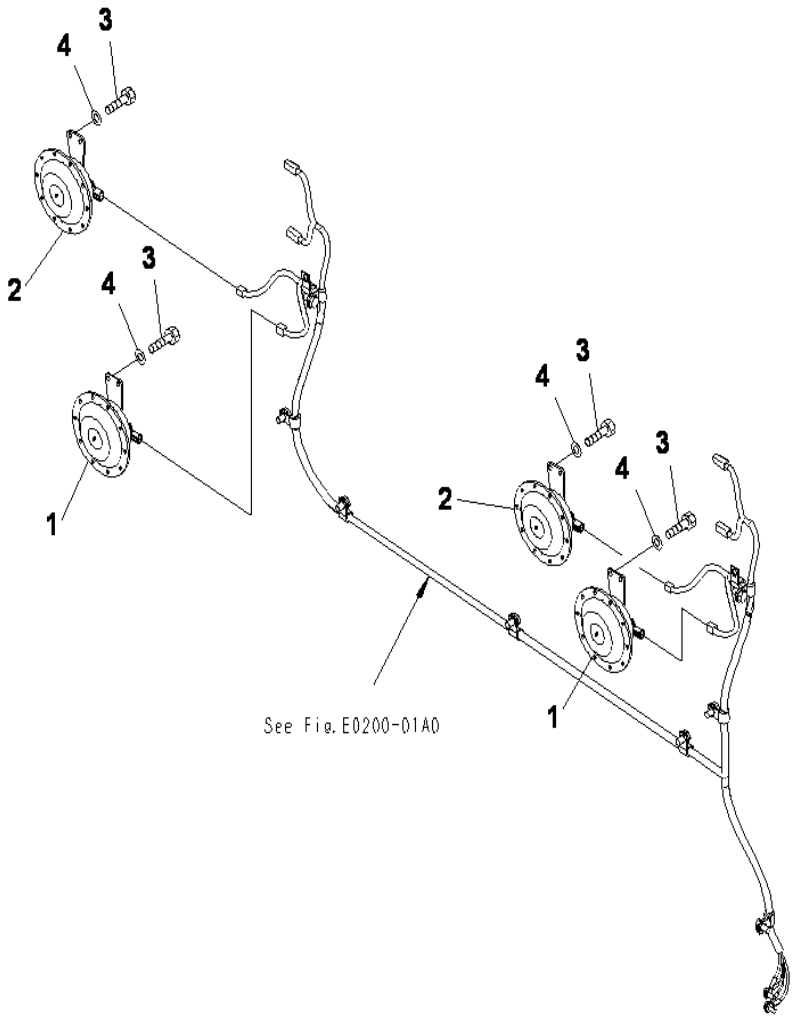

PC2000-8 S/N J10001-UP

HORN

INDEX	CD	PART NO.	DESCRIPTION	QTY	SERIAL NO.
1		208-06-71380	HORN	2	J10001-UP
2		208-06-71390	HORN	2	J10001-UP
3		01010-80825	BOLT	8	J10001-UP
4		01643-30823	WASHER	8	J10001-UP

Ref :E0410-01A0 Page :120490

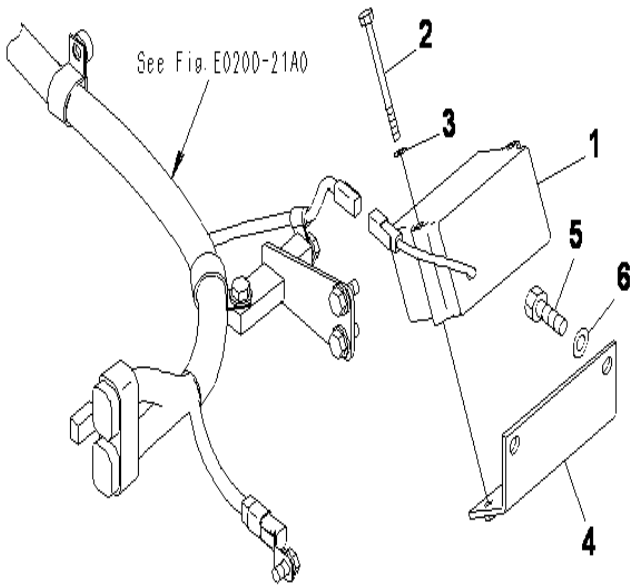

PC2000-8 S/N J10001-UP

TRAVEL ALARM

INDEX	CD	PART NO.	DESCRIPTION	QTY	SERIAL NO.
1		08164-C1100	BUZZER	1	J10001-UP
2		01010-80895	BOLT	2	J10001-UP
3		01640-20816	WASHER	2	J10001-UP
4		21T-06-72380	BRACKET	1	J10001-UP
5		01010-81225	BOLT	2	J10001-UP
6		01643-31232	WASHER	2	J10001-UP

Ref :E0420-01A0 Page :120500

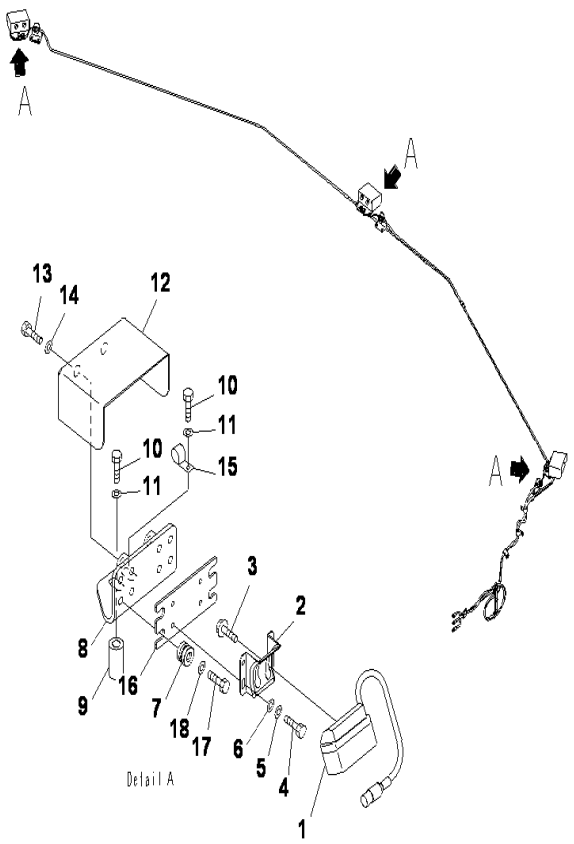

PC2000-8 S/N J10001-UP

BACK MONITOR (CAMERA)

INDEX	CD	PART NO.	DESCRIPTION	QTY	SERIAL NO.
		7835-33-1001	CAMERA ASS'Y	1	J10001-UP
1		7835-33-1100	.CAMERA	1	J10001-UP
2		7835-33-1201	.BRACKET	1	J10001-UP
3		7835-33-1310	.BOLT	2	J10001-UP
4		7835-33-1320	.BOLT	4	J10001-UP
5		7835-33-1330	.WASHER	4	J10001-UP
6		7835-33-1340	.WASHER	4	J10001-UP
7		20Y-810-1240	CUSHION	12	J10001-UP
8		21T-06-31640	BRACKET	3	J10001-UP
9		205-03-71331	COLLAR	6	J10001-UP
10		01010-81265	BOLT	6	J10001-UP
11		01643-31232	WASHER	6	J10001-UP
12		21T-06-31650	COVER	6	J10001-UP
13		01010-81220	BOLT	6	J10001-UP
14		01643-31232	WASHER	6	J10001-UP
15		04434-50612	CLIP	3	J10001-UP
16		20Y-06-41670	BRACKET	3	J10001-UP
17		01010-80830	BOLT	12	J10001-UP
18		01643-30823	WASHER	12	J10001-UP

Ref :E0450-01A0 Page :120510

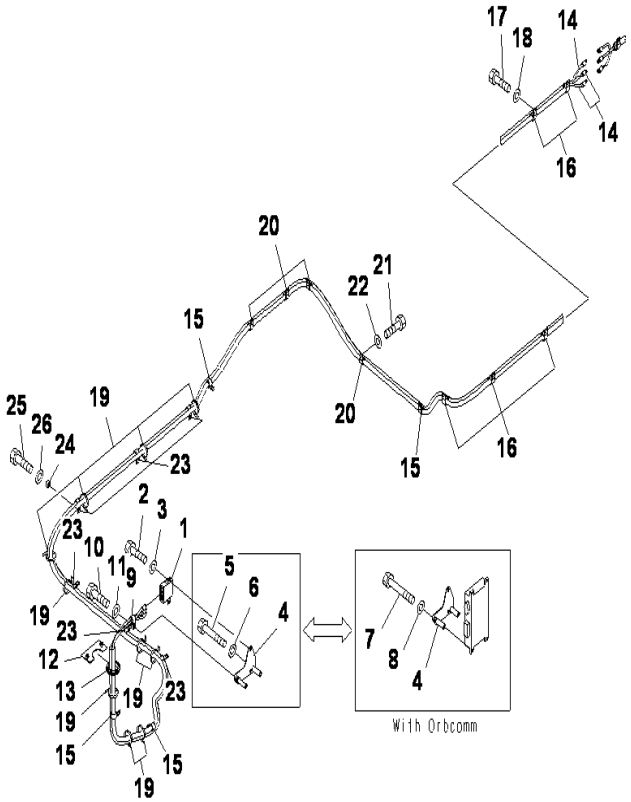

PC2000-8 S/N J10001-UP

BACK MONITOR(TERMINAL BOX)

INDEX	CD	PART NO.	DESCRIPTION	QTY	SERIAL NO.
1		7835-33-7000	TERMINAL BOX	1	J10001-UP
2		01010-80616	BOLT	2	J10001-UP
3		01643-30623	WASHER	2	J10001-UP
4		21T-06-32960	BRACKET	1	J10001-UP
5		01010-80885	BOLT	2	J10001-UP
6		01643-30823	WASHER	2	J10001-UP
7		01010-80875	BOLT	2	J10001-UP
8		01643-30823	WASHER	2	J10001-UP
9		04434-52312	CLIP	1	J10001-UP
10		01010-81225	BOLT	1	J10001-UP
11		01643-31232	WASHER	1	J10001-UP
12		21T-06-33380	PLATE	1	J10001-UP
13		21T-06-33390	GROMMET	1	J10001-UP
14		7835-33-8100	CABLE A	3	J10001-UP
15		04434-52112	CLIP	3	J10001-UP
16		04434-52512	CLIP	5	J10001-UP
17		01010-81220	BOLT	5	J10001-UP
18		01643-31232	WASHER	5	J10001-UP
19		08034-20519	BAND	10	J10001-UP
20		04434-52112	CLIP	4	J10001-UP
21		01010-81220	BOLT	4	J10001-UP
22		01643-31232	WASHER	4	J10001-UP
23		04435-51012	CLIP	7	J10001-UP
24		198-33-12380	WASHER	3	J10001-UP
25		01010-81240	BOLT	3	J10001-UP
26		01643-31232	WASHER	3	J10001-UP

Ref :E0450-02A0 Page :120520

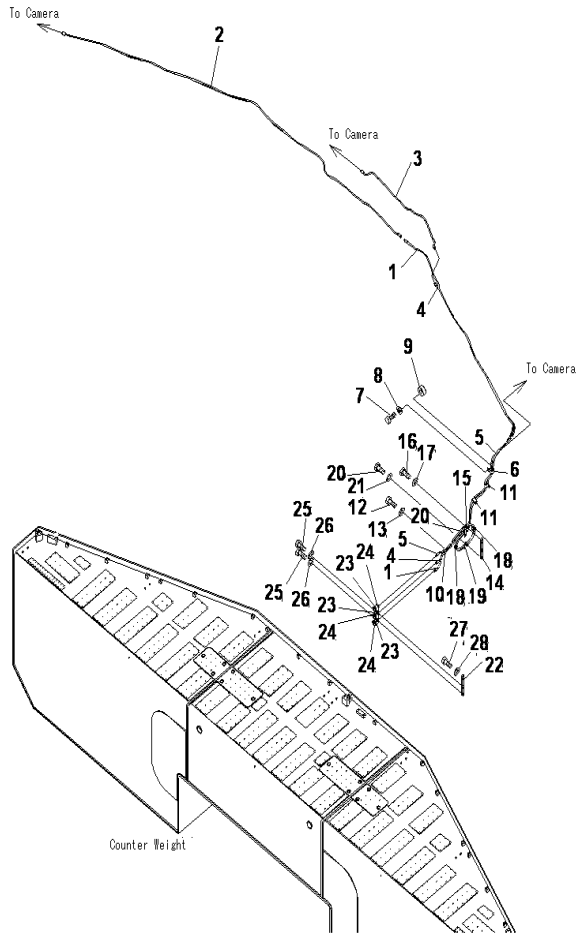

PC2000-8 S/N J10001-UP

BACK MONITOR(HARNESS)(1/2)

INDEX	CD	PART NO.	DESCRIPTION	QTY	SERIAL NO.
1		7835-33-8200	CABLE ASS'Y	1	J10001-UP
2		7835-33-8200	CABLE ASS'Y	1	J10001-UP
3		7835-33-8400	CABLE ASS'Y	1	J10001-UP
4		7835-33-8200	CABLE ASS'Y	1	J10001-UP
5		7835-33-8300	CABLE ASS'Y	1	J10001-UP
6		04434-52512	CLIP	1	J10001-UP
7		01010-81230	BOLT	1	J10001-UP
8		01643-31232	WASHER	1	J10001-UP
9		198-43-15310	COLLAR	1	J10001-UP
10		04434-51412	CLIP	1	J10001-UP
11		04434-52512	CLIP	2	J10001-UP
12		01010-81225	BOLT	2	J10001-UP
13		01643-31232	WASHER	2	J10001-UP
14		21T-68-67490	BRACKET	1	J10001-UP
15		04434-52512	CLIP	1	J10001-UP
16		01010-81230	BOLT	1	J10001-UP
17		01643-31232	WASHER	1	J10001-UP
18		08034-20519	BAND	2	J10001-UP
19		04435-51410	CLIP	2	J10001-UP
20		01010-81025	BOLT	2	J10001-UP
21		01643-31032	WASHER	2	J10001-UP
22		21T-68-67490	BRACKET	1	J10001-UP
23		04434-53210	CLIP	3	J10001-UP
24		07095-00317	CUSHION	3	J10001-UP
25		01010-81025	BOLT	2	J10001-UP
26		01643-31032	WASHER	2	J10001-UP
27		01010-81230	BOLT	1	J10001-UP
28		01643-31232	WASHER	1	J10001-UP

Ref :E0450-03A0 Page :120530

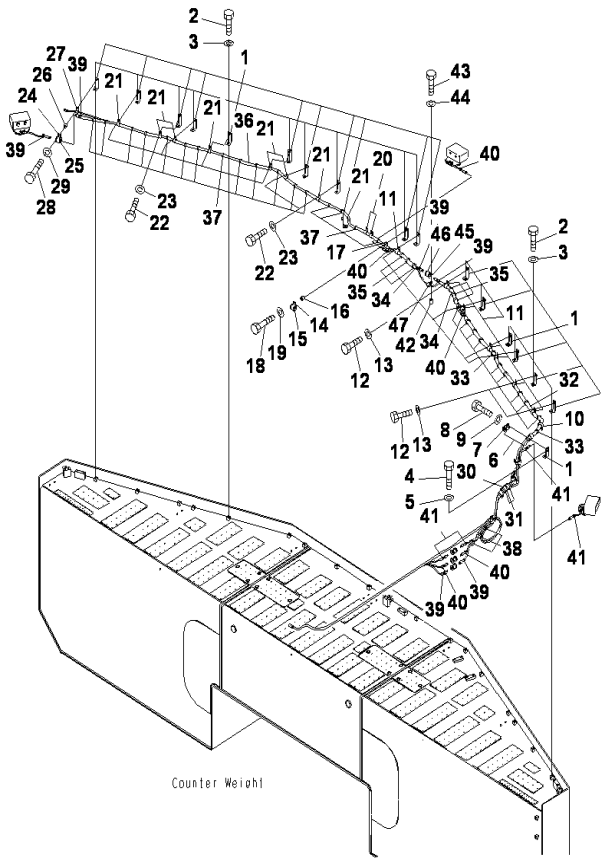

PC2000-8 S/N J10001-UP

BACK MONITOR(HARNESS)(2/2)

INDEX	CD	PART NO.	DESCRIPTION	QTY	SERIAL NO.
1		203-06-61730	BRACKET	18	J10001-UP
2		01010-81225	BOLT	17	J10001-UP
3		01643-31232	WASHER	17	J10001-UP
4		01010-81255	BOLT	1	J10001-UP
5		01643-31232	WASHER	1	J10001-UP
6		04434-53212	CLIP	2	J10001-UP
7		07095-00317	CUSHION	1	J10001-UP
8		01010-81225	BOLT	1	J10001-UP
9		01643-31232	WASHER	1	J10001-UP
10		04434-53212	CLIP	1	J10001-UP
11		04434-52512	CLIP	6	J10001-UP
12		01010-81225	BOLT	6	J10001-UP
13		01643-31232	WASHER	6	J10001-UP
14		04434-53212	CLIP	2	J10001-UP
15		07095-00317	CUSHION	2	J10001-UP
16		195-33-11220	SPACER	2	J10001-UP
17		04434-51812	CLIP	2	J10001-UP
18		01010-81250	BOLT	1	J10001-UP
19		01643-31232	WASHER	1	J10001-UP
20		04434-51812	CLIP	2	J10001-UP
21		04434-51812	CLIP	8	J10001-UP
22		01010-81225	BOLT	8	J10001-UP
23		01643-31232	WASHER	8	J10001-UP
24		04434-53212	CLIP	1	J10001-UP
25		07095-00317	CUSHION	1	J10001-UP
26		195-33-11220	SPACER	1	J10001-UP
27		04434-51012	CLIP	1	J10001-UP
28		01010-81250	BOLT	1	J10001-UP
29		01643-31232	WASHER	1	J10001-UP
30		203-62-52210	RUBBER	1	J10001-UP
31		08034-20823	BAND	3	J10001-UP
32		08017-C2220	CONDUIT	1	J10001-UP
33		08034-20823	BAND	10	J10001-UP
34		08017-C2204	CONDUIT	3	J10001-UP
35		08034-20823	BAND	6	J10001-UP
36		08017-C1533	CONDUIT	1	J10001-UP
37		08034-20823	BAND	17	J10001-UP
38		08034-20823	BAND	3	J10001-UP
39		20Y-62-22790	BAND (RED)	6	J10001-UP
40		20Y-62-22810	BAND (YELLOW)	6	J10001-UP
41		20Y-62-22820	BAND (BLUE)	4	J10001-UP
42		20Y-03-11220	COLLAR	1	J10001-UP
43		01010-81260	BOLT	1	J10001-UP
44		01643-31232	WASHER	1	J10001-UP
45		04434-53212	CLIP	1	J10001-UP

Ref :E0450-04A0 Page :120540

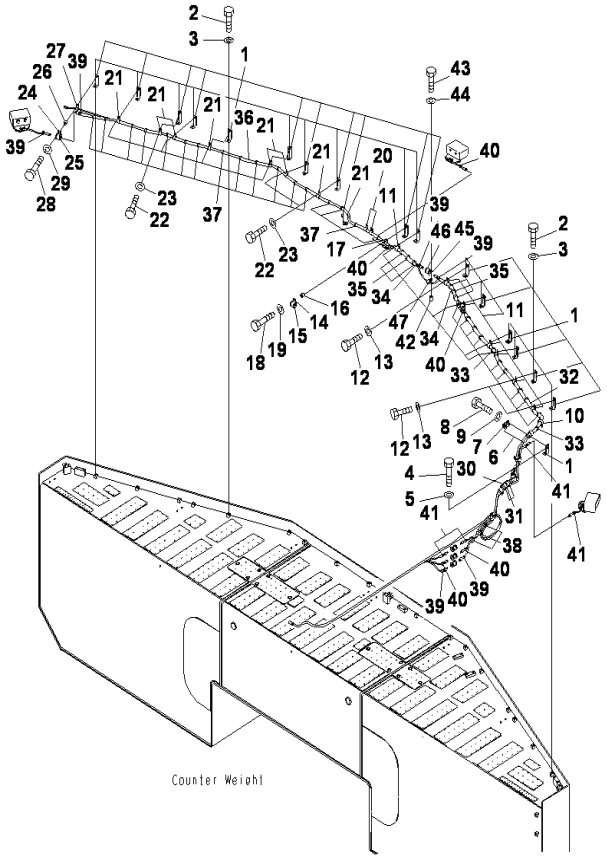

PC2000-8 S/N J10001-UP

BACK MONITOR(HARNESS)(2/2)

INDEX	CD	PART NO.	DESCRIPTION	QTY	SERIAL NO.
46		07095-00317	CUSHION.....	1	J10001-UP
47		04434-51812	CLIP.....	1	J10001-UP

Ref :E0450-04A0 Page :120541

AIR SYSTEM

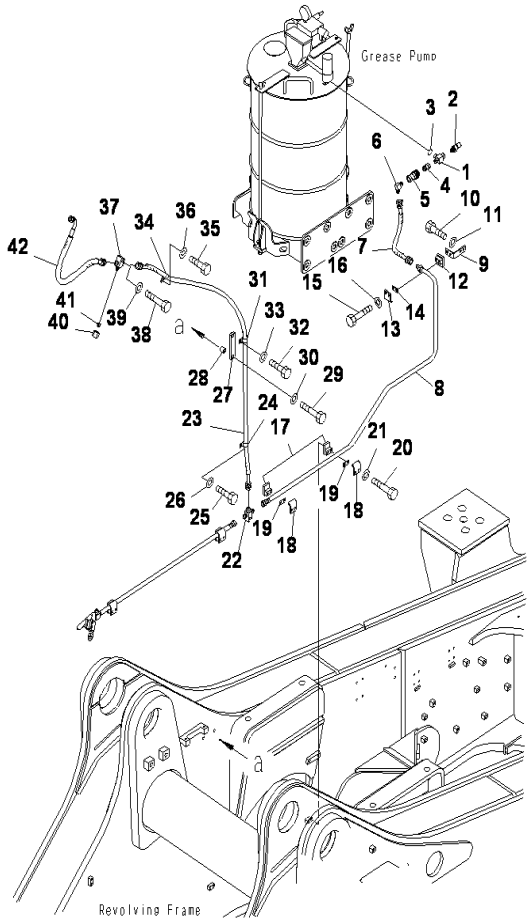

PC2000-8 S/N J10001-UP

AUTO GREASE PIPING(LUBRICATION PIPING) (1/4)

INDEX	CD	PART NO.	DESCRIPTION	QTY	SERIAL NO.
1		21T-68-31462	TEE	1	J10001-UP
2		7861-93-1652	SENSOR,PRESSURE	1	J10002-UP
		7861-93-1651	SENSOR,PRESSURE	1	J10001-J10001
3		07002-11823	O-RING	1	J10001-UP
4		21T-68-31390	PLUG	1	J10001-UP
5		21T-68-31380	SOCKET	1	J10001-UP
6		195-04-12280	ELBOW	1	J10001-UP
7		07631-004A4	HOSE	1	J10001-UP
8		21T-68-31310	TUBE	1	J10001-UP
9		21T-68-31290	BRACKET	1	J10001-UP
10		01010-81025	BOLT	2	J10001-UP
11		01643-31032	WASHER	2	J10001-UP
12		203-97-35720	SEAT	1	J10001-UP
13		203-97-35660	CLAMP	1	J10001-UP
14		21T-04-31620	PLATE	1	J10001-UP
15		01010-81060	BOLT	2	J10001-UP
16		01643-31032	WASHER	2	J10001-UP
17		203-97-35720	SEAT	2	J10001-UP
18		203-97-35660	CLAMP	2	J10001-UP
19		21T-04-31620	PLATE	2	J10001-UP
20		01010-81060	BOLT	4	J10001-UP
21		01643-31032	WASHER	4	J10001-UP
22		21T-04-71180	TEE	1	J10001-UP
23		07631-00419	HOSE	1	J10001-UP
24		04434-51912	CLIP	1	J10001-UP
25		01010-81220	BOLT	1	J10001-UP
26		01643-31232	WASHER	1	J10001-UP
27		21T-04-31481	BRACKET	1	J10001-UP
28		195-33-11220	SPACER	1	J10001-UP
29		01010-81255	BOLT	1	J10001-UP
30		01643-31232	WASHER	1	J10001-UP
31		04434-51912	CLIP	1	J10001-UP
32		01010-81225	BOLT	1	J10001-UP
33		01643-31232	WASHER	1	J10001-UP
34		04434-51912	CLIP	1	J10001-UP
35		01010-81220	BOLT	1	J10001-UP
36		01643-31232	WASHER	1	J10001-UP
37		21T-04-71180	TEE	1	J10001-UP
38		01010-81250	BOLT	1	J10001-UP
39		01643-31232	WASHER	1	J10001-UP
40		07221-20422	NUT	1	J10001-UP
41		07222-00414	PLUG	1	J10001-UP
42		07633-204A7	HOSE	1	J10001-UP

Ref :G1010-01A0 Page :150010

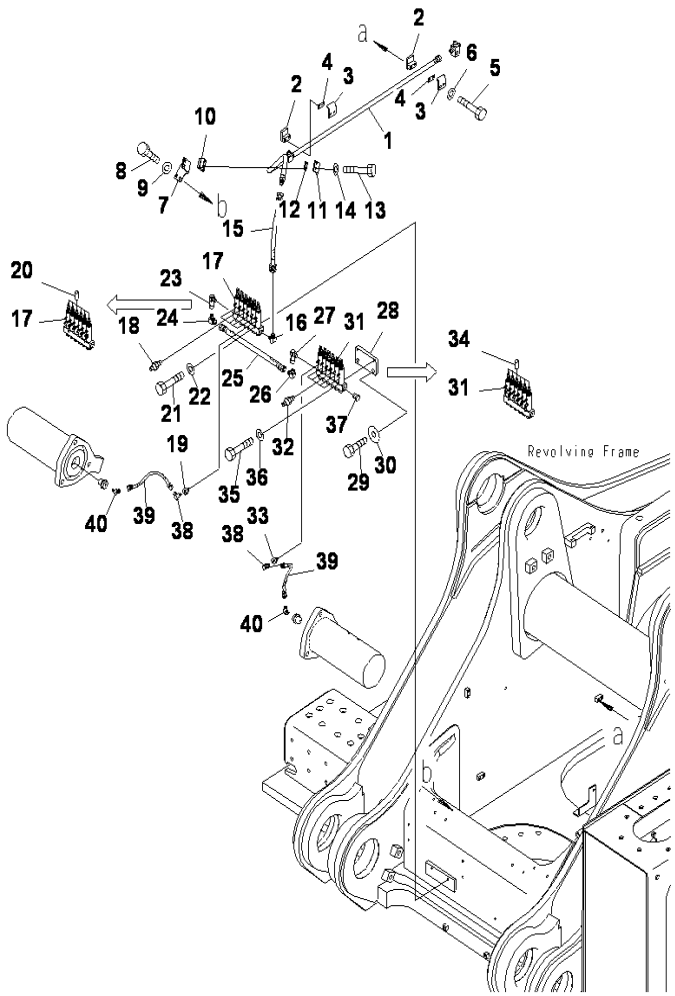

PC2000-8 S/N J10001-UP

AUTO GREASE PIPING(LUBRICATION PIPING) (2/4)

INDEX	CD	PART NO.	DESCRIPTION	QTY	SERIAL NO.
1		21T-68-31320	TUBE	1	J10001-UP
2		203-97-35720	SEAT	2	J10001-UP
3		203-97-35660	CLAMP	2	J10001-UP
4		21T-04-31620	PLATE	2	J10001-UP
5		01010-81060	BOLT	4	J10001-UP
6		01643-31032	WASHER	4	J10001-UP
7		21T-68-31270	BRACKET	1	J10001-UP
8		01010-81025	BOLT	2	J10001-UP
9		01643-31032	WASHER	2	J10001-UP
10		203-97-35720	SEAT	1	J10001-UP
11		203-97-35660	CLAMP	1	J10001-UP
12		21T-04-31620	PLATE	1	J10001-UP
13		01010-81060	BOLT	2	J10001-UP
14		01643-31032	WASHER	2	J10001-UP
15		07631-004A3	HOSE	1	J10001-UP
16		566-01-61190	ELBOW	1	J10001-UP
17		21T-68-32572	INJECTOR ASS'Y	1	J10001-UP
18		195-01-14651	.ELBOW	5	J10001-UP
19		145-A9-03270	.PLUG	1	J10001-UP
20		581-96-19620	.CAP	6	J10001-UP
21		01010-81050	BOLT	2	J10001-UP
22		01643-31032	WASHER	2	J10001-UP
23		6127-61-8330	ELBOW	1	J10001-UP
24		566-01-61190	ELBOW	1	J10001-UP
25		21T-68-32150	TUBE	1	J10001-UP
26		566-01-61190	ELBOW	1	J10001-UP
27		6127-61-8330	ELBOW	1	J10001-UP
28		21T-68-32140	PLATE	1	J10001-UP
29		01010-81235	BOLT	2	J10001-UP
30		175-54-34170	WASHER	2	J10001-UP
31		21T-68-32582	INJECTOR ASS'Y	1	J10001-UP
32		195-01-14651	.ELBOW	5	J10001-UP
33		145-A9-03270	.PLUG	1	J10001-UP
34		581-96-19620	.CAP	6	J10001-UP
35		01010-81050	BOLT	2	J10001-UP
36		01643-31032	WASHER	2	J10001-UP
37		581-96-19590	PLUG	1	J10001-UP
38		21T-70-71470	ELBOW	2	J10001-UP
39		21T-72-19360	HOSE	2	J10001-UP
40		21T-70-71470	ELBOW	2	J10001-UP

Ref :G1010-02A0 Page :150020

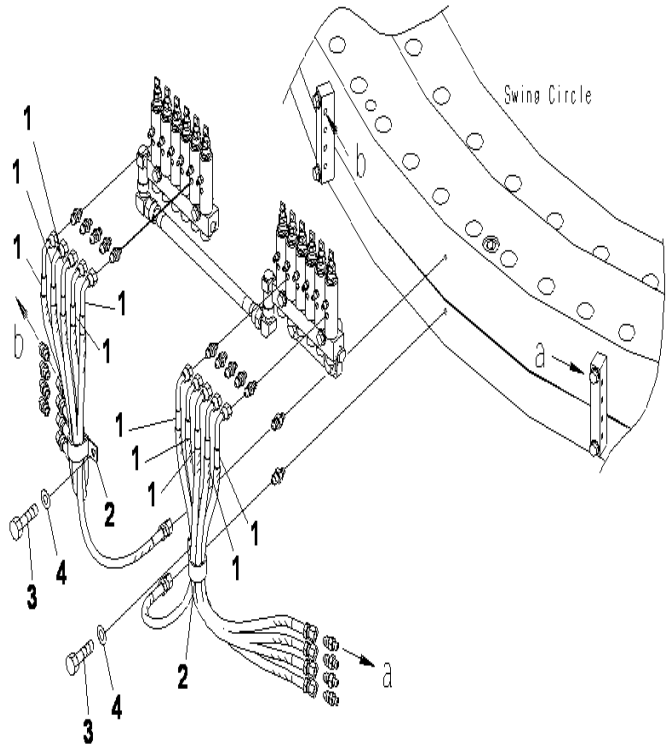

PC2000-8 S/N J10001-UP

AUTO GREASE PIPING(LUBRICATION PIPING) (3/4)

INDEX	CD	PART NO.	DESCRIPTION	QTY	SERIAL NO.
1		07633-002A6	HOSE	10	J10001-UP
2		04434-53411	CLIP	2	J10001-UP
3		01010-81020	BOLT	2	J10001-UP
4		01643-31032	WASHER	2	J10001-UP

Ref :G1010-03A0 Page :150030

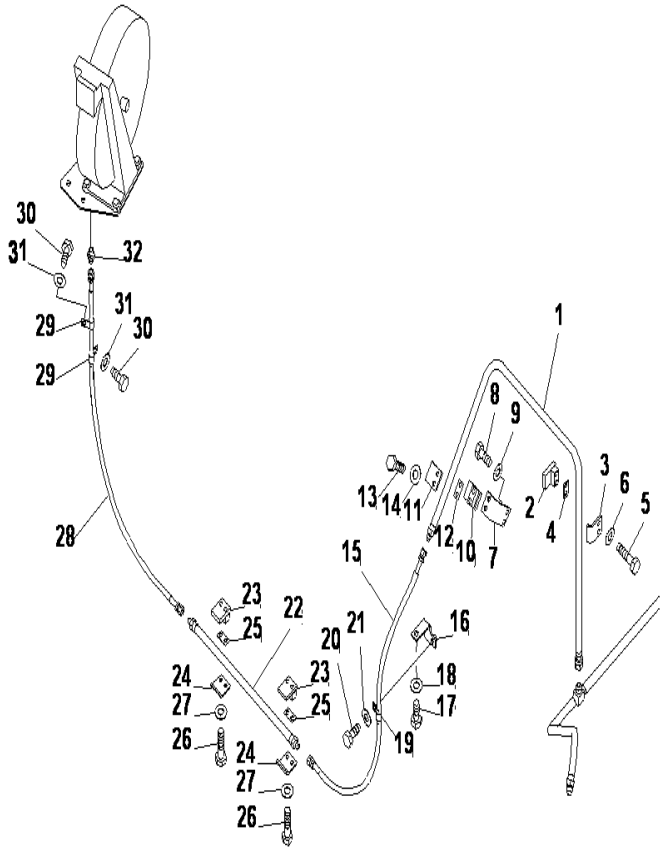

AUTO GREASE PIPING(LUBRICATION PIPING) (4/4)

INDEX	CD	PART NO.	DESCRIPTION	QTY	SERIAL NO.
1		21T-68-31331	TUBE	1	J10001-UP
2		203-97-35720	SEAT	1	J10001-UP
3		203-97-35660	CLAMP	1	J10001-UP
4		21T-04-31620	PLATE	1	J10001-UP
5		01010-81060	BOLT	2	J10001-UP
6		01643-31032	WASHER	2	J10001-UP
7		21T-68-31280	BRACKET	1	J10001-UP
8		01010-81025	BOLT	2	J10001-UP
9		01643-31032	WASHER	2	J10001-UP
10		203-97-35720	SEAT	1	J10001-UP
11		203-97-35660	CLAMP	1	J10001-UP
12		21T-04-31620	PLATE	1	J10001-UP
13		01010-81060	BOLT	2	J10001-UP
14		01643-31032	WASHER	2	J10001-UP
15		07631-002A8	HOSE	1	J10001-UP
16		21T-68-31430	BRACKET	1	J10001-UP
17		01010-81225	BOLT	1	J10001-UP
18		01643-31232	WASHER	1	J10001-UP
19		04434-51212	CLIP	1	J10001-UP
20		01010-81225	BOLT	1	J10001-UP
21		01643-31232	WASHER	1	J10001-UP
22		21T-68-31341	TUBE	1	J10001-UP
23		203-97-35720	SEAT	2	J10001-UP
24		203-97-35660	CLAMP	2	J10001-UP
25		21T-04-31620	PLATE	2	J10001-UP
26		01010-81060	BOLT	4	J10001-UP
27		01643-31032	WASHER	4	J10001-UP
28		07631-00211	HOSE	1	J10001-UP
29		04434-51212	CLIP	2	J10001-UP
30		01010-81220	BOLT	2	J10001-UP
31		01643-31232	WASHER	2	J10001-UP
32		21T-68-31481	NIPPLE	1	J10001-UP

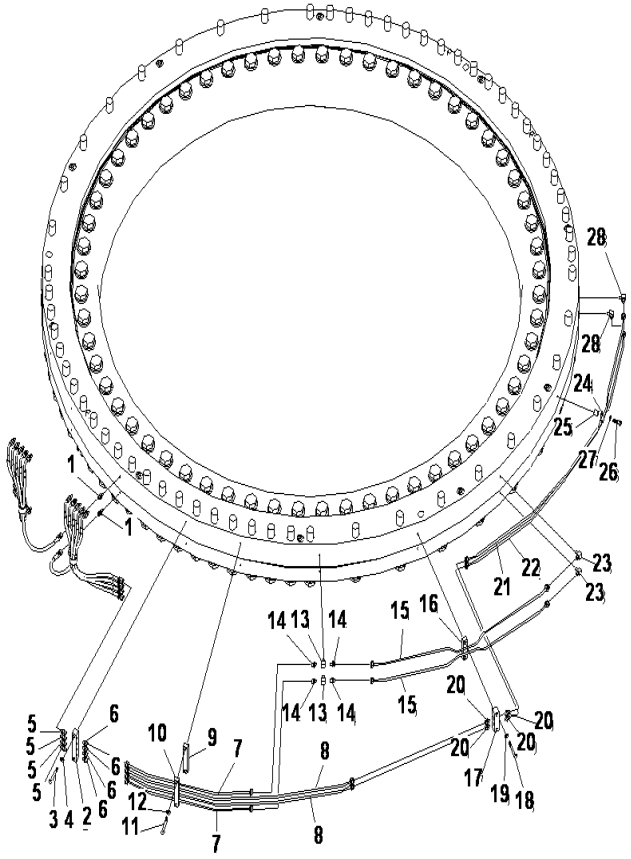

PC2000-8 S/N J10001-UP

AUTO GREASE PIPING(SWING CIRCLE LUBRICATION) (1/2)

INDEX	CD	PART NO.	DESCRIPTION	QTY	SERIAL NO.
1		07238-10208	CONNECTOR	2	J10001-UP
2		21T-68-32290	BLOCK	1	J10001-UP
3		01010-81050	BOLT	2	J10001-UP
4		01643-31032	WASHER	2	J10001-UP
5		07238-10208	CONNECTOR	4	J10001-UP
6		207-70-11730	NIPPLE	4	J10001-UP
7		21T-68-32280	TUBE	2	J10001-UP
8		21T-68-32270	TUBE	2	J10001-UP
9		21T-68-32320	PLATE	1	J10001-UP
10		21T-68-32310	CLAMP	1	J10001-UP
11		01010-81050	BOLT	2	J10001-UP
12		01643-31032	WASHER	2	J10001-UP
13		201-62-28540	TEE	2	J10001-UP
14		207-70-11730	NIPPLE	4	J10001-UP
15		21T-68-67390	TUBE	2	J10001-UP
16		21T-68-32330	PLATE	1	J10001-UP
17		21T-68-67510	BLOCK	1	J10001-UP
18		01010-81070	BOLT	2	J10001-UP
19		01643-31032	WASHER	2	J10001-UP
20		207-70-11730	NIPPLE	4	J10001-UP
21		21T-68-67410	TUBE(L.H)	1	J10001-UP
22		21T-68-67420	TUBE(L.H)	1	J10001-UP
23		207-70-11740	ELBOW	2	J10001-UP
24		04435-50810	CLIP	1	J10001-UP
25		175-79-83760	SPACER	1	J10001-UP
26		01010-81040	BOLT	1	J10001-UP
27		01643-31032	WASHER	1	J10001-UP
28		207-70-11740	ELBOW	2	J10001-UP

Ref :G1010-05A0 Page :150050

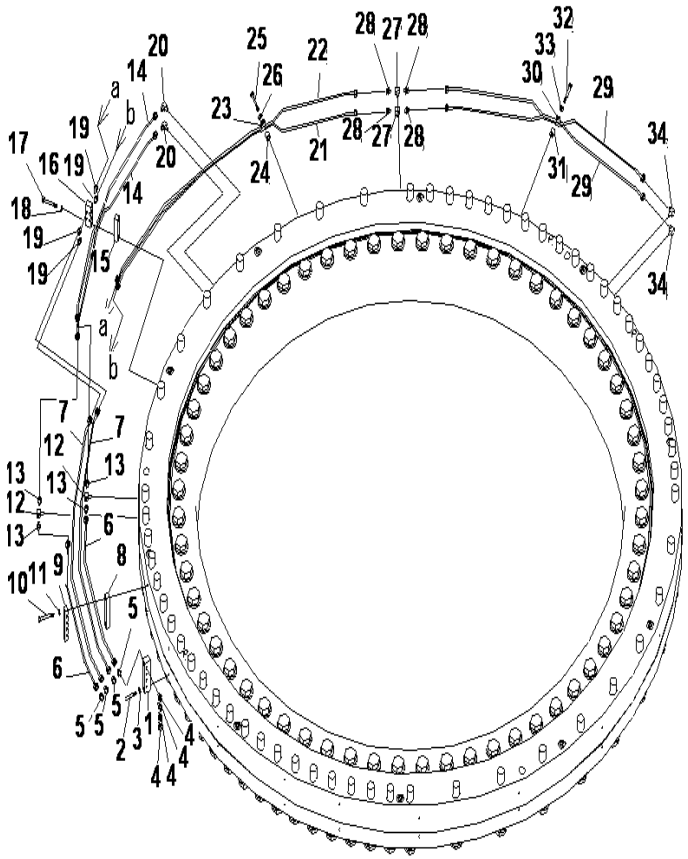

AUTO GREASE PIPING(SWING CIRCLE LUBRICATION) (2/2)

INDEX	CD	PART NO.	DESCRIPTION	QTY	SERIAL NO.
1		21T-68-32290	BLOCK	1	J10001-UP
2		01010-81050	BOLT	2	J10001-UP
3		01643-31032	WASHER	2	J10001-UP
4		07238-10208	CONNECTOR	4	J10001-UP
5		207-70-11730	NIPPLE	4	J10001-UP
6		21T-68-32280	TUBE	2	J10001-UP
7		21T-68-32270	TUBE	2	J10001-UP
8		21T-68-32320	PLATE	1	J10001-UP
9		21T-68-32310	CLAMP	1	J10001-UP
10		01010-81050	BOLT	2	J10001-UP
11		01643-31032	WASHER	2	J10001-UP
12		201-62-28540	TEE	2	J10001-UP
13		207-70-11730	NIPPLE	4	J10001-UP
14		21T-68-67390	TUBE	2	J10001-UP
15		21T-68-32330	PLATE	1	J10001-UP
16		21T-68-67510	BLOCK	1	J10001-UP
17		01010-81070	BOLT	2	J10001-UP
18		01643-31032	WASHER	2	J10001-UP
19		207-70-11730	NIPPLE	4	J10001-UP
20		207-70-11740	ELBOW	2	J10001-UP
21		21T-68-67570	TUBE(R.H)	1	J10001-UP
22		21T-68-67560	TUBE (R.H)	1	J10001-UP
23		04435-50810	CLIP	1	J10001-UP
24		175-79-83760	SPACER	1	J10001-UP
25		01010-81040	BOLT	1	J10001-UP
26		01643-31032	WASHER	1	J10001-UP
27		201-62-28540	TEE	2	J10001-UP
28		207-70-11730	NIPPLE	4	J10001-UP
29		21T-68-67430	TUBE	2	J10001-UP
30		04435-50810	CLIP	1	J10001-UP
31		175-79-83760	SPACER	1	J10001-UP
32		01010-81040	BOLT	1	J10001-UP
33		01643-31032	WASHER	1	J10001-UP
34		207-70-11740	ELBOW	2	J10001-UP

HYDRAULIC SYSTEM

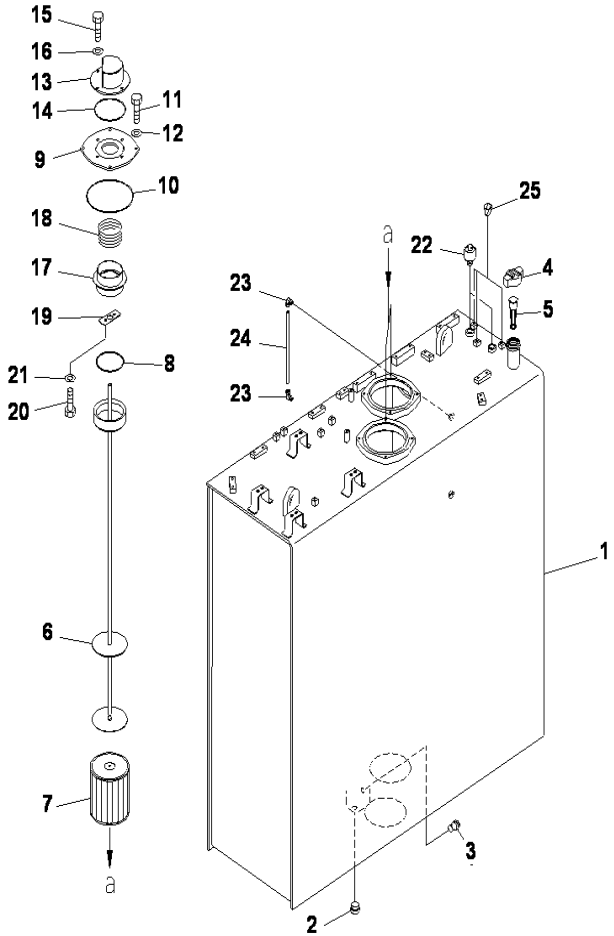

PC2000-8 S/N J10001-UP

HYDRAULIC TANK(TANK WITH CAP LOCK))

INDEX	CD	PART NO.	DESCRIPTION	QTY	SERIAL NO.
1		21T-60-31113	TANK	1	J10001-UP
2		07040-13618	PLUG	1	J10001-UP
3		198-60-19820	VALVE	1	J10001-UP
4		07092-01000	CAP	1	J10001-UP
5		07056-10045	STRAINER	1	J10001-UP
6		21T-60-31351	SUPPORT	2	J10001-UP
7		209-60-51120	STRAINER	2	J10001-UP
8		21N-09-11140	O-RING	4	J10001-UP
9		21T-60-31320	COVER	2	J10001-UP
10		07000-B5230	O-RING	2	J10001-UP
11		01010-81225	BOLT	8	J10001-UP
12		01643-31232	WASHER	8	J10001-UP
13		21T-60-31310	BRACKET	2	J10001-UP
14		07000-B2140	O-RING	2	J10001-UP
15		01010-81035	BOLT	8	J10001-UP
16		01643-31032	WASHER	8	J10001-UP
17		21T-60-31330	BRACKET	2	J10001-UP
18		12R-60-11390	SPRING	2	J10001-UP
19		21T-60-31340	PLATE	2	J10001-UP
20		01010-81020	BOLT	4	J10001-UP
21		01643-31032	WASHER	4	J10001-UP
22		198-60-55510	BREATHER	2	J10001-UP
23		203-60-31100	ELBOW ASS'Y	2	J10001-UP
24		21T-60-31440	TUBE	1	J10001-UP
25		07049-01215	PLUG	3	J10001-UP

Ref :H0110-01A0 Page :180010

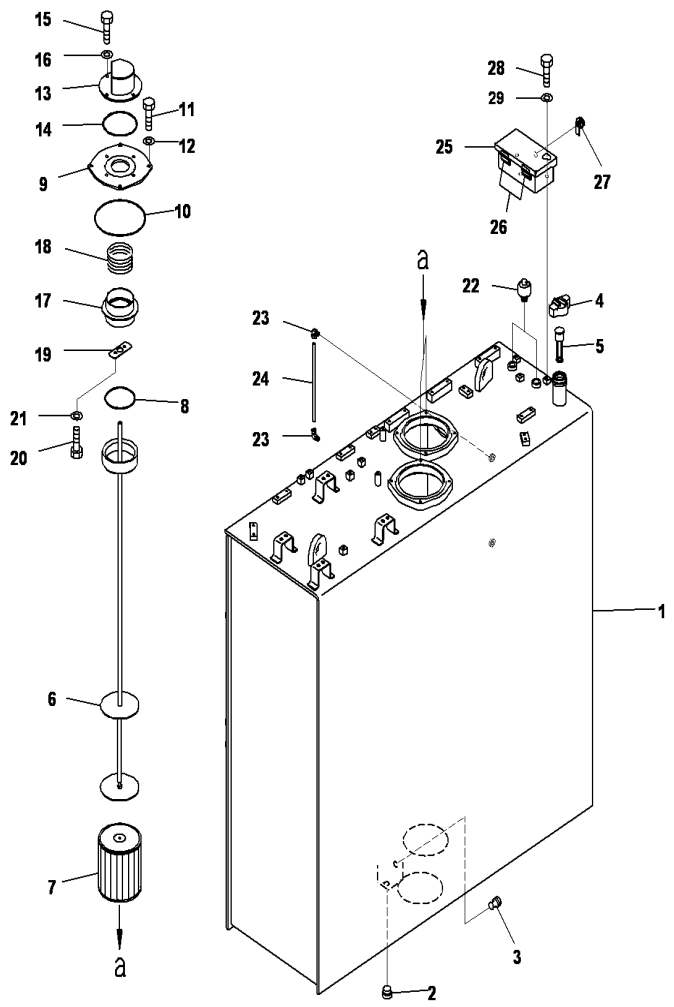

HYDRAULIC TANK(SANDY TERRAIN SPECIFICATION)

INDEX	CD	PART NO.	DESCRIPTION	QTY	SERIAL NO.
1		21T-60-31113	TANK	1	J10001-UP
2		07040-13618	PLUG	1	J10001-UP
3		198-60-19820	VALVE	1	J10001-UP
4		07092-01000	CAP	1	J10001-UP
		07051-00005	.GASKET	1	J10001-UP
5		07056-10045	STRAINER	1	J10001-UP
6		21T-60-31351	SUPPORT	2	J10001-UP
7		209-60-51120	STRAINER	2	J10001-UP
8		21N-09-11140	O-RING	4	J10001-UP
9		21T-60-31320	COVER	2	J10001-UP
10		07000-B5230	O-RING	2	J10001-UP
11		01010-81225	BOLT	8	J10001-UP
12		01643-31232	WASHER	8	J10001-UP
13		21T-60-31310	BRACKET	2	J10001-UP
14		07000-B2140	O-RING	2	J10001-UP
15		01010-81035	BOLT	8	J10001-UP
16		01643-31032	WASHER	8	J10001-UP
17		21T-60-31330	BRACKET	2	J10001-UP
18		12R-60-11390	SPRING	2	J10001-UP
19		21T-60-31340	PLATE	2	J10001-UP
20		01010-81020	BOLT	4	J10001-UP
21		01643-31032	WASHER	4	J10001-UP
22		198-60-55510	BREATHER	2	J10001-UP
23		203-60-31100	ELBOW ASS'Y	2	J10001-UP
24		21T-60-31440	TUBE	1	J10001-UP
25		21T-60-31291	COVER	1	J10001-UP
26		09455-12013	.HINGE, WELDED	2	J10001-UP
27		205-60-71220	LOCK ASSY	1	J10001-UP
28		01010-81220	BOLT	3	J10001-UP
29		01643-31232	WASHER	3	J10001-UP

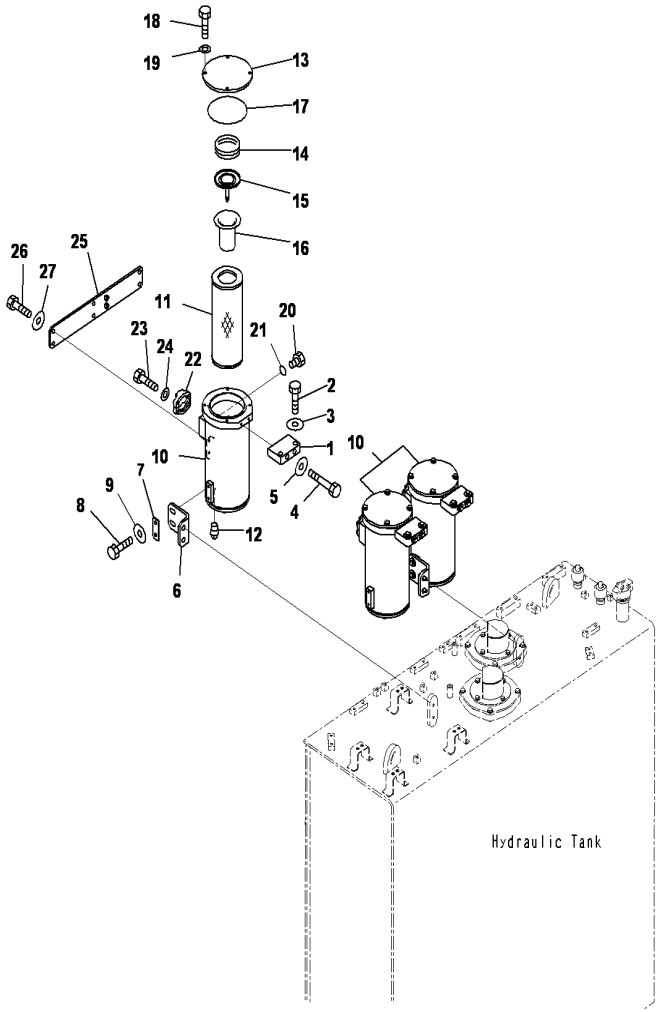

PC2000-8 S/N J10001-UP

HYDRAULIC TANK(RETURN FILTER)

INDEX	CD	PART NO.	DESCRIPTION	QTY	SERIAL NO.
1		209-60-77541	PLATE	3	J10001-UP
2		01010-81255	BOLT	6	J10001-UP
3		175-54-34170	WASHER	6	J10001-UP
4		01011-81210	BOLT	6	J10001-UP
5		175-54-34170	WASHER	6	J10001-UP
6		21T-60-31141	BRACKET	2	J10001-UP
7		21T-60-31490	PLATE	4	J10001-UP
8		01010-81235	BOLT	8	J10001-UP
9		175-54-34170	WASHER	8	J10001-UP
10		21T-60-31120	CASE	3	J10001-UP
11		209-60-77532	ELEMENT	3	J10001-UP
12		07042-30211	PLUG	3	J10001-UP
13		205-60-71141	COVER	3	J10001-UP
14		12R-60-11390	SPRING	3	J10001-UP
15		20Y-60-31131	VALVE ASS'Y	3	J10001-UP
16		20Y-60-31140	STRAINER	3	J10001-UP
17		07000-B5180	O-RING	3	J10001-UP
18		01010-81230	BOLT	12	J10001-UP
19		01643-31232	WASHER	12	J10001-UP
20		07040-11409	PLUG	2	J10001-UP
21		07002-61423	O-RING	2	J10001-UP
22		07371-32076	FLANGE	6	J10001-UP
23		07372-21240	BOLT	12	J10001-UP
24		01643-51232	WASHER	12	J10001-UP
25		21T-60-31131	BRACKET	1	J10001-UP
26		01010-81230	BOLT	6	J10001-UP
27		175-54-34170	WASHER	6	J10001-UP

Ref :H0110-02A0 Page :180020

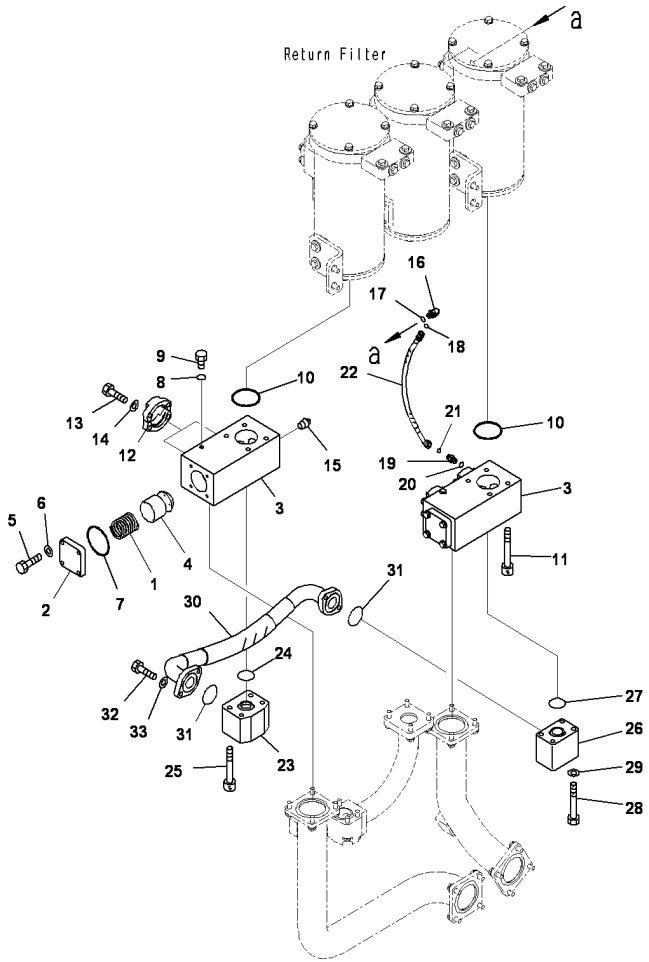

HYDRAULIC TANK(WITH CAP LOCK)(BLOCK)

INDEX	CD	PART NO.	DESCRIPTION	QTY	SERIAL NO.
		21T-60-31201	VALVE ASS'Y	2	J10001-UP
1		209-60-52320	.SPRING	1	J10001-UP
2		209-60-62220	.FLANGE	1	J10001-UP
3		21T-60-31211	.BLOCK	1	J10001-UP
4		21T-60-31221	.POPPET	1	J10001-UP
5		01010-81040	.BOLT	4	J10001-UP
6		01643-31032	.WASHER	4	J10001-UP
7		07000-B2075	.O-RING	1	J10001-UP
8		07002-61023	.O-RING	1	J10001-UP
9		07040-11007	.PLUG	1	J10001-UP
10		07000-B2095	O-RING	2	J10001-UP
11		01253-71215	BOLT	8	J10001-UP
12		07371-32076	FLANGE	8	J10001-UP
13		07372-21240	BOLT	16	J10001-UP
14		01643-51232	WASHER	16	J10001-UP
15		07042-00108	PLUG	1	J10001-UP
16		02782-10210	ELBOW	1	J10001-UP
17		07002-61423	O-RING	1	J10001-UP
18		02896-61008	O-RING	1	J10001-UP
19		02781-0021D	UNION	1	J10001-UP
20		07002-61423	O-RING	1	J10001-UP
21		02896-61008	O-RING	1	J10001-UP
22		02764-002A4	HOSE	1	J10001-UP
23		21T-60-31250	BLOCK	1	J10001-UP
24		07000-B2045	O-RING	1	J10001-UP
25		01252-71290	BOLT	4	J10001-UP
26		21T-60-31240	BLOCK	1	J10001-UP
27		07000-B2045	O-RING	1	J10001-UP
28		01011-81215	BOLT	4	J10001-UP
29		01643-31232	WASHER	4	J10001-UP
30		21T-60-31420	HOSE	1	J10001-UP
31		07000-B3048	O-RING	2	J10001-UP
32		01010-81240	BOLT	4	J10001-UP
33		01643-31232	WASHER	4	J10001-UP

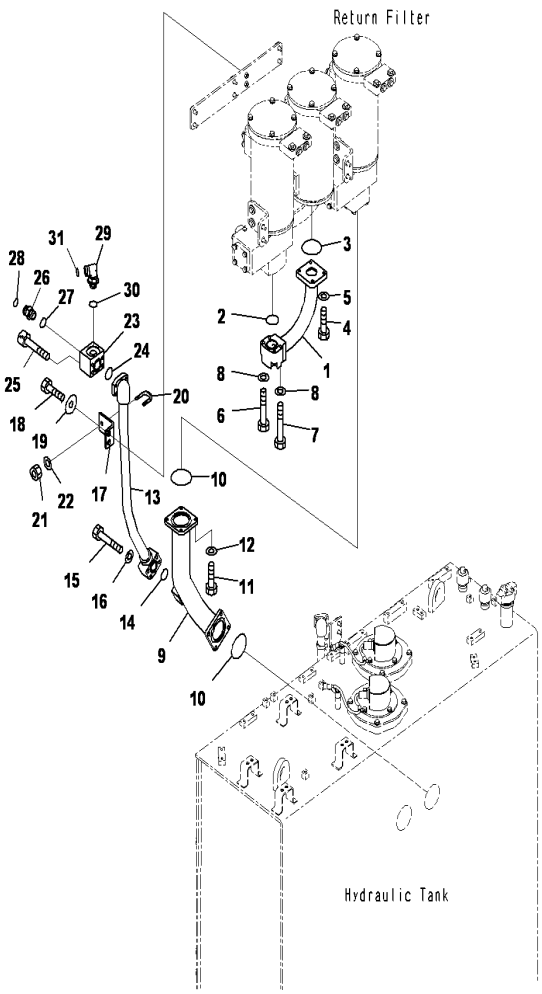

HYDRAULIC TANK(WITH CAP LOCK)(TUBE)(1/2)

INDEX	CD	PART NO.	DESCRIPTION	QTY	SERIAL NO.
1		21T-60-31150	TUBE	1	J10001-UP
2		07000-B2060	O-RING	1	J10001-UP
3		07000-B2095	O-RING	1	J10001-UP
4		01010-81245	BOLT	4	J10001-UP
5		01643-31232	WASHER	4	J10001-UP
6		01010-81270	BOLT	2	J10001-UP
7		01010-81285	BOLT	2	J10001-UP
8		01643-51232	WASHER	4	J10001-UP
9		21T-60-31170	TUBE	1	J10001-UP
10		07000-B2100	O-RING	2	J10001-UP
11		01010-81235	BOLT	8	J10001-UP
12		01643-31232	WASHER	8	J10001-UP
13		21T-64-32330	TUBE	1	J10001-UP
14		07000-B3045	O-RING	1	J10001-UP
15		01010-81275	BOLT	4	J10001-UP
16		01643-31232	WASHER	4	J10001-UP
17		21T-62-76420	BRACKET	1	J10001-UP
18		01010-81235	BOLT	2	J10001-UP
19		175-54-34170	WASHER	2	J10001-UP
20		07283-34346	CLIP	1	J10001-UP
21		01597-01009	NUT	2	J10001-UP
22		01643-31032	WASHER	2	J10001-UP
23		21T-64-33240	BLOCK	1	J10001-UP
24		07000-B3048	O-RING	1	J10001-UP
25		01252-71280	BOLT	4	J10001-UP
26		207-62-72110	UNION	1	J10001-UP
27		07002-63334	ORING	1	J10001-UP
28		11Y-62-11980	O-RING	1	J10001-UP
29		21W-62-42640	ELBOW	1	J10001-UP
30		07002-63334	ORING	1	J10001-UP
31		11Y-62-11980	O-RING	1	J10001-UP

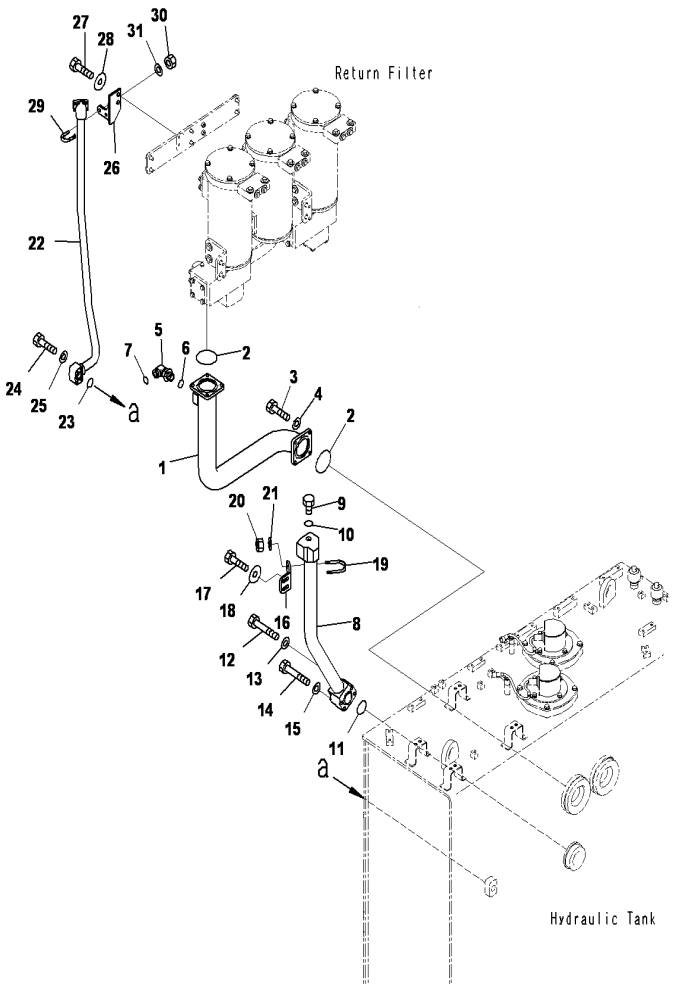

PC2000-8 S/N J10001-UP

HYDRAULIC TANK(WITH CAP LOCK)(TUBE)(2/2)

INDEX	CD	PART NO.	DESCRIPTION	QTY	SERIAL NO.
1		21T-60-31180	TUBE	1	J10001-UP
2		07000-B2100	O-RING	2	J10001-UP
3		01010-81235	BOLT	8	J10001-UP
4		01643-31232	WASHER	8	J10001-UP
5		21W-62-42640	ELBOW	1	J10001-UP
6		07002-63334	ORING	1	J10001-UP
7		11Y-62-11980	O-RING	1	J10001-UP
8		21T-64-33550	TUBE	1	J10001-UP
9		07040-11007	PLUG	1	J10001-UP
10		07002-61023	ORING	1	J10001-UP
11		07000-B2060	O-RING	1	J10001-UP
12		01010-81285	BOLT	2	J10001-UP
13		01643-31232	WASHER	2	J10001-UP
14		01010-81270	BOLT	2	J10001-UP
15		01643-31232	WASHER	2	J10001-UP
16		21T-64-33641	BRACKET	1	J10001-UP
17		01010-81230	BOLT	2	J10001-UP
18		175-54-34170	WASHER	2	J10001-UP
19		07283-36163	CLIP	1	J10001-UP
20		01597-01009	NUT	2	J10001-UP
21		01643-31032	WASHER	2	J10001-UP
22		21T-64-33731	TUBE	1	J10001-UP
23		07000-B3035	O-RING	1	J10001-UP
24		01010-81060	BOLT	4	J10001-UP
25		01643-31032	WASHER	4	J10001-UP
26		21T-64-33770	BRACKET	1	J10001-UP
27		01010-81230	BOLT	2	J10001-UP
28		175-54-34170	WASHER	2	J10001-UP
29		07283-33442	CLIP	1	J10001-UP
30		01597-01009	NUT	2	J10001-UP
31		01643-31032	WASHER	2	J10001-UP

Ref :H0110-05A0 Page :180050

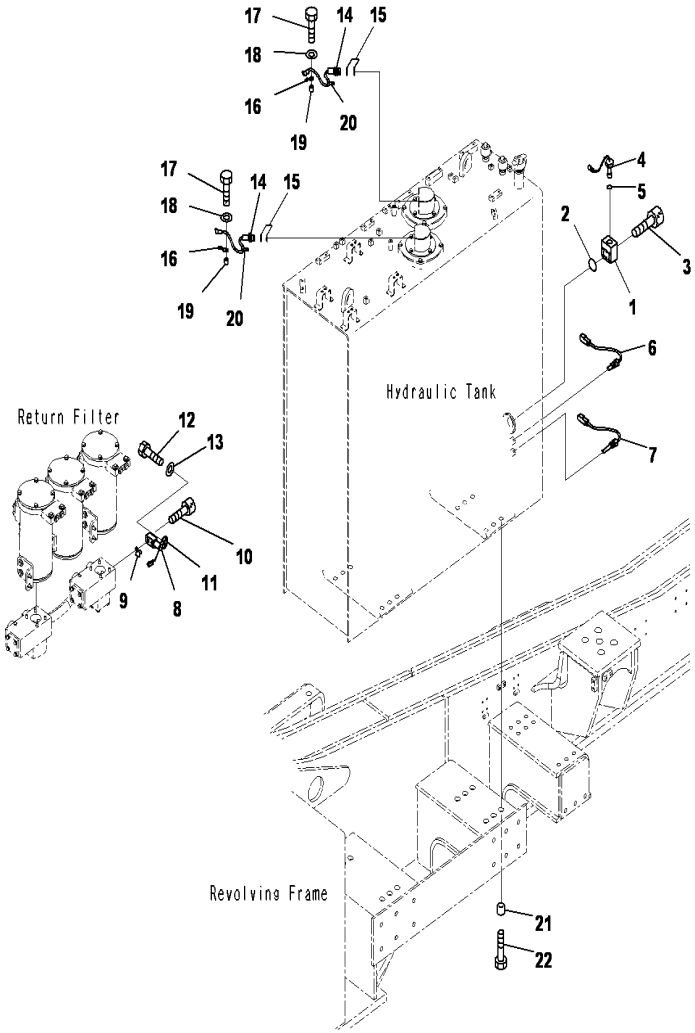

PC2000-8 S/N J10001-UP

HYDRAULIC TANK(WITH CAP LOCK)(SWITCH AND SENSOR)

INDEX	CD	PART NO.	DESCRIPTION	QTY	SERIAL NO.
1		21T-60-31390	BLOCK	1	J10001-UP
2		07000-B2055	O-RING	1	J10001-UP
3		01252-71065	BOLT	4	J10001-UP
4		7861-93-4520	SENSOR	1	J10001-UP
5		07002-23634	O-RING	1	J10001-UP
6		7861-93-3320	SENSOR	1	J10001-UP
7		7861-93-3510	SENSOR TEMP	1	J10001-UP
8		7861-93-1940	SENSOR	1	J10001-UP
9		07000-B2014	O-RING	2	J10001-UP
10		01252-40640	BOLT	4	J10001-UP
11		21T-38-12270	CLIP	1	J10001-UP
12		01010-81225	BOLT	1	J10001-UP
13		01643-31232	WASHER	1	J10001-UP
14		21T-06-33210	SWITCH	2	J10001-UP
15		07005-03016	GASKET	4	J10001-UP
16		08193-21012	CLIP	2	J10001-UP
17		01010-81245	BOLT	2	J10001-UP
18		01643-31232	WASHER	2	J10001-UP
19		195-33-11220	SPACER	2	J10001-UP
20		04434-51012	CLIP	2	J10001-UP
21		21T-26-11460	WASHER	12	J10001-UP
22		01011-83010	BOLT	12	J10001-UP

Ref :H0110-06A0 Page :180060

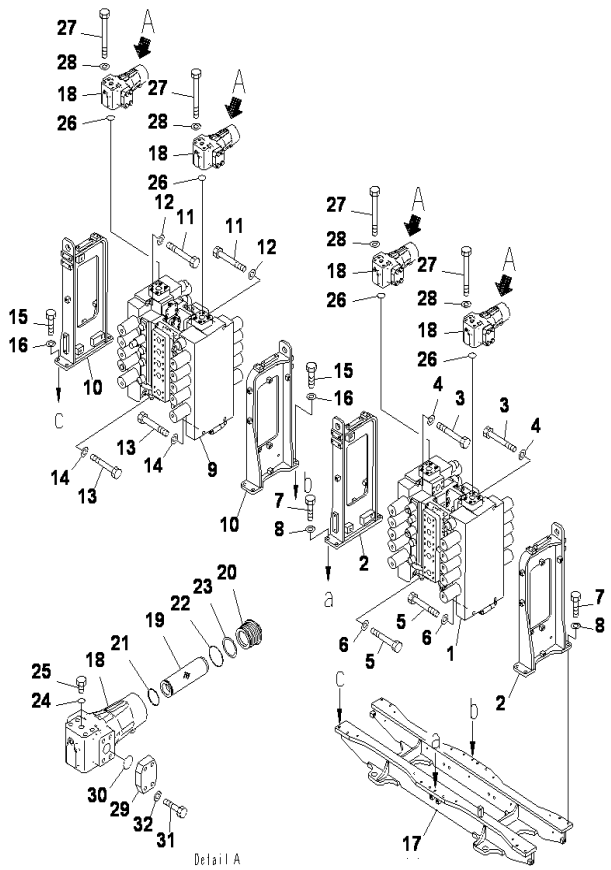

PC2000-8 S/N J10001-UP

MAIN VALVE(CONTROL VALVE)

INDEX	CD	PART NO.	DESCRIPTION	QTY	SERIAL NO.
1		(709-1A-11100)	CONTROL VALVE,P	1	J10001-UP
2		21T-64-31111	BRACKET	2	J10001-UP
3		01011-81630	BOLT	2	J10001-UP
4		01643-31645	WASHER	2	J10001-UP
5		01011-81605	BOLT	4	J10001-UP
6		01643-31645	WASHER	4	J10001-UP
7		01010-81645	BOLT	8	J10001-UP
8		01643-31645	WASHER	8	J10001-UP
9		(709-1A-11500)	CONTROL VALVE,P	1	J10001-UP
10		21T-64-31111	BRACKET	2	J10001-UP
11		01011-81630	BOLT	2	J10001-UP
12		01643-31645	WASHER	2	J10001-UP
13		01011-81605	BOLT	4	J10001-UP
14		01643-31645	WASHER	4	J10001-UP
15		01010-81645	BOLT	8	J10001-UP
16		01643-31645	WASHER	8	J10001-UP
17		21T-64-31120	FRAME	1	J10001-UP
		209-60-79100	FILTER ASS'Y	4	J10001-UP
18		209-60-79110	.CASE	4	J10001-UP
19		21N-62-31221	.ELEEMNT	4	J10001-UP
20		21N-62-31230	.COVER	4	J10001-UP
21		07000-12055	.O-RING	4	J10001-UP
22		07000-12070	.O-RING	4	J10001-UP
23		07001-02070	.O-RING	4	J10001-UP
24		07002-11423	.O-RING	4	J10001-UP
25		07040-11409	.PLUG	4	J10001-UP
26		07000-B3048	O-RING	4	J10001-UP
27		01011-81470	BOLT	16	J10001-UP
28		01643-31445	WASHER	16	J10001-UP
29		21N-62-12210	PLATE	4	J10001-UP
30		07000-B3048	O-RING	4	J10001-UP
31		01010-81455	BOLT	16	J10001-UP
32		01643-31445	WASHER	16	J10001-UP

Ref :H0120-01A0 Page :180070

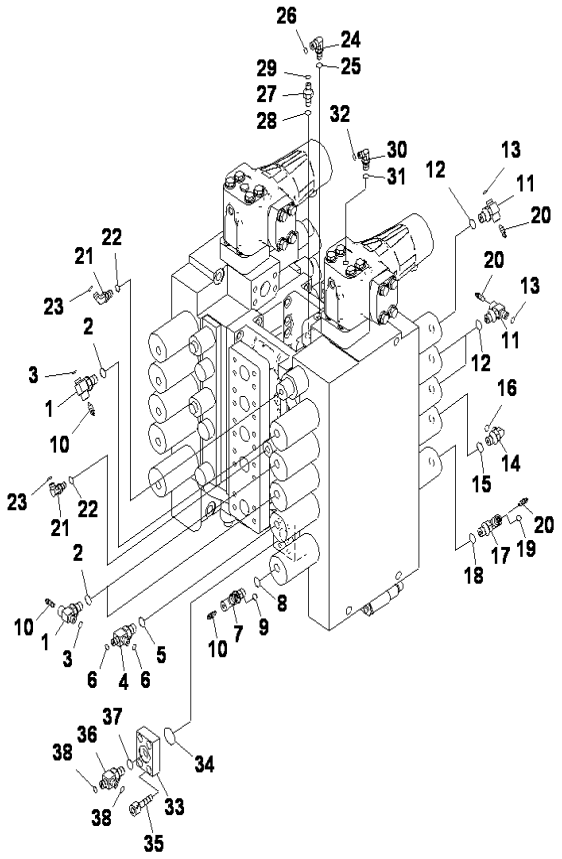

MAIN VALVE(JOINT PARTS)(L.H)(1/2)

INDEX	CD	PART NO.	DESCRIPTION	QTY	SERIAL NO.
1		21N-62-36980	ELBOW	3	J10001-UP
2		07002-62034	O-RING	3	J10001-UP
3		02896-61009	O-RING	3	J10001-UP
4		19M-61-35140	TEE	1	J10001-UP
5		07002-62034	O-RING	1	J10001-UP
6		02896-61009	O-RING	2	J10001-UP
7		21T6436161	ELBOW	1	J10001-UP
8		07002-62034	O-RING	1	J10001-UP
9		02896-61009	O-RING	1	J10001-UP
10		20B-27-11210	BLEEDER	4	J10001-UP
11		21N-62-36980	ELBOW	3	J10001-UP
12		07002-62034	O-RING	3	J10001-UP
13		02896-61009	O-RING	3	J10001-UP
14		02782-10315	ELBOW	1	J10001-UP
15		07002-62034	O-RING	1	J10001-UP
16		02896-61009	O-RING	1	J10001-UP
17		21T-64-36161	ELBOW	1	J10001-UP
18		07002-62034	O-RING	1	J10001-UP
19		02896-61009	O-RING	1	J10001-UP
20		20B-27-11210	BLEEDER	4	J10001-UP
21		02782-10210	ELBOW	2	J10001-UP
22		07002-61423	O-RING	2	J10001-UP
23		02896-61008	O-RING	2	J10001-UP
24		02782-10311	ELBOW	1	J10001-UP
25		07002-61423	O-RING	1	J10001-UP
26		02896-61009	O-RING	1	J10001-UP
27		02781-0021D	UNION	1	J10001-UP
28		07002-61423	O-RING	1	J10001-UP
29		02896-61008	O-RING	1	J10001-UP
30		02782-10210	ELBOW	1	J10001-UP
31		07002-61423	O-RING	1	J10001-UP
32		02896-61008	O-RING	1	J10001-UP
33		21T-64-36660	PLATE	1	J10001-UP
34		07000-B3048	O-RING	1	J10001-UP
35		01252-71235	BOLT	4	J10001-UP
36		19M-61-35140	TEE	1	J10001-UP
37		07002-62034	O-RING	1	J10001-UP
38		02896-61009	O-RING	2	J10001-UP

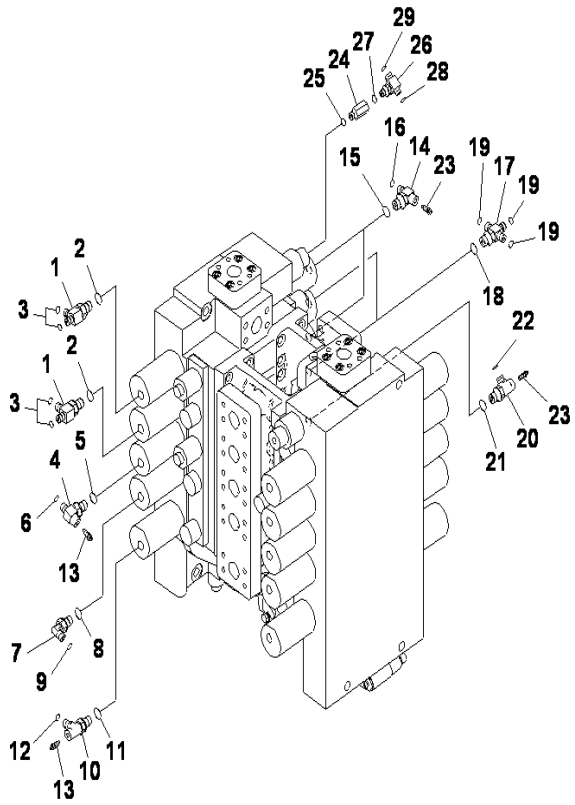

PC2000-8 S/N J10001-UP

MAIN VALVE(JOINT PARTS)(L.H)(2/2)

INDEX	CD	PART NO.	DESCRIPTION	QTY	SERIAL NO.
1		19M-61-35140	TEE	2	J10001-UP
2		07002-62034	O-RING	2	J10001-UP
3		02896-61009	O-RING	4	J10001-UP
4		21N-62-36980	ELBOW	1	J10001-UP
5		07002-62034	O-RING	1	J10001-UP
6		02896-61009	O-RING	1	J10001-UP
7		02782-10315	ELBOW	1	J10001-UP
8		07002-62034	O-RING	1	J10001-UP
9		02896-61009	O-RING	1	J10001-UP
10		21T-64-36161	ELBOW	1	J10001-UP
11		07002-62034	O-RING	1	J10001-UP
12		02896-61009	O-RING	1	J10001-UP
13		20B-27-11210	BLEEDER	2	J10001-UP
14		21N-62-36980	ELBOW	2	J10001-UP
15		07002-62034	O-RING	2	J10001-UP
16		02896-61009	O-RING	2	J10001-UP
17		8296621480	TEE	2	J10001-UP
18		07002-62034	O-RING	2	J10001-UP
19		02896-61009	O-RING	6	J10001-UP
20		21T6436161	ELBOW	1	J10001-UP
21		07002-62034	O-RING	1	J10001-UP
22		02896-61009	O-RING	1	J10001-UP
23		20B-27-11210	BLEEDER	3	J10001-UP
24		20Y-62-22160	ADAPTER	1	J10001-UP
25		07002-61423	O-RING	1	J10001-UP
26		11Y-62-12820	TEE	1	J10001-UP
27		07002-61423	O-RING	1	J10001-UP
28		02896-61008	O-RING	1	J10001-UP
29		02896-61009	O-RING	1	J10001-UP

Ref :H0120-03A0 Page :180090

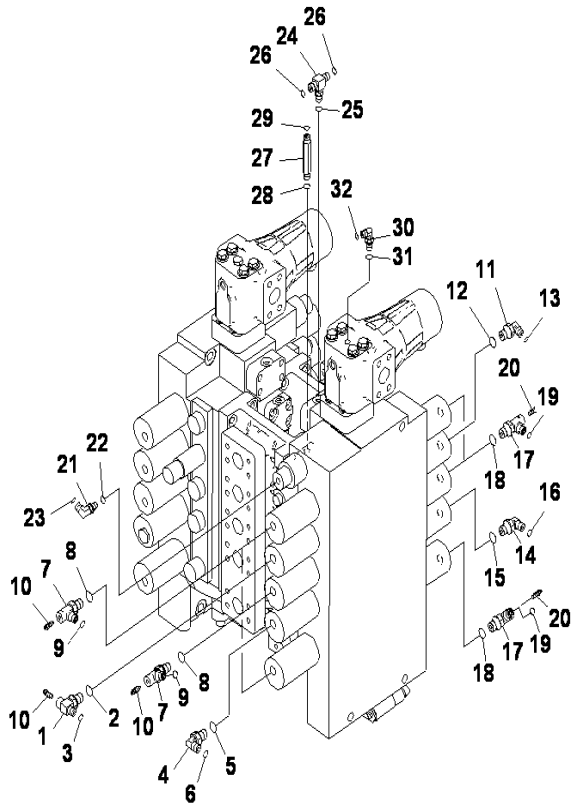

MAIN VALVE(JOINT PARTS)(R.H)(1/2)

INDEX	CD	PART NO.	DESCRIPTION	QTY	SERIAL NO.
1		21N-62-36980	ELBOW	1	J10001-UP
2		07002-62034	O-RING	1	J10001-UP
3		02896-61009	O-RING	1	J10001-UP
4		21T-64-36830	ELBOW	1	J10001-UP
5		07002-62034	O-RING	1	J10001-UP
6		02896-61009	O-RING	1	J10001-UP
7		21T-64-36161	ELBOW	3	J10001-UP
8		07002-62034	O-RING	3	J10001-UP
9		02896-61009	O-RING	3	J10001-UP
10		20B-27-11210	BLEEDER	4	J10001-UP
11		02782-10315	ELBOW	1	J10001-UP
12		07002-62034	O-RING	1	J10001-UP
13		02896-61009	O-RING	1	J10001-UP
14		21T-64-36830	ELBOW	1	J10001-UP
15		07002-62034	O-RING	1	J10001-UP
16		02896-61009	O-RING	1	J10001-UP
17		21T-64-36161	ELBOW	3	J10001-UP
18		07002-62034	O-RING	3	J10001-UP
19		02896-61009	O-RING	3	J10001-UP
20		20B-27-11210	BLEEDER	3	J10001-UP
21		02782-10311	ELBOW	1	J10001-UP
22		07002-61423	O-RING	1	J10001-UP
23		02896-61009	O-RING	1	J10001-UP
24		21W-62-42630	TEE	1	J10001-UP
25		07002-61423	O-RING	1	J10001-UP
26		02896-61009	O-RING	2	J10001-UP
27		207-62-71531	UNION	1	J10001-UP
28		07002-61423	O-RING	1	J10001-UP
29		02896-61008	O-RING	1	J10001-UP
30		02782-10210	ELBOW	1	J10001-UP
31		07002-61423	O-RING	1	J10001-UP
32		02896-61008	O-RING	1	J10001-UP

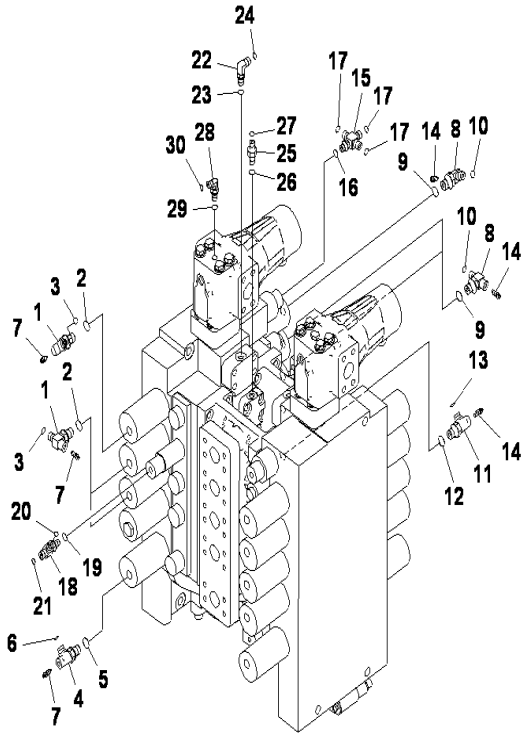

PC2000-8 S/N J10001-UP

MAIN VALVE(JOINT PARTS)(R.H)(2/2)

INDEX	CD	PART NO.	DESCRIPTION	QTY	SERIAL NO.
1		21N-62-36980	ELBOW	3	J10001-UP
2		07002-62034	O-RING	3	J10001-UP
3		02896-61009	O-RING	3	J10001-UP
4		21T-64-36161	ELBOW	1	J10001-UP
5		07002-62034	O-RING	1	J10001-UP
6		02896-61009	O-RING	1	J10001-UP
7		20B-27-11210	BLEEDER	4	J10001-UP
8		21N-62-36980	ELBOW	3	J10001-UP
9		07002-62034	O-RING	3	J10001-UP
10		02896-61009	O-RING	3	J10001-UP
11		21T-64-36161	ELBOW	1	J10001-UP
12		07002-62034	O-RING	1	J10001-UP
13		02896-61009	O-RING	1	J10001-UP
14		20B-27-11210	BLEEDER	4	J10001-UP
15		209-64-16491	TEE	1	J10001-UP
16		07002-61423	O-RING	1	J10001-UP
17		02896-61009	O-RING	3	J10001-UP
18		20U6241820	ELBOW	1	J10001-UP
19		07002-61423	O-RING	1	J10001-UP
20		02896-61008	O-RING	1	J10001-UP
21		02896-61009	O-RING	1	J10001-UP
22		02782-10311	ELBOW	1	J10001-UP
23		07002-61423	O-RING	1	J10001-UP
24		02896-61009	O-RING	1	J10001-UP
25		02781-0021D	UNION	1	J10001-UP
26		07002-61423	O-RING	1	J10001-UP
27		02896-61008	O-RING	1	J10001-UP
28		02782-10210	ELBOW	1	J10001-UP
29		07002-61423	O-RING	1	J10001-UP
30		02896-61008	O-RING	1	J10001-UP

Ref :H0120-05A0 Page :180110

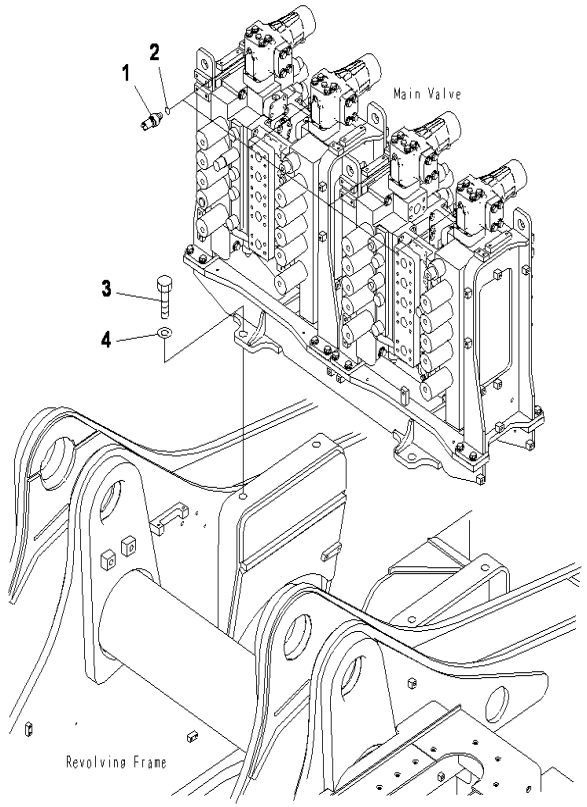

PC2000-8 S/N J10001-UP

MAIN VALVE(SENSOR AND BOLT)

INDEX	CD	PART NO.	DESCRIPTION	QTY	SERIAL NO.
1		7861-93-1812	.SENSOR, PRESSUR.....	4	J10001-UP
2		07002-11823	.O-RING.....	1	J10001-UP
3		01010-83085	BOLT.....	4	J10001-UP
4		01643-33080	WASHER.....	4	J10001-UP

Ref :H0120-06A0 Page :180120

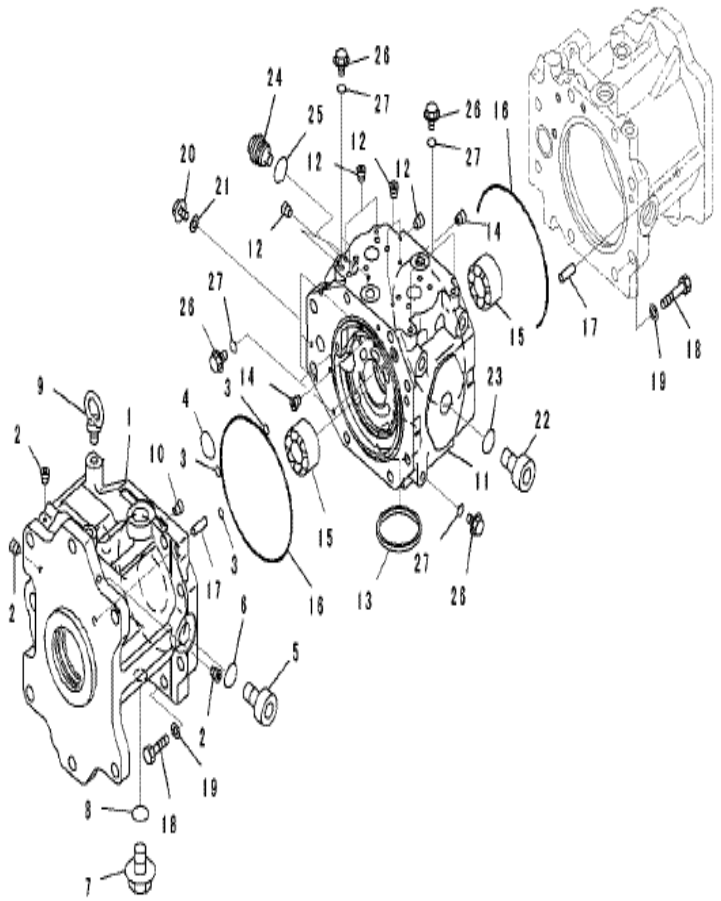

PC2000-8 S/N J10001-UP

NO.1 MAIN PUMP (INNER PARTS)(1/8)

INDEX	CD	PART NO.	DESCRIPTION	QTY	SERIAL NO.
		(708-2K-00123)	PUMP ASS'Y	1	J10011-UP
		(708-2K-00122)	PUMP ASS'Y	1	J10001-J10010
		708-2K-01124	.PUMP SUB ASSEMBLY	1	J10011-UP
		708-2K-01123	.PUMP SUB ASSEMBLY	1	J10001-J10010
	C2	708-2K-04361	..CASE ASSEMBLY,FRONT	1	J10001-UP
1	C1	708-2K-11251	...CASE,FRONT	1	J10001-UP
2	C1	708-8F-31620	...PLUG	3	J10001-UP
3	C2	708-2K-11170	..O-RING	3	J10001-UP
4	C2	708-2K-11190	..O-RING	1	J10001-UP
5		07040-14220	..PLUG	1	J10001-UP
6		07002-64234	..O-RING	1	J10001-UP
7		07044-13620	..PLUG	1	J10001-UP
8		07002-63634	..O-RING	1	J10001-UP
9		04530-12030	..BOLT	1	J10001-UP
10	C2	708-2K-11290	..ORIFICE	1	J10001-UP
	C2	708-2K-04380	..CAP ASSEMBLY, END	1	J10001-UP
11	C1	708-2K-11550	...CAP, END	1	J10001-UP
12	C1	708-8F-31620	...PLUG	7	J10001-UP
13	C2	708-2K-11720	..BUSHING	1	J10001-UP
14	C2	708-2K-11290	..ORIFICE	2	J10001-UP
15	C2	708-2K-12280	..BEARING	2	J10001-UP
16	C2	07000-A5260	..O-RING	2	J10001-UP
17	C2	04020-01638	..PIN DOWEL	2	J10001-UP
18	C2	01010-62275	..BOLT	1	J10001-UP
19	C2	01643-32260	..WASHER	1	J10001-UP
20		708-8E-16150	..PLUG	1	J10001-UP
21		07002-61023	..O-RING	1	J10001-UP
22		07040-14220	..PLUG	1	J10001-UP
23		07002-64234	..O-RING	1	J10001-UP
24		706-77-72150	..PLUG	1	J10001-UP
25		07002-64234	..O-RING	1	J10001-UP
26		706-73-71450	..PLUG	1	J10001-UP
27		07002-61423	..O-RING	1	J10001-UP

Ref :H0210-01A0 Page :180130

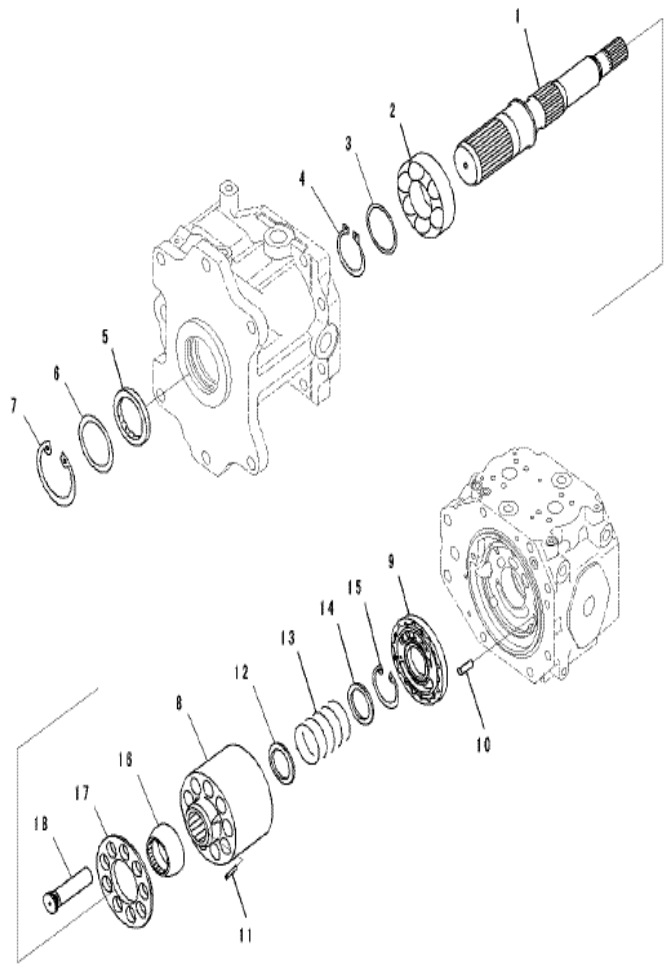

PC2000-8 S/N J10001-UP

NO.1 MAIN PUMP (INNER PARTS)(2/8)

INDEX	CD	PART NO.	DESCRIPTION	QTY	SERIAL NO.
		708-2K-00123	PUMP ASS'Y	3	J10011-UP
		708-2K-00122	PUMP ASS'Y	16	J10001-J10010
		708-2K-01124	.PUMP SUB ASS'Y	1	J10011-UP
		708-2K-01123	.PUMP SUB ASS'Y	1	J10001-J10010
1	C2	708-2K-12290	..SHAFT, FRONT	1	J10001-UP
2	C2	708-2K-12260	..BEARING	1	J10001-UP
3		708-2K-05050	..WASHER KIT	1	J10001-UP
	C2	708-2K-12170	...WASHER, T=5.0MM	1	J10001-UP
	C2	708-2K-12180	...WASHER, T=5.1MM	1	J10001-UP
	C2	708-2K-12190	...WASHER, T=5.2MM	1	J10001-UP
	C2	708-2K-12380	...WASHER, T=4.8MM	1	J10001-UP
	C2	708-2K-12390	...WASHER, T=4.9MM	1	J10001-UP
4	C2	04064-09030	..RING, SNAP	1	J10001-UP
5	C2	708-2K-12360	..SEAL, OIL	1	J10001-UP
6	C2	708-2K-12220	..SPACER	1	J10001-UP
7	C2	04065-01204	..RING,SNAP	1	J10001-UP
		708-2K-04281	..CYLINDER BLOCK ASS'Y	1	J10001-UP
8	C1	708-2K-13113	...CYLINDER BLOCK	1	J10001-UP
9	C1	708-2K-13240	...VALVE	1	J10001-UP
10	C2	708-18-13230	..PIN	1	J10001-UP
11	C2	708-2K-13361	..PIN	3	J10001-UP
12	C2	708-2K-13130	..SEAT	1	J10001-UP
13	C2	708-2K-13151	..SPRING	1	J10001-UP
14	C2	708-2K-13140	..SEAT	1	J10001-UP
15	C2	04065-08530	..RING	1	J10001-UP
16	C2	708-2K-13350	..RETAINER GUIDE	1	J10001-UP
17	C2	708-2K-13371	..SHOE RETAINER	1	J10001-UP
18	C2	708-2K-13312	..PISTON SUB ASS'Y	9	J10001-UP

Ref :H0210-02A0 Page :180131

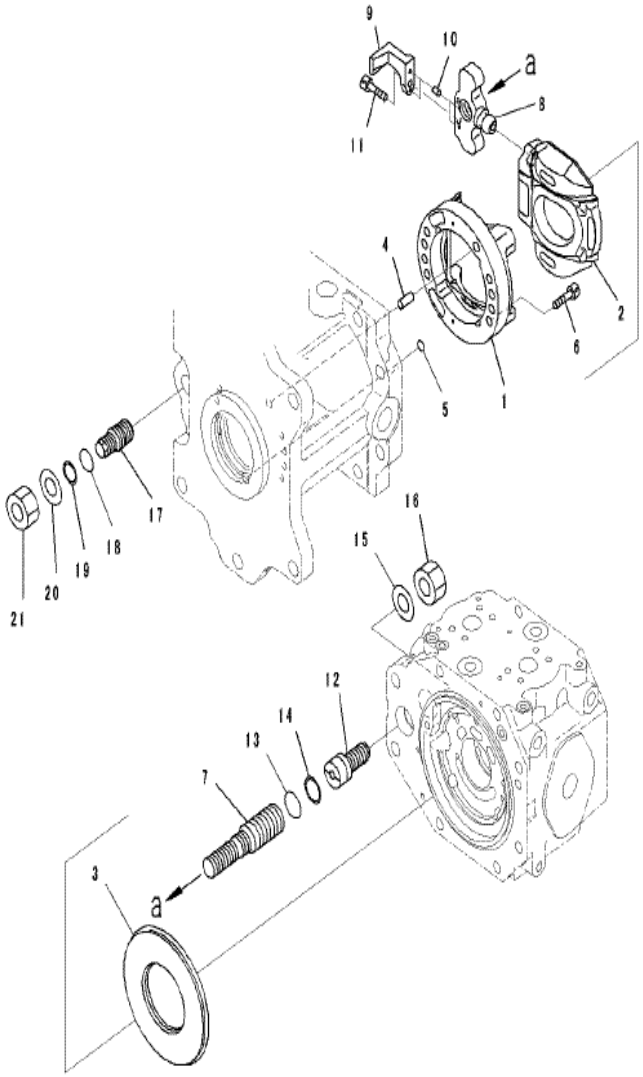

NO.1 MAIN PUMP (INNER PARTS)(3/8)

INDEX	CD	PART NO.	DESCRIPTION	QTY	SERIAL NO.
		7082K-00123	PUMP ASS'Y	1	J10011-UP
		7082K-00122	PUMP ASS'Y	1	J10001-J10010
		7082K-01124	.PUMP SUB ASS'Y	1	J10011-UP
		7082K-01123	.PUMP SUB ASS'Y	1	J10001-J10010
	C2	708-2K-04260	..CRADLE ASS'Y	1	J10001-UP
1	C1	708-2K-13610	...CRADLE	1	J10001-UP
2	C1	708-2K-13420	...CAM, ROCKER	1	J10001-UP
3	C2	708-2K-13430	..PLATE	1	J10001-UP
4	C2	04020-01638	..PIN, DOWEL	1	J10001-UP
5	C2	708-2K-11170	..O-RING	1	J10001-UP
6	C2	01252-61445	..BOLT	8	J10001-UP
7	C2	708-2K-14110	..PISTON	1	J10001-UP
8	C2	708-2K-14130	..ROD	1	J10001-UP
9	C2	708-2K-15180	..CAM	1	J10001-UP
10	C2	720-68-19610	..PIN	2	J10001-UP
11	C2	01252-61030	..BOLT	1	J10001-UP
12	C2	708-2K-14210	..SCREW	1	J10001-UP
13	C2	07000-B3039	..O-RING	1	J10001-UP
14	C2	07001-03039	..RING	1	J10001-UP
15		01643-33080	..WASHER	1	J10001-UP
16		01583-13018	..NUT	1	J10001-UP
17		708-2K-14230	..SCREW	1	J10001-UP
18		07000-B3032	..O-RING	1	J10001-UP
19		07001-03032	..RING	1	J10001-UP
20		01643-33080	..WASHER	1	J10001-UP
21		01583-13018	..NUT	1	J10001-UP

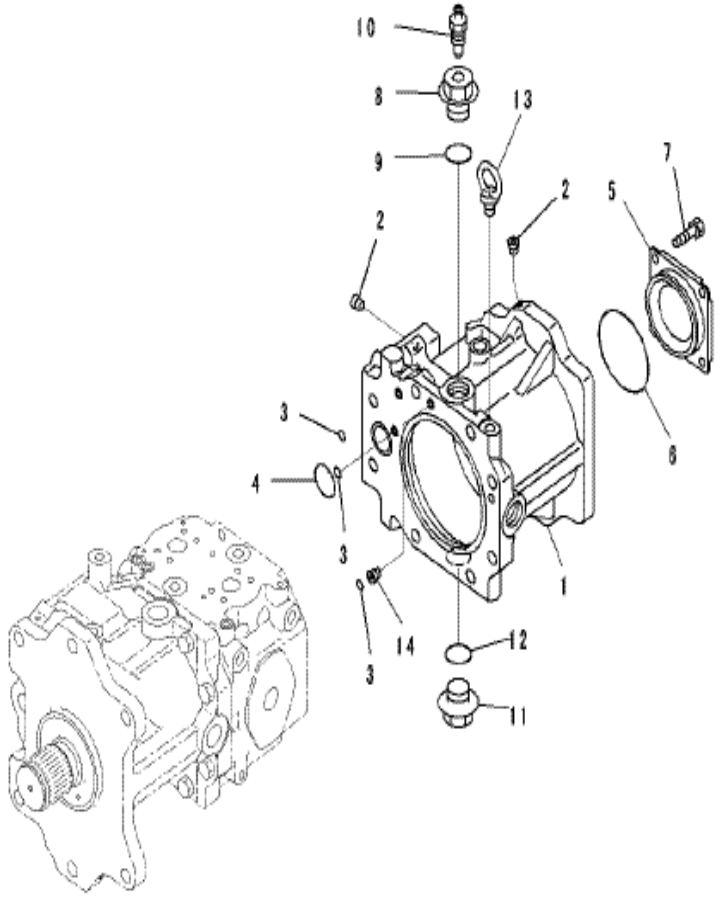

PC2000-8 S/N J10001-UP

NO.1 MAIN PUMP (INNER PARTS)(4/8)

INDEX	CD	PART NO.	DESCRIPTION	QTY	SERIAL NO.
		708-2K-00123	PUMP ASS'Y	1	J10011-UP
		708-2K-00122	PUMP ASS'Y	1	J10001-J10010
		708-2K-01124	.PUMP SUB ASS'Y	1	J10011-UP
		708-2K-01123	.PUMP SUB ASS'Y	1	J10001-J10010
	C2	708-2K-04470	..CASE ASS'Y,REAR	1	J10001-UP
1	C1	708-2K-11310	...CASE,REAR	1	J10001-UP
2	C1	708-8F-31620	...PLUG	3	J10001-UP
3	C2	708-2K-11170	..O-RING	3	J10001-UP
4	C2	708-2K-11190	..O-RING	1	J10001-UP
5		708-2K-11950	..PLATE	1	J10001-UP
6		07000-A2140	..O-RING	1	J10001-UP
7		01010-81025	..BOLT	4	J10001-UP
8		708-2K-11920	..PLUG	1	J10001-UP
9		07002-64234	..O-RING	1	J10001-UP
10		20B-27-11210	..BLEEDER	1	J10001-UP
11		07044-13620	..PLUG	1	J10001-UP
12		07002-63634	..O-RING	1	J10001-UP
13		04530-12030	..BOLT	1	J10001-UP
14		708-2K-11290	..ORIFICE	1	J10001-UP

Ref :H0210-04A0 Page :180133

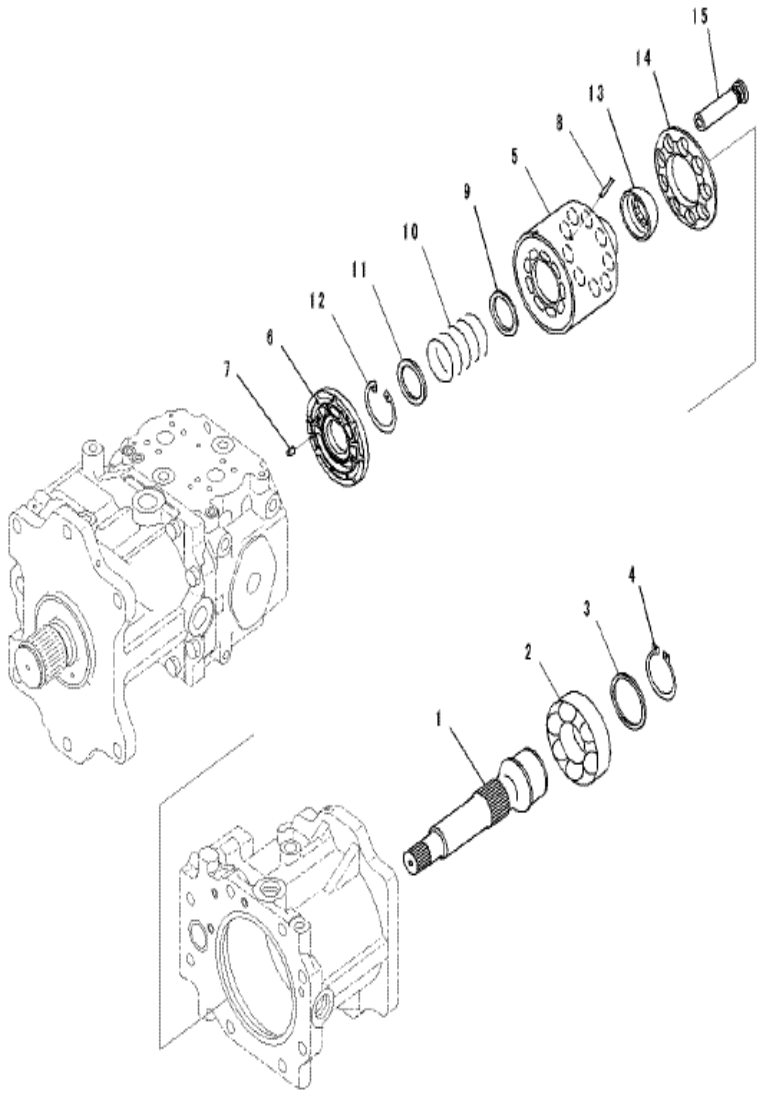

PC2000-8 S/N J10001-UP

NO.1 MAIN PUMP (INNER PARTS)(5/8)

INDEX	CD	PART NO.	DESCRIPTION	QTY	SERIAL NO.
		708-2K-00123	PUMP ASS'Y	1	J10011-UP
		708-2K-00122	PUMP ASS'Y	1	J10001-J10010
		708-2K-01124	.PUMP SUB ASS'Y	1	J10011-UP
		708-2K-01123	.PUMP SUB ASS'Y	1	J10001-J10010
1	C2	708-2K-12330	..SHAFT,REAR	1	J10001-UP
2	C2	708-2K-12260	..BEARING	1	J10001-UP
3		708-2K-05050	..WASHER KIT	1	J10001-UP
	C2	708-2K-12170	...WASHER, T=5.0MM	1	J10001-UP
	C2	708-2K-12180	...WASHER, T=5.1MM	1	J10001-UP
	C2	708-2K-12190	...WASHER, T=5.2MM	1	J10001-UP
	C2	708-2K-12380	...WASHER, T=4.8MM	1	J10001-UP
	C2	708-2K-12390	...WASHER, T=4.9MM	1	J10001-UP
4	C2	04064-09030	..RING, SNAP	1	J10001-UP
	C2	708-2K-04243	..CYLINDER BLOCK ASS'Y, REAR	1	J10001-UP
5	C1	708-2K-13113	...CYLINDER BLOCK	1	J10001-UP
6	C1	708-2K-13212	...VALVE, PLATE	1	J10001-UP
7	C2	708-18-13230	..PIN	1	J10001-UP
8	C2	708-2K-13361	..PIN	3	J10001-UP
9	C2	708-2K-13130	..SEAT	1	J10001-UP
10	C2	708-2K-13151	..SPRING	1	J10001-UP
11	C2	708-2K-13140	..SEAT	1	J10001-UP
12	C2	04065-08530	..RING	1	J10001-UP
13	C2	708-2K-13350	..RETAINER GUIDE	1	J10001-UP
14	C2	708-2K-13371	..SHOE RETAINER	1	J10001-UP
15	C2	708-2K-13312	..PISTON SUB ASS'Y	9	J10001-UP

Ref :H0210-05A0 Page :180134

PC2000-8 S/N J10001-UP

NO.1 MAIN PUMP (INNER PARTS)(6/8)

INDEX	CD	PART NO.	DESCRIPTION	QTY	SERIAL NO.
		708-2K-00123	PUMP ASS'Y	1	J10011-UP
		708-2K-00122	PUMP ASS'Y	1	J10001-J10010
		708-2K-01124	.PUMP SUB ASS'Y	1	J10011-UP
		708-2K-01123	.PUMP SUB ASS'Y	1	J10001-J10010
	C2	708-2K-04260	..CRADLE ASS'Y	1	J10001-UP
1	C1	708-2K-13610	...CRADLE	1	J10001-UP
2	C1	708-2K-13420	...CAM, ROCKER	1	J10001-UP
3	C2	708-2K-13430	..PLATE	1	J10001-UP
4	C2	04020-01638	..PIN DOWEL	1	J10001-UP
5	C2	708-2K-11170	..O-RING	1	J10001-UP
6	C2	01252-61445	..BOLT	8	J10001-UP
7	C2	708-2K-14110	..PISTON	1	J10001-UP
8	C2	708-2K-14130	..ROD	1	J10001-UP
9	C2	708-2K-15180	..CAM	1	J10001-UP
10	C2	720-68-19610	..PIN	2	J10001-UP
11	C2	01252-61030	..BOLT	1	J10001-UP
12	C2	708-2K-14210	..SCREW	1	J10001-UP
13	C2	07000-B3039	..O-RING	1	J10001-UP
14	C2	07001-03039	..RING	1	J10001-UP
15		01643-33080	..WASHER	1	J10001-UP
16		01583-13018	..NUT	1	J10001-UP
17		708-2K-14230	..SCREW	1	J10001-UP
18		07000-B3032	..O-RING	1	J10001-UP
19		07001-03032	..RING	1	J10001-UP
20		01643-33080	..WASHER	1	J10001-UP
21		01583-13018	..NUT	1	J10001-UP
22	C2	708-2K-12131	..COUPLING	1	J10001-UP
23	C2	708-2K-11711	..IMPELLER	1	J10001-UP
24	C2	708-2K-11781	..SHAFT	1	J10001-UP
25		01010-E1020	BOLT	1	J10001-UP
26		708-2K-11790	WASHER	1	J10001-UP
27	C2	708-2K-11740	..FLANGE	1	J10001-UP
28	C2	07000-A5135	..O-RING	1	J10001-UP
29		708-2K-05020	..SHIM KIT	1	J10001-UP
	C2	708-2K-11750	...SHIM, T=0.1MM	1	J10001-UP
	C2	708-2K-11760	...SHIM, T=0.2MM	1	J10001-UP
	C2	708-2K-11770	...SHIM, T=0.5MM	1	J10001-UP
30		01252-61230	..BOLT	4	J10001-UP
		708-2K-04420	..GEAR KIT	1	J10001-UP
31	C1	708-2K-12940	...GEAR,BEVEL	1	J10001-UP
32	C1	708-2K-12950	...PINION	1	J10001-UP
33		708-2K-12710	..BEARING	1	J10001-UP

Ref :H0210-06A0 Page :180135

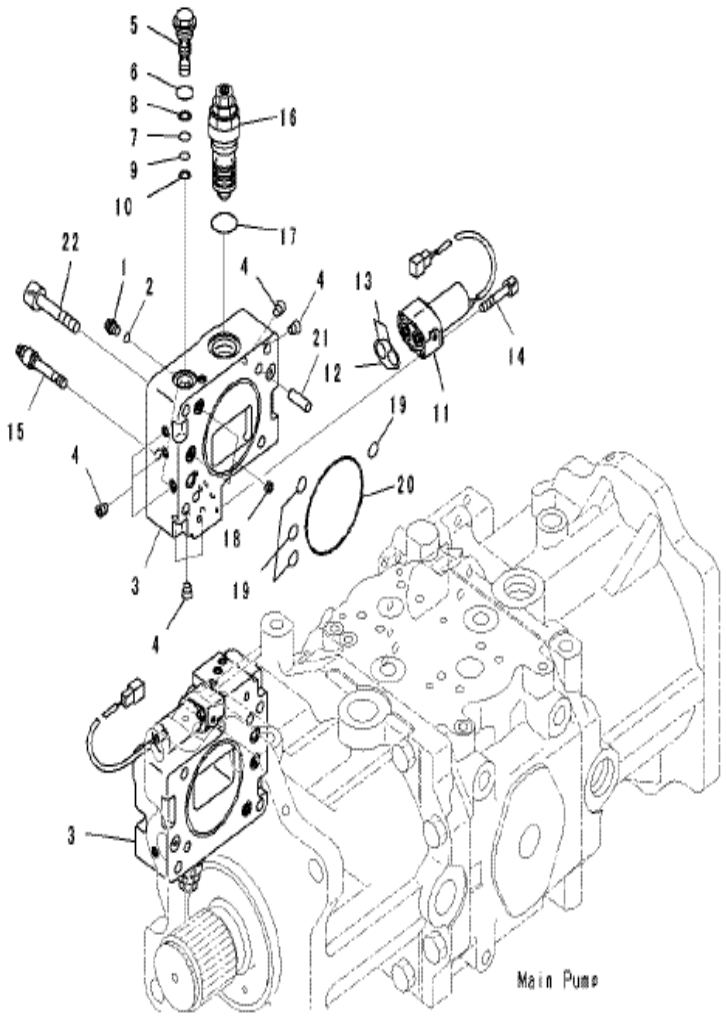

PC2000-8 S/N J10001-UP

NO.1 MAIN PUMP (INNER PARTS)(7/8)

INDEX	CD	PART NO.	DESCRIPTION	QTY	SERIAL NO.
		708-2K-00123	PUMP ASS'Y	1	J10011-UP
		708-2K-00122	PUMP ASS'Y	1	J10001-J10010
	C2	708-2K-03160	.VALVE ASS'Y, SERVO FRONT	2	J10001-UP
1		708-8E-16150	..PLUG	2	J10001-UP
2		07002-61023	..O-RING	2	J10001-UP
	C2	708-2K-04211	..BLOCK SUB ASS'Y, FRONT	1	J10001-UP
3	C1	708-2K-15141	...BLOCK, FRONT	1	J10001-UP
4	C1	708-21-12541	...PLUG	10	J10001-UP
5	C2	708-2K-03550	..VALVE ASS'Y	1	J10001-UP
6		07002-62434	...O-RING	1	J10001-UP
7		07000-B2012	...O-RING	1	J10001-UP
8		07001-02012	...RING,BACK UP	1	J10001-UP
9		07000-B2010	...O-RING	1	J10001-UP
10		07001-02010	...RING	1	J10001-UP
11		702-21-07650	..SOLENOID VALVE	1	J10001-UP
12		708-2K-16320	..O-RING	1	J10001-UP
13		708-2K-16310	..O-RING	2	J10001-UP
14		203-60-62220	..BOLT	2	J10001-UP
15		708-2K-03820	..PLUG ASS'Y	1	J10001-UP
16		708-2K-03560	..VALVE ASS'Y	1	J10001-UP
17		07002-63634	...O-RING	1	J10001-UP
18	C2	708-2L-25480	.FILTER	4	J10001-UP
19	C2	708-2K-11170	.O-RING	8	J10001-UP
20	C2	07000-A2110	.O-RING	2	J10001-UP
21	C2	04020-01228	.PIN	4	J10001-UP
22	C2	01252-61270	.BOLT	8	J10001-UP

Ref :H0210-07A0 Page :180136

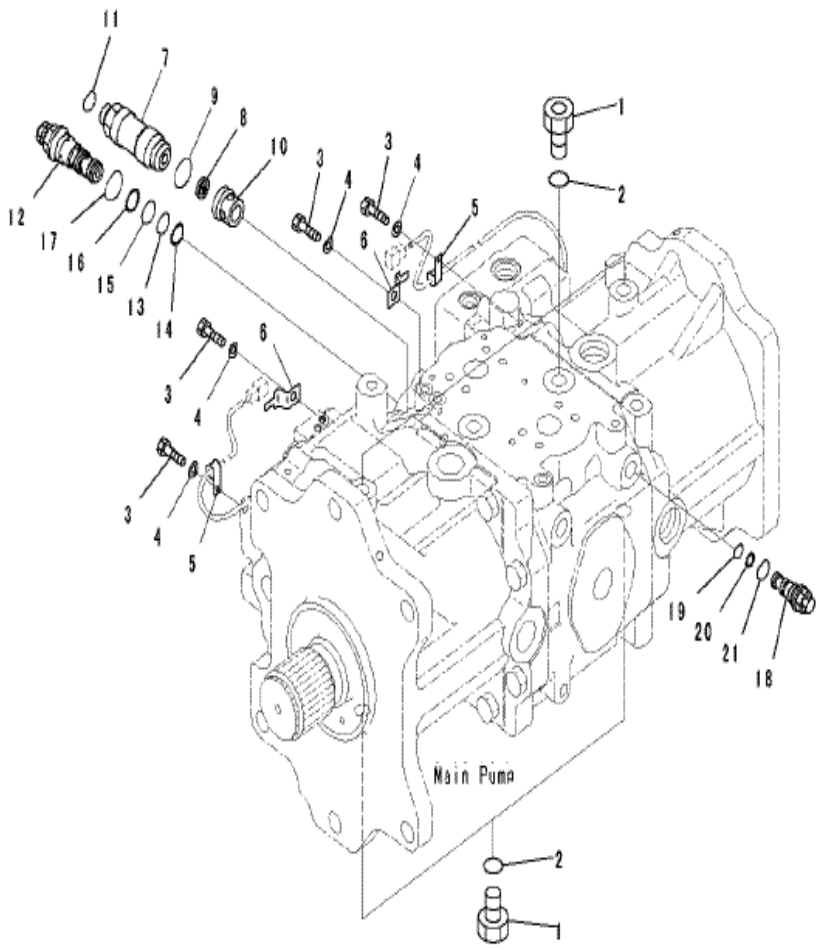

PC2000-8 S/N J10001-UP

NO.1 MAIN PUMP (INNER PARTS)(8/8)

INDEX	CD	PART NO.	DESCRIPTION	QTY	SERIAL NO.
		708-2K-00123	PUMP ASS'Y	1	J10011-UP
		708-2K-00122	PUMP ASS'Y	1	J10001-J10010
1		07040-12414	.PLUG	5	J10001-UP
2		07002-62434	.O-RING	5	J10001-UP
3		01010-81020	.BOLT	4	J10001-UP
4		01643-31032	.WASHER	4	J10001-UP
5		04434-50810	.CLIP	2	J10001-UP
6		08193-20010	.CLIP	2	J10001-UP
		708-2K-03250	.FILTER ASS'Y	1	J10001-UP
7		708-2K-16930	..UNION	1	J10001-UP
8		708-2K-16150	..FILTER	1	J10001-UP
9		07002-63634	..O-RING	1	J10001-UP
10		708-2K-16920	..PLUG	1	J10001-UP
11		02896-61015	..O-RING	1	J10001-UP
12		708-2K-03411	.VALVE ASS'Y, REDUCE	1	J10001-UP
13		07000-B2022	..O-RING	1	J10001-UP
14		07001-02022	..O-RING	1	J10001-UP
15		07000-B3022	..O-RING	1	J10001-UP
16		07001-03022	..RING	1	J10001-UP
17		07002-63634	..O-RING	1	J10001-UP
18		708-2K-03420	.VALVE ASS'Y, RELIEF	1	J10001-UP
19		07000-B2014	..O-RING	1	J10001-UP
20		723-40-56350	..RING	1	J10001-UP
21		07002-62434	..O-RING	1	J10001-UP

Ref :H0210-08A0 Page :180137

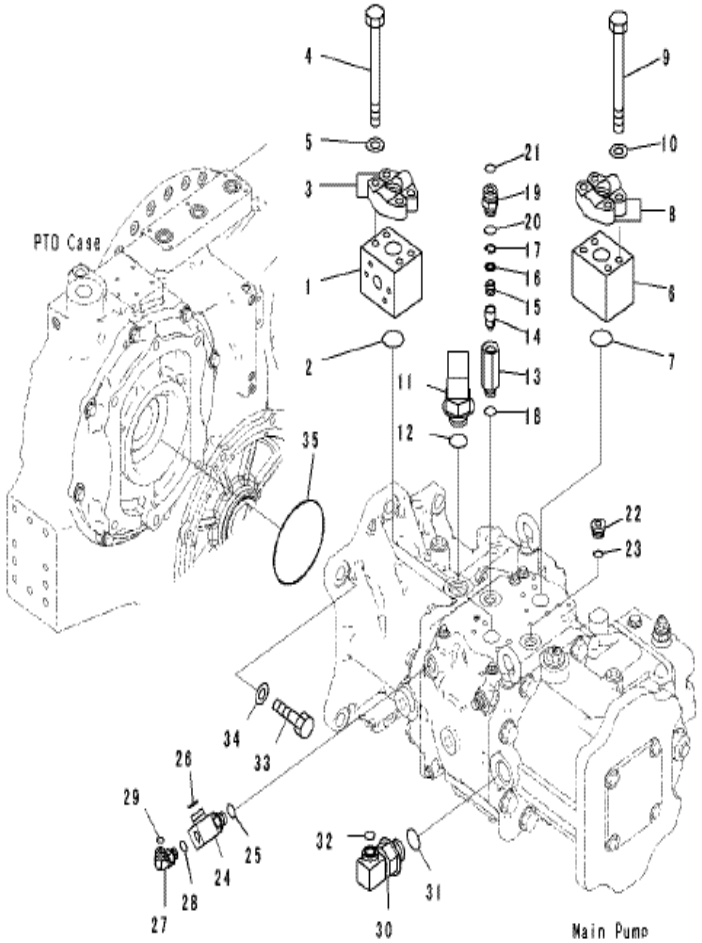

PC2000-8 S/N J10001-UP

NO.1 MAIN PUMP (PUMP MOUNTING)

INDEX	CD	PART NO.	DESCRIPTION	QTY	SERIAL NO.
1		21T-64-31210	BLOCK	1	J10001-UP
2		07000-B3050	O-RING	1	J10001-UP
3		07371-51470	FLANGE	2	J10001-UP
4		209-62-41270	BOLT	4	J10001-UP
5		01643-31445	WASHER	4	J10001-UP
6		21T-64-31221	BLOCK	1	J10001-UP
7		07000-B3050	O-RING	1	J10001-UP
8		07371-51470	FLANGE	2	J10001-UP
9		209-62-41270	BOLT	4	J10001-UP
10		01643-31445	WASHER	4	J10001-UP
11		21T-64-33451	ELBOW	1	J10001-UP
12		07002-64234	O-RING	1	J10001-UP
		203-62-56500	VALVE A'SSY	1	J10001-UP
13	C1	203-62-56580	.BLOCK	1	J10001-UP
14		203-60-21250	.POPPET	1	J10001-UP
15		203-60-21260	.SPRING	1	J10001-UP
16		203-60-21270	.SEAT	1	J10001-UP
17		04065-02212	.RING	1	J10001-UP
18		07002-62434	O-RING	1	J10001-UP
19		02781-00628	UNION	1	J10001-UP
20		07002-62434	O-RING	1	J10001-UP
21		02896-61018	O-RING	1	J10001-UP
22		07040-12414	PLUG	1	J10001-UP
23		07002-62434	O-RING	1	J10001-UP
24		21N-64-36550	ELBOW	1	J10001-UP
25		07002-62434	O-RING	1	J10001-UP
26		02896-61018	O-RING	1	J10001-UP
27		02782-10422	ELBOW	1	J10001-UP
28		07002-62034	O-RING	1	J10001-UP
29		02896-61012	O-RING	1	J10001-UP
30		209-62-41481	ELBOW	1	J10001-UP
31		07002-64234	O-RING	1	J10001-UP
32		11Y-62-11980	O-RING	1	J10001-UP
33		01010-82475	BOLT	6	J10001-UP
34		01643-32460	WASHER	6	J10001-UP
35		07000-E5185	O-RING	1	J10001-UP

Ref :H0210-09A0 Page :180138

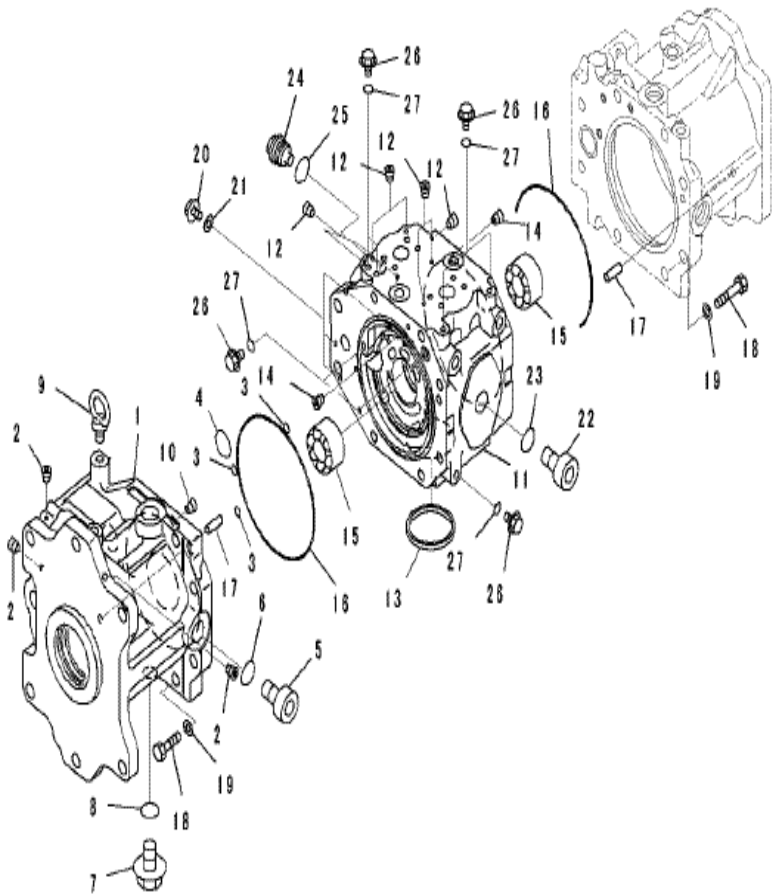

PC2000-8 S/N J10001-UP

NO.2 MAIN PUMP (INNER PARTS)(1/8)

INDEX	CD	PART NO.	DESCRIPTION	QTY	SERIAL NO.
		(708-2K-00123)	PUMP ASS'Y	1	J10011-UP
		(708-2K-00122)	PUMP ASS'Y	1	J10001-J10010
		708-2K-01124	.PUMP SUB ASS'Y	1	J10011-UP
		708-2K-01123	.PUMP SUB ASS'Y	1	J10001-J10010
	C2	708-2K-04361	..CASE ASS'Y,FRONT	1	J10001-UP
1	C1	708-2K-11251	...CASE,FRONT	1	J10001-UP
2	C1	708-8F-31620	...PLUG	3	J10001-UP
3	C2	708-2K-11170	..O-RING	3	J10001-UP
4	C2	708-2K-11190	..O-RING	1	J10001-UP
5		07040-14220	..PLUG	1	J10001-UP
6		07002-64234	..O-RING	1	J10001-UP
7		07044-13620	..PLUG	1	J10001-UP
8		07002-63634	..O-RING	1	J10001-UP
9		04530-12030	..BOLT	1	J10001-UP
10	C2	708-2K-11290	..ORIFICE	1	J10001-UP
	C2	708-2K-04380	..CAP ASS'Y, END	1	J10001-UP
11	C1	708-2K-11550	...CAP, END	1	J10001-UP
12	C1	708-8F-31620	...PLUG	7	J10001-UP
13	C2	708-2K-11720	..BUSHING	1	J10001-UP
14	C2	708-2K-11290	..ORIFICE	2	J10001-UP
15	C2	708-2K-12280	..BEARING	2	J10001-UP
16	C2	07000-A5260	..O-RING	2	J10001-UP
17	C2	04020-01638	..PIN DOWEL	2	J10001-UP
18	C2	01010-62275	..BOLT	16	J10001-UP
19	C2	01643-32260	..WASHER	16	J10001-UP
20		708-8E-16150	..PLUG	3	J10001-UP
21		07002-61023	..O-RING	3	J10001-UP
22		07040-14220	..PLUG	1	J10001-UP
23		07002-64234	..O-RING	1	J10001-UP
24		706-77-72150	..PLUG	1	J10001-UP
25		07002-64234	..O-RING	1	J10001-UP
26		706-73-71450	..PLUG	7	J10001-UP
27		07002-61423	..O-RING	7	J10001-UP

Ref :H0220-01A0 Page :180140

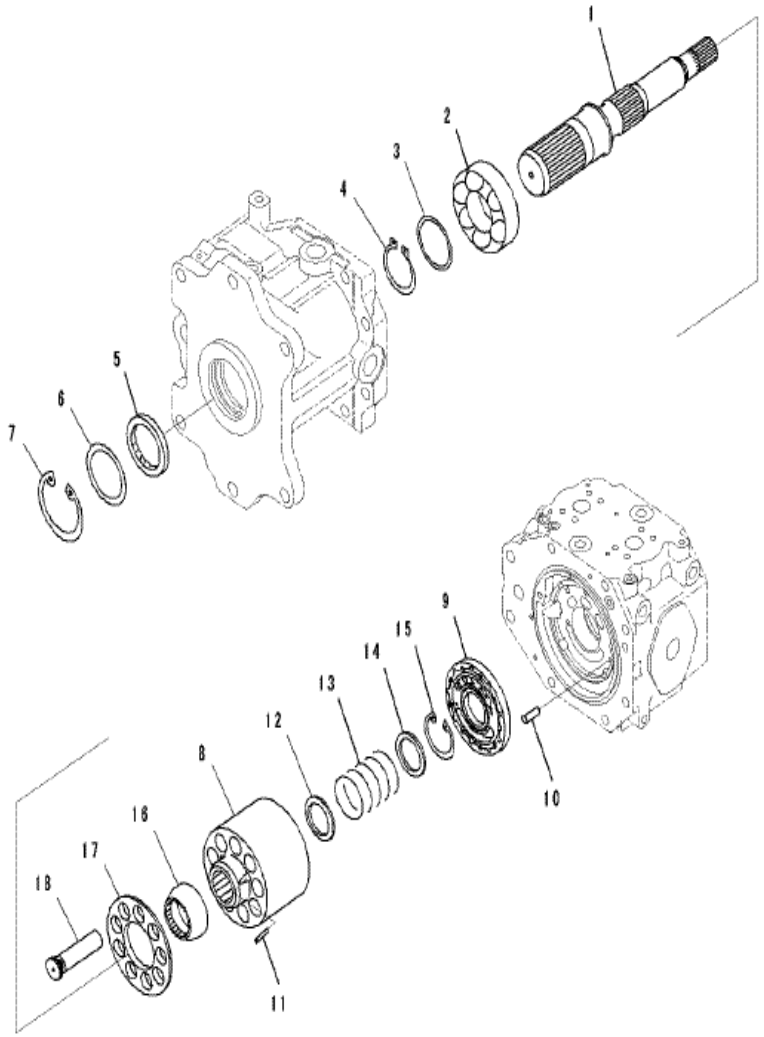

PC2000-8 S/N J10001-UP

NO.2 MAIN PUMP (INNER PARTS)(2/8)

INDEX	CD	PART NO.	DESCRIPTION	QTY	SERIAL NO.
		(708-2K-00123)	PUMP ASS'Y	1	J10011-UP
		(708-2K-00122)	PUMP ASS'Y	2	J10001-J10010
		708-2K-01124	.PUMP SUB ASS'Y	1	J10011-UP
		708-2K-01123	.PUMP SUB ASS'Y	1	J10001-J10010
1	C2	708-2K-12290	..SHAFT, FRONT	1	J10001-UP
2	C2	708-2K-12260	..BEARING	1	J10001-UP
3		708-2K-05050	..WASHER KIT	1	J10001-UP
	C2	708-2K-12170	...WASHER, T=5.0MM	1	J10001-UP
	C2	708-2K-12180	...WASHER, T=5.1MM	1	J10001-UP
	C2	708-2K-12190	...WASHER, T=5.2MM	1	J10001-UP
	C2	708-2K-12380	...WASHER, T=4.8MM	1	J10001-UP
	C2	708-2K-12390	...WASHER, T=4.9MM	1	J10001-UP
4	C2	04064-09030	..SNAP RING	1	J10001-UP
5	C2	708-2K-12360	..OIL SEAL	1	J10001-UP
6	C2	708-2K-12220	..SPACER	1	J10001-UP
7	C2	04065-01204	..RING,SNAP	1	J10001-UP
		708-2K-04281	..CYLINDER BLOCK ASS'Y	1	J10001-UP
8	C1	708-2K-13113	...CYLINDER BLOCK	1	J10001-UP
9	C1	708-2K-13240	...VALVE	1	J10001-UP
10	C2	708-18-13230	..PIN	1	J10001-UP
11	C2	708-2K-13361	..PIN	3	J10001-UP
12	C2	708-2K-13130	..SEAT	1	J10001-UP
13	C2	708-2K-13151	..SPRING	1	J10001-UP
14	C2	708-2K-13140	..SEAT	1	J10001-UP
15	C2	04065-08530	..RING	1	J10001-UP
16	C2	708-2K-13350	..RETAINER GUIDE	1	J10001-UP
17	C2	708-2K-13371	..SHOE RETAINER	1	J10001-UP
18	C2	708-2K-13312	..PISTON SUB ASS'Y	9	J10001-UP

Ref :H0220-02A0 Page :180141

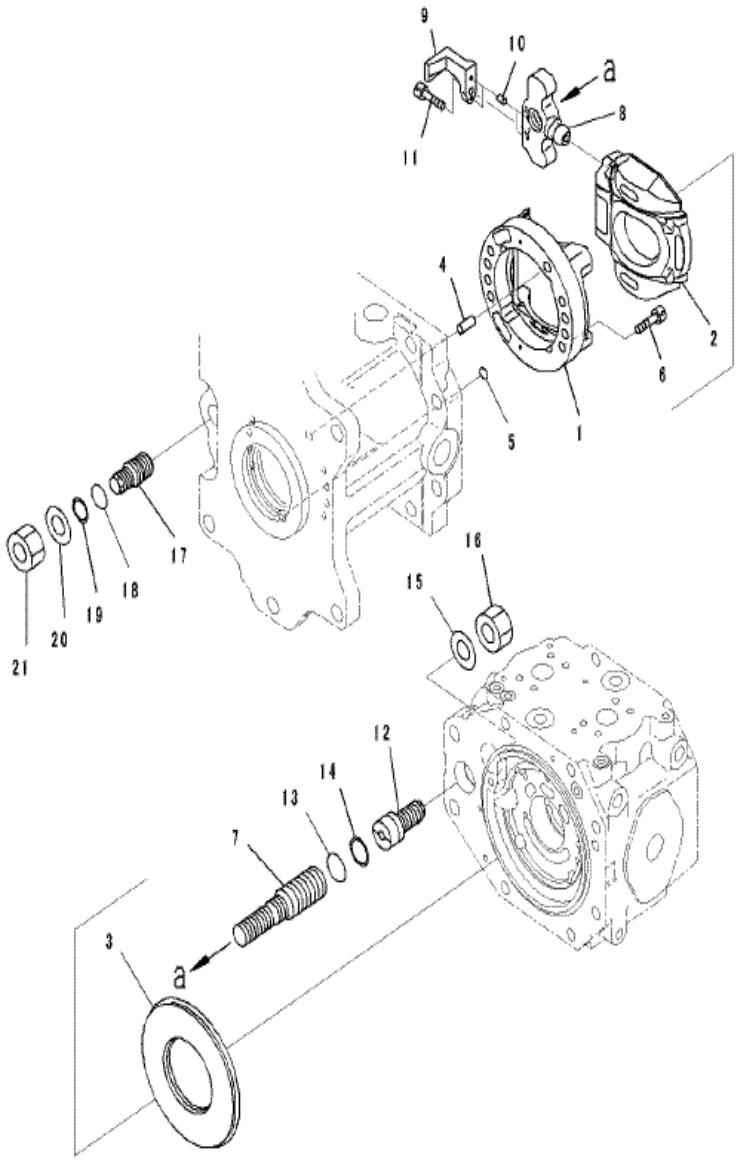

PC2000-8 S/N J10001-UP

NO.2 MAIN PUMP (INNER PARTS)(3/8)

INDEX	CD	PART NO.	DESCRIPTION	QTY	SERIAL NO.
		(708-2K-00123)	PUMP ASS'Y	1	J10011-UP
		(708-2K-00122)	PUMP ASS'Y	1	J10001-J10010
		708-2K-01124	.PUMP SUB ASS'Y	1	J10011-UP
		708-2K-01123	.PUMP SUB ASS'Y	1	J10001-J10010
	C2	708-2K-04260	..CRADLE ASS'Y	1	J10001-UP
1	C1	708-2K-13610	...CRADLE	1	J10001-UP
2	C1	708-2K-13420	...ROCKER CAM	1	J10001-UP
3	C2	708-2K-13430	..PLATE	1	J10001-UP
4	C2	04020-01638	..PIN DOWEL	1	J10001-UP
5	C2	708-2K-11170	..O-RING	1	J10001-UP
6	C2	01252-61445	..BOLT	8	J10001-UP
7	C2	708-2K-14110	..PISTON	1	J10001-UP
8	C2	708-2K-14130	..ROD	1	J10001-UP
9	C2	708-2K-15180	..CAM	1	J10001-UP
10	C2	720-68-19610	..PIN	2	J10001-UP
11	C2	01252-61030	..BOLT	1	J10001-UP
12	C2	708-2K-14210	..SCREW	1	J10001-UP
13	C2	07000-B3039	..O-RING	1	J10001-UP
14	C2	07001-03039	..RING	1	J10001-UP
15		01643-33080	..WASHER	1	J10001-UP
16		01583-13018	..NUT	1	J10001-UP
17		708-2K-14230	..SCREW	1	J10001-UP
18		07000-B3032	..O-RING	1	J10001-UP
19		07001-03032	..RING	1	J10001-UP
20		01643-33080	..WASHER	1	J10001-UP
21		01583-13018	..NUT	1	J10001-UP

Ref :H0220-03A0 Page :180142

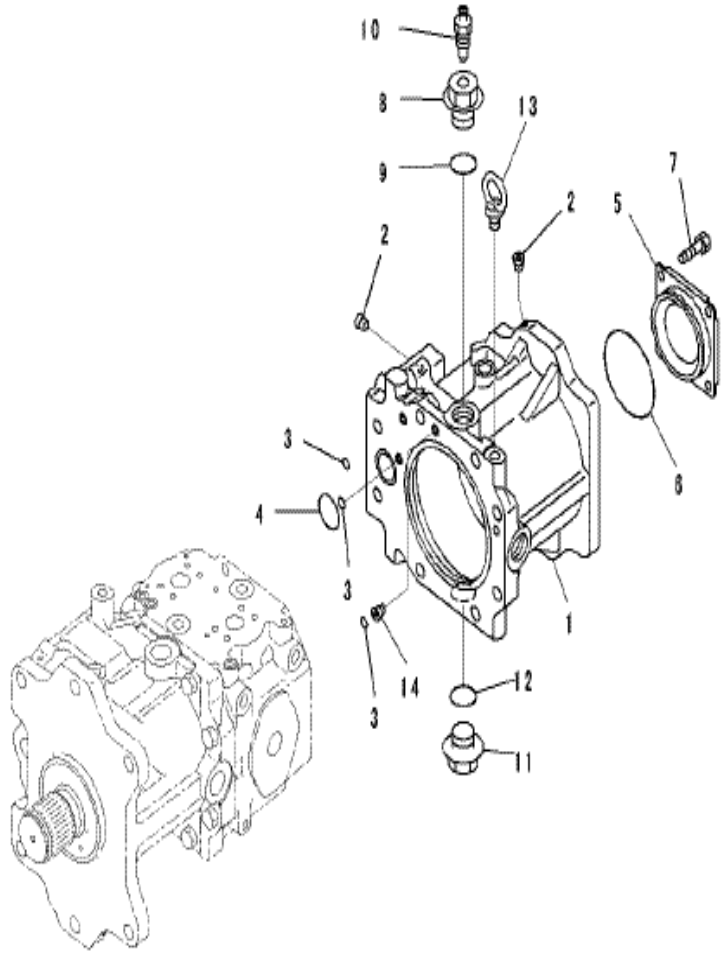

PC2000-8 S/N J10001-UP

NO.2 MAIN PUMP (INNER PARTS)(4/8)

INDEX	CD	PART NO.	DESCRIPTION	QTY	SERIAL NO.
		708-2K-00123	PUMP ASS'Y	1	J10011-UP
		708-2K-00122	PUMP ASS'Y	1	J10001-J10010
		708-2K-01124	.PUMP SUB ASS'Y	1	J10011-UP
		708-2K-01123	.PUMP SUB ASS'Y	1	J10001-J10010
	C2	708-2K-04470	..CASE ASSEMBLY, REAR	1	J10001-UP
1	C1	708-2K-11310	...CASE,REAR	1	J10001-UP
2	C1	708-8F-31620	...PLUG	3	J10001-UP
3	C2	708-2K-11170	..O-RING	3	J10001-UP
4	C2	708-2K-11190	..O-RING	1	J10001-UP
5		708-2K-11950	..PLATE	1	J10001-UP
6		07000-A2140	..O-RING	1	J10001-UP
7		01010-81025	..BOLT	4	J10001-UP
8		708-2K-11920	..PLUG	1	J10001-UP
9		07002-64234	..O-RING	1	J10001-UP
10		20B-27-11210	..BLEEDER	1	J10001-UP
11		07044-13620	..PLUG	1	J10001-UP
12		07002-63634	..O-RING	1	J10001-UP
13		04530-12030	..BOLT	1	J10001-UP
14		708-2K-11290	..ORIFICE	1	J10001-UP

Ref :H0220-04A0 Page :180143

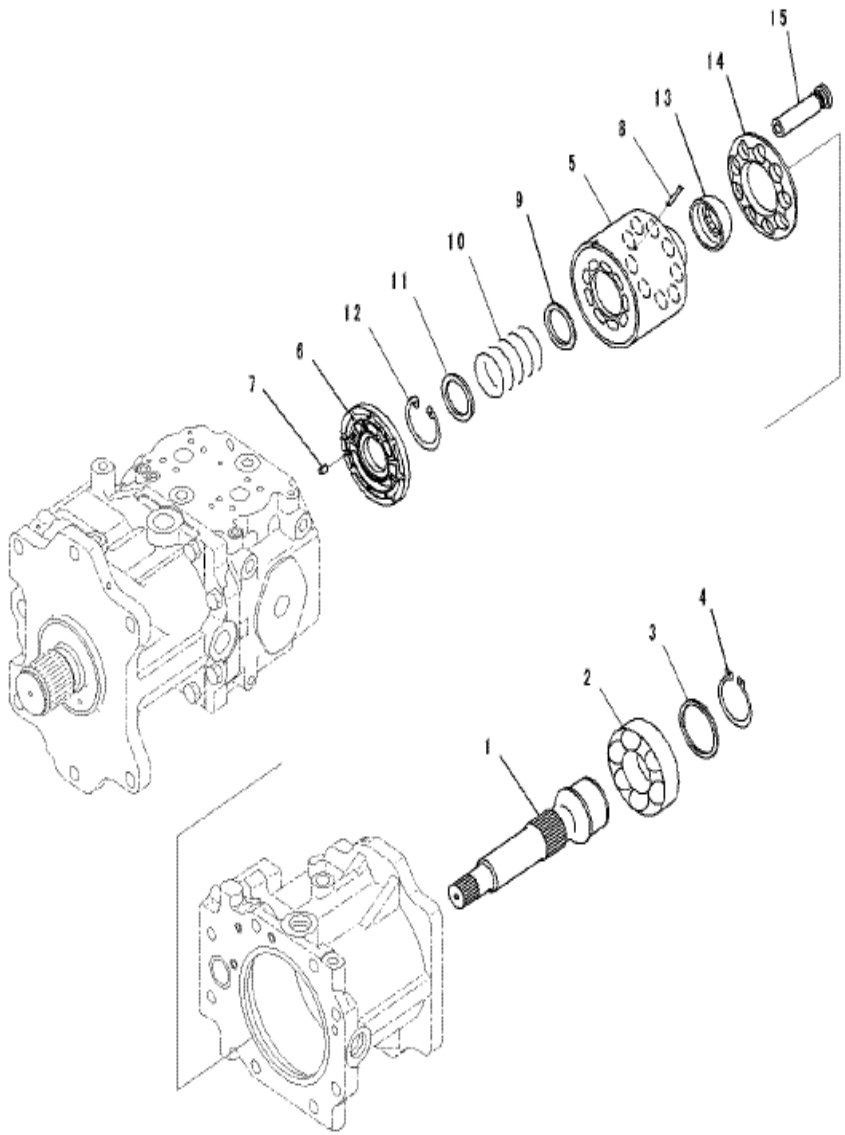

PC2000-8 S/N J10001-UP

NO.2 MAIN PUMP (INNER PARTS)(5/8)

INDEX	CD	PART NO.	DESCRIPTION	QTY	SERIAL NO.
		(708-2K-00123)	PUMP ASS'Y	1	J10011-UP
		(708-2K-00122)	PUMP ASS'Y	1	J10001-J10010
		708-2K-01124	.PUMP SUB ASS'Y	1	J10011-UP
		708-2K-01123	.PUMP SUB ASS'Y	1	J10001-J10010
1	C2	708-2K-12330	..SHAFT,REAR	1	J10001-UP
2	C2	708-2K-12260	..BEARING	1	J10001-UP
3		708-2K-05050	..WASHER KIT	1	J10001-UP
	C2	708-2K-12170	...WASHER, T=5.0MM	1	J10001-UP
	C2	708-2K-12180	...WASHER, T=5.1MM	1	J10001-UP
	C2	708-2K-12190	...WASHER, T=5.2MM	1	J10001-UP
	C2	708-2K-12380	...WASHER, T=4.8MM	1	J10001-UP
	C2	708-2K-12390	...WASHER, T=4.9MM	1	J10001-UP
4	C2	04064-09030	..RING, SNAP	1	J10001-UP
	C2	708-2K-04243	..CYLINDER BLOCK ASS'Y, REAR	1	J10001-UP
5	C1	708-2K-13113	...CYLINDER BLOCK	1	J10001-UP
6	C1	708-2K-13212	...VALVE, PLATE	1	J10001-UP
7	C2	708-18-13230	..PIN	1	J10001-UP
8	C2	708-2K-13361	..PIN	3	J10001-UP
9	C2	708-2K-13130	..SEAT	1	J10001-UP
10	C2	708-2K-13151	..SPRING	1	J10001-UP
11	C2	708-2K-13140	..SEAT	1	J10001-UP
12	C2	04065-08530	..RING	1	J10001-UP
13	C2	708-2K-13350	..RETAINER GUIDE	1	J10001-UP
14	C2	708-2K-13371	..SHOE RETAINER	1	J10001-UP
15	C2	708-2K-13312	..PISTON SUB ASS'Y	9	J10001-UP

Ref :H0220-05A0 Page :180144

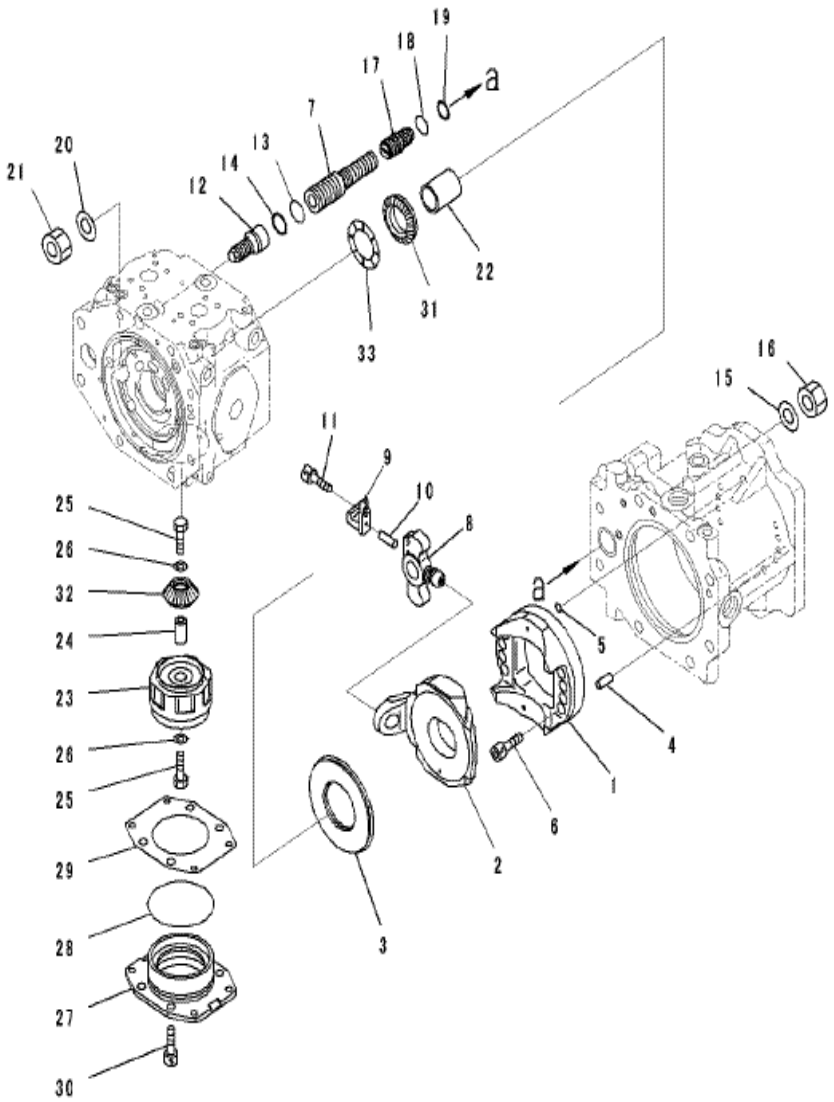

NO.2 MAIN PUMP (INNER PARTS)(6/8)

INDEX	CD	PART NO.	DESCRIPTION	QTY	SERIAL NO.
		(708-2K-00123)	PUMP ASS'Y	1	J10011-UP
		(708-2K-00122)	PUMP ASS'Y	1	J10001-J10010
		708-2K-01124	.PUMP SUB ASS'Y	1	J10011-UP
		708-2K-01123	.PUMP SUB ASS'Y	1	J10001-J10010
	C2	708-2K-04260	..CRADLE ASS'Y	1	J10001-UP
1	C1	708-2K-13610	...CRADLE	1	J10001-UP
2	C1	708-2K-13420	...CAM,ROCKER	1	J10001-UP
3	C2	708-2K-13430	..PLATE	1	J10001-UP
4	C2	04020-01638	..PIN DOWEL	1	J10001-UP
5	C2	708-2K-11170	..O-RING	1	J10001-UP
6	C2	01252-61445	..BOLT	8	J10001-UP
7	C2	708-2K-14110	..PISTON	1	J10001-UP
8	C2	708-2K-14130	..ROD	1	J10001-UP
9	C2	708-2K-15180	..CAM	1	J10001-UP
10	C2	720-68-19610	..PIN	2	J10001-UP
11	C2	01252-61030	..BOLT	1	J10001-UP
12	C2	708-2K-14210	..SCREW	1	J10001-UP
13	C2	07000-B3039	..O-RING	1	J10001-UP
14	C2	07001-03039	..RING	1	J10001-UP
15		01643-33080	..WASHER	1	J10001-UP
16		01583-13018	..NUT	1	J10001-UP
17		708-2K-14230	..SCREW	1	J10001-UP
18		07000-B3032	...O-RING	1	J10001-UP
19		07001-03032	...RING	1	J10001-UP
20		01643-33080	..WASHER	1	J10001-UP
21		01583-13018	..NUT	1	J10001-UP
22	C2	708-2K-12131	..COUPLING	1	J10001-UP
23	C2	708-2K-11711	..IMPELLER	1	J10001-UP
24	C2	708-2K-11781	..SHAFT	1	J10001-UP
25	C2	010-10-E1020	..BOLT	2	J10001-UP
26	C2	708-2K-11790	..WASHER	2	J10001-UP
27	C2	708-2K-11740	..FLANGE	1	J10001-UP
28	C2	07000-A5135	..O-RING	1	J10001-UP
29		708-2K-05020	..SHIM KIT	1	J10001-UP
	C2	708-2K-11750	...SHIM, T=0.1MM	1	J10001-UP
	C2	708-2K-11760	...SHIM, T=0.2MM	1	J10001-UP
	C2	708-2K-11770	...SHIM, T=0.5MM	1	J10001-UP
30		01252-61230	..BOLT	4	J10001-UP
		708-2K-04420	..GEAR KIT	1	J10001-UP
31	C1	708-2K-12940	...GEAR,BEVEL	1	J10001-UP
32	C1	708-2K-12950	...PINION	1	J10001-UP
33		708-2K-12710	..BEARING	1	J10001-UP

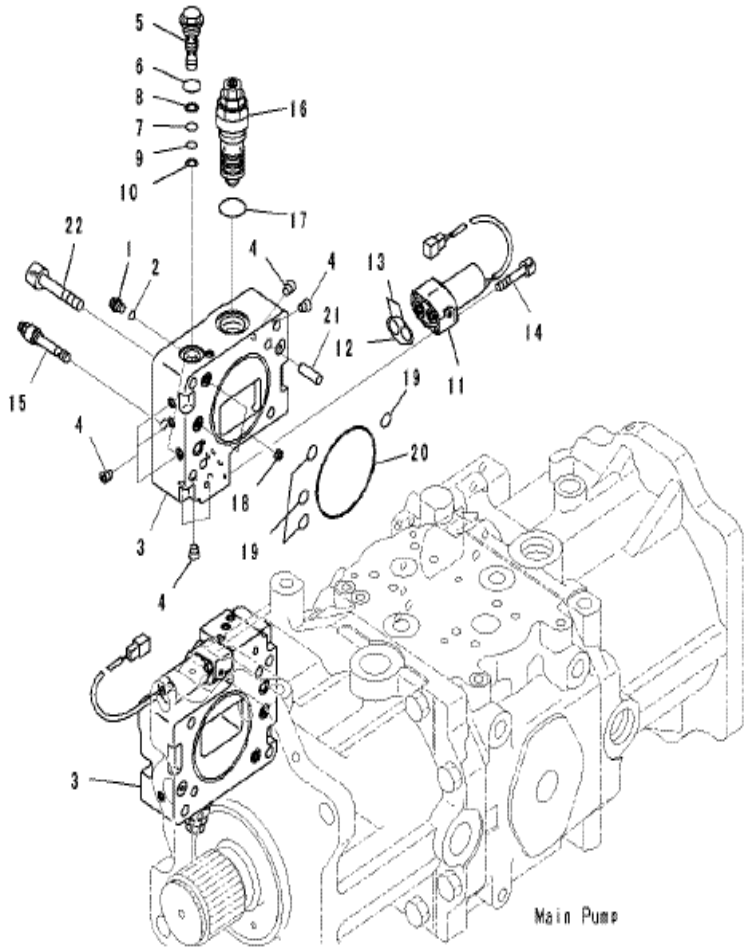

PC2000-8 S/N J10001-UP

NO.2 MAIN PUMP (INNER PARTS)(7/8)

INDEX	CD	PART NO.	DESCRIPTION	QTY	SERIAL NO.
		(708-2K-00123)	PUMP ASS'Y	1	J10011-UP
		(708-2K-00122)	PUMP ASS'Y	2	J10001-J10010
	C2	708-2K-03160	.VALVE ASS'Y, SERVO FRONT	2	J10001-UP
1		708-8E-16150	..PLUG	2	J10001-UP
2		07002-61023	..O-RING	2	J10001-UP
	C2	708-2K-04211	..BLOCK SUB ASS'Y, FRONT	1	J10001-UP
3	C1	708-2K-15141	...BLOCK, FRONT	1	J10001-UP
4	C1	708-21-12541	...PLUG	10	J10001-UP
5	C2	708-2K-03550	..VALVE ASS'Y	1	J10001-UP
6		07002-62434	...O-RING	1	J10001-UP
7		07000-B2012	...O-RING	1	J10001-UP
8		07001-02012	...RING,BACK UP	1	J10001-UP
9		07000-B2010	...O-RING	1	J10001-UP
10		07001-02010	...RING	1	J10001-UP
11		702-21-07650	..VALVE, SOLENOID	1	J10001-UP
12		708-2K-16320	..O-RING	1	J10001-UP
13		708-2K-16310	..O-RING	2	J10001-UP
14		203-60-62220	..BOLT	2	J10001-UP
15		708-2K-03820	..PLUG ASS'Y	1	J10001-UP
16		708-2K-03560	..VALVE ASS'Y	1	J10001-UP
17		07002-63634	...O-RING	1	J10001-UP
18	C2	708-2L-25480	.FILTER	4	J10001-UP
19	C2	708-2K-11170	.O-RING	8	J10001-UP
20	C2	07000-A2110	.O-RING	2	J10001-UP
21	C2	04020-01228	.PIN, DOWEL	4	J10001-UP
22	C2	01252-61270	.BOLT	8	J10001-UP

Ref :H0220-07A0 Page :180146

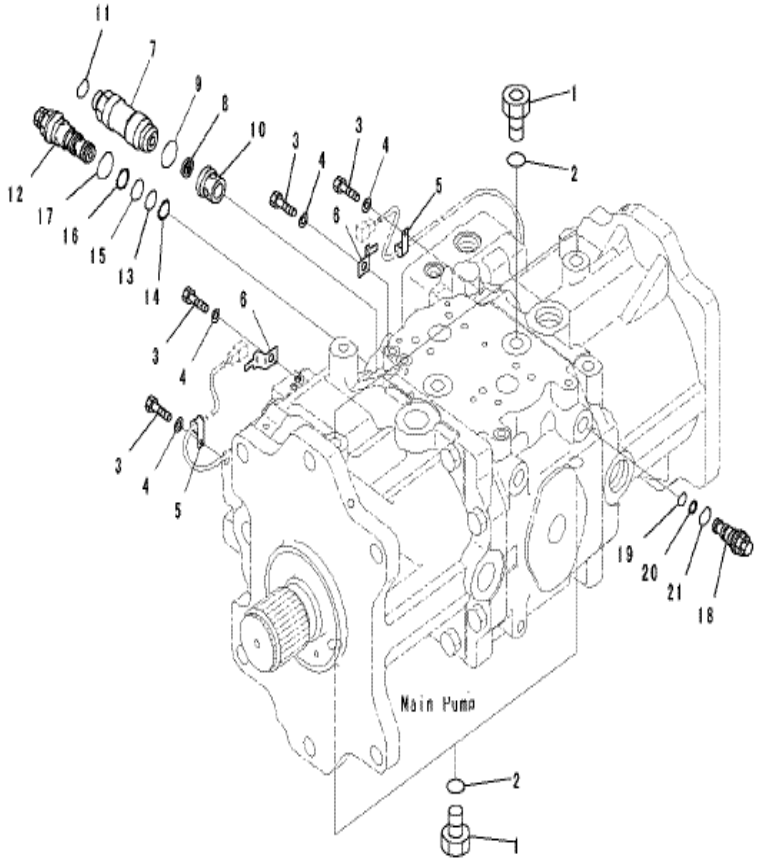

PC2000-8 S/N J10001-UP

NO.2 MAIN PUMP (INNER PARTS)(8/8)

INDEX	CD	PART NO.	DESCRIPTION	QTY	SERIAL NO.
		708-2K-00123	PUMP ASS'Y	1	J10011-UP
		708-2K-00122	PUMP ASS'Y	1	J10001-J10010
1		07040-12414	.PLUG	5	J10001-UP
2		07002-62434	.O-RING	5	J10001-UP
3		01010-81020	.BOLT	4	J10001-UP
4		01643-31032	.WASHER	4	J10001-UP
5		04434-50810	.CLIP	2	J10001-UP
6		08193-20010	.CLIP	2	J10001-UP
		708-2K-03250	.FILTER ASS'Y	1	J10001-UP
7		708-2K-16930	..UNION	1	J10001-UP
8		708-2K-16150	..FILTER	1	J10001-UP
9		07002-63634	..O-RING	1	J10001-UP
10		708-2K-16920	..PLUG	1	J10001-UP
11		02896-61015	..O-RING	1	J10001-UP
12		708-2K-03411	.VALVE ASS'Y, REDUCE	1	J10001-UP
13		07000-B2022	..O-RING	1	J10001-UP
14		07001-02022	..RING, BACK-UP	1	J10001-UP
15		07000-B3022	..O-RING	1	J10001-UP
16		07001-03022	..RING, BACK-UP	1	J10001-UP
17		07002-63634	..O-RING	1	J10001-UP
18		708-2K-03420	.VALVE ASS'Y, RELIEF	1	J10001-UP
19		07000-B2014	..O-RING	1	J10001-UP
20		723-40-56350	..RING	1	J10001-UP
21		07002-62434	..O-RING	1	J10001-UP

Ref :H0220-08A0 Page :180147

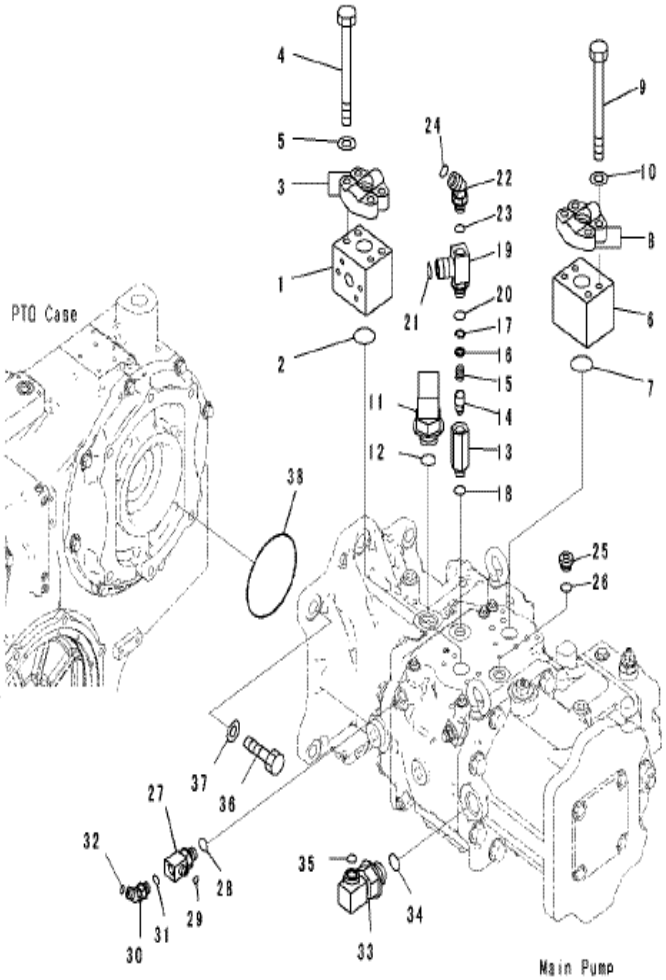

PC2000-8 S/N J10001-UP

NO.2 PUMP, PUMP MOUNTING

INDEX	CD	PART NO.	DESCRIPTION	QTY	SERIAL NO.
1		21T-64-31210	BLOCK	1	J10001-UP
2		07000-B3050	O-RING	1	J10001-UP
3		07371-51470	FLANGE	2	J10001-UP
4		209-62-41270	BOLT	4	J10001-UP
5		01643-31445	WASHER	4	J10001-UP
6		21T-64-31221	BLOCK	1	J10001-UP
7		07000-B3050	O-RING	1	J10001-UP
8		07371-51470	FLANGE	2	J10001-UP
9		209-62-41270	BOLT	4	J10001-UP
10		01643-31445	WASHER	4	J10001-UP
11		21T-64-33451	ELBOW	1	J10001-UP
12		07002-64234	O-RING	1	J10001-UP
		203-62-56500	VALVE A'SSY	1	J10001-UP
13	C1	203-62-56580	.BLOCK	1	J10001-UP
14		203-60-21250	.POPPET	1	J10001-UP
15		203-60-21260	.SPRING	1	J10001-UP
16		203-60-21270	.SEAT	1	J10001-UP
17		04065-02212	.RING	1	J10001-UP
18		07002-62434	O-RING	1	J10001-UP
19		20U-62-41630	ELBOW	1	J10001-UP
20		07002-62434	O-RING	1	J10001-UP
21		11Y-62-11980	O-RING	1	J10001-UP
22		02783-10628	UNION	1	J10001-UP
23		07002-62434	O-RING	1	J10001-UP
24		02896-61018	O-RING	1	J10001-UP
25		07040-12414	PLUG	1	J10001-UP
26		07002-62434	O-RING	1	J10001-UP
27		21N-64-36660	ELBOW	1	J10001-UP
28		07002-62434	O-RING	1	J10001-UP
29		02896-61009	O-RING	1	J10001-UP
30		02783-10422	HOSE	1	J10001-UP
31		07002-62034	O-RING	1	J10001-UP
32		02896-61012	O-RING	1	J10001-UP
33		209-62-41481	ELBOW	1	J10001-UP
34		07002-64234	O-RING	1	J10001-UP
35		11Y-62-11980	O-RING	1	J10001-UP
36		01010-82475	BOLT	6	J10001-UP
37		01643-32460	WASHER	6	J10001-UP
38		07000-E5185	O-RING	1	J10001-UP

Ref :H0220-09A0 Page :180148

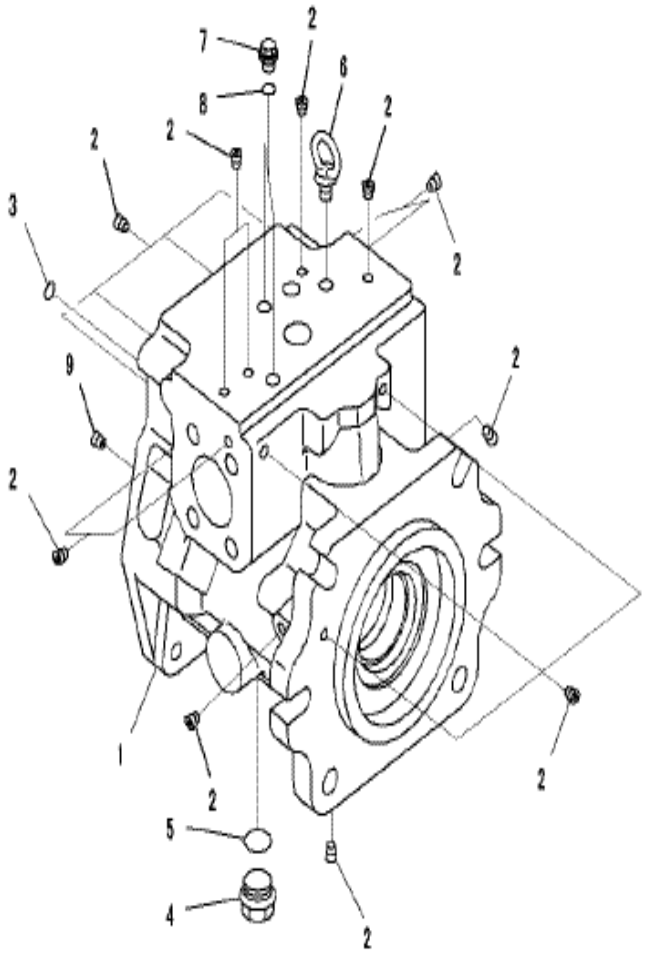

PC2000-8 S/N J10001-UP

FAN PUMP (INNER PARTS)(1/12)

INDEX	CD	PART NO.	DESCRIPTION	QTY	SERIAL NO.
		708-2L-00280	PUMP ASSEMBLY.....	1	J10001-UP
		708-2L-01280	.PUMP SUB ASSEMBLY.....	1	J10001-UP
	C2	708-2L-06980	..CASE ASSEMBLY, FRONT.....	1	J10001-UP
1	C1		...CASE, FRONT.....	1	J10001-UP
2	C1		...PLUG.....	18	J10001-UP
3	C2	07000-B1009	..O-RING.....	1	J10001-UP
4		07044-12412	..PLUG.....	1	J10001-UP
5		07002-62434	..O-RING.....	1	J10001-UP
6		04530-11222	..BOLT.....	1	J10001-UP
7		708-8E-16150	..PLUG.....	2	J10001-UP
8		07002-61023	..ORING.....	2	J10001-UP
9	C2	708-1L-29340	..ORIFICE.....	1	J10001-UP

Ref :H0230-01A0 Page :180149

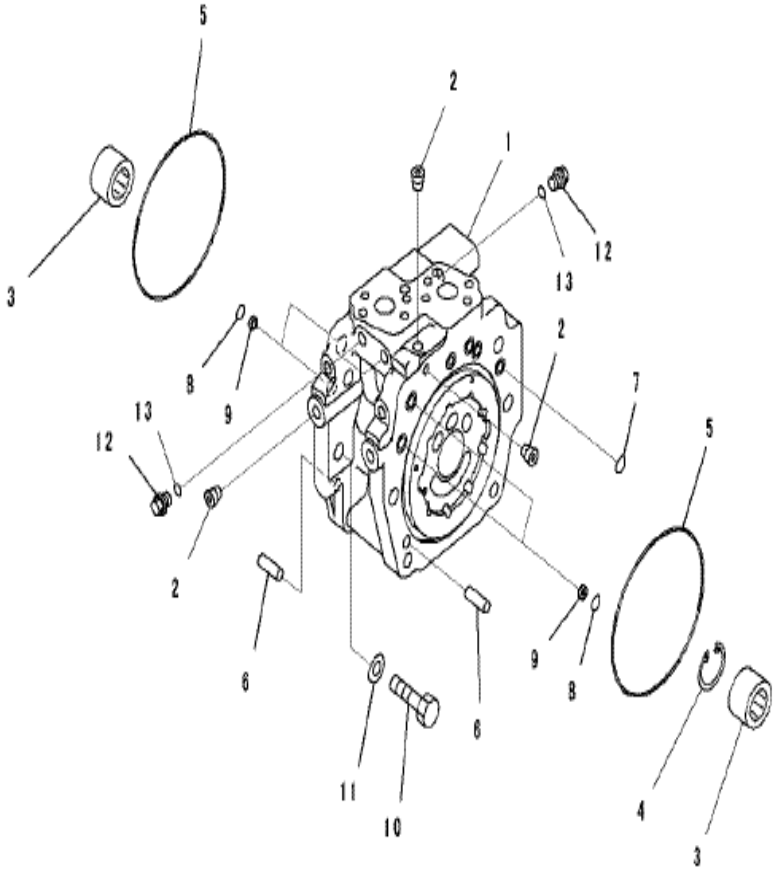

PC2000-8 S/N J10001-UP

FAN PUMP (INNER PARTS)(2/12)

INDEX	CD	PART NO.	DESCRIPTION	QTY	SERIAL NO.
		708-2L-00280	PUMP ASSEMBLY.....	1	J10001-UP
		708-2L-01280	.PUMP SUB ASSEMBLY.....	1	J10001-UP
	C2	708-2L-06121	..CAP ASSEMBLY, END.....	1	J10001-UP
1	C1		...CAP, END.....	1	J10001-UP
2	C1		...PLUG.....	15	J10001-UP
3	C2	708-2L-32260	..BEARING.....	2	J10001-UP
4	C2	708-2L-22271	..RING, SNAP.....	1	J10001-UP
5	C2	07000-A5165	..O-RING.....	2	J10001-UP
6	C2	04020-01228	..PIN.....	2	J10001-UP
7	C2	07000-B2012	..O-RING.....	7	J10001-UP
8	C2	07000-B2014	..O-RING.....	4	J10001-UP
9	C2	708-2L-25480	..FILTER.....	4	J10001-UP
10	C2	01010-61450	..BOLT.....	12	J10001-UP
11	C2	01643-31445	..WASHER.....	12	J10001-UP
12		708-8E-16150	..PLUG.....	3	J10001-UP
13		07002-61023	..O-RING.....	3	J10001-UP

Ref :H0230-01A1 Page :180150

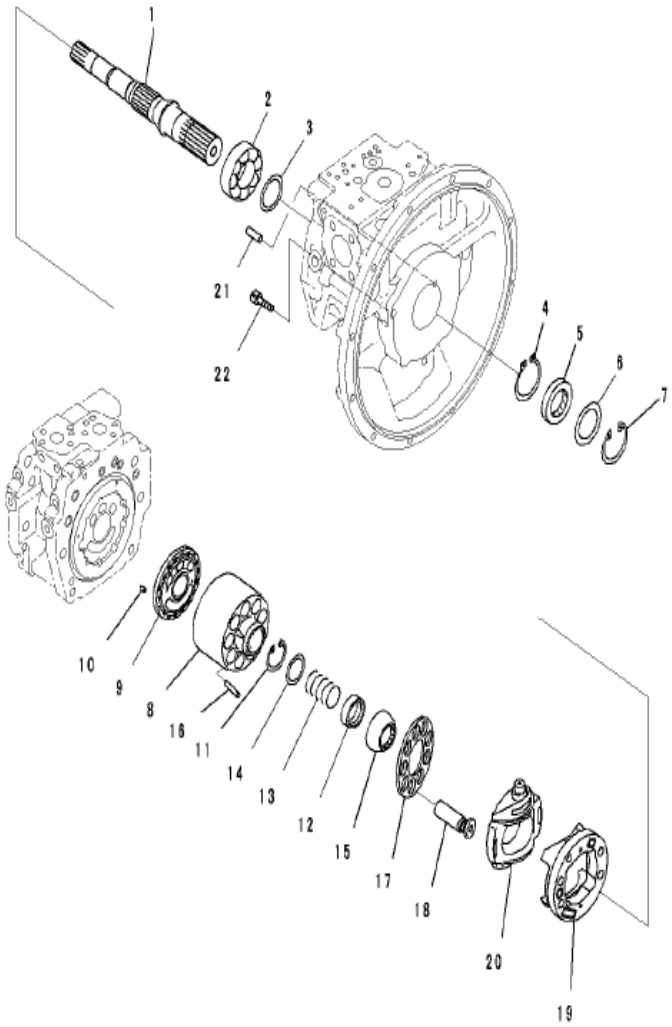

PC2000-8 S/N J10001-UP

FAN PUMP (INNER PARTS)(3/12)

INDEX	CD	PART NO.	DESCRIPTION	QTY	SERIAL NO.
		708-2L-00280	PUMP ASSEMBLY	1	J10001-UP
		708-2L-01280	.PUMP SUB ASSEMBLY	1	J10001-UP
1	C2	708-2L-32110	..SHAFT,FRONT	1	J10001-UP
2	C2	708-2L-32150	..BEARING	1	J10001-UP
3	C2	708-2E-05040	..WASHER KIT	1	J10001-UP
	C1		...WASHER, T=3.1MM	1	J10001-UP
	C1		...WASHER, T=3.0MM	1	J10001-UP
	C1		...WASHER, T=2.9MM	1	J10001-UP
	C1		...WASHER, T=2.8MM	1	J10001-UP
4	C2	708-25-12790	..RING SNAP	1	J10001-UP
5		708-25-52861	..OIL SEAL	1	J10001-UP
6		708-2L-22160	..SPACER	1	J10001-UP
7		04065-06825	..RING	1	J10001-UP
	C2	708-2L-06480	..BLOCK A.,REAR	1	J10001-UP
8	C1		...BLOCK, CYLINDER	1	J10001-UP
9	C1		...PLATE, VALVE	1	J10001-UP
10	C2	720-68-19610	..PIN	1	J10001-UP
11	C2	04065-04818	..RING	1	J10001-UP
12	C2	708-2L-23131	..SEAT	1	J10001-UP
13	C2	708-2L-33160	..SPRING	1	J10001-UP
14	C2	708-7L-13140	..SEAT	1	J10001-UP
15	C2	708-2L-23351	..RETAINER GUIDE	1	J10001-UP
16	C2	708-2L-23360	..PIN	3	J10001-UP
17	C2	708-2L-33350	..RETAINER,SHOE	1	J10001-UP
18	C2	708-2L-33430	..PISTON SUB A	9	J10001-UP
	C2	708-2L-06630	..CRADLE A	1	J10001-UP
19	C1		...CRADLE	1	J10001-UP
20	C1		...CAM	1	J10001-UP
21	C2	04020-01228	..PIN	1	J10001-UP
22	C2	01252-61230	..BOLT	4	J10001-UP

Ref :H0230-01A2 Page :180151

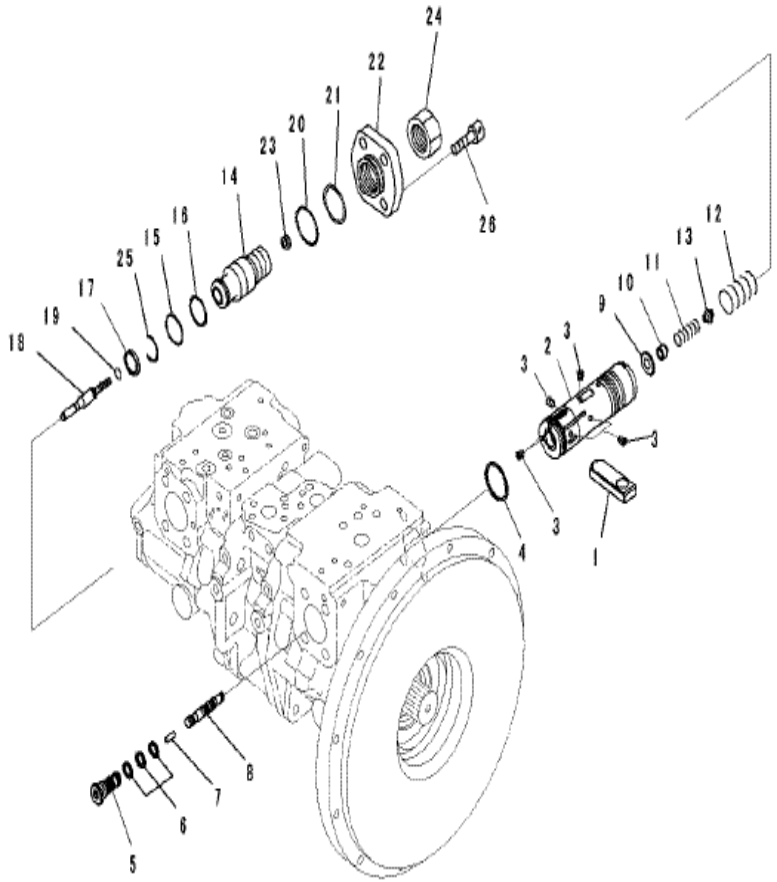

PC2000-8 S/N J10001-UP

FAN PUMP (INNER PARTS)(4/12)

INDEX	CD	PART NO.	DESCRIPTION	QTY	SERIAL NO.
		7082L00280	PUMP ASSEMBLY.....	1	J10001-UP
		7082L01280	.PUMP SUB ASSEMBLY.....	1	J10001-UP
1	C2	708-2L-34180	..SLIDER.....	1	J10001-UP
	C2	708-2L-06950	..VALVE ASSEMBLY.....	1	J10001-UP
	C2	708-2L-06960	...PISTON ASSEMBLY, SERVO.....	1	J10001-UP
2	C1		....PISTON, SERVO.....	1	J10001-UP
3	C1		....SCREW.....	6	J10001-UP
4	C2	708-2L-35680	...SEAL.....	1	J10001-UP
5	C2	708-2L-35230	...PLUG.....	1	J10001-UP
6	C2	708-2L-35690	...SEAL.....	3	J10001-UP
7	C2	708-2L-35170	...PIN.....	1	J10001-UP
8	C2	708-2L-35570	...SPOOL.....	1	J10001-UP
9	C2	708-2L-35630	...RETAINER.....	1	J10001-UP
10	C2	708-2L-35641	...SEAT.....	1	J10001-UP
11	C2	708-2L-35580	...SPRING.....	1	J10001-UP
12	C2	708-2L-35730	...SPRING.....	1	J10001-UP
13	C2	708-2L-35650	...SEAT.....	1	J10001-UP
14	C2	708-2L-34250	...SCREW.....	1	J10001-UP
15	C2	07000-B3034	...O-RING.....	1	J10001-UP
16	C2	708-2L-35210	...RING.....	1	J10001-UP
17	C2	708-2L-35710	...SEAL.....	1	J10001-UP
18	C2	708-2L-35590	...SPRING.....	1	J10001-UP
19	C2	07000-B2010	...O-RING.....	1	J10001-UP
20	C2	07000-B3045	...O-RING.....	1	J10001-UP
21	C2	708-2L-35750	...RING.....	1	J10001-UP
22	C2	708-2L-34230	...COVER.....	1	J10001-UP
23	C2	01580-10806	...NUT.....	1	J10001-UP
24	C2	708-2L-35870	...NUT.....	1	J10001-UP
25	C2	708-2L-35670	...RING,WIRE.....	1	J10001-UP
26	C2	01252-61440	..BOLT.....	4	J10001-UP

Ref :H0230-01A3 Page :180152

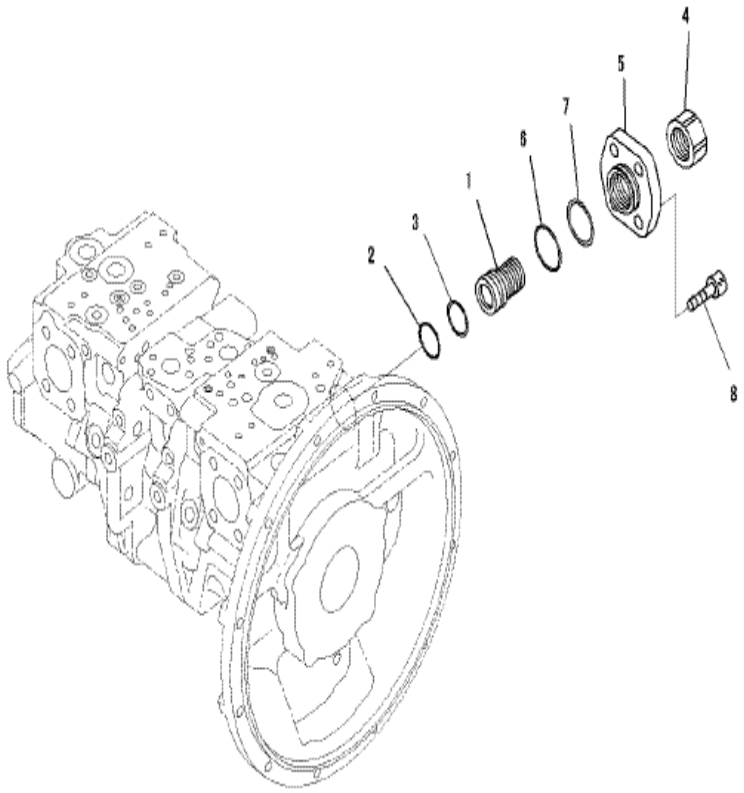

PC2000-8 S/N J10001-UP

FAN PUMP (INNER PARTS)(5/12)

INDEX	CD	PART NO.	DESCRIPTION	QTY	SERIAL NO.
		708-2L-00280	PUMP ASSEMBLY.....	1	J10001-UP
		708-2L-01280	.PUMP SUB ASSEMBLY.....	1	J10001-UP
	C2	708-2L-06970	..COVER ASSEMBLY.....	1	J10001-UP
1	C2	708-2L-34270	...SCREW.....	1	J10001-UP
2	C2	07000-B3034	...O-RING.....	1	J10001-UP
3	C2	708-2L-35210	...RING.....	1	J10001-UP
4	C2	708-2L-35870	...NUT.....	1	J10001-UP
5	C2	708-2L-34260	...COVER.....	1	J10001-UP
6	C2	07000-B3045	...O-RING.....	1	J10001-UP
7	C2	708-2L-35750	...RING.....	1	J10001-UP
8	C2	01252-61440	..BOLT.....	4	J10001-UP

Ref :H0230-01A4 Page :180153

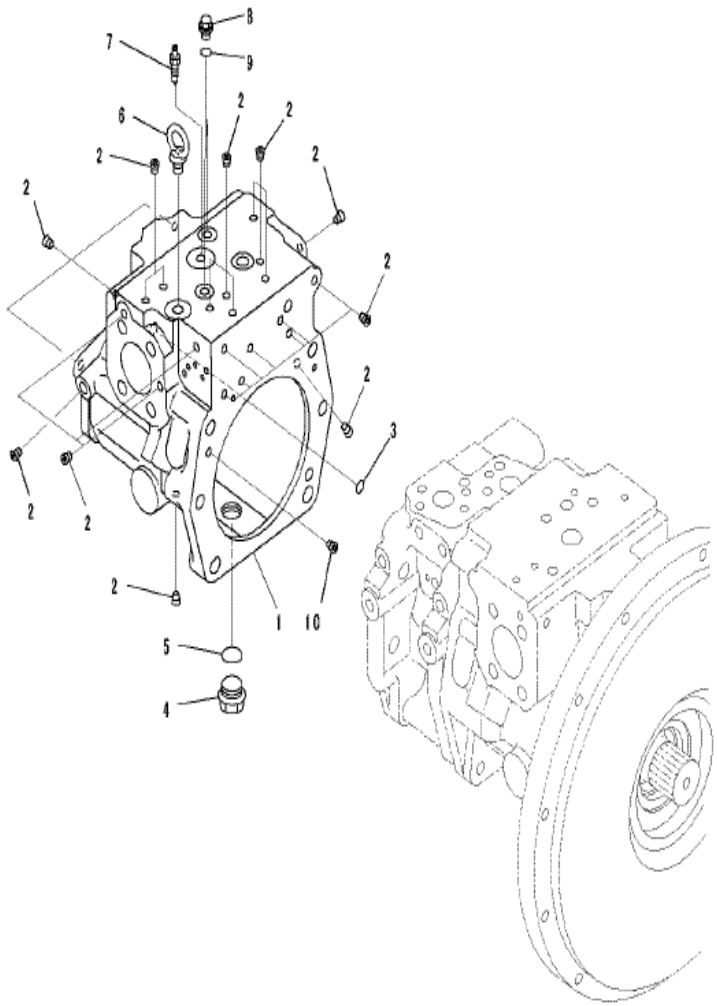

PC2000-8 S/N J10001-UP

FAN PUMP (INNER PARTS)(6/12)

INDEX	CD	PART NO.	DESCRIPTION	QTY	SERIAL NO.
		708-2L-00280	PUMP ASSEMBLY	1	J10001-UP
		708-2L-01280	.PUMP SUB ASSEMBLY	1	J10001-UP
	C2	708-2L-06990	..CASE ASSEMBLY, REAR	1	J10001-UP
1	C1		...CASE, REAR	1	J10001-UP
2	C1		...PLUG	25	J10001-UP
3	C2	07000-B1009	..O-RING	1	J10001-UP
4		07044-12412	..PLUG	1	J10001-UP
5		07002-62434	..O-RING	1	J10001-UP
6		04530-11222	..BOLT	1	J10001-UP
7		20B-27-11210	..BLEEDER	1	J10001-UP
8		708-8E-16150	..PLUG	2	J10001-UP
9		07002-61023	..O-RING	2	J10001-UP
10	C2	708-1L-29340	..ORIFICE	1	J10001-UP

Ref :H0230-01A5 Page :180154

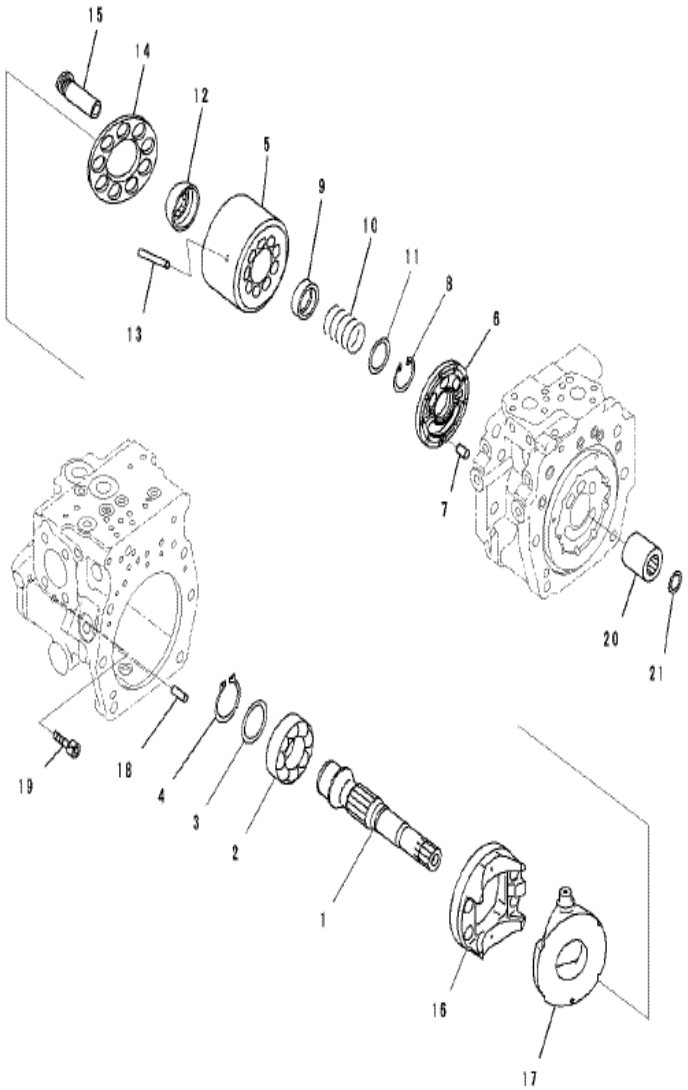

PC2000-8 S/N J10001-UP

FAN PUMP (INNER PARTS)(7/12)

INDEX	CD	PART NO.	DESCRIPTION	QTY	SERIAL NO.
		708-2L-00280	PUMP ASSEMBLY	1	J10001-UP
		708-2L-01280	.PUMP SUB ASSEMBLY	1	J10001-UP
1	C2	708-2L-32230	..SHAFT, REAR	1	J10001-UP
2	C2	708-2L-32150	..BEARING	1	J10001-UP
3	C2	708-2E-05040	..WASHER KIT	1	J10001-UP
	C1		...WASHER, T=3.1MM	1	J10001-UP
	C1		...WASHER, T=3.0MM	1	J10001-UP
	C1		...WASHER, T=2.9MM	1	J10001-UP
	C1		...WASHER, T=2.8MM	1	J10001-UP
4	C2	708-25-12790	..RING SNAP	1	J10001-UP
	C2	708-2L-06470	..BLOCK A.,FRONT	1	J10001-UP
5	C1		...BLOCK, CYLINDER	1	J10001-UP
6	C1		...PLATE	1	J10001-UP
7	C2	720-68-19610	..PIN	1	J10001-UP
8	C2	04065-04818	..RING	1	J10001-UP
9	C2	708-2L-23131	..SEAT	1	J10001-UP
10	C2	708-2L-33160	..SPRING	1	J10001-UP
11	C2	708-7L-13140	..SEAT	1	J10001-UP
12	C2	708-2L-23351	..RETAINER GUIDE	1	J10001-UP
13	C2	708-2L-23360	..PIN	3	J10001-UP
14	C2	708-2L-33350	..RETAINER,SHOE	1	J10001-UP
15	C2	708-2L-33430	..PISTON SUB A	9	J10001-UP
		708-2L-06630	..CRADLE A	1	J10001-UP
16	C1		...CRADLE	1	J10001-UP
17	C1		...CAM	1	J10001-UP
18	C2	04020-01228	..PIN	1	J10001-UP
19	C2	01252-61230	..BOLT	4	J10001-UP
20	C2	708-2L-22130	..COUPLING	1	J10001-UP
21	C2	708-2E-12140	..RING	1	J10001-UP

Ref :H0230-01A6 Page :180155

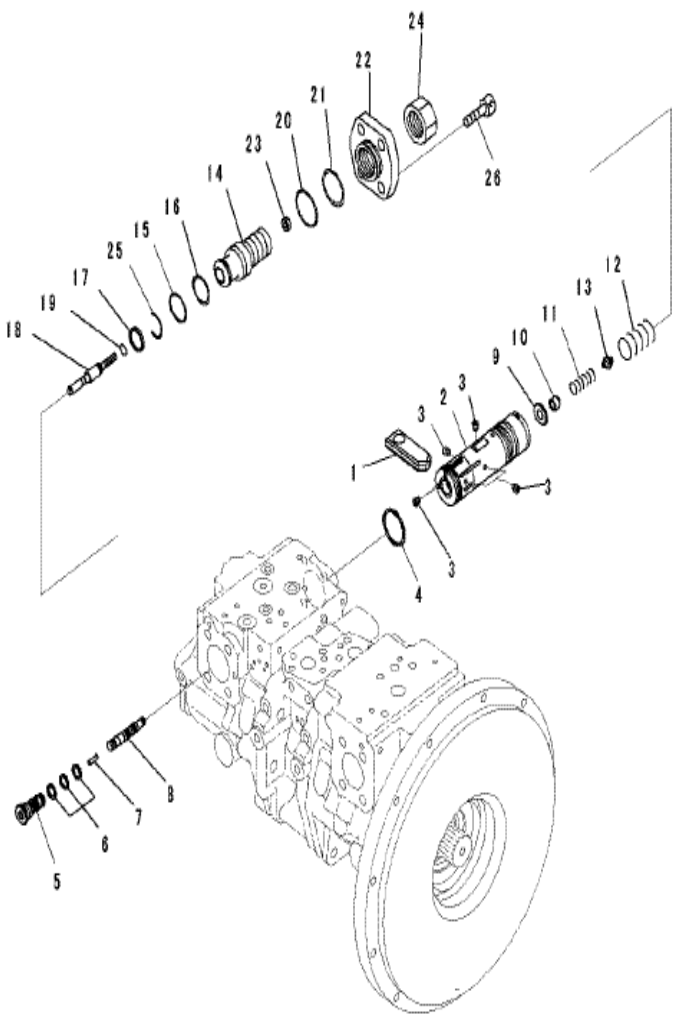

PC2000-8 S/N J10001-UP

FAN PUMP (INNER PARTS)(8/12)

INDEX	CD	PART NO.	DESCRIPTION	QTY	SERIAL NO.
		708-2L-00280	PUMP ASSEMBLY	1	J10001-UP
		708-2L-01280	.PUMP SUB ASSEMBLY	1	J10001-UP
1	C2	708-2L-34180	..SLIDER	1	J10001-UP
	C2	708-2L-06950	..VALVE ASEMBLY	1	J10001-UP
	C2	708-2L-06960	...PISTON ASSEMBLY, SERVO	1	J10001-UP
2	C1		....PISTON, SERVO	1	J10001-UP
3	C1		....SCREW	6	J10001-UP
4	C2	708-2L-35680	...SEAL	1	J10001-UP
5	C2	708-2L-35230	...PLUG	1	J10001-UP
6	C2	708-2L-35690	...SEAL	3	J10001-UP
7	C2	708-2L-35170	...PIN	1	J10001-UP
8	C2	708-2L-35570	...SPOOL	1	J10001-UP
9	C2	708-2L-35630	...RETAINER	1	J10001-UP
10	C2	708-2L-35641	...SEAT	1	J10001-UP
11	C2	708-2L-35580	...SPRING	1	J10001-UP
12	C2	708-2L-35730	...SPRING	1	J10001-UP
13	C2	708-2L-35650	...SEAT	1	J10001-UP
14	C2	708-2L-34250	...SCREW	1	J10001-UP
15	C2	07000-B3034	...O-RING	1	J10001-UP
16	C2	708-2L-35210	...RING	1	J10001-UP
17	C2	708-2L-35710	...SEAL	1	J10001-UP
18	C2	708-2L-35590	...SPRING	1	J10001-UP
19	C2	07000-B2010	...O-RING	1	J10001-UP
20	C2	07000-B3045	...O-RING	1	J10001-UP
21	C2	708-2L-35750	...RING	1	J10001-UP
22	C2	708-2L-34230	...COVER	1	J10001-UP
23	C2	01580-10806	...NUT	1	J10001-UP
24	C2	708-2L-35870	...NUT	1	J10001-UP
25	C2	708-2L-35670	...RING,WIRE	1	J10001-UP
26	C2	01252-61440	..BOLT	4	J10001-UP

Ref :H0230-01A7 Page :180156

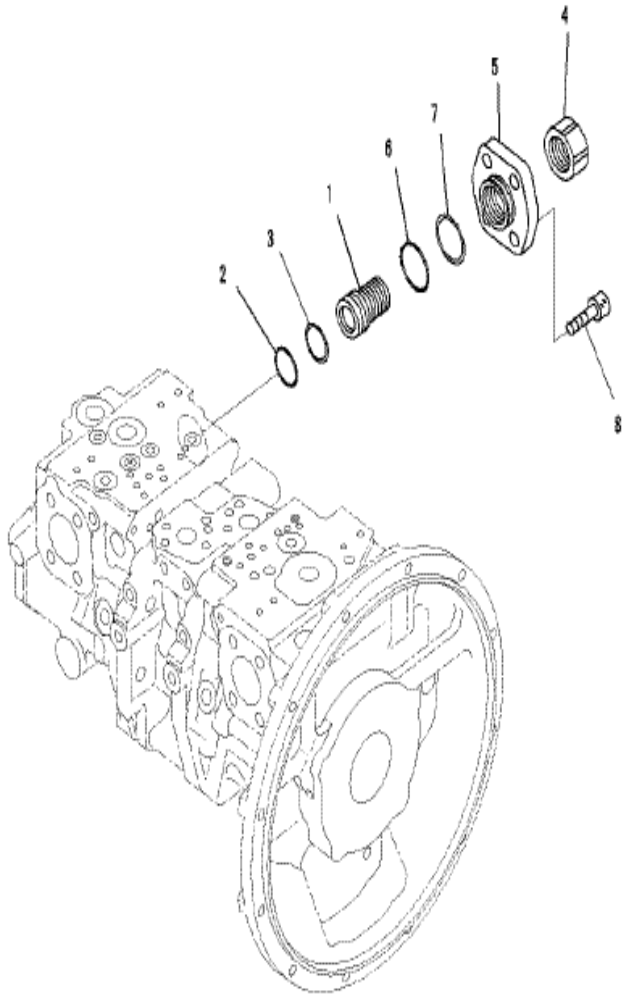

PC2000-8 S/N J10001-UP

FAN PUMP (INNER PARTS)(9/12)

INDEX	CD	PART NO.	DESCRIPTION	QTY	SERIAL NO.
		708-2L-00280	PUMP ASSEMBLY.....	1	J10001-UP
		708-2L-01280	.PUMP SUB ASSEMBLY.....	1	J10001-UP
	C2	708-2L-06970	..COVER ASSEMBLY.....	1	J10001-UP
1	C2	708-2L-34270	...SCREW.....	1	J10001-UP
2	C2	07000-B3034	...O-RING.....	1	J10001-UP
3	C2	708-2L-35210	...RING.....	1	J10001-UP
4	C2	708-2L-35870	...NUT.....	1	J10001-UP
5	C2	708-2L-34260	...COVER.....	1	J10001-UP
6	C2	07000-B3045	...O-RING.....	1	J10001-UP
7	C2	708-2L-35750	...RING.....	1	J10001-UP
8	C2	01252-61440	..BOLT.....	4	J10001-UP

Ref :H0230-01A8 Page :180157

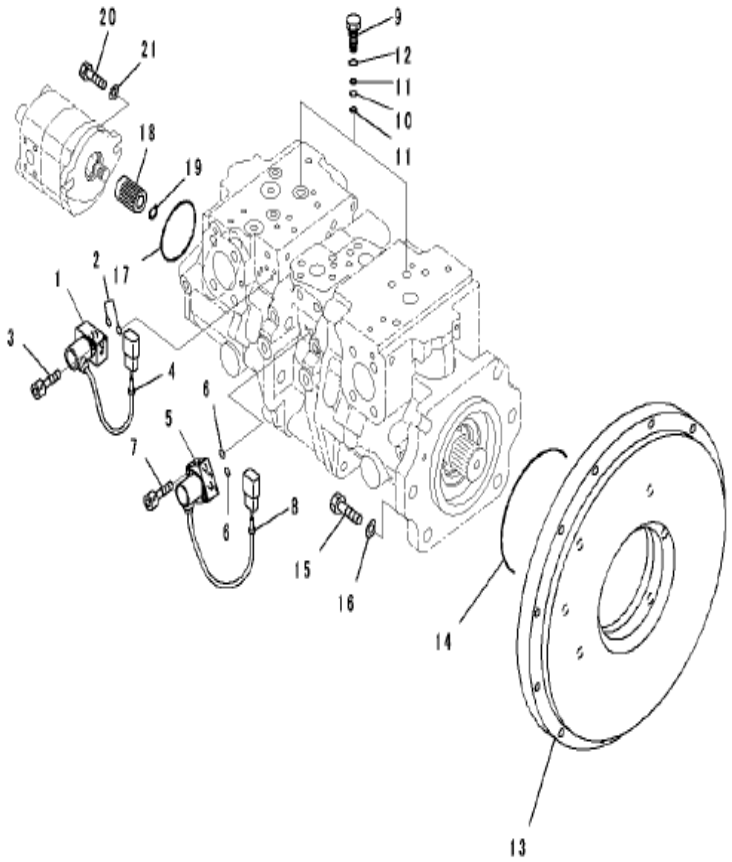

PC2000-8 S/N J10001-UP

FAN PUMP (INNSER PARTS)(10/12)

INDEX	CD	PART NO.	DESCRIPTION	QTY	SERIAL NO.
		708-2L-00280	PUMP ASSEMBLY	1	J10001-UP
1		702-21-57700	.VALVE, PILOT	1	J10001-UP
2		702-21-55890	..O-RING	2	J10001-UP
3		01252-60635	.BOLT	2	J10001-UP
4		20Y-62-22790	.BAND (RED)	1	J10001-UP
5		702-21-57700	.VALVE, PILOT	1	J10001-UP
6		702-21-55890	..O-RING	2	J10001-UP
7		01252-60635	.BOLT	2	J10001-UP
8		20Y-62-22830	.BAND (WHITE)	1	J10001-UP
9	C2	708-2L-35941	.PLUG	2	J10001-UP
10		07000-B1008	.O-RING	2	J10001-UP
11		07001-01008	.RING	4	J10001-UP
12		07002-61423	.O-RING	2	J10001-UP
13		708-2L-31910	.PLATE	1	J10001-UP
14		07000-E5165	.O-RING	1	J10001-UP
15		01010-61650	.BOLT	6	J10001-UP
16		01643-31645	.WASHER	6	J10001-UP
17		07000-A2080	.O-RING	1	J10001-UP
18		708-2L-32240	.COUPLING	1	J10001-UP
19		700-30-63140	.RING, SNAP	1	J10001-UP
20		07372-21030	.BOLT	2	J10001-UP
21		01643-31032	.WASHER	2	J10001-UP

Ref :H0230-01A9 Page :180158

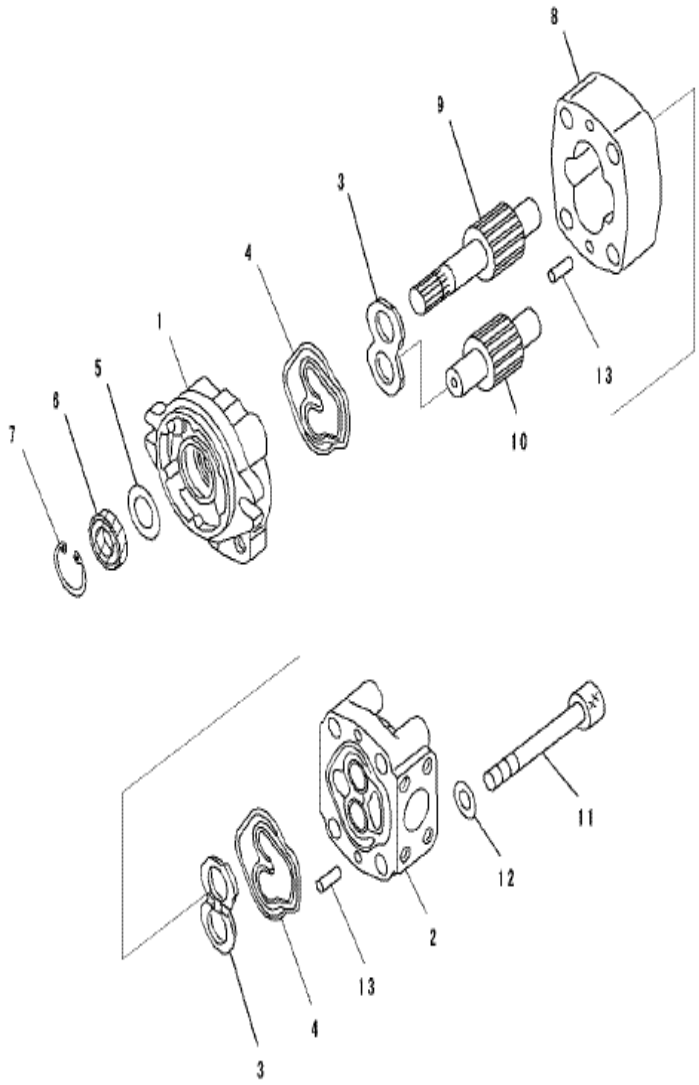

PC2000-8 S/N J10001-UP

FAN PUMP (INNER PARTS)(11/12)

INDEX	CD	PART NO.	DESCRIPTION	QTY	SERIAL NO.
		708-2L-00280	PUMP ASSEMBLY.....	1	J10001-UP
		705-40-02180	.PUMP ASSEMBLY.....	1	J10001-UP
1	C2	705-40-80250	..BRACKET ASSEMBLY.....	1	J10001-UP
	C2	705-41-80610	...BUSHING, PLANE.....	1	J10001-UP
	C2	705-41-80620	...BUSHING, PLANE.....	1	J10001-UP
2	C2	705-40-80131	..COVER ASSEMBLY.....	1	J10001-UP
	C2	705-41-80610	...BUSHING, PLANE.....	1	J10001-UP
	C2	705-41-80620	...BUSHING, PLANE.....	1	J10001-UP
3	C2	705-40-83720	..PLATE, SIDE.....	2	J10001-UP
4	C2	705-40-80770	..SEAL RING.....	2	J10001-UP
5		705-40-81870	..PLATE.....	1	J10001-UP
6		705-40-81820	..SEAL, OIL.....	1	J10001-UP
7		04065-03012	..RING.....	1	J10001-UP
8	C2	705-40-33011	..GEAR CASE.....	1	J10001-UP
9	C2	705-40-33430	..GEAR, DRIVE.....	1	J10001-UP
10	C2	705-40-33511	..GEAR, DRIVEN.....	1	J10001-UP
11		01253-71210	..BOLT.....	4	J10001-UP
12		01643-51232	..WASHER.....	4	J10001-UP
13		04020-00820	..DOWEL PIN.....	4	J10001-UP

Ref :H0230-01A10 Page :180159

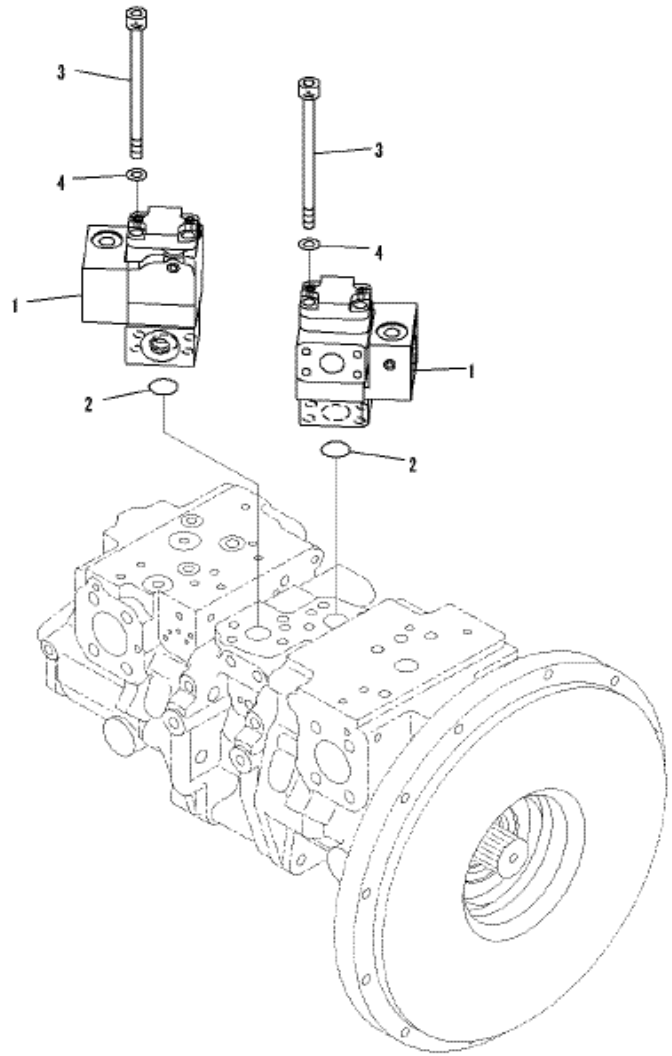

PC2000-8 S/N J10001-UP

FAN PUMP (INNER PARTS)(12/12)

INDEX	CD	PART NO.	DESCRIPTION	QTY	SERIAL NO.
		708-2L-00280	PUMP ASSEMBLY.....	1	J10001-UP
1		708-2K-03440	.VALVE, PILOT, LS.....	2	J10001-UP
2		07000-B3032	.O-RING.....	2	J10001-UP
3		708-2K-16170	.BOLT.....	8	J10001-UP
4		01643-51032	.WASHER.....	8	J10001-UP

Ref :H0230-01A11 Page :180160

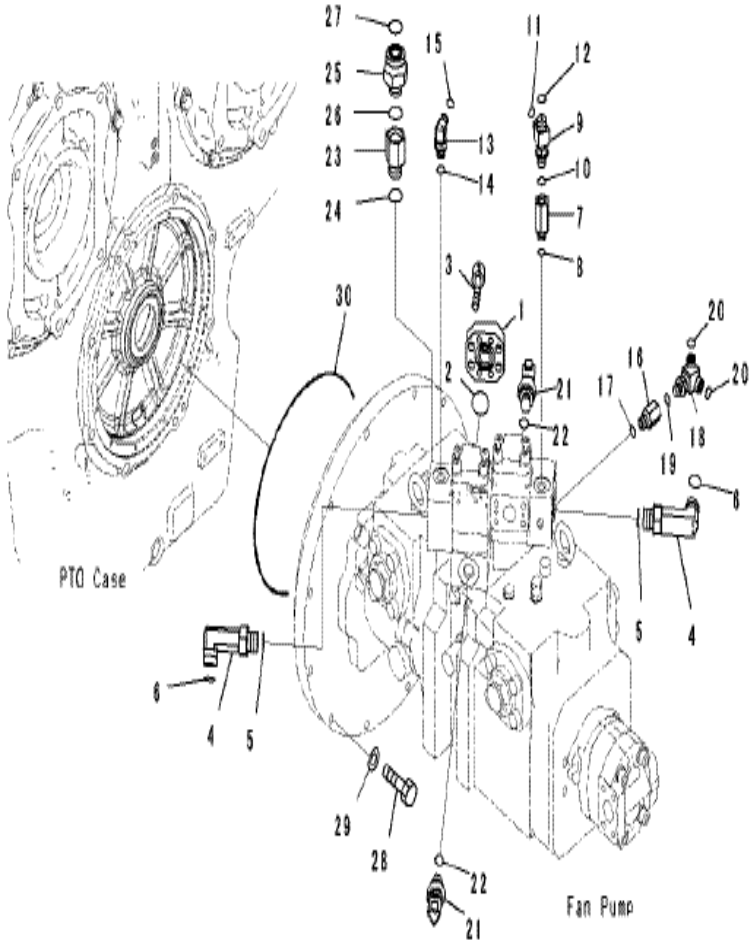

PC2000-8 S/N J10001-UP

FAN PUMP

INDEX	CD	PART NO.	DESCRIPTION	QTY	SERIAL NO.
1		21T-64-31870	PLATE	1	J10001-UP
2		07000-B3032	O-RING	1	J10001-UP
3		01252-71025	BOLT	4	J10001-UP
4		02782-10524	ELBOW	2	J10001-UP
5		07002-62434	O-RING	2	J10001-UP
6		02896-61015	O-RING	2	J10001-UP
7		20Y-62-22160	ADAPTER	1	J10001-UP
8		07002-61423	O-RING	1	J10001-UP
9		20U-62-41820	ELBOW	1	J10001-UP
10		07002-61423	O-RING	1	J10001-UP
11		02896-61008	O-RING	1	J10001-UP
12		02896-61009	O-RING	1	J10001-UP
13		02782-10210	ELBOW	1	J10001-UP
14		07002-61423	O-RING	1	J10001-UP
15		02896-61008	O-RING	1	J10001-UP
16		21M-62-16350	ADAPTER	1	J10001-UP
17		07002-61423	O-RING	1	J10001-UP
18		21W-62-45140	ELBOW	1	J10001-UP
19		07002-61423	O-RING	1	J10001-UP
20		02896-61009	O-RING	2	J10001-UP
21		7861-93-1812	SENSOR, PRESSUR	2	J10001-UP
22		07002-61823	.O-RING	1	J10001-UP
23		201-62-71810	JOINT	1	J10001-UP
24		07002-62434	O-RING	1	J10001-UP
25		20U-62-41810	NIPPLE	1	J10001-UP
26		07002-62434	O-RING	1	J10001-UP
27		11Y-62-11980	O-RING	1	J10001-UP
28		01010-81050	BOLT	12	J10001-UP
29		01643-31032	WASHER	12	J10001-UP
30		07000-E5400	O-RING	1	J10001-UP

Ref :H0230-02A0 Page :180161

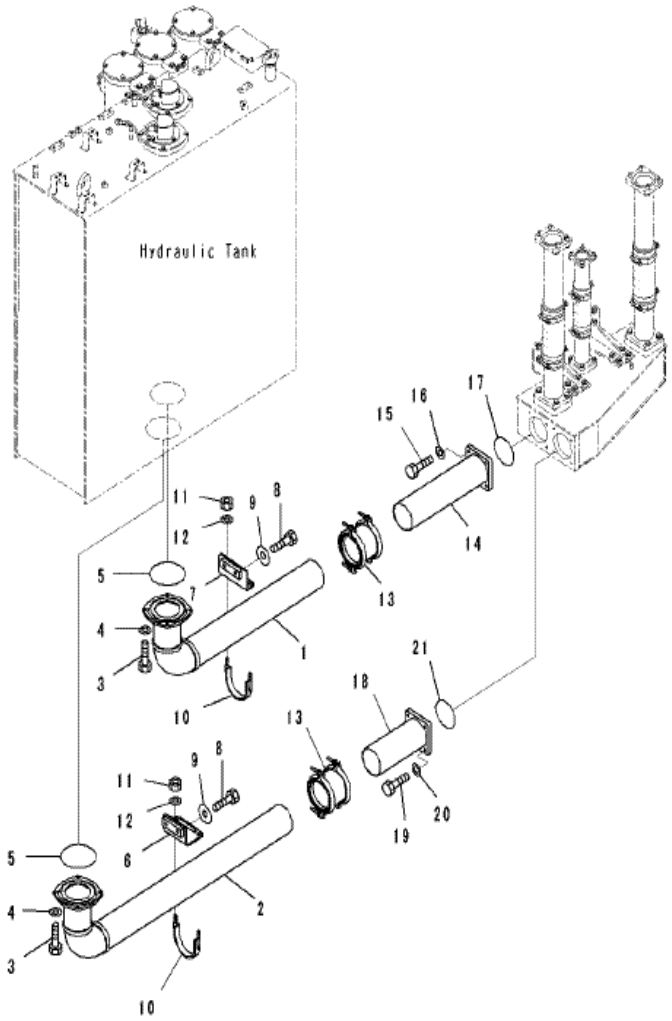

PC2000-8 S/N J10001-UP

SUCTION PIPING

INDEX	CD	PART NO.	DESCRIPTION	QTY	SERIAL NO.
1		21T-64-32210	TUBE	1	J10001-UP
2		21T-64-32220	TUBE	1	J10001-UP
3		01010-81235	BOLT	8	J10001-UP
4		01643-31232	WASHER	8	J10001-UP
5		07000-B5230	O-RING	2	J10001-UP
6		21T-64-32250	BRACKET	1	J10001-UP
7		21T-64-32260	BRACKET	1	J10001-UP
8		01010-81255	BOLT	4	J10001-UP
9		175-54-34170	WASHER	4	J10001-UP
10		21T-62-75351	CLIP	2	J10001-UP
11		01597-01615	NUT	4	J10001-UP
12		01643-31645	WASHER	4	J10001-UP
13		07332-06000	COUPRING	2	J10001-UP
14		21T-64-32230	TUBE	1	J10001-UP
15		01010-81245	BOLT	4	J10001-UP
16		01643-31232	WASHER	4	J10001-UP
17		07000-B5170	O-RING	1	J10001-UP
18		21T-64-32240	TUBE	1	J10001-UP
19		01010-81245	BOLT	4	J10001-UP
20		01643-31232	WASHER	4	J10001-UP
21		07000-B5170	O-RING	1	J10001-UP

Ref :H0311-01A0 Page :180165

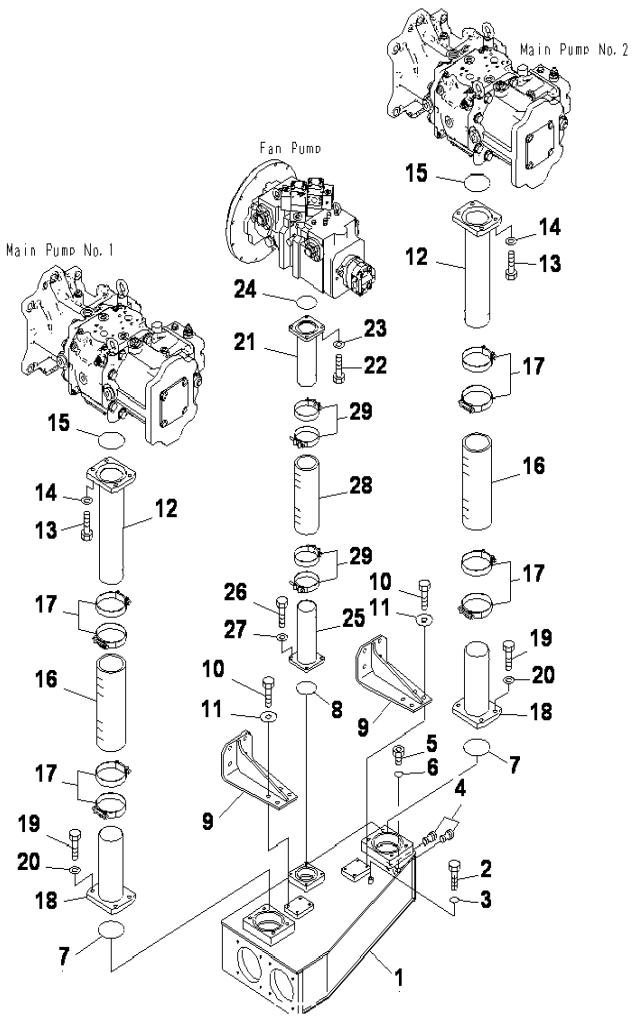

SUCTION PIPING(ENGINE SIDE)

INDEX	CD	PART NO.	DESCRIPTION	QTY	SERIAL NO.
1		21T-60-32113	TANK	1	J10001-UP
2		07060-11230	BOLT	1	J10001-UP
3		07002-61223	O-RING	1	J10001-UP
4		198-60-19820	VALVE	2	J10001-UP
5		07040-12412	PLUG	1	J10001-UP
6		07002-62434	O-RING	1	J10001-UP
7		07000-B2140	O-RING	2	J10001-UP
8		07000-B2100	O-RING	1	J10001-UP
9		21T-64-32310	BRACKET	2	J10001-UP
10		01010-81235	BOLT	16	J10001-UP
11		175-54-34170	WASHER	16	J10001-UP
12		21T-64-32271	TUBE	2	J10001-UP
13		01010-81660	BOLT	8	J10001-UP
14		01643-31645	WASHER	8	J10001-UP
15		07000-B2140	O-RING	2	J10001-UP
16		21T-64-32560	HOSE	2	J10001-UP
17		209-62-41341	CLAMP	8	J10001-UP
18		21T-64-32511	TUBE	2	J10001-UP
19		01010-81650	BOLT	8	J10001-UP
20		01643-31645	WASHER	8	J10001-UP
21		21T-64-32280	TUBE	1	J10001-UP
22		01010-81235	BOLT	4	J10001-UP
23		01643-31232	WASHER	4	J10001-UP
24		07000-B2100	O-RING	1	J10001-UP
25		21T-64-32520	TUBE	1	J10001-UP
26		01010-81235	BOLT	4	J10001-UP
27		01643-31232	WASHER	4	J10001-UP
28		07260-08732	HOSE	1	J10001-UP
29		20Y-62-51671	CLAMP	4	J10001-UP

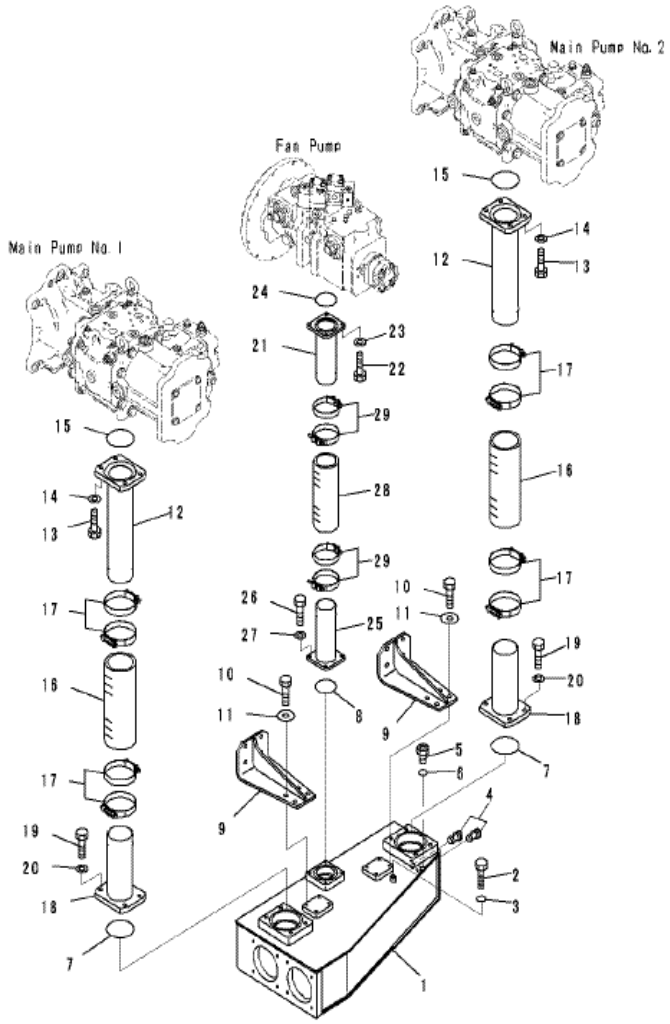

PC2000-8 S/N J10001-UP

SUCTION PIPING (SERVICE CENTER)(FUEL TANK TO MAIN PUMP)

INDEX	CD	PART NO.	DESCRIPTION	QTY	SERIAL NO.
1		21T-64-32210	TUBE	1	J10001-UP
2		21T-64-32220	TUBE	1	J10001-UP
3		01010-81235	BOLT	8	J10001-UP
4		01643-31232	WASHER	8	J10001-UP
5		07000-B5230	O-RING	2	J10001-UP
6		21T-64-32250	BRACKET	1	J10001-UP
7		21T-64-32260	BRACKET	1	J10001-UP
8		01010-81255	BOLT	4	J10001-UP
9		175-54-34170	WASHER	4	J10001-UP
10		21T-62-75351	CLIP	2	J10001-UP
11		01597-01615	NUT	4	J10001-UP
12		01643-31645	WASHER	4	J10001-UP
13		07332-06000	COUPRING	2	J10001-UP
14		21T-64-32230	TUBE	1	J10001-UP
15		01010-81245	BOLT	4	J10001-UP
16		01643-31232	WASHER	4	J10001-UP
17		07000-B5170	O-RING	1	J10001-UP
18		21T-64-32240	TUBE	1	J10001-UP
19		01010-81245	BOLT	4	J10001-UP
20		01643-31232	WASHER	4	J10001-UP
21		07000-B5170	O-RING	1	J10001-UP

Ref :H0311-02A0 Page :180175

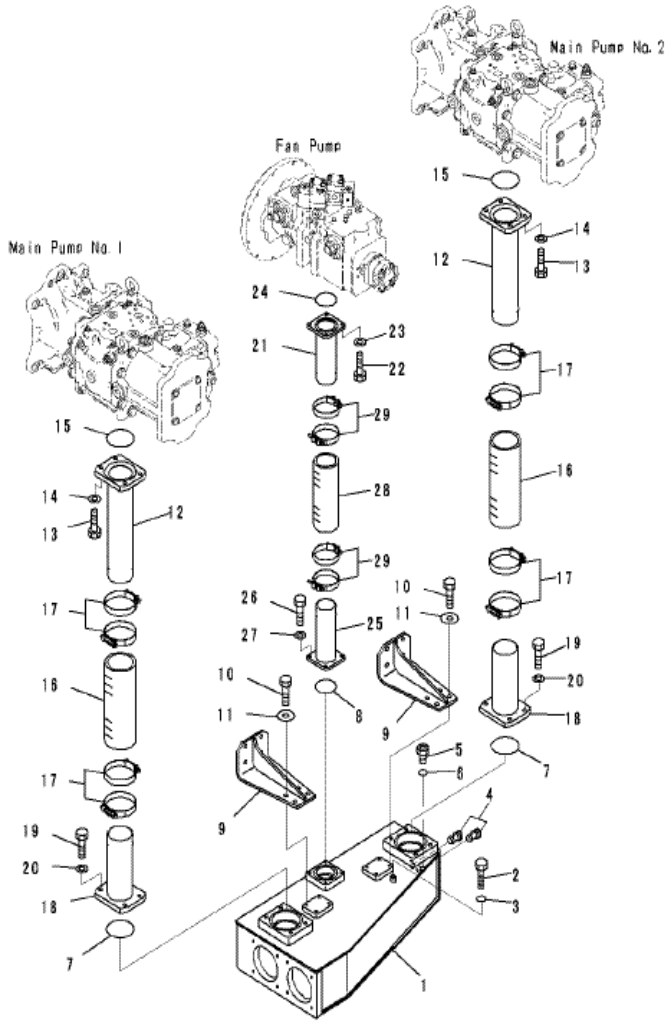

PC2000-8 S/N J10001-UP

SUCTION PIPING (SERVICE CENTER)(ENGINE SIDE)

INDEX	CD	PART NO.	DESCRIPTION	QTY	SERIAL NO.
1		21T-60-32113	TANK	1	J10001-UP
2		07060-11230	BOLT	1	J10001-UP
3		07002-61223	O-RING	1	J10001-UP
4		198-60-19820	VALVE	2	J10001-UP
5		07040-12412	PLUG	1	J10001-UP
6		07002-62434	O-RING	1	J10001-UP
7		07000-B2140	O-RING	2	J10001-UP
8		07000-B2100	O-RING	1	J10001-UP
9		21T-64-32310	BRACKET	2	J10001-UP
10		01010-81235	BOLT	16	J10001-UP
11		175-54-34170	WASHER	16	J10001-UP
12		21T-64-32271	TUBE	2	J10001-UP
13		01010-81660	BOLT	8	J10001-UP
14		01643-31645	WASHER	8	J10001-UP
15		07000-B2140	O-RING	2	J10001-UP
16		21T-64-32560	HOSE	2	J10001-UP
17		209-62-41341	CLAMP	8	J10001-UP
18		21T-64-32511	TUBE	2	J10001-UP
19		01010-81650	BOLT	8	J10001-UP
20		01643-31645	WASHER	8	J10001-UP
21		21T-64-32280	TUBE	1	J10001-UP
22		01010-81235	BOLT	4	J10001-UP
23		01643-31232	WASHER	4	J10001-UP
24		07000-B2100	O-RING	1	J10001-UP
25		21T-64-32520	TUBE	1	J10001-UP
26		01010-81235	BOLT	4	J10001-UP
27		01643-31232	WASHER	4	J10001-UP
28		07260-08732	HOSE	1	J10001-UP
29		20Y-62-51671	CLAMP	4	J10001-UP

Ref :H0311-02A1 Page :180177

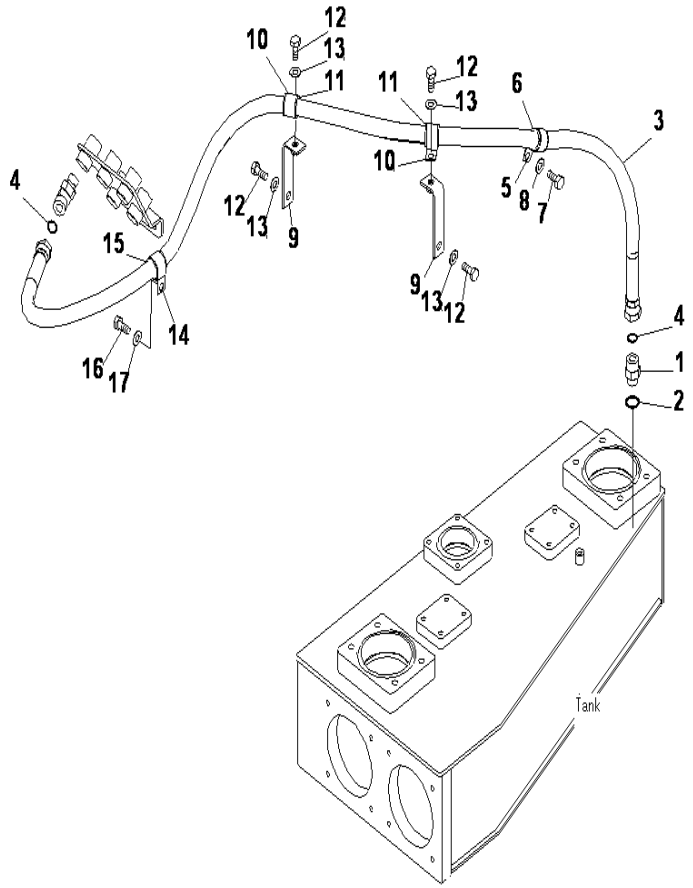

PC2000-8 S/N J10001-UP

SUCTION PIPING(HYDRAULIC LINE)(SERVICE CENTER)

INDEX	CD	PART NO.	DESCRIPTION	QTY	SERIAL NO.
1		02781-00628	UNION	1	J10001-UP
2		07002-62434	O-RING	1	J10001-UP
3		02762-00624	HOSE	1	J10001-UP
4		02896-61018	O-RING	2	J10001-UP
5		04434-53412	CLIP	1	J10001-UP
6		07095-20625	CUSHION	1	J10001-UP
7		01010-81225	BOLT	1	J10001-UP
8		01643-31232	WASHER	1	J10001-UP
9		17A-61-13391	BRACKET	2	J10001-UP
10		04434-53412	CLIP	2	J10001-UP
11		07095-20625	CUSHION	2	J10001-UP
12		01010-81225	BOLT	4	J10001-UP
13		01643-31232	WASHER	4	J10001-UP
14		04434-53412	CLIP	1	J10001-UP
15		07095-20625	CUSHION	1	J10001-UP
16		01010-81225	BOLT	1	J10001-UP
17		01643-31232	WASHER	1	J10001-UP

Ref :H0311-02A3 Page :180180

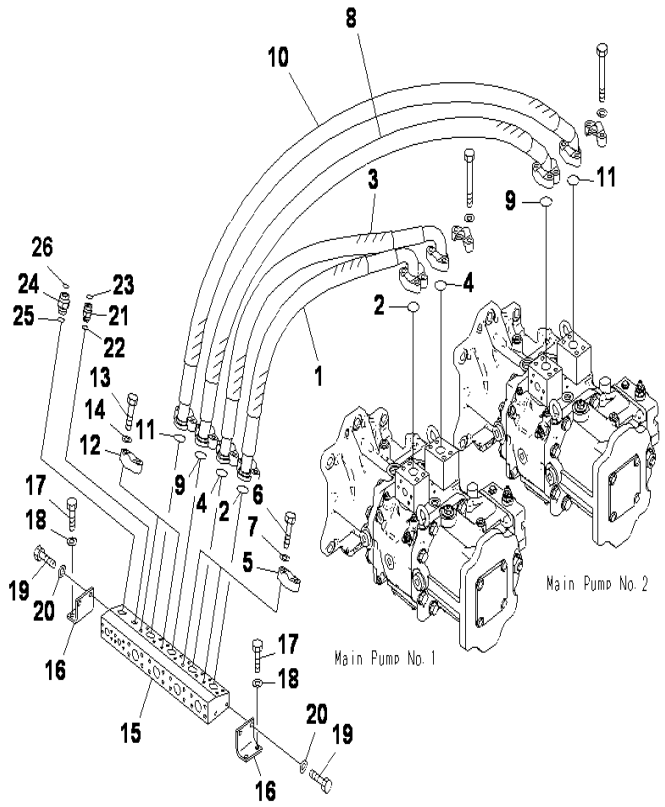

PC2000-8 S/N J10001-UP

DELIVERY PIPING(PUMP TO BLOCK)

INDEX	CD	PART NO.	DESCRIPTION	QTY	SERIAL NO.
1		07084-01412	HOSE	1	J10001-UP
2		07000-B3048	O-RING	2	J10001-UP
3		07084-01414	HOSE	1	J10001-UP
4		07000-B3048	O-RING	2	J10001-UP
5		07371-51470	FLANGE	4	J10001-UP
6		01010-81455	BOLT	8	J10001-UP
7		01643-31445	WASHER	8	J10001-UP
8		07083-01422	HOSE	1	J10001-UP
9		07000-B3048	O-RING	2	J10001-UP
10		07083-01425	HOSE	1	J10001-UP
11		07000-B3048	O-RING	2	J10001-UP
12		07371-51470	FLANGE	4	J10001-UP
13		01010-81455	BOLT	8	J10001-UP
14		01643-31445	WASHER	8	J10001-UP
15		21T-64-31260	BLOCK	1	J10001-UP
16		21T-64-32480	BRACKET	2	J10001-UP
17		01010-81230	BOLT	4	J10001-UP
18		01643-31232	WASHER	4	J10001-UP
19		01010-81240	BOLT	4	J10001-UP
20		01643-31232	WASHER	4	J10001-UP
21		02781-00628	UNION	1	J10001-UP
22		07002-62434	O-RING	1	J10001-UP
23		02896-61018	O-RING	1	J10001-UP
24		207-62-72110	UNION	1	J10001-UP
25		07002-63334	ORING	1	J10001-UP
26		11Y-62-11980	O-RING	1	J10001-UP

Ref :H0312-01A0 Page :180190

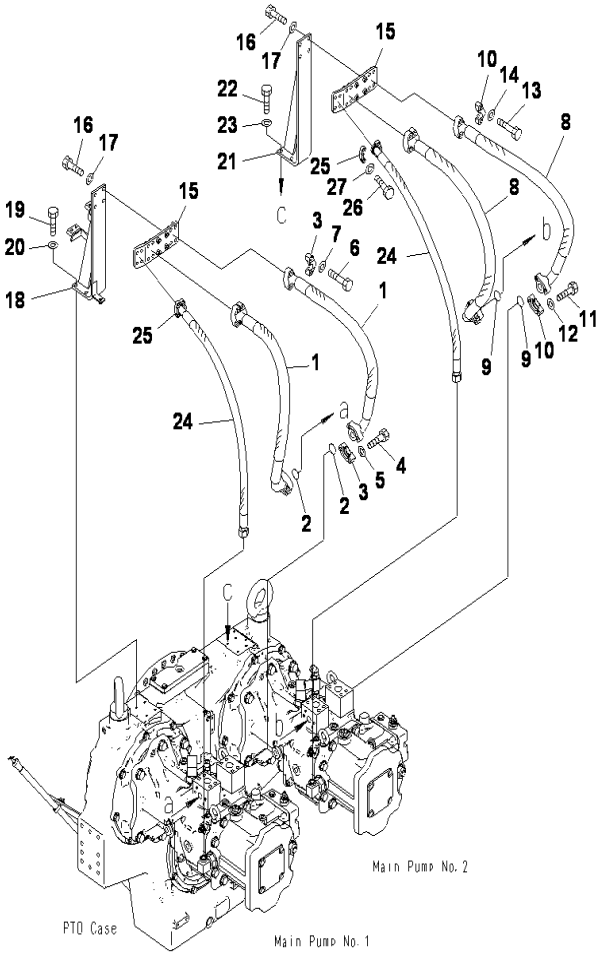

PC2000-8 S/N J10001-UP

DELIVERY PIPING(BRANCH)

INDEX	CD	PART NO.	DESCRIPTION	QTY	SERIAL NO.
1		209-62-41320	HOSE	2	J10001-UP
2		07000-B3038	O-RING	2	J10001-UP
3		07371-51260	FLANGE	8	J10001-UP
4		01010-81245	BOLT	8	J10001-UP
5		01643-31232	WASHER	8	J10001-UP
6		01018-31255	BOLT	8	J10001-UP
7		01643-31232	WASHER	8	J10001-UP
8		21T-62-31680	HOSE	2	J10001-UP
9		07000-B3038	O-RING	2	J10001-UP
10		07371-51260	FLANGE	8	J10001-UP
11		01010-81245	BOLT	8	J10001-UP
12		01643-31232	WASHER	8	J10001-UP
13		01018-31255	BOLT	8	J10001-UP
14		01643-31232	WASHER	8	J10001-UP
15		21T-64-33470	BRACKET	2	J10001-UP
16		01010-81240	BOLT	8	J10001-UP
17		01643-31232	WASHER	8	J10001-UP
18		21T-64-32181	BRACKET	1	J10001-UP
19		01010-81235	BOLT	4	J10001-UP
20		01643-31232	WASHER	4	J10001-UP
21		21T-64-32190	BRACKET	1	J10001-UP
22		01010-81235	BOLT	4	J10001-UP
23		01643-31232	WASHER	4	J10001-UP
24		21T-62-33171	HOSE	2	J10001-UP
25		07371-31049	FLANGE	4	J10001-UP
26		07372-31045	BOLT	8	J10001-UP
27		01643-51032	WASHER	8	J10001-UP

Ref :H0312-02A0 Page :180200

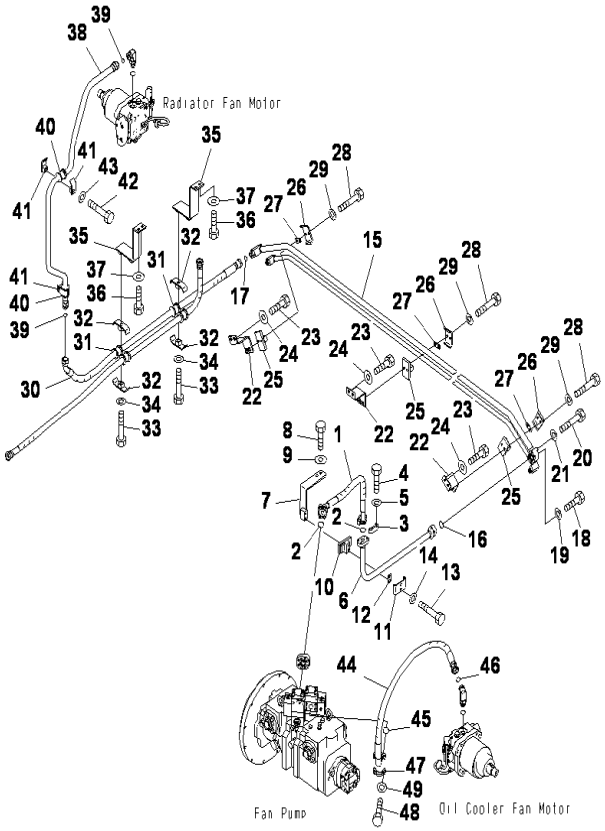

PC2000-8 S/N J10001-UP

DELIVERY PIPING(FAN LINE)(DELIVERY)

INDEX	CD	PART NO.	DESCRIPTION	QTY	SERIAL NO.
1		07097-00607	HOSE	1	J10001-UP
2		07000-B3025	O-RING	2	J10001-UP
3		07371-30640	FLANGE	4	J10001-UP
4		07372-21035	BOLT	8	J10001-UP
5		01643-51032	WASHER	8	J10001-UP
6		21T-64-31610	TUBE	1	J10001-UP
7		21T-64-31720	BRACKET	1	J10001-UP
8		01010-81025	BOLT	2	J10001-UP
9		201-54-72910	WASHER	2	J10001-UP
10		21T-04-31610	SEAT	1	J10001-UP
11		201-97-37430	CLAMP	1	J10001-UP
12		21T-04-31620	PLATE	1	J10001-UP
13		01010-81265	BOLT	2	J10001-UP
14		01643-31232	WASHER	2	J10001-UP
15		21T-64-31620	TUBE	1	J10001-UP
16		07000-B3030	O-RING	1	J10001-UP
17		02896-61018	O-RING	1	J10001-UP
18		07372-21045	BOLT	2	J10001-UP
19		01643-51032	WASHER	2	J10001-UP
20		07372-21060	BOLT	2	J10001-UP
21		01643-51032	WASHER	2	J10001-UP
22		21T-64-31730	BRACKET	3	J10001-UP
23		01010-81025	BOLT	6	J10001-UP
24		201-54-72910	WASHER	6	J10001-UP
25		21T-04-31610	SEAT	3	J10001-UP
26		201-97-37430	CLAMP	3	J10001-UP
27		21T-04-31620	PLATE	3	J10001-UP
28		01010-81065	BOLT	6	J10001-UP
29		01643-31032	WASHER	6	J10001-UP
30		02758-00616	HOSE	1	J10001-UP
31		07095-00628	CUSHION	2	J10001-UP
32		07094-30620	CLAMP	4	J10001-UP
33		01010-81270	BOLT	2	J10001-UP
34		01643-31232	WASHER	2	J10001-UP
35		21T-64-31690	BRACKET	2	J10001-UP
36		01010-81025	BOLT	4	J10001-UP
37		201-54-72910	WASHER	4	J10001-UP
38		21T-64-31631	TUBE	1	J10001-UP
39		02896-61018	O-RING	2	J10001-UP
40		07095-00526	CUSHION	2	J10001-UP
41		07094-10518	CLAMP	4	J10001-UP
42		01010-81265	BOLT	2	J10001-UP
43		01643-31232	WASHER	2	J10001-UP
44		21T-64-31790	HOSE	1	J10001-UP
45		07000-B3032	O-RING	1	J10001-UP

Ref :H0312-03A0 Page :180210

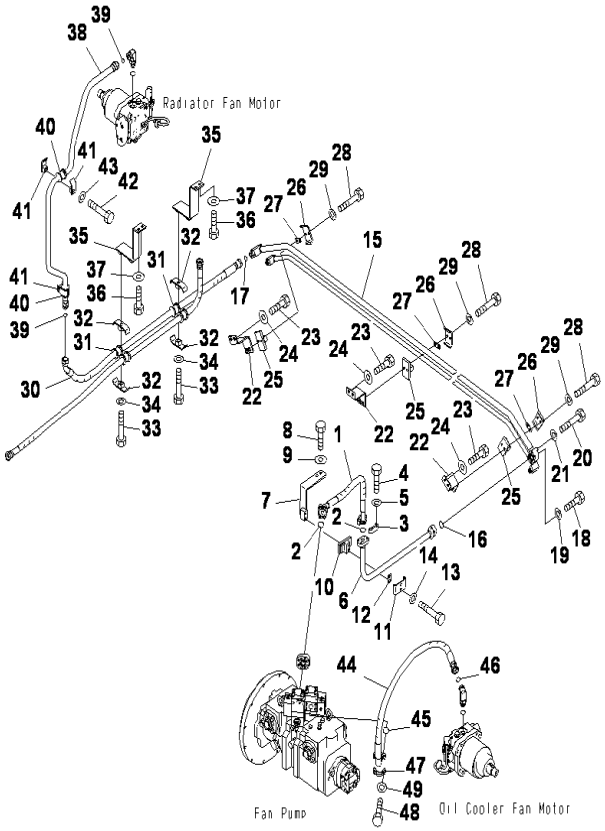

PC2000-8 S/N J10001-UP

DELIVERY PIPING(FAN LINE)(DELIVERY)

INDEX	CD	PART NO.	DESCRIPTION	QTY	SERIAL NO.
46		02896-61018	O-RING	1	J10001-UP
47		07371-31049	FLANGE	2	J10001-UP
48		07372-21035	BOLT	4	J10001-UP
49		01643-51032	WASHER	4	J10001-UP

Ref :H0312-03A0 Page :180211

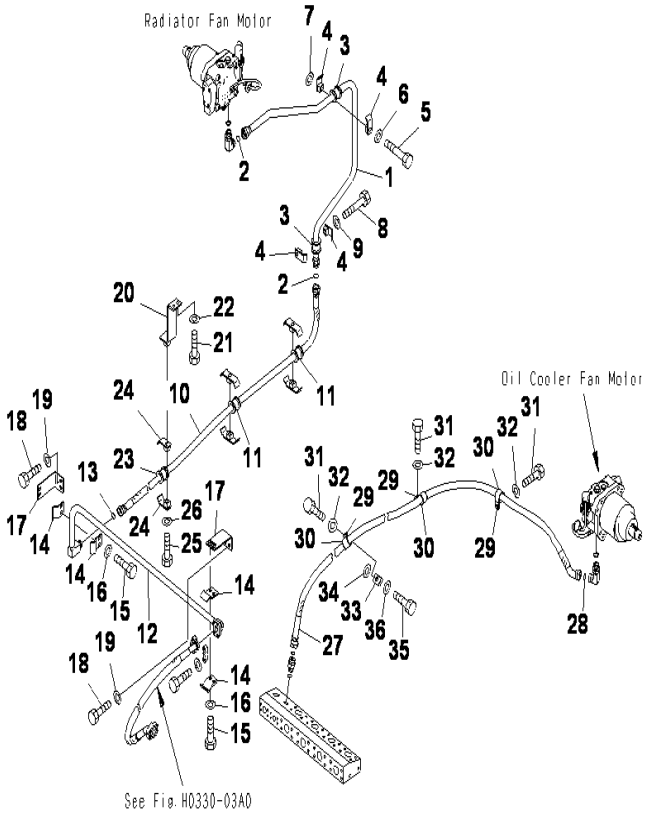

PC2000-8 S/N J10001-UP

DELIVERY PIPING(FAN LINE)(RETURN)

INDEX	CD	PART NO.	DESCRIPTION	QTY	SERIAL NO.
1		21T-64-31640	TUBE	1	J10001-UP
2		02896-61018	O-RING	2	J10001-UP
3		07095-00526	CUSHION	2	J10001-UP
4		07094-10518	CLAMP	4	J10001-UP
5		01010-81270	BOLT	1	J10001-UP
6		01643-31232	WASHER	1	J10001-UP
7		01643-31232	WASHER	1	J10001-UP
8		01010-81265	BOLT	1	J10001-UP
9		01643-31232	WASHER	1	J10001-UP
10		02762-00618	HOSE	1	J10001-UP
11		07095-00628	CUSHION	2	J10001-UP
12		21T-64-31650	TUBE	1	J10001-UP
13		02896-61018	O-RING	1	J10001-UP
14		20Y-62-13650	CLAMP	4	J10001-UP
15		01010-81030	BOLT	4	J10001-UP
16		01643-31032	WASHER	4	J10001-UP
17		21T-64-31710	BRACKET	2	J10001-UP
18		01010-81025	BOLT	4	J10001-UP
19		201-54-72910	WASHER	4	J10001-UP
20		21T-64-31590	BRACKET	1	J10001-UP
21		01010-81025	BOLT	2	J10001-UP
22		201-54-72910	WASHER	2	J10001-UP
23		07095-00628	CUSHION	2	J10001-UP
24		07094-10620	CLAMP	2	J10001-UP
25		01010-81270	BOLT	1	J10001-UP
26		01643-31232	WASHER	1	J10001-UP
27		02764-00623	HOSE	1	J10001-UP
28		02896-61018	O-RING	1	J10001-UP
29		04434-53412	CLIP	3	J10001-UP
30		07095-20625	CUSHION	3	J10001-UP
31		01010-81225	BOLT	3	J10001-UP
32		01643-31232	WASHER	3	J10001-UP
33		207-979-6180	BRACKET	1	J10001-UP
34		01643-31232	WASHER	1	J10001-UP
35		01010-81230	BOLT	1	J10001-UP
36		01643-31232	WASHER	1	J10001-UP

Ref :H0312-04A0 Page :180220

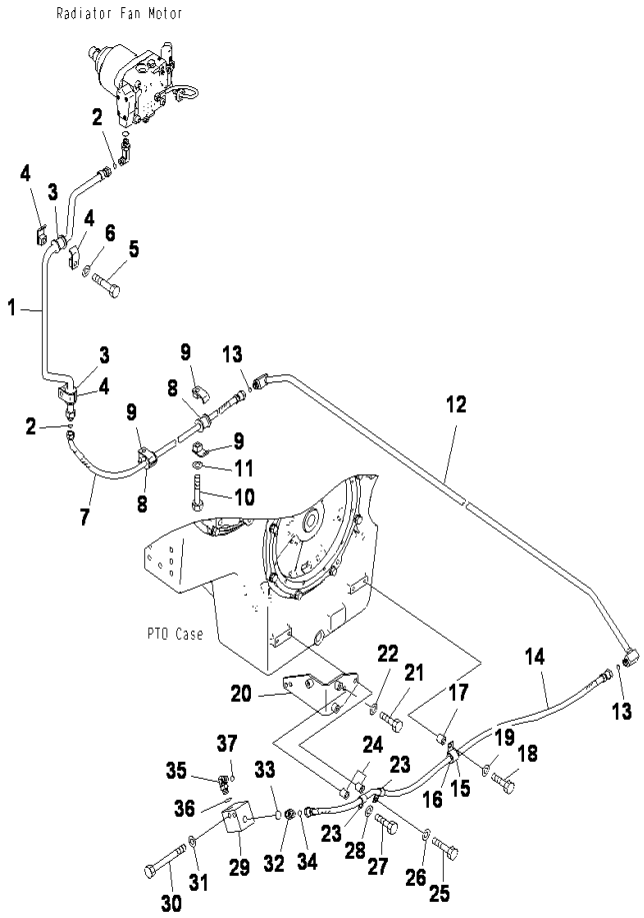

PC2000-8 S/N J10001-UP

DELIVERY PIPING(FAN LINE)(DRAIN)(1/2)

INDEX	CD	PART NO.	DESCRIPTION	QTY	SERIAL NO.
1		21T-64-31661	TUBE	1	J10001-UP
2		02896-61012	O-RING	2	J10001-UP
3		07095-00421	CUSHION	2	J10001-UP
4		07094-10417	CLAMP	4	J10001-UP
5		01010-81265	BOLT	2	J10001-UP
6		01643-31232	WASHER	2	J10001-UP
7		02764-00415	HOSE	1	J10001-UP
8		07095-00418	CUSHION	2	J10001-UP
9		07094-10417	CLAMP	4	J10001-UP
10		01010-81265	BOLT	2	J10001-UP
11		01643-31232	WASHER	2	J10001-UP
12		21T-64-31670	TUBE	1	J10001-UP
13		02896-61012	O-RING	2	J10001-UP
14		02762-00416	HOSE	1	J10001-UP
15		04434-52712	CLIP	1	J10001-UP
16		07095-20418	CUSHION	1	J10001-UP
17		195-33-11220	SPACER	1	J10001-UP
18		01010-81245	BOLT	1	J10001-UP
19		01643-31232	WASHER	1	J10001-UP
20		21T-64-33761	BRACKET	1	J10001-UP
21		01010-81230	BOLT	1	J10001-UP
22		01643-31232	WASHER	1	J10001-UP
23		04434-51912	CLIP	2	J10001-UP
24		195-33-11220	SPACER	2	J10001-UP
25		01010-81255	BOLT	1	J10001-UP
26		01643-31232	WASHER	1	J10001-UP
27		01010-81245	BOLT	1	J10001-UP
28		01643-31232	WASHER	1	J10001-UP
29		21T-64-33810	BLOCK	1	J10001-UP
30		01011-81200	BOLT	2	J10001-UP
31		01643-31232	WASHER	2	J10001-UP
32		02781-00422	UNION	1	J10001-UP
33		07002-62034	O-RING	1	J10001-UP
34		02896-61012	O-RING	1	J10001-UP
35		02782-10422	ELBOW	1	J10001-UP
36		07002-62034	O-RING	1	J10001-UP
37		02896-61012	O-RING	1	J10001-UP

Ref :H0312-05A0 Page :180230

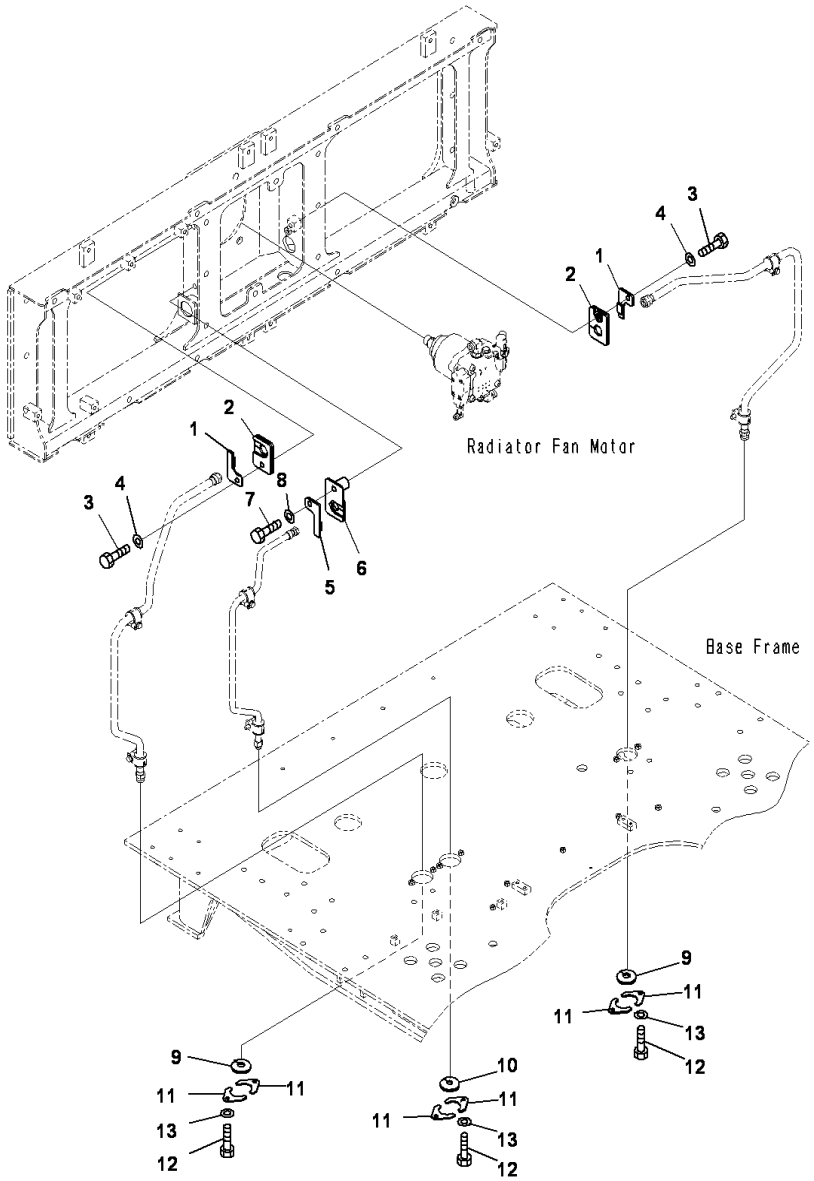

DELIVERY PIPING(FAN LINE)(DRAIN)(2/2)

INDEX	CD	PART NO.	DESCRIPTION	QTY	SERIAL NO.
1		02762-00426	HOSE	1	J10001-UP
2		02896-61012	O-RING	1	J10001-UP
3		04434-51912	CLIP	2	J10001-UP
4		205-03-71331	COLLAR	2	J10001-UP
5		01010-81265	BOLT	1	J10001-UP
6		01643-31232	WASHER	1	J10001-UP
7		01010-81275	BOLT	1	J10001-UP
8		01643-31232	WASHER	1	J10001-UP
9		04434-51912	CLIP	2	J10001-UP
10		01010-81225	BOLT	2	J10001-UP
11		01643-31232	WASHER	2	J10001-UP
12		21T-64-33820	BRACKET	1	J10001-UP
13		01010-81225	BOLT	1	J10001-UP
14		01643-31232	WASHER	1	J10001-UP
15		04434-52712	CLIP	2	J10001-UP
16		07095-20418	CUSHION	2	J10001-UP
17		01010-81225	BOLT	2	J10001-UP
18		01643-31232	WASHER	2	J10001-UP
19		21T-64-33820	BRACKET	1	J10001-UP
20		21T-04-31940	BRACKET	1	J10001-UP
21		01010-81225	BOLT	1	J10001-UP
22		01643-31232	WASHER	1	J10001-UP

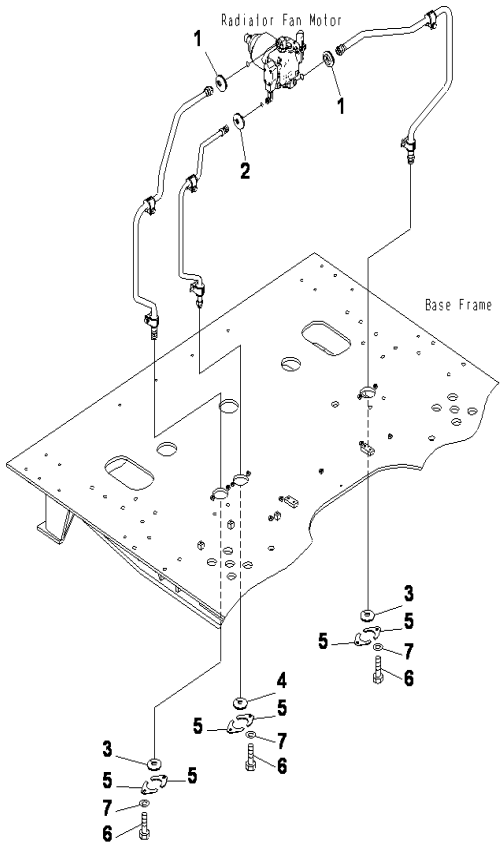

PC2000-8 S/N J10001-UP

DELIVERY PIPING(FAN LINE)(SEAL)(J10001-J10002)

INDEX	CD	PART NO.	DESCRIPTION	QTY	SERIAL NO.
1		21T-64-31740	CAP	2	J10001-J10002
2		21T-64-31750	CAP	1	J10001-J10002
3		21T-64-31760	CAP	2	J10001-J10002
4		21T-64-31770	CAP	1	J10001-J10002
5		21T-64-31781	PLATE	6	J10001-J10002
6		01010-81235	BOLT	6	J10001-J10002
7		01643-31232	WASHER	6	J10001-J10002

Ref :H0312-06A0 Page :180250

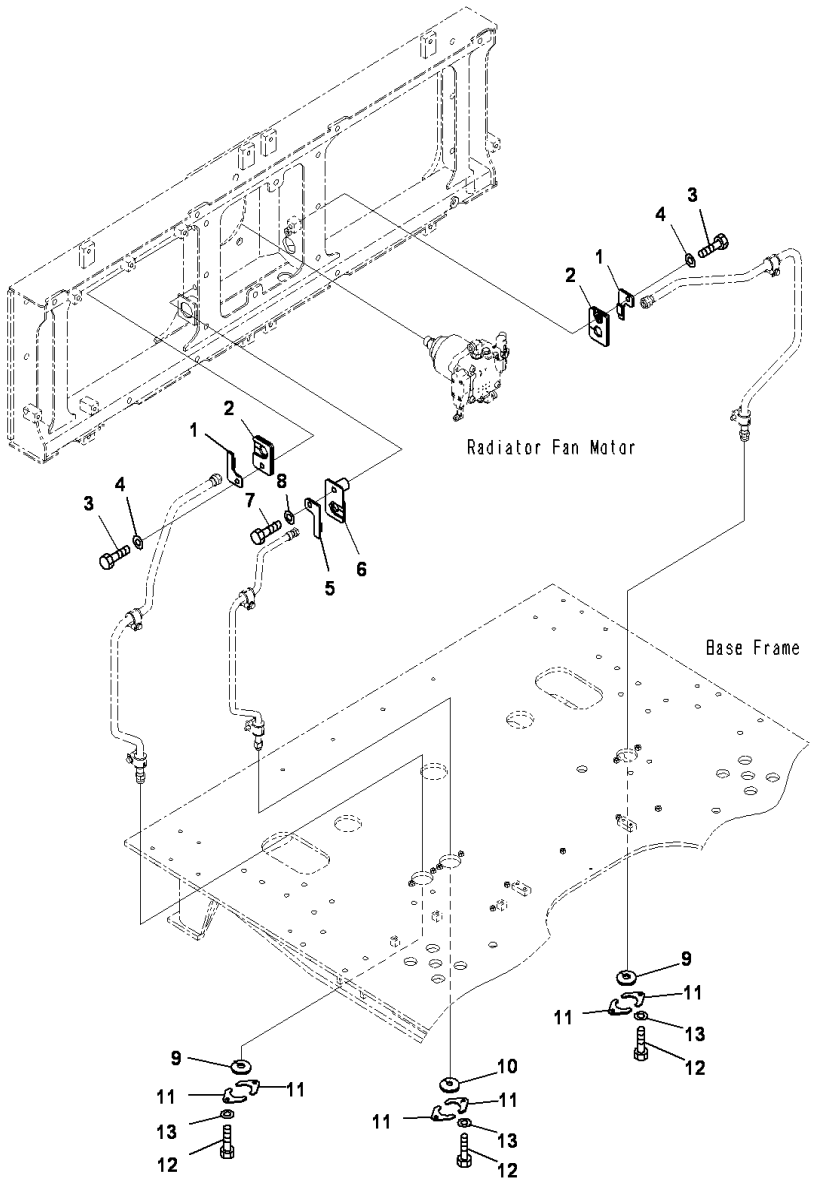

PC2000-8 S/N J10001-UP

DELIVERY PIPING (FAN LINE)(SEAL)(J10003~)

INDEX	CD	PART NO.	DESCRIPTION	QTY	SERIAL NO.
1		209-03-41860	BRACKET	2	J10003-UP
2		209-03-41870	COVER	2	J10003-UP
3		01010-81035	BOLT	2	J10003-UP
4		01643-31032	WASHER	2	J10003-UP
5		209-03-41921	BRACKET	1	J10003-UP
6		209-03-41931	COVER	1	J10003-UP
7		01010-81065	BOLT	1	J10003-UP
8		01643-31032	WASHER	1	J10003-UP
9		21T64-31760	CAP	2	J10003-UP
10		21T64-31770	CAP	1	J10003-UP
11		21T64-31781	PLATE	6	J10003-UP
12		01010-81235	BOLT	6	J10003-UP
13		01643-31232	WASHER	6	J10003-UP

Ref :H0312-06A0 Page :180251

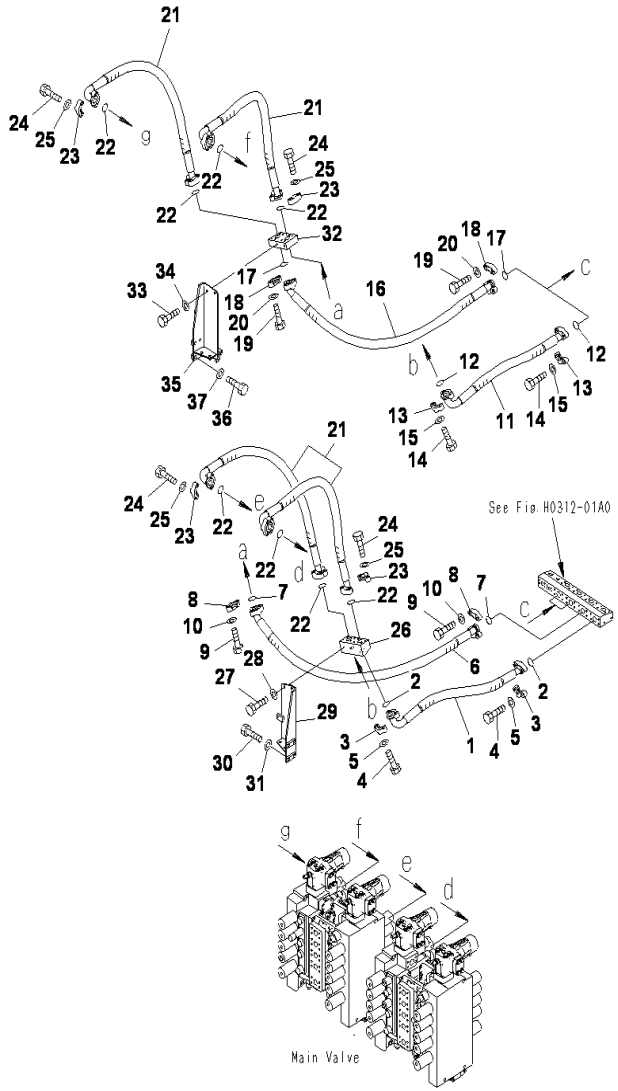

PC2000-8 S/N J10001-UP

DELIVERY PIPING(BLOCK TO MAIN VALVE)

INDEX	CD	PART NO.	DESCRIPTION	QTY	SERIAL NO.
1		07084-01411	HOSE	1	J10001-UP
2		07000-B3048	O-RING	2	J10001-UP
3		07371-51470	FLANGE	4	J10001-UP
4		01010-81455	BOLT	8	J10001-UP
5		01643-31445	WASHER	8	J10001-UP
6		07083-01419	HOSE	1	J10001-UP
7		07000-B3048	O-RING	2	J10001-UP
8		07371-51470	FLANGE	4	J10001-UP
9		01010-81455	BOLT	8	J10001-UP
10		01643-31445	WASHER	8	J10001-UP
11		07084-01411	HOSE	1	J10001-UP
12		07000-B3048	O-RING	2	J10001-UP
13		07371-51470	FLANGE	4	J10001-UP
14		01010-81455	BOLT	8	J10001-UP
15		01643-31445	WASHER	8	J10001-UP
16		07083-01418	HOSE	1	J10001-UP
17		07000-B3048	O-RING	2	J10001-UP
18		07371-51470	FLANGE	4	J10001-UP
19		01010-81455	BOLT	8	J10001-UP
20		01643-31445	WASHER	8	J10001-UP
21		07084-01416	HOSE	4	J10001-UP
22		07000-B3048	O-RING	8	J10001-UP
23		07371-51470	FLANGE	16	J10001-UP
24		01010-81455	BOLT	32	J10001-UP
25		01643-31445	WASHER	32	J10001-UP
26		21T-64-31960	BLOCK	1	J10001-UP
27		01010-81230	BOLT	2	J10001-UP
28		01643-31232	WASHER	2	J10001-UP
29		21T-64-32121	BRACKET	1	J10001-UP
30		01010-81240	BOLT	4	J10001-UP
31		01643-31232	WASHER	4	J10001-UP
32		21T-64-31970	BLOCK	1	J10001-UP
33		01010-81230	BOLT	2	J10001-UP
34		01643-31232	WASHER	2	J10001-UP
35		01010-81230	BOLT	1	J10001-UP
36		01010-81240	BOLT	4	J10001-UP
37		01643-31232	WASHER	4	J10001-UP

Ref :H0312-08A0 Page :180260

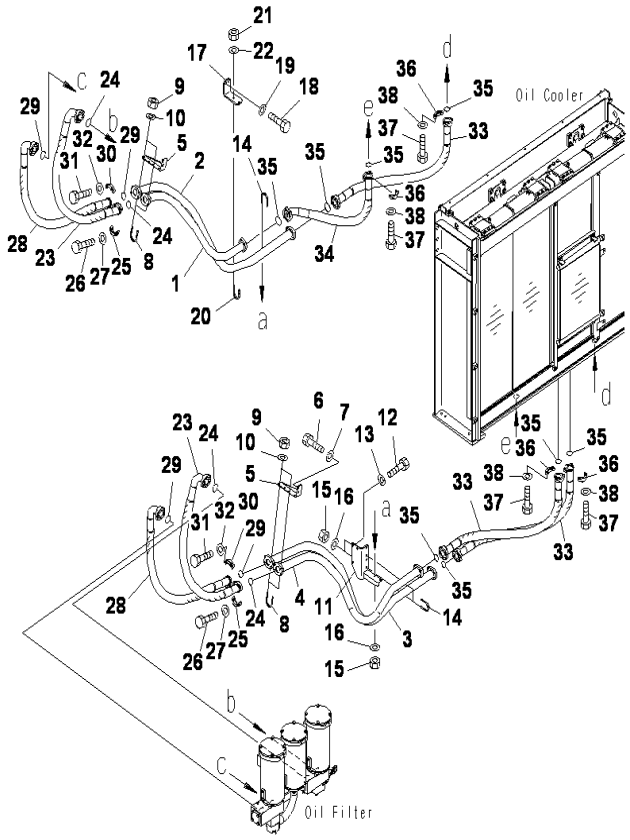

PC2000-8 S/N J10001-UP

OIL COOLER PIPING(1/2)

INDEX	CD	PART NO.	DESCRIPTION	QTY	SERIAL NO.
1		21T-64-33121	TUBE	1	J10001-UP
2		21T-64-33131	TUBE	1	J10001-UP
3		21T-64-33141	TUBE	1	J10001-UP
4		21T-64-33151	TUBE	1	J10001-UP
5		21T-64-33160	BRACKET	2	J10001-UP
6		01010-81230	BOLT	4	J10001-UP
7		01643-31232	WASHER	4	J10001-UP
8		07283-36163	CLIP	4	J10001-UP
9		01597-01009	NUT	8	J10001-UP
10		01643-31032	WASHER	8	J10001-UP
11		21T-64-33170	BRACKET	1	J10001-UP
12		01010-81230	BOLT	3	J10001-UP
13		175-54-34170	WASHER	3	J10001-UP
14		07283-36163	CLIP	3	J10001-UP
15		01597-01009	NUT	6	J10001-UP
16		01643-31032	WASHER	6	J10001-UP
17		21T-64-33180	BRACKET	1	J10001-UP
18		01010-81230	BOLT	2	J10001-UP
19		175-54-34170	WASHER	2	J10001-UP
20		07283-36163	CLIP	1	J10001-UP
21		01597-01009	NUT	2	J10001-UP
22		01643-31032	WASHER	2	J10001-UP
23		21T-64-33860	HOSE	2	J10001-UP
24		07000-B2060	O-RING	4	J10001-UP
25		07371-32076	FLANGE	4	J10001-UP
26		07372-21240	BOLT	8	J10001-UP
27		01643-51232	WASHER	8	J10001-UP
28		21T-64-33870	HOSE	2	J10001-UP
29		07000-B2060	O-RING	4	J10001-UP
30		07371-32076	FLANGE	4	J10001-UP
31		07372-21240	BOLT	8	J10001-UP
32		01643-51232	WASHER	8	J10001-UP
33		07296-02016	HOSE	3	J10001-UP
34		07297-02012	HOSE	1	J10001-UP
35		07000-B2060	O-RING	8	J10001-UP
36		07371-32076	FLANGE	16	J10001-UP
37		07372-21240	BOLT	32	J10001-UP
38		01643-51232	WASHER	32	J10001-UP

Ref :H0320-01A0 Page :180270

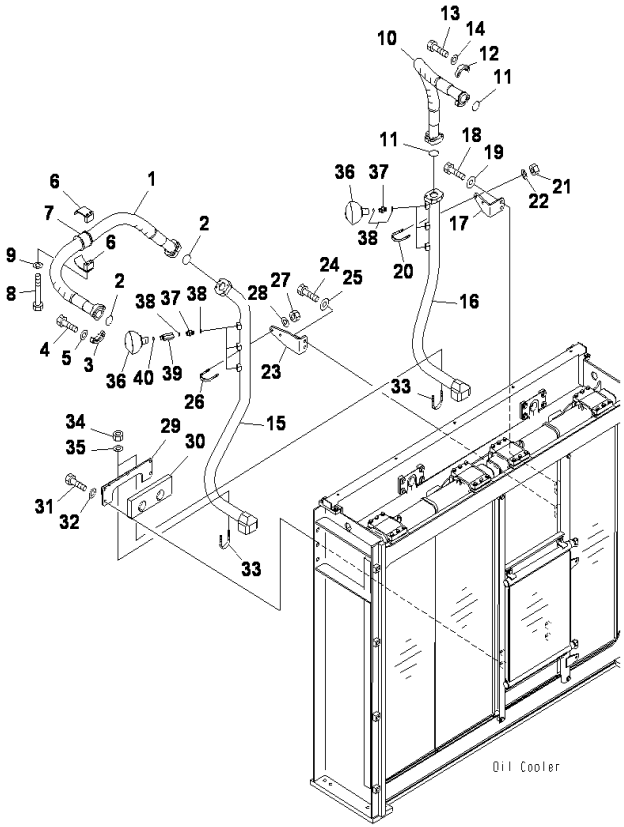

PC2000-8 S/N J10001-UP

OIL COOLER PIPING(2/2)

INDEX	CD	PART NO.	DESCRIPTION	QTY	SERIAL NO.
1		21T-64-33850	HOSE	1	J10001-UP
2		07000-B2060	O-RING	2	J10001-UP
3		07371-32076	FLANGE	4	J10001-UP
4		07372-21240	BOLT	8	J10001-UP
5		01643-51232	WASHER	8	J10001-UP
6		209-62-78930	CLAMP	2	J10001-UP
7		07095-02062	CUSHION	1	J10001-UP
8		01011-81210	BOLT	2	J10001-UP
9		01643-31232	WASHER	2	J10001-UP
10		07296-02012	HOSE	1	J10001-UP
11		07000-B2060	O-RING	2	J10001-UP
12		07371-32076	FLANGE	4	J10001-UP
13		07372-21240	BOLT	8	J10001-UP
14		01643-51232	WASHER	8	J10001-UP
15		21T-64-33411	TUBE	1	J10001-UP
16		21T-64-33421	TUBE	1	J10001-UP
17		21T-64-33431	BRACKET	1	J10001-UP
18		01010-81230	BOLT	2	J10001-UP
19		175-54-34170	WASHER	2	J10001-UP
20		07283-36163	CLIP	1	J10001-UP
21		01597-01009	NUT	2	J10001-UP
22		01643-31032	WASHER	2	J10001-UP
23		21T-64-33441	BRACKET	1	J10001-UP
24		01010-81230	BOLT	2	J10001-UP
25		175-54-34170	WASHER	2	J10001-UP
26		07283-36163	CLIP	1	J10001-UP
27		01597-01009	NUT	2	J10001-UP
28		01643-31032	WASHER	2	J10001-UP
29		21T-64-33480	BRACKET	1	J10001-UP
30		21T-64-33490	.SHEET	1	J10001-UP
31		01010-81230	BOLT	4	J10001-UP
32		01643-31232	WASHER	4	J10001-UP
33		07283-36163	CLIP	2	J10001-UP
34		01597-01009	NUT	4	J10001-UP
35		01643-31032	WASHER	4	J10001-UP
36		21T-64-33840	ACCUMULATOR	6	J10001-UP
37		203-97-35610	UNION	6	J10001-UP
38		07002-62034	O-RING	12	J10001-UP
39		201-97-37540	JOINT	3	J10001-UP
40		07002-62034	O-RING	3	J10001-UP

Ref :H0320-02A0 Page :180280

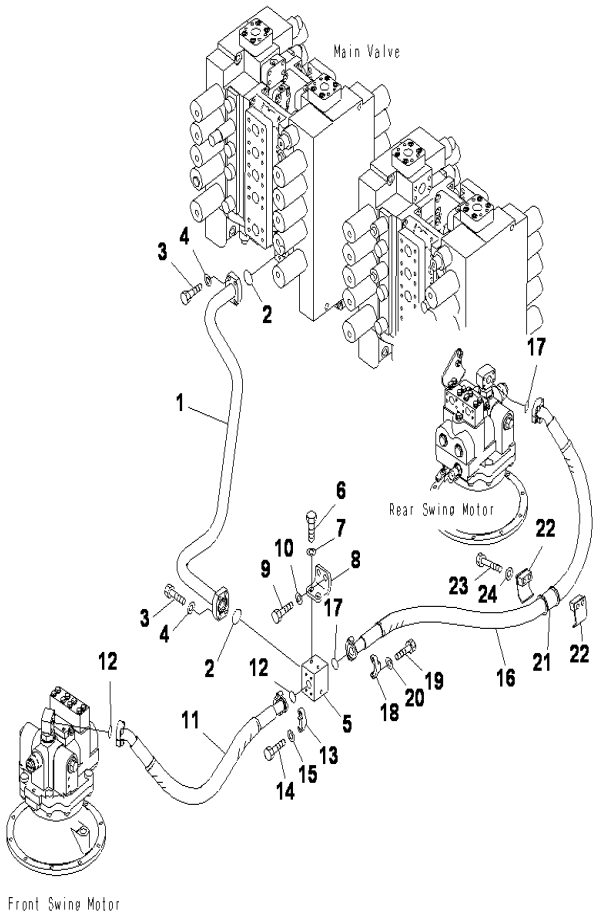

PC2000-8 S/N J10001-UP

RETURN LINES(SWING)

INDEX	CD	PART NO.	DESCRIPTION	QTY	SERIAL NO.
1		21T-64-33220	TUBE	1	J10001-UP
2		07000-B3048	O-RING	2	J10001-UP
3		07372-21240	BOLT	8	J10001-UP
4		01643-51232	WASHER	8	J10001-UP
5		21T-64-33211	BLOCK	1	J10001-UP
6		01010-81235	BOLT	2	J10001-UP
7		175-54-34170	WASHER	2	J10001-UP
8		21T-64-32470	BRACKET	1	J10001-UP
9		01010-81235	BOLT	2	J10001-UP
10		175-54-34170	WASHER	2	J10001-UP
11		07122-01211	HOSE	1	J10001-UP
12		07000-B3038	O-RING	2	J10001-UP
13		07371-31255	FLANGE	4	J10001-UP
14		07372-21035	BOLT	8	J10001-UP
15		01643-51032	WASHER	8	J10001-UP
16		07122-01217	HOSE	1	J10001-UP
17		07000-B3038	O-RING	2	J10001-UP
18		07371-31255	FLANGE	4	J10001-UP
19		07372-21035	BOLT	8	J10001-UP
20		01643-51032	WASHER	8	J10001-UP
21		07095-01241	CUSHION	1	J10001-UP
22		07094-11228	CLAMP	2	J10001-UP
23		01010-81285	BOLT	2	J10001-UP
24		01643-31232	WASHER	2	J10001-UP

Ref :H0330-01A0 Page :180290

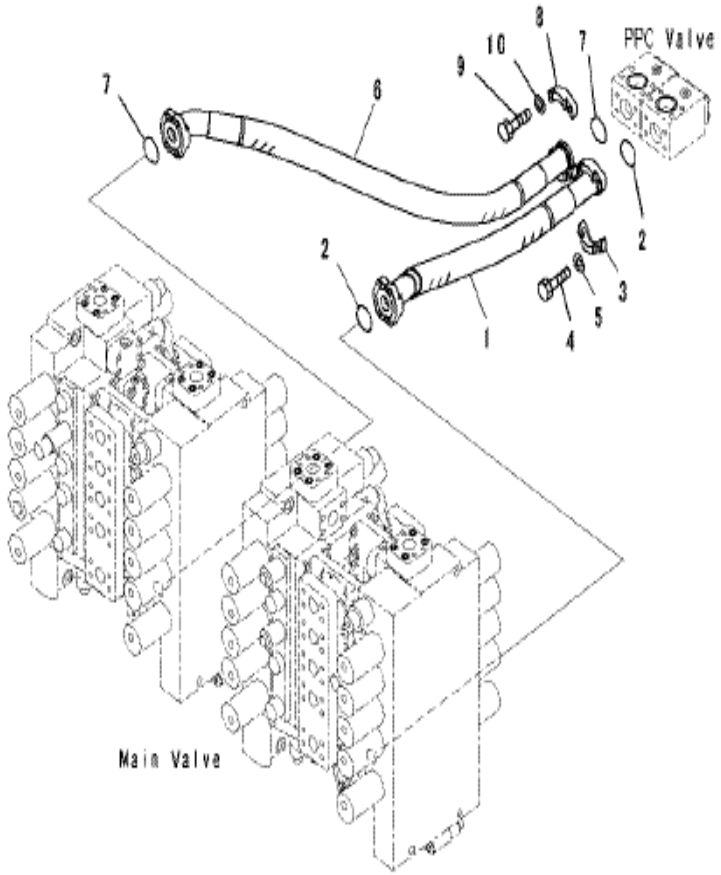

PC2000-8 S/N J10001-UP

RETURN LINES(MAIN VALVE)

INDEX	CD	PART NO.	DESCRIPTION	QTY	SERIAL NO.
1		07297-02011	HOSE	1	J10001-UP
2		07000-B2060	O-RING	2	J10001-UP
3		07371-32076	FLANGE	4	J10001-UP
4		07372-21240	BOLT	8	J10001-UP
5		01643-51232	WASHER	8	J10001-UP
6		07297-02013	HOSE	1	J10001-UP
7		07000-B2060	O-RING	2	J10001-UP
8		07371-32076	FLANGE	4	J10001-UP
9		07372-21240	BOLT	8	J10001-UP
10		01643-51232	WASHER	8	J10001-UP

Ref :H0330-02A1 Page :180300

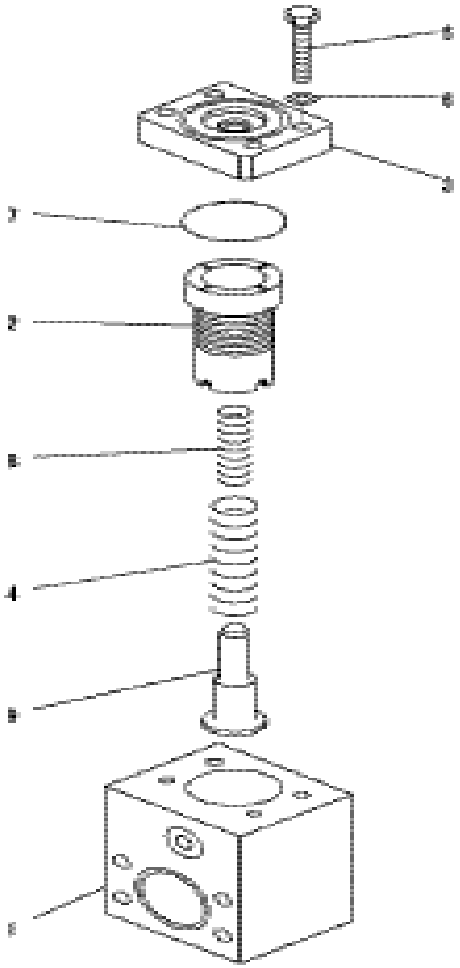

PC2000-8 S/N J10001-UP

RETURN LINES (MAIN VALVE)(INNER PARTS)

INDEX	CD	PART NO.	DESCRIPTION	QTY	SERIAL NO.
		709-10-94100	VALVE ASS'Y.....	2	J10001-UP
1	C1	709-10-91830	.BLOCK.....	1	J10001-UP
2	C1	709-10-91810	.VALVE.....	1	J10001-UP
3	C1	709-10-91840	.PLATE.....	1	J10001-UP
4		709-10-91850	.SPRING.....	1	J10001-UP
5		01016-51065	.BOLT.....	4	J10001-UP
6		01643-31032	.WASHER.....	4	J10001-UP
7		07000-B2065	.O-RING.....	1	J10001-UP
8		709-10-91820	.SPRING.....	1	J10001-UP
9		709-10-91860	.RETAINER.....	1	J10001-UP

Ref :H0330-02A2 Page :180301

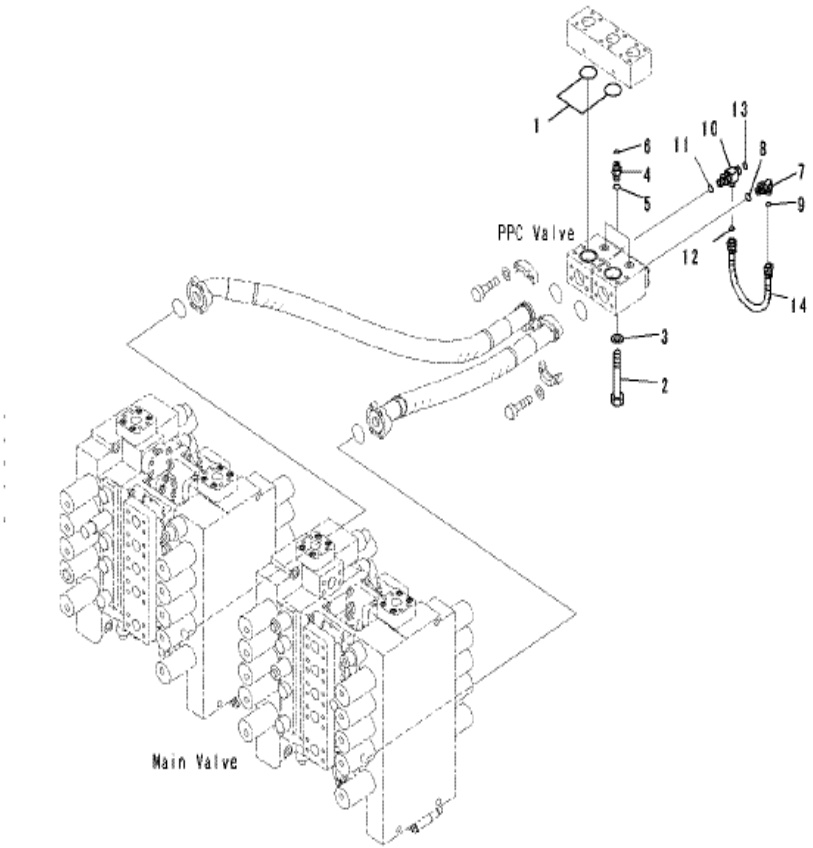

PC2000-8 S/N J10001-UP

RETURN LINES (PPC VALVE MOUNTING)

INDEX	CD	PART NO.	DESCRIPTION	QTY	SERIAL NO.
1		07000-B2060	O-RING	2	J10001-UP
2		01011-81220	BOLT	8	J10001-UP
3		01643-31232	WASHER	8	J10001-UP
4		02781-0021D	UNION	2	J10001-UP
5		07002-61423	O-RING	2	J10001-UP
6		02896-61008	O-RING	2	J10001-UP
7		02782-10210	ELBOW	1	J10001-UP
8		07002-61423	O-RING	1	J10001-UP
9		02896-61008	O-RING	1	J10001-UP
10		20U6241820	ELBOW	1	J10001-UP
11		07002-61423	O-RING	1	J10001-UP
12		02896-61008	O-RING	1	J10001-UP
13		02896-61009	O-RING	1	J10001-UP
14		02760-00203	HOSE	1	J10001-UP

Ref :H0330-02A3 Page :180302

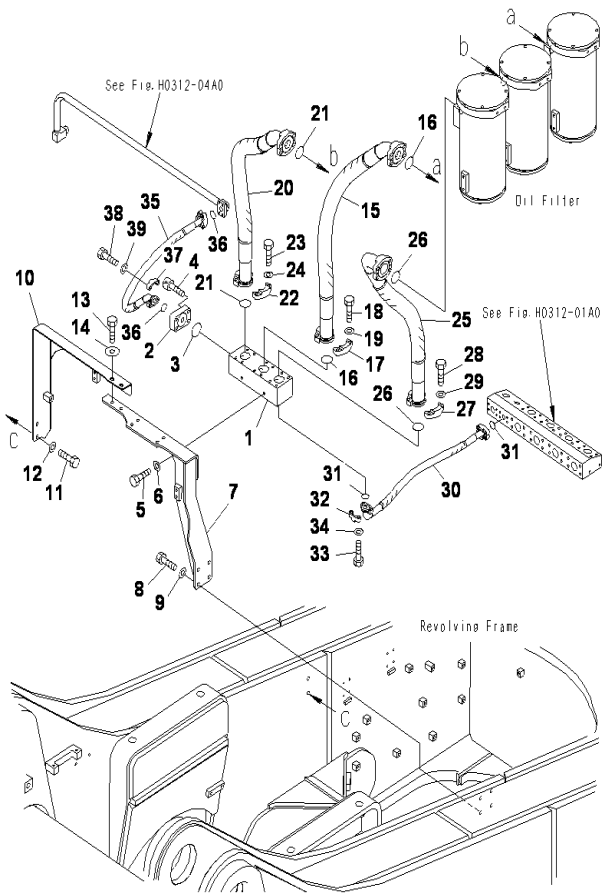

PC2000-8 S/N J10001-UP

RETURN LINES(FILTER)

INDEX	CD	PART NO.	DESCRIPTION	QTY	SERIAL NO.
1		21T-64-33110	BLOCK	1	J10001-UP
2		21T-64-33230	PLATE	1	J10001-UP
3		07000-B2060	O-RING	1	J10001-UP
4		01252-71235	BOLT	4	J10001-UP
5		01010-81230	BOLT	2	J10001-UP
6		01643-31232	WASHER	2	J10001-UP
7		21T-64-33361	BRACKET	1	J10001-UP
8		01010-81230	BOLT	4	J10001-UP
9		01643-31232	WASHER	4	J10001-UP
10		21T-64-33371	FRAME	1	J10001-UP
11		01010-81225	BOLT	2	J10001-UP
12		01643-31232	WASHER	2	J10001-UP
13		01010-81235	BOLT	4	J10001-UP
14		175-54-34170	WASHER	4	J10001-UP
15		07297-02012	HOSE	1	J10001-UP
16		07000-B2060	O-RING	2	J10001-UP
17		07371-32076	FLANGE	2	J10001-UP
18		07372-21240	BOLT	4	J10001-UP
19		01643-51232	WASHER	4	J10001-UP
20		07297-02013	HOSE	1	J10001-UP
21		07000-B2060	O-RING	2	J10001-UP
22		07371-32076	FLANGE	2	J10001-UP
23		07372-21240	BOLT	4	J10001-UP
24		01643-51232	WASHER	4	J10001-UP
25		07298-02012	HOSE	1	J10001-UP
26		07000-B2060	O-RING	2	J10001-UP
27		07371-32076	FLANGE	2	J10001-UP
28		07372-21240	BOLT	4	J10001-UP
29		01643-51232	WASHER	4	J10001-UP
30		21T-64-33880	HOSE	1	J10001-UP
31		07000-B3025	O-RING	2	J10001-UP
32		07371-30640	FLANGE	4	J10001-UP
33		07372-21035	BOLT	8	J10001-UP
34		01643-51032	WASHER	8	J10001-UP
35		21T-64-33890	HOSE	1	J10001-UP
36		07000-B3025	O-RING	2	J10001-UP
37		07371-30640	FLANGE	4	J10001-UP
38		07372-21035	BOLT	8	J10001-UP
39		01643-51032	WASHER	8	J10001-UP

Ref :H0330-03A0 Page :180310

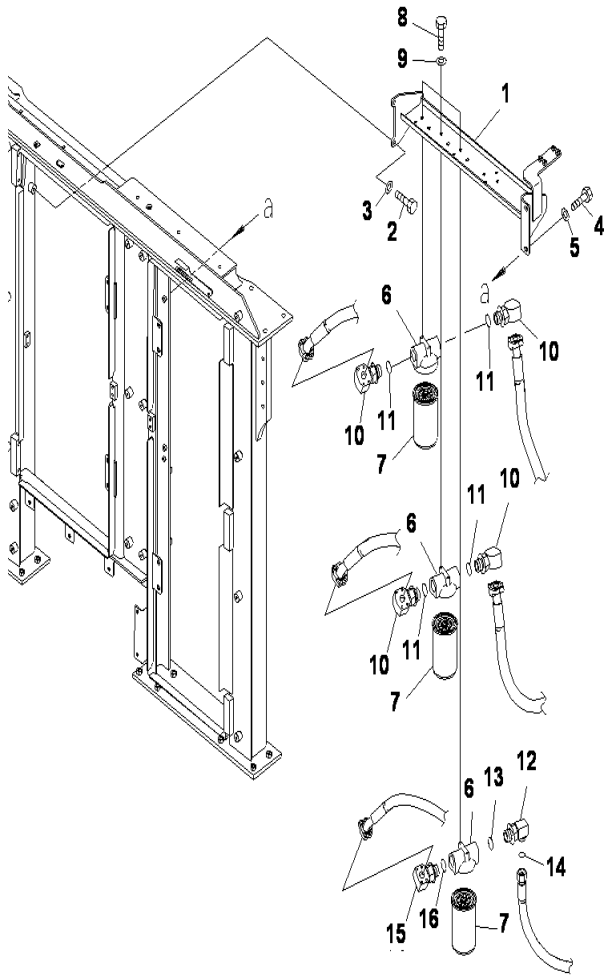

PC2000-8 S/N J10001-UP

DRAIN LINES(FILTER)(INSIDE OF POWER CONTAINER)

INDEX	CD	PART NO.	DESCRIPTION	QTY	SERIAL NO.
1		21T-64-33311	BRACKET	1	J10001-UP
2		01010-81230	BOLT	2	J10001-UP
3		01643-31232	WASHER	2	J10001-UP
4		01010-81235	BOLT	2	J10001-UP
5		175-54-34170	WASHER	2	J10001-UP
6		21T-60-31600	FILTER ASS'Y	3	J10001-UP
7		21T-60-31450	.FILTER	1	J10001-UP
8		01010-81235	BOLT	6	J10001-UP
9		01643-31232	WASHER	6	J10001-UP
10		21T-64-33451	ELBOW	4	J10001-UP
11		07002-64234	O-RING	4	J10001-UP
12		209-62-41481	ELBOW	1	J10001-UP
13		07002-64234	O-RING	1	J10001-UP
14		11Y-62-11980	O-RING	1	J10001-UP
15		21T-64-33710	ELBOW	1	J10001-UP
16		07002-64234	O-RING	1	J10001-UP

Ref :H0340-01A0 Page :180320

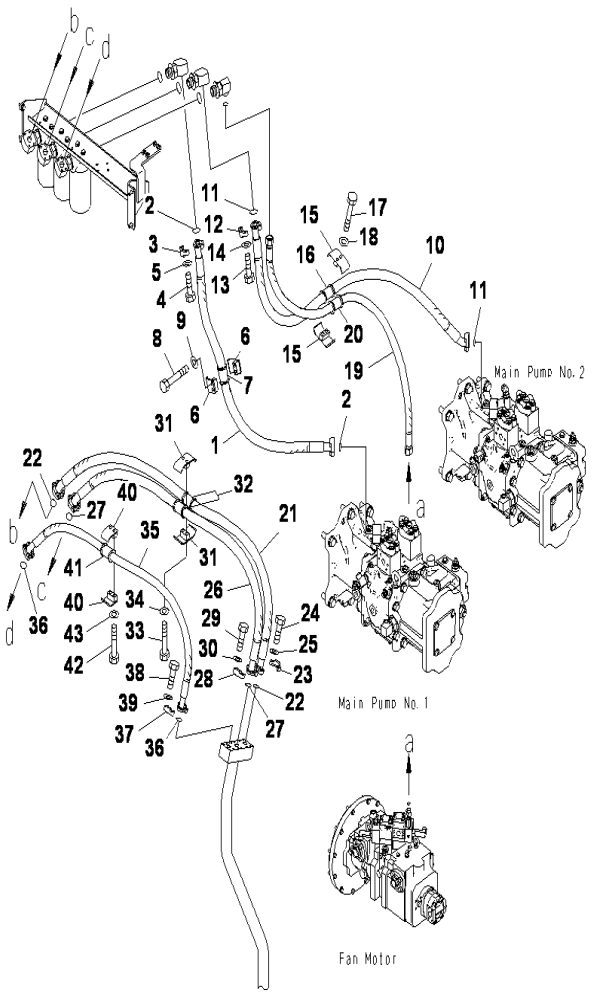

PC2000-8 S/N J10001-UP

DRAIN LINES(PIPING)(INSIDE OF POWER CONTAINER)(1/2)

INDEX	CD	PART NO.	DESCRIPTION	QTY	SERIAL NO.
1		07296-01215	HOSE	1	J10001-UP
2		07000-B3038	O-RING	2	J10001-UP
3		07371-31255	FLANGE	4	J10001-UP
4		07372-21035	BOLT	8	J10001-UP
5		01643-51032	WASHER	8	J10001-UP
6		07094-11024	CLAMP	2	J10001-UP
7		07095-01038	CUSHION	1	J10001-UP
8		01010-81280	BOLT	2	J10001-UP
9		01643-31232	WASHER	2	J10001-UP
10		07297-01219	HOSE	1	J10001-UP
11		07000-B3038	O-RING	2	J10001-UP
12		07371-31255	FLANGE	4	J10001-UP
13		07372-21035	BOLT	8	J10001-UP
14		01643-51032	WASHER	8	J10001-UP
15		07094-31024	CLAMP	2	J10001-UP
16		07095-01038	CUSHION	1	J10001-UP
17		01010-81280	BOLT	2	J10001-UP
18		01643-31232	WASHER	2	J10001-UP
19		21T-64-36591	HOSE	1	J10001-UP
20		07095-01033	CUSHION	1	J10001-UP
21		07297-01220	HOSE	1	J10001-UP
22		07000-B3038	O-RING	2	J10001-UP
23		07371-31255	FLANGE	4	J10001-UP
24		07372-21035	BOLT	8	J10001-UP
25		01643-51032	WASHER	8	J10001-UP
26		07297-01218	HOSE	1	J10001-UP
27		07000-B3038	O-RING	2	J10001-UP
28		07371-31255	FLANGE	4	J10001-UP
29		07372-21035	BOLT	8	J10001-UP
30		01643-51032	WASHER	8	J10001-UP
31		07094-31024	CLAMP	2	J10001-UP
32		07095-01038	CUSHION	2	J10001-UP
33		01010-81285	BOLT	2	J10001-UP
34		01643-31232	WASHER	2	J10001-UP
35		07297-01016	HOSE	1	J10001-UP
36		07000-B3032	O-RING	2	J10001-UP
37		07371-31049	FLANGE	4	J10001-UP
38		07372-21035	BOLT	8	J10001-UP
39		01643-51032	WASHER	8	J10001-UP
40		07094-11024	CLAMP	2	J10001-UP
41		07095-01033	CUSHION	1	J10001-UP
42		01010-81285	BOLT	2	J10001-UP
43		01643-31232	WASHER	2	J10001-UP

Ref :H0340-02A0 Page :180330

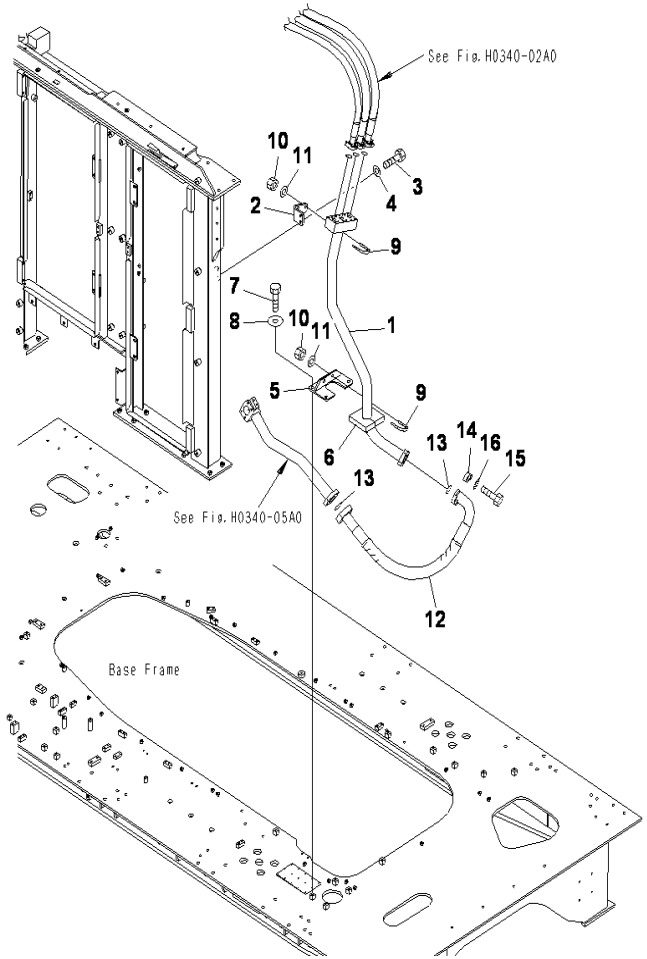

PC2000-8 S/N J10001-UP

DRAIN LINES(PIPING)(INSIDE OF POWER CONTAINER)(2/2)

INDEX	CD	PART NO.	DESCRIPTION	QTY	SERIAL NO.
1		21T-64-33530	TUBE	1	J10001-UP
2		21T-64-33580	BRACKET	1	J10001-UP
3		01010-81230	BOLT	2	J10001-UP
4		01643-31232	WASHER	2	J10001-UP
5		21T-64-33590	BRACKET	1	J10001-UP
6		21T-64-33650	.SHEET	1	J10001-UP
7		01010-81230	BOLT	4	J10001-UP
8		175-54-34170	WASHER	4	J10001-UP
9		07283-36163	CLIP	2	J10001-UP
10		01597-01009	NUT	4	J10001-UP
11		01643-31032	WASHER	4	J10001-UP
12		07298-02011	HOSE	1	J10001-UP
13		07000-B2060	O-RING	2	J10001-UP
14		07371-32076	FLANGE	4	J10001-UP
15		07372-21240	BOLT	8	J10001-UP
16		01643-51232	WASHER	8	J10001-UP

Ref :H0340-03A0 Page :180340

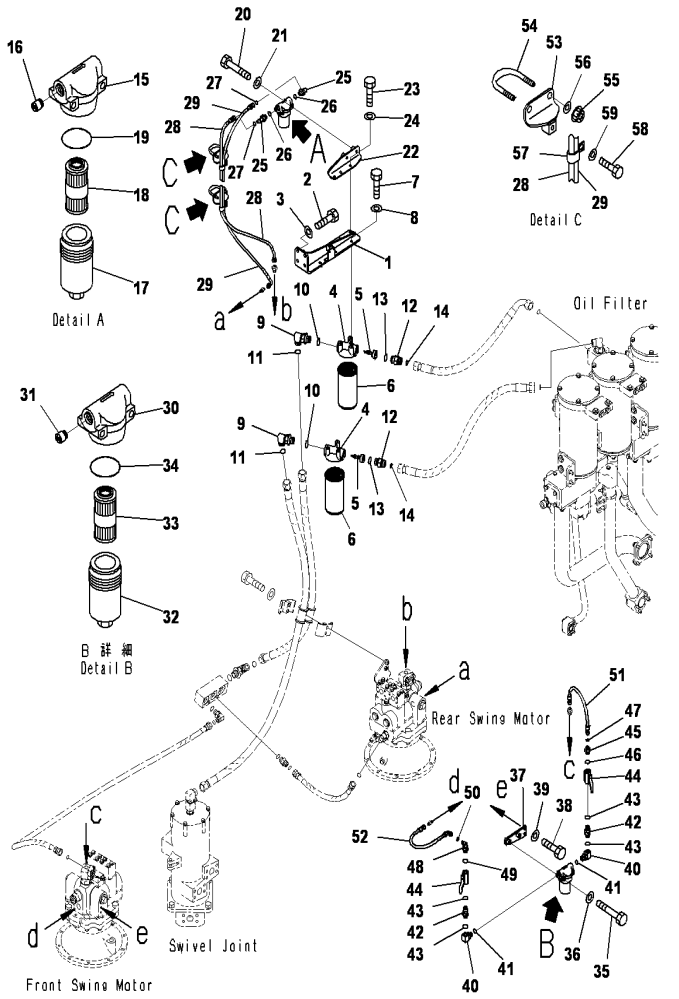

DRAIN LINES(FILTER AND PIPING)(REVOLVING FRAME SIDE)

INDEX	CD	PART NO.	DESCRIPTION	QTY	SERIAL NO.
1		21T-64-33261	BRACKET	1	J10001-UP
2		01010-81230	BOLT	4	J10001-UP
3		01643-31232	WASHER	4	J10001-UP
4		113-60-23151	BASE	2	J10001-UP
5		21T-62-22270	VALVE	2	J10001-UP
6		113-60-23160	CARTRIDGE	2	J10001-UP
7		01010-81030	BOLT	3	J10001-UP
8		01643-31032	WASHER	3	J10001-UP
9		21W-62-42640	ELBOW	2	J10001-UP
10		07002-63334	ORING	2	J10001-UP
11		11Y-62-11980	O-RING	2	J10001-UP
12		207-62-72110	UNION	2	J10001-UP
13		07002-63334	ORING	2	J10001-UP
14		11Y-62-11980	O-RING	2	J10001-UP
		20Y-62-51681	FILTER ASS'Y	1	J10001-UP
15	C1	20Y-62-5168101	.HEAD	1	J10001-UP
16	C1	20Y-62-5168102	.VALVE	1	J10001-UP
17	C1	20Y-62-5168103	.CASE	1	J10001-UP
18		20Y-62-51691	.FILTER	1	J10001-UP
19		706-76-71390	.O-RING	1	J10001-UP
20		01010-81075	BOLT	2	J10001-UP
21		01643-31032	WASHER	2	J10001-UP
22		21T-64-34460	BRACKET	1	J10001-UP
23		01010-81035	BOLT	3	J10001-UP
24		01643-31032	WASHER	3	J10001-UP
25		02782-10214	ELBOW	2	J10001-UP
26		07002-62034	O-RING	2	J10001-UP
27		02896-61008	O-RING	2	J10001-UP
28		02761-00214	HOSE	1	J10001-UP
29		02761-00215	HOSE	1	J10001-UP
		20Y-62-51681	FILTER ASS'Y	1	J10001-UP
30	C1	20Y-62-5168101	.HEAD	1	J10001-UP
31	C1	20Y-62-5168102	.VALVE	1	J10001-UP
32	C1	20Y-62-5168103	.CASE	1	J10001-UP
33		20Y-62-51691	.FILTER	1	J10001-UP
34		706-76-71390	.O-RING	1	J10001-UP
35		01010-81075	BOLT	2	J10001-UP
36		01643-31032	WASHER	2	J10001-UP
37		21T-64-34450	BRACKET	1	J10001-UP
38		01010-81025	BOLT	2	J10001-UP
39		01643-31032	WASHER	2	J10001-UP
40		21X-62-21140	ELBOW	2	J10001-UP
41		07002-62034	O-RING	2	J10001-UP
42		17A-04-41331	NIPPLE	2	J10001-UP
43		07002-62034	O-RING	4	J10001-UP

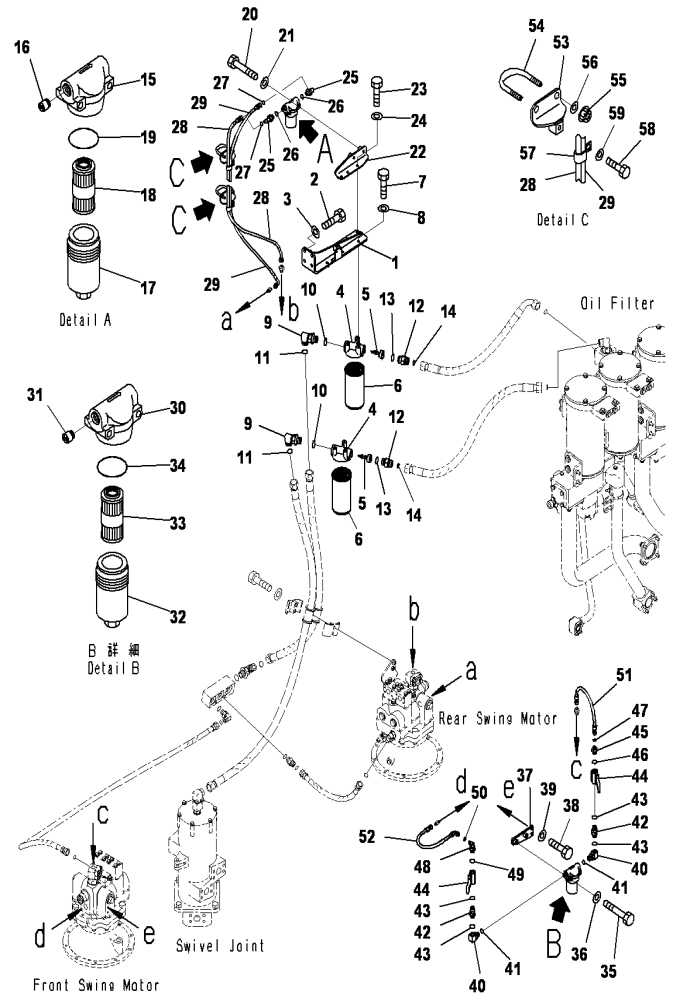

PC2000-8 S/N J10001-UP

DRAIN LINES(FILTER AND PIPING)(REVOLVING FRAME SIDE)

INDEX	CD	PART NO.	DESCRIPTION	QTY	SERIAL NO.
44		14X-04-21620	VALVE	2	J10001-UP
45		20Y-62-43460	NIPPLE	1	J10001-UP
46		07002-62034	O-RING	1	J10001-UP
47		02896-61008	O-RING	1	J10001-UP
48		02782-10214	ELBOW	1	J10001-UP
49		07002-62034	O-RING	1	J10001-UP
50		02896-61008	O-RING	1	J10001-UP
51		02760-00204	HOSE	1	J10001-UP
52		02764-002A3	HOSE	1	J10001-UP
53		21T-64-33670	BRACKET	2	J10001-UP
54		07283-36155	CLIP	2	J10001-UP
55		01597-01009	NUT	4	J10001-UP
56		01643-31032	WASHER	4	J10001-UP
57		04435-51412	CLIP	2	J10001-UP
58		01010-81225	BOLT	2	J10001-UP
59		01643-31232	WASHER	2	J10001-UP

Ref :H0340-04A0 Page :180351

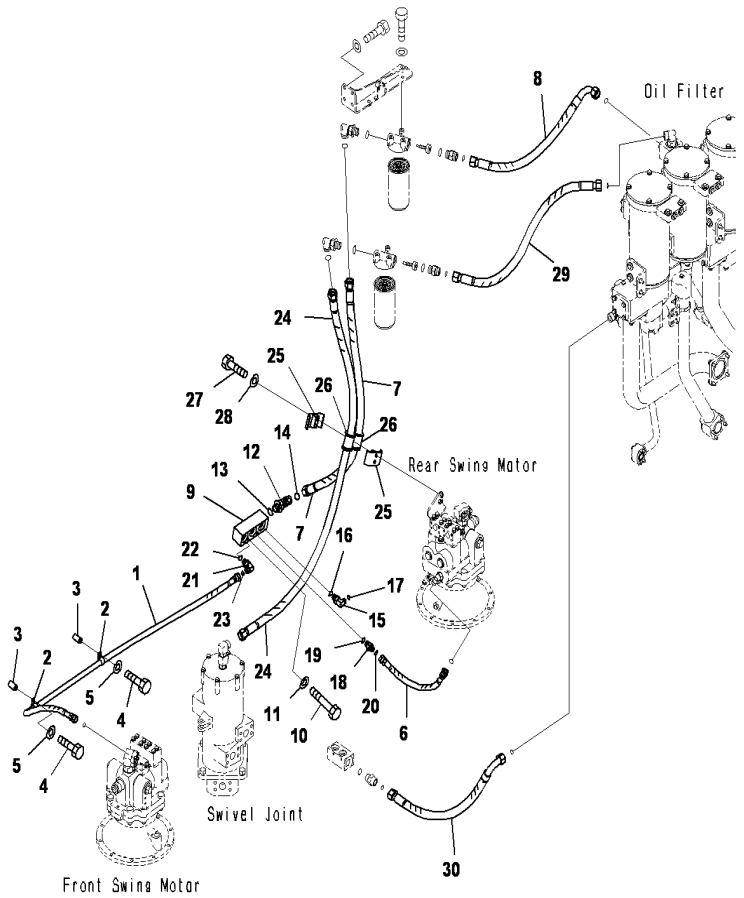

PC2000-8 S/N J10001-UP

DRAIN PIPING(MOTOR PIPING)

INDEX	CD	PART NO.	DESCRIPTION	QTY	SERIAL NO.
1		02762-00519	HOSE	1	J10001-UP
2		04434-52312	CLIP	2	J10001-UP
3		205-03-71331	COLLAR	2	J10001-UP
4		01010-81265	BOLT	2	J10001-UP
5		01643-31232	WASHER	1	J10001-UP
6		02762-005A4	HOSE	1	J10001-UP
7		21N-62-36670	HOSE	1	J10001-UP
8		11Y4921390	HOSE	1	J10001-UP
9		21T6433250	BLOCK	1	J10001-UP
10		01010-81285	BOLT	2	J10001-UP
11		01643-31232	WASHER	2	J10001-UP
12		21W-62-42640	ELBOW	1	J10001-UP
13		07002-63334	ORING	1	J10001-UP
14		11Y-62-11980	O-RING	1	J10001-UP
15		02782-10425	ELBOW	1	J10001-UP
16		07002-62434	O-RING	1	J10001-UP
17		02896-61012	O-RING	1	J10001-UP
18		02781-00522	UNION	1	J10001-UP
19		07002-62434	O-RING	1	J10001-UP
20		02896-61015	O-RING	1	J10001-UP
21		02782-10522	ELBOW	1	J10001-UP
22		07002-62434	O-RING	1	J10001-UP
23		02896-61015	O-RING	1	J10001-UP
24		21T-64-33830	HOSE	1	J10001-UP
25		07094-31024	CLAMP	2	J10001-UP
26		07095-01033	CUSHION	2	J10001-UP
27		01010-81280	BOLT	2	J10001-UP
28		01643-31232	WASHER	2	J10001-UP
29		21T-64-33391	HOSE	1	J10001-UP
30		11Y-49-21390	HOSE	1	J10001-UP

Ref :H0340-05A0 Page :180360

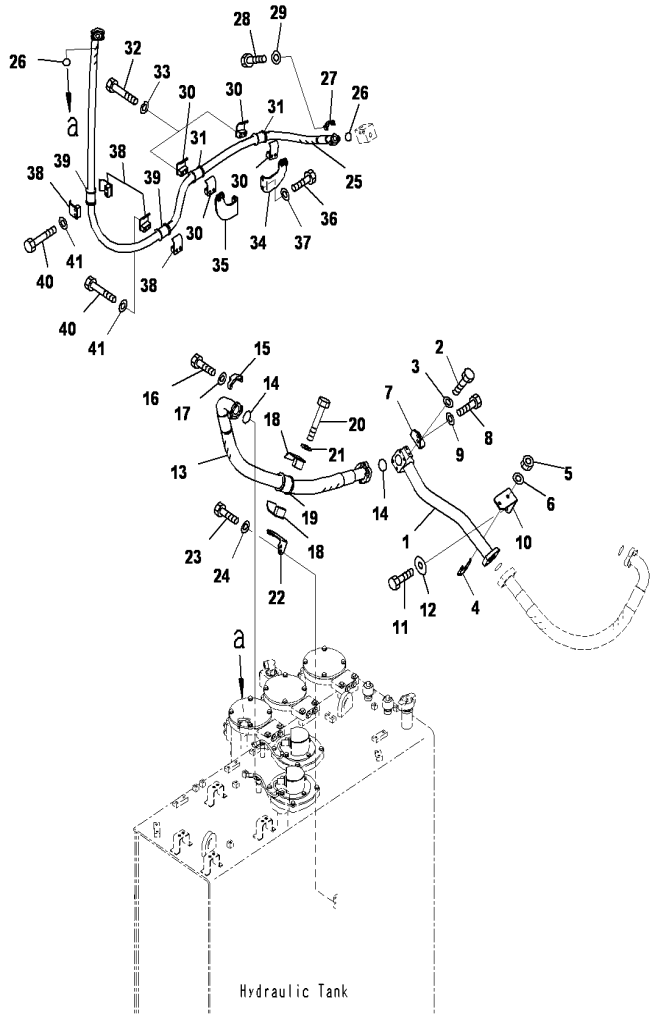

PC2000-8 S/N J10001-UP

DRAIN PIPING(PIPING)(REVOLVING FRAME SIDE)

INDEX	CD	PART NO.	DESCRIPTION	QTY	SERIAL NO.
1		21T-64-33540	TUBE	1	J10001-UP
2		01010-81230	BOLT	2	J10001-UP
3		01643-31232	WASHER	2	J10001-UP
4		07283-36163	CLIP	1	J10001-UP
5		01597-01009	NUT	2	J10001-UP
6		01643-31032	WASHER	2	J10001-UP
7		21T-64-33620	BRACKET	1	J10001-UP
8		01010-81230	BOLT	2	J10001-UP
9		01643-31232	WASHER	2	J10001-UP
10		21T-64-33610	BRACKET	1	J10001-UP
11		01010-81230	BOLT	2	J10001-UP
12		175-54-34170	WASHER	2	J10001-UP
13		07298-02015	HOSE	1	J10001-UP
14		07000-B2060	O-RING	2	J10001-UP
15		07371-32076	FLANGE	4	J10001-UP
16		07372-21240	BOLT	8	J10001-UP
17		01643-51232	WASHER	8	J10001-UP
18		209-62-78930	CLAMP	2	J10001-UP
19		07095-02062	CUSHION	1	J10001-UP
20		01011-81210	BOLT	2	J10001-UP
21		01643-31232	WASHER	2	J10001-UP
22		21T-64-33630	BRACKET	1	J10001-UP
23		01010-81225	BOLT	2	J10001-UP
24		01643-31232	WASHER	2	J10001-UP
25		21T-64-33970	HOSE	1	J10001-UP
26		07000-B3032	O-RING	2	J10001-UP
27		07371-31049	FLANGE	4	J10001-UP
28		07372-21035	BOLT	8	J10001-UP
29		01643-51032	WASHER	8	J10001-UP
30		07094-11024	CLAMP	4	J10001-UP
31		07095-01033	CUSHION	2	J10001-UP
32		01010-81285	BOLT	4	J10001-UP
33		01643-31232	WASHER	4	J10001-UP
34		21T-64-33680	BRACKET	1	J10001-UP
35		21T-64-33690	BRACKET	1	J10001-UP
36		01010-81225	BOLT	4	J10001-UP
37		01643-31232	WASHER	4	J10001-UP
38		07094-11024	CLAMP	4	J10001-UP
39		07095-01033	CUSHION	2	J10001-UP
40		01010-81280	BOLT	4	J10001-UP
41		01643-31232	WASHER	4	J10001-UP

Ref :H0340-06A0 Page :180370

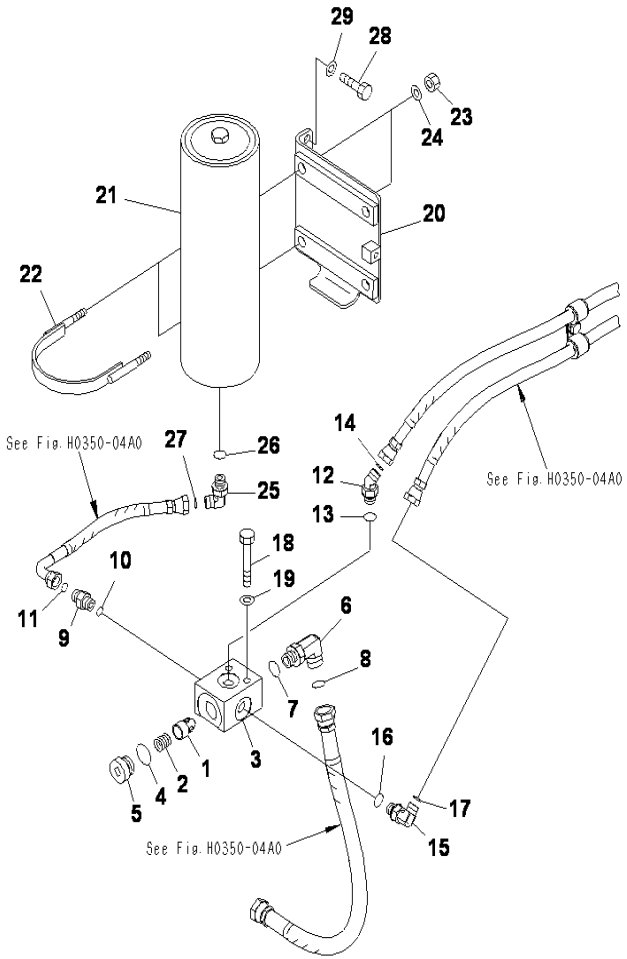

PC2000-8 S/N J10001-UP

PPC LOCK LINES(CHECK VALVE AND ACCUMULATOR)

INDEX	CD	PART NO.	DESCRIPTION	QTY	SERIAL NO.
		21T-60-31300	VALVE ASS'Y	1	J10001-UP
1		205-60-51290	.POPPET	1	J10001-UP
2		205-60-51310	.SPRING	1	J10001-UP
3	C1	21T-60-31380	.BODY	1	J10001-UP
4		07002-13334	.O-RING	1	J10001-UP
5		07040-13316	.PLUG	1	J10001-UP
6		02782-1062A	ELBOW	1	J10001-UP
7		07002-62434	O-RING	1	J10001-UP
8		02896-61018	O-RING	1	J10001-UP
9		02781-00422	UNION	1	J10001-UP
10		07002-62034	O-RING	1	J10001-UP
11		02896-61012	O-RING	1	J10001-UP
12		02783-10422	HOSE	1	J10001-UP
13		07002-62034	O-RING	1	J10001-UP
14		02896-61012	O-RING	1	J10001-UP
15		02782-10422	ELBOW	1	J10001-UP
16		07002-62034	O-RING	1	J10001-UP
17		02896-61012	O-RING	1	J10001-UP
18		01010-81280	BOLT	2	J10001-UP
19		01643-31232	WASHER	2	J10001-UP
20		21T-64-36620	BRACKET	1	J10001-UP
21		(209-60-12821)	ACCUMLATOR	1	J10001-UP
22		21T-62-87870	BAND	2	J10001-UP
23		01597-01211	NUT	4	J10001-UP
24		01643-31232	WASHER	4	J10001-UP
25		02782-10422	ELBOW	1	J10001-UP
26		07002-62034	O-RING	1	J10001-UP
27		02896-61012	O-RING	1	J10001-UP
28		01010-81225	BOLT	2	J10001-UP
29		01643-31232	WASHER	2	J10001-UP

Ref :H0350-01A0 Page :180380

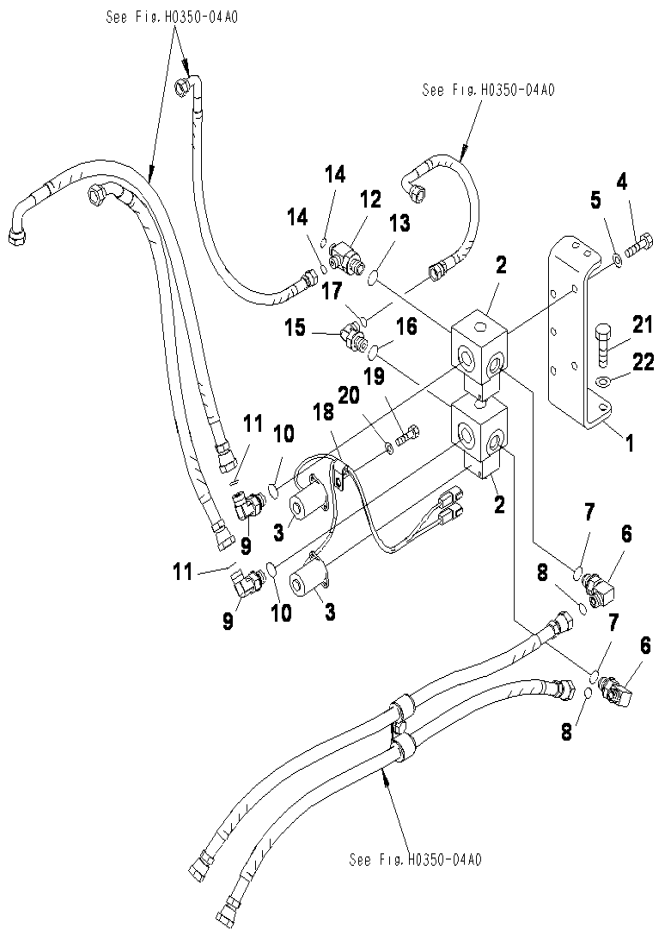

PPC LOCK LINES(LOCK VALVE)

INDEX	CD	PART NO.	DESCRIPTION	QTY	SERIAL NO.
1		21T-64-36631	BRACKET	1	J10001-UP
2		209-60-77220	VALVE ASS'Y	2	J10001-UP
3		209-60-77250	.SOLENOID ASS'Y	1	J10001-UP
4		01010-81025	BOLT	4	J10001-UP
5		01643-31032	WASHER	4	J10001-UP
6		21N-64-37410	ELBOW	2	J10001-UP
7		07002-62034	O-RING	2	J10001-UP
8		02896-61012	O-RING	2	J10001-UP
9		02782-10422	ELBOW	2	J10001-UP
10		07002-62034	O-RING	2	J10001-UP
11		02896-61012	O-RING	2	J10001-UP
12		19M-61-35140	TEE	1	J10001-UP
13		07002-62034	O-RING	1	J10001-UP
14		02896-61009	O-RING	2	J10001-UP
15		02782-10315	ELBOW	1	J10001-UP
16		07002-62034	O-RING	1	J10001-UP
17		02896-61009	O-RING	1	J10001-UP
18		04434-51010	CLIP	1	J10001-UP
19		01010-81025	BOLT	1	J10001-UP
20		01643-31032	WASHER	1	J10001-UP
21		01010-81230	BOLT	2	J10001-UP
22		01643-31232	WASHER	2	J10001-UP

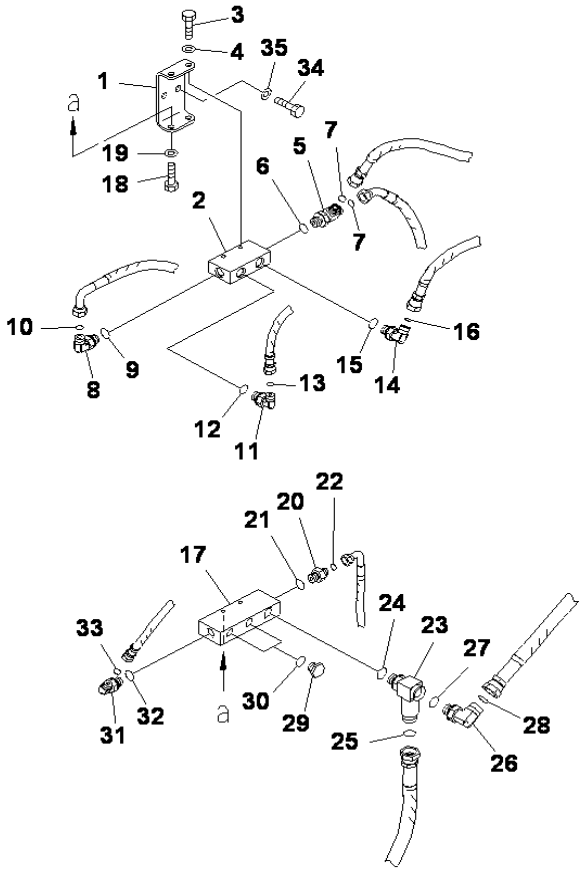

PC2000-8 S/N J10001-UP

PPC LOCK LINES(BLOCK)

INDEX	CD	PART NO.	DESCRIPTION	QTY	SERIAL NO.
1		21T-64-36640	BRACKET	1	J10001-UP
2		209-62-77181	BLOCK	1	J10001-UP
3		01010-81025	BOLT	2	J10001-UP
4		01643-31032	WASHER	2	J10001-UP
5		21N-64-36690	TEE	1	J10001-UP
6		07002-62034	O-RING	1	J10001-UP
7		02896-61012	O-RING	2	J10001-UP
8		02782-10422	ELBOW	1	J10001-UP
9		07002-62034	O-RING	1	J10001-UP
10		02896-61012	O-RING	1	J10001-UP
11		02782-10315	ELBOW	1	J10001-UP
12		07002-62034	O-RING	1	J10001-UP
13		02896-61009	O-RING	1	J10001-UP
14		02782-10422	ELBOW	1	J10001-UP
15		07002-62034	O-RING	1	J10001-UP
16		02896-61012	O-RING	1	J10001-UP
17		21T-64-36710	BLOCK	1	J10001-UP
18		01010-81025	BOLT	2	J10001-UP
19		01643-31032	WASHER	2	J10001-UP
20		02781-00315	UNION	1	J10001-UP
21		07002-62034	O-RING	1	J10001-UP
22		02896-61009	O-RING	1	J10001-UP
23		207-62-72171	ELBOW	1	J10001-UP
24		07002-62434	O-RING	1	J10001-UP
25		02896-61018	O-RING	1	J10001-UP
26		02782-10628	ELBOW	1	J10001-UP
27		07002-62434	O-RING	1	J10001-UP
28		02896-61018	O-RING	1	J10001-UP
29		07040-12012	PLUG	2	J10001-UP
30		07002-62034	O-RING	2	J10001-UP
31		02782-10315	ELBOW	1	J10001-UP
32		07002-62034	O-RING	1	J10001-UP
33		02896-61009	O-RING	1	J10001-UP
34		01010-81225	BOLT	2	J10001-UP
35		01643-31232	WASHER	2	J10001-UP

Ref :H0350-03A0 Page :180400

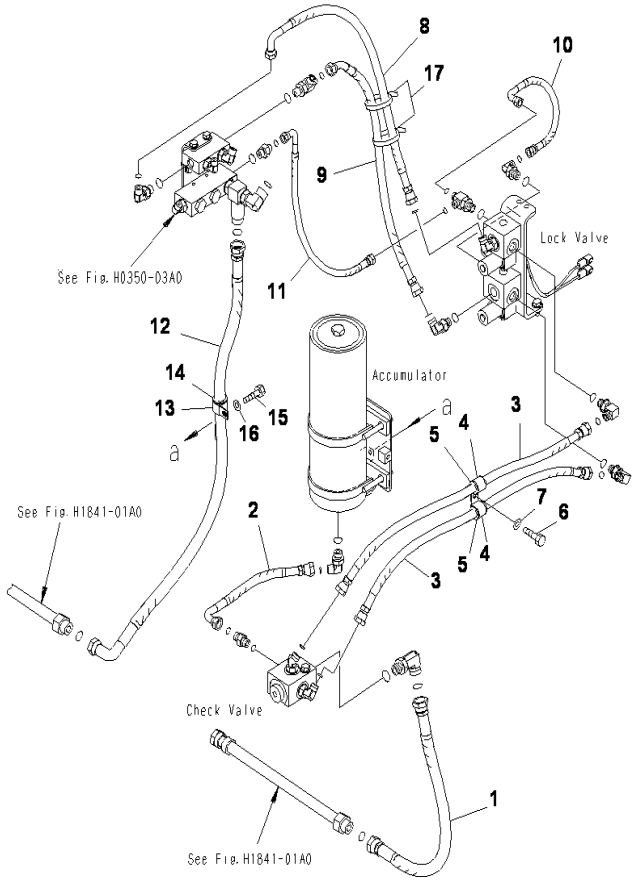

PC2000-8 S/N J10001-UP

PPC LOCK LINES(PIPING)

INDEX	CD	PART NO.	DESCRIPTION	QTY	SERIAL NO.
1		02762-00607	HOSE	1	J10001-UP
2		02763-004A3	HOSE	1	J10001-UP
3		02762-004A8	HOSE	2	J10001-UP
4		04434-52712	CLIP	2	J10001-UP
5		07095-20419	CUSHION	2	J10001-UP
6		01010-81225	BOLT	1	J10001-UP
7		01643-31232	WASHER	1	J10001-UP
8		02763-004A8	HOSE	1	J10001-UP
9		02764-004A7	HOSE	1	J10001-UP
10		02761-003A3	HOSE	1	J10001-UP
11		02761-003A5	HOSE	1	J10001-UP
12		02763-00612	HOSE	1	J10001-UP
13		04434-53412	CLIP	1	J10001-UP
14		07095-20625	CUSHION	1	J10001-UP
15		01010-81225	BOLT	1	J10001-UP
16		01643-31232	WASHER	1	J10001-UP
17		08034-20536	BAND	2	J10001-UP

Ref :H0350-04A0 Page :180410

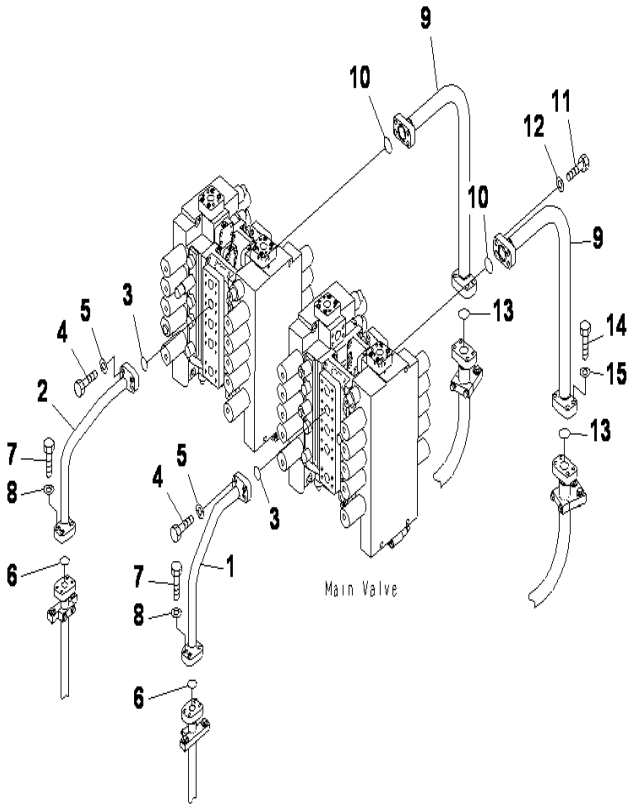

PC2000-8 S/N J10001-UP

BOOM LINES(MAIN VALVE SIDE)

INDEX	CD	PART NO.	DESCRIPTION	QTY	SERIAL NO.
1		21T-64-31540	TUBE	1	J10001-UP
2		21T-64-31550	TUBE	1	J10001-UP
3		07000-B3048	O-RING	2	J10001-UP
4		01010-81455	BOLT	8	J10001-UP
5		01643-31445	WASHER	8	J10001-UP
6		07000-B3048	O-RING	2	J10001-UP
7		01010-81445	BOLT	8	J10001-UP
8		01643-31445	WASHER	8	J10001-UP
9		21T-64-31310	TUBE	2	J10001-UP
10		07000-B2060	O-RING	2	J10001-UP
11		01010-81870	BOLT	8	J10001-UP
12		01643-31845	WASHER	8	J10001-UP
13		07000-B2060	O-RING	2	J10001-UP
14		01010-81865	BOLT	8	J10001-UP
15		01643-31845	WASHER	8	J10001-UP

Ref :H1210-01A0 Page :180420

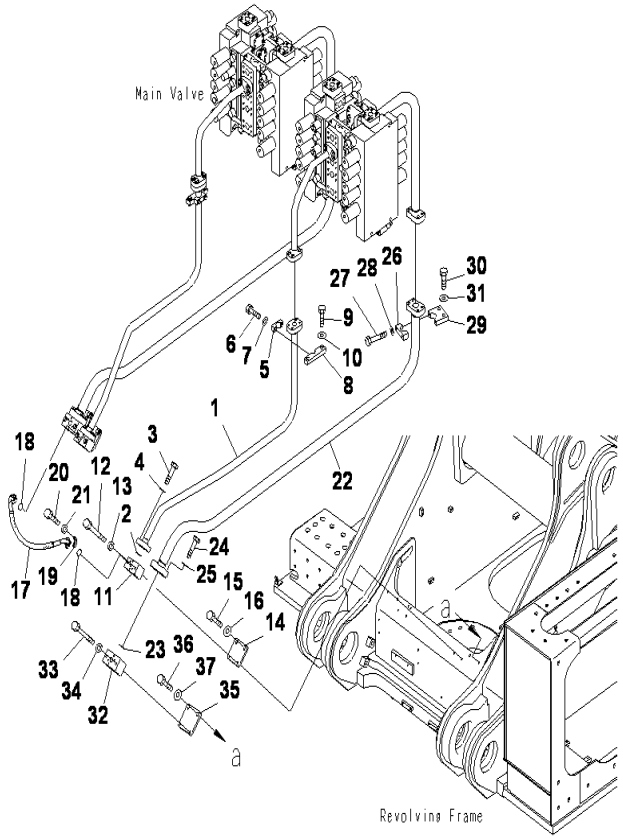

PC2000-8 S/N J10001-UP

BOOM LINES(L.H)

INDEX	CD	PART NO.	DESCRIPTION	QTY	SERIAL NO.
1		21T-64-31340	TUBE	1	J10001-UP
2		07000-B3048	O-RING	1	J10001-UP
3		01010-81455	BOLT	4	J10001-UP
4		01643-31445	WASHER	4	J10001-UP
5		176-61-41330	CLAMP	1	J10001-UP
6		01010-81250	BOLT	2	J10001-UP
7		01643-31232	WASHER	2	J10001-UP
8		21T-64-32610	CLAMP	1	J10001-UP
9		01010-81250	BOLT	2	J10001-UP
10		175-54-34170	WASHER	2	J10001-UP
11		21T-64-31810	BLOCK	1	J10001-UP
12		01011-81210	BOLT	2	J10001-UP
13		01643-31232	WASHER	2	J10001-UP
14		21T-64-32140	PLATE	1	J10001-UP
15		01010-81235	BOLT	2	J10001-UP
16		175-54-34170	WASHER	2	J10001-UP
17		21T-64-31990	HOSE	1	J10001-UP
18		07000-B3022	O-RING	2	J10001-UP
19		07371-30500	FLANGE	4	J10001-UP
20		01010-80830	BOLT	8	J10001-UP
21		01643-50823	WASHER	8	J10001-UP
22		21T-64-31320	TUBE	1	J10001-UP
23		07000-B2060	O-RING	1	J10001-UP
24		01010-81865	BOLT	4	J10001-UP
25		01643-31845	WASHER	4	J10001-UP
26		21T-64-32160	CLAMP	1	J10001-UP
27		01010-81470	BOLT	2	J10001-UP
28		01643-31445	WASHER	2	J10001-UP
29		21T-64-32410	PLATE	1	J10001-UP
30		01010-81460	BOLT	2	J10001-UP
31		195-71-32220	WASHER	2	J10001-UP
32		21T-64-31830	BLOCK	1	J10001-UP
33		01011-81220	BOLT	2	J10001-UP
34		01643-31232	WASHER	2	J10001-UP
35		21T-64-32150	PLATE	1	J10001-UP
36		01010-81235	BOLT	2	J10001-UP
37		175-54-34170	WASHER	2	J10001-UP

Ref :H1210-02A0 Page :180430

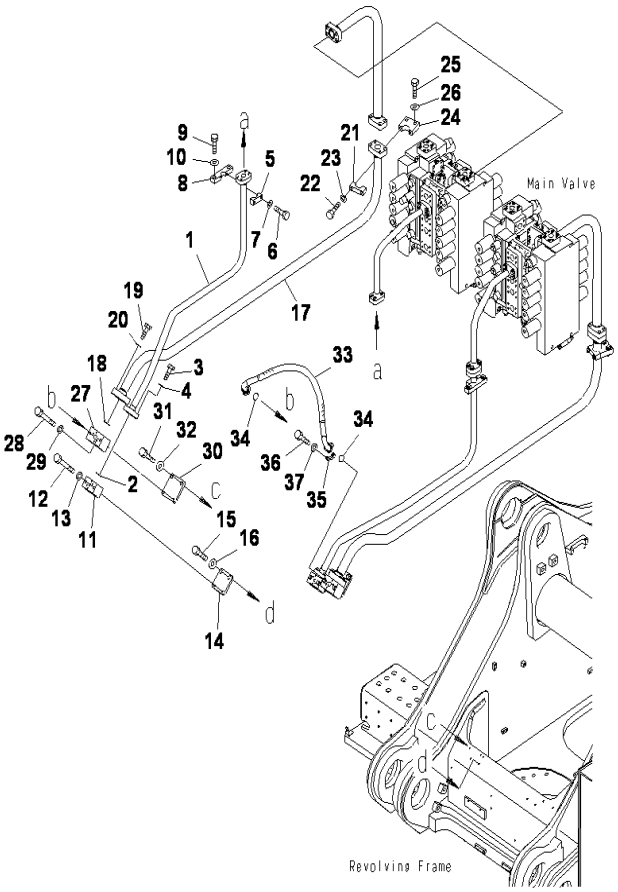

PC2000-8 S/N J10001-UP

BOOM LINES(R.H)

INDEX	CD	PART NO.	DESCRIPTION	QTY	SERIAL NO.
1		21T-64-31350	TUBE	1	J10001-UP
2		07000-B3048	O-RING	1	J10001-UP
3		01010-81455	BOLT	4	J10001-UP
4		01643-31445	WASHER	4	J10001-UP
5		176-61-41330	CLAMP	1	J10001-UP
6		01010-81250	BOLT	2	J10001-UP
7		01643-31232	WASHER	2	J10001-UP
8		21T-64-32610	CLAMP	1	J10001-UP
9		01010-81250	BOLT	2	J10001-UP
10		175-54-34170	WASHER	2	J10001-UP
11		21T-64-31820	BLOCK	1	J10001-UP
12		01011-81210	BOLT	2	J10001-UP
13		01643-31232	WASHER	2	J10001-UP
14		21T-64-32140	PLATE	1	J10001-UP
15		01010-81235	BOLT	2	J10001-UP
16		175-54-34170	WASHER	2	J10001-UP
17		21T-64-31330	TUBE	1	J10001-UP
18		07000-B2060	O-RING	1	J10001-UP
19		01010-81865	BOLT	4	J10001-UP
20		01643-31845	WASHER	4	J10001-UP
21		21T-64-32160	CLAMP	1	J10001-UP
22		01010-81470	BOLT	2	J10001-UP
23		01643-31445	WASHER	2	J10001-UP
24		21T-64-32410	PLATE	1	J10001-UP
25		01010-81460	BOLT	2	J10001-UP
26		195-71-32220	WASHER	2	J10001-UP
27		21T-64-31840	BLOCK	1	J10001-UP
28		01011-81220	BOLT	2	J10001-UP
29		01643-31232	WASHER	2	J10001-UP
30		21T-64-32150	PLATE	1	J10001-UP
31		01010-81235	BOLT	2	J10001-UP
32		175-54-34170	WASHER	2	J10001-UP
33		21T-64-31980	HOSE	1	J10001-UP
34		07000-B3032	O-RING	2	J10001-UP
35		07371-31049	FLANGE	4	J10001-UP
36		07372-21035	BOLT	8	J10001-UP
37		01643-51032	WASHER	8	J10001-UP

Ref :H1210-03A0 Page :180440

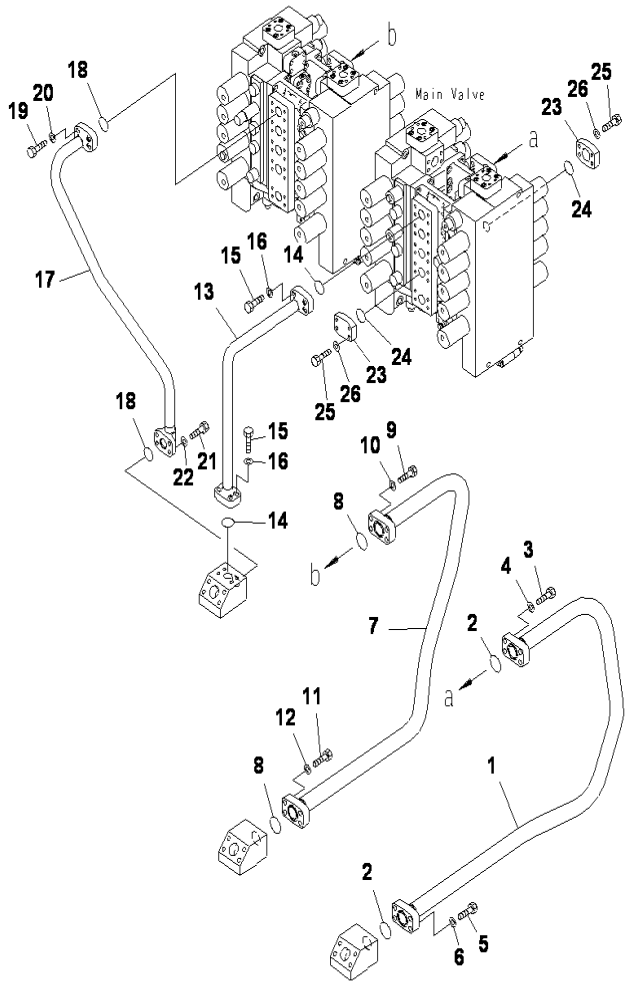

PC2000-8 S/N J10001-UP

ARM LINES(PIPING)

INDEX	CD	PART NO.	DESCRIPTION	QTY	SERIAL NO.
1		21T-64-31360	TUBE	1	J10001-UP
2		07000-B2060	O-RING	2	J10001-UP
3		01010-81870	BOLT	4	J10001-UP
4		01643-31845	WASHER	4	J10001-UP
5		01010-81865	BOLT	4	J10001-UP
6		01643-31845	WASHER	4	J10001-UP
7		21T-64-31370	TUBE	1	J10001-UP
8		07000-B2060	O-RING	2	J10001-UP
9		01010-81870	BOLT	4	J10001-UP
10		01643-31845	WASHER	4	J10001-UP
11		01010-81865	BOLT	4	J10001-UP
12		01643-31845	WASHER	4	J10001-UP
13		21T-64-31380	TUBE	1	J10001-UP
14		07000-B3048	O-RING	2	J10001-UP
15		01010-81455	BOLT	8	J10001-UP
16		01643-31445	WASHER	8	J10001-UP
17		21T-64-31390	TUBE	1	J10001-UP
18		07000-B3048	O-RING	2	J10001-UP
19		01010-81455	BOLT	4	J10001-UP
20		01643-31445	WASHER	4	J10001-UP
21		01010-81445	BOLT	4	J10001-UP
22		01643-31445	WASHER	4	J10001-UP
23		21N-62-12210	PLATE	2	J10001-UP
24		07000-B3048	O-RING	2	J10001-UP
25		01010-81455	BOLT	8	J10001-UP
26		01643-31445	WASHER	8	J10001-UP

Ref :H1221-01A0 Page :180450

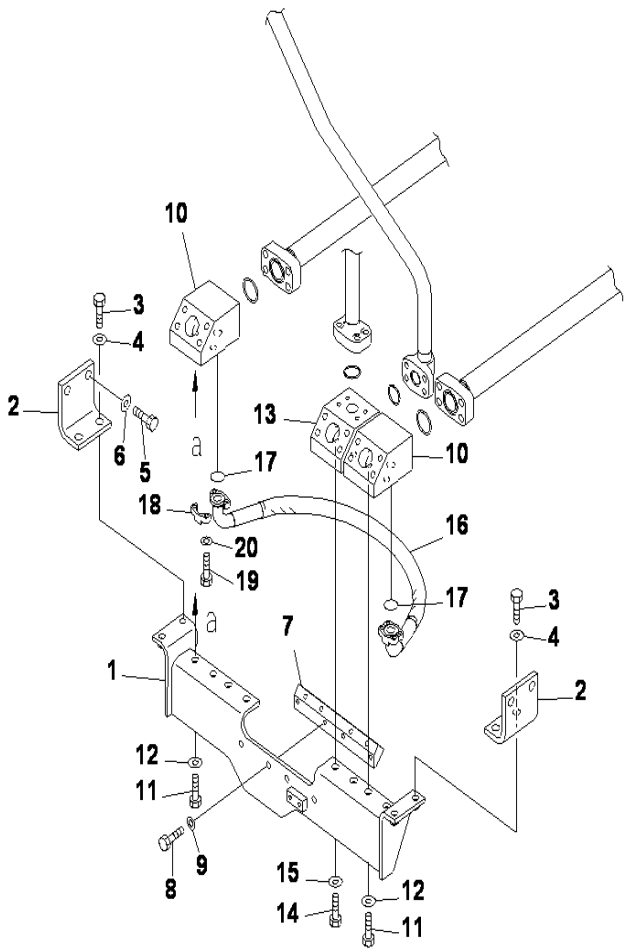

PC2000-8 S/N J10001-UP

ARM LINES(BRACKET)

INDEX	CD	PART NO.	DESCRIPTION	QTY	SERIAL NO.
1		21T-64-32431	BRACKET	1	J10001-UP
2		21T-64-32440	BRACKET	2	J10001-UP
3		01010-81655	BOLT	4	J10001-UP
4		21T-72-12620	WASHER	4	J10001-UP
5		01010-81645	BOLT	4	J10001-UP
6		21T-72-12620	WASHER	4	J10001-UP
7		21T-64-32650	SEAT	1	J10001-UP
8		01010-81435	BOLT	4	J10001-UP
9		01643-31445	WASHER	4	J10001-UP
10		21T-64-31911	BLOCK	2	J10001-UP
11		01010-81435	BOLT	4	J10001-UP
12		195-71-32220	WASHER	4	J10001-UP
13		21T-64-31920	BLOCK	1	J10001-UP
14		01010-81435	BOLT	2	J10001-UP
15		195-71-32220	WASHER	2	J10001-UP
16		21T-64-31980	HOSE	1	J10001-UP
17		07000-B3032	O-RING	2	J10001-UP
18		07371-31049	FLANGE	4	J10001-UP
19		07372-21035	BOLT	8	J10001-UP
20		01643-51032	WASHER	8	J10001-UP

Ref :H1221-02A0 Page :180460

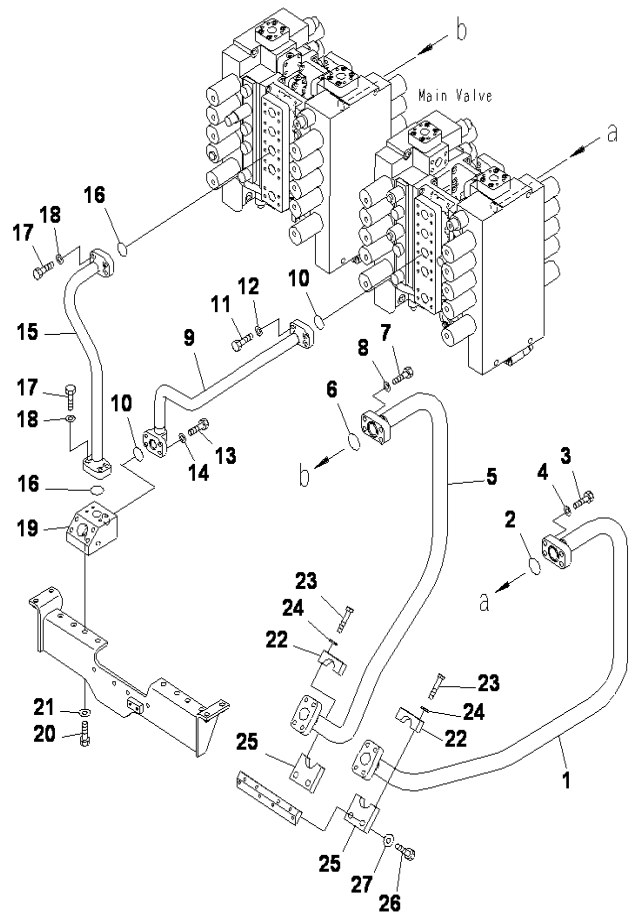

BUCKET LINES

INDEX	CD	PART NO.	DESCRIPTION	QTY	SERIAL NO.
1		21T-64-31430	TUBE	1	J10001-UP
2		07000-B2060	O-RING	1	J10001-UP
3		0101081870	BOLT	4	J10001-UP
4		01643-31845	WASHER	4	J10001-UP
5		21T-64-31440	TUBE	1	J10001-UP
6		07000-B2060	O-RING	1	J10001-UP
7		01010-81870	BOLT	4	J10001-UP
8		01643-31845	WASHER	4	J10001-UP
9		21T-64-31450	TUBE	1	J10001-UP
10		07000-B3048	O-RING	2	J10001-UP
11		01010-81455	BOLT	4	J10001-UP
12		01643-31445	WASHER	4	J10001-UP
13		01010-81445	BOLT	4	J10001-UP
14		01643-31445	WASHER	4	J10001-UP
15		21T-64-31460	TUBE	1	J10001-UP
16		07000-B3048	O-RING	2	J10001-UP
17		01010-81455	BOLT	8	J10001-UP
18		01643-31445	WASHER	8	J10001-UP
19		21T-64-31920	BLOCK	1	J10001-UP
20		01010-81435	BOLT	2	J10001-UP
21		195-71-32220	WASHER	2	J10001-UP
22		21T-64-32160	CLAMP	2	J10001-UP
23		01010-81470	BOLT	4	J10001-UP
24		01643-31445	WASHER	4	J10001-UP
25		21T-64-32410	PLATE	2	J10001-UP
26		01010-81460	BOLT	4	J10001-UP
27		195-71-32220	WASHER	4	J10001-UP

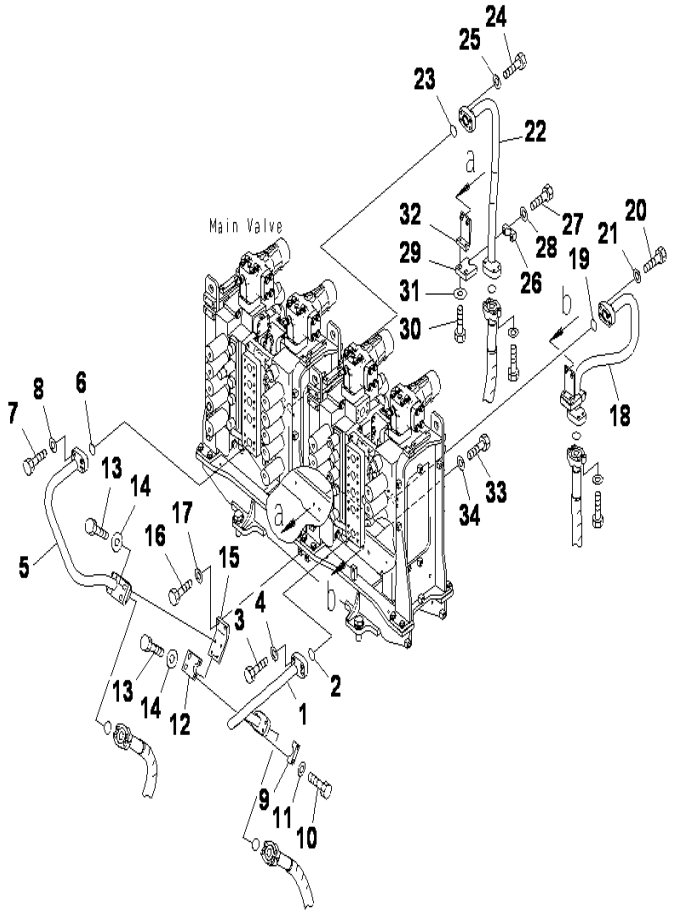

TRAVEL LINES(TUBE)

INDEX	CD	PART NO.	DESCRIPTION	QTY	SERIAL NO.
1		21T-64-31490	TUBE	1	J10001-UP
2		07000-B3048	O-RING	1	J10001-UP
3		01010-81455	BOLT	4	J10001-UP
4		01643-31445	WASHER	4	J10001-UP
5		21T6431510	TUBE	1	J10001-UP
6		07000-B3048	O-RING	1	J10001-UP
7		01010-81455	BOLT	4	J10001-UP
8		01643-31445	WASHER	4	J10001-UP
9		176-61-41330	CLAMP	2	J10001-UP
10		01010-81250	BOLT	4	J10001-UP
11		01643-31232	WASHER	4	J10001-UP
12		21T-62-71680	CLAMP	2	J10001-UP
13		01010-81250	BOLT	4	J10001-UP
14		175-54-34170	WASHER	4	J10001-UP
15		21T-64-31930	BRACKET	1	J10001-UP
16		01010-81235	BOLT	2	J10001-UP
17		01643-31232	WASHER	2	J10001-UP
18		21T-64-31470	TUBE	1	J10001-UP
19		07000-B3048	O-RING	1	J10001-UP
20		01010-81455	BOLT	4	J10001-UP
21		01643-31445	WASHER	4	J10001-UP
22		21T-64-31480	TUBE	1	J10001-UP
23		07000-B3048	O-RING	1	J10001-UP
24		01010-81455	BOLT	4	J10001-UP
25		01643-31445	WASHER	4	J10001-UP
26		176-61-41330	CLAMP	2	J10001-UP
27		01010-81250	BOLT	4	J10001-UP
28		01643-31232	WASHER	4	J10001-UP
29		21T-62-71680	CLAMP	2	J10001-UP
30		01010-81250	BOLT	4	J10001-UP
31		175-54-34170	WASHER	4	J10001-UP
32		21T-64-31940	BRACKET	2	J10001-UP
33		01010-81240	BOLT	4	J10001-UP
34		01643-31232	WASHER	4	J10001-UP

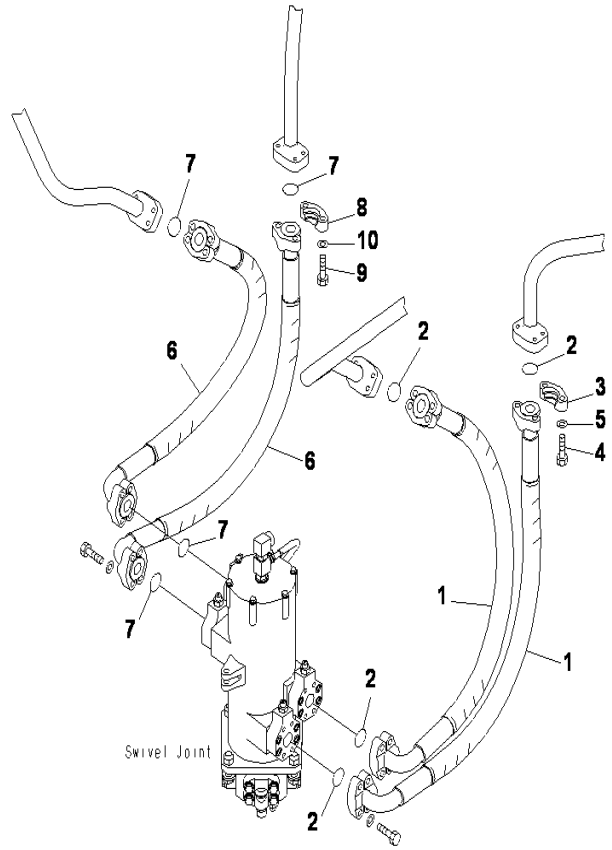

PC2000-8 S/N J10001-UP

TRAVEL LINES(HOSE)

INDEX	CD	PART NO.	DESCRIPTION	QTY	SERIAL NO.
1		07084-01414	HOSE	2	J10001-UP
2		07000-B3048	O-RING	4	J10001-UP
3		07371-51470	FLANGE	4	J10001-UP
4		01010-81455	BOLT	8	J10001-UP
5		01643-31445	WASHER	8	J10001-UP
6		07084-01413	HOSE	2	J10001-UP
7		07000-B3048	O-RING	4	J10001-UP
8		07371-51470	FLANGE	4	J10001-UP
9		01010-81455	BOLT	8	J10001-UP
10		01643-31445	WASHER	8	J10001-UP

Ref :H1310-02A0 Page :180490

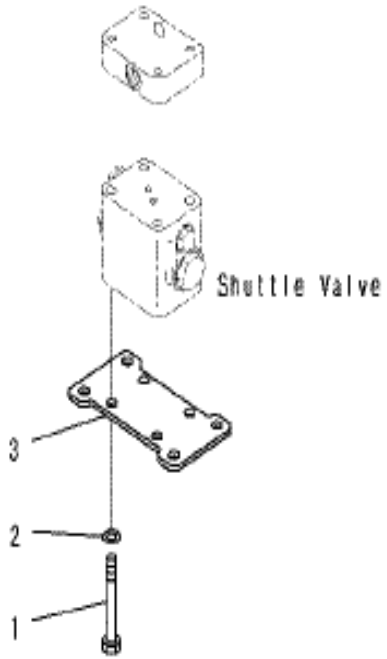

PC2000-8 S/N J10001-UP

STRAIGHT TRAVEL LINES

INDEX	CD	PART NO.	DESCRIPTION	QTY	SERIAL NO.
1		01011-81025	BOLT	4	J10001-UP
2		01643-31032	WASHER	4	J10001-UP
3		723-90-95510	PLATE	1	J10001-UP

Ref :H1320-01A0 Page :180500

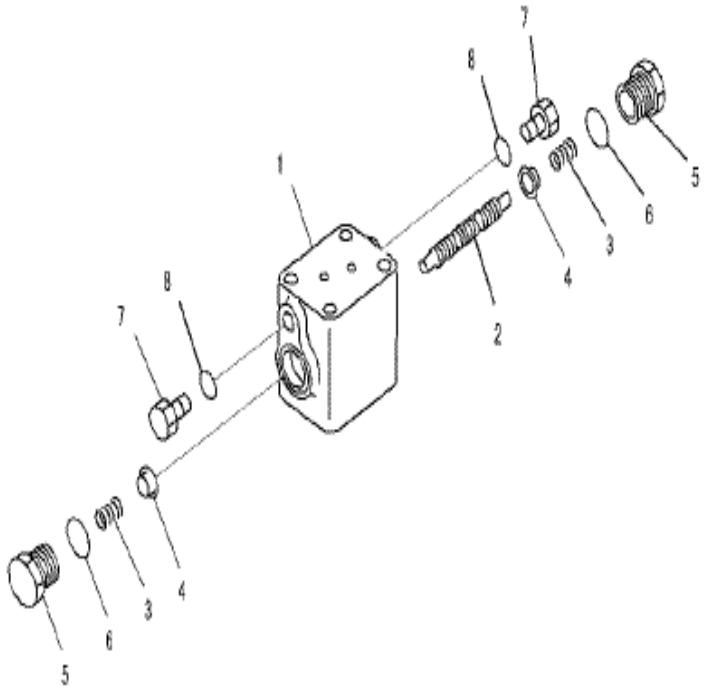

PC2000-8 S/N J10001-UP

STRAIGHT TRAVEL PIPING, SHUTTLE VALVE

INDEX	CD	PART NO.	DESCRIPTION	QTY	SERIAL NO.
		723-90-92000	VALVE SUB ASS'Y.....	1	J10001-UP
1	C1	723-90-93110	.BODY.....	1	J10001-UP
2	C1	723-90-93210	.SPOOL.....	1	J10001-UP
3		723-90-93310	.SPRING.....	2	J10001-UP
4		700-22-11291	.RETAINER.....	2	J10001-UP
5		700-84-11320	.PLUG.....	2	J10001-UP
6		07002-13034	.O-RING.....	2	J10001-UP
7		07040-11409	.PLUG.....	2	J10001-UP
8		07002-11423	.O-RING.....	2	J10001-UP

Ref :H1320-02A0 Page :180502

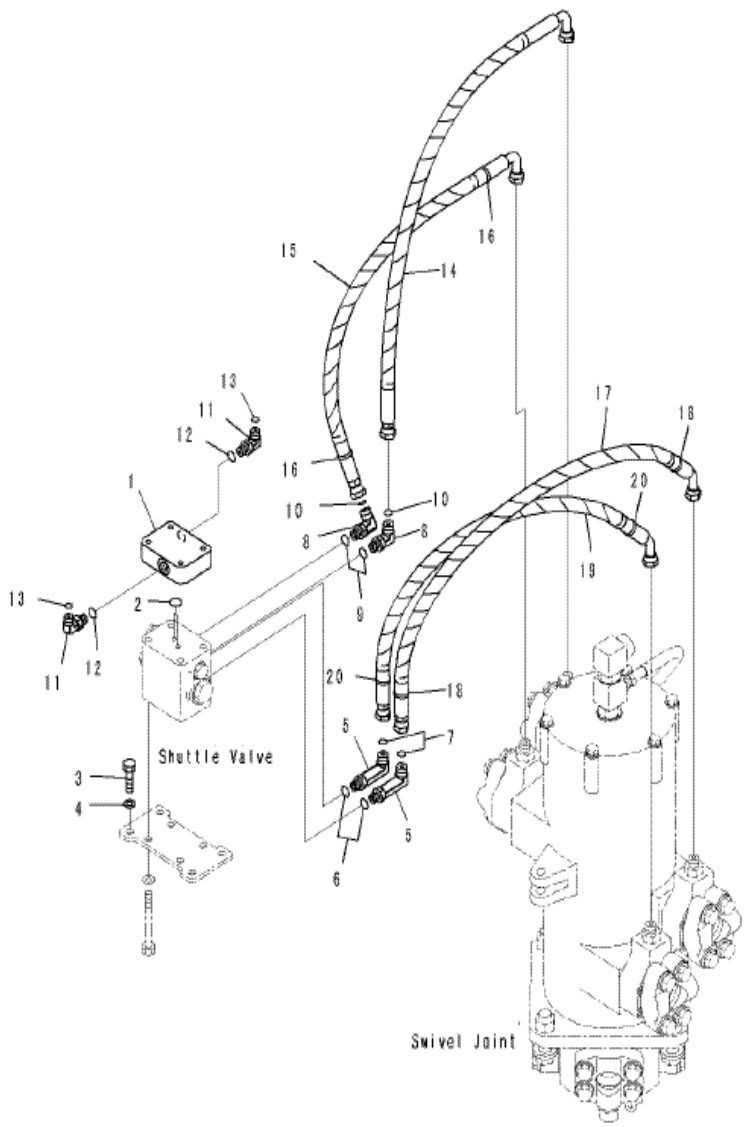

PC2000-8 S/N J10001-UP

STRAIGHT TRAVEL PIPING, VALVE RELATED PARTS

INDEX	CD	PART NO.	DESCRIPTION	QTY	SERIAL NO.
1		8292-60-3310	BLOCK	1	J10001-UP
2		07000-12014	O-RING	2	J10001-UP
3		01010-81025	BOLT	4	J10001-UP
4		01643-31032	WASHER	4	J10001-UP
5		02782-10312	ELBOW	2	J10001-UP
6		07002-61423	O-RING	2	J10001-UP
7		02896-61009	O-RING	2	J10001-UP
8		02782-10311	ELBOW	2	J10001-UP
9		07002-61423	O-RING	2	J10001-UP
10		02896-61009	O-RING	2	J10001-UP
11		02782-10210	ELBOW	2	J10001-UP
12		07002-61423	O-RING	2	J10001-UP
13		02896-61008	O-RING	2	J10001-UP
14		21T-64-33910	HOSE	1	J10001-UP
15		21T-64-33920	HOSE	1	J10001-UP
16		20Y-62-22820	.BAND, BLUE	2	J10001-UP
17		21T-64-33930	HOSE	1	J10001-UP
18		20Y-62-22790	.BAND, RED	2	J10001-UP
19		21T-64-33940	HOSE	1	J10001-UP
20		20Y-62-22850	.BAND, GREEN	2	J10001-UP

Ref :H1320-03A0 Page :180505

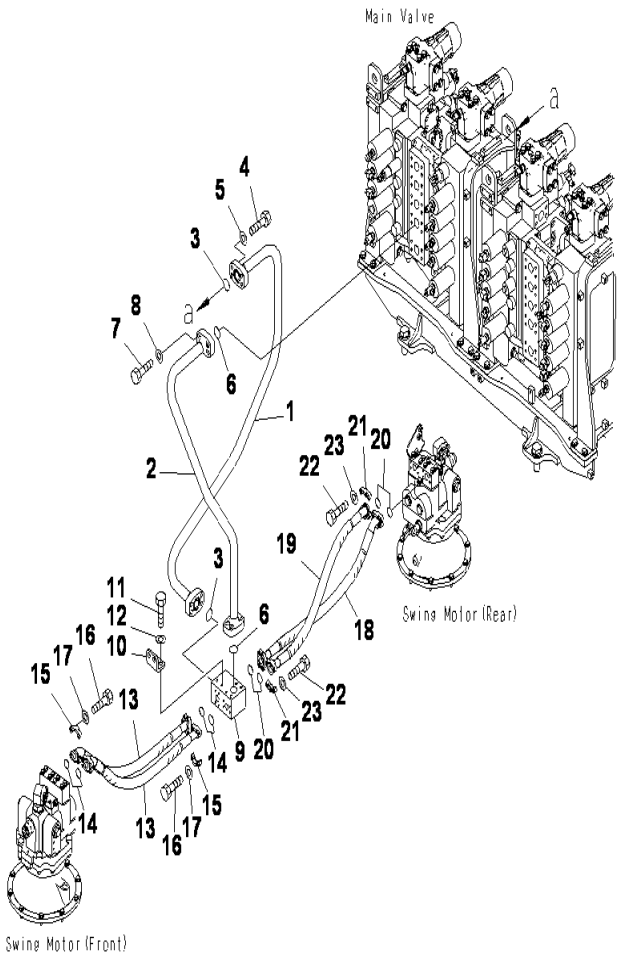

PC2000-8 S/N J10001-UP

SWING LINES

INDEX	CD	PART NO.	DESCRIPTION	QTY	SERIAL NO.
1		21T-64-31520	TUBE	1	J10001-UP
2		21T-64-31530	TUBE	1	J10001-UP
3		07000-B3048	O-RING	2	J10001-UP
4		01010-81455	BOLT	8	J10001-UP
5		01643-31445	WASHER	8	J10001-UP
6		07000-B3048	O-RING	2	J10001-UP
7		01010-81455	BOLT	8	J10001-UP
8		01643-31445	WASHER	8	J10001-UP
9		21T-64-31950	BLOCK	1	J10001-UP
10		21T-64-32470	BRACKET	1	J10001-UP
11		01010-81235	BOLT	4	J10001-UP
12		175-54-34170	WASHER	4	J10001-UP
13		07083-01010	HOSE	2	J10001-UP
14		07000-B3032	O-RING	4	J10001-UP
15		07371-31049	FLANGE	8	J10001-UP
16		07372-21035	BOLT	16	J10001-UP
17		01643-51032	WASHER	16	J10001-UP
18		07083-01009	HOSE	1	J10001-UP
19		07085-01009	HOSE	1	J10001-UP
20		07000-B3032	O-RING	4	J10001-UP
21		07371-31049	FLANGE	8	J10001-UP
22		07372-21035	BOLT	16	J10001-UP
23		01643-51032	WASHER	16	J10001-UP

Ref :H1340-01A0 Page :180510

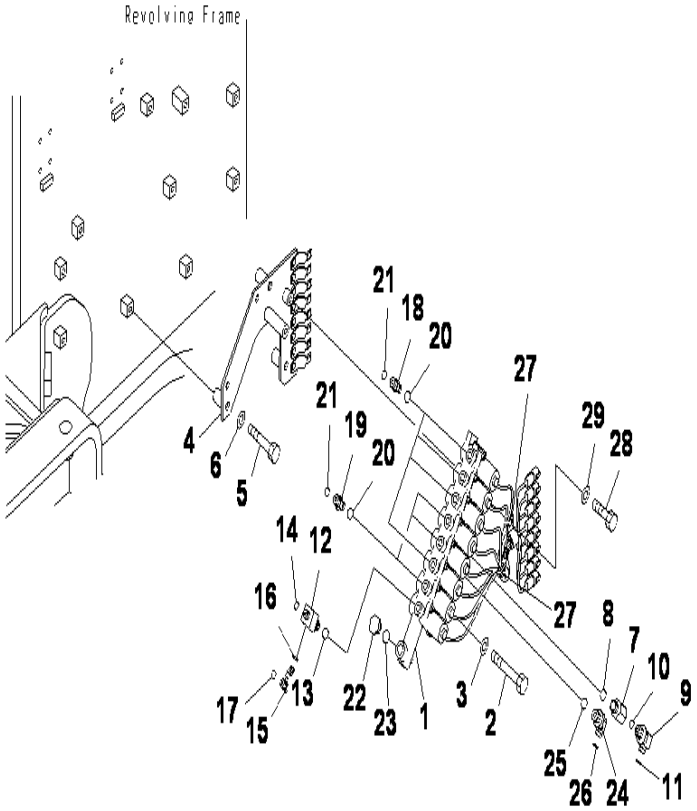

PC2000-8 S/N J10001-UP

SOLENOID VALVE(VALVE)

INDEX	CD	PART NO.	DESCRIPTION	QTY	SERIAL NO.
1		207-60-71320	VALVE ASS'Y	1	J10001-UP
2		01010-81090	BOLT	2	J10001-UP
3		01643-31032	WASHER	2	J10001-UP
4		21T-64-36242	BRACKET	1	J10001-UP
5		01010-81265	BOLT	3	J10001-UP
6		01643-31232	WASHER	3	J10001-UP
7		11T-61-11280	NIPPLE	1	J10001-UP
8		07002-62034	O-RING	1	J10001-UP
9		21N-64-36450	ELBOW	1	J10001-UP
10		07002-62034	O-RING	1	J10001-UP
11		02896-61009	O-RING	1	J10001-UP
12		424-43-37510	TEE	1	J10001-UP
13		07002-61423	O-RING	1	J10001-UP
14		02896-61008	O-RING	1	J10001-UP
15		02782-10210	ELBOW	1	J10001-UP
16		07002-61423	O-RING	1	J10001-UP
17		02896-61008	O-RING	1	J10001-UP
18		02781-0031D	NIPPLE	4	J10001-UP
19		20Y-62-41870	UNION	3	J10001-UP
20		07002-61423	O-RING	7	J10001-UP
21		02896-61009	O-RING	7	J10001-UP
22		07040-12012	PLUG	1	J10001-UP
23		07002-62034	O-RING	1	J10001-UP
24		02782-10315	ELBOW	1	J10001-UP
25		07002-62034	O-RING	1	J10001-UP
26		02896-61009	O-RING	1	J10001-UP
27		04434-51912	CLIP	2	J10001-UP
28		01010-81220	BOLT	2	J10001-UP
29		01643-31232	WASHER	2	J10001-UP

Ref :H1831-01A0 Page :180520

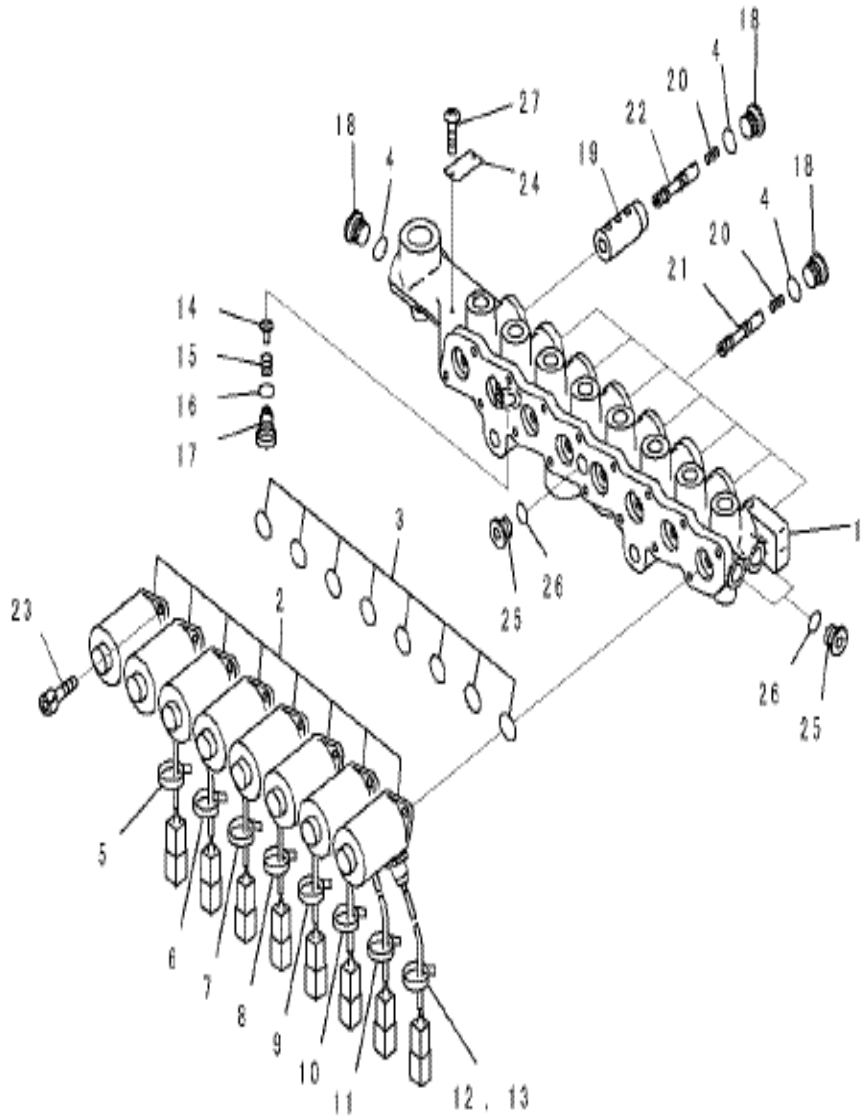

PC2000-8 S/N J10001-UP

SOLENOID VALVE(VALVE)(INNER PARTS)

INDEX	CD	PART NO.	DESCRIPTION	QTY	SERIAL NO.
		207-60-71320	VALVE A.....	1	J10001-UP
1	C1		.BLOCK.....	1	J10001-UP
2		20Y-60-32121	.SOLENOID A.....	8	J10001-UP
3		20Y-60-31240	.O-RING.....	8	J10001-UP
4		20Y-60-31250	.O-RING.....	9	J10001-UP
5		NY07207-11700	.TUBE.....	1	J10001-UP
6		NY07529-10200	.TUBE.....	1	J10001-UP
7		NY07529-10300	.TUBE.....	1	J10001-UP
8		NY07529-10400	.TUBE.....	1	J10001-UP
9		NY07529-10500	.TUBE.....	1	J10001-UP
10		NY07529-10600	.TUBE.....	1	J10001-UP
11		NY07505-10200	.TUBE.....	1	J10001-UP
12		NY07880-10900	.TUBE.....	1	J10001-UP
13		NY89103-00090	.BAND.....	8	J10001-UP
14		NY05062-1170A	.PLUNGER.....	1	J10001-UP
15		NY05062-11800	.SPRING.....	1	J10001-UP
16		07000-11010	.O-RING.....	1	J10001-UP
17		NY06277-1320A	.PLUG.....	1	J10001-UP
18		NY80000-02200	.PLUG.....	9	J10001-UP
19		NY16207-10200	.SLEEVE.....	1	J10001-UP
20		NY06339-10200	SPRING.....	8	J10001-UP
21		NY07493-10200	.SPOOL.....	7	J10001-UP
22		NY16207-10300	.SPOOL.....	1	J10001-UP
23		NY81446-05012	.BOLT.....	16	J10001-UP
24		NY09000-11400	.PLATE.....	1	J10001-UP
25		NY8000002100	.PLUG.....	3	J10001-UP
26		07000-11008	.O-RING.....	3	J10001-UP
27		NY84110-00248	.SCREW.....	2	J10001-UP

Ref :H1831-01A1 Page :180525

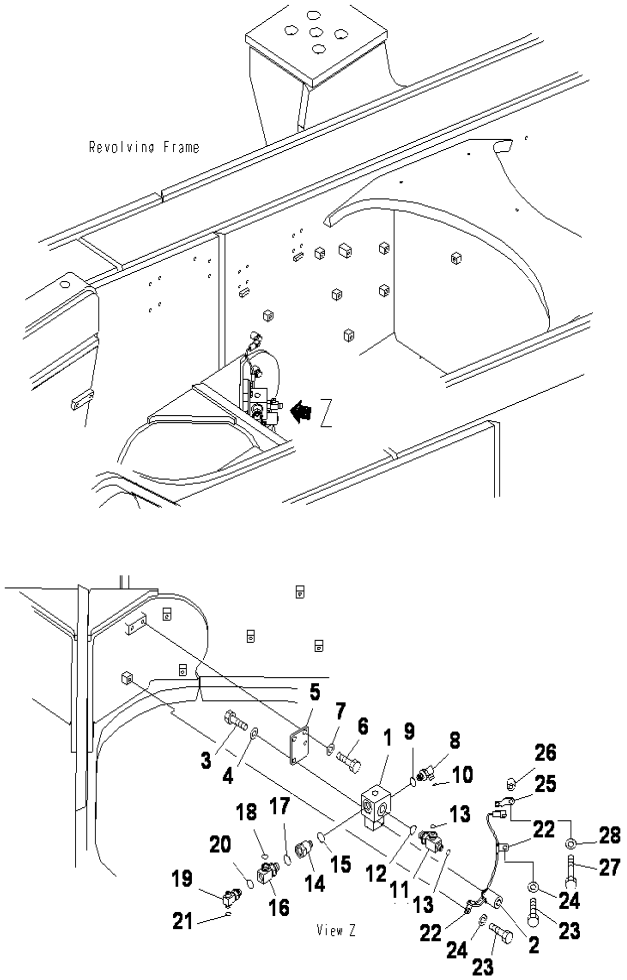

SOLENOID VALVE(SOLENOID VALVE FOR SWING PARTKING BRAKE)

INDEX	CD	PART NO.	DESCRIPTION	QTY	SERIAL NO.
1		209-60-77220	VALVE ASS'Y	1	J10001-UP
2		209-60-77250	.SOLENOID ASS'Y	1	J10001-UP
3		01010-81025	BOLT	2	J10001-UP
4		01643-31032	WASHER	2	J10001-UP
5		209-64-11410	PLATE	1	J10001-UP
6		01010-81225	BOLT	2	J10001-UP
7		01643-31232	WASHER	2	J10001-UP
8		21N-64-37410	ELBOW	1	J10001-UP
9		07002-62034	O-RING	1	J10001-UP
10		02896-61012	O-RING	1	J10001-UP
11		19M-61-35140	TEE	1	J10001-UP
12		07002-62034	O-RING	1	J10001-UP
13		02896-61009	O-RING	2	J10001-UP
14		203-62-21331	NIPPLE	1	J10001-UP
15		07002-62034	O-RING	1	J10001-UP
16		20U-62-46570	ELBOW	1	J10001-UP
17		07002-62434	O-RING	1	J10001-UP
18		02896-61015	O-RING	1	J10001-UP
19		209-64-16721	TEE	1	J10001-UP
20		07002-62034	O-RING	1	J10001-UP
21		02896-61009	O-RING	2	J10001-UP
22		21T-38-12270	CLIP	2	J10001-UP
23		01010-81225	BOLT	2	J10001-UP
24		01643-31232	WASHER	2	J10001-UP
25		08193-21012	CLIP	1	J10001-UP
26		195-33-11220	SPACER	1	J10001-UP
27		01010-81250	BOLT	1	J10001-UP
28		01643-31232	WASHER	1	J10001-UP

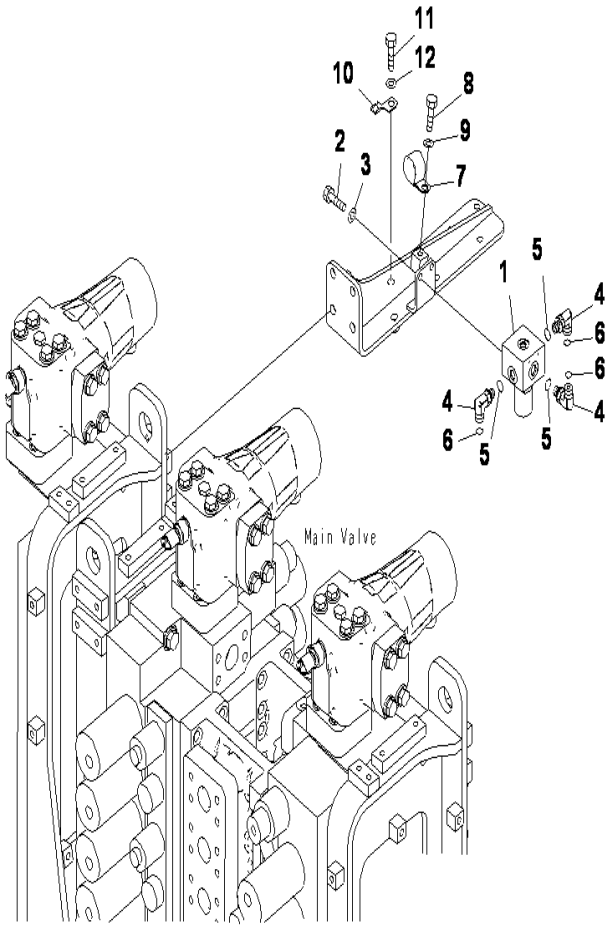

PC2000-8 S/N J10001-UP

SOLENOID VALVE(BUCKET HI CANCLE SOLENOID VALVE)

INDEX	CD	PART NO.	DESCRIPTION	QTY	SERIAL NO.
1		(209-60-77230)	VALVE ASS'Y	1	J10001-UP
2		01010-80820	BOLT	2	J10001-UP
3		01643-30823	WASHER	2	J10001-UP
4		02782-10311	ELBOW	3	J10001-UP
5		07002-61423	O-RING	3	J10001-UP
6		02896-61009	O-RING	3	J10001-UP
7		04434-51312	CLIP	1	J10001-UP
8		01010-81225	BOLT	1	J10001-UP
9		01643-31232	WASHER	1	J10001-UP
10		08193-21012	CLIP	1	J10001-UP
11		01010-81225	BOLT	1	J10001-UP
12		01643-31232	WASHER	1	J10001-UP

Ref :H1831-03A0 Page :180540

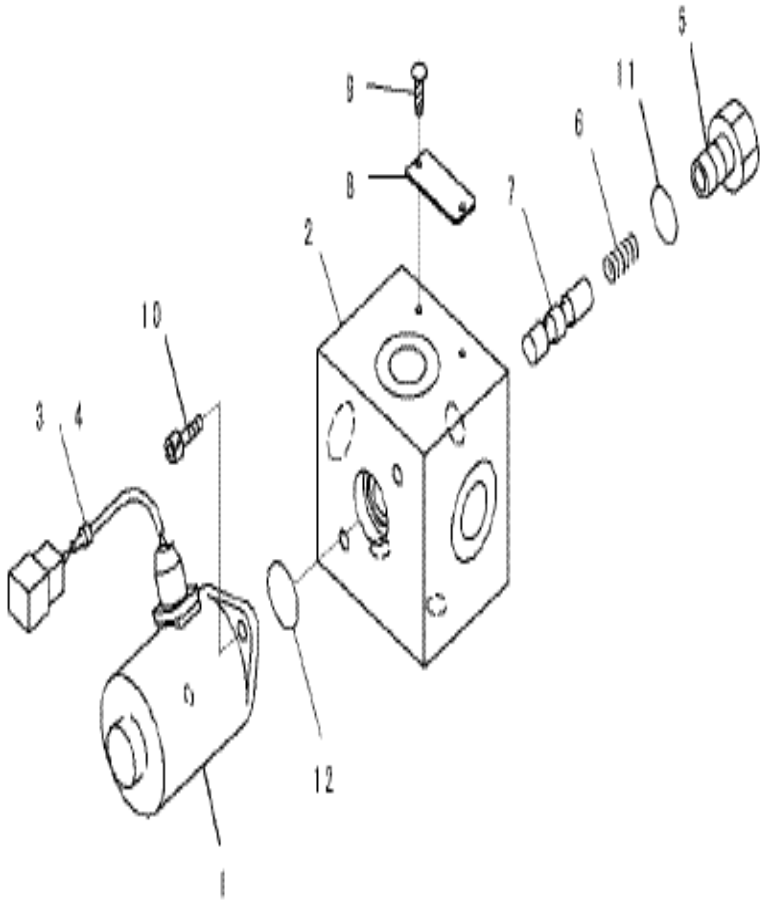

PC2000-8 S/N J10001-UP

SOLENOID VALVE(BUCKET HI CANCLE SOLENOID VALVE)(INNER PARTS)

INDEX	CD	PART NO.	DESCRIPTION	QTY	SERIAL NO.
		209-60-77230	VALVE ASSEMBLY.....	1	J10001-UP
1		209-60-77250	.SOLENOID ASSEMBLY.....	1	J10001-UP
2	C1		.BLOCK.....	1	J10001-UP
3		NY07207-11800	.TUBE.....	1	J10001-UP
4		NY89103-00090	.BAND.....	1	J10001-UP
5		NY06040-10300	.PLUG.....	1	J10001-UP
6		NY06339-10200	.SPRING.....	1	J10001-UP
7		NY06420-10100	.SPOOL.....	1	J10001-UP
8		NY09000-11400	.PLATE.....	1	J10001-UP
9		NY84110-00264	.SCREW.....	2	J10001-UP
10		NY81446-05010	.BOLT.....	2	J10001-UP
11		07000-11010	.O-RING.....	1	J10001-UP
12		07000-12016	.O-RING.....	1	J10001-UP

Ref :H1831-03A1 Page :180545

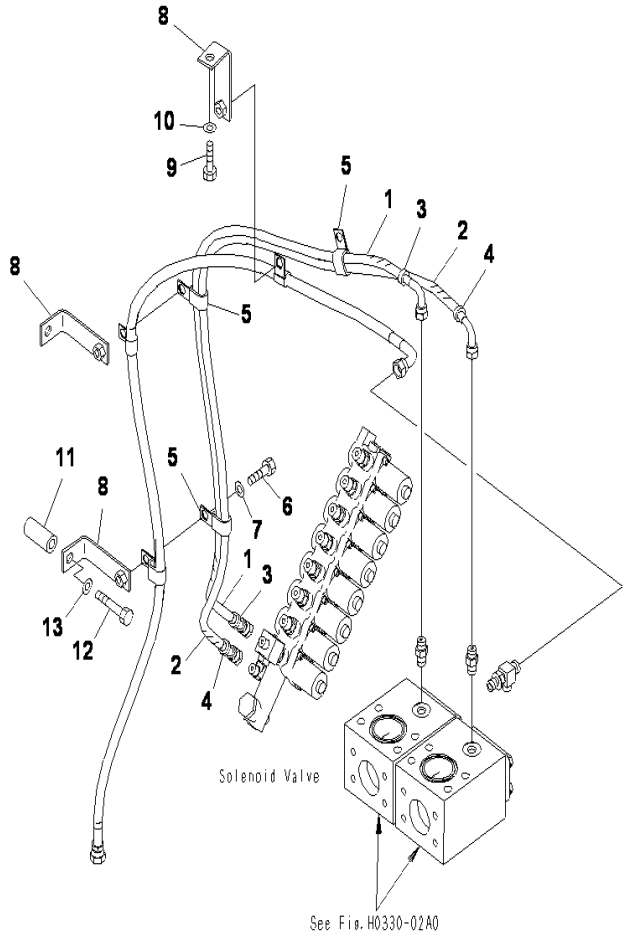

PC2000-8 S/N J10001-UP

SOLENOID VALVE LINE(1/3)

INDEX	CD	PART NO.	DESCRIPTION	QTY	SERIAL NO.
1		02761-00216	HOSE	1	J10001-UP
2		02761-00217	HOSE	1	J10001-UP
3		20Y-62-22820	BAND (BLUE)	2	J10001-UP
4		20Y-62-22850	BAND (GREEN)	2	J10001-UP
5		04435-51412	CLIP	3	J10001-UP
6		01010-81225	BOLT	3	J10001-UP
7		01643-31232	WASHER	3	J10001-UP
8		207-62-62770	BRACKET	3	J10001-UP
9		01010-81225	BOLT	2	J10001-UP
10		01643-31232	WASHER	2	J10001-UP
11		203-62-44510	SPACER	1	J10001-UP
12		01010-81280	BOLT	1	J10001-UP
13		01643-31232	WASHER	1	J10001-UP

Ref :H1832-01A0 Page :180550

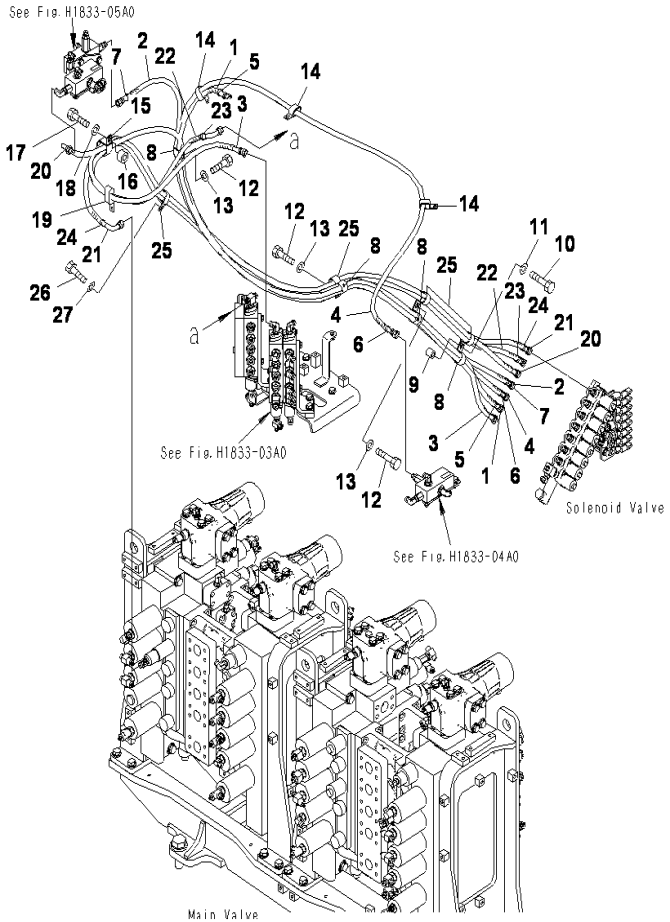

PC2000-8 S/N J10001-UP

SOLENOID VALVE LINE(2/3)

INDEX	CD	PART NO.	DESCRIPTION	QTY	SERIAL NO.
1		02760-00325	HOSE	1	J10001-UP
2		02760-00327	HOSE	1	J10001-UP
3		02760-00339	HOSE	1	J10001-UP
4		02760-00345	HOSE	1	J10001-UP
5		20Y-62-22790	BAND (RED)	2	J10001-UP
6		20Y-62-22830	BAND (WHITE)	2	J10001-UP
7		20Y-62-22840	BAND (BLACK)	2	J10001-UP
8		208-06-19170	CLIP	4	J10001-UP
9		195-33-11220	SPACER	1	J10001-UP
10		01010-81245	BOLT	1	J10001-UP
11		01643-31232	WASHER	1	J10001-UP
12		01010-81225	BOLT	3	J10001-UP
13		01643-31232	WASHER	3	J10001-UP
14		04434-51712	CLIP	3	J10001-UP
15		20Y-62-17930	CLIP	1	J10001-UP
16		195-33-11220	SPACER	1	J10001-UP
17		01010-81250	BOLT	1	J10001-UP
18		01643-31232	WASHER	1	J10001-UP
19		04435-51712	CLIP	1	J10001-UP
20		02761-00328	HOSE	1	J10001-UP
21		02761-00330	HOSE	1	J10001-UP
22		02761-00337	HOSE	1	J10001-UP
23		20Y-62-22810	BAND (YELLOW)	2	J10001-UP
24		20Y-62-22860	BAND (BROWN)	2	J10001-UP
25		04434-53412	CLIP	4	J10001-UP
26		01010-81225	BOLT	1	J10001-UP
27		01643-31232	WASHER	1	J10001-UP

Ref :H1832-02A0 Page :180560

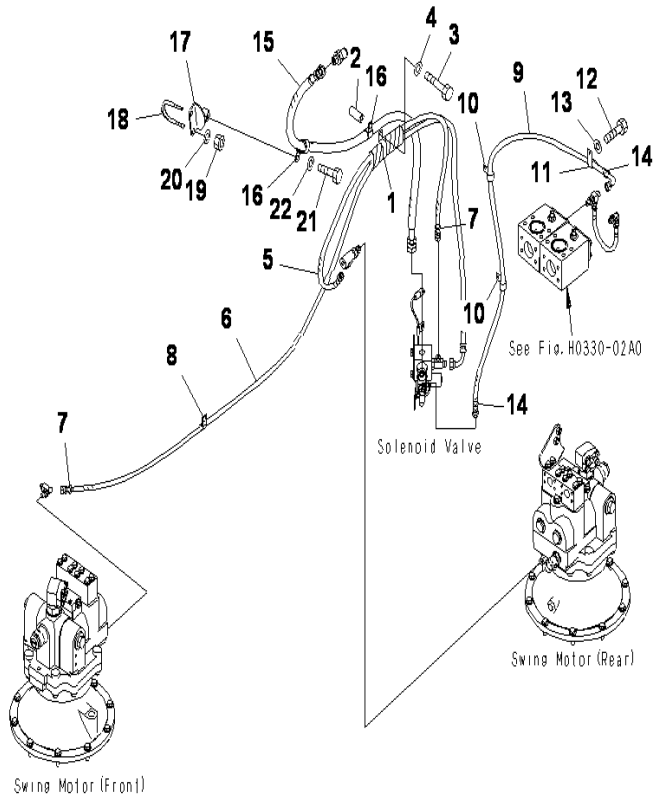

SOLENOID VALVE LINE(3/3)

INDEX	CD	PART NO.	DESCRIPTION	QTY	SERIAL NO.
1		04435-51712	CLIP	1	J10001-UP
2		203-62-44510	SPACER	1	J10001-UP
3		01010-81280	BOLT	1	J10001-UP
4		01643-31232	WASHER	1	J10001-UP
		21T-64-36890	HOSE ASS'Y	1	J10001-UP
5		02760-00332	.HOSE	1	J10001-UP
6		02761-00316	.HOSE	1	J10001-UP
7		20Y-62-22830	.BAND (WHITE)	2	J10001-UP
8		04434-51412	CLIP	1	J10001-UP
9		02761-00315	HOSE	1	J10001-UP
10		04435-51412	CLIP	2	J10001-UP
11		04434-53412	CLIP	1	J10001-UP
12		01010-81225	BOLT	1	J10001-UP
13		01643-31232	WASHER	1	J10001-UP
14		08034-20536	BAND	2	J10001-UP
15		02762-00517	HOSE	1	J10001-UP
16		04434-52312	CLIP	2	J10001-UP
17		21T-64-33670	BRACKET	1	J10001-UP
18		07283-36155	CLIP	1	J10001-UP
19		01597-01009	NUT	2	J10001-UP
20		01643-31032	WASHER	2	J10001-UP
21		01010-81225	BOLT	1	J10001-UP
22		01643-31232	WASHER	1	J10001-UP

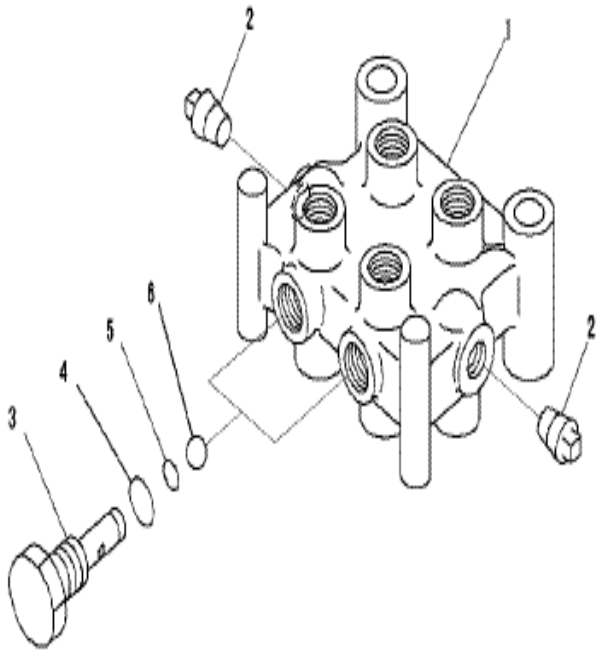

PC2000-8 S/N J10001-UP

SHUTTLE VALVE(SHUTTLE VALVE)

INDEX	CD	PART NO.	DESCRIPTION	QTY	SERIAL NO.
		(702-19-23000)	CHECK VALVE ASS'Y.....	1	J10001-UP
1		702-19-13210	.BLOCK.....	1	J10001-UP
2		07042-30108	.PLUG.....	2	J10001-UP
3		702-19-12120	.PLUG.....	2	J10001-UP
4		07002-11423	.O-RING.....	2	J10001-UP
5		07000-11007	.O-RING.....	2	J10001-UP
6		04260-00952	.BALL.....	2	J10001-UP

Ref :H1833-01A0 Page :180580

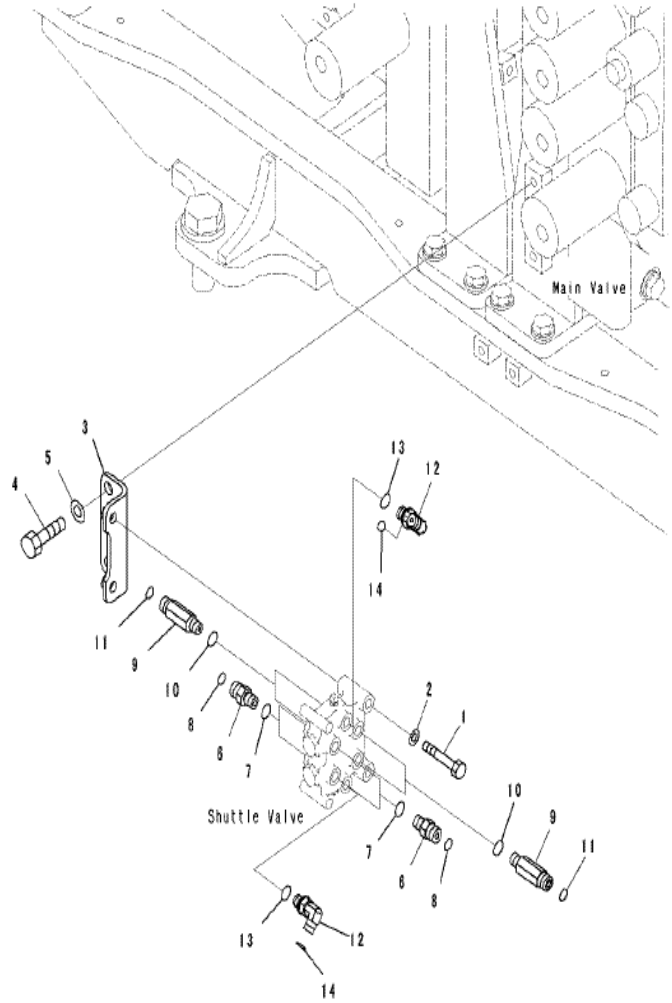

PC2000-8 S/N J10001-UP

SHUTTLE VALVE(RELATED PARTS)

INDEX	CD	PART NO.	DESCRIPTION	QTY	SERIAL NO.
1		01010-81070	BOLT	2	J10001-UP
2		01643-31032	WASHER	2	J10001-UP
3		21T-64-36270	BRACKET	1	J10001-UP
4		01010-81225	BOLT	2	J10001-UP
5		01643-31232	WASHER	2	J10001-UP
6		02781-0031D	NIPPLE	4	J10001-UP
7		07002-61423	O-RING	4	J10001-UP
8		02896-61009	O-RING	4	J10001-UP
9		20U-62-41710	NIPPLE	4	J10001-UP
10		07002-61423	O-RING	4	J10001-UP
11		02896-61009	O-RING	4	J10001-UP
12		02782-10210	ELBOW	2	J10001-UP
13		07002-61423	O-RING	2	J10001-UP
14		02896-61008	O-RING	2	J10001-UP

Ref :H1833-01A1 Page :180585

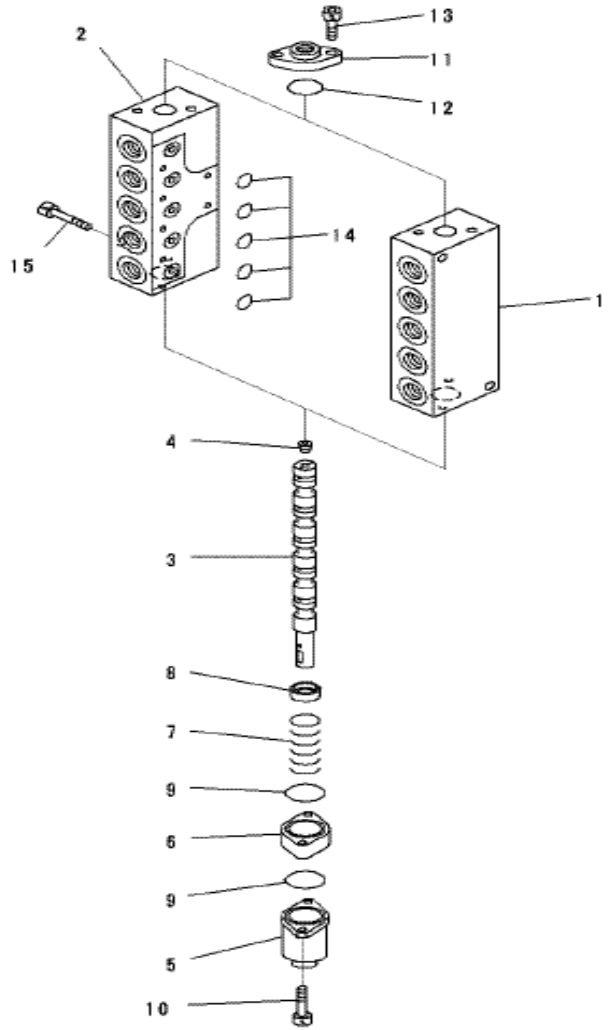

PC2000-8 S/N J10001-UP

SHUTTLE VALVE(PPC CUT OFF VALVE)(1/2)

INDEX	CD	PART NO.	DESCRIPTION	QTY	SERIAL NO.
		(702-21-07100)	VALVE ASS'Y.....	1	J10001-UP
1	C1	702-21-37550	.BLOCK,VALVE.....	1	J10001-UP
2	C1	702-21-37540	.BLOCK,VALVE.....	1	J10001-UP
3	C1	702-21-37531	.SPOOL.....	2	J10001-UP
4		708-21-12541	.PLUG.....	2	J10001-UP
5		700-84-12510	.CASE.....	2	J10001-UP
6		700-85-11310	.PLATE.....	2	J10001-UP
7		702-21-37560	.SPRING.....	2	J10001-UP
8		700-85-11350	.RETAINER.....	2	J10001-UP
9		709-14-13850	.O-RING.....	4	J10001-UP
10		01252-60635	.BOLT.....	4	J10001-UP
11		702-21-39430	.FLANGE.....	2	J10001-UP
12		07000-B3028	.O-RING.....	2	J10001-UP
13		01252-60820	.BOLT.....	4	J10001-UP
14		07000-B2014	.O-RING.....	5	J10001-UP
15		01252-60650	.BOLT.....	6	J10001-UP

Ref :H1833-02A0 Page :180590

PC2000-8 S/N J10001-UP

SHUTTLE VALVE CIRCUIT (PPC VALVE MOUNTING)(1/2)

INDEX	CD	PART NO.	DESCRIPTION	QTY	SERIAL NO.
1		01010-81030	BOLT	1	J10001-UP
2		01643-31032	WASHER	1	J10001-UP
3		21T6436110	BRACKET	1	J10001-UP
4		01010-81230	BOLT	1	J10001-UP
5		01643-31232	WASHER	1	J10001-UP
6		02783-10422	HOSE	5	J10001-UP
7		07002-62034	O-RING	5	J10001-UP
8		02896-61012	O-RING	5	J10001-UP
9		11T6111280	NIPPLE	2	J10001-UP
10		07002-62034	O-RING	2	J10001-UP
11		11T6111290	NIPPLE	1	J10001-UP
12		07002-62034	O-RING	1	J10001-UP
13		19M-61-35140	TEE	1	J10001-UP
14		07002-62034	O-RING	1	J10001-UP
15		02896-61009	O-RING	2	J10001-UP
16		02781-00315	UNION	2	J10001-UP
17		07002-62034	O-RING	2	J10001-UP
18		02896-61009	O-RING	2	J10001-UP
19		02782-10315	ELBOW	2	J10001-UP
20		07002-62034	O-RING	2	J10001-UP
21		02896-61009	O-RING	2	J10001-UP
22		07040-12012	PLUG	1	J10001-UP
23		07002-62034	O-RING	1	J10001-UP
24		02781-00315	UNION	4	J10001-UP
25		07002-62034	O-RING	4	J10001-UP
26		02896-61009	O-RING	4	J10001-UP
27		02782-10315	ELBOW	2	J10001-UP
28		07002-62034	O-RING	2	J10001-UP
29		02896-61009	O-RING	2	J10001-UP
30		19M-61-35140	TEE	3	J10001-UP
31		07002-62034	O-RING	3	J10001-UP
32		02896-61009	O-RING	6	J10001-UP
33		02782-10311	ELBOW	1	J10001-UP
34		21T6436820	ELBOW	1	J10001-UP
35		07002-61423	O-RING	2	J10001-UP
36		02896-61009	O-RING	2	J10001-UP
37		02781-0031D	NIPPLE	1	J10001-UP
38		07002-61423	O-RING	1	J10001-UP
39		02896-61009	O-RING	1	J10001-UP
40		21N-64-36680	TEE	1	J10001-UP
41		07002-61423	O-RING	1	J10001-UP
42		02896-61009	O-RING	2	J10001-UP

Ref :H1833-03A0 Page :180595

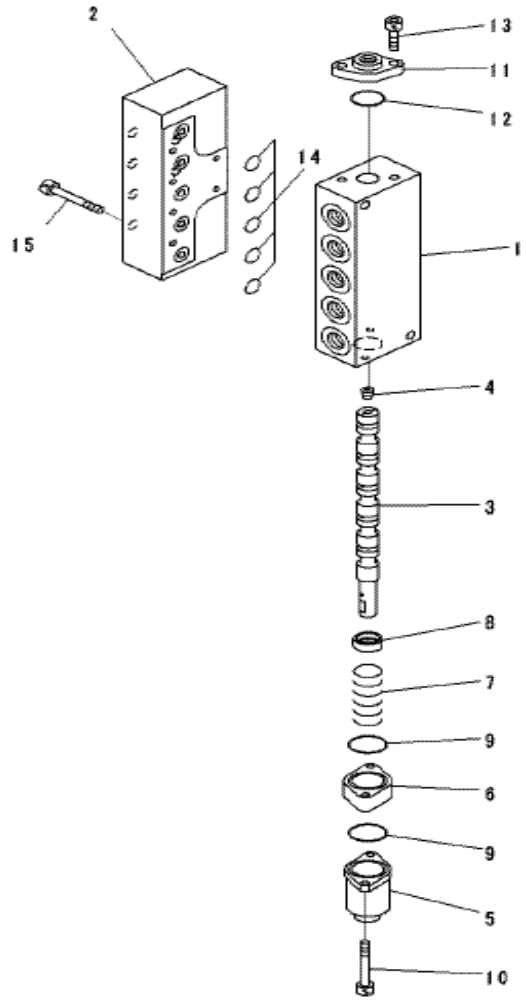

PC2000-8 S/N J10001-UP

SHUTTLE VALVE(PPC CUT OFF VALVE)(2/2)

INDEX	CD	PART NO.	DESCRIPTION	QTY	SERIAL NO.
		(702-21-07200)	VALVE ASS'Y.....	1	J10001-UP
1	C1	702-21-37550	.BLOCK,VALVE.....	1	J10001-UP
2	C1	702-21-37570	.COVER.....	1	J10001-UP
3	C1	702-21-37531	.SPOOL.....	1	J10001-UP
4		708-21-12541	.PLUG.....	1	J10001-UP
5		700-84-12510	.CASE.....	1	J10001-UP
6		700-85-11310	.PLATE.....	1	J10001-UP
7		702-21-37560	.SPRING.....	1	J10001-UP
8		700-85-11350	.RETAINER.....	1	J10001-UP
9		709-14-13850	.O-RING.....	2	J10001-UP
10		01252-60635	.BOLT.....	2	J10001-UP
11		702-21-39430	.FLANGE.....	1	J10001-UP
12		07000-B3028	.O-RING.....	1	J10001-UP
13		01252-60820	.BOLT.....	2	J10001-UP
14		07000-B2014	.O-RING.....	5	J10001-UP
15		01252-60635	.BOLT.....	6	J10001-UP

Ref :H1833-04A0 Page :180600

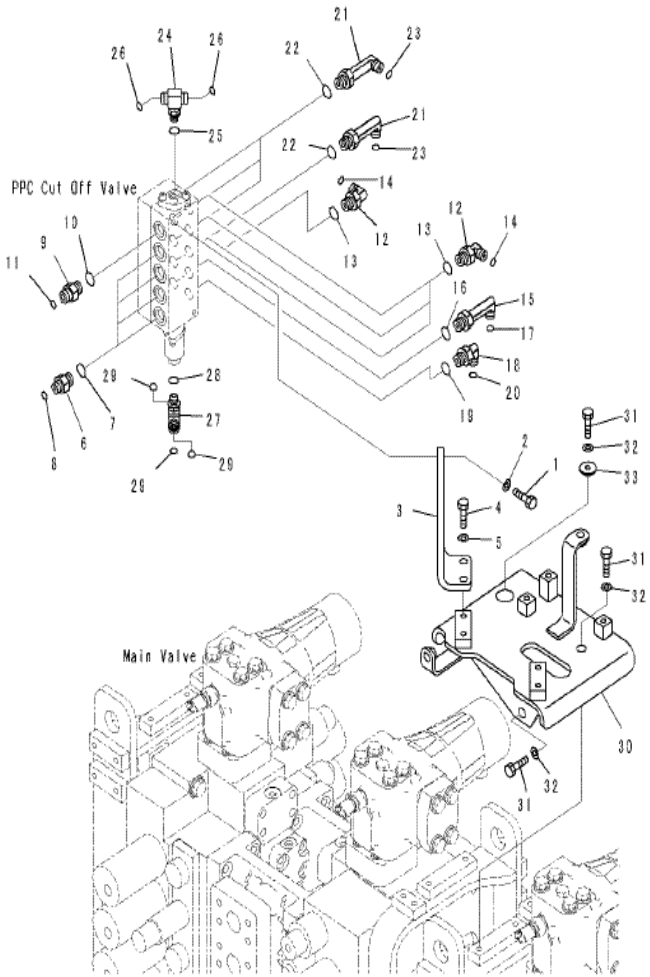

PC2000-8 S/N J10001-UP

SHUTTLE VALVE CIRCUIT, PPC VALVE MOUNTING(2/2)

INDEX	CD	PART NO.	DESCRIPTION	QTY	SERIAL NO.
1		01010-81030	BOLT	2	J10001-UP
2		01643-31032	WASHER	2	J10001-UP
3		21T-64-36110	BRACKET	1	J10001-UP
4		01010-81230	BOLT	2	J10001-UP
5		01643-31232	WASHER	2	J10001-UP
6		02781-00315	UNION	4	J10001-UP
7		07002-62034	O-RING	4	J10001-UP
8		02896-61009	O-RING	4	J10001-UP
9		02781-00422	UNION	1	J10001-UP
10		07002-62034	O-RING	1	J10001-UP
11		02896-61012	O-RING	1	J10001-UP
12		02782-10315	ELBOW	4	J10001-UP
13		07002-62034	O-RING	4	J10001-UP
14		02896-61009	O-RING	4	J10001-UP
15		02782-10317	ELBOW	1	J10001-UP
16		07002-62034	O-RING	1	J10001-UP
17		02896-61009	O-RING	1	J10001-UP
18		02782-10315	ELBOW	1	J10001-UP
19		07002-62034	O-RING	1	J10001-UP
20		02896-61009	O-RING	1	J10001-UP
21		02782-10317	ELBOW	4	J10001-UP
22		07002-62034	O-RING	4	J10001-UP
23		02896-61009	O-RING	4	J10001-UP
24		21T-64-36850	TEE	1	J10001-UP
25		07002-61423	O-RING	1	J10001-UP
26		02896-61009	O-RING	2	J10001-UP
27		209-64-16491	TEE	1	J10001-UP
28		07002-61423	O-RING	1	J10001-UP
29		02896-61009	O-RING	3	J10001-UP
30		21T-64-36122	BRACKET	1	J10001-UP
31		01010-81230	BOLT	4	J10001-UP
32		01643-31232	WASHER	4	J10001-UP
33		20Y-97-32430	COLLAR	1	J10001-UP

Ref :H1833-05A0 Page :180605

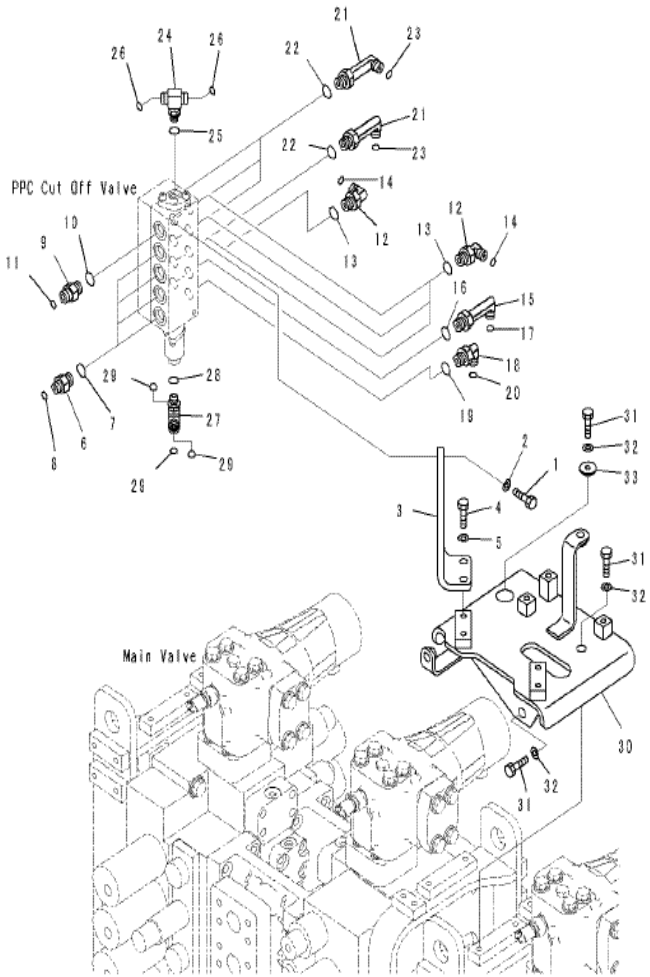

PC2000-8 S/N J10001-UP

SHUTTLE VALVE(PILOT VALVE)(L.H)

INDEX	CD	PART NO.	DESCRIPTION	QTY	SERIAL NO.
1		21N-60-31190	VALVE ASS'Y	1	J10001-UP
2		01010-81025	BOLT	2	J10001-UP
3		01643-31032	WASHER	2	J10001-UP
4		21T-64-36251	PLATE	1	J10001-UP
5		01010-81225	BOLT	2	J10001-UP
6		01643-31232	WASHER	2	J10001-UP
7		02782-10210	ELBOW	1	J10001-UP
8		07002-61423	O-RING	1	J10001-UP
9		02896-61008	O-RING	1	J10001-UP
10		21T-64-36870	ELBOW	1	J10001-UP
11		07002-61423	O-RING	1	J10001-UP
12		02896-61009	O-RING	1	J10001-UP
13		20B-27-11210	BLEEDER	1	J10001-UP
		21T-64-36800	VALVE ASS'Y	1	J10001-UP
14		20Y-60-22210	.BODY	1	J10001-UP
15		8287621620	.POPPET	1	J10001-UP
16		701-20-61230	.SPRING	1	J10001-UP
17		07002-61423	.O-RING	1	J10001-UP
18		20Y-62-47630	.NIPPLE	1	J10001-UP
19		07002-61423	O-RING	1	J10001-UP
20		02896-61008	O-RING	1	J10001-UP
21		02782-10311	ELBOW	1	J10001-UP
22		07002-61423	O-RING	1	J10001-UP
23		02896-61009	O-RING	1	J10001-UP

Ref :H1833-06A0 Page :180610

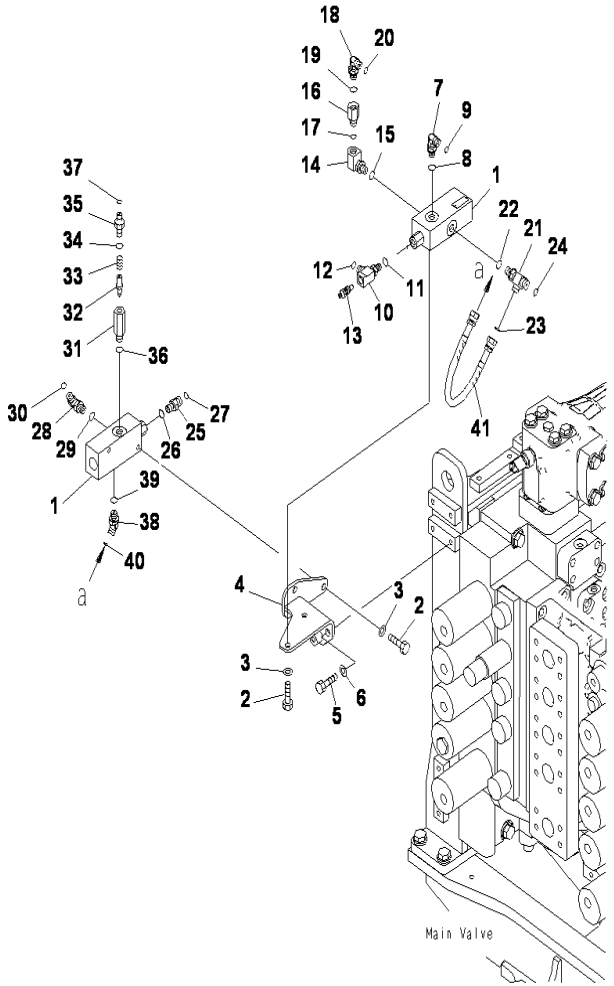

PC2000-8 S/N J10001-UP

SHUTTLE VALVE(PILOT VALVE)(R.H)

INDEX	CD	PART NO.	DESCRIPTION	QTY	SERIAL NO.
1		21N-60-31190	VALVE ASS'Y	2	J10001-UP
2		01010-81025	BOLT	4	J10001-UP
3		01643-31032	WASHER	4	J10001-UP
4		21T-64-36261	BRACKET	1	J10001-UP
5		01010-81225	BOLT	2	J10001-UP
6		01643-31232	WASHER	2	J10001-UP
7		21T-64-36810	ELBOW	1	J10001-UP
8		07002-61423	O-RING	1	J10001-UP
9		02896-61008	O-RING	1	J10001-UP
10		21T-64-36860	ELBOW	1	J10001-UP
11		07002-61423	O-RING	1	J10001-UP
12		02896-61009	O-RING	1	J10001-UP
13		20B-27-11210	BLEEDER	1	J10001-UP
14		20F-61-12460	ELBOW	1	J10001-UP
15		07002-61423	O-RING	1	J10001-UP
16		21M-62-16350	ADAPTER	1	J10001-UP
17		07002-61423	O-RING	1	J10001-UP
18		21T-64-36810	ELBOW	1	J10001-UP
19		07002-61423	O-RING	1	J10001-UP
20		02896-61008	O-RING	1	J10001-UP
21		20U-62-41820	ELBOW	1	J10001-UP
22		07002-61423	O-RING	1	J10001-UP
23		02896-61008	O-RING	1	J10001-UP
24		02896-61009	O-RING	1	J10001-UP
25		20Y6241870	UNION	1	J10001-UP
26		07002-61423	O-RING	1	J10001-UP
27		02896-61009	O-RING	1	J10001-UP
28		02782-10210	ELBOW	1	J10001-UP
29		07002-61423	O-RING	1	J10001-UP
30		02896-61008	O-RING	1	J10001-UP
		21T-64-36800	VALVE ASS'Y	1	J10001-UP
31		20Y-60-22210	.BODY	1	J10001-UP
32		828-76-21620	.POPPET	1	J10001-UP
33		701-20-61230	.SPRING	1	J10001-UP
34		07002-61423	.O-RING	1	J10001-UP
35		20Y-62-47630	.NIPPLE	1	J10001-UP
36		07002-61423	O-RING	1	J10001-UP
37		02896-61008	O-RING	1	J10001-UP
38		02783-10210	ELBOW	1	J10001-UP
39		07002-61423	O-RING	1	J10001-UP
40		02896-61008	O-RING	1	J10001-UP
41		02760-00204	HOSE	1	J10001-UP

Ref :H1833-07A0 Page :180620

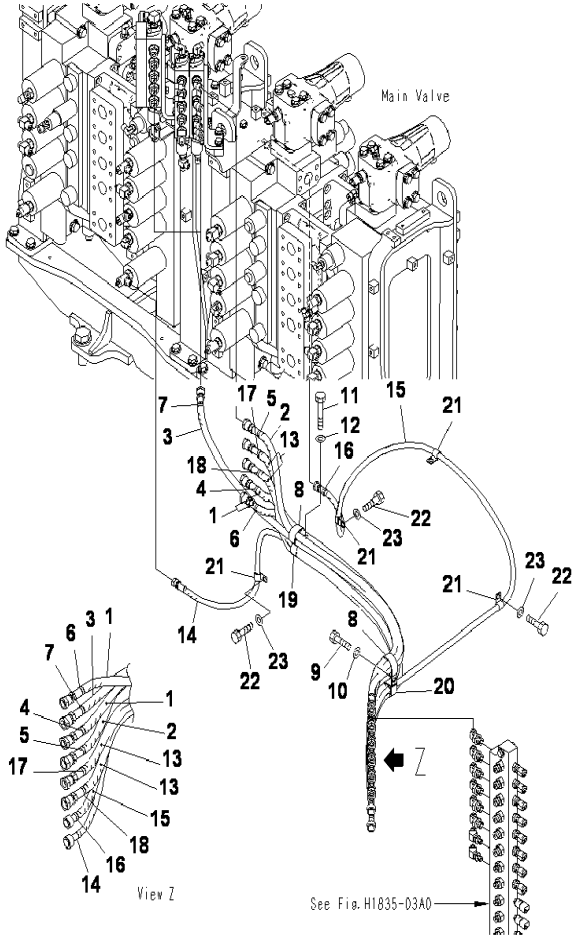

PC2000-8 S/N J10001-UP

PPC LINE JOINT(PIPING)(1/2)

INDEX	CD	PART NO.	DESCRIPTION	QTY	SERIAL NO.
1		02762-00413	HOSE	2	J10001-UP
2		02762-00414	HOSE	1	J10001-UP
3		02762-00416	HOSE	1	J10001-UP
4		20Y-62-22830	BAND (WHITE)	2	J10001-UP
5		20Y-62-22840	BAND (BLACK)	2	J10001-UP
6		20Y-62-22850	BAND (GREEN)	2	J10001-UP
7		20Y-62-22860	BAND (BROWN)	2	J10001-UP
8		20Y-62-17930	CLIP	2	J10001-UP
9		01010-81225	BOLT	1	J10001-UP
10		01643-31232	WASHER	1	J10001-UP
11		01010-81275	BOLT	1	J10001-UP
12		01643-31232	WASHER	1	J10001-UP
13		02762-00414	HOSE	2	J10001-UP
14		21T-64-36410	HOSE	1	J10001-UP
15		21T-64-36420	HOSE	1	J10001-UP
16		20Y-62-22790	BAND (RED)	2	J10001-UP
17		20Y-62-22810	BAND (YELLOW)	2	J10001-UP
18		20Y-62-22820	BAND (BLUE)	2	J10001-UP
19		04434-53412	CLIP	1	J10001-UP
20		20Y-62-15951	CLIP	1	J10001-UP
21		04434-51412	CLIP	4	J10001-UP
22		01010-81225	BOLT	3	J10001-UP
23		01643-31232	WASHER	3	J10001-UP

Ref :H1835-01A0 Page :180630

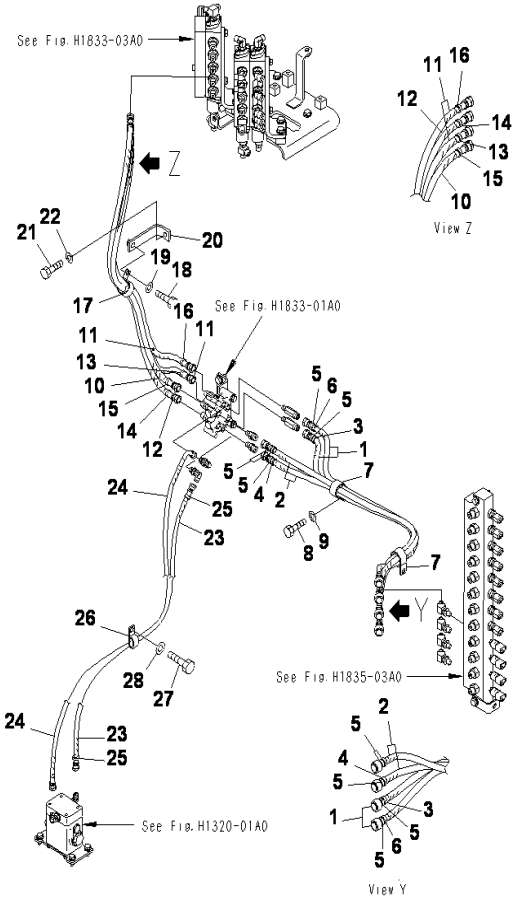

PPC LINE JOINT(PIPING)(2/2)

INDEX	CD	PART NO.	DESCRIPTION	QTY	SERIAL NO.
1		207-62-72630	HOSE,1300MM	2	J10001-UP
2		207-62-72640	HOSE, 1400MM	2	J10001-UP
3		20Y-62-22790	BAND (RED)	2	J10001-UP
4		20Y-62-22820	BAND (BLUE)	2	J10001-UP
5		20Y-62-22840	BAND (BLACK)	10	J10001-UP
6		20Y-62-22850	BAND (GREEN)	2	J10001-UP
7		208-06-19170	CLIP	2	J10001-UP
8		01010-81225	BOLT	2	J10001-UP
9		01643-31232	WASHER	2	J10001-UP
10		02760-00311	HOSE	1	J10001-UP
11		02760-00312	HOSE	2	J10001-UP
12		02760-00313	HOSE	1	J10001-UP
13		20Y-62-22790	BAND (RED)	2	J10001-UP
14		20Y-62-22820	BAND (BLUE)	2	J10001-UP
15		20Y-62-22840	BAND (BLACK)	2	J10001-UP
16		20Y-62-22850	BAND (GREEN)	2	J10001-UP
17		208-06-19170	CLIP	1	J10001-UP
18		01010-81230	BOLT	1	J10001-UP
19		01643-31232	WASHER	1	J10001-UP
20		198-61-44320	BRACKET	1	J10001-UP
21		01010-81230	BOLT	1	J10001-UP
22		01643-31232	WASHER	1	J10001-UP
23		02760-00217	HOSE	1	J10001-UP
24		02761-00219	HOSE	1	J10001-UP
25		20Y-62-22790	BAND (RED)	2	J10001-UP
26		04435-51512	CLIP	1	J10001-UP
27		01010-81220	BOLT	1	J10001-UP
28		01643-31232	WASHER	1	J10001-UP

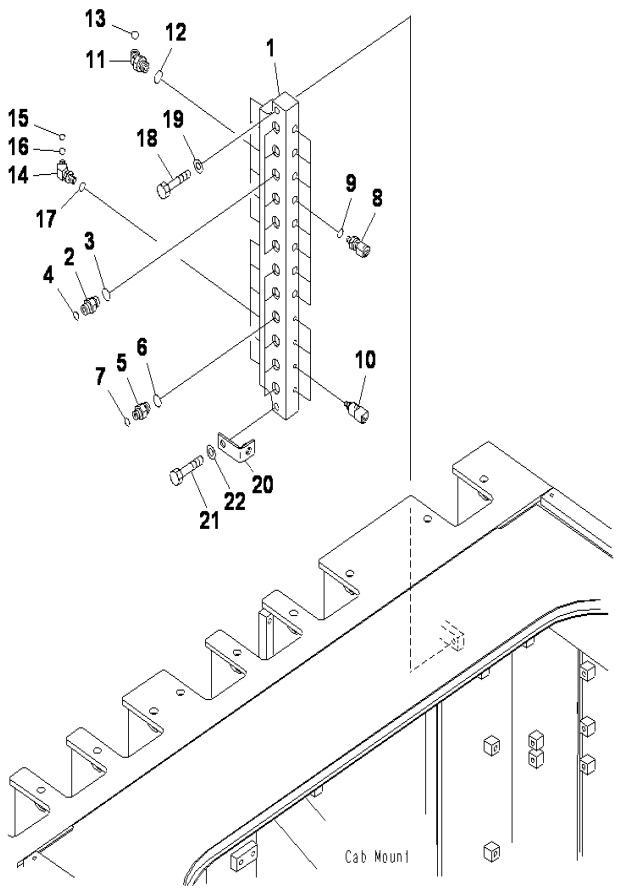

PC2000-8 S/N J10001-UP

PPC LINE JOINT(JOINT)

INDEX	CD	PART NO.	DESCRIPTION	QTY	SERIAL NO.
1		21T-64-36611	JOINT	1	J10001-UP
2		02781-00422	UNION	6	J10001-UP
3		07002-62034	O-RING	6	J10001-UP
4		02896-61012	O-RING	6	J10001-UP
5		02781-00315	UNION	6	J10001-UP
6		07002-62034	O-RING	6	J10001-UP
7		02896-61009	O-RING	6	J10001-UP
8		7861-93-1840	SENSOR	8	J10001-UP
9		07000-12011	O-RING	1	J10001-UP
10		206-06-61130	SWITCH	4	J10001-UP
11		02783-10422	HOSE	6	J10001-UP
12		07002-62034	O-RING	6	J10001-UP
13		02896-61012	O-RING	6	J10001-UP
14		21T-64-38120	ELBOW	6	J10001-UP
15		201-60-11390	O-RING	1	J10001-UP
16		20Y-62-19560	O-RING	1	J10001-UP
17		07002-61423	O-RING	6	J10001-UP
18		01010-81260	BOLT	1	J10001-UP
19		01643-31232	WASHER	1	J10001-UP
20		207-979-6180	BRACKET	1	J10001-UP
21		01010-81265	BOLT	1	J10001-UP
22		01643-31232	WASHER	1	J10001-UP

Ref :H1835-03A0 Page :180650

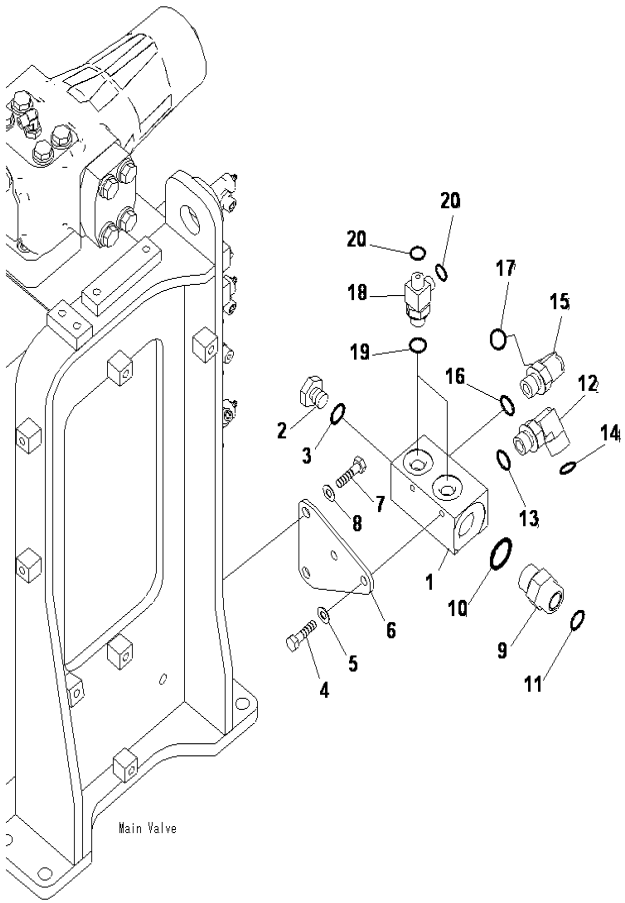

PC2000-8 S/N J10001-UP

PPC MAIN LINE(BLOCK)

INDEX	CD	PART NO.	DESCRIPTION	QTY	SERIAL NO.
1		21T-64-34541	BLOCK	1	J10001-UP
2		07040-11409	PLUG	1	J10001-UP
3		07002-61423	O-RING	1	J10001-UP
4		01010-81025	BOLT	2	J10001-UP
5		01643-31032	WASHER	2	J10001-UP
6		21T-64-33280	PLATE	1	J10001-UP
7		01010-81225	BOLT	2	J10001-UP
8		01643-31232	WASHER	2	J10001-UP
9		207-62-72110	UNION	1	J10001-UP
10		07002-63334	ORING	1	J10001-UP
11		11Y-62-11980	O-RING	1	J10001-UP
12		02782-10628	ELBOW	1	J10001-UP
13		07002-62434	O-RING	1	J10001-UP
14		02896-61018	O-RING	1	J10001-UP
15		02782-10522	ELBOW	1	J10001-UP
16		07002-62434	O-RING	1	J10001-UP
17		02896-61015	O-RING	1	J10001-UP
18		19M-61-35140	TEE	2	J10001-UP
19		07002-62034	O-RING	2	J10001-UP
20		02896-61009	O-RING	4	J10001-UP

Ref :H1840-01A0 Page :180660

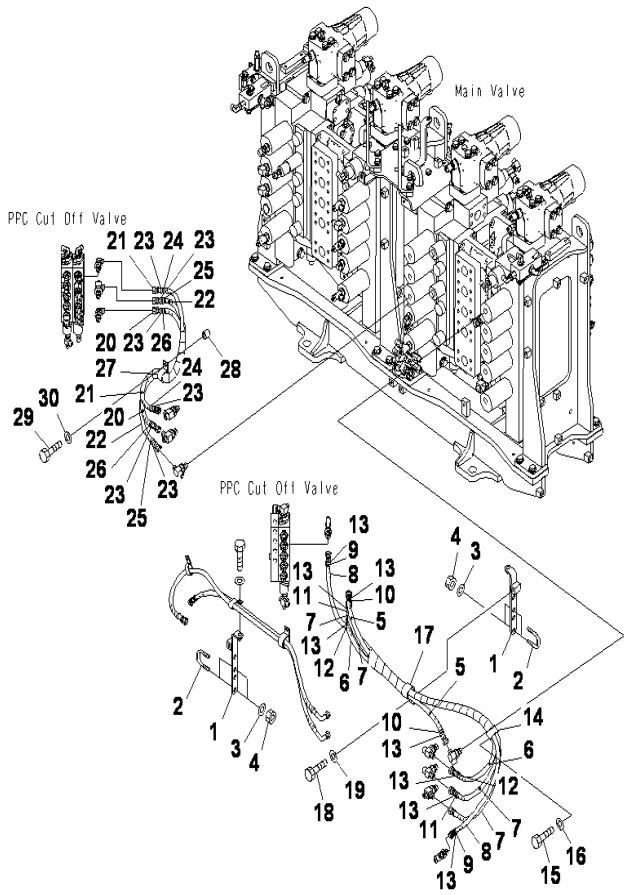

PC2000-8 S/N J10001-UP

PPC MAIN LINES(HOSE)(FRONT SIDE)(1/2)

INDEX	CD	PART NO.	DESCRIPTION	QTY	SERIAL NO.
1		21T-64-36280	BRACKET	2	J10001-UP
2		07283-34346	CLIP	4	J10001-UP
3		01597-01009	NUT	8	J10001-UP
4		01643-31032	WASHER	8	J10001-UP
5		02760-00308	HOSE	1	J10001-UP
6		02760-00313	HOSE	1	J10001-UP
7		02760-00314	HOSE	2	J10001-UP
8		02760-00319	HOSE	1	J10001-UP
9		20Y-62-22790	BAND (RED)	2	J10001-UP
10		20Y-62-22820	BAND (BLUE)	2	J10001-UP
11		20Y-62-22830	BAND (WHITE)	2	J10001-UP
12		20Y-62-22850	BAND (GREEN)	2	J10001-UP
13		20Y-62-22860	BAND (BROWN)	8	J10001-UP
14		208-06-19170	CLIP	1	J10001-UP
15		01010-81225	BOLT	1	J10001-UP
16		01643-31232	WASHER	1	J10001-UP
17		23T-62-12160	CLIP	1	J10001-UP
18		01010-81225	BOLT	1	J10001-UP
19		01643-31232	WASHER	1	J10001-UP
20		02760-003A8	HOSE	1	J10001-UP
21		02760-00309	HOSE	1	J10001-UP
22		02760-003A9	HOSE	1	J10001-UP
23		20Y-62-22790	BAND (RED)	6	J10001-UP
24		20Y-62-22820	BAND (BLUE)	2	J10001-UP
25		20Y-62-22830	BAND (WHITE)	2	J10001-UP
26		20Y-62-22850	BAND (GREEN)	2	J10001-UP
27		04434-53412	CLIP	1	J10001-UP
28		195-33-11220	SPACER	1	J10001-UP
29		01010-81245	BOLT	1	J10001-UP
30		01643-31232	WASHER	1	J10001-UP

Ref :H1840-02A0 Page :180670

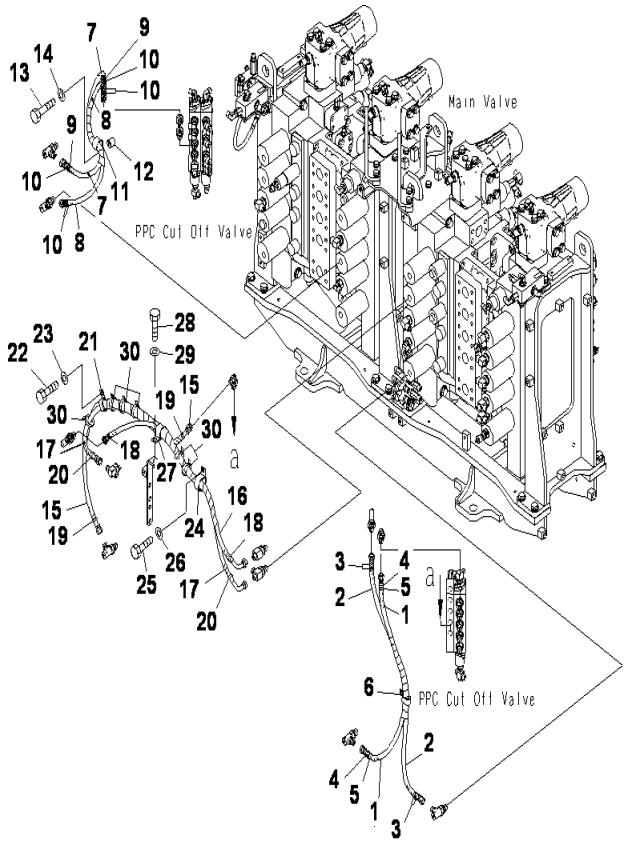

PC2000-8 S/N J10001-UP

PPC MAIN LINES(HOSE)(FRONT SIDE)(2/2)

INDEX	CD	PART NO.	DESCRIPTION	QTY	SERIAL NO.
1		02760-003A8	HOSE	1	J10001-UP
2		02760-003A9	HOSE	1	J10001-UP
3		20Y-62-22790	BAND (RED)	4	J10001-UP
4		20Y-62-22830	BAND (WHITE)	2	J10001-UP
5		20Y-62-22840	BAND (BLACK)	2	J10001-UP
6		04435-51712	CLIP	1	J10001-UP
7		02760-003A8	HOSE	1	J10001-UP
8		02760-00309	HOSE	1	J10001-UP
9		20Y-62-22820	BAND (BLUE)	2	J10001-UP
10		20Y-62-22830	BAND (WHITE)	6	J10001-UP
11		04434-53212	CLIP	1	J10001-UP
12		195-33-11220	SPACER	1	J10001-UP
13		01010-81245	BOLT	1	J10001-UP
14		01643-31232	WASHER	1	J10001-UP
15		02760-00312	HOSE	1	J10001-UP
16		02761-00311	HOSE	1	J10001-UP
17		02761-00315	HOSE	1	J10001-UP
18		20Y-62-22820	BAND (BLUE)	2	J10001-UP
19		20Y-62-22840	BAND (BLACK)	2	J10001-UP
20		20Y-62-22850	BAND (GREEN)	2	J10001-UP
21		04435-51712	CLIP	1	J10001-UP
22		01010-81225	BOLT	1	J10001-UP
23		01643-31232	WASHER	1	J10001-UP
24		208-06-19170	CLIP	1	J10001-UP
25		01010-81230	BOLT	1	J10001-UP
26		01643-31232	WASHER	1	J10001-UP
27		04434-53412	CLIP	1	J10001-UP
28		01010-81230	BOLT	1	J10001-UP
29		01643-31232	WASHER	1	J10001-UP
30		08034-20536	BAND	6	J10001-UP

Ref :H1840-03A0 Page :180680

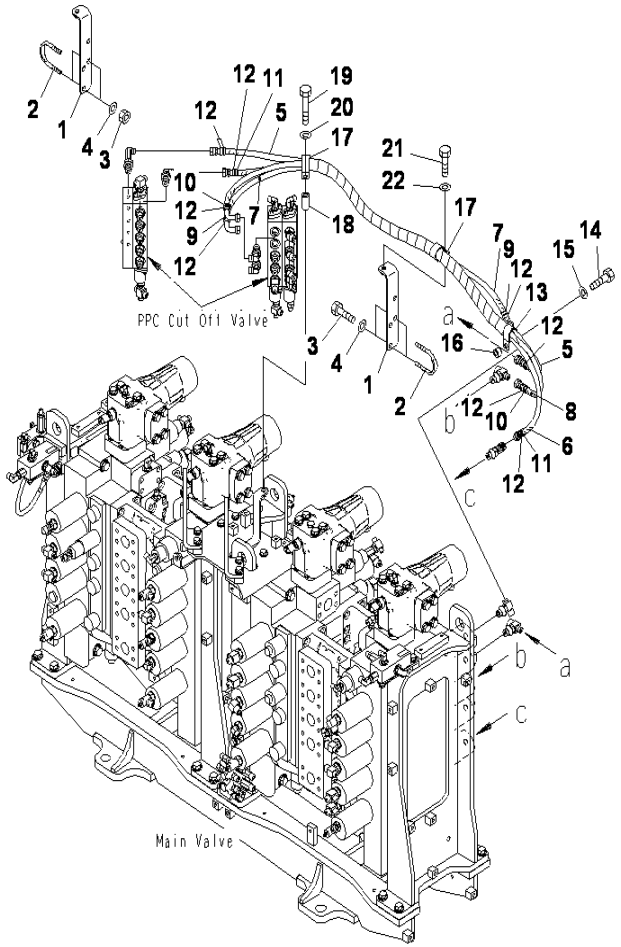

PC2000-8 S/N J10001-UP

PPC MAIN LINE(HOSE)(REAR SIDE)(1/3)

INDEX	CD	PART NO.	DESCRIPTION	QTY	SERIAL NO.
1		21T-64-36290	BRACKET	2	J10001-UP
2		07283-36155	CLIP	4	J10001-UP
3		01597-01009	NUT	8	J10001-UP
4		01643-31032	WASHER	8	J10001-UP
5		02760-00319	HOSE	1	J10001-UP
6		02760-00320	HOSE	1	J10001-UP
7		02761-00315	HOSE	1	J10001-UP
8		02761-00321	HOSE	1	J10001-UP
9		20Y-62-22810	BAND (YELLOW)	2	J10001-UP
10		20Y-62-22840	BAND (BLACK)	2	J10001-UP
11		20Y-62-22850	BAND (GREEN)	2	J10001-UP
12		20Y-62-22860	BAND (BROWN)	10	J10001-UP
13		04434-53412	CLIP	1	J10001-UP
14		01010-81235	BOLT	1	J10001-UP
15		01643-31232	WASHER	1	J10001-UP
16		198-33-12380	WASHER	1	J10001-UP
17		208-06-19170	CLIP	2	J10001-UP
18		205-03-71331	COLLAR	1	J10001-UP
19		01010-81265	BOLT	1	J10001-UP
20		01643-31232	WASHER	1	J10001-UP
21		01010-81230	BOLT	1	J10001-UP
22		01643-31232	WASHER	1	J10001-UP

Ref :H1840-04A0 Page :180690

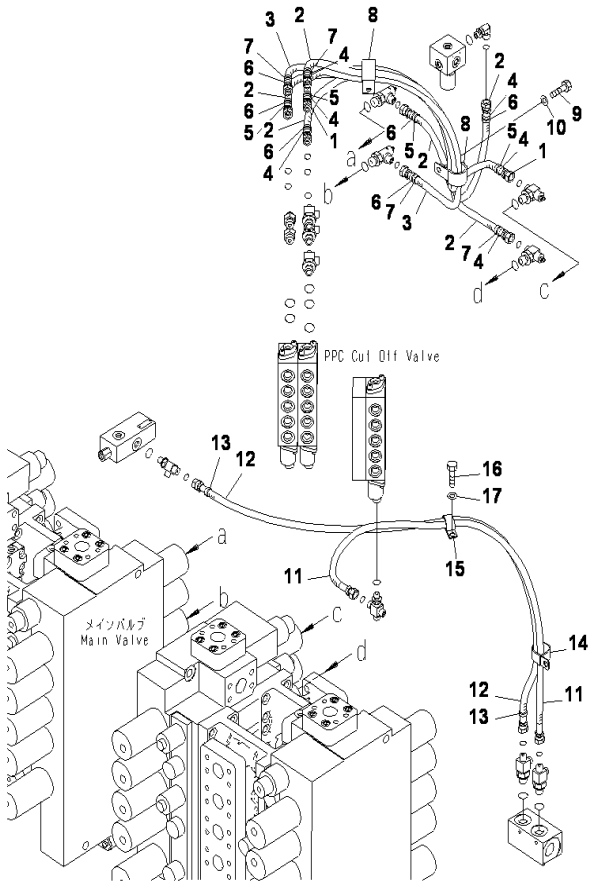

PC2000-8 S/N J10001-UP

PPC MAIN LINE(HOSE)(REAR SIDE)(2/3)

INDEX	CD	PART NO.	DESCRIPTION	QTY	SERIAL NO.
1		02760-00311	HOSE	1	J10001-UP
2		02760-00312	HOSE	3	J10001-UP
3		02760-00313	HOSE	1	J10001-UP
4		20Y-62-22790	BAND (RED)	6	J10001-UP
5		20Y-62-22810	BAND (YELLOW)	4	J10001-UP
6		20Y-62-22830	BAND (WHITE)	6	J10001-UP
7		20Y-62-22840	BAND (BLACK)	4	J10001-UP
8		23T-62-12160	CLIP	2	J10001-UP
9		01010-81225	BOLT	1	J10001-UP
10		01643-31232	WASHER	1	J10001-UP
11		02760-00314	HOSE	1	J10001-UP
12		02760-00316	HOSE	1	J10001-UP
13		20Y-62-22820	BAND (BLUE)	2	J10001-UP
14		23T-62-12160	CLIP	1	J10001-UP
15		04435-51712	CLIP	1	J10001-UP
16		01010-81225	BOLT	1	J10001-UP
17		01643-31232	WASHER	1	J10001-UP

Ref :H1840-05A0 Page :180700

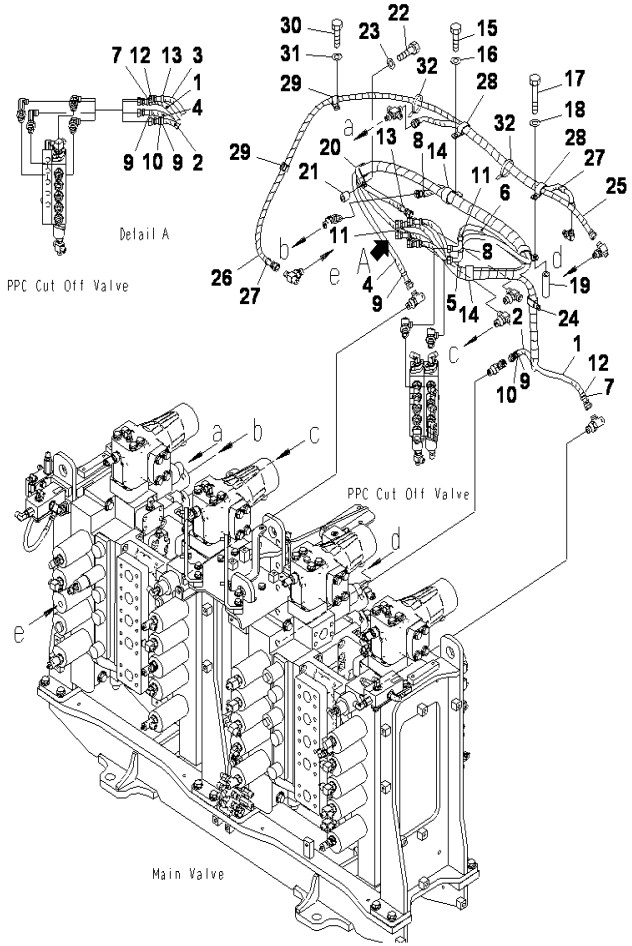

PC2000-8 S/N J10001-UP

PPC MAIN LINE(HOSE)(REAR SIDE)(3/3)

INDEX	CD	PART NO.	DESCRIPTION	QTY	SERIAL NO.
1		02760-00312	HOSE	1	J10001-UP
2		02760-00313	HOSE	1	J10001-UP
3		02760-00319	HOSE	1	J10001-UP
4		02760-00321	HOSE	1	J10001-UP
5		02761-00314	HOSE	1	J10001-UP
6		02761-00319	HOSE	1	J10001-UP
7		20Y-62-22790	BAND (RED)	2	J10001-UP
8		20Y-62-22810	BAND (YELLOW)	2	J10001-UP
9		20Y-62-22820	BAND (BLUE)	4	J10001-UP
10		20Y-62-22830	BAND (WHITE)	2	J10001-UP
11		20Y-62-22840	BAND (BLACK)	2	J10001-UP
12		20Y-62-22850	BAND (GREEN)	2	J10001-UP
13		20Y-62-22860	BAND (BROWN)	2	J10001-UP
14		208-06-19170	CLIP	3	J10001-UP
15		01010-81230	BOLT	1	J10001-UP
16		01643-31232	WASHER	1	J10001-UP
17		01011-81210	BOLT	1	J10001-UP
18		01643-31232	WASHER	1	J10001-UP
19		581-60-17860	SPACER	1	J10001-UP
20		04434-53412	CLIP	1	J10001-UP
21		195-33-11220	SPACER	1	J10001-UP
22		01010-81245	BOLT	1	J10001-UP
23		01643-31232	WASHER	1	J10001-UP
24		04435-51712	CLIP	1	J10001-UP
25		02761-003A9	HOSE	1	J10001-UP
26		02761-00319	HOSE	1	J10001-UP
27		20Y-62-22830	BAND (WHITE)	2	J10001-UP
28		04435-51712	CLIP	2	J10001-UP
29		04434-51712	CLIP	2	J10001-UP
30		01010-81220	BOLT	1	J10001-UP
31		01643-31232	WASHER	1	J10001-UP
32		08034-20536	BAND	2	J10001-UP

Ref :H1840-06A0 Page :180710

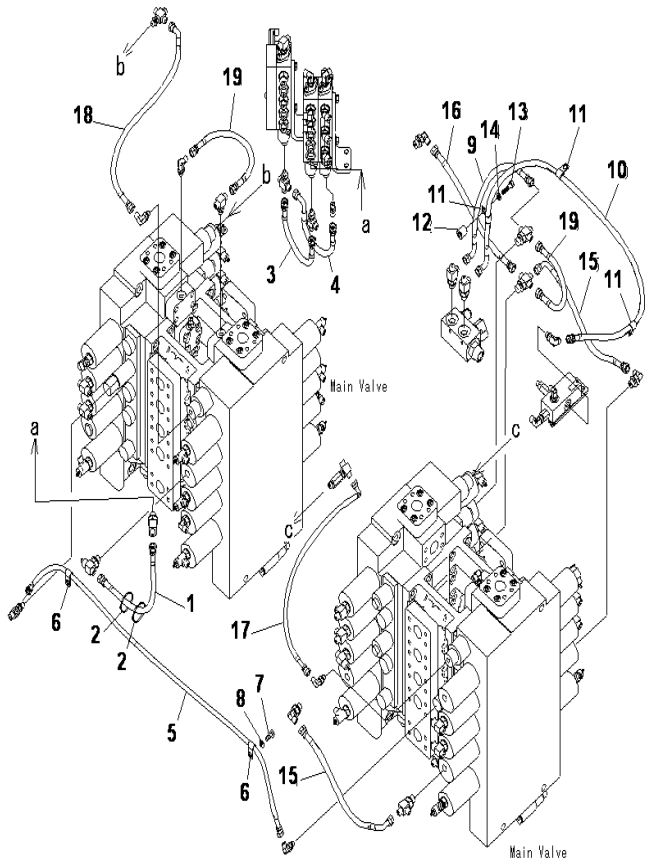

PPC MAIN LINE(HOSE)(OTHER)(1/2)

INDEX	CD	PART NO.	DESCRIPTION	QTY	SERIAL NO.
1		02760-00305	HOSE	1	J10001-UP
2		08034-20536	BAND	2	J10001-UP
3		02760-00304	HOSE	1	J10001-UP
4		02761-00304	HOSE	1	J10001-UP
5		02760-00215	HOSE, 1500MM	1	J10001-UP
6		04434-51012	CLIP	2	J10001-UP
7		01010-81225	BOLT	2	J10001-UP
8		01643-31232	WASHER	2	J10001-UP
9		02761-00305	HOSE	1	J10001-UP
10		0276100319	HOSE	1	J10001-UP
11		04434-51412	CLIP	3	J10001-UP
12		195-33-11220	SPACER	1	J10001-UP
13		01010-81250	BOLT	2	J10001-UP
14		01643-31232	WASHER	2	J10001-UP
15		02761-00305	HOSE	2	J10001-UP
16		02760-003A4	HOSE	1	J10001-UP
17		21T-64-36910	HOSE	1	J10001-UP
18		21T-64-36920	HOSE	1	J10001-UP
19		02760-00304	HOSE	2	J10001-UP

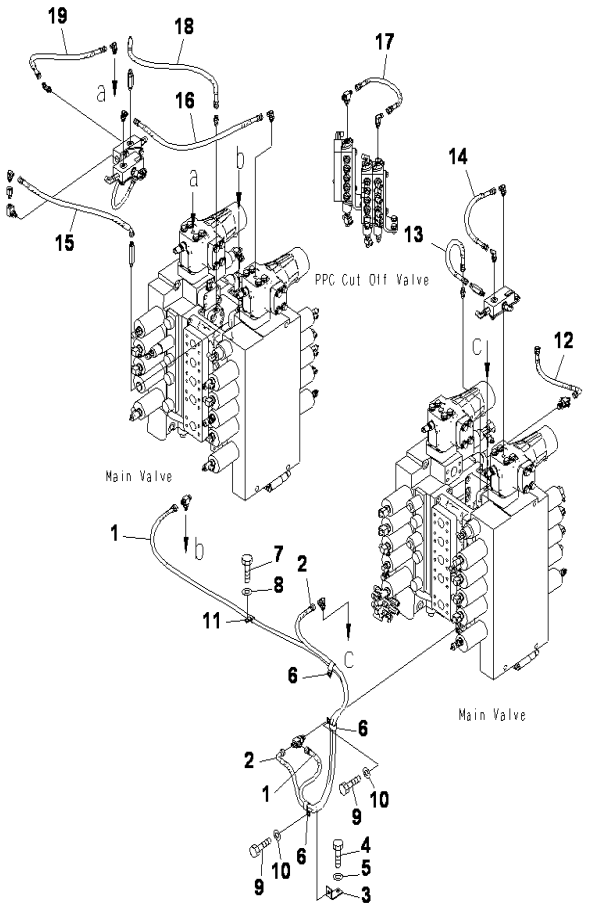

PPC MAIN LINE(HOSE)(OTHER)(2/2)

INDEX	CD	PART NO.	DESCRIPTION	QTY	SERIAL NO.
1		02760-00325	HOSE	1	J10001-UP
2		0276100315	HOSE	1	J10001-UP
3		207-979-6180	BRACKET	1	J10001-UP
4		01010-81225	BOLT	1	J10001-UP
5		01643-31232	WASHER	1	J10001-UP
6		04435-51512	CLIP	3	J10001-UP
7		01010-81230	BOLT	1	J10001-UP
8		01643-31232	WASHER	1	J10001-UP
9		01010-81225	BOLT	2	J10001-UP
10		01643-31232	WASHER	2	J10001-UP
11		04434-51512	CLIP	1	J10001-UP
12		02761-003A3	HOSE	1	J10001-UP
13		21T-64-36940	HOSE	1	J10001-UP
14		21T-64-36930	HOSE	1	J10001-UP
15		21T-64-36980	HOSE	1	J10001-UP
16		21T-64-36960	HOSE	1	J10001-UP
17		02760-00304	HOSE	1	J10001-UP
18		21T-64-36970	HOSE	1	J10001-UP
19		21T-64-36950	HOSE	1	J10001-UP

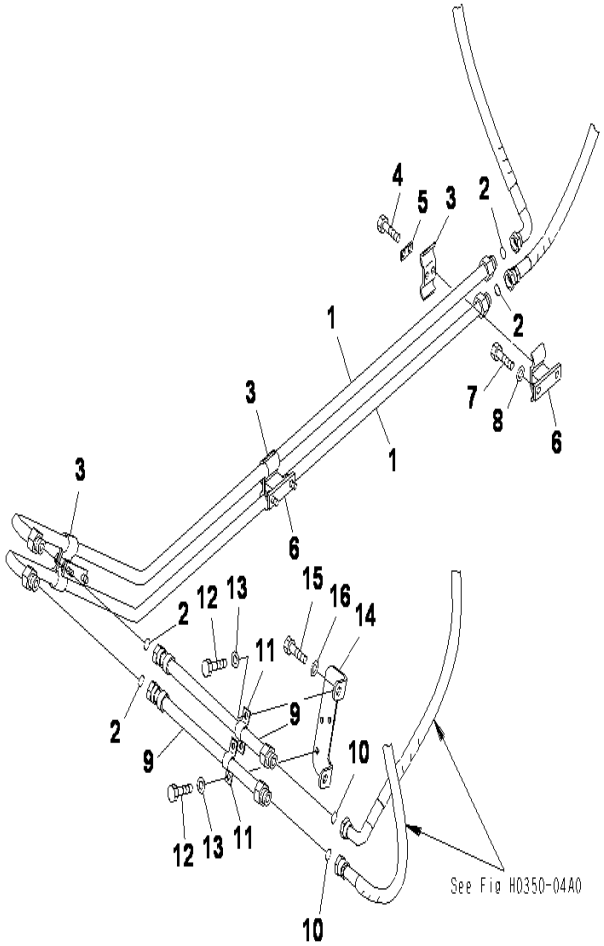

PC2000-8 S/N J10001-UP

PPC PUMP RETURN LINES(TUBE)

INDEX	CD	PART NO.	DESCRIPTION	QTY	SERIAL NO.
1		21T-64-36130	TUBE	2	J10001-UP
2		02896-61018	O-RING	4	J10001-UP
3		20Y-62-13710	CLAMP	3	J10001-UP
4		01010-81230	BOLT	6	J10001-UP
5		20Y-62-13450	PLATE	3	J10001-UP
6		21T-64-36150	CLAMP	3	J10001-UP
7		01010-81230	BOLT	6	J10001-UP
8		01643-31232	WASHER	6	J10001-UP
9		21T-64-36210	TUBE	2	J10001-UP
10		02896-61018	O-RING	2	J10001-UP
11		07282-12793	CLAMP	2	J10001-UP
12		01010-81025	BOLT	4	J10001-UP
13		01643-31032	WASHER	4	J10001-UP
14		21T-64-36220	BRACKET	1	J10001-UP
15		01010-81235	BOLT	2	J10001-UP
16		175-54-34170	WASHER	2	J10001-UP

Ref :H1841-01A0 Page :180740

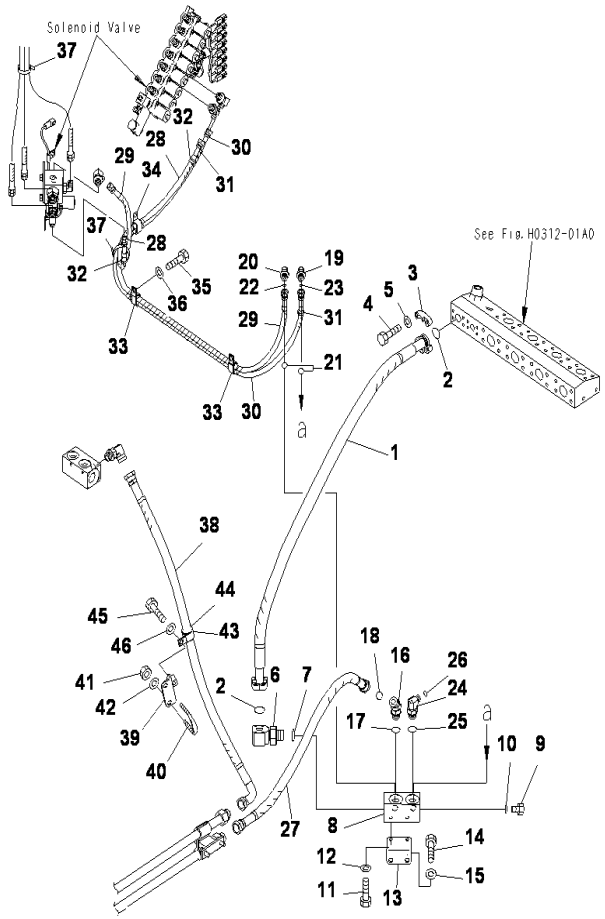

PC2000-8 S/N J10001-UP

PPC PUMP RETURN LINES(HOSE)(1/2)

INDEX	CD	PART NO.	DESCRIPTION	QTY	SERIAL NO.
1		07296-01013	HOSE	1	J10001-UP
2		07000-B3032	O-RING	2	J10001-UP
3		07371-31049	FLANGE	4	J10001-UP
4		07372-21035	BOLT	8	J10001-UP
5		01643-51032	WASHER	8	J10001-UP
6		209-62-57390	ELBOW	1	J10001-UP
7		07002-63334	ORING	1	J10001-UP
8		21T-64-34541	BLOCK	1	J10001-UP
9		07040-11409	PLUG	1	J10001-UP
10		07002-61423	O-RING	1	J10001-UP
11		01010-81025	BOLT	2	J10001-UP
12		01643-31032	WASHER	2	J10001-UP
13		21T-64-36230	BRACKET	1	J10001-UP
14		01010-81225	BOLT	2	J10001-UP
15		01643-31232	WASHER	2	J10001-UP
16		02783-10628	UNION	1	J10001-UP
17		07002-62434	O-RING	1	J10001-UP
18		02896-61018	O-RING	1	J10001-UP
19		02782-10315	ELBOW	1	J10001-UP
20		02782-10422	ELBOW	1	J10001-UP
21		07002-62034	O-RING	2	J10001-UP
22		02896-61012	O-RING	1	J10001-UP
23		02896-61009	O-RING	1	J10001-UP
24		02782-10425	ELBOW	1	J10001-UP
25		07002-62434	O-RING	1	J10001-UP
26		02896-61012	O-RING	1	J10001-UP
27		02762-006A8	HOSE	1	J10001-UP
28		02760-00308	HOSE	1	J10001-UP
29		02762-00414	HOSE	1	J10001-UP
30		02760-00318	HOSE	1	J10001-UP
31		20Y-62-22790	BAND (RED)	2	J10001-UP
32		20Y-62-22820	BAND (BLUE)	2	J10001-UP
33		04435-52112	CLIP	2	J10001-UP
34		04435-51712	CLIP	1	J10001-UP
35		01010-81225	BOLT	3	J10001-UP
36		01643-31232	WASHER	3	J10001-UP
37		08034-20536	BAND	3	J10001-UP
38		21T-64-36770	HOSE	1	J10001-UP
39		21T-64-33670	BRACKET	1	J10001-UP
40		07283-36155	CLIP	1	J10001-UP
41		01597-01009	NUT	2	J10001-UP
42		01643-31032	WASHER	2	J10001-UP
43		04434-53412	CLIP	1	J10001-UP
44		07095-20625	CUSHION	1	J10001-UP

Ref :H1841-02A0 Page :180750

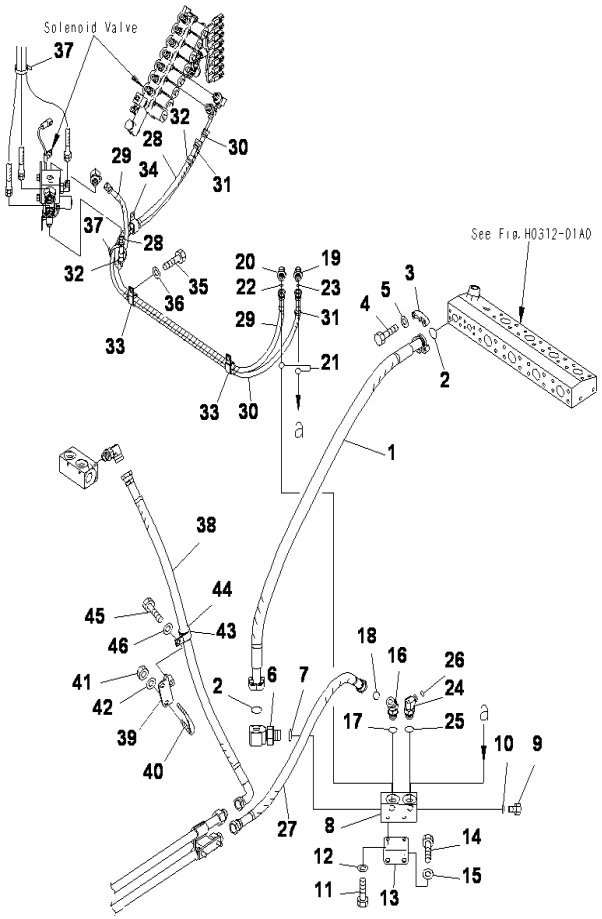

PC2000-8 S/N J10001-UP

PPC PUMP RETURN LINES(HOSE)(1/2)

INDEX	CD	PART NO.	DESCRIPTION	QTY	SERIAL NO.
45		01010-81225	BOLT	1	J10001-UP
46		01643-31232	WASHER	1	J10001-UP

Ref :H1841-02A0 Page :180751

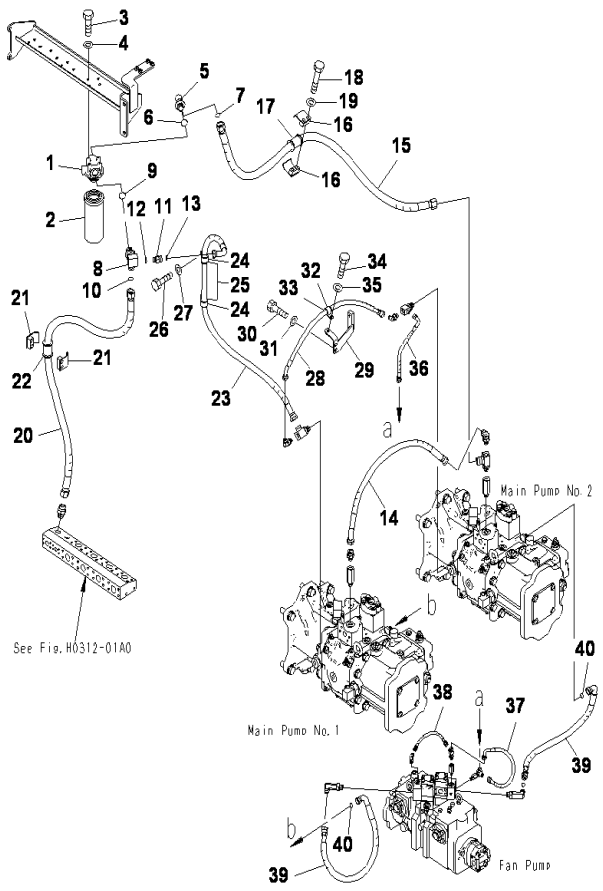

PPC PUMP RETURN LINES(HOSE)(2/2)

INDEX	CD	PART NO.	DESCRIPTION	QTY	SERIAL NO.
1		21T-60-31400	FILTER ASS'Y	1	J10001-UP
2		21T-60-31410	.FILTER	1	J10001-UP
3		01010-81025	BOLT	4	J10001-UP
4		01643-31032	WASHER	4	J10001-UP
5		21W-62-42640	ELBOW	1	J10001-UP
6		07002-63334	ORING	1	J10001-UP
7		11Y-62-11980	O-RING	1	J10001-UP
8		21W-97-34141	ELBOW	1	J10001-UP
9		07002-63334	ORING	1	J10001-UP
10		11Y-62-11980	O-RING	1	J10001-UP
11		02781-00628	UNION	1	J10001-UP
12		07002-62434	O-RING	1	J10001-UP
13		02896-61018	O-RING	1	J10001-UP
14		02764-006A9	HOSE	1	J10001-UP
15		21T-64-36590	HOSE	1	J10001-UP
16		07094-11024	CLAMP	2	J10001-UP
17		07095-01033	CUSHION	1	J10001-UP
18		01010-81280	BOLT	2	J10001-UP
19		01643-31232	WASHER	2	J10001-UP
20		21T-64-36590	HOSE	1	J10001-UP
21		07094-11024	CLAMP	2	J10001-UP
22		07095-01033	CUSHION	1	J10001-UP
23		21T-64-36780	HOSE	1	J10001-UP
24		04434-53412	CLIP	2	J10001-UP
25		07095-20625	CUSHION	2	J10001-UP
26		01010-81225	BOLT	1	J10001-UP
27		01643-31232	WASHER	1	J10001-UP
28		02764-00409	HOSE	1	J10001-UP
29		21T-64-33461	BRACKET	1	J10001-UP
30		01010-81225	BOLT	2	J10001-UP
31		01643-31232	WASHER	2	J10001-UP
32		04434-52712	CLIP	1	J10001-UP
33		07095-20418	CUSHION	1	J10001-UP
34		01010-81225	BOLT	1	J10001-UP
35		01643-31232	WASHER	1	J10001-UP
36		02761-003A4	HOSE	1	J10001-UP
37		02761-00305	HOSE	1	J10001-UP
38		02760-00203	HOSE	1	J10001-UP
39		02757-005A8	HOSE	2	J10001-UP
40		02896-61015	O-RING	2	J10001-UP

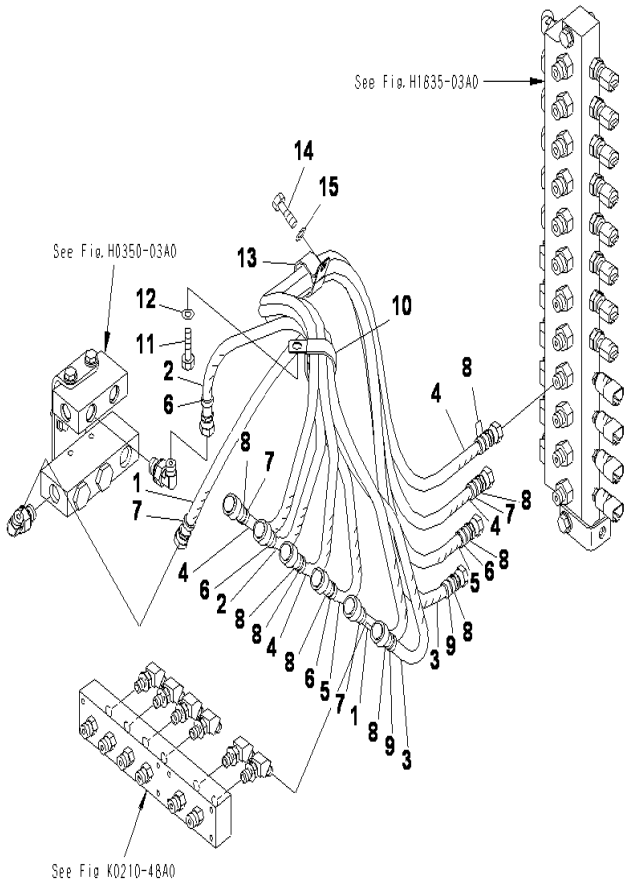

PC2000-8 S/N J10001-UP

PPC TRAVELN LINES

INDEX	CD	PART NO.	DESCRIPTION	QTY	SERIAL NO.
1		207-62-72630	HOSE, 1300MM.....	1	J10001-UP
2		20Y-62-42540	HOSE, 1050MM.....	1	J10001-UP
3		21T-64-36410	HOSE.....	1	J10001-UP
4		21T-64-36680	HOSE.....	2	J10001-UP
5		21T-64-36690	HOSE.....	1	J10001-UP
6		20Y-62-22790	BAND (RED).....	4	J10001-UP
7		20Y-62-22820	BAND (BLUE).....	4	J10001-UP
8		20Y-62-22840	BAND (BLACK).....	10	J10001-UP
9		20Y-62-22850	BAND (GREEN).....	2	J10001-UP
10		20Y-62-17930	CLIP.....	1	J10001-UP
11		01010-81225	BOLT.....	1	J10001-UP
12		01643-31232	WASHER.....	1	J10001-UP
13		208-06-19170	CLIP.....	1	J10001-UP
14		01010-81225	BOLT.....	1	J10001-UP
15		01643-31232	WASHER.....	1	J10001-UP

Ref :H1842-01A0 Page :180770

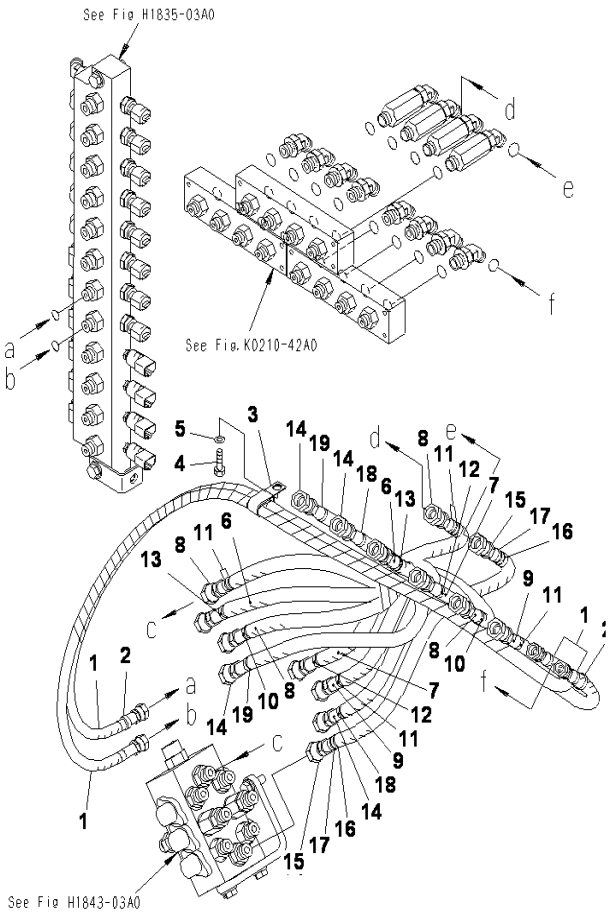

PC2000-8 S/N J10001-UP

PPC WORK LINES(PIPING)(1/2)

INDEX	CD	PART NO.	DESCRIPTION	QTY	SERIAL NO.
1		02760-00318	HOSE	2	J10001-UP
2		20Y-62-22790	BAND (RED)	2	J10001-UP
3		04435-51712	CLIP	1	J10001-UP
4		01010-81225	BOLT	1	J10001-UP
5		01643-31232	WASHER	1	J10001-UP
6		02762-00405	HOSE	1	J10001-UP
7		02762-004A5	HOSE	1	J10001-UP
8		02762-00406	HOSE	2	J10001-UP
9		02762-004A6	HOSE	1	J10001-UP
10		20Y-62-22810	BAND (YELLOW)	2	J10001-UP
11		20Y-62-22820	BAND (BLUE)	6	J10001-UP
12		20Y-62-22830	BAND (WHITE)	2	J10001-UP
13		20Y-62-22840	BAND (BLACK)	2	J10001-UP
14		02762-004A5	HOSE	2	J10001-UP
15		02762-004A6	HOSE	1	J10001-UP
16		20Y-62-22820	BAND (BLUE)	2	J10001-UP
17		20Y-62-22830	BAND (WHITE)	2	J10001-UP
18		20Y-62-22850	BAND (GREEN)	2	J10001-UP
19		20Y-62-22860	BAND (BROWN)	2	J10001-UP

Ref :H1843-01A0 Page :180780

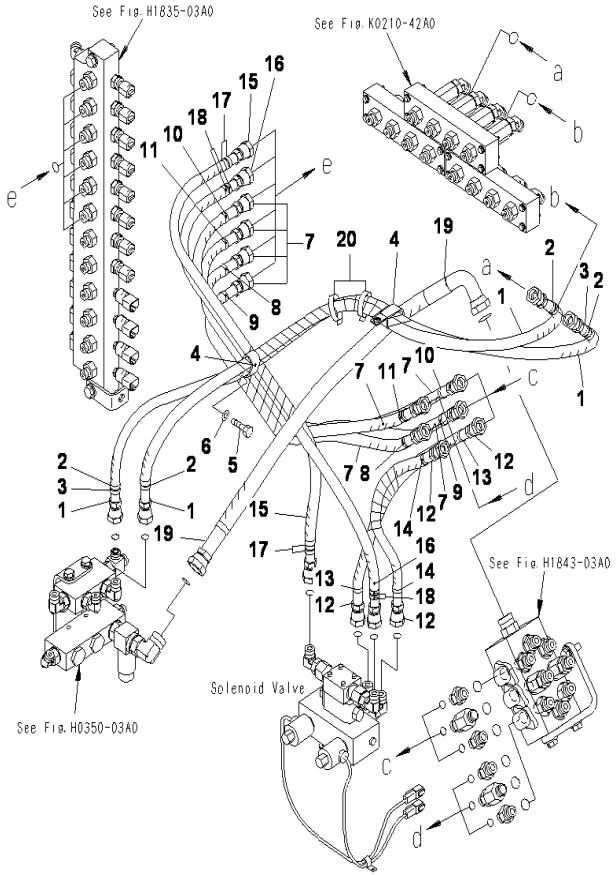

PPC WORK LINES(PIPING)(2/2)

INDEX	CD	PART NO.	DESCRIPTION	QTY	SERIAL NO.
1		02762-00415	HOSE	2	J10001-UP
2		20Y-62-22790	BAND (RED)	4	J10001-UP
3		20Y-62-22830	BAND (WHITE)	4	J10001-UP
4		04435-52212	CLIP	2	J10001-UP
5		01010-81225	BOLT	2	J10001-UP
6		01643-31232	WASHER	2	J10001-UP
7		02762-00406	HOSE	4	J10001-UP
8		20Y-62-22810	BAND (YELLOW)	2	J10001-UP
9		20Y-62-22820	BAND (BLUE)	2	J10001-UP
10		20Y-62-22830	BAND (WHITE)	2	J10001-UP
11		20Y-62-22840	BAND (BLACK)	2	J10001-UP
12		02762-00405	HOSE	2	J10001-UP
13		20Y-62-22850	BAND (GREEN)	2	J10001-UP
14		20Y-62-22860	BAND (BROWN)	2	J10001-UP
15		02762-004A6	HOSE	1	J10001-UP
16		02762-00407	HOSE	1	J10001-UP
17		20Y-62-22850	BAND (GREEN)	4	J10001-UP
18		20Y-62-22860	BAND (BROWN)	4	J10001-UP
19		02763-006A6	HOSE	1	J10001-UP
20		08034-20536	BAND	2	J10001-UP

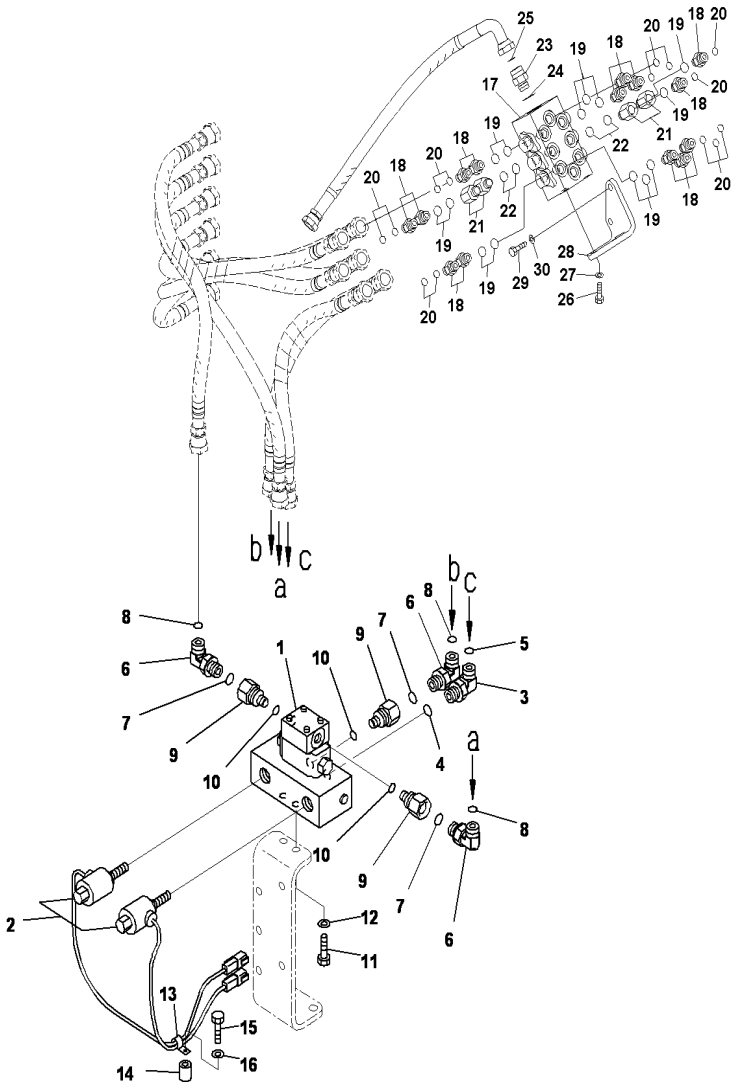

PPC WORK LINES(VALVE)

INDEX	CD	PART NO.	DESCRIPTION	QTY	SERIAL NO.
1		21T-60-31230	VALVE ASS'Y	1	J10001-UP
2		209-60-77290	.SOLENOID VALVE	2	J10001-UP
		209-60-77280	..SOLENOID ASS'Y	1	J10001-UP
3		17M-03-46530	ELBOW	1	J10001-UP
4		07002-61423	O-RING	1	J10001-UP
5		02896-61012	O-RING	1	J10001-UP
6		02782-10422	ELBOW	3	J10001-UP
7		07002-62034	O-RING	3	J10001-UP
8		02896-61012	O-RING	3	J10001-UP
9		21T-64-36671	JOINT	3	J10001-UP
10		07002-61423	O-RING	3	J10001-UP
11		01010-81025	BOLT	2	J10001-UP
12		01643-31032	WASHER	2	J10001-UP
13		04434-51012	CLIP	1	J10001-UP
14		195-33-11220	SPACER	1	J10001-UP
15		01010-81245	BOLT	1	J10001-UP
16		01643-31232	WASHER	1	J10001-UP
17		(702-21-09310)	VALVE ASS'Y	1	J10001-UP
18		02781-00422	UNION	14	J10001-UP
19		07002-62034	O-RING	14	J10001-UP
20		02896-61012	O-RING	14	J10001-UP
21		11T-61-11280	NIPPLE	4	J10001-UP
22		07002-62034	O-RING	4	J10001-UP
23		02781-00628	UNION	1	J10001-UP
24		07002-62434	O-RING	1	J10001-UP
25		02896-61018	O-RING	1	J10001-UP
26		01010-81235	BOLT	3	J10001-UP
27		01643-31232	WASHER	3	J10001-UP
28		21T-64-36721	PLATE	1	J10001-UP
29		01010-81235	BOLT	2	J10001-UP
30		01643-31232	WASHER	2	J10001-UP

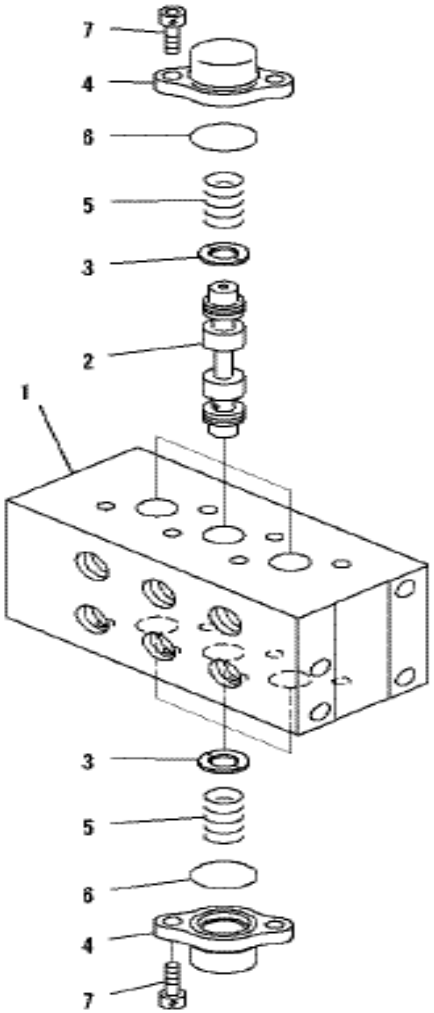

PC2000-8 S/N J10001-UP

PPC WORK LINES (INNER PARTS)

INDEX	CD	PART NO.	DESCRIPTION	QTY	SERIAL NO.
		702-21-09310	VALVE ASS'Y.....	1	J10001-UP
1	C1	702-21-42110	.BLOCK.....	1	J10001-UP
2	C1	702-21-42120	.SPOOL.....	3	J10001-UP
3		702-21-42130	.RETAINER.....	6	J10001-UP
4		702-21-42140	.FLANGE.....	6	J10001-UP
5		702-21-42150	.SPRING.....	6	J10001-UP
6		702-21-42160	.O-RING.....	6	J10001-UP
7		01252-60820	.BOLT.....	12	J10001-UP

Ref :H1843-04A0 Page :180805

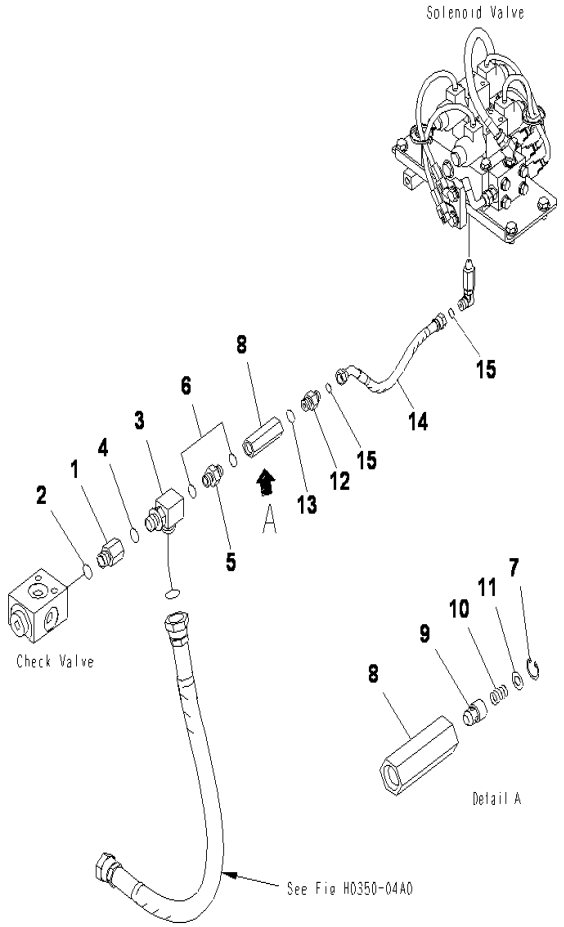

PC2000-8 S/N J10001-UP

HYDRAULIC LADDER LINE(DELIVERY LINE)

INDEX	CD	PART NO.	DESCRIPTION	QTY	SERIAL NO.
1		201-62-71810	JOINT	1	J10001-UP
2		07002-62434	O-RING	1	J10001-UP
3		21N-64-36550	ELBOW	1	J10001-UP
4		07002-62434	O-RING	1	J10001-UP
5		203-97-35610	UNION	1	J10001-UP
6		07002-62034	O-RING	2	J10001-UP
		205-60-64300	VALVE ASS'Y	1	J10001-UP
7		04065-01410	.RING	1	J10001-UP
8		205-60-64290	.BODY	1	J10001-UP
9		205-60-51390	.POPPET	1	J10001-UP
10		205-60-51410	.SPRING	1	J10001-UP
11		205-60-51420	.SEAT	1	J10001-UP
12		02781-00315	UNION	1	J10001-UP
13		07002-62034	O-RING	1	J10001-UP
14		02764-003A3	HOSE	1	J10001-UP
15		02896-61009	O-RING	2	J10001-UP

Ref :H1850-01A0 Page :180810

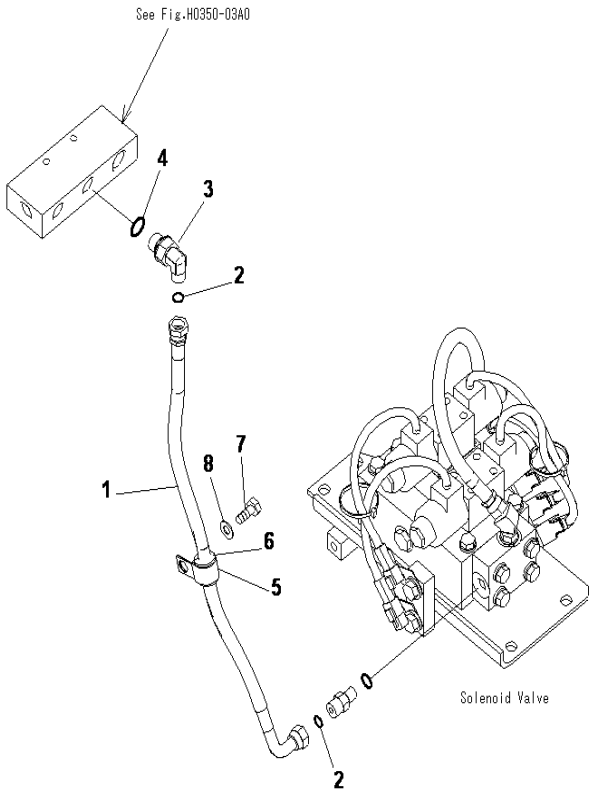

PC2000-8 S/N J10001-UP

HYDRAULIC LADDER LINE(DRAIN LINE)

INDEX	CD	PART NO.	DESCRIPTION	QTY	SERIAL NO.
1		02763-00306	HOSE	1	J10001-UP
2		02896-61009	O-RING	2	J10001-UP
3		02782-10315	ELBOW	1	J10001-UP
4		07002-62034	O-RING	1	J10001-UP
5		04434-52112	CLIP	1	J10001-UP
6		07095-20314	CUSHION	1	J10001-UP
7		01010-81225	BOLT	1	J10001-UP
8		01643-31232	WASHER	1	J10001-UP

Ref :H1850-02A0 Page :180820

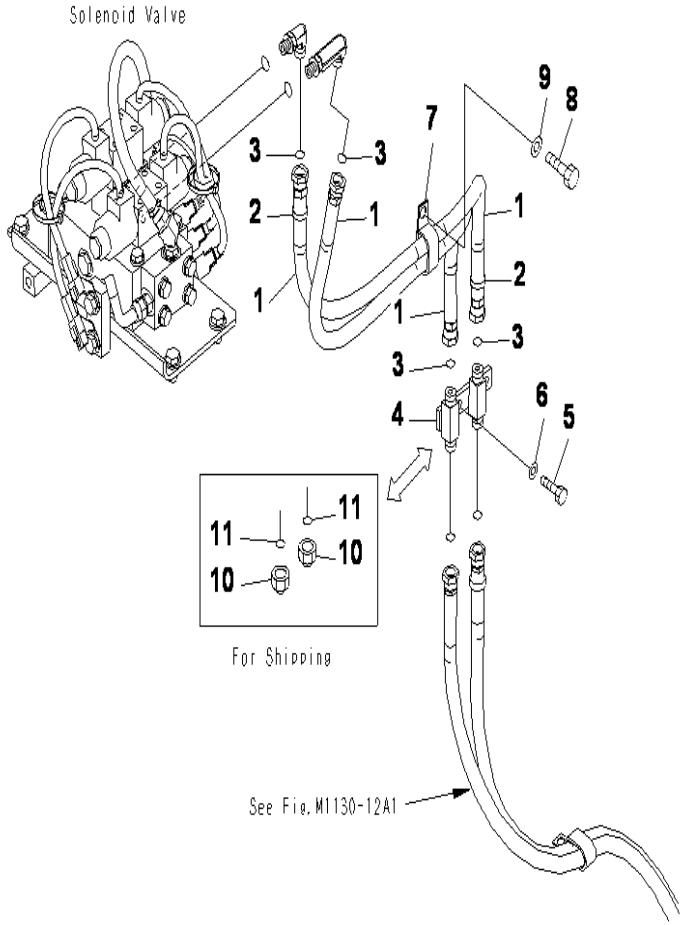

PC2000-8 S/N J10001-UP

HYDRAULIC LADDER LINE(CYLINDER LINE)

INDEX	CD	PART NO.	DESCRIPTION	QTY	SERIAL NO.
1		02753-003A9	HOSE	2	J10001-UP
2		20Y-62-22860	BAND (BROWN)	2	J10001-UP
3		02896-61009	O-RING	4	J10001-UP
4		21M-62-21880	JOINT	1	J10001-UP
5		01010-81025	BOLT	2	J10001-UP
6		01643-31032	WASHER	2	J10001-UP
7		04435-52112	CLIP	1	J10001-UP
8		01010-81225	BOLT	1	J10001-UP
9		01643-31232	WASHER	1	J10001-UP
10		02789-10315	PLUG	2	J10001-UP
11		02896-61009	O-RING	2	J10001-UP

Ref :H1830-03A0 Page :180830

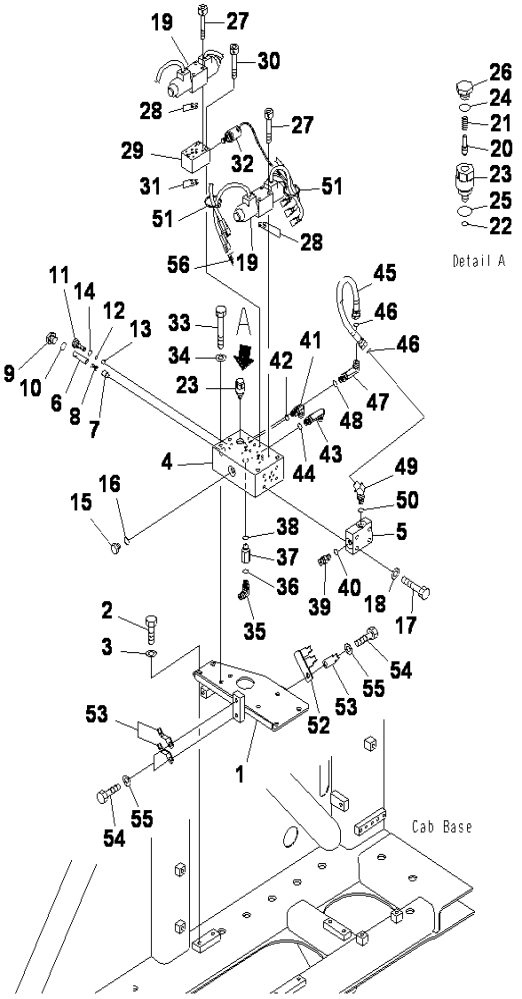

PC2000-8 S/N J10001-UP

HYDRAULIC LADDER LINE(VALVE)

INDEX	CD	PART NO.	DESCRIPTION	QTY	SERIAL NO.
1		21T-64-34371	BRACKET	1	J10001-UP
2		01010-81225	BOLT	4	J10001-UP
3		01643-31232	WASHER	4	J10001-UP
		21T-64-34301	VALVE ASS'Y	1	J10001-UP
4	C1	21T-64-34311	.BLOCK	1	J10001-UP
5		21T-64-34320	.BLOCK	1	J10001-UP
6		21T-64-34330	.BAR	1	J10001-UP
7		205-60-51390	.POPPET	1	J10001-UP
8		205-60-51410	.SPRING	1	J10001-UP
9		07040-12012	.PLUG	1	J10001-UP
10		07002-62034	.O-RING	1	J10001-UP
11		21T-60-72620	.PLUG	1	J10001-UP
12		07000-B1007	.O-RING	1	J10001-UP
13		04260-00952	.BALL	1	J10001-UP
14		07002-61423	.O-RING	1	J10001-UP
15		07040-11409	.PLUG	1	J10001-UP
16		07002-61423	.O-RING	1	J10001-UP
17		01010-81050	.BOLT	4	J10001-UP
18		01643-31032	.WASHER	4	J10001-UP
19		8234-60-1160	.SOLENOID VALVE	2	J10001-UP
		21T-60-31700	.CHECK VALVE	1	J10001-UP
20		21T-60-31710	..POPPET	1	J10001-UP
21		709-30-62160	..SPRING	1	J10001-UP
22		709-32-11840	..O-RING	1	J10001-UP
23	C1	723-20-61120	..SLEEVE	1	J10001-UP
24		07002-61423	..O-RING	1	J10001-UP
25		07002-62034	..O-RING	1	J10001-UP
26		07040-11409	..PLUG	1	J10001-UP
27		01252-70545	.BOLT	8	J10001-UP
28		07000-B1009	.O-RING	8	J10001-UP
29		21T-64-34410	.BLOCK	1	J10001-UP
30		01252-70645	.BOLT	3	J10001-UP
31		07000-B1009	.O-RING	4	J10001-UP
32		21T-64-34430	.VALVE ASS'Y	1	J10001-UP
33		01010-81095	BOLT	4	J10001-UP
34		01643-31032	WASHER	4	J10001-UP
35		02782-10311	ELBOW	1	J10001-UP
36		07002-61423	O-RING	1	J10001-UP
37		20Y-60-22350	BODY	1	J10001-UP
38		07002-61423	O-RING	1	J10001-UP
39		02781-0031D	NIPPLE	1	J10001-UP
40		07002-61423	O-RING	1	J10001-UP
41		02782-10311	ELBOW	1	J10001-UP
42		07002-61423	O-RING	1	J10001-UP
43		02782-10312	ELBOW	1	J10001-UP

Ref :H1850-04A0 Page :180840

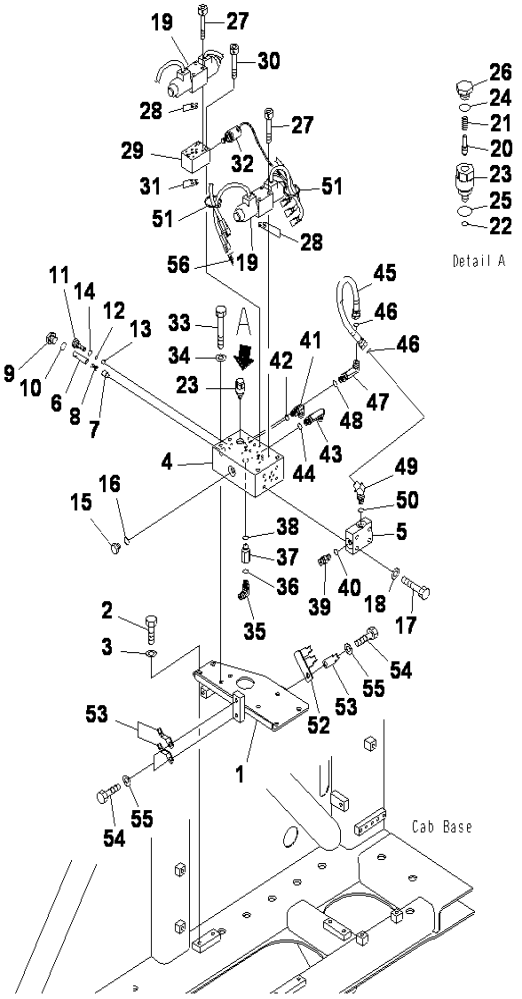

PC2000-8 S/N J10001-UP

HYDRAULIC LADDER LINE(VALVE)

INDEX	CD	PART NO.	DESCRIPTION	QTY	SERIAL NO.
44		07002-61423	O-RING	1	J10001-UP
45		02760-00304	HOSE	1	J10001-UP
46		02896-61009	O-RING	2	J10001-UP
47		02782-10312	ELBOW	1	J10001-UP
48		07002-61423	O-RING	1	J10001-UP
49		11Y-62-12510	ELBOW	1	J10001-UP
50		07002-61423	O-RING	1	J10001-UP
51		08034-20519	BAND	2	J10001-UP
52		21T-64-35340	BRACKET	1	J10001-UP
53		08193-20012	CLIP	3	J10001-UP
54		01010-81225	BOLT	3	J10001-UP
55		01643-31232	WASHER	3	J10001-UP
56		21T-06-31590	CONNECTOR	1	J10001-UP

Ref :H1850-04A0 Page :180841

MAIN FRAME AND RELATED PARTS

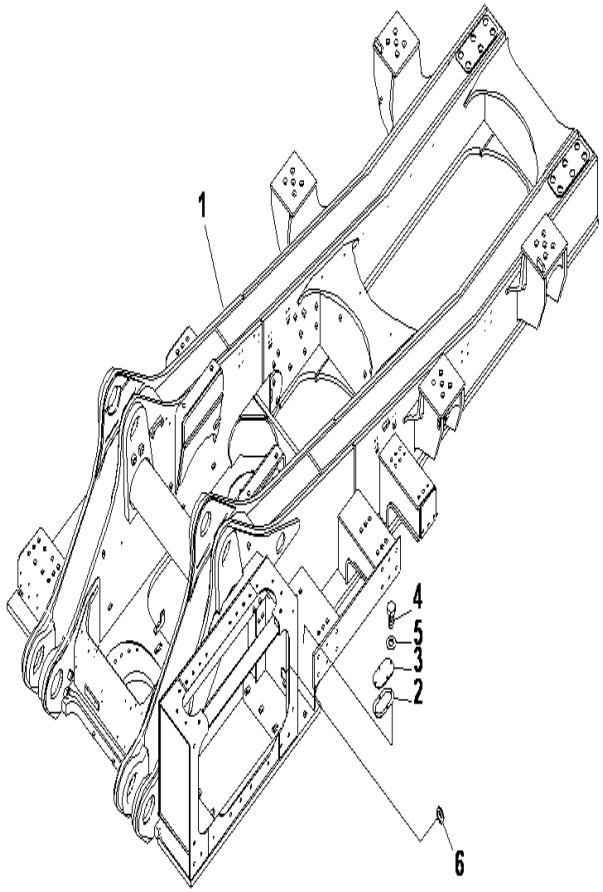

PC2000-8 S/N J10001-UP

REVOLVING FRAME

INDEX	CD	PART NO.	DESCRIPTION	QTY	SERIAL NO.
1		21T-46-00115	REVOLVING FRAME.....	1	J10001-UP
2		21T-46-31130	GASKET.....	1	J10001-UP
3		21T-46-31140	COVER.....	1	J10001-UP
4		01010-81230	BOLT.....	4	J10001-UP
5		01643-31232	WASHER.....	4	J10001-UP
6		203-62-67160	GROMMET.....	1	J10001-UP

Ref :J1110-01A0 Page :210010

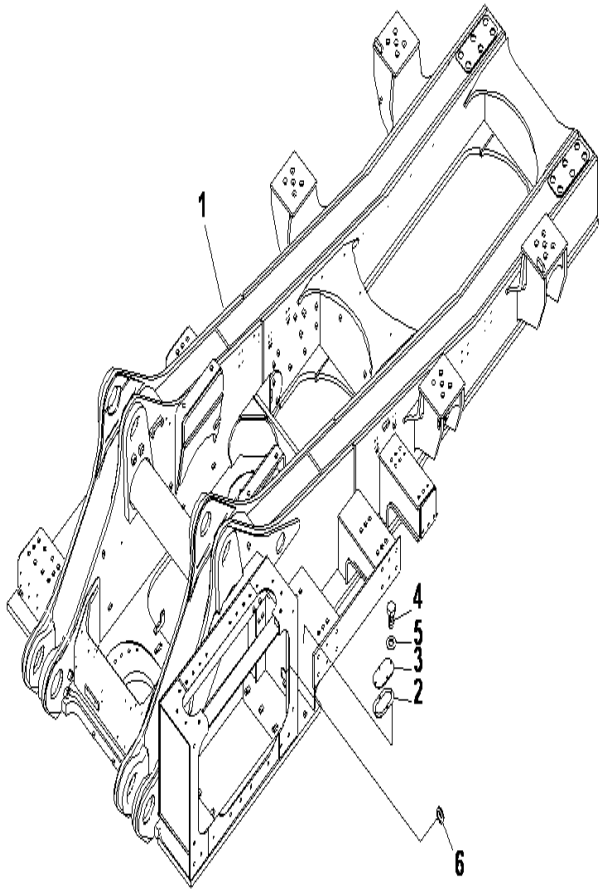

PC2000-8 S/N J10001-UP

REVOLVING FRAME

INDEX	CD	PART NO.	DESCRIPTION	QTY	SERIAL NO.
1		21T-46-31313	FRAME	1	J10001-UP
2		21T-46-31130	GASKET	1	J10001-UP
3		21T-46-31140	COVER	1	J10001-UP
4		01010-81230	BOLT	4	J10001-UP
5		01643-31232	WASHER	4	J10001-UP
6		203-62-67160	GROMMET	1	J10001-UP

Ref :J1110-01A1 Page :210020

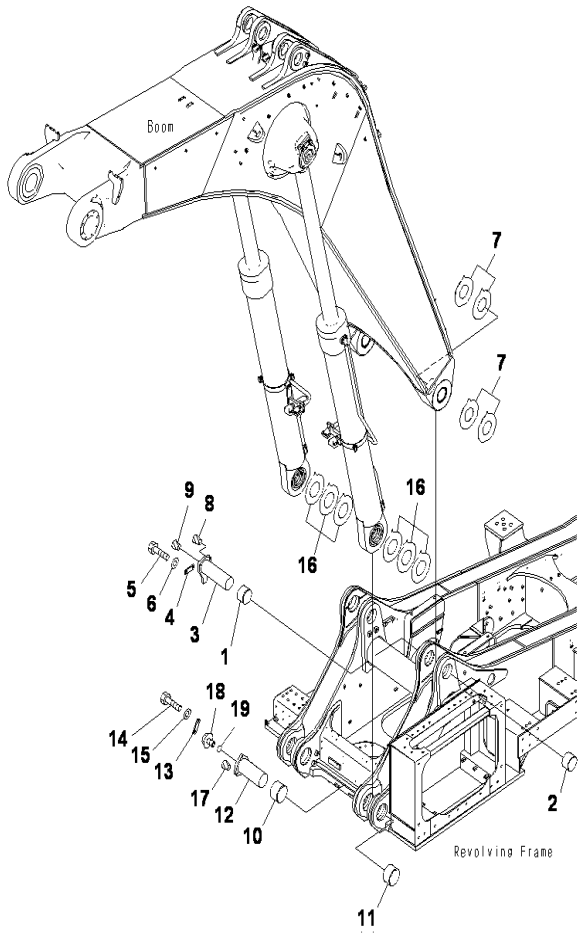

PC2000-8 S/N J10001-UP

BOOM FOOT PIN

INDEX	CD	PART NO.	DESCRIPTION	QTY	SERIAL NO.
1		21T-70-67230	BUSHING	2	J10001-UP
2		21T-70-71232	BUSHING	2	J10001-UP
3		21T-70-71181	PIN	2	J10001-UP
4		21T-70-71490	PLATE	2	J10001-UP
5		01010-82455	BOLT	4	J10001-UP
6		01643-32460	WASHER	4	J10001-UP
7		21T-70-00370	SHIM ASSY	4	J10001-UP
	C1	21T-70-31480	.SHIM, 1.0MM	2	J10001-UP
	C1	21T-70-31490	.SHIM, 1.5MM	4	J10001-UP
8		07049-02430	PLUG	6	J10001-UP
9		07049-03038	PLUG	2	J10001-UP
10		21T-70-31220	BUSHING	2	J10001-UP
11		21T-70-31230	BUSHING	2	J10001-UP
12		21T-70-31171	PIN	2	J10001-UP
13		21T-70-71490	PLATE	2	J10001-UP
14		01010-82455	BOLT	4	J10001-UP
15		01643-32460	WASHER	4	J10001-UP
16		21T-70-00380	SHIM ASS'Y	2	J10001-UP
	C1	21T-70-31470	.SHIM, 1.5MM	4	J10001-UP
	C1	21T-70-31690	.SHIM, 1.0MM	4	J10001-UP
	C1	21T-70-31421	.SHIM, 1.6MM	1	J10001-UP
17		07049-02430	PLUG	6	J10001-UP
18		21T-70-71460	PLUG	2	J10001-UP
19		07002-13034	O-RING	2	J10001-UP

Ref :J1310-01A0 Page :210030

OPERATORS COMPARTMENT AND CONTROL SYSTEM

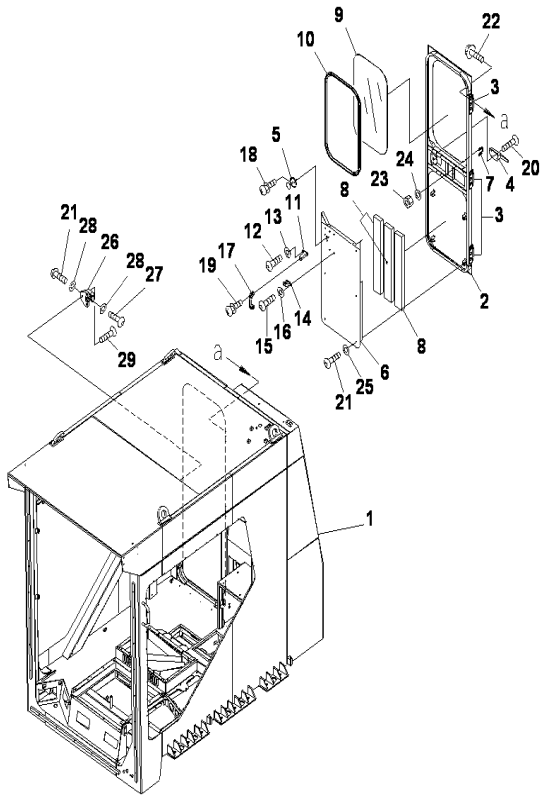

OPERATOR'S CAB(CAB AND DOOR)

INDEX	CD	PART NO.	DESCRIPTION	QTY	SERIAL NO.
		21T-54-00304	CAB ASS'Y	1	J10004-UP
		21T-54-00303	CAB ASS'Y	1	J10001-J10003
		21T-54-00312	CAB ASS'Y WITH FRONT GUARD	1	J10001-UP
1	C1	21T-54-35113	.CAB	1	J10001-UP
		21T-54-35402	.DOOR ASS'Y	1	J10001-UP
2	C1	21T-54-35412	..DOOR	1	J10001-UP
3		14X-91-11330	...HINGE	3	J10001-UP
4		21T-54-35421	..HANDLE	1	J10001-UP
5		21T-54-35440	..KNOB	1	J10001-UP
6		21T-54-35462	..COVER	1	J10001-UP
7		21T-54-35471	..STRIKER	1	J10001-UP
8		21T-54-35481	..SHEET	3	J10001-UP
9		21T-54-36281	..GLASS(REAR)	1	J10001-UP
10		21T-54-36291	..WEATHER STRIP(R	1	J10001-UP
11		21T-53-32131	..BRACKET	1	J10001-UP
12		01245-00825	..SCREW	2	J10001-UP
13		01643-70823	..WASHER	2	J10001-UP
14		21T-53-32140	..BRACKET	1	J10001-UP
15		01245-00825	..SCREW	2	J10001-UP
16		01643-70823	..WASHER	2	J10001-UP
17		20Y-54-14590	..HANDLE	1	J10001-UP
18		01023-10416	..SCREW	3	J10001-UP
19		01023-10616	..SCREW	2	J10001-UP
20		01240-00620	..SCREW	4	J10001-UP
21		01245-00825	..SCREW	6	J10001-UP
22		01435-41025	..BOLT	9	J10001-UP
23		01580-11008	..NUT	2	J10001-UP
24		01643-31032	..WASHER	2	J10001-UP
25		01643-70823	..WASHER	6	J10001-UP
26		21T-54-35432	.CATCH	1	J10001-UP
27		01245-00620	..SCREW	2	J10001-UP
28		01643-70623	..WASHER	2	J10001-UP
29		01240-00625	.SCREW	3	J10001-UP

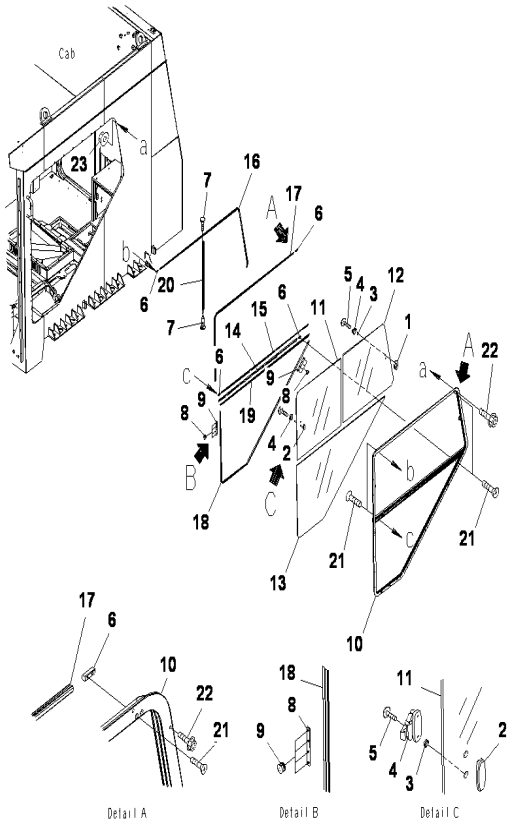

PC2000-8 S/N J10001-UP

OPERATOR'S CAB(WINDOW SASH)

INDEX	CD	PART NO.	DESCRIPTION	QTY	SERIAL NO.
		21T-54-00304	CAB ASS'Y	1	J10004-UP
		21T-54-00303	CAB ASS'Y	1	J10001-J10003
		21T-54-00312	CAB ASS'Y WITH FRONT GUARD	1	J10001-UP
		21T-54-36100	.SASH ASS'Y	1	J10001-UP
1	C1	21T-54-3610001	..RETAINER	1	J10001-UP
2	C1	21T-54-3610002	..RETAINER	1	J10001-UP
3	C1	21T-54-3610003	..PLATE	4	J10001-UP
4	C1	21T-54-3610004	..KNOB	2	J10001-UP
5	C1	21T-54-3610005	..SCREW	4	J10001-UP
6	C1	21T-54-3610006	..STOPPER	4	J10001-UP
7	C1	21T-54-3610007	..SCREW	3	J10001-UP
8		21T-54-27580	..COMPOUND	2	J10001-UP
9		201-54-27590	..POP RIVET	8	J10001-UP
10		21T-54-36121	..FRAME	1	J10001-UP
11		21T-54-36131	..GLASS	1	J10001-UP
12		21T-54-36141	..GLASS	1	J10001-UP
13		21T-54-36151	..GLASS	1	J10001-UP
14		21T-54-36161	..RUNCHANNEL	1	J10001-UP
15		21T-54-36171	..RUNCHANNEL	1	J10001-UP
16		21T-54-36180	..WEATHER STRIP	1	J10001-UP
17		21T-54-36190	..WEATHER STRIP	1	J10001-UP
18		21T-54-36210	..SEAL	1	J10001-UP
19		21T-54-36220	..SEAL	1	J10001-UP
20		21T-54-36231	..SEAL	1	J10001-UP
21		01224-70410	..SCREW	8	J10001-UP
22		21T-54-36311	.BOLT	33	J10001-UP
23		01584-30504	.NUT	33	J10001-UP

Ref :K0210-02A0 Page :240020

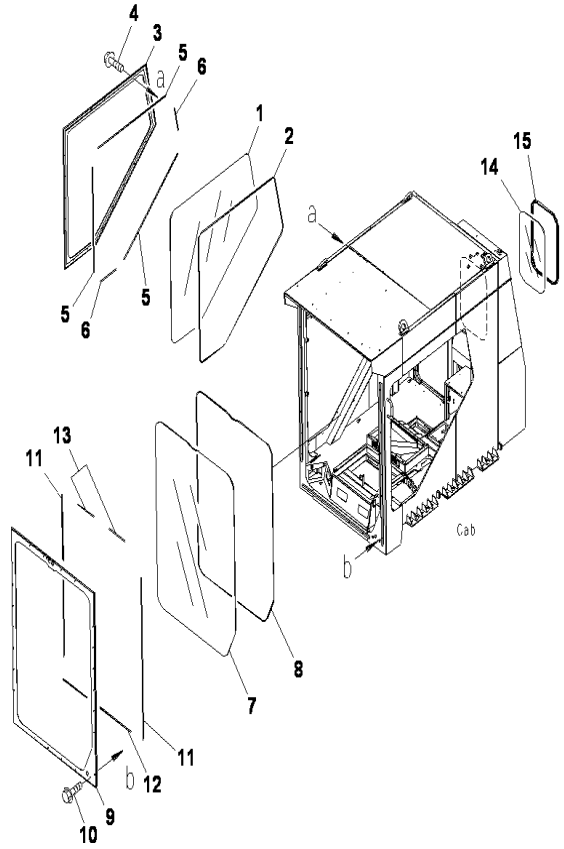

PC2000-8 S/N J10001-UP

OPERATOR'S CAB(GLASS WINDOWS)

INDEX	CD	PART NO.	DESCRIPTION	QTY	SERIAL NO.
		21T-54-00304	CAB ASS'Y.....	1	J10004-UP
		21T-54-00303	CAB ASS'Y.....	1	J10001-J10003
		21T-54-00312	CAB ASS'Y WITH FRONT GUARD.....	1	J10001-UP
1		21T-54-36321	.GLASS(R.H/FILM).....	1	J10001-UP
2		21T-54-35870	.SEAL(DAM/R.H).....	1	J10001-UP
3		21T-54-36271	.FRAME.....	1	J10001-UP
4		01435-41016	.BOLT.....	19	J10001-UP
5		21T-54-35840	.SHEET.....	3	J10001-UP
6		21T-54-35850	.SHEET.....	2	J10001-UP
7		21T-54-36241	.GLASS(FRONT).....	1	J10001-UP
8		21T-54-35861	.SEAL(DAM/FRONT).....	1	J10001-UP
9		21T-54-36261	.FRAME.....	1	J10001-UP
10		01435-41016	.BOLT.....	22	J10001-UP
11		21T-54-35830	.SHEET.....	2	J10001-UP
12		21T-54-35840	.SHEET.....	1	J10001-UP
13		21T-54-35850	.SHEET.....	2	J10001-UP
14		21T-54-36281	GLASS(REAR).....	1	J10001-UP
15		21T-54-36291	WEATHER STRIP(R.....	1	J10001-UP

Ref :K0210-03A0 Page :240030

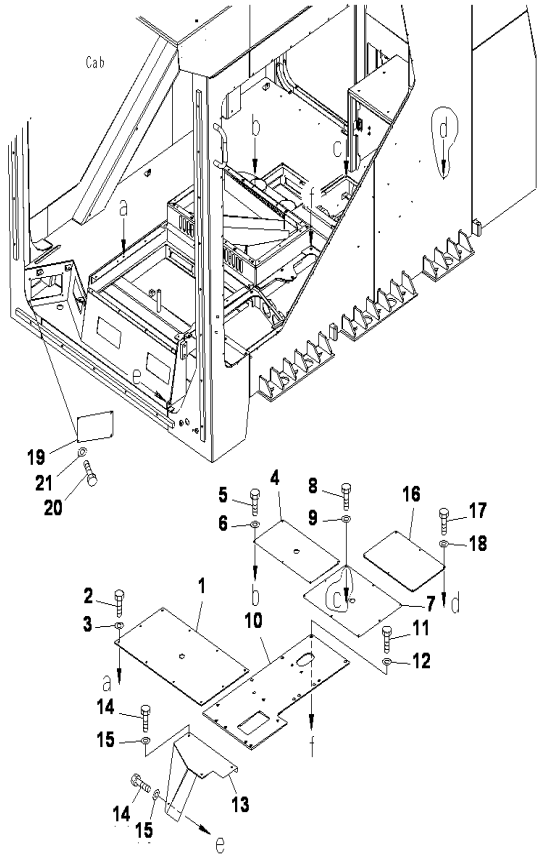

PC2000-8 S/N J10001-UP

OPERATOR'S CAB(FLOOR COVER)

INDEX	CD	PART NO.	DESCRIPTION	QTY	SERIAL NO.
		21T-54-00304	CAB ASS'Y	1	J10004-UP
		21T-54-00303	CAB ASS'Y	1	J10001-J10003
		21T-54-00312	CAB ASS'Y WITH FRONT GUARD	1	J10001-UP
1		21T-54-35231	.COVER	1	J10001-UP
2		01010-80616	.BOLT	10	J10001-UP
3		01643-30623	.WASHER	10	J10001-UP
4		21T-54-35241	.COVER	1	J10001-UP
5		01010-80616	.BOLT	5	J10001-UP
6		01643-30623	.WASHER	5	J10001-UP
7		21T-54-35251	.COVER	1	J10001-UP
8		01010-80616	.BOLT	8	J10001-UP
9		01643-30623	.WASHER	8	J10001-UP
10		21T-54-35264	.COVER	1	J10001-UP
11		01010-D1230	.BOLT	6	J10001-UP
12		01643-71232	.WASHER	6	J10001-UP
13		21T-54-35282	.COVER	1	J10001-UP
14		01010-D0616	.BOLT	4	J10001-UP
15		01643-70623	.WASHER	4	J10001-UP
16		21T-54-36371	.COVER	1	J10001-UP
17		01010-D0616	.BOLT	6	J10001-UP
18		01643-70623	.WASHER	6	J10001-UP
19		21T-54-36541	.COVER	1	J10001-UP
20		01010-D0616	.BOLT	4	J10001-UP
21		01643-70623	.WASHER	4	J10001-UP

Ref :K0210-04A0 Page :240040

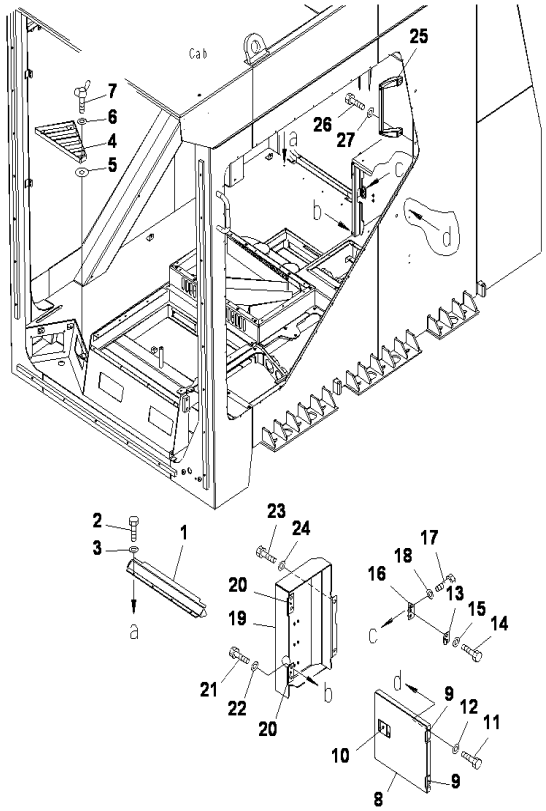

OPERATOR'S CAB(ACCESSORY PARTS)

INDEX	CD	PART NO.	DESCRIPTION	QTY	SERIAL NO.
		21T-54-00304	CAB ASS'Y	1	J10004-UP
		21T-54-00303	CAB ASS'Y	1	J10001-J10003
		21T-54-00312	CAB ASS'Y WITH FRONT GUARD	1	J10001-UP
1		21T-54-35221	.BRACKET	1	J10001-UP
2		01010-80616	.BOLT	4	J10001-UP
3		01643-30623	.WASHER	4	J10001-UP
4		21T-54-35271	.COVER	1	J10001-UP
5		20Y-54-65690	.WASHER	3	J10001-UP
6		01643-70623	.WASHER	3	J10001-UP
7		20Y-54-65790	.BOLT	3	J10001-UP
8		21T-54-35371	.DOOR	1	J10001-UP
9		154-55-31640	..HINGE	2	J10001-UP
10		09461-00030	..LEVER	1	J10001-UP
11		01010-D0616	.BOLT	4	J10001-UP
12		01643-70623	.WASHER	4	J10001-UP
13		20Y-54-29651	.BRACKET	1	J10001-UP
14		01010-D1225	.BOLT	2	J10001-UP
15		01643-71232	.WASHER	2	J10001-UP
16		21T-54-35341	.BRACKET	1	J10001-UP
17		01010-D1225	.BOLT	2	J10001-UP
18		01643-71232	.WASHER	2	J10001-UP
19		21T-54-36381	.COVER	1	J10001-UP
20		207-54-16520	..HINGE	2	J10001-UP
21		01010-81225	.BOLT	4	J10001-UP
22		01643-31232	.WASHER	4	J10001-UP
23		01010-D1225	.BOLT	2	J10001-UP
24		01643-71232	.WASHER	2	J10001-UP
25		20Y-54-51393	.GRIP(DOOR)	1	J10001-UP
26		01010-80825	.BOLT	2	J10001-UP
27		01643-30823	.WASHER	2	J10001-UP

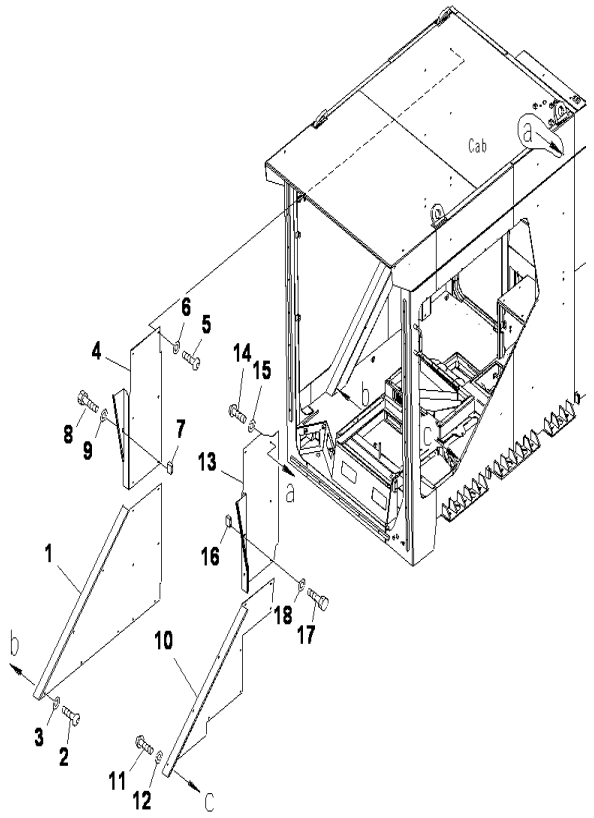

PC2000-8 S/N J10001-UP

OPERATOR'S CAB(COVER)(1/2)

INDEX	CD	PART NO.	DESCRIPTION	QTY	SERIAL NO.
		21T-54-00304	CAB ASS'Y	1	J10004-UP
		21T-54-00303	CAB ASS'Y	1	J10001-J10003
		21T-54-00312	CAB ASS'Y WITH FRONT GUARD	1	J10001-UP
1		21T-54-36571	.COVER	1	J10001-UP
2		01245-00820	.SCREW	11	J10001-UP
3		01643-70823	.WASHER	11	J10001-UP
4		21T-54-36581	.COVER	1	J10001-UP
5		01245-00820	.SCREW	6	J10001-UP
6		01643-70823	.WASHER	6	J10001-UP
7		21T-54-35671	.SEAT	1	J10001-UP
8		01010-80612	.BOLT	2	J10001-UP
9		01643-30623	.WASHER	2	J10001-UP
10		21T-54-36592	.COVER	1	J10001-UP
11		01245-00820	.SCREW	9	J10001-UP
12		01643-70823	.WASHER	9	J10001-UP
13		21T-54-36611	.COVER	1	J10001-UP
14		01245-00820	.SCREW	5	J10001-UP
15		01643-70823	.WASHER	5	J10001-UP
16		21T-54-35671	.SEAT	1	J10001-UP
17		01010-80612	.BOLT	2	J10001-UP
18		01643-30623	.WASHER	2	J10001-UP

Ref :K0210-06A0 Page :240060

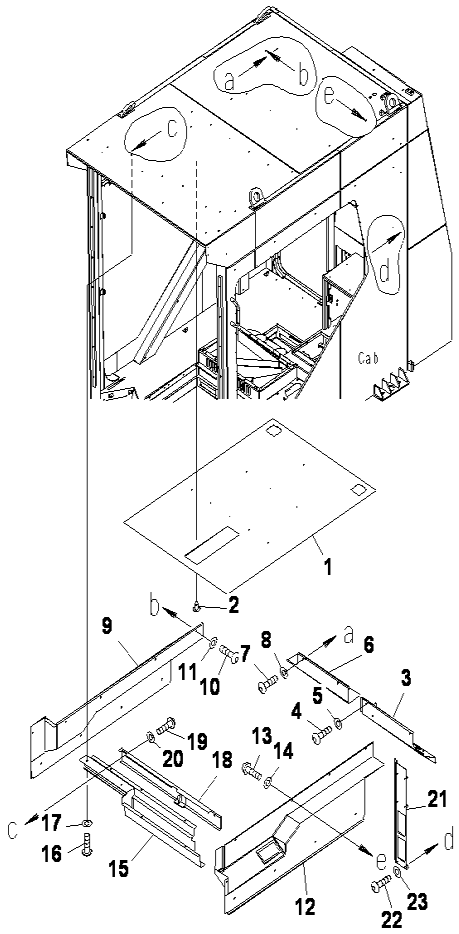

PC2000-8 S/N J10001-UP

OPERATOR'S CAB(COVER)(2/2)

INDEX	CD	PART NO.	DESCRIPTION	QTY	SERIAL NO.
		21T-54-00304	CAB ASS'Y	1	J10004-UP
		21T-54-00303	CAB ASS'Y	1	J10001-J10003
		21T-54-00312	CAB ASS'Y WITH FRONT GUARD	1	J10001-UP
1		21T-54-36622	.COVER	1	J10001-UP
2		114-X11-2260	.RIVET	10	J10001-UP
3		21T-54-36511	.COVER	1	J10001-UP
4		01245-00820	.SCREW	4	J10001-UP
5		01643-70823	.WASHER	4	J10001-UP
6		21T-54-36521	.PLATE	1	J10001-UP
7		01245-00820	.SCREW	4	J10001-UP
8		01643-70823	.WASHER	4	J10001-UP
9		21T-54-36551	.COVER	1	J10001-UP
10		01245-00820	.SCREW	9	J10001-UP
11		01643-70823	.WASHER	9	J10001-UP
12		21T-54-36561	.COVER	1	J10001-UP
13		01245-00820	.SCREW	9	J10001-UP
14		01643-70823	.WASHER	9	J10001-UP
15		21T-54-35741	.COVER	1	J10001-UP
16		01245-00820	.SCREW	7	J10001-UP
17		01643-70823	.WASHER	7	J10001-UP
18		21T-54-35711	.COVER	1	J10001-UP
19		01245-00820	.SCREW	3	J10001-UP
20		01643-70823	.WASHER	3	J10001-UP
21		21T-54-36531	.COVER	1	J10001-UP
22		01245-00835	.SCREW	6	J10001-UP
23		01643-70823	.WASHER	6	J10001-UP

Ref :K0210-07A0 Page :240070

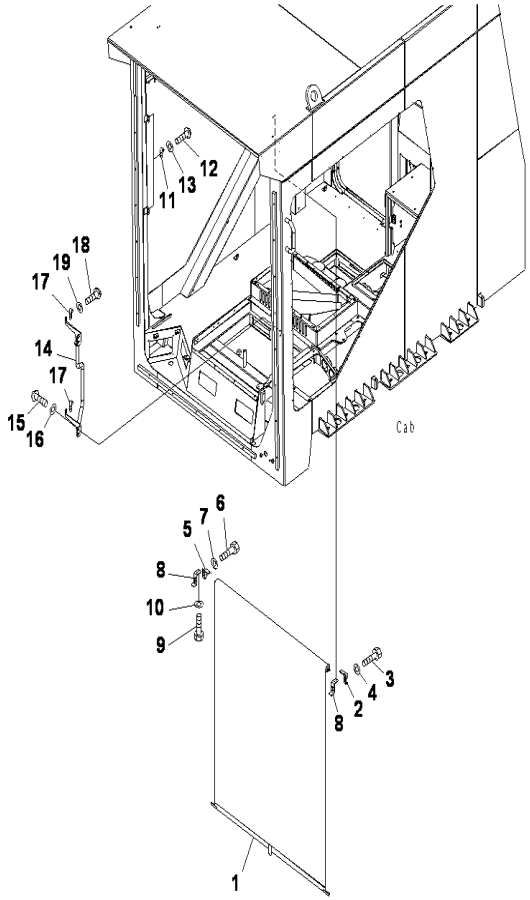

PC2000-8 S/N J10001-UP

OPERATOR'S CAB(CURTAIN)(1/3)

INDEX	CD	PART NO.	DESCRIPTION	QTY	SERIAL NO.
		21T-54-00304	CAB ASS'Y	1	J10004-UP
		21T-54-00303	CAB ASS'Y	1	J10001-J10003
		21T-54-00312	CAB ASS'Y WITH FRONT GUARD	1	J10001-UP
1		21T-54-35612	.CURTAIN A	1	J10001-UP
2		21T-54-69842	.BRACKET	1	J10001-UP
3		01010-80616	.BOLT	2	J10001-UP
4		01643-30623	.WASHER	2	J10001-UP
5		21T-54-69852	.BRACKET	1	J10001-UP
6		01010-80616	.BOLT	2	J10001-UP
7		01643-30623	.WASHER	2	J10001-UP
8		21T-54-35652	.BRACKET	2	J10001-UP
9		01010-80616	.BOLT	4	J10001-UP
10		01643-30623	.WASHER	4	J10001-UP
11		21T-54-69711	.BRACKET	2	J10001-UP
12		01245-00612	.SCREW	4	J10001-UP
13		01641-50608	.WASHER	4	J10001-UP
14		21T-54-35761	.GRIP	1	J10001-UP
15		0124500825	.SCREW	4	J10001-UP
16		01643-70823	.WASHER	4	J10001-UP
17		21T-54-69990	.BRACKET	2	J10001-UP
18		01245-00612	.SCREW	4	J10001-UP
19		01641-50608	.WASHER	4	J10001-UP

Ref :K0210-08A0 Page :240080

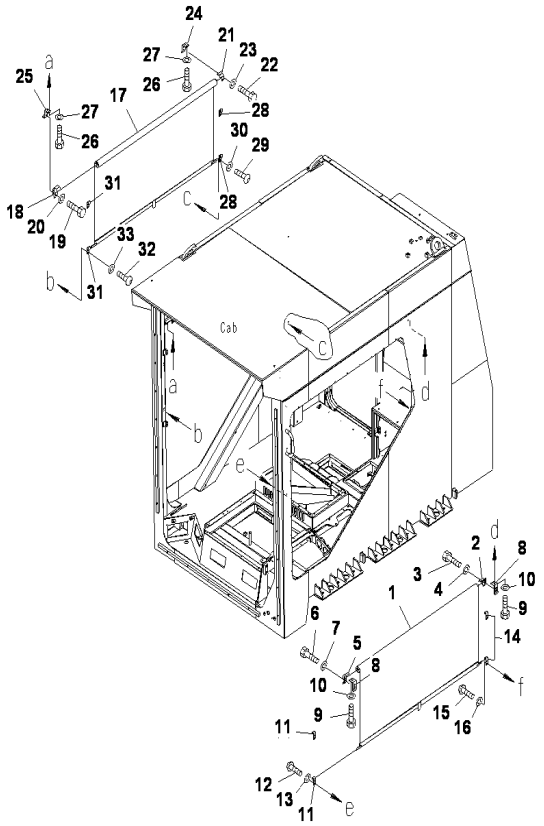

PC2000-8 S/N J10001-UP

OPERATOR'S CAB(CURTAIN)(2/3)

INDEX	CD	PART NO.	DESCRIPTION	QTY	SERIAL NO.
		21T-54-00304	CAB ASS'Y	1	J10004-UP
		21T-54-00303	CAB ASS'Y	1	J10001-J10003
		21T-54-00312	CAB ASS'Y WITH FRONT GUARD	1	J10001-UP
1		21T-54-35622	.CURTAIN A	1	J10001-UP
2		21T-54-69842	.BRACKET	1	J10001-UP
3		01010-80616	.BOLT	2	J10001-UP
4		01643-30623	.WASHER	2	J10001-UP
5		21T-54-69852	.BRACKET	1	J10001-UP
6		01010-80616	.BOLT	2	J10001-UP
7		01643-30623	.WASHER	2	J10001-UP
8		21T-54-35663	.BRACKET	2	J10001-UP
9		01010-80616	.BOLT	4	J10001-UP
10		01643-30623	.WASHER	4	J10001-UP
11		21T-54-69711	.BRACKET	2	J10001-UP
12		01245-00612	.SCREW	4	J10001-UP
13		01641-50608	.WASHER	4	J10001-UP
14		21T-54-69990	.BRACKET	2	J10001-UP
15		01245-00612	.SCREW	4	J10001-UP
16		01641-50608	.WASHER	4	J10001-UP
17		21T-54-35622	.CURTAIN A	1	J10001-UP
18		21T-54-69842	.BRACKET	1	J10001-UP
19		01010-80616	.BOLT	2	J10001-UP
20		01643-30623	.WASHER	2	J10001-UP
21		21T-54-69852	.BRACKET	1	J10001-UP
22		01010-80616	.BOLT	2	J10001-UP
23		01643-30623	.WASHER	2	J10001-UP
24		21T-54-35663	.BRACKET	1	J10001-UP
25		21T-54-35652	.BRACKET	1	J10001-UP
26		01010-80616	.BOLT	4	J10001-UP
27		01643-30623	.WASHER	4	J10001-UP
28		21T-54-69711	.BRACKET	2	J10001-UP
29		01245-00612	.SCREW	4	J10001-UP
30		01641-50608	.WASHER	4	J10001-UP
31		21T-54-69990	.BRACKET	2	J10001-UP
32		01245-00612	.SCREW	4	J10001-UP
33		01641-50608	.WASHER	4	J10001-UP

Ref :K0210-09A0 Page :240090

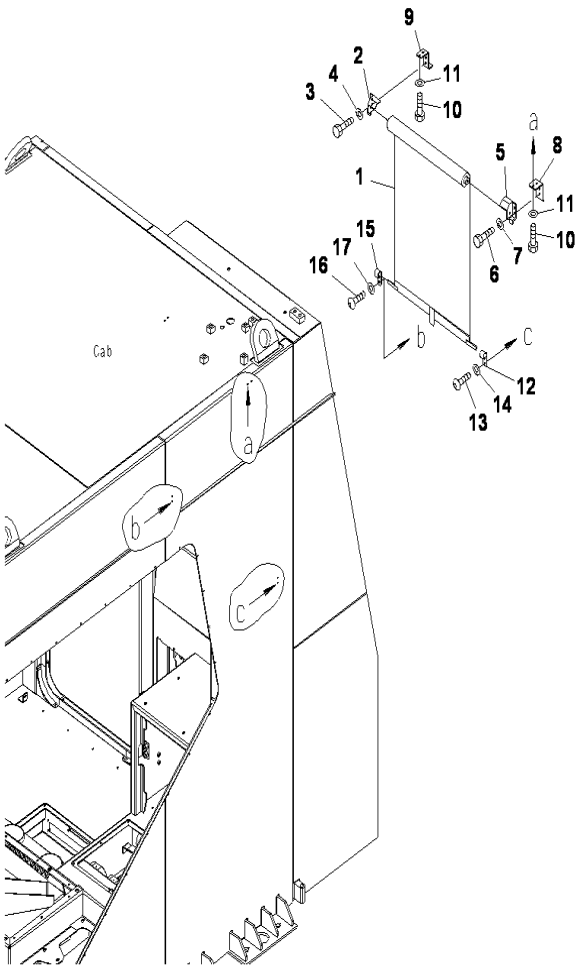

OPERATOR'S CAB(CURTAIN)(3/3)

INDEX	CD	PART NO.	DESCRIPTION	QTY	SERIAL NO.
		21T-54-00304	CAB ASS'Y	1	J10004-UP
		21T-54-00303	CAB ASS'Y	1	J10001-J10003
		21T-54-00312	CAB ASS'Y WITH FRONT GUARD	1	J10001-UP
1		21T-54-35642	.CURTAIN A	1	J10001-UP
2		21T-54-69842	.BRACKET	1	J10001-UP
3		01010-80616	.BOLT	2	J10001-UP
4		01643-30623	.WASHER	2	J10001-UP
5		21T-54-69852	.BRACKET	1	J10001-UP
6		01010-80616	.BOLT	2	J10001-UP
7		01643-30623	.WASHER	2	J10001-UP
8		21T-54-35663	.BRACKET	1	J10001-UP
9		21T-54-35652	.BRACKET	1	J10001-UP
10		01010-80616	.BOLT	4	J10001-UP
11		01643-30623	.WASHER	4	J10001-UP
12		21T-54-69711	.BRACKET	1	J10001-UP
13		01245-00612	.SCREW	2	J10001-UP
14		01641-50608	.WASHER	2	J10001-UP
15		21T-54-69990	.BRACKET	1	J10001-UP
16		01245-00612	.SCREW	2	J10001-UP
17		01641-50608	.WASHER	2	J10001-UP

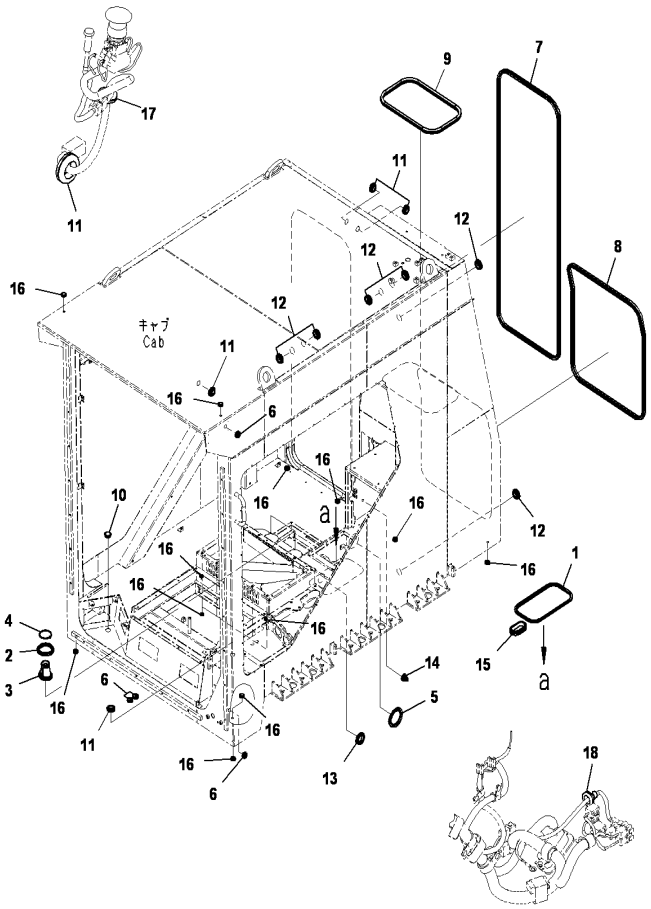

PC2000-8 S/N J10001-UP

OPERATOR'S CAB(GROMMET)

INDEX	CD	PART NO.	DESCRIPTION	QTY	SERIAL NO.
		21T-54-00304	CAB ASS'Y	1	J10004-UP
		21T-54-00303	CAB ASS'Y	1	J10001-J10003
		21T-54-00312	CAB ASS'Y WITH FRONT GUARD	1	J10001-UP
1		21T-54-35810	.TRIM	1	J10001-UP
2		21T-54-35821	.TRIM	2	J10001-UP
3		22M-62-21341	.GROMMET	2	J10001-UP
4		08034-20536	.BAND	2	J10001-UP
5		21T-54-35821	.TRIM	1	J10001-UP
6		21T-54-35950	.GROMMET	4	J10001-UP
7		21T-54-35961	.TRIM	1	J10001-UP
8		21T-54-35970	.SEAL(A/C REAR)	1	J10001-UP
9		21T-54-35990	.SEAL(FILTER/OUT	1	J10001-UP
10		22U-54-25581	.GROMMET	1	J10001-UP
11		08037-02512	.GROMMET	5	J10001-UP
12		08037-03614	.GROMMET	6	J10001-UP
13		08037-05016	.GROMMET	1	J10001-UP
14		08037-10610	.GROMMET	1	J10001-UP
15		20T-62-71790	.GROMMET	1	J10001-UP
16		09415-01008	.CAP	19	J10001-UP
17		08037-01610	.GROMMET	1	J10001-UP
18		21T-54-71980	.GROMMET	1	J10001-UP

Ref :K0210-11A0 Page :240110

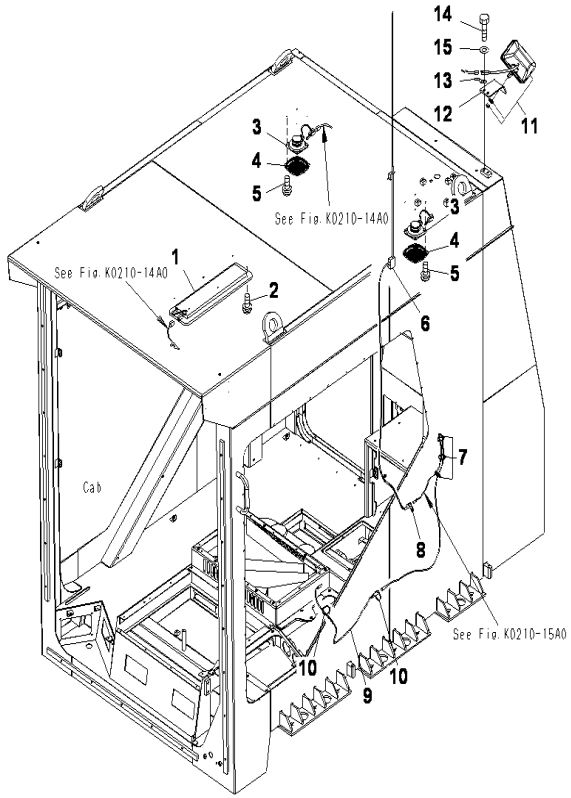

PC2000-8 S/N J10001-UP

OPERATOR'S CAB(ROOM LAMP,SPEAKER,ANTENNA AND STEP LIGHT)

INDEX	CD	PART NO.	DESCRIPTION	QTY	SERIAL NO.
		21T-54-00304	CAB ASS'Y	1	J10004-UP
		21T-54-00303	CAB ASS'Y	1	J10001-J10003
		21T-54-00312	CAB ASS'Y WITH FRONT GUARD	1	J10001-UP
1		21T-06-32611	.ROOM LAMP	1	J10001-UP
2		01023-10516	.SCREW	6	J10001-UP
3		20Y-06-42180	.SPEAKER	2	J10001-UP
4		20Y-53-12221	.COVER(SPEAKER)	2	J10001-UP
5		01023-20416	.SCREW	8	J10001-UP
6		08912-01500	.ANTENNA ASS'Y	1	J10001-UP
7		08034-40521	.BAND	3	J10001-UP
8		04434-51308	.CLIP	1	J10001-UP
9		08912-50900	.ANTENNA CORD	1	J10001-UP
10		08034-20519	.BAND	2	J10001-UP
11		21T-06-32810	.WORK LAMP A	1	J10001-UP
		421-06-23330	..BULB	1	J10001-UP
12		21T-54-36390	.BRACKET	1	J10001-UP
13		08193-21012	.CLIP	1	J10001-UP
14		01010-81225	.BOLT	2	J10001-UP
15		01643-31232	.WASHER	2	J10001-UP

Ref :K0210-12A0 Page :240120

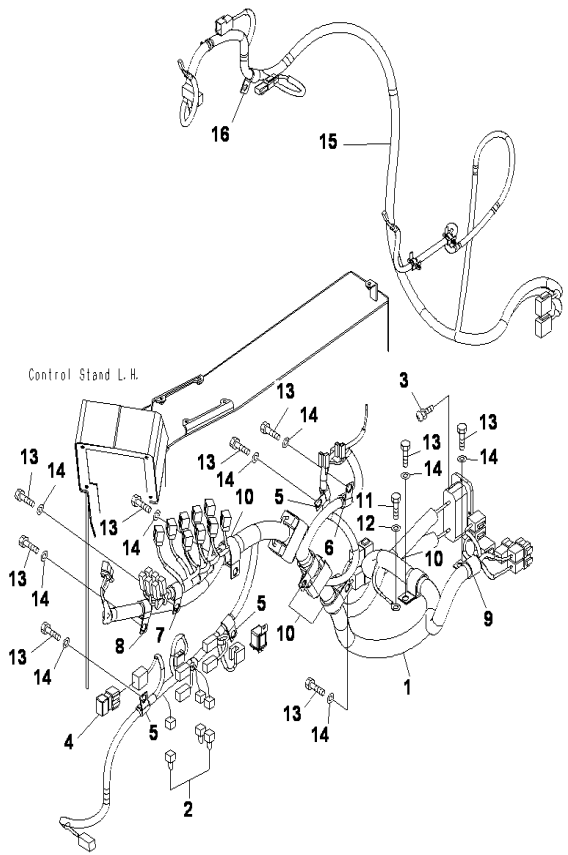

PC2000-8 S/N J10001-UP

OPERATOR'S CAB(HARNESS)(1/2)

INDEX	CD	PART NO.	DESCRIPTION	QTY	SERIAL NO.
		21T-54-00304	CAB ASS'Y	1	J10004-UP
		21T-54-00303	CAB ASS'Y	1	J10001-J10003
		21T-54-00312	CAB ASS'Y WITH FRONT GUARD	1	J10001-UP
1		21T-06-32113	.WIRING HARNESS	1	J10001-UP
2		21J-06-13661	..DIODE	3	J10001-UP
3		01023-60414	.SCREW	4	J10001-UP
4		8233-06-3350	.DIODE	1	J10001-UP
5		04434-51412	.CLIP	3	J10001-UP
6		04434-51712	.CLIP	1	J10001-UP
7		04434-51912	.CLIP	1	J10001-UP
8		04434-52312	.CLIP	1	J10001-UP
9		04434-52712	.CLIP	1	J10001-UP
10		04434-53412	CLIP	4	J10001-UP
11		01010-81016	.BOLT	1	J10001-UP
12		01643-31032	.WASHER	1	J10001-UP
13		01010-81220	.BOLT	10	J10001-UP
14		01643-31232	.WASHER	10	J10001-UP
15		21T-06-34122	.WIRING HARNESS	1	J10001-UP
16		04434-51710	.CLIP	1	J10001-UP

Ref :K0210-13A0 Page :240130

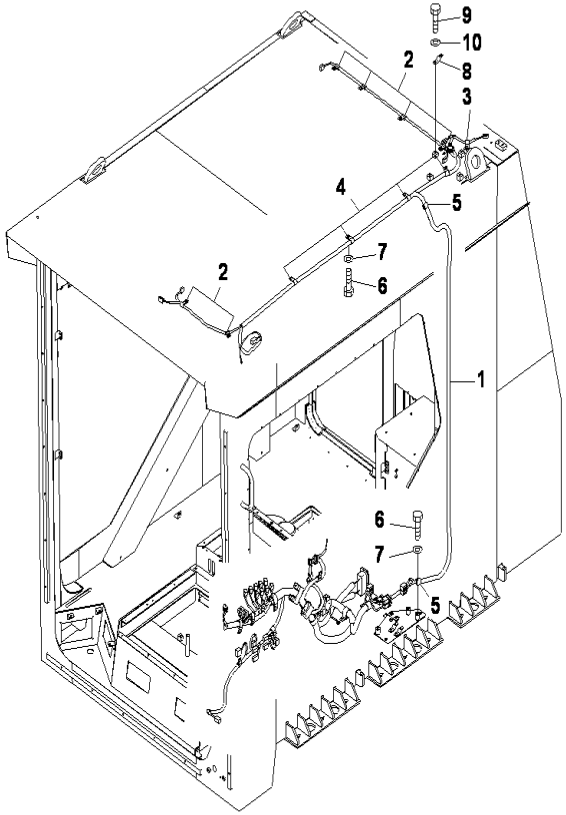

PC2000-8 S/N J10001-UP

OPERATOR'S CAB(HARNESS)(2/2)

INDEX	CD	PART NO.	DESCRIPTION	QTY	SERIAL NO.
		21T-54-00304	CAB ASS'Y	1	J10004-UP
		21T-54-00303	CAB ASS'Y	1	J10001-J10003
		21T-54-00312	CAB ASS'Y WITH FRONT GUARD	1	J10001-UP
1		21T-06-32131	.WIRING HARNESS	1	J10001-UP
2		04434-51012	.CLIP	6	J10001-UP
3		04434-51212	.CLIP	1	J10001-UP
4		04434-51412	.CLIP	4	J10001-UP
5		04434-51712	.CLIP	2	J10001-UP
6		01010-81220	.BOLT	13	J10001-UP
7		01643-31232	.WASHER	13	J10001-UP
8		08193-21012	.CLIP	1	J10001-UP
9		01010-81220	.BOLT	1	J10001-UP
10		01643-31232	.WASHER	1	J10001-UP

Ref :K0210-14A0 Page :240140

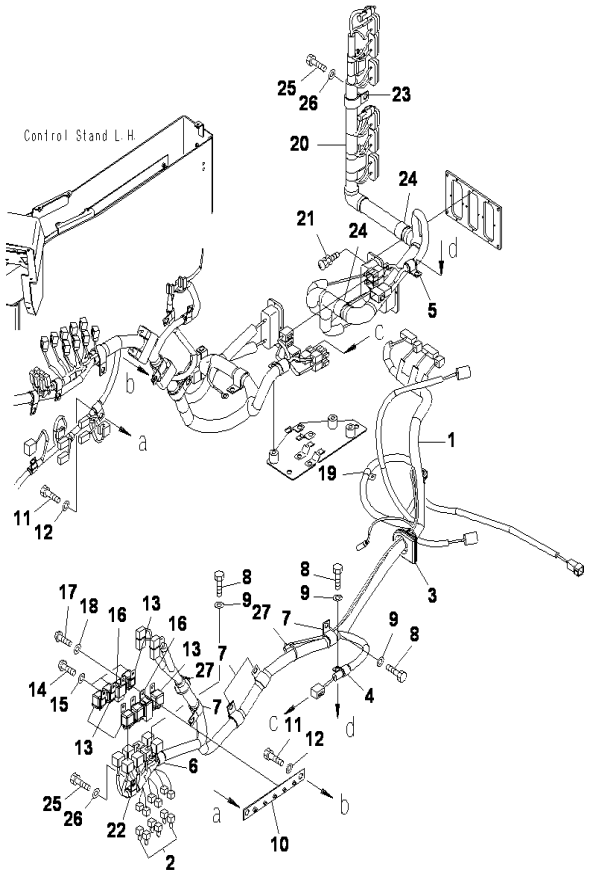

OPERATOR'S CAB(AIR CONDITIONER AND CONTROLLER HARNESS)

INDEX	CD	PART NO.	DESCRIPTION	QTY	SERIAL NO.
		21T-54-00304	CAB ASS'Y	1	J10004-UP
		21T-54-00303	CAB ASS'Y	1	J10001-J10003
		21T-54-00312	CAB ASS'Y WITH FRONT GUARD	1	J10001-UP
1		21T-06-32152	.WIRING HARNESS	1	J10001-UP
2		21J-06-13661	..DIODE	6	J10001-UP
3		21T-54-35940	..GROMMET	1	J10001-UP
4		04434-51712	.CLIP	1	J10001-UP
5		04434-51912	.CLIP	1	J10001-UP
6		04434-52312	.CLIP	1	J10001-UP
7		04434-52712	.CLIP	4	J10001-UP
8		01010-81220	.BOLT	6	J10001-UP
9		01643-31232	.WASHER	6	J10001-UP
10		21T-06-32631	.BRACKET	1	J10001-UP
11		01010-81220	.BOLT	1	J10001-UP
12		01643-31232	.WASHER	1	J10001-UP
13		20Y-979-6771	.RELAY	6	J10001-UP
14		01245-00616	.SCREW	3	J10001-UP
15		01643-70623	.WASHER	3	J10001-UP
16		198-91-19240	.RELAY ASS'Y	2	J10001-UP
17		01245-00616	.SCREW	1	J10001-UP
18		01643-70623	.WASHER	1	J10001-UP
19		04434-52312	.CLIP	1	J10001-UP
20		21T-06-34161	.WIRING HARNESS	1	J10001-UP
21		01023-60414	.SCREW	8	J10001-UP
22		04434-51912	.CLIP	1	J10001-UP
23		04434-53412	.CLIP	1	J10001-UP
24		581-04-22290	.CLIP	2	J10001-UP
25		01010-81220	.BOLT	3	J10001-UP
26		01643-31232	.WASHER	3	J10001-UP
27		08034-20519	.BAND	2	J10001-UP

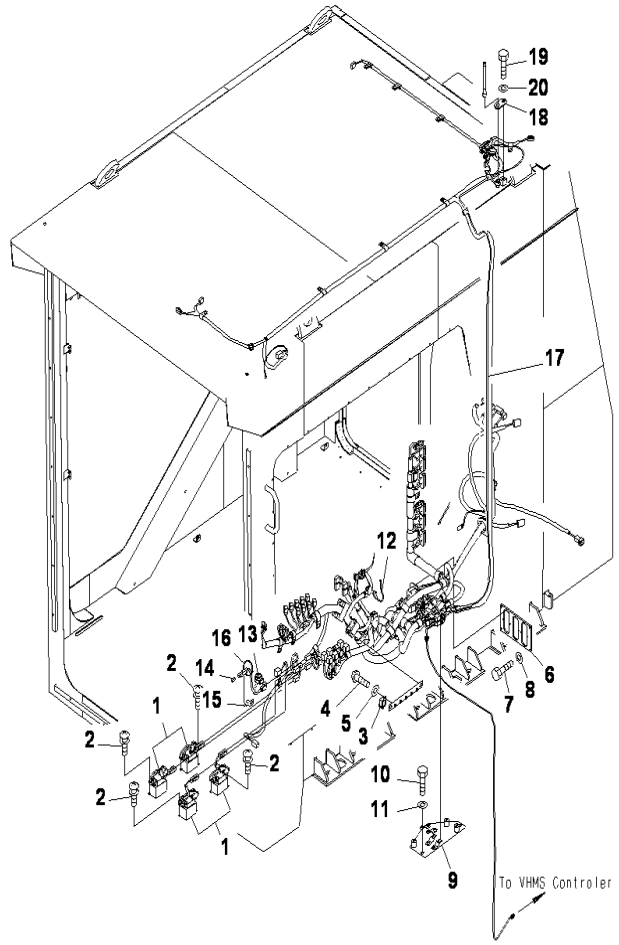

PC2000-8 S/N J10001-UP

OPERATOR'S CAB(BUZZER COVER)

INDEX	CD	PART NO.	DESCRIPTION	QTY	SERIAL NO.
		21T-54-00304	CAB ASS'Y	1	J10004-UP
		21T-54-00303	CAB ASS'Y	1	J10001-J10003
		21T-54-00312	CAB ASS'Y WITH FRONT GUARD	1	J10001-UP
1		21T-06-33881	.RELAY A	4	J10001-UP
2		01023-10410	.SCREW	8	J10001-UP
3		569-06-61960	.RELAY	1	J10001-UP
4		01245-00616	.SCREW	1	J10001-UP
5		01643-70623	.WASHER	1	J10001-UP
6		21T-54-36351	.PLATE	1	J10001-UP
7		01010-80620	.BOLT	4	J10001-UP
8		01643-30623	.WASHER	4	J10001-UP
9		21T-54-36341	.PLATE	1	J10001-UP
10		01010-81225	.BOLT	2	J10001-UP
11		01643-31232	.WASHER	2	J10001-UP
12		22U-06-22350	.HARNESS	1	J10001-UP
13		21T-06-34110	.BUZZAR ASS'Y	1	J10001-UP
14		21T-06-32911	.RESISTOR	1	J10001-UP
15		08193-20012	.CLIP	1	J10001-UP
16		08034-20519	.BAND	1	J10001-UP
17		21T-06-32930	.CABLE,SAT	1	J10001-UP
18		21T-06-64491	.BRACKET	1	J10001-UP
19		01010-81225	.BOLT	1	J10001-UP
20		01643-31232	.WASHER	1	J10001-UP

Ref :K0210-16A0 Page :240160

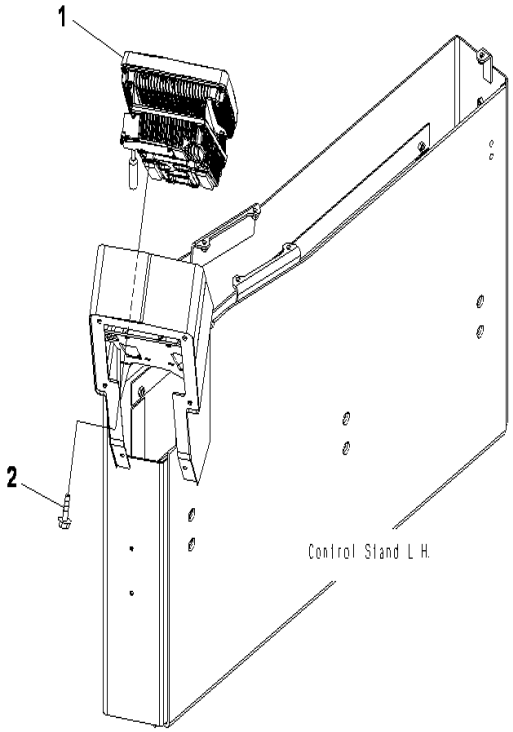

PC2000-8 S/N J10001-UP

OPERATOR'S CAB(MONITOR)

INDEX	CD	PART NO.	DESCRIPTION	QTY	SERIAL NO.
		21T-54-00304	CAB ASS'Y.....	1	J10004-UP
		21T-54-00303	CAB ASS'Y.....	1	J10001-J10003
		21T-54-00312	CAB ASS'Y WITH FRONT GUARD.....	1	J10001-UP
1		7835-31-2007	.MONITOR.....	1	J10001-UP
2		01435-00612	.BOLT.....	4	J10001-UP

Ref :K0210-17A0 Page :240170

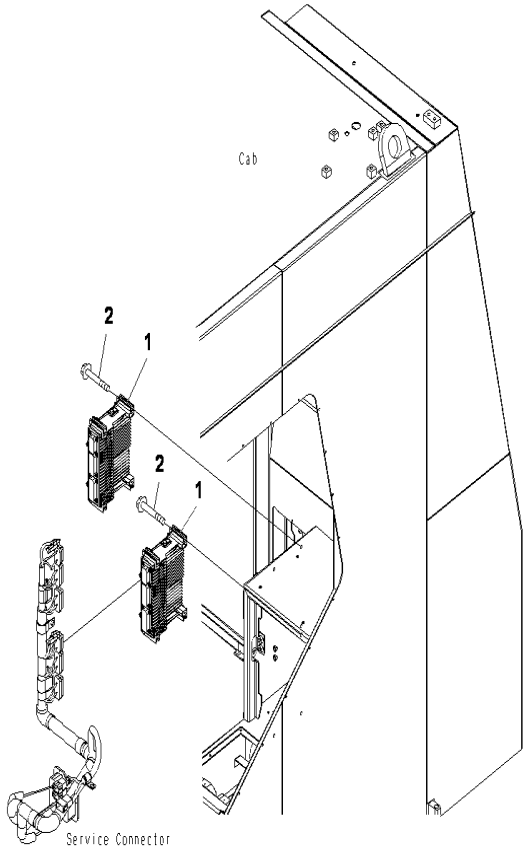

PC2000-8 S/N J10001-UP

OPERATOR'S CAB(CONTROLLER)

INDEX	CD	PART NO.	DESCRIPTION	QTY	SERIAL NO.
		21T-54-00304	CAB ASS'Y.....	1	J10004-UP
		21T-54-00303	CAB ASS'Y.....	1	J10001-J10003
		21T-54-00312	CAB ASS'Y WITH FRONT GUARD.....	1	J10001-UP
1		7835-48-2005	.CONTROLLER.....	2	J10001-UP
2		01435-00885	.BOLT.....	8	J10001-UP

Ref :K0210-18A0 Page :240180

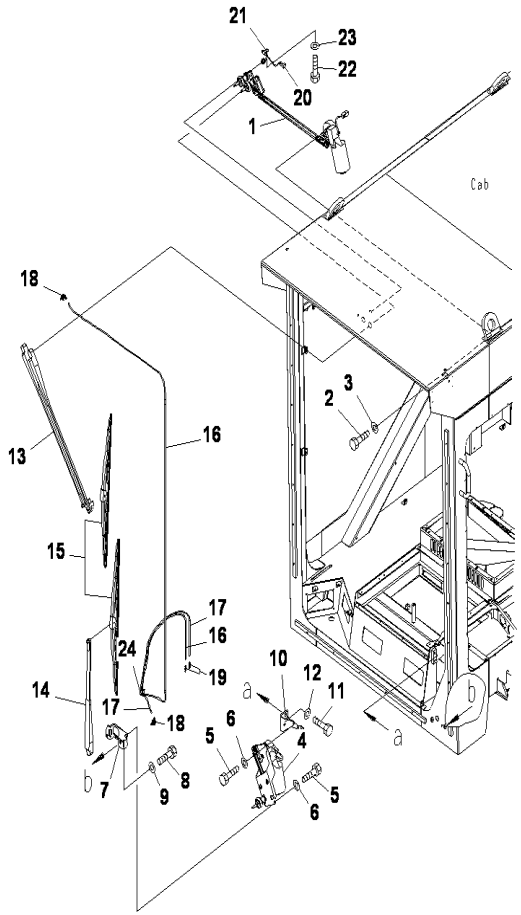

OPERATOR'S CAB(WIPER)

INDEX	CD	PART NO.	DESCRIPTION	QTY	SERIAL NO.
		21T-54-00304	CAB ASS'Y	1	J10004-UP
		21T-54-00303	CAB ASS'Y	1	J10001-J10003
		21T-54-00312	CAB ASS'Y WITH FRONT GUARD	1	J10001-UP
1		21T-54-36711	.WIPER MOTOR ASS'Y	1	J10001-UP
2		01010-80820	.BOLT	3	J10001-UP
3		01643-30823	.WASHER	3	J10001-UP
4		21T-54-36720	.WIPER MOTOR ASS'Y	1	J10001-UP
5		01010-80820	.BOLT	4	J10001-UP
6		01643-30823	.WASHER	4	J10001-UP
7		21T-54-36771	.BRACKET	1	J10001-UP
8		01010-81225	.BOLT	2	J10001-UP
9		01643-31232	.WASHER	2	J10001-UP
10		21T-54-36781	.BRACKET	1	J10001-UP
11		01010-81225	.BOLT	2	J10001-UP
12		01643-31232	.WASHER	2	J10001-UP
13		21T-54-36730	.WIPER ARM, (UPPER)	1	J10001-UP
14		21T-54-36740	.WIPER ARM, (LOWER)	1	J10001-UP
15		21T-54-36750	.WIPER BLADE	2	J10001-UP
16		23B-951-6281	.HOSE	1	J10001-UP
17		205-06-71470	.HOSE	1	J10001-UP
18		426-925-3930	.CONNECTOR	2	J10001-UP
19		207-06-61490	.VALVE	2	J10001-UP
20		21T-06-32621	.SWITCH, (PROXIMIT)	1	J10001-UP
21		04434-50612	.CLIP	1	J10001-UP
22		01010-81220	.BOLT	1	J10001-UP
23		01643-31232	.WASHER	1	J10001-UP
24		08034-40521	.BAND	1	J10001-UP

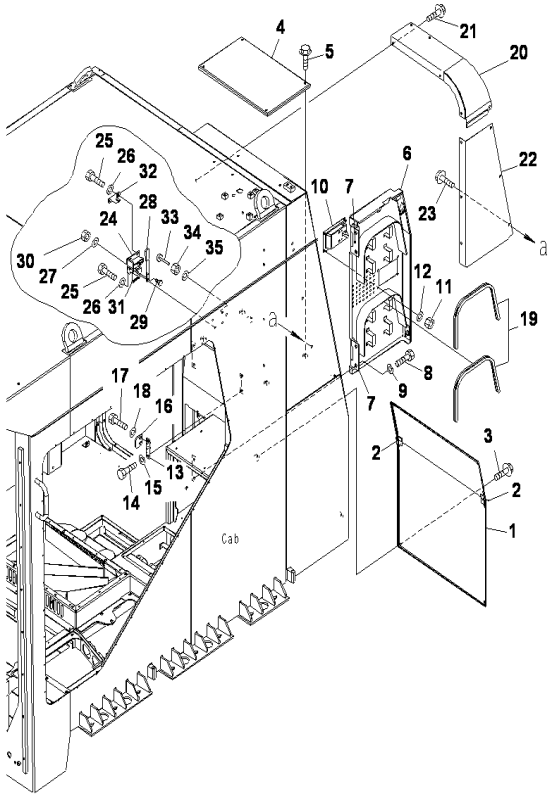

OPERATOR'S CAB(OUTER COVER AND LOCK ASSEMBLY)

INDEX	CD	PART NO.	DESCRIPTION	QTY	SERIAL NO.
		21T-54-00304	CAB ASS'Y	1	J10004-UP
		21T-54-00303	CAB ASS'Y	1	J10001-J10003
		21T-54-00312	CAB ASS'Y WITH FRONT GUARD	1	J10001-UP
1		21T-54-35352	.COVER	1	J10001-UP
2		21T-54-37190	..SHEET	2	J10001-UP
3		01435-41016	.BOLT	4	J10001-UP
4		21T-54-35361	.COVER	1	J10001-UP
5		01435-41016	.BOLT	4	J10001-UP
6		21T-54-35391	.COVER	1	J10001-UP
7		21T-54-35381	..HINGE	2	J10001-UP
8		01010-81025	.BOLT	4	J10001-UP
9		01643-31032	.WASHER	4	J10001-UP
10		198-54-55990	.LOCK	1	J10001-UP
11		01580-00806	.NUT	4	J10001-UP
12		01643-30823	.WASHER	4	J10001-UP
13		21T-54-35331	.BRACKET	1	J10001-UP
14		01010-81025	.BOLT	2	J10001-UP
15		01643-31032	.WASHER	2	J10001-UP
16		209-54-63260	.BRACKET	1	J10001-UP
17		01010-81025	.BOLT	2	J10001-UP
18		01643-31032	.WASHER	2	J10001-UP
19		21T-54-35911	.SEAL(FILTER/OUT)	2	J10001-UP
20		21T-54-36411	.COVER	1	J10001-UP
21		01435-41016	.BOLT	6	J10001-UP
22		21T-54-36421	.COVER	1	J10001-UP
23		01435-41016	.BOLT	6	J10001-UP
24		11Y-979-2721	.LOCK ASS'Y R.H	1	J10001-UP
25		01010-80820	.BOLT	4	J10001-UP
26		01643-30823	.WASHER	4	J10001-UP
27		01641-20812	.WASHER	1	J10001-UP
28		21T-54-35451	.LEVER	1	J10001-UP
29		20Y-54-13560	.PIN	1	J10001-UP
30		01580-00605	.NUT	1	J10001-UP
31		20Y-54-13550	.SPRING	1	J10001-UP
32		21T-54-35491	.BRACKET	1	J10001-UP
33		20T-54-75290	.STOPPER	1	J10001-UP
34		01580-01008	.NUT	1	J10001-UP
35		01643-31032	.WASHER	1	J10001-UP

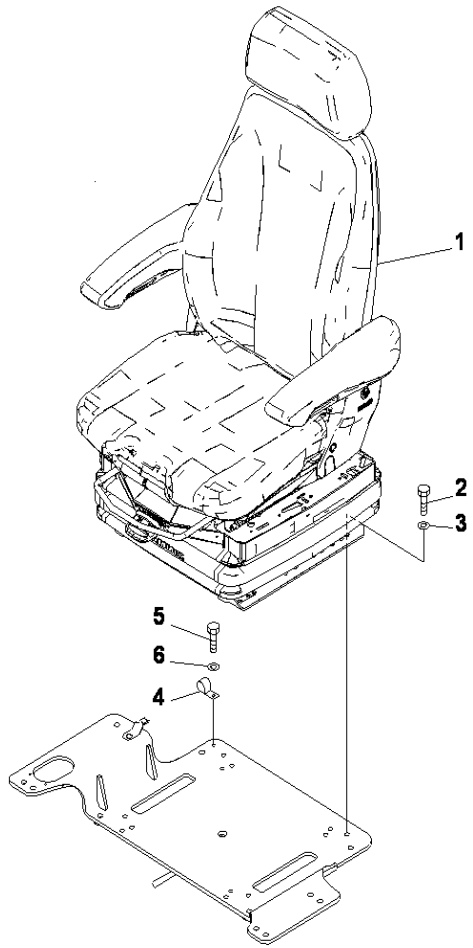

PC2000-8 S/N J10001-UP

OPERATOR'S CAB(SEAT)

INDEX	CD	PART NO.	DESCRIPTION	QTY	SERIAL NO.
		21T-54-00304	CAB ASS'Y.....	1	J10004-UP
		21T-54-00303	CAB ASS'Y.....	1	J10001-J10003
		21T-54-00312	CAB ASS'Y WITH FRONT GUARD.....	1	J10001-UP
1		21T-57-31112	.SEAT ASS'Y.....	1	J10001-UP
2		01010-D0825	.BOLT.....	4	J10001-UP
3		01643-70823	.WASHER.....	4	J10001-UP
4		04434-50808	.CLIP.....	1	J10001-UP
5		01010-D0816	.BOLT.....	1	J10001-UP
6		01643-70823	.WASHER.....	1	J10001-UP

Ref :K0210-21A0 Page :240210

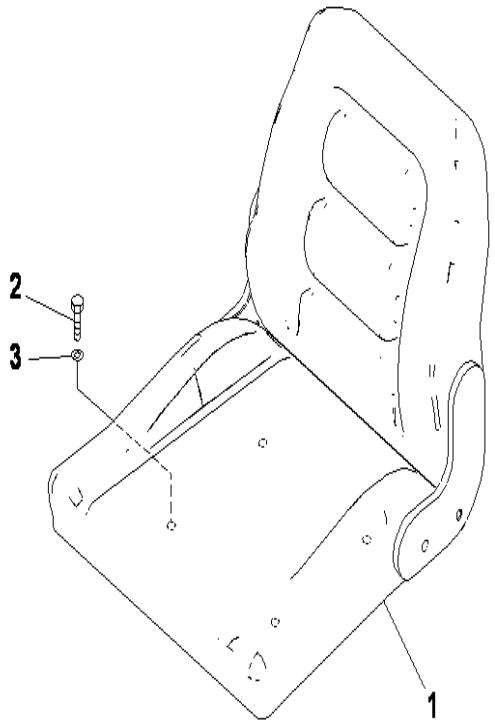

PC2000-8 S/N J10001-UP

OPERATOR'S CAB(SUB SEAT)

INDEX	CD	PART NO.	DESCRIPTION	QTY	SERIAL NO.
		21T-54-00304	CAB ASS'Y.....	1	J10004-UP
		21T-54-00303	CAB ASS'Y.....	1	J10001-J10003
		21T-54-00312	CAB ASS'Y WITH FRONT GUARD.....	1	J10001-UP
1		21T-57-31121	.SUB SEAT A.....	1	J10001-UP
2		01010-80825	.BOLT.....	4	J10001-UP
3		01643-30823	.WASHER.....	4	J10001-UP

Ref :K0210-22A0 Page :240220

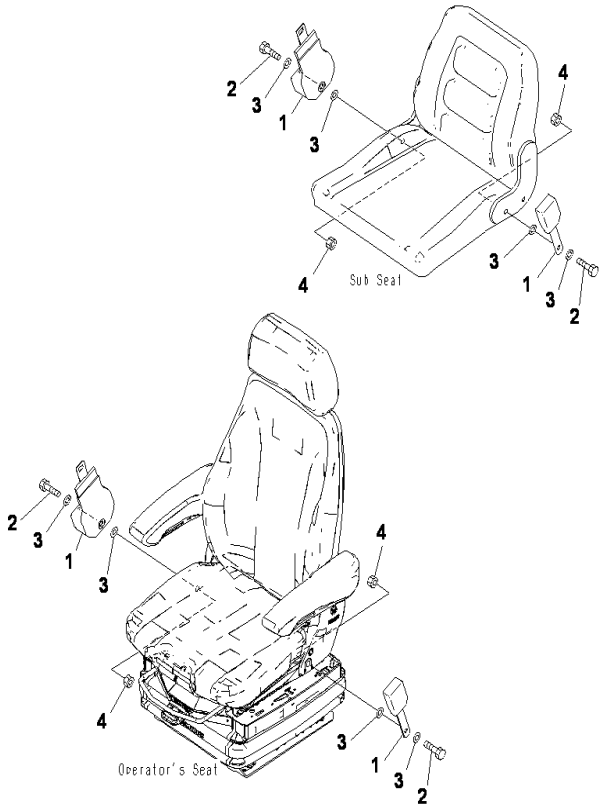

PC2000-8 S/N J10001-UP

OPERATOR'S CAB(SEAT BELT)

INDEX	CD	PART NO.	DESCRIPTION	QTY	SERIAL NO.
		21T-54-00304	CAB ASS'Y.....	1	J10004-UP
		21T-54-00303	CAB ASS'Y.....	1	J10001-J10003
		21T-54-00312	CAB ASS'Y WITH FRONT GUARD.....	1	J10001-UP
1		21T-54-37780	.LAP BELT.....	2	J10001-UP
2		02030-70729	.BOLT.....	4	J10001-UP
3		01643-51232	.WASHER.....	8	J10001-UP
4		02215-10710	.NUT.....	4	J10001-UP

Ref :K0210-23A0 Page :240230

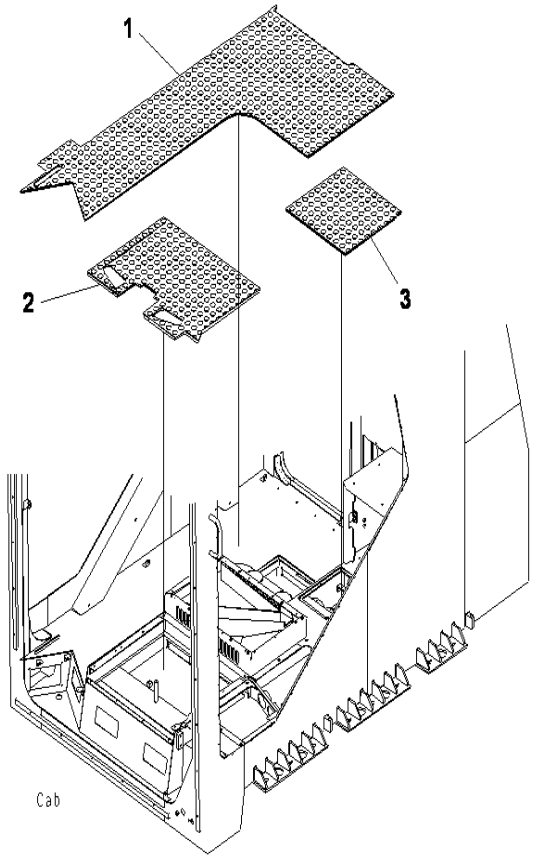

PC2000-8 S/N J10001-UP

OPERATOR'S CAB(FLOOR MAT)

INDEX	CD	PART NO.	DESCRIPTION	QTY	SERIAL NO.
		21T-54-00304	CAB ASS'Y.....	1	J10004-UP
		21T-54-00303	CAB ASS'Y.....	1	J10001-J10003
		21T-54-00312	CAB ASS'Y WITH FRONT GUARD.....	1	J10001-UP
1		21T-54-36631	.MAT.....	1	J10001-UP
2		21T-54-36642	.MAT.....	1	J10001-UP
3		21T-54-36651	.MAT.....	1	J10001-UP

Ref :K0210-24A0 Page :240240

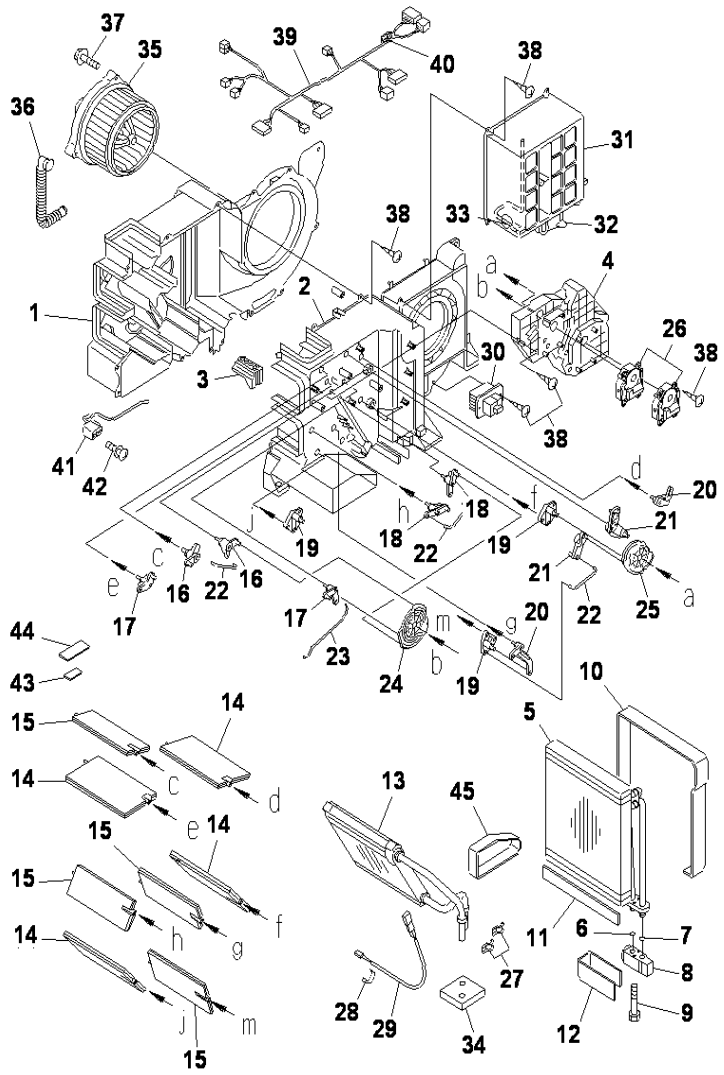

OPERATOR'S CAB(AIR CONDITIONER UNIT)

INDEX	CD	PART NO.	DESCRIPTION	QTY	SERIAL NO.
		208-979-7611	AIRCON UNIT A	2	J10001-UP
1		ND245450-5112	.CASE,COOLING	1	J10001-UP
2		ND245450-5121	.CASE,COOLING	1	J10001-UP
3		ND116576-3810	.PLATE	1	J10001-UP
4		ND116576-3820	.PLATE	1	J10001-UP
		ND446010-3131	.EVAPORATOR ASS'Y,PARTS	1	J10001-UP
5		ND446600-0990	..EVAPORATOR ASS'Y	1	J10001-UP
6		ND949142-0020	...O-RING	1	J10001-UP
7		ND949142-0030	...O-RING	1	J10001-UP
8		ND447500-1482	..VALVE,EXPANSION	1	J10001-UP
9		ND949046-3100	..BOLT	2	J10001-UP
10		ND146657-8841	..PACKING	1	J10001-UP
11		ND146657-9811	..PACKING	1	J10001-UP
12		ND146657-8850	..PACKING	1	J10001-UP
13		ND116140-0050	.CORE SUB ASS'Y,HEATER	1	J10001-UP
14		ND116660-7570	.DOOR SUB ASS'Y	4	J10001-UP
15		ND116650-6850	.DOOR SUB ASS'Y	4	J10001-UP
16		ND116780-2481	.LEVER SUB ASS'Y,LINK	2	J10001-UP
17		ND116780-2491	.LEVER SUB ASS'Y,LINK	2	J10001-UP
18		ND116780-2501	.LEVER SUB ASS'Y,LINK	2	J10001-UP
19		ND116780-2510	.LEVER SUB ASS'Y,LINK	3	J10001-UP
20		ND116781-3000	.LEVER	2	J10001-UP
21		ND116780-2521	.LEVER SUB ASS'Y,LINK	2	J10001-UP
22		ND116662-7670	.SHAFT	3	J10001-UP
23		ND116662-7681	.SHAFT	1	J10001-UP
24		ND116576-3851	.PLATE	1	J10001-UP
25		ND116576-3861	.PLATE	1	J10001-UP
26		ND063800-0300	.SERVO MOTOR ASS'Y	2	J10001-UP
27		ND017231-0700	.CLAMP	2	J10001-UP
28		ND170400-4670	.SENSOR ASS'Y,THERMO	1	J10001-UP
29		ND145511-0040	.HOLDER,REMOTE VALVE	1	J10001-UP
30		ND077800-0750	.POWER TRANSISTOR	1	J10001-UP
31		ND146340-0531	.BOX SUB ASS'Y	1	J10001-UP
32		ND063600-4580	..SERVO MOTOR ASS'Y	1	J10001-UP
33		ND077500-5650	..THERMISTOR ASS'Y	1	J10001-UP
34		ND146657-8860	.PACKING	1	J10001-UP
35		ND116340-7030	.MOTOR ASS'Y,FAN	1	J10001-UP
36		205-97-97260	.PIPE	1	J10001-UP
37		ND949008-0330	.SCREW,TAPPING	3	J10001-UP
38		ND9490011730	.SCREW,TAPPING	31	J10001-UP
39		ND246470-2451	.HARNESS SUB ASS'Y,WIRE	1	J10001-UP
40		ND939500-5003	..FUSE	1	J10001-UP
41		ND113550-0780	.THERMOSTAT ASS'Y	1	J10001-UP
42		ND913700-4101	.SCREW,WASHER	2	J10001-UP
43		ND146667-0300	.PACKING	1	J10001-UP

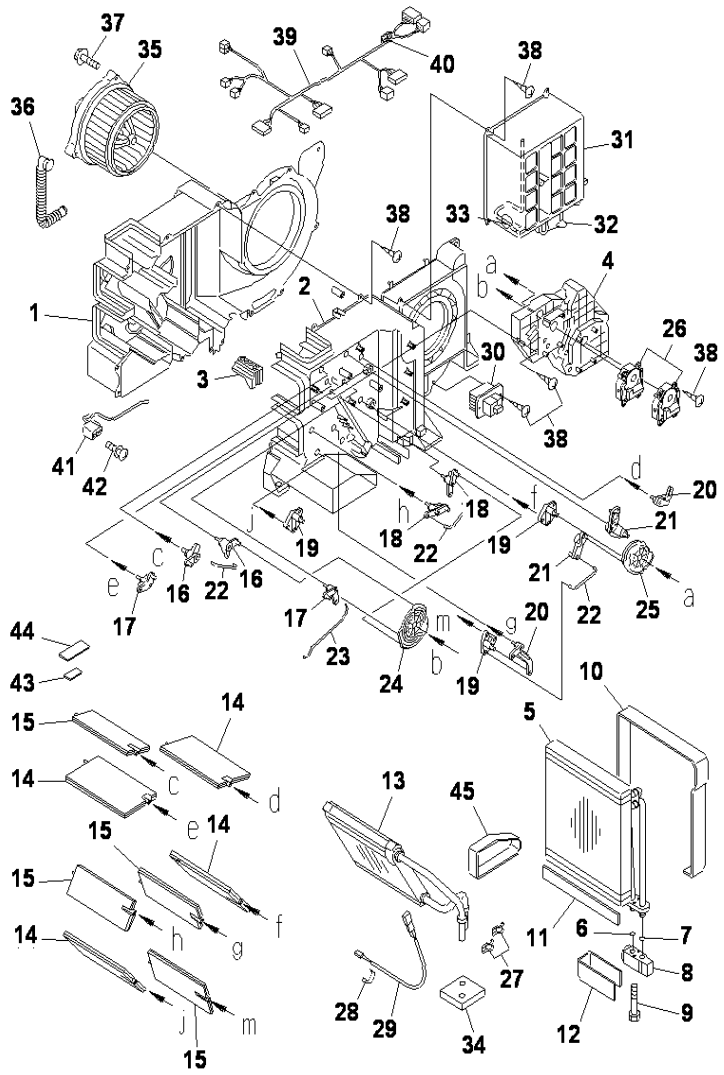

OPERATOR'S CAB(AIR CONDITIONER UNIT)

INDEX	CD	PART NO.	DESCRIPTION	QTY	SERIAL NO.
44		ND146667-0380	.PACKING.....	1	J10001-UP
45		ND146667-0440	.PACKING.....	1	J10001-UP

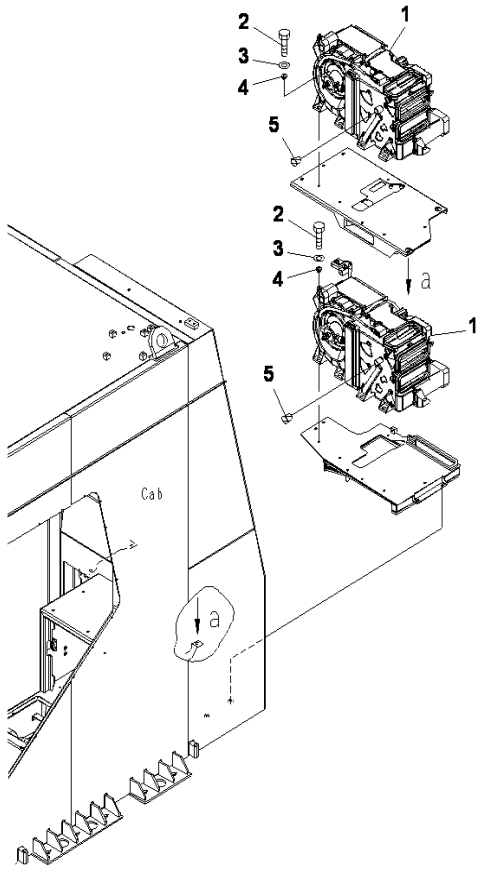

PC2000-8 S/N J10001-UP

OPERATOR'S CAB(AIR CONDITIONER UNIT MOUNTING)

INDEX	CD	PART NO.	DESCRIPTION	QTY	SERIAL NO.
		21T-54-00304	CAB ASS'Y	1	J10004-UP
		21T-54-00303	CAB ASS'Y	1	J10001-J10003
		21T-54-00312	CAB ASS'Y WITH FRONT GUARD	1	J10001-UP
1		208-979-7611	AIRCON UNIT A	2	J10001-UP
2		01010-80830	.BOLT	14	J10001-UP
3		01643-30823	.WASHER	14	J10001-UP
4		208-979-7540	.COLLAR	14	J10001-UP
5		07049-02430	.PLUG	2	J10001-UP

Ref :K0210-26A0 Page :240260

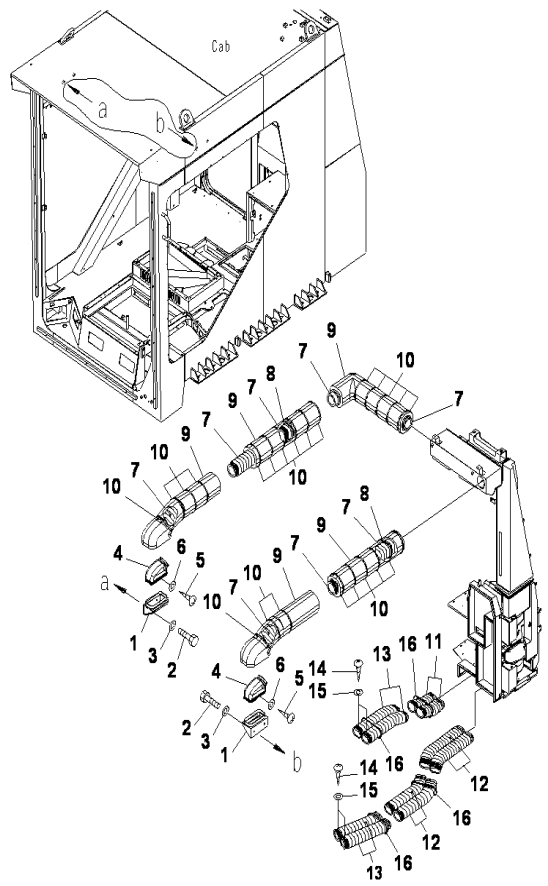

PC2000-8 S/N J10001-UP

OPERATOR'S CAB(AIR CONDITIONER DUCT)

INDEX	CD	PART NO.	DESCRIPTION	QTY	SERIAL NO.
		21T-54-00304	CAB ASS'Y	1	J10004-UP
		21T-54-00303	CAB ASS'Y	1	J10001-J10003
		21T-54-00312	CAB ASS'Y WITH FRONT GUARD	1	J10001-UP
1		21T-979-4121	.BRACKET	2	J10001-UP
2		01010-80816	.BOLT	4	J10001-UP
3		01643-30823	.WASHER	4	J10001-UP
4		21T-979-4380	.DUCT	2	J10001-UP
5		01370-00512	.SCREW	4	J10001-UP
6		01640-20508	.WASHER	4	J10001-UP
7		208-53-12220	.DUCT	8	J10001-UP
8		08034-20876	.BAND	8	J10001-UP
9		21T-979-4291	.SHEET	5	J10001-UP
10		08034-20876	.BAND	30	J10001-UP
11		20Y-53-13351	.DUCT	2	J10001-UP
12		208-53-12260	.DUCT	4	J10001-UP
13		21T-979-4281	.DUCT	4	J10001-UP
14		01370-00512	.SCREW	4	J10001-UP
15		01640-20508	.WASHER	4	J10001-UP
16		08034-20876	.BAND	4	J10001-UP

Ref :K0210-27A0 Page :240270

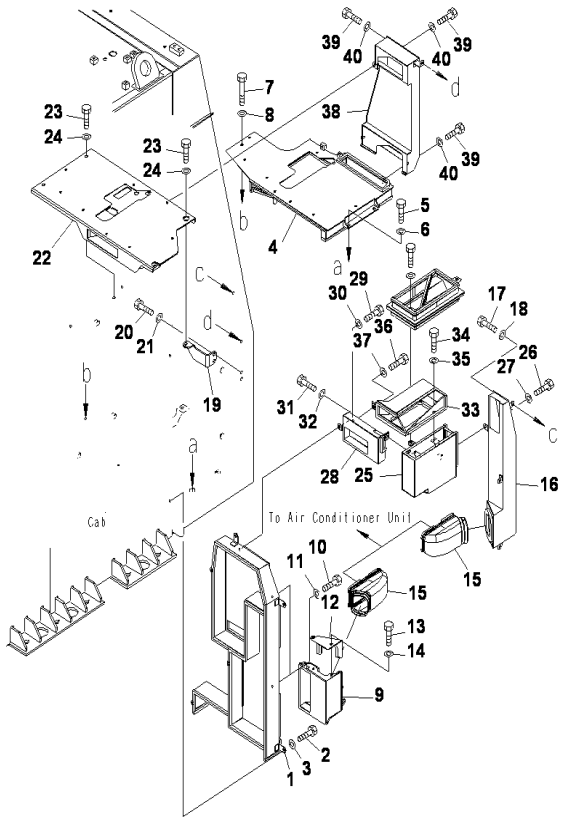

PC2000-8 S/N J10001-UP

OPERATOR'S CAB(AIR CONDITIONER DUCT,METAL)(1/2)

INDEX	CD	PART NO.	DESCRIPTION	QTY	SERIAL NO.
		21T-54-00304	CAB ASS'Y	1	J10004-UP
		21T-54-00303	CAB ASS'Y	1	J10001-J10003
		21T-54-00312	CAB ASS'Y WITH FRONT GUARD	1	J10001-UP
1		21T-979-4151	.COVER	1	J10001-UP
2		01010-80816	.BOLT	6	J10001-UP
3		01643-30823	.WASHER	6	J10001-UP
4		21T-979-4111	.DUCT	1	J10001-UP
5		01010-80816	.BOLT	3	J10001-UP
6		01643-30823	.WASHER	3	J10001-UP
7		01010-80870	.BOLT	2	J10001-UP
8		01643-30823	.WASHER	2	J10001-UP
9		21T-979-4181	.DUCT	2	J10001-UP
10		01010-80816	.BOLT	4	J10001-UP
11		01643-30823	.WASHER	4	J10001-UP
12		21T-979-4191	.DUCT	2	J10001-UP
13		01010-80816	.BOLT	4	J10001-UP
14		01643-30823	.WASHER	4	J10001-UP
15		20Y-53-13341	.DUCT	3	J10001-UP
16		21T-979-4211	.DUCT	1	J10001-UP
17		01010-80816	.BOLT	3	J10001-UP
18		01643-30823	.WASHER	3	J10001-UP
19		21T-54-35571	.BRACKET	1	J10001-UP
20		01010-81025	.BOLT	2	J10001-UP
21		01643-31032	.WASHER	2	J10001-UP
22		21T-54-35591	.BRACKET	1	J10001-UP
23		01010-81025	.BOLT	4	J10001-UP
24		01643-31032	.WASHER	4	J10001-UP
25		21T-979-4241	.DUCT	1	J10001-UP
26		01010-80816	.BOLT	1	J10001-UP
27		01643-30823	.WASHER	1	J10001-UP
28		21T-979-4261	.DUCT	1	J10001-UP
29		01010-80816	.BOLT	1	J10001-UP
30		01643-30823	.WASHER	1	J10001-UP
31		01010-80820	.BOLT	1	J10001-UP
32		01643-30823	.WASHER	1	J10001-UP
33		21T-979-4251	.DUCT	1	J10001-UP
34		01010-80816	.BOLT	2	J10001-UP
35		01643-30823	.WASHER	2	J10001-UP
36		01010-80820	.BOLT	1	J10001-UP
37		01643-30823	.WASHER	1	J10001-UP
38		21T-979-4271	.DUCT	1	J10001-UP
39		01010-80816	.BOLT	4	J10001-UP
40		01643-30823	.WASHER	4	J10001-UP

Ref :K0210-28A0 Page :240280

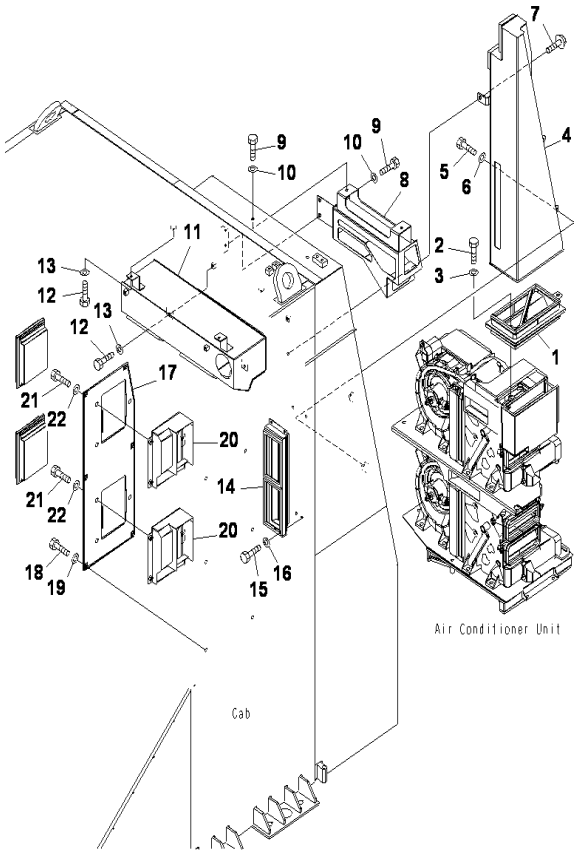

PC2000-8 S/N J10001-UP

OPERATOR'S CAB(AIR CONDITIONER DUCT,METAL)(2/2)

INDEX	CD	PART NO.	DESCRIPTION	QTY	SERIAL NO.
		21T-54-00304	CAB ASS'Y.....	1	J10004-UP
		21T-54-00303	CAB ASS'Y.....	1	J10001-J10003
		21T-54-00312	CAB ASS'Y WITH FRONT GUARD.....	1	J10001-UP
1		21T-979-4471	.DUCT.....	1	J10001-UP
2		01010-81020	.BOLT.....	2	J10001-UP
3		01643-31032	.WASHER.....	2	J10001-UP
4		21T-979-4481	.DUCT.....	1	J10001-UP
5		01010-81020	.BOLT.....	2	J10001-UP
6		01643-31032	.WASHER.....	2	J10001-UP
7		01435-41016	.BOLT.....	1	J10001-UP
8		21T-979-4492	.DUCT.....	1	J10001-UP
9		01010-81020	.BOLT.....	4	J10001-UP
10		01643-31032	.WASHER.....	4	J10001-UP
11		21T-979-4411	.DUCT.....	1	J10001-UP
12		01010-80816	.BOLT.....	4	J10001-UP
13		01643-30823	.WASHER.....	4	J10001-UP
14		21T-979-4391	.DUCT.....	1	J10001-UP
15		01010-80816	.BOLT.....	4	J10001-UP
16		01643-30823	.WASHER.....	4	J10001-UP
17		21T-979-4131	.COVER.....	1	J10001-UP
18		01010-81020	.BOLT.....	6	J10001-UP
19		01643-31032	.WASHER.....	6	J10001-UP
20		21T-979-4141	.DUCT.....	2	J10001-UP
21		01010-81020	.BOLT.....	6	J10001-UP
22		20Y5465330	.WASHER.....	6	J10001-UP

Ref :K0210-29A0 Page :240290

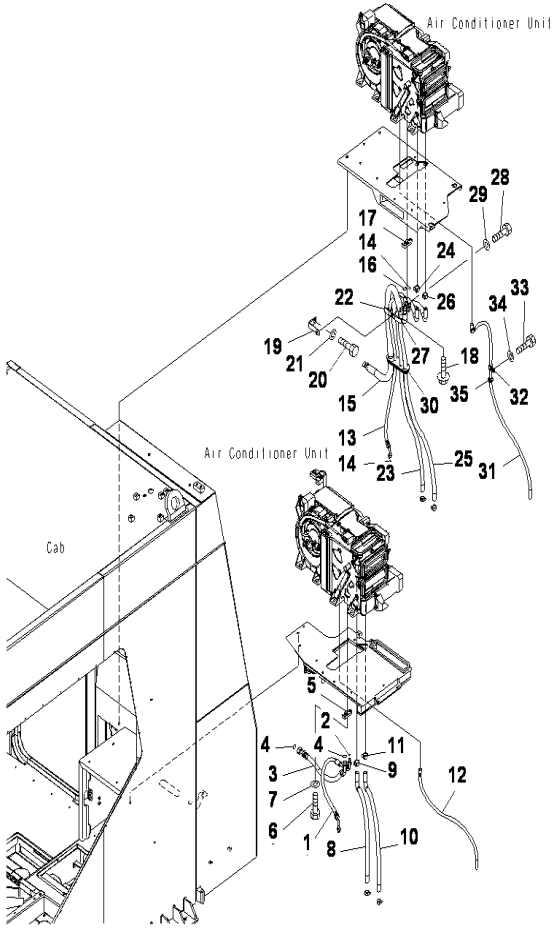

OPERATOR'S CAB(AIR CONDITONER PIPING)

INDEX	CD	PART NO.	DESCRIPTION	QTY	SERIAL NO.
		21T-54-00304	CAB ASS'Y	1	J10004-UP
		21T-54-00303	CAB ASS'Y	1	J10001-J10003
		21T-54-00312	CAB ASS'Y WITH FRONT GUARD	1	J10001-UP
1		21T-979-4510	.HOSE	1	J10001-UP
2		20Y-979-3150	..O-RING	1	J10001-UP
3		21T-979-4530	.HOSE	1	J10001-UP
4		20Y-979-3130	..O-RING	2	J10001-UP
5		208-979-7650	.CONNECTOR	1	J10001-UP
6		01010-D0625	.BOLT	1	J10001-UP
7		01643-70623	.WASHER	1	J10001-UP
8		21T-979-4552	.HOSE ASS'Y	1	J10001-UP
9		09479-02400	.CLAMP	1	J10001-UP
10		21T-979-4572	.HOSE ASS'Y	1	J10001-UP
11		09479-02400	.CLAMP	1	J10001-UP
12		21T-979-4610	.HOSE	1	J10001-UP
13		21T-979-4520	.HOSE	1	J10001-UP
14		20Y-979-3150	..O-RING	2	J10001-UP
15		21T-979-4542	.HOSE ASS'Y	1	J10001-UP
16		20Y-979-3130	..O-RING	1	J10001-UP
17		208-979-7650	.CONNECTOR	1	J10001-UP
18		01435-40620	.BOLT	1	J10001-UP
19		419-S62-2240	.BRACKET	1	J10001-UP
20		01010-81025	.BOLT	1	J10001-UP
21		01643-31032	.WASHER	1	J10001-UP
22		209-04-11260	.CLIP	1	J10001-UP
23		21T-979-4562	.HOSE ASS'Y	1	J10001-UP
24		09479-02400	.CLAMP	1	J10001-UP
25		21T-979-4582	.HOSE ASS'Y	1	J10001-UP
26		09479-02400	.CLAMP	1	J10001-UP
27		04435-52110	.CLIP	1	J10001-UP
28		01010-81025	.BOLT	1	J10001-UP
29		01643-31032	.WASHER	1	J10001-UP
30		21T-54-35561	.GROMMET	1	J10001-UP
31		21T-979-4590	.HOSE	1	J10001-UP
32		04434-51410	.CLIP	1	J10001-UP
33		01010-81025	.BOLT	1	J10001-UP
34		01643-31032	.WASHER	1	J10001-UP
35		21T-54-35550	.GROMMET	1	J10001-UP

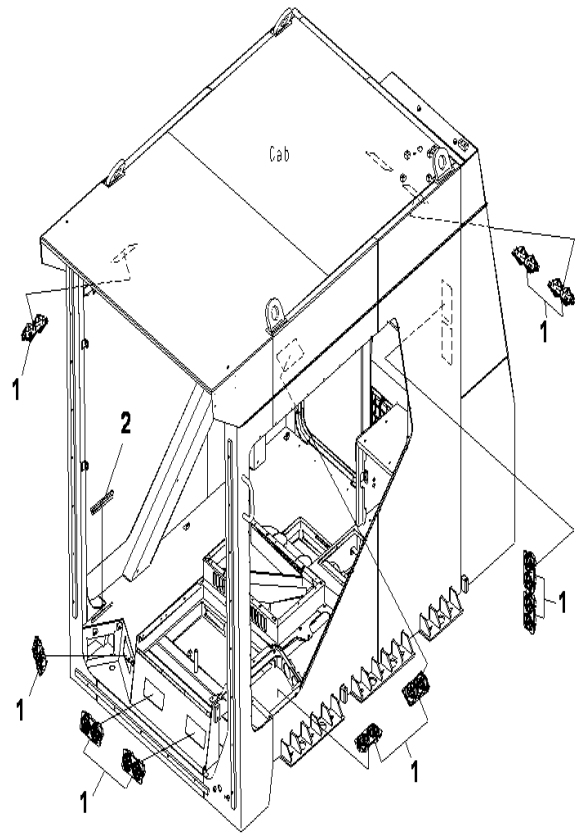

PC2000-8 S/N J10001-UP

OPERATOR'S CAB(GRILLE)

INDEX	CD	PART NO.	DESCRIPTION	QTY	SERIAL NO.
		21T-54-00304	CAB ASS'Y.....	1	J10004-UP
		21T-54-00303	CAB ASS'Y.....	1	J10001-J10003
		21T-54-00312	CAB ASS'Y WITH FRONT GUARD.....	1	J10001-UP
1		208-979-7560	.GRILLE.....	10	J10001-UP
2		21T-979-3280	.GRILLE.....	1	J10001-UP

Ref :K0210-31A0 Page :240310

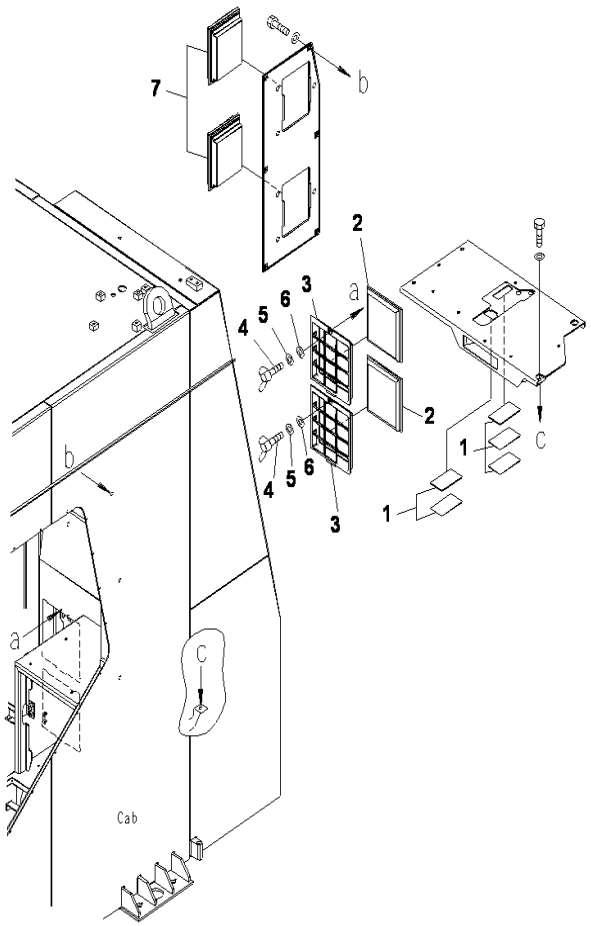

PC2000-8 S/N J10001-UP

OPERATOR'S CAB(AIR CONDITIONER FILTER)

INDEX	CD	PART NO.	DESCRIPTION	QTY	SERIAL NO.
		21T-54-00304	CAB ASS'Y.....	1	J10004-UP
		21T-54-00303	CAB ASS'Y.....	1	J10001-J10003
		21T-54-00312	CAB ASS'Y WITH FRONT GUARD.....	1	J10001-UP
1		21T-979-4421	.SEAL.....	5	J10001-UP
2		208-979-7620	.FILTER.....	2	J10001-UP
3		21T-54-37161	.HOLDER A.....	2	J10001-UP
4		20Y-54-65790	.BOLT.....	2	J10001-UP
5		01643-70623	.WASHER.....	2	J10001-UP
6		20Y-54-65690	.WASHER.....	2	J10001-UP
7		17M-91-13530	.ELEMENT.....	2	J10001-UP

Ref :K0210-32A0 Page :240320

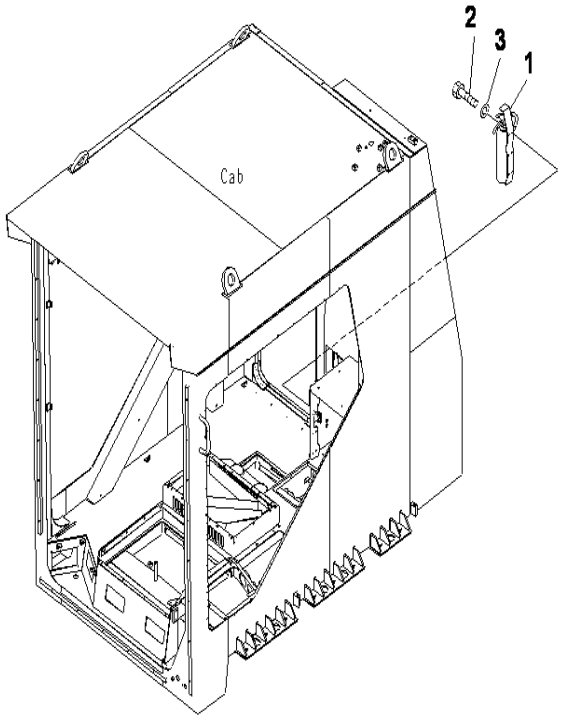

PC2000-8 S/N J10001-UP

OPERATOR'S CAB(FIRE EXTINGUISHER)

INDEX	CD	PART NO.	DESCRIPTION	QTY	SERIAL NO.
		21T-54-00304	CAB ASS'Y.....	1	J10004-UP
		21T-54-00303	CAB ASS'Y.....	1	J10001-J10003
		21T-54-00312	CAB ASS'Y WITH FRONT GUARD.....	1	J10001-UP
1		09495-40010	.EXTINGUISHER.....	1	J10001-UP
2		01010-80616	.BOLT.....	6	J10001-UP
3		01643-30623	.WASHER.....	6	J10001-UP

Ref :K0210-33A0 Page :240330

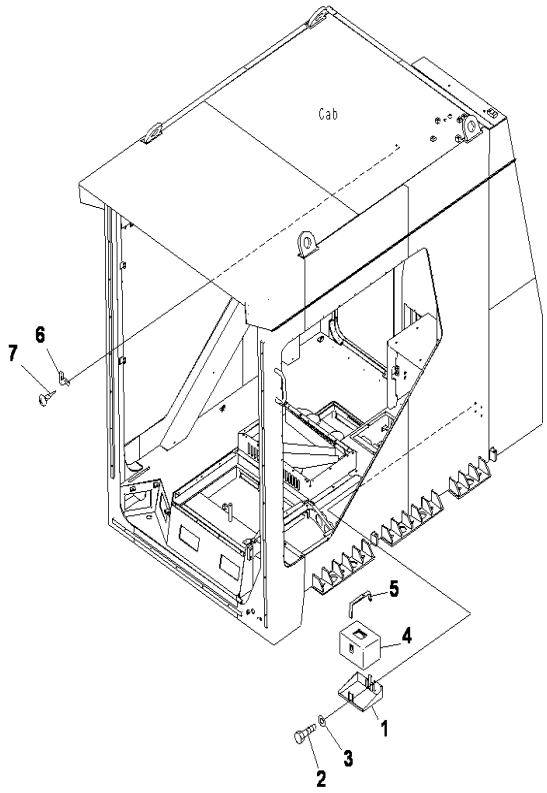

PC2000-8 S/N J10001-UP

OPERATOR'S CAB(FIRST AID BOX)

INDEX	CD	PART NO.	DESCRIPTION	QTY	SERIAL NO.
		21T-54-00304	CAB ASS'Y.....	1	J10004-UP
		21T-54-00303	CAB ASS'Y.....	1	J10001-J10003
		21T-54-00312	CAB ASS'Y WITH FRONT GUARD.....	1	J10001-UP
1		20Y-54-53370	.BRACKET.....	1	J10001-UP
2		01010-80816	.BOLT.....	4	J10001-UP
3		01643-30823	.WASHER.....	4	J10001-UP
4		195-911-6531	.BOX.....	1	J10001-UP
5		195-911-6562	.BAND.....	1	J10001-UP
6		205-54-51250	.HANGER.....	1	J10001-UP
7		01370-30412	.SCREW.....	2	J10001-UP

Ref :K0210-34A0 Page :240340

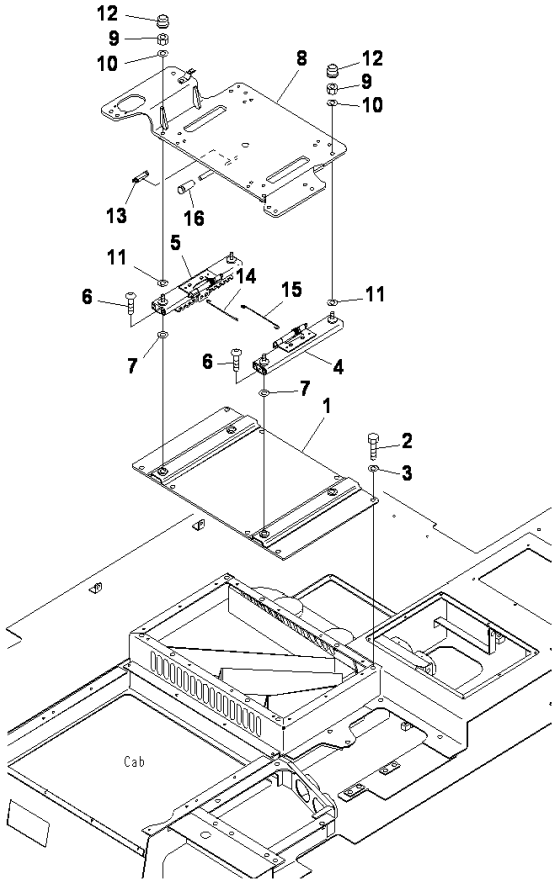

PC2000-8 S/N J10001-UP

OPERATOR'S CAB(SEAT STAND)

INDEX	CD	PART NO.	DESCRIPTION	QTY	SERIAL NO.
		21T-54-00304	CAB ASS'Y	1	J10004-UP
		21T-54-00303	CAB ASS'Y	1	J10001-J10003
		21T-54-00312	CAB ASS'Y WITH FRONT GUARD	1	J10001-UP
1		21T-43-31310	.FRAME	1	J10001-UP
2		01010-D1225	.BOLT	8	J10001-UP
3		01643-71232	.WASHER	8	J10001-UP
4		208-43-71741	.ADJUSTER(L.H)	1	J10001-UP
5		208-43-71751	.ADJUSTER(R.H)	1	J10001-UP
6		01245-01020	.SCREW	4	J10001-UP
7		01640-21016	.WASHER	4	J10001-UP
8		21T-43-31322	.FRAME	1	J10001-UP
9		20Y-54-65340	.NUT	4	J10001-UP
10		01643-71032	.WASHER	4	J10001-UP
11		01640-21016	.WASHER	4	J10001-UP
12		20Y-54-65540	.CAP	2	J10001-UP
13		20Y-979-6630	.CATCHER	1	J10001-UP
14		208-43-71731	.WIRE(L.H)	1	J10001-UP
15		208-43-71762	.WIRE(R.H)	1	J10001-UP
16		22U-43-21390	.CAP	1	J10001-UP

Ref :K0210-35A0 Page :240350

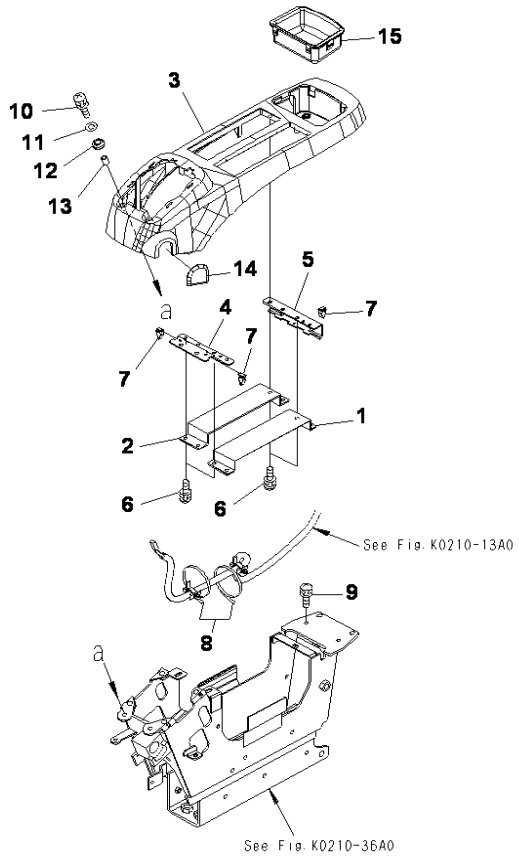

PC2000-8 S/N J10001-UP

OPERATOR'S CAB(CONSOLE BOX) LHS (1/2)

INDEX	CD	PART NO.	DESCRIPTION	QTY	SERIAL NO.
		21T-54-00304	CAB ASS'Y	1	J10004-UP
		21T-54-00303	CAB ASS'Y	1	J10001-J10003
		21T-54-00312	CAB ASS'Y WITH FRONT GUARD	1	J10001-UP
1		20Y-43-31460	.COVER	1	J10001-UP
2		20Y-43-31470	.COVER	1	J10001-UP
3		208-43-71680	.COVER	1	J10001-UP
4		22U-43-22220	.PLATE	1	J10001-UP
5		22U-43-22230	.STAY	1	J10001-UP
6		01023-60516	.SCREW	10	J10001-UP
7		20Y-06-23770	.CLIP	3	J10001-UP
8		08034-20414	.BAND	2	J10001-UP
9		01023-60620	.SCREW	2	J10001-UP
10		01023-60630	.SCREW	2	J10001-UP
11		01640-20610	.WASHER	2	J10001-UP
12		208-43-71610	.CUSHION	2	J10001-UP
13		208-43-71620	.PIPE	2	J10001-UP
14		22U-43-22620	.CAP	1	J10001-UP
15		22U-43-22110	.TRAY	1	J10001-UP

Ref :K0210-36A0 Page :240360

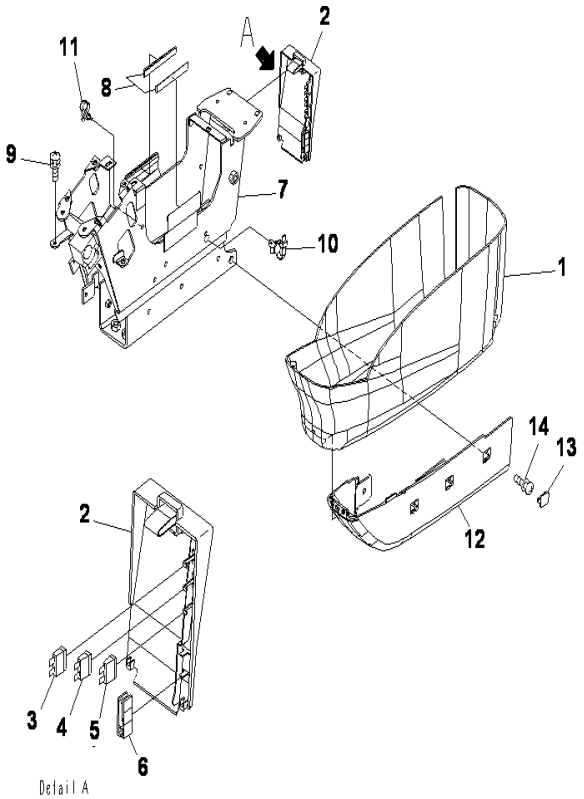

PC2000-8 S/N J10001-UP

OPERATOR'S CAB(CONSOLE BOX) LHS (2/2)

INDEX	CD	PART NO.	DESCRIPTION	QTY	SERIAL NO.
		21T-54-00304	CAB ASS'Y	1	J10004-UP
		21T-54-00303	CAB ASS'Y	1	J10001-J10003
		21T-54-00312	CAB ASS'Y WITH FRONT GUARD	1	J10001-UP
1		22U-43-22310	.COVER	1	J10001-UP
		22U-43-22320	.COVER A	1	J10001-UP
2	C1	22U-43-22330	..COVER	1	J10001-UP
3		08041-01000	..FUSE	1	J10001-UP
4		08041-02000	..FUSE	1	J10001-UP
5		08041-02500	..FUSE	1	J10001-UP
6		22U-43-22340	..PULLER	1	J10001-UP
7		20Y-43-31412	.FRAME(L.H)	1	J10001-UP
8		208-43-71410	..SHEET	2	J10001-UP
9		01023-60616	.SCREW	4	J10001-UP
10		22U-43-22430	.BAND	1	J10001-UP
11		08059-00310	.CLAMP	1	J10001-UP
12		20Y-43-31690	.COVER	1	J10001-UP
13		22U-43-22830	.CAP	3	J10001-UP
14		01023-20616	.SCREW	4	J10001-UP

Ref :K0210-37A0 Page :240370

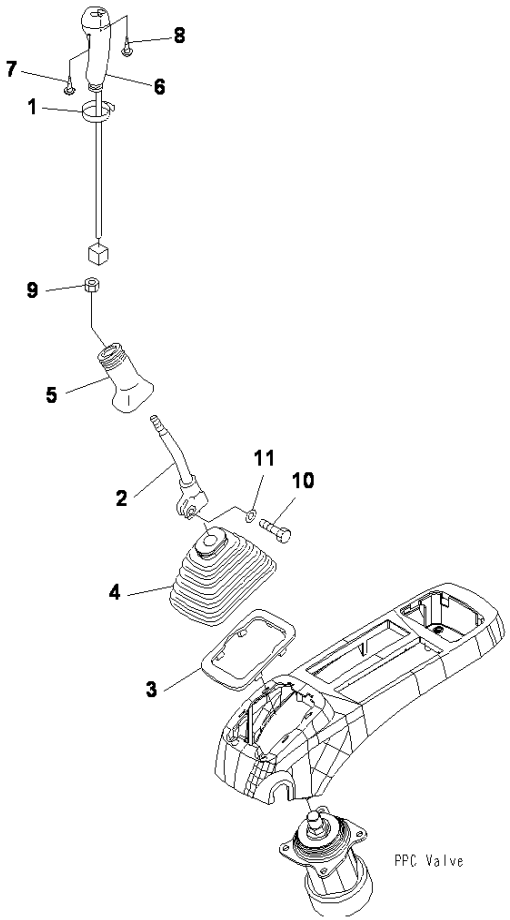

PC2000-8 S/N J10001-UP

OPERATOR'S CAB(FLOOR,LEVER,LHS)

INDEX	CD	PART NO.	DESCRIPTION	QTY	SERIAL NO.
		21T-54-00304	CAB ASS'Y	1	J10004-UP
		21T-54-00303	CAB ASS'Y	1	J10001-J10003
		21T-54-00312	CAB ASS'Y WITH FRONT GUARD	1	J10001-UP
1		08034-20519	.BAND	1	J10001-UP
2		20Y-43-22211	.LEVER, (L.H)	1	J10001-UP
3		20Y-43-22250	.PLATE	1	J10001-UP
4		20Y-43-22261	.BOOT	1	J10001-UP
5		20Y-43-22370	.BOOT	1	J10001-UP
6		21T4331190	.KNOB, (L.H)	1	J10001-UP
7		0137010310	..SCREW	1	J10001-UP
8		01370-10308	..SCREW	3	J10001-UP
9		600-411-1280	.NUT	1	J10001-UP
10		01252-41025	.BOLT	1	J10001-UP
11		01643-51032	.WASHER	1	J10001-UP

Ref :K0210-38A0 Page :240380

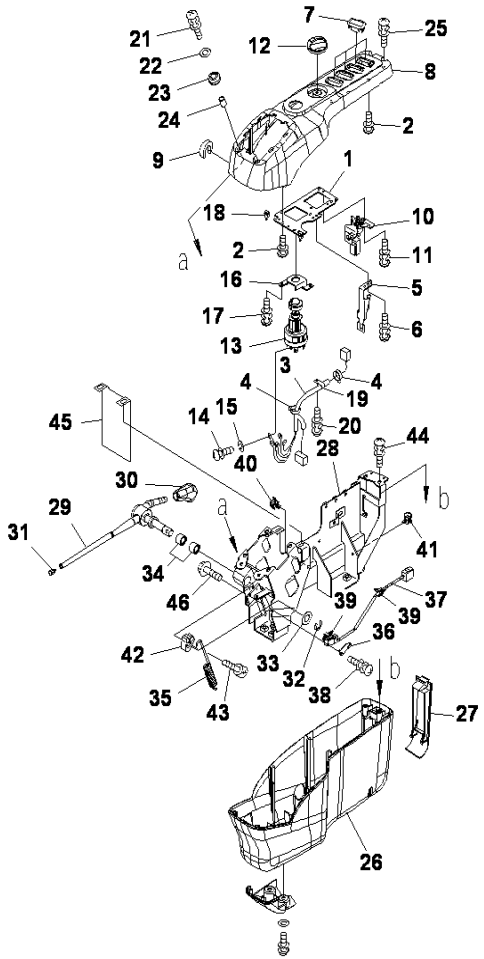

OPERATOR'S CAB(CONSOLE BOX,RHS) (1/2)

INDEX	CD	PART NO.	DESCRIPTION	QTY	SERIAL NO.
		21T-54-00304	CAB ASS'Y	1	J10004-UP
		21T-54-00303	CAB ASS'Y	1	J10001-J10003
		21T-54-00312	CAB ASS'Y WITH FRONT GUARD	1	J10001-UP
1		22U-43-23111	.PLATE	1	J10001-UP
2		01023-10512	.SCREW	4	J10001-UP
3		21T-06-32320	.HARNESS	1	J10001-UP
4		08034-10414	.BAND	2	J10001-UP
5		22U-43-23120	.BRACKET	1	J10001-UP
6		01023-60512	.SCREW	2	J10001-UP
7		22U-06-22320	.COVER	4	J10001-UP
8		21T-43-31430	.COVER	1	J10001-UP
9		21T-43-31470	.SHEET	1	J10001-UP
10		22U-06-22420	.POTENTIOMETER A	1	J10001-UP
11		01023-60512	.SCREW	2	J10001-UP
12		22U-06-22470	.KNOB	1	J10001-UP
13		08086-20000	.SWITCH	1	J10001-UP
14		01023-10508	.SCREW	5	J10001-UP
15		01601-20513	.WASHER	5	J10001-UP
16		22U-06-22480	.PLATE	1	J10001-UP
17		01023-60512	.SCREW	2	J10001-UP
18		20Y-06-23770	.CLIP	2	J10001-UP
19		20Y-06-23920	.CLAMP	1	J10001-UP
20		01023-60408	.SCREW	1	J10001-UP
21		01023-60630	.SCREW	2	J10001-UP
22		01640-20610	.WASHER	2	J10001-UP
23		208-43-71610	.CUSHION	2	J10001-UP
24		208-43-71620	.PIPE	2	J10001-UP
25		01023-70514	.SCREW	2	J10001-UP
26		21T-43-31420	.COVER	1	J10001-UP
27		22U-43-23210	.COVER	1	J10001-UP
28		21T-43-31411	.FRAME(R.H)	1	J10001-UP
		21T-43-31481	.LEVER ASS'Y	1	J10001-UP
29	C1	21T4331440	..LEVER	1	J10001-UP
30		22U-43-22490	..KNOB	1	J10001-UP
31		208-53-12280	..CAP	1	J10001-UP
32	C1	20Y-43-31440	.RING	1	J10001-UP
33		20Y-43-31450	.RING	1	J10001-UP
34		06124-01616	.BEARING	2	J10001-UP
35		20Y-43-31421	.SPRING	1	J10001-UP
36		21T-43-31460	.PLATE	1	J10001-UP
37		22U-06-22360	.SWITCH	1	J10001-UP
38		01023-60320	.SCREW	2	J10001-UP
39		22U-43-22410	.CLIP	2	J10001-UP
40		22U-43-23260	.CLIP	1	J10001-UP
41		08059-00310	.CLAMP	1	J10001-UP

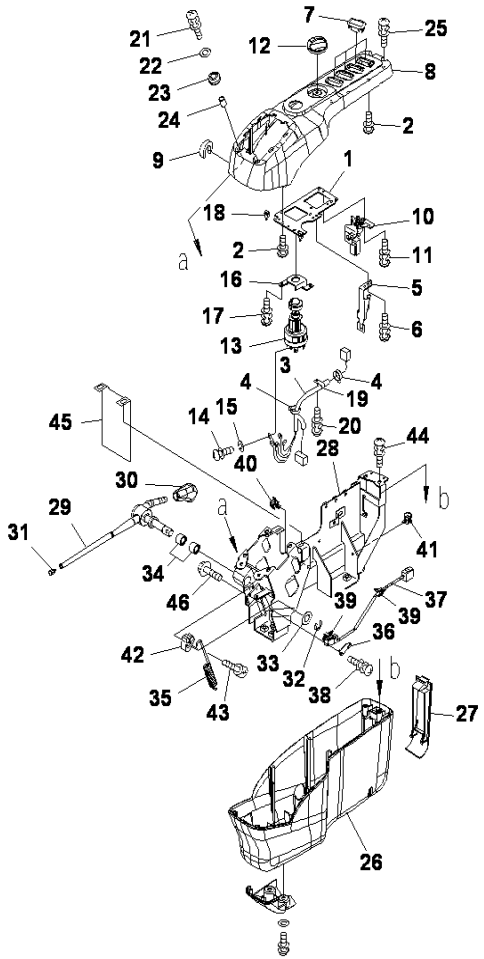

OPERATOR'S CAB(CONSOLE BOX,RHS) (1/2)

INDEX	CD	PART NO.	DESCRIPTION	QTY	SERIAL NO.
42		21T-43-31450	.CUM.....	1	J10001-UP
43		01252-70816	.BOLT.....	1	J10001-UP
44		01023-60616	.SCREW.....	3	J10001-UP
45		22U-43-23250	.SEAT.....	1	J10001-UP
46		01435-41016	.BOLT.....	2	J10001-UP

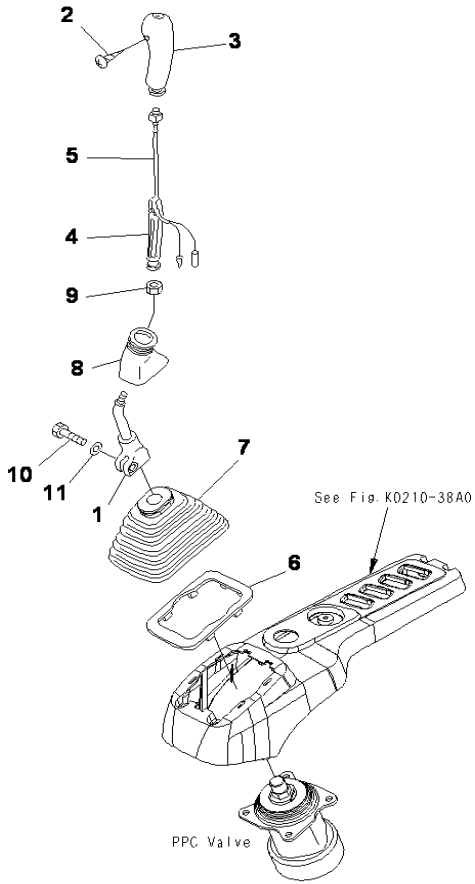

PC2000-8 S/N J10001-UP

OPERATOR'S CAB(FLOOR,LEVER,RHS)

INDEX	CD	PART NO.	DESCRIPTION	QTY	SERIAL NO.
		21T-54-00304	CAB ASS'Y	1	J10004-UP
		21T-54-00303	CAB ASS'Y	1	J10001-J10003
		21T-54-00312	CAB ASS'Y WITH FRONT GUARD	1	J10001-UP
1		20Y-43-22221	.LEVER(R.H)	1	J10001-UP
		22U-43-21192	.KNOB(R.H)	1	J10001-UP
2		01370-10308	..SCREW	1	J10001-UP
3		20Y-43-22390	..KNOB(R.H)	1	J10001-UP
4		20Y-43-22411	...INSERT	1	J10001-UP
5		22U-43-21211	..SWITCH	1	J10001-UP
6		20Y-43-22250	.PLATE	1	J10001-UP
7		20Y-43-22261	.BOOT	1	J10001-UP
8		20Y-43-22370	.BOOT	1	J10001-UP
9		600-411-1280	.NUT	1	J10001-UP
10		01252-41025	.BOLT	1	J10001-UP
11		01643-51032	.WASHER	1	J10001-UP

Ref :K0210-40A0 Page :240400

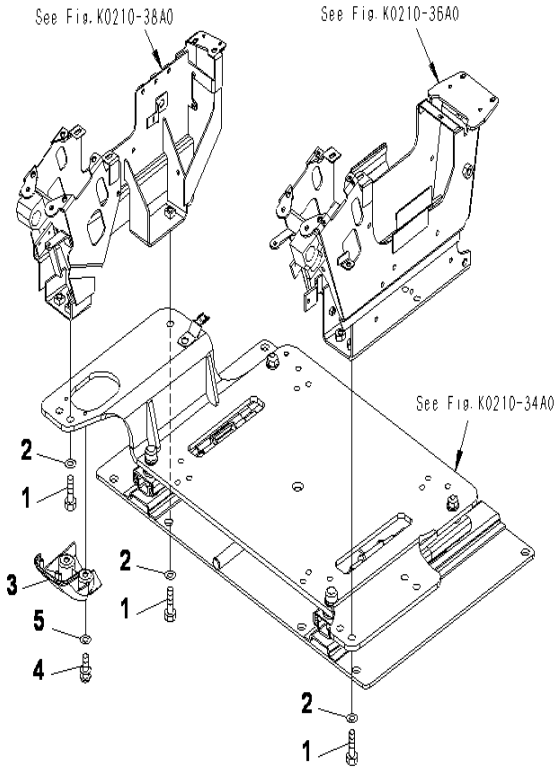

PC2000-8 S/N J10001-UP

OPERATOR'S CAB(MOUNTING PARTS)

INDEX	CD	PART NO.	DESCRIPTION	QTY	SERIAL NO.
		21T-54-00304	CAB ASS'Y.....	1	J10004-UP
		21T-54-00303	CAB ASS'Y.....	1	J10001-J10003
		21T-54-00312	CAB ASS'Y WITH FRONT GUARD.....	1	J10001-UP
1		01010-81030	.BOLT.....	7	J10001-UP
2		01643-31032	.WASHER.....	7	J10001-UP
3		22U-43-23711	.COVER.....	1	J10001-UP
4		01023-10614	.SCREW.....	2	J10001-UP
5		01643-30623	.WASHER.....	2	J10001-UP

Ref :K0210-41A0 Page :240410

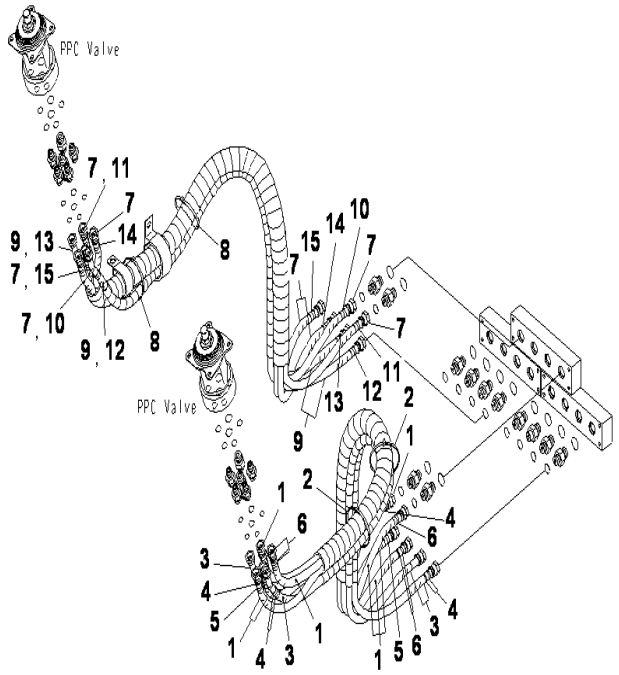

PC2000-8 S/N J10001-UP

OPERATOR'S CAB(HOSE)

INDEX	CD	PART NO.	DESCRIPTION	QTY	SERIAL NO.
		21T-54-00304	CAB ASS'Y	1	J10004-UP
		21T-54-00303	CAB ASS'Y	1	J10001-J10003
		21T-54-00312	CAB ASS'Y WITH FRONT GUARD	1	J10001-UP
1		02760-00316	.HOSE	4	J10001-UP
2		08034-20536	.BAND	2	J10001-UP
3		21T-64-38240	.HOSE	2	J10001-UP
4		20Y-62-22790	.BAND (RED)	6	J10001-UP
5		20Y-62-22810	.BAND (YELLOW)	2	J10001-UP
6		20Y-62-22820	.BAND (BLUE)	6	J10001-UP
7		02760-00316	.HOSE	4	J10001-UP
8		08034-20536	.BAND	2	J10001-UP
9		21T-64-38240	.HOSE	2	J10001-UP
10		20Y-62-22790	.BAND (RED)	2	J10001-UP
11		20Y-62-22820	.BAND (BLUE)	2	J10001-UP
12		20Y-62-22830	.BAND (WHITE)	2	J10001-UP
13		20Y-62-22840	.BAND (BLACK)	2	J10001-UP
14		20Y-62-22850	.BAND (GREEN)	2	J10001-UP
15		20Y-62-22860	.BAND (BROWN)	2	J10001-UP

Ref :K0210-42A0 Page :240420

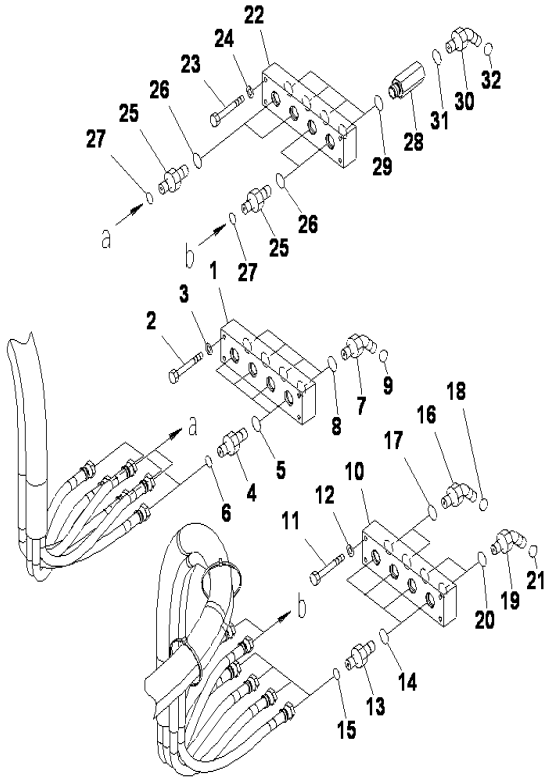

PC2000-8 S/N J10001-UP

OPERATOR'S CAB(JOINT PARTS)

INDEX	CD	PART NO.	DESCRIPTION	QTY	SERIAL NO.
		21T-54-00304	CAB ASS'Y	1	J10004-UP
		21T-54-00303	CAB ASS'Y	1	J10001-J10003
		21T-54-00312	CAB ASS'Y WITH FRONT GUARD	1	J10001-UP
1		21T-64-38211	.JOINT	1	J10001-UP
2		01010-80650	.BOLT	4	J10001-UP
3		01643-30623	.WASHER	4	J10001-UP
4		02781-00315	.UNION	4	J10001-UP
5		07002-62034	.O-RING	4	J10001-UP
6		02896-61009	.O-RING	4	J10001-UP
7		02783-10422	.HOSE	4	J10001-UP
8		07002-62034	.O-RING	4	J10001-UP
9		02896-61012	.O-RING	4	J10001-UP
10		21T-64-38211	.JOINT	1	J10001-UP
11		01010-80650	.BOLT	4	J10001-UP
12		01643-30623	.WASHER	4	J10001-UP
13		02781-00315	.UNION	4	J10001-UP
14		07002-62034	.O-RING	4	J10001-UP
15		02896-61009	.O-RING	4	J10001-UP
16		02783-10422	.HOSE	2	J10001-UP
17		07002-62034	.O-RING	2	J10001-UP
18		02896-61012	.O-RING	2	J10001-UP
19		21W-62-42570	.ELBOW	2	J10001-UP
20		07002-62034	.O-RING	2	J10001-UP
21		02896-61009	.O-RING	2	J10001-UP
22		21T-64-38211	.JOINT	1	J10001-UP
23		01010-80650	.BOLT	4	J10001-UP
24		01643-30623	.WASHER	4	J10001-UP
25		02781-00315	.UNION	4	J10001-UP
26		07002-62034	.O-RING	4	J10001-UP
27		02896-61009	.O-RING	4	J10001-UP
28		11T-61-11290	.NIPPLE	4	J10001-UP
29		07002-62034	.O-RING	4	J10001-UP
30		02783-10422	.HOSE	4	J10001-UP
31		07002-62034	.O-RING	4	J10001-UP
32		02896-61012	.O-RING	4	J10001-UP

Ref :K0210-43A0 Page :240430

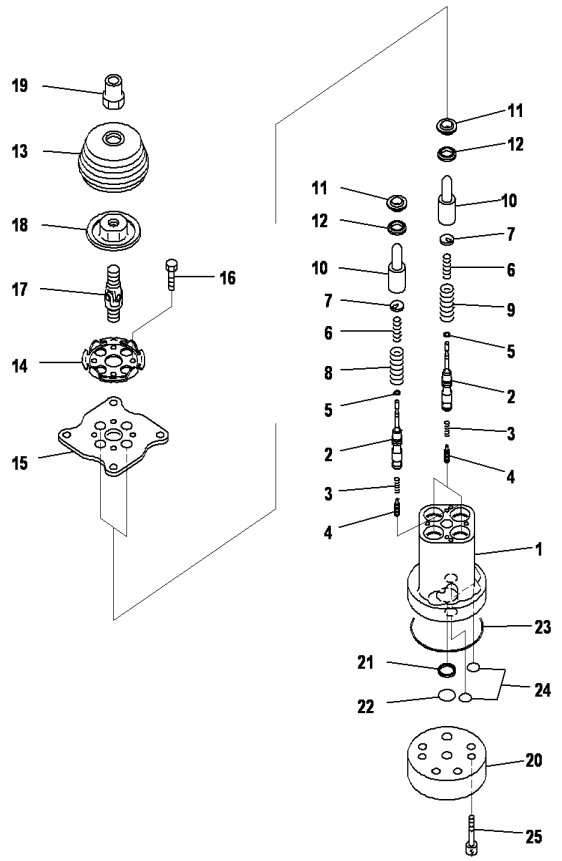

PC2000-8 S/N J10001-UP

OPERATOR'S CAB(PPC VALVE)(INNER PART)

INDEX	CD	PART NO.	DESCRIPTION	QTY	SERIAL NO.
		21T-54-00304	CAB ASS'Y	1	J10004-UP
		21T-54-00303	CAB ASS'Y	1	J10001-J10003
		21T-54-00312	CAB ASS'Y WITH FRONT GUARD	1	J10001-UP
		702-16-06191	.PILOT VALVE	2	J10001-UP
1	C1	702-16-75710	..BODY,VALVE	1	J10001-UP
2	C1	702-16-75980	..VALVE	4	J10001-UP
3	C1	702-16-75740	..SPRING	4	J10001-UP
4	C1	702-16-75730	..PISTON	4	J10001-UP
5		702-16-51140	..SHIM	4	J10001-UP
6		702-16-75720	..SPRING	4	J10001-UP
7		702-16-53140	..RETAINER	4	J10001-UP
8		702-16-75750	..SPRING	2	J10001-UP
9		702-16-75760	..SPRING	2	J10001-UP
10		702-16-53170	..PISTON	4	J10001-UP
11		702-16-71210	..SEAL	4	J10001-UP
12		702-16-71160	..SEAT	4	J10001-UP
13		702-16-71280	..BOOT	1	J10001-UP
14		702-16-71131	..PLATE	1	J10001-UP
15		702-16-71141	..PLATE	1	J10001-UP
16		01010-80620	..BOLT	4	J10001-UP
17		702-16-51240	..UNIVERSAL JOINT	1	J10001-UP
18	C1	702-16-71361	.DISC	1	J10001-UP
19		702-16-71441	..NUT	1	J10001-UP
20		702-16-53761	..COVER	1	J10001-UP
21		720-68-15240	..FILTER	1	J10001-UP
22		07000-B2021	..O-RING	1	J10001-UP
23		702-16-57260	..O-RING	1	J10001-UP
24		702-16-57270	..O-RING	2	J10001-UP
25		01252-60835	..BOLT	2	J10001-UP

Ref :K0210-44A0 Page :240440

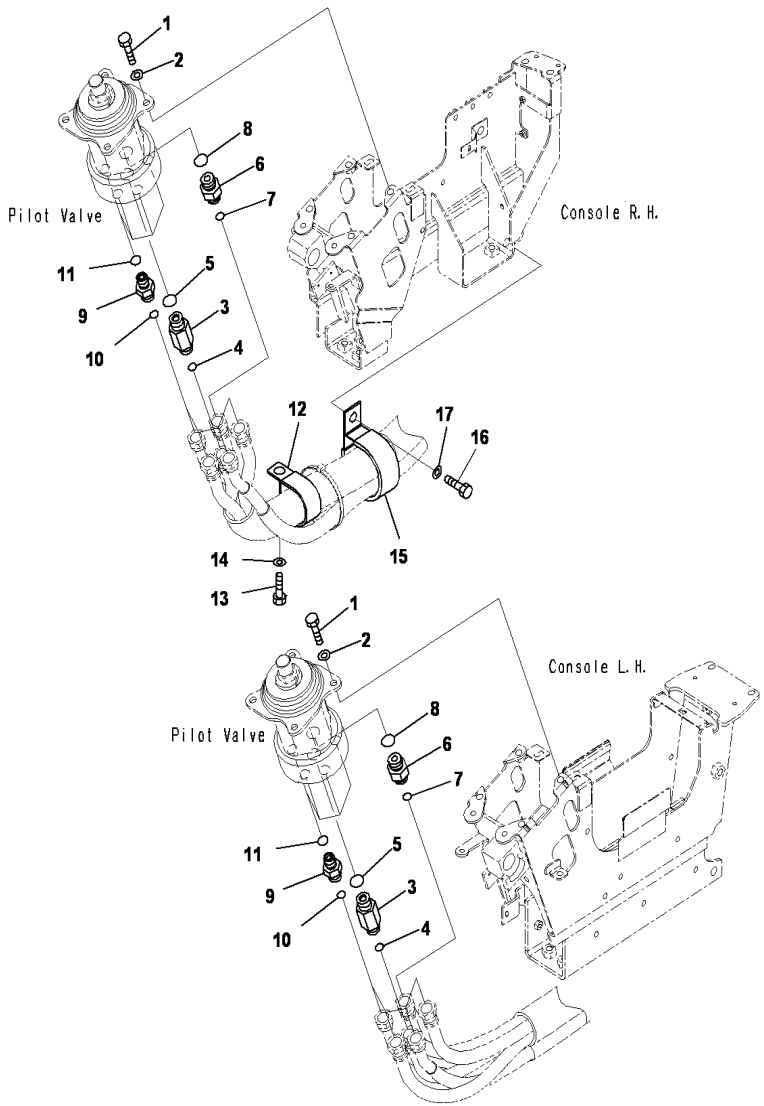

PC2000-8 S/N J10001-UP

OPERATOR'S CAB(CONTROL VALVE RELATED PARTS)

INDEX	CD	PART NO.	DESCRIPTION	QTY	SERIAL NO.
		21T-54-00304	CAB ASS'Y	1	J10004-UP
		21T-54-00303	CAB ASS'Y	1	J10001-J10003
		21T-54-00312	CAB ASS'Y WITH FRONT GUARD	1	J10001-UP
1		01010-80820	.BOLT	8	J10001-UP
2		01643-30823	.WASHER	8	J10001-UP
3		21W-62-42410	.NIPPLE	2	J10001-UP
4		02896-61009	.O-RING	2	J10001-UP
5		07002-61823	.O-RING	2	J10001-UP
6		02781-00313	.UNION	2	J10001-UP
7		02896-61009	.O-RING	2	J10001-UP
8		07002-61823	.O-RING	2	J10001-UP
9		11Y-62-12520	.UNION	8	J10001-UP
10		02896-61009	.O-RING	8	J10001-UP
11		07002-61423	.O-RING	8	J10001-UP
12		20Y-62-17930	.CLIP	1	J10001-UP
13		01010-81025	.BOLT	1	J10001-UP
14		01643-31032	.WASHER	1	J10001-UP
15		23S-61-12230	.CLAMP	1	J10001-UP
16		01010-81020	.BOLT	1	J10001-UP
17		01643-31032	.WASHER	1	J10001-UP

Ref :K0210-45A0 Page :240450

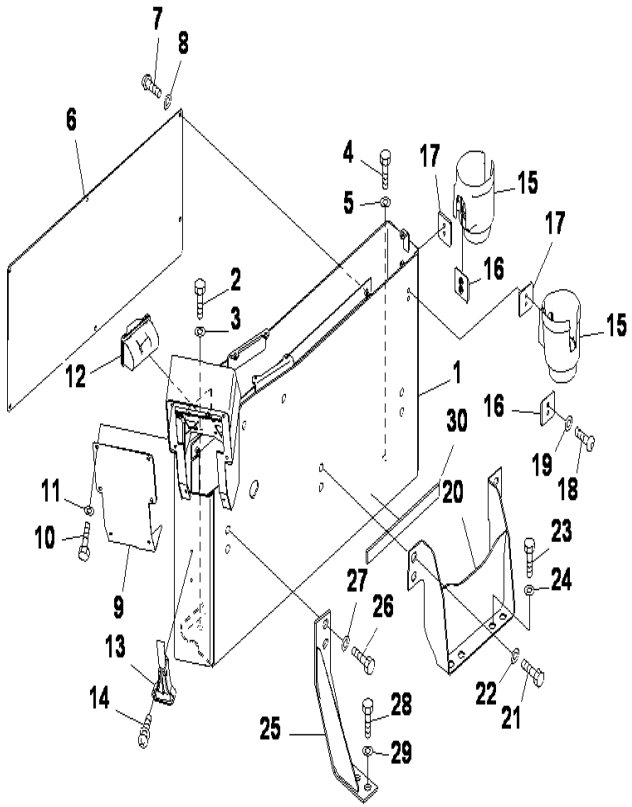

OPERATOR'S CAB(CONTROL STAND)

INDEX	CD	PART NO.	DESCRIPTION	QTY	SERIAL NO.
		21T-54-00304	CAB ASS'Y	1	J10004-UP
		21T-54-00303	CAB ASS'Y	1	J10001-J10003
		21T-54-00312	CAB ASS'Y WITH FRONT GUARD	1	J10001-UP
1		21T-43-31113	.STAND,(L.H)	1	J10001-UP
2		01010-81235	.BOLT	5	J10001-UP
3		01643-31232	.WASHER	5	J10001-UP
4		01010-81230	.BOLT	1	J10001-UP
5		01643-31232	.WASHER	1	J10001-UP
6		21T-43-31121	.COVER	1	J10001-UP
7		01245-00625	.SCREW	6	J10001-UP
8		01643-70623	.WASHER	6	J10001-UP
9		21T-43-31151	.COVER	1	J10001-UP
10		01010-D0620	.BOLT	6	J10001-UP
11		01643-70623	.WASHER	6	J10001-UP
12		22U-54-25371	.ASH TRAY	1	J10001-UP
13		21T-54-37240	.HAMMER	1	J10001-UP
14		01023-20516	.SCREW	2	J10001-UP
15		208-53-12991	.HOLDER,(CUP)	2	J10001-UP
16		21T-43-31141	.BRACKET	2	J10001-UP
17		21T-43-31170	.PLATE	2	J10001-UP
18		01245-00625	.SCREW	4	J10001-UP
19		01643-70623	.WASHER	4	J10001-UP
20		21T-54-37890	.BRACKET	1	J10001-UP
21		01010-D1230	.BOLT	4	J10001-UP
22		01643-71232	.WASHER	4	J10001-UP
23		01010-D1240	.BOLT	4	J10001-UP
24		01643-71232	.WASHER	4	J10001-UP
25		21T-54-37910	.BRACKET	1	J10001-UP
26		01010-D1230	.BOLT	2	J10001-UP
27		01643-71232	.WASHER	2	J10001-UP
28		01010-D1240	.BOLT	2	J10001-UP
29		01643-71232	.WASHER	2	J10001-UP
30		21T-54-37710	.SHEET	1	J10001-UP

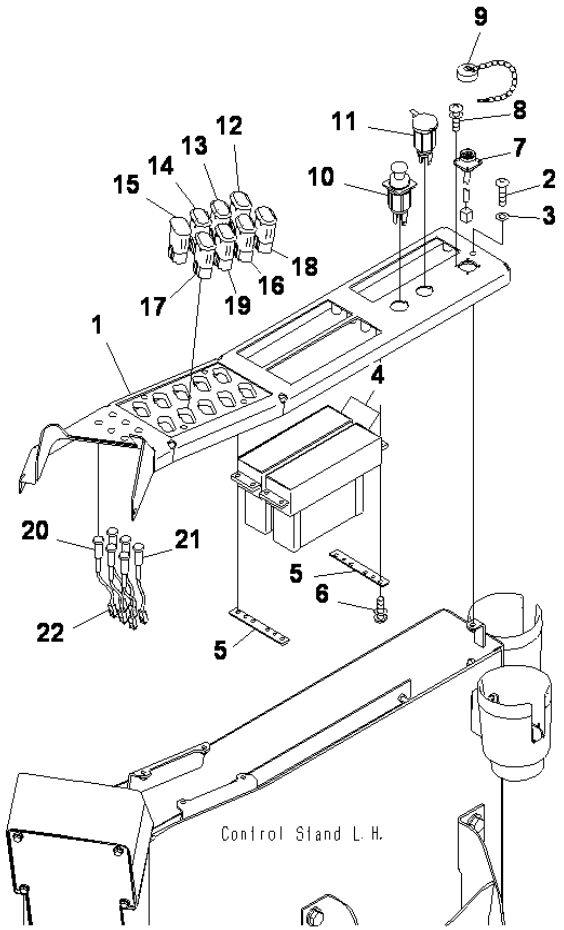

OPERATOR'S CAB(SWITCH AND PLATE)

INDEX	CD	PART NO.	DESCRIPTION	QTY	SERIAL NO.
		21T-54-00304	CAB ASS'Y	1	J10004-UP
		21T-54-00303	CAB ASS'Y	1	J10001-J10003
		21T-54-00312	CAB ASS'Y WITH FRONT GUARD	1	J10001-UP
1		21T-43-31131	.COVER	1	J10001-UP
2		01245-00625	.SCREW	7	J10001-UP
3		01643-70623	.WASHER	7	J10001-UP
4		208-979-7630	.PANEL ASS'Y CON	2	J10001-UP
5		21T-43-31161	.PLATE	2	J10001-UP
6		01023-10516	.SCREW	8	J10001-UP
7		21T-06-32450	.WIRING HARNESS	1	J10001-UP
		21T-06-67370	..CONNECTOR	1	J10001-UP
8		01023-20310	.SCREW	4	J10001-UP
9		562-43-15810	.CAP	1	J10001-UP
10		20Y-06-23472	.CIGARETTE LIGHT	1	J10001-UP
11		198-Z11-2640	.SOCKET ASS'Y	1	J10001-UP
12		21T-06-33740	.SWITCH A.(SWING LOCK)	1	J10001-UP
13		21T-06-33750	.SWITCH A.(BOOM SHOCKL)	1	J10001-UP
14		21T-06-33760	.SWITCH A.(MACHINE PUSH UP)	1	J10001-UP
15		21T-06-33770	.SWITCH A.(AUTO GREASE)	1	J10001-UP
16		21T-06-33780	.SWITCH A.(WORK LAMP)	1	J10001-UP
17		21T-06-33790	.SWITCH A.(ROOM LAMP)	1	J10001-UP
18		21T-06-33670	.SWITCH A.(STEP LIGHT)	1	J10001-UP
19		423-06-45350	.SWITCH	1	J10001-UP
20		21T-06-33441	.LED A.(RED)	5	J10001-UP
21		21T-06-33482	.LED A.(ORANGE)	1	J10001-UP
22		21T-06-33420	.CONNECTOR	6	J10001-UP

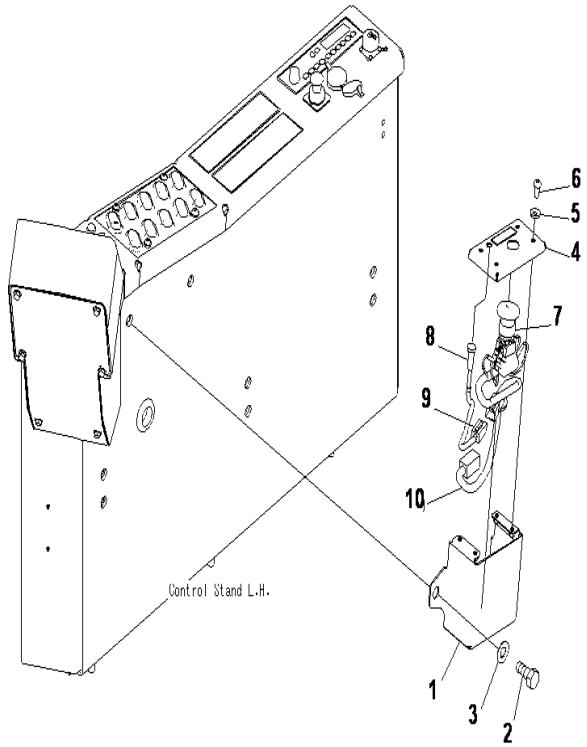

PC2000-8 S/N J10001-UP

OPERATOR'S CAB(EMERGENCY SWITCH)

INDEX	CD	PART NO.	DESCRIPTION	QTY	SERIAL NO.
		21T-54-00304	CAB ASS'Y	1	J10004-UP
		21T-54-00303	CAB ASS'Y	1	J10001-J10003
		21T-54-00312	CAB ASS'Y WITH FRONT GUARD	1	J10001-UP
1		21T-06-34752	.CASE	1	J10001-UP
2		01010-D1220	.BOLT	2	J10001-UP
3		01643-71232	.WASHER	2	J10001-UP
4		21T-06-35311	.PANEL	1	J10001-UP
5		01643-70623	.WASHER	4	J10001-UP
6		01245-00612	.SCREW	4	J10001-UP
7		21T-06-34450	.SWITCH	1	J10001-UP
8		21T-06-34690	.LED A	1	J10001-UP
9		08192-12930	.CONNECTOR	1	J10001-UP
10		21T-06-34911	.WIRING HARNESS	1	J10001-UP

Ref :K0210-48A0 Page :240480

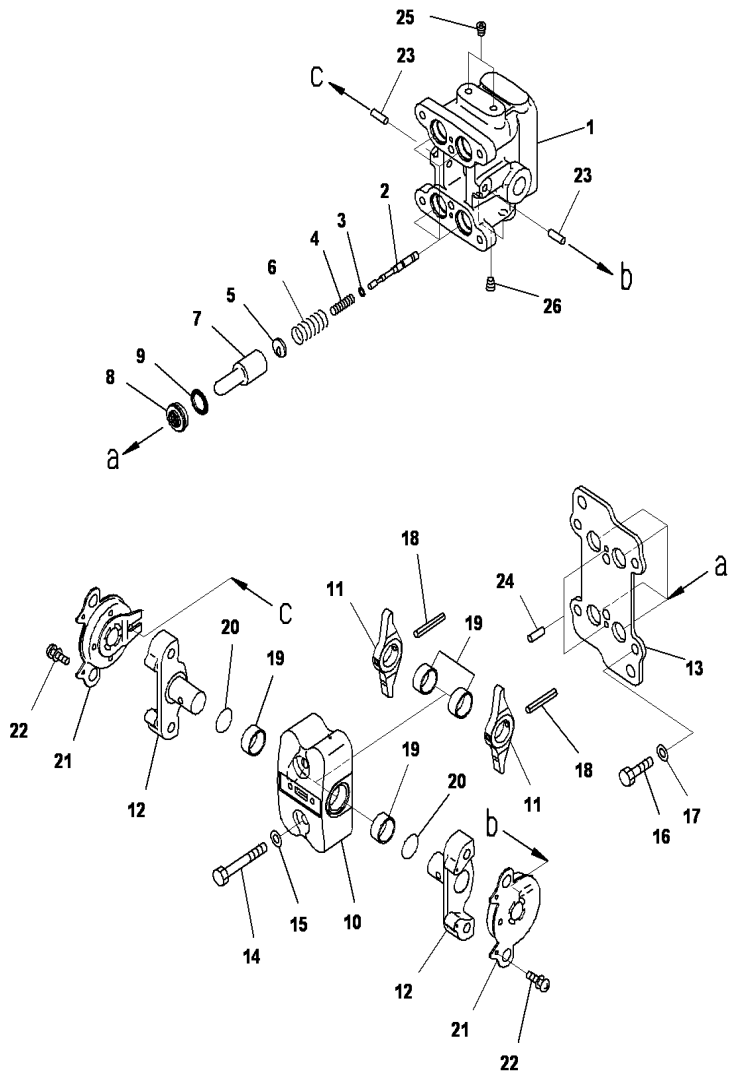

OPERATOR'S CAB(FLOOR,PPC VALVE FOR TRAVEL)

INDEX	CD	PART NO.	DESCRIPTION	QTY	SERIAL NO.
		21T-54-00304	CAB ASS'Y	1	J10004-UP
		21T-54-00303	CAB ASS'Y	1	J10001-J10003
		21T-54-00312	CAB ASS'Y WITH FRONT GUARD	1	J10001-UP
		702-16-06220	.PILOT VALVE PC2	1	J10001-UP
1	C1	702-16-73670	..BODY,VALVE	1	J10001-UP
2	C1	702-16-53120	..VALVE	4	J10001-UP
3		702-16-51140	..SHIM	4	J10001-UP
4		702-16-53420	..SPRING	4	J10001-UP
5		702-16-53140	..RETAINER	4	J10001-UP
6		702-16-54420	..SPRING	4	J10001-UP
7		702-16-53170	..PISTON	4	J10001-UP
8		702-16-71210	..SEAL	4	J10001-UP
9		702-16-71160	..SEAT	4	J10001-UP
10		702-16-73630	..CASE	1	J10001-UP
11	C1	702-16-57350	..LEVER	2	J10001-UP
12	C1	702-16-73550	..SHAFT	2	J10001-UP
13	C1	702-16-73640	..PLATE	1	J10001-UP
14		01010-80855	..BOLT	2	J10001-UP
15		01643-30823	..WASHER	2	J10001-UP
16		01010-80816	..BOLT	4	J10001-UP
17		702-16-54331	..WASHER, T=1.60MM	4	J10001-UP
18		04025-00432	..SPRING PIN	2	J10001-UP
19		702-16-54430	..BUSHING	4	J10001-UP
		702-16-54341	..WASHER, T=1.30MM	4	J10001-UP
		702-16-54351	..WASHER, T=1.00MM	4	J10001-UP
		702-16-56380	..WASHER, T=1.90MM	4	J10001-UP
		702-16-56390	..WASHER, T=2.20MM	4	J10001-UP
20		07000-12018	..O-RING	2	J10001-UP
21		702-16-73610	..DAMPER A	2	J10001-UP
22		01023-10306	..SCREW	4	J10001-UP
23		702-16-73650	..PLATE	2	J10001-UP
24		04022-04016	..SPRING PIN	2	J10001-UP
25	C1	706-86-51180	..PLUG	2	J10001-UP
26		708-18-12570	..PLUG	2	J10001-UP

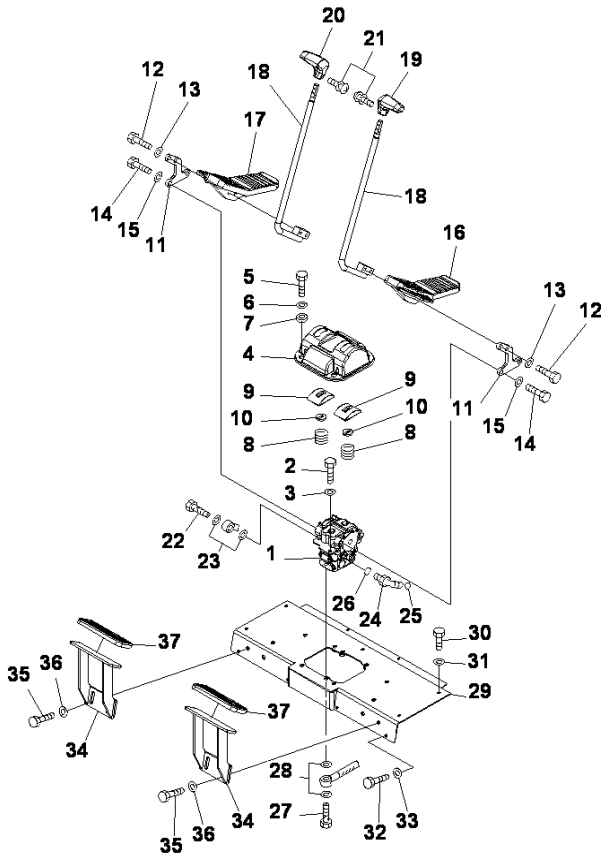

OPERATOR'S CAB(TRAVEL PIPING)

INDEX	CD	PART NO.	DESCRIPTION	QTY	SERIAL NO.
		21T-54-00304	CAB ASS'Y	1	J10004-UP
		21T-54-00303	CAB ASS'Y	1	J10001-J10003
		21T-54-00312	CAB ASS'Y WITH FRONT GUARD	1	J10001-UP
1		01010-81020	.BOLT	2	J10001-UP
2		01643-31032	.WASHER	2	J10001-UP
3		20Y-43-41121	.COVER	1	J10001-UP
4		01010-D1020	.BOLT	4	J10001-UP
5		01643-71032	.WASHER	4	J10001-UP
6		20Y-43-41361	.COLLAR	4	J10001-UP
7		203-43-51620	.SPRING	2	J10001-UP
		22U-43-21350	.COVER A	2	J10001-UP
8	C1	20Y-43-21140	..COVER	1	J10001-UP
9		22U-43-21360	..SEAL	1	J10001-UP
10		20Y-43-41111	.LEVER	2	J10001-UP
11		01010-D1045	.BOLT	4	J10001-UP
12		01643-71032	.WASHER	4	J10001-UP
13		01010-81030	.BOLT	4	J10001-UP
14		01643-31032	.WASHER	4	J10001-UP
15		22U-43-21111	.PEDAL(L.H)	1	J10001-UP
16		22U-43-21121	.PEDAL(R.H)	1	J10001-UP
17		22U-43-21131	.LEVER	2	J10001-UP
18		20Y-43-21231	.KNOB(L.H)	1	J10001-UP
19		20Y-43-21241	.KNOB(R.H)	1	J10001-UP
20		01023-20416	.SCREW	2	J10001-UP
21		702-16-53240	.PLUG	1	J10001-UP
22		07000-B2018	.O-RING	2	J10001-UP
23		02782-10311	.ELBOW	1	J10001-UP
24		02896-61009	.O-RING	1	J10001-UP
25		07002-61423	.O-RING	1	J10001-UP
26		20Y-62-16170	.EYE BOLT	4	J10001-UP
27		07000-B2015	.O-RING	8	J10001-UP
28		21T5435212	.PLATE	1	J10001-UP
29		01010-80616	.BOLT	5	J10001-UP
30		01643-30623	.WASHER	5	J10001-UP
31		01010D0616	.BOLT	4	J10001-UP
32		01643-70623	.WASHER	4	J10001-UP
33		21T5435750	.PEDAL	2	J10001-UP
34		01010-D1025	.BOLT	4	J10001-UP
35		01643-71032	.WASHER	4	J10001-UP
36		14X-43-12110	.PEDAL CAP	2	J10001-UP

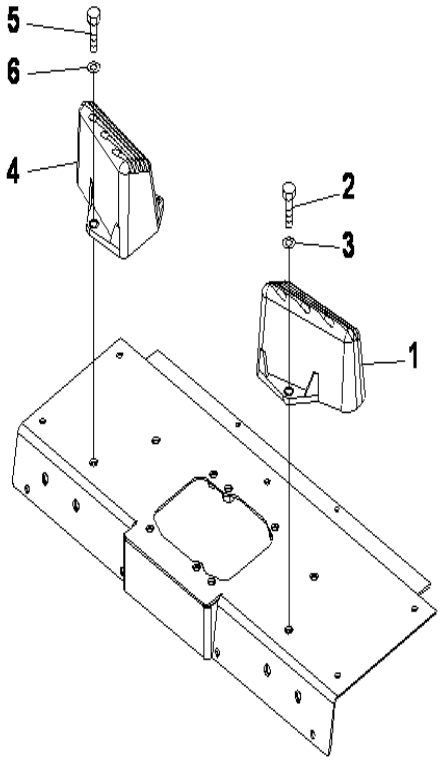

PC2000-8 S/N J10001-UP

OPERATOR'S CAB(FOOT REST)

INDEX	CD	PART NO.	DESCRIPTION	QTY	SERIAL NO.
		21T-54-00304	CAB ASS'Y.....	1	J10004-UP
		21T-54-00303	CAB ASS'Y.....	1	J10001-J10003
		21T-54-00312	CAB ASS'Y WITH FRONT GUARD.....	1	J10001-UP
1		22U-54-25110	.REST,FOOT(L.H).....	1	J10001-UP
2		01010-D1025	.BOLT.....	2	J10001-UP
3		01643-71032	.WASHER.....	2	J10001-UP
4		22U-54-25120	.REST,FOOT(R.H).....	1	J10001-UP
5		01010-D1025	.BOLT.....	2	J10001-UP
6		01643-71032	.WASHER.....	2	J10001-UP

Ref :K0210-51A0 Page :240510

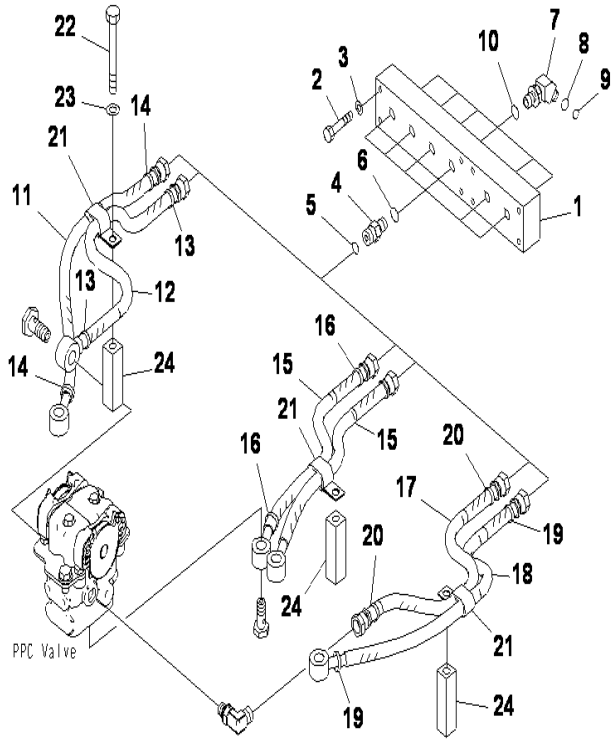

OPERATOR'S CAB(PPC VALVE PIPING)

INDEX	CD	PART NO.	DESCRIPTION	QTY	SERIAL NO.
		21T-54-00304	CAB ASS'Y	1	J10004-UP
		21T-54-00303	CAB ASS'Y	1	J10001-J10003
		21T-54-00312	CAB ASS'Y WITH FRONT GUARD	1	J10001-UP
1		21T-64-38111	.JOINT	1	J10001-UP
2		01010-80650	.BOLT	8	J10001-UP
3		01643-30623	.WASHER	8	J10001-UP
4		02781-0031D	.NIPPLE	6	J10001-UP
5		02896-61009	.O-RING	6	J10001-UP
6		07002-61423	.O-RING	6	J10001-UP
7		21T-64-38120	.ELBOW	6	J10001-UP
8		201-60-11390	..O-RING	1	J10001-UP
9		20Y-62-19560	..O-RING	1	J10001-UP
10		07002-61423	.O-RING	6	J10001-UP
11		21T-64-38170	.HOSE	1	J10001-UP
12		21T-64-38181	.HOSE	1	J10001-UP
13		20Y-62-22790	.BAND (RED)	2	J10001-UP
14		20Y-62-22850	.BAND (GREEN)	2	J10001-UP
15		21T-64-38160	.HOSE	2	J10001-UP
16		20Y-62-22820	.BAND (BLUE)	2	J10001-UP
17		02760-003A5	.HOSE	1	J10001-UP
18		21T-64-38170	.HOSE	1	J10001-UP
19		20Y-62-22790	.BAND (RED)	2	J10001-UP
20		20Y-62-22820	.BAND (BLUE)	2	J10001-UP
21		04435-51510	.CLIP	3	J10001-UP
22		01010-81095	.BOLT	3	J10001-UP
23		01643-31032	.WASHER	3	J10001-UP
24		175-06-25180	.SPACER	3	J10001-UP

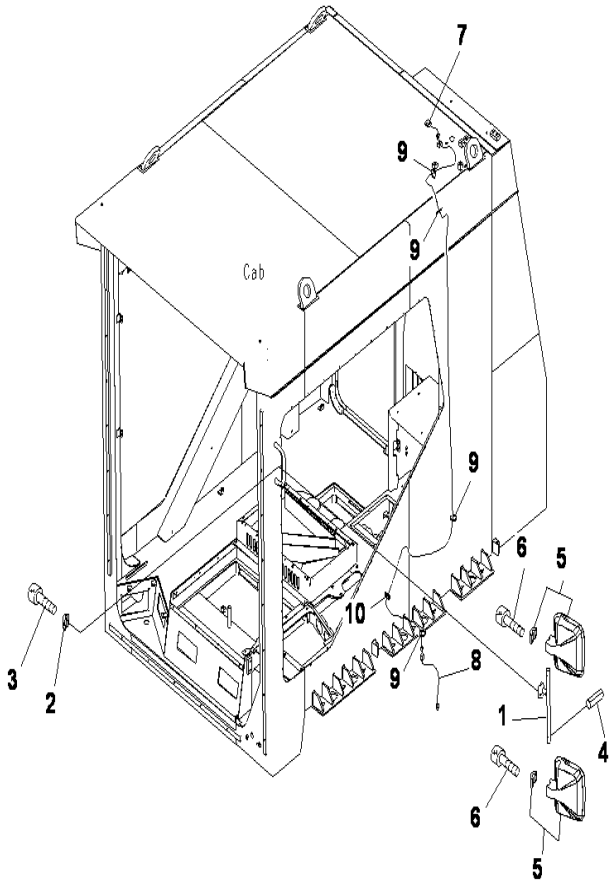

PC2000-8 S/N J10001-UP

OPERATOR'S CAB(MIRROR AND ANTENNA)

INDEX	CD	PART NO.	DESCRIPTION	QTY	SERIAL NO.
		21T-54-00304	CAB ASS'Y.....	1	J10001-UP
		21T-54-00303	CAB ASS'Y.....	1	J10001-J10003
		21T-54-00312	CAB ASS'Y WITH FRONT GUARD.....	1	J10001-UP
1		21T-54-35692	.SUPPORT.....	1	J10001-UP
2		20Y-54-35430	.CLAMP.....	1	J10001-UP
3		01252-71025	.BOLT.....	2	J10001-UP
4		04025-00632	.PIN.....	2	J10001-UP
5		421-54-25610	.MIRROR.....	2	J10001-UP
6		01252-70545	.BOLT.....	8	J10001-UP
7		8A13-10-1300	.ANTENA,GPS.....	1	J10001-UP
8		8A13-10-1400	.CABLE.....	1	J10001-UP
9		08034-20414	.BAND.....	4	J10001-UP
10		175-06-81610	.GROMMET.....	1	J10001-UP

Ref :K0210-53A0 Page :240530

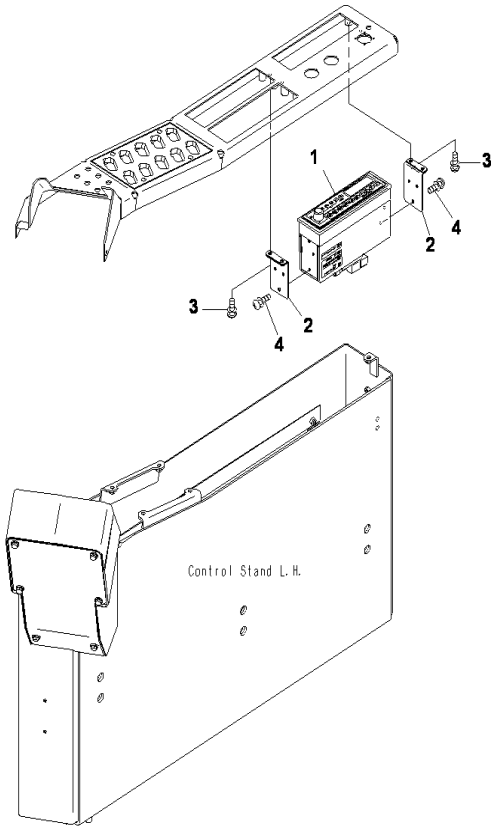

PC2000-8 S/N J10001-UP

OPERATOR'S CAB(RADIO)

INDEX	CD	PART NO.	DESCRIPTION	QTY	SERIAL NO.
1		20Y-06-42430	RADIO,ASIA.....	1	J10001-UP
2		22U-06-22510	BRACKET.....	2	J10001-UP
3		01023-10516	SCREW.....	4	J10001-UP
4		01023-10510	SCREW.....	4	J10001-UP

Ref :K0210-54A0 Page :240540

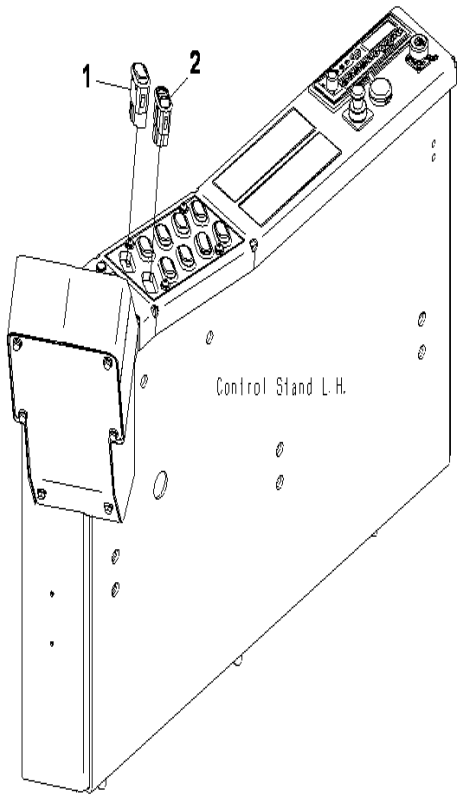

PC2000-8 S/N J10001-UP

OPERATOR'S CAB(SWITCH PANEL)

INDEX	CD	PART NO.	DESCRIPTION	QTY	SERIAL NO.
1		423-06-45590	SWITCH.....	1	J10001-UP
2		21T-06-34740	SWITCH A.(SERVICE CENTER).....	1	J10001-UP

Ref :K0210-55A0 Page :240550

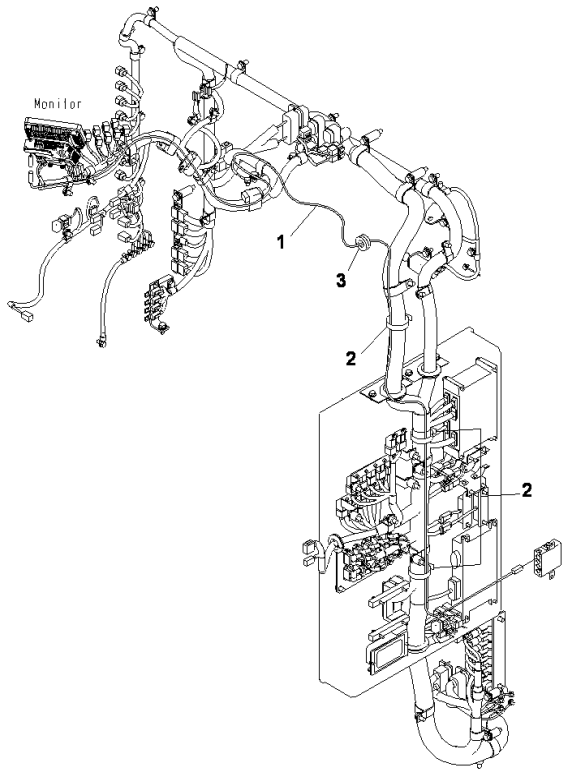

PC2000-8 S/N J10001-UP

OPERATOR'S CAB(REAR CAMERA)

INDEX	CD	PART NO.	DESCRIPTION	QTY	SERIAL NO.
1		783-53-37200	WIRING HARNESS.....	1	J10001-UP
2		08034-20519	BAND.....	3	J10001-UP
3		08037-10610	GROMMET.....	1	J10001-UP

Ref :K0210-56A0 Page :240560

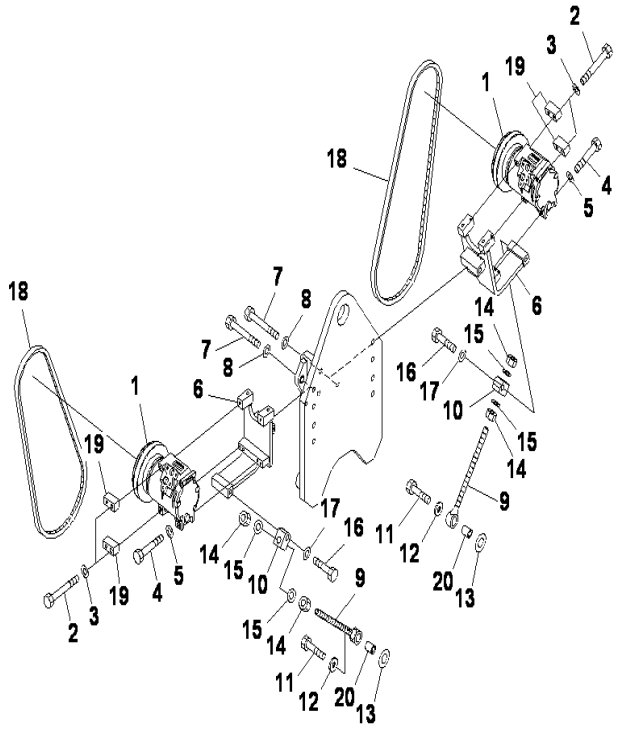

AIR CONDITIONER(COMPRESSOR)

INDEX	CD	PART NO.	DESCRIPTION	QTY	SERIAL NO.
1		(20Y-810-1260)	COMPRESSOR ASS'Y	2	J10002-UP
		(20Y-979-6121)	COMPRESSOR ASS'Y	2	J10001-J10001
2		363-15-16110	BOLT	4	J10001-UP
3		01643-30823	WASHER	4	J10001-UP
4		01010-80875	BOLT	4	J10001-UP
5		01643-30823	WASHER	4	J10001-UP
6		21T-979-3110	BRACKET	2	J10001-UP
7		01019-31220	BOLT	2	J10001-UP
8		01643-31232	WASHER	2	J10001-UP
9		6150-82-8610	ROD	2	J10001-UP
10		21T-979-3270	PLATE	2	J10001-UP
11		01010-81250	BOLT	2	J10001-UP
12		175-54-34170	WASHER	2	J10001-UP
13		01643-32260	WASHER	2	J10001-UP
14		01580-11411	NUT	4	J10001-UP
15		01643-31445	WASHER	4	J10001-UP
16		01010-81250	BOLT	2	J10001-UP
17		01643-31232	WASHER	2	J10001-UP
18		04120-21757	V-BELT	2	J10001-UP
19		154-911-1190	PLATE	4	J10001-UP
20		6215-81-6150	PIN	2	J10001-UP

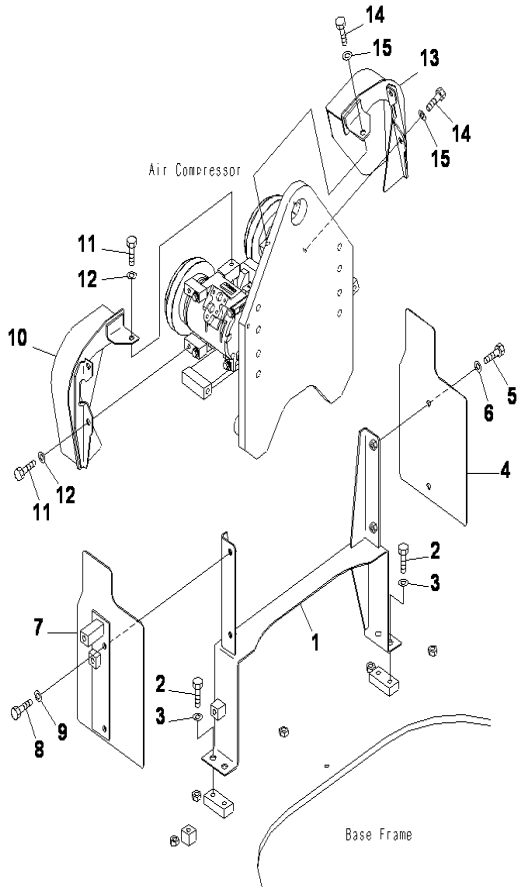

PC2000-8 S/N J10001-UP

AIR CONDITIONER(BELT COVER)

INDEX	CD	PART NO.	DESCRIPTION	QTY	SERIAL NO.
1		21T-979-3161	BRACKET	1	J10001-UP
2		01010-81225	BOLT	4	J10001-UP
3		01643-31232	WASHER	4	J10001-UP
4		21T-979-3141	PLATE	1	J10001-UP
5		01010-81020	BOLT	2	J10001-UP
6		01643-31032	WASHER	2	J10001-UP
7		21T-979-3150	COVER	1	J10001-UP
8		01010-81025	BOLT	2	J10001-UP
9		01643-31032	WASHER	2	J10001-UP
10		21T-979-3120	COVER	1	J10001-UP
11		01010-81020	BOLT	3	J10001-UP
12		01643-31032	WASHER	3	J10001-UP
13		21T-979-3130	COVER	1	J10001-UP
14		01010-81020	BOLT	3	J10001-UP
15		01643-31032	WASHER	3	J10001-UP

Ref :K0710-02A0 Page :240580

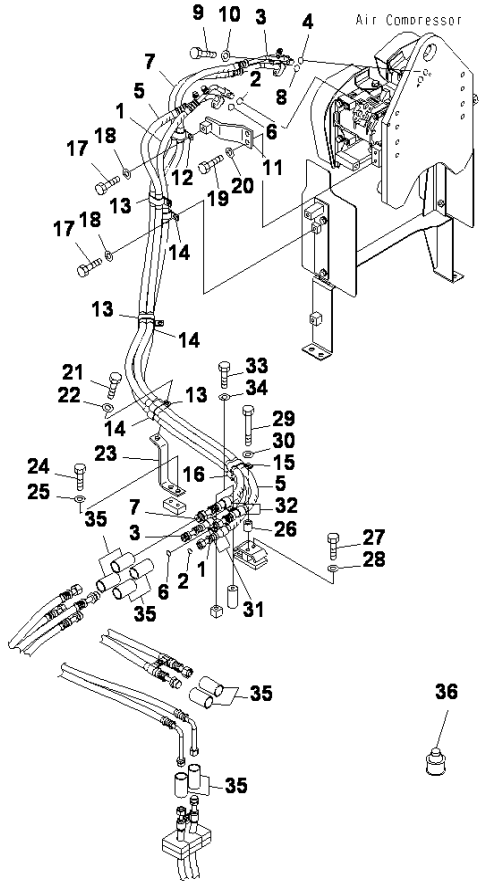

AIR CONDITIONER(HOSE)(INSIDE OF POWER CONTAINER)

INDEX	CD	PART NO.	DESCRIPTION	QTY	SERIAL NO.
1		21T-979-3511	HOSE	1	J10001-UP
2		20Y-979-3140	.O-RING	2	J10001-UP
3		21T-979-3611	HOSE	1	J10001-UP
4		20Y-979-3140	.O-RING	2	J10001-UP
5		21T-979-3521	HOSE	1	J10001-UP
6		20Y-979-3130	.O-RING	2	J10001-UP
7		21T-979-3621	HOSE	1	J10001-UP
8		20Y-979-3130	.O-RING	1	J10001-UP
9		01010-80630	BOLT	4	J10001-UP
10		01643-30623	WASHER	4	J10001-UP
11		21T-979-3441	BRACKET	1	J10001-UP
12		04435-52212	CLIP	1	J10001-UP
13		203-979-7170	CLIP	3	J10001-UP
14		421-07-11550	CLIP	3	J10001-UP
15		203-979-7170	CLIP	1	J10001-UP
16		421-07-11550	CLIP	1	J10001-UP
17		01010-81225	BOLT	4	J10001-UP
18		01643-31232	WASHER	4	J10001-UP
19		01010-81230	BOLT	2	J10001-UP
20		01643-31232	WASHER	2	J10001-UP
21		01010-81230	BOLT	1	J10001-UP
22		01643-31232	WASHER	1	J10001-UP
23		21T-979-3450	BRACKET	1	J10001-UP
24		01010-81225	BOLT	2	J10001-UP
25		01643-31232	WASHER	2	J10001-UP
26		195-33-11220	SPACER	1	J10001-UP
27		01010-81060	BOLT	1	J10001-UP
28		01643-31032	WASHER	1	J10001-UP
29		01010-81090	BOLT	1	J10001-UP
30		01643-31032	WASHER	1	J10001-UP
31		04434-52112	CLIP	2	J10001-UP
32		04434-52312	CLIP	2	J10001-UP
33		01010-81225	BOLT	2	J10001-UP
34		01643-31232	WASHER	2	J10001-UP
35		21T-979-4421	SEAL	8	J10001-UP
36		21N-97-98160	OIL,COMPRESSOR	2	J10001-UP

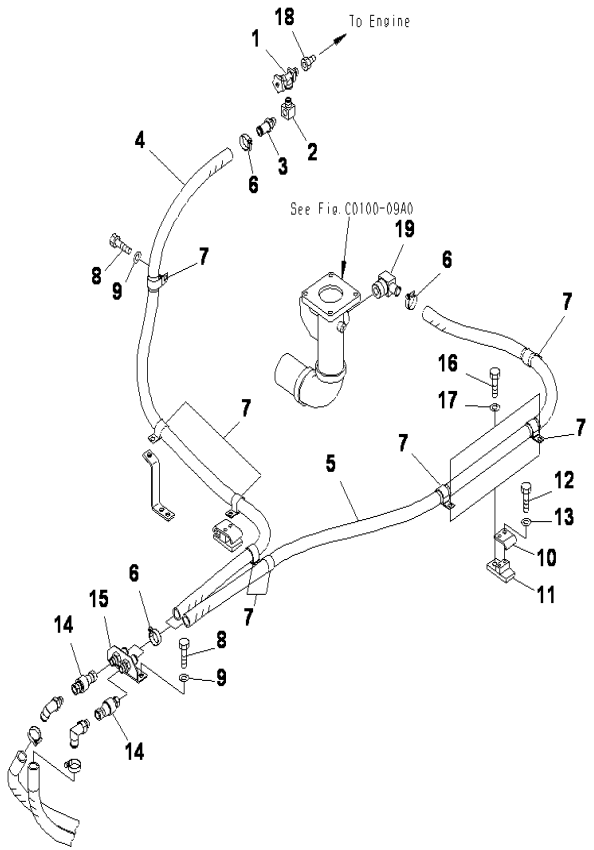

PC2000-8 S/N J10001-UP

AIR CONDITIONER(HOSE)(HEATER)

INDEX	CD	PART NO.	DESCRIPTION	QTY	SERIAL NO.
1		195-911-5591	VALVE	1	J10001-UP
2		565-44-15380	ELBOW	1	J10001-UP
3		113-899-7970	JOINT	1	J10001-UP
4		21T-979-3710	HOSE	1	J10001-UP
5		21T-979-3720	HOSE	1	J10001-UP
6		07281-00419	CLAMP	4	J10001-UP
7		04434-53412	CLIP	8	J10001-UP
8		01010-81225	BOLT	5	J10001-UP
9		01643-31232	WASHER	5	J10001-UP
10		203-973-5660	CLAMP	2	J10001-UP
11		21T-979-3430	BRACKET	2	J10001-UP
12		01010-81025	BOLT	4	J10001-UP
13		01643-31032	WASHER	4	J10001-UP
14		195-Z11-6990	COUPLING	2	J10001-UP
15		21T-979-3420	BRACKET	1	J10001-UP
16		01010-81230	BOLT	2	J10001-UP
17		01643-31232	WASHER	2	J10001-UP
18		196-911-4120	NIPPLE	1	J10001-UP
19		6127-61-7340	ELBOW	1	J10001-UP

Ref :K0710-04A0 Page :240600

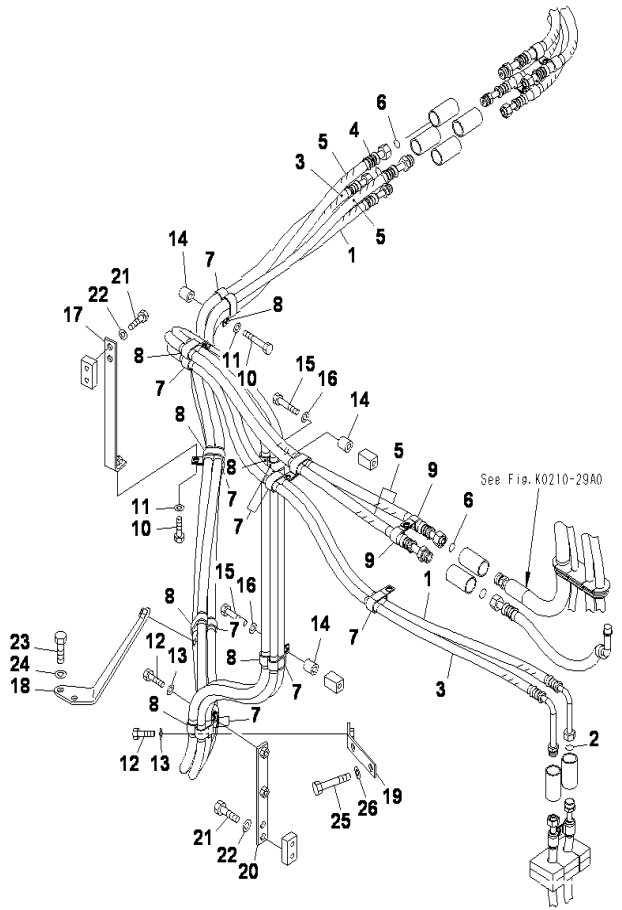

PC2000-8 S/N J10001-UP

AIR CONDITIONER(HOSE)(MACHINE CAB)(1/3)

INDEX	CD	PART NO.	DESCRIPTION	QTY	SERIAL NO.
1		21T-979-3531	HOSE	1	J10001-UP
2		20Y-979-3140	.O-RING	2	J10001-UP
3		21T-979-3640	HOSE	1	J10001-UP
4		20Y-979-3140	.O-RING	1	J10001-UP
5		21T-979-3631	HOSE	2	J10001-UP
6		20Y-979-3130	.O-RING	1	J10001-UP
7		421-07-11550	CLIP	10	J10001-UP
8		203-979-7170	CLIP	9	J10001-UP
9		04434-52312	CLIP	2	J10001-UP
10		01010-81250	BOLT	1	J10001-UP
11		01643-31232	WASHER	1	J10001-UP
12		01010-81225	BOLT	8	J10001-UP
13		01643-31232	WASHER	8	J10001-UP
14		195-33-11220	SPACER	3	J10001-UP
15		01010-81225	BOLT	2	J10001-UP
16		01643-31232	WASHER	2	J10001-UP
17		21T-979-3350	BRACKET	1	J10001-UP
18		21T-979-3860	BRACKET	1	J10001-UP
19		21T-979-3870	BRACKET	1	J10001-UP
20		21T-066-4450	BRACKET	1	J10001-UP
21		01010-81225	BOLT	4	J10001-UP
22		01643-31232	WASHER	4	J10001-UP
23		01010-81035	BOLT	2	J10001-UP
24		01643-31032	WASHER	2	J10001-UP
25		01010-81475	BOLT	2	J10001-UP
26		01643-31445	WASHER	2	J10001-UP

Ref :K0710-05A0 Page :240610

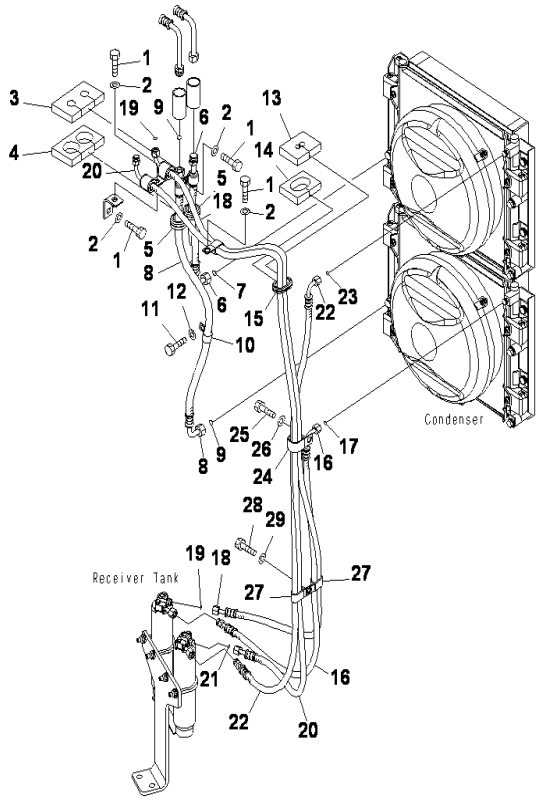

PC2000-8 S/N J10001-UP

AIR CONDITIONER(HOSE)(MACHINE CAB)(2/3)

INDEX	CD	PART NO.	DESCRIPTION	QTY	SERIAL NO.
1		01010-81020	BOLT	4	J10001-UP
2		01643-31032	WASHER	4	J10001-UP
3		21T-979-3390	SHEET	1	J10001-UP
4		21T-979-3380	SHEET	1	J10001-UP
5		195-06-18890	GROMMET	2	J10001-UP
6		21T-979-3571	HOSE	1	J10001-UP
7		20Y-979-3140	.O-RING	2	J10001-UP
8		21T-979-3671	HOSE	1	J10001-UP
9		20Y-979-3140	.O-RING	2	J10001-UP
10		04434-51912	CLIP	1	J10001-UP
11		01010-81225	BOLT	1	J10001-UP
12		01643-31232	WASHER	1	J10001-UP
13		21T-979-3370	SHEET	1	J10001-UP
14		21T-979-3360	SHEET	1	J10001-UP
15		120-06-24110	GROMMET	1	J10001-UP
16		154-911-7431	HOSE	1	J10001-UP
17		20Y-979-3150	.O-RING	2	J10001-UP
18		21T-979-3661	HOSE	1	J10001-UP
19		20Y-979-3150	.O-RING	2	J10001-UP
20		21T-979-3561	HOSE	1	J10001-UP
21		20Y-979-3150	.O-RING	1	J10001-UP
22		21T-979-6220	HOSE	1	J10001-UP
23		20Y-979-3150	.O-RING	2	J10001-UP
24		04434-53412	CLIP	1	J10001-UP
25		01010-81225	BOLT	1	J10001-UP
26		01643-31232	WASHER	1	J10001-UP
27		04435-51612	CLIP	2	J10001-UP
28		01010-81225	BOLT	1	J10001-UP
29		01643-31232	WASHER	1	J10001-UP

Ref :K0710-06A0 Page :240620

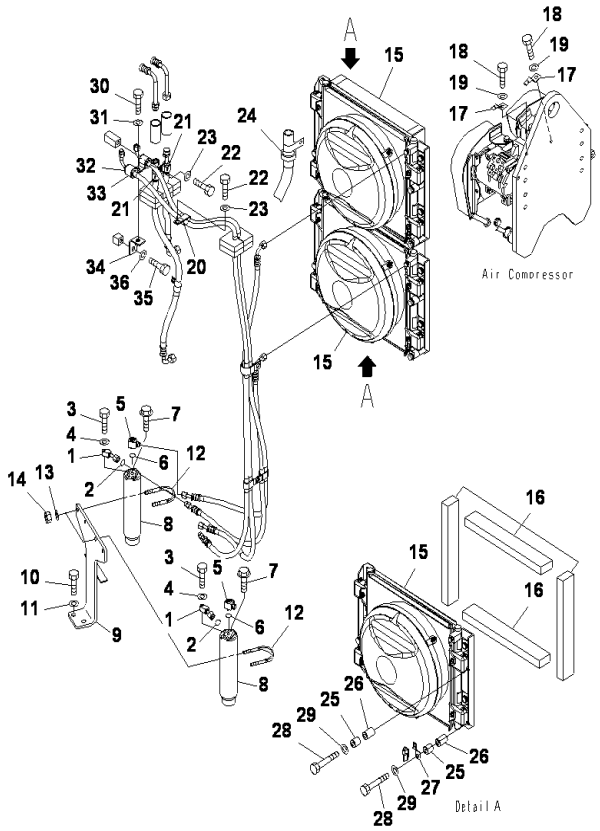

PC2000-8 S/N J10001-UP

AIR CONDITIONER(HOSE)(MACHINE CAB)(3/3)

INDEX	CD	PART NO.	DESCRIPTION	QTY	SERIAL NO.
1		21T-979-3481	TUBE	2	J10001-UP
2		20Y-979-3150	.O-RING	4	J10001-UP
3		01010-80625	BOLT	2	J10001-UP
4		01643-30623	WASHER	2	J10001-UP
5		21N-97-93420	JOINT	2	J10001-UP
6		20Y-979-3150	.O-RING	2	J10001-UP
7		01435-00625	BOLT	2	J10001-UP
8		20Y-979-3120	TANK RECEIVER	2	J10001-UP
9		21T-979-3410	BRACKET	1	J10001-UP
10		01010-81225	BOLT	2	J10001-UP
11		01643-31232	WASHER	2	J10001-UP
12		07283-36155	CLIP	2	J10001-UP
13		01643-31032	WASHER	4	J10001-UP
14		01597-01009	NUT	4	J10001-UP
15		418-S62-3150	CONDENSER ASSY	2	J10001-UP
16		21T-979-3460	SHEET	8	J10001-UP
17		08053-01510	CLIP	2	J10001-UP
18		01010-81025	BOLT	2	J10001-UP
19		01643-31032	WASHER	2	J10001-UP
20		04435-51612	CLIP	1	J10001-UP
21		04434-52112	CLIP	2	J10001-UP
22		01010-81225	BOLT	2	J10001-UP
23		01643-31232	WASHER	2	J10001-UP
24		21T-979-3470	SHEET	1	J10001-UP
25		195-33-11220	SPACER	4	J10001-UP
26		20Y-03-11220	COLLAR	4	J10001-UP
27		08193-21012	CLIP	2	J10001-UP
28		01010-81085	BOLT	4	J10001-UP
29		01643-31032	WASHER	4	J10001-UP
30		01010-81225	BOLT	1	J10001-UP
31		01643-31232	WASHER	1	J10001-UP
32		07095-20419	CUSHION	2	J10001-UP
33		04434-52712	CLIP	2	J10001-UP
34		17M-49-15260	BRACKET	1	J10001-UP
35		01010-81225	BOLT	1	J10001-UP
36		01643-31232	WASHER	1	J10001-UP

Ref :K0710-07A0 Page :240630

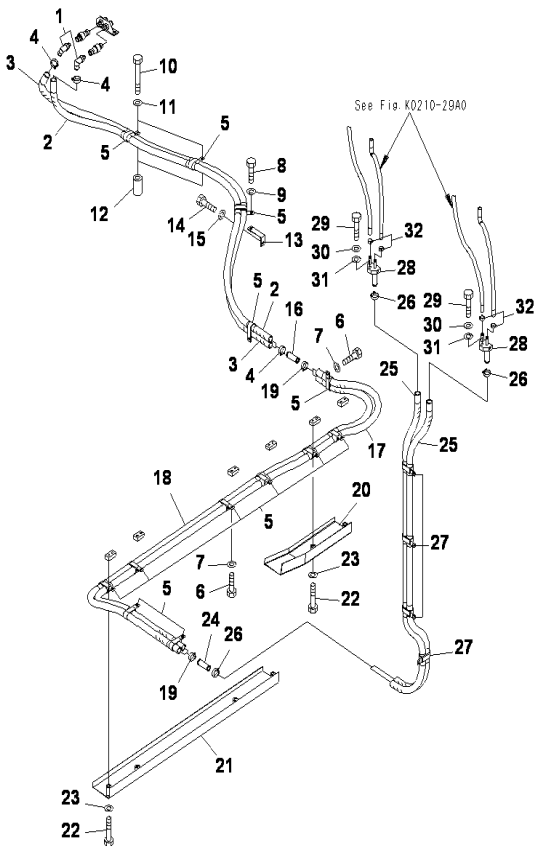

PC2000-8 S/N J10001-UP

AIR CONDITIONER(HEATER HOSE)(MACHINE CAB)

INDEX	CD	PART NO.	DESCRIPTION	QTY	SERIAL NO.
1		175-911-4340	JOINT	2	J10001-UP
2		21T-979-3731	HOSE	1	J10001-UP
3		21T-979-3741	HOSE	1	J10001-UP
4		07281-00419	CLAMP	4	J10001-UP
5		195-911-4350	CLIP	13	J10001-UP
6		01010-81220	BOLT	10	J10001-UP
7		01643-31232	WASHER	10	J10001-UP
8		01010-81225	BOLT	1	J10001-UP
9		01643-31232	WASHER	1	J10001-UP
10		01010-81275	BOLT	2	J10001-UP
11		01643-31232	WASHER	2	J10001-UP
12		175-40-22540	SPACER	2	J10001-UP
13		207-626-2770	BRACKET	1	J10001-UP
14		01010-81225	BOLT	1	J10001-UP
15		01643-31232	WASHER	1	J10001-UP
16		21T-979-3320	JOINT	2	J10001-UP
17		21T-979-3751	HOSE	1	J10001-UP
18		21T-979-3761	HOSE	1	J10001-UP
19		07281-00419	CLAMP	4	J10001-UP
20		21T-979-3340	BRACKET	1	J10001-UP
21		21T-979-3330	COVER	1	J10001-UP
22		01010-81270	BOLT	6	J10001-UP
23		01643-31232	WASHER	6	J10001-UP
24		21T-979-3320	JOINT	2	J10001-UP
25		21T-979-3780	HOSE	2	J10001-UP
26		07281-00419	CLAMP	4	J10001-UP
27		195-911-4350	CLIP	4	J10001-UP
28		21T-979-3810	TEE	2	J10001-UP
29		01010-81250	BOLT	2	J10001-UP
30		01643-31232	WASHER	2	J10001-UP
31		01643-31232	WASHER	2	J10001-UP
32		11Y-09-11160	CLIP	4	J10001-UP

Ref :K0710-08A0 Page :240640

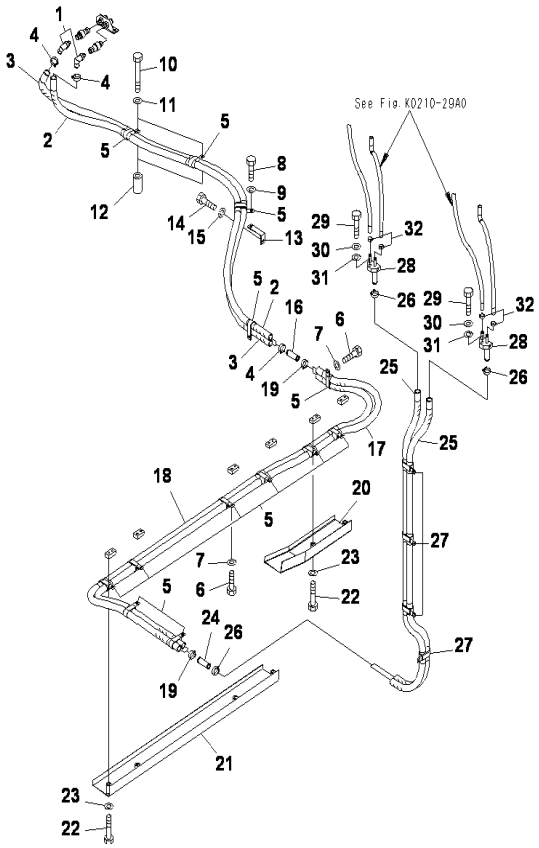

PC2000-8 S/N J10001-UP

AIR CONDITIONER(HEATER HOSE)(MACHINE CAB FOR LOADER)

INDEX	CD	PART NO.	DESCRIPTION	QTY	SERIAL NO.
1		175-911-4340	JOINT	2	J10001-UP
2		21T-979-3731	HOSE	1	J10001-UP
3		21T-979-3741	HOSE	1	J10001-UP
4		07281-00419	CLAMP	4	J10001-UP
5		195-911-4350	CLIP	14	J10001-UP
6		01010-81220	BOLT	5	J10001-UP
7		01643-31232	WASHER	5	J10001-UP
8		01010-81225	BOLT	1	J10001-UP
9		01643-31232	WASHER	1	J10001-UP
10		01010-81275	BOLT	2	J10001-UP
11		01643-31232	WASHER	2	J10001-UP
12		175-40-22540	SPACER	2	J10001-UP
13		207-626-2770	BRACKET	1	J10001-UP
14		01010-81225	BOLT	1	J10001-UP
15		01643-31232	WASHER	1	J10001-UP
16		21T-979-3320	JOINT	2	J10001-UP
17		21T-979-3751	HOSE	1	J10001-UP
18		21T-979-3761	HOSE	1	J10001-UP
19		07281-00419	CLAMP	4	J10001-UP
20		21T-979-3341	COVER	1	J10001-UP
21		21T-643-4360	COVER	1	J10001-UP
22		01010-81270	BOLT	8	J10001-UP
23		01643-31232	WASHER	8	J10001-UP
24		21T-979-3320	JOINT	2	J10001-UP
25		21T-979-3780	HOSE	2	J10001-UP
26		07281-00419	CLAMP	4	J10001-UP
27		195-911-4350	CLIP	4	J10001-UP
28		21T-979-3810	TEE	2	J10001-UP
29		01010-81250	BOLT	2	J10001-UP
30		01643-31232	WASHER	2	J10001-UP
31		01643-31232	WASHER	2	J10001-UP
32		11Y-09-11160	CLIP	4	J10001-UP

Ref :K0710-08A1 Page :240645

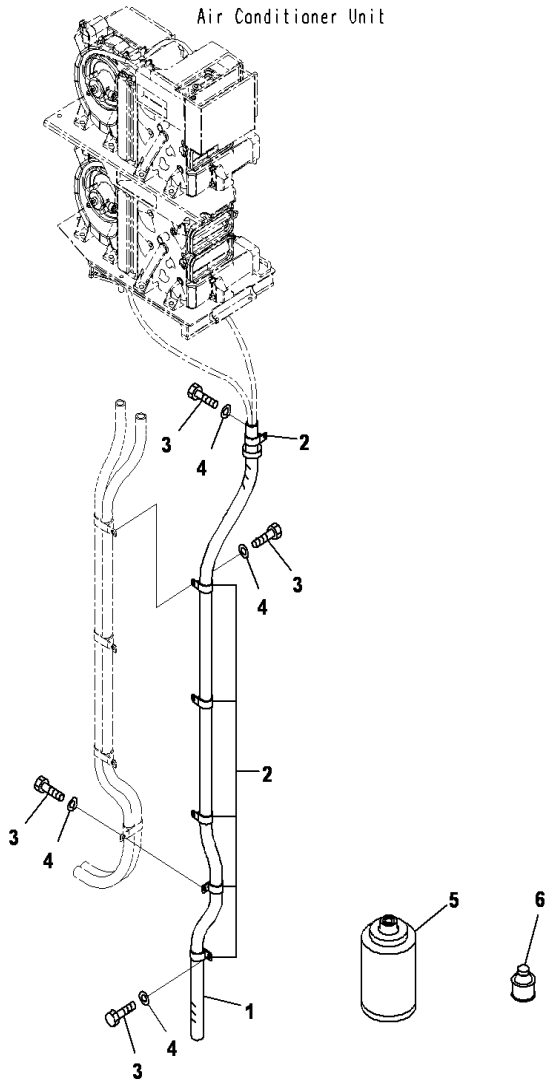

PC2000-8 S/N J10001-UP

AIR CONDITIONER(DRAIN PIPING)

INDEX	CD	PART NO.	DESCRIPTION	QTY	SERIAL NO.
1		09483-17240	HOSE	1	J10001-UP
2		208-06-19170	CLIP	6	J10001-UP
3		01010-81225	BOLT	6	J10001-UP
4		01643-31232	WASHER	6	J10001-UP
5		20Y-979-3310	DRUM	10	J10001-UP
6		21N-97-98160	OIL,COMPRESSOR	1	J10001-UP

Ref :K0710-09A0 Page :240650

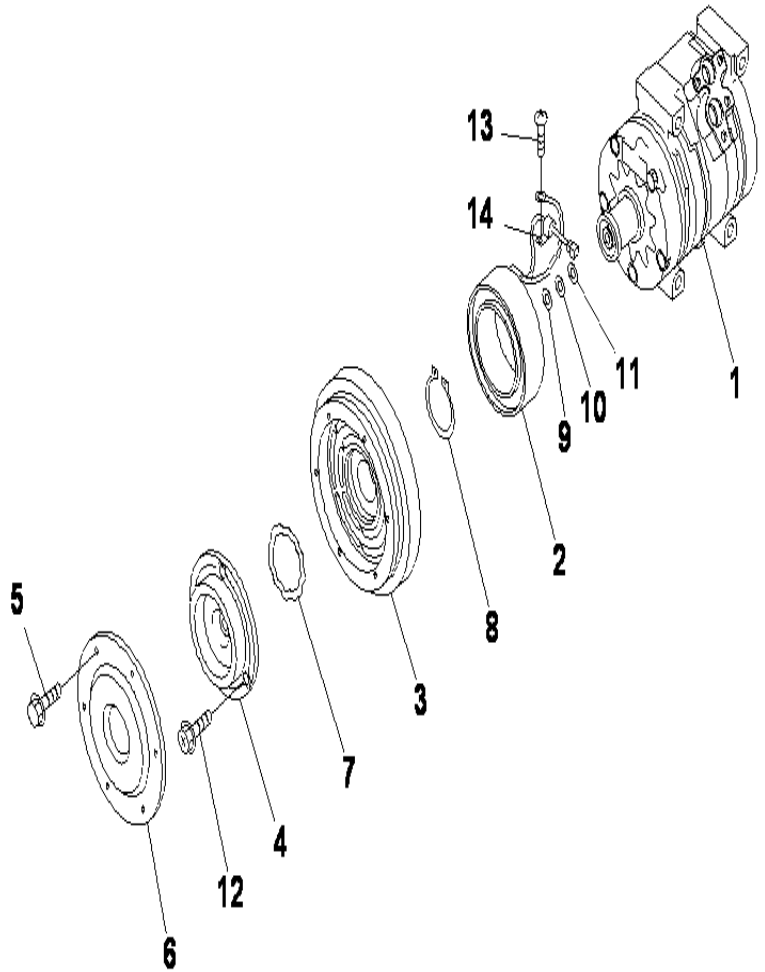

PC2000-8 S/N J10001-UP

AIR CONDITIONER(INNER PARTS)

INDEX	CD	PART NO.	DESCRIPTION	QTY	SERIAL NO.
		20Y-979-6121	COMPRESSOR A.....	2	J10001-UP
1		ND447220-4051	.COMPRESSOR ASS'Y.....	1	J10001-UP
		ND247300-0510	.CLUTCH ASS'Y,MAGNET.....	1	J10001-UP
2		ND047310-7240	..STATOR,MAGNET CLUTCH.....	1	J10001-UP
3	C1		..CLUCTH ASSEMBLY,MAGNETIC.....	1	J10001-UP
4		ND047410-1570	..HUB,CLUTCH.....	1	J10001-UP
		ND047410-1580	..HUB,CLUTCH.....	1	J10001-UP
5		ND949047-2950	..BOLT,WASHER.....	6	J10001-UP
6		ND047372-0660	..COVER,DUST.....	1	J10001-UP
		ND949070-1360	.RING, SNAP.....	1	J10001-UP
7		ND949070-0640	.RING, SNAP.....	1	J10001-UP
8		ND949070-1390	.RING, SNAP.....	1	J10001-UP
9		ND949013-7480	.WASHER, 0.1MM,PLATE.....	1	J10001-UP
10		ND949013-7500	.WASHER, 0.3MM,PLATE.....	1	J10001-UP
11		ND949013-7510	.WASHER, 0.5MM,PLATE.....	1	J10001-UP
12		ND949048-0430	.BOLT,WASHER HEAD.....	1	J10001-UP
13		ND91310-05081	.SCREW,WASHER.....	1	J10001-UP
14		ND146691-4470	.CLAMP.....	1	J10001-UP

Ref :K0710-10A0 Page :240655

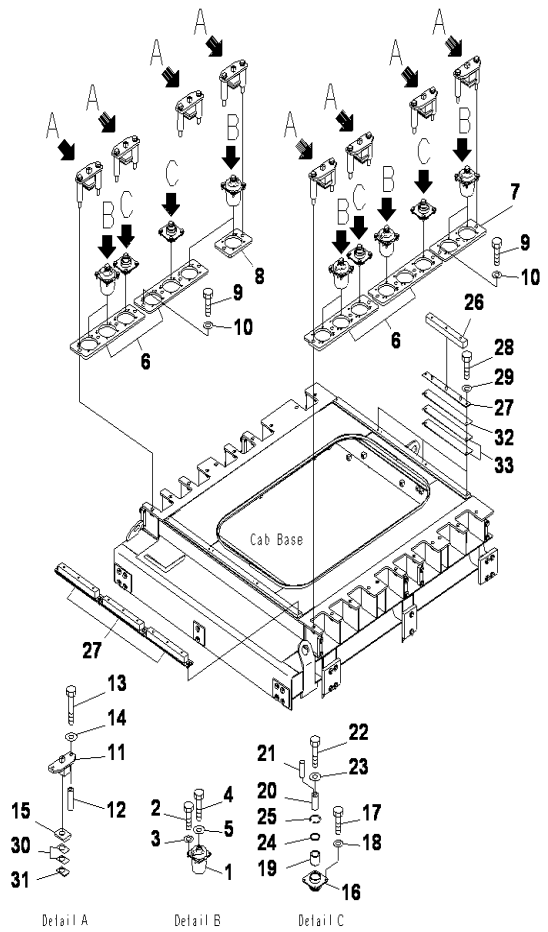

FLOOR FRAME MOUNTS

INDEX	CD	PART NO.	DESCRIPTION	QTY	SERIAL NO.
1		21T-54-36471	CUSHION	9	J10001-UP
2		01010-81230	BOLT	36	J10001-UP
3		01643-31232	WASHER	36	J10001-UP
4		01050-52040	BOLT	9	J10001-UP
5		01643-32060	WASHER	9	J10001-UP
6		21T-54-34172	BRACKET	4	J10001-UP
7		21T-54-34182	BRACKET	1	J10001-UP
8		21T-54-34192	BRACKET	1	J10001-UP
9		01010-82055	BOLT	5	J10001-UP
10		01643-32060	WASHER	5	J10001-UP
11		21T-54-35312	BRACKET	8	J10001-UP
12		21T-54-35582	COLLAR	16	J10001-UP
13		8230-46-1130	BOLT	16	J10001-UP
14		01643-32060	WASHER	16	J10001-UP
15		21T-54-35322	CUSHION	8	J10001-UP
16		21T-54-35682	BRACKET	4	J10001-UP
17		01010-81225	BOLT	16	J10001-UP
18		01643-31232	WASHER	16	J10001-UP
19		21T-54-35722	CUSHION	4	J10001-UP
20		21T5435732	PIN	4	J10001-UP
21		04020-00514	PIN	8	J10001-UP
22		01050-52040	BOLT	4	J10001-UP
23		01643-32060	WASHER	4	J10001-UP
24		21T-54-37291	PLATE	4	J10001-UP
25		04065-07025	RING	4	J10001-UP
26		21T-54-37990	CUSHION	6	J10001-UP
27		21T-54-37980	BRACKET	6	J10001-UP
28		01010-81030	BOLT	12	J10001-UP
29		01643-31032	WASHER	12	J10001-UP
30		21T-54-36661	PLATE	16	J10001-UP
31		21T-54-36671	PLATE	8	J10001-UP
32		21T-54-36680	PLATE	9	J10001-UP
33		21T-54-36690	PLATE	12	J10001-UP

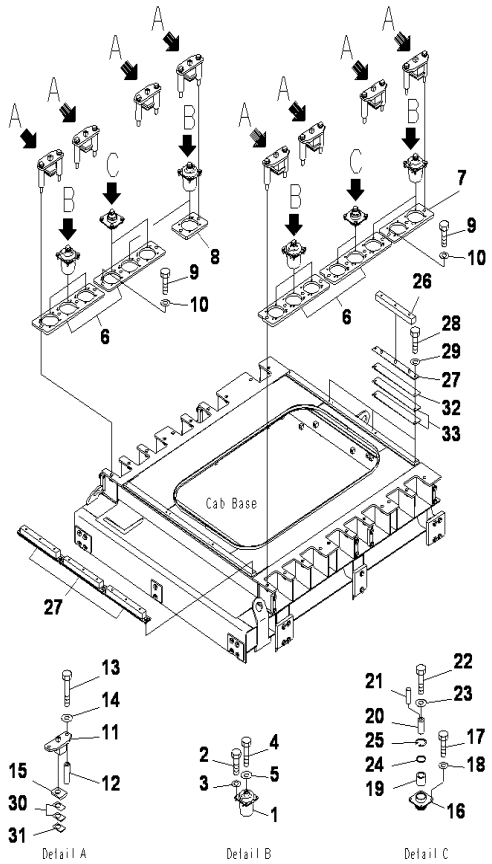

FLOOR FRAME MOUNTS(FRONT GUARD)

INDEX	CD	PART NO.	DESCRIPTION	QTY	SERIAL NO.
1		21T-54-36471	CUSHION	10	J10001-UP
2		01010-81230	BOLT	40	J10001-UP
3		01643-31232	WASHER	40	J10001-UP
4		01050-52040	BOLT	10	J10001-UP
5		01643-32060	WASHER	10	J10001-UP
6		21T-54-34172	BRACKET	4	J10001-UP
7		21T-54-34182	BRACKET	1	J10001-UP
8		21T-54-34192	BRACKET	1	J10001-UP
9		01010-82055	BOLT	5	J10001-UP
10		01643-32060	WASHER	5	J10001-UP
11		21T-54-35312	BRACKET	8	J10001-UP
12		21T-54-35582	COLLAR	16	J10001-UP
13		8230-46-1130	BOLT	16	J10001-UP
14		01643-32060	WASHER	16	J10001-UP
15		21T-54-35322	CUSHION	8	J10001-UP
16		21T-54-35682	BRACKET	4	J10001-UP
17		01010-81225	BOLT	16	J10001-UP
18		01643-31232	WASHER	16	J10001-UP
19		21T-54-35722	CUSHION	4	J10001-UP
20		21T-54-35732	PIN	4	J10001-UP
21		04020-00514	PIN	8	J10001-UP
22		01050-52040	BOLT	4	J10001-UP
23		01643-32060	WASHER	4	J10001-UP
24		21T-54-37291	PLATE	4	J10001-UP
25		04065-07025	RING	4	J10001-UP
26		21T-54-37990	CUSHION	6	J10001-UP
27		21T-54-37980	BRACKET	6	J10001-UP
28		01010-81030	BOLT	12	J10001-UP
29		01643-31032	WASHER	12	J10001-UP
30		21T-54-36661	PLATE	16	J10001-UP
31		21T-54-36671	PLATE	8	J10001-UP
32		21T-54-36680	PLATE	9	J10001-UP
33		21T-54-36690	PLATE	12	J10001-UP

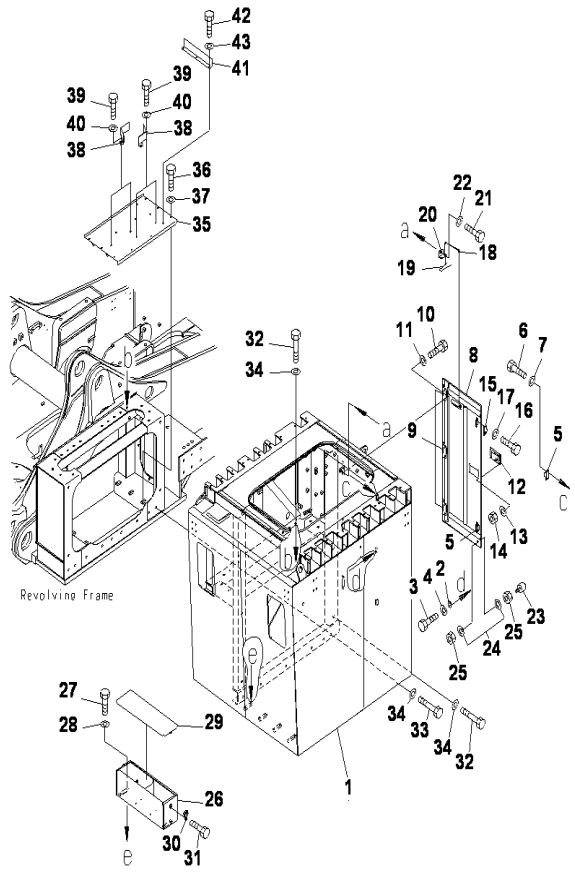

PC2000-8 S/N J10001-UP

CAB MOUNTS(BASE)

INDEX	CD	PART NO.	DESCRIPTION	QTY	SERIAL NO.
1		21T-54-34111	FRAME	1	J10001-UP
2		209-54-63260	BRACKET	1	J10001-UP
3		201-54-72910	WASHER	2	J10001-UP
4		01010-81020	BOLT	2	J10001-UP
5		205-54-51971	DOVE TAIL	2	J10007-UP
		205-54-51970	DOVE TAIL	2	J10001-J10006
6		01010-80616	BOLT	4	J10001-UP
7		01643-30623	WASHER	4	J10001-UP
8		21T-54-34121	DOOR	1	J10001-UP
9		21K-54-22460	.HINGE, WELDED	3	J10001-UP
10		01010-81225	BOLT	6	J10001-UP
11		01643-31232	WASHER	6	J10001-UP
12		198-54-55990	LOCK	1	J10001-UP
13		01643-30823	WASHER	4	J10001-UP
14		01580-10806	NUT	4	J10001-UP
15		205-54-53550	DOVE TAIL	2	J10001-UP
16		01010-80616	BOLT	4	J10001-UP
17		01643-30623	WASHER	4	J10001-UP
18		21T-54-32960	BAR	1	J10001-UP
19		04050-13018	PIN	1	J10001-UP
20		21T-53-31750	BRACKET	1	J10001-UP
21		01010-81225	BOLT	1	J10001-UP
22		175-54-34170	WASHER	1	J10001-UP
23		09453-00002	STOPPER	1	J10001-UP
24		175-54-34170	WASHER	2	J10001-UP
25		01580-01210	NUT	2	J10001-UP
26		21T-54-36961	TOOL BOX	1	J10001-UP
27		01010-81230	BOLT	8	J10001-UP
28		01643-31232	WASHER	8	J10001-UP
29		21T-54-36970	COVER	1	J10001-UP
30		195-57-11530	CATCH CLIP	1	J10001-UP
31		01016-20512	BOLT	3	J10001-UP
32		01011-82035	BOLT	20	J10001-UP
33		01011-82045	BOLT	7	J10001-UP
34		567-40-41380	WASHER	27	J10001-UP
35		21T-54-34231	FRAME	1	J10001-UP
36		01010-81225	BOLT	6	J10001-UP
37		175-54-34170	WASHER	6	J10001-UP
38		21T-54-34240	PLATE	4	J10001-UP
39		01010-81225	BOLT	8	J10001-UP
40		01643-31232	WASHER	8	J10001-UP
41		21T-54-34250	PLATE	1	J10001-UP
42		01010-81225	BOLT	3	J10001-UP
43		01643-31232	WASHER	3	J10001-UP

Ref :K1921-01A0 Page :240680

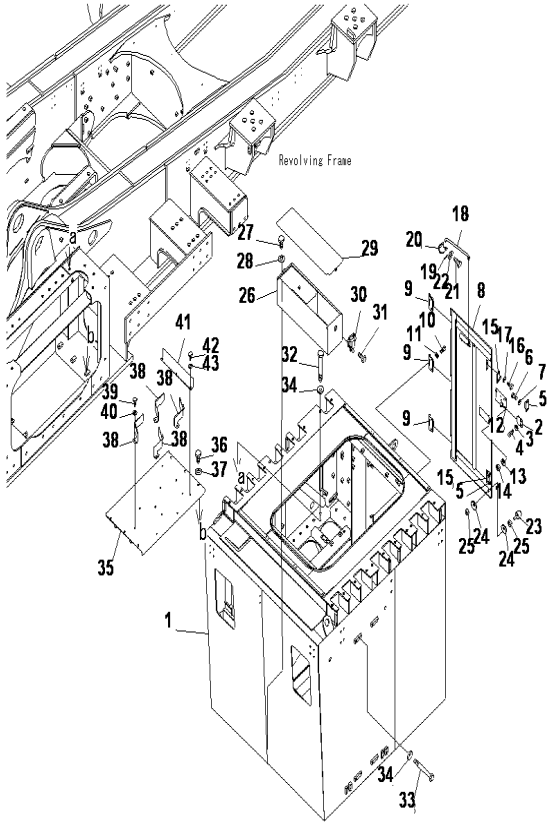

PC2000-8 S/N J10001-UP

CAB MOUNTS(BASE)(WITH FIXED EMERGENCY LADDER)

INDEX	CD	PART NO.	DESCRIPTION	QTY	SERIAL NO.
1		21T-53-33111	FRAME	1	J10001-UP
2		209-54-63260	BRACKET	1	J10001-UP
3		201-54-72910	WASHER	2	J10001-UP
4		01010-81020	BOLT	2	J10001-UP
5		205-54-51971	DOVE TAIL	2	J10007-UP
		205-54-51970	DOVE TAIL	2	J10001-J10006
6		01010-80616	BOLT	4	J10001-UP
7		01643-30623	WASHER	4	J10001-UP
8		21T-54-34121	DOOR	1	J10001-UP
9		21K-54-22460	.HINGE, WELDED	3	J10001-UP
10		01010-81225	BOLT	6	J10001-UP
11		01643-31232	WASHER	6	J10001-UP
12		198-54-55990	LOCK	1	J10001-UP
13		01643-30823	WASHER	4	J10001-UP
14		01580-10806	NUT	4	J10001-UP
15		205-54-53550	DOVE TAIL	2	J10001-UP
16		01010-80616	BOLT	4	J10001-UP
17		01643-30623	WASHER	4	J10001-UP
18		21T-54-32960	BAR	1	J10001-UP
19		04050-13018	PIN	1	J10001-UP
20		21T-53-31750	BRACKET	1	J10001-UP
21		01010-81225	BOLT	1	J10001-UP
22		175-54-34170	WASHER	1	J10001-UP
23		09453-00002	STOPPER	1	J10001-UP
24		175-54-34170	WASHER	2	J10001-UP
25		01580-01210	NUT	2	J10001-UP
26		21T-54-36961	TOOL BOX	1	J10001-UP
27		01010-81230	BOLT	8	J10001-UP
28		01643-31232	WASHER	8	J10001-UP
29		21T-54-36970	COVER	1	J10001-UP
30		195-57-11530	CATCH CLIP	1	J10001-UP
31		01016-20512	BOLT	3	J10001-UP
32		01011-82035	BOLT	20	J10001-UP
33		01011-82045	BOLT	7	J10001-UP
34		567-40-41380	WASHER	27	J10001-UP
35		21T-54-34231	FRAME	1	J10001-UP
36		01010-81225	BOLT	6	J10001-UP
37		175-54-34170	WASHER	6	J10001-UP
38		21T-54-34240	PLATE	4	J10001-UP
39		01010-81225	BOLT	8	J10001-UP
40		01643-31232	WASHER	8	J10001-UP
41		21T-54-34250	PLATE	1	J10001-UP
42		01010-81225	BOLT	3	J10001-UP
43		01643-31232	WASHER	3	J10001-UP

Ref :K1921-01A1 Page :240685

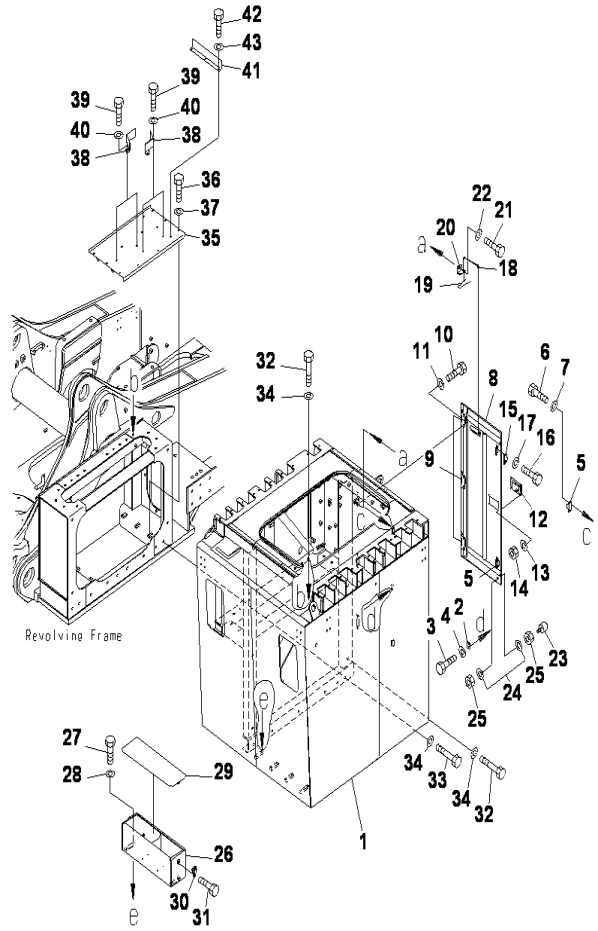

PC2000-8 S/N J10001-UP

CAB MOUNTS(BASE)(WITH FIXED EMERGENCY LADDER)(HYDRAULIC LADDER)

INDEX	CD	PART NO.	DESCRIPTION	QTY	SERIAL NO.
1		21T-53-33510	FRAME	1	J10001-UP
2		209-54-63260	BRACKET	1	J10001-UP
3		201-54-72910	WASHER	2	J10001-UP
4		01010-81020	BOLT	2	J10001-UP
5		205-54-51970	DOVE TAIL	2	J10001-UP
6		01010-80616	BOLT	4	J10001-UP
7		01643-30623	WASHER	4	J10001-UP
8		21T-54-34121	DOOR	1	J10001-UP
9		21K-54-22460	.HINGE, WELDED	3	J10001-UP
10		01010-81225	BOLT	6	J10001-UP
11		01643-31232	WASHER	6	J10001-UP
12		198-54-55990	LOCK	1	J10001-UP
13		01643-30823	WASHER	4	J10001-UP
14		01580-10806	NUT	4	J10001-UP
15		205-54-53550	DOVE TAIL	2	J10001-UP
16		01010-80616	BOLT	4	J10001-UP
17		01643-30623	WASHER	4	J10001-UP
18		21T-54-32960	BAR	1	J10001-UP
19		04050-13018	PIN	1	J10001-UP
20		21T-53-31750	BRACKET	1	J10001-UP
21		01010-81225	BOLT	1	J10001-UP
22		175-54-34170	WASHER	1	J10001-UP
23		09453-00002	STOPPER	1	J10001-UP
24		175-54-34170	WASHER	2	J10001-UP
25		01580-01210	NUT	2	J10001-UP
26		21T-54-36961	TOOL BOX	1	J10001-UP
27		01010-81230	BOLT	8	J10001-UP
28		01643-31232	WASHER	8	J10001-UP
29		21T-54-36970	COVER	1	J10001-UP
30		195-57-11530	CATCH CLIP	1	J10001-UP
31		01016-20512	BOLT	3	J10001-UP
32		01011-82035	BOLT	20	J10001-UP
33		01011-82045	BOLT	7	J10001-UP
34		567-40-41380	WASHER	27	J10001-UP
35		21T-54-34231	FRAME	1	J10001-UP
36		01010-81225	BOLT	6	J10001-UP
37		175-54-34170	WASHER	6	J10001-UP
38		21T-54-34240	PLATE	4	J10001-UP
39		01010-81225	BOLT	8	J10001-UP
40		01643-31232	WASHER	8	J10001-UP
41		21T-54-34250	PLATE	1	J10001-UP
42		01010-81225	BOLT	3	J10001-UP
43		01643-31232	WASHER	3	J10001-UP

Ref :K1921-01A3 Page :240687

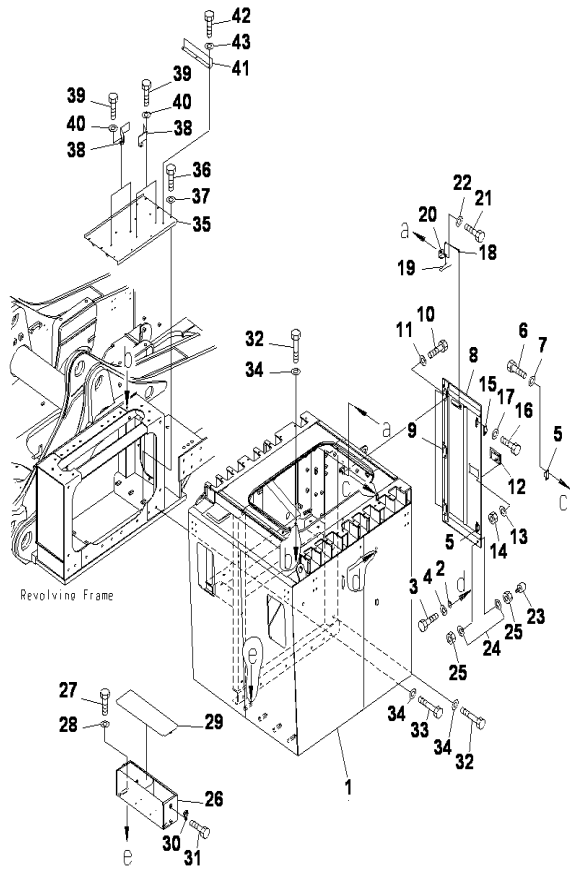

PC2000-8 S/N J10001-UP

CAB MOUNTS(STEP AND HANDRAIL)

INDEX	CD	PART NO.	DESCRIPTION	QTY	SERIAL NO.
1		21T-54-34312	STEP	1	J10001-UP
2		21T-54-34351	COVER	1	J10001-UP
3		21T-54-69950	.SHEET	1	J10001-UP
4		01010-D1225	BOLT	12	J10001-UP
5		01643-71232	WASHER	12	J10001-UP
6		209-54-63260	BRACKET	1	J10001-UP
7		01010-D1225	BOLT	2	J10001-UP
8		01643-71232	WASHER	2	J10001-UP
9		21T-54-34362	COVER	1	J10001-UP
10		21T-54-34381	.SHEET	2	J10001-UP
11		21T-54-69920	.SHEET	1	J10001-UP
12		207-54-16520	.HINGE, WELDED	2	J10001-UP
13		01010-D1225	BOLT	4	J10001-UP
14		01643-71232	WASHER	4	J10001-UP
15		21T-54-37150	LOCK	1	J10001-UP
16		01580-00806	NUT	4	J10001-UP
17		01643-30823	WASHER	4	J10001-UP
18		21T-54-34271	LINK	1	J10001-UP
19		202-970-1220	WASHER	1	J10001-UP
20		04050-13018	PIN	2	J10001-UP
21		01641-21016	WASHER	2	J10001-UP
22		01010-81265	BOLT	10	J10001-UP
23		175-54-34170	WASHER	10	J10001-UP
24		21T-54-34322	STEP	1	J10001-UP
25		01010-81245	BOLT	10	J10001-UP
26		175-54-34170	WASHER	10	J10001-UP
27		21T-54-34331	HANDRAIL	1	J10001-UP
28		01010-81245	BOLT	10	J10001-UP
29		175-54-34170	WASHER	10	J10001-UP
30		21T-54-34341	HANDRAIL	1	J10001-UP
31		176-38-41360	SHIM	4	J10001-UP
32		176-38-41370	SHIM	2	J10001-UP
33		176-38-41380	SHIM	2	J10001-UP
34		01010-81245	BOLT	6	J10001-UP
35		175-54-34170	WASHER	6	J10001-UP
36		21T-54-34260	ROPE	1	J10001-UP
37		21T-54-31140	CLAMP	1	J10001-UP
38		21T-54-31150	CLAMP	1	J10001-UP
39		01010-81245	BOLT	2	J10001-UP
40		175-54-34170	WASHER	2	J10001-UP

Ref :K1921-02A0 Page :240690

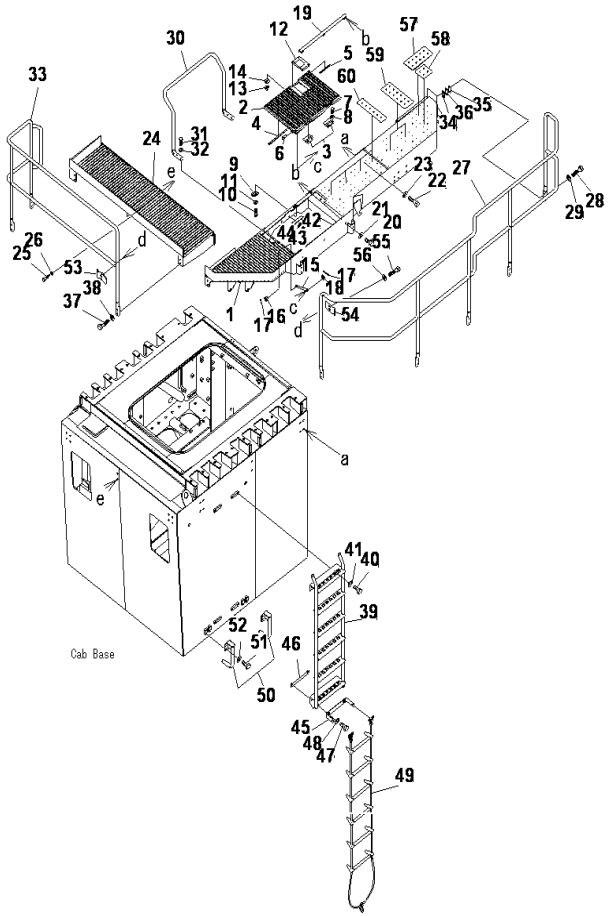

PC2000-8 S/N J10001-UP

CAB MOUNTS(STEP)(WITH FIXED EMERGENCY LADDER)

INDEX	CD	PART NO.	DESCRIPTION	QTY	SERIAL NO.
1		21T-53-33571	STEP	1	J10001-UP
2		21T-54-37672	COVER	1	J10001-UP
3		207-54-16520	.HINGE,(WELDED)	2	J10001-UP
4		21T-54-37580	.SHEET	1	J10001-UP
5		21T-54-37590	.SHEET	1	J10001-UP
6		04205-11022	.PIN	1	J10001-UP
7		01010-D1225	BOLT	4	J10001-UP
8		01643-71232	WASHER	4	J10001-UP
9		21T-54-37731	BRACKET	1	J10001-UP
10		01010-D1240	BOLT	2	J10001-UP
11		01643-71232	WASHER	2	J10001-UP
12		21T-54-37150	LOCK	1	J10001-UP
13		01580-10806	NUT	4	J10001-UP
14		01643-30823	WASHER	4	J10001-UP
15		21T-54-34271	LINK	1	J10001-UP
16		202-970-1220	WASHER	1	J10001-UP
17		04050-13018	PIN	2	J10001-UP
18		01641-21016	WASHER	1	J10001-UP
19		21T-54-37750	BRACKET	1	J10001-UP
20		01010-D1225	BOLT	3	J10001-UP
21		01643-71232	WASHER	3	J10001-UP
22		01010-81260	BOLT	10	J10001-UP
23		175-54-34170	WASHER	10	J10001-UP
24		21T-54-34322	STEP	1	J10001-UP
25		01010-81245	BOLT	10	J10001-UP
26		175-54-34170	WASHER	10	J10001-UP
27		21T-54-37630	HANDRAIL	1	J10001-UP
28		01010-81245	BOLT	10	J10001-UP
29		175-54-34170	WASHER	10	J10001-UP
30		21T-54-37640	HANDRAIL	1	J10001-UP
31		01010-81245	BOLT	4	J10001-UP
32		175-54-34170	WASHER	4	J10001-UP
33		21T-54-34341	HANDRAIL	1	J10001-UP
34		176-38-41360	.SHIM, 1.0MM	4	J10001-UP
35		176-38-41370	.SHIM, 0.5MM	2	J10001-UP
36		176-38-41380	.SHIM, 0.2MM	2	J10001-UP
37		01010-81245	BOLT	6	J10001-UP
38		175-54-34170	WASHER	6	J10001-UP
39		21T-54-37661	LADDER	1	J10001-UP
40		01010-81225	BOLT	8	J10001-UP
41		175-54-34170	WASHER	8	J10001-UP
42		21T-54-37611	BRACKET	1	J10001-UP
43		01010-81225	BOLT	2	J10001-UP
44		175-54-34170	WASHER	2	J10001-UP
45		21T-54-37621	BRACKET	1	J10001-UP

Ref :K1921-02A1 Page :240695

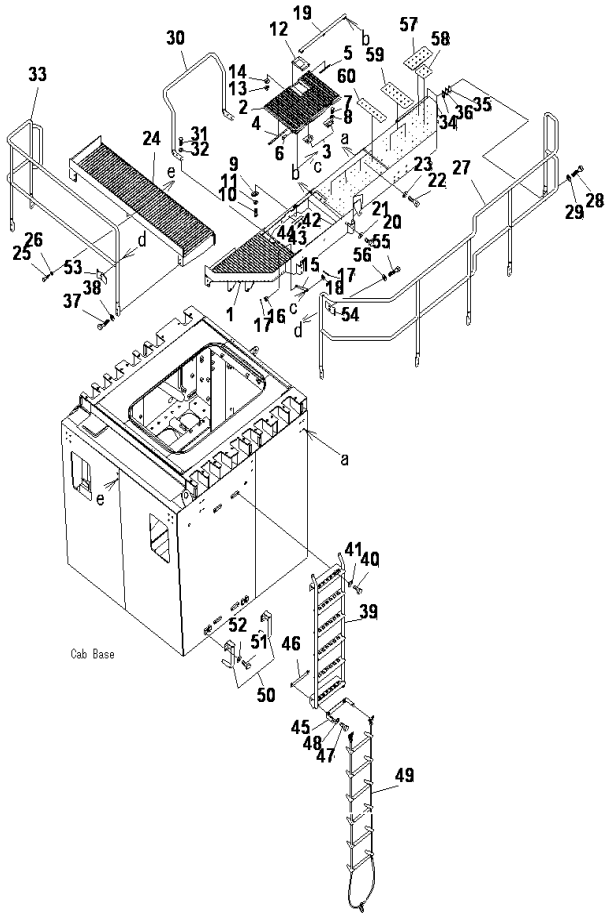

PC2000-8 S/N J10001-UP

CAB MOUNTS(STEP)(WITH FIXED EMERGENCY LADDER)

INDEX	CD	PART NO.	DESCRIPTION	QTY	SERIAL NO.
46		21T-54-37690	BRACKET	1	J10001-UP
47		01010-81235	BOLT	2	J10001-UP
48		175-54-34170	WASHER	2	J10001-UP
49		21T-54-37681	LADDER	1	J10001-UP
50		21T-53-33141	HANDRAIL	2	J10001-UP
51		01010-81225	BOLT	8	J10001-UP
52		01643-31232	WASHER	8	J10001-UP
53		21T-54-31140	CLAMP	1	J10001-UP
54		21T-54-31150	CLAMP	1	J10001-UP
55		01010-81245	BOLT	2	J10001-UP
56		175-54-34170	WASHER	2	J10001-UP
57		207-00-76250	PLATE	1	J10001-UP
58		207-00-76220	PLATE	1	J10001-UP
59		20Y-00-42140	PLATE	2	J10001-UP
60		20Y-00-42120	PLATE	4	J10001-UP

Ref :K1921-02A1 Page :240696

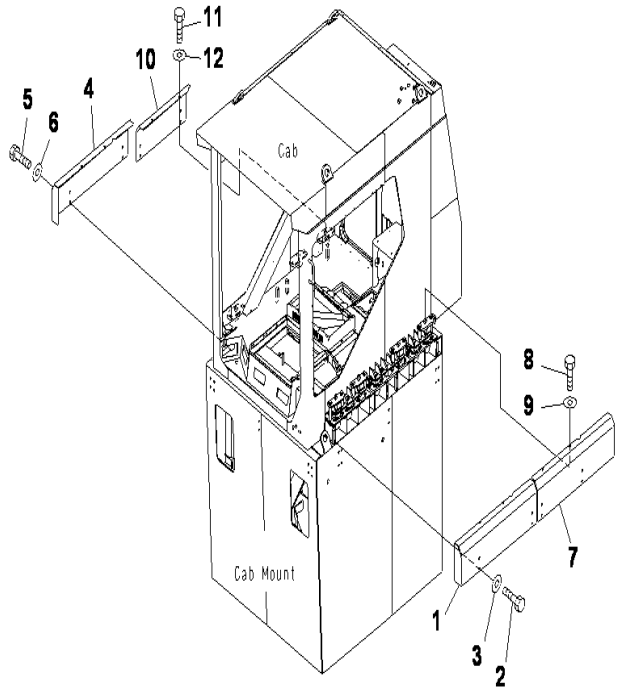

PC2000-8 S/N J10001-UP

CAB MOUNTS(COVER)

INDEX	CD	PART NO.	DESCRIPTION	QTY	SERIAL NO.
1		21T-54-34131	COVER	1	J10001-UP
2		01010-81225	BOLT	6	J10001-UP
3		175-54-34170	WASHER	6	J10001-UP
4		21T-54-34141	COVER	1	J10001-UP
5		01010-81225	BOLT	6	J10001-UP
6		175-54-34170	WASHER	6	J10001-UP
7		21T-54-34151	COVER	1	J10001-UP
8		01010-81225	BOLT	6	J10001-UP
9		175-54-34170	WASHER	6	J10001-UP
10		21T-54-34161	COVER	1	J10001-UP
11		01010-81225	BOLT	6	J10001-UP
12		175-54-34170	WASHER	6	J10001-UP

Ref :K1921-03A0 Page :240700

GUARD

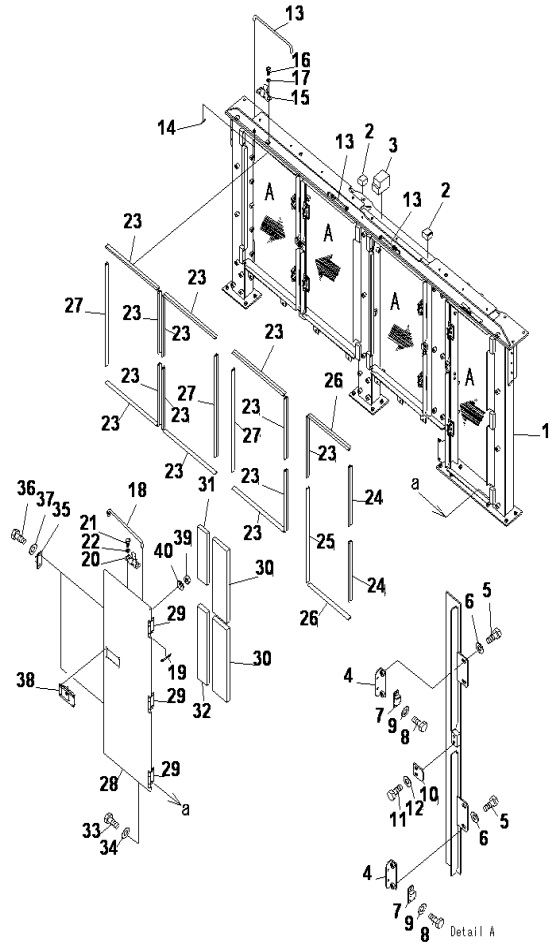

PC2000-8 S/N J10001-UP

HOOD(FRONT COVER)(1/2)

INDEX	CD	PART NO.	DESCRIPTION	QTY	SERIAL NO.
1		21T-54-31583	FRAME	1	J10001-UP
2		21T-54-32260	.SHEET	2	J10001-UP
3		21T-54-32280	.SHEET	1	J10001-UP
4		20Y-54-28170	BRACKET	8	J10001-UP
5		01010-81225	BOLT	16	J10001-UP
6		01643-31232	WASHER	16	J10001-UP
7		205-54-51970	DOVE TAIL	8	J10001-UP
8		01010-80616	BOLT	16	J10001-UP
9		01643-30623	WASHER	16	J10001-UP
10		209-54-63260	BRACKET	4	J10001-UP
11		01010-81225	BOLT	8	J10001-UP
12		01643-31232	WASHER	8	J10001-UP
13		205-54-64140	BAR	3	J10001-UP
14		04050-13018	PIN	3	J10001-UP
15		20B-54-12210	SPRING	3	J10001-UP
16		01220-40408	SCREW	6	J10001-UP
17		01641-20405	WASHER	6	J10001-UP
18		21T-54-32960	BAR	1	J10001-UP
19		04050-13018	PIN	1	J10001-UP
20		20B-54-12210	SPRING	1	J10001-UP
21		01220-40408	SCREW	2	J10001-UP
22		01641-20405	WASHER	2	J10001-UP
23		21T-54-31570	SEAL	13	J10001-UP
24		21T-54-31730	SEAL	2	J10001-UP
25		21T-54-31740	SEAL	1	J10001-UP
26		21T-54-31750	SEAL	2	J10001-UP
27		21T-54-31760	SEAL	3	J10001-UP
28		21T-54-31591	DOOR	1	J10001-UP
29		21K-54-22460	.HINGE	3	J10001-UP
30		21T-54-31670	.SHEET	2	J10001-UP
31		21T-54-31680	.SHEET	1	J10001-UP
32		21T-54-31690	.SHEET	1	J10001-UP
33		01010-81225	BOLT	6	J10001-UP
34		01643-31232	WASHER	6	J10001-UP
35		205-54-53550	DOVE TAIL	2	J10001-UP
36		01010-80616	BOLT	4	J10001-UP
37		01643-30623	WASHER	4	J10001-UP
38		198-54-55990	LOCK ASSEMBLY	1	J10001-UP
39		01580-10806	NUT	4	J10001-UP
40		01643-30823	WASHER	4	J10001-UP

Ref :M1110-01A0 Page :270010

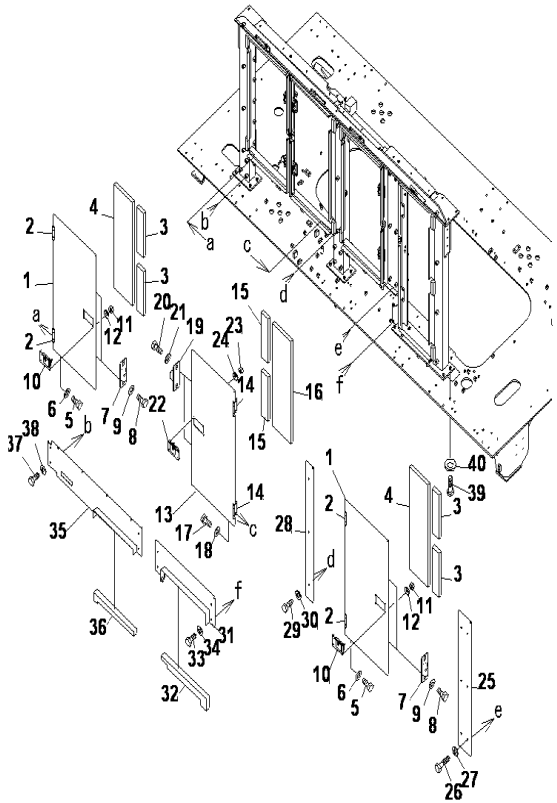

PC2000-8 S/N J10001-UP

HOOD(FRONT COVER)(2/2)

INDEX	CD	PART NO.	DESCRIPTION	QTY	SERIAL NO.
1		21T-54-31611	DOOR	2	J10001-UP
2		21K-54-22460	.HINGE (WELDED)	2	J10001-UP
3		21T-54-31680	.SHEET	2	J10001-UP
4		21T-54-31710	.SHEET	1	J10001-UP
5		01010-81225	BOLT	8	J10001-UP
6		01643-31232	WASHER	8	J10001-UP
7		205-54-53550	DOVE TAIL	4	J10001-UP
8		01010-80616	BOLT	8	J10001-UP
9		01643-30623	WASHER	8	J10001-UP
10		21T-54-69450	LOCK (R.H)	2	J10001-UP
11		01580-10806	NUT	8	J10001-UP
12		01643-30823	WASHER	8	J10001-UP
13		21T-54-31621	DOOR	1	J10001-UP
14		21K-54-22460	.HINGE (WELDED)	2	J10001-UP
15		21T-54-31680	.SHEET	2	J10001-UP
16		21T-54-31710	.SHEET	1	J10001-UP
17		01010-81225	BOLT	4	J10001-UP
18		01643-31232	WASHER	4	J10001-UP
19		205-54-53550	DOVE TAIL	2	J10001-UP
20		01010-80616	BOLT	4	J10001-UP
21		01643-30623	WASHER	4	J10001-UP
22		198-54-55990	LOCK	1	J10001-UP
23		01580-10806	NUT	4	J10001-UP
24		01643-30823	WASHER	4	J10001-UP
25		21T-54-31630	COVER	1	J10001-UP
26		01010-81280	BOLT	6	J10001-UP
27		01643-31232	WASHER	6	J10001-UP
28		21T-54-31640	COVER	1	J10001-UP
29		01010-81250	BOLT	3	J10001-UP
30		01643-31232	WASHER	3	J10001-UP
31		21T-54-31653	COVER	1	J10001-UP
32		21T-54-31772	.SHEET	1	J10001-UP
33		01010-81225	BOLT	4	J10001-UP
34		01643-31232	WASHER	4	J10001-UP
35		21T-54-31662	COVER	1	J10001-UP
36		21T-54-31782	.SHEET	1	J10001-UP
37		01010-81225	BOLT	8	J10001-UP
38		01643-31232	WASHER	8	J10001-UP
39		01010-81655	BOLT	15	J10001-UP
40		01643-31645	WASHER	15	J10001-UP

Ref :M1110-02A0 Page :270020

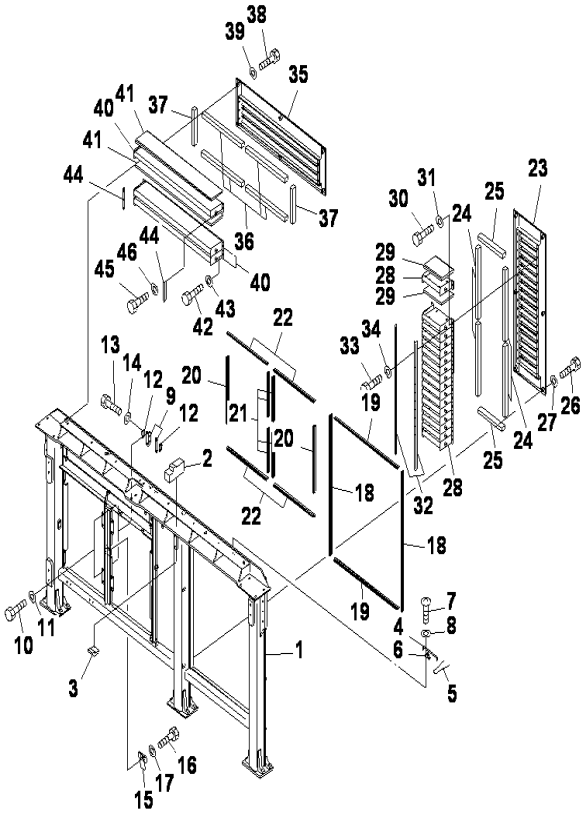

HOOD(COVER)(REAR)(1/3)

INDEX	CD	PART NO.	DESCRIPTION	QTY	SERIAL NO.
1		21T-54-31322	FRAME	1	J10001-UP
2		21T-54-39980	.SHEET	1	J10001-UP
3		21T-54-39990	.SHEET	1	J10001-UP
4		205-54-64140	BAR	1	J10001-UP
5		04050-13018	PIN	1	J10001-UP
6		20B-54-12210	SPRING	1	J10001-UP
7		01220-40408	SCREW	2	J10001-UP
8		01641-20405	WASHER	2	J10001-UP
9		20Y-54-28170	BRACKET	4	J10001-UP
10		01010-81225	BOLT	8	J10001-UP
11		01643-31232	WASHER	8	J10001-UP
12		205-54-51970	DOVE TAIL	4	J10001-UP
13		01010-80616	BOLT	8	J10001-UP
14		01643-30623	WASHER	8	J10001-UP
15		209-54-63260	BRACKET	2	J10001-UP
16		01010-81225	BOLT	4	J10001-UP
17		01643-31232	WASHER	4	J10001-UP
18		21T-54-31530	SEAL	2	J10001-UP
19		21T-54-31540	SEAL	2	J10001-UP
20		21T-54-31550	SEAL	2	J10001-UP
21		21T-54-31560	SEAL	4	J10001-UP
22		21T-54-31570	SEAL	4	J10001-UP
23		21T-54-31341	COVER	1	J10001-UP
24		21T-54-31440	.SHEET	4	J10001-UP
25		21T-54-31450	.SHEET	2	J10001-UP
26		01010-81255	BOLT	6	J10001-UP
27		01643-31232	WASHER	6	J10001-UP
28		21T-54-31420	BLADE	16	J10001-UP
29		21T-54-31430	.SHEET	2	J10001-UP
30		01010-81020	BOLT	32	J10001-UP
31		01643-31032	WASHER	32	J10001-UP
32		21T-54-31410	FRAME	2	J10001-UP
33		01010-80616	BOLT	32	J10001-UP
34		01643-30623	WASHER	32	J10001-UP
35		21T-54-31351	COVER	1	J10001-UP
36		21T-54-31490	.SHEET	4	J10001-UP
37		21T-54-31510	.SHEET	2	J10001-UP
38		01010-81255	BOLT	6	J10001-UP
39		01643-31232	WASHER	6	J10001-UP
40		21T-54-31460	BLADE	3	J10001-UP
41		21T-54-31480	.SHEET	2	J10001-UP
42		01010-81020	BOLT	6	J10001-UP
43		01643-31032	WASHER	6	J10001-UP
44		21T-54-31470	FRAME	2	J10001-UP
45		01010-80616	BOLT	6	J10001-UP

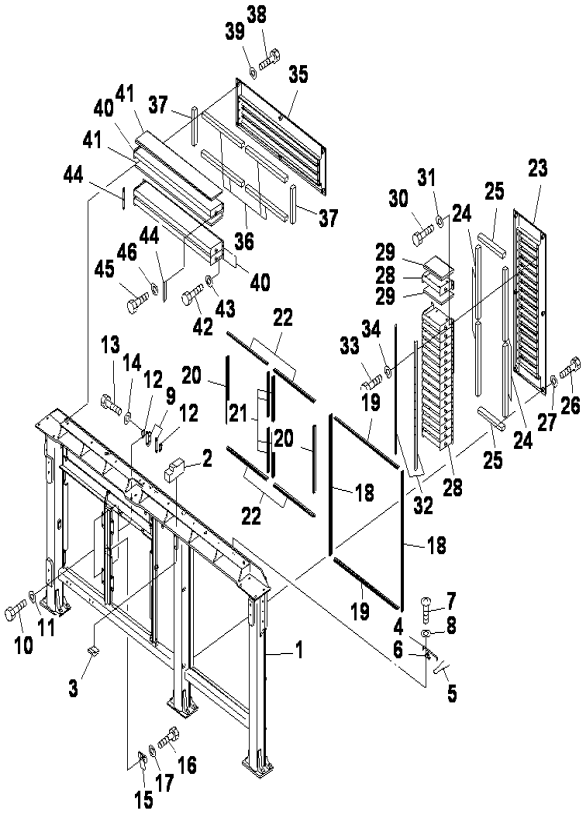

HOOD(COVER)(REAR)(1/3)

INDEX	CD	PART NO.	DESCRIPTION	QTY	SERIAL NO.
46		01643-30623	WASHER.....	6	J10001-UP

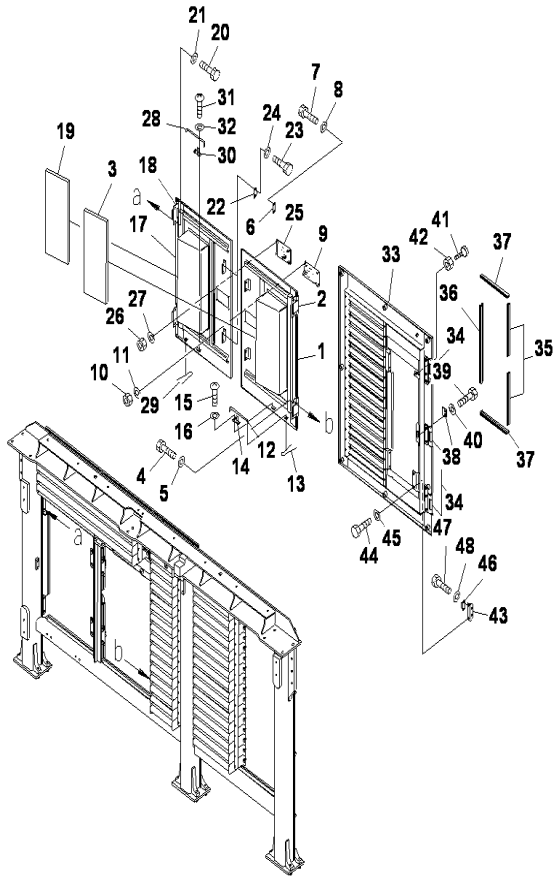

HOOD(COVER)(REAR)(2/3)

INDEX	CD	PART NO.	DESCRIPTION	QTY	SERIAL NO.
1		21T-54-31361	DOOR	1	J10001-UP
2		21K-54-22460	.HINGE, (WELDED)	2	J10001-UP
3		21T-54-31520	.SHEET	1	J10001-UP
4		01010-81225	BOLT	4	J10001-UP
5		01643-31232	WASHER	4	J10001-UP
6		205-54-53550	DOVE TAIL	2	J10001-UP
7		01010-80616	BOLT	4	J10001-UP
8		01643-30623	WASHER	4	J10001-UP
9		21T-54-69450	LOCK (R.H)	1	J10001-UP
10		01580-10806	NUT	4	J10001-UP
11		01643-30823	WASHER	4	J10001-UP
12		205-54-64140	BAR	1	J10001-UP
13		04050-13018	PIN	1	J10001-UP
14		20B-54-12210	SPRING	1	J10001-UP
15		01220-40408	SCREW	2	J10001-UP
16		01641-20405	WASHER	2	J10001-UP
17		21T-54-31371	DOOR	1	J10001-UP
18		21K-54-22460	.HINGE, (WELDED)	2	J10001-UP
19		21T-54-31520	.SHEET	1	J10001-UP
20		01010-81225	BOLT	4	J10001-UP
21		01643-31232	WASHER	4	J10001-UP
22		205-54-53550	DOVE TAIL	2	J10001-UP
23		01010-80616	BOLT	4	J10001-UP
24		01643-30623	WASHER	4	J10001-UP
25		198-54-55990	LOCK	1	J10001-UP
26		01580-10806	NUT	4	J10001-UP
27		01643-30823	WASHER	4	J10001-UP
28		205-54-64140	BAR	1	J10001-UP
29		04050-13018	PIN	1	J10001-UP
30		20B-54-12210	SPRING	1	J10001-UP
31		01220-40408	SCREW	2	J10001-UP
32		01641-20405	WASHER	2	J10001-UP
33		21T5431331	COVER	1	J10001-UP
34		21K-54-22460	.HINGE	3	J10001-UP
35		21T-54-32150	SEAL	2	J10001-UP
36		21T-54-31570	SEAL	1	J10001-UP
37		21T-54-32740	SEAL	2	J10001-UP
38		209-54-63260	BRACKET	1	J10001-UP
39		01010-81235	BOLT	2	J10001-UP
40		01643-31232	WASHER	2	J10001-UP
41		20Y-54-11611	STOPPER	1	J10001-UP
42		01580-11008	NUT	1	J10001-UP
43		20Y-54-28170	BRACKET	1	J10001-UP
44		01010-81225	BOLT	2	J10001-UP
45		01643-31232	WASHER	2	J10001-UP

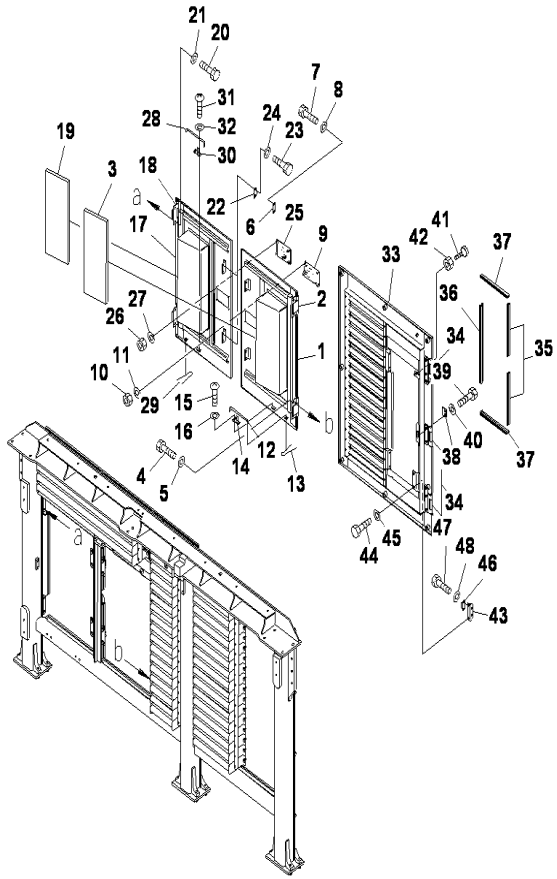

HOOD(COVER)(REAR)(2/3)

INDEX	CD	PART NO.	DESCRIPTION	QTY	SERIAL NO.
46		205-54-51970	DOVE TAIL.....	1	J10001-UP
47		01010-80616	BOLT.....	2	J10001-UP
48		01643-30623	WASHER.....	2	J10001-UP

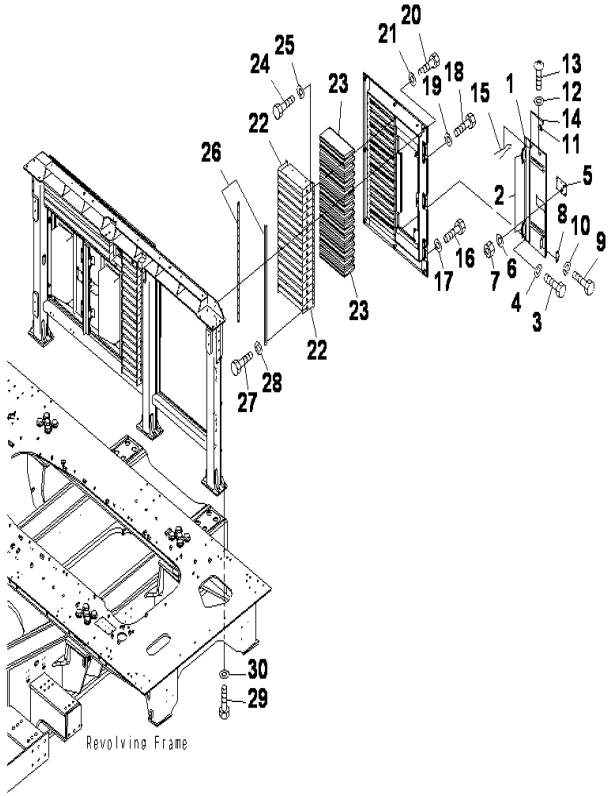

PC2000-8 S/N J10001-UP

HOOD(COVER)(REAR)(3/3)

INDEX	CD	PART NO.	DESCRIPTION	QTY	SERIAL NO.
1		21T-54-32711	DOOR	1	J10001-UP
2		21K-54-22460	.HINGE	2	J10001-UP
3		01010-81225	BOLT	4	J10001-UP
4		01643-31232	WASHER	4	J10001-UP
5		198-54-55990	LOCK	1	J10001-UP
6		01643-30823	WASHER	4	J10001-UP
7		01580-10806	NUT	4	J10001-UP
8		205-54-53550	DOVE TAIL	1	J10001-UP
9		01010-80616	BOLT	2	J10001-UP
10		01643-30623	WASHER	2	J10001-UP
11		20B-54-12210	SPRING	1	J10001-UP
12		01641-20405	WASHER	2	J10001-UP
13		01220-40408	SCREW	2	J10001-UP
14		205-54-64140	BAR	1	J10001-UP
15		04050-13018	PIN	1	J10001-UP
16		01010-81235	BOLT	6	J10001-UP
17		01643-31232	WASHER	6	J10001-UP
18		01010-81230	BOLT	2	J10001-UP
19		01643-31232	WASHER	2	J10001-UP
20		01010-81255	BOLT	7	J10001-UP
21		01643-31232	WASHER	7	J10001-UP
22		21T-54-32720	BLADE	16	J10001-UP
23		21T-54-32730	.SHEET	2	J10001-UP
24		01010-81020	BOLT	32	J10001-UP
25		01643-31032	WASHER	32	J10001-UP
26		21T-54-31410	FRAME	2	J10001-UP
27		01010-80616	BOLT	32	J10001-UP
28		01643-30623	WASHER	32	J10001-UP
29		01010-81655	BOLT	12	J10001-UP
30		01643-31645	WASHER	12	J10001-UP

Ref :M1110-05A0 Page :270050

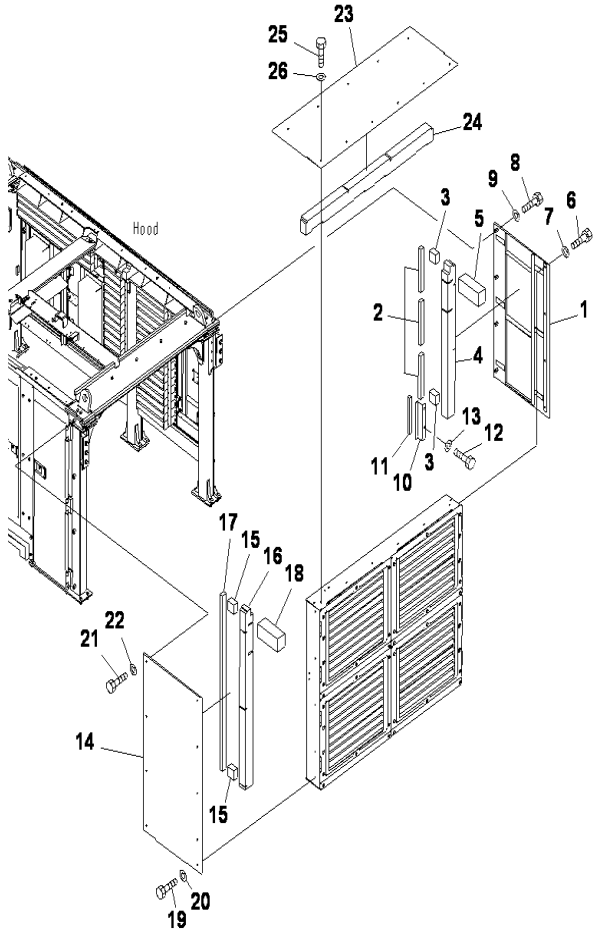

PC2000-8 S/N J10001-UP

HOOD(COVER)(LHS)

INDEX	CD	PART NO.	DESCRIPTION	QTY	SERIAL NO.
1		21T-54-31881	COVER	1	J10001-UP
2		21T-54-31970	.SHEET	3	J10001-UP
3		21T-54-32160	.SHEET	2	J10001-UP
4		21T-54-32170	.SHEET	1	J10001-UP
5		21T-54-32320	.SHEET	1	J10001-UP
6		01010-81230	BOLT	4	J10001-UP
7		01643-31232	WASHER	4	J10001-UP
8		01010-81250	BOLT	4	J10001-UP
9		01643-31232	WASHER	4	J10001-UP
10		21T-54-32210	COVER	1	J10001-UP
11		21T-54-32230	.SHEET	1	J10001-UP
12		01010-81230	BOLT	2	J10001-UP
13		01643-31232	WASHER	2	J10001-UP
14		21T-54-31892	COVER	1	J10001-UP
15		21T-54-32160	.SHEET	2	J10001-UP
16		21T-54-32180	.SHEET	1	J10001-UP
17		21T-54-32190	.SHEET	1	J10001-UP
18		21T-54-32320	.SHEET	1	J10001-UP
19		01010-81230	BOLT	5	J10001-UP
20		01643-31232	WASHER	5	J10001-UP
21		01010-81250	BOLT	4	J10001-UP
22		01643-31232	WASHER	4	J10001-UP
23		21T5432331	COVER	1	J10001-UP
24		21T5432360	.SHEET	1	J10001-UP
25		01010-81230	BOLT	11	J10001-UP
26		01643-31232	WASHER	11	J10001-UP

Ref :M1110-06A0 Page :270060

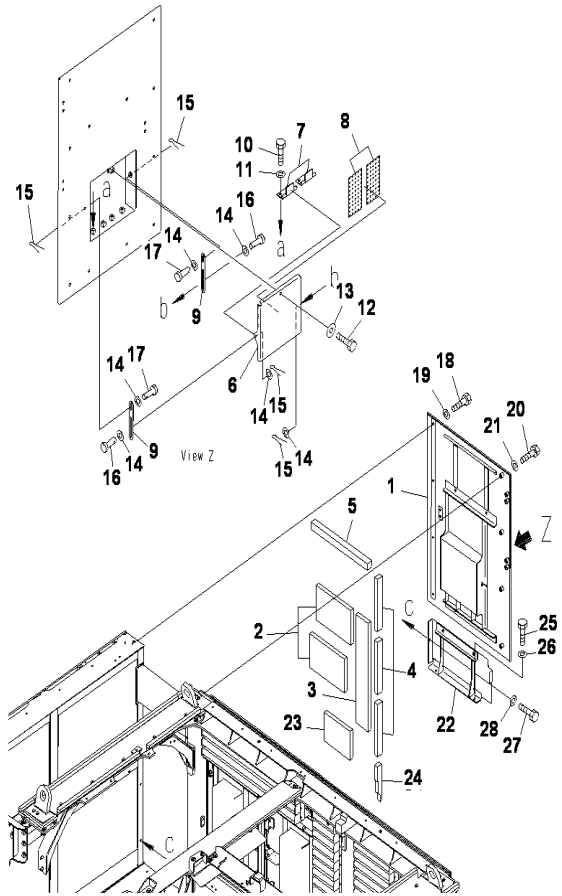

HOOD(COVER)(RHS)

INDEX	CD	PART NO.	DESCRIPTION	QTY	SERIAL NO.
1		21T-54-31911	COVER	1	J10001-UP
2		21T-54-31950	.SHEET	2	J10001-UP
3		21T-54-31960	.SHEET	1	J10001-UP
4		21T-54-31970	.SHEET	3	J10001-UP
5		21T-54-31980	.SHEET	1	J10001-UP
6		21T-54-31921	COVER	1	J10001-UP
7		21K-54-22460	.HINGE, WELDED	2	J10001-UP
8		21T-53-31670	.STEP, WELDED	2	J10001-UP
9		21T-54-32931	LINK	2	J10001-UP
10		01010-81225	BOLT	4	J10001-UP
11		01643-31232	WASHER	4	J10001-UP
12		01010-81225	BOLT	1	J10001-UP
13		175-54-34170	WASHER	1	J10001-UP
14		01640-21016	WASHER	6	J10001-UP
15		04050-13020	COTTER PIN	4	J10001-UP
16		04205-11022	PIN	2	J10001-UP
17		04205-11028	PIN	2	J10001-UP
18		01010-81230	BOLT	8	J10001-UP
19		01643-31232	WASHER	8	J10001-UP
20		01010-81250	BOLT	4	J10001-UP
21		01643-31232	WASHER	4	J10001-UP
22		21T-54-32221	COVER	1	J10001-UP
23		21T-54-32240	.SHEET	1	J10001-UP
24		21T-54-32252	.SHEET	1	J10001-UP
25		01010-81240	BOLT	2	J10001-UP
26		01643-31232	WASHER	2	J10001-UP
27		01010-81230	BOLT	1	J10001-UP
28		01643-31232	WASHER	1	J10001-UP

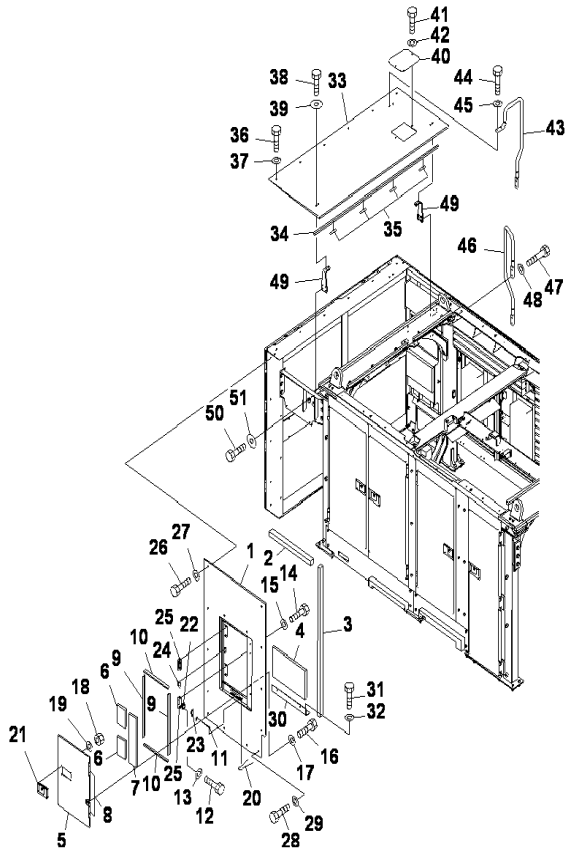

HOOD(COVER)(UPPER)

INDEX	CD	PART NO.	DESCRIPTION	QTY	SERIAL NO.
1		21T-54-31931	COVER	1	J10001-UP
2		21T-54-31980	.SHEET	1	J10001-UP
3		21T-54-31990	.SHEET	1	J10001-UP
4		21T-54-32130	.SHEET	1	J10001-UP
5		21T-54-31941	COVER	1	J10001-UP
6		21T-54-32110	.SHEET	2	J10001-UP
7		21T-54-32120	.SHEET	1	J10001-UP
8		426-54-11220	.HINGE, WELDED	2	J10001-UP
9		21T-54-32140	SEAL	2	J10001-UP
10		21T-54-32150	SEAL	2	J10001-UP
11		21T-54-32960	BAR	1	J10001-UP
12		01010-80616	BOLT	8	J10001-UP
13		01643-30623	WASHER	8	J10001-UP
14		01010-81225	BOLT	6	J10001-UP
15		01643-31232	WASHER	6	J10001-UP
16		01010-81230	BOLT	4	J10001-UP
17		01643-31232	WASHER	4	J10001-UP
18		01580-10806	NUT	4	J10001-UP
19		01643-30823	WASHER	4	J10001-UP
20		04050-13018	PIN	1	J10001-UP
21		198-54-55990	LOCK ASS'Y	1	J10001-UP
22		205-54-51970	DOVE TAIL	2	J10001-UP
23		205-54-53550	DOVE TAIL	2	J10001-UP
24		209-54-63260	BRACKET	1	J10001-UP
25		20Y-54-28170	BRACKET	1	J10001-UP
26		01010-81230	BOLT	9	J10001-UP
27		01643-31232	WASHER	9	J10001-UP
28		01010-81250	BOLT	5	J10001-UP
29		01643-31232	WASHER	5	J10001-UP
30		21T-54-32271	BRACKET	1	J10001-UP
31		01010-81240	BOLT	2	J10001-UP
32		01643-31232	WASHER	2	J10001-UP
33		21T-54-32341	COVER	1	J10001-UP
34		21T-54-39351	.SHEET	2	J10001-UP
35		21T-54-39360	.SHEET	4	J10001-UP
36		01010-81230	BOLT	6	J10001-UP
37		01643-31232	WASHER	6	J10001-UP
38		01010-81260	BOLT	4	J10001-UP
39		175-54-34170	WASHER	4	J10001-UP
40		21T-54-32350	COVER	1	J10001-UP
41		01010-81230	BOLT	2	J10001-UP
42		01643-31232	WASHER	2	J10001-UP
43		21T-54-32291	HANDRAILL	1	J10001-UP
44		01010-81250	BOLT	4	J10001-UP
45		01643-31232	WASHER	4	J10001-UP

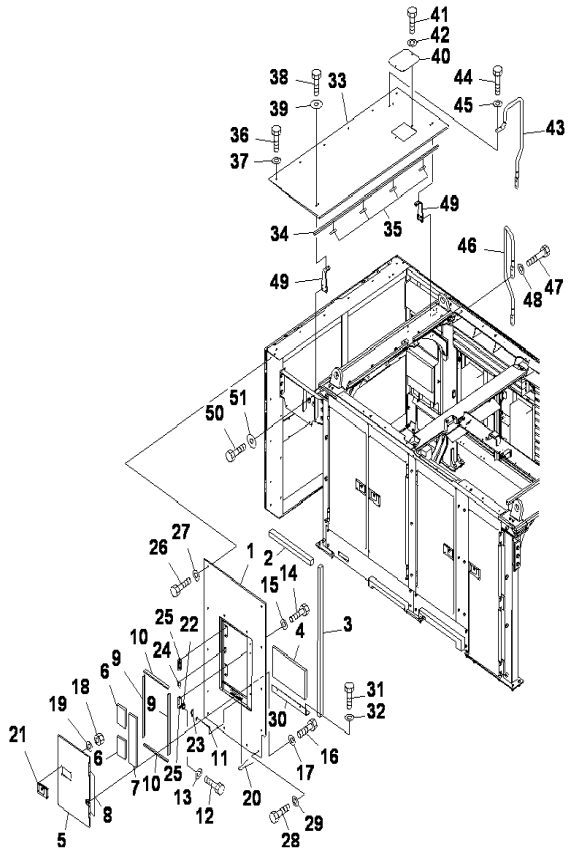

HOOD(COVER)(UPPER)

INDEX	CD	PART NO.	DESCRIPTION	QTY	SERIAL NO.
46		21T-54-32311	HANDRAILL.....	1	J10001-UP
47		01010-81275	BOLT.....	4	J10001-UP
48		01643-31232	WASHER.....	4	J10001-UP
49		21T-54-32750	BRACKET.....	2	J10001-UP
50		01010-81240	BOLT.....	8	J10001-UP
51		175-54-34170	WASHER.....	8	J10001-UP

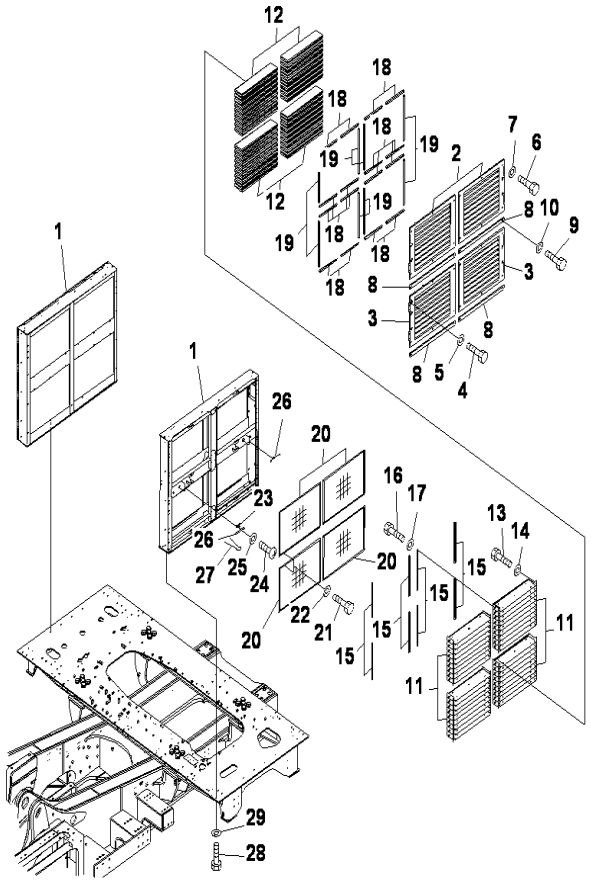

HOOD(DUCT)

INDEX	CD	PART NO.	DESCRIPTION	QTY	SERIAL NO.
1		21T-54-31211	FRAME	2	J10001-UP
2		21T-54-31221	COVER	8	J10001-UP
3		21K-54-22460	.HINGE, WELDED	2	J10001-UP
4		01010-81235	BOLT	64	J10001-UP
5		01643-31232	WASHER	64	J10001-UP
6		01010-81255	BOLT	32	J10001-UP
7		01643-31232	WASHER	32	J10001-UP
8		21T-54-31231	COVER	8	J10001-UP
9		01010-81255	BOLT	16	J10001-UP
10		01643-31232	WASHER	16	J10001-UP
11		21T-54-31240	BLADE	72	J10001-UP
12		21T-54-31260	.SHEET	2	J10001-UP
13		01010-81020	BOLT	144	J10001-UP
14		01643-31032	WASHER	144	J10001-UP
15		21T-54-31250	FRAME	16	J10001-UP
16		01010-80616	BOLT	144	J10001-UP
17		01643-30623	WASHER	144	J10001-UP
18		21T-54-31270	SEAL	32	J10001-UP
19		21T-54-31280	SEAL	16	J10001-UP
20		21T-54-31291	NET	8	J10001-UP
21		01010-80816	BOLT	24	J10001-UP
22		01643-30823	WASHER	24	J10001-UP
23		20B-54-12210	SPRING	8	J10001-UP
24		01220-40408	SCREW	16	J10001-UP
25		01641-20405	WASHER	16	J10001-UP
26		205-54-64140	BAR	8	J10001-UP
27		04050-13018	PIN	8	J10001-UP
28		01010-81240	BOLT	24	J10001-UP
29		01643-31232	WASHER	24	J10001-UP

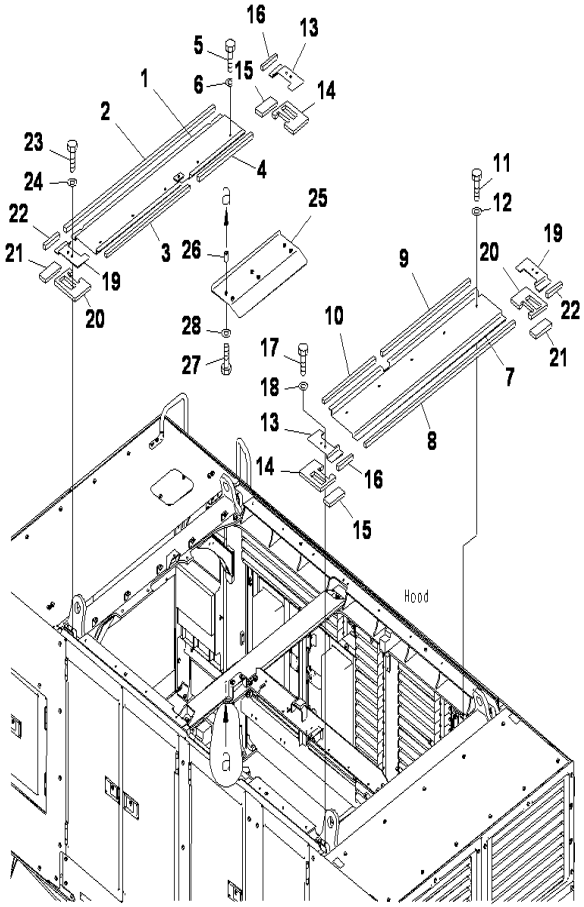

PC2000-8 S/N J10001-UP

HOOD(COVER)

INDEX	CD	PART NO.	DESCRIPTION	QTY	SERIAL NO.
1		21T-54-32521	COVER	1	J10001-UP
2		21T-54-32530	.SHEET	1	J10001-UP
3		21T-54-32560	.SHEET	1	J10001-UP
4		21T-54-32570	.SHEET	1	J10001-UP
5		01010-81230	BOLT	5	J10001-UP
6		01643-31232	WASHER	5	J10001-UP
7		21T-54-32510	COVER	1	J10001-UP
8		21T-54-32530	.SHEET	1	J10001-UP
9		21T-54-32540	.SHEET	1	J10001-UP
10		21T-54-32550	.SHEET	1	J10001-UP
11		01010-81230	BOLT	5	J10001-UP
12		01643-31232	WASHER	5	J10001-UP
13		21T-54-32651	COVER	2	J10001-UP
14		21T-54-32670	.SHEET	1	J10001-UP
15		21T-54-32680	.SHEET	1	J10001-UP
16		21T-54-32690	.SHEET	1	J10001-UP
17		01010-81230	BOLT	4	J10001-UP
18		01643-31232	WASHER	4	J10001-UP
19		21T-54-32641	COVER	2	J10001-UP
20		21T-54-32660	.SHEET	1	J10001-UP
21		21T-54-32680	.SHEET	1	J10001-UP
22		21T-54-32690	.SHEET	1	J10001-UP
23		01010-81230	BOLT	4	J10001-UP
24		01643-31232	WASHER	4	J10001-UP
25		21T-54-37210	COVER	1	J10001-UP
26		205-03-71331	COLLAR	6	J10001-UP
27		01010-81275	BOLT	6	J10001-UP
28		01643-31232	WASHER	6	J10001-UP

Ref :M1110-10A0 Page :270100

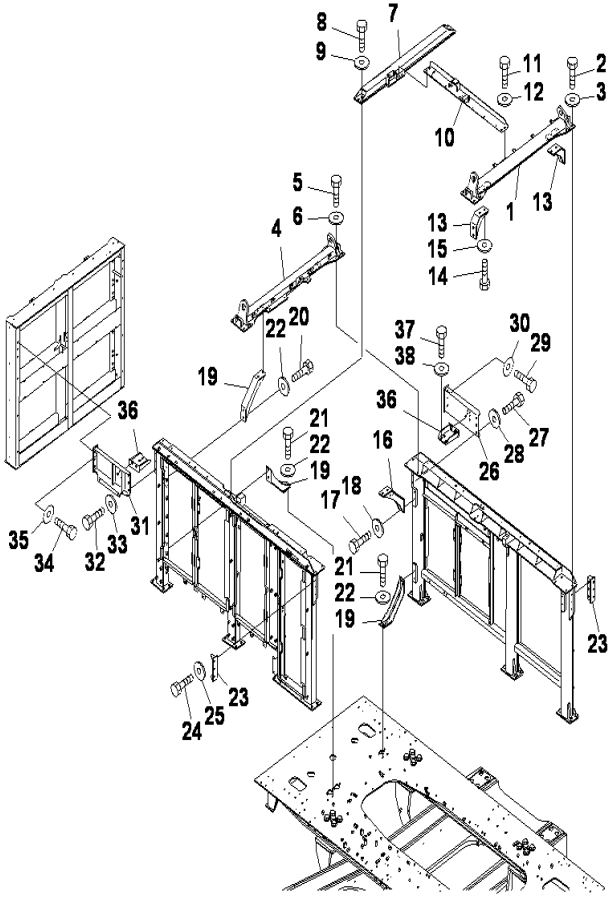

HOOD(FRAME)

INDEX	CD	PART NO.	DESCRIPTION	QTY	SERIAL NO.
1		21T-54-31811	FRAME	1	J10001-UP
2		01010-81665	BOLT	8	J10001-UP
3		21T-72-12620	WASHER	8	J10001-UP
4		21T-54-31821	1FRAME	1	J10001-UP
5		01010-81665	BOLT	8	J10001-UP
6		21T-72-12620	WASHER	8	J10001-UP
7		21T-54-31831	FRAME	1	J10001-UP
8		01010-81660	BOLT	4	J10001-UP
9		21T-72-12620	WASHER	4	J10001-UP
10		21T-54-31841	FRAME	1	J10001-UP
11		01010-81650	BOLT	4	J10001-UP
12		21T-72-12620	WASHER	4	J10001-UP
13		21T-54-31850	BRACKET	2	J10001-UP
14		01010-81640	BOLT	8	J10001-UP
15		21T-72-12620	WASHER	8	J10001-UP
16		21T-53-31690	BRACKET	1	J10001-UP
17		01010-81640	BOLT	4	J10001-UP
18		21T-72-12620	WASHER	4	J10001-UP
19		21T-53-31870	BRACKET	3	J10001-UP
20		01010-81640	BOLT	8	J10001-UP
21		01010-81655	BOLT	4	J10001-UP
22		21T-72-12620	WASHER	12	J10001-UP
23		21T-54-31860	BRACKET	2	J10001-UP
24		01010-81645	BOLT	12	J10001-UP
25		21T-72-12620	WASHER	12	J10001-UP
26		21T-54-32381	FRAME	1	J10001-UP
27		01010-81645	BOLT	3	J10001-UP
28		21T-72-12620	WASHER	3	J10001-UP
29		01010-81235	BOLT	3	J10001-UP
30		175-54-34170	WASHER	3	J10001-UP
31		21T-54-32391	FRAME	1	J10001-UP
32		01010-81645	BOLT	3	J10001-UP
33		21T-72-12620	WASHER	3	J10001-UP
34		01010-81235	BOLT	3	J10001-UP
35		175-54-34170	WASHER	3	J10001-UP
36		21T-54-31871	BRACKET	2	J10001-UP
37		01010-82050	BOLT	12	J10001-UP
38		567-40-41380	WASHER	12	J10001-UP

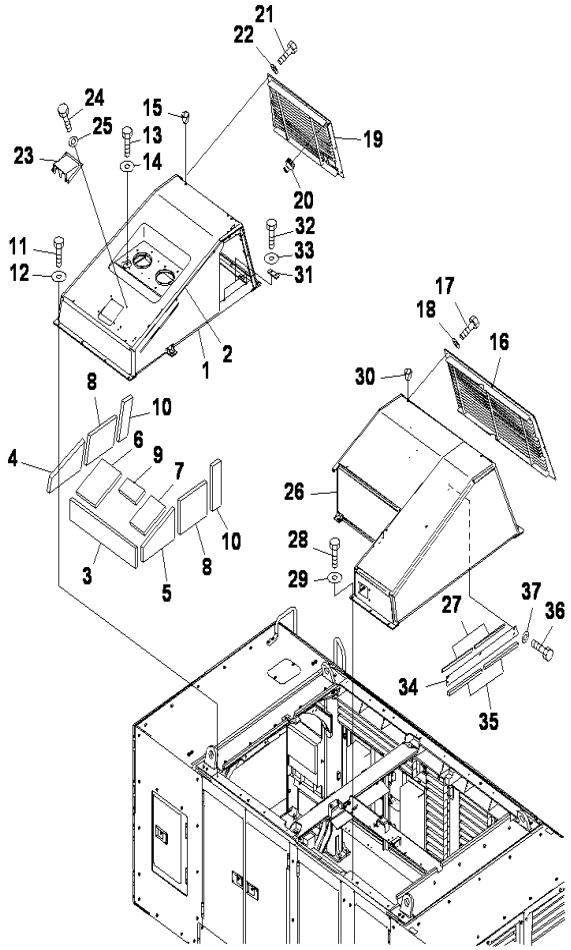

HOOD(HOOD)

INDEX	CD	PART NO.	DESCRIPTION	QTY	SERIAL NO.
1		21T-54-32811	HOOD	1	J10001-UP
2		21T-54-36920	.SEAL	1	J10001-UP
3		21T-54-39720	.SHEET	1	J10001-UP
4		21T-54-39730	.SHEET	1	J10001-UP
5		21T-54-39740	.SHEET	1	J10001-UP
6		21T-54-39751	.SHEET	1	J10001-UP
7		21T-54-39761	.SHEET	1	J10001-UP
8		21T-54-39770	.SHEET	2	J10001-UP
9		21T-54-39790	.SHEET	1	J10001-UP
10		21T-54-39810	.SHEET	2	J10001-UP
11		01010-81235	BOLT	9	J10001-UP
12		175-54-34170	WASHER	9	J10001-UP
13		01010-81245	BOLT	1	J10001-UP
14		175-54-34170	WASHER	1	J10001-UP
15		07049-01620	PLUG	4	J10001-UP
16		21T-54-32820	GRILLE	1	J10001-UP
17		01010-D1225	BOLT	12	J10001-UP
18		01643-71232	WASHER	12	J10001-UP
19		21T-54-32832	GRILLE	1	J10001-UP
20		08037-11425	GROMMET	10	J10001-UP
21		01010-D1225	BOLT	10	J10001-UP
22		01643-71232	WASHER	1	J10001-UP
23		21T-54-32851	COVER	4	J10001-UP
24		01010-D1225	BOLT	4	J10001-UP
25		01643-71232	WASHER	1	J10001-UP
26		21T-54-32862	HOOD	1	J10001-UP
27		21T-54-32891	.SHEET	2	J10001-UP
28		01010-81235	BOLT	16	J10001-UP
29		175-54-34170	WASHER	16	J10001-UP
30		07049-01620	PLUG	4	J10001-UP
31		120-54-35240	PLATE	2	J10001-UP
32		01010-81235	BOLT	4	J10001-UP
33		175-54-34170	WASHER	4	J10001-UP
34		21T-54-32411	COVER	1	J10001-UP
35		21T-54-32431	.SHEET	2	J10001-UP
36		01010-81225	BOLT	5	J10001-UP
37		01643-31232	WASHER	5	J10001-UP

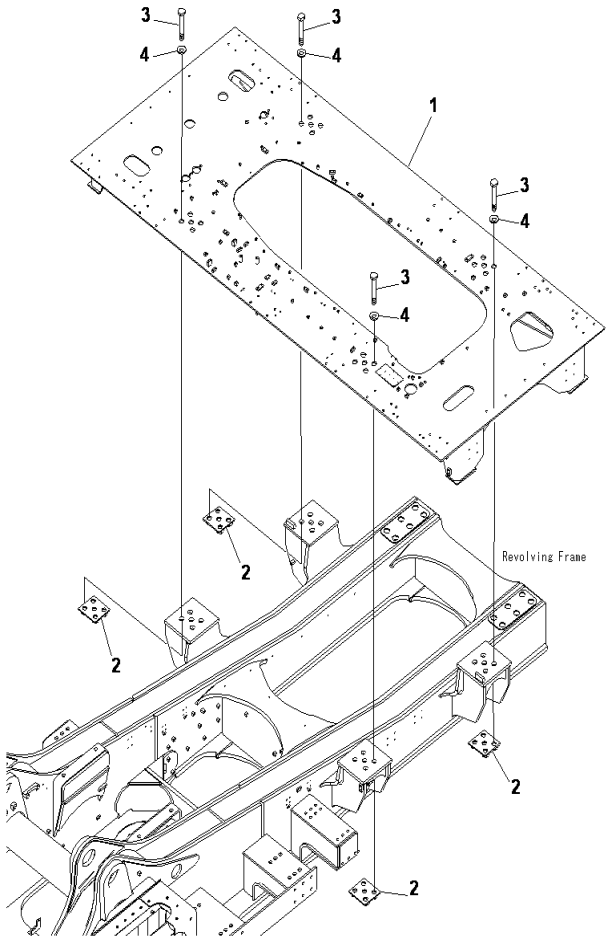

PC2000-8 S/N J10001-UP

CONTAINER BASE FRAME

INDEX	CD	PART NO.	DESCRIPTION	QTY	SERIAL NO.
1		21T-54-31112	FRAME	1	J10001-UP
2		21T-54-31121	PLATE	4	J10001-UP
3		21T-54-31130	BOLT	20	J10001-UP
4		01643-34212	WASHER, FLAT	20	J10001-UP

Ref :M1120-01A0 Page :270130

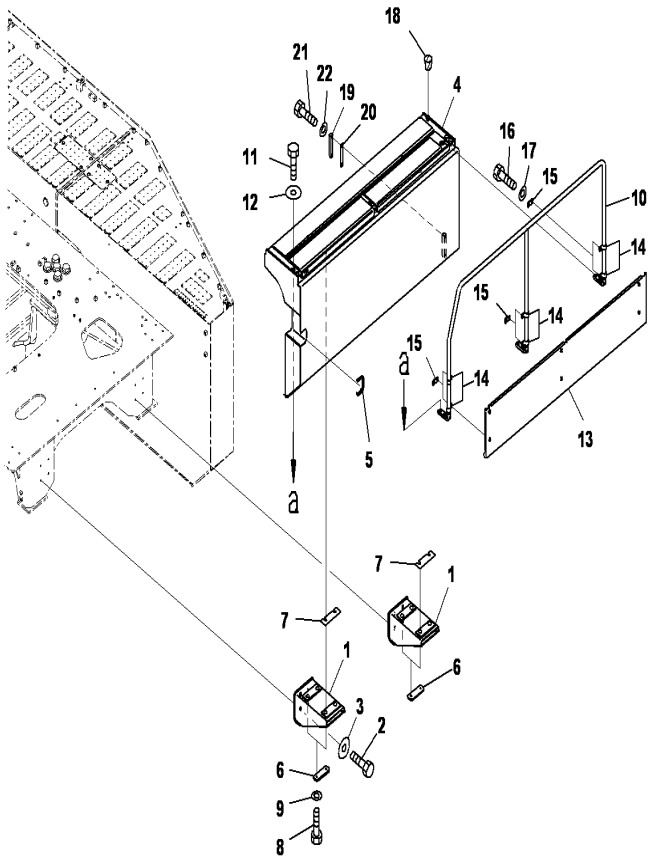

PC2000-8 S/N J10001-UP

LEFT SIDE COVER(POWER ASSIST LADDER)(LHS)(COVER AND HANDRAIL)

INDEX	CD	PART NO.	DESCRIPTION	QTY	SERIAL NO.
1		21T-54-33141	BRACKET	2	J10001-UP
2		01010-81240	BOLT	8	J10001-UP
3		175-54-34170	WASHER	8	J10001-UP
4		21T-54-33116	FRAME	1	J10001-UP
5		21T-53-33660	.SEAL	1	J10001-UP
6		21T-53-31570	PLATE	4	J10001-UP
7		21T-53-32290	SHIM	6	J10001-UP
8		01010-81260	BOLT	8	J10001-UP
9		01643-31232	WASHER	8	J10001-UP
10		21T-53-32871	HANDRAIL	1	J10001-UP
11		01010-81250	BOLT	6	J10001-UP
12		175-54-34170	WASHER	6	J10001-UP
13		21T-54-33121	COVER	1	J10001-UP
14		21T-54-33340	CLAMP	6	J10001-UP
15		21T-54-33170	CLAMP	6	J10001-UP
16		01010-81240	BOLT	6	J10001-UP
17		01643-31232	WASHER	6	J10001-UP
18		07049-01215	PLUG	1	J10001-UP
19		21T-53-33640	BRACKET	1	J10001-UP
20		21T-53-33650	SHIM	2	J10001-UP
21		01010-81255	BOLT	2	J10001-UP
22		01643-31232	WASHER	2	J10001-UP

Ref :M1130-01A0 Page :270140

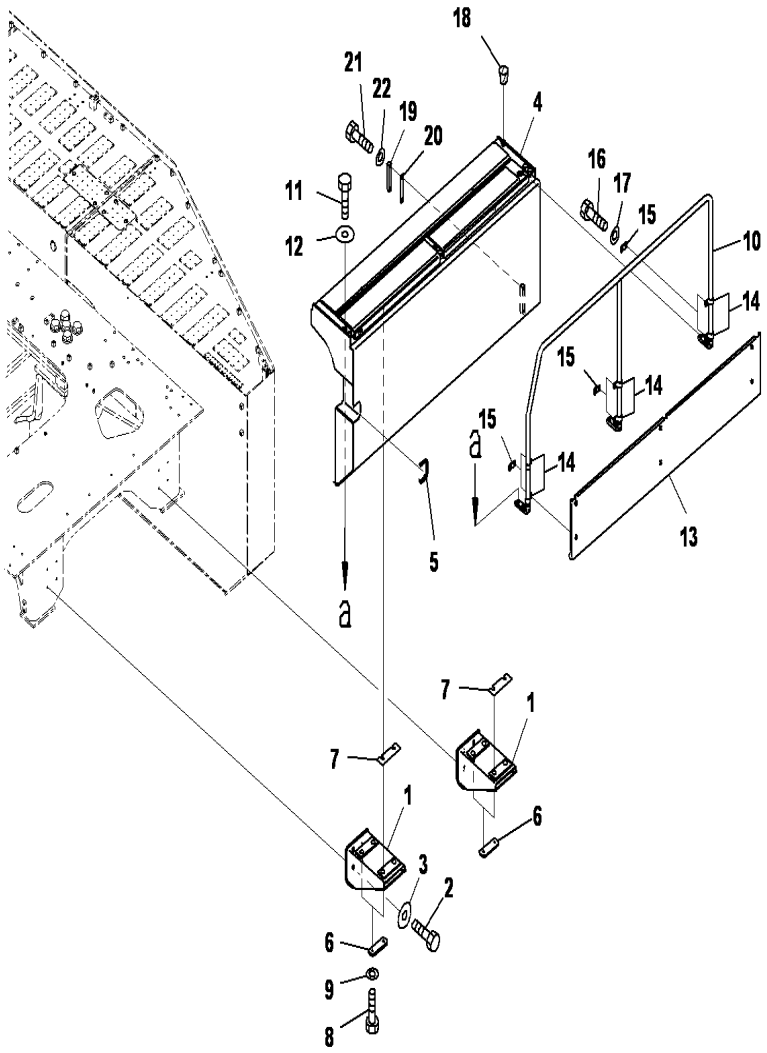

LEFT SIDE COVER(LHS)(COVER AND HANDRAIL)

INDEX	CD	PART NO.	DESCRIPTION	QTY	SERIAL NO.
1		21T-54-33141	BRACKET	2	J10001-UP
2		01010-81240	BOLT	8	J10001-UP
3		175-54-34170	WASHER	8	J10001-UP
4		21T-54-33116	FRAME	1	J10001-UP
5		21T-53-33660	.SEAL	1	J10001-UP
6		21T-53-31570	PLATE	4	J10001-UP
7		21T-53-32290	SHIM	6	J10001-UP
8		01010-81260	BOLT	8	J10001-UP
9		01643-31232	WASHER	8	J10001-UP
10		21T-53-32871	HANDRAIL	1	J10001-UP
11		01010-81250	BOLT	6	J10001-UP
12		175-54-34170	WASHER	6	J10001-UP
13		21T-54-33121	COVER	1	J10001-UP
14		21T-54-33340	CLAMP	6	J10001-UP
15		21T-54-33170	CLAMP	6	J10001-UP
16		01010-81240	BOLT	6	J10001-UP
17		01643-31232	WASHER	6	J10001-UP
18		07049-01215	PLUG	1	J10001-UP
19		21T-53-33640	BRACKET	1	J10001-UP
20		21T-53-33650	SHIM	2	J10001-UP
21		01010-81255	BOLT	2	J10001-UP
22		01643-31232	WASHER	2	J10001-UP

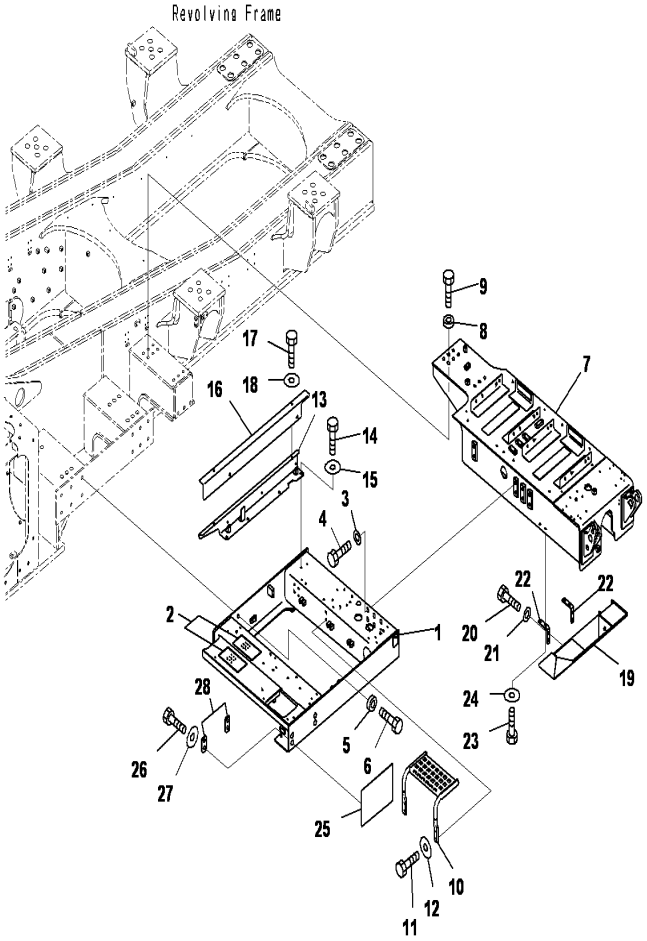

LEFT SIDE COVER(POWER ASSIST LADDER)(LHS,DECK)

INDEX	CD	PART NO.	DESCRIPTION	QTY	SERIAL NO.
1		21T-54-33633	FRAME	1	J10001-UP
2		21T-72-11730	.SEAT	3	J10001-UP
3		15R-70-16370	WASHER	8	J10001-UP
4		01010-82075	BOLT	8	J10001-UP
5		15R-70-16370	WASHER	12	J10001-UP
6		01010-82075	BOLT	12	J10001-UP
7		21T-53-32422	FRAME	1	J10001-UP
8		15R-70-16370	WASHER	12	J10001-UP
9		01010-82075	BOLT	12	J10001-UP
10		21T-54-33541	STEP	1	J10001-UP
11		01010-81250	BOLT	4	J10001-UP
12		175-54-34170	WASHER	4	J10001-UP
13		21T-54-33510	BRACKET	1	J10001-UP
14		01010-81230	BOLT	4	J10001-UP
15		175-54-34170	WASHER	4	J10001-UP
16		21T-54-33490	COVER	1	J10001-UP
17		01010-81230	BOLT	4	J10001-UP
18		175-54-34170	WASHER	4	J10001-UP
19		21T-53-32812	COVER	1	J10001-UP
20		01010-81240	BOLT	4	J10001-UP
21		175-54-34170	WASHER	4	J10001-UP
22		21T-53-32820	BRACKET	2	J10001-UP
23		01010-81240	BOLT	4	J10001-UP
24		175-54-34170	WASHER	4	J10001-UP
25		21T-54-33671	COVER	1	J10001-UP
26		01010-81220	BOLT	4	J10001-UP
27		175-54-34170	WASHER	4	J10001-UP
28		21T-53-31640	PLATE	2	J10001-UP

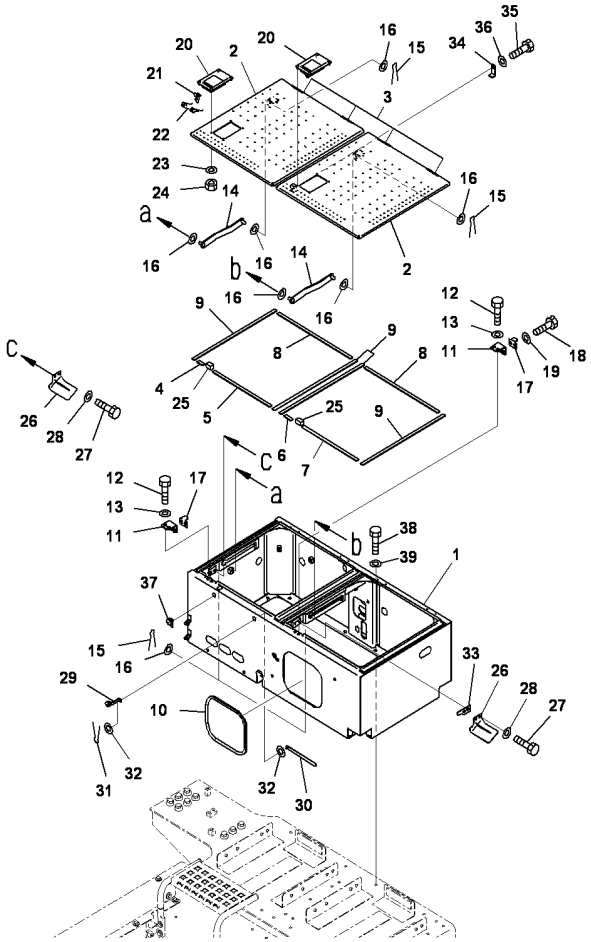

PC2000-8 S/N J10001-UP

LEFT SIDE COVER(POWER ASSIST LADDER)(LHS,CASE)

INDEX	CD	PART NO.	DESCRIPTION	QTY	SERIAL NO.
		21T-53-33310	COVER	1	J10001-UP
1	C1		.COVER	1	J10001-UP
2		21T-53-31211	.COVER	2	J10001-UP
3		20Y-54-29711	..HINGE, WELDED	2	J10001-UP
4		21T-53-31230	.SHEET	1	J10001-UP
5		21T-53-31240	.SHEET	1	J10001-UP
6		21T-53-31250	.SHEET	1	J10001-UP
7		21T-53-31260	.SHEET	1	J10001-UP
8		21T-53-31270	.SHEET	2	J10001-UP
9		21T-53-31280	.SHEET	4	J10001-UP
10		21T-53-32120	.SEAL	1	J10001-UP
11		21T-53-32260	BRACKET	2	J10001-UP
12		01010-81225	BOLT	4	J10001-UP
13		01643-31232	WASHER	4	J10001-UP
14		209-54-53151	STAY	2	J10001-UP
15		04050-14028	PIN	4	J10001-UP
16		01643-31645	WASHER	8	J10001-UP
17		20Y-54-29651	BRACKET	2	J10001-UP
18		01010-81225	BOLT	4	J10001-UP
19		01643-31232	WASHER	4	J10001-UP
20		21T-54-37150	LOCK	2	J10001-UP
21		198-54-42480	.HOOK	1	J10001-UP
22		198-54-42491	.SPRING	1	J10001-UP
23		01643-30823	WASHER	8	J10001-UP
24		01580-10806	NUT	8	J10001-UP
25		21T-54-65830	SHEET	2	J10001-UP
26		21T-53-31430	COVER	2	J10001-UP
27		01010-81225	BOLT	4	J10001-UP
28		01643-31232	WASHER	4	J10001-UP
29		21T-53-31420	LOCK ASS'Y	1	J10001-UP
		205-54-76280	.ROTOR ASS'Y	1	J10001-UP
30		21T-53-31411	PLATE	1	J10001-UP
31		04050-11612	COTTER PIN	1	J10001-UP
32		01643-30623	WASHER	2	J10001-UP
33		21T-53-31960	PLATE	1	J10001-UP
34		21T-53-31980	PLATE	1	J10001-UP
35		01010-81225	BOLT	1	J10001-UP
36		01643-31232	WASHER	1	J10001-UP
37		21T-53-31930	LOCK ASS'Y	1	J10001-UP
38		01010-81230	BOLT	13	J10001-UP
39		01643-31232	WASHER	13	J10001-UP

Ref :M1130-03A0 Page :270160

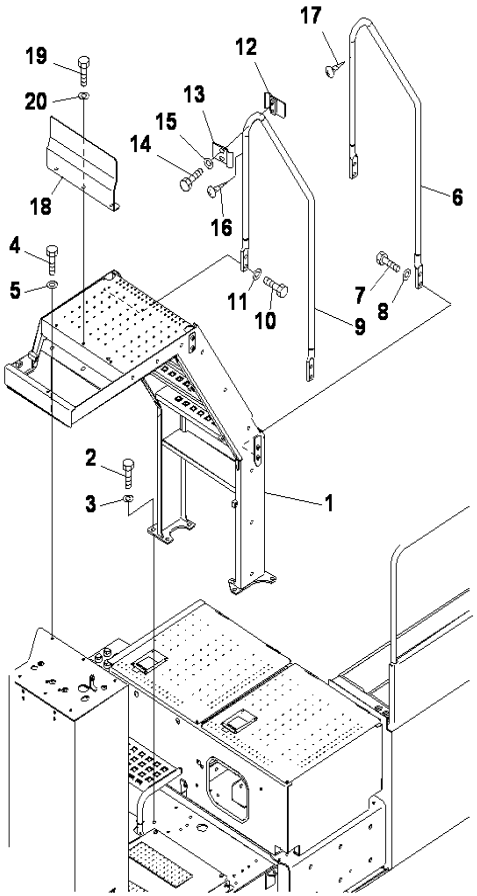

PC2000-8 S/N J10001-UP

LEFT SIDE COVER(POWER ASSIST LADDER)(LHS,LADDER)

INDEX	CD	PART NO.	DESCRIPTION	QTY	SERIAL NO.
1		21T-53-31115	LADDER	1	J10001-UP
2		01010-81240	BOLT	8	J10001-UP
3		175-54-34170	WASHER	8	J10001-UP
4		01010-81230	BOLT	6	J10001-UP
5		175-54-34170	WASHER	6	J10001-UP
6		21T-54-33682	HANDRAIL	1	J10001-UP
7		01010-81250	BOLT	4	J10001-UP
8		175-54-34170	WASHER	4	J10001-UP
9		21T-54-33691	HANDRAIL	1	J10001-UP
10		01010-81250	BOLT	4	J10001-UP
11		175-54-34170	WASHER	4	J10001-UP
12		21T-54-32911	CLAMP	1	J10001-UP
13		21T-54-32921	CLAMP	1	J10001-UP
14		01010-D1250	BOLT	2	J10001-UP
15		175-54-34170	WASHER	2	J10001-UP
16		01370-00508	SCREW	1	J10001-UP
17		01370-00508	SCREW	1	J10001-UP
18		21T-54-33471	COVER	1	J10001-UP
19		01010-81230	BOLT	3	J10001-UP
20		175-54-34170	WASHER	3	J10001-UP

Ref :M1130-04A0 Page :270170

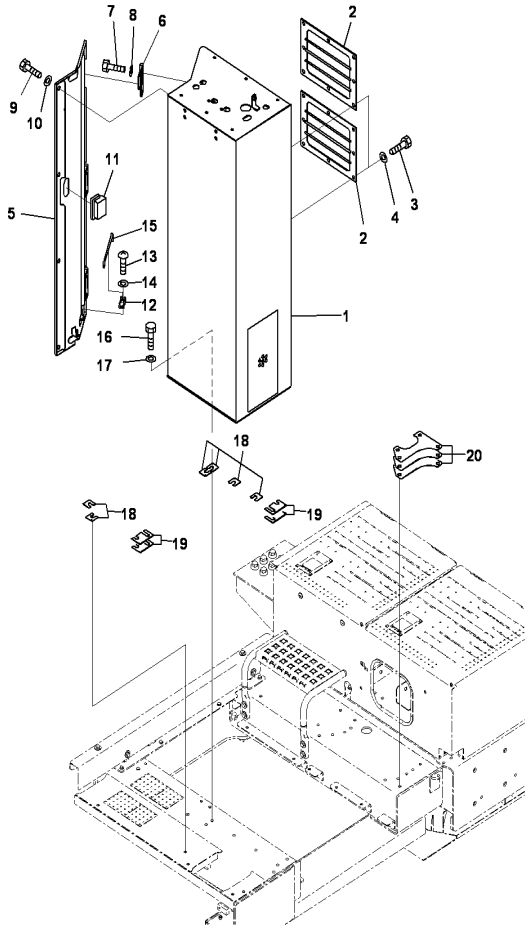

PC2000-8 S/N J10001-UP

LEFT SIDE COVER(CONDENSER BOX)

INDEX	CD	PART NO.	DESCRIPTION	QTY	SERIAL NO.
1		21T-54-33651	FRAME	1	J10001-UP
2		21T-54-68550	COVER	2	J10001-UP
3		01010-81225	BOLT	16	J10001-UP
4		01643-31232	WASHER	16	J10001-UP
5		21T-54-33661	COVER	1	J10001-UP
6		21K-54-22460	HINGE	3	J10001-UP
7		01010-81225	BOLT	6	J10001-UP
8		01643-31232	WASHER	6	J10001-UP
9		01010-81225	BOLT	6	J10001-UP
10		175-54-34170	WASHER	6	J10001-UP
11		209-54-12280	HANDLE	1	J10001-UP
12		20B-54-12210	SPRING	1	J10001-UP
13		01023-10406	SCREW	2	J10001-UP
14		01641-20405	WASHER	2	J10001-UP
15		20Y-54-29232	BAR	1	J10001-UP
16		01010-81240	BOLT	10	J10001-UP
17		01643-31232	WASHER	10	J10001-UP
18		21T-53-32271	SHIM, T=1.2MM	6	J10001-UP
19		21T-53-32350	SHIM, T=1.2MM	10	J10001-UP
20		21T-53-32360	SHIM, T=1.2MM	3	J10001-UP

Ref :M1130-05A0 Page :270180

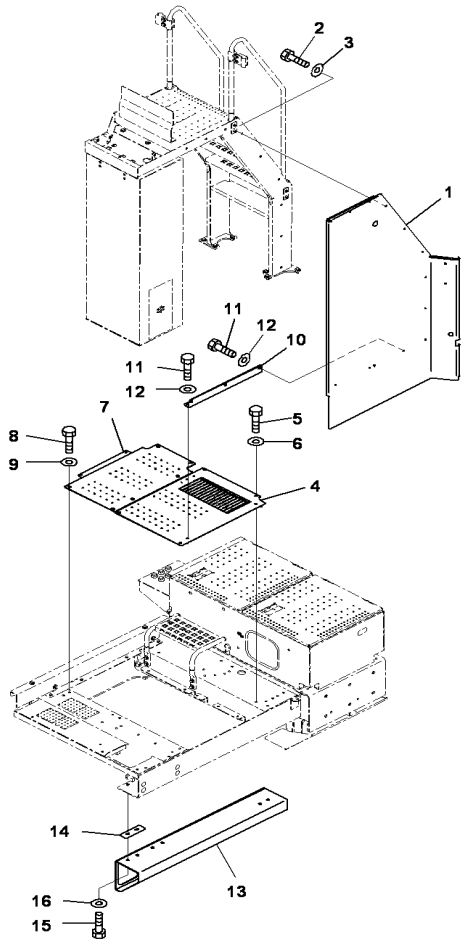

PC2000-8 S/N J10001-UP

LEFT SIDE COVER(POWER ASSIST LADDER)(LHS, COVER)

INDEX	CD	PART NO.	DESCRIPTION	QTY	SERIAL NO.
1		21T-54-33533	COVER	1	J10001-UP
2		01010-81230	BOLT	9	J10001-UP
3		175-54-34170	WASHER	9	J10001-UP
4		21T-54-33562	COVER	1	J10001-UP
5		01010-81230	BOLT	4	J10001-UP
6		175-54-34170	WASHER	4	J10001-UP
7		21T-54-33581	COVER	1	J10001-UP
8		01010-81230	BOLT	6	J10001-UP
9		175-54-34170	WASHER	6	J10001-UP
10		21T-54-33611	BRACKET	1	J10001-UP
11		01010-81230	BOLT	5	J10001-UP
12		175-54-34170	WASHER	5	J10001-UP
13		21T-54-33462	COVER	1	J10001-UP
14		21T-53-32280	PLATE	6	J10001-UP
15		01010-81240	BOLT	6	J10001-UP
16		175-54-34170	WASHER	6	J10001-UP

Ref :M1130-06A0 Page :270190

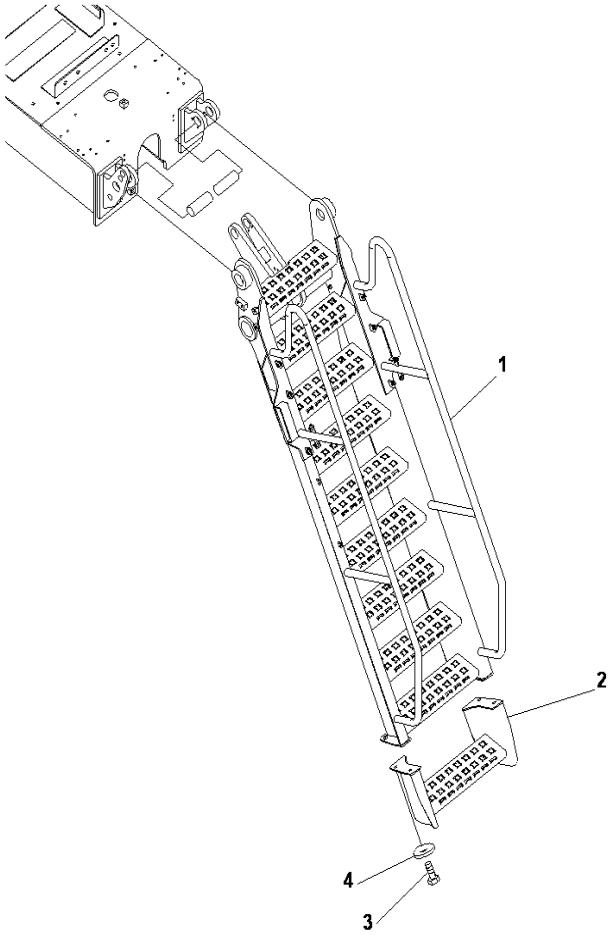

PC2000-8 S/N J10001-UP

LEFT SIDE COVER(POWER ASSIST LADDER)(LHS,LADDER FRAME)

INDEX	CD	PART NO.	DESCRIPTION	QTY	SERIAL NO.
1		21T-53-32411	LADDER	1	J10001-UP
2		21T-53-33170	LADDER	1	J10001-UP
3		01010-81230	BOLT	4	J10001-UP
4		175-54-34170	WASHER	4	J10001-UP

Ref :M1130-07A0 Page :270200

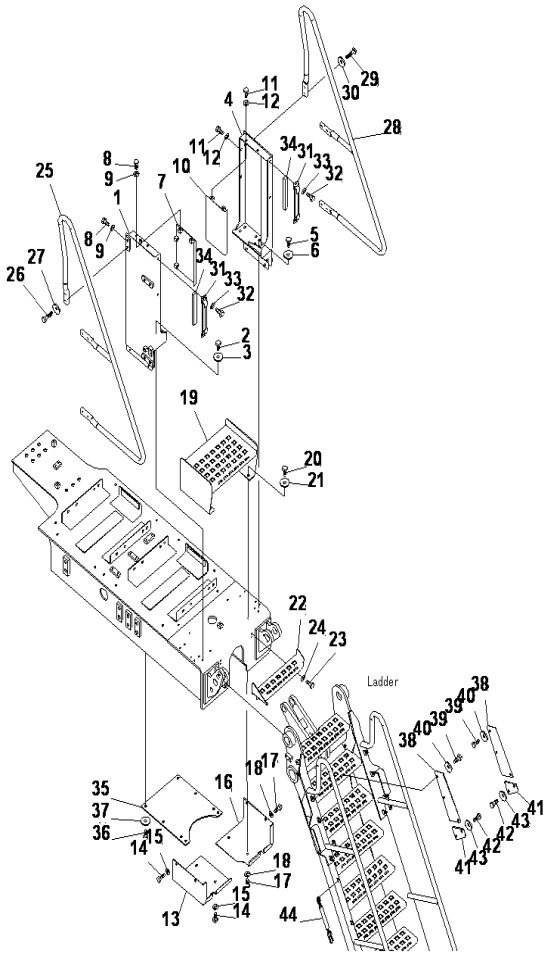

PC2000-8 S/N J10001-UP

LEFT SIDE COVER(POWER ASSIST LADDER)(LHS,LADDER WEIGHT)

INDEX	CD	PART NO.	DESCRIPTION	QTY	SERIAL NO.
1		21T-53-32741	COVER	1	J10001-UP
2		01010-81240	BOLT	6	J10001-UP
3		175-54-34170	WASHER	6	J10001-UP
4		21T-53-32752	COVER	1	J10001-UP
5		01010-81240	BOLT	6	J10001-UP
6		175-54-34170	WASHER	6	J10001-UP
7		21T-53-33540	COVER	1	J10001-UP
8		01010-81230	BOLT	4	J10001-UP
9		01643-31232	WASHER	4	J10001-UP
10		21T-53-33550	COVER	1	J10001-UP
11		01010-81230	BOLT	4	J10001-UP
12		01643-31232	WASHER	4	J10001-UP
13		21T-53-32760	COVER	1	J10001-UP
14		01010-81230	BOLT	4	J10001-UP
15		01643-31232	WASHER	4	J10001-UP
16		21T-53-32772	COVER	1	J10001-UP
17		01010-81230	BOLT	4	J10001-UP
18		01643-31232	WASHER	4	J10001-UP
19		21T-53-32492	STEP	1	J10001-UP
20		01010-81230	BOLT	4	J10001-UP
21		175-54-34170	WASHER	4	J10001-UP
22		21T-53-32861	STEP	1	J10001-UP
23		01010-81230	BOLT	4	J10001-UP
24		01643-31232	WASHER	4	J10001-UP
25		21T-53-32430	HANDRAIL	1	J10001-UP
26		01010-81260	BOLT	6	J10001-UP
27		175-54-34170	WASHER	6	J10001-UP
28		21T-53-32440	HANDRAIL	1	J10001-UP
29		01010-81260	BOLT	6	J10001-UP
30		175-54-34170	WASHER	6	J10001-UP
31		21T-53-32830	BRACKET	1	J10001-UP
32		01010-81230	BOLT	4	J10001-UP
33		01643-31232	WASHER	4	J10001-UP
34		21T-53-32840	CUSHION	2	J10001-UP
35		21T-53-32790	COVER	1	J10001-UP
36		01010-81240	BOLT	8	J10001-UP
37		175-54-34170	WASHER	8	J10001-UP
38		21T-53-33530	PLATE	2	J10001-UP
39		01010-81230	BOLT	6	J10001-UP
40		175-54-34170	WASHER	6	J10001-UP
41		21T-53-33560	PLATE	2	J10001-UP
42		01010-81230	BOLT	4	J10001-UP
43		175-54-34170	WASHER	4	J10001-UP
44		21T-53-33520	CHAIN	1	J10001-UP

Ref :M1130-08A0 Page :270210

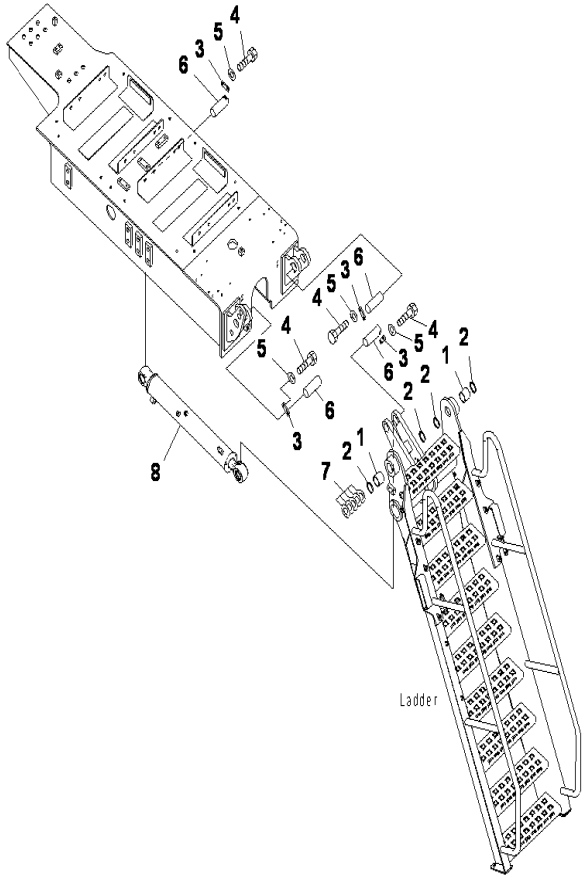

PC2000-8 S/N J10001-UP

LEFT SIDE COVER(POWER ASSIST LADDER)(LHS,SLIDE LADDER)

INDEX	CD	PART NO.	DESCRIPTION	QTY	SERIAL NO.
1		21W-70-41741	BUSHING	2	J10001-UP
2		07145-00050	SEAL	4	J10001-UP
3		04082-00212	LOCK	4	J10001-UP
4		01010-81230	BOLT	8	J10001-UP
5		01643-31232	WASHER	8	J10001-UP
6		22F-71-21130	PIN	4	J10001-UP
7		20T-70-81730	SPACER, T=1.0MM	5	J10001-UP
8		707-00-0E670	CYLINDER ASS'Y	1	J10001-UP

Ref :M1130-09A0 Page :270220

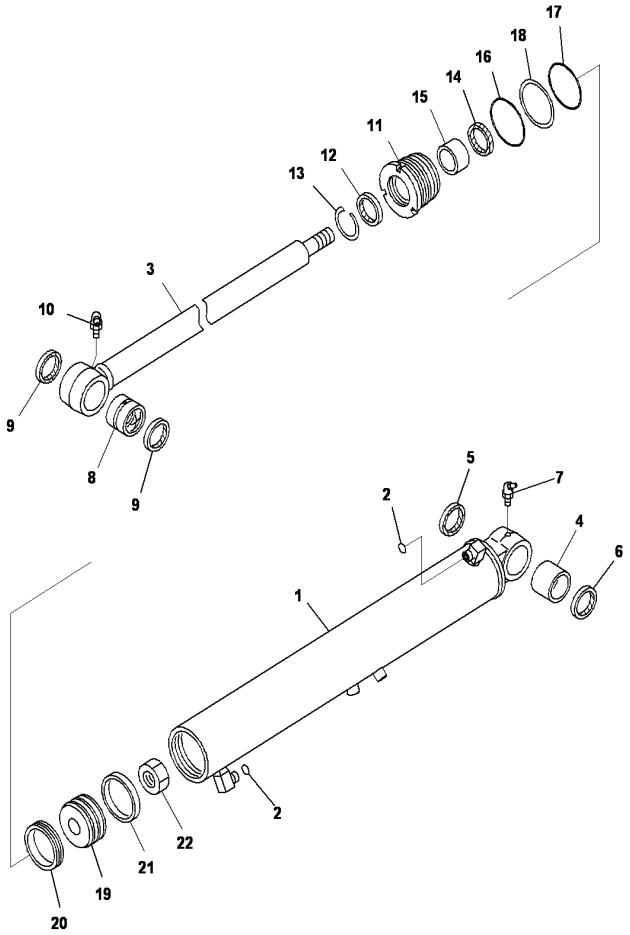

PC2000-8 S/N J10001-UP

LEFT SIDE COVER(LADDER CYLINDER SERVICE KIT)

INDEX	CD	PART NO.	DESCRIPTION	QTY	SERIAL NO.
		707-00-0E670	CYLINDER ASS'Y	1	J10001-UP
1		707-11-95280	.CYLINDER	1	J10001-UP
2		02896-11009	.O-RING	2	J10001-UP
3		707-58-50F00	.ROD,PISTON	1	J10001-UP
4		707-76-50880	.BUSHING	1	J10001-UP
5		707-77-50020	.OIL SEAL	1	J10001-UP
6		07145-00050	.SEAL	1	J10001-UP
7		07020-00675	.FITTING	1	J10001-UP
8		20T-87-01290	.BUSHING	1	J10001-UP
9		07145-00050	.SEAL	2	J10001-UP
10		07020-00675	.FITTING	1	J10001-UP
11		707-29-95721	.HEAD,CYL	1	J10001-UP
12		176-63-92240	.SEAL DUST	1	J10001-UP
13		07179-12062	.RING	1	J10001-UP
14		707-51-50211	.PACKING,ROD	1	J10001-UP
15		707-52-15230	.BUSHING	1	J10001-UP
16		07000-12095	.O-RING	1	J10001-UP
17		07000-12090	.O-RING	1	J10001-UP
18		707-35-52780	.RING,BACK UP	1	J10001-UP
19		707-36-95170	.PISTON	1	J10001-UP
20		707-44-95180	.RING,PISTON	1	J10001-UP
21		707-39-95110	.RING,WEAR	1	J10001-UP
22		707-67-36010	.NUT	1	J10001-UP

Ref :M1130-09A1 Page :270224

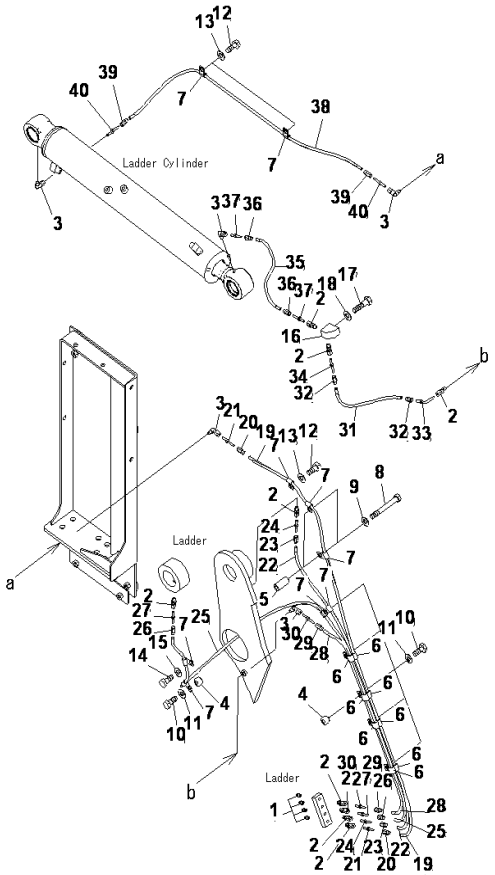

PC2000-8 S/N J10001-UP

LEFT SIDE COVER(LADDER)(LUBRICATION LINE)(FOR LADDER)

INDEX	CD	PART NO.	DESCRIPTION	QTY	SERIAL NO.
1		07020-00000	FITTING	4	J10001-UP
2		561-95-63310	CONNECTOR	9	J10001-UP
3		561-95-63290	ELBOW	5	J10001-UP
4		154-03-76490	SPACER	6	J10001-UP
5		14X-54-26640	COLLAR	2	J10001-UP
6		04435-51012	CLIP	8	J10001-UP
7		04434-50812	CLIP	9	J10001-UP
8		01010-81275	BOLT	2	J10001-UP
9		01643-31232	WASHER	2	J10001-UP
10		01010-81240	BOLT	6	J10001-UP
11		01643-31232	WASHER	6	J10001-UP
12		01010-81230	BOLT	3	J10001-UP
13		01643-31232	WASHER	3	J10001-UP
14		01010-81220	BOLT	1	J10001-UP
15		01643-31232	WASHER	1	J10001-UP
16		21T-53-33121	BLOCK	1	J10001-UP
17		01010-81040	BOLT	2	J10001-UP
18		01643-31032	WASHER	2	J10001-UP
19		21T-68-32950	HOSE ASS'Y	1	J10001-UP
20		425-S95-2140	.SLEEVE	2	J10001-UP
21		425-S95-2160	.HOSE STUD	2	J10001-UP
22		21T-68-32930	HOSE ASS'Y	1	J10001-UP
23		425-S95-2140	.SLEEVE	2	J10001-UP
24		425-S95-2160	.HOSE STUD	2	J10001-UP
25		21T-68-32970	HOSE ASS'Y	1	J10001-UP
26		425-S95-2140	.SLEEVE	2	J10001-UP
27		425-S95-2160	.HOSE STUD	2	J10001-UP
28		21T-68-31810	HOSE ASS'Y	1	J10001-UP
29		425-S95-2140	.SLEEVE	2	J10001-UP
30		425-S95-2160	.HOSE STUD	2	J10001-UP
31		21T-68-33130	HOSE ASS'Y	1	J10001-UP
32		425-S95-2140	.SLEEVE	2	J10001-UP
33		425-S95-2150	.HOSE STUD 90	1	J10001-UP
34		425-S95-2160	.HOSE STUD	1	J10001-UP
35		21T-68-33110	HOSE A	1	J10001-UP
36		425-S95-2140	.SLEEVE	2	J10001-UP
37		425-S95-2160	.HOSE STUD	2	J10001-UP
38		21T-68-32930	HOSE ASS'Y	1	J10001-UP
39		425-S95-2140	.SLEEVE	2	J10001-UP
40		425-S95-2160	.HOSE STUD	2	J10001-UP

Ref :M1130-10A0 Page :270230

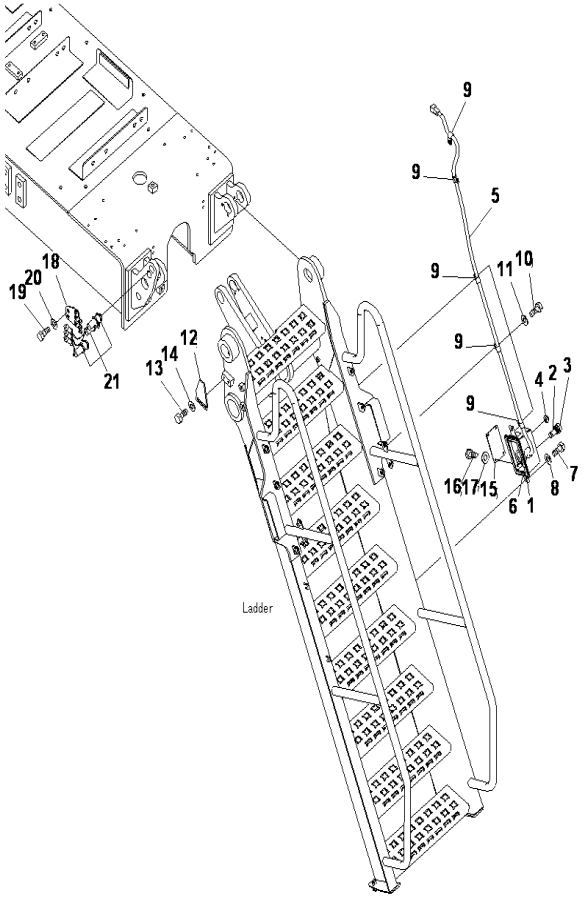

PC2000-8 S/N J10001-UP

LEFT SIDE COVER(LADDER)(HARNESS)(FOR HYDRAULIC LADDER)

INDEX	CD	PART NO.	DESCRIPTION	QTY	SERIAL NO.
1		21T-06-34491	COVER,LIGHT SWI.....	1	J10016-UP
		21T-06-34490	LIGHT SWITCH BO.....	1	J10001-J10015
2		8221-06-1480	SWITCH,GREEN.....	1	J10001-UP
3		8221-06-1670	.CAP, GREEN.....	1	J10001-UP
4		09415-01610	CAP.....	1	J10001-UP
5		21T-06-34423	WIRING HARNESS.....	1	J10016-UP
		21T-06-34422	WIRING HARNESS.....	1	J10001-J10015
6		08037-11425	.GROMMET.....	1	J10001-UP
7		01010-81220	BOLT.....	2	J10001-UP
8		01643-31232	WASHER.....	2	J10001-UP
9		04434-51412	CLIP.....	5	J10001-UP
10		01010-81220	BOLT.....	3	J10001-UP
11		01643-31232	WASHER.....	3	J10001-UP
12		21T-53-32880	PLATE.....	1	J10001-UP
13		01010-81225	BOLT.....	2	J10001-UP
14		01643-31232	WASHER.....	2	J10001-UP
15		21T-06-34570	PLATE.....	1	J10001-UP
16		01010-80616	BOLT.....	4	J10001-UP
17		01643-30623	WASHER.....	4	J10001-UP
18		21T-06-34460	BRACKET.....	1	J10001-UP
19		01010-81225	BOLT.....	2	J10001-UP
20		01643-31232	WASHER.....	2	J10001-UP
21		56B-06-15610	SWITCH.....	3	J10001-UP

Ref :M1130-11A0 Page :270240

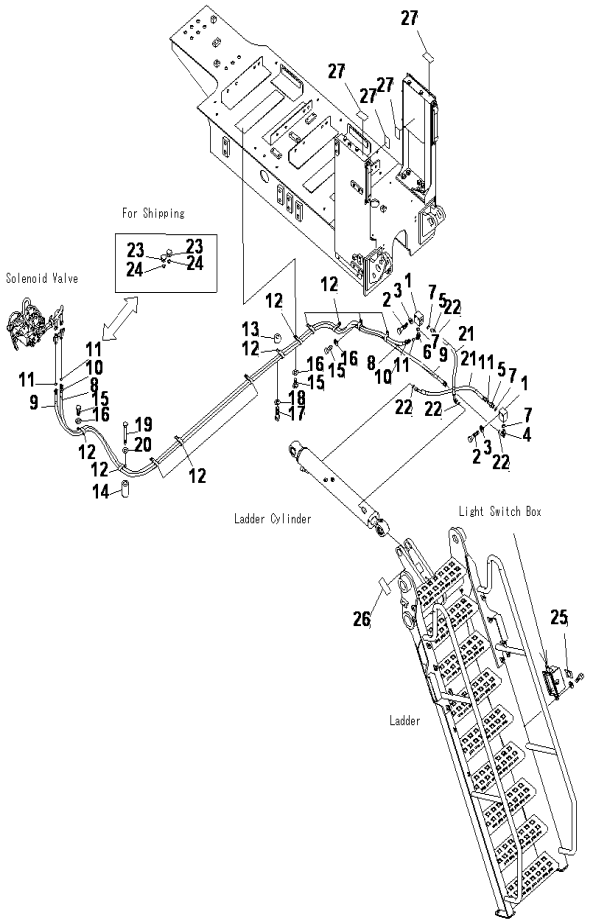

PC2000-8 S/N J10001-UP

LEFT SIDE COVER(LADDER)(HYDRAULIC PIPING)

INDEX	CD	PART NO.	DESCRIPTION	QTY	SERIAL NO.
1		21T-64-34350	BLOCK	2	J10001-UP
2		01010-81270	BOLT	4	J10001-UP
3		01643-31232	WASHER	4	J10001-UP
4		02782-10315	ELBOW	1	J10001-UP
5		02781-00315	UNION	2	J10001-UP
6		02783-10315	ELBOW	1	J10001-UP
7		07002-62034	O-RING	4	J10001-UP
8		02753-00340	HOSE, FACE SEAL TYPE	1	J10001-UP
9		02753-00343	HOSE, FACE SEAL TYPE	1	J10001-UP
10		20Y-62-22860	BAND ,BROWN	2	J10001-UP
11		02896-61009	O-RING	4	J10001-UP
12		04435-52112	CLIP	11	J10001-UP
13		154-03-76490	SPACER	1	J10001-UP
14		154-97-91480	COLLAR	1	J10001-UP
15		01010-81225	BOLT	9	J10001-UP
16		01643-31232	WASHER	9	J10001-UP
17		01010-81240	BOLT	1	J10001-UP
18		01643-31232	WASHER	1	J10001-UP
19		01010-81275	BOLT	1	J10001-UP
20		01643-31232	WASHER	1	J10001-UP
21		02755-00306	HOSE, FACE SEAL TYPE	2	J10001-UP
22		02896-61009	O-RING	4	J10001-UP
23		07376-70315	PLUG	2	J10001-UP
24		02896-61009	O-RING	2	J10001-UP
25		21T-00-32490	PLATE	1	J10001-UP
26		14X-98-35181	PLATE, REFLECTOR	1	J10001-UP
27		09824-K0481	SAFETY, PLATE	4	J10001-UP

Ref :M1130-12A0 Page :270250

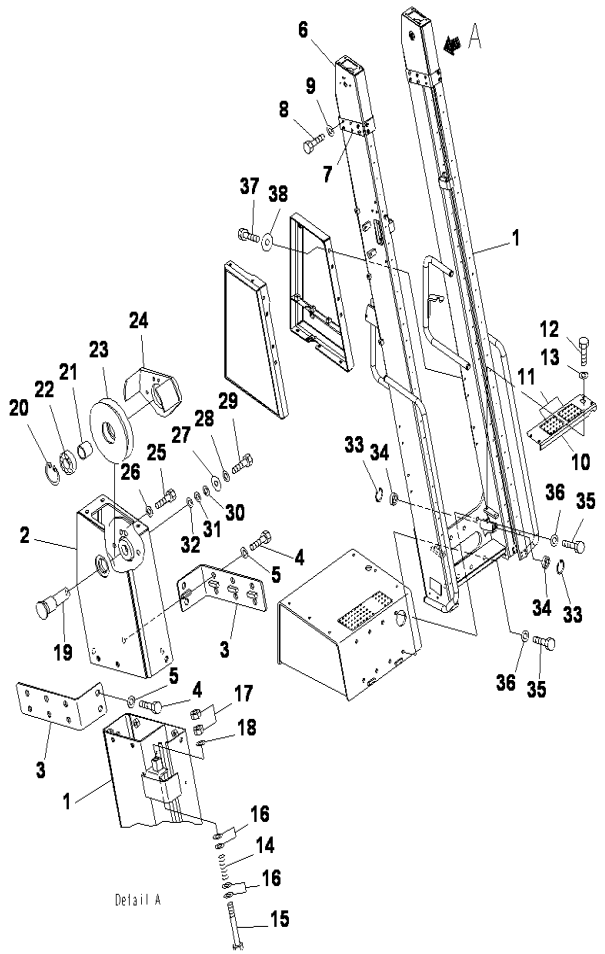

PC2000-8 S/N J10001-UP

LEFT SIDE COVER(LADDER)(LADDER FRAME)

INDEX	CD	PART NO.	DESCRIPTION	QTY	SERIAL NO.
1		21T-54-34515	FRAME	1	J10001-UP
2		21T-53-32151	FRAME	1	J10001-UP
3		21T-53-32170	BRACKET	2	J10001-UP
4		01010-81020	BOLT	12	J10001-UP
5		01643-31032	WASHER	12	J10001-UP
6		21T-53-32161	FRAME	1	J10001-UP
7		21T-53-32170	BRACKET	2	J10001-UP
8		01010-81020	BOLT	12	J10001-UP
9		01643-31032	WASHER	12	J10001-UP
10		21T-53-31860	BRACKET	1	J10001-UP
11		21T-53-31660	STEP	2	J10001-UP
12		01010-81225	BOLT	4	J10001-UP
13		01643-31232	WASHER	4	J10001-UP
14		125-43-33861	SPRING	2	J10001-UP
15		01011-81270	BOLT	2	J10001-UP
16		01643-31232	WASHER	8	J10001-UP
17		01580-01210	NUT	4	J10001-UP
18		01643-31232	WASHER	2	J10001-UP
19		21T-54-66130	PIN	2	J10001-UP
20		04065-05220	RING	2	J10001-UP
21		101-Z65-2650	COLLER	2	J10001-UP
22		06304-06205	BEARING	2	J10001-UP
23		21T-54-15750	SHEAVE	2	J10001-UP
24		21T-54-66141	STOPPER	2	J10001-UP
25		01010-80825	BOLT	8	J10001-UP
26		01643-30823	WASHER	8	J10001-UP
27		175-54-34170	WASHER	2	J10001-UP
28		01643-31232	WASHER	2	J10001-UP
29		01010-81225	BOLT	2	J10001-UP
30		21T-54-15790	SHIM, T=1.0MM	4	J10001-UP
31		21T-54-15810	SHIM, T=0.4MM	6	J10001-UP
32		21T-54-15820	SHIM, T=0.5MM	6	J10001-UP
33		04065-03212	RING	2	J10001-UP
34		07016-00206	SEAL	2	J10001-UP
35		01010-81660	BOLT	8	J10001-UP
36		21T-72-12620	WASHER	8	J10001-UP
37		01010-81225	BOLT	8	J10001-UP
38		175-54-34170	WASHER	8	J10001-UP

Ref :M1130-07A1 Page :270260

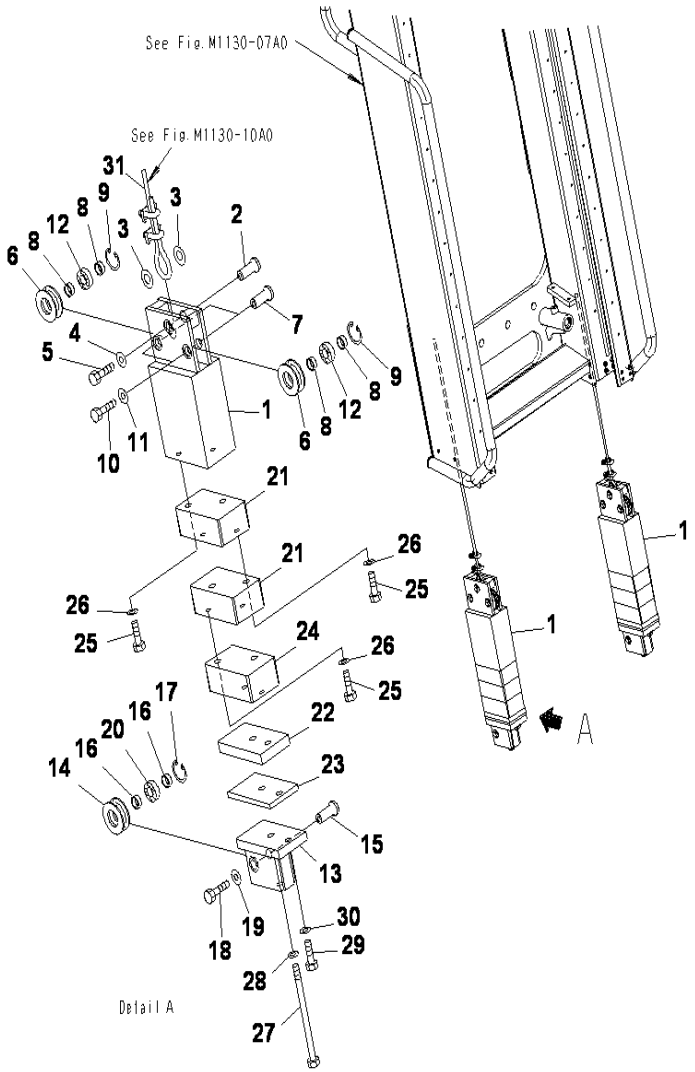

PC2000-8 S/N J10001-UP

LEFT SIDE COVER(LADDER)(LADDER WEIGHT)

INDEX	CD	PART NO.	DESCRIPTION	QTY	SERIAL NO.
1		21T-54-36450	BRACKET	2	J10001-UP
2		21T-54-15730	PIN	2	J10001-UP
3		01643-32060	WASHER	4	J10001-UP
4		154-61-16570	WASHER	2	J10001-UP
5		01010-80816	BOLT	2	J10001-UP
6		21T-54-15720	ROLLER	4	J10001-UP
7		21T-54-15730	PIN	4	J10001-UP
8		21T-54-15740	COLLAR	8	J10001-UP
9		04065-03515	RING SNAP	4	J10001-UP
10		01010-80816	BOLT	4	J10001-UP
11		154-61-16570	WASHER	4	J10001-UP
12		06304-06003	BEARING	4	J10001-UP
13		21T-54-66280	BRACKET	2	J10001-UP
14		21T-54-15720	ROLLER	2	J10001-UP
15		21T-54-15730	PIN	2	J10001-UP
16		21T-54-15740	COLLAR	2	J10001-UP
17		04065-03515	RING SNAP	2	J10001-UP
18		01010-80816	BOLT	2	J10001-UP
19		154-61-16570	WASHER	2	J10001-UP
20		06304-06003	BEARING	2	J10001-UP
21		21T-54-36430	PLATE	4	J10001-UP
22		21T-54-66260	PLATE	4	J10001-UP
23		21T-54-66270	PLATE	4	J10001-UP
24		21T-54-36440	PLATE	4	J10001-UP
25		01010-81255	BOLT	12	J10001-UP
26		01643-31232	WASHER	12	J10001-UP
27		01011-81210	BOLT	2	J10001-UP
		01011-81220	BOLT	2	J10001-UP
		01011-81230	BOLT	2	J10001-UP
		01011-81240	BOLT	2	J10001-UP
		01011-81250	BOLT	2	J10001-UP
		01011-81260	BOLT	2	J10001-UP
		01011-81270	BOLT	2	J10001-UP
28		01643-51232	WASHER	14	J10001-UP
29		01010-81235	BOLT	2	J10001-UP
30		01643-31232	WASHER	2	J10001-UP
		01010-81245	BOLT	2	J10001-UP
		01643-31232	WASHER	2	J10001-UP
		01010-81255	BOLT	2	J10001-UP
		01643-31232	WASHER	2	J10001-UP
		01010-81265	BOLT	2	J10001-UP
		01643-31232	WASHER	2	J10001-UP
		01010-81275	BOLT	2	J10001-UP
		01643-31232	WASHER	2	J10001-UP
		01010-81285	BOLT	2	J10001-UP

Ref :M1130-08A1 Page :270270

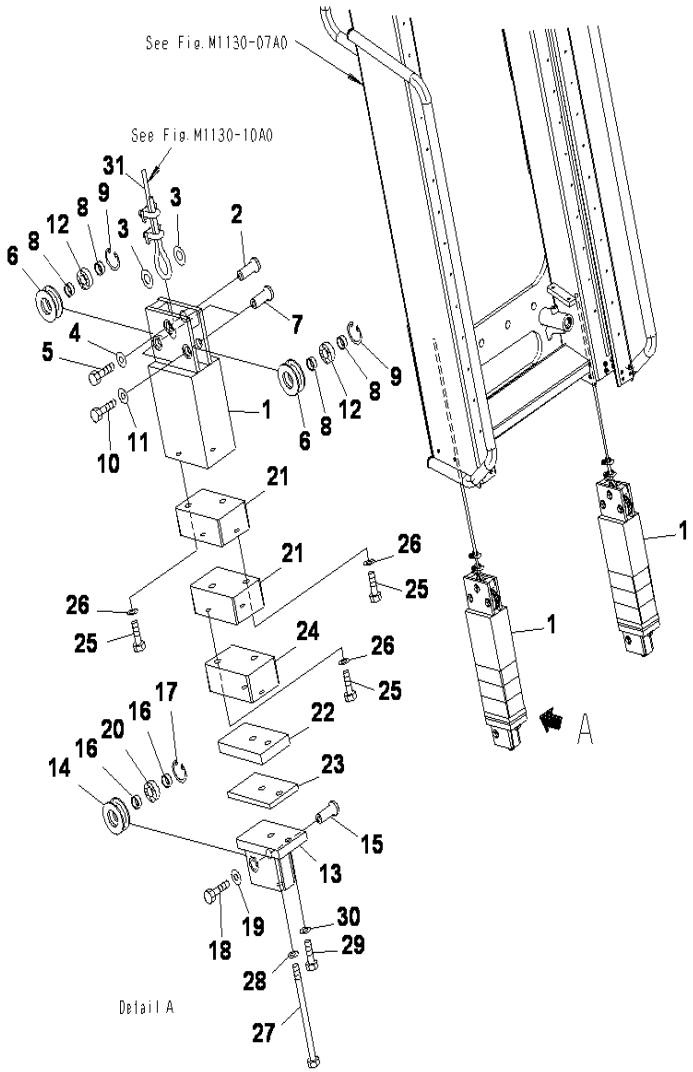

PC2000-8 S/N J10001-UP

LEFT SIDE COVER(LADDER)(LADDER WEIGHT)

INDEX	CD	PART NO.	DESCRIPTION	QTY	SERIAL NO.
		01643-31232	WASHER	2	J10001-UP
		01010-81295	BOLT	2	J10001-UP
		01643-31232	WASHER	2	J10001-UP
31		21T-54-34672	WIRE ROPE	2	J10001-UP

Ref :M1130-08A1 Page :270271

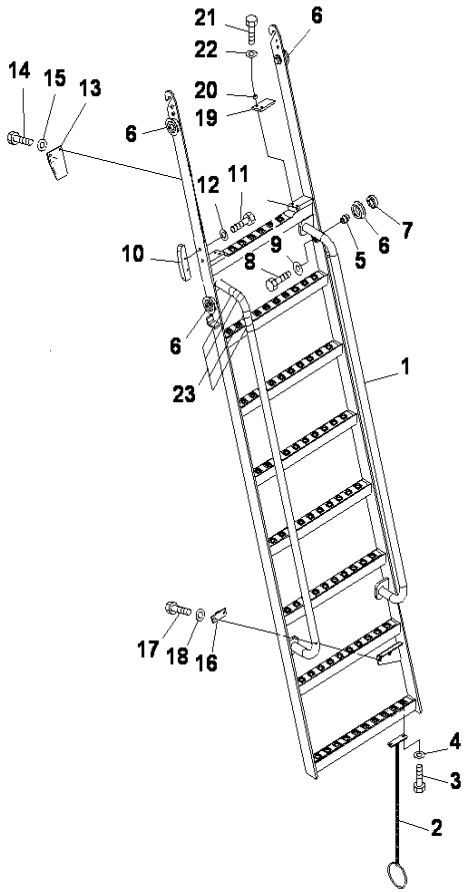

PC2000-8 S/N J10001-UP

LEFT SIDE COVER(POWER ASSIST LADDER)(LHS SLIDE LADDER)

INDEX	CD	PART NO.	DESCRIPTION	QTY	SERIAL NO.
1		21T-54-34523	LADDER	1	J10001-UP
2		21T-54-66161	CHAIN	1	J10001-UP
3		01010-81020	BOLT	2	J10001-UP
4		01643-31032	WASHER	2	J10001-UP
5		21T-54-15712	PIN	4	J10001-UP
6		21T-54-15691	ROLLER	4	J10001-UP
7		06304-06205	BEARING	4	J10001-UP
8		01010-81225	BOLT	4	J10001-UP
9		175-54-34170	WASHER	4	J10001-UP
10		21T-53-32380	PLATE	1	J10001-UP
11		01010-81230	BOLT	2	J10001-UP
12		175-54-34170	WASHER	2	J10001-UP
13		21T-54-34590	BRACKET	1	J10001-UP
14		01010-80820	BOLT	2	J10001-UP
15		01643-30823	WASHER	2	J10001-UP
16		21T-54-66351	BRACKET	1	J10001-UP
17		01010-80825	BOLT	2	J10001-UP
18		01643-30823	WASHER	2	J10001-UP
19		21T-53-32390	SHEET	2	J10001-UP
20		362-846-6940	SPACER	4	J10001-UP
21		01010-81230	BOLT	4	J10001-UP
22		01643-31232	WASHER	4	J10001-UP
23		21T-00-64180	PLATE	4	J10001-UP

Ref :M1130-09A2 Page :270280

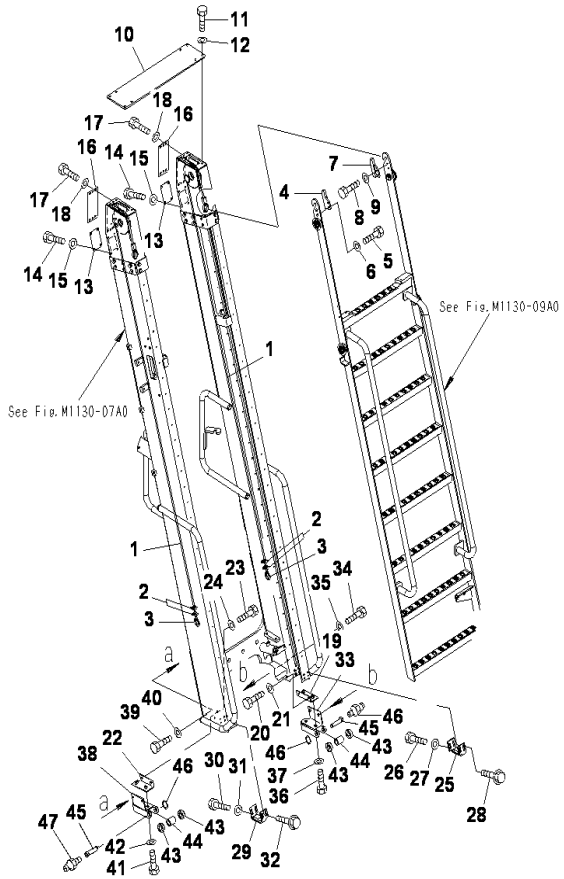

PC2000-8 S/N J10001-UP

LEFT SIDE COVER(POWER ASSIST LADDER)(LHS WIRING)

INDEX	CD	PART NO.	DESCRIPTION	QTY	SERIAL NO.
1		21T-54-34672	ROPE	2	J10001-UP
2		21T-54-15450	CLIP ASS'Y	4	J10001-UP
3		04500-10836	THIMBLE	2	J10001-UP
4		21T-54-34650	PLATE	1	J10001-UP
5		01010-80830	BOLT	2	J10001-UP
6		01643-30823	WASHER	2	J10001-UP
7		21T-54-34660	PLATE	1	J10001-UP
8		01010-80830	BOLT	2	J10001-UP
9		01643-30823	WASHER	2	J10001-UP
10		21T-54-34562	BRACKET	1	J10001-UP
11		01010-81235	BOLT	8	J10001-UP
12		01643-31232	WASHER	8	J10001-UP
13		21T-53-32250	PLATE	2	J10001-UP
14		01010-80820	BOLT	8	J10001-UP
15		01643-30823	WASHER	8	J10001-UP
16		21T-54-34210	PLATE	2	J10001-UP
17		01010-80820	BOLT	12	J10001-UP
18		01643-30823	WASHER	12	J10001-UP
19		21T-53-32180	BRACKET	1	J10001-UP
20		01010-80820	BOLT	2	J10001-UP
21		01643-30823	WASHER	2	J10001-UP
22		21T-53-32190	BRACKET	1	J10001-UP
23		01010-80820	BOLT	2	J10001-UP
24		01643-30823	WASHER	2	J10001-UP
25		21T-53-32210	BRACKET	1	J10001-UP
26		01010-80820	BOLT	4	J10001-UP
27		01643-30823	WASHER	4	J10001-UP
28		01435-00816	BOLT	4	J10001-UP
29		21T-53-32220	BRACKET	1	J10001-UP
30		01010-80820	BOLT	4	J10001-UP
31		01643-30823	WASHER	4	J10001-UP
32		01435-00816	BOLT	4	J10001-UP
33		21T-53-32230	BRACKET	1	J10001-UP
34		01010-80820	BOLT	2	J10001-UP
35		01643-30823	WASHER	2	J10001-UP
36		01010-81225	BOLT	2	J10001-UP
37		01643-31232	WASHER	2	J10001-UP
38		21T-53-32240	BRACKET	1	J10001-UP
39		01010-80820	BOLT	2	J10001-UP
40		01643-30823	WASHER	2	J10001-UP
41		01010-81225	BOLT	2	J10001-UP
42		01643-31232	WASHER	2	J10001-UP
43		06123-02018	BEARING	4	J10001-UP
44		22W-70-11740	ROLLER	2	J10001-UP
45		21T-53-32510	PIN	2	J10001-UP

Ref :M1130-10A1 Page :270290

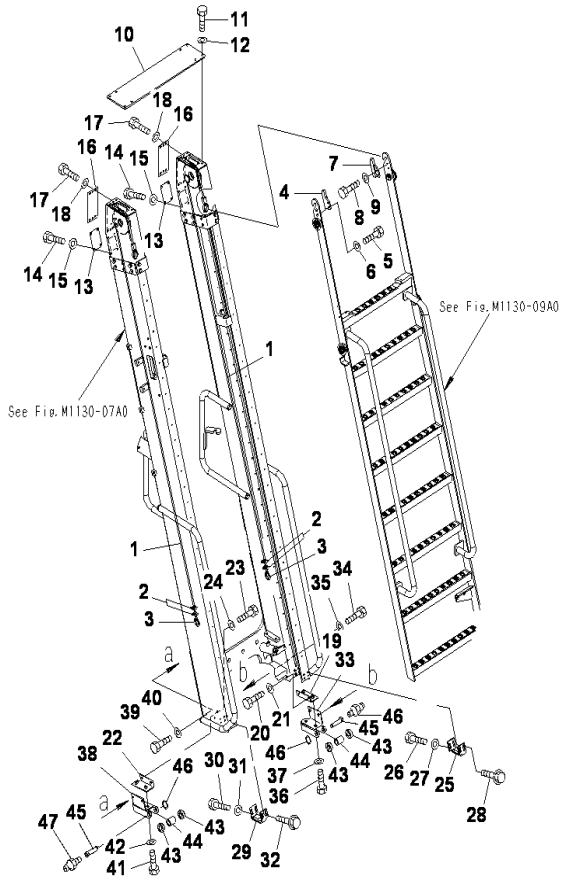

PC2000-8 S/N J10001-UP

LEFT SIDE COVER(POWER ASSIST LADDER)(LHS WIRING)

INDEX	CD	PART NO.	DESCRIPTION	QTY	SERIAL NO.
46		04064-02012	RING	2	J10001-UP
47		07020-00001	FITTING	2	J10001-UP

Ref :M1130-10A1 Page :270291

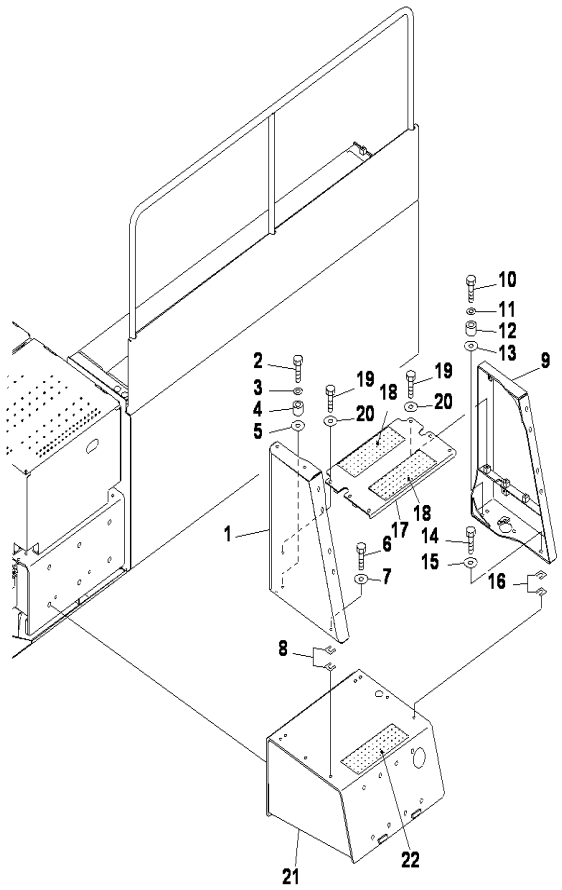

PC2000-8 S/N J10001-UP

LEFT SIDE COVER(LADDER)(SIDE STEP)

INDEX	CD	PART NO.	DESCRIPTION	QTY	SERIAL NO.
1		21T-54-34532	BRACKET	1	J10001-UP
2		01010-81260	BOLT	2	J10001-UP
3		01643-31232	WASHER	2	J10001-UP
4		144-94-73490	SPACER	2	J10001-UP
5		175-54-34170	WASHER	2	J10001-UP
6		01010-81240	BOLT	2	J10001-UP
7		175-54-34170	WASHER	2	J10001-UP
8		20Y-54-18190	PLATE	10	J10001-UP
9		21T5434542	BRACKET	1	J10001-UP
10		01010-81260	BOLT	2	J10001-UP
11		01643-31232	WASHER	2	J10001-UP
12		144-94-73490	SPACER	2	J10001-UP
13		175-54-34170	WASHER	2	J10001-UP
14		01010-81240	BOLT	2	J10001-UP
15		175-54-34170	WASHER	2	J10001-UP
16		20Y-54-18190	PLATE	10	J10001-UP
17		21T-54-34551	FRAME	1	J10001-UP
18		21T-53-31650	.STEP (WELDED)	2	J10001-UP
19		01010-81225	BOLT	6	J10001-UP
20		01643-31232	WASHER	6	J10001-UP
21		21T-54-34613	BRACKET	1	J10001-UP
22		21T-53-31650	.STEP (WELDED)	1	J10001-UP

Ref :M1130-11A1 Page :270300

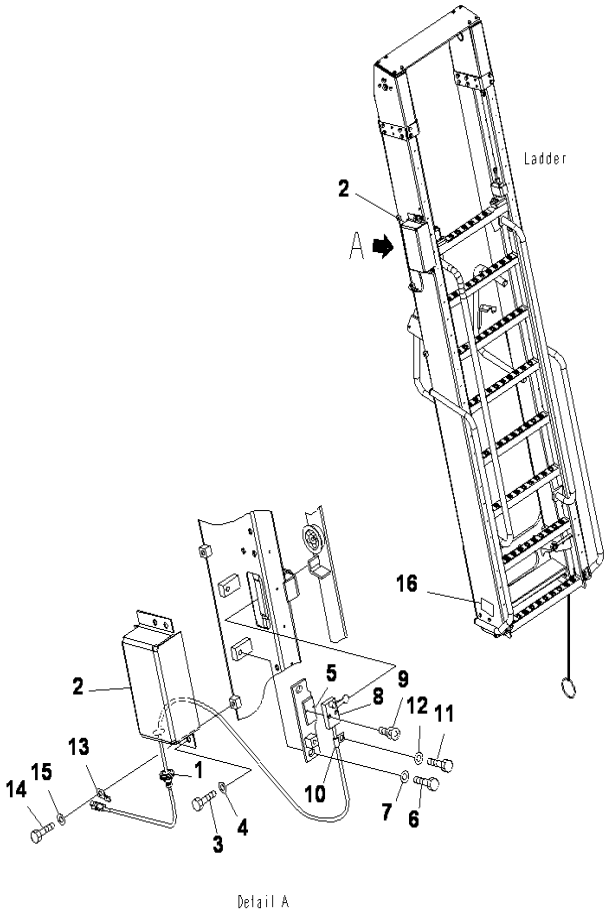

PC2000-8 S/N J10001-UP

LEFT SIDE COVER(LADDER)(LHS SWITCH)

INDEX	CD	PART NO.	DESCRIPTION	QTY	SERIAL NO.
1		21T-54-71980	GROMMET	1	J10001-UP
2		21T-54-64931	COVER	1	J10001-UP
3		01010-81220	BOLT	3	J10001-UP
4		01643-31232	WASHER	3	J10001-UP
5		21T-54-65950	BRACKET	1	J10001-UP
6		01010-81230	BOLT	2	J10001-UP
7		01643-31232	WASHER	2	J10001-UP
8		21T-06-33340	SWITCH ASS'Y	1	J10001-UP
9		01023-10520	SCREW	2	J10001-UP
10		04434-50812	CLIP	1	J10001-UP
11		01010-81220	BOLT	1	J10001-UP
12		01643-31232	WASHER	1	J10001-UP
13		08193-21012	CLIP	1	J10001-UP
14		01010-81220	BOLT	1	J10001-UP
15		01643-31232	WASHER	1	J10001-UP
16		14X-98-35181	PLATE	1	J10001-UP

Ref :M1130-12A1 Page :270310

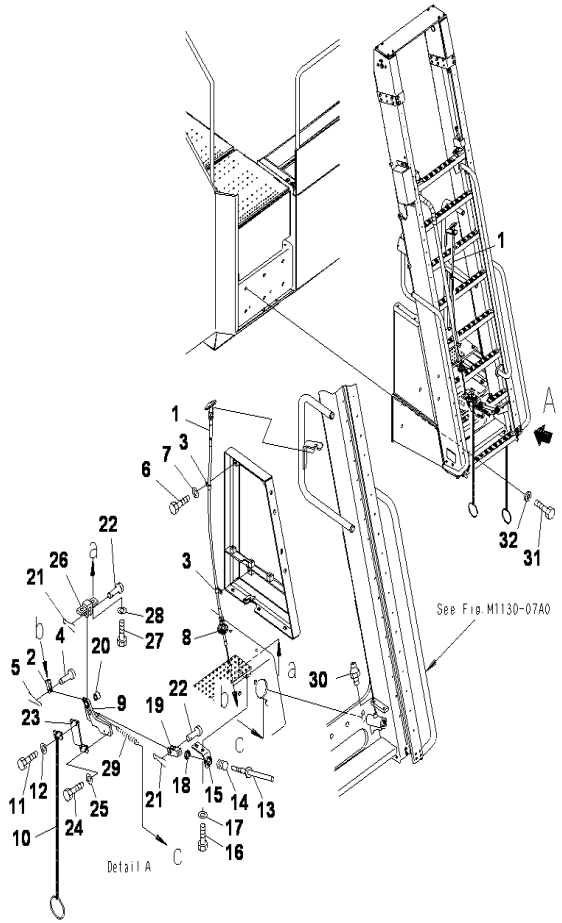

PC2000-8 S/N J10001-UP

LEFT SIDE COVER(LADDER)(LHS CABLE AND STOPPER)

INDEX	CD	PART NO.	DESCRIPTION	QTY	SERIAL NO.
1		21T-54-34640	CABLE	1	J10001-UP
2		04211-20634	YOKE	1	J10001-UP
3		04434-51212	CLIP	2	J10001-UP
4		04205-10620	PIN	1	J10001-UP
5		04050-11612	COTTER PIN	1	J10001-UP
6		01010-81220	BOLT	2	J10001-UP
7		01643-31232	WASHER	2	J10001-UP
8		08037-03620	GROMMET	1	J10001-UP
9		21T-54-34570	BRACKET	1	J10001-UP
10		21T-54-34620	CHAIN	1	J10001-UP
11		01010-81025	BOLT	2	J10001-UP
12		01643-31032	WASHER	2	J10001-UP
13		21T-54-66331	BRACKET	1	J10001-UP
14		170-33-13370	SPRING	1	J10001-UP
15		21T-54-34580	BRACKET	1	J10001-UP
16		01010-81225	BOLT	2	J10001-UP
17		01643-31232	WASHER	2	J10001-UP
18		195-49-13840	NUT	1	J10001-UP
19		04210-21664	YOKE	1	J10001-UP
20		06124-01616	BEARING	1	J10001-UP
21		04050-14028	PIN	2	J10001-UP
22		04205-11648	PIN	2	J10001-UP
23		21T-54-66450	BRACKET	1	J10001-UP
24		01010-81025	BOLT	2	J10001-UP
25		01643-31032	WASHER	2	J10001-UP
26		21T-54-66440	BRACKET	1	J10001-UP
27		01010-81230	BOLT	2	J10001-UP
28		01643-31232	WASHER	2	J10001-UP
29		113-89-06170	SPRING	1	J10001-UP
30		07020-00000	FITTING	1	J10001-UP
31		01010-82070	BOLT	6	J10001-UP
32		567-40-41380	WASHER	6	J10001-UP

Ref :M1130-13A0 Page :270320

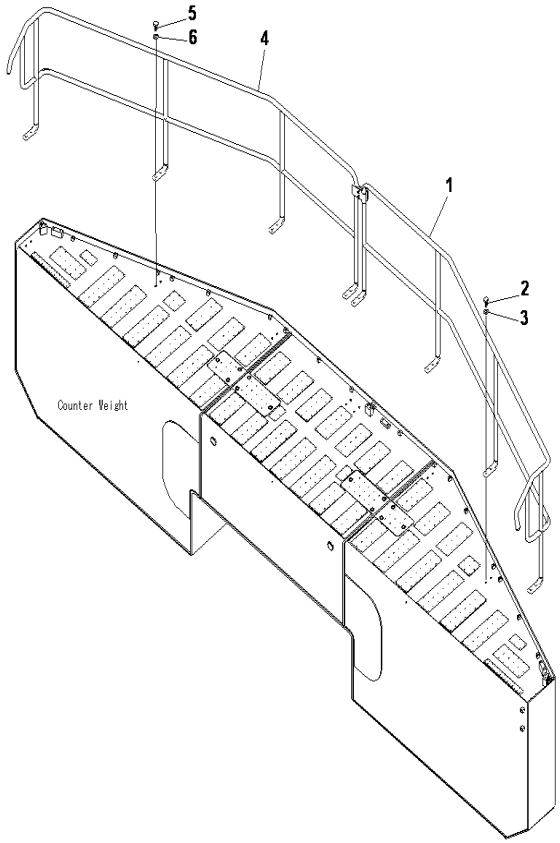

PC2000-8 S/N J10001-UP

RIGHT SIDE COVER(RHS COUNTERWEIGHT)

INDEX	CD	PART NO.	DESCRIPTION	QTY	SERIAL NO.
1		21T-54-34411	HAND RAIL (L.H).....	1	J10001-UP
2		01010-81250	BOLT.....	8	J10001-UP
3		175-54-34170	WASHER.....	8	J10001-UP
4		21T-54-34421	HAND RAIL (R.H).....	1	J10001-UP
5		01010-81250	BOLT.....	8	J10001-UP
6		175-54-34170	WASHER.....	8	J10001-UP

Ref :M1140-01A0 Page :270330

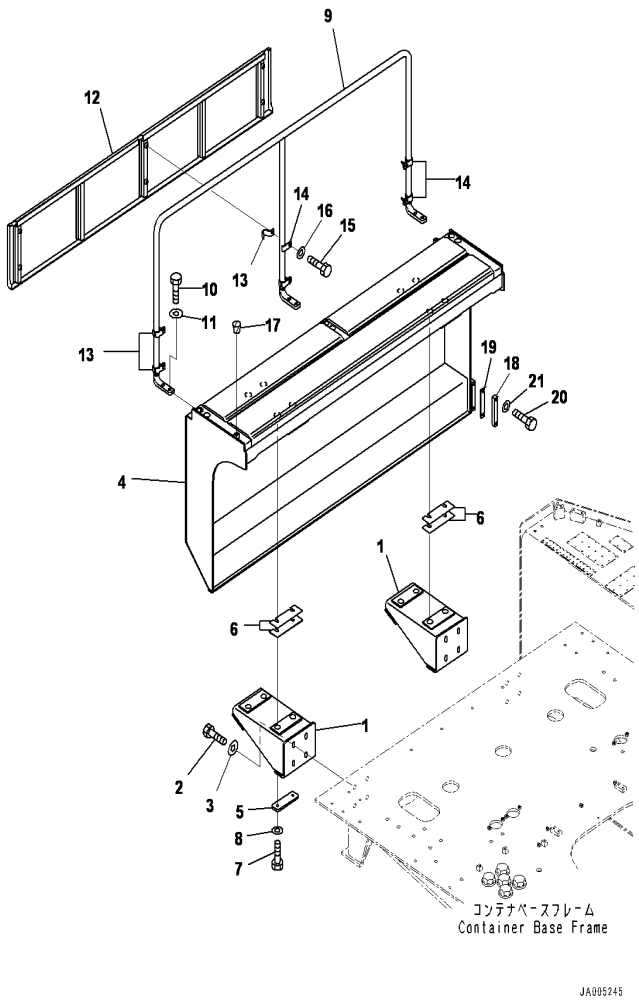

RIGHT SIDE COVER(RHS CONTAINER SIDE)

INDEX	CD	PART NO.	DESCRIPTION	QTY	SERIAL NO.
1		21T-54-33141	BRACKET	2	J10001-UP
2		01010-81240	BOLT	8	J10001-UP
3		175-54-34170	WASHER	8	J10001-UP
4		21T-53-31632	FRAME	1	J10001-UP
5		21T-53-31570	PLATE	4	J10001-UP
6		21T-53-32290	SHIM	6	J10001-UP
7		01010-81260	BOLT	8	J10001-UP
8		01643-31232	WASHER	8	J10001-UP
9		21T-54-33131	HANDRAIL	1	J10001-UP
10		01010-81250	BOLT	6	J10001-UP
11		175-54-34170	WASHER	6	J10001-UP
12		21T-54-33121	COVER	1	J10001-UP
13		21T-54-33340	CLAMP	6	J10001-UP
14		21T-54-33170	CLAMP	6	J10001-UP
15		01010-81240	BOLT	6	J10001-UP
16		01643-31232	WASHER	6	J10001-UP
17		07049-01215	PLUG	1	J10001-UP
18		21T-53-33640	BRACKET	1	J10001-UP
19		21T-53-33650	SHIM	2	J10001-UP
20		01010-81255	BOLT	2	J10001-UP
21		01643-31232	WASHER	2	J10001-UP

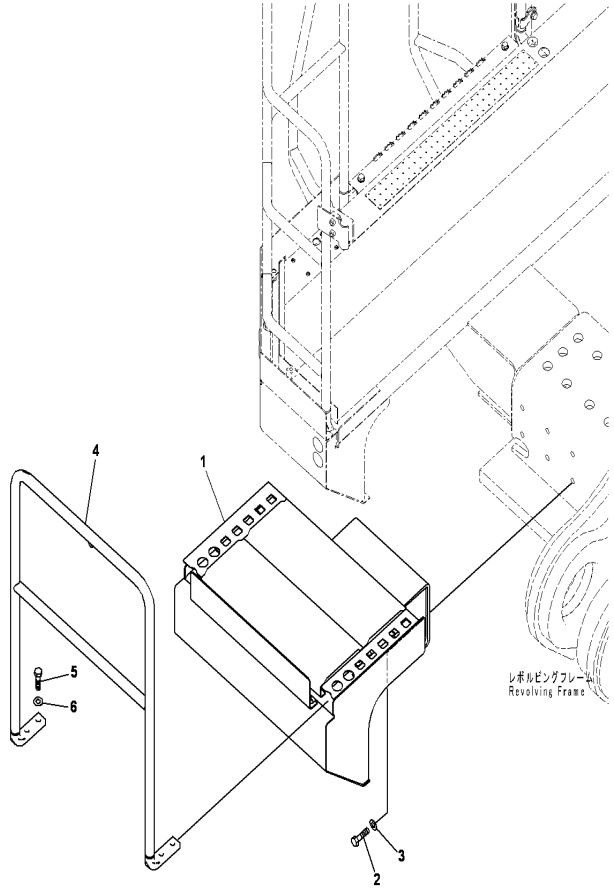

PC2000-8 S/N J10001-UP

RIGHT SIDE COVER(RHS FUEL TANK RELATED PARTS)

INDEX	CD	PART NO.	DESCRIPTION	QTY	SERIAL NO.
1		21T-54-33182	FRAME.....	1	J10001-UP
2		01010-81250	BOLT.....	6	J10001-UP
3		175-54-34170	WASHER.....	6	J10001-UP
4		21T-54-33191	HAND RAIL.....	1	J10001-UP
5		01010-81250	BOLT.....	4	J10001-UP
6		175-54-34170	WASHER.....	4	J10001-UP

Ref :M1140-03A0 Page :270350

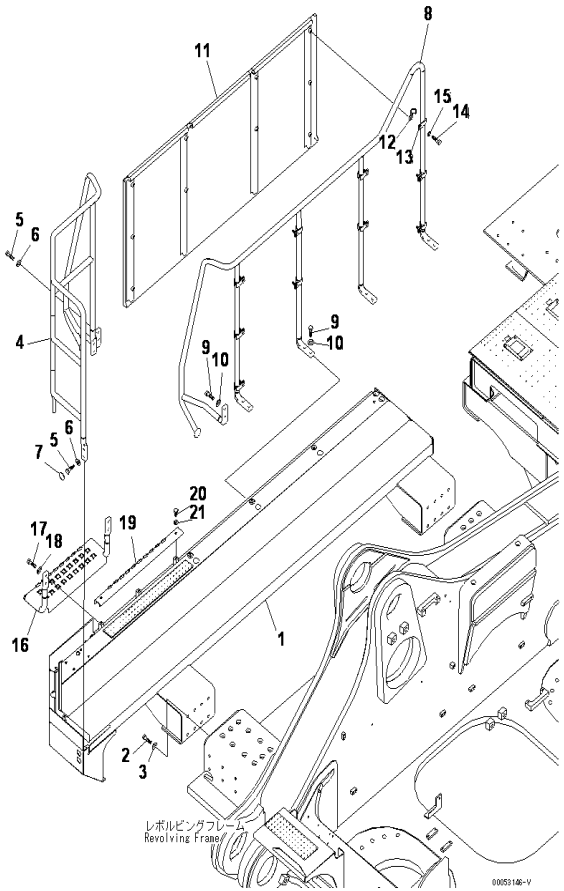

RIGHT SIDE COVER(RHS FUEL TANK SIDE)

INDEX	CD	PART NO.	DESCRIPTION	QTY	SERIAL NO.
1		21T-54-33213	FRAME	1	J10001-UP
2		01010-81240	BOLT	16	J10001-UP
3		175-54-34170	WASHER	16	J10001-UP
4		21T-54-33231	HAND RAIL	1	J10001-UP
5		01010-81250	BOLT	8	J10001-UP
6		175-54-34170	WASHER	8	J10001-UP
7		21N-53-31870	CAP	6	J10001-UP
8		21T-54-33251	HAND RAIL	1	J10001-UP
9		01010-81250	BOLT	10	J10001-UP
10		175-54-34170	WASHER	10	J10001-UP
11		21T-54-33241	COVER	1	J10001-UP
12		21T-54-33340	CLAMP	10	J10001-UP
13		21T-54-33170	CLAMP	10	J10001-UP
14		01010-81240	BOLT	10	J10001-UP
15		01643-31232	WASHER	10	J10001-UP
16		21T-54-33261	STEP	1	J10001-UP
17		01010-81250	BOLT	4	J10001-UP
18		175-54-34170	WASHER	4	J10001-UP
19		21T-53-31471	STEP	1	J10001-UP
20		01010-81230	BOLT	2	J10001-UP
21		175-54-34170	WASHER	2	J10001-UP

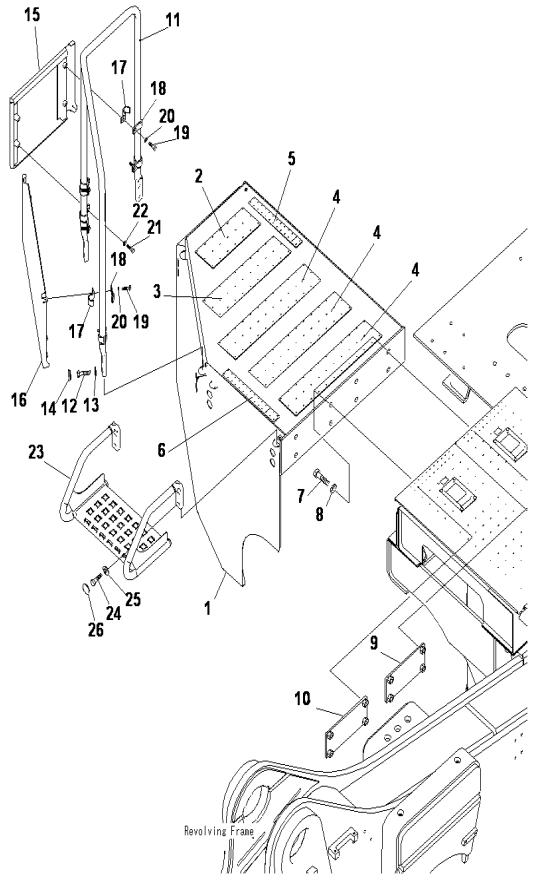

RIGHT SIDE COVER(RHS FUEL TANK SIDE)

INDEX	CD	PART NO.	DESCRIPTION	QTY	SERIAL NO.
1		21T-54-33282	FRAME	1	J10001-UP
2		20Y-04-41432	.PLATE (WELDED)	1	J10001-UP
3		21T-54-37110	.STEP (WELDED)	1	J10001-UP
4		21T-54-37120	.STEP (WELDED)	3	J10001-UP
5		21T-54-37130	.STEP (WELDED)	1	J10001-UP
6		21T-54-37140	.STEP (WELDED)	1	J10001-UP
7		01010-82060	BOLT	8	J10001-UP
8		01643-32060	WASHER	8	J10001-UP
9		21T-53-31550	PLATE	1	J10001-UP
10		21T-53-31560	PLATE	1	J10001-UP
11		21T-54-33321	HAND RAIL	1	J10001-UP
12		01010-81250	BOLT	6	J10001-UP
13		175-54-34170	WASHER	6	J10001-UP
14		21N-53-31870	CAP	6	J10001-UP
15		21T-54-33311	COVER	1	J10001-UP
16		21T-53-31880	COVER	1	J10001-UP
17		21T-54-33340	CLAMP	8	J10001-UP
18		21T-54-33170	CLAMP	8	J10001-UP
19		01010-81240	BOLT	6	J10001-UP
20		01643-31232	WASHER	6	J10001-UP
21		01010-81260	BOLT	2	J10001-UP
22		01643-31232	WASHER	2	J10001-UP
23		21T-54-33331	STEP	1	J10001-UP
24		01010-81250	BOLT	4	J10001-UP
25		175-54-34170	WASHER	4	J10001-UP
26		21N-53-31870	CAP	4	J10001-UP

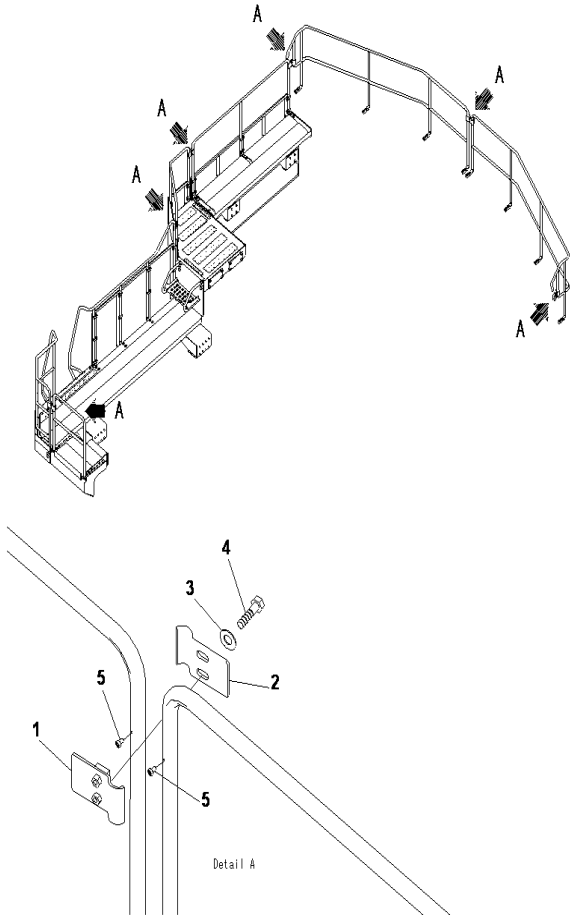

PC2000-8 S/N J10001-UP

RIGHT SIDE COVER(RHS CLAMP)

INDEX	CD	PART NO.	DESCRIPTION	QTY	SERIAL NO.
1		21T-54-32911	CLAMP	6	J10001-UP
2		21T-54-32921	CLAMP	6	J10001-UP
3		01010-D1250	BOLT	12	J10001-UP
4		175-54-34170	WASHER	12	J10001-UP
5		01370-00508	SCREW	6	J10001-UP

Ref :M1140-06A0 Page :270380

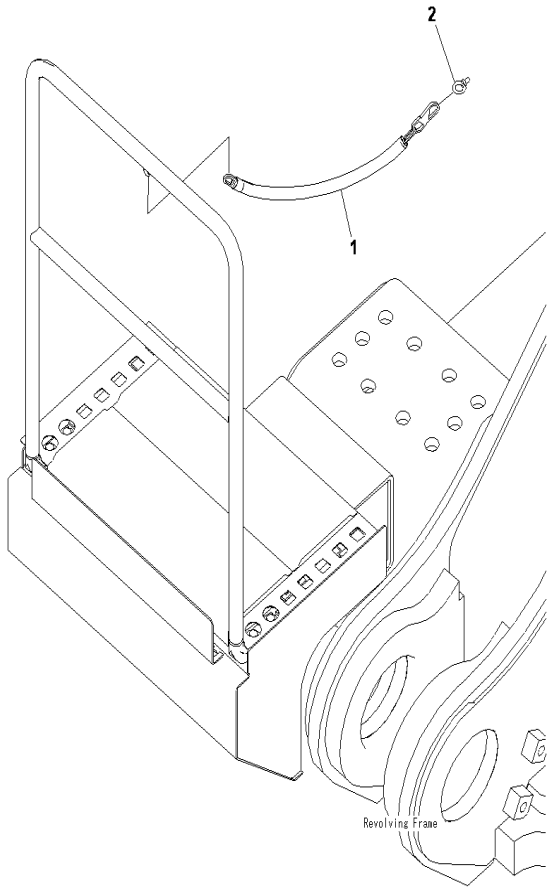

PC2000-8 S/N J10001-UP

RIGHT SIDE COVER(RHS CHAIN)

INDEX	CD	PART NO.	DESCRIPTION	QTY	SERIAL NO.
1		21T-54-37220	CHAIN.....	1	J10001-UP
2		04530-10815	BOLT.....	1	J10001-UP

Ref :M1140-07A0 Page :270390

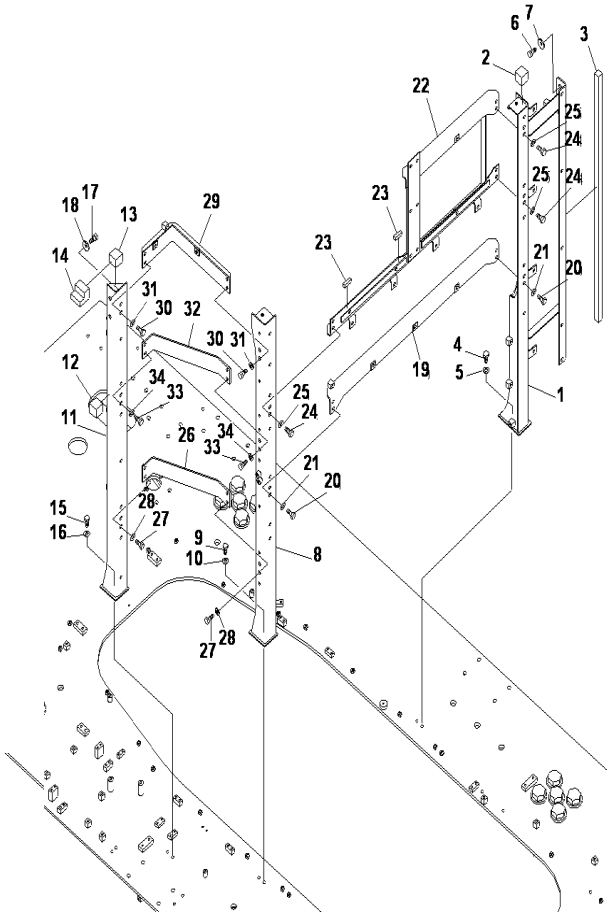

PARTITION COVER(FRAME)

INDEX	CD	PART NO.	DESCRIPTION	QTY	SERIAL NO.
1		21T-54-39411	FRAME	1	J10001-UP
2		21T-54-34280	.SHEET	1	J10001-UP
3		21T-54-39621	.SHEET	1	J10001-UP
4		01010-81240	BOLT	2	J10001-UP
5		01643-31232	WASHER	2	J10001-UP
6		01010-81230	BOLT	2	J10001-UP
7		175-54-34170	WASHER	2	J10001-UP
8		21T-54-39420	FRAME	1	J10001-UP
9		01010-81240	BOLT	2	J10001-UP
10		01643-31232	WASHER	2	J10001-UP
11		21T-54-39431	FRAME	1	J10001-UP
12		21T-54-34280	.SHEET	1	J10001-UP
13		21T-54-34290	.SHEET	1	J10001-UP
14		21T-54-34790	.SHEET	1	J10001-UP
15		01010-81240	BOLT	2	J10001-UP
16		01643-31232	WASHER	2	J10001-UP
17		01010-81230	BOLT	2	J10001-UP
18		175-54-34170	WASHER	2	J10001-UP
19		21T-54-39441	FRAME	1	J10001-UP
20		01010-81235	BOLT	4	J10001-UP
21		01643-31232	WASHER	4	J10001-UP
22		21T-54-39451	FRAME	1	J10001-UP
23		21T-54-52250	.SHEET	2	J10001-UP
24		01010-81225	BOLT	6	J10001-UP
25		01643-31232	WASHER	6	J10001-UP
26		21T-54-39461	BRACKET	1	J10001-UP
27		01010-81225	BOLT	4	J10001-UP
28		01643-31232	WASHER	4	J10001-UP
29		21T-54-39470	BRACKET	1	J10001-UP
30		01010-81225	BOLT	4	J10001-UP
31		01643-31232	WASHER	4	J10001-UP
32		21T-54-39480	BRACKET	1	J10001-UP
33		01010-81225	BOLT	4	J10001-UP
34		01643-31232	WASHER	4	J10001-UP

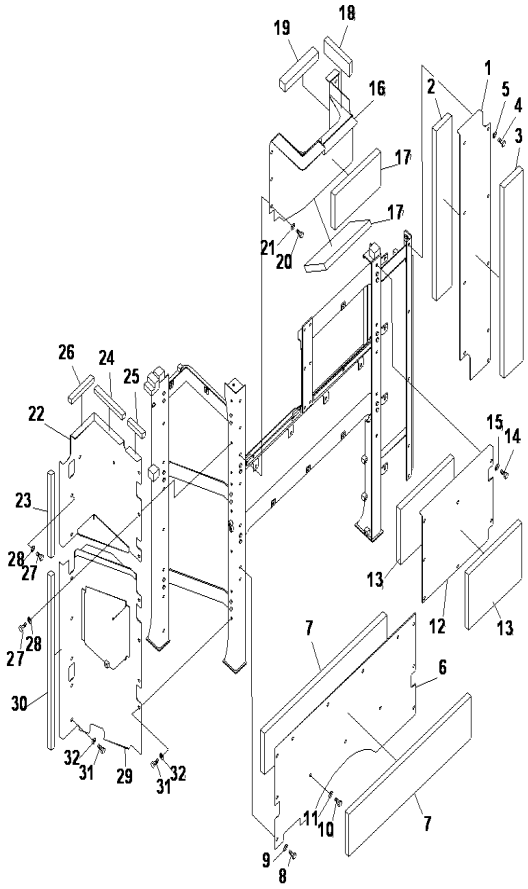

PC2000-8 S/N J10001-UP

PARTITION COVER(COVER)

INDEX	CD	PART NO.	DESCRIPTION	QTY	SERIAL NO.
1		21T-54-39490	COVER	1	J10001-UP
2		21T-54-39560	.SHEET	1	J10001-UP
3		21T-54-39570	.SHEET	1	J10001-UP
4		01010-81225	BOLT	9	J10001-UP
5		01643-31232	WASHER	9	J10001-UP
6		21T-54-39510	COVER	1	J10001-UP
7		21T-54-39580	.SHEET	2	J10001-UP
8		01010-81225	BOLT	10	J10001-UP
9		01643-31232	WASHER	10	J10001-UP
10		01010-81235	BOLT	3	J10001-UP
11		01643-31232	WASHER	3	J10001-UP
12		21T-54-39520	COVER	1	J10001-UP
13		21T5439590	.SHEET	2	J10001-UP
14		01010-81225	BOLT	7	J10001-UP
15		01643-31232	WASHER	7	J10001-UP
16		21T-54-39531	COVER	1	J10001-UP
17		21T-54-39610	.SHEET	2	J10001-UP
18		21T-54-39631	.SHEET	1	J10001-UP
19		21T-54-39641	.SHEET	1	J10001-UP
20		01010-81225	BOLT	8	J10001-UP
21		01643-31232	WASHER	8	J10001-UP
22		21T-54-39541	COVER	1	J10001-UP
23		21T-54-39650	.SHEET	1	J10001-UP
24		21T-54-39660	.SHEET	1	J10001-UP
25		21T-54-39670	.SHEET	1	J10001-UP
26		21T-54-39680	.SHEET	1	J10001-UP
27		01010-81225	BOLT	7	J10001-UP
28		01643-31232	WASHER	7	J10001-UP
29		21T-54-39551	COVER	1	J10001-UP
30		21T-54-39690	.SHEET	1	J10001-UP
31		01010-81225	BOLT	9	J10001-UP
32		01643-31232	WASHER	9	J10001-UP

Ref :M1150-02A0 Page :270410

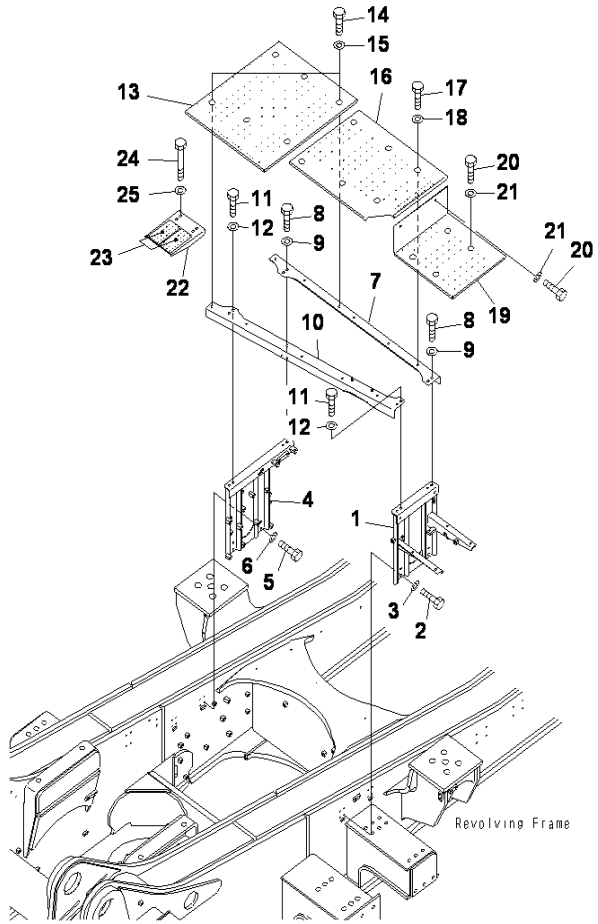

COVER(BRACKET)

INDEX	CD	PART NO.	DESCRIPTION	QTY	SERIAL NO.
1		21T-54-33742	BRACKET	1	J10001-UP
2		01010-81230	BOLT	8	J10001-UP
3		01643-31232	WASHER	8	J10001-UP
4		21T-54-33812	BRACKET	1	J10001-UP
5		01010-81230	BOLT	8	J10001-UP
6		01643-31232	WASHER	8	J10001-UP
7		21T5433761	FRAME	1	J10001-UP
8		01010-81230	BOLT	4	J10001-UP
9		175-54-34170	WASHER	4	J10001-UP
10		21T-54-33771	FRAME	1	J10001-UP
11		01010-81230	BOLT	4	J10001-UP
12		175-54-34170	WASHER	4	J10001-UP
13		21T-54-33731	COVER	1	J10001-UP
14		01010-81230	BOLT	6	J10001-UP
15		175-54-34170	WASHER	6	J10001-UP
16		21T-54-33781	COVER	1	J10001-UP
17		01010-81230	BOLT	6	J10001-UP
18		175-54-34170	WASHER	6	J10001-UP
19		21T-54-33791	COVER	1	J10001-UP
20		01010-81230	BOLT	6	J10001-UP
21		175-54-34170	WASHER	6	J10001-UP
22		21T-53-31590	STEP	1	J10001-UP
23		21T-53-31620	.STEP	2	J10001-UP
24		01010-81285	BOLT	4	J10001-UP
25		175-54-34170	WASHER	4	J10001-UP

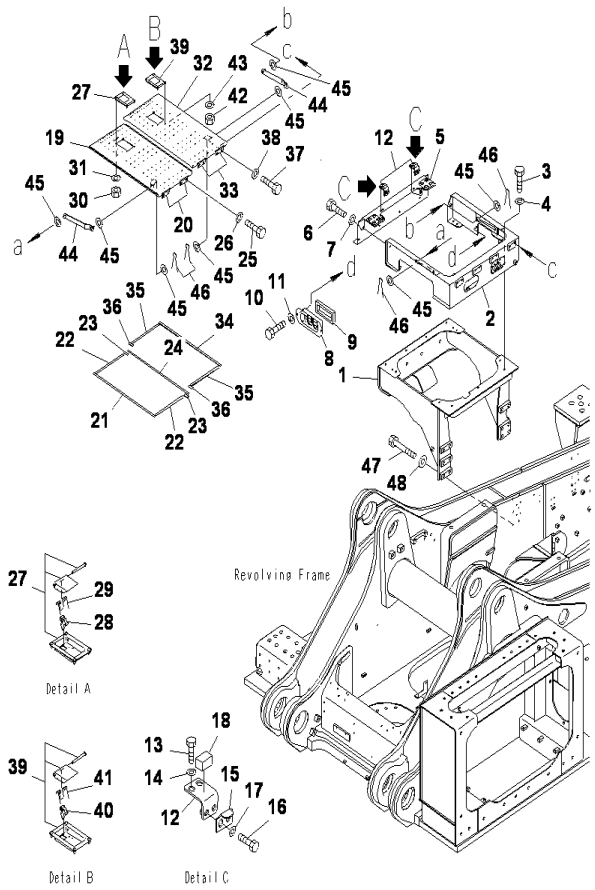

PC2000-8 S/N J10001-UP

COVER(DRUM)

INDEX	CD	PART NO.	DESCRIPTION	QTY	SERIAL NO.
1		21T-54-33712	BRACKET	1	J10001-UP
2		21T-54-33722	FRAME	1	J10001-UP
3		01010-81230	BOLT	9	J10001-UP
4		01643-31232	WASHER	9	J10001-UP
5		21T-54-33841	COVER	1	J10001-UP
6		01010-81235	BOLT	6	J10001-UP
7		01643-31232	WASHER	6	J10001-UP
8		21T-54-33891	DUCT	1	J10001-UP
9		21T-54-34710	.SHEET	1	J10001-UP
10		01010-81225	BOLT	2	J10001-UP
11		01643-31232	WASHER	2	J10001-UP
12		21T-54-33881	BRACKET	2	J10001-UP
13		01010-81225	BOLT	4	J10001-UP
14		01643-31232	WASHER	4	J10001-UP
15		20Y-54-29651	BRACKET	2	J10001-UP
16		01010-81225	BOLT	4	J10001-UP
17		01643-31232	WASHER	4	J10001-UP
18		21T-54-65830	SHEET	2	J10001-UP
19		21T-54-33751	COVER	1	J10001-UP
20		207-54-16520	.HINGE, (WELDED)	2	J10001-UP
21		21T-54-33850	.SHEET	1	J10001-UP
22		21T-54-33860	.SHEET	2	J10001-UP
23		21T-54-33870	.SHEET	2	J10001-UP
24		21T-54-36850	.SHEET	1	J10001-UP
25		01010-81225	BOLT	4	J10001-UP
26		01643-31232	WASHER	4	J10001-UP
27		21T-54-37150	LOCK	1	J10001-UP
28		198-54-42480	HOOK	1	J10001-UP
29		198-54-42491	SPRING	1	J10001-UP
30		01580-10806	NUT	4	J10001-UP
31		01643-30823	WASHER	4	J10001-UP
32		21T-54-33831	COVER	1	J10001-UP
33		207-54-16520	.HINGE, (WELDED)	2	J10001-UP
34		21T-54-33850	.SHEET	1	J10001-UP
35		21T-54-33860	.SHEET	2	J10001-UP
36		21T-54-33870	.SHEET	2	J10001-UP
37		01010-81225	BOLT	4	J10001-UP
38		01643-31232	WASHER	4	J10001-UP
39		21T-54-37150	LOCK	1	J10001-UP
40		198-54-42480	.HOOK	1	J10001-UP
41		198-54-42491	.SPRING	1	J10001-UP
42		01580-10806	NUT	4	J10001-UP
43		01643-30823	WASHER	4	J10001-UP
44		21T-54-33820	STAY	2	J10001-UP
45		01643-31645	WASHER	8	J10001-UP

Ref :M1210-02A0 Page :270430

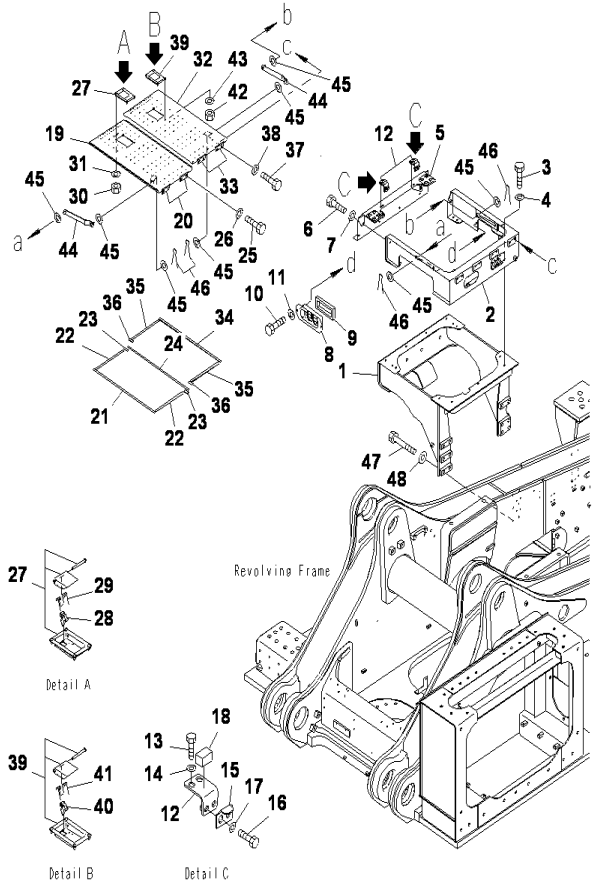

PC2000-8 S/N J10001-UP

COVER(DRUM)

INDEX	CD	PART NO.	DESCRIPTION	QTY	SERIAL NO.
46		04050-14028	PIN	4	J10001-UP
47		01010-82080	BOLT	12	J10001-UP
48		01643-32060	WASHER	12	J10001-UP

Ref :M1210-02A0 Page :270431

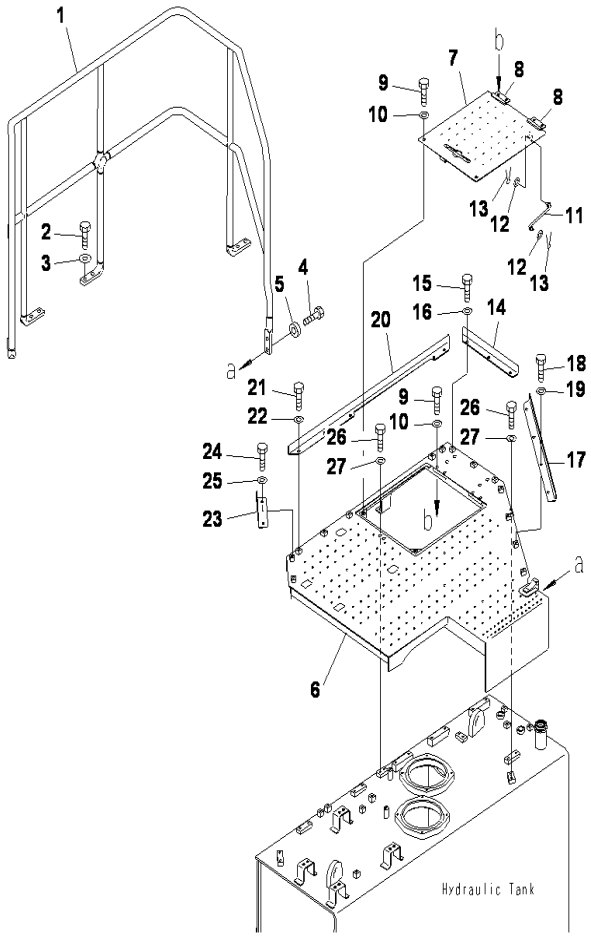

PC2000-8 S/N J10001-UP

COVER(HYDRAULIC TANK COVER)

INDEX	CD	PART NO.	DESCRIPTION	QTY	SERIAL NO.
1		21T-54-33931	HANDRAIL	1	J10001-UP
2		01010-81240	BOLT	8	J10001-UP
3		175-54-34170	WASHER	8	J10001-UP
4		20-395-72640	BOLT	2	J10001-UP
5		21T-03-11280	WASHER	2	J10001-UP
6		21T-54-33912	FRAME	1	J10001-UP
7		21T-54-33921	DOOR	1	J10001-UP
8		207-54-16520	.HINGE	2	J10001-UP
9		01010-81225	BOLT	6	J10001-UP
10		01643-31232	WASHER	6	J10001-UP
11		203-54-56630	ROD	1	J10001-UP
12		01643-30623	WASHER	2	J10001-UP
13		04050-11612	COTTER PIN	2	J10001-UP
14		21T-54-32761	PLATE	1	J10001-UP
15		01010-81225	BOLT	3	J10001-UP
16		01643-31232	WASHER	3	J10001-UP
17		21T-54-32771	PLATE	1	J10001-UP
18		01010-81225	BOLT	4	J10001-UP
19		01643-31232	WASHER	4	J10001-UP
20		21T-54-32781	PLATE	1	J10001-UP
21		01010-81225	BOLT	5	J10001-UP
22		01643-31232	WASHER	5	J10001-UP
23		21T-54-32791	PLATE	1	J10001-UP
24		01010-81225	BOLT	2	J10001-UP
25		01643-31232	WASHER	2	J10001-UP
26		01010-81225	BOLT	14	J10001-UP
27		01643-31232	WASHER	14	J10001-UP

Ref :M1210-03A0 Page :270440

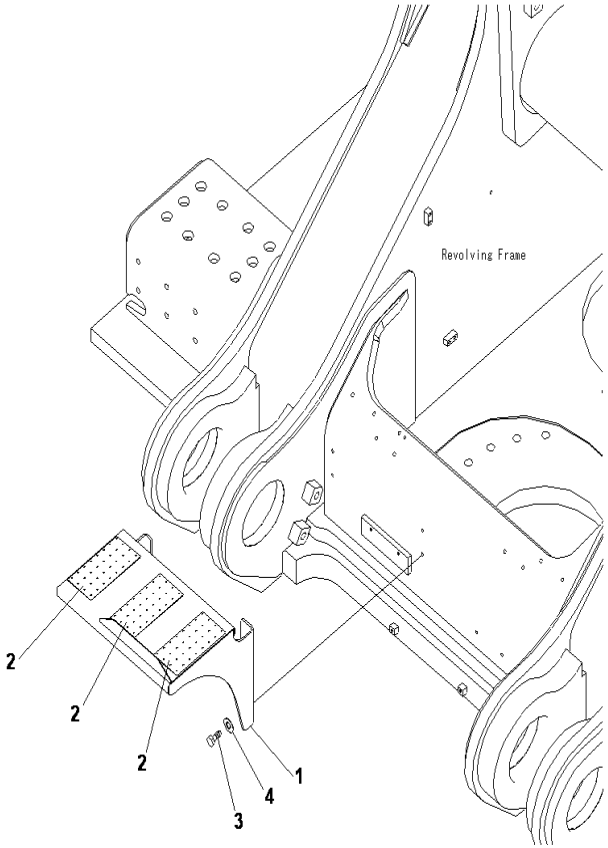

PC2000-8 S/N J10001-UP

COVER(STEP)

INDEX	CD	PART NO.	DESCRIPTION	QTY	SERIAL NO.
1		21T-54-39712	STEP.....	1	J10001-UP
2		21T-53-31620	.STEP (WELDED).....	3	J10001-UP
3		01010-81225	BOLT.....	4	J10001-UP
4		175-54-34170	WASHER.....	4	J10001-UP

Ref :M1210-04A0 Page :270450

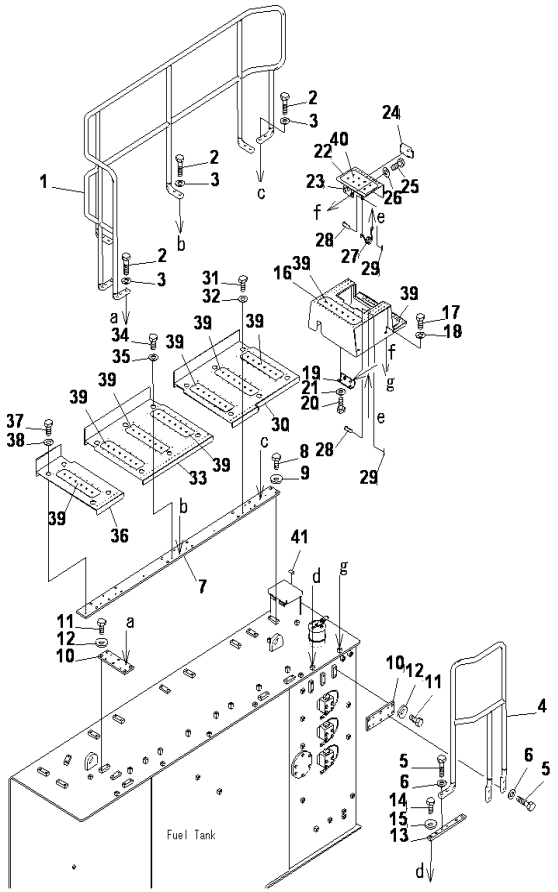

PC2000-8 S/N J10001-UP

COVER(HANDRAIL AND FUEL TANK COVER)

INDEX	CD	PART NO.	DESCRIPTION	QTY	SERIAL NO.
1		21T-53-32461	HANDRAIL	1	J10001-UP
2		01010-81250	BOLT	12	J10001-UP
3		175-54-34170	WASHER	12	J10001-UP
4		21T-53-32471	HANDRAIL	1	J10001-UP
5		01010-81250	BOLT	6	J10001-UP
6		175-54-34170	WASHER	6	J10001-UP
7		21T-53-32710	PLATE	1	J10001-UP
8		01010-81240	BOLT	14	J10001-UP
9		22U-54-25170	WASHER	14	J10001-UP
10		21T-53-32720	PLATE	2	J10001-UP
11		01010-81240	BOLT	12	J10001-UP
12		22U-54-25170	WASHER	12	J10001-UP
13		21T-53-32730	PLATE	1	J10001-UP
14		01010-81240	BOLT	4	J10001-UP
15		22U-54-25170	WASHER	4	J10001-UP
16		21T-53-32611	COVER	1	J10001-UP
17		01010-81230	BOLT	4	J10001-UP
18		01643-31232	WASHER	4	J10001-UP
19		21T-53-32630	BRACKET	1	J10001-UP
20		01010-81230	BOLT	2	J10001-UP
21		01643-31232	WASHER	2	J10001-UP
22		21T-53-32621	COVER	1	J10001-UP
23		207-54-16520	.HINGE (WELDED)	1	J10001-UP
24		209-54-12280	HANDLE	1	J10001-UP
25		01010-81230	BOLT	2	J10001-UP
26		01643-31232	WASHER	2	J10001-UP
27		09463-00006	SPRING	1	J10001-UP
28		04205-10618	PIN	2	J10001-UP
29		04050-01610	PIN	2	J10001-UP
30		21T-53-32653	COVER	1	J10001-UP
31		01010-81230	BOLT	6	J10001-UP
32		01643-31232	WASHER	6	J10001-UP
33		21T-53-32663	COVER	1	J10001-UP
34		01010-81230	BOLT	6	J10001-UP
35		01643-31232	WASHER	6	J10001-UP
36		21T-53-32673	COVER	1	J10001-UP
37		01010-81230	BOLT	4	J10001-UP
38		01643-31232	WASHER	4	J10001-UP
39		20Y-00-42120	PLATE	9	J10001-UP
40		208-00-76240	PLATE	1	J10001-UP
41		21T-54-37190	SHEET	1	J10001-UP

Ref :M1210-05A0 Page :270460

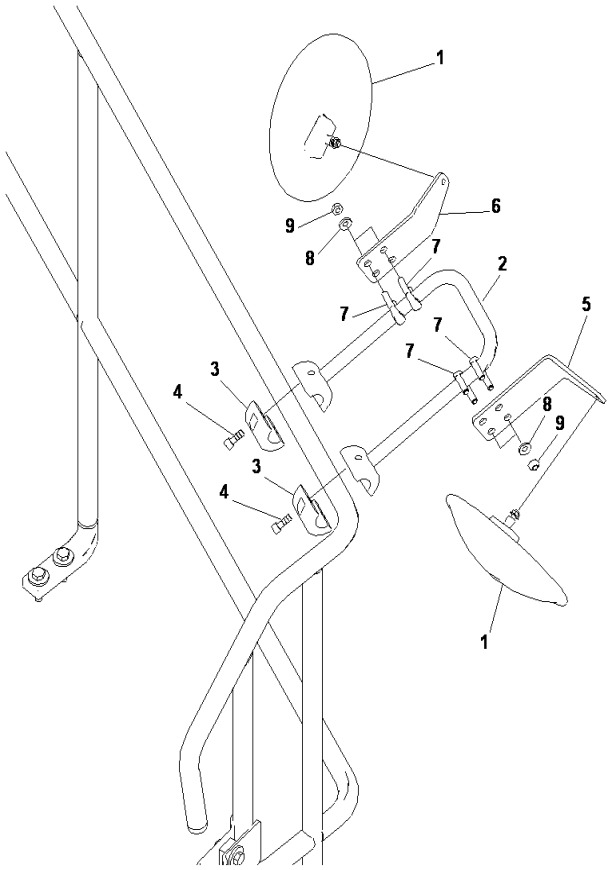

PC2000-8 S/N J10001-UP

REARVIEW MIRROR(RELATED PARTS)

INDEX	CD	PART NO.	DESCRIPTION	QTY	SERIAL NO.
1		23S-54-36270	MIRROR	2	J10001-UP
2		21T-54-34690	SUPPORT	1	J10001-UP
3		21T-54-79620	CLAMP	2	J10001-UP
4		01252-71025	BOLT	4	J10001-UP
5		21T-54-34850	PLATE	1	J10001-UP
6		21T-54-34680	PLATE	1	J10001-UP
7		07283-32236	CLIP	4	J10001-UP
8		01643-31032	WASHER	8	J10001-UP
9		01597-01009	NUT	8	J10001-UP

Ref :M1420-01A0 Page :270470

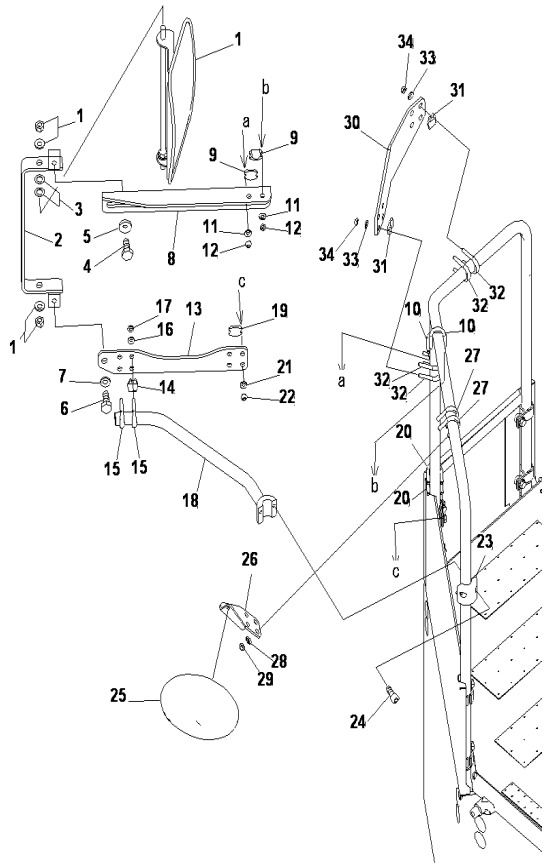

REARVIEW MIRROR(RHS)

INDEX	CD	PART NO.	DESCRIPTION	QTY	SERIAL NO.
		56B-54-17313	MIRROR, REARVIEW.....	1	J10001-UP
1		56B-54-17311	.BACK MIRROR.....	1	J10001-UP
2		21T-53-31831	.BRACKET.....	1	J10001-UP
3		195-91-17290	.WASHER.....	4	J10001-UP
4		01010-81640	BOLT.....	1	J10001-UP
5		21T-72-12620	WASHER.....	1	J10001-UP
6		01010-81640	BOLT.....	1	J10001-UP
7		01643-31645	WASHER.....	1	J10001-UP
8		21T-53-31841	BRACKET.....	1	J10001-UP
9		07283-53444	CLIP.....	2	J10001-UP
10		07283-33450	CLIP.....	2	J10001-UP
11		01643-31032	WASHER.....	4	J10001-UP
12		01597-01009	NUT.....	4	J10001-UP
13		21T-53-31791	BRACKET.....	1	J10001-UP
14		07283-53444	CLIP.....	2	J10001-UP
15		07283-33450	CLIP.....	2	J10001-UP
16		01643-31032	WASHER.....	4	J10001-UP
17		01597-01009	NUT.....	4	J10001-UP
18		21T-53-31820	SUPPORT.....	1	J10001-UP
19		07283-53444	CLIP.....	2	J10001-UP
20		07283-33450	CLIP.....	2	J10001-UP
21		01643-31032	WASHER.....	4	J10001-UP
22		01597-01009	NUT.....	4	J10001-UP
23		20Y-54-61630	CLAMP.....	1	J10001-UP
24		01252-71025	BOLT.....	2	J10001-UP
25		23S-54-36270	MIRROR.....	1	J10001-UP
26		21T-53-31850	BRACKET.....	1	J10001-UP
27		07283-33442	CLIP.....	2	J10001-UP
28		01643-31032	WASHER.....	4	J10001-UP
29		01597-01009	NUT.....	4	J10001-UP
30		21T-53-33860	BRACKET.....	1	J10001-UP
31		07283-53444	CLIP.....	4	J10001-UP
32		07283-33450	CLIP.....	4	J10001-UP
33		01643-31032	WASHER.....	8	J10001-UP
34		01597-01009	NUT.....	8	J10001-UP

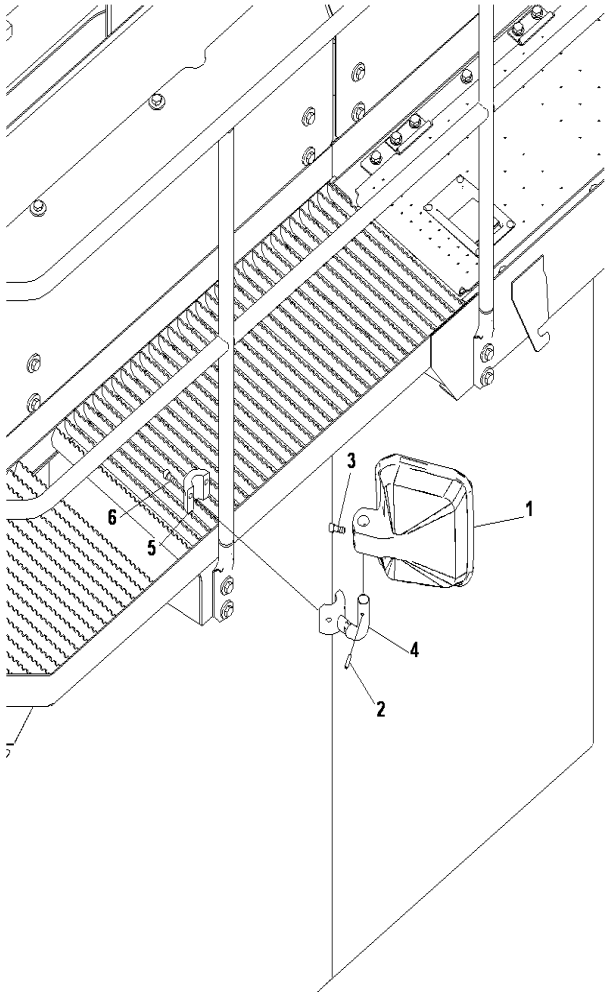

PC2000-8 S/N J10001-UP

REARVIEW MIRROR(LHS)

INDEX	CD	PART NO.	DESCRIPTION	QTY	SERIAL NO.
1		421-54-25610	MIRROR	1	J10001-UP
2		04025-00632	PIN	1	J10001-UP
3		01252-70545	BOLT	4	J10001-UP
4		21T-54-36480	SUPPORT	1	J10001-UP
5		20Y-54-61630	CLAMP	1	J10001-UP
6		01252-71030	BOLT	2	J10001-UP

Ref :M1420-03A0 Page :270490

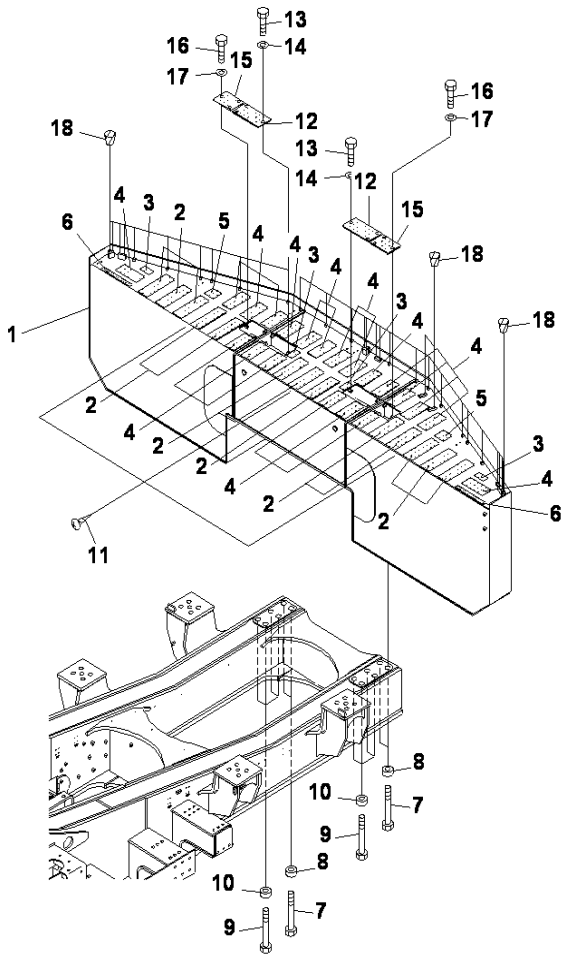

COUNTERWEIGHT

INDEX	CD	PART NO.	DESCRIPTION	QTY	SERIAL NO.
1		21T-46-34113	WEIGHT	1	J10001-UP
2		208-04-75180	.PLATE, (WELDED)	13	J10001-UP
3		209-46-42130	.PLATE, (WELDED)	4	J10001-UP
4		209-46-42140	.PLATE, (WELDED)	21	J10001-UP
5		21T-46-34170	.STEP, (WELDED)	2	J10001-UP
6		21T-46-34220	.STEP, (WELDED)	2	J10001-UP
7		21T-46-34120	BOLT	8	J10001-UP
8		209-46-11210	SPACER	8	J10001-UP
9		21T-46-34120	BOLT	4	J10001-UP
10		209-46-11210	SPACER	4	J10001-UP
11		01370-00508	SCREW	3	J10001-UP
12		21T-46-34131	COVER	2	J10001-UP
13		01010-81225	BOLT	6	J10001-UP
14		01643-31232	WASHER	6	J10001-UP
15		21T-46-34141	COVER	2	J10001-UP
16		01010-81225	BOLT	6	J10001-UP
17		01643-31232	WASHER	6	J10001-UP
18		07049-01215	PLUG	33	J10001-UP

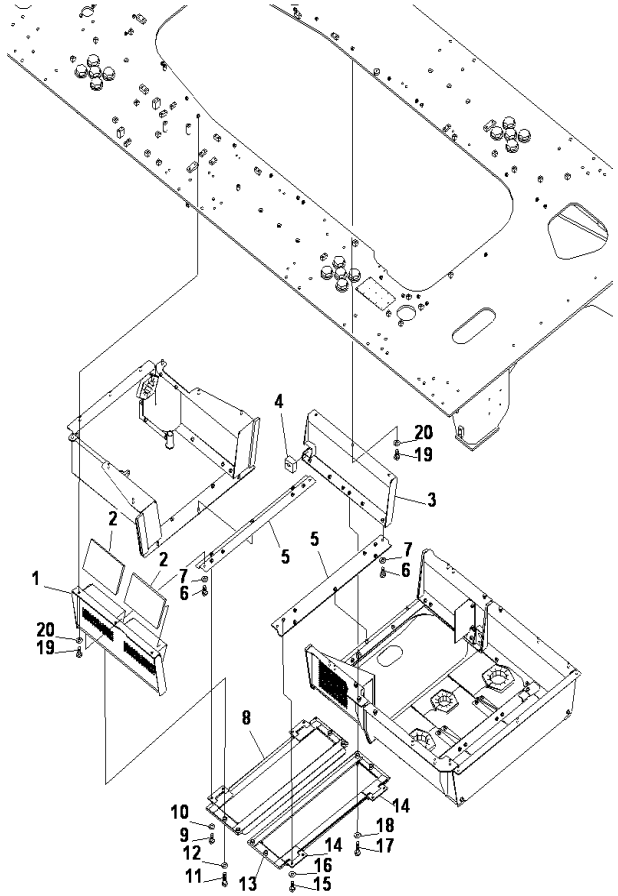

UNDER COVER(DOOR)

INDEX	CD	PART NO.	DESCRIPTION	QTY	SERIAL NO.
1		21T-54-34811	COVER	1	J10001-UP
2		21T-54-39220	.SHEET	2	J10001-UP
3		21T-54-39111	COVER	1	J10001-UP
4		21T-54-39330	.SHEET	1	J10001-UP
5		21T-54-34841	FRAME	2	J10001-UP
6		01010-81225	BOLT	4	J10001-UP
7		01643-31232	WASHER	4	J10001-UP
8		21T-54-34861	COVER	1	J10001-UP
9		01010-81230	BOLT	4	J10001-UP
10		01643-31232	WASHER	4	J10001-UP
11		01010-81240	BOLT	4	J10001-UP
12		175-54-34170	WASHER	4	J10001-UP
13		21T-54-34871	COVER	1	J10001-UP
14		205-54-65630	.HINGE	2	J10001-UP
15		01010-81230	BOLT	4	J10001-UP
16		01643-31232	WASHER	4	J10001-UP
17		01010-81240	BOLT	4	J10001-UP
18		175-54-34170	WASHER	4	J10001-UP
19		01010-81235	BOLT	6	J10001-UP
20		01643-31232	WASHER	6	J10001-UP

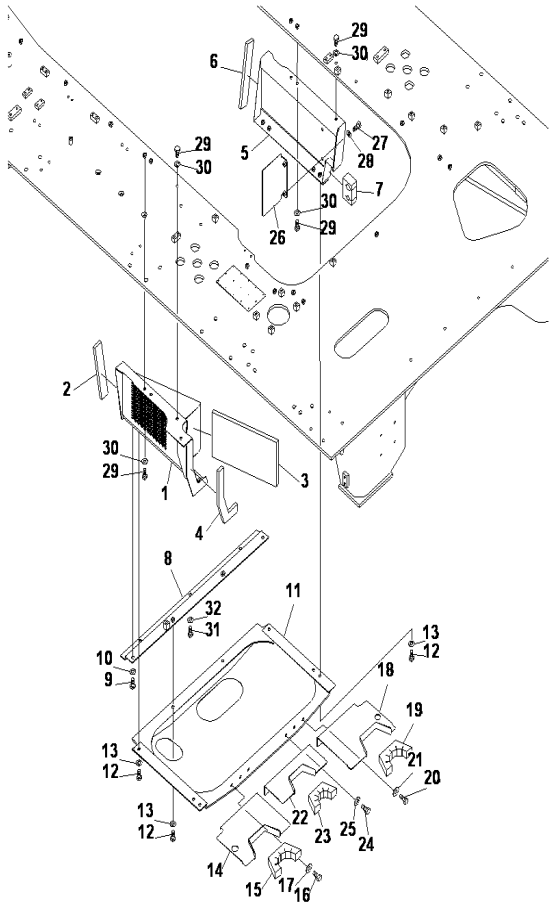

UNDER COVER(POWER TAKE OFF SECTION)

INDEX	CD	PART NO.	DESCRIPTION	QTY	SERIAL NO.
1		21T-54-34831	COVER	1	J10001-UP
2		21T-54-39210	.SHEET	1	J10001-UP
3		21T-54-39250	.SHEET	1	J10001-UP
4		21T-54-39280	.SHEET	1	J10001-UP
5		21T-54-34821	COVER	1	J10001-UP
6		21T-54-39210	.SHEET	1	J10001-UP
7		21T-54-39290	.SHEET	1	J10001-UP
8		21T-54-39162	FRAME	1	J10001-UP
9		01010-81225	BOLT	2	J10001-UP
10		01643-31232	WASHER	2	J10001-UP
11		21T-54-34882	COVER	1	J10001-UP
12		01010-81225	BOLT	8	J10001-UP
13		01643-31232	WASHER	8	J10001-UP
14		21T-54-34941	COVER	1	J10001-UP
15		21T-54-39261	.SHEET	1	J10001-UP
16		01010-81225	BOLT	2	J10001-UP
17		175-54-34170	WASHER	2	J10001-UP
18		21T-54-34951	COVER	1	J10001-UP
19		21T-54-39261	.SHEET	1	J10001-UP
20		01010-81225	BOLT	2	J10001-UP
21		175-54-34170	WASHER	2	J10001-UP
22		21T-54-34961	COVER	1	J10001-UP
23		21T-54-39271	.SHEET	1	J10001-UP
24		01010-81225	BOLT	2	J10001-UP
25		175-54-34170	WASHER	2	J10001-UP
26		21T-53-31970	BRACKET	1	J10001-UP
27		01010-81225	BOLT	2	J10001-UP
28		01643-31232	WASHER	2	J10001-UP
29		01010-81235	BOLT	7	J10001-UP
30		01643-31232	WASHER	7	J10001-UP
31		01010-81225	BOLT	3	J10001-UP
32		01643-31232	WASHER	3	J10001-UP

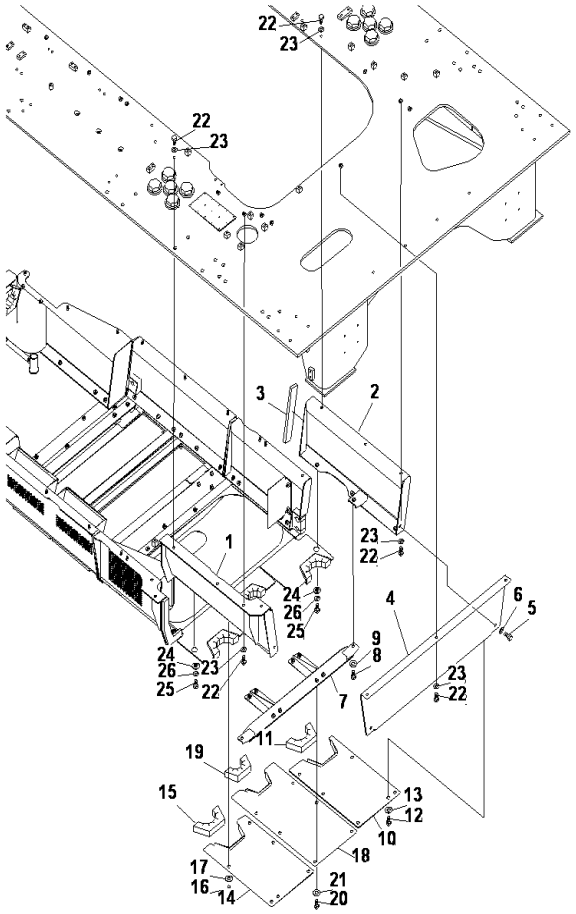

UNDER COVER(PUMP SECTION)

INDEX	CD	PART NO.	DESCRIPTION	QTY	SERIAL NO.
1		21T-54-34911	COVER	1	J10001-UP
2		21T-54-34891	COVER	1	J10001-UP
3		21T-54-39210	.SHEET	1	J10001-UP
4		21T-54-34920	COVER	1	J10001-UP
5		01010-81225	BOLT	2	J10001-UP
6		01643-31232	WASHER	2	J10001-UP
7		21T-54-34931	FRAME	1	J10001-UP
8		01010-81225	BOLT	2	J10001-UP
9		175-54-34170	WASHER	2	J10001-UP
10		21T-54-34971	COVER	1	J10001-UP
11		21T-54-39261	.SHEET	1	J10001-UP
12		01010-81225	BOLT	6	J10001-UP
13		175-54-34170	WASHER	6	J10001-UP
14		21T-54-34981	COVER	1	J10001-UP
15		21T-54-39261	.SHEET	1	J10001-UP
16		01010-81225	BOLT	6	J10001-UP
17		175-54-34170	WASHER	6	J10001-UP
18		21T-54-34991	COVER	1	J10001-UP
19		21T-54-39271	.SHEET	1	J10001-UP
20		01010-81225	BOLT	6	J10001-UP
21		175-54-34170	WASHER	6	J10001-UP
22		01010-81235	BOLT	10	J10001-UP
23		01643-31232	WASHER	10	J10001-UP
24		203-54-62670	COLLAR	2	J10001-UP
25		01010-81225	BOLT	2	J10001-UP
26		01643-31232	WASHER	2	J10001-UP

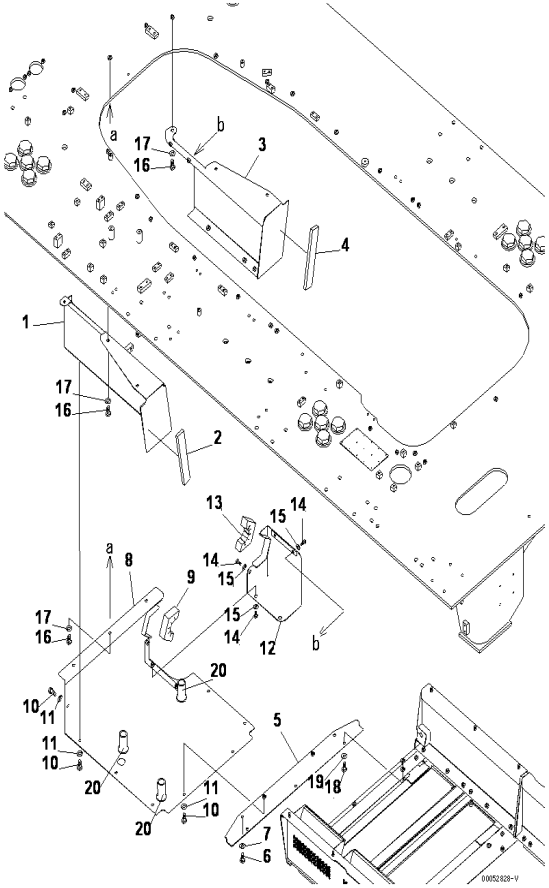

PC2000-8 S/N J10001-UP

UNDER COVER(OIL PAN SECTION)

INDEX	CD	PART NO.	DESCRIPTION	QTY	SERIAL NO.
1		21T-54-39121	COVER	1	J10001-UP
2		21T-54-39210	.SHEET	1	J10001-UP
3		21T-54-39131	COVER	1	J10001-UP
4		21T-54-39210	.SHEET	1	J10001-UP
5		21T-54-39171	FRAME	1	J10001-UP
6		01010-81225	BOLT	2	J10001-UP
7		01643-31232	WASHER	2	J10001-UP
8		21T-54-39141	COVER	1	J10001-UP
9		21T-54-39271	.SHEET	1	J10001-UP
10		01010-81225	BOLT	8	J10001-UP
11		01643-31232	WASHER	8	J10001-UP
12		21T-54-39151	COVER	1	J10001-UP
13		21T-54-39271	.SHEET	1	J10001-UP
14		01010-81225	BOLT	5	J10001-UP
15		175-54-34170	WASHER	5	J10001-UP
16		01010-81235	BOLT	9	J10001-UP
17		01643-31232	WASHER	9	J10001-UP
18		01010-81225	BOLT	3	J10001-UP
19		01643-31232	WASHER	3	J10001-UP
20		22U-54-24760	GROMMET	3	J10001-UP

Ref :M1810-04A0 Page :270540

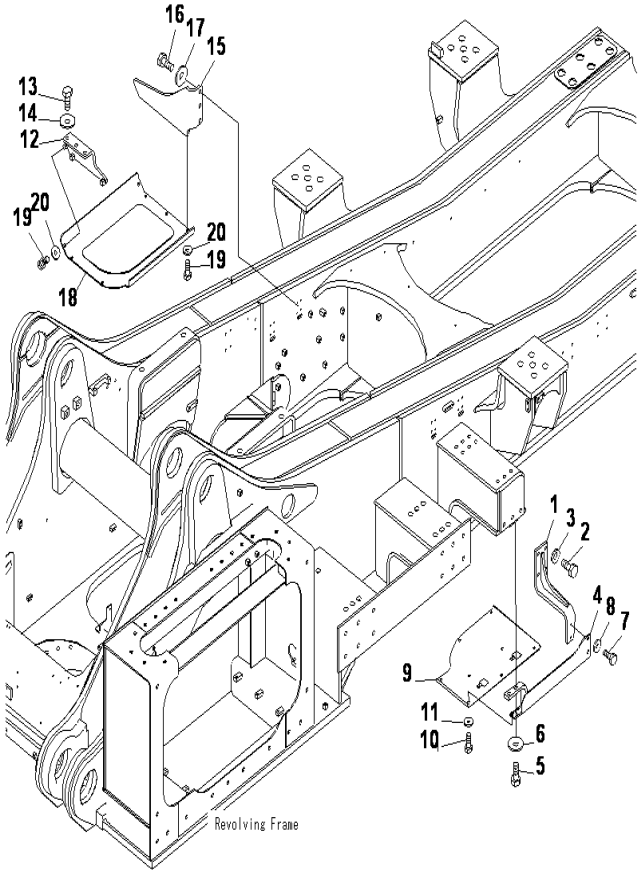

PC2000-8 S/N J10001-UP

UNDER COVER(WITH DECK GUARD)(UNDER COVER)

INDEX	CD	PART NO.	DESCRIPTION	QTY	SERIAL NO.
1		21T-53-32560	BRACKET	1	J10001-UP
2		01010-81645	BOLT	4	J10001-UP
3		01643-31645	WASHER	4	J10001-UP
4		21T-53-32520	FRAME	1	J10001-UP
5		01010-81645	BOLT	2	J10001-UP
6		20S-70-21480	WASHER	2	J10001-UP
7		01010-81230	BOLT	2	J10001-UP
8		175-54-34170	WASHER	2	J10001-UP
9		21T-53-32530	COVER	1	J10001-UP
10		01010-81230	BOLT	6	J10001-UP
11		175-54-34170	WASHER	6	J10001-UP
12		21T-53-32581NK	BRACKET	1	J10001-UP
13		01010-81645	BOLT	3	J10001-UP
14		20S-70-21480	WASHER	3	J10001-UP
15		21T-53-32591	BRACKET	1	J10001-UP
16		01010-81645	BOLT	3	J10001-UP
17		20S-70-21480	WASHER	3	J10001-UP
18		21T-53-32541	COVER	1	J10001-UP
19		01010-81230	BOLT	7	J10001-UP
20		175-54-34170	WASHER	7	J10001-UP

Ref :M1810-05A0 Page :270550

SWING CIRCLE AND RELATED PARTS

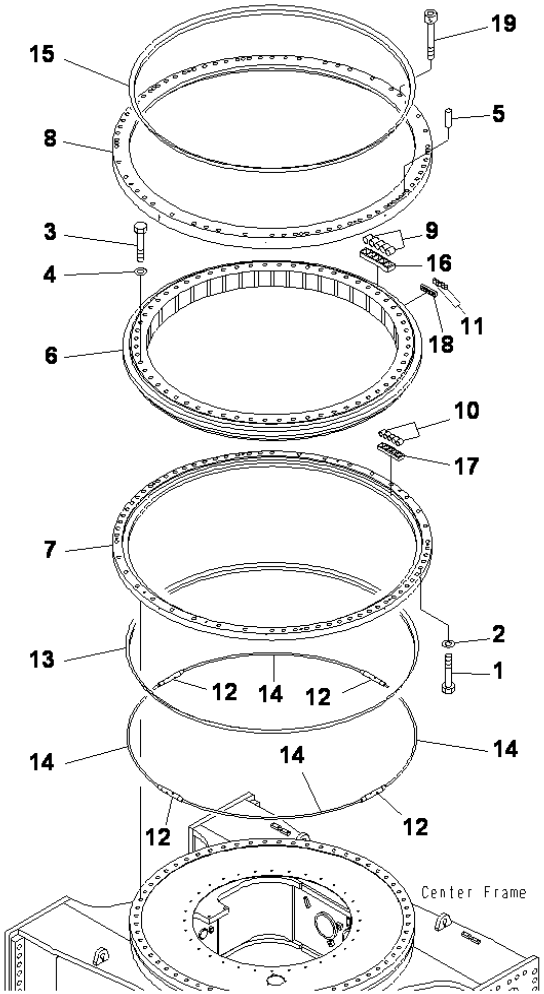

PC2000-8 S/N J10001-UP

SWING CIRCLE

INDEX	CD	PART NO.	DESCRIPTION	QTY	SERIAL NO.
1		21T-25-67150	BOLT	60	J10001-UP
2		01643-33690	WASHER	60	J10001-UP
3		21T-25-67160	BOLT	60	J10001-UP
4		01643-33690	WASHER	60	J10001-UP
5		205-27-51370	PIN	3	J10001-UP
		21T-25-00101	SWING CIRCLE	1	J10001-UP
6		21T-25-67310	.INNER RACE	1	J10001-UP
7		21T-25-67321	.OUTER RACE, LOWER	1	J10001-UP
8		21T-25-67331	.OUTER RACE, UPPER	1	J10001-UP
9		21T-25-67340	.ROLLER	170	J10001-UP
10		21T-25-67350	.ROLLER	225	J10001-UP
11		21T-25-67360	.ROLLER	335	J10001-UP
12		209-25-11150	.JOINT	4	J10001-UP
13		21T-25-67120	.SEAL	1	J10001-UP
14		21T-25-67130	.WIRE	4	J10001-UP
15		21T-25-67140	.SEAL	1	J10001-UP
16		21T-25-67370	.HOLDER	34	J10001-UP
17		21T-25-67380	.HOLDER	45	J10001-UP
18		21T-25-67390	.HOLDER	67	J10001-UP
19		01253-62430	.BOLT	10	J10001-UP

Ref :N1110-01A0 Page :300010

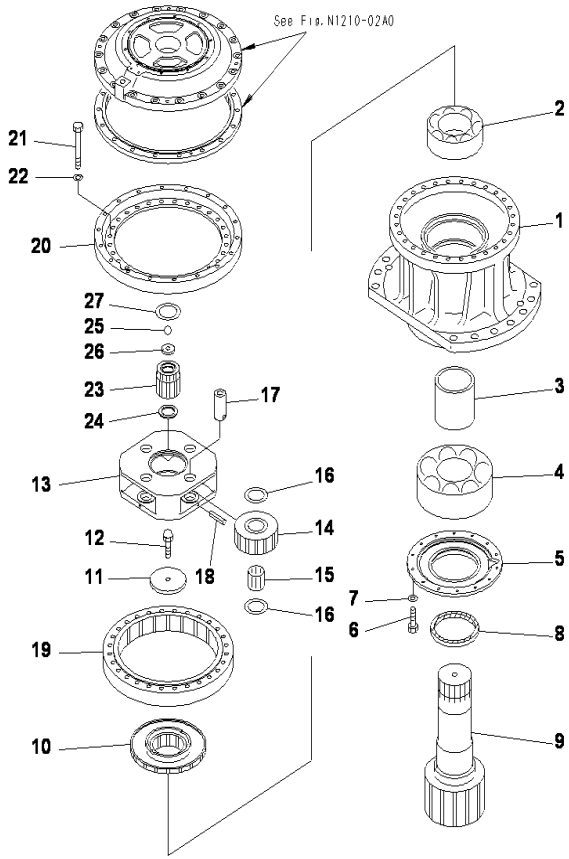

SWING MACHINERY,FRONT(1/2)

INDEX	CD	PART NO.	DESCRIPTION	QTY	SERIAL NO.
1		209-26-71212	CASE	1	J10001-UP
2		06300-23130	BEARING	1	J10001-UP
3		209-26-71360	SPACER	1	J10001-UP
4		209-26-71341	BEARING	1	J10001-UP
5		209-26-71230	COVER	1	J10001-UP
6		01010-81030	BOLT	14	J10001-UP
7		01643-31032	WASHER	14	J10001-UP
8		209-26-71332	OIL SEAL	1	J10001-UP
9		21T-26-67110	SHAFT	1	J10001-UP
10		209-26-71240	COUPLING	1	J10001-UP
11		209-26-71310	PLATE	1	J10001-UP
12		205-32-51211	BOLT	1	J10001-UP
13		208-27-61170	CARRIER	1	J10001-UP
14		208-27-61140	GEAR	4	J10001-UP
15		207-27-61230	BEARING(2P)	4	J10001-UP
16		20Y-27-21250	THRUST, WASHER	8	J10001-UP
17		207-27-61250	PIN	4	J10001-UP
18		20Y-27-21290	PIN	4	J10001-UP
19		209-26-71160	GEAR	1	J10001-UP
20		209-26-71190	SPACER	1	J10001-UP
21		01011-61820	BOLT	28	J10001-UP
22		01643-31845	WASHER	28	J10001-UP
23		208-27-61132	GEAR	1	J10001-UP
24		207-27-52270	SPACER	1	J10001-UP
25		04260-01270	BALL	1	J10001-UP
26		21T-26-31160	PLATE	1	J10001-UP
27		209-26-71180	SPACER	1	J10001-UP

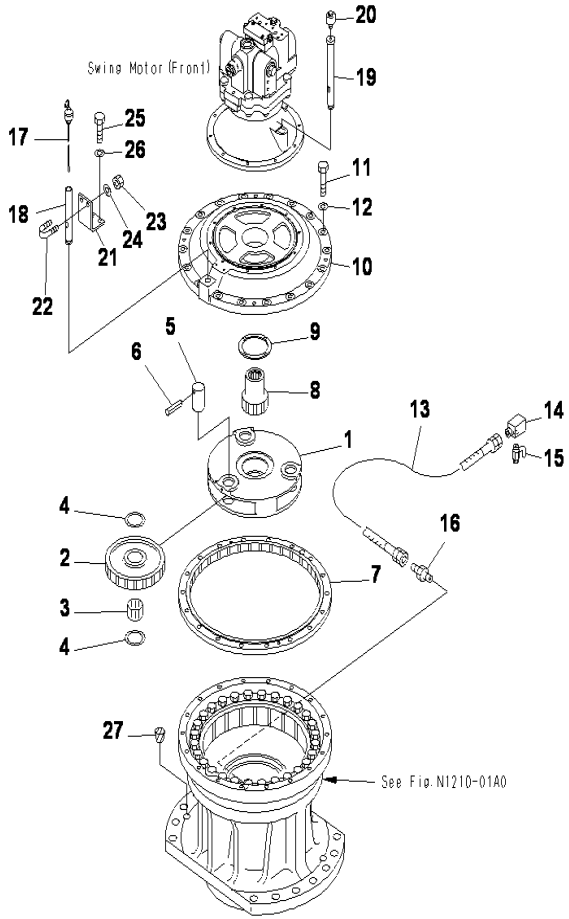

SWING MACHINERY(WITHOUT SERVICE CENTER)(FRONT)(2/2)

INDEX	CD	PART NO.	DESCRIPTION	QTY	SERIAL NO.
1		21T-26-31120	CARRIER	1	J10001-UP
2		21T-26-31140	GEAR	3	J10001-UP
3		20Y-26-21290	BEARING	3	J10001-UP
4		20Y-27-21250	THRUST WASHER	6	J10001-UP
5		20Y-26-21320	PIN	3	J10001-UP
6		20Y-26-21330	PIN	3	J10001-UP
7		209-26-71150	GEAR	1	J10001-UP
8		21T-26-31130	SHAFT	1	J10001-UP
9		20Y-27-11250	SPACER	1	J10001-UP
10		21T-26-31110	COVER	1	J10001-UP
11		01010-61685	BOLT	18	J10001-UP
12		01643-31645	WASHER	18	J10001-UP
13		07103-20606	HOSE	1	J10001-UP
14		209-26-51280	ELBOW	1	J10001-UP
15		07730-40004	VALVE	1	J10001-UP
16		417-875-1630	UNION	1	J10001-UP
17		209-26-72150	GAUGE	1	J10001-UP
18		21T-26-31210	FILLER	1	J10001-UP
19		21T-26-31170	TUBE	1	J10001-UP
20		07030-00252	BREATHER	1	J10001-UP
21		21T-26-31150	BRACKET	1	J10001-UP
22		07283-32738	CLIP	1	J10001-UP
23		01597-01009	NUT	2	J10001-UP
24		01643-31032	WASHER	2	J10001-UP
25		01010-81030	BOLT	2	J10001-UP
26		01643-31032	WASHER	2	J10001-UP
27		07049-03038	PLUG	2	J10001-UP

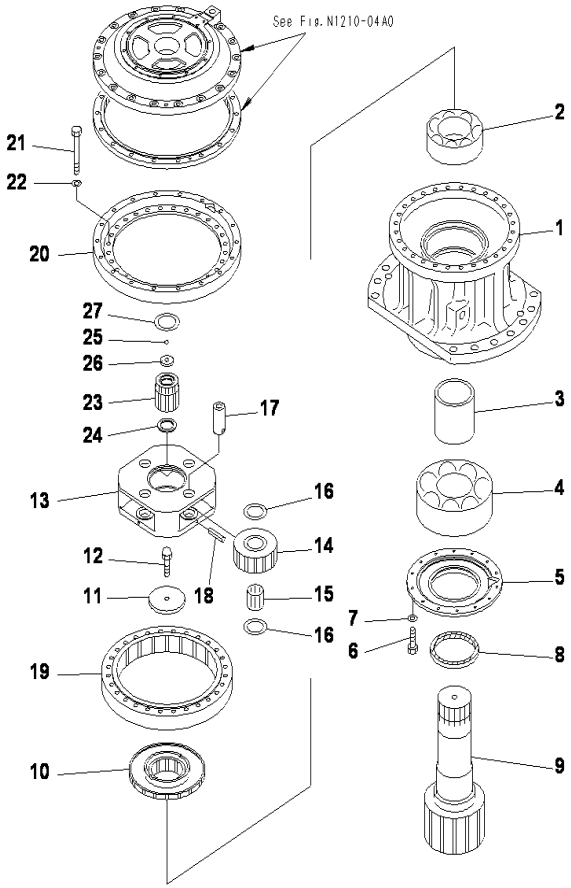

SWING MACHINERY,REAR (1/2)

INDEX	CD	PART NO.	DESCRIPTION	QTY	SERIAL NO.
1		209-26-71212	CASE	1	J10001-UP
2		06300-23130	BEARING	1	J10001-UP
3		209-26-71360	SPACER	1	J10001-UP
4		209-26-71341	BEARING	1	J10001-UP
5		209-26-71230	COVER	1	J10001-UP
6		01010-81030	BOLT	14	J10001-UP
7		01643-31032	WASHER	14	J10001-UP
8		209-26-71332	OIL SEAL	1	J10001-UP
9		21T-26-67110	SHAFT	1	J10001-UP
10		209-26-71240	COUPLING	1	J10001-UP
11		209-26-71310	PLATE	1	J10001-UP
12		205-32-51211	BOLT	1	J10001-UP
13		208-27-61170	CARRIER	1	J10001-UP
14		208-27-61140	GEAR	4	J10001-UP
15		207-27-61230	BEARING(2P)	4	J10001-UP
16		20Y-27-21250	THRUST WASHER	8	J10001-UP
17		207-27-61250	PIN	4	J10001-UP
18		20Y-27-21290	PIN	4	J10001-UP
19		209-26-71160	GEAR	1	J10001-UP
20		209-26-71190	SPACER	1	J10001-UP
21		01011-61820	BOLT	28	J10001-UP
22		01643-31845	WASHER	28	J10001-UP
23		208-27-61132	GEAR	1	J10001-UP
24		207-27-52270	SPACER	1	J10001-UP
25		04260-01270	BALL	1	J10001-UP
26		21T-26-31160	PLATE	1	J10001-UP
27		209-26-71180	SPACER	1	J10001-UP

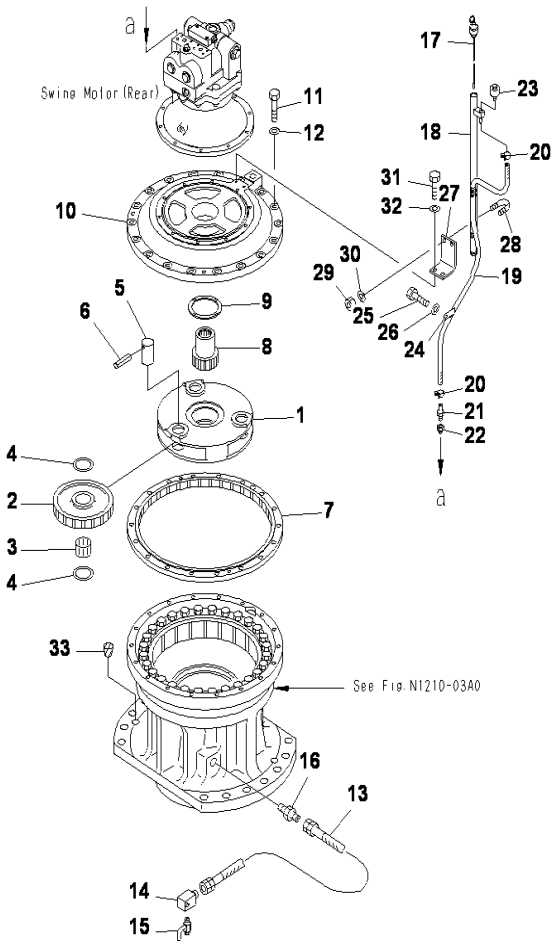

PC2000-8 S/N J10001-UP

SWING MACHINERY(WITHOUT SERVICE CENTER)(REAR)(2/2)

INDEX	CD	PART NO.	DESCRIPTION	QTY	SERIAL NO.
1		21T-26-31120	CARRIER	1	J10001-UP
2		21T-26-31140	GEAR	3	J10001-UP
3		20Y-26-21290	BEARING	3	J10001-UP
4		20Y-27-21250	THRUST WASHER	6	J10001-UP
5		20Y-26-21320	PIN	3	J10001-UP
6		20Y-26-21330	PIN	3	J10001-UP
7		209-26-71150	GEAR	1	J10001-UP
8		21T-26-31130	SHAFT	1	J10001-UP
9		20Y-27-11250	SPACER	1	J10001-UP
10		21T-26-31110	COVER	1	J10001-UP
11		01010-61685	BOLT	18	J10001-UP
12		01643-31645	WASHER	18	J10001-UP
13		07103-20606	HOSE	1	J10001-UP
14		209-26-51280	ELBOW	1	J10001-UP
15		07730-40004	VALVE	1	J10001-UP
16		417-875-1630	UNION	1	J10001-UP
17		21T-26-67140	GAUGE	1	J10001-UP
18		21T-26-31180	FILLER	1	J10001-UP
19		07286-01070	HOSE	1	J10001-UP
20		07285-00130	CLIP	2	J10001-UP
21		6138-55-7610	NIPPLE	1	J10001-UP
22		22W-61-14460	BUSHING	1	J10001-UP
23		07030-00252	BREATHER	1	J10001-UP
24		21T-26-31190	BRACKET	1	J10001-UP
25		01010-81030	BOLT	1	J10001-UP
26		01643-31032	WASHER	1	J10001-UP
27		21T26-31150	BRACKET	1	J10001-UP
28		07283-32738	CLIP	1	J10001-UP
29		01597-01009	NUT	2	J10001-UP
30		01643-31032	WASHER	2	J10001-UP
31		01010-81030	BOLT	2	J10001-UP
32		01643-31032	WASHER	2	J10001-UP
33		07049-03038	PLUG	2	J10001-UP

Ref :N1210-04A0 Page :300050

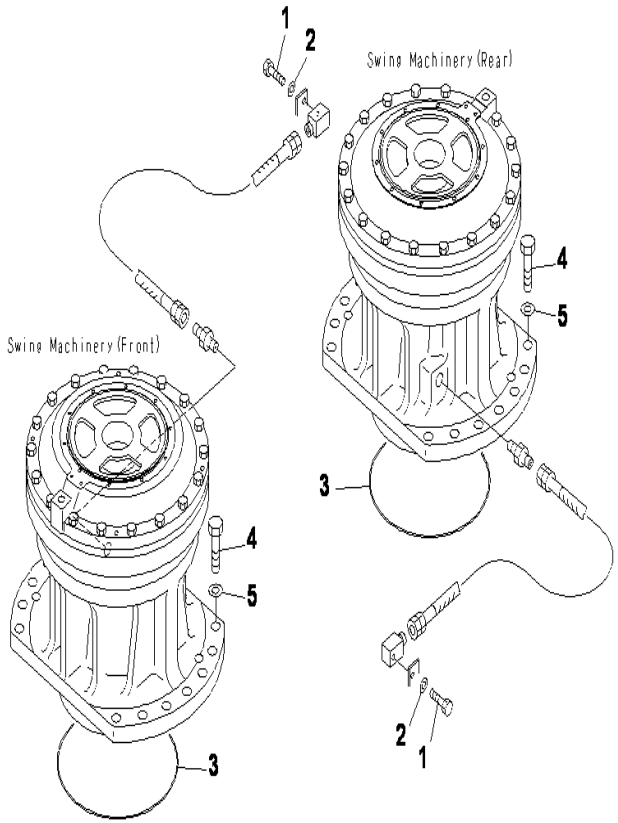

PC2000-8 S/N J10001-UP

SWING MACHINERY,MOUNTING BOLT

INDEX	CD	PART NO.	DESCRIPTION	QTY	SERIAL NO.
1		01010-81225	BOLT	2	J10001-UP
2		01643-31232	WASHER	2	J10001-UP
3		07000-15425	O-RING	2	J10001-UP
4		01010-83090	BOLT	28	J10001-UP
5		01643-33080	WASHER	28	J10001-UP

Ref :N1210-05A0 Page :300060

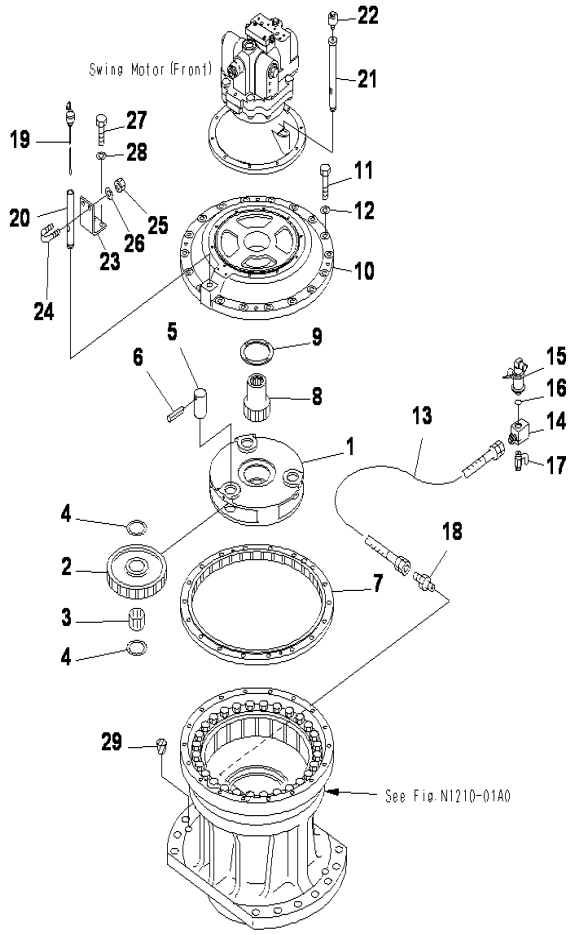

SWING MACHINERY,SERVICE CENTER,GREASE SHUT OFF VALVE,FRONT (2/2)

INDEX	CD	PART NO.	DESCRIPTION	QTY	SERIAL NO.
1		21T-26-31120	CARRIER	1	J10001-UP
2		21T-26-31140	GEAR	3	J10001-UP
3		20Y-26-21290	BEARING	3	J10001-UP
4		20Y-27-21250	THRUST WASHER	6	J10001-UP
5		20Y-26-21320	PIN	3	J10001-UP
6		20Y-26-21330	PIN	3	J10001-UP
7		209-26-71150	GEAR	1	J10001-UP
8		21T-26-31130	SHAFT	1	J10001-UP
9		20Y-27-11250	SPACER	1	J10001-UP
10		21T-26-31110	COVER	1	J10001-UP
11		01010-61685	BOLT	18	J10001-UP
12		01643-31645	WASHER	18	J10001-UP
13		07103-20606	HOSE	1	J10001-UP
14		21T-26-31231	ELBOW	1	J10001-UP
15		07705-11400	VALVE ASS'Y	1	J10001-UP
16		07002-12434	O-RING	1	J10001-UP
17		07730-40004	VALVE	1	J10001-UP
18		417-875-1630	UNION	1	J10001-UP
19		209-26-72150	GAUGE	1	J10001-UP
20		21T-26-31210	FILLER	1	J10001-UP
21		21T-26-31170	TUBE	1	J10001-UP
22		07030-00252	BREATHER	1	J10001-UP
23		21T-26-31150	BRACKET	1	J10001-UP
24		07283-32738	CLIP	1	J10001-UP
25		01597-01009	NUT	2	J10001-UP
26		01643-31032	WASHER	2	J10001-UP
27		01010-81030	BOLT	2	J10001-UP
28		01643-31032	WASHER	2	J10001-UP
29		07049-03038	PLUG	2	J10001-UP

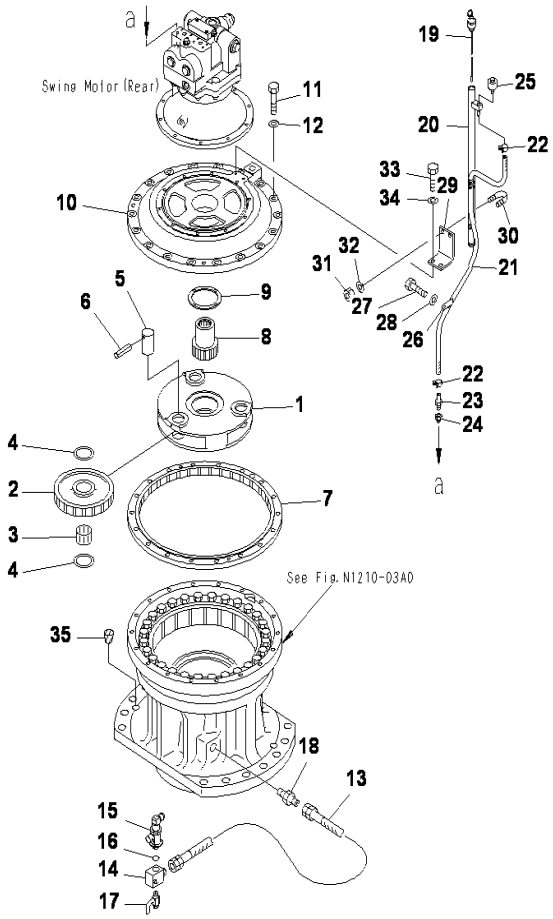

PC2000-8 S/N J10001-UP

SWING MACHINERY,SERVICE CENTER,GREASE SHUT OFF VALVE,REAR (2/2)

INDEX	CD	PART NO.	DESCRIPTION	QTY	SERIAL NO.
1		21T-26-31120	CARRIER	1	J10001-UP
2		21T-26-31140	GEAR	3	J10001-UP
3		20Y-26-21290	BEARING	3	J10001-UP
4		20Y-27-21250	THRUST WASHER	6	J10001-UP
5		20Y-26-21320	PIN	3	J10001-UP
6		20Y-26-21330	PIN	3	J10001-UP
7		209-26-71150	GEAR	1	J10001-UP
8		21T-26-31130	SHAFT	1	J10001-UP
9		20Y-27-11250	SPACER	1	J10001-UP
10		21T-26-31110	COVER	1	J10001-UP
11		01010-61685	BOLT	18	J10001-UP
12		01643-31645	WASHER	18	J10001-UP
13		07103-20606	HOSE	1	J10001-UP
14		21T-26-31231	ELBOW	1	J10001-UP
15		07705-11400	VALVE ASS'Y	1	J10001-UP
16		07002-12434	O-RING	1	J10001-UP
17		07730-40004	VALVE	1	J10001-UP
18		417-875-1630	UNION	1	J10001-UP
19		21T-26-67140	GAUGE	1	J10001-UP
20		21T-26-31180	FILLER	1	J10001-UP
21		07286-01070	HOSE	1	J10001-UP
22		07285-00130	CLIP	2	J10001-UP
23		6138-55-7610	NIPPLE	1	J10001-UP
24		22W-61-14460	BUSHING	1	J10001-UP
25		07030-00252	BREATHER	1	J10001-UP
26		21T-26-31190	BRACKET	1	J10001-UP
27		01010-81030	BOLT	1	J10001-UP
28		01643-31032	WASHER	1	J10001-UP
29		21T-26-31150	BRACKET	1	J10001-UP
30		07283-32738	CLIP	1	J10001-UP
31		01597-01009	NUT	2	J10001-UP
32		01643-31032	WASHER	2	J10001-UP
33		01010-81030	BOLT	2	J10001-UP
34		01643-31032	WASHER	2	J10001-UP
35		07049-03038	PLUG	2	J10001-UP

Ref :N1210-07A0 Page :300080

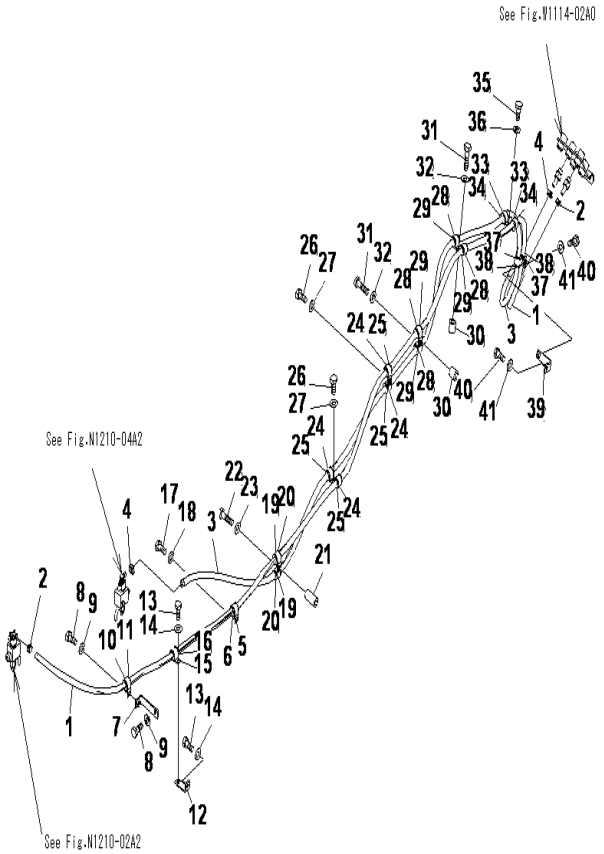

PC2000-8 S/N J10001-UP

SWING MACHINERY,SERVICE CENTER,GREASE SHUT OFF VALVE

INDEX	CD	PART NO.	DESCRIPTION	QTY	SERIAL NO.
1		07261-21447	HOSE	1	J10001-UP
2		07281-00259	CLAMP	2	J10001-UP
3		07261-21436	HOSE	1	J10001-UP
4		07281-00259	CLAMP	2	J10001-UP
5		04434-53212	CLIP	1	J10001-UP
6		07095-20523	CUSHION	1	J10001-UP
7		17A-61-13391	BRACKET	1	J10001-UP
8		01010-81225	BOLT	2	J10001-UP
9		01643-31232	WASHER	2	J10001-UP
10		04434-53212	CLIP	1	J10001-UP
11		07095-20523	CUSHION	1	J10001-UP
12		203-04-62110	BRACKET	1	J10001-UP
13		01010-81225	BOLT	2	J10001-UP
14		01643-31232	WASHER	2	J10001-UP
15		04434-53212	CLIP	1	J10001-UP
16		07095-20523	CUSHION	1	J10001-UP
17		01010-81225	BOLT	1	J10001-UP
18		01643-31232	WASHER	1	J10001-UP
19		04434-53212	CLIP	2	J10001-UP
20		07095-20523	CUSHION	2	J10001-UP
21		195-97-95190	COLLAR	1	J10001-UP
22		01010-81275	BOLT	1	J10001-UP
23		01643-31232	WASHER	1	J10001-UP
24		04434-53212	CLIP	4	J10001-UP
25		07095-20523	CUSHION	4	J10001-UP
26		01010-81225	BOLT	2	J10001-UP
27		01643-31232	WASHER	2	J10001-UP
28		04434-53212	CLIP	4	J10001-UP
29		07095-20523	CUSHION	4	J10001-UP
30		195-33-11220	SPACER	2	J10001-UP
31		01010-81250	BOLT	2	J10001-UP
32		01643-31232	WASHER	2	J10001-UP
33		04434-53212	CLIP	2	J10001-UP
34		07095-20523	CUSHION	2	J10001-UP
35		01010-81225	BOLT	1	J10001-UP
36		01643-31232	WASHER	1	J10001-UP
37		04434-53212	CLIP	2	J10001-UP
38		07095-20523	CUSHION	2	J10001-UP
39		207-62-62770	BRACKET	1	J10001-UP
40		01010-81225	BOLT	2	J10001-UP
41		01643-31232	WASHER	2	J10001-UP

Ref :N1210-08A0 Page :300090

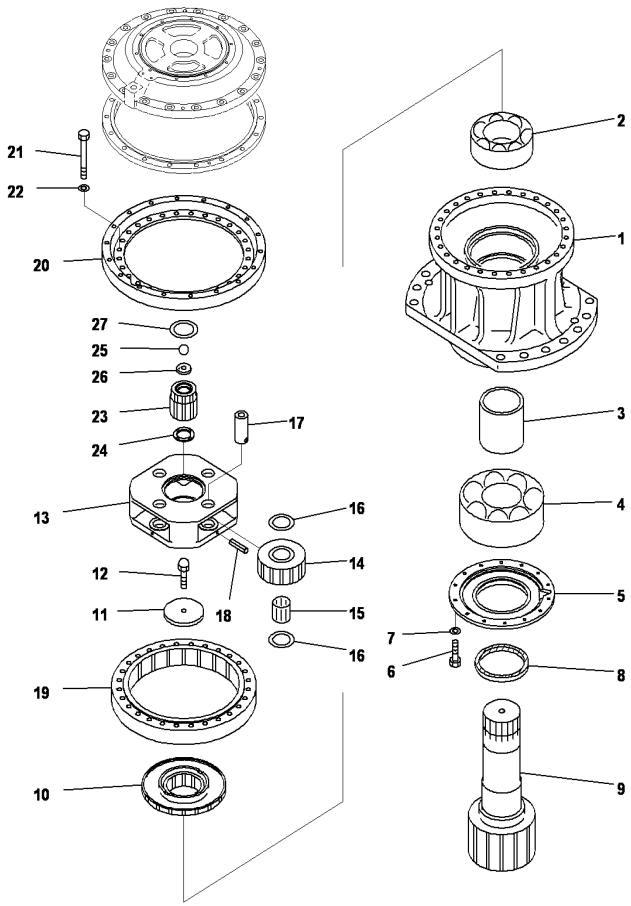

PC2000-8 S/N J10001-UP

SWING MACHINERY,SUPPLY PARTS (1/2)

INDEX	CD	PART NO.	DESCRIPTION	QTY	SERIAL NO.
1		209-26-71212	CASE	1	J10001-UP
2		06300-23130	BEARING	1	J10001-UP
3		209-26-71360	SPACER	1	J10001-UP
4		209-26-71341	BEARING	1	J10001-UP
5		209-26-71230	COVER	1	J10001-UP
6		01010-81030	BOLT	14	J10001-UP
7		01643-31032	WASHER	14	J10001-UP
8		209-26-71332	OIL SEAL	1	J10001-UP
9		21T-26-67110	SHAFT	1	J10001-UP
10		209-26-71240	COUPLING	1	J10001-UP
11		209-26-71310	PLATE	1	J10001-UP
12		205-32-51211	BOLT	1	J10001-UP
13		208-27-61170	CARRIER	1	J10001-UP
14		208-27-61140	GEAR	4	J10001-UP
15		207-27-61230	BEARING(2P)	4	J10001-UP
16		20Y-27-21250	THRUST WASHER	8	J10001-UP
17		207-27-61250	PIN	4	J10001-UP
18		20Y-27-21290	PIN	4	J10001-UP
19		209-26-71160	GEAR	1	J10001-UP
20		209-26-71190	SPACER	1	J10001-UP
21		01011-61820	BOLT	28	J10001-UP
22		01643-31845	WASHER	28	J10001-UP
23		208-27-61132	GEAR	1	J10001-UP
24		207-27-52270	SPACER	1	J10001-UP
25		04260-01270	BALL	1	J10001-UP
26		21T-26-31160	PLATE	1	J10001-UP
27		209-26-71180	SPACER	1	J10001-UP

Ref :N1210-09A0 Page :300100

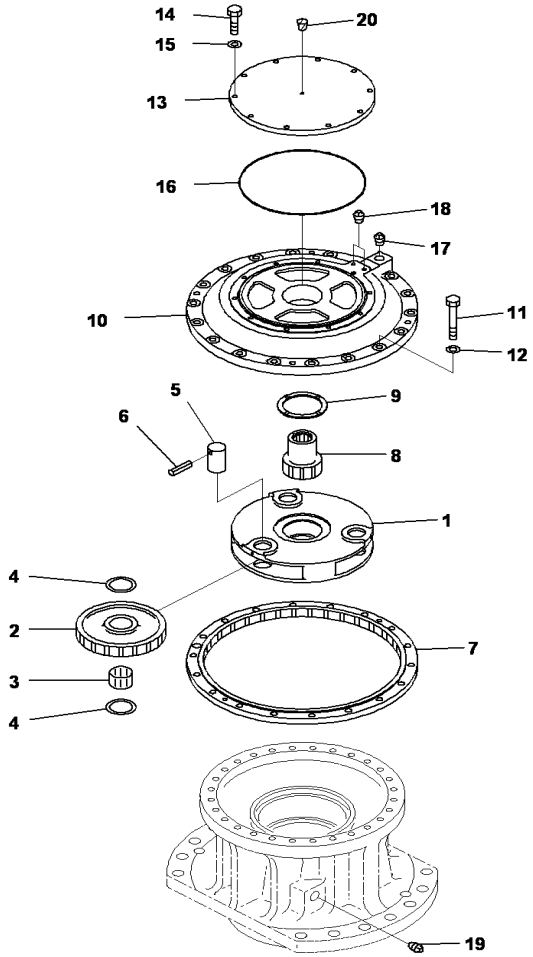

PC2000-8 S/N J10001-UP

SWING MACHINERY,SUPPLY PARTS (2/2)

INDEX	CD	PART NO.	DESCRIPTION	QTY	SERIAL NO.
1		21T-26-31120	CARRIER	1	J10001-UP
2		21T-26-31140	GEAR	3	J10001-UP
3		20Y-26-21290	BEARING	3	J10001-UP
4		20Y-27-21250	THRUST WASHER	6	J10001-UP
5		20Y-26-21320	PIN	3	J10001-UP
6		20Y-26-21330	PIN	3	J10001-UP
7		209-26-71150	GEAR	1	J10001-UP
8		21T-26-31130	SHAFT	1	J10001-UP
9		20Y-27-11250	SPACER	1	J10001-UP
10		21T-26-31110	COVER	1	J10001-UP
11		01010-61685	BOLT	18	J10001-UP
12		01643-31645	WASHER	18	J10001-UP
13		21T-26-31220	COVER	1	J10001-UP
14		01010-81240	BOLT	10	J10001-UP
15		01643-31232	WASHER	10	J10001-UP
16		208-26-71380	O-RING	1	J10001-UP
17		07042-30617	P-LUG	1	J10001-UP
18		07042-30108	PLUG	1	J10001-UP
19		07042-31019	PLUG	1	J10001-UP
20		07049-01012	PLUG	2	J10001-UP

Ref :N1210-10A0 Page :300110

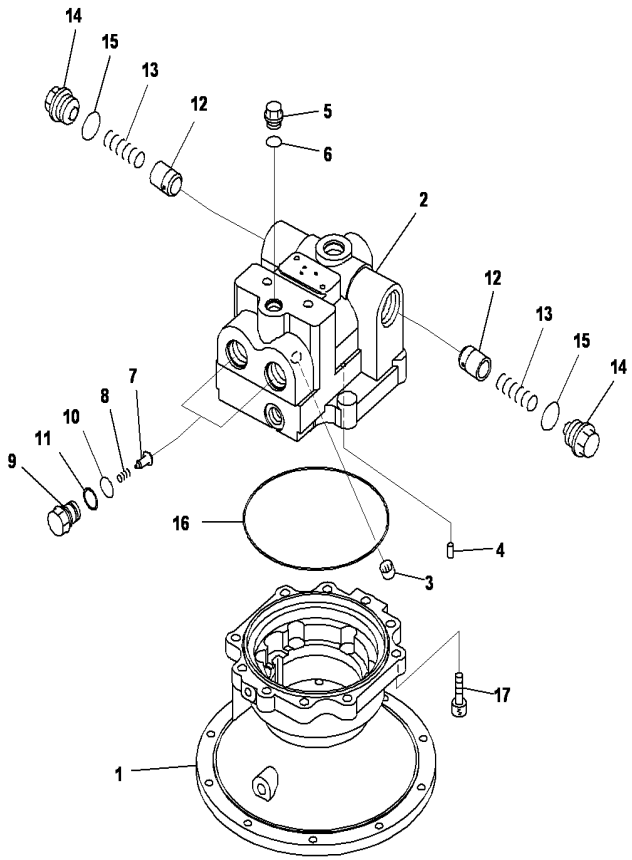

PC2000-8 S/N J10001-UP

SWING MOTOR,INNER PARTS,SWING MOTOR,FRONT (1/3)

INDEX	CD	PART NO.	DESCRIPTION	QTY	SERIAL NO.
		(706-7K-01130)	MOTOR A.(KMF230)	1	J10001-UP
		706-7K-03130	.MOTOR SUB A	1	J10001-UP
1	C2	706-7K-41150	..CASE,MOTOR	1	J10001-UP
2	C2	706-7K-71130	..HOUSING	1	J10001-UP
3	C2	706-7K-40010	..BEARING	1	J10001-UP
4	C2	706-75-42830	..DOWEL PIN	1	J10001-UP
5		706-77-72280	..PLUG	1	J10001-UP
6		07002-62034	..O-RING	1	J10001-UP
7		709-74-92810	..VALVE	2	J10001-UP
8		709-75-92220	..SPRING	2	J10001-UP
9		709-74-92821	..PLUG	2	J10001-UP
10		708-2L-23960	..O-RING	2	J10001-UP
11		700-93-11330	..O RING	2	J10001-UP
12		706-77-72130	..VALVE	2	J10001-UP
13		706-77-72140	..SPRING	2	J10001-UP
14		706-77-72150	..PLUG	2	J10001-UP
15		07002-64234	..O-RING	2	J10001-UP
16	C2	706-7K-40040	..O-RING	1	J10001-UP
17		01252-61450	..BOLT	10	J10001-UP

Ref :N1220-01A1 Page :300120

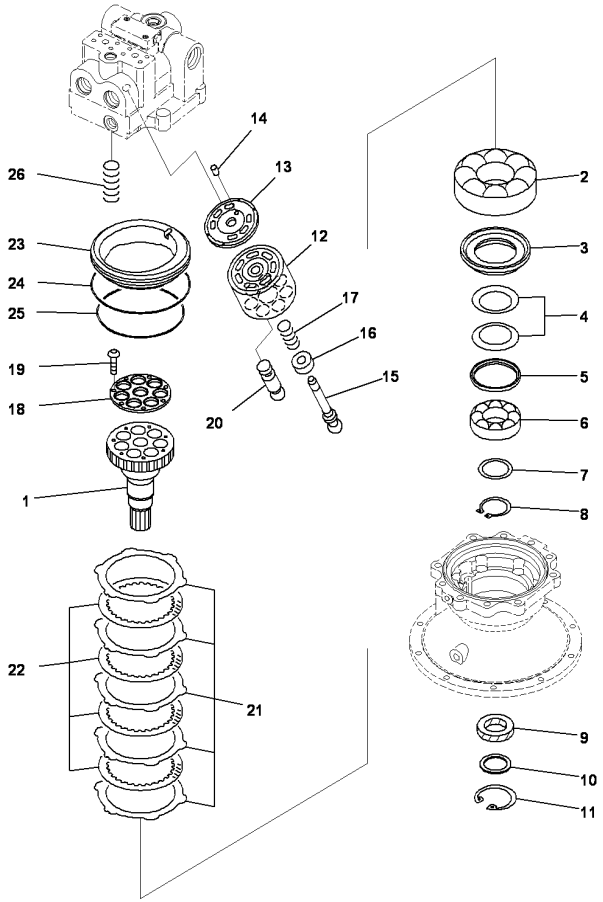

PC2000-8 S/N J10001-UP

SWING MOTOR,INNER PARTS,SWING MOTOR,FRONT (2/3)

INDEX	CD	PART NO.	DESCRIPTION	QTY	SERIAL NO.
		(706-7K-01130)	MOTOR A.(KMF230)	1	J10001-UP
		706-7K-03130	.MOTOR SUB A	1	J10001-UP
1	C2	706-7K-41610	..SHAFT	1	J10001-UP
2	C2	706-77-43890	..BEARING	1	J10001-UP
3	C2	706-7K-41810	..SPACER	1	J10001-UP
4	C2	706-77-42051	..SPRING	2	J10001-UP
5	C2	706-77-42041	..SEAT	1	J10001-UP
6	C2	706-77-42890	..BEARING	1	J10001-UP
7	C2	706-77-05010	..SPACER KIT	1	J10001-UP
	C1	706-77-42440	...SPACER, T=2.3MM	2	J10001-UP
	C1	706-77-42450	...SPACER, T=2.5MM	2	J10001-UP
	C1	706-77-42460	...SPACER, T=2.7MM	2	J10001-UP
8		04064-06525	..RING, SNAP	1	J10001-UP
9		706-8J-41420	..OIL SEAL	1	J10001-UP
10		706-7K-41920	..SPACER	1	J10001-UP
11		04065-07525	..RING	1	J10001-UP
12	C2	706-7K-41210	..CYLINDER BLOCK	1	J10001-UP
13	C2	706-7K-41710	..PLATE,VALVE	1	J10001-UP
14	C2	708-18-13230	..PIN	1	J10001-UP
15	C2	706-7K-41120	..SHAFT,CENTER	1	J10001-UP
16	C2	706-77-42130	..CENTER RING	1	J10001-UP
17	C2	706-7K-41140	..SPRING	1	J10001-UP
	C2	706-7K-05010	..RETAINER KIT	1	J10001-UP
18	C1	706-7K-41260	...RETAINER	1	J10001-UP
19	C1	708-23-12350	...SCREW	7	J10001-UP
20	C2	706-7K-41160	..PISTON SUB A	7	J10001-UP
21	C2	706-7K-91340	..PLATE	5	J10001-UP
22	C2	706-7K-91350	..DISC	4	J10001-UP
23	C2	706-7K-91111	..PISTON,BRAKE	1	J10001-UP
24	C2	07000-B5230	..O-RING	1	J10001-UP
25	C2	706-86-90290	..O-RING	1	J10001-UP
26	C2	706-7K-91360	..SPRING	6	J10001-UP

Ref :N1220-01A2 Page :300130

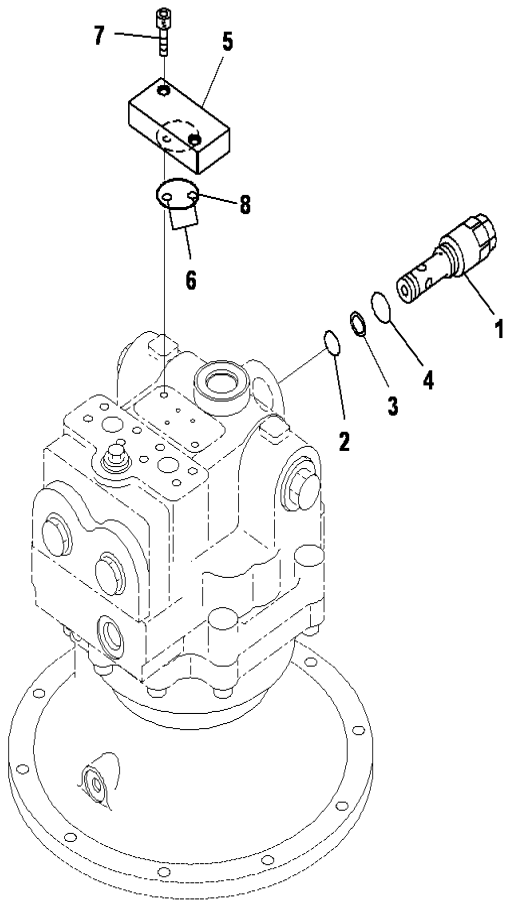

PC2000-8 S/N J10001-UP

SWING MOTOR,INNER PARTS,SWING MOTOR,FRONT (3/3)

INDEX	CD	PART NO.	DESCRIPTION	QTY	SERIAL NO.
		(706-7K-01130)	MOTOR A.(KMF230).....	1	J10001-UP
1		702-77-02160	.RELIEF VALVE.....	1	J10001-UP
2		07000-F3022	..O-RING.....	1	J10001-UP
3		070-01-03022	..RING.....	2	J10001-UP
4		07002-63634	..O-RING.....	1	J10001-UP
5		706-7G-71290	.PLATE.....	1	J10001-UP
6		07000-B1009	.O-RING.....	2	J10001-UP
7		01252-60825	.BOLT.....	2	J10001-UP
8		07000-B3042	.O-RING.....	1	J10001-UP

Ref :N1220-01A3 Page :300140

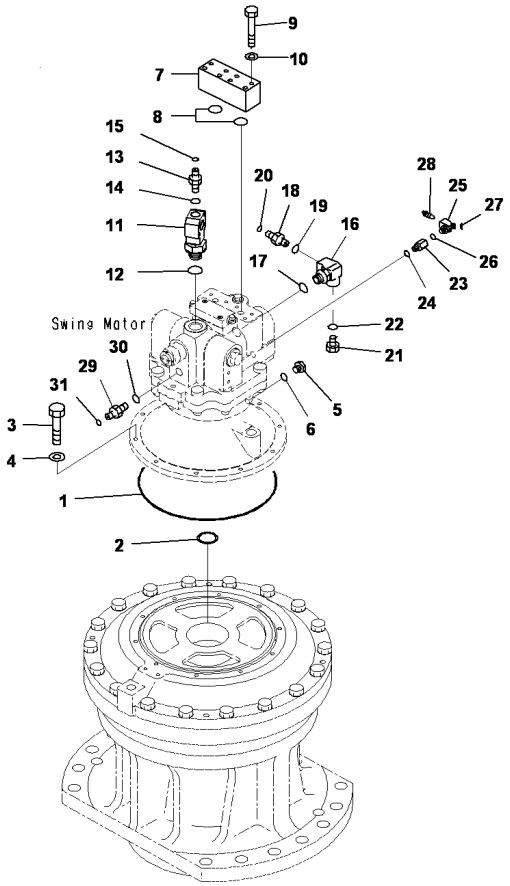

Swing Machinery (Front)

SWING MOTOR(FRONT)

INDEX	CD	PART NO.	DESCRIPTION	QTY	SERIAL NO.
1		208-26-71380	O-RING	1	J10001-UP
2		207-26-71240	RING	1	J10001-UP
3		01010-81240	BOLT	10	J10001-UP
4		01643-31232	WASHER	10	J10001-UP
5		07040-11209	PLUG	1	J10001-UP
6		07002-61223	O-RING	1	J10001-UP
7		21T-64-31890	BLOCK	1	J10001-UP
8		07000-B3035	O-RING	2	J10001-UP
9		01010-81085	BOLT	8	J10001-UP
10		01643-31032	WASHER	8	J10001-UP
11		21N-62-31891	TEE	1	J10001-UP
12		07002-63334	ORING	1	J10001-UP
13		20Y-62-43460	NIPPLE	1	J10001-UP
14		07002-62034	O-RING	1	J10001-UP
15		02896-61008	O-RING	1	J10001-UP
16		21T-64-35880	ELBOW	1	J10001-UP
17		07002-62434	O-RING	1	J10001-UP
18		02781-00522	UNION	1	J10001-UP
19		07002-62434	O-RING	1	J10001-UP
20		02896-61015	O-RING	1	J10001-UP
21		07044-12412	PLUG	1	J10001-UP
22		07002-62434	O-RING	1	J10001-UP
23		21M-62-16350	ADAPTER	1	J10001-UP
24		07002-61423	O-RING	1	J10001-UP
25		21T-64-35910	ELBOW	1	J10001-UP
26		07002-61423	O-RING	1	J10001-UP
27		02896-61009	O-RING	1	J10001-UP
28		20B-27-11210	BLEEDER	1	J10001-UP
29		561-43-84940	NIPPLE	1	J10001-UP
30		07002-61423	O-RING	1	J10001-UP
31		02896-61008	O-RING	1	J10001-UP

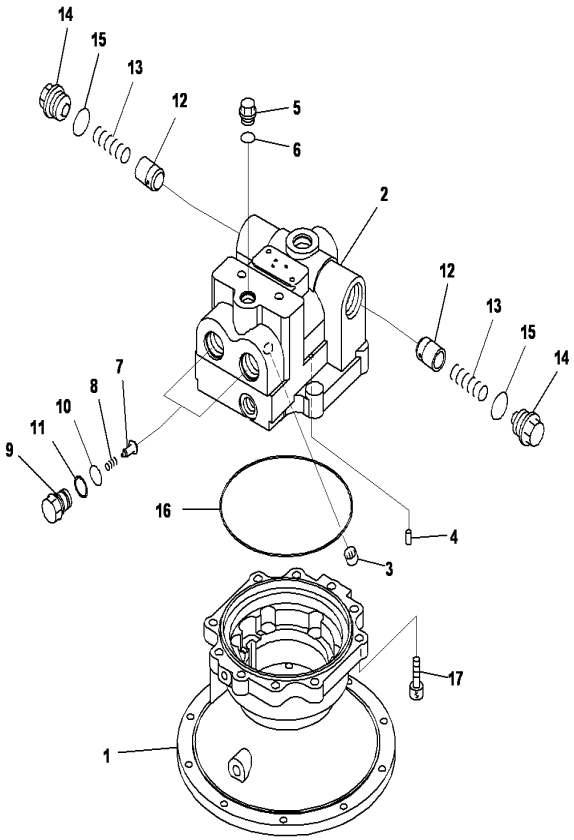

PC2000-8 S/N J10001-UP

SWING MOTOR,INNER PARTS,SWING MOTOR,REAR (1/3)

INDEX	CD	PART NO.	DESCRIPTION	QTY	SERIAL NO.
		(706-7K-01130)	MOTOR A.(KMF230	1	J10001-UP
		706-7K-03130	.MOTOR SUB A	1	J10001-UP
1	C2	706-7K-41150	..CASE,MOTOR	1	J10001-UP
2	C2	706-7K-71130	..HOUSING	1	J10001-UP
3	C2	706-7K-40010	..BEARING	1	J10001-UP
4	C2	706-75-42830	..DOWEL PIN	1	J10001-UP
5		706-77-72280	..PLUG	1	J10001-UP
6		07002-62034	..O-RING	1	J10001-UP
7		709-74-92810	..VALVE	2	J10001-UP
8		709-75-92220	..SPRING	2	J10001-UP
9		709-74-92821	..PLUG	2	J10001-UP
10		708-2L-23960	..O-RING	2	J10001-UP
11		700-93-11330	..O RING	2	J10001-UP
12		706-77-72130	..VALVE	2	J10001-UP
13		706-77-72140	..SPRING	2	J10001-UP
14		706-77-72150	..PLUG	2	J10001-UP
15		07002-64234	..O-RING	2	J10001-UP
16	C2	706-7K-40040	..O-RING	1	J10001-UP
17		01252-61450	..BOLT	10	J10001-UP

Ref :N1220-01A5 Page :300160

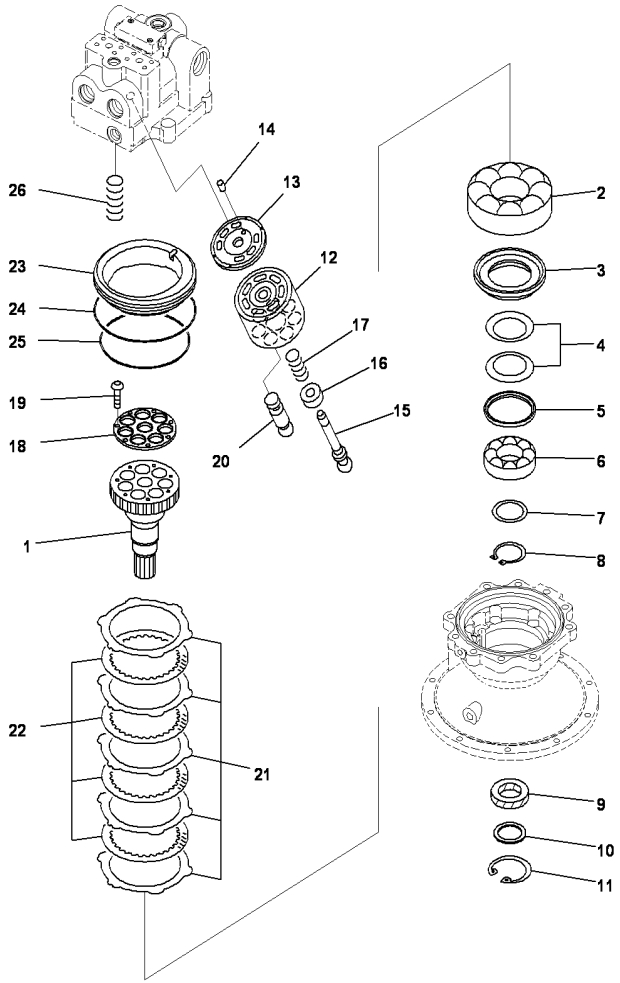

PC2000-8 S/N J10001-UP

SWING MOTOR,INNER PARTS,SWING MOTOR,REAR (2/3)

INDEX	CD	PART NO.	DESCRIPTION	QTY	SERIAL NO.
		(706-7K-01130)	MOTOR A.(KMF230)	1	J10001-UP
		706-7K-03130	.MOTOR SUB A	1	J10001-UP
1	C2	706-7K-41610	..SHAFT	1	J10001-UP
2	C2	706-77-43890	..BEARING	1	J10001-UP
3	C2	706-7K-41810	..SPACER	1	J10001-UP
4	C2	706-77-42051	..SPRING	2	J10001-UP
5	C2	706-77-42041	..SEAT	1	J10001-UP
6	C2	706-77-42890	..BEARING	1	J10001-UP
7	C2	706-77-05010	..SPACER KIT	1	J10001-UP
	C1	706-77-42440	...SPACER, T=2.3MM	2	J10001-UP
	C2	706-77-42450	...SPACER, T=2.5MM	2	J10001-UP
	C1	706-77-42460	...SPACER, T=2.7MM	2	J10001-UP
8		04064-06525	..RING	1	J10001-UP
9		706-8J-41420	..OIL SEAL	1	J10001-UP
10		706-7K-41920	..SPACER	1	J10001-UP
11		04065-07525	..RING	1	J10001-UP
12	C2	706-7K-41210	..CYLINDER BLOCK	1	J10001-UP
13	C2	706-7K-41710	..PLATE,VALVE	1	J10001-UP
14	C2	708-18-13230	..PIN	1	J10001-UP
15	C2	706-7K-41120	..SHAFT,CENTER	1	J10001-UP
16	C2	706-77-42130	..CENTER RING	1	J10001-UP
17	C2	706-7K-41140	..SPRING	1	J10001-UP
	C2	706-7K-05010	..RETAINER KIT	1	J10001-UP
18	C1	706-7K-41260	...RETAINER	1	J10001-UP
19	C1	708-23-12350	...SCREW	7	J10001-UP
20	C2	706-7K-41160	..PISTON SUB A	7	J10001-UP
21	C2	706-7K-91340	..PLATE	5	J10001-UP
22	C2	706-7K-91350	..DISC	4	J10001-UP
23	C2	706-7K-91111	..PISTON,BRAKE	1	J10001-UP
24	C2	07000-B5230	..O-RING	1	J10001-UP
25	C2	706-86-90290	..O-RING	1	J10001-UP
26	C2	706-7K-91360	..SPRING	6	J10001-UP

Ref :N1220-01A6 Page :300170

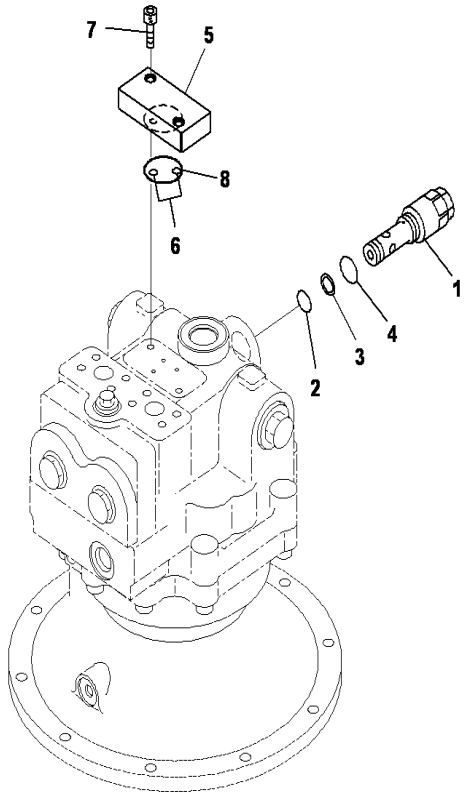

PC2000-8 S/N J10001-UP

SWING MOTOR,INNER PARTS,SWING MOTOR,REAR (3/3)

INDEX	CD	PART NO.	DESCRIPTION	QTY	SERIAL NO.
		706-7K-01130	MOTOR A.(KMF230).....	1	J10001-UP
1		702-77-02160	.RELIEF VALVE.....	1	J10001-UP
2		07000-F3022	..O-RING.....	1	J10001-UP
3		0700103022	..RING.....	2	J10001-UP
4		07002-63634	..O-RING.....	1	J10001-UP
5		706-7G-71290	.PLATE.....	1	J10001-UP
6		07000-B1009	.O-RING.....	2	J10001-UP
7		01252-60825	.BOLT.....	2	J10001-UP
8		07000-B3042	.O-RING.....	1	J10001-UP

Ref :N1220-01A7 Page :300180

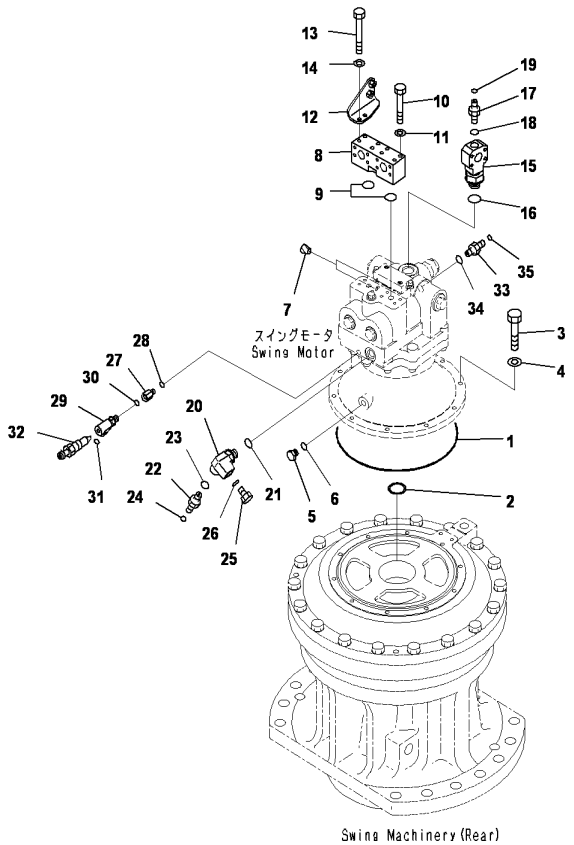

PC2000-8 S/N J10001-UP

SWING MOTOR,RELATED PARTS,REAR

INDEX	CD	PART NO.	DESCRIPTION	QTY	SERIAL NO.
1		208-26-71380	O-RING	1	J10001-UP
2		207-26-71240	RING	1	J10001-UP
3		01010-81240	BOLT	10	J10001-UP
4		01643-31232	WASHER	10	J10001-UP
5		07040-11209	PLUG	1	J10001-UP
6		07002-61223	O-RING	1	J10001-UP
7		07049-01012	PLUG	1	J10001-UP
8		21T-64-31890	BLOCK	1	J10001-UP
9		07000-B3035	O-RING	2	J10001-UP
10		01010-81085	BOLT	6	J10001-UP
11		01643-31032	WASHER	6	J10001-UP
12		21T-64-33660	BRACKET	1	J10001-UP
13		01010-81090	BOLT	2	J10001-UP
14		01643-31032	WASHER	2	J10001-UP
15		21N-62-31891	TEE	1	J10001-UP
16		07002-63334	ORING	1	J10001-UP
17		20Y-62-43460	NIPPLE	1	J10001-UP
18		07002-62034	O-RING	1	J10001-UP
19		02896-61008	O-RING	1	J10001-UP
20		21T-64-35880	ELBOW	1	J10001-UP
21		07002-62434	O-RING	1	J10001-UP
22		02781-00522	UNION	1	J10001-UP
23		07002-62434	O-RING	1	J10001-UP
24		02896-61015	O-RING	1	J10001-UP
25		07044-12412	PLUG	1	J10001-UP
26		07002-62434	O-RING	1	J10001-UP
27		21M-62-16350	ADAPTER	1	J10001-UP
28		07002-61423	O-RING	1	J10001-UP
29		21T-64-36860	ELBOW	1	J10001-UP
30		07002-61423	O-RING	1	J10001-UP
31		02896-61009	O-RING	1	J10001-UP
32		20B-27-11210	BLEEDER	1	J10001-UP
33		561-43-84940	NIPPLE	1	J10001-UP
34		07002-61423	O-RING	1	J10001-UP
35		02896-61008	O-RING	1	J10001-UP

Ref :N1220-01A8 Page :300190

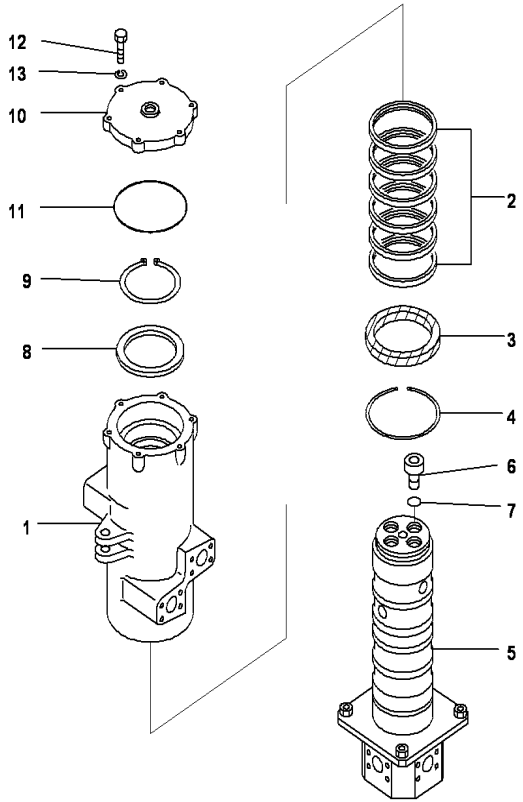

PC2000-8 S/N J10001-UP

SWIVEL JOINT,INNER PARTS

INDEX	CD	PART NO.	DESCRIPTION	QTY	SERIAL NO.
		703-15-00131	SWIVEL JOINT ASS'Y	1	J10001-UP
		703-15-73202	.SWIVEL JOINT ASS'Y	1	J10001-UP
1		703-15-91121	..ROTOR	1	J10001-UP
		703-15-91120G0	..ROTOR	1	J10001-UP
2		703-15-95011	..SEAL	6	J10001-UP
3		703-15-96011	..OIL SEAL	1	J10001-UP
4		04071-00180	..RING,SNAP	1	J10001-UP
5		703-15-92121	..SHAFT	1	J10001-UP
6		703-15-98110	..PLUG	4	J10001-UP
7		07002-14234	..O-RING	4	J10001-UP
8		703-15-94110	..PLATE	1	J10001-UP
9		04070-00140	..RING	1	J10001-UP
10		703-15-93110	..COVER	1	J10001-UP
11		07000-15185	..O-RING	1	J10001-UP
12		01010-81040	..BOLT	6	J10001-UP
13		01643-31032	..WASHER	6	J10001-UP

Ref :N1310-01A1 Page :300200

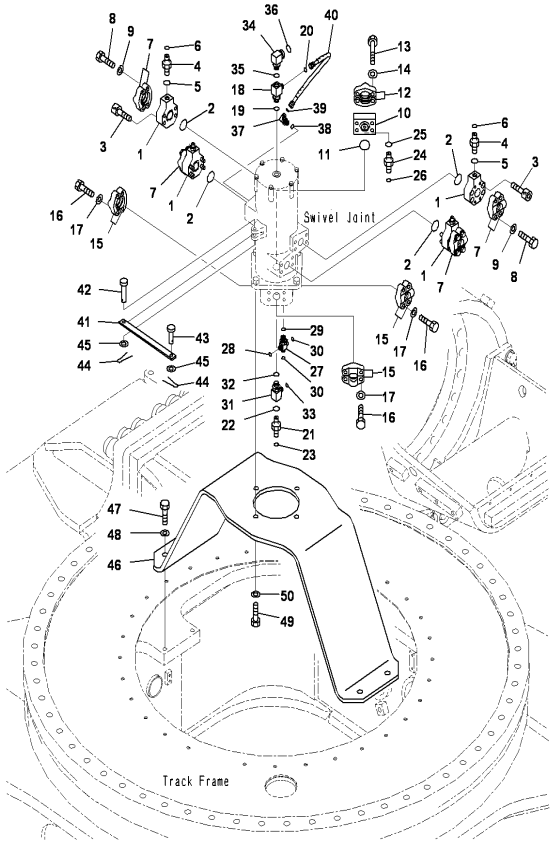

PC2000-8 S/N J10001-UP

SWIVEL JOINT,RELATED PARTS

INDEX	CD	PART NO.	DESCRIPTION	QTY	SERIAL NO.
1		21T-64-32421	BLOCK	4	J10001-UP
2		07000-B3048	O-RING	4	J10001-UP
3		01252-71450	BOLT	16	J10001-UP
4		02781-00315	UNION	4	J10001-UP
5		07002-62034	O-RING	4	J10001-UP
6		02896-61009	O-RING	4	J10001-UP
7		07371-51470	FLANGE	8	J10001-UP
8		01010-81455	BOLT	16	J10001-UP
9		01643-31445	WASHER	16	J10001-UP
10		21T-62-74121	BLOCK	1	J10001-UP
11		07000-B3048	O-RING	1	J10001-UP
12		07371-51470	FLANGE	2	J10001-UP
13		01018-31495	BOLT	4	J10001-UP
14		01643-31445	WASHER	4	J10001-UP
15		07371-51470	FLANGE	6	J10001-UP
16		01010-81455	BOLT	12	J10001-UP
17		01643-31445	WASHER	12	J10001-UP
18		21T-64-36190	ELBOW	1	J10001-UP
19		07002-62434	O-RING	1	J10001-UP
20		02896-61009	O-RING	1	J10001-UP
21		02781-00628	UNION	1	J10001-UP
22		07002-62434	O-RING	1	J10001-UP
23		02896-61018	O-RING	1	J10001-UP
24		02781-0021D	UNION	1	J10001-UP
25		07002-61423	O-RING	1	J10001-UP
26		02896-61008	O-RING	1	J10001-UP
27		829-66-21480	TEE	1	J10001-UP
28		02896-61009	O-RING	1	J10001-UP
29		07002-62034	O-RING	1	J10001-UP
30		02896-61009	O-RING	2	J10001-UP
31		21T-64-36190	ELBOW	1	J10001-UP
32		07002-62434	O-RING	1	J10001-UP
33		02896-61009	O-RING	1	J10001-UP
34		207-62-72131	ELBOW	1	J10001-UP
35		07002-62434	O-RING	1	J10001-UP
36		11Y-62-11980	O-RING	1	J10001-UP
37		02782-10315	ELBOW	1	J10001-UP
38		07002-62034	O-RING	1	J10001-UP
39		02896-61009	O-RING	1	J10001-UP
40		02760-003A5	HOSE	1	J10001-UP
41		21N-62-12420	PLATE	1	J10001-UP
42		209-62-52560	PIN	1	J10001-UP
43		04205-11645	PIN	1	J10001-UP
44		04050-14028	PIN	2	J10001-UP
45		01641-21626	WASHER	3	J10001-UP

Ref :N1310-01A2 Page :300210

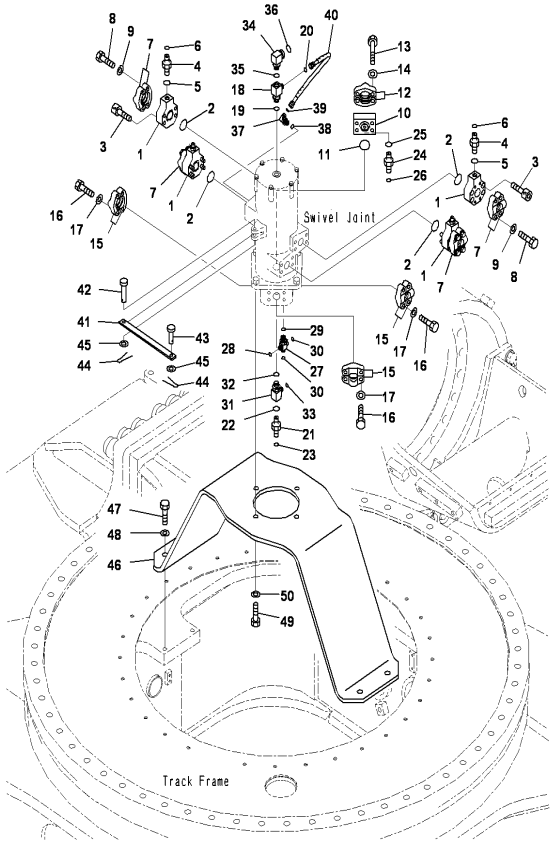

PC2000-8 S/N J10001-UP

SWIVEL JOINT,RELATED PARTS

INDEX	CD	PART NO.	DESCRIPTION	QTY	SERIAL NO.
46		21T-62-68350	BRACKET	1	J10001-UP
47		01010-82455	BOLT	4	J10001-UP
48		01643-32460	WASHER	4	J10001-UP
49		01010-82070	BOLT	4	J10001-UP
50		01643-32060	WASHER	4	J10001-UP

Ref :N1310-01A2 Page :300211

TRAVEL AND LOWER SYSTEM

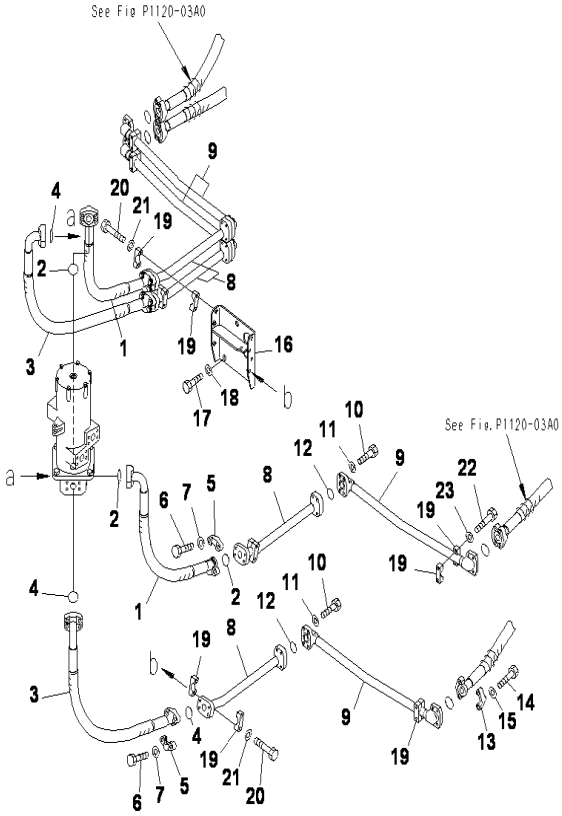

PC2000-8 S/N J10001-UP

TRAVEL PIPING,HOSE (1/3)

INDEX	CD	PART NO.	DESCRIPTION	QTY	SERIAL NO.
1		07084-01411	HOSE	2	J10001-UP
2		07000-B3048	O-RING	4	J10001-UP
3		07084-01414	HOSE	2	J10001-UP
4		07000-B3048	O-RING	4	J10001-UP
5		07371-51470	FLANGE	8	J10001-UP
6		01010-81455	BOLT	16	J10001-UP
7		01643-31445	WASHER	16	J10001-UP
8		21T-64-34210	TUBE	4	J10001-UP
9		21T-64-34111	TUBE	4	J10001-UP
10		01010-81445	BOLT	16	J10001-UP
11		01643-31445	WASHER	16	J10001-UP
12		07000-B3048	O-RING	4	J10001-UP
13		07371-51470	FLANGE	8	J10001-UP
14		01010-81455	BOLT	16	J10001-UP
15		01643-31445	WASHER	16	J10001-UP
16		21T-64-34190	BRACKET	1	J10001-UP
17		01010-82445	BOLT	3	J10001-UP
18		01643-32460	WASHER	3	J10001-UP
19		176-61-41330	CLAMP	16	J10001-UP
20		01010-81290	BOLT	8	J10001-UP
21		01643-31232	WASHER	8	J10001-UP
22		01010-81285	BOLT	8	J10001-UP
23		01643-31232	WASHER	8	J10001-UP

Ref :P1120-01A0 Page :330010

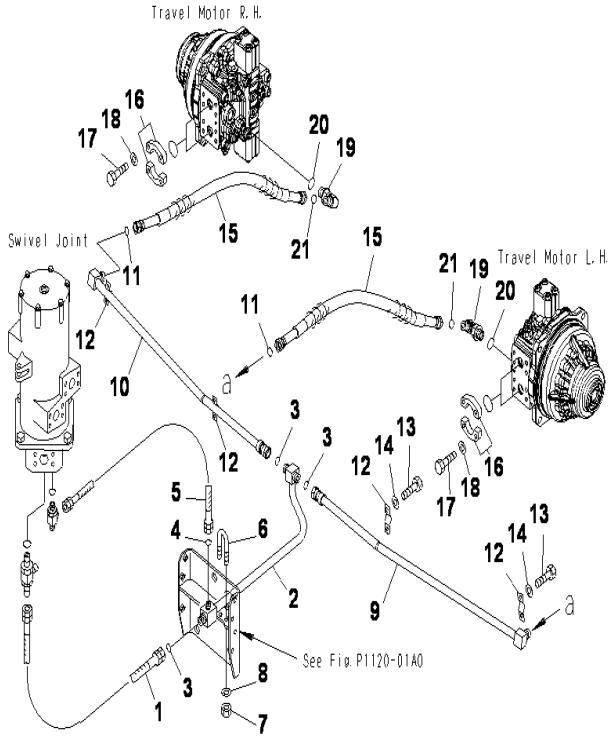

PC2000-8 S/N J10001-UP

TRAVEL PIPING,HOSE (2/3)

INDEX	CD	PART NO.	DESCRIPTION	QTY	SERIAL NO.
1		02760-00612	HOSE	1	J10001-UP
2		21T-64-34130	TUBE	1	J10001-UP
3		02896-61018	O-RING	3	J10001-UP
4		02896-61009	O-RING	1	J10001-UP
5		02760-00312	HOSE	1	J10001-UP
6		07283-32738	CLIP	1	J10001-UP
7		01597-01009	NUT	2	J10001-UP
8		01643-31032	WASHER	2	J10001-UP
9		21T-64-34121	TUBE	1	J10001-UP
10		21T-64-34141	TUBE	1	J10001-UP
11		02896-61018	O-RING	2	J10001-UP
12		07282-12793	CLAMP	4	J10001-UP
13		01010-81025	BOLT	8	J10001-UP
14		01643-31032	WASHER	8	J10001-UP
15		21T-64-34230	HOSE	2	J10001-UP
16		07371-51470	FLANGE	8	J10001-UP
17		01010-81455	BOLT	16	J10001-UP
18		01643-31445	WASHER	16	J10001-UP
19		11Y-62-12340	ELBOW	2	J10001-UP
20		07002-63334	ORING	2	J10001-UP
21		02896-61018	O-RING	2	J10001-UP

Ref :P1120-02A0 Page :330020

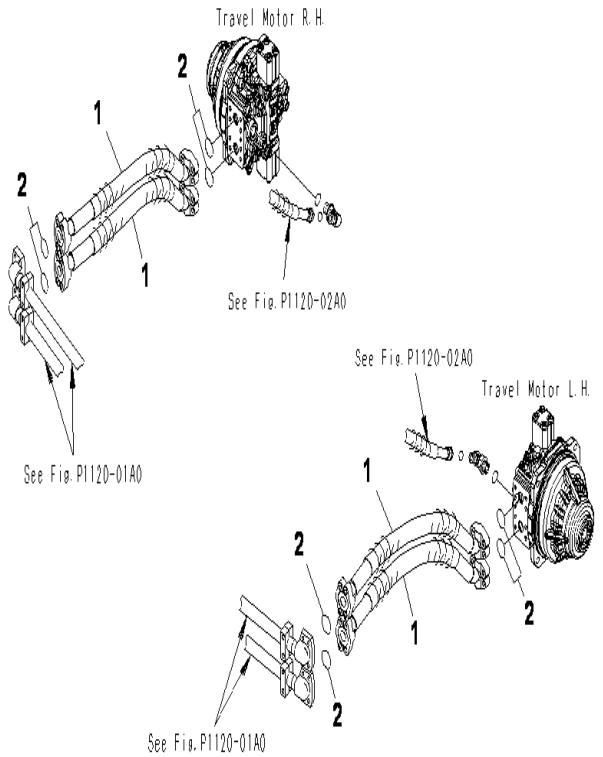

PC2000-8 S/N J10001-UP

TRAVEL PIPING,HOSE (3/3)

INDEX	CD	PART NO.	DESCRIPTION	QTY	SERIAL NO.
1		21T-64-34220	HOSE.....	4	J10001-UP
2		07000-B3048	O-RING.....	8	J10001-UP

Ref :P1120-03A0 Page :330030

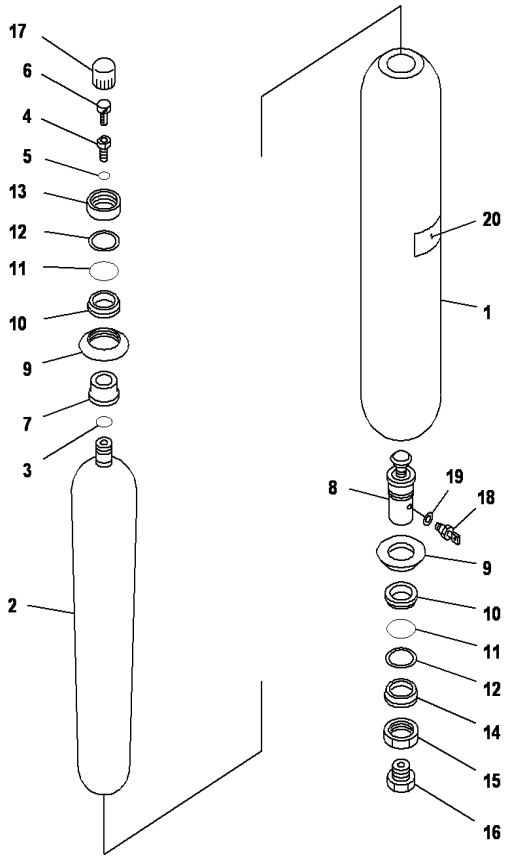

PC2000-8 S/N J10001-UP

HYDRAULIC IDLER CUSHION (HIC) PIPING,ACCUMULATOR

INDEX	CD	PART NO.	DESCRIPTION	QTY	SERIAL NO.
		21T-60-12222	ACCUMLATOR.....	1	J10020-UP
		21T-60-12221	ACCUMLATOR.....	1	J10001-J10019
1		21T-60-12620	.BUSHING.....	1	J10001-UP
2		21T-60-12630	.SHELL.....	1	J10001-UP
		21T-60-12640	.BLADDER ASS'Y.....	1	J10001-UP
3		21T-60-12650	..BLADDER.....	1	J10001-UP
4		21T-60-12660	..O-RING.....	1	J10001-UP
		21T-60-12670	..VALVE ASS'Y.....	1	J10001-UP
5		21T-60-12680	...BODY.....	1	J10001-UP
6		21T-60-12690	...O-RING.....	1	J10001-UP
7		21T-60-12710	...CAP.....	1	J10001-UP
8		21T-60-12720	.PLUG.....	1	J10001-UP
9		21T-60-12730	.RING.....	2	J10001-UP
10		21T-60-12740	.WASHER.....	2	J10001-UP
11		21T-60-12750	.O-RING.....	2	J10001-UP
12		21T-60-12760	.RING.....	2	J10001-UP
13		21T-60-12770	.RING.....	2	J10001-UP
14		21T-60-12780	.NUT.....	1	J10001-UP
15		21T-60-12790	.GUARD.....	1	J10001-UP
16		21T-60-12810	.BODY.....	1	J10001-UP
17		21T-60-12820	.NUT.....	1	J10001-UP
18		21T-60-12830	.PLUG.....	1	J10001-UP
19		21T-60-12840	.GASKET.....	1	J10001-UP
20		21T-60-12850	.PLATE.....	1	J10001-UP

Ref :P1140-01A1 Page :330040

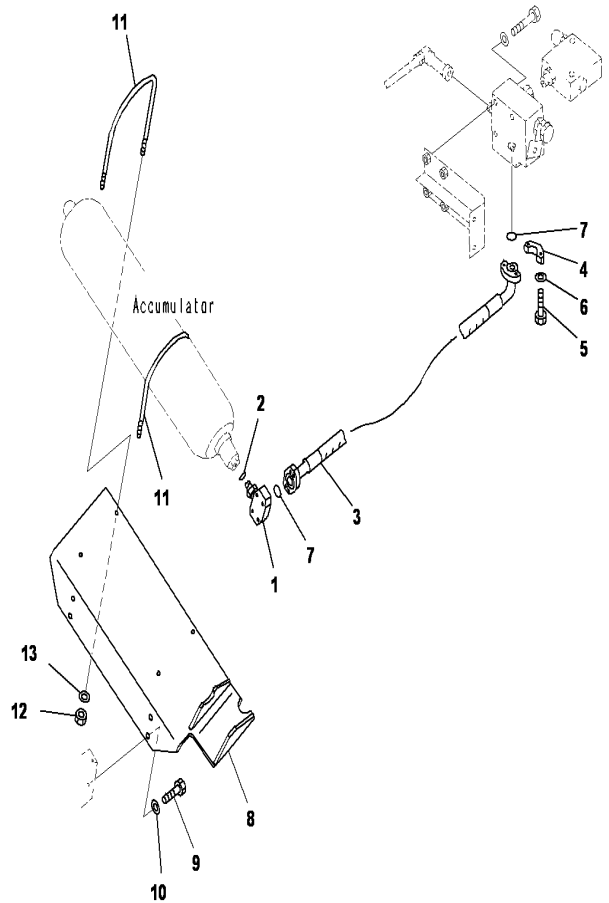

PC2000-8 S/N J10001-UP

HYDRAULIC IDLER CUSHION (HIC) PIPING,REDUCING VALVE TO ACCUMULATOR

INDEX	CD	PART NO.	DESCRIPTION	QTY	SERIAL NO.
1		21T-62-14130	ELBOW	1	J10001-UP
2		07002-62434	O-RING	1	J10001-UP
3		07098-01210	HOSE	1	J10001-UP
4		07371-51260	FLANGE	4	J10001-UP
5		01010-81245	BOLT	8	J10001-UP
6		01643-31232	WASHER	8	J10001-UP
7		07000-B3038	O-RING	2	J10001-UP
8		21T-62-84121	BRACKET	1	J10020-UP
		21T-62-84120	BRACKET	1	J10001-J10019
9		01010-82460	BOLT	4	J10001-UP
10		01643-32460	WASHER	4	J10001-UP
11		21T-62-64481	U-BOLT	2	J10020-UP
		21T-62-64480	U-BOLT	2	J10001-J10019
12		01597-01211	NUT	4	J10001-UP
13		01643-31232	WASHER	4	J10001-UP

Ref :P1140-01A2 Page :330050

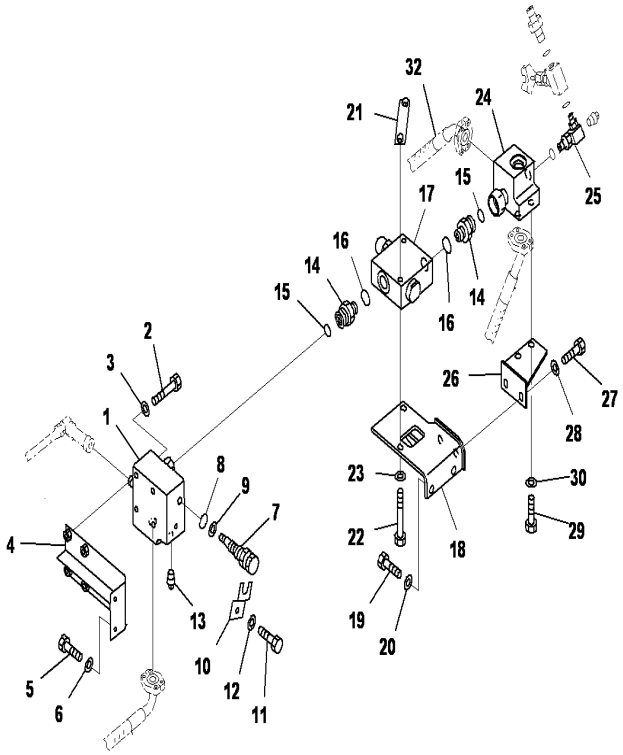

HYDRAULIC IDLER CUSHION (HIC) PIPING, RELIEF VALVE (1/2)

INDEX	CD	PART NO.	DESCRIPTION	QTY	SERIAL NO.
1		21T-62-74420	BLOCK	1	J10001-UP
2		01011-81200	BOLT	4	J10001-UP
3		01643-31232	WASHER	4	J10001-UP
4		21T-62-74430	BRACKET	1	J10001-UP
5		01010-81230	BOLT	2	J10001-UP
6		01643-31232	WASHER	2	J10001-UP
7		21T-64-34240	PLUG	1	J10001-UP
8		07000-B2012	O-RING	1	J10001-UP
9		07001-02012	RING,BACK UP	1	J10001-UP
10		21T-30-14250	STOPPER	1	J10001-UP
11		01010-81225	BOLT	1	J10001-UP
12		01643-31232	WASHER	1	J10001-UP
13		07042-30108	PLUG	1	J10001-UP
14		209-62-19150	NIPPLE	2	J10001-UP
15		07000-B3028	O-RING	2	J10001-UP
16		07000-B3038	O-RING	2	J10001-UP
17		21T-60-31510	VALVE	1	J10001-UP
18		209-62-28682	BRACKET	1	J10001-UP
19		01010-81230	BOLT	2	J10001-UP
20		01643-31232	WASHER	2	J10001-UP
21		209-62-28761	SEAT	1	J10001-UP
22		01010-81290	BOLT	2	J10001-UP
23		01643-31232	WASHER	2	J10001-UP
24		21T-62-74441	BLOCK	1	J10001-UP
25		209-62-28481	ELBOW	1	J10001-UP
26		21T-64-34440	BRACKET	1	J10001-UP
27		01010-81235	BOLT	2	J10001-UP
28		01643-31232	WASHER	2	J10001-UP
29		01010-81230	BOLT	2	J10001-UP
30		01643-31232	WASHER	2	J10001-UP

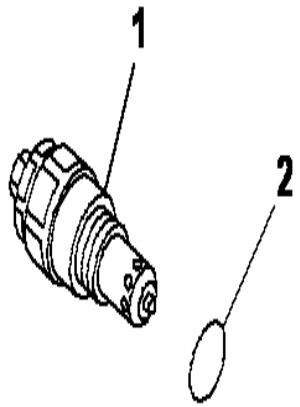

PC2000-8 S/N J10001-UP

HYDRAULIC IDLER CUSHION (HIC) PIPING,INNER PARTS,RELIEF VALVE

INDEX	CD	PART NO.	DESCRIPTION	QTY	SERIAL NO.
1		709-90-74401	SC.RIF.VALVE A.....	1	J10001-UP
2		07002-13634	.O-RING.....	1	J10001-UP

Ref :P1140-01A4 Page :330070

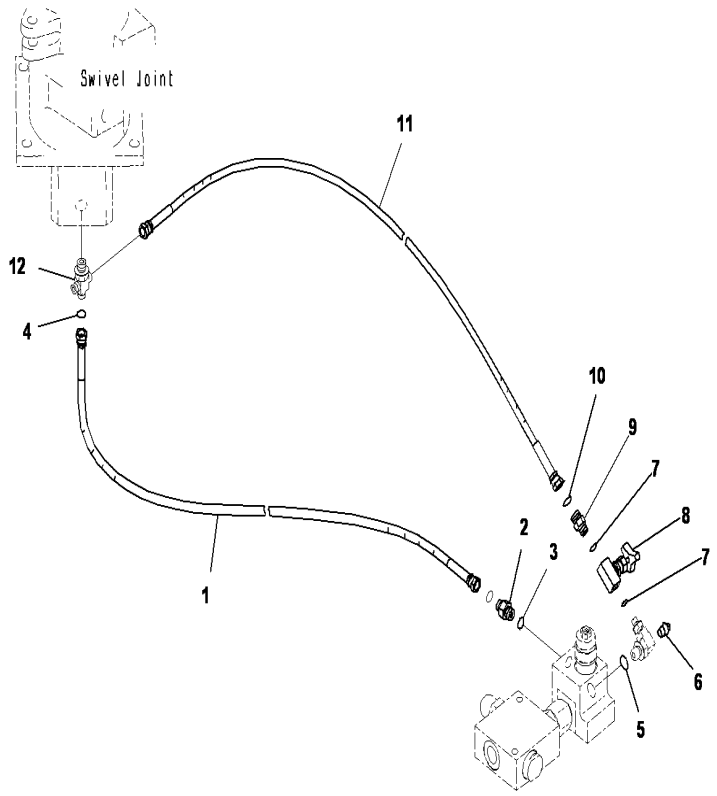

PC2000-8 S/N J10001-UP

HYDRAULIC IDLER CUSHION (HIC) PIPING, RELIEF VALVE (2/2)

INDEX	CD	PART NO.	DESCRIPTION	QTY	SERIAL NO.
1		02760-00313	HOSE	1	J10001-UP
2		02781-00315	UNION	1	J10001-UP
3		07002-62034	O-RING	1	J10001-UP
4		02896-61009	O-RING	1	J10001-UP
5		07002-62034	O-RING	1	J10001-UP
6		07042-30108	PLUG	1	J10001-UP
7		07002-61423	O-RING	2	J10001-UP
8		21T-60-12251	VALVE	1	J10001-UP
9		11Y-62-12850	UNION	1	J10001-UP
10		02896-61009	O-RING	1	J10001-UP
11		02760-00312	HOSE	1	J10001-UP

Ref :P1140-01A5 Page :330080

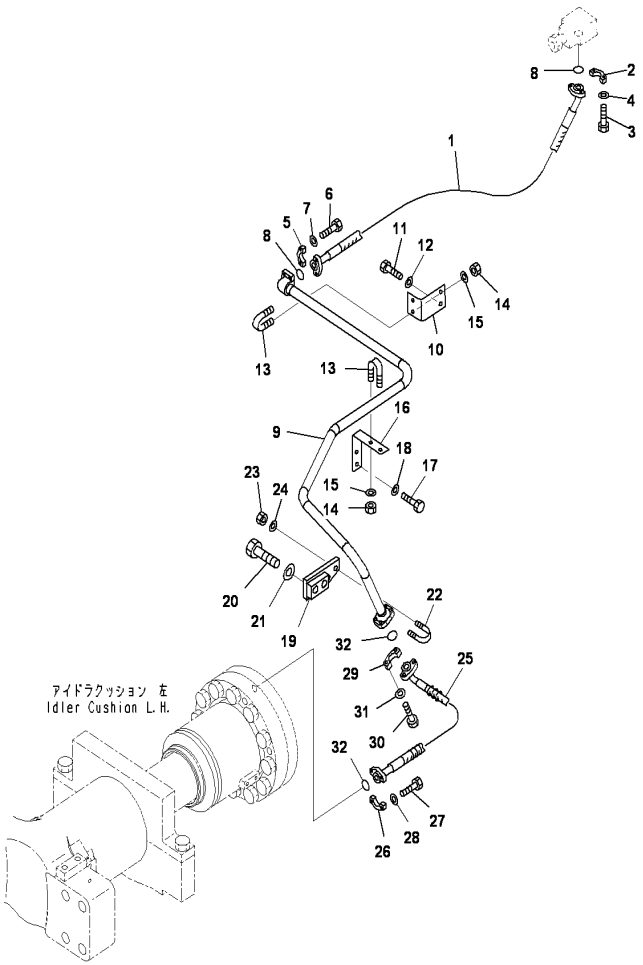

PC2000-8 S/N J10001-UP

HYDRAULIC IDLER CUSHION (HIC) PIPING,LHS

INDEX	CD	PART NO.	DESCRIPTION	QTY	SERIAL NO.
1		07097-006A7	HOSE	1	J10001-UP
2		07371-30638	FLANGE	2	J10001-UP
3		01010-80830	BOLT	4	J10001-UP
4		01643-50823	WASHER	4	J10001-UP
5		07371-30640	FLANGE	2	J10001-UP
6		07372-21035	BOLT	4	J10001-UP
7		01643-51032	WASHER	4	J10001-UP
8		07000-B3025	O-RING	2	J10001-UP
9		21T-64-34151	TUBE(L.H)	1	J10001-UP
10		209-62-54480	PLATE	1	J10001-UP
11		01010-81225	BOLT	2	J10001-UP
12		01643-31232	WASHER	2	J10001-UP
13		07283-32738	CLIP	2	J10001-UP
14		01597-01009	NUT	4	J10001-UP
15		01643-31032	WASHER	4	J10001-UP
16		209-62-54490	PLATE	1	J10001-UP
17		01010-81225	BOLT	2	J10001-UP
18		01643-31232	WASHER	2	J10001-UP
19		21T-64-34170	BRACKET	1	J10001-UP
20		01010-81660	BOLT	2	J10001-UP
21		01643-31645	WASHER	2	J10001-UP
22		07283-32746	CLIP	1	J10001-UP
23		01597-01009	NUT	2	J10001-UP
24		01643-31032	WASHER	2	J10001-UP
25		07098-20609	HOSE	1	J10001-UP
26		07371-30638	FLANGE	2	J10001-UP
27		01010-80830	BOLT	4	J10001-UP
28		01643-50823	WASHER	4	J10001-UP
29		07371-30640	FLANGE	2	J10001-UP
30		07372-21035	BOLT	4	J10001-UP
31		01643-51032	WASHER	4	J10001-UP
32		07000-B3025	O-RING	2	J10001-UP

Ref :P1140-01A6 Page :330090

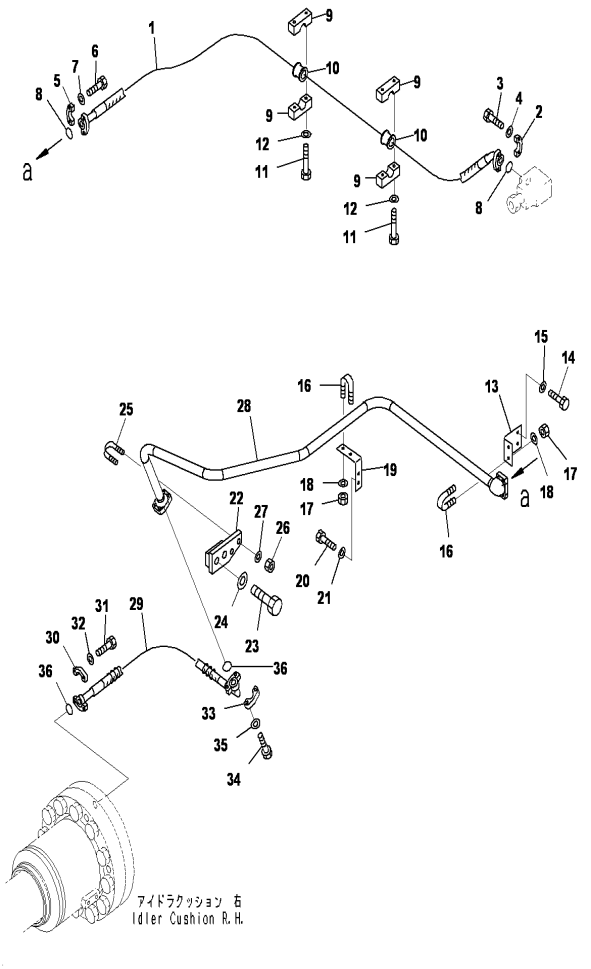

PC2000-8 S/N J10001-UP

HYDRAULIC IDLER CUSHION (HIC) PIPING,RHS

INDEX	CD	PART NO.	DESCRIPTION	QTY	SERIAL NO.
1		07097-00622	HOSE	1	J10001-UP
2		07371-30638	FLANGE	2	J10001-UP
3		01010-80830	BOLT	4	J10001-UP
4		01643-50823	WASHER	4	J10001-UP
5		07371-30640	FLANGE	2	J10001-UP
6		07372-21035	BOLT	4	J10001-UP
7		01643-51032	WASHER	4	J10001-UP
8		07000-B3025	O-RING	2	J10001-UP
9		21T-62-74460	CLAMP	4	J10001-UP
10		21T-62-74450	CUSHION	2	J10001-UP
11		01010-81285	BOLT	4	J10001-UP
12		01643-31232	WASHER	4	J10001-UP
13		209-62-54480	PLATE	1	J10001-UP
14		01010-81225	BOLT	2	J10001-UP
15		01643-31232	WASHER	2	J10001-UP
16		07283-32738	CLIP	2	J10001-UP
17		01597-01009	NUT	4	J10001-UP
18		01643-31032	WASHER	4	J10001-UP
19		209-62-54490	PLATE	1	J10001-UP
20		01010-81225	BOLT	2	J10001-UP
21		01643-31232	WASHER	2	J10001-UP
22		21T-64-34180	BRACKET	1	J10001-UP
23		01010-81660	BOLT	2	J10001-UP
24		01643-31645	WASHER	2	J10001-UP
25		07283-32746	CLIP	1	J10001-UP
26		01597-01009	NUT	2	J10001-UP
27		01643-31032	WASHER	2	J10001-UP
28		21T-64-34160	TUBE(R.H)	1	J10001-UP
29		07098-20609	HOSE	1	J10001-UP
30		07371-30638	FLANGE	2	J10001-UP
31		01010-80830	BOLT	4	J10001-UP
32		01643-50823	WASHER	4	J10001-UP
33		07371-30640	FLANGE	2	J10001-UP
34		07372-21035	BOLT	4	J10001-UP
35		01643-51032	WASHER	4	J10001-UP
36		07000-B3025	O-RING	2	J10001-UP

Ref :P1140-01A7 Page :330100

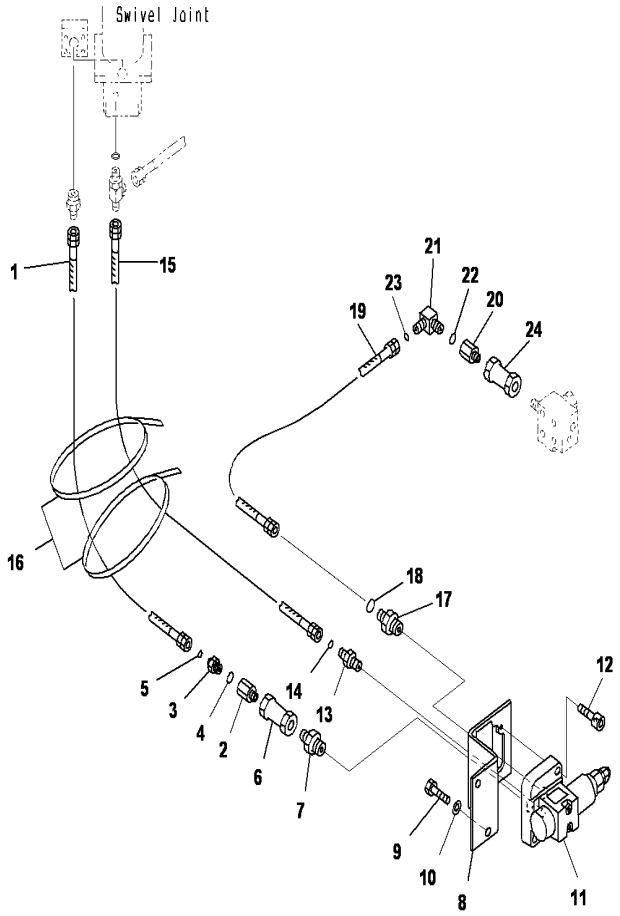

PC2000-8 S/N J10001-UP

HYDRAULIC IDLER CUSHION (HIC) PIPING,REDUCING VALVE

INDEX	CD	PART NO.	DESCRIPTION	QTY	SERIAL NO.
1		02777-00214	HOSE	1	J10001-UP
2		12H-49-11170	NIPPLE	1	J10001-UP
3		8255-62-4370	UNION	1	J10001-UP
4		07002-62034	O-RING	1	J10001-UP
5		02896-61008	O-RING	1	J10001-UP
6		209-60-52170	VALVE	1	J10001-UP
7		566-35-15230	NIPPLE	1	J10001-UP
8		21T-62-84110	BRACKET	1	J10001-UP
9		01010-81225	BOLT	2	J10001-UP
10		01643-31232	WASHER	2	J10001-UP
11		21T-60-72120	VALVE	1	J10001-UP
12		01252-70840	BOLT	2	J10001-UP
13		20U-62-42230	ELBOW	1	J10001-UP
14		02896-61009	O-RING	1	J10001-UP
15		02760-00313	HOSE	1	J10001-UP
16		08034-20536	BAND	2	J10001-UP
17		417-82-32670	CONNECTOR	1	J10001-UP
18		02896-61009	O-RING	1	J10001-UP
19		02765-00308	HOSE	1	J10001-UP
20		12H-49-11170	NIPPLE	1	J10001-UP
21		02782-10315	ELBOW	1	J10001-UP
22		07002-62034	O-RING	1	J10001-UP
23		02896-61009	O-RING	1	J10001-UP
24		209-60-52170	VALVE	1	J10001-UP

Ref :P1140-01A8 Page :330110

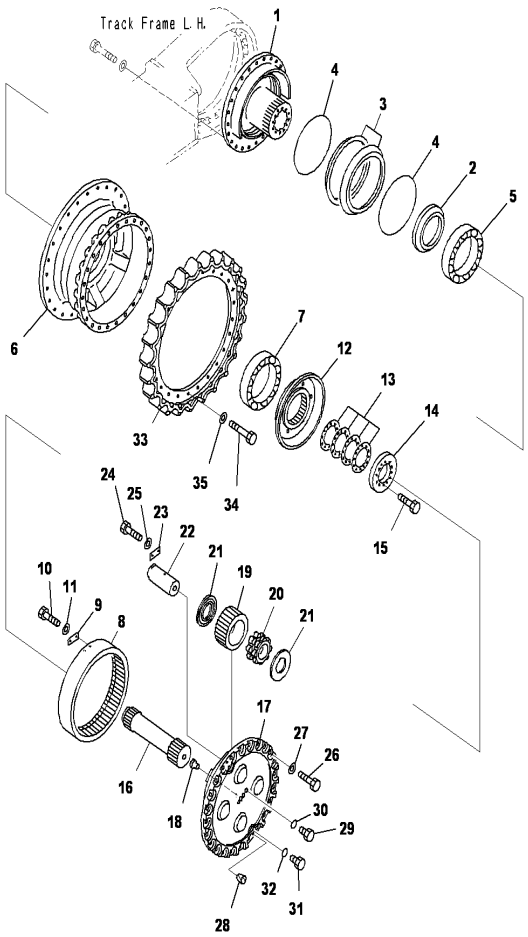

PC2000-8 S/N J10001-UP

FINAL DRIVE,LHS (1/2)

INDEX	CD	PART NO.	DESCRIPTION	QTY	SERIAL NO.
1		21T-27-71142	HOUSING	1	J10001-UP
2		21T-27-71421	RETAINER	1	J10001-UP
		198-27-00034	FLOATING SEAL A	1	J10001-UP
3	C1	198-27-00113	.SEAL RING ASS'Y	2	J10001-UP
4	C1	198-27-00121	.O-RING ASS'Y	2	J10001-UP
5		21T-27-11330	BEARING	1	J10001-UP
6		21T-27-71151	CASE	1	J10001-UP
7		21T-27-11330	BEARING	1	J10001-UP
8		21T-27-71311	GEAR	1	J10001-UP
9		209-27-21270	LOCK	6	J10001-UP
11		01010-81230	BOLT	12	J10001-UP
12		01643-31232	WASHER	12	J10001-UP
12		21T-27-71321	HOUSING	1	J10001-UP
13		21T-27-00070	SHIM ASS'Y	1	J10001-UP
		21T-27-71340	.SHIM (T1.0)	1	J10001-UP
		21T-27-71350	.SHIM (T0.5)	2	J10001-UP
		21T-27-71360	.SHIM (T0.2)	4	J10001-UP
		21T-27-71370	.SHIM (T0.15)	4	J10001-UP
14		21T-27-71330	RETAINER	1	J10001-UP
15		01010-82465	BOLT	10	J10001-UP
16		21T-27-71280	SHAFT	1	J10001-UP
17		21T-27-71164	CARRIER	1	J10001-UP
18		205-27-71360	BUTTON	1	J10001-UP
19		21T-27-71290	GEAR	4	J10001-UP
20		21T-27-71390	BEARING	4	J10001-UP
21		198-27-11420	THRUST WASHER	8	J10001-UP
22		21T-27-71440	PIN	4	J10001-UP
23		04082-00616	LOCK	4	J10001-UP
24		01010-81640	BOLT	8	J10001-UP
25		01643-31645	WASHER	8	J10001-UP
26		01010-83080	BOLT	24	J10001-UP
27		01643-33080	WASHER	24	J10001-UP
28		07049-03038	PLUG	2	J10001-UP
29		07040-11007	PLUG	1	J10001-UP
30		07002-11023	O-RING	1	J10001-UP
31		07044-13620	PLUG	2	J10001-UP
32		07002-13634	O-RING	2	J10001-UP
33		21T-27-71175	SPROCKET	1	J10001-UP
24		21T-27-11890	BOLT	25	J10001-UP
35		01643-33380	WASHER	25	J10001-UP

Ref :P1210-01A1 Page :330120

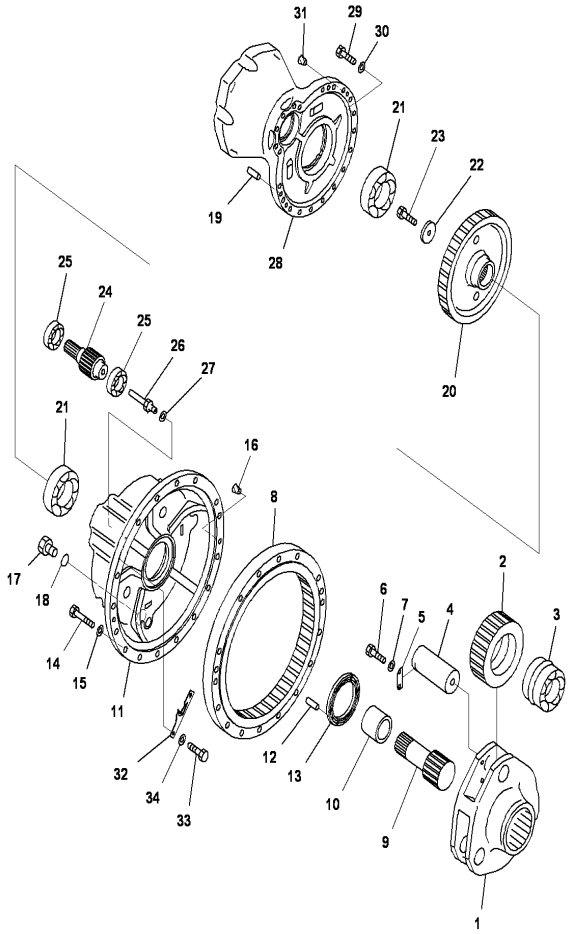

FINAL DRIVE,LHS (2/2)

INDEX	CD	PART NO.	DESCRIPTION	QTY	SERIAL NO.
1		21T-27-71270	CARRIER	1	J10001-UP
2		21T-27-71250	GEAR	3	J10001-UP
3		21T-27-71380	BEARING	3	J10001-UP
4		21T-27-71430	PIN	3	J10001-UP
5		209-27-51450	LOCK	3	J10001-UP
6		01010-81230	BOLT	6	J10001-UP
7		01643-31232	WASHER	6	J10001-UP
8		21T-27-72260	GEAR	1	J10001-UP
9		21T-27-71241	SHAFT	1	J10001-UP
10		21T-27-71230	SPACER	1	J10001-UP
11		21T-27-72130	CASE	1	J10001-UP
12		04020-00616	PIN	1	J10001-UP
13		21T-27-11540	THRUST WASHER	1	J10001-UP
14		01011-82015	BOLT	16	J10001-UP
15		01643-32060	WASHER	16	J10001-UP
16		07049-02025	PLUG	2	J10001-UP
17		07044-13620	PLUG	1	J10001-UP
18		07002-13634	O-RING	1	J10001-UP
19		04020-01638	PIN DOWEL	2	J10001-UP
20		21T-27-72210	GEAR	1	J10001-UP
21		06044-00221	BEARING	2	J10001-UP
22		21T-27-71220	HOLDER	1	J10001-UP
23		01010-81650	BOLT	1	J10001-UP
24		21T-27-72190	SHAFT	1	J10001-UP
25		21T-27-72180	BEARING	2	J10001-UP
26		209-27-51470	NIPPLE	1	J10001-UP
27		01643-31032	WASHER	1	J10001-UP
28		21T-27-72120	CASE	1	J10001-UP
29		01010-81665	BOLT	21	J10001-UP
30		01643-31645	WASHER	21	J10001-UP
31		07049-01620	PLUG	2	J10001-UP
32		21T-27-72530	PLATE	1	J10001-UP
33		01010-81025	BOLT	2	J10001-UP
34		01643-31032	WASHER	2	J10001-UP

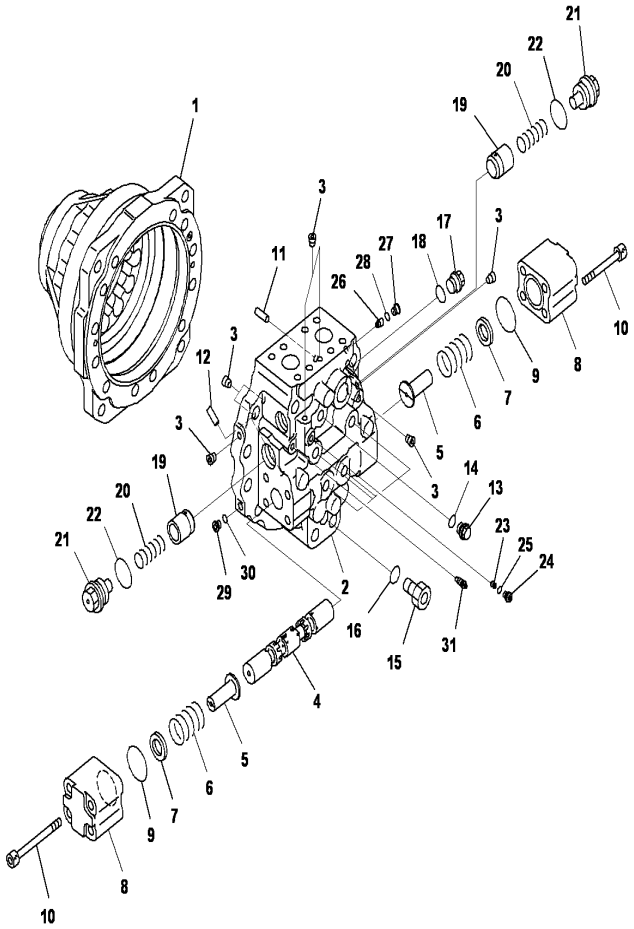

FINAL DRIVE,INNER PARTS,TRAVEL MOTOR,LHS (1/3)

INDEX	CD	PART NO.	DESCRIPTION	QTY	SERIAL NO.
		706-7L-01110	MOTOR A.,PC2000.....	1	J10001-UP
1	C2	706-8L-41110	.CASE,MOTOR.....	1	J10001-UP
	C2	706-7L-00110	.HOUSING A.....	1	J10001-UP
2	C1	706-7L-71110	..HOUSING.....	1	J10001-UP
3	C1	708-8F-31620	..PLUG.....	7	J10001-UP
4	C1	706-7L-71120	..SPOOL.....	1	J10001-UP
5	C2	706-7L-71130	.RETAINER.....	2	J10001-UP
6		706-7L-71140	.SPRING.....	2	J10001-UP
7		706-7L-71160	.SPACER.....	2	J10001-UP
8		706-7L-71150	.COVER.....	2	J10001-UP
9		07000-B2055	.O-RING.....	2	J10001-UP
10		01253-61400	.BOLT.....	8	J10001-UP
11	C2	708-8K-15190	.DOWEL PIN.....	1	J10001-UP
12	C2	708-18-13230	.PIN.....	1	J10001-UP
13		706-8E-14191	.PLUG.....	5	J10001-UP
14		07002-61823	.O-RING.....	5	J10001-UP
15		07040-12414	.PLUG.....	1	J10001-UP
16		07002-62434	.O-RING.....	1	J10001-UP
17		706-77-72170	.PLUG.....	1	J10001-UP
18		07002-62434	.O-RING.....	1	J10001-UP
19		706-77-72130	.VALVE.....	2	J10001-UP
20		706-77-72140	.SPRING.....	2	J10001-UP
21		706-7L-71170	.PLUG.....	2	J10001-UP
22		07002-64234	.O-RING.....	2	J10001-UP
23		708-8E-16180	.VALVE.....	1	J10001-UP
24		708-8E-16160	.PLUG.....	1	J10001-UP
25		07002-61023	.O-RING.....	1	J10001-UP
26		706-8J-71181	.VALVE.....	1	J10001-UP
27		706-8J-71190	.PLUG.....	1	J10001-UP
28		07002-61223	.O-RING.....	1	J10001-UP
29		706-8J-71190	.PLUG.....	1	J10001-UP
30		07002-61223	.O-RING.....	1	J10001-UP
31		20B-27-11210	.BLEEDER.....	1	J10001-UP

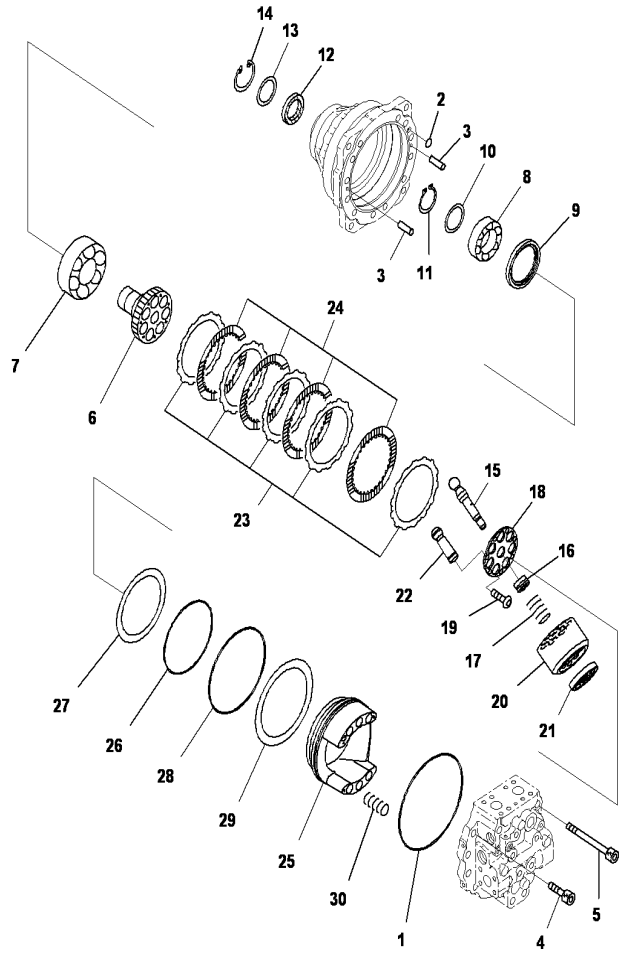

FINAL DRIVE,INNER PARTS,TRAVEL MOTOR,LHS (2/3)

INDEX	CD	PART NO.	DESCRIPTION	QTY	SERIAL NO.
		706-7L-01110	MOTOR A.,PC2000	1	J10001-UP
1	C2	706-8L-41120	.O-RING	1	J10001-UP
2	C2	07000-B2012	.O-RING	1	J10001-UP
3	C2	04020-01024	.PIN	2	J10001-UP
4	C2	01252-62055	.BOLT	8	J10001-UP
5	C2	01253-62040	.BOLT	4	J10001-UP
6	C2	706-8L-41510	.SHAFT,DRIVE	1	J10001-UP
7	C2	706-8J-41010	.BEARING	1	J10001-UP
8	C2	706-8L-41890	.BEARING	1	J10001-UP
9	C2	706-8L-41810	.RETAINER	1	J10001-UP
10	C2	706-8L-05010	.SPACER, KIT	1	J10001-UP
	C1	706-8L-41440	..SPACER	1	J10001-UP
	C1	706-8L-41450	..SPACER	1	J10001-UP
	C1	706-8L-41460	..SPACER	1	J10001-UP
	C1	706-8L-41470	..SPACER	1	J10001-UP
	C1	706-8L-41480	..SPACER	1	J10001-UP
11	C2	04064-07025	.RING	1	J10001-UP
12		706-8J-41620	.OIL SEAL	1	J10001-UP
13		706-8J-41820	.SPACER	1	J10001-UP
14		04065-09030	.RING	1	J10001-UP
15	C2	706-8L-41280	.SHAFT,CENTER	1	J10001-UP
16	C2	706-8L-41270	.RING,CENTER	1	J10001-UP
17	C2	706-8L-41290	.SPRING	1	J10001-UP
18	C2	706-8L-41260	.RETAINER	1	J10001-UP
19	C2	708-23-12350	.SCREW	7	J10001-UP
	C2	706-7L-00120	.BLOCK A.,CYLIND	1	J10001-UP
20	C1	706-8L-41210	..BLOCK,CYLINDER	1	J10001-UP
21	C1	706-7L-41710	..PLATE, VALVE	1	J10001-UP
22	C2	706-8L-41160	.PISTON SUB A	7	J10001-UP
23	C2	706-8L-91340	.PLATE	5	J10001-UP
24	C2	706-8L-91370	.DISC	4	J10001-UP
25	C2	706-8L-91110	.PISTON,BRAKE	1	J10001-UP
26	C2	07000-B5220	.O-RING	1	J10001-UP
27	C2	07001-05220	.BACKUP-RING	1	J10001-UP
28	C2	07000-B5250	.O-RING	1	J10001-UP
29	C2	07001-05250	.RING	1	J10001-UP
30	C2	706-8L-91360	.SPRING	6	J10001-UP

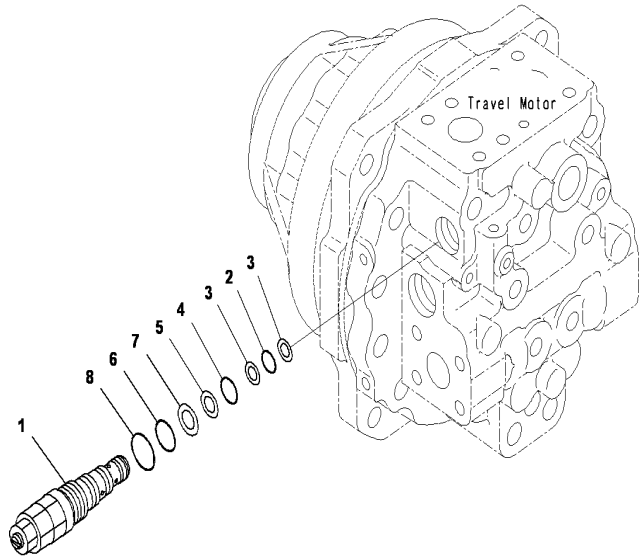

PC2000-8 S/N J10001-UP

FINAL DRIVE,INNER PARTS,TRAVEL MOTOR,LHS (3/3)

INDEX	CD	PART NO.	DESCRIPTION	QTY	SERIAL NO.
		706-7L-01110	MOTOR ASS'Y	1	J10001-UP
1		702-75-04110	.RELIEF VALVE	1	J10001-UP
2		07000-F2018	..O-RING	1	J10001-UP
3		702-75-11830	..O-RING	2	J10001-UP
4		07000-B2021	..O-RING	1	J10001-UP
5		702-75-11840	..RING	1	J10001-UP
6		702-75-11430	..O-RING	1	J10001-UP
7		702-75-11850	..RING BACK UP	1	J10001-UP
8		07002-63634	..O-RING	1	J10001-UP

Ref :P1210-01A5 Page :330160

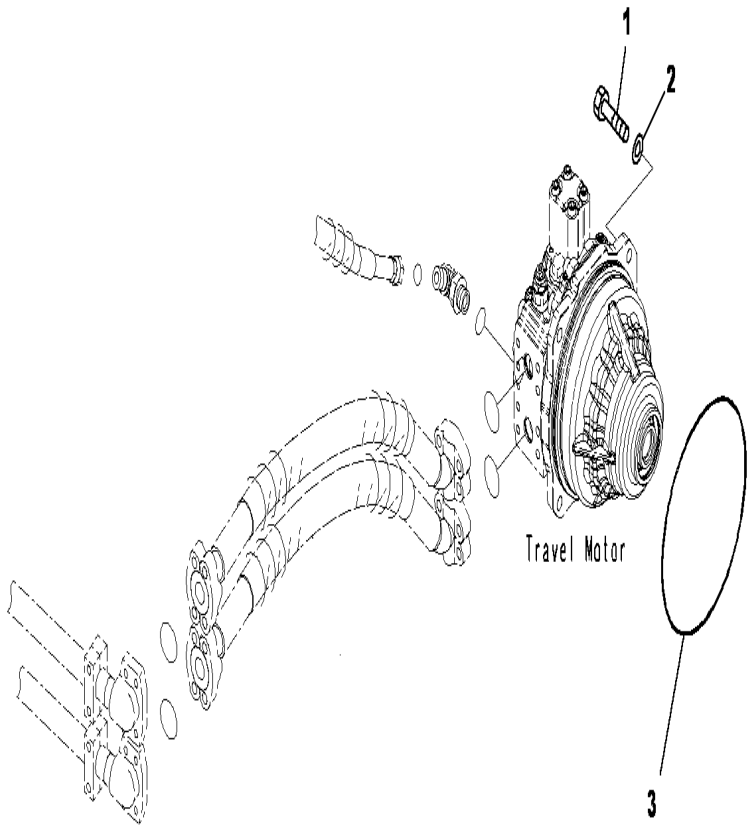

PC2000-8 S/N J10001-UP

FINAL DRIVE,TRAVEL MOTOR LHS, RELATED PARTS

INDEX	CD	PART NO.	DESCRIPTION	QTY	SERIAL NO.
1		01010-81860	BOLT	4	J10001-UP
2		01643-31845	WASHER	4	J10001-UP
3		209-27-71370	O-RING	1	J10001-UP

Ref :P1210-01A6 Page :330170

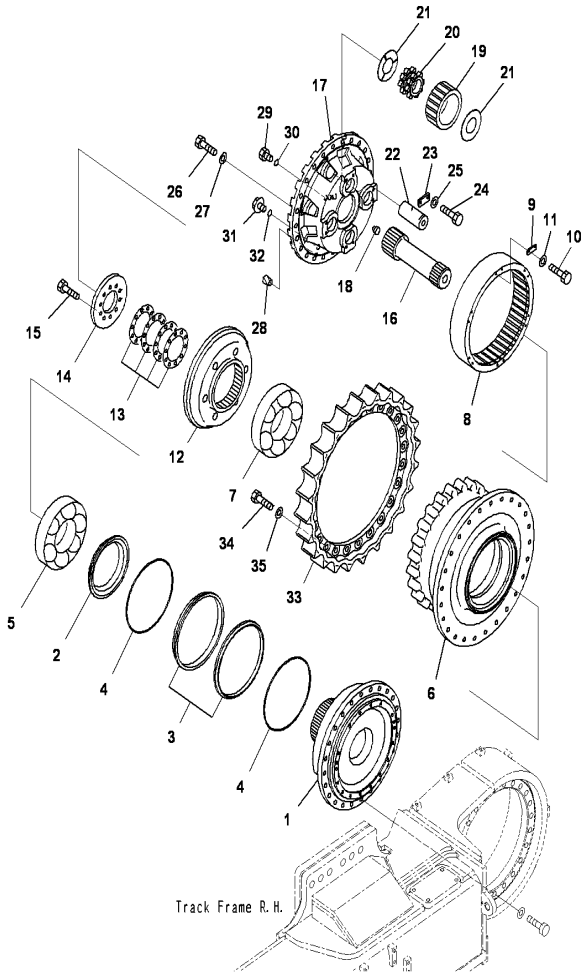

PC2000-8 S/N J10001-UP

FINAL DRIVE,RHS (1/2)

INDEX	CD	PART NO.	DESCRIPTION	QTY	SERIAL NO.
1		21T-27-71142	HOUSING	1	J10001-UP
2		21T-27-71421	RETAINER	1	J10001-UP
		198-27-00034	FLOATING SEAL A	1	J10001-UP
3	C1	198-27-00113	.SEAL RING ASS'Y	2	J10001-UP
4	C1	198-27-00121	.O-RING ASS'Y	2	J10001-UP
5		21T-27-11330	BEARING	1	J10001-UP
6		21T-27-71151	CASE	1	J10001-UP
7		21T-27-11330	BEARING	1	J10001-UP
8		21T-27-71311	GEAR	1	J10001-UP
9		209-27-21270	LOCK	6	J10001-UP
10		01010-81230	BOLT	12	J10001-UP
11		01643-31232	WASHER	12	J10001-UP
12		21T-27-71321	HOUSING	1	J10001-UP
13		21T-27-00070	SHIM ASS'Y	1	J10001-UP
		21T-27-71340	.SHIM (T1.0)	1	J10001-UP
		21T-27-71350	.SHIM (T0.5)	2	J10001-UP
		21T-27-71360	.SHIM (T0.2)	4	J10001-UP
		21T-27-71370	.SHIM (T0.15)	4	J10001-UP
14		21T-27-71330	RETAINER	1	J10001-UP
15		01010-82465	BOLT	10	J10001-UP
16		21T-27-71280	SHAFT	1	J10001-UP
17		21T-27-71164	CARRIER	1	J10001-UP
18		205-27-71360	BUTTON	1	J10001-UP
19		21T-27-71290	GEAR	4	J10001-UP
20		21T-27-71390	BEARING	4	J10001-UP
21		198-27-11420	THRUST WASHER	8	J10001-UP
22		21T-27-71440	PIN	4	J10001-UP
23		04082-00616	LOCK	4	J10001-UP
24		01010-81640	BOLT	8	J10001-UP
25		01643-31645	WASHER	8	J10001-UP
26		01010-83080	BOLT	24	J10001-UP
27		01643-33080	WASHER	24	J10001-UP
28		07049-03038	PLUG	2	J10001-UP
29		07040-11007	PLUG	1	J10001-UP
30		07002-11023	O-RING	1	J10001-UP
31		07044-13620	PLUG	2	J10001-UP
32		07002-13634	O-RING	2	J10001-UP
33		21T-27-71175	SPROCKET	1	J10001-UP
34		21T-27-11890	BOLT	25	J10001-UP
35		01643-33380	WASHER	25	J10001-UP

Ref :P1210-01A7 Page :330180

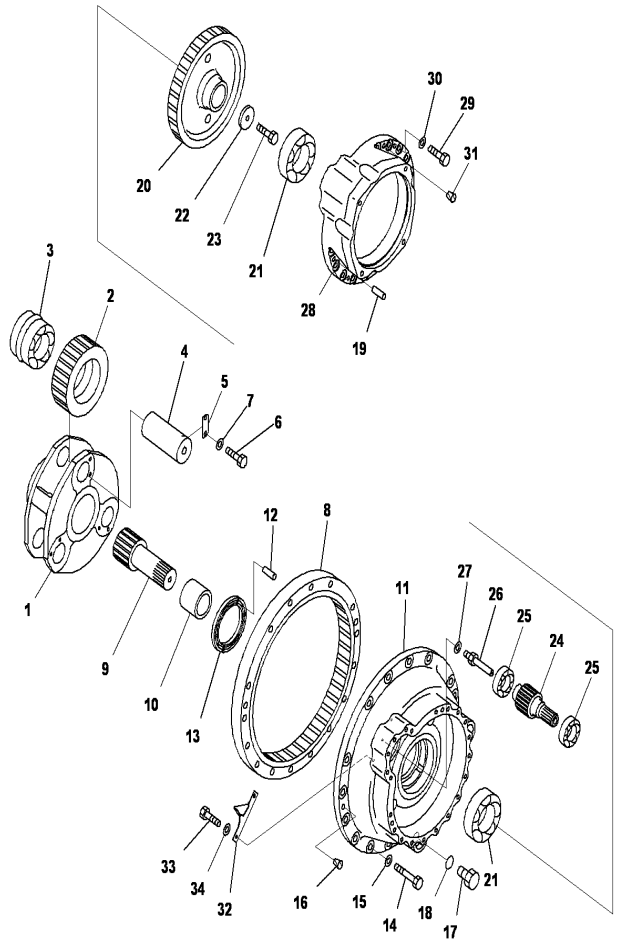

FINAL DRIVE,RHS (2/2)

INDEX	CD	PART NO.	DESCRIPTION	QTY	SERIAL NO.
1		21T-27-71270	CARRIER	1	J10001-UP
2		21T-27-71250	GEAR	3	J10001-UP
3		21T-27-71380	BEARING	3	J10001-UP
4		21T-27-71430	PIN	3	J10001-UP
5		209-27-51450	LOCK	3	J10001-UP
6		01010-81230	BOLT	6	J10001-UP
7		01643-31232	WASHER	6	J10001-UP
8		21T-27-72260	GEAR	1	J10001-UP
9		21T-27-71241	SHAFT	1	J10001-UP
10		21T-27-71230	SPACER	1	J10001-UP
11		21T-27-72140	CASE	1	J10001-UP
12		04020-00616	PIN	1	J10001-UP
13		21T-27-11540	THRUST WASHER	1	J10001-UP
14		01011-82015	BOLT	16	J10001-UP
15		01643-32060	WASHER	16	J10001-UP
16		07049-02025	PLUG	2	J10001-UP
17		07044-13620	PLUG	1	J10001-UP
18		07002-13634	O-RING	1	J10001-UP
19		04020-01638	PIN DOWEL	2	J10001-UP
20		21T-27-72210	GEAR	1	J10001-UP
21		06044-00221	BEARING	2	J10001-UP
22		21T-27-71220	HOLDER	1	J10001-UP
23		01010-81650	BOLT	1	J10001-UP
24		21T-27-72190	SHAFT	1	J10001-UP
25		21T-27-72180	BEARING	2	J10001-UP
26		209-27-51470	NIPPLE	1	J10001-UP
27		01643-31032	WASHER	1	J10001-UP
28		21T-27-72110	CASE	1	J10001-UP
29		01010-81665	BOLT	21	J10001-UP
30		01643-31645	WASHER	21	J10001-UP
31		07049-01620	PLUG	2	J10001-UP
32		21T-27-72540	PLATE	1	J10001-UP
33		01010-81025	BOLT	2	J10001-UP
34		01643-31032	WASHER	2	J10001-UP

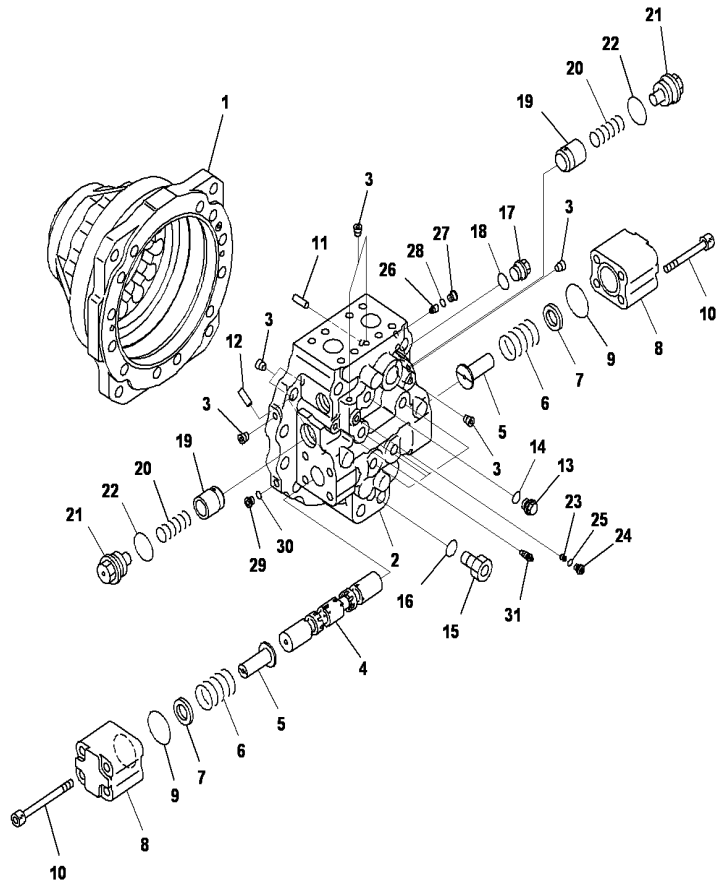

PC2000-8 S/N J10001-UP

FINAL DRIVE,INNER PARTS,TRAVEL MOTOR,RHS (1/3)

INDEX	CD	PART NO.	DESCRIPTION	QTY	SERIAL NO.
		706-7L-01110	MOTOR	1	J10001-UP
1	C2	706-8L-41110	.CASE,MOTOR	1	J10001-UP
	C2	706-7L-00110	.HOUSING A	1	J10001-UP
2	C1	706-7L-71110	..HOUSING	1	J10001-UP
3	C1	708-8F-31620	..PLUG	7	J10001-UP
4	C1	706-7L-71120	..SPOOL	1	J10001-UP
5	C2	706-7L-71130	.RETAINER	2	J10001-UP
6		706-7L-71140	.SPRING	2	J10001-UP
7		706-7L-71160	.SPACER	2	J10001-UP
8		706-7L-71150	.COVER	2	J10001-UP
9		07000-B2055	.O-RING	2	J10001-UP
10		01253-61400	.BOLT	8	J10001-UP
11	C2	708-8K-15190	.DOWEL PIN	1	J10001-UP
12	C2	708-18-13230	.PIN	1	J10001-UP
13		706-8E-14191	.PLUG	5	J10001-UP
14		07002-61823	.O-RING	5	J10001-UP
15		07040-12414	.PLUG	1	J10001-UP
16		07002-62434	.O-RING	1	J10001-UP
17		706-77-72170	.PLUG	1	J10001-UP
18		07002-62434	.O-RING	1	J10001-UP
19		706-77-72130	.VALVE	2	J10001-UP
20		706-77-72140	.SPRING	2	J10001-UP
21		706-7L-71170	.PLUG	2	J10001-UP
22		07002-64234	.O-RING	2	J10001-UP
23		708-8E-16180	.VALVE	1	J10001-UP
24		708-8E-16160	.PLUG	1	J10001-UP
25		07002-61023	.O-RING	1	J10001-UP
26		706-8J-71181	.VALVE	1	J10001-UP
27		706-8J-71190	.PLUG	1	J10001-UP
28		07002-61223	.O-RING	1	J10001-UP
29		706-8J-71190	.PLUG	1	J10001-UP
30		07002-61223	.O-RING	1	J10001-UP
31		20B-27-11210	.BLEEDER	1	J10001-UP

Ref :P1210-01A9 Page :330200

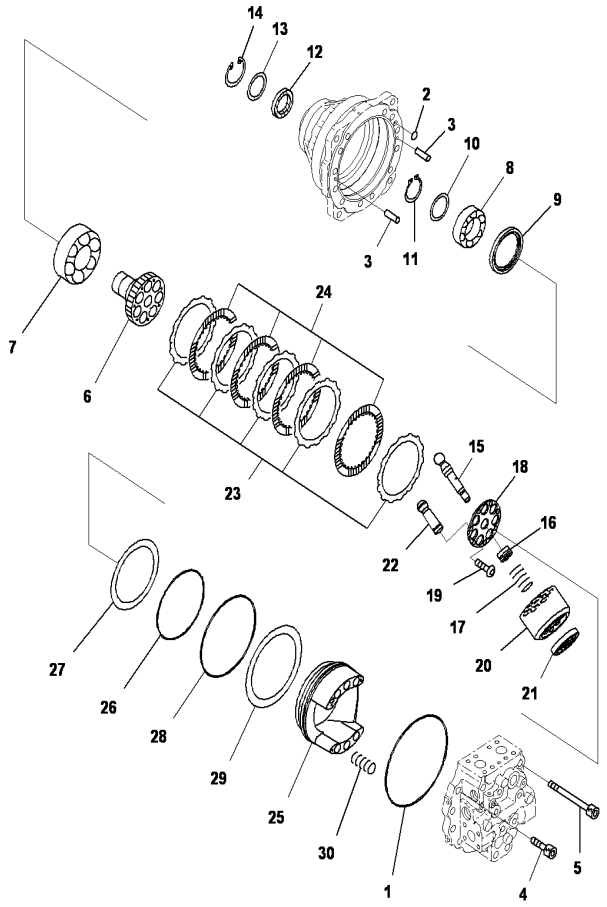

PC2000-8 S/N J10001-UP

FINAL DRIVE,INNER PARTS,TRAVEL MOTOR,RHS (2/3)

INDEX	CD	PART NO.	DESCRIPTION	QTY	SERIAL NO.
		706-7L-01110	MOTOR	1	J10001-UP
1	C2	706-8L-41120	.O-RING	1	J10001-UP
2	C2	07000-B2012	.O-RING	1	J10001-UP
3	C2	04020-01024	.PIN	2	J10001-UP
4	C2	01252-62055	.BOLT	8	J10001-UP
5	C2	01253-62040	.BOLT	4	J10001-UP
6	C2	706-8L-41510	.SHAFT,DRIVE	1	J10001-UP
7	C2	706-8J-41010	.BEARING	1	J10001-UP
8	C2	706-8L-41890	.BEARING	1	J10001-UP
9	C2	706-8L-41810	.RETAINER	1	J10001-UP
10	C2	706-8L-05010	.SPACER, KIT	1	J10001-UP
	C1	706-8L-41440	..SPACER, T=1.8MM	1	J10001-UP
	C1	706-8L-41450	..SPACER, T=2.0MM	1	J10001-UP
	C1	706-8L-41460	..SPACER, T=2.2MM	1	J10001-UP
	C1	706-8L-41470	..SPACER, T=2.4MM	1	J10001-UP
	C1	706-8L-41480	..SPACER, T=2.6MM	1	J10001-UP
11	C2	04064-07025	.RING	1	J10001-UP
12	C2	706-8J-41620	.OIL SEAL	1	J10001-UP
13	C2	706-8J-41820	.SPACER	1	J10001-UP
14	C2	04065-09030	.RING	1	J10001-UP
15	C2	706-8L-41280	.SHAFT,CENTER	1	J10001-UP
16	C2	706-8L-41270	.RING,CENTER	1	J10001-UP
17	C2	706-8L-41290	.SPRING	1	J10001-UP
18	C2	706-8L-41260	.RETAINER	1	J10001-UP
19	C2	708-23-12350	.SCREW	7	J10001-UP
	C2	706-7L-00120	.BLOCK A.,CYLIND	1	J10001-UP
20	C1	706-8L-41210	..BLOCK,CYLINDER	1	J10001-UP
21	C1	706-7L-41710	..PLATE, VALVE	1	J10001-UP
22	C2	706-8L-41160	.PISTON SUB ASS'Y	7	J10001-UP
23	C2	706-8L-91340	.PLATE	5	J10001-UP
24	C2	706-8L-91370	.DISC	4	J10001-UP
25	C2	706-8L-91110	.PISTON,BRAKE	1	J10001-UP
26	C2	07000-B5220	.O-RING	1	J10001-UP
27	C2	07001-05220	.BACKUP-RING	1	J10001-UP
28	C2	07000-B5250	.O-RING	1	J10001-UP
29	C2	07001-05250	.RING	1	J10001-UP
30	C2	706-8L-91360	.SPRING	6	J10001-UP

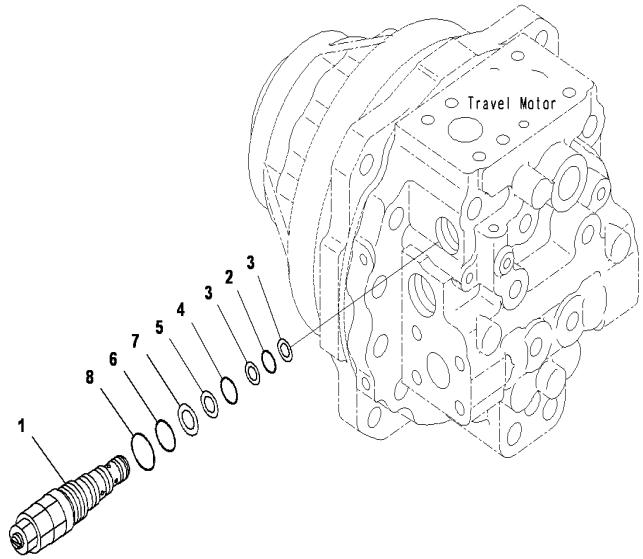

PC2000-8 S/N J10001-UP

FINAL DRIVE,INNER PARTS,TRAVEL MOTOR,RHS (3/3)

INDEX	CD	PART NO.	DESCRIPTION	QTY	SERIAL NO.
		706-7L-01110	MOTOR.....	1	J10001-UP
1		702-75-04110	.RELIEF VALVE.....	1	J10001-UP
2		07000-F2018	..O-RING.....	1	J10001-UP
3		702-75-11830	..O-RING.....	2	J10001-UP
4		07000-B2021	..O-RING.....	1	J10001-UP
5		702-75-11840	..RING.....	1	J10001-UP
6		702-75-11430	..O-RING.....	1	J10001-UP
7		702-75-11850	..RING BACK UP.....	1	J10001-UP
8		07002-63634	..O-RING.....	1	J10001-UP

Ref :P1210-01A11 Page :330220

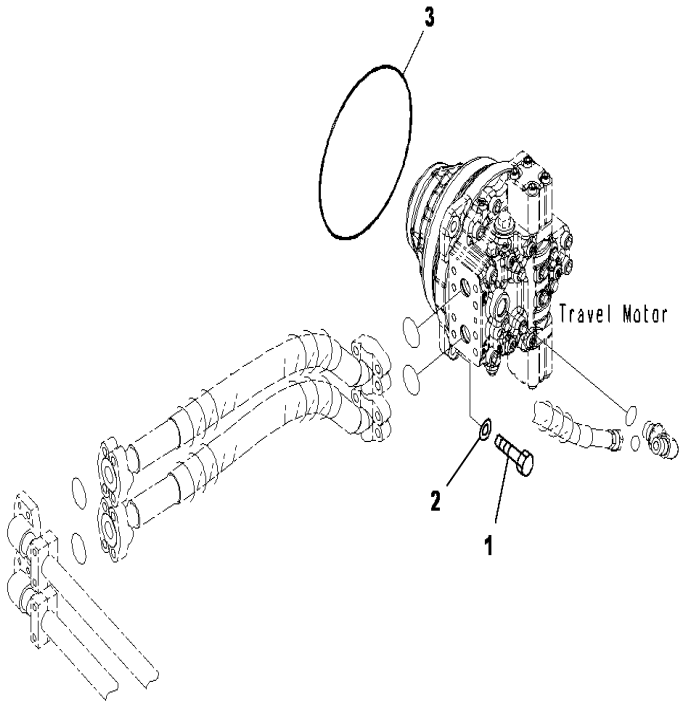

PC2000-8 S/N J10001-UP

FINAL DRIVE,TRAVEL MOTOR RHS,RELATED PARTS

INDEX	CD	PART NO.	DESCRIPTION	QTY	SERIAL NO.
1		01010-81860	BOLT	4	J10001-UP
2		01643-31845	WASHER	4	J10001-UP
3		20927-71370	O-RING	1	J10001-UP

Ref :P1210-01A12 Page :330230

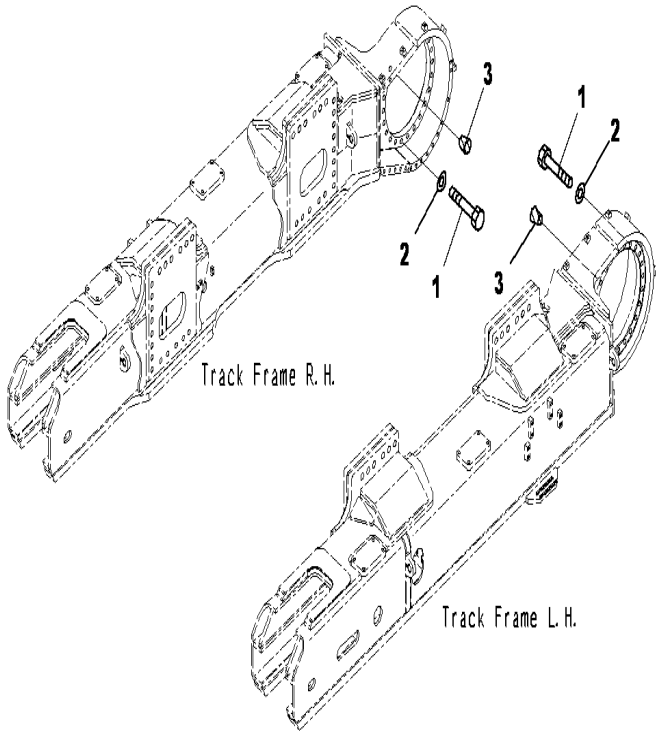

PC2000-8 S/N J10001-UP

FINAL DRIVE,PLUG BOLT

INDEX	CD	PART NO.	DESCRIPTION	QTY	SERIAL NO.
1		01011-83320	BOLT	46	J10001-UP
2		01643-33380	WASHER	46	J10001-UP
3		07049-03342	PLUG	2	J10001-UP

Ref :P1210-01A13 Page :330240

UNDER CARRIAGE

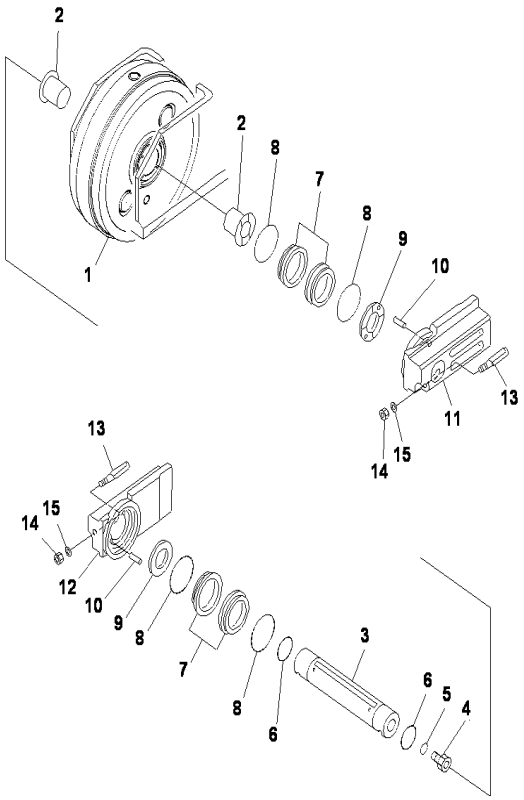

PC2000-8 S/N J10001-UP

IDLER CUSHION,FRONT IDLER,LHS

INDEX	CD	PART NO.	DESCRIPTION	QTY	SERIAL NO.
		21T-30-00381	IDLER ASSY	1	J10001-UP
1		21T-30-81412	.IDLER	1	J10001-UP
2		21T-30-81441	.BUSHING	2	J10001-UP
3		21T-30-81431	.SHAFT	1	J10001-UP
4		07040-15223	.PLUG	1	J10001-UP
5		07002-15234	.O-RING	1	J10001-UP
6		07000-15155	.O-RING	2	J10001-UP
		14X-27-00101	.FLOATING S	2	J10001-UP
7	C1	14X-27-00111	..SEAL ASS'Y	2	J10001-UP
8	C1	14X-27-00120	..O-RING ASS'Y	2	J10001-UP
9		21T-30-81421	.SPACER	2	J10001-UP
10		04020-01228	.PIN	4	J10001-UP
11		21T-30-81451	.SUPPORT	1	J10001-UP
12		21T-30-81461	.SUPPORT	1	J10001-UP
13		21T-30-81470	.BOLT	2	J10001-UP
14		01580-12218	.NUT	2	J10001-UP
15		01643-32260	.WASHER	2	J10001-UP

Ref :R0120-01A1 Page :360010

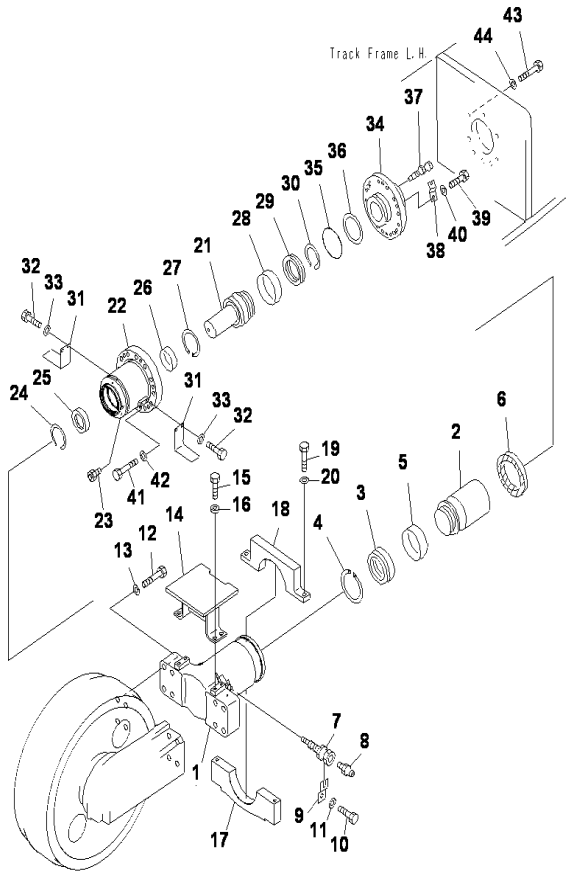

IDLER CUSHION,LHS

INDEX	CD	PART NO.	DESCRIPTION	QTY	SERIAL NO.
1		21T-30-32540	YOKE(L.H.)	1	J10001-UP
2		21T-30-14181	PLUNGER	1	J10001-UP
3		21T-30-14210	PACKING	1	J10001-UP
4		04070-00155	RING	1	J10001-UP
5		07155-01845	RING	1	J10001-UP
6		21T-30-14230	SEAL	1	J10001-UP
7		07959-30000	VALVE	1	J10001-UP
8		07020-00000	FITTING	1	J10001-UP
9		209-30-55130	PLATE	1	J10001-UP
10		01010-81225	BOLT	1	J10001-UP
11		01643-31232	WASHER	1	J10001-UP
12		01011-83070	BOLT	8	J10001-UP
13		01643-33080	WASHER	8	J10001-UP
14		21T-30-32511	GUARD	1	J10001-UP
15		01010-82045	BOLT	4	J10001-UP
16		01643-32060	WASHER	4	J10001-UP
17		21T-30-32522	PLATE	1	J10001-UP
18		21T-30-32531	PLATE	1	J10001-UP
19		01010-82060	BOLT	2	J10001-UP
20		01643-32060	WASHER	2	J10001-UP
		21T-30-00521	CYLINDER ASS'Y	1	J10001-UP
21		21T-30-74220	.PLUNGER	1	J10001-UP
22		21T-30-32351	.CYLINDER	1	J10001-UP
23		07029-00000	.VALVE	1	J10001-UP
24		07179-14160	.RING SNAP	1	J10001-UP
25		07016-01400	.SEAL	1	J10001-UP
26		21T-30-74210	.BUSHING	1	J10001-UP
27		04077-00150	.RING	1	J10001-UP
28		07155-02045	.RING	1	J10001-UP
29		21T-30-14220	.PACKING	1	J10001-UP
30		04070-00175	.RING	1	J10001-UP
31		21T-30-32340	.GUIDE	2	J10001-UP
32		01010-81230	.BOLT	4	J10001-UP
33		01643-31232	.WASHER	4	J10001-UP
34		21T-30-74140	.GRAND	1	J10001-UP
35		07000-15190	.O-RING	1	J10001-UP
36		07001-05190	.BACKUP RING	1	J10001-UP
37		198-30-14420	.PLUG	1	J10001-UP
38		21T-30-14250	.STOPPER	1	J10001-UP
39		01010-81225	.BOLT	1	J10001-UP
40		01643-31232	.WASHER	1	J10001-UP
41		01011-82400	.BOLT	12	J10001-UP
42		01643-32460	.WASHER	12	J10001-UP
43		01011-82440	BOLT	8	J10001-UP
44		01643-32460	WASHER	8	J10001-UP

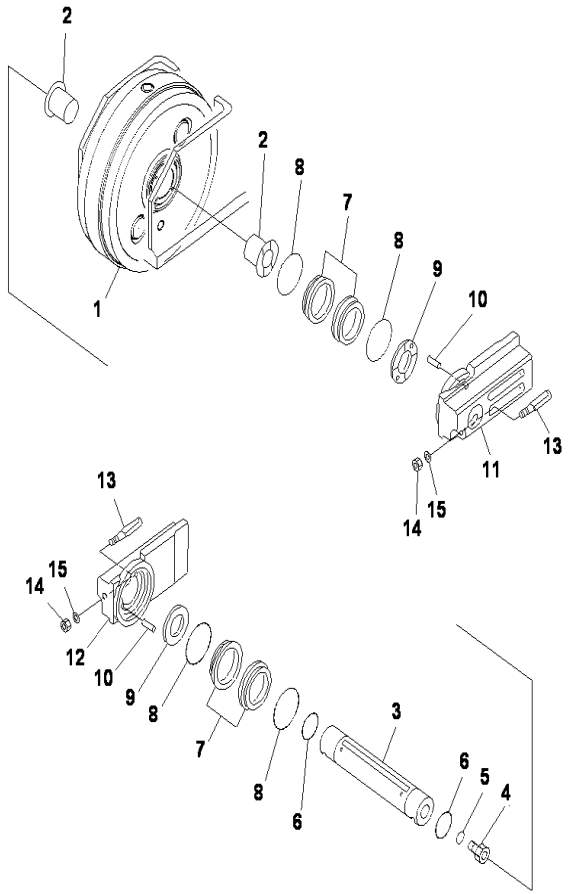

PC2000-8 S/N J10001-UP

IDLER CUSHION,FRONT IDLER,RHS

INDEX	CD	PART NO.	DESCRIPTION	QTY	SERIAL NO.
		21T-30-00381	IDLER ASSY.....	1	J10001-UP
1		21T-30-81412	.IDLER.....	1	J10001-UP
2		21T-30-81441	.BUSHING.....	2	J10001-UP
3		21T-30-81431	.SHAFT.....	1	J10001-UP
4		07040-15223	.PLUG.....	1	J10001-UP
5		07002-15234	.O-RING.....	1	J10001-UP
6		07000-15155	.O-RING.....	2	J10001-UP
		14X-27-00101	.FLOATING S.....	2	J10001-UP
7	C1	14X-27-00111	..SEAL ASS'Y.....	2	J10001-UP
8	C1	14X-27-00120	..O-RING ASS'Y.....	2	J10001-UP
9		21T-30-81421	.SPACER.....	2	J10001-UP
10		04020-01228	.PIN.....	4	J10001-UP
11		21T-30-81451	.SUPPORT.....	1	J10001-UP
12		21T-30-81461	.SUPPORT.....	1	J10001-UP
13		21T-30-81470	.BOLT.....	2	J10001-UP
14		01580-12218	.NUT.....	2	J10001-UP
15		01643-32260	.WASHER.....	2	J10001-UP

Ref :R0120-01A3 Page :360030

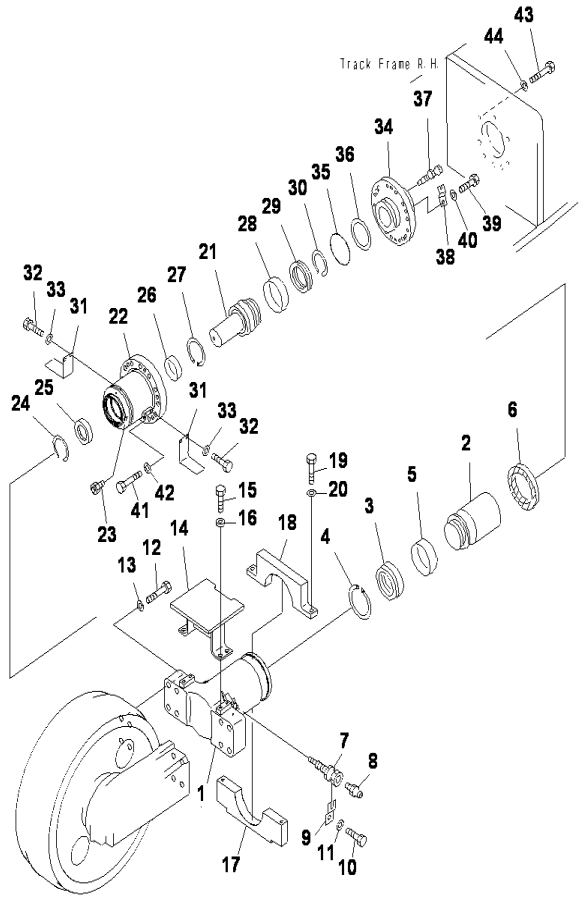

IDLER CUSHION,RHS

INDEX	CD	PART NO.	DESCRIPTION	QTY	SERIAL NO.
1		21T-30-32550	YOKE(R.H.)	1	J10001-UP
2		21T-30-14181	PLUNGER	1	J10001-UP
3		21T-30-14210	PACKING	1	J10001-UP
4		04070-00155	RING	1	J10001-UP
5		07155-01845	RING	1	J10001-UP
6		21T-30-14230	SEAL	1	J10001-UP
7		07959-30000	VALVE	1	J10001-UP
8		07020-00000	FITTING	1	J10001-UP
9		209-30-55130	PLATE	1	J10001-UP
10		01010-81225	BOLT	1	J10001-UP
11		01643-31232	WASHER	1	J10001-UP
12		01011-83070	BOLT	8	J10001-UP
13		01643-33080	WASHER	8	J10001-UP
14		21T-30-32511	GUARD	1	J10001-UP
15		01010-82045	BOLT	4	J10001-UP
16		01643-32060	WASHER	4	J10001-UP
17		21T-30-32522	PLATE	1	J10001-UP
18		21T-30-32531	PLATE	1	J10001-UP
19		01010-82060	BOLT	2	J10001-UP
20		01643-32060	WASHER	2	J10001-UP
		21T-30-00521	CYLINDER ASS'Y	1	J10001-UP
21		21T-30-74220	.PLUNGER	1	J10001-UP
22		21T-30-32351	CYLINDER	1	J10001-UP
23		07029-00000	.VALVE	1	J10001-UP
24		07179-14160	RING SNAP	1	J10001-UP
25		07016-01400	.SEAL	1	J10001-UP
26		21T-30-74210	.BUSHING	1	J10001-UP
27		04077-00150	.RING	1	J10001-UP
28		07155-02045	.RING	1	J10001-UP
29		21T-30-14220	.PACKING	1	J10001-UP
30		04070-00175	.RING	1	J10001-UP
31		21T-30-32340	.GUIDE	2	J10001-UP
32		01010-81230	BOLT	4	J10001-UP
33		01643-31232	WASHER	4	J10001-UP
34		21T-30-74140	.GRAND	1	J10001-UP
35		07000-15190	.O-RING	1	J10001-UP
36		07001-05190	.BACKUP RING	1	J10001-UP
37		198-30-14420	.PLUG	1	J10001-UP
38		21T-30-14250	.STOPPER	1	J10001-UP
39		01010-81225	.BOLT	1	J10001-UP
40		01643-31232	.WASHER	1	J10001-UP
41		01011-82400	.BOLT	12	J10001-UP
42		01643-32460	.WASHER	12	J10001-UP
43		01011-82440	BOLT	8	J10001-UP
44		01643-32460	WASHER	8	J10001-UP

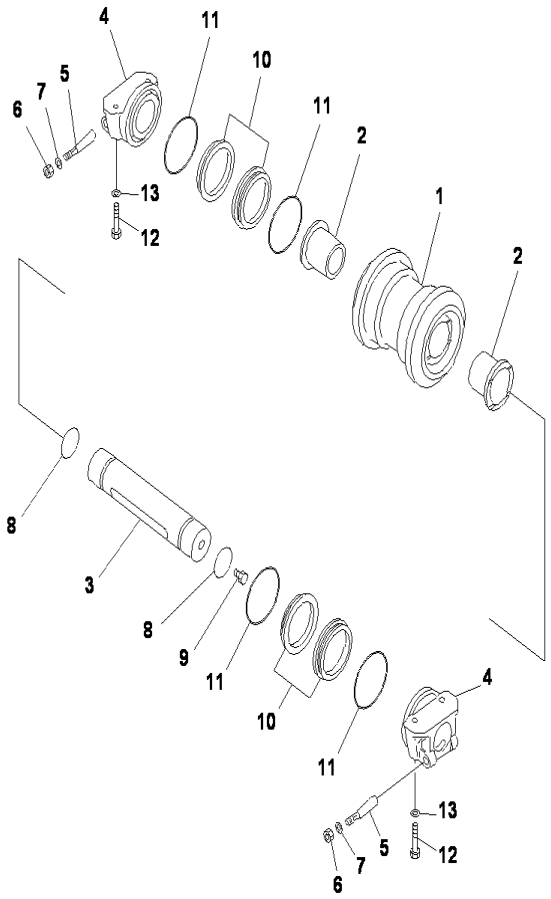

PC2000-8 S/N J10001-UP

TRACK ROLLER

INDEX	CD	PART NO.	DESCRIPTION	QTY	SERIAL NO.
		21T-30-00211	T.ROLLER A.....	16	J10001-UP
1		21T-30-31110	.ROLLER.....	1	J10001-UP
2		21T-30-31121	.BUSHING.....	2	J10001-UP
3		21T-30-31130	.SHAFT.....	1	J10001-UP
4		21T-30-31140	.COLLAR.....	2	J10001-UP
5		21T-30-31170	.BOLT.....	2	J10001-UP
6		01803-12228	.NUT.....	2	J10001-UP
7		01643-32260	.WASHER.....	2	J10001-UP
8		07000-15135	.O-RING.....	2	J10001-UP
9		07052-31624	.PLUG.....	1	J10001-UP
		130-27-00012	.FLOATING SEAL A.....	2	J10001-UP
10	C1	130-27-00132	..SEAL RING ASS'Y.....	2	J10001-UP
11	C1	130-27-00140	..O-RING ASS'Y.....	2	J10001-UP
12		156-70-12250	BOLT.....	64	J10001-UP
13		01643-33080	WASHER.....	64	J10001-UP

Ref :R0200-01A1 Page :360050

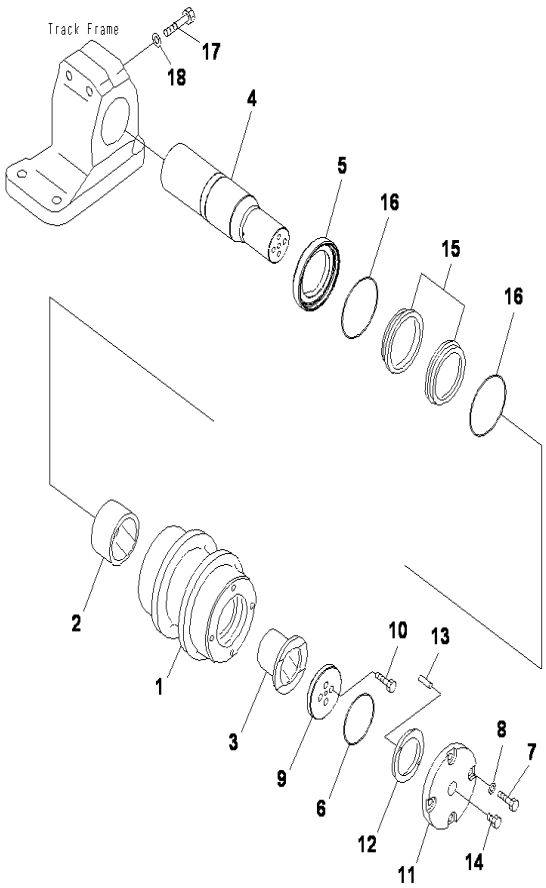

PC2000-8 S/N J10001-UP

CARRIER ROLLER

INDEX	CD	PART NO.	DESCRIPTION	QTY	SERIAL NO.
1		21T-30-00220	C.ROLLER A	6	J10001-UP
1		21T-30-33110	.ROLLER	1	J10001-UP
2		21T-30-75190	.BUSHING	1	J10001-UP
3		21T-30-75170	.BUSHING	1	J10001-UP
4		21T-30-33130	.SHAFT	1	J10001-UP
5		21T-30-33180	.RING	1	J10001-UP
6		07000-12145	.O-RING	1	J10001-UP
7		01010-81640	.BOLT	4	J10001-UP
8		01643-31645	.WASHER	4	J10001-UP
9		21T-30-33150	.SPACER	1	J10001-UP
10		01010-81640	.BOLT	4	J10001-UP
		21T-30-75100	.COVER ASS'Y	1	J10001-UP
11	C1	21T-30-75140	..COVER	1	J10001-UP
12	C1	21T-30-75160	..PLATE	1	J10001-UP
13		170-30-91130	..DOWEL PIN	2	J10001-UP
14		07052-31624	.PLUG	1	J10001-UP
		175-27-00121	.F SEAL ASS'Y	1	J10001-UP
15	C1	175-27-00131	..SEAL RING ASS'Y	2	J10001-UP
16	C1	175-27-00060	..O-RING ASS'Y	2	J10001-UP
17		01011-82410	BOLT	12	J10001-UP
18		01643-32460	WASHER	12	J10001-UP

Ref :R0300-01A1 Page :360060

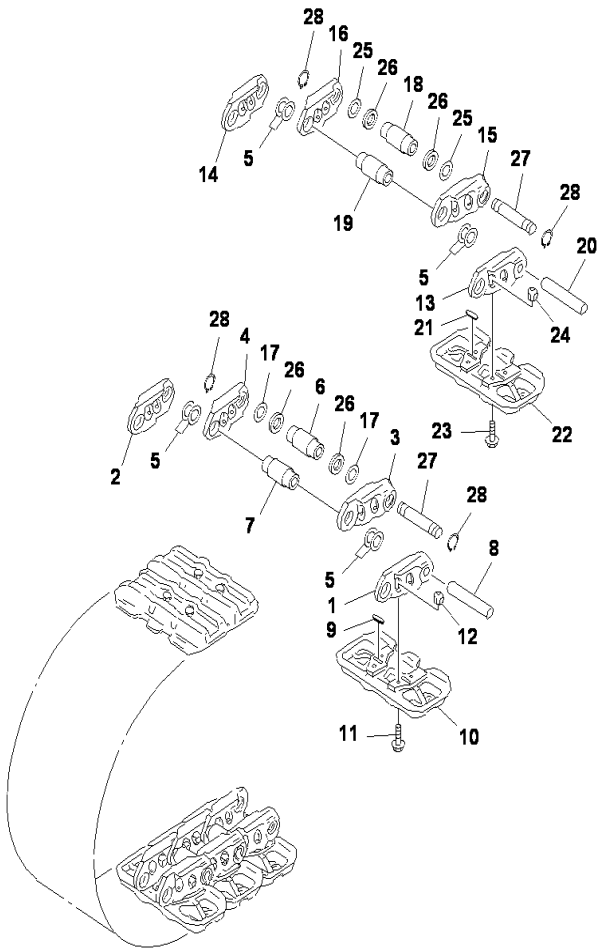

PC2000-8 S/N J10001-UP

TRACK SHOE ASSEMBLY, DOUBLE GROUSER SHOE,810MM

INDEX	CD	PART NO.	DESCRIPTION	QTY	SERIAL NO.
		21T-32-01120	TRACK SHOE A,81.....	1	J10002-UP
		21T-32-01016	TRACK SHOE A,81.....	1	J10001-J10001
1		21T-32-31123	.LINK LH.....	60	J10001-UP
2		21T-32-31133	.LINK RH.....	60	J10001-UP
3		21T-32-31323	.LINK MASTER(L.H.....	4	J10001-UP
4		21T-32-31333	.LINK MASTER(R.H.....	4	J10001-UP
5		21T-32-31260	.WASHER.....	240	J10001-UP
6		21T-32-31370	.BUSHING(M).....	4	J10001-UP
7		21T-32-31340	.BUSHING.....	60	J10001-UP
8		21T-32-31152	.PIN.....	60	J10001-UP
9		04000-01890	.KEY.....	128	J10001-UP
10		21T-32-31110	.SHOE.....	64	J10002-UP
		21T-32-31111	.SHOE.....	64	J10001-J10001
11		21T-32-31210	.BOLT.....	256	J10001-UP
12		198-32-31220	.NUT.....	256	J10001-UP
13		21T-32-31123	.LINK LH.....	32	J10001-UP
14		21T-32-31133	.LINK RH.....	32	J10001-UP
15		21T-32-31323	.LINK MASTER(L.H.....	2	J10001-UP
16		21T-32-31333	.LINK MASTER(R.H.....	2	J10001-UP
17		21T-32-31260	.WASHER.....	128	J10001-UP
18		21T-32-31370	.BUSHING(M).....	2	J10001-UP
19		21T-32-31340	.BUSHING.....	32	J10001-UP
20		21T-32-31152	.PIN.....	32	J10001-UP
21		04000-01890	.KEY.....	68	J10001-UP
22		21T-32-31111	.SHOE.....	34	J10001-UP
23		21T-32-31210	.BOLT.....	136	J10001-UP
24		198-32-31220	.NUT.....	136	J10001-UP
25		21T-32-31260	.WASHER.....	12	J10001-UP
26		21T-32-31280	.SPACER.....	12	J10001-UP
27		21T-32-31293	.PIN,(MASTER).....	6	J10001-UP
28		21T-32-11480	.RING.....	12	J10001-UP

Ref :R0500-01A1 Page :360070

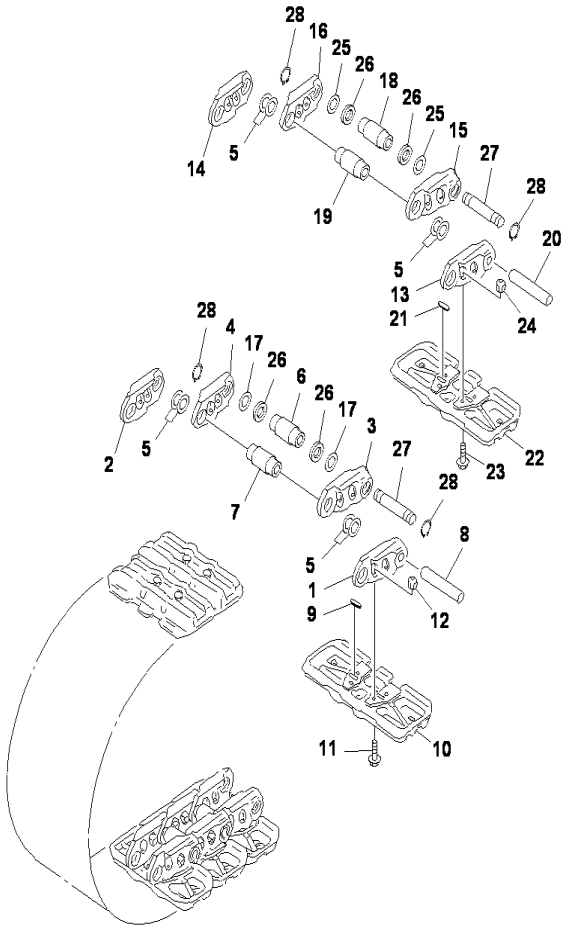

PC2000-8 S/N J10001-UP

TRACK SHOE ASSEMBLY,TRIPLE GROUSER SHOE, 1010MM

INDEX	CD	PART NO.	DESCRIPTION	QTY	SERIAL NO.
		21T-32-01305	TRACK SHOE ASS'Y	1	J10001-UP
1		21T-32-31123	.LINK LH	60	J10001-UP
2		21T-32-31133	.LINK RH	60	J10001-UP
3		21T-32-31323	.LINK MASTER(L.H	4	J10001-UP
4		21T-32-31333	.LINK MASTER(R.H	1	J10001-UP
5		21T-32-31260	.WASHER	240	J10001-UP
6		21T-32-31370	.BUSHING(M)	4	J10001-UP
7		21T-32-31340	.BUSHING	60	J10001-UP
8		21T-32-31152	.PIN	60	J10001-UP
9		04000-01890	.KEY	128	J10001-UP
10		21T-32-31350	.SHOE	64	J10001-UP
11		21T-32-31210	.BOLT	256	J10001-UP
12		198-32-31220	.NUT	256	J10001-UP
13		21T-32-31123	.LINK LH	32	J10001-UP
14		21T-32-31133	.LINK RH	32	J10001-UP
15		21T-32-31323	.LINK MASTER(L.H	2	J10001-UP
16		21T-32-31333	.LINK MASTER(R.H	2	J10001-UP
17		21T-32-31260	.WASHER	128	J10001-UP
18		21T-32-31370	.BUSHING(M)	2	J10001-UP
19		21T-32-31340	.BUSHING	32	J10001-UP
20		21T-32-31152	.PIN	32	J10001-UP
21		04000-01890	.KEY	68	J10001-UP
22		21T-32-31350	.SHOE	34	J10001-UP
23		21T-32-31210	.BOLT	136	J10001-UP
24		198-32-31220	.NUT	136	J10001-UP
25		21T-32-31260	.WASHER	12	J10001-UP
26		21T-32-31280	.SPACER	12	J10001-UP
27		21T-32-31293	.PIN,(MASTER)	6	J10001-UP
28		21T-32-11480	.RING	12	J10001-UP

Ref :R0500-01A2 Page :360080

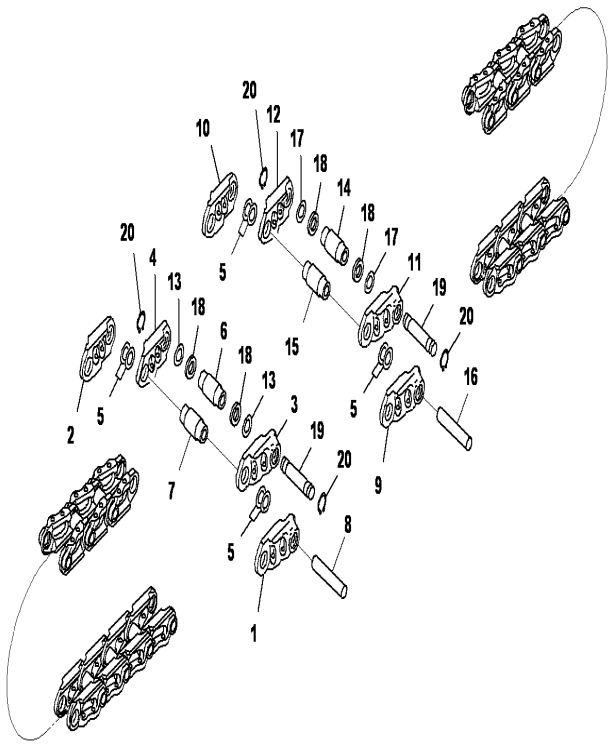

PC2000-8 S/N J10001-UP

TRACK LINK ASSEMBLY

INDEX	CD	PART NO.	DESCRIPTION	QTY	SERIAL NO.
1		21T-32-31123	LINK LH.....	60	J10001-UP
2		21T-32-31133	LINK RH.....	60	J10001-UP
3		21T-32-31323	LINK MASTER(L.H.....	4	J10001-UP
4		21T-32-31333	LINK MASTER(R.H.....	4	J10001-UP
5		21T-32-31260	WASHER.....	240	J10001-UP
6		21T-32-31370	BUSHING(M).....	4	J10001-UP
7		21T-32-31340	BUSHING.....	60	J10001-UP
8		21T-32-31152	PIN.....	60	J10001-UP
9		21T-32-31123	LINK LH.....	32	J10001-UP
10		21T-32-31133	LINK RH.....	32	J10001-UP
11		21T-32-31323	LINK MASTER(L.H.....	2	J10001-UP
12		21T-32-31333	LINK MASTER(R.H.....	2	J10001-UP
13		21T-32-31260	WASHER.....	128	J10001-UP
14		21T-32-31370	BUSHING(M).....	2	J10001-UP
15		21T-32-31340	BUSHING.....	32	J10001-UP
16		21T-32-31152	PIN.....	32	J10001-UP
17		21T-32-31260	WASHER.....	12	J10001-UP
18		21T-32-31280	SPACER.....	12	J10001-UP
19		21T-32-31293	PIN,(MASTER).....	6	J10001-UP
20		21T-32-11480	RING.....	12	J10001-UP

Ref :R0501-01A1 Page :360090

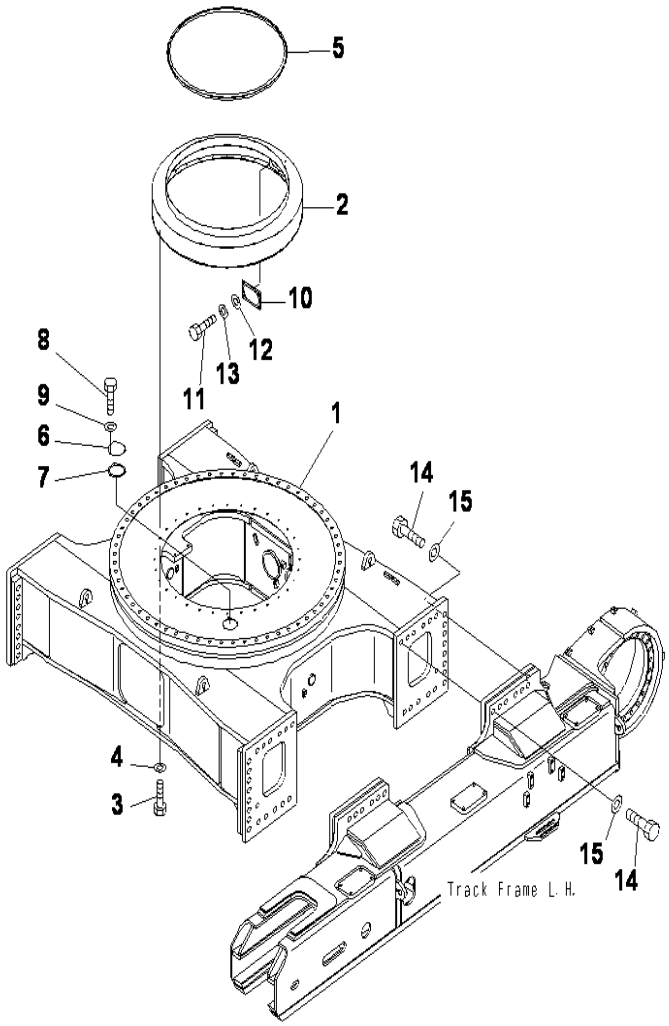

PC2000-8 S/N J10001-UP

TRACK FRAME

INDEX	CD	PART NO.	DESCRIPTION	QTY	SERIAL NO.
1		21T-30-32113	FRAME	1	J10001-UP
2		21T-25-67170	BRACKET	1	J10001-UP
3		01010-81255	BOLT	31	J10001-UP
4		01643-31232	WASHER	31	J10001-UP
5		21T-30-67130	SEAL	1	J10001-UP
6		208-30-11850	COVER	1	J10001-UP
7		208-30-11861	GASKET	1	J10001-UP
8		01010-81225	BOLT	3	J10001-UP
9		01643-31232	WASHER	3	J10001-UP
10		21T-25-67180	COVER	1	J10001-UP
11		01010-81225	BOLT	4	J10001-UP
12		01643-31232	WASHER	4	J10001-UP
13		01643-31232	WASHER	4	J10001-UP
14		21T-30-71160	BOLT	76	J10001-UP
15		21T-30-71170	WASHER	76	J10001-UP

Ref :R1110-01A1 Page :360100

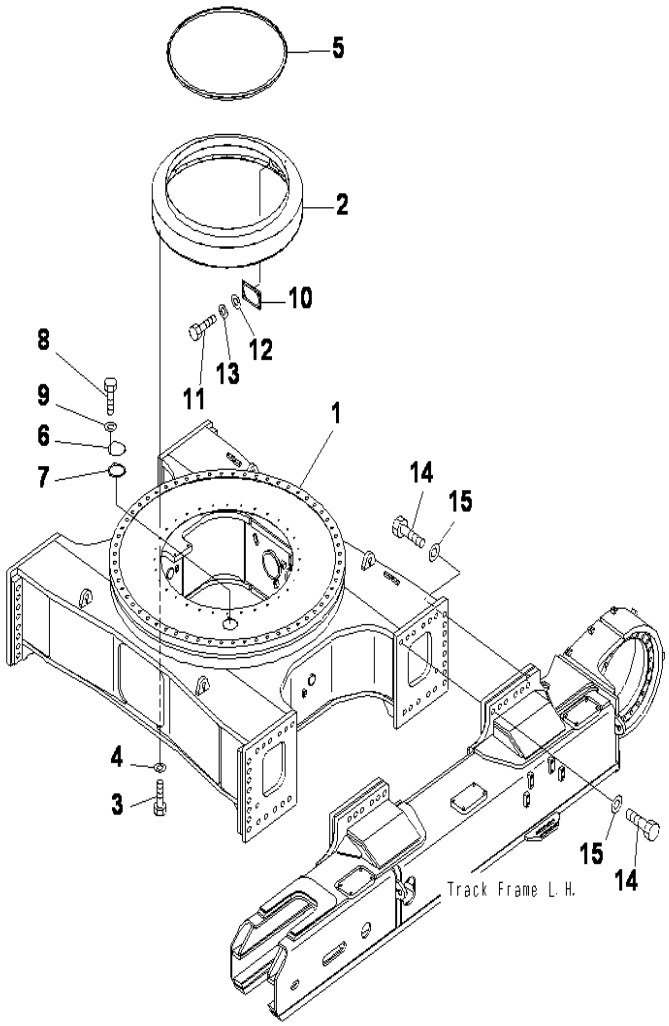

PC2000-8 S/N J10001-UP

TRACK FRAME(COVER)(WITH UNDER COVER)

INDEX	CD	PART NO.	DESCRIPTION	QTY	SERIAL NO.
1		21T-30-32122	FRAME	1	J10001-UP
2		21T-25-67170	BRACKET	1	J10001-UP
3		01010-81255	.BOLT	31	J10001-UP
4		01643-31232	WASHER	31	J10001-UP
5		21T-30-67130	SEAL	1	J10001-UP
6		208-30-11850	COVER	1	J10001-UP
7		208-30-11861	GASKET	1	J10001-UP
8		01010-81225	BOLT	3	J10001-UP
9		01643-31232	WASHER	3	J10001-UP
10		21T-25-67180	COVER	1	J10001-UP
11		01010-81225	BOLT	4	J10001-UP
12		01643-31232	WASHER	4	J10001-UP
13		01643-31232	WASHER	4	J10001-UP
14		21T-30-71160	BOLT	76	J10001-UP
15		21T-30-71170	WASHER	76	J10001-UP

Ref :R1110-02A1 Page :360110

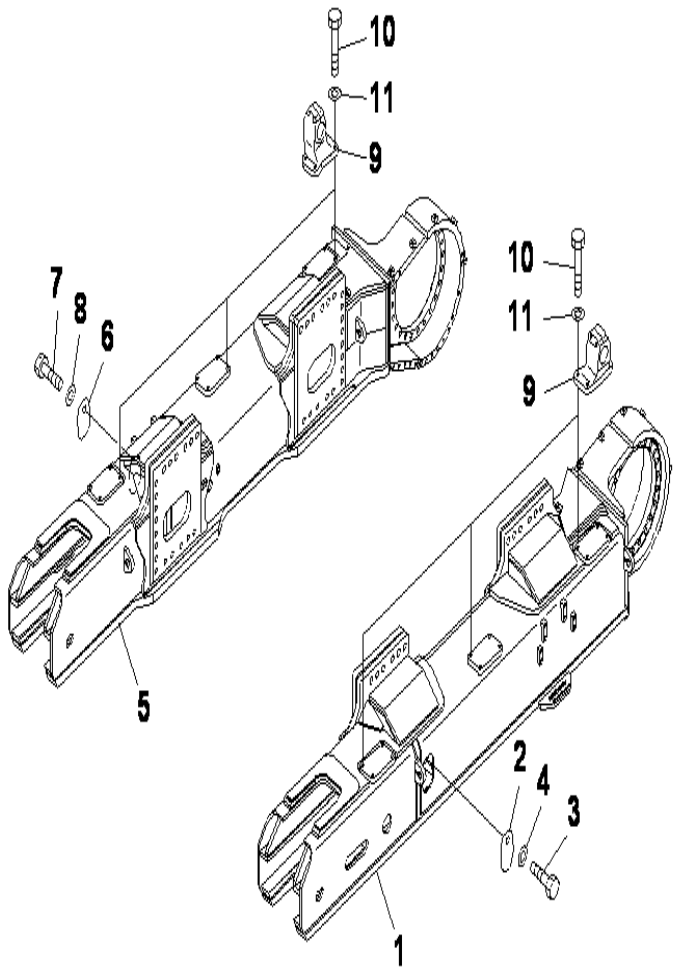

PC2000-8 S/N J10001-UP

TRACK FRAME

INDEX	CD	PART NO.	DESCRIPTION	QTY	SERIAL NO.
1		21T-30-32212	CRAWLER FRAME G.....	1	J10001-UP
2		209-30-11220	PLATE.....	1	J10001-UP
3		01010-81225	BOLT.....	1	J10001-UP
4		01643-31232	WASHER.....	1	J10001-UP
5		21T-30-32222	CRAWLER FRAME G.....	1	J10001-UP
6		209-30-11220	PLATE.....	1	J10001-UP
7		01010-81225	BOLT.....	1	J10001-UP
8		01643-31232	WASHER.....	1	J10001-UP
9		21T-30-71140	SUPPORT.....	6	J10001-UP
10		01010-83080	BOLT.....	24	J10001-UP
11		01643-33080	WASHER.....	24	J10001-UP

Ref :R1120-01A1 Page :360120

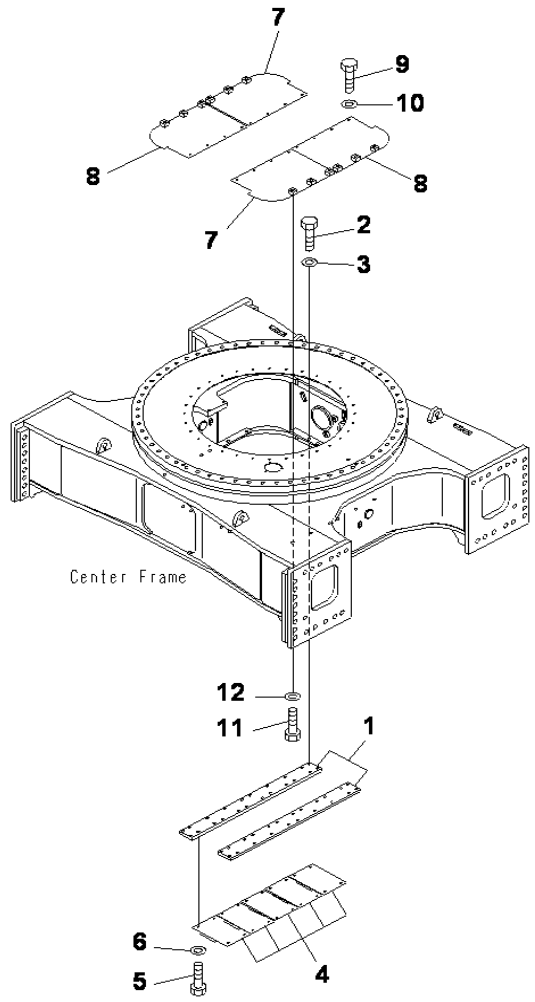

PC2000-8 S/N J10001-UP

TRACK FRAME UNDER COVER

INDEX	CD	PART NO.	DESCRIPTION	QTY	SERIAL NO.
1		21T-30-71251	BRACKET	2	J10001-UP
2		01010-82465	BOLT	8	J10001-UP
3		01643-32460	WASHER	8	J10001-UP
4		21T-30-18120	COVER	5	J10001-UP
5		01010-82465	BOLT	20	J10001-UP
6		01643-32460	WASHER	20	J10001-UP
7		21T-30-71280	COVER	2	J10001-UP
8		21T-30-71270	COVER	2	J10001-UP
9		01010-82465	BOLT	16	J10001-UP
10		01643-32460	WASHER	16	J10001-UP
11		01010-82485	BOLT	12	J10001-UP
12		01643-32460	WASHER	12	J10001-UP

Ref :R1140-01A1 Page :360130

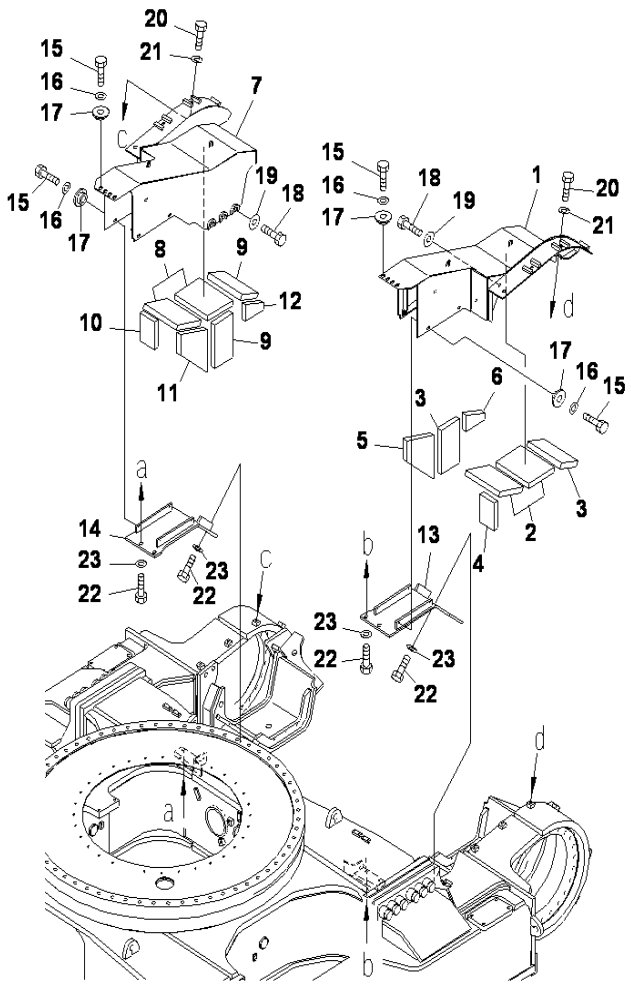

TRAVEL MOTOR GUARD

INDEX	CD	PART NO.	DESCRIPTION	QTY	SERIAL NO.
1		21T-30-32154	COVER(L.H)	1	J10001-UP
2		21T-30-32711	.SHEET	2	J10001-UP
3		21T-30-32722	.SHEET	2	J10001-UP
4		21T-30-32732	.SHEET	1	J10001-UP
5		21T-30-32742	.SHEET	1	J10001-UP
6		21T-30-32752	.SHEET	1	J10001-UP
7		21T-30-32164	COVER(R.H)	1	J10001-UP
8		21T-30-32711	.SHEET	2	J10001-UP
9		21T-30-32722	.SHEET	2	J10001-UP
10		21T-30-32732	.SHEET	1	J10001-UP
11		21T-30-32762	.SHEET	1	J10001-UP
12		21T-30-32772	.SHEET	1	J10001-UP
13		21T-30-32173	COVER(L.H)	1	J10001-UP
14		21T-30-32183	COVER(R.H)	1	J10001-UP
15		01010-82460	BOLT	16	J10001-UP
16		01643-32460	WASHER	16	J10001-UP
17		21T-30-32370	COLLAR	16	J10001-UP
18		01010-82460	BOLT	6	J10001-UP
19		17A-54-44130	WASHER	6	J10001-UP
20		01010-82445	BOLT	8	J10001-UP
21		17A-54-44130	WASHER	8	J10001-UP
22		01010-82460	BOLT	10	J10001-UP
23		17A-54-44130	WASHER	10	J10001-UP

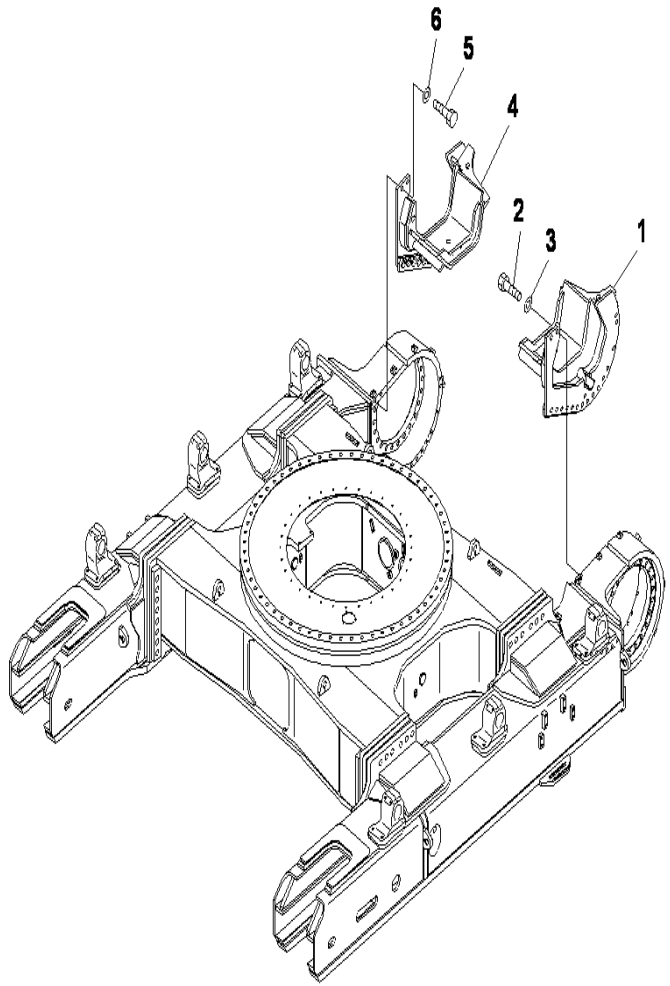

PC2000-8 S/N J10001-UP

TRAVEL MOTOR GUARD

INDEX	CD	PART NO.	DESCRIPTION	QTY	SERIAL NO.
1		21T-30-32133	GUARD, (L.H).....	1	J10001-UP
2		01010-83080	BOLT.....	17	J10001-UP
3		01643-33080	WASHER.....	17	J10001-UP
4		21T-30-32143	GUARD, (RH).....	1	J10001-UP
5		01010-83080	BOLT.....	17	J10001-UP
6		01643-33080	WASHER.....	17	J10001-UP

Ref :R1160-01A1 Page :360150

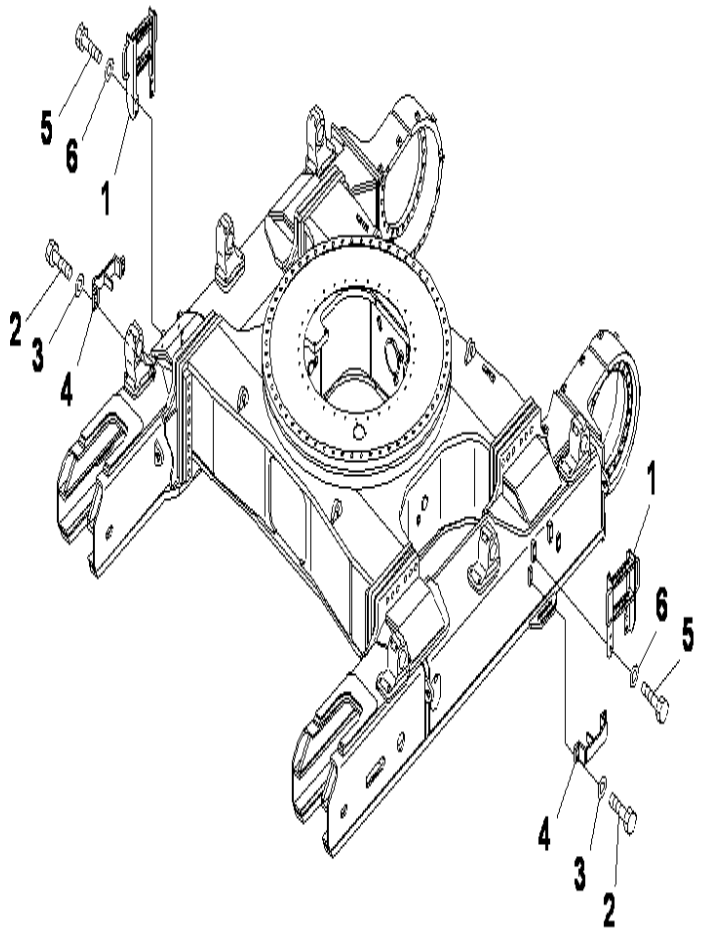

PC2000-8 S/N J10001-UP

STEP

INDEX	CD	PART NO.	DESCRIPTION	QTY	SERIAL NO.
1		21T-30-32241	LADDER	2	J10001-UP
2		01010-82450	BOLT	8	J10001-UP
3		01643-32460	WASHER	8	J10001-UP
4		21T-30-32231	BRACKET	2	J10001-UP
5		01010-82460	BOLT	8	J10001-UP
6		01643-32460	WASHER	8	J10001-UP

Ref :R1170-01A1 Page :360160

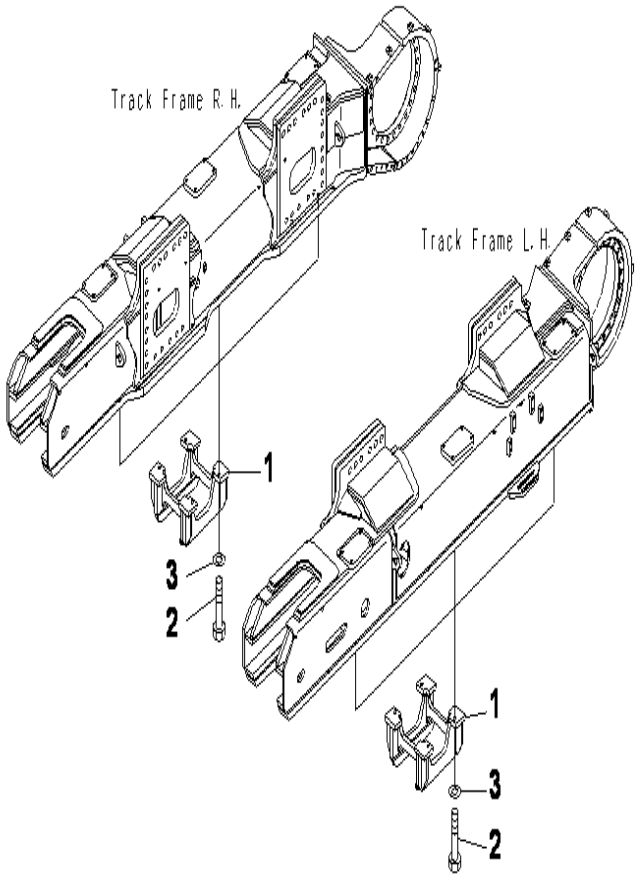

PC2000-8 S/N J10001-UP

TRACK ROLLER GUARD

INDEX	CD	PART NO.	DESCRIPTION	QTY	SERIAL NO.
1		21T-30-32360	GUARD	6	J10001-UP
2		01010-83085	BOLT	24	J10001-UP
3		01643-33080	WASHER	24	J10001-UP

Ref :R1200-01A1 Page :360170

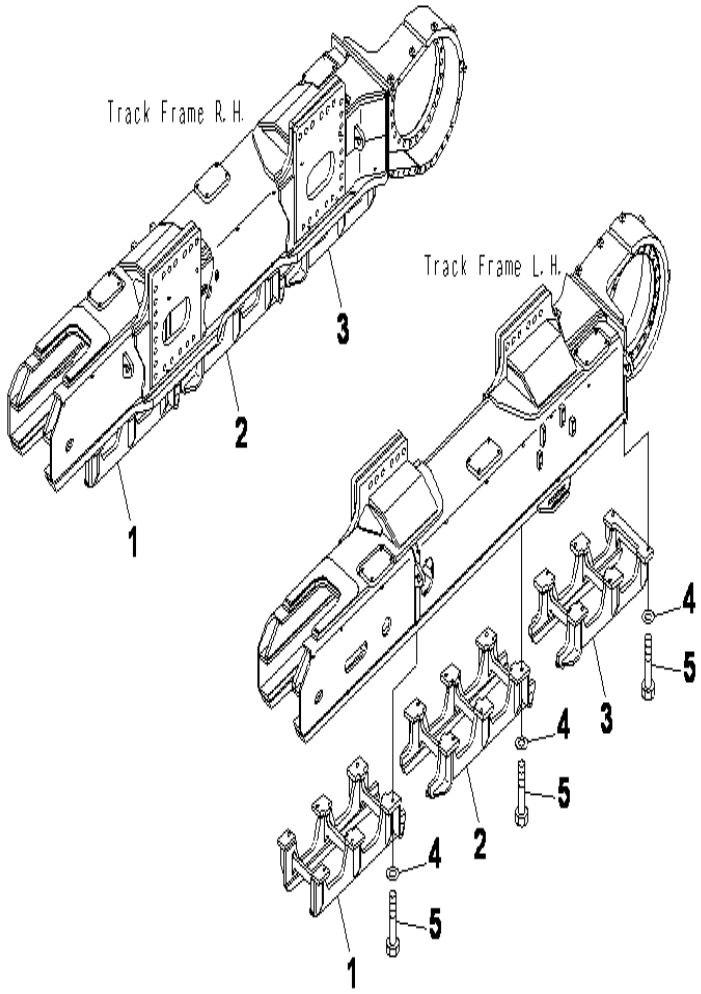

PC2000-8 S/N J10001-UP

TRACK ROLLER GUARD, FULL ROLLER GUARD

INDEX	CD	PART NO.	DESCRIPTION	QTY	SERIAL NO.
1		21T-30-32411	GUARD	2	J10001-UP
2		21T-30-32421	GUARD	2	J10001-UP
3		21T-30-32431	GUARD	2	J10001-UP
4		01643-33080	WASHER	36	J10001-UP
5		01010-83085	BOLT	36	J10001-UP

Ref :R1200-02A1 Page :360180

WORK EQUIPMENT

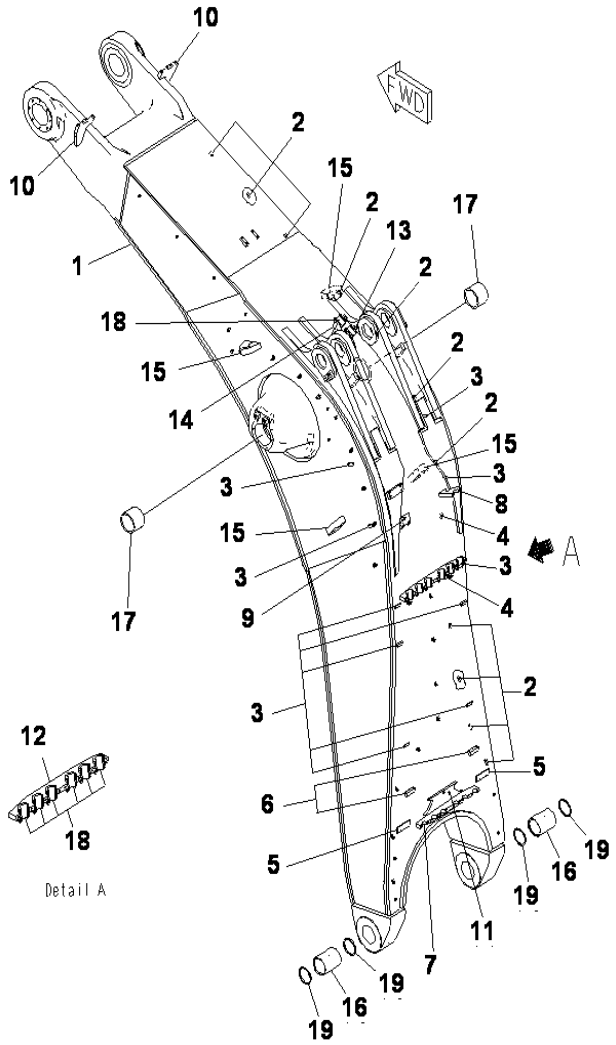

PC2000-8 S/N J10001-UP

BOOM(8700MM)(BOOM)

INDEX	CD	PART NO.	DESCRIPTION	QTY	SERIAL NO.
		21T-70-00203	BOOM ASS'Y	1	J10005-UP
		21T-70-00202	BOOM ASS'Y	1	J10001-J10004
1		21T-70-31113	.BOOM	1	J10005-UP
	C1	21T-70-31112	.BOOM	1	J10001-J10004
2		156-21-11150	..SEAT, (WELDED)	11	J10001-UP
3		176-06-41490	..SEAT, (WELDED)	10	J10001-UP
4		205-62-73410	..SEAT, (WELDED)	2	J10001-UP
5		21N-68-32630	..SEAT, (WELDED)	2	J10001-UP
6		21T-68-31960	..BLOCK, (WELDED)	2	J10001-UP
7		21T-70-31511	..CLAMP, (WELDED)	1	J10001-UP
8		21T-70-31531	..CLAMP, (WELDED)	1	J10001-UP
9		21T-70-31541	..CLAMP, (WELDED)	1	J10001-UP
10		21T-70-31610	..CLAMP, (WELDED)	2	J10001-UP
11		21T-70-31670	..PLATE, (WELDED)	1	J10001-UP
12		21T-70-31620	..CLAMP, (WELDED)	1	J10001-UP
13		21T-70-31630	..CLAMP, (WELDED)	1	J10001-UP
14		21T-70-31640	..CLAMP, (WELDED)	1	J10001-UP
15		21T-70-71130	..BRACKET	4	J10001-UP
16		21T-70-71210	.BUSHING	2	J10001-UP
17		21T-70-31250	.BUSHING	2	J10001-UP
18		21T-64-39540	.SEAT	9	J10001-UP
19		209-72-11311	SEAL	4	J10001-UP

Ref :T1110-01A1 Page :390010

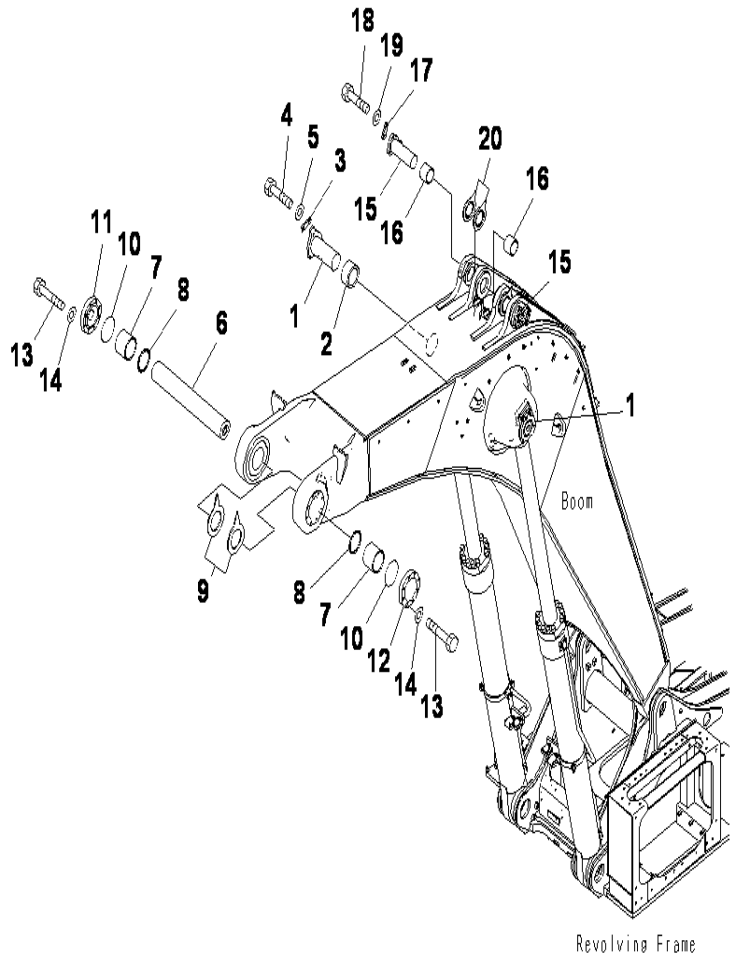

PC2000-8 S/N J10001-UP

BOOM,PIN

INDEX	CD	PART NO.	DESCRIPTION	QTY	SERIAL NO.
1		21T-70-31181	PIN	2	J10001-UP
2		21T-70-31240	BUSHING	2	J10001-UP
3		21T-70-71490	PLATE	2	J10001-UP
4		01010-82455	BOLT	4	J10001-UP
5		01643-32460	WASHER	4	J10001-UP
6		21T-70-11320	PIN	1	J10001-UP
7		21T-70-31213	BUSHING	2	J10001-UP
8		21T-70-31290	SEAL	2	J10001-UP
9		21T-70-00022	SHIM ASS'Y	1	J10001-UP
	C1	21T-70-31391	.SHIM	2	J10001-UP
	C1	21T-70-31780	.SHIM	1	J10001-UP
	C1	21T-70-31810	.SHIM	1	J10001-UP
	C1	21T-70-31820	.SHIM	1	J10001-UP
10		07000-15260	O-RING	2	J10001-UP
11		21T-70-31310	COVER	1	J10001-UP
12		21T-70-31320	COVER	1	J10001-UP
13		01010-82495	BOLT	16	J10001-UP
14		01643-32460	WASHER	16	J10001-UP
15		21T-70-31190	PIN	2	J10001-UP
16		21T-70-31260	BUSHING	4	J10001-UP
17		21T-70-31350	PLATE	2	J10001-UP
18		01010-82455	BOLT	4	J10001-UP
19		01643-32460	WASHER	4	J10001-UP
20		21T-70-31441	SHIM	4	J10001-UP

Ref :T1110-01A2 Page :390020

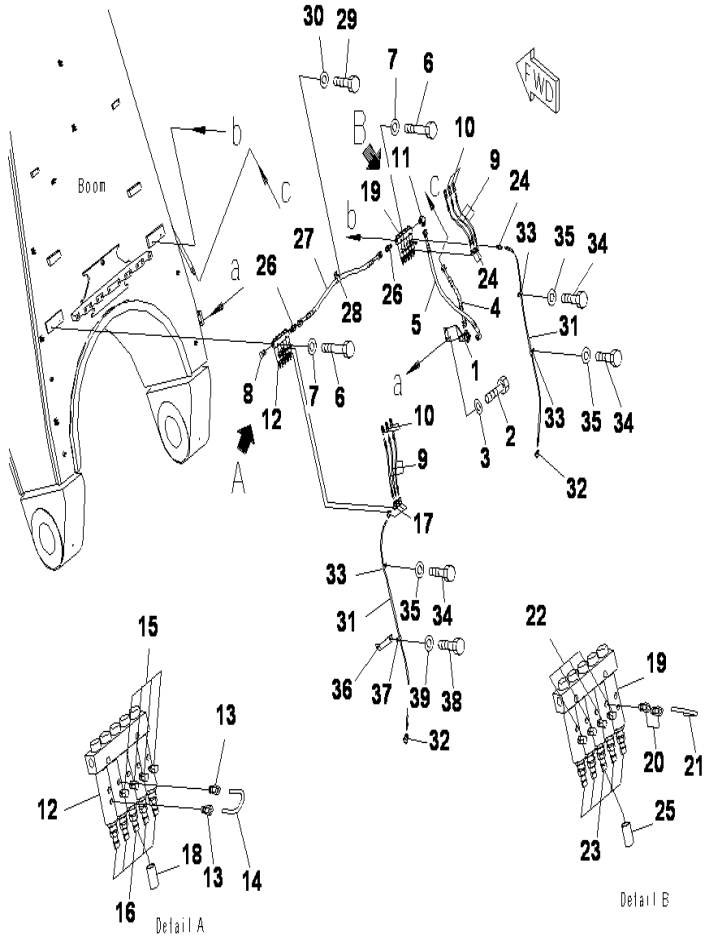

PC2000-8 S/N J10001-UP

BOOM,LUBRICATION (1/3)

INDEX	CD	PART NO.	DESCRIPTION	QTY	SERIAL NO.
1		21T-68-68430	BRACKET	1	J10001-UP
2		01010-81225	BOLT	2	J10001-UP
3		01643-31232	WASHER	2	J10001-UP
4		07631-20404	HOSE	1	J10001-UP
5		07633-204A8	HOSE	1	J10001-UP
6		01010-81050	BOLT	4	J10001-UP
7		01643-31032	WASHER	4	J10001-UP
8		581-96-19590	PLUG	1	J10001-UP
9		21T-68-68550	HOSE A	6	J10001-UP
10		561-95-63310	CONNECTOR	6	J10001-UP
11		566-01-61190	ELBOW	1	J10001-UP
12		21T-68-32362	INJECTOR ASS'Y	1	J10001-UP
13		21N-68-32320	.CONNECTOR	2	J10001-UP
14		21N-68-32360	.TUBE	1	J10001-UP
15		21T-68-32340	.FITTING	4	J10001-UP
16		21T-68-32351	.INJECTOR	5	J10001-UP
17		561-95-63250	.ELBOW	4	J10001-UP
18		581-96-19620	.CAP	5	J10001-UP
19		21T-68-32822	INJECTOR ASS'Y	1	J10001-UP
20		21N-68-32320	.CONNECTOR	2	J10001-UP
21		21N-68-32360	.TUBE	1	J10001-UP
22		21T-68-32340	.FITTING	4	J10001-UP
23		21T-68-32351	.INJECTOR	5	J10001-UP
24		561-95-63250	.ELBOW	4	J10001-UP
25		581-96-19620	.CAP	5	J10001-UP
26		21T-68-31950	CONNECTOR	2	J10001-UP
27		07631-204A9	HOSE	1	J10001-UP
28		04434-52511	CLIP	1	J10001-UP
29		01010-81020	BOLT	1	J10001-UP
30		01643-31032	WASHER	1	J10001-UP
31		21T-68-31980	HOSE ASS'Y	2	J10001-UP
32		561-95-63290	ELBOW	2	J10001-UP
33		04434-51010	CLIP	3	J10001-UP
34		01010-81020	BOLT	3	J10001-UP
35		01643-31032	WASHER	3	J10001-UP
36		17A-61-13391	BRACKET	1	J10001-UP
37		04434-51010	CLIP	1	J10001-UP
38		01010-81025	BOLT	1	J10001-UP
39		01643-31032	WASHER	1	J10001-UP

Ref :T1110-01A3 Page :390030

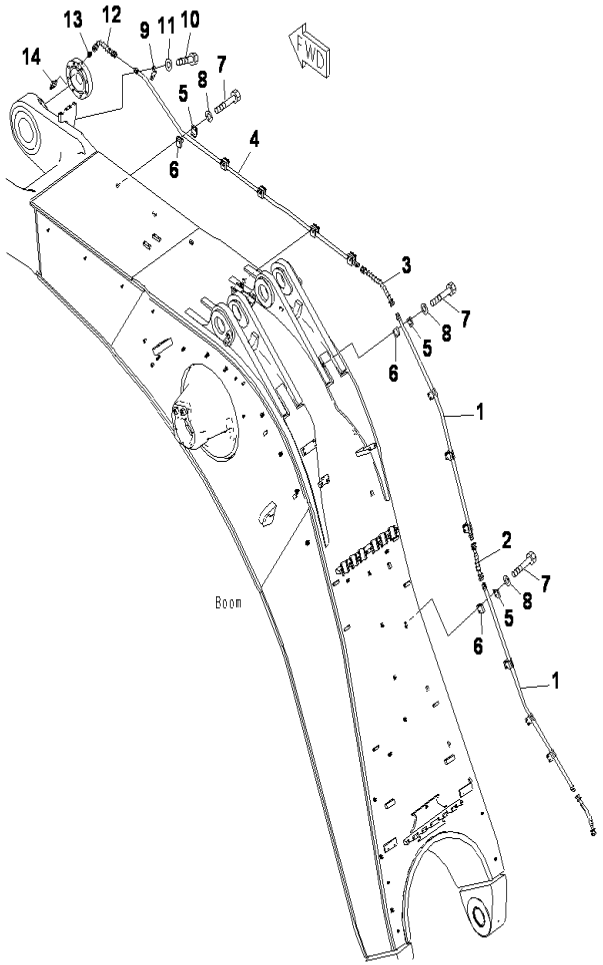

PC2000-8 S/N J10001-UP

BOOM,LUBRICATION (2/3)

INDEX	CD	PART NO.	DESCRIPTION	QTY	SERIAL NO.
1		21N-68-32420	TUBE	2	J10001-UP
2		07631-20403	HOSE	1	J10001-UP
3		07631-20405	HOSE	1	J10001-UP
4		21T-68-31510	TUBE	1	J10001-UP
5		203-973-5660	CLAMP	13	J10001-UP
6		203-973-5720	SEAT	13	J10001-UP
7		01010-81055	BOLT	26	J10001-UP
8		01643-31032	WASHER	26	J10001-UP
9		07282-12288	CLAMP	1	J10001-UP
10		01010-81020	BOLT	2	J10001-UP
11		01643-31032	WASHER	2	J10001-UP
12		07631-204A4	HOSE	1	J10001-UP
13		237-60-14550	NIPPLE	1	J10001-UP
14		237-60-14550	NIPPLE	1	J10001-UP

Ref :T1110-01A4 Page :390040

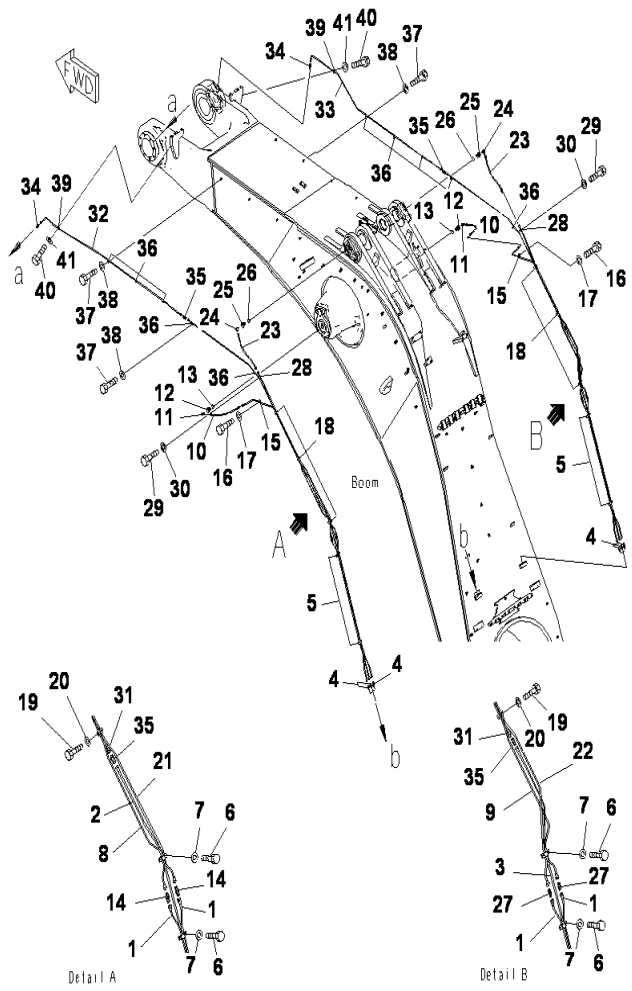

PC2000-8 S/N J10001-UP

BOOM,LUBRICATION (3/3)

INDEX	CD	PART NO.	DESCRIPTION	QTY	SERIAL NO.
1		21T-68-31540	TUBE	4	J10001-UP
2		21T-68-31560	TUBE	1	J10001-UP
3		21T-68-31580	TUBE	1	J10001-UP
4		07214-51013	CONNECTOR	6	J10001-UP
5		207-70-11770	CLIP	4	J10001-UP
6		01010-80612	BOLT	8	J10001-UP
7		01643-30623	WASHER	8	J10001-UP
8		21T-68-31590	TUBE	1	J10001-UP
9		21T-68-31910	TUBE	1	J10001-UP
10		208-70-62190	HOSE	2	J10001-UP
11		205-70-51380	ELBOW	2	J10001-UP
12		21T-70-71460	PLUG	2	J10001-UP
13		07002-13034	O-RING	2	J10001-UP
14		21N-70-35230	NIPPLE	2	J10001-UP
15		04434-51010	CLIP	2	J10001-UP
16		01010-81020	BOLT	2	J10001-UP
17		01643-31032	WASHER	2	J10001-UP
18		207-70-11770	CLIP	6	J10001-UP
19		01010-80612	BOLT	12	J10001-UP
20		01643-30623	WASHER	12	J10001-UP
21		21T-68-31550	TUBE	1	J10001-UP
22		21T-68-31930	TUBE	1	J10001-UP
23		208-70-62190	HOSE	2	J10001-UP
24		205-70-51380	ELBOW	2	J10001-UP
25		21T-70-71460	PLUG	2	J10001-UP
26		07002-13034	O-RING	2	J10001-UP
27		21N-70-35230	NIPPLE	2	J10001-UP
28		04434-51010	CLIP	2	J10001-UP
29		01010-81020	BOLT	2	J10001-UP
30		01643-31032	WASHER	2	J10001-UP
31		21T-68-31570	TUBE	2	J10001-UP
32		21T-68-31920	TUBE	1	J10001-UP
33		21T-68-31940	TUBE	1	J10001-UP
34		07214-51013	CONNECTOR	2	J10001-UP
35		21N-70-35230	NIPPLE	4	J10001-UP
36		04434-51010	CLIP	10	J10001-UP
37		01010-81020	BOLT	10	J10001-UP
38		01643-31032	WASHER	10	J10001-UP
39		07282-11048	CLAMP	2	J10001-UP
40		01010-80612	BOLT	4	J10001-UP
41		01643-30623	WASHER	4	J10001-UP

Ref :T1110-01A5 Page :390050

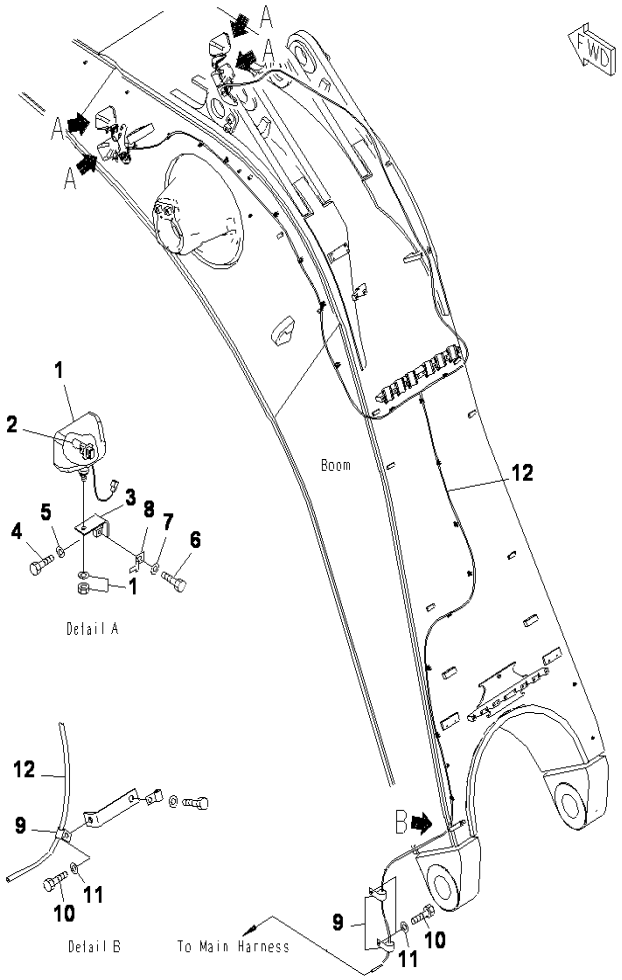

PC2000-8 S/N J10001-UP

BOOM,WORKING LAMP

INDEX	CD	PART NO.	DESCRIPTION	QTY	SERIAL NO.
1		21T-06-32810	WORK LAMP A.....	4	J10001-UP
2		421-06-23330	.BULB.....	1	J10001-UP
3		20Y-06-21551	BRACKET.....	4	J10001-UP
4		01010-81430	BOLT.....	4	J10001-UP
5		01643-31445	WASHER.....	4	J10001-UP
6		01010-81225	BOLT.....	4	J10001-UP
7		01643-31232	WASHER.....	4	J10001-UP
8		08193-21012	CLIP.....	4	J10001-UP
9		04434-51412	CLIP.....	3	J10001-UP
10		01010-81220	BOLT.....	3	J10001-UP
11		01643-31232	WASHER.....	3	J10001-UP
12		21T-06-32362	WIRING HARNESS.....	1	J10001-UP

Ref :T1110-01A6 Page :390060

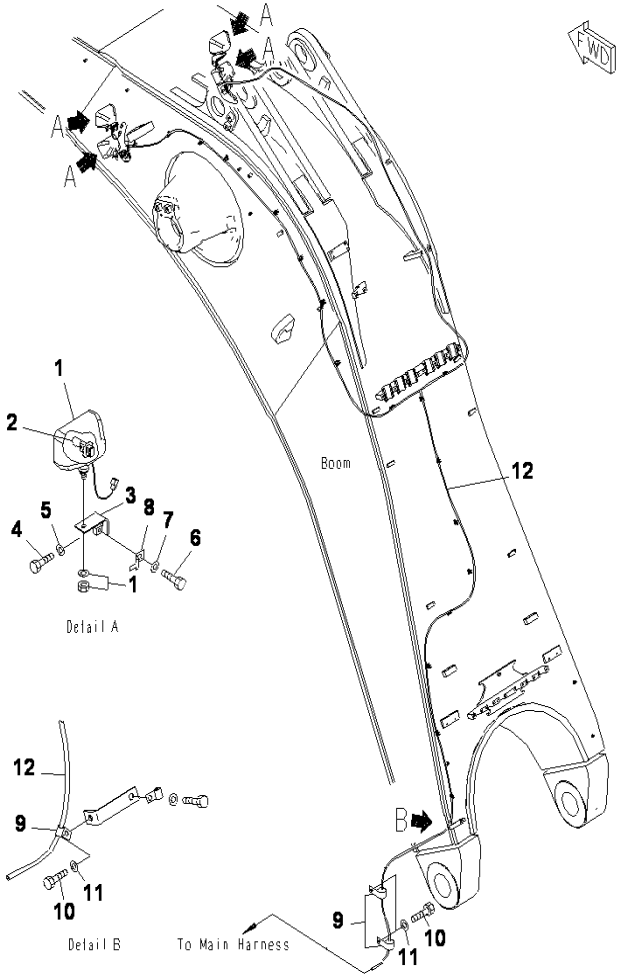

PC2000-8 S/N J10001-UP

BOOM,ARM CYLINDER PIPING (1/2)

INDEX	CD	PART NO.	DESCRIPTION	QTY	SERIAL NO.
1		21T-64-39110	TUBE	6	J10001-UP
2		21T-64-39570	CLAMP	6	J10001-UP
3		207-30-35310	BOLT	12	J10001-UP
4		01643-31845	WASHER	12	J10001-UP
5		21T-64-39510	TUBE	2	J10001-UP
6		21T-64-39540	.SEAT	3	J10001-UP
7		207-30-35310	BOLT	8	J10001-UP
8		01643-31845	WASHER	8	J10001-UP
9		07371-52080	FLANGE	12	J10001-UP
10		01010-81865	BOLT	24	J10001-UP
11		01643-31845	WASHER	24	J10001-UP

Ref :T1110-01A7 Page :390070

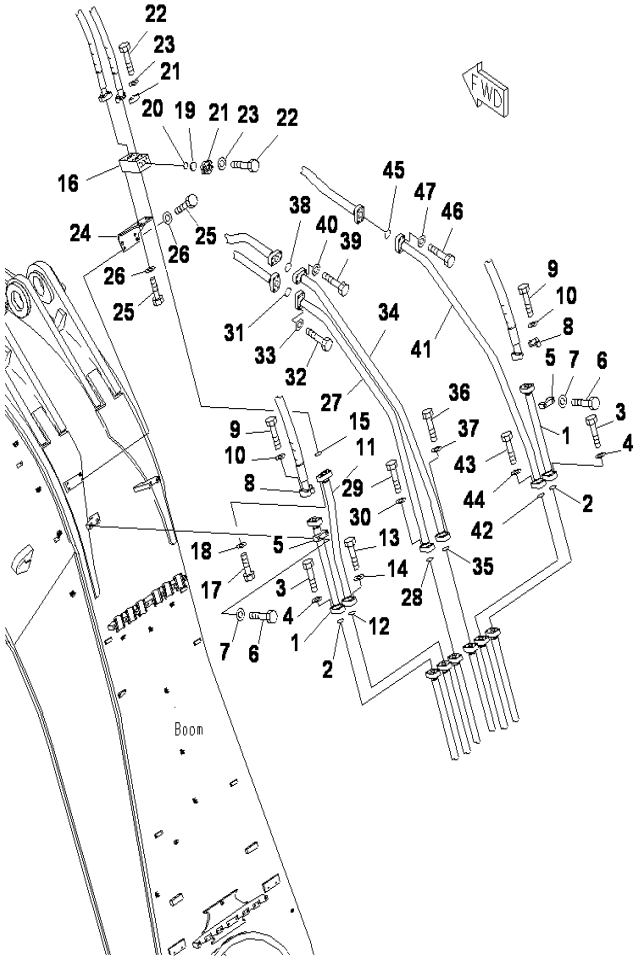

PC2000-8 S/N J10001-UP

BOOM,ARM CYLINDER PIPING (2/2)

INDEX	CD	PART NO.	DESCRIPTION	QTY	SERIAL NO.
1		21T-64-39120	TUBE	2	J10001-UP
2		07000-B2060	O-RING	2	J10001-UP
3		01010-81865	BOLT	8	J10001-UP
4		01643-31845	WASHER	8	J10001-UP
5		21T-64-39570	CLAMP	2	J10001-UP
6		207-30-35310	BOLT	4	J10001-UP
7		01643-31845	WASHER	4	J10001-UP
8		0737152080	FLANGE	4	J10001-UP
9		01010-81865	BOLT	8	J10001-UP
10		01643-31845	WASHER	8	J10001-UP
11		21T-64-39130	TUBE	1	J10001-UP
12		07000-B2060	O-RING	1	J10001-UP
13		01010-81865	BOLT	4	J10001-UP
14		01643-31845	WASHER	4	J10001-UP
15		07000-B2060	O-RING	1	J10001-UP
16		21T-64-39590	BLOCK	1	J10001-UP
17		01010-81865	BOLT	4	J10001-UP
18		01643-31845	WASHER	4	J10001-UP
19		07378-11410	HEAD	1	J10001-UP
20		07000-B3048	O-RING	1	J10001-UP
21		07371-51470	FLANGE	6	J10001-UP
22		01010-81455	BOLT	12	J10001-UP
23		01643-31445	WASHER	12	J10001-UP
24		21T-64-39640	PLATE	1	J10001-UP
25		01010-81840	BOLT	8	J10001-UP
26		01643-31845	WASHER	8	J10001-UP
27		21T-64-39140	TUBE	1	J10001-UP
28		07000-B2060	O-RING	1	J10001-UP
29		01010-81865	BOLT	4	J10001-UP
30		01643-31845	WASHER	4	J10001-UP
31		07000-B2060	O-RING	1	J10001-UP
32		01010-81865	BOLT	4	J10001-UP
33		01643-31845	WASHER	4	J10001-UP
34		21T-64-39150	TUBE	1	J10001-UP
35		07000-B2060	O-RING	1	J10001-UP
36		01010-81865	BOLT	4	J10001-UP
37		01643-31845	WASHER	4	J10001-UP
38		07000-B2060	O-RING	1	J10001-UP
39		01010-81865	BOLT	4	J10001-UP
40		01643-31845	WASHER	4	J10001-UP
41		21T-64-39160	TUBE	1	J10001-UP
42		07000-B2060	O-RING	1	J10001-UP
43		01010-81865	BOLT	4	J10001-UP
44		01643-31845	WASHER	4	J10001-UP
45		07000-B2060	O-RING	1	J10001-UP

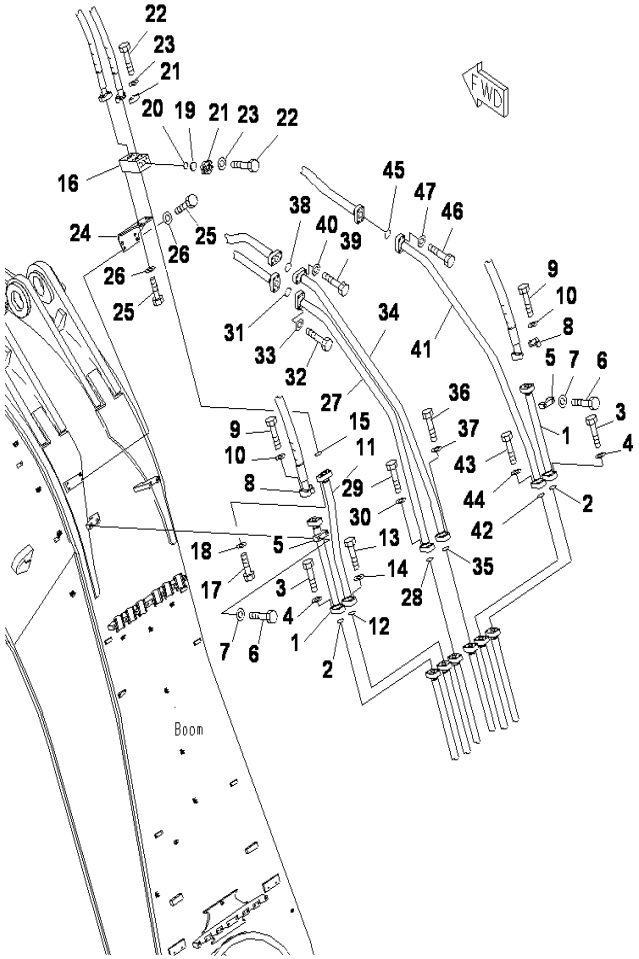

PC2000-8 S/N J10001-UP

BOOM,ARM CYLINDER PIPING (2/2)

INDEX	CD	PART NO.	DESCRIPTION	QTY	SERIAL NO.
46		01010-81865	BOLT	4	J10001-UP
47		01643-31845	WASHER	4	J10001-UP

Ref :T1110-01A8 Page :390081

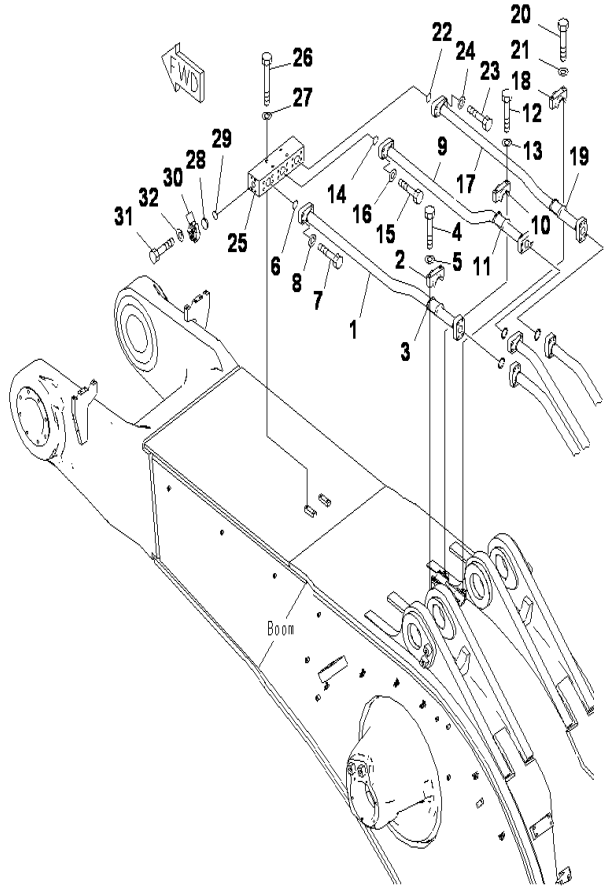

PC2000-8 S/N J10001-UP

BOOM,BUCKET CYLINDER PIPING (1/2)

INDEX	CD	PART NO.	DESCRIPTION	QTY	SERIAL NO.
1		21T-64-39170	TUBE	1	J10001-UP
2		21T-64-39551	CLAMP	1	J10001-UP
3		21T-64-39540	.SEAT	1	J10001-UP
4		207-30-35310	BOLT	2	J10001-UP
5		01643-31845	WASHER	2	J10001-UP
6		07000-B2060	O-RING	1	J10001-UP
7		01010-81865	BOLT	4	J10001-UP
8		01643-31845	WASHER	4	J10001-UP
9		21T-64-39180	TUBE	1	J10001-UP
10		21T-64-39551	CLAMP	1	J10001-UP
11		21T-64-39540	.SEAT	1	J10001-UP
12		207-30-35310	BOLT	2	J10001-UP
13		01643-31845	WASHER	2	J10001-UP
14		07000-B2060	O-RING	1	J10001-UP
15		01010-81865	BOLT	4	J10001-UP
16		01643-31845	WASHER	4	J10001-UP
17		21T-64-39190	TUBE	1	J10001-UP
18		21T-64-39551	CLAMP	1	J10001-UP
19		21T-64-39540	.SEAT	1	J10001-UP
20		207-30-35310	BOLT	2	J10001-UP
21		01643-31845	WASHER	2	J10001-UP
22		07000-B2060	O-RING	1	J10001-UP
23		01010-81865	BOLT	4	J10001-UP
24		01643-31845	WASHER	4	J10001-UP
25		21T-64-39610	BLOCK	1	J10001-UP
26		01011-81635	BOLT	4	J10001-UP
27		01643-31645	WASHER	4	J10001-UP
28		07378-11410	HEAD	1	J10001-UP
29		07000-B3048	O-RING	1	J10001-UP
30		07371-51470	FLANGE	2	J10001-UP
31		01010-81455	BOLT	4	J10001-UP
32		01643-31445	WASHER	4	J10001-UP

Ref :T1110-01A9 Page :390090

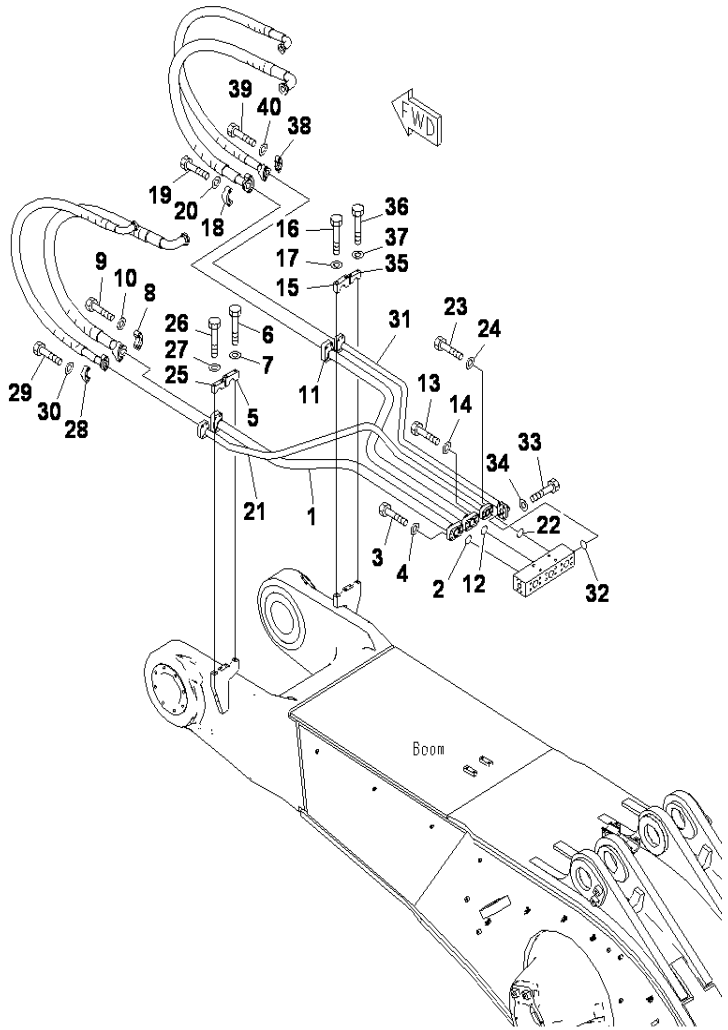

PC2000-8 S/N J10001-UP

BOOM,BUCKET CYLINDER PIPING (2/2)

INDEX	CD	PART NO.	DESCRIPTION	QTY	SERIAL NO.
1		21T-64-39210	TUBE	1	J10001-UP
2		07000-B2060	O-RING	1	J10001-UP
3		01010-81865	BOLT	4	J10001-UP
4		01643-31845	WASHER	4	J10001-UP
5		21T-64-39570	CLAMP	1	J10001-UP
6		207-30-35310	BOLT	2	J10001-UP
7		01643-31845	WASHER	2	J10001-UP
8		07371-52080	FLANGE	2	J10001-UP
9		01010-81865	BOLT	4	J10001-UP
10		01643-31845	WASHER	4	J10001-UP
11		21T-64-39220	TUBE	1	J10001-UP
12		07000-B2060	O-RING	1	J10001-UP
13		01010-81865	BOLT	4	J10001-UP
14		01643-31845	WASHER	4	J10001-UP
15		21T-64-39570	CLAMP	1	J10001-UP
16		207-30-35310	BOLT	2	J10001-UP
17		01643-31845	WASHER	2	J10001-UP
18		07371-52080	FLANGE	2	J10001-UP
19		01010-81865	BOLT	4	J10001-UP
20		01643-31845	WASHER	4	J10001-UP
21		21T-64-39230	TUBE	1	J10001-UP
22		07000-B3048	O-RING	1	J10001-UP
23		01010-81455	BOLT	4	J10001-UP
24		01643-31445	WASHER	4	J10001-UP
25		21T-62-68740	CLAMP	1	J10001-UP
26		01010-81680	BOLT	2	J10001-UP
27		01643-31645	WASHER	2	J10001-UP
28		07371-51470	FLANGE	2	J10001-UP
29		01010-81455	BOLT	4	J10001-UP
30		01643-31445	WASHER	4	J10001-UP
31		21T-64-39240	TUBE	1	J10001-UP
32		07000-B3048	O-RING	1	J10001-UP
33		01010-81445	BOLT	4	J10001-UP
34		01643-31445	WASHER	4	J10001-UP
35		21T-62-68740	CLAMP	1	J10001-UP
36		01010-81680	BOLT	2	J10001-UP
37		01643-31645	WASHER	2	J10001-UP
38		07371-51470	FLANGE	2	J10001-UP
39		01010-81455	BOLT	4	J10001-UP
40		01643-31445	WASHER	4	J10001-UP

Ref :T1110-01A10 Page :390100

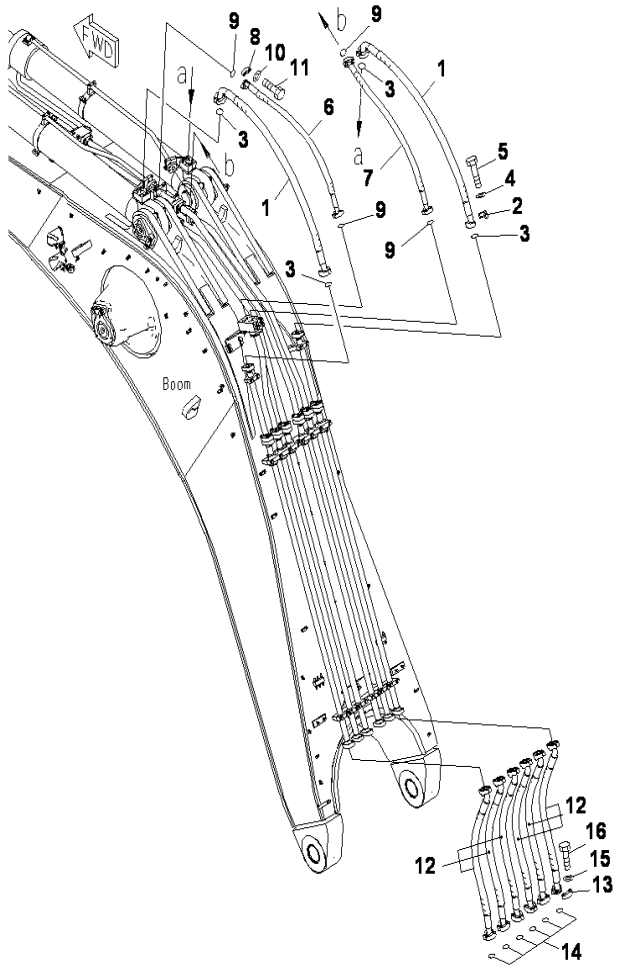

PC2000-8 S/N J10001-UP

BOOM,HOSE

INDEX	CD	PART NO.	DESCRIPTION	QTY	SERIAL NO.
1		07084-02022	HOSE	2	J10001-UP
2		07371-52080	FLANGE	4	J10001-UP
3		07000-B2060	O-RING	4	J10001-UP
4		01643-31845	WASHER	8	J10001-UP
5		01010-81865	BOLT	8	J10001-UP
6		07085-01418	HOSE	1	J10001-UP
7		07085-01420	HOSE	1	J10001-UP
8		07371-51470	FLANGE	8	J10001-UP
9		07000-B3048	O-RING	4	J10001-UP
10		01643-31445	WASHER	16	J10001-UP
11		01010-81455	BOLT	16	J10001-UP
12		21T-64-39421	TUBE	6	J10001-UP
13		07371-52080	FLANGE	12	J10001-UP
14		07000-B2060	O-RING	12	J10001-UP
15		01643-31845	WASHER	24	J10001-UP
16		01010-81865	BOLT	24	J10001-UP

Ref :T1110-01A11 Page :390110

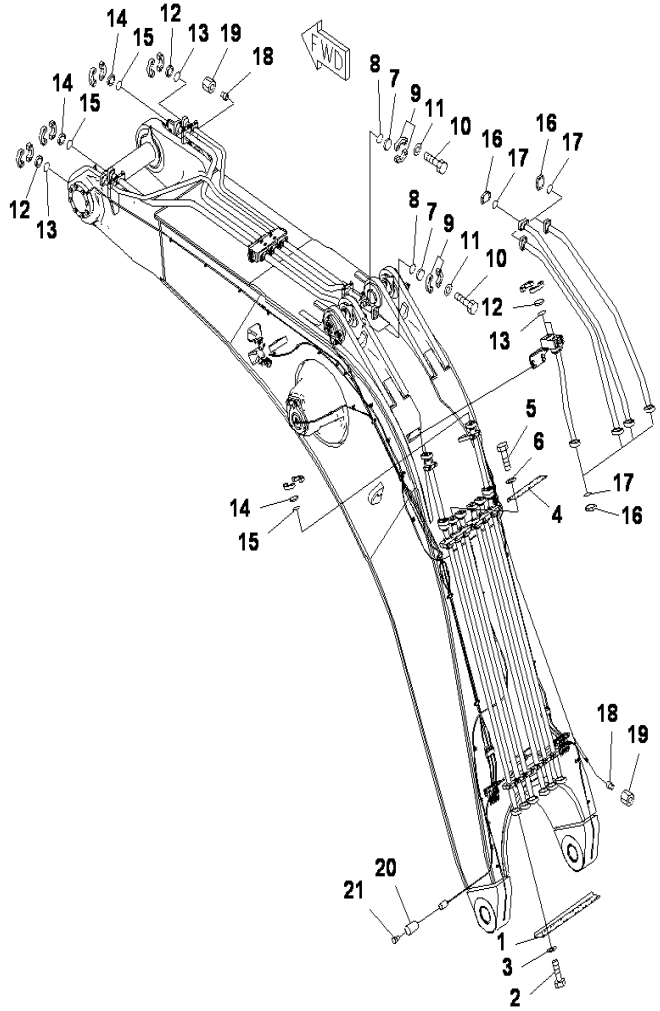

PC2000-8 S/N J10001-UP

BOOM,BLIND PARTS

INDEX	CD	PART NO.	DESCRIPTION	QTY	SERIAL NO.
1		01010-81835	BOLT	24	J10001-UP
2		01643-31845	WASHER	24	J10001-UP
3		01010-81835	BOLT	16	J10001-UP
4		01643-31845	WASHER	16	J10001-UP
5		07378-12010	HEAD	3	J10001-UP
6		07000-B2060	O-RING	3	J10001-UP
7		07371-52080	FLANGE	6	J10001-UP
8		01010-81865	BOLT	12	J10001-UP
9		01643-31845	WASHER	12	J10001-UP
10		07378-11410	HEAD	4	J10001-UP
11		07000-B3048	O-RING	4	J10001-UP
12		07378-12010	HEAD	4	J10001-UP
13		07000-B2060	O-RING	4	J10001-UP
14		07379-02080	FLANGE	7	J10001-UP
15		07000-B2060	O-RING	7	J10001-UP
16		07222-00414	PLUG	2	J10001-UP
17		07221-20422	NUT	2	J10001-UP
18		08192-14100	CONNECTOR	1	J10001-UP
19		08191-00770	PLUG	4	J10001-UP

Ref :T1110-01A12 Page :390120

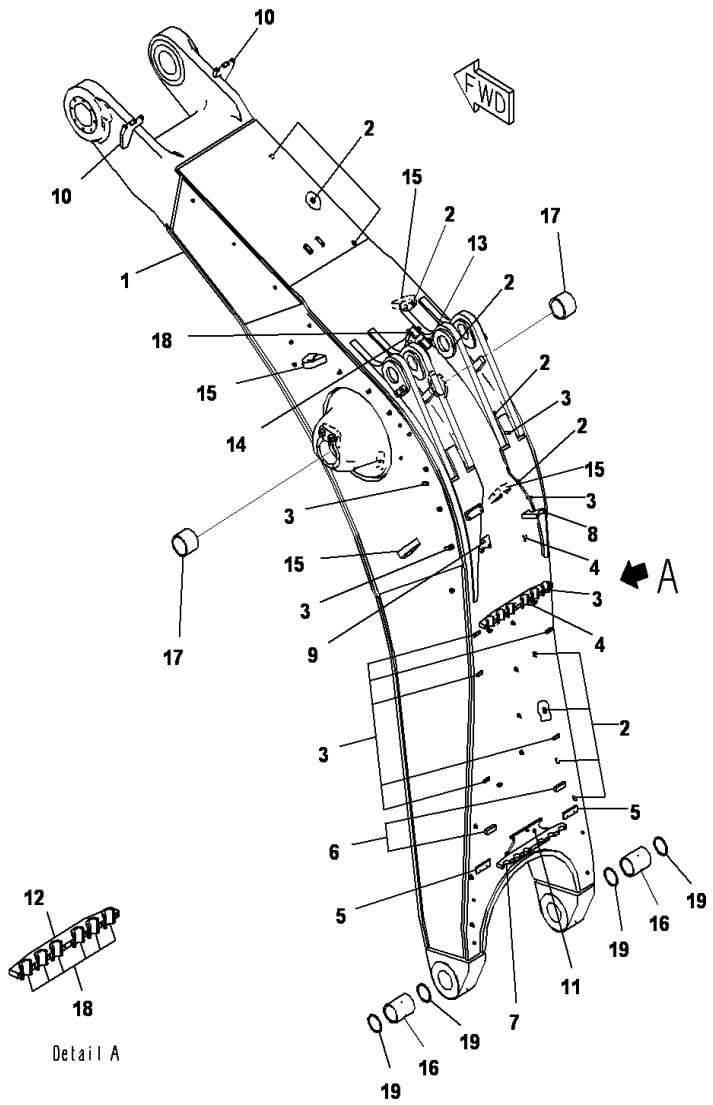

PC2000-8 S/N J10001-UP

BOOM,HEAVY DUTY BOOM (BOOM)

INDEX	CD	PART NO.	DESCRIPTION	QTY	SERIAL NO.
		21T-70-00431	BOOM ASS'Y LINC.....	1	J10005-UP
		21T-70-00430	BOOM ASS'Y LINC.....	1	J10001-J10004
1	C1	21T-70-35111	.BOOM.....	1	J10005-UP
	C1	21T-70-35110	.BOOM.....	1	J10001-J10004
2		156-21-11150	..SEAT.....	11	J10001-UP
3		176-06-41490	..SEAT.....	10	J10001-UP
4		205-62-73410	..SEAT.....	2	J10001-UP
5		21N-68-32630	..SEAT.....	2	J10001-UP
6		21T-68-31960	..BLOCK.....	2	J10001-UP
7		21T-70-31511	..CLAMP.....	1	J10001-UP
8		21T-70-31531	..CLAMP.....	1	J10001-UP
9		21T-70-31541	..CLAMP.....	1	J10001-UP
10		21T-70-31610	..CLAMP.....	2	J10001-UP
11		21T-70-31670	..PLATE.....	1	J10001-UP
12		21T-70-31620	..CLAMP.....	1	J10001-UP
13		21T-70-31630	..CLAMP.....	1	J10001-UP
14		21T-70-31640	..CLAMP.....	1	J10001-UP
15		21T-70-71130	..BRACKET.....	4	J10001-UP
16		21T-70-71210	.BUSHING.....	2	J10001-UP
17		21T-70-31250	.BUSHING.....	2	J10001-UP
18		21T-64-39540	.SEAT.....	9	J10001-UP
19		209-72-11311	SEAL.....	4	J10001-UP

Ref :T1110-02A1 Page :390130

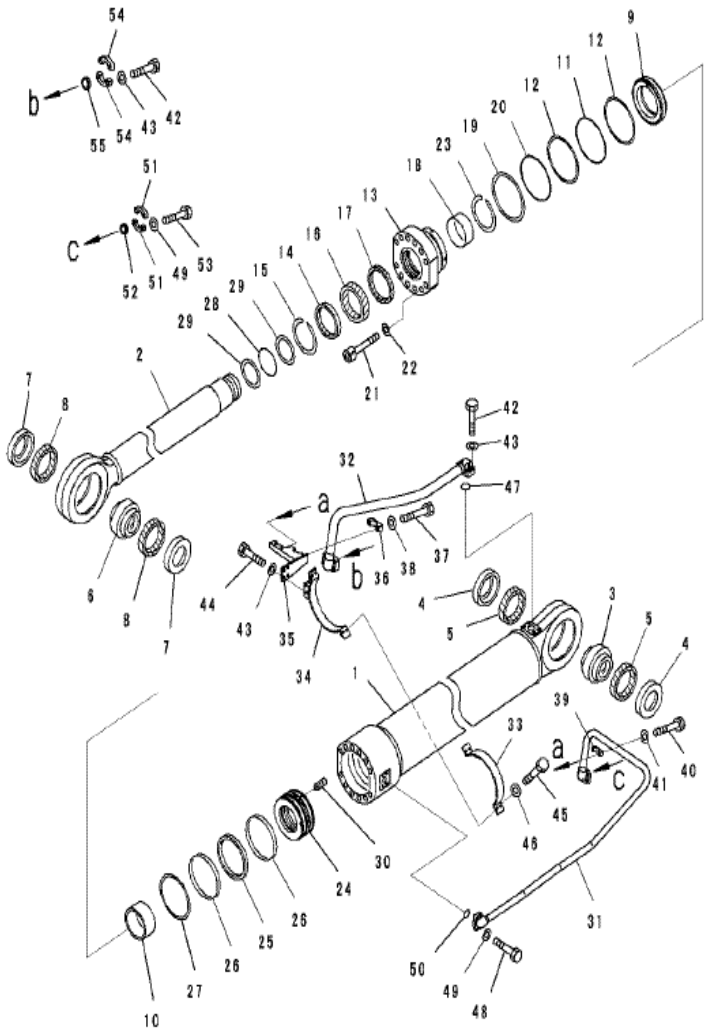

PC2000-8 S/N J10001-UP

BOOM CYLINDER,LHS

INDEX	CD	PART NO.	DESCRIPTION	QTY	SERIAL NO.
	G-1	(707-01-XP701)	CYLINDER GROUP LH.....	1	J10020-UP
	G-1	(707-01-XP700)	CYLINDER GROUP LH.....	1	J10001-J10019
			==========.....		
		707-01-0K750	CYLINDER ASS'Y, L.H.....	1	J10001-UP
1		707-13-30130	.CYLINDER.....	1	J10001-UP
2		707-58-20270	.ROD.....	1	J10001-UP
3		707-46-18050	.BUSHING.....	1	J10001-UP
4		707-46-18020	.BUSHING.....	2	J10001-UP
5		707-77-18010	.SEAL (KIT).....	2	J10001-UP
6		70746-18050	BUSHING.....	1	J10001-UP
7		70746-18020	BUSHING.....	2	J10001-UP
8		70777-18010	SEAL (KIT).....	2	J10001-UP
9		707-71-35070	.COLLAR.....	1	J10001-UP
10		707-71-62000	.PLUNGER.....	1	J10001-UP
11		07000-15300	.O-RING (KIT).....	1	J10001-UP
12		07001-05300	.RING,BACK-UP (KIT).....	2	J10001-UP
13		707-27-30090	.HEAD.....	1	J10001-UP
14		581-63-92670	.SEAL (KIT).....	1	J10001-UP
15		07179-15216	.RING.....	1	J10001-UP
16		707-51-20080	.PACKING,ROD (KIT).....	1	J10001-UP
17		707-51-20850	.RING,BUFFER (KIT).....	1	J10001-UP
18		707-52-91761	.BUSHING.....	1	J10001-UP
19		07001-05300	.RING,BACK-UP (KIT).....	1	J10001-UP
20		07000-15300	.O-RING (KIT).....	1	J10001-UP
21		01253-63650	.BOLT.....	12	J10001-UP
22		707-41-10270	.WASHER.....	12	J10001-UP
23		707-75-20040	.RING,SNAP.....	1	J10001-UP
24		707-36-30110	.PISTON.....	1	J10001-UP
25		707-44-30010	.RING,PISTON (KIT).....	1	J10001-UP
26		707-39-30900	.RING,WEAR (KIT).....	2	J10001-UP
27		707-44-30910	.RING.....	2	J10001-UP
28		07000-B5185	.O-RING (KIT).....	1	J10001-UP
29		07001-05185	.RING,BACK-UP (KIT).....	2	J10001-UP
30		01310-01640	.SCREW.....	1	J10001-UP
31		707-86-14230	TUBE,L.H.....	1	J10001-UP
32		707-86-15010	TUBE,L.H.....	1	J10001-UP
33		707-88-26220	BAND.....	1	J10001-UP
34		707-88-28690	BRACKET.....	1	J10001-UP
35		707-88-28610	BRACKET.....	1	J10001-UP
36		707-88-37410	BRACKET.....	1	J10001-UP
37		01010-81675	BOLT.....	2	J10001-UP
38		01643-31645	WASHER.....	2	J10001-UP
39		176-61-41330	CLAMP.....	1	J10001-UP
40		01010-81250	BOLT.....	2	J10001-UP
41		01643-31232	WASHER.....	2	J10001-UP

Ref :T1120-01A1 Page :390140

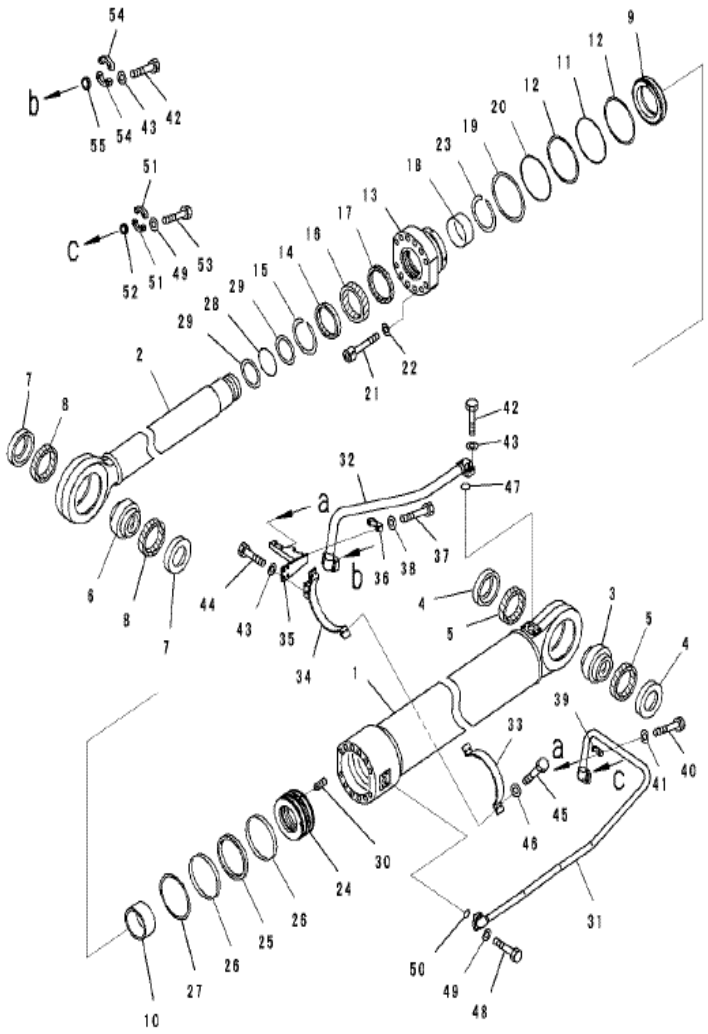

PC2000-8 S/N J10001-UP

BOOM CYLINDER,LHS

INDEX	CD	PART NO.	DESCRIPTION	QTY	SERIAL NO.
42		01010-81865	BOLT, FOR SHIPPING.....	8	J10001-UP
43		01643-31845	WASHER, FOR SHIPPING.....	12	J10001-UP
44		01010-81840	BOLT.....	4	J10001-UP
45		07372-21250	BOLT.....	4	J10001-UP
46		01643-31232	WASHER.....	4	J10001-UP
47		07000-12060	O-RING KIT.....	1	J10001-UP
48		01010-81450	BOLT.....	4	J10001-UP
49		01643-31445	WASHER, FOR SHIPPING.....	8	J10001-UP
50		07000-13048	O-RING.....	1	J10001-UP
51		07371-51470	FLANGE,(FOR SHIPPING).....	2	J10001-UP
52		707-88-33060	CAP,(FOR SHIPPING).....	1	J10001-UP
53		01010-81455	BOLT,(FOR SHIPPING).....	4	J10001-UP
54		07371-52080	FLANGE,(FOR SHIPPING).....	2	J10001-UP
55		707-88-33070	CAP,(FOR SHIPPING).....	1	J10001-UP
			==========.....		
		707-99-96140	SERVICE KIT.....	1	J10001-UP

Ref :T1120-01A1 Page :390141

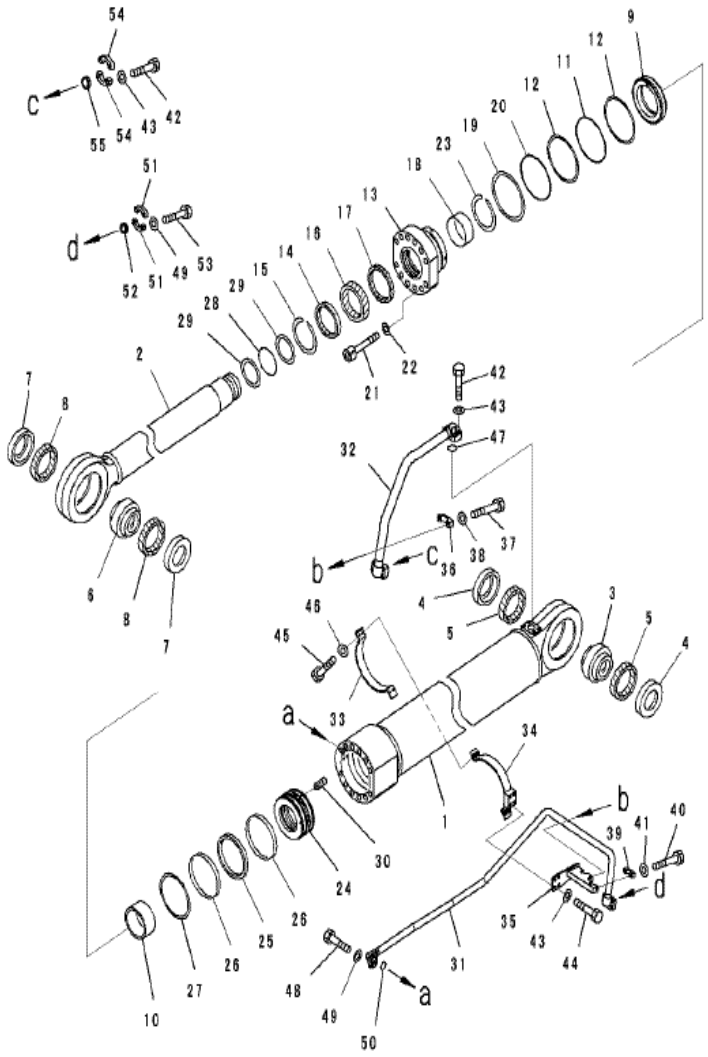

PC2000-8 S/N J10001-UP

BOOM CYLINDER,RHS

INDEX	CD	PART NO.	DESCRIPTION	QTY	SERIAL NO.
	G1	(707-01-XP711)	CYLINDER GROUP RH.....	1	J10020-UP
	G1	(707-01-XP710)	CYLINDER GROUP R.H.....	1	J10001-J10019
			==========.....		
		707-01-0K760	CYLINDER ASS'Y,R.H.....	1	J10001-UP
1		707-13-30140	.CYLINDER.....	1	J10001-UP
2		707-58-20270	.ROD.....	1	J10001-UP
3		707-46-18050	.BUSHING.....	2	J10001-UP
4		707-46-18020	.BUSHING.....	4	J10001-UP
5		707-77-18010	.SEAL (KIT).....	4	J10001-UP
6		707-46-18050	BUSHING.....	1	J10001-UP
7		707-46-18020	BUSHING.....	1	J10001-UP
8		707-77-18010	SEAL (KIT).....	4	J10001-UP
9		707-71-35070	.COLLAR.....	1	J10001-UP
10		707-71-62000	.PLUNGER.....	1	J10001-UP
11		07000-15300	.O-RING (KIT).....	1	J10001-UP
12		07001-05300	.RING,BACK-UP (KIT).....	2	J10001-UP
13		707-27-30090	.HEAD.....	1	J10001-UP
14		581-63-92670	.SEAL (KIT).....	1	J10001-UP
15		07179-15216	.RING.....	1	J10001-UP
16		707-51-20080	.PACKING,ROD (KIT).....	1	J10001-UP
17		707-51-20850	.RING,BUFFER (KIT).....	1	J10001-UP
18		707-52-91761	.BUSHING.....	1	J10001-UP
19		07001-05300	.RING,BACK-UP (KIT).....	1	J10001-UP
20		07000-15300	.O-RING (KIT).....	1	J10001-UP
21		01253-63650	.BOLT.....	12	J10001-UP
22		707-41-10270	.WASHER.....	12	J10001-UP
23		707-75-20040	.RING,SNAP.....	1	J10001-UP
24		707-36-30110	.PISTON.....	1	J10001-UP
25		707-44-30010	.RING,PISTON (KIT).....	1	J10001-UP
26		707-39-30900	.RING,WEAR (KIT).....	2	J10001-UP
27		707-44-30910	.RING.....	2	J10001-UP
28		07000-B5185	.O-RING (KIT).....	1	J10001-UP
29		07001-05185	.RING,BACK-UP (KIT).....	2	J10001-UP
30		01310-01640	.SCREW.....	1	J10001-UP
31		707-86-14240	TUBE,R.H.....	1	J10001-UP
32		707-86-15020	TUBE,R.H.....	1	J10001-UP
33		707-88-26220	BAND.....	1	J10001-UP
34		707-88-28690	BRACKET.....	1	J10001-UP
35		707-88-28620	BRACKET.....	1	J10001-UP
36		7078837410	BRACKET.....	1	J10001-UP
37		01010-81675	BOLT.....	2	J10001-UP
38		01643-31645	WASHER.....	2	J10001-UP
39		1766141330	CLAMP.....	1	J10001-UP
40		01010-81250	BOLT.....	2	J10001-UP
41		01643-31232	WASHER.....	2	J10001-UP

Ref :T1120-01A2 Page :390150

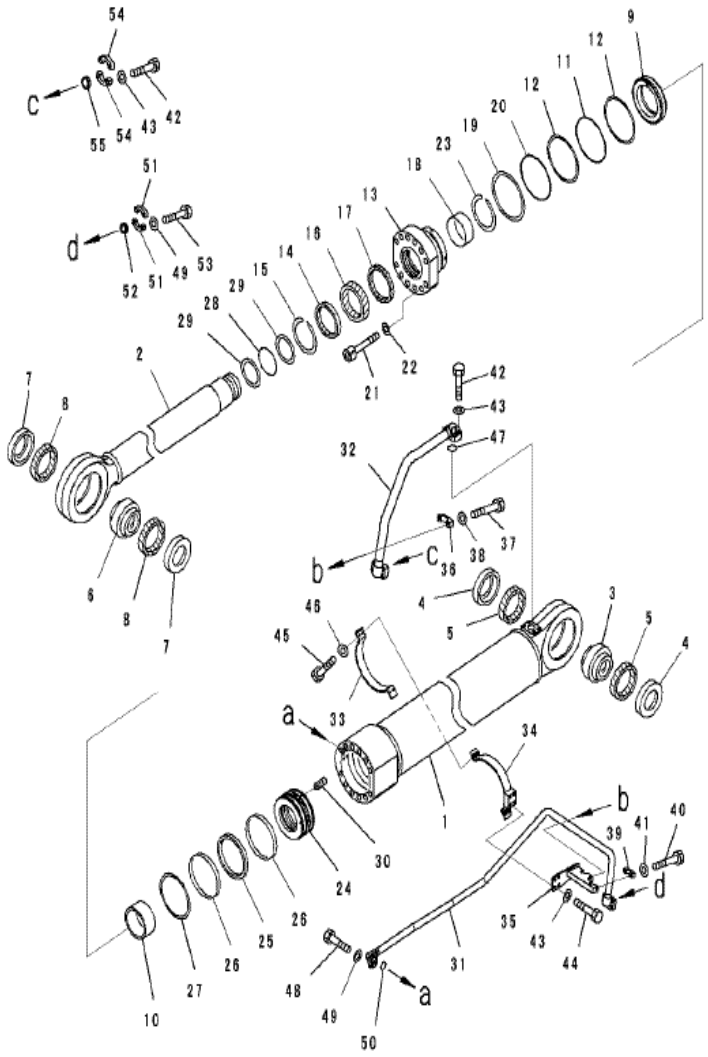

PC2000-8 S/N J10001-UP

BOOM CYLINDER,RHS

INDEX	CD	PART NO.	DESCRIPTION	QTY	SERIAL NO.
42		01010-81865	BOLT,(FOR SHIPPING).....	8	J10001-UP
43		01643-31845	WASHER,(FOR SHIPPING).....	12	J10001-UP
44		01010-81840	BOLT.....	4	J10001-UP
45		07372-21250	BOLT.....	4	J10001-UP
46		01643-31232	WASHER.....	4	J10001-UP
47		07000-12060	O-RING (KIT).....	1	J10001-UP
48		01010-81450	BOLT.....	4	J10001-UP
49		01643-31445	WASHER, FOR SHIPPING.....	8	J10001-UP
50		07000-13048	O-RING (KIT).....	1	J10001-UP
51		07371-51470	FLANGE,(FOR SHIPPING).....	2	J10001-UP
52		707-88-33060	CAP,(FOR SHIPPING).....	1	J10001-UP
53		01010-81455	BOLT,(FOR SHIPPING).....	4	J10001-UP
54		07371-52080	FLANGE,(FOR SHIPPING).....	2	J10001-UP
55		707-88-33070	CAP,(FOR SHIPPING).....	1	J10001-UP
			==========.....		
		707-99-96140	SERVICE KIT.....	1	J10001-UP

Ref :T1120-01A2 Page :390151

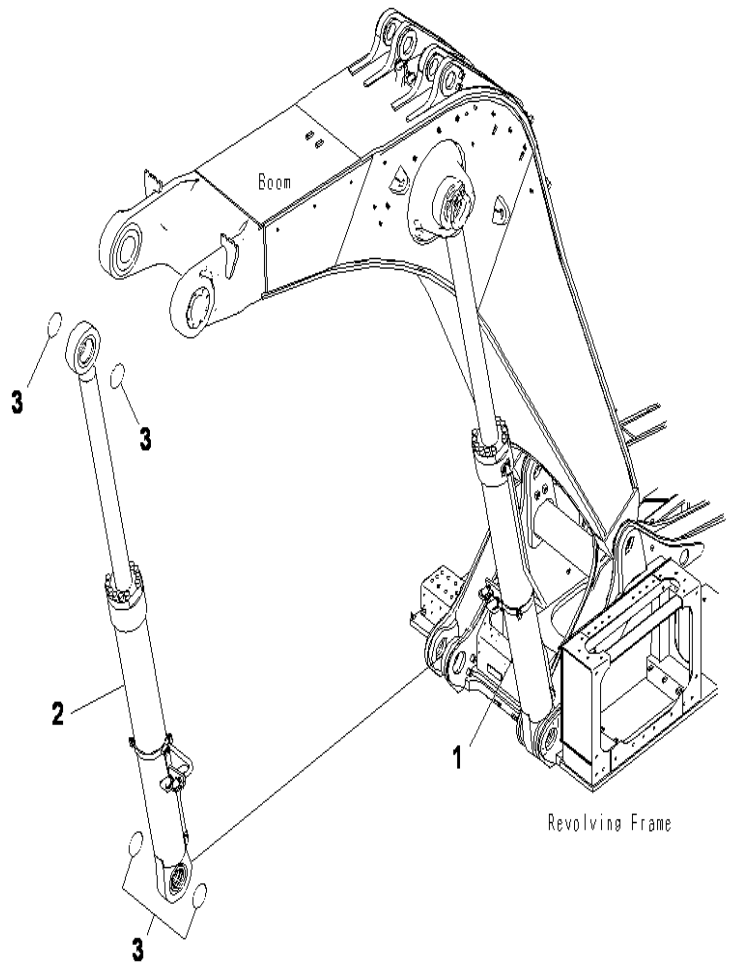

PC2000-8 S/N J10001-UP

BOOM CYLINDER(O-RING)

INDEX	CD	PART NO.	DESCRIPTION	QTY	SERIAL NO.
1		(707-01-XP700)	CYLINDER GROUP L.H.....	1	J10001-UP
2		(707-01-XP710)	CYLINDER GROUP R.H.....	1	J10001-UP
3		07000-15180	O-RING.....	8	J10001-UP

Ref :T1120-01A3 Page :390160

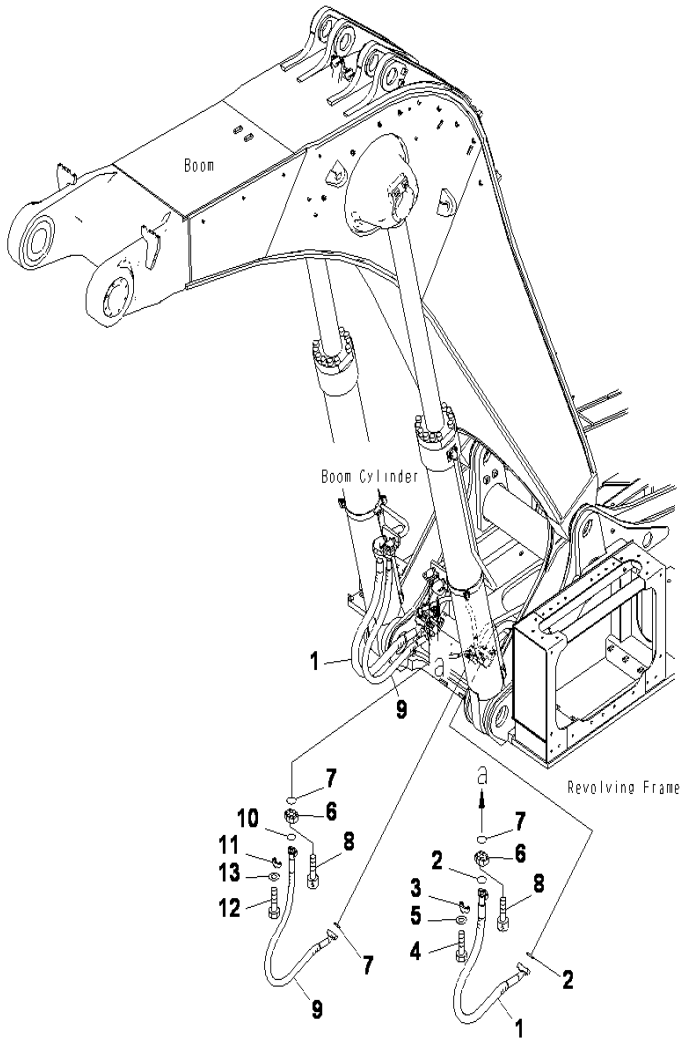

PC2000-8 S/N J10001-UP

BOOM CYLINDER PIPING

INDEX	CD	PART NO.	DESCRIPTION	QTY	SERIAL NO.
1		21T-64-32970	HOSE	2	J10001-UP
2		07000-B3048	O-RING	4	J10001-UP
3		07371-51470	FLANGE	8	J10001-UP
4		01010-81455	BOLT	16	J10001-UP
5		01643-31445	WASHER	16	J10001-UP
6		21T-64-32980	ADAPTER	4	J10001-UP
7		07000-B2060	O-RING	4	J10001-UP
8		21T-64-32990	BOLT	16	J10001-UP
9		07083-01417	HOSE	2	J10001-UP
10		07000-B3048	O-RING	4	J10001-UP
11		07371-51470	FLANGE	8	J10001-UP
12		01010-81455	BOLT	16	J10001-UP
13		01643-31445	WASHER	16	J10001-UP

Ref :T1130-01A1 Page :390170

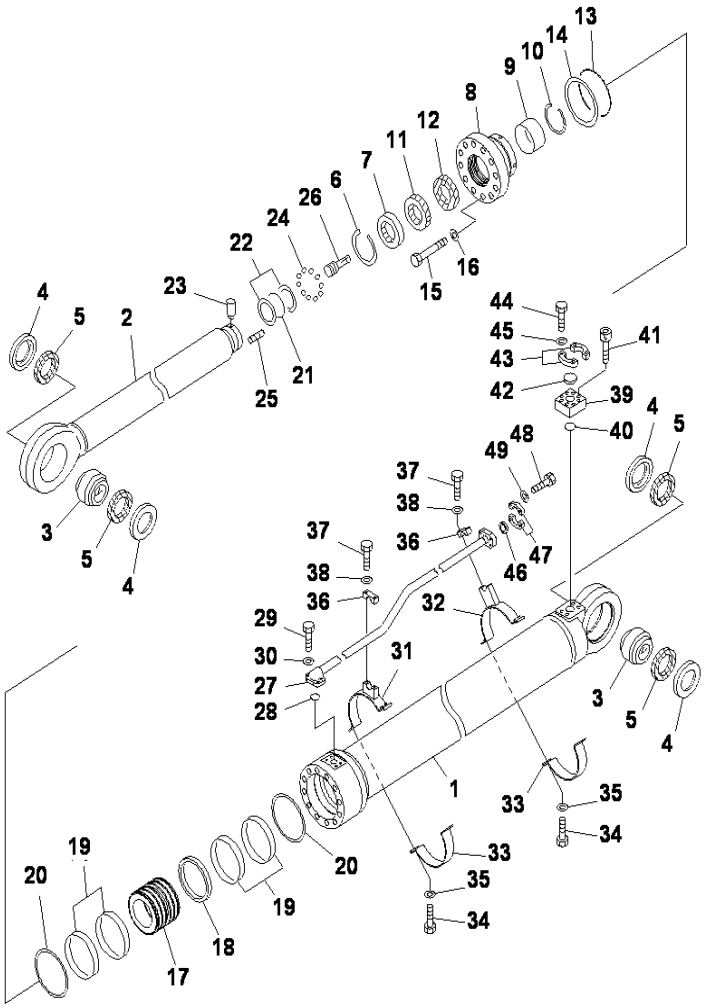

PC2000-8 S/N J10001-UP

ARM CYLINDER,LHS

INDEX	CD	PART NO.	DESCRIPTION	QTY	SERIAL NO.
	G1	(707-01-XP722)	CYLINDER GROUP LH.....	1	J10020-UP
	G1	(707-01-XP720)	CYLINDER GROUP L.H.....	1	J10001-J10019
			==========.....		
		707-01-0K770	CYLINDER ASS'Y.....	1	J10001-UP
1		707-13-25170	.CYLINDER.....	1	J10001-UP
2		707-58-16170	.ROD,PISTON.....	1	J10001-UP
3		707-46-14050	.BUSHING.....	2	J10001-UP
4		21T-72-15860	.BUSHING.....	4	J10001-UP
5		21T-72-15870	.SEAL,DUST (KIT).....	4	J10001-UP
6		07179-14180	.RING,SNAP.....	1	J10001-UP
7		566-63-22241	.SEAL,DUST (KIT).....	1	J10001-UP
8		707-27-25310	.HEAD,CYLINDER.....	1	J10001-UP
9		707-52-91351	.BUSHING.....	1	J10001-UP
10		707-75-16110	.RING,SNAP.....	1	J10001-UP
11		707-51-16030	.PACKING,ROD (KIT).....	1	J10001-UP
12		707-51-16850	.RING,BAFFLE (KIT).....	1	J10001-UP
13		07000-15250	.O-RING (KIT).....	1	J10001-UP
14		07001-05250	.RING,BACK-UP (KIT).....	1	J10001-UP
15		01011-83330	.BOLT.....	12	J10001-UP
16		01643-33380	.WASHER.....	12	J10001-UP
17		707-36-25220	.PISTON.....	1	J10001-UP
18		707-44-25010	.RING,PISTON (KIT).....	1	J10001-UP
19		707-39-25011	.RING,WEAR (KIT).....	4	J10001-UP
20		707-44-25910	.RING.....	2	J10001-UP
21		07000-B5160	.O-RING (KIT).....	1	J10001-UP
22		07001-05160	.RING,BACK-UP (KIT).....	2	J10001-UP
23		707-71-91380	.PIN.....	1	J10001-UP
24		04260-01270	.BALL.....	10	J10001-UP
25		01310-01240	.SCREW.....	1	J10001-UP
26		707-71-50390	.PLUNGER.....	1	J10001-UP
27		707-86-14250	TUBE,L.H.....	1	J10001-UP
28		07000-13048	O-RING (KIT).....	1	J10001-UP
29		01010-81450	BOLT.....	4	J10001-UP
30		01643-31445	WASHER.....	4	J10001-UP
31		707-88-28630	BRACKET.....	1	J10001-UP
32		707-88-28640	BRACKET.....	1	J10001-UP
33		21N-62-18430	BAND.....	2	J10001-UP
34		07372-21240	BOLT.....	8	J10001-UP
35		01643-51232	WASHER.....	8	J10001-UP
36		176-61-41330	CLAMP.....	1	J10001-UP
37		01010-81250	BOLT.....	2	J10001-UP
38		01643-31232	WASHER.....	2	J10001-UP
39		707-87-14660	BRACKET.....	1	J10001-UP
40		07000-12060	O-RING (KIT).....	1	J10001-UP
41		01252-72065	BOLT.....	4	J10001-UP
42		707-88-33070	CAP,(FOR SHIPPING).....	1	J10001-UP

Ref :T1140-01A1 Page :390180

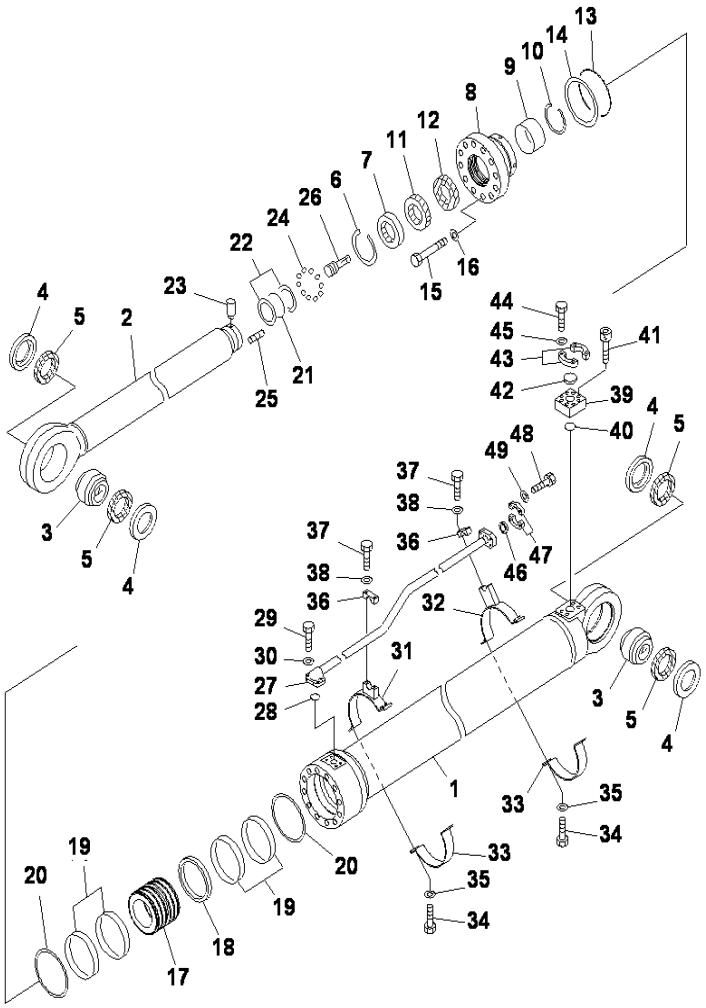

ARM CYLINDER,LHS

INDEX	CD	PART NO.	DESCRIPTION	QTY	SERIAL NO.
43		07371-52080	FLANGE,(FOR SHIPPING).....	2	J10001-UP
44		01010-81865	BOLT,(FOR SHIPPING).....	4	J10001-UP
45		01643-31845	WASHER,(FOR SHIPPING).....	4	J10001-UP
46		707-88-33060	CAP,(FOR SHIPPING).....	1	J10001-UP
47		07371-51470	FLANGE,(FOR SHIPPING).....	2	J10001-UP
48		01010-81455	BOLT,(FOR SHIPPING).....	4	J10001-UP
49		01643-31445	WASHER,(FOR SHIPPING).....	4	J10001-UP
			==========.....		
		707-99-85350	SERVICE KIT.....	1	J10001-UP

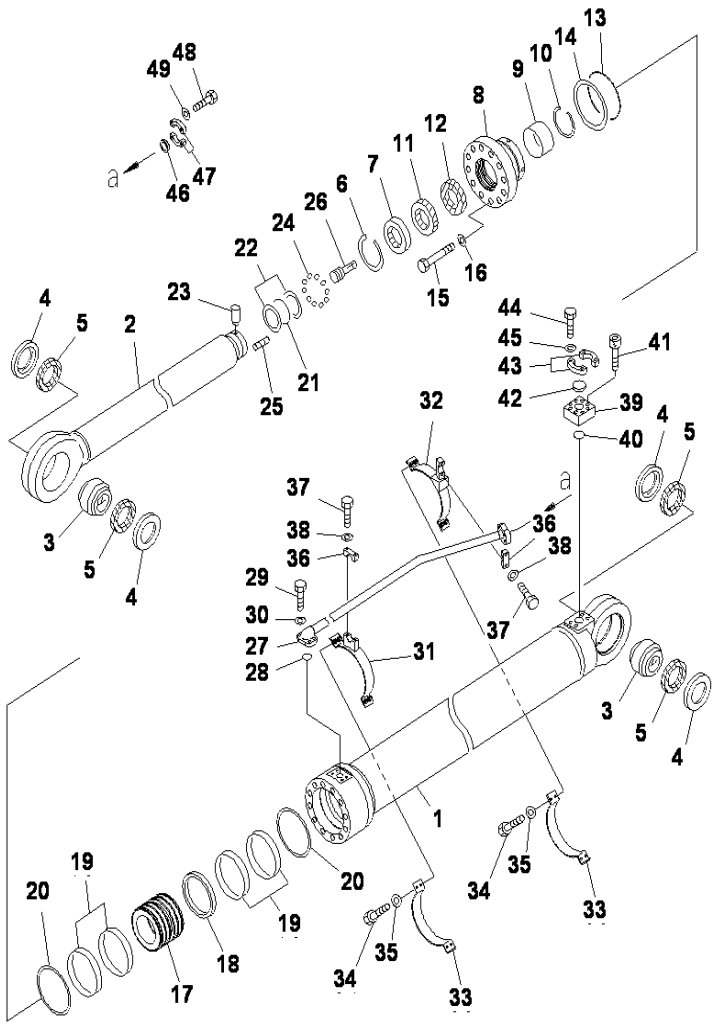

PC2000-8 S/N J10001-UP

ARM CYLINDER,RHS

INDEX	CD	PART NO.	DESCRIPTION	QTY	SERIAL NO.
	G1	(707-01-XP732)	CYLINDER GROUP RH.....	1	J10020-UP
	G1	(707-01-XP730)	CYLINDER GROUP, R.H.....	1	J10001-J10019
			==========.....		
		707-01-0K770	CYLINDER ASS'Y.....	1	J10001-UP
1		707-13-25170	.CYLINDER.....	1	J10001-UP
2		707-58-16170	.ROD,PISTON.....	1	J10001-UP
3		707-46-14050	.BUSHING.....	2	J10001-UP
4		21T-72-15860	.BUSHING.....	4	J10001-UP
5		21T-72-15870	.SEAL,DUST (KIT).....	4	J10001-UP
6		07179-14180	.RING,SNAP.....	1	J10001-UP
7		566-63-22241	.SEAL,DUST (KIT).....	1	J10001-UP
8		707-27-25310	.HEAD,CYLINDER.....	1	J10001-UP
9		707-52-91351	.BUSHING.....	1	J10001-UP
10		707-75-16110	.RING,SNAP.....	1	J10001-UP
11		707-51-16030	.PACKING,ROD (KIT).....	1	J10001-UP
12		707-51-16850	.RING,BAFFLE (KIT).....	1	J10001-UP
13		07000-15250	.O-RING (KIT).....	1	J10001-UP
14		07001-05250	.RING,BACK-UP (KIT).....	1	J10001-UP
15		01011-83330	.BOLT.....	12	J10001-UP
16		01643-33380	.WASHER.....	12	J10001-UP
17		707-36-25220	.PISTON.....	1	J10001-UP
18		707-44-25010	.RING,PISTON (KIT).....	1	J10001-UP
19		707-39-25011	.RING,WEAR (KIT).....	4	J10001-UP
20		707-44-25910	.RING.....	2	J10001-UP
21		07000-B5160	.O-RING (KIT).....	1	J10001-UP
22		07001-05160	.RING,BACK-UP (KIT).....	2	J10001-UP
23		707-71-91380	.PIN.....	1	J10001-UP
24		04260-01270	.BALL.....	10	J10001-UP
25		01310-01240	.SCREW.....	1	J10001-UP
26		707-71-50390	.PLUNGER.....	1	J10001-UP
27		707-86-14260	TUBE,R.H.....	1	J10001-UP
28		07000-13048	O-RING (KIT).....	1	J10001-UP
29		01010-81450	BOLT.....	4	J10001-UP
30		01643-31445	WASHER.....	4	J10001-UP
31		707-88-28630	BRACKET.....	1	J10001-UP
32		707-88-28650	BRACKET.....	1	J10001-UP
33		21N-62-18430	BAND.....	2	J10001-UP
34		07372-21240	BOLT.....	8	J10001-UP
35		01643-51232	WASHER.....	8	J10001-UP
36		176-61-41330	CLAMP.....	1	J10001-UP
37		01010-81250	BOLT.....	2	J10001-UP
38		01643-31232	WASHER.....	2	J10001-UP
39		707-87-14660	BRACKET.....	1	J10001-UP
40		07000-12060	O-RING (KIT).....	1	J10001-UP
41		01252-72065	BOLT.....	4	J10001-UP
42		707-88-33070	CAP,(FOR SHIPPING).....	1	J10001-UP

Ref :T1140-01A2 Page :390190

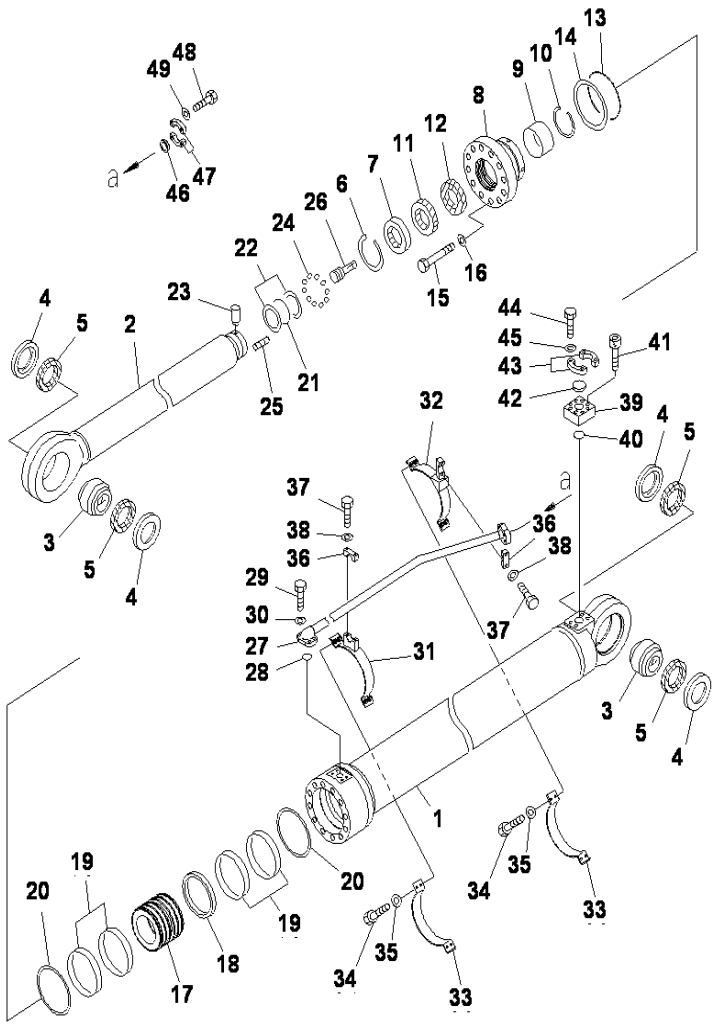

PC2000-8 S/N J10001-UP

ARM CYLINDER,RHS

INDEX	CD	PART NO.	DESCRIPTION	QTY	SERIAL NO.
43		07371-52080	FLANGE,(FOR SHIPPING).....	2	J10001-UP
44		01010-81865	BOLT,(FOR SHIPPING).....	4	J10001-UP
45		01643-31845	WASHER,(FOR SHIPPING).....	4	J10001-UP
46		707-88-33060	CAP,(FOR SHIPPING).....	1	J10001-UP
47		07371-51470	FLANGE,(FOR SHIPPING).....	2	J10001-UP
48		01010-81455	BOLT,(FOR SHIPPING).....	4	J10001-UP
49		01643-31445	WASHER,(FOR SHIPPING).....	4	J10001-UP
			==========.....		
		707-99-85350	SERVICE KIT.....	1	J10001-UP

Ref :T1140-01A2 Page :390191

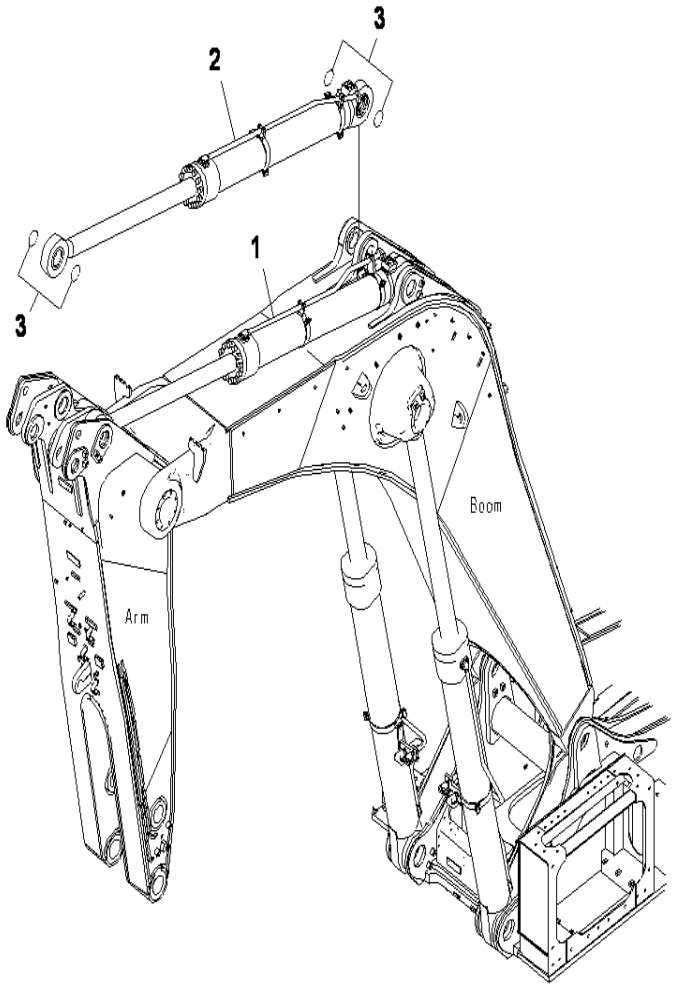

PC2000-8 S/N J10001-UP

ARM CYLINDER (0-RING)

INDEX	CD	PART NO.	DESCRIPTION	QTY	SERIAL NO.
1		(707-01-XP722)	CYLINDER GROUP.....	1	
		(707-01-XP720)	CYLINDER GROUP.....	1	J10001-UP
2		(707-01-XP732)	CYLINDER GROUP.....	1	
		(707-01-XP730)	CYLINDER GROUP.....	1	J10001-UP
3		07000-12140	O-RING.....	8	J10001-UP

Ref :T1140-01A3 Page :390200

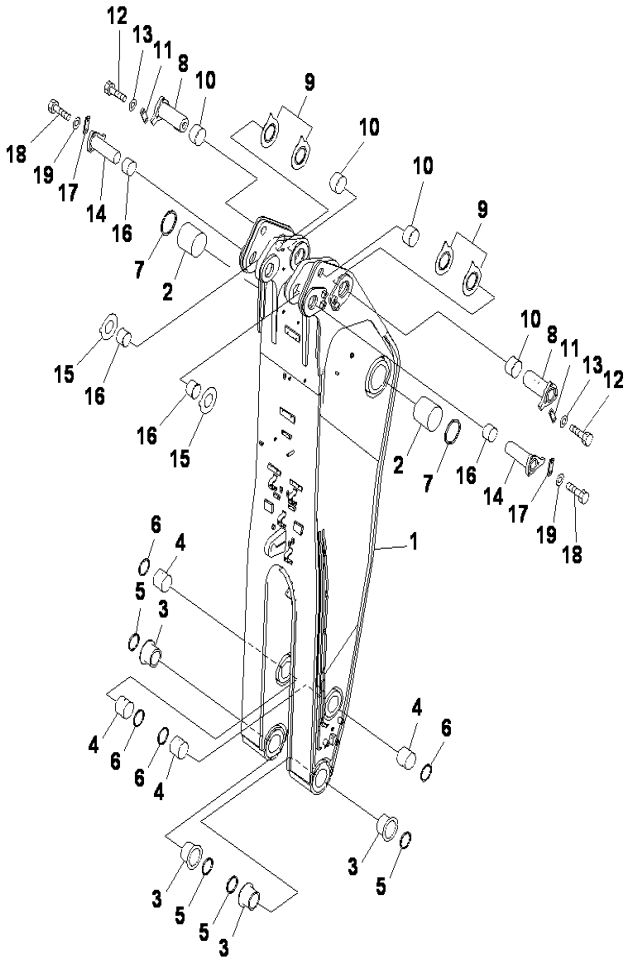

PC2000-8 S/N J10001-UP

ARM (ARM)

INDEX	CD	PART NO.	DESCRIPTION	QTY	SERIAL NO.
		21T-70-00340	ARM ASS'Y	1	J10001-UP
1	C1	21T-70-32111	.ARM PC2000-8	1	J10001-UP
2		21T-70-32153	.BUSHING	2	J10001-UP
3		21T-94-31142	.BUSHING	4	J10001-UP
4		209-72-11251	.BUSHING	4	J10001-UP
5		21N-70-12160	SEAL	4	J10001-UP
6		209-72-11261	SEAL	4	J10001-UP
7		21T-70-31290	SEAL	2	J10001-UP
8		21T-70-32130	PIN	2	J10001-UP
9		21T-70-32181	SHIM	4	J10001-UP
10		21T-70-32160	BUSHING	4	J10001-UP
11		21T-70-31350	PLATE	2	J10001-UP
12		01010-82455	BOLT	4	J10001-UP
13		01643-32460	WASHER	4	J10001-UP
14		21T-70-32140	PIN	2	J10001-UP
15		21T-70-32211	SHIM	4	J10001-UP
16		21T-70-32170	BUSHING	4	J10001-UP
17		21T-70-31350	PLATE	2	J10001-UP
18		01010-82455	BOLT	4	J10001-UP
19		01643-32460	WASHER	4	J10001-UP

Ref :T1210-01A1 Page :390210

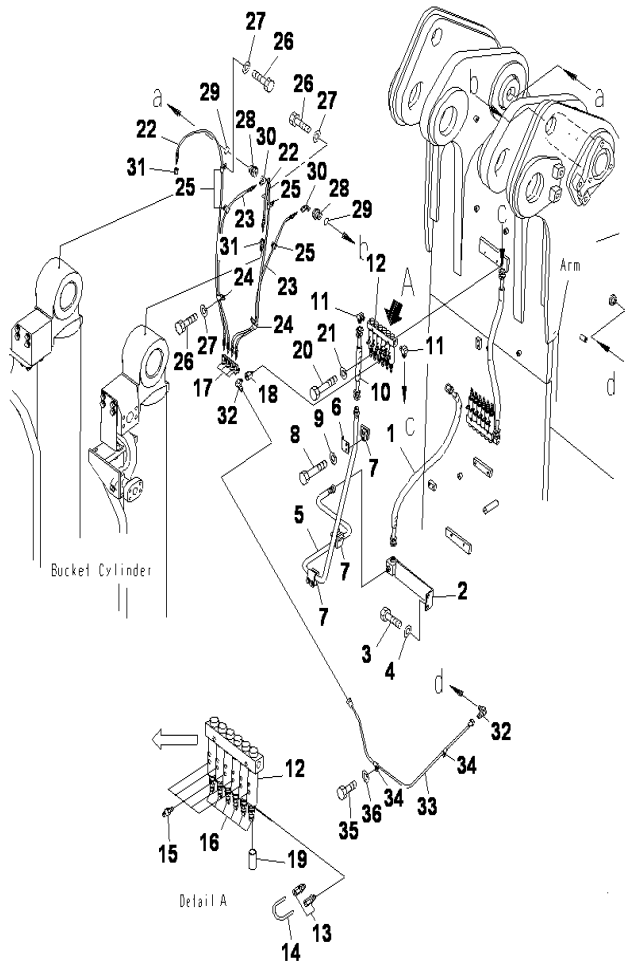

PC2000-8 S/N J10001-UP

ARM,LUBRICATION PIPING (1/3)

INDEX	CD	PART NO.	DESCRIPTION	QTY	SERIAL NO.
1		07631-20409	HOSE	1	J10001-UP
2		21T-70-32330	BRACKET	1	J10001-UP
3		01010-81225	BOLT	2	J10001-UP
4		01643-31232	WASHER	2	J10001-UP
5		21T-68-31830	TUBE	1	J10001-UP
6		203-973-5660	CLAMP	3	J10001-UP
7		203-973-5720	SEAT	3	J10001-UP
8		01010-81055	BOLT	6	J10001-UP
9		01643-31032	WASHER	6	J10001-UP
10		07631-20403	HOSE	1	J10001-UP
11		566-01-61190	ELBOW	2	J10001-UP
12		21T-68-32372	INJECTOR ASS'Y	1	J10001-UP
13		21N-68-32320	.CONNECTOR	1	J10001-UP
14		21N-68-32360	.TUBE	1	J10001-UP
15		21T-68-32340	.FITTING	5	J10001-UP
16		21T-68-32351	.INJECTOR	6	J10001-UP
17		561-95-63250	.ELBOW	4	J10001-UP
18		581-95-12180	.BUSHING	1	J10001-UP
19		581-96-19620	.CAP	6	J10001-UP
20		01010-81050	BOLT	2	J10001-UP
21		01643-31032	WASHER	2	J10001-UP
22		21T-68-31980	HOSE ASS'Y	2	J10001-UP
23		21T-68-31810	HOSE ASS'Y	2	J10001-UP
24		04435-51010	CLIP	2	J10001-UP
25		04434-51010	CLIP	4	J10001-UP
26		01010-81020	BOLT	6	J10001-UP
27		01643-31032	WASHER	6	J10001-UP
28		21T-70-71460	PLUG	2	J10001-UP
29		07002-13034	O-RING	2	J10001-UP
30		561-95-63290	ELBOW	2	J10001-UP
31		561-95-63310	CONNECTOR	2	J10001-UP
32		07217-51013	ELBOW	2	J10001-UP
33		21T-68-31840	TUBE	1	J10001-UP
34		04434-51010	CLIP	2	J10001-UP
35		01010-81020	BOLT	2	J10001-UP
36		01643-31032	WASHER	2	J10001-UP

Ref :T1210-01A2 Page :390220

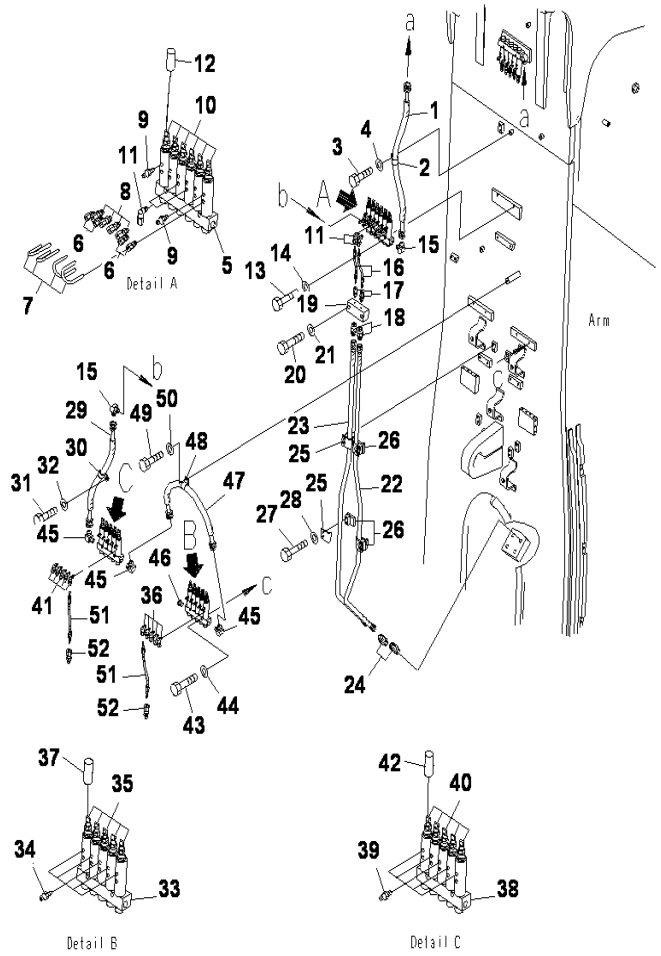

PC2000-8 S/N J10001-UP

ARM,LUBRICATION PIPING (2/3)

INDEX	CD	PART NO.	DESCRIPTION	QTY	SERIAL NO.
1		07631-20408	HOSE	1	J10001-UP
2		04434-52511	CLIP	1	J10001-UP
3		01010-81020	BOLT	1	J10001-UP
4		01643-31032	WASHER	1	J10001-UP
5		21T-68-32592	INJECTOR ASS'Y	1	J10001-UP
6		21N-68-32320	.CONNECTOR	4	J10001-UP
7		21N-68-32360	.TUBE	4	J10001-UP
8		21N-68-32370	.CONNECTOR	4	J10001-UP
9		21T-68-32340	.FITTING	2	J10001-UP
10		21T-68-32351	.INJECTOR	6	J10001-UP
11		561-95-63250	.ELBOW	2	J10001-UP
12		581-96-19620	.CAP	6	J10001-UP
13		01010-81050	BOLT	2	J10001-UP
14		01643-31032	WASHER	2	J10001-UP
15		566-01-61190	ELBOW	2	J10001-UP
16		21T-68-68570	HOSE A	2	J10001-UP
17		561-95-63310	CONNECTOR	2	J10001-UP
18		07238-10422	CONNECTOR	2	J10001-UP
19		21T-68-31870	BLOCK	1	J10001-UP
20		01010-81260	BOLT	2	J10001-UP
21		01643-31232	WASHER	2	J10001-UP
22		21T-68-31710	TUBE	1	J10001-UP
23		21T-68-31720	TUBE	1	J10001-UP
24		07238-10422	CONNECTOR	2	J10001-UP
25		203-973-5660	CLAMP	4	J10001-UP
26		203-973-5720	SEAT	4	J10001-UP
27		01010-81055	BOLT	8	J10001-UP
28		01643-31032	WASHER	8	J10001-UP
29		07631-204A6	HOSE	1	J10001-UP
30		04434-52511	CLIP	1	J10001-UP
31		01010-81020	BOLT	1	J10001-UP
32		01643-31032	WASHER	1	J10001-UP
33		21T-68-32682	INJECTOR ASS'Y	1	J10001-UP
34		21T-68-32340	.FITTING	5	J10001-UP
35		21T-68-32351	.INJECTOR	5	J10001-UP
36		561-95-63250	.ELBOW	5	J10001-UP
37		581-96-19620	.CAP	5	J10001-UP
38		21T-68-32831	INJECTOR ASS'Y	1	J10001-UP
39		21T-68-32340	.FITTING	5	J10001-UP
40		21T-68-32351	.INJECTOR	5	J10001-UP
41		561-95-63250	.ELBOW	5	J10001-UP
42		581-96-19620	.CAP	5	J10001-UP
43		01010-81050	BOLT	4	J10001-UP
44		01643-31032	WASHER	4	J10001-UP
45		566-01-61190	ELBOW	3	J10001-UP

Ref :T1210-01A3 Page :390230

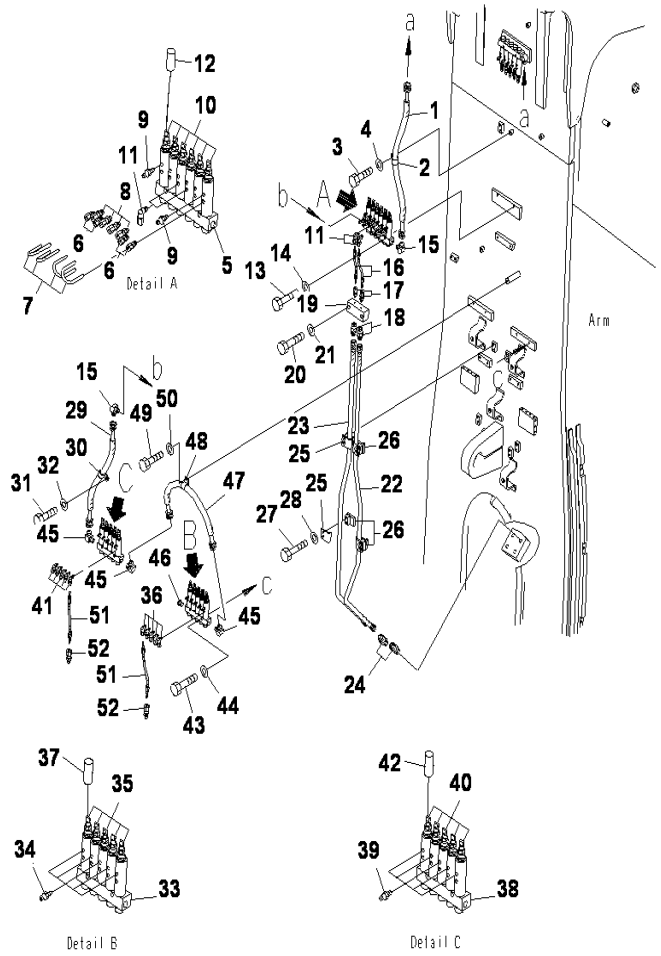

PC2000-8 S/N J10001-UP

ARM,LUBRICATION PIPING (2/3)

INDEX	CD	PART NO.	DESCRIPTION	QTY	SERIAL NO.
46		581-96-19590	PLUG	1	J10001-UP
47		07631-20407	HOSE	1	J10001-UP
48		04434-52511	CLIP	1	J10001-UP
49		01010-81016	BOLT	1	J10001-UP
50		01643-31032	WASHER	1	J10001-UP
51		21T-68-32550	HOSE A	2	J10001-UP
52		561-95-63310	CONNECTOR	2	J10001-UP

Ref :T1210-01A3 Page :390231

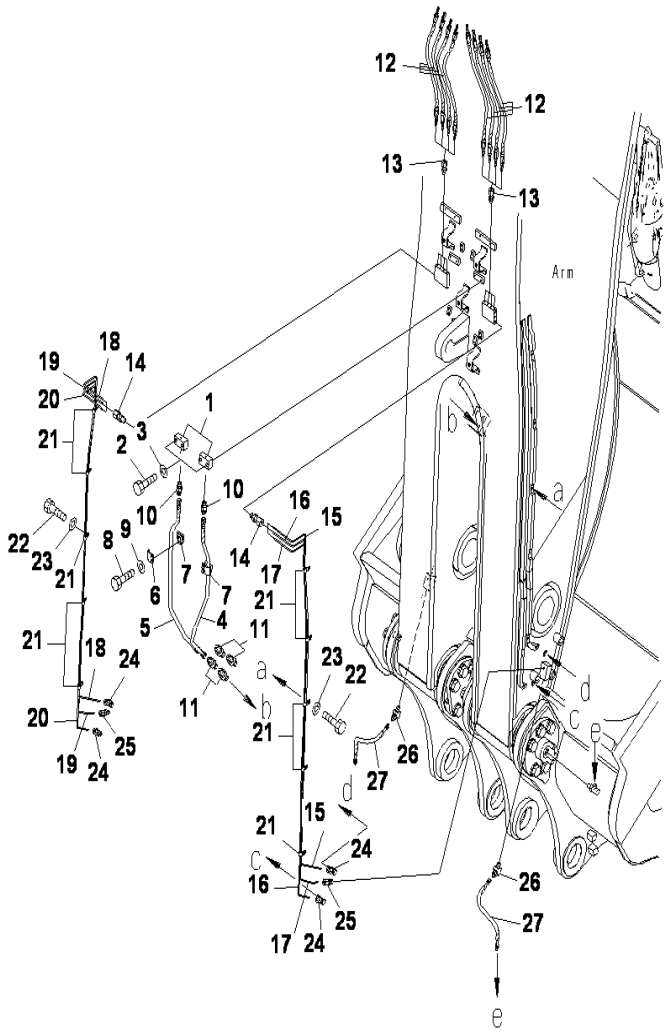

PC2000-8 S/N J10001-UP

ARM,LUBRICATION PIPING (3/3)

INDEX	CD	PART NO.	DESCRIPTION	QTY	SERIAL NO.
1		21T-68-31620	BLOCK	2	J10001-UP
2		01010-81260	BOLT	4	J10001-UP
3		01643-31232	WASHER	4	J10001-UP
4		21T-68-31730	TUBE	1	J10001-UP
5		21T-68-31740	TUBE	1	J10001-UP
6		203-973-5660	CLAMP	2	J10001-UP
7		203-973-5720	SEAT	2	J10001-UP
8		01010-81055	BOLT	4	J10001-UP
9		01643-31032	WASHER	4	J10001-UP
10		07238-10422	CONNECTOR	4	J10001-UP
11		22W-62-17710	NIPPLE	4	J10001-UP
12		21T-68-32530	HOSE A	8	J10001-UP
13		561-95-63310	CONNECTOR	8	J10001-UP
14		561-95-63310	CONNECTOR	6	J10001-UP
15		21T-68-67711	TUBE	1	J10001-UP
16		21T-68-67721	TUBE	1	J10001-UP
17		21T-68-31880	TUBE	1	J10001-UP
18		21T-68-67961	TUBE	1	J10001-UP
19		21T-68-67971	TUBE	1	J10001-UP
20		21T-68-32110	TUBE	1	J10001-UP
21		04434-51312	CLIP	10	J10001-UP
22		01010-81220	BOLT	10	J10001-UP
23		01643-31232	WASHER	10	J10001-UP
24		569-95-63520	CONNECTOR	4	J10001-UP
25		561-95-63310	CONNECTOR	2	J10001-UP
26		205-70-65780	ELBOW	2	J10001-UP
27		21T-62-34211	HOSE	2	J10001-UP

Ref :T1210-01A4 Page :390240

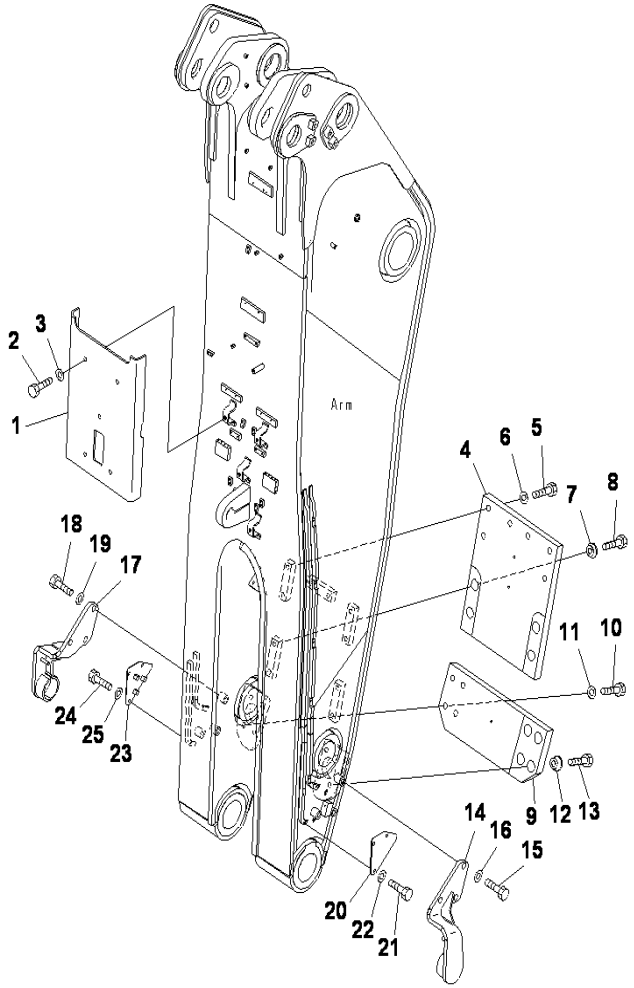

PC2000-8 S/N J10001-UP

ARM,COVER

INDEX	CD	PART NO.	DESCRIPTION	QTY	SERIAL NO.
1		21T-68-31851	COVER	1	J10001-UP
2		01010-82080	BOLT	5	J10001-UP
3		01643-32060	WASHER	5	J10001-UP
4		21T-68-32612	PLATE	1	J10001-UP
5		01010-83075	BOLT	6	J10001-UP
6		01643-33080	WASHER	6	J10001-UP
7		21T-68-32840	COLLAR	4	J10001-UP
8		01010-83075	BOLT	4	J10001-UP
9		21T-68-32662	COVER	1	J10001-UP
10		0101083095	BOLT	8	J10001-UP
11		01643-33080	WASHER	4	J10001-UP
12		21T-68-32850	COLLAR	4	J10001-UP
13		01010-83090	BOLT	4	J10001-UP
14		21T-68-31643	BRACKET	1	J10001-UP
15		01010-83075	BOLT	3	J10001-UP
16		01643-33080	WASHER	3	J10001-UP
17		21T-68-31143	BRACKET	1	J10001-UP
18		01010-83075	BOLT	3	J10001-UP
19		01643-33080	WASHER	3	J10001-UP
20		21T-70-32310	PLATE	1	J10001-UP
21		01010-81225	BOLT	3	J10001-UP
22		01643-31232	WASHER	3	J10001-UP
23		21T-70-32320	PLATE	1	J10001-UP
24		01010-81225	BOLT	3	J10001-UP
25		01643-31232	WASHER	3	J10001-UP

Ref :T1210-01A5 Page :390250

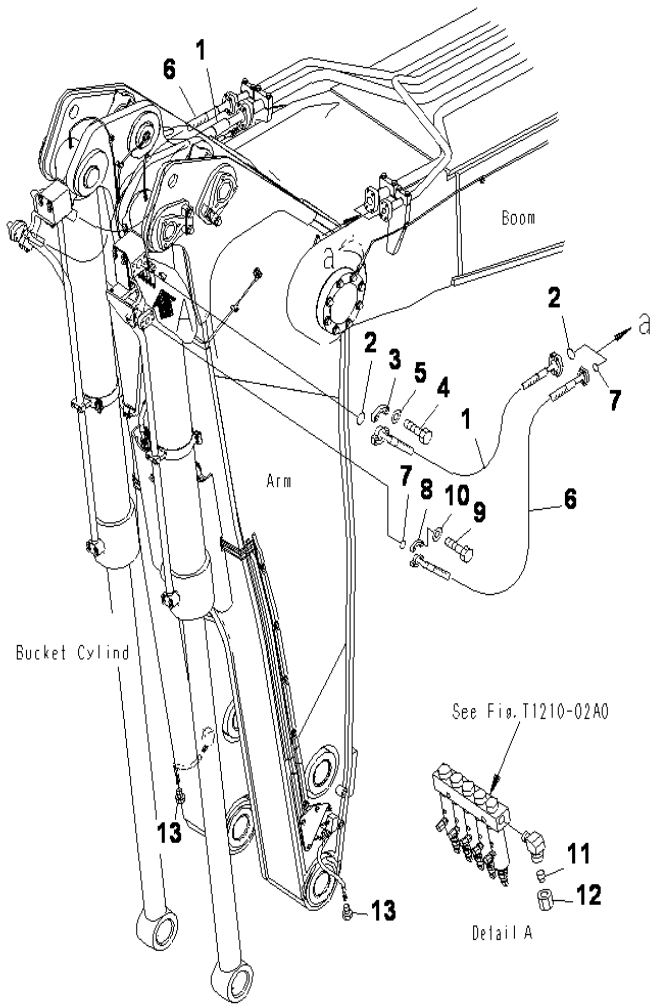

PC2000-8 S/N J10001-UP

ARM,BUCKET CYLINDER HOSE

INDEX	CD	PART NO.	DESCRIPTION	QTY	SERIAL NO.
1		21T-64-39430	HOSE	2	J10001-UP
2		07000-B2060	O-RING	4	J10001-UP
3		07371-52080	FLANGE	4	J10001-UP
4		01010-81865	BOLT	8	J10001-UP
5		01643-31845	WASHER	8	J10001-UP
6		07084-41427	HOSE	2	J10001-UP
7		07000-B3048	O-RING	4	J10001-UP
8		07371-51470	FLANGE	4	J10001-UP
9		01010-81455	BOLT	8	J10001-UP
10		01643-31445	WASHER	8	J10001-UP
11		07222-00414	PLUG	1	J10001-UP
12		07221-20422	NUT	1	J10001-UP
13		209-98-11450	PLUG	2	J10001-UP

Ref :T1210-01A6 Page :390260

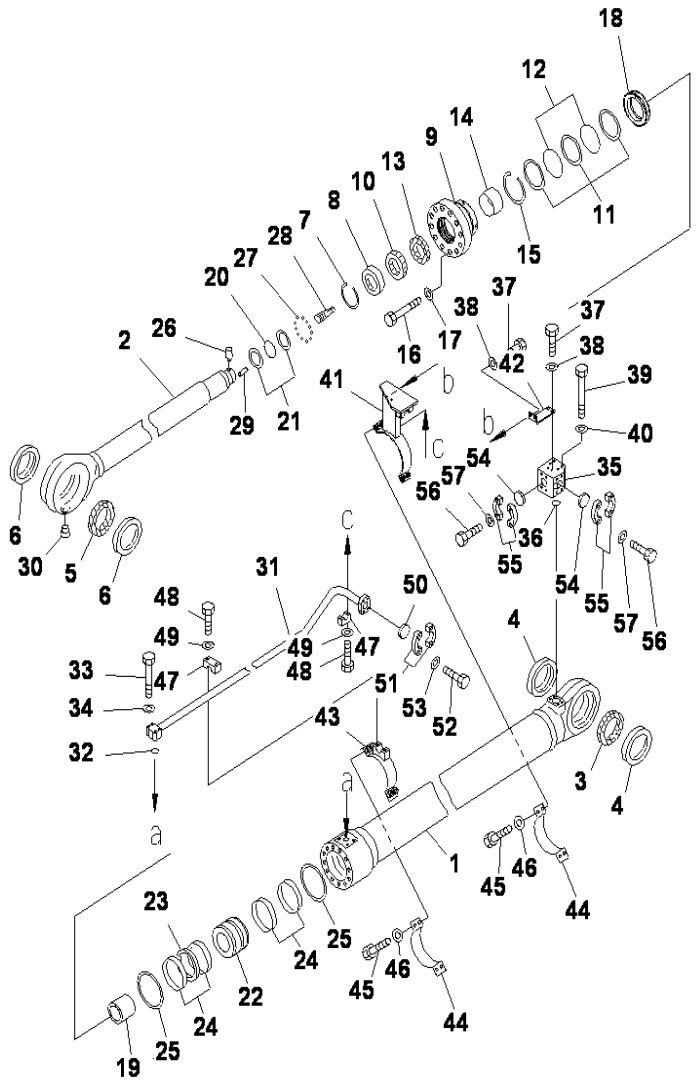

PC2000-8 S/N J10001-UP

BUCKET CYLINDER,LHS

INDEX	CD	PART NO.	DESCRIPTION	QTY	SERIAL NO.
	G1	(707-01-XP742)	CYLINDER GROUP LH.....	1	J10020-UP
	G1	(707-01-XP740)	CYLINDER GROUP, L.H.....	1	J10001-J10019
			==========.....		
		707-01-0K790	CYLINDER ASS'Y.....	1	J10001-UP
1		707-13-20520	.CYLINDER.....	1	J10001-UP
2		707-58-14560	.ROD,PISTON.....	1	J10001-UP
3		707-76-12180	.BUSHING.....	1	J10001-UP
4		07145-00120	.SEAL,DUST (KIT).....	2	J10001-UP
5		707-76-14050	.BUSHING.....	1	J10001-UP
6		209-72-11261	.SEAL (KIT).....	2	J10001-UP
7		07179-14160	.RING,SNAP.....	1	J10001-UP
8		198-63-93170	.SEAL,DUST (KIT).....	1	J10001-UP
9		707-27-20920	.HEAD,CYLINDER.....	1	J10001-UP
10		707-51-14080	.PACKING,ROD (KIT).....	1	J10001-UP
11		07001-05195	.RING,BACK-UP (KIT).....	3	J10001-UP
12		07000-15195	.O-RING (KIT).....	2	J10001-UP
13		707-51-14850	.RING,BUFFER (KIT).....	1	J10001-UP
14		707-52-91171	.BUSHING.....	1	J10001-UP
15		707-75-14110	.RING,SNAP.....	1	J10001-UP
16		01011-82705	.BOLT.....	12	J10001-UP
17		01643-32780	.WASHER.....	12	J10001-UP
18		707-71-35080	.COLLAR.....	1	J10001-UP
19		707-71-61540	.PLUNGER.....	1	J10001-UP
20		07000-B5130	.O-RING (KIT).....	1	J10001-UP
21		07001-05130	.RING,BACK-UP (KIT).....	2	J10001-UP
22		707-36-20560	.PISTON.....	1	J10001-UP
23		707-44-20020	.RING,PISTON (KIT).....	1	J10001-UP
24		707-39-20020	.RING,WEAR (KIT).....	4	J10001-UP
25		707-44-20910	.RING.....	2	J10001-UP
26		707-71-91230	.CAP.....	1	J10001-UP
27		04260-00952	.BALL.....	11	J10001-UP
28		707-71-70350	.PLUNGER.....	1	J10001-UP
29		01310-01232	.SCREW.....	1	J10001-UP
30		07043-00108	.PLUG.....	2	J10001-UP
31		707-86-14270	TUBE,L.H.....	1	J10001-UP
32		07000-13048	O-RING (KIT).....	1	J10001-UP
33		01010-81280	BOLT.....	4	J10001-UP
34		01643-31232	WASHER.....	4	J10001-UP
35		707-87-14670	BRACKET,L.H.....	1	J10001-UP
36		07000-13048	O-RING (KIT).....	1	J10001-UP
37		01010-81435	BOLT.....	4	J10001-UP
38		01643-31445	WASHER.....	4	J10001-UP
39		01011-81480	BOLT.....	4	J10001-UP
40		01643-31445	WASHER.....	4	J10001-UP
41		707-88-28670	BRACKET.....	1	J10001-UP
42		707-88-37421	PLATE.....	1	J10001-UP

Ref :T1220-01A1 Page :390270

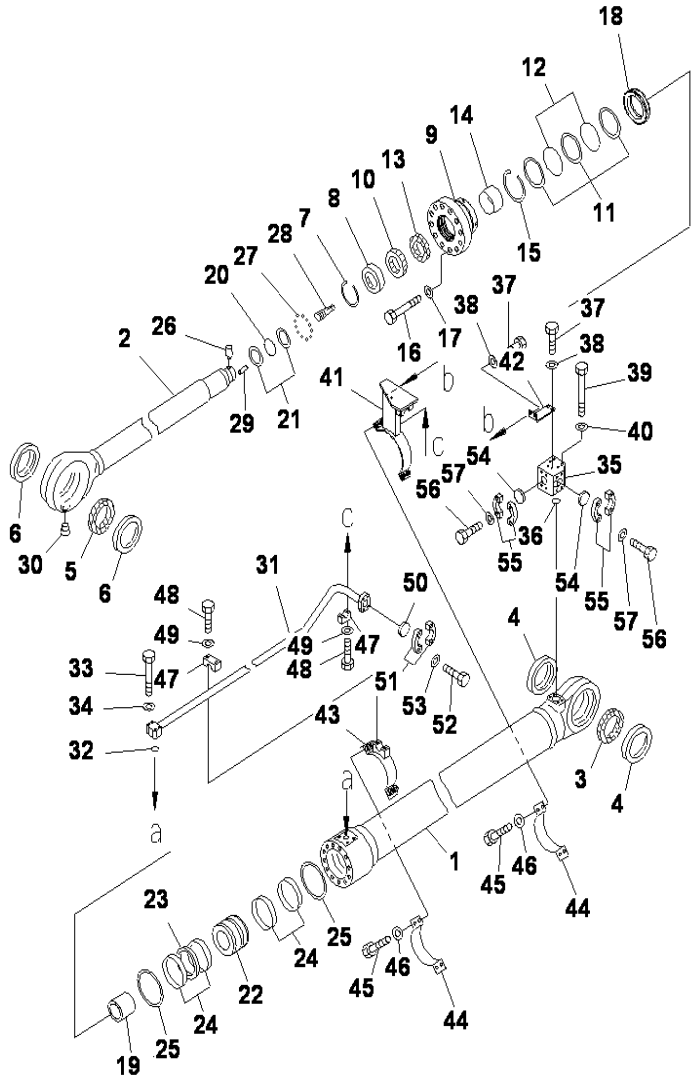

BUCKET CYLINDER,LHS

INDEX	CD	PART NO.	DESCRIPTION	QTY	SERIAL NO.
43		707-88-28660	BRACKET	2	J10001-UP
44		707-88-26230	BAND	2	J10001-UP
45		07372-21240	BOLT	8	J10001-UP
46		01643-51232	WASHER	8	J10001-UP
47		176-61-41330	CLAMP	2	J10001-UP
48		01010-81250	BOLT	4	J10001-UP
49		01643-31232	WASHER	4	J10001-UP
50		707-88-33060	CAP,(FOR SHIPPING)	1	J10001-UP
51		07371-51470	FLANGE,(FOR SHIPPING)	2	J10001-UP
52		01010-81455	BOLT,(FOR SHIPPING)	4	J10001-UP
53		01643-31445	WASHER,(FOR SHIPPING)	4	J10001-UP
54		707-88-33070	CAP,(FOR SHIPPING)	2	J10001-UP
55		07371-52080	FLANGE,(FOR SHIPPING)	4	J10001-UP
56		01010-81865	BOLT,(FOR SHIPPING)	8	J10001-UP
57		01643-31845	WASHER,(FOR SHIPPING)	8	J10001-UP
			==========		
		707-99-76260	SERVICE KIT	1	J10001-UP

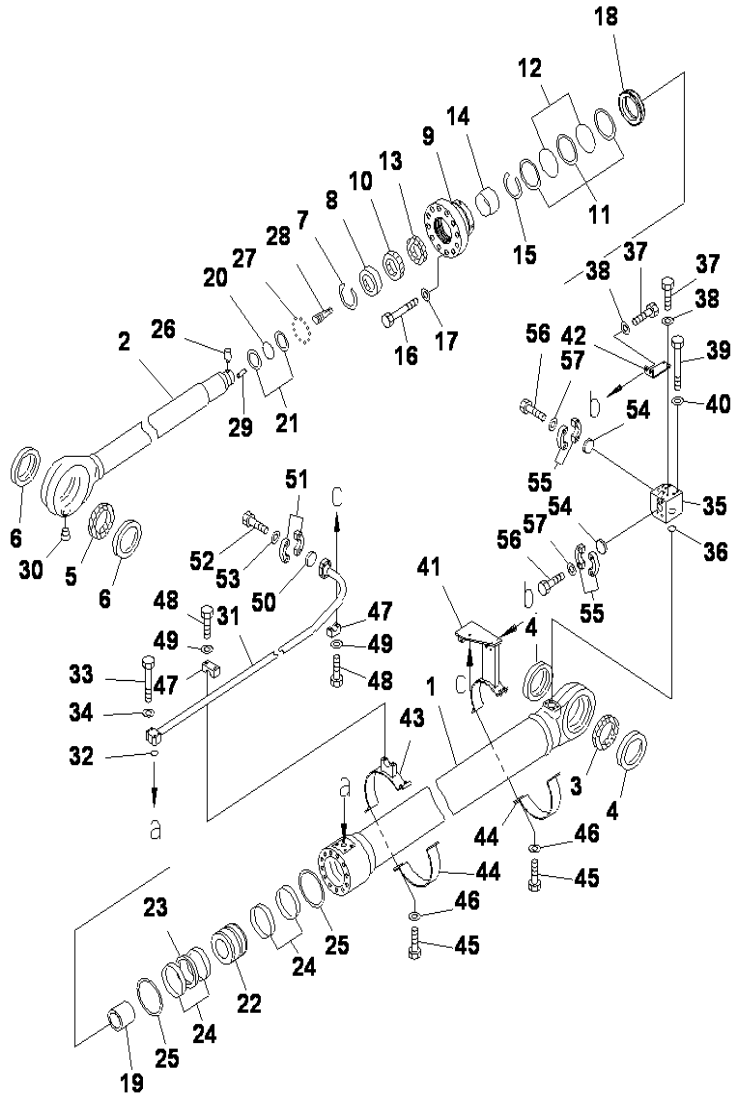

BUCKET CYLINDER,RHS

INDEX	CD	PART NO.	DESCRIPTION	QTY	SERIAL NO.
	G1	(707-01-XP752)	CYLINDER GROUP RH.....	1	J10020-UP
	G1	(707-01-XP750)	CYLINDER GROUP RH.....	1	J10001-J10019
			==========.....		
		707-01-0K790	CYLINDER ASS'Y.....	1	J10001-UP
1		707-13-20520	.CYLINDER.....	1	J10001-UP
2		707-58-14560	.ROD,PISTON.....	1	J10001-UP
3		707-76-12180	.BUSHING.....	1	J10001-UP
4		07145-00120	.SEAL,DUST (KIT).....	2	J10001-UP
5		707-76-14050	.BUSHING.....	1	J10001-UP
6		209-72-11261	.SEAL (KIT).....	2	J10001-UP
7		07179-14160	.RING,SNAP.....	1	J10001-UP
8		198-63-93170	.SEAL,DUST (KIT).....	1	J10001-UP
9		707-27-20920	.HEAD,CYLINDER.....	1	J10001-UP
10		707-51-14080	.PACKING,ROD (KIT).....	1	J10001-UP
11		07001-05195	.RING,BACK-UP (KIT).....	3	J10001-UP
12		07000-15195	.O-RING (KIT).....		J10001-UP
13		707-51-14850	.RING,BUFFER (KIT).....	1	J10001-UP
14		707-52-91171	.BUSHING.....	1	J10001-UP
15		707-75-14110	.RING,SNAP.....	1	J10001-UP
16		01011-82705	.BOLT.....	12	J10001-UP
17		01643-32780	.WASHER.....	12	J10001-UP
18		707-71-35080	.COLLAR.....	1	J10001-UP
19		707-71-61540	.PLUNGER.....	1	J10001-UP
20		07000-B5130	.O-RING (KIT).....	1	J10001-UP
21		07001-05130	.RING,BACK-UP (KIT).....	2	J10001-UP
22		707-36-20560	.PISTON.....	1	J10001-UP
23		707-44-20020	.RING,PISTON (KIT).....	1	J10001-UP
24		707-39-20020	.RING,WEAR (KIT).....	4	J10001-UP
25		707-44-20910	.RING.....	2	J10001-UP
26		707-71-91230	.CAP.....	1	J10001-UP
27		04260-00952	.BALL.....	11	J10001-UP
28		707-71-70350	.PLUNGER.....	1	J10001-UP
29		01310-01232	.SCREW.....	1	J10001-UP
30		07043-00108	.PLUG.....	2	J10001-UP
31		707-86-14280	TUBE,R.H.....	1	J10001-UP
32		07000-13048	O-RING (KIT).....	1	J10001-UP
33		01010-81280	BOLT.....	4	J10001-UP
34		01643-31232	WASHER.....	4	J10001-UP
35		707-87-14680	BRACKET,R.H.....	1	J10001-UP
36		07000-13048	O-RING (KIT).....	1	J10001-UP
37		01010-81435	BOLT.....	4	J10001-UP
38		01643-31445	WASHER.....	4	J10001-UP
39		01011-81480	BOLT.....	4	J10001-UP
40		01643-31445	WASHER.....	4	J10001-UP
41		707-88-28680	BRACKET.....	1	J10001-UP
42		707-88-37421	PLATE.....	1	J10001-UP

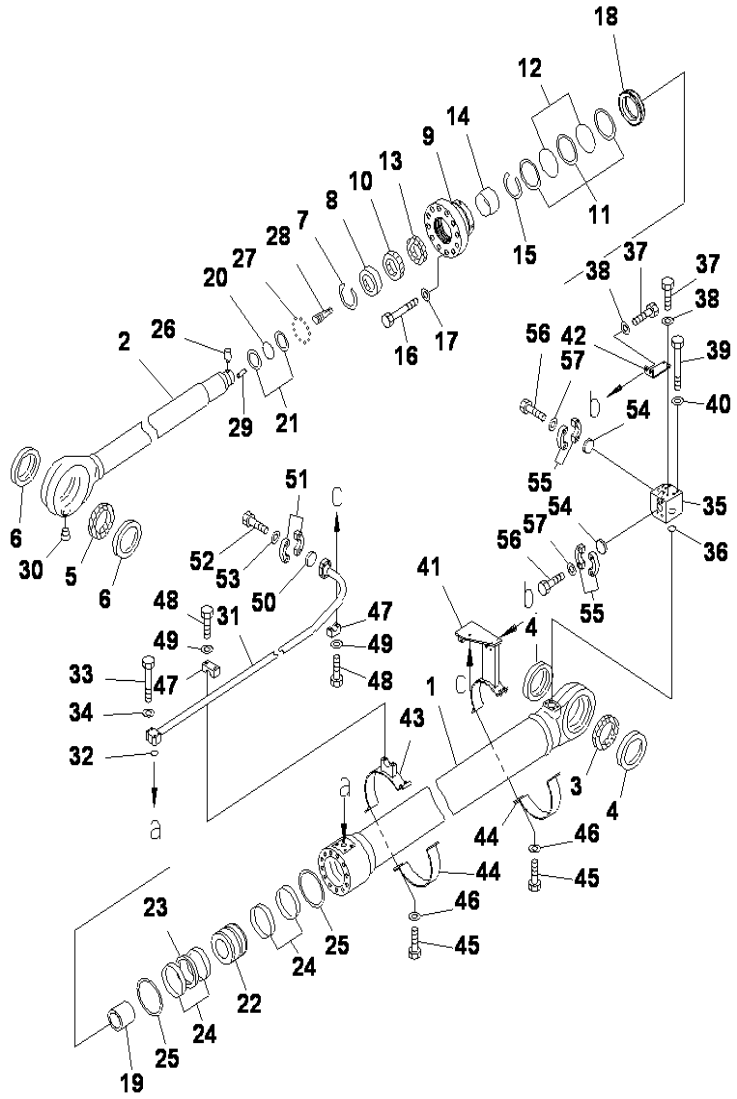

BUCKET CYLINDER,RHS

INDEX	CD	PART NO.	DESCRIPTION	QTY	SERIAL NO.
43		707-88-28660	BRACKET	2	J10001-UP
44		707-88-26230	BAND	2	J10001-UP
45		07372-21240	BOLT	8	J10001-UP
46		01643-51232	WASHER	8	J10001-UP
47		176-61-41330	CLAMP	2	J10001-UP
48		01010-81250	BOLT	4	J10001-UP
49		01643-31232	WASHER	4	J10001-UP
50		707-88-33060	CAP,(FOR SHIPPING)	1	J10001-UP
51		07371-51470	FLANGE,(FOR SHIPPING)	2	J10001-UP
52		01010-81455	BOLT,(FOR SHIPPING)	4	J10001-UP
53		01643-31445	WASHER,(FOR SHIPPING)	4	J10001-UP
54		707-88-33070	CAP,(FOR SHIPPING)	2	J10001-UP
55		07371-52080	FLANGE,(FOR SHIPPING)	4	J10001-UP
56		01010-81865	BOLT,(FOR SHIPPING)	8	J10001-UP
57		01643-31845	WASHER,(FOR SHIPPING)	8	J10001-UP
			==========		
		7079976260	SERVICE KIT	1	J10001-UP

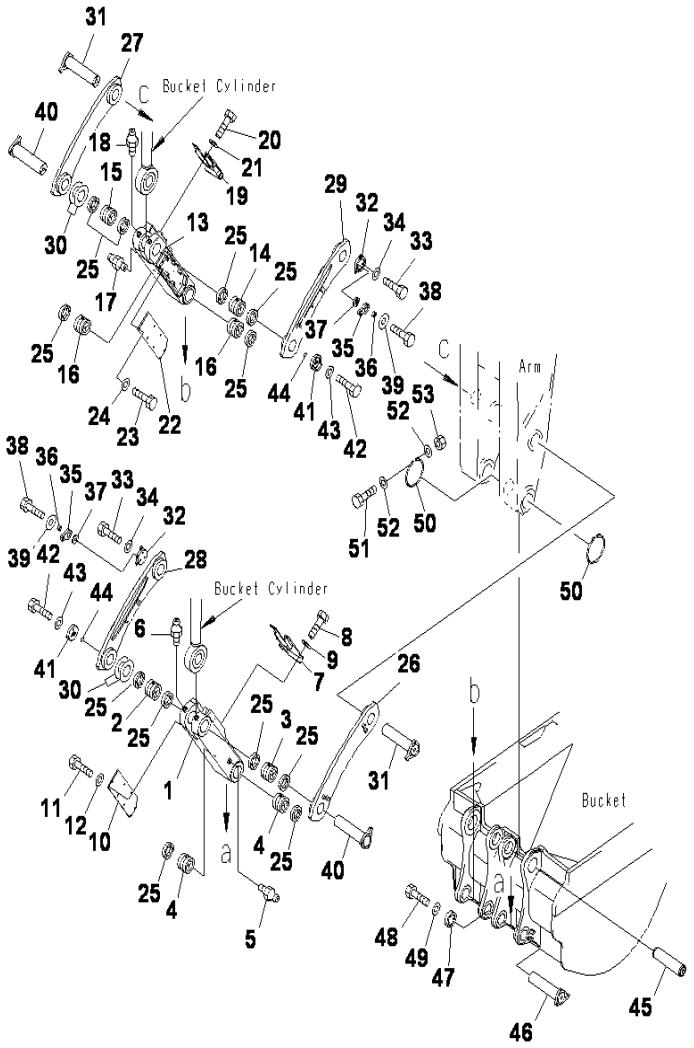

PC2000-8 S/N J10001-UP

BUCKET LINKAGE,LINK

INDEX	CD	PART NO.	DESCRIPTION	QTY	SERIAL NO.
		21T-70-00350	LINK ASS'Y,L.H.	1	J10001-UP
1	C1	21T-70-33110	.LINK (L.H)	1	J10001-UP
2		21T-70-73170	.BUSHING	1	J10001-UP
3		21T7073160	.BUSHING	1	J10001-UP
4		209-72-11251	.BUSHING	2	J10001-UP
5		07020-00675	.FITTING	1	J10001-UP
6		07020-00000	.FITTING	2	J10001-UP
7		21T-70-33221	.COVER (L.H)	1	J10001-UP
8		01010-81640	.BOLT	5	J10001-UP
9		01643-31645	.WASHER	5	J10001-UP
10		21T-70-67461	.PLATE	1	J10001-UP
11		01010-81640	.BOLT	8	J10001-UP
12		01643-31645	.WASHER	8	J10001-UP
		21T-70-00360	LINK ASS'Y,R.H.	1	J10001-UP
13		21T-70-33120NK	.LINK (R.H)	1	J10001-UP
14		21T-70-73170	.BUSHING	1	J10001-UP
15		21T-70-73160	.BUSHING	1	J10001-UP
16		209-72-11251	.BUSHING	2	J10001-UP
17		07020-00675	.FITTING	1	J10001-UP
18		07020-00000	.FITTING	2	J10001-UP
19		21T-70-33231	.COVER (R.H)	1	J10001-UP
20		01010-81640	.BOLT	5	J10001-UP
21		01643-31645	.WASHER	5	J10001-UP
22		21T-70-67461	.PLATE	1	J10001-UP
23		01010-81640	.BOLT	8	J10001-UP
24		01643-31645	.WASHER	8	J10001-UP
25		209-72-11261	SEAL	12	J10001-UP
26		21T-70-33151	LINK	1	J10001-UP
27		21T-70-33161	LINK	1	J10001-UP
28		21T-70-33131	LINK	1	J10001-UP
29		21T-70-33141	LINK	1	J10001-UP
30		21N-72-11230	SHIM	6	J10001-UP
31		21T-70-33250	PIN	2	J10001-UP
32		21T-70-33211	STOPPER	2	J10001-UP
33		01010-81645	BOLT	6	J10001-UP
34		01643-31645	WASHER	6	J10001-UP
35		21T-70-31771	PLATE	2	J10001-UP
36		21T-72-14590	SPACER	2	J10001-UP
37		208-54-57181	COLLAR	2	J10001-UP
38		01010-81240	BOLT	2	J10001-UP
39		175-54-34170	WASHER	2	J10001-UP
40		21T-70-33184	PIN	2	J10001-UP
41		21T-70-33190	STOPPER	2	J10001-UP
42		01010-81645	BOLT	6	J10001-UP
43		01643-31645	WASHER	6	J10001-UP

Ref :T1230-01A1 Page :390290

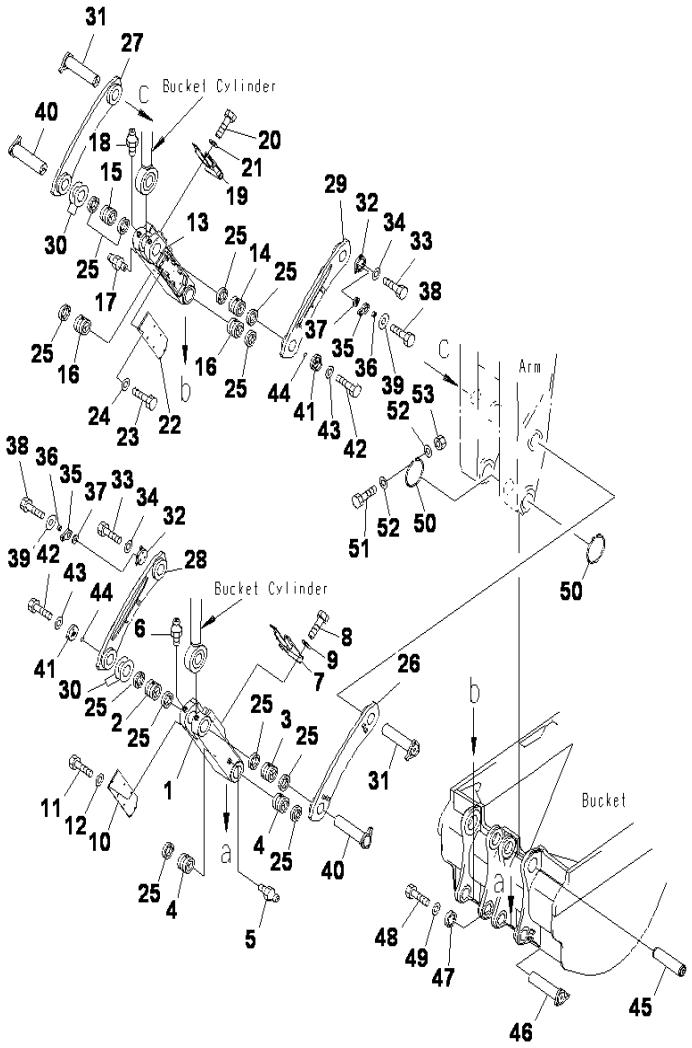

PC2000-8 S/N J10001-UP

BUCKET LINKAGE,LINK

INDEX	CD	PART NO.	DESCRIPTION	QTY	SERIAL NO.
44		07000-13034	O-RING	2	J10001-UP
45		21T-70-33171	PIN	2	J10001-UP
46		21T-70-33250	PIN	2	J10001-UP
47		21T-72-73170	STOPPER	2	J10001-UP
48		01010-81645	BOLT	6	J10001-UP
49		01643-31645	WASHER	6	J10001-UP
50		209-70-71370	O-RING	4	J10001-UP
51		205-09-61240	BOLT	4	J10001-UP
52		01640-20610	WASHER	8	J10001-UP
53		01596-00606	NUT	4	J10001-UP

Ref :T1230-01A1 Page :390291

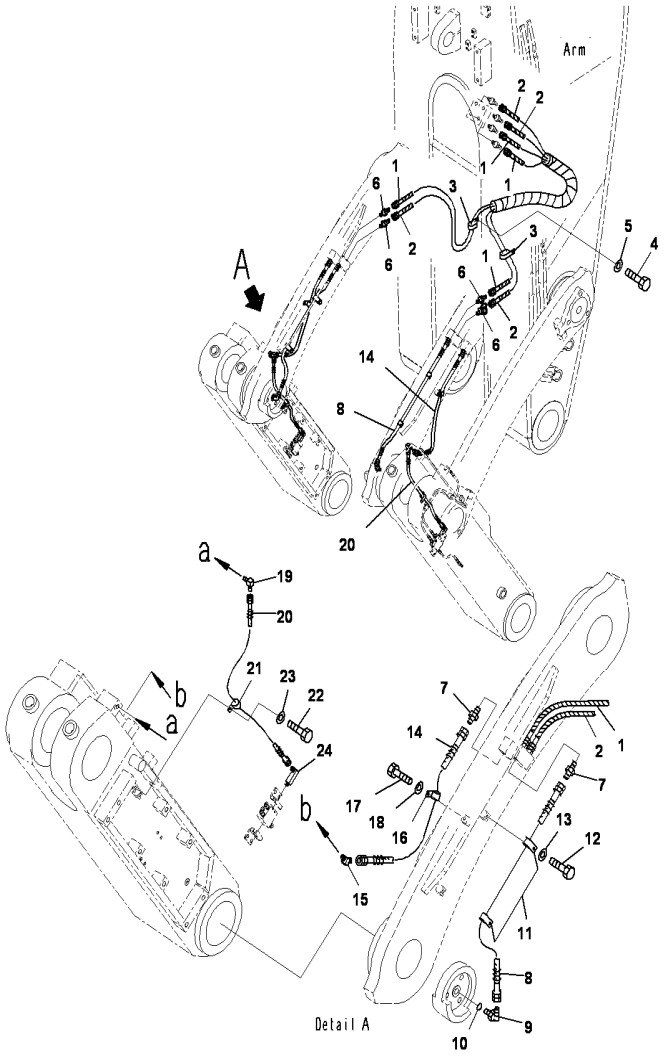

PC2000-8 S/N J10001-UP

BUCKET LINKAGE,LUBRICATION PIPING

INDEX	CD	PART NO.	DESCRIPTION	QTY	SERIAL NO.
1		07631-A0213	HOSE A	2	J10001-UP
2		07631-A0214	HOSE	2	J10001-UP
3		21T-70-31760	CLIP	2	J10001-UP
4		01010-81225	BOLT	2	J10001-UP
5		01643-31232	WASHER	2	J10001-UP
6		22W-62-17710	NIPPLE	4	J10001-UP
7		07238-10315	NIPPLE	4	J10001-UP
8		21T-68-67980	HOSE	2	J10001-UP
9		07235-10315	ELBOW	2	J10001-UP
10		07002-12034	O-RING	2	J10001-UP
11		04434-52212	CLIP	4	J10001-UP
12		01010-81225	BOLT	4	J10001-UP
13		01643-31232	WASHER	4	J10001-UP
14		21T-68-67990	HOSE	2	J10001-UP
15		363-62-25230	ELBOW	2	J10001-UP
16		04434-52212	CLIP	2	J10001-UP
17		01010-81225	BOLT	2	J10001-UP
18		01643-31232	WASHER	2	J10001-UP
19		567-35-12160	ELBOW	2	J10001-UP
20		07631-202A6	HOSE	2	J10001-UP
21		04434-51712	CLIP	2	J10001-UP
22		01010-81225	BOLT	2	J10001-UP
23		01643-31232	WASHER	2	J10001-UP
24		132-33-11410	ELBOW	2	J10001-UP

Ref :T1230-01A2 Page :390300

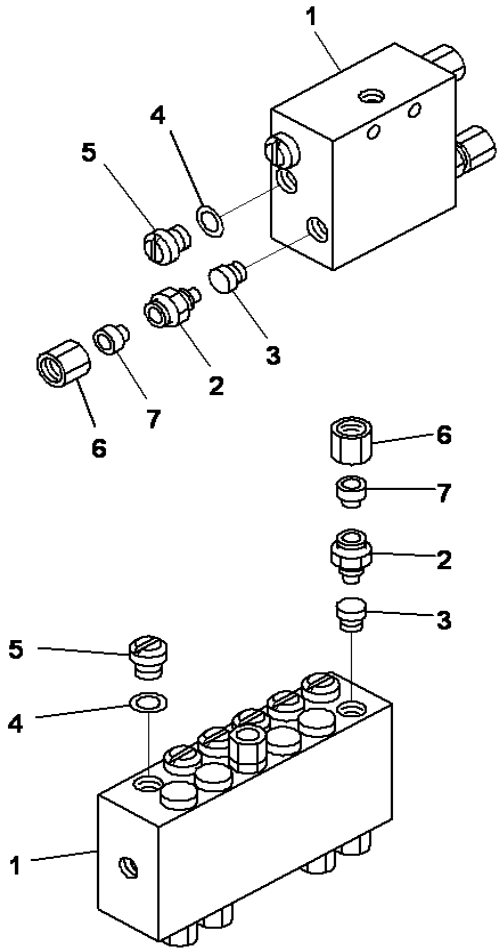

PC2000-8 S/N J10001-UP

BUCKET LINKAGE,INNER PARTS,DISTRIBUTOR VALVE,LHS

INDEX	CD	PART NO.	DESCRIPTION	QTY	SERIAL NO.
		21T-68-67940	VALVE A.....	1	J10001-UP
1	C1	569-956-3430	.VALVE.....	1	J10001-UP
2		425-S95-2180	.VALVE BODY.....	3	J10001-UP
3		425-S95-2210	.CLANMPING RING.....	3	J10001-UP
4		425-S95-2240	.WASHER.....	3	J10001-UP
5		425-S95-2610	.PLUG.....	3	J10001-UP
6		425-S95-2170	.COUPLING NUT.....	3	J10001-UP
7		425-S95-2190	.FERRULE.....	3	J10001-UP

Ref :T1230-01A3 Page :390310

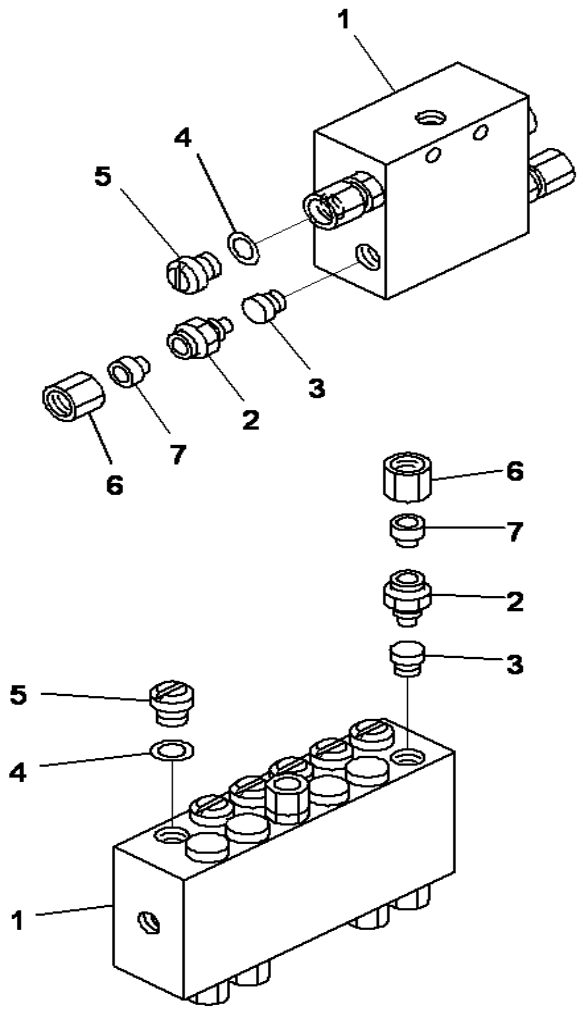

PC2000-8 S/N J10001-UP

BUCKET LINKAGE,INNER PARTS,DISTRIBUTOR VALVE,RHS

INDEX	CD	PART NO.	DESCRIPTION	QTY	SERIAL NO.
		21T-68-67950	VALVE A.....	1	J10001-UP
1	C1	569-95-63430	.VALVE.....	1	J10001-UP
2		425-S95-2180	.VALVE BODY.....	3	J10001-UP
3		425-S95-2210	.CLANMPING RING.....	3	J10001-UP
4		425-S95-2240	.WASHER.....	3	J10001-UP
5		425-S95-2610	.PLUG.....	3	J10001-UP
6		425-S95-2170	.COUPLING NUT.....	4	J10001-UP
7		425-S95-2190	.FERRULE.....	4	J10001-UP

Ref :T1230-01A4 Page :390320

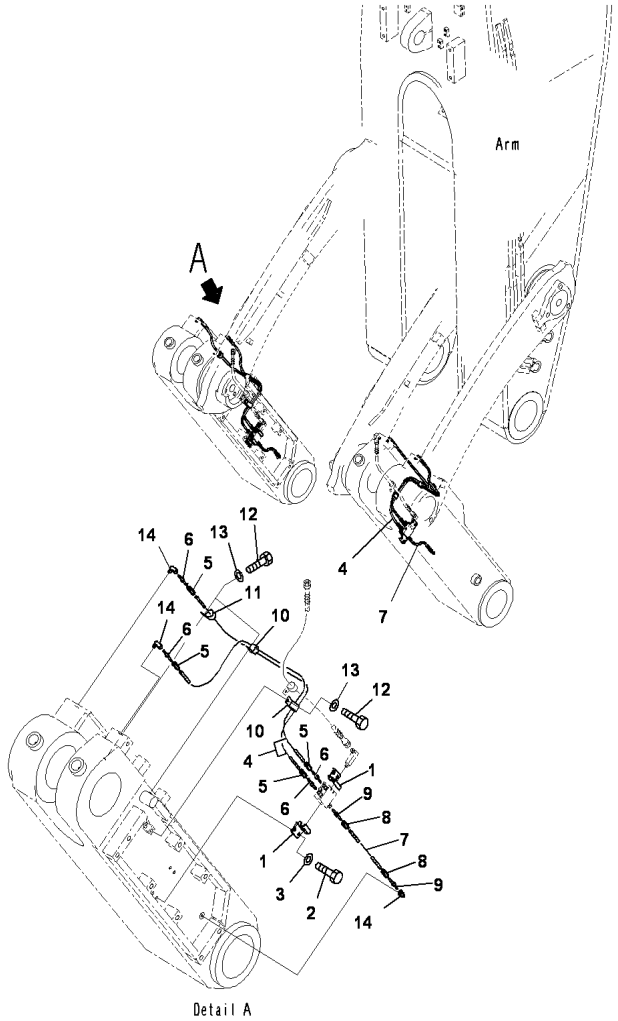

PC2000-8 S/N J10001-UP

BUCKET LINKAGE,DISTRIBUTOR VALVE,RELATED PARTS

INDEX	CD	PART NO.	DESCRIPTION	QTY	SERIAL NO.
1		425-S95-2250	CLAMP	4	J10001-UP
2		01010-81020	BOLT	8	J10001-UP
3		01643-31032	WASHER	8	J10001-UP
4		21T-68-67911	HOSE	4	J10001-UP
5		425-S95-2140	.SLEEVE	1	J10001-UP
6		425-S95-2160	.HOSE STUD	1	J10001-UP
7		21T-68-68320	HOSE	2	J10001-UP
8		425-S95-2140	SLEEVE	2	J10001-UP
9		425-S95-2160	HOSE STUD	2	J10001-UP
10		04435-51012	CLIP	4	J10001-UP
11		04434-51012	CLIP	2	J10001-UP
12		01010-81225	BOLT	6	J10001-UP
13		01643-31232	WASHER	6	J10001-UP
14		561-95-63290	ELBOW	6	J10001-UP

Ref :T1230-01A5 Page :390330

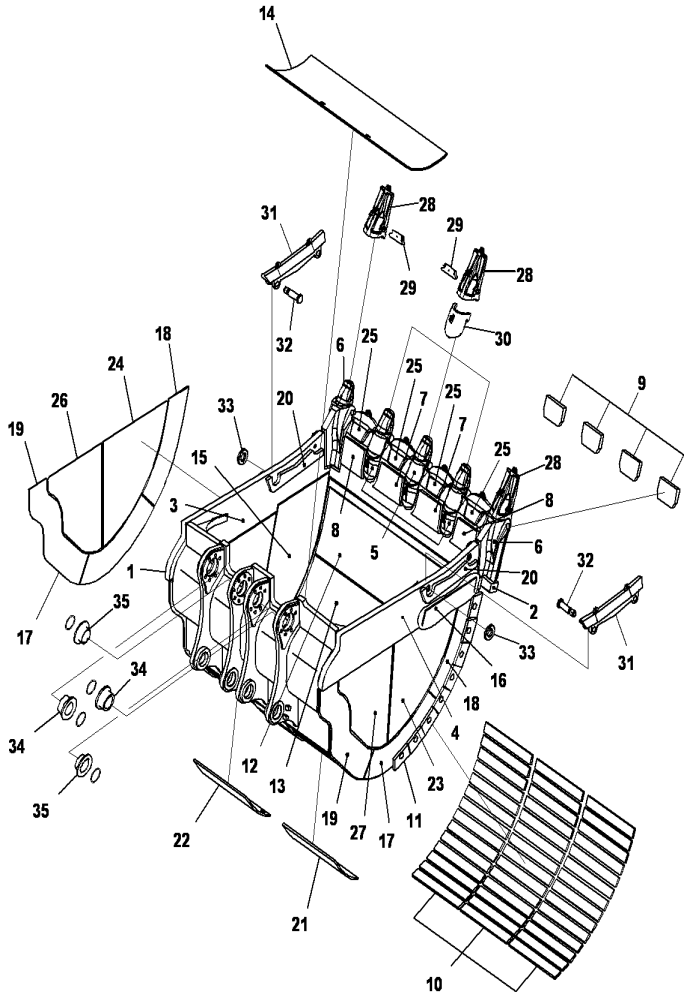

BUCKET,12M3 BUCKET,HORIZONTAL PIN TYPE,BUCKET

INDEX	CD	PART NO.	DESCRIPTION	QTY	SERIAL NO.
1		775-934-R112	BUCKET 12.0.....	1	J10001-UP
2		21T-70-34121	.PLATE, WELDED.....	1	J10001-UP
3		775-920-R131	.PLATE RH, WELDED.....	1	J10001-UP
4		775-920-R141	.PLATE LH, WELDED.....	1	J10001-UP
5		21T-70-34610	.ADAPTER, WELDED.....	2	J10001-UP
6		21T-70-34620	.ADAPTER, WELDED.....	3	J10001-UP
7		21T-70-34B92	.PLATE, WELDED.....	2	J10001-UP
8		21T-70-34D12	.PLATE, WELDED.....	2	J10001-UP
9		21T-70-34D62	.PLATE, WELDED.....	4	J10001-UP
10		21T-70-34F10	.PLATE, WELDED.....	42	J10001-UP
11		21T-70-34F20	.PLATE, WELDED.....	16	J10001-UP
12		21T-70-34F31	.PLATE, WELDED.....	1	J10001-UP
13		21T-70-34F40	.PLATE, WELDED.....	1	J10001-UP
14		21T-70-34F50	.PLATE, WELDED.....	1	J10001-UP
15		21T-70-34F60	.PLATE, WELDED.....	1	J10001-UP
16		21T-70-34F70	.PLATE, WELDED.....	1	J10001-UP
17		21T-70-34F80	.PLATE, WELDED.....	2	J10001-UP
18		21T-70-34F90	.PLATE, WELDED.....	2	J10001-UP
19		21T-70-34G10	.PLATE, WELDED.....	2	J10001-UP
20		775-934-R340	.PLATE, WELDED.....	4	J10001-UP
21		21T-70-34G50	.PLATE, WELDED.....	1	J10001-UP
22		21T-70-34G60	.PLATE, WELDED.....	1	J10001-UP
23		21T-70-34L10	.PLATE, WELDED.....	1	J10001-UP
24		21T-70-34L30	.PLATE, WELDED.....	1	J10001-UP
25		21T-70-34590	.SHROUD, WELDED.....	4	J10001-UP
26		21T-70-34L20	.PLATE, WELDED.....	1	J10001-UP
27		21T-70-34L40	.PLATE, WELDED.....	1	J10001-UP
28		21T-70-34580	TOOTH.....	5	J10001-UP
29		21T-70-34461	PIN A.....	5	J10001-UP
30		21T-70-34452	WEAR CAP.....	3	J10001-UP
31		21T-70-34221	GUARD.....	2	J10001-UP
32		21T-70-34231	PIN.....	4	J10001-UP
33		21T-70-34240	WASHER.....	4	J10001-UP
34		21T-70-34312	BUSHING.....	2	J10001-UP
35		21T-70-34321	BUSHING.....	2	J10001-UP

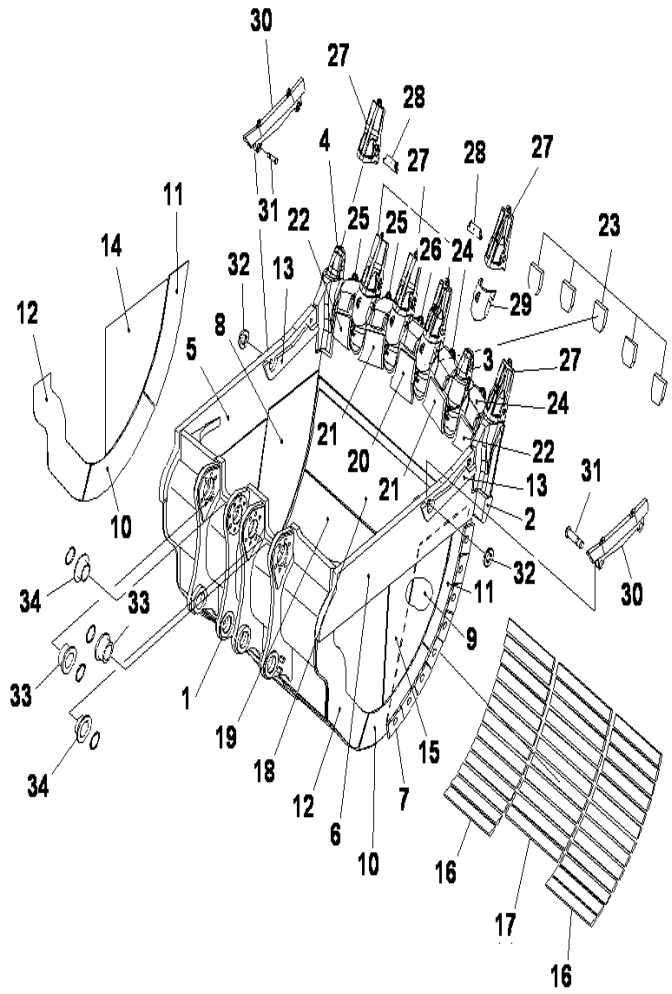

PC2000-8 S/N J10001-UP

BUCKET,14M3 BUCKET,HORIZONTAL PIN TYPE,BUCKET

INDEX	CD	PART NO.	DESCRIPTION	QTY	SERIAL NO.
1		775-920-R410	BUCKET.....	1	J10001-UP
2		775-920-R420	.PLATE.....	1	J10001-UP
3		21T-70-34620	.ADAPTER.....	4	J10001-UP
4		21T-70-34610	.ADAPTER.....	2	J10001-UP
5		775-920-R170	.PLATE(L.H).....	1	J10001-UP
6		775-920-R180	.PLATE(L.H).....	1	J10001-UP
7		21T-70-34F20	.PLATE, WELDED.....	16	J10001-UP
8		775-93-4R380	.PLATE, WELDED.....	1	J10001-UP
9		775-934-R390	.PLATE, WELDED.....	1	J10001-UP
10		775-934-R170	.PLATE, WELDED.....	2	J10001-UP
11		775-934-R180	.PLATE, WELDED.....	2	J10001-UP
12		775-934-R190	.PLATE, WELDED.....	2	J10001-UP
13		775-934-R340	.PLATE, WELDED.....	4	J10001-UP
14		21T-70-34L10	.PLATE, WELDED.....	1	J10001-UP
15		21T-70-34L30	.PLATE, WELDED.....	1	J10001-UP
16		21T-70-34F10	.PLATE, WELDED.....	26	J10001-UP
17		775-934-R140	.PLATE, WELDED.....	11	J10001-UP
18		775-934-R230	.PLATE, WELDED.....	1	J10001-UP
19		775-934-R160	.PLATE, WELDED.....	1	J10001-UP
20		775-934-R280	.PLATE, WELDED.....	1	J10001-UP
21		775-934-R440	.PLATE, WELDED.....	2	J10001-UP
22		775-934-R450	.PLATE, WELDED.....	2	J10001-UP
23		775-934-R460	.PLATE, WELDED.....	5	J10001-UP
24		775-934-R350	.SHROUD, WELDED.....	2	J10001-UP
25		775-934-R360	.SHROUD, WELDED.....	2	J10001-UP
26		775-934-R370	.SHROUD, WELDED.....	1	J10001-UP
27		21T-70-34580	TOOTH.....	6	J10001-UP
28		21T-70-34461	PIN A.....	6	J10001-UP
29		21T-70-34452	WEAR CAP.....	4	J10001-UP
30		21T-70-34221	GUARD.....	2	J10001-UP
31		21T-70-34231	PIN.....	4	J10001-UP
32		21T-70-34240	WASHER.....	4	J10001-UP
33		21T-70-34312	BUSHING.....	2	J10001-UP
34		21T-70-34321	BUSHING.....	2	J10001-UP

Ref :T1510-04A1 Page :390350

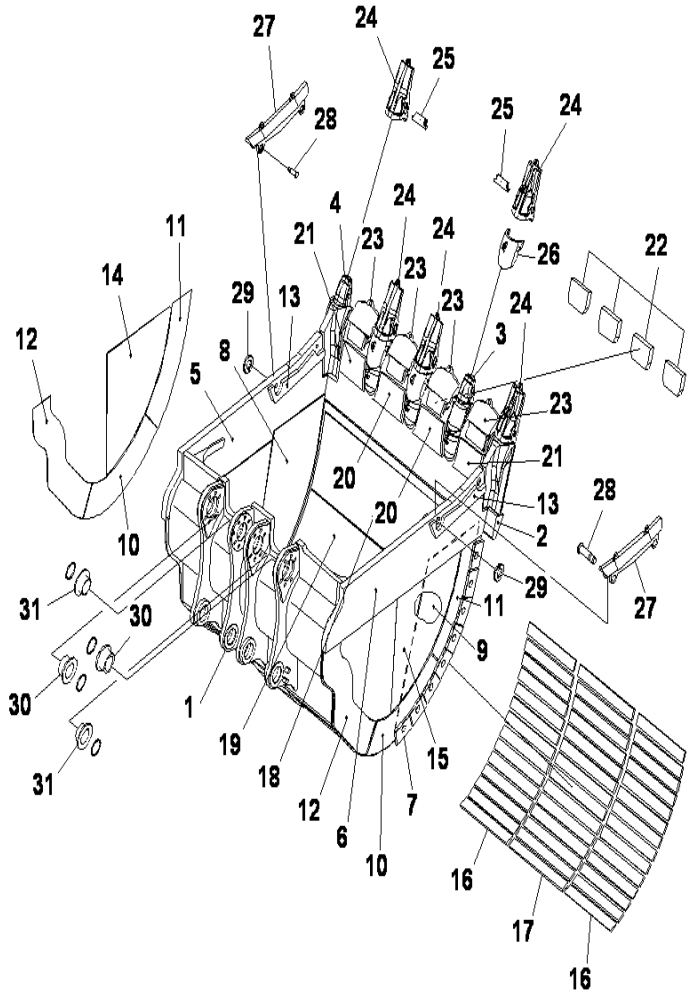

BUCKET,14M3 BUCKET,HORIZONTAL PIN TYPE,BUCKET

INDEX	CD	PART NO.	DESCRIPTION	QTY	SERIAL NO.
1		775-934-R310	BUCKET 14.0.....	1	J10001-UP
2		775-920-R340	.PLATE,WELDED.....	1	J10001-UP
3		21T-70-34620	.ADAPTER,WELDED.....	3	J10001-UP
4		21T-70-34610	.ADAPTER,WELDED.....	2	J10001-UP
5		775-920-R170	.PLATE(L.H), WELDED.....	1	J10001-UP
6		775-920-R180	.PLATE(L.H), WELDED.....	1	J10001-UP
7		21T-70-34F20	.PLATE,WELDED.....	16	J10001-UP
8		775-934-R380	.PLATE,WELDED.....	1	J10001-UP
9		775-934-R390	.PLATE,WELDED.....	1	J10001-UP
10		775-934-R170	.PLATE,WELDED.....	2	J10001-UP
11		775-934-R180	.PLATE,WELDED.....	2	J10001-UP
12		775-934-R190	.PLATE,WELDED.....	2	J10001-UP
13		775-934-R340	.PLATE,WELDED.....	4	J10001-UP
14		21T-70-34L10	.PLATE,WELDED.....	1	J10001-UP
15		21T-70-34L30	.PLATE,WELDED.....	1	J10001-UP
16		21T-70-34F10	.PLATE,WELDED.....	28	J10001-UP
17		775-934-R140	.PLATE,WELDED.....	14	J10001-UP
18		775-934-R230	.PLATE,WELDED.....	1	J10001-UP
19		775-934-R160	.PLATE,WELDED.....	1	J10001-UP
20		775-934-R121	.PLATE,WELDED.....	2	J10001-UP
21		775-934-R131	.PLATE,WELDED.....	2	J10001-UP
22		21T-70-34D62	.PLATE,WELDED.....	4	J10001-UP
23		21T-70-34590	SHROUD.....	4	J10001-UP
24		21T-70-34580	TOOTH.....	5	J10001-UP
25		21T-70-34461	PIN A.....	5	J10001-UP
26		21T-70-34452	WEAR CAP.....	3	J10001-UP
27		21T-70-34221	GUARD.....	2	J10001-UP
28		21T-70-34231	PIN.....	4	J10001-UP
29		21T-70-34240	WASHER.....	4	J10001-UP
30		21T-70-34312	BUSHING.....	2	J10001-UP
31		21T-70-34321	BUSHING.....	2	J10001-UP

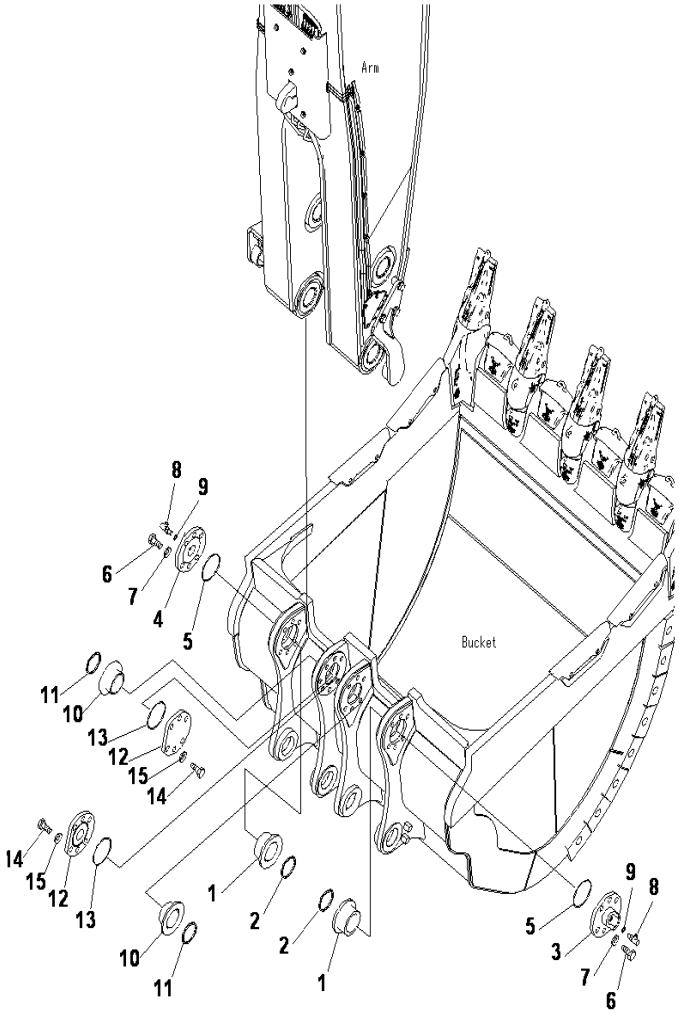

PARTS FOR LESS BUCKET

INDEX	CD	PART NO.	DESCRIPTION	QTY	SERIAL NO.
1		21T-70-34312	BUSHING	2	J10001-UP
2		209-72-11261	SEAL	2	J10001-UP
3		21T-70-34332	COVER	1	J10001-UP
4		21T-70-34372	COVER	1	J10001-UP
5		07000-15195	O-RING	2	J10001-UP
6		01010-83695	BOLT	12	J10001-UP
7		01643-33690	WASHER	12	J10001-UP
8		8247-62-1810	SWIVEL	2	J10001-UP
9		07000-12011	O-RING	2	J10001-UP
10		21T-70-34321	BUSHING	2	J10001-UP
11		209-72-11261	SEAL	2	J10001-UP
12		21T-70-34341	COVER	1	J10001-UP
13		07000-15175	O-RING	2	J10001-UP
14		01010-83685	BOLT	12	J10001-UP
15		01643-33690	WASHER	12	J10001-UP

MARKS AND PLATES

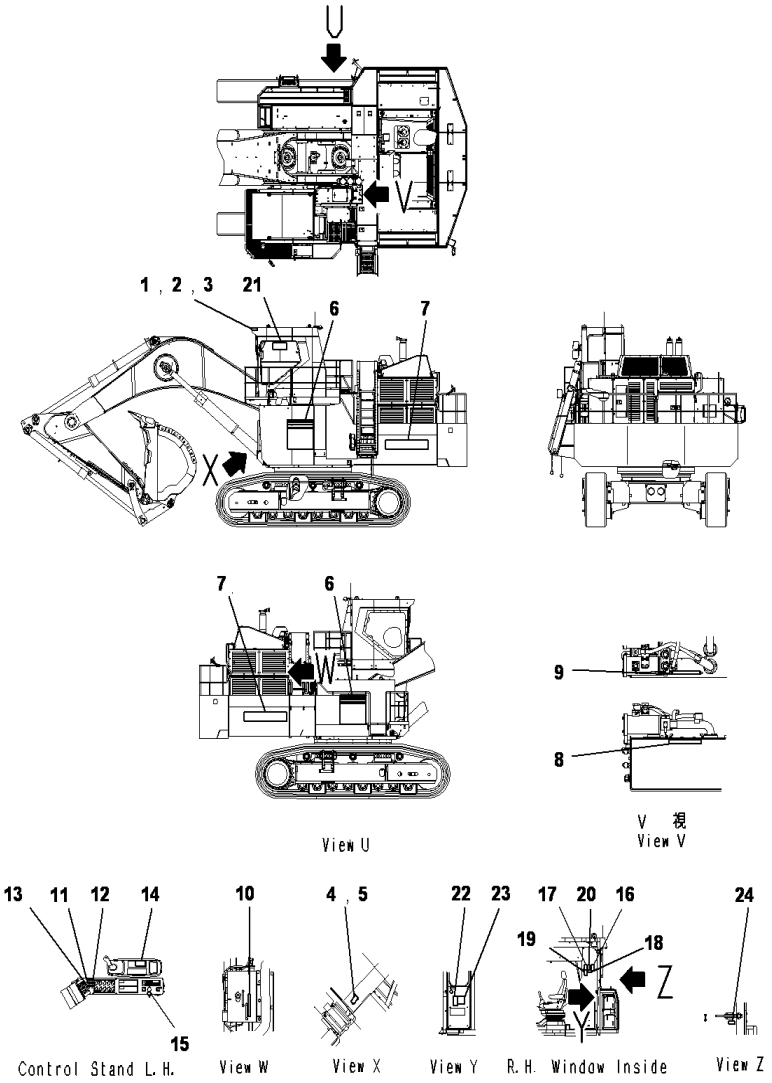

OPERATING AND CAUTION PLATE

INDEX	CD	PART NO.	DESCRIPTION	QTY	SERIAL NO.
1		09620-D2000	PLATE, NAME	1	J10001-UP
2		09620-D2050	PLATE	1	J10001-UP
3		04418-13060	SCREW	4	J10001-UP
4		09602-120D2	PLATE	1	J10001-UP
5		01220-60408	SCREW	4	J10001-UP
6		21T-00-31310	PLATE, NAME	2	J10001-UP
7		09690-P1600	MARK, MARK	2	J10001-UP
8		21T-00-31180	PLATE	1	J10001-UP
9		21T-00-31361	PLATE	1	J10001-UP
10		21T-00-31171	PLATE	1	J10001-UP
11		21T-00-33130	PLATE	1	J10001-UP
12		21T-00-33140	PLATE	1	J10001-UP
13		21T-00-33150	PLATE	1	J10001-UP
14		21T-00-33290	PLATE	1	J10001-UP
15		22U-00-21510	PLATE, COUTION	1	J10001-UP
16		09802-00500	PLATE, SAFETY	1	J10001-UP
17		09654-A0641	PLATE, SAFETY	1	J10001-UP
18		09657-A0881	PLATE, SAFETY	1	J10001-UP
19		09801-A0641	PLATE, SAFETY	1	J10001-UP
20		09651-A0641	PLATE, SAFETY	1	J10001-UP
21		09844-00050	PLATE	1	J10001-UP
22		21T-00-33421	PLATE	1	J10001-UP
23		21T-00-31332	PLATE	1	J10001-UP
24		21T-00-67660	PLATE	1	J10001-UP

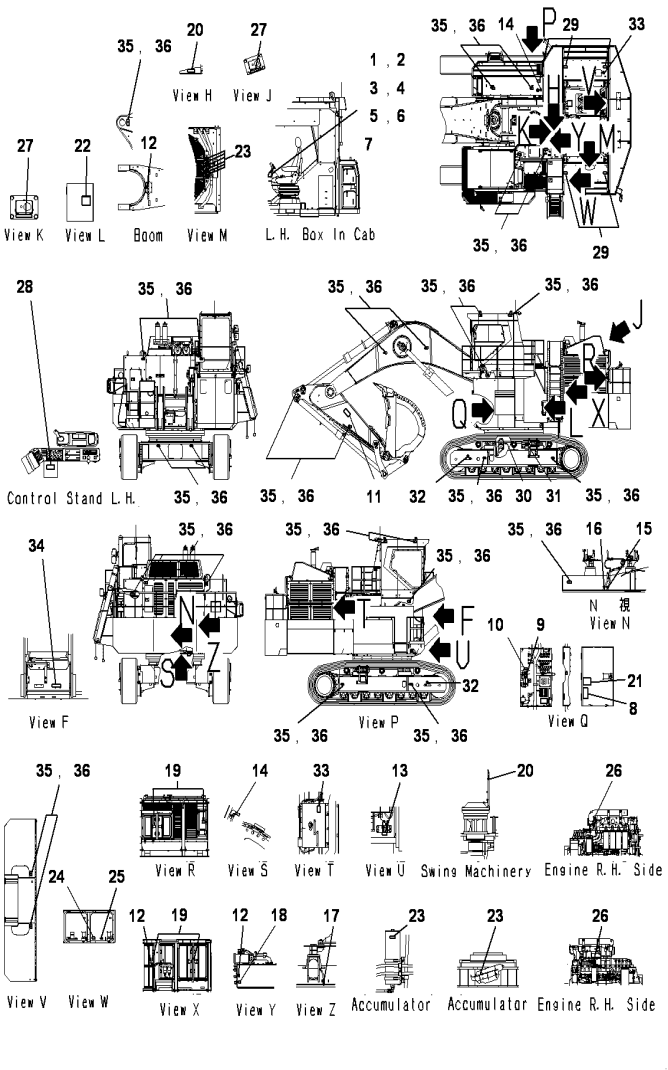

MARKS AND PALTE(TAG PLATE)

INDEX	CD	PART NO.	DESCRIPTION	QTY	SERIAL NO.
1		21T-00-33450	TAG PALTE	1	J10001-UP
2		209-98-54160	TAG PALTE	1	J10001-UP
3		21T-00-33190	TAG PALTE	1	J10001-UP
4		21T-00-33350	PLATE	1	J10001-UP
5		21T-00-33540	PLATE, TAG	1	J10001-UP
6		21T-00-31342	PLATE	1	J10001-UP
7		09963-A1640	PLATE	1	J10001-UP
8		21T-00-33251	PLATE	1	J10001-UP
9		21T-00-33230	PLATE	1	J10001-UP
10		21T-00-33240	PLATE	1	J10001-UP
11		09134-A1681	PLATE	2	J10001-UP
12		21T-00-19130	PLATE,SAFETY	3	J10001-UP
13		21T-00-33210	PLATE	1	J10001-UP
14		09669-0000E	CAUTION PLATE	2	J10001-UP
15		21T-00-31110	MARK PLATE	1	J10001-UP
16		21T-00-31120	MARK PLATE	1	J10001-UP
17		09669-0000A	PLATE	1	J10001-UP
18		09653-A0481	PLATE,SAFETY	1	J10001-UP
19		09667-A0481	PLATE,SAFETY	4	J10001-UP
20		209-00-19490	PLATE	2	J10001-UP
21		21T-00-33270	PLATE	1	J10001-UP
22		21T-00-33280	PLATE	1	J10001-UP
23		09659-A057B	PLATE	8	J10001-UP
24		09808-A0881	PLATE,SAFETY	2	J10001-UP
25		21T-00-67490	PLATE	2	J10001-UP
26		6217-71-6530	PLATE	2	J10001-UP
27		21T-00-33980	PLATE	2	J10001-UP
28		21T-00-33970	PLATE	1	J10001-UP
29		09805-C0881	PLATE,SAFETY	5	J10001-UP
30		209-00-54250	PLATE	1	J10001-UP
31		21N-00-14170	PLATE CAUTION	1	J10001-UP
32		09657-A0881	PLATE	2	J10001-UP
33		09653-A0481	PLATE,SAFETY	2	J10001-UP
34		09690-M0063	MARK PLATE	1	J10001-UP
35		09960-00801	MARK	39	J10001-UP
36		09960-00802	MARK	39	J10001-UP

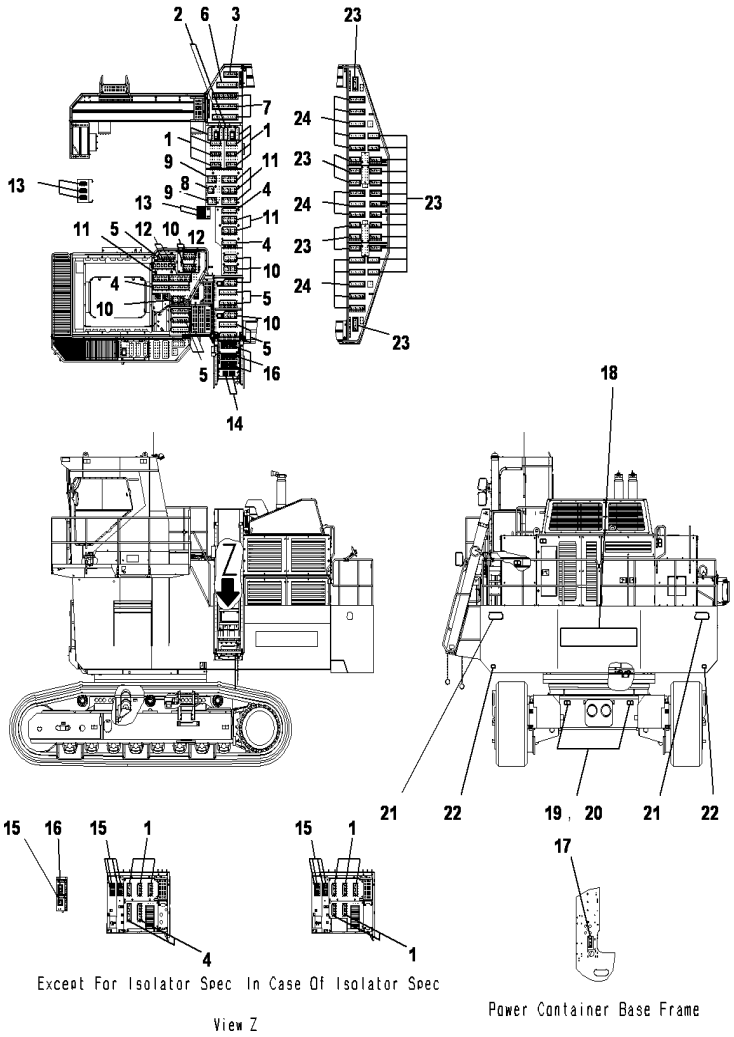

PC2000-8 S/N J10001-UP

ANTI SLIP

INDEX	CD	PART NO.	DESCRIPTION	QTY	SERIAL NO.
1		208-00-76140	PLATE	13	J10001-UP
2		21T-00-31740	PLATE	2	J10001-UP
3		20Y-00-42110	PLATE	1	J10001-UP
4		20Y-00-42120	PLATE	5	J10001-UP
5		22U-00-28140	PLATE	8	J10001-UP
6		21K-00-71370	PLATE	1	J10001-UP
7		20Y-00-42130	PLATE	3	J10001-UP
8		207-00-76220	PLATE	1	J10001-UP
9		207-00-76230	PLATE	2	J10001-UP
10		207-00-76250	PLATE	7	J10001-UP
11		20Y-00-42140	PLATE	6	J10001-UP
12		209-00-41550	PLATE	3	J10001-UP
13		21T-00-31730	PLATE	5	J10001-UP
14		21T-00-31710	PLATE	2	J10001-UP
15		21M-00-21280	PLATE	5	J10001-UP
16		21M-00-21290	PLATE	7	J10001-UP
17		22U-00-28110	PLATE	1	J10001-UP
18		09690-P2000	MARK	1	J10001-UP
19		09960-00801	MARK	2	J10001-UP
20		09960-00802	MARK	2	J10001-UP
21		09133-A3281	PLATE	2	J10001-UP
22		14X-98-35181	PLATE	2	J10001-UP
23		208-00-76140	PLATE	21	J10001-UP
24		20Y-00-42120	PLATE	13	J10001-UP

Ref :U0100-01A3 Page :420030

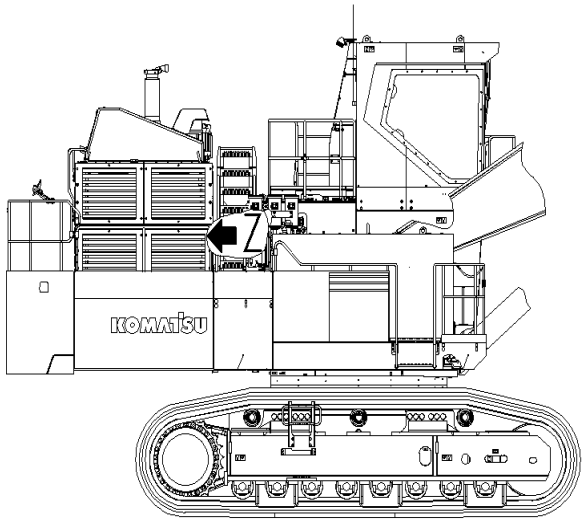

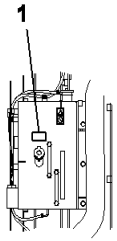

PC2000-8 S/N J10001-UP

COOLAT DECAL

INDEX	CD	PART NO.	DESCRIPTION	QTY	SERIAL NO.
1		09642-10500	PLATE	1	J10001-UP

Ref :U0202-01A0 Page :420040

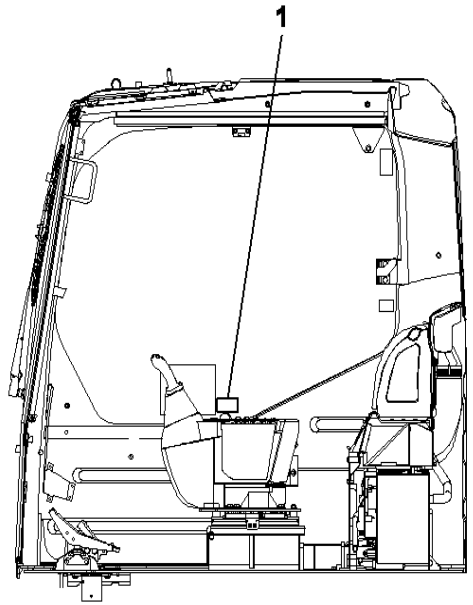

PC2000-8 S/N J10001-UP

CAUTION PLATE(WITH VHMS)

INDEX	CD	PART NO.	DESCRIPTION	QTY	SERIAL NO.
1		09845-00480	PLATE.....	1	J10001-UP

Ref :U0205-01A0 Page :420050

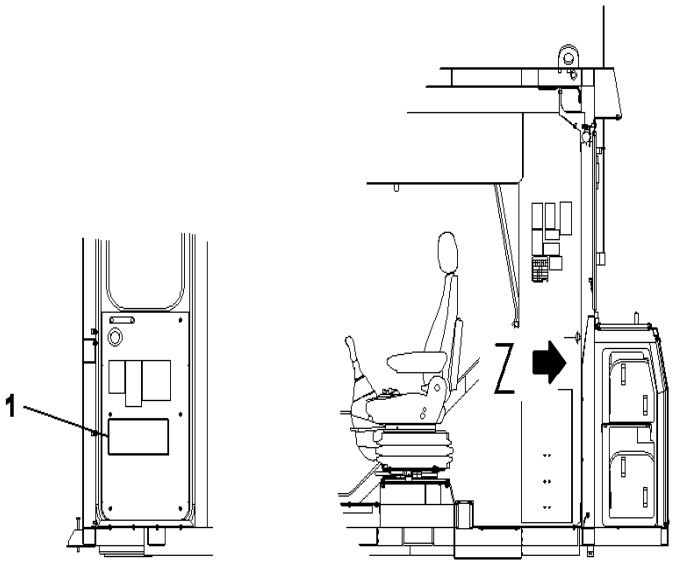

PC2000-8 S/N J10001-UP

LIFTING CAPACITY CHART

INDEX	CD	PART NO.	DESCRIPTION	QTY	SERIAL NO.
1		21T-00-31321	PLATE	1	J10001-UP

Ref :U0210-01A0 Page :420060

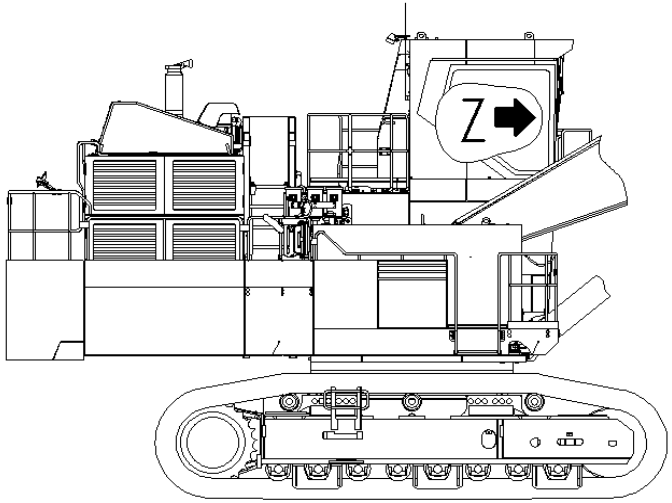

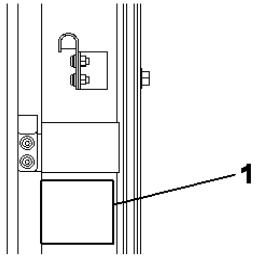

View Z

PC2000-8 S/N J10001-UP

MARKS PLATE(INDONESIAN-ENGLISH)

INDEX	CD	PART NO.	DESCRIPTION	QTY	SERIAL NO.
1		09822-00400	PLATE.....	1	J10001-UP

Ref :U0300-01A0 Page :420070

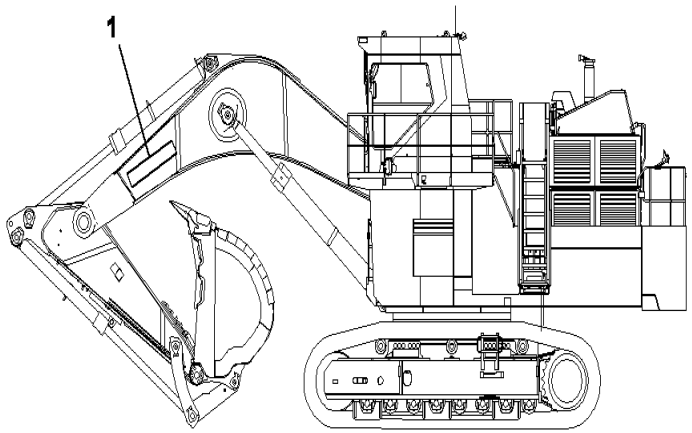

PC2000-8 S/N J10001-UP

MARKS AND PLATES

INDEX	CD	PART NO.	DESCRIPTION	QTY	SERIAL NO.
1		09690-P1250	MARK PLATE.....	2	J10001-UP

Ref :U0510-01A0 Page :420080

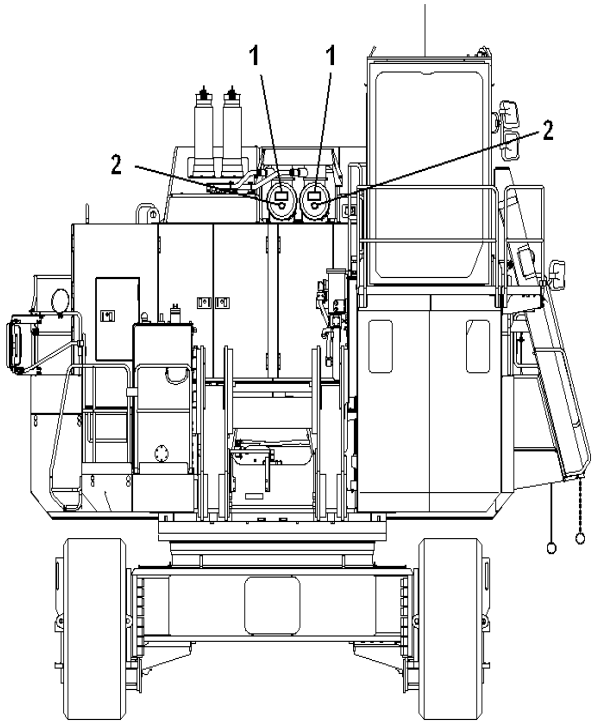

PC2000-8 S/N J10001-UP

NAME PLATE(AIR CLEANER)(INDONESIAN-ENGLISH)

INDEX	CD	PART NO.	DESCRIPTION	QTY	SERIAL NO.
1		09637-05163	PLATE.....	2	J10001-UP
2		600-184-2810	MARKING.....	2	J10001-UP

Ref :U0550-01A0 Page :420090

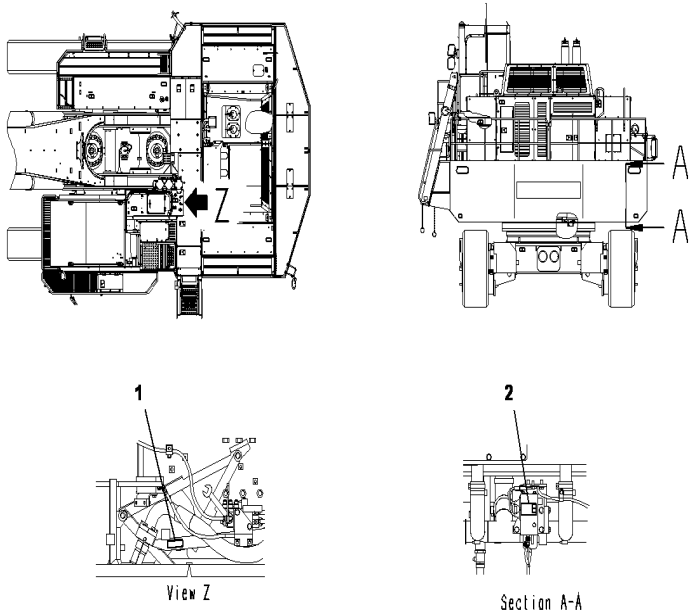

PC2000-8 S/N J10001-UP

NAME PLATE AND WARNING DECAL(INDONESIAN-ENGLISH)(1/2)

INDEX	CD	PART NO.	DESCRIPTION	QTY	SERIAL NO.
1		21T-00-32630	PLATE	2	J10001-UP
2		21T-00-33830	PLATE	2	J10001-UP

Ref :U0710-01A0 Page :420100

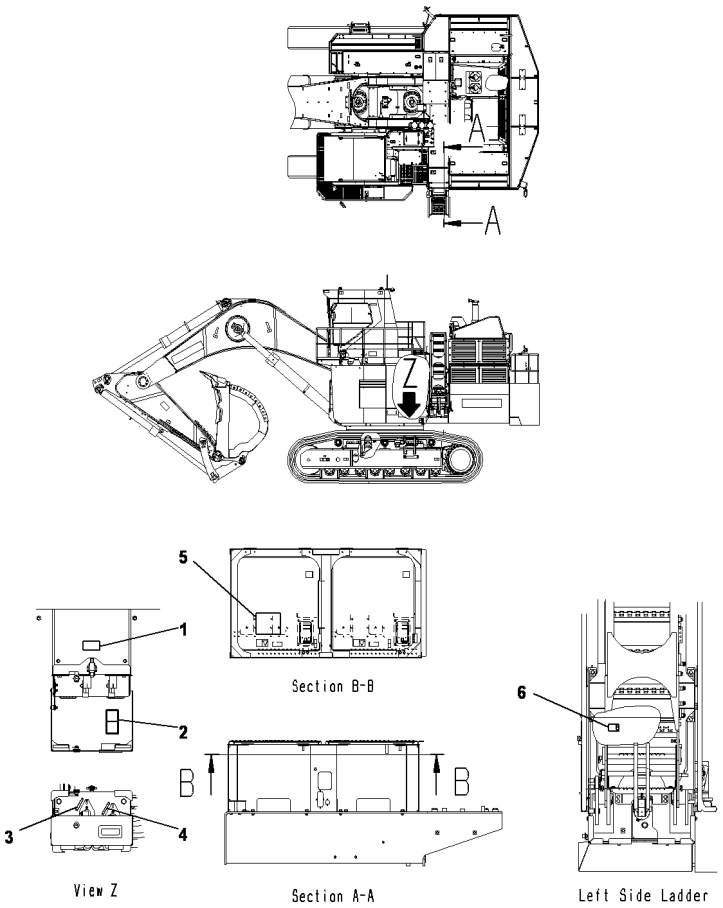

PC2000-8 S/N J10001-UP

NAME PLATE AND WARNING DECAL(INDONESIAN-ENGLISH)(2/2)

INDEX	CD	PART NO.	DESCRIPTION	QTY	SERIAL NO.
1		09808-A0881	PLATE,SAFETY.....	1	J10001-UP
2		09651-A0641	PLATE,SAFETY.....	1	J10001-UP
3		21T-00-33810	PLATE.....	1	J10001-UP
4		21T-00-33820	PLATE.....	1	J10001-UP
5		21T-00-33860	PLATE.....	1	J10001-UP
6		21T-00-33690	PLATE.....	1	J10001-UP

Ref :U0710-02A0 Page :420110

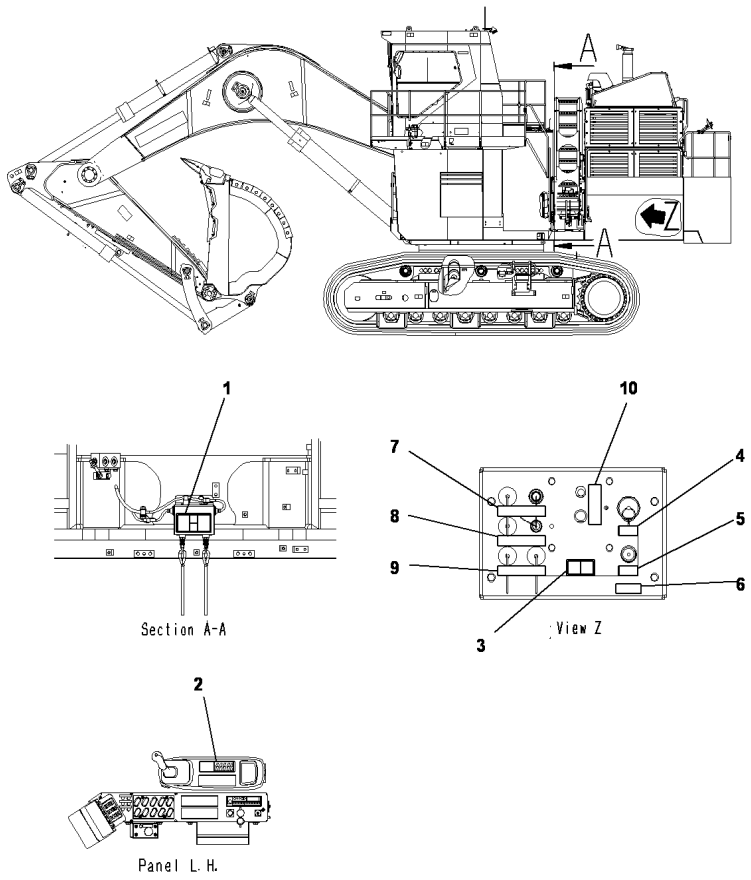

PC2000-8 S/N J10001-UP

NAME PLATE AND WARNING DECAL(ADDITIONAL EMERGENCY)

INDEX	CD	PART NO.	DESCRIPTION	QTY	SERIAL NO.
1		21T-00-32840	PLATE	1	J10001-UP
2		21T-00-33850	PLATE	1	J10001-UP
3		09651-A0841	PLATE	1	J10001-UP
4		21T-00-32660	PLATE	1	J10001-UP
5		21T-00-32670	PLATE	1	J10001-UP
6		21T-00-33680	PLATE	2	J10001-UP
7		21T-00-32760	PLATE	1	J10001-UP
8		21T-00-32770	PLATE	1	J10001-UP
9		21T-00-32780	PLATE	1	J10001-UP
10		21T-00-32791	PLATE	1	J10001-UP

Ref :U0710-03A0 Page :420120

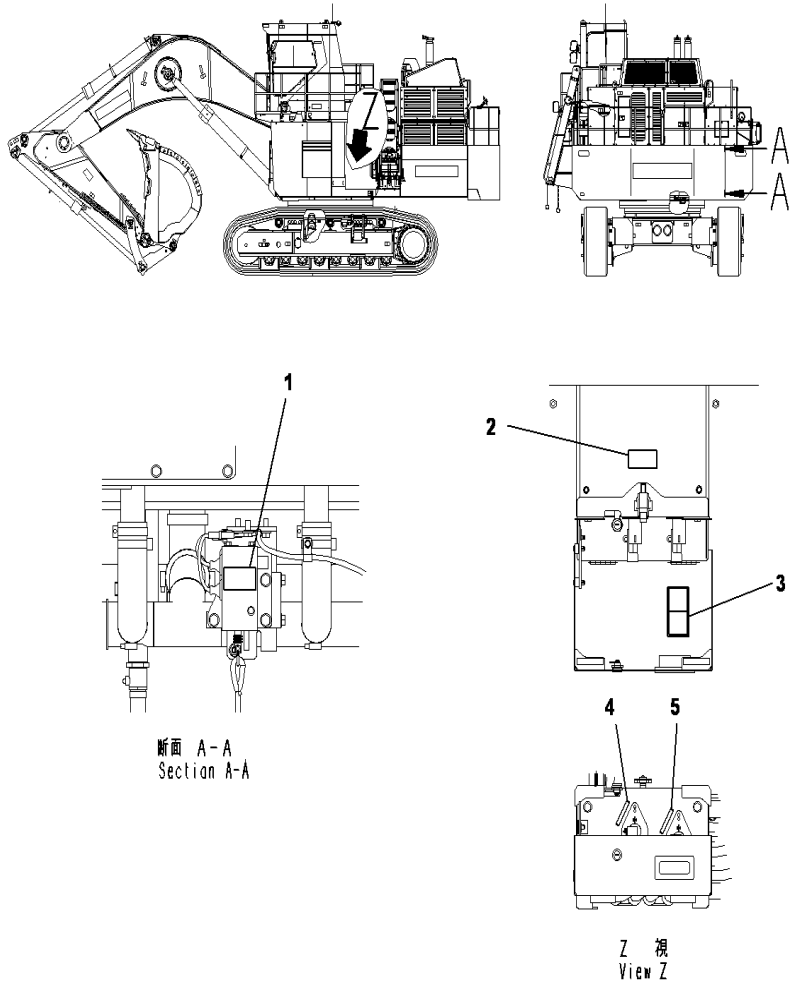

PC2000-8 S/N J10001-UP

NAME PLATE AND WARNING DECAL CENTER SERVICE(INDONESIA-ENGLISH)(1/2)

INDEX	CD	PART NO.	DESCRIPTION	QTY	SERIAL NO.
1		21T-00-33830	PLATE	2	J10001-UP
2		09808-A0881	PLATE,SAFETY	1	J10001-UP
3		09651-A0641	PLATE,SAFETY	1	J10001-UP
4		21T-00-33810	PLATE	1	J10001-UP
5		21T-00-33820	PLATE	1	J10001-UP

Ref :U0710-03A1 Page :420125

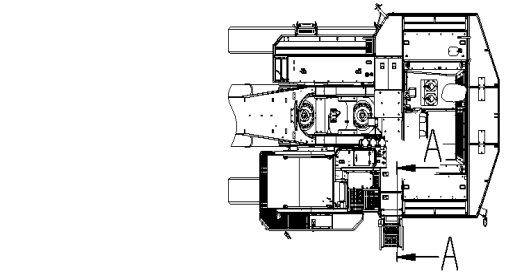

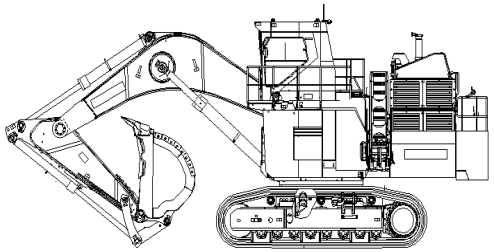

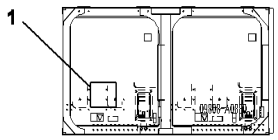

Section B-B

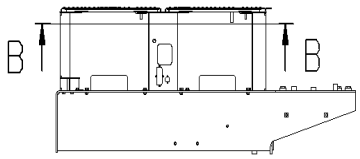

Section A-A

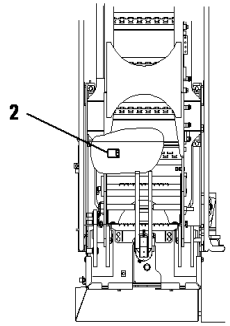

Left Side Ladder

NAME PLATE AND WARNING DECAL CENTER SERVICE(INDONESIA-ENGLISH)(2/2)

INDEX	CD	PART NO.	DESCRIPTION	QTY	SERIAL NO.
1		21T-00-33860	PLATE	1	J10001-UP
2		21T-00-33690	PLATE	1	J10001-UP

ACCESSORY

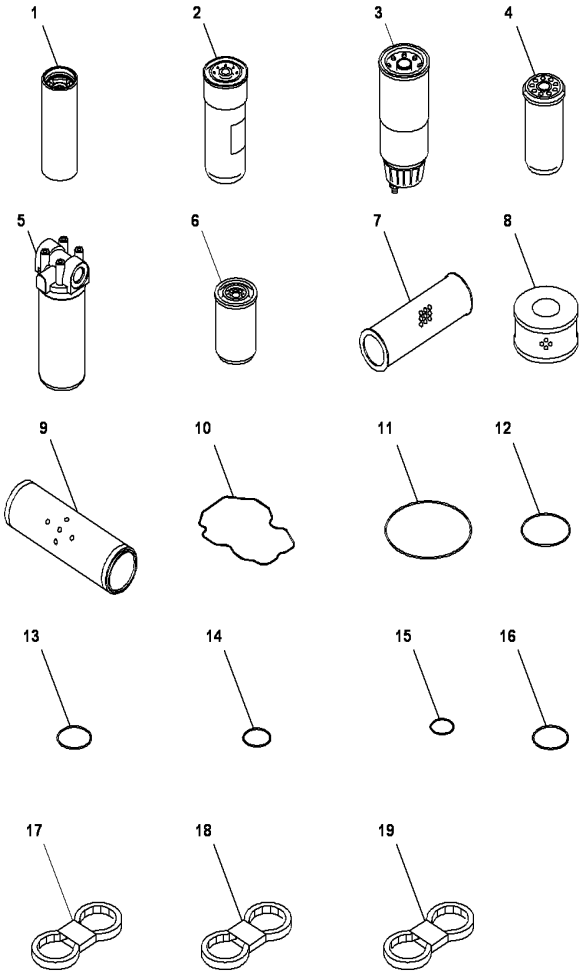

PC2000-8 S/N J10001-UP

SPARE PARTS

INDEX	CD	PART NO.	DESCRIPTION	QTY	SERIAL NO.
1		600-211-1340	CARTRIDGE	4	J10001-UP
2		600-319-3550	CARTRIDGE	2	J10001-UP
3		600-319-4500	FILTER	2	J10001-UP
4		113-60-23160	CARTRIDGE	2	J10001-UP
5		21T-60-31410	FILTER	1	J10001-UP
6		21T-60-31450	FILTER	3	J10001-UP
7		209-60-77532	ELEMENT	3	J10001-UP
8		421-60-35170	ELEMENT	3	J10001-UP
9		600-185-6100	ELEMENT ASS'Y	2	J10001-UP
10		6217-11-8830	GASKET	12	J10001-UP
11		07000-15180	O-RING	6	J10001-UP
12		07000-B3048	O-RING	40	J10001-UP
13		07000-B3032	O-RING	8	J10001-UP
14		07000-B3025	O-RING	2	J10001-UP
15		07000-B2060	O-RING	20	J10001-UP
16		07002-13634	O-RING	4	J10001-UP
17		04120-21757	V-BELT	2	J10001-UP
18		04120-21944	V-BELT	1	J10001-UP
19		04120-21951	V-BELT	1	J10001-UP

Ref :V0100-01A0 Page :450010

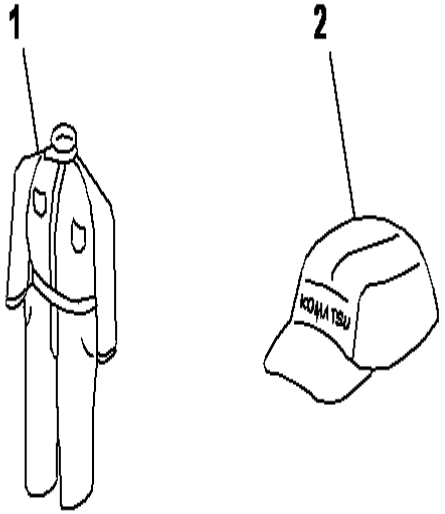

PC2000-8 S/N J10001-UP

CAP AND OVERALL

INDEX	CD	PART NO.	DESCRIPTION	QTY	SERIAL NO.
		09980-92550	CAP & OVERALL.....	1	J10001-UP
1		09980-10550	.OVERALL.....	1	J10001-UP
2		09982-20057	.CAP.....	1	J10001-UP

Ref :V0200-02A0 Page :450020

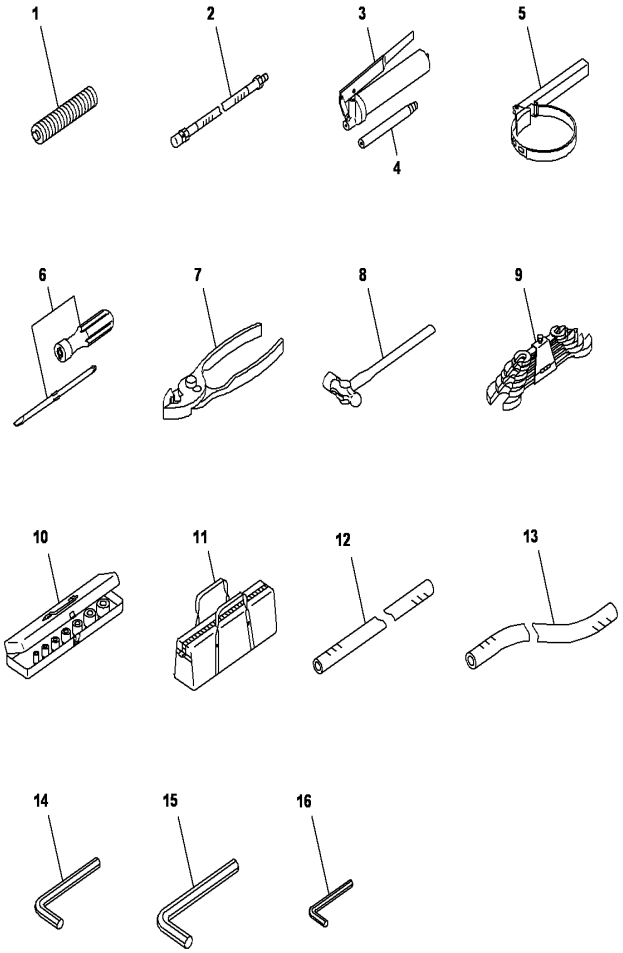

PC2000-8 S/N J10001-UP

TOOL

INDEX	CD	PART NO.	DESCRIPTION	QTY	SERIAL NO.
1		07950-90403	CARTRIDGE	1	J10001-UP
2		07951-11400	NOZZLE	1	J10001-UP
		07952-80002	GREASE PUMP	1	J10001-UP
3		07950-10450	.PUMP ASSEMBLY	1	J10001-UP
4		0795121045	.NOZZLE	1	J10001-UP
5		09019-28036	WRENCH	1	J10001-UP
6		09033-00190	DRIVER	1	J10001-UP
7		09036-00150	PLIERS	1	J10001-UP
8		09039-00150	HAMMER	1	J10001-UP
9		09000-30006	WRENCH SET	1	J10001-UP
		09002-00810	.WRENCH	1	J10001-UP
		09002-01214	.WRENCH	1	J10001-UP
		09002-01317	.WRENCH	1	J10001-UP
		09002-01922	.WRENCH	1	J10001-UP
		09002-02427	.WRENCH	1	J10001-UP
		09002-03032	.WRENCH	1	J10001-UP
10		09020-10284	SOCKET WRENCH S	1	J10001-UP
		09021-01016	.SOCKET,W=10MM	1	J10001-UP
		09021-01319	.SOCKET,W=13MM	1	J10001-UP
		09021-01422	.SOCKET,W=14MM	1	J10001-UP
		09021-01725	.SOCKET,W=17MM	1	J10001-UP
		09021-01928	.SOCKET,W=19MM	1	J10001-UP
		09021-02233	.SOCKET,W=22MM	1	J10001-UP
		09021-02436	.SOCKET,W=24MM	1	J10001-UP
		09021-02739	.SOCKET,W=27MM	1	J10001-UP
		09021-03044	.SOCKET,W=30MM	1	J10001-UP
		09021-03246	.SOCKET,W=32MM	1	J10001-UP
		09021-03653	.SOCKET,W=36MM	1	J10001-UP
		09022-00150	.EXTENSION	1	J10001-UP
		09022-00250	.EXTENTION	1	J10001-UP
		09023-00300	.HANDLE	1	J10001-UP
		09024-00300	.HANDLE	1	J10001-UP
		09025-00075	.UNIVERSAL JOINT	1	J10001-UP
		09026-00250	.HANDLE	1	J10001-UP
11		09056-05513	TOOL BAG	1	J10001-UP
12		07287-01413	HOSE	2	J10001-UP
13		07287-02618	HOSE	2	J10001-UP
14		09007-00632	WRENCH	1	J10001-UP
15		09007-00836	WRENCH	1	J10001-UP
16		09007-00425	WRENCH	1	J10001-UP

Ref :V0300-03A0 Page :450030

MISSCELENOUS

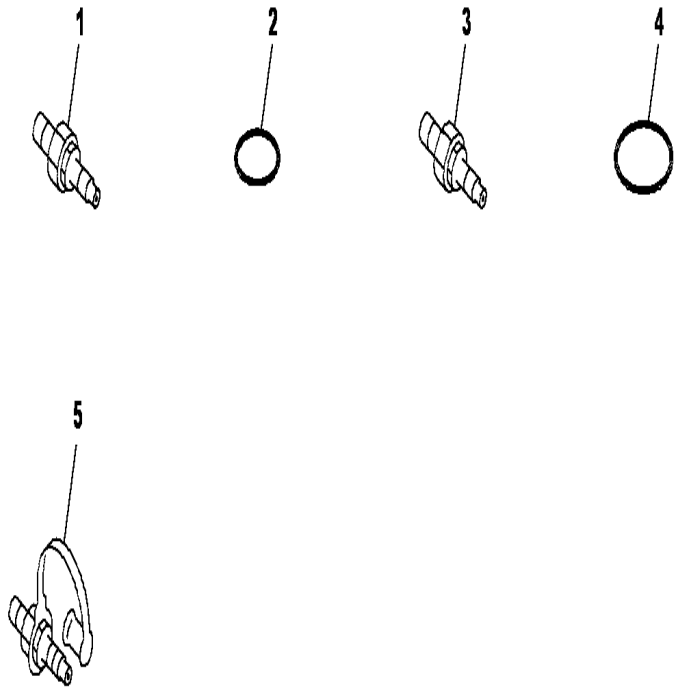

PC2000-8 S/N J10001-UP

PREVENTIVE MAINTENANCE SERVICE CONNECTORS

INDEX	CD	PART NO.	DESCRIPTION	QTY	SERIAL NO.
1		7991-01-5220	NIPPLE	19	J10001-UP
2		07002-61023	ORING	19	J10001-UP
3		7991-01-5230	NIPPLE	1	J10001-UP
4		07002-61423	O-RING	1	J10001-UP
5		21T-62-23880	NIPPLE	2	J10001-UP

Ref :W0111-01A1 Page :480010

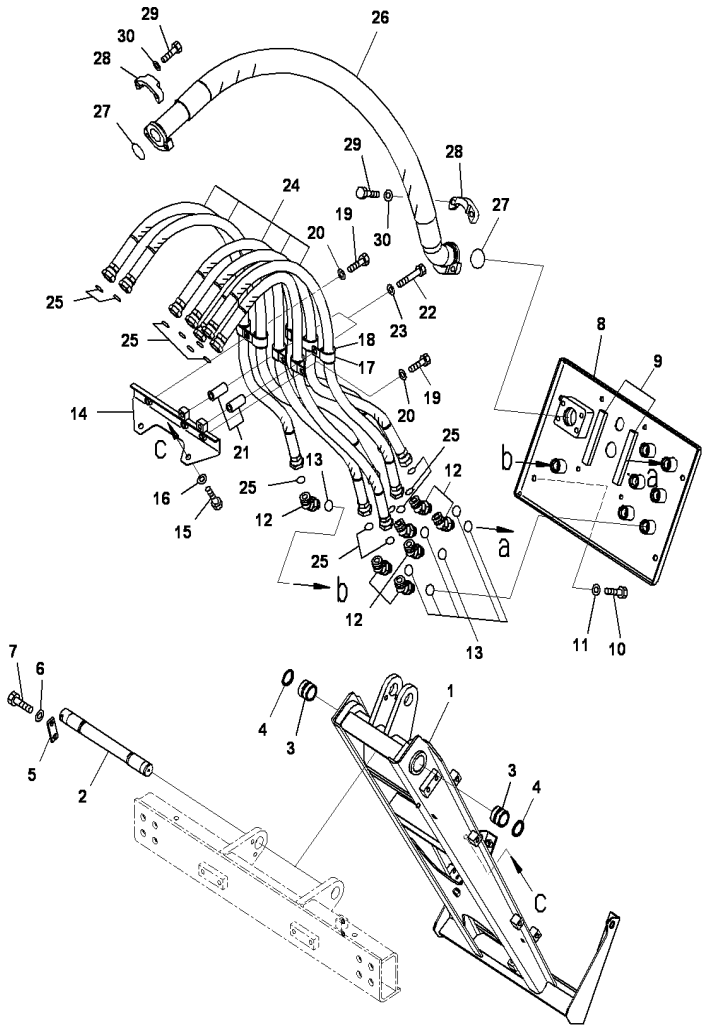

SERVICE CENTER,ARM

INDEX	CD	PART NO.	DESCRIPTION	QTY	SERIAL NO.
1		21T-98-31211	FRAME	1	J10001-UP
2		21T-98-31290	PIN	1	J10001-UP
3		20P-71-81130	BUSHING	2	J10001-UP
4		07145-00035	DUST SEAL	2	J10001-UP
5		04082-00206	LOCK	1	J10001-UP
6		20Y-54-12670	WASHER	2	J10001-UP
7		01010-81225	BOLT	2	J10001-UP
8		21T-98-31241	PANEL	1	J10001-UP
9		21T-98-31421	.SHEET	2	J10001-UP
10		01010-D1225	BOLT	4	J10001-UP
11		01643-71232	WASHER	4	J10001-UP
12		02783-10628	UNION	7	J10001-UP
13		07002-62434	O-RING	7	J10001-UP
14		21T-98-31361	BRACKET	1	J10001-UP
15		01010-81225	BOLT	2	J10001-UP
16		01643-31232	WASHER	2	J10001-UP
17		04434-53412	CLIP	7	J10001-UP
18		07095-20625	CUSHION	7	J10001-UP
19		01010-81235	BOLT	3	J10001-UP
20		01643-31232	WASHER	3	J10001-UP
21		203-62-44510	SPACER	2	J10001-UP
22		01010-81290	BOLT	2	J10001-UP
23		01643-31232	WASHER	2	J10001-UP
24		21T-98-31311	HOSE A	7	J10001-UP
25		02896-61018	O-RING	14	J10001-UP
26		07297-02016	HOSE	1	J10001-UP
27		07000-B2060	O-RING	2	J10001-UP
28		07371-32076	FLANGE	4	J10001-UP
29		07372-21240	BOLT	8	J10001-UP
30		01643-51232	WASHER	8	J10001-UP

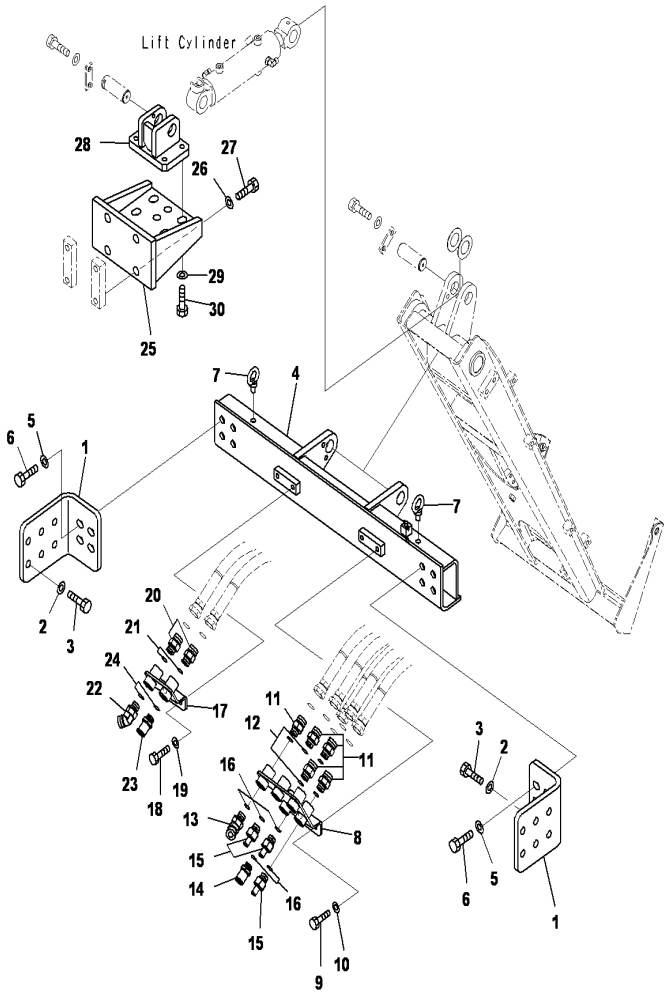

SERVICE CENTER,FRAME (1/2)

INDEX	CD	PART NO.	DESCRIPTION	QTY	SERIAL NO.
1		21T-98-31231	BRACKET	2	J10001-UP
2		418-18-31160	WASHER	12	J10001-UP
3		01010-81645	BOLT	12	J10001-UP
4		21T-98-31221	BRACKET	1	J10001-UP
5		418-18-31160	WASHER	8	J10001-UP
6		01010-81645	BOLT	8	J10001-UP
7		04530-11222	BOLT	2	J10001-UP
8		21T-98-31281	BRACKET	1	J10001-UP
9		01010-81225	BOLT	2	J10001-UP
10		01643-31232	WASHER	2	J10001-UP
11		02781-00628	UNION	5	J10001-UP
12		07002-62434	O-RING	5	J10001-UP
13		02783-10628	UNION	1	J10001-UP
14		21T-01-31471	JOINT	1	J10001-UP
15		21T-98-31352	JOINT	3	J10001-UP
16		07002-62434	O-RING	5	J10001-UP
17		21T-98-31271	BRACKET	1	J10001-UP
18		01010-81225	BOLT	2	J10001-UP
19		01643-31232	WASHER	2	J10001-UP
20		02781-00628	UNION	2	J10001-UP
21		07002-62434	O-RING	2	J10001-UP
22		02783-10628	UNION	1	J10001-UP
23		21T-01-31471	JOINT	1	J10001-UP
24		07002-62434	O-RING	2	J10001-UP
25		21T-98-31260	BRACKET	1	J10001-UP
26		418-18-31160	WASHER	4	J10001-UP
27		01010-81645	BOLT	4	J10001-UP
28		21T-98-31250	BRACKET	1	J10001-UP
29		418-18-31160	WASHER	6	J10001-UP
30		01010-81645	BOLT	6	J10001-UP

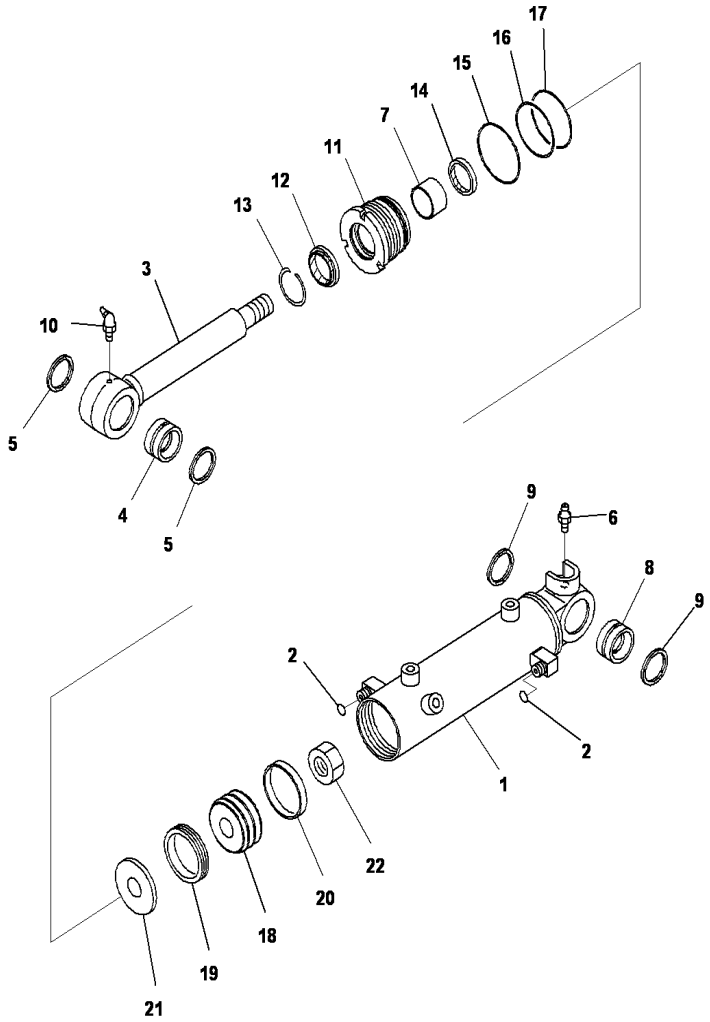

PC2000-8 S/N J10001-UP

SERVICE CENTER,SERVICE CENTER,GREASE SHUT OFF VALVE

INDEX	CD	PART NO.	DESCRIPTION	QTY	SERIAL NO.
		707-00-0Y770	BLADE	1	J10001-UP
1		707-11-65690	.CYLINDER	1	J10001-UP
2		02896-11008	.O-RING	2	J10001-UP
3		721-58-35570	.ROD,PISTON	1	J10001-UP
4		20P-71-81130	.BUSHING	1	J10001-UP
5		07145-00035	.DUST SEAL	2	J10001-UP
6		07020-00000	.FITTING	1	J10001-UP
8		20P-71-81130	.BUSHING	1	J10001-UP
9		07145-00035	.DUST SEAL	2	J10001-UP
10		07020-00675	.FITTING	1	J10001-UP
7		071-77-03525	.BUSHING	1	J10001-UP
11		707-29-65831	.HEAD,CYL	1	J10001-UP
12		175-63-75190	.SEAL,DUST	1	J10001-UP
13		07179-12047	.RING	1	J10001-UP
14		707-51-35210	.PACKING,ROD	1	J10001-UP
15		07000-12065	.O-RING	1	J10001-UP
16		707-35-52660	.RING,BACK UP	1	J10001-UP
17		07000-12060	.O-RING	1	J10001-UP
18		707-36-65270	.PISTON	1	J10001-UP
19		707-44-65180	.RING,PISTON	1	J10001-UP
20		707-39-65190	.RING,WEAR	1	J10001-UP
21		707-40-65270	.RETAINER	1	J10001-UP
22		707-67-27020	.NUT	1	J10001-UP

Ref :W1114-01A3 Page :480080

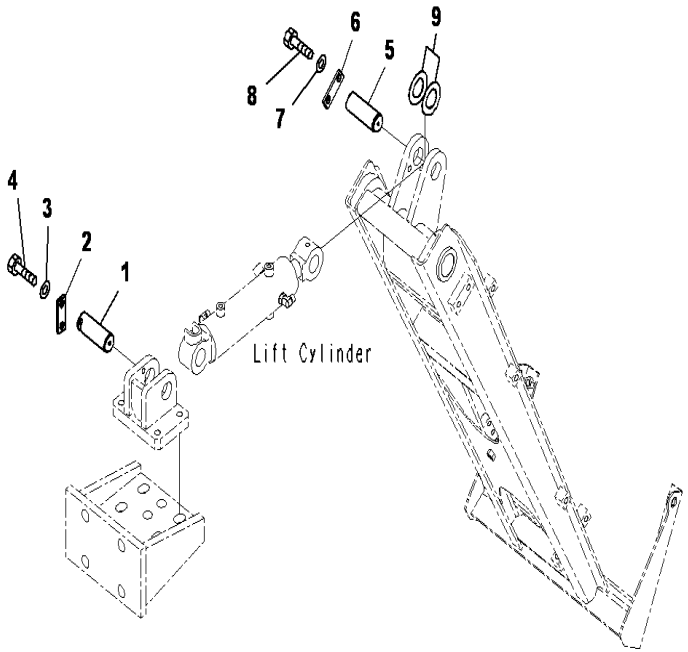

PC2000-8 S/N J10001-UP

SERVICE CENTER,FRAME (2/2)

INDEX	CD	PART NO.	DESCRIPTION	QTY	SERIAL NO.
1		22L-71-21120	PIN	1	J10001-UP
2		04082-00206	LOCK	1	J10001-UP
3		20Y-54-12670	WASHER	2	J10001-UP
4		01010-81225	BOLT	2	J10001-UP
5		22L-71-21120	PIN	1	J10001-UP
6		04082-00206	LOCK	1	J10001-UP
7		20Y-54-12670	WASHER	2	J10001-UP
8		01010-81225	BOLT	2	J10001-UP
9		20T-70-81720	SPACER	2	J10001-UP

Ref :W1114-01A4 Page :480090

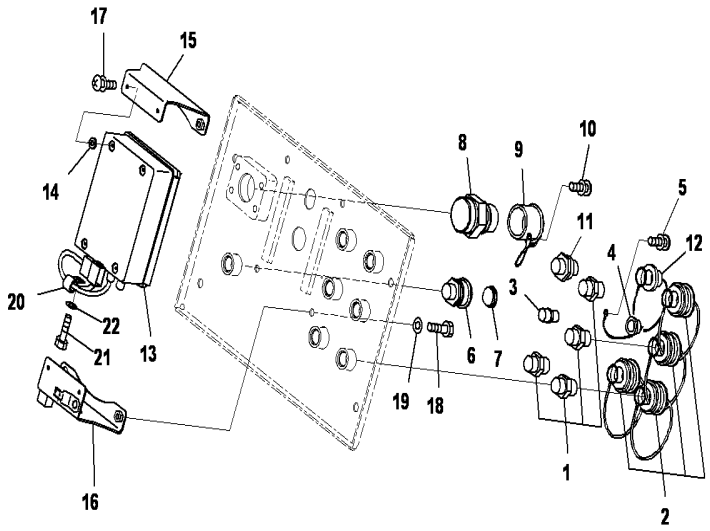

PC2000-8 S/N J10001-UP

SERVICE CENTER,SERVICE CENTER,GREASE SHUT OFF VALVE

INDEX	CD	PART NO.	DESCRIPTION	QTY	SERIAL NO.
1		42C-04-13440	RECEIVER	4	J10001-UP
2		42C-04-13450	CAP	4	J10001-UP
3		42C-03-12480	RECEIVER	1	J10001-UP
4		42C-03-12490	CAP	1	J10001-UP
5		01023-20408	SCREW	1	J10001-UP
6		21T-68-32410	RECEIVER	1	J10001-UP
7		21T-68-32420	CAP	1	J10001-UP
8		21T-04-31770	RECEIVER	1	J10001-UP
9		566-98-15300	CAP ASS'Y	1	J10001-UP
10		01023-20610	SCREW	1	J10001-UP
11		42C-60-15220	RECEIVER	1	J10001-UP
12		42C-60-15230	CAP	1	J10001-UP
13		21T-98-31430	CONTROLLER	1	J10001-UP
14		21T-98-31440	SPACER	4	J10001-UP
15		21T-98-31330	BRACKET	1	J10001-UP
16		21T-98-31340	BRACKET	1	J10001-UP
17		01023-10514	SCREW	4	J10001-UP
18		01010-D1025	BOLT	4	J10001-UP
19		01643-71032	WASHER	4	J10001-UP
20		04434-51612	CLIP	1	J10001-UP
21		01010-81220	BOLT	1	J10001-UP
22		01643-31232	WASHER	1	J10001-UP

Ref :W1114-01A5 Page :480100

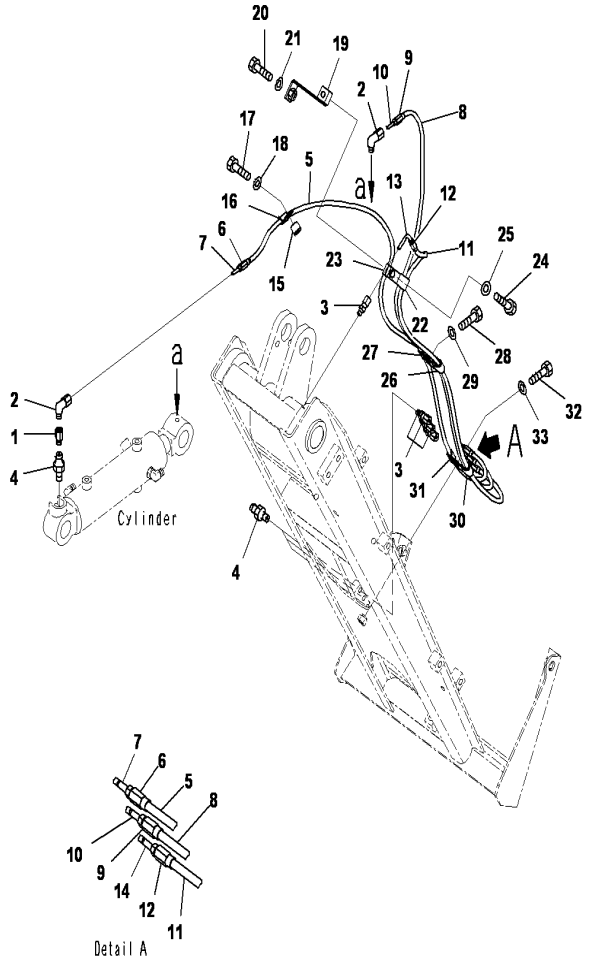

PC2000-8 S/N J10001-UP

SERVICE CENTER,LUBRICATION PIPING

INDEX	CD	PART NO.	DESCRIPTION	QTY	SERIAL NO.
1		566-52-12210	NIPPLE	1	J10001-UP
2		561-95-63290	ELBOW	2	J10001-UP
3		561-95-63310	CONNECTOR	4	J10001-UP
4		07020-00000	FITTING	3	J10001-UP
5		21T-68-33551	HOSE ASS'Y	1	J10001-UP
6		425-S95-2140	.SLEEVE	2	J10001-UP
7		425-S95-2160	.HOSE STUD	2	J10001-UP
8		21T-68-33541	HOSE ASS'Y	1	J10001-UP
9		425-S95-2140	.SLEEVE	2	J10001-UP
10		425-S95-2160	.HOSE STUD	2	J10001-UP
11		21T-68-33561	HOSE ASS'Y	1	J10001-UP
12		425-S95-2140	.SLEEVE	2	J10001-UP
13		425-S95-2150	.HOSE STUD 90	1	J10001-UP
14		425-S95-2160	.HOSE STUD	1	J10001-UP
15		6631-11-5630	SPACER	1	J10001-UP
16		04434-50812	CLIP	1	J10001-UP
17		01010-81035	BOLT	1	J10001-UP
18		01643-31032	WASHER	1	J10001-UP
19		21T-98-31370	BRACKET	1	J10001-UP
20		01010-81225	BOLT	1	J10001-UP
21		01643-31232	WASHER	1	J10001-UP
22		04435-51012	CLIP	1	J10001-UP
23		04434-50812	CLIP	1	J10001-UP
24		01010-81225	BOLT	1	J10001-UP
25		01643-31232	WASHER	1	J10001-UP
26		04435-51012	CLIP	1	J10001-UP
27		04434-50812	CLIP	1	J10001-UP
28		01010-81225	BOLT	1	J10001-UP
29		01643-31232	WASHER	1	J10001-UP
30		04435-51012	CLIP	1	J10001-UP
31		04434-50812	CLIP	1	J10001-UP
32		01010-81225	BOLT	1	J10001-UP
33		01643-31232	WASHER	1	J10001-UP

Ref :W1114-01A6 Page :480110

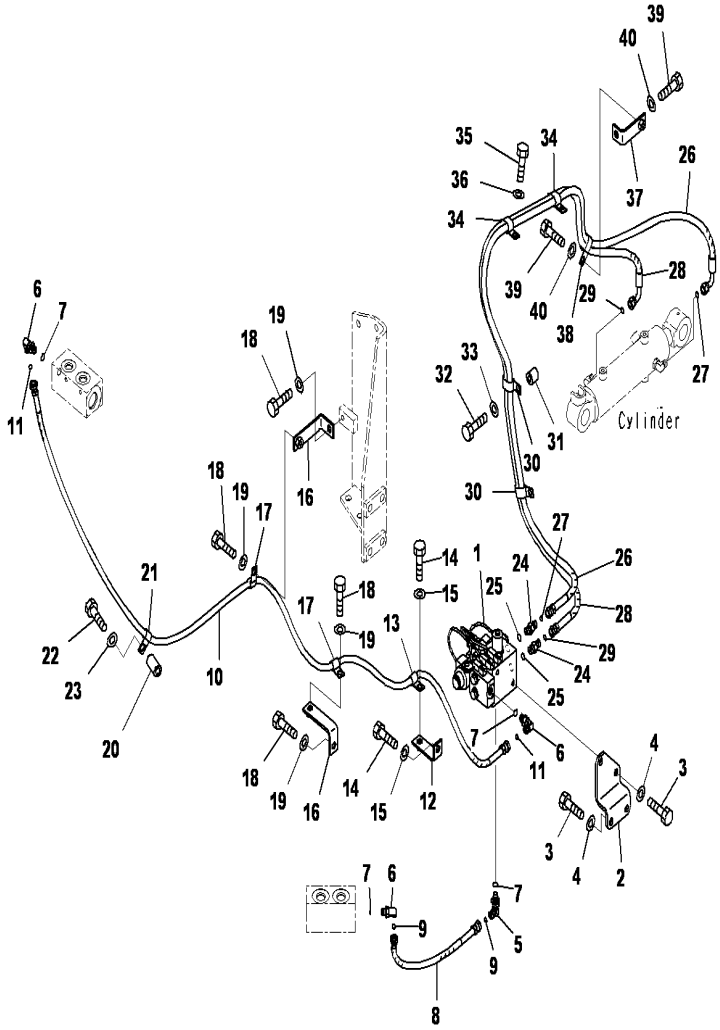

PC2000-8 S/N J10001-UP

SERVICE CENTER,HYDRAULIC PIPING

INDEX	CD	PART NO.	DESCRIPTION	QTY	SERIAL NO.
1		21T-64-34510	VALVE A	1	J10001-UP
2		21T-64-34560	PLATE	1	J10001-UP
3		01010-81225	BOLT	4	J10001-UP
4		01643-31232	WASHER	4	J10001-UP
5		21W-62-43960	ELBOW	1	J10001-UP
6		02782-10210	ELBOW	3	J10001-UP
7		07002-61423	O-RING	4	J10001-UP
8		02762-00205	HOSE	1	J10001-UP
9		02896-61008	O-RING	2	J10001-UP
10		02762-00222	HOSE	1	J10001-UP
11		02896-61008	O-RING	2	J10001-UP
12		203-04-62110	BRACKET	1	J10001-UP
13		04434-51212	CLIP	1	J10001-UP
14		01010-81225	BOLT	2	J10001-UP
15		01643-31232	WASHER	2	J10001-UP
16		207-62-62770	BRACKET	2	J10001-UP
17		04434-51212	CLIP	2	J10001-UP
18		01010-81225	BOLT	4	J10001-UP
19		01643-31232	WASHER	4	J10001-UP
20		205-03-71331	COLLAR	1	J10001-UP
21		04434-51212	CLIP	1	J10001-UP
22		01010-81265	BOLT	1	J10001-UP
23		01643-31232	WASHER	1	J10001-UP
24		02781-0021D	UNION	2	J10001-UP
25		07002-61423	O-RING	2	J10001-UP
26		02766-00223	HOSE	1	J10001-UP
27		02896-61008	O-RING	2	J10001-UP
28		02766-00221	HOSE	1	J10001-UP
29		02896-61008	O-RING	2	J10001-UP
30		04435-51412	CLIP	2	J10001-UP
31		195-33-11220	SPACER	2	J10001-UP
32		01010-81250	BOLT	2	J10001-UP
33		01643-31232	WASHER	2	J10001-UP
34		04435-51412	CLIP	2	J10001-UP
35		01010-81225	BOLT	2	J10001-UP
36		01643-31232	WASHER	2	J10001-UP
37		203-04-62110	BRACKET	1	J10001-UP
38		04435-51412	CLIP	1	J10001-UP
39		01010-81225	BOLT	2	J10001-UP
40		01643-31232	WASHER	2	J10001-UP

Ref :W1114-01A7 Page :480120

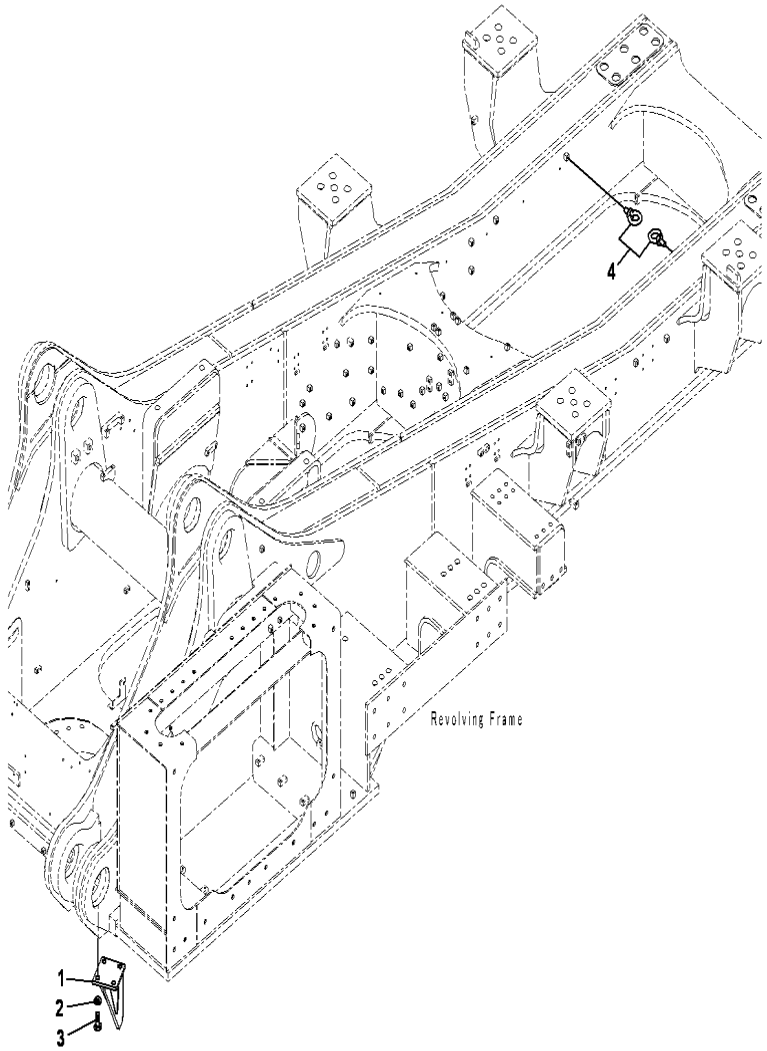

PC2000-8 S/N J10001-UP

SERVICE CENTER,GUARD MOUNT

INDEX	CD	PART NO.	DESCRIPTION	QTY	SERIAL NO.
1		21T-46-31161	BRACKET	1	J10001-UP
2		01643-32060	WASHER	4	J10001-UP
3		01010-82050	BOLT	4	J10001-UP
4		04530-11222	BOLT	2	J10001-UP

Ref :W1114-01A8 Page :480130

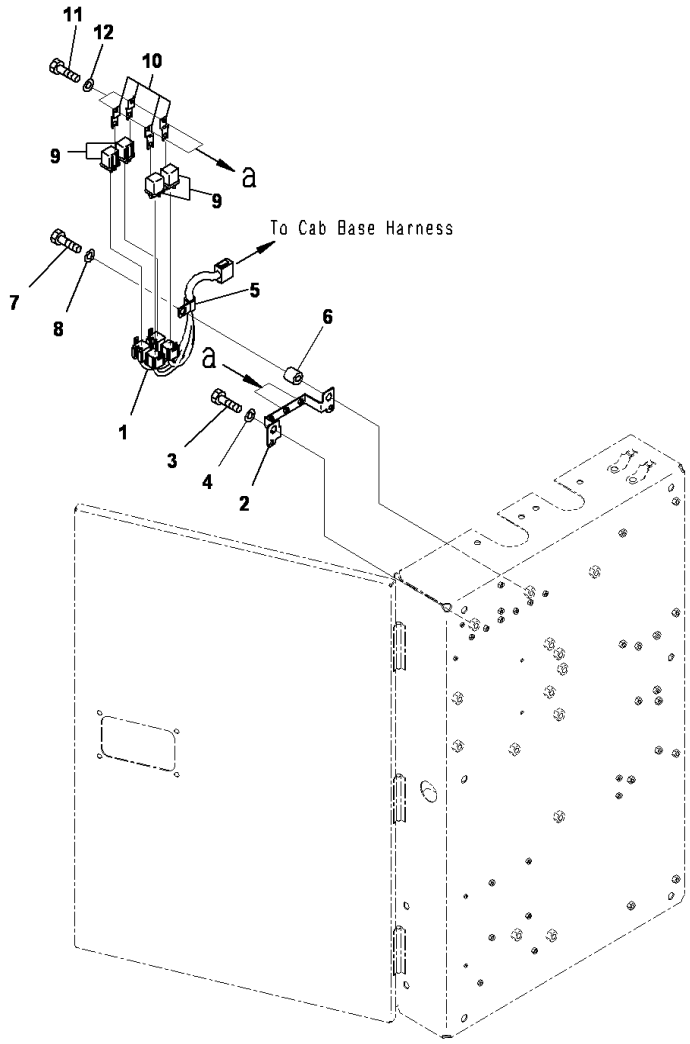

PC2000-8 S/N J10001-UP

SERVICE CENTER,HARNESS

INDEX	CD	PART NO.	DESCRIPTION	QTY	SERIAL NO.
1		21T-06-34921	WIRING HARNESS.....	1	J10001-UP
2		21T-06-34791	BRACKET.....	1	J10001-UP
3		01010-81225	BOLT.....	1	J10001-UP
4		01643-31232	WASHER.....	1	J10001-UP
5		04434-51412	CLIP.....	1	J10001-UP
6		195-33-11220	SPACER.....	1	J10001-UP
7		01010-81245	BOLT.....	1	J10001-UP
8		01643-31232	WASHER.....	1	J10001-UP
9		569-06-61960	RELAY.....	4	J10001-UP
10		287-06-16420	BRACKET.....	4	J10001-UP
11		01010-80612	BOLT.....	2	J10001-UP
12		01643-30623	WASHER.....	2	J10001-UP

Ref :W1114-01A9 Page :480140

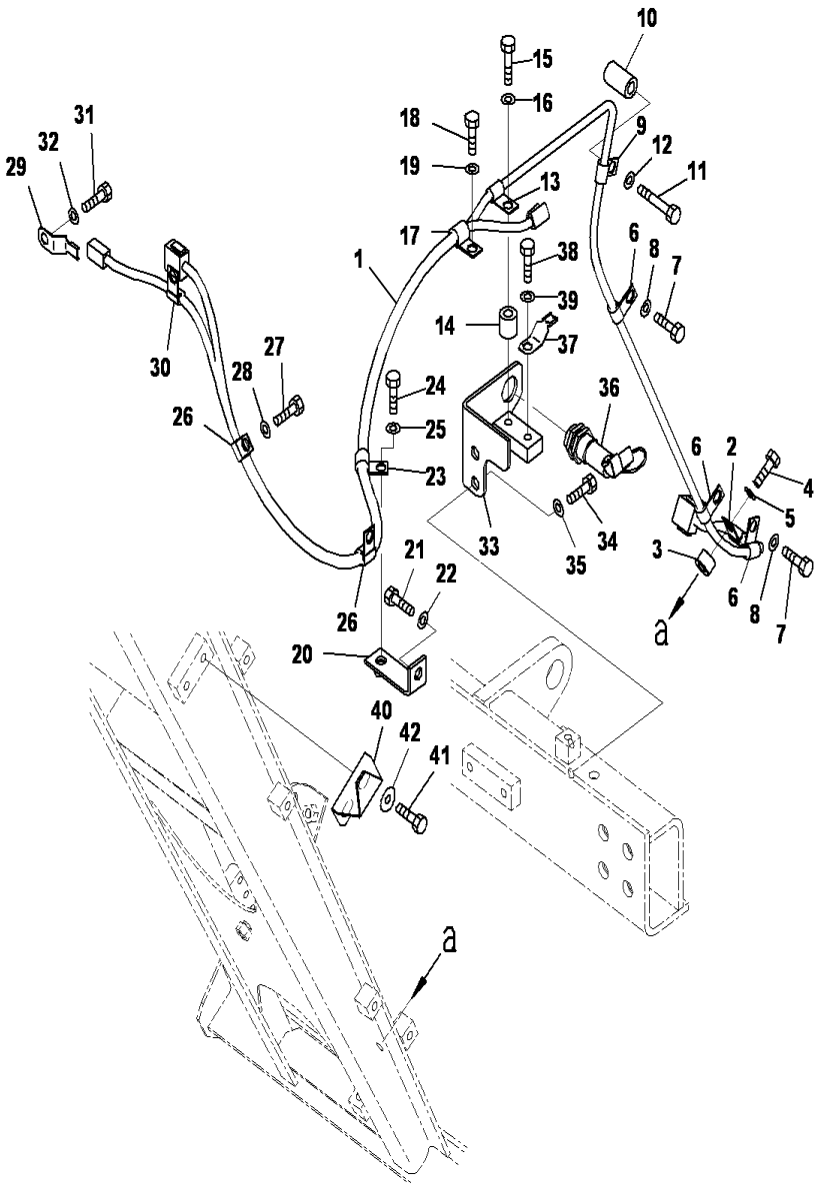

SERVICE CENTER,FRAME PIPING

INDEX	CD	PART NO.	DESCRIPTION	QTY	SERIAL NO.
1		21T0634961	WIRING HARNESS	1	J10001-UP
2		04434-51012	CLIP	1	J10001-UP
3		1540376490	SPACER	1	J10001-UP
4		01010-81235	BOLT	1	J10001-UP
5		01643-31232	WASHER	1	J10001-UP
6		04434-51012	CLIP	3	J10001-UP
7		01010-81220	BOLT	3	J10001-UP
8		01643-31232	WASHER	3	J10001-UP
9		04434-51012	CLIP	1	J10001-UP
10		205-03-71331	COLLAR	1	J10001-UP
11		01010-81275	BOLT	1	J10001-UP
12		01643-31232	WASHER	1	J10001-UP
13		04434-51012	CLIP	1	J10001-UP
14		195-33-11220	SPACER	1	J10001-UP
15		01010-81245	BOLT	1	J10001-UP
16		01643-31232	WASHER	1	J10001-UP
17		04434-51412	CLIP	1	J10001-UP
18		01010-81220	BOLT	1	J10001-UP
19		01643-31232	WASHER	1	J10001-UP
20		203-04-62110	BRACKET	1	J10001-UP
21		01010-81225	BOLT	1	J10001-UP
22		01643-31232	WASHER	1	J10001-UP
23		04434-51412	CLIP	1	J10001-UP
24		01010-81225	BOLT	1	J10001-UP
25		01643-31232	WASHER	1	J10001-UP
26		04434-51412	CLIP	2	J10001-UP
27		01010-81220	BOLT	2	J10001-UP
28		01643-31232	WASHER	2	J10001-UP
29		08193-20012	CLIP	1	J10001-UP
30		04434-51012	CLIP	1	J10001-UP
31		01010-81225	BOLT	1	J10001-UP
32		01643-31232	WASHER	1	J10001-UP
33		21T-06-35270	BRACKET	1	J10001-UP
34		01010-81225	BOLT	2	J10001-UP
35		01643-31232	WASHER	2	J10001-UP
36		56B-06-15610	SWITCH	1	J10001-UP
37		08193-20012	CLIP	1	J10001-UP
38		01010-81220	BOLT	1	J10001-UP
39		01643-31232	WASHER	1	J10001-UP
40		21T-06-35260	BRACKET	1	J10001-UP
41		01010-81225	BOLT	2	J10001-UP
42		175-54-34170	WASHER	2	J10001-UP

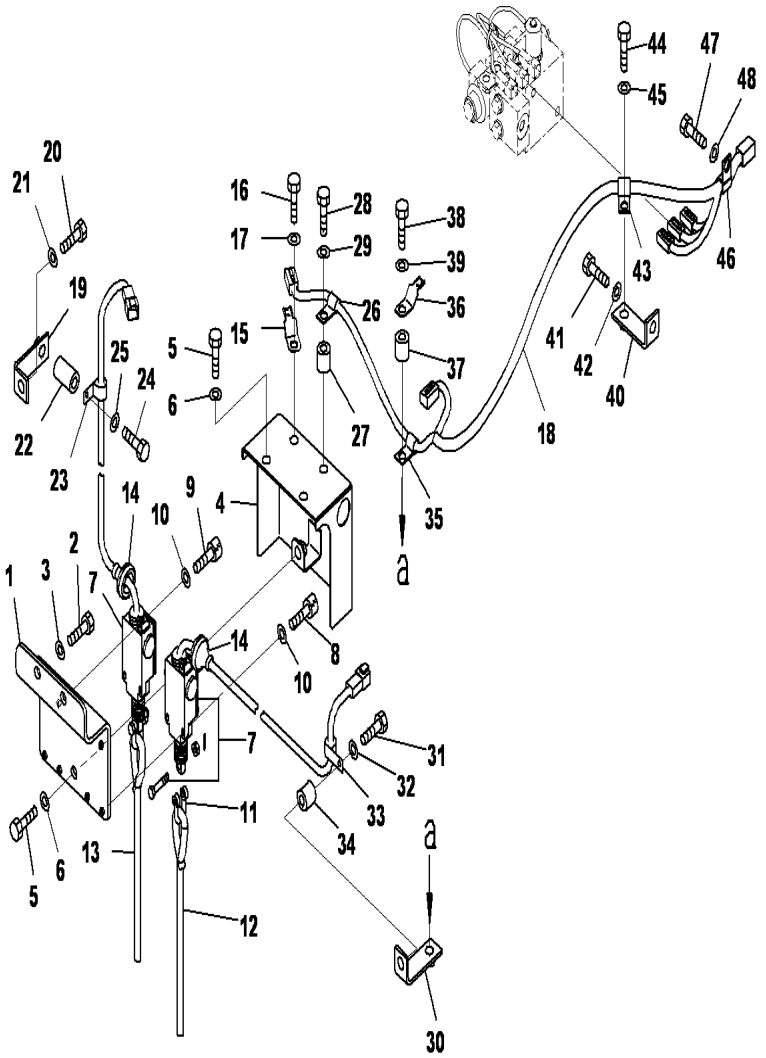

SERVICE CENTER,SWITCH VALVE

INDEX	CD	PART NO.	DESCRIPTION	QTY	SERIAL NO.
1		21T-06-31180	BRACKET	1	J10001-UP
2		01010-81225	BOLT	2	J10001-UP
3		01643-31232	WASHER	2	J10001-UP
4		21T-06-35321	COVER	1	J10001-UP
5		01010-81225	BOLT	3	J10001-UP
6		01643-31232	WASHER	3	J10001-UP
7		21T-06-34722	SWITCH A	2	J10001-UP
8		01252-70525	BOLT	4	J10001-UP
9		01252-70520	BOLT	2	J10001-UP
10		01601-20513	WASHER	6	J10001-UP
11		21T-06-31170	SHACKLE	2	J10001-UP
12		21T-06-31150	ROPE(GREEN)	1	J10001-UP
13		21T-06-31160	ROPE(YELLOW)	1	J10001-UP
14		21T-54-71980	GROMMET	2	J10001-UP
15		08193-20012	CLIP	1	J10001-UP
16		01010-81220	BOLT	1	J10001-UP
17		01643-31232	WASHER	1	J10001-UP
18		21T-06-34951	WIRING HARNESS	1	J10001-UP
19		203-04-62110	BRACKET	1	J10001-UP
20		01010-81225	BOLT	1	J10001-UP
21		01643-31232	WASHER	1	J10001-UP
22		205-03-71331	COLLAR	1	J10001-UP
23		04434-51412	CLIP	1	J10001-UP
24		01010-81270	BOLT	1	J10001-UP
25		01643-31232	WASHER	1	J10001-UP
26		04434-51012	CLIP	1	J10001-UP
27		195-33-11220	SPACER	1	J10001-UP
28		01010-81245	BOLT	1	J10001-UP
29		01643-31232	WASHER	1	J10001-UP
30		203-04-62110	BRACKET	1	J10001-UP
31		01010-81250	BOLT	1	J10001-UP
32		01643-31232	WASHER	1	J10001-UP
33		04434-51412	CLIP	1	J10001-UP
34		195-33-11220	SPACER	1	J10001-UP
35		04434-51012	CLIP	1	J10001-UP
36		08193-20012	CLIP	1	J10001-UP
37		195-33-11220	SPACER	1	J10001-UP
38		01010-81250	BOLT	1	J10001-UP
39		01643-31232	WASHER	1	J10001-UP
40		203-04-62110	BRACKET	1	J10001-UP
41		01010-81225	BOLT	1	J10001-UP
42		01643-31232	WASHER	1	J10001-UP
43		04434-51412	CLIP	1	J10001-UP
44		01010-81225	BOLT	1	J10001-UP
45		01643-31232	WASHER	1	J10001-UP

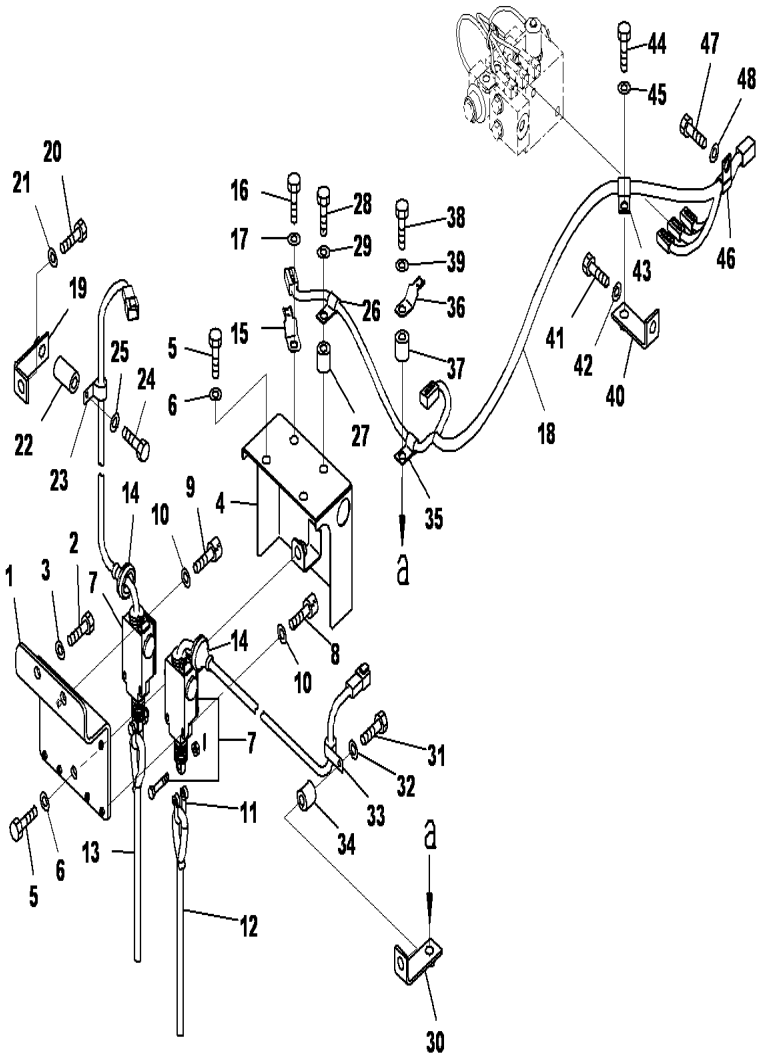

SERVICE CENTER,SWITCH VALVE

INDEX	CD	PART NO.	DESCRIPTION	QTY	SERIAL NO.
46		04434-51412	CLIP	1	J10001-UP
47		01010-81220	BOLT	1	J10001-UP
48		01643-31232	WASHER	1	J10001-UP

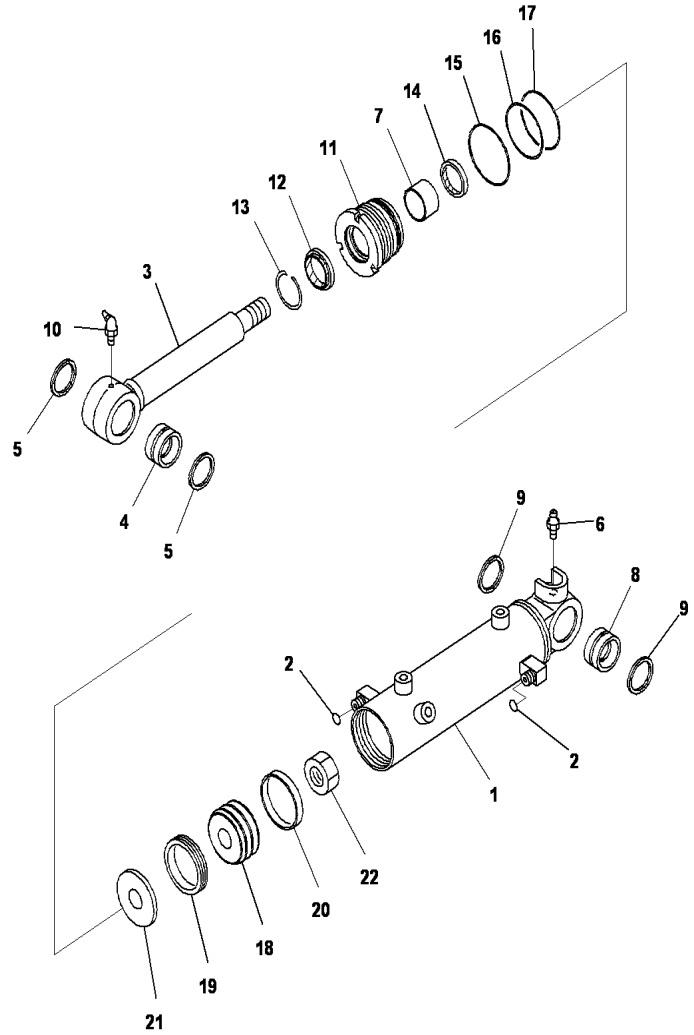

PC2000-8 S/N J10001-UP

SERVICE CENTER,SERVICE CENTER,SERVICE BOARD

INDEX	CD	PART NO.	DESCRIPTION	QTY	SERIAL NO.
		707-00-0Y770	BLADE	1	J10001-UP
1		707-11-65690	.CYLINDER	1	J10001-UP
2		02896-11008	.O-RING	2	J10001-UP
3		721-58-35570	.ROD,PISTON	1	J10001-UP
4		20P-71-81130	.BUSHING	1	J10001-UP
5		07145-00035	.DUST SEAL	2	J10001-UP
6		07020-00000	.FITTING	1	J10001-UP
7		07177-03525	.BUSHING	1	J10001-UP
8		20P-71-81130	.BUSHING	1	J10001-UP
9		07145-00035	.DUST SEAL	2	J10001-UP
10		07020-00675	.FITTING	1	J10001-UP
11		707-29-65831	.HEAD,CYL	1	J10001-UP
12		175-63-75190	.SEAL,DUST	1	J10001-UP
13		07179-12047	.RING	1	J10001-UP
14		707-51-35210	.PACKING,ROD	1	J10001-UP
15		07000-12065	.O-RING	1	J10001-UP
16		707-35-52660	.RING,BACK UP	1	J10001-UP
17		07000-12060	.O-RING	1	J10001-UP
18		707-36-65270	.PISTON	1	J10001-UP
19		707-44-65180	.RING,PISTON	1	J10001-UP
20		707-39-65190	.RING,WEAR	1	J10001-UP
21		707-40-65270	.RETAINER	1	J10001-UP
22		707-67-27020	.NUT	1	J10001-UP

Ref :W1114-02A3 Page :480170

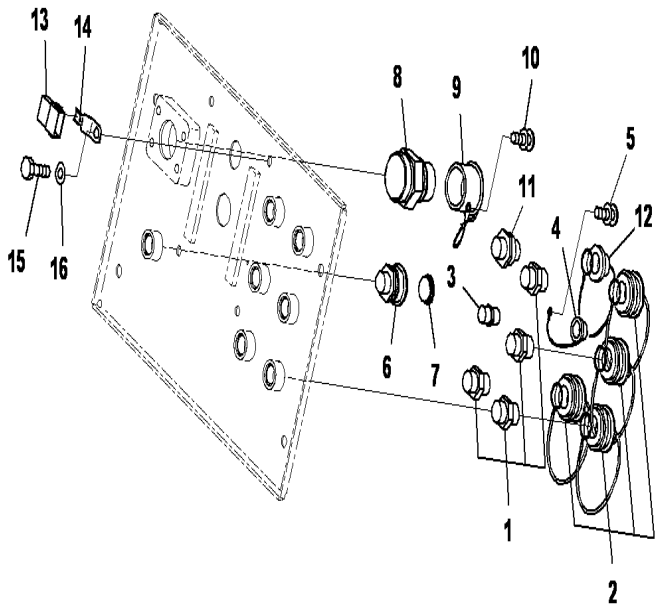

PC2000-8 S/N J10001-UP

SERVICE CENTER,SERVICE CENTER,CONNECTING PARTS

INDEX	CD	PART NO.	DESCRIPTION	QTY	SERIAL NO.
1		42C-04-13440	RECIEVER	4	J10001-UP
2		42C-04-13450	CAP	4	J10001-UP
3		42C-03-12480	RECIEVER	1	J10001-UP
4		42C-03-12490	CAP	1	J10001-UP
5		01023-20408	SCREW	1	J10001-UP
6		21T-68-32410	RECEIVER	1	J10001-UP
7		21T-68-32420	CAP	1	J10001-UP
8		21T-04-31770	RECEIVER	1	J10001-UP
9		566-98-15300	CAP ASS'Y	1	J10001-UP
10		01023-20610	SCREW	1	J10001-UP
11		42C-60-15220	RECIEVER	1	J10001-UP
12		42C-60-15230	CAP	1	J10001-UP
13		21T-06-31840	CONNECTOR	1	J10001-UP
14		08193-20012	CLIP	1	J10001-UP
15		01010-81225	BOLT	1	J10001-UP
16		01643-31232	WASHER	1	J10001-UP

Ref :W1114-02A5 Page :480180

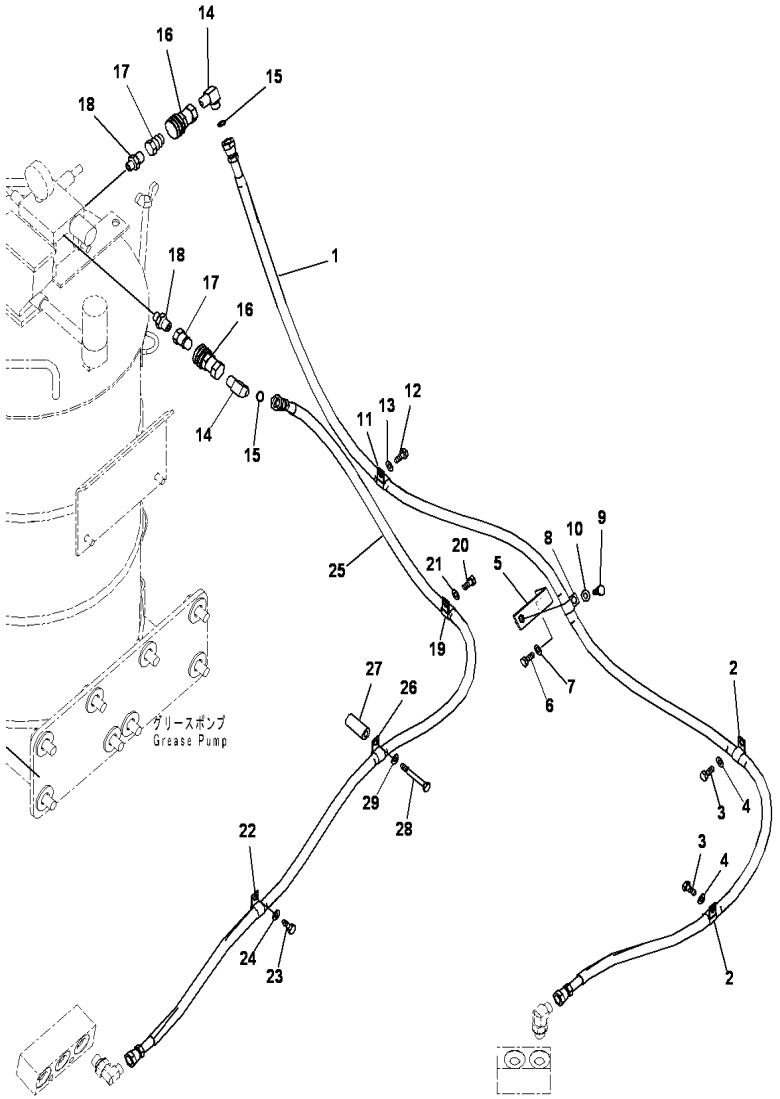

PC2000-8 S/N J10001-UP

GREASE PUMP,AUTO GREASING SYSTEM,HYDRAULIC MOTOR PIPING

INDEX	CD	PART NO.	DESCRIPTION	QTY	SERIAL NO.
1		02762-00429	HOSE	1	J10001-UP
2		04434-51912	CLIP	2	J10001-UP
3		01010-81220	BOLT	2	J10001-UP
4		01643-31232	WASHER	2	J10001-UP
5		207-62-62770	BRACKET	1	J10001-UP
6		01010-81225	BOLT	1	J10001-UP
7		01643-31232	WASHER	1	J10001-UP
8		04434-51912	CLIP	1	J10001-UP
9		01010-81225	BOLT	1	J10001-UP
10		01643-31232	WASHER	1	J10001-UP
11		04434-51912	CLIP	1	J10001-UP
12		01010-81225	BOLT	1	J10001-UP
13		01643-31232	WASHER	1	J10001-UP
14		21N-64-36520	ELBOW	2	J10001-UP
15		02896-61012	O-RING	2	J10001-UP
16		21T-68-31380	SOCKET	2	J10001-UP
17		21T-68-31390	PLUG	2	J10001-UP
18		21T-68-31450	NIPPLE	2	J10001-UP
19		04434-51912	CLIP	1	J10001-UP
20		01010-81225	BOLT	1	J10001-UP
21		01643-31232	WASHER	1	J10001-UP
22		04434-51912	CLIP	1	J10001-UP
23		01010-81225	BOLT	1	J10001-UP
24		01643-31232	WASHER	1	J10001-UP
25		02762-00421	HOSE	1	J10001-UP
26		04434-51912	CLIP	1	J10001-UP
27		203-62-44510	SPACER	1	J10001-UP
28		01010-81280	BOLT	1	J10001-UP
29		01643-31232	WASHER	1	J10001-UP

Ref :W1117-02A1 Page :480190

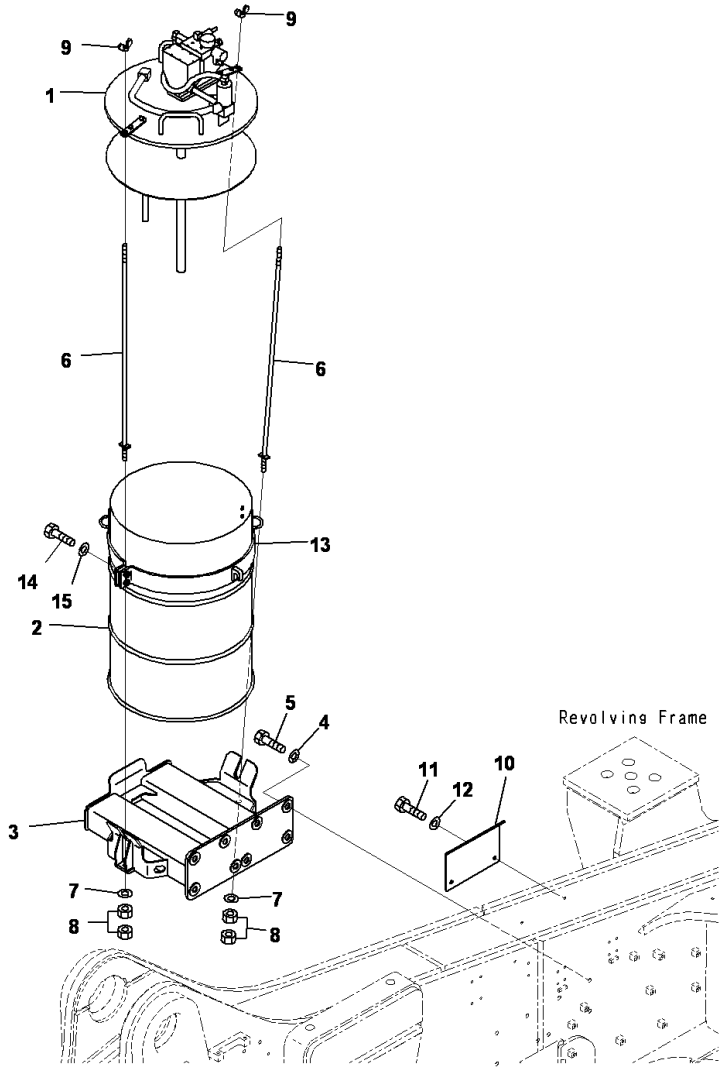

PC2000-8 S/N J10001-UP

GREASE PUMP,AUTO GREASING SYSTEM,PUMP

INDEX	CD	PART NO.	DESCRIPTION	QTY	SERIAL NO.
1		21T-68-31132	GREASE PUMP A	1	J10001-UP
2		21T-68-31180	GREASE	1	J10001-UP
3		21T-68-31231	BRACKET	1	J10001-UP
4		01643-32060	WASHER	8	J10001-UP
5		01010-82050	BOLT	8	J10001-UP
6		21T-68-31250	ROD	2	J10001-UP
7		01643-31645	WASHER	2	J10001-UP
8		01580-11613	NUT	4	J10001-UP
9		01541-21670	NUT	2	J10001-UP
10		21T-68-31240	PLATE	1	J10001-UP
11		01010-81230	BOLT	2	J10001-UP
12		01643-31232	WASHER	2	J10001-UP
13		21T-68-31260	BAND	2	J10001-UP
14		01010-81260	BOLT	4	J10001-UP
15		01643-31232	WASHER	4	J10001-UP

Ref :W1117-02A2A Page :480200

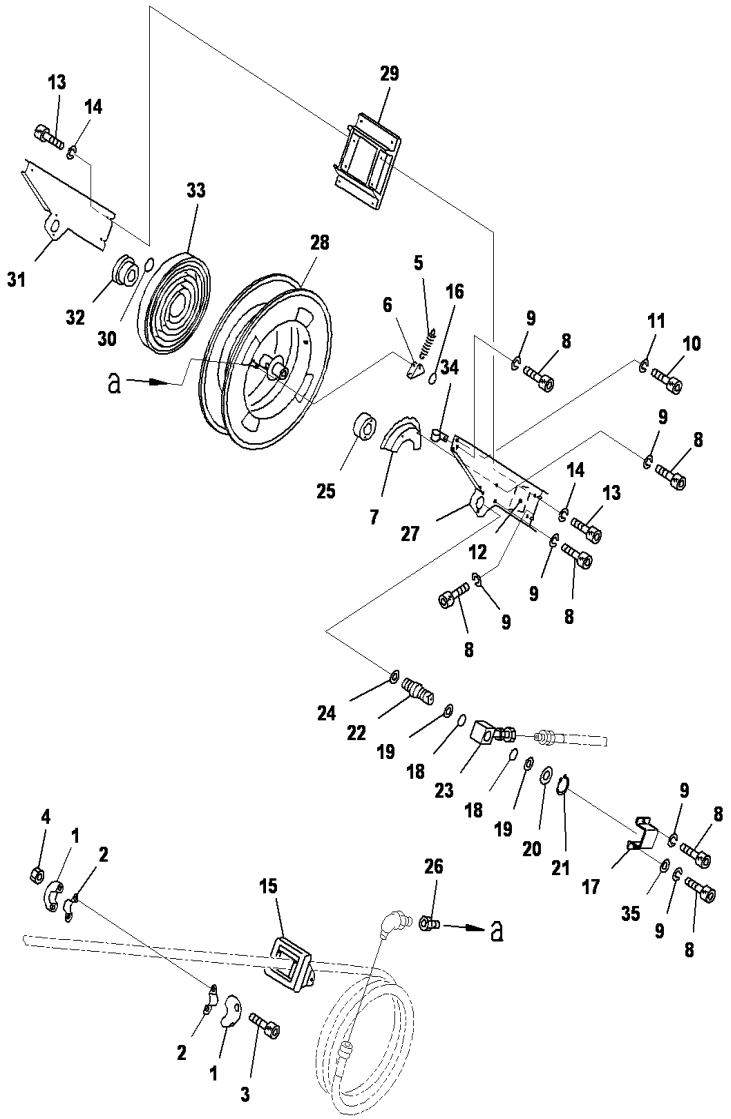

GREASE PUMP,AUTO GREASING SYSTEM,INNER PARTS,REEL

INDEX	CD	PART NO.	DESCRIPTION	QTY	SERIAL NO.
		21T-68-31190	Reel	1	J10001-UP
1		YU770199-4	.Stopper	2	J10001-UP
2		YU702062-4	.Band	2	J10001-UP
3		YU619155-4	.Bolt	2	J10001-UP
4		YU627012-1	.Nut	2	J10001-UP
5		YU707944-4	.Spring	1	J10001-UP
6		YU707942-4	.Stopper	1	J10001-UP
7		YU707954-3	.Cam	1	J10001-UP
8		YU619097-4	.Bolt	12	J10001-UP
9		YU631418-1	.Washer	12	J10001-UP
10		YU619073-4	.Bolt	2	J10001-UP
11		YU631417-1	.Washer	2	J10001-UP
12		YU790372-4	.Label	1	J10001-UP
13		YU619145-4	.Bolt	4	J10001-UP
14		YU631420-1	.Washer	4	J10001-UP
15		YU831174-3	.Plate	1	J10001-UP
16		YU640006-0	.O-ring	1	J10001-UP
17		YU708830-4	.Stopper	1	J10001-UP
18		YU640020-0	.O-ring	2	J10001-UP
19		YU643680-0	.Ring	2	J10001-UP
20		YU705893-4	.Washer	1	J10001-UP
21		YU630695-4	.Retainer	1	J10001-UP
22		YU708673-4	.Adapter	1	J10001-UP
23		YU705903-4	.Swivel Assembly	1	J10001-UP
24		YU770951-4	.Packing	1	J10001-UP
25		YU708832-4	.Bearing	1	J10001-UP
26		YU680109-4	.Adapter	1	J10001-UP
27		YU708833-3	.Arm	1	J10001-UP
28		YU708834-4	.Bracket	1	J10001-UP
29		YU790371-4	.Label	1	J10001-UP
30		YU708835-3	.Arm	1	J10001-UP
31		YU708671-4	.Bearing	1	J10001-UP
32		YU801941-4	.Spring	1	J10001-UP
33		YU683362-4	.Clip	1	J10001-UP
34		YU711679-4	.Washer	1	J10001-UP
35		YU831089-2	.Drum	1	J10001-UP

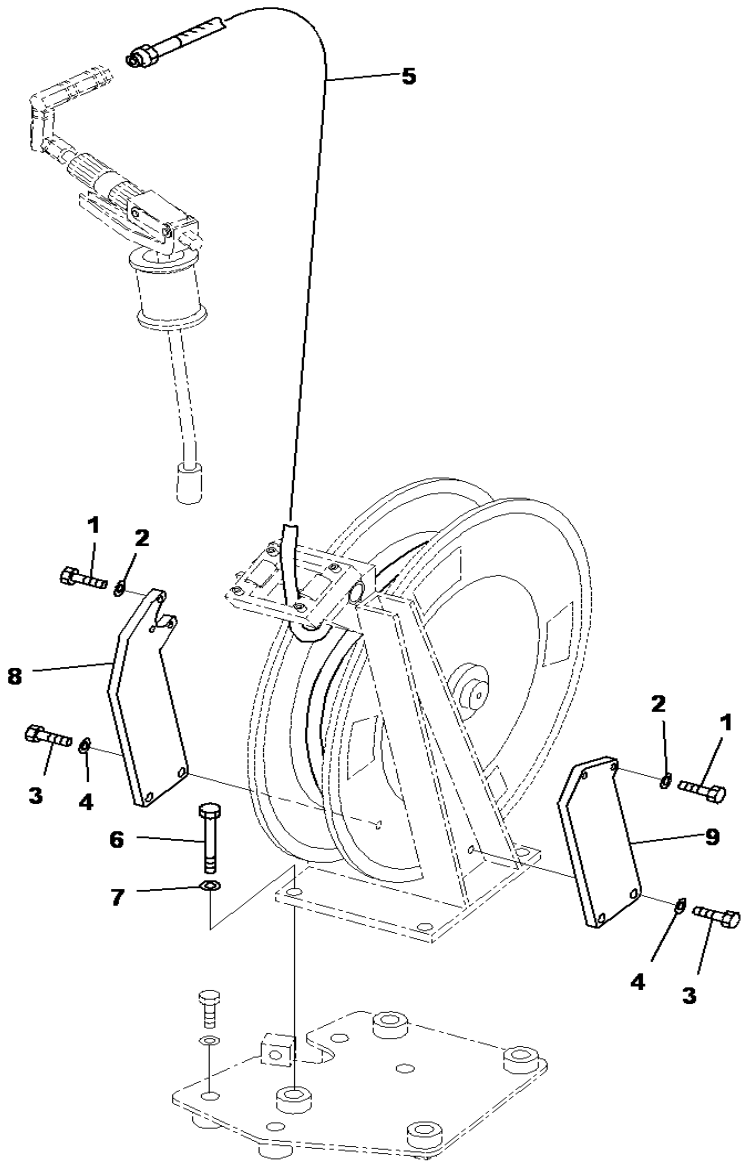

PC2000-8 S/N J10001-UP

GREASE PUMP,AUTO GREASING SYSTEM,REEL RELATED PARTS

INDEX	CD	PART NO.	DESCRIPTION	QTY	SERIAL NO.
1		01010-80620	BOLT	5	J10001-UP
2		01643-30623	WASHER	5	J10001-UP
3		01010-80825	BOLT	4	J10001-UP
4		01643-30823	WASHER	4	J10001-UP
5		21T-68-72450	HOSE	1	J10001-UP
6		01010-81230	BOLT	4	J10001-UP
7		01643-31232	WASHER	4	J10001-UP
8		21T-68-32380	PLATE	1	J10001-UP
9		21T-68-32390	PLATE	1	J10001-UP

Ref :W1117-02A4 Page :480220

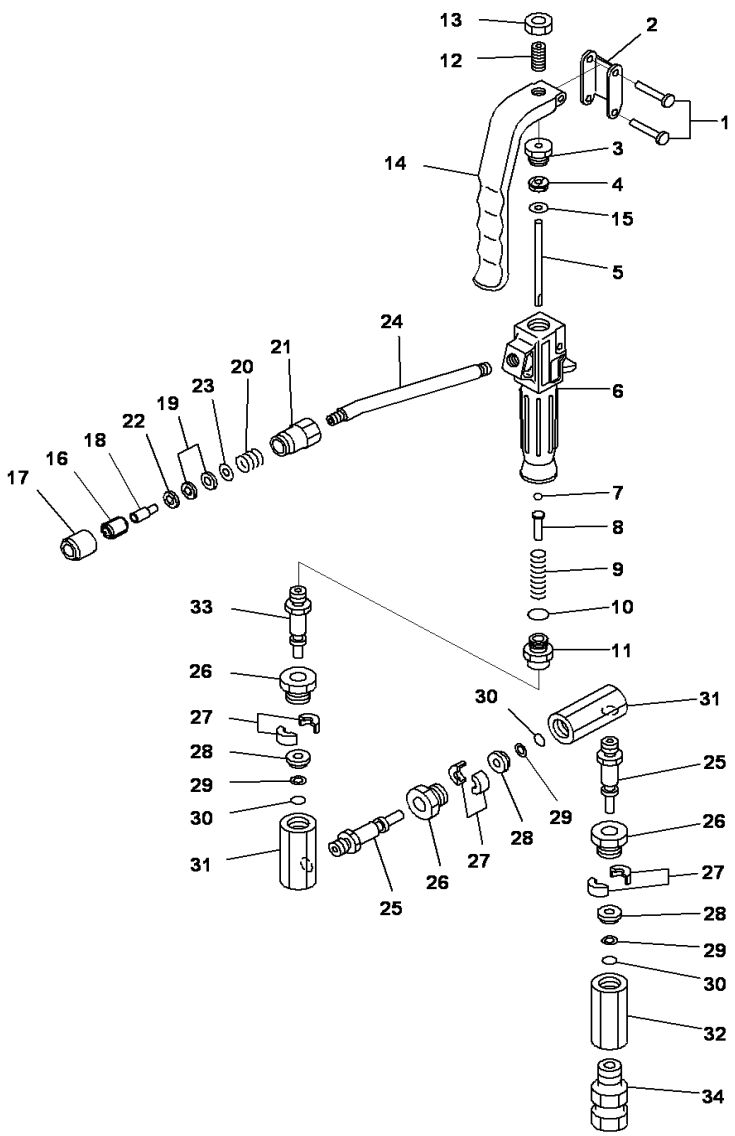

GREASE PUMP,AUTO GREASING SYSTEM,INNER PARTS,GREASE GUN

INDEX	CD	PART NO.	DESCRIPTION	QTY	SERIAL NO.
		209-68-11230	Grease Gun Assembly.....	1	J10001-UP
		YU802732	.Grease Gun Assembly.....	1	J10001-UP
1		YU683201	..Rivet.....	2	J10001-UP
2		YU711351	..Link.....	1	J10001-UP
3		YU711444	..Nut.....	1	J10001-UP
4		YU772160	..Packing.....	2	J10001-UP
5		YU711357	..Rod.....	1	J10001-UP
6		YU711352	..Grease Gun.....	1	J10001-UP
7		YU630314	..Ball.....	1	J10001-UP
8		YU711445	..Holder.....	1	J10001-UP
9		YU711446	..Spring.....	1	J10001-UP
10		YU640011	..O-ring.....	1	J10001-UP
11		YU710971	..Union.....	1	J10001-UP
12		YU711750	..Bolt.....	1	J10001-UP
13		YU627641	..Nut.....	1	J10001-UP
14		YU711354	..Lever.....	1	J10001-UP
15		YU713638	..Plate.....	1	J10001-UP
		YU800702	.Nozzle Assembly.....	1	J10001-UP
		YU800573	..Chuck Assembly.....	1	J10001-UP
16		YU702450	...Tooth.....	3	J10001-UP
17		YU702449	...Cover.....	1	J10001-UP
18		YU702451	...Nozzle.....	1	J10001-UP
19		YU770263	...Packing.....	2	J10001-UP
20		YU702453	...Spring.....	1	J10001-UP
21		YU702468	...Body.....	1	J10001-UP
22		YU702452	...Washer.....	1	J10001-UP
23		YU702454	...Washer.....	1	J10001-UP
24		YU703344	..Nozzle.....	1	J10001-UP
		YU802910	.Joint.....	1	J10001-UP
25		YU711732	..Nipple.....	2	J10001-UP
26		YU711731	..Nut.....	3	J10001-UP
27		YU580300	..Spacer.....	3	J10001-UP
28		YU711730	..Retainer.....	3	J10001-UP
29		YU682988	..Ring.....	3	J10001-UP
30		YU640003	..O-ring.....	3	J10001-UP
31		YU711729	..Housing.....	2	J10001-UP
32		YU711728	..Housing.....	1	J10001-UP
33		YU712212	..Nipple.....	1	J10001-UP
34		209-68-51220	.Adapter.....	1	J10001-UP

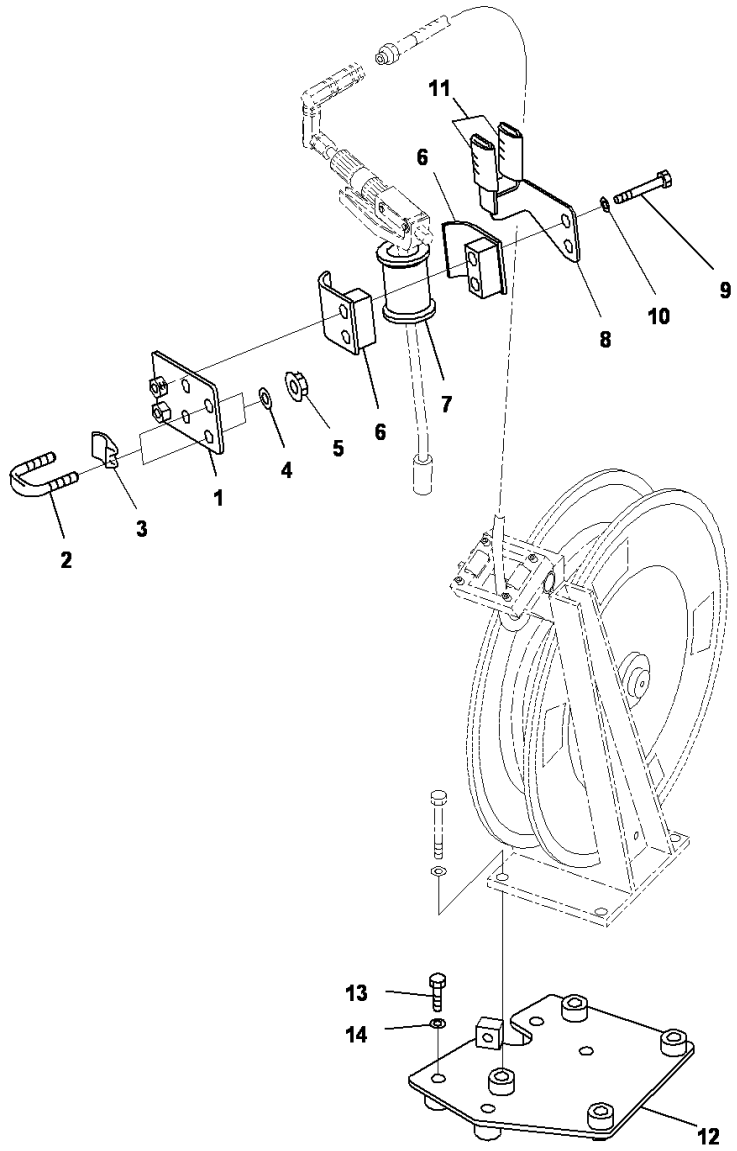

PC2000-8 S/N J10001-UP

GREASE PUMP,AUTO GREASING SYSTEM,GREASE GUN,RELATED PARTS

INDEX	CD	PART NO.	DESCRIPTION	QTY	SERIAL NO.
1		21T-68-31371	BRACKET	1	J10001-UP
2		07283-33442	CLIP	2	J10001-UP
3		07283-53444	CLIP	2	J10001-UP
4		01643-31032	WASHER	4	J10001-UP
5		01597-01009	NUT	4	J10001-UP
6		07094-11024	CLAMP	2	J10001-UP
7		07095-01035	CUSHION	1	J10001-UP
8		21T-68-31361	BRACKET	1	J10001-UP
9		01010-81280	BOLT	2	J10001-UP
10		01643-31232	WASHER	2	J10001-UP
11		07286-02605	HOSE	2	J10001-UP
12		21T-68-31211	BRACKET	1	J10001-UP
13		01010-81255	BOLT	4	J10001-UP
14		01643-31232	WASHER	4	J10001-UP

Ref :W1117-02A6 Page :480240

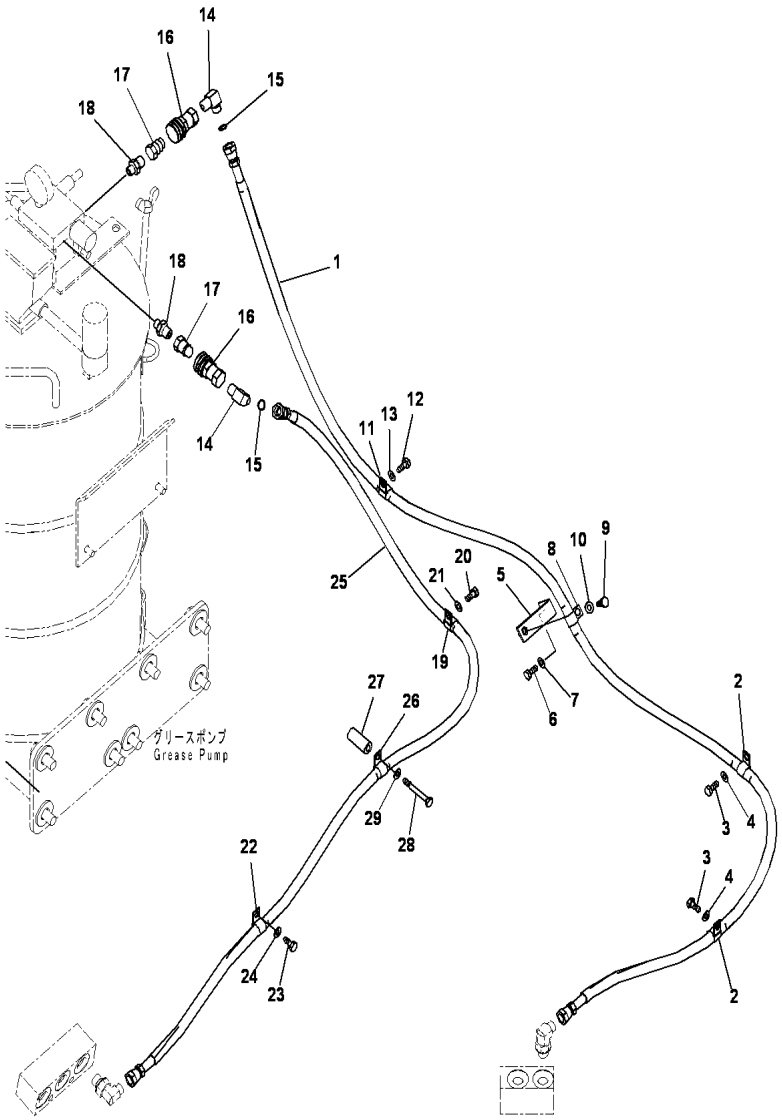

PC2000-8 S/N J10001-UP

GREASE PUMP,HYDRAULIC PIPING

INDEX	CD	PART NO.	DESCRIPTION	QTY	SERIAL NO.
1		02762-00429	HOSE	1	J10001-UP
2		04434-51912	CLIP	2	J10001-UP
3		01010-81220	BOLT	2	J10001-UP
4		01643-31232	WASHER	2	J10001-UP
5		207-62-62770	BRACKET	1	J10001-UP
6		01010-81225	BOLT	1	J10001-UP
7		01643-31232	WASHER	1	J10001-UP
8		04434-51912	CLIP	1	J10001-UP
9		01010-81225	BOLT	1	J10001-UP
10		01643-31232	WASHER	1	J10001-UP
11		04434-51912	CLIP	1	J10001-UP
12		01010-81225	BOLT	1	J10001-UP
13		01643-31232	WASHER	1	J10001-UP
14		21N-64-36520	ELBOW	2	J10001-UP
15		02896-61012	O-RING	2	J10001-UP
16		21T-68-31380	SOCKET	2	J10001-UP
17		21T-68-31390	PLUG	2	J10001-UP
18		21T-68-31450	NIPPLE	2	J10001-UP
19		04434-51912	CLIP	1	J10001-UP
20		01010-81225	BOLT	1	J10001-UP
21		01643-31232	WASHER	1	J10001-UP
22		04434-51912	CLIP	1	J10001-UP
23		01010-81225	BOLT	1	J10001-UP
24		01643-31232	WASHER	1	J10001-UP
25		0276200421	HOSE	1	J10001-UP
26		04434-51912	CLIP	1	J10001-UP
27		203-62-44510	SPACER	1	J10001-UP
28		01010-81280	BOLT	1	J10001-UP
29		01643-31232	WASHER	1	J10001-UP

Ref :W1117-04A1 Page :480250

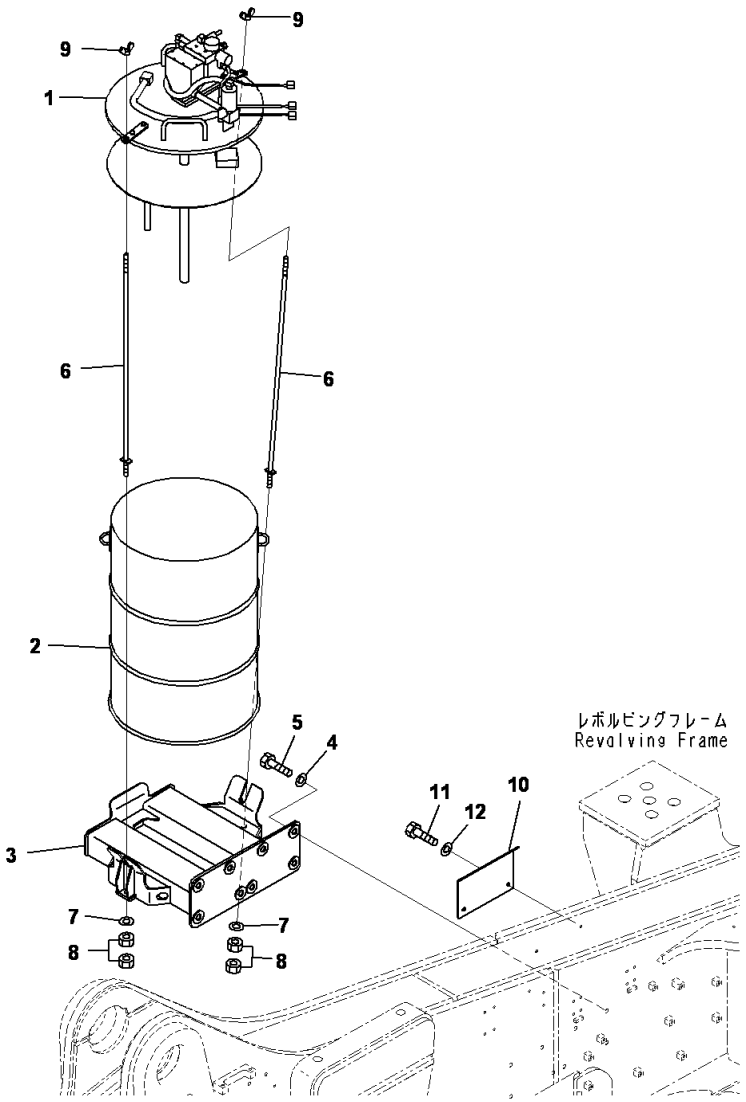

PC2000-8 S/N J10001-UP

GREASE PUMP, PUMP (1/2)

INDEX	CD	PART NO.	DESCRIPTION	QTY	SERIAL NO.
1		21T-68-31112	GREASE PUMP A	1	J10001-UP
2		21T-68-32450	TANK	1	J10001-UP
3		21T-68-31231	BRACKET	1	J10001-UP
4		01643-32060	WASHER	8	J10001-UP
5		01010-82050	BOLT	8	J10001-UP
6		21T-68-31250	ROD	2	J10001-UP
7		01643-31645	WASHER	2	J10001-UP
8		01580-11613	NUT	4	J10001-UP
9		0154121670	NUT	2	J10001-UP
10		21T-68-31240	PLATE	1	J10001-UP
11		01010-81230	BOLT	2	J10001-UP
12		01643-31232	WASHER	2	J10001-UP

Ref :W1117-04A2A Page :480260

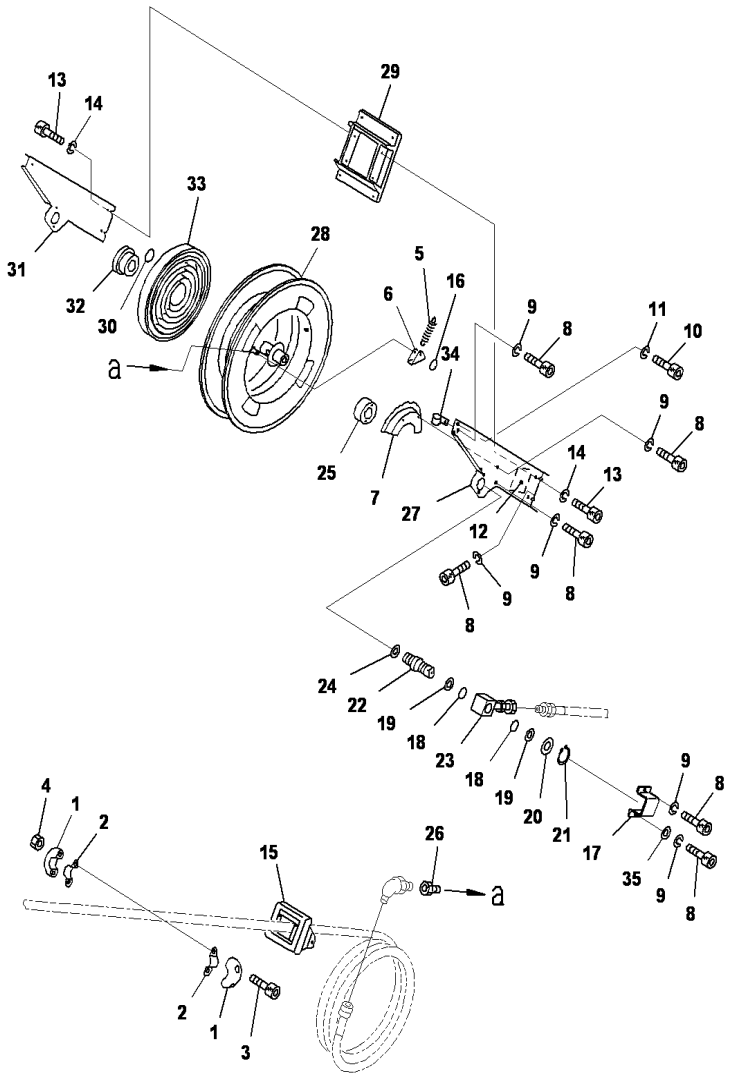

GREASE PUMP, PUMP (2/2)

INDEX	CD	PART NO.	DESCRIPTION	QTY	SERIAL NO.
		21T-68-31190	Reel	1	J10001-UP
1		YU770199-4	.Stopper	2	J10001-UP
2		YU702062-4	.Band	2	J10001-UP
3		YU619155-4	.Bolt	2	J10001-UP
4		YU627012-1	.Nut	2	J10001-UP
5		YU707944-4	.Spring	1	J10001-UP
6		YU707942-4	.Stopper	1	J10001-UP
7		YU707954-3	.Cam	1	J10001-UP
8		YU619097-4	.Bolt	12	J10001-UP
9		YU631418-1	.Washer	12	J10001-UP
10		YU619073-4	.Bolt	2	J10001-UP
11		YU631417-1	.Washer	2	J10001-UP
12		YU790372-4	.Label	1	J10001-UP
13		YU619145-4	.Bolt	4	J10001-UP
14		YU631420-1	.Washer	4	J10001-UP
15		YU831174-3	.Plate	1	J10001-UP
16		YU640006-0	.O-ring	1	J10001-UP
17		YU708830-4	.Stopper	1	J10001-UP
18		YU640020-0	.O-ring	2	J10001-UP
19		YU643680-0	.Ring	2	J10001-UP
20		YU705893-4	.Washer	1	J10001-UP
21		YU630695-4	.Retainer	1	J10001-UP
22		YU708673-4	.Adapter	1	J10001-UP
23		YU705903-4	.Swivel Assembly	1	J10001-UP
24		YU770951-4	.Packing	1	J10001-UP
25		YU708832-4	.Bearing	1	J10001-UP
26		YU680109-4	.Adapter	1	J10001-UP
27		YU708833-3	.Arm	1	J10001-UP
28		YU831089-2	.Drum	1	J10001-UP
29		YU708834-4	.Bracket	1	J10001-UP
30		YU790371-4	.Label	1	J10001-UP
31		YU708835-3	.Arm	1	J10001-UP
32		YU708671-4	.Bearing	1	J10001-UP
33		YU801941-4	.Spring	1	J10001-UP
34		YU683362-4	.Clip	1	J10001-UP
35		YU711679-4	.Washer	1	J10001-UP

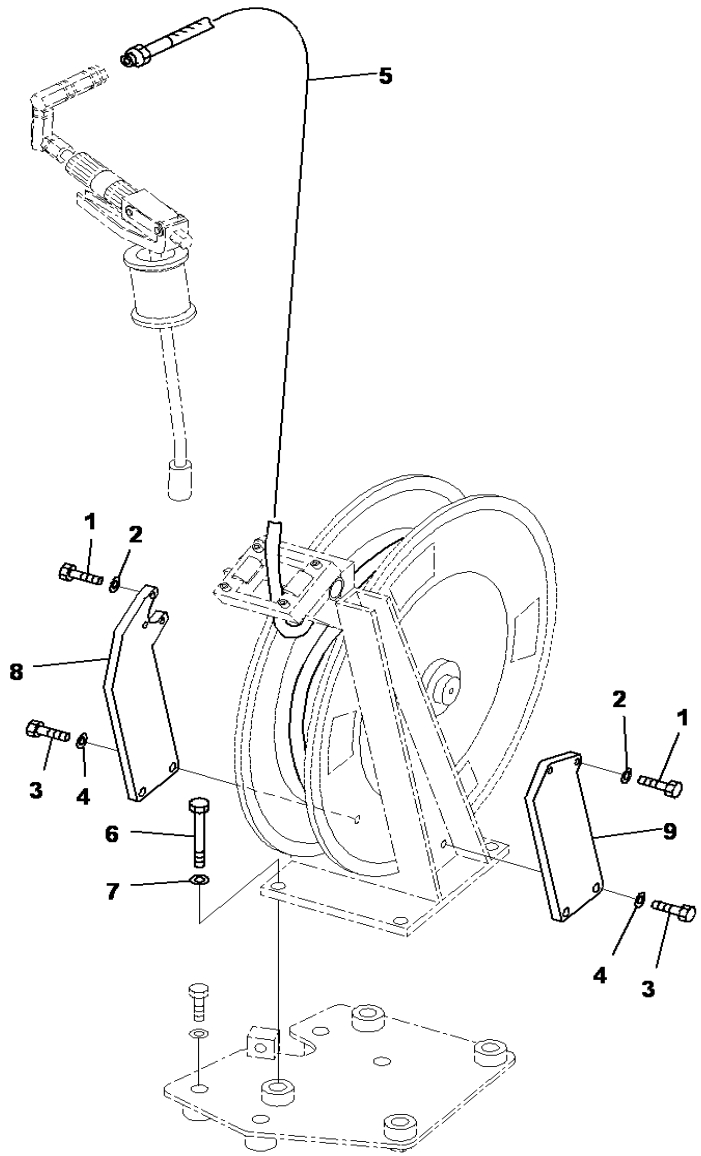

PC2000-8 S/N J10001-UP

GREASE PUMP,PRE-CLEANER AND GREASE GUN BRACKET (1/2)

INDEX	CD	PART NO.	DESCRIPTION	QTY	SERIAL NO.
1		01010-80620	BOLT	5	J10001-UP
2		01643-30623	WASHER	5	J10001-UP
3		01010-80825	BOLT	4	J10001-UP
4		01643-30823	WASHER	4	J10001-UP
5		21T-68-72450	HOSE	1	J10001-UP
6		01010-81230	BOLT	4	J10001-UP
7		01643-31232	WASHER	4	J10001-UP
8		21T-68-32380	PLATE	1	J10001-UP
9		21T-68-32390	PLATE	1	J10001-UP

Ref :W1117-04A4 Page :480280

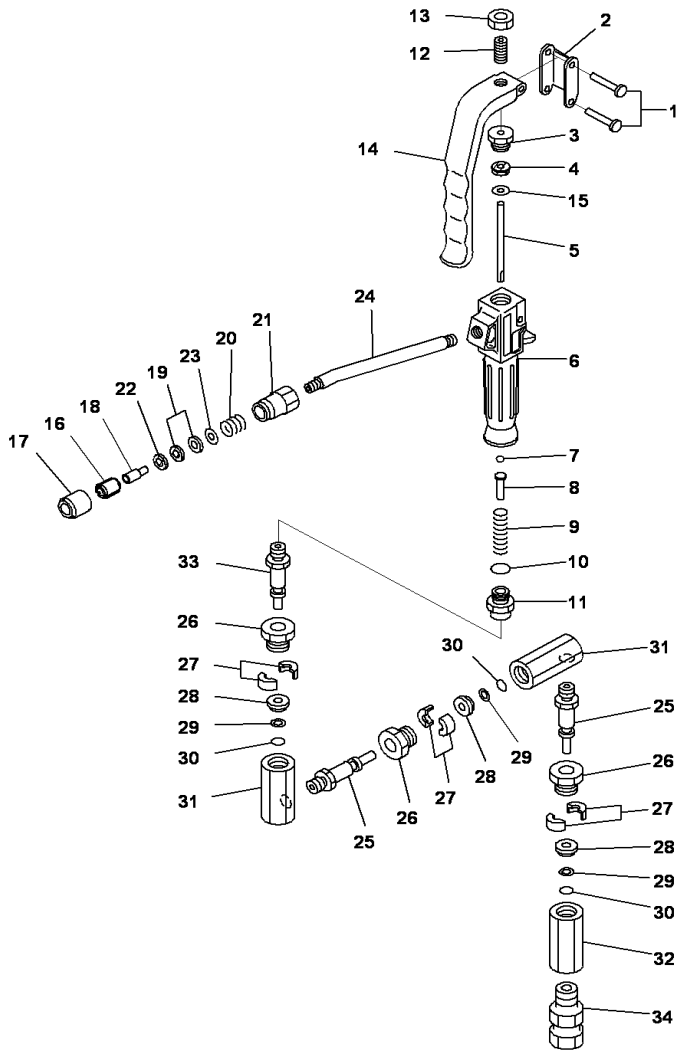

PC2000-8 S/N J10001-UP

GREASE PUMP,GREASE PUMP

INDEX	CD	PART NO.	DESCRIPTION	QTY	SERIAL NO.
		209-68-11230	GREASE GUN	1	J10001-UP
		YU802732	.Grease Gun Assembly	1	J10001-UP
1		YU683201	..Rivet	2	J10001-UP
2		YU711351	..Link	1	J10001-UP
3		YU711444	..Nut	1	J10001-UP
4		YU772160	..Packing	2	J10001-UP
5		YU711357	..Rod	1	J10001-UP
6		YU711352	..Grease Gun	1	J10001-UP
7		YU630314	..Ball	1	J10001-UP
8		YU711445	..Holder	1	J10001-UP
9		YU711446	..Spring	1	J10001-UP
10		YU640011	..O-ring	1	J10001-UP
11		YU710971	..Union	1	J10001-UP
12		YU711750	..Bolt	1	J10001-UP
13		YU627641	..Nut	1	J10001-UP
14		YU711354	..Lever	1	J10001-UP
15		YU713638	..Plate	1	J10001-UP
		YU800702	.Nozzle Assembly	1	J10001-UP
		YU800573	..Chuck Assembly	1	J10001-UP
16		YU702450	...Tooth	3	J10001-UP
17		YU702449	...Cover	1	J10001-UP
18		YU702451	...Nozzle	1	J10001-UP
19		YU770263	...Packing	2	J10001-UP
20		YU702453	...Spring	1	J10001-UP
21		YU702468	...Body	1	J10001-UP
22		YU702452	...Washer	1	J10001-UP
23		YU702454	...Washer	1	J10001-UP
24		YU703344	...Nozzle	1	J10001-UP
		YU802910	.Joint	1	J10001-UP
25		YU711732	..Nipple	2	J10001-UP
26		YU711731	..Nut	3	J10001-UP
27		YU580300	..Spacer	3	J10001-UP
28		YU711730	..Retainer	3	J10001-UP
29		YU682988	..Ring	3	J10001-UP
30		YU640003	..O-ring	3	J10001-UP
31		YU711729	..Housing	2	J10001-UP
32		YU711728	..Housing	1	J10001-UP
33		YU712212	..Nipple	1	J10001-UP
34		2096851220	.Adapter	1	J10001-UP

Ref :W1117-04A5 Page :480290

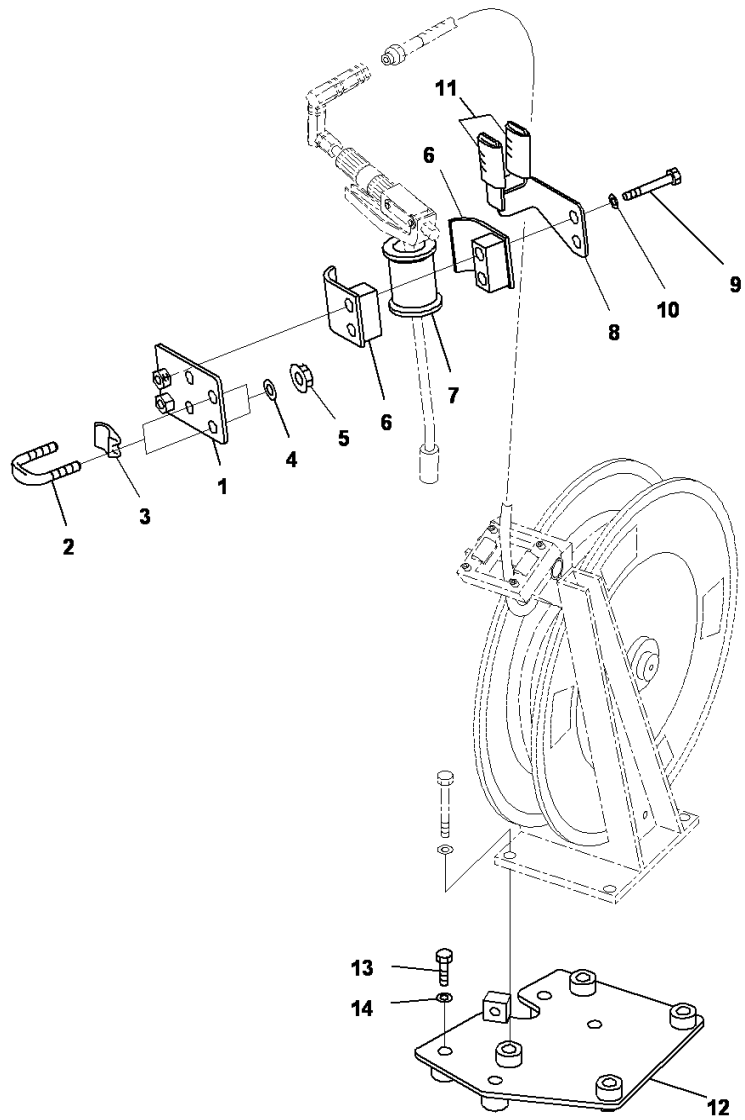

PC2000-8 S/N J10001-UP

GREASE PUMP,PRE-CLEANER AND GREASE GUN BRACKET (2/2)

INDEX	CD	PART NO.	DESCRIPTION	QTY	SERIAL NO.
1		21T-68-31371	BRACKET	1	J10001-UP
2		07283-33442	CLIP	2	J10001-UP
3		07283-53444	CLIP	2	J10001-UP
4		01643-31032	WASHER	4	J10001-UP
5		01597-01009	NUT	4	J10001-UP
6		07094-11024	CLAMP	2	J10001-UP
7		07095-01035	CUSHION	1	J10001-UP
8		21T-68-31361	BRACKET	1	J10001-UP
9		01010-81280	BOLT	2	J10001-UP
10		01643-31232	WASHER	2	J10001-UP
11		07286-02605	HOSE	2	J10001-UP
12		21T-68-31211	BRACKET	1	J10001-UP
13		01010-81255	BOLT	4	J10001-UP
14		01643-31232	WASHER	4	J10001-UP

Ref :W1117-04A6 Page :480300

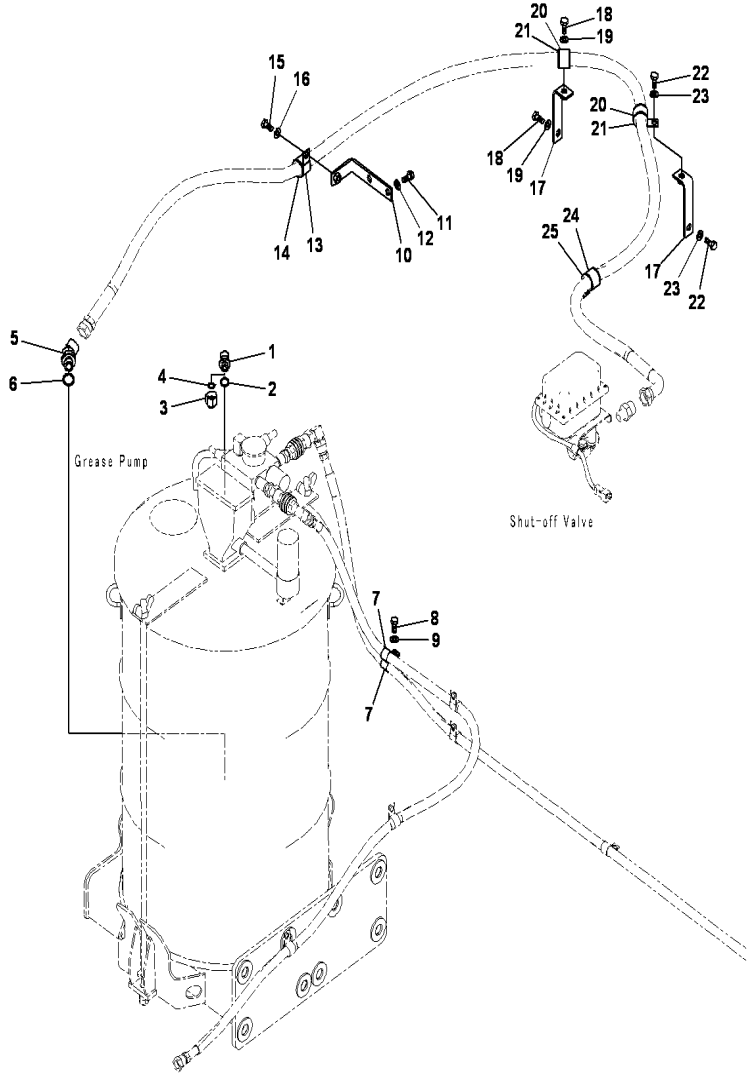

PC2000-8 S/N J10001-UP

GREASE PUMP,AUTO GREASING SYSTEM,SERVICE CENTER (1/2)

INDEX	CD	PART NO.	DESCRIPTION	QTY	SERIAL NO.
1		02782-10420	ELBOW	1	J10001-UP
2		07002-61823	O-RING	1	J10001-UP
3		0278910422	PLUG	1	J10001-UP
4		02896-61012	O-RING	1	J10001-UP
5		02783-10628	UNION	1	J10001-UP
6		07002-62434	O-RING	1	J10001-UP
7		04434-51912	CLIP	2	J10001-UP
8		01010-81225	BOLT	1	J10001-UP
9		01643-31232	WASHER	1	J10001-UP
10		21T-68-32480	BRACKET	1	J10001-UP
11		01010-81225	BOLT	2	J10001-UP
12		01643-31232	WASHER	2	J10001-UP
13		04434-53412	CLIP	1	J10001-UP
14		07095-20625	CUSHION	1	J10001-UP
15		01010-81225	BOLT	1	J10001-UP
16		01643-31232	WASHER	1	J10001-UP
17		17A-61-13391	BRACKET	2	J10001-UP
18		01010-81225	BOLT	2	J10001-UP
19		01643-31232	WASHER	2	J10001-UP
20		04434-53412	CLIP	2	J10001-UP
21		07095-20625	CUSHION	2	J10001-UP
22		01010-81225	BOLT	2	J10001-UP
23		01643-31232	WASHER	2	J10001-UP
24		04434-53412	CLIP	1	J10001-UP
25		07095-20625	CUSHION	1	J10001-UP

Ref :W1117-04A7 Page :480310

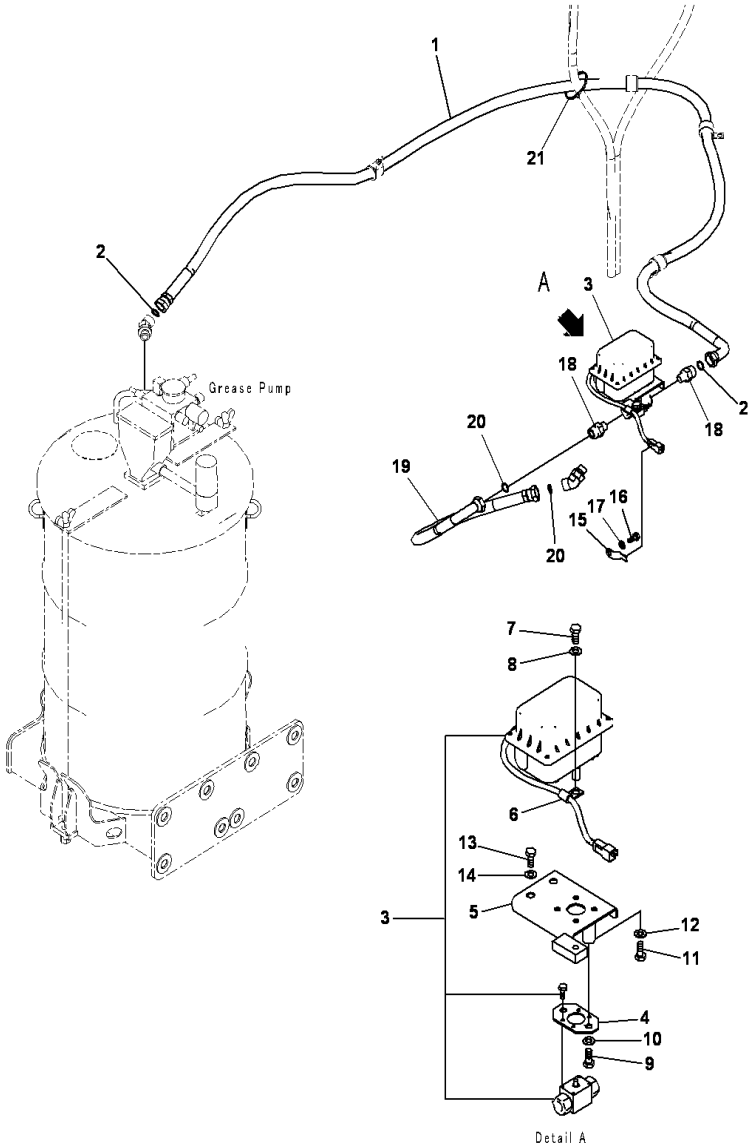

GREASE PUMP,AUTO GREASING SYSTEM,SERVICE CENTER (2/2)

INDEX	CD	PART NO.	DESCRIPTION	QTY	SERIAL NO.
1		02763-00629	HOSE	1	J10001-UP
2		02896-61018	O-RING	2	J10001-UP
3		21T-68-33240	VALVE A	1	J10001-UP
4		21T-68-33221	PLATE	1	J10001-UP
5		21T-68-33210	BRACKET	1	J10001-UP
6		04434-51012	CLIP	1	J10001-UP
7		01010-81220	BOLT	1	J10001-UP
8		01643-31232	WASHER	1	J10001-UP
9		01010-81020	BOLT	2	J10001-UP
10		01643-31032	WASHER	2	J10001-UP
11		01010-80816	BOLT	4	J10001-UP
12		01643-30823	WASHER	4	J10001-UP
13		01010-81230	BOLT	2	J10001-UP
14		01643-31232	WASHER	2	J10001-UP
15		08193-20012	CLIP	1	J10001-UP
16		01010-81220	BOLT	1	J10001-UP
17		01643-31232	WASHER	1	J10001-UP
18		21T-68-33232	CONNECTOR	2	J10001-UP
19		02763-006A7	HOSE	1	J10001-UP
20		02896-61018	O-RING	2	J10001-UP
21		08034-20876	BAND	1	J10001-UP

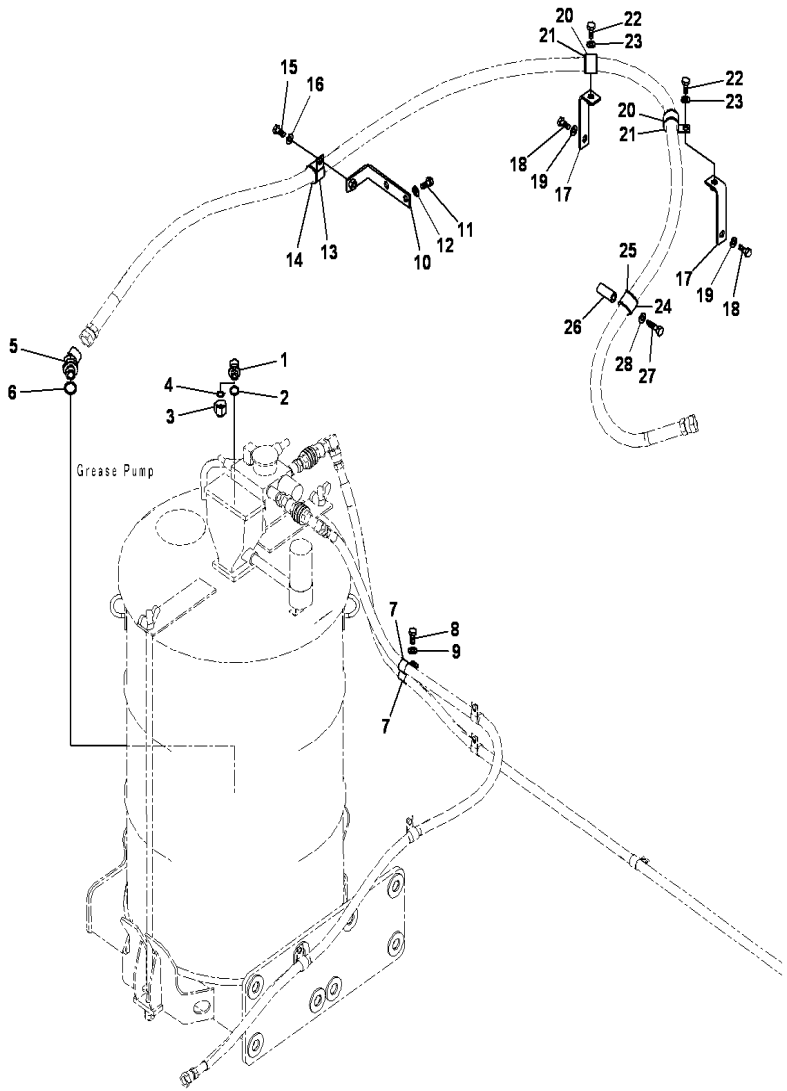

PC2000-8 S/N J10001-UP

GREASE PUMP,AUTO GREASING SYSTEM,SERVICE CENTER GUARD

INDEX	CD	PART NO.	DESCRIPTION	QTY	SERIAL NO.
1		02782-10420	ELBOW	1	J10001-UP
2		07002-61823	O-RING	1	J10001-UP
3		0278910422	PLUG	1	J10001-UP
4		02896-61012	O-RING	1	J10001-UP
5		02783-10628	UNION	1	J10001-UP
6		07002-62434	O-RING	1	J10001-UP
7		04434-51912	CLIP	2	J10001-UP
8		01010-81225	BOLT	1	J10001-UP
9		01643-31232	WASHER	1	J10001-UP
10		21T-68-32480	BRACKET	1	J10001-UP
11		01010-81225	BOLT	2	J10001-UP
12		01643-31232	WASHER	2	J10001-UP
13		04434-53412	CLIP	1	J10001-UP
14		07095-20625	CUSHION	1	J10001-UP
15		01010-81225	BOLT	1	J10001-UP
16		01643-31232	WASHER	1	J10001-UP
17		17A-61-13391	BRACKET	2	J10001-UP
18		01010-81225	BOLT	2	J10001-UP
19		01643-31232	WASHER	2	J10001-UP
20		04434-53412	CLIP	2	J10001-UP
21		07095-20625	CUSHION	2	J10001-UP
22		01010-81225	BOLT	2	J10001-UP
23		01643-31232	WASHER	2	J10001-UP
24		04434-53412	CLIP	1	J10001-UP
25		07095-20625	CUSHION	1	J10001-UP
26		195-97-95190	COLLAR	1	J10001-UP
27		01010-81275	BOLT	1	J10001-UP
28		01643-31232	WASHER	1	J10001-UP

Ref :W1117-06A7 Page :480330

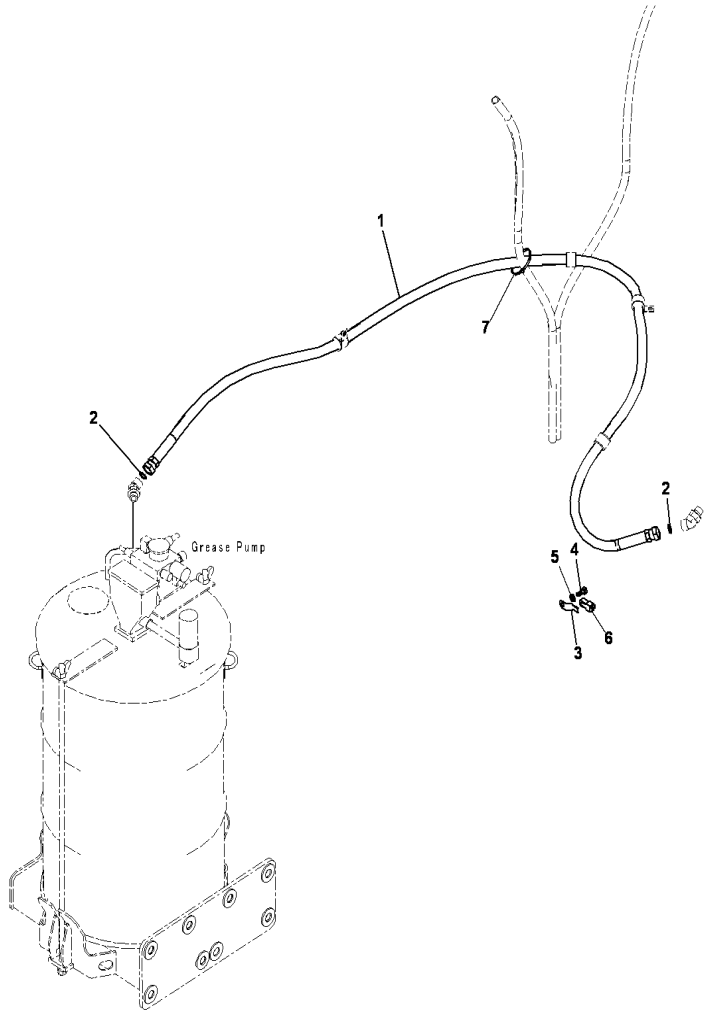

PC2000-8 S/N J10001-UP

GREASE PUMP,AUTO GREASING SYSTEM,SERVICE CENTER,PIPING

INDEX	CD	PART NO.	DESCRIPTION	QTY	SERIAL NO.
1		02762-00629	HOSE	1	J10001-UP
2		02896-61018	O-RING	2	J10001-UP
3		08193-20012	CLIP	1	J10001-UP
4		01010-81220	BOLT	1	J10001-UP
5		01643-31232	WASHER	1	J10001-UP
6		21T-06-31880	CONNECOTOR	1	J10001-UP
7		08034-20876	BAND	1	J10001-UP

Ref :W1117-06A8 Page :480340

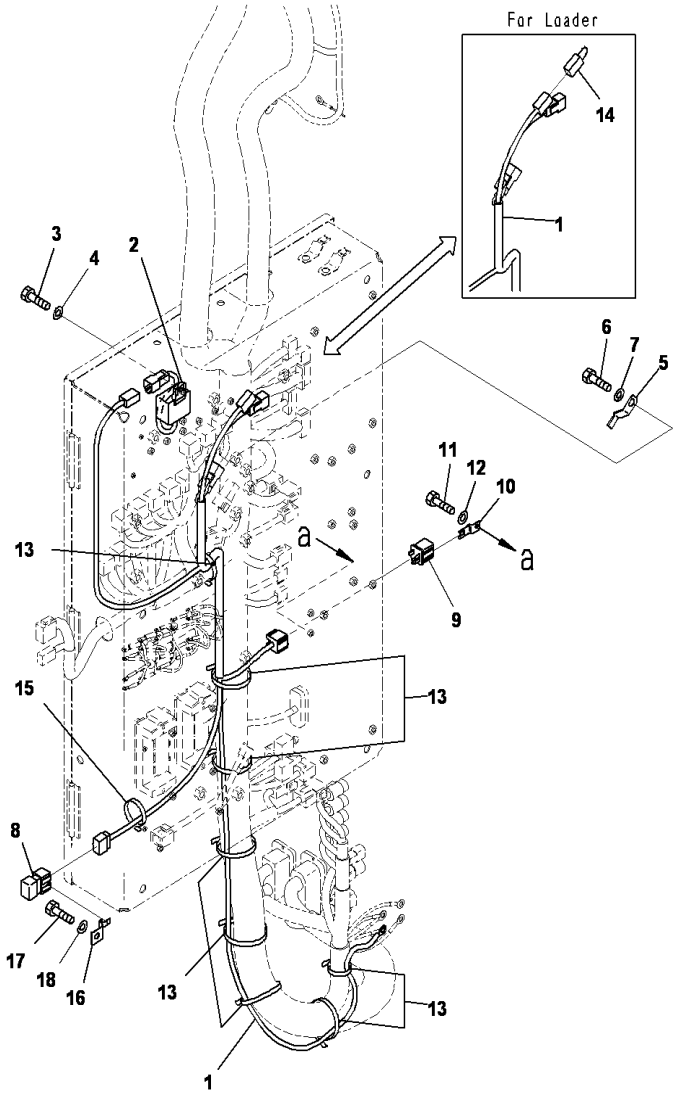

PC2000-8 S/N J10001-UP

GREASE PUMP,OVER LOAD ALARM

INDEX	CD	PART NO.	DESCRIPTION	QTY	SERIAL NO.
1		21T-06-34141	WIRING HARNESS	1	J10001-UP
2		21T-06-34151	TIMER	1	J10001-UP
3		01010-80620	BOLT	1	J10001-UP
4		01643-30623	WASHER	1	J10001-UP
5		08193-21012	CLIP	1	J10001-UP
6		01010-81220	BOLT	1	J10001-UP
7		01643-31232	WASHER	1	J10001-UP
8		823-30-63350	DIODE	1	J10001-UP
9		569-06-61960	RELAY	1	J10001-UP
10		287-06-16420	BRACKET	1	J10001-UP
11		01010-80612	BOLT	1	J10001-UP
12		01643-30623	WASHER	1	J10001-UP
13		08034-20519	BAND	8	J10001-UP
14		21T-06-31980	CONNECTOR	1	J10001-UP
15		08034-20519	BAND	1	J10001-UP
16		08053-00910	CLIP	1	J10001-UP
17		01010-80612	BOLT	1	J10001-UP
18		01643-30623	WASHER	1	J10001-UP

Ref :W1117-06A9A Page :480350

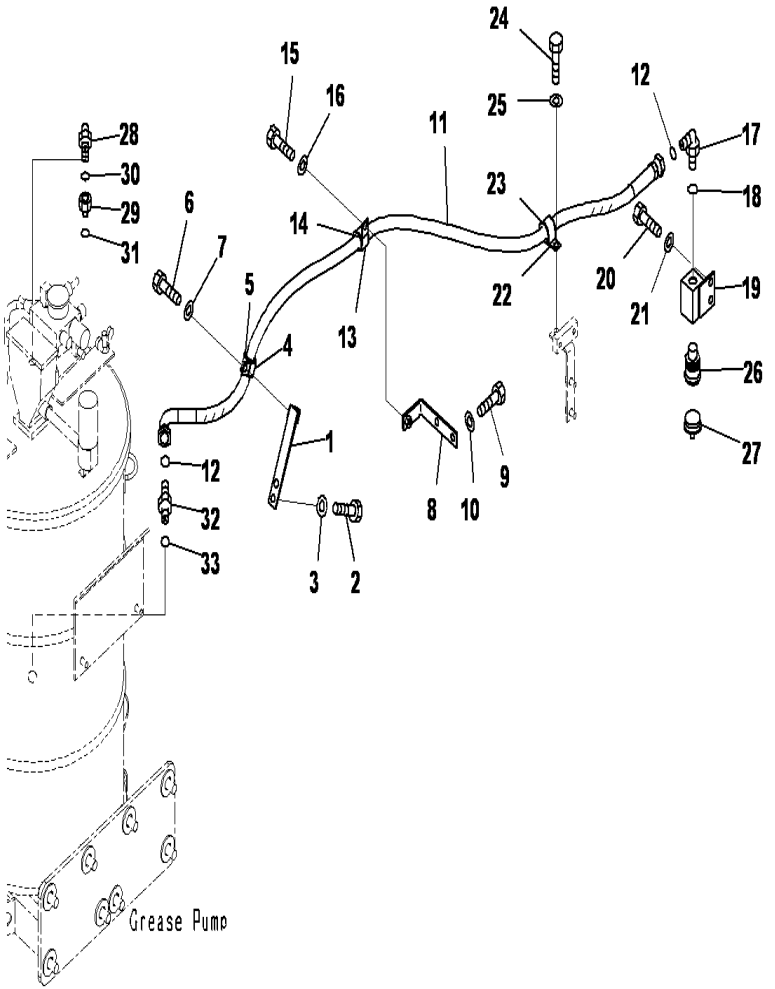

PC2000-8 S/N J10001-UP

GREASE PUMP,CENTER GUARD

INDEX	CD	PART NO.	DESCRIPTION	QTY	SERIAL NO.
1		21T-68-32460	BRACKET	1	J10001-UP
2		01010-81225	BOLT	2	J10001-UP
3		01643-31232	WASHER	2	J10001-UP
4		04434-53412	CLIP	1	J10001-UP
5		07095-20625	CUSHION	1	J10001-UP
6		01010-81225	BOLT	1	J10001-UP
7		01643-31232	WASHER	1	J10001-UP
8		21T-68-32480	BRACKET	1	J10001-UP
9		01010-81225	BOLT	2	J10001-UP
10		01643-31232	WASHER	2	J10001-UP
11		02763-00620	HOSE	1	J10001-UP
12		02896-61018	O-RING	2	J10001-UP
13		04434-53412	CLIP	1	J10001-UP
14		07095-20625	CUSHION	1	J10001-UP
15		01010-81225	BOLT	1	J10001-UP
16		01643-31232	WASHER	1	J10001-UP
17		02782-10630	ELBOW	1	J10001-UP
18		07002-62434	O-RING	1	J10001-UP
19		21T-68-32430	BRACKET	1	J10001-UP
20		01010-81225	BOLT	2	J10001-UP
21		01643-31232	WASHER	2	J10001-UP
22		04434-53412	CLIP	1	J10001-UP
23		07095-20625	CUSHION	1	J10001-UP
24		01010-81225	BOLT	1	J10001-UP
25		01643-31232	WASHER	1	J10001-UP
26		21T-68-32410	RECEIVER	1	J10001-UP
27		21T-68-32420	CAP	1	J10001-UP
28		02782-10420	ELBOW	1	J10001-UP
29		02789-10422	PLUG	1	J10001-UP
30		07002-61823	O-RING	1	J10001-UP
31		02896-61012	O-RING	1	J10001-UP
32		02781-00628	UNION	1	J10001-UP
33		07002-62434	O-RING	1	J10001-UP

Ref :W1117-05A7 Page :480360

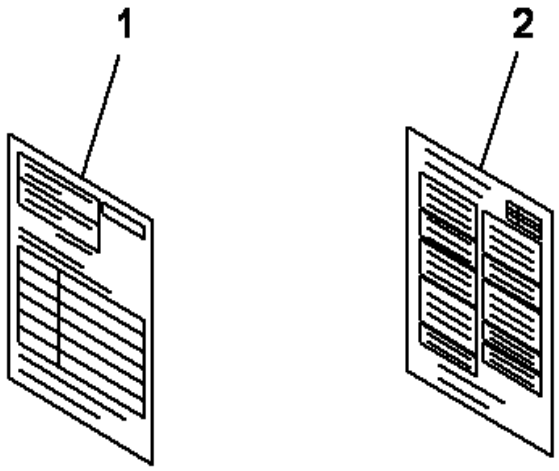

PC2000-8 S/N J10001-UP

REGISTRATION FORMS FOR VEHICLE HEALTH MONITORING SYSTEM (VHMS)

INDEX	CD	PART NO.	DESCRIPTION	QTY	SERIAL NO.
1		21T-00-64511	PLATE	1	J10001-UP
2		21T-00-64520	PLATE	1	J10001-UP

Ref :W1200-01A1 Page :480380

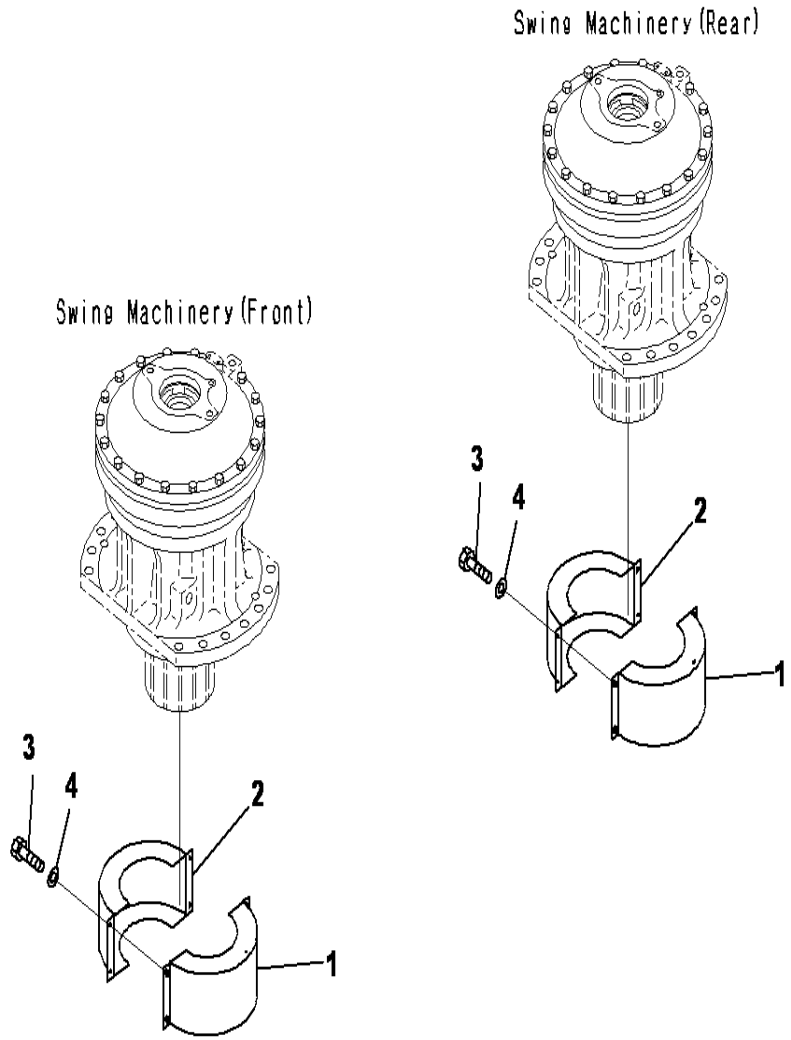

PC2000-8 S/N J10001-UP

PARTS FOR MACHINE TRANSPORTATION

INDEX	CD	PART NO.	DESCRIPTION	QTY	SERIAL NO.
1		21T-98-63150	COVER	2	J10001-UP
2		21T-98-63160	COVER	2	J10001-UP
3		01010-80820	BOLT	8	J10001-UP
4		01643-30823	WASHER	8	J10001-UP

Ref :W9970-02A1 Page :480390

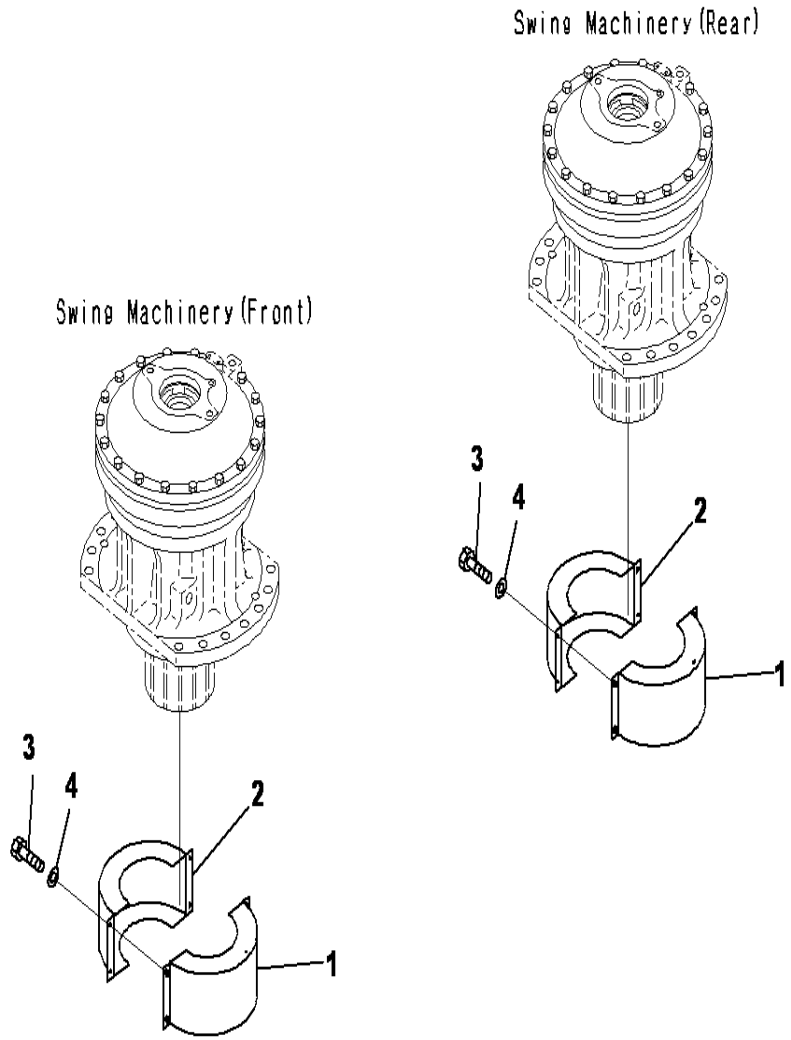

PC2000-8 S/N J10001-UP

PARTS FOR MACHINE TRANSPORTATION,LADDER

INDEX	CD	PART NO.	DESCRIPTION	QTY	SERIAL NO.
1		21T-98-63150	COVER	2	J10001-UP
2		21T-98-63160	COVER	2	J10001-UP
3		01010-80820	BOLT	8	J10001-UP
4		01643-30823	WASHER	8	J10001-UP

Ref :W9970-03A1 Page :480400

SERVICE KIT

PC2000-8 S/N J10001-UP

KIT (1/2)

INDEX	CD	PART NO.	DESCRIPTION	QTY	SERIAL NO.
	K01	707-98-29640	Service Kit.....	1	J10001-UP
		02896-11009	.O-ring.....	2	
		07000-12090	.O-ring.....	1	
		07000-12095	.O-ring.....	1	
		07145-00050	.Seal, Dust.....	3	
		176-63-92240	.Seal, Dust.....	1	
		707-35-52780	.Ring, Back-up.....	1	
		707-39-95110	.Ring, Wear.....	1	
		707-44-95180	.Ring, Piston.....	1	
		707-51-50211	.Packing, Rod.....	1	
		707-77-50020	.Seal, Dust.....	1	
	K02	21T-32-05020	Shoe Bolt and Nut Kit.....	1	J10001-UP
		198-32-31220	.Nut.....	30	
		21T-32-31210	.Bolt.....	30	
	K03	707-99-96140	Service Kit, Boom Cylinder.....	1	J10001-UP
		07000-12060	.O-ring.....	1	
		07000-13048	.O-ring.....	1	
		07000-15300	.O-ring.....	2	
		07000-B5185	.O-ring.....	1	
		07001-05185	.Ring, Back-up.....	2	
		07001-05300	.Ring, Back-up.....	3	
		581-63-92670	.Seal.....	1	
		707-39-30900	.Ring, Wear.....	2	
		707-44-30010	.Ring, Piston.....	1	
		707-51-20080	.Packing, Rod.....	1	
		707-51-20850	.Ring, Buffer.....	1	
		707-77-18010	.Seal, Dust.....	8	
	K04	707-99-85350	Service Kit, Arm Cylinder.....	1	J10001-UP
		07000-12060	.O-ring.....	1	
		07000-13048	.O-ring.....	1	
		07000-15250	.O-ring.....	1	
		07000-B5160	.O-ring.....	1	
		07001-05160	.Ring, Back-up.....	2	
		07001-05250	.Ring, Back-up.....	1	
		21T-72-15870	.Seal, Dust.....	4	
		566-63-22241	.Seal.....	1	
		707-39-25011	.Ring, Wear.....	4	
		707-44-25010	.Ring, Piston.....	1	
		707-51-16030	.Packing, Rod.....	1	
		707-51-16850	.Ring, Buffer.....	1	
	K05	707-99-76260	Service Kit, Bucket Cylinder.....	1	J10001-UP
		07000-13048	.O-ring.....	1	
		07000-15195	.O-ring.....	2	
		07000-B5130	.O-ring.....	1	
		07001-05130	.Ring, Back-up.....	2	

Ref :Y0100-01A0 Page :510010

PC2000-8 S/N J10001-UP

KIT (2/2)

INDEX	CD	PART NO.	DESCRIPTION	QTY	SERIAL NO.
		07001-05195	.Ring, Back-up	3	
		07145-00120	Seal, Dust	2	
		198-63-93170	.Seal, Dust	1	
		209-72-11261	Seal	2	
		707-39-20020	.Ring, Wear	4	
		707-44-20020	.Ring, Piston	1	
		707-51-14080	.Packing, Rod	1	
		707-51-14850	.Ring, Buffer	1	
	K06	707-99-76230	Service Kit	1	J10001-UP
		07000-13038	.O-ring	4	
		07000-15195	.O-ring	2	
		07000-B5130	.O-ring	1	
		07001-05130	.Ring, Back-up	2	
		07001-05195	.Ring, Back-up	3	
		198-63-93170	.Seal, Dust	1	
		707-39-20020	.Ring, Wear	2	
		707-44-20190	.Ring, Piston	1	
		707-51-14080	.Packing, Rod	1	
		707-51-14650	.Ring, Buffer	1	
	K07	707-98-13890	Service Kit, Cylinder	1	J10001-UP
		02896-11008	O-RING	2	
		07000-12060	.O-ring	1	
		07000-12065	.O-ring	1	
		07145-00035	.Seal, Dust	4	
		175-63-75190	.Seal, Dust	1	
		707-35-52660	.Ring, Back-up	1	
		707-39-65190	.Ring, Wear	1	
		707-44-65180	.Ring, Piston	1	
		707-51-35210	.Packing, Rod	1	

Ref :Y0100-02A1 Page :510020

INDEX

PART NO.	FIG.NO.	INDEX	PAGE
(209-60-12821)	H0350-01A0	21	180380
(209-60-77230)	H1831-03A0	1	180540
(20Y-810-1260)	K0710-01A0	1	240570
(20Y-979-6121)	K0710-01A0		240570
(6505-67-5070)	A1530-A7C3	1	010060
(6505-67-5080)	A1530-A7C3	2	010060
(702-19-23000)	H1833-01A0		180580
(702-21-07100)	H1833-02A0		180590
(702-21-07200)	H1833-04A0		180600
(702-21-09310)	H1843-03A0	17	180800
(706-7K-01130)	N1220-01A1		300120
(706-7K-01130)	N1220-01A2		300130
(706-7K-01130)	N1220-01A3		300140
(706-7K-01130)	N1220-01A5		300160
(706-7K-01130)	N1220-01A6		300170
(707-01-XP700)	T1120-01A1		390140
(707-01-XP700)	T1120-01A3	1	390160
(707-01-XP701)	T1120-01A1		390140
(707-01-XP710)	T1120-01A2		390150
(707-01-XP710)	T1120-01A3	2	390160
(707-01-XP711)	T1120-01A2		390150
(707-01-XP720)	T1140-01A1		390180
(707-01-XP720)	T1140-01A3		390200
(707-01-XP722)	T1140-01A1		390180
(707-01-XP722)	T1140-01A3	1	390200
(707-01-XP730)	T1140-01A2		390190
(707-01-XP730)	T1140-01A3		390200
(707-01-XP732)	T1140-01A2		390190
(707-01-XP732)	T1140-01A3	2	390200
(707-01-XP740)	T1220-01A1		390270
(707-01-XP742)	T1220-01A1		390270
(707-01-XP750)	T1220-01A2		390280
(707-01-XP752)	T1220-01A2		390280
(708-2K-00122)	H0210-01A0		180130
(708-2K-00122)	H0220-01A0		180140
(708-2K-00122)	H0220-02A0		180141
(708-2K-00122)	H0220-03A0		180142
(708-2K-00122)	H0220-05A0		180144
(708-2K-00122)	H0220-06A0		180145
(708-2K-00122)	H0220-07A0		180146
(708-2K-00123)	H0210-01A0		180130
(708-2K-00123)	H0220-01A0		180140
(708-2K-00123)	H0220-02A0		180141
(708-2K-00123)	H0220-03A0		180142
(708-2K-00123)	H0220-05A0		180144
(708-2K-00123)	H0220-06A0		180145
(708-2K-00123)	H0220-07A0		180146
(708-7W-00130)	C0100-05A0	4	060050
(708-7W-00160)	C0100-14A0	4	060140
(709-1A-11100)	H0120-01A0	1	180070

PART NO.	FIG.NO.	INDEX	PAGE
(709-1A-11500)	H0120-01A0	9	180070
010-10-E1020	H0220-06A0	25	180145
01010-61450	H0230-01A1	10	180150
01010-61640	A6210-A7A6	3	011020
01010-61650	H0230-01A9	15	180158
01010-61685	N1210-02A0	11	300030
01010-61685	N1210-04A0	11	300050
01010-61685	N1210-06A0	11	300070
01010-61685	N1210-07A0	11	300080
01010-61685	N1210-10A0	11	300110
01010-61865	A2210-A7D1	3	010380
01010-62050	A2250-A7C4	6	010400
01010-62055	A4710-A7D7	12	010650
01010-62055	A4710-A7E3	16	010660
01010-62275	H0210-01A0	18	180130
01010-62275	H0220-01A0	18	180140
01010-80610	D0200-13A0	15	090170
01010-80612	D0100-01A0	30	090010
01010-80612	D0100-01A1	25	090020
01010-80612	D0100-01A2	30	090030
01010-80612	D0100-01A3	25	090040
01010-80612	D0200-11A0	35	090150
01010-80612	E0200-03A0	23	120050
01010-80612	E0200-03A0	26	120050
01010-80612	E0200-03A0	30	120050
01010-80612	E0200-09A0	2	120110
01010-80612	K0210-06A0	17	240060
01010-80612	K0210-06A0	8	240060
01010-80612	T1110-01A5	19	390050
01010-80612	T1110-01A5	40	390050
01010-80612	T1110-01A5	6	390050
01010-80612	W1114-01A9	11	480140
01010-80612	W1117-06A9A	11	480350
01010-80612	W1117-06A9A	17	480350
01010-80616	A4110-G7E9	18	010830
01010-80616	A4110-G7E9	3	010830
01010-80616	E0200-09A0	4	120110
01010-80616	E0450-02A0	2	120520
01010-80616	K0210-04A0	2	240040
01010-80616	K0210-04A0	5	240040
01010-80616	K0210-04A0	8	240040
01010-80616	K0210-05A0	2	240050
01010-80616	K0210-08A0	3	240080
01010-80616	K0210-08A0	6	240080
01010-80616	K0210-08A0	9	240080
01010-80616	K0210-09A0	19	240090
01010-80616	K0210-09A0	22	240090
01010-80616	K0210-09A0	26	240090
01010-80616	K0210-09A0	3	240090
01010-80616	K0210-09A0	6	240090

PART NO.	FIG.NO.	INDEX	PAGE
01010-80616	K0210-09A0	9	240090
01010-80616	K0210-10A0	10	240100
01010-80616	K0210-10A0	3	240100
01010-80616	K0210-10A0	6	240100
01010-80616	K0210-33A0	2	240330
01010-80616	K0210-50A0	29	240500
01010-80616	K1921-01A0	16	240680
01010-80616	K1921-01A0	6	240680
01010-80616	K1921-01A1	16	240685
01010-80616	K1921-01A1	6	240685
01010-80616	K1921-01A3	16	240687
01010-80616	K1921-01A3	6	240687
01010-80616	M1110-01A0	36	270010
01010-80616	M1110-01A0	8	270010
01010-80616	M1110-02A0	20	270020
01010-80616	M1110-02A0	8	270020
01010-80616	M1110-03A0	13	270030
01010-80616	M1110-03A0	33	270030
01010-80616	M1110-03A0	45	270030
01010-80616	M1110-04A0	23	270040
01010-80616	M1110-04A0	7	270040
01010-80616	M1110-04A0	47	270041
01010-80616	M1110-05A0	27	270050
01010-80616	M1110-05A0	9	270050
01010-80616	M1110-08A0	12	270080
01010-80616	M1110-09A0	16	270090
01010-80616	M1130-11A0	16	270240
01010-80620	E0200-14A1	12	120165
01010-80620	E0200-14A1	17	120165
01010-80620	K0210-16A0	7	240160
01010-80620	K0210-44A0	16	240440
01010-80620	W1117-02A4	1	480220
01010-80620	W1117-04A4	1	480280
01010-80620	W1117-06A9A	3	480350
01010-80625	K0710-07A0	3	240630
01010-80630	K0710-03A0	9	240590
01010-80650	K0210-43A0	11	240430
01010-80650	K0210-43A0	2	240430
01010-80650	K0210-43A0	23	240430
01010-80650	K0210-52A0	2	240520
01010-80812	A3110-A7D6	13	010490
01010-80812	E0200-03A0	20	120050
01010-80812	E0200-05A0	24	120070
01010-80812	E0200-07A0	7	120090
01010-80816	A6030-A7B4	19	010930
01010-80816	A6810-B7C6	38	011040
01010-80816	A6810-D9C6	38	011080
01010-80816	A6810-E1C6	25	011090
01010-80816	B0600-05A0	5	030150
01010-80816	E0200-03A0	11	120050

PART NO.	FIG.NO.	INDEX	PAGE
01010-80816	E0200-13A0	10	120150
01010-80816	E0200-13A0	21	120150
01010-80816	E0200-25A0	7	120260
01010-80816	E0200-32A0	2	120330
01010-80816	E0200-33A0	2	120340
01010-80816	E0202-03A0	13	120400
01010-80816	E0202-04A0	13	120410
01010-80816	K0210-27A0	2	240270
01010-80816	K0210-28A0	10	240280
01010-80816	K0210-28A0	13	240280
01010-80816	K0210-28A0	17	240280
01010-80816	K0210-28A0	2	240280
01010-80816	K0210-28A0	26	240280
01010-80816	K0210-28A0	29	240280
01010-80816	K0210-28A0	34	240280
01010-80816	K0210-28A0	39	240280
01010-80816	K0210-28A0	5	240280
01010-80816	K0210-29A0	12	240290
01010-80816	K0210-29A0	15	240290
01010-80816	K0210-34A0	2	240340
01010-80816	K0210-49A0	16	240490
01010-80816	M1110-09A0	21	270090
01010-80816	M1130-08A1	10	270270
01010-80816	M1130-08A1	18	270270
01010-80816	M1130-08A1	5	270270
01010-80816	W1117-04A8	11	480320
01010-80820	A2210-A7D1	11	010380
01010-80820	A6810-A7C6	24	011030
01010-80820	A6810-D8C6	24	011070
01010-80820	D0200-10A0	30	090140
01010-80820	E0200-03A0	18	120050
01010-80820	E0200-08A0	21	120100
01010-80820	E0200-13A0	24	120150
01010-80820	H1831-03A0	2	180540
01010-80820	K0210-19A0	2	240190
01010-80820	K0210-19A0	5	240190
01010-80820	K0210-20A0	25	240200
01010-80820	K0210-28A0	31	240280
01010-80820	K0210-28A0	36	240280
01010-80820	K0210-45A0	1	240450
01010-80820	M1130-09A2	14	270280
01010-80820	M1130-10A1	14	270290
01010-80820	M1130-10A1	17	270290
01010-80820	M1130-10A1	20	270290
01010-80820	M1130-10A1	23	270290
01010-80820	M1130-10A1	26	270290
01010-80820	M1130-10A1	30	270290
01010-80820	M1130-10A1	34	270290
01010-80820	M1130-10A1	39	270290
01010-80820	W9970-02A1	3	480390

PART NO.	FIG.NO.	INDEX	PAGE
01010-80820	W9970-03A1	3	480400
01010-80825	A4050-B7A5	26	010690
01010-80825	E0200-19A1	5	120215
01010-80825	E0410-01A0	3	120490
01010-80825	K0210-05A0	26	240050
01010-80825	K0210-22A0	2	240220
01010-80825	M1130-07A1	25	270260
01010-80825	M1130-09A2	17	270280
01010-80825	W1117-02A4	3	480220
01010-80825	W1117-04A4	3	480280
01010-80830	D0200-11A0	28	090150
01010-80830	E0450-01A0	17	120510
01010-80830	H1210-02A0	20	180430
01010-80830	K0210-26A0	2	240260
01010-80830	M1130-10A1	5	270290
01010-80830	M1130-10A1	8	270290
01010-80830	P1140-01A6	27	330090
01010-80830	P1140-01A6	3	330090
01010-80830	P1140-01A7	3	330100
01010-80830	P1140-01A7	31	330100
01010-80835	A4110-B7E4	29	010730
01010-80835	A4110-C7F2	20	010790
01010-80845	A4110-A7E4	28	010720
01010-80845	A4110-B7E4	27	010730
01010-80845	A4110-C7F2	18	010790
01010-80845	A4110-D7F2	28	010800
01010-80850	A6810-A7C6	16	011030
01010-80850	A6810-A7C6	4	011030
01010-80850	A6810-D8C6	16	011070
01010-80850	A6810-D8C6	4	011070
01010-80855	K0210-49A0	14	240490
01010-80870	K0210-28A0	7	240280
01010-80875	A6810-A7C6	10	011030
01010-80875	A6810-A7C6	22	011030
01010-80875	A6810-D8C6	10	011070
01010-80875	A6810-D8C6	22	011070
01010-80875	E0450-02A0	7	120520
01010-80875	K0710-01A0	4	240570
01010-80885	E0450-02A0	5	120520
01010-80895	E0420-01A0	2	120500
01010-81016	A2041-B7E4	36	010170
01010-81016	A6810-B7C6	18	011040
01010-81016	A6810-C7C6	23	011051
01010-81016	A6810-C7C6	42	011051
01010-81016	A6810-D9C6	19	011080
01010-81016	A6810-E1C6	44	011090
01010-81016	A6810-E1C6	53	011091
01010-81016	E0200-19A0	14	120210
01010-81016	K0210-13A0	11	240130
01010-81016	T1210-01A3	49	390231

PART NO.	FIG.NO.	INDEX	PAGE
01010-81020	A1310-B7E8	19	010040
01010-81020	A1510-A7C5	23	010050
01010-81020	A2011-A7B9	10	010140
01010-81020	A2041-B7E4	29	010170
01010-81020	A2110-C7G9	34	010370
01010-81020	A4110-A7E4	37	010720
01010-81020	A4110-A7E5	59	010721
01010-81020	A4110-B7E4	32	010730
01010-81020	A4110-B7E4	51	010731
01010-81020	A4110-B7E4	57	010731
01010-81020	A4110-D7F2	33	010800
01010-81020	A4110-E7F2	23	010810
01010-81020	A5010-A7E6	28	010880
01010-81020	A5010-A7E8	27	010900
01010-81020	A6010-B7D1	2	010970
01010-81020	A6010-B7D1	7	010970
01010-81020	A6010-B7D2	2	011000
01010-81020	A6010-B7D2	7	011000
01010-81020	A6810-A7C6	27	011030
01010-81020	A6810-B7C6	16	011040
01010-81020	A6810-C7C6	12	011051
01010-81020	A6810-D7C6	15	011060
01010-81020	A6810-D7C6	3	011060
01010-81020	A6810-D8C6	27	011070
01010-81020	A6810-D9C6	17	011080
01010-81020	A6810-E1C6	14	011090
01010-81020	A6810-E2C6	17	011100
01010-81020	A6810-E2C6	3	011100
01010-81020	B0300-04A0	22	030080
01010-81020	B0300-04A0	25	030080
01010-81020	B0300-05A0	26	030090
01010-81020	B0300-05A0	8	030090
01010-81020	C0100-02A0	38	060020
01010-81020	C0100-05A0	16	060050
01010-81020	C0100-14A0	23	060140
01010-81020	D0200-06A0	30	090100
01010-81020	D0200-07A0	23	090110
01010-81020	D0200-08A0	21	090120
01010-81020	D0200-08A0	4	090120
01010-81020	E0200-04A0	11	120060
01010-81020	E0200-04A0	15	120060
01010-81020	E0200-04A0	7	120060
01010-81020	E0200-07A0	32	120090
01010-81020	E0200-07A0	35	120090
01010-81020	E0200-10A0	27	120120
01010-81020	E0200-14A0	18	120160
01010-81020	E0200-16A1	37	120185
01010-81020	E0200-17A1	13	120195
01010-81020	E0200-25A0	9	120260
01010-81020	E0200-26A0	18	120270

PART NO.	FIG.NO.	INDEX	PAGE
01010-81020	E0200-26A0	21	120270
01010-81020	E0200-27A0	21	120280
01010-81020	E0200-27A0	31	120280
01010-81020	E0200-27A0	34	120280
01010-81020	E0200-31A0	27	120320
01010-81020	G1010-03A0	3	150030
01010-81020	H0110-01A0	20	180010
01010-81020	H0110-01A1	20	180015
01010-81020	H0210-08A0	3	180137
01010-81020	H0220-08A0	3	180147
01010-81020	K0210-29A0	18	240290
01010-81020	K0210-29A0	2	240290
01010-81020	K0210-29A0	21	240290
01010-81020	K0210-29A0	5	240290
01010-81020	K0210-29A0	9	240290
01010-81020	K0210-45A0	16	240450
01010-81020	K0210-50A0	1	240500
01010-81020	K0710-02A0	11	240580
01010-81020	K0710-02A0	14	240580
01010-81020	K0710-02A0	5	240580
01010-81020	K0710-06A0	1	240620
01010-81020	K1921-01A0	4	240680
01010-81020	K1921-01A1	4	240685
01010-81020	K1921-01A3	4	240687
01010-81020	M1110-03A0	30	270030
01010-81020	M1110-03A0	42	270030
01010-81020	M1110-05A0	24	270050
01010-81020	M1110-09A0	13	270090
01010-81020	M1130-07A1	4	270260
01010-81020	M1130-07A1	8	270260
01010-81020	M1130-09A2	3	270280
01010-81020	T1110-01A3	29	390030
01010-81020	T1110-01A3	34	390030
01010-81020	T1110-01A4	10	390040
01010-81020	T1110-01A5	16	390050
01010-81020	T1110-01A5	29	390050
01010-81020	T1110-01A5	37	390050
01010-81020	T1210-01A2	26	390220
01010-81020	T1210-01A2	35	390220
01010-81020	T1210-01A3	3	390230
01010-81020	T1210-01A3	31	390230
01010-81020	T1230-01A5	2	390330
01010-81020	W1117-04A8	9	480320
01010-81025	A1310-A7E8	9	010030
01010-81025	A1310-B7E8	39	010040
01010-81025	A1510-A7C5	16	010050
01010-81025	A1530-A7C3	30	010060
01010-81025	A1730-A7C6	6	010120
01010-81025	A2041-A7E4	3	010160
01010-81025	A2110-A7F9	14	010220

PART NO.	FIG.NO.	INDEX	PAGE
01010-81025	A2110-A7F9	8	010220
01010-81025	A2110-B7G6	17	010235
01010-81025	A2110-C7F9	14	010240
01010-81025	A2110-C7F9	8	010240
01010-81025	A2110-C7G8	27	010360
01010-81025	A2110-C7G8	32	010360
01010-81025	A2110-C7G8	35	010360
01010-81025	A2110-C7G8	9	010360
01010-81025	A2110-C7G9	26	010370
01010-81025	A2110-C7G9	31	010370
01010-81025	A2110-C7G9	9	010370
01010-81025	A4050-B7A5	15	010690
01010-81025	A4050-B7A5	5	010690
01010-81025	A4050-D7A5	10	010710
01010-81025	A4050-D7A5	13	010710
01010-81025	A4050-D7A5	19	010710
01010-81025	A4050-D7A5	22	010710
01010-81025	A4110-A7E5	53	010721
01010-81025	A4110-C7E4	2	010740
01010-81025	A4110-D7E4	2	010750
01010-81025	A4110-E7F2	27	010810
01010-81025	A4110-F7E9	28	010820
01010-81025	A5010-A7E8	25	010900
01010-81025	A6010-A7C9	15	010960
01010-81025	A6010-B7D1	10	010970
01010-81025	A6010-B7D2	10	011000
01010-81025	A6010-B7D3	15	011010
01010-81025	A6210-A7A6	15	011020
01010-81025	A6210-A7A6	18	011020
01010-81025	A6810-A7C6	29	011030
01010-81025	A6810-B7C6	13	011040
01010-81025	A6810-B7C6	49	011041
01010-81025	A6810-C7C6	10	011051
01010-81025	A6810-D8C6	29	011070
01010-81025	A6810-D9C6	14	011080
01010-81025	A6810-D9C6	48	011081
01010-81025	A6810-E1C6	12	011090
01010-81025	B0300-01A0	15	030040
01010-81025	B0300-05A0	23	030090
01010-81025	D0200-06A0	19	090100
01010-81025	D0200-09A0	11	090130
01010-81025	D0200-11A0	32	090150
01010-81025	D0200-13A0	10	090170
01010-81025	E0200-04A0	25	120060
01010-81025	E0200-18A1	32	120205
01010-81025	E0200-28A0	40	120290
01010-81025	E0450-03A0	20	120530
01010-81025	E0450-03A0	25	120530
01010-81025	G1010-01A0	10	150010
01010-81025	G1010-02A0	8	150020

PART NO.	FIG.NO.	INDEX	PAGE
01010-81025	G1010-04A0	8	150040
01010-81025	H0210-04A0	7	180133
01010-81025	H0220-04A0	7	180143
01010-81025	H0312-03A0	23	180210
01010-81025	H0312-03A0	36	180210
01010-81025	H0312-03A0	8	180210
01010-81025	H0312-04A0	18	180220
01010-81025	H0312-04A0	21	180220
01010-81025	H0340-04A0	38	180350
01010-81025	H0350-02A0	19	180390
01010-81025	H0350-02A0	4	180390
01010-81025	H0350-03A0	18	180400
01010-81025	H0350-03A0	3	180400
01010-81025	H1320-03A0	3	180505
01010-81025	H1830-03A0	5	180830
01010-81025	H1831-02A0	3	180530
01010-81025	H1833-06A0	2	180610
01010-81025	H1833-07A0	2	180620
01010-81025	H1840-01A0	4	180660
01010-81025	H1841-01A0	12	180740
01010-81025	H1841-02A0	11	180750
01010-81025	H1841-03A0	3	180760
01010-81025	H1843-03A0	11	180800
01010-81025	K0210-20A0	14	240200
01010-81025	K0210-20A0	17	240200
01010-81025	K0210-20A0	8	240200
01010-81025	K0210-28A0	20	240280
01010-81025	K0210-28A0	23	240280
01010-81025	K0210-30A0	20	240300
01010-81025	K0210-30A0	28	240300
01010-81025	K0210-30A0	33	240300
01010-81025	K0210-45A0	13	240450
01010-81025	K0710-02A0	8	240580
01010-81025	K0710-04A0	12	240600
01010-81025	K0710-07A0	18	240630
01010-81025	M1130-13A0	11	270320
01010-81025	M1130-13A0	24	270320
01010-81025	P1120-02A0	13	330020
01010-81025	P1210-01A2	33	330130
01010-81025	P1210-01A8	33	330190
01010-81025	T1110-01A3	38	390030
01010-81030	A1310-B7E8	16	010040
01010-81030	A1310-B7E8	29	010040
01010-81030	A1310-B7E8	8	010040
01010-81030	A1510-A7C5	15	010050
01010-81030	A1510-A7C5	32	010050
01010-81030	A2110-C7G9	12	010370
01010-81030	A2110-D8F9	5	010250
01010-81030	A2110-D8F9	7	010250
01010-81030	A2210-A7D1	22	010380

PART NO.	FIG.NO.	INDEX	PAGE
01010-81030	A3110-B7D6	17	010500
01010-81030	A3310-A7C4	13	010510
01010-81030	A3310-A7C4	7	010510
01010-81030	A4040-A7B1	15	010640
01010-81030	A4040-A7B1	19	010640
01010-81030	A4050-B7A5	17	010690
01010-81030	A4050-D7A5	4	010710
01010-81030	A4050-D7A5	7	010710
01010-81030	A4110-A7E5	62	010721
01010-81030	A4110-B7E4	19	010730
01010-81030	A4110-B7E4	59	010731
01010-81030	A4110-C7E4	10	010740
01010-81030	A4110-C7F2	6	010790
01010-81030	A4110-D7E4	10	010750
01010-81030	A4110-F7E9	27	010820
01010-81030	A4110-G7E9	21	010830
01010-81030	A4110-G7E9	6	010830
01010-81030	A4230-A7C7	10	010840
01010-81030	A4230-A7C7	13	010840
01010-81030	A4230-A7C8	10	010850
01010-81030	A4230-A7C8	13	010850
01010-81030	A4710-A7D7	16	010650
01010-81030	A4710-A7E3	20	010660
01010-81030	A5010-A7E6	37	010880
01010-81030	A5010-A7E8	36	010900
01010-81030	A5010-B7E6	7	010910
01010-81030	A5010-B7F4	7	010890
01010-81030	A6010-A7C9	2	010960
01010-81030	A6010-A7C9	9	010960
01010-81030	A6010-B7D1	16	010970
01010-81030	A6010-B7D2	16	011000
01010-81030	A6010-B7D3	2	011010
01010-81030	A6010-B7D3	9	011010
01010-81030	A6810-B7C6	23	011040
01010-81030	A6810-B7C6	44	011040
01010-81030	A6810-C7C6	11	011051
01010-81030	A6810-D9C6	24	011080
01010-81030	A6810-D9C6	43	011080
01010-81030	A6810-E1C6	13	011090
01010-81030	B0600-01A0	48	030111
01010-81030	B0600-08A0	47	030181
01010-81030	C0100-02A0	23	060020
01010-81030	C0100-13A0	12	060130
01010-81030	E4110-E7E4	12	010760
01010-81030	H0312-04A0	15	180220
01010-81030	H0340-04A0	7	180350
01010-81030	H1833-03A0	1	180595
01010-81030	H1833-05A0	1	180605
01010-81030	K0210-41A0	1	240410
01010-81030	K0210-50A0	13	240500

PART NO.	FIG.NO.	INDEX	PAGE
01010-81030	K1120-01A0	28	240660
01010-81030	K1120-01A1	28	240670
01010-81030	N1210-01A0	6	300020
01010-81030	N1210-02A0	25	300030
01010-81030	N1210-03A0	6	300040
01010-81030	N1210-04A0	25	300050
01010-81030	N1210-04A0	31	300050
01010-81030	N1210-06A0	27	300070
01010-81030	N1210-07A0	27	300080
01010-81030	N1210-07A0	33	300080
01010-81030	N1210-09A0	6	300100
01010-81035	A1310-B7E8	14	010040
01010-81035	A1530-A7C3	21	010060
01010-81035	A2041-B7E4	13	010170
01010-81035	A2110-A7F9	10	010220
01010-81035	A2110-C7F9	10	010240
01010-81035	A2110-C7G8	6	010360
01010-81035	A2110-C7G9	6	010370
01010-81035	A4010-H1J1	5	010571
01010-81035	A4080-01A0	37	010620
01010-81035	A4110-A7E4	39	010720
01010-81035	A4110-B7E4	62	010731
01010-81035	A4110-D7F2	35	010800
01010-81035	A4110-E7F2	25	010810
01010-81035	A4110-F7E9	5	010820
01010-81035	A5210-A7A1	13	010920
01010-81035	A6010-A7C9	7	010960
01010-81035	A6010-B7D1	13	010970
01010-81035	A6010-B7D2	13	011000
01010-81035	A6010-B7D3	7	011010
01010-81035	A6810-B7C6	24	011040
01010-81035	A6810-B7C6	50	011041
01010-81035	A6810-C7C6	32	011051
01010-81035	A6810-D9C6	25	011080
01010-81035	A6810-D9C6	49	011081
01010-81035	A6810-E1C6	34	011090
01010-81035	A6810-E2C6	9	011100
01010-81035	B0600-03A0	9	030130
01010-81035	D0200-04A0	28	090080
01010-81035	E4110-E7E4	7	010760
01010-81035	H0110-01A0	15	180010
01010-81035	H0110-01A1	15	180015
01010-81035	H0312-06A0	3	180251
01010-81035	H0340-04A0	23	180350
01010-81035	K0710-05A0	23	240610
01010-81035	W1114-01A6	17	480110
01010-81040	A2041-B7E4	3	010170
01010-81040	A2050-A7A3	10	010180
01010-81040	A2110-A7F9	7	010220
01010-81040	A2110-C7F9	7	010240

PART NO.	FIG.NO.	INDEX	PAGE
01010-81040	A4110-B7E4	35	010730
01010-81040	A4110-C7F2	30	010790
01010-81040	A4110-E7F2	21	010810
01010-81040	A4110-F7E9	6	010820
01010-81040	A5010-A7E6	36	010880
01010-81040	A5010-A7E8	35	010900
01010-81040	A6810-E1C6	52	011091
01010-81040	B0300-04A0	2	030080
01010-81040	B0300-04A0	8	030080
01010-81040	B0600-01A0	37	030110
01010-81040	B0600-08A0	37	030180
01010-81040	D0200-10A0	6	090140
01010-81040	E0200-04A0	49	120061
01010-81040	G1010-05A0	26	150050
01010-81040	G1010-06A0	25	150060
01010-81040	G1010-06A0	32	150060
01010-81040	H0110-03A0	5	180030
01010-81040	M1130-10A0	17	270230
01010-81040	N1310-01A1	12	300200
01010-81045	A1310-B7E8	10	010040
01010-81045	A2041-B7E4	4	010170
01010-81045	A4110-A7E4	35	010720
01010-81045	A4110-D7F2	31	010800
01010-81045	A4110-E7F2	4	010810
01010-81045	A4110-F7E9	12	010820
01010-81045	A6010-B7D1	22	010970
01010-81045	A6010-B7D2	20	011000
01010-81045	A6810-C7C6	20	011051
01010-81045	A6810-D7C6	7	011060
01010-81045	A6810-E1C6	22	011090
01010-81045	A6810-E2C6	7	011100
01010-81045	D0200-06A0	10	090100
01010-81050	A4710-A7D7	18	010650
01010-81050	A4710-A7D7	6	010650
01010-81050	A4710-A7E3	10	010660
01010-81050	A4710-A7E3	22	010660
01010-81050	A6810-B7C6	21	011040
01010-81050	A6810-D9C6	22	011080
01010-81050	C0100-13A0	7	060130
01010-81050	D0200-06A0	7	090100
01010-81050	D0200-07A0	15	090110
01010-81050	D0200-07A0	7	090110
01010-81050	E0200-27A0	16	120280
01010-81050	E0200-28A0	4	120290
01010-81050	G1010-02A0	21	150020
01010-81050	G1010-02A0	35	150020
01010-81050	G1010-05A0	11	150050
01010-81050	G1010-05A0	3	150050
01010-81050	G1010-06A0	10	150060
01010-81050	G1010-06A0	2	150060

PART NO.	FIG.NO.	INDEX	PAGE
01010-81050	H0230-02A0	28	180161
01010-81050	H1850-04A0	17	180840
01010-81050	T1110-01A3	6	390030
01010-81050	T1210-01A2	20	390220
01010-81050	T1210-01A3	13	390230
01010-81050	T1210-01A3	43	390230
01010-81055	A1310-B7E8	33	010040
01010-81055	A2110-C7G8	18	010360
01010-81055	A2110-C7G8	29	010360
01010-81055	A2110-C7G8	3	010360
01010-81055	A2110-C7G9	17	010370
01010-81055	A2110-C7G9	28	010370
01010-81055	A2110-C7G9	3	010370
01010-81055	A4110-A7E4	32	010720
01010-81055	A6010-B7D1	20	010970
01010-81055	A6010-B7D2	22	011000
01010-81055	C0100-02A0	27	060020
01010-81055	D0200-03A0	14	090070
01010-81055	D0200-03A0	19	090070
01010-81055	D0200-03A0	24	090070
01010-81055	D0200-07A0	31	090110
01010-81055	D0200-08A0	25	090120
01010-81055	D0200-08A0	8	090120
01010-81055	D0200-09A0	29	090130
01010-81055	T1110-01A4	7	390040
01010-81055	T1210-01A2	8	390220
01010-81055	T1210-01A3	27	390230
01010-81055	T1210-01A4	8	390240
01010-81060	A4110-A7E4	17	010720
01010-81060	A4110-B7E4	17	010730
01010-81060	A6810-C7C6	35	011051
01010-81060	A6810-E1C6	37	011090
01010-81060	D0200-06A0	14	090100
01010-81060	G1010-01A0	15	150010
01010-81060	G1010-01A0	20	150010
01010-81060	G1010-02A0	13	150020
01010-81060	G1010-02A0	5	150020
01010-81060	G1010-04A0	13	150040
01010-81060	G1010-04A0	26	150040
01010-81060	G1010-04A0	5	150040
01010-81060	H0110-05A0	24	180050
01010-81060	K0710-03A0	27	240590
01010-81065	A1310-B7E8	31	010040
01010-81065	A2110-C7G8	13	010360
01010-81065	A2110-C7G8	21	010360
01010-81065	A2110-C7G9	20	010370
01010-81065	A3310-A7C4	8	010510
01010-81065	A4110-G7E9	10	010830
01010-81065	A4110-G7E9	25	010830
01010-81065	A4230-A7C7	7	010840

PART NO.	FIG.NO.	INDEX	PAGE
01010-81065	A4230-A7C8	7	010850
01010-81065	B0600-02A0	3	030120
01010-81065	D0200-06A0	24	090100
01010-81065	D0200-07A0	11	090110
01010-81065	H0312-03A0	28	180210
01010-81065	H0312-06A0	7	180251
01010-81070	A4110-F7E9	2	010820
01010-81070	B0300-05A0	28	030090
01010-81070	G1010-05A0	18	150050
01010-81070	G1010-06A0	17	150060
01010-81070	H1833-01A1	1	180585
01010-81075	A2110-C7G8	38	010360
01010-81075	A3310-A7C4	9	010510
01010-81075	D0100-01A0	34	090010
01010-81075	D0100-01A1	29	090020
01010-81075	D0100-01A2	34	090030
01010-81075	D0100-01A3	29	090040
01010-81075	H0340-04A0	20	180350
01010-81075	H0340-04A0	35	180350
01010-81080	A3110-B7D6	7	010500
01010-81085	A2110-B7F9	7	010230
01010-81085	A2110-B7G6	7	010235
01010-81085	A3310-A7C4	12	010510
01010-81085	A4110-C7F2	27	010790
01010-81085	A6810-C7C6	15	011051
01010-81085	A6810-C7C6	44	011051
01010-81085	A6810-E1C6	17	011090
01010-81085	A6810-E1C6	46	011091
01010-81085	B0600-05A0	17	030150
01010-81085	K0710-07A0	28	240630
01010-81085	N1220-01A4	9	300150
01010-81085	N1220-01A8	10	300190
01010-81090	A3110-A7D6	17	010490
01010-81090	A4110-A7E4	15	010720
01010-81090	A6810-B7C6	41	011040
01010-81090	A6810-D9C6	41	011080
01010-81090	H1831-01A0	2	180520
01010-81090	K0710-03A0	29	240590
01010-81090	N1220-01A8	13	300190
01010-81095	H1850-04A0	33	180840
01010-81095	K0210-52A0	22	240520
01010-81220	A2041-B7E4	10	010170
01010-81220	A6810-B7C6	31	011040
01010-81220	A6810-D7C6	11	011060
01010-81220	A6810-D9C6	31	011080
01010-81220	A6810-E2C6	13	011100
01010-81220	C0100-09A0	21	060090
01010-81220	C0100-14A0	14	060140
01010-81220	C0100-16A0	10	060160
01010-81220	D0100-01A0	23	090010

PART NO.	FIG.NO.	INDEX	PAGE
01010-81220	D0100-01A1	18	090020
01010-81220	D0100-01A2	23	090030
01010-81220	D0100-01A3	18	090040
01010-81220	D0200-02A0	13	090060
01010-81220	D0200-02A0	26	090060
01010-81220	D0200-13A0	27	090170
01010-81220	E0200-01A0	6	120030
01010-81220	E0200-01A1	6	120035
01010-81220	E0200-02A0	19	120040
01010-81220	E0200-04A0	35	120060
01010-81220	E0200-04A0	42	120060
01010-81220	E0200-05A0	1	120070
01010-81220	E0200-05A0	7	120070
01010-81220	E0200-06A0	14	120080
01010-81220	E0200-07A0	18	120090
01010-81220	E0200-07A0	2	120090
01010-81220	E0200-07A0	27	120090
01010-81220	E0200-07A0	30	120090
01010-81220	E0200-07A0	38	120090
01010-81220	E0200-07A0	5	120090
01010-81220	E0200-08A0	14	120100
01010-81220	E0200-08A0	19	120100
01010-81220	E0200-08A0	27	120100
01010-81220	E0200-08A0	30	120100
01010-81220	E0200-08A0	34	120100
01010-81220	E0200-08A0	5	120100
01010-81220	E0200-08A0	8	120100
01010-81220	E0200-09A0	10	120110
01010-81220	E0200-10A0	24	120120
01010-81220	E0200-10A0	5	120120
01010-81220	E0200-11A0	11	120130
01010-81220	E0200-11A0	14	120130
01010-81220	E0200-11A0	7	120130
01010-81220	E0200-13A0	27	120150
01010-81220	E0200-13A0	30	120150
01010-81220	E0200-14A0	12	120160
01010-81220	E0200-14A0	15	120160
01010-81220	E0200-15A0	12	120170
01010-81220	E0200-15A0	5	120170
01010-81220	E0200-16A0	18	120180
01010-81220	E0200-16A0	21	120180
01010-81220	E0200-16A1	35	120185
01010-81220	E0200-17A0	18	120190
01010-81220	E0200-17A0	37	120190
01010-81220	E0200-17A0	43	120190
01010-81220	E0200-17A1	11	120195
01010-81220	E0200-17A1	16	120195
01010-81220	E0200-17A1	19	120195
01010-81220	E0200-17A1	5	120195
01010-81220	E0200-17A1	8	120195

PART NO.	FIG.NO.	INDEX	PAGE
01010-81220	E0200-18A1	37	120205
01010-81220	E0200-18A1	6	120205
01010-81220	E0200-19A0	12	120210
01010-81220	E0200-19A0	17	120210
01010-81220	E0200-19A0	20	120210
01010-81220	E0200-19A0	23	120210
01010-81220	E0200-19A0	26	120210
01010-81220	E0200-19A0	29	120210
01010-81220	E0200-19A0	3	120210
01010-81220	E0200-19A0	32	120210
01010-81220	E0200-19A0	35	120210
01010-81220	E0200-19A0	6	120210
01010-81220	E0200-19A0	9	120210
01010-81220	E0200-19A1	10	120215
01010-81220	E0200-20A0	22	120220
01010-81220	E0200-20A0	29	120220
01010-81220	E0200-20A0	3	120220
01010-81220	E0200-20A0	36	120220
01010-81220	E0200-20A0	42	120220
01010-81220	E0200-22A0	3	120230
01010-81220	E0200-23A0	3	120240
01010-81220	E0200-23A0	6	120240
01010-81220	E0200-23A0	9	120240
01010-81220	E0200-24A0	39	120250
01010-81220	E0200-24A0	4	120250
01010-81220	E0200-25A0	23	120260
01010-81220	E0200-26A0	24	120270
01010-81220	E0200-26A0	3	120270
01010-81220	E0200-26A0	6	120270
01010-81220	E0200-28A0	15	120290
01010-81220	E0200-28A0	18	120290
01010-81220	E0200-28A0	21	120290
01010-81220	E0200-28A0	24	120290
01010-81220	E0200-28A0	27	120290
01010-81220	E0200-28A0	34	120290
01010-81220	E0200-28A0	37	120290
01010-81220	E0200-28A0	43	120290
01010-81220	E0200-28A0	9	120290
01010-81220	E0200-28A0	56	120291
01010-81220	E0200-28A0	59	120291
01010-81220	E0200-29A0	11	120300
01010-81220	E0200-29A0	17	120300
01010-81220	E0200-29A0	8	120300
01010-81220	E0200-30A0	13	120310
01010-81220	E0200-30A0	16	120310
01010-81220	E0200-30A0	2	120310
01010-81220	E0200-30A0	6	120310
01010-81220	E0200-30A0	9	120310
01010-81220	E0200-31A0	10	120320
01010-81220	E0200-31A0	2	120320

PART NO.	FIG.NO.	INDEX	PAGE
01010-81220	E0200-31A0	21	120320
01010-81220	E0200-31A0	33	120320
01010-81220	E0201-01A0	10	120360
01010-81220	E0201-01A0	7	120360
01010-81220	E0202-01A0	16	120380
01010-81220	E0202-01A0	28	120380
01010-81220	E0202-02A0	11	120390
01010-81220	E0202-02A0	14	120390
01010-81220	E0202-02A0	17	120390
01010-81220	E0202-02A0	20	120390
01010-81220	E0202-02A0	29	120390
01010-81220	E0202-02A0	38	120390
01010-81220	E0202-02A0	8	120390
01010-81220	E0202-03A0	24	120400
01010-81220	E0202-03A0	27	120400
01010-81220	E0202-03A0	30	120400
01010-81220	E0202-03A0	37	120400
01010-81220	E0202-04A0	33	120410
01010-81220	E0202-04A0	37	120410
01010-81220	E0202-04A0	40	120410
01010-81220	E0202-04A0	47	120411
01010-81220	E0202-05A0	12	120420
01010-81220	E0202-05A0	2	120420
01010-81220	E0202-05A0	6	120420
01010-81220	E0450-01A0	13	120510
01010-81220	E0450-02A0	17	120520
01010-81220	E0450-02A0	21	120520
01010-81220	G1010-01A0	25	150010
01010-81220	G1010-01A0	35	150010
01010-81220	G1010-04A0	30	150040
01010-81220	H0110-01A1	28	180015
01010-81220	H1831-01A0	28	180520
01010-81220	H1835-02A0	27	180640
01010-81220	H1840-06A0	30	180710
01010-81220	K0210-13A0	13	240130
01010-81220	K0210-14A0	6	240140
01010-81220	K0210-14A0	9	240140
01010-81220	K0210-15A0	11	240150
01010-81220	K0210-15A0	25	240150
01010-81220	K0210-15A0	8	240150
01010-81220	K0210-19A0	22	240190
01010-81220	K0710-08A0	6	240640
01010-81220	K0710-08A1	6	240645
01010-81220	M1130-02A0	26	270150
01010-81220	M1130-10A0	14	270230
01010-81220	M1130-11A0	10	270240
01010-81220	M1130-11A0	7	270240
01010-81220	M1130-12A1	11	270310
01010-81220	M1130-12A1	14	270310
01010-81220	M1130-12A1	3	270310

PART NO.	FIG.NO.	INDEX	PAGE
01010-81220	M1130-13A0	6	270320
01010-81220	T1110-01A6	10	390060
01010-81220	T1210-01A4	22	390240
01010-81220	W1114-01A10	18	480150
01010-81220	W1114-01A10	27	480150
01010-81220	W1114-01A10	38	480150
01010-81220	W1114-01A10	7	480150
01010-81220	W1114-01A11	16	480160
01010-81220	W1114-01A11	47	480161
01010-81220	W1114-01A5	21	480100
01010-81220	W1117-02A1	3	480190
01010-81220	W1117-04A1	3	480250
01010-81220	W1117-04A8	16	480320
01010-81220	W1117-04A8	7	480320
01010-81220	W1117-06A8	4	480340
01010-81220	W1117-06A9A	6	480350
01010-81225	A2011-A7B9	4	010140
01010-81225	A2011-A7B9	7	010140
01010-81225	A2041-A7E4	15	010160
01010-81225	A2041-B7E4	33	010170
01010-81225	A6810-B7C6	3	011040
01010-81225	A6810-C7C6	3	011051
01010-81225	A6810-D9C6	3	011080
01010-81225	A6810-E1C6	3	011090
01010-81225	B0100-02A0	4	030020
01010-81225	B0100-02A0	7	030020
01010-81225	B0100-02A1	4	030030
01010-81225	B0300-05A0	32	030090
01010-81225	B0300-05A0	35	030090
01010-81225	B0300-05A0	38	030090
01010-81225	B0300-05A0	41	030090
01010-81225	B0300-06A0	15	030100
01010-81225	B0300-06A0	2	030100
01010-81225	B0300-06A0	8	030100
01010-81225	B0600-03A0	18	030130
01010-81225	B0600-04A0	12	030140
01010-81225	B0600-04A0	9	030140
01010-81225	B0600-06A0	7	030160
01010-81225	C0100-03A0	10	060030
01010-81225	C0100-03A0	3	060030
01010-81225	C0100-05A0	26	060050
01010-81225	C0100-05A0	32	060050
01010-81225	C0100-07A0	18	060070
01010-81225	C0100-07A0	23	060070
01010-81225	C0100-07A0	28	060070
01010-81225	C0100-08A0	7	060080
01010-81225	C0100-09A0	26	060090
01010-81225	C0100-11A0	11	060110
01010-81225	C0100-14A0	17	060140
01010-81225	C0100-16A0	6	060160

PART NO.	FIG.NO.	INDEX	PAGE
01010-81225	C0100-16A0	22	060170
01010-81225	C0100-16A0	26	060170
01010-81225	C0100-16A0	29	060170
01010-81225	D0200-01A0	10	090050
01010-81225	D0200-01A0	7	090050
01010-81225	D0200-02A0	16	090060
01010-81225	D0200-02A0	19	090060
01010-81225	D0200-03A0	3	090070
01010-81225	D0200-03A0	35	090070
01010-81225	D0200-06A0	35	090100
01010-81225	D0200-09A0	15	090130
01010-81225	D0200-10A0	34	090140
01010-81225	D0200-11A0	16	090150
01010-81225	D0200-11A0	19	090150
01010-81225	D0200-11A0	22	090150
01010-81225	D0200-12A0	12	090160
01010-81225	D0200-12A0	18	090160
01010-81225	D0200-12A0	29	090160
01010-81225	D0200-12A9	11	090165
01010-81225	D0200-13A0	2	090170
01010-81225	D0200-13A0	47	090171
01010-81225	D0200-13A0	53	090171
01010-81225	E0200-01A0	2	120030
01010-81225	E0200-01A1	2	120035
01010-81225	E0200-05A0	10	120070
01010-81225	E0200-05A0	4	120070
01010-81225	E0200-06A0	2	120080
01010-81225	E0200-06A0	7	120080
01010-81225	E0200-07A0	15	120090
01010-81225	E0200-07A0	21	120090
01010-81225	E0200-07A0	24	120090
01010-81225	E0200-08A0	16	120100
01010-81225	E0200-08A0	24	120100
01010-81225	E0200-10A0	11	120120
01010-81225	E0200-10A0	16	120120
01010-81225	E0200-10A0	21	120120
01010-81225	E0200-10A0	7	120120
01010-81225	E0200-12A0	14	120140
01010-81225	E0200-12A0	25	120140
01010-81225	E0200-12A0	4	120140
01010-81225	E0200-12A0	8	120140
01010-81225	E0200-14A0	22	120160
01010-81225	E0200-14A0	4	120160
01010-81225	E0200-14A1	22	120165
01010-81225	E0200-14A1	25	120165
01010-81225	E0200-14A1	28	120165
01010-81225	E0200-14A1	31	120165
01010-81225	E0200-15A0	20	120170
01010-81225	E0200-16A0	24	120180
01010-81225	E0200-17A0	11	120190

PART NO.	FIG.NO.	INDEX	PAGE
01010-81225	E0200-17A0	15	120190
01010-81225	E0200-17A0	21	120190
01010-81225	E0200-17A0	24	120190
01010-81225	E0200-17A0	30	120190
01010-81225	E0200-17A0	5	120190
01010-81225	E0200-17A0	8	120190
01010-81225	E0200-17A0	46	120191
01010-81225	E0200-17A1	2	120195
01010-81225	E0200-18A0	4	120200
01010-81225	E0200-18A0	7	120200
01010-81225	E0200-18A1	17	120205
01010-81225	E0200-19A1	2	120215
01010-81225	E0200-20A0	10	120220
01010-81225	E0200-20A0	39	120220
01010-81225	E0200-20A0	7	120220
01010-81225	E0200-22A0	12	120230
01010-81225	E0200-22A0	6	120230
01010-81225	E0200-22A0	9	120230
01010-81225	E0200-23A0	13	120240
01010-81225	E0200-23A0	17	120240
01010-81225	E0200-24A0	18	120250
01010-81225	E0200-24A0	31	120250
01010-81225	E0200-24A0	36	120250
01010-81225	E0200-24A0	9	120250
01010-81225	E0200-25A0	13	120260
01010-81225	E0200-25A0	17	120260
01010-81225	E0200-25A0	2	120260
01010-81225	E0200-25A0	20	120260
01010-81225	E0200-25A0	29	120260
01010-81225	E0200-25A0	5	120260
01010-81225	E0200-27A0	18	120280
01010-81225	E0200-28A0	12	120290
01010-81225	E0200-28A0	47	120291
01010-81225	E0200-28A0	50	120291
01010-81225	E0200-28A0	53	120291
01010-81225	E0200-29A0	14	120300
01010-81225	E0200-29A0	2	120300
01010-81225	E0200-31A0	13	120320
01010-81225	E0200-31A0	18	120320
01010-81225	E0200-31A0	24	120320
01010-81225	E0200-31A0	30	120320
01010-81225	E0200-31A0	5	120320
01010-81225	E0200-32A0	4	120330
01010-81225	E0200-33A0	4	120340
01010-81225	E0201-01A0	4	120360
01010-81225	E0202-01A0	8	120380
01010-81225	E0202-03A0	2	120400
01010-81225	E0202-04A0	16	120410
01010-81225	E0202-04A0	19	120410
01010-81225	E0202-04A0	2	120410

PART NO.	FIG.NO.	INDEX	PAGE
01010-81225	E0202-04A0	24	120410
01010-81225	E0320-02A0	17	120480
01010-81225	E0320-02A0	9	120480
01010-81225	E0420-01A0	5	120500
01010-81225	E0450-02A0	10	120520
01010-81225	E0450-03A0	12	120530
01010-81225	E0450-04A0	12	120540
01010-81225	E0450-04A0	2	120540
01010-81225	E0450-04A0	22	120540
01010-81225	E0450-04A0	8	120540
01010-81225	G1010-01A0	32	150010
01010-81225	G1010-04A0	17	150040
01010-81225	G1010-04A0	20	150040
01010-81225	H0110-01A0	11	180010
01010-81225	H0110-01A1	11	180015
01010-81225	H0110-06A0	12	180060
01010-81225	H0311-02A3	12	180180
01010-81225	H0311-02A3	16	180180
01010-81225	H0311-02A3	7	180180
01010-81225	H0312-04A0	31	180220
01010-81225	H0312-06A0	10	180240
01010-81225	H0312-06A0	13	180240
01010-81225	H0312-06A0	17	180240
01010-81225	H0312-06A0	21	180240
01010-81225	H0330-03A0	11	180310
01010-81225	H0340-04A0	58	180351
01010-81225	H0340-06A0	23	180370
01010-81225	H0340-06A0	36	180370
01010-81225	H0350-01A0	28	180380
01010-81225	H0350-03A0	34	180400
01010-81225	H0350-04A0	15	180410
01010-81225	H0350-04A0	6	180410
01010-81225	H1830-03A0	8	180830
01010-81225	H1831-02A0	23	180530
01010-81225	H1831-02A0	6	180530
01010-81225	H1831-03A0	11	180540
01010-81225	H1831-03A0	8	180540
01010-81225	H1832-01A0	6	180550
01010-81225	H1832-01A0	9	180550
01010-81225	H1832-02A0	12	180560
01010-81225	H1832-02A0	26	180560
01010-81225	H1832-03A0	12	180570
01010-81225	H1832-03A0	21	180570
01010-81225	H1833-01A1	4	180585
01010-81225	H1833-06A0	5	180610
01010-81225	H1833-07A0	5	180620
01010-81225	H1835-01A0	22	180630
01010-81225	H1835-01A0	9	180630
01010-81225	H1835-02A0	8	180640
01010-81225	H1840-01A0	7	180660

PART NO.	FIG.NO.	INDEX	PAGE
01010-81225	H1840-02A0	15	180670
01010-81225	H1840-02A0	18	180670
01010-81225	H1840-03A0	22	180680
01010-81225	H1840-05A0	16	180700
01010-81225	H1840-05A0	9	180700
01010-81225	H1840-08A0	7	180720
01010-81225	H1840-09A0	4	180730
01010-81225	H1840-09A0	9	180730
01010-81225	H1841-02A0	14	180750
01010-81225	H1841-02A0	35	180750
01010-81225	H1841-02A0	45	180751
01010-81225	H1841-03A0	26	180760
01010-81225	H1841-03A0	30	180760
01010-81225	H1841-03A0	34	180760
01010-81225	H1842-01A0	11	180770
01010-81225	H1842-01A0	14	180770
01010-81225	H1843-01A0	4	180780
01010-81225	H1843-02A0	5	180790
01010-81225	H1850-02A0	7	180820
01010-81225	H1850-04A0	2	180840
01010-81225	H1850-04A0	54	180841
01010-81225	K0210-05A0	21	240050
01010-81225	K0210-12A0	14	240120
01010-81225	K0210-16A0	10	240160
01010-81225	K0210-16A0	19	240160
01010-81225	K0210-19A0	11	240190
01010-81225	K0210-19A0	8	240190
01010-81225	K0710-02A0	2	240580
01010-81225	K0710-03A0	17	240590
01010-81225	K0710-03A0	24	240590
01010-81225	K0710-03A0	33	240590
01010-81225	K0710-04A0	8	240600
01010-81225	K0710-05A0	12	240610
01010-81225	K0710-05A0	15	240610
01010-81225	K0710-05A0	21	240610
01010-81225	K0710-06A0	11	240620
01010-81225	K0710-06A0	25	240620
01010-81225	K0710-06A0	28	240620
01010-81225	K0710-07A0	10	240630
01010-81225	K0710-07A0	22	240630
01010-81225	K0710-07A0	30	240630
01010-81225	K0710-07A0	35	240630
01010-81225	K0710-08A0	14	240640
01010-81225	K0710-08A0	8	240640
01010-81225	K0710-08A1	14	240645
01010-81225	K0710-08A1	8	240645
01010-81225	K0710-09A0	3	240650
01010-81225	K1120-01A0	17	240660
01010-81225	K1120-01A1	17	240670
01010-81225	K1921-01A0	10	240680

PART NO.	FIG.NO.	INDEX	PAGE
01010-81225	K1921-01A0	21	240680
01010-81225	K1921-01A0	36	240680
01010-81225	K1921-01A0	39	240680
01010-81225	K1921-01A0	42	240680
01010-81225	K1921-01A1	10	240685
01010-81225	K1921-01A1	21	240685
01010-81225	K1921-01A1	36	240685
01010-81225	K1921-01A1	39	240685
01010-81225	K1921-01A1	42	240685
01010-81225	K1921-01A3	10	240687
01010-81225	K1921-01A3	21	240687
01010-81225	K1921-01A3	36	240687
01010-81225	K1921-01A3	39	240687
01010-81225	K1921-01A3	42	240687
01010-81225	K1921-02A1	40	240695
01010-81225	K1921-02A1	43	240695
01010-81225	K1921-02A1	51	240696
01010-81225	K1921-03A0	11	240700
01010-81225	K1921-03A0	2	240700
01010-81225	K1921-03A0	5	240700
01010-81225	K1921-03A0	8	240700
01010-81225	M1110-01A0	11	270010
01010-81225	M1110-01A0	33	270010
01010-81225	M1110-01A0	5	270010
01010-81225	M1110-02A0	17	270020
01010-81225	M1110-02A0	33	270020
01010-81225	M1110-02A0	37	270020
01010-81225	M1110-02A0	5	270020
01010-81225	M1110-03A0	10	270030
01010-81225	M1110-03A0	16	270030
01010-81225	M1110-04A0	20	270040
01010-81225	M1110-04A0	4	270040
01010-81225	M1110-04A0	44	270040
01010-81225	M1110-05A0	3	270050
01010-81225	M1110-07A0	10	270070
01010-81225	M1110-07A0	12	270070
01010-81225	M1110-08A0	14	270080
01010-81225	M1110-12A0	36	270120
01010-81225	M1130-03A0	12	270160
01010-81225	M1130-03A0	18	270160
01010-81225	M1130-03A0	27	270160
01010-81225	M1130-03A0	35	270160
01010-81225	M1130-05A0	3	270180
01010-81225	M1130-05A0	7	270180
01010-81225	M1130-05A0	9	270180
01010-81225	M1130-07A1	12	270260
01010-81225	M1130-07A1	29	270260
01010-81225	M1130-07A1	37	270260
01010-81225	M1130-09A2	8	270280
01010-81225	M1130-10A1	36	270290

PART NO.	FIG.NO.	INDEX	PAGE
01010-81225	M1130-10A1	41	270290
01010-81225	M1130-11A0	13	270240
01010-81225	M1130-11A0	19	270240
01010-81225	M1130-11A1	19	270300
01010-81225	M1130-12A0	15	270250
01010-81225	M1130-13A0	16	270320
01010-81225	M1150-01A0	24	270400
01010-81225	M1150-01A0	27	270400
01010-81225	M1150-01A0	30	270400
01010-81225	M1150-01A0	33	270400
01010-81225	M1150-02A0	14	270410
01010-81225	M1150-02A0	20	270410
01010-81225	M1150-02A0	27	270410
01010-81225	M1150-02A0	31	270410
01010-81225	M1150-02A0	4	270410
01010-81225	M1150-02A0	8	270410
01010-81225	M1210-02A0	10	270430
01010-81225	M1210-02A0	13	270430
01010-81225	M1210-02A0	16	270430
01010-81225	M1210-02A0	25	270430
01010-81225	M1210-02A0	37	270430
01010-81225	M1210-03A0	15	270440
01010-81225	M1210-03A0	18	270440
01010-81225	M1210-03A0	21	270440
01010-81225	M1210-03A0	24	270440
01010-81225	M1210-03A0	26	270440
01010-81225	M1210-03A0	9	270440
01010-81225	M1210-04A0	3	270450
01010-81225	M1510-01A0	13	270500
01010-81225	M1510-01A0	16	270500
01010-81225	M1810-01A0	6	270510
01010-81225	M1810-02A0	12	270520
01010-81225	M1810-02A0	16	270520
01010-81225	M1810-02A0	20	270520
01010-81225	M1810-02A0	24	270520
01010-81225	M1810-02A0	27	270520
01010-81225	M1810-02A0	31	270520
01010-81225	M1810-02A0	9	270520
01010-81225	M1810-03A0	12	270530
01010-81225	M1810-03A0	16	270530
01010-81225	M1810-03A0	20	270530
01010-81225	M1810-03A0	25	270530
01010-81225	M1810-03A0	5	270530
01010-81225	M1810-03A0	8	270530
01010-81225	M1810-04A0	10	270540
01010-81225	M1810-04A0	14	270540
01010-81225	M1810-04A0	18	270540
01010-81225	M1810-04A0	6	270540
01010-81225	N1210-05A0	1	300060
01010-81225	N1210-08A0	13	300090

PART NO.	FIG.NO.	INDEX	PAGE
01010-81225	N1210-08A0	17	300090
01010-81225	N1210-08A0	26	300090
01010-81225	N1210-08A0	35	300090
01010-81225	N1210-08A0	40	300090
01010-81225	N1210-08A0	8	300090
01010-81225	P1140-01A3	11	330060
01010-81225	P1140-01A6	11	330090
01010-81225	P1140-01A6	17	330090
01010-81225	P1140-01A7	14	330100
01010-81225	P1140-01A7	20	330100
01010-81225	P1140-01A8	9	330110
01010-81225	R0120-01A2	10	360020
01010-81225	R0120-01A2	39	360020
01010-81225	R0120-01A4	10	360040
01010-81225	R0120-01A4	39	360040
01010-81225	R1110-01A1	11	360100
01010-81225	R1110-01A1	8	360100
01010-81225	R1110-02A1	11	360110
01010-81225	R1110-02A1	8	360110
01010-81225	R1120-01A1	3	360120
01010-81225	R1120-01A1	7	360120
01010-81225	T1110-01A3	2	390030
01010-81225	T1110-01A6	6	390060
01010-81225	T1210-01A2	3	390220
01010-81225	T1210-01A5	21	390250
01010-81225	T1210-01A5	24	390250
01010-81225	T1230-01A2	12	390300
01010-81225	T1230-01A2	17	390300
01010-81225	T1230-01A2	22	390300
01010-81225	T1230-01A2	4	390300
01010-81225	T1230-01A5	12	390330
01010-81225	W1114-01A1	15	480060
01010-81225	W1114-01A1	7	480060
01010-81225	W1114-01A10	21	480150
01010-81225	W1114-01A10	24	480150
01010-81225	W1114-01A10	31	480150
01010-81225	W1114-01A10	34	480150
01010-81225	W1114-01A10	41	480150
01010-81225	W1114-01A11	2	480160
01010-81225	W1114-01A11	20	480160
01010-81225	W1114-01A11	41	480160
01010-81225	W1114-01A11	44	480160
01010-81225	W1114-01A11	5	480160
01010-81225	W1114-01A2	18	480070
01010-81225	W1114-01A2	9	480070
01010-81225	W1114-01A4	4	480090
01010-81225	W1114-01A4	8	480090
01010-81225	W1114-01A6	20	480110
01010-81225	W1114-01A6	24	480110
01010-81225	W1114-01A6	28	480110

PART NO.	FIG.NO.	INDEX	PAGE
01010-81225	W1114-01A6	32	480110
01010-81225	W1114-01A7	14	480120
01010-81225	W1114-01A7	18	480120
01010-81225	W1114-01A7	3	480120
01010-81225	W1114-01A7	35	480120
01010-81225	W1114-01A7	39	480120
01010-81225	W1114-01A9	3	480140
01010-81225	W1114-02A5	15	480180
01010-81225	W1117-02A1	12	480190
01010-81225	W1117-02A1	20	480190
01010-81225	W1117-02A1	23	480190
01010-81225	W1117-02A1	6	480190
01010-81225	W1117-02A1	9	480190
01010-81225	W1117-04A1	12	480250
01010-81225	W1117-04A1	20	480250
01010-81225	W1117-04A1	23	480250
01010-81225	W1117-04A1	6	480250
01010-81225	W1117-04A1	9	480250
01010-81225	W1117-04A7	11	480310
01010-81225	W1117-04A7	15	480310
01010-81225	W1117-04A7	18	480310
01010-81225	W1117-04A7	22	480310
01010-81225	W1117-04A7	8	480310
01010-81225	W1117-05A7	15	480360
01010-81225	W1117-05A7	2	480360
01010-81225	W1117-05A7	20	480360
01010-81225	W1117-05A7	24	480360
01010-81225	W1117-05A7	6	480360
01010-81225	W1117-05A7	9	480360
01010-81225	W1117-06A7	11	480330
01010-81225	W1117-06A7	15	480330
01010-81225	W1117-06A7	18	480330
01010-81225	W1117-06A7	22	480330
01010-81225	W1117-06A7	8	480330
01010-81230	A2041-A7E4	17	010160
01010-81230	A2041-A7E4	22	010160
01010-81230	A4080-01A0	18	010620
01010-81230	A4110-A7E4	25	010720
01010-81230	A4110-D7F2	24	010800
01010-81230	A5010-A7E6	18	010880
01010-81230	A5010-A7E8	18	010900
01010-81230	B0300-02A0	10	030050
01010-81230	B0300-02A0	13	030050
01010-81230	B0300-02A1	10	030060
01010-81230	B0300-02A1	13	030060
01010-81230	B0300-03A0	5	030070
01010-81230	B0300-04A0	14	030080
01010-81230	B0300-05A0	18	030090
01010-81230	B0300-06A0	12	030100
01010-81230	C0100-05A0	23	060050

PART NO.	FIG.NO.	INDEX	PAGE
01010-81230	C0100-06A0	11	060060
01010-81230	C0100-06A0	14	060060
01010-81230	C0100-06A0	17	060060
01010-81230	C0100-06A0	2	060060
01010-81230	C0100-06A0	5	060060
01010-81230	C0100-06A0	8	060060
01010-81230	C0100-09A0	9	060090
01010-81230	C0100-13A0	18	060130
01010-81230	C0100-15A0	11	060150
01010-81230	C0100-15A0	14	060150
01010-81230	C0100-15A0	2	060150
01010-81230	C0100-15A0	5	060150
01010-81230	C0100-15A0	8	060150
01010-81230	C0100-16A0	9	060170
01010-81230	D0100-01A0	16	090010
01010-81230	D0100-01A2	16	090030
01010-81230	D0200-01A0	24	090050
01010-81230	D0200-03A0	27	090070
01010-81230	D0200-04A0	13	090080
01010-81230	D0200-04A0	37	090080
01010-81230	D0200-04A0	6	090080
01010-81230	D0200-05A0	11	090090
01010-81230	D0200-10A0	23	090140
01010-81230	D0200-10A0	26	090140
01010-81230	D0200-11A0	13	090150
01010-81230	D0200-11A0	45	090150
01010-81230	D0200-13A0	18	090170
01010-81230	E0200-04A0	3	120060
01010-81230	E0200-10A0	30	120120
01010-81230	E0200-11A0	4	120130
01010-81230	E0200-13A0	5	120150
01010-81230	E0200-14A1	9	120165
01010-81230	E0200-15A0	31	120170
01010-81230	E0200-15A1	2	120175
01010-81230	E0200-15A1	5	120175
01010-81230	E0200-16A0	6	120180
01010-81230	E0200-17A0	27	120190
01010-81230	E0200-17A0	40	120190
01010-81230	E0200-18A1	42	120205
01010-81230	E0200-26A0	11	120270
01010-81230	E0200-26A0	14	120270
01010-81230	E0200-27A0	11	120280
01010-81230	E0200-27A0	24	120280
01010-81230	E0200-27A0	4	120280
01010-81230	E0202-02A0	23	120390
01010-81230	E0202-02A0	26	120390
01010-81230	E0202-02A0	32	120390
01010-81230	E0202-02A0	35	120390
01010-81230	E0450-03A0	16	120530
01010-81230	E0450-03A0	27	120530

PART NO.	FIG.NO.	INDEX	PAGE
01010-81230	E0450-03A0	7	120530
01010-81230	H0110-02A0	18	180020
01010-81230	H0110-02A0	26	180020
01010-81230	H0110-05A0	17	180050
01010-81230	H0110-05A0	27	180050
01010-81230	H0312-01A0	17	180190
01010-81230	H0312-04A0	35	180220
01010-81230	H0312-05A0	21	180230
01010-81230	H0312-08A0	27	180260
01010-81230	H0312-08A0	33	180260
01010-81230	H0312-08A0	35	180260
01010-81230	H0320-01A0	12	180270
01010-81230	H0320-01A0	18	180270
01010-81230	H0320-01A0	6	180270
01010-81230	H0320-02A0	18	180280
01010-81230	H0320-02A0	24	180280
01010-81230	H0320-02A0	31	180280
01010-81230	H0330-03A0	5	180310
01010-81230	H0330-03A0	8	180310
01010-81230	H0340-01A0	2	180320
01010-81230	H0340-03A0	3	180340
01010-81230	H0340-03A0	7	180340
01010-81230	H0340-04A0	2	180350
01010-81230	H0340-06A0	11	180370
01010-81230	H0340-06A0	2	180370
01010-81230	H0340-06A0	8	180370
01010-81230	H0350-02A0	21	180390
01010-81230	H1833-03A0	4	180595
01010-81230	H1833-05A0	31	180605
01010-81230	H1833-05A0	4	180605
01010-81230	H1835-02A0	18	180640
01010-81230	H1835-02A0	21	180640
01010-81230	H1840-03A0	25	180680
01010-81230	H1840-03A0	28	180680
01010-81230	H1840-04A0	21	180690
01010-81230	H1840-06A0	15	180710
01010-81230	H1840-09A0	7	180730
01010-81230	H1841-01A0	4	180740
01010-81230	H1841-01A0	7	180740
01010-81230	J1110-01A0	4	210010
01010-81230	J1110-01A1	4	210020
01010-81230	K0210-46A0	4	240460
01010-81230	K0710-03A0	19	240590
01010-81230	K0710-03A0	21	240590
01010-81230	K0710-04A0	16	240600
01010-81230	K1120-01A0	2	240660
01010-81230	K1120-01A1	2	240670
01010-81230	K1921-01A0	27	240680
01010-81230	K1921-01A1	27	240685
01010-81230	K1921-01A3	27	240687

PART NO.	FIG.NO.	INDEX	PAGE
01010-81230	M1110-05A0	18	270050
01010-81230	M1110-06A0	12	270060
01010-81230	M1110-06A0	19	270060
01010-81230	M1110-06A0	25	270060
01010-81230	M1110-06A0	6	270060
01010-81230	M1110-07A0	18	270070
01010-81230	M1110-07A0	27	270070
01010-81230	M1110-08A0	16	270080
01010-81230	M1110-08A0	26	270080
01010-81230	M1110-08A0	36	270080
01010-81230	M1110-08A0	41	270080
01010-81230	M1110-10A0	11	270100
01010-81230	M1110-10A0	17	270100
01010-81230	M1110-10A0	23	270100
01010-81230	M1110-10A0	5	270100
01010-81230	M1130-02A0	14	270150
01010-81230	M1130-02A0	17	270150
01010-81230	M1130-03A0	38	270160
01010-81230	M1130-04A0	19	270170
01010-81230	M1130-04A0	4	270170
01010-81230	M1130-06A0	11	270190
01010-81230	M1130-06A0	2	270190
01010-81230	M1130-06A0	5	270190
01010-81230	M1130-06A0	8	270190
01010-81230	M1130-07A0	3	270200
01010-81230	M1130-08A0	11	270210
01010-81230	M1130-08A0	14	270210
01010-81230	M1130-08A0	17	270210
01010-81230	M1130-08A0	20	270210
01010-81230	M1130-08A0	23	270210
01010-81230	M1130-08A0	32	270210
01010-81230	M1130-08A0	39	270210
01010-81230	M1130-08A0	42	270210
01010-81230	M1130-08A0	8	270210
01010-81230	M1130-09A0	4	270220
01010-81230	M1130-09A2	11	270280
01010-81230	M1130-09A2	21	270280
01010-81230	M1130-10A0	12	270230
01010-81230	M1130-12A1	6	270310
01010-81230	M1130-13A0	27	270320
01010-81230	M1140-04A0	20	270360
01010-81230	M1150-01A0	17	270400
01010-81230	M1150-01A0	6	270400
01010-81230	M1210-01A0	11	270420
01010-81230	M1210-01A0	14	270420
01010-81230	M1210-01A0	17	270420
01010-81230	M1210-01A0	2	270420
01010-81230	M1210-01A0	20	270420
01010-81230	M1210-01A0	5	270420
01010-81230	M1210-01A0	8	270420

PART NO.	FIG.NO.	INDEX	PAGE
01010-81230	M1210-02A0	3	270430
01010-81230	M1210-05A0	17	270460
01010-81230	M1210-05A0	20	270460
01010-81230	M1210-05A0	25	270460
01010-81230	M1210-05A0	31	270460
01010-81230	M1210-05A0	34	270460
01010-81230	M1210-05A0	37	270460
01010-81230	M1810-01A0	15	270510
01010-81230	M1810-01A0	9	270510
01010-81230	M1810-05A0	10	270550
01010-81230	M1810-05A0	19	270550
01010-81230	M1810-05A0	7	270550
01010-81230	P1140-01A3	19	330060
01010-81230	P1140-01A3	29	330060
01010-81230	P1140-01A3	5	330060
01010-81230	P1210-01A1	11	330120
01010-81230	P1210-01A2	6	330130
01010-81230	P1210-01A7	10	330180
01010-81230	P1210-01A8	6	330190
01010-81230	R0120-01A2	32	360020
01010-81230	R0120-01A4	32	360040
01010-81230	W1117-02A2A	11	480200
01010-81230	W1117-02A4	6	480220
01010-81230	W1117-04A2A	11	480260
01010-81230	W1117-04A4	6	480280
01010-81230	W1117-04A8	13	480320
01010-81235	A2110-D8F9	3	010250
01010-81235	A2330-A7A1	2	010420
01010-81235	B0300-01A0	25	030040
01010-81235	B0300-02A0	21	030050
01010-81235	B0300-02A1	26	030060
01010-81235	B0300-03A0	12	030070
01010-81235	B0600-02A0	7	030120
01010-81235	B0600-05A0	24	030150
01010-81235	C0100-02A0	14	060020
01010-81235	C0100-02A0	19	060020
01010-81235	C0100-02A0	30	060020
01010-81235	C0100-02A0	9	060020
01010-81235	C0100-05A0	2	060050
01010-81235	C0100-07A0	2	060070
01010-81235	C0100-08A0	15	060080
01010-81235	C0100-08A0	22	060080
01010-81235	C0100-08A0	30	060080
01010-81235	C0100-08A0	37	060080
01010-81235	C0100-11A0	20	060110
01010-81235	C0100-11A0	5	060110
01010-81235	C0100-12A0	11	060120
01010-81235	C0100-12A0	17	060120
01010-81235	C0100-14A0	2	060140
01010-81235	D0100-01A0	12	090010

PART NO.	FIG.NO.	INDEX	PAGE
01010-81235	D0100-01A1	12	090020
01010-81235	D0100-01A2	12	090030
01010-81235	D0100-01A3	12	090040
01010-81235	D0200-01A0	21	090050
01010-81235	D0200-04A0	39	090080
01010-81235	D0200-05A0	13	090090
01010-81235	D0200-07A0	26	090110
01010-81235	D0200-09A0	6	090130
01010-81235	D0200-12A0	3	090160
01010-81235	D0200-12A9	18	090165
01010-81235	D0200-12A9	24	090165
01010-81235	D0200-12A9	3	090165
01010-81235	D0200-13A0	44	090170
01010-81235	D0200-13A0	50	090171
01010-81235	E0200-01A0	9	120030
01010-81235	E0200-01A1	9	120035
01010-81235	E0200-02A0	12	120040
01010-81235	E0200-15A0	16	120170
01010-81235	E0200-15A0	28	120170
01010-81235	E0200-15A0	9	120170
01010-81235	E0200-24A0	23	120250
01010-81235	E0200-27A0	28	120280
01010-81235	E0200-27A0	8	120280
01010-81235	G1010-02A0	29	150020
01010-81235	H0110-02A0	8	180020
01010-81235	H0110-04A0	11	180040
01010-81235	H0110-04A0	18	180040
01010-81235	H0110-05A0	3	180050
01010-81235	H0311-01A0	3	180165
01010-81235	H0311-01A1	10	180170
01010-81235	H0311-01A1	22	180170
01010-81235	H0311-01A1	26	180170
01010-81235	H0311-02A0	3	180175
01010-81235	H0311-02A1	10	180177
01010-81235	H0311-02A1	22	180177
01010-81235	H0311-02A1	26	180177
01010-81235	H0312-02A0	19	180200
01010-81235	H0312-02A0	22	180200
01010-81235	H0312-06A0	6	180250
01010-81235	H0312-06A0	12	180251
01010-81235	H0330-01A0	6	180290
01010-81235	H0330-01A0	9	180290
01010-81235	H0330-03A0	13	180310
01010-81235	H0340-01A0	4	180320
01010-81235	H0340-01A0	8	180320
01010-81235	H1210-02A0	15	180430
01010-81235	H1210-02A0	36	180430
01010-81235	H1210-03A0	15	180440
01010-81235	H1210-03A0	31	180440
01010-81235	H1310-01A0	16	180480

PART NO.	FIG.NO.	INDEX	PAGE
01010-81235	H1340-01A0	11	180510
01010-81235	H1840-04A0	14	180690
01010-81235	H1841-01A0	15	180740
01010-81235	H1843-03A0	26	180800
01010-81235	H1843-03A0	29	180800
01010-81235	K0210-46A0	2	240460
01010-81235	K1921-02A1	47	240696
01010-81235	M1110-04A0	39	270040
01010-81235	M1110-05A0	16	270050
01010-81235	M1110-09A0	4	270090
01010-81235	M1110-11A0	29	270110
01010-81235	M1110-11A0	34	270110
01010-81235	M1110-12A0	11	270120
01010-81235	M1110-12A0	28	270120
01010-81235	M1110-12A0	32	270120
01010-81235	M1130-08A1	29	270270
01010-81235	M1130-10A1	11	270290
01010-81235	M1150-01A0	20	270400
01010-81235	M1150-02A0	10	270410
01010-81235	M1210-02A0	6	270430
01010-81235	M1810-01A0	19	270510
01010-81235	M1810-02A0	29	270520
01010-81235	M1810-03A0	22	270530
01010-81235	M1810-04A0	16	270540
01010-81235	P1140-01A3	27	330060
01010-81235	W1114-01A1	19	480060
01010-81235	W1114-01A10	4	480150
01010-81240	A1730-A7C6	18	010120
01010-81240	C0100-05A0	20	060050
01010-81240	C0100-09A0	2	060090
01010-81240	C0100-14A0	26	060140
01010-81240	C0100-16A0	2	060170
01010-81240	E0200-16A0	29	120180
01010-81240	E0200-16A0	34	120180
01010-81240	E0200-20A0	15	120220
01010-81240	E0200-20A0	19	120220
01010-81240	E0200-20A0	26	120220
01010-81240	E0200-20A0	33	120220
01010-81240	E0450-02A0	25	120520
01010-81240	H0110-03A0	32	180030
01010-81240	H0312-01A0	19	180190
01010-81240	H0312-02A0	16	180200
01010-81240	H0312-08A0	30	180260
01010-81240	H0312-08A0	36	180260
01010-81240	H1310-01A0	33	180480
01010-81240	M1110-07A0	25	270070
01010-81240	M1110-08A0	31	270080
01010-81240	M1110-08A0	50	270081
01010-81240	M1110-09A0	28	270090
01010-81240	M1130-01A0	16	270140

PART NO.	FIG.NO.	INDEX	PAGE
01010-81240	M1130-01A0	2	270140
01010-81240	M1130-01A1	16	270145
01010-81240	M1130-01A1	2	270145
01010-81240	M1130-02A0	20	270150
01010-81240	M1130-02A0	23	270150
01010-81240	M1130-04A0	2	270170
01010-81240	M1130-05A0	16	270180
01010-81240	M1130-06A0	15	270190
01010-81240	M1130-08A0	2	270210
01010-81240	M1130-08A0	36	270210
01010-81240	M1130-08A0	5	270210
01010-81240	M1130-10A0	10	270230
01010-81240	M1130-11A1	14	270300
01010-81240	M1130-11A1	6	270300
01010-81240	M1130-12A0	17	270250
01010-81240	M1140-02A0	15	270340
01010-81240	M1140-02A0	2	270340
01010-81240	M1140-04A0	14	270360
01010-81240	M1140-04A0	2	270360
01010-81240	M1140-05A0	19	270370
01010-81240	M1150-01A0	15	270400
01010-81240	M1150-01A0	4	270400
01010-81240	M1150-01A0	9	270400
01010-81240	M1210-03A0	2	270440
01010-81240	M1210-05A0	11	270460
01010-81240	M1210-05A0	14	270460
01010-81240	M1210-05A0	8	270460
01010-81240	M1810-01A0	11	270510
01010-81240	M1810-01A0	17	270510
01010-81240	N1210-10A0	14	300110
01010-81240	N1220-01A4	3	300150
01010-81240	N1220-01A8	3	300190
01010-81240	T1230-01A1	38	390290
01010-81245	A2041-A7E4	10	010160
01010-81245	A2041-B7E4	16	010170
01010-81245	D0200-10A0	10	090140
01010-81245	E0200-02A0	16	120040
01010-81245	E0200-16A1	41	120185
01010-81245	E0200-16A1	45	120185
01010-81245	E0200-17A0	34	120190
01010-81245	E0200-17A0	49	120191
01010-81245	E0200-18A1	10	120205
01010-81245	E0200-18A1	21	120205
01010-81245	E0200-19A1	13	120215
01010-81245	E0202-01A0	20	120380
01010-81245	E0202-01A0	25	120380
01010-81245	E0202-02A0	4	120390
01010-81245	E0202-03A0	34	120400
01010-81245	E0202-04A0	44	120410
01010-81245	H0110-04A0	4	180040

PART NO.	FIG.NO.	INDEX	PAGE
01010-81245	H0110-06A0	17	180060
01010-81245	H0311-01A0	15	180165
01010-81245	H0311-01A0	19	180165
01010-81245	H0311-02A0	15	180175
01010-81245	H0311-02A0	19	180175
01010-81245	H0312-02A0	11	180200
01010-81245	H0312-02A0	4	180200
01010-81245	H0312-05A0	18	180230
01010-81245	H0312-05A0	27	180230
01010-81245	H1832-02A0	10	180560
01010-81245	H1840-02A0	29	180670
01010-81245	H1840-03A0	13	180680
01010-81245	H1840-06A0	22	180710
01010-81245	H1843-03A0	15	180800
01010-81245	K1921-02A0	25	240690
01010-81245	K1921-02A0	28	240690
01010-81245	K1921-02A0	34	240690
01010-81245	K1921-02A0	39	240690
01010-81245	K1921-02A1	25	240695
01010-81245	K1921-02A1	28	240695
01010-81245	K1921-02A1	31	240695
01010-81245	K1921-02A1	37	240695
01010-81245	K1921-02A1	55	240696
01010-81245	M1110-12A0	13	270120
01010-81245	M1130-08A1		270270
01010-81245	P1140-01A2	5	330050
01010-81245	W1114-01A10	15	480150
01010-81245	W1114-01A11	28	480160
01010-81245	W1114-01A9	7	480140
01010-81250	A2011-A7B9	13	010140
01010-81250	C0100-02A0	11	060020
01010-81250	C0100-02A0	16	060020
01010-81250	C0100-16A0	33	060170
01010-81250	D0200-01A0	18	090050
01010-81250	D0200-02A0	10	090060
01010-81250	D0200-02A0	23	090060
01010-81250	D0200-02A0	6	090060
01010-81250	D0200-13A0	40	090170
01010-81250	E0200-18A1	13	120205
01010-81250	E0200-18A1	3	120205
01010-81250	E0200-24A0	28	120250
01010-81250	E0202-01A0	4	120380
01010-81250	E0202-03A0	20	120400
01010-81250	E0202-03A0	4	120400
01010-81250	E0202-04A0	28	120410
01010-81250	E0202-04A0	4	120410
01010-81250	E0450-04A0	18	120540
01010-81250	E0450-04A0	28	120540
01010-81250	G1010-01A0	38	150010
01010-81250	H1210-02A0	6	180430

PART NO.	FIG.NO.	INDEX	PAGE
01010-81250	H1210-02A0	9	180430
01010-81250	H1210-03A0	6	180440
01010-81250	H1210-03A0	9	180440
01010-81250	H1310-01A0	10	180480
01010-81250	H1310-01A0	13	180480
01010-81250	H1310-01A0	27	180480
01010-81250	H1310-01A0	30	180480
01010-81250	H1831-02A0	27	180530
01010-81250	H1832-02A0	17	180560
01010-81250	H1840-08A0	13	180720
01010-81250	K0710-01A0	11	240570
01010-81250	K0710-01A0	16	240570
01010-81250	K0710-05A0	10	240610
01010-81250	K0710-08A0	29	240640
01010-81250	K0710-08A1	29	240645
01010-81250	M1110-02A0	29	270020
01010-81250	M1110-06A0	21	270060
01010-81250	M1110-06A0	8	270060
01010-81250	M1110-07A0	20	270070
01010-81250	M1110-08A0	28	270080
01010-81250	M1110-08A0	44	270080
01010-81250	M1130-01A0	11	270140
01010-81250	M1130-01A1	11	270145
01010-81250	M1130-02A0	11	270150
01010-81250	M1130-04A0	10	270170
01010-81250	M1130-04A0	7	270170
01010-81250	M1140-01A0	2	270330
01010-81250	M1140-01A0	5	270330
01010-81250	M1140-02A0	10	270340
01010-81250	M1140-03A0	2	270350
01010-81250	M1140-03A0	5	270350
01010-81250	M1140-04A0	17	270360
01010-81250	M1140-04A0	5	270360
01010-81250	M1140-04A0	9	270360
01010-81250	M1140-05A0	12	270370
01010-81250	M1140-05A0	24	270370
01010-81250	M1210-05A0	2	270460
01010-81250	M1210-05A0	5	270460
01010-81250	N1210-08A0	31	300090
01010-81250	T1120-01A1	40	390140
01010-81250	T1120-01A2	40	390150
01010-81250	T1140-01A1	37	390180
01010-81250	T1140-01A2	37	390190
01010-81250	T1220-01A1	48	390271
01010-81250	T1220-01A2	48	390281
01010-81250	W1114-01A11	31	480160
01010-81250	W1114-01A11	38	480160
01010-81250	W1114-01A7	32	480120
01010-81255	A6810-C7C6	40	011051
01010-81255	A6810-E1C6	42	011090

PART NO.	FIG.NO.	INDEX	PAGE
01010-81255	D0200-13A0	31	090170
01010-81255	E0200-05A0	14	120070
01010-81255	E0200-05A0	18	120070
01010-81255	E0200-16A0	4	120180
01010-81255	E0320-02A0	14	120480
01010-81255	E0450-04A0	4	120540
01010-81255	G1010-01A0	29	150010
01010-81255	H0110-02A0	2	180020
01010-81255	H0311-01A0	8	180165
01010-81255	H0311-02A0	8	180175
01010-81255	H0312-05A0	25	180230
01010-81255	M1110-03A0	26	270030
01010-81255	M1110-03A0	38	270030
01010-81255	M1110-05A0	20	270050
01010-81255	M1110-09A0	6	270090
01010-81255	M1110-09A0	9	270090
01010-81255	M1130-01A0	21	270140
01010-81255	M1130-01A1	21	270145
01010-81255	M1130-08A1	25	270270
01010-81255	M1130-08A1		270270
01010-81255	M1140-02A0	20	270340
01010-81255	R1110-01A1	3	360100
01010-81255	R1110-02A1	3	360110
01010-81255	W1117-02A6	13	480240
01010-81255	W1117-04A6	13	480300
01010-81260	A6010-A7C8	7	010950
01010-81260	A6010-A7D1	7	010990
01010-81260	A6030-A7B4	15	010930
01010-81260	B0600-07A0	8	030170
01010-81260	C0100-15A0	20	060150
01010-81260	E0200-15A0	26	120170
01010-81260	E0200-28A0	30	120290
01010-81260	E0450-04A0	43	120540
01010-81260	H1835-03A0	18	180650
01010-81260	K1921-02A1	22	240695
01010-81260	M1110-08A0	38	270080
01010-81260	M1130-01A0	8	270140
01010-81260	M1130-01A1	8	270145
01010-81260	M1130-08A0	26	270210
01010-81260	M1130-08A0	29	270210
01010-81260	M1130-11A1	10	270300
01010-81260	M1130-11A1	2	270300
01010-81260	M1140-02A0	7	270340
01010-81260	M1140-05A0	21	270370
01010-81260	T1210-01A3	20	390230
01010-81260	T1210-01A4	2	390240
01010-81260	W1117-02A2A	14	480200
01010-81265	C0100-02A0	32	060020
01010-81265	D0200-04A0	43	090080
01010-81265	D0200-05A0	20	090090

PART NO.	FIG.NO.	INDEX	PAGE
01010-81265	D0200-08A0	14	090120
01010-81265	D0200-08A0	18	090120
01010-81265	E0200-16A1	3	120185
01010-81265	E0200-17A1	23	120195
01010-81265	E0200-18A1	25	120205
01010-81265	E0202-01A0	13	120380
01010-81265	E0320-01A0	3	120470
01010-81265	E0320-02A0	3	120480
01010-81265	E0450-01A0	10	120510
01010-81265	H0312-03A0	13	180210
01010-81265	H0312-03A0	42	180210
01010-81265	H0312-04A0	8	180220
01010-81265	H0312-05A0	10	180230
01010-81265	H0312-05A0	5	180230
01010-81265	H0312-06A0	5	180240
01010-81265	H0340-05A0	4	180360
01010-81265	H1831-01A0	5	180520
01010-81265	H1835-03A0	21	180650
01010-81265	H1840-04A0	19	180690
01010-81265	K1921-02A0	22	240690
01010-81265	M1130-08A1		270270
01010-81265	W1114-01A7	22	480120
01010-81270	D0200-06A0	38	090100
01010-81270	D0200-09A0	18	090130
01010-81270	E0200-04A0	20	120060
01010-81270	H0110-04A0	6	180040
01010-81270	H0110-05A0	14	180050
01010-81270	H0312-03A0	33	180210
01010-81270	H0312-04A0	25	180220
01010-81270	H0312-04A0	5	180220
01010-81270	K0710-08A0	22	240640
01010-81270	K0710-08A1	22	240645
01010-81270	M1130-12A0	2	270250
01010-81270	W1114-01A11	24	480160
01010-81275	A2040-A7B4	7	010150
01010-81275	A6810-B7C6	29	011040
01010-81275	A6810-D9C6	29	011080
01010-81275	E0200-05A0	22	120070
01010-81275	E0200-06A0	11	120080
01010-81275	E0200-07A0	10	120090
01010-81275	E0200-12A0	29	120140
01010-81275	H0110-04A0	15	180040
01010-81275	H0312-06A0	7	180240
01010-81275	H1835-01A0	11	180630
01010-81275	K0710-08A0	10	240640
01010-81275	K0710-08A1	10	240645
01010-81275	M1110-08A0	47	270081
01010-81275	M1110-10A0	27	270100
01010-81275	M1130-08A1		270270
01010-81275	M1130-10A0	8	270230

PART NO.	FIG.NO.	INDEX	PAGE
01010-81275	M1130-12A0	19	270250
01010-81275	N1210-08A0	22	300090
01010-81275	W1114-01A10	11	480150
01010-81275	W1117-06A7	27	480330
01010-81280	A2050-A7A3	9	010180
01010-81280	C0100-03A0	8	060030
01010-81280	D0200-06A0	42	090100
01010-81280	E0200-16A1	13	120185
01010-81280	H0340-02A0	17	180330
01010-81280	H0340-02A0	8	180330
01010-81280	H0340-05A0	27	180360
01010-81280	H0340-06A0	40	180370
01010-81280	H0350-01A0	18	180380
01010-81280	H1832-01A0	12	180550
01010-81280	H1832-03A0	3	180570
01010-81280	H1841-03A0	18	180760
01010-81280	M1110-02A0	26	270020
01010-81280	T1220-01A1	33	390270
01010-81280	T1220-01A2	33	390280
01010-81280	W1117-02A1	28	480190
01010-81280	W1117-02A6	9	480240
01010-81280	W1117-04A1	28	480250
01010-81280	W1117-04A6	9	480300
01010-81285	A2041-A7E4	14	010160
01010-81285	A6010-A7C8	9	010950
01010-81285	A6010-A7D1	9	010990
01010-81285	B0300-02A1	24	030060
01010-81285	E0200-12A0	11	120140
01010-81285	H0110-04A0	7	180040
01010-81285	H0110-05A0	12	180050
01010-81285	H0330-01A0	23	180290
01010-81285	H0340-02A0	33	180330
01010-81285	H0340-02A0	42	180330
01010-81285	H0340-05A0	10	180360
01010-81285	H0340-06A0	32	180370
01010-81285	M1130-08A1		270270
01010-81285	M1210-01A0	24	270420
01010-81285	P1120-01A0	22	330010
01010-81285	P1140-01A7	11	330100
01010-81290	A2040-A7B4	6	010150
01010-81290	A6030-A7B4	12	010930
01010-81290	D0200-01A0	31	090050
01010-81290	D0200-04A0	24	090080
01010-81290	E0200-16A1	22	120185
01010-81290	E0200-16A1	8	120185
01010-81290	E0200-17A1	27	120195
01010-81290	P1120-01A0	20	330010
01010-81290	P1140-01A3	22	330060
01010-81290	W1114-01A1	22	480060
01010-81295	E0200-24A0	12	120250

PART NO.	FIG.NO.	INDEX	PAGE
01010-81295	M1130-08A1		270271
01010-81430	T1110-01A6	4	390060
01010-81435	H1221-02A0	11	180460
01010-81435	H1221-02A0	14	180460
01010-81435	H1221-02A0	8	180460
01010-81435	H1222-01A0	20	180470
01010-81435	T1220-01A1	37	390270
01010-81435	T1220-01A2	37	390280
01010-81445	H1210-01A0	7	180420
01010-81445	H1221-01A0	21	180450
01010-81445	H1222-01A0	13	180470
01010-81445	P1120-01A0	10	330010
01010-81445	T1110-01A10	33	390100
01010-81450	T1120-01A1	48	390141
01010-81450	T1120-01A2	48	390151
01010-81450	T1140-01A1	29	390180
01010-81450	T1140-01A2	29	390190
01010-81455	H0120-01A0	31	180070
01010-81455	H0312-01A0	13	180190
01010-81455	H0312-01A0	6	180190
01010-81455	H0312-08A0	14	180260
01010-81455	H0312-08A0	19	180260
01010-81455	H0312-08A0	24	180260
01010-81455	H0312-08A0	4	180260
01010-81455	H0312-08A0	9	180260
01010-81455	H1210-01A0	4	180420
01010-81455	H1210-02A0	3	180430
01010-81455	H1210-03A0	3	180440
01010-81455	H1221-01A0	15	180450
01010-81455	H1221-01A0	19	180450
01010-81455	H1221-01A0	25	180450
01010-81455	H1222-01A0	11	180470
01010-81455	H1222-01A0	17	180470
01010-81455	H1310-01A0	20	180480
01010-81455	H1310-01A0	24	180480
01010-81455	H1310-01A0	3	180480
01010-81455	H1310-01A0	7	180480
01010-81455	H1310-02A0	4	180490
01010-81455	H1310-02A0	9	180490
01010-81455	H1340-01A0	4	180510
01010-81455	H1340-01A0	7	180510
01010-81455	N1310-01A2	16	300210
01010-81455	N1310-01A2	8	300210
01010-81455	P1120-01A0	14	330010
01010-81455	P1120-01A0	6	330010
01010-81455	P1120-02A0	17	330020
01010-81455	T1110-01A10	23	390100
01010-81455	T1110-01A10	29	390100
01010-81455	T1110-01A10	39	390100
01010-81455	T1110-01A11	11	390110

PART NO.	FIG.NO.	INDEX	PAGE
01010-81455	T1110-01A8	22	390080
01010-81455	T1110-01A9	31	390090
01010-81455	T1120-01A1	53	390141
01010-81455	T1120-01A2	53	390151
01010-81455	T1130-01A1	12	390170
01010-81455	T1130-01A1	4	390170
01010-81455	T1140-01A1	48	390181
01010-81455	T1140-01A2	48	390191
01010-81455	T1210-01A6	9	390260
01010-81455	T1220-01A1	52	390271
01010-81455	T1220-01A2	52	390281
01010-81460	H1210-02A0	30	180430
01010-81460	H1210-03A0	25	180440
01010-81460	H1222-01A0	26	180470
01010-81470	H1210-02A0	27	180430
01010-81470	H1210-03A0	22	180440
01010-81470	H1222-01A0	23	180470
01010-81475	K0710-05A0	25	240610
01010-81635	D0200-13A0	21	090170
01010-81635	D0200-13A0	24	090170
01010-81640	C0100-05A0	6	060050
01010-81640	C0100-14A0	5	060140
01010-81640	M1110-11A0	14	270110
01010-81640	M1110-11A0	17	270110
01010-81640	M1110-11A0	20	270110
01010-81640	M1420-02A0	4	270480
01010-81640	M1420-02A0	6	270480
01010-81640	P1210-01A1	24	330120
01010-81640	P1210-01A7	24	330180
01010-81640	R0300-01A1	10	360060
01010-81640	R0300-01A1	7	360060
01010-81640	T1230-01A1	11	390290
01010-81640	T1230-01A1	20	390290
01010-81640	T1230-01A1	23	390290
01010-81640	T1230-01A1	8	390290
01010-81645	H0120-01A0	15	180070
01010-81645	H0120-01A0	7	180070
01010-81645	H1221-02A0	5	180460
01010-81645	M1110-11A0	24	270110
01010-81645	M1110-11A0	27	270110
01010-81645	M1110-11A0	32	270110
01010-81645	M1810-05A0	13	270550
01010-81645	M1810-05A0	16	270550
01010-81645	M1810-05A0	2	270550
01010-81645	M1810-05A0	5	270550
01010-81645	T1230-01A1	33	390290
01010-81645	T1230-01A1	42	390290
01010-81645	T1230-01A1	48	390291
01010-81645	W1114-01A2	27	480070
01010-81645	W1114-01A2	3	480070

PART NO.	FIG.NO.	INDEX	PAGE
01010-81645	W1114-01A2	30	480070
01010-81645	W1114-01A2	6	480070
01010-81650	B0300-05A0	1	030090
01010-81650	B0600-01A0	19	030110
01010-81650	B0600-01A0	26	030110
01010-81650	B0600-01A0	33	030110
01010-81650	B0600-01A0	9	030110
01010-81650	B0600-07A0	3	030170
01010-81650	B0600-07A0	5	030170
01010-81650	B0600-08A0	19	030180
01010-81650	B0600-08A0	26	030180
01010-81650	B0600-08A0	33	030180
01010-81650	B0600-08A0	9	030180
01010-81650	C0100-04A0	13	060040
01010-81650	H0311-01A1	19	180170
01010-81650	H0311-02A1	19	180177
01010-81650	M1110-11A0	11	270110
01010-81650	P1210-01A2	23	330130
01010-81650	P1210-01A8	23	330190
01010-81655	C0100-06A0	19	060060
01010-81655	H1221-02A0	3	180460
01010-81655	M1110-02A0	39	270020
01010-81655	M1110-05A0	29	270050
01010-81655	M1110-11A0	21	270110
01010-81660	C0100-15A0	16	060150
01010-81660	H0311-01A1	13	180170
01010-81660	H0311-02A1	13	180177
01010-81660	M1110-11A0	8	270110
01010-81660	M1130-07A1	35	270260
01010-81660	P1140-01A6	20	330090
01010-81660	P1140-01A7	23	330100
01010-81665	M1110-11A0	2	270110
01010-81665	M1110-11A0	5	270110
01010-81665	P1210-01A2	29	330130
01010-81665	P1210-01A8	29	330190
01010-81675	T1120-01A1	37	390140
01010-81675	T1120-01A2	37	390150
01010-81680	T1110-01A10	26	390100
01010-81680	T1110-01A10	36	390100
01010-81835	T1110-01A12	1	390120
01010-81835	T1110-01A12	3	390120
01010-81840	T1110-01A8	25	390080
01010-81840	T1120-01A1	44	390141
01010-81840	T1120-01A2	44	390151
01010-81860	P1210-01A12	1	330230
01010-81860	P1210-01A6	1	330170
01010-81865	H1210-01A0	14	180420
01010-81865	H1210-02A0	24	180430
01010-81865	H1210-03A0	19	180440
01010-81865	H1221-01A0	11	180450

PART NO.	FIG.NO.	INDEX	PAGE
01010-81865	H1221-01A0	5	180450
01010-81865	T1110-01A10	13	390100
01010-81865	T1110-01A10	19	390100
01010-81865	T1110-01A10	3	390100
01010-81865	T1110-01A10	9	390100
01010-81865	T1110-01A11	16	390110
01010-81865	T1110-01A11	5	390110
01010-81865	T1110-01A12	8	390120
01010-81865	T1110-01A7	10	390070
01010-81865	T1110-01A8	13	390080
01010-81865	T1110-01A8	17	390080
01010-81865	T1110-01A8	29	390080
01010-81865	T1110-01A8	3	390080
01010-81865	T1110-01A8	32	390080
01010-81865	T1110-01A8	36	390080
01010-81865	T1110-01A8	39	390080
01010-81865	T1110-01A8	43	390080
01010-81865	T1110-01A8	9	390080
01010-81865	T1110-01A8	46	390081
01010-81865	T1110-01A9	15	390090
01010-81865	T1110-01A9	23	390090
01010-81865	T1110-01A9	7	390090
01010-81865	T1120-01A1	42	390141
01010-81865	T1120-01A2	42	390151
01010-81865	T1140-01A1	44	390181
01010-81865	T1140-01A2	44	390191
01010-81865	T1210-01A6	4	390260
01010-81865	T1220-01A1	56	390271
01010-81865	T1220-01A2	56	390281
01010-81870	H1210-01A0	11	180420
01010-81870	H1221-01A0	3	180450
01010-81870	H1221-01A0	9	180450
01010-81870	H1222-01A0	7	180470
01010-82045	R0120-01A2	15	360020
01010-82045	R0120-01A4	15	360040
01010-82050	M1110-11A0	37	270110
01010-82050	W1114-01A8	3	480130
01010-82050	W1117-02A2A	5	480200
01010-82050	W1117-04A2A	5	480260
01010-82055	K1120-01A0	9	240660
01010-82055	K1120-01A1	9	240670
01010-82060	M1140-05A0	7	270370
01010-82060	R0120-01A2	19	360020
01010-82060	R0120-01A4	19	360040
01010-82070	B0100-01A0	3	030010
01010-82070	M1130-13A0	31	270320
01010-82070	N1310-01A2	49	300211
01010-82075	M1130-02A0	4	270150
01010-82075	M1130-02A0	6	270150
01010-82075	M1130-02A0	9	270150

PART NO.	FIG.NO.	INDEX	PAGE
01010-82080	M1210-02A0	47	270431
01010-82080	T1210-01A5	2	390250
01010-82445	P1120-01A0	17	330010
01010-82445	R1150-01A1	20	360140
01010-82450	R1170-01A1	2	360160
01010-82455	J1310-01A0	14	210030
01010-82455	J1310-01A0	5	210030
01010-82455	N1310-01A2	47	300211
01010-82455	T1110-01A2	18	390020
01010-82455	T1110-01A2	4	390020
01010-82455	T1210-01A1	12	390210
01010-82455	T1210-01A1	18	390210
01010-82460	P1140-01A2	9	330050
01010-82460	R1150-01A1	15	360140
01010-82460	R1150-01A1	18	360140
01010-82460	R1150-01A1	22	360140
01010-82460	R1170-01A1	5	360160
01010-82465	P1210-01A1	15	330120
01010-82465	P1210-01A7	15	330180
01010-82465	R1140-01A1	2	360130
01010-82465	R1140-01A1	5	360130
01010-82465	R1140-01A1	9	360130
01010-82475	H0210-09A0	33	180138
01010-82475	H0220-09A0	36	180148
01010-82485	R1140-01A1	11	360130
01010-82495	T1110-01A2	13	390020
01010-83075	T1210-01A5	15	390250
01010-83075	T1210-01A5	18	390250
01010-83075	T1210-01A5	5	390250
01010-83075	T1210-01A5	8	390250
01010-83080	P1210-01A1	26	330120
01010-83080	P1210-01A7	26	330180
01010-83080	R1120-01A1	10	360120
01010-83080	R1160-01A1	2	360150
01010-83080	R1160-01A1	5	360150
01010-83085	H0120-06A0	3	180120
01010-83085	R1200-01A1	2	360170
01010-83085	R1200-02A1	5	360180
01010-83090	N1210-05A0	4	300060
01010-83090	T1210-01A5	13	390250
01010-83685	T1930-02A1	14	390370
01010-83695	T1930-02A1	6	390370
01010-D0616	K0210-04A0	14	240040
01010-D0616	K0210-04A0	17	240040
01010-D0616	K0210-04A0	20	240040
01010-D0616	K0210-05A0	11	240050
01010-D0620	K0210-46A0	10	240460
01010-D0625	K0210-30A0	6	240300
01010-D0816	K0210-21A0	5	240210
01010-D0825	K0210-21A0	2	240210

PART NO.	FIG.NO.	INDEX	PAGE
01010-D1020	K0210-50A0	4	240500
01010-D1025	K0210-50A0	34	240500
01010-D1025	K0210-51A0	2	240510
01010-D1025	K0210-51A0	5	240510
01010-D1025	W1114-01A5	18	480100
01010-D1045	K0210-50A0	11	240500
01010-D1220	K0210-48A0	2	240480
01010-D1225	K0210-05A0	14	240050
01010-D1225	K0210-05A0	17	240050
01010-D1225	K0210-05A0	23	240050
01010-D1225	K0210-35A0	2	240350
01010-D1225	K1921-02A0	13	240690
01010-D1225	K1921-02A0	4	240690
01010-D1225	K1921-02A0	7	240690
01010-D1225	K1921-02A1	20	240695
01010-D1225	K1921-02A1	7	240695
01010-D1225	M1110-12A0	17	270120
01010-D1225	M1110-12A0	21	270120
01010-D1225	M1110-12A0	24	270120
01010-D1225	W1114-01A1	10	480060
01010-D1230	E0200-32A0	16	120330
01010-D1230	E0200-33A0	16	120340
01010-D1230	K0210-04A0	11	240040
01010-D1230	K0210-46A0	21	240460
01010-D1230	K0210-46A0	26	240460
01010-D1240	K0210-46A0	23	240460
01010-D1240	K0210-46A0	28	240460
01010-D1240	K1921-02A1	10	240695
01010-D1250	M1130-04A0	14	270170
01010-D1250	M1140-06A0	3	270380
01010-E1016	A1570-A7A7	10	010100
01010-E1020	A1530-A7C3	8	010060
01010-E1020	H0210-06A0	25	180135
01010-E1040	A1570-A7A7	2	010100
01010-E1045	A1510-A7C5	26	010050
01010-E1045	A1610-A7B9	11	010110
01010-E1050	A1610-A7B9	12	010110
01010-E1055	A1610-A7B9	13	010110
01010-E1055	B0300-03A0	14	030070
01010-E1055	B0300-05A0	11	030090
01011-61820	N1210-01A0	21	300020
01011-61820	N1210-03A0	21	300040
01011-61820	N1210-09A0	21	300100
01011-81000	A1310-A7E8	4	010030
01011-81000	A1510-A7C5	19	010050
01011-81000	A4110-A7E4	13	010720
01011-81000	A4110-B7E4	13	010730
01011-81000	A6810-C7C6	36	011051
01011-81000	A6810-E1C6	38	011090
01011-81000	B0600-03A0	11	030130

PART NO.	FIG.NO.	INDEX	PAGE
01011-81005	A4110-A7E9	2	010770
01011-81005	A4110-B7E4	50	010731
01011-81005	A4110-B7E9	2	010780
01011-81010	A5010-A7E6	24	010880
01011-81015	A1730-A7C6	1	010120
01011-81015	A2110-B7F9	6	010230
01011-81015	A2110-B7G6	6	010235
01011-81015	A4110-D7F2	9	010800
01011-81015	A6810-D9C6	54	011081
01011-81015	D0200-09A0	22	090130
01011-81015	E4110-E7E4	9	010760
01011-81020	A1310-A7E8	5	010030
01011-81020	D0200-10A0	8	090140
01011-81025	H1320-01A0	1	180500
01011-81030	A2110-C7G8	24	010360
01011-81030	A2110-C7G9	23	010370
01011-81030	A4110-A7E9	21	010770
01011-81030	A4110-B7E4	43	010730
01011-81030	A5010-B7E6	4	010910
01011-81030	A5010-B7F4	4	010890
01011-81035	A1570-A7A7	13	010100
01011-81045	A1310-A7E8	19	010030
01011-81045	A1530-B7C3	27	010070
01011-81060	A4110-B7E9	19	010780
01011-81070	A4110-C7F2	9	010790
01011-81070	E4110-E7E4	15	010760
01011-81085	A1310-A7E8	3	010030
01011-81095	A4110-C7F2	23	010790
01011-81095	A4110-D7F2	21	010800
01011-81200	E0200-04A0	32	120060
01011-81200	H0312-05A0	30	180230
01011-81200	P1140-01A3	2	330060
01011-81205	E0200-18A1	30	120205
01011-81210	A2050-A7A3	15	010180
01011-81210	A5010-A7E6	22	010880
01011-81210	A5010-A7E8	22	010900
01011-81210	D0200-12A0	33	090160
01011-81210	D0200-12A9	15	090165
01011-81210	E0200-24A0	15	120250
01011-81210	H0110-02A0	4	180020
01011-81210	H0320-02A0	8	180280
01011-81210	H0340-06A0	20	180370
01011-81210	H1210-02A0	12	180430
01011-81210	H1210-03A0	12	180440
01011-81210	H1840-06A0	17	180710
01011-81210	M1130-08A1	27	270270
01011-81215	E0200-16A1	17	120185
01011-81215	H0110-03A0	28	180030
01011-81220	A1730-A7C6	10	010120
01011-81220	A6030-A7B4	14	010930

PART NO.	FIG.NO.	INDEX	PAGE
01011-81220	H0330-02A3	2	180302
01011-81220	H1210-02A0	33	180430
01011-81220	H1210-03A0	28	180440
01011-81220	M1130-08A1		270270
01011-81230	A2040-A7B4	5	010150
01011-81230	M1130-08A1		270270
01011-81240	E0200-16A1	25	120185
01011-81240	M1130-08A1		270270
01011-81245	A2040-A7B4	4	010150
01011-81250	E0200-16A1	31	120185
01011-81250	M1130-08A1		270270
01011-81260	M1130-08A1		270270
01011-81265	A5010-A7E6	20	010880
01011-81265	A5010-A7E8	20	010900
01011-81270	M1130-07A1	15	270260
01011-81270	M1130-08A1		270270
01011-81470	H0120-01A0	27	180070
01011-81480	T1220-01A1	39	390270
01011-81480	T1220-01A2	39	390280
01011-81600	C0100-04A0	10	060040
01011-81600	C0100-04A0	4	060040
01011-81605	H0120-01A0	13	180070
01011-81605	H0120-01A0	5	180070
01011-81630	H0120-01A0	11	180070
01011-81630	H0120-01A0	3	180070
01011-81635	T1110-01A9	26	390090
01011-82015	P1210-01A2	14	330130
01011-82015	P1210-01A8	14	330190
01011-82035	K1921-01A0	32	240680
01011-82035	K1921-01A1	32	240685
01011-82035	K1921-01A3	32	240687
01011-82045	K1921-01A0	33	240680
01011-82045	K1921-01A1	33	240685
01011-82045	K1921-01A3	33	240687
01011-82400	R0120-01A2	41	360020
01011-82400	R0120-01A4	41	360040
01011-82410	R0300-01A1	17	360060
01011-82440	R0120-01A2	43	360020
01011-82440	R0120-01A4	43	360040
01011-82705	T1220-01A1	16	390270
01011-82705	T1220-01A2	16	390280
01011-83010	D0100-01A0	40	090010
01011-83010	D0100-01A1	35	090020
01011-83010	D0100-01A2	40	090030
01011-83010	D0100-01A3	35	090040
01011-83010	H0110-06A0	22	180060
01011-83070	R0120-01A2	12	360020
01011-83070	R0120-01A4	12	360040
01011-83320	P1210-01A13	1	330240
01011-83330	T1140-01A1	15	390180

PART NO.	FIG.NO.	INDEX	PAGE
01011-83330	T1140-01A2	15	390190
01016-20512	K1921-01A0	31	240680
01016-20512	K1921-01A1	31	240685
01016-20512	K1921-01A3	31	240687
01016-50840	D0200-13A0	35	090170
01016-51065	H0330-02A2	5	180301
01018-31255	H0312-02A0	13	180200
01018-31255	H0312-02A0	6	180200
01018-31495	N1310-01A2	13	300210
01019-31220	K0710-01A0	7	240570
01020-01016	A1530-C7C3	19	010080
01020-01016	A1530-C8C4	19	010090
01020-11025	A1610-A7B9	9	010110
01020-11095	A1510-A7C5	6	010050
01023-10306	K0210-49A0	22	240490
01023-10406	M1130-05A0	13	270180
01023-10410	K0210-16A0	2	240160
01023-10416	E0201-02A0	7	120370
01023-10416	K0210-01A0	18	240010
01023-10420	E0200-08A0	1	120100
01023-10420	E0200-08A0	2	120100
01023-10420	E0200-08A0	3	120100
01023-10420	E0200-15A0	22	120170
01023-10420	E0200-16A0	14	120180
01023-10420	E0200-16A0	15	120180
01023-10508	K0210-39A0	14	240390
01023-10510	E0200-13A0	8	120150
01023-10510	E0200-14A1	4	120165
01023-10510	K0210-54A0	4	240540
01023-10512	K0210-39A0	2	240390
01023-10514	W1114-01A5	17	480100
01023-10516	K0210-12A0	2	240120
01023-10516	K0210-47A0	6	240470
01023-10516	K0210-54A0	3	240540
01023-10520	M1130-12A1	9	270310
01023-10530	E0200-16A0	9	120180
01023-10612	E0200-32A0	1	120330
01023-10612	E0200-33A0	1	120340
01023-10614	K0210-41A0	4	240410
01023-10616	E0200-28A0	7	120290
01023-10616	K0210-01A0	19	240010
01023-20310	K0210-47A0	8	240470
01023-20408	W1114-01A5	5	480100
01023-20408	W1114-02A5	5	480180
01023-20416	K0210-12A0	5	240120
01023-20416	K0210-50A0	20	240500
01023-20516	K0210-46A0	14	240460
01023-20610	W1114-01A5	10	480100
01023-20610	W1114-02A5	10	480180
01023-20616	K0210-37A0	14	240370

PART NO.	FIG.NO.	INDEX	PAGE
01023-60320	K0210-39A0	38	240390
01023-60408	K0210-39A0	20	240390
01023-60414	K0210-13A0	3	240130
01023-60414	K0210-15A0	21	240150
01023-60512	K0210-39A0	11	240390
01023-60512	K0210-39A0	17	240390
01023-60512	K0210-39A0	6	240390
01023-60516	K0210-36A0	6	240360
01023-60616	K0210-37A0	9	240370
01023-60616	K0210-39A0	44	240391
01023-60620	K0210-36A0	9	240360
01023-60630	K0210-36A0	10	240360
01023-60630	K0210-39A0	21	240390
01023-70514	K0210-39A0	25	240390
01050-31020	A6210-A7A6	9	011020
01050-32080	A2230-A7B5	3	010390
01050-51255	A6010-A7C8	4	010950
01050-51255	A6010-A7D1	4	010990
01050-52040	K1120-01A0	22	240660
01050-52040	K1120-01A0	4	240660
01050-52040	K1120-01A1	22	240670
01050-52040	K1120-01A1	4	240670
01220-40408	M1110-01A0	16	270010
01220-40408	M1110-01A0	21	270010
01220-40408	M1110-03A0	7	270030
01220-40408	M1110-04A0	15	270040
01220-40408	M1110-04A0	31	270040
01220-40408	M1110-05A0	13	270050
01220-40408	M1110-09A0	24	270090
01220-60408	U0100-01A1	5	420010
01224-70410	K0210-02A0	21	240020
01240-00620	K0210-01A0	20	240010
01240-00625	K0210-01A0	29	240010
01245-00612	K0210-08A0	12	240080
01245-00612	K0210-08A0	18	240080
01245-00612	K0210-09A0	12	240090
01245-00612	K0210-09A0	15	240090
01245-00612	K0210-09A0	29	240090
01245-00612	K0210-09A0	32	240090
01245-00612	K0210-10A0	13	240100
01245-00612	K0210-10A0	16	240100
01245-00612	K0210-48A0	6	240480
01245-00616	K0210-15A0	14	240150
01245-00616	K0210-15A0	17	240150
01245-00616	K0210-16A0	4	240160
01245-00620	K0210-01A0	27	240010
01245-00625	K0210-46A0	18	240460
01245-00625	K0210-46A0	7	240460
01245-00625	K0210-47A0	2	240470
01245-00816	E0200-12A0	23	120140

PART NO.	FIG.NO.	INDEX	PAGE
01245-00820	K0210-06A0	11	240060
01245-00820	K0210-06A0	14	240060
01245-00820	K0210-06A0	2	240060
01245-00820	K0210-06A0	5	240060
01245-00820	K0210-07A0	10	240070
01245-00820	K0210-07A0	13	240070
01245-00820	K0210-07A0	16	240070
01245-00820	K0210-07A0	19	240070
01245-00820	K0210-07A0	4	240070
01245-00820	K0210-07A0	7	240070
01245-00825	K0210-01A0	12	240010
01245-00825	K0210-01A0	15	240010
01245-00825	K0210-01A0	21	240010
01245-00835	K0210-07A0	22	240070
01245-01020	K0210-35A0	6	240350
01252-30820	A4080-01A0	14	010620
01252-30820	A4080-01A0	33	010620
01252-40640	H0110-06A0	10	180060
01252-41025	K0210-38A0	10	240380
01252-41025	K0210-40A0	10	240400
01252-60516	A6810-B7C6	28	011040
01252-60516	A6810-D9C6	28	011080
01252-60616	C0100-05A1	17	060055
01252-60616	C0100-14A1	17	060145
01252-60635	H0230-01A9	3	180158
01252-60635	H0230-01A9	7	180158
01252-60635	H1833-02A0	10	180590
01252-60635	H1833-04A0	10	180600
01252-60635	H1833-04A0	15	180600
01252-60645	E0200-03A0	9	120050
01252-60650	H1833-02A0	15	180590
01252-60820	H1833-02A0	13	180590
01252-60820	H1833-04A0	13	180600
01252-60820	H1843-04A0	7	180805
01252-60825	N1220-01A3	7	300140
01252-60825	N1220-01A7	7	300180
01252-60835	C0100-05A1	23	060055
01252-60835	C0100-14A1	23	060145
01252-60835	K0210-44A0	25	240440
01252-60845	C0100-05A1	14	060055
01252-60845	C0100-14A1	14	060145
01252-61030	H0210-03A0	11	180132
01252-61030	H0210-06A0	11	180135
01252-61030	H0220-03A0	11	180142
01252-61030	H0220-06A0	11	180145
01252-61035	A1530-B7C3	10	010070
01252-61035	A1530-B7C3	13	010070
01252-61230	H0210-06A0	30	180135
01252-61230	H0220-06A0	30	180145
01252-61230	H0230-01A2	22	180151

PART NO.	FIG.NO.	INDEX	PAGE
01252-61230	H0230-01A6	19	180155
01252-61270	H0210-07A0	22	180136
01252-61270	H0220-07A0	22	180146
01252-61440	H0230-01A3	26	180152
01252-61440	H0230-01A4	8	180153
01252-61440	H0230-01A7	26	180156
01252-61440	H0230-01A8	8	180157
01252-61445	H0210-03A0	6	180132
01252-61445	H0210-06A0	6	180135
01252-61445	H0220-03A0	6	180142
01252-61445	H0220-06A0	6	180145
01252-61450	N1220-01A1	17	300120
01252-61450	N1220-01A5	17	300160
01252-61480	C0100-05A2	3	060056
01252-61480	C0100-14A2	3	060146
01252-62055	P1210-01A10	4	330210
01252-62055	P1210-01A4	4	330150
01252-70410	E0200-03A0	2	120050
01252-70410	E0200-03A0	5	120050
01252-70520	W1114-01A11	9	480160
01252-70525	W1114-01A11	8	480160
01252-70535	E0202-03A0	9	120400
01252-70535	E0202-04A0	9	120410
01252-70545	H1850-04A0	27	180840
01252-70545	K0210-53A0	6	240530
01252-70545	M1420-03A0	3	270490
01252-70612	E0200-13A0	13	120150
01252-70645	H1850-04A0	30	180840
01252-70816	K0210-39A0	43	240391
01252-70835	B0600-04A0	2	030140
01252-70840	P1140-01A8	12	330110
01252-71025	H0230-02A0	3	180161
01252-71025	K0210-53A0	3	240530
01252-71025	M1420-01A0	4	270470
01252-71025	M1420-02A0	24	270480
01252-71030	M1420-03A0	6	270490
01252-71065	H0110-06A0	3	180060
01252-71235	H0120-02A0	35	180080
01252-71235	H0330-03A0	4	180310
01252-71280	H0110-04A0	25	180040
01252-71290	H0110-03A0	25	180030
01252-71450	N1310-01A2	3	300210
01252-72065	T1140-01A1	41	390180
01252-72065	T1140-01A2	41	390190
01253-61400	P1210-01A3	10	330140
01253-61400	P1210-01A9	10	330200
01253-62040	P1210-01A10	5	330210
01253-62040	P1210-01A4	5	330150
01253-62430	N1110-01A0	19	300010
01253-63650	T1120-01A1	21	390140

PART NO.	FIG.NO.	INDEX	PAGE
01253-63650	T1120-01A2	21	390150
01253-71210	H0230-01A10	11	180159
01253-71215	H0110-03A0	11	180030
01310-01232	T1220-01A1	29	390270
01310-01232	T1220-01A2	29	390280
01310-01240	T1140-01A1	25	390180
01310-01240	T1140-01A2	25	390190
01310-01640	T1120-01A1	30	390140
01310-01640	T1120-01A2	30	390150
01370-00508	M1130-04A0	16	270170
01370-00508	M1130-04A0	17	270170
01370-00508	M1140-06A0	5	270380
01370-00508	M1510-01A0	11	270500
01370-00512	K0210-27A0	14	240270
01370-00512	K0210-27A0	5	240270
01370-10308	K0210-38A0	8	240380
01370-10308	K0210-40A0	2	240400
01370-30412	K0210-34A0	7	240340
01435-00610	A2041-A7E4	6	010160
01435-00610	A4210-A7C5	8	010670
01435-00612	K0210-17A0	2	240170
01435-00616	A1310-B7E8	36	010040
01435-00620	A2041-B7E4	26	010170
01435-00620	A4010-A7A6	8	010630
01435-00620	A4040-A7B1	8	010640
01435-00625	K0710-07A0	7	240630
01435-00630	A4010-A7A6	12	010630
01435-00630	A4040-A7B1	12	010640
01435-00630	A4050-B7A5	21	010690
01435-00630	A4050-B7A5	8	010690
01435-00630	A4050-D7A5	33	010710
01435-00630	A4050-D7A5	37	010710
01435-00635	A4050-B7A5	30	010690
01435-00635	A4060-01A0	16	010610
01435-00635	A4210-A7C5	12	010670
01435-00640	A4050-D7A5	29	010710
01435-00816	M1130-10A1	28	270290
01435-00816	M1130-10A1	32	270290
01435-00820	A3110-B7D6	26	010500
01435-00820	A4050-B7A5	10	010690
01435-00820	A4050-B7A5	3	010690
01435-00820	A4710-A7D7	24	010650
01435-00820	A4710-A7E3	28	010660
01435-00820	E0250-01A1	4	120440
01435-00820	E0250-01A5	4	120460
01435-00825	A4710-A7E3		010660
01435-00840	A4050-D7A5	35	010710
01435-00845	A4710-A7D7	3	010650
01435-00845	A4710-A7E3	3	010660
01435-00850	A1530-B7C3	30	010070

PART NO.	FIG.NO.	INDEX	PAGE
01435-00855	A1110-A7A6	3	010020
01435-00880	E0250-01A0	2	120430
01435-00880	E0250-01A1	2	120440
01435-00880	E0250-01A4	2	120450
01435-00880	E0250-01A5	2	120460
01435-00885	K0210-18A0	2	240180
01435-00895	A1570-A7A7	8	010100
01435-01016	A1530-A7C3	25	010060
01435-01016	A1530-B7C3	24	010070
01435-01020	A1530-A7C3	24	010060
01435-01020	A1530-A7C3	32	010060
01435-01020	A1530-B7C3	22	010070
01435-01020	A2110-A7F9	11	010220
01435-01020	A2110-B7F9	5	010230
01435-01020	A2110-B7G6	5	010235
01435-01020	A2110-C7F9	11	010240
01435-01020	A4060-01A0	12	010610
01435-01025	A1310-B7E8	24	010040
01435-01025	A1510-A7C5	30	010050
01435-01025	A1570-A7A7	17	010100
01435-01025	A2070-A7B5	4	010200
01435-01025	A2070-A7B9	4	010210
01435-01025	A3110-B7D6	22	010500
01435-01025	A4010-A7A6	16	010630
01435-01025	A4010-A7A6	21	010630
01435-01025	A4050-D7A5	25	010710
01435-01030	A4010-A7A6	15	010630
01435-01030	A4010-A7A6	22	010630
01435-01030	A4060-01A0	9	010610
01435-01035	A3110-B7D6	13	010500
01435-01035	A4010-A7A6	6	010630
01435-01035	A4040-A7B1	6	010640
01435-01040	A1530-A7C3	16	010060
01435-01040	A1530-A7C3	27	010060
01435-01040	A2110-B7F9	17	010230
01435-01040	A4060-01A0	14	010610
01435-01040	D0200-05A0	4	090090
01435-01055	A3110-B7D6	24	010500
01435-01060	A2070-A7B9	15	010210
01435-01070	A4010-H3G1	2	010600
01435-01075	A3110-A7D6	3	010490
01435-01095	A3110-B7D6	14	010500
01435-01220	A4010-A7A6	18	010630
01435-01220	A4010-A7A6	24	010630
01435-01220	A4040-A7B1	14	010640
01435-01220	A4040-A7B1	18	010640
01435-40620	K0210-30A0	18	240300
01435-41016	K0210-03A0	10	240030
01435-41016	K0210-03A0	4	240030
01435-41016	K0210-20A0	21	240200

PART NO.	FIG.NO.	INDEX	PAGE
01435-41016	K0210-20A0	23	240200
01435-41016	K0210-20A0	3	240200
01435-41016	K0210-20A0	5	240200
01435-41016	K0210-29A0	7	240290
01435-41016	K0210-39A0	46	240391
01435-41025	K0210-01A0	22	240010
01436-01020	A3110-A7D6	4	010490
01436-01025	A3110-B7D6	4	010500
01436-01045	A2070-A7B5	11	010200
01436-01045	A2070-A7B9	10	010210
01436-01050	A3110-B7D6	12	010500
01436-01050	A6810-D9C6	52	011081
01437-01025	A2010-A7C6	25	010130
01437-01030	A3010-A7A6	10	010480
01437-01060	A3010-A7A6	11	010480
01437-01070	A4210-A7C5	16	010670
01437-01220	A2410-A7A7	9	010450
01437-01245	A3010-A7A6	2	010480
01437-01280	A3010-A7A6	3	010480
01438-01020	A1010-A7B4	29	010010
01541-21670	W1117-02A2A	9	480200
01580-00605	D0200-11A0	10	090150
01580-00605	K0210-20A0	30	240200
01580-00806	D0200-13A0	36	090170
01580-00806	E0200-04A0	23	120060
01580-00806	K0210-20A0	11	240200
01580-00806	K1921-02A0	16	240690
01580-01008	A2110-D8F9	8	010250
01580-01008	K0210-20A0	34	240200
01580-01210	D0200-13A0	34	090170
01580-01210	K1921-01A0	25	240680
01580-01210	K1921-01A1	25	240685
01580-01210	K1921-01A3	25	240687
01580-01210	M1130-07A1	17	270260
01580-10605	E0200-14A1	15	120165
01580-10605	E0200-14A1	20	120165
01580-10806	H0230-01A3	23	180152
01580-10806	H0230-01A7	23	180156
01580-10806	K1921-01A0	14	240680
01580-10806	K1921-01A1	14	240685
01580-10806	K1921-01A3	14	240687
01580-10806	K1921-02A1	13	240695
01580-10806	M1110-01A0	39	270010
01580-10806	M1110-02A0	11	270020
01580-10806	M1110-02A0	23	270020
01580-10806	M1110-04A0	10	270040
01580-10806	M1110-04A0	26	270040
01580-10806	M1110-05A0	7	270050
01580-10806	M1110-08A0	18	270080
01580-10806	M1130-03A0	24	270160

PART NO.	FIG.NO.	INDEX	PAGE
01580-10806	M1210-02A0	30	270430
01580-10806	M1210-02A0	42	270430
01580-11008	A4050-D7A5	16	010710
01580-11008	A4710-A7D7	21	010650
01580-11008	A4710-A7E3	25	010660
01580-11008	A6810-B7C6	34	011040
01580-11008	A6810-D9C6	34	011080
01580-11008	B0300-03A0	17	030070
01580-11008	B0300-04A0	11	030080
01580-11008	B0300-04A0	5	030080
01580-11008	B0300-05A0	13	030090
01580-11008	E0110-01A0	6	120010
01580-11008	E0110-01A1	6	120020
01580-11008	K0210-01A0	23	240010
01580-11008	M1110-04A0	42	270040
01580-11210	A6010-A7C8	14	010950
01580-11210	A6010-A7D1	14	010990
01580-11210	E0200-10A0	14	120120
01580-11210	E0200-29A0	5	120300
01580-11210	E0200-31A0	8	120320
01580-11411	A6010-A7C8	12	010950
01580-11411	A6010-A7D1	12	010990
01580-11411	K0710-01A0	14	240570
01580-11613	W1117-02A2A	8	480200
01580-11613	W1117-04A2A	8	480260
01580-12218	R0120-01A1	14	360010
01580-12218	R0120-01A3	14	360030
01582-01008	A2411-B7A5	11	010470
01582-01008	A2411-B7A5	6	010470
01582-01008	A6210-A7A6	7	011020
01583-02213	A2210-A7D1	14	010380
01583-13018	H0210-03A0	16	180132
01583-13018	H0210-03A0	21	180132
01583-13018	H0210-06A0	16	180135
01583-13018	H0210-06A0	21	180135
01583-13018	H0220-03A0	16	180142
01583-13018	H0220-03A0	21	180142
01583-13018	H0220-06A0	16	180145
01583-13018	H0220-06A0	21	180145
01583-13621	C0100-05A0	14	060050
01583-13621	C0100-14A0	22	060140
01584-01008	A1530-A7C3	17	010060
01584-01008	A1530-B7C3	25	010070
01584-01008	A4010-A7A6	17	010630
01584-01008	A4010-A7A6	23	010630
01584-01008	A4050-D7A5	26	010710
01584-01008	A4060-01A0	10	010610
01584-01008	A4110-A7E4	41	010720
01584-01008	A4110-D7F2	37	010800
01584-01008	A4110-E7F2	29	010810

PART NO.	FIG.NO.	INDEX	PAGE
01584-01008	A4110-F7E9	29	010820
01584-01008	A4110-F7E9	7	010820
01584-01008	A6010-B7D1	15	010970
01584-01008	A6010-B7D2	15	011000
01584-01008	A6210-A7A6	20	011020
01584-01008	A6810-B7C6	45	011040
01584-01008	A6810-C7C6	37	011051
01584-01008	A6810-D7C6	10	011060
01584-01008	A6810-D9C6	44	011080
01584-01008	A6810-E1C6	39	011090
01584-01008	A6810-E2C6	12	011100
01584-30504	K0210-02A0	23	240020
01596-00606	T1230-01A1	53	390291
01597-01009	A2070-A7B5	8	010200
01597-01009	A2070-A7B9	7	010210
01597-01009	B0300-02A0	16	030050
01597-01009	B0300-02A1	16	030060
01597-01009	B0300-04A0	17	030080
01597-01009	B0600-02A0	10	030120
01597-01009	C0100-11A0	14	060110
01597-01009	C0100-11A0	8	060110
01597-01009	D0200-12A0	16	090160
01597-01009	D0200-12A0	22	090160
01597-01009	D0200-12A9	22	090165
01597-01009	D0200-12A9	29	090165
01597-01009	H0110-04A0	21	180040
01597-01009	H0110-05A0	20	180050
01597-01009	H0110-05A0	30	180050
01597-01009	H0320-01A0	15	180270
01597-01009	H0320-01A0	21	180270
01597-01009	H0320-01A0	9	180270
01597-01009	H0320-02A0	21	180280
01597-01009	H0320-02A0	27	180280
01597-01009	H0320-02A0	34	180280
01597-01009	H0340-03A0	10	180340
01597-01009	H0340-04A0	55	180351
01597-01009	H0340-06A0	5	180370
01597-01009	H1832-03A0	19	180570
01597-01009	H1840-02A0	3	180670
01597-01009	H1840-04A0	3	180690
01597-01009	H1841-02A0	41	180750
01597-01009	K0710-07A0	14	240630
01597-01009	M1420-01A0	9	270470
01597-01009	M1420-02A0	12	270480
01597-01009	M1420-02A0	17	270480
01597-01009	M1420-02A0	22	270480
01597-01009	M1420-02A0	29	270480
01597-01009	M1420-02A0	34	270480
01597-01009	N1210-02A0	23	300030
01597-01009	N1210-04A0	29	300050

PART NO.	FIG.NO.	INDEX	PAGE
01597-01009	N1210-06A0	25	300070
01597-01009	N1210-07A0	31	300080
01597-01009	P1120-02A0	7	330020
01597-01009	P1140-01A6	14	330090
01597-01009	P1140-01A6	23	330090
01597-01009	P1140-01A7	17	330100
01597-01009	P1140-01A7	26	330100
01597-01009	W1117-02A6	5	480240
01597-01009	W1117-04A6	5	480300
01597-01211	A1310-B7E8	23	010040
01597-01211	C0100-09A0	13	060090
01597-01211	C0100-12A0	15	060120
01597-01211	C0100-12A0	21	060120
01597-01211	C0100-12A0	24	060120
01597-01211	C0100-16A0	13	060170
01597-01211	H0350-01A0	23	180380
01597-01211	P1140-01A2	12	330050
01597-01615	H0311-01A0	11	180165
01597-01615	H0311-02A0	11	180175
01601-20410	E0200-03A0	3	120050
01601-20410	E0200-03A0	6	120050
01601-20513	E0202-03A0	8	120400
01601-20513	E0202-04A0	8	120410
01601-20513	K0210-39A0	15	240390
01601-20513	W1114-01A11	10	480160
01602-20619	E0200-13A0	14	120150
01602-20619	E0200-13A0	17	120150
01640-20508	K0210-27A0	15	240270
01640-20508	K0210-27A0	6	240270
01640-20610	D0200-11A0	36	090150
01640-20610	D0200-11A0	40	090150
01640-20610	D0200-11A0	41	090150
01640-20610	D0200-11A0	5	090150
01640-20610	D0200-11A0	9	090150
01640-20610	K0210-36A0	11	240360
01640-20610	K0210-39A0	22	240390
01640-20610	T1230-01A1	52	390291
01640-20816	E0420-01A0	3	120500
01640-21016	A6210-A7A6	8	011020
01640-21016	E0110-01A0	7	120010
01640-21016	E0110-01A1	7	120020
01640-21016	E0200-14A1	7	120165
01640-21016	K0210-35A0	11	240350
01640-21016	K0210-35A0	7	240350
01640-21016	M1110-07A0	14	270070
01640-21323	A6010-A7C8	3	010950
01640-21323	A6010-A7D1	3	010990
01641-20405	M1110-01A0	17	270010
01641-20405	M1110-01A0	22	270010
01641-20405	M1110-03A0	8	270030

PART NO.	FIG.NO.	INDEX	PAGE
01641-20405	M1110-04A0	16	270040
01641-20405	M1110-04A0	32	270040
01641-20405	M1110-05A0	12	270050
01641-20405	M1110-09A0	25	270090
01641-20405	M1130-05A0	14	270180
01641-20812	K0210-20A0	27	240200
01641-21016	K1921-02A0	21	240690
01641-21016	K1921-02A1	18	240695
01641-21626	N1310-01A2	45	300210
01641-50608	K0210-08A0	13	240080
01641-50608	K0210-08A0	19	240080
01641-50608	K0210-09A0	13	240090
01641-50608	K0210-09A0	16	240090
01641-50608	K0210-09A0	30	240090
01641-50608	K0210-09A0	33	240090
01641-50608	K0210-10A0	14	240100
01641-50608	K0210-10A0	17	240100
01643-30623	A4010-A7A6	9	010630
01643-30623	A4040-A7B1	9	010640
01643-30623	A4110-G7E9	19	010830
01643-30623	A4110-G7E9	4	010830
01643-30623	D0100-01A0	31	090010
01643-30623	D0100-01A1	26	090020
01643-30623	D0100-01A2	31	090030
01643-30623	D0100-01A3	26	090040
01643-30623	D0200-13A0	16	090170
01643-30623	E0200-03A0	24	120050
01643-30623	E0200-03A0	27	120050
01643-30623	E0200-03A0	31	120050
01643-30623	E0200-09A0	3	120110
01643-30623	E0200-09A0	5	120110
01643-30623	E0200-14A1	13	120165
01643-30623	E0200-14A1	14	120165
01643-30623	E0200-14A1	18	120165
01643-30623	E0200-14A1	19	120165
01643-30623	E0450-02A0	3	120520
01643-30623	K0210-04A0	3	240040
01643-30623	K0210-04A0	6	240040
01643-30623	K0210-04A0	9	240040
01643-30623	K0210-05A0	3	240050
01643-30623	K0210-06A0	18	240060
01643-30623	K0210-06A0	9	240060
01643-30623	K0210-08A0	10	240080
01643-30623	K0210-08A0	4	240080
01643-30623	K0210-08A0	7	240080
01643-30623	K0210-09A0	10	240090
01643-30623	K0210-09A0	20	240090
01643-30623	K0210-09A0	23	240090
01643-30623	K0210-09A0	27	240090
01643-30623	K0210-09A0	4	240090

PART NO.	FIG.NO.	INDEX	PAGE
01643-30623	K0210-09A0	7	240090
01643-30623	K0210-10A0	11	240100
01643-30623	K0210-10A0	4	240100
01643-30623	K0210-10A0	7	240100
01643-30623	K0210-16A0	8	240160
01643-30623	K0210-33A0	3	240330
01643-30623	K0210-41A0	5	240410
01643-30623	K0210-43A0	12	240430
01643-30623	K0210-43A0	24	240430
01643-30623	K0210-43A0	3	240430
01643-30623	K0210-50A0	30	240500
01643-30623	K0210-52A0	3	240520
01643-30623	K0710-03A0	10	240590
01643-30623	K0710-07A0	4	240630
01643-30623	K1921-01A0	17	240680
01643-30623	K1921-01A0	7	240680
01643-30623	K1921-01A1	17	240685
01643-30623	K1921-01A1	7	240685
01643-30623	K1921-01A3	17	240687
01643-30623	K1921-01A3	7	240687
01643-30623	M1110-01A0	37	270010
01643-30623	M1110-01A0	9	270010
01643-30623	M1110-02A0	21	270020
01643-30623	M1110-02A0	9	270020
01643-30623	M1110-03A0	14	270030
01643-30623	M1110-03A0	34	270030
01643-30623	M1110-03A0	46	270031
01643-30623	M1110-04A0	24	270040
01643-30623	M1110-04A0	8	270040
01643-30623	M1110-04A0	48	270041
01643-30623	M1110-05A0	10	270050
01643-30623	M1110-05A0	28	270050
01643-30623	M1110-08A0	13	270080
01643-30623	M1110-09A0	17	270090
01643-30623	M1130-03A0	32	270160
01643-30623	M1130-11A0	17	270240
01643-30623	M1210-03A0	12	270440
01643-30623	T1110-01A5	20	390050
01643-30623	T1110-01A5	41	390050
01643-30623	T1110-01A5	7	390050
01643-30623	W1114-01A9	12	480140
01643-30623	W1117-02A4	2	480220
01643-30623	W1117-04A4	2	480280
01643-30623	W1117-06A9A	12	480350
01643-30623	W1117-06A9A	18	480350
01643-30623	W1117-06A9A	4	480350
01643-30823	A1510-A7C5	13	010050
01643-30823	A2210-A7D1	12	010380
01643-30823	A4050-D7A5	30	010710
01643-30823	A4110-A7E4	29	010720

PART NO.	FIG.NO.	INDEX	PAGE
01643-30823	A4110-B7E4	28	010730
01643-30823	A4110-B7E4	30	010730
01643-30823	A4110-C7F2	19	010790
01643-30823	A4110-C7F2	21	010790
01643-30823	A4110-D7F2	29	010800
01643-30823	A6810-A7C6	11	011030
01643-30823	A6810-A7C6	17	011030
01643-30823	A6810-A7C6	23	011030
01643-30823	A6810-A7C6	25	011030
01643-30823	A6810-A7C6	5	011030
01643-30823	A6810-B7C6	39	011040
01643-30823	A6810-D8C6	11	011070
01643-30823	A6810-D8C6	17	011070
01643-30823	A6810-D8C6	23	011070
01643-30823	A6810-D8C6	25	011070
01643-30823	A6810-D8C6	5	011070
01643-30823	A6810-D9C6	39	011080
01643-30823	A6810-E1C6	26	011090
01643-30823	B0600-05A0	6	030150
01643-30823	D0200-10A0	31	090140
01643-30823	D0200-11A0	29	090150
01643-30823	D0200-13A0	58	090171
01643-30823	E0200-03A0	12	120050
01643-30823	E0200-03A0	19	120050
01643-30823	E0200-03A0	21	120050
01643-30823	E0200-05A0	25	120070
01643-30823	E0200-07A0	8	120090
01643-30823	E0200-08A0	22	120100
01643-30823	E0200-13A0	11	120150
01643-30823	E0200-13A0	22	120150
01643-30823	E0200-13A0	25	120150
01643-30823	E0200-19A1	6	120215
01643-30823	E0200-25A0	8	120260
01643-30823	E0200-32A0	3	120330
01643-30823	E0200-33A0	3	120340
01643-30823	E0202-03A0	14	120400
01643-30823	E0202-04A0	14	120410
01643-30823	E0410-01A0	4	120490
01643-30823	E0450-01A0	18	120510
01643-30823	E0450-02A0	6	120520
01643-30823	E0450-02A0	8	120520
01643-30823	H1831-03A0	3	180540
01643-30823	K0210-05A0	27	240050
01643-30823	K0210-19A0	3	240190
01643-30823	K0210-19A0	6	240190
01643-30823	K0210-20A0	12	240200
01643-30823	K0210-20A0	26	240200
01643-30823	K0210-22A0	3	240220
01643-30823	K0210-26A0	3	240260
01643-30823	K0210-27A0	3	240270

PART NO.	FIG.NO.	INDEX	PAGE
01643-30823	K0210-28A0	11	240280
01643-30823	K0210-28A0	14	240280
01643-30823	K0210-28A0	18	240280
01643-30823	K0210-28A0	27	240280
01643-30823	K0210-28A0	3	240280
01643-30823	K0210-28A0	30	240280
01643-30823	K0210-28A0	32	240280
01643-30823	K0210-28A0	35	240280
01643-30823	K0210-28A0	37	240280
01643-30823	K0210-28A0	40	240280
01643-30823	K0210-28A0	6	240280
01643-30823	K0210-28A0	8	240280
01643-30823	K0210-29A0	13	240290
01643-30823	K0210-29A0	16	240290
01643-30823	K0210-34A0	3	240340
01643-30823	K0210-45A0	2	240450
01643-30823	K0210-49A0	15	240490
01643-30823	K0710-01A0	3	240570
01643-30823	K0710-01A0	5	240570
01643-30823	K1921-01A0	13	240680
01643-30823	K1921-01A1	13	240685
01643-30823	K1921-01A3	13	240687
01643-30823	K1921-02A0	17	240690
01643-30823	K1921-02A1	14	240695
01643-30823	M1110-01A0	40	270010
01643-30823	M1110-02A0	12	270020
01643-30823	M1110-02A0	24	270020
01643-30823	M1110-04A0	11	270040
01643-30823	M1110-04A0	27	270040
01643-30823	M1110-05A0	6	270050
01643-30823	M1110-08A0	19	270080
01643-30823	M1110-09A0	22	270090
01643-30823	M1130-03A0	23	270160
01643-30823	M1130-07A1	26	270260
01643-30823	M1130-09A2	15	270280
01643-30823	M1130-09A2	18	270280
01643-30823	M1130-10A1	15	270290
01643-30823	M1130-10A1	18	270290
01643-30823	M1130-10A1	21	270290
01643-30823	M1130-10A1	24	270290
01643-30823	M1130-10A1	27	270290
01643-30823	M1130-10A1	31	270290
01643-30823	M1130-10A1	35	270290
01643-30823	M1130-10A1	40	270290
01643-30823	M1130-10A1	6	270290
01643-30823	M1130-10A1	9	270290
01643-30823	M1210-02A0	31	270430
01643-30823	M1210-02A0	43	270430
01643-30823	W1117-02A4	4	480220
01643-30823	W1117-04A4	4	480280

PART NO.	FIG.NO.	INDEX	PAGE
01643-30823	W1117-04A8	12	480320
01643-30823	W9970-02A1	4	480390
01643-30823	W9970-03A1	4	480400
01643-31032	A1310-A7E8	20	010030
01643-31032	A1310-A7E8	6	010030
01643-31032	A1310-B7E8	11	010040
01643-31032	A1310-B7E8	15	010040
01643-31032	A1310-B7E8	17	010040
01643-31032	A1310-B7E8	20	010040
01643-31032	A1310-B7E8	30	010040
01643-31032	A1310-B7E8	32	010040
01643-31032	A1310-B7E8	34	010040
01643-31032	A1310-B7E8	9	010040
01643-31032	A1510-A7C5	17	010050
01643-31032	A1510-A7C5	24	010050
01643-31032	A1510-A7C5	27	010050
01643-31032	A1510-A7C5	33	010050
01643-31032	A1530-B7C3	28	010070
01643-31032	A1570-A7A7	11	010100
01643-31032	A1570-A7A7	3	010100
01643-31032	A1610-A7B9	10	010110
01643-31032	A1730-A7C6	2	010120
01643-31032	A2041-A7E4	4	010160
01643-31032	A2041-B7E4	14	010170
01643-31032	A2041-B7E4	30	010170
01643-31032	A2041-B7E4	31	010170
01643-31032	A2041-B7E4	37	010170
01643-31032	A2041-B7E4	5	010170
01643-31032	A2070-A7B5	9	010200
01643-31032	A2070-A7B9	8	010210
01643-31032	A2110-A7F9	15	010220
01643-31032	A2110-A7F9	9	010220
01643-31032	A2110-B7F9	10	010230
01643-31032	A2110-B7G6	10	010235
01643-31032	A2110-B7G6	18	010235
01643-31032	A2110-C7F9	15	010240
01643-31032	A2110-C7F9	9	010240
01643-31032	A2110-C7G8	10	010360
01643-31032	A2110-C7G8	14	010360
01643-31032	A2110-C7G8	19	010360
01643-31032	A2110-C7G8	22	010360
01643-31032	A2110-C7G8	25	010360
01643-31032	A2110-C7G8	28	010360
01643-31032	A2110-C7G8	30	010360
01643-31032	A2110-C7G8	33	010360
01643-31032	A2110-C7G8	36	010360
01643-31032	A2110-C7G8	39	010360
01643-31032	A2110-C7G8	4	010360
01643-31032	A2110-C7G8	7	010360
01643-31032	A2110-C7G9	10	010370

PART NO.	FIG.NO.	INDEX	PAGE
01643-31032	A2110-C7G9	13	010370
01643-31032	A2110-C7G9	18	010370
01643-31032	A2110-C7G9	21	010370
01643-31032	A2110-C7G9	24	010370
01643-31032	A2110-C7G9	27	010370
01643-31032	A2110-C7G9	29	010370
01643-31032	A2110-C7G9	32	010370
01643-31032	A2110-C7G9	35	010370
01643-31032	A2110-C7G9	4	010370
01643-31032	A2110-C7G9	7	010370
01643-31032	A2110-D8F9	6	010250
01643-31032	A2210-A7D1	23	010380
01643-31032	A4010-H1J1	6	010571
01643-31032	A4040-A7B1	16	010640
01643-31032	A4040-A7B1	20	010640
01643-31032	A4050-B7A5	16	010690
01643-31032	A4050-B7A5	18	010690
01643-31032	A4050-B7A5	6	010690
01643-31032	A4050-D7A5	11	010710
01643-31032	A4050-D7A5	14	010710
01643-31032	A4050-D7A5	17	010710
01643-31032	A4050-D7A5	20	010710
01643-31032	A4050-D7A5	23	010710
01643-31032	A4050-D7A5	5	010710
01643-31032	A4050-D7A5	8	010710
01643-31032	A4080-01A0	38	010620
01643-31032	A4110-A7E4	16	010720
01643-31032	A4110-A7E4	18	010720
01643-31032	A4110-A7E4	19	010720
01643-31032	A4110-A7E4	33	010720
01643-31032	A4110-A7E4	36	010720
01643-31032	A4110-A7E4	38	010720
01643-31032	A4110-A7E4	40	010720
01643-31032	A4110-A7E5	54	010721
01643-31032	A4110-A7E5	60	010721
01643-31032	A4110-A7E5	63	010721
01643-31032	A4110-A7E9	22	010770
01643-31032	A4110-A7E9	3	010770
01643-31032	A4110-B7E4	14	010730
01643-31032	A4110-B7E4	18	010730
01643-31032	A4110-B7E4	20	010730
01643-31032	A4110-B7E4	33	010730
01643-31032	A4110-B7E4	36	010730
01643-31032	A4110-B7E4	44	010730
01643-31032	A4110-B7E4	52	010731
01643-31032	A4110-B7E4	53	010731
01643-31032	A4110-B7E4	58	010731
01643-31032	A4110-B7E4	60	010731
01643-31032	A4110-B7E4	63	010731
01643-31032	A4110-B7E9	20	010780

PART NO.	FIG.NO.	INDEX	PAGE
01643-31032	A4110-B7E9	3	010780
01643-31032	A4110-C7E4	11	010740
01643-31032	A4110-C7E4	3	010740
01643-31032	A4110-C7E4	8	010740
01643-31032	A4110-C7F2	11	010790
01643-31032	A4110-C7F2	24	010790
01643-31032	A4110-C7F2	28	010790
01643-31032	A4110-C7F2	31	010790
01643-31032	A4110-C7F2	7	010790
01643-31032	A4110-D7E4	11	010750
01643-31032	A4110-D7E4	3	010750
01643-31032	A4110-D7E4	8	010750
01643-31032	A4110-D7F2	10	010800
01643-31032	A4110-D7F2	22	010800
01643-31032	A4110-D7F2	32	010800
01643-31032	A4110-D7F2	34	010800
01643-31032	A4110-D7F2	36	010800
01643-31032	A4110-E7F2	22	010810
01643-31032	A4110-E7F2	24	010810
01643-31032	A4110-E7F2	26	010810
01643-31032	A4110-E7F2	28	010810
01643-31032	A4110-E7F2	5	010810
01643-31032	A4110-F7E9	13	010820
01643-31032	A4110-F7E9	30	010820
01643-31032	A4110-F7E9	8	010820
01643-31032	A4110-G7E9	11	010830
01643-31032	A4110-G7E9	22	010830
01643-31032	A4110-G7E9	26	010830
01643-31032	A4110-G7E9	7	010830
01643-31032	A4230-A7C7	11	010840
01643-31032	A4230-A7C7	8	010840
01643-31032	A4230-A7C8	11	010850
01643-31032	A4230-A7C8	8	010850
01643-31032	A4710-A7D7	17	010650
01643-31032	A4710-A7D7	19	010650
01643-31032	A4710-A7D7	20	010650
01643-31032	A4710-A7D7	7	010650
01643-31032	A4710-A7E3	11	010660
01643-31032	A4710-A7E3	21	010660
01643-31032	A4710-A7E3	23	010660
01643-31032	A4710-A7E3	24	010660
01643-31032	A5010-B7E6	8	010910
01643-31032	A5010-B7F4	8	010890
01643-31032	A6010-A7C9	10	010960
01643-31032	A6010-A7C9	16	010960
01643-31032	A6010-A7C9	3	010960
01643-31032	A6010-A7C9	8	010960
01643-31032	A6010-B7D1	11	010970
01643-31032	A6010-B7D1	14	010970
01643-31032	A6010-B7D1	17	010970

PART NO.	FIG.NO.	INDEX	PAGE
01643-31032	A6010-B7D1	21	010970
01643-31032	A6010-B7D1	23	010970
01643-31032	A6010-B7D1	3	010970
01643-31032	A6010-B7D1	8	010970
01643-31032	A6010-B7D2	11	011000
01643-31032	A6010-B7D2	14	011000
01643-31032	A6010-B7D2	17	011000
01643-31032	A6010-B7D2	21	011000
01643-31032	A6010-B7D2	23	011000
01643-31032	A6010-B7D2	3	011000
01643-31032	A6010-B7D2	8	011000
01643-31032	A6010-B7D3	10	011010
01643-31032	A6010-B7D3	16	011010
01643-31032	A6010-B7D3	3	011010
01643-31032	A6010-B7D3	8	011010
01643-31032	A6210-A7A6	16	011020
01643-31032	A6210-A7A6	19	011020
01643-31032	A6810-A7C6	28	011030
01643-31032	A6810-A7C6	30	011030
01643-31032	A6810-B7C6	14	011040
01643-31032	A6810-B7C6	17	011040
01643-31032	A6810-B7C6	19	011040
01643-31032	A6810-B7C6	22	011040
01643-31032	A6810-B7C6	25	011040
01643-31032	A6810-B7C6	35	011040
01643-31032	A6810-B7C6	42	011040
01643-31032	A6810-B7C6	46	011041
01643-31032	A6810-B7C6	51	011041
01643-31032	A6810-C7C6	13	011051
01643-31032	A6810-C7C6	16	011051
01643-31032	A6810-C7C6	21	011051
01643-31032	A6810-C7C6	24	011051
01643-31032	A6810-C7C6	33	011051
01643-31032	A6810-C7C6	45	011051
01643-31032	A6810-D7C6	16	011060
01643-31032	A6810-D7C6	4	011060
01643-31032	A6810-D7C6	8	011060
01643-31032	A6810-D8C6	28	011070
01643-31032	A6810-D8C6	30	011070
01643-31032	A6810-D9C6	15	011080
01643-31032	A6810-D9C6	18	011080
01643-31032	A6810-D9C6	20	011080
01643-31032	A6810-D9C6	23	011080
01643-31032	A6810-D9C6	35	011080
01643-31032	A6810-D9C6	45	011080
01643-31032	A6810-D9C6	50	011081
01643-31032	A6810-D9C6	55	011081
01643-31032	A6810-E1C6	15	011090
01643-31032	A6810-E1C6	18	011090
01643-31032	A6810-E1C6	23	011090

PART NO.	FIG.NO.	INDEX	PAGE
01643-31032	A6810-E1C6	35	011090
01643-31032	A6810-E1C6	47	011091
01643-31032	A6810-E1C6	54	011091
01643-31032	A6810-E2C6	10	011100
01643-31032	A6810-E2C6	18	011100
01643-31032	A6810-E2C6	4	011100
01643-31032	A6810-E2C6	8	011100
01643-31032	B0300-01A0	16	030040
01643-31032	B0300-02A0	17	030050
01643-31032	B0300-02A1	17	030060
01643-31032	B0300-03A0	10	030070
01643-31032	B0300-03A0	15	030070
01643-31032	B0300-04A0	10	030080
01643-31032	B0300-04A0	18	030080
01643-31032	B0300-04A0	23	030080
01643-31032	B0300-04A0	26	030080
01643-31032	B0300-04A0	3	030080
01643-31032	B0300-04A0	4	030080
01643-31032	B0300-04A0	9	030080
01643-31032	B0300-05A0	14	030090
01643-31032	B0300-05A0	24	030090
01643-31032	B0300-05A0	27	030090
01643-31032	B0300-05A0	29	030090
01643-31032	B0300-05A0	9	030090
01643-31032	B0600-01A0	38	030110
01643-31032	B0600-01A0	49	030111
01643-31032	B0600-02A0	11	030120
01643-31032	B0600-02A0	4	030120
01643-31032	B0600-03A0	10	030130
01643-31032	B0600-03A0	12	030130
01643-31032	B0600-03A0	24	030130
01643-31032	B0600-05A0	18	030150
01643-31032	B0600-08A0	38	030180
01643-31032	B0600-08A0	48	030181
01643-31032	C0100-02A0	24	060020
01643-31032	C0100-02A0	28	060020
01643-31032	C0100-02A0	39	060020
01643-31032	C0100-05A0	17	060050
01643-31032	C0100-11A0	15	060110
01643-31032	C0100-11A0	9	060110
01643-31032	C0100-13A0	13	060130
01643-31032	C0100-13A0	8	060130
01643-31032	C0100-14A0	24	060140
01643-31032	D0100-01A0	35	090010
01643-31032	D0100-01A1	30	090020
01643-31032	D0100-01A2	35	090030
01643-31032	D0100-01A3	30	090040
01643-31032	D0200-03A0	15	090070
01643-31032	D0200-03A0	20	090070
01643-31032	D0200-03A0	25	090070

PART NO.	FIG.NO.	INDEX	PAGE
01643-31032	D0200-04A0	29	090080
01643-31032	D0200-06A0	11	090100
01643-31032	D0200-06A0	15	090100
01643-31032	D0200-06A0	20	090100
01643-31032	D0200-06A0	25	090100
01643-31032	D0200-06A0	31	090100
01643-31032	D0200-06A0	8	090100
01643-31032	D0200-07A0	12	090110
01643-31032	D0200-07A0	16	090110
01643-31032	D0200-07A0	24	090110
01643-31032	D0200-07A0	32	090110
01643-31032	D0200-07A0	8	090110
01643-31032	D0200-08A0	22	090120
01643-31032	D0200-08A0	26	090120
01643-31032	D0200-08A0	5	090120
01643-31032	D0200-08A0	9	090120
01643-31032	D0200-09A0	12	090130
01643-31032	D0200-09A0	23	090130
01643-31032	D0200-09A0	30	090130
01643-31032	D0200-10A0	7	090140
01643-31032	D0200-10A0	9	090140
01643-31032	D0200-11A0	33	090150
01643-31032	D0200-12A0	15	090160
01643-31032	D0200-12A0	21	090160
01643-31032	D0200-12A9	21	090165
01643-31032	D0200-12A9	28	090165
01643-31032	D0200-13A0	11	090170
01643-31032	E0200-04A0	12	120060
01643-31032	E0200-04A0	16	120060
01643-31032	E0200-04A0	26	120060
01643-31032	E0200-04A0	8	120060
01643-31032	E0200-04A0	50	120061
01643-31032	E0200-07A0	33	120090
01643-31032	E0200-07A0	36	120090
01643-31032	E0200-10A0	28	120120
01643-31032	E0200-14A0	19	120160
01643-31032	E0200-16A1	38	120185
01643-31032	E0200-17A1	14	120195
01643-31032	E0200-18A1	33	120205
01643-31032	E0200-19A0	15	120210
01643-31032	E0200-25A0	10	120260
01643-31032	E0200-26A0	19	120270
01643-31032	E0200-26A0	22	120270
01643-31032	E0200-27A0	17	120280
01643-31032	E0200-27A0	22	120280
01643-31032	E0200-27A0	32	120280
01643-31032	E0200-27A0	35	120280
01643-31032	E0200-28A0	41	120290
01643-31032	E0200-28A0	5	120290
01643-31032	E0200-31A0	28	120320

PART NO.	FIG.NO.	INDEX	PAGE
01643-31032	E0450-03A0	21	120530
01643-31032	E0450-03A0	26	120530
01643-31032	E4110-E7E4	10	010760
01643-31032	E4110-E7E4	13	010760
01643-31032	E4110-E7E4	17	010760
01643-31032	E4110-E7E4	8	010760
01643-31032	G1010-01A0	11	150010
01643-31032	G1010-01A0	16	150010
01643-31032	G1010-01A0	21	150010
01643-31032	G1010-02A0	14	150020
01643-31032	G1010-02A0	22	150020
01643-31032	G1010-02A0	36	150020
01643-31032	G1010-02A0	6	150020
01643-31032	G1010-02A0	9	150020
01643-31032	G1010-03A0	4	150030
01643-31032	G1010-04A0	14	150040
01643-31032	G1010-04A0	27	150040
01643-31032	G1010-04A0	6	150040
01643-31032	G1010-04A0	9	150040
01643-31032	G1010-05A0	12	150050
01643-31032	G1010-05A0	19	150050
01643-31032	G1010-05A0	27	150050
01643-31032	G1010-05A0	4	150050
01643-31032	G1010-06A0	11	150060
01643-31032	G1010-06A0	18	150060
01643-31032	G1010-06A0	26	150060
01643-31032	G1010-06A0	3	150060
01643-31032	G1010-06A0	33	150060
01643-31032	H0110-01A0	16	180010
01643-31032	H0110-01A0	21	180010
01643-31032	H0110-01A1	16	180015
01643-31032	H0110-01A1	21	180015
01643-31032	H0110-03A0	6	180030
01643-31032	H0110-04A0	22	180040
01643-31032	H0110-05A0	21	180050
01643-31032	H0110-05A0	25	180050
01643-31032	H0110-05A0	31	180050
01643-31032	H0210-08A0	4	180137
01643-31032	H0220-08A0	4	180147
01643-31032	H0230-01A9	21	180158
01643-31032	H0230-02A0	29	180161
01643-31032	H0312-03A0	29	180210
01643-31032	H0312-04A0	16	180220
01643-31032	H0312-06A0	4	180251
01643-31032	H0312-06A0	8	180251
01643-31032	H0320-01A0	10	180270
01643-31032	H0320-01A0	16	180270
01643-31032	H0320-01A0	22	180270
01643-31032	H0320-02A0	22	180280
01643-31032	H0320-02A0	28	180280

PART NO.	FIG.NO.	INDEX	PAGE
01643-31032	H0320-02A0	35	180280
01643-31032	H0330-02A2	6	180301
01643-31032	H0340-03A0	11	180340
01643-31032	H0340-04A0	21	180350
01643-31032	H0340-04A0	24	180350
01643-31032	H0340-04A0	36	180350
01643-31032	H0340-04A0	39	180350
01643-31032	H0340-04A0	8	180350
01643-31032	H0340-04A0	56	180351
01643-31032	H0340-06A0	6	180370
01643-31032	H0350-02A0	20	180390
01643-31032	H0350-02A0	5	180390
01643-31032	H0350-03A0	19	180400
01643-31032	H0350-03A0	4	180400
01643-31032	H1320-01A0	2	180500
01643-31032	H1320-03A0	4	180505
01643-31032	H1830-03A0	6	180830
01643-31032	H1831-01A0	3	180520
01643-31032	H1831-02A0	4	180530
01643-31032	H1832-03A0	20	180570
01643-31032	H1833-01A1	2	180585
01643-31032	H1833-03A0	2	180595
01643-31032	H1833-05A0	2	180605
01643-31032	H1833-06A0	3	180610
01643-31032	H1833-07A0	3	180620
01643-31032	H1840-01A0	5	180660
01643-31032	H1840-02A0	4	180670
01643-31032	H1840-04A0	4	180690
01643-31032	H1841-01A0	13	180740
01643-31032	H1841-02A0	12	180750
01643-31032	H1841-02A0	42	180750
01643-31032	H1841-03A0	4	180760
01643-31032	H1843-03A0	12	180800
01643-31032	H1850-04A0	18	180840
01643-31032	H1850-04A0	34	180840
01643-31032	K0210-01A0	24	240010
01643-31032	K0210-13A0	12	240130
01643-31032	K0210-20A0	15	240200
01643-31032	K0210-20A0	18	240200
01643-31032	K0210-20A0	35	240200
01643-31032	K0210-20A0	9	240200
01643-31032	K0210-28A0	21	240280
01643-31032	K0210-28A0	24	240280
01643-31032	K0210-29A0	10	240290
01643-31032	K0210-29A0	19	240290
01643-31032	K0210-29A0	3	240290
01643-31032	K0210-29A0	6	240290
01643-31032	K0210-30A0	21	240300
01643-31032	K0210-30A0	29	240300
01643-31032	K0210-30A0	34	240300

PART NO.	FIG.NO.	INDEX	PAGE
01643-31032	K0210-41A0	2	240410
01643-31032	K0210-45A0	14	240450
01643-31032	K0210-45A0	17	240450
01643-31032	K0210-50A0	14	240500
01643-31032	K0210-50A0	2	240500
01643-31032	K0210-52A0	23	240520
01643-31032	K0710-02A0	12	240580
01643-31032	K0710-02A0	15	240580
01643-31032	K0710-02A0	6	240580
01643-31032	K0710-02A0	9	240580
01643-31032	K0710-03A0	28	240590
01643-31032	K0710-03A0	30	240590
01643-31032	K0710-04A0	13	240600
01643-31032	K0710-05A0	24	240610
01643-31032	K0710-06A0	2	240620
01643-31032	K0710-07A0	13	240630
01643-31032	K0710-07A0	19	240630
01643-31032	K0710-07A0	29	240630
01643-31032	K1120-01A0	29	240660
01643-31032	K1120-01A1	29	240670
01643-31032	M1110-03A0	31	270030
01643-31032	M1110-03A0	43	270030
01643-31032	M1110-05A0	25	270050
01643-31032	M1110-09A0	14	270090
01643-31032	M1130-07A1	5	270260
01643-31032	M1130-07A1	9	270260
01643-31032	M1130-09A2	4	270280
01643-31032	M1130-10A0	18	270230
01643-31032	M1130-13A0	12	270320
01643-31032	M1130-13A0	25	270320
01643-31032	M1420-01A0	8	270470
01643-31032	M1420-02A0	11	270480
01643-31032	M1420-02A0	16	270480
01643-31032	M1420-02A0	21	270480
01643-31032	M1420-02A0	28	270480
01643-31032	M1420-02A0	33	270480
01643-31032	N1210-01A0	7	300020
01643-31032	N1210-02A0	24	300030
01643-31032	N1210-02A0	26	300030
01643-31032	N1210-03A0	7	300040
01643-31032	N1210-04A0	26	300050
01643-31032	N1210-04A0	30	300050
01643-31032	N1210-04A0	32	300050
01643-31032	N1210-06A0	26	300070
01643-31032	N1210-06A0	28	300070
01643-31032	N1210-07A0	28	300080
01643-31032	N1210-07A0	32	300080
01643-31032	N1210-07A0	34	300080
01643-31032	N1210-09A0	7	300100
01643-31032	N1220-01A4	10	300150

PART NO.	FIG.NO.	INDEX	PAGE
01643-31032	N1220-01A8	11	300190
01643-31032	N1220-01A8	14	300190
01643-31032	N1310-01A1	13	300200
01643-31032	P1120-02A0	14	330020
01643-31032	P1120-02A0	8	330020
01643-31032	P1140-01A6	15	330090
01643-31032	P1140-01A6	24	330090
01643-31032	P1140-01A7	18	330100
01643-31032	P1140-01A7	27	330100
01643-31032	P1210-01A2	27	330130
01643-31032	P1210-01A2	34	330130
01643-31032	P1210-01A8	27	330190
01643-31032	P1210-01A8	34	330190
01643-31032	T1110-01A3	30	390030
01643-31032	T1110-01A3	35	390030
01643-31032	T1110-01A3	39	390030
01643-31032	T1110-01A3	7	390030
01643-31032	T1110-01A4	11	390040
01643-31032	T1110-01A4	8	390040
01643-31032	T1110-01A5	17	390050
01643-31032	T1110-01A5	30	390050
01643-31032	T1110-01A5	38	390050
01643-31032	T1210-01A2	21	390220
01643-31032	T1210-01A2	27	390220
01643-31032	T1210-01A2	36	390220
01643-31032	T1210-01A2	9	390220
01643-31032	T1210-01A3	14	390230
01643-31032	T1210-01A3	28	390230
01643-31032	T1210-01A3	32	390230
01643-31032	T1210-01A3	4	390230
01643-31032	T1210-01A3	44	390230
01643-31032	T1210-01A3	50	390231
01643-31032	T1210-01A4	9	390240
01643-31032	T1230-01A5	3	390330
01643-31032	W1114-01A6	18	480110
01643-31032	W1117-02A6	4	480240
01643-31032	W1117-04A6	4	480300
01643-31032	W1117-04A8	10	480320
01643-31232	A1310-B7E8	22	010040
01643-31232	A1730-A7C6	11	010120
01643-31232	A2011-A7B9	14	010140
01643-31232	A2041-A7E4	11	010160
01643-31232	A2041-A7E4	18	010160
01643-31232	A2041-B7E4	11	010170
01643-31232	A2041-B7E4	17	010170
01643-31232	A2041-B7E4	34	010170
01643-31232	A2330-A7A1	3	010420
01643-31232	A4110-A7E4	26	010720
01643-31232	A4110-D7F2	25	010800
01643-31232	A5010-A7E6	21	010880

PART NO.	FIG.NO.	INDEX	PAGE
01643-31232	A5010-A7E8	21	010900
01643-31232	A6010-A7C8	10	010950
01643-31232	A6010-A7C8	15	010950
01643-31232	A6010-A7C8	5	010950
01643-31232	A6010-A7C8	8	010950
01643-31232	A6010-A7D1	10	010990
01643-31232	A6010-A7D1	15	010990
01643-31232	A6010-A7D1	6	010990
01643-31232	A6010-A7D1	8	010990
01643-31232	A6030-A7B4	13	010930
01643-31232	A6030-A7B4	16	010930
01643-31232	A6030-A7B4	17	010930
01643-31232	A6810-B7C6	32	011040
01643-31232	A6810-B7C6	4	011040
01643-31232	A6810-C7C6	4	011051
01643-31232	A6810-C7C6	41	011051
01643-31232	A6810-D7C6	12	011060
01643-31232	A6810-D9C6	32	011080
01643-31232	A6810-D9C6	4	011080
01643-31232	A6810-E1C6	4	011090
01643-31232	A6810-E1C6	43	011090
01643-31232	A6810-E2C6	14	011100
01643-31232	B0100-02A0	5	030020
01643-31232	B0100-02A0	8	030020
01643-31232	B0100-02A1	5	030030
01643-31232	B0300-01A0	26	030040
01643-31232	B0300-02A0	11	030050
01643-31232	B0300-02A0	14	030050
01643-31232	B0300-02A1	11	030060
01643-31232	B0300-02A1	14	030060
01643-31232	B0300-02A1	25	030060
01643-31232	B0300-03A0	13	030070
01643-31232	B0300-03A0	6	030070
01643-31232	B0300-04A0	15	030080
01643-31232	B0300-05A0	19	030090
01643-31232	B0300-05A0	33	030090
01643-31232	B0300-05A0	36	030090
01643-31232	B0300-05A0	39	030090
01643-31232	B0300-05A0	42	030090
01643-31232	B0300-06A0	13	030100
01643-31232	B0300-06A0	16	030100
01643-31232	B0300-06A0	3	030100
01643-31232	B0300-06A0	9	030100
01643-31232	B0600-02A0	8	030120
01643-31232	B0600-03A0	19	030130
01643-31232	B0600-04A0	10	030140
01643-31232	B0600-04A0	13	030140
01643-31232	B0600-05A0	25	030150
01643-31232	B0600-06A0	8	030160
01643-31232	B0600-07A0	9	030170

PART NO.	FIG.NO.	INDEX	PAGE
01643-31232	C0100-02A0	10	060020
01643-31232	C0100-02A0	12	060020
01643-31232	C0100-02A0	15	060020
01643-31232	C0100-02A0	17	060020
01643-31232	C0100-02A0	20	060020
01643-31232	C0100-02A0	31	060020
01643-31232	C0100-02A0	33	060020
01643-31232	C0100-03A0	11	060030
01643-31232	C0100-03A0	4	060030
01643-31232	C0100-05A0	21	060050
01643-31232	C0100-05A0	24	060050
01643-31232	C0100-05A0	27	060050
01643-31232	C0100-05A0	3	060050
01643-31232	C0100-05A0	33	060050
01643-31232	C0100-06A0	12	060060
01643-31232	C0100-06A0	15	060060
01643-31232	C0100-06A0	18	060060
01643-31232	C0100-06A0	3	060060
01643-31232	C0100-06A0	6	060060
01643-31232	C0100-06A0	9	060060
01643-31232	C0100-07A0	19	060070
01643-31232	C0100-07A0	24	060070
01643-31232	C0100-07A0	29	060070
01643-31232	C0100-07A0	3	060070
01643-31232	C0100-08A0	31	060080
01643-31232	C0100-08A0	8	060080
01643-31232	C0100-09A0	10	060090
01643-31232	C0100-09A0	12	060090
01643-31232	C0100-09A0	22	060090
01643-31232	C0100-09A0	27	060090
01643-31232	C0100-09A0	3	060090
01643-31232	C0100-11A0	12	060110
01643-31232	C0100-11A0	21	060110
01643-31232	C0100-11A0	6	060110
01643-31232	C0100-12A0	25	060120
01643-31232	C0100-13A0	19	060130
01643-31232	C0100-14A0	15	060140
01643-31232	C0100-14A0	18	060140
01643-31232	C0100-14A0	27	060140
01643-31232	C0100-14A0	3	060140
01643-31232	C0100-15A0	12	060150
01643-31232	C0100-15A0	15	060150
01643-31232	C0100-15A0	3	060150
01643-31232	C0100-15A0	6	060150
01643-31232	C0100-15A0	9	060150
01643-31232	C0100-15A0		060150
01643-31232	C0100-16A0	11	060160
01643-31232	C0100-16A0	7	060160
01643-31232	C0100-16A0	10	060170
01643-31232	C0100-16A0	12	060170

PART NO.	FIG.NO.	INDEX	PAGE
01643-31232	C0100-16A0	23	060170
01643-31232	C0100-16A0	27	060170
01643-31232	C0100-16A0	3	060170
01643-31232	C0100-16A0	30	060170
01643-31232	C0100-16A0	34	060170
01643-31232	D0100-01A0	13	090010
01643-31232	D0100-01A0	17	090010
01643-31232	D0100-01A0	24	090010
01643-31232	D0100-01A1	13	090020
01643-31232	D0100-01A1	19	090020
01643-31232	D0100-01A2	13	090030
01643-31232	D0100-01A2	17	090030
01643-31232	D0100-01A2	24	090030
01643-31232	D0100-01A3	13	090040
01643-31232	D0100-01A3	19	090040
01643-31232	D0200-01A0	11	090050
01643-31232	D0200-01A0	19	090050
01643-31232	D0200-01A0	22	090050
01643-31232	D0200-01A0	25	090050
01643-31232	D0200-01A0	32	090050
01643-31232	D0200-01A0	8	090050
01643-31232	D0200-02A0	11	090060
01643-31232	D0200-02A0	14	090060
01643-31232	D0200-02A0	17	090060
01643-31232	D0200-02A0	20	090060
01643-31232	D0200-02A0	24	090060
01643-31232	D0200-02A0	27	090060
01643-31232	D0200-02A0	7	090060
01643-31232	D0200-03A0	28	090070
01643-31232	D0200-03A0	36	090070
01643-31232	D0200-03A0	4	090070
01643-31232	D0200-04A0	14	090080
01643-31232	D0200-04A0	25	090080
01643-31232	D0200-04A0	38	090080
01643-31232	D0200-04A0	44	090080
01643-31232	D0200-04A0	7	090080
01643-31232	D0200-05A0	12	090090
01643-31232	D0200-05A0	21	090090
01643-31232	D0200-06A0	36	090100
01643-31232	D0200-06A0	39	090100
01643-31232	D0200-06A0	43	090100
01643-31232	D0200-07A0	27	090110
01643-31232	D0200-08A0	15	090120
01643-31232	D0200-08A0	19	090120
01643-31232	D0200-09A0	16	090130
01643-31232	D0200-09A0	19	090130
01643-31232	D0200-09A0	7	090130
01643-31232	D0200-10A0	11	090140
01643-31232	D0200-10A0	24	090140
01643-31232	D0200-10A0	27	090140

PART NO.	FIG.NO.	INDEX	PAGE
01643-31232	D0200-10A0	35	090140
01643-31232	D0200-11A0	14	090150
01643-31232	D0200-11A0	17	090150
01643-31232	D0200-11A0	20	090150
01643-31232	D0200-11A0	23	090150
01643-31232	D0200-11A0	46	090151
01643-31232	D0200-12A0	30	090160
01643-31232	D0200-12A0	34	090160
01643-31232	D0200-12A0	4	090160
01643-31232	D0200-12A9	14	090165
01643-31232	D0200-12A9	4	090165
01643-31232	D0200-13A0	28	090170
01643-31232	D0200-13A0	3	090170
01643-31232	D0200-13A0	32	090170
01643-31232	D0200-13A0	33	090170
01643-31232	D0200-13A0	41	090170
01643-31232	D0200-13A0	45	090170
01643-31232	D0200-13A0	48	090171
01643-31232	D0200-13A0	51	090171
01643-31232	D0200-13A0	54	090171
01643-31232	E0200-01A0	10	120030
01643-31232	E0200-01A0	3	120030
01643-31232	E0200-01A0	7	120030
01643-31232	E0200-01A1	10	120035
01643-31232	E0200-01A1	3	120035
01643-31232	E0200-01A1	7	120035
01643-31232	E0200-02A0	13	120040
01643-31232	E0200-02A0	17	120040
01643-31232	E0200-02A0	20	120040
01643-31232	E0200-04A0	21	120060
01643-31232	E0200-04A0	33	120060
01643-31232	E0200-04A0	36	120060
01643-31232	E0200-04A0	4	120060
01643-31232	E0200-04A0	43	120060
01643-31232	E0200-05A0	11	120070
01643-31232	E0200-05A0	15	120070
01643-31232	E0200-05A0	19	120070
01643-31232	E0200-05A0	2	120070
01643-31232	E0200-05A0	23	120070
01643-31232	E0200-05A0	5	120070
01643-31232	E0200-05A0	8	120070
01643-31232	E0200-06A0	12	120080
01643-31232	E0200-06A0	15	120080
01643-31232	E0200-06A0	3	120080
01643-31232	E0200-06A0	8	120080
01643-31232	E0200-07A0	11	120090
01643-31232	E0200-07A0	16	120090
01643-31232	E0200-07A0	19	120090
01643-31232	E0200-07A0	22	120090
01643-31232	E0200-07A0	25	120090

PART NO.	FIG.NO.	INDEX	PAGE
01643-31232	E0200-07A0	28	120090
01643-31232	E0200-07A0	3	120090
01643-31232	E0200-07A0	31	120090
01643-31232	E0200-07A0	39	120090
01643-31232	E0200-07A0	6	120090
01643-31232	E0200-08A0	15	120100
01643-31232	E0200-08A0	17	120100
01643-31232	E0200-08A0	20	120100
01643-31232	E0200-08A0	25	120100
01643-31232	E0200-08A0	28	120100
01643-31232	E0200-08A0	31	120100
01643-31232	E0200-08A0	35	120100
01643-31232	E0200-08A0	6	120100
01643-31232	E0200-08A0	9	120100
01643-31232	E0200-09A0	11	120110
01643-31232	E0200-10A0	12	120120
01643-31232	E0200-10A0	13	120120
01643-31232	E0200-10A0	17	120120
01643-31232	E0200-10A0	22	120120
01643-31232	E0200-10A0	25	120120
01643-31232	E0200-10A0	31	120120
01643-31232	E0200-10A0	6	120120
01643-31232	E0200-10A0	8	120120
01643-31232	E0200-11A0	12	120130
01643-31232	E0200-11A0	15	120130
01643-31232	E0200-11A0	5	120130
01643-31232	E0200-11A0	8	120130
01643-31232	E0200-12A0	12	120140
01643-31232	E0200-12A0	15	120140
01643-31232	E0200-12A0	26	120140
01643-31232	E0200-12A0	30	120140
01643-31232	E0200-12A0	5	120140
01643-31232	E0200-12A0	9	120140
01643-31232	E0200-13A0	28	120150
01643-31232	E0200-13A0	31	120150
01643-31232	E0200-13A0	6	120150
01643-31232	E0200-14A0	13	120160
01643-31232	E0200-14A0	16	120160
01643-31232	E0200-14A0	23	120160
01643-31232	E0200-14A0	5	120160
01643-31232	E0200-14A1	10	120165
01643-31232	E0200-14A1	23	120165
01643-31232	E0200-14A1	26	120165
01643-31232	E0200-14A1	29	120165
01643-31232	E0200-14A1	32	120165
01643-31232	E0200-15A0	10	120170
01643-31232	E0200-15A0	13	120170
01643-31232	E0200-15A0	17	120170
01643-31232	E0200-15A0	21	120170
01643-31232	E0200-15A0	27	120170

PART NO.	FIG.NO.	INDEX	PAGE
01643-31232	E0200-15A0	29	120170
01643-31232	E0200-15A0	32	120170
01643-31232	E0200-15A0	6	120170
01643-31232	E0200-15A1	3	120175
01643-31232	E0200-15A1	6	120175
01643-31232	E0200-16A0	19	120180
01643-31232	E0200-16A0	22	120180
01643-31232	E0200-16A0	25	120180
01643-31232	E0200-16A0	30	120180
01643-31232	E0200-16A0	35	120180
01643-31232	E0200-16A0	5	120180
01643-31232	E0200-16A0	7	120180
01643-31232	E0200-16A1	14	120185
01643-31232	E0200-16A1	18	120185
01643-31232	E0200-16A1	23	120185
01643-31232	E0200-16A1	26	120185
01643-31232	E0200-16A1	32	120185
01643-31232	E0200-16A1	36	120185
01643-31232	E0200-16A1	4	120185
01643-31232	E0200-16A1	42	120185
01643-31232	E0200-16A1	9	120185
01643-31232	E0200-16A1	46	120186
01643-31232	E0200-17A0	12	120190
01643-31232	E0200-17A0	16	120190
01643-31232	E0200-17A0	19	120190
01643-31232	E0200-17A0	22	120190
01643-31232	E0200-17A0	25	120190
01643-31232	E0200-17A0	28	120190
01643-31232	E0200-17A0	31	120190
01643-31232	E0200-17A0	35	120190
01643-31232	E0200-17A0	38	120190
01643-31232	E0200-17A0	41	120190
01643-31232	E0200-17A0	44	120190
01643-31232	E0200-17A0	6	120190
01643-31232	E0200-17A0	9	120190
01643-31232	E0200-17A0	47	120191
01643-31232	E0200-17A0	50	120191
01643-31232	E0200-17A1	12	120195
01643-31232	E0200-17A1	17	120195
01643-31232	E0200-17A1	20	120195
01643-31232	E0200-17A1	24	120195
01643-31232	E0200-17A1	28	120195
01643-31232	E0200-17A1	3	120195
01643-31232	E0200-17A1	6	120195
01643-31232	E0200-17A1	9	120195
01643-31232	E0200-18A0	5	120200
01643-31232	E0200-18A0	8	120200
01643-31232	E0200-18A1	11	120205
01643-31232	E0200-18A1	14	120205
01643-31232	E0200-18A1	18	120205

PART NO.	FIG.NO.	INDEX	PAGE
01643-31232	E0200-18A1	22	120205
01643-31232	E0200-18A1	26	120205
01643-31232	E0200-18A1	31	120205
01643-31232	E0200-18A1	38	120205
01643-31232	E0200-18A1	4	120205
01643-31232	E0200-18A1	43	120205
01643-31232	E0200-18A1	7	120205
01643-31232	E0200-19A0	10	120210
01643-31232	E0200-19A0	13	120210
01643-31232	E0200-19A0	18	120210
01643-31232	E0200-19A0	21	120210
01643-31232	E0200-19A0	24	120210
01643-31232	E0200-19A0	27	120210
01643-31232	E0200-19A0	30	120210
01643-31232	E0200-19A0	33	120210
01643-31232	E0200-19A0	36	120210
01643-31232	E0200-19A0	4	120210
01643-31232	E0200-19A0	7	120210
01643-31232	E0200-19A1	11	120215
01643-31232	E0200-19A1	14	120215
01643-31232	E0200-19A1	3	120215
01643-31232	E0200-20A0	11	120220
01643-31232	E0200-20A0	16	120220
01643-31232	E0200-20A0	20	120220
01643-31232	E0200-20A0	23	120220
01643-31232	E0200-20A0	27	120220
01643-31232	E0200-20A0	30	120220
01643-31232	E0200-20A0	34	120220
01643-31232	E0200-20A0	37	120220
01643-31232	E0200-20A0	4	120220
01643-31232	E0200-20A0	40	120220
01643-31232	E0200-20A0	43	120220
01643-31232	E0200-20A0	8	120220
01643-31232	E0200-22A0	10	120230
01643-31232	E0200-22A0	13	120230
01643-31232	E0200-22A0	4	120230
01643-31232	E0200-22A0	7	120230
01643-31232	E0200-23A0	10	120240
01643-31232	E0200-23A0	14	120240
01643-31232	E0200-23A0	18	120240
01643-31232	E0200-23A0	4	120240
01643-31232	E0200-23A0	7	120240
01643-31232	E0200-24A0	10	120250
01643-31232	E0200-24A0	13	120250
01643-31232	E0200-24A0	16	120250
01643-31232	E0200-24A0	19	120250
01643-31232	E0200-24A0	24	120250
01643-31232	E0200-24A0	29	120250
01643-31232	E0200-24A0	32	120250
01643-31232	E0200-24A0	37	120250

PART NO.	FIG.NO.	INDEX	PAGE
01643-31232	E0200-24A0	40	120250
01643-31232	E0200-24A0	5	120250
01643-31232	E0200-25A0	14	120260
01643-31232	E0200-25A0	18	120260
01643-31232	E0200-25A0	21	120260
01643-31232	E0200-25A0	24	120260
01643-31232	E0200-25A0	3	120260
01643-31232	E0200-25A0	30	120260
01643-31232	E0200-25A0	6	120260
01643-31232	E0200-26A0	12	120270
01643-31232	E0200-26A0	15	120270
01643-31232	E0200-26A0	25	120270
01643-31232	E0200-26A0	4	120270
01643-31232	E0200-26A0	7	120270
01643-31232	E0200-27A0	12	120280
01643-31232	E0200-27A0	19	120280
01643-31232	E0200-27A0	25	120280
01643-31232	E0200-27A0	29	120280
01643-31232	E0200-27A0	5	120280
01643-31232	E0200-27A0	9	120280
01643-31232	E0200-28A0	10	120290
01643-31232	E0200-28A0	13	120290
01643-31232	E0200-28A0	16	120290
01643-31232	E0200-28A0	19	120290
01643-31232	E0200-28A0	22	120290
01643-31232	E0200-28A0	25	120290
01643-31232	E0200-28A0	28	120290
01643-31232	E0200-28A0	31	120290
01643-31232	E0200-28A0	35	120290
01643-31232	E0200-28A0	38	120290
01643-31232	E0200-28A0	44	120290
01643-31232	E0200-28A0	48	120291
01643-31232	E0200-28A0	51	120291
01643-31232	E0200-28A0	54	120291
01643-31232	E0200-28A0	57	120291
01643-31232	E0200-28A0	60	120291
01643-31232	E0200-29A0	12	120300
01643-31232	E0200-29A0	15	120300
01643-31232	E0200-29A0	18	120300
01643-31232	E0200-29A0	3	120300
01643-31232	E0200-29A0	4	120300
01643-31232	E0200-29A0	9	120300
01643-31232	E0200-30A0	10	120310
01643-31232	E0200-30A0	14	120310
01643-31232	E0200-30A0	17	120310
01643-31232	E0200-30A0	3	120310
01643-31232	E0200-30A0	7	120310
01643-31232	E0200-31A0	11	120320
01643-31232	E0200-31A0	14	120320
01643-31232	E0200-31A0	19	120320

PART NO.	FIG.NO.	INDEX	PAGE
01643-31232	E0200-31A0	22	120320
01643-31232	E0200-31A0	3	120320
01643-31232	E0200-31A0	31	120320
01643-31232	E0200-31A0	34	120320
01643-31232	E0200-31A0	6	120320
01643-31232	E0200-31A0	7	120320
01643-31232	E0200-32A0	5	120330
01643-31232	E0200-33A0	5	120340
01643-31232	E0201-01A0	11	120360
01643-31232	E0201-01A0	5	120360
01643-31232	E0201-01A0	8	120360
01643-31232	E0202-01A0	14	120380
01643-31232	E0202-01A0	17	120380
01643-31232	E0202-01A0	21	120380
01643-31232	E0202-01A0	26	120380
01643-31232	E0202-01A0	29	120380
01643-31232	E0202-01A0	5	120380
01643-31232	E0202-01A0	9	120380
01643-31232	E0202-02A0	12	120390
01643-31232	E0202-02A0	15	120390
01643-31232	E0202-02A0	18	120390
01643-31232	E0202-02A0	21	120390
01643-31232	E0202-02A0	24	120390
01643-31232	E0202-02A0	27	120390
01643-31232	E0202-02A0	30	120390
01643-31232	E0202-02A0	33	120390
01643-31232	E0202-02A0	36	120390
01643-31232	E0202-02A0	39	120390
01643-31232	E0202-02A0	5	120390
01643-31232	E0202-02A0	9	120390
01643-31232	E0202-03A0	21	120400
01643-31232	E0202-03A0	25	120400
01643-31232	E0202-03A0	28	120400
01643-31232	E0202-03A0	3	120400
01643-31232	E0202-03A0	31	120400
01643-31232	E0202-03A0	35	120400
01643-31232	E0202-03A0	38	120400
01643-31232	E0202-03A0	5	120400
01643-31232	E0202-04A0	17	120410
01643-31232	E0202-04A0	20	120410
01643-31232	E0202-04A0	25	120410
01643-31232	E0202-04A0	29	120410
01643-31232	E0202-04A0	3	120410
01643-31232	E0202-04A0	34	120410
01643-31232	E0202-04A0	38	120410
01643-31232	E0202-04A0	41	120410
01643-31232	E0202-04A0	45	120410
01643-31232	E0202-04A0	5	120410
01643-31232	E0202-04A0	48	120411
01643-31232	E0202-05A0	13	120420

PART NO.	FIG.NO.	INDEX	PAGE
01643-31232	E0202-05A0	3	120420
01643-31232	E0202-05A0	7	120420
01643-31232	E0320-01A0	4	120470
01643-31232	E0320-02A0	10	120480
01643-31232	E0320-02A0	15	120480
01643-31232	E0320-02A0	18	120480
01643-31232	E0320-02A0	4	120480
01643-31232	E0420-01A0	6	120500
01643-31232	E0450-01A0	11	120510
01643-31232	E0450-01A0	14	120510
01643-31232	E0450-02A0	11	120520
01643-31232	E0450-02A0	18	120520
01643-31232	E0450-02A0	22	120520
01643-31232	E0450-02A0	26	120520
01643-31232	E0450-03A0	13	120530
01643-31232	E0450-03A0	17	120530
01643-31232	E0450-03A0	28	120530
01643-31232	E0450-03A0	8	120530
01643-31232	E0450-04A0	13	120540
01643-31232	E0450-04A0	19	120540
01643-31232	E0450-04A0	23	120540
01643-31232	E0450-04A0	29	120540
01643-31232	E0450-04A0	3	120540
01643-31232	E0450-04A0	44	120540
01643-31232	E0450-04A0	5	120540
01643-31232	E0450-04A0	9	120540
01643-31232	G1010-01A0	26	150010
01643-31232	G1010-01A0	30	150010
01643-31232	G1010-01A0	33	150010
01643-31232	G1010-01A0	36	150010
01643-31232	G1010-01A0	39	150010
01643-31232	G1010-04A0	18	150040
01643-31232	G1010-04A0	21	150040
01643-31232	G1010-04A0	31	150040
01643-31232	H0110-01A0	12	180010
01643-31232	H0110-01A1	12	180015
01643-31232	H0110-01A1	29	180015
01643-31232	H0110-02A0	19	180020
01643-31232	H0110-03A0	29	180030
01643-31232	H0110-03A0	33	180030
01643-31232	H0110-04A0	12	180040
01643-31232	H0110-04A0	16	180040
01643-31232	H0110-04A0	5	180040
01643-31232	H0110-05A0	13	180050
01643-31232	H0110-05A0	15	180050
01643-31232	H0110-05A0	4	180050
01643-31232	H0110-06A0	13	180060
01643-31232	H0110-06A0	18	180060
01643-31232	H0311-01A0	16	180165
01643-31232	H0311-01A0	20	180165

PART NO.	FIG.NO.	INDEX	PAGE
01643-31232	H0311-01A0	4	180165
01643-31232	H0311-01A1	23	180170
01643-31232	H0311-01A1	27	180170
01643-31232	H0311-02A0	16	180175
01643-31232	H0311-02A0	20	180175
01643-31232	H0311-02A0	4	180175
01643-31232	H0311-02A1	23	180177
01643-31232	H0311-02A1	27	180177
01643-31232	H0311-02A3	13	180180
01643-31232	H0311-02A3	17	180180
01643-31232	H0311-02A3	8	180180
01643-31232	H0312-01A0	18	180190
01643-31232	H0312-01A0	20	180190
01643-31232	H0312-02A0	12	180200
01643-31232	H0312-02A0	14	180200
01643-31232	H0312-02A0	17	180200
01643-31232	H0312-02A0	20	180200
01643-31232	H0312-02A0	23	180200
01643-31232	H0312-02A0	5	180200
01643-31232	H0312-02A0	7	180200
01643-31232	H0312-03A0	14	180210
01643-31232	H0312-03A0	34	180210
01643-31232	H0312-03A0	43	180210
01643-31232	H0312-04A0	26	180220
01643-31232	H0312-04A0	32	180220
01643-31232	H0312-04A0	34	180220
01643-31232	H0312-04A0	36	180220
01643-31232	H0312-04A0	6	180220
01643-31232	H0312-04A0	7	180220
01643-31232	H0312-04A0	9	180220
01643-31232	H0312-05A0	11	180230
01643-31232	H0312-05A0	19	180230
01643-31232	H0312-05A0	22	180230
01643-31232	H0312-05A0	26	180230
01643-31232	H0312-05A0	28	180230
01643-31232	H0312-05A0	31	180230
01643-31232	H0312-05A0	6	180230
01643-31232	H0312-06A0	11	180240
01643-31232	H0312-06A0	14	180240
01643-31232	H0312-06A0	18	180240
01643-31232	H0312-06A0	22	180240
01643-31232	H0312-06A0	6	180240
01643-31232	H0312-06A0	8	180240
01643-31232	H0312-06A0	7	180250
01643-31232	H0312-06A0	13	180251
01643-31232	H0312-08A0	28	180260
01643-31232	H0312-08A0	31	180260
01643-31232	H0312-08A0	34	180260
01643-31232	H0312-08A0	37	180260
01643-31232	H0320-01A0	7	180270

PART NO.	FIG.NO.	INDEX	PAGE
01643-31232	H0320-02A0	32	180280
01643-31232	H0320-02A0	9	180280
01643-31232	H0330-01A0	24	180290
01643-31232	H0330-02A3	3	180302
01643-31232	H0330-03A0	12	180310
01643-31232	H0330-03A0	6	180310
01643-31232	H0330-03A0	9	180310
01643-31232	H0340-01A0	3	180320
01643-31232	H0340-01A0	9	180320
01643-31232	H0340-02A0	18	180330
01643-31232	H0340-02A0	34	180330
01643-31232	H0340-02A0	43	180330
01643-31232	H0340-02A0	9	180330
01643-31232	H0340-03A0	4	180340
01643-31232	H0340-04A0	3	180350
01643-31232	H0340-04A0	59	180351
01643-31232	H0340-05A0	11	180360
01643-31232	H0340-05A0	28	180360
01643-31232	H0340-05A0	5	180360
01643-31232	H0340-06A0	21	180370
01643-31232	H0340-06A0	24	180370
01643-31232	H0340-06A0	3	180370
01643-31232	H0340-06A0	33	180370
01643-31232	H0340-06A0	37	180370
01643-31232	H0340-06A0	41	180370
01643-31232	H0340-06A0	9	180370
01643-31232	H0350-01A0	19	180380
01643-31232	H0350-01A0	24	180380
01643-31232	H0350-01A0	29	180380
01643-31232	H0350-02A0	22	180390
01643-31232	H0350-03A0	35	180400
01643-31232	H0350-04A0	16	180410
01643-31232	H0350-04A0	7	180410
01643-31232	H1210-02A0	13	180430
01643-31232	H1210-02A0	34	180430
01643-31232	H1210-02A0	7	180430
01643-31232	H1210-03A0	13	180440
01643-31232	H1210-03A0	29	180440
01643-31232	H1210-03A0	7	180440
01643-31232	H1310-01A0	11	180480
01643-31232	H1310-01A0	17	180480
01643-31232	H1310-01A0	28	180480
01643-31232	H1310-01A0	34	180480
01643-31232	H1830-03A0	9	180830
01643-31232	H1831-01A0	29	180520
01643-31232	H1831-01A0	6	180520
01643-31232	H1831-02A0	24	180530
01643-31232	H1831-02A0	28	180530
01643-31232	H1831-02A0	7	180530
01643-31232	H1831-03A0	12	180540

PART NO.	FIG.NO.	INDEX	PAGE
01643-31232	H1831-03A0	9	180540
01643-31232	H1832-01A0	10	180550
01643-31232	H1832-01A0	13	180550
01643-31232	H1832-01A0	7	180550
01643-31232	H1832-02A0	11	180560
01643-31232	H1832-02A0	13	180560
01643-31232	H1832-02A0	18	180560
01643-31232	H1832-02A0	27	180560
01643-31232	H1832-03A0	13	180570
01643-31232	H1832-03A0	22	180570
01643-31232	H1832-03A0	4	180570
01643-31232	H1833-01A1	5	180585
01643-31232	H1833-03A0	5	180595
01643-31232	H1833-05A0	32	180605
01643-31232	H1833-05A0	5	180605
01643-31232	H1833-06A0	6	180610
01643-31232	H1833-07A0	6	180620
01643-31232	H1835-01A0	10	180630
01643-31232	H1835-01A0	12	180630
01643-31232	H1835-01A0	23	180630
01643-31232	H1835-02A0	19	180640
01643-31232	H1835-02A0	22	180640
01643-31232	H1835-02A0	28	180640
01643-31232	H1835-02A0	9	180640
01643-31232	H1835-03A0	19	180650
01643-31232	H1835-03A0	22	180650
01643-31232	H1840-01A0	8	180660
01643-31232	H1840-02A0	16	180670
01643-31232	H1840-02A0	19	180670
01643-31232	H1840-02A0	30	180670
01643-31232	H1840-03A0	14	180680
01643-31232	H1840-03A0	23	180680
01643-31232	H1840-03A0	26	180680
01643-31232	H1840-03A0	29	180680
01643-31232	H1840-04A0	15	180690
01643-31232	H1840-04A0	20	180690
01643-31232	H1840-04A0	22	180690
01643-31232	H1840-05A0	10	180700
01643-31232	H1840-05A0	17	180700
01643-31232	H1840-06A0	16	180710
01643-31232	H1840-06A0	18	180710
01643-31232	H1840-06A0	23	180710
01643-31232	H1840-06A0	31	180710
01643-31232	H1840-08A0	14	180720
01643-31232	H1840-08A0	8	180720
01643-31232	H1840-09A0	10	180730
01643-31232	H1840-09A0	5	180730
01643-31232	H1840-09A0	8	180730
01643-31232	H1841-01A0	8	180740
01643-31232	H1841-02A0	15	180750

PART NO.	FIG.NO.	INDEX	PAGE
01643-31232	H1841-02A0	36	180750
01643-31232	H1841-02A0	46	180751
01643-31232	H1841-03A0	19	180760
01643-31232	H1841-03A0	27	180760
01643-31232	H1841-03A0	31	180760
01643-31232	H1841-03A0	35	180760
01643-31232	H1842-01A0	12	180770
01643-31232	H1842-01A0	15	180770
01643-31232	H1843-01A0	5	180780
01643-31232	H1843-02A0	6	180790
01643-31232	H1843-03A0	16	180800
01643-31232	H1843-03A0	27	180800
01643-31232	H1843-03A0	30	180800
01643-31232	H1850-02A0	8	180820
01643-31232	H1850-04A0	3	180840
01643-31232	H1850-04A0	55	180841
01643-31232	J1110-01A0	5	210010
01643-31232	J1110-01A1	5	210020
01643-31232	K0210-05A0	22	240050
01643-31232	K0210-12A0	15	240120
01643-31232	K0210-13A0	14	240130
01643-31232	K0210-14A0	10	240140
01643-31232	K0210-14A0	7	240140
01643-31232	K0210-15A0	12	240150
01643-31232	K0210-15A0	26	240150
01643-31232	K0210-15A0	9	240150
01643-31232	K0210-16A0	11	240160
01643-31232	K0210-16A0	20	240160
01643-31232	K0210-19A0	12	240190
01643-31232	K0210-19A0	23	240190
01643-31232	K0210-19A0	9	240190
01643-31232	K0210-46A0	3	240460
01643-31232	K0210-46A0	5	240460
01643-31232	K0710-01A0	17	240570
01643-31232	K0710-01A0	8	240570
01643-31232	K0710-02A0	3	240580
01643-31232	K0710-03A0	18	240590
01643-31232	K0710-03A0	20	240590
01643-31232	K0710-03A0	22	240590
01643-31232	K0710-03A0	25	240590
01643-31232	K0710-03A0	34	240590
01643-31232	K0710-04A0	17	240600
01643-31232	K0710-04A0	9	240600
01643-31232	K0710-05A0	11	240610
01643-31232	K0710-05A0	13	240610
01643-31232	K0710-05A0	16	240610
01643-31232	K0710-05A0	22	240610
01643-31232	K0710-06A0	12	240620
01643-31232	K0710-06A0	26	240620
01643-31232	K0710-06A0	29	240620

PART NO.	FIG.NO.	INDEX	PAGE
01643-31232	K0710-07A0	11	240630
01643-31232	K0710-07A0	23	240630
01643-31232	K0710-07A0	31	240630
01643-31232	K0710-07A0	36	240630
01643-31232	K0710-08A0	11	240640
01643-31232	K0710-08A0	15	240640
01643-31232	K0710-08A0	23	240640
01643-31232	K0710-08A0	30	240640
01643-31232	K0710-08A0	31	240640
01643-31232	K0710-08A0	7	240640
01643-31232	K0710-08A0	9	240640
01643-31232	K0710-08A1	11	240645
01643-31232	K0710-08A1	15	240645
01643-31232	K0710-08A1	23	240645
01643-31232	K0710-08A1	30	240645
01643-31232	K0710-08A1	31	240645
01643-31232	K0710-08A1	7	240645
01643-31232	K0710-08A1	9	240645
01643-31232	K0710-09A0	4	240650
01643-31232	K1120-01A0	18	240660
01643-31232	K1120-01A0	3	240660
01643-31232	K1120-01A1	18	240670
01643-31232	K1120-01A1	3	240670
01643-31232	K1921-01A0	11	240680
01643-31232	K1921-01A0	28	240680
01643-31232	K1921-01A0	40	240680
01643-31232	K1921-01A0	43	240680
01643-31232	K1921-01A1	11	240685
01643-31232	K1921-01A1	28	240685
01643-31232	K1921-01A1	40	240685
01643-31232	K1921-01A1	43	240685
01643-31232	K1921-01A3	11	240687
01643-31232	K1921-01A3	28	240687
01643-31232	K1921-01A3	40	240687
01643-31232	K1921-01A3	43	240687
01643-31232	K1921-02A1	52	240696
01643-31232	M1110-01A0	12	270010
01643-31232	M1110-01A0	34	270010
01643-31232	M1110-01A0	6	270010
01643-31232	M1110-02A0	18	270020
01643-31232	M1110-02A0	27	270020
01643-31232	M1110-02A0	30	270020
01643-31232	M1110-02A0	34	270020
01643-31232	M1110-02A0	38	270020
01643-31232	M1110-02A0	6	270020
01643-31232	M1110-03A0	11	270030
01643-31232	M1110-03A0	17	270030
01643-31232	M1110-03A0	27	270030
01643-31232	M1110-03A0	39	270030
01643-31232	M1110-04A0	21	270040

PART NO.	FIG.NO.	INDEX	PAGE
01643-31232	M1110-04A0	40	270040
01643-31232	M1110-04A0	45	270040
01643-31232	M1110-04A0	5	270040
01643-31232	M1110-05A0	17	270050
01643-31232	M1110-05A0	19	270050
01643-31232	M1110-05A0	21	270050
01643-31232	M1110-05A0	4	270050
01643-31232	M1110-06A0	13	270060
01643-31232	M1110-06A0	20	270060
01643-31232	M1110-06A0	22	270060
01643-31232	M1110-06A0	26	270060
01643-31232	M1110-06A0	7	270060
01643-31232	M1110-06A0	9	270060
01643-31232	M1110-07A0	11	270070
01643-31232	M1110-07A0	19	270070
01643-31232	M1110-07A0	21	270070
01643-31232	M1110-07A0	26	270070
01643-31232	M1110-07A0	28	270070
01643-31232	M1110-08A0	15	270080
01643-31232	M1110-08A0	17	270080
01643-31232	M1110-08A0	27	270080
01643-31232	M1110-08A0	29	270080
01643-31232	M1110-08A0	32	270080
01643-31232	M1110-08A0	37	270080
01643-31232	M1110-08A0	42	270080
01643-31232	M1110-08A0	45	270080
01643-31232	M1110-08A0	48	270081
01643-31232	M1110-09A0	10	270090
01643-31232	M1110-09A0	29	270090
01643-31232	M1110-09A0	5	270090
01643-31232	M1110-09A0	7	270090
01643-31232	M1110-10A0	12	270100
01643-31232	M1110-10A0	18	270100
01643-31232	M1110-10A0	24	270100
01643-31232	M1110-10A0	28	270100
01643-31232	M1110-10A0	6	270100
01643-31232	M1110-12A0	37	270120
01643-31232	M1130-01A0	17	270140
01643-31232	M1130-01A0	22	270140
01643-31232	M1130-01A0	9	270140
01643-31232	M1130-01A1	17	270145
01643-31232	M1130-01A1	22	270145
01643-31232	M1130-01A1	9	270145
01643-31232	M1130-03A0	13	270160
01643-31232	M1130-03A0	19	270160
01643-31232	M1130-03A0	28	270160
01643-31232	M1130-03A0	36	270160
01643-31232	M1130-03A0	39	270160
01643-31232	M1130-05A0	17	270180
01643-31232	M1130-05A0	4	270180

PART NO.	FIG.NO.	INDEX	PAGE
01643-31232	M1130-05A0	8	270180
01643-31232	M1130-07A1	13	270260
01643-31232	M1130-07A1	16	270260
01643-31232	M1130-07A1	18	270260
01643-31232	M1130-07A1	28	270260
01643-31232	M1130-08A0	12	270210
01643-31232	M1130-08A0	15	270210
01643-31232	M1130-08A0	18	270210
01643-31232	M1130-08A0	24	270210
01643-31232	M1130-08A0	33	270210
01643-31232	M1130-08A0	9	270210
01643-31232	M1130-08A1	26	270270
01643-31232	M1130-08A1	30	270270
01643-31232	M1130-08A1		270270
01643-31232	M1130-08A1		270271
01643-31232	M1130-09A0	5	270220
01643-31232	M1130-09A2	22	270280
01643-31232	M1130-10A0	11	270230
01643-31232	M1130-10A0	13	270230
01643-31232	M1130-10A0	15	270230
01643-31232	M1130-10A0	9	270230
01643-31232	M1130-10A1	12	270290
01643-31232	M1130-10A1	37	270290
01643-31232	M1130-10A1	42	270290
01643-31232	M1130-11A0	11	270240
01643-31232	M1130-11A0	14	270240
01643-31232	M1130-11A0	20	270240
01643-31232	M1130-11A0	8	270240
01643-31232	M1130-11A1	11	270300
01643-31232	M1130-11A1	20	270300
01643-31232	M1130-11A1	3	270300
01643-31232	M1130-12A0	16	270250
01643-31232	M1130-12A0	18	270250
01643-31232	M1130-12A0	20	270250
01643-31232	M1130-12A0	3	270250
01643-31232	M1130-12A1	12	270310
01643-31232	M1130-12A1	15	270310
01643-31232	M1130-12A1	4	270310
01643-31232	M1130-12A1	7	270310
01643-31232	M1130-13A0	17	270320
01643-31232	M1130-13A0	28	270320
01643-31232	M1130-13A0	7	270320
01643-31232	M1140-02A0	16	270340
01643-31232	M1140-02A0	21	270340
01643-31232	M1140-02A0	8	270340
01643-31232	M1140-04A0	15	270360
01643-31232	M1140-05A0	20	270370
01643-31232	M1140-05A0	22	270370
01643-31232	M1150-01A0	10	270400
01643-31232	M1150-01A0	16	270400

PART NO.	FIG.NO.	INDEX	PAGE
01643-31232	M1150-01A0	21	270400
01643-31232	M1150-01A0	25	270400
01643-31232	M1150-01A0	28	270400
01643-31232	M1150-01A0	31	270400
01643-31232	M1150-01A0	34	270400
01643-31232	M1150-01A0	5	270400
01643-31232	M1150-02A0	11	270410
01643-31232	M1150-02A0	15	270410
01643-31232	M1150-02A0	21	270410
01643-31232	M1150-02A0	28	270410
01643-31232	M1150-02A0	32	270410
01643-31232	M1150-02A0	5	270410
01643-31232	M1150-02A0	9	270410
01643-31232	M1210-01A0	3	270420
01643-31232	M1210-01A0	6	270420
01643-31232	M1210-02A0	11	270430
01643-31232	M1210-02A0	14	270430
01643-31232	M1210-02A0	17	270430
01643-31232	M1210-02A0	26	270430
01643-31232	M1210-02A0	38	270430
01643-31232	M1210-02A0	4	270430
01643-31232	M1210-02A0	7	270430
01643-31232	M1210-03A0	10	270440
01643-31232	M1210-03A0	16	270440
01643-31232	M1210-03A0	19	270440
01643-31232	M1210-03A0	22	270440
01643-31232	M1210-03A0	25	270440
01643-31232	M1210-03A0	27	270440
01643-31232	M1210-05A0	18	270460
01643-31232	M1210-05A0	21	270460
01643-31232	M1210-05A0	26	270460
01643-31232	M1210-05A0	32	270460
01643-31232	M1210-05A0	35	270460
01643-31232	M1210-05A0	38	270460
01643-31232	M1510-01A0	14	270500
01643-31232	M1510-01A0	17	270500
01643-31232	M1810-01A0	10	270510
01643-31232	M1810-01A0	16	270510
01643-31232	M1810-01A0	20	270510
01643-31232	M1810-01A0	7	270510
01643-31232	M1810-02A0	10	270520
01643-31232	M1810-02A0	13	270520
01643-31232	M1810-02A0	28	270520
01643-31232	M1810-02A0	30	270520
01643-31232	M1810-02A0	32	270520
01643-31232	M1810-03A0	23	270530
01643-31232	M1810-03A0	26	270530
01643-31232	M1810-03A0	6	270530
01643-31232	M1810-04A0	11	270540
01643-31232	M1810-04A0	17	270540

PART NO.	FIG.NO.	INDEX	PAGE
01643-31232	M1810-04A0	19	270540
01643-31232	M1810-04A0	7	270540
01643-31232	N1210-05A0	2	300060
01643-31232	N1210-08A0	14	300090
01643-31232	N1210-08A0	18	300090
01643-31232	N1210-08A0	23	300090
01643-31232	N1210-08A0	27	300090
01643-31232	N1210-08A0	32	300090
01643-31232	N1210-08A0	36	300090
01643-31232	N1210-08A0	41	300090
01643-31232	N1210-08A0	9	300090
01643-31232	N1210-10A0	15	300110
01643-31232	N1220-01A4	4	300150
01643-31232	N1220-01A8	4	300190
01643-31232	P1120-01A0	21	330010
01643-31232	P1120-01A0	23	330010
01643-31232	P1140-01A2	13	330050
01643-31232	P1140-01A2	6	330050
01643-31232	P1140-01A3	12	330060
01643-31232	P1140-01A3	20	330060
01643-31232	P1140-01A3	23	330060
01643-31232	P1140-01A3	28	330060
01643-31232	P1140-01A3	3	330060
01643-31232	P1140-01A3	30	330060
01643-31232	P1140-01A3	6	330060
01643-31232	P1140-01A6	12	330090
01643-31232	P1140-01A6	18	330090
01643-31232	P1140-01A7	12	330100
01643-31232	P1140-01A7	15	330100
01643-31232	P1140-01A7	21	330100
01643-31232	P1140-01A8	10	330110
01643-31232	P1210-01A1	12	330120
01643-31232	P1210-01A2	7	330130
01643-31232	P1210-01A7	11	330180
01643-31232	P1210-01A8	7	330190
01643-31232	R0120-01A2	11	360020
01643-31232	R0120-01A2	33	360020
01643-31232	R0120-01A2	40	360020
01643-31232	R0120-01A4	11	360040
01643-31232	R0120-01A4	33	360040
01643-31232	R0120-01A4	40	360040
01643-31232	R1110-01A1	12	360100
01643-31232	R1110-01A1	13	360100
01643-31232	R1110-01A1	4	360100
01643-31232	R1110-01A1	9	360100
01643-31232	R1110-02A1	12	360110
01643-31232	R1110-02A1	13	360110
01643-31232	R1110-02A1	4	360110
01643-31232	R1110-02A1	9	360110
01643-31232	R1120-01A1	4	360120

PART NO.	FIG.NO.	INDEX	PAGE
01643-31232	R1120-01A1	8	360120
01643-31232	T1110-01A3	3	390030
01643-31232	T1110-01A6	11	390060
01643-31232	T1110-01A6	7	390060
01643-31232	T1120-01A1	41	390140
01643-31232	T1120-01A1	46	390141
01643-31232	T1120-01A2	41	390150
01643-31232	T1120-01A2	46	390151
01643-31232	T1140-01A1	38	390180
01643-31232	T1140-01A2	38	390190
01643-31232	T1210-01A2	4	390220
01643-31232	T1210-01A3	21	390230
01643-31232	T1210-01A4	23	390240
01643-31232	T1210-01A4	3	390240
01643-31232	T1210-01A5	22	390250
01643-31232	T1210-01A5	25	390250
01643-31232	T1220-01A1	34	390270
01643-31232	T1220-01A1	49	390271
01643-31232	T1220-01A2	34	390280
01643-31232	T1220-01A2	49	390281
01643-31232	T1230-01A2	13	390300
01643-31232	T1230-01A2	18	390300
01643-31232	T1230-01A2	23	390300
01643-31232	T1230-01A2	5	390300
01643-31232	T1230-01A5	13	390330
01643-31232	W1114-01A1	16	480060
01643-31232	W1114-01A1	20	480060
01643-31232	W1114-01A1	23	480060
01643-31232	W1114-01A10	12	480150
01643-31232	W1114-01A10	16	480150
01643-31232	W1114-01A10	19	480150
01643-31232	W1114-01A10	22	480150
01643-31232	W1114-01A10	25	480150
01643-31232	W1114-01A10	28	480150
01643-31232	W1114-01A10	32	480150
01643-31232	W1114-01A10	35	480150
01643-31232	W1114-01A10	39	480150
01643-31232	W1114-01A10	5	480150
01643-31232	W1114-01A10	8	480150
01643-31232	W1114-01A11	17	480160
01643-31232	W1114-01A11	21	480160
01643-31232	W1114-01A11	25	480160
01643-31232	W1114-01A11	29	480160
01643-31232	W1114-01A11	3	480160
01643-31232	W1114-01A11	32	480160
01643-31232	W1114-01A11	39	480160
01643-31232	W1114-01A11	42	480160
01643-31232	W1114-01A11	45	480160
01643-31232	W1114-01A11	6	480160
01643-31232	W1114-01A11	48	480161

PART NO.	FIG.NO.	INDEX	PAGE
01643-31232	W1114-01A2	10	480070
01643-31232	W1114-01A2	19	480070
01643-31232	W1114-01A5	22	480100
01643-31232	W1114-01A6	21	480110
01643-31232	W1114-01A6	25	480110
01643-31232	W1114-01A6	29	480110
01643-31232	W1114-01A6	33	480110
01643-31232	W1114-01A7	15	480120
01643-31232	W1114-01A7	19	480120
01643-31232	W1114-01A7	23	480120
01643-31232	W1114-01A7	33	480120
01643-31232	W1114-01A7	36	480120
01643-31232	W1114-01A7	4	480120
01643-31232	W1114-01A7	40	480120
01643-31232	W1114-01A9	4	480140
01643-31232	W1114-01A9	8	480140
01643-31232	W1114-02A5	16	480180
01643-31232	W1117-02A1	10	480190
01643-31232	W1117-02A1	13	480190
01643-31232	W1117-02A1	21	480190
01643-31232	W1117-02A1	24	480190
01643-31232	W1117-02A1	29	480190
01643-31232	W1117-02A1	4	480190
01643-31232	W1117-02A1	7	480190
01643-31232	W1117-02A2A	12	480200
01643-31232	W1117-02A2A	15	480200
01643-31232	W1117-02A4	7	480220
01643-31232	W1117-02A6	10	480240
01643-31232	W1117-02A6	14	480240
01643-31232	W1117-04A1	10	480250
01643-31232	W1117-04A1	13	480250
01643-31232	W1117-04A1	21	480250
01643-31232	W1117-04A1	24	480250
01643-31232	W1117-04A1	29	480250
01643-31232	W1117-04A1	4	480250
01643-31232	W1117-04A1	7	480250
01643-31232	W1117-04A2A	12	480260
01643-31232	W1117-04A4	7	480280
01643-31232	W1117-04A6	10	480300
01643-31232	W1117-04A6	14	480300
01643-31232	W1117-04A7	12	480310
01643-31232	W1117-04A7	16	480310
01643-31232	W1117-04A7	19	480310
01643-31232	W1117-04A7	23	480310
01643-31232	W1117-04A7	9	480310
01643-31232	W1117-04A8	14	480320
01643-31232	W1117-04A8	17	480320
01643-31232	W1117-04A8	8	480320
01643-31232	W1117-05A7	10	480360
01643-31232	W1117-05A7	16	480360

PART NO.	FIG.NO.	INDEX	PAGE
01643-31232	W1117-05A7	21	480360
01643-31232	W1117-05A7	25	480360
01643-31232	W1117-05A7	3	480360
01643-31232	W1117-05A7	7	480360
01643-31232	W1117-06A7	12	480330
01643-31232	W1117-06A7	16	480330
01643-31232	W1117-06A7	19	480330
01643-31232	W1117-06A7	23	480330
01643-31232	W1117-06A7	28	480330
01643-31232	W1117-06A7	9	480330
01643-31232	W1117-06A8	5	480340
01643-31232	W1117-06A9A	7	480350
01643-31445	H0120-01A0	28	180070
01643-31445	H0120-01A0	32	180070
01643-31445	H0210-09A0	10	180138
01643-31445	H0210-09A0	5	180138
01643-31445	H0220-09A0	10	180148
01643-31445	H0220-09A0	5	180148
01643-31445	H0230-01A1	11	180150
01643-31445	H0312-01A0	14	180190
01643-31445	H0312-01A0	7	180190
01643-31445	H0312-08A0	10	180260
01643-31445	H0312-08A0	15	180260
01643-31445	H0312-08A0	20	180260
01643-31445	H0312-08A0	25	180260
01643-31445	H0312-08A0	5	180260
01643-31445	H1210-01A0	5	180420
01643-31445	H1210-01A0	8	180420
01643-31445	H1210-02A0	28	180430
01643-31445	H1210-02A0	4	180430
01643-31445	H1210-03A0	23	180440
01643-31445	H1210-03A0	4	180440
01643-31445	H1221-01A0	16	180450
01643-31445	H1221-01A0	20	180450
01643-31445	H1221-01A0	22	180450
01643-31445	H1221-01A0	26	180450
01643-31445	H1221-02A0	9	180460
01643-31445	H1222-01A0	12	180470
01643-31445	H1222-01A0	14	180470
01643-31445	H1222-01A0	18	180470
01643-31445	H1222-01A0	24	180470
01643-31445	H1310-01A0	21	180480
01643-31445	H1310-01A0	25	180480
01643-31445	H1310-01A0	4	180480
01643-31445	H1310-01A0	8	180480
01643-31445	H1310-02A0	10	180490
01643-31445	H1310-02A0	5	180490
01643-31445	H1340-01A0	5	180510
01643-31445	H1340-01A0	8	180510
01643-31445	K0710-01A0	15	240570

PART NO.	FIG.NO.	INDEX	PAGE
01643-31445	K0710-05A0	26	240610
01643-31445	N1310-01A2	14	300210
01643-31445	N1310-01A2	17	300210
01643-31445	N1310-01A2	9	300210
01643-31445	P1120-01A0	11	330010
01643-31445	P1120-01A0	15	330010
01643-31445	P1120-01A0	7	330010
01643-31445	P1120-02A0	18	330020
01643-31445	T1110-01A10	24	390100
01643-31445	T1110-01A10	30	390100
01643-31445	T1110-01A10	34	390100
01643-31445	T1110-01A10	40	390100
01643-31445	T1110-01A11	10	390110
01643-31445	T1110-01A6	5	390060
01643-31445	T1110-01A8	23	390080
01643-31445	T1110-01A9	32	390090
01643-31445	T1120-01A1	49	390141
01643-31445	T1120-01A2	49	390151
01643-31445	T1130-01A1	13	390170
01643-31445	T1130-01A1	5	390170
01643-31445	T1140-01A1	30	390180
01643-31445	T1140-01A1	49	390181
01643-31445	T1140-01A2	30	390190
01643-31445	T1140-01A2	49	390191
01643-31445	T1210-01A6	10	390260
01643-31445	T1220-01A1	38	390270
01643-31445	T1220-01A1	40	390270
01643-31445	T1220-01A1	53	390271
01643-31445	T1220-01A2	38	390280
01643-31445	T1220-01A2	40	390280
01643-31445	T1220-01A2	53	390281
01643-31645	B0600-01A0	10	030110
01643-31645	B0600-01A0	20	030110
01643-31645	B0600-01A0	27	030110
01643-31645	B0600-01A0	34	030110
01643-31645	B0600-07A0	4	030170
01643-31645	B0600-07A0	6	030170
01643-31645	B0600-08A0	10	030180
01643-31645	B0600-08A0	20	030180
01643-31645	B0600-08A0	27	030180
01643-31645	B0600-08A0	34	030180
01643-31645	C0100-04A0	11	060040
01643-31645	C0100-04A0	14	060040
01643-31645	C0100-04A0	5	060040
01643-31645	C0100-05A0	5	060050
01643-31645	C0100-06A0	20	060060
01643-31645	C0100-14A0	6	060140
01643-31645	C0100-15A0	17	060150
01643-31645	D0200-13A0	22	090170
01643-31645	D0200-13A0	25	090170

PART NO.	FIG.NO.	INDEX	PAGE
01643-31645	H0120-01A0	12	180070
01643-31645	H0120-01A0	14	180070
01643-31645	H0120-01A0	16	180070
01643-31645	H0120-01A0	4	180070
01643-31645	H0120-01A0	6	180070
01643-31645	H0120-01A0	8	180070
01643-31645	H0230-01A9	16	180158
01643-31645	H0311-01A0	12	180165
01643-31645	H0311-01A1	14	180170
01643-31645	H0311-01A1	20	180170
01643-31645	H0311-02A0	12	180175
01643-31645	H0311-02A1	14	180177
01643-31645	H0311-02A1	20	180177
01643-31645	M1110-02A0	40	270020
01643-31645	M1110-05A0	30	270050
01643-31645	M1130-03A0	16	270160
01643-31645	M1210-02A0	45	270430
01643-31645	M1420-02A0	7	270480
01643-31645	M1810-05A0	3	270550
01643-31645	N1210-02A0	12	300030
01643-31645	N1210-04A0	12	300050
01643-31645	N1210-06A0	12	300070
01643-31645	N1210-07A0	12	300080
01643-31645	N1210-10A0	12	300110
01643-31645	P1140-01A6	21	330090
01643-31645	P1140-01A7	24	330100
01643-31645	P1210-01A1	25	330120
01643-31645	P1210-01A2	30	330130
01643-31645	P1210-01A7	25	330180
01643-31645	P1210-01A8	30	330190
01643-31645	R0300-01A1	8	360060
01643-31645	T1110-01A10	27	390100
01643-31645	T1110-01A10	37	390100
01643-31645	T1110-01A9	27	390090
01643-31645	T1120-01A1	38	390140
01643-31645	T1120-01A2	38	390150
01643-31645	T1230-01A1	12	390290
01643-31645	T1230-01A1	21	390290
01643-31645	T1230-01A1	24	390290
01643-31645	T1230-01A1	34	390290
01643-31645	T1230-01A1	43	390290
01643-31645	T1230-01A1	9	390290
01643-31645	T1230-01A1	49	390291
01643-31645	W1117-02A2A	7	480200
01643-31645	W1117-04A2A	7	480260
01643-31845	A2210-A7D1	4	010380
01643-31845	H1210-01A0	12	180420
01643-31845	H1210-01A0	15	180420
01643-31845	H1210-02A0	25	180430
01643-31845	H1210-03A0	20	180440

PART NO.	FIG.NO.	INDEX	PAGE
01643-31845	H1221-01A0	10	180450
01643-31845	H1221-01A0	12	180450
01643-31845	H1221-01A0	4	180450
01643-31845	H1221-01A0	6	180450
01643-31845	H1222-01A0	4	180470
01643-31845	H1222-01A0	8	180470
01643-31845	N1210-01A0	22	300020
01643-31845	N1210-03A0	22	300040
01643-31845	N1210-09A0	22	300100
01643-31845	P1210-01A12	2	330230
01643-31845	P1210-01A6	2	330170
01643-31845	T1110-01A10	10	390100
01643-31845	T1110-01A10	14	390100
01643-31845	T1110-01A10	17	390100
01643-31845	T1110-01A10	20	390100
01643-31845	T1110-01A10	4	390100
01643-31845	T1110-01A10	7	390100
01643-31845	T1110-01A11	15	390110
01643-31845	T1110-01A11	4	390110
01643-31845	T1110-01A12	2	390120
01643-31845	T1110-01A12	4	390120
01643-31845	T1110-01A12	9	390120
01643-31845	T1110-01A7	11	390070
01643-31845	T1110-01A7	4	390070
01643-31845	T1110-01A7	8	390070
01643-31845	T1110-01A8	10	390080
01643-31845	T1110-01A8	14	390080
01643-31845	T1110-01A8	18	390080
01643-31845	T1110-01A8	26	390080
01643-31845	T1110-01A8	30	390080
01643-31845	T1110-01A8	33	390080
01643-31845	T1110-01A8	37	390080
01643-31845	T1110-01A8	4	390080
01643-31845	T1110-01A8	40	390080
01643-31845	T1110-01A8	44	390080
01643-31845	T1110-01A8	7	390080
01643-31845	T1110-01A8	47	390081
01643-31845	T1110-01A9	13	390090
01643-31845	T1110-01A9	16	390090
01643-31845	T1110-01A9	21	390090
01643-31845	T1110-01A9	24	390090
01643-31845	T1110-01A9	5	390090
01643-31845	T1110-01A9	8	390090
01643-31845	T1120-01A1	43	390141
01643-31845	T1120-01A2	43	390151
01643-31845	T1140-01A1	45	390181
01643-31845	T1140-01A2	45	390191
01643-31845	T1210-01A6	5	390260
01643-31845	T1220-01A1	57	390271
01643-31845	T1220-01A2	57	390281

PART NO.	FIG.NO.	INDEX	PAGE
01643-32060	A2250-A7C4	7	010400
01643-32060	A4710-A7D7	13	010650
01643-32060	A4710-A7E3	17	010660
01643-32060	K1120-01A0	10	240660
01643-32060	K1120-01A0	14	240660
01643-32060	K1120-01A0	23	240660
01643-32060	K1120-01A0	5	240660
01643-32060	K1120-01A1	10	240670
01643-32060	K1120-01A1	14	240670
01643-32060	K1120-01A1	23	240670
01643-32060	K1120-01A1	5	240670
01643-32060	M1130-08A1	3	270270
01643-32060	M1140-05A0	8	270370
01643-32060	M1210-02A0	48	270431
01643-32060	N1310-01A2	50	300211
01643-32060	P1210-01A2	15	330130
01643-32060	P1210-01A8	15	330190
01643-32060	R0120-01A2	16	360020
01643-32060	R0120-01A2	20	360020
01643-32060	R0120-01A4	16	360040
01643-32060	R0120-01A4	20	360040
01643-32060	T1210-01A5	3	390250
01643-32060	W1114-01A8	2	480130
01643-32060	W1117-02A2A	4	480200
01643-32060	W1117-04A2A	4	480260
01643-32260	H0210-01A0	19	180130
01643-32260	H0220-01A0	19	180140
01643-32260	K0710-01A0	13	240570
01643-32260	R0120-01A1	15	360010
01643-32260	R0120-01A3	15	360030
01643-32260	R0200-01A1	7	360050
01643-32460	A2010-A7C6	7	010130
01643-32460	B0100-01A0	14	030010
01643-32460	B0100-01A0	22	030010
01643-32460	H0210-09A0	34	180138
01643-32460	H0220-09A0	37	180148
01643-32460	J1310-01A0	15	210030
01643-32460	J1310-01A0	6	210030
01643-32460	N1310-01A2	48	300211
01643-32460	P1120-01A0	18	330010
01643-32460	P1140-01A2	10	330050
01643-32460	R0120-01A2	42	360020
01643-32460	R0120-01A2	44	360020
01643-32460	R0120-01A4	42	360040
01643-32460	R0120-01A4	44	360040
01643-32460	R0300-01A1	18	360060
01643-32460	R1140-01A1	10	360130
01643-32460	R1140-01A1	12	360130
01643-32460	R1140-01A1	3	360130
01643-32460	R1140-01A1	6	360130

PART NO.	FIG.NO.	INDEX	PAGE
01643-32460	R1150-01A1	16	360140
01643-32460	R1170-01A1	3	360160
01643-32460	R1170-01A1	6	360160
01643-32460	T1110-01A2	14	390020
01643-32460	T1110-01A2	19	390020
01643-32460	T1110-01A2	5	390020
01643-32460	T1210-01A1	13	390210
01643-32460	T1210-01A1	19	390210
01643-32780	T1220-01A1	17	390270
01643-32780	T1220-01A2	17	390280
01643-33080	H0120-06A0	4	180120
01643-33080	H0210-03A0	15	180132
01643-33080	H0210-03A0	20	180132
01643-33080	H0210-06A0	15	180135
01643-33080	H0210-06A0	20	180135
01643-33080	H0220-03A0	15	180142
01643-33080	H0220-03A0	20	180142
01643-33080	H0220-06A0	15	180145
01643-33080	H0220-06A0	20	180145
01643-33080	N1210-05A0	5	300060
01643-33080	P1210-01A1	27	330120
01643-33080	P1210-01A7	27	330180
01643-33080	R0120-01A2	13	360020
01643-33080	R0120-01A4	13	360040
01643-33080	R0200-01A1	13	360050
01643-33080	R1120-01A1	11	360120
01643-33080	R1160-01A1	3	360150
01643-33080	R1160-01A1	6	360150
01643-33080	R1200-01A1	3	360170
01643-33080	R1200-02A1	4	360180
01643-33080	T1210-01A5	11	390250
01643-33080	T1210-01A5	16	390250
01643-33080	T1210-01A5	19	390250
01643-33080	T1210-01A5	6	390250
01643-33380	P1210-01A1	35	330120
01643-33380	P1210-01A13	2	330240
01643-33380	P1210-01A7	35	330180
01643-33380	T1140-01A1	16	390180
01643-33380	T1140-01A2	16	390190
01643-33690	N1110-01A0	2	300010
01643-33690	N1110-01A0	4	300010
01643-33690	T1930-02A1	15	390370
01643-33690	T1930-02A1	7	390370
01643-34212	M1120-01A0	4	270130
01643-50823	H1210-02A0	21	180430
01643-50823	P1140-01A6	28	330090
01643-50823	P1140-01A6	4	330090
01643-50823	P1140-01A7	32	330100
01643-50823	P1140-01A7	4	330100
01643-51032	A2010-A7C6	26	010130

PART NO.	FIG.NO.	INDEX	PAGE
01643-51032	H0230-01A11	4	180160
01643-51032	H0312-02A0	27	180200
01643-51032	H0312-03A0	19	180210
01643-51032	H0312-03A0	21	180210
01643-51032	H0312-03A0	5	180210
01643-51032	H0312-03A0	49	180211
01643-51032	H0330-01A0	15	180290
01643-51032	H0330-01A0	20	180290
01643-51032	H0330-03A0	34	180310
01643-51032	H0330-03A0	39	180310
01643-51032	H0340-02A0	14	180330
01643-51032	H0340-02A0	25	180330
01643-51032	H0340-02A0	30	180330
01643-51032	H0340-02A0	39	180330
01643-51032	H0340-02A0	5	180330
01643-51032	H0340-06A0	29	180370
01643-51032	H1210-03A0	37	180440
01643-51032	H1221-02A0	20	180460
01643-51032	H1340-01A0	17	180510
01643-51032	H1340-01A0	23	180510
01643-51032	H1841-02A0	5	180750
01643-51032	K0210-38A0	11	240380
01643-51032	K0210-40A0	11	240400
01643-51032	P1140-01A6	31	330090
01643-51032	P1140-01A6	7	330090
01643-51032	P1140-01A7	35	330100
01643-51032	P1140-01A7	7	330100
01643-51232	A2411-B7A5	22	010470
01643-51232	D0200-12A0	27	090160
01643-51232	D0200-12A0	9	090160
01643-51232	D0200-12A9	9	090165
01643-51232	H0110-02A0	24	180020
01643-51232	H0110-03A0	14	180030
01643-51232	H0110-04A0	8	180040
01643-51232	H0230-01A10	12	180159
01643-51232	H0320-01A0	27	180270
01643-51232	H0320-01A0	32	180270
01643-51232	H0320-01A0	38	180270
01643-51232	H0320-02A0	14	180280
01643-51232	H0320-02A0	5	180280
01643-51232	H0330-01A0	4	180290
01643-51232	H0330-02A1	10	180300
01643-51232	H0330-02A1	5	180300
01643-51232	H0330-03A0	19	180310
01643-51232	H0330-03A0	24	180310
01643-51232	H0330-03A0	29	180310
01643-51232	H0340-03A0	16	180340
01643-51232	H0340-06A0	17	180370
01643-51232	K0210-23A0	3	240230
01643-51232	M1130-08A1	28	270270

PART NO.	FIG.NO.	INDEX	PAGE
01643-51232	T1140-01A1	35	390180
01643-51232	T1140-01A2	35	390190
01643-51232	T1220-01A1	46	390271
01643-51232	T1220-01A2	46	390281
01643-51232	W1114-01A1	30	480060
01643-51645	A1010-A7B4	28	010010
01643-70623	K0210-01A0	28	240010
01643-70623	K0210-04A0	15	240040
01643-70623	K0210-04A0	18	240040
01643-70623	K0210-04A0	21	240040
01643-70623	K0210-05A0	12	240050
01643-70623	K0210-05A0	6	240050
01643-70623	K0210-15A0	15	240150
01643-70623	K0210-15A0	18	240150
01643-70623	K0210-16A0	5	240160
01643-70623	K0210-30A0	7	240300
01643-70623	K0210-32A0	5	240320
01643-70623	K0210-46A0	11	240460
01643-70623	K0210-46A0	19	240460
01643-70623	K0210-46A0	8	240460
01643-70623	K0210-47A0	3	240470
01643-70623	K0210-48A0	5	240480
01643-70623	K0210-50A0	32	240500
01643-70823	E0200-12A0	22	120140
01643-70823	K0210-01A0	13	240010
01643-70823	K0210-01A0	16	240010
01643-70823	K0210-01A0	25	240010
01643-70823	K0210-06A0	12	240060
01643-70823	K0210-06A0	15	240060
01643-70823	K0210-06A0	3	240060
01643-70823	K0210-06A0	6	240060
01643-70823	K0210-07A0	11	240070
01643-70823	K0210-07A0	14	240070
01643-70823	K0210-07A0	17	240070
01643-70823	K0210-07A0	20	240070
01643-70823	K0210-07A0	23	240070
01643-70823	K0210-07A0	5	240070
01643-70823	K0210-07A0	8	240070
01643-70823	K0210-08A0	16	240080
01643-70823	K0210-21A0	3	240210
01643-70823	K0210-21A0	6	240210
01643-71032	K0210-35A0	10	240350
01643-71032	K0210-50A0	12	240500
01643-71032	K0210-50A0	35	240500
01643-71032	K0210-50A0	5	240500
01643-71032	K0210-51A0	3	240510
01643-71032	K0210-51A0	6	240510
01643-71032	W1114-01A5	19	480100
01643-71232	E0200-32A0	17	120330
01643-71232	E0200-33A0	17	120340

PART NO.	FIG.NO.	INDEX	PAGE
01643-71232	K0210-04A0	12	240040
01643-71232	K0210-05A0	15	240050
01643-71232	K0210-05A0	18	240050
01643-71232	K0210-05A0	24	240050
01643-71232	K0210-35A0	3	240350
01643-71232	K0210-46A0	22	240460
01643-71232	K0210-46A0	24	240460
01643-71232	K0210-46A0	27	240460
01643-71232	K0210-46A0	29	240460
01643-71232	K0210-48A0	3	240480
01643-71232	K1921-02A0	14	240690
01643-71232	K1921-02A0	5	240690
01643-71232	K1921-02A0	8	240690
01643-71232	K1921-02A1	11	240695
01643-71232	K1921-02A1	21	240695
01643-71232	K1921-02A1	8	240695
01643-71232	M1110-12A0	18	270120
01643-71232	M1110-12A0	22	270120
01643-71232	M1110-12A0	25	270120
01643-71232	W1114-01A1	11	480060
01660-03650	C0100-05A0	15	060050
01660-03650	C0100-14A0	21	060140
01803-12228	R0200-01A1	6	360050
02030-70729	K0210-23A0	2	240230
02215-10710	K0210-23A0	4	240230
02400-10413	A2350-A7B5	11	010430
02400-10413	A2350-A7B5	17	010430
02720-40204	A1730-A7C6	7	010120
02720-41616	A2110-A7F9	12	010220
02720-41616	A2110-C7F9	12	010240
02753-00340	M1130-12A0	8	270250
02753-00343	M1130-12A0	9	270250
02753-003A9	H1830-03A0	1	180830
02755-00306	M1130-12A0	21	270250
02757-005A8	H1841-03A0	39	180760
02758-00616	H0312-03A0	30	180210
02760-00203	H0330-02A3	14	180302
02760-00203	H1841-03A0	38	180760
02760-00204	H0340-04A0	51	180351
02760-00204	H1833-07A0	41	180620
02760-00215	H1840-08A0	5	180720
02760-00217	H1835-02A0	23	180640
02760-00304	H1840-08A0	19	180720
02760-00304	H1840-08A0	3	180720
02760-00304	H1840-09A0	17	180730
02760-00304	H1850-04A0	45	180841
02760-00305	H1840-08A0	1	180720
02760-00308	H1840-02A0	5	180670
02760-00308	H1841-02A0	28	180750
02760-00309	H1840-02A0	21	180670

PART NO.	FIG.NO.	INDEX	PAGE
02760-00309	H1840-03A0	8	180680
02760-00311	H1835-02A0	10	180640
02760-00311	H1840-05A0	1	180700
02760-00312	H1835-02A0	11	180640
02760-00312	H1840-03A0	15	180680
02760-00312	H1840-05A0	2	180700
02760-00312	H1840-06A0	1	180710
02760-00312	P1120-02A0	5	330020
02760-00312	P1140-01A5	11	330080
02760-00313	H1835-02A0	12	180640
02760-00313	H1840-02A0	6	180670
02760-00313	H1840-05A0	3	180700
02760-00313	H1840-06A0	2	180710
02760-00313	P1140-01A5	1	330080
02760-00313	P1140-01A8	15	330110
02760-00314	H1840-02A0	7	180670
02760-00314	H1840-05A0	11	180700
02760-00316	H1840-05A0	12	180700
02760-00316	K0210-42A0	1	240420
02760-00316	K0210-42A0	7	240420
02760-00318	H1841-02A0	30	180750
02760-00318	H1843-01A0	1	180780
02760-00319	H1840-02A0	8	180670
02760-00319	H1840-04A0	5	180690
02760-00319	H1840-06A0	3	180710
02760-00320	H1840-04A0	6	180690
02760-00321	H1840-06A0	4	180710
02760-00325	H1832-02A0	1	180560
02760-00325	H1840-09A0	1	180730
02760-00327	H1832-02A0	2	180560
02760-00332	H1832-03A0	5	180570
02760-00339	H1832-02A0	3	180560
02760-00345	H1832-02A0	4	180560
02760-003A4	H1840-08A0	16	180720
02760-003A5	K0210-52A0	17	240520
02760-003A5	N1310-01A2	40	300210
02760-003A8	H1840-02A0	20	180670
02760-003A8	H1840-03A0	1	180680
02760-003A8	H1840-03A0	7	180680
02760-003A9	H1840-02A0	22	180670
02760-003A9	H1840-03A0	2	180680
02760-00612	P1120-02A0	1	330020
02761-00214	H0340-04A0	28	180350
02761-00215	H0340-04A0	29	180350
02761-00216	H1832-01A0	1	180550
02761-00217	H1832-01A0	2	180550
02761-00219	H1835-02A0	24	180640
02761-00304	H1840-08A0	4	180720
02761-00305	H1840-08A0	15	180720
02761-00305	H1840-08A0	9	180720

PART NO.	FIG.NO.	INDEX	PAGE
02761-00305	H1841-03A0	37	180760
02761-00311	H1840-03A0	16	180680
02761-00314	H1840-06A0	5	180710
02761-00315	H1832-03A0	9	180570
02761-00315	H1840-03A0	17	180680
02761-00315	H1840-04A0	7	180690
02761-00316	H1832-03A0	6	180570
02761-00319	H1840-06A0	26	180710
02761-00319	H1840-06A0	6	180710
02761-00321	H1840-04A0	8	180690
02761-00328	H1832-02A0	20	180560
02761-00330	H1832-02A0	21	180560
02761-00337	H1832-02A0	22	180560
02761-003A3	H0350-04A0	10	180410
02761-003A3	H1840-09A0	12	180730
02761-003A4	H1841-03A0	36	180760
02761-003A5	H0350-04A0	11	180410
02761-003A9	H1840-06A0	25	180710
02762-00205	W1114-01A7	8	480120
02762-00222	W1114-01A7	10	480120
02762-00305	D0200-09A0	2	090130
02762-003A3	D0200-07A0	17	090110
02762-00405	H1843-01A0	6	180780
02762-00405	H1843-02A0	12	180790
02762-00406	H1843-01A0	8	180780
02762-00406	H1843-02A0	7	180790
02762-00407	H1843-02A0	16	180790
02762-00413	H1835-01A0	1	180630
02762-00414	H1835-01A0	13	180630
02762-00414	H1835-01A0	2	180630
02762-00414	H1841-02A0	29	180750
02762-00415	H1843-02A0	1	180790
02762-00416	H0312-05A0	14	180230
02762-00416	H1835-01A0	3	180630
02762-00421	W1117-02A1	25	480190
02762-00426	H0312-06A0	1	180240
02762-00429	W1117-02A1	1	480190
02762-00429	W1117-04A1	1	480250
02762-004A5	H1843-01A0	14	180780
02762-004A5	H1843-01A0	7	180780
02762-004A6	H1843-01A0	15	180780
02762-004A6	H1843-01A0	9	180780
02762-004A6	H1843-02A0	15	180790
02762-004A8	H0350-04A0	3	180410
02762-00514	B0600-04A0	7	030140
02762-00517	H1832-03A0	15	180570
02762-00519	H0340-05A0	1	180360
02762-00522	D0200-02A0	1	090060
02762-00551	D0200-02A0	2	090060
02762-005A4	H0340-05A0	6	180360

PART NO.	FIG.NO.	INDEX	PAGE
02762-00607	H0350-04A0	1	180410
02762-00609	D0200-04A0	19	090080
02762-00611	D0200-01A0	26	090050
02762-00611	D0200-04A0	20	090080
02762-00618	H0312-04A0	10	180220
02762-00624	H0311-02A3	3	180180
02762-00629	W1117-06A8	1	480340
02762-006A8	H1841-02A0	27	180750
02763-00306	H1850-02A0	1	180820
02763-003A4	A4110-A7E5	50	010721
02763-003A4	A4110-B7E4	47	010731
02763-00404	A4110-A7E5	46	010721
02763-00412	D0200-10A0	19	090140
02763-004A3	A4110-A7E5	48	010721
02763-004A3	H0350-04A0	2	180410
02763-004A5	A4110-A7E5	51	010721
02763-004A5	A4110-B7E4	48	010731
02763-004A7	D0200-03A0	1	090070
02763-004A8	H0350-04A0	8	180410
02763-004A9	D0200-10A0	18	090140
02763-00506	D0200-06A0	26	090100
02763-00512	D0200-05A0	17	090090
02763-005A6	D0200-06A0	16	090100
02763-00611	D0200-01A0	5	090050
02763-00612	H0350-04A0	12	180410
02763-00620	W1117-05A7	11	480360
02763-00629	W1117-04A8	1	480320
02763-006A4	D0200-04A0	47	090081
02763-006A6	H1843-02A0	19	180790
02763-006A7	W1117-04A8	19	480320
02764-002A3	H0340-04A0	52	180351
02764-002A4	H0110-03A0	22	180030
02764-003A3	H1850-01A0	14	180810
02764-003A4	D0200-07A0	1	090110
02764-003A7	D0200-09A0	9	090130
02764-00404	A4110-B7E4	37	010730
02764-00406	A4110-B7E4	38	010730
02764-00409	A4110-A7E9	19	010770
02764-00409	H1841-03A0	28	180760
02764-00415	H0312-05A0	7	180230
02764-004A4	A4110-A7E5	64	010721
02764-004A5	A4110-B7E9	17	010780
02764-004A7	H0350-04A0	9	180410
02764-00623	H0312-04A0	27	180220
02764-006A9	H1841-03A0	14	180760
02765-00308	P1140-01A8	19	330110
02766-00221	W1114-01A7	28	480120
02766-00223	W1114-01A7	26	480120
02777-00214	P1140-01A8	1	330110
02781-0021D	H0110-03A0	19	180030

PART NO.	FIG.NO.	INDEX	PAGE
02781-0021D	H0120-02A0	27	180080
02781-0021D	H0120-05A0	25	180110
02781-0021D	H0330-02A3	4	180302
02781-0021D	N1310-01A2	24	300210
02781-0021D	W1114-01A7	24	480120
02781-00313	K0210-45A0	6	240450
02781-00315	A4110-A7E4	7	010720
02781-00315	A4110-B7E4	7	010730
02781-00315	H0350-03A0	20	180400
02781-00315	H1833-03A0	16	180595
02781-00315	H1833-03A0	24	180595
02781-00315	H1833-05A0	6	180605
02781-00315	H1835-03A0	5	180650
02781-00315	H1850-01A0	12	180810
02781-00315	K0210-43A0	13	240430
02781-00315	K0210-43A0	25	240430
02781-00315	K0210-43A0	4	240430
02781-00315	M1130-12A0	5	270250
02781-00315	N1310-01A2	4	300210
02781-00315	P1140-01A5	2	330080
02781-0031D	A4110-C7E4	4	010740
02781-0031D	A4110-D7E4	4	010750
02781-0031D	H1831-01A0	18	180520
02781-0031D	H1833-01A1	6	180585
02781-0031D	H1833-03A0	37	180595
02781-0031D	H1850-04A0	39	180840
02781-0031D	K0210-52A0	4	240520
02781-00420	A4110-B7E4	39	010730
02781-00420	A4710-A7E3	6	010660
02781-00420	A4710-A7E3		010660
02781-00422	A4110-A7E4	4	010720
02781-00422	A4110-B7E4	4	010730
02781-00422	A4110-D7F2	15	010800
02781-00422	H0312-05A0	32	180230
02781-00422	H0350-01A0	9	180380
02781-00422	H1833-05A0	9	180605
02781-00422	H1835-03A0	2	180650
02781-00422	H1843-03A0	18	180800
02781-0042A	A4110-A7E9	4	010770
02781-00516	A4110-A7E4	2	010720
02781-00516	A4110-B7E4	2	010730
02781-00522	A4110-A7E9	5	010770
02781-00522	A4110-B7E9	4	010780
02781-00522	H0340-05A0	18	180360
02781-00522	N1220-01A4	18	300150
02781-00522	N1220-01A8	22	300190
02781-00628	D0200-04A0	33	090080
02781-00628	H0210-09A0	19	180138
02781-00628	H0311-02A3	1	180180
02781-00628	H0312-01A0	21	180190

PART NO.	FIG.NO.	INDEX	PAGE
02781-00628	H1841-03A0	11	180760
02781-00628	H1843-03A0	23	180800
02781-00628	N1310-01A2	21	300210
02781-00628	W1114-01A2	11	480070
02781-00628	W1114-01A2	20	480070
02781-00628	W1117-05A7	32	480360
02782-10210	H0110-03A0	16	180030
02782-10210	H0120-02A0	21	180080
02782-10210	H0120-02A0	30	180080
02782-10210	H0120-04A0	30	180100
02782-10210	H0120-05A0	28	180110
02782-10210	H0230-02A0	13	180161
02782-10210	H0330-02A3	7	180302
02782-10210	H1320-03A0	11	180505
02782-10210	H1831-01A0	15	180520
02782-10210	H1833-01A1	12	180585
02782-10210	H1833-06A0	7	180610
02782-10210	H1833-07A0	28	180620
02782-10210	W1114-01A7	6	480120
02782-10214	H0340-04A0	25	180350
02782-10214	H0340-04A0	48	180351
02782-10311	H0120-02A0	24	180080
02782-10311	H0120-04A0	21	180100
02782-10311	H0120-05A0	22	180110
02782-10311	H1320-03A0	8	180505
02782-10311	H1831-03A0	4	180540
02782-10311	H1833-03A0	33	180595
02782-10311	H1833-06A0	21	180610
02782-10311	H1850-04A0	35	180840
02782-10311	H1850-04A0	41	180840
02782-10311	K0210-50A0	23	240500
02782-10312	H1320-03A0	5	180505
02782-10312	H1850-04A0	43	180840
02782-10312	H1850-04A0	47	180841
02782-10315	H0120-02A0	14	180080
02782-10315	H0120-03A0	7	180090
02782-10315	H0120-04A0	11	180100
02782-10315	H0350-02A0	15	180390
02782-10315	H0350-03A0	11	180400
02782-10315	H0350-03A0	31	180400
02782-10315	H1831-01A0	24	180520
02782-10315	H1833-03A0	19	180595
02782-10315	H1833-03A0	27	180595
02782-10315	H1833-05A0	12	180605
02782-10315	H1833-05A0	18	180605
02782-10315	H1841-02A0	19	180750
02782-10315	H1850-02A0	3	180820
02782-10315	M1130-12A0	4	270250
02782-10315	N1310-01A2	37	300210
02782-10315	P1140-01A8	21	330110

PART NO.	FIG.NO.	INDEX	PAGE
02782-10317	H1833-05A0	15	180605
02782-10317	H1833-05A0	21	180605
02782-10420	A4710-A7E3	7	010660
02782-10420	W1117-04A7	1	480310
02782-10420	W1117-05A7	28	480360
02782-10420	W1117-06A7	1	480330
02782-10422	A4110-A7E4	10	010720
02782-10422	A4110-B7E4	10	010730
02782-10422	H0210-09A0	27	180138
02782-10422	H0312-05A0	35	180230
02782-10422	H0350-01A0	15	180380
02782-10422	H0350-01A0	25	180380
02782-10422	H0350-02A0	9	180390
02782-10422	H0350-03A0	14	180400
02782-10422	H0350-03A0	8	180400
02782-10422	H1841-02A0	20	180750
02782-10422	H1843-03A0	6	180800
02782-10423	C0100-05A0	10	060050
02782-10423	C0100-14A0	10	060140
02782-10425	A4110-A7E9	6	010770
02782-10425	A4110-B7E9	5	010780
02782-10425	H0340-05A0	15	180360
02782-10425	H1841-02A0	24	180750
02782-10426	A4110-A7E9	8	010770
02782-10516	B0600-04A0	15	030140
02782-10516	B0600-04A0	4	030140
02782-10516	C0100-13A0	14	060130
02782-10516	D0100-01A0	25	090010
02782-10516	D0100-01A1	20	090020
02782-10516	D0100-01A2	25	090030
02782-10516	D0100-01A3	20	090040
02782-10516	D0200-05A0	8	090090
02782-10522	H0340-05A0	21	180360
02782-10522	H1840-01A0	15	180660
02782-10524	H0230-02A0	4	180161
02782-1052A	A4110-A7E9	7	010770
02782-10628	D0200-04A0	30	090080
02782-10628	H0350-03A0	26	180400
02782-10628	H1840-01A0	12	180660
02782-1062A	C0100-05A0	7	060050
02782-1062A	C0100-14A0	7	060140
02782-1062A	H0350-01A0	6	180380
02782-10630	W1117-05A7	17	480360
02783-10210	H1833-07A0	38	180620
02783-10315	M1130-12A0	6	270250
02783-10422	H0220-09A0	30	180148
02783-10422	H0350-01A0	12	180380
02783-10422	H1833-03A0	6	180595
02783-10422	H1835-03A0	11	180650
02783-10422	K0210-43A0	16	240430

PART NO.	FIG.NO.	INDEX	PAGE
02783-10422	K0210-43A0	30	240430
02783-10422	K0210-43A0	7	240430
02783-10522	A4110-B7E9	6	010780
02783-10628	H0220-09A0	22	180148
02783-10628	H1841-02A0	16	180750
02783-10628	W1114-01A1	12	480060
02783-10628	W1114-01A2	13	480070
02783-10628	W1114-01A2	22	480070
02783-10628	W1117-04A7	5	480310
02783-10628	W1117-06A7	5	480330
02789-10315	H1830-03A0	10	180830
02789-10422	W1117-05A7	29	480360
02895-77075	A1310-B7E8	5	010040
02896-11008	W1114-01A3	2	480080
02896-11008	W1114-02A3	2	480170
02896-11008	Y0100-02A1		510020
02896-11009	A4110-A7E4	9	010720
02896-11009	A4110-B7E4	9	010730
02896-11009	M1130-09A1	2	270224
02896-11009	Y0100-01A0		510010
02896-11012	A4110-A7E4	12	010720
02896-11012	A4110-A7E4	6	010720
02896-11012	A4110-A7E9	10	010770
02896-11012	A4110-B7E4	12	010730
02896-11012	A4110-B7E4	40	010730
02896-11012	A4110-B7E4	6	010730
02896-11012	A4110-B7E9	8	010780
02896-11012	A4110-D7F2	17	010800
02896-11012	A4710-A7D7	8	010650
02896-11012	A4710-A7E3	12	010660
02896-11015	A4110-A7E9	11	010770
02896-11015	A4110-B7E9	9	010780
02896-21009	D0200-09A0	1	090130
02896-21009	D0200-09A0	8	090130
02896-21015	B0600-04A0	17	030140
02896-21015	B0600-04A0	6	030140
02896-61008	H0110-03A0	18	180030
02896-61008	H0110-03A0	21	180030
02896-61008	H0120-02A0	23	180080
02896-61008	H0120-02A0	29	180080
02896-61008	H0120-02A0	32	180080
02896-61008	H0120-03A0	28	180090
02896-61008	H0120-04A0	29	180100
02896-61008	H0120-04A0	32	180100
02896-61008	H0120-05A0	20	180110
02896-61008	H0120-05A0	27	180110
02896-61008	H0120-05A0	30	180110
02896-61008	H0230-02A0	11	180161
02896-61008	H0230-02A0	15	180161
02896-61008	H0330-02A3	12	180302

PART NO.	FIG.NO.	INDEX	PAGE
02896-61008	H0330-02A3	6	180302
02896-61008	H0330-02A3	9	180302
02896-61008	H0340-04A0	27	180350
02896-61008	H0340-04A0	47	180351
02896-61008	H0340-04A0	50	180351
02896-61008	H1320-03A0	13	180505
02896-61008	H1831-01A0	14	180520
02896-61008	H1831-01A0	17	180520
02896-61008	H1833-01A1	14	180585
02896-61008	H1833-06A0	20	180610
02896-61008	H1833-06A0	9	180610
02896-61008	H1833-07A0	20	180620
02896-61008	H1833-07A0	23	180620
02896-61008	H1833-07A0	30	180620
02896-61008	H1833-07A0	37	180620
02896-61008	H1833-07A0	40	180620
02896-61008	H1833-07A0	9	180620
02896-61008	N1220-01A4	15	300150
02896-61008	N1220-01A4	31	300150
02896-61008	N1220-01A8	19	300190
02896-61008	N1220-01A8	35	300190
02896-61008	N1310-01A2	26	300210
02896-61008	P1140-01A8	5	330110
02896-61008	W1114-01A7	11	480120
02896-61008	W1114-01A7	27	480120
02896-61008	W1114-01A7	29	480120
02896-61008	W1114-01A7	9	480120
02896-61009	D0200-07A0	18	090110
02896-61009	D0200-07A0	2	090110
02896-61009	D0200-07A0	20	090110
02896-61009	D0200-07A0	4	090110
02896-61009	D0200-09A0	25	090130
02896-61009	D0200-09A0	4	090130
02896-61009	H0120-02A0	13	180080
02896-61009	H0120-02A0	16	180080
02896-61009	H0120-02A0	19	180080
02896-61009	H0120-02A0	26	180080
02896-61009	H0120-02A0	3	180080
02896-61009	H0120-02A0	38	180080
02896-61009	H0120-02A0	6	180080
02896-61009	H0120-02A0	9	180080
02896-61009	H0120-03A0	12	180090
02896-61009	H0120-03A0	16	180090
02896-61009	H0120-03A0	19	180090
02896-61009	H0120-03A0	22	180090
02896-61009	H0120-03A0	29	180090
02896-61009	H0120-03A0	3	180090
02896-61009	H0120-03A0	6	180090
02896-61009	H0120-03A0	9	180090
02896-61009	H0120-04A0	13	180100

PART NO.	FIG.NO.	INDEX	PAGE
02896-61009	H0120-04A0	16	180100
02896-61009	H0120-04A0	19	180100
02896-61009	H0120-04A0	23	180100
02896-61009	H0120-04A0	26	180100
02896-61009	H0120-04A0	3	180100
02896-61009	H0120-04A0	6	180100
02896-61009	H0120-04A0	9	180100
02896-61009	H0120-05A0	10	180110
02896-61009	H0120-05A0	13	180110
02896-61009	H0120-05A0	17	180110
02896-61009	H0120-05A0	21	180110
02896-61009	H0120-05A0	24	180110
02896-61009	H0120-05A0	3	180110
02896-61009	H0120-05A0	6	180110
02896-61009	H0220-09A0	29	180148
02896-61009	H0230-02A0	12	180161
02896-61009	H0230-02A0	20	180161
02896-61009	H0330-02A3	13	180302
02896-61009	H0350-02A0	14	180390
02896-61009	H0350-02A0	17	180390
02896-61009	H0350-03A0	13	180400
02896-61009	H0350-03A0	22	180400
02896-61009	H0350-03A0	33	180400
02896-61009	H1320-03A0	10	180505
02896-61009	H1320-03A0	7	180505
02896-61009	H1830-03A0	11	180830
02896-61009	H1830-03A0	3	180830
02896-61009	H1831-01A0	11	180520
02896-61009	H1831-01A0	21	180520
02896-61009	H1831-01A0	26	180520
02896-61009	H1831-02A0	13	180530
02896-61009	H1831-02A0	21	180530
02896-61009	H1831-03A0	6	180540
02896-61009	H1833-01A1	11	180585
02896-61009	H1833-01A1	8	180585
02896-61009	H1833-03A0	15	180595
02896-61009	H1833-03A0	18	180595
02896-61009	H1833-03A0	21	180595
02896-61009	H1833-03A0	26	180595
02896-61009	H1833-03A0	29	180595
02896-61009	H1833-03A0	32	180595
02896-61009	H1833-03A0	36	180595
02896-61009	H1833-03A0	39	180595
02896-61009	H1833-03A0	42	180595
02896-61009	H1833-05A0	14	180605
02896-61009	H1833-05A0	17	180605
02896-61009	H1833-05A0	20	180605
02896-61009	H1833-05A0	23	180605
02896-61009	H1833-05A0	26	180605
02896-61009	H1833-05A0	29	180605

PART NO.	FIG.NO.	INDEX	PAGE
02896-61009	H1833-05A0	8	180605
02896-61009	H1833-06A0	12	180610
02896-61009	H1833-06A0	23	180610
02896-61009	H1833-07A0	12	180620
02896-61009	H1833-07A0	24	180620
02896-61009	H1833-07A0	27	180620
02896-61009	H1835-03A0	7	180650
02896-61009	H1840-01A0	20	180660
02896-61009	H1841-02A0	23	180750
02896-61009	H1850-01A0	15	180810
02896-61009	H1850-02A0	2	180820
02896-61009	H1850-04A0	46	180841
02896-61009	K0210-43A0	15	240430
02896-61009	K0210-43A0	21	240430
02896-61009	K0210-43A0	27	240430
02896-61009	K0210-43A0	6	240430
02896-61009	K0210-45A0	10	240450
02896-61009	K0210-45A0	4	240450
02896-61009	K0210-45A0	7	240450
02896-61009	K0210-50A0	24	240500
02896-61009	K0210-52A0	5	240520
02896-61009	M1130-12A0	11	270250
02896-61009	M1130-12A0	22	270250
02896-61009	M1130-12A0	24	270250
02896-61009	N1220-01A4	27	300150
02896-61009	N1220-01A8	31	300190
02896-61009	N1310-01A2	20	300210
02896-61009	N1310-01A2	28	300210
02896-61009	N1310-01A2	30	300210
02896-61009	N1310-01A2	33	300210
02896-61009	N1310-01A2	39	300210
02896-61009	N1310-01A2	6	300210
02896-61009	P1120-02A0	4	330020
02896-61009	P1140-01A5	10	330080
02896-61009	P1140-01A5	4	330080
02896-61009	P1140-01A8	14	330110
02896-61009	P1140-01A8	18	330110
02896-61009	P1140-01A8	23	330110
02896-61012	C0100-05A0	12	060050
02896-61012	C0100-14A0	11	060140
02896-61012	D0100-01A0	10	090010
02896-61012	D0100-01A1	10	090020
02896-61012	D0100-01A2	10	090030
02896-61012	D0100-01A3	10	090040
02896-61012	D0200-03A0	6	090070
02896-61012	D0200-03A0	9	090070
02896-61012	D0200-10A0	17	090140
02896-61012	D0200-10A0	20	090140
02896-61012	H0210-09A0	29	180138
02896-61012	H0220-09A0	32	180148

PART NO.	FIG.NO.	INDEX	PAGE
02896-61012	H0312-05A0	13	180230
02896-61012	H0312-05A0	2	180230
02896-61012	H0312-05A0	34	180230
02896-61012	H0312-05A0	37	180230
02896-61012	H0312-06A0	2	180240
02896-61012	H0340-05A0	17	180360
02896-61012	H0350-01A0	11	180380
02896-61012	H0350-01A0	14	180380
02896-61012	H0350-01A0	17	180380
02896-61012	H0350-01A0	27	180380
02896-61012	H0350-02A0	11	180390
02896-61012	H0350-02A0	8	180390
02896-61012	H0350-03A0	10	180400
02896-61012	H0350-03A0	16	180400
02896-61012	H0350-03A0	7	180400
02896-61012	H1831-02A0	10	180530
02896-61012	H1833-03A0	8	180595
02896-61012	H1833-05A0	11	180605
02896-61012	H1835-03A0	13	180650
02896-61012	H1835-03A0	4	180650
02896-61012	H1841-02A0	22	180750
02896-61012	H1841-02A0	26	180750
02896-61012	H1843-03A0	20	180800
02896-61012	H1843-03A0	5	180800
02896-61012	H1843-03A0	8	180800
02896-61012	K0210-43A0	18	240430
02896-61012	K0210-43A0	32	240430
02896-61012	K0210-43A0	9	240430
02896-61012	W1117-02A1	15	480190
02896-61012	W1117-04A1	15	480250
02896-61012	W1117-04A7	4	480310
02896-61012	W1117-05A7	31	480360
02896-61012	W1117-06A7	4	480330
02896-61015	C0100-13A0	15	060130
02896-61015	D0100-01A0	26	090010
02896-61015	D0100-01A1	21	090020
02896-61015	D0100-01A2	26	090030
02896-61015	D0100-01A3	21	090040
02896-61015	D0200-05A0	10	090090
02896-61015	D0200-06A0	17	090100
02896-61015	D0200-06A0	2	090100
02896-61015	D0200-06A0	27	090100
02896-61015	D0200-06A0	4	090100
02896-61015	D0200-07A0	21	090110
02896-61015	D0200-08A0	2	090120
02896-61015	D0200-08A0	28	090120
02896-61015	D0200-09A0	26	090130
02896-61015	H0210-08A0	11	180137
02896-61015	H0220-08A0	11	180147
02896-61015	H0230-02A0	6	180161

PART NO.	FIG.NO.	INDEX	PAGE
02896-61015	H0340-05A0	20	180360
02896-61015	H0340-05A0	23	180360
02896-61015	H1831-02A0	18	180530
02896-61015	H1840-01A0	17	180660
02896-61015	H1841-03A0	40	180760
02896-61015	N1220-01A4	20	300150
02896-61015	N1220-01A8	24	300190
02896-61018	C0100-05A0	9	060050
02896-61018	C0100-14A0	8	060140
02896-61018	D0200-01A0	13	090050
02896-61018	D0200-01A0	15	090050
02896-61018	D0200-01A0	4	090050
02896-61018	D0200-04A0	11	090080
02896-61018	D0200-04A0	18	090080
02896-61018	D0200-04A0	2	090080
02896-61018	D0200-04A0	32	090080
02896-61018	D0200-04A0	35	090080
02896-61018	D0200-04A0	4	090080
02896-61018	D0200-04A0	9	090080
02896-61018	D0200-05A0	7	090090
02896-61018	H0210-09A0	21	180138
02896-61018	H0210-09A0	26	180138
02896-61018	H0220-09A0	24	180148
02896-61018	H0311-02A3	4	180180
02896-61018	H0312-01A0	23	180190
02896-61018	H0312-03A0	17	180210
02896-61018	H0312-03A0	39	180210
02896-61018	H0312-03A0	46	180211
02896-61018	H0312-04A0	13	180220
02896-61018	H0312-04A0	2	180220
02896-61018	H0312-04A0	28	180220
02896-61018	H0350-01A0	8	180380
02896-61018	H0350-03A0	25	180400
02896-61018	H0350-03A0	28	180400
02896-61018	H1840-01A0	14	180660
02896-61018	H1841-01A0	10	180740
02896-61018	H1841-01A0	2	180740
02896-61018	H1841-02A0	18	180750
02896-61018	H1841-03A0	13	180760
02896-61018	H1843-03A0	25	180800
02896-61018	N1310-01A2	23	300210
02896-61018	P1120-02A0	11	330020
02896-61018	P1120-02A0	21	330020
02896-61018	P1120-02A0	3	330020
02896-61018	W1114-01A1	25	480060
02896-61018	W1117-04A8	2	480320
02896-61018	W1117-04A8	20	480320
02896-61018	W1117-05A7	12	480360
02896-61018	W1117-06A8	2	480340
04000-01890	R0500-01A1	21	360070

PART NO.	FIG.NO.	INDEX	PAGE
04000-01890	R0500-01A1	9	360070
04000-01890	R0500-01A2	21	360080
04000-01890	R0500-01A2	9	360080
04010-00519	A4010-G7H8	1	010540
04010-00519	A4010-H1J1	1	010571
04010-00519	A4080-01A0	20	010620
04010-00519	A4080-01A0	35	010620
04010-00725	A2410-A7A7	3	010450
04010-00725	A2410-A7A7	7	010450
04010-00728	A2310-A7A4	3	010410
04010-01032	C0100-05A0	18	060050
04010-01032	C0100-14A0	20	060140
04020-00514	A2411-B7A5	16	010470
04020-00514	A2411-B7A5	17	010470
04020-00514	B0600-01A0	46	030111
04020-00514	K1120-01A0	21	240660
04020-00514	K1120-01A1	21	240670
04020-00616	P1210-01A2	12	330130
04020-00616	P1210-01A8	12	330190
04020-00820	A2010-A7C6	11	010130
04020-00820	A2010-A7C6	5	010130
04020-00820	A6010-A7C9	11	010960
04020-00820	A6010-B7D3	11	011010
04020-00820	H0230-01A10	13	180159
04020-01024	A2330-A7A1	4	010420
04020-01024	A2330-A7A1	3	010440
04020-01024	A2370-01A0	3	010445
04020-01024	C0100-05A2	2	060056
04020-01024	C0100-14A2	2	060146
04020-01024	P1210-01A10	3	330210
04020-01024	P1210-01A4	3	330150
04020-01228	A2230-A7B5	5	010390
04020-01228	H0210-07A0	21	180136
04020-01228	H0220-07A0	21	180146
04020-01228	H0230-01A1	6	180150
04020-01228	H0230-01A2	21	180151
04020-01228	H0230-01A6	18	180155
04020-01228	R0120-01A1	10	360010
04020-01228	R0120-01A3	10	360030
04020-01434	A2010-A7C6	12	010130
04020-01434	A2040-A7B4	8	010150
04020-01434	A2250-A7C4	5	010400
04020-01434	A4710-A7D7	11	010650
04020-01434	A4710-A7E3	15	010660
04020-01638	H0210-01A0	17	180130
04020-01638	H0210-03A0	4	180132
04020-01638	H0210-06A0	4	180135
04020-01638	H0220-01A0	17	180140
04020-01638	H0220-03A0	4	180142
04020-01638	H0220-06A0	4	180145

PART NO.	FIG.NO.	INDEX	PAGE
04020-01638	P1210-01A2	19	330130
04020-01638	P1210-01A8	19	330190
04020-01842	B0100-01A0	5	030010
04022-04016	K0210-49A0	24	240490
04025-00432	K0210-49A0	18	240490
04025-00632	K0210-53A0	4	240530
04025-00632	M1420-03A0	2	270490
04050-01610	M1210-05A0	29	270460
04050-11612	D0200-11A0	39	090150
04050-11612	D0200-11A0	4	090150
04050-11612	D0200-11A0	8	090150
04050-11612	D0200-13A0	59	090171
04050-11612	M1130-03A0	31	270160
04050-11612	M1130-13A0	5	270320
04050-11612	M1210-03A0	13	270440
04050-13018	K1921-01A0	19	240680
04050-13018	K1921-01A1	19	240685
04050-13018	K1921-01A3	19	240687
04050-13018	K1921-02A0	20	240690
04050-13018	K1921-02A1	17	240695
04050-13018	M1110-01A0	14	270010
04050-13018	M1110-01A0	19	270010
04050-13018	M1110-03A0	5	270030
04050-13018	M1110-04A0	13	270040
04050-13018	M1110-04A0	29	270040
04050-13018	M1110-05A0	15	270050
04050-13018	M1110-08A0	20	270080
04050-13018	M1110-09A0	27	270090
04050-13020	E0200-14A1	8	120165
04050-13020	M1110-07A0	15	270070
04050-14028	M1130-03A0	15	270160
04050-14028	M1130-13A0	21	270320
04050-14028	M1210-02A0	46	270431
04050-14028	N1310-01A2	44	300210
04064-01030	B0600-01A0	11	030110
04064-01030	B0600-08A0	11	030180
04064-02012	M1130-10A1	46	270291
04064-02212	A2411-A7A5	7	010460
04064-06525	N1220-01A2	8	300130
04064-06525	N1220-01A6	8	300170
04064-07025	P1210-01A10	11	330210
04064-07025	P1210-01A4	11	330150
04064-09030	H0210-02A0	4	180131
04064-09030	H0210-05A0	4	180134
04064-09030	H0220-02A0	4	180141
04064-09030	H0220-05A0	4	180144
04065-01204	H0210-02A0	7	180131
04065-01204	H0220-02A0	7	180141
04065-01410	H1850-01A0	7	180810
04065-02212	H0210-09A0	17	180138

PART NO.	FIG.NO.	INDEX	PAGE
04065-02212	H0220-09A0	17	180148
04065-03012	H0230-01A10	7	180159
04065-03212	M1130-07A1	33	270260
04065-03515	M1130-08A1	17	270270
04065-03515	M1130-08A1	9	270270
04065-04818	C0100-05A2	17	060056
04065-04818	C0100-14A2	17	060146
04065-04818	H0230-01A2	11	180151
04065-04818	H0230-01A6	8	180155
04065-05220	A2350-A7B5	3	010430
04065-05220	M1130-07A1	20	270260
04065-05520	A4080-01A0	19	010620
04065-05520	A4080-01A0	36	010620
04065-06825	C0100-05A2	10	060056
04065-06825	C0100-14A2	10	060146
04065-06825	H0230-01A2	7	180151
04065-07025	K1120-01A0	25	240660
04065-07025	K1120-01A1	25	240670
04065-07525	N1220-01A2	11	300130
04065-07525	N1220-01A6	11	300170
04065-08530	H0210-02A0	15	180131
04065-08530	H0210-05A0	12	180134
04065-08530	H0220-02A0	15	180141
04065-08530	H0220-05A0	12	180144
04065-09030	P1210-01A10	14	330210
04065-09030	P1210-01A4	14	330150
04070-00140	N1310-01A1	9	300200
04070-00155	R0120-01A2	4	360020
04070-00155	R0120-01A4	4	360040
04070-00175	R0120-01A2	30	360020
04070-00175	R0120-01A4	30	360040
04071-00180	B0600-01A0	12	030110
04071-00180	B0600-08A0	12	030180
04071-00180	N1310-01A1	4	300200
04077-00150	R0120-01A2	27	360020
04077-00150	R0120-01A4	27	360040
04082-00110	D0200-13A0	9	090170
04082-00206	W1114-01A1	5	480060
04082-00206	W1114-01A4	2	480090
04082-00206	W1114-01A4	6	480090
04082-00212	M1130-09A0	3	270220
04082-00616	P1210-01A1	23	330120
04082-00616	P1210-01A7	23	330180
04120-21757	K0710-01A0	18	240570
04120-21757	V0100-01A0	17	450010
04120-21944	V0100-01A0	18	450010
04120-21951	V0100-01A0	19	450010
04205-10618	M1210-05A0	28	270460
04205-10620	D0200-11A0	3	090150
04205-10620	D0200-11A0	7	090150

PART NO.	FIG.NO.	INDEX	PAGE
04205-10620	M1130-13A0	4	270320
04205-10628	D0200-11A0	38	090150
04205-10820	D0200-13A0	57	090171
04205-10835	D0200-13A0	56	090171
04205-11022	K1921-02A1	6	240695
04205-11022	M1110-07A0	16	270070
04205-11028	M1110-07A0	17	270070
04205-11645	N1310-01A2	43	300210
04205-11648	M1130-13A0	22	270320
04210-21664	M1130-13A0	19	270320
04211-20634	D0200-11A0	37	090150
04211-20634	M1130-13A0	2	270320
04216-20630	D0200-11A0	1	090150
04244-50605	D0200-11A0	6	090150
04260-00317	A2411-B7A5	4	010470
04260-00317	A2411-B7A5	9	010470
04260-00635	A2411-B7A5	13	010470
04260-00952	H1833-01A0	6	180580
04260-00952	H1850-04A0	13	180840
04260-00952	T1220-01A1	27	390270
04260-00952	T1220-01A2	27	390280
04260-01270	N1210-01A0	25	300020
04260-01270	N1210-03A0	25	300040
04260-01270	N1210-09A0	25	300100
04260-01270	T1140-01A1	24	390180
04260-01270	T1140-01A2	24	390190
04418-02550	A1530-C7C3	23	010080
04418-03060	A9810-A8H4	2	011120
04418-13060	U0100-01A1	3	420010
0443-552712	D0200-01A0	9	090050
04434-50612	C0100-07A0	16	060070
04434-50612	E0450-01A0	15	120510
04434-50612	K0210-19A0	21	240190
04434-50808	B0600-05A0	4	030150
04434-50808	K0210-21A0	4	240210
04434-50810	H0210-08A0	5	180137
04434-50810	H0220-08A0	5	180147
04434-50812	E0200-09A0	9	120110
04434-50812	E0200-11A0	13	120130
04434-50812	E0200-11A0	6	120130
04434-50812	E0202-03A0	16	120400
04434-50812	E0202-03A0	18	120400
04434-50812	E0202-04A0	22	120410
04434-50812	E0202-04A0	27	120410
04434-50812	M1130-10A0	7	270230
04434-50812	M1130-12A1	10	270310
04434-50812	W1114-01A6	16	480110
04434-50812	W1114-01A6	23	480110
04434-50812	W1114-01A6	27	480110
04434-50812	W1114-01A6	31	480110

PART NO.	FIG.NO.	INDEX	PAGE
04434-51010	E0200-26A0	20	120270
04434-51010	E0200-27A0	30	120280
04434-51010	H0350-02A0	18	180390
04434-51010	T1110-01A3	33	390030
04434-51010	T1110-01A3	37	390030
04434-51010	T1110-01A5	15	390050
04434-51010	T1110-01A5	28	390050
04434-51010	T1110-01A5	36	390050
04434-51010	T1210-01A2	25	390220
04434-51010	T1210-01A2	34	390220
04434-51012	B0600-05A0	23	030150
04434-51012	C0100-14A0	13	060140
04434-51012	E0200-06A0	5	120080
04434-51012	E0200-07A0	1	120090
04434-51012	E0200-07A0	4	120090
04434-51012	E0200-08A0	23	120100
04434-51012	E0200-08A0	26	120100
04434-51012	E0200-08A0	33	120100
04434-51012	E0200-09A0	8	120110
04434-51012	E0200-10A0	4	120120
04434-51012	E0200-11A0	9	120130
04434-51012	E0200-17A0	4	120190
04434-51012	E0200-18A0	6	120200
04434-51012	E0200-19A0	11	120210
04434-51012	E0200-19A0	19	120210
04434-51012	E0200-20A0	13	120220
04434-51012	E0200-20A0	2	120220
04434-51012	E0200-20A0	41	120220
04434-51012	E0200-20A0	6	120220
04434-51012	E0200-22A0	2	120230
04434-51012	E0200-22A0	5	120230
04434-51012	E0200-23A0	2	120240
04434-51012	E0200-26A0	23	120270
04434-51012	E0200-26A0	9	120270
04434-51012	E0200-28A0	23	120290
04434-51012	E0200-28A0	26	120290
04434-51012	E0200-28A0	58	120291
04434-51012	E0200-30A0	1	120310
04434-51012	E0200-30A0	12	120310
04434-51012	E0200-30A0	4	120310
04434-51012	E0200-30A0	5	120310
04434-51012	E0200-30A0	8	120310
04434-51012	E0200-31A0	1	120320
04434-51012	E0200-31A0	20	120320
04434-51012	E0200-31A0	29	120320
04434-51012	E0201-01A0	6	120360
04434-51012	E0201-02A0	5	120370
04434-51012	E0202-01A0	11	120380
04434-51012	E0202-01A0	15	120380
04434-51012	E0202-01A0	23	120380

PART NO.	FIG.NO.	INDEX	PAGE
04434-51012	E0202-03A0	23	120400
04434-51012	E0202-03A0	29	120400
04434-51012	E0202-03A0	32	120400
04434-51012	E0202-03A0	36	120400
04434-51012	E0202-04A0	32	120410
04434-51012	E0202-04A0	39	120410
04434-51012	E0202-04A0	42	120410
04434-51012	E0202-04A0	46	120411
04434-51012	E0202-05A0	11	120420
04434-51012	E0320-02A0	16	120480
04434-51012	E0450-04A0	27	120540
04434-51012	H0110-06A0	20	180060
04434-51012	H1840-08A0	6	180720
04434-51012	H1843-03A0	13	180800
04434-51012	K0210-14A0	2	240140
04434-51012	T1230-01A5	11	390330
04434-51012	W1114-01A10	13	480150
04434-51012	W1114-01A10	2	480150
04434-51012	W1114-01A10	30	480150
04434-51012	W1114-01A10	6	480150
04434-51012	W1114-01A10	9	480150
04434-51012	W1114-01A11	26	480160
04434-51012	W1114-01A11	35	480160
04434-51012	W1117-04A8	6	480320
04434-51212	C0100-07A0	22	060070
04434-51212	C0100-07A0	27	060070
04434-51212	D0200-11A0	15	090150
04434-51212	E0202-03A0	15	120400
04434-51212	E0202-04A0	21	120410
04434-51212	G1010-04A0	19	150040
04434-51212	G1010-04A0	29	150040
04434-51212	K0210-14A0	3	240140
04434-51212	M1130-13A0	3	270320
04434-51212	W1114-01A7	13	480120
04434-51212	W1114-01A7	17	480120
04434-51212	W1114-01A7	21	480120
04434-51308	K0210-12A0	8	240120
04434-51310	A2110-B7F9	16	010230
04434-51310	A2110-B7G6	23	010235
04434-51312	H1831-03A0	7	180540
04434-51312	T1210-01A4	21	390240
04434-51410	E0200-27A0	14	120280
04434-51410	E0200-27A0	33	120280
04434-51410	K0210-30A0	32	240300
04434-51412	E0200-06A0	13	120080
04434-51412	E0200-07A0	29	120090
04434-51412	E0200-08A0	18	120100
04434-51412	E0200-11A0	10	120130
04434-51412	E0200-12A0	24	120140
04434-51412	E0200-16A0	17	120180

PART NO.	FIG.NO.	INDEX	PAGE
04434-51412	E0200-16A0	28	120180
04434-51412	E0200-17A0	20	120190
04434-51412	E0200-17A0	23	120190
04434-51412	E0200-17A0	29	120190
04434-51412	E0200-17A0	32	120190
04434-51412	E0200-17A0	36	120190
04434-51412	E0200-17A0	42	120190
04434-51412	E0200-17A0	45	120190
04434-51412	E0200-17A0	7	120190
04434-51412	E0200-18A0	3	120200
04434-51412	E0200-19A0	16	120210
04434-51412	E0200-20A0	17	120220
04434-51412	E0200-22A0	8	120230
04434-51412	E0200-27A0	10	120280
04434-51412	E0200-27A0	20	120280
04434-51412	E0200-27A0	6	120280
04434-51412	E0200-29A0	10	120300
04434-51412	E0200-31A0	32	120320
04434-51412	E0202-02A0	13	120390
04434-51412	E0202-02A0	19	120390
04434-51412	E0202-02A0	25	120390
04434-51412	E0202-02A0	28	120390
04434-51412	E0202-02A0	34	120390
04434-51412	E0202-03A0	17	120400
04434-51412	E0202-04A0	26	120410
04434-51412	E0320-02A0	8	120480
04434-51412	E0450-03A0	10	120530
04434-51412	H1832-03A0	8	180570
04434-51412	H1835-01A0	21	180630
04434-51412	H1840-08A0	11	180720
04434-51412	K0210-13A0	5	240130
04434-51412	K0210-14A0	4	240140
04434-51412	M1130-11A0	9	270240
04434-51412	T1110-01A6	9	390060
04434-51412	W1114-01A10	17	480150
04434-51412	W1114-01A10	23	480150
04434-51412	W1114-01A10	26	480150
04434-51412	W1114-01A11	23	480160
04434-51412	W1114-01A11	33	480160
04434-51412	W1114-01A11	43	480160
04434-51412	W1114-01A11	46	480161
04434-51412	W1114-01A9	5	480140
04434-51512	H1840-09A0	11	180730
04434-51612	W1114-01A5	20	480100
04434-51710	K0210-13A0	16	240130
04434-51712	E0200-12A0	13	120140
04434-51712	E0200-12A0	7	120140
04434-51712	E0200-16A1	34	120185
04434-51712	E0200-17A0	10	120190
04434-51712	E0200-17A0	14	120190

PART NO.	FIG.NO.	INDEX	PAGE
04434-51712	E0200-17A0	17	120190
04434-51712	E0200-17A0	48	120191
04434-51712	E0200-19A0	22	120210
04434-51712	E0200-19A0	5	120210
04434-51712	E0200-20A0	21	120220
04434-51712	E0200-20A0	24	120220
04434-51712	E0200-22A0	11	120230
04434-51712	E0200-24A0	35	120250
04434-51712	E0200-25A0	1	120260
04434-51712	E0200-25A0	19	120260
04434-51712	E0200-26A0	5	120270
04434-51712	E0200-27A0	26	120280
04434-51712	E0200-28A0	14	120290
04434-51712	E0200-28A0	20	120290
04434-51712	E0200-29A0	16	120300
04434-51712	E0202-01A0	2	120380
04434-51712	E0202-01A0	6	120380
04434-51712	E0202-01A0	7	120380
04434-51712	E0202-02A0	1	120390
04434-51712	E0202-02A0	2	120390
04434-51712	E0202-02A0	6	120390
04434-51712	E0202-02A0	7	120390
04434-51712	H1832-02A0	14	180560
04434-51712	H1840-06A0	29	180710
04434-51712	K0210-13A0	6	240130
04434-51712	K0210-14A0	5	240140
04434-51712	K0210-15A0	4	240150
04434-51712	T1230-01A2	21	390300
04434-51812	E0450-04A0	17	120540
04434-51812	E0450-04A0	20	120540
04434-51812	E0450-04A0	21	120540
04434-51812	E0450-04A0	47	120541
04434-51912	D0200-03A0	2	090070
04434-51912	E0200-06A0	6	120080
04434-51912	E0200-08A0	13	120100
04434-51912	E0200-11A0	1	120130
04434-51912	E0200-11A0	3	120130
04434-51912	E0200-12A0	3	120140
04434-51912	E0200-14A0	21	120160
04434-51912	E0200-14A0	3	120160
04434-51912	E0200-14A0	7	120160
04434-51912	E0200-19A0	28	120210
04434-51912	E0200-19A0	8	120210
04434-51912	E0200-23A0	5	120240
04434-51912	E0200-24A0	21	120250
04434-51912	E0200-24A0	26	120250
04434-51912	E0200-24A0	34	120250
04434-51912	E0200-25A0	12	120260
04434-51912	E0200-28A0	17	120290
04434-51912	E0200-28A0	36	120290

PART NO.	FIG.NO.	INDEX	PAGE
04434-51912	E0200-28A0	42	120290
04434-51912	E0202-01A0	10	120380
04434-51912	E0202-01A0	19	120380
04434-51912	E0202-05A0	1	120420
04434-51912	E0202-05A0	4	120420
04434-51912	E0202-05A0	5	120420
04434-51912	G1010-01A0	24	150010
04434-51912	G1010-01A0	31	150010
04434-51912	G1010-01A0	34	150010
04434-51912	H0312-05A0	23	180230
04434-51912	H0312-06A0	3	180240
04434-51912	H0312-06A0	9	180240
04434-51912	H1831-01A0	27	180520
04434-51912	K0210-13A0	7	240130
04434-51912	K0210-15A0	22	240150
04434-51912	K0210-15A0	5	240150
04434-51912	K0710-06A0	10	240620
04434-51912	W1117-02A1	11	480190
04434-51912	W1117-02A1	19	480190
04434-51912	W1117-02A1	2	480190
04434-51912	W1117-02A1	22	480190
04434-51912	W1117-02A1	26	480190
04434-51912	W1117-02A1	8	480190
04434-51912	W1117-04A1	11	480250
04434-51912	W1117-04A1	19	480250
04434-51912	W1117-04A1	2	480250
04434-51912	W1117-04A1	22	480250
04434-51912	W1117-04A1	26	480250
04434-51912	W1117-04A1	8	480250
04434-51912	W1117-04A7	7	480310
04434-51912	W1117-06A7	7	480330
04434-52110	A4110-A7E5	55	010721
04434-52110	A4110-B7E4	54	010731
04434-52110	D0200-09A0	13	090130
04434-52110	E0200-26A0	16	120270
04434-52112	A2041-B7E4	19	010170
04434-52112	E0200-26A0	8	120270
04434-52112	E0450-02A0	15	120520
04434-52112	E0450-02A0	20	120520
04434-52112	H1850-02A0	5	180820
04434-52112	K0710-03A0	31	240590
04434-52112	K0710-07A0	21	240630
04434-52212	T1230-01A2	11	390300
04434-52212	T1230-01A2	16	390300
04434-52312	D0200-02A0	8	090060
04434-52312	D0200-03A0	34	090070
04434-52312	D0200-06A0	34	090100
04434-52312	D0200-13A0	26	090170
04434-52312	E0200-07A0	20	120090
04434-52312	E0200-07A0	23	120090

PART NO.	FIG.NO.	INDEX	PAGE
04434-52312	E0200-07A0	26	120090
04434-52312	E0200-13A0	29	120150
04434-52312	E0200-15A0	14	120170
04434-52312	E0200-15A0	19	120170
04434-52312	E0200-15A0	30	120170
04434-52312	E0200-16A0	16	120180
04434-52312	E0200-16A1	39	120185
04434-52312	E0200-16A1	43	120185
04434-52312	E0200-17A1	1	120195
04434-52312	E0200-17A1	10	120195
04434-52312	E0200-17A1	15	120195
04434-52312	E0200-17A1	18	120195
04434-52312	E0200-17A1	21	120195
04434-52312	E0200-17A1	25	120195
04434-52312	E0200-17A1	4	120195
04434-52312	E0200-17A1	7	120195
04434-52312	E0200-18A1	1	120205
04434-52312	E0200-18A1	16	120205
04434-52312	E0200-18A1	20	120205
04434-52312	E0200-18A1	5	120205
04434-52312	E0200-18A1	9	120205
04434-52312	E0200-19A0	2	120210
04434-52312	E0200-19A0	25	120210
04434-52312	E0200-19A0	34	120210
04434-52312	E0200-19A1	12	120215
04434-52312	E0200-19A1	9	120215
04434-52312	E0200-20A0	28	120220
04434-52312	E0200-20A0	31	120220
04434-52312	E0200-24A0	38	120250
04434-52312	E0200-28A0	39	120290
04434-52312	E0200-28A0	49	120291
04434-52312	E0200-28A0	55	120291
04434-52312	E0450-02A0	9	120520
04434-52312	H0340-05A0	2	180360
04434-52312	H1832-03A0	16	180570
04434-52312	K0210-13A0	8	240130
04434-52312	K0210-15A0	19	240150
04434-52312	K0210-15A0	6	240150
04434-52312	K0710-03A0	32	240590
04434-52312	K0710-05A0	9	240610
04434-52511	A4110-A7E4	44	010720
04434-52511	A4110-A7E9	23	010770
04434-52511	A4110-B7E9	21	010780
04434-52511	A4110-D7F2	40	010800
04434-52511	T1110-01A3	28	390030
04434-52511	T1210-01A3	2	390230
04434-52511	T1210-01A3	30	390230
04434-52511	T1210-01A3	48	390231
04434-52512	D0200-02A0	4	090060
04434-52512	E0200-25A0	16	120260

PART NO.	FIG.NO.	INDEX	PAGE
04434-52512	E0450-02A0	16	120520
04434-52512	E0450-03A0	11	120530
04434-52512	E0450-03A0	15	120530
04434-52512	E0450-03A0	6	120530
04434-52512	E0450-04A0	11	120540
04434-52711	A4110-A7E5	57	010721
04434-52711	A4110-B7E4	45	010730
04434-52712	C0100-05A0	30	060050
04434-52712	D0200-10A0	22	090140
04434-52712	E0200-04A0	30	120060
04434-52712	E0200-05A0	13	120070
04434-52712	E0200-13A0	26	120150
04434-52712	E0200-25A0	22	120260
04434-52712	E0200-25A0	25	120260
04434-52712	E0200-25A0	33	120260
04434-52712	E0200-27A0	2	120280
04434-52712	E0200-28A0	8	120290
04434-52712	H0312-05A0	15	180230
04434-52712	H0312-06A0	15	180240
04434-52712	H0350-04A0	4	180410
04434-52712	H1841-03A0	32	180760
04434-52712	K0210-13A0	9	240130
04434-52712	K0210-15A0	7	240150
04434-52712	K0710-07A0	33	240630
04434-53210	E0450-03A0	23	120530
04434-53211	E0200-28A0	1	120290
04434-53212	B0600-09A0	3	030190
04434-53212	C0100-05A0	31	060050
04434-53212	E0200-15A0	11	120170
04434-53212	E0200-25A0	4	120260
04434-53212	E0200-26A0	1	120270
04434-53212	E0200-28A0	32	120290
04434-53212	E0200-28A0	45	120290
04434-53212	E0450-04A0	10	120540
04434-53212	E0450-04A0	14	120540
04434-53212	E0450-04A0	24	120540
04434-53212	E0450-04A0	45	120540
04434-53212	E0450-04A0	6	120540
04434-53212	H1840-03A0	11	180680
04434-53212	N1210-08A0	10	300090
04434-53212	N1210-08A0	15	300090
04434-53212	N1210-08A0	19	300090
04434-53212	N1210-08A0	24	300090
04434-53212	N1210-08A0	28	300090
04434-53212	N1210-08A0	33	300090
04434-53212	N1210-08A0	37	300090
04434-53212	N1210-08A0	5	300090
04434-53411	G1010-03A0	2	150030
04434-53412	B0600-04A0	8	030140
04434-53412	E0200-04A0	1	120060

PART NO.	FIG.NO.	INDEX	PAGE
04434-53412	E0200-05A0	17	120070
04434-53412	E0200-07A0	17	120090
04434-53412	E0200-15A0	24	120170
04434-53412	E0200-16A0	2	120180
04434-53412	E0200-16A0	31	120180
04434-53412	E0200-24A0	20	120250
04434-53412	E0200-24A0	25	120250
04434-53412	E0200-24A0	30	120250
04434-53412	E0200-24A0	33	120250
04434-53412	E0200-25A0	11	120260
04434-53412	H0311-02A3	10	180180
04434-53412	H0311-02A3	14	180180
04434-53412	H0311-02A3	5	180180
04434-53412	H0312-04A0	29	180220
04434-53412	H0350-04A0	13	180410
04434-53412	H1832-02A0	25	180560
04434-53412	H1832-03A0	11	180570
04434-53412	H1835-01A0	19	180630
04434-53412	H1840-02A0	27	180670
04434-53412	H1840-03A0	27	180680
04434-53412	H1840-04A0	13	180690
04434-53412	H1840-06A0	20	180710
04434-53412	H1841-02A0	43	180750
04434-53412	H1841-03A0	24	180760
04434-53412	K0210-13A0	10	240130
04434-53412	K0210-15A0	23	240150
04434-53412	K0710-04A0	7	240600
04434-53412	K0710-06A0	24	240620
04434-53412	W1114-01A1	17	480060
04434-53412	W1117-04A7	13	480310
04434-53412	W1117-04A7	20	480310
04434-53412	W1117-04A7	24	480310
04434-53412	W1117-05A7	13	480360
04434-53412	W1117-05A7	22	480360
04434-53412	W1117-05A7	4	480360
04434-53412	W1117-06A7	13	480330
04434-53412	W1117-06A7	20	480330
04434-53412	W1117-06A7	24	480330
04435-50810	G1010-05A0	24	150050
04435-50810	G1010-06A0	23	150060
04435-50810	G1010-06A0	30	150060
04435-51010	T1210-01A2	24	390220
04435-51012	B0300-06A0	14	030100
04435-51012	E0200-28A0	11	120290
04435-51012	E0450-02A0	23	120520
04435-51012	M1130-10A0	6	270230
04435-51012	T1230-01A5	10	390330
04435-51012	W1114-01A6	22	480110
04435-51012	W1114-01A6	26	480110
04435-51012	W1114-01A6	30	480110

PART NO.	FIG.NO.	INDEX	PAGE
04435-51410	E0450-03A0	19	120530
04435-51412	B0300-06A0	7	030100
04435-51412	E0202-03A0	26	120400
04435-51412	H0340-04A0	57	180351
04435-51412	H1832-01A0	5	180550
04435-51412	H1832-03A0	10	180570
04435-51412	W1114-01A7	30	480120
04435-51412	W1114-01A7	34	480120
04435-51412	W1114-01A7	38	480120
04435-51510	K0210-52A0	21	240520
04435-51512	H1835-02A0	26	180640
04435-51512	H1840-09A0	6	180730
04435-51612	K0710-06A0	27	240620
04435-51612	K0710-07A0	20	240630
04435-51710	B0300-05A0	25	030090
04435-51712	B0300-05A0	31	030090
04435-51712	B0300-05A0	37	030090
04435-51712	D0200-09A0	20	090130
04435-51712	H1832-02A0	19	180560
04435-51712	H1832-03A0	1	180570
04435-51712	H1840-03A0	21	180680
04435-51712	H1840-03A0	6	180680
04435-51712	H1840-05A0	15	180700
04435-51712	H1840-06A0	24	180710
04435-51712	H1840-06A0	28	180710
04435-51712	H1841-02A0	34	180750
04435-51712	H1843-01A0	3	180780
04435-52110	K0210-30A0	27	240300
04435-52112	H1830-03A0	7	180830
04435-52112	H1841-02A0	33	180750
04435-52112	M1130-12A0	12	270250
04435-52212	H1843-02A0	4	180790
04435-52212	K0710-03A0	12	240590
04435-52512	D0200-02A0	12	090060
04435-52512	D0200-02A0	18	090060
04435-52512	D0200-02A0	21	090060
04435-52512	D0200-02A0	25	090060
04435-52712	D0200-01A0	28	090050
04500-10836	M1130-10A1	3	270290
04530-10815	M1140-07A0	2	270390
04530-11222	H0230-01A0	6	180149
04530-11222	H0230-01A5	6	180154
04530-11222	W1114-01A2	7	480070
04530-11222	W1114-01A8	4	480130
04530-12030	H0210-01A0	9	180130
04530-12030	H0210-04A0	13	180133
04530-12030	H0220-01A0	9	180140
04530-12030	H0220-04A0	13	180143
06044-00221	P1210-01A2	21	330130
06044-00221	P1210-01A8	21	330190

PART NO.	FIG.NO.	INDEX	PAGE
06122-02504	D0200-11A0	30	090150
06122-02504	D0200-13A0	6	090170
06123-02018	M1130-10A1	43	270290
06124-01616	K0210-39A0	34	240390
06124-01616	M1130-13A0	20	270320
06300-23130	N1210-01A0	2	300020
06300-23130	N1210-03A0	2	300040
06300-23130	N1210-09A0	2	300100
06304-06003	M1130-08A1	12	270270
06304-06003	M1130-08A1	20	270270
06304-06205	M1130-07A1	22	270260
06304-06205	M1130-09A2	7	270280
06330-06206	A5010-A7E6	7	010880
06330-06206	A5010-A7E8	7	010900
06340-06306	A5010-A7E6	8	010880
06340-06306	A5010-A7E8	8	010900
070-01-03022	N1220-01A3	3	300140
07000-01006	A5210-A7A1	2	010920
07000-02014	A5210-A7A1	3	010920
07000-03050	A2041-B7E4	25	010170
07000-11007	H1833-01A0	5	180580
07000-11008	H1831-01A1	26	180525
07000-11010	H1831-01A1	16	180525
07000-11010	H1831-03A1	11	180545
07000-12011	H1835-03A0	9	180650
07000-12011	T1930-02A1	9	390370
07000-12014	H1320-03A0	2	180505
07000-12016	H1831-03A1	12	180545
07000-12018	K0210-49A0	20	240490
07000-12055	H0120-01A0	21	180070
07000-12060	T1120-01A1	47	390141
07000-12060	T1120-01A2	47	390151
07000-12060	T1140-01A1	40	390180
07000-12060	T1140-01A2	40	390190
07000-12060	W1114-01A3	17	480080
07000-12060	W1114-02A3	17	480170
07000-12060	Y0100-01A0		510010
07000-12060	Y0100-02A1		510020
07000-12065	W1114-01A3	15	480080
07000-12065	W1114-02A3	15	480170
07000-12065	Y0100-02A1		510020
07000-12070	H0120-01A0	22	180070
07000-12090	M1130-09A1	17	270224
07000-12090	Y0100-01A0		510010
07000-12095	M1130-09A1	16	270224
07000-12095	Y0100-01A0		510010
07000-12140	T1140-01A3	3	390200
07000-12145	R0300-01A1	6	360060
07000-13034	T1230-01A1	44	390291
07000-13038	Y0100-02A1		510020

PART NO.	FIG.NO.	INDEX	PAGE
07000-13048	T1120-01A1	50	390141
07000-13048	T1120-01A2	50	390151
07000-13048	T1140-01A1	28	390180
07000-13048	T1140-01A2	28	390190
07000-13048	T1220-01A1	32	390270
07000-13048	T1220-01A1	36	390270
07000-13048	T1220-01A2	32	390280
07000-13048	T1220-01A2	36	390280
07000-13048	Y0100-01A0		510010
07000-15135	R0200-01A1	8	360050
07000-15155	R0120-01A1	6	360010
07000-15155	R0120-01A3	6	360030
07000-15175	T1930-02A1	13	390370
07000-15180	T1120-01A3	3	390160
07000-15180	V0100-01A0	11	450010
07000-15185	N1310-01A1	11	300200
07000-15190	R0120-01A2	35	360020
07000-15190	R0120-01A4	35	360040
07000-15195	T1220-01A1	12	390270
07000-15195	T1220-01A2	12	390280
07000-15195	T1930-02A1	5	390370
07000-15195	Y0100-01A0		510010
07000-15195	Y0100-02A1		510020
07000-15250	T1140-01A1	13	390180
07000-15250	T1140-01A2	13	390190
07000-15250	Y0100-01A0		510010
07000-15260	T1110-01A2	10	390020
07000-15300	T1120-01A1	11	390140
07000-15300	T1120-01A1	20	390140
07000-15300	T1120-01A2	11	390150
07000-15300	T1120-01A2	20	390150
07000-15300	Y0100-01A0		510010
07000-15425	N1210-05A0	3	300060
07000-22010	C0100-05A3	7	060057
07000-22010	C0100-14A3	7	060147
07000-72012	A2110-B7F9	19	010230
07000-72012	A2110-B7G6	19	010235
07000-72016	A6030-A7B4	10	010930
07000-72018	A3110-A7D6	14	010490
07000-72018	A3110-A7D6	19	010490
07000-72018	A3110-B7D6	2	010500
07000-72020	A4080-01A0	17	010620
07000-72021	A1530-A7C3	31	010060
07000-72060	A2041-B7E4	6	010170
07000-72100	A2041-A7E4	16	010160
07000-72100	A4080-01A0	16	010620
07000-72100	A5010-A7E6	19	010880
07000-72100	A5010-A7E8	19	010900
07000-72100	A6030-A7B4	9	010930
07000-73022	A3110-A7D6	15	010490

PART NO.	FIG.NO.	INDEX	PAGE
07000-73025	A1010-A7B4	6	010010
07000-73038	A3110-A7D6	18	010490
07000-73040	A3110-B7D6	11	010500
07000-73040	A3310-A7C4	11	010510
07000-73042	A3110-B7D6	3	010500
07000-73045	A3110-B7D6	10	010500
07000-73045	A3110-B7D6	18	010500
07000-75445	B0600-01A0	32	030110
07000-75445	B0600-08A0	32	030180
07000-75470	B0600-01A0	18	030110
07000-75470	B0600-01A0	25	030110
07000-75470	B0600-08A0	18	030180
07000-75470	B0600-08A0	25	030180
07000-A2016	A3310-A7C4	4	010510
07000-A2016	A5010-A7E6	15	010880
07000-A2016	A5010-A7E8	15	010900
07000-A2060	A5010-A7E6	14	010880
07000-A2060	A5010-A7E8	14	010900
07000-A2080	H0230-01A9	17	180158
07000-A2110	H0210-07A0	20	180136
07000-A2110	H0220-07A0	20	180146
07000-A2140	H0210-04A0	6	180133
07000-A2140	H0220-04A0	6	180143
07000-A5050	B0300-01A0	17	030040
07000-A5135	H0210-06A0	28	180135
07000-A5135	H0220-06A0	28	180145
07000-A5165	H0230-01A1	5	180150
07000-A5260	H0210-01A0	16	180130
07000-A5260	H0220-01A0	16	180140
07000-B1007	H1850-04A0	12	180840
07000-B1008	H0230-01A9	10	180158
07000-B1009	H0230-01A0	3	180149
07000-B1009	H0230-01A5	3	180154
07000-B1009	H1850-04A0	28	180840
07000-B1009	H1850-04A0	31	180840
07000-B1009	N1220-01A3	6	300140
07000-B1009	N1220-01A7	6	300180
07000-B2010	H0210-07A0	9	180136
07000-B2010	H0220-07A0	9	180146
07000-B2010	H0230-01A3	19	180152
07000-B2010	H0230-01A7	19	180156
07000-B2012	H0210-07A0	7	180136
07000-B2012	H0220-07A0	7	180146
07000-B2012	H0230-01A1	7	180150
07000-B2012	P1140-01A3	8	330060
07000-B2012	P1210-01A10	2	330210
07000-B2012	P1210-01A4	2	330150
07000-B2014	H0110-06A0	9	180060
07000-B2014	H0210-08A0	19	180137
07000-B2014	H0220-08A0	19	180147

PART NO.	FIG.NO.	INDEX	PAGE
07000-B2014	H0230-01A1	8	180150
07000-B2014	H1833-02A0	14	180590
07000-B2014	H1833-04A0	14	180600
07000-B2015	K0210-50A0	27	240500
07000-B2018	K0210-50A0	22	240500
07000-B2021	K0210-44A0	22	240440
07000-B2021	P1210-01A11	4	330220
07000-B2021	P1210-01A5	4	330160
07000-B2022	H0210-08A0	13	180137
07000-B2022	H0220-08A0	13	180147
07000-B2045	H0110-03A0	24	180030
07000-B2045	H0110-03A0	27	180030
07000-B2055	D0100-01A0	33	090010
07000-B2055	D0100-01A1	28	090020
07000-B2055	D0100-01A2	33	090030
07000-B2055	D0100-01A3	28	090040
07000-B2055	H0110-06A0	2	180060
07000-B2055	P1210-01A3	9	330140
07000-B2055	P1210-01A9	9	330200
07000-B2060	D0200-12A0	24	090160
07000-B2060	D0200-12A0	6	090160
07000-B2060	D0200-12A9	6	090165
07000-B2060	H0110-04A0	2	180040
07000-B2060	H0110-05A0	11	180050
07000-B2060	H0320-01A0	24	180270
07000-B2060	H0320-01A0	29	180270
07000-B2060	H0320-01A0	35	180270
07000-B2060	H0320-02A0	11	180280
07000-B2060	H0320-02A0	2	180280
07000-B2060	H0330-02A1	2	180300
07000-B2060	H0330-02A1	7	180300
07000-B2060	H0330-02A3	1	180302
07000-B2060	H0330-03A0	16	180310
07000-B2060	H0330-03A0	21	180310
07000-B2060	H0330-03A0	26	180310
07000-B2060	H0330-03A0	3	180310
07000-B2060	H0340-03A0	13	180340
07000-B2060	H0340-06A0	14	180370
07000-B2060	H1210-01A0	10	180420
07000-B2060	H1210-01A0	13	180420
07000-B2060	H1210-02A0	23	180430
07000-B2060	H1210-03A0	18	180440
07000-B2060	H1221-01A0	2	180450
07000-B2060	H1221-01A0	8	180450
07000-B2060	H1222-01A0	2	180470
07000-B2060	H1222-01A0	6	180470
07000-B2060	T1110-01A10	12	390100
07000-B2060	T1110-01A10	2	390100
07000-B2060	T1110-01A11	14	390110
07000-B2060	T1110-01A11	3	390110

PART NO.	FIG.NO.	INDEX	PAGE
07000-B2060	T1110-01A12	13	390120
07000-B2060	T1110-01A12	15	390120
07000-B2060	T1110-01A12	6	390120
07000-B2060	T1110-01A8	12	390080
07000-B2060	T1110-01A8	15	390080
07000-B2060	T1110-01A8	2	390080
07000-B2060	T1110-01A8	28	390080
07000-B2060	T1110-01A8	31	390080
07000-B2060	T1110-01A8	35	390080
07000-B2060	T1110-01A8	38	390080
07000-B2060	T1110-01A8	42	390080
07000-B2060	T1110-01A8	45	390080
07000-B2060	T1110-01A9	14	390090
07000-B2060	T1110-01A9	22	390090
07000-B2060	T1110-01A9	6	390090
07000-B2060	T1130-01A1	7	390170
07000-B2060	T1210-01A6	2	390260
07000-B2060	V0100-01A0	15	450010
07000-B2060	W1114-01A1	27	480060
07000-B2065	H0330-02A2	7	180301
07000-B2075	H0110-03A0	7	180030
07000-B2095	H0110-03A0	10	180030
07000-B2095	H0110-04A0	3	180040
07000-B2100	H0110-04A0	10	180040
07000-B2100	H0110-05A0	2	180050
07000-B2100	H0311-01A1	24	180170
07000-B2100	H0311-01A1	8	180170
07000-B2100	H0311-02A1	24	180177
07000-B2100	H0311-02A1	8	180177
07000-B2135	D0100-01A0	15	090010
07000-B2135	D0100-01A2	15	090030
07000-B2135	D0200-12A0	2	090160
07000-B2135	D0200-12A9	2	090165
07000-B2140	H0110-01A0	14	180010
07000-B2140	H0110-01A1	14	180015
07000-B2140	H0311-01A1	15	180170
07000-B2140	H0311-01A1	7	180170
07000-B2140	H0311-02A1	15	180177
07000-B2140	H0311-02A1	7	180177
07000-B3022	H0210-08A0	15	180137
07000-B3022	H0220-08A0	15	180147
07000-B3022	H1210-02A0	18	180430
07000-B3025	H0312-03A0	2	180210
07000-B3025	H0330-03A0	31	180310
07000-B3025	H0330-03A0	36	180310
07000-B3025	P1140-01A6	32	330090
07000-B3025	P1140-01A6	8	330090
07000-B3025	P1140-01A7	36	330100
07000-B3025	P1140-01A7	8	330100
07000-B3025	V0100-01A0	14	450010

PART NO.	FIG.NO.	INDEX	PAGE
07000-B3028	H1833-02A0	12	180590
07000-B3028	H1833-04A0	12	180600
07000-B3028	P1140-01A3	15	330060
07000-B3030	H0312-03A0	16	180210
07000-B3032	H0210-03A0	18	180132
07000-B3032	H0210-06A0	18	180135
07000-B3032	H0220-03A0	18	180142
07000-B3032	H0220-06A0	18	180145
07000-B3032	H0230-01A11	2	180160
07000-B3032	H0230-02A0	2	180161
07000-B3032	H0312-03A0	45	180210
07000-B3032	H0340-02A0	36	180330
07000-B3032	H0340-06A0	26	180370
07000-B3032	H1210-03A0	34	180440
07000-B3032	H1221-02A0	17	180460
07000-B3032	H1340-01A0	14	180510
07000-B3032	H1340-01A0	20	180510
07000-B3032	H1841-02A0	2	180750
07000-B3032	V0100-01A0	13	450010
07000-B3034	H0230-01A3	15	180152
07000-B3034	H0230-01A4	2	180153
07000-B3034	H0230-01A7	15	180156
07000-B3034	H0230-01A8	2	180157
07000-B3035	H0110-05A0	23	180050
07000-B3035	N1220-01A4	8	300150
07000-B3035	N1220-01A8	9	300190
07000-B3038	H0312-02A0	2	180200
07000-B3038	H0312-02A0	9	180200
07000-B3038	H0330-01A0	12	180290
07000-B3038	H0330-01A0	17	180290
07000-B3038	H0340-02A0	11	180330
07000-B3038	H0340-02A0	2	180330
07000-B3038	H0340-02A0	22	180330
07000-B3038	H0340-02A0	27	180330
07000-B3038	P1140-01A2	7	330050
07000-B3038	P1140-01A3	16	330060
07000-B3039	H0210-03A0	13	180132
07000-B3039	H0210-06A0	13	180135
07000-B3039	H0220-03A0	13	180142
07000-B3039	H0220-06A0	13	180145
07000-B3042	N1220-01A3	8	300140
07000-B3042	N1220-01A7	8	300180
07000-B3045	H0110-04A0	14	180040
07000-B3045	H0230-01A3	20	180152
07000-B3045	H0230-01A4	6	180153
07000-B3045	H0230-01A7	20	180156
07000-B3045	H0230-01A8	6	180157
07000-B3048	H0110-03A0	31	180030
07000-B3048	H0110-04A0	24	180040
07000-B3048	H0120-01A0	26	180070

PART NO.	FIG.NO.	INDEX	PAGE
07000-B3048	H0120-01A0	30	180070
07000-B3048	H0120-02A0	34	180080
07000-B3048	H0312-01A0	11	180190
07000-B3048	H0312-01A0	2	180190
07000-B3048	H0312-01A0	4	180190
07000-B3048	H0312-01A0	9	180190
07000-B3048	H0312-08A0	12	180260
07000-B3048	H0312-08A0	17	180260
07000-B3048	H0312-08A0	2	180260
07000-B3048	H0312-08A0	22	180260
07000-B3048	H0312-08A0	7	180260
07000-B3048	H0330-01A0	2	180290
07000-B3048	H1210-01A0	3	180420
07000-B3048	H1210-01A0	6	180420
07000-B3048	H1210-02A0	2	180430
07000-B3048	H1210-03A0	2	180440
07000-B3048	H1221-01A0	14	180450
07000-B3048	H1221-01A0	18	180450
07000-B3048	H1221-01A0	24	180450
07000-B3048	H1222-01A0	10	180470
07000-B3048	H1222-01A0	16	180470
07000-B3048	H1310-01A0	19	180480
07000-B3048	H1310-01A0	2	180480
07000-B3048	H1310-01A0	23	180480
07000-B3048	H1310-01A0	6	180480
07000-B3048	H1310-02A0	2	180490
07000-B3048	H1310-02A0	7	180490
07000-B3048	H1340-01A0	3	180510
07000-B3048	H1340-01A0	6	180510
07000-B3048	N1310-01A2	11	300210
07000-B3048	N1310-01A2	2	300210
07000-B3048	P1120-01A0	12	330010
07000-B3048	P1120-01A0	2	330010
07000-B3048	P1120-01A0	4	330010
07000-B3048	P1120-03A0	2	330030
07000-B3048	T1110-01A10	22	390100
07000-B3048	T1110-01A10	32	390100
07000-B3048	T1110-01A11	9	390110
07000-B3048	T1110-01A12	11	390120
07000-B3048	T1110-01A8	20	390080
07000-B3048	T1110-01A9	29	390090
07000-B3048	T1130-01A1	10	390170
07000-B3048	T1130-01A1	2	390170
07000-B3048	T1210-01A6	7	390260
07000-B3048	V0100-01A0	12	450010
07000-B3050	D0100-01A0	29	090010
07000-B3050	D0100-01A1	24	090020
07000-B3050	D0100-01A2	29	090030
07000-B3050	D0100-01A3	24	090040
07000-B3050	H0210-09A0	2	180138

PART NO.	FIG.NO.	INDEX	PAGE
07000-B3050	H0210-09A0	7	180138
07000-B3050	H0220-09A0	2	180148
07000-B3050	H0220-09A0	7	180148
07000-B5130	T1220-01A1	20	390270
07000-B5130	T1220-01A2	20	390280
07000-B5130	Y0100-01A0		510010
07000-B5130	Y0100-02A1		510020
07000-B5160	T1140-01A1	21	390180
07000-B5160	T1140-01A2	21	390190
07000-B5160	Y0100-01A0		510010
07000-B5170	D0100-01A0	9	090010
07000-B5170	D0100-01A1	9	090020
07000-B5170	D0100-01A2	9	090030
07000-B5170	D0100-01A3	9	090040
07000-B5170	H0311-01A0	17	180165
07000-B5170	H0311-01A0	21	180165
07000-B5170	H0311-02A0	17	180175
07000-B5170	H0311-02A0	21	180175
07000-B5180	H0110-02A0	17	180020
07000-B5185	T1120-01A1	28	390140
07000-B5185	T1120-01A2	28	390150
07000-B5185	Y0100-01A0		510010
07000-B5220	P1210-01A10	26	330210
07000-B5220	P1210-01A4	26	330150
07000-B5230	H0110-01A0	10	180010
07000-B5230	H0110-01A1	10	180015
07000-B5230	H0311-01A0	5	180165
07000-B5230	H0311-02A0	5	180175
07000-B5230	N1220-01A2	24	300130
07000-B5230	N1220-01A6	24	300170
07000-B5250	P1210-01A10	28	330210
07000-B5250	P1210-01A4	28	330150
07000-E2015	A4050-A7A5	13	010680
07000-E2018	A4210-A7C5	6	010670
07000-E2080	A2110-D8F9	2	010250
07000-E3028	B0600-01A0	47	030111
07000-E3028	B0600-02A0	2	030120
07000-E3028	B0600-05A0	16	030150
07000-E3028	B0600-08A0	46	030181
07000-E3030	B0600-04A0	3	030140
07000-E3032	B0600-03A0	21	030130
07000-E3038	A2070-A7B5	3	010200
07000-E3038	A2070-A7B9	3	010210
07000-E3050	A3010-A7A6	4	010480
07000-E5165	H0230-01A9	14	180158
07000-E5185	H0210-09A0	35	180138
07000-E5185	H0220-09A0	38	180148
07000-E5400	H0230-02A0	30	180161
07000-F1008	C0100-05A1	19	060055
07000-F1008	C0100-14A1	19	060145

PART NO.	FIG.NO.	INDEX	PAGE
07000-F2010	C0100-05A1	15	060055
07000-F2010	C0100-14A1	15	060145
07000-F2016	C0100-05A1	12	060055
07000-F2016	C0100-05A3	11	060057
07000-F2016	C0100-14A1	12	060145
07000-F2016	C0100-14A3	11	060147
07000-F2018	P1210-01A11	2	330220
07000-F2018	P1210-01A5	2	330160
07000-F2035	C0100-05A1	13	060055
07000-F2035	C0100-14A1	13	060145
07000-F2090	B0600-03A0	7	030130
07000-F3022	N1220-01A3	2	300140
07000-F3022	N1220-01A7	2	300180
07000-G2080	A5010-A7E6	31	010880
07000-G2080	A5010-A7E8	30	010900
07000-G2090	A5010-A7E6	32	010880
07000-G2090	A5010-A7E8	31	010900
07000-G2140	A5010-A7E6	13	010880
07000-G2140	A5010-A7E8	13	010900
07000-G3045	A5010-A7E6	29	010880
07000-G3045	A5010-A7E8	28	010900
07001-01008	H0230-01A9	11	180158
07001-02010	C0100-05A3	8	060057
07001-02010	C0100-14A3	8	060147
07001-02010	H0210-07A0	10	180136
07001-02010	H0220-07A0	10	180146
07001-02012	H0210-07A0	8	180136
07001-02012	H0220-07A0	8	180146
07001-02012	P1140-01A3	9	330060
07001-02022	H0210-08A0	14	180137
07001-02022	H0220-08A0	14	180147
07001-02070	H0120-01A0	23	180070
07001-03022	H0210-08A0	16	180137
07001-03022	H0220-08A0	16	180147
07001-03032	H0210-03A0	19	180132
07001-03032	H0210-06A0	19	180135
07001-03032	H0220-03A0	19	180142
07001-03032	H0220-06A0	19	180145
07001-03039	H0210-03A0	14	180132
07001-03039	H0210-06A0	14	180135
07001-03039	H0220-03A0	14	180142
07001-03039	H0220-06A0	14	180145
07001-05130	T1220-01A1	21	390270
07001-05130	T1220-01A2	21	390280
07001-05130	Y0100-01A0		510010
07001-05130	Y0100-02A1		510020
07001-05160	T1140-01A1	22	390180
07001-05160	T1140-01A2	22	390190
07001-05160	Y0100-01A0		510010
07001-05185	T1120-01A1	29	390140

PART NO.	FIG.NO.	INDEX	PAGE
07001-05185	T1120-01A2	29	390150
07001-05185	Y0100-01A0		510010
07001-05190	R0120-01A2	36	360020
07001-05190	R0120-01A4	36	360040
07001-05195	T1220-01A1	11	390270
07001-05195	T1220-01A2	11	390280
07001-05195	Y0100-02A1		510020
07001-05220	P1210-01A10	27	330210
07001-05220	P1210-01A4	27	330150
07001-05250	P1210-01A10	29	330210
07001-05250	P1210-01A4	29	330150
07001-05250	T1140-01A1	14	390180
07001-05250	T1140-01A2	14	390190
07001-05250	Y0100-01A0		510010
07001-05300	T1120-01A1	12	390140
07001-05300	T1120-01A1	19	390140
07001-05300	T1120-01A2	12	390150
07001-05300	T1120-01A2	19	390150
07001-05300	Y0100-01A0		510010
07002-11023	P1210-01A1	30	330120
07002-11023	P1210-01A7	30	330180
07002-11423	A4110-A7E9	15	010770
07002-11423	A4110-B7E9	13	010780
07002-11423	A4110-E7F2	7	010810
07002-11423	A4110-F7E9	15	010820
07002-11423	H0120-01A0	24	180070
07002-11423	H1320-02A0	8	180502
07002-11423	H1833-01A0	4	180580
07002-11823	A4110-B7E4	41	010730
07002-11823	A4710-A7E3	8	010660
07002-11823	A4710-A7E3		010660
07002-11823	G1010-01A0	3	150010
07002-11823	H0120-06A0	2	180120
07002-12034	A4110-A7E4	11	010720
07002-12034	A4110-A7E4	3	010720
07002-12034	A4110-A7E4	5	010720
07002-12034	A4110-A7E4	8	010720
07002-12034	A4110-B7E4	11	010730
07002-12034	A4110-B7E4	3	010730
07002-12034	A4110-B7E4	5	010730
07002-12034	A4110-B7E4	8	010730
07002-12034	A4110-D7F2	16	010800
07002-12034	T1230-01A2	10	390300
07002-12434	A4110-A7E9	16	010770
07002-12434	A4110-A7E9	9	010770
07002-12434	A4110-B7E9	14	010780
07002-12434	A4110-B7E9	7	010780
07002-12434	N1210-06A0	16	300070
07002-12434	N1210-07A0	16	300080
07002-13034	H1320-02A0	6	180502

PART NO.	FIG.NO.	INDEX	PAGE
07002-13034	J1310-01A0	19	210030
07002-13034	T1110-01A5	13	390050
07002-13034	T1110-01A5	26	390050
07002-13034	T1210-01A2	29	390220
07002-13334	H0350-01A0	4	180380
07002-13634	P1140-01A4	2	330070
07002-13634	P1210-01A1	32	330120
07002-13634	P1210-01A2	18	330130
07002-13634	P1210-01A7	32	330180
07002-13634	P1210-01A8	18	330190
07002-13634	V0100-01A0	16	450010
07002-14234	N1310-01A1	7	300200
07002-15234	R0120-01A1	5	360010
07002-15234	R0120-01A3	5	360030
07002-21023	B0600-05A0	10	030150
07002-21023	C0100-05A1	22	060055
07002-21023	C0100-14A1	22	060145
07002-21423	A1530-A7C3	11	010060
07002-21423	A3310-A7C4	15	010510
07002-22034	A3110-B7D6	28	010500
07002-22034	B0600-04A0	16	030140
07002-22034	B0600-04A0	5	030140
07002-22434	B0600-05A0	20	030150
07002-22434	B0600-08A0	44	030180
07002-22434	C0100-05A1	7	060055
07002-22434	C0100-05A3	12	060057
07002-22434	C0100-14A1	7	060145
07002-22434	C0100-14A3	12	060147
07002-23334	A2210-A7D1	6	010380
07002-23334	B0600-03A0	14	030130
07002-23334	B0600-03A0	2	030130
07002-23334	B0600-05A0	14	030150
07002-23334	B0600-05A0	8	030150
07002-23634	A2110-A7F9	19	010220
07002-23634	A2110-B7F9	3	010230
07002-23634	A2110-B7G6	3	010235
07002-23634	A2110-C7F9	19	010240
07002-23634	B0100-02A0	10	030020
07002-23634	B0600-06A0	10	030160
07002-23634	H0110-06A0	5	180060
07002-61023	H0110-03A0	8	180030
07002-61023	H0110-05A0	10	180050
07002-61023	H0210-01A0	21	180130
07002-61023	H0210-07A0	2	180136
07002-61023	H0220-01A0	21	180140
07002-61023	H0220-07A0	2	180146
07002-61023	H0230-01A0	8	180149
07002-61023	H0230-01A1	13	180150
07002-61023	H0230-01A5	9	180154
07002-61023	P1210-01A3	25	330140

PART NO.	FIG.NO.	INDEX	PAGE
07002-61023	P1210-01A9	25	330200
07002-61023	W0111-01A1	2	480010
07002-61223	H0311-01A1	3	180170
07002-61223	H0311-02A1	3	180177
07002-61223	N1220-01A4	6	300150
07002-61223	N1220-01A8	6	300190
07002-61223	P1210-01A3	28	330140
07002-61223	P1210-01A3	30	330140
07002-61223	P1210-01A9	28	330200
07002-61223	P1210-01A9	30	330200
07002-61423	B0300-01A0	24	030040
07002-61423	C0100-07A0	5	060070
07002-61423	H0110-02A0	21	180020
07002-61423	H0110-03A0	17	180030
07002-61423	H0110-03A0	20	180030
07002-61423	H0120-02A0	22	180080
07002-61423	H0120-02A0	25	180080
07002-61423	H0120-02A0	28	180080
07002-61423	H0120-02A0	31	180080
07002-61423	H0120-03A0	25	180090
07002-61423	H0120-03A0	27	180090
07002-61423	H0120-04A0	22	180100
07002-61423	H0120-04A0	25	180100
07002-61423	H0120-04A0	28	180100
07002-61423	H0120-04A0	31	180100
07002-61423	H0120-05A0	16	180110
07002-61423	H0120-05A0	19	180110
07002-61423	H0120-05A0	23	180110
07002-61423	H0120-05A0	26	180110
07002-61423	H0120-05A0	29	180110
07002-61423	H0210-01A0	27	180130
07002-61423	H0220-01A0	27	180140
07002-61423	H0230-01A9	12	180158
07002-61423	H0230-02A0	10	180161
07002-61423	H0230-02A0	14	180161
07002-61423	H0230-02A0	17	180161
07002-61423	H0230-02A0	19	180161
07002-61423	H0230-02A0	8	180161
07002-61423	H0330-02A3	11	180302
07002-61423	H0330-02A3	5	180302
07002-61423	H0330-02A3	8	180302
07002-61423	H1320-03A0	12	180505
07002-61423	H1320-03A0	6	180505
07002-61423	H1320-03A0	9	180505
07002-61423	H1831-01A0	13	180520
07002-61423	H1831-01A0	16	180520
07002-61423	H1831-01A0	20	180520
07002-61423	H1831-03A0	5	180540
07002-61423	H1833-01A1	10	180585
07002-61423	H1833-01A1	13	180585

PART NO.	FIG.NO.	INDEX	PAGE
07002-61423	H1833-01A1	7	180585
07002-61423	H1833-03A0	35	180595
07002-61423	H1833-03A0	38	180595
07002-61423	H1833-03A0	41	180595
07002-61423	H1833-05A0	25	180605
07002-61423	H1833-05A0	28	180605
07002-61423	H1833-06A0	11	180610
07002-61423	H1833-06A0	17	180610
07002-61423	H1833-06A0	19	180610
07002-61423	H1833-06A0	22	180610
07002-61423	H1833-06A0	8	180610
07002-61423	H1833-07A0	11	180620
07002-61423	H1833-07A0	15	180620
07002-61423	H1833-07A0	17	180620
07002-61423	H1833-07A0	19	180620
07002-61423	H1833-07A0	22	180620
07002-61423	H1833-07A0	26	180620
07002-61423	H1833-07A0	29	180620
07002-61423	H1833-07A0	34	180620
07002-61423	H1833-07A0	36	180620
07002-61423	H1833-07A0	39	180620
07002-61423	H1833-07A0	8	180620
07002-61423	H1835-03A0	17	180650
07002-61423	H1840-01A0	3	180660
07002-61423	H1841-02A0	10	180750
07002-61423	H1843-03A0	10	180800
07002-61423	H1843-03A0	4	180800
07002-61423	H1850-04A0	14	180840
07002-61423	H1850-04A0	16	180840
07002-61423	H1850-04A0	24	180840
07002-61423	H1850-04A0	36	180840
07002-61423	H1850-04A0	38	180840
07002-61423	H1850-04A0	40	180840
07002-61423	H1850-04A0	42	180840
07002-61423	H1850-04A0	44	180841
07002-61423	H1850-04A0	48	180841
07002-61423	H1850-04A0	50	180841
07002-61423	K0210-45A0	11	240450
07002-61423	K0210-50A0	25	240500
07002-61423	K0210-52A0	10	240520
07002-61423	K0210-52A0	6	240520
07002-61423	N1220-01A4	24	300150
07002-61423	N1220-01A4	26	300150
07002-61423	N1220-01A4	30	300150
07002-61423	N1220-01A8	28	300190
07002-61423	N1220-01A8	30	300190
07002-61423	N1220-01A8	34	300190
07002-61423	N1310-01A2	25	300210
07002-61423	P1140-01A5	7	330080
07002-61423	W0111-01A1	4	480010

PART NO.	FIG.NO.	INDEX	PAGE
07002-61423	W1114-01A7	25	480120
07002-61423	W1114-01A7	7	480120
07002-61823	H0230-02A0	22	180161
07002-61823	K0210-45A0	5	240450
07002-61823	K0210-45A0	8	240450
07002-61823	P1210-01A3	14	330140
07002-61823	P1210-01A9	14	330200
07002-61823	W1117-04A7	2	480310
07002-61823	W1117-05A7	30	480360
07002-61823	W1117-06A7	2	480330
07002-62034	C0100-05A0	11	060050
07002-62034	C0100-13A0	16	060130
07002-62034	C0100-14A0	12	060140
07002-62034	D0100-01A0	11	090010
07002-62034	D0100-01A0	27	090010
07002-62034	D0100-01A1	11	090020
07002-62034	D0100-01A1	22	090020
07002-62034	D0100-01A2	11	090030
07002-62034	D0100-01A2	27	090030
07002-62034	D0100-01A3	11	090040
07002-62034	D0100-01A3	22	090040
07002-62034	D0200-01A0	3	090050
07002-62034	D0200-05A0	6	090090
07002-62034	D0200-05A0	9	090090
07002-62034	H0120-02A0	12	180080
07002-62034	H0120-02A0	15	180080
07002-62034	H0120-02A0	18	180080
07002-62034	H0120-02A0	2	180080
07002-62034	H0120-02A0	37	180080
07002-62034	H0120-02A0	5	180080
07002-62034	H0120-02A0	8	180080
07002-62034	H0120-03A0	11	180090
07002-62034	H0120-03A0	15	180090
07002-62034	H0120-03A0	18	180090
07002-62034	H0120-03A0	2	180090
07002-62034	H0120-03A0	21	180090
07002-62034	H0120-03A0	5	180090
07002-62034	H0120-03A0	8	180090
07002-62034	H0120-04A0	12	180100
07002-62034	H0120-04A0	15	180100
07002-62034	H0120-04A0	18	180100
07002-62034	H0120-04A0	2	180100
07002-62034	H0120-04A0	5	180100
07002-62034	H0120-04A0	8	180100
07002-62034	H0120-05A0	12	180110
07002-62034	H0120-05A0	2	180110
07002-62034	H0120-05A0	5	180110
07002-62034	H0120-05A0	9	180110
07002-62034	H0210-09A0	28	180138
07002-62034	H0220-09A0	31	180148

PART NO.	FIG.NO.	INDEX	PAGE
07002-62034	H0312-05A0	33	180230
07002-62034	H0312-05A0	36	180230
07002-62034	H0320-02A0	38	180280
07002-62034	H0320-02A0	40	180280
07002-62034	H0340-04A0	26	180350
07002-62034	H0340-04A0	41	180350
07002-62034	H0340-04A0	43	180350
07002-62034	H0340-04A0	46	180351
07002-62034	H0340-04A0	49	180351
07002-62034	H0350-01A0	10	180380
07002-62034	H0350-01A0	13	180380
07002-62034	H0350-01A0	16	180380
07002-62034	H0350-01A0	26	180380
07002-62034	H0350-02A0	10	180390
07002-62034	H0350-02A0	13	180390
07002-62034	H0350-02A0	16	180390
07002-62034	H0350-02A0	7	180390
07002-62034	H0350-03A0	12	180400
07002-62034	H0350-03A0	15	180400
07002-62034	H0350-03A0	21	180400
07002-62034	H0350-03A0	30	180400
07002-62034	H0350-03A0	32	180400
07002-62034	H0350-03A0	6	180400
07002-62034	H0350-03A0	9	180400
07002-62034	H1831-01A0	10	180520
07002-62034	H1831-01A0	23	180520
07002-62034	H1831-01A0	25	180520
07002-62034	H1831-01A0	8	180520
07002-62034	H1831-02A0	12	180530
07002-62034	H1831-02A0	15	180530
07002-62034	H1831-02A0	20	180530
07002-62034	H1831-02A0	9	180530
07002-62034	H1833-03A0	10	180595
07002-62034	H1833-03A0	12	180595
07002-62034	H1833-03A0	14	180595
07002-62034	H1833-03A0	17	180595
07002-62034	H1833-03A0	20	180595
07002-62034	H1833-03A0	23	180595
07002-62034	H1833-03A0	25	180595
07002-62034	H1833-03A0	28	180595
07002-62034	H1833-03A0	31	180595
07002-62034	H1833-03A0	7	180595
07002-62034	H1833-05A0	10	180605
07002-62034	H1833-05A0	13	180605
07002-62034	H1833-05A0	16	180605
07002-62034	H1833-05A0	19	180605
07002-62034	H1833-05A0	22	180605
07002-62034	H1833-05A0	7	180605
07002-62034	H1835-03A0	12	180650
07002-62034	H1835-03A0	3	180650

PART NO.	FIG.NO.	INDEX	PAGE
07002-62034	H1835-03A0	6	180650
07002-62034	H1840-01A0	19	180660
07002-62034	H1841-02A0	21	180750
07002-62034	H1843-03A0	19	180800
07002-62034	H1843-03A0	22	180800
07002-62034	H1843-03A0	7	180800
07002-62034	H1850-01A0	13	180810
07002-62034	H1850-01A0	6	180810
07002-62034	H1850-02A0	4	180820
07002-62034	H1850-04A0	10	180840
07002-62034	H1850-04A0	25	180840
07002-62034	K0210-43A0	14	240430
07002-62034	K0210-43A0	17	240430
07002-62034	K0210-43A0	20	240430
07002-62034	K0210-43A0	26	240430
07002-62034	K0210-43A0	29	240430
07002-62034	K0210-43A0	31	240430
07002-62034	K0210-43A0	5	240430
07002-62034	K0210-43A0	8	240430
07002-62034	M1130-12A0	7	270250
07002-62034	N1220-01A1	6	300120
07002-62034	N1220-01A4	14	300150
07002-62034	N1220-01A5	6	300160
07002-62034	N1220-01A8	18	300190
07002-62034	N1310-01A2	29	300210
07002-62034	N1310-01A2	38	300210
07002-62034	N1310-01A2	5	300210
07002-62034	P1140-01A5	3	330080
07002-62034	P1140-01A5	5	330080
07002-62034	P1140-01A8	22	330110
07002-62034	P1140-01A8	4	330110
07002-62434	C0100-05A0	8	060050
07002-62434	C0100-13A0	10	060130
07002-62434	C0100-14A0	9	060140
07002-62434	D0200-04A0	31	090080
07002-62434	D0200-04A0	34	090080
07002-62434	H0210-07A0	6	180136
07002-62434	H0210-08A0	2	180137
07002-62434	H0210-08A0	21	180137
07002-62434	H0210-09A0	18	180138
07002-62434	H0210-09A0	20	180138
07002-62434	H0210-09A0	23	180138
07002-62434	H0210-09A0	25	180138
07002-62434	H0220-07A0	6	180146
07002-62434	H0220-08A0	2	180147
07002-62434	H0220-08A0	21	180147
07002-62434	H0220-09A0	18	180148
07002-62434	H0220-09A0	20	180148
07002-62434	H0220-09A0	23	180148
07002-62434	H0220-09A0	26	180148

PART NO.	FIG.NO.	INDEX	PAGE
07002-62434	H0220-09A0	28	180148
07002-62434	H0230-01A0	5	180149
07002-62434	H0230-01A5	5	180154
07002-62434	H0230-02A0	24	180161
07002-62434	H0230-02A0	26	180161
07002-62434	H0230-02A0	5	180161
07002-62434	H0311-01A1	6	180170
07002-62434	H0311-02A1	6	180177
07002-62434	H0311-02A3	2	180180
07002-62434	H0312-01A0	22	180190
07002-62434	H0340-05A0	16	180360
07002-62434	H0340-05A0	19	180360
07002-62434	H0340-05A0	22	180360
07002-62434	H0350-01A0	7	180380
07002-62434	H0350-03A0	24	180400
07002-62434	H0350-03A0	27	180400
07002-62434	H1831-02A0	17	180530
07002-62434	H1840-01A0	13	180660
07002-62434	H1840-01A0	16	180660
07002-62434	H1841-02A0	17	180750
07002-62434	H1841-02A0	25	180750
07002-62434	H1841-03A0	12	180760
07002-62434	H1843-03A0	24	180800
07002-62434	H1850-01A0	2	180810
07002-62434	H1850-01A0	4	180810
07002-62434	N1220-01A4	17	300150
07002-62434	N1220-01A4	19	300150
07002-62434	N1220-01A4	22	300150
07002-62434	N1220-01A8	21	300190
07002-62434	N1220-01A8	23	300190
07002-62434	N1220-01A8	26	300190
07002-62434	N1310-01A2	19	300210
07002-62434	N1310-01A2	22	300210
07002-62434	N1310-01A2	32	300210
07002-62434	N1310-01A2	35	300210
07002-62434	P1140-01A2	2	330050
07002-62434	P1210-01A3	16	330140
07002-62434	P1210-01A3	18	330140
07002-62434	P1210-01A9	16	330200
07002-62434	P1210-01A9	18	330200
07002-62434	W1114-01A1	13	480060
07002-62434	W1114-01A2	12	480070
07002-62434	W1114-01A2	16	480070
07002-62434	W1114-01A2	21	480070
07002-62434	W1114-01A2	24	480070
07002-62434	W1117-04A7	6	480310
07002-62434	W1117-05A7	18	480360
07002-62434	W1117-05A7	33	480360
07002-62434	W1117-06A7	6	480330
07002-63334	H0110-04A0	27	180040

PART NO.	FIG.NO.	INDEX	PAGE
07002-63334	H0110-04A0	30	180040
07002-63334	H0110-05A0	6	180050
07002-63334	H0312-01A0	25	180190
07002-63334	H0340-04A0	10	180350
07002-63334	H0340-04A0	13	180350
07002-63334	H0340-05A0	13	180360
07002-63334	H1840-01A0	10	180660
07002-63334	H1841-02A0	7	180750
07002-63334	H1841-03A0	6	180760
07002-63334	H1841-03A0	9	180760
07002-63334	N1220-01A4	12	300150
07002-63334	N1220-01A8	16	300190
07002-63334	P1120-02A0	20	330020
07002-63634	C0100-07A0	15	060070
07002-63634	C0100-09A0	17	060090
07002-63634	C0100-09A0	24	060090
07002-63634	C0100-16A0	17	060170
07002-63634	D0100-01A0	37	090010
07002-63634	D0100-01A1	32	090020
07002-63634	D0100-01A2	37	090030
07002-63634	D0100-01A3	32	090040
07002-63634	H0210-01A0	8	180130
07002-63634	H0210-04A0	12	180133
07002-63634	H0210-07A0	17	180136
07002-63634	H0210-08A0	17	180137
07002-63634	H0210-08A0	9	180137
07002-63634	H0220-01A0	8	180140
07002-63634	H0220-04A0	12	180143
07002-63634	H0220-07A0	17	180146
07002-63634	H0220-08A0	17	180147
07002-63634	H0220-08A0	9	180147
07002-63634	N1220-01A3	4	300140
07002-63634	N1220-01A7	4	300180
07002-63634	P1210-01A11	8	330220
07002-63634	P1210-01A5	8	330160
07002-64234	H0210-01A0	23	180130
07002-64234	H0210-01A0	25	180130
07002-64234	H0210-01A0	6	180130
07002-64234	H0210-04A0	9	180133
07002-64234	H0210-09A0	12	180138
07002-64234	H0210-09A0	31	180138
07002-64234	H0220-01A0	23	180140
07002-64234	H0220-01A0	25	180140
07002-64234	H0220-01A0	6	180140
07002-64234	H0220-04A0	9	180143
07002-64234	H0220-09A0	12	180148
07002-64234	H0220-09A0	34	180148
07002-64234	H0340-01A0	11	180320
07002-64234	H0340-01A0	13	180320
07002-64234	H0340-01A0	16	180320

PART NO.	FIG.NO.	INDEX	PAGE
07002-64234	N1220-01A1	15	300120
07002-64234	N1220-01A5	15	300160
07002-64234	P1210-01A3	22	330140
07002-64234	P1210-01A9	22	330200
07003-01015	A5010-B7E6	14	010910
07003-01015	A5010-B7F4	14	010890
07003-01419	A1530-B7C3	16	010070
07003-01419	A1530-B7C3	20	010070
07003-01419	A1530-B7C3	35	010070
07003-01419	A1530-B7C3	8	010070
07003-01621	A1530-B7C3	4	010070
07003-02026	A1530-B7C3	2	010070
07005-00612	A4080-01A0	22	010620
07005-00612	A4080-01A0	40	010620
07005-00812	A4110-C7F2	3	010790
07005-00812	A4110-D7F2	3	010800
07005-00812	A4110-E7F2	14	010810
07005-00812	A4110-F7E9	22	010820
07005-00812	E4110-E7E4	3	010760
07005-01012	A2040-A7B4	10	010150
07005-01012	A4060-01A0	5	010610
07005-01012	A4110-E7F2	18	010810
07005-01012	A4210-A7C5	3	010670
07005-01212	A4110-D7F2	6	010800
07005-01212	A4110-E7F2	16	010810
07005-01212	A4110-F7E9	25	010820
07005-01212	A4110-G7E9	15	010830
07005-01212	A4110-G7E9	30	010830
07005-01212	A4230-A7C7	4	010840
07005-01212	A4230-A7C8	4	010850
07005-01212	B0600-05A0	2	030150
07005-01212	D0200-10A0	5	090140
07005-01212	E4110-E7E4	6	010760
07005-01412	A1530-A7C3	13	010060
07005-01412	A1730-A7C6	15	010120
07005-01412	A2110-A7F9	17	010220
07005-01412	A2110-B7F9	14	010230
07005-01412	A2110-B7G6	14	010235
07005-01412	A2110-C7F9	17	010240
07005-01412	A4110-A7E4	23	010720
07005-01412	A4110-A7E9	14	010770
07005-01412	A4110-B7E4	24	010730
07005-01412	A4110-B7E9	12	010780
07005-01412	A4110-C7E4	14	010740
07005-01412	A4110-C7E4	5	010740
07005-01412	A4110-C7F2	15	010790
07005-01412	A4110-D7E4	14	010750
07005-01412	A4110-D7E4	5	010750
07005-01412	A4110-D7F2	19	010800
07005-01412	A4230-A7C7	17	010840

PART NO.	FIG.NO.	INDEX	PAGE
07005-01412	A4230-A7C8	17	010850
07005-01412	D0200-10A0	13	090140
07005-01412	D0200-10A0	16	090140
07005-02216	A2210-A7D1	9	010380
07005-02416	A4230-A7C7	20	010840
07005-02416	A4230-A7C8	20	010850
07005-02416	B0600-06A0	2	030160
07005-03016	B0600-01A0	3	030110
07005-03016	B0600-08A0	3	030180
07005-03016	H0110-06A0	15	180060
07016-00206	M1130-07A1	34	270260
07016-01400	R0120-01A2	25	360020
07016-01400	R0120-01A4	25	360040
07020-00000	A2250-A7C4	2	010400
07020-00000	B0100-01A0	24	030010
07020-00000	M1130-10A0	1	270230
07020-00000	M1130-13A0	30	270320
07020-00000	R0120-01A2	8	360020
07020-00000	R0120-01A4	8	360040
07020-00000	T1230-01A1	18	390290
07020-00000	T1230-01A1	6	390290
07020-00000	W1114-01A3	6	480080
07020-00000	W1114-01A6	4	480110
07020-00000	W1114-02A3	6	480170
07020-00001	D0200-11A0	25	090150
07020-00001	D0200-13A0	12	090170
07020-00001	M1130-10A1	47	270291
07020-00675	M1130-09A1	10	270224
07020-00675	M1130-09A1	7	270224
07020-00675	T1230-01A1	17	390290
07020-00675	T1230-01A1	5	390290
07020-00675	W1114-01A3	10	480080
07020-00675	W1114-02A3	10	480170
07025-00100	A2070-A7B5	1	010200
07025-00100	A2070-A7B9	1	010210
07029-00000	R0120-01A2	23	360020
07029-00000	R0120-01A4	23	360040
07030-00252	N1210-02A0	20	300030
07030-00252	N1210-04A0	23	300050
07030-00252	N1210-06A0	22	300070
07030-00252	N1210-07A0	25	300080
07030-03034	B0600-01A0	2	030110
07030-03034	B0600-08A0	2	030180
07040-02412	B0600-01A0	45	030111
07040-11007	A2040-A7B4	9	010150
07040-11007	B0600-05A0	9	030150
07040-11007	C0100-05A1	21	060055
07040-11007	C0100-14A1	21	060145
07040-11007	H0110-03A0	9	180030
07040-11007	H0110-05A0	9	180050

PART NO.	FIG.NO.	INDEX	PAGE
07040-11007	P1210-01A1	29	330120
07040-11007	P1210-01A7	29	330180
07040-11209	A4110-D7F2	5	010800
07040-11209	D0200-10A0	4	090140
07040-11209	E4110-E7E4	5	010760
07040-11209	N1220-01A4	5	300150
07040-11209	N1220-01A8	5	300190
07040-11409	A1730-A7C6	14	010120
07040-11409	A2110-A7F9	16	010220
07040-11409	A2110-C7F9	16	010240
07040-11409	A3310-A7C4	14	010510
07040-11409	A4110-A7E9	17	010770
07040-11409	A4110-B7E9	15	010780
07040-11409	B0300-01A0	23	030040
07040-11409	C0100-07A0	4	060070
07040-11409	H0110-02A0	20	180020
07040-11409	H0120-01A0	25	180070
07040-11409	H1320-02A0	7	180502
07040-11409	H1840-01A0	2	180660
07040-11409	H1841-02A0	9	180750
07040-11409	H1850-04A0	15	180840
07040-11409	H1850-04A0	26	180840
07040-12012	A3110-B7D6	27	010500
07040-12012	H0350-03A0	29	180400
07040-12012	H1831-01A0	22	180520
07040-12012	H1833-03A0	22	180595
07040-12012	H1850-04A0	9	180840
07040-12412	A4110-A7E9	18	010770
07040-12412	A4110-B7E9	16	010780
07040-12412	A4230-A7C7	19	010840
07040-12412	A4230-A7C8	19	010850
07040-12412	B0600-05A0	19	030150
07040-12412	C0100-13A0	9	060130
07040-12412	H0311-01A1	5	180170
07040-12412	H0311-02A1	5	180177
07040-12414	H0210-08A0	1	180137
07040-12414	H0210-09A0	22	180138
07040-12414	H0220-08A0	1	180147
07040-12414	H0220-09A0	25	180148
07040-12414	P1210-01A3	15	330140
07040-12414	P1210-01A9	15	330200
07040-13316	A2210-A7D1	5	010380
07040-13316	H0350-01A0	5	180380
07040-13618	H0110-01A0	2	180010
07040-13618	H0110-01A1	2	180015
07040-14220	H0210-01A0	22	180130
07040-14220	H0210-01A0	5	180130
07040-14220	H0220-01A0	22	180140
07040-14220	H0220-01A0	5	180140
07040-15223	R0120-01A1	4	360010

PART NO.	FIG.NO.	INDEX	PAGE
07040-15223	R0120-01A3	4	360030
07042-00108	H0110-03A0	15	180030
07042-30108	B0600-01A0	40	030110
07042-30108	B0600-08A0	40	030180
07042-30108	H1833-01A0	2	180580
07042-30108	N1210-10A0	18	300110
07042-30108	P1140-01A3	13	330060
07042-30108	P1140-01A5	6	330080
07042-30211	H0110-02A0	12	180020
07042-30617	N1210-10A0	17	300110
07042-31019	N1210-10A0	19	300110
07042-70108	A1310-A7E8	21	010030
07042-70108	A1310-B7E8	3	010040
07043-00108	A5210-A7A1	11	010920
07043-00108	T1220-01A1	30	390270
07043-00108	T1220-01A2	30	390280
07043-30211	B0600-01A0	39	030110
07043-30211	B0600-08A0	39	030180
07043-30312	B0600-01A0	41	030110
07043-30312	B0600-08A0	41	030180
07043-50108	A1010-A7B4	8	010010
07043-70108	A3110-B7D6		010500
07043-70108	A5010-A7E6	34	010880
07043-70108	A5010-A7E8	33	010900
07043-70415	A1730-A7C6	13	010120
07043-70617	A5010-A7E6	33	010880
07043-70617	A5010-A7E8	32	010900
07044-12412	H0230-01A0	4	180149
07044-12412	H0230-01A5	4	180154
07044-12412	N1220-01A4	21	300150
07044-12412	N1220-01A8	25	300190
07044-13620	H0210-01A0	7	180130
07044-13620	H0210-04A0	11	180133
07044-13620	H0220-01A0	7	180140
07044-13620	H0220-04A0	11	180143
07044-13620	P1210-01A1	31	330120
07044-13620	P1210-01A2	17	330130
07044-13620	P1210-01A7	31	330180
07044-13620	P1210-01A8	17	330190
07046-11816	A2040-A7B4	2	010150
07046-11816	A2041-A7E4	20	010160
07046-42010	A2010-A7C6	17	010130
07046-42516	A2010-A7C6	18	010130
07046-42816	A2040-A7B4	11	010150
07046-44016	A2010-A7C6	10	010130
07049-01012	N1210-10A0	20	300110
07049-01012	N1220-01A8	7	300190
07049-01215	B0300-02A0	23	030050
07049-01215	B0300-02A1	28	030060
07049-01215	H0110-01A0	25	180010

PART NO.	FIG.NO.	INDEX	PAGE
07049-01215	M1130-01A0	18	270140
07049-01215	M1130-01A1	18	270145
07049-01215	M1140-02A0	17	270340
07049-01215	M1510-01A0	18	270500
07049-01620	M1110-12A0	15	270120
07049-01620	M1110-12A0	30	270120
07049-01620	P1210-01A2	31	330130
07049-01620	P1210-01A8	31	330190
07049-02025	P1210-01A2	16	330130
07049-02025	P1210-01A8	16	330190
07049-02430	J1310-01A0	17	210030
07049-02430	J1310-01A0	8	210030
07049-02430	K0210-26A0	5	240260
07049-03038	J1310-01A0	9	210030
07049-03038	N1210-02A0	27	300030
07049-03038	N1210-04A0	33	300050
07049-03038	N1210-06A0	29	300070
07049-03038	N1210-07A0	35	300080
07049-03038	P1210-01A1	28	330120
07049-03038	P1210-01A7	28	330180
07049-03342	P1210-01A13	3	330240
07049-04860	B0600-01A0	42	030110
07049-04860	B0600-08A0	42	030180
07051-00005	H0110-01A1		180015
07052-31624	R0200-01A1	9	360050
07052-31624	R0300-01A1	14	360060
07056-10045	H0110-01A0	5	180010
07056-10045	H0110-01A1	5	180015
07056-18422	D0100-01A0	4	090010
07056-18422	D0100-01A1	4	090020
07056-18422	D0100-01A2	4	090030
07056-18422	D0100-01A3	4	090040
07060-11230	H0311-01A1	2	180170
07060-11230	H0311-02A1	2	180177
07083-01009	H1340-01A0	18	180510
07083-01010	H1340-01A0	13	180510
07083-01417	T1130-01A1	9	390170
07083-01418	H0312-08A0	16	180260
07083-01419	H0312-08A0	6	180260
07083-01422	H0312-01A0	8	180190
07083-01425	H0312-01A0	10	180190
07084-01411	H0312-08A0	1	180260
07084-01411	H0312-08A0	11	180260
07084-01411	P1120-01A0	1	330010
07084-01412	H0312-01A0	1	180190
07084-01413	H1310-02A0	6	180490
07084-01414	H0312-01A0	3	180190
07084-01414	H1310-02A0	1	180490
07084-01414	P1120-01A0	3	330010
07084-01416	H0312-08A0	21	180260

PART NO.	FIG.NO.	INDEX	PAGE
07084-02022	T1110-01A11	1	390110
07084-41427	T1210-01A6	6	390260
07085-01009	H1340-01A0	19	180510
07085-01418	T1110-01A11	6	390110
07085-01420	T1110-01A11	7	390110
07092-01000	H0110-01A0	4	180010
07092-01000	H0110-01A1	4	180015
07094-10417	D0200-08A0	12	090120
07094-10417	E0200-18A1	23	120205
07094-10417	H0312-05A0	4	180230
07094-10417	H0312-05A0	9	180230
07094-10518	H0312-03A0	41	180210
07094-10518	H0312-04A0	4	180220
07094-10620	H0312-04A0	24	180220
07094-11024	D0200-06A0	41	090100
07094-11024	H0340-02A0	40	180330
07094-11024	H0340-02A0	6	180330
07094-11024	H0340-06A0	30	180370
07094-11024	H0340-06A0	38	180370
07094-11024	H1841-03A0	16	180760
07094-11024	H1841-03A0	21	180760
07094-11024	W1117-02A6	6	480240
07094-11024	W1117-04A6	6	480300
07094-11228	H0330-01A0	22	180290
07094-30417	D0200-05A0	18	090090
07094-30417	D0200-08A0	16	090120
07094-30417	E0200-16A1	1	120185
07094-30417	E0200-16A1	10	120185
07094-30417	E0200-16A1	15	120185
07094-30417	E0200-16A1	20	120185
07094-30417	E0200-16A1	29	120185
07094-30417	E0200-16A1	5	120185
07094-30417	E0200-18A1	28	120205
07094-30518	D0200-04A0	22	090080
07094-30518	D0200-04A0	41	090080
07094-30620	H0312-03A0	32	180210
07094-31024	H0340-02A0	15	180330
07094-31024	H0340-02A0	31	180330
07094-31024	H0340-05A0	25	180360
07095-00317	E0450-03A0	24	120530
07095-00317	E0450-04A0	15	120540
07095-00317	E0450-04A0	25	120540
07095-00317	E0450-04A0	7	120540
07095-00317	E0450-04A0	46	120541
07095-00418	H0312-05A0	8	180230
07095-00421	D0200-05A0	19	090090
07095-00421	D0200-08A0	13	090120
07095-00421	D0200-08A0	17	090120
07095-00421	H0312-05A0	3	180230
07095-00423	E0200-16A1	11	120185

PART NO.	FIG.NO.	INDEX	PAGE
07095-00423	E0200-16A1	16	120185
07095-00423	E0200-16A1	2	120185
07095-00423	E0200-16A1	21	120185
07095-00423	E0200-16A1	30	120185
07095-00423	E0200-16A1	6	120185
07095-00423	E0200-18A1	24	120205
07095-00423	E0200-18A1	29	120205
07095-00526	D0200-04A0	23	090080
07095-00526	D0200-04A0	42	090080
07095-00526	H0312-03A0	40	180210
07095-00526	H0312-04A0	3	180220
07095-00628	H0312-03A0	31	180210
07095-00628	H0312-04A0	11	180220
07095-00628	H0312-04A0	23	180220
07095-01033	D0200-06A0	40	090100
07095-01033	H0340-02A0	20	180330
07095-01033	H0340-02A0	41	180330
07095-01033	H0340-05A0	26	180360
07095-01033	H0340-06A0	31	180370
07095-01033	H0340-06A0	39	180370
07095-01033	H1841-03A0	17	180760
07095-01033	H1841-03A0	22	180760
07095-01035	W1117-02A6	7	480240
07095-01035	W1117-04A6	7	480300
07095-01038	H0340-02A0	16	180330
07095-01038	H0340-02A0	32	180330
07095-01038	H0340-02A0	7	180330
07095-01241	H0330-01A0	21	180290
07095-02062	D0200-12A0	32	090160
07095-02062	D0200-12A9	16	090165
07095-02062	H0320-02A0	7	180280
07095-02062	H0340-06A0	19	180370
07095-20314	A4110-A7E5	56	010721
07095-20314	A4110-B7E4	55	010731
07095-20314	D0200-09A0	14	090130
07095-20314	H1850-02A0	6	180820
07095-20318	A4110-A7E4	45	010720
07095-20318	A4110-A7E9	24	010770
07095-20318	A4110-B7E9	22	010780
07095-20318	A4110-D7F2	41	010800
07095-20418	D0200-10A0	21	090140
07095-20418	H0312-05A0	16	180230
07095-20418	H0312-06A0	16	180240
07095-20418	H1841-03A0	33	180760
07095-20419	A4110-A7E5	58	010721
07095-20419	A4110-B7E4	46	010731
07095-20419	H0350-04A0	5	180410
07095-20419	K0710-07A0	32	240630
07095-20522	B0600-04A0	14	030140
07095-20523	B0600-09A0	4	030190

PART NO.	FIG.NO.	INDEX	PAGE
07095-20523	E0200-28A0	2	120290
07095-20523	E0200-28A0	46	120291
07095-20523	N1210-08A0	11	300090
07095-20523	N1210-08A0	16	300090
07095-20523	N1210-08A0	20	300090
07095-20523	N1210-08A0	25	300090
07095-20523	N1210-08A0	29	300090
07095-20523	N1210-08A0	34	300090
07095-20523	N1210-08A0	38	300090
07095-20523	N1210-08A0	6	300090
07095-20625	H0311-02A3	11	180180
07095-20625	H0311-02A3	15	180180
07095-20625	H0311-02A3	6	180180
07095-20625	H0312-04A0	30	180220
07095-20625	H0350-04A0	14	180410
07095-20625	H1841-02A0	44	180750
07095-20625	H1841-03A0	25	180760
07095-20625	W1114-01A1	18	480060
07095-20625	W1117-04A7	14	480310
07095-20625	W1117-04A7	21	480310
07095-20625	W1117-04A7	25	480310
07095-20625	W1117-05A7	14	480360
07095-20625	W1117-05A7	23	480360
07095-20625	W1117-05A7	5	480360
07095-20625	W1117-06A7	14	480330
07095-20625	W1117-06A7	21	480330
07095-20625	W1117-06A7	25	480330
07097-00607	H0312-03A0	1	180210
07097-00622	P1140-01A7	1	330100
07097-006A7	P1140-01A6	1	330090
07098-01210	P1140-01A2	3	330050
07098-20609	P1140-01A6	25	330090
07098-20609	P1140-01A7	29	330100
071-77-03525	W1114-01A3	7	480080
07103-20606	N1210-02A0	13	300030
07103-20606	N1210-04A0	13	300050
07103-20606	N1210-06A0	13	300070
07103-20606	N1210-07A0	13	300080
07122-01211	H0330-01A0	11	180290
07122-01217	H0330-01A0	16	180290
07145-00035	W1114-01A1	4	480060
07145-00035	W1114-01A3	5	480080
07145-00035	W1114-01A3	9	480080
07145-00035	W1114-02A3	5	480170
07145-00035	W1114-02A3	9	480170
07145-00035	Y0100-02A1		510020
07145-00050	M1130-09A0	2	270220
07145-00050	M1130-09A1	6	270224
07145-00050	M1130-09A1	9	270224
07145-00050	Y0100-01A0		510010

PART NO.	FIG.NO.	INDEX	PAGE
07145-00120	T1220-01A1	4	390270
07145-00120	T1220-01A2	4	390280
07145-00120	Y0100-02A1		510020
07155-01845	R0120-01A2	5	360020
07155-01845	R0120-01A4	5	360040
07155-02045	R0120-01A2	28	360020
07155-02045	R0120-01A4	28	360040
07177-03525	W1114-02A3	7	480170
07179-12047	W1114-01A3	13	480080
07179-12047	W1114-02A3	13	480170
07179-12062	M1130-09A1	13	270224
07179-14160	R0120-01A2	24	360020
07179-14160	R0120-01A4	24	360040
07179-14160	T1220-01A1	7	390270
07179-14160	T1220-01A2	7	390280
07179-14180	T1140-01A1	6	390180
07179-14180	T1140-01A2	6	390190
07179-15216	T1120-01A1	15	390140
07179-15216	T1120-01A2	15	390150
07201-61527	A2110-B7F9	20	010230
07201-61527	A2110-B7G6	20	010235
07206-30508	A4110-E7F2	12	010810
07206-30508	A4110-F7E9	20	010820
07206-30710	A5010-B7E6	5	010910
07206-30710	A5010-B7F4	5	010890
07206-30812	A4110-E7F2	15	010810
07206-30812	A4110-F7E9	23	010820
07206-30812	A4110-G7E9	14	010830
07206-30812	A4110-G7E9	29	010830
07206-30812	A4230-A7C7	3	010840
07206-30812	A4230-A7C8	3	010850
07206-30812	B0600-05A0	3	030150
07206-31014	A1530-A7C3	12	010060
07206-31014	A1530-B7C3	19	010070
07206-31014	A1530-B7C3	7	010070
07206-31014	A4110-A7E4	22	010720
07206-31014	A4110-B7E4	23	010730
07206-31014	A4110-C7E4	13	010740
07206-31014	A4110-C7F2	14	010790
07206-31014	A4110-D7E4	13	010750
07206-31014	A4110-D7F2	18	010800
07206-31014	A4230-A7C7	16	010840
07206-31014	A4230-A7C8	16	010850
07206-31014	D0200-10A0	15	090140
07211-51016	A1530-B7C3	3	010070
07212-50814	A1530-B7C3	15	010070
07214-51013	T1110-01A5	34	390050
07214-51013	T1110-01A5	4	390050
07217-51013	T1210-01A2	32	390220
07221-20422	G1010-01A0	40	150010

PART NO.	FIG.NO.	INDEX	PAGE
07221-20422	T1110-01A12	17	390120
07221-20422	T1210-01A6	12	390260
07222-00414	G1010-01A0	41	150010
07222-00414	T1110-01A12	16	390120
07222-00414	T1210-01A6	11	390260
07235-10315	T1230-01A2	9	390300
07238-10208	G1010-05A0	1	150050
07238-10208	G1010-05A0	5	150050
07238-10208	G1010-06A0	4	150060
07238-10315	T1230-01A2	7	390300
07238-10422	T1210-01A3	18	390230
07238-10422	T1210-01A3	24	390230
07238-10422	T1210-01A4	10	390240
07260-04750	C0100-11A0	16	060110
07260-08732	H0311-01A1	28	180170
07260-08732	H0311-02A1	28	180177
07260-22650	B0600-06A0	3	030160
07261-20929	B0300-05A0	20	030090
07261-21411	D0200-03A0	31	090070
07261-21415	B0600-09A0	1	030190
07261-21436	N1210-08A0	3	300090
07261-21447	N1210-08A0	1	300090
07261-22612	C0100-09A0	18	060090
07261-22619	B0100-02A0	1	030020
07261-22639	C0100-16A0	18	060170
07271-01420	A4230-A7C7	14	010840
07271-01420	A4230-A7C8	14	010850
07281-00197	A5010-B7E6	15	010910
07281-00197	A5010-B7F4	15	010890
07281-00259	B0600-09A0	2	030190
07281-00259	N1210-08A0	2	300090
07281-00259	N1210-08A0	4	300090
07281-00359	C0100-05A0	29	060050
07281-00419	B0100-02A0	2	030020
07281-00419	B0100-02A1	2	030030
07281-00419	B0600-06A0	4	030160
07281-00419	C0100-09A0	19	060090
07281-00419	C0100-16A0	20	060170
07281-00419	K0710-04A0	6	240600
07281-00419	K0710-08A0	19	240640
07281-00419	K0710-08A0	26	240640
07281-00419	K0710-08A0	4	240640
07281-00419	K0710-08A1	19	240645
07281-00419	K0710-08A1	26	240645
07281-00419	K0710-08A1	4	240645
07281-00709	B0300-02A0	19	030050
07281-00709	B0300-02A0	6	030050
07281-00709	B0300-02A1	19	030060
07281-00709	B0300-02A1	6	030060
07282-11048	T1110-01A5	39	390050

PART NO.	FIG.NO.	INDEX	PAGE
07282-12288	T1110-01A4	9	390040
07282-12793	H1841-01A0	11	180740
07282-12793	P1120-02A0	12	330020
07283-22738	B0600-02A0	9	030120
07283-31079	C0100-12A0	13	060120
07283-31079	C0100-12A0	19	060120
07283-31079	C0100-12A0	23	060120
07283-31087	A1310-B7E8	21	010040
07283-32236	M1420-01A0	7	270470
07283-32738	N1210-02A0	22	300030
07283-32738	N1210-04A0	28	300050
07283-32738	N1210-06A0	24	300070
07283-32738	N1210-07A0	30	300080
07283-32738	P1120-02A0	6	330020
07283-32738	P1140-01A6	13	330090
07283-32738	P1140-01A7	16	330100
07283-32746	P1140-01A6	22	330090
07283-32746	P1140-01A7	25	330100
07283-33442	H0110-05A0	29	180050
07283-33442	M1420-02A0	27	270480
07283-33442	W1117-02A6	2	480240
07283-33442	W1117-04A6	2	480300
07283-33450	M1420-02A0	10	270480
07283-33450	M1420-02A0	15	270480
07283-33450	M1420-02A0	20	270480
07283-33450	M1420-02A0	32	270480
07283-34346	A2070-A7B5	7	010200
07283-34346	A2070-A7B9	6	010210
07283-34346	H0110-04A0	20	180040
07283-34346	H1840-02A0	2	180670
07283-34949	C0100-11A0	13	060110
07283-34949	C0100-11A0	7	060110
07283-35150	B0300-02A0	15	030050
07283-35150	B0300-02A1	15	030060
07283-35150	B0300-04A0	16	030080
07283-36155	D0200-12A0	14	090160
07283-36155	D0200-12A0	20	090160
07283-36155	D0200-12A9	20	090165
07283-36155	D0200-12A9	27	090165
07283-36155	H0340-04A0	54	180351
07283-36155	H1832-03A0	18	180570
07283-36155	H1840-04A0	2	180690
07283-36155	H1841-02A0	40	180750
07283-36155	K0710-07A0	12	240630
07283-36163	H0110-05A0	19	180050
07283-36163	H0320-01A0	14	180270
07283-36163	H0320-01A0	20	180270
07283-36163	H0320-01A0	8	180270
07283-36163	H0320-02A0	20	180280
07283-36163	H0320-02A0	26	180280

PART NO.	FIG.NO.	INDEX	PAGE
07283-36163	H0320-02A0	33	180280
07283-36163	H0340-03A0	9	180340
07283-36163	H0340-06A0	4	180370
07283-38973	C0100-09A0	11	060090
07283-38973	C0100-16A0	11	060170
07283-53444	M1420-02A0	14	270480
07283-53444	M1420-02A0	19	270480
07283-53444	M1420-02A0	31	270480
07283-53444	M1420-02A0	9	270480
07283-53444	W1117-02A6	3	480240
07283-53444	W1117-04A6	3	480300
07285-00110	C0100-07A0	21	060070
07285-00110	C0100-07A0	26	060070
07285-00125	D0200-04A0	46	090081
07285-00125	D0200-05A0	16	090090
07285-00130	N1210-04A0	20	300050
07285-00130	N1210-07A0	22	300080
07285-00150	B0300-05A0	21	030090
07285-00220	A2041-B7E4	22	010170
07285-00220	D0200-06A0	33	090100
07285-00260	A2041-B7E4	8	010170
07286-00825	D0200-04A0	45	090080
07286-00863	D0200-05A0	15	090090
07286-01070	N1210-04A0	19	300050
07286-01070	N1210-07A0	21	300080
07286-01903	A6210-A7A6	11	011020
07286-01906	A6210-A7A6	12	011020
07286-02605	W1117-02A6	11	480240
07286-02605	W1117-04A6	11	480300
07287-01413	V0300-03A0	12	450030
07287-01913	D0200-06A0	32	090100
07287-01914	A2041-B7E4	20	010170
07287-01916	A2041-B7E4	21	010170
07287-02618	V0300-03A0	13	450030
07289-00055	C0100-02A0	35	060020
07289-00055	C0100-11A0	17	060110
07289-00055	C0100-11A0	2	060110
07289-00070	C0100-09A0	15	060090
07289-00070	C0100-16A0	15	060170
07289-00080	C0100-10A0	2	060100
07289-00105	C0100-09A0	6	060090
07289-00105	C0100-16A0	6	060170
07289-00170	B0300-01A0	21	030040
07296-01013	H1841-02A0	1	180750
07296-01215	H0340-02A0	1	180330
07296-02012	H0320-02A0	10	180280
07296-02016	H0320-01A0	33	180270
07297-01016	H0340-02A0	35	180330
07297-01218	H0340-02A0	26	180330
07297-01219	H0340-02A0	10	180330

PART NO.	FIG.NO.	INDEX	PAGE
07297-01220	H0340-02A0	21	180330
07297-02011	H0330-02A1	1	180300
07297-02012	H0320-01A0	34	180270
07297-02012	H0330-03A0	15	180310
07297-02013	H0330-02A1	6	180300
07297-02013	H0330-03A0	20	180310
07297-02016	W1114-01A1	26	480060
07298-02011	H0340-03A0	12	180340
07298-02012	H0330-03A0	25	180310
07298-02014	D0200-12A9	5	090165
07298-02015	H0340-06A0	13	180370
07298-020A8	D0200-12A0	5	090160
07299-00160	B0300-02A0	2	030050
07299-00160	B0300-02A0	4	030050
07299-00160	B0300-02A1	2	030060
07299-00160	B0300-02A1	4	030060
07332-06000	H0311-01A0	13	180165
07332-06000	H0311-02A0	13	180175
07343-24808	C0100-11A0	19	060110
07371-30500	H1210-02A0	19	180430
07371-30638	P1140-01A6	2	330090
07371-30638	P1140-01A6	26	330090
07371-30638	P1140-01A7	2	330100
07371-30638	P1140-01A7	30	330100
07371-30640	H0312-03A0	3	180210
07371-30640	H0330-03A0	32	180310
07371-30640	H0330-03A0	37	180310
07371-30640	P1140-01A6	29	330090
07371-30640	P1140-01A6	5	330090
07371-30640	P1140-01A7	33	330100
07371-30640	P1140-01A7	5	330100
07371-31049	B0600-03A0	22	030130
07371-31049	H0312-02A0	25	180200
07371-31049	H0312-03A0	47	180211
07371-31049	H0340-02A0	37	180330
07371-31049	H0340-06A0	27	180370
07371-31049	H1210-03A0	35	180440
07371-31049	H1221-02A0	18	180460
07371-31049	H1340-01A0	15	180510
07371-31049	H1340-01A0	21	180510
07371-31049	H1841-02A0	3	180750
07371-31255	H0330-01A0	13	180290
07371-31255	H0330-01A0	18	180290
07371-31255	H0340-02A0	12	180330
07371-31255	H0340-02A0	23	180330
07371-31255	H0340-02A0	28	180330
07371-31255	H0340-02A0	3	180330
07371-32076	D0200-12A0	25	090160
07371-32076	D0200-12A0	7	090160
07371-32076	D0200-12A9	7	090165

PART NO.	FIG.NO.	INDEX	PAGE
07371-32076	H0110-02A0	22	180020
07371-32076	H0110-03A0	12	180030
07371-32076	H0320-01A0	25	180270
07371-32076	H0320-01A0	30	180270
07371-32076	H0320-01A0	36	180270
07371-32076	H0320-02A0	12	180280
07371-32076	H0320-02A0	3	180280
07371-32076	H0330-02A1	3	180300
07371-32076	H0330-02A1	8	180300
07371-32076	H0330-03A0	17	180310
07371-32076	H0330-03A0	22	180310
07371-32076	H0330-03A0	27	180310
07371-32076	H0340-03A0	14	180340
07371-32076	H0340-06A0	15	180370
07371-32076	W1114-01A1	28	480060
07371-51260	H0312-02A0	10	180200
07371-51260	H0312-02A0	3	180200
07371-51260	P1140-01A2	4	330050
07371-51470	H0210-09A0	3	180138
07371-51470	H0210-09A0	8	180138
07371-51470	H0220-09A0	3	180148
07371-51470	H0220-09A0	8	180148
07371-51470	H0312-01A0	12	180190
07371-51470	H0312-01A0	5	180190
07371-51470	H0312-08A0	13	180260
07371-51470	H0312-08A0	18	180260
07371-51470	H0312-08A0	23	180260
07371-51470	H0312-08A0	3	180260
07371-51470	H0312-08A0	8	180260
07371-51470	H1310-02A0	3	180490
07371-51470	H1310-02A0	8	180490
07371-51470	N1310-01A2	12	300210
07371-51470	N1310-01A2	15	300210
07371-51470	N1310-01A2	7	300210
07371-51470	P1120-01A0	13	330010
07371-51470	P1120-01A0	5	330010
07371-51470	P1120-02A0	16	330020
07371-51470	T1110-01A10	28	390100
07371-51470	T1110-01A10	38	390100
07371-51470	T1110-01A11	8	390110
07371-51470	T1110-01A8	21	390080
07371-51470	T1110-01A9	30	390090
07371-51470	T1120-01A1	51	390141
07371-51470	T1120-01A2	51	390151
07371-51470	T1130-01A1	11	390170
07371-51470	T1130-01A1	3	390170
07371-51470	T1140-01A1	47	390181
07371-51470	T1140-01A2	47	390191
07371-51470	T1210-01A6	8	390260
07371-51470	T1220-01A1	51	390271

PART NO.	FIG.NO.	INDEX	PAGE
07371-51470	T1220-01A2	51	390281
07371-52080	T1110-01A10	18	390100
07371-52080	T1110-01A10	8	390100
07371-52080	T1110-01A11	13	390110
07371-52080	T1110-01A11	2	390110
07371-52080	T1110-01A12	7	390120
07371-52080	T1110-01A7	9	390070
07371-52080	T1120-01A1	54	390141
07371-52080	T1120-01A2	54	390151
07371-52080	T1140-01A1	43	390181
07371-52080	T1140-01A2	43	390191
07371-52080	T1210-01A6	3	390260
07371-52080	T1220-01A1	55	390271
07371-52080	T1220-01A2	55	390281
07372-21030	H0230-01A9	20	180158
07372-21035	H0312-03A0	4	180210
07372-21035	H0312-03A0	48	180211
07372-21035	H0330-01A0	14	180290
07372-21035	H0330-01A0	19	180290
07372-21035	H0330-03A0	33	180310
07372-21035	H0330-03A0	38	180310
07372-21035	H0340-02A0	13	180330
07372-21035	H0340-02A0	24	180330
07372-21035	H0340-02A0	29	180330
07372-21035	H0340-02A0	38	180330
07372-21035	H0340-02A0	4	180330
07372-21035	H0340-06A0	28	180370
07372-21035	H1210-03A0	36	180440
07372-21035	H1221-02A0	19	180460
07372-21035	H1340-01A0	16	180510
07372-21035	H1340-01A0	22	180510
07372-21035	H1841-02A0	4	180750
07372-21035	P1140-01A6	30	330090
07372-21035	P1140-01A6	6	330090
07372-21035	P1140-01A7	34	330100
07372-21035	P1140-01A7	6	330100
07372-21045	H0312-03A0	18	180210
07372-21050	B0600-03A0	23	030130
07372-21060	H0312-03A0	20	180210
07372-21240	D0200-12A0	26	090160
07372-21240	D0200-12A0	8	090160
07372-21240	D0200-12A9	8	090165
07372-21240	H0110-02A0	23	180020
07372-21240	H0110-03A0	13	180030
07372-21240	H0320-01A0	26	180270
07372-21240	H0320-01A0	31	180270
07372-21240	H0320-01A0	37	180270
07372-21240	H0320-02A0	13	180280
07372-21240	H0320-02A0	4	180280
07372-21240	H0330-01A0	3	180290

PART NO.	FIG.NO.	INDEX	PAGE
07372-21240	H0330-02A1	4	180300
07372-21240	H0330-02A1	9	180300
07372-21240	H0330-03A0	18	180310
07372-21240	H0330-03A0	23	180310
07372-21240	H0330-03A0	28	180310
07372-21240	H0340-03A0	15	180340
07372-21240	H0340-06A0	16	180370
07372-21240	T1140-01A1	34	390180
07372-21240	T1140-01A2	34	390190
07372-21240	T1220-01A1	45	390271
07372-21240	T1220-01A2	45	390281
07372-21240	W1114-01A1	29	480060
07372-21250	T1120-01A1	45	390141
07372-21250	T1120-01A2	45	390151
07372-31045	H0312-02A0	26	180200
07376-70315	M1130-12A0	23	270250
07378-11410	T1110-01A12	10	390120
07378-11410	T1110-01A8	19	390080
07378-11410	T1110-01A9	28	390090
07378-12010	T1110-01A12	12	390120
07378-12010	T1110-01A12	5	390120
07379-02080	T1110-01A12	14	390120
07631-00211	G1010-04A0	28	150040
07631-002A8	G1010-04A0	15	150040
07631-00419	G1010-01A0	23	150010
07631-004A3	G1010-02A0	15	150020
07631-004A4	G1010-01A0	7	150010
07631-202A6	T1230-01A2	20	390300
07631-20403	T1110-01A4	2	390040
07631-20403	T1210-01A2	10	390220
07631-20404	T1110-01A3	4	390030
07631-20405	T1110-01A4	3	390040
07631-20407	T1210-01A3	47	390231
07631-20408	T1210-01A3	1	390230
07631-20409	T1210-01A2	1	390220
07631-204A4	T1110-01A4	12	390040
07631-204A6	T1210-01A3	29	390230
07631-204A9	T1110-01A3	27	390030
07631-A0213	T1230-01A2	1	390300
07631-A0214	T1230-01A2	2	390300
07633-002A6	G1010-03A0	1	150030
07633-204A7	G1010-01A0	42	150010
07633-204A8	T1110-01A3	5	390030
07700-40460	D0200-03A0	29	090070
07700-40460	D0200-03A0	7	090070
07700-40661	D0200-04A0	16	090080
07705-11400	B0600-08A0	43	030180
07705-11400	N1210-06A0	15	300070
07705-11400	N1210-07A0	15	300080
07730-40004	N1210-02A0	15	300030

PART NO.	FIG.NO.	INDEX	PAGE
07730-40004	N1210-04A0	15	300050
07730-40004	N1210-06A0	17	300070
07730-40004	N1210-07A0	17	300080
07730-50004	A5010-A7E6	35	010880
07730-50004	A5010-A7E8	34	010900
07950-10450	V0300-03A0	3	450030
07950-90403	V0300-03A0	1	450030
07951-11400	V0300-03A0	2	450030
07952-80002	V0300-03A0		450030
07959-30000	R0120-01A2	7	360020
07959-30000	R0120-01A4	7	360040
080-28-75005	E0110-01A0	9	120010
08000-00000	E0110-01A0	2	120010
08000-00000	E0110-01A1	2	120020
08000-00001	E0110-01A0	3	120010
08000-00001	E0110-01A1	3	120020
08000-02221	E0110-01A0	1	120010
08000-3222Z	E0110-01A1	1	120020
08005-52056	E0110-01A0	5	120010
08005-52056	E0110-01A1	5	120020
08006-40255	E0110-01A0	4	120010
08006-40255	E0110-01A1	4	120020
08017-C1533	E0450-04A0	36	120540
08017-C2204	E0450-04A0	34	120540
08017-C2220	E0450-04A0	32	120540
08028-52035	E0200-07A0	34	120090
08028-52040	E0200-10A0	26	120120
08028-55065	E0200-14A0	17	120160
08028-55100	E0200-14A0	20	120160
08028-73025	A6210-A7A6	10	011020
08028-75005	E0110-01A1	9	120020
08028-FE055	E0200-15A1	19	120175
08028-FE175	E0200-15A1	20	120175
08028-HE045	E0200-14A0	1	120160
08028-HE085	E0200-14A0	9	120160
08028-HE095	E0200-14A0	8	120160
08028-HE100	E0200-14A0	2	120160
08028-HE510	E0200-24A0	6	120250
08033-10630	E0200-12A0		120140
08034-10414	K0210-39A0	4	240390
08034-20414	K0210-36A0	8	240360
08034-20414	K0210-53A0	9	240530
08034-20519	E0200-04A0	46	120061
08034-20519	E0450-02A0	19	120520
08034-20519	E0450-03A0	18	120530
08034-20519	H1850-04A0	51	180841
08034-20519	K0210-12A0	10	240120
08034-20519	K0210-15A0	27	240150
08034-20519	K0210-16A0	16	240160
08034-20519	K0210-38A0	1	240380

PART NO.	FIG.NO.	INDEX	PAGE
08034-20519	K0210-56A0	2	240560
08034-20519	W1117-06A9A	13	480350
08034-20519	W1117-06A9A	15	480350
08034-20536	E0201-02A0	6	120370
08034-20536	H0350-04A0	17	180410
08034-20536	H1832-03A0	14	180570
08034-20536	H1840-03A0	30	180680
08034-20536	H1840-06A0	32	180710
08034-20536	H1840-08A0	2	180720
08034-20536	H1841-02A0	37	180750
08034-20536	H1843-02A0	20	180790
08034-20536	K0210-11A0	4	240110
08034-20536	K0210-42A0	2	240420
08034-20536	K0210-42A0	8	240420
08034-20536	P1140-01A8	16	330110
08034-20823	E0320-02A0	12	120480
08034-20823	E0450-04A0	31	120540
08034-20823	E0450-04A0	33	120540
08034-20823	E0450-04A0	35	120540
08034-20823	E0450-04A0	37	120540
08034-20823	E0450-04A0	38	120540
08034-20876	C0100-16A0	19	060170
08034-20876	K0210-27A0	10	240270
08034-20876	K0210-27A0	16	240270
08034-20876	K0210-27A0	8	240270
08034-20876	W1117-04A8	21	480320
08034-20876	W1117-06A8	7	480340
08034-40521	K0210-12A0	7	240120
08034-40521	K0210-19A0	24	240190
08037-01610	D0200-04A0	36	090080
08037-01610	K0210-11A0	17	240110
08037-02512	K0210-11A0	11	240110
08037-03614	E0200-13A0	32	120150
08037-03614	E0200-14A0	24	120160
08037-03614	E0200-18A1	15	120205
08037-03614	K0210-11A0	12	240110
08037-03620	E0200-17A0	52	120191
08037-03620	M1130-13A0	8	270320
08037-05016	K0210-11A0	13	240110
08037-10610	K0210-11A0	14	240110
08037-10610	K0210-56A0	3	240560
08037-11425	M1110-12A0	20	270120
08037-11425	M1130-11A0	6	270240
08037-11825	E0200-17A0	2	120190
08037-12536	E0200-12A0	2	120140
08037-12536	E0200-17A0	3	120190
08038-00519	E0200-03A0	7	120050
08038-00519	E0200-13A0	19	120150
08038-02027	E0200-13A0	18	120150
08038-04030	E0200-16A0	10	120180

PART NO.	FIG.NO.	INDEX	PAGE
08038-10035	E0200-14A0	6	120160
08038-10035	E0200-15A1	21	120175
08038-10035	E0200-16A0	12	120180
08038-10035	E0200-18A1	34	120205
08038-10519	E0200-15A0	3	120170
08038-22511	E0110-01A0	10	120010
08038-22511	E0110-01A1	10	120020
08038-22511	E0200-19A1	17	120215
08038-42511	E0110-01A0	11	120010
08038-42511	E0110-01A1	11	120020
08038-42511	E0200-19A1	16	120215
08041-00500	E0200-02A0	2	120040
08041-01000	E0200-02A0	3	120040
08041-01000	K0210-37A0	3	240370
08041-02000	E0200-02A0	4	120040
08041-02000	K0210-37A0	4	240370
08041-02500	K0210-37A0	5	240370
08041-03000	E0200-02A0	5	120040
08053-00910	W1117-06A9A	16	480350
08053-01510	K0710-07A0	17	240630
08059-00310	K0210-37A0	11	240370
08059-00310	K0210-39A0	41	240390
08086-20000	K0210-39A0	13	240390
08088-40000	E0200-13A0	23	120150
08154-12400	E0201-01A0		120360
08164-C1100	E0420-01A0	1	120500
08191-00760	E0200-08A0	11	120100
08191-00770	T1110-01A12	19	390120
08192-12930	E0200-32A0	6	120330
08192-12930	E0200-33A0	6	120340
08192-12930	K0210-48A0	9	240480
08192-14100	T1110-01A12	18	390120
08192-21012	E0200-24A0	3	120250
08192-51900	E0200-08A0	10	120100
08193-20010	A2041-B7E4	35	010170
08193-20010	A2110-B7F9	11	010230
08193-20010	A2110-B7G6	11	010235
08193-20010	A2110-C7G8	31	010360
08193-20010	A2110-C7G8	8	010360
08193-20010	A2110-C7G9	30	010370
08193-20010	A2110-C7G9	8	010370
08193-20010	A4110-G7E9	23	010830
08193-20010	A4110-G7E9	8	010830
08193-20010	A6210-A7A6	17	011020
08193-20010	A6810-B7C6	52	011041
08193-20010	A6810-C7C6	34	011051
08193-20010	A6810-D9C6	51	011081
08193-20010	A6810-E1C6	36	011090
08193-20010	H0210-08A0	6	180137
08193-20010	H0220-08A0	6	180147

PART NO.	FIG.NO.	INDEX	PAGE
08193-20012	B0600-05A0	26	030150
08193-20012	C0100-05A0	25	060050
08193-20012	C0100-07A0	17	060070
08193-20012	C0100-14A0	16	060140
08193-20012	E0200-04A0	34	120060
08193-20012	E0200-12A0	28	120140
08193-20012	E0200-32A0	7	120330
08193-20012	E0200-33A0	7	120340
08193-20012	E0202-01A0	27	120380
08193-20012	E0202-02A0	10	120390
08193-20012	E0202-02A0	16	120390
08193-20012	E0202-02A0	37	120390
08193-20012	E0202-04A0	36	120410
08193-20012	H1850-04A0	53	180841
08193-20012	K0210-16A0	15	240160
08193-20012	W1114-01A10	29	480150
08193-20012	W1114-01A10	37	480150
08193-20012	W1114-01A11	15	480160
08193-20012	W1114-01A11	36	480160
08193-20012	W1114-02A5	14	480180
08193-20012	W1117-04A8	15	480320
08193-20012	W1117-06A8	3	480340
08193-21012	D0100-01A0	38	090010
08193-21012	D0100-01A1	33	090020
08193-21012	D0100-01A2	38	090030
08193-21012	D0100-01A3	33	090040
08193-21012	E0200-08A0	29	120100
08193-21012	E0200-10A0	18	120120
08193-21012	E0200-10A0	23	120120
08193-21012	E0200-23A0	15	120240
08193-21012	E0200-23A0	19	120240
08193-21012	E0200-23A0	8	120240
08193-21012	E0200-29A0	7	120300
08193-21012	E0200-30A0	15	120310
08193-21012	E0200-31A0	17	120320
08193-21012	E0200-31A0	9	120320
08193-21012	E0201-01A0	13	120360
08193-21012	E0320-01A0	5	120470
08193-21012	E0320-02A0	5	120480
08193-21012	H0110-06A0	16	180060
08193-21012	H1831-02A0	25	180530
08193-21012	H1831-03A0	10	180540
08193-21012	K0210-12A0	13	240120
08193-21012	K0210-14A0	8	240140
08193-21012	K0710-07A0	27	240630
08193-21012	M1130-12A1	13	270310
08193-21012	T1110-01A6	8	390060
08193-21012	W1117-06A9A	5	480350
08504-10000	D0200-10A0	29	090140
08671-50090	B0300-06A0	6	030100

PART NO.	FIG.NO.	INDEX	PAGE
08671-50130	B0300-06A0	5	030100
08672-01000	B0300-06A0	4	030100
08912-01500	K0210-12A0	6	240120
08912-50900	K0210-12A0	9	240120
09000-30006	V0300-03A0	9	450030
09002-00810	V0300-03A0		450030
09002-01214	V0300-03A0		450030
09002-01317	V0300-03A0		450030
09002-01922	V0300-03A0		450030
09002-02427	V0300-03A0		450030
09002-03032	V0300-03A0		450030
09007-00425	V0300-03A0	16	450030
09007-00632	V0300-03A0	14	450030
09007-00836	V0300-03A0	15	450030
09019-28036	V0300-03A0	5	450030
09020-10284	V0300-03A0	10	450030
09021-01016	V0300-03A0		450030
09021-01319	V0300-03A0		450030
09021-01422	V0300-03A0		450030
09021-01725	V0300-03A0		450030
09021-01928	V0300-03A0		450030
09021-02233	V0300-03A0		450030
09021-02436	V0300-03A0		450030
09021-02739	V0300-03A0		450030
09021-03044	V0300-03A0		450030
09021-03246	V0300-03A0		450030
09021-03653	V0300-03A0		450030
09022-00150	V0300-03A0		450030
09022-00250	V0300-03A0		450030
09023-00300	V0300-03A0		450030
09024-00300	V0300-03A0		450030
09025-00075	V0300-03A0		450030
09026-00250	V0300-03A0		450030
09033-00190	V0300-03A0	6	450030
09036-00150	V0300-03A0	7	450030
09039-00150	V0300-03A0	8	450030
09056-05513	V0300-03A0	11	450030
09133-A3281	U0100-01A3	21	420030
09134-A1681	U0100-01A2	11	420020
09305-00800	D0200-11A0	27	090150
09415-01008	K0210-11A0	16	240110
09415-01610	M1130-11A0	4	270240
09453-00002	K1921-01A0	23	240680
09453-00002	K1921-01A1	23	240685
09453-00002	K1921-01A3	23	240687
09455-12013	H0110-01A1	26	180015
09455-13016	E0200-14A1		120165
09460-00000	D0100-01A0	3	090010
09460-00000	D0100-01A1	3	090020
09460-00000	D0100-01A2	3	090030

PART NO.	FIG.NO.	INDEX	PAGE
09460-00000	D0100-01A3	3	090040
09461-00030	K0210-05A0	10	240050
09463-00006	M1210-05A0	27	270460
09479-02400	D0200-03A0	32	090070
09479-02400	K0210-30A0	11	240300
09479-02400	K0210-30A0	24	240300
09479-02400	K0210-30A0	26	240300
09479-02400	K0210-30A0	9	240300
09483-17240	K0710-09A0	1	240650
09495-40010	K0210-33A0	1	240330
09602-120D2	U0100-01A1	4	420010
09620-D2000	U0100-01A1	1	420010
09620-D2050	U0100-01A1	2	420010
09637-05163	U0550-01A0	1	420090
09642-10500	U0202-01A0	1	420040
09651-A0641	U0100-01A1	20	420010
09651-A0641	U0710-02A0	2	420110
09651-A0641	U0710-03A1	3	420125
09651-A0841	U0710-03A0	3	420120
09653-A0481	U0100-01A2	18	420020
09653-A0481	U0100-01A2	33	420020
09654-A0641	U0100-01A1	17	420010
09657-A0881	U0100-01A1	18	420010
09657-A0881	U0100-01A2	32	420020
09659-A057B	U0100-01A2	23	420020
09667-A0481	U0100-01A2	19	420020
09669-0000A	U0100-01A2	17	420020
09669-0000E	U0100-01A2	14	420020
09690-M0063	U0100-01A2	34	420020
09690-P1250	U0510-01A0	1	420080
09690-P1600	U0100-01A1	7	420010
09690-P2000	U0100-01A3	18	420030
09801-A0641	U0100-01A1	19	420010
09802-00500	U0100-01A1	16	420010
09805-C0881	U0100-01A2	29	420020
09808-A0881	U0100-01A2	24	420020
09808-A0881	U0710-02A0	1	420110
09808-A0881	U0710-03A1	2	420125
09822-00400	U0300-01A0	1	420070
09824-K0481	M1130-12A0	27	270250
09844-00050	U0100-01A1	21	420010
09845-00480	U0205-01A0	1	420050
09920-00150	A2041-A7E4	25	010160
09920-00150	A2110-A7F9	20	010220
09920-00150	A2110-C7F9	20	010240
09960-00801	U0100-01A2	35	420020
09960-00801	U0100-01A3	19	420030
09960-00802	U0100-01A2	36	420020
09960-00802	U0100-01A3	20	420030
09963-A1640	U0100-01A2	7	420020

PART NO.	FIG.NO.	INDEX	PAGE
09980-10550	V0200-02A0	1	450020
09980-92550	V0200-02A0		450020
09982-20057	V0200-02A0	2	450020
101-Z65-2650	M1130-07A1	21	270260
110-03-11341	C0100-07A0	6	060070
113-60-23151	H0340-04A0	4	180350
113-60-23160	H0340-04A0	6	180350
113-60-23160	V0100-01A0	4	450010
113-89-06170	M1130-13A0	29	270320
113-89-97950	B0600-03A0	17	030130
113-899-7970	K0710-04A0	3	240600
114-X11-2260	K0210-07A0	2	240070
11T-27-11190	A3110-A7D6	16	010490
11T-61-11280	H1831-01A0	7	180520
11T-61-11280	H1843-03A0	21	180800
11T-61-11290	K0210-43A0	28	240430
11Y-09-11140	C0100-10A0	4	060100
11Y-09-11160	K0710-08A0	32	240640
11Y-09-11160	K0710-08A1	32	240645
11Y-49-21390	H0340-05A0	30	180360
11Y-62-11980	H0110-04A0	28	180040
11Y-62-11980	H0110-04A0	31	180040
11Y-62-11980	H0110-05A0	7	180050
11Y-62-11980	H0210-09A0	32	180138
11Y-62-11980	H0220-09A0	21	180148
11Y-62-11980	H0220-09A0	35	180148
11Y-62-11980	H0230-02A0	27	180161
11Y-62-11980	H0312-01A0	26	180190
11Y-62-11980	H0340-01A0	14	180320
11Y-62-11980	H0340-04A0	11	180350
11Y-62-11980	H0340-04A0	14	180350
11Y-62-11980	H0340-05A0	14	180360
11Y-62-11980	H1840-01A0	11	180660
11Y-62-11980	H1841-03A0	10	180760
11Y-62-11980	H1841-03A0	7	180760
11Y-62-11980	N1310-01A2	36	300210
11Y-62-12340	P1120-02A0	19	330020
11Y-62-12510	H1850-04A0	49	180841
11Y-62-12520	K0210-45A0	9	240450
11Y-62-12820	H0120-03A0	26	180090
11Y-62-12850	P1140-01A5	9	330080
11Y-979-2721	K0210-20A0	24	240200
120-06-24110	K0710-06A0	15	240620
120-54-35240	M1110-12A0	31	270120
124-62-61110	B0600-05A0	7	030150
125-43-33861	M1130-07A1	14	270260
12H-49-11170	P1140-01A8	2	330110
12H-49-11170	P1140-01A8	20	330110
12R-60-11390	H0110-01A0	18	180010
12R-60-11390	H0110-01A1	18	180015

PART NO.	FIG.NO.	INDEX	PAGE
12R-60-11390	H0110-02A0	14	180020
130-27-00012	R0200-01A1		360050
130-27-00132	R0200-01A1	10	360050
130-27-00140	R0200-01A1	11	360050
130-62-71350	D0200-07A0	10	090110
130-62-71350	D0200-07A0	14	090110
130-62-71350	D0200-07A0	6	090110
132-33-11410	T1230-01A2	24	390300
141-06-11220	E0202-01A0	18	120380
142-06-13451	E0200-18A0	2	120200
142-54-13640	E0200-02A0	9	120040
142-54-13640	E0200-13A0	2	120150
144-94-73490	M1130-11A1	12	270300
144-94-73490	M1130-11A1	4	270300
145-A9-03270	G1010-02A0	19	150020
145-A9-03270	G1010-02A0	33	150020
14X-04-21620	H0340-04A0	44	180351
14X-27-00101	R0120-01A1		360010
14X-27-00101	R0120-01A3		360030
14X-27-00111	R0120-01A1	7	360010
14X-27-00111	R0120-01A3	7	360030
14X-27-00120	R0120-01A1	8	360010
14X-27-00120	R0120-01A3	8	360030
14X-43-12110	K0210-50A0	36	240500
14X-54-26640	M1130-10A0	5	270230
14X-54-32310	E0200-12A0	6	120140
14X-91-11330	K0210-01A0	3	240010
14X-98-35181	M1130-12A0	26	270250
14X-98-35181	M1130-12A1	16	270310
14X-98-35181	U0100-01A3	22	420030
150-95-27160	E0200-13A0	33	120150
150-95-27160	E0200-16A1	47	120186
150-95-27160	E0200-18A1	8	120205
154-03-76490	M1130-10A0	4	270230
154-03-76490	M1130-12A0	13	270250
154-06-13262	E0110-01A0	8	120010
154-06-13262	E0110-01A1	8	120020
154-55-31640	K0210-05A0	9	240050
154-61-16570	M1130-08A1	11	270270
154-61-16570	M1130-08A1	19	270270
154-61-16570	M1130-08A1	4	270270
154-911-1190	K0710-01A0	19	240570
154-911-7431	K0710-06A0	16	240620
154-97-91480	E0200-05A0	20	120070
154-97-91480	E0200-06A0	10	120080
154-97-91480	M1130-12A0	14	270250
1540-61-3130	A6210-A7A6	4	011020
156-21-11150	T1110-01A1	2	390010
156-21-11150	T1110-02A1	2	390130
156-70-12250	R0200-01A1	12	360050

PART NO.	FIG.NO.	INDEX	PAGE
156-91-14190	E0200-15A0	4	120170
156-91-14190	E0200-15A0	7	120170
15R-70-16370	B0100-01A0	4	030010
15R-70-16370	M1130-02A0	3	270150
15R-70-16370	M1130-02A0	5	270150
15R-70-16370	M1130-02A0	8	270150
170-30-91130	R0300-01A1	13	360060
170-33-13370	M1130-13A0	14	270320
175-01-31230	E0200-01A0	11	120030
175-01-31230	E0200-01A1	11	120035
175-03-32580	D0200-13A0	39	090170
175-03-32580	D0200-13A0	43	090170
175-03-32580	D0200-13A0	49	090171
175-06-25150	E0200-16A0	20	120180
175-06-25150	E0200-16A0	23	120180
175-06-25150	E0200-16A0	32	120180
175-06-25180	K0210-52A0	24	240520
175-06-81610	K0210-53A0	10	240530
175-27-00060	R0300-01A1	16	360060
175-27-00121	R0300-01A1		360060
175-27-00131	R0300-01A1	15	360060
175-40-22540	B0300-05A0	30	030090
175-40-22540	E0200-07A0	13	120090
175-40-22540	E0200-16A1	19	120185
175-40-22540	E0200-16A1	28	120185
175-40-22540	K0710-08A0	12	240640
175-40-22540	K0710-08A1	12	240645
175-54-34170	B0300-02A0	22	030050
175-54-34170	B0300-02A1	27	030060
175-54-34170	C0100-03A0	9	060030
175-54-34170	C0100-08A0	16	060080
175-54-34170	C0100-08A0	23	060080
175-54-34170	C0100-08A0	38	060080
175-54-34170	C0100-12A0	12	060120
175-54-34170	C0100-12A0	14	060120
175-54-34170	C0100-12A0	18	060120
175-54-34170	C0100-12A0	20	060120
175-54-34170	C0100-15A0	21	060150
175-54-34170	D0200-04A0	40	090080
175-54-34170	D0200-05A0	14	090090
175-54-34170	D0200-12A0	13	090160
175-54-34170	D0200-12A0	19	090160
175-54-34170	D0200-12A9	12	090165
175-54-34170	D0200-12A9	19	090165
175-54-34170	D0200-12A9	25	090165
175-54-34170	D0200-13A0	19	090170
175-54-34170	E0200-31A0	25	120320
175-54-34170	G1010-02A0	30	150020
175-54-34170	H0110-02A0	27	180020
175-54-34170	H0110-02A0	3	180020

PART NO.	FIG.NO.	INDEX	PAGE
175-54-34170	H0110-02A0	5	180020
175-54-34170	H0110-02A0	9	180020
175-54-34170	H0110-04A0	19	180040
175-54-34170	H0110-05A0	18	180050
175-54-34170	H0110-05A0	28	180050
175-54-34170	H0311-01A0	9	180165
175-54-34170	H0311-01A1	11	180170
175-54-34170	H0311-02A0	9	180175
175-54-34170	H0311-02A1	11	180177
175-54-34170	H0320-01A0	13	180270
175-54-34170	H0320-01A0	19	180270
175-54-34170	H0320-02A0	19	180280
175-54-34170	H0320-02A0	25	180280
175-54-34170	H0330-01A0	10	180290
175-54-34170	H0330-01A0	7	180290
175-54-34170	H0330-03A0	14	180310
175-54-34170	H0340-01A0	5	180320
175-54-34170	H0340-03A0	8	180340
175-54-34170	H0340-06A0	12	180370
175-54-34170	H1210-02A0	10	180430
175-54-34170	H1210-02A0	16	180430
175-54-34170	H1210-02A0	37	180430
175-54-34170	H1210-03A0	10	180440
175-54-34170	H1210-03A0	16	180440
175-54-34170	H1210-03A0	32	180440
175-54-34170	H1310-01A0	14	180480
175-54-34170	H1310-01A0	31	180480
175-54-34170	H1340-01A0	12	180510
175-54-34170	H1841-01A0	16	180740
175-54-34170	K0710-01A0	12	240570
175-54-34170	K1921-01A0	22	240680
175-54-34170	K1921-01A0	24	240680
175-54-34170	K1921-01A0	37	240680
175-54-34170	K1921-01A1	22	240685
175-54-34170	K1921-01A1	24	240685
175-54-34170	K1921-01A1	37	240685
175-54-34170	K1921-01A3	22	240687
175-54-34170	K1921-01A3	24	240687
175-54-34170	K1921-01A3	37	240687
175-54-34170	K1921-02A0	23	240690
175-54-34170	K1921-02A0	26	240690
175-54-34170	K1921-02A0	29	240690
175-54-34170	K1921-02A0	35	240690
175-54-34170	K1921-02A0	40	240690
175-54-34170	K1921-02A1	23	240695
175-54-34170	K1921-02A1	26	240695
175-54-34170	K1921-02A1	29	240695
175-54-34170	K1921-02A1	32	240695
175-54-34170	K1921-02A1	38	240695
175-54-34170	K1921-02A1	41	240695

PART NO.	FIG.NO.	INDEX	PAGE
175-54-34170	K1921-02A1	44	240695
175-54-34170	K1921-02A1	48	240696
175-54-34170	K1921-02A1	56	240696
175-54-34170	K1921-03A0	12	240700
175-54-34170	K1921-03A0	3	240700
175-54-34170	K1921-03A0	6	240700
175-54-34170	K1921-03A0	9	240700
175-54-34170	M1110-07A0	13	270070
175-54-34170	M1110-08A0	39	270080
175-54-34170	M1110-08A0	51	270081
175-54-34170	M1110-11A0	30	270110
175-54-34170	M1110-11A0	35	270110
175-54-34170	M1110-12A0	12	270120
175-54-34170	M1110-12A0	14	270120
175-54-34170	M1110-12A0	29	270120
175-54-34170	M1110-12A0	33	270120
175-54-34170	M1130-01A0	12	270140
175-54-34170	M1130-01A0	3	270140
175-54-34170	M1130-01A1	12	270145
175-54-34170	M1130-01A1	3	270145
175-54-34170	M1130-02A0	12	270150
175-54-34170	M1130-02A0	15	270150
175-54-34170	M1130-02A0	18	270150
175-54-34170	M1130-02A0	21	270150
175-54-34170	M1130-02A0	24	270150
175-54-34170	M1130-02A0	27	270150
175-54-34170	M1130-04A0	11	270170
175-54-34170	M1130-04A0	15	270170
175-54-34170	M1130-04A0	20	270170
175-54-34170	M1130-04A0	3	270170
175-54-34170	M1130-04A0	5	270170
175-54-34170	M1130-04A0	8	270170
175-54-34170	M1130-05A0	10	270180
175-54-34170	M1130-06A0	12	270190
175-54-34170	M1130-06A0	16	270190
175-54-34170	M1130-06A0	3	270190
175-54-34170	M1130-06A0	6	270190
175-54-34170	M1130-06A0	9	270190
175-54-34170	M1130-07A0	4	270200
175-54-34170	M1130-07A1	27	270260
175-54-34170	M1130-07A1	38	270260
175-54-34170	M1130-08A0	21	270210
175-54-34170	M1130-08A0	27	270210
175-54-34170	M1130-08A0	3	270210
175-54-34170	M1130-08A0	30	270210
175-54-34170	M1130-08A0	37	270210
175-54-34170	M1130-08A0	40	270210
175-54-34170	M1130-08A0	43	270210
175-54-34170	M1130-08A0	6	270210
175-54-34170	M1130-09A2	12	270280

PART NO.	FIG.NO.	INDEX	PAGE
175-54-34170	M1130-09A2	9	270280
175-54-34170	M1130-11A1	13	270300
175-54-34170	M1130-11A1	15	270300
175-54-34170	M1130-11A1	5	270300
175-54-34170	M1130-11A1	7	270300
175-54-34170	M1140-01A0	3	270330
175-54-34170	M1140-01A0	6	270330
175-54-34170	M1140-02A0	11	270340
175-54-34170	M1140-02A0	3	270340
175-54-34170	M1140-03A0	3	270350
175-54-34170	M1140-03A0	6	270350
175-54-34170	M1140-04A0	10	270360
175-54-34170	M1140-04A0	18	270360
175-54-34170	M1140-04A0	21	270360
175-54-34170	M1140-04A0	3	270360
175-54-34170	M1140-04A0	6	270360
175-54-34170	M1140-05A0	13	270370
175-54-34170	M1140-05A0	25	270370
175-54-34170	M1140-06A0	4	270380
175-54-34170	M1150-01A0	18	270400
175-54-34170	M1150-01A0	7	270400
175-54-34170	M1210-01A0	12	270420
175-54-34170	M1210-01A0	15	270420
175-54-34170	M1210-01A0	18	270420
175-54-34170	M1210-01A0	21	270420
175-54-34170	M1210-01A0	25	270420
175-54-34170	M1210-01A0	9	270420
175-54-34170	M1210-03A0	3	270440
175-54-34170	M1210-04A0	4	270450
175-54-34170	M1210-05A0	3	270460
175-54-34170	M1210-05A0	6	270460
175-54-34170	M1810-01A0	12	270510
175-54-34170	M1810-01A0	18	270510
175-54-34170	M1810-02A0	17	270520
175-54-34170	M1810-02A0	21	270520
175-54-34170	M1810-02A0	25	270520
175-54-34170	M1810-03A0	13	270530
175-54-34170	M1810-03A0	17	270530
175-54-34170	M1810-03A0	21	270530
175-54-34170	M1810-03A0	9	270530
175-54-34170	M1810-04A0	15	270540
175-54-34170	M1810-05A0	11	270550
175-54-34170	M1810-05A0	20	270550
175-54-34170	M1810-05A0	8	270550
175-54-34170	T1230-01A1	39	390290
175-54-34170	W1114-01A10	42	480150
175-63-75190	W1114-01A3	12	480080
175-63-75190	W1114-02A3	12	480170
175-63-75190	Y0100-02A1		510020
175-79-83760	G1010-05A0	25	150050

PART NO.	FIG.NO.	INDEX	PAGE
175-79-83760	G1010-06A0	24	150060
175-79-83760	G1010-06A0	31	150060
175-911-4340	K0710-08A0	1	240640
175-911-4340	K0710-08A1	1	240645
176-06-41490	T1110-01A1	3	390010
176-06-41490	T1110-02A1	3	390130
176-38-41360	K1921-02A0	31	240690
176-38-41360	K1921-02A1	34	240695
176-38-41370	K1921-02A0	32	240690
176-38-41370	K1921-02A1	35	240695
176-38-41380	K1921-02A0	33	240690
176-38-41380	K1921-02A1	36	240695
176-61-41330	H1210-02A0	5	180430
176-61-41330	H1210-03A0	5	180440
176-61-41330	H1310-01A0	26	180480
176-61-41330	H1310-01A0	9	180480
176-61-41330	P1120-01A0	19	330010
176-61-41330	T1120-01A1	39	390140
176-61-41330	T1140-01A1	36	390180
176-61-41330	T1140-01A2	36	390190
176-61-41330	T1220-01A1	47	390271
176-61-41330	T1220-01A2	47	390281
176-63-92240	M1130-09A1	12	270224
176-63-92240	Y0100-01A0		510010
176-91-14170	B0300-05A0	40	030090
17A-04-41331	H0340-04A0	42	180350
17A-04-41411	D0100-01A0	2	090010
17A-04-41411	D0100-01A1	2	090020
17A-04-41411	D0100-01A2	2	090030
17A-04-41411	D0100-01A3	2	090040
17A-54-44130	R1150-01A1	19	360140
17A-54-44130	R1150-01A1	21	360140
17A-54-44130	R1150-01A1	23	360140
17A-61-13391	B0600-04A0	11	030140
17A-61-13391	C0100-16A0	24	060170
17A-61-13391	D0200-02A0	15	090060
17A-61-13391	E0200-17A0	26	120190
17A-61-13391	E0200-20A0	5	120220
17A-61-13391	E0200-29A0	13	120300
17A-61-13391	H0311-02A3	9	180180
17A-61-13391	N1210-08A0	7	300090
17A-61-13391	T1110-01A3	36	390030
17A-61-13391	W1117-04A7	17	480310
17A-61-13391	W1117-06A7	17	480330
17M-03-46530	H1843-03A0	3	180800
17M-49-15260	E0202-04A0	15	120410
17M-49-15260	K0710-07A0	34	240630
17M-91-13530	K0210-32A0	7	240320
195-01-14651	G1010-02A0	18	150020
195-01-14651	G1010-02A0	32	150020

PART NO.	FIG.NO.	INDEX	PAGE
195-01-35210	B0300-02A1	21	030060
195-03-41390	C0100-07A0	11	060070
195-03-41420	C0100-07A0	12	060070
195-03-61550	C0100-07A0	8	060070
195-03-64441	C0100-12A0	8	060120
195-03-64451	C0100-12A0	5	060120
195-04-12280	G1010-01A0	6	150010
195-06-18890	K0710-06A0	5	240620
195-06-48320	E0200-19A1	7	120215
195-06-48340	E0200-19A1	8	120215
195-33-11220	C0100-16A0	32	060170
195-33-11220	D0200-01A0	29	090050
195-33-11220	D0200-02A0	22	090060
195-33-11220	D0200-02A0	5	090060
195-33-11220	D0200-02A0	9	090060
195-33-11220	D0200-04A0	21	090080
195-33-11220	E0200-02A0	15	120040
195-33-11220	E0200-07A0	12	120090
195-33-11220	E0200-15A0	25	120170
195-33-11220	E0200-16A0	3	120180
195-33-11220	E0200-16A1	24	120185
195-33-11220	E0200-16A1	27	120185
195-33-11220	E0200-16A1	40	120185
195-33-11220	E0200-16A1	44	120185
195-33-11220	E0200-16A1	7	120185
195-33-11220	E0200-17A0	33	120190
195-33-11220	E0200-17A0	51	120191
195-33-11220	E0200-17A1	29	120195
195-33-11220	E0200-18A1	12	120205
195-33-11220	E0200-18A1	19	120205
195-33-11220	E0200-18A1	2	120205
195-33-11220	E0200-19A1	15	120215
195-33-11220	E0200-20A0	14	120220
195-33-11220	E0200-20A0	18	120220
195-33-11220	E0200-20A0	25	120220
195-33-11220	E0200-20A0	32	120220
195-33-11220	E0200-24A0	27	120250
195-33-11220	E0200-27A0	15	120280
195-33-11220	E0200-28A0	3	120290
195-33-11220	E0202-01A0	22	120380
195-33-11220	E0202-01A0	24	120380
195-33-11220	E0202-01A0	3	120380
195-33-11220	E0202-02A0	3	120390
195-33-11220	E0202-03A0	19	120400
195-33-11220	E0202-03A0	33	120400
195-33-11220	E0202-03A0	6	120400
195-33-11220	E0202-04A0	30	120410
195-33-11220	E0202-04A0	43	120410
195-33-11220	E0202-04A0	6	120410
195-33-11220	E0450-04A0	16	120540

PART NO.	FIG.NO.	INDEX	PAGE
195-33-11220	E0450-04A0	26	120540
195-33-11220	G1010-01A0	28	150010
195-33-11220	H0110-06A0	19	180060
195-33-11220	H0312-05A0	17	180230
195-33-11220	H0312-05A0	24	180230
195-33-11220	H1831-02A0	26	180530
195-33-11220	H1832-02A0	16	180560
195-33-11220	H1832-02A0	9	180560
195-33-11220	H1840-02A0	28	180670
195-33-11220	H1840-03A0	12	180680
195-33-11220	H1840-06A0	21	180710
195-33-11220	H1840-08A0	12	180720
195-33-11220	H1843-03A0	14	180800
195-33-11220	K0710-03A0	26	240590
195-33-11220	K0710-05A0	14	240610
195-33-11220	K0710-07A0	25	240630
195-33-11220	N1210-08A0	30	300090
195-33-11220	W1114-01A10	14	480150
195-33-11220	W1114-01A11	27	480160
195-33-11220	W1114-01A11	34	480160
195-33-11220	W1114-01A11	37	480160
195-33-11220	W1114-01A7	31	480120
195-33-11220	W1114-01A9	6	480140
195-49-13840	M1130-13A0	18	270320
195-57-11530	E0200-13A0	7	120150
195-57-11530	E0200-14A1	3	120165
195-57-11530	K1921-01A0	30	240680
195-57-11530	K1921-01A1	30	240685
195-57-11530	K1921-01A3	30	240687
195-71-32220	H1210-02A0	31	180430
195-71-32220	H1210-03A0	26	180440
195-71-32220	H1221-02A0	12	180460
195-71-32220	H1221-02A0	15	180460
195-71-32220	H1222-01A0	21	180470
195-71-32220	H1222-01A0	27	180470
195-91-17290	M1420-02A0	3	270480
195-911-4350	K0710-08A0	27	240640
195-911-4350	K0710-08A0	5	240640
195-911-4350	K0710-08A1	27	240645
195-911-4350	K0710-08A1	5	240645
195-911-5591	K0710-04A0	1	240600
195-911-6531	K0210-34A0	4	240340
195-911-6562	K0210-34A0	5	240340
195-97-95190	N1210-08A0	21	300090
195-97-95190	W1117-06A7	26	480330
195-Z11-6990	K0710-04A0	14	240600
196-911-4120	K0710-04A0	18	240600
198-03-22290	C0100-03A0	5	060030
198-03-55411	C0100-09A0	4	060090
198-03-55411	C0100-16A0	4	060170

PART NO.	FIG.NO.	INDEX	PAGE
198-06-53550	E0200-26A0	10	120270
198-06-53550	E0200-26A0	17	120270
198-06-53560	E0200-25A0	15	120260
198-06-53580	E0200-25A0	26	120260
198-06-53580	E0200-25A0	34	120260
198-06-53580	E0200-27A0	3	120280
198-06-53610	E0200-26A0	2	120270
198-06-53610	E0200-28A0	33	120290
198-06-73171	E0200-14A1	11	120165
198-06-73180	E0200-14A1	16	120165
198-22-69640	B0600-07A0	10	030170
198-27-00034	P1210-01A1		330120
198-27-00034	P1210-01A7		330180
198-27-00113	P1210-01A1	3	330120
198-27-00113	P1210-01A7	3	330180
198-27-00121	P1210-01A1	4	330120
198-27-00121	P1210-01A7	4	330180
198-27-11420	P1210-01A1	21	330120
198-27-11420	P1210-01A7	21	330180
198-30-14420	R0120-01A2	37	360020
198-30-14420	R0120-01A4	37	360040
198-32-31220	R0500-01A1	12	360070
198-32-31220	R0500-01A1	24	360070
198-32-31220	R0500-01A2	12	360080
198-32-31220	R0500-01A2	24	360080
198-32-31220	Y0100-01A0		510010
198-33-12380	E0200-02A0	11	120040
198-33-12380	E0450-02A0	24	120520
198-33-12380	H1840-04A0	16	180690
198-43-15310	B0600-05A0	22	030150
198-43-15310	E0200-04A0	2	120060
198-43-15310	E0200-04A0	48	120061
198-43-15310	E0200-15A0	15	120170
198-43-15310	E0200-15A0	8	120170
198-43-15310	E0200-16A0	26	120180
198-43-15310	E0200-16A0	33	120180
198-43-15310	E0200-16A1	12	120185
198-43-15310	E0200-18A1	41	120205
198-43-15310	E0200-24A0	22	120250
198-43-15310	E0200-27A0	27	120280
198-43-15310	E0200-27A0	7	120280
198-43-15310	E0450-03A0	9	120530
198-54-42480	M1130-03A0	21	270160
198-54-42480	M1210-02A0	28	270430
198-54-42480	M1210-02A0	40	270430
198-54-42491	M1130-03A0	22	270160
198-54-42491	M1210-02A0	29	270430
198-54-42491	M1210-02A0	41	270430
198-54-55990	K0210-20A0	10	240200
198-54-55990	K1921-01A0	12	240680

PART NO.	FIG.NO.	INDEX	PAGE
198-54-55990	K1921-01A1	12	240685
198-54-55990	K1921-01A3	12	240687
198-54-55990	M1110-01A0	38	270010
198-54-55990	M1110-02A0	22	270020
198-54-55990	M1110-04A0	25	270040
198-54-55990	M1110-05A0	5	270050
198-54-55990	M1110-08A0	21	270080
198-60-19820	H0110-01A0	3	180010
198-60-19820	H0110-01A1	3	180015
198-60-19820	H0311-01A1	4	180170
198-60-19820	H0311-02A1	4	180177
198-60-55510	H0110-01A0	22	180010
198-60-55510	H0110-01A1	22	180015
198-61-44320	D0200-10A0	25	090140
198-61-44320	H1835-02A0	20	180640
198-61-61850	E0200-16A0	27	120180
198-63-93170	T1220-01A1	8	390270
198-63-93170	T1220-01A2	8	390280
198-63-93170	Y0100-02A1		510020
198-91-19240	K0210-15A0	16	240150
198-Z11-2640	K0210-47A0	11	240470
19M-06-31720	E0200-02A0	6	120040
19M-06-31720	E0200-24A0	2	120250
19M-61-35140	H0120-02A0	36	180080
19M-61-35140	H0120-02A0	4	180080
19M-61-35140	H0120-03A0	1	180090
19M-61-35140	H0350-02A0	12	180390
19M-61-35140	H1831-02A0	11	180530
19M-61-35140	H1833-03A0	13	180595
19M-61-35140	H1833-03A0	30	180595
19M-61-35140	H1840-01A0	18	180660
20-395-72640	M1210-03A0	4	270440
201-54-27590	K0210-02A0	9	240020
201-54-72910	H0312-03A0	24	180210
201-54-72910	H0312-03A0	37	180210
201-54-72910	H0312-03A0	9	180210
201-54-72910	H0312-04A0	19	180220
201-54-72910	H0312-04A0	22	180220
201-54-72910	K1921-01A0	3	240680
201-54-72910	K1921-01A1	3	240685
201-54-72910	K1921-01A3	3	240687
201-60-11390	H1835-03A0	15	180650
201-60-11390	K0210-52A0	8	240520
201-62-21880	D0200-06A0	13	090100
201-62-21880	D0200-06A0	6	090100
201-62-21880	D0200-08A0	24	090120
201-62-21880	D0200-08A0	7	090120
201-62-28540	G1010-05A0	13	150050
201-62-28540	G1010-06A0	12	150060
201-62-28540	G1010-06A0	27	150060

PART NO.	FIG.NO.	INDEX	PAGE
201-62-71810	H0230-02A0	23	180161
201-62-71810	H1850-01A0	1	180810
201-97-37430	H0312-03A0	11	180210
201-97-37430	H0312-03A0	26	180210
201-97-37540	H0320-02A0	39	180280
202-970-1220	K1921-02A0	19	240690
202-970-1220	K1921-02A1	16	240695
203-04-62110	E0200-17A0	13	120190
203-04-62110	E0202-02A0	22	120390
203-04-62110	E0202-02A0	31	120390
203-04-62110	E0202-04A0	23	120410
203-04-62110	E0320-02A0	13	120480
203-04-62110	N1210-08A0	12	300090
203-04-62110	W1114-01A10	20	480150
203-04-62110	W1114-01A11	19	480160
203-04-62110	W1114-01A11	30	480160
203-04-62110	W1114-01A11	40	480160
203-04-62110	W1114-01A7	12	480120
203-04-62110	W1114-01A7	37	480120
203-06-61730	E0450-04A0	1	120540
203-43-51620	K0210-50A0	7	240500
203-54-42661	D0200-13A0	37	090170
203-54-56630	M1210-03A0	11	270440
203-54-62670	M1810-03A0	24	270530
203-60-21250	H0210-09A0	14	180138
203-60-21250	H0220-09A0	14	180148
203-60-21260	H0210-09A0	15	180138
203-60-21260	H0220-09A0	15	180148
203-60-21270	H0210-09A0	16	180138
203-60-21270	H0220-09A0	16	180148
203-60-31100	H0110-01A0	23	180010
203-60-31100	H0110-01A1	23	180015
203-60-62220	H0210-07A0	14	180136
203-60-62220	H0220-07A0	14	180146
203-62-21331	H1831-02A0	14	180530
203-62-44510	H1832-01A0	11	180550
203-62-44510	H1832-03A0	2	180570
203-62-44510	W1114-01A1	21	480060
203-62-44510	W1117-02A1	27	480190
203-62-44510	W1117-04A1	27	480250
203-62-52210	E0320-02A0	11	120480
203-62-52210	E0450-04A0	30	120540
203-62-56500	H0210-09A0		180138
203-62-56500	H0220-09A0		180148
203-62-56580	H0210-09A0	13	180138
203-62-56580	H0220-09A0	13	180148
203-62-67160	J1110-01A0	6	210010
203-62-67160	J1110-01A1	6	210020
203-97-35610	H0320-02A0	37	180280
203-97-35610	H1850-01A0	5	180810

PART NO.	FIG.NO.	INDEX	PAGE
203-97-35660	D0200-03A0	12	090070
203-97-35660	D0200-03A0	17	090070
203-97-35660	D0200-03A0	22	090070
203-97-35660	D0200-06A0	22	090100
203-97-35660	D0200-07A0	29	090110
203-97-35660	D0200-09A0	28	090130
203-97-35660	G1010-01A0	13	150010
203-97-35660	G1010-01A0	18	150010
203-97-35660	G1010-02A0	11	150020
203-97-35660	G1010-02A0	3	150020
203-97-35660	G1010-04A0	11	150040
203-97-35660	G1010-04A0	24	150040
203-97-35660	G1010-04A0	3	150040
203-97-35720	D0200-03A0	11	090070
203-97-35720	D0200-03A0	16	090070
203-97-35720	D0200-03A0	21	090070
203-97-35720	D0200-06A0	21	090100
203-97-35720	D0200-07A0	28	090110
203-97-35720	D0200-09A0	27	090130
203-97-35720	G1010-01A0	12	150010
203-97-35720	G1010-01A0	17	150010
203-97-35720	G1010-02A0	10	150020
203-97-35720	G1010-02A0	2	150020
203-97-35720	G1010-04A0	10	150040
203-97-35720	G1010-04A0	2	150040
203-97-35720	G1010-04A0	23	150040
203-973-5660	K0710-04A0	10	240600
203-973-5660	T1110-01A4	5	390040
203-973-5660	T1210-01A2	6	390220
203-973-5660	T1210-01A3	25	390230
203-973-5660	T1210-01A4	6	390240
203-973-5720	T1110-01A4	6	390040
203-973-5720	T1210-01A2	7	390220
203-973-5720	T1210-01A3	26	390230
203-973-5720	T1210-01A4	7	390240
203-979-7170	K0710-03A0	13	240590
203-979-7170	K0710-03A0	15	240590
203-979-7170	K0710-05A0	8	240610
205-03-71331	D0200-01A0	30	090050
205-03-71331	D0200-06A0	37	090100
205-03-71331	D0200-09A0	17	090130
205-03-71331	D0200-09A0	21	090130
205-03-71331	E0200-04A0	19	120060
205-03-71331	E0200-16A1	33	120185
205-03-71331	E0200-17A1	22	120195
205-03-71331	E0200-17A1	26	120195
205-03-71331	E0200-18A1	27	120205
205-03-71331	E0202-01A0	12	120380
205-03-71331	E0320-01A0	2	120470
205-03-71331	E0320-02A0	2	120480

PART NO.	FIG.NO.	INDEX	PAGE
205-03-71331	E0450-01A0	9	120510
205-03-71331	H0312-06A0	4	180240
205-03-71331	H0340-05A0	3	180360
205-03-71331	H1840-04A0	18	180690
205-03-71331	M1110-10A0	26	270100
205-03-71331	W1114-01A10	10	480150
205-03-71331	W1114-01A11	22	480160
205-03-71331	W1114-01A7	20	480120
205-06-71470	K0210-19A0	17	240190
205-09-61240	T1230-01A1	51	390291
205-25-71270	A4080-01A0	11	010620
205-25-71270	A4080-01A0	30	010620
205-27-51370	N1110-01A0	5	300010
205-27-71360	P1210-01A1	18	330120
205-27-71360	P1210-01A7	18	330180
205-32-51211	N1210-01A0	12	300020
205-32-51211	N1210-03A0	12	300040
205-32-51211	N1210-09A0	12	300100
205-54-51250	K0210-34A0	6	240340
205-54-51970	K1921-01A0		240680
205-54-51970	K1921-01A1		240685
205-54-51970	K1921-01A3	5	240687
205-54-51970	M1110-01A0	7	270010
205-54-51970	M1110-03A0	12	270030
205-54-51970	M1110-04A0	46	270041
205-54-51970	M1110-08A0	22	270080
205-54-51971	K1921-01A0	5	240680
205-54-51971	K1921-01A1	5	240685
205-54-53550	K1921-01A0	15	240680
205-54-53550	K1921-01A1	15	240685
205-54-53550	K1921-01A3	15	240687
205-54-53550	M1110-01A0	35	270010
205-54-53550	M1110-02A0	19	270020
205-54-53550	M1110-02A0	7	270020
205-54-53550	M1110-04A0	22	270040
205-54-53550	M1110-04A0	6	270040
205-54-53550	M1110-05A0	8	270050
205-54-53550	M1110-08A0	23	270080
205-54-64140	M1110-01A0	13	270010
205-54-64140	M1110-03A0	4	270030
205-54-64140	M1110-04A0	12	270040
205-54-64140	M1110-04A0	28	270040
205-54-64140	M1110-05A0	14	270050
205-54-64140	M1110-09A0	26	270090
205-54-65630	M1810-01A0	14	270510
205-54-76280	D0100-01A0	22	090010
205-54-76280	D0100-01A1	17	090020
205-54-76280	D0100-01A2	22	090030
205-54-76280	D0100-01A3	17	090040
205-54-76280	E0200-14A1		120165

PART NO.	FIG.NO.	INDEX	PAGE
205-54-76280	M1130-03A0		270160
205-60-51290	H0350-01A0	1	180380
205-60-51310	H0350-01A0	2	180380
205-60-51390	H1850-01A0	9	180810
205-60-51390	H1850-04A0	7	180840
205-60-51410	H1850-01A0	10	180810
205-60-51410	H1850-04A0	8	180840
205-60-51420	H1850-01A0	11	180810
205-60-64290	H1850-01A0	8	180810
205-60-64300	H1850-01A0		180810
205-60-71141	H0110-02A0	13	180020
205-60-71220	D0100-01A0	21	090010
205-60-71220	D0100-01A1	16	090020
205-60-71220	D0100-01A2	21	090030
205-60-71220	D0100-01A3	16	090040
205-60-71220	H0110-01A1	27	180015
205-62-72140	C0100-10A0	5	060100
205-62-73410	T1110-01A1	4	390010
205-62-73410	T1110-02A1	4	390130
205-62-74690	A4110-E7F2	6	010810
205-70-51380	T1110-01A5	11	390050
205-70-51380	T1110-01A5	24	390050
205-70-65780	T1210-01A4	26	390240
205-97-97260	K0210-25A0	36	240250
2056-27-4690	A4110-F7E9	14	010820
206-06-61130	H1835-03A0	10	180650
207-00-76220	K1921-02A1	58	240696
207-00-76220	U0100-01A3	8	420030
207-00-76230	U0100-01A3	9	420030
207-00-76250	K1921-02A1	57	240696
207-00-76250	U0100-01A3	10	420030
207-03-75590	C0100-02A0	25	060020
207-06-61490	E0200-09A0	7	120110
207-06-61490	K0210-19A0	19	240190
207-26-71240	N1220-01A4	2	300150
207-26-71240	N1220-01A8	2	300190
207-27-52270	N1210-01A0	24	300020
207-27-52270	N1210-03A0	24	300040
207-27-52270	N1210-09A0	24	300100
207-27-61230	N1210-01A0	15	300020
207-27-61230	N1210-03A0	15	300040
207-27-61230	N1210-09A0	15	300100
207-27-61250	N1210-01A0	17	300020
207-27-61250	N1210-03A0	17	300040
207-27-61250	N1210-09A0	17	300100
207-30-35310	T1110-01A10	16	390100
207-30-35310	T1110-01A10	6	390100
207-30-35310	T1110-01A7	3	390070
207-30-35310	T1110-01A7	7	390070
207-30-35310	T1110-01A8	6	390080

PART NO.	FIG.NO.	INDEX	PAGE
207-30-35310	T1110-01A9	12	390090
207-30-35310	T1110-01A9	20	390090
207-30-35310	T1110-01A9	4	390090
207-54-16520	K0210-05A0	20	240050
207-54-16520	K1921-02A0	12	240690
207-54-16520	K1921-02A1	3	240695
207-54-16520	M1210-02A0	20	270430
207-54-16520	M1210-02A0	33	270430
207-54-16520	M1210-03A0	8	270440
207-54-16520	M1210-05A0	23	270460
207-54-16860	E0200-01A0	5	120030
207-54-16860	E0200-01A1	5	120035
207-60-71320	H1831-01A0	1	180520
207-60-71320	H1831-01A1		180525
207-62-62770	H1832-01A0	8	180550
207-62-62770	N1210-08A0	39	300090
207-62-62770	W1114-01A7	16	480120
207-62-62770	W1117-02A1	5	480190
207-62-62770	W1117-04A1	5	480250
207-62-71410	B0600-05A0	13	030150
207-62-71531	H0120-04A0	27	180100
207-62-72110	H0110-04A0	26	180040
207-62-72110	H0312-01A0	24	180190
207-62-72110	H0340-04A0	12	180350
207-62-72110	H1840-01A0	9	180660
207-62-72131	N1310-01A2	34	300210
207-62-72171	H0350-03A0	23	180400
207-62-72510	B0600-03A0	4	030130
207-62-72630	H1835-02A0	1	180640
207-62-72630	H1842-01A0	1	180770
207-62-72640	H1835-02A0	2	180640
207-626-2770	K0710-08A0	13	240640
207-626-2770	K0710-08A1	13	240645
207-70-11730	G1010-05A0	14	150050
207-70-11730	G1010-05A0	20	150050
207-70-11730	G1010-05A0	6	150050
207-70-11730	G1010-06A0	13	150060
207-70-11730	G1010-06A0	19	150060
207-70-11730	G1010-06A0	28	150060
207-70-11730	G1010-06A0	5	150060
207-70-11740	G1010-05A0	23	150050
207-70-11740	G1010-05A0	28	150050
207-70-11740	G1010-06A0	20	150060
207-70-11740	G1010-06A0	34	150060
207-70-11770	T1110-01A5	18	390050
207-70-11770	T1110-01A5	5	390050
207-979-6180	E0200-19A0	31	120210
207-979-6180	E0200-20A0	12	120220
207-979-6180	E0200-20A0	38	120220
207-979-6180	E0200-20A0	9	120220

PART NO.	FIG.NO.	INDEX	PAGE
207-979-6180	H0312-04A0	33	180220
207-979-6180	H1835-03A0	20	180650
207-979-6180	H1840-09A0	3	180730
208-00-76140	U0100-01A3	1	420030
208-00-76140	U0100-01A3	23	420030
208-00-76240	M1210-05A0	40	270460
208-01-11181	B0100-01A0	13	030010
208-04-75180	M1510-01A0	2	270500
208-06-19170	E0200-07A0	37	120090
208-06-19170	E0200-20A0	35	120220
208-06-19170	E0200-25A0	27	120260
208-06-19170	E0200-25A0	31	120260
208-06-19170	H1832-02A0	8	180560
208-06-19170	H1835-02A0	17	180640
208-06-19170	H1835-02A0	7	180640
208-06-19170	H1840-02A0	14	180670
208-06-19170	H1840-03A0	24	180680
208-06-19170	H1840-04A0	17	180690
208-06-19170	H1840-06A0	14	180710
208-06-19170	H1842-01A0	13	180770
208-06-19170	K0710-09A0	2	240650
208-06-71380	E0410-01A0	1	120490
208-06-71390	E0410-01A0	2	120490
208-26-71380	N1210-10A0	16	300110
208-26-71380	N1220-01A4	1	300150
208-26-71380	N1220-01A8	1	300190
208-27-61132	N1210-01A0	23	300020
208-27-61132	N1210-03A0	23	300040
208-27-61132	N1210-09A0	23	300100
208-27-61140	N1210-01A0	14	300020
208-27-61140	N1210-03A0	14	300040
208-27-61140	N1210-09A0	14	300100
208-27-61170	N1210-01A0	13	300020
208-27-61170	N1210-03A0	13	300040
208-27-61170	N1210-09A0	13	300100
208-30-11850	R1110-01A1	6	360100
208-30-11850	R1110-02A1	6	360110
208-30-11861	R1110-01A1	7	360100
208-30-11861	R1110-02A1	7	360110
208-43-71410	K0210-37A0	8	240370
208-43-71420	E0200-03A0	16	120050
208-43-71610	K0210-36A0	12	240360
208-43-71610	K0210-39A0	23	240390
208-43-71620	K0210-36A0	13	240360
208-43-71620	K0210-39A0	24	240390
208-43-71680	K0210-36A0	3	240360
208-43-71731	K0210-35A0	14	240350
208-43-71741	K0210-35A0	4	240350
208-43-71751	K0210-35A0	5	240350
208-43-71762	K0210-35A0	15	240350

PART NO.	FIG.NO.	INDEX	PAGE
208-53-12220	K0210-27A0	7	240270
208-53-12260	K0210-27A0	12	240270
208-53-12280	K0210-39A0	31	240390
208-53-12991	K0210-46A0	15	240460
208-54-57181	T1230-01A1	37	390290
208-62-73910	C0100-12A0	6	060120
208-70-62190	T1110-01A5	10	390050
208-70-62190	T1110-01A5	23	390050
208-979-7540	K0210-26A0	4	240260
208-979-7560	K0210-31A0	1	240310
208-979-7611	K0210-25A0		240250
208-979-7611	K0210-26A0	1	240260
208-979-7620	K0210-32A0	2	240320
208-979-7630	K0210-47A0	4	240470
208-979-7650	K0210-30A0	17	240300
208-979-7650	K0210-30A0	5	240300
209-00-19490	U0100-01A2	20	420020
209-00-41550	U0100-01A3	12	420030
209-00-54250	U0100-01A2	30	420020
209-03-41280	C0100-02A0	4	060020
209-03-41340	C0100-02A0	34	060020
209-03-41860	H0312-06A0	1	180251
209-03-41870	H0312-06A0	2	180251
209-03-41921	H0312-06A0	5	180251
209-03-41931	H0312-06A0	6	180251
209-03-42310	C0100-02A0	37	060020
209-03-42320	C0100-02A0	36	060020
209-03-42710	C0100-04A0	1	060040
209-03-42730	C0100-04A0	3	060040
209-04-11260	K0210-30A0	22	240300
209-06-77350	E0200-03A0	1	120050
209-06-77460	E0200-03A0	4	120050
209-25-11150	N1110-01A0	12	300010
209-26-51280	N1210-02A0	14	300030
209-26-51280	N1210-04A0	14	300050
209-26-71150	N1210-02A0	7	300030
209-26-71150	N1210-04A0	7	300050
209-26-71150	N1210-06A0	7	300070
209-26-71150	N1210-07A0	7	300080
209-26-71150	N1210-10A0	7	300110
209-26-71160	N1210-01A0	19	300020
209-26-71160	N1210-03A0	19	300040
209-26-71160	N1210-09A0	19	300100
209-26-71180	N1210-01A0	27	300020
209-26-71180	N1210-03A0	27	300040
209-26-71180	N1210-09A0	27	300100
209-26-71190	N1210-01A0	20	300020
209-26-71190	N1210-03A0	20	300040
209-26-71190	N1210-09A0	20	300100
209-26-71212	N1210-01A0	1	300020

PART NO.	FIG.NO.	INDEX	PAGE
209-26-71212	N1210-03A0	1	300040
209-26-71212	N1210-09A0	1	300100
209-26-71230	N1210-01A0	5	300020
209-26-71230	N1210-03A0	5	300040
209-26-71230	N1210-09A0	5	300100
209-26-71240	N1210-01A0	10	300020
209-26-71240	N1210-03A0	10	300040
209-26-71240	N1210-09A0	10	300100
209-26-71310	N1210-01A0	11	300020
209-26-71310	N1210-03A0	11	300040
209-26-71310	N1210-09A0	11	300100
209-26-71332	N1210-01A0	8	300020
209-26-71332	N1210-03A0	8	300040
209-26-71332	N1210-09A0	8	300100
209-26-71341	N1210-01A0	4	300020
209-26-71341	N1210-03A0	4	300040
209-26-71341	N1210-09A0	4	300100
209-26-71360	N1210-01A0	3	300020
209-26-71360	N1210-03A0	3	300040
209-26-71360	N1210-09A0	3	300100
209-26-72150	N1210-02A0	17	300030
209-26-72150	N1210-06A0	19	300070
209-27-21270	P1210-01A1	9	330120
209-27-21270	P1210-01A7	9	330180
209-27-51450	P1210-01A2	5	330130
209-27-51450	P1210-01A8	5	330190
209-27-51470	P1210-01A2	26	330130
209-27-51470	P1210-01A8	26	330190
209-27-71370	P1210-01A6	3	330170
209-30-11220	R1120-01A1	2	360120
209-30-11220	R1120-01A1	6	360120
209-30-55130	R0120-01A2	9	360020
209-30-55130	R0120-01A4	9	360040
209-38-11270	B0600-01A0	4	030110
209-38-11270	B0600-08A0	4	030180
209-46-11210	M1510-01A0	10	270500
209-46-11210	M1510-01A0	8	270500
209-46-42130	M1510-01A0	3	270500
209-46-42140	M1510-01A0	4	270500
209-54-12280	E0200-14A1	5	120165
209-54-12280	M1130-05A0	11	270180
209-54-12280	M1210-05A0	24	270460
209-54-53151	M1130-03A0	14	270160
209-54-63260	K0210-20A0	16	240200
209-54-63260	K1921-01A0	2	240680
209-54-63260	K1921-01A1	2	240685
209-54-63260	K1921-01A3	2	240687
209-54-63260	K1921-02A0	6	240690
209-54-63260	M1110-01A0	10	270010
209-54-63260	M1110-03A0	15	270030

PART NO.	FIG.NO.	INDEX	PAGE
209-54-63260	M1110-04A0	38	270040
209-54-63260	M1110-08A0	24	270080
209-60-51120	H0110-01A0	7	180010
209-60-51120	H0110-01A1	7	180015
209-60-52170	P1140-01A8	24	330110
209-60-52170	P1140-01A8	6	330110
209-60-52320	H0110-03A0	1	180030
209-60-62220	H0110-03A0	2	180030
209-60-77220	H0350-02A0	2	180390
209-60-77220	H1831-02A0	1	180530
209-60-77230	H1831-03A1		180545
209-60-77250	H0350-02A0	3	180390
209-60-77250	H1831-02A0	2	180530
209-60-77250	H1831-03A1	1	180545
209-60-77280	H1843-03A0		180800
209-60-77290	H1843-03A0	2	180800
209-60-77532	H0110-02A0	11	180020
209-60-77532	V0100-01A0	7	450010
209-60-77541	H0110-02A0	1	180020
209-60-79100	H0120-01A0		180070
209-60-79110	H0120-01A0	18	180070
209-62-19150	P1140-01A3	14	330060
209-62-28481	P1140-01A3	25	330060
209-62-28682	P1140-01A3	18	330060
209-62-28761	P1140-01A3	21	330060
209-62-41270	H0210-09A0	4	180138
209-62-41270	H0210-09A0	9	180138
209-62-41270	H0220-09A0	4	180148
209-62-41270	H0220-09A0	9	180148
209-62-41320	H0312-02A0	1	180200
209-62-41341	H0311-01A1	17	180170
209-62-41341	H0311-02A1	17	180177
209-62-41481	H0210-09A0	30	180138
209-62-41481	H0220-09A0	33	180148
209-62-41481	H0340-01A0	12	180320
209-62-52560	N1310-01A2	42	300210
209-62-54480	P1140-01A6	10	330090
209-62-54480	P1140-01A7	13	330100
209-62-54490	P1140-01A6	16	330090
209-62-54490	P1140-01A7	19	330100
209-62-57390	H1841-02A0	6	180750
209-62-77181	H0350-03A0	2	180400
209-62-78930	H0320-02A0	6	180280
209-62-78930	H0340-06A0	18	180370
209-64-11410	H1831-02A0	5	180530
209-64-16491	H0120-05A0	15	180110
209-64-16491	H1833-05A0	27	180605
209-64-16721	H1831-02A0	19	180530
209-68-11230	W1117-02A5		480230
209-68-11230	W1117-04A5		480290

PART NO.	FIG.NO.	INDEX	PAGE
209-68-51220	W1117-02A5	34	480230
209-70-71370	T1230-01A1	50	390291
209-72-11251	T1210-01A1	4	390210
209-72-11251	T1230-01A1	16	390290
209-72-11251	T1230-01A1	4	390290
209-72-11261	T1210-01A1	6	390210
209-72-11261	T1220-01A1	6	390270
209-72-11261	T1220-01A2	6	390280
209-72-11261	T1230-01A1	25	390290
209-72-11261	T1930-02A1	11	390370
209-72-11261	T1930-02A1	2	390370
209-72-11261	Y0100-02A1		510020
209-72-11311	T1110-01A1	19	390010
209-72-11311	T1110-02A1	19	390130
209-98-11450	T1210-01A6	13	390260
209-98-54160	U0100-01A2	2	420020
20927-71370	P1210-01A12	3	330230
20B-27-11210	H0120-02A0	10	180080
20B-27-11210	H0120-02A0	20	180080
20B-27-11210	H0120-03A0	13	180090
20B-27-11210	H0120-03A0	23	180090
20B-27-11210	H0120-04A0	10	180100
20B-27-11210	H0120-04A0	20	180100
20B-27-11210	H0120-05A0	14	180110
20B-27-11210	H0120-05A0	7	180110
20B-27-11210	H0210-04A0	10	180133
20B-27-11210	H0220-04A0	10	180143
20B-27-11210	H0230-01A5	7	180154
20B-27-11210	H1833-06A0	13	180610
20B-27-11210	H1833-07A0	13	180620
20B-27-11210	N1220-01A4	28	300150
20B-27-11210	N1220-01A8	32	300190
20B-27-11210	P1210-01A3	31	330140
20B-27-11210	P1210-01A9	31	330200
20B-54-12210	M1110-01A0	15	270010
20B-54-12210	M1110-01A0	20	270010
20B-54-12210	M1110-03A0	6	270030
20B-54-12210	M1110-04A0	14	270040
20B-54-12210	M1110-04A0	30	270040
20B-54-12210	M1110-05A0	11	270050
20B-54-12210	M1110-09A0	23	270090
20B-54-12210	M1130-05A0	12	270180
20F-61-12460	H1833-07A0	14	180620
20N-60-41360	C0100-07A0	9	060070
20N-60-41360	D0100-01A0	7	090010
20N-60-41360	D0100-01A1	7	090020
20N-60-41360	D0100-01A2	7	090030
20N-60-41360	D0100-01A3	7	090040
20N-60-41371	C0100-07A0	10	060070
20N-60-41371	D0100-01A0	6	090010

PART NO.	FIG.NO.	INDEX	PAGE
20N-60-41371	D0100-01A1	6	090020
20N-60-41371	D0100-01A2	6	090030
20N-60-41371	D0100-01A3	6	090040
20P-71-81130	W1114-01A1	3	480060
20P-71-81130	W1114-01A3	4	480080
20P-71-81130	W1114-01A3	8	480080
20P-71-81130	W1114-02A3	4	480170
20P-71-81130	W1114-02A3	8	480170
20S-70-21480	M1810-05A0	14	270550
20S-70-21480	M1810-05A0	17	270550
20S-70-21480	M1810-05A0	6	270550
20T-54-75290	K0210-20A0	33	240200
20T-62-71790	K0210-11A0	15	240110
20T-70-81720	W1114-01A4	9	480090
20T-70-81730	M1130-09A0	7	270220
20T-87-01290	M1130-09A1	8	270224
20U-62-41630	H0220-09A0	19	180148
20U-62-41710	H1833-01A1	9	180585
20U-62-41810	H0230-02A0	25	180161
20U-62-41820	H0230-02A0	9	180161
20U-62-41820	H1833-07A0	21	180620
20U-62-42230	P1140-01A8	13	330110
20U-62-46570	H1831-02A0	16	180530
20Y-00-42110	U0100-01A3	3	420030
20Y-00-42120	K1921-02A1	60	240696
20Y-00-42120	M1210-05A0	39	270460
20Y-00-42120	U0100-01A3	24	420030
20Y-00-42120	U0100-01A3	4	420030
20Y-00-42130	U0100-01A3	7	420030
20Y-00-42140	K1921-02A1	59	240696
20Y-00-42140	U0100-01A3	11	420030
20Y-03-11220	E0200-05A0	12	120070
20Y-03-11220	E0200-05A0	16	120070
20Y-03-11220	E0200-28A0	29	120290
20Y-03-11220	E0450-04A0	42	120540
20Y-03-11220	K0710-07A0	26	240630
20Y-04-21220	D0100-01A0	5	090010
20Y-04-21220	D0100-01A1	5	090020
20Y-04-21220	D0100-01A2	5	090030
20Y-04-21220	D0100-01A3	5	090040
20Y-04-41432	M1140-05A0	2	270370
20Y-06-21551	E0200-31A0	12	120320
20Y-06-21551	T1110-01A6	3	390060
20Y-06-23472	K0210-47A0	10	240470
20Y-06-23770	K0210-36A0	7	240360
20Y-06-23770	K0210-39A0	18	240390
20Y-06-23920	K0210-39A0	19	240390
20Y-06-31171	E0200-27A0	13	120280
20Y-06-41670	E0450-01A0	16	120510
20Y-06-41940	E0200-10A0	10	120120

PART NO.	FIG.NO.	INDEX	PAGE
20Y-06-41940	E0200-29A0	1	120300
20Y-06-41940	E0200-31A0	4	120320
20Y-06-42180	K0210-12A0	3	240120
20Y-06-42430	K0210-54A0	1	240540
20Y-26-21290	N1210-02A0	3	300030
20Y-26-21290	N1210-04A0	3	300050
20Y-26-21290	N1210-06A0	3	300070
20Y-26-21290	N1210-07A0	3	300080
20Y-26-21290	N1210-10A0	3	300110
20Y-26-21320	N1210-02A0	5	300030
20Y-26-21320	N1210-04A0	5	300050
20Y-26-21320	N1210-06A0	5	300070
20Y-26-21320	N1210-07A0	5	300080
20Y-26-21320	N1210-10A0	5	300110
20Y-26-21330	N1210-02A0	6	300030
20Y-26-21330	N1210-04A0	6	300050
20Y-26-21330	N1210-06A0	6	300070
20Y-26-21330	N1210-07A0	6	300080
20Y-26-21330	N1210-10A0	6	300110
20Y-27-11250	N1210-02A0	9	300030
20Y-27-11250	N1210-04A0	9	300050
20Y-27-11250	N1210-06A0	9	300070
20Y-27-11250	N1210-07A0	9	300080
20Y-27-11250	N1210-10A0	9	300110
20Y-27-21250	N1210-01A0	16	300020
20Y-27-21250	N1210-02A0	4	300030
20Y-27-21250	N1210-03A0	16	300040
20Y-27-21250	N1210-04A0	4	300050
20Y-27-21250	N1210-06A0	4	300070
20Y-27-21250	N1210-07A0	4	300080
20Y-27-21250	N1210-09A0	16	300100
20Y-27-21250	N1210-10A0	4	300110
20Y-27-21290	N1210-01A0	18	300020
20Y-27-21290	N1210-03A0	18	300040
20Y-27-21290	N1210-09A0	18	300100
20Y-43-21140	K0210-50A0	8	240500
20Y-43-21231	K0210-50A0	18	240500
20Y-43-21241	K0210-50A0	19	240500
20Y-43-22211	K0210-38A0	2	240380
20Y-43-22221	K0210-40A0	1	240400
20Y-43-22250	K0210-38A0	3	240380
20Y-43-22250	K0210-40A0	6	240400
20Y-43-22261	K0210-38A0	4	240380
20Y-43-22261	K0210-40A0	7	240400
20Y-43-22370	K0210-38A0	5	240380
20Y-43-22370	K0210-40A0	8	240400
20Y-43-22390	K0210-40A0	3	240400
20Y-43-22411	K0210-40A0	4	240400
20Y-43-31412	K0210-37A0	7	240370
20Y-43-31421	K0210-39A0	35	240390

PART NO.	FIG.NO.	INDEX	PAGE
20Y-43-31440	K0210-39A0	32	240390
20Y-43-31450	K0210-39A0	33	240390
20Y-43-31460	K0210-36A0	1	240360
20Y-43-31470	K0210-36A0	2	240360
20Y-43-31690	K0210-37A0	12	240370
20Y-43-41111	K0210-50A0	10	240500
20Y-43-41121	K0210-50A0	3	240500
20Y-43-41361	K0210-50A0	6	240500
20Y-53-12221	K0210-12A0	4	240120
20Y-53-13341	K0210-28A0	15	240280
20Y-53-13351	K0210-27A0	11	240270
20Y-54-11611	M1110-04A0	41	270040
20Y-54-12670	W1114-01A1	6	480060
20Y-54-12670	W1114-01A4	3	480090
20Y-54-12670	W1114-01A4	7	480090
20Y-54-13550	K0210-20A0	31	240200
20Y-54-13560	K0210-20A0	29	240200
20Y-54-14590	K0210-01A0	17	240010
20Y-54-18190	M1130-11A1	16	270300
20Y-54-18190	M1130-11A1	8	270300
20Y-54-28170	M1110-01A0	4	270010
20Y-54-28170	M1110-03A0	9	270030
20Y-54-28170	M1110-04A0	43	270040
20Y-54-28170	M1110-08A0	25	270080
20Y-54-29232	M1130-05A0	15	270180
20Y-54-29651	K0210-05A0	13	240050
20Y-54-29651	M1130-03A0	17	270160
20Y-54-29651	M1210-02A0	15	270430
20Y-54-29711	M1130-03A0	3	270160
20Y-54-35430	K0210-53A0	2	240530
20Y-54-51393	K0210-05A0	25	240050
20Y-54-53370	K0210-34A0	1	240340
20Y-54-61630	M1420-02A0	23	270480
20Y-54-61630	M1420-03A0	5	270490
20Y-54-65340	K0210-35A0	9	240350
20Y-54-65540	K0210-35A0	12	240350
20Y-54-65690	K0210-05A0	5	240050
20Y-54-65690	K0210-32A0	6	240320
20Y-54-65790	K0210-05A0	7	240050
20Y-54-65790	K0210-32A0	4	240320
20Y-60-22210	H1833-06A0	14	180610
20Y-60-22210	H1833-07A0	31	180620
20Y-60-22350	H1850-04A0	37	180840
20Y-60-31131	H0110-02A0	15	180020
20Y-60-31140	H0110-02A0	16	180020
20Y-60-31240	H1831-01A1	3	180525
20Y-60-31250	H1831-01A1	4	180525
20Y-60-32121	H1831-01A1	2	180525
20Y-62-13450	H1841-01A0	5	180740
20Y-62-13650	H0312-04A0	14	180220

PART NO.	FIG.NO.	INDEX	PAGE
20Y-62-13710	H1841-01A0	3	180740
20Y-62-13711	D0200-01A0	16	090050
20Y-62-13711	D0200-01A0	23	090050
20Y-62-13711	D0200-04A0	12	090080
20Y-62-13711	D0200-04A0	5	090080
20Y-62-15651	D0200-01A0	1	090050
20Y-62-15951	H1835-01A0	20	180630
20Y-62-15960	E0200-04A0	18	120060
20Y-62-15960	E0200-05A0	21	120070
20Y-62-15960	E0200-05A0	9	120070
20Y-62-15960	E0200-08A0	4	120100
20Y-62-16170	K0210-50A0	26	240500
20Y-62-17930	H1832-02A0	15	180560
20Y-62-17930	H1835-01A0	8	180630
20Y-62-17930	H1842-01A0	10	180770
20Y-62-17930	K0210-45A0	12	240450
20Y-62-19560	H1835-03A0	16	180650
20Y-62-19560	K0210-52A0	9	240520
20Y-62-22160	H0120-03A0	24	180090
20Y-62-22160	H0230-02A0	7	180161
20Y-62-22790	D0200-02A0	3	090060
20Y-62-22790	E0450-04A0	39	120540
20Y-62-22790	H0230-01A9	4	180158
20Y-62-22790	H1320-03A0	18	180505
20Y-62-22790	H1832-02A0	5	180560
20Y-62-22790	H1835-01A0	16	180630
20Y-62-22790	H1835-02A0	13	180640
20Y-62-22790	H1835-02A0	25	180640
20Y-62-22790	H1835-02A0	3	180640
20Y-62-22790	H1840-02A0	23	180670
20Y-62-22790	H1840-02A0	9	180670
20Y-62-22790	H1840-03A0	3	180680
20Y-62-22790	H1840-05A0	4	180700
20Y-62-22790	H1840-06A0	7	180710
20Y-62-22790	H1841-02A0	31	180750
20Y-62-22790	H1842-01A0	6	180770
20Y-62-22790	H1843-01A0	2	180780
20Y-62-22790	H1843-02A0	2	180790
20Y-62-22790	K0210-42A0	10	240420
20Y-62-22790	K0210-42A0	4	240420
20Y-62-22790	K0210-52A0	13	240520
20Y-62-22790	K0210-52A0	19	240520
20Y-62-22810	E0450-04A0	40	120540
20Y-62-22810	H1832-02A0	23	180560
20Y-62-22810	H1835-01A0	17	180630
20Y-62-22810	H1840-04A0	9	180690
20Y-62-22810	H1840-05A0	5	180700
20Y-62-22810	H1840-06A0	8	180710
20Y-62-22810	H1843-01A0	10	180780
20Y-62-22810	H1843-02A0	8	180790

PART NO.	FIG.NO.	INDEX	PAGE
20Y-62-22810	K0210-42A0	5	240420
20Y-62-22820	E0450-04A0	41	120540
20Y-62-22820	H1320-03A0	16	180505
20Y-62-22820	H1832-01A0	3	180550
20Y-62-22820	H1835-01A0	18	180630
20Y-62-22820	H1835-02A0	14	180640
20Y-62-22820	H1835-02A0	4	180640
20Y-62-22820	H1840-02A0	10	180670
20Y-62-22820	H1840-02A0	24	180670
20Y-62-22820	H1840-03A0	18	180680
20Y-62-22820	H1840-03A0	9	180680
20Y-62-22820	H1840-05A0	13	180700
20Y-62-22820	H1840-06A0	9	180710
20Y-62-22820	H1841-02A0	32	180750
20Y-62-22820	H1842-01A0	7	180770
20Y-62-22820	H1843-01A0	11	180780
20Y-62-22820	H1843-01A0	16	180780
20Y-62-22820	H1843-02A0	9	180790
20Y-62-22820	K0210-42A0	11	240420
20Y-62-22820	K0210-42A0	6	240420
20Y-62-22820	K0210-52A0	16	240520
20Y-62-22820	K0210-52A0	20	240520
20Y-62-22830	H0230-01A9	8	180158
20Y-62-22830	H1832-02A0	6	180560
20Y-62-22830	H1832-03A0	7	180570
20Y-62-22830	H1835-01A0	4	180630
20Y-62-22830	H1840-02A0	11	180670
20Y-62-22830	H1840-02A0	25	180670
20Y-62-22830	H1840-03A0	10	180680
20Y-62-22830	H1840-03A0	4	180680
20Y-62-22830	H1840-05A0	6	180700
20Y-62-22830	H1840-06A0	10	180710
20Y-62-22830	H1840-06A0	27	180710
20Y-62-22830	H1843-01A0	12	180780
20Y-62-22830	H1843-01A0	17	180780
20Y-62-22830	H1843-02A0	10	180790
20Y-62-22830	H1843-02A0	3	180790
20Y-62-22830	K0210-42A0	12	240420
20Y-62-22840	H1832-02A0	7	180560
20Y-62-22840	H1835-01A0	5	180630
20Y-62-22840	H1835-02A0	15	180640
20Y-62-22840	H1835-02A0	5	180640
20Y-62-22840	H1840-03A0	19	180680
20Y-62-22840	H1840-03A0	5	180680
20Y-62-22840	H1840-04A0	10	180690
20Y-62-22840	H1840-05A0	7	180700
20Y-62-22840	H1840-06A0	11	180710
20Y-62-22840	H1842-01A0	8	180770
20Y-62-22840	H1843-01A0	13	180780
20Y-62-22840	H1843-02A0	11	180790

PART NO.	FIG.NO.	INDEX	PAGE
20Y-62-22840	K0210-42A0	13	240420
20Y-62-22850	H1320-03A0	20	180505
20Y-62-22850	H1832-01A0	4	180550
20Y-62-22850	H1835-01A0	6	180630
20Y-62-22850	H1835-02A0	16	180640
20Y-62-22850	H1835-02A0	6	180640
20Y-62-22850	H1840-02A0	12	180670
20Y-62-22850	H1840-02A0	26	180670
20Y-62-22850	H1840-03A0	20	180680
20Y-62-22850	H1840-04A0	11	180690
20Y-62-22850	H1840-06A0	12	180710
20Y-62-22850	H1842-01A0	9	180770
20Y-62-22850	H1843-01A0	18	180780
20Y-62-22850	H1843-02A0	13	180790
20Y-62-22850	H1843-02A0	17	180790
20Y-62-22850	K0210-42A0	14	240420
20Y-62-22850	K0210-52A0	14	240520
20Y-62-22860	H1830-03A0	2	180830
20Y-62-22860	H1832-02A0	24	180560
20Y-62-22860	H1835-01A0	7	180630
20Y-62-22860	H1840-02A0	13	180670
20Y-62-22860	H1840-04A0	12	180690
20Y-62-22860	H1840-06A0	13	180710
20Y-62-22860	H1843-01A0	19	180780
20Y-62-22860	H1843-02A0	14	180790
20Y-62-22860	H1843-02A0	18	180790
20Y-62-22860	K0210-42A0	15	240420
20Y-62-22860	M1130-12A0	10	270250
20Y-62-41870	H1831-01A0	19	180520
20Y-62-42540	H1842-01A0	2	180770
20Y-62-43460	H0340-04A0	45	180351
20Y-62-43460	N1220-01A4	13	300150
20Y-62-43460	N1220-01A8	17	300190
20Y-62-47630	H1833-06A0	18	180610
20Y-62-47630	H1833-07A0	35	180620
20Y-62-51671	C0100-12A0	7	060120
20Y-62-51671	C0100-12A0	9	060120
20Y-62-51671	H0311-01A1	29	180170
20Y-62-51671	H0311-02A1	29	180177
20Y-62-51681	H0340-04A0		180350
20Y-62-5168101	H0340-04A0	15	180350
20Y-62-5168101	H0340-04A0	30	180350
20Y-62-5168102	H0340-04A0	16	180350
20Y-62-5168102	H0340-04A0	31	180350
20Y-62-5168103	H0340-04A0	17	180350
20Y-62-5168103	H0340-04A0	32	180350
20Y-62-51691	H0340-04A0	18	180350
20Y-62-51691	H0340-04A0	33	180350
20Y-810-1240	E0450-01A0	7	120510
20Y-96-62310	D0200-07A0	25	090110

PART NO.	FIG.NO.	INDEX	PAGE
20Y-96-62310	D0200-09A0	5	090130
20Y-97-32430	H1833-05A0	33	180605
20Y-979-3120	K0710-07A0	8	240630
20Y-979-3130	K0210-30A0	16	240300
20Y-979-3130	K0210-30A0	4	240300
20Y-979-3130	K0710-03A0	6	240590
20Y-979-3130	K0710-03A0	8	240590
20Y-979-3130	K0710-05A0	6	240610
20Y-979-3140	K0710-03A0	2	240590
20Y-979-3140	K0710-03A0	4	240590
20Y-979-3140	K0710-05A0	2	240610
20Y-979-3140	K0710-05A0	4	240610
20Y-979-3140	K0710-06A0	7	240620
20Y-979-3140	K0710-06A0	9	240620
20Y-979-3150	K0210-30A0	14	240300
20Y-979-3150	K0210-30A0	2	240300
20Y-979-3150	K0710-06A0	17	240620
20Y-979-3150	K0710-06A0	19	240620
20Y-979-3150	K0710-06A0	21	240620
20Y-979-3150	K0710-06A0	23	240620
20Y-979-3150	K0710-07A0	2	240630
20Y-979-3150	K0710-07A0	6	240630
20Y-979-3310	K0710-09A0	5	240650
20Y-979-6121	K0710-10A0		240655
20Y-979-6630	K0210-35A0	13	240350
20Y-979-6771	K0210-15A0	13	240150
21J-06-13661	E0200-02A0	7	120040
21J-06-13661	E0200-32A0	8	120330
21J-06-13661	E0200-33A0	8	120340
21J-06-13661	K0210-13A0	2	240130
21J-06-13661	K0210-15A0	2	240150
21K-00-71370	U0100-01A3	6	420030
21K-54-22460	K1921-01A0	9	240680
21K-54-22460	K1921-01A1	9	240685
21K-54-22460	K1921-01A3	9	240687
21K-54-22460	M1110-01A0	29	270010
21K-54-22460	M1110-02A0	14	270020
21K-54-22460	M1110-02A0	2	270020
21K-54-22460	M1110-04A0	18	270040
21K-54-22460	M1110-04A0	2	270040
21K-54-22460	M1110-04A0	34	270040
21K-54-22460	M1110-05A0	2	270050
21K-54-22460	M1110-07A0	7	270070
21K-54-22460	M1110-09A0	3	270090
21K-54-22460	M1130-05A0	6	270180
21M-00-21280	U0100-01A3	15	420030
21M-00-21290	U0100-01A3	16	420030
21M-01-18130	B0300-05A0	16	030090
21M-03-22250	C0100-05A0	13	060050
21M-03-22250	C0100-14A0	19	060140

PART NO.	FIG.NO.	INDEX	PAGE
21M-62-16350	H0230-02A0	16	180161
21M-62-16350	H1833-07A0	16	180620
21M-62-16350	N1220-01A4	23	300150
21M-62-16350	N1220-01A8	27	300190
21M-62-21880	H1830-03A0	4	180830
21N-00-14170	U0100-01A2	31	420020
21N-01-11120	B0100-01A0	17	030010
21N-01-11120	B0100-01A0	7	030010
21N-01-37120SG	B0100-01A0	19	030010
21N-01-37130SG	B0100-01A0	20	030010
21N-03-37960	C0100-03A0	7	060030
21N-04-41232	D0200-04A0	17	090080
21N-09-11140	H0110-01A0	8	180010
21N-09-11140	H0110-01A1	8	180015
21N-53-31870	M1140-04A0	7	270360
21N-53-31870	M1140-05A0	14	270370
21N-53-31870	M1140-05A0	26	270370
21N-60-31190	H1833-06A0	1	180610
21N-60-31190	H1833-07A0	1	180620
21N-62-12210	H0120-01A0	29	180070
21N-62-12210	H1221-01A0	23	180450
21N-62-12420	N1310-01A2	41	300210
21N-62-18430	T1140-01A1	33	390180
21N-62-18430	T1140-01A2	33	390190
21N-62-31221	H0120-01A0	19	180070
21N-62-31230	H0120-01A0	20	180070
21N-62-31891	N1220-01A4	11	300150
21N-62-31891	N1220-01A8	15	300190
21N-62-31920	B0600-04A0	1	030140
21N-62-36670	H0340-05A0	7	180360
21N-62-36980	H0120-02A0	1	180080
21N-62-36980	H0120-02A0	11	180080
21N-62-36980	H0120-03A0	14	180090
21N-62-36980	H0120-03A0	4	180090
21N-62-36980	H0120-04A0	1	180100
21N-62-36980	H0120-05A0	1	180110
21N-62-36980	H0120-05A0	8	180110
21N-64-36450	H1831-01A0	9	180520
21N-64-36520	W1117-02A1	14	480190
21N-64-36520	W1117-04A1	14	480250
21N-64-36550	H0210-09A0	24	180138
21N-64-36550	H1850-01A0	3	180810
21N-64-36660	H0220-09A0	27	180148
21N-64-36680	H1833-03A0	40	180595
21N-64-36690	H0350-03A0	5	180400
21N-64-37410	H0350-02A0	6	180390
21N-64-37410	H1831-02A0	8	180530
21N-68-32320	T1110-01A3	13	390030
21N-68-32320	T1110-01A3	20	390030
21N-68-32320	T1210-01A2	13	390220

PART NO.	FIG.NO.	INDEX	PAGE
21N-68-32320	T1210-01A3	6	390230
21N-68-32360	T1110-01A3	14	390030
21N-68-32360	T1110-01A3	21	390030
21N-68-32360	T1210-01A2	14	390220
21N-68-32360	T1210-01A3	7	390230
21N-68-32370	T1210-01A3	8	390230
21N-68-32420	T1110-01A4	1	390040
21N-68-32630	T1110-01A1	5	390010
21N-68-32630	T1110-02A1	5	390130
21N-70-12160	T1210-01A1	5	390210
21N-70-35230	T1110-01A5	14	390050
21N-70-35230	T1110-01A5	27	390050
21N-70-35230	T1110-01A5	35	390050
21N-72-11230	T1230-01A1	30	390290
21N-97-93420	K0710-07A0	5	240630
21N-97-98160	K0710-03A0	36	240590
21N-97-98160	K0710-09A0	6	240650
21T-00-19130	U0100-01A2	12	420020
21T-00-31110	U0100-01A2	15	420020
21T-00-31120	U0100-01A2	16	420020
21T-00-31171	U0100-01A1	10	420010
21T-00-31180	U0100-01A1	8	420010
21T-00-31310	U0100-01A1	6	420010
21T-00-31321	U0210-01A0	1	420060
21T-00-31332	U0100-01A1	23	420010
21T-00-31342	U0100-01A2	6	420020
21T-00-31361	U0100-01A1	9	420010
21T-00-31710	U0100-01A3	14	420030
21T-00-31730	U0100-01A3	13	420030
21T-00-31740	U0100-01A3	2	420030
21T-00-32450	D0200-13A0	60	090171
21T-00-32481	E0200-12A0	21	120140
21T-00-32490	M1130-12A0	25	270250
21T-00-32630	U0710-01A0	1	420100
21T-00-32660	U0710-03A0	4	420120
21T-00-32670	U0710-03A0	5	420120
21T-00-32760	U0710-03A0	7	420120
21T-00-32770	U0710-03A0	8	420120
21T-00-32780	U0710-03A0	9	420120
21T-00-32791	U0710-03A0	10	420120
21T-00-32840	U0710-03A0	1	420120
21T-00-33130	U0100-01A1	11	420010
21T-00-33140	U0100-01A1	12	420010
21T-00-33150	U0100-01A1	13	420010
21T-00-33190	U0100-01A2	3	420020
21T-00-33210	U0100-01A2	13	420020
21T-00-33230	U0100-01A2	9	420020
21T-00-33240	U0100-01A2	10	420020
21T-00-33251	U0100-01A2	8	420020
21T-00-33270	U0100-01A2	21	420020

PART NO.	FIG.NO.	INDEX	PAGE
21T-00-33280	U0100-01A2	22	420020
21T-00-33290	U0100-01A1	14	420010
21T-00-33350	U0100-01A2	4	420020
21T-00-33421	U0100-01A1	22	420010
21T-00-33450	U0100-01A2	1	420020
21T-00-33540	U0100-01A2	5	420020
21T-00-33680	U0710-03A0	6	420120
21T-00-33690	U0710-02A0	6	420110
21T-00-33690	U0710-04A0	2	420130
21T-00-33810	U0710-02A0	3	420110
21T-00-33810	U0710-03A1	4	420125
21T-00-33820	U0710-02A0	4	420110
21T-00-33820	U0710-03A1	5	420125
21T-00-33830	U0710-01A0	2	420100
21T-00-33830	U0710-03A1	1	420125
21T-00-33850	U0710-03A0	2	420120
21T-00-33860	U0710-02A0	5	420110
21T-00-33860	U0710-04A0	1	420130
21T-00-33970	U0100-01A2	28	420020
21T-00-33980	U0100-01A2	27	420020
21T-00-64180	M1130-09A2	23	270280
21T-00-64511	E0250-01A1	6	120440
21T-00-64511	E0250-01A5	6	120460
21T-00-64511	W1200-01A1	1	480380
21T-00-64520	E0250-01A1	7	120440
21T-00-64520	E0250-01A5	7	120460
21T-00-64520	W1200-01A1	2	480380
21T-00-67490	U0100-01A2	25	420020
21T-00-67660	U0100-01A1	24	420010
21T-01-11180	B0100-01A0	11	030010
21T-01-11190	B0100-01A0	12	030010
21T-01-11210	B0100-01A0	16	030010
21T-01-11210	B0100-01A0	6	030010
21T-01-11220	B0100-01A0	18	030010
21T-01-11220	B0100-01A0	8	030010
21T-01-31111	A2250-A7C4	1	010400
21T-01-31120	B0100-01A0	1	030010
21T-01-31130	B0100-01A0		030010
21T-01-31140	B0100-01A0	15	030010
21T-01-31160	B0100-01A0	9	030010
21T-01-31170	B0100-01A0	10	030010
21T-01-31211	B0300-03A0	4	030070
21T-01-31221	B0300-02A0	1	030050
21T-01-31221	B0300-02A1	1	030060
21T-01-31231	B0300-02A0	3	030050
21T-01-31231	B0300-02A1	3	030060
21T-01-31240	B0300-03A0	11	030070
21T-01-31251	B0300-02A0	7	030050
21T-01-31251	B0300-02A1	7	030060
21T-01-31261	B0300-02A0	8	030050

PART NO.	FIG.NO.	INDEX	PAGE
21T-01-31261	B0300-02A1	8	030060
21T-01-31271	B0300-04A0	1	030080
21T-01-31281	B0300-04A0	7	030080
21T-01-31291	B0300-02A0	9	030050
21T-01-31291	B0300-02A1	9	030060
21T-01-31311	B0300-04A0	13	030080
21T-01-31320	B0300-06A0	1	030100
21T-01-31331	B0300-06A0	11	030100
21T-01-31340	B0300-04A0	19	030080
21T-01-31350	B0300-04A0	20	030080
21T-01-31360	B0300-04A0	21	030080
21T-01-31371	B0300-05A0	22	030090
21T-01-31382	B0300-01A0	1	030040
21T-01-31391	B0300-03A0	1	030070
21T-01-31410	B0300-01A0	2	030040
21T-01-31420	B0300-01A0	3	030040
21T-01-31430	B0300-01A0	4	030040
21T-01-31440	B0300-01A0	5	030040
21T-01-31450	B0300-01A0	6	030040
21T-01-31460	B0300-01A0	7	030040
21T-01-31471	B0600-06A0	1	030160
21T-01-31471	W1114-01A2	14	480070
21T-01-31471	W1114-01A2	23	480070
21T-01-31481	B0100-02A0	6	030020
21T-01-31481	B0600-06A0	6	030160
21T-01-31481	C0100-09A0	25	060090
21T-01-31490	A2110-A7F9	18	010220
21T-01-31490	A2110-C7F9	18	010240
21T-01-31490	B0100-02A0	9	030020
21T-01-31490	B0600-06A0	9	030160
21T-01-31490	C0100-09A0	16	060090
21T-01-31490	C0100-09A0	23	060090
21T-01-31490	C0100-16A0	16	060170
21T-01-31510	B0300-01A0	8	030040
21T-01-31520	B0300-01A0	9	030040
21T-01-31530	B0300-02A1	22	030060
21T-01-31540	B0300-02A1	23	030060
21T-01-31560	B0300-02A0	12	030050
21T-01-31560	B0300-02A1	12	030060
21T-01-31570	B0300-05A0	6	030090
21T-01-31580	B0300-05A0	7	030090
21T-01-31590	B0300-03A0	8	030070
21T-01-31711	B0300-01A0	14	030040
21T-01-67182	B0300-05A0	3	030090
21T-01-67321	B0300-05A0	5	030090
21T-01-67330	B0100-01A0	23	030010
21T-01-67450	B0300-05A0	4	030090
21T-03-11280	M1210-03A0	5	270440
21T-03-31112	C0100-01A0	1	060010
21T-03-31121	C0100-05A0		060050

PART NO.	FIG.NO.	INDEX	PAGE
21T-03-31122	C0100-05A0	1	060050
21T-03-31160	C0100-03A0	1	060030
21T-03-31180	C0100-04A0	12	060040
21T-03-31190	C0100-04A0	9	060040
21T-03-31211	C0100-13A0	1	060130
21T-03-31221	C0100-14A0	1	060140
21T-03-31232	C0100-13A0	17	060130
21T-03-31240	C0100-13A0	4	060130
21T-03-31260	C0100-13A0	11	060130
21T-03-31271	C0100-13A0	5	060130
21T-03-31280	C0100-13A0	6	060130
21T-03-31311	C0100-12A0	1	060120
21T-03-31321	C0100-12A0	2	060120
21T-03-31331	C0100-12A0	3	060120
21T-03-31341	C0100-12A0	4	060120
21T-03-31352	C0100-12A0	16	060120
21T-03-31362	C0100-12A0	10	060120
21T-03-31391	C0100-10A0	1	060100
21T-03-31411	C0100-07A0	1	060070
21T-03-31430	C0100-01A0	2	060010
21T-03-31440	C0100-01A0	3	060010
21T-03-31450	C0100-07A0	25	060070
21T-03-31472	C0100-09A0		060090
21T-03-31472	C0100-16A0		060170
21T-03-31473	C0100-09A0	1	060090
21T-03-31473	C0100-16A0	1	060170
21T-03-31491	C0100-09A0	5	060090
21T-03-31491	C0100-16A0	5	060170
21T-03-31550	C0100-13A0	2	060130
21T-03-31561	C0100-13A0	3	060130
21T-03-31570	C0100-01A0	4	060010
21T-03-31611	C0100-06A0	1	060060
21T-03-31611	C0100-15A0	1	060150
21T-03-31623	C0100-06A0	7	060060
21T-03-31623	C0100-15A0	4	060150
21T-03-31632	C0100-06A0	16	060060
21T-03-31642	C0100-06A0	13	060060
21T-03-31652	C0100-15A0	7	060150
21T-03-31661	C0100-05A0		060050
21T-03-31662	C0100-05A0	22	060050
21T-03-31671	C0100-06A0	4	060060
21T-03-31671	C0100-15A0	10	060150
21T-03-31683	C0100-06A0	10	060060
21T-03-31683	C0100-15A0	13	060150
21T-03-31690	C0100-10A0	3	060100
21T-03-31711	C0100-02A0	1	060020
21T-03-31721	C0100-02A0	5	060020
21T-03-31731	C0100-02A0	8	060020
21T-03-31741	C0100-02A0	13	060020
21T-03-31751	C0100-02A0	29	060020

PART NO.	FIG.NO.	INDEX	PAGE
21T-03-31791	C0100-02A0	18	060020
21T-03-31821	C0100-02A0	22	060020
21T-03-31840	C0100-02A0	21	060020
21T-03-31850	C0100-02A0	2	060020
21T-03-31860	C0100-02A0	7	060020
21T-03-31891	C0100-03A0		060030
21T-03-31911	C0100-03A0	6	060030
21T-03-31921	C0100-03A0	2	060030
21T-03-31931	C0100-02A0	6	060020
21T-03-31970	C0100-15A0	18	060150
21T-03-31980	C0100-15A0	19	060150
21T-03-31990	C0100-04A0	2	060040
21T-03-32111	C0100-08A0	1	060080
21T-03-32121	C0100-08A0	9	060080
21T-03-32131	C0100-08A0	17	060080
21T-03-32141	C0100-08A0	24	060080
21T-03-32151	C0100-08A0	32	060080
21T-03-32161	C0100-16A0	1	060160
21T-03-32190	C0100-08A0	25	060080
21T-03-32212	C0100-02A0	40	060020
21T-03-32231	C0100-08A0	2	060080
21T-03-32240	C0100-08A0	3	060080
21T-03-32240	C0100-16A0	2	060160
21T-03-32251	C0100-08A0	4	060080
21T-03-32261	C0100-08A0	26	060080
21T-03-32270	C0100-08A0	10	060080
21T-03-32280	C0100-08A0	11	060080
21T-03-32291	C0100-08A0	12	060080
21T-03-32311	C0100-16A0	9	060160
21T-03-32321	C0100-16A0	3	060160
21T-03-32331	C0100-16A0	4	060160
21T-03-32341	C0100-16A0	5	060160
21T-03-32350	C0100-08A0	27	060080
21T-03-32360	C0100-08A0	18	060080
21T-03-32360	C0100-08A0	33	060080
21T-03-32370	C0100-08A0	19	060080
21T-03-32370	C0100-08A0	34	060080
21T-03-32380	C0100-08A0	13	060080
21T-03-32380	C0100-08A0	20	060080
21T-03-32380	C0100-08A0	28	060080
21T-03-32380	C0100-08A0	35	060080
21T-03-32390	C0100-08A0	21	060080
21T-03-32390	C0100-08A0	36	060080
21T-03-32410	C0100-09A0	7	060090
21T-03-32410	C0100-16A0	7	060170
21T-03-32421	C0100-09A0	8	060090
21T-03-32421	C0100-16A0	8	060170
21T-03-32430	C0100-09A0	14	060090
21T-03-32430	C0100-16A0	14	060170
21T-03-32440	C0100-02A0	26	060020

PART NO.	FIG.NO.	INDEX	PAGE
21T-03-32460	C0100-08A0	14	060080
21T-03-32470	C0100-08A0	5	060080
21T-03-32480	C0100-07A0	13	060070
21T-03-32480	C0100-07A0	7	060070
21T-03-32490	C0100-12A0	22	060120
21T-03-32511	C0100-11A0	4	060110
21T-03-32521	C0100-11A0	10	060110
21T-03-32531	C0100-11A0	18	060110
21T-03-32541	C0100-11A0	3	060110
21T-03-32590	C0100-11A0	1	060110
21T-03-32610	C0100-08A0	6	060080
21T-03-32620	C0100-08A0	29	060080
21T-03-32630	C0100-16A0	8	060160
21T-03-32641	C0100-02A0	41	060020
21T-03-32650	C0100-10A0	6	060100
21T-03-32690	C0100-05A0	28	060050
21T-03-32730	E0202-04A0	18	120410
21T-03-64330	C0100-07A0	20	060070
21T-04-11710	D0200-03A0	33	090070
21T-04-11750	D0200-03A0	30	090070
21T-04-31112	D0100-01A0	1	090010
21T-04-31112	D0100-01A1	1	090020
21T-04-31121	D0100-01A0	8	090010
21T-04-31121	D0100-01A1	8	090020
21T-04-31121	D0100-01A2	8	090030
21T-04-31121	D0100-01A3	8	090040
21T-04-31130	D0100-01A1	14	090020
21T-04-31130	D0100-01A3	14	090040
21T-04-31141	D0100-01A0	20	090010
21T-04-31141	D0100-01A1	15	090020
21T-04-31141	D0100-01A2	20	090030
21T-04-31141	D0100-01A3	15	090040
21T-04-31190	D0100-01A0	18	090010
21T-04-31190	D0100-01A2	18	090030
21T-04-31212	D0200-04A0	1	090080
21T-04-31222	D0200-04A0	8	090080
21T-04-31231	D0200-06A0	1	090100
21T-04-31241	D0200-06A0	3	090100
21T-04-31251	D0200-09A0	24	090130
21T-04-31260	D0200-09A0	3	090130
21T-04-31270	D0200-08A0	27	090120
21T-04-31280	D0200-08A0	1	090120
21T-04-31290	D0200-07A0	19	090110
21T-04-31310	D0200-07A0	3	090110
21T-04-31320	D0200-08A0	10	090120
21T-04-31330	D0200-08A0	11	090120
21T-04-31341	D0200-03A0	10	090070
21T-04-31391	D0200-04A0	3	090080
21T-04-31431	D0200-06A0	9	090100
21T-04-31440	D0200-08A0	3	090120

PART NO.	FIG.NO.	INDEX	PAGE
21T-04-31450	D0200-08A0	20	090120
21T-04-31461	D0200-06A0	18	090100
21T-04-31470	D0200-07A0	22	090110
21T-04-31481	G1010-01A0	27	150010
21T-04-31491	D0200-09A0	10	090130
21T-04-31550	D0200-11A0	12	090150
21T-04-31610	H0312-03A0	10	180210
21T-04-31610	H0312-03A0	25	180210
21T-04-31620	D0200-03A0	13	090070
21T-04-31620	D0200-03A0	18	090070
21T-04-31620	D0200-03A0	23	090070
21T-04-31620	D0200-06A0	23	090100
21T-04-31620	D0200-07A0	30	090110
21T-04-31620	D0200-09A0	31	090130
21T-04-31620	G1010-01A0	14	150010
21T-04-31620	G1010-01A0	19	150010
21T-04-31620	G1010-02A0	12	150020
21T-04-31620	G1010-02A0	4	150020
21T-04-31620	G1010-04A0	12	150040
21T-04-31620	G1010-04A0	25	150040
21T-04-31620	G1010-04A0	4	150040
21T-04-31620	H0312-03A0	12	180210
21T-04-31620	H0312-03A0	27	180210
21T-04-31630	D0200-06A0	12	090100
21T-04-31630	D0200-06A0	5	090100
21T-04-31630	D0200-08A0	23	090120
21T-04-31630	D0200-08A0	6	090120
21T-04-31661	D0200-01A0	20	090050
21T-04-31671	D0200-01A0	17	090050
21T-04-31681	D0200-04A0	10	090080
21T-04-31691	D0200-11A0	11	090150
21T-04-31750	D0200-12A0	10	090160
21T-04-31770	D0200-13A0	13	090170
21T-04-31770	W1114-01A5	8	480100
21T-04-31770	W1114-02A5	8	480180
21T-04-31840	D0200-12A0	17	090160
21T-04-31851	D0200-12A0	1	090160
21T-04-31851	D0200-12A9	1	090165
21T-04-31861	D0100-01A0	14	090010
21T-04-31861	D0100-01A2	14	090030
21T-04-31880	D0200-03A0	26	090070
21T-04-31910	D0200-01A0	12	090050
21T-04-31920	D0200-01A0	14	090050
21T-04-31940	H0312-06A0	20	180240
21T-04-31950	D0200-11A0	24	090150
21T-04-31970	D0200-11A0	18	090150
21T-04-31980	D0100-01A0	19	090010
21T-04-31980	D0100-01A2	19	090030
21T-04-32171	D0200-11A0	44	090150
21T-04-32180	D0200-11A0	47	090151

PART NO.	FIG.NO.	INDEX	PAGE
21T-04-32210	D0200-05A0	1	090090
21T-04-32221	D0200-04A0	26	090080
21T-04-32231	D0200-06A0	28	090100
21T-04-32260	D0200-10A0	1	090140
21T-04-32270	D0200-04A0	15	090080
21T-04-32280	D0200-01A0	27	090050
21T-04-32311	D0200-13A0	4	090170
21T-04-32320	D0200-13A0	42	090170
21T-04-32330	D0200-13A0	38	090170
21T-04-32340	D0200-13A0	55	090171
21T-04-32351	D0200-13A0	5	090170
21T-04-32361	D0200-13A0	1	090170
21T-04-32371	D0200-13A0	20	090170
21T-04-32381	D0200-13A0	29	090170
21T-04-32390	D0200-13A0	30	090170
21T-04-32410	D0200-13A0	52	090171
21T-04-32431	D0200-12A0	28	090160
21T-04-32440	D0200-13A0	46	090171
21T-04-32451	D0200-13A0	23	090170
21T-04-32471	D0200-13A0	17	090170
21T-04-32480	D0200-13A0	7	090170
21T-04-32490	D0200-13A0	8	090170
21T-04-32530	D0200-12A0	23	090160
21T-04-32551	D0200-12A9	26	090165
21T-04-32560	D0200-12A9	17	090165
21T-04-32570	D0200-12A9	10	090165
21T-04-32581	D0200-12A9	23	090165
21T-04-32610	D0100-01A2	1	090030
21T-04-32610	D0100-01A3	1	090040
21T-04-67150	D0200-11A0	2	090150
21T-04-71180	G1010-01A0	22	150010
21T-04-71180	G1010-01A0	37	150010
21T-04-71320	D0200-01A0	6	090050
21T-06-11350	E0200-09A0	1	120110
21T-06-11950	E0200-05A0	3	120070
21T-06-11950	E0200-07A0	9	120090
21T-06-17430	E0201-01A0	3	120360
21T-06-31121	E0200-14A1	1	120165
21T-06-31131	E0202-05A0	9	120420
21T-06-31141	E0202-05A0	10	120420
21T-06-31150	W1114-01A11	12	480160
21T-06-31160	W1114-01A11	13	480160
21T-06-31170	E0202-05A0	8	120420
21T-06-31170	W1114-01A11	11	480160
21T-06-31180	W1114-01A11	1	480160
21T-06-31210	E0200-15A1	1	120175
21T-06-31290	E0200-14A1	30	120165
21T-06-31590	H1850-04A0	56	180841
21T-06-31640	E0450-01A0	8	120510
21T-06-31650	E0450-01A0	12	120510

PART NO.	FIG.NO.	INDEX	PAGE
21T-06-31815	E0200-02A0	8	120040
21T-06-31830	E0200-34A0	1	120350
21T-06-31840	E0200-34A0	3	120350
21T-06-31840	W1114-02A5	13	480180
21T-06-31880	W1117-06A8	6	480340
21T-06-31910	E0200-04A0	44	120060
21T-06-31930	E0200-34A0	2	120350
21T-06-31940	E0200-34A0	4	120350
21T-06-31980	W1117-06A9A	14	480350
21T-06-32113	K0210-13A0	1	240130
21T-06-32131	K0210-14A0	1	240140
21T-06-32152	K0210-15A0	1	240150
21T-06-32181	E0200-08A0	12	120100
21T-06-32212	E0200-15A0	2	120170
21T-06-32265	E0200-24A0	1	120250
21T-06-32272	E0200-22A0	1	120230
21T-06-32282	E0200-20A0	1	120220
21T-06-32292	E0200-23A0	1	120240
21T-06-32312	E0200-10A0	1	120120
21T-06-32320	K0210-39A0	3	240390
21T-06-32340	E0201-01A0	9	120360
21T-06-32351	E0200-24A0	7	120250
21T-06-32362	T1110-01A6	12	390060
21T-06-32371	E0200-18A0	1	120200
21T-06-32390	E0200-03A0	10	120050
21T-06-32410	E0200-23A0	12	120240
21T-06-32420	E0200-23A0	16	120240
21T-06-32441	E0200-10A0	20	120120
21T-06-32441	E0200-31A0	16	120320
21T-06-32450	K0210-47A0	7	240470
21T-06-32470	E0200-27A0	1	120280
21T-06-32470	E0200-27A0	23	120280
21T-06-32490	E0200-24A0	14	120250
21T-06-32511	E0200-01A0	1	120030
21T-06-32511	E0200-01A1	1	120035
21T-06-32520	E0200-01A0	8	120030
21T-06-32520	E0200-01A1	8	120035
21T-06-32534	E0200-13A0	1	120150
21T-06-32561	E0200-02A0	10	120040
21T-06-32570	E0200-02A0	18	120040
21T-06-32581	E0200-02A0	14	120040
21T-06-32590	E0200-01A0	4	120030
21T-06-32590	E0200-01A1	4	120035
21T-06-32611	K0210-12A0	1	240120
21T-06-32621	K0210-19A0	20	240190
21T-06-32631	K0210-15A0	10	240150
21T-06-32650	E0200-24A0	11	120250
21T-06-32723	E0200-04A0	9	120060
21T-06-32732	E0200-04A0	13	120060
21T-06-32732	E0200-04A0	5	120060

PART NO.	FIG.NO.	INDEX	PAGE
21T-06-32751	E0200-10A0	15	120120
21T-06-32751	E0200-29A0	6	120300
21T-06-32762	E0200-32A0	9	120330
21T-06-32762	E0200-33A0	9	120340
21T-06-32772	E0200-32A0	10	120330
21T-06-32772	E0200-33A0	10	120340
21T-06-32780	E0200-32A0	11	120330
21T-06-32780	E0200-33A0	11	120340
21T-06-32810	E0200-01A0	12	120030
21T-06-32810	E0200-01A1	12	120035
21T-06-32810	E0200-10A0	3	120120
21T-06-32810	E0200-12A0	27	120140
21T-06-32810	E0320-01A0	6	120470
21T-06-32810	E0320-02A0	6	120480
21T-06-32810	K0210-12A0	11	240120
21T-06-32810	T1110-01A6	1	390060
21T-06-32820	E0200-10A0	2	120120
21T-06-32831	E0200-10A0	19	120120
21T-06-32831	E0200-31A0	15	120320
21T-06-32840	E0200-24A0	8	120250
21T-06-32911	K0210-16A0	14	240160
21T-06-32930	K0210-16A0	17	240160
21T-06-32960	E0450-02A0	4	120520
21T-06-32970	E0200-03A0	8	120050
21T-06-32980	E0320-01A0	7	120470
21T-06-32980	E0320-02A0	7	120480
21T-06-33182	E0200-04A0	27	120060
21T-06-33190	E0200-13A0	12	120150
21T-06-33210	H0110-06A0	14	180060
21T-06-33220	E0200-16A0	8	120180
21T-06-33292	E0200-32A0	12	120330
21T-06-33292	E0200-33A0	12	120340
21T-06-33310	E0200-03A0	13	120050
21T-06-33320	E0200-03A0	14	120050
21T-06-33330	E0200-03A0	15	120050
21T-06-33340	M1130-12A1	8	270310
21T-06-33350	E0200-10A0	29	120120
21T-06-33360	E0320-01A0	1	120470
21T-06-33360	E0320-02A0	1	120480
21T-06-33370	E0201-02A0	1	120370
21T-06-33380	E0201-02A0	3	120370
21T-06-33380	E0450-02A0	12	120520
21T-06-33390	E0201-02A0	4	120370
21T-06-33390	E0450-02A0	13	120520
21T-06-33420	K0210-47A0	22	240470
21T-06-33441	K0210-47A0	20	240470
21T-06-33482	K0210-47A0	21	240470
21T-06-33491	E0200-31A0	26	120320
21T-06-33510NK	E0200-15A0	18	120170
21T-06-33520	E0200-06A0	1	120080

PART NO.	FIG.NO.	INDEX	PAGE
21T-06-33530	E0200-06A0	4	120080
21T-06-33531	E0200-06A0	9	120080
21T-06-33551	E0200-24A0	17	120250
21T-06-33560	E0200-16A0	1	120180
21T-06-33581	E0200-15A0	23	120170
21T-06-33582	E0200-15A1	4	120175
21T-06-33610	E0201-01A0	2	120360
21T-06-33641	E0200-31A0	23	120320
21T-06-33650	D0200-10A0	33	090140
21T-06-33670	K0210-47A0	18	240470
21T-06-33740	K0210-47A0	12	240470
21T-06-33750	K0210-47A0	13	240470
21T-06-33760	K0210-47A0	14	240470
21T-06-33770	K0210-47A0	15	240470
21T-06-33780	K0210-47A0	16	240470
21T-06-33790	K0210-47A0	17	240470
21T-06-33881	K0210-16A0	1	240160
21T-06-33910	E0250-01A4	3	120450
21T-06-33910	E0250-01A5	9	120460
21T-06-33970	E0200-01A1	14	120035
21T-06-33980	E0200-01A1	13	120035
21T-06-34110	K0210-16A0	13	240160
21T-06-34122	K0210-13A0	15	240130
21T-06-34141	W1117-06A9A	1	480350
21T-06-34151	W1117-06A9A	2	480350
21T-06-34161	K0210-15A0	20	240150
21T-06-34172	E0200-02A0	1	120040
21T-06-34231	E0200-15A0	1	120170
21T-06-34241	E0200-19A0	1	120210
21T-06-34411	E0200-12A0	1	120140
21T-06-34422	M1130-11A0		270240
21T-06-34423	M1130-11A0	5	270240
21T-06-34432	E0200-04A0	29	120060
21T-06-34442	E0200-17A0	1	120190
21T-06-34450	E0200-32A0	13	120330
21T-06-34450	E0200-33A0	13	120340
21T-06-34450	K0210-48A0	7	240480
21T-06-34460	M1130-11A0	18	270240
21T-06-34481	E0200-04A0	41	120060
21T-06-34490	M1130-11A0		270240
21T-06-34491	M1130-11A0	1	270240
21T-06-34552	E0200-12A0		120140
21T-06-34570	M1130-11A0	15	270240
21T-06-34582	E0200-12A0	16	120140
21T-06-34611	E0200-12A0	17	120140
21T-06-34620	E0200-12A0	18	120140
21T-06-34630	E0200-12A0	19	120140
21T-06-34640	E0200-12A0	20	120140
21T-06-34650	E0200-12A0		120140
21T-06-34660	E0200-12A0		120140

PART NO.	FIG.NO.	INDEX	PAGE
21T-06-34670	E0200-12A0		120140
21T-06-34690	E0200-32A0	14	120330
21T-06-34690	E0200-33A0	14	120340
21T-06-34690	K0210-48A0	8	240480
21T-06-34712	E0202-03A0	7	120400
21T-06-34712	E0202-04A0	7	120410
21T-06-34722	W1114-01A11	7	480160
21T-06-34731	E0202-03A0	1	120400
21T-06-34731	E0202-04A0	1	120410
21T-06-34740	K0210-55A0	2	240550
21T-06-34752	K0210-48A0	1	240480
21T-06-34761	E0202-03A0	12	120400
21T-06-34761	E0202-04A0	12	120410
21T-06-34791	W1114-01A9	2	480140
21T-06-34811	E0200-14A1	21	120165
21T-06-34821	E0200-14A1	24	120165
21T-06-34830	E0200-14A1	27	120165
21T-06-34842	E0200-19A1	1	120215
21T-06-34851	E0200-17A0	39	120190
21T-06-34871	E0200-19A1	4	120215
21T-06-34911	K0210-48A0	10	240480
21T-06-34921	W1114-01A9	1	480140
21T-06-34931	E0202-01A0	1	120380
21T-06-34941	E0202-03A0	22	120400
21T-06-34951	W1114-01A11	18	480160
21T-06-34971	E0202-04A0	31	120410
21T-06-34991	E0202-04A0	35	120410
21T-06-35112	E0200-15A1	7	120175
21T-06-35122	E0200-15A1	8	120175
21T-06-35132	E0200-15A1	9	120175
21T-06-35142	E0200-15A1	10	120175
21T-06-35152	E0200-15A1	11	120175
21T-06-35162	E0200-15A1	12	120175
21T-06-35172	E0200-15A1	13	120175
21T-06-35182	E0200-15A1	14	120175
21T-06-35211	E0200-14A1	6	120165
21T-06-35222	E0200-15A1	15	120175
21T-06-35232	E0200-15A1	16	120175
21T-06-35242	E0200-15A1	17	120175
21T-06-35252	E0200-15A1	18	120175
21T-06-35260	W1114-01A10	40	480150
21T-06-35270	W1114-01A10	33	480150
21T-06-35280	E0200-12A0		120140
21T-06-35311	K0210-48A0	4	240480
21T-06-35321	W1114-01A11	4	480160
21T-06-35332	E0202-03A0	10	120400
21T-06-35332	E0202-04A0	10	120410
21T-06-35360	E0200-18A1	35	120205
21T-06-35390	E0200-32A0		120330
21T-06-35390	E0200-33A0		120340

PART NO.	FIG.NO.	INDEX	PAGE
21T-06-35410	E0200-16A0	36	120180
21T-06-35420	E0200-13A0	3	120150
21T-06-35430	E0200-13A0	4	120150
21T-06-35440NK	E0200-14A0	14	120160
21T-06-35450	E0200-18A1	39	120205
21T-06-35460	E0200-18A1	40	120205
21T-06-35471	E0200-14A0	10	120160
21T-06-35481	E0200-14A0	11	120160
21T-06-35490	E0200-16A0	37	120180
21T-06-35511	E0200-04A0	47	120061
21T-06-35530	E0200-04A0	28	120060
21T-06-35550	E0200-18A1	36	120205
21T-06-64491	K0210-16A0	18	240160
21T-06-67370	K0210-47A0		240470
21T-06-67880	E0201-02A0	2	120370
21T-06-71870	E0200-07A0	40	120090
21T-06-71870	E0200-08A0	7	120100
21T-06-72380	E0420-01A0	4	120500
21T-06-73320	E0200-15A0	33	120170
21T-066-4450	K0710-05A0	20	240610
21T-09-31110	B0600-01A0	6	030110
21T-09-31110	B0600-08A0	6	030180
21T-09-31120	B0600-01A0	7	030110
21T-09-31120	B0600-08A0	7	030180
21T-09-31130	B0600-01A0	15	030110
21T-09-31130	B0600-01A0	22	030110
21T-09-31130	B0600-08A0	15	030180
21T-09-31130	B0600-08A0	22	030180
21T-09-31140	B0600-01A0	16	030110
21T-09-31140	B0600-01A0	23	030110
21T-09-31140	B0600-08A0	16	030180
21T-09-31140	B0600-08A0	23	030180
21T-09-31150	B0600-01A0	30	030110
21T-09-31150	B0600-08A0	30	030180
21T-09-31160	B0600-03A0	15	030130
21T-09-31160	B0600-03A0	3	030130
21T-09-31160	B0600-05A0	12	030150
21T-25-00101	N1110-01A0		300010
21T-25-67120	N1110-01A0	13	300010
21T-25-67130	N1110-01A0	14	300010
21T-25-67140	N1110-01A0	15	300010
21T-25-67150	N1110-01A0	1	300010
21T-25-67160	N1110-01A0	3	300010
21T-25-67170	R1110-01A1	2	360100
21T-25-67170	R1110-02A1	2	360110
21T-25-67180	R1110-01A1	10	360100
21T-25-67180	R1110-02A1	10	360110
21T-25-67310	N1110-01A0	6	300010
21T-25-67321	N1110-01A0	7	300010
21T-25-67331	N1110-01A0	8	300010

PART NO.	FIG.NO.	INDEX	PAGE
21T-25-67340	N1110-01A0	9	300010
21T-25-67350	N1110-01A0	10	300010
21T-25-67360	N1110-01A0	11	300010
21T-25-67370	N1110-01A0	16	300010
21T-25-67380	N1110-01A0	17	300010
21T-25-67390	N1110-01A0	18	300010
21T-26-11270	B0600-01A0	13	030110
21T-26-11270	B0600-08A0	13	030180
21T-26-11460	D0100-01A0	39	090010
21T-26-11460	D0100-01A1	34	090020
21T-26-11460	D0100-01A2	39	090030
21T-26-11460	D0100-01A3	34	090040
21T-26-11460	H0110-06A0	21	180060
21T-26-31110	N1210-02A0	10	300030
21T-26-31110	N1210-04A0	10	300050
21T-26-31110	N1210-06A0	10	300070
21T-26-31110	N1210-07A0	10	300080
21T-26-31110	N1210-10A0	10	300110
21T-26-31120	N1210-02A0	1	300030
21T-26-31120	N1210-04A0	1	300050
21T-26-31120	N1210-06A0	1	300070
21T-26-31120	N1210-07A0	1	300080
21T-26-31120	N1210-10A0	1	300110
21T-26-31130	N1210-02A0	8	300030
21T-26-31130	N1210-04A0	8	300050
21T-26-31130	N1210-06A0	8	300070
21T-26-31130	N1210-07A0	8	300080
21T-26-31130	N1210-10A0	8	300110
21T-26-31140	N1210-02A0	2	300030
21T-26-31140	N1210-04A0	2	300050
21T-26-31140	N1210-06A0	2	300070
21T-26-31140	N1210-07A0	2	300080
21T-26-31140	N1210-10A0	2	300110
21T-26-31150	N1210-02A0	21	300030
21T-26-31150	N1210-06A0	23	300070
21T-26-31150	N1210-07A0	29	300080
21T-26-31160	N1210-01A0	26	300020
21T-26-31160	N1210-03A0	26	300040
21T-26-31160	N1210-09A0	26	300100
21T-26-31170	N1210-02A0	19	300030
21T-26-31170	N1210-06A0	21	300070
21T-26-31180	N1210-04A0	18	300050
21T-26-31180	N1210-07A0	20	300080
21T-26-31190	N1210-04A0	24	300050
21T-26-31190	N1210-07A0	26	300080
21T-26-31210	N1210-02A0	18	300030
21T-26-31210	N1210-06A0	20	300070
21T-26-31220	N1210-10A0	13	300110
21T-26-31231	N1210-06A0	14	300070
21T-26-31231	N1210-07A0	14	300080

PART NO.	FIG.NO.	INDEX	PAGE
21T-26-67110	N1210-01A0	9	300020
21T-26-67110	N1210-03A0	9	300040
21T-26-67110	N1210-09A0	9	300100
21T-26-67140	N1210-04A0	17	300050
21T-26-67140	N1210-07A0	19	300080
21T-27-00070	P1210-01A1	13	330120
21T-27-00070	P1210-01A7	13	330180
21T-27-11330	P1210-01A1	5	330120
21T-27-11330	P1210-01A1	7	330120
21T-27-11330	P1210-01A7	5	330180
21T-27-11330	P1210-01A7	7	330180
21T-27-11540	P1210-01A2	13	330130
21T-27-11540	P1210-01A8	13	330190
21T-27-11890	P1210-01A1	24	330120
21T-27-11890	P1210-01A7	34	330180
21T-27-71142	P1210-01A1	1	330120
21T-27-71142	P1210-01A7	1	330180
21T-27-71151	P1210-01A1	6	330120
21T-27-71151	P1210-01A7	6	330180
21T-27-71164	P1210-01A1	17	330120
21T-27-71164	P1210-01A7	17	330180
21T-27-71175	P1210-01A1	33	330120
21T-27-71175	P1210-01A7	33	330180
21T-27-71220	P1210-01A2	22	330130
21T-27-71220	P1210-01A8	22	330190
21T-27-71230	P1210-01A2	10	330130
21T-27-71230	P1210-01A8	10	330190
21T-27-71241	P1210-01A2	9	330130
21T-27-71241	P1210-01A8	9	330190
21T-27-71250	P1210-01A2	2	330130
21T-27-71250	P1210-01A8	2	330190
21T-27-71270	P1210-01A2	1	330130
21T-27-71270	P1210-01A8	1	330190
21T-27-71280	P1210-01A1	16	330120
21T-27-71280	P1210-01A7	16	330180
21T-27-71290	P1210-01A1	19	330120
21T-27-71290	P1210-01A7	19	330180
21T-27-71311	P1210-01A1	8	330120
21T-27-71311	P1210-01A7	8	330180
21T-27-71321	P1210-01A1	12	330120
21T-27-71321	P1210-01A7	12	330180
21T-27-71330	P1210-01A1	14	330120
21T-27-71330	P1210-01A7	14	330180
21T-27-71340	P1210-01A1		330120
21T-27-71340	P1210-01A7		330180
21T-27-71350	P1210-01A1		330120
21T-27-71350	P1210-01A7		330180
21T-27-71360	P1210-01A1		330120
21T-27-71360	P1210-01A7		330180
21T-27-71370	P1210-01A1		330120

PART NO.	FIG.NO.	INDEX	PAGE
21T-27-71370	P1210-01A7		330180
21T-27-71380	P1210-01A2	3	330130
21T-27-71380	P1210-01A8	3	330190
21T-27-71390	P1210-01A1	20	330120
21T-27-71390	P1210-01A7	20	330180
21T-27-71421	P1210-01A1	2	330120
21T-27-71421	P1210-01A7	2	330180
21T-27-71430	P1210-01A2	4	330130
21T-27-71430	P1210-01A8	4	330190
21T-27-71440	P1210-01A1	22	330120
21T-27-71440	P1210-01A7	22	330180
21T-27-72110	P1210-01A8	28	330190
21T-27-72120	P1210-01A2	28	330130
21T-27-72130	P1210-01A2	11	330130
21T-27-72140	P1210-01A8	11	330190
21T-27-72180	P1210-01A2	25	330130
21T-27-72180	P1210-01A8	25	330190
21T-27-72190	P1210-01A2	24	330130
21T-27-72190	P1210-01A8	24	330190
21T-27-72210	P1210-01A2	20	330130
21T-27-72210	P1210-01A8	20	330190
21T-27-72260	P1210-01A2	8	330130
21T-27-72260	P1210-01A8	8	330190
21T-27-72530	P1210-01A2	32	330130
21T-27-72540	P1210-01A8	32	330190
21T-30-00211	R0200-01A1		360050
21T-30-00220	R0300-01A1	1	360060
21T-30-00381	R0120-01A1		360010
21T-30-00381	R0120-01A3		360030
21T-30-00521	R0120-01A2		360020
21T-30-00521	R0120-01A4		360040
21T-30-14181	R0120-01A2	2	360020
21T-30-14181	R0120-01A4	2	360040
21T-30-14210	R0120-01A2	3	360020
21T-30-14210	R0120-01A4	3	360040
21T-30-14220	R0120-01A2	29	360020
21T-30-14220	R0120-01A4	29	360040
21T-30-14230	R0120-01A2	6	360020
21T-30-14230	R0120-01A4	6	360040
21T-30-14250	P1140-01A3	10	330060
21T-30-14250	R0120-01A2	38	360020
21T-30-14250	R0120-01A4	38	360040
21T-30-18120	R1140-01A1	4	360130
21T-30-31110	R0200-01A1	1	360050
21T-30-31121	R0200-01A1	2	360050
21T-30-31130	R0200-01A1	3	360050
21T-30-31140	R0200-01A1	4	360050
21T-30-31170	R0200-01A1	5	360050
21T-30-32113	R1110-01A1	1	360100
21T-30-32122	R1110-02A1	1	360110

PART NO.	FIG.NO.	INDEX	PAGE
21T-30-32133	R1160-01A1	1	360150
21T-30-32143	R1160-01A1	4	360150
21T-30-32154	R1150-01A1	1	360140
21T-30-32164	R1150-01A1	7	360140
21T-30-32173	R1150-01A1	13	360140
21T-30-32183	R1150-01A1	14	360140
21T-30-32212	R1120-01A1	1	360120
21T-30-32222	R1120-01A1	5	360120
21T-30-32231	R1170-01A1	4	360160
21T-30-32241	R1170-01A1	1	360160
21T-30-32340	R0120-01A2	31	360020
21T-30-32340	R0120-01A4	31	360040
21T-30-32351	R0120-01A2	22	360020
21T-30-32351	R0120-01A4	22	360040
21T-30-32360	R1200-01A1	1	360170
21T-30-32370	R1150-01A1	17	360140
21T-30-32411	R1200-02A1	1	360180
21T-30-32421	R1200-02A1	2	360180
21T-30-32431	R1200-02A1	3	360180
21T-30-32511	R0120-01A2	14	360020
21T-30-32511	R0120-01A4	14	360040
21T-30-32522	R0120-01A2	17	360020
21T-30-32522	R0120-01A4	17	360040
21T-30-32531	R0120-01A2	18	360020
21T-30-32531	R0120-01A4	18	360040
21T-30-32540	R0120-01A2	1	360020
21T-30-32550	R0120-01A4	1	360040
21T-30-32711	R1150-01A1	2	360140
21T-30-32711	R1150-01A1	8	360140
21T-30-32722	R1150-01A1	3	360140
21T-30-32722	R1150-01A1	9	360140
21T-30-32732	R1150-01A1	10	360140
21T-30-32732	R1150-01A1	4	360140
21T-30-32742	R1150-01A1	5	360140
21T-30-32752	R1150-01A1	6	360140
21T-30-32762	R1150-01A1	11	360140
21T-30-32772	R1150-01A1	12	360140
21T-30-33110	R0300-01A1	1	360060
21T-30-33130	R0300-01A1	4	360060
21T-30-33150	R0300-01A1	9	360060
21T-30-33180	R0300-01A1	5	360060
21T-30-67130	R1110-01A1	5	360100
21T-30-67130	R1110-02A1	5	360110
21T-30-71140	R1120-01A1	9	360120
21T-30-71160	R1110-01A1	14	360100
21T-30-71160	R1110-02A1	14	360110
21T-30-71170	R1110-01A1	15	360100
21T-30-71170	R1110-02A1	15	360110
21T-30-71251	R1140-01A1	1	360130
21T-30-71270	R1140-01A1	8	360130

PART NO.	FIG.NO.	INDEX	PAGE
21T-30-71280	R1140-01A1	7	360130
21T-30-74140	R0120-01A2	34	360020
21T-30-74140	R0120-01A4	34	360040
21T-30-74210	R0120-01A2	26	360020
21T-30-74210	R0120-01A4	26	360040
21T-30-74220	R0120-01A2	21	360020
21T-30-74220	R0120-01A4	21	360040
21T-30-75100	R0300-01A1		360060
21T-30-75140	R0300-01A1	11	360060
21T-30-75160	R0300-01A1	12	360060
21T-30-75170	R0300-01A1	3	360060
21T-30-75190	R0300-01A1	2	360060
21T-30-81412	R0120-01A1	1	360010
21T-30-81412	R0120-01A3	1	360030
21T-30-81421	R0120-01A1	9	360010
21T-30-81421	R0120-01A3	9	360030
21T-30-81431	R0120-01A1	3	360010
21T-30-81431	R0120-01A3	3	360030
21T-30-81441	R0120-01A1	2	360010
21T-30-81441	R0120-01A3	2	360030
21T-30-81451	R0120-01A1	11	360010
21T-30-81451	R0120-01A3	11	360030
21T-30-81461	R0120-01A1	12	360010
21T-30-81461	R0120-01A3	12	360030
21T-30-81470	R0120-01A1	13	360010
21T-30-81470	R0120-01A3	13	360030
21T-32-01016	R0500-01A1		360070
21T-32-01120	R0500-01A1		360070
21T-32-01305	R0500-01A2		360080
21T-32-05020	Y0100-01A0		510010
21T-32-11480	R0500-01A1	28	360070
21T-32-11480	R0500-01A2	28	360080
21T-32-11480	R0501-01A1	20	360090
21T-32-31110	R0500-01A1	10	360070
21T-32-31111	R0500-01A1	22	360070
21T-32-31111	R0500-01A1		360070
21T-32-31123	R0500-01A1	1	360070
21T-32-31123	R0500-01A1	13	360070
21T-32-31123	R0500-01A2	1	360080
21T-32-31123	R0500-01A2	13	360080
21T-32-31123	R0501-01A1	1	360090
21T-32-31123	R0501-01A1	9	360090
21T-32-31133	R0500-01A1	14	360070
21T-32-31133	R0500-01A1	2	360070
21T-32-31133	R0500-01A2	14	360080
21T-32-31133	R0500-01A2	2	360080
21T-32-31133	R0501-01A1	10	360090
21T-32-31133	R0501-01A1	2	360090
21T-32-31152	R0500-01A1	20	360070
21T-32-31152	R0500-01A1	8	360070

PART NO.	FIG.NO.	INDEX	PAGE
21T-32-31152	R0500-01A2	20	360080
21T-32-31152	R0500-01A2	8	360080
21T-32-31152	R0501-01A1	16	360090
21T-32-31152	R0501-01A1	8	360090
21T-32-31210	R0500-01A1	11	360070
21T-32-31210	R0500-01A1	23	360070
21T-32-31210	R0500-01A2	11	360080
21T-32-31210	R0500-01A2	23	360080
21T-32-31210	Y0100-01A0		510010
21T-32-31260	R0500-01A1	17	360070
21T-32-31260	R0500-01A1	25	360070
21T-32-31260	R0500-01A1	5	360070
21T-32-31260	R0500-01A2	17	360080
21T-32-31260	R0500-01A2	25	360080
21T-32-31260	R0500-01A2	5	360080
21T-32-31260	R0501-01A1	13	360090
21T-32-31260	R0501-01A1	17	360090
21T-32-31260	R0501-01A1	5	360090
21T-32-31280	R0500-01A1	26	360070
21T-32-31280	R0500-01A2	26	360080
21T-32-31280	R0501-01A1	18	360090
21T-32-31293	R0500-01A1	27	360070
21T-32-31293	R0500-01A2	27	360080
21T-32-31293	R0501-01A1	19	360090
21T-32-31323	R0500-01A1	15	360070
21T-32-31323	R0500-01A1	3	360070
21T-32-31323	R0500-01A2	15	360080
21T-32-31323	R0500-01A2	3	360080
21T-32-31323	R0501-01A1	11	360090
21T-32-31323	R0501-01A1	3	360090
21T-32-31333	R0500-01A1	16	360070
21T-32-31333	R0500-01A1	4	360070
21T-32-31333	R0500-01A2	16	360080
21T-32-31333	R0500-01A2	4	360080
21T-32-31333	R0501-01A1	12	360090
21T-32-31333	R0501-01A1	4	360090
21T-32-31340	R0500-01A1	19	360070
21T-32-31340	R0500-01A1	7	360070
21T-32-31340	R0500-01A2	19	360080
21T-32-31340	R0500-01A2	7	360080
21T-32-31340	R0501-01A1	15	360090
21T-32-31340	R0501-01A1	7	360090
21T-32-31350	R0500-01A2	10	360080
21T-32-31350	R0500-01A2	22	360080
21T-32-31370	R0500-01A1	18	360070
21T-32-31370	R0500-01A1	6	360070
21T-32-31370	R0500-01A2	18	360080
21T-32-31370	R0500-01A2	6	360080
21T-32-31370	R0501-01A1	14	360090
21T-32-31370	R0501-01A1	6	360090

PART NO.	FIG.NO.	INDEX	PAGE
21T-38-00160	B0600-01A0		030110
21T-38-00170	B0600-08A0		030180
21T-38-12270	E0250-01A1	8	120440
21T-38-12270	E0250-01A5	8	120460
21T-38-12270	H0110-06A0	11	180060
21T-38-12270	H1831-02A0	22	180530
21T-38-31121	B0600-01A0	8	030110
21T-38-31121	B0600-08A0	8	030180
21T-38-31131	B0600-01A0	17	030110
21T-38-31131	B0600-01A0	24	030110
21T-38-31131	B0600-08A0	17	030180
21T-38-31131	B0600-08A0	24	030180
21T-38-31141	B0600-01A0	31	030110
21T-38-31141	B0600-08A0	31	030180
21T-38-31151	B0600-01A0	1	030110
21T-38-31151	B0600-08A0	1	030180
21T-38-31160	B0600-01A0	5	030110
21T-38-31160	B0600-08A0	5	030180
21T-38-31170	B0600-01A0	14	030110
21T-38-31170	B0600-08A0	14	030180
21T-38-31180	B0600-01A0	21	030110
21T-38-31180	B0600-08A0	21	030180
21T-38-31190	B0600-01A0	29	030110
21T-38-31190	B0600-08A0	29	030180
21T-38-31220	B0600-07A0	2	030170
21T-38-31230	B0600-07A0	1	030170
21T-38-31240	B0600-01A0	36	030110
21T-38-31240	B0600-08A0	36	030180
21T-38-31310	B0600-05A0	1	030150
21T-38-31321	B0600-02A0	1	030120
21T-38-31331	B0600-01A0	35	030110
21T-38-31331	B0600-08A0	35	030180
21T-38-31341	B0600-02A0	6	030120
21T-38-31350	B0600-03A0	5	030130
21T-38-31360	B0600-03A0	6	030130
21T-38-31370	B0600-03A0	20	030130
21T-38-31380	B0600-03A0	16	030130
21T-38-31411	B0600-01A0	28	030110
21T-38-31411	B0600-08A0	28	030180
21T-38-31421	B0600-03A0	8	030130
21T-38-31440	B0600-05A0	11	030150
21T-38-31450	B0600-02A0	5	030120
21T-38-31460	B0600-05A0	15	030150
21T-43-31113	K0210-46A0	1	240460
21T-43-31121	K0210-46A0	6	240460
21T-43-31131	K0210-47A0	1	240470
21T-43-31141	K0210-46A0	16	240460
21T-43-31151	K0210-46A0	9	240460
21T-43-31161	K0210-47A0	5	240470
21T-43-31170	K0210-46A0	17	240460

PART NO.	FIG.NO.	INDEX	PAGE
21T-43-31310	K0210-35A0	1	240350
21T-43-31322	K0210-35A0	8	240350
21T-43-31411	K0210-39A0	28	240390
21T-43-31420	K0210-39A0	26	240390
21T-43-31430	K0210-39A0	8	240390
21T-43-31450	K0210-39A0	42	240391
21T-43-31460	K0210-39A0	36	240390
21T-43-31470	K0210-39A0	9	240390
21T-43-31481	K0210-39A0		240390
21T-46-00115	J1110-01A0	1	210010
21T-46-31130	J1110-01A0	2	210010
21T-46-31130	J1110-01A1	2	210020
21T-46-31140	J1110-01A0	3	210010
21T-46-31140	J1110-01A1	3	210020
21T-46-31161	W1114-01A8	1	480130
21T-46-31313	J1110-01A1	1	210020
21T-46-34113	M1510-01A0	1	270500
21T-46-34120	M1510-01A0	7	270500
21T-46-34120	M1510-01A0	9	270500
21T-46-34131	M1510-01A0	12	270500
21T-46-34141	M1510-01A0	15	270500
21T-46-34170	M1510-01A0	5	270500
21T-46-34220	M1510-01A0	6	270500
21T-53-31115	M1130-04A0	1	270170
21T-53-31211	M1130-03A0	2	270160
21T-53-31230	M1130-03A0	4	270160
21T-53-31240	M1130-03A0	5	270160
21T-53-31250	M1130-03A0	6	270160
21T-53-31260	M1130-03A0	7	270160
21T-53-31270	M1130-03A0	8	270160
21T-53-31280	M1130-03A0	9	270160
21T-53-31411	M1130-03A0	30	270160
21T-53-31420	M1130-03A0	29	270160
21T-53-31430	M1130-03A0	26	270160
21T-53-31471	M1140-04A0	19	270360
21T-53-31550	M1140-05A0	9	270370
21T-53-31560	M1140-05A0	10	270370
21T-53-31570	M1130-01A0	6	270140
21T-53-31570	M1130-01A1	6	270145
21T-53-31570	M1140-02A0	5	270340
21T-53-31590	M1210-01A0	22	270420
21T-53-31620	M1210-01A0	23	270420
21T-53-31620	M1210-04A0	2	270450
21T-53-31632	M1140-02A0	4	270340
21T-53-31640	M1130-02A0	28	270150
21T-53-31650	M1130-11A1	18	270300
21T-53-31650	M1130-11A1	22	270300
21T-53-31660	M1130-07A1	11	270260
21T-53-31670	M1110-07A0	8	270070
21T-53-31690	M1110-11A0	16	270110

PART NO.	FIG.NO.	INDEX	PAGE
21T-53-31750	K1921-01A0	20	240680
21T-53-31750	K1921-01A1	20	240685
21T-53-31750	K1921-01A3	20	240687
21T-53-31791	M1420-02A0	13	270480
21T-53-31820	M1420-02A0	18	270480
21T-53-31831	M1420-02A0	2	270480
21T-53-31841	M1420-02A0	8	270480
21T-53-31850	M1420-02A0	26	270480
21T-53-31860	M1130-07A1	10	270260
21T-53-31870	M1110-11A0	19	270110
21T-53-31880	M1140-05A0	16	270370
21T-53-31930	E0200-14A1	2	120165
21T-53-31930	M1130-03A0	37	270160
21T-53-31960	M1130-03A0	33	270160
21T-53-31970	M1810-02A0	26	270520
21T-53-31980	M1130-03A0	34	270160
21T-53-32120	M1130-03A0	10	270160
21T-53-32131	K0210-01A0	11	240010
21T-53-32140	K0210-01A0	14	240010
21T-53-32151	M1130-07A1	2	270260
21T-53-32161	M1130-07A1	6	270260
21T-53-32170	M1130-07A1	3	270260
21T-53-32170	M1130-07A1	7	270260
21T-53-32180	M1130-10A1	19	270290
21T-53-32190	M1130-10A1	22	270290
21T-53-32210	M1130-10A1	25	270290
21T-53-32220	M1130-10A1	29	270290
21T-53-32230	M1130-10A1	33	270290
21T-53-32240	M1130-10A1	38	270290
21T-53-32250	M1130-10A1	13	270290
21T-53-32260	M1130-03A0	11	270160
21T-53-32271	M1130-05A0	18	270180
21T-53-32280	M1130-06A0	14	270190
21T-53-32290	M1130-01A0	7	270140
21T-53-32290	M1130-01A1	7	270145
21T-53-32290	M1140-02A0	6	270340
21T-53-32350	M1130-05A0	19	270180
21T-53-32360	M1130-05A0	20	270180
21T-53-32380	M1130-09A2	10	270280
21T-53-32390	M1130-09A2	19	270280
21T-53-32411	M1130-07A0	1	270200
21T-53-32422	M1130-02A0	7	270150
21T-53-32430	M1130-08A0	25	270210
21T-53-32440	M1130-08A0	28	270210
21T-53-32461	M1210-05A0	1	270460
21T-53-32471	M1210-05A0	4	270460
21T-53-32492	M1130-08A0	19	270210
21T-53-32510	M1130-10A1	45	270290
21T-53-32520	M1810-05A0	4	270550
21T-53-32530	M1810-05A0	9	270550

PART NO.	FIG.NO.	INDEX	PAGE
21T-53-32541	M1810-05A0	18	270550
21T-53-32560	M1810-05A0	1	270550
21T-53-32581NK	M1810-05A0	12	270550
21T-53-32591	M1810-05A0	15	270550
21T-53-32611	M1210-05A0	16	270460
21T-53-32621	M1210-05A0	22	270460
21T-53-32630	M1210-05A0	19	270460
21T-53-32653	M1210-05A0	30	270460
21T-53-32663	M1210-05A0	33	270460
21T-53-32673	M1210-05A0	36	270460
21T-53-32710	M1210-05A0	7	270460
21T-53-32720	M1210-05A0	10	270460
21T-53-32730	M1210-05A0	13	270460
21T-53-32741	M1130-08A0	1	270210
21T-53-32752	M1130-08A0	4	270210
21T-53-32760	M1130-08A0	13	270210
21T-53-32772	M1130-08A0	16	270210
21T-53-32790	M1130-08A0	35	270210
21T-53-32812	M1130-02A0	19	270150
21T-53-32820	M1130-02A0	22	270150
21T-53-32830	M1130-08A0	31	270210
21T-53-32840	M1130-08A0	34	270210
21T-53-32861	M1130-08A0	22	270210
21T-53-32871	M1130-01A0	10	270140
21T-53-32871	M1130-01A1	10	270145
21T-53-32880	M1130-11A0	12	270240
21T-53-32961	E0200-12A0	10	120140
21T-53-33111	K1921-01A1	1	240685
21T-53-33121	M1130-10A0	16	270230
21T-53-33141	K1921-02A1	50	240696
21T-53-33170	M1130-07A0	2	270200
21T-53-33310	M1130-03A0		270160
21T-53-33510	K1921-01A3	1	240687
21T-53-33520	M1130-08A0	44	270210
21T-53-33530	M1130-08A0	38	270210
21T-53-33540	M1130-08A0	7	270210
21T-53-33550	M1130-08A0	10	270210
21T-53-33560	M1130-08A0	41	270210
21T-53-33571	K1921-02A1	1	240695
21T-53-33640	M1130-01A0	19	270140
21T-53-33640	M1130-01A1	19	270145
21T-53-33640	M1140-02A0	18	270340
21T-53-33650	M1130-01A0	20	270140
21T-53-33650	M1130-01A1	20	270145
21T-53-33650	M1140-02A0	19	270340
21T-53-33660	M1130-01A0	5	270140
21T-53-33660	M1130-01A1	5	270145
21T-53-33860	M1420-02A0	30	270480
21T-54-00303	K0210-01A0		240010
21T-54-00303	K0210-02A0		240020

PART NO.	FIG.NO.	INDEX	PAGE
21T-54-00303	K0210-03A0		240030
21T-54-00303	K0210-04A0		240040
21T-54-00303	K0210-05A0		240050
21T-54-00303	K0210-06A0		240060
21T-54-00303	K0210-07A0		240070
21T-54-00303	K0210-08A0		240080
21T-54-00303	K0210-09A0		240090
21T-54-00303	K0210-10A0		240100
21T-54-00303	K0210-11A0		240110
21T-54-00303	K0210-12A0		240120
21T-54-00303	K0210-13A0		240130
21T-54-00303	K0210-14A0		240140
21T-54-00303	K0210-15A0		240150
21T-54-00303	K0210-16A0		240160
21T-54-00303	K0210-17A0		240170
21T-54-00303	K0210-18A0		240180
21T-54-00303	K0210-19A0		240190
21T-54-00303	K0210-20A0		240200
21T-54-00303	K0210-21A0		240210
21T-54-00303	K0210-22A0		240220
21T-54-00303	K0210-23A0		240230
21T-54-00303	K0210-24A0		240240
21T-54-00303	K0210-26A0		240260
21T-54-00303	K0210-27A0		240270
21T-54-00303	K0210-28A0		240280
21T-54-00303	K0210-29A0		240290
21T-54-00303	K0210-30A0		240300
21T-54-00303	K0210-31A0		240310
21T-54-00303	K0210-32A0		240320
21T-54-00303	K0210-33A0		240330
21T-54-00303	K0210-34A0		240340
21T-54-00303	K0210-35A0		240350
21T-54-00303	K0210-36A0		240360
21T-54-00303	K0210-37A0		240370
21T-54-00303	K0210-38A0		240380
21T-54-00303	K0210-39A0		240390
21T-54-00303	K0210-40A0		240400
21T-54-00303	K0210-41A0		240410
21T-54-00303	K0210-42A0		240420
21T-54-00303	K0210-43A0		240430
21T-54-00303	K0210-44A0		240440
21T-54-00303	K0210-45A0		240450
21T-54-00303	K0210-46A0		240460
21T-54-00303	K0210-47A0		240470
21T-54-00303	K0210-48A0		240480
21T-54-00303	K0210-49A0		240490
21T-54-00303	K0210-50A0		240500
21T-54-00303	K0210-51A0		240510
21T-54-00303	K0210-52A0		240520
21T-54-00303	K0210-53A0		240530

PART NO.	FIG.NO.	INDEX	PAGE
21T-54-00304	K0210-01A0		240010
21T-54-00304	K0210-02A0		240020
21T-54-00304	K0210-03A0		240030
21T-54-00304	K0210-04A0		240040
21T-54-00304	K0210-05A0		240050
21T-54-00304	K0210-06A0		240060
21T-54-00304	K0210-07A0		240070
21T-54-00304	K0210-08A0		240080
21T-54-00304	K0210-09A0		240090
21T-54-00304	K0210-10A0		240100
21T-54-00304	K0210-11A0		240110
21T-54-00304	K0210-12A0		240120
21T-54-00304	K0210-13A0		240130
21T-54-00304	K0210-14A0		240140
21T-54-00304	K0210-15A0		240150
21T-54-00304	K0210-16A0		240160
21T-54-00304	K0210-17A0		240170
21T-54-00304	K0210-18A0		240180
21T-54-00304	K0210-19A0		240190
21T-54-00304	K0210-20A0		240200
21T-54-00304	K0210-21A0		240210
21T-54-00304	K0210-22A0		240220
21T-54-00304	K0210-23A0		240230
21T-54-00304	K0210-24A0		240240
21T-54-00304	K0210-26A0		240260
21T-54-00304	K0210-27A0		240270
21T-54-00304	K0210-28A0		240280
21T-54-00304	K0210-29A0		240290
21T-54-00304	K0210-30A0		240300
21T-54-00304	K0210-31A0		240310
21T-54-00304	K0210-32A0		240320
21T-54-00304	K0210-33A0		240330
21T-54-00304	K0210-34A0		240340
21T-54-00304	K0210-35A0		240350
21T-54-00304	K0210-36A0		240360
21T-54-00304	K0210-37A0		240370
21T-54-00304	K0210-38A0		240380
21T-54-00304	K0210-39A0		240390
21T-54-00304	K0210-40A0		240400
21T-54-00304	K0210-41A0		240410
21T-54-00304	K0210-42A0		240420
21T-54-00304	K0210-43A0		240430
21T-54-00304	K0210-44A0		240440
21T-54-00304	K0210-45A0		240450
21T-54-00304	K0210-46A0		240460
21T-54-00304	K0210-47A0		240470
21T-54-00304	K0210-48A0		240480
21T-54-00304	K0210-49A0		240490
21T-54-00304	K0210-50A0		240500
21T-54-00304	K0210-51A0		240510

PART NO.	FIG.NO.	INDEX	PAGE
21T-54-00304	K0210-52A0		240520
21T-54-00304	K0210-53A0		240530
21T-54-00312	K0210-01A0		240010
21T-54-00312	K0210-02A0		240020
21T-54-00312	K0210-03A0		240030
21T-54-00312	K0210-04A0		240040
21T-54-00312	K0210-05A0		240050
21T-54-00312	K0210-06A0		240060
21T-54-00312	K0210-07A0		240070
21T-54-00312	K0210-08A0		240080
21T-54-00312	K0210-09A0		240090
21T-54-00312	K0210-10A0		240100
21T-54-00312	K0210-11A0		240110
21T-54-00312	K0210-12A0		240120
21T-54-00312	K0210-13A0		240130
21T-54-00312	K0210-14A0		240140
21T-54-00312	K0210-15A0		240150
21T-54-00312	K0210-16A0		240160
21T-54-00312	K0210-17A0		240170
21T-54-00312	K0210-18A0		240180
21T-54-00312	K0210-19A0		240190
21T-54-00312	K0210-20A0		240200
21T-54-00312	K0210-21A0		240210
21T-54-00312	K0210-22A0		240220
21T-54-00312	K0210-23A0		240230
21T-54-00312	K0210-24A0		240240
21T-54-00312	K0210-26A0		240260
21T-54-00312	K0210-27A0		240270
21T-54-00312	K0210-28A0		240280
21T-54-00312	K0210-29A0		240290
21T-54-00312	K0210-30A0		240300
21T-54-00312	K0210-31A0		240310
21T-54-00312	K0210-32A0		240320
21T-54-00312	K0210-33A0		240330
21T-54-00312	K0210-34A0		240340
21T-54-00312	K0210-35A0		240350
21T-54-00312	K0210-36A0		240360
21T-54-00312	K0210-37A0		240370
21T-54-00312	K0210-38A0		240380
21T-54-00312	K0210-39A0		240390
21T-54-00312	K0210-40A0		240400
21T-54-00312	K0210-41A0		240410
21T-54-00312	K0210-42A0		240420
21T-54-00312	K0210-43A0		240430
21T-54-00312	K0210-44A0		240440
21T-54-00312	K0210-45A0		240450
21T-54-00312	K0210-46A0		240460
21T-54-00312	K0210-47A0		240470
21T-54-00312	K0210-48A0		240480
21T-54-00312	K0210-49A0		240490

PART NO.	FIG.NO.	INDEX	PAGE
21T-54-00312	K0210-50A0		240500
21T-54-00312	K0210-51A0		240510
21T-54-00312	K0210-52A0		240520
21T-54-00312	K0210-53A0		240530
21T-54-15450	M1130-10A1	2	270290
21T-54-15691	M1130-09A2	6	270280
21T-54-15712	M1130-09A2	5	270280
21T-54-15720	M1130-08A1	14	270270
21T-54-15720	M1130-08A1	6	270270
21T-54-15730	M1130-08A1	15	270270
21T-54-15730	M1130-08A1	2	270270
21T-54-15730	M1130-08A1	7	270270
21T-54-15740	M1130-08A1	16	270270
21T-54-15740	M1130-08A1	8	270270
21T-54-15750	M1130-07A1	23	270260
21T-54-15790	M1130-07A1	30	270260
21T-54-15810	M1130-07A1	31	270260
21T-54-15820	M1130-07A1	32	270260
21T-54-27580	K0210-02A0	8	240020
21T-54-31112	M1120-01A0	1	270130
21T-54-31121	M1120-01A0	2	270130
21T-54-31130	M1120-01A0	3	270130
21T-54-31140	K1921-02A0	37	240690
21T-54-31140	K1921-02A1	53	240696
21T-54-31150	K1921-02A0	38	240690
21T-54-31150	K1921-02A1	54	240696
21T-54-31211	M1110-09A0	1	270090
21T-54-31221	M1110-09A0	2	270090
21T-54-31231	M1110-09A0	8	270090
21T-54-31240	M1110-09A0	11	270090
21T-54-31250	M1110-09A0	15	270090
21T-54-31260	M1110-09A0	12	270090
21T-54-31270	M1110-09A0	18	270090
21T-54-31280	M1110-09A0	19	270090
21T-54-31291	M1110-09A0	20	270090
21T-54-31322	M1110-03A0	1	270030
21T-54-31341	M1110-03A0	23	270030
21T-54-31351	M1110-03A0	35	270030
21T-54-31361	M1110-04A0	1	270040
21T-54-31371	M1110-04A0	17	270040
21T-54-31410	M1110-03A0	32	270030
21T-54-31410	M1110-05A0	26	270050
21T-54-31420	M1110-03A0	28	270030
21T-54-31430	M1110-03A0	29	270030
21T-54-31440	M1110-03A0	24	270030
21T-54-31450	M1110-03A0	25	270030
21T-54-31460	M1110-03A0	40	270030
21T-54-31470	M1110-03A0	44	270030
21T-54-31480	M1110-03A0	41	270030
21T-54-31490	M1110-03A0	36	270030

PART NO.	FIG.NO.	INDEX	PAGE
21T-54-31510	M1110-03A0	37	270030
21T-54-31520	M1110-04A0	19	270040
21T-54-31520	M1110-04A0	3	270040
21T-54-31530	M1110-03A0	18	270030
21T-54-31540	M1110-03A0	19	270030
21T-54-31550	M1110-03A0	20	270030
21T-54-31560	M1110-03A0	21	270030
21T-54-31570	M1110-01A0	23	270010
21T-54-31570	M1110-03A0	22	270030
21T-54-31570	M1110-04A0	36	270040
21T-54-31583	M1110-01A0	1	270010
21T-54-31591	M1110-01A0	28	270010
21T-54-31611	M1110-02A0	1	270020
21T-54-31621	M1110-02A0	13	270020
21T-54-31630	M1110-02A0	25	270020
21T-54-31640	M1110-02A0	28	270020
21T-54-31653	M1110-02A0	31	270020
21T-54-31662	M1110-02A0	35	270020
21T-54-31670	M1110-01A0	30	270010
21T-54-31680	M1110-01A0	31	270010
21T-54-31680	M1110-02A0	15	270020
21T-54-31680	M1110-02A0	3	270020
21T-54-31690	M1110-01A0	32	270010
21T-54-31710	M1110-02A0	16	270020
21T-54-31710	M1110-02A0	4	270020
21T-54-31730	M1110-01A0	24	270010
21T-54-31740	M1110-01A0	25	270010
21T-54-31750	M1110-01A0	26	270010
21T-54-31760	M1110-01A0	27	270010
21T-54-31772	M1110-02A0	32	270020
21T-54-31782	M1110-02A0	36	270020
21T-54-31811	M1110-11A0	1	270110
21T-54-31821	M1110-11A0	4	270110
21T-54-31831	M1110-11A0	7	270110
21T-54-31841	M1110-11A0	10	270110
21T-54-31850	M1110-11A0	13	270110
21T-54-31860	M1110-11A0	23	270110
21T-54-31871	M1110-11A0	36	270110
21T-54-31881	M1110-06A0	1	270060
21T-54-31892	M1110-06A0	14	270060
21T-54-31911	M1110-07A0	1	270070
21T-54-31921	M1110-07A0	6	270070
21T-54-31931	M1110-08A0	1	270080
21T-54-31941	M1110-08A0	5	270080
21T-54-31950	M1110-07A0	2	270070
21T-54-31960	M1110-07A0	3	270070
21T-54-31970	M1110-06A0	2	270060
21T-54-31970	M1110-07A0	4	270070
21T-54-31980	M1110-07A0	5	270070
21T-54-31980	M1110-08A0	2	270080

PART NO.	FIG.NO.	INDEX	PAGE
21T-54-31990	M1110-08A0	3	270080
21T-54-32110	M1110-08A0	6	270080
21T-54-32120	M1110-08A0	7	270080
21T-54-32130	M1110-08A0	4	270080
21T-54-32140	M1110-08A0	9	270080
21T-54-32150	M1110-04A0	35	270040
21T-54-32150	M1110-08A0	10	270080
21T-54-32160	M1110-06A0	15	270060
21T-54-32160	M1110-06A0	3	270060
21T-54-32170	M1110-06A0	4	270060
21T-54-32180	M1110-06A0	16	270060
21T-54-32190	M1110-06A0	17	270060
21T-54-32210	M1110-06A0	10	270060
21T-54-32221	M1110-07A0	22	270070
21T-54-32230	M1110-06A0	11	270060
21T-54-32240	M1110-07A0	23	270070
21T-54-32252	M1110-07A0	24	270070
21T-54-32260	M1110-01A0	2	270010
21T-54-32271	M1110-08A0	30	270080
21T-54-32280	M1110-01A0	3	270010
21T-54-32291	M1110-08A0	43	270080
21T-54-32311	M1110-08A0	46	270081
21T-54-32320	M1110-06A0	18	270060
21T-54-32320	M1110-06A0	5	270060
21T-54-32341	M1110-08A0	33	270080
21T-54-32350	M1110-08A0	40	270080
21T-54-32381	M1110-11A0	26	270110
21T-54-32391	M1110-11A0	31	270110
21T-54-32411	M1110-12A0	34	270120
21T-54-32431	M1110-12A0	35	270120
21T-54-32510	M1110-10A0	7	270100
21T-54-32521	M1110-10A0	1	270100
21T-54-32530	M1110-10A0	2	270100
21T-54-32530	M1110-10A0	8	270100
21T-54-32540	M1110-10A0	9	270100
21T-54-32550	M1110-10A0	10	270100
21T-54-32560	M1110-10A0	3	270100
21T-54-32570	M1110-10A0	4	270100
21T-54-32641	M1110-10A0	19	270100
21T-54-32651	M1110-10A0	13	270100
21T-54-32660	M1110-10A0	20	270100
21T-54-32670	M1110-10A0	14	270100
21T-54-32680	M1110-10A0	15	270100
21T-54-32680	M1110-10A0	21	270100
21T-54-32690	M1110-10A0	16	270100
21T-54-32690	M1110-10A0	22	270100
21T-54-32711	M1110-05A0	1	270050
21T-54-32720	M1110-05A0	22	270050
21T-54-32730	M1110-05A0	23	270050
21T-54-32740	M1110-04A0	37	270040

PART NO.	FIG.NO.	INDEX	PAGE
21T-54-32750	M1110-08A0	49	270081
21T-54-32761	M1210-03A0	14	270440
21T-54-32771	M1210-03A0	17	270440
21T-54-32781	M1210-03A0	20	270440
21T-54-32791	M1210-03A0	23	270440
21T-54-32811	M1110-12A0	1	270120
21T-54-32820	M1110-12A0	16	270120
21T-54-32832	M1110-12A0	19	270120
21T-54-32841	B0300-02A0	20	030050
21T-54-32851	M1110-12A0	23	270120
21T-54-32862	M1110-12A0	26	270120
21T-54-32891	M1110-12A0	27	270120
21T-54-32911	M1130-04A0	12	270170
21T-54-32911	M1140-06A0	1	270380
21T-54-32921	M1130-04A0	13	270170
21T-54-32921	M1140-06A0	2	270380
21T-54-32931	M1110-07A0	9	270070
21T-54-32940	B0300-02A1	20	030060
21T-54-32960	K1921-01A0	18	240680
21T-54-32960	K1921-01A1	18	240685
21T-54-32960	K1921-01A3	18	240687
21T-54-32960	M1110-01A0	18	270010
21T-54-32960	M1110-08A0	11	270080
21T-54-32973	D0200-11A0	26	090150
21T-54-32980	D0200-11A0	34	090150
21T-54-32990	D0200-11A0	31	090150
21T-54-33116	M1130-01A0	4	270140
21T-54-33116	M1130-01A1	4	270145
21T-54-33121	M1130-01A0	13	270140
21T-54-33121	M1130-01A1	13	270145
21T-54-33121	M1140-02A0	12	270340
21T-54-33131	M1140-02A0	9	270340
21T-54-33141	M1130-01A0	1	270140
21T-54-33141	M1130-01A1	1	270145
21T-54-33141	M1140-02A0	1	270340
21T-54-33170	D0200-11A0	43	090150
21T-54-33170	M1130-01A0	15	270140
21T-54-33170	M1130-01A1	15	270145
21T-54-33170	M1140-02A0	14	270340
21T-54-33170	M1140-04A0	13	270360
21T-54-33170	M1140-05A0	18	270370
21T-54-33182	M1140-03A0	1	270350
21T-54-33191	M1140-03A0	4	270350
21T-54-33213	M1140-04A0	1	270360
21T-54-33231	M1140-04A0	4	270360
21T-54-33241	M1140-04A0	11	270360
21T-54-33251	M1140-04A0	8	270360
21T-54-33261	M1140-04A0	16	270360
21T-54-33282	M1140-05A0	1	270370
21T-54-33311	M1140-05A0	15	270370

PART NO.	FIG.NO.	INDEX	PAGE
21T-54-33321	M1140-05A0	11	270370
21T-54-33331	M1140-05A0	23	270370
21T-54-33340	D0200-11A0	42	090150
21T-54-33340	M1130-01A0	14	270140
21T-54-33340	M1130-01A1	14	270145
21T-54-33340	M1140-02A0	13	270340
21T-54-33340	M1140-04A0	12	270360
21T-54-33340	M1140-05A0	17	270370
21T-54-33382	D0200-11A0	21	090150
21T-54-33462	M1130-06A0	13	270190
21T-54-33471	M1130-04A0	18	270170
21T-54-33490	M1130-02A0	16	270150
21T-54-33510	M1130-02A0	13	270150
21T-54-33533	M1130-06A0	1	270190
21T-54-33541	M1130-02A0	10	270150
21T-54-33562	M1130-06A0	4	270190
21T-54-33581	M1130-06A0	7	270190
21T-54-33611	M1130-06A0	10	270190
21T-54-33633	M1130-02A0	1	270150
21T-54-33651	M1130-05A0	1	270180
21T-54-33661	M1130-05A0	5	270180
21T-54-33671	M1130-02A0	25	270150
21T-54-33682	M1130-04A0	6	270170
21T-54-33691	M1130-04A0	9	270170
21T-54-33712	M1210-02A0	1	270430
21T-54-33722	M1210-02A0	2	270430
21T-54-33731	M1210-01A0	13	270420
21T-54-33742	M1210-01A0	1	270420
21T-54-33751	M1210-02A0	19	270430
21T-54-33771	M1210-01A0	10	270420
21T-54-33781	M1210-01A0	16	270420
21T-54-33791	M1210-01A0	19	270420
21T-54-33812	M1210-01A0	4	270420
21T-54-33820	M1210-02A0	44	270430
21T-54-33831	M1210-02A0	32	270430
21T-54-33841	M1210-02A0	5	270430
21T-54-33850	M1210-02A0	21	270430
21T-54-33850	M1210-02A0	34	270430
21T-54-33860	M1210-02A0	22	270430
21T-54-33860	M1210-02A0	35	270430
21T-54-33870	M1210-02A0	23	270430
21T-54-33870	M1210-02A0	36	270430
21T-54-33881	M1210-02A0	12	270430
21T-54-33891	M1210-02A0	8	270430
21T-54-33912	M1210-03A0	6	270440
21T-54-33921	M1210-03A0	7	270440
21T-54-33931	M1210-03A0	1	270440
21T-54-34111	K1921-01A0	1	240680
21T-54-34121	K1921-01A0	8	240680
21T-54-34121	K1921-01A1	8	240685

PART NO.	FIG.NO.	INDEX	PAGE
21T-54-34121	K1921-01A3	8	240687
21T-54-34131	K1921-03A0	1	240700
21T-54-34141	K1921-03A0	4	240700
21T-54-34151	K1921-03A0	7	240700
21T-54-34161	K1921-03A0	10	240700
21T-54-34172	K1120-01A0	6	240660
21T-54-34172	K1120-01A1	6	240670
21T-54-34182	K1120-01A0	7	240660
21T-54-34182	K1120-01A1	7	240670
21T-54-34192	K1120-01A0	8	240660
21T-54-34192	K1120-01A1	8	240670
21T-54-34210	M1130-10A1	16	270290
21T-54-34231	K1921-01A0	35	240680
21T-54-34231	K1921-01A1	35	240685
21T-54-34231	K1921-01A3	35	240687
21T-54-34240	K1921-01A0	38	240680
21T-54-34240	K1921-01A1	38	240685
21T-54-34240	K1921-01A3	38	240687
21T-54-34250	K1921-01A0	41	240680
21T-54-34250	K1921-01A1	41	240685
21T-54-34250	K1921-01A3	41	240687
21T-54-34260	K1921-02A0	36	240690
21T-54-34271	K1921-02A0	18	240690
21T-54-34271	K1921-02A1	15	240695
21T-54-34280	M1150-01A0	12	270400
21T-54-34280	M1150-01A0	2	270400
21T-54-34290	M1150-01A0	13	270400
21T-54-34312	K1921-02A0	1	240690
21T-54-34322	K1921-02A0	24	240690
21T-54-34322	K1921-02A1	24	240695
21T-54-34331	K1921-02A0	27	240690
21T-54-34341	K1921-02A0	30	240690
21T-54-34341	K1921-02A1	33	240695
21T-54-34351	K1921-02A0	2	240690
21T-54-34362	K1921-02A0	9	240690
21T-54-34381	K1921-02A0	10	240690
21T-54-34411	M1140-01A0	1	270330
21T-54-34421	M1140-01A0	4	270330
21T-54-34515	M1130-07A1	1	270260
21T-54-34523	M1130-09A2	1	270280
21T-54-34532	M1130-11A1	1	270300
21T-54-34551	M1130-11A1	17	270300
21T-54-34562	M1130-10A1	10	270290
21T-54-34570	M1130-13A0	9	270320
21T-54-34580	M1130-13A0	15	270320
21T-54-34590	M1130-09A2	13	270280
21T-54-34613	M1130-11A1	21	270300
21T-54-34620	M1130-13A0	10	270320
21T-54-34640	M1130-13A0	1	270320
21T-54-34650	M1130-10A1	4	270290

PART NO.	FIG.NO.	INDEX	PAGE
21T-54-34660	M1130-10A1	7	270290
21T-54-34672	M1130-08A1	31	270271
21T-54-34672	M1130-10A1	1	270290
21T-54-34680	M1420-01A0	6	270470
21T-54-34690	M1420-01A0	2	270470
21T-54-34710	M1210-02A0	9	270430
21T-54-34790	M1150-01A0	14	270400
21T-54-34811	M1810-01A0	1	270510
21T-54-34821	M1810-02A0	5	270520
21T-54-34831	M1810-02A0	1	270520
21T-54-34841	M1810-01A0	5	270510
21T-54-34850	M1420-01A0	5	270470
21T-54-34861	M1810-01A0	8	270510
21T-54-34871	M1810-01A0	13	270510
21T-54-34882	M1810-02A0	11	270520
21T-54-34891	M1810-03A0	2	270530
21T-54-34911	M1810-03A0	1	270530
21T-54-34920	M1810-03A0	4	270530
21T-54-34931	M1810-03A0	7	270530
21T-54-34941	M1810-02A0	14	270520
21T-54-34951	M1810-02A0	18	270520
21T-54-34961	M1810-02A0	22	270520
21T-54-34971	M1810-03A0	10	270530
21T-54-34981	M1810-03A0	14	270530
21T-54-34991	M1810-03A0	18	270530
21T-54-35113	K0210-01A0	1	240010
21T-54-35221	K0210-05A0	1	240050
21T-54-35231	K0210-04A0	1	240040
21T-54-35241	K0210-04A0	4	240040
21T-54-35251	K0210-04A0	7	240040
21T-54-35264	K0210-04A0	10	240040
21T-54-35271	K0210-05A0	4	240050
21T-54-35282	K0210-04A0	13	240040
21T-54-35312	K1120-01A0	11	240660
21T-54-35312	K1120-01A1	11	240670
21T-54-35322	K1120-01A0	15	240660
21T-54-35322	K1120-01A1	15	240670
21T-54-35331	K0210-20A0	13	240200
21T-54-35341	K0210-05A0	16	240050
21T-54-35352	K0210-20A0	1	240200
21T-54-35361	K0210-20A0	4	240200
21T-54-35371	K0210-05A0	8	240050
21T-54-35381	K0210-20A0	7	240200
21T-54-35391	K0210-20A0	6	240200
21T-54-35402	K0210-01A0		240010
21T-54-35412	K0210-01A0	2	240010
21T-54-35421	K0210-01A0	4	240010
21T-54-35432	K0210-01A0	26	240010
21T-54-35440	K0210-01A0	5	240010
21T-54-35451	K0210-20A0	28	240200

PART NO.	FIG.NO.	INDEX	PAGE
21T-54-35462	K0210-01A0	6	240010
21T-54-35471	K0210-01A0	7	240010
21T-54-35481	K0210-01A0	8	240010
21T-54-35491	K0210-20A0	32	240200
21T-54-35550	K0210-30A0	35	240300
21T-54-35561	K0210-30A0	30	240300
21T-54-35571	K0210-28A0	19	240280
21T-54-35582	K1120-01A0	12	240660
21T-54-35582	K1120-01A1	12	240670
21T-54-35591	K0210-28A0	22	240280
21T-54-35612	K0210-08A0	1	240080
21T-54-35622	K0210-09A0	1	240090
21T-54-35622	K0210-09A0	17	240090
21T-54-35642	K0210-10A0	1	240100
21T-54-35652	K0210-08A0	8	240080
21T-54-35652	K0210-09A0	25	240090
21T-54-35652	K0210-10A0	9	240100
21T-54-35663	K0210-09A0	24	240090
21T-54-35663	K0210-09A0	8	240090
21T-54-35663	K0210-10A0	8	240100
21T-54-35671	K0210-06A0	16	240060
21T-54-35671	K0210-06A0	7	240060
21T-54-35682	K1120-01A0	16	240660
21T-54-35682	K1120-01A1	16	240670
21T-54-35692	K0210-53A0	1	240530
21T-54-35711	K0210-07A0	18	240070
21T-54-35722	K1120-01A0	19	240660
21T-54-35722	K1120-01A1	19	240670
21T-54-35732	K1120-01A1	20	240670
21T-54-35741	K0210-07A0	15	240070
21T-54-35761	K0210-08A0	14	240080
21T-54-35810	K0210-11A0	1	240110
21T-54-35821	K0210-11A0	2	240110
21T-54-35821	K0210-11A0	5	240110
21T-54-35830	K0210-03A0	11	240030
21T-54-35840	K0210-03A0	12	240030
21T-54-35840	K0210-03A0	5	240030
21T-54-35850	K0210-03A0	13	240030
21T-54-35850	K0210-03A0	6	240030
21T-54-35861	K0210-03A0	8	240030
21T-54-35870	K0210-03A0	2	240030
21T-54-35911	K0210-20A0	19	240200
21T-54-35940	K0210-15A0	3	240150
21T-54-35950	K0210-11A0	6	240110
21T-54-35961	K0210-11A0	7	240110
21T-54-35970	K0210-11A0	8	240110
21T-54-35990	K0210-11A0	9	240110
21T-54-36100	K0210-02A0		240020
21T-54-3610001	K0210-02A0	1	240020
21T-54-3610002	K0210-02A0	2	240020

PART NO.	FIG.NO.	INDEX	PAGE
21T-54-3610003	K0210-02A0	3	240020
21T-54-3610004	K0210-02A0	4	240020
21T-54-3610005	K0210-02A0	5	240020
21T-54-3610006	K0210-02A0	6	240020
21T-54-3610007	K0210-02A0	7	240020
21T-54-36121	K0210-02A0	10	240020
21T-54-36131	K0210-02A0	11	240020
21T-54-36141	K0210-02A0	12	240020
21T-54-36151	K0210-02A0	13	240020
21T-54-36161	K0210-02A0	14	240020
21T-54-36171	K0210-02A0	15	240020
21T-54-36180	K0210-02A0	16	240020
21T-54-36190	K0210-02A0	17	240020
21T-54-36210	K0210-02A0	18	240020
21T-54-36220	K0210-02A0	19	240020
21T-54-36231	K0210-02A0	20	240020
21T-54-36241	K0210-03A0	7	240030
21T-54-36261	K0210-03A0	9	240030
21T-54-36271	K0210-03A0	3	240030
21T-54-36281	K0210-01A0	9	240010
21T-54-36281	K0210-03A0	14	240030
21T-54-36291	K0210-01A0	10	240010
21T-54-36291	K0210-03A0	15	240030
21T-54-36311	K0210-02A0	22	240020
21T-54-36321	K0210-03A0	1	240030
21T-54-36341	K0210-16A0	9	240160
21T-54-36351	K0210-16A0	6	240160
21T-54-36371	K0210-04A0	16	240040
21T-54-36381	K0210-05A0	19	240050
21T-54-36390	K0210-12A0	12	240120
21T-54-36411	K0210-20A0	20	240200
21T-54-36421	K0210-20A0	22	240200
21T-54-36430	M1130-08A1	21	270270
21T-54-36440	M1130-08A1	24	270270
21T-54-36450	M1130-08A1	1	270270
21T-54-36471	K1120-01A0	1	240660
21T-54-36471	K1120-01A1	1	240670
21T-54-36480	M1420-03A0	4	270490
21T-54-36511	K0210-07A0	3	240070
21T-54-36521	K0210-07A0	6	240070
21T-54-36531	K0210-07A0	21	240070
21T-54-36541	K0210-04A0	19	240040
21T-54-36551	K0210-07A0	9	240070
21T-54-36561	K0210-07A0	12	240070
21T-54-36571	K0210-06A0	1	240060
21T-54-36581	K0210-06A0	4	240060
21T-54-36592	K0210-06A0	10	240060
21T-54-36611	K0210-06A0	13	240060
21T-54-36622	K0210-07A0	1	240070
21T-54-36631	K0210-24A0	1	240240

PART NO.	FIG.NO.	INDEX	PAGE
21T-54-36642	K0210-24A0	2	240240
21T-54-36651	K0210-24A0	3	240240
21T-54-36661	K1120-01A0	30	240660
21T-54-36661	K1120-01A1	30	240670
21T-54-36671	K1120-01A0	31	240660
21T-54-36671	K1120-01A1	31	240670
21T-54-36680	K1120-01A0	32	240660
21T-54-36680	K1120-01A1	32	240670
21T-54-36690	K1120-01A0	33	240660
21T-54-36690	K1120-01A1	33	240670
21T-54-36711	K0210-19A0	1	240190
21T-54-36720	K0210-19A0	4	240190
21T-54-36730	K0210-19A0	13	240190
21T-54-36740	K0210-19A0	14	240190
21T-54-36750	K0210-19A0	15	240190
21T-54-36771	K0210-19A0	7	240190
21T-54-36781	K0210-19A0	10	240190
21T-54-36820	B0300-01A0	10	030040
21T-54-36850	M1210-02A0	24	270430
21T-54-36920	M1110-12A0	2	270120
21T-54-36930	B0300-01A0	11	030040
21T-54-36961	K1921-01A0	26	240680
21T-54-36961	K1921-01A1	26	240685
21T-54-36961	K1921-01A3	26	240687
21T-54-36970	K1921-01A0	29	240680
21T-54-36970	K1921-01A1	29	240685
21T-54-36970	K1921-01A3	29	240687
21T-54-37110	M1140-05A0	3	270370
21T-54-37120	M1140-05A0	4	270370
21T-54-37130	M1140-05A0	5	270370
21T-54-37140	M1140-05A0	6	270370
21T-54-37150	K1921-02A0	15	240690
21T-54-37150	K1921-02A1	12	240695
21T-54-37150	M1130-03A0	20	270160
21T-54-37150	M1210-02A0	27	270430
21T-54-37150	M1210-02A0	39	270430
21T-54-37161	K0210-32A0	3	240320
21T-54-37190	K0210-20A0	2	240200
21T-54-37190	M1210-05A0	41	270460
21T-54-37210	M1110-10A0	25	270100
21T-54-37220	M1140-07A0	1	270390
21T-54-37240	K0210-46A0	13	240460
21T-54-37291	K1120-01A0	24	240660
21T-54-37291	K1120-01A1	24	240670
21T-54-37580	K1921-02A1	4	240695
21T-54-37590	K1921-02A1	5	240695
21T-54-37611	K1921-02A1	42	240695
21T-54-37621	K1921-02A1	45	240695
21T-54-37630	K1921-02A1	27	240695
21T-54-37640	K1921-02A1	30	240695

PART NO.	FIG.NO.	INDEX	PAGE
21T-54-37661	K1921-02A1	39	240695
21T-54-37672	K1921-02A1	2	240695
21T-54-37681	K1921-02A1	49	240696
21T-54-37690	K1921-02A1	46	240696
21T-54-37710	K0210-46A0	30	240460
21T-54-37731	K1921-02A1	9	240695
21T-54-37750	K1921-02A1	19	240695
21T-54-37780	K0210-23A0	1	240230
21T-54-37890	K0210-46A0	20	240460
21T-54-37910	K0210-46A0	25	240460
21T-54-37980	K1120-01A0	27	240660
21T-54-37980	K1120-01A1	27	240670
21T-54-37990	K1120-01A0	26	240660
21T-54-37990	K1120-01A1	26	240670
21T-54-39111	M1810-01A0	3	270510
21T-54-39121	M1810-04A0	1	270540
21T-54-39131	M1810-04A0	3	270540
21T-54-39141	M1810-04A0	8	270540
21T-54-39151	M1810-04A0	12	270540
21T-54-39162	M1810-02A0	8	270520
21T-54-39171	M1810-04A0	5	270540
21T-54-39210	M1810-02A0	2	270520
21T-54-39210	M1810-02A0	6	270520
21T-54-39210	M1810-03A0	3	270530
21T-54-39210	M1810-04A0	2	270540
21T-54-39210	M1810-04A0	4	270540
21T-54-39220	M1810-01A0	2	270510
21T-54-39250	M1810-02A0	3	270520
21T-54-39261	M1810-02A0	15	270520
21T-54-39261	M1810-02A0	19	270520
21T-54-39261	M1810-03A0	11	270530
21T-54-39261	M1810-03A0	15	270530
21T-54-39271	M1810-02A0	23	270520
21T-54-39271	M1810-03A0	19	270530
21T-54-39271	M1810-04A0	13	270540
21T-54-39271	M1810-04A0	9	270540
21T-54-39280	M1810-02A0	4	270520
21T-54-39290	M1810-02A0	7	270520
21T-54-39330	M1810-01A0	4	270510
21T-54-39351	M1110-08A0	34	270080
21T-54-39360	M1110-08A0	35	270080
21T-54-39411	M1150-01A0	1	270400
21T-54-39420	M1150-01A0	8	270400
21T-54-39431	M1150-01A0	11	270400
21T-54-39441	M1150-01A0	19	270400
21T-54-39451	M1150-01A0	22	270400
21T-54-39461	M1150-01A0	26	270400
21T-54-39470	M1150-01A0	29	270400
21T-54-39480	M1150-01A0	32	270400
21T-54-39490	M1150-02A0	1	270410

PART NO.	FIG.NO.	INDEX	PAGE
21T-54-39510	M1150-02A0	6	270410
21T-54-39520	M1150-02A0	12	270410
21T-54-39531	M1150-02A0	16	270410
21T-54-39541	M1150-02A0	22	270410
21T-54-39551	M1150-02A0	29	270410
21T-54-39560	M1150-02A0	2	270410
21T-54-39570	M1150-02A0	3	270410
21T-54-39580	M1150-02A0	7	270410
21T-54-39610	M1150-02A0	17	270410
21T-54-39621	M1150-01A0	3	270400
21T-54-39631	M1150-02A0	18	270410
21T-54-39641	M1150-02A0	19	270410
21T-54-39650	M1150-02A0	23	270410
21T-54-39660	M1150-02A0	24	270410
21T-54-39670	M1150-02A0	25	270410
21T-54-39680	M1150-02A0	26	270410
21T-54-39690	M1150-02A0	30	270410
21T-54-39712	M1210-04A0	1	270450
21T-54-39720	M1110-12A0	3	270120
21T-54-39730	M1110-12A0	4	270120
21T-54-39740	M1110-12A0	5	270120
21T-54-39751	M1110-12A0	6	270120
21T-54-39761	M1110-12A0	7	270120
21T-54-39770	M1110-12A0	8	270120
21T-54-39790	M1110-12A0	9	270120
21T-54-39810	M1110-12A0	10	270120
21T-54-39980	M1110-03A0	2	270030
21T-54-39990	M1110-03A0	3	270030
21T-54-52250	M1150-01A0	23	270400
21T-54-64931	M1130-12A1	2	270310
21T-54-65830	M1130-03A0	25	270160
21T-54-65830	M1210-02A0	18	270430
21T-54-65950	M1130-12A1	5	270310
21T-54-66130	M1130-07A1	19	270260
21T-54-66141	M1130-07A1	24	270260
21T-54-66161	M1130-09A2	2	270280
21T-54-66260	M1130-08A1	22	270270
21T-54-66270	M1130-08A1	23	270270
21T-54-66280	M1130-08A1	13	270270
21T-54-66331	M1130-13A0	13	270320
21T-54-66351	M1130-09A2	16	270280
21T-54-66440	M1130-13A0	26	270320
21T-54-66450	M1130-13A0	23	270320
21T-54-68550	M1130-05A0	2	270180
21T-54-69450	E0200-04A0	22	120060
21T-54-69450	M1110-02A0	10	270020
21T-54-69450	M1110-04A0	9	270040
21T-54-69711	K0210-08A0	11	240080
21T-54-69711	K0210-09A0	11	240090
21T-54-69711	K0210-09A0	28	240090

PART NO.	FIG.NO.	INDEX	PAGE
21T-54-69711	K0210-10A0	12	240100
21T-54-69842	K0210-08A0	2	240080
21T-54-69842	K0210-09A0	18	240090
21T-54-69842	K0210-09A0	2	240090
21T-54-69842	K0210-10A0	2	240100
21T-54-69852	K0210-08A0	5	240080
21T-54-69852	K0210-09A0	21	240090
21T-54-69852	K0210-09A0	5	240090
21T-54-69852	K0210-10A0	5	240100
21T-54-69920	K1921-02A0	11	240690
21T-54-69950	K1921-02A0	3	240690
21T-54-69990	K0210-08A0	17	240080
21T-54-69990	K0210-09A0	14	240090
21T-54-69990	K0210-09A0	31	240090
21T-54-69990	K0210-10A0	15	240100
21T-54-71980	E0200-10A0	9	120120
21T-54-71980	E0200-32A0	15	120330
21T-54-71980	E0200-33A0	15	120340
21T-54-71980	E0201-01A0	12	120360
21T-54-71980	E0202-03A0	11	120400
21T-54-71980	E0202-04A0	11	120410
21T-54-71980	K0210-11A0	18	240110
21T-54-71980	M1130-12A1	1	270310
21T-54-71980	W1114-01A11	14	480160
21T-54-73211	E0200-04A0	24	120060
21T-54-79620	M1420-01A0	3	270470
21T-57-31112	K0210-21A0	1	240210
21T-57-31121	K0210-22A0	1	240220
21T-60-12221	P1140-01A1		330040
21T-60-12222	P1140-01A1		330040
21T-60-12251	P1140-01A5	8	330080
21T-60-12620	P1140-01A1	1	330040
21T-60-12630	P1140-01A1	2	330040
21T-60-12640	P1140-01A1		330040
21T-60-12650	P1140-01A1	3	330040
21T-60-12660	P1140-01A1	4	330040
21T-60-12670	P1140-01A1		330040
21T-60-12680	P1140-01A1	5	330040
21T-60-12690	P1140-01A1	6	330040
21T-60-12710	P1140-01A1	7	330040
21T-60-12720	P1140-01A1	8	330040
21T-60-12730	P1140-01A1	9	330040
21T-60-12740	P1140-01A1	10	330040
21T-60-12750	P1140-01A1	11	330040
21T-60-12760	P1140-01A1	12	330040
21T-60-12770	P1140-01A1	13	330040
21T-60-12780	P1140-01A1	14	330040
21T-60-12790	P1140-01A1	15	330040
21T-60-12810	P1140-01A1	16	330040
21T-60-12820	P1140-01A1	17	330040

PART NO.	FIG.NO.	INDEX	PAGE
21T-60-12830	P1140-01A1	18	330040
21T-60-12840	P1140-01A1	19	330040
21T-60-12850	P1140-01A1	20	330040
21T-60-31113	H0110-01A0	1	180010
21T-60-31113	H0110-01A1	1	180015
21T-60-31120	H0110-02A0	10	180020
21T-60-31131	H0110-02A0	25	180020
21T-60-31141	H0110-02A0	6	180020
21T-60-31150	H0110-04A0	1	180040
21T-60-31170	H0110-04A0	9	180040
21T-60-31180	H0110-05A0	1	180050
21T-60-31201	H0110-03A0		180030
21T-60-31211	H0110-03A0	3	180030
21T-60-31221	H0110-03A0	4	180030
21T-60-31230	H1843-03A0	1	180800
21T-60-31240	H0110-03A0	26	180030
21T-60-31250	H0110-03A0	23	180030
21T-60-31291	H0110-01A1	25	180015
21T-60-31300	H0350-01A0		180380
21T-60-31310	H0110-01A0	13	180010
21T-60-31310	H0110-01A1	13	180015
21T-60-31320	H0110-01A0	9	180010
21T-60-31320	H0110-01A1	9	180015
21T-60-31330	H0110-01A0	17	180010
21T-60-31330	H0110-01A1	17	180015
21T-60-31340	H0110-01A0	19	180010
21T-60-31340	H0110-01A1	19	180015
21T-60-31351	H0110-01A0	6	180010
21T-60-31351	H0110-01A1	6	180015
21T-60-31380	H0350-01A0	3	180380
21T-60-31390	H0110-06A0	1	180060
21T-60-31400	H1841-03A0	1	180760
21T-60-31410	H1841-03A0	2	180760
21T-60-31410	V0100-01A0	5	450010
21T-60-31420	H0110-03A0	30	180030
21T-60-31440	H0110-01A0	24	180010
21T-60-31440	H0110-01A1	24	180015
21T-60-31450	H0340-01A0	7	180320
21T-60-31450	V0100-01A0	6	450010
21T-60-31460	D0100-01A0	32	090010
21T-60-31460	D0100-01A1	27	090020
21T-60-31460	D0100-01A2	32	090030
21T-60-31460	D0100-01A3	27	090040
21T-60-31490	H0110-02A0	7	180020
21T-60-31510	P1140-01A3	17	330060
21T-60-31600	H0340-01A0	6	180320
21T-60-31700	H1850-04A0		180840
21T-60-31710	H1850-04A0	20	180840
21T-60-32113	H0311-01A1	1	180170
21T-60-32113	H0311-02A1	1	180177

PART NO.	FIG.NO.	INDEX	PAGE
21T-60-72120	P1140-01A8	11	330110
21T-60-72620	H1850-04A0	11	180840
21T-62-14130	P1140-01A2	1	330050
21T-62-22270	H0340-04A0	5	180350
21T-62-23880	W0111-01A1	5	480010
21T-62-31680	H0312-02A0	8	180200
21T-62-33171	H0312-02A0	24	180200
21T-62-34211	T1210-01A4	27	390240
21T-62-64480	P1140-01A2		330050
21T-62-64481	P1140-01A2	11	330050
21T-62-68350	N1310-01A2	46	300211
21T-62-68740	T1110-01A10	25	390100
21T-62-68740	T1110-01A10	35	390100
21T-62-71680	H1310-01A0	12	180480
21T-62-71680	H1310-01A0	29	180480
21T-62-74121	N1310-01A2	10	300210
21T-62-74420	P1140-01A3	1	330060
21T-62-74430	P1140-01A3	4	330060
21T-62-74441	P1140-01A3	24	330060
21T-62-74450	P1140-01A7	10	330100
21T-62-74460	P1140-01A7	9	330100
21T-62-75351	H0311-01A0	10	180165
21T-62-75351	H0311-02A0	10	180175
21T-62-76420	H0110-04A0	17	180040
21T-62-84110	P1140-01A8	8	330110
21T-62-84120	P1140-01A2		330050
21T-62-84121	P1140-01A2	8	330050
21T-62-87870	H0350-01A0	22	180380
21T-64-31111	H0120-01A0	10	180070
21T-64-31111	H0120-01A0	2	180070
21T-64-31120	H0120-01A0	17	180070
21T-64-31210	H0210-09A0	1	180138
21T-64-31210	H0220-09A0	1	180148
21T-64-31221	H0210-09A0	6	180138
21T-64-31221	H0220-09A0	6	180148
21T-64-31260	H0312-01A0	15	180190
21T-64-31310	H1210-01A0	9	180420
21T-64-31320	H1210-02A0	22	180430
21T-64-31330	H1210-03A0	17	180440
21T-64-31340	H1210-02A0	1	180430
21T-64-31350	H1210-03A0	1	180440
21T-64-31360	H1221-01A0	1	180450
21T-64-31370	H1221-01A0	7	180450
21T-64-31380	H1221-01A0	13	180450
21T-64-31390	H1221-01A0	17	180450
21T-64-31430	H1222-01A0	1	180470
21T-64-31440	H1222-01A0	5	180470
21T-64-31450	H1222-01A0	9	180470
21T-64-31460	H1222-01A0	15	180470
21T-64-31470	H1310-01A0	18	180480

PART NO.	FIG.NO.	INDEX	PAGE
21T-64-31480	H1310-01A0	22	180480
21T-64-31490	H1310-01A0	1	180480
21T-64-31520	H1340-01A0	1	180510
21T-64-31530	H1340-01A0	2	180510
21T-64-31540	H1210-01A0	1	180420
21T-64-31550	H1210-01A0	2	180420
21T-64-31590	H0312-04A0	20	180220
21T-64-31610	H0312-03A0	6	180210
21T-64-31620	H0312-03A0	15	180210
21T-64-31631	H0312-03A0	38	180210
21T-64-31640	H0312-04A0	1	180220
21T-64-31650	H0312-04A0	12	180220
21T-64-31661	H0312-05A0	1	180230
21T-64-31670	H0312-05A0	12	180230
21T-64-31690	H0312-03A0	35	180210
21T-64-31710	H0312-04A0	17	180220
21T-64-31720	H0312-03A0	7	180210
21T-64-31730	H0312-03A0	22	180210
21T-64-31740	H0312-06A0	1	180250
21T-64-31750	H0312-06A0	2	180250
21T-64-31760	H0312-06A0	3	180250
21T-64-31770	H0312-06A0	4	180250
21T-64-31781	H0312-06A0	5	180250
21T-64-31790	H0312-03A0	44	180210
21T-64-31810	H1210-02A0	11	180430
21T-64-31820	H1210-03A0	11	180440
21T-64-31830	H1210-02A0	32	180430
21T-64-31840	H1210-03A0	27	180440
21T-64-31870	H0230-02A0	1	180161
21T-64-31890	N1220-01A4	7	300150
21T-64-31890	N1220-01A8	8	300190
21T-64-31911	H1221-02A0	10	180460
21T-64-31920	H1221-02A0	13	180460
21T-64-31920	H1222-01A0	19	180470
21T-64-31930	H1310-01A0	15	180480
21T-64-31940	H1310-01A0	32	180480
21T-64-31950	H1340-01A0	9	180510
21T-64-31960	H0312-08A0	26	180260
21T-64-31970	H0312-08A0	32	180260
21T-64-31980	H1210-03A0	33	180440
21T-64-31980	H1221-02A0	16	180460
21T-64-31990	H1210-02A0	17	180430
21T-64-32121	H0312-08A0	29	180260
21T-64-32140	H1210-02A0	14	180430
21T-64-32140	H1210-03A0	14	180440
21T-64-32150	H1210-02A0	35	180430
21T-64-32150	H1210-03A0	30	180440
21T-64-32160	H1210-02A0	26	180430
21T-64-32160	H1210-03A0	21	180440
21T-64-32160	H1222-01A0	22	180470

PART NO.	FIG.NO.	INDEX	PAGE
21T-64-32181	H0312-02A0	18	180200
21T-64-32190	H0312-02A0	21	180200
21T-64-32210	H0311-01A0	1	180165
21T-64-32210	H0311-02A0	1	180175
21T-64-32220	H0311-01A0	2	180165
21T-64-32220	H0311-02A0	2	180175
21T-64-32230	H0311-01A0	14	180165
21T-64-32230	H0311-02A0	14	180175
21T-64-32240	H0311-01A0	18	180165
21T-64-32240	H0311-02A0	18	180175
21T-64-32250	H0311-01A0	6	180165
21T-64-32250	H0311-02A0	6	180175
21T-64-32260	H0311-01A0	7	180165
21T-64-32260	H0311-02A0	7	180175
21T-64-32271	H0311-01A1	12	180170
21T-64-32271	H0311-02A1	12	180177
21T-64-32280	H0311-01A1	21	180170
21T-64-32280	H0311-02A1	21	180177
21T-64-32310	H0311-01A1	9	180170
21T-64-32310	H0311-02A1	9	180177
21T-64-32330	H0110-04A0	13	180040
21T-64-32410	H1210-02A0	29	180430
21T-64-32410	H1210-03A0	24	180440
21T-64-32410	H1222-01A0	25	180470
21T-64-32421	N1310-01A2	1	300210
21T-64-32431	H1221-02A0	1	180460
21T-64-32440	H1221-02A0	2	180460
21T-64-32470	H0330-01A0	8	180290
21T-64-32470	H1340-01A0	10	180510
21T-64-32480	H0312-01A0	16	180190
21T-64-32511	H0311-01A1	18	180170
21T-64-32511	H0311-02A1	18	180177
21T-64-32520	H0311-01A1	25	180170
21T-64-32520	H0311-02A1	25	180177
21T-64-32560	H0311-01A1	16	180170
21T-64-32560	H0311-02A1	16	180177
21T-64-32610	H1210-02A0	8	180430
21T-64-32610	H1210-03A0	8	180440
21T-64-32650	H1221-02A0	7	180460
21T-64-32970	T1130-01A1	1	390170
21T-64-32980	T1130-01A1	6	390170
21T-64-32990	T1130-01A1	8	390170
21T-64-33110	H0330-03A0	1	180310
21T-64-33121	H0320-01A0	1	180270
21T-64-33131	H0320-01A0	2	180270
21T-64-33141	H0320-01A0	3	180270
21T-64-33151	H0320-01A0	4	180270
21T-64-33160	H0320-01A0	5	180270
21T-64-33170	H0320-01A0	11	180270
21T-64-33180	H0320-01A0	17	180270

PART NO.	FIG.NO.	INDEX	PAGE
21T-64-33211	H0330-01A0	5	180290
21T-64-33220	H0330-01A0	1	180290
21T-64-33230	H0330-03A0	2	180310
21T-64-33240	H0110-04A0	23	180040
21T-64-33261	H0340-04A0	1	180350
21T-64-33280	H1840-01A0	6	180660
21T-64-33311	H0340-01A0	1	180320
21T-64-33361	H0330-03A0	7	180310
21T-64-33371	H0330-03A0	10	180310
21T-64-33391	H0340-05A0	29	180360
21T-64-33411	H0320-02A0	15	180280
21T-64-33421	H0320-02A0	16	180280
21T-64-33431	H0320-02A0	17	180280
21T-64-33441	H0320-02A0	23	180280
21T-64-33451	H0210-09A0	11	180138
21T-64-33451	H0220-09A0	11	180148
21T-64-33451	H0340-01A0	10	180320
21T-64-33461	H1841-03A0	29	180760
21T-64-33470	H0312-02A0	15	180200
21T-64-33480	H0320-02A0	29	180280
21T-64-33490	H0320-02A0	30	180280
21T-64-33530	H0340-03A0	1	180340
21T-64-33540	H0340-06A0	1	180370
21T-64-33550	H0110-05A0	8	180050
21T-64-33580	H0340-03A0	2	180340
21T-64-33590	H0340-03A0	5	180340
21T-64-33610	H0340-06A0	10	180370
21T-64-33620	H0340-06A0	7	180370
21T-64-33630	H0340-06A0	22	180370
21T-64-33641	H0110-05A0	16	180050
21T-64-33650	H0340-03A0	6	180340
21T-64-33660	N1220-01A8	12	300190
21T-64-33670	H0340-04A0	53	180351
21T-64-33670	H1832-03A0	17	180570
21T-64-33670	H1841-02A0	39	180750
21T-64-33680	H0340-06A0	34	180370
21T-64-33690	H0340-06A0	35	180370
21T-64-33710	H0340-01A0	15	180320
21T-64-33731	H0110-05A0	22	180050
21T-64-33761	H0312-05A0	20	180230
21T-64-33770	H0110-05A0	26	180050
21T-64-33810	H0312-05A0	29	180230
21T-64-33820	H0312-06A0	12	180240
21T-64-33820	H0312-06A0	19	180240
21T-64-33830	H0340-05A0	24	180360
21T-64-33840	H0320-02A0	36	180280
21T-64-33850	H0320-02A0	1	180280
21T-64-33860	H0320-01A0	23	180270
21T-64-33870	H0320-01A0	28	180270
21T-64-33880	H0330-03A0	30	180310

PART NO.	FIG.NO.	INDEX	PAGE
21T-64-33890	H0330-03A0	35	180310
21T-64-33910	H1320-03A0	14	180505
21T-64-33920	H1320-03A0	15	180505
21T-64-33930	H1320-03A0	17	180505
21T-64-33940	H1320-03A0	19	180505
21T-64-33970	H0340-06A0	25	180370
21T-64-34111	P1120-01A0	9	330010
21T-64-34121	P1120-02A0	9	330020
21T-64-34130	P1120-02A0	2	330020
21T-64-34141	P1120-02A0	10	330020
21T-64-34151	P1140-01A6	9	330090
21T-64-34160	P1140-01A7	28	330100
21T-64-34170	P1140-01A6	19	330090
21T-64-34180	P1140-01A7	22	330100
21T-64-34190	P1120-01A0	16	330010
21T-64-34210	P1120-01A0	8	330010
21T-64-34220	P1120-03A0	1	330030
21T-64-34230	P1120-02A0	15	330020
21T-64-34240	P1140-01A3	7	330060
21T-64-34301	H1850-04A0		180840
21T-64-34311	H1850-04A0	4	180840
21T-64-34320	H1850-04A0	5	180840
21T-64-34330	H1850-04A0	6	180840
21T-64-34350	M1130-12A0	1	270250
21T-64-34371	H1850-04A0	1	180840
21T-64-34410	H1850-04A0	29	180840
21T-64-34430	H1850-04A0	32	180840
21T-64-34440	P1140-01A3	26	330060
21T-64-34450	H0340-04A0	37	180350
21T-64-34460	H0340-04A0	22	180350
21T-64-34510	W1114-01A7	1	480120
21T-64-34541	H1840-01A0	1	180660
21T-64-34541	H1841-02A0	8	180750
21T-64-34560	W1114-01A7	2	480120
21T-64-35340	H1850-04A0	52	180841
21T-64-35880	N1220-01A4	16	300150
21T-64-35880	N1220-01A8	20	300190
21T-64-35910	N1220-01A4	25	300150
21T-64-36110	H1833-05A0	3	180605
21T-64-36122	H1833-05A0	30	180605
21T-64-36130	H1841-01A0	1	180740
21T-64-36150	H1841-01A0	6	180740
21T-64-36161	H0120-02A0	17	180080
21T-64-36161	H0120-03A0	10	180090
21T-64-36161	H0120-04A0	17	180100
21T-64-36161	H0120-04A0	7	180100
21T-64-36161	H0120-05A0	11	180110
21T-64-36161	H0120-05A0	4	180110
21T-64-36190	N1310-01A2	18	300210
21T-64-36190	N1310-01A2	31	300210

PART NO.	FIG.NO.	INDEX	PAGE
21T-64-36210	H1841-01A0	9	180740
21T-64-36220	H1841-01A0	14	180740
21T-64-36230	H1841-02A0	13	180750
21T-64-36242	H1831-01A0	4	180520
21T-64-36251	H1833-06A0	4	180610
21T-64-36261	H1833-07A0	4	180620
21T-64-36270	H1833-01A1	3	180585
21T-64-36280	H1840-02A0	1	180670
21T-64-36290	H1840-04A0	1	180690
21T-64-36410	H1835-01A0	14	180630
21T-64-36410	H1842-01A0	3	180770
21T-64-36420	H1835-01A0	15	180630
21T-64-36590	H1841-03A0	15	180760
21T-64-36590	H1841-03A0	20	180760
21T-64-36591	H0340-02A0	19	180330
21T-64-36611	H1835-03A0	1	180650
21T-64-36620	H0350-01A0	20	180380
21T-64-36631	H0350-02A0	1	180390
21T-64-36640	H0350-03A0	1	180400
21T-64-36660	H0120-02A0	33	180080
21T-64-36671	H1843-03A0	9	180800
21T-64-36680	H1842-01A0	4	180770
21T-64-36690	H1842-01A0	5	180770
21T-64-36710	H0350-03A0	17	180400
21T-64-36721	H1843-03A0	28	180800
21T-64-36770	H1841-02A0	38	180750
21T-64-36780	H1841-03A0	23	180760
21T-64-36800	H1833-06A0		180610
21T-64-36800	H1833-07A0		180620
21T-64-36810	H1833-07A0	18	180620
21T-64-36810	H1833-07A0	7	180620
21T-64-36830	H0120-04A0	14	180100
21T-64-36830	H0120-04A0	4	180100
21T-64-36850	H1833-05A0	24	180605
21T-64-36860	H1833-07A0	10	180620
21T-64-36860	N1220-01A8	29	300190
21T-64-36870	H1833-06A0	10	180610
21T-64-36890	H1832-03A0		180570
21T-64-36910	H1840-08A0	17	180720
21T-64-36920	H1840-08A0	18	180720
21T-64-36930	H1840-09A0	14	180730
21T-64-36940	H1840-09A0	13	180730
21T-64-36950	H1840-09A0	19	180730
21T-64-36960	H1840-09A0	16	180730
21T-64-36970	H1840-09A0	18	180730
21T-64-36980	H1840-09A0	15	180730
21T-64-38111	K0210-52A0	1	240520
21T-64-38120	H1835-03A0	14	180650
21T-64-38120	K0210-52A0	7	240520
21T-64-38160	K0210-52A0	15	240520

PART NO.	FIG.NO.	INDEX	PAGE
21T-64-38170	K0210-52A0	11	240520
21T-64-38170	K0210-52A0	18	240520
21T-64-38181	K0210-52A0	12	240520
21T-64-38211	K0210-43A0	1	240430
21T-64-38211	K0210-43A0	10	240430
21T-64-38211	K0210-43A0	22	240430
21T-64-38240	K0210-42A0	3	240420
21T-64-38240	K0210-42A0	9	240420
21T-64-39110	T1110-01A7	1	390070
21T-64-39120	T1110-01A8	1	390080
21T-64-39130	T1110-01A8	11	390080
21T-64-39140	T1110-01A8	27	390080
21T-64-39150	T1110-01A8	34	390080
21T-64-39160	T1110-01A8	41	390080
21T-64-39170	T1110-01A9	1	390090
21T-64-39180	T1110-01A9	9	390090
21T-64-39190	T1110-01A9	17	390090
21T-64-39210	T1110-01A10	1	390100
21T-64-39220	T1110-01A10	11	390100
21T-64-39230	T1110-01A10	21	390100
21T-64-39240	T1110-01A10	31	390100
21T-64-39421	T1110-01A11	12	390110
21T-64-39430	T1210-01A6	1	390260
21T-64-39510	T1110-01A7	5	390070
21T-64-39540	T1110-01A1	18	390010
21T-64-39540	T1110-01A7	6	390070
21T-64-39540	T1110-01A9	11	390090
21T-64-39540	T1110-01A9	19	390090
21T-64-39540	T1110-01A9	3	390090
21T-64-39540	T1110-02A1	18	390130
21T-64-39551	T1110-01A9	10	390090
21T-64-39551	T1110-01A9	18	390090
21T-64-39551	T1110-01A9	2	390090
21T-64-39570	T1110-01A10	15	390100
21T-64-39570	T1110-01A10	5	390100
21T-64-39570	T1110-01A7	2	390070
21T-64-39570	T1110-01A8	5	390080
21T-64-39590	T1110-01A8	16	390080
21T-64-39610	T1110-01A9	25	390090
21T-64-39640	T1110-01A8	24	390080
21T-643-4360	K0710-08A1	21	240645
21T-68-31112	W1117-04A2A	1	480260
21T-68-31132	W1117-02A2A	1	480200
21T-68-31143	T1210-01A5	17	390250
21T-68-31180	W1117-02A2A	2	480200
21T-68-31190	W1117-02A3		480210
21T-68-31190	W1117-04A3		480270
21T-68-31211	W1117-02A6	12	480240
21T-68-31211	W1117-04A6	12	480300
21T-68-31231	W1117-02A2A	3	480200

PART NO.	FIG.NO.	INDEX	PAGE
21T-68-31231	W1117-04A2A	3	480260
21T-68-31240	W1117-02A2A	10	480200
21T-68-31240	W1117-04A2A	10	480260
21T-68-31250	W1117-02A2A	6	480200
21T-68-31250	W1117-04A2A	6	480260
21T-68-31260	W1117-02A2A	13	480200
21T-68-31270	G1010-02A0	7	150020
21T-68-31280	G1010-04A0	7	150040
21T-68-31290	G1010-01A0	9	150010
21T-68-31310	G1010-01A0	8	150010
21T-68-31320	G1010-02A0	1	150020
21T-68-31331	G1010-04A0	1	150040
21T-68-31341	G1010-04A0	22	150040
21T-68-31361	W1117-02A6	8	480240
21T-68-31361	W1117-04A6	8	480300
21T-68-31371	W1117-02A6	1	480240
21T-68-31371	W1117-04A6	1	480300
21T-68-31380	G1010-01A0	5	150010
21T-68-31380	W1117-02A1	16	480190
21T-68-31380	W1117-04A1	16	480250
21T-68-31390	G1010-01A0	4	150010
21T-68-31390	W1117-02A1	17	480190
21T-68-31390	W1117-04A1	17	480250
21T-68-31430	G1010-04A0	16	150040
21T-68-31450	W1117-02A1	18	480190
21T-68-31450	W1117-04A1	18	480250
21T-68-31462	G1010-01A0	1	150010
21T-68-31481	G1010-04A0	32	150040
21T-68-31510	T1110-01A4	4	390040
21T-68-31540	T1110-01A5	1	390050
21T-68-31550	T1110-01A5	21	390050
21T-68-31560	T1110-01A5	2	390050
21T-68-31570	T1110-01A5	31	390050
21T-68-31580	T1110-01A5	3	390050
21T-68-31590	T1110-01A5	8	390050
21T-68-31620	T1210-01A4	1	390240
21T-68-31643	T1210-01A5	14	390250
21T-68-31710	T1210-01A3	22	390230
21T-68-31720	T1210-01A3	23	390230
21T-68-31730	T1210-01A4	4	390240
21T-68-31740	T1210-01A4	5	390240
21T-68-31810	M1130-10A0	28	270230
21T-68-31810	T1210-01A2	23	390220
21T-68-31830	T1210-01A2	5	390220
21T-68-31840	T1210-01A2	33	390220
21T-68-31851	T1210-01A5	1	390250
21T-68-31870	T1210-01A3	19	390230
21T-68-31880	T1210-01A4	17	390240
21T-68-31910	T1110-01A5	9	390050
21T-68-31920	T1110-01A5	32	390050

PART NO.	FIG.NO.	INDEX	PAGE
21T-68-31930	T1110-01A5	22	390050
21T-68-31940	T1110-01A5	33	390050
21T-68-31950	T1110-01A3	26	390030
21T-68-31960	T1110-01A1	6	390010
21T-68-31960	T1110-02A1	6	390130
21T-68-31980	T1110-01A3	31	390030
21T-68-31980	T1210-01A2	22	390220
21T-68-32110	T1210-01A4	20	390240
21T-68-32140	G1010-02A0	28	150020
21T-68-32150	G1010-02A0	25	150020
21T-68-32270	G1010-05A0	8	150050
21T-68-32270	G1010-06A0	7	150060
21T-68-32280	G1010-05A0	7	150050
21T-68-32280	G1010-06A0	6	150060
21T-68-32290	G1010-05A0	2	150050
21T-68-32290	G1010-06A0	1	150060
21T-68-32310	G1010-05A0	10	150050
21T-68-32310	G1010-06A0	9	150060
21T-68-32320	G1010-05A0	9	150050
21T-68-32320	G1010-06A0	8	150060
21T-68-32330	G1010-05A0	16	150050
21T-68-32330	G1010-06A0	15	150060
21T-68-32340	T1110-01A3	15	390030
21T-68-32340	T1110-01A3	22	390030
21T-68-32340	T1210-01A2	15	390220
21T-68-32340	T1210-01A3	34	390230
21T-68-32340	T1210-01A3	39	390230
21T-68-32340	T1210-01A3	9	390230
21T-68-32351	T1110-01A3	16	390030
21T-68-32351	T1110-01A3	23	390030
21T-68-32351	T1210-01A2	16	390220
21T-68-32351	T1210-01A3	10	390230
21T-68-32351	T1210-01A3	35	390230
21T-68-32351	T1210-01A3	40	390230
21T-68-32362	T1110-01A3	12	390030
21T-68-32372	T1210-01A2	12	390220
21T-68-32380	W1117-02A4	8	480220
21T-68-32380	W1117-04A4	8	480280
21T-68-32390	W1117-02A4	9	480220
21T-68-32390	W1117-04A4	9	480280
21T-68-32410	W1114-01A5	6	480100
21T-68-32410	W1114-02A5	6	480180
21T-68-32410	W1117-05A7	26	480360
21T-68-32420	W1114-01A5	7	480100
21T-68-32420	W1114-02A5	7	480180
21T-68-32420	W1117-05A7	27	480360
21T-68-32430	W1117-05A7	19	480360
21T-68-32441	B0300-05A0	34	030090
21T-68-32450	W1117-04A2A	2	480260
21T-68-32460	W1117-05A7	1	480360

PART NO.	FIG.NO.	INDEX	PAGE
21T-68-32480	W1117-04A7	10	480310
21T-68-32480	W1117-05A7	8	480360
21T-68-32480	W1117-06A7	10	480330
21T-68-32530	T1210-01A4	12	390240
21T-68-32550	T1210-01A3	51	390231
21T-68-32572	G1010-02A0	17	150020
21T-68-32582	G1010-02A0	31	150020
21T-68-32592	T1210-01A3	5	390230
21T-68-32612	T1210-01A5	4	390250
21T-68-32662	T1210-01A5	9	390250
21T-68-32682	T1210-01A3	33	390230
21T-68-32822	T1110-01A3	19	390030
21T-68-32831	T1210-01A3	38	390230
21T-68-32840	T1210-01A5	7	390250
21T-68-32850	T1210-01A5	12	390250
21T-68-32930	M1130-10A0	22	270230
21T-68-32930	M1130-10A0	38	270230
21T-68-32950	M1130-10A0	19	270230
21T-68-32970	M1130-10A0	25	270230
21T-68-33110	M1130-10A0	35	270230
21T-68-33130	M1130-10A0	31	270230
21T-68-33210	W1117-04A8	5	480320
21T-68-33221	W1117-04A8	4	480320
21T-68-33232	W1117-04A8	18	480320
21T-68-33240	W1117-04A8	3	480320
21T-68-33541	W1114-01A6	8	480110
21T-68-33551	W1114-01A6	5	480110
21T-68-33561	W1114-01A6	11	480110
21T-68-67390	G1010-05A0	15	150050
21T-68-67390	G1010-06A0	14	150060
21T-68-67410	G1010-05A0	21	150050
21T-68-67420	G1010-05A0	22	150050
21T-68-67430	G1010-06A0	29	150060
21T-68-67490	E0450-03A0	14	120530
21T-68-67490	E0450-03A0	22	120530
21T-68-67510	G1010-05A0	17	150050
21T-68-67510	G1010-06A0	16	150060
21T-68-67560	G1010-06A0	22	150060
21T-68-67570	G1010-06A0	21	150060
21T-68-67711	T1210-01A4	15	390240
21T-68-67721	T1210-01A4	16	390240
21T-68-67911	T1230-01A5	4	390330
21T-68-67940	T1230-01A3		390310
21T-68-67950	T1230-01A4		390320
21T-68-67961	T1210-01A4	18	390240
21T-68-67971	T1210-01A4	19	390240
21T-68-67980	T1230-01A2	8	390300
21T-68-67990	T1230-01A2	14	390300
21T-68-68320	T1230-01A5	7	390330
21T-68-68430	T1110-01A3	1	390030

PART NO.	FIG.NO.	INDEX	PAGE
21T-68-68550	T1110-01A3	9	390030
21T-68-68570	T1210-01A3	16	390230
21T-68-72450	W1117-02A4	5	480220
21T-68-72450	W1117-04A4	5	480280
21T-70-00022	T1110-01A2	9	390020
21T-70-00202	T1110-01A1		390010
21T-70-00203	T1110-01A1		390010
21T-70-00340	T1210-01A1		390210
21T-70-00350	T1230-01A1		390290
21T-70-00360	T1230-01A1		390290
21T-70-00370	J1310-01A0	7	210030
21T-70-00380	J1310-01A0	16	210030
21T-70-00430	T1110-02A1		390130
21T-70-00431	T1110-02A1		390130
21T-70-11320	T1110-01A2	6	390020
21T-70-31112	T1110-01A1		390010
21T-70-31113	T1110-01A1	1	390010
21T-70-31171	J1310-01A0	12	210030
21T-70-31181	T1110-01A2	1	390020
21T-70-31190	T1110-01A2	15	390020
21T-70-31213	T1110-01A2	7	390020
21T-70-31220	J1310-01A0	10	210030
21T-70-31230	J1310-01A0	11	210030
21T-70-31240	T1110-01A2	2	390020
21T-70-31250	T1110-01A1	17	390010
21T-70-31250	T1110-02A1	17	390130
21T-70-31260	T1110-01A2	16	390020
21T-70-31290	T1110-01A2	8	390020
21T-70-31290	T1210-01A1	7	390210
21T-70-31310	T1110-01A2	11	390020
21T-70-31320	T1110-01A2	12	390020
21T-70-31350	T1110-01A2	17	390020
21T-70-31350	T1210-01A1	11	390210
21T-70-31350	T1210-01A1	17	390210
21T-70-31391	T1110-01A2		390020
21T-70-31421	J1310-01A0		210030
21T-70-31441	T1110-01A2	20	390020
21T-70-31470	J1310-01A0		210030
21T-70-31480	J1310-01A0		210030
21T-70-31490	J1310-01A0		210030
21T-70-31511	T1110-01A1	7	390010
21T-70-31511	T1110-02A1	7	390130
21T-70-31531	T1110-01A1	8	390010
21T-70-31531	T1110-02A1	8	390130
21T-70-31541	T1110-01A1	9	390010
21T-70-31541	T1110-02A1	9	390130
21T-70-31610	T1110-01A1	10	390010
21T-70-31610	T1110-02A1	10	390130
21T-70-31620	T1110-01A1	12	390010
21T-70-31620	T1110-02A1	12	390130

PART NO.	FIG.NO.	INDEX	PAGE
21T-70-31630	T1110-01A1	13	390010
21T-70-31630	T1110-02A1	13	390130
21T-70-31640	T1110-01A1	14	390010
21T-70-31640	T1110-02A1	14	390130
21T-70-31670	T1110-01A1	11	390010
21T-70-31670	T1110-02A1	11	390130
21T-70-31690	J1310-01A0		210030
21T-70-31760	T1230-01A2	3	390300
21T-70-31771	T1230-01A1	35	390290
21T-70-31780	T1110-01A2		390020
21T-70-31810	T1110-01A2		390020
21T-70-31820	T1110-01A2		390020
21T-70-32111	T1210-01A1	1	390210
21T-70-32130	T1210-01A1	8	390210
21T-70-32140	T1210-01A1	14	390210
21T-70-32153	T1210-01A1	2	390210
21T-70-32160	T1210-01A1	10	390210
21T-70-32170	T1210-01A1	16	390210
21T-70-32181	T1210-01A1	9	390210
21T-70-32211	T1210-01A1	15	390210
21T-70-32310	T1210-01A5	20	390250
21T-70-32320	T1210-01A5	23	390250
21T-70-32330	T1210-01A2	2	390220
21T-70-33110	T1230-01A1	1	390290
21T-70-33120NK	T1230-01A1	13	390290
21T-70-33131	T1230-01A1	28	390290
21T-70-33141	T1230-01A1	29	390290
21T-70-33151	T1230-01A1	26	390290
21T-70-33161	T1230-01A1	27	390290
21T-70-33171	T1230-01A1	45	390291
21T-70-33184	T1230-01A1	40	390290
21T-70-33190	T1230-01A1	41	390290
21T-70-33211	T1230-01A1	32	390290
21T-70-33221	T1230-01A1	7	390290
21T-70-33231	T1230-01A1	19	390290
21T-70-33250	T1230-01A1	31	390290
21T-70-33250	T1230-01A1	46	390291
21T-70-34121	T1510-02A1	2	390340
21T-70-34221	T1510-02A1	31	390340
21T-70-34221	T1510-03A1	27	390360
21T-70-34221	T1510-04A1	30	390350
21T-70-34231	T1510-02A1	32	390340
21T-70-34231	T1510-03A1	28	390360
21T-70-34231	T1510-04A1	31	390350
21T-70-34240	T1510-02A1	33	390340
21T-70-34240	T1510-03A1	29	390360
21T-70-34240	T1510-04A1	32	390350
21T-70-34312	T1510-02A1	34	390340
21T-70-34312	T1510-03A1	30	390360
21T-70-34312	T1510-04A1	33	390350

PART NO.	FIG.NO.	INDEX	PAGE
21T-70-34312	T1930-02A1	1	390370
21T-70-34321	T1510-02A1	35	390340
21T-70-34321	T1510-03A1	31	390360
21T-70-34321	T1510-04A1	34	390350
21T-70-34321	T1930-02A1	10	390370
21T-70-34332	T1930-02A1	3	390370
21T-70-34341	T1930-02A1	12	390370
21T-70-34372	T1930-02A1	4	390370
21T-70-34452	T1510-02A1	30	390340
21T-70-34452	T1510-03A1	26	390360
21T-70-34452	T1510-04A1	29	390350
21T-70-34461	T1510-02A1	29	390340
21T-70-34461	T1510-03A1	25	390360
21T-70-34461	T1510-04A1	28	390350
21T-70-34580	T1510-02A1	28	390340
21T-70-34580	T1510-03A1	24	390360
21T-70-34580	T1510-04A1	27	390350
21T-70-34590	T1510-02A1	25	390340
21T-70-34590	T1510-03A1	23	390360
21T-70-34610	T1510-02A1	5	390340
21T-70-34610	T1510-03A1	4	390360
21T-70-34610	T1510-04A1	4	390350
21T-70-34620	T1510-02A1	6	390340
21T-70-34620	T1510-03A1	3	390360
21T-70-34620	T1510-04A1	3	390350
21T-70-34B92	T1510-02A1	7	390340
21T-70-34D12	T1510-02A1	8	390340
21T-70-34D62	T1510-02A1	9	390340
21T-70-34D62	T1510-03A1	22	390360
21T-70-34F10	T1510-02A1	10	390340
21T-70-34F10	T1510-03A1	16	390360
21T-70-34F10	T1510-04A1	16	390350
21T-70-34F20	T1510-02A1	11	390340
21T-70-34F20	T1510-03A1	7	390360
21T-70-34F20	T1510-04A1	7	390350
21T-70-34F31	T1510-02A1	12	390340
21T-70-34F40	T1510-02A1	13	390340
21T-70-34F50	T1510-02A1	14	390340
21T-70-34F60	T1510-02A1	15	390340
21T-70-34F70	T1510-02A1	16	390340
21T-70-34F80	T1510-02A1	17	390340
21T-70-34F90	T1510-02A1	18	390340
21T-70-34G10	T1510-02A1	19	390340
21T-70-34G50	T1510-02A1	21	390340
21T-70-34G60	T1510-02A1	22	390340
21T-70-34L10	T1510-02A1	23	390340
21T-70-34L10	T1510-03A1	14	390360
21T-70-34L10	T1510-04A1	14	390350
21T-70-34L20	T1510-02A1	26	390340
21T-70-34L30	T1510-02A1	24	390340

PART NO.	FIG.NO.	INDEX	PAGE
21T-70-34L30	T1510-03A1	15	390360
21T-70-34L30	T1510-04A1	15	390350
21T-70-34L40	T1510-02A1	27	390340
21T-70-35110	T1110-02A1		390130
21T-70-35111	T1110-02A1	1	390130
21T-70-67230	J1310-01A0	1	210030
21T-70-67461	T1230-01A1	10	390290
21T-70-67461	T1230-01A1	22	390290
21T-70-71130	T1110-01A1	15	390010
21T-70-71130	T1110-02A1	15	390130
21T-70-71181	J1310-01A0	3	210030
21T-70-71210	T1110-01A1	16	390010
21T-70-71210	T1110-02A1	16	390130
21T-70-71232	J1310-01A0	2	210030
21T-70-71460	J1310-01A0	18	210030
21T-70-71460	T1110-01A5	12	390050
21T-70-71460	T1110-01A5	25	390050
21T-70-71460	T1210-01A2	28	390220
21T-70-71470	G1010-02A0	38	150020
21T-70-71470	G1010-02A0	40	150020
21T-70-71490	J1310-01A0	13	210030
21T-70-71490	J1310-01A0	4	210030
21T-70-71490	T1110-01A2	3	390020
21T-70-73160	T1230-01A1	15	390290
21T-70-73170	T1230-01A1	14	390290
21T-70-73170	T1230-01A1	2	390290
21T-72-11730	M1130-02A0	2	270150
21T-72-12620	B0300-05A0	2	030090
21T-72-12620	H1221-02A0	4	180460
21T-72-12620	H1221-02A0	6	180460
21T-72-12620	M1110-11A0	12	270110
21T-72-12620	M1110-11A0	15	270110
21T-72-12620	M1110-11A0	18	270110
21T-72-12620	M1110-11A0	22	270110
21T-72-12620	M1110-11A0	25	270110
21T-72-12620	M1110-11A0	28	270110
21T-72-12620	M1110-11A0	3	270110
21T-72-12620	M1110-11A0	33	270110
21T-72-12620	M1110-11A0	6	270110
21T-72-12620	M1110-11A0	9	270110
21T-72-12620	M1130-07A1	36	270260
21T-72-12620	M1420-02A0	5	270480
21T-72-14590	T1230-01A1	36	390290
21T-72-15860	T1140-01A1	4	390180
21T-72-15860	T1140-01A2	4	390190
21T-72-15870	T1140-01A1	5	390180
21T-72-15870	T1140-01A2	5	390190
21T-72-15870	Y0100-01A0		510010
21T-72-19360	G1010-02A0	39	150020
21T-72-73170	T1230-01A1	47	390291

PART NO.	FIG.NO.	INDEX	PAGE
21T-94-31142	T1210-01A1	3	390210
21T-979-3110	K0710-01A0	6	240570
21T-979-3120	K0710-02A0	10	240580
21T-979-3130	K0710-02A0	13	240580
21T-979-3141	K0710-02A0	4	240580
21T-979-3150	K0710-02A0	7	240580
21T-979-3161	K0710-02A0	1	240580
21T-979-3270	K0710-01A0	10	240570
21T-979-3280	K0210-31A0	2	240310
21T-979-3320	K0710-08A0	16	240640
21T-979-3320	K0710-08A0	24	240640
21T-979-3320	K0710-08A1	16	240645
21T-979-3320	K0710-08A1	24	240645
21T-979-3330	K0710-08A0	21	240640
21T-979-3340	K0710-08A0	20	240640
21T-979-3341	K0710-08A1	20	240645
21T-979-3350	K0710-05A0	17	240610
21T-979-3360	K0710-06A0	14	240620
21T-979-3370	K0710-06A0	13	240620
21T-979-3380	K0710-06A0	4	240620
21T-979-3390	K0710-06A0	3	240620
21T-979-3410	K0710-07A0	9	240630
21T-979-3420	K0710-04A0	15	240600
21T-979-3430	K0710-04A0	11	240600
21T-979-3441	K0710-03A0	11	240590
21T-979-3450	K0710-03A0	23	240590
21T-979-3460	K0710-07A0	16	240630
21T-979-3470	K0710-07A0	24	240630
21T-979-3481	K0710-07A0	1	240630
21T-979-3511	K0710-03A0	1	240590
21T-979-3521	K0710-03A0	5	240590
21T-979-3531	K0710-05A0	1	240610
21T-979-3561	K0710-06A0	20	240620
21T-979-3571	K0710-06A0	6	240620
21T-979-3611	K0710-03A0	3	240590
21T-979-3621	K0710-03A0	7	240590
21T-979-3631	K0710-05A0	5	240610
21T-979-3640	K0710-05A0	3	240610
21T-979-3661	K0710-06A0	18	240620
21T-979-3671	K0710-06A0	8	240620
21T-979-3710	K0710-04A0	4	240600
21T-979-3720	K0710-04A0	5	240600
21T-979-3731	K0710-08A0	2	240640
21T-979-3731	K0710-08A1	2	240645
21T-979-3741	K0710-08A0	3	240640
21T-979-3741	K0710-08A1	3	240645
21T-979-3751	K0710-08A0	17	240640
21T-979-3751	K0710-08A1	17	240645
21T-979-3761	K0710-08A0	18	240640
21T-979-3761	K0710-08A1	18	240645

PART NO.	FIG.NO.	INDEX	PAGE
21T-979-3780	K0710-08A0	25	240640
21T-979-3780	K0710-08A1	25	240645
21T-979-3810	K0710-08A0	28	240640
21T-979-3810	K0710-08A1	28	240645
21T-979-3860	K0710-05A0	18	240610
21T-979-3870	K0710-05A0	19	240610
21T-979-4111	K0210-28A0	4	240280
21T-979-4121	K0210-27A0	1	240270
21T-979-4131	K0210-29A0	17	240290
21T-979-4141	K0210-29A0	20	240290
21T-979-4151	K0210-28A0	1	240280
21T-979-4181	K0210-28A0	9	240280
21T-979-4191	K0210-28A0	12	240280
21T-979-4211	K0210-28A0	16	240280
21T-979-4241	K0210-28A0	25	240280
21T-979-4251	K0210-28A0	33	240280
21T-979-4261	K0210-28A0	28	240280
21T-979-4271	K0210-28A0	38	240280
21T-979-4281	K0210-27A0	13	240270
21T-979-4291	K0210-27A0	9	240270
21T-979-4380	K0210-27A0	4	240270
21T-979-4391	K0210-29A0	14	240290
21T-979-4411	K0210-29A0	11	240290
21T-979-4421	K0210-32A0	1	240320
21T-979-4421	K0710-03A0	35	240590
21T-979-4471	K0210-29A0	1	240290
21T-979-4481	K0210-29A0	4	240290
21T-979-4492	K0210-29A0	8	240290
21T-979-4510	K0210-30A0	1	240300
21T-979-4520	K0210-30A0	13	240300
21T-979-4530	K0210-30A0	3	240300
21T-979-4542	K0210-30A0	15	240300
21T-979-4552	K0210-30A0	8	240300
21T-979-4562	K0210-30A0	23	240300
21T-979-4572	K0210-30A0	10	240300
21T-979-4582	K0210-30A0	25	240300
21T-979-4590	K0210-30A0	31	240300
21T-979-4610	K0210-30A0	12	240300
21T-979-6220	K0710-06A0	22	240620
21T-98-31211	W1114-01A1	1	480060
21T-98-31221	W1114-01A2	4	480070
21T-98-31231	W1114-01A2	1	480070
21T-98-31241	W1114-01A1	8	480060
21T-98-31250	W1114-01A2	28	480070
21T-98-31260	W1114-01A2	25	480070
21T-98-31271	W1114-01A2	17	480070
21T-98-31281	W1114-01A2	8	480070
21T-98-31290	W1114-01A1	2	480060
21T-98-31311	W1114-01A1	24	480060
21T-98-31320	B0100-02A1	1	030030

PART NO.	FIG.NO.	INDEX	PAGE
21T-98-31330	W1114-01A5	15	480100
21T-98-31340	W1114-01A5	16	480100
21T-98-31352	W1114-01A2	15	480070
21T-98-31361	W1114-01A1	14	480060
21T-98-31370	W1114-01A6	19	480110
21T-98-31393	B0600-08A0	45	030181
21T-98-31421	W1114-01A1	9	480060
21T-98-31430	W1114-01A5	13	480100
21T-98-31440	W1114-01A5	14	480100
21T-98-63150	W9970-02A1	1	480390
21T-98-63150	W9970-03A1	1	480400
21T-98-63160	W9970-02A1	2	480390
21T-98-63160	W9970-03A1	2	480400
21T26-31150	N1210-04A0	27	300050
21T64-31760	H0312-06A0	9	180251
21T64-31770	H0312-06A0	10	180251
21T64-31781	H0312-06A0	11	180251
21W-62-42410	K0210-45A0	3	240450
21W-62-42570	K0210-43A0	19	240430
21W-62-42630	H0120-04A0	24	180100
21W-62-42640	B0600-03A0	1	030130
21W-62-42640	B0600-03A0	13	030130
21W-62-42640	H0110-04A0	29	180040
21W-62-42640	H0110-05A0	5	180050
21W-62-42640	H0340-04A0	9	180350
21W-62-42640	H0340-05A0	12	180360
21W-62-42640	H1841-03A0	5	180760
21W-62-43960	W1114-01A7	5	480120
21W-62-45140	H0230-02A0	18	180161
21W-70-41741	M1130-09A0	1	270220
21W-97-34141	H1841-03A0	8	180760
21X-54-39380	E0200-04A0	45	120060
21X-62-21140	H0340-04A0	40	180350
21Y-06-11290	E0200-04A0	10	120060
21Y-06-11290	E0200-04A0	14	120060
21Y-06-11290	E0200-04A0	6	120060
22B-03-12590	C0100-02A0	3	060020
22B-06-11690	E0200-23A0	11	120240
22F-71-21130	M1130-09A0	6	270220
22L-71-21120	W1114-01A4	1	480090
22L-71-21120	W1114-01A4	5	480090
22M-62-21341	K0210-11A0	3	240110
22U-00-21510	U0100-01A1	15	420010
22U-00-28110	U0100-01A3	17	420030
22U-00-28140	U0100-01A3	5	420030
22U-06-11660	E0200-09A0	6	120110
22U-06-22250	E0200-03A0	22	120050
22U-06-22320	K0210-39A0	7	240390
22U-06-22350	K0210-16A0	12	240160
22U-06-22360	K0210-39A0	37	240390

PART NO.	FIG.NO.	INDEX	PAGE
22U-06-22420	K0210-39A0	10	240390
22U-06-22470	K0210-39A0	12	240390
22U-06-22480	K0210-39A0	16	240390
22U-06-22510	K0210-54A0	2	240540
22U-43-21111	K0210-50A0	15	240500
22U-43-21121	K0210-50A0	16	240500
22U-43-21131	K0210-50A0	17	240500
22U-43-21192	K0210-40A0		240400
22U-43-21211	K0210-40A0	5	240400
22U-43-21350	K0210-50A0		240500
22U-43-21360	K0210-50A0	9	240500
22U-43-21390	K0210-35A0	16	240350
22U-43-22110	K0210-36A0	15	240360
22U-43-22220	K0210-36A0	4	240360
22U-43-22230	K0210-36A0	5	240360
22U-43-22310	K0210-37A0	1	240370
22U-43-22320	K0210-37A0		240370
22U-43-22330	K0210-37A0	2	240370
22U-43-22340	K0210-37A0	6	240370
22U-43-22410	K0210-39A0	39	240390
22U-43-22430	K0210-37A0	10	240370
22U-43-22490	K0210-39A0	30	240390
22U-43-22620	K0210-36A0	14	240360
22U-43-22830	K0210-37A0	13	240370
22U-43-23111	K0210-39A0	1	240390
22U-43-23120	K0210-39A0	5	240390
22U-43-23210	K0210-39A0	27	240390
22U-43-23250	K0210-39A0	45	240391
22U-43-23260	K0210-39A0	40	240390
22U-43-23711	K0210-41A0	3	240410
22U-54-24760	D0200-06A0	29	090100
22U-54-24760	M1810-04A0	20	270540
22U-54-25110	K0210-51A0	1	240510
22U-54-25120	K0210-51A0	4	240510
22U-54-25170	M1210-05A0	12	270460
22U-54-25170	M1210-05A0	15	270460
22U-54-25170	M1210-05A0	9	270460
22U-54-25371	K0210-46A0	12	240460
22U-54-25581	K0210-11A0	10	240110
22W-61-14460	N1210-04A0	22	300050
22W-61-14460	N1210-07A0	24	300080
22W-62-17710	T1210-01A4	11	390240
22W-62-17710	T1230-01A2	6	390300
22W-70-11740	M1130-10A1	44	270290
234-97-71750	B0100-01A0	21	030010
237-60-14550	T1110-01A4	13	390040
237-60-14550	T1110-01A4	14	390040
23B-951-6281	K0210-19A0	16	240190
23S-54-36270	M1420-01A0	1	270470
23S-54-36270	M1420-02A0	25	270480

PART NO.	FIG.NO.	INDEX	PAGE
23S-61-12230	K0210-45A0	15	240450
23T-62-12160	H1840-02A0	17	180670
23T-62-12160	H1840-05A0	14	180700
23T-62-12160	H1840-05A0	8	180700
281-01-13180	B0100-02A0	3	030020
281-01-13180	B0100-02A1	3	030030
281-01-13180	B0600-06A0	5	030160
281-01-13180	C0100-09A0	20	060090
281-01-13180	C0100-16A0	21	060170
281-01-13180	C0100-16A0	25	060170
281-01-13180	C0100-16A0	28	060170
281-01-13180	C0100-16A0	31	060170
287-06-16420	E0200-03A0	29	120050
287-06-16420	E0200-04A0	39	120060
287-06-16420	W1114-01A9	10	480140
287-06-16420	W1117-06A9A	10	480350
287-35-11470	A1730-A7C6	16	010120
362-846-6940	M1130-09A2	20	270280
363-15-16110	K0710-01A0	2	240570
363-62-25230	T1230-01A2	15	390300
417-82-32670	P1140-01A8	17	330110
417-875-1630	N1210-02A0	16	300030
417-875-1630	N1210-04A0	16	300050
417-875-1630	N1210-06A0	18	300070
417-875-1630	N1210-07A0	18	300080
4178-23-1460	A2070-A7B5	5	010200
4178-23-1460	A2070-A7B9	12	010210
418-18-31160	W1114-01A2	2	480070
418-18-31160	W1114-01A2	26	480070
418-18-31160	W1114-01A2	29	480070
418-18-31160	W1114-01A2	5	480070
418-S62-3150	K0710-07A0	15	240630
419-S62-2240	K0210-30A0	19	240300
421-06-23330	E0200-01A0		120030
421-06-23330	E0200-01A1		120035
421-06-23330	E0200-10A0		120120
421-06-23330	E0200-12A0		120140
421-06-23330	E0200-29A0		120300
421-06-23330	E0200-31A0		120320
421-06-23330	E0320-01A0		120470
421-06-23330	E0320-02A0		120480
421-06-23330	K0210-12A0		240120
421-06-23330	T1110-01A6	2	390060
421-07-11550	K0710-03A0	14	240590
421-07-11550	K0710-03A0	16	240590
421-07-11550	K0710-05A0	7	240610
421-54-25610	K0210-53A0	5	240530
421-54-25610	M1420-03A0	1	270490
421-60-35170	V0100-01A0	8	450010
423-06-45350	K0210-47A0	19	240470

PART NO.	FIG.NO.	INDEX	PAGE
423-06-45590	K0210-55A0	1	240550
424-43-37510	H1831-01A0	12	180520
425-S95-2140	M1130-10A0	20	270230
425-S95-2140	M1130-10A0	23	270230
425-S95-2140	M1130-10A0	26	270230
425-S95-2140	M1130-10A0	29	270230
425-S95-2140	M1130-10A0	32	270230
425-S95-2140	M1130-10A0	36	270230
425-S95-2140	M1130-10A0	39	270230
425-S95-2140	T1230-01A5	5	390330
425-S95-2140	T1230-01A5	8	390330
425-S95-2140	W1114-01A6	12	480110
425-S95-2140	W1114-01A6	6	480110
425-S95-2140	W1114-01A6	9	480110
425-S95-2150	M1130-10A0	33	270230
425-S95-2150	W1114-01A6	13	480110
425-S95-2160	M1130-10A0	21	270230
425-S95-2160	M1130-10A0	24	270230
425-S95-2160	M1130-10A0	27	270230
425-S95-2160	M1130-10A0	30	270230
425-S95-2160	M1130-10A0	34	270230
425-S95-2160	M1130-10A0	37	270230
425-S95-2160	M1130-10A0	40	270230
425-S95-2160	T1230-01A5	6	390330
425-S95-2160	T1230-01A5	9	390330
425-S95-2160	W1114-01A6	10	480110
425-S95-2160	W1114-01A6	14	480110
425-S95-2160	W1114-01A6	7	480110
425-S95-2170	T1230-01A3	6	390310
425-S95-2170	T1230-01A4	6	390320
425-S95-2180	T1230-01A3	2	390310
425-S95-2180	T1230-01A4	2	390320
425-S95-2190	T1230-01A3	7	390310
425-S95-2190	T1230-01A4	7	390320
425-S95-2210	T1230-01A3	3	390310
425-S95-2210	T1230-01A4	3	390320
425-S95-2240	T1230-01A3	4	390310
425-S95-2240	T1230-01A4	4	390320
425-S95-2250	T1230-01A5	1	390330
425-S95-2610	T1230-01A3	5	390310
425-S95-2610	T1230-01A4	5	390320
426-06-11570	A6810-E1C6	50	011091
426-54-11220	M1110-08A0	8	270080
426-925-3930	K0210-19A0	18	240190
42C-03-12480	W1114-01A5	3	480100
42C-03-12480	W1114-02A5	3	480180
42C-03-12490	W1114-01A5	4	480100
42C-03-12490	W1114-02A5	4	480180
42C-04-13440	W1114-01A5	1	480100
42C-04-13440	W1114-02A5	1	480180

PART NO.	FIG.NO.	INDEX	PAGE
42C-04-13450	W1114-01A5	2	480100
42C-04-13450	W1114-02A5	2	480180
42C-16-11510	D0200-12A0	31	090160
42C-16-11510	D0200-12A9	13	090165
42C-60-15220	W1114-01A5	11	480100
42C-60-15220	W1114-02A5	11	480180
42C-60-15230	W1114-01A5	12	480100
42C-60-15230	W1114-02A5	12	480180
561-02-12150	B0300-01A0	20	030040
561-03-6A510	C0100-03A0	12	060030
561-43-84940	N1220-01A4	29	300150
561-43-84940	N1220-01A8	33	300190
561-95-63250	T1110-01A3	17	390030
561-95-63250	T1110-01A3	24	390030
561-95-63250	T1210-01A2	17	390220
561-95-63250	T1210-01A3	11	390230
561-95-63250	T1210-01A3	36	390230
561-95-63250	T1210-01A3	41	390230
561-95-63290	M1130-10A0	3	270230
561-95-63290	T1110-01A3	32	390030
561-95-63290	T1210-01A2	30	390220
561-95-63290	T1230-01A5	14	390330
561-95-63290	W1114-01A6	2	480110
561-95-63310	M1130-10A0	2	270230
561-95-63310	T1110-01A3	10	390030
561-95-63310	T1210-01A2	31	390220
561-95-63310	T1210-01A3	17	390230
561-95-63310	T1210-01A3	52	390231
561-95-63310	T1210-01A4	13	390240
561-95-63310	T1210-01A4	14	390240
561-95-63310	T1210-01A4	25	390240
561-95-63310	W1114-01A6	3	480110
562-43-15810	K0210-47A0	9	240470
565-44-15380	K0710-04A0	2	240600
565-54-12841	C0100-04A0	7	060040
566-01-61190	G1010-02A0	16	150020
566-01-61190	G1010-02A0	24	150020
566-01-61190	G1010-02A0	26	150020
566-01-61190	T1110-01A3	11	390030
566-01-61190	T1210-01A2	11	390220
566-01-61190	T1210-01A3	15	390230
566-01-61190	T1210-01A3	45	390230
566-35-15230	P1140-01A8	7	330110
566-52-12210	W1114-01A6	1	480110
566-54-12212	C0100-04A0	6	060040
566-61-49810	E0200-25A0	28	120260
566-61-49810	E0200-25A0	32	120260
566-63-22241	T1140-01A1	7	390180
566-63-22241	T1140-01A2	7	390190
566-63-22241	Y0100-01A0		510010

PART NO.	FIG.NO.	INDEX	PAGE
566-98-15300	D0200-13A0	14	090170
566-98-15300	W1114-01A5	9	480100
566-98-15300	W1114-02A5	9	480180
567-35-12160	T1230-01A2	19	390300
567-40-41380	K1921-01A0	34	240680
567-40-41380	K1921-01A1	34	240685
567-40-41380	K1921-01A3	34	240687
567-40-41380	M1110-11A0	38	270110
567-40-41380	M1130-13A0	32	270320
569-03-12190	C0100-04A0	8	060040
569-06-61960	E0200-03A0	25	120050
569-06-61960	E0200-04A0	37	120060
569-06-61960	K0210-16A0	3	240160
569-06-61960	W1114-01A9	9	480140
569-06-61960	W1117-06A9A	9	480350
569-06-61970	E0200-03A0	28	120050
569-06-61970	E0200-04A0	38	120060
569-95-63430	T1230-01A4	1	390320
569-95-63520	T1210-01A4	24	390240
569-956-3430	T1230-01A3	1	390310
56B-06-15610	D0200-14A0	1	090180
56B-06-15610	M1130-11A0	21	270240
56B-06-15610	W1114-01A10	36	480150
56B-43-17370	D0200-01A0	2	090050
56B-43-17370	D0200-05A0	5	090090
56B-54-17311	M1420-02A0	1	270480
56B-54-17313	M1420-02A0		270480
581-04-22290	E0200-05A0	6	120070
581-04-22290	E0200-07A0	14	120090
581-04-22290	K0210-15A0	24	240150
581-60-17860	E0200-04A0	31	120060
581-60-17860	H1840-06A0	19	180710
581-63-92670	T1120-01A1	14	390140
581-63-92670	T1120-01A2	14	390150
581-63-92670	Y0100-01A0		510010
581-95-12180	T1210-01A2	18	390220
581-96-19590	G1010-02A0	37	150020
581-96-19590	T1110-01A3	8	390030
581-96-19590	T1210-01A3	46	390231
581-96-19620	G1010-02A0	20	150020
581-96-19620	G1010-02A0	34	150020
581-96-19620	T1110-01A3	18	390030
581-96-19620	T1110-01A3	25	390030
581-96-19620	T1210-01A2	19	390220
581-96-19620	T1210-01A3	12	390230
581-96-19620	T1210-01A3	37	390230
581-96-19620	T1210-01A3	42	390230
600-023-2140	A9810-A8H4	1	011120
600-051-2050	A2110-B7F9	9	010230
600-051-2060	A6810-B7C6	6	011040

PART NO.	FIG.NO.	INDEX	PAGE
600-051-2060	A6810-C7C6	6	011051
600-051-2060	A6810-D9C6	6	011080
600-051-2060	A6810-E1C6	6	011090
600-051-2080	A2110-C7G8	11	010360
600-051-2080	A2110-C7G8	34	010360
600-051-2080	A2110-C7G9	11	010370
600-051-2080	A6810-A7C6	20	011030
600-051-2080	A6810-A7C6	8	011030
600-051-2080	A6810-B7C6	7	011040
600-051-2080	A6810-D8C6	20	011070
600-051-2080	A6810-D8C6	8	011070
600-051-2080	A6810-D9C6	7	011080
600-051-2080	A6810-E1C6	7	011090
600-051-2100	A6810-A7C6	19	011030
600-051-2100	A6810-A7C6	7	011030
600-051-2100	A6810-D8C6	19	011070
600-051-2100	A6810-D8C6	7	011070
600-051-2100	A6810-D9C6	8	011080
600-051-2100	A6810-E1C6	8	011090
600-051-2120	A6810-A7C6	18	011030
600-051-2120	A6810-A7C6	6	011030
600-051-2120	A6810-D7C6	2	011060
600-051-2120	A6810-D7C6	6	011060
600-051-2120	A6810-D8C6	18	011070
600-051-2120	A6810-D8C6	6	011070
600-051-2120	A6810-E2C6	2	011100
600-051-2120	A6810-E2C6	6	011100
600-051-2140	A6810-B7C6	8	011040
600-051-2140	A6810-C7C6	8	011051
600-051-2140	A6810-D9C6	9	011080
600-051-2140	A6810-E1C6	10	011090
600-051-2160	A6810-B7C6	9	011040
600-051-2160	A6810-C7C6	7	011051
600-051-2160	A6810-D9C6	10	011080
600-051-2160	A6810-E1C6	9	011090
600-051-2180	A6010-B7D2	5	011000
600-051-2180	A6810-B7C6	10	011040
600-051-2180	A6810-C7C6	9	011051
600-051-2180	A6810-D9C6	11	011080
600-051-2180	A6810-E1C6	11	011090
600-051-2260	A6810-B7C6	11	011040
600-051-2260	A6810-D9C6	12	011080
600-051-3100	A6810-B7C6	12	011040
600-051-3100	A6810-D9C6	13	011080
600-051-3120	A6810-C7C6	39	011051
600-051-3120	A6810-E1C6	41	011090
600-18-37521	B0300-01A0	13	030040
600-184-2810	U0550-01A0	2	420090
600-185-6100	V0100-01A0	9	450010
600-211-1340	A3110-A7D6	2	010490

PART NO.	FIG.NO.	INDEX	PAGE
600-211-1340	V0100-01A0	1	450010
600-311-3550	A4110-D7F2	4	010800
600-311-3550	D0200-10A0	3	090140
600-311-4500	D0200-05A0	3	090090
600-311-9330	D0200-04A0	27	090080
600-319-3550	A4119-A7A2	1	010860
600-319-3550	A4119-A7A3	1	010870
600-319-3550	V0100-01A0	2	450010
600-319-4500	V0100-01A0	3	450010
600-411-1171	A5210-A7A1	12	010920
600-411-1231	A5210-A7A1	9	010920
600-411-1240	A5210-A7A1	5	010920
600-411-1250	A5210-A7A1	4	010920
600-411-1260	A5210-A7A1	6	010920
600-411-1280	A5210-A7A1	7	010920
600-411-1280	K0210-38A0	9	240380
600-411-1280	K0210-40A0	9	240400
600-411-1290	A5210-A7A1	8	010920
600-411-1602	A5210-A7A1		010920
600-411-1610	A5210-A7A1		010920
600-411-1670	A5210-A7A1	10	010920
600-421-6630	A1730-A7C6	19	010120
600-464-1300	A4710-A7D7	1	010650
600-464-1300	A4710-A7E3	1	010660
600-464-1370	A4710-A7D7	2	010650
600-464-1370	A4710-A7E3	2	010660
600-645-7450	C0100-05A0	19	060050
600-645-7450	C0100-14A0	25	060140
600-651-1610	A3310-A7C4	2	010510
600-81-54280	A1310-A7E8	15	010030
600-813-9910	A6210-A7A6	1	011020
600-815-2690	E0200-13A0	20	120150
600-815-9370	A2110-C7G8	1	010360
600-815-9370	A2110-C7G8	16	010360
600-815-9370	A2110-C7G9	1	010370
600-815-9370	A2110-C7G9	15	010370
600-815-9471	D0200-10A0	28	090140
600-825-9330	A6010-C7B9		010940
600-825-9330	A6010-C7D1		010980
6000-51-2050	A2110-B7G6	9	010235
6000-51-2100	A2041-B7E4	27	010170
6000-51-3100	A2041-B7E4	28	010170
6110-23-6490	A2041-B7E4	15	010170
6110-23-6490	A2110-D8F9	9	010250
6110-73-6231	A4110-C7F2	2	010790
6110-73-6231	A4110-D7F2	2	010800
6110-73-6231	E4110-E7E4	2	010760
6112-23-6971	A4110-C7F2	26	010790
6114-11-5590	A1530-A7C3	5	010060
6127-11-1620	A2230-A7B5	4	010390

PART NO.	FIG.NO.	INDEX	PAGE
6127-21-1160	A2010-A7C6	13	010130
6127-21-1260	A2050-A7A3	11	010180
6127-31-6221	A6030-A7B4	5	010930
6127-31-6261	A6030-A7B4	6	010930
6127-61-7340	K0710-04A0	19	240600
6127-61-8330	G1010-02A0	23	150020
6127-61-8330	G1010-02A0	27	150020
6127-71-5710	A1530-B7C3	34	010070
6127-92-1250	A2041-B7E4	18	010170
6128-21-6730	A1530-A7C3	26	010060
6128-81-2830	B0300-05A0	10	030090
6128-81-4810	A4110-E7F2	8	010810
6128-81-4810	A4110-F7E9	16	010820
6130-12-1961	A4050-B7A5	27	010690
6130-12-8620	B0300-02A0	18	030050
6130-12-8620	B0300-02A0	5	030050
6130-12-8620	B0300-02A1	18	030060
6130-12-8620	B0300-02A1	5	030060
6130-22-3940	A6010-A7C8	17	010950
6130-22-3940	A6010-A7D1	17	010990
6130-61-6611	A2041-B7E4	7	010170
6131-12-5920	A6810-B7C6	20	011040
6131-12-5920	A6810-B7C6	48	011041
6131-12-5920	A6810-C7C6	14	011051
6131-12-5920	A6810-C7C6	31	011051
6131-12-5920	A6810-D9C6	21	011080
6131-12-5920	A6810-D9C6	47	011081
6131-12-5920	A6810-E1C6	16	011090
6131-12-5920	A6810-E1C6	33	011090
6132-21-4630	A4110-D7F2	8	010800
6136-11-5120	A6810-B7C6	40	011040
6136-11-5120	A6810-D9C6	40	011080
6136-41-4520	A1010-A7B4	18	010010
6136-51-4140	A2210-A7D1	8	010380
6137-71-3750	A1570-A7A7	7	010100
6138-11-4870	A1510-A7C5	11	010050
6138-13-4510	A1530-A7C3	4	010060
6138-55-7610	N1210-04A0	21	300050
6138-55-7610	N1210-07A0	23	300080
6141-25-3770	A2110-D8F9	10	010250
6141-71-1710	A1530-B7C3	33	010070
6142-22-4640	A4110-F7E9	3	010820
6144-11-5630	A2070-A7B9	14	010210
6144-85-6680	A6810-C7C6	38	011051
6144-85-6680	A6810-E1C6	40	011090
6150-61-1510	A5010-A7E6	6	010880
6150-61-1510	A5010-A7E8	6	010900
6150-81-6920	A1310-B7E8	26	010040
6150-81-6940	A6810-A7C6	21	011030
6150-81-6940	A6810-A7C6	9	011030

PART NO.	FIG.NO.	INDEX	PAGE
6150-81-6940	A6810-D8C6	21	011070
6150-81-6940	A6810-D8C6	9	011070
6150-82-8610	K0710-01A0	9	240570
6151-11-8550	A1510-A7C5	9	010050
6151-51-8151	A1530-A7C3	33	010060
6151-51-8161	A1530-A7C3	20	010060
6151-51-8540	A1510-A7C5	21	010050
6151-51-8540	A1530-B7C3	23	010070
6151-53-8280	A1530-A7C3	22	010060
6151-71-2980	A4010-H1J1	8	010571
6151-71-9710	A6010-A7C8	6	010950
6151-71-9710	A6010-A7D1	5	010990
6151-81-5960	A1530-B7C3	21	010070
6152-11-4970	A6810-C7C6	19	011051
6152-11-4970	A6810-E1C6	21	011090
6152-11-4970	A6810-E1C6	51	011091
6152-11-9990	A4110-B7E9	18	010780
6152-15-4660	A6810-C7C6	27	011051
6152-15-4660	A6810-E1C6	29	011090
6152-21-6590	A4110-G7E9	24	010830
6152-21-6590	A4110-G7E9	9	010830
6156-71-5370	A4230-A7C7	15	010840
6156-71-5370	A4230-A7C8	15	010850
6156-71-5380	A4110-A7E5	47	010721
6156-71-5380	A4110-C7E4	12	010740
6156-71-5380	A4110-D7E4	12	010750
6156-71-5380	D0200-10A0	14	090140
6156-71-9730	A4050-C7A5	4	010700
6162-13-1150	A1010-A7B4	7	010010
6162-13-5611	B0300-04A0	12	030080
6162-13-5611	B0300-04A0	6	030080
6162-13-5660	B0300-04A0	24	030080
6162-13-6440	A1730-A7C6	20	010120
6162-13-6530	A1310-A7E8	17	010030
6162-13-6540	A4110-C7E4	7	010740
6162-13-6540	A4110-C7F2	10	010790
6162-13-6540	A4110-D7E4	7	010750
6162-13-6540	E4110-E7E4	16	010760
6162-14-5640	B0300-05A0	17	030090
6162-15-8181	A1510-A7C5	10	010050
6162-23-4500	A2210-A7D1		010380
6162-23-4531	A2210-A7D1	19	010380
6162-23-4941	A2210-A7D1	21	010380
6162-33-5321	A2330-A7A1	2	010440
6162-33-5321	A2370-01A0	2	010445
6162-43-5340	A2411-B7A5	3	010470
6162-43-5630	A1010-A7B4	32	010015
6162-63-1440	A5010-A7E6	9	010880
6162-63-1440	A5010-A7E8	9	010900
6162-63-3910	A4110-A7E4	34	010720

PART NO.	FIG.NO.	INDEX	PAGE
6162-63-3910	A4110-D7F2	30	010800
6162-63-8570	A1530-B7C3	9	010070
6162-73-4540	A4110-A7E4	42	010720
6162-73-4540	A4110-D7F2	38	010800
6162-73-4670	A1530-A7C3	10	010060
6162-73-4670	D0200-10A0	12	090140
6162-73-4690	A2011-A7B9	23	010140
6164-51-8611	A1530-A7C3	18	010060
6164-51-8621	A1530-A7C3	19	010060
6164-62-8230	A1530-A7C3	6	010060
6164-62-8241	A1530-A7C3	7	010060
6164-62-8241	A1530-B7C3	11	010070
6164-62-8241	A1530-B7C3	14	010070
6164-91-6290	A6810-C7C6	43	011051
6164-91-6290	A6810-E1C6	45	011090
6165-61-6791	A3110-B7D6	25	010500
6165-71-6180	A1310-A7E8	18	010030
6166-11-5391	A1310-B7E8	27	010040
6166-11-5391	A2110-B7F9	8	010230
6166-11-5391	A2110-B7G6	8	010235
6166-11-5391	A4110-A7E4	31	010720
6166-11-5391	A6810-C7C6	28	011051
6166-11-5391	A6810-E1C6	30	011090
6166-61-1511	A5010-A7E6	5	010880
6166-61-1511	A5010-A7E8	5	010900
6166-75-6821	A4110-A7E4	27	010720
6166-75-6821	A4110-B7E4	25	010730
6166-75-6821	A4110-C7F2	16	010790
6166-75-6821	A4110-D7F2	26	010800
6166-85-6721	A4050-D7A5	34	010710
6204-81-9560	A6810-C7C6	22	011051
6204-81-9560	A6810-E1C6	24	011090
6206-81-6830	A2110-C7G8	37	010360
6206-81-9870	A4110-A7E9	20	010770
6206-81-9870	A4110-B7E4	42	010730
6207-65-8410	A6810-A7C6	26	011030
6207-65-8410	A6810-C7C6	26	011051
6207-65-8410	A6810-D8C6	26	011070
6207-65-8410	A6810-E1C6	28	011090
621-57-13170	A4080-01A0	34	010620
621-97-11201	A4010-H1J1		010571
6210-11-1140	A1010-A7B4	10	010010
6210-11-1150	A1010-A7B4	5	010010
6210-11-1820	A1010-A7B4	20	010010
6210-11-1831	A1010-A7B4	21	010010
6210-11-1840	A1010-A7B4	22	010010
6210-11-1940	A1010-A7B4	25	010010
6210-11-1940	A1010-A7B4		010010
6210-11-1962	A1010-A7B4	23	010010
6210-11-4811	A1310-A7E8	2	010030

PART NO.	FIG.NO.	INDEX	PAGE
6210-11-5820	A4110-A7E4	43	010720
6210-11-5820	A4110-D7F2	39	010800
6210-11-5820	A6010-B7D1	19	010970
6210-11-5820	A6010-B7D2	19	011000
6210-11-5820	A6810-B7C6	37	011040
6210-11-5820	A6810-D7C6	9	011060
6210-11-5820	A6810-D9C6	37	011080
6210-11-5820	A6810-E2C6	11	011100
6210-17-1814	A1010-A7B4	19	010010
6210-19-1814	A1010-A7B4		010010
6210-19-1820	A1010-A7B4		010010
6210-19-1831	A1010-A7B4		010010
6210-19-1840	A1010-A7B4		010010
6210-19-1962	A1010-A7B4		010010
6210-21-1390	A2010-A7C6	19	010130
6210-21-1491	A2010-A7C6	8	010130
6210-21-1790	A4080-01A0	2	010620
6210-21-1790	A4080-01A0	24	010620
6210-21-2230	A2010-A7C6	30	010130
6210-21-2240	A2010-A7C6	29	010130
6210-21-2270	A2010-A7C6	28	010130
6210-21-5480	A4110-F7E9	4	010820
6210-21-8711	A2041-B7E4	1	010170
6210-41-1120	A2410-A7A7	6	010450
6210-41-1131	A2410-A7A7	4	010450
6210-41-1131	A2410-A7A7	8	010450
6210-41-2320	A2411-A7A5		010460
6210-41-2431	A2411-A7A5	9	010460
6210-41-2450	A2411-A7A5	8	010460
6210-41-3120	A2411-A7A5	10	010460
6210-41-4430	A1010-A7B4	11	010010
6210-41-4440	A1010-A7B4	12	010010
6210-41-4510	A1010-A7B4	13	010010
6210-41-5440	A2411-B7A5	15	010470
6210-41-5620	A1010-A7B4	30	010010
6210-41-5641	A1010-A7B4	31	010015
6210-412400	A2411-A7A5		010460
6210-51-8310	A1510-A7C5	18	010050
6210-51-8320	A1510-A7C5	14	010050
6210-61-2520	A3310-A7C4	3	010510
6210-81-5540	A4110-F7E9	26	010820
6210-81-9210	A2010-A7C6	14	010130
6210-81-9210	A2010-A7C6	9	010130
6211-11-4410	A1310-B7E8	4	010040
6211-11-4821	A1310-A7E8	16	010030
6211-11-5890	B0300-03A0	18	030070
6211-11-5890	B0300-05A0	15	030090
6211-22-2220	A2010-A7C6	27	010130
6211-31-2410	A2350-A7B5	2	010430
6212-11-5940	A1610-A7B9	3	010110

PART NO.	FIG.NO.	INDEX	PAGE
6212-31-6130	A2050-A7A3	4	010180
6212-31-6130	A2050-A7A3	6	010180
6212-65-6390	A1530-A7C3	23	010060
6212-65-6390	A2041-B7E4	32	010170
6212-65-6390	A6810-C7C6	25	011051
6212-65-6390	A6810-E1C6	27	011090
6212-65-8860	A4060-01A0	6	010610
6212-81-4132	A1510-A7C5	29	010050
6212-85-2440	A6010-B7D1	6	010970
6212-85-2440	A6010-B7D2	6	011000
6212-85-2440	A6810-B7C6	15	011040
6212-85-2440	A6810-C7C6	29	011051
6212-85-2440	A6810-D9C6	16	011080
6212-85-2440	A6810-E1C6	31	011090
6215-11-5110	A1510-A7C5	3	010050
6215-11-5130	A1510-A7C5	4	010050
6215-11-5171	A1510-A7C5	1	010050
6215-11-5181	A1510-A7C5	2	010050
6215-11-5220	B0300-03A0	7	030070
6215-11-5720	A1510-A7C5	7	010050
6215-11-5740	B0300-03A0	9	030070
6215-11-5920	A1510-A7C5	8	010050
6215-11-5920	A1610-A7B9	15	010110
6215-11-5980	A1610-A7B9	7	010110
6215-11-5990	A1610-A7B9	8	010110
6215-11-6120	A1730-A7C6	9	010120
6215-11-6150	A1730-A7C6	4	010120
6215-11-6180	A5010-B7E6	1	010910
6215-11-6180	A5010-B7F4	1	010890
6215-11-6190	A5010-B7E6	2	010910
6215-11-6190	A5010-B7F4	2	010890
6215-11-6320	A2041-B7E4	24	010170
6215-11-6560	A4110-E7F2	17	010810
6215-11-6560	A4210-A7C5	4	010670
6215-11-6560	A5010-B7E6	6	010910
6215-11-6560	A5010-B7F4	6	010890
6215-11-6810	A1730-A7C6	12	010120
6215-11-6820	A1730-A7C6	3	010120
6215-11-6831	A1730-A7C6	5	010120
6215-11-6831	A5010-B7E6	3	010910
6215-11-6831	A5010-B7F4	3	010890
6215-21-1610	A2011-A7B9	1	010140
6215-21-1682	A2011-A7B9	2	010140
6215-21-1710	A2010-A7C6	6	010130
6215-21-1850	A2041-A7E4	12	010160
6215-21-1970	A2011-A7B9	12	010140
6215-21-3134	A2040-A7B4	1	010150
6215-21-3180	A2250-A7C4	3	010400
6215-21-3190	A2041-A7E4	9	010160
6215-21-3350	A2041-A7E4	5	010160

PART NO.	FIG.NO.	INDEX	PAGE
6215-21-3402	A6030-A7B4		010930
6215-21-3411	A6030-A7B4	1	010930
6215-21-3421	A6030-A7B4	2	010930
6215-21-3430	A6030-A7B4	3	010930
6215-21-3441	A6030-A7B4	4	010930
6215-21-3481	A6030-A7B4	7	010930
6215-21-3811	A2040-A7B4	3	010150
6215-21-3821	A2041-A7E4	21	010160
6215-21-4810	A2210-A7D1	2	010380
6215-21-5121	A2110-A7F9	2	010220
6215-21-5121	A2110-C7F9	2	010240
6215-21-5130	A2110-A7F9	3	010220
6215-21-5130	A2110-C7F9	3	010240
6215-21-5140	A2110-A7F9	4	010220
6215-21-5140	A2110-C7F9	4	010240
6215-21-5160	A2110-A7F9	13	010220
6215-21-5160	A2110-C7F9	13	010240
6215-21-5490	A2011-A7B9	19	010140
6215-21-5811	A2110-A7F9	5	010220
6215-21-5811	A2110-C7F9	5	010240
6215-21-5820	A2110-A7F9	6	010220
6215-21-5820	A2110-C7F9	6	010240
6215-21-6420	A2060-A7A1	1	010190
6215-21-6431	A2060-A7A1	2	010190
6215-21-6450	A2060-A7A1	3	010190
6215-21-6460	A2011-A7B9	5	010140
6215-21-6480	A2011-A7B9	6	010140
6215-21-7260	A2070-A7B5	12	010200
6215-21-7260	A2070-A7B9	11	010210
6215-21-8000	A2310-A7A4		010410
6215-21-8011	A2310-A7A4		010410
6215-21-8021	A2310-A7A4		010410
6215-21-8050	A2310-A7A4	8	010410
6215-21-8610	A2041-B7E4	9	010170
6215-21-8620	A2041-B7E4	12	010170
6215-21-9210	A2011-A7B9	20	010140
6215-26-8011	A2310-A7A4		010410
6215-26-8021	A2310-A7A4		010410
6215-26-8050	A2310-A7A4		010410
6215-27-8011	A2310-A7A4		010410
6215-27-8021	A2310-A7A4		010410
6215-27-8050	A2310-A7A4		010410
6215-28-8011	A2310-A7A4		010410
6215-28-8021	A2310-A7A4		010410
6215-28-8050	A2310-A7A4		010410
6215-29-8011	A2310-A7A4		010410
6215-29-8021	A2310-A7A4		010410
6215-29-8050	A2310-A7A4		010410
6215-2L-3310	A2250-A7C4	4	010400
6215-31-1140	A2310-A7A4	2	010410

PART NO.	FIG.NO.	INDEX	PAGE
6215-31-3060	A2350-A7B5	19	010430
6215-31-3310	A2350-A7B5	10	010430
6215-31-3310	A2350-A7B5	16	010430
6215-31-3330	A2350-A7B5	12	010430
6215-31-3330	A2350-A7B5	18	010430
6215-31-6100	A2050-A7A3		010180
6215-31-6120	A2050-A7A3	2	010180
6215-31-6131	A2050-A7A3	14	010180
6215-31-6160	A2050-A7A3	1	010180
6215-31-6420	A2050-A7A3	7	010180
6215-31-6431	A2050-A7A3	12	010180
6215-31-6460	A2050-A7A3	8	010180
6215-31-6470	A2050-A7A3	13	010180
6215-31-6500	A2050-A7A3		010180
6215-31-8200	A2330-A7A1	1	010420
6215-36-3060	A2350-A7B5		010430
6215-37-3060	A2350-A7B5		010430
6215-38-3060	A2350-A7B5		010430
6215-39-3060	A2350-A7B5		010430
6215-41-1100	A2410-A7A7		010450
6215-41-1130	A2410-A7A7	2	010450
6215-41-1200	A2410-A7A7		010450
6215-41-4220	A1010-A7B4	14	010010
6215-51-1730	A3110-A7D6	9	010490
6215-51-1780	A3010-A7A6	9	010480
6215-51-1791	A3110-A7D6	10	010490
6215-51-5481	A3110-B7D6	5	010500
6215-51-5490	A3110-B7D6	6	010500
6215-51-5511	A3110-A7D6	5	010490
6215-51-5540	A3110-A7D6	6	010490
6215-51-5550	A3110-A7D6	7	010490
6215-51-5560	A3110-A7D6	8	010490
6215-51-5571	A3110-A7D6	11	010490
6215-51-5591	A3110-A7D6	12	010490
6215-51-5601	A3110-A7D6		010490
6215-51-5650	A3110-B7D6	20	010500
6215-51-5870	A6010-B7D1	9	010970
6215-51-5870	A6010-B7D2	9	011000
6215-51-5870	A6810-B7C6	43	011040
6215-51-5870	A6810-D9C6	42	011080
6215-51-5870	A6810-E1C6	49	011091
6215-61-1160	A5010-A7E6	4	010880
6215-61-1160	A5010-A7E8	4	010900
6215-61-2113	A3310-A7C4	1	010510
6215-61-2171	A3310-A7C4	10	010510
6215-61-2580	A3310-A7C4	5	010510
6215-61-2810	A3310-A7C4	6	010510
6215-61-6510	A5010-A7E8	24	010900
6215-61-6520	A5010-A7E6	27	010880
6215-61-6520	A5010-A7E8	26	010900

PART NO.	FIG.NO.	INDEX	PAGE
6215-61-6531	A5010-A7E6	25	010880
6215-61-6531	A5010-A7E8	23	010900
6215-61-6630	A2011-A7B9	9	010140
6215-61-7510	A5010-A7E6	23	010880
6215-61-7521	A5010-A7E6	26	010880
6215-61-8450	A1530-B7C3	29	010070
6215-61-8470	A1530-B7C3	18	010070
6215-61-8480	A1530-B7C3	17	010070
6215-61-8610	A1530-B7C3	1	010070
6215-71-3170	A4080-01A0	15	010620
6215-71-4921	A4050-D7A5	15	010710
6215-71-4921	A6810-B7C6	33	011040
6215-71-4921	A6810-D9C6	33	011080
6215-71-6190	A6810-D9C6	53	011081
6215-81-6131	A6010-A7C8	11	010950
6215-81-6131	A6010-A7D1	11	010990
6215-81-6141	A6010-A7C8	13	010950
6215-81-6141	A6010-A7D1	13	010990
6215-81-6150	A6010-A7C8	16	010950
6215-81-6150	A6010-A7D1	16	010990
6215-81-6150	K0710-01A0	20	240570
6215-81-6190	A2041-A7E4	2	010160
6215-81-6190	A6010-A7C9	5	010960
6215-81-6190	A6010-B7D3	5	011010
6215-81-6250	A6210-A7A6	5	011020
6215-81-8150	E0200-28A0	6	120290
6215-81-9510	A1310-A7E8	10	010030
6215-81-9510	A2010-A7C6	15	010130
6215-81-9510	A2041-A7E4	23	010160
6215-81-9510	A4080-01A0	26	010620
6215-81-9510	A4080-01A0	4	010620
6215-81-9510	A6030-A7B4		010930
6215-81-9520	A1310-A7E8	12	010030
6215-81-9520	A2010-A7C6	20	010130
6215-81-9520	A2011-A7B9	15	010140
6215-81-9520	A2011-A7B9	25	010140
6215-81-9520	A5010-A7E6	10	010880
6215-81-9520	A5010-A7E6	16	010880
6215-81-9520	A5010-A7E8	10	010900
6215-81-9520	A5010-A7E8	16	010900
6215-81-9540	A2010-A7C6	22	010130
6215-81-9710	A1310-A7E8	11	010030
6215-81-9710	A2010-A7C6	16	010130
6215-81-9710	A2041-A7E4	24	010160
6215-81-9710	A4080-01A0	27	010620
6215-81-9710	A4080-01A0	5	010620
6215-81-9710	A6030-A7B4		010930
6215-81-9720	A1310-A7E8	13	010030
6215-81-9720	A2010-A7C6	21	010130
6215-81-9720	A2011-A7B9	16	010140

PART NO.	FIG.NO.	INDEX	PAGE
6215-81-9720	A2011-A7B9	24	010140
6215-81-9720	A4060-01A0	7	010610
6215-81-9720	A5010-A7E6	11	010880
6215-81-9720	A5010-A7E6	17	010880
6215-81-9720	A5010-A7E8	11	010900
6215-81-9720	A5010-A7E8	17	010900
6215-81-9740	A2010-A7C6	23	010130
6215-91-1170	A1610-A7B9	16	010110
6216-11-1330	A1010-A7B4	2	010010
6216-11-8210	A1310-A7E8	7	010030
6216-11-8220	A1310-A7E8	8	010030
6216-11-8220	A1310-B7E8	38	010040
6216-11-8220	A4230-A7C7	5	010840
6216-11-8220	A4230-A7C8	5	010850
6216-16-1330	A1010-A7B4		010010
6216-17-1330	A1010-A7B4		010010
6216-18-1330	A1010-A7B4		010010
6216-19-1330	A1010-A7B4		010010
6216-54-6431	A3110-A7D6	1	010490
6216-84-9740	A2011-A7B9		010140
6217-11-1321	A1010-A7B4	3	010010
6217-11-1441	A1010-A7B4	4	010010
6217-11-1610	A1010-A7B4	26	010010
6217-11-1620	A1010-A7B4	27	010010
6217-11-8100	A1110-A7A6		010020
6217-11-8110	A1110-A7A6	1	010020
6217-11-8830	A1110-A7A6	2	010020
6217-11-8830	V0100-01A0	10	450010
6217-11-9690	A2070-A7B5	10	010200
6217-11-9690	A2070-A7B9	9	010210
6217-11-9770	A4110-E7F2	19	010810
6217-16-1321	A1010-A7B4		010010
6217-17-1321	A1010-A7B4		010010
6217-18-1321	A1010-A7B4		010010
6217-19-1321	A1010-A7B4		010010
6217-21-1940	A2011-A7B9	8	010140
6217-21-4810	A6010-B7D1	18	010970
6217-21-4810	A6010-B7D2	18	011000
6217-41-4110	A1010-A7B4	15	010010
6217-41-4531	A1010-A7B4	16	010010
6217-41-4540	A1010-A7B4	17	010010
6217-41-5540	A2411-B7A5	18	010470
6217-41-5550	A2411-B7A5	10	010470
6217-41-5550	A2411-B7A5	5	010470
6217-41-5560	A2411-B7A5	20	010470
6217-41-5570	A2411-B7A5	19	010470
6217-71-1140	A4210-A7C5	19	010670
6217-71-1150	A4210-A7C5	10	010670
6217-71-1161	A4210-A7C5	13	010670
6217-71-1170	A4210-A7C5	11	010670

PART NO.	FIG.NO.	INDEX	PAGE
6217-71-5171	A4050-D7A5	27	010710
6217-71-5211	A4050-D7A5	28	010710
6217-71-5211	A4050-D7A5	36	010710
6217-71-5251	A4010-H1J1	9	010571
6217-71-5261	A4050-B7A5	28	010690
6217-71-5281	A4050-D7A5	24	010710
6217-71-5340	A4210-A7C5	9	010670
6217-71-5761	A4050-B7A5	29	010690
6217-71-5770	A4050-C7A5	5	010700
6217-71-5910	A4010-H1J1	4	010571
6217-71-6530	U0100-01A2	26	420020
6217-71-6640	A4050-B7A5	19	010690
6217-71-6640	A4050-D7A5	31	010710
6217-71-6650	A4050-B7A5	20	010690
6217-71-6650	A4050-D7A5	32	010710
6217-71-6650	A4060-01A0	15	010610
6217-71-6660	A4010-A7A6	10	010630
6217-71-6660	A4040-A7B1	10	010640
6217-71-6660	A4050-B7A5	23	010690
6217-71-6670	A4010-A7A6	11	010630
6217-71-6670	A4040-A7B1	11	010640
6217-71-6670	A4050-B7A5	22	010690
6217-71-8210	A4110-C7E4	1	010740
6217-71-8210	A4110-D7E4	1	010750
6217-71-9331	A9810-A7H4	1	011110
6217-71-9331	A9810-A8H4	3	011120
6217-71-9770	A4050-C7A5	2	010700
6217-71-9780	A4050-C7A5	1	010700
6217-71-9791	A4050-C7A5	3	010700
6217-81-6840	A6010-A7C8	1	010950
6217-81-6840	A6010-A7D1	1	010990
6217-81-8311	A2411-B7A5	21	010470
6218-11-5830	A1530-A7C3	3	010060
6218-11-5880	A1510-A7C5	5	010050
6218-81-4111	A2041-B7E4	23	010170
6218-81-8480	A2110-C7G8	15	010360
6218-81-8480	A2110-C7G8	40	010360
6218-81-8480	A2110-C7G9	14	010370
6218-81-8480	A2110-C7G9	36	010370
6218-81-8480	A6210-A7A6	13	011020
6218-81-8480	A6810-A7C6	12	011030
6218-81-8480	A6810-A7C6	31	011030
6218-81-8480	A6810-B7C6	5	011040
6218-81-8480	A6810-C7C6	17	011051
6218-81-8480	A6810-D8C6	12	011070
6218-81-8480	A6810-D8C6	31	011070
6218-81-8480	A6810-D9C6	5	011080
6218-81-8480	A6810-E1C6	19	011090
6219-11-1100	A1010-A7B4		010010
6219-11-3100	A4210-A7C5	15	010670

PART NO.	FIG.NO.	INDEX	PAGE
6219-11-4111	A1310-A7E8	1	010030
6219-11-5210	B0300-03A0	2	030070
6219-11-5220	B0300-03A0	3	030070
6219-11-5760	A1570-A7A7	9	010100
6219-11-5770	A6810-A7C6	15	011030
6219-11-5770	A6810-A7C6	3	011030
6219-11-5770	A6810-D8C6	15	011070
6219-11-5770	A6810-D8C6	3	011070
6219-11-5780	A1570-A7A7	1	010100
6219-11-5790	A1570-A7A7	6	010100
6219-11-5830	A1610-A7B9	19	010110
6219-11-5840	A1610-A7B9	17	010110
6219-11-5850	A1610-A7B9	18	010110
6219-11-5860	A1610-A7B9	4	010110
6219-11-5880	A1610-A7B9	1	010110
6219-11-5890	A1610-A7B9	2	010110
6219-11-6110	A1730-A7C6	8	010120
6219-11-6310	A1310-A7E8	14	010030
6219-11-6510	A5010-B7E6	9	010910
6219-11-6510	A5010-B7F4	9	010890
6219-11-8110	A1310-B7E8	13	010040
6219-11-8120	A1310-B7E8	28	010040
6219-11-8130	A1310-B7E8	25	010040
6219-11-8140	A1310-B7E8	6	010040
6219-11-8170	A1310-B7E8	12	010040
6219-11-8190	A1310-B7E8	18	010040
6219-11-8210	A1310-B7E8	1	010040
6219-11-8220	A1310-B7E8	2	010040
6219-11-8240	A1570-A7A7	5	010100
6219-21-1200	A2010-A7C6		010130
6219-21-1810	A2041-A7E4	13	010160
6219-21-1820	A2041-A7E4	1	010160
6219-21-1910	A2011-A7B9	11	010140
6219-21-1950	A2010-A7C6	24	010130
6219-21-3110	A2041-A7E4	19	010160
6219-21-3510	A2041-A7E4	8	010160
6219-21-4110	A2210-A7D1	1	010380
6219-21-4240	A2210-A7D1	7	010380
6219-21-5110	A2110-A7F9	1	010220
6219-21-5110	A2110-C7F9	1	010240
6219-21-5321	A2110-B7F9	21	010230
6219-21-5321	A2110-B7G6	21	010235
6219-21-5410	A2110-B7F9	22	010230
6219-21-5410	A2110-B7G6	22	010235
6219-21-5460	A2110-B7G6	16	010235
6219-21-6410	A1570-A7A7	14	010100
6219-21-6420	A1570-A7A7	15	010100
6219-21-6450	A1570-A7A7	16	010100
6219-21-7510	A2070-A7B5	2	010200
6219-21-7520	A2070-A7B9	2	010210

PART NO.	FIG.NO.	INDEX	PAGE
6219-21-7530	A2070-A7B5	6	010200
6219-21-7540	A2070-A7B9	13	010210
6219-21-7550	A2070-A7B9	5	010210
6219-21-8760	A1730-A7C6	17	010120
6219-21-8770	A2011-A7B9	17	010140
6219-31-1100	A2310-A7A4		010410
6219-31-1510	A2330-A7A1	1	010440
6219-31-1510	A2370-01A0	1	010445
6219-31-2110	A2350-A7B5	1	010430
6219-31-3100	A2350-A7B5		010430
6219-31-3200	A2350-A7B5		010430
6219-31-4300	A2230-A7B5		010390
6219-51-1000	A3010-A7A6	1	010480
6219-51-2210	A2110-B7F9	4	010230
6219-51-2210	A2110-B7G6	4	010235
6219-51-2270	A2110-B7F9	12	010230
6219-51-2270	A2110-B7G6	12	010235
6219-51-2280	A2110-B7F9	15	010230
6219-51-2280	A2110-B7G6	15	010235
6219-51-2290	A2110-B7F9	13	010230
6219-51-2290	A2110-B7G6	13	010235
6219-51-2700	A3010-A7A6		010480
6219-51-2730	A3010-A7A6	7	010480
6219-51-2740	A3010-A7A6	6	010480
6219-51-2750	A3010-A7A6	8	010480
6219-51-5100	A3110-B7D6	8	010500
6219-51-5110	A3110-B7D6	1	010500
6219-51-5120	A3110-B7D6		010500
6219-51-5150	A3110-B7D6	9	010500
6219-51-5610	A3110-B7D6	19	010500
6219-51-5620	A3110-B7D6	21	010500
6219-51-5710	A3110-B7D6	15	010500
6219-51-5720	A3110-B7D6	16	010500
6219-51-5830	A3110-B7D6	23	010500
6219-51-6210	A2110-D8F9	4	010250
6219-51-6310	A2110-D8F9	1	010250
6219-51-8110	A1530-A7C3	28	010060
6219-51-8120	A1530-A7C3	29	010060
6219-51-8150	A1530-A7C3	9	010060
6219-51-8160	A1530-A7C3	14	010060
6219-61-1100	A5010-A7E6		010880
6219-61-1100	A5010-A7E8		010900
6219-61-1120	A5010-A7E6	12	010880
6219-61-1120	A5010-A7E8	12	010900
6219-61-1230	A5010-A7E6	3	010880
6219-61-1230	A5010-A7E8	3	010900
6219-61-1330	A5010-A7E8	1	010900
6219-61-1470	A5010-A7E6	2	010880
6219-61-1470	A5010-A7E8	2	010900
6219-61-6310	A5010-A7E6	30	010880

PART NO.	FIG.NO.	INDEX	PAGE
6219-61-6310	A5010-A7E8	29	010900
6219-61-6570	A5010-B7E6	10	010910
6219-61-6570	A5010-B7F4	10	010890
6219-61-6580	A5010-B7E6	11	010910
6219-61-6580	A5010-B7F4	11	010890
6219-61-6710	A5010-B7E6	12	010910
6219-61-6710	A5010-B7F4	12	010890
6219-61-6720	A5010-B7E6	13	010910
6219-61-6720	A5010-B7F4	13	010890
6219-61-7821	A2110-C7G8	17	010360
6219-61-7821	A2110-C7G8	2	010360
6219-61-7821	A2110-C7G9	16	010370
6219-61-7821	A2110-C7G9	2	010370
6219-61-8310	A2011-A7B9	3	010140
6219-61-8320	A1530-B7C3	5	010070
6219-61-8330	A1530-B7C3	6	010070
6219-61-8370	A1530-B7C3	31	010070
6219-61-8380	A1530-B7C3	32	010070
6219-61-8390	A1530-B7C3	26	010070
6219-71-1101	A4010-D7F7		010520
6219-71-1101	A4010-E7G7		010530
6219-71-1101	A4010-G7H8		010540
6219-71-1111	A4010-D7F7		010520
6219-71-1121	A4010-G8H9		010550
6219-71-1150	A4210-A7C5	17	010670
6219-71-1160	A4210-A7C5	18	010670
6219-71-1201	A4010-G8H9		010550
6219-71-1201	A4010-G9H9		010561
6219-71-1210	A4010-H1G1	1	010580
6219-71-1220	A4010-H2G1	1	010590
6219-71-3100	A4080-01A0		010620
6219-71-3130	A4080-01A0	8	010620
6219-71-3140	A4010-G7H8	2	010540
6219-71-3140	A4010-H1J1	2	010571
6219-71-3140	A4080-01A0	9	010620
6219-71-3150	A4010-G7H8	3	010540
6219-71-3150	A4010-H1J1	3	010571
6219-71-3150	A4080-01A0	10	010620
6219-71-3160	A4080-01A0	13	010620
6219-71-3160	A4080-01A0	32	010620
6219-71-3170	A4080-01A0	21	010620
6219-71-3170	A4080-01A0	39	010620
6219-71-3200	A4080-01A0		010620
6219-71-3230	A4080-01A0	42	010620
6219-71-3280	A4080-01A0	41	010620
6219-71-4111	A4050-A7A5	1	010680
6219-71-4121	A4050-A7A5	2	010680
6219-71-4131	A4050-A7A5	3	010680
6219-71-4141	A4050-A7A5	4	010680
6219-71-4151	A4050-A7A5	5	010680

PART NO.	FIG.NO.	INDEX	PAGE
6219-71-4161	A4050-A7A5	6	010680
6219-71-4211	A4050-A7A5	7	010680
6219-71-4221	A4050-A7A5	8	010680
6219-71-4231	A4050-A7A5	9	010680
6219-71-4241	A4050-A7A5	10	010680
6219-71-4251	A4050-A7A5	11	010680
6219-71-4261	A4050-A7A5	12	010680
6219-71-4340	A4050-D7A5	12	010710
6219-71-4350	A4050-D7A5	9	010710
6219-71-4360	A4050-B7A5	25	010690
6219-71-4370	A4040-A7B1	7	010640
6219-71-4380	A4010-A7A6	13	010630
6219-71-4380	A4040-A7B1	13	010640
6219-71-4390	A4010-A7A6	14	010630
6219-71-4410	A4010-H3G1	1	010600
6219-71-4470	A4050-D7A5	6	010710
6219-71-4480	A4010-A7A6	19	010630
6219-71-4480	A4040-A7B1	17	010640
6219-71-4491	A4010-A7A6	20	010630
6219-71-4530	A4060-01A0	8	010610
6219-71-4550	A4050-D7A5	3	010710
6219-71-4590	A4050-B7A5	24	010690
6219-71-4680	A4050-B7A5	4	010690
6219-71-5110	A4010-A7A6	3	010630
6219-71-5110	A4040-A7B1	3	010640
6219-71-5121	A4050-D7A5	2	010710
6219-71-5141	A4050-D7A5	1	010710
6219-71-5150	A4010-A7A6	1	010630
6219-71-5150	A4040-A7B1	1	010640
6219-71-5280	A4110-C7E4	9	010740
6219-71-5290	A4110-D7E4	9	010750
6219-71-5320	A4210-A7C5	7	010670
6219-71-5330	A4050-B7A5	12	010690
6219-71-5350	A4050-D7A5	21	010710
6219-71-5360	A4060-01A0	11	010610
6219-71-5410	A4050-B7A5	1	010690
6219-71-5420	A4050-B7A5	9	010690
6219-71-5430	A4050-B7A5	14	010690
6219-71-5451	A4050-B7A5	11	010690
6219-71-5480	A4050-B7A5	2	010690
6219-71-5490	A4050-D7A5	18	010710
6219-71-5810	A4060-01A0	3	010610
6219-71-5820	A4060-01A0	1	010610
6219-71-5830	A4060-01A0	2	010610
6219-71-6330	A4110-A7E4	20	010720
6219-71-6330	A4110-D7F2	11	010800
6219-71-6340	A4110-A7E4	21	010720
6219-71-6350	A4110-A7E5	52	010721
6219-71-6370	A4110-A7E4	24	010720
6219-71-6370	A4110-D7F2	23	010800

PART NO.	FIG.NO.	INDEX	PAGE
6219-71-6390	A4110-C7E4	6	010740
6219-71-6390	A4110-D7E4	6	010750
6219-71-6430	A4110-B7E4	21	010730
6219-71-6440	A4110-B7E4	22	010730
6219-71-6440	A4110-C7F2	13	010790
6219-71-6450	A4110-B7E4	16	010730
6219-71-6480	A4110-B7E4	61	010731
6219-71-6490	A4110-C7F2	8	010790
6219-71-6490	E4110-E7E4	14	010760
6219-71-6500	A4110-A7E4	1	010720
6219-71-6510	A4230-A7C7	1	010840
6219-71-6510	A4230-A7C8	1	010850
6219-71-6520	A4230-A7C7	2	010840
6219-71-6520	A4230-A7C8	2	010850
6219-71-6540	A4230-A7C7	9	010840
6219-71-6540	A4230-A7C8	9	010850
6219-71-6560	A4110-B7E4	64	010731
6219-71-6580	A4110-A7E4	14	010720
6219-71-6600	A4110-B7E4	1	010730
6219-71-6610	E4110-E7E4	11	010760
6219-71-6630	A4110-B7E4	49	010731
6219-71-6640	A4110-B7E4	31	010730
6219-71-6650	A4110-B7E4	15	010730
6219-71-6660	A4110-A7E5	61	010721
6219-71-6660	A4110-B7E4	56	010731
6219-71-6670	A4110-B7E4	65	010731
6219-71-6682	A4230-A7C7	6	010840
6219-71-6682	A4230-A7C8	6	010850
6219-71-6700	A4110-C7F2		010790
6219-71-6700	A4110-D7F2		010800
6219-71-6700	D0200-10A0	2	090140
6219-71-6700	E4110-E7E4		010760
6219-71-6710	A4110-C7F2	1	010790
6219-71-6710	A4110-D7F2	1	010800
6219-71-6710	E4110-E7E4	1	010760
6219-71-6730	A4110-D7F2	12	010800
6219-71-6780	A4110-C7F2	22	010790
6219-71-6820	A4110-G7E9	12	010830
6219-71-6820	A4110-G7E9	27	010830
6219-71-6830	A4110-G7E9	13	010830
6219-71-6830	A4110-G7E9	28	010830
6219-71-6850	A4110-A7E9	12	010770
6219-71-6870	A4110-A7E9	13	010770
6219-71-7110	A4210-A7C5	1	010670
6219-71-7350	A4110-F7E9	19	010820
6219-71-7360	A4110-F7E9	18	010820
6219-71-7370	A4110-F7E9	1	010820
6219-71-7430	A4110-E7F2	10	010810
6219-71-7440	A4110-E7F2	11	010810
6219-71-7610	A4110-A7E9	1	010770

PART NO.	FIG.NO.	INDEX	PAGE
6219-71-7610	A4110-B7E9	1	010780
6219-71-7630	A4110-B7E9	10	010780
6219-71-7640	A4110-B7E9	11	010780
6219-71-8120	A4010-A7A6	4	010630
6219-71-8120	A4040-A7B1	4	010640
6219-71-8130	A4050-B7A5	13	010690
6219-71-8140	A4110-A7E5	49	010721
6219-71-8180	A4110-C7F2	5	010790
6219-71-8250	A4110-D7F2	13	010800
6219-71-8260	A4110-D7F2	14	010800
6219-71-8270	A4110-D7F2	20	010800
6219-71-8280	A4110-C7F2	12	010790
6219-71-8370	A4110-C7F2	25	010790
6219-71-8600	A4110-G7E9	20	010830
6219-71-8600	A4110-G7E9	5	010830
6219-71-8810	A4230-A7C7	12	010840
6219-71-8810	A4230-A7C8	12	010850
6219-81-1110	A4710-A7D7	9	010650
6219-81-1110	A4710-A7E3	13	010660
6219-81-1120	A4710-A7D7	10	010650
6219-81-1120	A4710-A7E3	14	010660
6219-81-1130	A4710-A7D7	14	010650
6219-81-1130	A4710-A7E3	18	010660
6219-81-1140	A4710-A7D7	15	010650
6219-81-1140	A4710-A7E3	19	010660
6219-81-1150	A4710-A7D7	22	010650
6219-81-1150	A4710-A7E3	26	010660
6219-81-1160	A4710-A7D7	23	010650
6219-81-1160	A4710-A7E3	27	010660
6219-81-1961	A2011-A7B9	21	010140
6219-81-4190	A1510-A7C5	31	010050
6219-81-5310	A2110-C7G8	23	010360
6219-81-5310	A2110-C7G9	22	010370
6219-81-5320	A2110-C7G8	20	010360
6219-81-5320	A2110-C7G9	19	010370
6219-81-5340	A2110-C7G8	5	010360
6219-81-5340	A2110-C7G9	5	010370
6219-81-5350	A2110-C7G8	26	010360
6219-81-5350	A2110-C7G9	25	010370
6219-81-6110	A6010-A7C9	6	010960
6219-81-6110	A6010-B7D3	6	011010
6219-81-6120	A6030-A7B4	11	010930
6219-81-6130	A6010-A7C9	1	010960
6219-81-6130	A6010-B7D3	1	011010
6219-81-6140	A6010-A7C9	4	010960
6219-81-6140	A6010-B7D3	4	011010
6219-81-6150	A6030-A7B4	18	010930
6219-81-6210	A6010-A7C9	14	010960
6219-81-6210	A6010-B7D3	14	011010
6219-81-6220	A6010-A7C9	12	010960

PART NO.	FIG.NO.	INDEX	PAGE
6219-81-6220	A6010-B7D3	12	011010
6219-81-6230	A6010-A7C9	13	010960
6219-81-6230	A6010-B7D3	13	011010
6219-81-6460	A1570-A7A7	12	010100
6219-81-6480	A6210-A7A6	6	011020
6219-81-6750	A6010-A7C9	18	010960
6219-81-6750	A6010-B7D3	18	011010
6219-81-6760	A6010-A7C9	17	010960
6219-81-6760	A6010-B7D3	17	011010
6219-81-7100	A4710-A7E3	5	010660
6219-81-7851	A6810-C7C6	30	011051
6219-81-7851	A6810-E1C6	32	011090
6219-81-7860	A6810-C7C6	18	011051
6219-81-7860	A6810-E1C6	20	011090
6219-81-8111	A6810-B7C6	1	011040
6219-81-8121	A6810-C7C6	1	011051
6219-81-8130	A6810-C7C6	5	011051
6219-81-8130	A6810-E1C6	5	011090
6219-81-8160	A6010-B7D1	4	010970
6219-81-8160	A6010-B7D2	4	011000
6219-81-8170	A6010-B7D1	1	010970
6219-81-8170	A6010-B7D2	1	011000
6219-81-8180	A6810-D7C6	13	011060
6219-81-8180	A6810-E2C6	15	011100
6219-81-8210	A6810-B7C6	2	011040
6219-81-8210	A6810-D9C6	2	011080
6219-81-8220	A6810-C7C6	2	011051
6219-81-8220	A6810-E1C6	2	011090
6219-81-8240	A1510-A7C5	28	010050
6219-81-8280	A6810-B7C6	36	011040
6219-81-8280	A6810-D9C6	36	011080
6219-81-8350	A1510-A7C5	22	010050
6219-81-8360	A6810-B7C6	26	011040
6219-81-8360	A6810-D9C6	26	011080
6219-81-8370	A1510-A7C5	25	010050
6219-81-8380	A6810-D7C6	14	011060
6219-81-8380	A6810-E2C6	16	011100
6219-81-8390	A6810-B7C6	47	011041
6219-81-8390	A6810-D9C6	46	011081
6219-81-8450	A6810-B7C6	30	011040
6219-81-8450	A6810-D9C6	30	011080
6219-81-8520	A6810-D7C6	1	011060
6219-81-8520	A6810-E2C6	1	011100
6219-81-8530	A6810-D7C6	5	011060
6219-81-8530	A6810-E2C6	5	011100
6219-81-8580	A6810-A7C6	14	011030
6219-81-8580	A6810-D8C6	14	011070
6219-81-8590	A6810-A7C6	2	011030
6219-81-8590	A6810-D8C6	2	011070
6219-81-8620	A2110-B7F9	2	010230

PART NO.	FIG.NO.	INDEX	PAGE
6219-81-8620	A2110-B7G6	2	010235
6219-81-8710	A6810-A7C6	1	011030
6219-81-8710	A6810-D8C6	1	011070
6219-81-8720	A6810-A7C6	13	011030
6219-81-8720	A6810-D8C6	13	011070
6219-81-8760	A6810-D9C6	1	011080
6219-81-8770	A6810-E1C6	1	011090
6219-81-8780	A6810-C7C6	46	011052
6219-81-8780	A6810-E1C6	48	011091
6219-81-8940	A1310-B7E8	37	010040
6221-81-6810	A6210-A7A6	2	011020
6240-11-4460	A6210-A7A6	14	011020
6240-11-9910	B0300-01A0	18	030040
6240-21-7470	A1510-A7C5	20	010050
6240-51-8770	A1510-A7C5	12	010050
6240-71-6530	A4110-E7F2	2	010810
6240-71-6530	A4110-F7E9	10	010820
6240-71-6540	A4110-E7F2	3	010810
6240-71-6540	A4110-F7E9	11	010820
6240-81-5440	A6010-B7D1	12	010970
6240-81-5440	A6010-B7D2	12	011000
6240-81-7402	B0300-01A0	12	030040
6245-21-3121	A2041-A7E4	7	010160
6245-71-5680	A4110-G7E9	17	010830
6245-71-5680	A4110-G7E9	2	010830
6245-71-5950	A4110-E7F2	30	010810
6245-71-5950	A4110-F7E9	31	010820
6245-71-5960	A4110-E7F2	13	010810
6245-71-5960	A4110-F7E9	21	010820
6245-71-6180	A4110-E7F2	9	010810
6245-71-6180	A4110-F7E9	17	010820
6245-71-8110	A4110-G7E9	1	010830
6245-71-8110	A4110-G7E9	16	010830
6245-81-9410	D0200-10A0	32	090140
6245-81-9420	A4110-E7F2	31	010810
6245-81-9420	A4110-F7E9	32	010820
6251-81-7210	A4710-A7D7	5	010650
6251-81-7210	A4710-A7E3	9	010660
626-18-12700	A1310-B7E8	35	010040
6261-11-8280	A1570-A7A7	4	010100
6261-21-5920	A4110-E7F2	20	010810
6261-31-2030	A2350-A7B5		010430
6261-31-3140	A2350-A7B5	15	010430
6261-31-3140	A2350-A7B5	9	010430
6261-41-5040	A2411-B7A5		010470
6261-41-5050	A2411-B7A5		010470
6261-41-5400	A2411-B7A5		010470
6261-41-5420	A2411-B7A5	2	010470
6261-41-5500	A2411-B7A5		010470
6261-41-5520	A2411-B7A5	8	010470

PART NO.	FIG.NO.	INDEX	PAGE
6261-41-5530	A2411-B7A5	14	010470
6261-51-9481	A4110-A7E4	30	010720
6261-51-9481	A4110-B7E4	26	010730
6261-51-9481	A4110-C7F2	17	010790
6261-51-9481	A4110-D7F2	27	010800
6261-61-8680	A1530-B7C3	12	010070
6261-71-6150	A4210-A7C5	14	010670
6261-71-6430	D0200-05A0	2	090090
6261-71-6670	A4050-B7A5	7	010690
6261-71-7180	A4110-E7F2	1	010810
6261-71-7180	A4110-F7E9	9	010820
6261-81-2600	A6810-B7C6	27	011040
6261-81-2600	A6810-D9C6	27	011080
6261-81-2710	A1310-B7E8		010040
6261-81-2720	A1310-B7E8		010040
6261-81-2902	A2210-A7D1	10	010380
6261-81-2911	A2210-A7D1		010380
6261-81-6890	A6010-A7C8	2	010950
6261-81-6890	A6010-A7D1	2	010990
6261-81-6901	A2011-A7B9	18	010140
6261-81-6901	A2011-A7B9	22	010140
6261-81-6901	A4230-A7C7	18	010840
6261-81-6901	A4230-A7C8	18	010850
6261-81-7100	A4710-A7D7	4	010650
6261-81-7100	A4710-A7E3	4	010660
6261-81-7110	A4710-A7E3		010660
6261-81-7120	A4710-A7E3		010660
6261-81-7130	A4710-A7E3		010660
6261-81-9280	A4210-A7C5	5	010670
6265-71-3120	A4080-01A0	7	010620
6265-71-3220	A4080-01A0	29	010620
6265-71-3310	A4080-01A0	6	010620
6265-71-3320	A4080-01A0	28	010620
6265-71-9580	A4080-01A0	12	010620
6265-71-9580	A4080-01A0	31	010620
6271-81-9220	A2210-A7D1		010380
6354-71-5560	A4110-F7E9	24	010820
6505-11-0450	A1530-C7C3	21	010080
6505-11-0450	A1530-C8C4	21	010090
6505-11-0520	A1530-C7C3	18	010080
6505-11-0520	A1530-C8C4	18	010090
6505-61-2160	A1530-C7C3	20	010080
6505-61-2160	A1530-C8C4	20	010090
6505-61-4470	A1530-C7C3	17	010080
6505-61-4470	A1530-C8C4	17	010090
6505-67-5070	A1530-C7C3		010080
6505-67-5080	A1530-C8C4		010090
6505-67-5910	A1530-C7C3		010080
6505-67-5910	A1530-C8C4		010090
6505-99-9011	A1530-C7C3	22	010080

PART NO.	FIG.NO.	INDEX	PAGE
6505-99-9011	A1530-C8C4	22	010090
6553-71-3720	A4080-01A0	25	010620
6553-71-3720	A4080-01A0	3	010620
6560-61-7300	A1310-B7E8	40	010040
6560-61-7300	B0300-01A0	22	030040
6560-61-7310	A1310-B7E8		010040
6560-61-7310	B0300-01A0		030040
6631-11-5630	A1310-B7E8	7	010040
6631-11-5630	A1610-A7B9	14	010110
6631-11-5630	A2041-B7E4	2	010170
6631-11-5630	B0300-03A0	16	030070
6631-11-5630	B0300-05A0	12	030090
6631-11-5630	W1114-01A6	15	480110
6643-11-4641	B0300-01A0	19	030040
6643-21-6550	A2110-B7F9	18	010230
6645-31-1321	A2230-A7B5	2	010390
6691-21-6670	A2110-C7G8	12	010360
6693-22-5600	B0600-01A0		030110
6693-22-5620	B0600-01A0	44	030111
6732-21-1960	A6030-A7B4	8	010930
6735-21-1930	A1310-B7E8		010040
6735-21-1930	B0300-01A0		030040
6933-11-5140	A1610-A7B9	5	010110
6933-11-5150	A1610-A7B9	6	010110
6934-42-5300	A2411-B7A5		010470
6934-52-6810	A1530-A7C3	15	010060
6934-52-6810	A4110-B7E4	34	010730
6934-52-6810	A4110-C7F2	29	010790
6934-71-5950	A4010-A7A6	2	010630
6934-71-5950	A4040-A7B1	2	010640
6934-72-3980	A4010-H1J1	7	010571
6934-72-3980	A4110-D7F2	7	010800
6934-72-5660	A4010-A7A6	5	010630
6934-72-5660	A4040-A7B1	5	010640
6934-72-5660	A4060-01A0	13	010610
6934-72-7190	A4060-01A0	4	010610
6934-72-7190	A4210-A7C5	2	010670
700-22-11291	H1320-02A0	4	180502
700-30-63140	H0230-01A9	19	180158
700-84-11320	H1320-02A0	5	180502
700-84-12510	H1833-02A0	5	180590
700-84-12510	H1833-04A0	5	180600
700-85-11310	H1833-02A0	6	180590
700-85-11310	H1833-04A0	6	180600
700-85-11350	H1833-02A0	8	180590
700-85-11350	H1833-04A0	8	180600
700-93-11330	N1220-01A1	11	300120
700-93-11330	N1220-01A5	11	300160
701-20-61230	H1833-06A0	16	180610
701-20-61230	H1833-07A0	33	180620

PART NO.	FIG.NO.	INDEX	PAGE
702-16-06191	K0210-44A0		240440
702-16-06220	K0210-49A0		240490
702-16-51140	K0210-44A0	5	240440
702-16-51140	K0210-49A0	3	240490
702-16-51240	K0210-44A0	17	240440
702-16-53120	K0210-49A0	2	240490
702-16-53140	K0210-44A0	7	240440
702-16-53140	K0210-49A0	5	240490
702-16-53170	K0210-44A0	10	240440
702-16-53170	K0210-49A0	7	240490
702-16-53240	K0210-50A0	21	240500
702-16-53420	K0210-49A0	4	240490
702-16-53761	K0210-44A0	20	240440
702-16-54331	K0210-49A0	17	240490
702-16-54341	K0210-49A0		240490
702-16-54351	K0210-49A0		240490
702-16-54420	K0210-49A0	6	240490
702-16-54430	K0210-49A0	19	240490
702-16-56380	K0210-49A0		240490
702-16-56390	K0210-49A0		240490
702-16-57260	K0210-44A0	23	240440
702-16-57270	K0210-44A0	24	240440
702-16-57350	K0210-49A0	11	240490
702-16-71131	K0210-44A0	14	240440
702-16-71141	K0210-44A0	15	240440
702-16-71160	K0210-44A0	12	240440
702-16-71160	K0210-49A0	9	240490
702-16-71210	K0210-44A0	11	240440
702-16-71210	K0210-49A0	8	240490
702-16-71280	K0210-44A0	13	240440
702-16-71361	K0210-44A0	18	240440
702-16-71441	K0210-44A0	19	240440
702-16-73550	K0210-49A0	12	240490
702-16-73610	K0210-49A0	21	240490
702-16-73630	K0210-49A0	10	240490
702-16-73640	K0210-49A0	13	240490
702-16-73650	K0210-49A0	23	240490
702-16-73670	K0210-49A0	1	240490
702-16-75710	K0210-44A0	1	240440
702-16-75720	K0210-44A0	6	240440
702-16-75730	K0210-44A0	4	240440
702-16-75740	K0210-44A0	3	240440
702-16-75750	K0210-44A0	8	240440
702-16-75760	K0210-44A0	9	240440
702-16-75980	K0210-44A0	2	240440
702-19-12120	H1833-01A0	3	180580
702-19-13210	H1833-01A0	1	180580
702-21-07650	H0210-07A0	11	180136
702-21-07650	H0220-07A0	11	180146
702-21-09310	H1843-04A0		180805

PART NO.	FIG.NO.	INDEX	PAGE
702-21-37531	H1833-02A0	3	180590
702-21-37531	H1833-04A0	3	180600
702-21-37540	H1833-02A0	2	180590
702-21-37550	H1833-02A0	1	180590
702-21-37550	H1833-04A0	1	180600
702-21-37560	H1833-02A0	7	180590
702-21-37560	H1833-04A0	7	180600
702-21-37570	H1833-04A0	2	180600
702-21-39430	H1833-02A0	11	180590
702-21-39430	H1833-04A0	11	180600
702-21-42110	H1843-04A0	1	180805
702-21-42120	H1843-04A0	2	180805
702-21-42130	H1843-04A0	3	180805
702-21-42140	H1843-04A0	4	180805
702-21-42150	H1843-04A0	5	180805
702-21-42160	H1843-04A0	6	180805
702-21-55890	H0230-01A9	2	180158
702-21-55890	H0230-01A9	6	180158
702-21-57700	H0230-01A9	1	180158
702-21-57700	H0230-01A9	5	180158
702-73-01660	C0100-05A3		060057
702-73-01660	C0100-14A3		060147
702-73-11810	C0100-05A3	1	060057
702-73-11810	C0100-14A3	1	060147
702-73-11820	C0100-05A3	2	060057
702-73-11820	C0100-14A3	2	060147
702-73-11830	C0100-05A3	3	060057
702-73-11830	C0100-14A3	3	060147
702-73-11840	C0100-05A3	5	060057
702-73-11840	C0100-14A3	5	060147
702-73-11850	C0100-05A3	6	060057
702-73-11850	C0100-14A3	6	060147
702-73-11860	C0100-05A3	9	060057
702-73-11860	C0100-14A3	9	060147
702-75-04110	P1210-01A11	1	330220
702-75-04110	P1210-01A5	1	330160
702-75-11430	P1210-01A11	6	330220
702-75-11430	P1210-01A5	6	330160
702-75-11830	P1210-01A11	3	330220
702-75-11830	P1210-01A5	3	330160
702-75-11840	P1210-01A11	5	330220
702-75-11840	P1210-01A5	5	330160
702-75-11850	P1210-01A11	7	330220
702-75-11850	P1210-01A5	7	330160
702-77-02160	N1220-01A3	1	300140
702-77-02160	N1220-01A7	1	300180
703-15-00131	N1310-01A1		300200
703-15-73202	N1310-01A1		300200
703-15-91120G0	N1310-01A1		300200
703-15-91121	N1310-01A1	1	300200

PART NO.	FIG.NO.	INDEX	PAGE
703-15-92121	N1310-01A1	5	300200
703-15-93110	N1310-01A1	10	300200
703-15-94110	N1310-01A1	8	300200
703-15-95011	N1310-01A1	2	300200
703-15-96011	N1310-01A1	3	300200
703-15-98110	N1310-01A1	6	300200
705-40-02180	H0230-01A10		180159
705-40-33011	H0230-01A10	8	180159
705-40-33430	H0230-01A10	9	180159
705-40-33511	H0230-01A10	10	180159
705-40-80131	H0230-01A10	2	180159
705-40-80250	H0230-01A10	1	180159
705-40-80770	H0230-01A10	4	180159
705-40-81820	H0230-01A10	6	180159
705-40-81870	H0230-01A10	5	180159
705-40-83720	H0230-01A10	3	180159
705-41-80610	H0230-01A10		180159
705-41-80620	H0230-01A10		180159
706-73-71450	H0210-01A0	26	180130
706-73-71450	H0220-01A0	26	180140
706-75-42830	N1220-01A1	4	300120
706-75-42830	N1220-01A5	4	300160
706-75-75280	C0100-05A3	4	060057
706-75-75280	C0100-14A3	4	060147
706-76-71390	H0340-04A0	19	180350
706-76-71390	H0340-04A0	34	180350
706-77-05010	N1220-01A2	7	300130
706-77-05010	N1220-01A6	7	300170
706-77-42041	N1220-01A2	5	300130
706-77-42041	N1220-01A6	5	300170
706-77-42051	N1220-01A2	4	300130
706-77-42051	N1220-01A6	4	300170
706-77-42130	N1220-01A2	16	300130
706-77-42130	N1220-01A6	16	300170
706-77-42440	N1220-01A2		300130
706-77-42440	N1220-01A6		300170
706-77-42450	N1220-01A2		300130
706-77-42450	N1220-01A6		300170
706-77-42460	N1220-01A2		300130
706-77-42460	N1220-01A6		300170
706-77-42890	N1220-01A2	6	300130
706-77-42890	N1220-01A6	6	300170
706-77-43890	N1220-01A2	2	300130
706-77-43890	N1220-01A6	2	300170
706-77-72130	N1220-01A1	12	300120
706-77-72130	N1220-01A5	12	300160
706-77-72130	P1210-01A3	19	330140
706-77-72130	P1210-01A9	19	330200
706-77-72140	N1220-01A1	13	300120
706-77-72140	N1220-01A5	13	300160

PART NO.	FIG.NO.	INDEX	PAGE
706-77-72140	P1210-01A3	20	330140
706-77-72140	P1210-01A9	20	330200
706-77-72150	H0210-01A0	24	180130
706-77-72150	H0220-01A0	24	180140
706-77-72150	N1220-01A1	14	300120
706-77-72150	N1220-01A5	14	300160
706-77-72170	P1210-01A3	17	330140
706-77-72170	P1210-01A9	17	330200
706-77-72280	N1220-01A1	5	300120
706-77-72280	N1220-01A5	5	300160
706-7G-71290	N1220-01A3	5	300140
706-7G-71290	N1220-01A7	5	300180
706-7K-01130	N1220-01A7		300180
706-7K-03130	N1220-01A1		300120
706-7K-03130	N1220-01A2		300130
706-7K-03130	N1220-01A5		300160
706-7K-03130	N1220-01A6		300170
706-7K-05010	N1220-01A2		300130
706-7K-05010	N1220-01A6		300170
706-7K-40010	N1220-01A1	3	300120
706-7K-40010	N1220-01A5	3	300160
706-7K-40040	N1220-01A1	16	300120
706-7K-40040	N1220-01A5	16	300160
706-7K-41120	N1220-01A2	15	300130
706-7K-41120	N1220-01A6	15	300170
706-7K-41140	N1220-01A2	17	300130
706-7K-41140	N1220-01A6	17	300170
706-7K-41150	N1220-01A1	1	300120
706-7K-41150	N1220-01A5	1	300160
706-7K-41160	N1220-01A2	20	300130
706-7K-41160	N1220-01A6	20	300170
706-7K-41210	N1220-01A2	12	300130
706-7K-41210	N1220-01A6	12	300170
706-7K-41260	N1220-01A2	18	300130
706-7K-41260	N1220-01A6	18	300170
706-7K-41610	N1220-01A2	1	300130
706-7K-41610	N1220-01A6	1	300170
706-7K-41710	N1220-01A2	13	300130
706-7K-41710	N1220-01A6	13	300170
706-7K-41810	N1220-01A2	3	300130
706-7K-41810	N1220-01A6	3	300170
706-7K-41920	N1220-01A2	10	300130
706-7K-41920	N1220-01A6	10	300170
706-7K-71130	N1220-01A1	2	300120
706-7K-71130	N1220-01A5	2	300160
706-7K-91111	N1220-01A2	23	300130
706-7K-91111	N1220-01A6	23	300170
706-7K-91340	N1220-01A2	21	300130
706-7K-91340	N1220-01A6	21	300170
706-7K-91350	N1220-01A2	22	300130

PART NO.	FIG.NO.	INDEX	PAGE
706-7K-91350	N1220-01A6	22	300170
706-7K-91360	N1220-01A2	26	300130
706-7K-91360	N1220-01A6	26	300170
706-7L-00110	P1210-01A3		330140
706-7L-00110	P1210-01A9		330200
706-7L-00120	P1210-01A10		330210
706-7L-00120	P1210-01A4		330150
706-7L-01110	P1210-01A10		330210
706-7L-01110	P1210-01A11		330220
706-7L-01110	P1210-01A3		330140
706-7L-01110	P1210-01A4		330150
706-7L-01110	P1210-01A5		330160
706-7L-01110	P1210-01A9		330200
706-7L-41710	P1210-01A10	21	330210
706-7L-41710	P1210-01A4	21	330150
706-7L-71110	P1210-01A3	2	330140
706-7L-71110	P1210-01A9	2	330200
706-7L-71120	P1210-01A3	4	330140
706-7L-71120	P1210-01A9	4	330200
706-7L-71130	P1210-01A3	5	330140
706-7L-71130	P1210-01A9	5	330200
706-7L-71140	P1210-01A3	6	330140
706-7L-71140	P1210-01A9	6	330200
706-7L-71150	P1210-01A3	8	330140
706-7L-71150	P1210-01A9	8	330200
706-7L-71160	P1210-01A3	7	330140
706-7L-71160	P1210-01A9	7	330200
706-7L-71170	P1210-01A3	21	330140
706-7L-71170	P1210-01A9	21	330200
706-86-51180	K0210-49A0	25	240490
706-86-90290	N1220-01A2	25	300130
706-86-90290	N1220-01A6	25	300170
706-8E-14191	P1210-01A3	13	330140
706-8E-14191	P1210-01A9	13	330200
706-8J-41010	P1210-01A10	7	330210
706-8J-41010	P1210-01A4	7	330150
706-8J-41420	N1220-01A2	9	300130
706-8J-41420	N1220-01A6	9	300170
706-8J-41620	P1210-01A10	12	330210
706-8J-41620	P1210-01A4	12	330150
706-8J-41820	P1210-01A10	13	330210
706-8J-41820	P1210-01A4	13	330150
706-8J-71181	P1210-01A3	26	330140
706-8J-71181	P1210-01A9	26	330200
706-8J-71190	P1210-01A3	27	330140
706-8J-71190	P1210-01A3	29	330140
706-8J-71190	P1210-01A9	27	330200
706-8J-71190	P1210-01A9	29	330200
706-8L-05010	P1210-01A10	10	330210
706-8L-05010	P1210-01A4	10	330150

PART NO.	FIG.NO.	INDEX	PAGE
706-8L-41110	P1210-01A3	1	330140
706-8L-41110	P1210-01A9	1	330200
706-8L-41120	P1210-01A10	1	330210
706-8L-41120	P1210-01A4	1	330150
706-8L-41160	P1210-01A10	22	330210
706-8L-41160	P1210-01A4	22	330150
706-8L-41210	P1210-01A10	20	330210
706-8L-41210	P1210-01A4	20	330150
706-8L-41260	P1210-01A10	18	330210
706-8L-41260	P1210-01A4	18	330150
706-8L-41270	P1210-01A10	16	330210
706-8L-41270	P1210-01A4	16	330150
706-8L-41280	P1210-01A10	15	330210
706-8L-41280	P1210-01A4	15	330150
706-8L-41290	P1210-01A10	17	330210
706-8L-41290	P1210-01A4	17	330150
706-8L-41440	P1210-01A10		330210
706-8L-41440	P1210-01A4		330150
706-8L-41450	P1210-01A10		330210
706-8L-41450	P1210-01A4		330150
706-8L-41460	P1210-01A10		330210
706-8L-41460	P1210-01A4		330150
706-8L-41470	P1210-01A10		330210
706-8L-41470	P1210-01A4		330150
706-8L-41480	P1210-01A10		330210
706-8L-41480	P1210-01A4		330150
706-8L-41510	P1210-01A10	6	330210
706-8L-41510	P1210-01A4	6	330150
706-8L-41810	P1210-01A10	9	330210
706-8L-41810	P1210-01A4	9	330150
706-8L-41890	P1210-01A10	8	330210
706-8L-41890	P1210-01A4	8	330150
706-8L-91110	P1210-01A10	25	330210
706-8L-91110	P1210-01A4	25	330150
706-8L-91340	P1210-01A10	23	330210
706-8L-91340	P1210-01A4	23	330150
706-8L-91360	P1210-01A10	30	330210
706-8L-91360	P1210-01A4	30	330150
706-8L-91370	P1210-01A10	24	330210
706-8L-91370	P1210-01A4	24	330150
707-00-0E670	M1130-09A0	8	270220
707-00-0E670	M1130-09A1		270224
707-00-0Y770	W1114-01A3		480080
707-00-0Y770	W1114-02A3		480170
707-01-0K750	T1120-01A1		390140
707-01-0K760	T1120-01A2		390150
707-01-0K770	T1140-01A1		390180
707-01-0K770	T1140-01A2		390190
707-01-0K790	T1220-01A1		390270
707-01-0K790	T1220-01A2		390280

PART NO.	FIG.NO.	INDEX	PAGE
707-11-65690	W1114-01A3	1	480080
707-11-65690	W1114-02A3	1	480170
707-11-95280	M1130-09A1	1	270224
707-13-20520	T1220-01A1	1	390270
707-13-20520	T1220-01A2	1	390280
707-13-25170	T1140-01A1	1	390180
707-13-25170	T1140-01A2	1	390190
707-13-30130	T1120-01A1	1	390140
707-13-30140	T1120-01A2	1	390150
707-27-20920	T1220-01A1	9	390270
707-27-20920	T1220-01A2	9	390280
707-27-25310	T1140-01A1	8	390180
707-27-25310	T1140-01A2	8	390190
707-27-30090	T1120-01A1	13	390140
707-27-30090	T1120-01A2	13	390150
707-29-65831	W1114-01A3	11	480080
707-29-65831	W1114-02A3	11	480170
707-29-95721	M1130-09A1	11	270224
707-35-52660	W1114-01A3	16	480080
707-35-52660	W1114-02A3	16	480170
707-35-52660	Y0100-02A1		510020
707-35-52780	M1130-09A1	18	270224
707-35-52780	Y0100-01A0		510010
707-36-20560	T1220-01A1	22	390270
707-36-20560	T1220-01A2	22	390280
707-36-25220	T1140-01A1	17	390180
707-36-25220	T1140-01A2	17	390190
707-36-30110	T1120-01A1	24	390140
707-36-30110	T1120-01A2	24	390150
707-36-65270	W1114-01A3	18	480080
707-36-65270	W1114-02A3	18	480170
707-36-95170	M1130-09A1	19	270224
707-39-20020	T1220-01A1	24	390270
707-39-20020	T1220-01A2	24	390280
707-39-20020	Y0100-02A1		510020
707-39-25011	T1140-01A1	19	390180
707-39-25011	T1140-01A2	19	390190
707-39-25011	Y0100-01A0		510010
707-39-30900	T1120-01A1	26	390140
707-39-30900	T1120-01A2	26	390150
707-39-30900	Y0100-01A0		510010
707-39-65190	W1114-01A3	20	480080
707-39-65190	W1114-02A3	20	480170
707-39-65190	Y0100-02A1		510020
707-39-95110	M1130-09A1	21	270224
707-39-95110	Y0100-01A0		510010
707-40-65270	W1114-01A3	21	480080
707-40-65270	W1114-02A3	21	480170
707-41-10270	T1120-01A1	22	390140
707-41-10270	T1120-01A2	22	390150

PART NO.	FIG.NO.	INDEX	PAGE
707-44-20020	T1220-01A1	23	390270
707-44-20020	T1220-01A2	23	390280
707-44-20020	Y0100-02A1		510020
707-44-20190	Y0100-02A1		510020
707-44-20910	T1220-01A1	25	390270
707-44-20910	T1220-01A2	25	390280
707-44-25010	T1140-01A1	18	390180
707-44-25010	T1140-01A2	18	390190
707-44-25010	Y0100-01A0		510010
707-44-25910	T1140-01A1	20	390180
707-44-25910	T1140-01A2	20	390190
707-44-30010	T1120-01A1	25	390140
707-44-30010	T1120-01A2	25	390150
707-44-30010	Y0100-01A0		510010
707-44-30910	T1120-01A1	27	390140
707-44-30910	T1120-01A2	27	390150
707-44-65180	W1114-01A3	19	480080
707-44-65180	W1114-02A3	19	480170
707-44-65180	Y0100-02A1		510020
707-44-95180	M1130-09A1	20	270224
707-44-95180	Y0100-01A0		510010
707-46-14050	T1140-01A1	3	390180
707-46-14050	T1140-01A2	3	390190
707-46-18020	T1120-01A1	4	390140
707-46-18020	T1120-01A2	4	390150
707-46-18020	T1120-01A2	7	390150
707-46-18050	T1120-01A1	3	390140
707-46-18050	T1120-01A2	3	390150
707-46-18050	T1120-01A2	6	390150
707-51-14080	T1220-01A1	10	390270
707-51-14080	T1220-01A2	10	390280
707-51-14080	Y0100-02A1		510020
707-51-14650	Y0100-02A1		510020
707-51-14850	T1220-01A1	13	390270
707-51-14850	T1220-01A2	13	390280
707-51-14850	Y0100-02A1		510020
707-51-16030	T1140-01A1	11	390180
707-51-16030	T1140-01A2	11	390190
707-51-16030	Y0100-01A0		510010
707-51-16850	T1140-01A1	12	390180
707-51-16850	T1140-01A2	12	390190
707-51-16850	Y0100-01A0		510010
707-51-20080	T1120-01A1	16	390140
707-51-20080	T1120-01A2	16	390150
707-51-20080	Y0100-01A0		510010
707-51-20850	T1120-01A1	17	390140
707-51-20850	T1120-01A2	17	390150
707-51-20850	Y0100-01A0		510010
707-51-35210	W1114-01A3	14	480080
707-51-35210	W1114-02A3	14	480170

PART NO.	FIG.NO.	INDEX	PAGE
707-51-35210	Y0100-02A1		510020
707-51-50211	M1130-09A1	14	270224
707-51-50211	Y0100-01A0		510010
707-52-15230	M1130-09A1	15	270224
707-52-91171	T1220-01A1	14	390270
707-52-91171	T1220-01A2	14	390280
707-52-91351	T1140-01A1	9	390180
707-52-91351	T1140-01A2	9	390190
707-52-91761	T1120-01A1	18	390140
707-52-91761	T1120-01A2	18	390150
707-58-14560	T1220-01A1	2	390270
707-58-14560	T1220-01A2	2	390280
707-58-16170	T1140-01A1	2	390180
707-58-16170	T1140-01A2	2	390190
707-58-20270	T1120-01A1	2	390140
707-58-20270	T1120-01A2	2	390150
707-58-50F00	M1130-09A1	3	270224
707-67-27020	W1114-01A3	22	480080
707-67-27020	W1114-02A3	22	480170
707-67-36010	M1130-09A1	22	270224
707-71-35070	T1120-01A1	9	390140
707-71-35070	T1120-01A2	9	390150
707-71-35080	T1220-01A1	18	390270
707-71-35080	T1220-01A2	18	390280
707-71-50390	T1140-01A1	26	390180
707-71-50390	T1140-01A2	26	390190
707-71-61540	T1220-01A1	19	390270
707-71-61540	T1220-01A2	19	390280
707-71-62000	T1120-01A1	10	390140
707-71-62000	T1120-01A2	10	390150
707-71-70350	T1220-01A1	28	390270
707-71-70350	T1220-01A2	28	390280
707-71-91230	T1220-01A1	26	390270
707-71-91230	T1220-01A2	26	390280
707-71-91380	T1140-01A1	23	390180
707-71-91380	T1140-01A2	23	390190
707-75-14110	T1220-01A1	15	390270
707-75-14110	T1220-01A2	15	390280
707-75-16110	T1140-01A1	10	390180
707-75-16110	T1140-01A2	10	390190
707-75-20040	T1120-01A1	23	390140
707-75-20040	T1120-01A2	23	390150
707-76-12180	T1220-01A1	3	390270
707-76-12180	T1220-01A2	3	390280
707-76-14050	T1220-01A1	5	390270
707-76-14050	T1220-01A2	5	390280
707-76-50880	M1130-09A1	4	270224
707-77-18010	T1120-01A1	5	390140
707-77-18010	T1120-01A2	5	390150
707-77-18010	T1120-01A2	8	390150

PART NO.	FIG.NO.	INDEX	PAGE
707-77-18010	Y0100-01A0		510010
707-77-50020	M1130-09A1	5	270224
707-77-50020	Y0100-01A0		510010
707-86-14230	T1120-01A1	31	390140
707-86-14240	T1120-01A2	31	390150
707-86-14250	T1140-01A1	27	390180
707-86-14260	T1140-01A2	27	390190
707-86-14270	T1220-01A1	31	390270
707-86-14280	T1220-01A2	31	390280
707-86-15010	T1120-01A1	32	390140
707-86-15020	T1120-01A2	32	390150
707-87-14660	T1140-01A1	39	390180
707-87-14660	T1140-01A2	39	390190
707-87-14670	T1220-01A1	35	390270
707-87-14680	T1220-01A2	35	390280
707-88-26220	T1120-01A1	33	390140
707-88-26220	T1120-01A2	33	390150
707-88-26230	T1220-01A1	44	390271
707-88-26230	T1220-01A2	44	390281
707-88-28610	T1120-01A1	35	390140
707-88-28620	T1120-01A2	35	390150
707-88-28630	T1140-01A1	31	390180
707-88-28630	T1140-01A2	31	390190
707-88-28640	T1140-01A1	32	390180
707-88-28650	T1140-01A2	32	390190
707-88-28660	T1220-01A1	43	390271
707-88-28660	T1220-01A2	43	390281
707-88-28670	T1220-01A1	41	390270
707-88-28680	T1220-01A2	41	390280
707-88-28690	T1120-01A1	34	390140
707-88-28690	T1120-01A2	34	390150
707-88-33060	T1120-01A1	52	390141
707-88-33060	T1120-01A2	52	390151
707-88-33060	T1140-01A1	46	390181
707-88-33060	T1140-01A2	46	390191
707-88-33060	T1220-01A1	50	390271
707-88-33060	T1220-01A2	50	390281
707-88-33070	T1120-01A1	55	390141
707-88-33070	T1120-01A2	55	390151
707-88-33070	T1140-01A1	42	390180
707-88-33070	T1140-01A2	42	390190
707-88-33070	T1220-01A1	54	390271
707-88-33070	T1220-01A2	54	390281
707-88-37410	T1120-01A1	36	390140
707-88-37421	T1220-01A1	42	390270
707-88-37421	T1220-01A2	42	390280
707-98-13890	Y0100-02A1		510020
707-98-29640	Y0100-01A0		510010
707-99-76230	Y0100-02A1		510020
707-99-76260	T1220-01A1		390271

PART NO.	FIG.NO.	INDEX	PAGE
707-99-76260	Y0100-01A0		510010
707-99-85350	T1140-01A1		390181
707-99-85350	T1140-01A2		390191
707-99-85350	Y0100-01A0		510010
707-99-96140	T1120-01A1		390141
707-99-96140	T1120-01A2		390151
707-99-96140	Y0100-01A0		510010
70746-18020	T1120-01A1	7	390140
70746-18050	T1120-01A1	6	390140
70777-18010	T1120-01A1	8	390140
708-18-12570	K0210-49A0	26	240490
708-18-13230	H0210-02A0	10	180131
708-18-13230	H0210-05A0	7	180134
708-18-13230	H0220-02A0	10	180141
708-18-13230	H0220-05A0	7	180144
708-18-13230	N1220-01A2	14	300130
708-18-13230	N1220-01A6	14	300170
708-18-13230	P1210-01A3	12	330140
708-18-13230	P1210-01A9	12	330200
708-1L-29340	H0230-01A0	9	180149
708-1L-29340	H0230-01A5	10	180154
708-21-12541	A1010-A7B4	9	010010
708-21-12541	H0210-07A0	4	180136
708-21-12541	H0220-07A0	4	180146
708-21-12541	H1833-02A0	4	180590
708-21-12541	H1833-04A0	4	180600
708-23-12350	N1220-01A2	19	300130
708-23-12350	N1220-01A6	19	300170
708-23-12350	P1210-01A10	19	330210
708-23-12350	P1210-01A4	19	330150
708-25-12790	H0230-01A2	4	180151
708-25-12790	H0230-01A6	4	180155
708-25-52861	C0100-05A2	8	060056
708-25-52861	C0100-14A2	8	060146
708-25-52861	H0230-01A2	5	180151
708-2E-05040	H0230-01A2	3	180151
708-2E-05040	H0230-01A6	3	180155
708-2E-12140	H0230-01A6	21	180155
708-2K-00122	H0210-02A0		180131
708-2K-00122	H0210-04A0		180133
708-2K-00122	H0210-05A0		180134
708-2K-00122	H0210-06A0		180135
708-2K-00122	H0210-07A0		180136
708-2K-00122	H0210-08A0		180137
708-2K-00122	H0220-04A0		180143
708-2K-00122	H0220-08A0		180147
708-2K-00123	H0210-02A0		180131
708-2K-00123	H0210-04A0		180133
708-2K-00123	H0210-05A0		180134
708-2K-00123	H0210-06A0		180135

PART NO.	FIG.NO.	INDEX	PAGE
708-2K-00123	H0210-07A0		180136
708-2K-00123	H0210-08A0		180137
708-2K-00123	H0220-04A0		180143
708-2K-00123	H0220-08A0		180147
708-2K-01123	H0210-01A0		180130
708-2K-01123	H0210-02A0		180131
708-2K-01123	H0210-04A0		180133
708-2K-01123	H0210-05A0		180134
708-2K-01123	H0210-06A0		180135
708-2K-01123	H0220-01A0		180140
708-2K-01123	H0220-02A0		180141
708-2K-01123	H0220-03A0		180142
708-2K-01123	H0220-04A0		180143
708-2K-01123	H0220-05A0		180144
708-2K-01123	H0220-06A0		180145
708-2K-01124	H0210-01A0		180130
708-2K-01124	H0210-02A0		180131
708-2K-01124	H0210-04A0		180133
708-2K-01124	H0210-05A0		180134
708-2K-01124	H0210-06A0		180135
708-2K-01124	H0220-01A0		180140
708-2K-01124	H0220-02A0		180141
708-2K-01124	H0220-03A0		180142
708-2K-01124	H0220-04A0		180143
708-2K-01124	H0220-05A0		180144
708-2K-01124	H0220-06A0		180145
708-2K-03160	H0210-07A0		180136
708-2K-03160	H0220-07A0		180146
708-2K-03250	H0210-08A0		180137
708-2K-03250	H0220-08A0		180147
708-2K-03411	H0210-08A0	12	180137
708-2K-03411	H0220-08A0	12	180147
708-2K-03420	H0210-08A0	18	180137
708-2K-03420	H0220-08A0	18	180147
708-2K-03440	H0230-01A11	1	180160
708-2K-03550	H0210-07A0	5	180136
708-2K-03550	H0220-07A0	5	180146
708-2K-03560	H0210-07A0	16	180136
708-2K-03560	H0220-07A0	16	180146
708-2K-03820	H0210-07A0	15	180136
708-2K-03820	H0220-07A0	15	180146
708-2K-04211	H0210-07A0		180136
708-2K-04211	H0220-07A0		180146
708-2K-04243	H0210-05A0		180134
708-2K-04243	H0220-05A0		180144
708-2K-04260	H0210-03A0		180132
708-2K-04260	H0210-06A0		180135
708-2K-04260	H0220-03A0		180142
708-2K-04260	H0220-06A0		180145
708-2K-04281	H0210-02A0		180131

PART NO.	FIG.NO.	INDEX	PAGE
708-2K-04281	H0220-02A0		180141
708-2K-04361	H0210-01A0		180130
708-2K-04361	H0220-01A0		180140
708-2K-04380	H0210-01A0		180130
708-2K-04380	H0220-01A0		180140
708-2K-04420	H0210-06A0		180135
708-2K-04420	H0220-06A0		180145
708-2K-04470	H0210-04A0		180133
708-2K-04470	H0220-04A0		180143
708-2K-05020	H0210-06A0	29	180135
708-2K-05020	H0220-06A0	29	180145
708-2K-05050	H0210-02A0	3	180131
708-2K-05050	H0210-05A0	3	180134
708-2K-05050	H0220-02A0	3	180141
708-2K-05050	H0220-05A0	3	180144
708-2K-11170	H0210-01A0	3	180130
708-2K-11170	H0210-03A0	5	180132
708-2K-11170	H0210-04A0	3	180133
708-2K-11170	H0210-06A0	5	180135
708-2K-11170	H0210-07A0	19	180136
708-2K-11170	H0220-01A0	3	180140
708-2K-11170	H0220-03A0	5	180142
708-2K-11170	H0220-04A0	3	180143
708-2K-11170	H0220-06A0	5	180145
708-2K-11170	H0220-07A0	19	180146
708-2K-11190	H0210-01A0	4	180130
708-2K-11190	H0210-04A0	4	180133
708-2K-11190	H0220-01A0	4	180140
708-2K-11190	H0220-04A0	4	180143
708-2K-11251	H0210-01A0	1	180130
708-2K-11251	H0220-01A0	1	180140
708-2K-11290	H0210-01A0	10	180130
708-2K-11290	H0210-01A0	14	180130
708-2K-11290	H0210-04A0	14	180133
708-2K-11290	H0220-01A0	10	180140
708-2K-11290	H0220-01A0	14	180140
708-2K-11290	H0220-04A0	14	180143
708-2K-11310	H0210-04A0	1	180133
708-2K-11310	H0220-04A0	1	180143
708-2K-11550	H0210-01A0	11	180130
708-2K-11550	H0220-01A0	11	180140
708-2K-11711	H0210-06A0	23	180135
708-2K-11711	H0220-06A0	23	180145
708-2K-11720	H0210-01A0	13	180130
708-2K-11720	H0220-01A0	13	180140
708-2K-11740	H0210-06A0	27	180135
708-2K-11740	H0220-06A0	27	180145
708-2K-11750	H0210-06A0		180135
708-2K-11750	H0220-06A0		180145
708-2K-11760	H0210-06A0		180135

PART NO.	FIG.NO.	INDEX	PAGE
708-2K-11760	H0220-06A0		180145
708-2K-11770	H0210-06A0		180135
708-2K-11770	H0220-06A0		180145
708-2K-11781	H0210-06A0	24	180135
708-2K-11781	H0220-06A0	24	180145
708-2K-11790	H0210-06A0	26	180135
708-2K-11790	H0220-06A0	26	180145
708-2K-11920	H0210-04A0	8	180133
708-2K-11920	H0220-04A0	8	180143
708-2K-11950	H0210-04A0	5	180133
708-2K-11950	H0220-04A0	5	180143
708-2K-12131	H0210-06A0	22	180135
708-2K-12131	H0220-06A0	22	180145
708-2K-12170	H0210-02A0		180131
708-2K-12170	H0210-05A0		180134
708-2K-12170	H0220-02A0		180141
708-2K-12170	H0220-05A0		180144
708-2K-12180	H0210-02A0		180131
708-2K-12180	H0210-05A0		180134
708-2K-12180	H0220-02A0		180141
708-2K-12180	H0220-05A0		180144
708-2K-12190	H0210-02A0		180131
708-2K-12190	H0210-05A0		180134
708-2K-12190	H0220-02A0		180141
708-2K-12190	H0220-05A0		180144
708-2K-12220	H0210-02A0	6	180131
708-2K-12220	H0220-02A0	6	180141
708-2K-12260	H0210-02A0	2	180131
708-2K-12260	H0210-05A0	2	180134
708-2K-12260	H0220-02A0	2	180141
708-2K-12260	H0220-05A0	2	180144
708-2K-12280	H0210-01A0	15	180130
708-2K-12280	H0220-01A0	15	180140
708-2K-12290	H0210-02A0	1	180131
708-2K-12290	H0220-02A0	1	180141
708-2K-12330	H0210-05A0	1	180134
708-2K-12330	H0220-05A0	1	180144
708-2K-12360	H0210-02A0	5	180131
708-2K-12360	H0220-02A0	5	180141
708-2K-12380	H0210-02A0		180131
708-2K-12380	H0210-05A0		180134
708-2K-12380	H0220-02A0		180141
708-2K-12380	H0220-05A0		180144
708-2K-12390	H0210-02A0		180131
708-2K-12390	H0210-05A0		180134
708-2K-12390	H0220-02A0		180141
708-2K-12390	H0220-05A0		180144
708-2K-12710	H0210-06A0	33	180135
708-2K-12710	H0220-06A0	33	180145
708-2K-12940	H0210-06A0	31	180135

PART NO.	FIG.NO.	INDEX	PAGE
708-2K-12940	H0220-06A0	31	180145
708-2K-12950	H0210-06A0	32	180135
708-2K-12950	H0220-06A0	32	180145
708-2K-13113	H0210-02A0	8	180131
708-2K-13113	H0210-05A0	5	180134
708-2K-13113	H0220-02A0	8	180141
708-2K-13113	H0220-05A0	5	180144
708-2K-13130	H0210-02A0	12	180131
708-2K-13130	H0210-05A0	9	180134
708-2K-13130	H0220-02A0	12	180141
708-2K-13130	H0220-05A0	9	180144
708-2K-13140	H0210-02A0	14	180131
708-2K-13140	H0210-05A0	11	180134
708-2K-13140	H0220-02A0	14	180141
708-2K-13140	H0220-05A0	11	180144
708-2K-13151	H0210-02A0	13	180131
708-2K-13151	H0210-05A0	10	180134
708-2K-13151	H0220-02A0	13	180141
708-2K-13151	H0220-05A0	10	180144
708-2K-13212	H0210-05A0	6	180134
708-2K-13212	H0220-05A0	6	180144
708-2K-13240	H0210-02A0	9	180131
708-2K-13240	H0220-02A0	9	180141
708-2K-13312	H0210-02A0	18	180131
708-2K-13312	H0210-05A0	15	180134
708-2K-13312	H0220-02A0	18	180141
708-2K-13312	H0220-05A0	15	180144
708-2K-13350	H0210-02A0	16	180131
708-2K-13350	H0210-05A0	13	180134
708-2K-13350	H0220-02A0	16	180141
708-2K-13350	H0220-05A0	13	180144
708-2K-13361	H0210-02A0	11	180131
708-2K-13361	H0210-05A0	8	180134
708-2K-13361	H0220-02A0	11	180141
708-2K-13361	H0220-05A0	8	180144
708-2K-13371	H0210-02A0	17	180131
708-2K-13371	H0210-05A0	14	180134
708-2K-13371	H0220-02A0	17	180141
708-2K-13371	H0220-05A0	14	180144
708-2K-13420	H0210-03A0	2	180132
708-2K-13420	H0210-06A0	2	180135
708-2K-13420	H0220-03A0	2	180142
708-2K-13420	H0220-06A0	2	180145
708-2K-13430	H0210-03A0	3	180132
708-2K-13430	H0210-06A0	3	180135
708-2K-13430	H0220-03A0	3	180142
708-2K-13430	H0220-06A0	3	180145
708-2K-13610	H0210-03A0	1	180132
708-2K-13610	H0210-06A0	1	180135
708-2K-13610	H0220-03A0	1	180142

PART NO.	FIG.NO.	INDEX	PAGE
708-2K-13610	H0220-06A0	1	180145
708-2K-14110	H0210-03A0	7	180132
708-2K-14110	H0210-06A0	7	180135
708-2K-14110	H0220-03A0	7	180142
708-2K-14110	H0220-06A0	7	180145
708-2K-14130	H0210-03A0	8	180132
708-2K-14130	H0210-06A0	8	180135
708-2K-14130	H0220-03A0	8	180142
708-2K-14130	H0220-06A0	8	180145
708-2K-14210	H0210-03A0	12	180132
708-2K-14210	H0210-06A0	12	180135
708-2K-14210	H0220-03A0	12	180142
708-2K-14210	H0220-06A0	12	180145
708-2K-14230	H0210-03A0	17	180132
708-2K-14230	H0210-06A0	17	180135
708-2K-14230	H0220-03A0	17	180142
708-2K-14230	H0220-06A0	17	180145
708-2K-15141	H0210-07A0	3	180136
708-2K-15141	H0220-07A0	3	180146
708-2K-15180	H0210-03A0	9	180132
708-2K-15180	H0210-06A0	9	180135
708-2K-15180	H0220-03A0	9	180142
708-2K-15180	H0220-06A0	9	180145
708-2K-16150	H0210-08A0	8	180137
708-2K-16150	H0220-08A0	8	180147
708-2K-16170	H0230-01A11	3	180160
708-2K-16310	H0210-07A0	13	180136
708-2K-16310	H0220-07A0	13	180146
708-2K-16320	H0210-07A0	12	180136
708-2K-16320	H0220-07A0	12	180146
708-2K-16920	H0210-08A0	10	180137
708-2K-16920	H0220-08A0	10	180147
708-2K-16930	H0210-08A0	7	180137
708-2K-16930	H0220-08A0	7	180147
708-2L-00280	H0230-01A0		180149
708-2L-00280	H0230-01A1		180150
708-2L-00280	H0230-01A10		180159
708-2L-00280	H0230-01A11		180160
708-2L-00280	H0230-01A2		180151
708-2L-00280	H0230-01A4		180153
708-2L-00280	H0230-01A5		180154
708-2L-00280	H0230-01A6		180155
708-2L-00280	H0230-01A7		180156
708-2L-00280	H0230-01A8		180157
708-2L-00280	H0230-01A9		180158
708-2L-01280	H0230-01A0		180149
708-2L-01280	H0230-01A1		180150
708-2L-01280	H0230-01A2		180151
708-2L-01280	H0230-01A4		180153
708-2L-01280	H0230-01A5		180154

PART NO.	FIG.NO.	INDEX	PAGE
708-2L-01280	H0230-01A6		180155
708-2L-01280	H0230-01A7		180156
708-2L-01280	H0230-01A8		180157
708-2L-06121	H0230-01A1		180150
708-2L-06470	H0230-01A6		180155
708-2L-06480	H0230-01A2		180151
708-2L-06630	H0230-01A2		180151
708-2L-06630	H0230-01A6		180155
708-2L-06950	H0230-01A3		180152
708-2L-06950	H0230-01A7		180156
708-2L-06960	H0230-01A3		180152
708-2L-06960	H0230-01A7		180156
708-2L-06970	H0230-01A4		180153
708-2L-06970	H0230-01A8		180157
708-2L-06980	H0230-01A0		180149
708-2L-06990	H0230-01A5		180154
708-2L-22130	H0230-01A6	20	180155
708-2L-22160	C0100-05A2	9	060056
708-2L-22160	C0100-14A2	9	060146
708-2L-22160	H0230-01A2	6	180151
708-2L-22271	H0230-01A1	4	180150
708-2L-23131	H0230-01A2	12	180151
708-2L-23131	H0230-01A6	9	180155
708-2L-23351	H0230-01A2	15	180151
708-2L-23351	H0230-01A6	12	180155
708-2L-23360	H0230-01A2	16	180151
708-2L-23360	H0230-01A6	13	180155
708-2L-23960	N1220-01A1	10	300120
708-2L-23960	N1220-01A5	10	300160
708-2L-25480	H0210-07A0	18	180136
708-2L-25480	H0220-07A0	18	180146
708-2L-25480	H0230-01A1	9	180150
708-2L-31910	H0230-01A9	13	180158
708-2L-32110	H0230-01A2	1	180151
708-2L-32150	H0230-01A2	2	180151
708-2L-32150	H0230-01A6	2	180155
708-2L-32230	H0230-01A6	1	180155
708-2L-32240	H0230-01A9	18	180158
708-2L-32260	H0230-01A1	3	180150
708-2L-33160	H0230-01A2	13	180151
708-2L-33160	H0230-01A6	10	180155
708-2L-33350	C0100-05A2	19	060056
708-2L-33350	C0100-14A2	19	060146
708-2L-33350	H0230-01A2	17	180151
708-2L-33350	H0230-01A6	14	180155
708-2L-33430	H0230-01A2	18	180151
708-2L-33430	H0230-01A6	15	180155
708-2L-34180	H0230-01A3	1	180152
708-2L-34180	H0230-01A7	1	180156
708-2L-34230	H0230-01A3	22	180152

PART NO.	FIG.NO.	INDEX	PAGE
708-2L-34230	H0230-01A7	22	180156
708-2L-34250	H0230-01A3	14	180152
708-2L-34250	H0230-01A7	14	180156
708-2L-34260	H0230-01A4	5	180153
708-2L-34260	H0230-01A8	5	180157
708-2L-34270	H0230-01A4	1	180153
708-2L-34270	H0230-01A8	1	180157
708-2L-35170	H0230-01A3	7	180152
708-2L-35170	H0230-01A7	7	180156
708-2L-35210	H0230-01A3	16	180152
708-2L-35210	H0230-01A4	3	180153
708-2L-35210	H0230-01A7	16	180156
708-2L-35210	H0230-01A8	3	180157
708-2L-35230	H0230-01A3	5	180152
708-2L-35230	H0230-01A7	5	180156
708-2L-35570	H0230-01A3	8	180152
708-2L-35570	H0230-01A7	8	180156
708-2L-35580	H0230-01A3	11	180152
708-2L-35580	H0230-01A7	11	180156
708-2L-35590	H0230-01A3	18	180152
708-2L-35590	H0230-01A7	18	180156
708-2L-35630	H0230-01A3	9	180152
708-2L-35630	H0230-01A7	9	180156
708-2L-35641	H0230-01A3	10	180152
708-2L-35641	H0230-01A7	10	180156
708-2L-35650	H0230-01A3	13	180152
708-2L-35650	H0230-01A7	13	180156
708-2L-35670	H0230-01A3	25	180152
708-2L-35670	H0230-01A7	25	180156
708-2L-35680	H0230-01A3	4	180152
708-2L-35680	H0230-01A7	4	180156
708-2L-35690	H0230-01A3	6	180152
708-2L-35690	H0230-01A7	6	180156
708-2L-35710	H0230-01A3	17	180152
708-2L-35710	H0230-01A7	17	180156
708-2L-35730	H0230-01A3	12	180152
708-2L-35730	H0230-01A7	12	180156
708-2L-35750	H0230-01A3	21	180152
708-2L-35750	H0230-01A4	7	180153
708-2L-35750	H0230-01A7	21	180156
708-2L-35750	H0230-01A8	7	180157
708-2L-35870	H0230-01A3	24	180152
708-2L-35870	H0230-01A4	4	180153
708-2L-35870	H0230-01A7	24	180156
708-2L-35870	H0230-01A8	4	180157
708-2L-35941	H0230-01A9	9	180158
708-7F-13420	C0100-05A2	21	060056
708-7F-13420	C0100-14A2	21	060146
708-7L-05010	C0100-05A2	7	060056
708-7L-05010	C0100-14A2	7	060146

PART NO.	FIG.NO.	INDEX	PAGE
708-7L-13140	C0100-05A2	15	060056
708-7L-13140	C0100-14A2	15	060146
708-7L-13140	H0230-01A2	14	180151
708-7L-13140	H0230-01A6	11	180155
708-7S-01330	C0100-14A1	16	060145
708-7S-18230	C0100-05A1	20	060055
708-7S-18230	C0100-14A1	20	060145
708-7S-18360	C0100-05A1	18	060055
708-7S-18360	C0100-14A1	18	060145
708-7S-21610	C0100-05A1	6	060055
708-7S-21610	C0100-14A1	6	060145
708-7W-00130	C0100-05A1		060055
708-7W-00130	C0100-05A2		060056
708-7W-00130	C0100-05A3		060057
708-7W-00160	C0100-14A1		060145
708-7W-00160	C0100-14A2		060146
708-7W-00160	C0100-14A3		060147
708-7W-01050	C0100-05A1		060055
708-7W-01050	C0100-14A1		060145
708-7W-01070	C0100-05A1	16	060055
708-7W-11180	C0100-05A1	1	060055
708-7W-11180	C0100-14A1	1	060145
708-7W-11920	C0100-05A2	1	060056
708-7W-11920	C0100-14A2	1	060146
708-7W-12130	C0100-05A2	4	060056
708-7W-12130	C0100-14A2	4	060146
708-7W-12140	C0100-05A2	5	060056
708-7W-12140	C0100-14A2	5	060146
708-7W-12150	C0100-05A2	6	060056
708-7W-12150	C0100-14A2	6	060146
708-7W-18150	C0100-05A1	9	060055
708-7W-18150	C0100-14A1	9	060145
708-7W-18160	C0100-05A1	10	060055
708-7W-18160	C0100-14A1	10	060145
708-7W-18170	C0100-05A1	11	060055
708-7W-18170	C0100-14A1	11	060145
708-8E-16150	H0210-01A0	20	180130
708-8E-16150	H0210-07A0	1	180136
708-8E-16150	H0220-01A0	20	180140
708-8E-16150	H0220-07A0	1	180146
708-8E-16150	H0230-01A0	7	180149
708-8E-16150	H0230-01A1	12	180150
708-8E-16150	H0230-01A5	8	180154
708-8E-16160	P1210-01A3	24	330140
708-8E-16160	P1210-01A9	24	330200
708-8E-16180	P1210-01A3	23	330140
708-8E-16180	P1210-01A9	23	330200
708-8F-31620	H0210-01A0	12	180130
708-8F-31620	H0210-01A0	2	180130
708-8F-31620	H0210-04A0	2	180133

PART NO.	FIG.NO.	INDEX	PAGE
708-8F-31620	H0220-01A0	12	180140
708-8F-31620	H0220-01A0	2	180140
708-8F-31620	H0220-04A0	2	180143
708-8F-31620	P1210-01A3	3	330140
708-8F-31620	P1210-01A9	3	330200
708-8F-33121	C0100-05A2	11	060056
708-8F-33121	C0100-14A2	11	060146
708-8F-33160	C0100-05A2	16	060056
708-8F-33160	C0100-14A2	16	060146
708-8F-33230	C0100-05A2	12	060056
708-8F-33230	C0100-14A2	12	060146
708-8F-33310	C0100-05A2	20	060056
708-8F-33310	C0100-14A2	20	060146
708-8F-33350	C0100-05A2	18	060056
708-8F-33350	C0100-14A2	18	060146
708-8F-33360	C0100-05A2	14	060056
708-8F-33360	C0100-14A2	14	060146
708-8K-15190	P1210-01A3	11	330140
708-8K-15190	P1210-01A9	11	330200
7082K-00122	H0210-03A0		180132
7082K-00123	H0210-03A0		180132
7082K-01123	H0210-03A0		180132
7082K-01124	H0210-03A0		180132
709-10-91810	H0330-02A2	2	180301
709-10-91820	H0330-02A2	8	180301
709-10-91830	H0330-02A2	1	180301
709-10-91840	H0330-02A2	3	180301
709-10-91850	H0330-02A2	4	180301
709-10-91860	H0330-02A2	9	180301
709-10-94100	H0330-02A2		180301
709-14-13850	H1833-02A0	9	180590
709-14-13850	H1833-04A0	9	180600
709-25-11361	C0100-05A1	5	060055
709-25-11361	C0100-14A1	5	060145
709-25-11650	C0100-05A1	4	060055
709-25-11650	C0100-14A1	4	060145
709-30-62160	H1850-04A0	21	180840
709-32-11840	H1850-04A0	22	180840
709-74-92810	N1220-01A1	7	300120
709-74-92810	N1220-01A5	7	300160
709-74-92821	N1220-01A1	9	300120
709-74-92821	N1220-01A5	9	300160
709-75-92220	N1220-01A1	8	300120
709-75-92220	N1220-01A5	8	300160
709-90-74401	P1140-01A4	1	330070
720-68-15240	K0210-44A0	21	240440
720-68-19610	C0100-05A2	13	060056
720-68-19610	C0100-14A2	13	060146
720-68-19610	H0210-03A0	10	180132
720-68-19610	H0210-06A0	10	180135

PART NO.	FIG.NO.	INDEX	PAGE
720-68-19610	H0220-03A0	10	180142
720-68-19610	H0220-06A0	10	180145
720-68-19610	H0230-01A2	10	180151
720-68-19610	H0230-01A6	7	180155
721-58-35570	W1114-01A3	3	480080
721-58-35570	W1114-02A3	3	480170
723-20-61120	H1850-04A0	23	180840
723-40-56350	H0210-08A0	20	180137
723-40-56350	H0220-08A0	20	180147
723-60-22230	C0100-05A3	10	060057
723-60-22230	C0100-14A3	10	060147
723-90-92000	H1320-02A0		180502
723-90-93110	H1320-02A0	1	180502
723-90-93210	H1320-02A0	2	180502
723-90-93310	H1320-02A0	3	180502
723-90-95510	H1320-01A0	3	180500
775-920-R131	T1510-02A1	3	390340
775-920-R141	T1510-02A1	4	390340
775-920-R170	T1510-03A1	5	390360
775-920-R170	T1510-04A1	5	390350
775-920-R180	T1510-03A1	6	390360
775-920-R180	T1510-04A1	6	390350
775-920-R340	T1510-03A1	2	390360
775-920-R410	T1510-04A1	1	390350
775-920-R420	T1510-04A1	2	390350
775-93-4R380	T1510-04A1	8	390350
775-934-R112	T1510-02A1	1	390340
775-934-R121	T1510-03A1	20	390360
775-934-R131	T1510-03A1	21	390360
775-934-R140	T1510-03A1	17	390360
775-934-R140	T1510-04A1	17	390350
775-934-R160	T1510-03A1	19	390360
775-934-R160	T1510-04A1	19	390350
775-934-R170	T1510-03A1	10	390360
775-934-R170	T1510-04A1	10	390350
775-934-R180	T1510-03A1	11	390360
775-934-R180	T1510-04A1	11	390350
775-934-R190	T1510-03A1	12	390360
775-934-R190	T1510-04A1	12	390350
775-934-R230	T1510-03A1	18	390360
775-934-R230	T1510-04A1	18	390350
775-934-R280	T1510-04A1	20	390350
775-934-R310	T1510-03A1	1	390360
775-934-R340	T1510-02A1	20	390340
775-934-R340	T1510-03A1	13	390360
775-934-R340	T1510-04A1	13	390350
775-934-R350	T1510-04A1	24	390350
775-934-R360	T1510-04A1	25	390350
775-934-R370	T1510-04A1	26	390350
775-934-R380	T1510-03A1	8	390360

PART NO.	FIG.NO.	INDEX	PAGE
775-934-R390	T1510-03A1	9	390360
775-934-R390	T1510-04A1	9	390350
775-934-R440	T1510-04A1	21	390350
775-934-R450	T1510-04A1	22	390350
775-934-R460	T1510-04A1	23	390350
7826-11-7502	E0250-01A0	1	120430
7826-11-7502	E0250-01A1	1	120440
7826-11-7502	E0250-01A4	1	120450
7826-11-7502	E0250-01A5	1	120460
7826-12-2502	E0250-01A1	3	120440
7826-12-2502	E0250-01A5	3	120460
783-53-37200	K0210-56A0	1	240560
7835-31-2007	K0210-17A0	1	240170
7835-33-1001	E0450-01A0		120510
7835-33-1100	E0450-01A0	1	120510
7835-33-1201	E0450-01A0	2	120510
7835-33-1310	E0450-01A0	3	120510
7835-33-1320	E0450-01A0	4	120510
7835-33-1330	E0450-01A0	5	120510
7835-33-1340	E0450-01A0	6	120510
7835-33-7000	E0450-02A0	1	120520
7835-33-8100	E0450-02A0	14	120520
7835-33-8200	E0450-03A0	1	120530
7835-33-8200	E0450-03A0	2	120530
7835-33-8200	E0450-03A0	4	120530
7835-33-8300	E0450-03A0	5	120530
7835-33-8400	E0450-03A0	3	120530
7835-48-2005	K0210-18A0	1	240180
7861-93-1421	B0300-06A0		030100
7861-93-1422	B0300-06A0	10	030100
7861-93-1651	G1010-01A0		150010
7861-93-1652	G1010-01A0	2	150010
7861-93-1812	H0120-06A0	1	180120
7861-93-1812	H0230-02A0	21	180161
7861-93-1840	H1835-03A0	8	180650
7861-93-1940	H0110-06A0	8	180060
7861-93-2330	A2210-A7D1	13	010380
7861-93-3320	H0110-06A0	6	180060
7861-93-3500	B0600-05A0	21	030150
7861-93-3510	E0200-08A0	32	120100
7861-93-3510	H0110-06A0	7	180060
7861-93-4520	C0100-07A0	14	060070
7861-93-4520	D0100-01A0	36	090010
7861-93-4520	D0100-01A1	31	090020
7861-93-4520	D0100-01A2	36	090030
7861-93-4520	D0100-01A3	31	090040
7861-93-4520	H0110-06A0	4	180060
7861-93-4550	A2110-B7F9	1	010230
7861-93-4550	A2110-B7G6	1	010235
7861-93-5810	D0100-01A0	28	090010

PART NO.	FIG.NO.	INDEX	PAGE
7861-93-5810	D0100-01A1	23	090020
7861-93-5810	D0100-01A2	28	090030
7861-93-5810	D0100-01A3	23	090040
7861-94-3000	E0200-03A0	17	120050
7991-01-5220	W0111-01A1	1	480010
7991-01-5230	W0111-01A1	3	480010
822-10-61650	E0200-12A0		120140
822-10-61670	E0200-12A0		120140
8221-06-1480	M1130-11A0	2	270240
8221-06-1670	M1130-11A0	3	270240
823-30-63350	E0200-04A0	17	120060
823-30-63350	E0200-04A0	40	120060
823-30-63350	W1117-06A9A	8	480350
8230-46-1130	K1120-01A0	13	240660
8230-46-1130	K1120-01A1	13	240670
8233-06-3350	K0210-13A0	4	240130
8234-60-1160	H1850-04A0	19	180840
8247-62-1810	T1930-02A1	8	390370
825-56-21330	D0200-07A0	13	090110
8255-62-1330	D0200-07A0	5	090110
8255-62-1330	D0200-07A0	9	090110
8255-62-4370	P1140-01A8	3	330110
8255-62-4590	D0200-03A0	5	090070
8255-62-4590	D0200-03A0	8	090070
828-76-21620	H1833-07A0	32	180620
829-66-21480	N1310-01A2	27	300210
8292-60-3310	H1320-03A0	1	180505
8295-06-1480	E0201-01A0	1	120360
8A13-10-1300	K0210-53A0	7	240530
8A13-10-1400	K0210-53A0	8	240530
8A13-10-2100	E0250-01A1	5	120440
8A13-10-2100	E0250-01A5	5	120460
KD000800-6142	A6010-C7B9	27	010940
KD000800-6142	A6010-C7D1	27	010980
KD000830-8802	A6010-C7B9	12	010940
KD000830-8802	A6010-C7D1	12	010980
KD002802-2022	A6010-C7B9	16	010940
KD002802-2022	A6010-C7D1	16	010980
KD009201-0760	A6010-C7B9	8	010940
KD009201-0760	A6010-C7D1	8	010980
KD009201-0770	A6010-C7B9	4	010940
KD009201-0770	A6010-C7D1	4	010980
KD033902-0080	A6010-C7B9	23	010940
KD033902-0080	A6010-C7D1	23	010980
KD033902-0090	A6010-C7B9	22	010940
KD033902-0090	A6010-C7D1	22	010980
KD035100-0310	A6010-C7B9	1	010940
KD035100-0310	A6010-C7D1	1	010980
KD035120-0250	A6010-C7B9	18	010940
KD035120-0250	A6010-C7D1	18	010980

PART NO.	FIG.NO.	INDEX	PAGE
KD035200-0320	A6010-C7B9	10	010940
KD035200-0320	A6010-C7D1	10	010980
KD035300-0200	A6010-C7B9	11	010940
KD035300-0200	A6010-C7D1	11	010980
KD035411-0950	A6010-C7B9	13	010940
KD035411-0950	A6010-C7D1	13	010980
KD035421-0190	A6010-C7B9	14	010940
KD035421-0190	A6010-C7D1	14	010980
KD035700-0760	A6010-C7B9		010940
KD035700-0760	A6010-C7D1		010980
KD035710-0890	A6010-C7B9	19	010940
KD035710-0890	A6010-C7D1	19	010980
KD035730-0162	A6010-C7B9	20	010940
KD035730-0162	A6010-C7D1	20	010980
KD035926-0080	A6010-C7B9	5	010940
KD035926-0080	A6010-C7D1	5	010980
KD035943-0210	A6010-C7B9	21	010940
KD035943-0210	A6010-C7D1	21	010980
KD035951-0080	A6010-C7B9	6	010940
KD035951-0080	A6010-C7D1	6	010980
KD100200-6452	A6010-C7B9	24	010940
KD100200-6452	A6010-C7D1	24	010980
KD101460-4160	A6010-C7B9	29	010940
KD101460-4160	A6010-C7D1	29	010980
KD103350-6002	A6010-C7B9	26	010940
KD103350-6002	A6010-C7D1	26	010980
KD103350-6012	A6010-C7B9	25	010940
KD103350-6012	A6010-C7D1	25	010980
KD103352-2002	A6010-C7B9	15	010940
KD103352-2002	A6010-C7D1	15	010980
KD133923-0030	A6010-C7B9	3	010940
KD133923-0030	A6010-C7D1	3	010980
KD133923-0890	A6010-C7B9	2	010940
KD133923-0890	A6010-C7D1	2	010980
KD133926-0660	A6010-C7B9	7	010940
KD133926-0660	A6010-C7D1	7	010980
KD133926-0790	A6010-C7B9	9	010940
KD133926-0790	A6010-C7D1	9	010980
KD135921-0010	A6010-C7B9	17	010940
KD135921-0010	A6010-C7D1	17	010980
KD735719-0181	A6010-C7B9	28	010940
KD735719-0181	A6010-C7D1	28	010980
ND017231-0700	K0210-25A0	27	240250
ND063600-4580	K0210-25A0	32	240250
ND063800-0300	K0210-25A0	26	240250
ND077500-5650	K0210-25A0	33	240250
ND077800-0750	K0210-25A0	30	240250
ND090207-0100	A4010-D7F7	34	010521
ND090207-0100	A4010-G8H9	34	010551
ND090222-0070	A4010-D7F7	28	010520

PART NO.	FIG.NO.	INDEX	PAGE
ND090222-0070	A4010-E7G7	18	010530
ND090222-0070	A4010-G8H9	28	010550
ND090222-0070	A4010-G9H9	18	010561
ND090222-0120	A4010-D7F7	30	010520
ND090222-0120	A4010-G8H9	30	010550
ND090244-0010	A4010-D7F7	35	010521
ND090244-0010	A4010-G8H9	35	010551
ND090310-0490	A4010-E7G7	19	010530
ND090310-0490	A4010-G9H9	19	010561
ND090310-0500	A4010-D7F7	27	010520
ND090310-0500	A4010-G8H9	27	010550
ND090317-0060	A4010-E7G7	15	010530
ND090317-0060	A4010-G9H9	15	010561
ND090317-0480	A4010-D7F7	33	010521
ND090317-0480	A4010-G8H9	33	010551
ND092121-0011	A4010-E7G7	12	010530
ND092121-0011	A4010-G9H9	12	010561
ND092124-0010	A4010-E7G7	11	010530
ND092124-0010	A4010-G9H9	11	010561
ND092125-0010	A4010-E7G7	14	010530
ND092125-0010	A4010-G9H9	14	010561
ND092126-0010	A4010-E7G7	13	010530
ND092126-0010	A4010-G9H9	13	010561
ND092220-0040	A4010-E7G7	20	010530
ND092220-0040	A4010-G9H9	20	010561
ND092223-0042	A4010-E7G7	21	010530
ND092223-0042	A4010-G9H9	21	010561
ND094040-0380	A4010-D7F7	2	010520
ND094040-0380	A4010-G8H9	2	010550
ND094082-0040	A4010-E7G7	7	010530
ND094082-0040	A4010-G9H9	7	010561
ND094086-0090	A4010-D7F7	3	010520
ND094086-0090	A4010-G8H9	3	010550
ND094086-0100	A4010-D7F7	5	010520
ND094086-0100	A4010-G8H9	5	010550
ND094086-0150	A4010-D7F7	16	010520
ND094086-0150	A4010-G8H9	16	010550
ND094086-0160	A4010-D7F7	20	010520
ND094086-0160	A4010-G8H9	20	010550
ND094086-0170	A4010-D7F7	21	010520
ND094086-0170	A4010-G8H9	21	010550
ND094086-0200	A4010-E7G7	8	010530
ND094086-0200	A4010-G9H9	8	010561
ND094086-0210	A4010-D7F7	37	010521
ND094086-0210	A4010-G8H9	37	010551
ND094087-0050	A4010-E7G7	9	010530
ND094087-0050	A4010-G9H9	9	010561
ND094092-0010	A4010-D7F7	18	010520
ND094092-0010	A4010-G8H9	18	010550
ND094093-0090	A4010-D7F7	22	010520

PART NO.	FIG.NO.	INDEX	PAGE
ND094093-0090	A4010-G8H9	22	010550
ND094093-0100	A4010-D7F7		010520
ND094093-0100	A4010-G8H9		010550
ND094093-0110	A4010-D7F7		010520
ND094093-0110	A4010-G8H9		010550
ND094093-0120	A4010-D7F7		010520
ND094093-0120	A4010-G8H9		010550
ND094095-0330	A4010-D7F7	17	010520
ND094095-0330	A4010-G8H9	17	010550
ND094095-0340	A4010-D7F7		010520
ND094095-0340	A4010-G8H9		010550
ND094095-0350	A4010-D7F7		010520
ND094095-0350	A4010-G8H9		010550
ND094095-0360	A4010-D7F7		010520
ND094095-0360	A4010-G8H9		010550
ND094095-0370	A4010-D7F7		010520
ND094095-0370	A4010-G8H9		010550
ND094096-0050	A4010-D7F7	24	010520
ND094096-0050	A4010-G8H9	24	010550
ND094096-0060	A4010-D7F7		010520
ND094096-0060	A4010-G8H9		010550
ND094096-0070	A4010-D7F7		010520
ND094096-0070	A4010-G8H9		010550
ND094096-0080	A4010-D7F7		010520
ND094096-0080	A4010-G8H9		010550
ND094100-0512	A4010-D7F7		010520
ND094100-0522	A4010-G8H9		010550
ND094104-0160	A4010-D7F7	14	010520
ND094104-0160	A4010-G8H9	14	010550
ND094110-0230	A4010-D7F7	1	010520
ND094110-0270	A4010-G8H9	1	010550
ND094140-0040	A4010-D7F7	4	010520
ND094140-0040	A4010-G8H9	4	010550
ND094162-0031	A4010-D7F7	8	010520
ND094162-0031	A4010-G8H9	8	010550
ND094164-0030	A4010-D7F7	9	010520
ND094164-0030	A4010-G8H9	9	010550
ND094165-0031	A4010-D7F7	10	010520
ND094165-0031	A4010-G8H9	10	010550
ND094170-0110	A4010-D7F7	11	010520
ND094170-0110	A4010-G8H9	11	010550
ND094191-0571	A4010-G8H9	12	010550
ND094191-0590	A4010-D7F7	12	010520
ND094200-0430	A4010-E7G7		010530
ND094200-0430	A4010-G9H9		010561
ND094205-0060	A4010-E7G7	10	010530
ND094205-0060	A4010-G9H9	10	010561
ND094210-0090	A4010-E7G7	1	010530
ND094210-0090	A4010-G9H9	1	010561
ND094230-0080	A4010-E7G7	3	010530

PART NO.	FIG.NO.	INDEX	PAGE
ND094230-0080	A4010-G9H9	3	010561
ND094231-0060	A4010-E7G7	2	010530
ND094231-0060	A4010-G9H9	2	010561
ND094241-0040	A4010-E7G7	4	010530
ND094241-0040	A4010-G9H9	4	010561
ND094244-0040	A4010-E7G7	5	010530
ND094244-0040	A4010-G9H9	5	010561
ND094251-0050	A4010-E7G7	6	010530
ND094251-0050	A4010-G9H9	6	010561
ND095400-0310	A4010-H1G1	2	010580
ND095400-0310	A4010-H2G1	2	010590
ND095420-0150	A4010-H1G1	3	010580
ND095420-0150	A4010-H2G1	3	010590
ND095438-0090	A4010-H1G1	6	010580
ND095438-0090	A4010-H2G1	6	010590
ND095444-0020	A4010-H1G1	5	010580
ND095444-0020	A4010-H2G1	5	010590
ND096449-0070	A4010-E7G7	23	010530
ND096449-0070	A4010-G9H9	23	010561
ND113550-0780	K0210-25A0	41	240250
ND116140-0050	K0210-25A0	13	240250
ND116340-7030	K0210-25A0	35	240250
ND116576-3810	K0210-25A0	3	240250
ND116576-3820	K0210-25A0	4	240250
ND116576-3851	K0210-25A0	24	240250
ND116576-3861	K0210-25A0	25	240250
ND116650-6850	K0210-25A0	15	240250
ND116660-7570	K0210-25A0	14	240250
ND116662-7670	K0210-25A0	22	240250
ND116662-7681	K0210-25A0	23	240250
ND116780-2481	K0210-25A0	16	240250
ND116780-2491	K0210-25A0	17	240250
ND116780-2501	K0210-25A0	18	240250
ND116780-2510	K0210-25A0	19	240250
ND116780-2521	K0210-25A0	21	240250
ND116781-3000	K0210-25A0	20	240250
ND145511-0040	K0210-25A0	29	240250
ND146340-0531	K0210-25A0	31	240250
ND146657-8841	K0210-25A0	10	240250
ND146657-8850	K0210-25A0	12	240250
ND146657-8860	K0210-25A0	34	240250
ND146657-9811	K0210-25A0	11	240250
ND146667-0300	K0210-25A0	43	240250
ND146667-0380	K0210-25A0	44	240251
ND146667-0440	K0210-25A0	45	240251
ND170400-4670	K0210-25A0	28	240250
ND245450-5112	K0210-25A0	1	240250
ND245450-5121	K0210-25A0	2	240250
ND246470-2451	K0210-25A0	39	240250
ND446010-3131	K0210-25A0		240250

PART NO.	FIG.NO.	INDEX	PAGE
ND446600-0990	K0210-25A0	5	240250
ND447500-1482	K0210-25A0	8	240250
ND499000-6160	A4010-H1G1	4	010580
ND499000-6160	A4010-H2G1	4	010590
ND901070-6161	A4010-D7F7	26	010520
ND901070-6161	A4010-G8H9	26	010550
ND902000-6081	A4010-D7F7	25	010520
ND902000-6081	A4010-G8H9	25	010550
ND913700-4101	K0210-25A0	42	240250
ND921560-8081	A4010-D7F7	7	010520
ND921560-8081	A4010-G8H9	7	010550
ND939500-5003	K0210-25A0	40	240250
ND949008-0330	K0210-25A0	37	240250
ND949010-2530	A4010-H1G1	7	010580
ND949010-2530	A4010-H2G1	7	010590
ND949010-3020	A4010-D7F7	36	010521
ND949010-3020	A4010-G8H9	36	010551
ND949013-5880	A4010-D7F7	6	010520
ND949013-5880	A4010-G8H9	6	010550
ND949018-0350	A4010-D7F7	32	010521
ND949018-0350	A4010-G8H9	32	010551
ND949018-1500	A4010-E7G7	16	010530
ND949018-1500	A4010-G9H9	16	010561
ND949044-3320	A4010-D7F7	19	010520
ND949044-3320	A4010-E7G7	17	010530
ND949044-3320	A4010-E7G7	22	010530
ND949044-3320	A4010-G8H9	19	010550
ND949044-3320	A4010-G9H9	22	010561
ND9490443320	A4010-G9H9	17	010561
ND949046-3100	K0210-25A0	9	240250
ND949101-0250	A4010-D7F7	13	010520
ND949101-0250	A4010-G8H9	13	010550
ND949140-6310	A4010-D7F7		010520
ND949140-6310	A4010-G8H9		010550
ND949142-0020	K0210-25A0	6	240250
ND949142-0030	K0210-25A0	7	240250
ND949150-3200	A4010-D7F7	15	010520
ND949150-3200	A4010-G8H9	15	010550
ND949180-0060	A4010-D7F7	31	010520
ND949180-0060	A4010-G8H9	31	010550
ND949180-0310	A4010-D7F7	29	010520
ND949180-0310	A4010-G8H9	29	010550
ND949979-1300	A4010-D7F7	23	010520
ND949979-1300	A4010-G8H9	23	010550
NY05062-1170A	H1831-01A1	14	180525
NY05062-11800	H1831-01A1	15	180525
NY06040-10300	H1831-03A1	5	180545
NY06277-1320A	H1831-01A1	17	180525
NY06339-10200	H1831-01A1	20	180525
NY06339-10200	H1831-03A1	6	180545

PART NO.	FIG.NO.	INDEX	PAGE
NY06420-10100	H1831-03A1	7	180545
NY07207-11700	H1831-01A1	5	180525
NY07493-10200	H1831-01A1	21	180525
NY07505-10200	H1831-01A1	11	180525
NY07529-10200	H1831-01A1	6	180525
NY07529-10300	H1831-01A1	7	180525
NY07529-10400	H1831-01A1	8	180525
NY07529-10500	H1831-01A1	9	180525
NY07529-10600	H1831-01A1	10	180525
NY07880-10900	H1831-01A1	12	180525
NY09000-11400	H1831-01A1	24	180525
NY09000-11400	H1831-03A1	8	180545
NY16207-10200	H1831-01A1	19	180525
NY16207-10300	H1831-01A1	22	180525
NY80000-02200	H1831-01A1	18	180525
NY81446-05010	H1831-03A1	10	180545
NY81446-05012	H1831-01A1	23	180525
NY84110-00248	H1831-01A1	27	180525
NY84110-00264	H1831-03A1	9	180545
NY89103-00090	H1831-01A1	13	180525
NY89103-00090	H1831-03A1	4	180545

PART NO.	FIG.NO.	INDEX	PAGE

LEPBP2M801

KOMATSU

Published 18-Oct-2012
(c) 2012 KOMATSU