https://truckmanualshub.com/

PEPBK2053P00

RUTHZIL TRATOR COMERCIAL DE PEÇAS LTDA 11 97083-6812 ROLANDO CITRANGULO

PARTS BOOK

PC210-3KP
PC210LC-3KP
PC240-3KP
PC240LC-3KP
PC240NLC-3KP

SERIAL NUMBERS	**PC210-3KP**	**K15001** AND UP
	PC210LC-3KP	**K15001** AND UP
	PC240-3KP	**K15001** AND UP
	PC240LC-3KP	**K15001** AND UP
	PC240NLC-3KP	**K15001** AND UP

KOMATSU

https://truckmanualshub.com/

FOREWORD

When ordering a part, please specify the model number, the engine serial number and the reading of the service meter.

For complete understanding, the parts list is written as follows:

Fig. number
Figure numbers are not continuous.

Description
"•" is put in front of the name of an assembly component and the item is entered next to the assembly. If a part marked with "•" is an assembly, its component is marked with "••".

Quantity
The number of pieces per set used for assembly is specified.
For assembly or part group components, the number of pieces per assembly is specified.

Serial number
The engine or machine serial number in which the part is used.

Machine code
The codes in parentheses shown in the table of contents or figure represent models as follows.

—STD PC240-6K
—LC PC240LC-6K
—NLC PC240NLC-6K

Codes
The codes and part numbers specified in the "Part No." and "Part Name" columns represent the following:

□	The part specified in the line above is applicable instead of this part.
⊡	This part is applicable instead of the part specified in the line immediately above.
◆	This part and the part specified in the line immediately above are interchangeable.
⊠	This part is not supplied anymore. The part specified in the above line is supplied instead.
■	The part specified in the "Part Name" column is applicable instead of this part if it is used as a set.
▼	This part is not supplied anymore. The part specified in the "Part Name" column is supplied instead as a set.
△	Part supplied as semi-finished. It must be reworked before use.

Codes

☆	Supplied as a set rather than singly.
★	Supplied as a set rather than singly. It is supplied singly by specific dealers only.
⊙	Part group. This part is not considered a supply part.
= = = =	The parts surrounded by this line are components of the part group specified above.
G-1, G-2	Part group numbers.
KIT	Kit components. For kit components, please refer to the service kit table.
PAINT (1)	Parts shipped painted with undercoat.
PAINT (2)	Parts shipped with different colors.
(A)	Cold weather (A) spec. (−30°C)
(B)	Cold weather (B) spec. (−50°C)

This parts list specifies not only standard accessories but also optional parts and attachments.
To order a part, please contact your nearest Komatsu dealer.

https://truckmanualshub.com/

AVANT-PROPOS

Lorsque vous passez une commande pour une pièce détachée, vous êtes prié de spécifier le numéro du modèle, le numéro de série du moteur et la lecture du compteur de service.

Pour une complète compréhension, la liste des pièces est écrite comme suit:

Numéro de Fig.
Les numéros des figures ne sont pas corrélatifs.

Description
"•" est placé avant le nom de la composante d'assemblage et l'élément est entré à côté de l'assemblage. Si la pièce marquée d'un "•" est un assemblage, ses composantes sont marquées d'un "••".

Quantité
Le nombre de pièces par jeu utilisé pour l'assemblage est spécifié.
Pour l'assemblage ou groupe de pièces composantes, le nombre de pièces par assemblage est spécifié.

Numéro de série
Le numéro de série du moteur ou machine dans lequel la pièce est utilisée.

Code de machine
Les codes mis entre parenthèses indiqués dans la table des matières ou les chiffres représentent des modèles comme ciaprès:

—STD PC240-6K
—LC PC240LC-6K
—NLC PC240NLC-6K

Codifications
Les codifications et numéros de pièce spécifiés dans les colonnes "No. de Pièce" et "Nom de Pièce" représentent le suivant:

□	La pièce spécifiée dans la ligne ci-dessus est applicable au lieu de cette pièce.
⊡	Cette pièce est applicable au lieu de la pièce spécifiée dans la ligne immédiatement au-dessus.
◆	Cette pièce et la pièce spécifiée dans la ligne immédiatement au-dessus sont interchangeables.
⊠	Cette pièce n'est plus fournie. A sa place, la pièce spécifiée dans la ligne ci-dessus est fournie.
■	La pièce spécifiée dans la colonne "Nom de Pièce" est applicable à la place de cette pièce lorque la pièce est utilisée comme un jeu.
▼	Cette pièce n'est plus fournie. La pièce specifiée dans la colonne "Nom de Pièce" est fournie à sa place comme un jeu.
△	Pièce fourni en semi-finition. Elle doit être usinée avant l'utilisation.

Codifications

☆	Fourni comme un jeu plutôt qu'en unité.
★	Fourni comme un jeu plutôt qu'en unité. Est fourni en unité seulement par des fournisseurs spécifiés.
⊙	Groupe de pièces. Cette pièce n'est pas considérée comme une pièce de fourniture.
====	Les pièces entourées de cette ligne sont composantes du groupe de pièces spécifié ci-dessus.
G-1, G-2	Numéros de groupe de pièces.
KIT	Composants de trousse. Pour les composants de trousse, consultez la table des trousses de service.

PEINTURE (1) Pièces expédiées avec une sous-couche de peinture.

PEINTURE (2) Pièces expédiées en différentes couleurs.

(A)	Caract. temps froid (A) (−30°C)
(B)	Caract. temps froid (B) (−50°C)

Cette liste de pièces ne spécifie pas seulement les accessoires standard, mais aussi les pièces et accessoires en option.
Pour passer une commande de pièce, vous êtes prié de prendre contact avec votre fournisseur Komatsu le plus proche.

https://truckmanualshub.com/

VORWORT

Bei der Bestellung von Teilen bitte die Modellnummer, die Seriennummer des Motors und den Stand des Betriebsstundenzählers angeben.

Um Fehler bei der Bestellung zu vermeiden, die folgenden Hinweise beachten:

Bild Nr.
Die Bilder sind nicht fortlaufend numeriert.

Beschreibung
Jedes Bauteil ist mit "•" gekennzeichnet und hinter der entsprechenden Baugruppe aufgeführt. Ist die Baugruppe selbst mit "•" gekennzeichnet, sind die entsprechenden Bauteile mit "••" gekennzeichnet.

Menge
Die Anzahl der Teile für einen Satz ist vorgegeben.
Bei Baugruppen und Aggregaten ist die Anzahl der Teile für eine Baugruppe angegeben.

Serien-Nr.
Die Serien-Nr. von Motor oder Maschine, in die das entsprechende Teil eingebaut wird.

Maschinen-Kode
Die im Inhaltsverzeichnis in Klammern abgebildeten Kodes order ziffern stellen die Modelle wie folgt dar:

—STD PC240-6K
—LC PC240LC-6K
—NLC PC240NLC-6K

Zeichen
Die in den Spalten "Teile-Nr." und "Teile-Bezeichnung" verwendeten Zeichen haben folgende Bedeutung:

□	Dieses Teil kann anstelle des oben aufgeführten Teils verwendet werden.
⊡	Dieses Teil kann anstelle des in der vorangegangenen Zeile aufgeführten Teils verwendet werden.
◆	Dieses Teil ist mit dem in der vorangegangenen Zeile aufgeführten Teil austauschbar.
⊠	Dieses Teil kann nicht mehr geliefert werden. Es wird durch das obenaufgeführte Teil ersetzt.
■	Dieses Teil kann durch das in der Spalte "Teilebezeichnung" aufgeführte Teil ersetzt werden, wenn das Teil zusammen mit anderen Teilen als Einheit verwendet wird.
▼	Dieses Teil kann nicht mehr geliefert werden. Stattdessen wird die in Spalte "Teile-Bezeichnung" aufgeführte Einheit geliefert.
△	Dieses Teil wird im vorbearbeiteten Zustand geliefert und muß vor dem Einbau nachbearbeitet werden.

Zeichen

☆	Dieses Teil wird nicht als Einzelteil, sondern nur als Bausatz geliefert.
★	Dieses Teil wird nicht als Einzelteil, sondern nur als Bausatz geliefert und kann nur über bestimmte Händler als Einzelteil bezogen werden.
⊙	Baugruppe; wird nicht zu den Ersatzteilen gerechnet.
= = = =	Die Teile innerhalb dieser Markierung gehören zur oben aufgeführten Baugruppe.
G-1, G-2	Baugruppen-Nr.
KIT	Dieses Teil ist nur als Satz erhältlich. Siehe Auflistung der als Satz gelieferten Ersatzteile.
FARBE (1)	Gelieferte Teile mit Grundierung.
FARBE (2)	Gelieferte Teile in unterschiedlichen Farben.
(A)	Spezifikation für kalte Witterung (–30°C) (A)
(B)	Spezifikation für kalte Witterung (–50°C) (B)

In dieser Ersatzteilliste ist das Standard- und Sonderzubehör aufgeführt. Bestellungen nimmt Ihr zuständiger Komatsu-Händler entgegen.

https://truckmanualshub.com/

PROLOGO

Cuando solicite una parte, sírvase especificar el número de modelo, el número de serie del motor y la lectura del serviciómetro.

Para un completo entendimiento, la lista de partes está redactada de la siguiente manera:

Número de fig.	Los números de figura no son continuos.
Descripción	"•" se coloca enfrente del nombre de un componente de conjunto y el ítem es ingresado luego al conjunto. Si una parte marcada con "•" es un conjunto, su componente está marcado con "••".
Cantidad	Se especifica el número de piezas por juego utilizadas para un conjunto. Se especifica para un conjunto o componentes de grupo de parte, el número de piezas por conjunto.
Número de serie	El número de serie del motor o máquina en que se utiliza la parte.
Código de máquina	Los códigos en paréntesis que se muestran en el índice o en la figura representan los modelos de la manera siguiente: —STD .... PC240-6K —LC ..... PC240LC-6K —NLC PC240NLC-6K
Códigos	Los códigos y números de parte especificados en las columnas "No. de Parte" y "Nombre de Parte" representan lo siguiente:

□	La parte especificada en la línea anterior es aplicable en lugar de esta parte.
⊡	Esta parte es aplicable en lugar de la parte especificada en la línea inmediatamente anterior.
◆	Esta parte y la parte especificada en la línea inmediatamente anterior son intercambiables.
⊠	Esta parte se ha dejado de suministrar. En lugar de ésta, se suministra la parte especificada en la línea anterior.
■	La parte especificada en la columna "Nombre de Parte" es aplicable en lugar de esta parte si se utiliza como un conjunto.
▼	Esta parte se ha dejado de suministrar. En lugar de ésta, se suministra la parte especificada en la columna "Nombre de Parte" como un conjunto.
△	Parte suministrada como semi-terminada. Tiene que ser modificada antes del uso.

Códigos

☆	Suministrado como un conjunto en lugar de individualmente.
★	Suministrado como un conjunto en lugar de individualmente. Es suministrado individualmente por distribuidores específicos solamente.
⊙	Grupo de parte. Esta parte no es considerada una parte de suministro.
= = = =	Las partes rodeadas por esta línea son componentes del grupo de partes especificado antes.
G-1, G-2	Números de grupo de partes.
KIT	Componentes de juego. Para componentes de juego, sírvase referirse al cuadro de juego de servicio.
PINTURA (1)	Las piezas embarcadas tienen una primera mano de pintura.
PINTURA (2)	Las piezas embarcadas son de diferentes colores.
(A)	Espec. Tiempo frio (A) (−30°C)
(B)	Espec. Tiempo frio (B) (−50°C)

Esta lista de partes especifica no solamente accesorios normales sino también partes y accesorios opcionales.
Para solicitar una parte, sírvase comunicarse con su distribuidor Komatsu más cercano.

https://truckmanualshub.com/

PREFÁCIO

Ao solicitar uma peça sobressalente, favor especificar o número do modelo, o número de série do motor e a leitura do medidor de serviço.

Para uma fácil compreensão, a lista de peças sobressalentes é indicada como segue:

Número do desenho — Os números dos desenhos nem sempre são contínuos.

Descrição — Todos os componentes e peças que compõe o conjunto levam o sinal "•" na frente do seu nome, e vêm descriminados em seguida ao nome do conjunto. Além disso, se o componente com o sinal "•" já fôr um conjunto, seus componentes vêm marcados com o sinal "••".

Quantidade — Está especificada a quantidade de componentes utilizados em um conjunto.
Contudo, no caso de peças de montagem ou de grupo de pças. está especificada a quantidade de componentes por conjunto.

Número de série — Está especificado o número da série do motor ou da máquina no qual a peça sobressalente é usada.

Código da máquina — Os códigos em parêntesis mostrados na tabela de conteúdo ou os desenhos representam modelos como se segue.

—STD PC240-6K
—LC PC240LC-6K
—NLC PC240NLC-6K

Códigos — Os códigos e números de peças sobressalentes especificados na coluna do "No da Peça" e do "Nome de Peça" representa o seguinte:

□	Pode-se usar a peça especificada na linha acima, no lugar desta.
⊡	Esta peça pode ser usada no lugar da peça especificada na linha imediatamente acima.
◆	Esta peça e aquela especificada na linha imediatamente acima são intercambiáveis.
⊠	Esta peça não é mais fornecida. No lugar desta, é fornecida a peça especificada na linha imediatamente acima.
■	A peça especificada na coluna de "Nome de Paça" pode ser utilizada no lugar desta, se aquela for usada como conjunto.
▼	Esta peça não é mais fornecida. A peça especificada na coluna de "Nome da Peça" é fornecida no lugar desta, como conjunto.
△	Esta peça é fornecida como semi-acabada. Necessita de um trabalho adicional antes de sua utilização.

Códigos

☆	Não é fornecida somente a peça, e sim em conjunto.
★	Não é fornecida somente a peça, e sim em conjunto. Porém, pode ser fornecida somente a revendedores especiais.
⊙	Especifica o grupo de peças. Estas peças não são consideradas peças de suprimento.
= = = =	As peças circundadas com esta linha são componentes do grupo de peças especificadas acima.
G-1, G-2	Número de grupo de peças.
KIT	Componentes de "kits". Para peças que compõe o "kit", favor consultar a tabela de "kit" de serviço.

PINTURA (1) Pecas embarcadas, pintadas com tinta base.

PINTURA (2) Pecas embarcadas, pintadas com cores diferentes.

(A)	Tempo frio (A) esp. (−30°C)
(B)	Tempo frio (B) esp. (−50°C)

Esta lista de peças sobressalentes especifica não apenas os acessórios padrões e sim também, as peças opcionais e os pertences.
Para solicitar uma peça sobressalente, favor entrar em contato com o seu revendedor Komatsu mais próximo.

https://truckmanualshub.com/

رموز الدلالة

☒	هذه القطعة توقف تزويدها. ويتم تزويد القطعة المعينة في السطر السابق بدلا منها.
■	القطعة المعينة في عمود "اسم القطعة" يمكن استخدامها بدلا من هذه القطعة إذا استعملت كمجموعة.
▼	هذه القطعة توقف تزويدها. والقطعة المعينة في عمود "اسم القطعة" مستخدمة بدلا منها كمجموعة.
△	يتم تزويد القطعة شبه منتهية الصنع. ويجب إنهاء تصنيعها قبل الاستعمال.
☆	يتم تزويدها كمجموعة وليس إفراديا.
★	يتم تزويدها كمجموعة وليس إفراديا. يمكن تزويدها إفراديا بواسطة باعين معينين فقط.
⊙	مجموعة قطع. هذه القطعة لا تعتبر قطعة في التزويد.
= = = =	القطع المحاطة بهذا الخط هي مكونات لمجموعة القطع المعينة سابقا.
G-1, G-2	أرقام مجموعات القطع.
KIT	أجزاء مكونة لطقم. لمكونات الطقم، يرجى الرجوع الى جدول طقم الخدمة.
الطلاء (١)	أجزاء شحنت مطلية مع تغطية سفلية
الطلاء (٢)	أجزاء شحنت مع ألوان مختلفة
(A)	الجو البارد (A) المواصفات (— ٣٠° م)
(B)	الجو البارد (B) المواصفات (— ٥٠° م)

هذه القائمة للقطع لا تحدد فقط الملحقات القياسية، بل أيضا القطع والمرفقات الاختيارية.
لطلب قطعة غيار، يرجى الاتصال بأقرب موزع لكوماتسو لديكم.

تقديم

عند طلب قطع الغيار، يرجى تحديد رقم الموديل، رقم التسلسل للمحرك وقراءة عداد الخدمة.

وللفهم الكامل فان قائمة قطع الغيار تكتب كالتالي :

رقم الشكل	أرقام الأشكال ليس من الضرورى أن تكون متسلسلة.
الوصف	توضع العلامة "." أمام إسم الجزء من مجموعة وتدخل المادة بعد المجموعة. وإذا كانت قطعة الغيار ذات العلامة "." هي مجموعة أجزاء، فان مكوناتها يشار إليها بالعلامة ".."،
الكمية	يحدد عدد القطع المستخدمة في التجميع بكل مجموعة. ومن أجل المجموعة أو الأجزاء المكونة لمجموعات، فانه يحدد عدد القطع لكل مجموعة.
رقم التسلسل	رقم تسلسل المحرك أو الماكينة التي تستعمل فيها القطعة.
رمز الآلة :	الرموز الموجودة بين قوسين الموضحة في جدول المحتويات أو الارقام الممثلة للموديلات هي كما يلي. —STD .... PC240-6K —LC ..... PC240LC-6K —NLC PC240NLC-6K
رموز الدلالة	الرموز وأرقام القطع المحددة في أعمدة "رقم القطعة" و"اسم القطعة" هي كما يلي :
□	القطعة المعينة في السطر السابق يمكن استخدامها بدلا من هذه القطعة.
⊡	هذه القطعة يمكن استخدامها بدلا من القطعة المعينة في السطر السابق مباشرة.
◆	هذه القطعة والقطعة المعينة في السطر السابق مباشرة هما قابلتان للتبادل.

https://truckmanualshub.com/

П Р Е Д И С Л О В И Е

При оформлении заказа деталей, узлов и агрегатов просьба сообщить серийный номер машины и двигателя, а также показание счетчика мото-часов.

Каталог деталей составлен в следующем порядке:

№ рисунка — № рисунка не порядковый.

Наименование — Точка "." поставлена перед наименованием каждой составной части агрегата. Если составная часть состоит из множества деталей, то эти детали обозначаются двумя точками "..".

Количество — Указано количество агрегатов на машину.
Для составных частей агрегата указано их количество на агрегат.

Серийные номера — Это серийные номера машин или двигателей, на которые рассчитаны настоящий каталог.

Модель машины — Условные обозначения, приведенные в скобках, обозначают следующую модель машины.

—STD PC240-6K
—LC PC240LC-6K
—NLC PC240NLC-6K

Условные обозначения — Условные обозначения, приведенные в графах "№ детали" и "Наименование детали", указывают, что:

□	Вышеприведенная деталь может заменить настоящую деталь.
⊡	Деталь может заменить деталь, которая приведена непосредственно выше.
◆	Настоящая деталь и деталь, приведенная непосредственно выше, имеют взаимозаменяемость.
⊠	Эта деталь в настоящее время не поставляется. Взамен этой детали поставляется деталь, которая приведена непосредственно выше.
■	Деталь, приведенная в графе "Наименование детали", может применяться в комплекте взамен настоящей детали.
▼	Эта деталь в настоящее время не поставляется. Взамен этой детали поставляется деталь, приведенная в графе "Наименование детали", в комплекте.
△	Деталь в неготовом виде. Перед употреблением необходимо ее обработать.
☆	Поставляется в основном в комплекте, а не в отдельности.

Условные обозначения

★	Поставляется в основном в комплекте, а не в отдельности. Ее отдельная поставка производится только по специальному заказу.
⊙	Деталь группы. Эта деталь не поставляется.
= = = =	Детали, ограниченные этой линией, составляющие вышеприведенной группы деталей.
G-1, G-2	№№ групп деталей.
KIT	Составляющая комплекта. См. таблицу ремонтных комплектов.
Покрытие (1)	Детали, отгружаемые после грунтовки.
Покрытие (2)	Детали, отгружаемые после окраски различного цвета
(A)	Соверное исполнение (A) (-30°C)
(B)	Соверное исполнение (B) (-50°C)

В настоящей таблице приведены не только стандартные принадлежности, но и детали и агрегаты, поставляемые по специальному заказу.

При необходимости обратиться к местному представительству фирмы "Комацу".

https://truckmanualshub.com/

CONTENTS

10. ENGINE RELATED PARTS AND ELECTRICAL SYSTEM	FIG NO.	PAGE
AIR CLEANER	1001	1-2
MUFFLER	1003	1-4
OIL PAN	1005	1-8
CRANKSHAFT	1007	1-10
FUEL INJECTION PUMP LINKAGE (WITH POTENTIO METER) (PC210)	1011	1-12
FUEL INJECTION PUMP LINKAGE (WITH POTENTIO METER) (PC240)	1012	1-14
FUEL INJECTION PUMP LINKAGE (WITHOUT POTENTIO METER) (PC210)	1013	1-16
FUEL INJECTION PUMP LINKAGE (WITHOUT POTENTIO METER) (PC240)	1014	1-18
COOLING FAN (PC210)	1015	1-20
COOLING FAN (PC240)	1017	1-22
ELECTRICAL WIRING (AROUND ENGINE)	1019	1-24
ENGINE MOUNT	1041	1-26
DAMPER	1051	1-28
AIR INTAKE AND TAIL PIPE	1061	1-30
FUEL CONTROL LEVER	1111	1-32
FUEL CONTROL LINKAGE	1127	1-34
RADIATOR AND OIL COOLER (PC210)	1201	1-36
RADIATOR AND OIL COOLER (PC240)	1203	1-40
RADIATOR GUARD AND PIPING (PC210)	1211	1-44
RADIATOR GUARD AND PIPING (PC240)	1213	1-48
FUEL TANK	1301	1-52
BATTERY	1401	1-56
INSTRUMENT PANEL (1/2)	1421	1-58
INSTRUMENT PANEL (2/2)	1423	1-60
ELECTRICAL SYSTEM (RELATED PARTS)	1431	1-62
ELECTRICAL SYSTEM (WIRING) (1/2) (WITHOUT AUTO DECELERATION) (WITH SWING MECHANICAL BRAKE) (FOR 3-STAGE SELECTOR MODE OLSS)	1437	1-64
ELECTRICAL SYSTEM (WIRING) (2/2) (WITHOUT AUTO DECELERATION) (WITH SWING MECHANICAL BRAKE) (FOR 3-STAGE SELECTOR MODE OLSS)	1438	1-68
ELECTRICAL SYSTEM (WIRING) (1/2) (WITHOUT AUTO DECELERATION) (WITHOUT SWING MECHANICAL BRAKE) (FOR 2-STAGE SELECTOR MODE OLSS)	1441	1-72
ELECTRICAL SYSTEM (WIRING) (2/2) (WITHOUT AUTO DECELERATION) (WITHOUT SWING MECHANICAL BRAKE) (FOR 2-STAGE SELECTOR MODE OLSS)	1443	1-76
ELECTRICAL SYSTEM (WIRING) (ATTACHMENT SIDE)	1451	1-78
MONITOR PANEL AND RELATED PARTS (FOR 3-STAGE SELECTOR MODE OLSS)	1501	1-80
MONITOR PANEL AND RELATED PARTS (FOR 2-STAGE SELECTOR MODE OLSS)	1503	1-82

20. TRAVEL AND FINAL DRIVE		
TRAVEL MOTOR (1/2)	2001	2-2
TRAVEL MOTOR (2/2)	2002	2-6
SWIVEL JOINT	2101	2-10
HYDRAULIC PIPING (CONTROL VALVE TO/FROM SWIVEL JOINT) (PC210)	2201	2-12
HYDRAULIC PIPING (CONTROL VALVE TO/FROM SWIVEL JOINT) (PC240)	2203	2-16
HYDRAULIC PIPING (SWIVEL JOINT TO/FROM TRAVEL MOTOR) (PC210)	2211	2-20
HYDRAULIC PIPING (SWIVEL JOINT TO/FROM TRAVEL MOTOR) (PC240)	2213	2-22
TRAVEL CONTROL LEVER AND LINKAGE (1/2)	2315	2-24
TRAVEL CONTROL LEVER AND LINKAGE (2/2)	2317	2-26
FINAL DRIVE (PC210)	2401	2-28
FINAL DRIVE (PC240)	2403	2-32

30. UNDER CARRIAGE		
TRACK FRAME (PC210)	3001	3-2
TRACK FRAME (PC210LC)	3003	3-4
TRACK FRAME (PC240)	3005	3-6

https://truckmanualshub.com/

	FIG NO.	PAGE
TRACK FRAME (PC240LC)	3007	3-8
RECOIL SPRING	3011	3-10
FRONT IDLER	3021	3-12
TRACK ROLLER (PC210)	3031	3-14
TRACK ROLLER (PC240)	3035	3-16
CARRIER ROLLER	3041	3-18
TRACK SHOE, TRIPLE GROUSER (PC210)	3101	3-20
TRACK SHOE, TRIPLE GROUSER (PC210LC)	3111	3-24
TRACK SHOE, TRIPLE GROUSER (PC240)	3121	3-28
TRACK SHOE, TRIPLE GROUSER (PC240LC)	3131	3-30

40. SWING AND CONTROL SYSTEM

SWING CIRCLE	4001	4-2
SWING MACHINERY	4011	4-4
SWING MOTOR (1/2) (WITH SWING MECHANICAL BRAKE)	4101	4-8
SWING MOTOR (2/2) (WITH SWING MECHANICAL BRAKE)	4102	4-12
SWING MOTOR (1/2) (WITHOUT SWING MECHANICAL BRAKE)	4111	4-14
SWING MOTOR (2/2) (WITHOUT SWING MECHANICAL BRAKE)	4112	4-16
HYDRAULIC PIPING (CONTROL VALVE TO/FROM SWING MOTOR)	4301	4-18
WRIST CONTROL AND STAND, L.H. (PC210)	4431	4-20
WRIST CONTROL AND STAND, L.H. (PC240)	4432	4-24
WRIST CONTROL AND STAND, R.H. (1/2)	4433	4-28
WRIST CONTROL AND STAND, R.H. (2/2)	4435	4-30
KNOB AND HORN SWITCH	4439	4-32
P.P.C. VALVE PIPING (1/3) (WITH AUTO DECELERATION) (WITH SWING MECHANICAL BRAKE)	4511	4-34
P.P.C. VALVE PIPING (2/3) (WITH AUTO DECELERATION) (WITH SWING MECHANICAL BRAKE)	4513	4-36
P.P.C. VALVE PIPING (3/3) (WITH AUTO DECELERATION) (WITH SWING MECHANICAL BRAKE)	4515	4-38
P.P.C. VALVE PIPING (1/3) (WITHOUT AUTO DECELERATION) (WITHOUT SWING MECHANICAL BRAKE)	4517	4-40
P.P.C. VALVE PIPING (2/3) (WITHOUT AUTO DECELERATION) (WITHOUT SWING MECHANICAL BRAKE)	4519	4-42
P.P.C. VALVE PIPING (3/3) (WITHOUT AUTO DECELERATION) (WITHOUT SWING MECHANICAL BRAKE)	4521	4-44
PILOT PIPING (WITH AUTO DECELERATION) (WITH SWING MECHANICAL BRAKE)	4551	4-46
O.L.S.S. PIPING	4611	4-48
SWING MECHANICAL BRAKE PIPING (WITH AUTO DECELERATION) (WITH SWING MECHANICAL BRAKE)	4701	4-52

50. REVOLVING FRAME AND CAB

REVOLVING FRAME (PC210)	5001	5-2
REVOLVING FRAME (PC240)	5003	5-4
MACHINERY COMPARTMENT (1/5) (PC210)	5101	5-6
MACHINERY COMPARTMENT (1/5) (PC240)	5102	5-10
MACHINERY COMPARTMENT (2/5)	5103	5-14
MACHINERY COMPARTMENT (3/5)	5105	5-18
MACHINERY COMPARTMENT (4/5)	5107	5-20
MACHINERY COMPARTMENT (5/5)	5109	5-22
OPERATOR'S CAB (1/6)	5221	5-24
OPERATOR'S CAB (2/6)	5223	5-28
OPERATOR'S CAB (3/6)	5225	5-32
OPERATOR'S CAB (4/6)	5227	5-34
OPERATOR'S CAB (5/6)	5229	5-38
OPERATOR'S CAB (6/6)	5231	5-40
OPERATOR'S CAB, FLOOR FRAME	5311	5-44

https://truckmanualshub.com/

	FIG NO.	PAGE
OPERATOR'S SEAT	5411	5-46
CAR HEATER AND PIPING	5501	5-48

60. WORK EQUIPMENT CONTROL SYSTEM

	FIG NO.	PAGE
HYDRAULIC PISTON PUMP (1/4) (FOR 3-STAGE SELECTOR MODE OLSS) (PC210)	6001	6-2
HYDRAULIC PISTON PUMP (2/4) (FOR 3-STAGE SELECTOR MODE OLSS) (PC210)	6002	6-6
HYDRAULIC PISTON PUMP (3/4) (FOR 3-STAGE SELECTOR MODE OLSS) (PC210)	6003	6-10
HYDRAULIC PISTON PUMP (4/4) (FOR 3-STAGE SELECTOR MODE OLSS) (PC210)	6004	6-12
SERVO VALVE, FRONT (1/2) (FOR 3-STAGE SELECTOR MODE OLSS) (PC210)	6011	6-16
SERVO VALVE, FRONT (2/2) (FOR 3-STAGE SELECTOR MODE OLSS) (PC210)	6012	6-18
CUT OFF AND NEGATIVE CONTROL VALVE, FRONT (FOR 3-STAGE SELECTOR MODE OLSS) (PC210)	6013	6-22
SERVO VALVE, REAR (1/2) (FOR 3-STAGE SELECTOR MODE OLSS) (PC210)	6015	6-26
SERVO VALVE, REAR (2/2) (FOR 3-STAGE SELECTOR MODE OLSS) (PC210)	6016	6-28
CUT OFF AND NEGATIVE CONTROL VALVE, REAR (FOR 3-STAGE SELECTOR MODE OLSS) (PC210)	6017	6-32
TORQUE VARIABLE CONTROL VALVE (FOR 3-STAGE SELECTOR MODE OLSS) (PC210)	6018	6-36
HYDRAULIC PUMP (FOR 3-STAGE SELECTOR MODE OLSS) (PC210)	6021	6-38
RELIEF VALVE (FOR 3-STAGE SELECTOR MODE OLSS) (PC210)	6023	6-40
HYDRAULIC PISTON PUMP (1/4) (FOR 2-STAGE SELECTOR MODE OLSS) (PC210)	6031	6-42
HYDRAULIC PISTON PUMP (2/4) (FOR 2-STAGE SELECTOR MODE OLSS) (PC210)	6032	6-46
HYDRAULIC PISTON PUMP (3/4) (FOR 2-STAGE SELECTOR MODE OLSS) (PC210)	6033	6-50
HYDRAULIC PISTON PUMP (4/4) (FOR 2-STAGE SELECTOR MODE OLSS) (PC210)	6034	6-52

	FIG NO.	PAGE
SERVO VALVE, FRONT (1/2) (FOR 2-STAGE SELECTOR MODE OLSS) (PC210)	6041	6-56
SERVO VALVE, FRONT (2/2) (FOR 2-STAGE SELECTOR MODE OLSS) (PC210)	6042	6-58
CUT OFF AND NEGATIVE CONTROL VALVE, FRONT (FOR 2-STAGE SELECTOR MODE OLSS) (PC210)	6043	6-62
SERVO VALVE, REAR (1/2) (FOR 2-STAGE SELECTOR MODE OLSS) (PC210)	6045	6-66
SERVO VALVE, REAR (2/2) (FOR 2-STAGE SELECTOR MODE OLSS) (PC210)	6046	6-68
CUT OFF AND NEGATIVE CONTROL VALVE, REAR (FOR 2-STAGE SELECTOR MODE OLSS) (PC210)	6047	6-72
TORQUE VARIABLE CONTROL VALVE (FOR 2-STAGE SELECTOR MODE OLSS) (PC210)	6048	6-76
HYDRAULIC PUMP (FOR 2-STAGE SELECTOR MODE OLSS) (PC210)	6051	6-78
RELIEF VALVE (FOR 2-STAGE SELECTOR MODE OLSS) (PC210)	6053	6-80
HYDRAULIC PISTON PUMP (1/4) (FOR 3-STAGE SELECTOR MODE OLSS) (PC240)	6101	6-82
HYDRAULIC PISTON PUMP (2/4) (FOR 3-STAGE SELECTOR MODE OLSS) (PC240)	6102	6-86
HYDRAULIC PISTON PUMP (3/4) (FOR 3-STAGE SELECTOR MODE OLSS) (PC240)	6103	6-90
HYDRAULIC PISTON PUMP (4/4) (FOR 3-STAGE SELECTOR MODE OLSS) (PC240)	6104	6-92
SERVO VALVE, FRONT (1/2) (FOR 3-STAGE SELECTOR MODE OLSS) (PC240)	6111	6-96
SERVO VALVE, FRONT (2/2) (FOR 3-STAGE SELECTOR MODE OLSS) (PC240)	6112	6-98
CUT OFF AND NEGATIVE CONTROL VALVE, FRONT (FOR 3-STAGE SELECTOR MODE OLSS) (PC240)	6113	6-102
SERVO VALVE, REAR (1/2) (FOR 3-STAGE SELECTOR MODE OLSS) (PC240)	6115	6-106
SERVO VALVE, REAR (2/2) (FOR 3-STAGE SELECTOR MODE OLSS) (PC240)	6116	6-108
CUT OFF AND NEGATIVE CONTROL VALVE, REAR (FOR 3-STAGE SELECTOR MODE OLSS) (PC240)	6117	6-112
TORQUE VARIABLE CONTROL VALVE (FOR 3-STAGE SELECTOR MODE OLSS) (PC240)	6118	6-116
HYDRAULIC PUMP (FOR 3-STAGE SELECTOR MODE OLSS) (PC240)	6121	6-118

https://truckmanualshub.com/

	FIG NO.	PAGE
RELIEF VALVE (FOR 3-STAGE SELECTOR MODE OLSS) (PC240)	6123	6-120
HYDRAULIC PISTON PUMP (1/4) (FOR 2-STAGE SELECTOR MODE OLSS) (PC240)	6131	6-122
HYDRAULIC PISTON PUMP (2/4) (FOR 2-STAGE SELECTOR MODE OLSS) (PC240)	6132	6-126
HYDRAULIC PISTON PUMP (3/4) (FOR 2-STAGE SELECTOR MODE OLSS) (PC240)	6133	6-130
HYDRAULIC PISTON PUMP (4/4) (FOR 2-STAGE SELECTOR MODE OLSS) (PC240)	6134	6-132
SERVO VALVE, FRONT (1/2) (FOR 2-STAGE SELECTOR MODE OLSS) (PC240)	6141	6-136
SERVO VALVE, FRONT (2/2) (FOR 2-STAGE SELECTOR MODE OLSS) (PC240)	6142	6-138
CUT OFF AND NEGATIVE CONTROL VALVE, FRONT (FOR 2-STAGE SELECTOR MODE OLSS) (PC240)	6143	6-142
SERVO VALVE, REAR (1/2) (FOR 2-STAGE SELECTOR MODE OLSS) (PC240)	6145	6-146
SERVO VALVE, REAR (2/2) (FOR 2-STAGE SELECTOR MODE OLSS) (PC240)	6146	6-148
CUT OFF AND NEGATIVE CONTROL VALVE, REAR (FOR 2-STAGE SELECTOR MODE OLSS) (PC240)	6147	6-152
TORQUE VARIABLE CONTROL VALVE (FOR 2-STAGE SELECTOR MODE OLSS) (PC240)	6148	6-156
HYDRAULIC PUMP (FOR 2-STAGE SELECTOR MODE OLSS) (PC240)	6151	6-158
RELIEF VALVE (FOR 2-STAGE SELECTOR MODE OLSS) (PC240)	6153	6-160
HYDRAULIC OIL TANK	6191	6-162
CONTROL VALVE (1/7)	6201	6-166
CONTROL VALVE (2/7)	6202	6-170
CONTROL VALVE (3/7)	6203	6-174
CONTROL VALVE (4/7)	6204	6-176
CONTROL VALVE (5/7)	6205	6-180
CONTROL VALVE (6/7)	6206	6-182
CONTROL VALVE (7/7)	6207	6-186
P.P.C. VALVE	6223	6-190
CHECK VALVE, L.H.	6225	6-192

	FIG NO.	PAGE
CHECK VALVE, R.H.	6227	6-194
BOOM CYLINDER (PC210)	6401	6-196
BOOM CYLINDER (PC240)	6402	6-200
ARM CYLINDER (PC210)	6403	6-204
ARM CYLINDER (PC240)	6404	6-208
BUCKET CYLINDER (PC210)	6405	6-212
BUCKET CYLINDER (PC240)	6406	6-216
HYDRAULIC PIPING (TANK TO PUMP)	6501	6-220
HYDRAULIC PIPING (PUMP TO CONTROL VALVE)	6503	6-222
HYDRAULIC PIPING (BOOM CYLINDER LINE) (CHASSIS SIDE)	6511	6-224
HYDRAULIC PIPING (ARM, BUCKET CYLINDER LINE) (CHASSIS SIDE) (PC210)	6513	6-226
HYDRAULIC PIPING (ARM, BUCKET CYLINDER LINE) (CHASSIS SIDE) (PC240)	6514	6-230
HYDRAULIC PIPING (RETURN AND OIL COOLER) (WITH AUTO DECELERATION) (WITH SWING MECHANICAL BRAKE) (PC210)	6521	6-234
HYDRAULIC PIPING (RETURN AND OIL COOLER) (WITH AUTO DECELERATION) (WITH SWING MECHANICAL BRAKE) (PC240)	6522	6-236
HYDRAULIC PIPING (RETURN AND OIL COOLER) (WITHOUT AUTO DECELERATION) (WITHOUT SWING MECHANICAL BRAKE) (PC210)	6523	6-238
HYDRAULIC PIPING (RETURN AND OIL COOLER) (WITHOUT AUTO DECELERATION) (WITHOUT SWING MECHANICAL BRAKE) (PC240)	6524	6-240
HYDRAULIC PIPING (RETURN)	6525	6-242
HYDRAULIC PIPING (DRAIN)	6529	6-244
HYDRAULIC PIPING (BOOM AND ARM CYLINDER LINE) (ATTACHMENT SIDE) (PC210)	6531	6-246
HYDRAULIC PIPING (BOOM AND ARM CYLINDER LINE) (ATTACHMENT SIDE) (PC240)	6532	6-250
HYDRAULIC PIPING (BUCKET CYLINDER LINE) (ATTACHMENT SIDE) (PC210)	6533	6-254
HYDRAULIC PIPING (BUCKET CYLINDER LINE) (ATTACHMENT SIDE) (PC240)	6534	6-256

https://truckmanualshub.com/

70. WORK EQUIPMENT — FIG NO. — PAGE

BOOM (PC210) 7001 7-2

BOOM (PC240) 7003 7-6

ARM, 2925MM (PC210) 7005 7-10

ARM, 2500MM (PC240) 7007 7-12

LINK (PC210) 7011 7-14

LINK (PC240) 7015 7-16

LONG ARM, 3500MM (PC240) 7305 7-18

LONG ARM, 3045MM (PC240) 7307 7-20

SHORT ARM, 2400MM (PC210) 7321 7-22

SHORT ARM, 1800MM (PC210) 7323 7-24

SHORT ARM, 2000MM (PC240) 7325 7-26

BUCKET CYLINDER (FOR 1800MM SHORT ARM) (PC210) 7331 7-28

BUCKET CYLINDER (FOR 2000MM SHORT ARM) (PC240) 7335 7-30

80. SPECIAL APPLICATION PARTS

WINDOW WASHER 8151 8-2

DEFROSTER 8153 8-4

RADIO-LESS 8161 8-6

HEATER-LESS (1/2) 8163 8-8

HEATER-LESS (2/2) 8164 8-10

CONTROL PEDAL (FOR ADDITIONAL PIPING) 8311 8-12

CONTROL LINKAGE (FOR ADDITIONAL PIPING) 8313 8-14

ADDITIONAL PIPING (PILOT) (PC210) 8321 8-16

ADDITIONAL PIPING (PILOT) (PC240) 8322 8-18

ADDITIONAL PIPING (RETURN) 8323 8-20

ADDITIONAL PIPING (CONTROL VALVE TO CHANGE ROTOR) (PC210) 8325 8-22

ADDITIONAL PIPING (CONTROL VALVE TO CHANGE ROTOR) (PC240) 8326 8-24

ADDITIONAL PIPING (CHANGE ROTOR AND SWIVEL JOINT) 8331 8-26

ADDITIONAL PIPING (ATTACHMENT SIDE) (1/3) (PC210) 8333 8-28

FIG NO. — PAGE

ADDITIONAL PIPING (ATTACHMENT SIDE) (FOR 2925MM ARM) (2/3) (PC210) 8335 8-30

ADDITIONAL PIPING (ATTACHMENT SIDE) (FOR 1800MM AND 2400MM SHORT ARM) (2/3) (PC210) 8336 8-32

ADDITIONAL PIPING (ATTACHMENT SIDE) (FOR 2925MM ARM) (3/3) (PC210) 8337 8-36

ADDITIONAL PIPING (ATTACHMENT SIDE) (FOR 1800MM AND 2400MM SHORT ARM) (3/3) (PC210) 8338 8-38

ADDITIONAL PIPING (ATTACHMENT SIDE) (1/3) (PC240) 8343 8-40

ADDITIONAL PIPING (ATTACHMENT SIDE) (FOR 2000MM ARM) (2/3) (PC240) 8345 8-42

ADDITIONAL PIPING (ATTACHMENT SIDE) (FOR 2500MM ARM) (2/3) (PC240) 8346 8-44

ADDITIONAL PIPING (ATTACHMENT SIDE) (FOR 2000MM ARM) (3/3) (PC240) 8347 8-46

ADDITIONAL PIPING (ATTACHMENT SIDE) (FOR 2500MM ARM) (3/3) (PC240) 8348 8-48

COLD WEATHER SPECIFICATIONS (1/3) 8401 8-50

COLD WEATHER SPECIFICATIONS (2/3) 8402 8-52

COLD WEATHER SPECIFICATIONS (3/3) 8403 8-54

TRACK FRAME UNDER COVER 8501 8-58

SELF SUPPLY PUMP 8601 8-60

90. SPECIAL APPLICATION PARTS, MARK PLATE, TOOL AND KIT

OVER LOAD WARNING DEVICE (1/2) (TBG SPEC.) (PC210) 9001 9-2

OVER LOAD WARNING DEVICE (1/2) (TBG SPEC.) (PC240) 9002 9-6

OVER LOAD WARNING DEVICE (2/2) (TBG SPEC.) 9003 9-8

INSTRUMENT PANEL (TBG SPEC.) 9005 9-10

REVOLVING FRAME (TBG SPEC.) (PC210) 9006 9-12

REVOLVING FRAME (TBG SPEC.) (PC240) 9007 9-14

CONTROL STAND (TBG SPEC.) 9008 9-16

MACHINERY COMPARTMENT (1/2) (TBG SPEC.) 9010 9-18

MACHINERY COMPARTMENT (2/2) (TBG SPEC.) 9011 9-20

OPERATOR'S CAB (TBG SPEC.) 9014 9-22

https://truckmanualshub.com/

	FIG NO.	PAGE
MARKS AND PLATES (TBG SPEC.)	9016	9-24
INSTRUMENT PANEL (REGULATION OF SWEDEN)	9054	9-26
ELECTRICAL SYSTEM (1/2) (REGULATION OF SWEDEN)	9057	9-28
ELECTRICAL SYSTEM (2/2) (REGULATION OF SWEDEN)	9060	9-30
MODIFIED CHASSIS PARTS (REGULATION OF SWEDEN) (PC210)	9066	9-32
MODIFIED CHASSIS PARTS (REGULATION OF SWEDEN) (PC240)	9067	9-34
OPERATOR'S CAB (REGULATION OF SWEDEN)	9069	9-36
REVOLVING FRAME (FOR NORWAY) (PC210)	9081	9-38
REVOLVING FRAME (FOR NORWAY) (PC240)	9082	9-40
TRACK FRAME (PC240NLC)	9301	9-42
HYDRAULIC PIPING (SWIVEL JOINT TO/FROM TRAVEL MOTOR) (PC240NLC)	9303	9-44
TRACK ROLLER (PC240NLC)	9305	9-46
TRACK SHOE (PC240NLC)	9307	9-48
LOCK VALVE PIPING (FOR BOOM CYLINDER) (1/2)	9501	9-52
LOCK VALVE PIPING (FOR BOOM CYLINDER) (2/2) (PC210)	9502	9-54
LOCK VALVE PIPING (FOR BOOM CYLINDER) (2/2) (PC240)	9503	9-58
LOCK VALVE PIPING (FOR ARM CYLINDER) (PC210)	9511	9-62
LOCK VALVE PIPING (FOR ARM CYLINDER) (PC240)	9512	9-66
MARKS AND PLATES (ENGLISH) (PC210)	9941	9-70
MARKS AND PLATES (ENGLISH) (PC240)	9942	9-74
MARKS AND PLATES (SPANISH) (PC210)	9947	9-78
MARKS AND PLATES (SPANISH) (PC240)	9948	9-82
MARKS AND PLATES (GERMAN) (PC210)	9950	9-86
MARKS AND PLATES (GERMAN) (PC240)	9951	9-90
MARKS AND PLATES (FRENCH) (PC210)	9953	9-94
MARKS AND PLATES (FRENCH) (PC240)	9954	9-98
TOOL	9992	9-102

99. NUMERICAL INDEX

NUMERICAL INDEX 1

https://truckmanualshub.com/

ENGINE RELATED PARTS AND ELECTRICAL SYSTEM

https://truckmanualshub.com/

FIG. 1001 AIR CLEANER

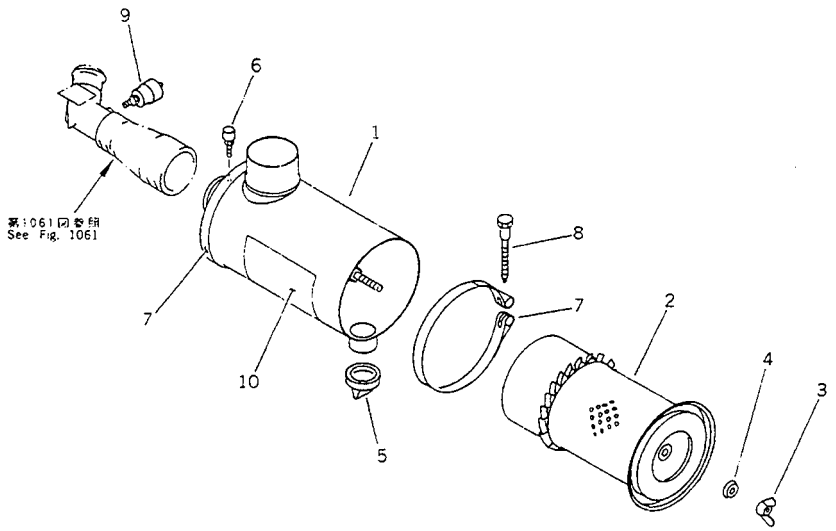

FIG NO. :1001

INDEX NO.	PART NO.	DESCRIPTION	Q'TY	SERIAL NO. PC210-3KP	SERIAL NO. PC240-3KP
	205-01-73600	AIR CLEANER ASS'Y	1	K15001-	K15001-
1	205-01-73560	.BODY	1	K15001-	K15001-
2	205-01-73570	.ELEMENT	1	K15001-	K15001-
3	205-01-K1460	..NUT	1	K15001-	K15001-
4	205-01-K1450	..WASHER	1	K15001-	K15001-
5	205-01-73580	.CAP,VACUATOR	1	K15001-	K15001-
6	205-01-73590	.CAP,INDICATOR	1	K15001-	K15001-
7	6131-11-4520	BAND	2	K15001-	K15001-
8	6643-11-4641	BOLT	2	K15001-	K15001-
9	08670-02001	INDICATOR,(ENGLISH)	1	K15001-	K15001-
	08670-50641	INDICATOR,(FRENCH)	1	K15001-	K15001-
	08670-60635	INDICATOR,(SPANISH)	1	K15001-	K15001-
	08670-70635	INDICATOR,(GERMAN)	1	K15001-	K15001-
10	09637-30661	PLATE, INSTRUCTION,(ENGLISH)	1	K15001-	K15001-
	09637-81661	PLATE, INSTRUCTION,(GERMAN)	1	K15001-	K15001-
	09637-70661	PLATE, INSTRUCTION,(SPANISH)	1	K15001-	K15001-
	09637-30752	PLATE, INSTRUCTION,(FRENCH)	1	K15001-	K15001-

https://truckmanualshub.com/

FIG. 1003 MUFFLER

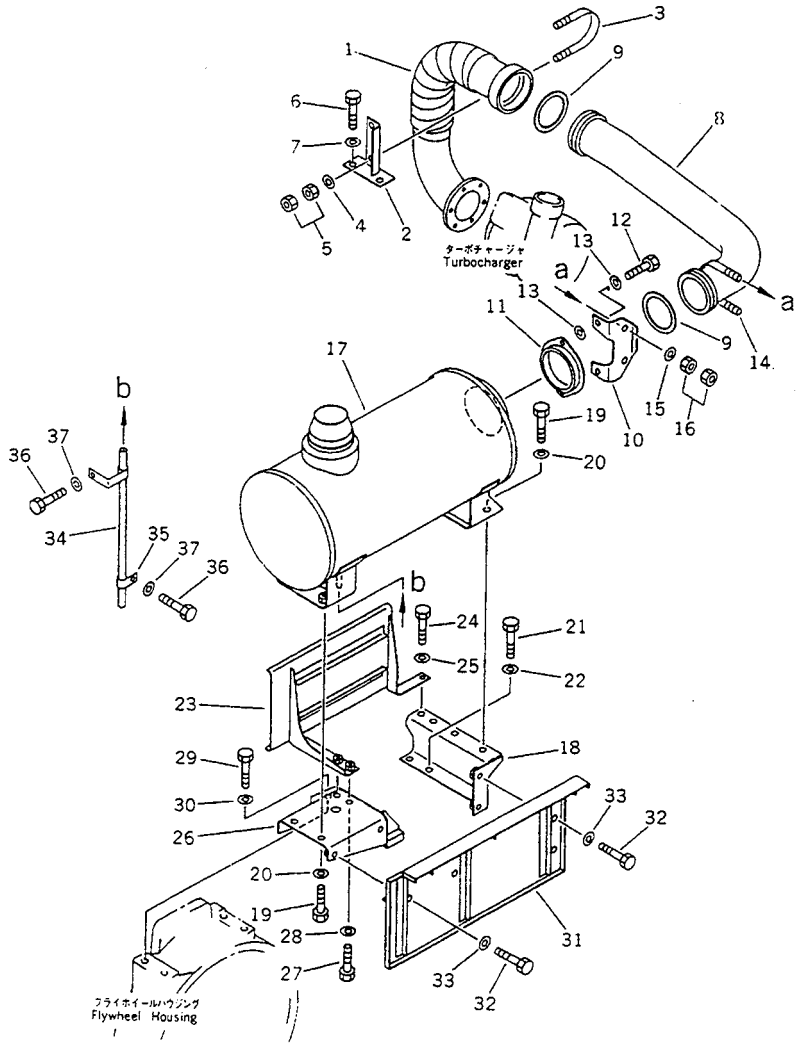

FIG NO. :1003

INDEX NO.	PART NO.	DESCRIPTION	Q'TY	SERIAL NO. PC210-3KP	SERIAL NO. PC240-3KP
1	205-01-73420	TUBE	1	K15001-	K15001-
2	205-01-73450	BRACKET	1	K15001-	K15001-
3	07283-27663	CLIP	1	K15001-	K15001-
4	01643-31032	WASHER	2	K15001-	K15001-
5	01582-11008	NUT	4	K15001-	K15001-
6	01010-51025	BOLT	2	K15001-	K15001-
7	01643-31032	WASHER	2	K15001-	K15001-
8	205-01-73430	TUBE	1	K15001-	K15001-
9	6136-12-5280	RING,SEAL	2	K15001-	K15001-
10	205-01-73460	BRACKET	1	K15001-	K15001-
11	6137-11-5370	JOINT	1	K15001-	K15001-
12	01020-10830	BOLT	2	K15001-	K15001-
13	01643-30823	WASHER	4	K15001-	K15001-
14	07283-27663	CLIP	1	K15001-	K15001-
15	01643-31032	WASHER	2	K15001-	K15001-
16	01582-11008	NUT	4	K15001-	K15001-
17	205-01-73410	MUFFLER	1	K15001-	K15001-
18	205-01-73310	BRACKET	1	K15001-	K15001-
19	01010-51025	BOLT	4	K15001-	K15001-
20	01643-31032	WASHER	4	K15001-	K15001-
21	01010-51225	BOLT	2	K15001-	K15001-
22	01643-31232	WASHER	2	K15001-	K15001-
23	205-01-73340	COVER	1	K15001-	K15001-
24	01010-51030	BOLT	2	K15001-	K15001-
25	01643-31032	WASHER	2	K15001-	K15001-
26	205-01-73320	BRACKET	1	K15001-	K15001-
27	01010-51025	BOLT	2	K15001-	K15001-
28	01643-31032	WASHER	2	K15001-	K15001-
29	01010-51240	BOLT	2	K15001-	K15001-
30	01643-31232	WASHER	2	K15001-	K15001-

https://truckmanualshub.com/

FIG NO. :1003

INDEX NO.	PART NO.	DESCRIPTION	Q'TY	SERIAL NO. PC210-3KP	SERIAL NO. PC240-3KP
31	205-01-73350	COVER	1	K15001-	K15001-
32	01010-51025	BOLT	4	K15001-	K15001-
33	01643-31032	WASHER	4	K15001-	K15001-
34	205-01-73440	TUBE	1	K15001-	K15001-
35	08036-21014	CLIP	1	K15001-	K15001-
36	01010-51020	BOLT	2	K15001-	K15001-
37	01643-31032	WASHER	2	K15001-	K15001-

https://truckmanualshub.com/

FIG. 1005 OIL PAN

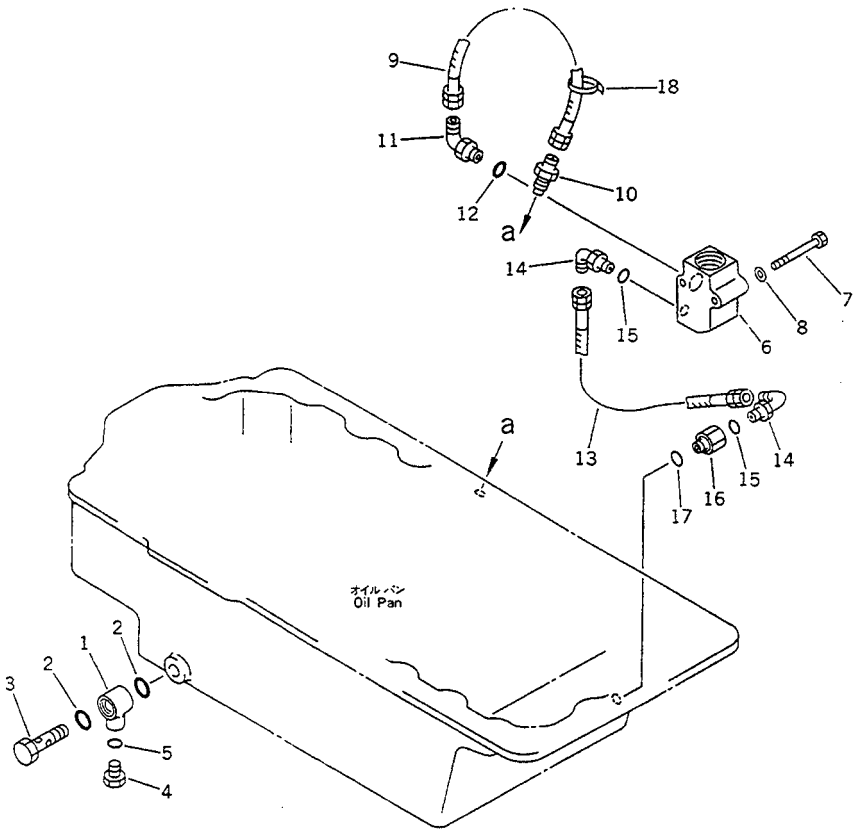

FIG NO. :1005

INDEX NO.	PART NO.	DESCRIPTION	Q'TY	SERIAL NO. PC210-3KP	SERIAL NO. PC240-3KP
1	205-01-73520	JOINT	1	K15001-	K15001-
2	07000-02021	O-RING	2	K15001-	K15001-
3	205-01-73530	JOINT	1	K15001-	K15001-
4	07040-11409	PLUG	1	K15001-	K15001-
5	07002-01423	O-RING	1	K15001-	K15001-
6	205-01-73370	BLOCK	1	K15001-	K15001-
7	01010-50860	BOLT	2	K15001-	K15001-
8	01643-30823	WASHER	2	K15001-	K15001-
9	07102-20204	HOSE	1	K15001-	K15001-
10	205-01-73260	NIPPLE	1	K15001-	K15001-
11	20N-63-66190	ELBOW	1	K15001-	K15001-
12	07002-02034	O-RING	1	K15001-	K15001-
13	07102-20203	HOSE	1	K15001-	K15001-
14	07235-10210	ELBOW	2	K15001-	K15001-
15	07002-01423	O-RING	2	K15001-	K15001-
16	205-01-73380	JOINT	1	K15001-	K15001-
17	07000-02021	O-RING	1	K15001-	K15001-
18	08034-00519	BAND	1	K15001-	K15001-

https://truckmanualshub.com/

FIG. 1007 CRANKSHAFT

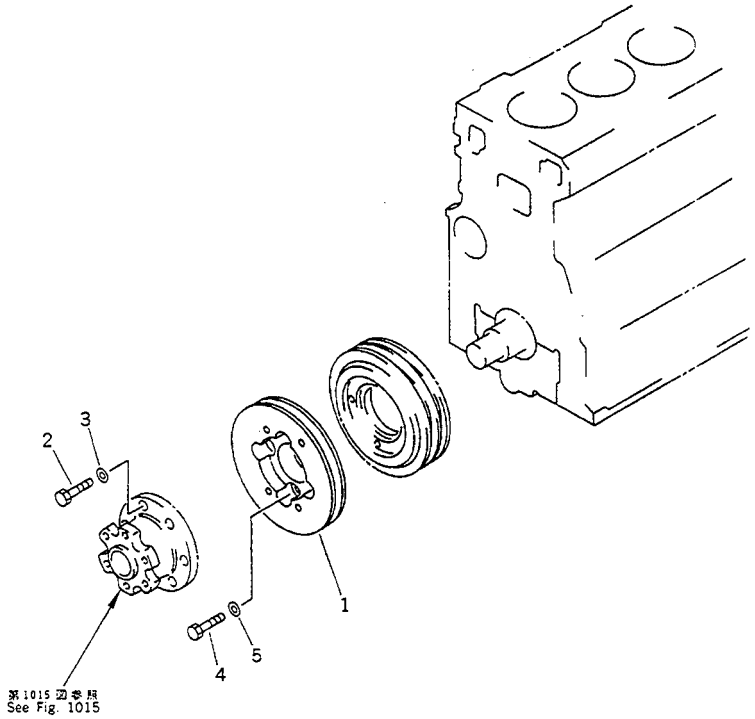

FIG NO. 1007

INDEX NO.	PART NO.	DESCRIPTION	Q'TY	SERIAL NO. PC210-3KP	SERIAL NO. PC240-3KP
1	205-01-73290	ADAPTER	1	K15001-	K15001-
2	01010-51230	BOLT	4	K15001-	K15001-
3	01643-31232	WASHER	4	K15001-	K15001-
4	02030-10738	BOLT	4	K15001-	K15001-
5	205-01-73240	WASHER	5	K15001-	K15001-

https://truckmanualshub.com/

FIG. 1011 FUEL INJECTION PUMP LINKAGE (WITH POTENTIO METER) (PC210)

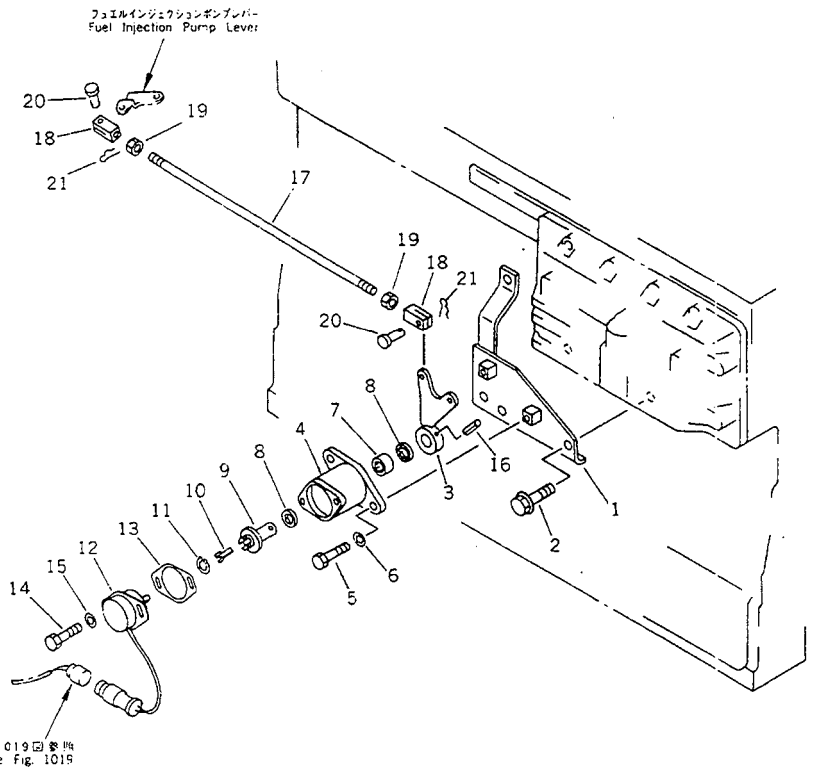

FIG NO. 1011

INDEX NO.	PART NO.	DESCRIPTION	Q'TY	SERIAL NO. PC210-3KP	SERIAL NO. PC240-3KP
1	205-43-74420	BRACKET	1	K15001-	
2	01435-21016	BOLT	2	K15001-	
3	205-43-74430	LEVER	1	K15001-	
4	205-43-74450	BLOCK	1	K15001-	
5	01010-50825	BOLT	2	K15001-	
6	01643-30823	WASHER	2	K15001-	
7	702-16-11490	BEARING	1	K15001-	
8	702-16-11510	SEAL,OIL	2	K15001-	
9	6136-71-9730	SHAFT	1	K15001-	
10	142-43-13180	SPRING	1	K15001-	
11	04064-01610	RING	1	K15001-	
12	7861-91-4110	SENSOR,POTENTIOMETER	1	K15001-	
13	142-06-14510	GASKET	1	K15001-	
14	01010-50612	BOLT	2	K15001-	
15	01643-30623	WASHER	2	K15001-	
16	04025-00432	PIN	1	K15001-	
17	04245-00638	ROD	1	K15001-	
18	04210-20624	YOKE	2	K15001-	
19	01580-10605	NUT	2	K15001-	
20	04205-10618	PIN	2	K15001-	
21	04052-10633	PIN,SNAP	2	K15001-	

https://truckmanualshub.com/

FIG. 1012 FUEL INJECTION PUMP LINKAGE (WITH POTENTIO METER) (PC240)

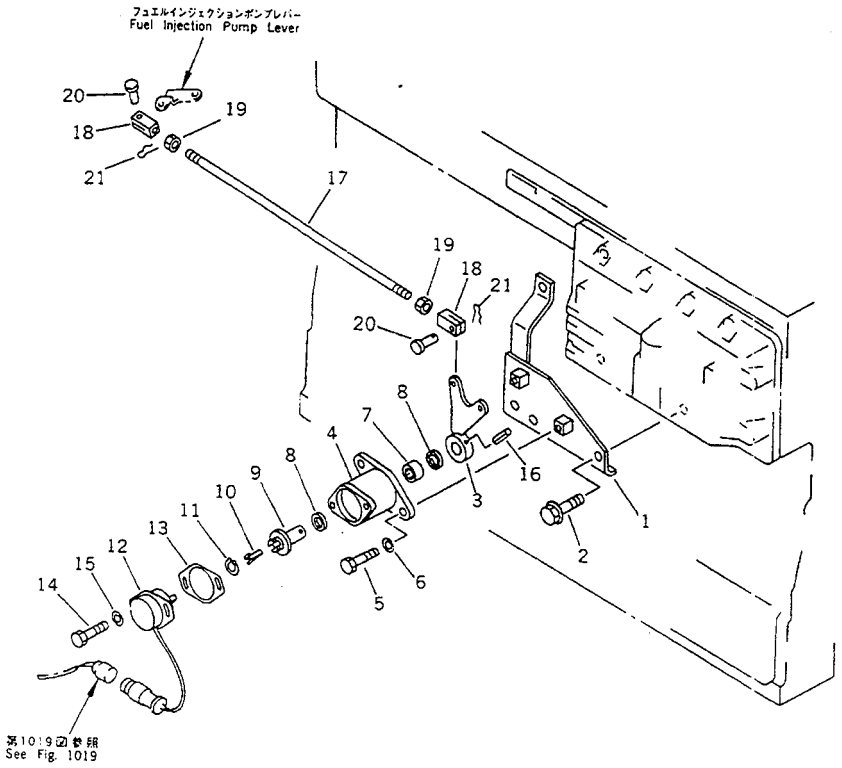

FIG NO. 1012

INDEX NO.	PART NO.	DESCRIPTION	Q'TY	SERIAL NO. PC210-3KP	SERIAL NO. PC240-3KP
1	205-43-74420	BRACKET	1		K15001-
2	01435-21016	BOLT	2		K15001-
3	205-43-74430	LEVER	1		K15001-
4	205-43-74450	BLOCK	1		K15001-
5	01010-50825	BOLT	2		K15001-
6	01643-30823	WASHER	2		K15001-
7	702-16-11490	BEARING	1		K15001-
8	702-16-11510	SEAL,OIL	2		K15001-
9	6136-71-9730	SHAFT	1		K15001-
10	142-43-13180	SPRING	1		K15001-
11	04064-01610	RING	1		K15001-
12	7861-91-4110	SENSOR,POTENTIOMETER	1		K15001-
13	142-06-14510	GASKET	1		K15001-
14	01010-50612	BOLT	2		K15001-
15	01643-30623	WASHER	2		K15001-
16	04025-00432	PIN	1		K15001-
17	04245-00640	ROD	1		K15001-
18	04210-20624	YOKE	2		K15001-
19	01580-10605	NUT	2		K15001-
20	04205-10618	PIN	2		K15001-
21	04052-10633	PIN,SNAP	2		K15001-

https://truckmanualshub.com/

FIG. 1013 FUEL INJECTION PUMP LINKAGE (WITHOUT POTENTIO METER) (PC210)

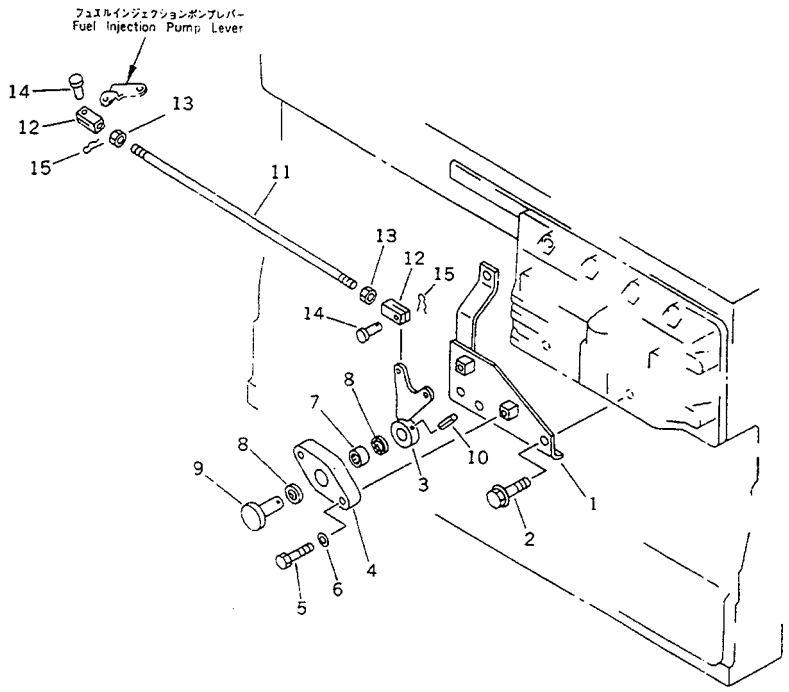

FIG NO. :1013

INDEX NO.	PART NO.	DESCRIPTION	Q'TY	SERIAL NO. PC210-3KP	SERIAL NO. PC240-3KP
1	205-43-74420	BRACKET	1	K15001-	
2	01435-21016	BOLT	2	K15001-	
3	205-43-74430	LEVER	1	K15001-	
4	205-43-74440	BLOCK	1	K15001-	
5	01010-50835	BOLT	2	K15001-	
6	01643-30823	WASHER	2	K15001-	
7	702-16-11490	BEARING	1	K15001-	
8	702-16-11510	SEAL,OIL	2	K15001-	
9	205-43-74460	SHAFT	1	K15001-	
10	04025-00432	PIN	1	K15001-	
11	04245-00638	ROD	1	K15001-	
12	04210-20624	YOKE	2	K15001-	
13	01580-10605	NUT	2	K15001-	
14	04205-10618	PIN	2	K15001-	
15	04052-10633	PIN,SNAP	2	K15001-	

https://truckmanualshub.com/

FIG. 1014 FUEL INJECTION PUMP LINKAGE (WITHOUT POTENTIO METER) (PC240)

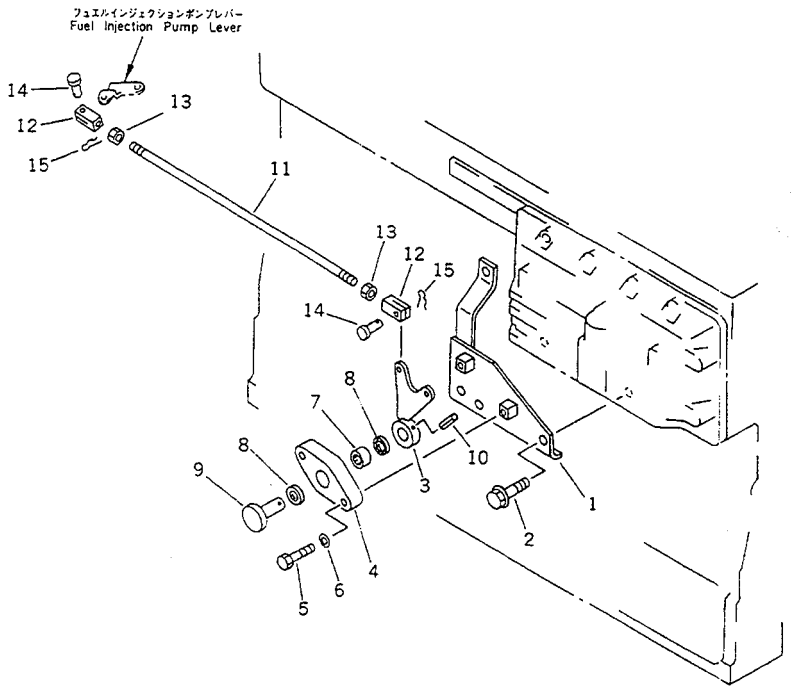

FIG NO. 1014

INDEX NO.	PART NO.	DESCRIPTION	Q'TY	SERIAL NO. PC210-3KP	SERIAL NO. PC240-3KP
1	205-43-74420	BRACKET	1		K15001-
2	01435-21016	BOLT	2		K15001-
3	205-43-74430	LEVER	1		K15001-
4	205-43-74440	BLOCK	1		K15001-
5	01010-50835	BOLT	2		K15001-
6	01643-30823	WASHER	2		K15001-
7	702-16-11490	BEARING	1		K15001-
8	702-16-11510	SEAL,OIL	2		K15001-
9	205-43-74460	SHAFT	1		K15001-
10	04025-00432	PIN	1		K15001-
11	04245-00640	ROD	1		K15001-
12	04210-20624	YOKE	2		K15001-
13	01580-10605	NUT	2		K15001-
14	04205-10618	PIN	2		K15001-
15	04052-10633	PIN,SNAP	2		K15001-

https://truckmanualshub.com/

FIG. 1015 COOLING FAN (PC210)

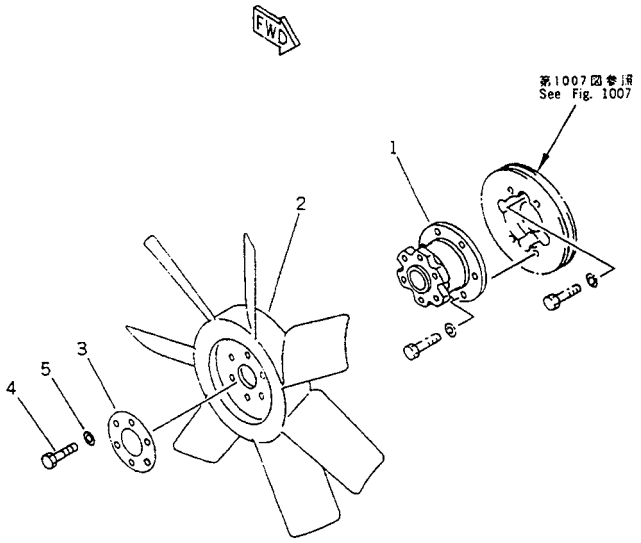

FIG NO. 1015

INDEX NO.	PART NO.	DESCRIPTION	Q'TY	SERIAL NO. PC210-3KP	SERIAL NO. PC240-3KP
1	6136-61-3610	COUPLING ASS'Y	1	K15001-	
2	600-625-6580	FAN	1	K15001-	
3	6131-62-3310	PLATE	1	K15001-	
4	01010-51030	BOLT	6	K15001-	
5	01643-31032	WASHER	6	K15001-	

https://truckmanualshub.com/

FIG. 1017 COOLING FAN (PC240)

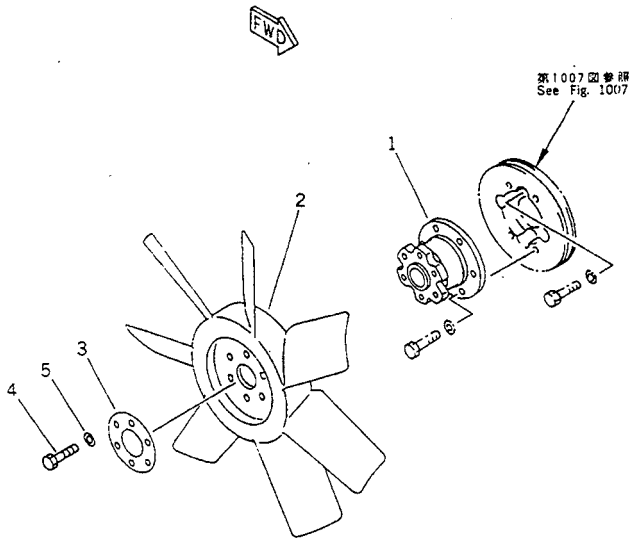

FIG NO. :1017

INDEX NO.	PART NO.	DESCRIPTION	Q'TY	SERIAL NO. PC210-3KP	SERIAL NO. PC240-3KP
1	6136-61-3610	COUPLING ASS'Y	1		K15001-
2	600-625-6620	FAN	1		K15001-
3	6131-62-3310	PLATE	1		K15001-
4	01010-51030	BOLT	6		K15001-
5	01643-31032	WASHER	6		K15001-

https://truckmanualshub.com/

FIG. 1019 ELECTRICAL WIRING (AROUND ENGINE)

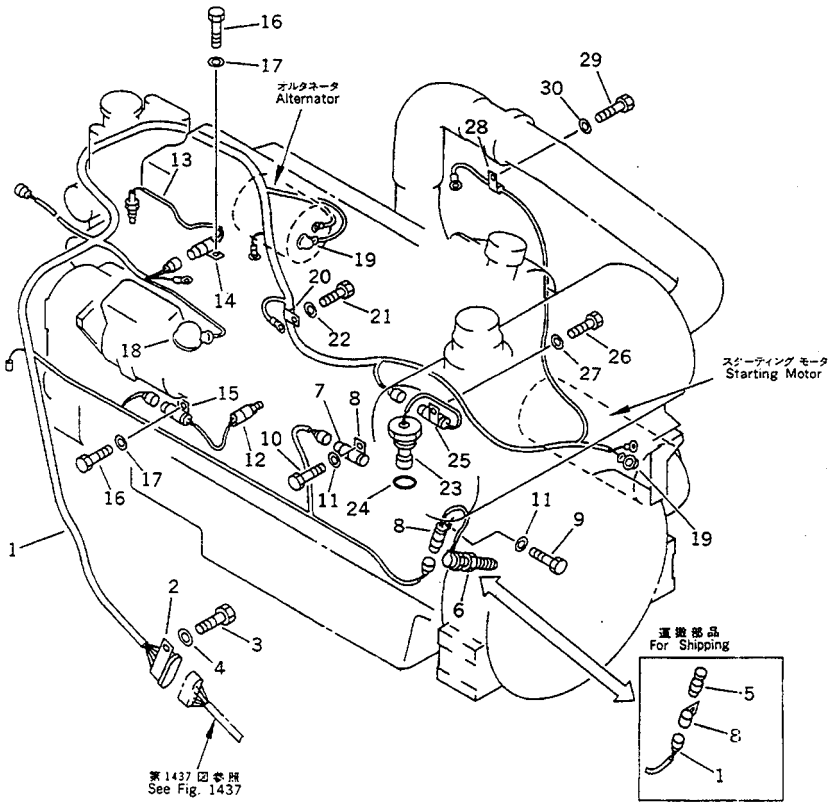

FIG NO. :1019

INDEX NO.	PART NO.	DESCRIPTION	Q'TY	SERIAL NO. PC210-3KP	SERIAL NO. PC240-3KP
1	205-06-73330	WIRING HARNESS	1	K15001-	K15001-
2	142-06-13530	CLIP	1	K15001-	K15001-
3	01010-51025	BOLT	1	K15001-	K15001-
4	01643-31032	WASHER	1	K15001-	K15001-
5	195-06-41740	PLUG	1	K15001-	K15001-
6	7819-11-2310	SENSOR	1	K15001-	K15001-
7	195-06-41760	CONNECTOR	1	K15001-	K15001-
8	08052-11711	CLIP	2	K15001-	K15001-
9	01010-50820	BOLT	1	K15001-	K15001-
10	01010-50816	BOLT	1	K15001-	K15001-
11	01643-30823	WASHER	2	K15001-	K15001-
12	7861-99-1300	SENSOR,PRESSURE SWITCH	1	K15001-	K15001-
13	7861-91-3370	SENSOR,TEMPERATURE	1	K15001-	K15001-
14	08052-11711	CLIP	1	K15001-	K15001-
15	08036-01814	CLIP	1	K15001-	K15001-
16	01010-51016	BOLT	2	K15001-	K15001-
17	01643-31032	WASHER	2	K15001-	K15001-
18	08038-16037	CAP	1	K15001-	K15001-
19	08038-02027	CAP	2	K15001-	K15001-
20	08036-01414	CLIP	1	K15001-	K15001-
21	01010-51016	BOLT	1	K15001-	K15001-
22	01643-31032	WASHER	1	K15001-	K15001-
23	7861-91-4520	SENSOR	1	K15001-	K15001-
24	07002-03634	O-RING	1	K15001-	K15001-
25	08052-21711	CLIP	1	K15001-	K15001-
26	01010-50816	BOLT	1	K15001-	K15001-
27	01643-30823	WASHER	1	K15001-	K15001-
28	08036-30810	CLIP	1	K15001-	K15001-
29	01010-50612	BOLT	1	K15001-	K15001-
30	01643-30623	WASHER	1	K15001-	K15001-

https://truckmanualshub.com/

FIG. 1041 ENGINE MOUNT

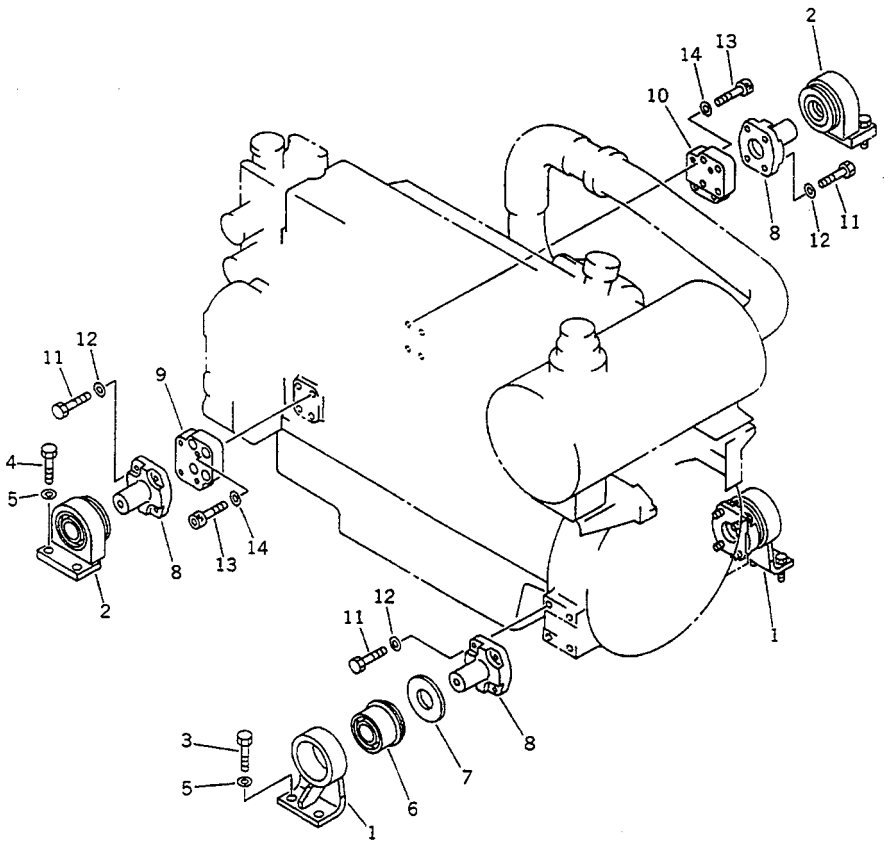

FIG NO. :1041

INDEX NO.	PART NO.	DESCRIPTION	Q'TY	SERIAL NO. PC210-3KP	SERIAL NO. PC240-3KP
1	205-01-73540	BRACKET	2	K15001-	K15001-
2	205-01-73550	BRACKET	2	K15001-	K15001-
3	01010-51640	BOLT	4	K15001-	K15001-
4	01010-51645	BOLT	4	K15001-	K15001-
5	01643-31645	WASHER	8	K15001-	K15001-
6	205-01-71111	CUSHION	4	K15001-	K15001-
7	205-01-71151	SPACER	4	K15001-	K15001-
8	205-01-71120	PIN	4	K15001-	K15001-
9	205-01-73270	ADAPTER,L.H.	1	K15001-	K15001-
10	205-01-73280	ADAPTER,R.H.	1	K15001-	K15001-
11	01010-51240	BOLT	16	K15001-	K15001-
12	01643-31232	WASHER	16	K15001-	K15001-
13	01252-31645	BOLT	8	K15001-	K15001-
14	01643-51645	WASHER	8	K15001-	K15001-

https://truckmanualshub.com/

FIG. 1051 DAMPER

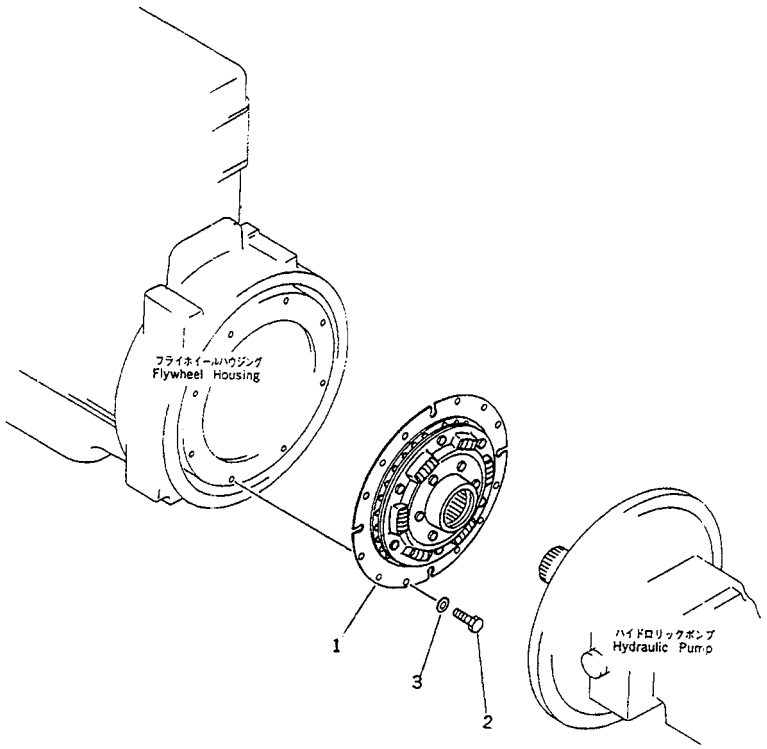

FIG NO. :1051

INDEX NO.	PART NO.	DESCRIPTION	Q'TY	SERIAL NO. PC210-3KP	SERIAL NO. PC240-3KP
1	205-01-72110	DAMPER,DISC	1	K15001-	K15001-
	205-01-73620	DAMPER DISC (WITH NON-ASBESTOS PLATE)	1	K15001-	K15001-
2	01010-51020	BOLT	8	K15001-	K15001-
3	01643-31032	WASHER	8	K15001-	K15001-

https://truckmanualshub.com/

FIG. 1061 AIR INTAKE AND TAIL PIPE

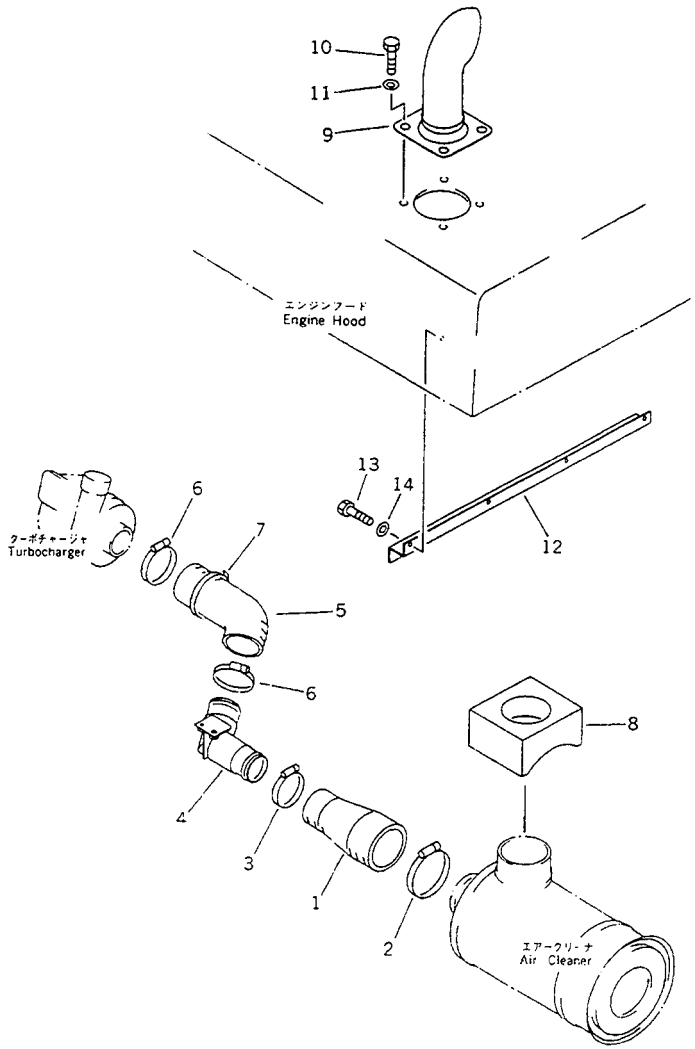

FIG. NO. :1061

INDEX NO.	PART NO.	DESCRIPTION	Q'TY	SERIAL NO. PC210-3KP	SERIAL NO. PC240-3KP
1	207-01-52180	HOSE	1	K15001-	K15001-
2	07281-01159	CLAMP	1	K15001-	K15001-
3	07281-00909	CLAMP	1	K15001-	K15001-
4	205-01-73330	TUBE	1	K15001-	K15001-
5	205-01-73250	HOSE	1	K15001-	K15001-
6	07281-01029	CLAMP	2	K15001-	K15001-
7	08034-00536	BAND	1	K15001-	K15001-
8	205-01-73610	SEAL	1	K15001-	K15001-
9	205-01-73390	PIPE,TAIL	1	K15001-	K15001-
10	01010-51230	BOLT	4	K15001-	K15001-
11	124-54-26540	WASHER	4	K15001-	K15001-
12	205-01-73360	COVER	1	K15001-	K15001-
13	01010-51020	BOLT	4	K15001-	K15001-
14	01643-31032	WASHER	4	K15001-	K15001-

https://truckmanualshub.com/

FIG. 1111 FUEL CONTROL LEVER

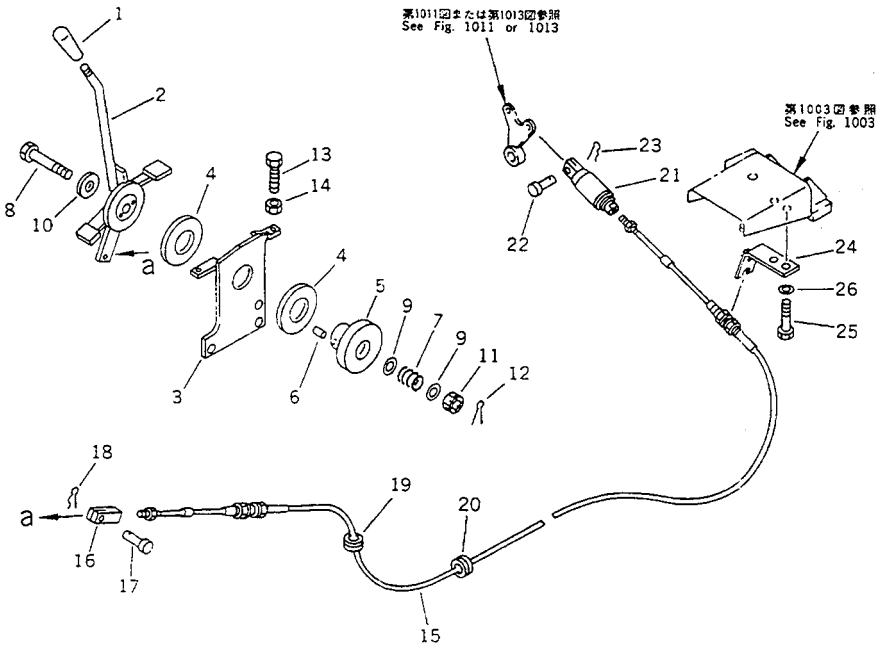

FIG NO. :1111

INDEX NO.	PART NO.	DESCRIPTION	Q'TY	SERIAL NO. PC210-3KP	SERIAL NO. PC240-3KP
1	09304-01240	KNOB	1	K15001-	K15001-
2	205-43-73250	LEVER	1	K15001-	K15001-
3	205-43-74510	BRACKET	1	K15001-	K15001-
4	101-43-11281	FACING	2	K15001-	K15001-
5	201-43-22181	DISC	1	K15001-	K15001-
6	04020-00616	PIN,DOWEL	2	K15001-	K15001-
7	154-43-14690	SPRING	1	K15001-	K15001-
8	01052-51265	BOLT	1	K15001-	K15001-
9	01640-21223	WASHER	2	K15001-	K15001-
10	101-43-11380	COVER	1	K15001-	K15001-
11	01593-11210	NUT	1	K15001-	K15001-
12	04050-13030	PIN,COTTER	1	K15001-	K15001-
13	01016-51050	BOLT	2	K15001-	K15001-
14	01580-11008	NUT	2	K15001-	K15001-
15	205-43-62121	CABLE	1	K15001-	K15001-
16	04211-20634	YOKE	1	K15001-	K15001-
17	04205-10618	PIN	1	K15001-	K15001-
18	04052-00633	PIN,SNAP	1	K15001-	K15001-
19	566-54-11340	GROMMET	1	K15001-	K15001-
20	08037-03620	GROMMET	1	K15001-	K15001-
21	205-43-74530	ABSORBER	1	K15001-	K15001-
22	04205-10622	PIN	1	K15001-	K15001-
23	04052-10633	PIN,SNAP	1	K15001-	K15001-
24	205-43-74570	PLATE	1	K15001-	K15001-
25	01010-51025	BOLT	2	K15001-	K15001-
26	01643-31032	WASHER	2	K15001-	K15001-

https://truckmanualshub.com/

FIG. 1127 FUEL CONTROL LINKAGE

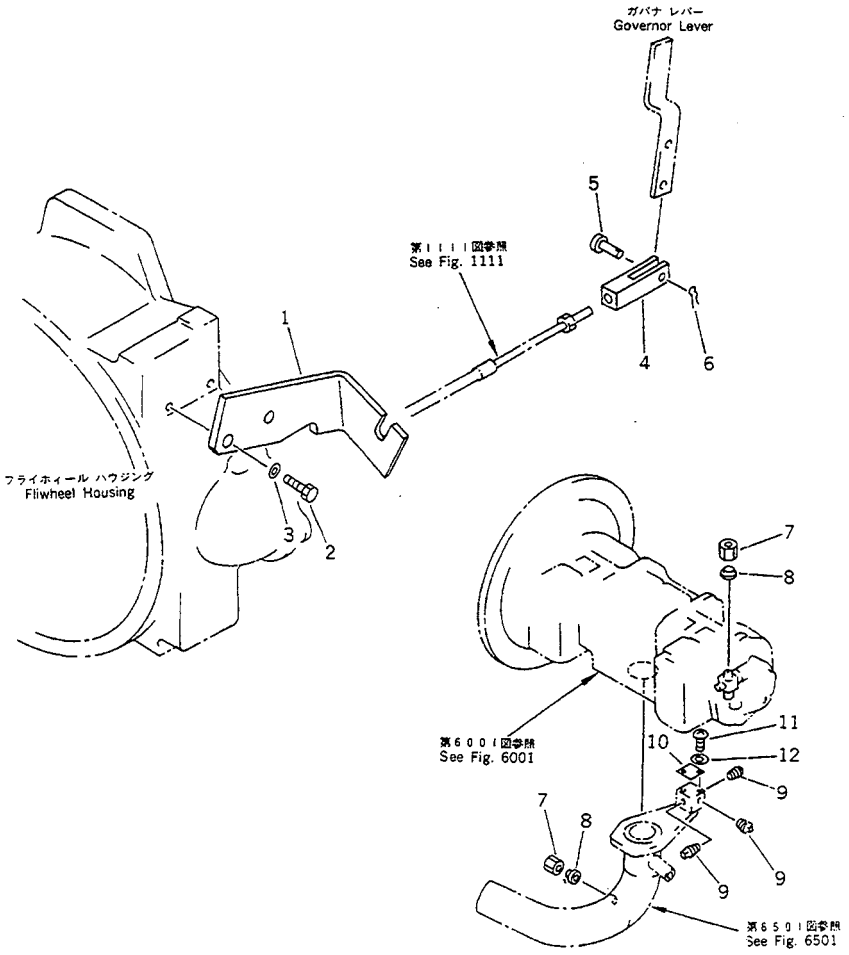

FIG NO. :1127

INDEX NO.	PART NO.	DESCRIPTION	Q'TY	SERIAL NO. PC210-3KP	SERIAL NO. PC240-3KP
1	206-43-48110	BRACKET	1	K15001-	K15001-
2	01010-51230	BOLT	2	K15001-	K15001-
3	01643-31232	WASHER	2	K15001-	K15001-
4	22D-43-14220	YOKE	1	K15001-	K15001-
5	04205-31028	PIN	1	K15001-	K15001-
6	04052-11038	PIN,SNAP	1	K15001-	K15001-
7	07221-20210	NUT	2	K15001-	K15001-
8	07222-00210	PLUG	2	K15001-	K15001-
9	07042-30211	PLUG	3	K15001-	K15001-
10	205-43-74320	COVER	1	K15001-	K15001-
11	01220-40512	SCREW	2	K15001-	K15001-
12	01642-20508	WASHER	2	K15001-	K15001-

https://truckmanualshub.com/

FIG. 1201 RADIATOR AND OIL COOLER (PC210)

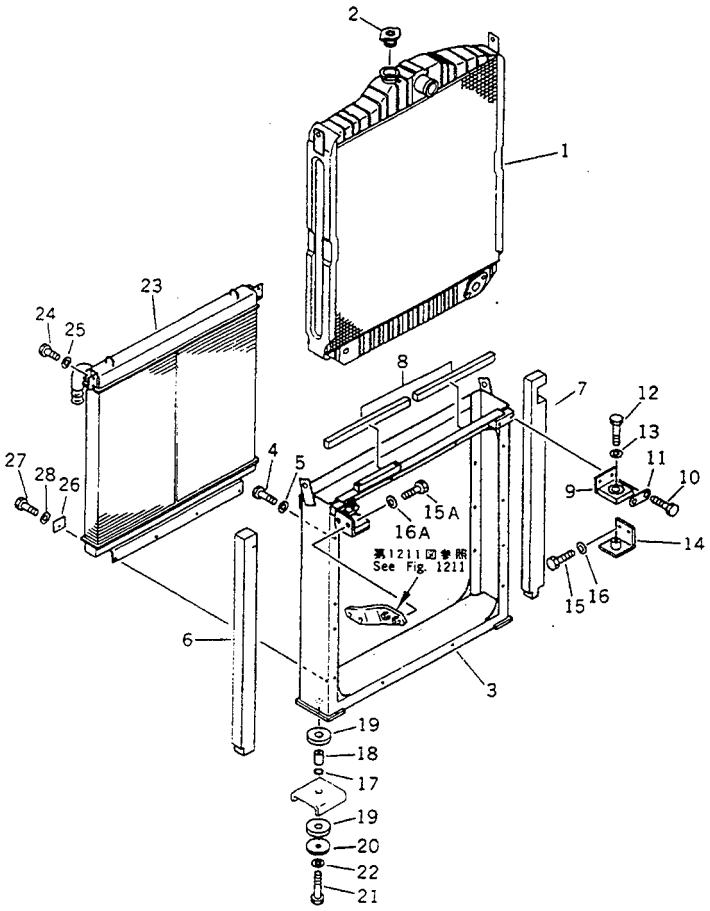

FIG NO. :1201

INDEX NO.	PART NO.	DESCRIPTION	Q'TY	SERIAL NO. PC210-3KP	SERIAL NO. PC240-3KP
	205-03-00041	RADIATOR ASS'Y	1	K15001-	
1	205-03-71111	.CORE ASS'Y	1	K15001-	
2	205-03-71280	.CAP ASS'Y	1	K15001-	
3	205-03-71131	FRAME	1	K15001-	
4	01010-50816	BOLT	8	K15001-	
5	01643-30823	WASHER	8	K15001-	
6	205-03-71790	SHEET	1	K15001-	
7	205-03-71810	SHEET	1	K15001-	
8	205-03-71380	SEAL	2	K15001-	
9	205-03-71310	DAMPER ASS'Y	2	K15001-	
10	01010-51230	BOLT	4	K15001-	
11	205-03-71520	WASHER	2	K15001-	
12	01010-51260	BOLT	2	K15001-	
13	01643-31232	WASHER	2	K15001-	
14	205-03-71292	BRACKET	2	K15001-	
15	01010-51230	BOLT	2	K15001-	
15A	01010-51235	BOLT	2	K15001-	
16	01643-31232	WASHER	2	K15001-	
16A	01643-31232	WASHER	2	K15001-	
17	07000-03022	O-RING	2	K15001-	
18	205-03-71330	COLLAR	2	K15001-	
19	205-03-71470	CUSHION	4	K15001-	
20	205-03-71340	PLATE	2	K15001-	
21	01010-51270	BOLT	2	K15001-	
22	01643-31232	WASHER	2	K15001-	
23	205-03-71121	OIL COOLER ASS'Y	1	K15001-	
24	01010-50820	BOLT	4	K15001-	
25	01643-30823	WASHER	4	K15001-	
26	205-03-71390	PLATE	4	K15001-	
27	01010-50825	BOLT	4	K15001-	

https://truckmanualshub.com/

FIG NO. :1201

INDEX NO.	PART NO.	DESCRIPTION	Q'TY	SERIAL NO. PC210-3KP	SERIAL NO. PC240-3KP
28	01643-30823	WASHER	4	K15001-	

https://truckmanualshub.com/

FIG. 1203 RADIATOR AND OIL COOLER (PC240)

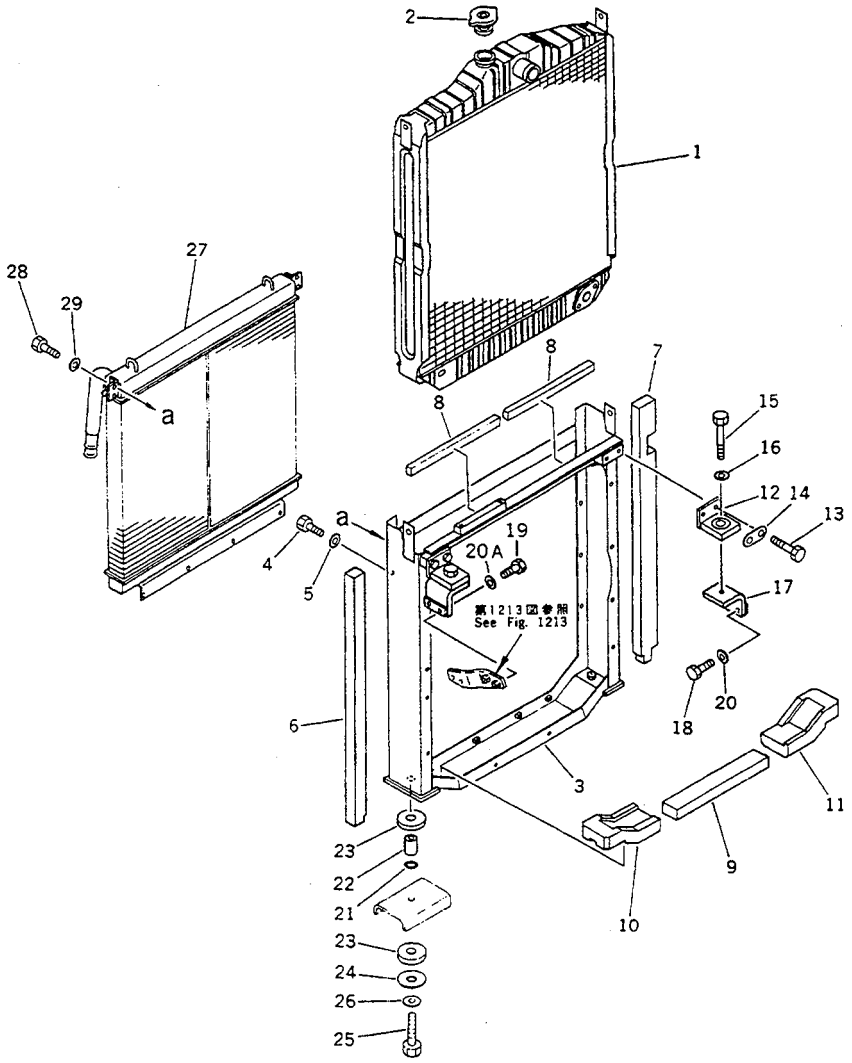

FIG NO. :1203

INDEX NO.	PART NO.	DESCRIPTION	Q'TY	SERIAL NO. PC210-3KP	SERIAL NO. PC240-3KP
	206-03-00021	RADIATOR ASS'Y	1		K15001-
1	206-03-44211	.CORE ASS'Y	1		K15001-
2	205-03-71280	.CAP ASS'Y	1		K15001-
3	206-03-44121	FRAME	1		K15001-
4	01010-50816	BOLT	8		K15001-
5	01643-30823	WASHER	8		K15001-
6	206-03-44530	SHEET	1		K15001-
7	206-03-44540	SHEET	1		K15001-
8	205-03-71380	SEAL	2		K15001-
9	206-03-44240	SEAL	1		K15001-
10	206-03-44250	CUSHION	1		K15001-
11	206-03-44260	CUSHION	1		K15001-
12	205-03-71310	DAMPER ASS'Y	2		K15001-
13	01010-51230	BOLT	4		K15001-
14	205-03-71520	WASHER	2		K15001-
15	01010-51260	BOLT	2		K15001-
16	01643-31232	WASHER	2		K15001-
17	206-03-44191	BRACKET	2		K15001-
18	01010-51235	BOLT	2		K15001-
19	01010-51240	BOLT	2		K15001-
20	01643-31232	WASHER	2		K15001-
20A	01643-31232	WASHER	2		K15001-
21	07000-03022	O-RING	2		K15001-
22	205-03-71330	COLLAR	2		K15001-
23	205-03-71470	CUSHION	4		K15001-
24	205-03-71340	PLATE	2		K15001-
25	01010-51270	BOLT	2		K15001-
26	01643-31232	WASHER	2		K15001-
27	206-03-44111	OIL COOLER ASS'Y	1		K15001-
28	01010-50820	BOLT	8		K15001-

https://truckmanualshub.com/

FIG NO. :1203

INDEX NO.	PART NO.	DESCRIPTION	Q'TY	SERIAL NO. PC210-3KP	SERIAL NO. PC240-3KP
29	01643-30823	WASHER	8		K15001-

https://truckmanualshub.com/

FIG. 1211 RADIATOR GUARD AND PIPING (PC210)

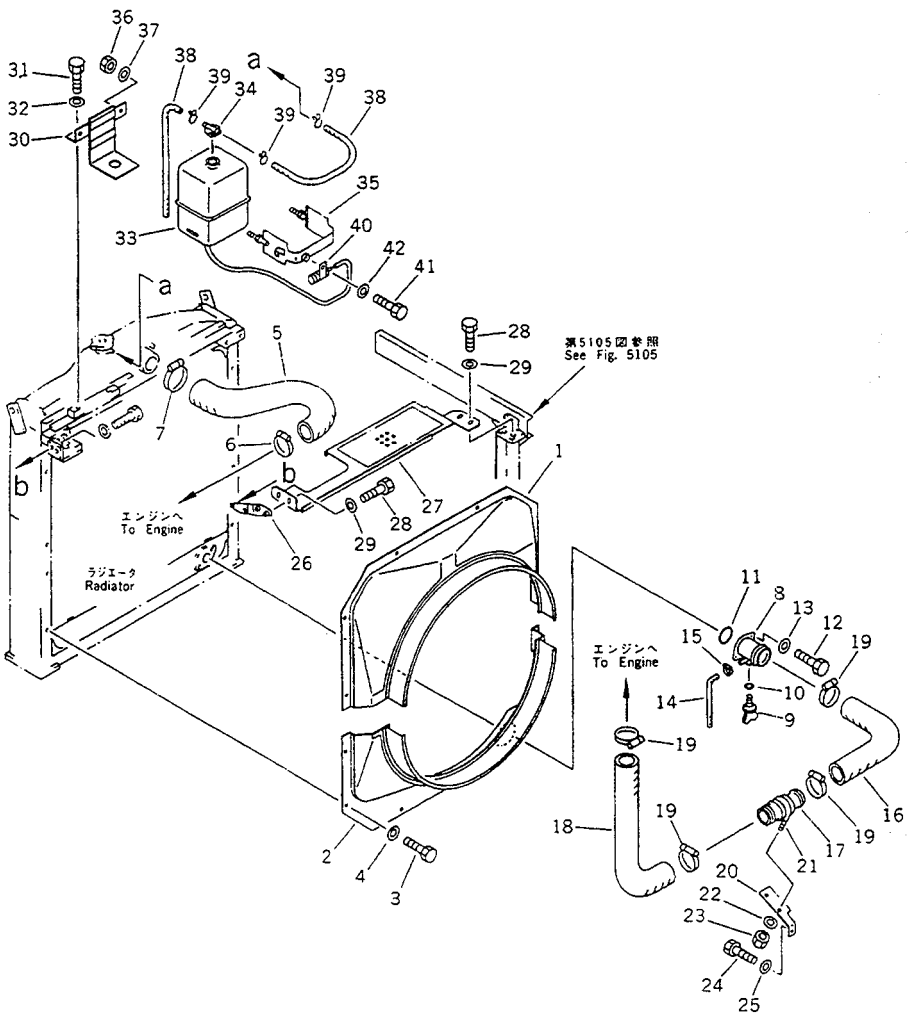

FIG NO. :1211

INDEX NO.	PART NO.	DESCRIPTION	Q'TY	SERIAL NO. PC210-3KP	SERIAL NO. PC240-3KP
1	205-03-71160	GUARD,UPPER	1	K15001-	
2	205-03-71170	GUARD,LOWER	1	K15001-	
3	01010-50816	BOLT	12	K15001-	
4	01643-30823	WASHER	12	K15001-	
5	205-03-71710	HOSE	1	K15001-	
6	07281-00709	CLAMP	1	K15001-	
7	07281-00909	CLAMP	1	K15001-	
8	205-03-71210	TUBE	1	K15001-	
9	205-03-62660	PLUG	1	K15001-	
10	07000-01007	.O-RING	1	K15001-	
11	07000-02055	O-RING	1	K15001-	
12	01010-50825	BOLT	2	K15001-	
13	01643-30823	WASHER	2	K15001-	
14	205-03-71230	HOSE	1	K15001-	
15	07280-00910	CLAMP	1	K15001-	
16	205-03-71720	HOSE	1	K15001-	
17	205-03-71740	TUBE	1	K15001-	
18	205-03-71730	HOSE	1	K15001-	
19	07281-00709	CLAMP	4	K15001-	
20	205-03-71750	BRACKET	1	K15001-	
21	07283-26155	CLIP	1	K15001-	
22	01643-31032	WASHER	2	K15001-	
23	01599-01011	NUT	2	K15001-	
24	01010-51225	BOLT	1	K15001-	
25	01643-31232	WASHER	1	K15001-	
26	205-03-71491	BRACKET	1	K15001-	
27	205-03-71780	COVER	1	K15001-	
28	01010-51225	BOLT	4	K15001-	
29	01643-31232	WASHER	4	K15001-	
30	205-03-71251	BRACKET	1	K15001-	

https://truckmanualshub.com/

FIG NO. :1211

INDEX NO.	PART NO.	DESCRIPTION	Q'TY	SERIAL NO. PC210-3KP	SERIAL NO. PC240-3KP
31	01010-51225	BOLT	2	K15001-	
32	01643-31232	WASHER	2	K15001-	
33	205-03-71242	TANK,RESERVE	1	K15001-	
34	205-03-71531	.CAP	1	K15001-	
35	205-03-71260	BAND	1	K15001-	
36	01580-10806	NUT	2	K15001-	
37	01643-30823	WASHER	2	K15001-	
38	206-03-43331	HOSE	2	K15001-	
39	206-03-43340	CLIP	3	K15001-	
40	08052-31711	CLIP	1	K15001-	
41	01010-50816	BOLT	1	K15001-	
42	01643-30823	WASHER	1	K15001-	

https://truckmanualshub.com/

FIG. 1213 RADIATOR GUARD AND PIPING (PC240)

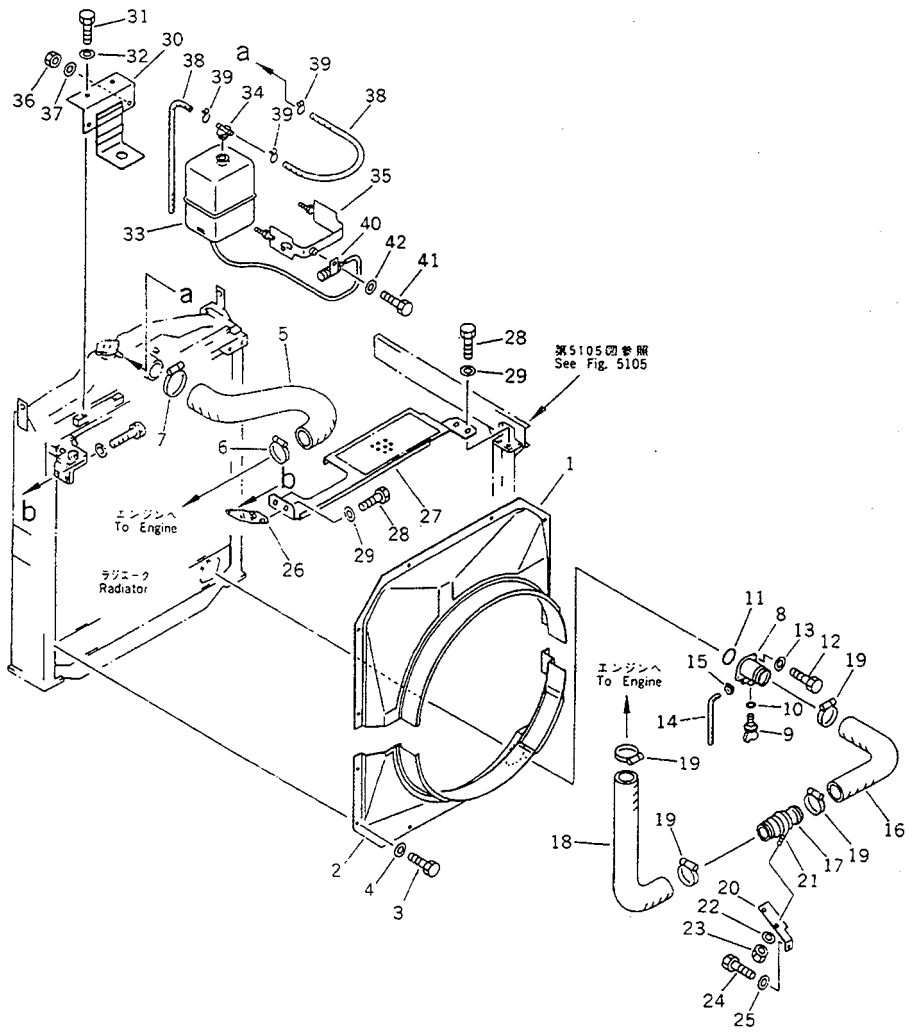

FIG NO. 1213

INDEX NO.	PART NO.	DESCRIPTION	Q'TY	SERIAL NO. PC210-3KP	SERIAL NO. PC240-3KP
1	206-03-44510	GUARD,UPPER	1		K15001-
2	206-03-44520	GUARD,LOWER	1		K15001-
3	01010-50816	BOLT	12		K15001-
4	01643-30823	WASHER	12		K15001-
5	205-03-71710	HOSE	1		K15001-
6	07281-00709	CLAMP	1		K15001-
7	07281-00909	CLAMP	1		K15001-
8	205-03-71210	TUBE	1		K15001-
9	205-03-62660	PLUG	1		K15001-
10	07000-01007	.O-RING	1		K15001-
11	07000-02055	O-RING	1		K15001-
12	01010-50825	BOLT	2		K15001-
13	01643-30823	WASHER	2		K15001-
14	205-03-71230	HOSE	1		K15001-
15	07280-00910	CLAMP	1		K15001-
16	205-03-71720	HOSE	1		K15001-
17	205-03-71740	TUBE	1		K15001-
18	205-03-71730	HOSE	1		K15001-
19	07281-00709	CLAMP	4		K15001-
20	205-03-71750	BRACKET	1		K15001-
21	07283-26155	CLIP	1		K15001-
22	01643-31032	WASHER	2		K15001-
23	01599-01011	NUT	2		K15001-
24	01010-51225	BOLT	1		K15001-
25	01643-31232	WASHER	1		K15001-
26	205-03-71491	BRACKET	1		K15001-
27	205-03-71780	COVER	1		K15001-
28	01010-51225	BOLT	4		K15001-
29	01643-31232	WASHER	4		K15001-
30	206-03-44180	BRACKET	1		K15001-

https://truckmanualshub.com/

FIG NO. :1213

INDEX NO.	PART NO.	DESCRIPTION	Q'TY	SERIAL NO. PC210-3KP	SERIAL NO. PC240-3KP
31	01010-51225	BOLT	2		K15001-
32	01643-31232	WASHER	2		K15001-
33	205-03-71242	TANK,RESERVE	1		K15001-
34	205-03-71531	.CAP	1		K15001-
35	205-03-71260	BAND	1		K15001-
36	01580-10806	NUT	2		K15001-
37	01643-30823	WASHER	2		K15001-
38	206-03-43331	HOSE	2		K15001-
39	206-03-43340	CLIP	3		K15001-
40	08052-31711	CLIP	1		K15001-
41	01010-50816	BOLT	1		K15001-
42	01643-30823	WASHER	1		K15001-

https://truckmanualshub.com/

FIG. 1301 FUEL TANK

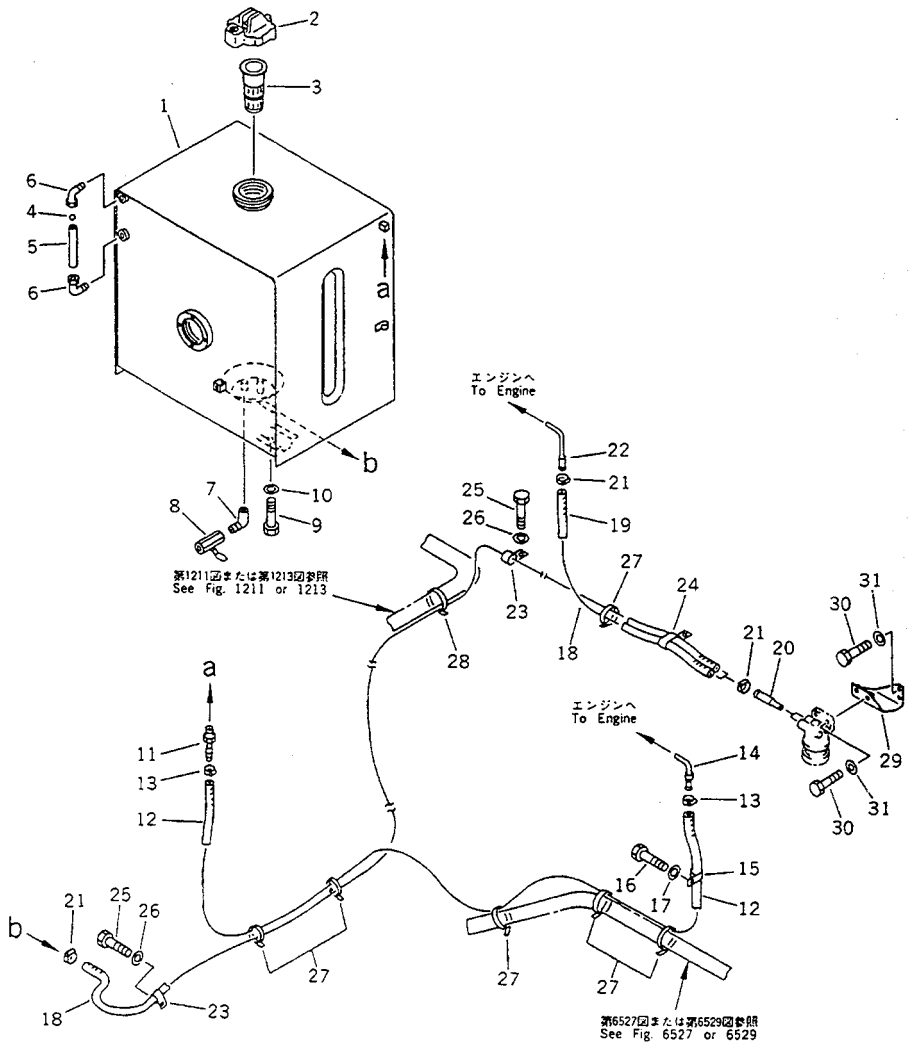

FIG NO. :1301

INDEX NO.	PART NO.	DESCRIPTION	Q'TY	SERIAL NO. PC210-3KP	SERIAL NO. PC240-3KP
1	205-04-71210	TANK	1	K15001-	K15001-
2	07091-21200	CAP	1	K15001-	K15001-
3	205-04-71140	STRAINER	1	K15001-	K15001-
4	208-04-19160	BALL,FLOAT	1	K15001-	K15001-
5	203-60-31160	TUBE	1	K15001-	K15001-
6	208-04-19130	ELBOW	2	K15001-	K15001-
7	07323-30200	ELBOW	1	K15001-	K15001-
8	07700-40240	VALVE	1	K15001-	K15001-
9	01010-51635	BOLT	4	K15001-	K15001-
10	01643-31645	WASHER	4	K15001-	K15001-
11	198-06-12840	NIPPLE	1	K15001-	K15001-
12	07288-10627	HOSE	1	K15001-	K15001-
13	07281-00167	CLAMP	2	K15001-	K15001-
14	205-04-71250	TUBE	1	K15001-	K15001-
15	08036-31210	CLIP	1	K15001-	K15001-
16	01010-50816	BOLT	1	K15001-	K15001-
17	01643-30823	WASHER	1	K15001-	K15001-
18	07288-11031	HOSE	1	K15001-	K15001-
19	07288-11011	HOSE	1	K15001-	K15001-
20	205-04-71230	TUBE	2	K15001-	K15001-
21	07281-00197	CLAMP	4	K15001-	K15001-
22	205-04-71240	TUBE	1	K15001-	K15001-
23	08036-01814	CLIP	4	K15001-	K15001-
24	141-06-11220	CLIP	1	K15001-	K15001-
25	01010-51225	BOLT	5	K15001-	K15001-
26	01643-31232	WASHER	5	K15001-	K15001-
27	08034-00519	BAND	7	K15001-	K15001-
28	08034-00536	BAND	1	K15001-	K15001-
29	205-04-71220	BRACKET	1	K15001-	K15001-
30	01010-51025	BOLT	4	K15001-	K15001-

https://truckmanualshub.com/

FIG NO. :1301

INDEX NO.	PART NO.	DESCRIPTION	Q'TY	SERIAL NO. PC210-3KP	SERIAL NO. PC240-3KP
31	01643-31032	WASHER	4	K15001-	K15001-

https://truckmanualshub.com/

FIG. 1401 BATTERY

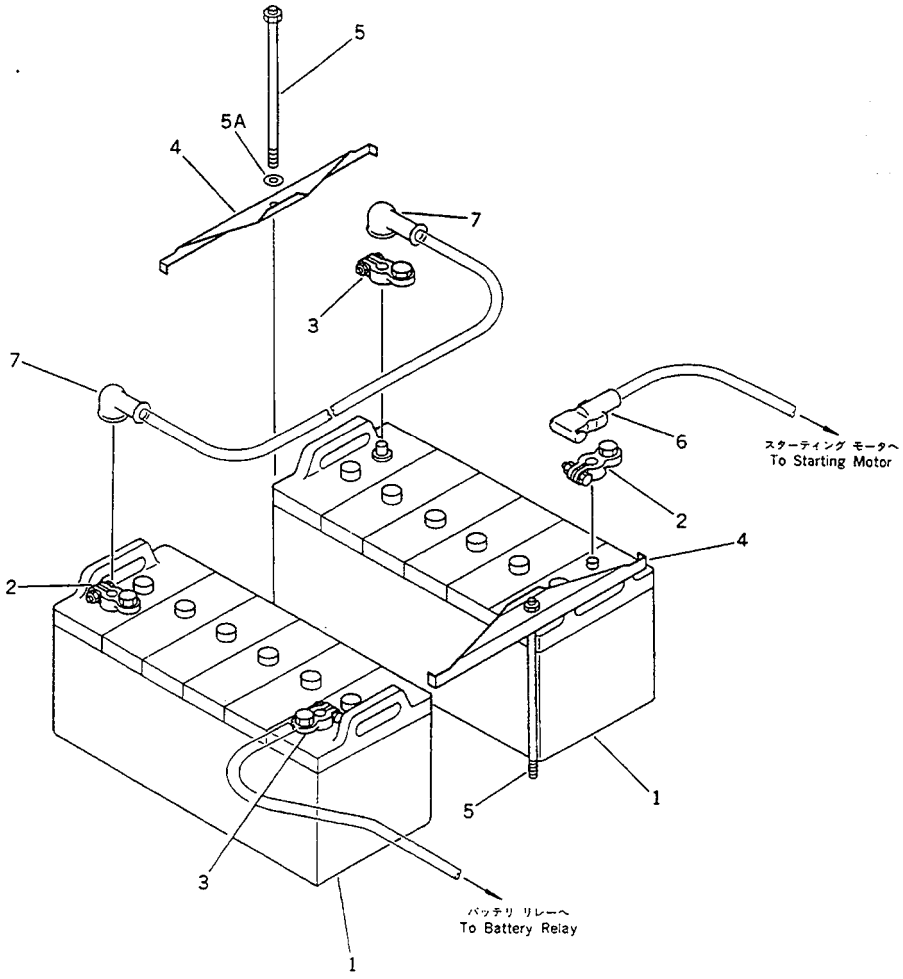

FIG NO. :1401

INDEX NO.	PART NO.	DESCRIPTION	Q'TY	SERIAL NO. PC210-3KP	SERIAL NO. PC240-3KP
1	205-06-K1160	BATTERY, 12V 150AH,(NS120)	2	K15001-	K15001-
2	08000-00000	TERMINAL, (+)	2	K15001-	K15001-
3	08000-00001	TERMINAL, (-)	2	K15001-	K15001-
4	205-06-K1140	HOLDER	2	K15001-	K15001-
5	205-06-71180	BOLT	2	K15001-	K15001-
5A	01643-31232	WASHER	2	K15001-	K15001-
6	08038-22511	CAP	1	K15001-	K15001-
7	08038-22009	CAP	2	K15001-	K15001-

https://truckmanualshub.com/

FIG. 1421 INSTRUMENT PANEL (1/2)

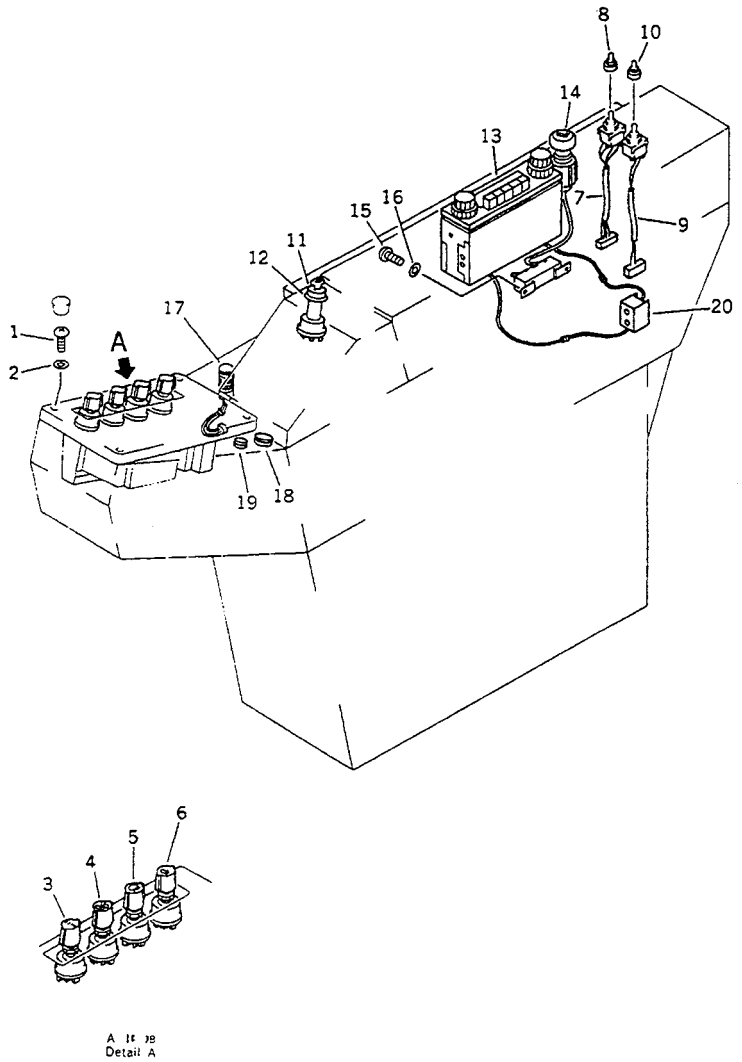

FIG NO. :1421

INDEX NO.	PART NO.	DESCRIPTION	Q'TY	SERIAL NO. PC210-3KP	SERIAL NO. PC240-3KP
1	01220-40616	SCREW	4	K15001-	K15001-
2	01641-20608	WASHER	4	K15001-	K15001-
3	205-06-72160	SWITCH,MODE	1	K15001-	K15001-
4	205-06-71321	SWITCH,HEATER	1	K15001-	K15001-
5	205-06-71331	SWITCH,LAMP	1	K15001-	K15001-
6	205-06-71341	SWITCH,WIPER	1	K15001-	K15001-
7	207-06-31220	WIRING HARNESS	1	K15001-	K15001-
8	203-06-41680	CAP	1	K15001-	K15001-
9	207-06-31240	WIRING HARNESS	1	K15001-	K15001-
10	203-06-41610	CAP	1	K15001-	K15001-
11	205-06-73350	SWITCH	1	K15001-	K15001-
12	205-06-91140	SPACER	1	K15001-	K15001-
13	205-06-K1170	RADIO ASS'Y	1	K15001-	K15001-
14	195-822-6151	LIGHTER	1	K15001-	K15001-
15	01220-40408	SCREW	2	K15001-	K15001-
16	01641-20405	WASHER	2	K15001-	K15001-
17	209-06-51750	SWITCH	1	K15001-	K15001-
18	09415-01610	CAP	1	K15001-	K15001-
19	09415-00706	CAP	1	K15001-	K15001-
20	205-06-K1190	REGULATOR	1	K15001-	K15001-

https://truckmanualshub.com/

FIG. 1423 INSTRUMENT PANEL (2/2)

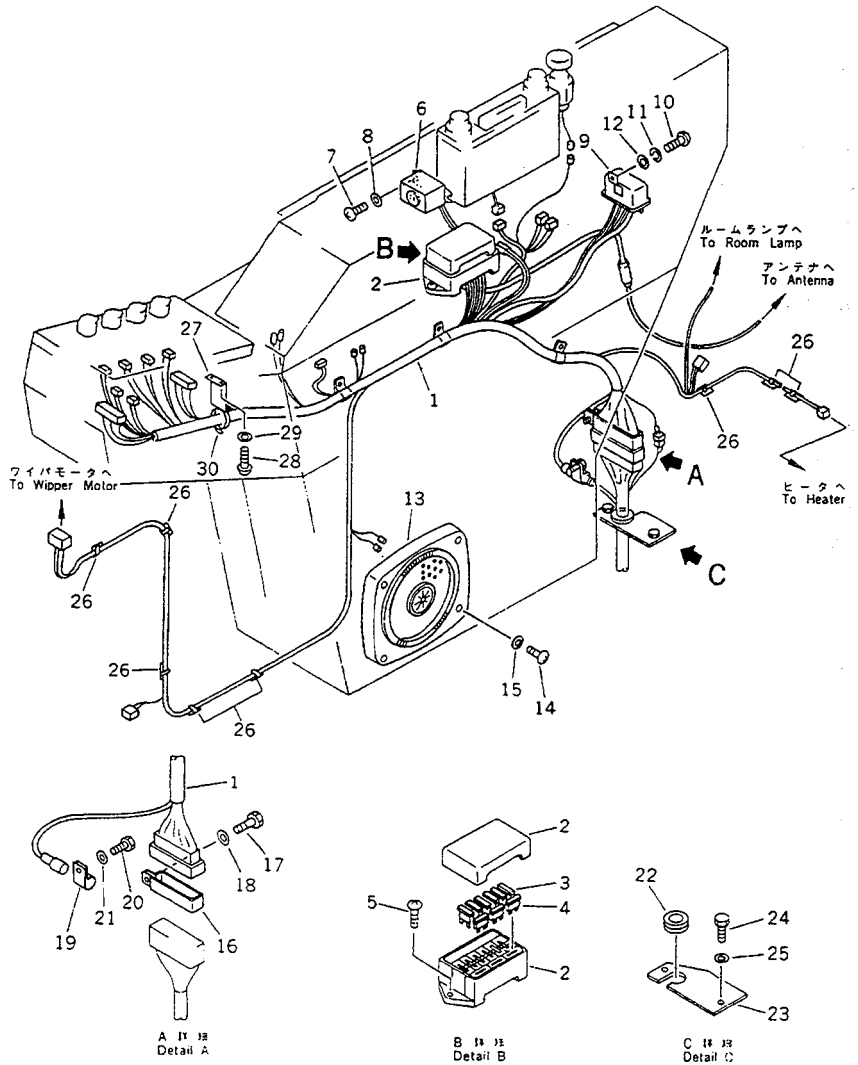

FIG NO. :1423

INDEX NO.	PART NO.	DESCRIPTION	Q'TY	SERIAL NO. PC210-3KP	SERIAL NO. PC240-3KP
1	205-06-K1580	WIRING HARNESS	1	K15001-	K15001-
2	205-06-71480	.BOX,FUSE	1	K15001-	K15001-
3	205-06-73180	.FUSE, 15A	8	K15001-	K15001-
4	22W-06-13160	.FUSE, 20A	1	K15001-	K15001-
5	01220-40616	SCREW	2	K15001-	K15001-
6	207-06-31160	BUZZER	1	K15001-	K15001-
7	01220-40412	SCREW	2	K15001-	K15001-
8	01642-20405	WASHER	2	K15001-	K15001-
9	206-06-41130	RELAY,HORN	1	K15001-	K15001-
10	01220-40616	SCREW	1	K15001-	K15001-
11	01602-20619	WASHER,SPRING	1	K15001-	K15001-
12	01643-30623	WASHER	1	K15001-	K15001-
13	20G-06-15120	SPEAKER	1	K15001-	K15001-
14	01220-40420	SCREW	4	K15001-	K15001-
15	01641-20405	WASHER	4	K15001-	K15001-
16	142-06-13530	CLIP	1	K15001-	K15001-
17	01010-51220	BOLT	1	K15001-	K15001-
18	01643-31232	WASHER	1	K15001-	K15001-
19	195-06-41830	CLIP	1	K15001-	K15001-
20	01010-51220	BOLT	1	K15001-	K15001-
21	01643-31232	WASHER	1	K15001-	K15001-
22	205-06-72410	GROMMET	1	K15001-	K15001-
23	205-06-72211	COVER	1	K15001-	K15001-
24	01010-51025	BOLT	2	K15001-	K15001-
25	01643-31032	WASHER	2	K15001-	K15001-
26	205-54-72710	CLIP	9	K15001-	K15001-
27	205-06-72620	PLATE	1	K15001-	K15001-
28	01235-50408	SCREW	2	K15001-	K15001-
29	01641-20405	WASHER	2	K15001-	K15001-
30	08034-00414	BAND	1	K15001-	K15001-

https://truckmanualshub.com/

FIG. 1431 ELECTRICAL SYSTEM (RELATED PARTS)

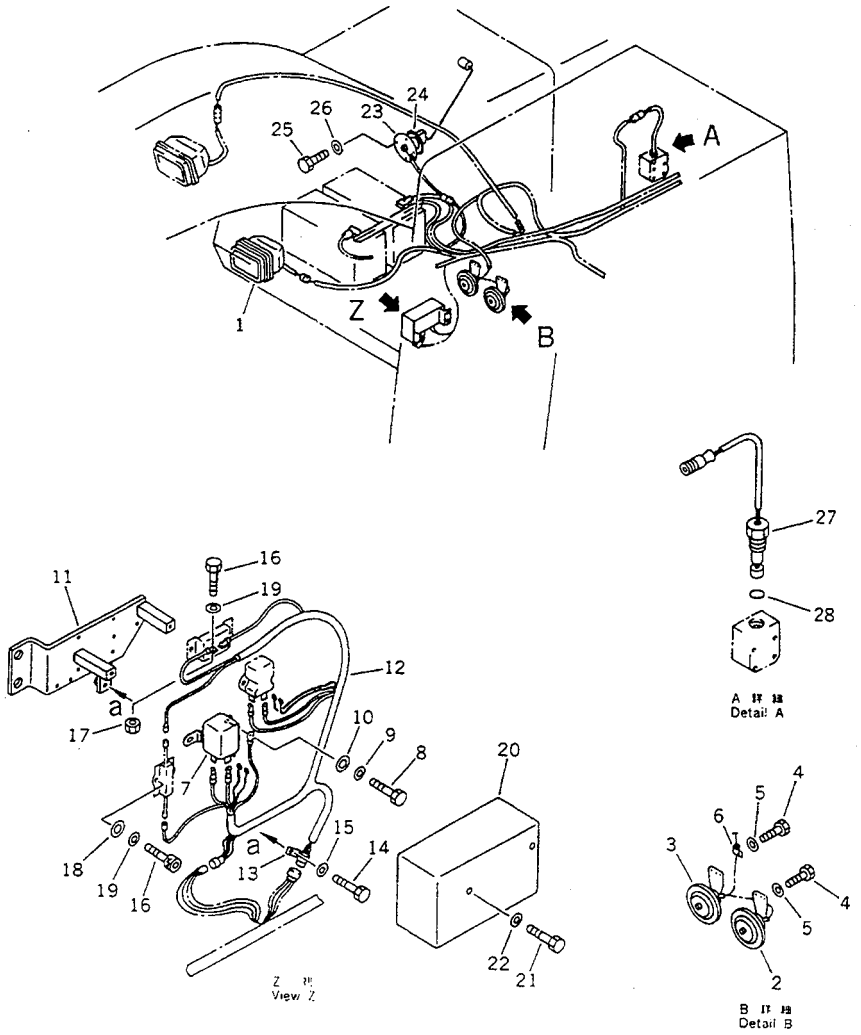

FIG NO. :1431

INDEX NO.	PART NO.	DESCRIPTION	Q'TY	SERIAL NO. PC210-3KP	SERIAL NO. PC240-3KP
1	205-06-K1220	WORK LAMP ASS'Y	1	K15001-	K15001-
2	205-06-64430	HORN,LOW	1	K15001-	K15001-
3	175-06-39170	HORN,HIGH	1	K15001-	K15001-
4	01010-50820	BOLT	4	K15001-	K15001-
5	01643-30823	WASHER	4	K15001-	K15001-
6	08036-10810	CLIP	1	K15001-	K15001-
7	205-06-73420	SWITCH,BATTERY RELAY	1	K15001-	K15001-
8	01252-40412	BOLT	2	K15001-	K15001-
9	01640-20408	WASHER	2	K15001-	K15001-
10	01643-30623	WASHER	2	K15001-	K15001-
11	205-06-73360	BRACKET	1	K15001-	K15001-
12	205-06-73340	WIRING HARNESS	1	K15001-	K15001-
13	08052-12411	CLIP	1	K15001-	K15001-
14	01010-50816	BOLT	1	K15001-	K15001-
15	01643-30823	WASHER	1	K15001-	K15001-
16	01252-40412	BOLT	8	K15001-	K15001-
17	01580-10403	NUT	2	K15001-	K15001-
18	01643-30623	WASHER	6	K15001-	K15001-
19	01640-20408	WASHER	8	K15001-	K15001-
20	205-06-73370	COVER	1	K15001-	K15001-
21	01010-50816	BOLT	2	K15001-	K15001-
22	01643-30823	WASHER	2	K15001-	K15001-
23	7861-91-4700	SENSOR,FUEL	1	K15001-	K15001-
24	07000-02085	O-RING	1	K15001-	K15001-
25	01010-51016	BOLT	4	K15001-	K15001-
26	01643-31032	WASHER	4	K15001-	K15001-
27	7861-91-4520	SENSOR,HYDRAULIC OIL	1	K15001-	K15001-
28	07002-03634	O-RING	1	K15001-	K15001-

https://truckmanualshub.com/

FIG. 1437 ELECTRICAL SYSTEM (WIRING) (1/2)
(WITHOUT AUTO DECELERATION)
(WITH SWING MECHANICAL BRAKE)
(FOR 3-STAGE SELECTOR MODE OLSS)

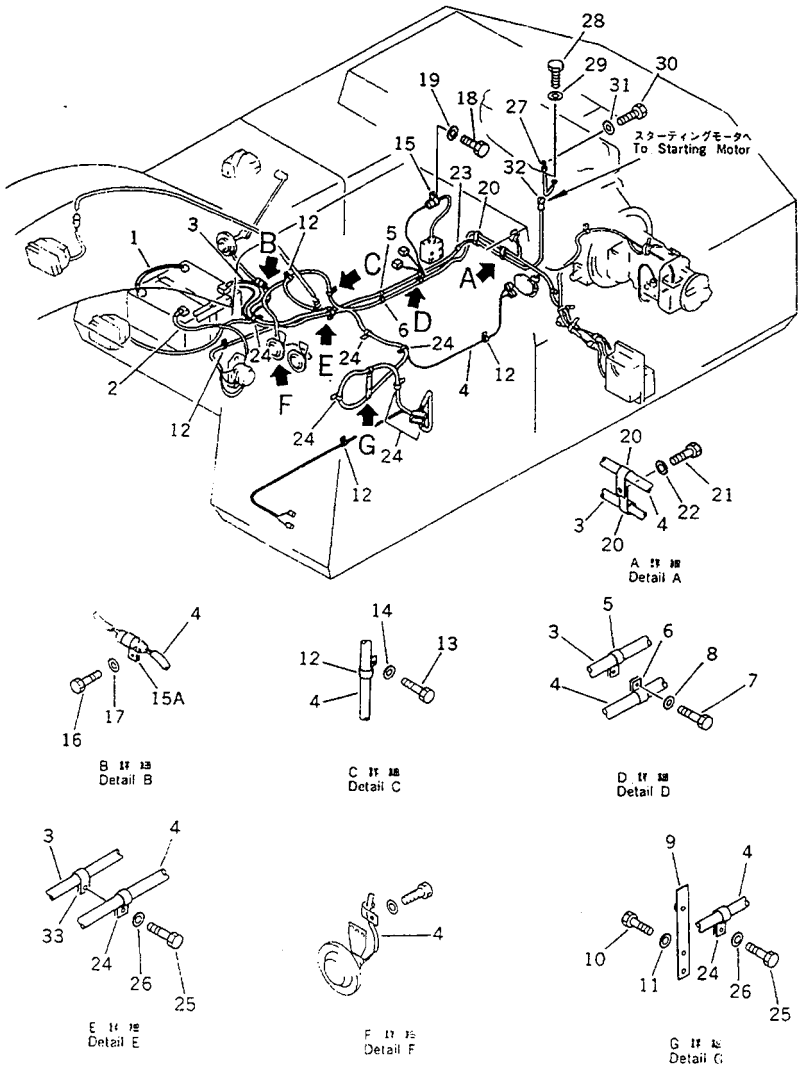

FIG NO. :1437

INDEX NO.	PART NO.	DESCRIPTION	Q'TY	SERIAL NO. PC210-3KP	SERIAL NO. PC240-3KP
1	08028-13035	WIRE	1	K15001-	K15001-
2	08028-13045	WIRE	1	K15001-	K15001-
3	08028-13350	WIRE	1	K15001-	K15001-
4	205-06-73320	WIRING HARNESS	1	K15001-	K15001-
5	08036-01414	CLIP	3	K15001-	K15001-
6	08036-01814	CLIP	3	K15001-	K15001-
7	01010-51225	BOLT	3	K15001-	K15001-
8	01643-31232	WASHER	3	K15001-	K15001-
9	205-06-71240	PLATE	1	K15001-	K15001-
10	01010-51225	BOLT	2	K15001-	K15001-
11	01643-31232	WASHER	2	K15001-	K15001-
12	08036-10814	CLIP	5	K15001-	K15001-
13	01010-51225	BOLT	5	K15001-	K15001-
14	01643-31232	WASHER	5	K15001-	K15001-
15	195-06-41820	CLIP	1	K15001-	K15001-
15A	08052-31711	CLIP	1	K15001-	K15001-
16	01010-51016	BOLT	1	K15001-	K15001-
17	01643-31032	WASHER	1	K15001-	K15001-
18	01010-51225	BOLT	1	K15001-	K15001-
19	01643-31232	WASHER	1	K15001-	K15001-
20	08036-01414	CLIP	7	K15001-	K15001-
21	01010-51210	BOLT	4	K15001-	K15001-
22	01643-31232	WASHER	4	K15001-	K15001-
23	08036-01414	CLIP	1	K15001-	K15001-
24	08036-02514	CLIP	8	K15001-	K15001-
25	01010-51225	BOLT	11	K15001-	K15001-
26	01643-31232	WASHER	11	K15001-	K15001-
27	08028-13050	WIRE	1	K15001-	K15001-
28	01010-51020	BOLT	1	K15001-	K15001-
29	01643-31032	WASHER	1	K15001-	K15001-

https://truckmanualshub.com/

FIG NO. :1437

INDEX NO.	PART NO.	DESCRIPTION	Q'TY	SERIAL NO. PC210-3KP	SERIAL NO. PC240-3KP
30	01010-50816	BOLT	1	K15001-	K15001-
31	01643-30823	WASHER	1	K15001-	K15001-
32	08038-02027	CAP	1	K15001-	K15001-
33	195-01-12520	CLIP	1	K15001-	K15001-

https://truckmanualshub.com/

FIG. 1438 ELECTRICAL SYSTEM (WIRING) (2/2)
(WITHOUT AUTO DECELERATION)
(WITH SWING MECHANICAL BRAKE)
(FOR 3-STAGE SELECTOR MODE GLSS)

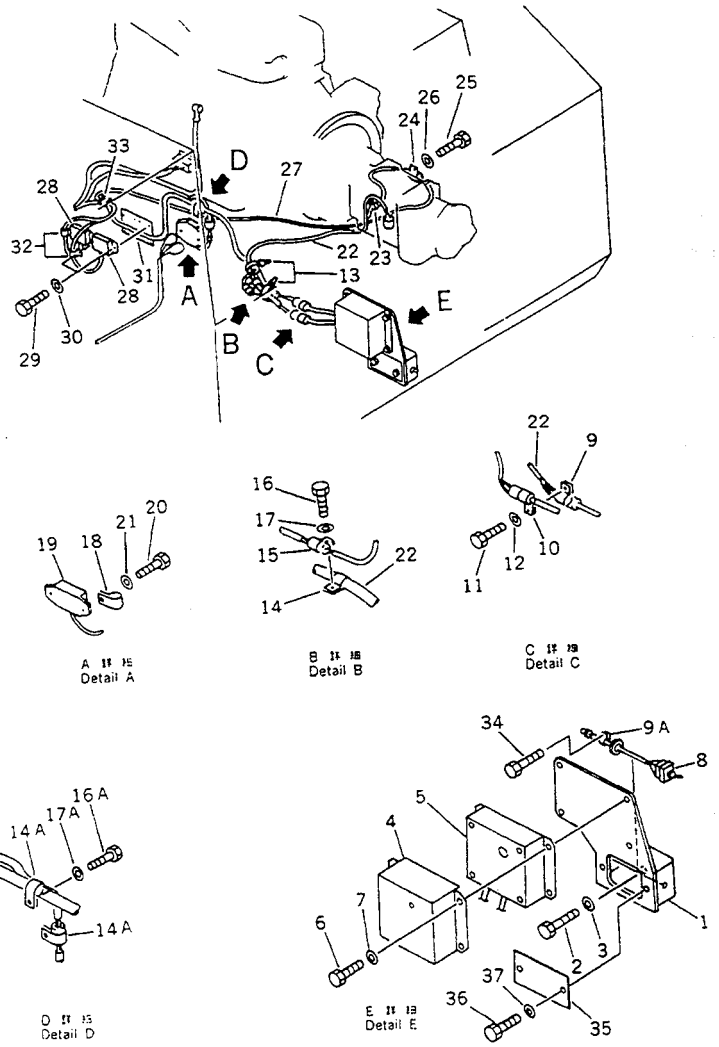

FIG NO. :1438

INDEX NO.	PART NO.	DESCRIPTION	Q'TY	SERIAL NO. PC210-3KP	SERIAL NO. PC240-3KP
1	205-06-71211	BRACKET	1	K15001-	K15001-
2	01010-51225	BOLT	3	K15001-	K15001-
3	01643-31232	WASHER	3	K15001-	K15001-
4	205-06-71261	COVER	1	K15001-	K15001-
5	7827-13-1000	CONTROL BOX ASS'Y	1	K15001-	K15001-
6	01010-50820	BOLT	4	K15001-	K15001-
7	01643-30823	WASHER	4	K15001-	K15001-
8	205-06-71890	SWITCH	1	K15001-	K15001-
9	195-06-41830	CLIP	1	K15001-	K15001-
9A	08052-32411	CLIP	1	K15001-	K15001-
10	195-06-41840	CLIP	1	K15001-	K15001-
11	01010-51225	BOLT	1	K15001-	K15001-
12	01643-31232	WASHER	1	K15001-	K15001-
13	08034-00519	BAND	2	K15001-	K15001-
14	08036-01814	CLIP	4	K15001-	K15001-
14A	08052-31711	CLIP	2	K15001-	K15001-
15	195-06-41830	CLIP	1	K15001-	K15001-
16	01010-51225	BOLT	3	K15001-	K15001-
16A	01010-51025	BOLT	2	K15001-	K15001-
17	01643-31232	WASHER	3	K15001-	K15001-
17A	01643-31032	WASHER	2	K15001-	K15001-
18	08036-10810	CLIP	1	K15001-	K15001-
19	7827-11-1500	RESISTOR	1	K15001-	K15001-
20	01010-50820	BOLT	2	K15001-	K15001-
21	01643-30823	WASHER	2	K15001-	K15001-
22	206-06-42115	WIRING HARNESS	1	K15001-	K15001-
23	08036-10814	CLIP	1	K15001-	K15001-
24	195-06-41820	CLIP	2	K15001-	K15001-
25	01010-51225	BOLT	1	K15001-	K15001-
26	01643-31232	WASHER	1	K15001-	K15001-

https://truckmanualshub.com/

FIG NO. :1438

INDEX NO.	PART NO.	DESCRIPTION	Q'TY	SERIAL NO. PC210-3KP	SERIAL NO. PC240-3KP
27	205-06-72550	WIRING HARNESS	1	K15001-	K15001-
28	205-06-72280	RESISTOR	2	K15001-	K15001-
29	01010-50820	BOLT	4	K15001-	K15001-
30	01643-30823	WASHER	4	K15001-	K15001-
31	205-06-72540	BRACKET	1	K15001-	K15001-
32	08036-01814	CLIP	2	K15001-	K15001-
33	08034-00519	BAND	3	K15001-	K15001-
34	01010-50820	BOLT	1	K15001-	K15001-
35	205-06-71290	COVER	1	K15001-	K15001-
36	01010-51225	BOLT	2	K15001-	K15001-
37	01643-31232	WASHER	2	K15001-	K15001-

https://truckmanualshub.com/

FIG. 1441 ELECTRICAL SYSTEM (WIRING) (1/2)
(WITHOUT AUTO DECELERATION)
(WITHOUT SWING MECHANICAL BRAKE)
(FOR 2-STAGE SELECTOR MODE OLSS)

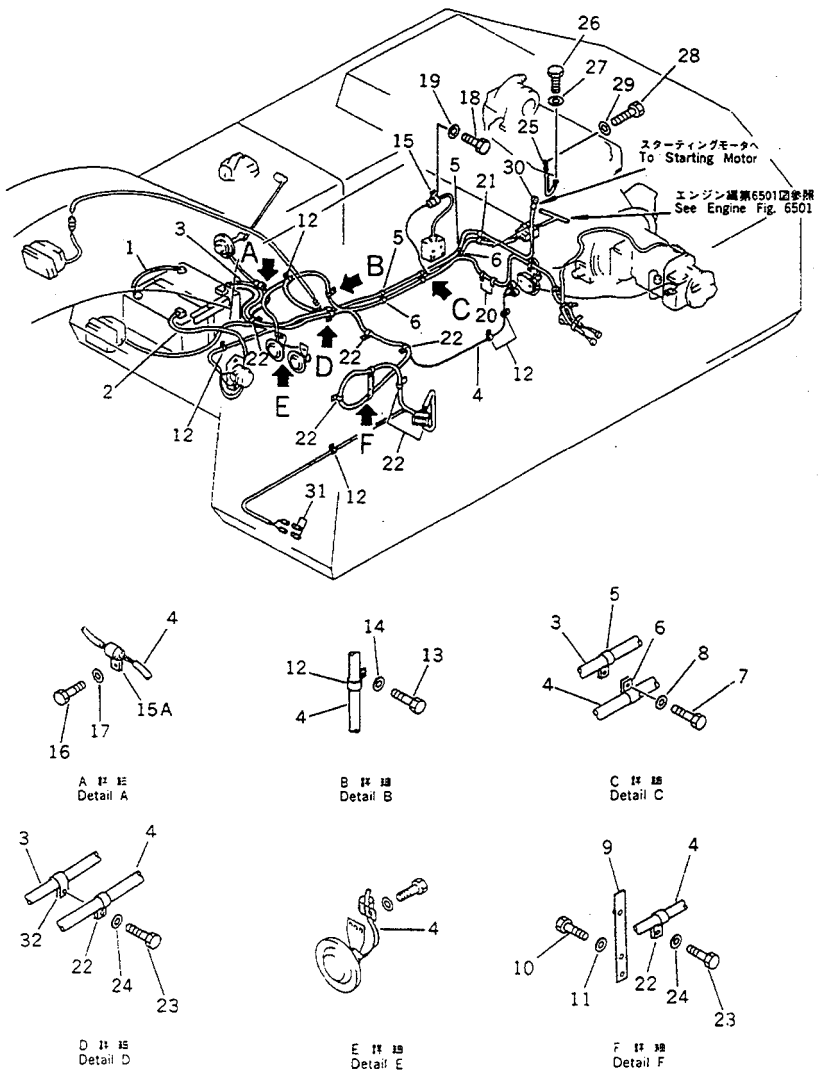

FIG NO. :1441

INDEX NO.	PART NO.	DESCRIPTION	Q'TY	SERIAL NO. PC210-3KP	SERIAL NO. PC240-3KP
1	08028-13035	WIRE	1	K15001-	K15001-
2	08028-13045	WIRE	1	K15001-	K15001-
3	08028-13275	WIRE	1	K15001-	K15001-
4	205-06-71137	WIRING HARNESS	1	K15001-	K15001-
5	08036-01414	CLIP	3	K15001-	K15001-
6	08036-01814	CLIP	3	K15001-	K15001-
7	01010-51225	BOLT	3	K15001-	K15001-
8	01643-31232	WASHER	3	K15001-	K15001-
9	205-06-71240	PLATE	1	K15001-	K15001-
10	01010-51225	BOLT	2	K15001-	K15001-
11	01643-31232	WASHER	2	K15001-	K15001-
12	08036-10814	CLIP	5	K15001-	K15001-
13	01010-51225	BOLT	5	K15001-	K15001-
14	01643-31232	WASHER	5	K15001-	K15001-
15	195-06-41820	CLIP	1	K15001-	K15001-
15A	08052-31711	CLIP	1	K15001-	K15001-
16	01010-51016	BOLT	1	K15001-	K15001-
17	01643-31032	WASHER	1	K15001-	K15001-
18	01010-51225	BOLT	1	K15001-	K15001-
19	01643-31232	WASHER	1	K15001-	K15001-
20	08036-01814	CLIP	3	K15001-	K15001-
21	08036-01414	CLIP	1	K15001-	K15001-
22	08036-02514	CLIP	8	K15001-	K15001-
23	01010-51225	BOLT	11	K15001-	K15001-
24	01643-31232	WASHER	11	K15001-	K15001-
25	08028-13035	WIRE	1	K15001-	K15001-
26	01010-51025	BOLT	1	K15001-	K15001-
27	01643-31032	WASHER	1	K15001-	K15001-
28	01010-50816	BOLT	1	K15001-	K15001-
29	01643-30823	WASHER	1	K15001-	K15001-

https://truckmanualshub.com/

FIG NO. :1441

INDEX NO.	PART NO.	DESCRIPTION	Q'TY	SERIAL NO. PC210-3KP	SERIAL NO. PC240-3KP
30	08038-00035	CAP	1	K15001-	K15001-
31	195-06-41760	CONNECTOR	2	K15001-	K15001-
32	195-01-12520	CLIP	1	K15001-	K15001-

https://truckmanualshub.com/

FIG. 1443 ELECTRICAL SYSTEM (WIRING) (2/2)
(WITHOUT AUTO DECELERATION)
(WITHOUT SWING MECHANICAL BRAKE)
(FOR 2-STAGE SELECTOR MODE OLSS)

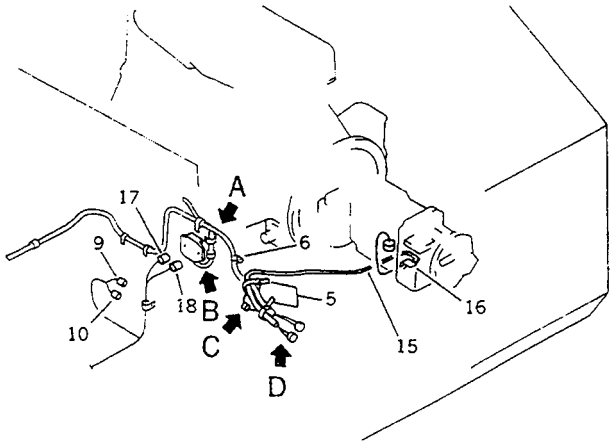

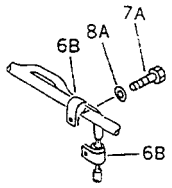

A 詳 図
Detail A

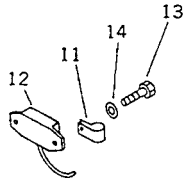

B 詳 図
Detail B

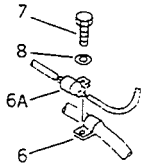

C 詳 図
Detail C

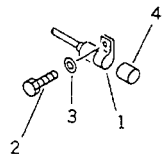

D 詳 図
Detail D

FIG NO. :1443

INDEX NO.	PART NO.	DESCRIPTION	Q'TY	SERIAL NO. PC210-3KP	SERIAL NO. PC240-3KP
1	195-06-41840	CLIP	1	K15001-	K15001-
2	01010-51225	BOLT	1	K15001-	K15001-
3	01643-31232	WASHER	1	K15001-	K15001-
4	207-06-31370	CONNECTOR	1	K15001-	K15001-
5	08034-00519	BAND	2	K15001-	K15001-
6	08036-01814	CLIP	3	K15001-	K15001-
6A	195-06-41820	CLIP	1	K15001-	K15001-
6B	08052-31711	CLIP	2	K15001-	K15001-
7	01010-51225	BOLT	3	K15001-	K15001-
7A	01010-51025	BOLT	2	K15001-	K15001-
8	01643-31232	WASHER	3	K15001-	K15001-
8A	01643-31032	WASHER	2	K15001-	K15001-
9	195-06-41740	PLUG	1	K15001-	K15001-
10	195-06-41760	CONNECTOR	1	K15001-	K15001-
11	08036-10810	CLIP	1	K15001-	K15001-
12	205-06-72280	RESISTOR	1	K15001-	K15001-
13	01010-50820	BOLT	2	K15001-	K15001-
14	01643-30823	WASHER	2	K15001-	K15001-
15	205-06-72251	WIRING HARNESS	1	K15001-	K15001-
16	08036-10814	CLIP	1	K15001-	K15001-
17	195-Z11-2910	CONNECTOR	1	K15001-	K15001-
18	195-06-41760	CONNECTOR	1	K15001-	K15001-

https://truckmanualshub.com/

FIG. 1451 ELECTRICAL SYSTEM (WIRING) (ATTACHMENT SIDE)

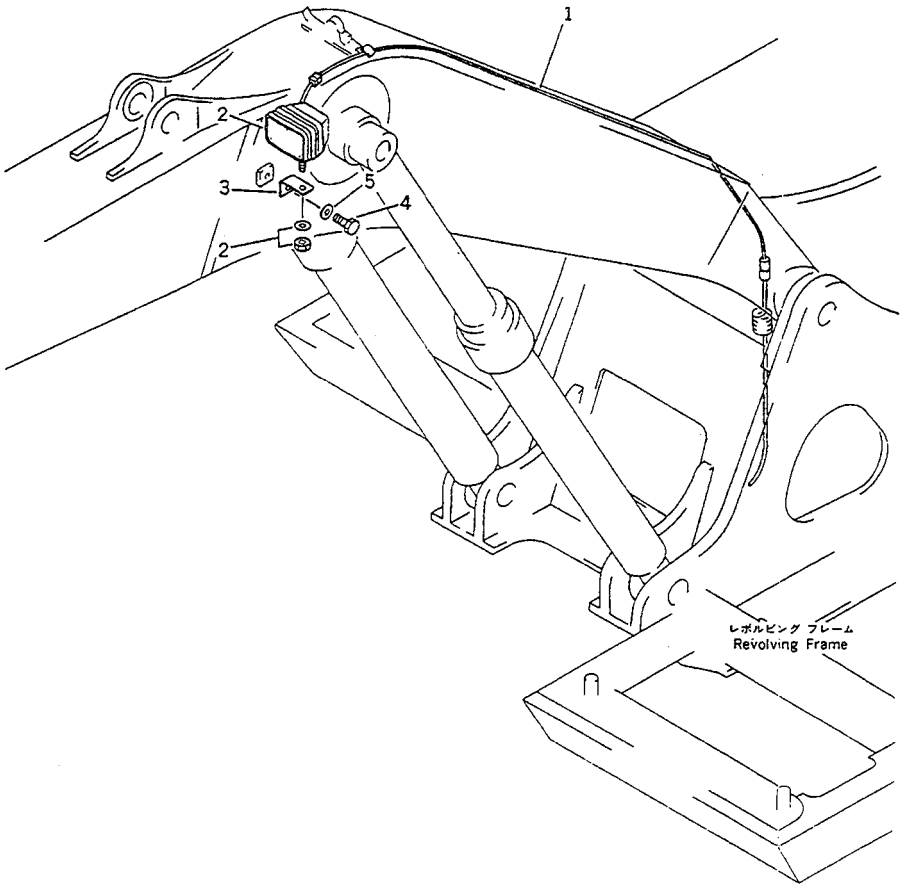

FIG NO. :1451

INDEX NO.	PART NO.	DESCRIPTION	Q'TY	SERIAL NO. PC210-3KP	SERIAL NO. PC240-3KP
1	205-06-71160	WIRE	1	K15001-	K15001-
2	205-06-K1220	WORK LAMP ASS'Y	1	K15001-	K15001-
3	203-06-21290	PLATE	1	K15001-	K15001-
4	01010-51430	BOLT	1	K15001-	K15001-
5	01643-31445	WASHER	1	K15001-	K15001-

https://truckmanualshub.com/

FIG. 1501 MONITOR PANEL AND RELATED PARTS (FOR 3-STAGE SELECTOR MODE OLSS)

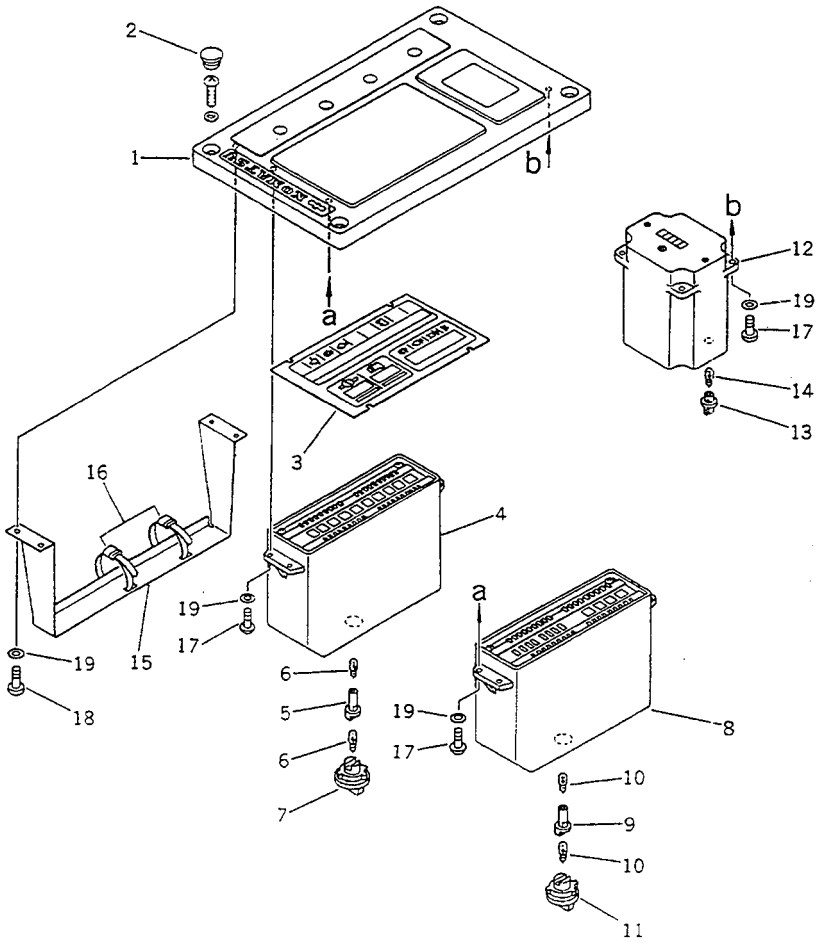

FIG NO. :1501

INDEX NO.	PART NO.	DESCRIPTION	Q'TY	SERIAL NO. PC210-3KP	SERIAL NO. PC240-3KP
	7861-22-1101	PANEL ASS'Y	1	K15001-	K15001-
1	7861-22-1110	.PANEL	1	K15001-	K15001-
2	7861-21-1190	.CAP	4	K15001-	K15001-
3	7861-21-1140	.PLATE	1	K15001-	K15001-
4	7861-21-1300	.MONITOR ASS'Y	1	K15001-	K15001-
5	7861-01-1320	..SOCKET	1	K15001-	K15001-
6	7815-11-1010	..BULB, 3W	2	K15001-	K15001-
7	7861-21-1170	..CAP	1	K15001-	K15001-
8	7861-21-1701	.GAUGE ASS'Y	1	K15001-	K15001-
9	7861-01-1320	..SOCKET	1	K15001-	K15001-
10	7815-11-1010	..BULB, 3W	2	K15001-	K15001-
11	7861-21-1170	..CAP	1	K15001-	K15001-
12	7861-21-1800	.SERVICE METER ASS'Y	1	K15001-	K15001-
13	7861-01-1820	..HOLDER	1	K15001-	K15001-
14	7815-11-1010	..BULB, 3W	1	K15001-	K15001-
15	7861-21-1180	.BRACKET	1	K15001-	K15001-
16	7861-21-1150	.BAND	2	K15001-	K15001-
17	01235-50412	.SCREW	12	K15001-	K15001-
18	01235-50408	.SCREW	4	K15001-	K15001-
19	01641-20405	.WASHER	16	K15001-	K15001-

https://truckmanualshub.com/

FIG. 1503 MONITOR PANEL AND RELATED PARTS (FOR 2-STAGE SELECTOR MODE OLSS)

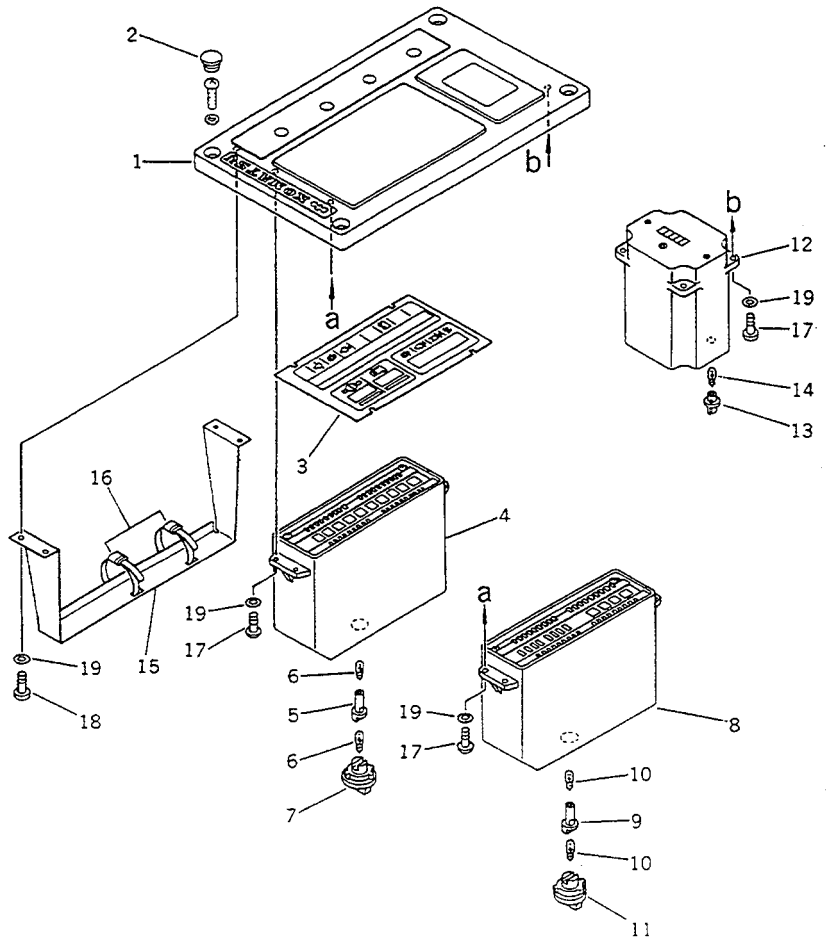

FIG NO. :1503

INDEX NO.	PART NO.	DESCRIPTION	Q'TY	SERIAL NO. PC210-3KP	SERIAL NO. PC240-3KP
	7861-21-1101	PANEL ASS'Y	1	K15001-	K15001-
1	7861-21-1110	.PANEL	1	K15001-	K15001-
2	7861-21-1190	.CAP	4	K15001-	K15001-
3	7861-21-1140	.PLATE	1	K15001-	K15001-
4	7861-21-1300	.MONITOR ASS'Y	1	K15001-	K15001-
5	7861-01-1320	..SOCKET	1	K15001-	K15001-
6	7815-11-1010	..BULB, 3W	2	K15001-	K15001-
7	7861-21-1170	..CAP	1	K15001-	K15001-
8	7861-21-1701	.GAUGE ASS'Y	1	K15001-	K15001-
9	7861-01-1320	..SOCKET	1	K15001-	K15001-
10	7815-11-1010	..BULB, 3W	2	K15001-	K15001-
11	7861-21-1170	..CAP	1	K15001-	K15001-
12	7861-21-1800	.SERVICE METER ASS'Y	1	K15001-	K15001-
13	7861-01-1820	..HOLDER	1	K15001-	K15001-
14	7815-11-1010	..BULB, 3W	1	K15001-	K15001-
15	7861-21-1180	.BRACKET	1	K15001-	K15001-
16	7861-21-1150	.BAND	2	K15001-	K15001-
17	01235-50412	.SCREW	12	K15001-	K15001-
18	01235-50408	.SCREW	4	K15001-	K15001-
19	01641-20405	.WASHER	16	K15001-	K15001-

https://truckmanualshub.com/

FIG. 2001 TRAVEL MOTOR (1/2)

このアセンブリの構成部品は第２００１図および第２００２図を含みます。
706-75-10402 : This assembly consists of all parts shown in Figs. 2001 and 2002.

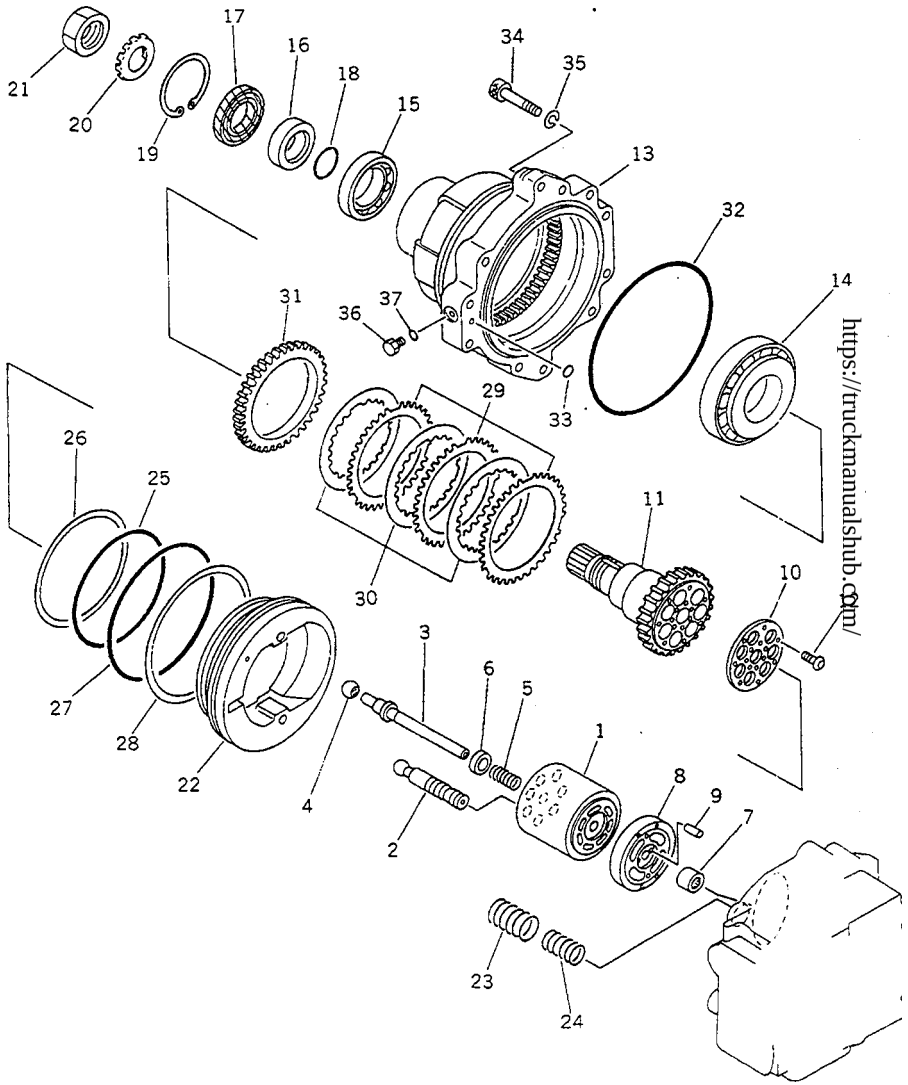

https://truckmanualshub.com/

TRAVEL AND FINAL DRIVE

FIG NO. :2001

INDEX NO.	PART NO.	DESCRIPTION	Q'TY	SERIAL NO. PC210-3KP	SERIAL NO. PC240-3KP
	706-75-10402	TRAVEL MOTOR ASS'Y	2	K15001-	K15001-
	706-75-03302	.MOTOR SUB ASS'Y	1	K15001-	K15001-
1	(★706-75-41091)	..BLOCK,CYLINDER	1	K15001-	K15001-
2	(★706-75-41163)	..PISTON SUB ASS'Y	7	K15001-	K15001-
3	(★706-75-42080)	..SHAFT,CENTER	1	K15001-	K15001-
4	(★706-75-41220)	..BALL,CENTER	1	K15001-	K15001-
5	(★706-75-41110)	..SPRING	1	K15001-	K15001-
6	(★706-75-41130)	..RING,CENTER	1	K15001-	K15001-
7	(★706-75-40010)	..BEARING	1	K15001-	K15001-
8	(★706-75-42840)	..PLATE,VALVE	1	K15001-	K15001-
9	(★04020-00820)	..PIN,DOWEL	1	K15001-	K15001-
10	(★706-75-42260)	..RETAINER	1	K15001-	K15001-
11	(★706-75-42960)	..SHAFT,DRIVE	1	K15001-	K15001-
12	(★706-75-42270)	..SCREW	7	K15001-	K15001-
13	(★706-75-42060)	..CASE,BRAKE	1	K15001-	K15001-
14	(★706-75-42880)	..BEARING	1	K15001-	K15001-
15	(★706-76-40890)	..BEARING	1	K15001-	K15001-
16	(★706-75-42910)	..RING	1	K15001-	K15001-
17	706-76-41931	..SEAL,OIL	1	K15001-	K15001-
18	(★07000-03040)	..O-RING	1	K15001-	K15001-
19	04065-09030	..RING,SNAP	1	K15001-	K15001-
20	(★706-75-40940)	..WASHER,LOCK	1	K15001-	K15001-
21	(★01530-03912)	..NUT	1	K15001-	K15001-
22	(★706-75-91382)	..PISTON,BRAKE	1	K15001-	K15001-
23	(★706-75-91420)	..SPRING	4	K15001-	K15001-
24	(★706-75-91410)	..SPRING	4	K15001-	K15001-
25	(★07000-15155)	..O-RING	1	K15001-	K15001-
26	(★07001-05155)	..RING,BACK-UP	1	K15001-	K15001-
27	(★07000-15170)	..O-RING	1	K15001-	K15001-
28	(★07001-05170)	..RING,BACK-UP	1	K15001-	K15001-

https://truckmanualshub.com/

FIG NO. :2001

INDEX NO.	PART NO.	DESCRIPTION	Q'TY	SERIAL NO. PC210-3KP	SERIAL NO. PC240-3KP
29	(★706-75-91340)	..PLATE	3	K15001-	K15001-
30	(★706-75-91350)	..DISC	3	K15001-	K15001-
31	(★706-75-91330)	..PLATE	1	K15001-	K15001-
32	(★07000-05195)	..O-RING	1	K15001-	K15001-
33	(★07000-12010)	..O-RING	1	K15001-	K15001-
34	(★706-75-40360)	..BOLT	9	K15001-	K15001-
35	(★01602-21442)	..WASHER,SPRING	9	K15001-	K15001-
36	706-75-71420	..PLUG	1	K15001-	K15001-
37	07002-10823	..O-RING	1	K15001-	K15001-

https://truckmanualshub.com/

FIG. 2002 TRAVEL MOTOR (2/2)

このアセンブリの構成部品は第２００１図および第２００２図を含みます。
(706-75-10402) : This assembly consists of all parts shown in Figs. 2001 and 2002.

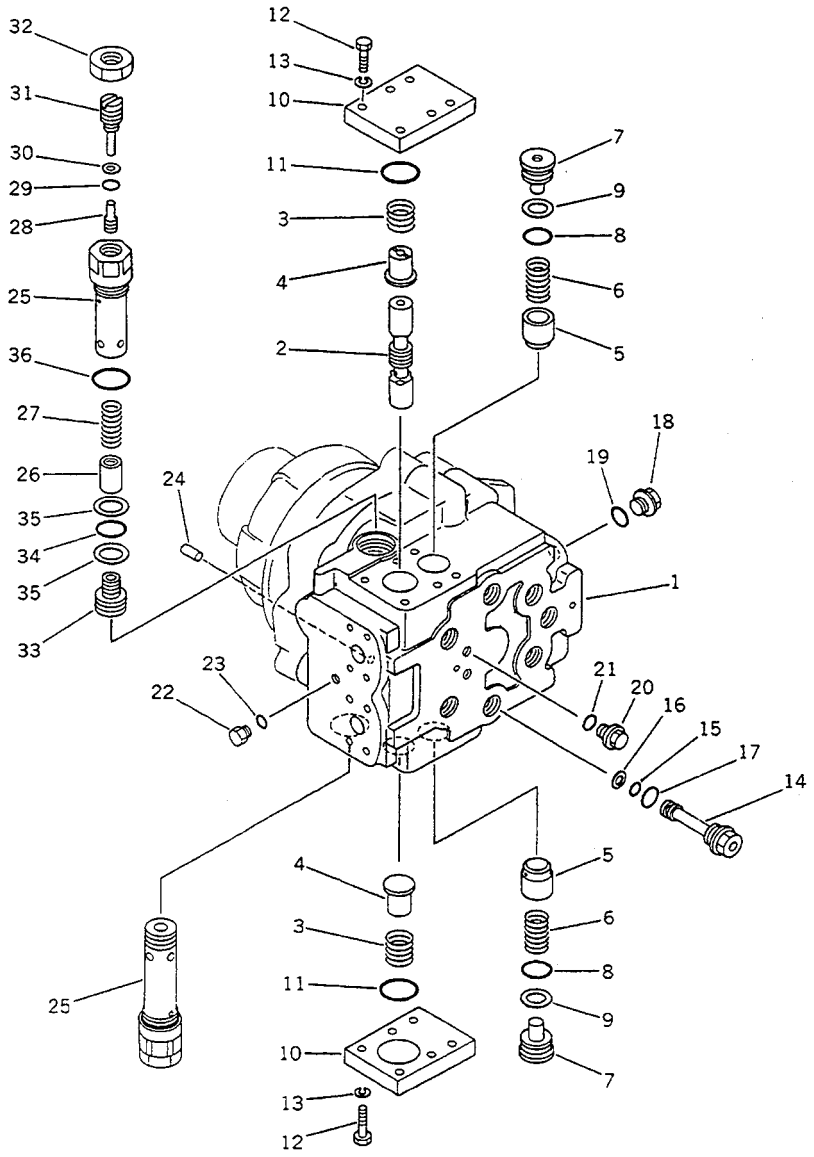

FIG NO. :2002

INDEX NO.	PART NO.	DESCRIPTION	Q'TY	SERIAL NO. PC210-3KP	SERIAL NO. PC240-3KP
	(706-75-10402)	TRAVEL MOTOR ASS'Y	2	K15001-	K15001-
	(706-75-03302)	.MOTOR SUB ASS'Y	1	K15001-	K15001-
	(★706-75-00030)	..HOUSING SUB ASS'Y	1	K15001-	K15001-
1	☆	...HOUSING	1	K15001-	K15001-
2	☆	...SPOOL	1	K15001-	K15001-
3	706-75-74190	..SPRING	2	K15001-	K15001-
4	706-75-74161	..RETAINER	2	K15001-	K15001-
5	706-75-74231	..VALVE	2	K15001-	K15001-
6	706-75-74240	..SPRING	2	K15001-	K15001-
7	706-75-74261	..SEAT	2	K15001-	K15001-
8	07000-13022	..O-RING	2	K15001-	K15001-
9	07001-03022	..RING,BACK-UP	2	K15001-	K15001-
10	706-75-74220	..PLATE	2	K15001-	K15001-
11	07000-13040	..O-RING	2	K15001-	K15001-
12	01010-51035	..BOLT	12	K15001-	K15001-
13	01602-21030	..WASHER,SPRING	12	K15001-	K15001-
14	706-75-74420	..PLUG	2	K15001-	K15001-
15	07000-12011	..O-RING	2	K15001-	K15001-
16	07001-02011	..RING,BACK-UP	2	K15001-	K15001-
17	07002-12034	..O-RING	2	K15001-	K15001-
18	706-77-72170	..PLUG	7	K15001-	K15001-
19	07002-12434	..O-RING	7	K15001-	K15001-
20	706-73-71450	..PLUG	2	K15001-	K15001-
21	07002-11423	..O-RING	2	K15001-	K15001-
22	706-75-71420	..PLUG	1	K15001-	K15001-
23	07002-10823	..O-RING	1	K15001-	K15001-
24	(★706-75-42830)	..PIN,DOWEL	1	K15001-	K15001-
	706-75-85401	.RELIEF VALVE ASS'Y	2	K15001-	K15001-
25	☆	..SLEEVE	1	K15001-	K15001-
26	☆	..VALVE	1	K15001-	K15001-

https://truckmanualshub.com/

FIG NO. :2002

INDEX NO.	PART NO.	DESCRIPTION	Q'TY	SERIAL NO. PC210-3KP	SERIAL NO. PC240-3KP
27	☆	..SPRING	1	K15001-	K15001-
28	☆	..PISTON	1	K15001-	K15001-
29	☆	..O-RING	1	K15001-	K15001-
30	☆	..RING,BACK-UP	1	K15001-	K15001-
31	☆	..SCREW	1	K15001-	K15001-
32	☆	..NUT	1	K15001-	K15001-
33	☆	..SEAT,VALVE	1	K15001-	K15001-
34	07000-22020	..O-RING	1	K15001-	K15001-
35	07001-02020	..RING,BACK-UP	2	K15001-	K15001-
36	07002-13034	..O-RING	1	K15001-	K15001-

https://truckmanualshub.com/

FIG. 2101 SWIVEL JOINT

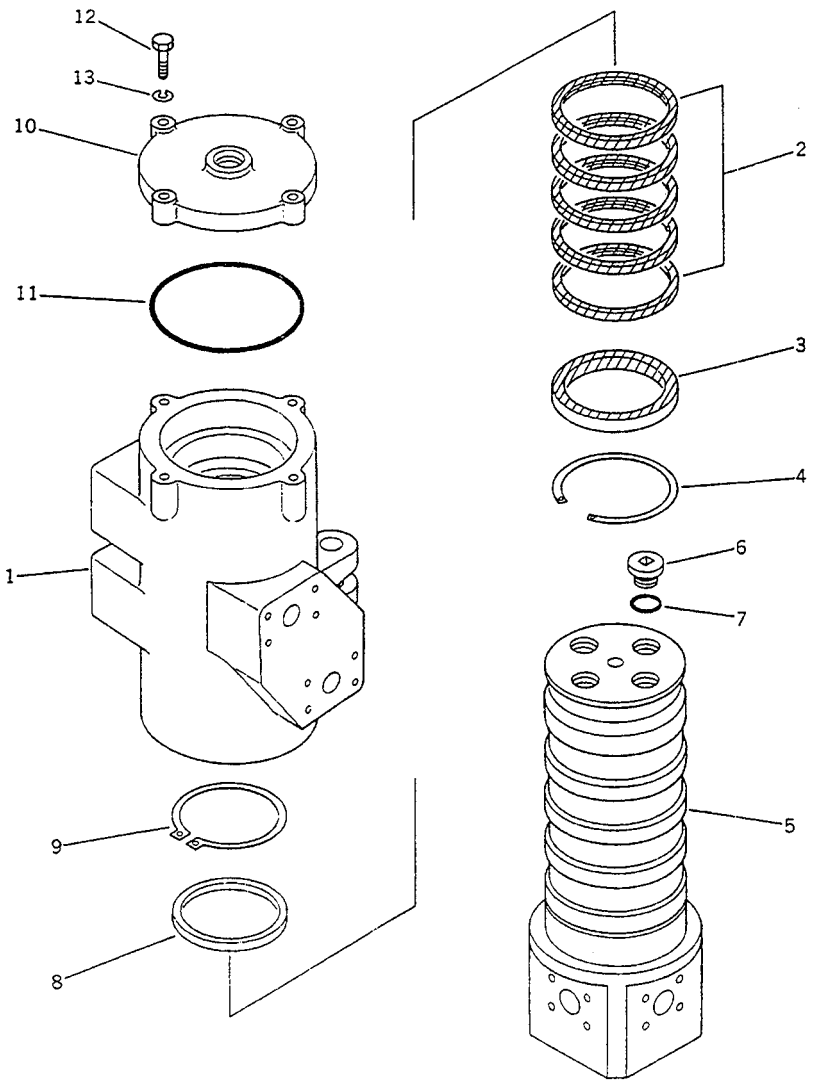

FIG NO. :2101

DEX O.	PART NO.	DESCRIPTION	Q'TY	SERIAL NO. PC210-3KP	SERIAL NO. PC240-3KP
	703-09-31620	SWIVEL JOINT ASS'Y	1	K15001-	K15001-
1	703-09-91530	.ROTOR,SWIVEL	1	K15001-	K15001-
2	703-09-95312	.SEAL,SLIPPER	5	K15001-	K15001-
3	703-09-96310	.SEAL,OIL	1	K15001-	K15001-
4	04077-00110	.RING,SNAP	1	K15001-	K15001-
5	703-09-92530	.SHAFT,SWIVEL	1	K15001-	K15001-
6	07040-12414	.PLUG	4	K15001-	K15001-
7	07002-12434	.O-RING	4	K15001-	K15001-
8	703-09-94210	.RING	1	K15001-	K15001-
9	04064-08530	.RING,SNAP	1	K15001-	K15001-
10	703-09-93520	.COVER	1	K15001-	K15001-
11	07000-02115	.O-RING	1	K15001-	K15001-
12	01010-50835	.BOLT	4	K15001-	K15001-
13	01602-20825	.WASHER,SPRING	4	K15001-	K15001-

https://truckmanualshub.com/

FIG. 2201 HYDRAULIC PIPING
(CONTROL VALVE TO/FROM SWIVEL JOINT) (PC210)

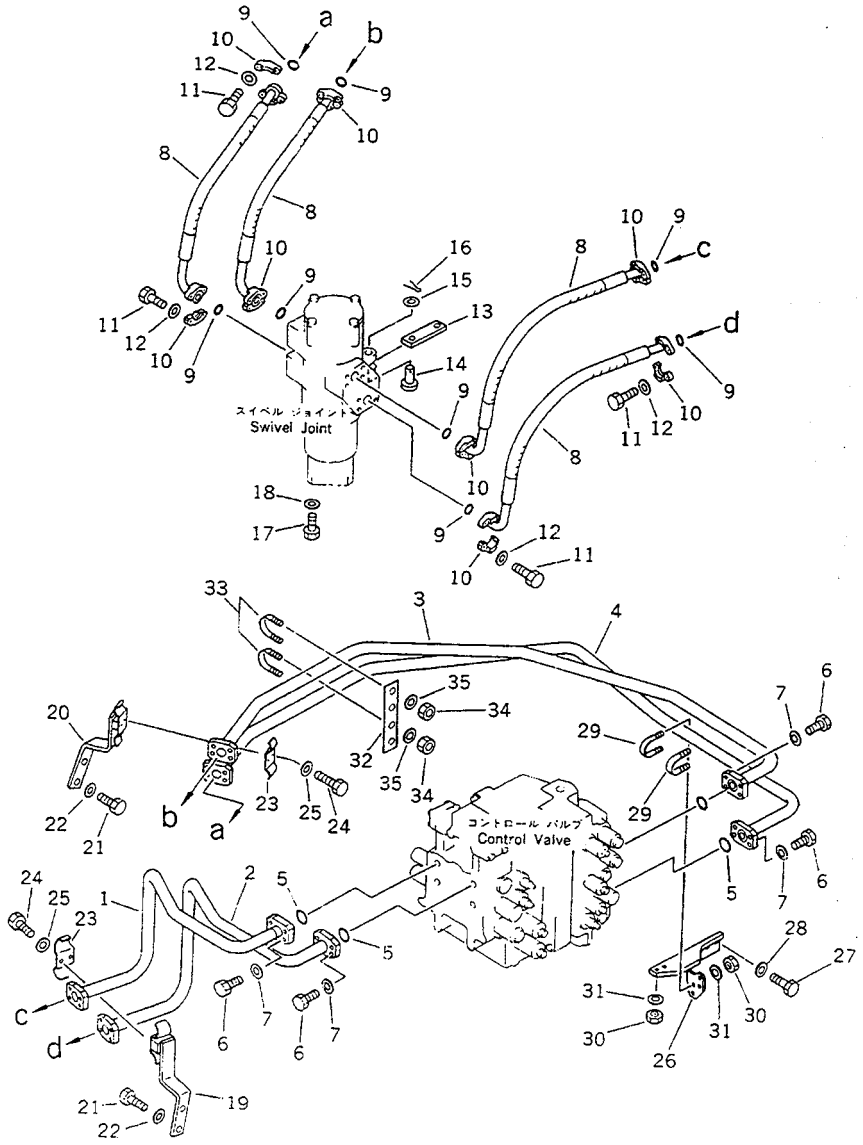

FIG NO. :2201

INDEX NO.	PART NO.	DESCRIPTION	Q'TY	SERIAL NO. PC210-3KP	SERIAL NO. PC240-3KP
1	205-62-71333	TUBE	1	K15001-	
2	205-62-71343	TUBE	1	K15001-	
3	205-62-71354	TUBE	1	K15001-	
4	205-62-71364	TUBE	1	K15001-	
5	21T-09-11450	O-RING	4	K15001-	
6	01010-50830	BOLT	16	K15001-	
7	01643-50823	WASHER	16	K15001-	
8	205-62-74470	HOSE	4	K15001-	
9	07000-13025	O-RING	8	K15001-	
10	07371-30638	FLANGE,SPLIT	16	K15001-	
11	01010-50830	BOLT	32	K15001-	
12	01643-50823	WASHER	32	K15001-	
13	209-62-14430	PLATE	1	K15001-	
14	201-60-11230	PIN	1	K15001-	
15	01641-21626	WASHER	2	K15001-	
16	04050-14025	PIN,COTTER	2	K15001-	
17	01010-51230	BOLT	4	K15001-	
18	01643-31232	WASHER	4	K15001-	
19	205-62-71441	BRACKET	1	K15001-	
20	205-62-71451	BRACKET	1	K15001-	
21	01010-51230	BOLT	4	K15001-	
22	01643-31232	WASHER	4	K15001-	
23	205-62-71470	CLAMP	2	K15001-	
24	205-09-71110	BOLT	4	K15001-	
25	01643-31032	WASHER	4	K15001-	
26	205-62-71514	BRACKET	1	K15001-	
27	01010-51230	BOLT	2	K15001-	
28	01643-31232	WASHER	2	K15001-	
29	07283-22738	CLIP	2	K15001-	
30	01599-01011	NUT	4	K15001-	

https://truckmanualshub.com/

FIG NO. :2201

INDEX NO.	PART NO.	DESCRIPTION	Q'TY	SERIAL NO. PC210-3KP	SERIAL NO. PC240-3KP
31	01643-31032	WASHER	4	K15001-	
32	205-62-71581	PLATE	1	K15001-	
33	07283-22738	CLIP	2	K15001-	
34	01599-01011	NUT	4	K15001-	
35	01643-31032	WASHER	4	K15001-	

https://truckmanualshub.com/

FIG. 2203 HYDRAULIC PIPING (CONTROL VALVE TO/FROM SWIVEL JOINT) (PC240)

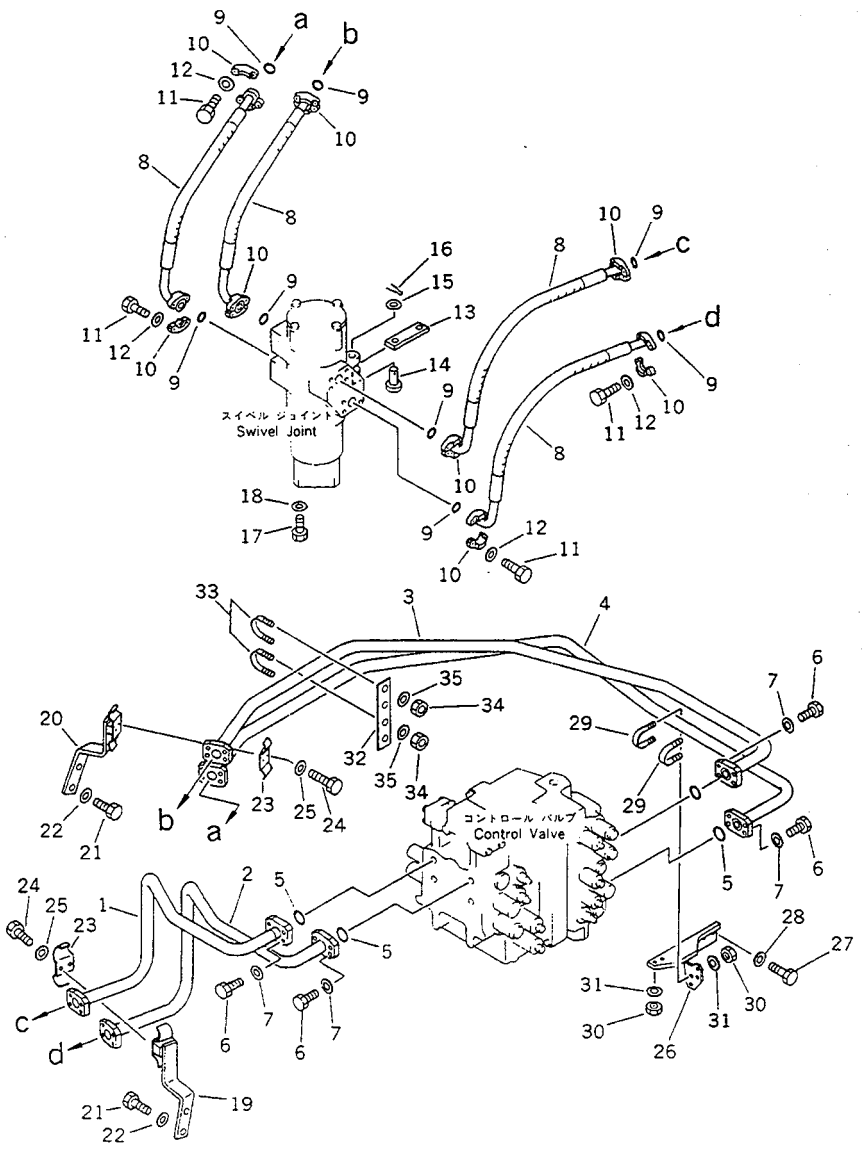

FIG NO. :2203

DEX O.	PART NO.	DESCRIPTION	Q'TY	SERIAL NO. PC210-3KP	SERIAL NO. PC240-3KP
1	205-62-71333	TUBE	1		K15001-
2	205-62-71343	TUBE	1		K15001-
3	205-62-71354	TUBE	1		K15001-
4	205-62-71364	TUBE	1		K15001-
5	21T-09-11450	O-RING	4		K15001-
6	01010-50830	BOLT	16		K15001-
7	01643-50823	WASHER	16		K15001-
8	205-62-74470	HOSE	4		K15001-
9	07000-13025	O-RING	8		K15001-
10	07371-30638	FLANGE,SPLIT	16		K15001-
11	01010-50830	BOLT	32		K15001-
12	01643-50823	WASHER	32		K15001-
13	209-62-14430	PLATE	1		K15001-
14	201-60-11230	PIN	1		K15001-
15	01641-21626	WASHER	2		K15001-
16	04050-14025	PIN,COTTER	2		K15001-
17	01010-51230	BOLT	4		K15001-
18	01643-31232	WASHER	4		K15001-
19	206-62-45130	BRACKET	1		K15001-
20	206-62-45140	BRACKET	1		K15001-
21	01010-51230	BOLT	4		K15001-
22	01643-31232	WASHER	4		K15001-
23	205-62-71470	CLAMP	2		K15001-
24	205-09-71110	BOLT	4		K15001-
25	01643-31032	WASHER	4		K15001-
26	205-62-71514	BRACKET	1		K15001-
27	01010-51230	BOLT	2		K15001-
28	01643-31232	WASHER	2		K15001-
29	07283-22746	CLIP	2		K15001-
30	01599-01011	NUT	4		K15001-

https://truckmanualshub.com/

FIG NO. :2203

INDEX NO.	PART NO.	DESCRIPTION	Q'TY	SERIAL NO. PC210-3KP	SERIAL NO. PC240-3KP
31	01643-31032	WASHER	4		K15001-
32	205-62-71581	PLATE	1		K15001-
33	07283-22738	CLIP	2		K15001-
34	01599-01011	NUT	4		K15001-
35	01643-31032	WASHER	4		K15001-

https://truckmanualshub.com/

FIG. 2211 HYDRAULIC PIPING (SWIVEL JOINT TO/FROM TRAVEL MOTOR) (PC210)

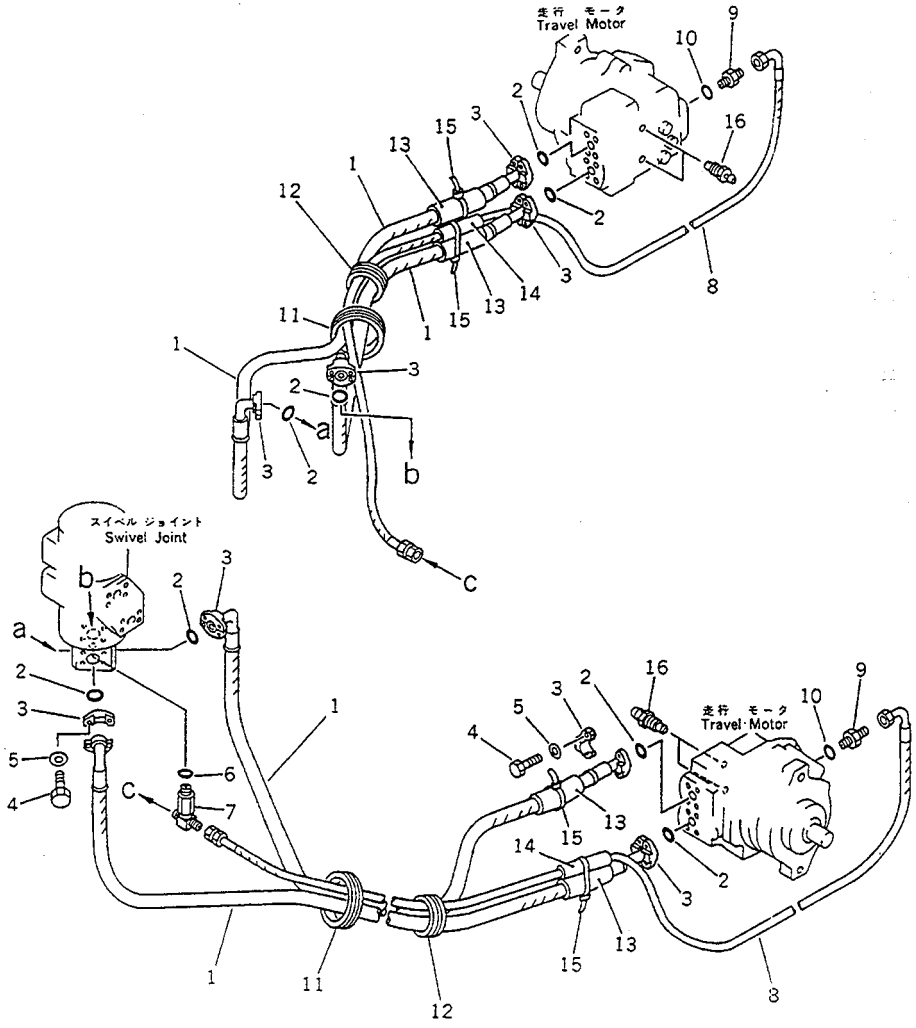

FIG NO. :2211

INDEX NO.	PART NO.	DESCRIPTION	Q'TY	SERIAL NO. PC210-3KP	SERIAL NO. PC240-3KP
1	205-62-K1220	HOSE	4	K15001-	
2	07000-13025	O-RING	8	K15001-	
3	07371-30638	FLANGE,SPLIT	16	K15001-	
4	01010-50830	BOLT	32	K15001-	
5	01643-50823	WASHER	32	K15001-	
6	07002-02034	O-RING	1	K15001-	
7	205-62-72121	TEE	1	K15001-	
8	205-62-72111	HOSE	2	K15001-	
9	07230-20315	NIPPLE	2	K15001-	
10	07002-02034	O-RING	2	K15001-	
11	205-62-72330	GROMMET	2	K15001-	
12	205-62-72190	GROMMET	2	K15001-	
13	205-62-72240	COVER,HOSE	4	K15001-	
14	205-62-72140	COVER,HOSE	2	K15001-	
15	08034-00536	BAND	4	K15001-	
16	20B-27-11210	BLEEDER	4	K15001-	

https://truckmanualshub.com/

FIG. 2213 HYDRAULIC PIPING (SWIVEL JOINT TO/FROM TRAVEL MOTOR) (PC240)

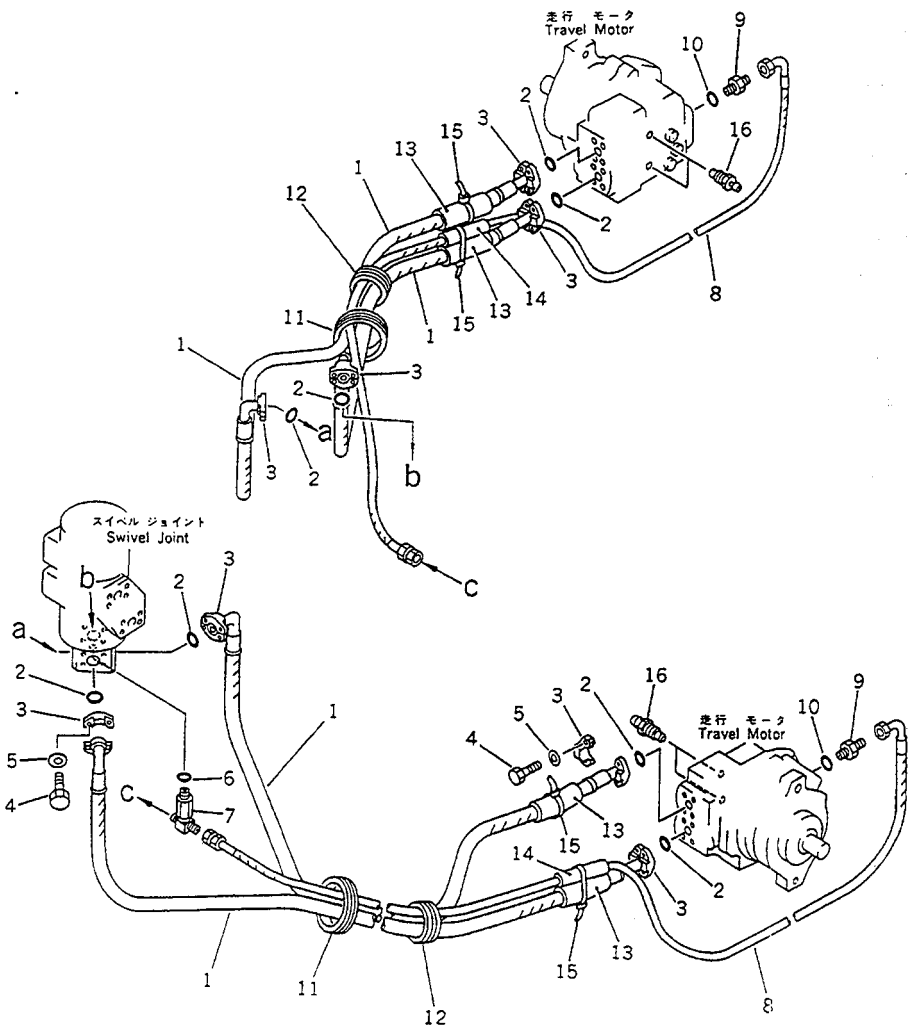

FIG NO. :2213

INDEX NO.	PART NO.	DESCRIPTION	Q'TY	SERIAL NO. PC210-3KP	SERIAL NO. PC240-3KP
1	205-62-K1220	HOSE	4		K15001-
2	07000-13025	O-RING	8		K15001-
3	07371-30638	FLANGE,SPLIT	16		K15001-
4	01010-50830	BOLT	32		K15001-
5	01643-50823	WASHER	32		K15001-
6	07002-02034	O-RING	1		K15001-
7	205-62-72121	TEE	1		K15001-
8	205-62-72230	HOSE	2		K15001-
9	07230-20315	NIPPLE	2		K15001-
10	07002-02034	O-RING	2		K15001-
11	205-62-72330	GROMMET	2		K15001-
12	205-62-72190	GROMMET	2		K15001-
13	203-977-3110	COVER,HOSE	4		K15001-
14	205-62-72140	COVER,HOSE	2		K15001-
15	08034-00536	BAND	4		K15001-
16	20B-27-11210	BLEEDER	4		K15001-

https://truckmanualshub.com/

FIG. 2315 TRAVEL CONTROL LEVER AND LINKAGE (1/2)

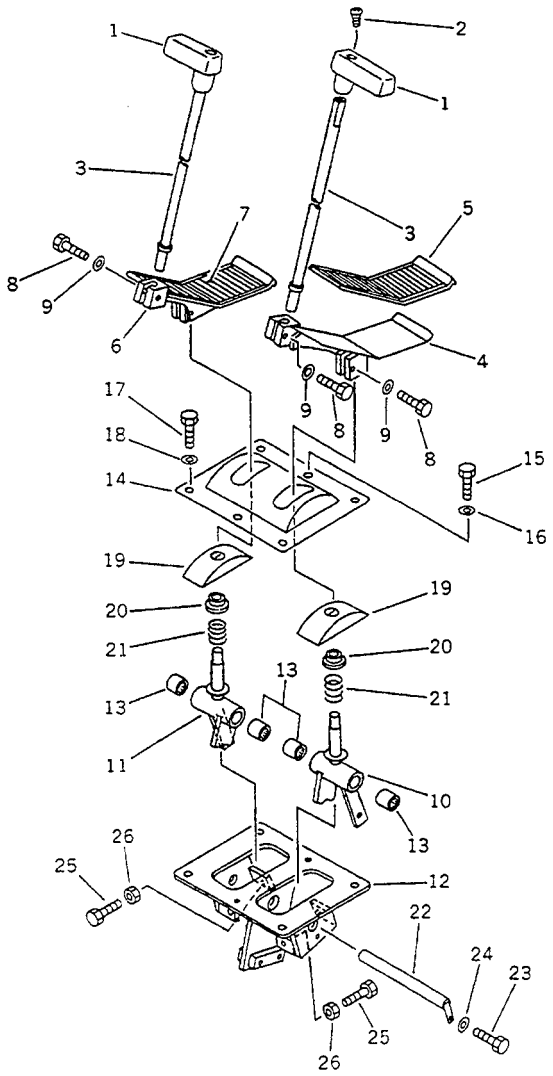

FIG NO. :2315

INDEX NO.	PART NO.	DESCRIPTION	Q'TY	SERIAL NO. PC210-3KP	SERIAL NO. PC240-3KP
1	203-43-41340	KNOB	2	K15001-	K15001-
2	207-09-11130	SCREW	2	K15001-	K15001-
3	205-43-71871	LEVER	2	K15001-	K15001-
4	205-43-71883	PEDAL,L.H.	1	K15001-	K15001-
5	205-43-71911	.CAP,PEDAL	1	K15001-	K15001-
6	205-43-71893	PEDAL,R.H.	1	K15001-	K15001-
7	205-43-71911	.CAP,PEDAL	1	K15001-	K15001-
8	01010-50825	BOLT	4	K15001-	K15001-
9	01643-30823	WASHER	4	K15001-	K15001-
10	205-43-71472	LEVER,L.H.	1	K15001-	K15001-
11	205-43-73270	LEVER,R.H.	1	K15001-	K15001-
12	205-43-71463	BRACKET	1	K15001-	K15001-
13	195-61-34130	BEARING	4	K15001-	K15001-
14	205-43-71590	COVER	1	K15001-	K15001-
15	01010-51016	BOLT	2	K15001-	K15001-
16	01643-31032	WASHER	2	K15001-	K15001-
17	01010-51235	BOLT	4	K15001-	K15001-
18	01643-31232	WASHER	4	K15001-	K15001-
19	20S-43-11230	COVER	2	K15001-	K15001-
20	203-43-41660	SPACER	2	K15001-	K15001-
21	09340-10130	SPRING	2	K15001-	K15001-
22	205-43-73280	SHAFT	1	K15001-	K15001-
23	01010-50616	BOLT	1	K15001-	K15001-
24	01643-30623	WASHER	1	K15001-	K15001-
25	01016-51040	BOLT	4	K15001-	K15001-
26	01580-11008	NUT	4	K15001-	K15001-

https://truckmanualshub.com/

FIG. 2317 TRAVEL CONTROL LEVER AND LINKAGE (2/2)

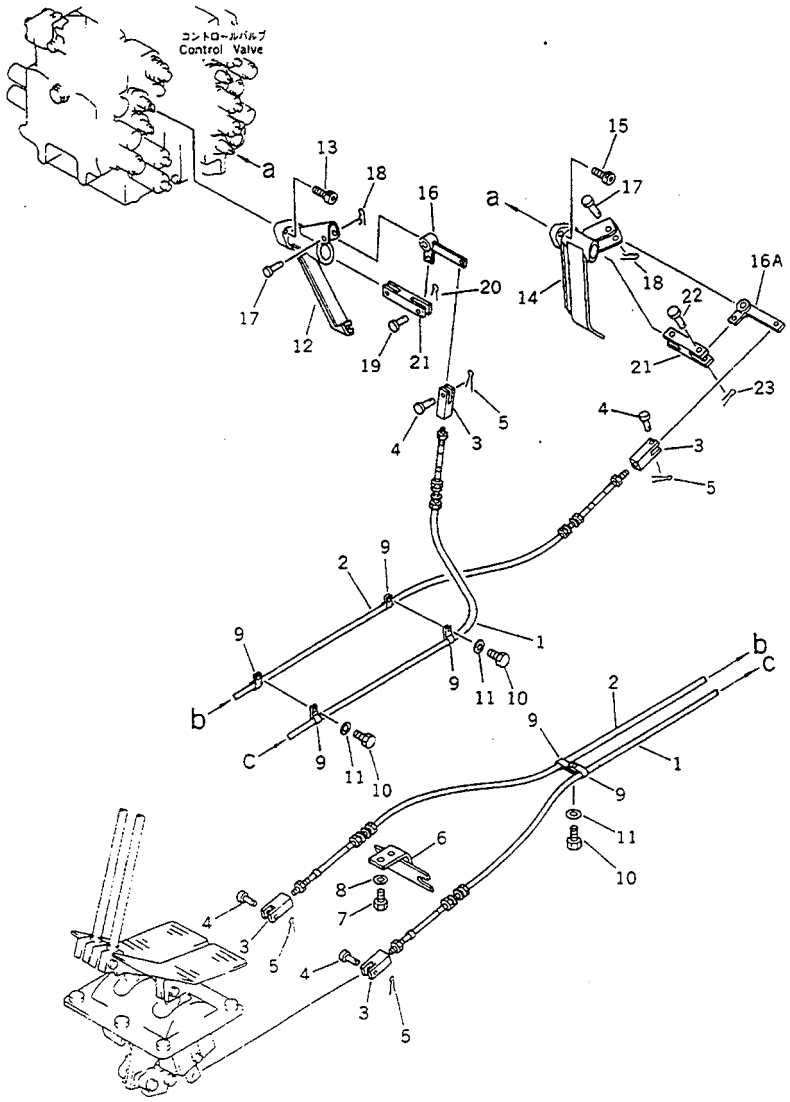

FIG NO. :2317

INDEX NO.	PART NO.	DESCRIPTION	Q'TY	SERIAL NO. PC210-3KP	SERIAL NO. PC240-3KP
1	205-43-73530	CABLE	1	K15001-	K15001-
2	205-43-73540	CABLE	1	K15001-	K15001-
3	04211-20844	YOKE	4	K15001-	K15001-
4	04205-30822	PIN	4	K15001-	K15001-
5	04050-12015	PIN,COTTER	4	K15001-	K15001-
6	205-43-71811	BRACKET	1	K15001-	K15001-
7	01010-51225	BOLT	2	K15001-	K15001-
8	01643-31232	WASHER	2	K15001-	K15001-
9	08036-01414	CLIP	6	K15001-	K15001-
10	01010-51225	BOLT	3	K15001-	K15001-
11	01643-31232	WASHER	3	K15001-	K15001-
12	205-43-71533	BRACKET	1	K15001-	K15001-
13	01252-40835	BOLT	2	K15001-	K15001-
14	205-43-71542	BRACKET	1	K15001-	K15001-
15	01252-40835	BOLT	2	K15001-	K15001-
16	205-43-71930	LEVER	1	K15001-	K15001-
16A	205-43-71491	LEVER	1	K15001-	K15001-
17	04205-31238	PIN	2	K15001-	K15001-
18	04050-12015	PIN,COTTER	2	K15001-	K15001-
19	04205-30822	PIN	2	K15001-	K15001-
20	04050-12015	PIN,COTTER	2	K15001-	K15001-
21	101-75-31870	YOKE	2	K15001-	K15001-
22	04205-30822	PIN	2	K15001-	K15001-
23	04050-12015	PIN,COTTER	2	K15001-	K15001-

https://truckmanualshub.com/

FIG. 2401 FINAL DRIVE (PC210)

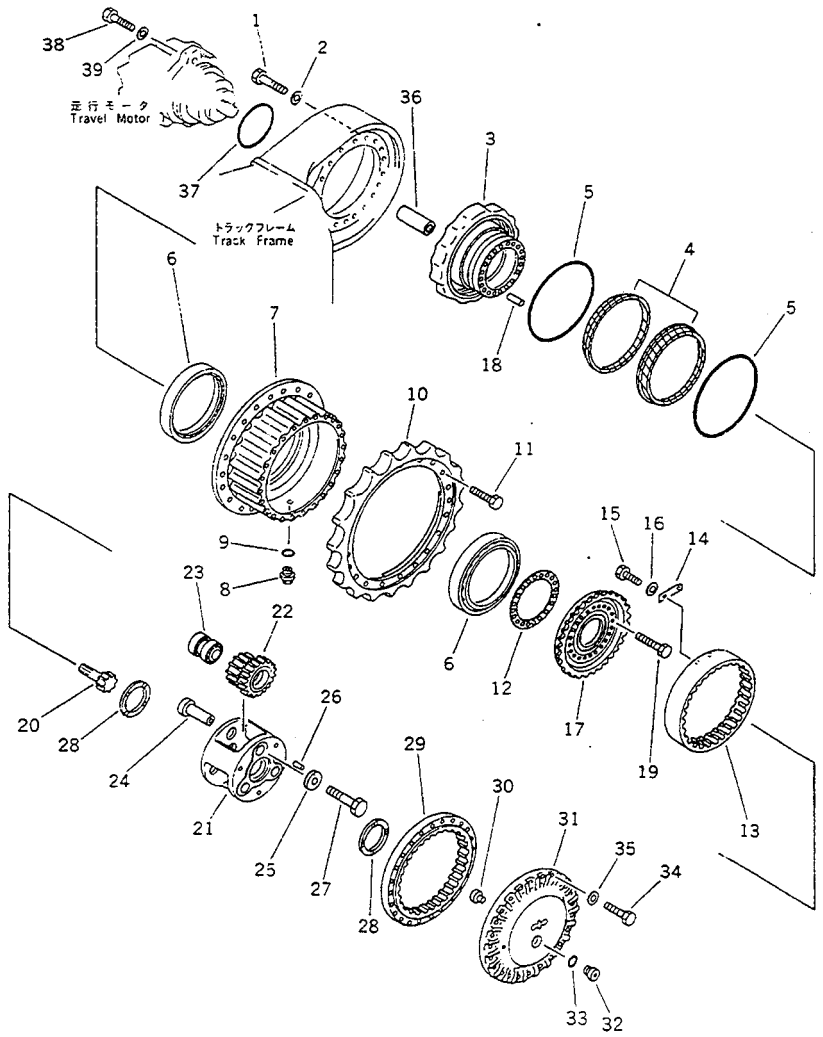

FIG NO. :2401

INDEX NO.	PART NO.	DESCRIPTION	Q'TY	SERIAL NO. PC210-3KP	SERIAL NO. PC240-3KP
1	01010-51670	BOLT	36	K15001-	
2	01643-31645	WASHER	36	K15001-	
	205-27-00087	FINAL DRIVE ASS'Y,(PC210)	2	K15001-	
	206-27-00027	FINAL DRIVE ASS'Y,(PC210LC)	2	K15001-	
3	205-27-71481	.SHAFT	1	K15001-	
	150-27-00027	.FLOATING SEAL ASS'Y	1	K15001-	
4	150-27-00262	..SEAL RING ASS'Y	1	K15001-	
5	150-27-00270	..O-RING ASS'Y	1	K15001-	
6	205-27-71430	.BEARING	2	K15001-	
7	205-27-71471	.HUB	1	K15001-	
8	07044-12412	.PLUG	1	K15001-	
9	07002-02434	.O-RING	1	K15001-	
10	205-27-71281	.SPROCKET	1	K15001-	
11	205-27-71670	.BOLT	20	K15001-	
12	20Y-27-11310	.SPACER, 4.85MM	1	K15001-	
13	205-27-71531	.GEAR	1	K15001-	
14	205-27-71610	.PLATE	6	K15001-	
15	01010-50820	.BOLT	12	K15001-	
16	01643-50823	.WASHER	12	K15001-	
17	205-27-71630	.GEAR	1	K15001-	
18	04020-01842	.PIN,DOWEL	2	K15001-	
19	205-27-71680	.BOLT	18	K15001-	
20	205-27-71550	.GEAR,(PC210)	1	K15001-	
	206-27-44112	.GEAR,(PC210LC)	1	K15001-	
21	205-27-71510	.CARRIER	1	K15001-	
22	205-27-00070	.PLANETARY GEAR A.,(PC210)	1	K15001-	
	206-27-00010	.PLANETARY GEAR A.,(PC210LC)	1	K15001-	
23	205-27-71560	.BEARING	3	K15001-	
24	205-27-71582	.PIN	3	K15001-	
25	205-27-71592	.COLLAR	3	K15001-	

https://truckmanualshub.com/

FIG NO. :2401

INDEX NO.	PART NO.	DESCRIPTION	Q'TY	SERIAL NO. PC210-3KP	SERIAL NO. PC240-3KP
26	01658-03618	.WASHER	3	K15001-	
27	01010-51465	.BOLT	3	K15001-	
28	205-27-71570	.SPACER	2	K15001-	
29	205-27-71520	.GEAR,(PC210)	1	K15001-	
	206-27-44132	.GEAR,(PC210LC)	1	K15001-	
30	205-27-71360	.BUTTON	1	K15001-	
31	205-27-71492	.COVER	1	K15001-	
32	07040-12414	.PLUG	1	K15001-	
33	07002-02434	.O-RING	1	K15001-	
34	01010-51685	.BOLT	24	K15001-	
35	01643-31645	.WASHER	24	K15001-	
36	205-27-71131	COUPLING	2	K15001-	
37	07000-05190	O-RING	2	K15001-	
38	01010-51670	BOLT	4	K15001-	
39	01643-31645	WASHER	4	K15001-	
		ADJUSTMENT SPACER			
12	20Y-27-11320	SPACER, 4.90MM	2	K15001-	
	20Y-27-11330	SPACER, 4.95MM	2	K15001-	
	20Y-27-11340	SPACER, 5.00MM	2	K15001-	
	20Y-27-11350	SPACER, 5.05MM	2	K15001-	
	20Y-27-11360	SPACER, 5.10MM	2	K15001-	

https://truckmanualshub.com/

FIG. 2403 FINAL DRIVE (PC240)

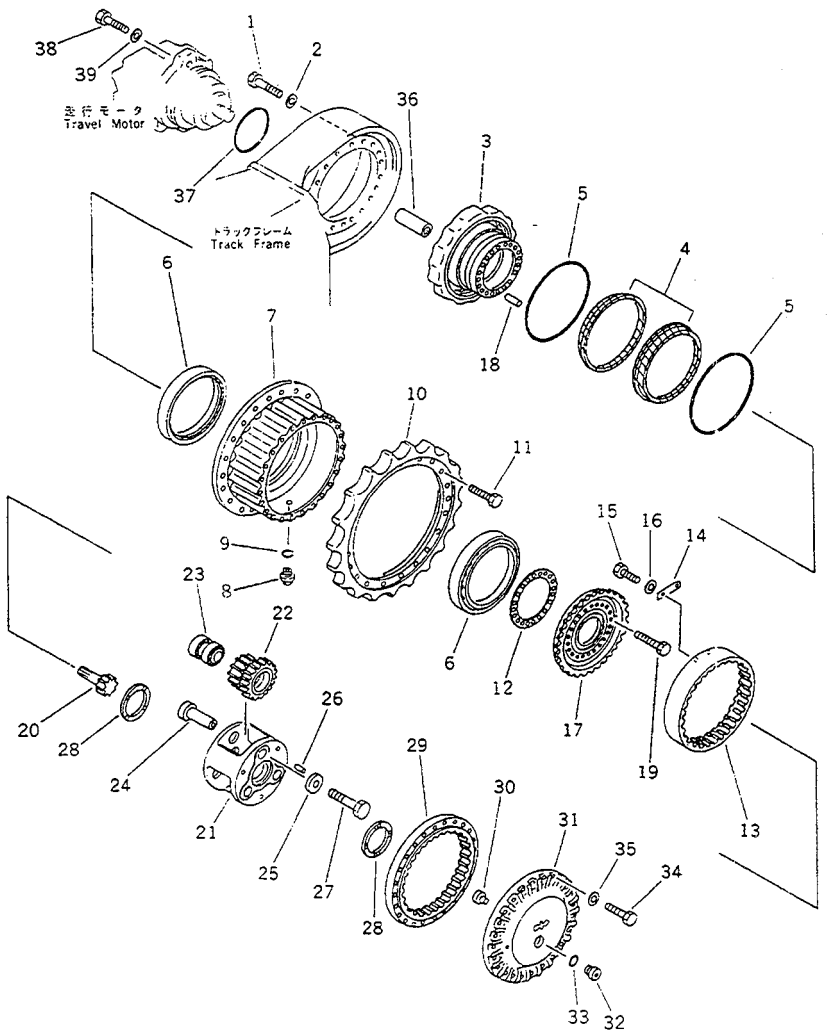

FIG NO. :2403

INDEX NO.	PART NO.	DESCRIPTION	Q'TY	SERIAL NO. PC210-3KP	SERIAL NO. PC240-3KP
1	01010-51670	BOLT	36		K15001-
2	01643-31645	WASHER	36		K15001-
	206-27-00024	FINAL DRIVE ASS'Y	2		K15001-
3	205-27-71481	.SHAFT	1		K15001-
	150-27-00027	.FLOATING SEAL ASS'Y	1		K15001-
4	150-27-00262	..SEAL RING ASS'Y	1		K15001-
5	150-27-00270	..O-RING ASS'Y	1		K15001-
6	205-27-71430	.BEARING	2		K15001-
7	205-27-71471	.HUB	1		K15001-
8	07044-12412	.PLUG	1		K15001-
9	07002-02434	.O-RING	1		K15001-
10	205-27-71281	.SPROCKET	1		K15001-
11	205-27-71670	.BOLT	20		K15001-
12	205-27-00060	.SHIM ASS'Y	1		K15001-
13	205-27-71531	.GEAR	1		K15001-
14	205-27-71610	.PLATE	6		K15001-
15	01010-50820	.BOLT	12		K15001-
16	01643-30823	.WASHER	12		K15001-
17	205-27-71630	.GEAR	1		K15001-
18	04020-01842	.PIN,DOWEL	2		K15001-
19	205-27-71680	.BOLT	18		K15001-
20	206-27-44112	.GEAR	1		K15001-
21	205-27-71510	.CARRIER	1		K15001-
22	206-27-00010	.PLANETARY GEAR A.	1		K15001-
23	205-27-71560	.BEARING	3		K15001-
24	205-27-71582	.PIN	3		K15001-
25	205-27-71592	.COLLAR	3		K15001-
26	04020-00616	.PIN,DOWEL	3		K15001-
27	01010-51465	.BOLT	3		K15001-
28	205-27-71570	.SPACER	2		K15001-

https://truckmanualshub.com/

FIG NO. :2403

INDEX NO.	PART NO.	DESCRIPTION	Q'TY	SERIAL NO. PC210-3KP	SERIAL NO. PC240-3KP
29	205-27-44132	.GEAR	1		K15001-
30	205-27-71360	.BUTTON	1		K15001-
31	205-27-71492	.COVER	1		K15001-
32	07040-12414	.PLUG	1		K15001-
33	07002-02434	.O-RING	1		K15001-
34	01010-51685	.BOLT	24		K15001-
35	01643-31645	.WASHER	24		K15001-
36	205-27-71131	COUPLING	2		K15001-
37	07000-05190	O-RING	2		K15001-
38	01010-51670	BOLT	4		K15001-
39	01643-31645	WASHER	4		K15001-
		ADJUSTMENT SPACER			
12	20Y-27-11320	SPACER, 4.90MM	2		K15001-
	20Y-27-11330	SPACER, 4.95MM	2		K15001-
	20Y-27-11340	SPACER, 5.00MM	2		K15001-
	20Y-27-11350	SPACER, 5.05MM	2		K15001-
	20Y-27-11360	SPACER, 5.10MM	2		K15001-

UNDER CARRIAGE

https://truckmanualshub.com/

FIG. 3001 TRACK FRAME (PC210)

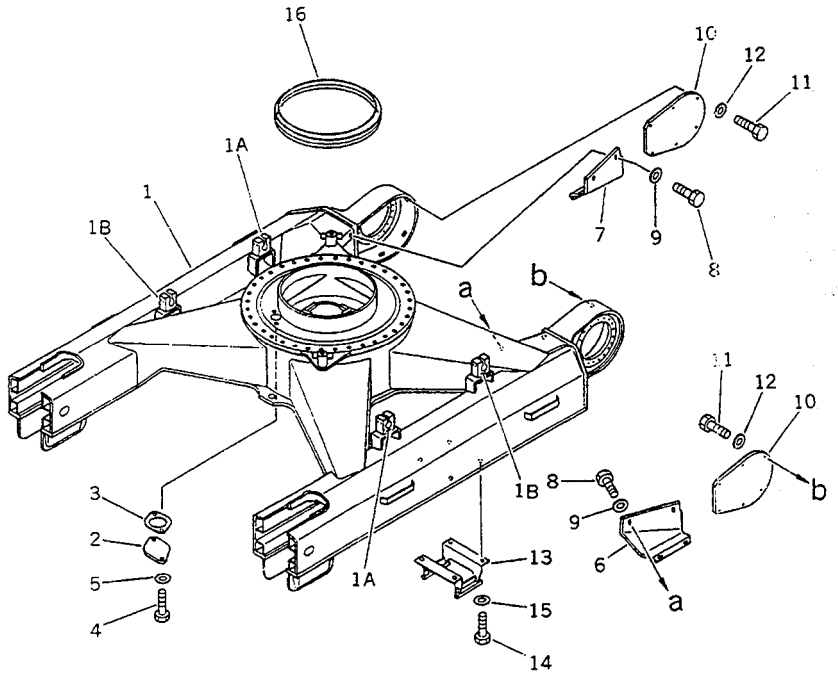

FIG NO. :3001

INDEX NO.	PART NO.	DESCRIPTION	Q'TY	SERIAL NO. PC210-3KP	SERIAL NO. PC240-3KP
1	205-30-71830	FRAME,TRACK	1	K15001-	
1A	205-30-71690	.SUPPORT (WELDED)	2	K15001-	
1B	205-30-71710	.SUPPORT (WELDED)	2	K15001-	
2	205-30-71181	COVER	1	K15001-	
3	205-30-71191	GASKET	1	K15001-	
4	01010-51225	BOLT	2	K15001-	
5	01643-31232	WASHER	2	K15001-	
6	205-30-71221	COVER,L.H.	1	K15001-	
7	205-30-71231	COVER,R.H.	1	K15001-	
8	01010-51230	BOLT	12	K15001-	
9	01643-31232	WASHER	12	K15001-	
10	205-30-71210	COVER	2	K15001-	
11	01010-51230	BOLT	12	K15001-	
12	01643-31232	WASHER	12	K15001-	
13	205-30-71243	GUARD	2	K15001-	
14	01010-52050	BOLT	16	K15001-	
15	01643-32060	WASHER	16	K15001-	
16	205-30-71170	SEAL	1	K15001-	

https://truckmanualshub.com/

FIG. 3003 TRACK FRAME (PC210LC)

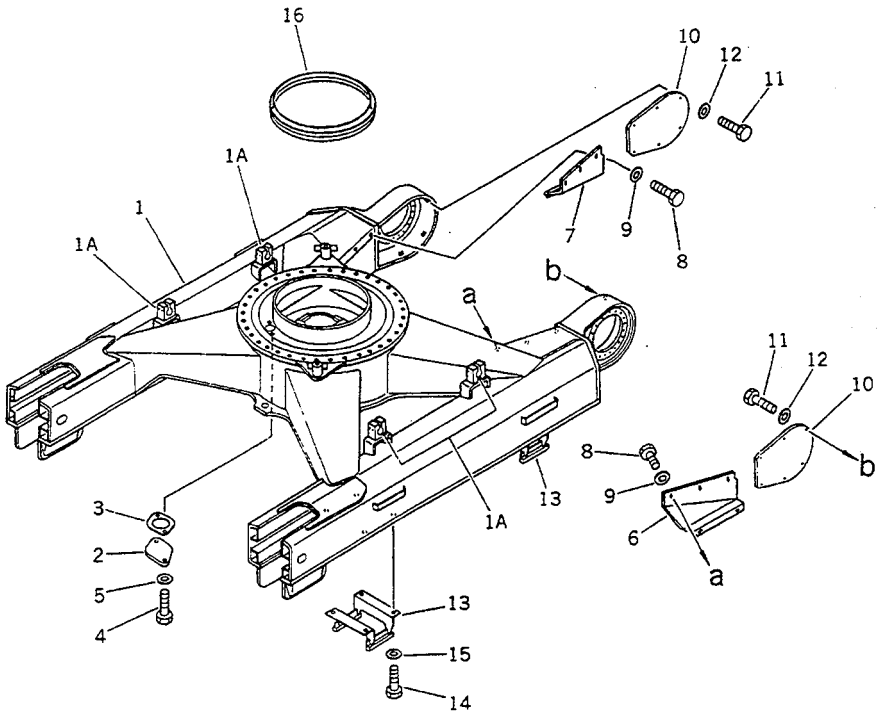

FIG NO. :3003

INDEX NO.	PART NO.	DESCRIPTION	Q'TY	SERIAL NO. PC210-3KP	SERIAL NO. PC240-3KP
1	205-30-71860	FRAME,TRACK	1	K15001-	
1A	205-30-71720	.SUPPORT (WELDED)	4	K15001-	
2	205-30-71181	COVER	1	K15001-	
3	205-30-71191	GASKET	1	K15001-	
4	01010-51225	BOLT	2	K15001-	
5	01643-31232	WASHER	2	K15001-	
6	205-30-71331	COVER,L.H.	1	K15001-	
7	205-30-71341	COVER,R.H.	1	K15001-	
8	01010-51230	BOLT	12	K15001-	
9	01643-31232	WASHER	12	K15001-	
10	205-30-71210	COVER	2	K15001-	
11	01010-51230	BOLT	12	K15001-	
12	01643-31232	WASHER	12	K15001-	
13	205-30-71243	GUARD	4	K15001-	
14	01010-52050	BOLT	16	K15001-	
15	01643-32060	WASHER	16	K15001-	
16	205-30-71170	SEAL	1	K15001-	

https://truckmanualshub.com/

FIG. 3005 TRACK FRAME (PC240)

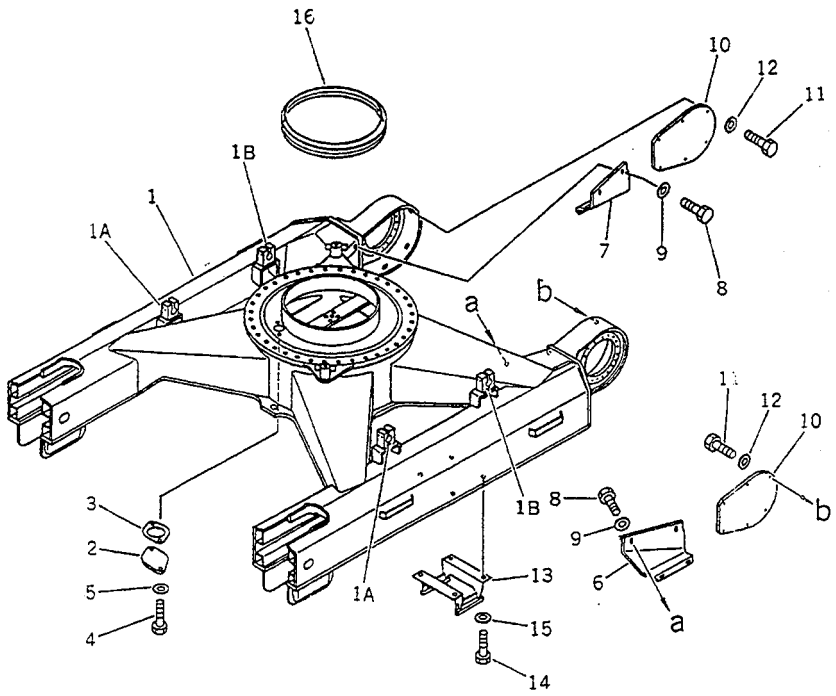

FIG NO. 3005

INDEX NO.	PART NO.	DESCRIPTION	Q'TY	SERIAL NO. PC210-3KP	SERIAL NO. PC240-3KP
1	206-30-45310	FRAME,TRACK	1		K15001-
1A	205-30-71690	.SUPPORT (WELDED)	2		K15001-
1B	205-30-71710	.SUPPORT (WELDED)	2		K15001-
2	205-30-71181	COVER	1		K15001-
3	205-30-71191	GASKET	1		K15001-
4	01010-51225	BOLT	2		K15001-
5	01643-31232	WASHER	2		K15001-
6	206-30-45320	COVER,L.H.	1		K15001-
7	206-30-45330	COVER,R.H.	1		K15001-
8	01010-51230	BOLT	12		K15001-
9	01643-31232	WASHER	12		K15001-
10	205-30-71210	COVER	2		K15001-
11	01010-51230	BOLT	12		K15001-
12	01643-31232	WASHER	12		K15001-
13	205-30-71243	GUARD	2		K15001-
14	01010-52050	BOLT	16		K15001-
15	01643-32060	WASHER	16		K15001-
16	205-30-71170	SEAL	1		K15001-

https://truckmanualshub.com/

FIG. 3007 TRACK FRAME (PC240LC)

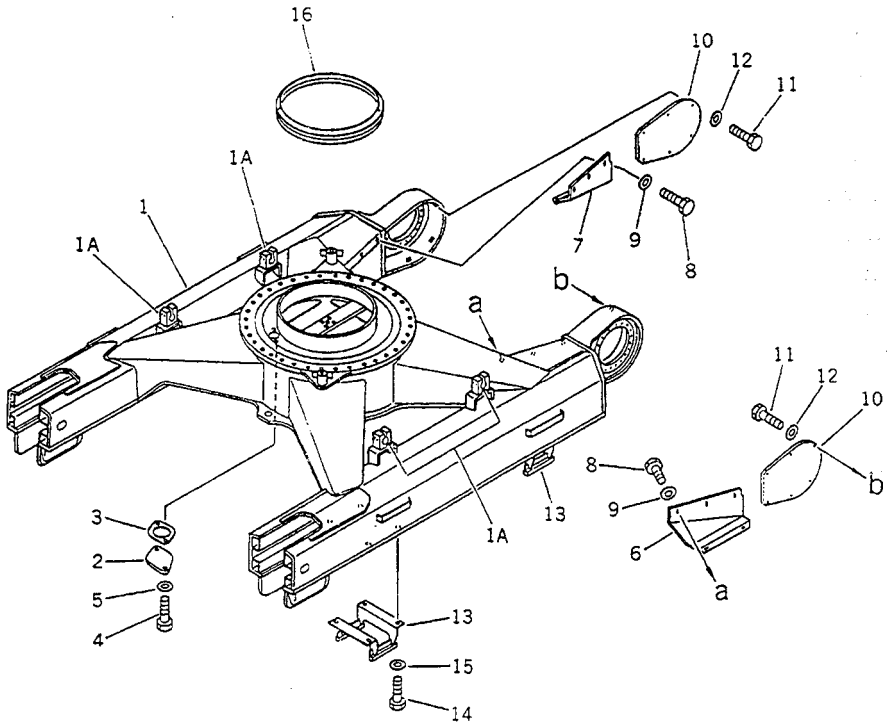

FIG NO. 3007

INDEX NO.	PART NO.	DESCRIPTION	Q'TY	SERIAL NO. PC210-3KP	SERIAL NO. PC240-3KP
1	206-30-45410	FRAME,TRACK	1		K15001-
1A	205-30-71720	.SUPPORT (WELDED)	4		K15001-
2	205-30-71181	COVER	1		K15001-
3	205-30-71191	GASKET	1		K15001-
4	01010-51225	BOLT	2		K15001-
5	01643-31232	WASHER	2		K15001-
6	206-30-45420	COVER,L.H.	1		K15001-
7	206-30-45430	COVER,R.H.	1		K15001-
8	01010-51230	BOLT	12		K15001-
9	01643-31232	WASHER	12		K15001-
10	205-30-71210	COVER	2		K15001-
11	01010-51230	BOLT	12		K15001-
12	01643-31232	WASHER	12		K15001-
13	205-30-71243	GUARD	4		K15001-
14	01010-52050	BOLT	16		K15001-
15	01643-32060	WASHER	16		K15001-
16	205-30-71170	SEAL	1		K15001-

https://truckmanualshub.com/

FIG. 3011 RECOIL SPRING

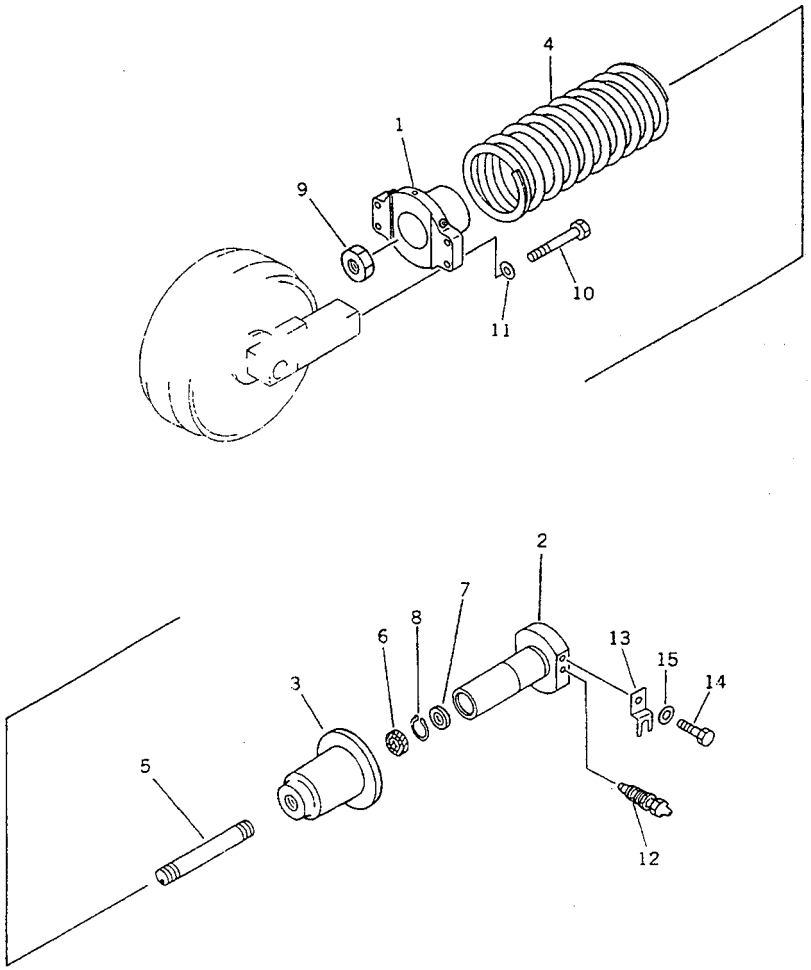

FIG NO. :3011

INDEX NO.	PART NO.	DESCRIPTION	Q'TY	SERIAL NO. PC210-3KP	SERIAL NO. PC240-3KP
	205-30-K1322	SPRING ASS'Y	1	K15001-	K15001-
1	205-30-K1450	.YOKE	2	K15001-	K15001-
2	205-30-K1330	.PISTON	1	K15001-	K15001-
3	205-30-K1470	.CARRIER	1	K15001-	K15001-
4	205-30-K1480	.SPRING	1	K15001-	K15001-
5	205-30-K1490	.BOLT	1	K15001-	K15001-
6	21P-30-K1140	.SEAL	1	K15001-	K15001-
7	21P-30-K1130	.SEAL,WIPER	1	K15001-	K15001-
8	205-30-K1530	.RING,SNAP	1	K15001-	K15001-
9	205-30-K1550	.NUT	1	K15001-	K15001-
10	01010-51645	BOLT	8	K15001-	K15001-
11	01643-31645	WASHER	8	K15001-	K15001-
12	07959-20000	LUBRICATOR,LUBRICATION	2	K15001-	K15001-
13	205-30-72170	PLATE,STOPPER	2	K15001-	K15001-
14	01010-51225	BOLT	2	K15001-	K15001-
15	01643-31232	WASHER	2	K15001-	K15001-

https://truckmanualshub.com/

FIG. 3021 FRONT IDLER

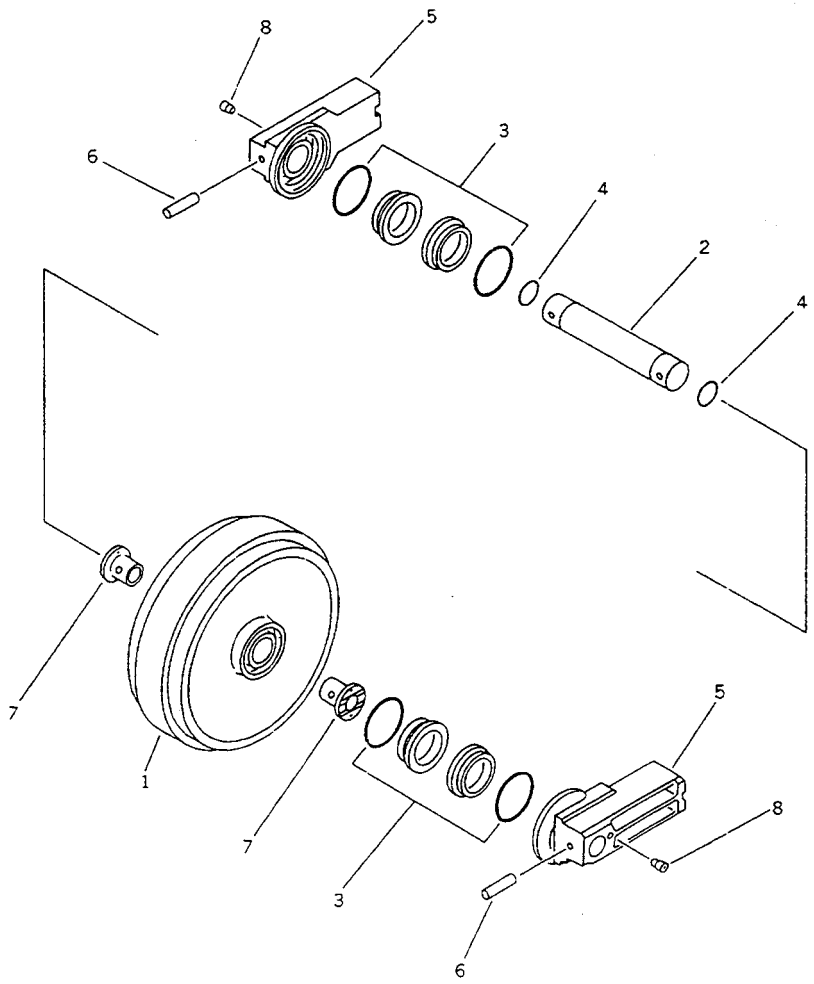

FIG NO. :3021

INDEX NO.	PART NO.	DESCRIPTION	Q'TY	SERIAL NO. PC210-3KP	SERIAL NO. PC240-3KP
	205-30-K1310	FRONT IDLER ASS'Y	2	K15001-	K15001-
1	205-30-K1340	.IDLER	1	K15001-	K15001-
2	205-30-K1360	.SHAFT	1	K15001-	K15001-
3	205-30-K1390	.FLOATING SEAL ASS'Y	2	K15001-	K15001-
4	205-30-K1370	.O-RING	2	K15001-	K15001-
5	205-30-K1410	.BLOCK,SLIDING	2	K15001-	K15001-
6	205-30-K1420	.PIN	2	K15001-	K15001-
7	205-30-K1350	.BUSHING	2	K15001-	K15001-
8	205-30-K1380	.PLUG	2	K15001-	K15001-

https://truckmanualshub.com/

FIG. 3031 TRACK ROLLER (PC210)

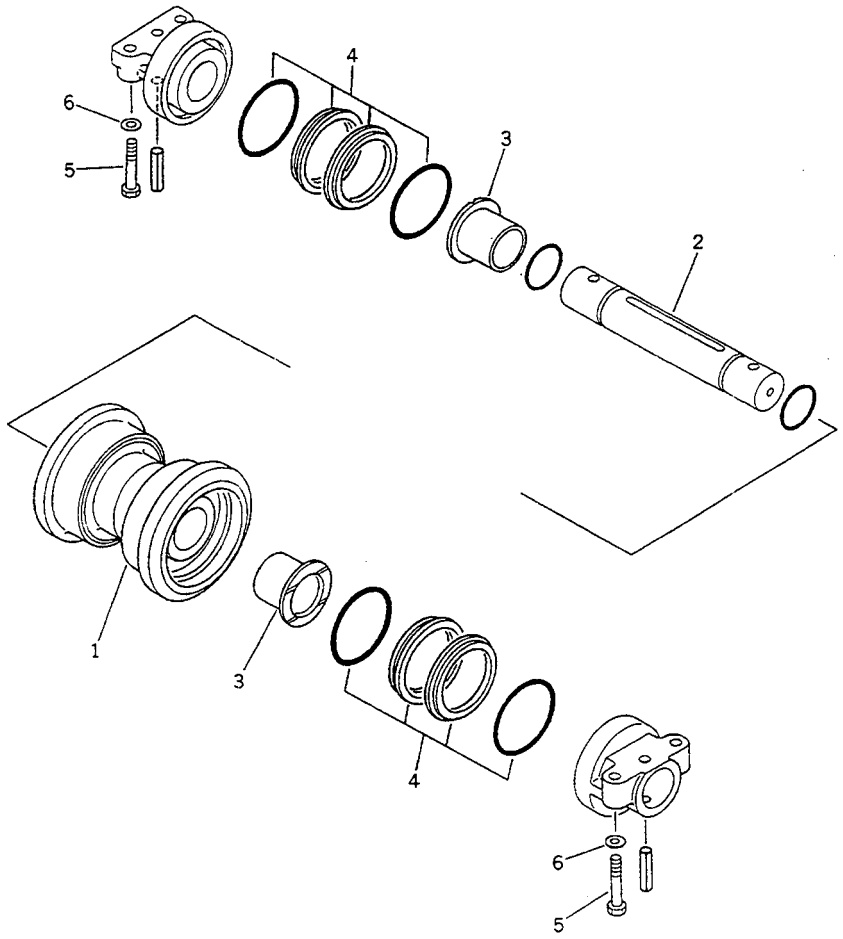

FIG NO. :3031

INDEX NO.	PART NO.	DESCRIPTION	Q'TY	SERIAL NO. PC210-3KP	SERIAL NO. PC240-3KP
	205-30-K0010	TRACK ROLLER ASS'Y,(PC210)	14	K15001-	
	205-30-K0010	TRACK ROLLER ASS'Y,(PC210LC)	18	K15001-	
1	205-30-K1110	.ROLLER,TRACK	1	K15001-	
2	205-30-K1120	.SHAFT	1	K15001-	
3	205-30-K1140	.BUSHING	2	K15001-	
4	205-30-K1130	.FLOATING SEAL ASS'Y	2	K15001-	
5	01010-51680	BOLT,(PC210)	56	K15001-	
	01010-51680	BOLT,(PC210LC)	72	K15001-	
6	01643-31645	WASHER,(PC210)	56	K15001-	
	01643-31645	WASHER,(PC210LC)	72	K15001-	

https://truckmanualshub.com/

FIG. 3035 TRACK ROLLER (PC240)

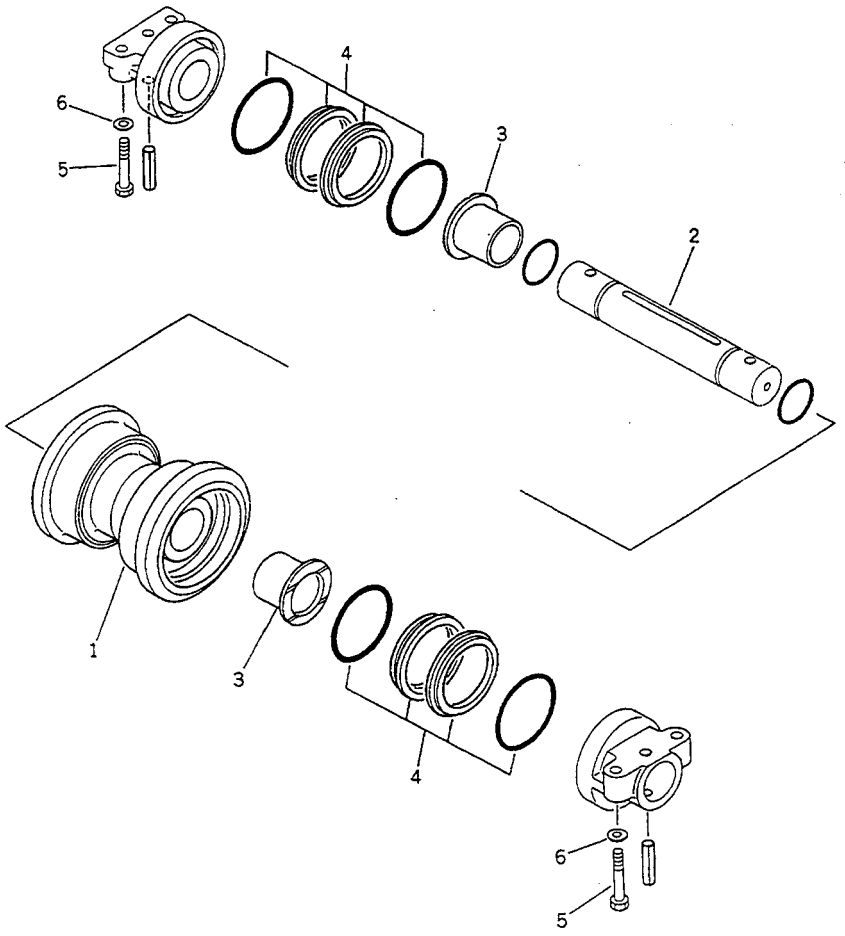

FIG NO. :3035

INDEX NO.	PART NO.	DESCRIPTION	Q'TY	SERIAL NO. PC210-3KP	SERIAL NO. PC240-3KP
	205-30-K0010	TRACK ROLLER ASS'Y,(PC240)	16		K15001-
	205-30-K0010	TRACK ROLLER ASS'Y,(PC240LC)	20		K15001-
1	205-30-K1110	.ROLLER,TRACK	1		K15001-
2	205-30-K1120	.SHAFT	1		K15001-
3	205-30-K1140	.BUSHING	2		K15001-
4	205-30-K1130	.FLOATING SEAL ASS'Y	2		K15001-
5	01010-51690	BOLT,(PC240)	64		K15001-
	01010-51690	BOLT,(PC240LC)	80		K15001-
6	01643-31645	WASHER,(PC240)	64		K15001-
	01643-31645	WASHER,(PC240LC)	80		K15001-

https://truckmanualshub.com/

FIG. 3041 CARRIER ROLLER

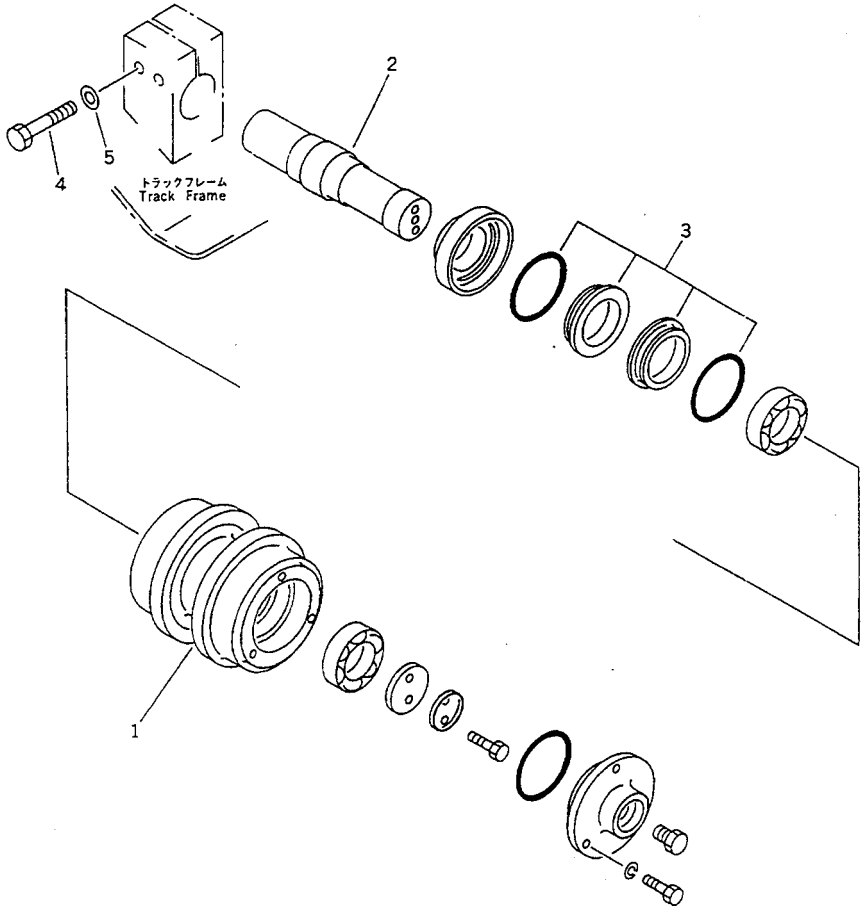

FIG NO. :3041

INDEX NO.	PART NO.	DESCRIPTION	Q'TY	SERIAL NO. PC210-3KP	SERIAL NO. PC240-3KP
	205-30-K1200	CARRIER ROLLER ASS'Y	4	K15001-	K15001-
1	205-30-K1150	.ROLLER	1	K15001-	K15001-
2	205-30-K1160	.SHAFT	1	K15001-	K15001-
3	205-30-K1170	.FLOATING SEAL ASS'Y	1	K15001-	K15001-
4	01010-51680	BOLT	8	K15001-	K15001-
5	01643-31645	WASHER	8	K15001-	K15001-

https://truckmanualshub.com/

FIG. 3101 TRACK SHOE, TRIPLE GROUSER (PC210)

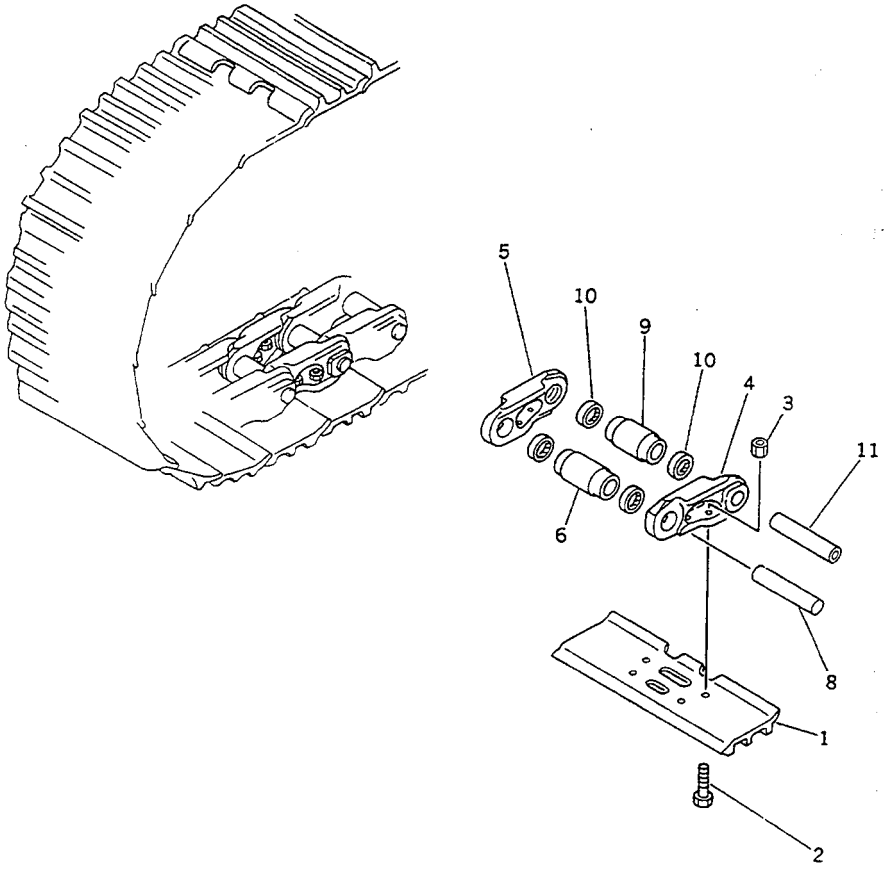

FIG NO. :3101

INDEX NO.	PART NO.	DESCRIPTION	Q'TY	SERIAL NO. PC210-3KP	SERIAL NO. PC240-3KP
		610MM WIDE			
	205-32-K1500	TRACK SHOE ASS'Y	1	K15001-	
1	205-32-E5113	.SHOE,TRACK	90	K15001-	
2	205-32-E5121	.BOLT, SHOE	360	K15001-	
3	205-32-E1122	.NUT, SHOE	360	K15001-	
	205-32-E0005	.TRACK LINK ASS'Y	1	K15001-	
4	205-32-E1112	..LINK,TRACK, L.H.	90	K15001-	
5	205-32-E1113	..LINK,TRACK, R.H.	90	K15001-	
6	205-32-E1114	..BUSHING,REGULAR	88	K15001-	
8	205-32-51152	..PIN,REGULAR	88	K15001-	
9	135-32-E1117	..BUSHING,MASTER	2	K15001-	
10	205-32-E1138	..SPACER,MASTER	4	K15001-	
11	205-32-K1130	..PIN,MASTER	2	K15001-	
		710MM WIDE			
	205-32-K1600	TRACK SHOE ASS'Y	1	K15001-	
1	206-32-E4111	.SHOE,TRACK	90	K15001-	
2	205-32-E5121	.BOLT, SHOE	360	K15001-	
3	205-32-E1122	.NUT, SHOE	360	K15001-	
4	205-32-E0005	.TRACK LINK ASS'Y	1	K15001-	
		810MM WIDE			
	205-32-K1700	TRACK SHOE ASS'Y	1	K15001-	
1	205-32-E5125	.SHOE,TRACK	90	K15001-	
2	205-32-E5121	.BOLT, SHOE	360	K15001-	
3	205-32-E1122	.NUT, SHOE	360	K15001-	
4	205-32-E0005	.TRACK LINK ASS'Y	1	K15001-	
		910MM WIDE			
	205-32-K1800	TRACK SHOE ASS'Y	1	K15001-	
1	205-32-E5128	.SHOE,TRACK	90	K15001-	
2	205-32-E5121	.BOLT, SHOE	360	K15001-	
3	205-32-E1122	.NUT, SHOE	360	K15001-	

https://truckmanualshub.com/

FIG NO. :3101

INDEX NO.	PART NO.	DESCRIPTION	Q'TY	SERIAL NO. PC210-3KP	SERIAL NO. PC240-3KP
4	205-32-E0005	.TRACK LINK ASS'Y	1	K15001-	

https://truckmanualshub.com/

FIG. 3111 TRACK SHOE, TRIPLE GROUSER (PC210LC)

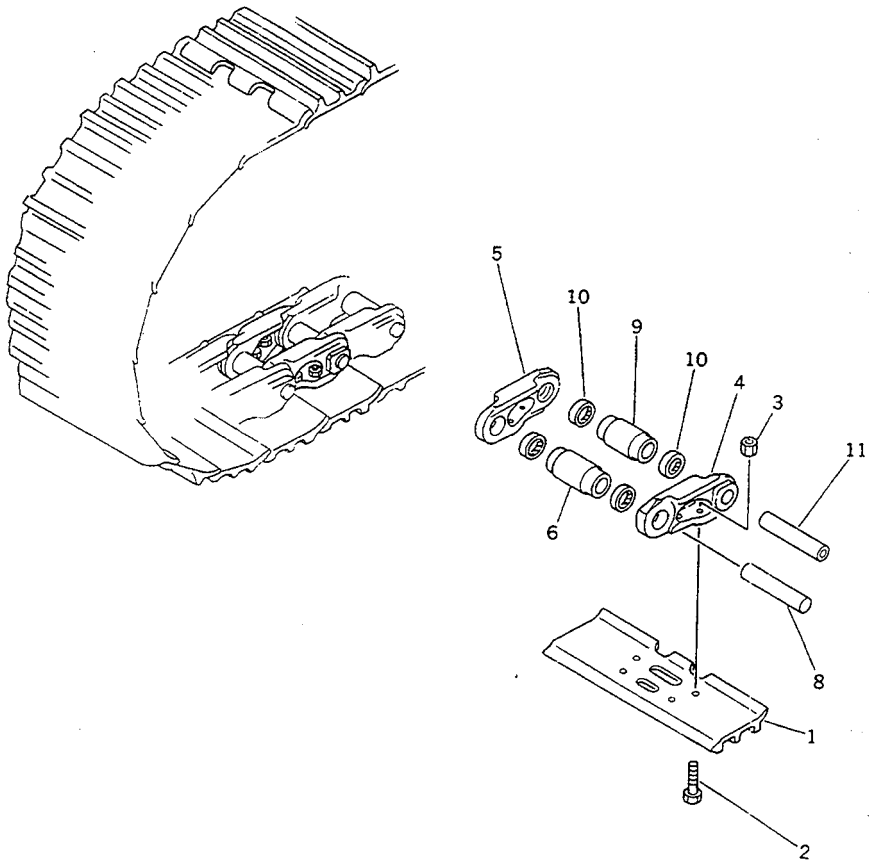

FIG NO. :3111

INDEX NO.	PART NO.	DESCRIPTION	Q'TY	SERIAL NO. PC210-3KP	SERIAL NO. PC240-3KP
		710MM WIDE			
	205-32-K1100	TRACK SHOE ASS'Y	1	K15001-	
1	205-32-E4111	.SHOE,TRACK	98	K15001-	
2	205-32-E5121	.BOLT, SHOE	392	K15001-	
3	205-32-E1122	.NUT, SHOE	392	K15001-	
	205-32-E0004	.TRACK LINK ASS'Y	1	K15001-	
4	205-32-E1112	..LINK,L.H.	98	K15001-	
5	205-32-E1113	..LINK,R.H.	98	K15001-	
6	205-32-E1114	..BUSHING,REGULAR	96	K15001-	
8	205-32-51152	..PIN,REGULAR	96	K15001-	
9	135-32-E1117	..BUSHING,MASTER	2	K15001-	
10	205-32-E1138	..SPACER,MASTER	4	K15001-	
11	205-32-E1130	..PIN,MASTER	2	K15001-	
		610MM WIDE			
	205-32-K1200	TRACK SHOE ASS'Y	1	K15001-	
1	205-32-E5113	.SHOE,TRACK	98	K15001-	
2	205-32-E5121	.BOLT, SHOE	392	K15001-	
3	205-32-E1122	.NUT, SHOE	392	K15001-	
4	205-32-E0004	.TRACK LINK ASS'Y	1	K15001-	
		810MM WIDE			
	205-32-K1300	TRACK SHOE ASS'Y	1	K15001-	
1	205-32-E5125	.SHOE,TRACK	98	K15001-	
2	205-32-E5121	.BOLT, SHOE	392	K15001-	
3	205-32-E1122	.NUT, SHOE	392	K15001-	
4	205-32-E0004	.TRACK LINK ASS'Y	1	K15001-	
		910MM WIDE			
	205-32-K1400	TRACK SHOE ASS'Y	1	K15001-	
1	205-32-E5128	.SHOE,TRACK	98	K15001-	
2	205-32-E5121	.BOLT, SHOE	392	K15001-	
3	205-32-E1122	.NUT, SHOE	392	K15001-	

https://truckmanualshub.com/

FIG NO. :3111

INDEX NO.	PART NO.	DESCRIPTION	Q'TY	SERIAL NO. PC210-3KP	SERIAL NO. PC240-3KP
4	205-32-E0004	.TRACK LINK ASS'Y	1	K15001-	

https://truckmanualshub.com/

FIG. 3121 TRACK SHOE, TRIPLE GROUSER (PC240)

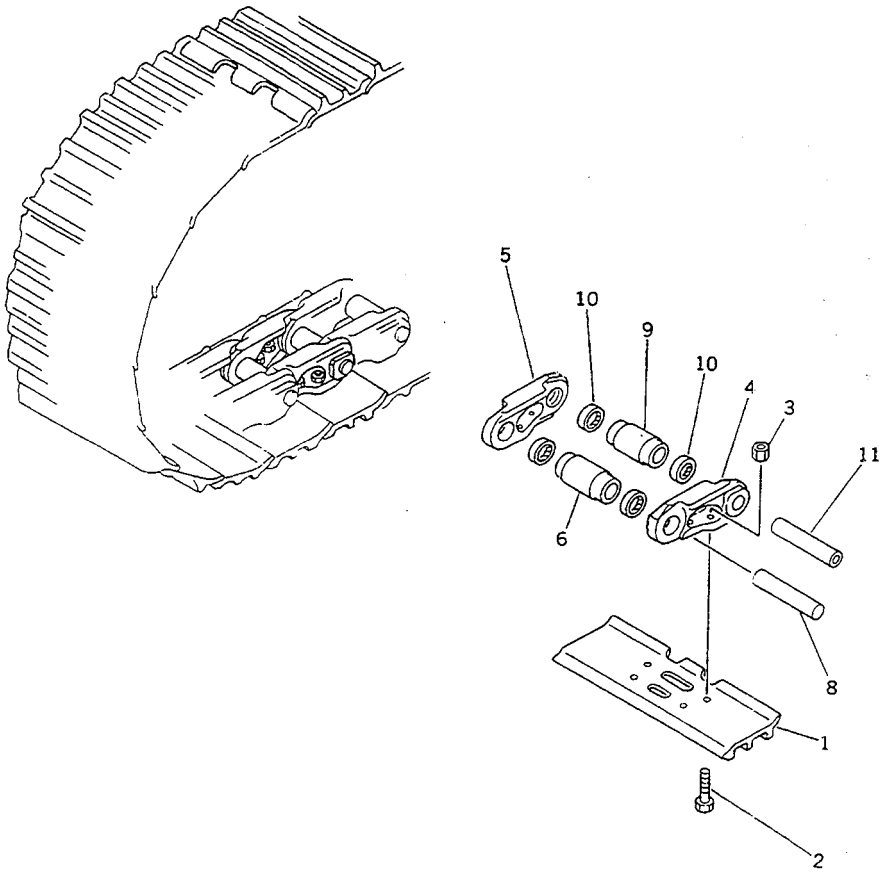

FIG NO. :3121

INDEX NO.	PART NO.	DESCRIPTION	Q'TY	SERIAL NO. PC210-3KP	SERIAL NO. PC240-3KP
		610MM WIDE			
	206-32-K1100	TRACK SHOE ASS'Y	1		K15001-
1	205-32-E5113	.SHOE,TRACK	94		K15001-
2	205-32-E5121	.BOLT, SHOE	376		K15001-
3	205-32-E1122	.NUT, SHOE	376		K15001-
	206-32-E0003	.TRACK LINK ASS'Y	1		K15001-
4	205-32-E1112	..LINK,TRACK, R.H.	94		K15001-
5	205-32-E1113	..LINK,TRACK, R.H.	94		K15001-
6	205-32-E1114	..BUSHING,REGULAR	92		K15001-
8	205-32-51152	..PIN,REGULAR	92		K15001-
9	205-32-E1117	..BUSHING,MASTER	2		K15001-
10	205-32-E1138	..SPACER,MASTER	4		K15001-
11	205-32-K1130	..PIN,MASTER	2		K15001-
		710MM WIDE			
	206-32-K1200	TRACK SHOE ASS'Y	1		K15001-
1	205-32-E4111	.SHOE,TRACK	94		K15001-
2	205-32-E5121	.BOLT, SHOE	376		K15001-
3	205-32-E1122	.NUT, SHOE	376		K15001-
4	206-32-E0003	.TRACK LINK ASS'Y	1		K15001-
		810MM WIDE			
	206-32-K1300	TRACK SHOE ASS'Y	1		K15001-
1	205-32-E5125	.SHOE,TRACK	94		K15001-
2	205-32-E5121	.BOLT, SHOE	376		K15001-
3	205-32-E1122	.NUT, SHOE	376		K15001-
4	206-32-E0003	.TRACK LINK ASS'Y	1		K15001-

https://truckmanualshub.com/

FIG. 3131 TRACK SHOE, TRIPLE GROUSER (PC240LC)

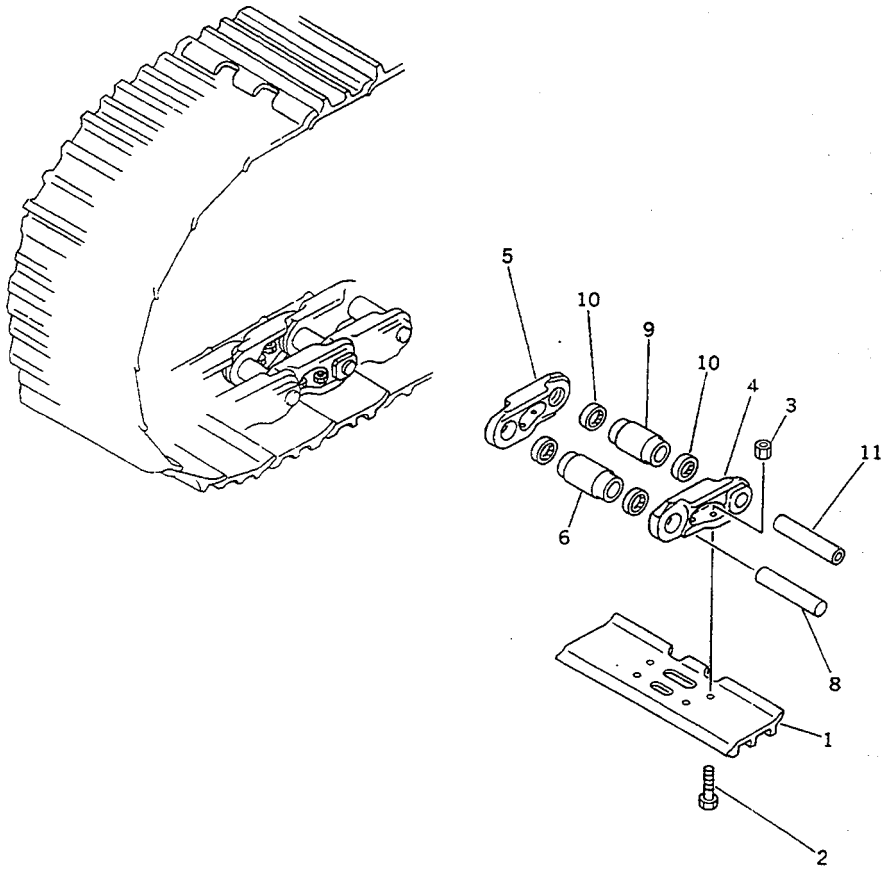

FIG NO. :3131

INDEX NO.	PART NO.	DESCRIPTION	Q'TY	SERIAL NO. PC210-3KP	SERIAL NO. PC240-3KP
		710MM WIDE			
	206-32-K1500	TRACK SHOE ASS'Y	1		K15001-
1	206-32-E4111	.SHOE,TRACK	102		K15001-
2	205-32-E5121	.BOLT, SHOE	408		K15001-
3	205-32-E1122	.NUT, SHOE	408		K15001-
	206-32-E0002	.TRACK LINK ASS'Y	1		K15001-
4	206-32-E1112	..LINK,L.H.	102		K15001-
5	205-32-E1113	..LINK,R.H.	102		K15001-
6	205-32-E1114	..BUSHING,REGULAR	100		K15001-
8	205-32-51152	..PIN,REGULAR	100		K15001-
9	205-32-E1117	..BUSHING,MASTER	2		K15001-
10	205-32-E1138	..SPACER,MASTER	4		K15001-
11	205-32-K1130	..PIN,MASTER	2		K15001-
		610MM WIDE			
	206-32-K1400	TRACK SHOE ASS'Y	1		K15001-
1	205-32-E5113	.SHOE	102		K15001-
2	205-32-E5121	.BOLT, SHOE	408		K15001-
3	205-32-E1122	.NUT, SHOE	408		K15001-
4	206-32-E0002	.TRACK LINK ASS'Y	1		K15001-
		810MM WIDE			
	206-32-K1600	TRACK SHOE ASS'Y	1		K15001-
1	205-32-E5125	.SHOE	102		K15001-
2	205-32-E5121	.BOLT, SHOE	408		K15001-
3	205-32-E1122	.NUT, SHOE	408		K15001-
4	206-32-E0002	.TRACK LINK ASS'Y	1		K15001-

https://truckmanualshub.com/

SWING AND CONTROL SYSTEM

https://truckmanualshub.com/

FIG. 4001 SWING CIRCLE

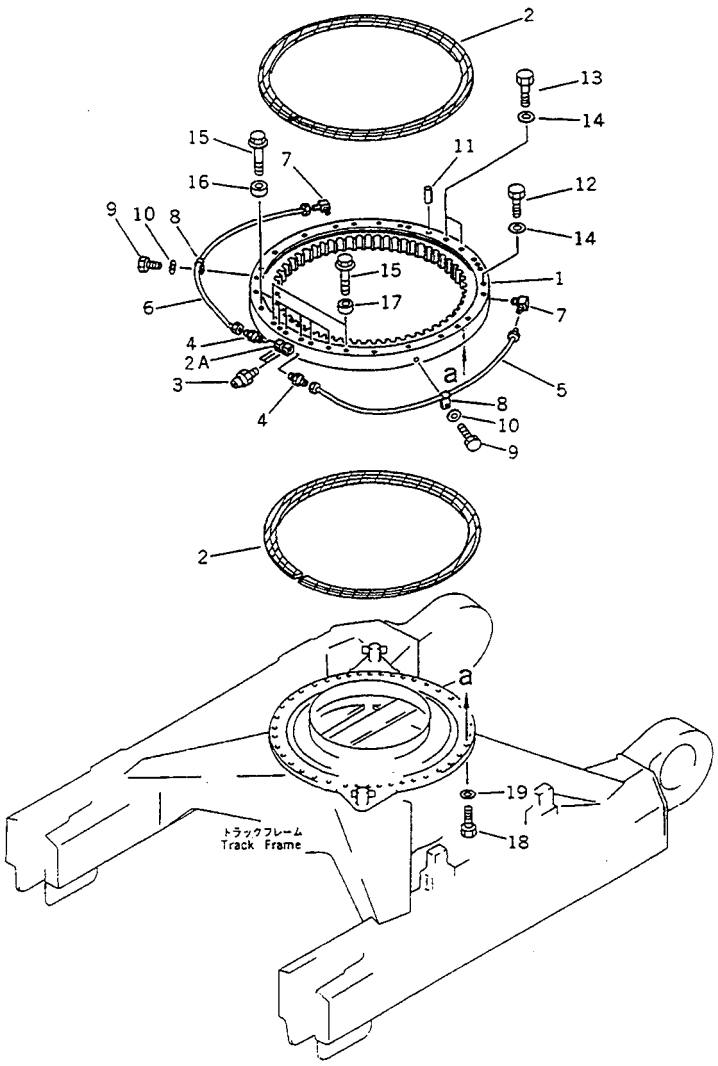

FIG NO. :4001

INDEX NO.	PART NO.	DESCRIPTION	Q'TY	SERIAL NO. PC210-3KP	SERIAL NO. PC240-3KP
1	205-25-71103	CIRCLE,SWING	1	K15001-	K15001-
2	205-25-71151	.SEAL	2	K15001-	K15001-
2A	205-25-71280	NIPPLE	2	K15001-	K15001-
3	07020-00000	FITTING,GREASE	3	K15001-	K15001-
4	07213-50813	CONNECTOR	2	K15001-	K15001-
5	205-25-71220	TUBE	1	K15001-	K15001-
6	205-25-71230	TUBE	1	K15001-	K15001-
7	207-70-11740	ELBOW	2	K15001-	K15001-
8	08036-00814	CLIP	2	K15001-	K15001-
9	01010-51016	BOLT	2	K15001-	K15001-
10	01643-31032	WASHER	2	K15001-	K15001-
11	04020-01842	PIN,DOWEL	2	K15001-	K15001-
12	205-25-71250	BOLT	16	K15001-	K15001-
13	205-25-71260	BOLT	2	K15001-	K15001-
14	01643-32260	WASHER	18	K15001-	K15001-
15	208-27-31371	BOLT	8	K15001-	K15001-
16	154-30-14130	SPACER	6	K15001-	K15001-
17	205-25-71270	WASHER	2	K15001-	K15001-
18	01018-32070	BOLT	36	K15001-	K15001-
19	01643-32060	WASHER	36	K15001-	K15001-

https://truckmanualshub.com/

FIG. 4011 SWING MACHINERY

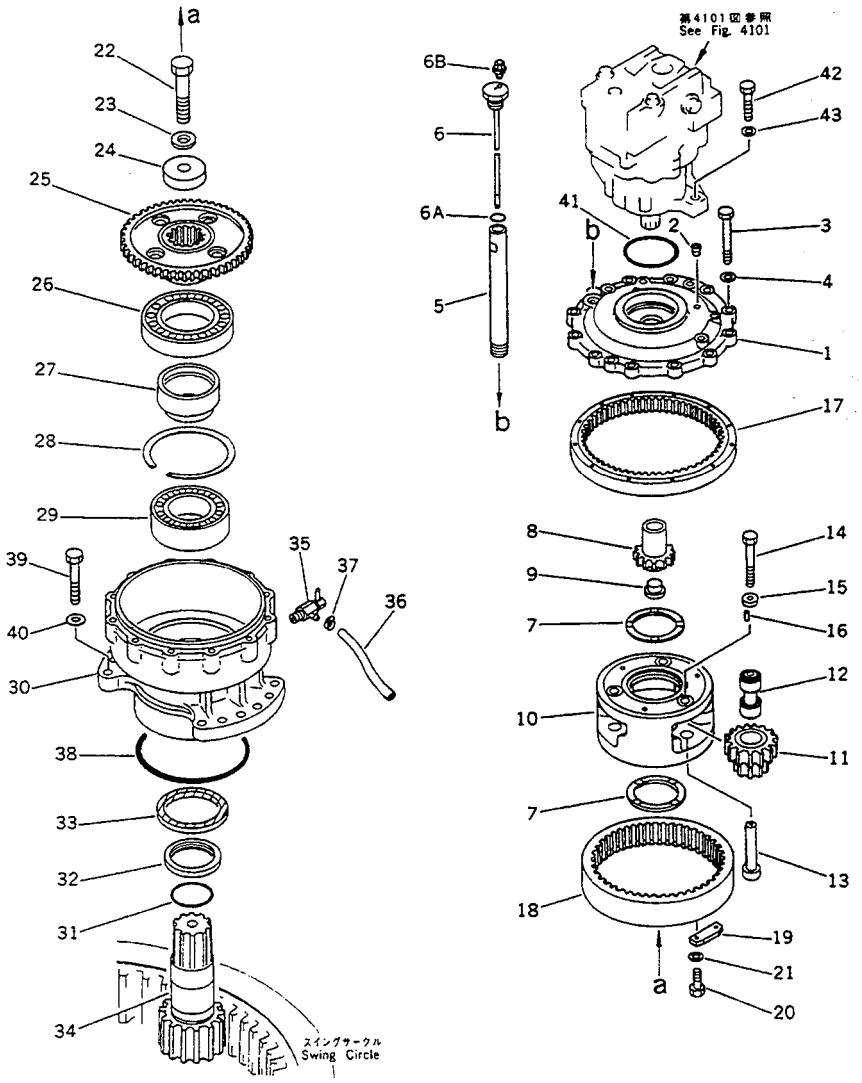

FIG NO. :4011

INDEX NO.	PART NO.	DESCRIPTION	Q'TY	SERIAL NO. PC210-3KP	SERIAL NO. PC240-3KP
	205-26-00042	SWING MACHINERY A.	1	K15001-	K15001-
1	205-26-71323	.COVER	1	K15001-	K15001-
2	07043-70312	.PLUG	2	K15001-	K15001-
3	01010-51690	.BOLT	12	K15001-	K15001-
4	01643-31645	.WASHER	12	K15001-	K15001-
5	205-26-71482	.FILLER	1	K15001-	K15001-
6	205-26-71493	.GAUGE	1	K15001-	K15001-
6A	07000-03025	.O-RING	1	K15001-	K15001-
6B	205-26-71680	.BREATHER	1	K15001-	K15001-
7	205-26-71591	.SPACER	2	K15001-	K15001-
8	205-26-71362	.GEAR	1	K15001-	K15001-
9	205-26-71530	.BUTTON	1	K15001-	K15001-
10	205-26-71332	.CARRIER	1	K15001-	K15001-
11	205-26-00031	.PLANETARY GEAR A.	1	K15001-	K15001-
12	205-26-71650	.BEARING,ROLLER	3	K15001-	K15001-
13	205-26-71453	.PIN	3	K15001-	K15001-
14	01010-51250	.BOLT	3	K15001-	K15001-
15	205-26-71660	.COLLAR	3	K15001-	K15001-
16	04020-00514	.PIN	3	K15001-	K15001-
17	205-26-71611	.GEAR	1	K15001-	K15001-
18	205-26-71373	.GEAR	1	K15001-	K15001-
19	205-26-71510	.PLATE	6	K15001-	K15001-
20	01010-50820	.BOLT	12	K15001-	K15001-
21	01643-50823	.WASHER	12	K15001-	K15001-
22	175-32-11210	.BOLT	1	K15001-	K15001-
23	01643-32460	.WASHER	1	K15001-	K15001-
24	205-26-71521	.PLATE	1	K15001-	K15001-
25	205-26-71383	.GEAR	1	K15001-	K15001-
26	205-26-71580	.BEARING,ROLLER	1	K15001-	K15001-
27	205-26-71560	.SPACER	1	K15001-	K15001-

https://truckmanualshub.com/

FIG NO. :4011

INDEX NO.	PART NO.	DESCRIPTION	Q'TY	SERIAL NO. PC210-3KP	SERIAL NO. PC240-3KP
28	04071-00200	.RING,SNAP	1	K15001-	K15001-
29	06030-22319	.BEARING,ROLLER	1	K15001-	K15001-
30	205-26-71313	.CASE	1	K15001-	K15001-
31	07000-05095	.O-RING	1	K15001-	K15001-
32	205-26-71430	.SPACER	1	K15001-	K15001-
33	07012-00125	.SEAL	1	K15001-	K15001-
34	205-26-71393	.SHAFT	1	K15001-	K15001-
35	195-03-13241	.VALVE	1	K15001-	K15001-
36	205-26-71620	.TUBE	1	K15001-	K15001-
37	07281-00197	.CLAMP	1	K15001-	K15001-
38	07000-05240	O-RING	1	K15001-	K15001-
39	01010-52060	BOLT	12	K15001-	K15001-
40	01643-32060	WASHER	12	K15001-	K15001-
41	07000-02110	O-RING	1	K15001-	K15001-
42	01010-52055	BOLT	2	K15001-	K15001-
43	01643-32060	WASHER	2	K15001-	K15001-

https://truckmanualshub.com/

FIG. 4101 SWING MOTOR (1/2) (WITH SWING MECHANICAL BRAKE)

このアセンブリの構成部品は第４１０１図および第４１０２図を含みます.
706-75-11302 : This assembly consists of all parts shown in Figs. 4101 and 4102.

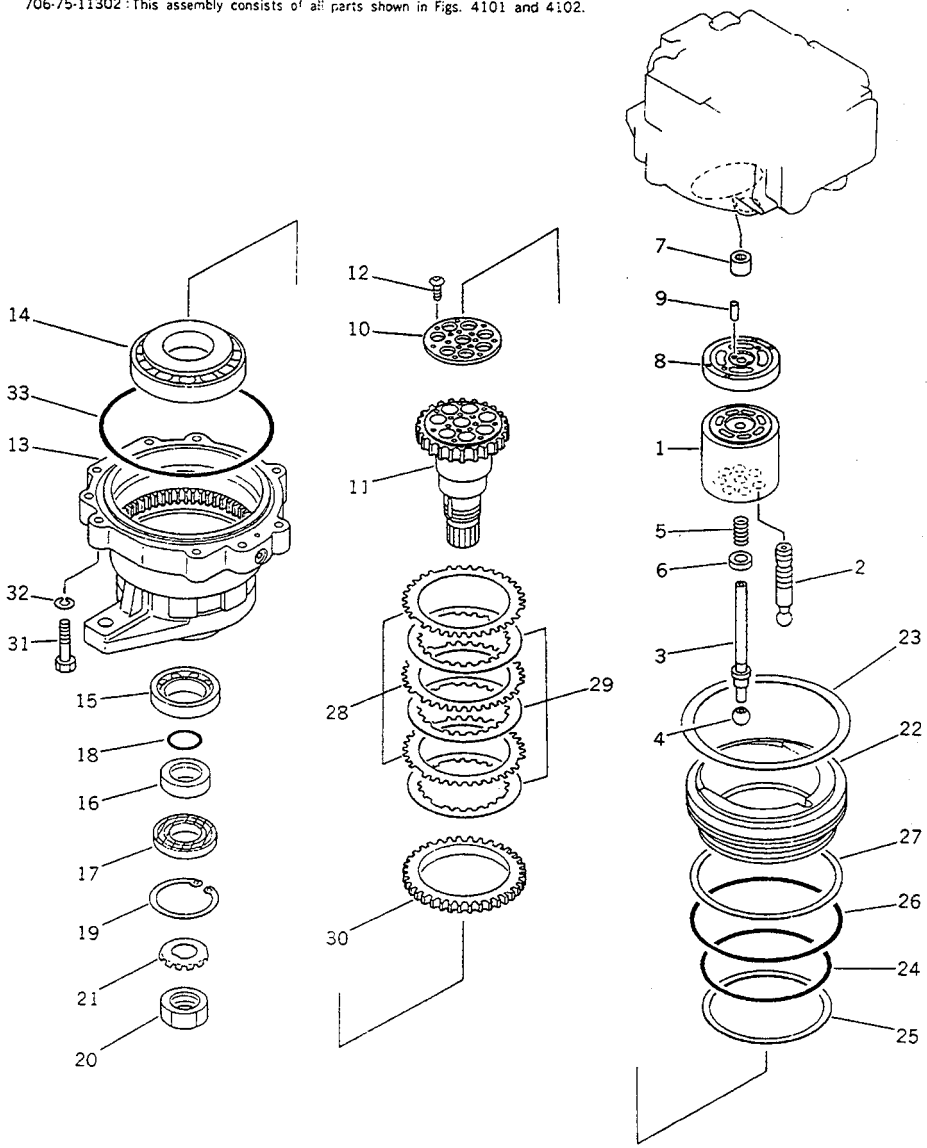

FIG NO. :4101

INDEX NO.	PART NO.	DESCRIPTION	Q'TY	SERIAL NO. PC210-3KP	SERIAL NO. PC240-3KP
	706-75-11302	SWING MOTOR ASS'Y	1	K15001-	K15001-
	706-75-03102	.MOTOR SUB ASS'Y	1	K15001-	K15001-
1	(★706-75-41091)	..BLOCK,CYLINDER	1	K15001-	K15001-
2	(★706-75-41163)	..PISTON SUB ASS'Y	7	K15001-	K15001-
3	(★706-75-42080)	..SHAFT,CENTER	1	K15001-	K15001-
4	(★706-75-41220)	..BALL,CENTER	1	K15001-	K15001-
5	(★706-75-41110)	..SPRING	1	K15001-	K15001-
6	(★706-75-41130)	..RING,CENTER	1	K15001-	K15001-
7	(★706-75-40010)	..BEARING	1	K15001-	K15001-
8	(★706-75-42840)	..PLATE,VALVE	1	K15001-	K15001-
9	(★04020-00820)	..PIN,DOWEL	1	K15001-	K15001-
10	(★706-75-42260)	..RETAINER	1	K15001-	K15001-
11	(★706-75-42960)	..SHAFT,DRIVE	1	K15001-	K15001-
12	(★706-75-42270)	..SCREW	7	K15001-	K15001-
13	(★706-75-42051)	..CASE,BRAKE	1	K15001-	K15001-
14	(★706-75-42880)	..BEARING	1	K15001-	K15001-
15	(★706-76-40890)	..BEARING	1	K15001-	K15001-
16	(★706-75-42910)	..RING	1	K15001-	K15001-
17	706-76-40920	..SEAL,OIL	1	K15001-	K15001-
18	(★07000-03040)	..O-RING	1	K15001-	K15001-
19	04065-09030	..RING,SNAP	1	K15001-	K15001-
20	(★01530-03912)	..NUT	1	K15001-	K15001-
21	(★706-75-40940)	..WASHER,LOCK	1	K15001-	K15001-
22	(★706-75-91481)	..PISTON,BRAKE	1	K15001-	K15001-
23	(★706-75-91431)	..SPRING	1	K15001-	K15001-
24	(★07000-15155)	..O-RING	1	K15001-	K15001-
25	(★07001-05155)	..RING,BACK-UP	1	K15001-	K15001-
26	(★07000-15175)	..O-RING	1	K15001-	K15001-
27	(★07001-05175)	..RING,BACK-UP	1	K15001-	K15001-
28	(★706-75-91340)	..PLATE	3	K15001-	K15001-

https://truckmanualshub.com/

FIG NO. :4101

INDEX NO.	PART NO.	DESCRIPTION	Q'TY	SERIAL NO. PC210-3KP	SERIAL NO. PC240-3KP
29	(★706-75-91350)	..DISC	3	K15001-	K15001-
30	(★706-75-91330)	..PLATE	1	K15001-	K15001-
31	(★01010-51455)	..BOLT	9	K15001-	K15001-
32	(★01602-21442)	..WASHER,SPRING	9	K15001-	K15001-
33	(★706-75-42370)	..O-RING	1	K15001-	K15001-

https://truckmanualshub.com/

FIG. 4102 SWING MOTOR (2/2) (WITH SWING MECHANICAL BRAKE)

(706-75-11302): このアセンブリの構成部品は第4101図および第4102図を含みます.
This assembly consists of all parts shown in Figs. 4101 and 4102.

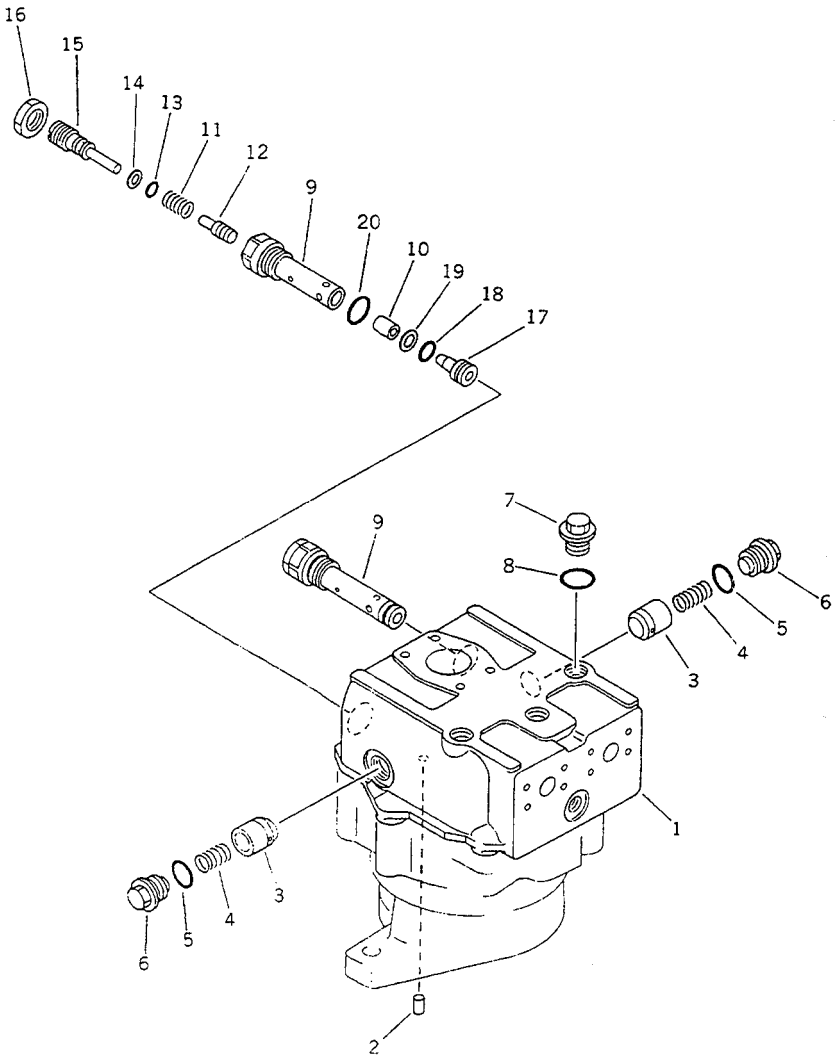

FIG NO. 4102

INDEX NO.	PART NO.	DESCRIPTION	Q'TY	SERIAL NO. PC210-3KP	SERIAL NO. PC240-3KP
	706-75-11302	SWING MOTOR ASS'Y	1	K15001-	K15001-
	(706-75-03102)	.MOTOR SUB ASS'Y	1	K15001-	K15001-
1	(★706-75-74141)	..HOUSING	1	K15001-	K15001-
2	(★706-75-42820)	..PIN,DOWEL	1	K15001-	K15001-
3	706-75-74540	..VALVE	2	K15001-	K15001-
4	706-75-74550	..SPRING	2	K15001-	K15001-
5	07002-13334	..O-RING	2	K15001-	K15001-
6	706-75-74560	..PLUG	2	K15001-	K15001-
7	706-77-72170	..PLUG	3	K15001-	K15001-
8	07002-12434	..O-RING	3	K15001-	K15001-
	706-75-85502	.RELIEF VALVE ASS'Y	2	K15001-	K15001-
9	(★706-75-75331)	..SLEEVE	1	K15001-	K15001-
10	(★706-75-75310)	..VALVE	1	K15001-	K15001-
11	(★706-73-75170)	..SPRING	1	K15001-	K15001-
12	(★706-75-75280)	..PISTON	1	K15001-	K15001-
13	(★07000-12012)	..O-RING	1	K15001-	K15001-
14	(★07001-02012)	..RING,BACK-UP	1	K15001-	K15001-
15	(★706-75-75291)	..SCREW	1	K15001-	K15001-
16	(★706-75-75350)	..NUT	1	K15001-	K15001-
17	(★706-75-75392)	..SEAT,VALVE	1	K15001-	K15001-
18	07000-22020	..O-RING	1	K15001-	K15001-
19	07001-02020	..RING,BACK-UP	1	K15001-	K15001-
20	07002-13034	..O-RING	1	K15001-	K15001-

https://truckmanualshub.com/

FIG. 4111 SWING MOTOR (1/2) (WITHOUT SWING MECHANICAL BRAKE)

706-75-11902 :このアセンブリの構成部品は第４１１１図および第４１１２図を含みます。
706-75-11902 :This assembly consists of all parts shown in Figs. 4111 and 4112.

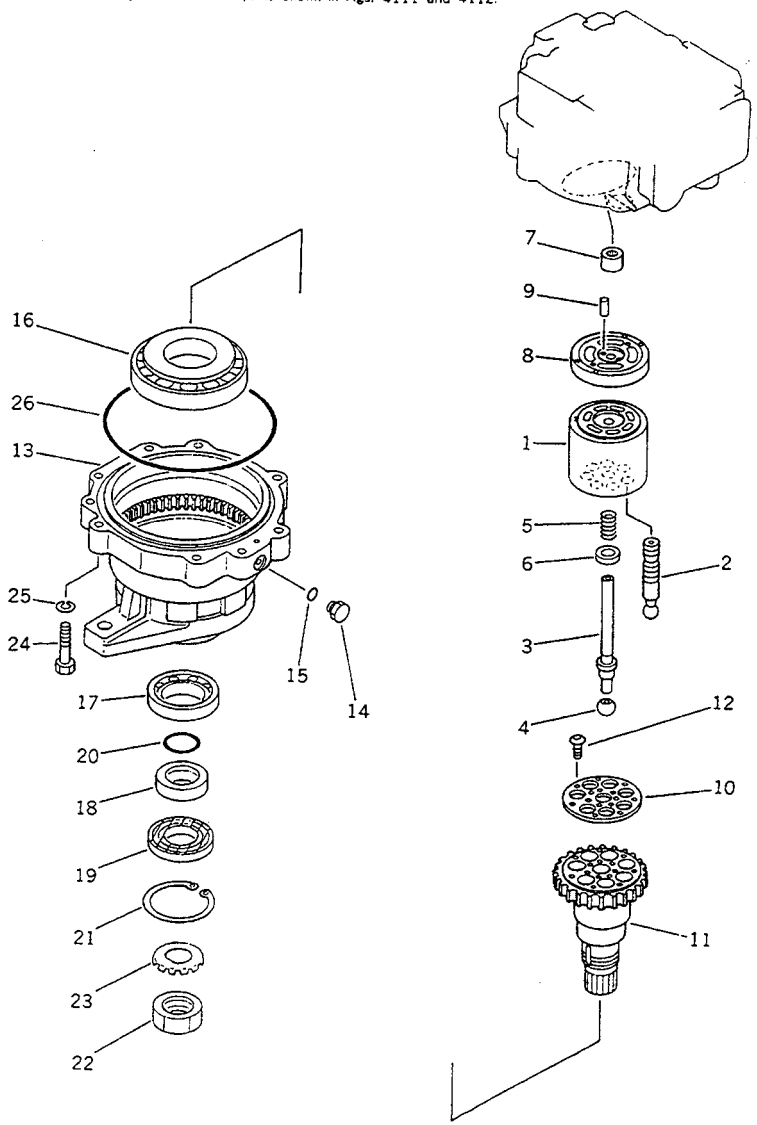

FIG NO. :4111

INDEX NO.	PART NO.	DESCRIPTION	Q'TY	SERIAL NO. PC210-3KP	SERIAL NO. PC240-3KP
	706-75-11902	SWING MOTOR ASS'Y	1	K15001-	K15001-
	706-75-03202	.MOTOR SUB ASS'Y	1	K15001-	K15001-
1	(★706-75-41091)	..BLOCK,CYLINDER	1	K15001-	K15001-
2	(★706-73-41163)	..PISTON ASS'Y	7	K15001-	K15001-
3	(★706-75-42080)	..SHAFT,CENTER	1	K15001-	K15001-
4	(★706-75-41220)	..BALL,CENTER	1	K15001-	K15001-
5	(★706-75-41110)	..SPRING	1	K15001-	K15001-
6	(★706-75-41130)	..RING,CENTER	1	K15001-	K15001-
7	(★706-75-40010)	..BEARING	1	K15001-	K15001-
8	(★706-75-42840)	..PLATE,VALVE	1	K15001-	K15001-
9	(★04020-00820)	..PIN,DOWEL	1	K15001-	K15001-
10	(★706-75-42260)	..RETAINER	1	K15001-	K15001-
11	(★706-75-42960)	..SHAFT,DRIVE	1	K15001-	K15001-
12	(★706-75-42270)	..SCREW	7	K15001-	K15001-
13	(★706-75-42051)	..CASE,BRAKE	1	K15001-	K15001-
14	07040-11409	..PLUG	1	K15001-	K15001-
15	07002-01423	..O-RING	1	K15001-	K15001-
16	(★706-75-42880)	..BEARING	1	K15001-	K15001-
17	(★706-76-40890)	..BEARING	1	K15001-	K15001-
18	(★706-75-42910)	..RING	1	K15001-	K15001-
19	706-76-40920	..SEAL,OIL	1	K15001-	K15001-
20	(★07000-03040)	..O-RING	1	K15001-	K15001-
21	04065-09030	..RING,SNAP	1	K15001-	K15001-
22	(★01530-03912)	..NUT	1	K15001-	K15001-
23	(★706-75-40940)	..WASHER,LOCK	1	K15001-	K15001-
24	(★01010-51455)	..BOLT	9	K15001-	K15001-
25	(★01602-21442)	..WASHER,SPRING	9	K15001-	K15001-
26	(★706-75-42370)	..O-RING	1	K15001-	K15001-

https://truckmanualshub.com/

FIG. 4112 SWING MOTOR (2/2) (WITHOUT SWING MECHANICAL BRAKE)

(706-75-11902) : このアセンブリの構成部品は第4111図および第4112図を含みます。
This assembly consists of all parts shown in Figs. 4111 and 4112.

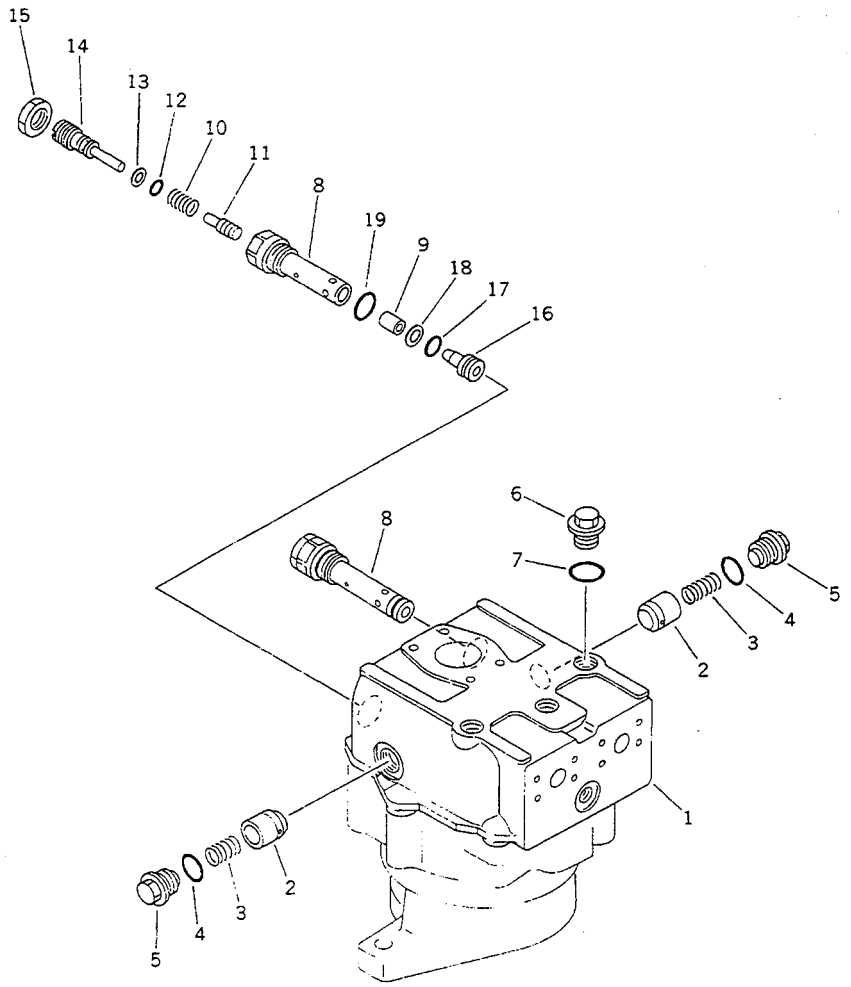

FIG NO. :4112

INDEX NO.	PART NO.	DESCRIPTION	Q'TY	SERIAL NO. PC210-3KP	SERIAL NO. PC240-3KP
	(706-75-11902)	SWING MOTOR ASS'Y	1	K15001-	K15001-
	(706-75-03202)	.MOTOR SUB ASS'Y	1	K15001-	K15001-
1	(★706-75-74141)	..HOUSING	1	K15001-	K15001-
2	706-75-74540	..VALVE	2	K15001-	K15001-
3	706-75-74550	..SPRING	2	K15001-	K15001-
4	07002-13334	..O-RING	2	K15001-	K15001-
5	706-75-74560	..PLUG	2	K15001-	K15001-
6	706-77-72170	..PLUG	3	K15001-	K15001-
7	07002-12434	..O-RING	3	K15001-	K15001-
	706-75-85502	.RELIEF VALVE ASS'Y	2	K15001-	K15001-
8	☆	..SLEEVE	1	K15001-	K15001-
9	☆	..VALVE	1	K15001-	K15001-
10	☆	..SPRING	1	K15001-	K15001-
11	☆	..PISTON	1	K15001-	K15001-
12	☆	..O-RING	1	K15001-	K15001-
13	☆	..RING,BACK-UP	1	K15001-	K15001-
14	☆	..SCREW	1	K15001-	K15001-
15	☆	..NUT	1	K15001-	K15001-
16	☆	..SEAT,VALVE	1	K15001-	K15001-
17	07000-22020	..O-RING	1	K15001-	K15001-
18	07001-02020	..RING,BACK-UP	1	K15001-	K15001-
19	07002-13034	..O-RING	1	K15001-	K15001-

https://truckmanualshub.com/

FIG. 4301 HYDRAULIC PIPING (CONTROL VALVE TO/FROM SWING MOTOR)

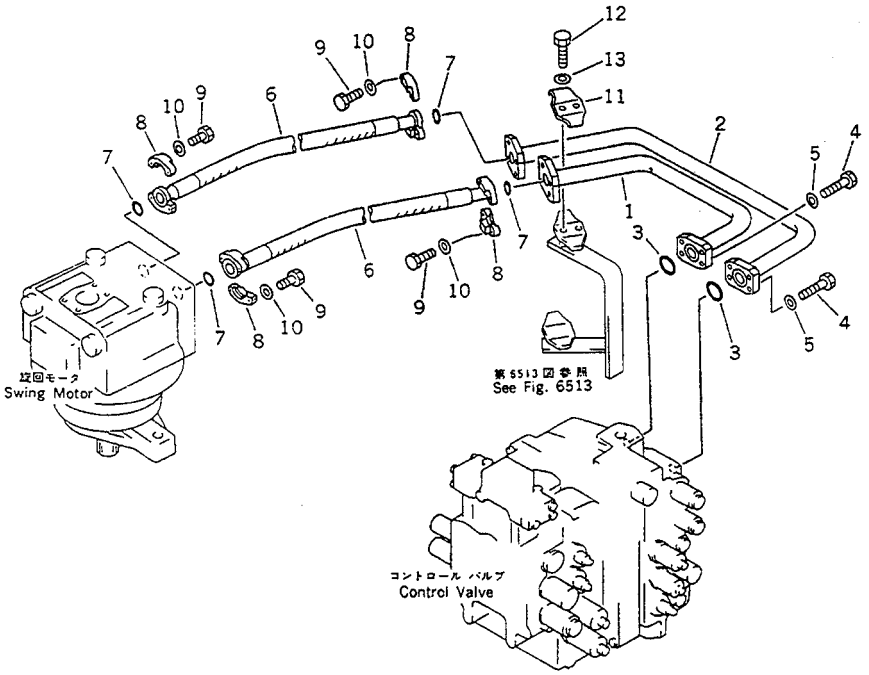

FIG NO. :4301

INDEX NO.	PART NO.	DESCRIPTION	Q'TY	SERIAL NO. PC210-3KP	SERIAL NO. PC240-3KP
1	205-62-71312	TUBE	1	K15001-	K15001-
2	205-62-71322	TUBE	1	K15001-	K15001-
3	21T-09-11450	O-RING	2	K15001-	K15001-
4	01010-50830	BOLT	8	K15001-	K15001-
5	01643-50823	WASHER	8	K15001-	K15001-
6	205-62-K1170	HOSE	2	K15001-	K15001-
7	07000-13025	O-RING	4	K15001-	K15001-
8	07371-30638	FLANGE,SPLIT	8	K15001-	K15001-
9	01010-50830	BOLT	16	K15001-	K15001-
10	01643-50823	WASHER	16	K15001-	K15001-
11	205-62-71470	CLAMP	1	K15001-	K15001-
12	205-09-71110	BOLT	2	K15001-	K15001-
13	01643-31032	WASHER	2	K15001-	K15001-

https://truckmanualshub.com/

FIG. 4431 WRIST CONTROL AND STAND, L.H. (PC210)

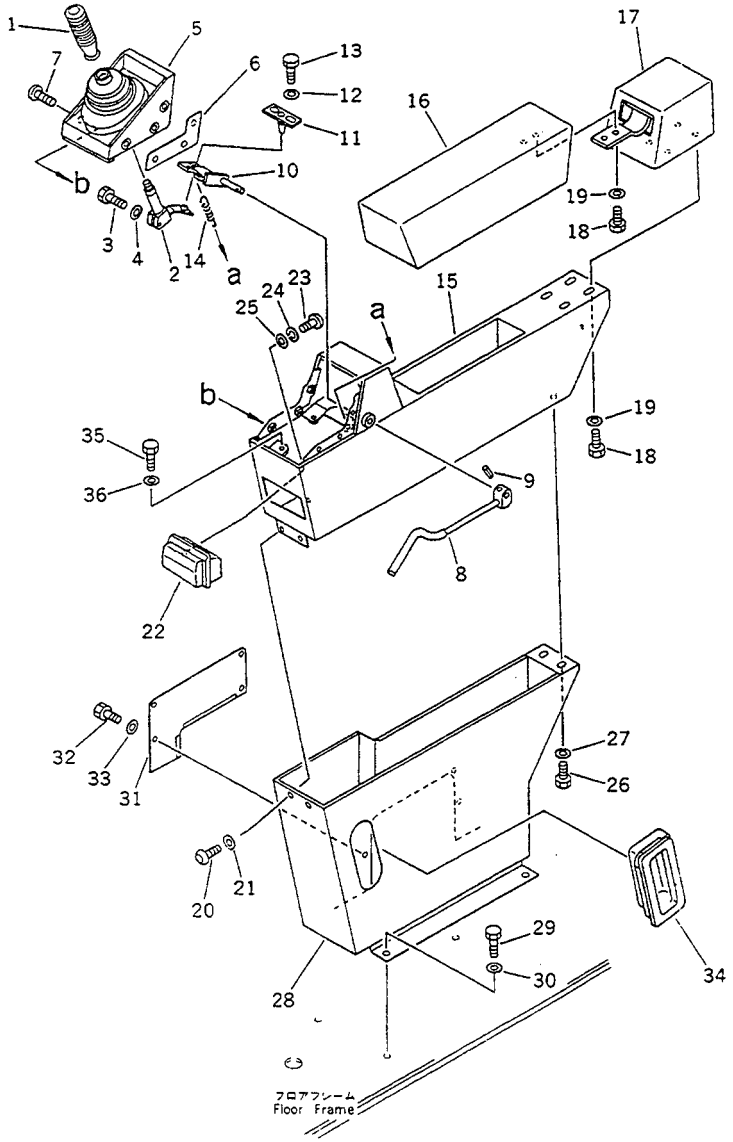

FIG NO. :4431

INDEX NO.	PART NO.	DESCRIPTION	Q'TY	SERIAL NO. PC210-3KP	SERIAL NO. PC240-3KP
1	(205-43-73600)	KNOB,(SEE FIG. 4439)	1	K15001-	
2	205-43-73750	LEVER,L.H.	1	K15001-	
3	01010-50825	BOLT	1	K15001-	
4	01643-30823	WASHER	1	K15001-	
5	205-43-71223	BOOT	1	K15001-	
6	205-43-71991	COVER	2	K15001-	
7	205-43-71280	SCREW	6	K15001-	
8	205-43-73381	LEVER	1	K15001-	
9	04025-00520	PIN,SPRING	1	K15001-	
10	205-43-71195	LEVER,L.H.	1	K15001-	
11	205-43-73551	PLATE	1	K15001-	
12	01643-30623	WASHER	2	K15001-	
13	01252-40614	BOLT	2	K15001-	
14	205-43-73340	SPRING	1	K15001-	
15	205-43-71243	BOX,L.H.	1	K15001-	
16	205-43-73570	CUSHION,L.H.	1	K15001-	
17	205-43-71612	COVER,L.H.	1	K15001-	
18	01010-50820	BOLT	6	K15001-	
19	01643-30823	WASHER	6	K15001-	
20	198-911-3430	SCREW	2	K15001-	
21	198-911-3160	WASHER	2	K15001-	
22	205-54-72240	ASHTRAY	1	K15001-	
23	01220-40408	SCREW	2	K15001-	
24	01601-20410	WASHER,SPRING	2	K15001-	
25	01642-20405	WASHER	2	K15001-	
26	01010-50820	BOLT	2	K15001-	
27	01643-30823	WASHER	2	K15001-	
28	205-43-71652	CASE,L.H.	1	K15001-	
29	01010-51230	BOLT	4	K15001-	
30	01643-31232	WASHER	4	K15001-	

https://truckmanualshub.com/

FIG NO. :4431

INDEX NO.	PART NO.	DESCRIPTION	Q'TY	SERIAL NO. PC210-3KP	SERIAL NO. PC240-3KP
31	205-43-71762	COVER	1	K15001-	
32	01010-50820	BOLT	4	K15001-	
33	01643-30823	WASHER	4	K15001-	
34	205-43-72480	COVER	1	K15001-	
35	01010-50825	BOLT	3	K15001-	
36	01643-30823	WASHER	3	K15001-	

https://truckmanualshub.com/

FIG. 4432 WRIST CONTROL AND STAND, L.H. (PC240)

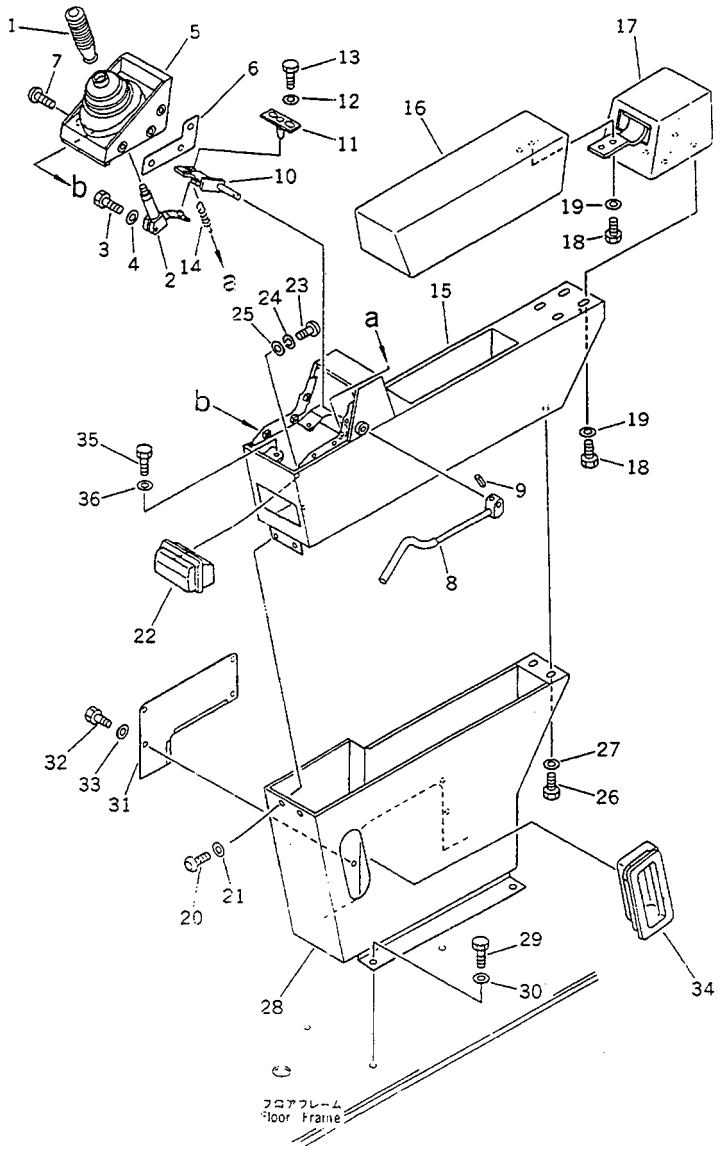

FIG NO. :4432

INDEX NO.	PART NO.	DESCRIPTION	Q'TY	SERIAL NO. PC210-3KP	SERIAL NO. PC240-3KP
1	(205-43-73600)	KNOB,(SEE FIG. 4439)	1		K15001-
2	205-43-73760	LEVER,L.H.	1		K15001-
3	01010-50825	BOLT	1		K15001-
4	01643-30823	WASHER	1		K15001-
5	205-43-71223	BOOT	1		K15001-
6	205-43-71991	COVER	2		K15001-
7	205-43-71280	SCREW	6		K15001-
8	205-43-73381	LEVER	1		K15001-
9	04025-00520	PIN,SPRING	1		K15001-
10	205-43-71195	LEVER,L.H.	1		K15001-
11	205-43-73551	PLATE	1		K15001-
12	01643-30623	WASHER	2		K15001-
13	01252-40618	BOLT	2		K15001-
14	205-43-73340	SPRING	1		K15001-
15	205-43-71243	BOX,L.H.	1		K15001-
16	205-43-73570	CUSHION,L.H.	1		K15001-
17	205-43-71612	COVER,L.H.	1		K15001-
18	01010-50820	BOLT	6		K15001-
19	01643-30823	WASHER	6		K15001-
20	198-911-3430	SCREW	2		K15001-
21	198-911-3160	WASHER	2		K15001-
22	205-54-72240	ASHTRAY	1		K15001-
23	01220-40408	SCREW	2		K15001-
24	01601-20410	WASHER,SPRING	2		K15001-
25	01642-20405	WASHER	2		K15001-
26	01010-50820	BOLT	2		K15001-
27	01643-30823	WASHER	2		K15001-
28	205-43-71652	CASE,L.H.	1		K15001-
29	01010-51230	BOLT	4		K15001-
30	01643-31232	WASHER	4		K15001-

https://truckmanualshub.com/

FIG NO. :4432

INDEX NO.	PART NO.	DESCRIPTION	Q'TY	SERIAL NO. PC210-3KP	SERIAL NO. PC240-3KP
31	205-43-71762	COVER	1		K15001-
32	01010-50820	BOLT	4		K15001-
33	01643-30823	WASHER	4		K15001-
34	205-43-72480	COVER	1		K15001-
35	01010-50825	BOLT	3		K15001-
36	01643-30823	WASHER	3		K15001-

https://truckmanualshub.com/

FIG. 4433 WRIST CONTROL AND STAND, R.H. (1/2)

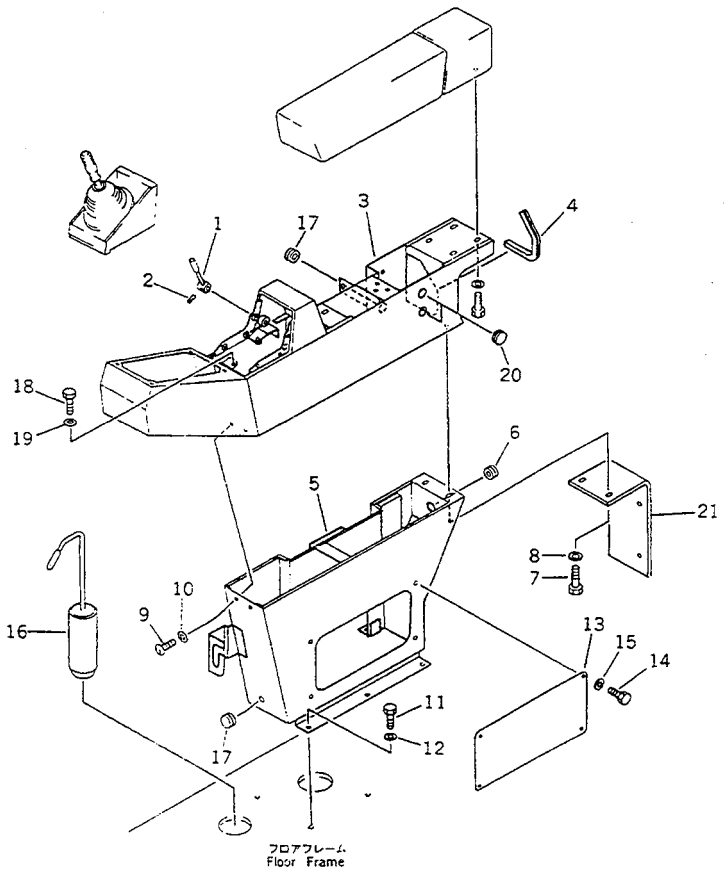

FIG NO. :4433

INDEX NO.	PART NO.	DESCRIPTION	Q'TY	SERIAL NO. PC210-3KP	SERIAL NO. PC240-3KP
1	205-43-71291	LEVER,R.H.	1	K15001-	K15001-
2	04025-00520	PIN,SPRING	1	K15001-	K15001-
3	205-43-71254	BOX,R.H.	1	K15001-	K15001-
4	21T-54-26220	.SEAL	1	K15001-	K15001-
5	205-43-71663	CASE,R.H.	1	K15001-	K15001-
6	08037-02512	GROMMET	1	K15001-	K15001-
7	01010-50820	BOLT	2	K15001-	K15001-
8	01643-30823	WASHER	2	K15001-	K15001-
9	198-911-3430	SCREW	2	K15001-	K15001-
10	198-911-3160	WASHER	2	K15001-	K15001-
11	01010-51230	BOLT	5	K15001-	K15001-
12	01643-31232	WASHER	5	K15001-	K15001-
13	205-43-K1120	COVER	1	K15001-	K15001-
14	01010-50820	BOLT	4	K15001-	K15001-
15	01643-30823	WASHER	4	K15001-	K15001-
16	205-43-72492	PIN	1	K15001-	K15001-
17	08037-02512	GROMMET	2	K15001-	K15001-
18	01010-50820	BOLT	3	K15001-	K15001-
19	01643-30823	WASHER	3	K15001-	K15001-
20	09415-02512	CAP	2	K15001-	K15001-
21	205-06-K1210	BRACKET	1	K15001-	K15001-

https://truckmanualshub.com/

FIG. 4435 WRIST CONTROL AND STAND, R.H. (2/2)

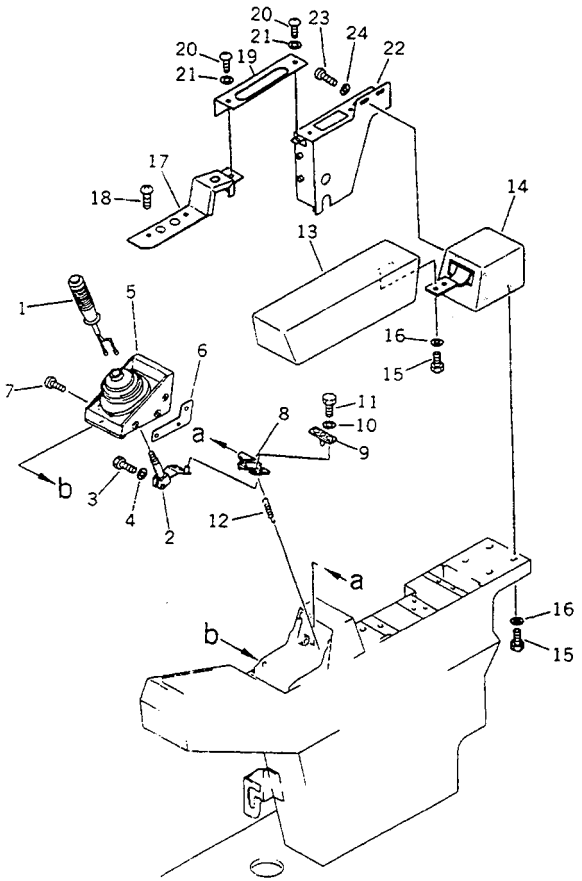

FIG NO. :4435

INDEX NO.	PART NO.	DESCRIPTION	Q'TY	SERIAL NO. PC210-3KP	SERIAL NO. PC240-3KP
1	(205-43-73700)	SWITCH,(SEE FIG. 4439)	1	K15001-	K15001-
2	205-43-73760	LEVER,R.H.	1	K15001-	K15001-
3	01010-50825	BOLT	1	K15001-	K15001-
4	01643-30823	WASHER	1	K15001-	K15001-
5	205-43-71223	BOOT	1	K15001-	K15001-
6	205-43-71991	COVER	2	K15001-	K15001-
7	205-43-71280	SCREW	6	K15001-	K15001-
8	205-43-71944	LEVER,R.H.	1	K15001-	K15001-
9	205-43-73561	PLATE	1	K15001-	K15001-
10	01643-30623	WASHER	2	K15001-	K15001-
11	01252-40614	BOLT	2	K15001-	K15001-
12	205-43-73340	SPRING	1	K15001-	K15001-
13	205-43-73580	CUSHION,R.H.	1	K15001-	K15001-
14	205-43-71622	COVER,R.H.	1	K15001-	K15001-
15	01010-50820	BOLT	6	K15001-	K15001-
16	01643-30823	WASHER	6	K15001-	K15001-
17	205-43-K1230	COVER	1	K15001-	K15001-
18	205-43-71280	SCREW	2	K15001-	K15001-
19	205-43-71951	PLATE	1	K15001-	K15001-
20	205-43-71280	SCREW	2	K15001-	K15001-
21	205-43-73420	WASHER	2	K15001-	K15001-
22	205-43-K1110	COVER	1	K15001-	K15001-
23	198-911-3430	SCREW	3	K15001-	K15001-
24	198-911-3160	WASHER	3	K15001-	K15001-

https://truckmanualshub.com/

FIG. 4439 KNOB AND HORN SWITCH

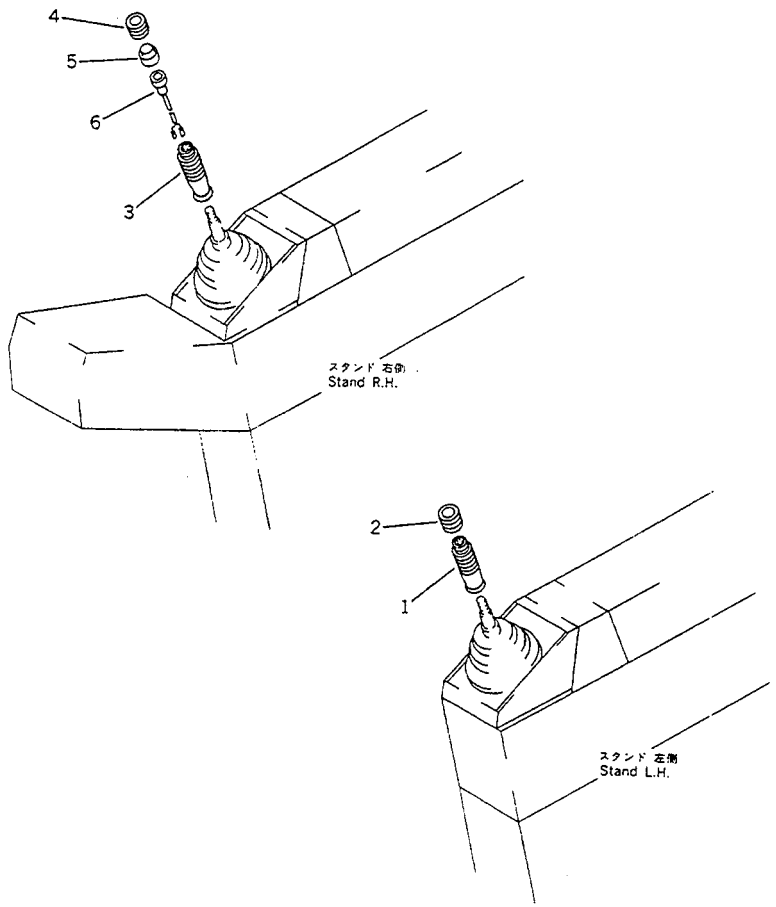

FIG NO. :4439

INDEX NO.	PART NO.	DESCRIPTION	Q'TY	SERIAL NO. PC210-3KP	SERIAL NO. PC240-3KP
	205-43-73600	KNOB	1	K15001-	K15001-
1	205-43-73710	.BODY	1	K15001-	K15001-
2	205-43-73680	.CAP	1	K15001-	K15001-
	205-43-73700	SWITCH	1	K15001-	K15001-
3	205-43-73710	.BODY	1	K15001-	K15001-
4	205-43-73720	.CAP	1	K15001-	K15001-
5	205-43-73730	.CAP	1	K15001-	K15001-
6	205-06-72520	.SWITCH	1	K15001-	K15001-

https://truckmanualshub.com/

FIG. 4511 P.P.C. VALVE PIPING (1/3) (WITH AUTO DECELERATION) (WITH SWING MECHANICAL BRAKE)

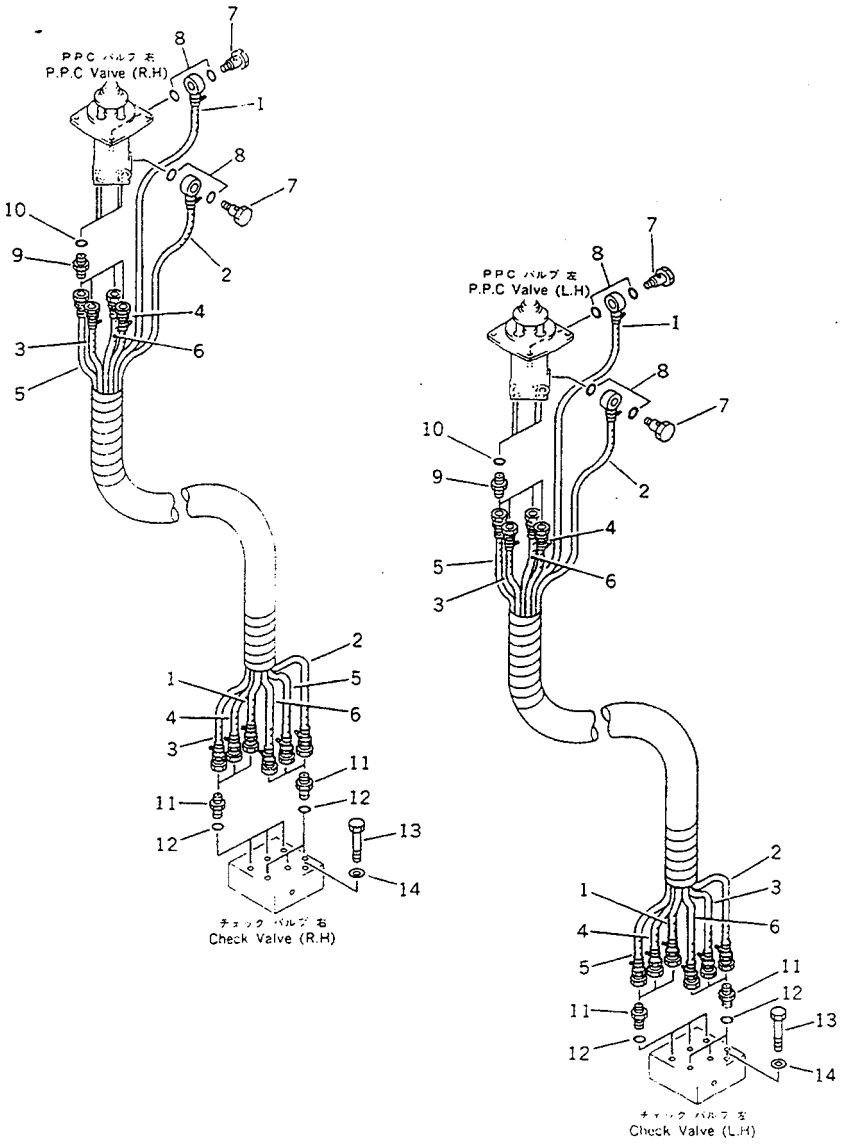

FIG NO. 4511

INDEX NO.	PART NO.	DESCRIPTION	Q'TY	SERIAL NO. PC210-3KP	SERIAL NO. PC240-3KP
	205-62-74160	HOSE ASS'Y	2	K15001-	K15001-
1	205-62-71640	.HOSE,(BLUE)	1	K15001-	K15001-
2	205-62-71640	.HOSE,(RED)	1	K15001-	K15001-
3	205-62-71630	.HOSE,(WHITE)	1	K15001-	K15001-
4	205-62-71630	.HOSE,(BLACK)	1	K15001-	K15001-
5	205-62-71630	.HOSE,(GREEN)	1	K15001-	K15001-
6	205-62-71630	.HOSE,(YELLOW)	1	K15001-	K15001-
7	706-46-56290	BOLT,EYE	4	K15001-	K15001-
8	07000-02018	O-RING	8	K15001-	K15001-
9	07230-20210	UNION	8	K15001-	K15001-
10	07002-01423	O-RING	8	K15001-	K15001-
11	07230-20210	UNION	12	K15001-	K15001-
12	07002-01423	O-RING	12	K15001-	K15001-
13	01010-51070	BOLT	4	K15001-	K15001-
14	01643-31032	WASHER	4	K15001-	K15001-

https://truckmanualshub.com/

FIG. 4513 P.P.C. VALVE PIPING (2/3) (WITH AUTO DECELERATION) (WITH SWING MECHANICAL BRAKE)

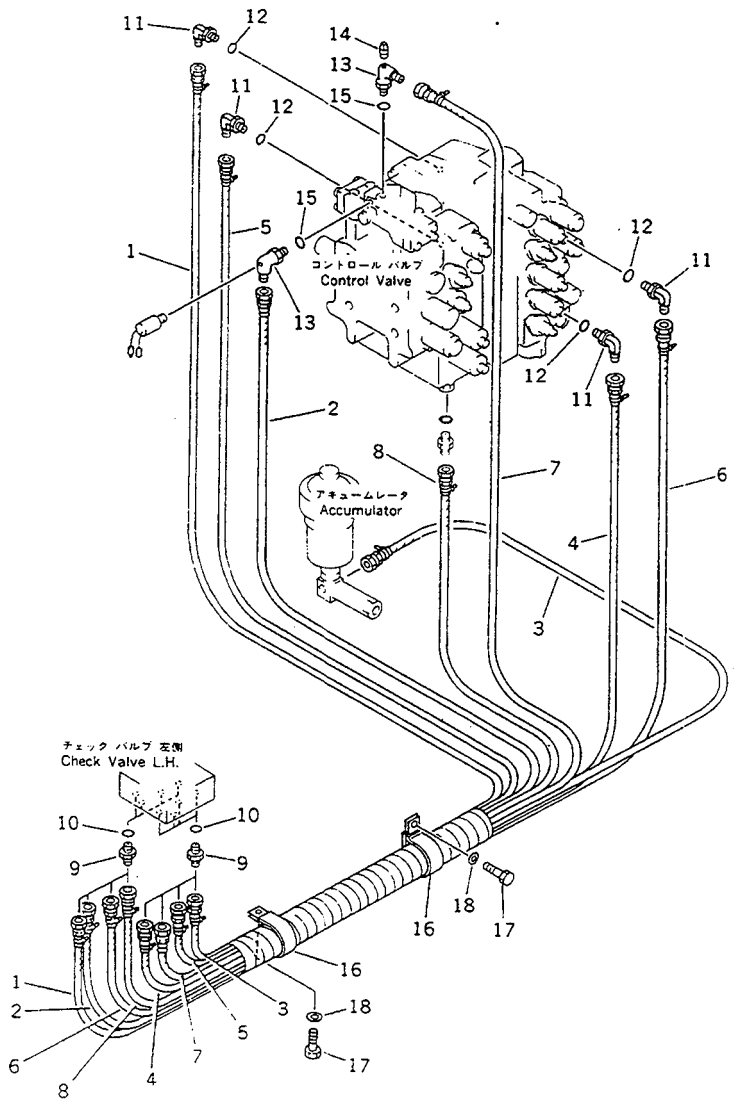

FIG NO. :4513

INDEX NO.	PART NO.	DESCRIPTION	Q'TY	SERIAL NO. PC210-3KP	SERIAL NO. PC240-3KP
	205-62-74170	HOSE ASS'Y	1	K15001-	K15001-
1	205-62-71740	.HOSE,(WHITE)	1	K15001-	K15001-
2	205-62-71730	.HOSE,(BROWN)	1	K15001-	K15001-
3	205-62-71720	.HOSE,(RED)	1	K15001-	K15001-
4	205-62-71730	.HOSE,(GREEN)	1	K15001-	K15001-
5	205-62-71790	.HOSE,(BLACK)	1	K15001-	K15001-
6	205-62-74520	.HOSE,(YELLOW)	1	K15001-	K15001-
7	205-62-71790	.HOSE	1	K15001-	K15001-
8	205-62-71780	.HOSE,(BLUE)	1	K15001-	K15001-
9	07230-20210	UNION	8	K15001-	K15001-
10	07002-01423	O-RING	8	K15001-	K15001-
11	07235-10210	ELBOW	4	K15001-	K15001-
12	07002-01423	O-RING	4	K15001-	K15001-
13	07235-50210	ELBOW	2	K15001-	K15001-
14	07042-30108	PLUG	1	K15001-	K15001-
15	07002-01423	O-RING	2	K15001-	K15001-
16	21T-06-11950	CLIP	2	K15001-	K15001-
17	01010-51225	BOLT	2	K15001-	K15001-
18	01643-31232	WASHER	2	K15001-	K15001-

https://truckmanualshub.com/

FIG. 4515 P.P.C. VALVE PIPING (3/3) (WITH AUTO DECELERATION) (WITH SWING MECHANICAL BRAKE)

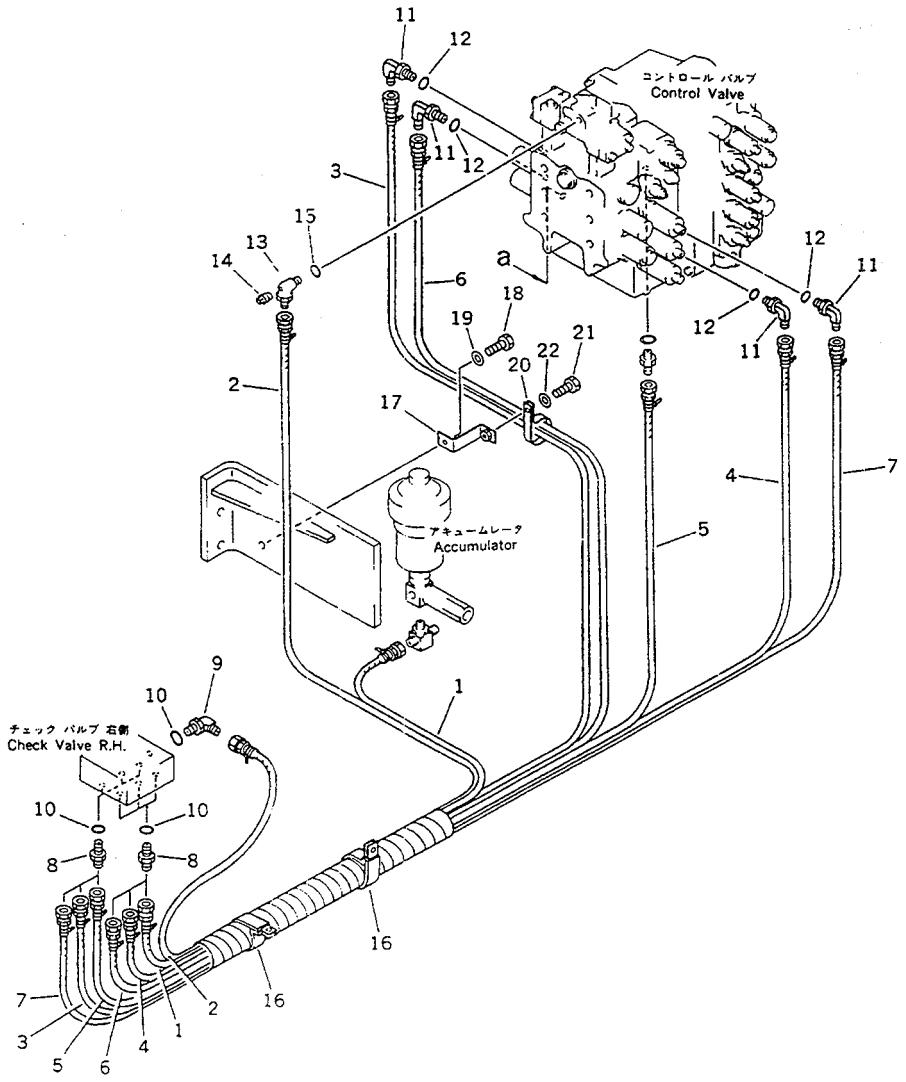

FIG NO. :4515

INDEX NO.	PART NO.	DESCRIPTION	Q'TY	SERIAL NO. PC210-3KP	SERIAL NO. PC240-3KP
	205-62-74180	HOSE ASS'Y	1	K15001-	K15001-
1	205-62-74520	.HOSE,(RED)	1	K15001-	K15001-
2	205-62-71740	.HOSE	1	K15001-	K15001-
3	205-62-71810	.HOSE,(YELLOW)	1	K15001-	K15001-
4	205-62-71790	.HOSE,(BLACK)	1	K15001-	K15001-
5	205-62-74530	.HOSE,(BLUE)	1	K15001-	K15001-
6	205-62-71740	.HOSE,(GREEN)	1	K15001-	K15001-
7	205-62-74530	.HOSE,(WHITE)	1	K15001-	K15001-
8	07230-20210	UNION	6	K15001-	K15001-
9	07235-10210	ELBOW	1	K15001-	K15001-
10	07002-01423	O-RING	7	K15001-	K15001-
11	07235-10210	ELBOW	4	K15001-	K15001-
12	07002-01423	O-RING	4	K15001-	K15001-
13	07235-50210	ELBOW	1	K15001-	K15001-
14	07042-30108	.PLUG	1	K15001-	K15001-
15	07002-01423	O-RING	1	K15001-	K15001-
16	21T-06-11950	CLIP	2	K15001-	K15001-
17	205-62-71890	BRACKET	1	K15001-	K15001-
18	01010-51225	BOLT	1	K15001-	K15001-
19	01643-31232	WASHER	1	K15001-	K15001-
20	21T-06-11950	CLIP	1	K15001-	K15001-
21	01010-51225	BOLT	1	K15001-	K15001-
22	01643-31232	WASHER	1	K15001-	K15001-

https://truckmanualshub.com/

FIG. 4517 P.P.C. VALVE PIPING (1/3) (WITHOUT AUTO DECELERATION) (WITHOUT SWING MECHANICAL BRAKE)

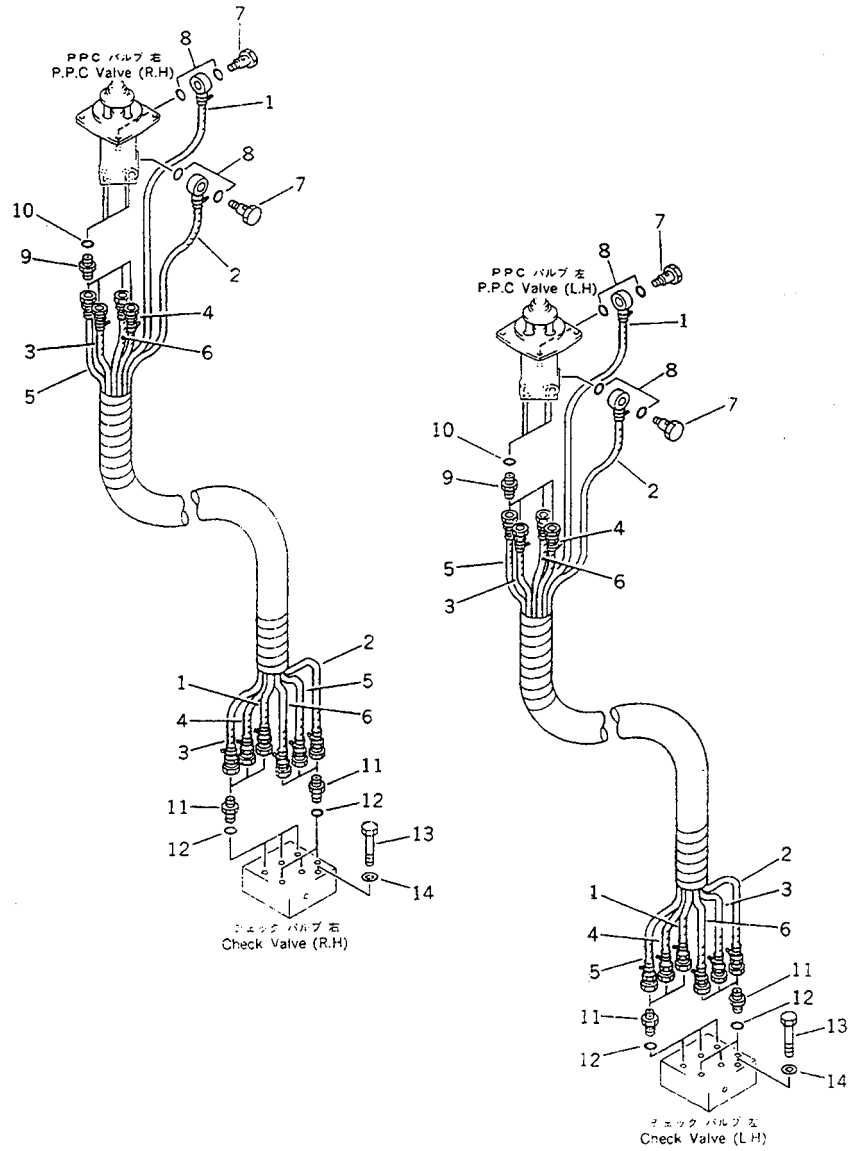

FIG NO. :4517

INDEX NO.	PART NO.	DESCRIPTION	Q'TY	SERIAL NO. PC210-3KP	SERIAL NO. PC240-3KP
	205-62-74160	HOSE ASS'Y	2	K15001-	K15001-
1	205-62-71640	.HOSE,(BLUE)	1	K15001-	K15001-
2	205-62-71640	.HOSE,(RED)	1	K15001-	K15001-
3	205-62-71630	.HOSE,(WHITE)	1	K15001-	K15001-
4	205-62-71630	.HOSE,(BLACK)	1	K15001-	K15001-
5	205-62-71630	.HOSE,(GREEN)	1	K15001-	K15001-
6	205-62-71630	.HOSE,(YELLOW)	1	K15001-	K15001-
7	706-46-56290	BOLT,EYE	4	K15001-	K15001-
8	07000-02018	O-RING	8	K15001-	K15001-
9	07230-20210	UNION	8	K15001-	K15001-
10	07002-01423	O-RING	8	K15001-	K15001-
11	07230-20210	UNION	12	K15001-	K15001-
12	07002-01423	O-RING	12	K15001-	K15001-
13	01010-51070	BOLT	4	K15001-	K15001-
14	01643-31032	WASHER	4	K15001-	K15001-

https://truckmanualshub.com/

FIG. 4519 P.P.C. VALVE PIPING (2/3) (WITHOUT AUTO DECELERATION) (WITHOUT SWING MECHANICAL BRAKE)

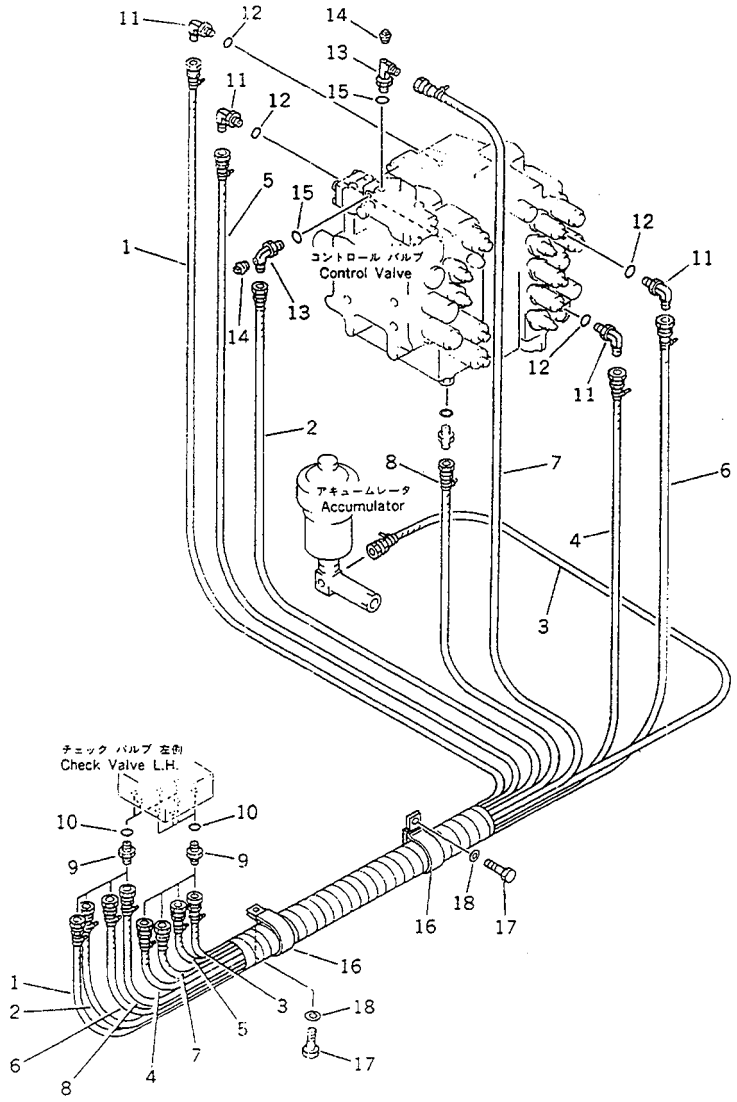

FIG NO. :4519

INDEX NO.	PART NO.	DESCRIPTION	Q'TY	SERIAL NO. PC210-3KP	SERIAL NO. PC240-3KP
	205-62-74170	HOSE ASS'Y	1	K15001-	K15001-
1	205-62-71740	.HOSE,(WHITE)	1	K15001-	K15001-
2	205-62-71730	.HOSE,(BROWN)	1	K15001-	K15001-
3	205-62-71720	.HOSE,(RED)	1	K15001-	K15001-
4	205-62-71730	.HOSE,(GREEN)	1	K15001-	K15001-
5	205-62-71790	.HOSE,(BLACK)	1	K15001-	K15001-
6	205-62-74520	.HOSE,(YELLOW)	1	K15001-	K15001-
7	205-62-71790	.HOSE	1	K15001-	K15001-
8	205-62-71780	.HOSE,(BLUE)	1	K15001-	K15001-
9	07230-10210	UNION	8	K15001-	K15001-
10	07002-01423	O-RING	8	K15001-	K15001-
11	07235-10210	ELBOW	4	K15001-	K15001-
12	07002-01423	O-RING	4	K15001-	K15001-
13	07235-50210	ELBOW	2	K15001-	K15001-
14	07042-30108	PLUG	2	K15001-	K15001-
15	07002-01423	O-RING	2	K15001-	K15001-
16	21T-06-11950	CLIP	2	K15001-	K15001-
17	01010-51225	BOLT	2	K15001-	K15001-
18	01643-31232	WASHER	2	K15001-	K15001-

https://truckmanualshub.com/

FIG. 4521 P.P.C. VALVE PIPING (3/3) (WITHOUT AUTO DECELERATION) (WITHOUT SWING MECHANICAL BRAKE)

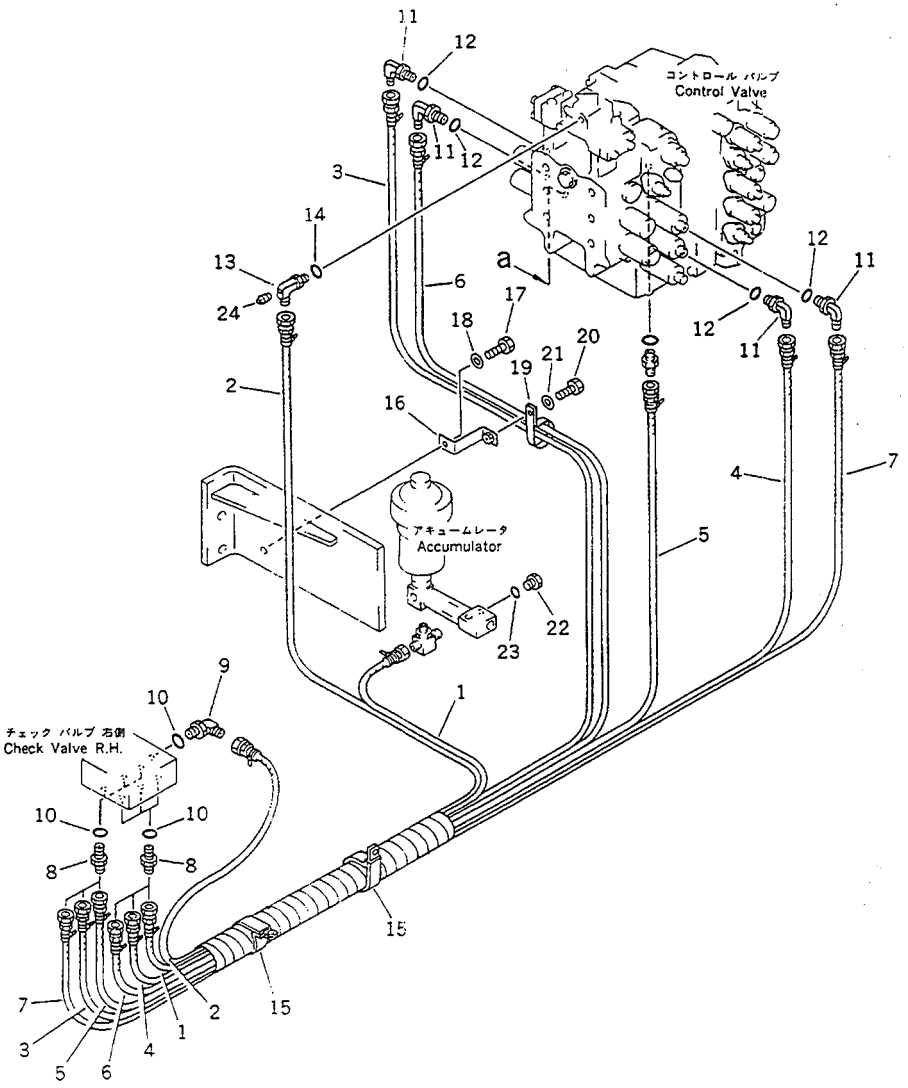

FIG NO. :4521

INDEX NO.	PART NO.	DESCRIPTION	Q'TY	SERIAL NO. PC210-3KP	SERIAL NO. PC240-3KP
	205-62-74180	HOSE ASS'Y	1	K15001-	K15001-
1	205-62-74520	.HOSE,(RED)	1	K15001-	K15001-
2	205-62-71740	.HOSE	1	K15001-	K15001-
3	205-62-71810	.HOSE,(YELLOW)	1	K15001-	K15001-
4	205-62-71790	.HOSE,(BLACK)	1	K15001-	K15001-
5	205-62-74530	.HOSE,(BLUE)	1	K15001-	K15001-
6	205-62-71740	.HOSE,(GREEN)	1	K15001-	K15001-
7	205-62-74530	.HOSE,(WHITE)	1	K15001-	K15001-
8	07230-20210	UNION	6	K15001-	K15001-
9	07235-10210	ELBOW	1	K15001-	K15001-
10	07002-01423	O-RING	7	K15001-	K15001-
11	07235-10210	ELBOW	4	K15001-	K15001-
12	07002-01423	O-RING	4	K15001-	K15001-
13	07235-50210	ELBOW	1	K15001-	K15001-
14	07002-01423	O-RING	1	K15001-	K15001-
15	21T-06-11950	CLIP	2	K15001-	K15001-
16	205-62-71890	BRACKET	1	K15001-	K15001-
17	01010-51225	BOLT	1	K15001-	K15001-
18	01643-31232	WASHER	1	K15001-	K15001-
19	21T-06-11950	CLIP	1	K15001-	K15001-
20	01010-51225	BOLT	1	K15001-	K15001-
21	01643-31232	WASHER	1	K15001-	K15001-
22	07040-11409	PLUG	1	K15001-	K15001-
23	07002-01423	O-RING	1	K15001-	K15001-
24	07042-30108	PLUG	1	K15001-	K15001-

https://truckmanualshub.com/

FIG. 4551 PILOT PIPING (WITH AUTO DECELERATION) (WITH SWING MECHANICAL BRAKE)

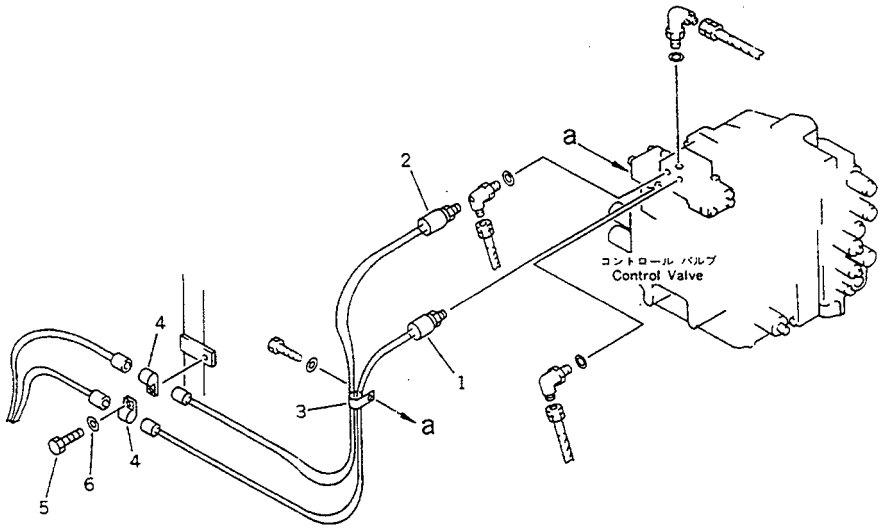

FIG NO. :4551

EX.	PART NO.	DESCRIPTION	Q'TY	SERIAL NO. PC210-3KP	SERIAL NO. PC240-3KP
1	205-06-72431	SWITCH	1	K15001-	K15001-
2	205-06-72442	SWITCH	1	K15001-	K15001-
3	08036-10810	CLIP	1	K15001-	K15001-
4	08052-31711	CLIP	2	K15001-	K15001-
5	01010-51020	BOLT	1	K15001-	K15001-
6	01643-31032	WASHER	1	K15001-	K15001-

https://truckmanualshub.com/

FIG. 4611 O.L.S.S. PIPING

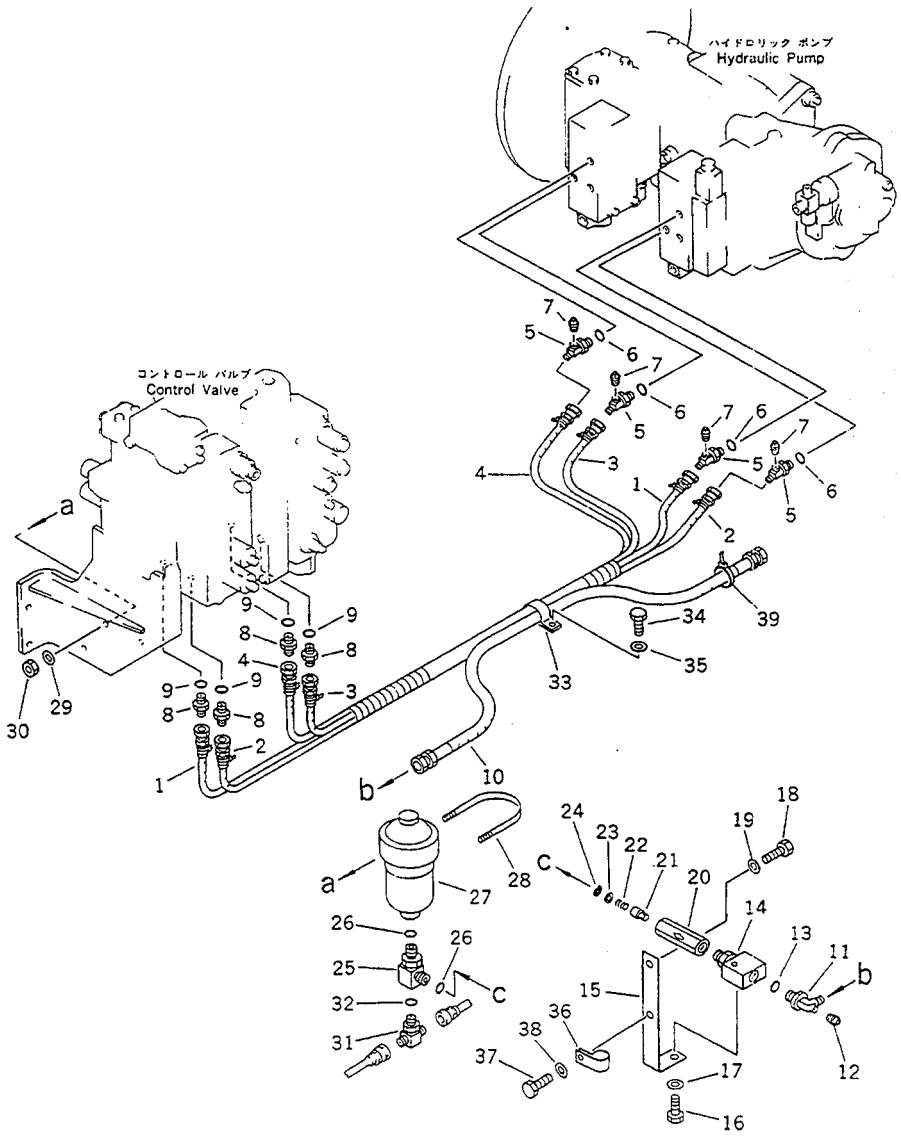

FIG NO. :4611

INDEX NO.	PART NO.	DESCRIPTION	Q'TY	SERIAL NO. PC210-3KP	SERIAL NO. PC240-3KP
	205-62-74150	HOSE ASS'Y	1	K15001-	K15001-
1	07108-20212	.HOSE,(YELLOW)	1	K15001-	K15001-
2	205-62-71770	.HOSE,(GREEN)	1	K15001-	K15001-
3	07108-20211	.HOSE,(RED)	1	K15001-	K15001-
4	205-62-74290	.HOSE,(BLUE)	1	K15001-	K15001-
5	07236-50210	ELBOW	4	K15001-	K15001-
6	07002-11423	O-RING	4	K15001-	K15001-
7	07042-30108	PLUG	4	K15001-	K15001-
8	07230-20210	UNION	4	K15001-	K15001-
9	07002-01423	O-RING	4	K15001-	K15001-
10	07102-20413	HOSE	1	K15001-	K15001-
11	07235-50422	ELBOW	1	K15001-	K15001-
12	07042-30108	PLUG	1	K15001-	K15001-
13	07002-02034	O-RING	2	K15001-	K15001-
14	205-62-71681	TEE	1	K15001-	K15001-
15	205-62-71880	BRACKET	1	K15001-	K15001-
16	01010-51225	BOLT	1	K15001-	K15001-
17	01643-31232	WASHER	1	K15001-	K15001-
18	01010-51225	BOLT	1	K15001-	K15001-
19	01643-31232	WASHER	1	K15001-	K15001-
	205-60-64300	VALVE ASS'Y	1	K15001-	K15001-
20	205-60-64290	.BODY	1	K15001-	K15001-
21	205-60-51390	.POPPET	1	K15001-	K15001-
22	205-60-51410	.SPRING	1	K15001-	K15001-
23	205-60-51420	.SEAT	1	K15001-	K15001-
24	04065-01410	.RING,SNAP	1	K15001-	K15001-
25	205-62-71671	TEE	1	K15001-	K15001-
26	07002-02034	O-RING	2	K15001-	K15001-
27	205-60-71152	ACCUMULATOR	1	K15001-	K15001-
28	07283-28981	CLIP	1	K15001-	K15001-

https://truckmanualshub.com/

FIG NO. :4611

INDEX NO.	PART NO.	DESCRIPTION	Q'TY	SERIAL NO. PC210-3KP	SERIAL NO. PC240-3KP
29	01643-31232	WASHER	2	K15001-	K15001-
30	01599-01214	NUT	2	K15001-	K15001-
31	208-26-11611	TEE	1	K15001-	K15001-
32	07002-01423	O-RING	1	K15001-	K15001-
33	21T-06-12650	CLIP	1	K15001-	K15001-
34	01010-51265	BOLT	1	K15001-	K15001-
35	01643-31232	WASHER	1	K15001-	K15001-
36	08036-03014	CLIP	1	K15001-	K15001-
37	01010-51225	BOLT	1	K15001-	K15001-
38	01643-31232	WASHER	1	K15001-	K15001-
39	08034-00519	BAND	1	K15001-	K15001-

https://truckmanualshub.com/

FIG. 4701 SWING MECHANICAL BRAKE PIPING (WITH AUTO DECELERATION) (WITH SWING MECHANICAL BRAKE)

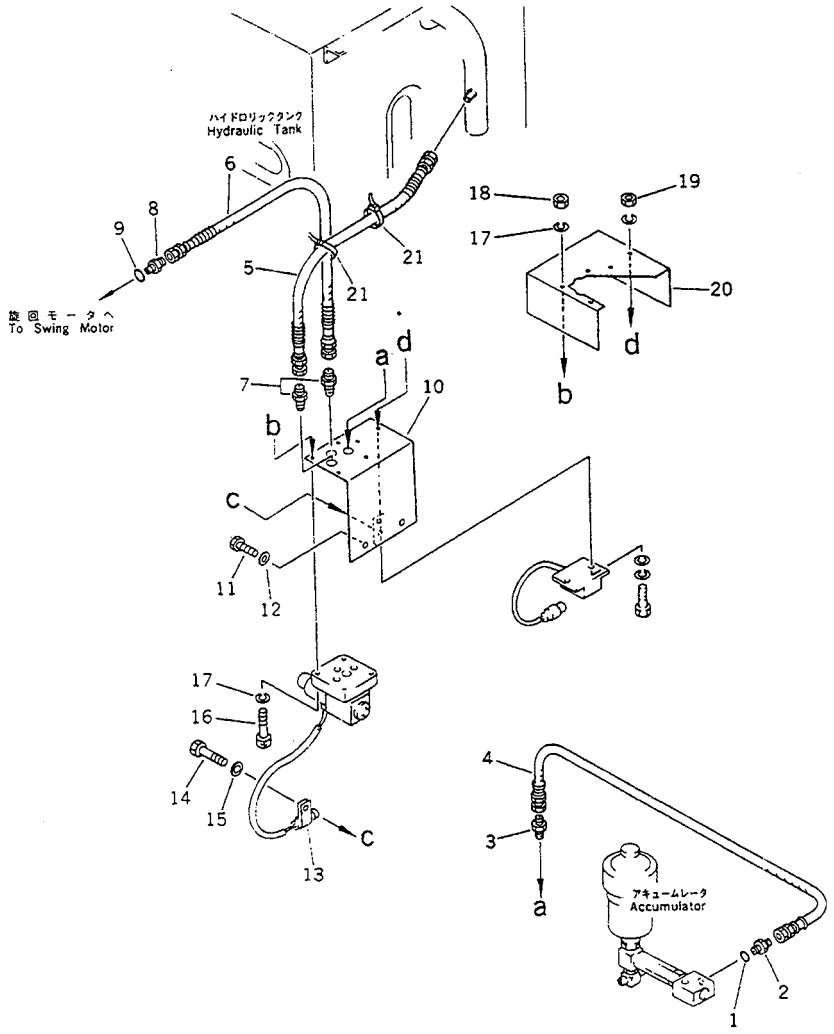

FIG NO. :4701

INDEX NO.	PART NO.	DESCRIPTION	Q'TY	SERIAL NO. PC210-3KP	SERIAL NO. PC240-3KP
1	07002-01423	O-RING	1	K15001-	K15001-
2	07230-20210	UNION	1	K15001-	K15001-
3	22W-62-17710	NIPPLE	1	K15001-	K15001-
4	205-62-74310	HOSE	1	K15001-	K15001-
5	07102-20209	HOSE	1	K15001-	K15001-
6	07108-20205	HOSE	1	K15001-	K15001-
7	22W-62-17710	NIPPLE	2	K15001-	K15001-
8	07230-20210	UNION	1	K15001-	K15001-
9	07002-01423	O-RING	1	K15001-	K15001-
10	205-62-74221	BRACKET	1	K15001-	K15001-
11	01010-51225	BOLT	2	K15001-	K15001-
12	01643-31232	WASHER	2	K15001-	K15001-
13	08052-31711	CLIP	1	K15001-	K15001-
14	01010-51025	BOLT	1	K15001-	K15001-
15	01643-31032	WASHER	1	K15001-	K15001-
16	01252-40535	BOLT	4	K15001-	K15001-
17	01601-20513	WASHER,SPRING	7	K15001-	K15001-
18	01580-10504	NUT	3	K15001-	K15001-
19	01580-10504	NUT	2	K15001-	K15001-
20	205-62-74550	COVER	1	K15001-	K15001-
21	08034-00519	BAND	2	K15001-	K15001-

https://truckmanualshub.com/

REVOLVING FRAME AND CAB

https://truckmanualshub.com/

FIG. 5001 REVOLVING FRAME (PC210)

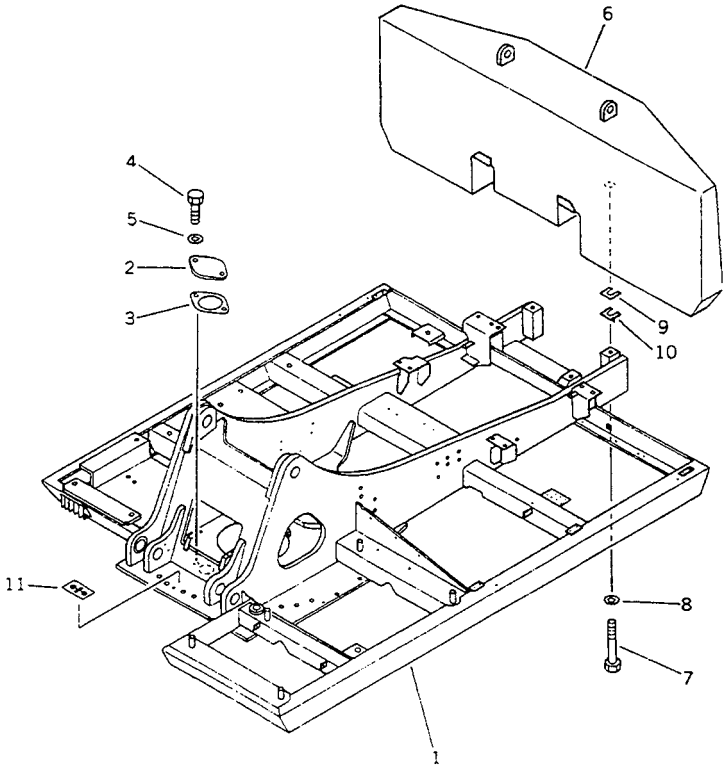

FIG NO. :5001

INDEX NO.	PART NO.	DESCRIPTION	Q'TY	SERIAL NO. PC210-3KP	SERIAL NO. PC240-3KP
1	205-46-73510	FRAME,REVOLVING	1	K15001-	
2	205-30-71181	COVER	1	K15001-	
3	205-30-71191	GASKET	1	K15001-	
4	01010-51230	BOLT	2	K15001-	
5	01643-31232	WASHER	2	K15001-	
6	205-46-72160	WEIGHT,COUNTER	1	K15001-	
7	203-09-21110	BOLT	4	K15001-	
8	01643-32460	WASHER	4	K15001-	
9	205-46-71160	PLATE, 3.2MM	1	K15001-	
10	205-46-71190	PLATE, 1.6MM	1	K15001-	
11	207-00-31630	PLATE, MARK	1	K15001-	

https://truckmanualshub.com/

FIG. 5003 REVOLVING FRAME (PC240)

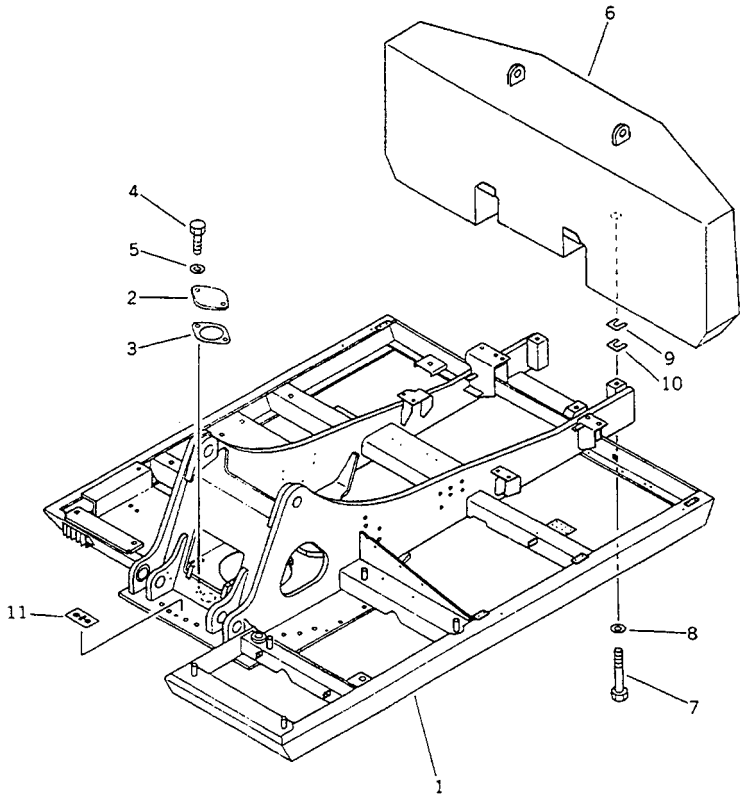

FIG NO. :5003

INDEX NO.	PART NO.	DESCRIPTION	Q'TY	SERIAL NO. PC210-3KP	SERIAL NO. PC240-3KP
1	206-46-44610	FRAME,REVOLVING	1		K15001-
2	205-30-71181	COVER	1		K15001-
3	205-30-71191	GASKET	1		K15001-
4	01010-51230	BOLT	2		K15001-
5	01643-31232	WASHER	2		K15001-
6	206-46-44160	WEIGHT,COUNTER	1		K15001-
7	203-09-21110	BOLT	4		K15001-
8	01643-32460	WASHER	4		K15001-
9	205-46-71160	PLATE, 3.2MM	1		K15001-
10	205-46-71190	PLATE, 1.6MM	1		K15001-
11	207-00-31630	PLATE, MARK	1		K15001-

https://truckmanualshub.com/

FIG. 5101 MACHINERY COMPARTMENT (1/5) (PC210)

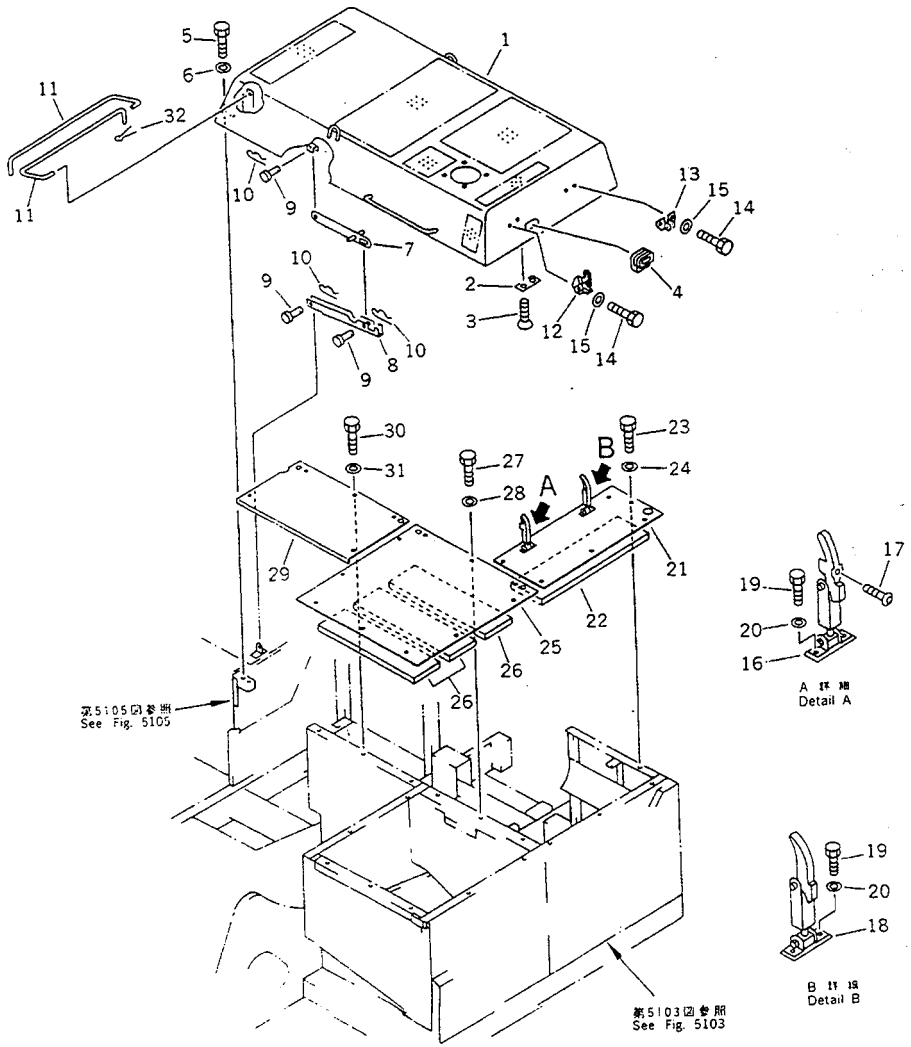

FIG NO. :5101

INDEX NO.	PART NO.	DESCRIPTION	Q'TY	SERIAL NO. PC210-3KP	SERIAL NO. PC240-3KP
1	205-54-77710	HOOD	1	K15001-	
2	205-54-68440	PLATE	2	K15001-	
3	01224-40620	SCREW	4	K15001-	
4	209-54-12280	HANDLE	1	K15001-	
5	01010-51230	BOLT	4	K15001-	
6	01643-31232	WASHER	4	K15001-	
7	205-54-75323	STAY	1	K15001-	
8	205-54-65940	STAY	1	K15001-	
9	04205-11228	PIN	3	K15001-	
10	04052-01253	PIN,SNAP	3	K15001-	
11	205-54-75344	SPRING	2	K15001-	
12	205-54-67660	SUPPORT	1	K15001-	
13	205-54-67660	SUPPORT	1	K15001-	
14	01010-50825	BOLT	4	K15001-	
15	01643-30823	WASHER	4	K15001-	
16	205-54-76260	CATCHER	1	K15001-	
17	205-54-76280	.ROTOR ASS'Y	1	K15001-	
18	205-54-76530	CATCHER	1	K15001-	
19	01010-50825	BOLT	4	K15001-	
20	01643-30823	WASHER	4	K15001-	
21	205-54-77790	COVER	1	K15001-	
22	20910-54-429	.SHEET	1	K15001-	
23	01010-51230	BOLT	6	K15001-	
24	01643-31232	WASHER	6	K15001-	
25	205-54-76111	COVER	1	K15001-	
26	205-54-75611	.SHEET	3	K15001-	
27	01010-51230	BOLT	10	K15001-	
28	01643-31232	WASHER	10	K15001-	
29	205-54-76132	COVER	1	K15001-	
30	01010-51230	BOLT	5	K15001-	

https://truckmanualshub.com/

FIG NO. :5101

INDEX NO.	PART NO.	DESCRIPTION	Q'TY	SERIAL NO. PC210-3KP	SERIAL NO. PC240-3KP
31	01643-31232	WASHER	5	K15001-	
32	04050-13030	PIN,COTTER	2	K15001-	

https://truckmanualshub.com/

FIG. 5102 MACHINERY COMPARTMENT (1/5) (PC240)

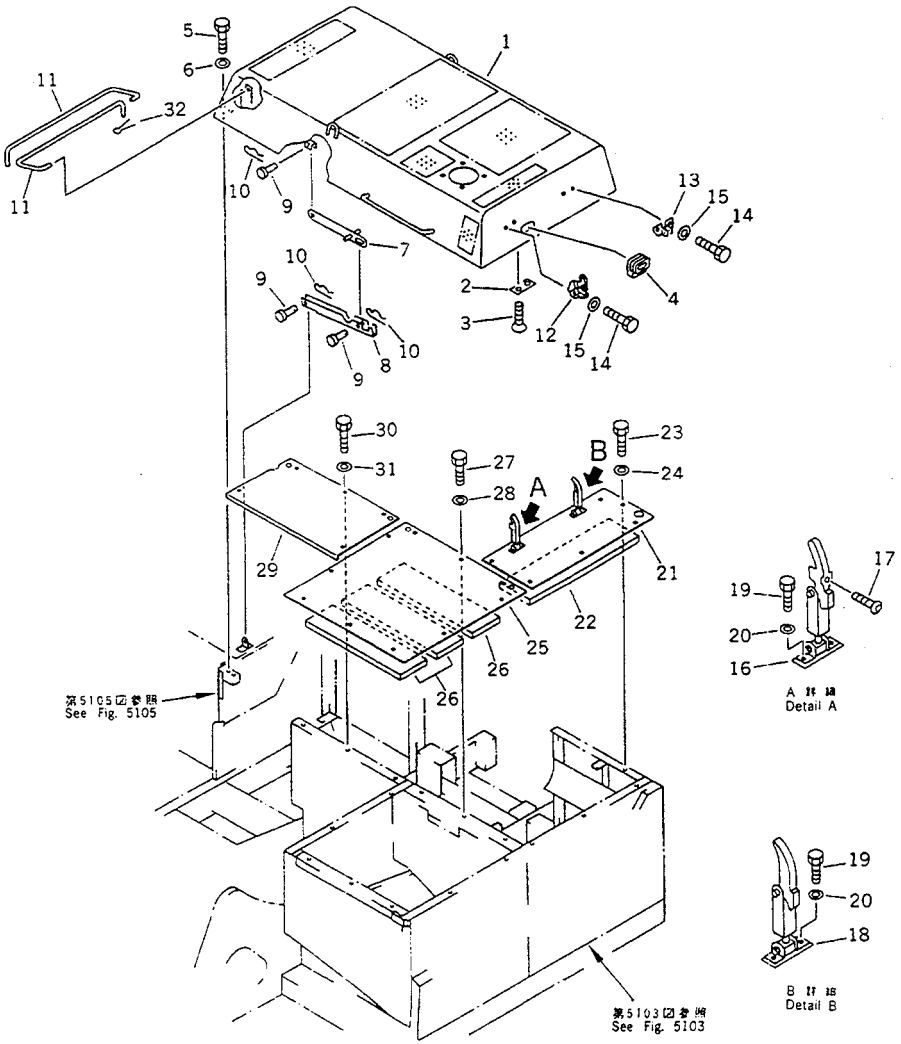

FIG NO. :5102

INDEX NO.	PART NO.	DESCRIPTION	Q'TY	SERIAL NO. PC210-3KP	SERIAL NO. PC240-3KP
1	206-54-46310	HOOD	1		K15001-
2	205-54-68440	PLATE	2		K15001-
3	01224-40620	SCREW	4		K15001-
4	209-54-12280	HANDLE	1		K15001-
5	01010-51230	BOLT	4		K15001-
6	01643-31232	WASHER	4		K15001-
7	205-54-75323	STAY	1		K15001-
8	205-54-65940	STAY	1		K15001-
9	04205-11228	PIN	3		K15001-
10	04052-01253	PIN,SNAP	3		K15001-
11	205-54-75344	SPRING	2		K15001-
12	205-54-67660	SUPPORT	1		K15001-
13	205-54-67660	SUPPORT	1		K15001-
14	01010-50825	BOLT	4		K15001-
15	01643-30823	WASHER	4		K15001-
16	205-54-76260	CATCHER	1		K15001-
17	205-54-76280	.ROTOR ASS'Y	1		K15001-
18	205-54-76530	CATCHER	1		K15001-
19	01010-50825	BOLT	4		K15001-
20	01643-30823	WASHER	4		K15001-
21	205-54-77790	COVER	1		K15001-
22	20910-54-429	.SHEET	1		K15001-
23	01010-51230	BOLT	6		K15001-
24	01643-31232	WASHER	6		K15001-
25	205-54-76111	COVER	1		K15001-
26	205-54-75611	.SHEET	3		K15001-
27	01010-51230	BOLT	10		K15001-
28	01643-31232	WASHER	10		K15001-
29	205-54-76132	COVER	1		K15001-
30	01010-51230	BOLT	5		K15001-

https://truckmanualshub.com/

FIG NO. :5102

INDEX NO.	PART NO.	DESCRIPTION	Q'TY	SERIAL NO. PC210-3KP	SERIAL NO. PC240-3KP
31	01643-31232	WASHER	5		K15001-
32	04050-13030	PIN,COTTER	2		K15001-

https://truckmanualshub.com/

FIG. 5103 MACHINERY COMPARTMENT (2/5)

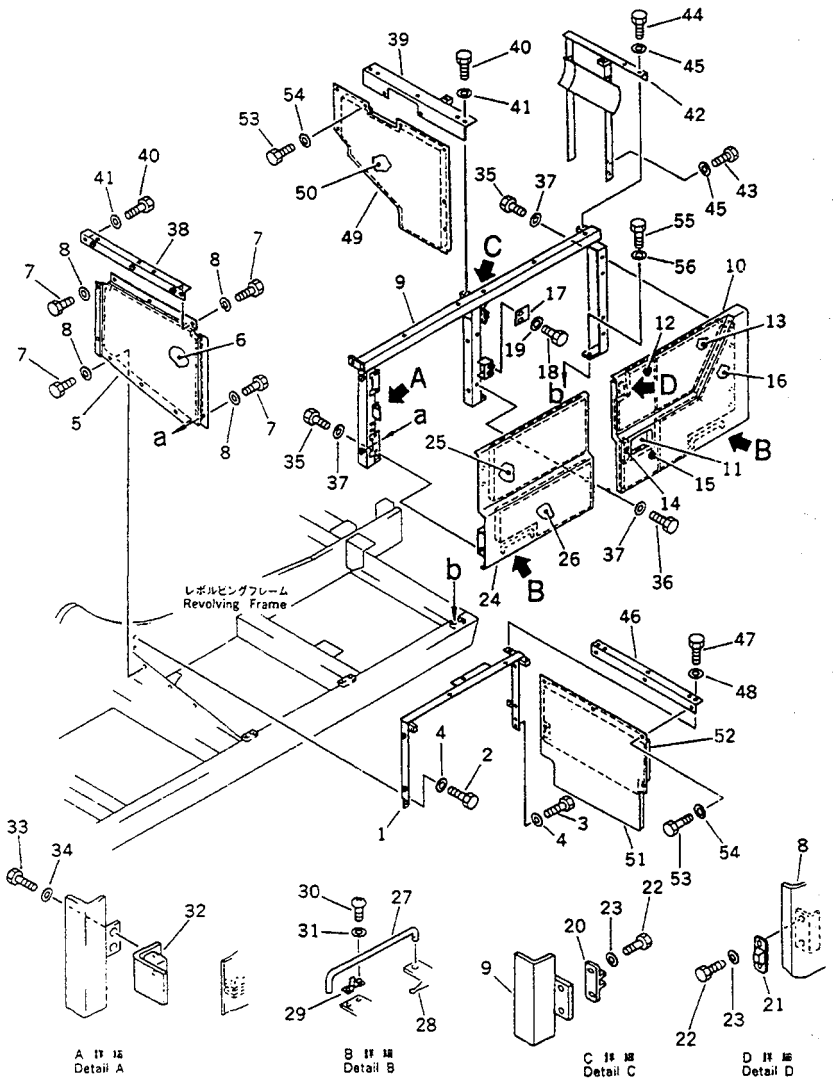

FIG NO. :5103

INDEX NO.	PART NO.	DESCRIPTION	Q'TY	SERIAL NO. PC210-3KP	SERIAL NO. PC240-3KP
1	205-54-75914	FRAME	1	K15001-	K15001-
2	01010-51230	BOLT	2	K15001-	K15001-
3	01010-51220	BOLT	2	K15001-	K15001-
4	01643-31232	WASHER	4	K15001-	K15001-
5	205-54-76151	COVER	1	K15001-	K15001-
6	205-54-75571	.SHEET	1	K15001-	K15001-
7	01010-51220	BOLT	10	K15001-	K15001-
8	01643-31232	WASHER	10	K15001-	K15001-
9	205-54-75832	FRAME	1	K15001-	K15001-
10	205-54-75822	DOOR	1	K15001-	K15001-
11	205-54-76250	.LOCK (WELDED)	1	K15001-	K15001-
12	205-54-75691	.SHEET	1	K15001-	K15001-
13	205-54-75681	.SHEET	1	K15001-	K15001-
14	205-54-75740	.SHEET	1	K15001-	K15001-
15	205-54-75671	.SHEET	1	K15001-	K15001-
16	205-54-75661	.SHEET	1	K15001-	K15001-
17	205-54-75860	BRACKET	1	K15001-	K15001-
18	01010-51025	BOLT	2	K15001-	K15001-
19	01643-31032	WASHER	2	K15001-	K15001-
20	205-54-51970	DOVE TAIL	1	K15001-	K15001-
21	205-54-53550	DOVE TAIL	1	K15001-	K15001-
22	01010-50616	BOLT	4	K15001-	K15001-
23	01643-30623	WASHER	4	K15001-	K15001-
24	205-54-75812	DOOR	1	K15001-	K15001-
25	205-54-75581	.SHEET	1	K15001-	K15001-
26	205-54-75592	.SHEET	1	K15001-	K15001-
27	205-54-64140	BAR	2	K15001-	K15001-
28	04050-13018	PIN,COTTER	2	K15001-	K15001-
29	20B-54-12210	SPRING	2	K15001-	K15001-
30	01220-40408	SCREW	4	K15001-	K15001-

https://truckmanualshub.com/

FIG NO. :5103

INDEX NO.	PART NO.	DESCRIPTION	Q'TY	SERIAL NO. PC210-3KP	SERIAL NO. PC240-3KP
31	01641-20405	WASHER	4	K15001-	K15001-
32	205-54-75181	BRACKET	1	K15001-	K15001-
33	01010-51020	BOLT	2	K15001-	K15001-
34	01643-31032	WASHER	2	K15001-	K15001-
35	01010-51225	BOLT	8	K15001-	K15001-
36	01010-51230	BOLT	2	K15001-	K15001-
37	01643-31232	WASHER	10	K15001-	K15001-
38	205-54-75881	FRAME	1	K15001-	K15001-
39	205-54-77780	FRAME	1	K15001-	K15001-
40	01010-51230	BOLT	4	K15001-	K15001-
41	01643-31232	WASHER	4	K15001-	K15001-
42	205-54-77660	FRAME	1	K15001-	K15001-
43	01010-51230	BOLT	4	K15001-	K15001-
44	01010-51230	BOLT	1	K15001-	K15001-
45	01643-31232	WASHER	5	K15001-	K15001-
46	205-54-76320	FRAME	1	K15001-	K15001-
47	01010-51230	BOLT	2	K15001-	K15001-
48	01643-31232	WASHER	2	K15001-	K15001-
49	205-54-76163	COVER	1	K15001-	K15001-
50	205-54-75532	.SHEET	1	K15001-	K15001-
51	205-54-76174	COVER	1	K15001-	K15001-
52	205-54-75523	.SHEET	1	K15001-	K15001-
53	01010-51230	BOLT	12	K15001-	K15001-
54	01643-31232	WASHER	12	K15001-	K15001-
55	01010-51230	BOLT	6	K15001-	K15001-
56	01643-31232	WASHER	6	K15001-	K15001-

https://truckmanualshub.com/

FIG. 5105 MACHINERY COMPARTMENT (3/5)

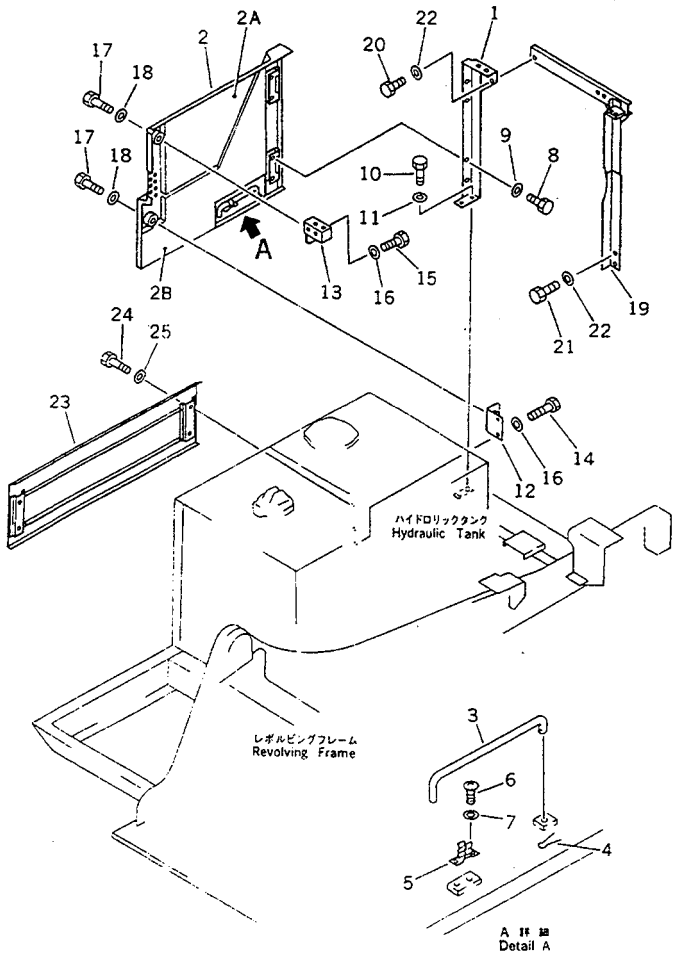

FIG NO. :5105

INDEX NO.	PART NO.	DESCRIPTION	Q'TY	SERIAL NO. PC210-3KP	SERIAL NO. PC240-3KP
1	205-54-75972	FRAME	1	K15001-	K15001-
2	205-54-75981	DCOR	1	K15001-	K15001-
2A	205-54-75561	.SHEET	1	K15001-	K15001-
2B	205-54-75551	.SHEET	1	K15001-	K15001-
3	205-54-64140	BAR	1	K15001-	K15001-
4	04050-13018	PIN,COTTER	1	K15001-	K15001-
5	20B-54-12210	SPRING	1	K15001-	K15001-
6	01220-40408	SCREW	2	K15001-	K15001-
7	01641-20405	WASHER	2	K15001-	K15001-
8	01010-51225	BOLT	4	K15001-	K15001-
9	01643-31232	WASHER	4	K15001-	K15001-
10	01010-51230	BOLT	2	K15001-	K15001-
11	01643-31232	WASHER	2	K15001-	K15001-
12	205-54-75290	BRACKET	1	K15001-	K15001-
13	205-54-75372	BRACKET	1	K15001-	K15001-
14	01010-51225	BOLT	2	K15001-	K15001-
15	01010-51255	BOLT	2	K15001-	K15001-
16	01643-31232	WASHER	4	K15001-	K15001-
17	01010-51230	BOLT	2	K15001-	K15001-
18	01643-31232	WASHER	2	K15001-	K15001-
19	205-54-77770	FRAME	1	K15001-	K15001-
20	01010-51230	BOLT	1	K15001-	K15001-
21	01010-51225	BOLT	2	K15001-	K15001-
22	01643-31232	WASHER	3	K15001-	K15001-
23	205-54-76240	COVER	1	K15001-	K15001-
24	01010-51225	BOLT	4	K15001-	K15001-
25	01643-31232	WASHER	4	K15001-	K15001-

https://truckmanualshub.com/

FIG. 5107 MACHINERY COMPARTMENT (4/5)

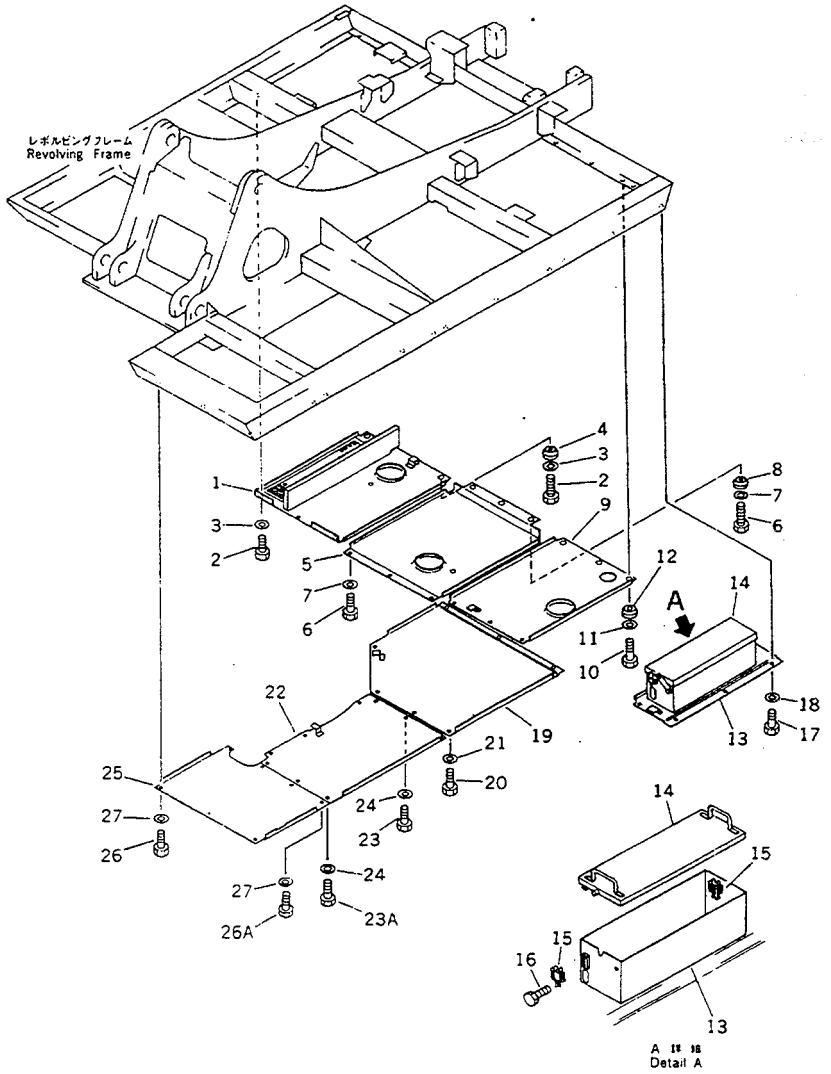

FIG NO. 5107

INDEX NO.	PART NO.	DESCRIPTION	Q'TY	SERIAL NO. PC210-3KP	SERIAL NO. PC240-3KP
1	205-54-77680	COVER	1	K15001-	K15001-
2	01010-51230	BOLT	6	K15001-	K15001-
3	01643-31232	WASHER	6	K15001-	K15001-
4	205-54-76411	COLLAR	3	K15001-	K15001-
5	205-54-77820	COVER	1	K15001-	K15001-
6	01010-51230	BOLT	6	K15001-	K15001-
7	01643-31232	WASHER	6	K15001-	K15001-
8	205-54-76411	COLLAR	3	K15001-	K15001-
9	205-54-77830	COVER	1	K15001-	K15001-
10	01010-51230	BOLT	6	K15001-	K15001-
11	01643-31232	WASHER	6	K15001-	K15001-
12	205-54-76411	COLLAR	3	K15001-	K15001-
13	205-54-76360	BOX	1	K15001-	K15001-
14	205-54-76370	COVER	1	K15001-	K15001-
15	195-57-11530	CLIP	2	K15001-	K15001-
16	01016-20512	BOLT	6	K15001-	K15001-
17	01010-51230	BOLT	5	K15001-	K15001-
18	01643-31232	WASHER	5	K15001-	K15001-
19	205-54-75730	COVER	1	K15001-	K15001-
20	01010-51230	BOLT	7	K15001-	K15001-
21	01643-31232	WASHER	7	K15001-	K15001-
22	205-54-75432	COVER	1	K15001-	K15001-
23	01010-51230	BOLT	6	K15001-	K15001-
23A	01010-51225	BOLT	3	K15001-	K15001-
24	01643-31232	WASHER	9	K15001-	K15001-
25	205-54-75412	COVER	1	K15001-	K15001-
26	01010-51230	BOLT	4	K15001-	K15001-
26A	01010-51225	BOLT	3	K15001-	K15001-
27	01643-31232	WASHER	7	K15001-	K15001-

https://truckmanualshub.com/

FIG. 5109 MACHINERY COMPARTMENT (5/5)

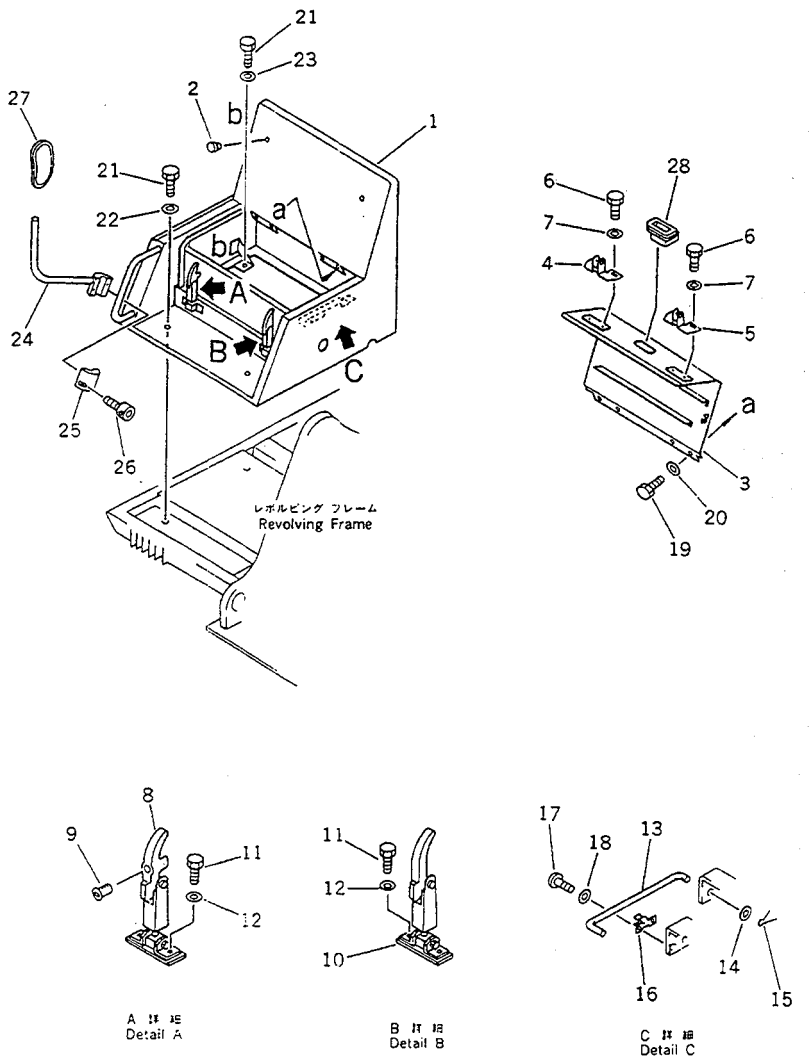

FIG NO. :5109

INDEX NO.	PART NO.	DESCRIPTION	Q'TY	SERIAL NO. PC210-3KP	SERIAL NO. PC240-3KP
1	205-54-75112	COVER	1	K15001-	K15001-
2	203-54-32260	STOPPER	2	K15001-	K15001-
3	205-54-75711	COVER	1	K15001-	K15001-
4	205-54-67660	SUPPORT	1	K15001-	K15001-
5	205-54-67660	SUPPORT	1	K15001-	K15001-
6	01010-50820	BOLT	4	K15001-	K15001-
7	01643-30823	WASHER	4	K15001-	K15001-
8	205-54-76260	CATCHER	1	K15001-	K15001-
9	205-54-76280	.ROTOR ASS'Y	1	K15001-	K15001-
10	205-54-76530	CATCHER	1	K15001-	K15001-
11	01010-50820	BOLT	4	K15001-	K15001-
12	01643-30823	WASHER	4	K15001-	K15001-
13	205-54-75720	BAR	1	K15001-	K15001-
14	01643-31032	WASHER	1	K15001-	K15001-
15	04050-13018	PIN,COTTER	1	K15001-	K15001-
16	20B-54-12210	SPRING	1	K15001-	K15001-
17	01220-40408	SCREW	2	K15001-	K15001-
18	01641-20405	WASHER	2	K15001-	K15001-
19	01010-51025	BOLT	4	K15001-	K15001-
20	01643-31032	WASHER	4	K15001-	K15001-
21	01010-51230	BOLT	4	K15001-	K15001-
22	01643-31232	WASHER	2	K15001-	K15001-
23	01643-31445	WASHER	2	K15001-	K15001-
24	205-54-76380	SUPPORT	1	K15001-	K15001-
25	205-54-76390	CLAMP	1	K15001-	K15001-
26	01252-41025	BOLT	2	K15001-	K15001-
27	205-54-K1130	MIRROR	1	K15001-	K15001-
28	209-54-12280	HANDLE	1	K15001-	K15001-

https://truckmanualshub.com/

FIG. 5221 OPERATOR'S CAB (1/6)

このアセンブリの構成部品は第5221図から5231図まで含みます.
205-54-K1300:This assembly consists of all paarts shown in Figs. 5221 to 5231.

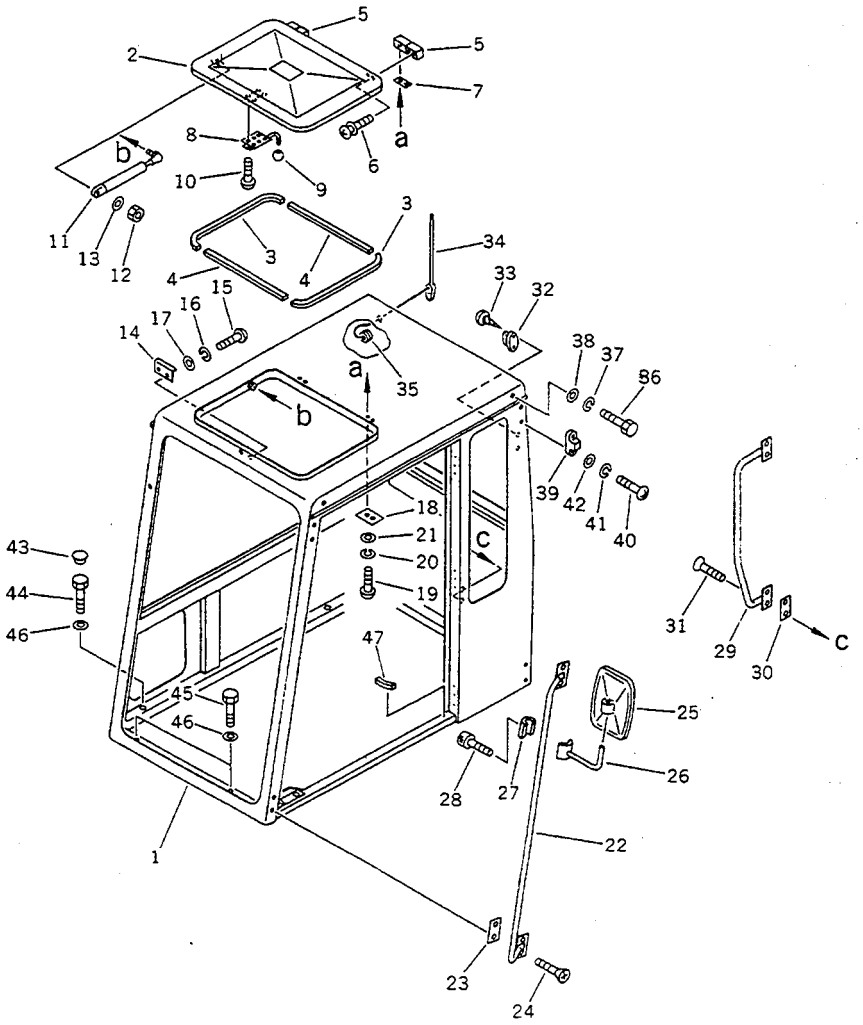

FIG NO. :5221

DEX O.	PART NO.	DESCRIPTION	Q'TY	SERIAL NO. PC210-3KP	SERIAL NO. PC240-3KP
	205-54-K1300	OPERATOR'S CAB ASS'Y	1	K15001-	K15001-
1	205-54-K1530	.CAB	1	K15001-	K15001-
	205-54-K1540	.COVER ASS'Y	1	K15001-	K15001-
2	205-54-K1620	..COVER	1	K15001-	K15001-
3	205-54-K1630	..SEAL	2	K15001-	K15001-
4	205-54-K1560	..SEAL	2	K15001-	K15001-
5	205-54-K1570	..HINGE ASS'Y	2	K15001-	K15001-
6	205-54-K2220	..SCREW	2	K15001-	K15001-
7	205-54-K1580	..GASKET	2	K15001-	K15001-
8	205-54-K2660	..LOCK	1	K15001-	K15001-
9	205-54-K1610	..KNOB	1	K15001-	K15001-
10	205-54-K2130	..SCREW	6	K15001-	K15001-
11	205-54-K1550	..GAS SPRING ASS'Y	1	K15001-	K15001-
12	205-54-K2160	..NUT	1	K15001-	K15001-
13	01642-20608	..WASHER	1	K15001-	K15001-
14	205-54-K1590	..PLATE	1	K15001-	K15001-
15	205-54-K2870	.SCREW	2	K15001-	K15001-
16	01601-00513	.WASHER,SPRING	2	K15001-	K15001-
17	01642-00518	.WASHER	2	K15001-	K15001-
18	205-54-K1950	.SEAL	2	K15001-	K15001-
19	205-54-K2870	.SCREW	8	K15001-	K15001-
20	01601-00513	.WASHER,SPRING	4	K15001-	K15001-
21	01642-20608	.WASHER	4	K15001-	K15001-
22	205-54-K1880	.HANDLE,OUTER	1	K15001-	K15001-
23	205-54-K1920	.GASKET	1	K15001-	K15001-
24	01224-30830	.SCREW	4	K15001-	K15001-
25	205-54-K2620	.MIRROR	1	K15001-	K15001-
26	205-54-K2610	.SUPPORT	1	K15001-	K15001-
27	205-54-76390	.CLAMP	1	K15001-	K15001-
28	01252-41025	.BOLT	2	K15001-	K15001-

https://truckmanualshub.com/

FIG NO. :5221

INDEX NO.	PART NO.	DESCRIPTION	Q'TY	SERIAL NO. PC210-3KP	SERIAL NO. PC240-3KP
29	205-54-K1870	.HANDLE,INNER	1	K15001-	K15001-
30	205-54-K1930	.PLATE	2	K15001-	K15001-
31	01224-30830	.SCREW	4	K15001-	K15001-
32	423-56-K1480	.HOOK	1	K15001-	K15001-
33	01370-00412	.SCREW	2	K15001-	K15001-
34	423-56-K1950	.ANTENNA	1	K15001-	K15001-
35	205-54-K1840	.GROMMET	2	K15001-	K15001-
36	205-54-K2950	.SCREW	4	K15001-	K15001-
37	01602-01338	.WASHER,SPRING	4	K15001-	K15001-
38	01641-21223	.WASHER	4	K15001-	K15001-
39	205-54-K2520	.BUFFER	2	K15001-	K15001-
40	205-54-K2870	.SCREW	8	K15001-	K15001-
41	01602-00720	.WASHER,SPRING	4	K15001-	K15001-
42	01642-20608	.WASHER	4	K15001-	K15001-
42	205-54-K2120	.GROMMET	7	K15001-	K15001-
44	01010-51240	.BOLT	7	K15001-	K15001-
45	01010-51260	.BOLT	2	K15001-	K15001-
46	01643-31232	.WASHER	9	K15001-	K15001-
47	205-54-K2510	.SEAL	1	K15001-	K15001-

https://truckmanualshub.com/

FIG. 5223 OPERATOR'S CAB (2/6)

このアセンブリの構成部品は第5221図から5231図まで含みます。
(205-54-K1300):This assembly consists of all parts shown in Figs. 5221 to 5231.

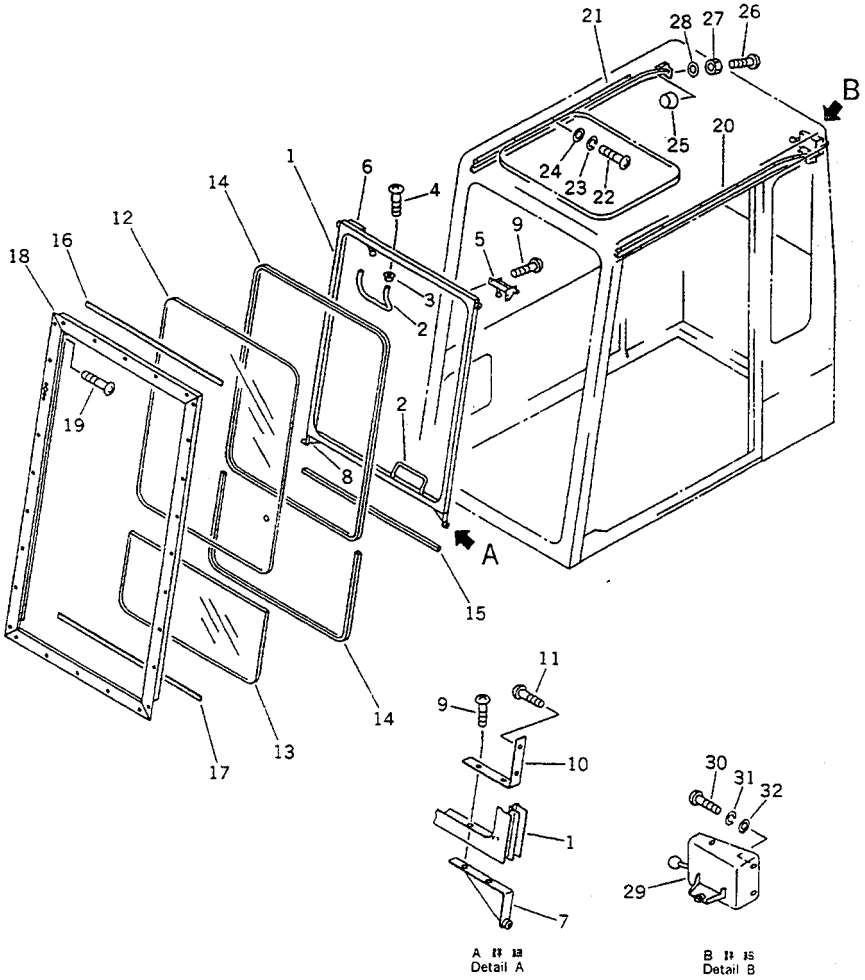

FIG NO. :5223

INDEX NO.	PART NO.	DESCRIPTION	Q'TY	SERIAL NO. PC210-3KP	SERIAL NO. PC240-3KP
	(205-54-K1300)	OPERATOR'S CAB ASS'Y	1	K15001-	K15001-
	205-54-K1640	.FRONT WINDOW ASS'Y	1	K15001-	K15001-
1	205-54-K1670	..FRAME	2	K15001-	K15001-
2	205-54-K1650	..HANDLE	2	K15001-	K15001-
3	205-54-K1660	..ESCUTCHEON	4	K15001-	K15001-
4	205-54-K2180	..SCREW	8	K15001-	K15001-
5	205-54-K2670	..LEVER,L.H.	1	K15001-	K15001-
6	205-54-K1710	..LEVER,R.H.	1	K15001-	K15001-
7	205-54-K1680	..ROLLER,L.H.	1	K15001-	K15001-
8	205-54-K1690	..ROLLER,R.H.	1	K15001-	K15001-
9	205-54-K2180	..SCREW	4	K15001-	K15001-
10	205-54-K2770	..PLATE	2	K15001-	K15001-
11	205-54-K2180	..SCREW	4	K15001-	K15001-
12	205-54-K1810	..GLASS	1	K15001-	K15001-
13	205-54-K2680	..GLASS	1	K15001-	K15001-
14	205-54-K1780	..SEAL	1	K15001-	K15001-
15	205-54-K1790	..SEAL	1	K15001-	K15001-
16	205-54-K1760	..SEAL	1	K15001-	K15001-
17	205-54-K1770	..SEAL	1	K15001-	K15001-
18	205-54-K1720	..FRAME	1	K15001-	K15001-
19	205-54-K2150	..SCREW	2	K15001-	K15001-
20	205-54-K1730	..GUIDE,L.H.	1	K15001-	K15001-
21	205-54-K1740	..GUIDE,R.H.	1	K15001-	K15001-
22	205-54-K2870	..SCREW	14	K15001-	K15001-
23	01602-00720	..WASHER,SPRING	14	K15001-	K15001-
24	01641-20608	..WASHER	14	K15001-	K15001-
25	205-54-K1820	..BUFFER	2	K15001-	K15001-
26	205-54-K2170	..SCREW	2	K15001-	K15001-
27	205-54-K2190	..NUT	2	K15001-	K15001-
28	205-54-K2730	..WASHER	2	K15001-	K15001-

https://truckmanualshub.com/

FIG NO. :5223

INDEX NO.	PART NO.	DESCRIPTION	Q'TY	SERIAL NO. PC210-3KP	SERIAL NO. PC240-3KP
29	205-54-K1750	..LOCK,REAR	2	K15001-	K15001-
30	205-54-K2870	..SCREW	3	K15001-	K15001-
31	01602-00720	..WASHER,SPRING	3	K15001-	K15001-
32	01641-20608	..WASHER	3	K15001-	K15001-

https://truckmanualshub.com/

FIG. 5225 OPERATOR'S CAB (3/6)

このアセンブリの構成部品は第5221図から5231図まで含みます。
(205-54-K1300):This assembly consists of all parts shown in Figs.5221 to 5231.

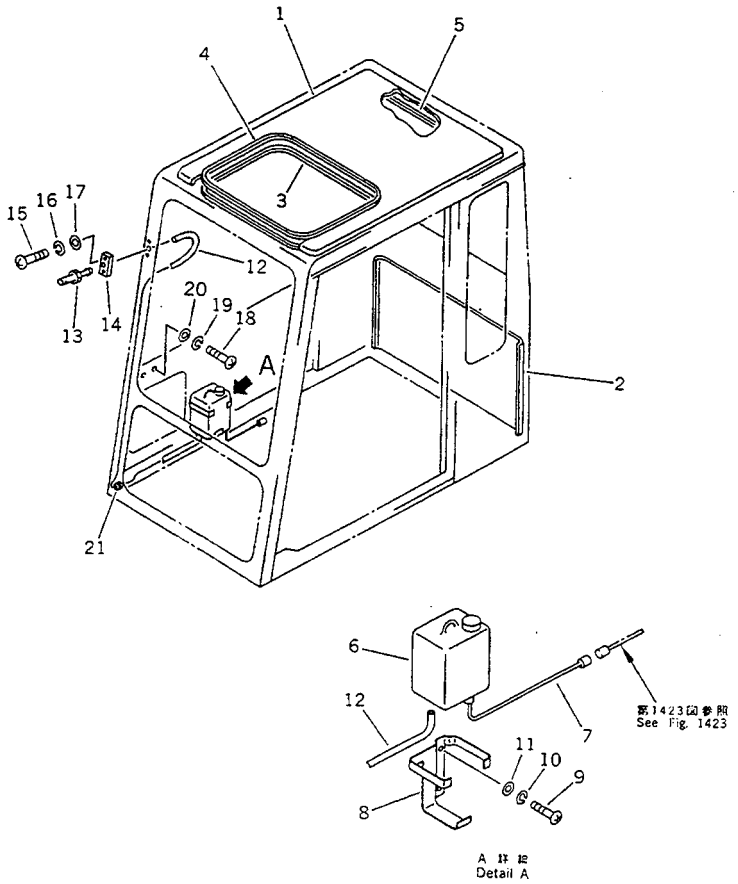

INDEX NO.	PART NO.	DESCRIPTION	Q'TY	SERIAL NO. PC210-3KP	SERIAL NO. PC240-3KP
	(205-54-K1300)	OPERATOR'S CAB ASS'Y	1	K15001-	K15001-
1	205-54-K1850	.TRIM,ROOF	1	K15001-	K15001-
2	205-54-K1860	.TRIM,REAR	1	K15001-	K15001-
3	205-54-K1940	.EDGE	1	K15001-	K15001-
4	205-54-K2840	.EDGE	1	K15001-	K15001-
5	205-54-K2690	.EDGE	1	K15001-	K15001-
6	205-54-K2230	.TANK,WASHER	1	K15001-	K15001-
7	205-54-K2540	.HARNESS	1	K15001-	K15001-
8	205-54-K2210	.CAGE	1	K15001-	K15001-
9	205-54-K2870	.SCREW	2	K15001-	K15001-
10	01602-00720	.WASHER,SPRING	2	K15001-	K15001-
11	01641-20608	.WASHER	2	K15001-	K15001-
12	205-54-K2470	.PIPE	1	K15001-	K15001-
13	205-54-K2710	.NOZZLE	1	K15001-	K15001-
14	205-54-K1980	.PLATE	1	K15001-	K15001-
15	205-54-K2860	.SCREW	2	K15001-	K15001-
16	01601-00513	.WASHER,SPRING	2	K15001-	K15001-
17	01641-00508	.WASHER	2	K15001-	K15001-
18	01235-40616	.SCREW	2	K15001-	K15001-
19	01602-00720	.WASHER,SPRING	2	K15001-	K15001-
20	01641-20608	.WASHER	2	K15001-	K15001-
21	205-54-K1840	.GROMMET	1	K15001-	K15001-

https://truckmanualshub.com/

FIG. 5227 OPERATOR'S CAB (4/6)

このアセンブリの構成部品は第5221図から5231図まで含みます。
(205-54-K1300):This assembly consists of all parts shown in Figs.5221 to 5231.

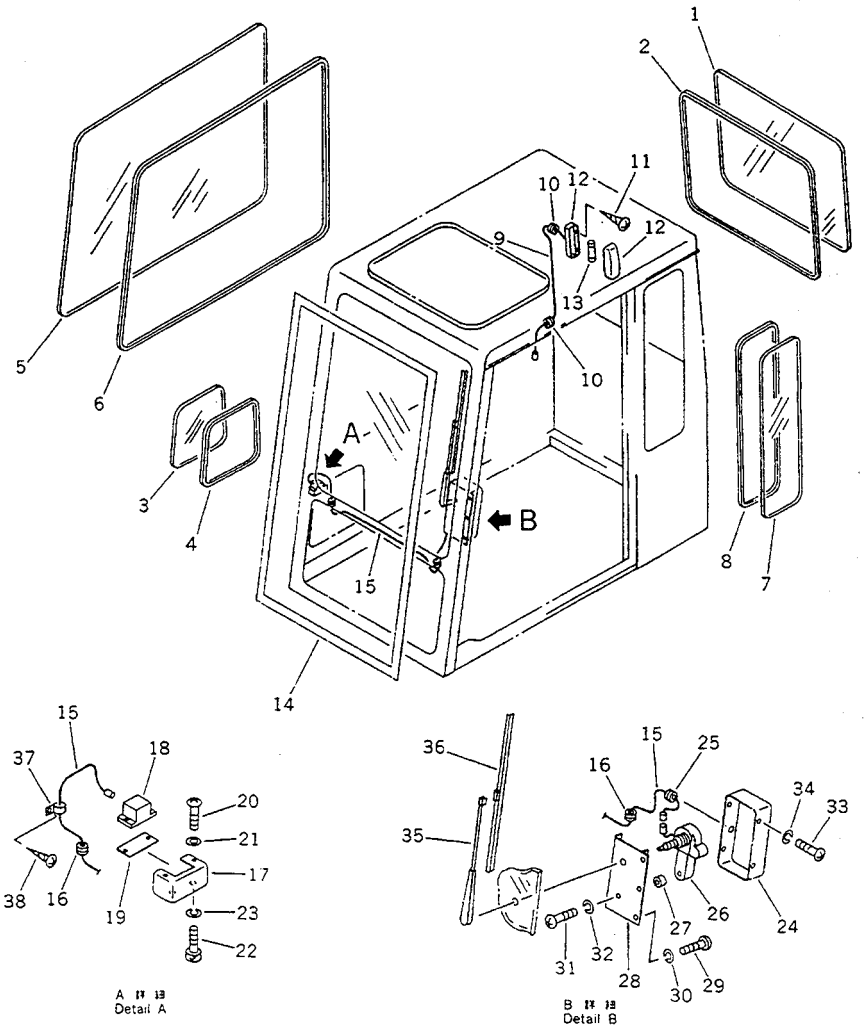

FIG NO. :5227

INDEX NO.	PART NO.	DESCRIPTION	Q'TY	SERIAL NO. PC210-3KP	SERIAL NO. PC240-3KP
	(205-54-K1300)	OPERATOR'S CAB ASS'Y	1	K15001-	K15001-
1	205-54-K2240	.GLASS	1	K15001-	K15001-
2	205-54-K2250	.SEAL	1	K15001-	K15001-
3	205-54-K2740	.GLASS	1	K15001-	K15001-
4	205-54-K2310	.SEAL	1	K15001-	K15001-
5	205-54-K2280	.GLASS	1	K15001-	K15001-
6	205-54-K2290	.SEAL	1	K15001-	K15001-
7	205-54-K2260	.GLASS	1	K15001-	K15001-
8	205-54-K2270	.SEAL	1	K15001-	K15001-
9	205-54-K2530	.WIRE	1	K15001-	K15001-
10	205-54-K1840	.GROMMET	2	K15001-	K15001-
11	01370-00420	.SCREW	2	K15001-	K15001-
12	423-56-K1490	.LIGHT	1	K15001-	K15001-
13	423-56-K1500	..BULB	1	K15001-	K15001-
14	205-54-K2820	.GASKET	1	K15001-	K15001-
15	205-54-K2430	.HARNESS	1	K15001-	K15001-
16	205-54-K1840	.GROMMET	2	K15001-	K15001-
17	205-54-K2460	.COVER	1	K15001-	K15001-
18	205-06-K1130	.CONNECTOR	1	K15001-	K15001-
19	205-54-K2450	.PLATE	1	K15001-	K15001-
20	01238-40310	.SCREW	2	K15001-	K15001-
21	01641-00305	.WASHER	2	K15001-	K15001-
22	01252-30510	.BOLT	2	K15001-	K15001-
23	01601-00513	.WASHER,SPRING	2	K15001-	K15001-
24	205-54-K2440	.COVER	1	K15001-	K15001-
25	205-54-K2480	.TRIM	1	K15001-	K15001-
26	205-54-K2420	.MOTOR,WIPER	1	K15001-	K15001-
27	205-54-K2490	.SPACER	1	K15001-	K15001-
28	205-54-K2410	.BRACKET	1	K15001-	K15001-
29	205-54-K2860	.SCREW	3	K15001-	K15001-

https://truckmanualshub.com/

FIG NO. :5227

INDEX NO.	PART NO.	DESCRIPTION	Q'TY	SERIAL NO. PC210-3KP	SERIAL NO. PC240-3KP
30	01601-00513	.WASHER,SPRING	3	K15001-	K15001-
31	205-54-K2890	.SCREW	1	K15001-	K15001-
32	01602-00720	.WASHER,SPRING	1	K15001-	K15001-
33	205-54-K2870	.SCREW	4	K15001-	K15001-
34	01602-00720	.WASHER,SPRING	4	K15001-	K15001-
35	205-54-K2750	.ARM,WIPER	1	K15001-	K15001-
36	423-56-K1290	.BLADE,WIPER	1	K15001-	K15001-
37	08036-00206	.CLIP	1	K15001-	K15001-
38	01370-00412	.SCREW	1	K15001-	K15001-

https://truckmanualshub.com/

FIG. 5229 OPERATOR'S CAB (5/6)

このアセンブリの構成部品は第5221図から5231図まで含みます。
(205-54-K1300):This assembly consists of all parts shown in Figs. 5221 to 5231.

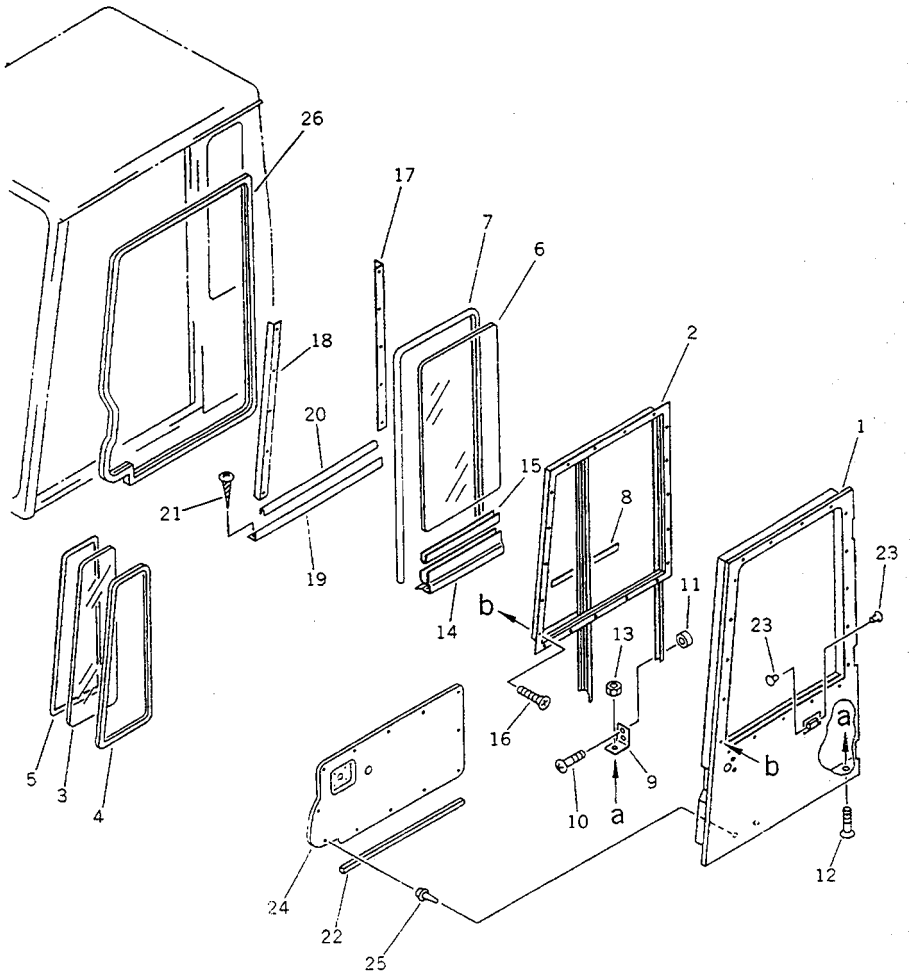

FIG NO. :5229

DEX O.	PART NO.	DESCRIPTION	Q'TY	SERIAL NO. PC210-3KP	SERIAL NO. PC240-3KP
	(205-54-K1300)	OPERATOR'S CAB ASS'Y	1	K15001-	K15001-
	205-54-K1310	.DOOR ASS'Y	1	K15001-	K15001-
1	205-54-K1320	..DOOR	1	K15001-	K15001-
	205-54-K1340	..WINDOW ASS'Y	1	K15001-	K15001-
2	205-54-K1350	...FRAME	1	K15001-	K15001-
3	205-54-K1370	...GLASS	1	K15001-	K15001-
4	205-54-K2640	...SEAL	1	K15001-	K15001-
5	205-54-K1390	...FELT	1	K15001-	K15001-
6	205-54-K1380	...GLASS	1	K15001-	K15001-
7	205-54-K1410	...SEAL	1	K15001-	K15001-
8	205-54-K1420	...SEAL	1	K15001-	K15001-
9	205-54-K1360	...DEVISION BAR A.	2	K15001-	K15001-
0	205-54-K1430	...SCREW	4	K15001-	K15001-
1	205-54-K1830	...BUSHING	4	K15001-	K15001-
2	205-54-K2880	..SCREW	2	K15001-	K15001-
3	205-54-K2160	..NUT	2	K15001-	K15001-
4	205-54-K1460	..CHANNEL	1	K15001-	K15001-
5	205-54-K1470	..SEAL	1	K15001-	K15001-
6	205-54-K2150	..SCREW	19	K15001-	K15001-
7	205-54-K2570	..ANGLE	1	K15001-	K15001-
8	205-54-K2560	..ANGLE	1	K15001-	K15001-
9	205-54-K2580	..ANGLE	1	K15001-	K15001-
0	205-54-K2590	..TRIM	1	K15001-	K15001-
1	01370-00412	..SCREW	15	K15001-	K15001-
2	205-54-K1960	..SEAL	1	K15001-	K15001-
3	205-54-K2830	..PLUG	2	K15001-	K15001-
4	205-54-K2650	..TRIM	1	K15001-	K15001-
5	205-54-K1510	..CLIP ASS'Y	13	K15001-	K15001-
6	205-54-K1910	..SEAL	1	K15001-	K15001-

https://truckmanualshub.com/

FIG. 5231 OPERATOR'S CAB (6/6)

このアセンブリの構成部品は第5221図から5231図まで含みます。
(205-54-K1300):This assembly consists of all parts shown in Figs.5221 to 5231.

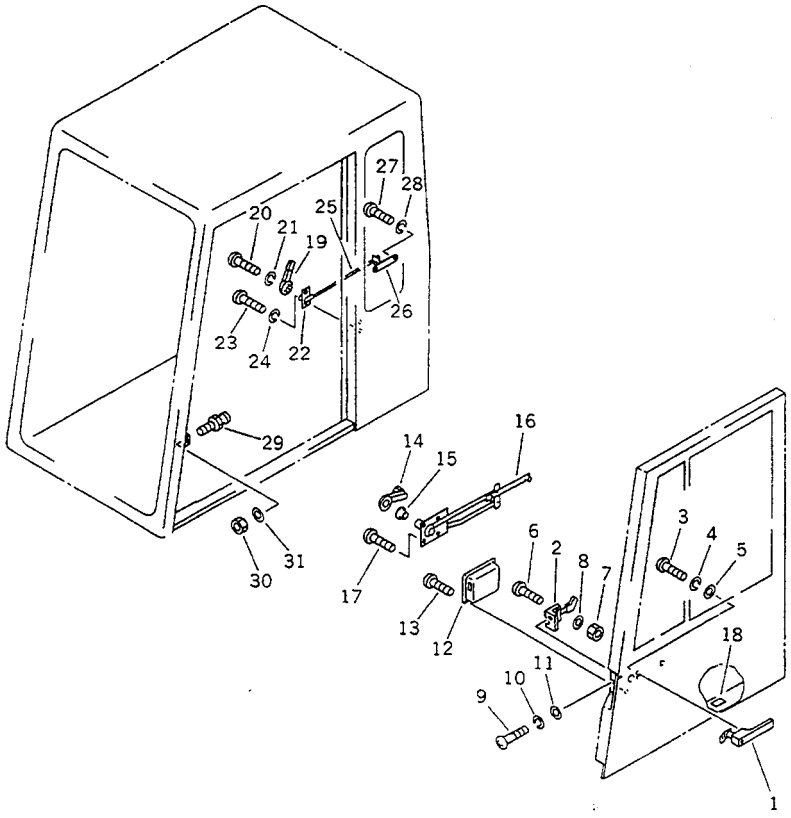

FIG NO. :5231

INDEX NO.	PART NO.	DESCRIPTION	Q'TY	SERIAL NO. PC210-3KP	SERIAL NO. PC240-3KP
	(205-54-K1300)	OPERATOR'S CAB ASS'Y	1	K15001-	K15001-
	(205-54-K1310)	.DOOR ASS'Y	1	K15001-	K15001-
1	205-54-K1330	..HANDLE	1	K15001-	K15001-
	205-54-K2110	..KEY	2	K15001-	K15001-
2	205-54-K1440	..LATCH	1	K15001-	K15001-
3	205-54-K2870	..SCREW	3	K15001-	K15001-
4	01602-00720	..WASHER,SPRING	3	K15001-	K15001-
5	01642-20608	..WASHER	3	K15001-	K15001-
6	208-54-K2890	..SCREW	1	K15001-	K15001-
7	205-54-K2160	..NUT	1	K15001-	K15001-
8	01642-20608	..WASHER	1	K15001-	K15001-
9	205-54-K2880	..SCREW	2	K15001-	K15001-
10	01602-00720	..WASHER,SPRING	2	K15001-	K15001-
11	01642-20608	..WASHER	2	K15001-	K15001-
12	205-54-K1520	..ESCUTCHEON	1	K15001-	K15001-
13	205-54-K2140	..SCREW	4	K15001-	K15001-
14	205-54-K1480	..HANDLE	1	K15001-	K15001-
15	205-54-K1490	..BEZEL	1	K15001-	K15001-
16	205-54-K1450	..REGULATOR	1	K15001-	K15001-
17	205-54-K2910	..SCREW	4	K15001-	K15001-
18	205-54-K2320	..BUFFER	1	K15001-	K15001-
19	205-54-K2810	..HANDLE	1	K15001-	K15001-
20	205-54-K2860	..SCREW	1	K15001-	K15001-
21	01601-00513	..WASHER	1	K15001-	K15001-
22	423-56-K1780	..LOCK	1	K15001-	K15001-
23	205-54-K2870	..SCREW	2	K15001-	K15001-
24	01602-00720	..WASHER,SPRING	2	K15001-	K15001-
25	205-54-K1990	..LINKAGE	1	K15001-	K15001-
26	205-54-K1970	..LATCH	1	K15001-	K15001-
27	205-54-K2870	..SCREW	2	K15001-	K15001-

https://truckmanualshub.com/

FIG NO. :5231

INDEX NO.	PART NO.	DESCRIPTION	Q'TY	SERIAL NO. PC210-3KP	SERIAL NO. PC240-3KP
28	01602-00720	..WASHER,SPRING	2	K15001-	K15001-
29	205-54-K1890	..BOLT	1	K15001-	K15001-
30	205-54-K2720	..NUT	1	K15001-	K15001-
31	01643-21223	..WASHER	1	K15001-	K15001-

https://truckmanualshub.com/

FIG. 5311 OPERATOR'S CAB, FLOOR FRAME

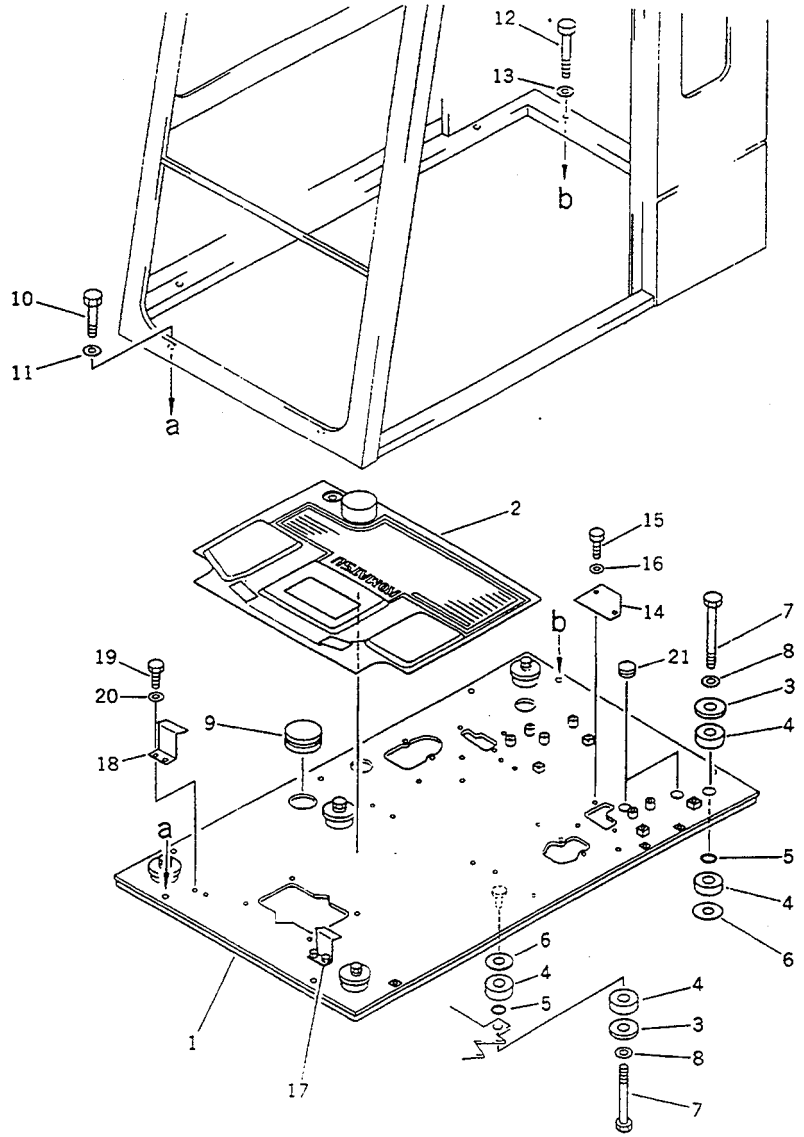

FIG NO. :5311

INDEX NO.	PART NO.	DESCRIPTION	Q'TY	SERIAL NO. PC210-3KP	SERIAL NO. PC240-3KP
1	205-54-71165	FRAME,FLOOR	1	K15001-	K15001-
2	205-54-K1110	MAT,FLOOR	1	K15001-	K15001-
3	205-54-71691	PLATE	6	K15001-	K15001-
4	205-54-71680	CUSHION	12	K15001-	K15001-
5	07000-03028	O-RING	6	K15001-	K15001-
6	205-54-72640	SPACER	6	K15001-	K15001-
7	01011-51600	BOLT	6	K15001-	K15001-
8	01643-31645	WASHER	6	K15001-	K15001-
9	09415-05016	CAP	2	K15001-	K15001-
10	01010-51250	BOLT	3	K15001-	K15001-
11	01643-31232	WASHER	3	K15001-	K15001-
12	01010-51270	BOLT	6	K15001-	K15001-
13	01643-31232	WASHER	6	K15001-	K15001-
14	205-06-71771	PLATE	1	K15001-	K15001-
15	01010-51025	BOLT	2	K15001-	K15001-
16	01643-31032	WASHER	2	K15001-	K15001-
17	203-43-42572	BRACKET,L.H.	1	K15001-	K15001-
18	203-43-42572	BRACKET,R.H.	1	K15001-	K15001-
19	01010-51025	BOLT	4	K15001-	K15001-
20	01643-31032	WASHER	4	K15001-	K15001-
21	09415-02520	CAP	2	K15001-	K15001-

https://truckmanualshub.com/

FIG. 5411 OPERATOR'S SEAT

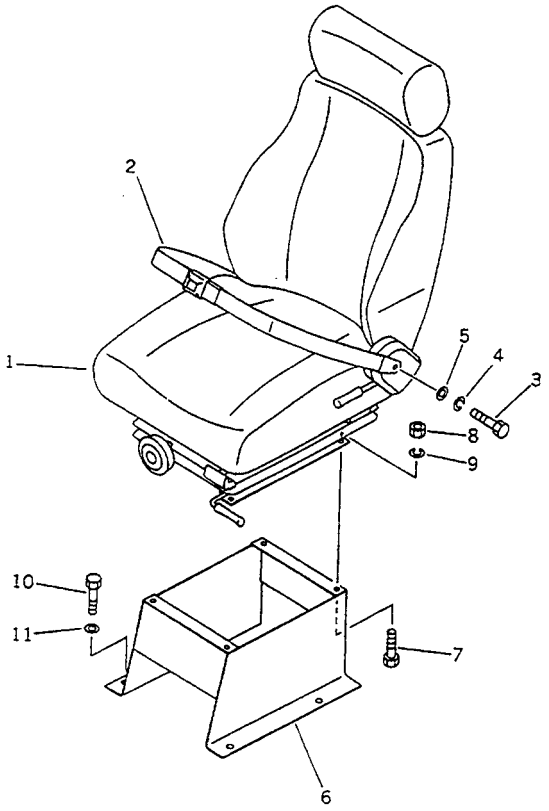

FIG NO. :5411

INDEX NO.	PART NO.	DESCRIPTION	Q'TY	SERIAL NO. PC210-3KP	SERIAL NO. PC240-3KP
	205-57-K1000	OPERATOR'S SEAT A.	1	K15001-	K15001-
1	205-57-K1100	.SEAT	1	K15001-	K15001-
2	205-57-K1120	.BELT,SEAT	1	K15001-	K15001-
3	205-57-K1130	.BOLT	2	K15001-	K15001-
4	205-57-K1140	.WASHER	2	K15001-	K15001-
5	205-57-K1150	.WASHER	2	K15001-	K15001-
6	205-57-K1110	.BRACKET	1	K15001-	K15001-
7	01010-50820	.BOLT	4	K15001-	K15001-
8	01580-10806	.NUT	4	K15001-	K15001-
9	01601-20825	.WASHER,SPRING	4	K15001-	K15001-
10	01010-51230	.BOLT	4	K15001-	K15001-
11	01643-31232	.WASHER	4	K15001-	K15001-

https://truckmanualshub.com/

FIG. 5501 CAR HEATER AND PIPING

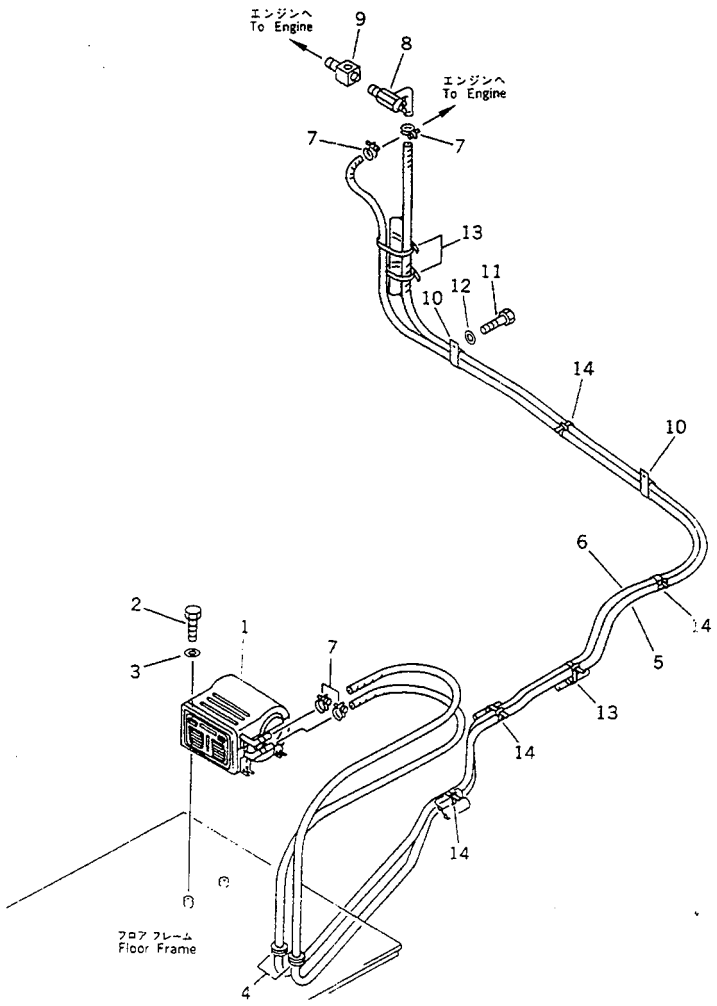

FIG NO. :5501

INDEX NO.	PART NO.	DESCRIPTION	Q'TY	SERIAL NO. PC210-3KP	SERIAL NO. PC240-3KP
1	(205-977-K110)	HEATER ASS'Y	1	K15001-	K15001-
2	01010-51020	BOLT	3	K15001-	K15001-
3	01643-31032	WASHER	3	K15001-	K15001-
4	205-977-7310	GROMMET	2	K15001-	K15001-
5	09483-00440	HOSE	1	K15001-	K15001-
6	09483-00437	HOSE	1	K15001-	K15001-
7	09480-10100	CLAMP	4	K15001-	K15001-
8	09482-20000	VALVE	1	K15001-	K15001-
9	205-977-7320	ADAPTER	1	K15001-	K15001-
10	141-06-11220	CLIP	2	K15001-	K15001-
11	(01010-51025)	BOLT	2	K15001-	K15001-
12	(01643-31032)	WASHER	2	K15001-	K15001-
13	08034-00536	BAND	3	K15001-	K15001-
14	08034-00519	BAND	4	K15001-	K15001-

https://truckmanualshub.com/

WORK EQUIPMENT CONTROL SYSTEM

https://truckmanualshub.com/

FIG. 6001 HYDRAULIC PISTON PUMP (1/4)
(FOR 3-STAGE SELECTOR MODE OLSS) (PC210)

このアセンブリの構成部品は※6001図から※6023図まで含みます。
708-25-01061 : This assembly consists of all parts shown in Figs. 6001 to 6023.

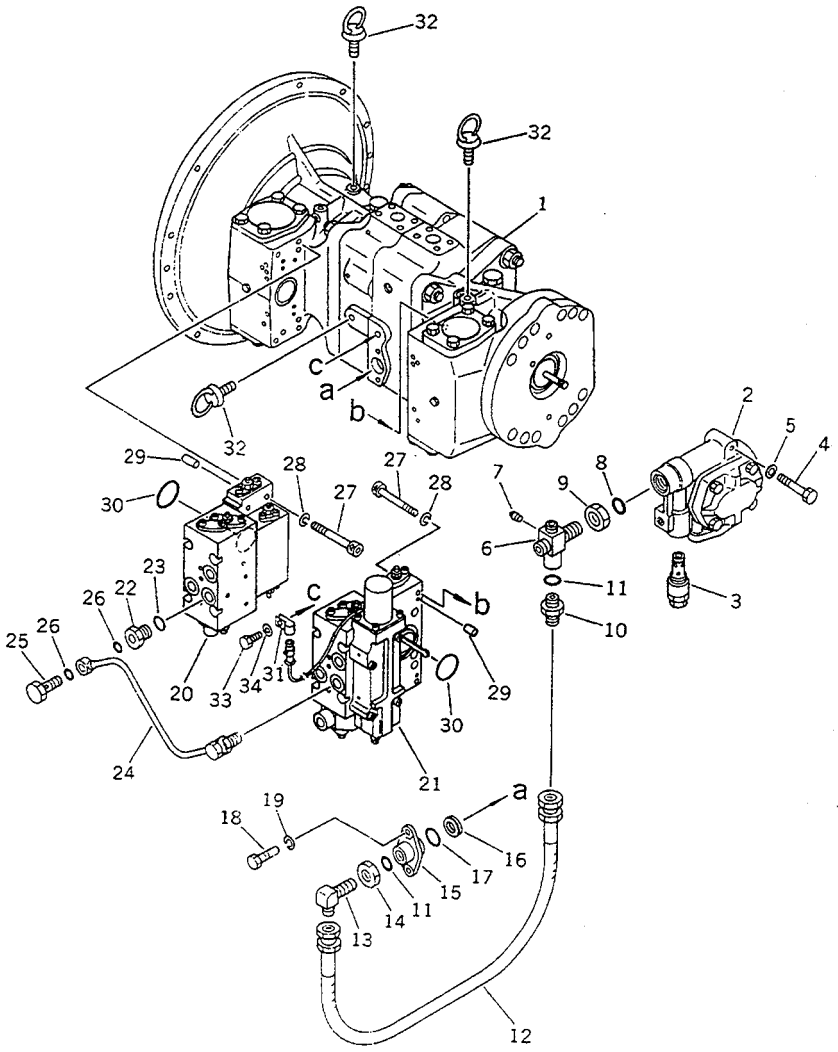

FIG NO. :6001

INDEX NO.	PART NO.	DESCRIPTION	Q'TY	SERIAL NO. PC210-3KP	SERIAL NO. PC240-3KP
	708-25-01061	HYDRAULIC PUMP ASS'Y	1	K15001-	
	708-25-01150	.PUMP SUB ASS'Y	1	K15001-	
1	☆	..PUMP SUB ASS'Y	1	K15001-	
2	(704-24-28202)	..PUMP ASS'Y	1	K15001-	
3	(708-25-14901)	..RELIEF VALVE A.	1	K15001-	
4	(01010-31260)	..BOLT	2	K15001-	
5	(01602-01236)	..WASHER,SPRING	2	K15001-	
6	708-25-19111	..JOINT	1	K15001-	
7	07042-20108	..PLUG	1	K15001-	
8	07002-02434	..O-RING	3	K15001-	
9	07239-12410	..NUT	1	K15001-	
10	07230-10422	..UNION	1	K15001-	
11	07002-02034	..O-RING	2	K15001-	
12	07102-20404	..HOSE	1	K15001-	
13	07231-20422	..ELBOW	1	K15001-	
14	07239-12009	..NUT	1	K15001-	
15	708-25-19120	..FLANGE	1	K15001-	
16	720-68-15240	..FILTER	1	K15001-	
17	07000-02021	..O-RING	1	K15001-	
18	01010-30820	..BOLT	2	K15001-	
19	01602-00825	..WASHER,SPRING	2	K15001-	
20	(708-25-07110)	.SERVO VALVE ASS'Y,FRONT	1	K15001-	
21	(708-25-07210)	.SERVO VALVE ASS'Y,REAR	1	K15001-	
22	706-46-53260	.PLUG	2	K15001-	
23	07002-01423	.O-RING	2	K15001-	
24	708-25-19140	.TUBE	1	K15001-	
25	706-46-53180	.BOLT,JOINT	2	K15001-	
26	07000-02012	.O-RING	4	K15001-	
27	(708-25-19130)	.BOLT	8	K15001-	
28	(01602-00825)	.WASHER,SPRING	8	K15001-	

https://truckmanualshub.com/

FIG NO. :6001

INDEX NO.	PART NO.	DESCRIPTION	Q'TY	SERIAL NO. PC210-3KP	SERIAL NO. PC240-3KP
29	(04020-00616)	.PIN,DOWEL	4	K15001-	
30	(07000-03048)	.O-RING	2	K15001-	
31	08036-21814	.CLIP	1	K15001-	
32	04530-01018	.BOLT,EYE	2	K15001-	
33	01010-31016	.BOLT	1	K15001-	
34	01643-31032	.WASHER	1	K15001-	

https://truckmanualshub.com/

FIG. 6002 HYDRAULIC PISTON PUMP (2/4)
(FOR 3-STAGE SELECTOR MODE OLSS) (PC210)

このアセンブリの構成部品は第6001図から第5023図まで含みます。
(708-25-01061) : This assembly consists of all parts shown in Figs. 6001 to 6023.

このアセンブリの構成部品は第6002図から第6004図、第6021図および第6023図を含みます。
708-25-01150 : This assembly consists of all parts shown in Figs. 6002 to 6004, 6021 and 6023.

このアセンブリの構成部品は第6002図から第6004図まで含みます。
708-25-01250 : This assembly consists of all parts shown in Figs. 6002 to 6004.

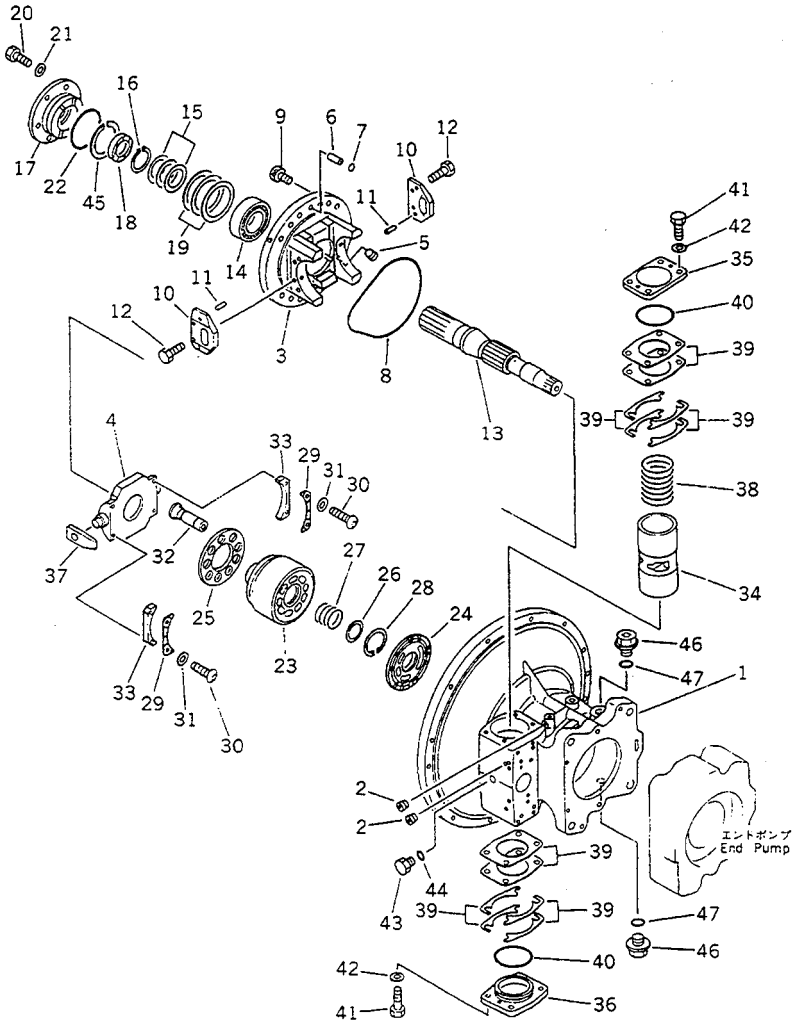

FIG NO. :6002

DEX O.	PART NO.	DESCRIPTION	Q'TY	SERIAL NO. PC210-3KP	SERIAL NO. PC240-3KP
	(708-25-01061)	HYDRAULIC PUMP ASS'Y	1	K15001-	
	(708-25-01150)	.PUMP SUB ASS'Y	1	K15001-	
	(708-25-01250)	..PUMP SUB ASS'Y	1	K15001-	
	(★708-25-00090)	...CASE ASS'Y	1	K15001-	
1	☆	....CASE,FRONT	1	K15001-	
2	706-86-51180	....PLUG	11	K15001-	
	(★708-25-00030)	...CRADLE ASS'Y,FRONT	1	K15001-	
3	☆	....CRADLE,FRONT	1	K15001-	
4	☆	....CAM,ROCKER	1	K15001-	
5	☆	....PLUG	1	K15001-	
6	(★708-25-12330)	...JOINT	1	K15001-	
7	(★07000-12015)	...O-RING	1	K15001-	
8	(★708-25-12340)	...O-RING	1	K15001-	
9	(★708-25-12390)	...BOLT	12	K15001-	
0	(★708-25-12360)	...PLATE	2	K15001-	
1	(★04020-00820)	...PIN,DOWEL	4	K15001-	
2	(★01010-50816)	...BOLT	4	K15001-	
3	(★708-25-12711)	...SHAFT,FRONT	1	K15001-	
4	(★708-25-12731)	...BEARING	1	K15001-	
5	(★708-25-05010)	...WASHER KIT	1	K15001-	
6	☆	...RING,SNAP	1	K15001-	
7	☆	...HOUSING	1	K15001-	
8	708-25-12980	...SEAL,OIL	1	K15001-	
9	(★708-25-05130)	...SHIM KIT	1	K15001-	
0	01010-50820	...BOLT	4	K15001-	
1	01643-30823	...WASHER	4	K15001-	
2	07000-02080	...O-RING	1	K15001-	
	(★708-25-00010)	..BLOCK ASS'Y	1	K15001-	
3	☆	...BLOCK,CYLINDER	1	K15001-	
4	☆	...PLATE,VALVE	1	K15001-	

https://truckmanualshub.com/

FIG NO. :6002

INDEX NO.	PART NO.	DESCRIPTION	Q'TY	SERIAL NO. PC210-3KP	SERIAL NO. PC240-3KP
25	☆	...RETAINER,SHOE	1	K15001-	
26	(★708-25-13120)	..WASHER	1	K15001-	
27	(★708-25-13130)	..SPRING	1	K15001-	
28	(★708-25-13140)	...RING,SNAP	1	K15001-	
29	(★708-25-13441)	...RETAINER	2	K15001-	
30	(★708-25-13470)	...SCREW	4	K15001-	
31	(★01643-30623)	...WASHER	4	K15001-	
32	(★708-25-13311)	...PISTON SUB ASS'Y	9	K15001-	
33	(★708-25-05060)	...SPACER KIT	2	K15001-	
34	(★708-25-14210)	...PISTON	1	K15001-	
35	(★708-25-14140)	...CAP	1	K15001-	
36	(★708-25-14150)	...CAP	1	K15001-	
37	(★708-25-14120)	...SLIDER	1	K15001-	
38	708-25-14130	...SPRING	1	K15001-	
39	(★708-25-05050)	...SHIM KIT	2	K15001-	
40	07000-02065	...O-RING	2	K15001-	
41	01010-51035	...BOLT	8	K15001-	
42	01643-31032	...WASHER	8	K15001-	
43	720-68-19870	...PLUG	5	K15001-	
44	07002-01223	...O-RING	1	K15001-	
45	(★708-25-12970)	...RING,SNAP	1	K15001-	
46	07044-02412	...PLUG	1	K15001-	
47	07002-02434	...O-RING	1	K15001-	

https://truckmanualshub.com/

FIG. 6003 HYDRAULIC PISTON PUMP (3/4)
(FOR 3-STAGE SELECTOR MODE OLSS) (PC210)

(708-25-01061) : このアセンブリの構成部品は第6001図から第6023図まで含みます。
This assembly consists of all parts shown in Figs. 6001 to 6023.

(708-25-01150) : このアセンブリの構成部品は第6002図から第6004図、第6021図および第6023図を含みます。
This assembly consists of all parts shown in Figs. 6002 to 6004, 6021 and 6023.

(708-25-01250) : このアセンブリの構成部品は第6002図から第6004図まで含みます。
This assembly consists of all parts shown in Figs. 6002 to 6004.

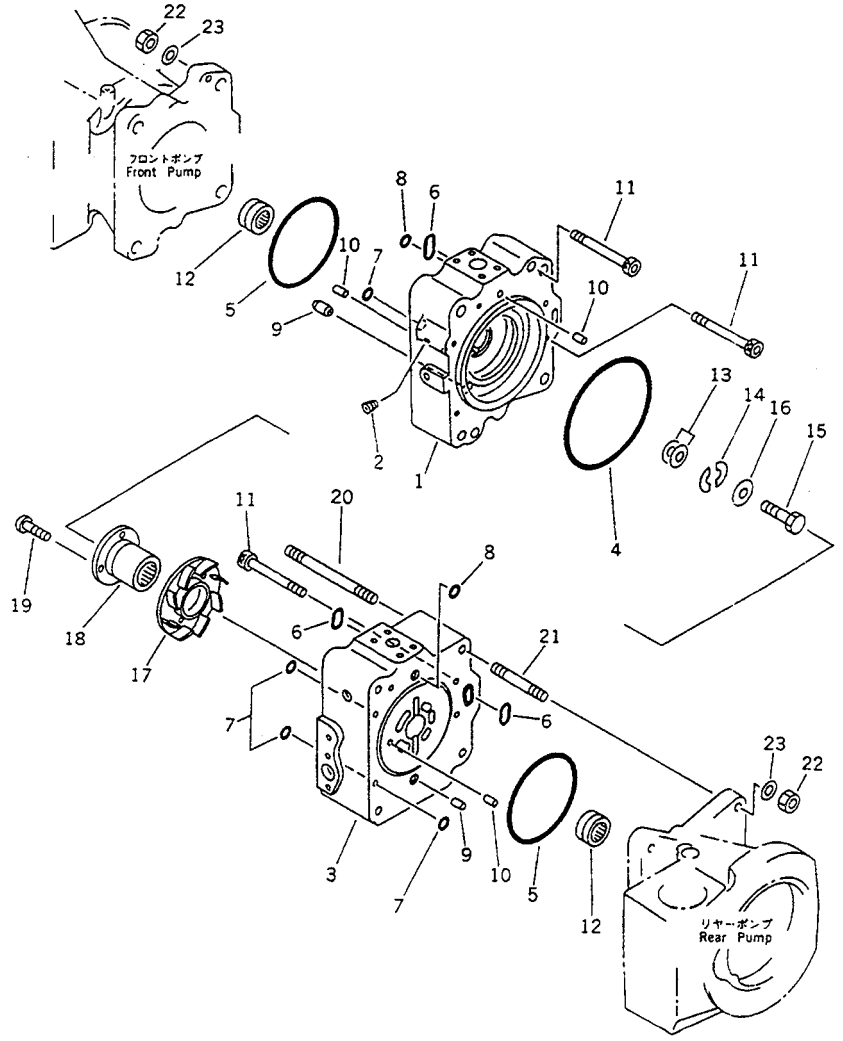

FIG NO. :6003

INDEX NO.	PART NO.	DESCRIPTION	Q'TY	SERIAL NO. PC210-3KP	SERIAL NO. PC240-3KP
	(708-25-01061)	HYDRAULIC PUMP ASS'Y	1	K15001-	
	(708-25-01150)	.PUMP SUB ASS'Y	1	K15001-	
	(708-25-01250)	..PUMP SUB ASS'Y	1	K15001-	
1	(★708-25-12511)	....CAP,END	1	K15001-	
2	☆	....PLUG,EYE	2	K15001-	
3	(★708-25-12521)	..CAP,END	1	K15001-	
4	(★07000-05165)	...O-RING	1	K15001-	
5	(★07000-02135)	...O-RING	2	K15001-	
6	(★07000-03032)	...O-RING	3	K15001-	
7	(★07000-11009)	...O-RING	5	K15001-	
8	(★07000-12015)	...O-RING	2	K15001-	
9	(★6130-21-1910)	...PIN	2	K15001-	
10	(★720-68-19610)	...PIN	3	K15001-	
11	(★708-25-12530)	...BOLT	6	K15001-	
12	(★708-25-12740)	...BEARING	2	K15001-	
13	(★708-25-05020)	...SHIM KIT	1	K15001-	
14	(★708-25-12950)	...PLATE	2	K15001-	
15	(★706-74-40320)	...BOLT	1	K15001-	
16	(★01643-31032)	...WASHER	1	K15001-	
17	(★708-25-12542)	...IMPELLER	1	K15001-	
18	(★708-25-12552)	...COUPLING	1	K15001-	
19	(★706-73-42270)	...SCREW	4	K15001-	
20	(★01141-81620)	...STUD	4	K15001-	
21	(★01140-81645)	...STUD	4	K15001-	
22	(★01582-21613)	...NUT	4	K15001-	
23	(★01643-31645)	...WASHER	4	K15001-	

https://truckmanualshub.com/

FIG. 6004 HYDRAULIC PISTON PUMP (4/4)
(FOR 3-STAGE SELECTOR MODE OLSS) (PC210)

このアセンブリの構成部品は第6001図から第6023図まで含みます。
(708-25-01061) : This assembly consists of all parts shown in Figs. 6001 to 6023.

このアセンブリの構成部品は第6002図から第6004図、第6021図および第6023図を含みます。
(708-25-01150) : This assembly consists of all parts shown in Figs. 6002 to 6004, 6021 and 6023.

このアセンブリの構成部品は第6002図から第6004図まで含みます。
(708-25-01250) : This assembly consists of all parts shown in Figs. 6002 to 6004.

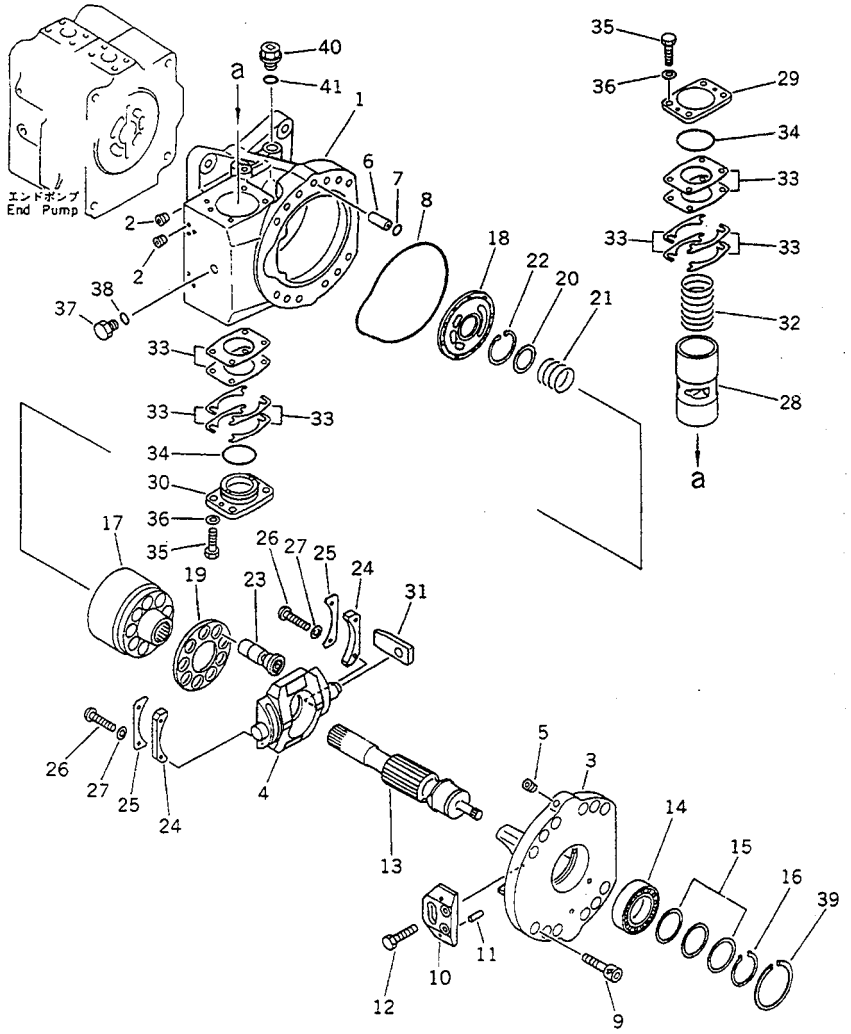

FIG NO. :6004

INDEX NO.	PART NO.	DESCRIPTION	Q'TY	SERIAL NO. PC210-3KP	SERIAL NO. PC240-3KP
	(708-25-01061)	HYDRAULIC PUMP ASS'Y	1	K15001-	
	(708-25-01150)	.PUMP SUB ASS'Y	1	K15001-	
	(708-25-01250)	..PUMP SUB ASS'Y	1	K15001-	
	(★708-25-00110)	...END CAP ASS'Y	1	K15001-	
1	☆	....CASE,REAR	1	K15001-	
2	☆	....PLUG	12	K15001-	
	(★708-25-00040)	...CRADLE ASS'Y (LIMITED SUPPLY)	1	K15001-	
3	☆	....CRADLE,REAR	1	K15001-	
4	☆	....CAM,ROCKER	1	K15001-	
5	☆	....PLUG	1	K15001-	
6	(★708-25-12330)	...JOINT	1	K15001-	
7	(★07000-12015)	...O-RING	1	K15001-	
8	(★708-25-12340)	...O-RING	1	K15001-	
9	(★708-25-12350)	...BOLT	12	K15001-	
10	(★708-25-12360)	...PLATE	2	K15001-	
11	(★04020-00820)	...PIN,DOWEL	4	K15001-	
12	(★01010-30816)	...BOLT	4	K15001-	
13	(★708-25-12721)	...SHAFT	1	K15001-	
14	(★708-25-12731)	...BEARING	1	K15001-	
15	(★708-25-05010)	...WASHER KIT	1	K15001-	
16	(★708-25-12790)	...RING,SNAP	1	K15001-	
	(★708-25-00020)	...BLOCK ASS'Y	1	K15001-	
17	☆	....BLOCK,CYLINDER	1	K15001-	
18	☆	....PLATE,VALVE	1	K15001-	
19	(★708-25-13422)	...RETAINER,SHOE	1	K15001-	
20	(★708-25-13120)	...WASHER	1	K15001-	
21	(★708-25-13130)	...SPRING	1	K15001-	
22	(★708-25-13140)	...RING,SNAP	1	K15001-	
23	☆	...PISTON SUB ASS'Y	9	K15001-	

https://truckmanualshub.com/

FIG NO. :6004

INDEX NO.	PART NO.	DESCRIPTION	Q'TY	SERIAL NO. PC210-3KP	SERIAL NO. PC240-3KP
24	(★708-25-05060)	...SPACER KIT	2	K15001-	
25	(★708-25-13441)	...RETAINER	2	K15001-	
26	(★708-25-13470)	...SCREW	4	K15001-	
27	(★01643-30623)	...WASHER	4	K15001-	
28	(★708-25-14111)	...PISTON	1	K15001-	
29	(★708-25-14140)	...CAP	1	K15001-	
30	(★708-25-14150)	...CAP	1	K15001-	
31	(★708-25-14120)	...SLIDER	1	K15001-	
32	708-25-14130	...SPRING	1	K15001-	
33	(★708-25-05050)	...SHIM KIT	2	K15001-	
34	07000-02065	...O-RING	4	K15001-	
35	01016-31035	...BOLT	8	K15001-	
36	01643-31032	...WASHER	8	K15001-	
37	☆	...PLUG	4	K15001-	
38	07002-01223	...O-RING	1	K15001-	
39	(★708-25-12970)	...RING,SNAP	1	K15001-	
40	07044-02412	...PLUG	1	K15001-	
41	07002-02434	...O-RING	1	K15001-	

https://truckmanualshub.com/

FIG. 6011 SERVO VALVE, FRONT (1/2)
(FOR 3-STAGE SELECTOR MODE OLSS) (PC210)

このアセンブリの構成部品は第6001図から第6023図まで含みます。
(708-25-01061) : This assembly consists of all parts shown in Figs. 6001 to 6023.

このアセンブリの構成部品は第6011図から第6013図まで含みます。
708-25-07110 : This assembly consists of all parts shown in Figs. 6011 to 6013.

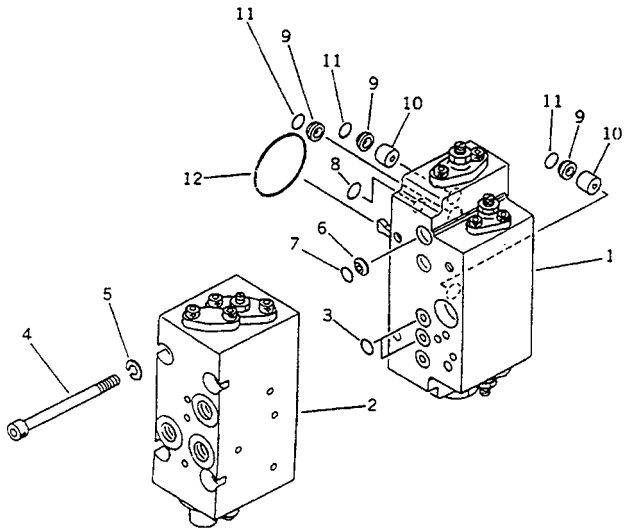

FIG NO. :6011

INDEX NO.	PART NO.	DESCRIPTION	Q'TY	SERIAL NO. PC210-3KP	SERIAL NO. PC240-3KP
	(708-25-01061)	HYDRAULIC PUMP ASS'Y	1	K15001-	
	708-25-07110	.SERVO VALVE ASS'Y,FRONT	1	K15001-	
1	(708-25-15200)	..VALVE SUB ASS'Y	1	K15001-	
2	(708-25-07510)	..VALVE ASS'Y	1	K15001-	
3	07000-02011	..O-RING	2	K15001-	
4	708-25-19160	..BOLT	4	K15001-	
5	01602-20825	..WASHER,SPRING	4	K15001-	
6	720-68-11920	..FILTER	1	K15001-	
7	07000-12010	..O-RING	1	K15001-	
8	07000-11009	..O-RING	3	K15001-	
9	720-68-11920	..FILTER	3	K15001-	
10	708-25-19150	..ORIFICE	2	K15001-	
11	07000-12010	..O-RING	3	K15001-	
12	07000-03048	..O-RING	1	K15001-	

https://truckmanualshub.com/

FIG. 6012 SERVO VALVE, FRONT (2/2)
(FOR 3-STAGE SELECTOR MODE OLSS) (PC210)

(708-25-01061) : このアセンブリの構成部品は第6001図から第6023図まで含みます。
This assembly consists of all parts shown in Figs. 6001 to 6023.

(708-25-07110) : このアセンブリの構成部品は第6011図から第6013図まで含みます。
This assembly consists of all parts shown in Figs. 6011 to 6013.

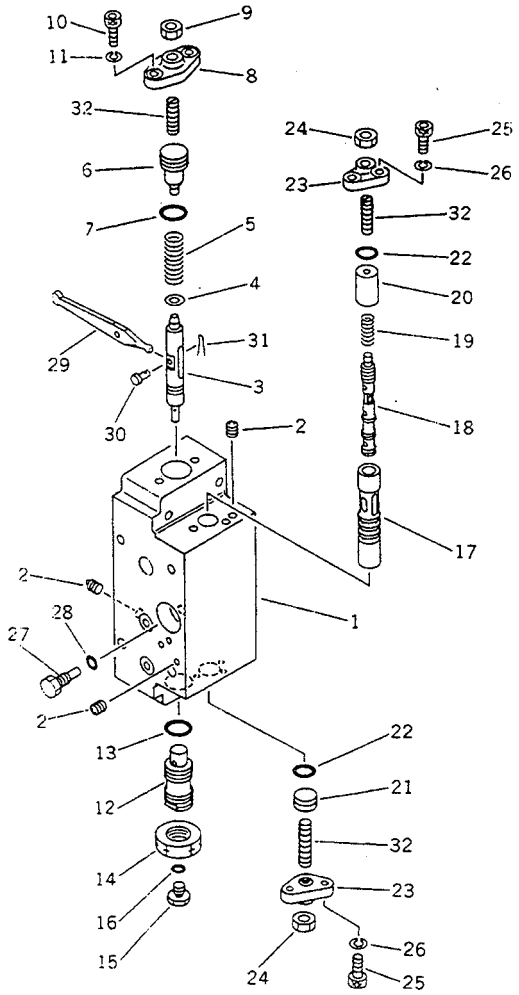

FIG NO. :6012

INDEX NO.	PART NO.	DESCRIPTION	Q'TY	SERIAL NO. PC210-3KP	SERIAL NO. PC240-3KP
	(708-25-01061)	HYDRAULIC PUMP ASS'Y	1	K15001-	
	(708-25-07110)	.SERVO VALVE ASS'Y,FRONT	1	K15001-	
	708-25-15200	..VALVE SUB ASS'Y	1	K15001-	
	(★708-23-07021)	...BODY ASS'Y	1	K15001-	
1	☆	....BODY	1	K15001-	
2	☆	....PLUG	5	K15001-	
3	(★708-25-15120)	...PISTON	1	K15001-	
4	(★708-25-15130)	...SEAT	1	K15001-	
5	(★708-25-15140)	...SPRING	1	K15001-	
6	(★708-25-15420)	...PLUG	1	K15001-	
7	(★07000-02018)	...O-RING	1	K15001-	
8	(★708-25-15150)	...COVER	1	K15001-	
9	(★01580-10806)	...NUT	1	K15001-	
10	(★708-25-15320)	...BOLT	2	K15001-	
11	(★01602-20619)	...WASHER,SPRING	2	K15001-	
12	(★708-25-15171)	...PLUG	1	K15001-	
13	(★07002-02034)	...O-RING	1	K15001-	
14	(★07239-12009)	...NUT	1	K15001-	
15	(★07040-11007)	...PLUG	1	K15001-	
16	(★07002-01023)	...O-RING	1	K15001-	
17	(★708-25-15180)	...SLEEVE	1	K15001-	
18	(★708-25-15280)	...SPOOL	1	K15001-	
19	(★708-25-15310)	...SPRING	1	K15001-	
20	(★708-25-15330)	...SPACER	1	K15001-	
21	(★708-25-15430)	...PLUG	2	K15001-	
22	(★07000-02012)	...O-RING	2	K15001-	
23	(★708-25-15250)	...COVER	2	K15001-	
24	(★01580-10806)	...NUT	2	K15001-	
25	(★708-25-15320)	...BOLT	4	K15001-	
26	(★01602-20619)	...WASHER,SPRING	4	K15001-	

https://truckmanualshub.com/

FIG NO. :6012

INDEX NO.	PART NO.	DESCRIPTION	Q'TY	SERIAL NO. PC210-3KP	SERIAL NO. PC240-3KP
27	(★708-25-15260)	...PLUG	1	K15001-	
28	(★07002-00823)	...O-RING	1	K15001-	
29	(★708-25-15270)	...ARM	1	K15001-	
30	(★04205-00514)	...PIN	1	K15001-	
31	(★04050-01210)	...PIN,COTTER	1	K15001-	
32	(★708-25-15340)	...SCREW	3	K15001-	

https://truckmanualshub.com/

FIG. 6013 CUT OFF AND NEGATIVE CONTROL VALVE, FRONT (FOR 3-STAGE SELECTOR MODE OLSS) (PC210)

このアセンブリの構成部品は第6001図から第6023図まで含みます。
(708-25-01061) : This assembly consists of all parts shown in Figs. 6001 to 6023.

このアセンブリの構成部品は第6011図から第6013図まで含みます。
(708-25-07110) : This assembly consists of all parts shown in Figs. 6011 to 6013.

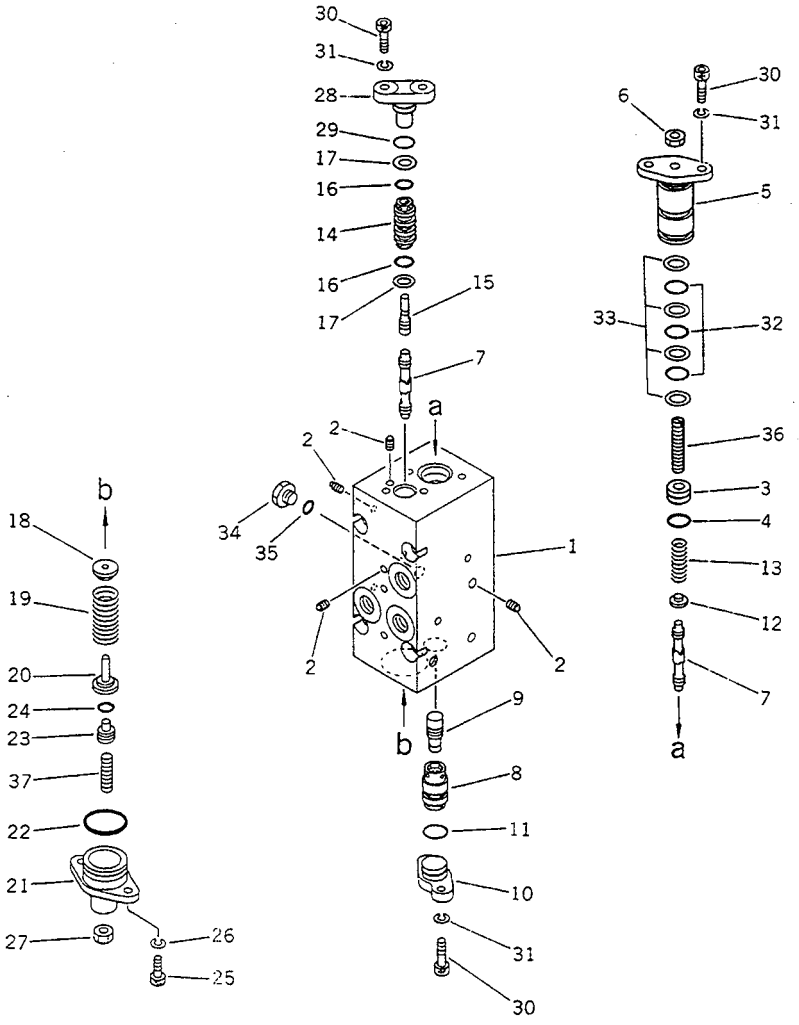

FIG NO. :6013

INDEX NO.	PART NO.	DESCRIPTION	Q'TY	SERIAL NO. PC210-3KP	SERIAL NO. PC240-3KP
	(708-25-01061)	HYDRAULIC PUMP ASS'Y	1	K15001-	
	(708-25-07110)	.SERVO VALVE ASS'Y,FRONT	1	K15001-	
1	☆	....BODY	1	K15001-	
2	☆	....PLUG	16	K15001-	
3	(★708-25-17420)	...PLUG	1	K15001-	
4	(★07000-02010)	...O-RING	1	K15001-	
5	(★708-25-17131)	...COVER	1	K15001-	
6	(★01580-10806)	...NUT	1	K15001-	
7	(★708-25-17140)	...SPOOL	2	K15001-	
8	(★708-25-17150)	...SLEEVE	1	K15001-	
9	(★708-25-17160)	...PISTON	1	K15001-	
10	(★708-25-17170)	...COVER	1	K15001-	
11	(★07000-02014)	...O-RING	1	K15001-	
12	(★708-25-17180)	...SEAT	1	K15001-	
13	(★708-25-17190)	...SPRING	1	K15001-	
14	(★708-25-17210)	...SLEEVE	1	K15001-	
15	(★708-25-17220)	...PISTON	1	K15001-	
16	(★07000-12012)	...O-RING	2	K15001-	
17	(★07001-02012)	...RING,BACK-UP	2	K15001-	
18	(★708-25-17370)	...SEAT	1	K15001-	
19	(★708-25-17250)	...SPRING	1	K15001-	
20	(★708-25-17260)	...SEAT	1	K15001-	
21	(★708-25-17350)	...COVER	1	K15001-	
22	(★07000-03028)	...O-RING	1	K15001-	
23	(★708-25-17410)	...PLUG	1	K15001-	
24	(★07000-01009)	...O-RING	1	K15001-	
25	(★708-25-15320)	...BOLT	2	K15001-	
26	(★01602-20619)	...WASHER,SPRING	2	K15001-	
27	(★01580-10806)	...NUT	1	K15001-	
28	(★708-25-17230)	...COVER	1	K15001-	

https://truckmanualshub.com/

FIG NO. :6013

INDEX NO.	PART NO.	DESCRIPTION	Q'TY	SERIAL NO. PC210-3KP	SERIAL NO. PC240-3KP
29	(★07000-02012)	...O-RING	1	K15001-	
30	(★708-25-15320)	...BOLT	6	K15001-	
31	(★01602-20619)	...WASHER,SPRING	6	K15001-	
32	(★07000-12021)	...O-RING	3	K15001-	
33	(★07001-02021)	...RING,BACK-UP	4	K15001-	
34	(★07040-11007)	...PLUG	1	K15001-	
35	(★07002-01023)	...O-RING	1	K15001-	
36	(★708-25-17430)	...SCREW	1	K15001-	
37	(★708-25-15340)	...SCREW	1	K15001-	

https://truckmanualshub.com/

FIG. 6015 SERVO VALVE, REAR (1/2)
(FOR 3-STAGE SELECTOR MODE OLSS) (PC210)

(708-25-01061) : このアセンブリの構成部品は第6001図から第6023図まで含みます。
This assembly consists of all parts shown in Figs. 6001 to 6023.

708-25-07210 : このアセンブリの構成部品は第6015図から第6018図まで含みます。
This assembly consists of all parts shown in Figs. 6015 to 6018.

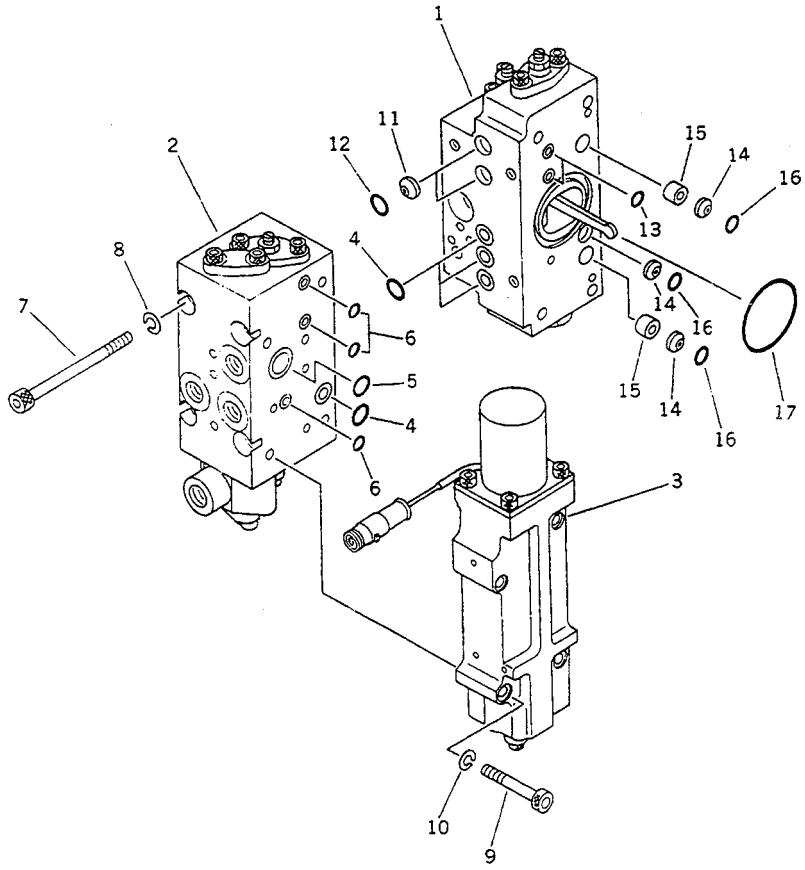

FIG NO. :6015

INDEX NO.	PART NO.	DESCRIPTION	Q'TY	SERIAL NO. PC210-3KP	SERIAL NO. PC240-3KP
	(708-25-01061)	HYDRAULIC PUMP ASS'Y	1	K15001-	
	708-25-07210	.SERVO VALVE ASS'Y,REAR	1	K15001-	
1	(708-25-16200)	..VALVE ASS'Y	1	K15001-	
2	(708-25-07610)	..VALVE ASS'Y	1	K15001-	
3	(708-25-18600)	..VALVE ASS'Y	1	K15001-	
4	07000-02011	..O-RING	4	K15001-	
5	07000-02018	..O-RING	1	K15001-	
6	07000-11009	..O-RING	3	K15001-	
7	708-25-19160	..BOLT	4	K15001-	
8	01602-20825	..WASHER,SPRING	4	K15001-	
9	708-25-19130	..BOLT	4	K15001-	
10	01602-20825	..WASHER,SPRING	4	K15001-	
11	720-68-11920	..FILTER	2	K15001-	
12	07000-12010	..O-RING	2	K15001-	
13	07000-11009	..O-RING	2	K15001-	
14	720-68-11920	..FILTER	3	K15001-	
15	708-25-19150	..ORIFICE	2	K15001-	
16	07000-12010	..O-RING	3	K15001-	
17	07000-03048	..O-RING	1	K15001-	

https://truckmanualshub.com/

FIG. 6016 SERVO VALVE, REAR (2/2)
(FOR 3-STAGE SELECTOR MODE OLSS) (PC210)

このアセンブリの構成部品は第6001図から第6023図まで含みます。
(708-25-01061) : This assembly consists of all parts shown in Figs. 6001 to 6023.

このアセンブリの構成部品は第6015図から第6018図まで含みます。
(708-25-07210) : This assembly consists of all parts shown in Figs. 6015 to 6018.

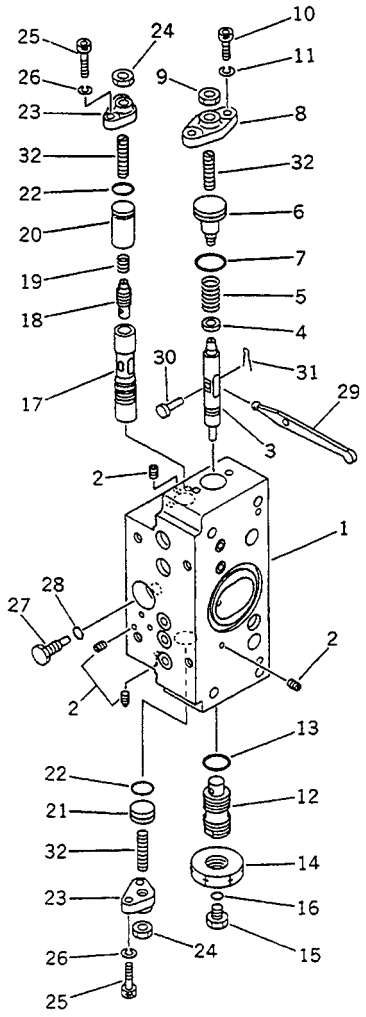

FIG NO. :6016

INDEX NO.	PART NO.	DESCRIPTION	Q'TY	SERIAL NO. PC210-3KP	SERIAL NO. PC240-3KP
	(708-25-01061)	HYDRAULIC PUMP ASS'Y	1	K15001-	
	(708-25-07210)	.SERVO VALVE ASS'Y,REAR	1	K15001-	
	708-25-16200	..VALVE ASS'Y	1	K15001-	
	(★708-23-07011)	...BODY ASS'Y	1	K15001-	
1	☆	....BODY	1	K15001-	
2	☆	....PLUG	7	K15001-	
3	(★708-25-15120)	...PISTON	1	K15001-	
4	(★708-25-15130)	...SEAT	1	K15001-	
5	(★708-25-15140)	...SPRING	1	K15001-	
6	(★708-25-15420)	...PLUG	1	K15001-	
7	(★07000-02018)	...O-RING	1	K15001-	
8	(★708-25-15150)	...COVER	1	K15001-	
9	(★01580-10806)	...NUT	1	K15001-	
10	(★708-25-15320)	...BOLT	2	K15001-	
11	(★01602-20619)	...WASHER,SPRING	2	K15001-	
12	(★708-25-15171)	...PLUG	1	K15001-	
13	(★07002-02034)	...O-RING	1	K15001-	
14	(★07239-12009)	...NUT	1	K15001-	
15	(★07040-11007)	...PLUG	1	K15001-	
16	(★07002-01023)	...O-RING	1	K15001-	
17	(★708-25-15180)	...SLEEVE	1	K15001-	
18	(★708-25-15280)	...SPOOL	1	K15001-	
19	(★708-25-15310)	...SPRING	1	K15001-	
20	(★708-25-15330)	...SPACER	1	K15001-	
21	(★708-25-15430)	...PLUG	1	K15001-	
22	(★07000-02012)	...O-RING	2	K15001-	
23	(★708-25-15250)	...COVER	2	K15001-	
24	(★01580-10806)	...NUT	2	K15001-	
25	(★708-25-15320)	...BOLT	4	K15001-	
26	(★01602-20619)	...WASHER,SPRING	4	K15001-	

https://truckmanualshub.com/

FIG NO. :6016

INDEX NO.	PART NO.	DESCRIPTION	Q'TY	SERIAL NO. PC210-3KP	SERIAL NO. PC240-3KP
27	(★708-25-15260)	...PLUG	1	K15001-	
28	(★07002-00823)	...O-RING	1	K15001-	
29	(★708-25-15270)	...ARM	1	K15001-	
30	(★04205-00514)	...PIN	1	K15001-	
31	(★04050-01210)	...PIN,COTTER	1	K15001-	
32	(★708-25-15340)	...SCREW	3	K15001-	

https://truckmanualshub.com/

FIG. 6017 CUT OFF AND NEGATIVE CONTROL VAVLE, REAR (FOR 3-STAGE SELECTOR MODE OLSS) (PC210)

このアセンブリの構成部品は第6001図から第6023図まで含みます。
(708-25-01061) : This assembly consists of all parts shown in Figs. 6001 to 6023.
このアセンブリの構成部品は第6015図から第6018図まで含みます。
(708-25-07210) : This assembly consists of all parts shown in Figs. 6015 to 6018.

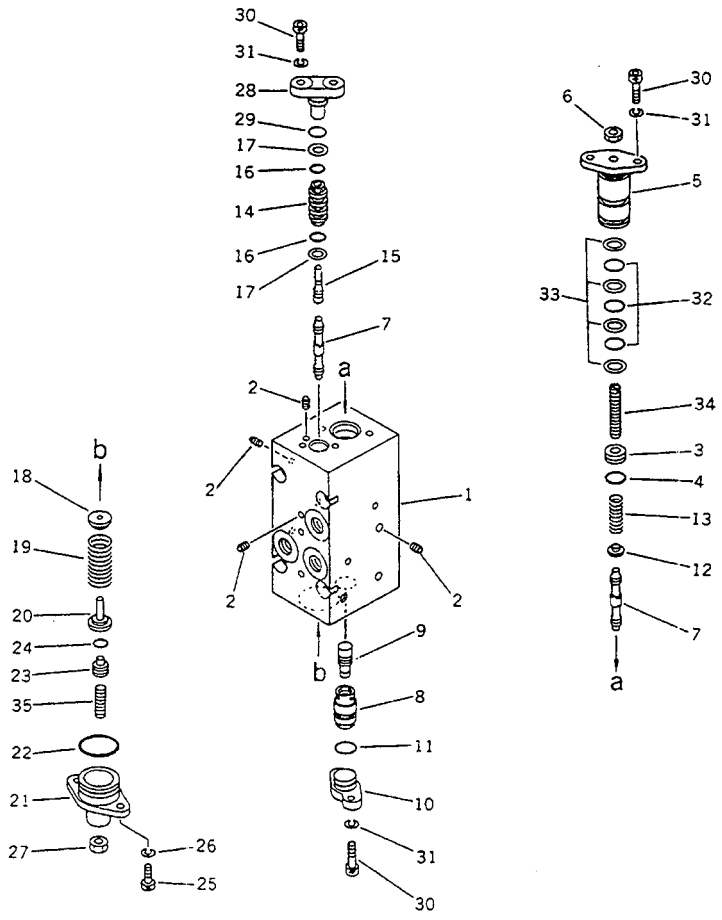

FIG NO. :6017

INDEX NO.	PART NO.	DESCRIPTION	Q'TY	SERIAL NO. PC210-3KP	SERIAL NO. PC240-3KP
	(708-25-01061)	HYDRAULIC PUMP ASS'Y	1	K15001-	
	(708-25-07210)	.SERVO VALVE ASS'Y,REAR	1	K15001-	
	708-25-07610	..VALVE ASS'Y	1	K15001-	
	(★708-23-07041)	...BODY ASS'Y	1	K15001-	
1	☆	....BODY	1	K15001-	
2	☆	....PLUG	15	K15001-	
3	(★708-25-17420)	...PLUG	1	K15001-	
4	(★07000-02010)	...O-RING	1	K15001-	
5	(★708-25-17131)	...COVER	1	K15001-	
6	(★01580-10806)	...NUT	1	K15001-	
7	(★708-25-17140)	...SPOOL	2	K15001-	
8	(★708-25-17150)	...SLEEVE	1	K15001-	
9	(★708-25-17160)	...PISTON	1	K15001-	
10	(★708-25-17170)	...COVER	1	K15001-	
11	(★07000-02014)	...O-RING	1	K15001-	
12	(★708-25-17180)	...SEAT	1	K15001-	
13	(★708-25-17190)	...SPRING	1	K15001-	
14	(★708-25-17210)	...SLEEVE	1	K15001-	
15	(★708-25-17220)	...PISTON	1	K15001-	
16	(★07000-12012)	...O-RING	2	K15001-	
17	(★07001-02012)	...RING,BACK-UP	2	K15001-	
18	(★708-25-17370)	...SEAT	1	K15001-	
19	(★708-25-17250)	...SPRING	1	K15001-	
20	(★708-25-17260)	...SEAT	1	K15001-	
21	(★708-25-17350)	...COVER	1	K15001-	
22	(★07000-03028)	...O-RING	1	K15001-	
23	(★708-25-17410)	...PLUG	1	K15001-	
24	(★07000-01009)	...O-RING	1	K15001-	
25	(★708-25-15320)	...BOLT	2	K15001-	
26	(★01602-20619)	...WASHER,SPRING	4	K15001-	

https://truckmanualshub.com/

FIG NO. :6017

INDEX NO.	PART NO.	DESCRIPTION	Q'TY	SERIAL NO. PC210-3KP	SERIAL NO. PC240-3KP
27	(★01580-10806)	...NUT	1	K15001-	
28	(★708-25-17230)	...COVER	1	K15001-	
29	(★07000-02012)	...O-RING	1	K15001-	
30	(★708-25-15320)	...BOLT	6	K15001-	
31	(★01602-20619)	...WASHER,SPRING	6	K15001-	
32	(★07000-12021)	...O-RING	3	K15001-	
33	(★07001-02021)	...RING,BACK-UP	4	K15001-	
34	(★708-25-17430)	...SCREW	1	K15001-	
35	(★708-25-15340)	...SCREW	1	K15001-	

https://truckmanualshub.com/

FIG. 6018 TORQUE VARIABLE CONTROL VALVE (FOR 3-STAGE SELECTOR MODE OLSS) (PC210)

このアセンブリの構成部品は第6001図から第6023図まで含みます。
(708-25-01061) : This assembly consists of all parts shown in Figs. 6001 to 6023.
このアセンブリの構成部品は第6015図から第6018図まで含みます。
(708-25-07210) : This assembly consists of all parts shown in Figs. 6015 to 6018.

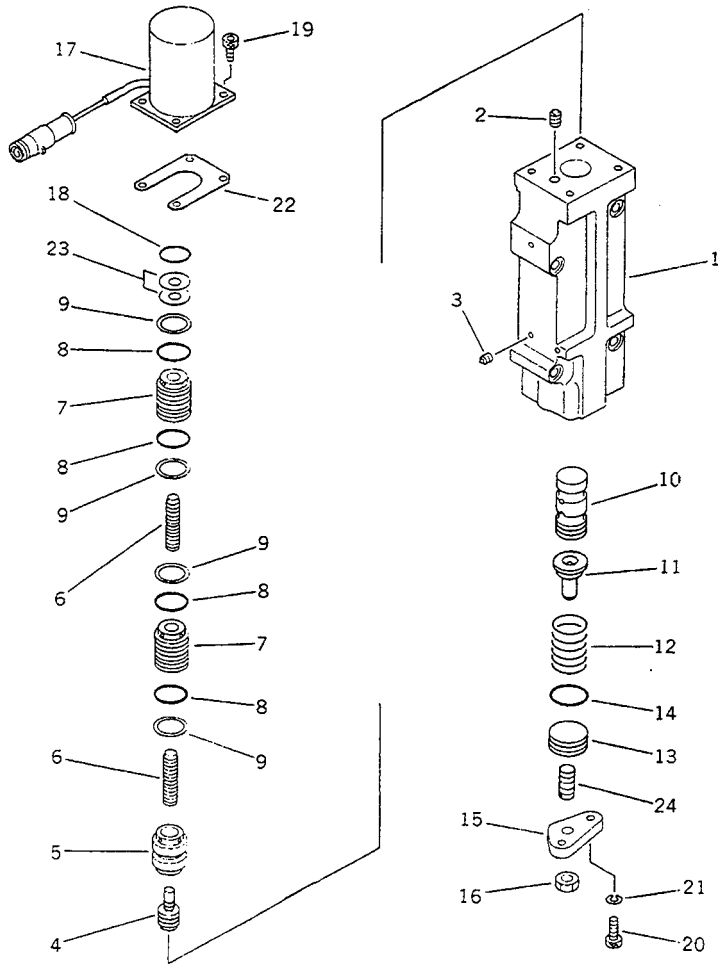

FIG NO. :6018

DEX O.	PART NO.	DESCRIPTION	Q'TY	SERIAL NO. PC210-3KP	SERIAL NO. PC240-3KP
	(708-25-01061)	HYDRAULIC PUMP ASS'Y	1	K15001-	
	(708-25-07210)	.SERVO VALVE ASS'Y,REAR	1	K15001-	
	708-25-18600	..VALVE ASS'Y	1	K15001-	
	(★708-23-07051)	...BODY ASS'Y	1	K15001-	
1	☆	....BODY	1	K15001-	
2	☆	....PLUG	1	K15001-	
3	☆	....PLUG	12	K15001-	
4	(★708-23-18120)	...PISTON	1	K15001-	
5	(★708-23-18130)	...SLEEVE	1	K15001-	
6	(★708-23-18140)	...PISTON	2	K15001-	
7	(★708-23-18150)	...SLEEVE	2	K15001-	
8	(★07000-12016)	...O-RING	4	K15001-	
9	(★07001-02016)	...RING,BACK-UP	4	K15001-	
.0	(★708-23-18161)	...SPOOL	1	K15001-	
.1	(★708-23-18170)	...SEAT	1	K15001-	
.2	(★708-23-18181)	...SPRING	1	K15001-	
.3	(★708-23-15160)	...PLUG	1	K15001-	
.4	(★07000-02018)	...O-RING	1	K15001-	
.5	(★708-23-18210)	...COVER	1	K15001-	
.6	(★01580-10806)	...NUT	1	K15001-	
.7	708-23-18221	...SOLENOID ASS'Y	1	K15001-	
.8	07000-02016	...O-RING	1	K15001-	
.9	708-25-18250	...BOLT	4	K15001-	
0	(★708-25-15320)	...BOLT	2	K15001-	
1	(★01602-20619)	...WASHER,SPRING	2	K15001-	
2	(★708-25-18571)	...SHIM, 0.50MM	2	K15001-	
3	(★708-25-18580)	...SHIM, 0.50MM	2	K15001-	
4	(★708-25-15340)	...SCREW	1	K15001-	

https://truckmanualshub.com/

FIG. 6021 HYDRAULIC PUMP (FOR 3-STAGE SELECTOR MODE OLSS) (PC210)

(708-25-01061) : このアセンブリの構成部品は第6001図から第6023図まで含みます。
This assembly consists of all parts shown in Figs. 6001 to 6023.

(708-25-01150) : このアセンブリの構成部品は第6002図から第6004図、第6021図および第6023図を含みます。
This assembly consists of all parts shown in Figs. 6002 to 6004, 6021 and 6023.

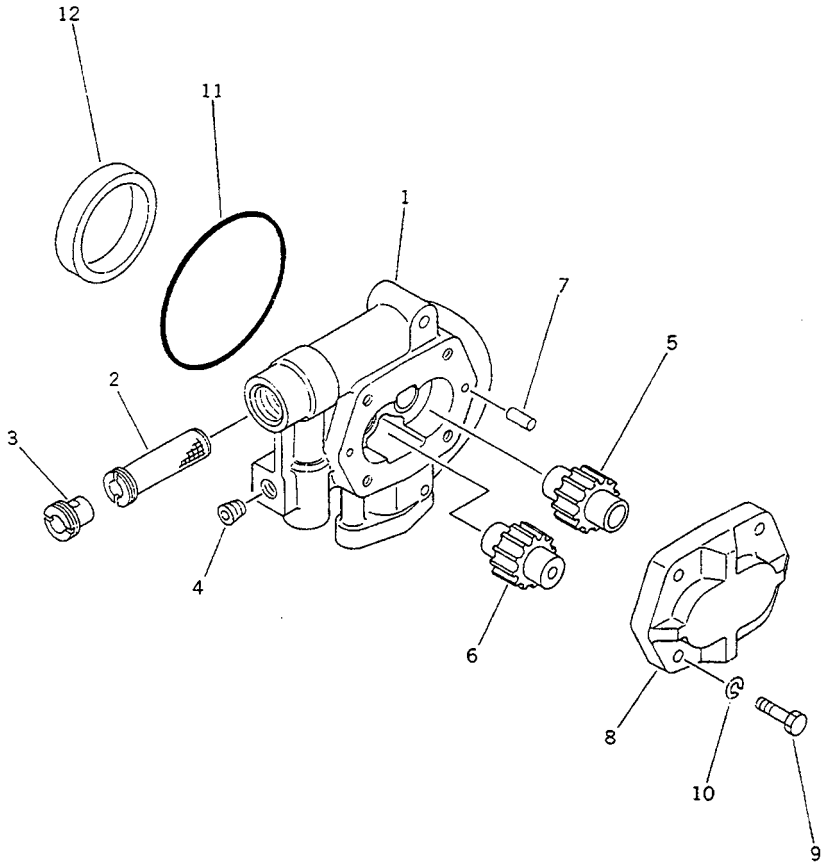

FIG NO. :6021

INDEX NO.	PART NO.	DESCRIPTION	Q'TY	SERIAL NO. PC210-3KP	SERIAL NO. PC240-3KP
	(708-25-01061)	HYDRAULIC PUMP ASS'Y	1	K15001-	
	(708-25-01150)	.PUMP SUB ASS'Y	1	K15001-	
	704-24-28202	..PUMP ASS'Y (BAR25)	1	K15001-	
1	(★704-28-28050)	...BODY	1	K15001-	
2	704-28-02751	...STRAINER	1	K15001-	
3	704-28-02760	...SCREW	1	K15001-	
4	07043-50312	...PLUG	1	K15001-	
5	(★704-28-28450)	...GEAR,DRIVE	1	K15001-	
6	(★704-28-28550)	...GEAR,DRIVEN	1	K15001-	
7	(★04020-00820)	...PIN,DOWEL	2	K15001-	
8	(★704-28-02410)	...HOUSING	1	K15001-	
9	(★01010-51240)	...BOLT	4	K15001-	
10	(★01602-21236)	...WASHER,SPRING	4	K15001-	
11	704-28-02710	...O-RING	1	K15001-	
12	704-28-02771	...COLLAR	1	K15001-	

https://truckmanualshub.com/

FIG. 6023 RELIEF VALVE (FOR 3-STAGE SELECTOR MODE OLSS) (PC210)

このアセンブリの構成部品は第6001図から第6023図まで含みます。
(708-25-01061) : This assembly consists of all parts shown in Figs. 6001 to 6023.

このアセンブリの構成部品は第6002図から第6004図、第6021図および第6023図を含みます。
(708-25-01150) : This assembly consists of all parts shown in Figs. 6002 to 6004, 6021 and 6023.

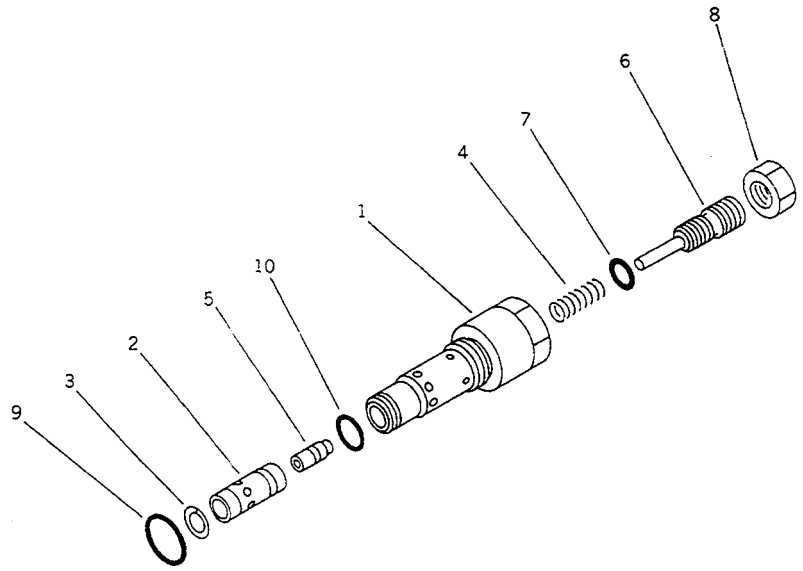

FIG NO. :6023

INDEX NO.	PART NO.	DESCRIPTION	Q'TY	SERIAL NO. PC210-3KP	SERIAL NO. PC240-3KP
	(708-25-01061)	HYDRAULIC PUMP ASS'Y	1	K15001-	
	(708-25-01150)	.PUMP SUB ASS'Y	1	K15001-	
	708-25-14901	..RELIEF VALVE A.	1	K15001-	
1	700-23-14810	...SLEEVE	1	K15001-	
2	708-23-14830	...VALVE	1	K15001-	
3	708-23-14820	...RING,SNAP	1	K15001-	
4	708-23-14840	...SPRING	1	K15001-	
5	708-23-14850	...PISTON	1	K15001-	
6	708-23-14860	...SCREW	1	K15001-	
7	07000-02010	...O-RING	1	K15001-	
8	706-73-75350	...NUT	1	K15001-	
9	700-22-11410	...O-RING	1	K15001-	
10	07002-02434	...O-RING	1	K15001-	

https://truckmanualshub.com/

FIG. 6031 HYDRAULIC PISTON PUMP (1/4)
(FOR 2-STAGE SELECTOR MODE OLSS) (PC210)

このアセンブリの構成部品は第6031図から第6053図まで含みます。
708-25-01081 : This assembly consists of all parts shown in Figs. 6031 to 6053.

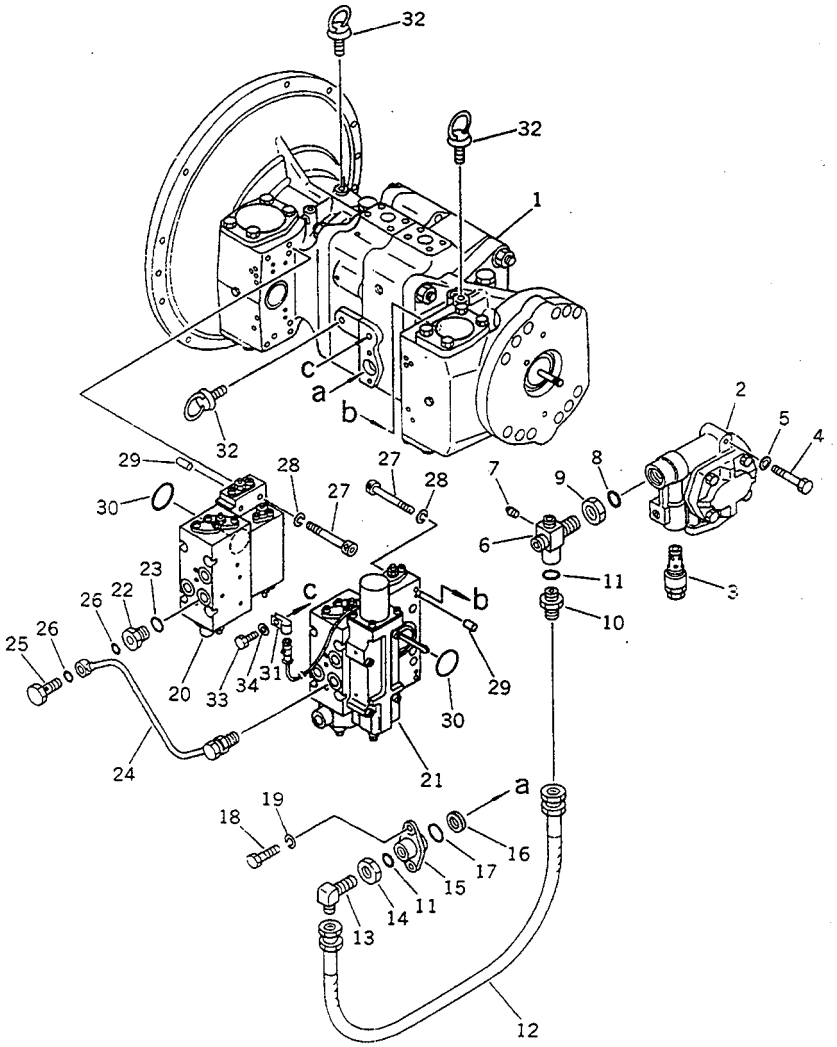

FIG NO. :6031

INDEX NO.	PART NO.	DESCRIPTION	Q'TY	SERIAL NO. PC210-3KP	SERIAL NO. PC240-3KP
	708-25-01081	HYDRAULIC PUMP ASS'Y	1	K15001-	
	708-25-01150	.PUMP SUB ASS'Y	1	K15001-	
1	(708-25-01250)	..PUMP SUB ASS'Y	1	K15001-	
2	(704-24-28202)	..PUMP ASS'Y	1	K15001-	
3	(708-25-14901)	..RELIEF VALVE A.	1	K15001-	
4	(01010-31260)	..BOLT	2	K15001-	
5	(01602-01236)	..WASHER,SPRING	2	K15001-	
6	708-25-19111	..JOINT	1	K15001-	
7	07042-20108	..PLUG	1	K15001-	
8	07002-02434	..O-RING	3	K15001-	
9	07239-12410	..NUT	1	K15001-	
10	07230-10422	..UNION	1	K15001-	
11	07002-02034	..O-RING	2	K15001-	
12	07102-20404	..HOSE	1	K15001-	
13	07231-20422	..ELBOW	1	K15001-	
14	07239-12009	..NUT	1	K15001-	
15	708-25-19120	..FLANGE	1	K15001-	
16	720-68-15240	..FILTER	1	K15001-	
17	07000-02021	..O-RING	1	K15001-	
18	01010-30820	..BOLT	2	K15001-	
19	01602-00825	..WASHER,SPRING	2	K15001-	
20	(708-25-07130)	.SERVO VALVE ASS'Y,FRONT	1	K15001-	
21	(708-25-07230)	.SERVO VALVE ASS'Y,REAR	2	K15001-	
22	706-46-53260	.PLUG	2	K15001-	
23	07002-01423	.O-RING	2	K15001-	
24	708-25-19140	.TUBE	1	K15001-	
25	706-46-53180	.BOLT,JOINT	2	K15001-	
26	07000-02012	.O-RING	4	K15001-	
27	(708-25-19130)	.BOLT	8	K15001-	
28	(01602-00825)	.WASHER,SPRING	8	K15001-	

https://truckmanualshub.com/

FIG NO. :6031

INDEX NO.	PART NO.	DESCRIPTION	Q'TY	SERIAL NO. PC210-3KP	SERIAL NO. PC240-3KP
29	(04020-00616)	.PIN,DOWEL	4	K15001-	
30	(07000-03048)	.O-RING	2	K15001-	
31	08036-21814	.CLIP	1	K15001-	
32	04530-01018	.BOLT,EYE	2	K15001-	
33	01010-31016	.BOLT	1	K15001-	
34	01643-31032	.WASHER	1	K15001-	

https://truckmanualshub.com/

FIG. 6032 HYDRAULIC PISTON PUMP (2/4)
(FOR 2-STAGE SELECTOR MODE OLSS) (PC210)

このアセンブリの構成部品は第6031図から第6053図まで含みます。
(708-25-01081) : This assembly consists of all parts shown in Figs. 6031 to 6053

このアセンブリの構成部品は第6032図から第6034図、第6051図および第6053図を含みます。
708-25-01150 : This assembly consists of all parts shown in Figs. 6032 to 6034, 6051 and 6053.

このアセンブリの構成部品は第6032図から第6034図まで含みます。
708-25-01250 : This assembly consists of all parts shown in Figs. 6032 to 6034.

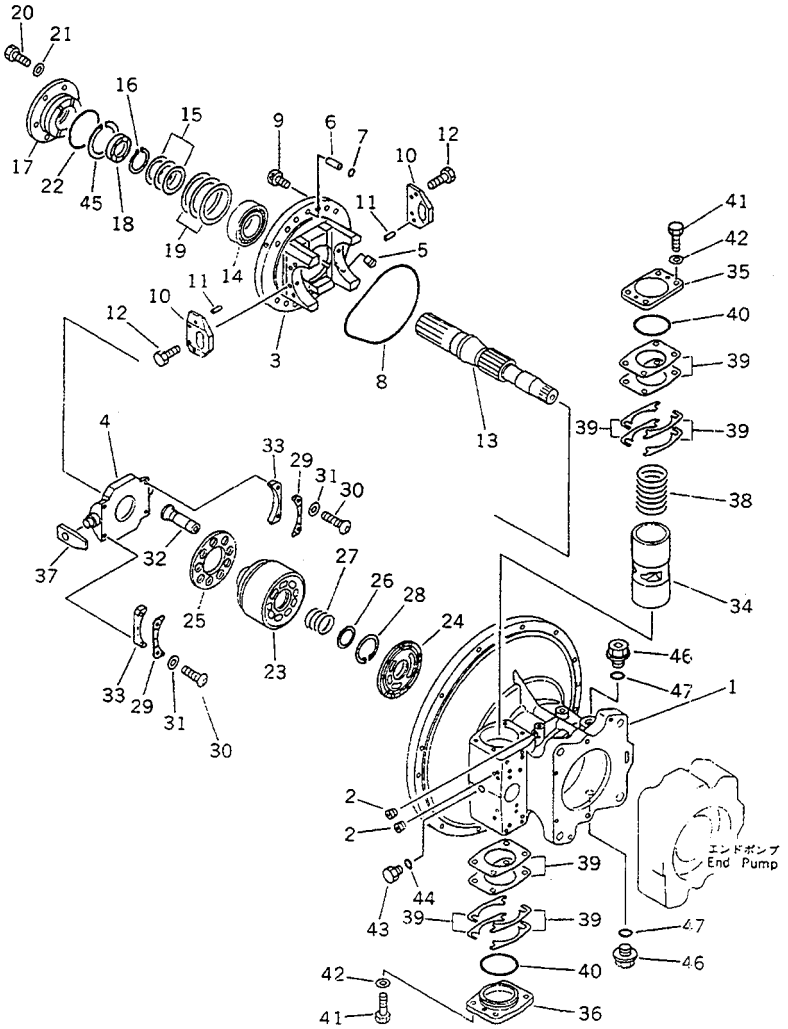

FIG NO. :6032

INDEX NO.	PART NO.	DESCRIPTION	Q'TY	SERIAL NO. PC210-3KP	SERIAL NO. PC240-3KP
	(708-25-01081)	HYDRAULIC PUMP ASS'Y	1	K15001-	
	(708-25-01150)	.PUMP SUB ASS'Y	1	K15001-	
	708-25-01250	..PUMP SUB ASS'Y	1	K15001-	
	(★708-25-00090)	...CASE ASS'Y	1	K15001-	
1	☆	....CASE,FRONT	1	K15001-	
2	☆	....PLUG	11	K15001-	
	(★708-25-00030)	...CRADLE ASS'Y,FRONT	1	K15001-	
3	☆	....CRADLE,FRONT	1	K15001-	
4	☆	....CAM,ROCKER	1	K15001-	
5	☆	....PLUG	1	K15001-	
6	(★708-25-12330)	...JOINT	1	K15001-	
7	(★07000-12015)	...O-RING	1	K15001-	
8	(★708-25-12340)	...O-RING	1	K15001-	
9	(★708-25-12390)	...BOLT	12	K15001-	
10	(★708-25-12360)	...PLATE	2	K15001-	
11	(★04020-00820)	...PIN,DOWEL	4	K15001-	
12	(★01010-50816)	...BOLT	4	K15001-	
13	(★708-25-12711)	...SHAFT,FRONT	1	K15001-	
14	(★708-25-12731)	...BEARING	1	K15001-	
15	(★708-25-05010)	...WASHER KIT	1	K15001-	
16	(★708-25-12790)	...RING,SNAP	1	K15001-	
17	☆	...HOUSING	1	K15001-	
18	708-25-12980	...SEAL,OIL	1	K15001-	
19	(★708-25-05130)	...SHIM KIT	1	K15001-	
	(★708-25-12940)	....SHIM, 0.1MM	1	K15001-	
	(★708-25-12930)	....SHIM, 0.2MM	2	K15001-	
20	01010-50820	...BOLT	4	K15001-	
21	01643-30823	...WASHER	4	K15001-	
22	07000-02080	...O-RING	1	K15001-	
	(★708-25-00010)	...BLOCK ASS'Y	1	K15001-	

https://truckmanualshub.com/

FIG NO. :6032

INDEX NO.	PART NO.	DESCRIPTION	Q'TY	SERIAL NO. PC210-3KP	SERIAL NO. PC240-3KP
23	☆	....BLOCK,CYLINDER	1	K15001-	
24	☆	....PLATE,VALVE	1	K15001-	
25	☆	....RETAINER,SHOE	1	K15001-	
26	(★708-25-13120)	...WASHER	1	K15001-	
27	(★708-25-13130)	...SPRING	1	K15001-	
28	(★708-25-13140)	...RING,SNAP	1	K15001-	
29	(★708-25-13441)	...RETAINER	2	K15001-	
30	(★708-25-13470)	...SCREW	4	K15001-	
31	(★01643-30623)	...WASHER	4	K15001-	
32	(★708-25-13311)	...PISTON SUB ASS'Y	9	K15001-	
33	(★708-25-05060)	...SPACER KIT	2	K15001-	
34	(★708-25-14210)	...PISTON	1	K15001-	
35	(★708-25-14140)	...CAP	1	K15001-	
36	(★708-25-14150)	...CAP	1	K15001-	
37	(★708-25-14120)	...SLIDER	1	K15001-	
38	708-25-14130	...SPRING	1	K15001-	
39	(★708-25-05050)	...SHIM KIT	2	K15001-	
40	07000-02065	...O-RING	2	K15001-	
41	01010-51035	...BOLT	8	K15001-	
42	01643-31032	...WASHER	8	K15001-	
43	720-68-19870	...PLUG	5	K15001-	
44	07002-01223	...O-RING	1	K15001-	
45	(★708-25-12970)	...RING,SNAP	1	K15001-	
46	07044-02412	...PLUG	1	K15001-	
47	07002-02434	...O-RING	1	K15001-	

https://truckmanualshub.com/

FIG. 6033 HYDRAULIC PISTON PUMP (3/4)
(FOR 2-STAGE SELECTOR MODE OLSS) (PC210)

このアセンブリの構成部品は第6031図から第6053図まで含みます。
(708-25-01081) : This assembly consists of all parts shown in Figs. 6031 to 6053.

このアセンブリの構成部品は第6032図から第6034図、第6051図および第6053図を含みます。
(708-25-01150) : This assembly consists of all parts shown in Figs. 6032 to 6034, 6051 and 6053.

このアセンブリの構成部品は第6032図から第6034図まで含みます。
(708-25-01250) : This assembly consists of all parts shown in Figs. 6032 to 6034.

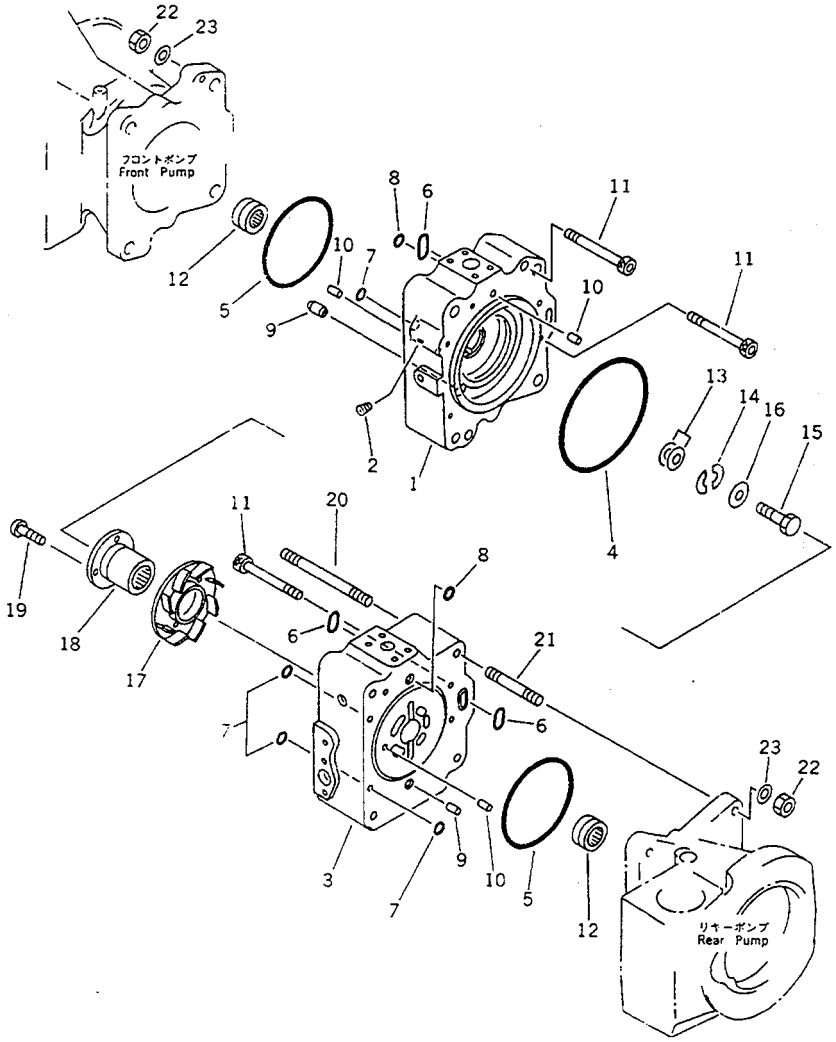

FIG NO. :6033

INDEX NO.	PART NO.	DESCRIPTION	Q'TY	SERIAL NO. PC210-3KP	SERIAL NO. PC240-3KP
	(708-25-01081)	HYDRAULIC PUMP ASS'Y	1	K15001-	
	(708-25-01150)	.PUMP SUB ASS'Y	1	K15001-	
	(708-25-01250)	..PUMP SUB ASS'Y	1	K15001-	
	☆	...END CAP ASS'Y	1	K15001-	
1	☆	....CAP,END	1	K15001-	
2	☆	....PLUG	1	K15001-	
3	☆	...CAP,END	1	K15001-	
4	(★07000-05165)	...O-RING	1	K15001-	
5	(★07000-02135)	...O-RING	2	K15001-	
6	(★07000-03032)	...O-RING	3	K15001-	
7	(★07000-11009)	...O-RING	5	K15001-	
8	(★07000-12015)	...O-RING	2	K15001-	
9	(★6130-21-1910)	...PIN	2	K15001-	
10	(★720-68-19610)	...PIN	3	K15001-	
11	(★708-25-12530)	...BOLT	6	K15001-	
12	(★708-25-12740)	...BEARING	2	K15001-	
13	(★708-25-05020)	...SHIM KIT	1	K15001-	
14	(★708-25-12950)	...PLATE	2	K15001-	
15	(★706-74-40320)	...BOLT	1	K15001-	
16	(★01643-31032)	...WASHER	1	K15001-	
17	(★708-25-12542)	...IMPELLER	1	K15001-	
18	(★708-25-12552)	...COUPLING	1	K15001-	
19	(★706-73-42270)	...SCREW	4	K15001-	
20	(★01141-81620)	...STUD	4	K15001-	
21	(★01140-81645)	...STUD	4	K15001-	
22	(★01582-21613)	...NUT	4	K15001-	
23	(★01643-31645)	...WASHER	4	K15001-	

https://truckmanualshub.com/

FIG. 6034 HYDRAULIC PISTON PUMP (4/4) (FOR 2-STAGE SELECTOR MODE OLSS) (PC210)

このアセンブリの構成部品は第6031図から第6053図まで含みます。
(708-25-01081) : This assembly consists of all parts shown in Figs. 6031 to 6053.

このアセンブリの構成部品は第6032図から第6034図、第6051図および第6053図を含みます。
(708-25-01150) : This assembly consists of all parts shown in Figs. 6032 to 6034, 6051 and 6053.

このアセンブリの構成部品は第6032図から第6034図まで含みます。
(708-25-01250) : This assembly consists of all parts shown in Figs. 6032 to 6034.

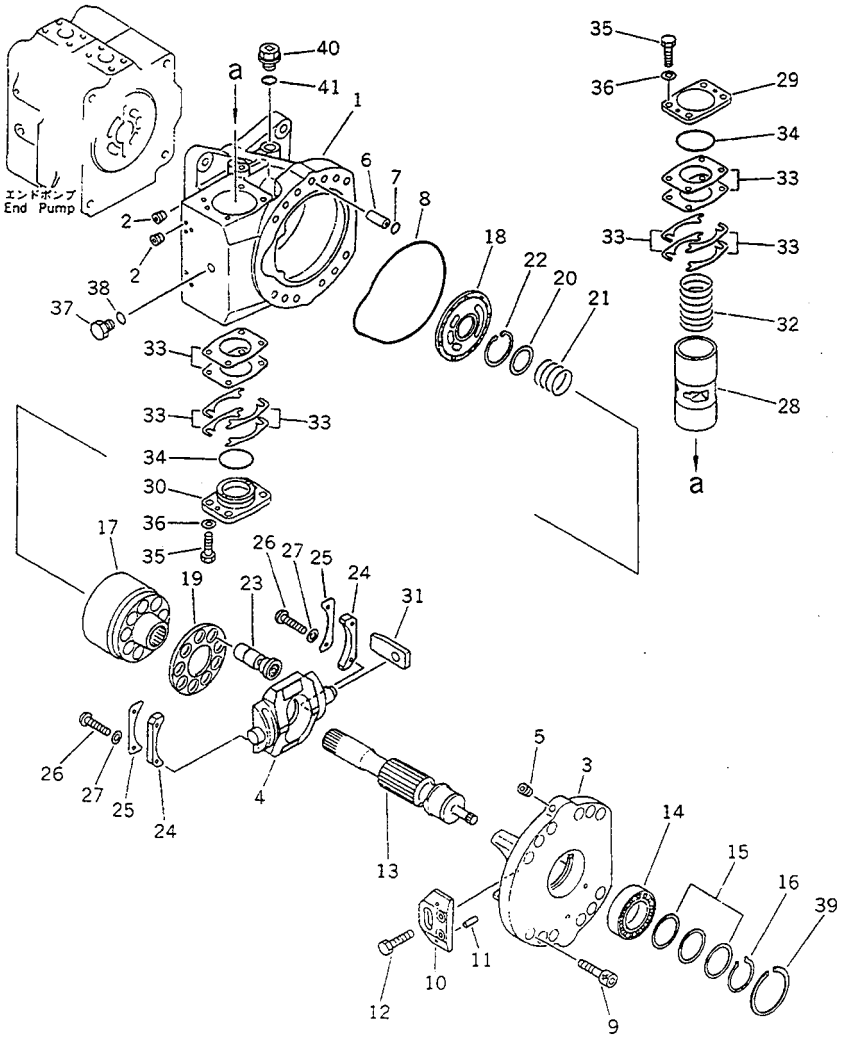

FIG NO. :6034

INDEX NO.	PART NO.	DESCRIPTION	Q'TY	SERIAL NO. PC210-3KP	SERIAL NO. PC240-3KP
	(708-25-01081)	HYDRAULIC PUMP ASS'Y	1	K15001-	
	(708-25-01150)	.PUMP SUB ASS'Y	1	K15001-	
	(708-25-01250)	..PUMP SUB ASS'Y	1	K15001-	
	(★708-25-00100)	...CASE ASS'Y	1	K15001-	
1	☆	....CASE,REAR	1	K15001-	
2	☆	....PLUG	12	K15001-	
	(★708-25-00040)	...CRADLE ASS'Y (LIMITED SUPPLY)	1	K15001-	
3	☆	....CRADLE,REAR	1	K15001-	
4	☆	....CAM,ROCKER	1	K15001-	
5	☆	....PLUG	1	K15001-	
6	(★708-25-12330)	...JOINT	1	K15001-	
7	(★07000-12015)	...O-RING	1	K15001-	
8	(★708-25-12340)	...O-RING	1	K15001-	
9	(★708-25-12350)	...BOLT	12	K15001-	
10	(★708-25-12360)	...PLATE	2	K15001-	
11	(★04020-00820)	...PIN,DOWEL	4	K15001-	
12	(★01010-30816)	...BOLT	4	K15001-	
13	(★708-25-12721)	...SHAFT	1	K15001-	
14	(★708-25-12731)	...BEARING	1	K15001-	
15	(★708-25-05010)	...WASHER KIT	1	K15001-	
16	(★708-25-12790)	...RING,SNAP	1	K15001-	
	(★708-25-00020)	...BLOCK ASS'Y	1	K15001-	
17	☆	....BLOCK,CYLINDER	1	K15001-	
18	☆	....PLATE,VALVE	1	K15001-	
19	☆	....RETAINER,SHOE	1	K15001-	
20	(★708-25-13120)	...WASHER	1	K15001-	
21	(★708-25-13130)	...SPRING	1	K15001-	
22	(★708-25-13140)	...RING,SNAP	1	K15001-	
23	☆	...PISTON SUB ASS'Y	9	K15001-	

https://truckmanualshub.com/

FIG NO. :6034

INDEX NO.	PART NO.	DESCRIPTION	Q'TY	SERIAL NO. PC210-3KP	SERIAL NO. PC240-3KP
24	(*708-25-05060)	...SPACER KIT	2	K15001-	
25	(*708-25-13441)	...RETAINER	2	K15001-	
26	(*708-25-13470)	...SCREW	4	K15001-	
27	(*01643-30623)	...WASHER	4	K15001-	
28	(*708-25-14111)	...PISTON	1	K15001-	
29	(*708-25-14140)	...CAP	1	K15001-	
30	(*708-25-14150)	...CAP	1	K15001-	
31	(*708-25-14120)	...SLIDER	1	K15001-	
32	708-25-14130	...SPRING	1	K15001-	
33	(*708-25-05050)	...SHIM KIT	2	K15001-	
34	07000-02065	...O-RING	2	K15001-	
35	01016-31035	...BOLT	8	K15001-	
36	01643-31032	...WASHER	8	K15001-	
37	☆	...PLUG	4	K15001-	
38	07002-01223	...O-RING	1	K15001-	
39	(*708-25-12970)	...RING,SNAP	1	K15001-	
40	07044-02412	...PLUG	1	K15001-	
41	07002-02434	...O-RING	1	K15001-	

https://truckmanualshub.com/

FIG. 6041 SERVO VALVE, FRONT (1/2)
(FOR 2-STAGE SELECTOR MODE OLSS) (PC210)

(708-25-01081) : このアセンブリの構成部品は第6031図から第6053図まで含みます。
This assembly consists of all parts shown in Figs. 6031 to 6053.

708-25-07130 : このアセンブリの構成部品は第6041図から第6043図まで含みます。
This assembly consists of all parts shown in Figs. 6041 to 6043.

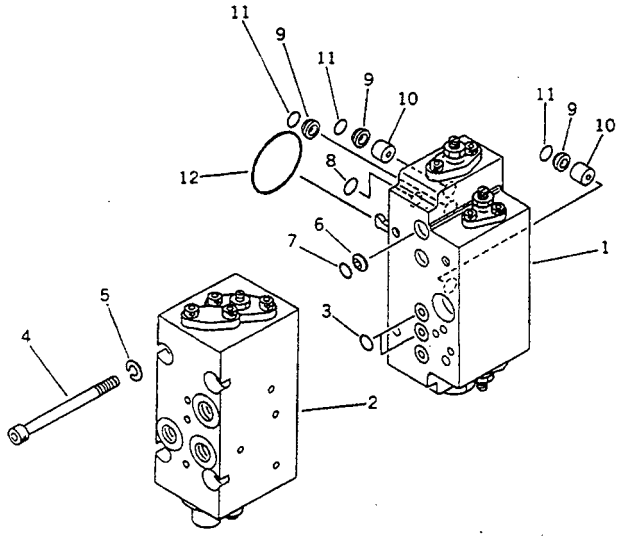

FIG NO. :6041

INDEX NO.	PART NO.	DESCRIPTION	Q'TY	SERIAL NO. PC210-3KP	SERIAL NO. PC240-3KP
	(708-25-01081)	HYDRAULIC PUMP ASS'Y	1	K15001-	
	708-25-07130	.SERVO VALVE ASS'Y,FRONT	1	K15001-	
1	(708-25-35200)	..VALVE SUB ASS'Y	1	K15001-	
2	(708-25-07530)	..VALVE ASS'Y	1	K15001-	
3	07000-02011	..O-RING	2	K15001-	
4	708-25-19160	..BOLT	4	K15001-	
5	01602-20825	..WASHER,SPRING	4	K15001-	
6	720-68-11920	..FILTER	1	K15001-	
7	07000-12010	..O-RING	1	K15001-	
8	07000-11009	..O-RING	3	K15001-	
9	720-68-11920	..FILTER	3	K15001-	
10	708-25-19150	..ORIFICE	2	K15001-	
11	07000-12010	..O-RING	3	K15001-	
12	07000-03048	..O-RING	1	K15001-	

https://truckmanualshub.com/

FIG. 6042 SERVO VALVE, FRONT (2/2) (FOR 2-STAGE SELECTOR MODE OLSS) (PC210)

このアセンブリの構成部品は第6031図から第6053図まで含みます。
(708-25-01081) : This assembly consists of all parts shown in Figs. 6031 to 6053.

このアセンブリの構成部品は第6041図から第6043図まで含みます。
(708-25-07130) : This assembly consists of all parts shown in Figs. 6041 to 6043.

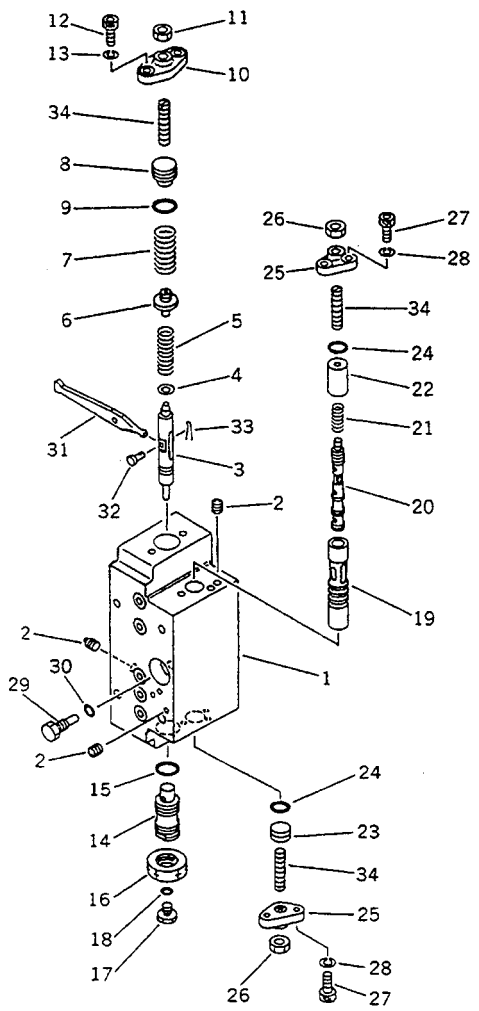

FIG NO. :6042

INDEX NO.	PART NO.	DESCRIPTION	Q'TY	SERIAL NO. PC210-3KP	SERIAL NO. PC240-3KP
	(708-25-01081)	HYDRAULIC PUMP ASS'Y	1	K15001-	
	(708-25-07130)	.SERVO VALVE ASS'Y,FRONT	1	K15001-	
	708-25-35200	..VALVE SUB ASS'Y	1	K15001-	
	(★708-23-07021)	...BODY ASS'Y	1	K15001-	
1	☆	....BODY	1	K15001-	
2	☆	....PLUG	5	K15001-	
3	(★708-25-15120)	...PISTON	1	K15001-	
4	(★708-25-15130)	...SEAT	1	K15001-	
5	(★708-25-25110)	...SPRING	1	K15001-	
6	(★708-23-15120)	...SEAT	1	K15001-	
7	(★708-25-25120)	...SPRING	1	K15001-	
8	(★708-23-15160)	...PLUG	1	K15001-	
9	(★07000-02018)	...O-RING	1	K15001-	
10	(★708-25-15150)	...COVER	1	K15001-	
11	(★01580-10806)	...NUT	1	K15001-	
12	(★708-25-15320)	...BOLT	2	K15001-	
13	(★01602-20619)	...WASHER,SPRING	2	K15001-	
14	(★708-25-15171)	...PLUG	1	K15001-	
15	(★07002-02034)	...O-RING	1	K15001-	
16	(★07239-12009)	...NUT	1	K15001-	
17	(★07040-11007)	...PLUG	1	K15001-	
18	(★07002-01023)	...O-RING	1	K15001-	
19	(★708-25-15180)	...SLEEVE	1	K15001-	
20	(★708-25-15280)	...SPOOL	1	K15001-	
21	(★708-25-15310)	...SPRING	1	K15001-	
22	(★708-25-15330)	...SPACER	1	K15001-	
23	(★708-25-15430)	...PLUG	1	K15001-	
24	(★07000-02012)	...O-RING	2	K15001-	
25	(★708-25-15250)	...COVER	2	K15001-	
26	(★01580-10806)	...NUT	2	K15001-	

https://truckmanualshub.com/

FIG NO. :6042

INDEX NO.	PART NO.	DESCRIPTION	Q'TY	SERIAL NO. PC210-3KP	SERIAL NO. PC240-3KP
27	(★708-25-15320)	...BOLT	4	K15001-	
28	(★01602-20619)	...WASHER,SPRING	4	K15001-	
29	(★708-25-15260)	...PLUG	1	K15001-	
30	(★07002-00823)	...O-RING	1	K15001-	
31	(★708-25-15270)	...ARM	1	K15001-	
32	(★04205-00514)	...PIN	1	K15001-	
33	(★04050-01210)	...PIN,COTTER	1	K15001-	
34	(★708-25-15340)	...SCREW	3	K15001-	

https://truckmanualshub.com/

FIG. 6043 CUT OFF AND NEGATIVE CONTROL VALVE, FRONT (FOR 2-STAGE SELECTOR MODE OLSS) (PC210)

このアセンブリの構成部品は第6031図から第6053図まで含みます。
(708-25-01081) : This assembly consists of all parts shown in Figs. 6031 to 6053.

このアセンブリの構成部品は第6041図から第6043図まで含みます。
(708-25-07130) : This assembly consists of all parts shown in Figs. 6041 to 6043.

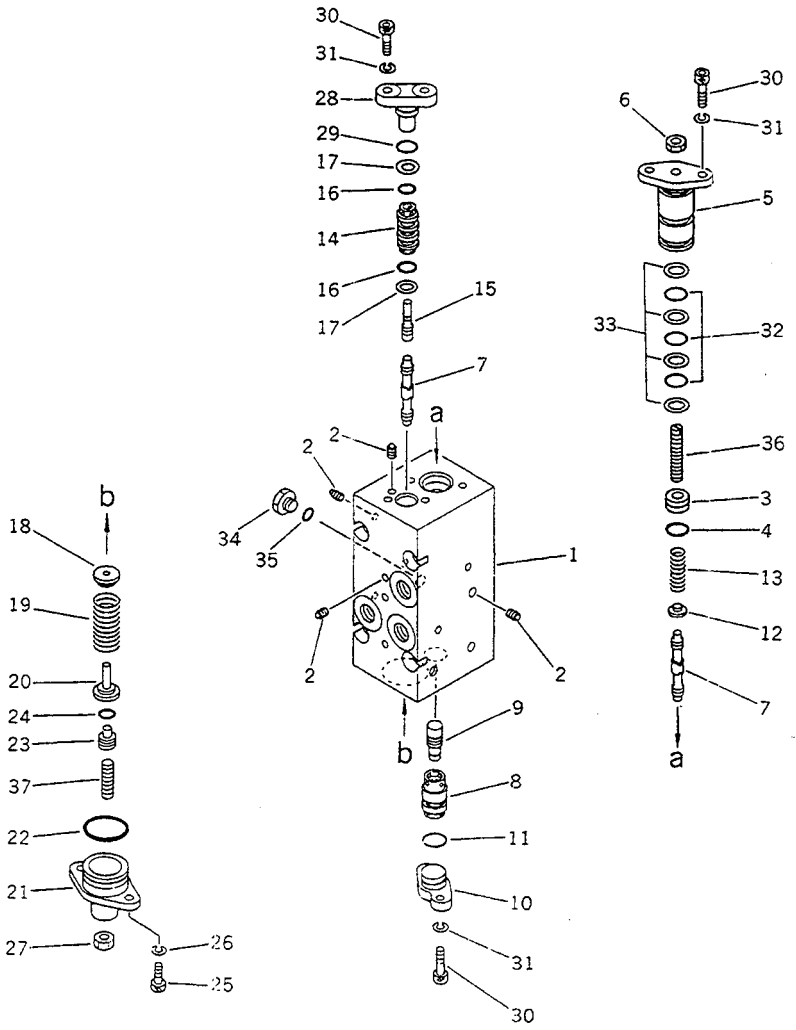

FIG NO. :6043

INDEX NO.	PART NO.	DESCRIPTION	Q'TY	SERIAL NO. PC210-3KP	SERIAL NO. PC240-3KP
	(708-25-01081)	HYDRAULIC PUMP ASS'Y	1	K15001-	
	(708-25-07130)	.SERVO VALVE ASS'Y,FRONT	1	K15001-	
	708-25-07530	..VALVE ASS'Y	1	K15001-	
	(★708-23-07031)	...BODY ASS'Y	1	K15001-	
1	☆	....BODY	1	K15001-	
2	☆	....PLUG	16	K15001-	
3	(★708-25-17420)	...PLUG	1	K15001-	
4	(★07000-02010)	...O-RING	1	K15001-	
5	(★708-25-17131)	...COVER	1	K15001-	
6	(★01580-10806)	...NUT	1	K15001-	
7	(★708-25-17140)	...SPOOL	2	K15001-	
8	(★708-25-17150)	...SLEEVE	1	K15001-	
9	(★708-25-17160)	...PISTON	1	K15001-	
10	(★708-25-17170)	...COVER	1	K15001-	
11	(★07000-02014)	...O-RING	1	K15001-	
12	(★708-25-17180)	...SEAT	1	K15001-	
13	(★708-25-17190)	...SPRING	1	K15001-	
14	(★708-25-17210)	...SLEEVE	1	K15001-	
15	(★708-25-17220)	...PISTON	1	K15001-	
16	(★07000-12012)	...O-RING	2	K15001-	
17	(★07001-02012)	...RING,BACK-UP	2	K15001-	
18	(★708-25-17370)	...SEAT	1	K15001-	
19	(★708-25-17250)	...SPRING	1	K15001-	
20	(★708-25-17260)	...SEAT	1	K15001-	
21	(★708-25-17350)	...COVER	1	K15001-	
22	(★07000-03028)	...O-RING	1	K15001-	
23	(★708-25-17410)	...PLUG	1	K15001-	
24	(★07000-01009)	...O-RING	1	K15001-	
25	(★708-25-15320)	...BOLT	2	K15001-	
26	(★01602-20619)	...WASHER,SPRING	2	K15001-	

https://truckmanualshub.com/

FIG NO. :6043

INDEX NO.	PART NO.	DESCRIPTION	Q'TY	SERIAL NO. PC210-3KP	SERIAL NO. PC240-3KP
27	(★01580-10806)	...NUT	1	K15001-	
28	(★708-25-17230)	...COVER	1	K15001-	
29	(★07000-02012)	...O-RING	1	K15001-	
30	(★708-25-15320)	...BOLT	6	K15001-	
31	(★01602-20619)	...WASHER,SPRING	6	K15001-	
32	(★07000-12021)	...O-RING	3	K15001-	
33	(★07001-02021)	...RING,BACK-UP	4	K15001-	
34	(★07040-11007)	...PLUG	1	K15001-	
35	(★07002-01023)	...O-RING	1	K15001-	
36	(★708-25-17430)	...SCREW	1	K15001-	
37	(★708-25-15340)	...SCREW	1	K15001-	

https://truckmanualshub.com/

FIG. 6045 SERVO VALVE, REAR (1/2)
(FOR 2-STAGE SELECTOR MODE OLSS) (PC210)

このアセンブリの構成部品は第6031図から第6053図まで含みます。
(708-25-01081) : This assembly consists of all parts shown in Figs. 6031 to 6053.

このアセンブリの構成部品は第6045図から第6048図まで含みます。
708-25-07230 : This assembly consists of all parts shown in Figs. 6045 to 6048.

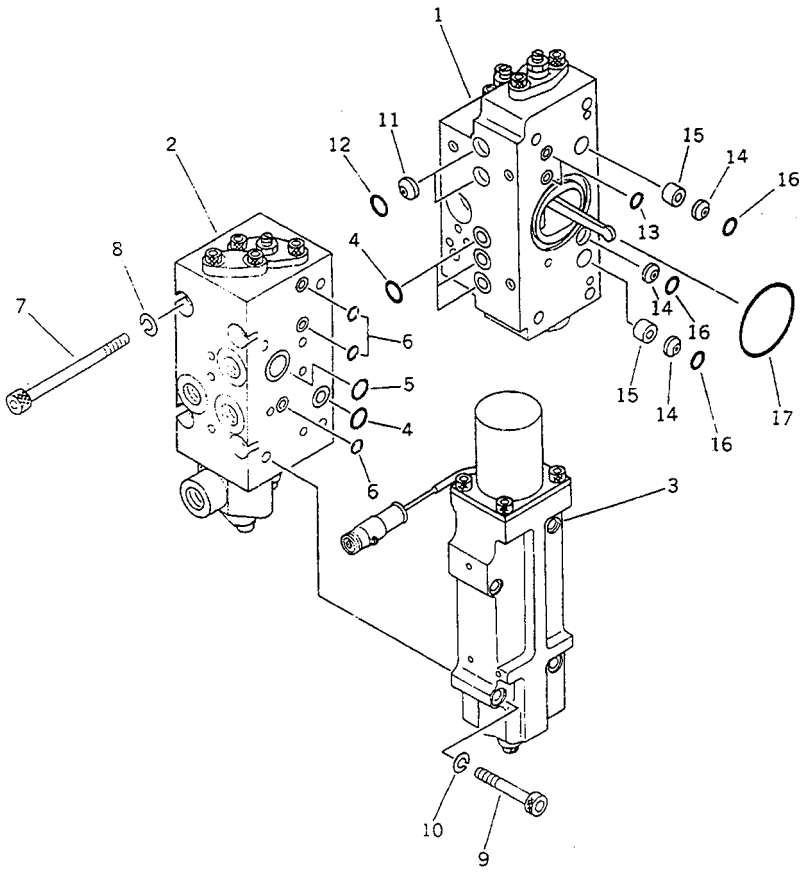

FIG NO. :6045

INDEX NO.	PART NO.	DESCRIPTION	Q'TY	SERIAL NO. PC210-3KP	SERIAL NO. PC240-3KP
	(708-25-01081)	HYDRAULIC PUMP ASS'Y	1	K15001-	
	708-25-07230	.SERVO VALVE ASS'Y,REAR	1	K15001-	
1	(708-25-36200)	..VALVE SUB ASS'Y	1	K15001-	
2	(708-25-07630)	..VALVE ASS'Y	1	K15001-	
3	(708-25-38600)	..VALVE ASS'Y	1	K15001-	
4	07000-02011	..O-RING	4	K15001-	
5	07000-02018	..O-RING	1	K15001-	
6	07000-11009	..O-RING	3	K15001-	
7	708-25-19160	..BOLT	4	K15001-	
8	01602-20825	..WASHER,SPRING	4	K15001-	
9	708-25-19130	..BOLT	4	K15001-	
10	01602-20825	..WASHER,SPRING	4	K15001-	
11	720-68-11920	..FILTER	2	K15001-	
12	07000-12010	..O-RING	2	K15001-	
13	07000-11009	..O-RING	2	K15001-	
14	720-68-11920	..FILTER	3	K15001-	
15	708-25-19150	..ORIFICE	2	K15001-	
16	07000-12010	..O-RING	3	K15001-	
17	07000-03048	..O-RING	1	K15001-	

https://truckmanualshub.com/

FIG. 6046 SERVO VALVE, REAR (2/2) (FOR 2-STAGE SELECTOR MODE OLSS) (PC210)

(708-25-01081) : このアセンブリの構成部品は第6031図から第6053図まで含みます。
This assembly consists of all parts shown in Figs. 6031 to 6053.

(708-25-07230) : このアセンブリの構成部品は第6045図から第6048図まで含みます。
This assembly consists of all parts shown in Figs. 6045 to 6048.

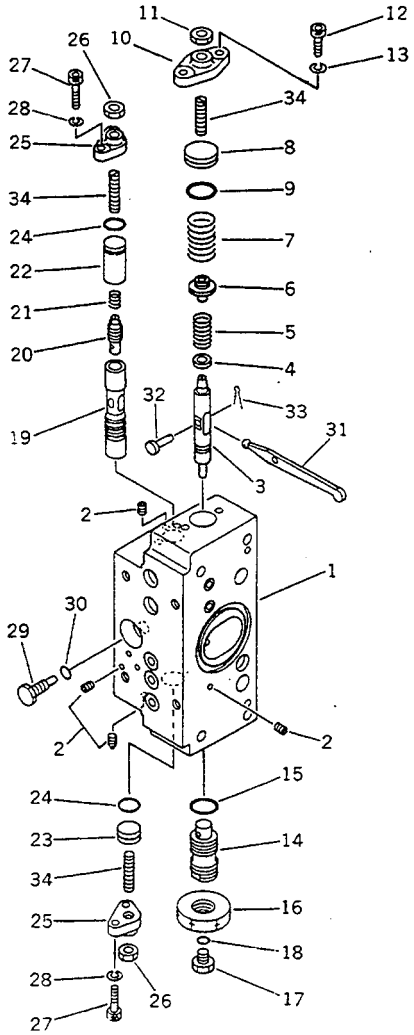

FIG NO. :6046

INDEX NO.	PART NO.	DESCRIPTION	Q'TY	SERIAL NO. PC210-3KP	SERIAL NO. PC240-3KP
	(708-25-01081)	HYDRAULIC PUMP ASS'Y	1	K15001-	
	(708-25-07230)	.SERVO VALVE ASS'Y,REAR	1	K15001-	
	708-25-36200	..VALVE SUB ASS'Y	1	K15001-	
	(★708-23-07011)	...BODY ASS'Y	1	K15001-	
1	☆	....BODY	1	K15001-	
2	☆	....PLUG	7	K15001-	
3	(★708-25-15120)	...PISTON	1	K15001-	
4	(★708-25-15130)	...SEAT	1	K15001-	
5	(★708-25-25110)	...SPRING	1	K15001-	
6	(★708-23-15120)	...SEAT	1	K15001-	
7	(★708-25-25120)	...SPRING	1	K15001-	
8	(★708-23-15160)	...PLUG	1	K15001-	
9	(★07000-02018)	...O-RING	1	K15001-	
10	(★708-25-15150)	...COVER	1	K15001-	
11	(★01580-10806)	...NUT	1	K15001-	
12	(★708-25-15320)	...BOLT	2	K15001-	
13	(★01602-20619)	...WASHER,SPRING	2	K15001-	
14	(★708-25-15171)	...PLUG	1	K15001-	
15	(★07002-02034)	...O-RING	1	K15001-	
16	(★07239-12009)	...NUT	1	K15001-	
17	(★07040-11007)	...PLUG	1	K15001-	
18	(★07002-01023)	...O-RING	1	K15001-	
19	(★708-25-15180)	...SLEEVE	1	K15001-	
20	(★708-25-15280)	...SPOOL	1	K15001-	
21	(★708-25-15310)	...SPRING	1	K15001-	
22	(★708-25-15330)	...SPACER	1	K15001-	
23	(★708-25-15430)	...PLUG	1	K15001-	
24	(★07000-02012)	...O-RING	2	K15001-	
25	(★708-25-15250)	...COVER	2	K15001-	
26	(★01580-10806)	...NUT	2	K15001-	

https://truckmanualshub.com/

FIG NO. :6046

INDEX NO.	PART NO.	DESCRIPTION	Q'TY	SERIAL NO. PC210-3KP	SERIAL NO. PC240-3KP
27	(*708-25-15320)	...BOLT	4	K15001-	
28	(*01602-20619)	...WASHER,SPRING	4	K15001-	
29	(*708-25-15260)	...PLUG	1	K15001-	
30	(*07002-00823)	...O-RING	1	K15001-	
31	(*708-25-15270)	...ARM	1	K15001-	
32	(*04205-00514)	...PIN	1	K15001-	
33	(*04050-01210)	...PIN,COTTER	1	K15001-	
34	(*708-25-15340)	...SCREW	3	K15001-	

https://truckmanualshub.com/

FIG. 6047 CUT OFF AND NEGATIVE CONTROL VALVE, REAR (FOR 2-STAGE SELECTOR MODE OLSS) (PC210)

このアセンブリの構成部品は第6031図から第6053図まで含みます。
(708-25-01081) : This assembly consists of all parts shown in Figs. 6031 to 6053.

このアセンブリの構成部品は第6045図から第6048図まで含みます。
(708-25-07230) : This assembly consists of all parts shown in Figs. 6045 to 6048.

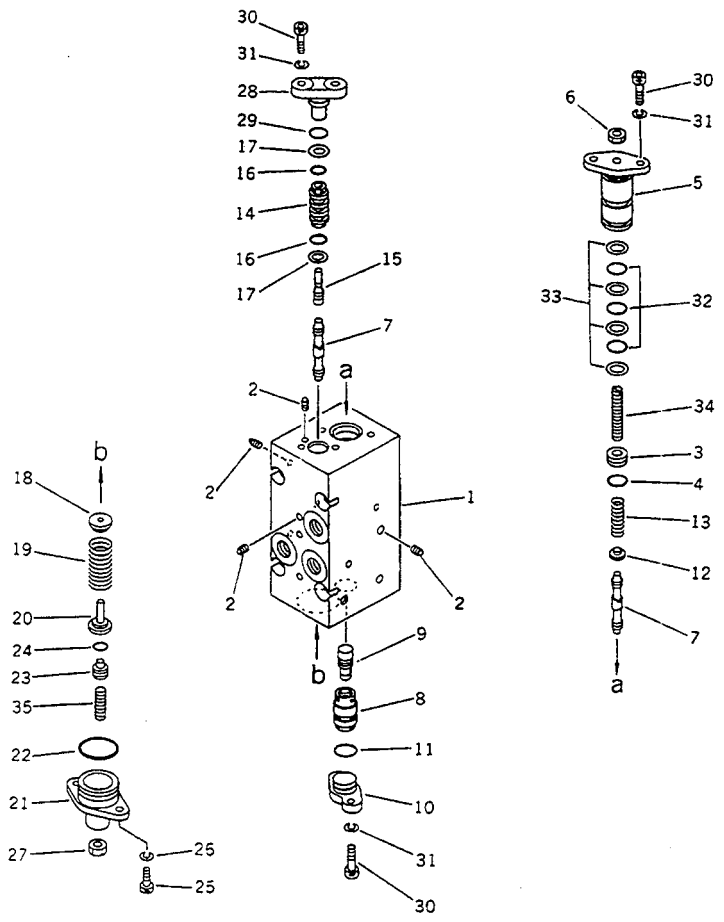

FIG NO. :6047

INDEX NO.	PART NO.	DESCRIPTION	Q'TY	SERIAL NO. PC210-3KP	SERIAL NO. PC240-3KP
	(708-25-01081)	HYDRAULIC PUMP ASS'Y	1	K15001-	
	(708-25-07230)	.SERVO VALVE ASS'Y,REAR	1	K15001-	
	708-25-07630	..VALVE ASS'Y	1	K15001-	
	(★708-23-07041)	...BODY ASS'Y	1	K15001-	
1	☆	....BODY	1	K15001-	
2	☆	....PLUG	15	K15001-	
3	(★708-25-17420)	...PLUG	1	K15001-	
4	(★07000-02010)	...O-RING	1	K15001-	
5	(★708-25-17131)	...COVER	1	K15001-	
6	(★01580-10806)	...NUT	1	K15001-	
7	(★708-25-17140)	...SPOOL	2	K15001-	
8	(★708-25-17150)	...SLEEVE	1	K15001-	
9	(★708-25-17160)	...PISTON	1	K15001-	
10	(★708-25-17170)	...COVER	1	K15001-	
11	(★07000-02014)	...O-RING	1	K15001-	
12	(★708-25-17180)	...SEAT	1	K15001-	
13	(★708-25-17190)	...SPRING	1	K15001-	
14	(★708-25-17210)	...SLEEVE	1	K15001-	
15	(★708-25-17220)	...PISTON	1	K15001-	
16	(★07000-12012)	...O-RING	2	K15001-	
17	(★07001-02012)	...RING,BACK-UP	2	K15001-	
18	(★708-25-17370)	...SEAT	1	K15001-	
19	(★708-25-17250)	...SPRING	1	K15001-	
20	(★708-25-17260)	...SEAT	1	K15001-	
21	(★708-25-17280)	...COVER	1	K15001-	
22	(★07000-03028)	...O-RING	1	K15001-	
23	(★708-25-17410)	...PLUG	1	K15001-	
24	(★07000-01009)	...O-RING	1	K15001-	
25	(★708-25-15320)	...BOLT	2	K15001-	
26	(★01602-20619)	...WASHER,SPRING	2	K15001-	

https://truckmanualshub.com/

FIG NO. :6047

INDEX NO.	PART NO.	DESCRIPTION	Q'TY	SERIAL NO. PC210-3KP	SERIAL NO. PC240-3KP
27	(★01580-10806)	...NUT	1	K15001-	
28	(★708-25-17230)	...COVER	1	K15001-	
29	(★07000-02012)	...O-RING	1	K15001-	
30	(★708-25-15320)	...BOLT	6	K15001-	
31	(★01602-20619)	...WASHER,SPRING	6	K15001-	
32	(★07000-12021)	...O-RING	3	K15001-	
33	(★07001-02021)	...RING,BACK-UP	4	K15001-	
34	(★708-25-17430)	...SCREW	1	K15001-	
35	(★708-25-15340)	...SCREW	1	K15001-	

https://truckmanualshub.com/

FIG. 6048 TORQUE VARIABLE CONTROL VALVE (FOR 2-STAGE SELECTOR MODE OLSS) (PC210)

このアセンブリの構成部品は第6031図から第6053図まで含みます。
(708-25-01081) : This assembly consists of all parts shown in Figs. 6031 to 6053.

このアセンブリの構成部品は第6045図から第6048図まで含みます。
(708-25-07230) : This assembly consists of all parts shown in Figs. 6045 to 6048.

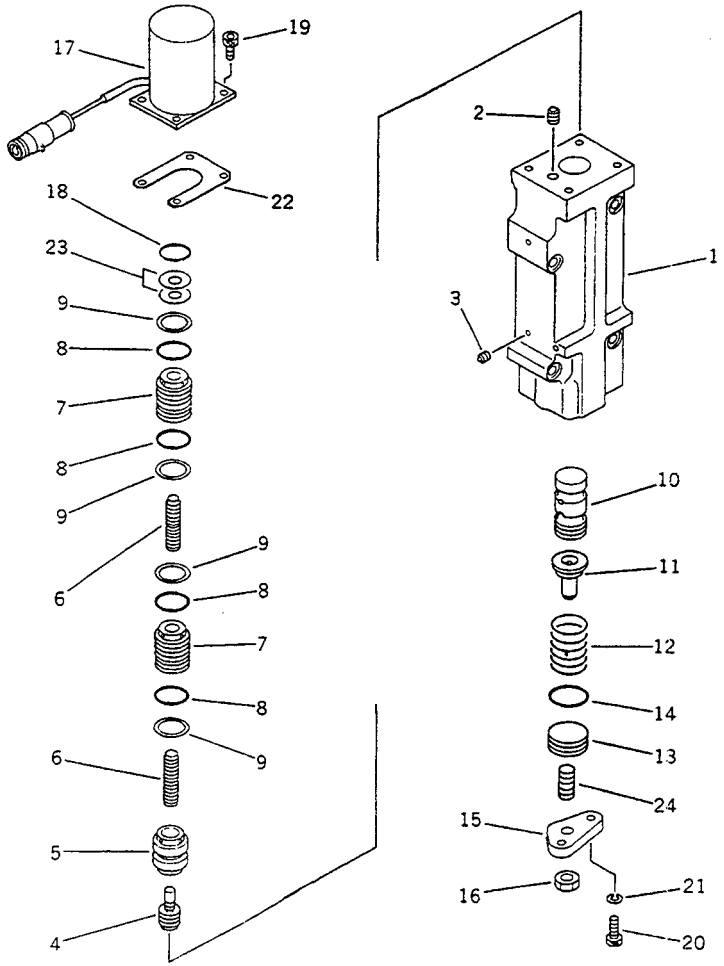

FIG NO. :6048

INDEX NO.	PART NO.	DESCRIPTION	Q'TY	SERIAL NO. PC210-3KP	SERIAL NO. PC240-3KP
	(708-25-01081)	HYDRAULIC PUMP ASS'Y	1	K15001-	
	(708-25-07230)	.SERVO VALVE ASS'Y,REAR	1	K15001-	
	708-25-38600	..VALVE ASS'Y	1	K15001-	
	(★708-23-07051)	...BODY ASS'Y	1	K15001-	
1	☆	....BODY	1	K15001-	
2	☆	....PLUG	1	K15001-	
3	(★720-25-15350)	....PLUG	12	K15001-	
4	(★708-23-18120)	...PISTON	1	K15001-	
5	(★708-23-18130)	...SLEEVE	1	K15001-	
6	(★708-23-18140)	...PISTON	2	K15001-	
7	(★708-23-18150)	...SLEEVE	2	K15001-	
8	(★07000-12016)	...O-RING	4	K15001-	
9	(★07001-02016)	...RING,BACK-UP	4	K15001-	
10	(★708-23-18161)	...SPOOL	1	K15001-	
11	(★708-23-18170)	...SEAT	1	K15001-	
12	(★708-23-18181)	...SPRING	1	K15001-	
13	(★708-23-15160)	...PLUG	1	K15001-	
14	(★07000-02018)	...O-RING	1	K15001-	
15	(★708-23-18210)	...COVER	1	K15001-	
16	(★01580-10806)	...NUT	1	K15001-	
17	708-23-18221	...SOLENOID ASS'Y	1	K15001-	
18	07000-02016	...O-RING	1	K15001-	
19	708-25-18250	...BOLT	4	K15001-	
20	(★708-25-15320)	...BOLT	2	K15001-	
21	(★01602-20619)	...WASHER,SPRING	2	K15001-	
22	(★708-25-18571)	...SHIM, 0.50MM	2	K15001-	
23	(★708-25-18580)	...SHIM, 0.50MM	2	K15001-	
24	(★708-25-15340)	...SCREW	1	K15001-	

https://truckmanualshub.com/

FIG. 6051 HYDRAULIC PUMP (FOR 2-STAGE SELECTOR MODE OLSS) (PC210)

(708-25-01081) : このアセンブリの構成部品は第6031図から第6053図まで含みます。
This assembly consists of all parts shown in Figs. 6031 to 6053.

(708-25-01150) : このアセンブリの構成部品は第6032図から第6034図、第6051図および第6053図を含みます。
This assembly consists of all parts shown in Figs. 6032 to 6034, 6051 and 6053.

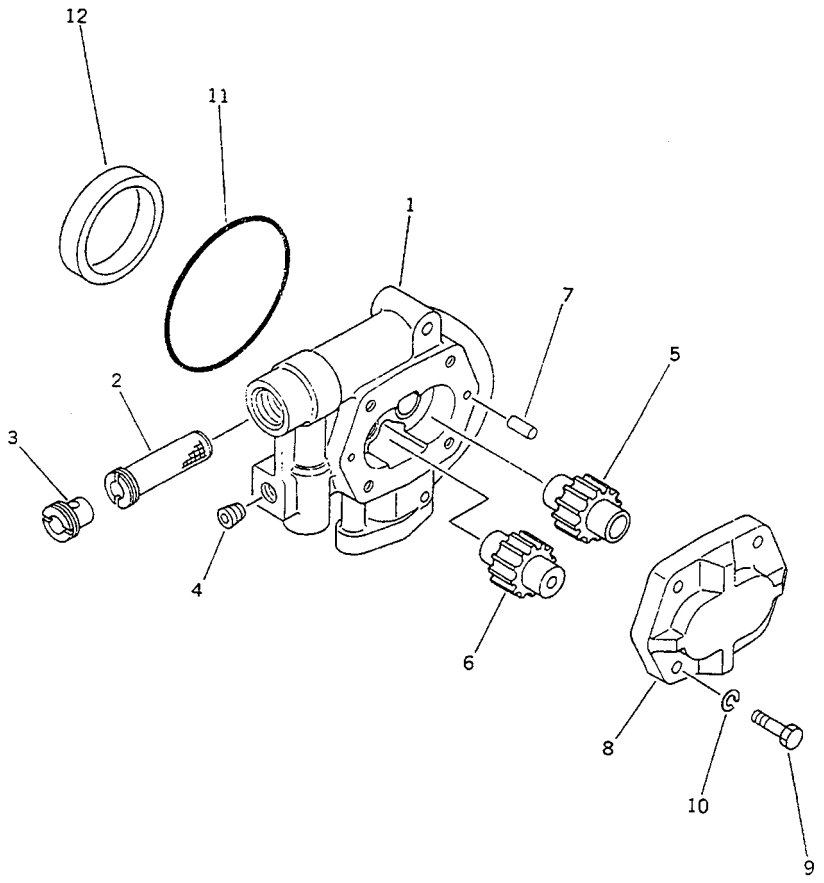

FIG NO. :6051

INDEX NO.	PART NO.	DESCRIPTION	Q'TY	SERIAL NO. PC210-3KP	SERIAL NO. PC240-3KP
	(708-25-01081)	HYDRAULIC PUMP ASS'Y	1	K15001-	
	(708-25-01150)	.PUMP SUB ASS'Y	1	K15001-	
	704-24-28202	..PUMP ASS'Y (BAR25)	1	K15001-	
1	(★704-28-28050)	...BODY	1	K15001-	
2	704-28-02751	...STRAINER	1	K15001-	
3	704-28-02760	...SCREW	1	K15001-	
4	07043-50312	...PLUG	1	K15001-	
5	704-28-28450	...GEAR,DRIVE	1	K15001-	
6	704-28-28550	...GEAR,DRIVEN	1	K15001-	
7	04020-00820	...PIN,DOWEL	2	K15001-	
8	☆	...HOUSING	1	K15001-	
9	01010-51240	...BOLT	4	K15001-	
10	01602-21236	...WASHER,SPRING	4	K15001-	
11	704-28-02710	...O-RING	1	K15001-	
12	704-28-02771	...COLLAR	1	K15001-	

https://truckmanualshub.com/

FIG. 6053 RELIEF VALVE (FOR 2-STAGE SELECTOR MODE OLSS) (PC210)

(708-25-01081) : このアセンブリの構成部品は第6031図から第6053図まで含みます。
This assembly consists of all parts shown in Figs. 6031 to 6053.

(708-25-01150) : このアセンブリの構成部品は第6032図から第6034図、第6051図および第6053図を含みます。
This assembly consists of all parts shown in Figs. 6032 to 6034, 6051 and 6053.

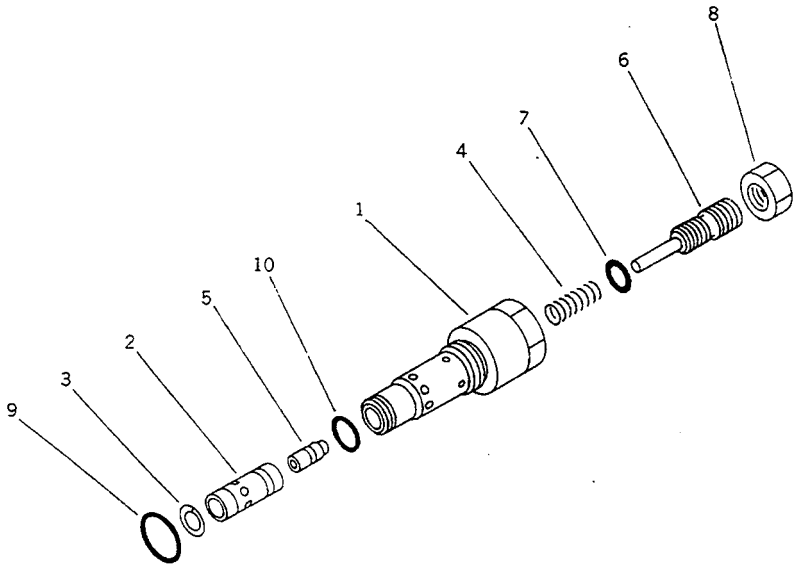

FIG NO. :6053

INDEX NO.	PART NO.	DESCRIPTION	Q'TY	SERIAL NO. PC210-3KP	SERIAL NO. PC240-3KP
	(708-25-01081)	HYDRAULIC PUMP ASS'Y	1	K15001-	
	(708-25-01150)	.PUMP SUB ASS'Y	1	K15001-	
	708-25-14901	..RELIEF VALVE A.	1	K15001-	
1	700-20-14810	...SLEEVE	1	K15001-	
2	708-23-14830	...VALVE	1	K15001-	
3	700-23-14820	...RING,SNAP	1	K15001-	
4	708-23-14840	...SPRING	1	K15001-	
5	708-23-14850	...PISTON	1	K15001-	
6	708-23-14860	...SCREW	1	K15001-	
7	07000-02010	...O-RING	1	K15001-	
8	706-73-75350	...NUT	1	K15001-	
9	700-22-11410	...O-RING	1	K15001-	
10	07002-02434	...O-RING	1	K15001-	

https://truckmanualshub.com/

FIG. 6101 HYDRAULIC PISTON PUMP (1/4)
(FOR 3-STAGE SELECTOR MODE OLSS) (PC240)

このアセンブリの構成部品は第6101図から第6123図までです。
708-25-01051 : This assembly consists of all parts shown in Figs. 6101 to 6123.

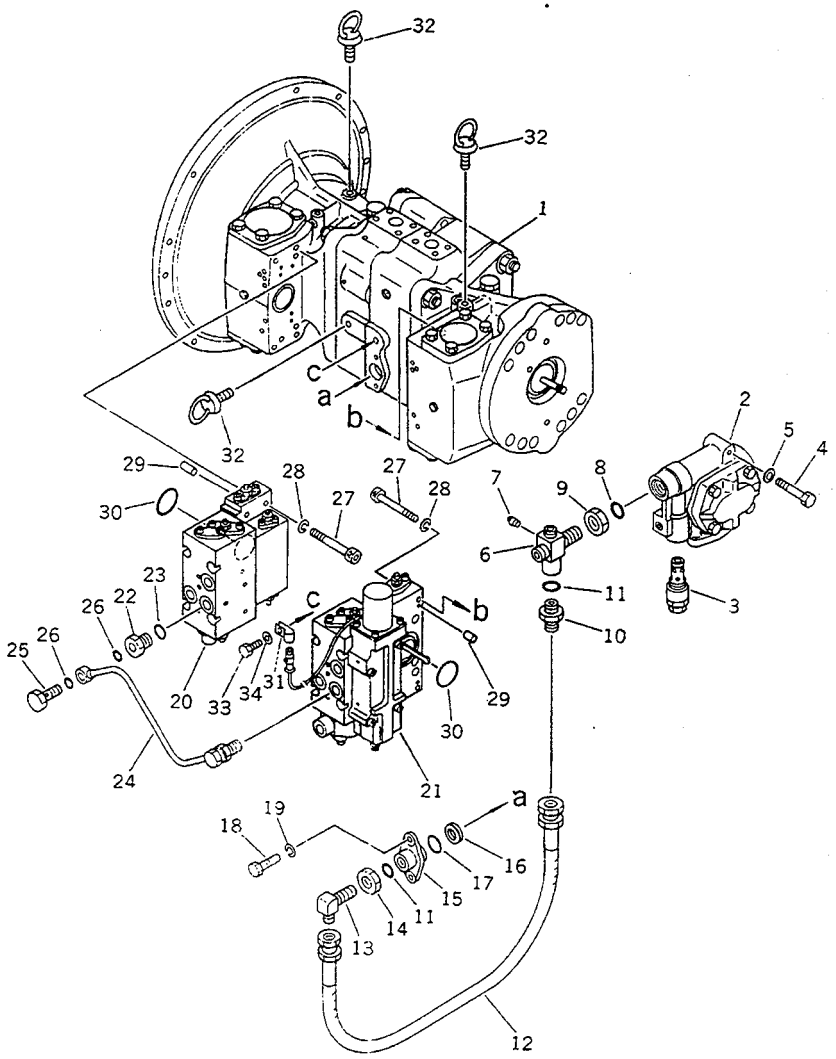

FIG NO. :6101

DEX O.	PART NO.	DESCRIPTION	Q'TY	SERIAL NO. PC210-3KP	SERIAL NO. PC240-3KP
	708-25-01051	HYDRAULIC PUMP ASS'Y	1		K15001-
	708-25-01150	.PUMP SUB ASS'Y	1		K15001-
1	(708-25-01250)	..PUMP SUB ASS'Y	1		K15001-
2	(704-24-28202)	..PUMP ASS'Y	1		K15001-
3	(708-25-14901)	..RELIEF VALVE A.	1		K15001-
4	(01010-31260)	..BOLT	2		K15001-
5	(01602-01236)	..WASHER,SPRING	2		K15001-
6	708-25-19111	..JOINT	1		K15001-
7	07042-20108	..PLUG	1		K15001-
8	07002-02434	..O-RING	3		K15001-
9	07239-12410	..NUT	1		K15001-
10	07230-10422	..UNION	1		K15001-
11	07002-02034	..O-RING	2		K15001-
12	07102-20404	..HOSE	1		K15001-
13	07231-20422	..ELBOW	1		K15001-
14	07239-12009	..NUT	1		K15001-
15	708-25-19120	..FLANGE	1		K15001-
16	720-68-15240	..FILTER	1		K15001-
17	07000-02021	..O-RING	1		K15001-
18	01010-30820	..BOLT	2		K15001-
19	01602-00825	..WASHER,SPRING	2		K15001-
20	(708-25-07110)	.SERVO VALVE ASS'Y,FRONT	1		K15001-
21	(708-25-07220)	.SERVO VALVE ASS'Y,REAR	1		K15001-
22	706-46-53260	.PLUG	2		K15001-
23	07002-01423	.O-RING	2		K15001-
24	708-25-19140	.TUBE	1		K15001-
25	706-46-53180	.BOLT,JOINT	2		K15001-
26	07000-02012	.O-RING	4		K15001-
27	(708-25-19130)	.BOLT	8		K15001-
28	(01602-00825)	.WASHER,SPRING	8		K15001-

https://truckmanualshub.com/

FIG NO. :6101

INDEX NO.	PART NO.	DESCRIPTION	Q'TY	SERIAL NO. PC210-3KP	SERIAL NO. PC240-3KP
29	(04020-00616)	.PIN,DOWEL	4		K15001-
30	(07000-03048)	.O-RING	2		K15001-
31	08036-21814	.CLIP	1		K15001-
32	04530-01018	.BOLT,EYE	2		K15001-
33	01010-31016	.BOLT	1		K15001-
34	01643-31032	.WASHER	1		K15001-

https://truckmanualshub.com/

FIG. 6102 HYDRAULIC PISTON PUMP (2/4)
(FOR 3-STAGE SELECTOR MODE OLSS) (PC240)

このアセンブリの構成部品は第6101図から第6123図まで含みます。
(708-25-01051) : This assembly consists of all parts shown in Figs. 6101 to 6123.
このアセンブリの構成部品は第6102図から第6104図、第6121図および第6123図を含みます。
708-25-01150) : This assembly consists of all parts shown in Figs. 6102 to 6104, 6121 and 6123.
このアセンブリの構成部品は第6102図から第6104図まで含みます。
708-25-01250 : This assembly consists of all parts shown in Figs. 6102 to 6104.

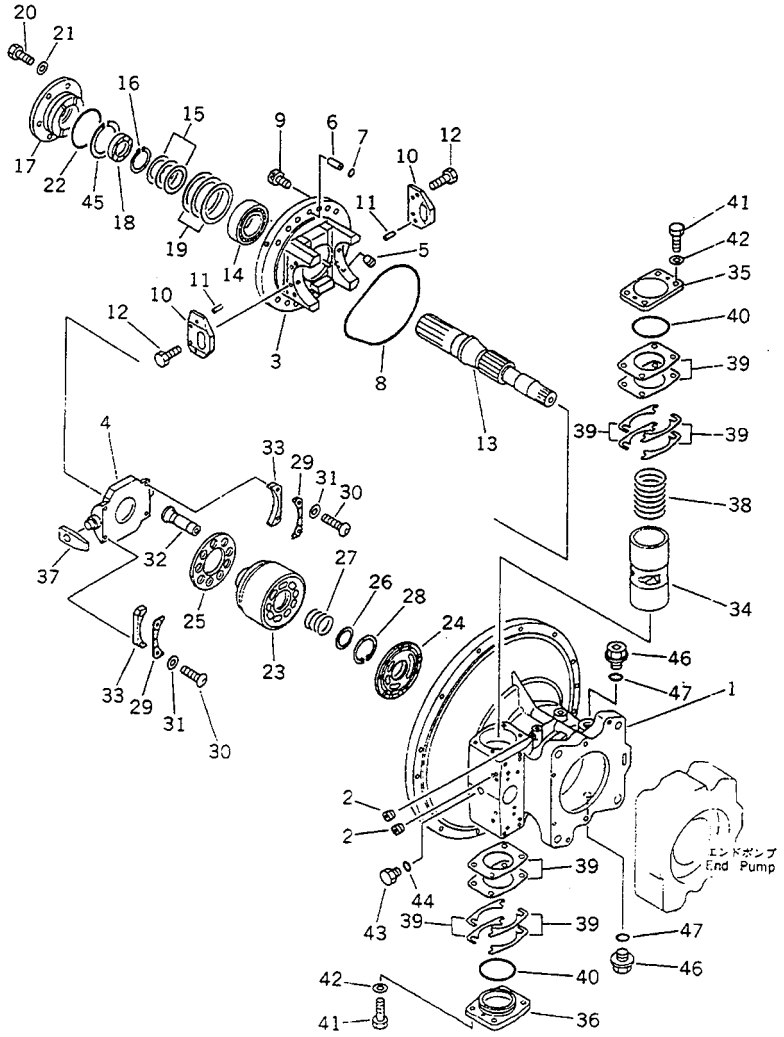

FIG NO. :6102

DEX O.	PART NO.	DESCRIPTION	Q'TY	SERIAL NO. PC210-3KP	SERIAL NO. PC240-3KP
	(708-25-01051)	HYDRAULIC PUMP ASS'Y	1		K15001-
	(708-25-01150)	.PUMP SUB ASS'Y	1		K15001-
	708-25-01250	..PUMP SUB ASS'Y	1		K15001-
	(★708-25-00090)	...CASE ASS'Y	1		K15001-
1	☆	....CASE	1		K15001-
2	☆	....PLUG	11		K15001-
	(★708-25-00030)	...CRADLE ASS'Y,FRONT	1		K15001-
3	☆	....CRADLE,FRONT	1		K15001-
4	☆	....CAM,ROCKER	1		K15001-
5	☆	....PLUG	1		K15001-
6	(★708-25-12330)	...JOINT	1		K15001-
7	(★07000-12015)	...O-RING	1		K15001-
8	(★708-25-12340)	...O-RING	1		K15001-
9	(★708-25-12390)	...BOLT	12		K15001-
10	(★708-25-12360)	...PLATE	2		K15001-
11	(★04020-00820)	...PIN,DOWEL	4		K15001-
12	(★01010-50816)	...BOLT	4		K15001-
13	(★708-25-12711)	...SHAFT,FRONT	1		K15001-
14	(★708-25-12731)	...BEARING	1		K15001-
15	(★708-25-05010)	...WASHER KIT	1		K15001-
16	☆	...RING,SNAP	1		K15001-
17	☆	...HOUSING	1		K15001-
18	708-25-12980	...SEAL,OIL	1		K15001-
19	(★708-25-05130)	...SHIM KIT	1		K15001-
20	01010-50820	...BOLT	4		K15001-
21	01643-30823	...WASHER	4		K15001-
22	07000-02080	...O-RING	1		K15001-
	(★708-25-00010)	...BLOCK ASS'Y	1		K15001-
23	☆	....BLOCK,CYLINDER	1		K15001-
24	☆	....PLATE,VALVE	1		K15001-

https://truckmanualshub.com/

FIG NO. :6102

INDEX NO.	PART NO.	DESCRIPTION	Q'TY	SERIAL NO. PC210-3KP	SERIAL NO. PC240-3KP
25	☆	...RETAINER,SHOE	1		K15001-
26	(★708-25-13120)	...WASHER	1		K15001-
27	(★708-25-13130)	...SPRING	1		K15001-
28	(★708-25-13140)	...RING,SNAP	1		K15001-
29	(★708-25-13441)	...RETAINER	2		K15001-
30	(★708-25-13470)	...SCREW	4		K15001-
31	(★01643-30623)	...WASHER	4		K15001-
32	(★708-25-13310)	...PISTON SUB ASS'Y	9		K15001-
33	(★708-25-05060)	...SPACER KIT	2		K15001-
34	(★708-25-14210)	...PISTON	1		K15001-
35	(★708-25-14140)	...CAP	1		K15001-
36	(★708-25-14150)	...CAP	1		K15001-
37	(★708-25-14120)	...SLIDER	1		K15001-
38	708-25-14130	...SPRING	1		K15001-
39	(★708-25-05050)	...SHIM KIT	2		K15001-
40	(★07000-02065)	...O-RING	2		K15001-
41	(★01010-51035)	...BOLT	8		K15001-
42	(★01643-31032)	...WASHER	8		K15001-
43	720-68-19870	...PLUG	5		K15001-
44	07002-01223	...O-RING	1		K15001-
45	(★708-25-12970)	...RING,SNAP	1		K15001-
46	07044-02412	...PLUG	1		K15001-
47	07002-02434	...O-RING	1		K15001-

https://truckmanualshub.com/

FIG. 6103 HYDRAULIC PISTON PUMP (3/4) (FOR 3-STAGE SELECTOR MODE OLSS) (PC240)

このアセンブリの構成部品は第6101図から第6123図まで含みます。
(708-25-01051) : This assembly consists of all parts shown in Figs. 6101 to 6123.
このアセンブリの構成部品は第6102図から第6104図、第6121図および第6123図を含みます。
(708-25-01150) : This assembly consists of all parts shown in Figs. 6102 to 6104, 6121 and 6123.
このアセンブリの構成部品は第6102図から第6104図まで含みます。
(708-25-01250) : This assembly consists of all parts shown in Figs. 6102 to 6104.

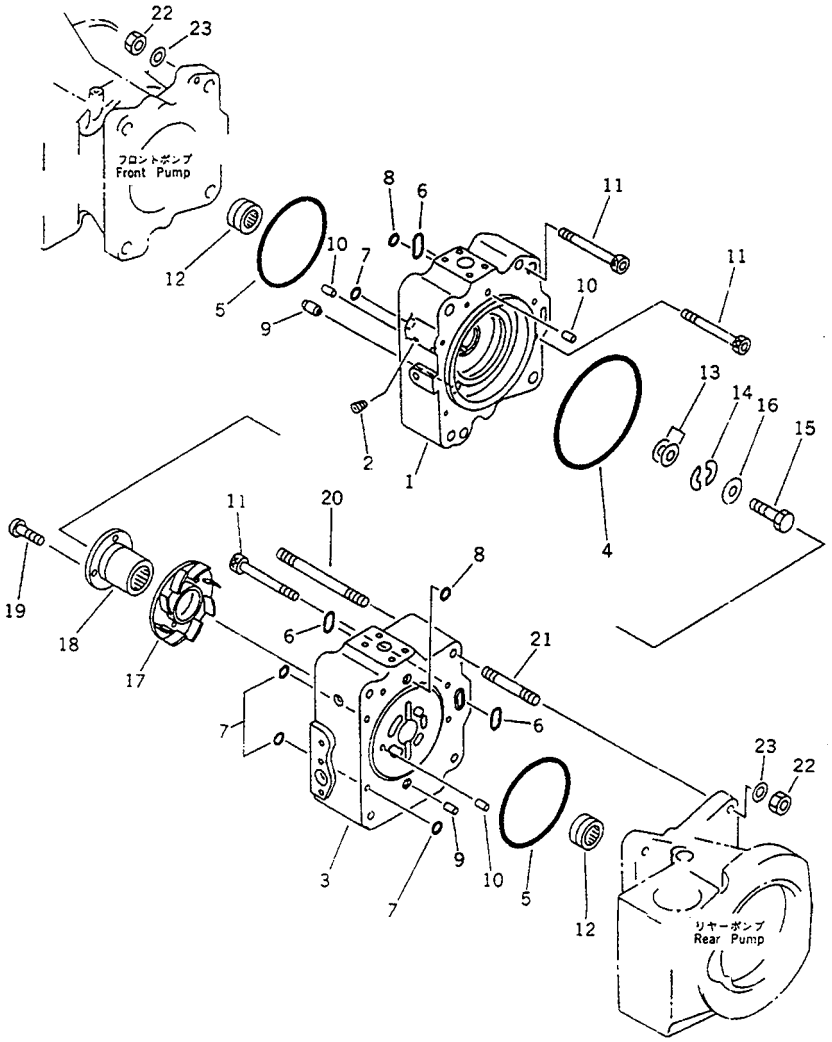

FIG NO. :6103

INDEX NO.	PART NO.	DESCRIPTION	Q'TY	SERIAL NO. PC210-3KP	SERIAL NO. PC240-3KP
	(708-25-01051)	HYDRAULIC PUMP ASS'Y	1		K15001-
	(708-25-01150)	.PUMP SUB ASS'Y	1		K15001-
	(708-25-01250)	..PUMP SUB ASS'Y	1		K15001-
	(★708-25-00110)	...END CAP ASS'Y,FRONT	1		K15001-
1	☆	....CAP,END	1		K15001-
2	☆	....PLUG	1		K15001-
3	(★708-25-12521)	...CAP,END	1		K15001-
4	(★07000-05165)	...O-RING	1		K15001-
5	(★07000-02135)	...O-RING	2		K15001-
6	(★07000-03032)	...O-RING	3		K15001-
7	(★07000-11009)	...O-RING	5		K15001-
8	(★07000-12015)	...O-RING	2		K15001-
9	(★6130-21-1910)	...PIN	2		K15001-
10	(★720-68-19610)	...PIN	3		K15001-
11	(★708-25-12530)	...BOLT	6		K15001-
12	(★708-25-12740)	...BEARING	2		K15001-
13	(★708-25-05020)	...SHIM KIT	1		K15001-
14	(★708-25-12950)	...PLATE	2		K15001-
15	(★706-74-40320)	...BOLT	1		K15001-
16	(★01643-31032)	...WASHER	1		K15001-
17	(★708-25-12542)	...IMPELLER	1		K15001-
18	(★708-25-12552)	...COUPLING	1		K15001-
19	(★706-73-42270)	...SCREW	4		K15001-
20	(★01141-81620)	...STUD	4		K15001-
21	(★01140-81645)	...STUD	4		K15001-
22	(★01582-21613)	...NUT	4		K15001-
23	(★01643-31645)	...WASHER	4		K15001-

https://truckmanualshub.com/

FIG. 6104 HYDRAULIC PISTON PUMP (4/4) (FOR 3-STAGE SELECTOR MODE OLSS) (PC240)

(708-25-01051) : このアセンブリの構成部品は第6101図から第6123図まで含みます。
This assembly consists of all parts shown in Figs. 6101 to 6123.

(708-25-01150) : このアセンブリの構成部品は第6102図から第6104図、第6121図および第6123図を含みます。
This assembly consists of all parts shown in Figs. 6102 to 6104, 6121 and 6123.

(708-25-01250) : このアセンブリの構成部品は第6102図から第6104図まで含みます。
This assembly consists of all parts shown in Figs. 6102 to 6104.

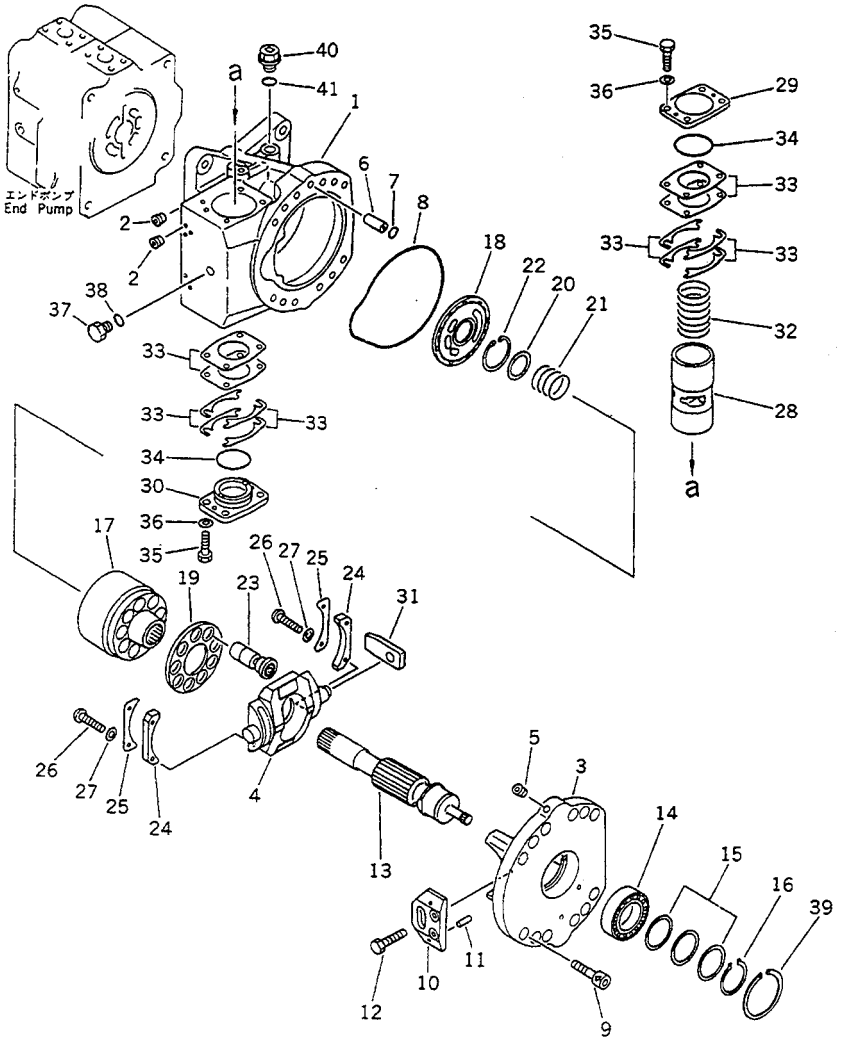

FIG NO. :6104

INDEX NO.	PART NO.	DESCRIPTION	Q'TY	SERIAL NO. PC210-3KP	SERIAL NO. PC240-3KP
	(708-25-01051)	HYDRAULIC PUMP ASS'Y	1		K15001-
	(708-25-01150)	.PUMP SUB ASS'Y	1		K15001-
	(708-25-01250)	..PUMP SUB ASS'Y	1		K15001-
	(★708-25-00100)	...CASE ASS'Y,REAR	1		K15001-
1	☆	....CASE,REAR	1		K15001-
2	☆	....PLUG	12		K15001-
	(★708-25-00040)	...CRADLE ASS'Y,REAR	1		K15001-
3	☆	....CRADLE,REAR	1		K15001-
4	☆	....CAM,ROCKER	1		K15001-
5	☆	....PLUG	1		K15001-
6	(★708-25-12330)	...JOINT	1		K15001-
7	☆	...O-RING	1		K15001-
8	(★708-25-12340)	...O-RING	1		K15001-
9	(★708-25-12350)	...BOLT	12		K15001-
10	(★708-25-12360)	...PLATE	2		K15001-
11	☆	...PIN,DOWEL	4		K15001-
12	☆	...BOLT	4		K15001-
13	(★708-25-12721)	...SHAFT	1		K15001-
14	(★708-25-12731)	...BEARING	1		K15001-
15	(★708-25-05010)	...WASHER KIT	1		K15001-
16	(★708-25-12790)	...RING,SNAP	1		K15001-
	(★708-25-00020)	...BLOCK ASS'Y	1		K15001-
17	☆	....BLOCK,CYLINDER	1		K15001-
18	☆	....PLATE,VALVE	1		K15001-
19	☆	...RETAINER,SHOE	1		K15001-
20	(★708-25-13120)	...WASHER	1		K15001-
21	(★708-25-13130)	...SPRING	1		K15001-
22	(★708-25-13140)	...RING,SNAP	1		K15001-
23	☆	...PISTON SUB ASS'Y	9		K15001-
24	(★708-25-05060)	...SPACER KIT	2		K15001-

https://truckmanualshub.com/

FIG NO. :6104

INDEX NO.	PART NO.	DESCRIPTION	Q'TY	SERIAL NO. PC210-3KP	SERIAL NO. PC240-3KP
25	(★708-25-13441)	...RETAINER	2		K15001-
26	(★708-25-13470)	...SCREW	4		K15001-
27	☆	...WASHER	4		K15001-
28	(★708-25-14111)	...PISTON	1		K15001-
29	(★708-25-14140)	...CAP	1		K15001-
30	(★708-25-14150)	...CAP	1		K15001-
31	(★708-25-14120)	...SLIDER	1		K15001-
32	708-25-14130	...SPRING	1		K15001-
33	(★708-25-05050)	...SHIM KIT	2		K15001-
34	07000-02065	...O-RING	2		K15001-
35	01016-31035	...BOLT	8		K15001-
36	01643-31032	...WASHER	8		K15001-
37	☆	...PLUG	4		K15001-
38	07002-01223	...O-RING	1		K15001-
39	☆	...RING,SNAP	1		K15001-
40	07044-02412	...PLUG	1		K15001-
41	07002-02434	...O-RING	1		K15001-

https://truckmanualshub.com/

FIG. 6111 SERVO VALVE, FRONT (1/2) (FOR 3-STAGE SELECTOR MODE OLSS) (PC240)

(708-25-01051) : このアセンブリの構成部品は第6101図から第6123図まで含みます。
This assembly consists of all parts shown in Figs. 6101 to 6123.

708-25-07110 : このアセンブリの構成部品は第6111図から第6113図まで含みます。
This assembly consists of all parts shown in Figs. 6111 to 6113.

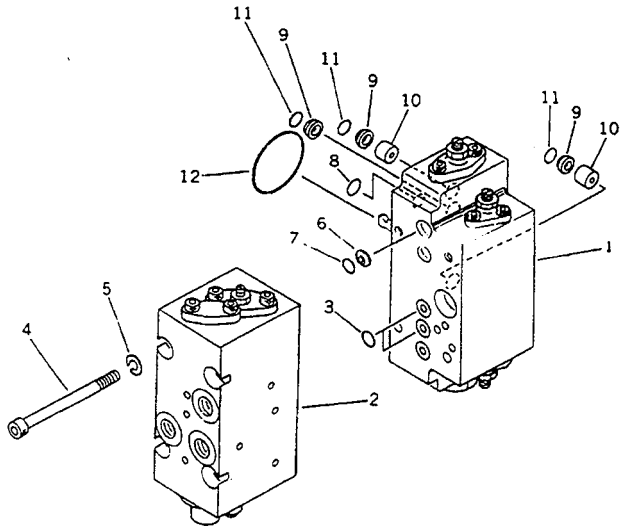

FIG NO. :6111

INDEX NO.	PART NO.	DESCRIPTION	Q'TY	SERIAL NO. PC210-3KP	SERIAL NO. PC240-3KP
	(708-25-01051)	HYDRAULIC PUMP ASS'Y	1		K15001-
	708-25-07110	.SERVO VALVE ASS'Y,FRONT	1		K15001-
1	(708-25-15200)	..VALVE SUB ASS'Y	1		K15001-
2	(708-25-07510)	..VALVE ASS'Y	1		K15001-
3	07000-02011	..O-RING	2		K15001-
4	708-25-19160	..BOLT	4		K15001-
5	01602-20825	..WASHER,SPRING	4		K15001-
6	720-68-11920	..FILTER	1		K15001-
7	07000-12010	..O-RING	1		K15001-
8	07000-11009	..O-RING	2		K15001-
9	720-68-11920	..FILTER	3		K15001-
10	708-25-19150	..ORIFICE	2		K15001-
11	07000-12010	..O-RING	3		K15001-
12	07000-03048	..O-RING	1		K15001-

https://truckmanualshub.com/

FIG. 6112 SERVO VALVE, FRONT (2/2)
(FOR 3-STAGE SELECTOR MODE OLSS) (PC240)

このアセンブリの構成部品は第6101図から第6123図までをみます。
(708-25-01051) : This assembly consists of all parts shown in Figs. 6101 to 6123.

このアセンブリの構成部品は第6111図から第6113図までをみます。
(708-25-07110) : This assembly consists of all parts shown in Figs. 6111 to 6113.

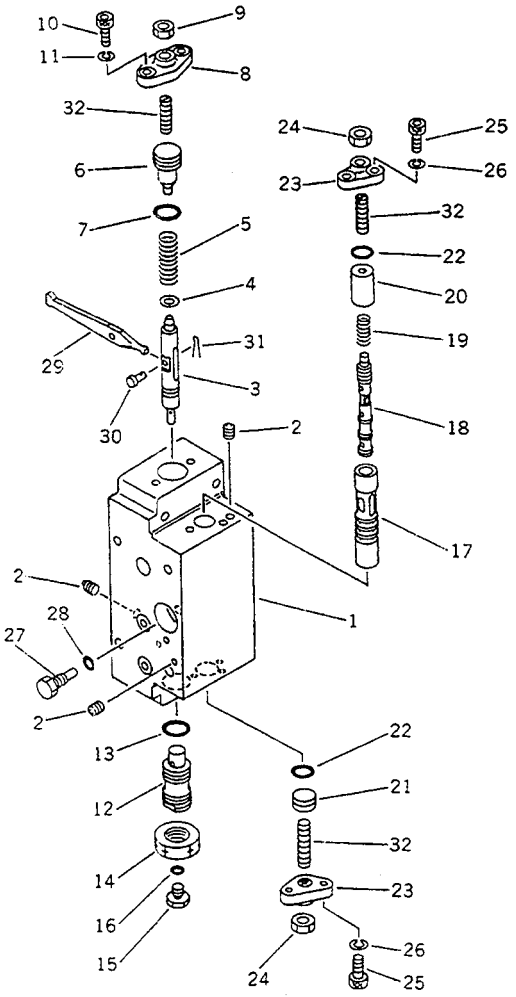

FIG NO. :6112

INDEX NO.	PART NO.	DESCRIPTION	Q'TY	SERIAL NO. PC210-3KP	SERIAL NO. PC240-3KP
	(708-25-01051)	HYDRAULIC PUMP ASS'Y	1		K15001-
	(708-25-07110)	.SERVO VALVE ASS'Y,FRONT	1		K15001-
	708-25-15200	..VALVE SUB ASS'Y	1		K15001-
	(★708-23-07021)	...BODY ASS'Y	1		K15001-
1	☆	....BODY	1		K15001-
2	☆	....PLUG	2		K15001-
3	(★708-25-15120)	...PISTON	1		K15001-
4	(★708-25-15130)	...SEAT	1		K15001-
5	(★708-25-15140)	...SPRING	1		K15001-
6	(★708-25-15420)	...PLUG	1		K15001-
7	(★07000-02018)	...O-RING	1		K15001-
8	(★708-25-15150)	...COVER	1		K15001-
9	(★01580-10806)	...NUT	1		K15001-
10	(★708-25-15320)	...BOLT	2		K15001-
11	(★01602-20619)	...WASHER,SPRING	2		K15001-
12	(★708-25-15171)	...PLUG	1		K15001-
13	(★07002-02034)	...O-RING	1		K15001-
14	(★07239-12009)	...NUT	1		K15001-
15	(★07040-11007)	...PLUG	1		K15001-
16	(★07002-01023)	...O-RING	1		K15001-
17	(★708-25-15180)	...SLEEVE	1		K15001-
18	(★708-25-15280)	...SPOOL	1		K15001-
19	(★708-25-15310)	...SPRING	1		K15001-
20	(★708-25-15330)	...SPACER	1		K15001-
21	(★708-25-15430)	...PLUG	1		K15001-
22	(★07000-02012)	...O-RING	2		K15001-
23	(★708-25-15250)	...COVER	2		K15001-
24	(★01580-10806)	...NUT	2		K15001-
25	(★708-25-15320)	...BOLT	4		K15001-
26	(★01602-20619)	...WASHER,SPRING	4		K15001-

https://truckmanualshub.com/

FIG NO. :6112

INDEX NO.	PART NO.	DESCRIPTION	Q'TY	SERIAL NO. PC210-3KP	SERIAL NO. PC240-3KP
27	(★708-25-15260)	...PLUG	1		K15001-
28	(★07002-00823)	...O-RING	1		K15001-
29	(★708-25-15270)	...ARM	1		K15001-
30	(★04205-00514)	...PIN	1		K15001-
31	(★04050-01210)	...PIN,COTTER	1		K15001-
32	(★708-25-15340)	...SCREW	3		K15001-

https://truckmanualshub.com/

FIG. 6113 CUT OFF AND NEGATIVE CONTROL VALVE, FRONT (FOR 3-STAGE SELECTOR MODE OLSS) (PC240)

このアセンブリの構成部品は第6101図から第6123図まで含みます。
(708-25-01051) : This assembly consists of all parts shown in Figs. 6101 to 6123.

このアセンブリの構成部品は第6111図から第6113図まで含みます。
(708-25-07110) : This assembly consists of all parts shown in Figs. 6111 to 6113.

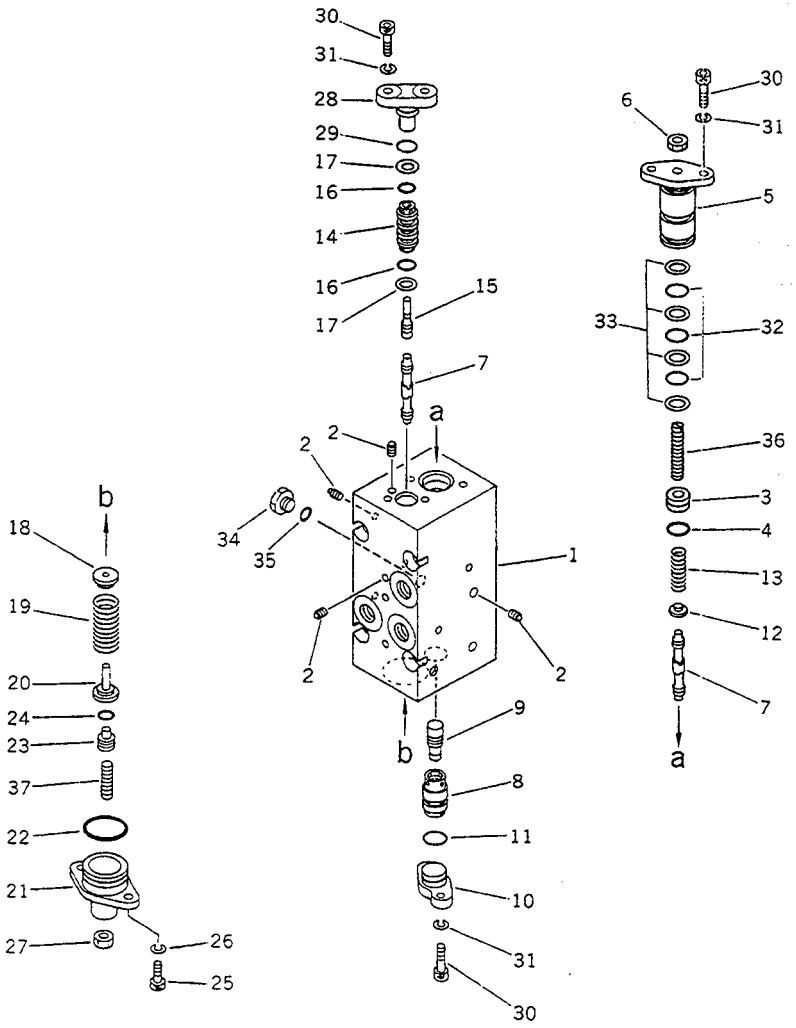

FIG NO. :6113

DEX NO.	PART NO.	DESCRIPTION	Q'TY	SERIAL NO. PC210-3KP	SERIAL NO. PC240-3KP
	(708-25-01051)	HYDRAULIC PUMP ASS'Y	1		K15001-
	(708-25-07110)	.SERVO VALVE ASS'Y,FRONT	1		K15001-
	708-25-07510	..VALVE ASS'Y	1		K15001-
1	(★708-21-17110)	...BODY	1		K15001-
2	(★708-25-15350)	...PLUG	16		K15001-
3	(★708-25-17420)	...PLUG	1		K15001-
4	(★07000-02010)	...O-RING	1		K15001-
5	(★708-25-17131)	...COVER	1		K15001-
6	(★01580-10806)	...NUT	1		K15001-
7	(★708-25-17140)	...SPOOL	2		K15001-
8	(★708-25-17150)	...SLEEVE	1		K15001-
9	(★708-25-17160)	...PISTON	1		K15001-
0	(★708-25-17170)	...COVER	1		K15001-
1	(★07000-02014)	...O-RING	1		K15001-
2	(★708-25-17180)	...SEAT	1		K15001-
3	(★708-25-17190)	...SPRING	1		K15001-
4	(★708-25-17210)	...SLEEVE	1		K15001-
5	(★708-25-17220)	...PISTON	1		K15001-
6	(★07000-12012)	...O-RING	2		K15001-
7	(★07001-02012)	...RING,BACK-UP	2		K15001-
8	(★708-25-17370)	...SEAT	1		K15001-
9	(★708-25-17250)	...SPRING	1		K15001-
0	(★708-25-17260)	...SEAT	1		K15001-
1	(★708-25-17280)	...COVER	1		K15001-
2	(★07000-03028)	...O-RING	1		K15001-
3	(★708-25-17410)	...PLUG	1		K15001-
4	(★07000-01009)	...O-RING	1		K15001-
5	(★708-25-15320)	...BOLT	2		K15001-
6	(★01602-20619)	...WASHER,SPRING	2		K15001-
7	(★01580-10806)	...NUT	1		K15001-

https://truckmanualshub.com/

FIG NO. :6113

INDEX NO.	PART NO.	DESCRIPTION	Q'TY	SERIAL NO. PC210-3KP	SERIAL NO. PC240-3KP
28	(★708-25-17230)	...COVER	1		K15001-
29	(★07000-02012)	...O-RING	1		K15001-
30	(★708-25-15320)	...BOLT	6		K15001-
31	(★01602-20619)	...WASHER,SPRING	6		K15001-
32	(★07000-12021)	...O-RING	3		K15001-
33	(★07001-02021)	...RING,BACK-UP	4		K15001-
34	(★07040-11007)	...PLUG	1		K15001-
35	(★07002-01023)	...O-RING	1		K15001-
36	(★708-25-17430)	...SCREW	1		K15001-
37	(★708-25-15340)	...SCREW	1		K15001-

https://truckmanualshub.com/

FIG. 6115 SERVO VALVE, REAR (1/2) (FOR 3-STAGE SELECTOR MODE OLSS) (PC240)

このアセンブリの構成部品は第6101図から第6123図まで含みます。
(708-25-01051) : This assembly consists of all parts shown in Figs. 6101 to 6123.
このアセンブリの構成部品は第6115図から第6118図まで含みます。
708-25-07220 : This assembly consists of all parts shown in Figs. 6115 to 6118.

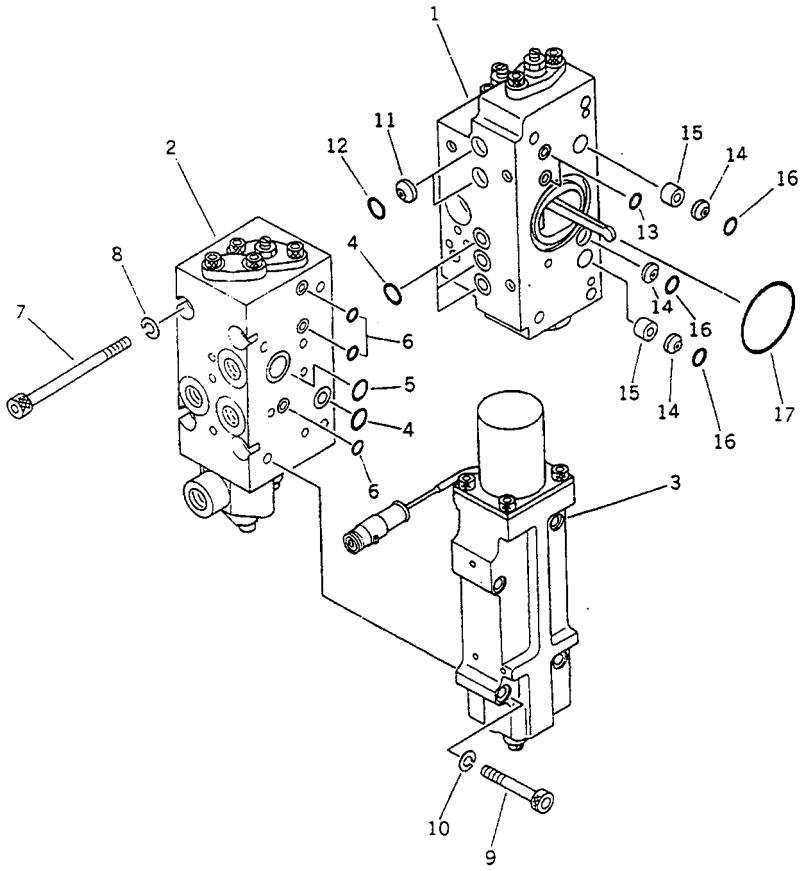

FIG NO. :6115

INDEX NO.	PART NO.	DESCRIPTION	Q'TY	SERIAL NO. PC210-3KP	SERIAL NO. PC240-3KP
	(708-25-01051)	HYDRAULIC PUMP ASS'Y	1		K15001-
	708-25-07220	.SERVO VALVE ASS'Y,REAR	1		K15001-
1	(708-25-16200)	..VALVE ASS'Y	1		K15001-
2	(708-25-07610)	..VALVE ASS'Y	1		K15001-
3	(708-25-18100)	..VALVE ASS'Y	1		K15001-
4	07000-02011	..O-RING	4		K15001-
5	07000-02018	..O-RING	1		K15001-
6	07000-11009	..O-RING	3		K15001-
7	708-25-19160	..BOLT	4		K15001-
8	01602-20825	..WASHER,SPRING	4		K15001-
9	708-25-19130	..BOLT	4		K15001-
10	01602-20825	..WASHER,SPRING	4		K15001-
11	720-68-11920	..FILTER	2		K15001-
12	07000-12010	..O-RING	2		K15001-
13	07000-11009	..O-RING	2		K15001-
14	720-68-11920	..FILTER	3		K15001-
15	708-25-19150	..ORIFICE	2		K15001-
16	07000-12010	..O-RING	3		K15001-
17	07000-03048	..O-RING	1		K15001-

https://truckmanualshub.com/

FIG. 6116 SERVO VALVE, REAR (2/2)
(FOR 3-STAGE SELECTOR MODE OLSS) (PC240)

このアセンブリの構成部品は第6101図から第6123図まで含みます。
(708-25-01051) : This assembly consists of all parts shown in Figs. 6101 to 6123.

このアセンブリの構成部品は第6115図から第6118図まで含みます。
(708-25-07220) : This assembly consists of all parts shown in Figs. 6115 to 6118.

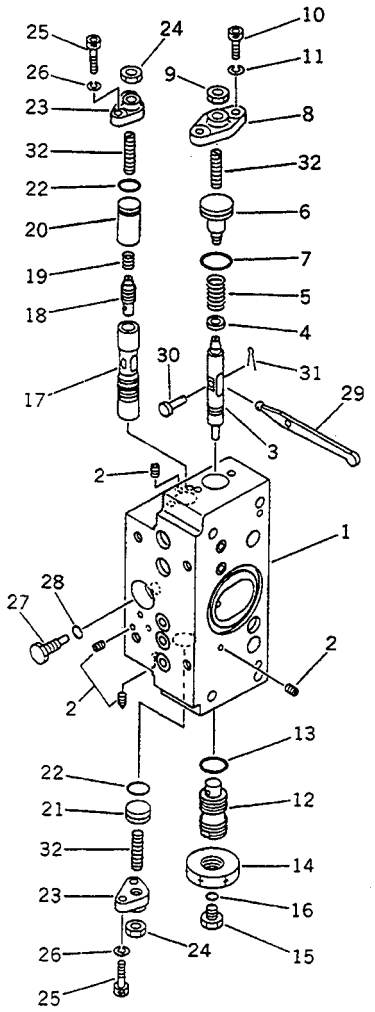

FIG NO. :6116

INDEX NO.	PART NO.	DESCRIPTION	Q'TY	SERIAL NO. PC210-3KP	SERIAL NO. PC240-3KP
	(708-25-01051)	HYDRAULIC PUMP ASS'Y	1		K15001-
	(708-25-07220)	.SERVO VALVE ASS'Y,REAR	1		K15001-
	708-25-16200	..VALVE ASS'Y	1		K15001-
	(★708-23-07011)	...BODY ASS'Y	1		K15001-
1	☆	....BODY	1		K15001-
2	☆	....PLUG	7		K15001-
3	(★708-25-15120)	...PISTON	1		K15001-
4	(★708-25-15130)	...SEAT	1		K15001-
5	(★708-25-15140)	...SPRING	1		K15001-
6	(★708-25-15420)	...PLUG	1		K15001-
7	(★07000-02018)	...O-RING	1		K15001-
8	(★708-25-15150)	...COVER	1		K15001-
9	(★01580-10806)	...NUT	1		K15001-
10	(★708-25-15320)	...BOLT	2		K15001-
11	(★01602-20619)	...WASHER,SPRING	2		K15001-
12	(★708-25-15171)	...PLUG	1		K15001-
13	(★07002-02034)	...O-RING	1		K15001-
14	(★07239-12009)	...NUT	1		K15001-
15	(★07040-11007)	...PLUG	1		K15001-
16	(★07002-01023)	...O-RING	1		K15001-
17	(★708-25-15180)	...SLEEVE	1		K15001-
18	(★708-25-15280)	...SPOOL	1		K15001-
19	(★708-25-15310)	...SPRING	1		K15001-
20	(★708-25-15330)	...SPACER	1		K15001-
21	(★708-25-15430)	...PLUG	1		K15001-
22	(★07000-02012)	...O-RING	2		K15001-
23	(★708-25-15250)	...COVER	2		K15001-
24	(★01580-10806)	...NUT	2		K15001-
25	(★708-25-15320)	...BOLT	4		K15001-
26	(★01602-20619)	...WASHER,SPRING	4		K15001-

https://truckmanualshub.com/

FIG NO. :6116

INDEX NO.	PART NO.	DESCRIPTION	Q'TY	SERIAL NO. PC210-3KP	SERIAL NO. PC240-3KP
27	(*708-25-15260)	...PLUG	1		K15001-
28	(*07002-00823)	...O-RING	1		K15001-
29	(*708-25-15270)	...ARM	1		K15001-
30	(*04205-00514)	...PIN	1		K15001-
31	(*04050-01210)	...PIN,COTTER	1		K15001-
32	(*708-25-15340)	...SCREW	3		K15001-

https://truckmanualshub.com/

FIG. 6117 CUT OFF AND NEGATIVE CONTROL VALVE, REAR (FOR 3-STAGE SELECTOR MODE OLSS) (PC240)

このアセンブリの構成部品は第6101図から第6123図まで含みます。
(708-25-01051) : This assembly consists of all parts shown in Figs. 6101 to 6123.
このアセンブリの構成部品は第6115図から第6118図まで含みます。
(708-25-07220) : This assembly consists of all parts shown in Figs. 6115 to 6118.

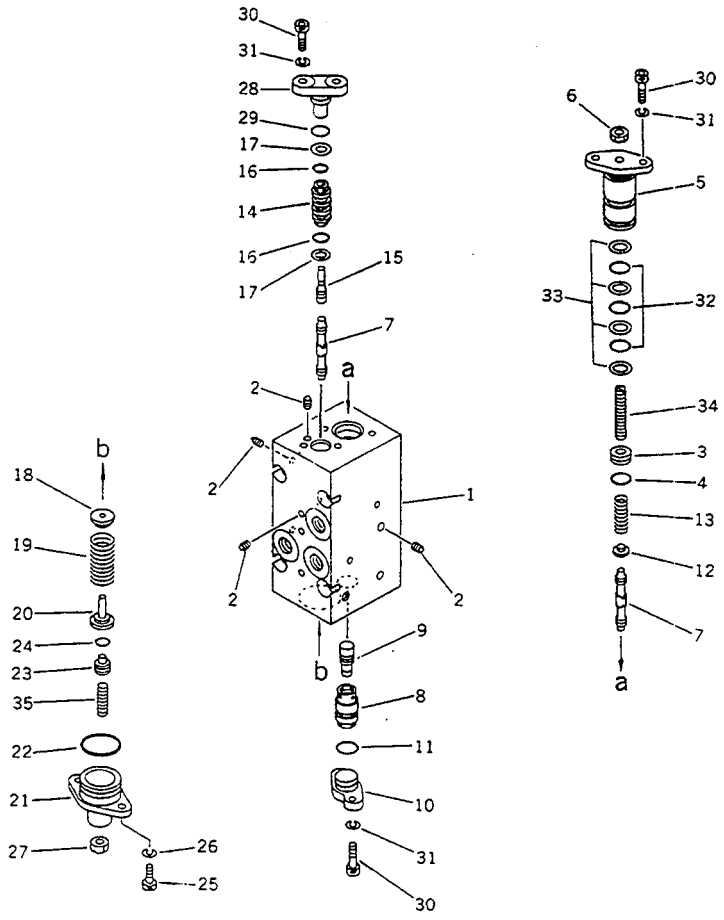

FIG NO. :6117

INDEX NO.	PART NO.	DESCRIPTION	Q'TY	SERIAL NO. PC210-3KP	SERIAL NO. PC240-3KP
	(708-25-01051)	HYDRAULIC PUMP ASS'Y	1		K15001-
	(708-25-07220)	.SERVO VALVE ASS'Y,REAR	1		K15001-
	708-25-07610	..VALVE ASS'Y	1		K15001-
	(★708-23-07041)	...BODY ASS'Y	1		K15001-
1	☆	....BODY	1		K15001-
2	☆	....PLUG	15		K15001-
3	(★708-25-17420)	...PLUG	1		K15001-
4	(★07000-02010)	...O-RING	1		K15001-
5	(★708-25-17131)	...COVER	1		K15001-
6	(★01580-10806)	...NUT	1		K15001-
7	(★708-25-17140)	...SPOOL	2		K15001-
8	(★708-25-17150)	...SLEEVE	1		K15001-
9	(★708-25-17160)	...PISTON	1		K15001-
10	(★708-25-17170)	...COVER	1		K15001-
11	(★07000-02014)	...O-RING	1		K15001-
12	(★708-25-17180)	...SEAT	1		K15001-
13	(★708-25-17190)	...SPRING	1		K15001-
14	(★708-25-17210)	...SLEEVE	1		K15001-
15	(★708-25-17220)	...PISTON	1		K15001-
16	(★07000-12012)	...O-RING	2		K15001-
17	(★07001-02012)	...RING,BACK-UP	2		K15001-
18	(★708-25-17370)	...SEAT	1		K15001-
19	(★708-25-17250)	...SPRING	1		K15001-
20	(★708-25-17260)	...SEAT	1		K15001-
21	(★708-25-17350)	...COVER	1		K15001-
22	(★07000-03028)	...O-RING	1		K15001-
23	(★708-25-17410)	...PLUG	1		K15001-
24	(★07000-01009)	...O-RING	1		K15001-
25	(★708-25-15320)	...BOLT	2		K15001-
26	(★01602-20619)	...WASHER,SPRING	4		K15001-

https://truckmanualshub.com/

FIG NO. :6117

INDEX NO.	PART NO.	DESCRIPTION	Q'TY	SERIAL NO. PC210-3KP	SERIAL NO. PC240-3KP
27	(★01580-10806)	...NUT	1		K15001-
28	(★708-25-17230)	...COVER	1		K15001-
29	(★07000-02012)	...O-RING	1		K15001-
30	(★708-25-15320)	...BOLT	6		K15001-
31	(★01602-20619)	...WASHER,SPRING	6		K15001-
32	(★07000-12021)	...O-RING	3		K15001-
33	(★07001-02021)	...RING,BACK-UP	4		K15001-
34	(★708-25-17430)	...SCREW	1		K15001-
35	(★708-25-15340)	...SCREW	1		K15001-

https://truckmanualshub.com/

FIG. 6118 TORQUE VARIABLE CONTROL VALVE (FOR 3-STAGE SELECTOR MODE OLSS) (PC240)

(708-25-01051) : このアセンブリの構成部品は第6101図から第6123図まで含みます。
This assembly consists of all parts shown in Figs. 6101 to 6123.

(708-25-07220) : このアセンブリの構成部品は第6115図から第6118図まで含みます。
This assembly consists of all parts shown in Figs. 6115 to 6118.

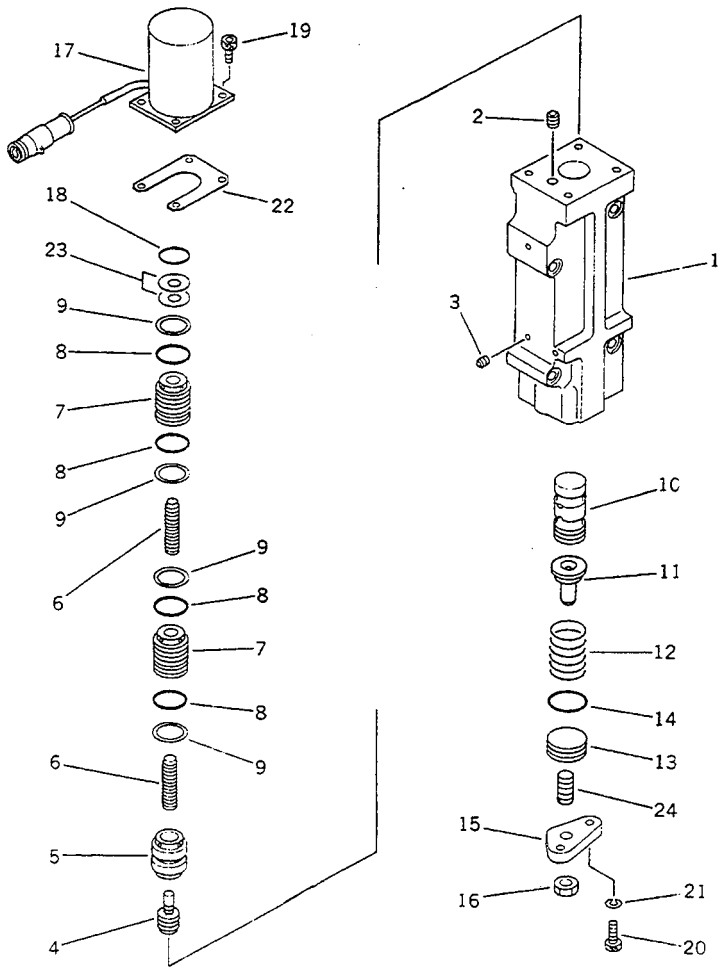

FIG NO. :6118

INDEX NO.	PART NO.	DESCRIPTION	Q'TY	SERIAL NO. PC210-3KP	SERIAL NO. PC240-3KP
	(708-25-01051)	HYDRAULIC PUMP ASS'Y	1		K15001-
	(708-25-07220)	.SERVO VALVE ASS'Y,REAR	1		K15001-
	708-25-18100	..VALVE ASS'Y	1		K15001-
	(★708-23-07051)	...BODY ASS'Y	1		K15001-
1	☆	....BODY	1		K15001-
2	☆	....PLUG	2		K15001-
3	(★708-25-15350)	...PLUG	12		K15001-
4	(★708-23-18120)	...PISTON	1		K15001-
5	(★708-23-18130)	...SLEEVE	1		K15001-
6	(★708-23-18140)	...PISTON	2		K15001-
7	(★708-23-18150)	...SLEEVE	2		K15001-
8	(★07000-12016)	...O-RING	4		K15001-
9	(★07001-02016)	...RING,BACK-UP	4		K15001-
0	(★708-23-18161)	...SPOOL	1		K15001-
1	(★708-23-18170)	...SEAT	1		K15001-
2	(★708-23-18181)	...SPRING	1		K15001-
3	(★708-23-15160)	...PLUG	1		K15001-
4	(★07000-02018)	...O-RING	1		K15001-
5	(★708-23-18210)	...COVER	1		K15001-
6	(★01580-10806)	...NUT	1		K15001-
7	708-23-18221	...SOLENCID ASS'Y	1		K15001-
8	07000-02016	...O-RING	1		K15001-
9	708-23-18250	...BOLT	4		K15001-
0	(★708-25-15320)	...BOLT	2		K15001-
1	(★01602-20619)	...WASHER,SPRING	2		K15001-
2	(★708-25-18571)	...SHIM, 0.50MM	2		K15001-
3	(★708-25-18580)	...SHIM, 0.50MM	2		K15001-
4	(★708-25-15340)	...SCREW	1		K15001-

https://truckmanualshub.com/

FIG. 6121 HYDRAULIC PUMP (FOR 3-STAGE SELECTOR MODE OLSS) (PC240)

(708-25-01051) : このアセンブリの構成部品は第6101図から第6123図まで含みます。
This assembly consists of all parts shown in Figs. 6101 to 6123.

(708-25-01150) : このアセンブリの構成部品は第6102図から第6104図、第6121図および第6123図を含みます。
This assembly consists of all parts shown in Figs. 6102 to 6104, 6121 and 6123.

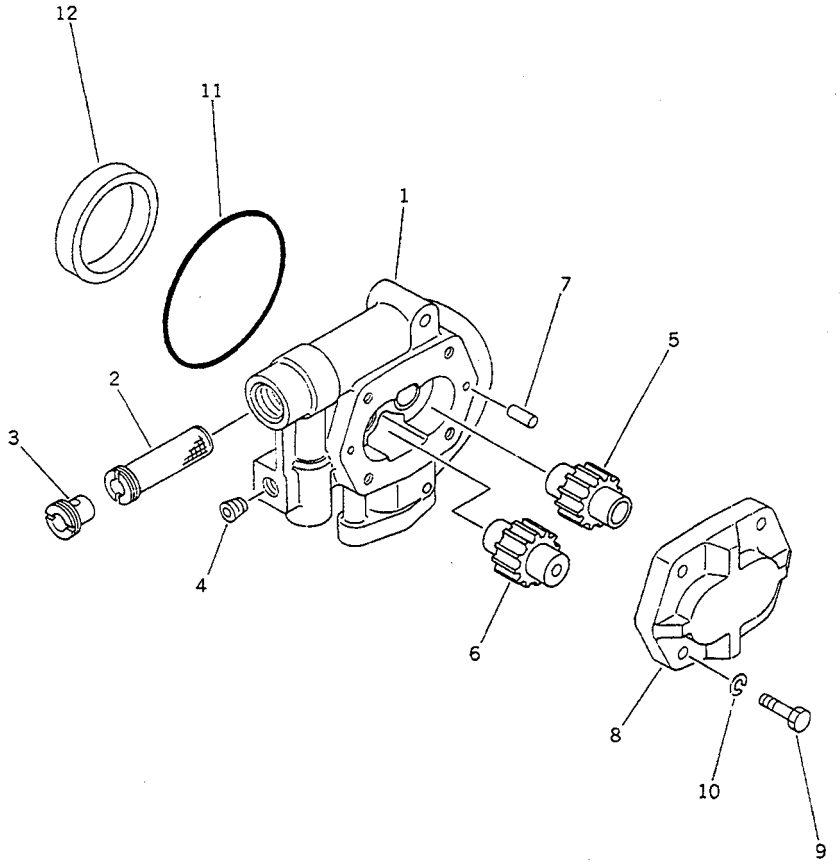

FIG NO. :6121

INDEX NO.	PART NO.	DESCRIPTION	Q'TY	SERIAL NO. PC210-3KP	SERIAL NO. PC240-3KP
	(708-25-01051)	HYDRAULIC PUMP ASS'Y	1		K15001-
	(708-25-01150)	.PUMP SUB ASS'Y	1		K15001-
	704-24-28202	..PUMP ASS'Y	1		K15001-
1	(★704-28-28050)	...BODY	1		K15001-
2	704-28-02751	...STRAINER	1		K15001-
3	704-28-02760	...SCREW	1		K15001-
4	07043-50312	...PLUG	1		K15001-
5	(★704-28-28450)	...GEAR,DRIVE	1		K15001-
6	(★704-28-28550)	...GEAR,DRIVEN	1		K15001-
7	04020-00820	...PIN,DOWEL	2		K15001-
8	(★704-28-02410)	...HOUSING	1		K15001-
9	01010-51240	...BOLT	4		K15001-
10	01502-21236	...WASHER,SPRING	4		K15001-
11	704-28-02710	...O-RING	1		K15001-
12	704-28-02771	...COLLAR	1		K15001-

https://truckmanualshub.com/

FIG. 6123 RELIEF VALVE (FOR 3-STAGE SELECTOR MODE OLSS) (PC240)

このアセンブリの構成部品は第6101図から第6123図まで含みます。
(708-25-01051) : This assembly consists of all parts shown in Figs. 6101 to 6123.
このアセンブリの構成部品は第6102図から第6104図、第6121図および第6123図を含みます。
(708-25-01150) : This assembly consists of all parts shown in Figs. 6102 to 6104, 6121 and 6123.

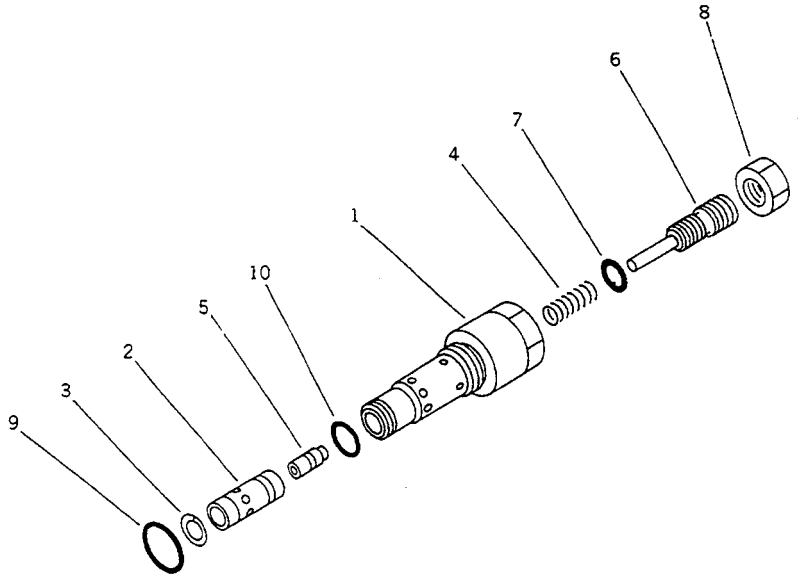

FIG NO. :6123

INDEX NO.	PART NO.	DESCRIPTION	Q'TY	SERIAL NO. PC210-3KP	SERIAL NO. PC240-3KP
	(708-25-01051)	HYDRAULIC PUMP ASS'Y	1		K15001-
	(708-25-01150)	.PUMP SUB ASS'Y	1		K15001-
	708-25-14901	..RELIEF VALVE A.	1		K15001-
1	708-23-14810	...SLEEVE	2		K15001-
2	708-23-14830	...VALVE	1		K15001-
3	708-23-14820	...RING,SNAP	1		K15001-
4	708-23-14840	...SPRING	1		K15001-
5	708-23-14850	...PISTON	1		K15001-
6	708-23-14860	...SCREW	1		K15001-
7	07000-02010	...O-RING	1		K15001-
8	706-73-75350	...NUT	1		K15001-
9	700-22-11410	...O-RING	1		K15001-
10	07002-02434	...O-RING	1		K15001-

https://truckmanualshub.com/

FIG. 6131 HYDRAULIC PISTON PUMP (1/4)
(FOR 2-STAGE SELECTOR MODE OLSS) (PC240)

708-25-01071 : このアセンブリの構成部品は第6131図から第6153図までです。
This assembly consists of all parts shown in Figs. 6131 to 6153.

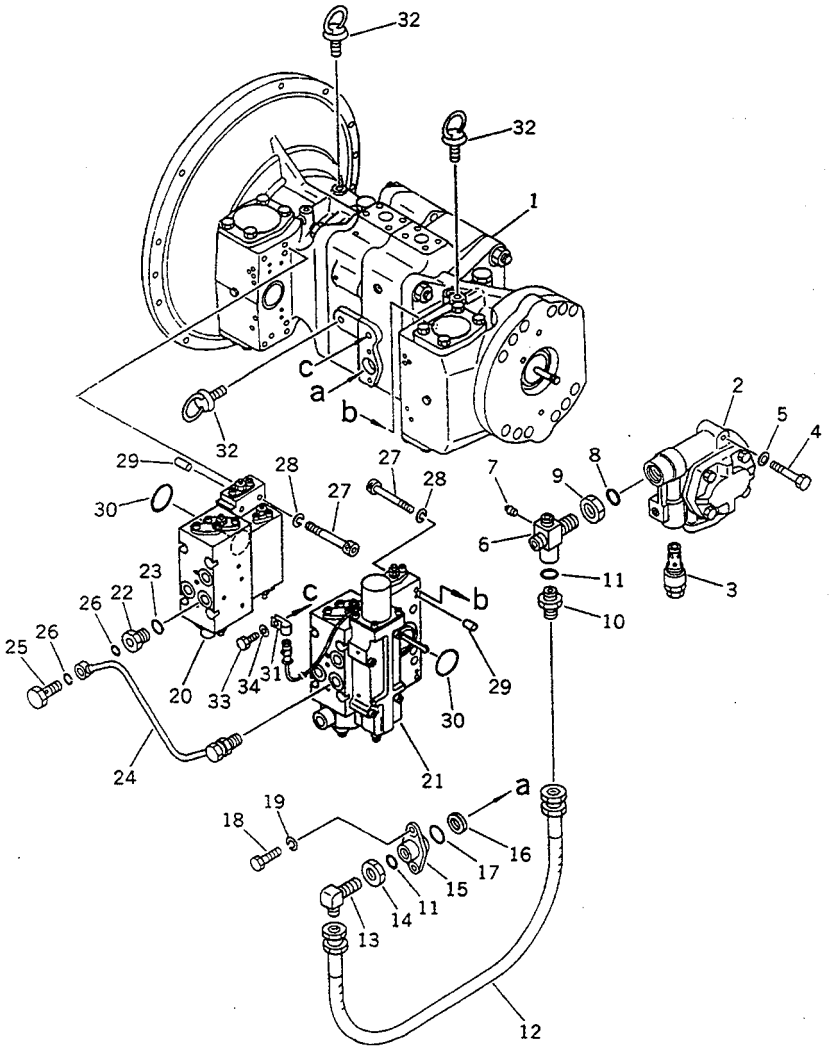

INDEX NO.	PART NO.	DESCRIPTION	Q'TY	SERIAL NO. PC210-3KP	SERIAL NO. PC240-3KP
	708-25-01071	HYDRAULIC PUMP ASS'Y	1		K15001-
	(708-25-01150)	.PUMP SUB ASS'Y	1		K15001-
1	(708-25-01250)	..PUMP SUB ASS'Y	1		K15001-
2	(704-24-28202)	..PUMP ASS'Y	1		K15001-
3	(708-25-14901)	..RELIEF VALVE A.	1		K15001-
4	(01010-31260)	..BOLT	2		K15001-
5	(01602-01236)	..WASHER,SPRING	2		K15001-
6	708-25-19111	..JOINT	1		K15001-
7	07042-20108	..PLUG	1		K15001-
8	07002-02434	..O-RING	3		K15001-
9	07239-12410	..NUT	1		K15001-
10	07230-10422	..UNION	1		K15001-
11	07002-02034	..O-RING	2		K15001-
12	07102-20404	..HOSE	1		K15001-
13	07231-20422	..ELBOW	1		K15001-
14	07239-12009	..NUT	1		K15001-
15	708-25-19120	..FLANGE	1		K15001-
16	720-68-15240	..FILTER	1		K15001-
17	07000-02021	..O-RING	1		K15001-
18	01010-30820	..BOLT	2		K15001-
19	01602-00825	..WASHER,SPRING	2		K15001-
20	(708-25-07140)	.SERVO VALVE ASS'Y,FRONT	1		K15001-
21	(708-25-07240)	.SERVO VALVE ASS'Y,REAR	1		K15001-
22	706-46-53260	.PLUG	2		K15001-
23	07002-01423	.O-RING	2		K15001-
24	708-25-19140	.TUBE	1		K15001-
25	706-46-53180	.BOLT	2		K15001-
26	07000-02012	.O-RING	4		K15001-
27	(708-25-19130)	.BOLT	8		K15001-
28	(01602-00825)	.WASHER,SPRING	8		K15001-

FIG NO. :6131

https://truckmanualshub.com/

FIG NO. :6131

INDEX NO.	PART NO.	DESCRIPTION	Q'TY	SERIAL NO. PC210-3KP	SERIAL NO. PC240-3KP
29	(04020-00616)	.PIN,DOWEL	4		K15001-
30	(07000-03048)	.O-RING	2		K15001-
31	08036-21814	.CLIP	1		K15001-
32	04530-01018	.BOLT,EYE	2		K15001-
33	01010-31016	.BOLT	1		K15001-
34	01643-31032	.WASHER	1		K15001-

https://truckmanualshub.com/

FIG. 6132 HYDRAULIC PISTON PUMP (2/4)
(FOR 2-STAGE SELECTOR MODE OLSS) (PC240)

このアセンブリの構成部品は第6131図から第6153図まで含みます。
(708-25-01071) : This assembly consists of all parts shown in Figs. 6131 to 6153.

このアセンブリの構成部品は第6132図から第6134図、第6151図および第6153図を含みます。
(708-25-01150) : This assembly consists of all parts shown in Figs. 6132 to 6134, 6151 and 6153.

このアセンブリの構成部品は第6132図から第6134図まで含みます。
(708-25-01250) : This assembly consists of all parts shown in Figs. 6132 to 6134.

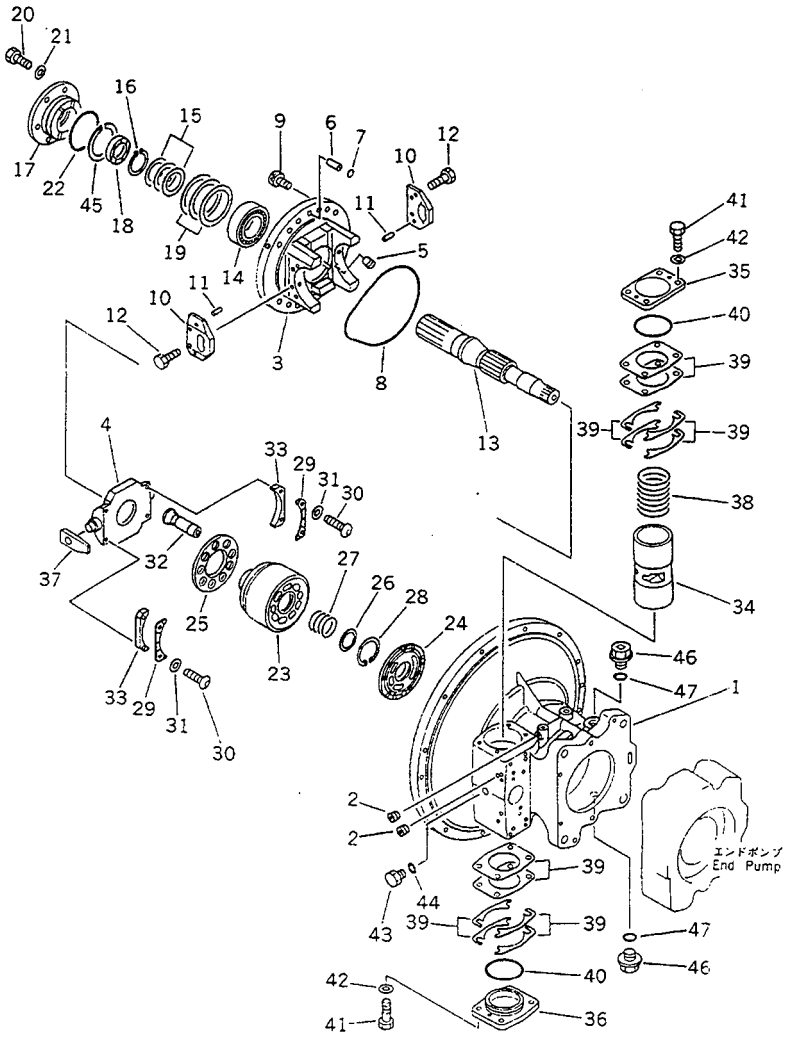

FIG NO. :6132

INDEX NO.	PART NO.	DESCRIPTION	Q'TY	SERIAL NO. PC210-3KP	SERIAL NO. PC240-3KP
	(708-25-01071)	HYDRAULIC PUMP ASS'Y	1		K15001-
	708-25-01150	.PUMP SUB ASS'Y	1		K15001-
	708-25-01250	..PUMP SUB ASS'Y	1		K15001-
	(☆708-25-00090)	...CASE ASS'Y,FRONT	1		K15001-
1	☆	....CASE,FRONT	1		K15001-
2	☆	....PLUG	11		K15001-
	(☆708-25-00030)	...CRADLE ASS'Y,FRONT	1		K15001-
3	☆	....CRADLE,FRONT	1		K15001-
4	☆	....CAM,ROCKER	1		K15001-
5	☆	....PLUG	1		K15001-
6	(☆708-25-12330)	...JOINT	1		K15001-
7	(☆07000-12015)	...O-RING	1		K15001-
8	(☆708-25-12340)	...O-RING	1		K15001-
9	(☆708-25-12390)	...BOLT	12		K15001-
10	(☆708-25-12360)	...PLATE	2		K15001-
11	(☆04020-00820)	...PIN,DOWEL	4		K15001-
12	(☆01010-50816)	...BOLT	4		K15001-
13	(☆708-25-12711)	...SHAFT,FRONT	1		K15001-
14	(☆708-25-12731)	...BEARING	1		K15001-
15	(☆708-25-05010)	...WASHER KIT	1		K15001-
16	☆	...RING,SNAP	1		K15001-
17	☆	...HOUSING	1		K15001-
18	708-25-12980	...SEAL,OIL	1		K15001-
19	(☆708-25-05130)	...SHIM KIT	1		K15001-
20	01010-50820	...BOLT	4		K15001-
21	01643-30823	...WASHER	4		K15001-
22	07000-02080	...O-RING	1		K15001-
	(☆708-25-00010)	...BLOCK ASS'Y	1		K15001-
23	☆	....BLOCK,CYLINDER	1		K15001-
24	☆	....PLATE,VALVE	1		K15001-

https://truckmanualshub.com/

FIG NO. :6132

INDEX NO.	PART NO.	DESCRIPTION	Q'TY	SERIAL NO. PC210-3KP	SERIAL NO. PC240-3KP
25	☆	...RETAINER,SHOE	1		K15001-
26	(★708-25-13120)	...WASHER	1		K15001-
27	(★708-25-13130)	...SPRING	1		K15001-
28	(★708-25-13140)	...RING,SNAP	1		K15001-
29	(★708-25-13441)	...RETAINER	2		K15001-
30	(★708-25-13470)	...SCREW	4		K15001-
31	(★01643-30623)	...WASHER	4		K15001-
32	(★708-25-13310)	...PISTON SUB ASS'Y	9		K15001-
33	(★708-25-05060)	...SPACER KIT	2		K15001-
34	(★708-25-14210)	...PISTON	1		K15001-
35	(★708-25-14140)	...CAP	1		K15001-
36	(★708-25-14150)	...CAP	1		K15001-
37	(★708-25-14120)	...SLIDER	1		K15001-
38	708-25-14130	...SPRING	1		K15001-
39	(★708-25-05050)	...SHIM KIT	2		K15001-
40	(★07000-02065)	...O-RING	2		K15001-
41	(★01010-51035)	...BOLT	8		K15001-
42	(★01643-31032)	...WASHER	8		K15001-
43	720-68-19870	...PLUG	5		K15001-
44	07002-01223	...O-RING	1		K15001-
45	(★708-25-12970)	...RING,SNAP	1		K15001-
46	07044-02412	...PLUG	1		K15001-
47	07002-02434	...O-RING	1		K15001-

https://truckmanualshub.com/

FIG. 6133 HYDRAULIC PISTON PUMP (3/4)
(FOR 2-STAGE SELECTOR MODE OLSS) (PC240)

(708-25-01071) : このアセンブリの構成部品は第6131図から第6153図まで含みます。
This assembly consists of all parts shown in Figs. 6131 to 6153.

(708-25-01150) : このアセンブリの構成部品は第6132図から第6134図、第6151図および第6153図を含みます。
This assembly consists of all parts shown in Figs. 6132 to 6134, 6151 and 6153.

(708-25-01250) : このアセンブリの構成部品は第6132図から第6134図まで含みます。
This assembly consists of all parts shown in Figs. 6132 to 6134.

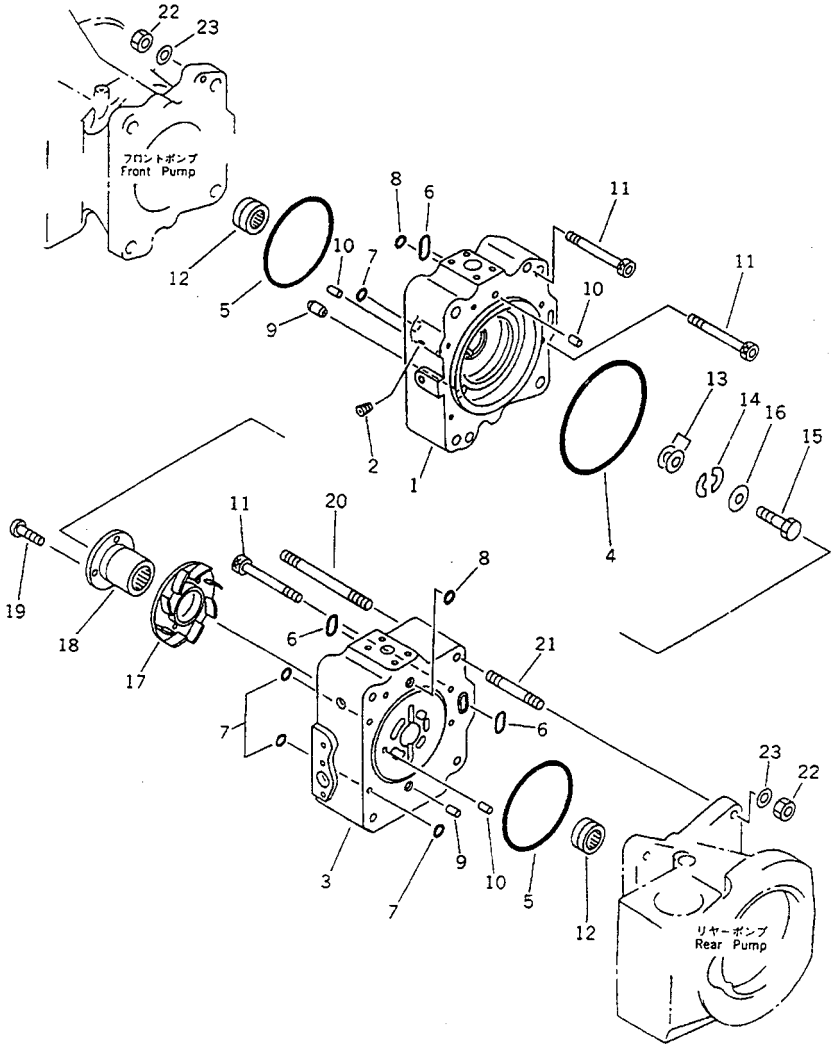

FIG NO. :6133

INDEX NO.	PART NO.	DESCRIPTION	Q'TY	SERIAL NO. PC210-3KP	SERIAL NO. PC240-3KP
	(708-25-01071)	HYDRAULIC PUMP ASS'Y	1		K15001-
	(708-25-01150)	.PUMP SUB ASS'Y	1		K15001-
	(708-25-01250)	..PUMP SUB ASS'Y	1		K15001-
	(★708-25-00110)	...END CAP ASS'Y,FRONT	1		K15001-
1	☆	....CAP,END	1		K15001-
2	☆	....PLUG	1		K15001-
3	(★708-25-12521)	...CAP,END	1		K15001-
4	(★07000-05165)	...O-RING	1		K15001-
5	(★07000-02135)	...O-RING	2		K15001-
6	(★07000-03032)	...O-RING	3		K15001-
7	(★07000-11009)	...O-RING	5		K15001-
8	(★07000-12015)	...O-RING	2		K15001-
9	(★6130-21-1910)	...PIN	2		K15001-
10	(★720-68-19610)	...PIN	3		K15001-
11	(★708-25-12530)	...BOLT	6		K15001-
12	(★708-25-12740)	...BEARING	2		K15001-
13	(★708-25-05020)	...SHIM KIT	1		K15001-
14	(★708-25-12950)	...PLATE	2		K15001-
15	(★706-74-40320)	...BOLT	1		K15001-
16	(★01643-31032)	...WASHER	1		K15001-
17	(★708-25-12542)	...IMPELLER	1		K15001-
18	(★708-25-12552)	...COUPLING	1		K15001-
19	(★706-73-42270)	...SCREW	4		K15001-
20	(★01141-81620)	...STUD	4		K15001-
21	(★01140-81645)	...STUD	4		K15001-
22	(★01582-21613)	...NUT	4		K15001-
23	(★01643-31645)	...WASHER	4		K15001-

https://truckmanualshub.com/

FIG. 6134 HYDRAULIC PISTON PUMP (4/4)
(FOR 2-STAGE SELECTOR MODE OLSS) (PC240)

(708-25-01071) : このアセンブリの構成部品は第6131図から第6153図まで含みます。
This assembly consists of all parts shown in Figs. 6131 to 6153.

(708-25-01150) : このアセンブリの構成部品は第6132図から第6134図、第6151図および第6153図を含みます。
This assembly consists of all parts shown in Figs. 6132 to 6134, 6151 and 6153.

(708-25-01250) : このアセンブリの構成部品は第6132図から第6134図まで含みます。
This assembly consists of all parts shown in Figs. 6132 to 6134.

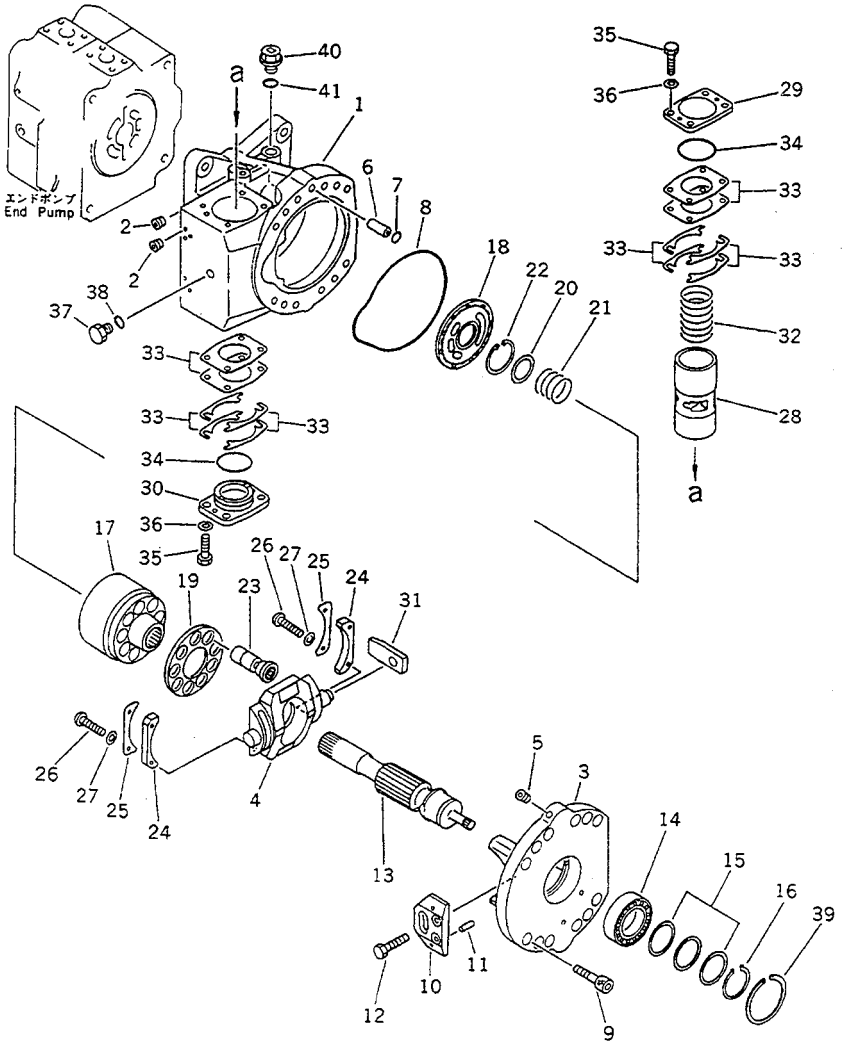

FIG NO. :6134

INDEX NO.	PART NO.	DESCRIPTION	Q'TY	SERIAL NO. PC210-3KP	SERIAL NO. PC240-3KP
	(708-25-01071)	HYDRAULIC PUMP ASS'Y	1		K15001-
	(708-25-01150)	.PUMP SUB ASS'Y	1		K15001-
	(708-25-01250)	..PUMP SUB ASS'Y	1		K15001-
	(★708-25-00100)	...CASE ASS'Y,REAR	1		K15001-
1	☆	....CASE,REAR	1		K15001-
2	☆	....PLUG	12		K15001-
	(★708-25-00040)	...CRADLE ASS'Y,REAR	1		K15001-
3	☆	....CRADLE,REAR	1		K15001-
4	☆	....CAM,ROCKER	1		K15001-
5	☆	....PLUG	1		K15001-
6	(★708-25-12330)	...JOINT	1		K15001-
7	(★07000-12015)	...O-RING	1		K15001-
8	(★708-25-12340)	...O-RING	1		K15001-
9	(★708-25-12350)	...BOLT	12		K15001-
10	(★708-25-12360)	...PLATE	2		K15001-
11	(★04020-00820)	...PIN,DOWEL	4		K15001-
12	(★01010-30816)	...BOLT	4		K15001-
13	(★708-25-12721)	...SHAFT	1		K15001-
14	(★708-25-12731)	...BEARING	1		K15001-
15	(★708-25-05010)	...WASHER KIT	1		K15001-
16	(★708-25-12790)	...RING,SNAP	1		K15001-
	(★708-25-00020)	...BLOCK ASS'Y	1		K15001-
17	☆	....BLOCK,CYLINDER	1		K15001-
18	☆	....PLATE,VALVE	1		K15001-
19	(★708-25-13422)	...RETAINER,SHOE	1		K15001-
20	(★708-25-13120)	...WASHER	1		K15001-
21	(★708-25-13130)	...SPRING	1		K15001-
22	(★708-25-13140)	...RING,SNAP	1		K15001-
23	☆	...PISTON SUB ASS'Y	9		K15001-
24	(★708-25-05060)	...SPACER KIT	2		K15001-

https://truckmanualshub.com/

FIG NO. :6134

INDEX NO.	PART NO.	DESCRIPTION	Q'TY	SERIAL NO. PC210-3KP	SERIAL NO. PC240-3KP
25	(★708-25-13441)	...RETAINER	2		K15001-
26	(★708-25-13470)	...SCREW	4		K15001-
27	(★01643-30623)	...WASHER	4		K15001-
28	(★708-25-14111)	...PISTON	1		K15001-
29	(★708-25-14140)	...CAP	1		K15001-
30	(★708-25-14150)	...CAP	1		K15001-
31	(★708-25-14120)	...SLIDER	1		K15001-
32	708-25-14130	...SPRING	1		K15001-
33	(★708-25-05050)	...SHIM KIT	2		K15001-
34	07000-02065	...O-RING	2		K15001-
35	01016-31035	...BOLT	8		K15001-
36	01643-31032	...WASHER	8		K15001-
37	☆	...PLUG	4		K15001-
38	07002-01223	...O-RING	1		K15001-
39	☆	...RING,SNAP	1		K15001-
40	07044-02412	...PLUG	1		K15001-
41	07002-02434	...O-RING	1		K15001-

https://truckmanualshub.com/

FIG. 6141 SERVO VALVE, FRONT (1/2)
(FOR 2-STAGE SELECTOR MODE OLSS) (PC240)

(708-25-01071) : このアセンブリの構成部品は第6131図から第6153図まで含みます。
This assembly consists of all parts shown in Figs. 6131 to 6153.

708-25-07140 : このアセンブリの構成部品は第6141図から第6143図まで含みます。
This assembly consists of all parts shown in Figs. 6141 to 6143.

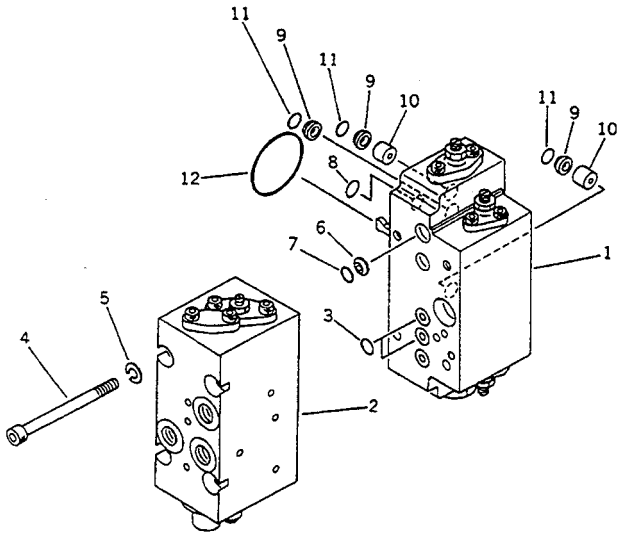

FIG NO. :6141

INDEX NO.	PART NO.	DESCRIPTION	Q'TY	SERIAL NO. PC210-3KP	SERIAL NO. PC240-3KP
	(708-25-01071)	HYDRAULIC PUMP ASS'Y	1		K15001-
	708-25-07140	.SERVO VALVE ASS'Y,FRONT	1		K15001-
1	(708-25-35300)	..SERVO VALVE SUB A.	1		K15001-
2	(708-25-07540)	..VALVE ASS'Y	1		K15001-
3	07000-02011	..O-RING	2		K15001-
4	708-25-19160	..BOLT	4		K15001-
5	01602-20825	..WASHER,SPRING	4		K15001-
6	720-68-11920	..FILTER	1		K15001-
7	07000-12010	..O-RING	1		K15001-
8	07000-11009	..O-RING	2		K15001-
9	720-68-11920	..FILTER	3		K15001-
10	708-25-19150	..ORIFICE	2		K15001-
11	07000-12010	..O-RING	3		K15001-
12	07000-03048	..O-RING	1		K15001-

https://truckmanualshub.com/

FIG. 6142 SERVO VALVE, FRONT (2/2)
(FOR 2-STAGE SELECTOR MODE OLSS) (PC240)

このアセンブリの構成部品は第6131図から第6153図まで含みます。
(708-25-01071) : This assembly consists of all parts shown in Figs. 6131 to 6153.

このアセンブリの構成部品は第6141図から第6143図まで含みます。
(708-25-07140) : This assembly consists of all parts shown in Figs. 6141 to 6143.

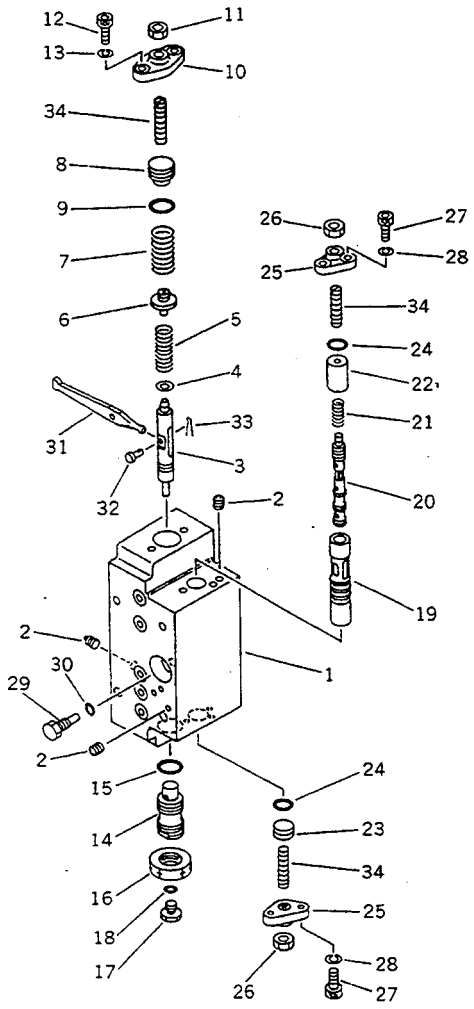

FIG NO. :6142

INDEX NO.	PART NO.	DESCRIPTION	Q'TY	SERIAL NO. PC210-3KP	SERIAL NO. PC240-3KP
	(708-25-01071)	HYDRAULIC PUMP ASS'Y	1		K15001-
	(708-25-07140)	.SERVO VALVE ASS'Y,FRONT	1		K15001-
	708-25-35300	..SERVO VALVE SUB A.	1		K15001-
	(★708-23-07021)	...BODY ASS'Y	1		K15001-
1	☆	....BODY	1		K15001-
2	☆	....PLUG	2		K15001-
3	(★708-25-15120)	...PISTON	1		K15001-
4	(★708-25-15130)	...SEAT	1		K15001-
5	(★708-23-15110)	...SPRING	1		K15001-
6	(★708-23-15120)	...SEAT	1		K15001-
7	(★708-23-15130)	...SPRING	1		K15001-
8	(★708-23-15160)	...PLUG	1		K15001-
9	(★07000-02018)	...O-RING	1		K15001-
10	(★708-25-15150)	...COVER	1		K15001-
11	(★01580-10806)	...NUT	1		K15001-
12	(★708-25-15320)	...BOLT	2		K15001-
13	(★01602-20619)	...WASHER,SPRING	2		K15001-
14	(★708-25-15171)	...PLUG	1		K15001-
15	(★07002-02034)	...O-RING	1		K15001-
16	(★07239-12009)	...NUT	1		K15001-
17	(★07040-11007)	...PLUG	1		K15001-
18	(★07002-01023)	...O-RING	1		K15001-
19	(★708-25-15180)	...SLEEVE	1		K15001-
20	(★708-25-15280)	...SPOOL	1		K15001-
21	(★708-25-15310)	...SPRING	1		K15001-
22	(★708-25-15330)	...SPACER	1		K15001-
23	(★708-25-15430)	...PLUG	1		K15001-
24	(★07000-02012)	...O-RING	2		K15001-
25	(★708-25-15250)	...COVER	2		K15001-
26	(★01580-10806)	...NUT	2		K15001-

https://truckmanualshub.com/

FIG NO. :6142

INDEX NO.	PART NO.	DESCRIPTION	Q'TY	SERIAL NO. PC210-3KP	SERIAL NO. PC240-3KP
27	(*708-25-15320)	...BOLT	4		K15001-
28	(*01602-20619)	...WASHER,SPRING	4		K15001-
29	(*708-25-15260)	...PLUG	1		K15001-
30	(*07002-00823)	...O-RING	1		K15001-
31	(*708-25-15270)	...ARM	1		K15001-
32	(*04205-00514)	...PIN	1		K15001-
33	(*04050-01210)	...PIN,COTTER	1		K15001-
34	(*708-25-15340)	...SCREW	3		K15001-

https://truckmanualshub.com/

FIG. 6143 CUT OFF AND NEGATIVE CONTROL VALVE, FRONT (FOR 2-STAGE SELECTOR MODE OLSS) (PC240)

(708-25-01071) : このアセンブリの構成部品は第6131図から第6153図まで含みます。
This assembly consists of all parts shown in Figs. 6131 to 6153.

(708-25-07140) : このアセンブリの構成部品は第6141図から第6143図まで含みます。
This assembly consists of all parts shown in Figs. 6141 to 6143.

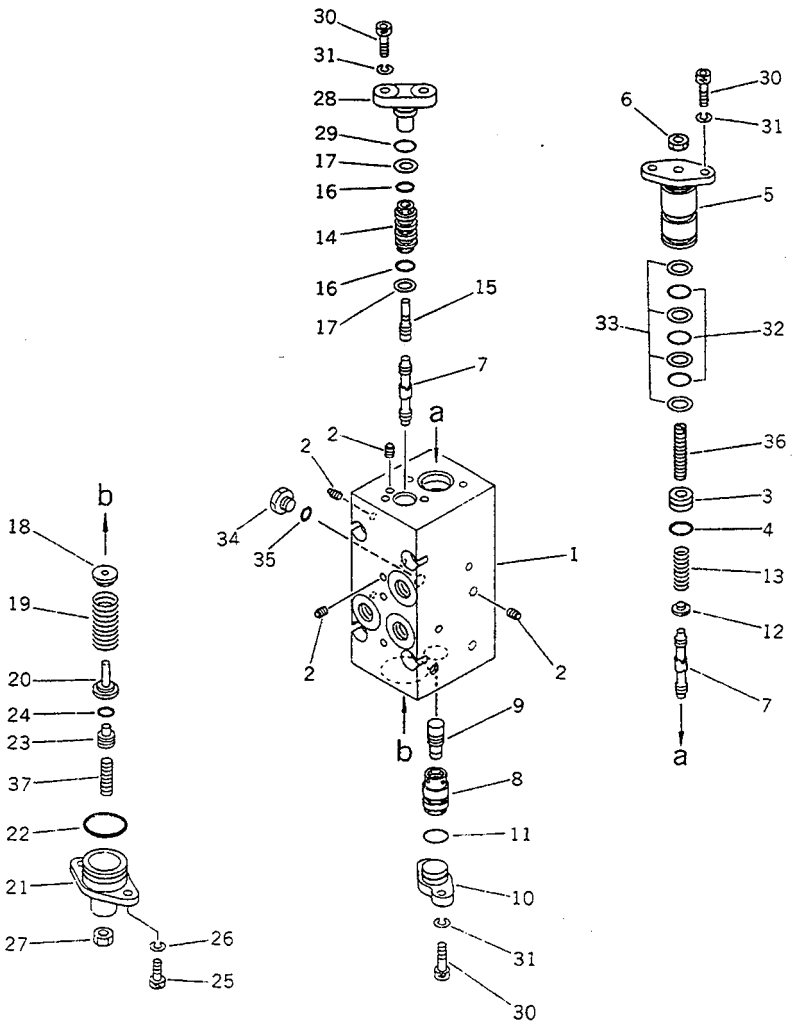

INDEX NO.	PART NO.	DESCRIPTION	Q'TY	SERIAL NO. PC210-3KP	SERIAL NO. PC240-3KP
		FIG NO. :6143			
	(708-25-01071)	HYDRAULIC PUMP ASS'Y	1		K15001-
	(708-25-07140)	.SERVO VALVE ASS'Y,FRONT	1		K15001-
	708-25-07540	..VALVE ASS'Y	1		K15001-
	(★708-23-07031)	...BODY ASS'Y	1		K15001-
1	☆	....BODY	1		K15001-
2	☆	....PLUG	16		K15001-
3	(★708-25-17420)	...PLUG	1		K15001-
4	(★07000-02010)	...O-RING	1		K15001-
5	(★708-25-17131)	...COVER	1		K15001-
6	(★01580-10806)	...NUT	1		K15001-
7	(★708-25-17140)	...SPOOL	2		K15001-
8	(★708-25-17150)	...SLEEVE	1		K15001-
9	(★708-25-17160)	...PISTON	1		K15001-
10	(★708-25-17170)	...COVER	1		K15001-
11	(★07000-02014)	...O-RING	1		K15001-
12	(★708-25-17180)	...SEAT	1		K15001-
13	(★708-25-17190)	...SPRING	1		K15001-
14	(★708-25-17210)	...SLEEVE	1		K15001-
15	(★708-25-17220)	...PISTON	1		K15001-
16	(★07000-12012)	...O-RING	2		K15001-
17	(★07001-02012)	...RING,BACK-UP	2		K15001-
18	(★708-25-17370)	...SEAT	1		K15001-
19	(★708-25-17250)	...SPRING	1		K15001-
20	(★708-25-17260)	...SEAT	1		K15001-
21	(★708-25-15350)	...PLUG	1		K15001-
22	(★07000-03028)	...O-RING	1		K15001-
23	(★708-25-17410)	...PLUG	1		K15001-
24	(★07000-01009)	...O-RING	1		K15001-
25	(★708-25-15320)	...BOLT	2		K15001-
26	(★01602-20619)	...WASHER,SPRING	2		K15001-

https://truckmanualshub.com/

FIG NO. :6143

INDEX NO.	PART NO.	DESCRIPTION	Q'TY	SERIAL NO. PC210-3KP	SERIAL NO. PC240-3KP
27	(★01580-10806)	...NUT	1		K15001-
28	(★708-25-17230)	...COVER	1		K15001-
29	(★07000-02012)	...O-RING	1		K15001-
30	(★708-25-15320)	...BOLT	6		K15001-
31	(★01602-20619)	...WASHER,SPRING	6		K15001-
32	(★07000-12021)	...O-RING	3		K15001-
33	(★07001-02021)	...RING,BACK-UP	4		K15001-
34	(★07040-11007)	...PLUG	1		K15001-
35	(★07002-01023)	...O-RING	1		K15001-
36	(★708-25-17430)	...SCREW	1		K15001-
37	(★708-25-15340)	...SCREW	1		K15001-

https://truckmanualshub.com/

FIG. 6145 SERVO VALVE, REAR (1/2)
(FOR 2-STAGE SELECTOR MODE OLSS) (PC240)

このアセンブリの構成部品は第6131図から第6153図まで含みます。
(708-25-01071) : This assembly consists of all parts shown in Figs. 6131 to 6153.

このアセンブリの構成部品は第6145図から第6148図まで含みます。
708-25-07240 : This assembly consists of all parts shown in Figs. 6145 to 6148.

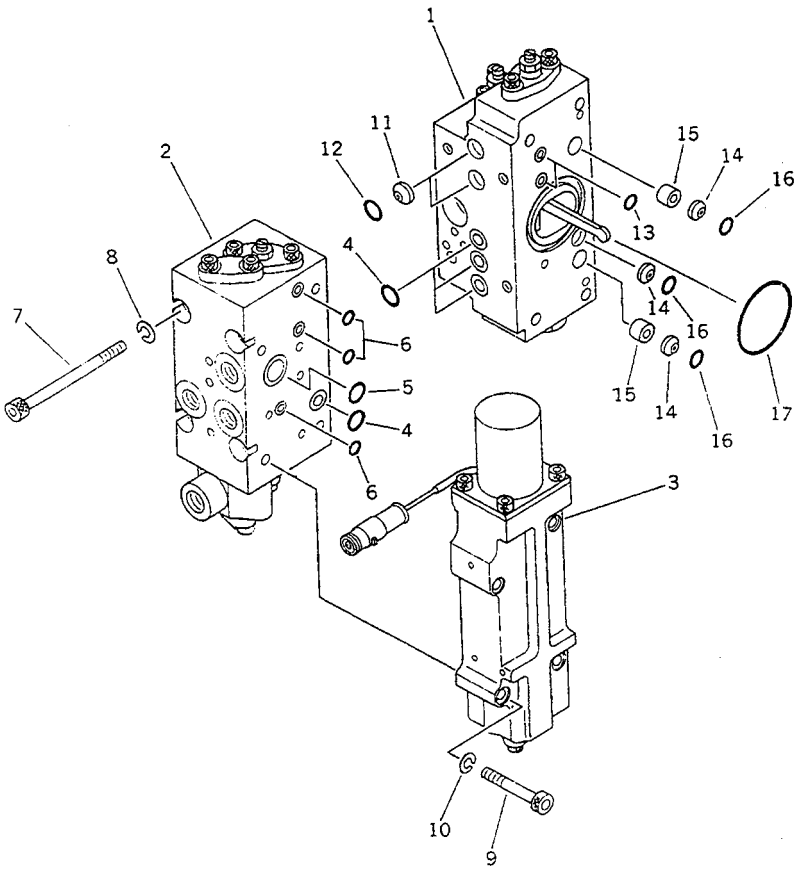

FIG NO. :6145

INDEX NO.	PART NO.	DESCRIPTION	Q'TY	SERIAL NO. PC210-3KP	SERIAL NO. PC240-3KP
	(708-25-01071)	HYDRAULIC PUMP ASS'Y	1		K15001-
	708-25-07240	.SERVO VALVE ASS'Y,REAR	1		K15001-
1	(708-25-36300)	..SERVO VALVE SUB A.	1		K15001-
2	(708-25-07640)	..VALVE ASS'Y	1		K15001-
3	(708-25-18100)	..VALVE ASS'Y	1		K15001-
4	07000-02011	..O-RING	4		K15001-
5	07000-02018	..O-RING	1		K15001-
6	07000-11009	..O-RING	3		K15001-
7	708-25-19160	..BOLT	4		K15001-
8	01602-20825	..WASHER,SPRING	4		K15001-
9	708-25-19130	..BOLT	4		K15001-
10	01602-20825	..WASHER,SPRING	4		K15001-
11	720-68-11920	..FILTER	2		K15001-
12	07000-12010	..O-RING	2		K15001-
13	07000-11009	..O-RING	2		K15001-
14	720-68-11920	..FILTER	3		K15001-
15	708-25-19150	..ORIFICE	2		K15001-
16	07000-12010	..O-RING	3		K15001-
17	07000-03048	..O-RING	1		K15001-

https://truckmanualshub.com/

FIG. 6146 SERVO VALVE, REAR (2/2) (FOR 2-STAGE SELECTOR MODE OLSS) (PC240)

このアセンブリの構成部品は第6131図から第6153図まで含みます。
(708-25-01071) : This assembly consists of all parts shown in Figs. 6131 to 6153.

このアセンブリの構成部品は第6145図から第6148図まで含みます。
(708-25-07240) : This assembly consists of all parts shown in Figs. 6145 to 6148.

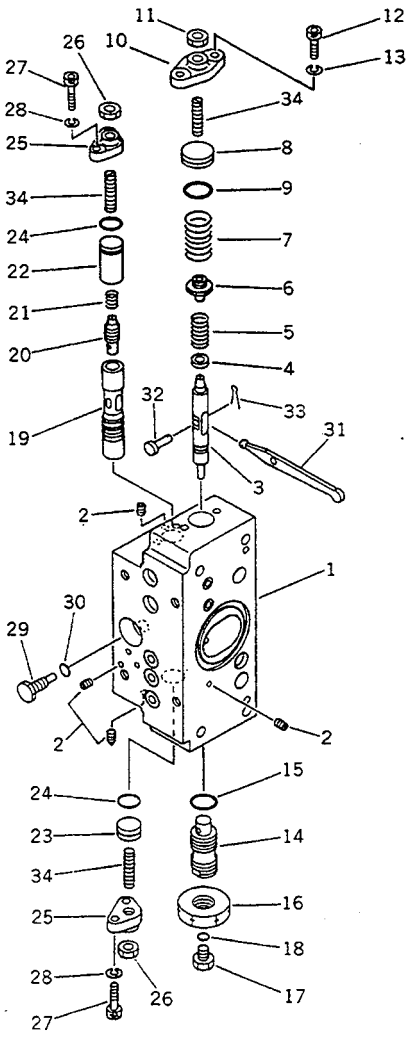

FIG NO. :6146

INDEX NO.	PART NO.	DESCRIPTION	Q'TY	SERIAL NO. PC210-3KP	SERIAL NO. PC240-3KP
	(708-25-01071)	HYDRAULIC PUMP ASS'Y	1		K15001-
	(708-25-07240)	.SERVO VALVE ASS'Y,REAR	1		K15001-
	708-25-36300	..SERVO VALVE SUB A.	1		K15001-
	(★708-23-07011)	...BODY ASS'Y	1		K15001-
1	☆	....BODY	1		K15001-
2	☆	....PLUG	7		K15001-
3	(★708-25-15120)	...PISTON	1		K15001-
4	(★708-25-15130)	...SEAT	1		K15001-
5	(★708-25-15110)	...BODY	1		K15001-
6	(★708-23-15120)	...SEAT	1		K15001-
7	(★708-25-15130)	...SEAT	1		K15001-
8	(★708-23-15160)	...PLUG	1		K15001-
9	(★07000-02018)	...O-RING	1		K15001-
10	(★708-25-15150)	...COVER	1		K15001-
11	(★01580-10806)	...NUT	1		K15001-
12	(★708-25-15320)	...BOLT	2		K15001-
13	(★01602-20619)	...WASHER,SPRING	2		K15001-
14	(★708-25-15171)	...PLUG	1		K15001-
15	(★07002-02034)	...O-RING	1		K15001-
16	(★07239-12009)	...NUT	1		K15001-
17	(★07040-11007)	...PLUG	1		K15001-
18	(★07002-01023)	...O-RING	1		K15001-
19	(★708-25-15180)	...SLEEVE	1		K15001-
20	(★708-25-15280)	...SPOOL	1		K15001-
21	(★708-25-15310)	...SPRING	1		K15001-
22	(★708-25-15430)	...PLUG	1		K15001-
23	(★708-25-15240)	...PLUG	1		K15001-
24	(★07000-02012)	...O-RING	2		K15001-
25	(★708-25-15250)	...COVER	2		K15001-
26	(★01580-10806)	...NUT	2		K15001-

https://truckmanualshub.com/

FIG NO. :6146

INDEX NO.	PART NO.	DESCRIPTION	Q'TY	SERIAL NO. PC210-3KP	SERIAL NO. PC240-3KP
27	(★708-25-15320)	...BOLT	4		K15001-
28	(★01602-20619)	...WASHER,SPRING	4		K15001-
29	(★708-25-15260)	...PLUG	1		K15001-
30	(★07002-00823)	...O-RING	1		K15001-
31	(★708-25-15270)	...ARM	1		K15001-
32	(★04205-00514)	...PIN	1		K15001-
33	(★04050-01210)	...PIN,COTTER	1		K15001-
34	(★708-25-15340)	...SCREW	3		K15001-

https://truckmanualshub.com/

FIG. 6147 CUT OFF AND NEGATIVE CONTROL VALVE, REAR (FOR 2-STAGE SELECTOR MODE OLSS) (PC240)

このアセンブリの構成部品は第6131図から第6153図まで含みます。
(708-25-01071) : This assembly consists of all parts shown in Figs. 6131 to 6153.

このアセンブリの構成部品は第6145図から第6148図まで含みます。
(708-25-07240) : This assembly consists of all parts shown in Figs. 6145 to 6148.

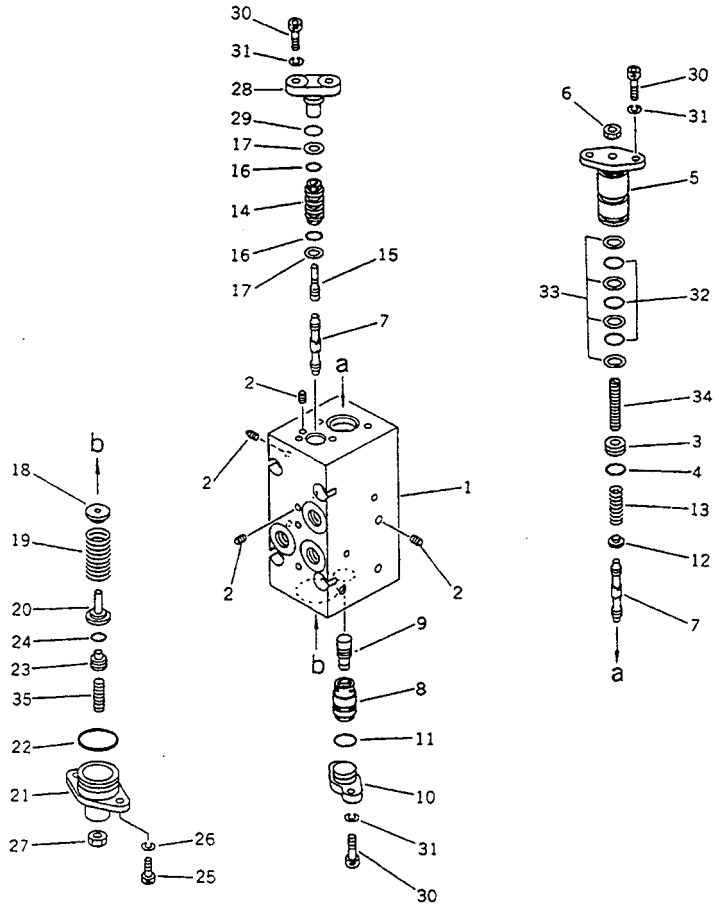

FIG NO. :6147

INDEX NO.	PART NO.	DESCRIPTION	Q'TY	SERIAL NO. PC210-3KP	SERIAL NO. PC240-3KP
	(708-25-01071)	HYDRAULIC PUMP ASS'Y	1		K15001-
	(708-25-07240)	.SERVO VALVE ASS'Y,REAR	1		K15001-
	708-25-07640	..VALVE ASS'Y	1		K15001-
	(*708-23-07041)	...BODY ASS'Y	1		K15001-
1	*	....BODY	1		K15001-
2	*	....PLUG	15		K15001-
3	(*708-25-17420)	...PLUG	1		K15001-
4	(*07000-02010)	...O-RING	1		K15001-
5	(*708-25-17131)	...COVER	1		K15001-
6	(*01580-10806)	...NUT	1		K15001-
7	(*708-25-17140)	...SPOOL	2		K15001-
8	(*708-25-17150)	...SLEEVE	1		K15001-
9	(*708-25-17160)	...PISTON	1		K15001-
10	(*708-25-17170)	...COVER	1		K15001-
11	(*07000-02014)	...O-RING	1		K15001-
12	(*708-25-17180)	...SEAT	1		K15001-
13	(*708-25-17190)	...SPRING	1		K15001-
14	(*708-25-17210)	...SLEEVE	1		K15001-
15	(*708-25-17220)	...PISTON	1		K15001-
16	(*07000-12012)	...O-RING	2		K15001-
17	(*07001-02012)	...RING,BACK-UP	2		K15001-
18	(*708-25-17370)	...SEAT	1		K15001-
19	(*708-25-17250)	...SPRING	1		K15001-
20	(*708-25-17260)	...SEAT	1		K15001-
21	(*708-25-17350)	...COVER	1		K15001-
22	(*07000-03028)	...O-RING	1		K15001-
23	(*708-25-17410)	...PLUG	1		K15001-
24	(*07000-01009)	...O-RING	1		K15001-
25	(*708-25-15320)	...BOLT	2		K15001-
26	(*01602-20619)	...WASHER,SPRING	4		K15001-

https://truckmanualshub.com/

FIG NO. :6147

INDEX NO.	PART NO.	DESCRIPTION	Q'TY	SERIAL NO. PC210-3KP	SERIAL NO. PC240-3KP
27	(★01580-10806)	...NUT	1		K15001-
28	(★708-25-17230)	...COVER	1		K15001-
29	(★07000-02012)	...O-RING	1		K15001-
30	(★708-25-15320)	...BOLT	6		K15001-
31	(★01602-20619)	...WASHER,SPRING	6		K15001-
32	(★07000-12021)	...O-RING	3		K15001-
33	(★07001-02021)	...RING,BACK-UP	4		K15001-
34	(★708-25-17430)	...SCREW	1		K15001-
35	(★708-25-15340)	...SCREW	1		K15001-

https://truckmanualshub.com/

FIG. 6148 TORQUE VARIABLE CONTROL VALVE (FOR 2-STAGE SELECTOR MODE OLSS) (PC240)

このアセンブリの構成部品は第6131図から第6153図まで含みます。
(708-25-01071) : This assembly consists of all parts shown in Figs. 6131 to 6153.

このアセンブリの構成部品は第6145図から第6148図まで含みます。
(708-25-07240) : This assembly consists of all parts shown in Figs. 6145 to 6148.

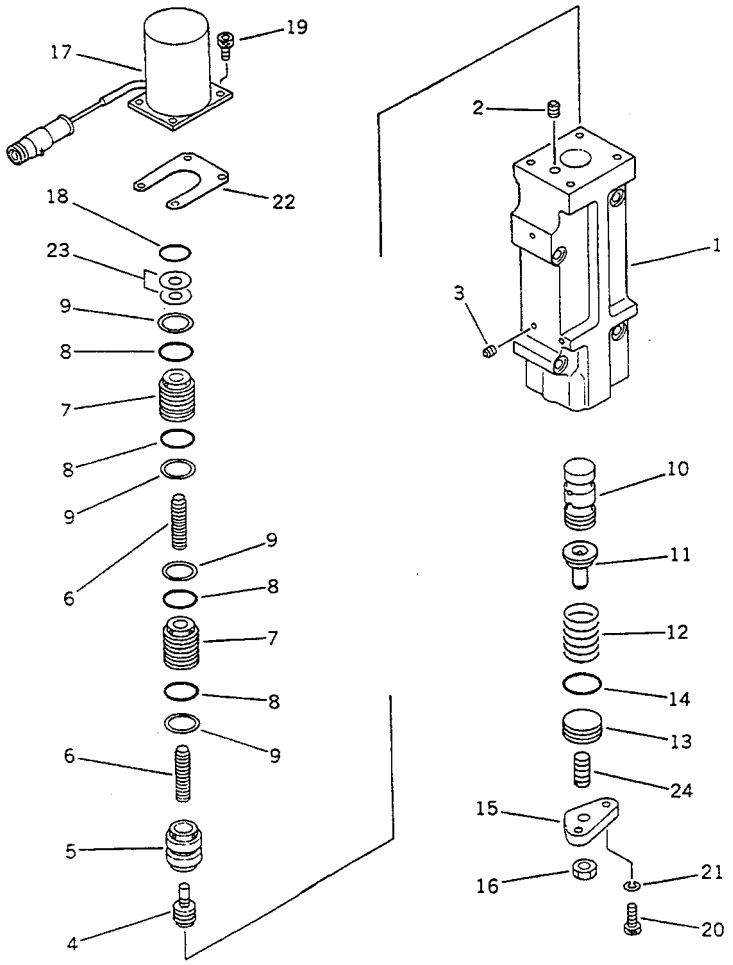

FIG NO. :6148

INDEX NO.	PART NO.	DESCRIPTION	Q'TY	SERIAL NO. PC210-3KP	SERIAL NO. PC240-3KP
	(708-25-01071)	HYDRAULIC PUMP ASS'Y	1		K15001-
	(708-25-07240)	.SERVO VALVE ASS'Y,REAR	1		K15001-
	708-25-18100	..VALVE ASS'Y	1		K15001-
	(★708-23-07051)	...BODY ASS'Y	1		K15001-
1	☆	....BODY	1		K15001-
2	☆	....PLUG	2		K15001-
3	(★708-25-15350)	...PLUG	12		K15001-
4	(★708-23-18120)	...PISTON	1		K15001-
5	(★708-23-18130)	...SLEEVE	1		K15001-
6	(★708-23-18140)	...PISTON	2		K15001-
7	(★708-23-18150)	...SLEEVE	2		K15001-
8	(★07000-12016)	...O-RING	4		K15001-
9	(★07001-02016)	...RING,BACK-UP	4		K15001-
10	(★708-23-18161)	...SPOOL	1		K15001-
11	(★708-23-18170)	...SEAT	1		K15001-
12	(★708-23-18181)	...SPRING	1		K15001-
13	(★708-23-15160)	...PLUG	1		K15001-
14	(★07000-02018)	...O-RING	1		K15001-
15	(★708-23-18210)	...COVER	1		K15001-
16	(★01580-10806)	...NUT	1		K15001-
17	708-23-18221	...SOLENOID ASS'Y	1		K15001-
18	07000-02016	...O-RING	1		K15001-
19	708-23-18250	...BOLT	4		K15001-
20	(★708-25-15320)	...BOLT	2		K15001-
21	(★01602-20619)	...WASHER,SPRING	2		K15001-
22	(★708-25-18571)	...SHIM, 0.50MM	2		K15001-
23	(★708-25-18580)	...SHIM, 0.50MM	2		K15001-
24	(★708-25-15340)	...SCREW	1		K15001-

https://truckmanualshub.com/

FIG. 6151 HYDRALIC PUMP (FOR 2-STAGE SELECTOR MODE OLSS) (PC240)

(708-25-01071) : このアセンブリの構成部品は第6131図から第6153図まで含みます。
This assembly consists of all parts shown in Figs. 6131 to 6153.

(708-25-01150) : このアセンブリの構成部品は第6132図から第6134図、第6151図および第6153図を含みます。
This assembly consists of all parts shown in Figs. 6132 to 6134, 6151 and 6153.

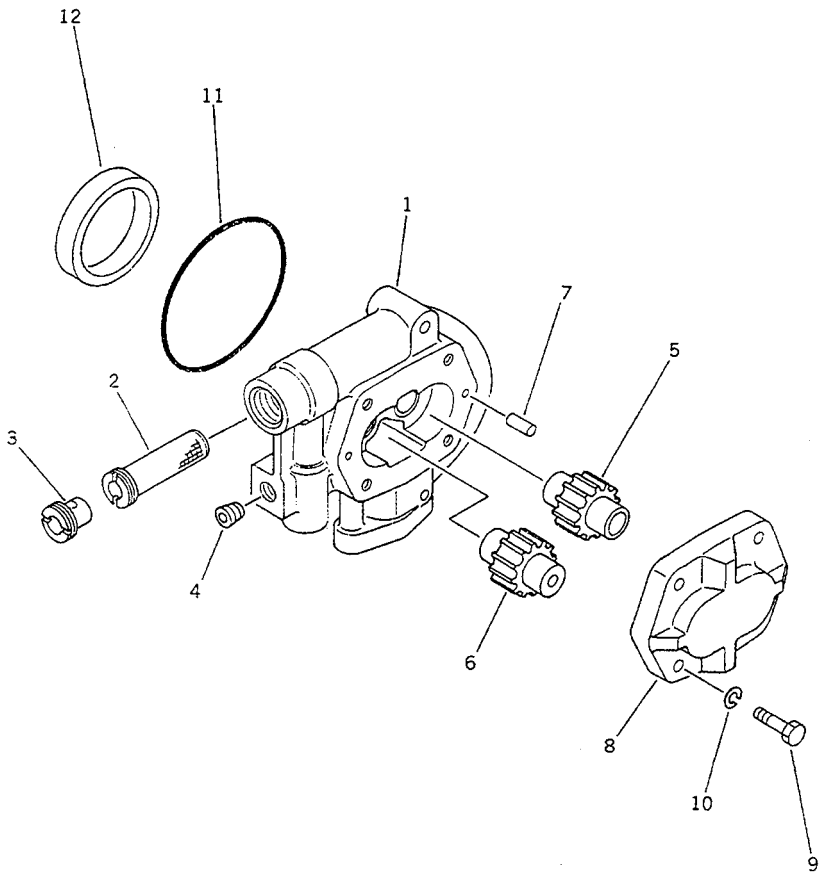

FIG NO. :6151

INDEX NO.	PART NO.	DESCRIPTION	Q'TY	SERIAL NO. PC210-3KP	SERIAL NO. PC240-3KP
	(708-25-01071)	HYDRAULIC PUMP ASS'Y	1		K15001-
	(708-25-01150)	.PUMP SUB ASS'Y	1		K15001-
	704-24-28202	..PUMP ASS'Y	1		K15001-
1	(★704-28-28050)	...BODY	1		K15001-
2	704-28-02751	...STRAINER	1		K15001-
3	704-28-02760	...SCREW	1		K15001-
4	07043-50312	...PLUG	1		K15001-
5	(★704-28-28450)	...GEAR,DRIVE	1		K15001-
6	(★704-28-28550)	...GEAR,DRIVEN	1		K15001-
7	04020-00820	...PIN,DOWEL	2		K15001-
8	(★704-28-02410)	...HOUSING	1		K15001-
9	01010-51240	...BOLT	4		K15001-
10	01602-21236	...WASHER,SPRING	4		K15001-
11	704-28-02710	...O-RING	1		K15001-
12	704-28-02771	...COLLAR	1		K15001-

https://truckmanualshub.com/

FIG. 6153 RELIEF VALVE (FOR 2-STAGE SELECTOR MODE OLSS) (PC240)

(708-25-01071) : このアセンブリの構成部品は第6131図から第6153図まで含みます。
This assembly consists of all parts shown in Figs. 6131 to 6153.

(708-25-01150) : このアセンブリの構成部品は第6132図から第6134図、第6151図および第6153図を含みます。
This assembly consists of all parts shown in Figs. 6132 to 6134, 6151 and 6153.

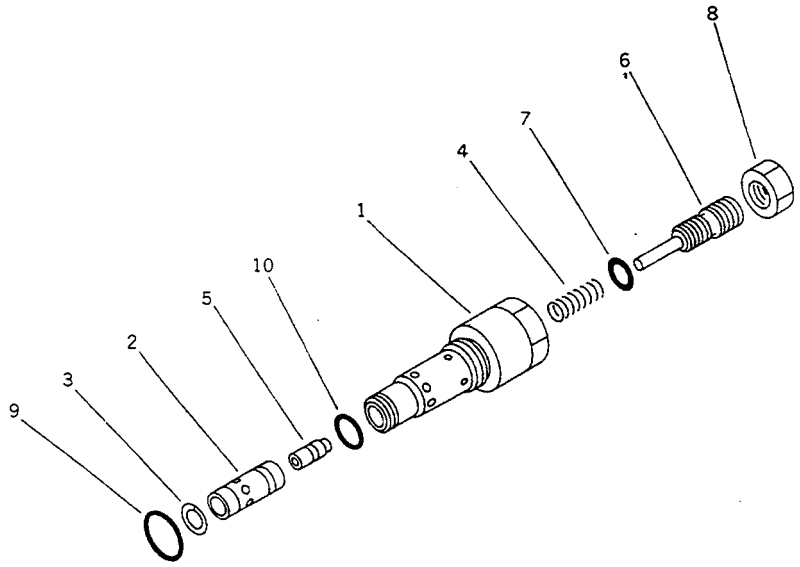

FIG NO. :6153

INDEX NO.	PART NO.	DESCRIPTION	Q'TY	SERIAL NO. PC210-3KP	SERIAL NO. PC240-3KP
	(708-25-01071)	HYDRAULIC PUMP ASS'Y	1		K15001-
	(708-25-01150)	.PUMP SUB ASS'Y	1		K15001-
	708-25-14901	..RELIEF VALVE A.	1		K15001-
1	708-23-14810	...SLEEVE	2		K15001-
2	708-23-14830	...VALVE	1		K15001-
3	708-23-14820	...RING,SNAP	1		K15001-
4	708-23-14840	...SPRING	1		K15001-
5	708-23-14850	...PISTON	1		K15001-
6	708-23-14860	...SCREW	1		K15001-
7	07000-02010	...O-RING	1		K15001-
8	706-73-75350	...NUT	1		K15001-
9	700-22-11410	...O-RING	1		K15001-
10	07002-02434	...O-RING	1		K15001-

https://truckmanualshub.com/

FIG. 6191 HYDRAULIC OIL TANK

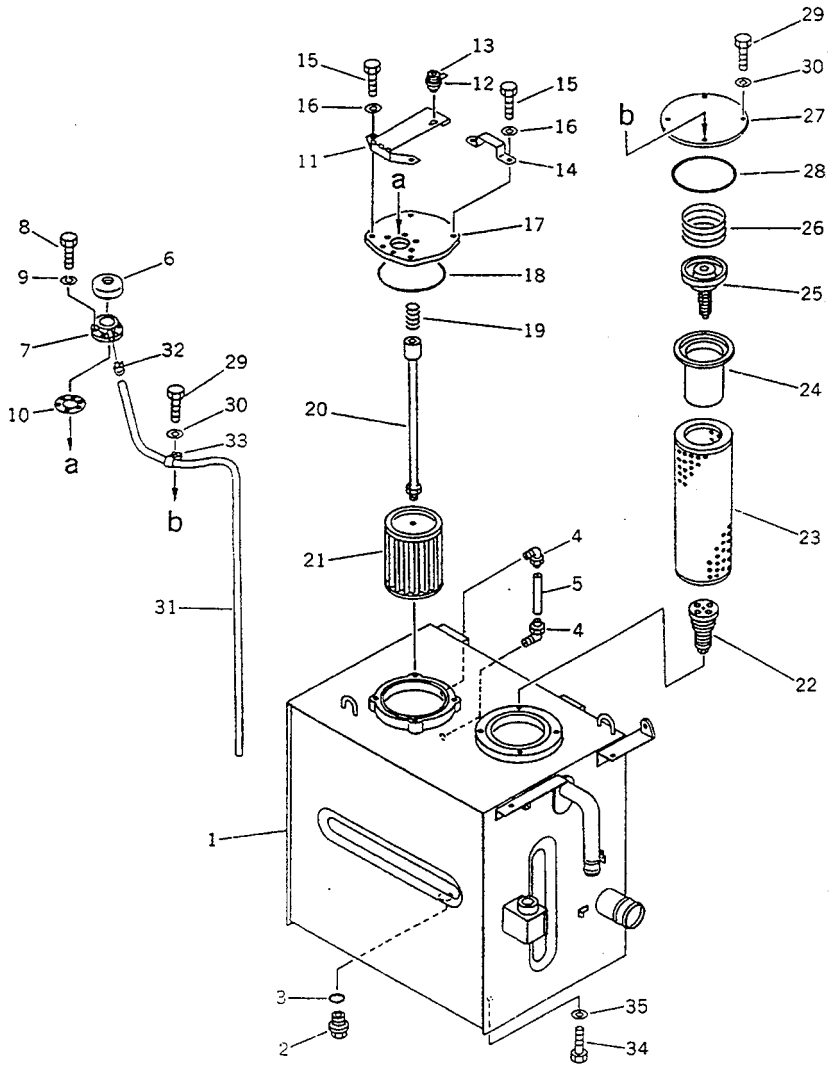

FIG NO. :6191

INDEX NO.	PART NO.	DESCRIPTION	Q'TY	SERIAL NO. PC210-3KP	SERIAL NO. PC240-3KP
	205-60-00083	HYDRAULIC TANK ASS'Y	1	K15001-	K15001-
1	205-60-71114	.TANK,HYDRAULIC	1	K15001-	K15001-
2	07044-13620	.PLUG	2	K15001-	K15001-
3	07002-03634	.O-RING	2	K15001-	K15001-
4	203-60-31100	.ELBOW ASS'Y	2	K15001-	K15001-
5	203-60-31160	.TUBE	1	K15001-	K15001-
6	201-60-12190	.CAP ASS'Y	1	K15001-	K15001-
7	201-60-12171	.FILLER	1	K15001-	K15001-
8	01220-40516	.SCREW	6	K15001-	K15001-
9	01601-20513	.WASHER,SPRING	6	K15001-	K15001-
10	205-60-51460	.GASKET	2	K15001-	K15001-
11	205-60-71190	.COVER	1	K15001-	K15001-
12	205-60-71220	.LOCK ASS'Y	1	K15001-	K15001-
13	205-54-76280	..ROTOR ASS'Y	1	K15001-	K15001-
14	205-60-71210	.BRACKET	1	K15001-	K15001-
15	01010-51035	.BOLT	4	K15001-	K15001-
16	01643-51032	.WASHER	4	K15001-	K15001-
17	203-60-31192	.COVER	1	K15001-	K15001-
18	07000-05180	.O-RING	1	K15001-	K15001-
19	12R-60-11230	.SPRING	1	K15001-	K15001-
20	205-60-71170	.SUPPORT	1	K15001-	K15001-
21	205-60-51450	.STRAINER,STRAINER	1	K15001-	K15001-
22	205-60-71270	.VALVE	1	K15001-	K15001-
23	195-60-16320	.ELEMENT	1	K15001-	K15001-
24	206-60-41221	.STRAINER	1	K15001-	K15001-
25	12R-60-11300	.BYPASS VALVE ASS'Y	1	K15001-	K15001-
26	12R-60-11390	.SPRING	1	K15001-	K15001-
27	205-60-71141	.COVER	1	K15001-	K15001-
28	07000-05180	.O-RING	1	K15001-	K15001-
29	01010-51230	.BOLT	4	K15001-	K15001-

https://truckmanualshub.com/

FIG NO. :6191

INDEX NO.	PART NO.	DESCRIPTION	Q'TY	SERIAL NO. PC210-3KP	SERIAL NO. PC240-3KP
30	01643-31232	.WASHER	4	K15001-	K15001-
31	207-60-11350	TUBE	1	K15001-	K15001-
32	07285-00100	CLIP	1	K15001-	K15001-
33	08036-11214	CLIP	1	K15001-	K15001-
34	01010-51635	BOLT	4	K15001-	K15001-
35	01643-31645	WASHER	4	K15001-	K15001-

https://truckmanualshub.com/

FIG. 6201 CONTROL VALVE (1/7)

このアセンブリの構成部品は第6201図から第6207図まで含みます。
709-79-22101 : This assembly consists of all parts shown in Figs. 6201 to 6207.

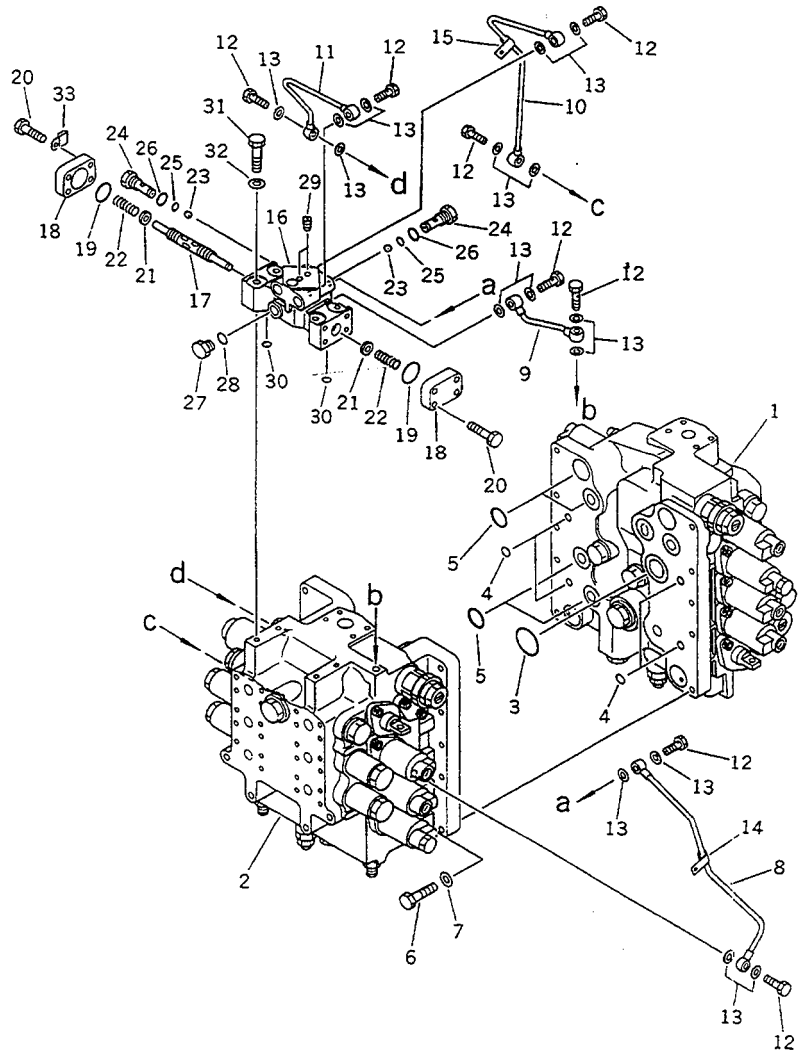

FIG NO. :6201

INDEX NO.	PART NO.	DESCRIPTION	Q'TY	SERIAL NO. PC210-3KP	SERIAL NO. PC240-3KP
	709-79-22101	CONTROL VALVE ASS'Y	1	K15001-	K15001-
1	709-75-92105	.VALVE ASS'Y	1	K15001-	K15001-
2	709-74-92105	.VALVE ASS'Y	1	K15001-	K15001-
3	07000-13038	.O-RING	1	K15001-	K15001-
4	07000-02010	.O-RING	4	K15001-	K15001-
5	07000-13028	.O-RING	9	K15001-	K15001-
6	01010-51040	.BOLT	10	K15001-	K15001-
7	01643-31032	.WASHER	10	K15001-	K15001-
8	709-79-11130	.TUBE	1	K15001-	K15001-
9	709-79-11110	.TUBE	1	K15001-	K15001-
10	709-79-11140	.TUBE	1	K15001-	K15001-
11	709-79-11120	.TUBE	1	K15001-	K15001-
12	07206-30508	.BOLT,JOINT	8	K15001-	K15001-
13	07005-00812	.GASKET	16	K15001-	K15001-
14	08036-31210	.CLIP	1	K15001-	K15001-
15	08036-31214	.CLIP	1	K15001-	K15001-
	709-70-91102	.SHUTTLE VALVE ASS'Y	1	K15001-	K15001-
16	☆	..BODY	1	K15001-	K15001-
17	☆	..SPOOL	1	K15001-	K15001-
18	709-70-91150	..PLATE	2	K15001-	K15001-
19	07000-13025	..O-RING	2	K15001-	K15001-
20	01010-50825	..BOLT	8	K15001-	K15001-
21	706-73-77140	..PLATE	2	K15001-	K15001-
22	709-70-91130	..SPRING	2	K15001-	K15001-
23	04260-00793	..BALL	2	K15001-	K15001-
24	709-70-91170	..PLUG	2	K15001-	K15001-
25	07000-01007	..O-RING	2	K15001-	K15001-
26	07002-01423	..O-RING	2	K15001-	K15001-
27	07040-11409	..PLUG	1	K15001-	K15001-
28	07002-01423	..O-RING	1	K15001-	K15001-

https://truckmanualshub.com/

FIG NO. :6201

INDEX NO.	PART NO.	DESCRIPTION	Q'TY	SERIAL NO. PC210-3KP	SERIAL NO. PC240-3KP
29	07043-70108	..PLUG	2	K15001-	K15001-
30	07000-11009	..O-RING	2	K15001-	K15001-
31	01010-50855	.BOLT	4	K15001-	K15001-
32	01643-30823	.WASHER	4	K15001-	K15001-
33	08036-30810	.CLIP	1	K15001-	K15001-

https://truckmanualshub.com/

FIG. 6202 CONTROL VALVE (2/7)

このアセンブリの構成部品は第6201図から第6207図まで含みます。
(709-79-22101) : This assembly consists of all parts shown in Figs. 6201 to 6207.
このアセンブリの構成部品は第6202図および第6203図を含みます。
709-75-92105 : This assembly consists of all parts shown in Figs. 6202 and 6203.

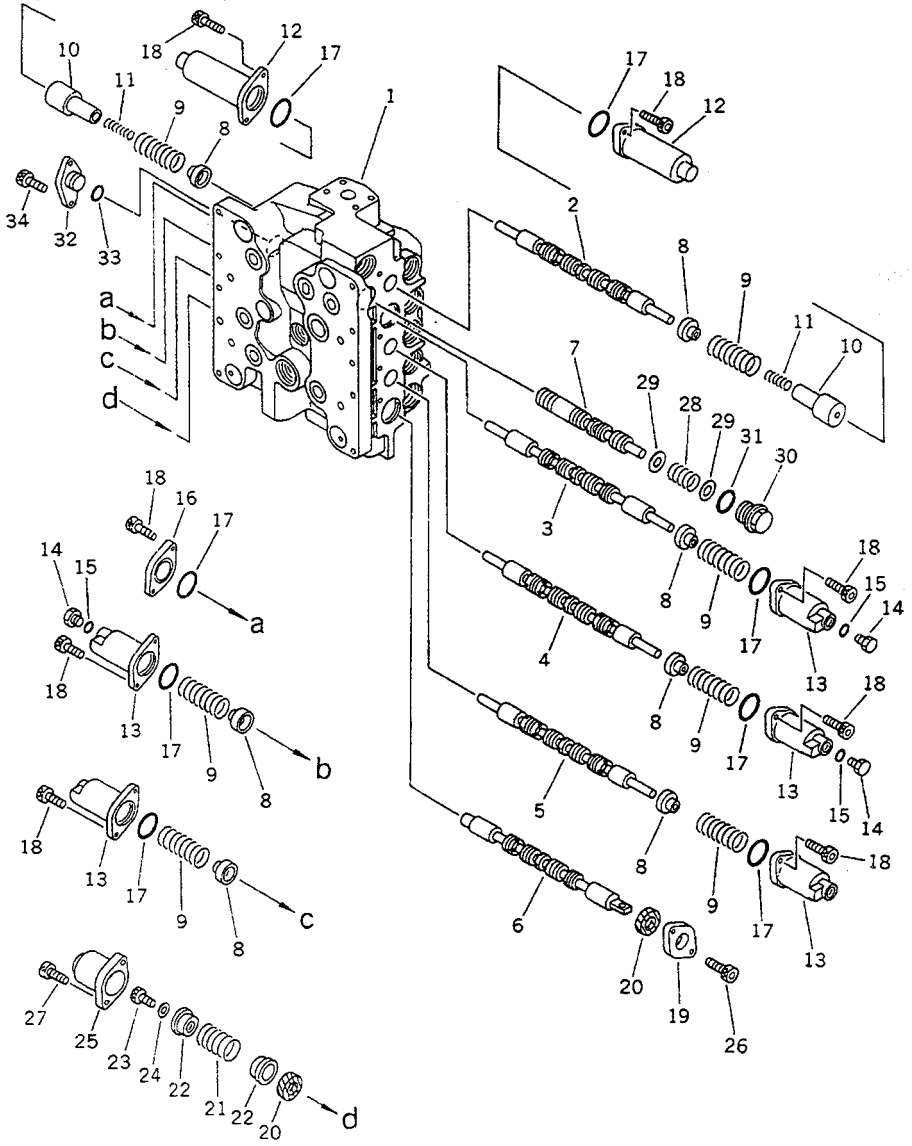

FIG NO. :6202

INDEX NO.	PART NO.	DESCRIPTION	Q'TY	SERIAL NO. PC210-3KP	SERIAL NO. PC240-3KP
	(709-79-22101)	CONTROL VALVE ASS'Y	1	K15001-	K15001-
	(709-75-92105)	.VALVE ASS'Y	1	K15001-	K15001-
1	☆	..BODY,VALVE	1	K15001-	K15001-
2	☆	..SPOOL,SWING	1	K15001-	K15001-
3	☆	..SPOOL,BOOM HIGH	1	K15001-	K15001-
4	☆	..SPOOL,SERVICE	1	K15001-	K15001-
5	☆	..SPOOL,ARM	1	K15001-	K15001-
6	☆	..SPOOL,L.H. TRAVEL	1	K15001-	K15001-
7	☆	..SPOOL	1	K15001-	K15001-
8	709-74-92110	..RETAINER	7	K15001-	K15001-
9	709-74-92180	..SPRING	7	K15001-	K15001-
10	709-74-92420	..RETAINER	2	K15001-	K15001-
11	709-74-92430	..SPRING	2	K15001-	K15001-
12	709-74-92580	..CASE	2	K15001-	K15001-
13	709-74-92120	..CASE	5	K15001-	K15001-
14	07040-11409	..PLUG	3	K15001-	K15001-
15	07002-01423	..O-RING	3	K15001-	K15001-
16	709-74-92590	..PLATE	1	K15001-	K15001-
17	709-74-92170	..O-RING	8	K15001-	K15001-
18	01252-30820	..BOLT	16	K15001-	K15001-
19	709-75-92110	..PLATE	3	K15001-	K15001-
20	709-75-92120	..SEAL	2	K15001-	K15001-
21	709-75-92180	..SPRING	1	K15001-	K15001-
22	709-75-92130	..RETAINER	2	K15001-	K15001-
23	01252-30812	..BOLT	1	K15001-	K15001-
24	01643-30823	..WASHER	1	K15001-	K15001-
25	709-75-92140	..CASE	1	K15001-	K15001-
26	01252-30812	..BOLT	2	K15001-	K15001-
27	01252-30825	..BOLT	2	K15001-	K15001-
28	709-74-92210	..SPRING	1	K15001-	K15001-

https://truckmanualshub.com/

FIG NO. :6202

INDEX NO.	PART NO.	DESCRIPTION	Q'TY	SERIAL NO. PC210-3KP	SERIAL NO. PC240-3KP
29	709-74-92270	..WASHER	2	K15001-	K15001-
30	709-74-92230	..PLUG	1	K15001-	K15001-
31	07002-03034	..O-RING	1	K15001-	K15001-
32	709-74-92260	..PLATE	1	K15001-	K15001-
33	07000-02018	..O-RING	1	K15001-	K15001-
34	01252-30820	..BOLT	2	K15001-	K15001-

https://truckmanualshub.com/

FIG. 6203 CONTROL VALVE (3/7)

このアセンブリの構成部品は第6201図から第6207図まで含みます。
(709-79-22101) : This assembly consists of all parts shown in Figs. 6201 to 6207.

このアセンブリの構成部品は第6202図および第6203図を含みます。
(709-75-92105) : This assembly consists of all parts shown in Figs. 6202 and 6203.

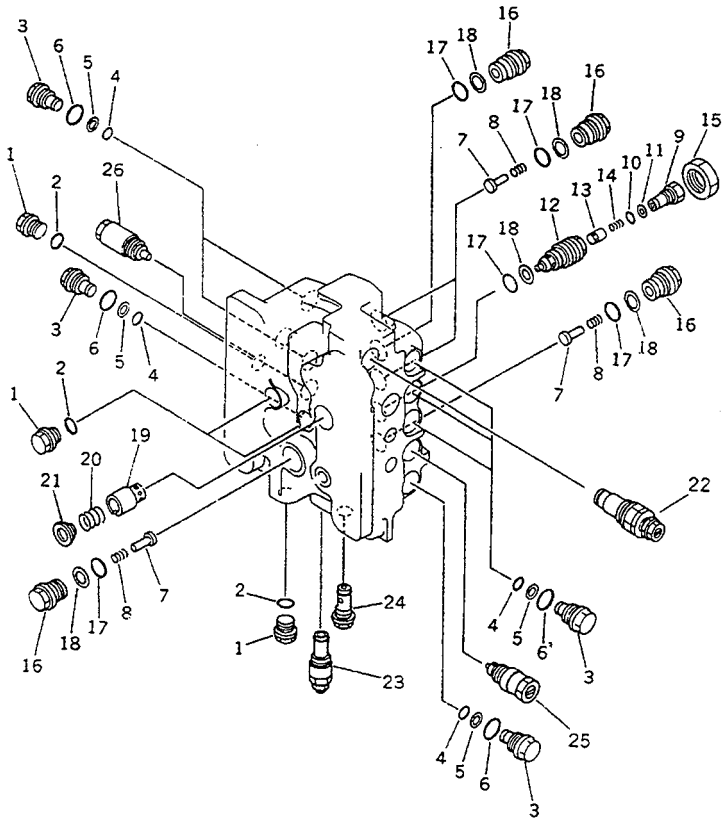

FIG NO. :6203

INDEX NO.	PART NO.	DESCRIPTION	Q'TY	SERIAL NO. PC210-3KP	SERIAL NO. PC240-3KP
	(709-79-22101)	CONTROL VALVE ASS'Y	1	K15001-	K15001-
	(709-75-92105)	.VALVE ASS'Y	1	K15001-	K15001-
1	700-22-11370	..PLUG	4	K15001-	K15001-
2	07002-12434	..O-RING	4	K15001-	K15001-
3	700-84-13960	..PLUG	7	K15001-	K15001-
4	700-22-11410	..O-RING	7	K15001-	K15001-
5	700-80-64220	..RING,BACK-UP	7	K15001-	K15001-
6	07002-03034	..O-RING	7	K15001-	K15001-
7	709-74-92810	..VALVE,CHECK	4	K15001-	K15001-
8	709-75-92220	..SPRING	4	K15001-	K15001-
9	709-74-92450	..PLUG	1	K15001-	K15001-
10	07000-12010	..O-RING	1	K15001-	K15001-
11	07001-02010	..RING,BACK-UP	1	K15001-	K15001-
12	709-74-92440	..PLUG	1	K15001-	K15001-
13	706-73-70140	..VALVE,CHECK	1	K15001-	K15001-
14	706-73-70150	..SPRING	1	K15001-	K15001-
15	709-74-92460	..NUT	1	K15001-	K15001-
16	709-74-92820	..PLUG	5	K15001-	K15001-
17	700-93-11320	..O-RING	6	K15001-	K15001-
18	700-93-11330	..RING,BACK-UP	6	K15001-	K15001-
19	709-74-92281	..VALVE	1	K15001-	K15001-
20	709-74-92290	..SPRING	1	K15001-	K15001-
21	709-74-92310	..SEAT	1	K15001-	K15001-
22	(709-70-51200)	.RELIEF VALVE ASS'Y	1	K15001-	K15001-
23	(709-70-55103)	.RELIEF VALVE ASS'Y	1	K15001-	K15001-
24	(709-70-91300)	.ORIFICE ASS'Y	1	K15001-	K15001-
25	(709-70-62100)	.SAFETY VALVE ASS'Y	1	K15001-	K15001-
26	(709-70-61601)	.VALVE ASS'Y SUCTION AND SAFETY	1	K15001-	K15001-

https://truckmanualshub.com/

FIG. 6204 CONTROL VALVE (4/7)

このアセンブリの構成部品は第6201図から第6207図まで含みます。
(709-79-22101) : This assembly consists of all parts shown in Figs. 6201 to 6207.
このアセンブリの構成部品は第6204図および第6205図も含みます。
709-74-92105 : This assembly consists of all parts shown in Figs. 6204 and 6205.

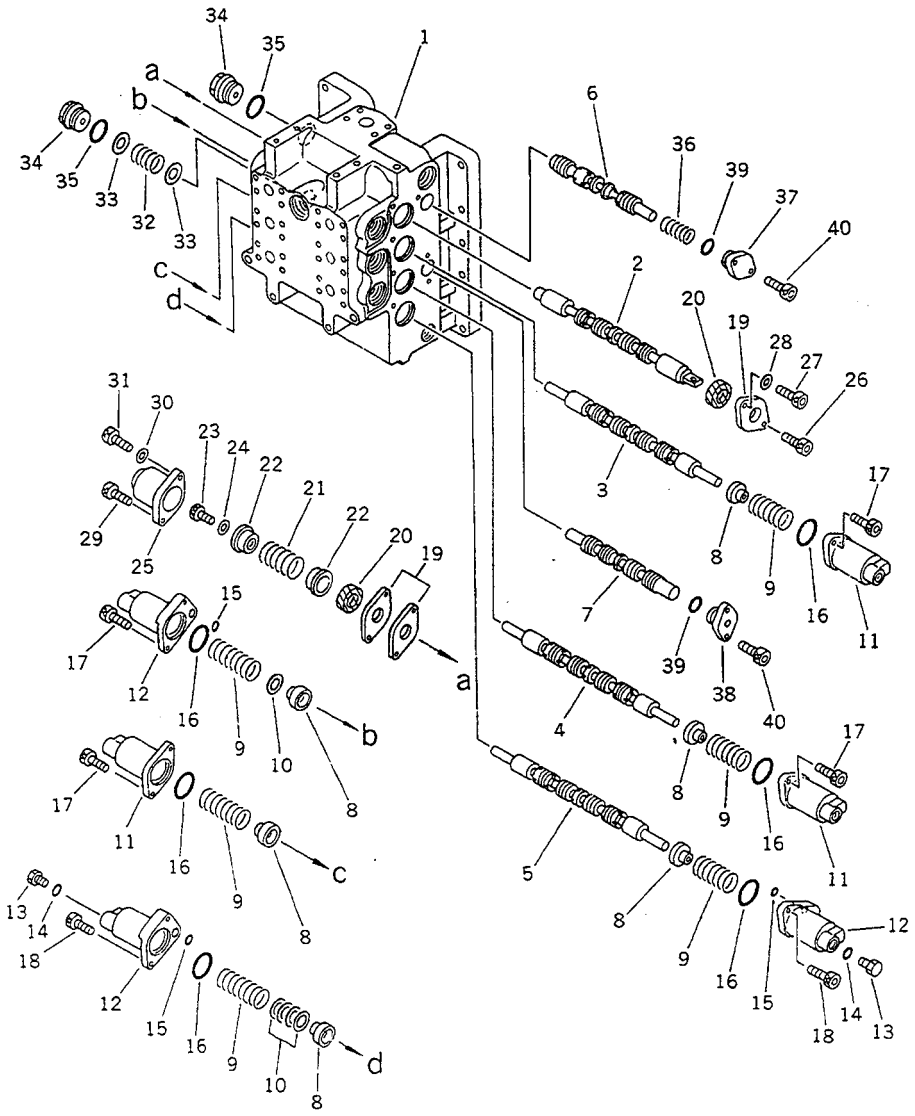

PC210-3KP

FIG NO. :6204

INDEX NO.	PART NO.	DESCRIPTION	Q'TY	SERIAL NO. PC210-3KP	SERIAL NO. PC240-3KP
	(709-79-22101)	CONTROL VALVE ASS'Y	1	K15001-	K15001-
	709-74-92105	.VALVE ASS'Y	1	K15001-	K15001-
1	☆	..BODY,VALVE	1	K15001-	K15001-
2	☆	..SPOOL,R.H. TRAVEL	1	K15001-	K15001-
3	☆	..SPOOL,BOOM	1	K15001-	K15001-
4	☆	..SPOOL,BUCKET	1	K15001-	K15001-
5	☆	..SPOOL,ARM HIGH	1	K15001-	K15001-
6	☆	..SPOOL	1	K15001-	K15001-
7	☆	..SPOOL	1	K15001-	K15001-
8	709-74-92110	..RETAINER	6	K15001-	K15001-
9	709-74-92180	..SPRING	6	K15001-	K15001-
10	709-74-92360	..SHIM, 0.5MM	5	K15001-	K15001-
11	709-74-92120	..CASE	3	K15001-	K15001-
12	709-74-92140	..CASE	3	K15001-	K15001-
13	07040-11409	..PLUG	2	K15001-	K15001-
14	07002-01423	..O-RING	2	K15001-	K15001-
15	07000-02010	..O-RING	3	K15001-	K15001-
16	709-74-92170	..O-RING	6	K15001-	K15001-
17	01252-30820	..BOLT	8	K15001-	K15001-
18	01252-30830	..BOLT	4	K15001-	K15001-
19	709-75-92110	..PLATE	3	K15001-	K15001-
20	709-75-92120	..SEAL	2	K15001-	K15001-
21	709-75-92180	..SPRING	1	K15001-	K15001-
22	709-75-92130	..RETAINER	2	K15001-	K15001-
23	01252-30812	..BOLT	1	K15001-	K15001-
24	01643-30823	..WASHER	1	K15001-	K15001-
25	709-75-92140	..CASE	1	K15001-	K15001-
26	01252-30812	..BOLT	1	K15001-	K15001-
27	01252-30816	..BOLT	1	K15001-	K15001-
28	01643-30823	..WASHER	1	K15001-	K15001-

PC210-3KP

https://truckmanualshub.com/

FIG NO. :6204

INDEX NO.	PART NO.	DESCRIPTION	Q'TY	SERIAL NO. PC210-3KP	SERIAL NO. PC240-3KP
29	01252-30825	..BOLT	1	K15001-	K15001-
30	01643-50823	..WASHER	1	K15001-	K15001-
31	01252-30830	..BOLT	1	K15001-	K15001-
32	700-23-13130	..SPRING	1	K15001-	K15001-
33	709-74-92270	..WASHER	2	K15001-	K15001-
34	709-74-92220	..PLUG	2	K15001-	K15001-
35	07002-03034	..O-RING	2	K15001-	K15001-
36	709-74-92190	..SPRING	1	K15001-	K15001-
37	709-74-92250	..PLATE	1	K15001-	K15001-
38	709-74-92240	..PLATE	1	K15001-	K15001-
39	07000-02018	..O-RING	2	K15001-	K15001-
40	01252-30820	..BOLT	4	K15001-	K15001-

https://truckmanualshub.com/

FIG. 6205 CONTROL VALVE (5/7)

このアセンブリの構成部品は第6201図から第6207図まで含みます。
(709-79-22101) : This assembly consists of all parts shown in Figs. 6201 to 6207.
このアセンブリの構成部品は第6204図および第6205図を含みます。
(709-74-92105) : This assembly consists of all parts shown in Figs. 6204 and 6205.

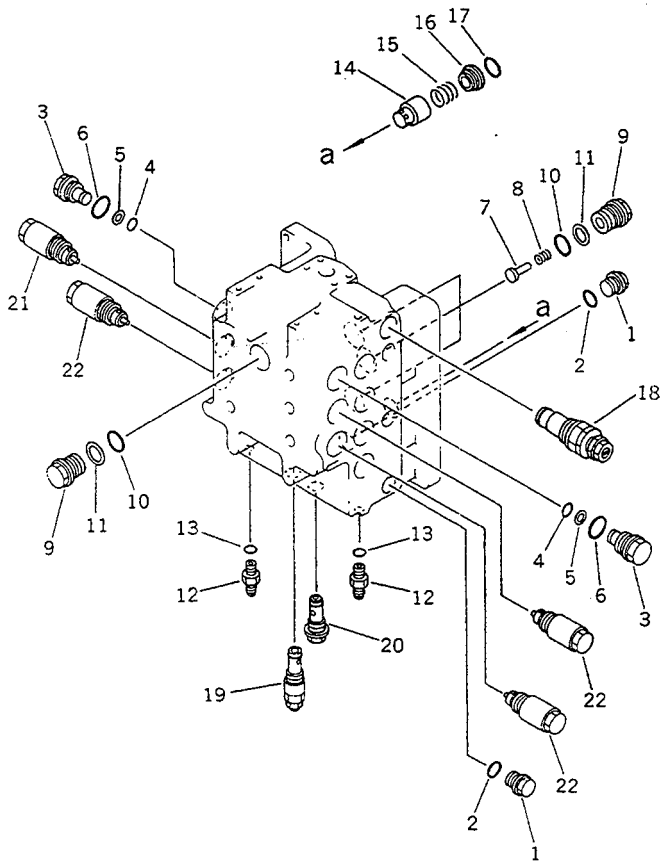

FIG NO. :6205

INDEX NO.	PART NO.	DESCRIPTION	Q'TY	SERIAL NO. PC210-3KP	SERIAL NO. PC240-3KP
	(709-79-22101)	CONTROL VALVE ASS'Y	1	K15001-	K15001-
	(709-74-92105)	.VALVE ASS'Y	1	K15001-	K15001-
1	700-22-11370	..PLUG	2	K15001-	K15001-
2	07002-12434	..O-RING	2	K15001-	K15001-
3	700-84-13960	..PLUG	2	K15001-	K15001-
4	700-22-11410	..O-RING	2	K15001-	K15001-
5	700-80-64220	..RING,BACK-UP	2	K15001-	K15001-
6	07002-03034	..O-RING	2	K15001-	K15001-
7	709-74-92810	..VALVE,CHECK	3	K15001-	K15001-
8	709-75-92220	..SPRING	3	K15001-	K15001-
9	709-74-92820	..PLUG	4	K15001-	K15001-
10	700-93-11320	..O-RING	4	K15001-	K15001-
11	700-93-11330	..RING,BACK-UP	4	K15001-	K15001-
12	709-75-92240	..UNION	2	K15001-	K15001-
13	07002-01623	..O-RING	2	K15001-	K15001-
14	709-74-92281	..VALVE	1	K15001-	K15001-
15	709-74-92290	..SPRING	1	K15001-	K15001-
16	709-74-92310	..SEAT	1	K15001-	K15001-
17	07000-13038	..O-RING	1	K15001-	K15001-
18	(709-70-51200)	.RELIEF VALVE ASS'Y	1	K15001-	K15001-
19	(709-70-55103)	.RELIEF VALVE ASS'Y	1	K15001-	K15001-
20	(709-70-91300)	.ORIFICE ASS'Y	1	K15001-	K15001-
21	(709-70-61101)	.VALVE ASS'Y SUCTION AND SAFETY	1	K15001-	K15001-
22	(709-70-61201)	.VALVE ASS'Y SUCTION AND SAFETY	3	K15001-	K15001-

https://truckmanualshub.com/

FIG. 6206 CONTROL VALVE (6/7)

このアセンブリの構成部品は第6201図から第6207図まで含みます。
(709-79-22101) : This assembly consists of all parts shown in Figs. 6201 to 6207.

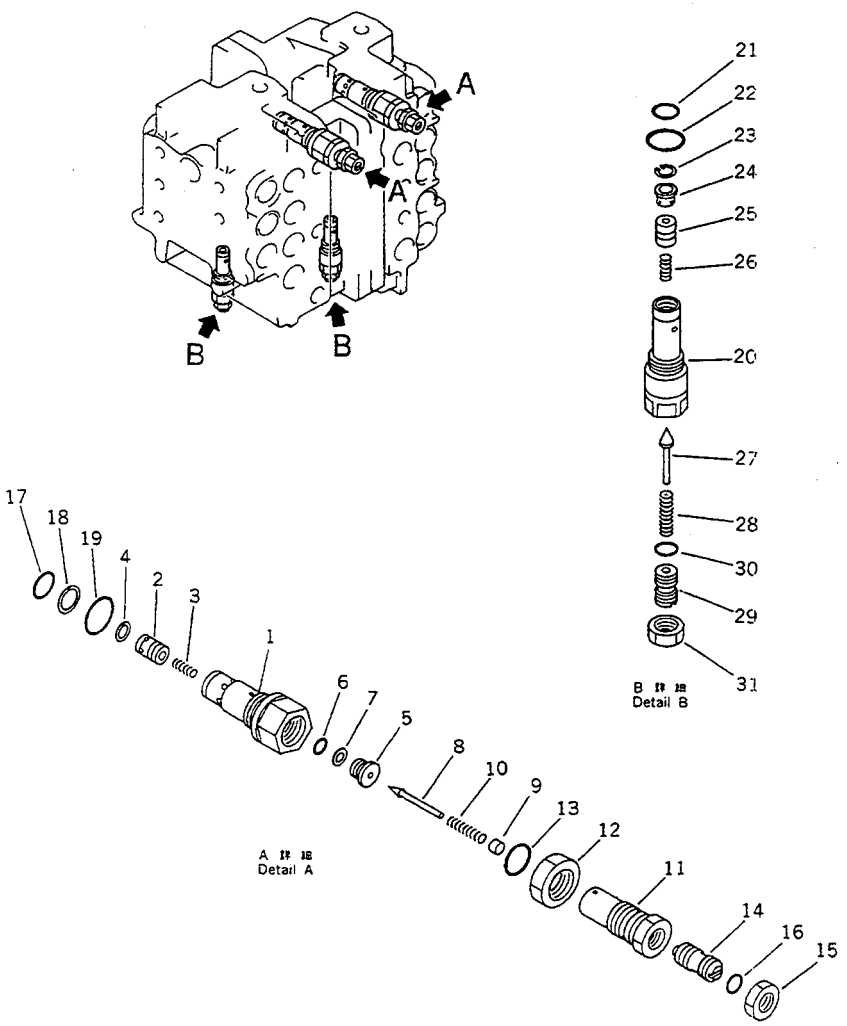

FIG NO. :6206

DEX O.	PART NO.	DESCRIPTION	Q'TY	SERIAL NO. PC210-3KP	SERIAL NO. PC240-3KP
	(709-79-22101)	CONTROL VALVE ASS'Y	1	K15001-	K15001-
	709-70-51200	.RELIEF VALVE ASS'Y	2	K15001-	K15001-
1	☆	..SLEEVE	1	K15001-	K15001-
2	☆	..VALVE	1	K15001-	K15001-
3	700-80-51390	..SPRING	1	K15001-	K15001-
4	700-80-51350	..RING,SNAP	1	K15001-	K15001-
5	700-80-51340	..SEAT	1	K15001-	K15001-
6	07000-22012	..O-RING	1	K15001-	K15001-
7	07001-02012	..RING,BACK-UP	1	K15001-	K15001-
8	700-80-61190	..POPPET	1	K15001-	K15001-
9	709-20-51260	..VALVE	1	K15001-	K15001-
10	709-20-51231	..SPRING	1	K15001-	K15001-
11	700-80-51360	..HOLDER	1	K15001-	K15001-
12	07239-12410	..NUT	1	K15001-	K15001-
13	07002-02434	..O-RING	1	K15001-	K15001-
14	700-80-51630	..SCREW	1	K15001-	K15001-
15	01582-11411	..NUT	1	K15001-	K15001-
16	07000-02011	..O-RING	1	K15001-	K15001-
17	700-13-31161	..O-RING	1	K15001-	K15001-
18	700-80-51190	..RING,BACK-UP	1	K15001-	K15001-
19	07002-03334	..O-RING	1	K15001-	K15001-
	709-70-55103	.RELIEF VALVE ASS'Y	1	K15001-	K15001-
20	☆	..SLEEVE	1	K15001-	K15001-
21	700-22-11410	..O-RING	1	K15001-	K15001-
22	07002-02434	..O-RING	1	K15001-	K15001-
23	700-20-51550	..RING,SNAP	1	K15001-	K15001-
24	700-20-51540	..RETAINER	1	K15001-	K15001-
25	☆	..VALVE	1	K15001-	K15001-
26	709-70-51210	..SPRING	1	K15001-	K15001-
27	709-70-51420	..POPPET	1	K15001-	K15001-

https://truckmanualshub.com/

FIG NO. :6206

INDEX NO.	PART NO.	DESCRIPTION	Q'TY	SERIAL NO. PC210-3KP	SERIAL NO. PC240-3KP
28	709-20-51580	..SPRING	1	K15001-	K15001-
29	700-20-51340	..SCREW	1	K15001-	K15001-
30	07000-02011	..O-RING	1	K15001-	K15001-
31	01582-11411	..NUT	1	K15001-	K15001-

https://truckmanualshub.com/

FIG. 6207 CONTROL VALVE (7/7)

このアセンブリの構成部品は第6201図から第6207図まで含みます。
(709-79-22101) : This assembly consists of all parts shown in Figs. 6201 to 6207.

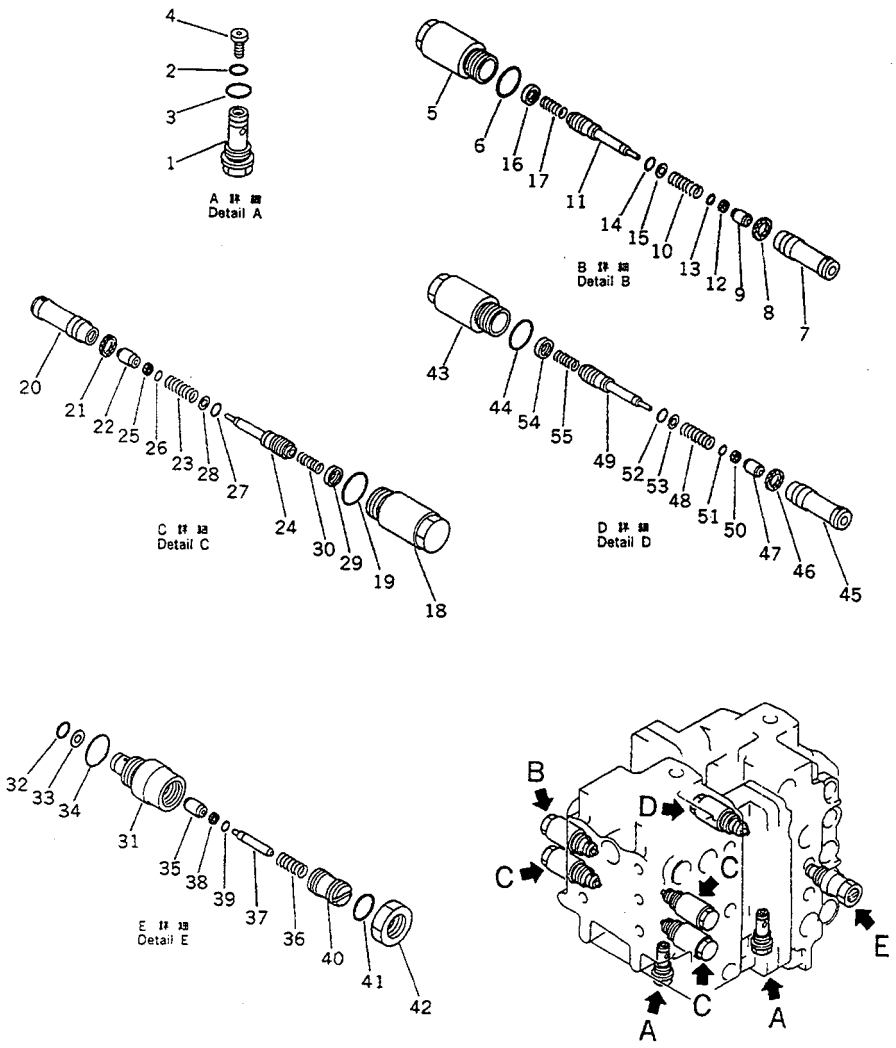

FIG NO. :6207

INDEX NO.	PART NO.	DESCRIPTION	Q'TY	SERIAL NO. PC210-3KP	SERIAL NO. PC240-3KP
	(709-79-22101)	CONTROL VALVE ASS'Y	1	K15001-	K15001-
	709-70-91300	.ORIFICE ASS'Y	2	K15001-	K15001-
1	☆	..ORIFICE	1	K15001-	K15001-
2	07000-02014	..O-RING	1	K15001-	K15001-
3	07002-02434	..O-RING	1	K15001-	K15001-
4	☆	..SENSOR	1	K15001-	K15001-
	709-70-61101	.VALVE ASS'Y SUCTION AND SAFETY	1	K15001-	K15001-
5	700-80-62310	..SLEEVE	1	K15001-	K15001-
6	07002-03034	..O-RING	1	K15001-	K15001-
7	☆	..VALVE	1	K15001-	K15001-
8	☆	..SEAL	1	K15001-	K15001-
9	☆	..POPPET	1	K15001-	K15001-
10	☆	..SPRING	1	K15001-	K15001-
11	☆	..PISTON	1	K15001-	K15001-
12	☆	..SEAL	1	K15001-	K15001-
13	☆	..O-RING	1	K15001-	K15001-
14	☆	..O-RING	1	K15001-	K15001-
15	☆	..RING,BACK-UP	1	K15001-	K15001-
16	☆	..NUT	1	K15001-	K15001-
17	700-80-62250	..SPRING	1	K15001-	K15001-
	709-70-61201	.VALVE ASS'Y SUCTION AND SAFETY	4	K15001-	K15001-
18	700-80-62310	..SLEEVE	1	K15001-	K15001-
19	07002-03034	..O-RING	1	K15001-	K15001-
20	☆	..VALVE	1	K15001-	K15001-
21	☆	..SEAL	1	K15001-	K15001-
22	☆	..POPPET	1	K15001-	K15001-
23	☆	..SPRING	1	K15001-	K15001-
24	☆	..PISTON	1	K15001-	K15001-
25	☆	..SEAL	1	K15001-	K15001-

https://truckmanualshub.com/

FIG NO. :6207

INDEX NO.	PART NO.	DESCRIPTION	Q'TY	SERIAL NO. PC210-3KP	SERIAL NO. PC240-3KP
26	☆	..O-RING	1	K15001-	K15001-
27	☆	..O-RING	1	K15001-	K15001-
28	☆	..RING,BACK-UP	1	K15001-	K15001-
29	☆	..NUT	1	K15001-	K15001-
30	700-80-62250	..SPRING	1	K15001-	K15001-
31	☆	..SLEEVE	1	K15001-	K15001-
32	700-22-11410	..O-RING	1	K15001-	K15001-
33	700-80-64220	..RING,BACK-UP	1	K15001-	K15001-
34	07002-03034	..O-RING	1	K15001-	K15001-
35	☆	..POPPET	1	K15001-	K15001-
36	☆	..SPRING	1	K15001-	K15001-
37	☆	..PISTON	1	K15001-	K15001-
38	☆	..SEAL	1	K15001-	K15001-
39	☆	..O-RING	1	K15001-	K15001-
40	☆	..SCREW	1	K15001-	K15001-
41	☆	..O-RING	1	K15001-	K15001-
42	☆	..NUT	1	K15001-	K15001-
	709-70-61601	.VALVE ASS'Y SUCTION AND SAFETY	1	K15001-	K15001-
43	700-80-62310	..SLEEVE	1	K15001-	K15001-
44	07002-03034	..O-RING	1	K15001-	K15001-
45	☆	..VALVE	1	K15001-	K15001-
46	☆	..SEAL	1	K15001-	K15001-
47	☆	..POPPET	1	K15001-	K15001-
48	☆	..SPRING	1	K15001-	K15001-
49	☆	..PISTON	1	K15001-	K15001-
50	☆	..SEAL	1	K15001-	K15001-
51	☆	..O-RING	1	K15001-	K15001-
52	☆	..O-RING	1	K15001-	K15001-
53	☆	..RING,BACK-UP	1	K15001-	K15001-

FIG NO. :6207

INDEX NO.	PART NO.	DESCRIPTION	Q'TY	SERIAL NO. PC210-3KP	SERIAL NO. PC240-3KP
54	☆	..NUT	1	K15001-	K15001-
55	700-80-62250	..SPRING	1	K15001-	K15001-

https://truckmanualshub.com/

FIG. 6223 P.P.C. VALVE

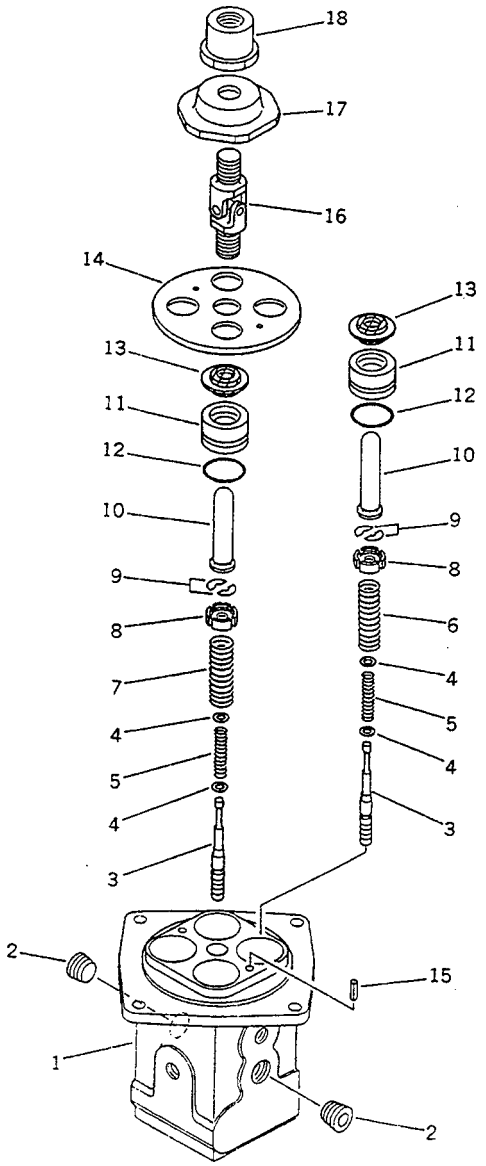

FIG NO. :6223

INDEX NO.	PART NO.	DESCRIPTION	Q'TY	SERIAL NO. PC210-3KP	SERIAL NO. PC240-3KP
	702-16-53001	VALVE ASS'Y	2	K15001-	K15001-
1	☆	.BODY,VALVE	1	K15001-	K15001-
2	07043-50312	.PLUG	2	K15001-	K15001-
3	☆	.VALVE	4	K15001-	K15001-
4	702-16-51140	.SHIM, 0.3MM	8	K15001-	K15001-
5	702-16-51510	.SPRING,INNER	4	K15001-	K15001-
6	702-16-51180	.SPRING,OUTER	2	K15001-	K15001-
7	702-16-51190	.SPRING,OUTER	2	K15001-	K15001-
8	702-16-51161	.RETAINER	4	K15001-	K15001-
9	702-16-51170	.COLLAR	8	K15001-	K15001-
10	702-16-51210	.PISTON	4	K15001-	K15001-
11	702-16-51220	.COLLAR	4	K15001-	K15001-
12	07000-02020	.O-RING	4	K15001-	K15001-
13	702-16-51270	.SEAL	4	K15001-	K15001-
14	702-16-51231	.PLATE	1	K15001-	K15001-
15	04025-00312	.PIN,SPRING	2	K15001-	K15001-
16	702-16-51240	.JOINT	1	K15001-	K15001-
17	702-16-51250	.DISK	1	K15001-	K15001-
18	702-16-51260	.NUT	1	K15001-	K15001-

https://truckmanualshub.com/

FIG. 6225 CHECK VALVE, L.H.

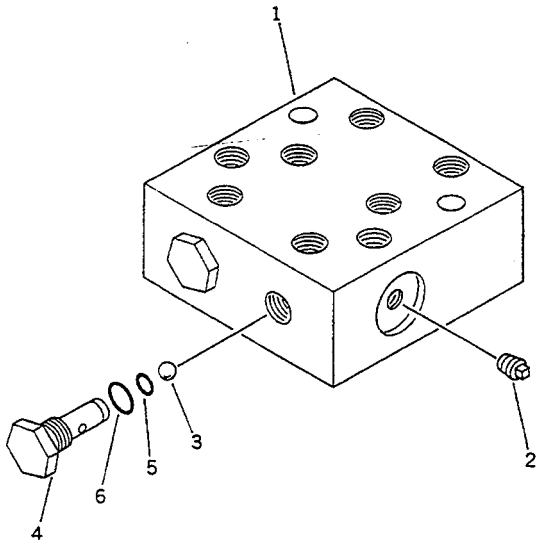

FIG NO. :6225

INDEX NO.	PART NO.	DESCRIPTION	Q'TY	SERIAL NO. PC210-3KP	SERIAL NO. PC240-3KP
	702-19-13000	CHECK VALVE ASS'Y,L.H.	1	K15001-	K15001-
1	702-19-13110	.BLOCK	1	K15001-	K15001-
2	07042-30108	.PLUG	2	K15001-	K15001-
3	04260-00793	.BALL	2	K15001-	K15001-
4	702-19-12120	.PLUG	2	K15001-	K15001-
5	07000-11007	.O-RING	2	K15001-	K15001-
6	07002-11423	.O-RING	2	K15001-	K15001-

https://truckmanualshub.com/

FIG. 6227 CHECK VALVE, R.H.

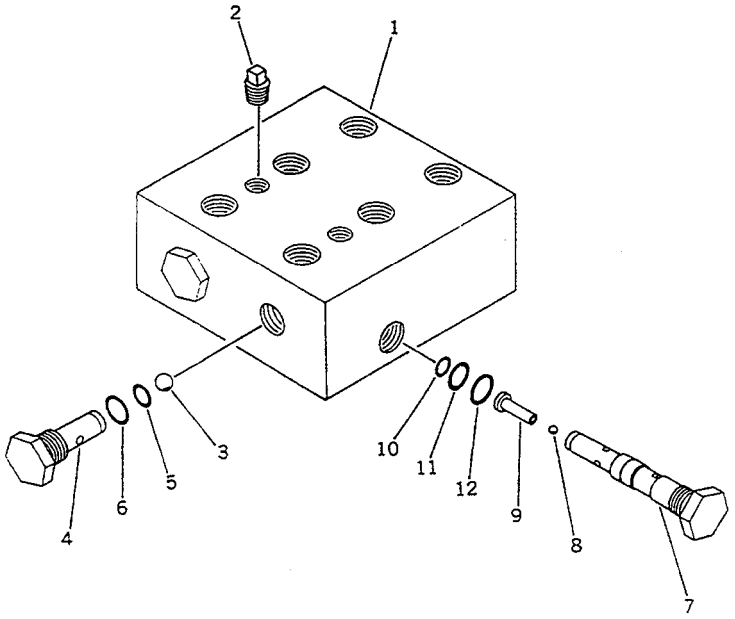

FIG NO. :6227

INDEX NO.	PART NO.	DESCRIPTION	Q'TY	SERIAL NO. PC210-3KP	SERIAL NO. PC240-3KP
	702-19-12000	CHECK VALVE ASS'Y,R.H.	1	K15001-	K15001-
1	702-19-12110	.BLOCK	1	K15001-	K15001-
2	07042-30108	.PLUG	2	K15001-	K15001-
3	04260-00793	.BALL	2	K15001-	K15001-
4	702-19-12120	.PLUG	2	K15001-	K15001-
5	07000-11007	.O-RING	2	K15001-	K15001-
6	07002-11423	.O-RING	2	K15001-	K15001-
	702-19-11000	.VALVE ASS'Y	1	K15001-	K15001-
7	☆	..PLUG	1	K15001-	K15001-
8	☆	..BALL	1	K15001-	K15001-
9	☆	..SEAT	1	K15001-	K15001-
10	07000-11007	..O-RING	1	K15001-	K15001-
11	07000-11009	..O-RING	1	K15001-	K15001-
12	07002-11423	..O-RING	1	K15001-	K15001-

https://truckmanualshub.com/

FIG. 6401 BOOM CYLINDER (PC210)

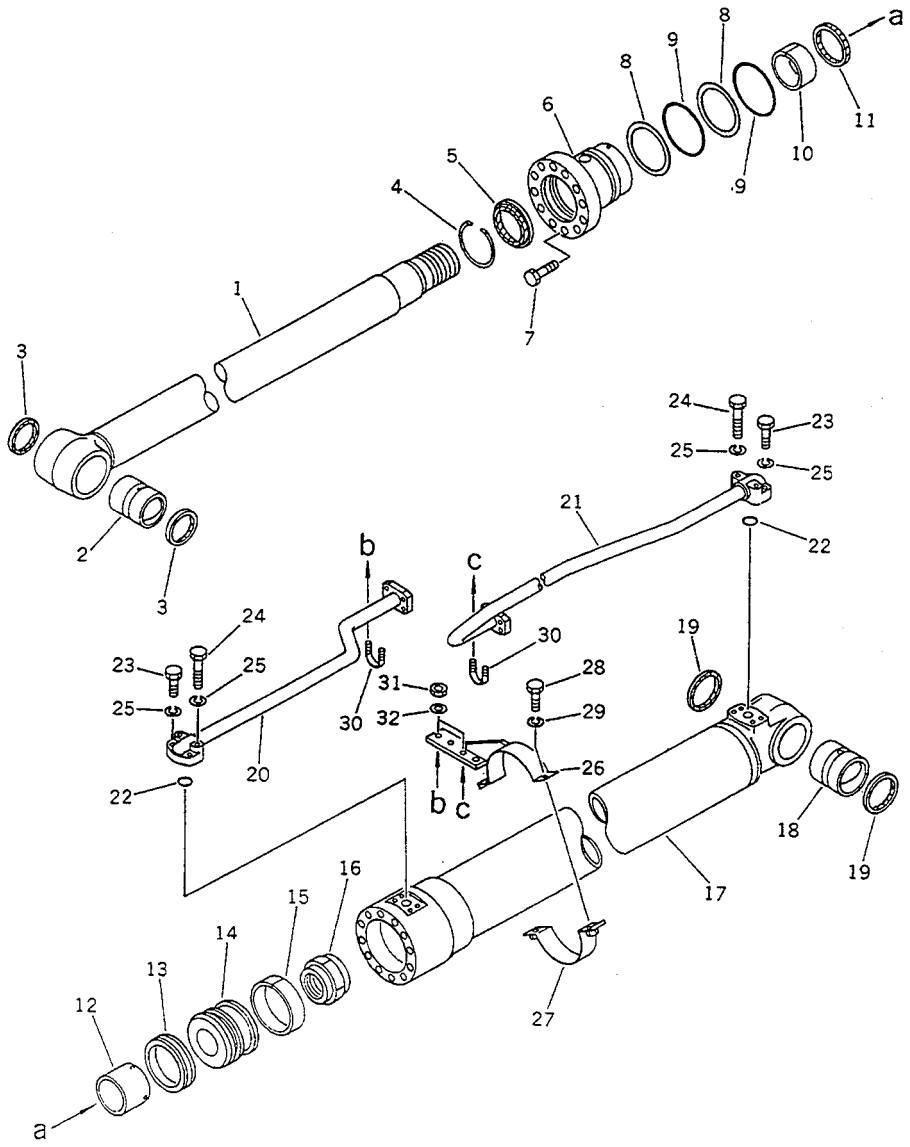

FIG NO. :6401

INDEX NO.	PART NO.	DESCRIPTION	Q'TY	SERIAL NO. PC210-3KP	SERIAL NO. PC240-3KP
	205-63-52100	BOOM CYLINDER ASS'Y,L.H.	1	K15001-	
	205-63-52200	BOOM CYLINDER ASS'Y,R.H.	1	K15001-	
	205-63-52110	.CYLINDER SUB ASS'Y	1	K15001-	
1	205-63-52121	..ROD,PISTON	1	K15001-	
2	707-76-80010	..BUSHING	1	K15001-	
3	07145-00080	..SEAL,DUST	2	K15001-	
4	707-75-10020	..RING,SNAP	1	K15001-	
5	707-56-85510	..SEAL,DUST	1	K15001-	
6	707-28-12570	..HEAD,CYLINDER	1	K15001-	
7	01010-81655	..BOLT	12	K15001-	
8	07146-02116	..RING,BACK-UP	2	K15001-	
9	07000-12115	..O-RING	2	K15001-	
10	707-52-10850	..BUSHING	1	K15001-	
11	707-51-85211	..PACKING,ROD	1	K15001-	
12	707-71-50911	..PLUNGER	1	K15001-	
13	707-44-12080	..RING,PISTON	1	K15001-	
14	707-36-12360	..PISTON	1	K15001-	
15	07155-01230	..RING,WEAR	1	K15001-	
16	707-68-10580	..NUT	1	K15001-	
17	205-63-52141	..CYLINDER	1	K15001-	
18	707-76-70110	..BUSHING	1	K15001-	
19	07145-00070	..SEAL,DUST	2	K15001-	
20	205-63-52170	.TUBE,L.H.	1	K15001-	
	205-63-52270	.TUBE,R.H.	1	K15001-	
21	205-63-52180	.TUBE,L.H.	1	K15001-	
	205-63-52280	.TUBE,R.H.	1	K15001-	
22	07000-13030	.O-RING	2	K15001-	
23	01010-50845	.BOLT	4	K15001-	
24	01010-50855	.BOLT	4	K15001-	
25	01602-20825	.WASHER,SPRING	8	K15001-	

https://truckmanualshub.com/

FIG NO. :6401

INDEX NO.	PART NO.	DESCRIPTION	Q'TY	SERIAL NO. PC210-3KP	SERIAL NO. PC240-3KP
26	707-88-99230	.BRACKET	1	K15001-	
27	707-88-99220	.BAND	1	K15001-	
28	01010-51030	.BOLT	2	K15001-	
29	01602-21030	.WASHER,SPRING	2	K15001-	
30	07283-22738	.CLIP	2	K15001-	
31	01599-01011	.NUT	4	K15001-	
32	01643-31032	.WASHER	4	K15001-	

https://truckmanualshub.com/

FIG. 6402 BOOM CYLINDER (PC240)

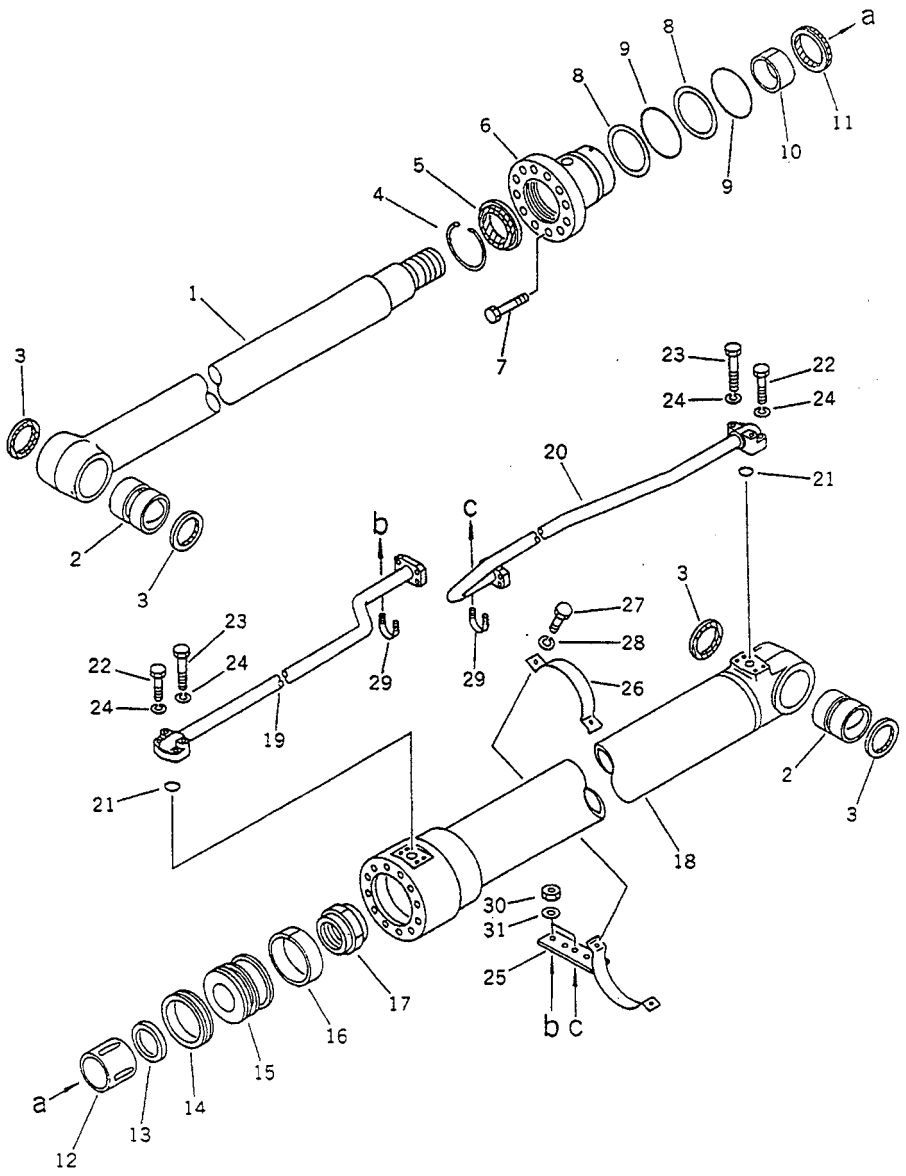

FIG NO. :6402

INDEX NO.	PART NO.	DESCRIPTION	Q'TY	SERIAL NO. PC210-3KP	SERIAL NO. PC240-3KP
	206-63-52100	BOOM CYLINDER ASS'Y,L.H.	1		K15001-
	206-63-52200	BOOM CYLINDER ASS'Y,R.H.	1		K15001-
	206-63-52110	.CYLINDER SUB ASS'Y	1		K15001-
1	206-63-52120	..ROD,PISTON	1		K15001-
2	707-76-80010	..BUSHING	2		K15001-
3	07145-00080	..SEAL,DUST	4		K15001-
4	07179-00113	..RING,SNAP	1		K15001-
5	195-63-94170	..SEAL,DUST	1		K15001-
6	707-28-13170	..HEAD,CYLINDER	1		K15001-
7	01010-81655	..BOLT	12		K15001-
8	07146-02125	..RING,BACK-UP	2		K15001-
9	07000-12125	..O-RING	2		K15001-
10	07177-09040	..BUSHING	1		K15001-
11	707-51-90211	..PACKING,ROD	1		K15001-
12	707-71-50920	..PLUNGER	1		K15001-
13	707-40-13470	..RETAINER	1		K15001-
14	707-44-13080	..RING,PISTON	1		K15001-
15	707-36-13460	..PISTON	1		K15001-
16	07155-01330	..RING,WEAR	1		K15001-
17	707-68-10680	..NUT	1		K15001-
18	206-63-52140	..CYLINDER	1		K15001-
19	206-63-52170	.TUBE,L.H.	1		K15001-
	206-63-52270	.TUBE,R.H.	1		K15001-
20	206-63-52180	.TUBE,L.H.	1		K15001-
	206-63-52280	.TUBE,R.H.	1		K15001-
21	07000-13030	.O-RING	2		K15001-
22	01010-50845	.BOLT	4		K15001-
23	01010-50855	.BOLT	4		K15001-
24	01602-20825	.WASHER,SPRING	8		K15001-
25	707-88-99330	.BRACKET	1		K15001-

https://truckmanualshub.com/

FIG NO. :6402

INDEX NO.	PART NO.	DESCRIPTION	Q'TY	SERIAL NO. PC210-3KP	SERIAL NO. PC240-3KP
26	707-88-99310	.BAND	1		K15001-
27	01010-51030	.BOLT	2		K15001-
28	01602-21030	.WASHER,SPRING	2		K15001-
29	07283-22738	.CLIP	2		K15001-
30	01599-01011	.NUT	4		K15001-
31	01643-31032	.WASHER	4		K15001-

https://truckmanualshub.com/

FIG. 6403 ARM CYLINDER (PC210)

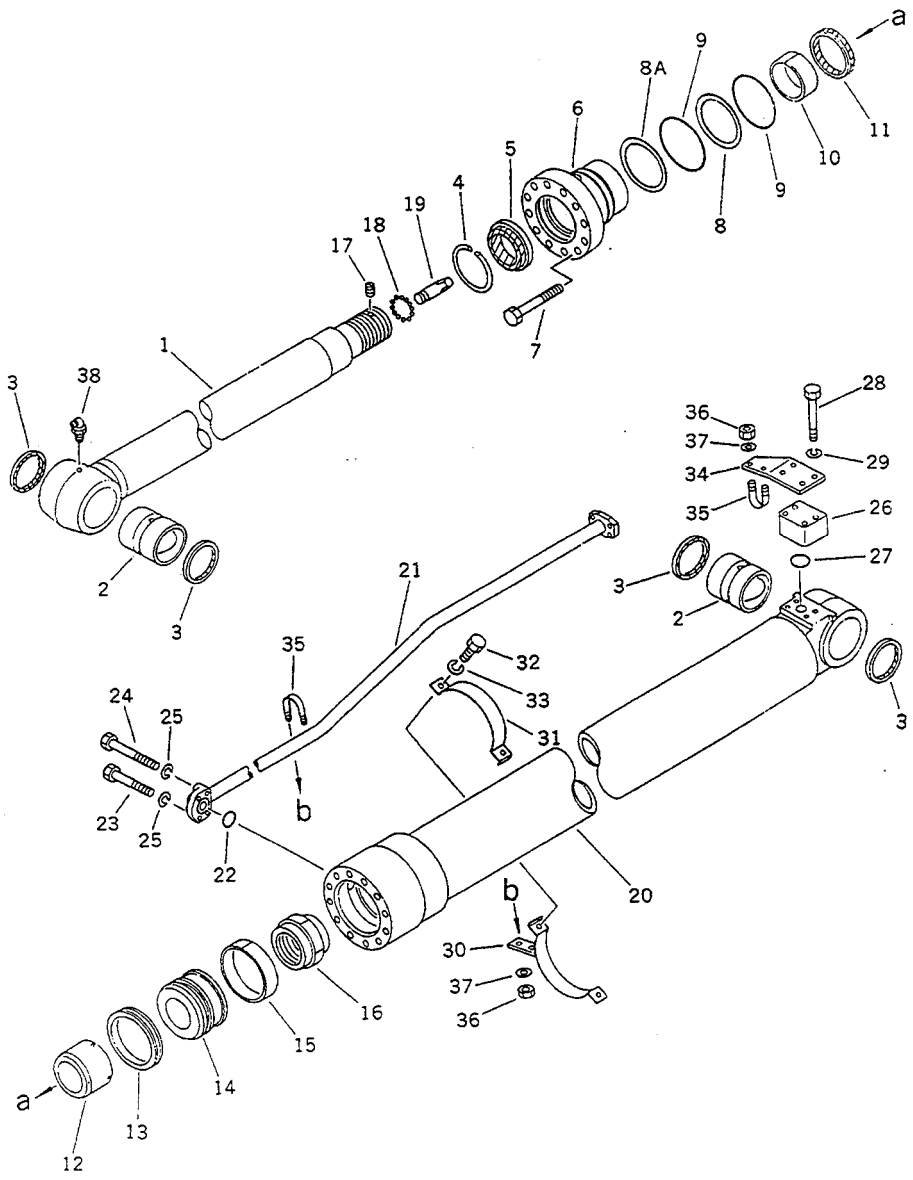

FIG NO. :6403

INDEX NO.	PART NO.	DESCRIPTION	Q'TY	SERIAL NO. PC210-3KP	SERIAL NO. PC240-3KP
	205-63-62101	ARM CYLINDER ASS'Y	1	K15001-	
1	205-63-62122	.ROD,PISTON	1	K15001-	
2	707-76-80010	.BUSHING	2	K15001-	
3	07145-00080	.SEAL,DUST	4	K15001-	
4	707-75-10030	.RING,SNAP	1	K15001-	
5	707-56-95510	.SEAL,DUST	1	K15001-	
6	707-28-13270	.HEAD,CYLINDER	1	K15001-	
7	01010-81655	.BOLT	12	K15001-	
8	07146-02126	.RING,BACK-UP	1	K15001-	
8A	707-35-91310	.RING,BACK-UP	1	K15001-	
9	07000-12125	.O-RING	2	K15001-	
10	707-52-10950	.BUSHING	1	K15001-	
11	707-51-95211	.PACKING,ROD	1	K15001-	
12	707-71-50011	.PLUNGER	1	K15001-	
13	707-44-13080	.RING,PISTON	1	K15001-	
14	707-36-13460	.PISTON	1	K15001-	
15	07155-01330	.RING,WEAR	1	K15001-	
16	707-68-10680	.NUT	1	K15001-	
17	707-71-91250	.SCREW	1	K15001-	
18	04260-00635	.BALL	12	K15001-	
19	707-71-50252	.PLUNGER	1	K15001-	
20	205-63-62141	.CYLINDER	1	K15001-	
21	205-63-62170	.TUBE	1	K15001-	
22	07000-13030	.O-RING	1	K15001-	
23	01010-50845	.BOLT	2	K15001-	
24	01010-50855	.BOLT	2	K15001-	
25	01602-20825	.WASHER,SPRING	4	K15001-	
26	20D-62-17860	.ELBOW	1	K15001-	
27	07000-13035	.O-RING	1	K15001-	
28	01010-51080	.BOLT	4	K15001-	

https://truckmanualshub.com/

FIG NO. :6403

INDEX NO.	PART NO.	DESCRIPTION	Q'TY	SERIAL NO. PC210-3KP	SERIAL NO. PC240-3KP
29	01602-21030	.WASHER,SPRING	4	K15001-	
30	707-88-99360	.BAND	1	K15001-	
31	707-88-99310	.BAND	1	K15001-	
32	01010-51030	.BOLT	2	K15001-	
33	01602-21030	.WASHER,SPRING	2	K15001-	
34	707-88-10820	.PLATE	1	K15001-	
35	07283-22738	.CLIP	2	K15001-	
36	01599-01011	.NUT	4	K15001-	
37	01643-31032	.WASHER	4	K15001-	
38	07020-00900	.FITTING,GREASE	1	K15001-	

https://truckmanualshub.com/

FIG. 6404 ARM CYLINDER (PC240)

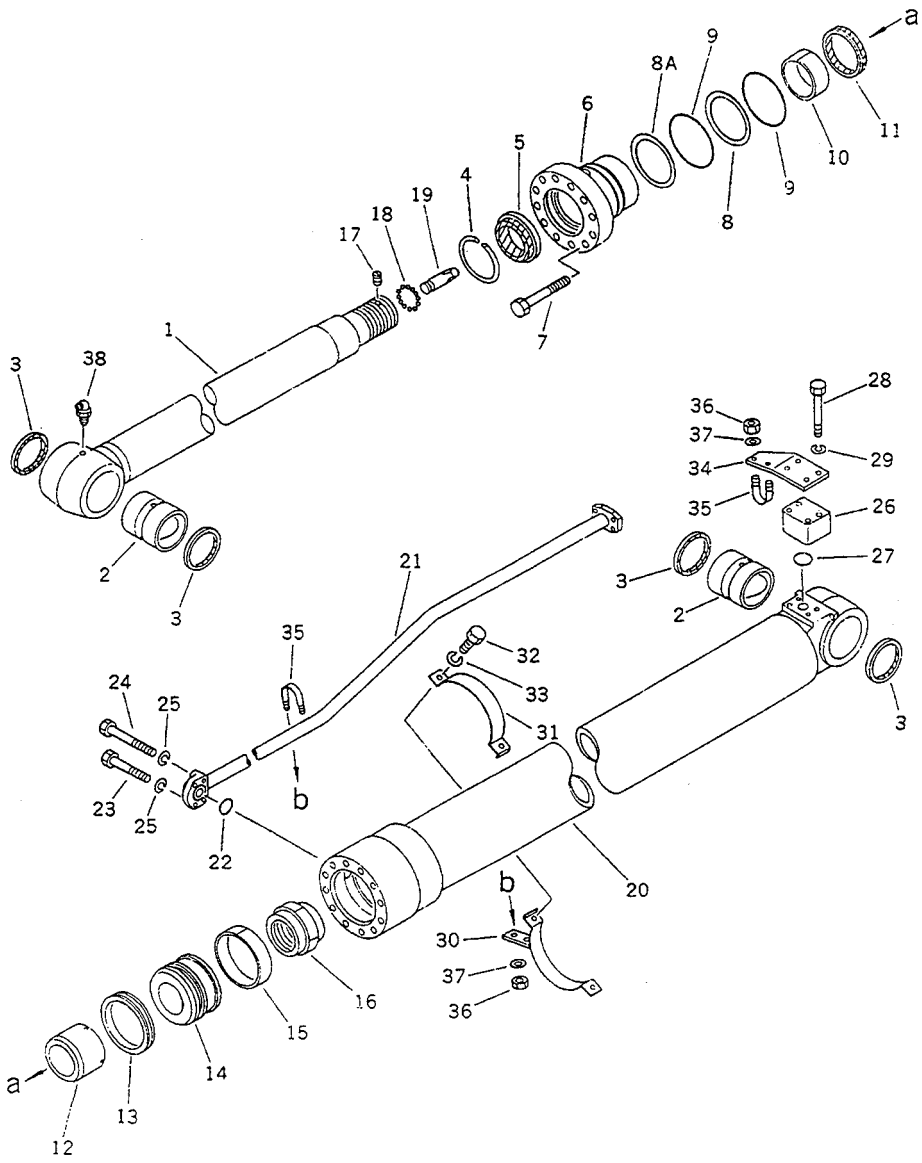

FIG NO. :6404

INDEX NO.	PART NO.	DESCRIPTION	Q'TY	SERIAL NO. PC210-3KP	SERIAL NO. PC240-3KP
	206-63-62101	ARM CYLINDER ASS'Y	1		K15001-
1	206-63-62121	.ROD,PISTON	1		K15001-
2	707-76-80010	.BUSHING	2		K15001-
3	07145-00080	.SEAL,DUST	4		K15001-
4	707-75-10030	.RING,SNAP	1		K15001-
5	707-56-95510	.SEAL,DUST	1		K15001-
6	707-28-14270	.HEAD,CYLINDER	1		K15001-
7	01010-81860	.BOLT	12		K15001-
8	07146-02136	.RING,BACK-UP	1		K15001-
8A	707-35-91410	.RING,BACK-UP	1		K15001-
9	07000-12135	.O-RING	2		K15001-
10	707-52-10950	.BUSHING	1		K15001-
11	707-51-95211	.PACKING,ROD	1		K15001-
12	707-71-50011	.PLUNGER	1		K15001-
13	707-44-14080	.RING,PISTON	1		K15001-
14	707-36-14460	.PISTON	1		K15001-
15	07155-01435	.RING,WEAR	1		K15001-
16	707-68-10680	.NUT	1		K15001-
17	707-71-91250	.SCREW	1		K15001-
18	04260-00635	.BALL	12		K15001-
19	707-71-50252	.PLUNGER	1		K15001-
20	206-63-62140	.CYLINDER	1		K15001-
21	206-63-62170	.TUBE	1		K15001-
22	07000-13030	.O-RING	1		K15001-
23	01010-50845	.BOLT	2		K15001-
24	01010-50855	.BOLT	2		K15001-
25	01602-20825	.WASHER,SPRING	4		K15001-
26	20D-62-17860	.ELBOW	1		K15001-
27	07000-13035	.O-RING	1		K15001-
28	01010-51070	.BOLT	4		K15001-

https://truckmanualshub.com/

FIG NO. 6404

INDEX NO.	PART NO.	DESCRIPTION	Q'TY	SERIAL NO. PC210-3KP	SERIAL NO. PC240-3KP
29	01602-21030	.WASHER,SPRING	4		K15001-
30	707-88-99460	.BAND	1		K15001-
31	707-88-99410	.BAND	1		K15001-
32	01010-51030	.BOLT	2		K15001-
33	01602-21030	.WASHER,SPRING	2		K15001-
34	707-88-10820	.PLATE	1		K15001-
35	07283-22738	.CLIP	2		K15001-
36	01599-01011	.NUT	4		K15001-
37	01643-31032	.WASHER	4		K15001-
38	07020-00900	.FITTING,GREASE	1		K15001-

https://truckmanualshub.com/

FIG. 6405 BUCKET CYLINDER (PC210)

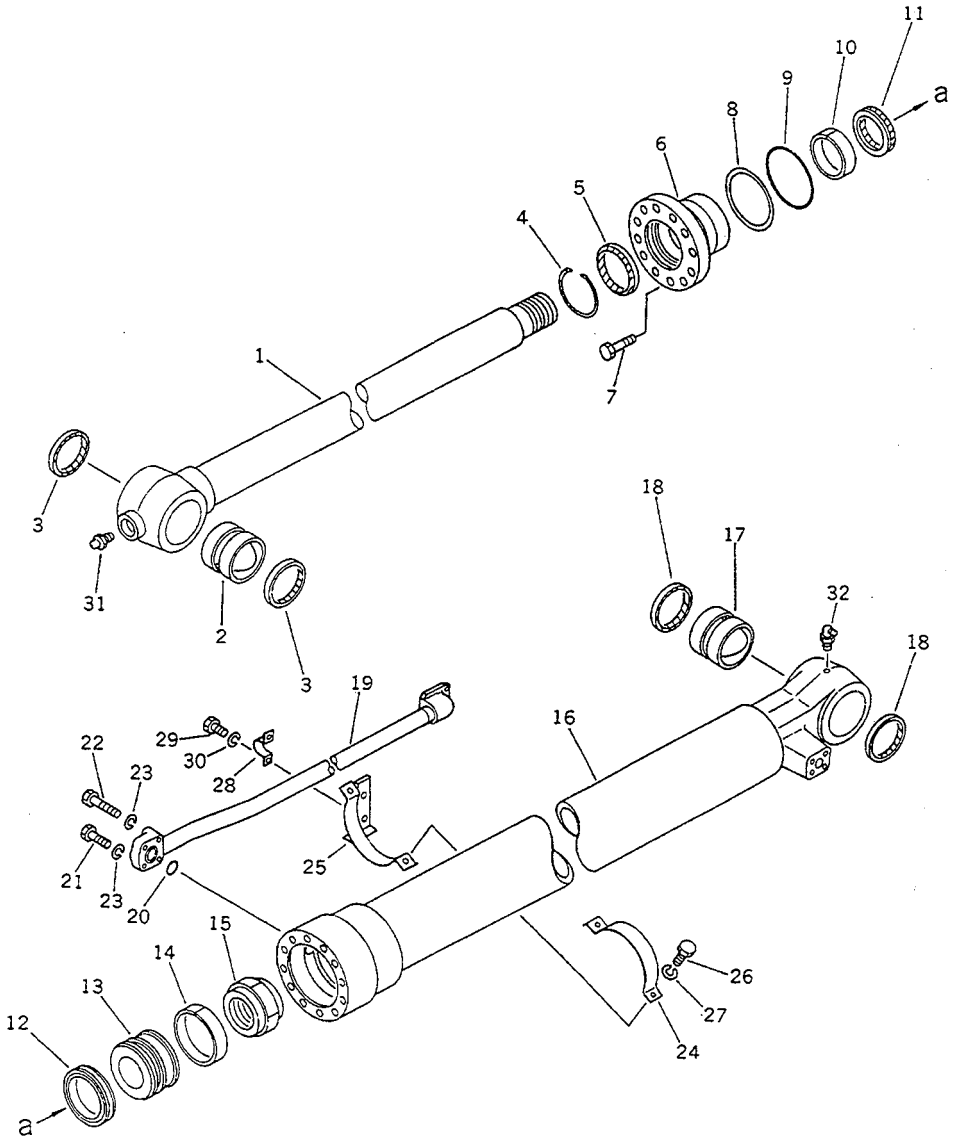

FIG NO. :6405

INDEX NO.	PART NO.	DESCRIPTION	Q'TY	SERIAL NO. PC210-3KP	SERIAL NO. PC240-3KP
	205-63-72100	CYLINDER ASS'Y	1	K15001-	
1	205-63-72121	.ROD,PISTON	1	K15001-	
2	707-76-70120	.BUSHING	1	K15001-	
3	21K-70-12180	.SEAL,DUST	2	K15001-	
4	07179-00097	.RING,SNAP	1	K15001-	
5	144-63-94170	.SEAL,DUST	1	K15001-	
6	707-27-11371	.HEAD,CYLINDER	1	K15001-	
7	01010-81655	.BOLT	12	K15001-	
8	07146-02106	.RING,BACK-UP	1	K15001-	
9	07000-12105	.O-RING	1	K15001-	
10	07177-07530	.BUSHING	1	K15001-	
11	707-51-75211	.PACKING,ROD	1	K15001-	
12	707-44-11080	.RING,PISTON	1	K15001-	
13	707-36-11460	.PISTON	1	K15001-	
14	07155-01125	.RING,WEAR	1	K15001-	
15	707-68-10580	.NUT	1	K15001-	
16	205-63-72141	.CYLINDER	1	K15001-	
17	707-76-70110	.BUSHING	1	K15001-	
18	07145-00070	.SEAL,DUST	2	K15001-	
19	205-63-72170	.TUBE	1	K15001-	
20	07000-13030	.O-RING	1	K15001-	
21	01010-50845	.BOLT	2	K15001-	
22	01010-50855	.BOLT	2	K15001-	
23	01602-20825	.WASHER,SPRING	4	K15001-	
24	707-88-99110	.BAND	2	K15001-	
25	707-88-99160	.BAND	2	K15001-	
26	01010-51030	.BOLT	4	K15001-	
27	01602-21030	.WASHER,SPRING	4	K15001-	
28	07282-02793	.CLAMP	2	K15001-	
29	01010-51020	.BOLT	4	K15001-	

https://truckmanualshub.com/

FIG NO. :6405

INDEX NO.	PART NO.	DESCRIPTION	Q'TY	SERIAL NO. PC210-3KP	SERIAL NO. PC240-3KP
30	01602-21030	.WASHER,SPRING	4	K15001-	
31	07020-00000	.FITTING,GREASE	1	K15001-	
32	07020-00900	.FITTING,GREASE	1	K15001-	

https://truckmanualshub.com/

FIG. 6406 BUCKET CYLINDER (PC240)

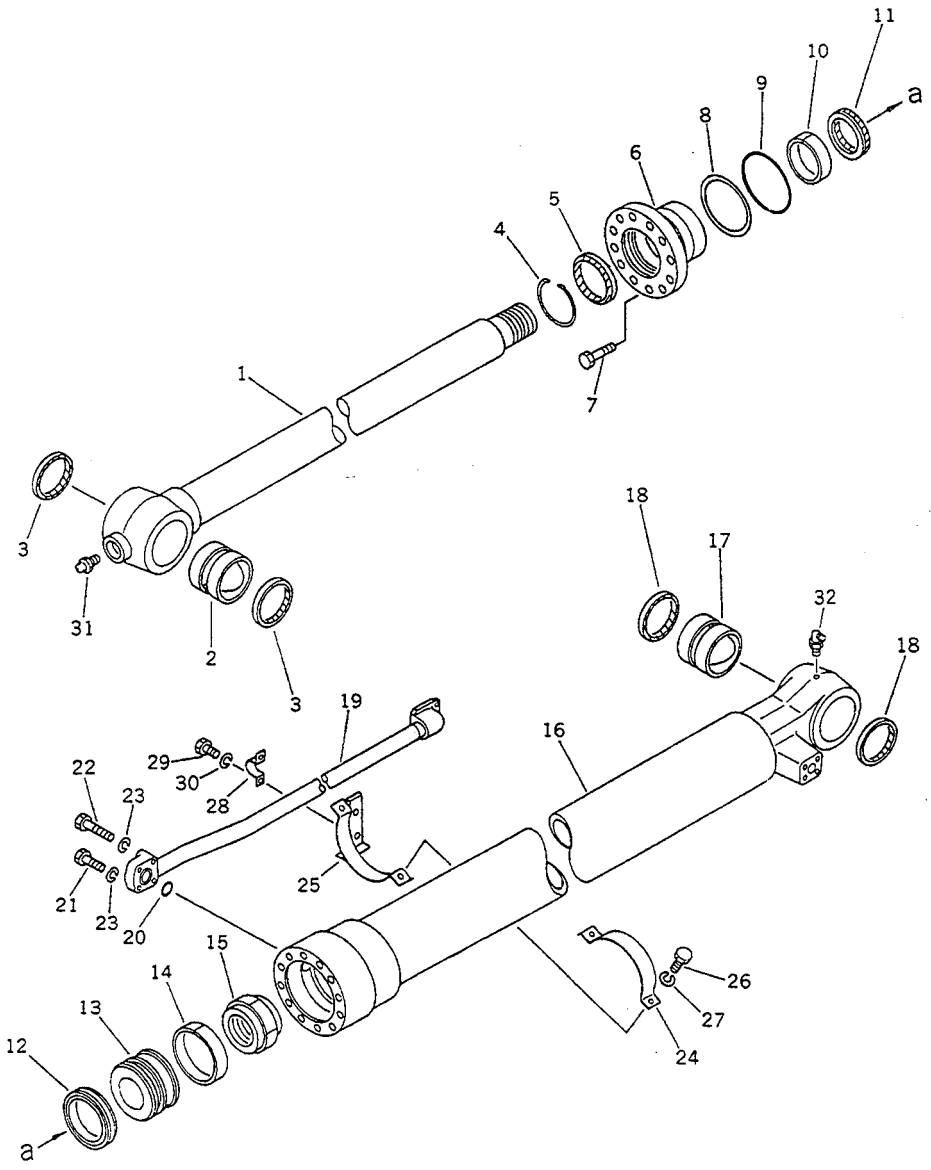

FIG NO. :6406

INDEX NO.	PART NO.	DESCRIPTION	Q'TY	SERIAL NO. PC210-3KP	SERIAL NO. PC240-3KP
	206-63-72100	BUCKET CYLINDER A.	1		K15001-
1	206-63-72120	.ROD,PISTON	1		K15001-
2	707-76-80020	.BUSHING	1		K15001-
3	205-70-62140	.SEAL,DUST	2		K15001-
4	07179-00113	.RING,SNAP	1		K15001-
5	195-63-94170	.SEAL,DUST	1		K15001-
6	707-27-13771	.HEAD,CYLINDER	1		K15001-
7	01010-81655	.BOLT	12		K15001-
8	07146-02126	.RING,BACK-UP	1		K15001-
9	07000-12125	.O-RING	1		K15001-
10	07177-09040	.BUSHING	1		K15001-
11	707-51-90211	.PACKING,ROD	1		K15001-
12	707-44-13080	.RING,PISTON	1		K15001-
13	707-36-13460	.PISTON	1		K15001-
14	07155-01330	.RING,WEAR	1		K15001-
15	707-68-10680	.NUT	1		K15001-
16	206-63-72140	.CYLINDER	1		K15001-
17	707-76-80010	.BUSHING	1		K15001-
18	07145-00080	.SEAL,DUST	2		K15001-
19	206-63-72170	.TUBE	1		K15001-
20	07000-13030	.O-RING	1		K15001-
21	01010-50845	.BOLT	2		K15001-
22	01010-50855	.BOLT	2		K15001-
23	01602-20825	.WASHER,SPRING	4		K15001-
24	707-88-99340	.BAND	2		K15001-
25	707-88-99310	.BAND	2		K15001-
26	01010-51030	.BOLT	4		K15001-
27	01602-21030	.WASHER,SPRING	4		K15001-
28	07282-02793	.CLAMP	2		K15001-
29	01010-51020	.BOLT	4		K15001-

https://truckmanualshub.com/

FIG NO. :6406

INDEX NO.	PART NO.	DESCRIPTION	Q'TY	SERIAL NO. PC210-3KP	SERIAL NO. PC240-3KP
30	01602-21030	.WASHER,SPRING	4		K15001-
31	07020-00000	.FITTING,GREASE	1		K15001-
32	07020-00900	.FITTING,GREASE	1		K15001-

https://truckmanualshub.com/

FIG. 6501 HYDRAULIC PIPING (TANK TO PUMP)

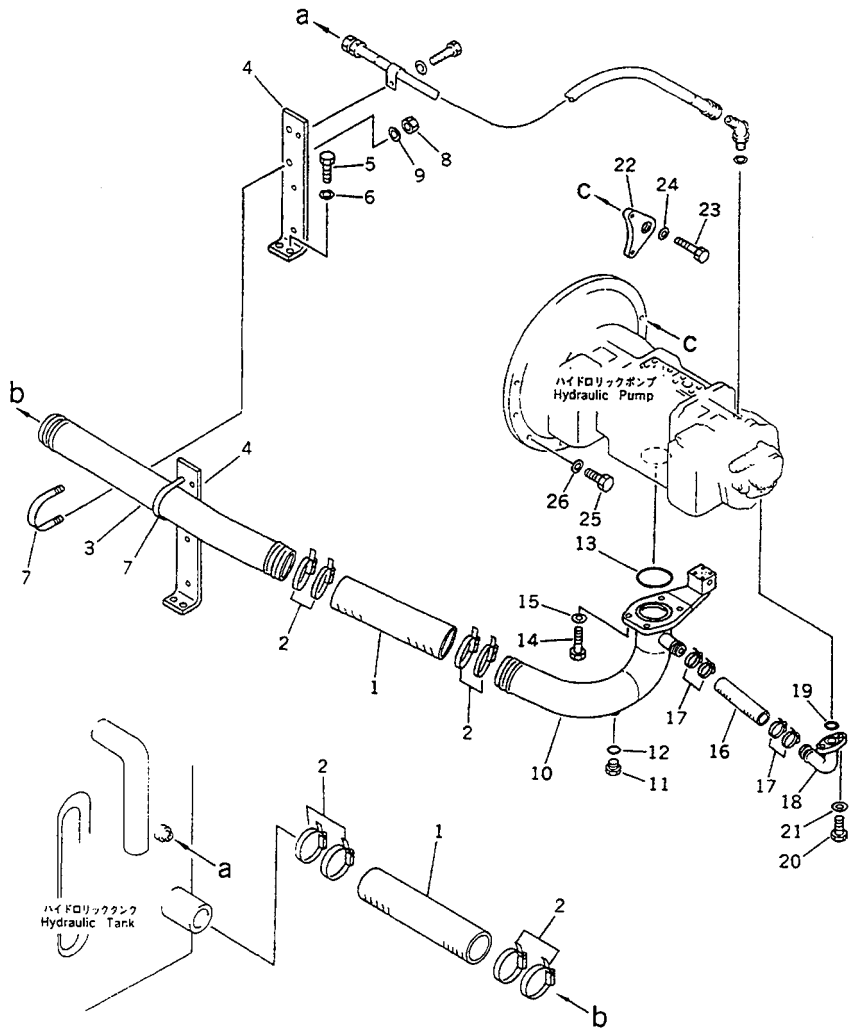

FIG NO. :6501

INDEX NO.	PART NO.	DESCRIPTION	Q'TY	SERIAL NO. PC210-3KP	SERIAL NO. PC240-3KP
1	205-62-74650	HOSE	2	K15001-	K15001-
2	20D-09-11130	CLAMP	8	K15001-	K15001-
3	205-62-71253	TUBE	1	K15001-	K15001-
4	205-62-74940	BRACKET	2	K15001-	K15001-
5	01010-51235	BOLT	4	K15001-	K15001-
6	01643-31232	WASHER	4	K15001-	K15001-
7	07283-27663	CLIP	2	K15001-	K15001-
8	01599-01011	NUT	4	K15001-	K15001-
9	01643-31032	WASHER	4	K15001-	K15001-
10	205-62-71242	TUBE	1	K15001-	K15001-
11	07040-11812	PLUG	1	K15001-	K15001-
12	07002-01823	O-RING	1	K15001-	K15001-
13	07000-02075	O-RING	1	K15001-	K15001-
14	01010-51235	BOLT	4	K15001-	K15001-
15	01643-31232	WASHER	4	K15001-	K15001-
16	07260-02616	HOSE	1	K15001-	K15001-
17	07281-00489	CLAMP	4	K15001-	K15001-
18	205-62-71261	TUBE	1	K15001-	K15001-
19	07000-03028	O-RING	1	K15001-	K15001-
20	01010-51030	BOLT	2	K15001-	K15001-
21	01643-31032	WASHER	2	K15001-	K15001-
22	205-01-67170	PLATE	1	K15001-	K15001-
23	01010-51055	BOLT	2	K15001-	K15001-
24	01643-31032	WASHER	2	K15001-	K15001-
25	01010-51040	BOLT	10	K15001-	K15001-
26	01643-31032	WASHER	10	K15001-	K15001-

https://truckmanualshub.com/

FIG. 6503 HYDRAULIC PIPING (PUMP TO CONTROL VALVE)

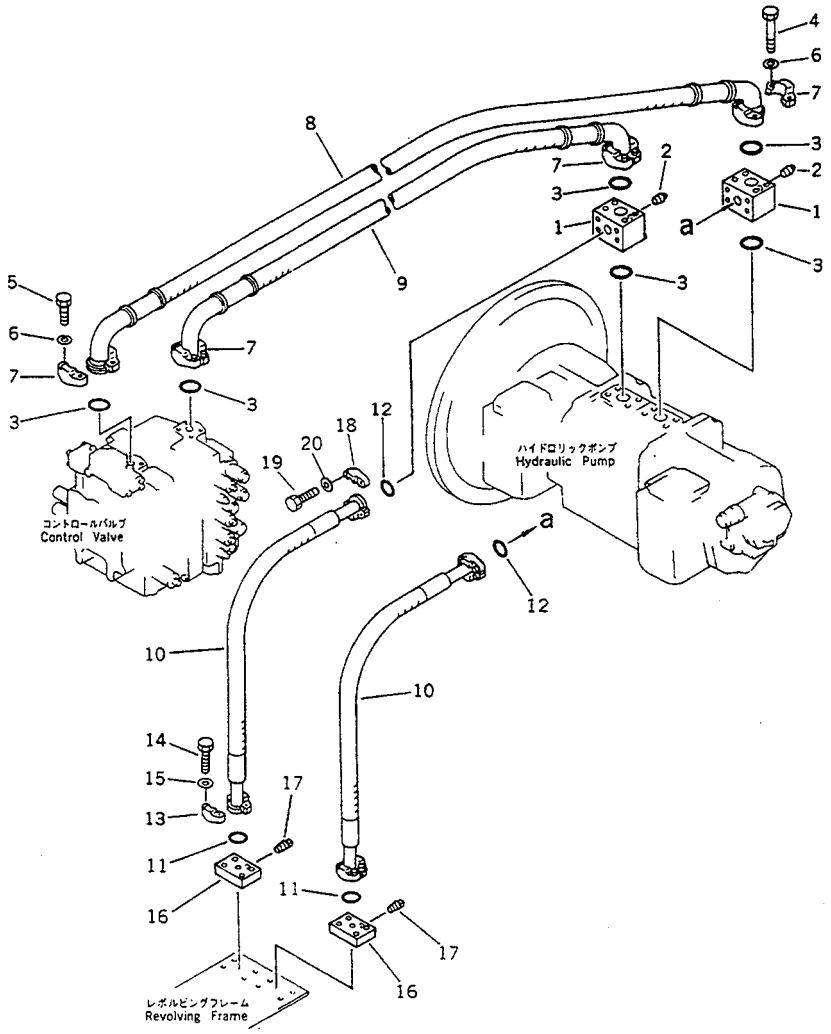

FIG NO. :6503

INDEX NO.	PART NO.	DESCRIPTION	Q'TY	SERIAL NO. PC210-3KP	SERIAL NO. PC240-3KP
1	205-62-71230	ELBOW	2	K15001-	K15001-
2	07042-30108	PLUG	2	K15001-	K15001-
3	21T-09-11460	O-RING	6	K15001-	K15001-
4	205-62-74740	BOLT	8	K15001-	K15001-
5	07372-21035	BOLT	8	K15001-	K15001-
6	01643-51032	WASHER	16	K15001-	K15001-
7	07371-31049	FLANGE,SPLIT	8	K15001-	K15001-
8	205-62-K1140	HOSE	1	K15001-	K15001-
9	205-62-K1130	HOSE	1	K15001-	K15001-
10	205-62-K1160	HOSE	2	K15001-	K15001-
11	21T-09-11430	O-RING	2	K15001-	K15001-
12	21T-09-11430	O-RING	2	K15001-	K15001-
13	07371-30638	FLANGE	4	K15001-	K15001-
14	01010-50850	BOLT	8	K15001-	K15001-
15	01643-50823	WASHER	8	K15001-	K15001-
16	205-62-74930	FLANGE,SPILT	2	K15001-	K15001-
17	07042-30108	PLUG	2	K15001-	K15001-
18	07371-30638	FLANGE,SPLIT	4	K15001-	K15001-
19	01010-50830	BOLT	8	K15001-	K15001-
20	01643-50823	WASHER	8	K15001-	K15001-

https://truckmanualshub.com/

FIG. 6511 HYDRAULIC PIPING (BOOM CYLINDER LINE) (CHASSIS SIDE)

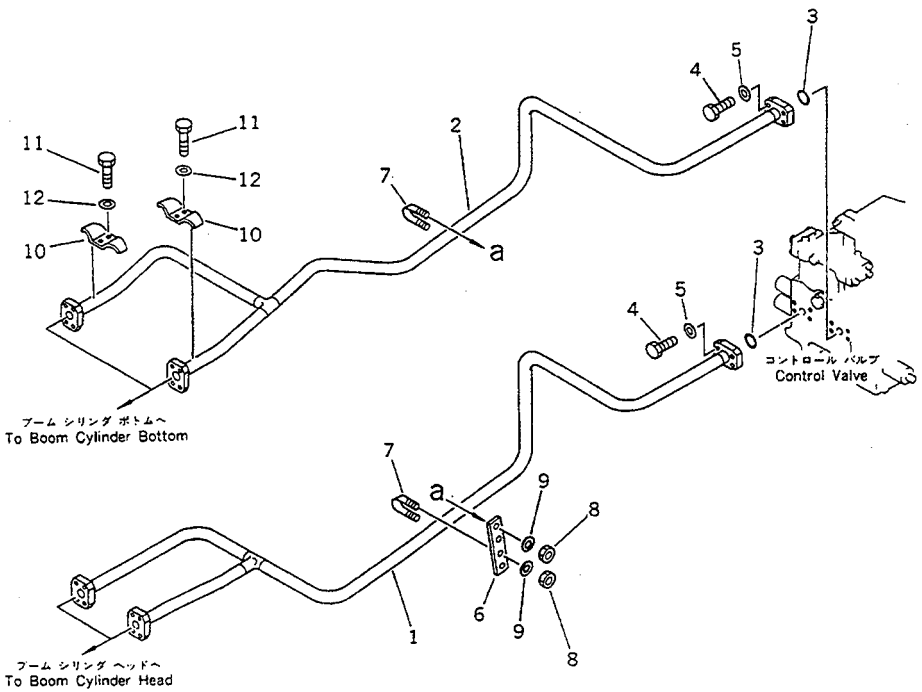

FIG NO. :6511

INDEX NO.	PART NO.	DESCRIPTION	Q'TY	SERIAL NO. PC210-3KP	SERIAL NO. PC240-3KP
1	205-62-71372	TUBE	1	K15001-	K15001-
2	205-62-71382	TUBE	1	K15001-	K15001-
3	21T-09-11450	O-RING	2	K15001-	K15001-
4	01010-50830	BOLT	8	K15001-	K15001-
5	01643-50823	WASHER	8	K15001-	K15001-
6	205-62-71581	PLATE	1	K15001-	K15001-
7	07283-22738	CLIP	2	K15001-	K15001-
8	01599-01011	NUT	4	K15001-	K15001-
9	01643-31032	WASHER	4	K15001-	K15001-
10	205-62-71470	CLAMP	2	K15001-	K15001-
11	205-09-71110	BOLT	4	K15001-	K15001-
12	01643-31032	WASHER	4	K15001-	K15001-

https://truckmanualshub.com/

FIG. 6513 HYDRAULIC PIPING (ARM, BUCKET CYLINDER LINE) (CHASSIS SIDE) (PC210)

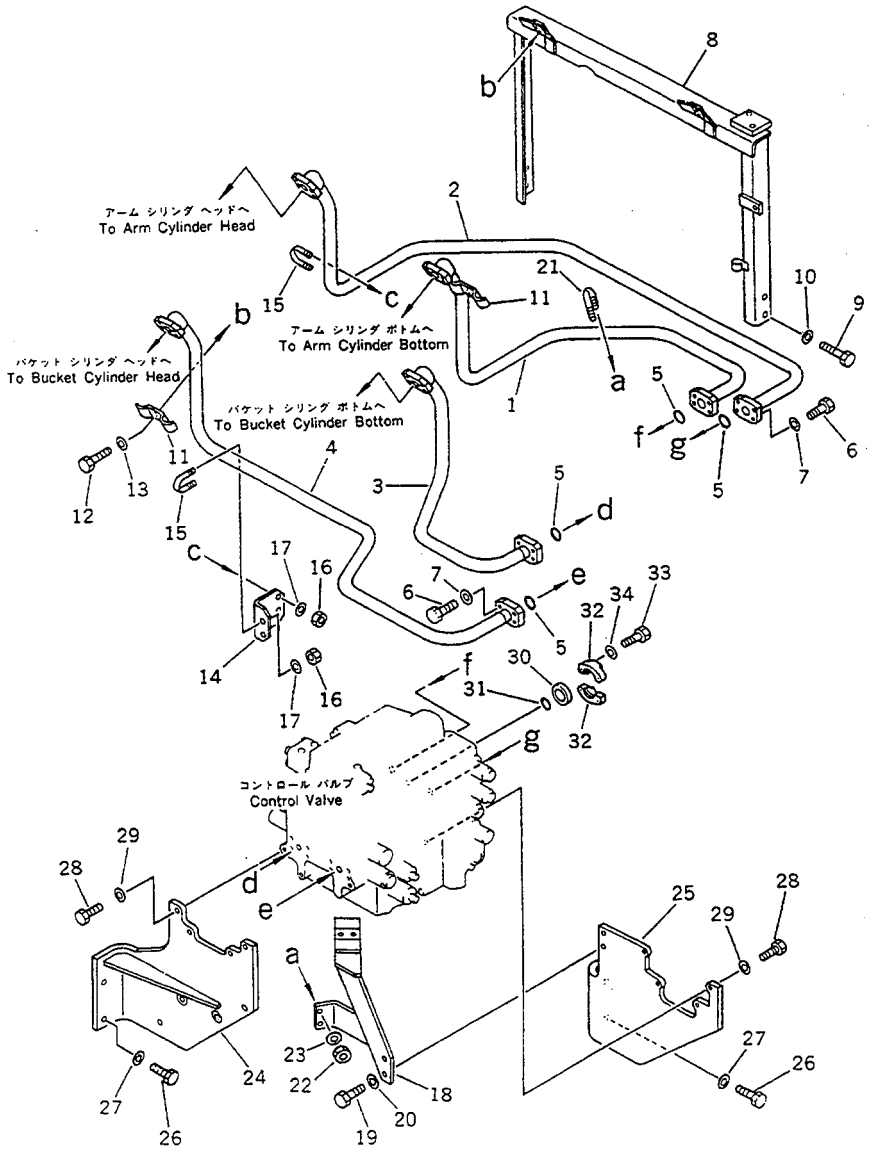

FIG NO. :6513

INDEX NO.	PART NO.	DESCRIPTION	Q'TY	SERIAL NO. PC210-3KP	SERIAL NO. PC240-3KP
1	205-62-71392	TUBE	1	K15001-	
2	205-62-71412	TUBE	1	K15001-	
3	205-62-71422	TUBE	1	K15001-	
4	205-62-71432	TUBE	1	K15001-	
5	21T-09-11450	O-RING	4	K15001-	
6	01010-50830	BOLT	16	K15001-	
7	01643-50823	WASHER	16	K15001-	
8	205-62-71492	BRACKET	1	K15001-	
9	01010-51230	BOLT	1	K15001-	
10	01643-31232	WASHER	4	K15001-	
11	205-62-71470	CLAMP	2	K15001-	
12	01010-51035	BOLT	4	K15001-	
13	01643-31032	WASHER	4	K15001-	
14	205-62-71591	BRACKET	1	K15001-	
15	07283-22738	CLIP	2	K15001-	
16	01599-01011	NUT	4	K15001-	
17	01643-31032	WASHER	4	K15001-	
18	205-62-71461	BRACKET	1	K15001-	
19	01010-51235	BOLT	2	K15001-	
20	01643-31232	WASHER	2	K15001-	
21	205-62-71550	CLAMP	1	K15001-	
22	01010-51030	BOLT	2	K15001-	
23	01643-31032	WASHER	2	K15001-	
24	205-62-71612	BRACKET	1	K15001-	
25	205-62-71622	BRACKET	1	K15001-	
26	01010-51230	BOLT	4	K15001-	
27	01643-31232	WASHER	4	K15001-	
28	01010-51030	BOLT	8	K15001-	
29	01643-31032	WASHER	8	K15001-	
30	07378-10600	HEAD	2	K15001-	

https://truckmanualshub.com/

FIG NO. :6513

INDEX NO.	PART NO.	DESCRIPTION	Q'TY	SERIAL NO. PC210-3KP	SERIAL NO. PC240-3KP
31	21T-09-11430	O-RING	2	K15001-	
32	07371-30638	FLANGE,SPLIT	4	K15001-	
33	01010-50830	BOLT	8	K15001-	
34	01643-50823	WASHER	8	K15001-	

https://truckmanualshub.com/

FIG. 6514 HYDRAULIC PIPING (ARM, BUCKET CYLINDER LINE) (CHASSIS SIDE) (PC240)

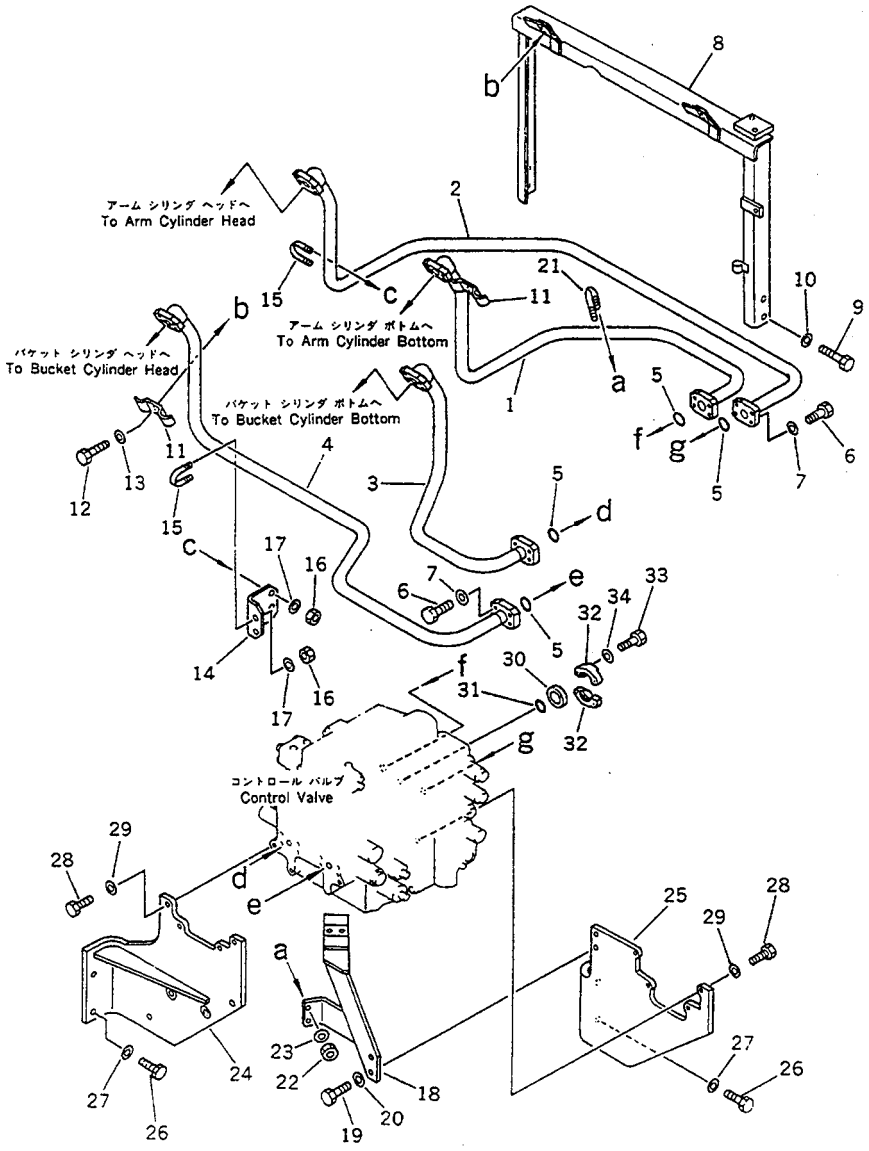

FIG NO. :6514

INDEX NO.	PART NO.	DESCRIPTION	Q'TY	SERIAL NO. PC210-3KP	SERIAL NO. PC240-3KP
1	205-62-71392	TUBE	1		K15001-
2	205-62-71412	TUBE	1		K15001-
3	205-62-71422	TUBE	1		K15001-
4	205-62-71432	TUBE	1		K15001-
5	21T-09-11450	O-RING	4		K15001-
6	01010-50830	BOLT	16		K15001-
7	01643-50823	WASHER	16		K15001-
8	206-62-45121	BRACKET	1		K15001-
9	01010-51230	BOLT	1		K15001-
10	01643-31232	WASHER	4		K15001-
11	205-62-71470	CLAMP	2		K15001-
12	01010-51035	BOLT	4		K15001-
13	01643-31032	WASHER	4		K15001-
14	205-62-71591	BRACKET	1		K15001-
15	07283-22738	CLIP	2		K15001-
16	01599-01011	NUT	4		K15001-
17	01643-31032	WASHER	4		K15001-
18	205-62-71461	BRACKET	1		K15001-
19	01010-51235	BOLT	2		K15001-
20	01643-31232	WASHER	2		K15001-
21	205-62-71550	CLAMP	1		K15001-
22	01010-51030	BOLT	2		K15001-
23	01643-31032	WASHER	2		K15001-
24	205-62-71612	BRACKET	1		K15001-
25	205-62-71622	BRACKET	1		K15001-
26	01010-51230	BOLT	4		K15001-
27	01643-31232	WASHER	4		K15001-
28	01010-51030	BOLT	8		K15001-
29	01643-31032	WASHER	8		K15001-
30	07378-10600	HEAD	2		K15001-

https://truckmanualshub.com/

FIG NO. :6514

INDEX NO.	PART NO.	DESCRIPTION	Q'TY	SERIAL NO. PC210-3KP	SERIAL NO. PC240-3KP
31	21T-09-11430	O-RING	2		K15001-
32	07371-30638	FLANGE,SPLIT	4		K15001-
33	01010-50830	BOLT	8		K15001-
34	01643-50823	WASHER	8		K15001-

https://truckmanualshub.com/

FIG. 6521 HYDRAULIC PIPING (RETURN AND OIL COOLER) (WITH AUTO DECELERATION) (WITH SWING MECHANICAL BRAKE) (PC210)

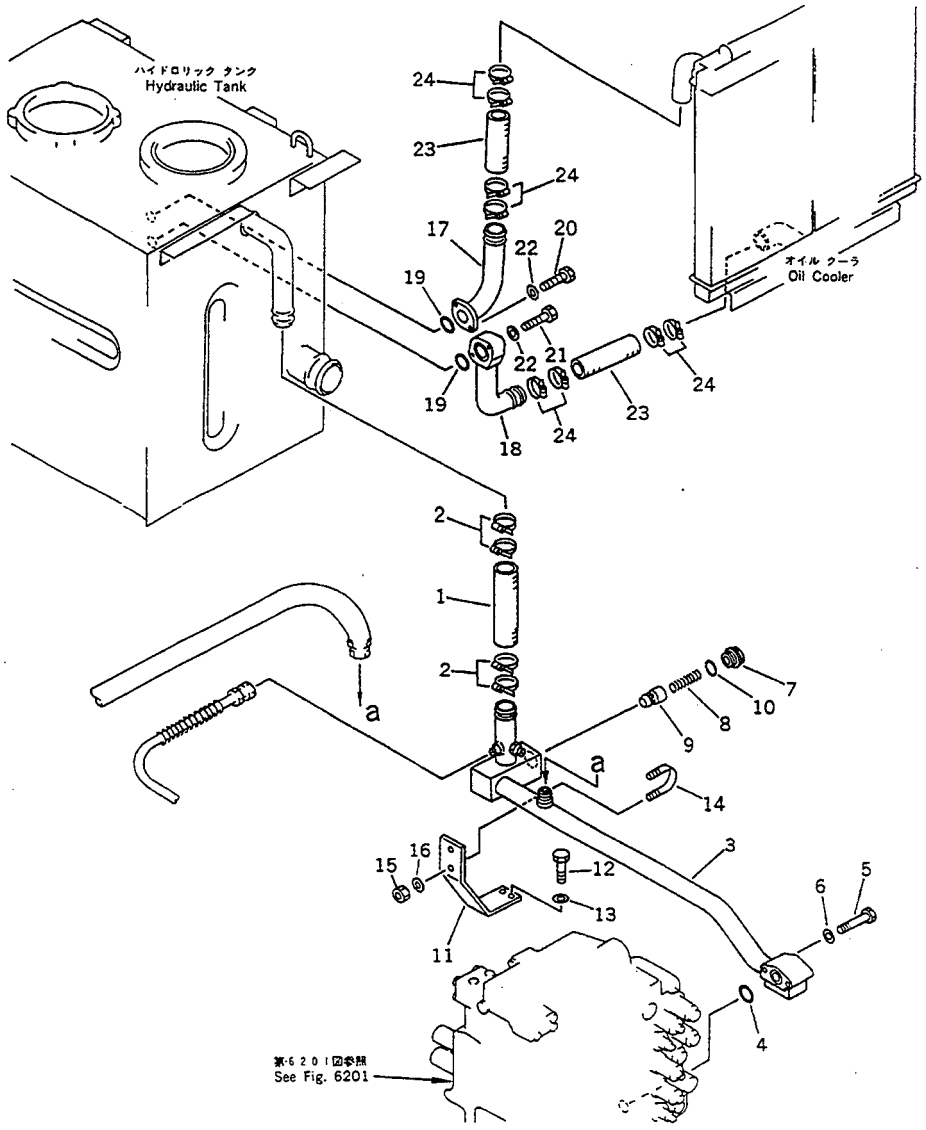

FIG NO. :6521

INDEX NO.	PART NO.	DESCRIPTION	Q'TY	SERIAL NO. PC210-3KP	SERIAL NO. PC240-3KP
1	205-62-68330	HOSE	1	K15001-	
2	208-09-11110	CLAMP	4	K15001-	
3	205-62-71276	TUBE	1	K15001-	
4	07000-03035	O-RING	1	K15001-	
5	01010-51085	BOLT	2	K15001-	
6	01643-31032	WASHER	2	K15001-	
7	205-62-71971	PLUG	1	K15001-	
8	135-60-17110	SPRING	1	K15001-	
9	205-60-71230	POPPET	1	K15001-	
10	07002-05234	O-RING	1	K15001-	
11	205-62-71952	BRACKET	1	K15001-	
12	01010-51230	BOLT	2	K15001-	
13	01643-31232	WASHER	2	K15001-	
14	07283-24346	CLIP	1	K15001-	
15	01599-01011	NUT	2	K15001-	
16	01643-31032	WASHER	2	K15001-	
17	205-62-71912	TUBE	1	K15001-	
18	205-62-71922	TUBE	1	K15001-	
19	07000-02065	O-RING	2	K15001-	
20	01010-51035	BOLT	2	K15001-	
21	01010-51070	BOLT	2	K15001-	
22	01643-31032	WASHER	4	K15001-	
23	205-62-68330	HOSE	2	K15001-	
24	208-09-11110	CLAMP	8	K15001-	

https://truckmanualshub.com/

FIG. 6522 HYDRAULIC PIPING (RETURN AND OIL COOLER) (WITH AUTO DECELERATION) (WITH SWING MECHANICAL BRAKE) (PC240)

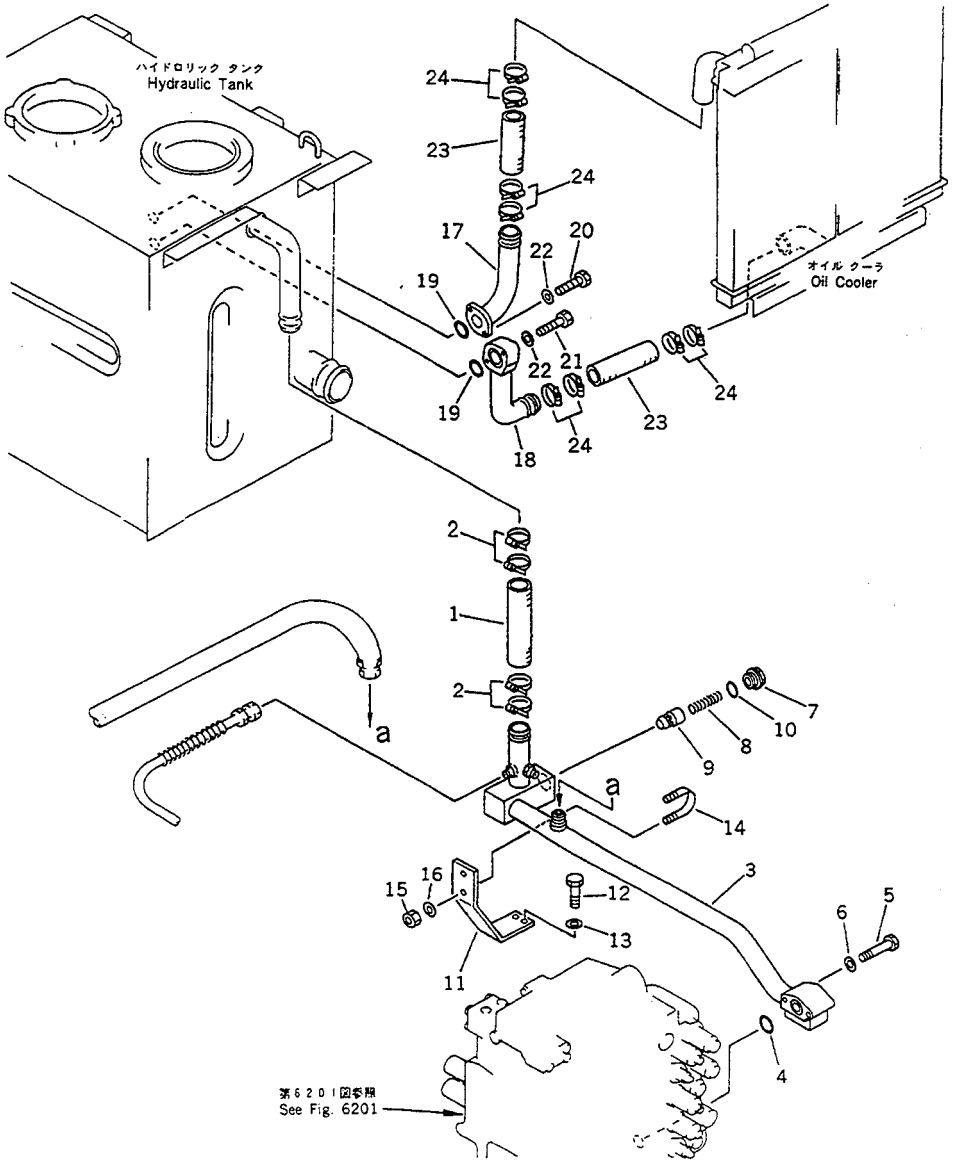

FIG NO. :6522

INDEX NO.	PART NO.	DESCRIPTION	Q'TY	SERIAL NO. PC210-3KP	SERIAL NO. PC240-3KP
1	205-62-68330	HOSE	1		K15001-
2	208-09-11110	CLAMP	4		K15001-
3	205-62-71276	TUBE	1		K15001-
4	07000-03035	O-RING	1		K15001-
5	01010-51085	BOLT	2		K15001-
6	01643-31032	WASHER	2		K15001-
7	205-62-71971	PLUG	1		K15001-
8	135-60-17110	SPRING	1		K15001-
9	205-60-71230	POPPET	1		K15001-
10	07002-05234	O-RING	1		K15001-
11	205-62-71952	BRACKET	1		K15001-
12	01010-51230	BOLT	2		K15001-
13	01643-31232	WASHER	2		K15001-
14	07283-24346	CLIP	1		K15001-
15	01599-01011	NUT	2		K15001-
16	01643-31032	WASHER	2		K15001-
17	205-62-71912	TUBE	1		K15001-
18	206-62-45161	TUBE	1		K15001-
19	07000-02065	O-RING	2		K15001-
20	01010-51035	BOLT	2		K15001-
21	01010-51070	BOLT	2		K15001-
22	01643-31032	WASHER	4		K15001-
23	205-62-68330	HOSE	2		K15001-
24	208-09-11110	CLAMP	8		K15001-

https://truckmanualshub.com/

FIG. 6523 HYDRAULIC PIPING (RETURN AND OIL COOLER) (WITHOUT AUTO DECELERATION) (WITHOUT SWING MECHANICAL BRAKE) (PC210)

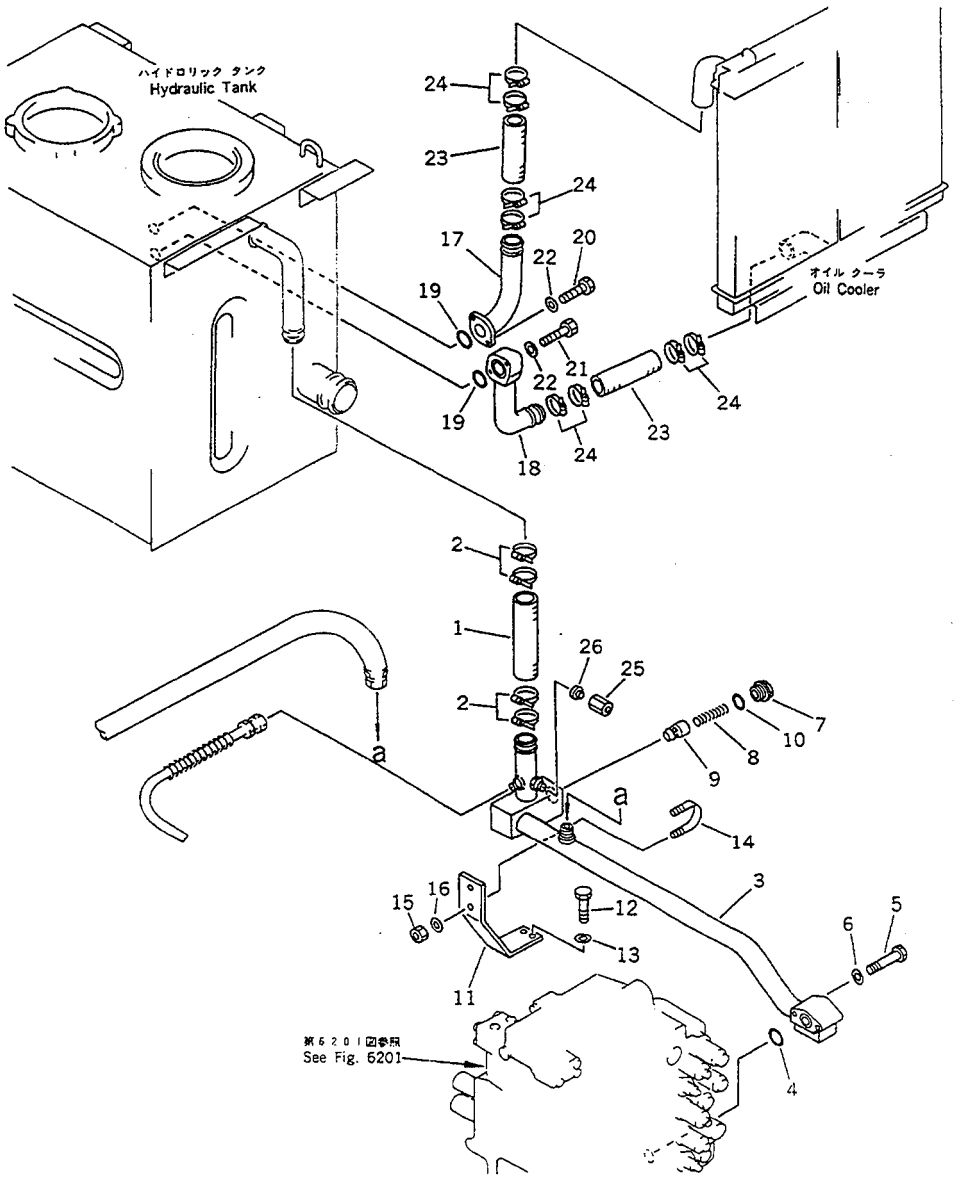

FIG NO. :6523

INDEX NO.	PART NO.	DESCRIPTION	Q'TY	SERIAL NO. PC210-3KP	SERIAL NO. PC240-3KP
1	205-62-68330	HOSE	1	K15001-	
2	208-09-11110	CLAMP	4	K15001-	
3	205-62-71277	TUBE	1	K15001-	
4	07000-03035	O-RING	1	K15001-	
5	01010-51085	BOLT	2	K15001-	
6	01643-31032	WASHER	2	K15001-	
7	205-62-71971	PLUG	1	K15001-	
8	135-60-17110	SPRING	1	K15001-	
9	205-60-71230	POPPET	1	K15001-	
10	07002-05234	O-RING	1	K15001-	
11	205-62-71952	BRACKET	1	K15001-	
12	01010-51230	BOLT	2	K15001-	
13	01643-31232	WASHER	2	K15001-	
14	07283-24346	CLIP	1	K15001-	
15	01599-01011	NUT	2	K15001-	
16	01643-31032	WASHER	2	K15001-	
17	205-62-71913	TUBE	1	K15001-	
18	205-62-71923	TUBE	1	K15001-	
19	07000-02065	O-RING	2	K15001-	
20	01010-51035	BOLT	2	K15001-	
21	01010-51070	BOLT	2	K15001-	
22	01643-31032	WASHER	4	K15001-	
23	205-62-68330	HOSE	2	K15001-	
24	208-09-11110	CLAMP	8	K15001-	
25	07221-20210	NUT	1	K15001-	
26	07222-00210	PLUG	1	K15001-	

https://truckmanualshub.com/

FIG. 6524 HYDRAULIC PIPING (RETURN AND OIL COOLER) (WITHOUT AUTO DECELERATION) (WITHOUT SWING MECHANICAL BRAKE) (PC240)

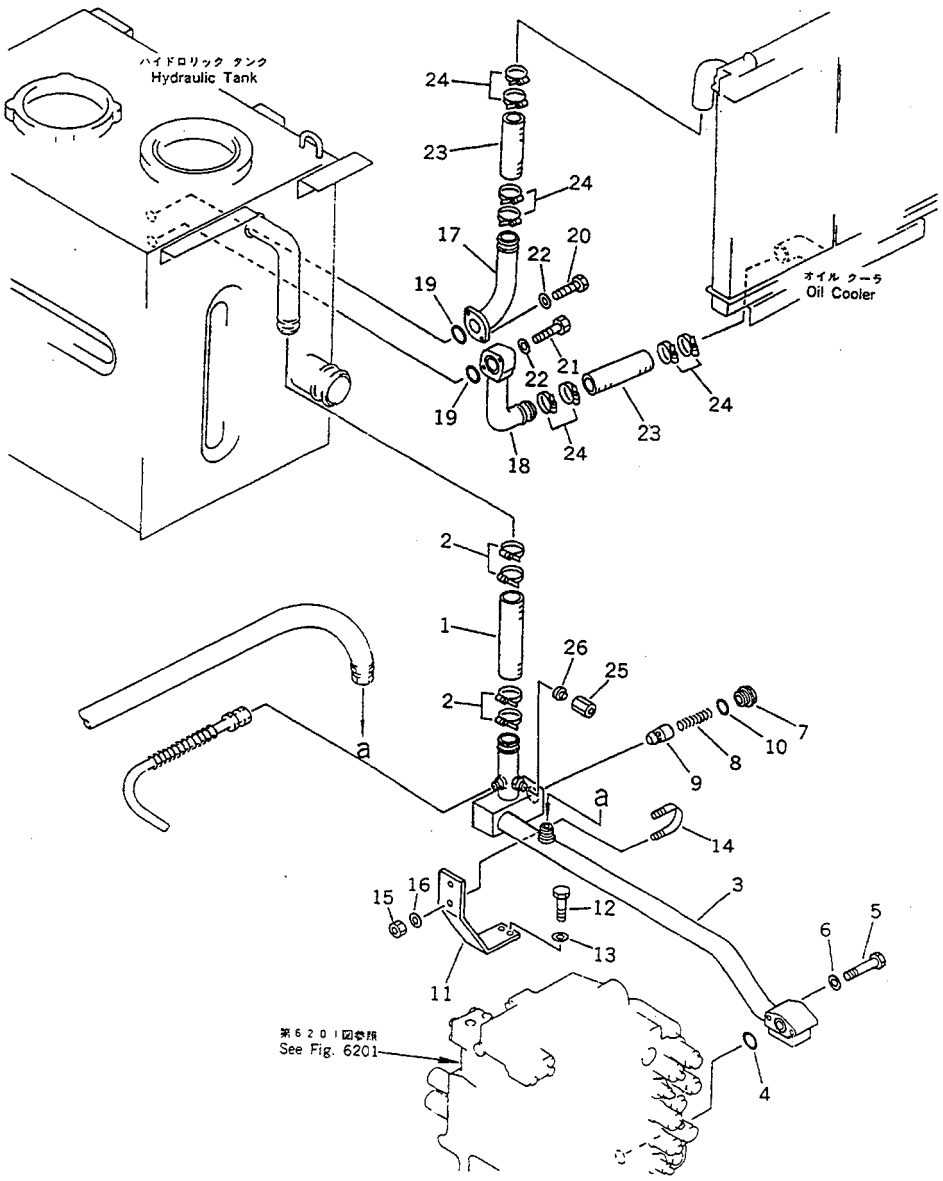

FIG NO. :6524

INDEX NO.	PART NO.	DESCRIPTION	Q'TY	SERIAL NO. PC210-3KP	SERIAL NO. PC240-3KP
1	205-62-68330	HOSE	1		K15001-
2	208-09-11110	CLAMP	4		K15001-
3	205-62-71277	TUBE	1		K15001-
4	07000-03035	O-RING	1		K15001-
5	01010-51085	BOLT	2		K15001-
6	01643-31032	WASHER	2		K15001-
7	205-62-71971	PLUG	1		K15001-
8	135-60-17110	SPRING	1		K15001-
9	205-60-71230	POPPET	1		K15001-
10	07002-05234	O-RING	1		K15001-
11	205-62-71952	BRACKET	1		K15001-
12	01010-51230	BOLT	2		K15001-
13	01643-31232	WASHER	2		K15001-
14	07283-24346	CLIP	1		K15001-
15	01599-01011	NUT	2		K15001-
16	01643-31032	WASHER	2		K15001-
17	205-62-71913	TUBE	1		K15001-
18	206-62-45161	TUBE	1		K15001-
19	07000-02065	O-RING	2		K15001-
20	01010-51035	BOLT	2		K15001-
21	01010-51070	BOLT	2		K15001-
22	01643-31032	WASHER	4		K15001-
23	205-62-68330	HOSE	2		K15001-
24	208-09-11110	CLAMP	8		K15001-
25	07221-20315	NUT	1		K15001-
26	07222-00312	PLUG	1		K15001-

https://truckmanualshub.com/

FIG. 6525 HYDRAULIC PIPING (RETURN)

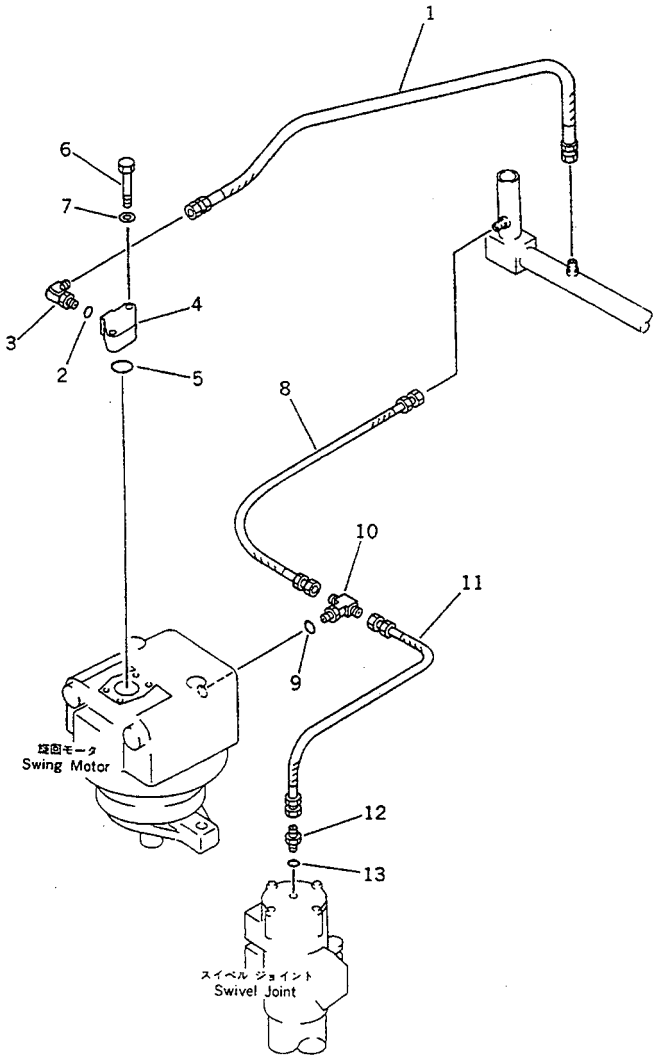

FIG NO. :6525

INDEX NO.	PART NO.	DESCRIPTION	Q'TY	SERIAL NO. PC210-3KP	SERIAL NO. PC240-3KP
1	205-62-72840	HOSE	1	K15001-	K15001-
2	07002-02434	O-RING	1	K15001-	K15001-
3	07235-10628	ELBOW	1	K15001-	K15001-
4	205-62-72470	FLANGE	1	K15001-	K15001-
5	07000-03045	O-RING	1	K15001-	K15001-
6	01010-51265	BOLT	2	K15001-	K15001-
7	01643-31232	WASHER	2	K15001-	K15001-
8	205-62-71282	HOSE	1	K15001-	K15001-
9	07002-02034	O-RING	1	K15001-	K15001-
10	209-62-27580	TEE	1	K15001-	K15001-
11	205-62-71290	HOSE	1	K15001-	K15001-
12	07230-20315	NIPPLE	1	K15001-	K15001-
13	07002-02034	O-RING	1	K15001-	K15001-

https://truckmanualshub.com/

FIG. 6529 HYDRAULIC PIPING (DRAIN)

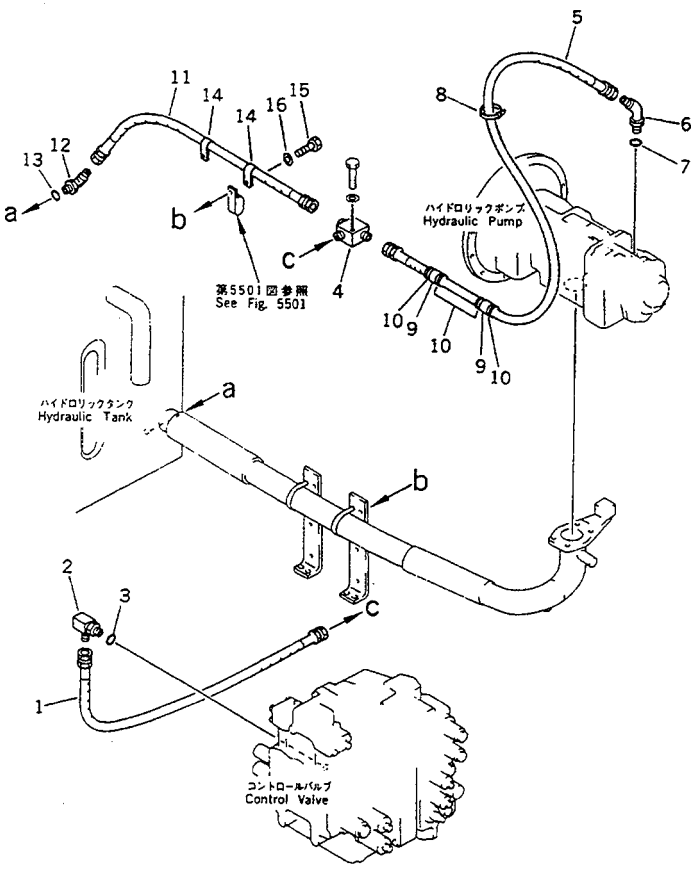

FIG NO. :6529

INDEX NO.	PART NO.	DESCRIPTION	Q'TY	SERIAL NO. PC210-3KP	SERIAL NO. PC240-3KP
1	07102-20508	HOSE	1	K15001-	K15001-
2	205-62-74910	ELBOW	1	K15001-	K15001-
3	07002-02434	O-RING	1	K15001-	K15001-
4	205-62-74722	TEE	1	K15001-	K15001-
5	07102-20610	HOSE	1	K15001-	K15001-
6	07236-10628	ELBOW	1	K15001-	K15001-
7	07002-02434	O-RING	1	K15001-	K15001-
8	08034-00823	BAND	2	K15001-	K15001-
9	205-62-72240	COVER	2	K15001-	K15001-
10	08034-00536	BAND	7	K15001-	K15001-
11	07102-20616	HOSE	1	K15001-	K15001-
12	07235-10628	ELBOW	1	K15001-	K15001-
13	07002-02434	O-RING	1	K15001-	K15001-
14	08036-02514	CLIP	2	K15001-	K15001-
15	01010-51025	BOLT	2	K15001-	K15001-
16	01643-31032	WASHER	2	K15001-	K15001-

https://truckmanualshub.com/

FIG. 6531 HYDRAULIC PIPING (BOOM AND ARM CYLINDER LINE) (ATTACHMENT SIDE) (PC210)

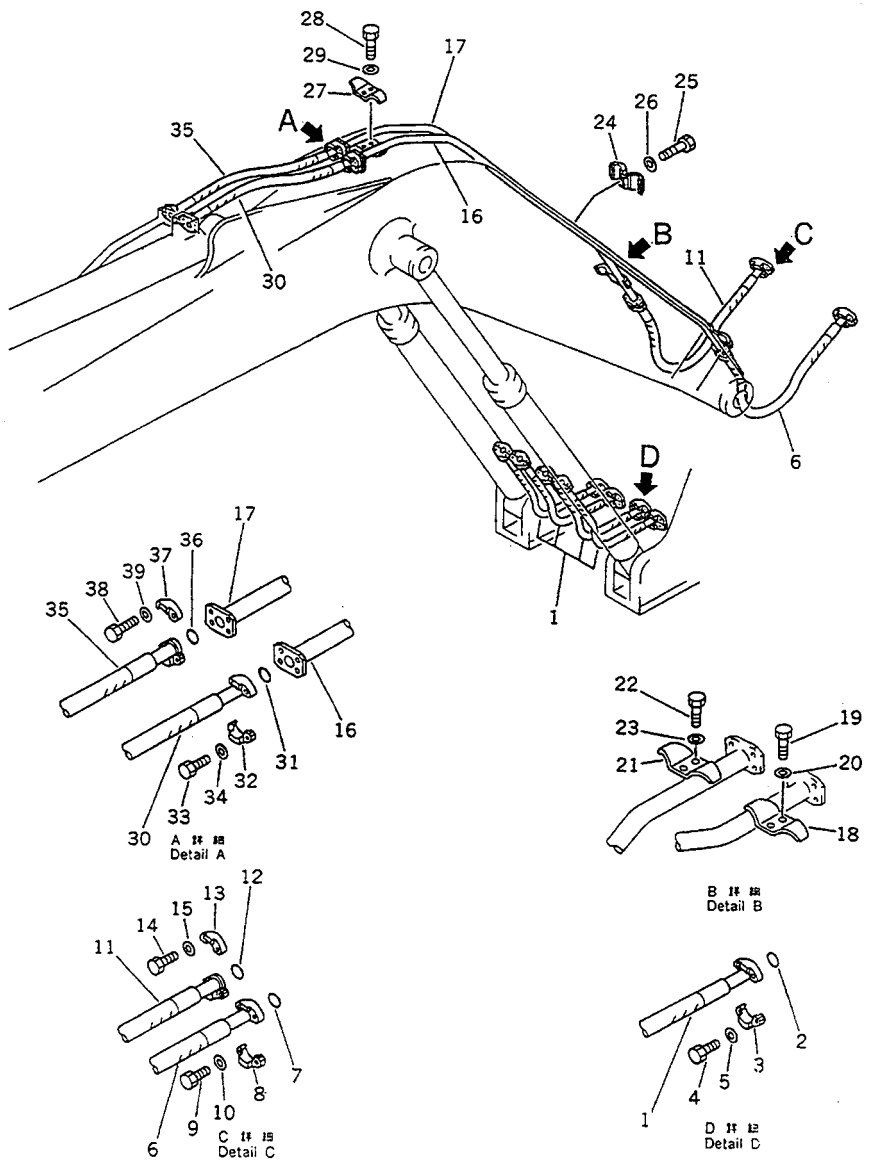

FIG NO. :6531

INDEX NO.	PART NO.	DESCRIPTION	Q'TY	SERIAL NO. PC210-3KP	SERIAL NO. PC240-3KP
1	205-62-K1160	HOSE	4	K15001-	
2	07000-13025	O-RING	8	K15001-	
3	07371-30638	FLANGE,SPLIT	16	K15001-	
4	01010-50830	BOLT	32	K15001-	
5	01643-50823	WASHER	32	K15001-	
6	205-62-K1180	HOSE	1	K15001-	
7	07000-13032	O-RING	2	K15001-	
8	07371-31049	FLANGE,SPLIT	4	K15001-	
9	07372-21035	BOLT	8	K15001-	
10	01643-51032	WASHER	8	K15001-	
11	07099-00610	HOSE	1	K15001-	
12	07000-13025	O-RING	2	K15001-	
13	07371-30638	FLANGE,SPLIT	4	K15001-	
14	01010-50830	BOLT	8	K15001-	
15	01643-50823	WASHER	8	K15001-	
16	205-62-73152	TUBE	1	K15001-	
17	205-62-73142	TUBE	1	K15001-	
18	205-62-71560	CLAMP	1	K15001-	
19	205-09-71110	BOLT	2	K15001-	
20	01643-31032	WASHER	2	K15001-	
21	205-62-71470	CLAMP	1	K15001-	
22	205-09-71110	BOLT	2	K15001-	
23	01643-31032	WASHER	2	K15001-	
24	205-62-73450	CLAMP	1	K15001-	
25	205-09-71110	BOLT	2	K15001-	
26	01643-31032	WASHER	2	K15001-	
27	205-62-73460	CLAMP	1	K15001-	
28	205-09-71110	BOLT	2	K15001-	
29	01643-31032	WASHER	2	K15001-	
30	205-62-K1190	HOSE	1	K15001-	

https://truckmanualshub.com/

FIG NO. :6531

INDEX NO.	PART NO.	DESCRIPTION	Q'TY	SERIAL NO. PC210-3KP	SERIAL NO. PC240-3KP
31	07000-13032	O-RING	2	K15001-	
32	07371-31049	FLANGE,SPLIT	4	K15001-	
33	07372-21035	BOLT	8	K15001-	
34	01643-51032	WASHER	8	K15001-	
35	205-62-K1160	HOSE	1	K15001-	
36	07000-13025	O-RING	2	K15001-	
37	07371-30638	FLANGE,SPLIT	4	K15001-	
38	01010-50830	BOLT	8	K15001-	
39	01643-50823	WASHER	8	K15001-	

https://truckmanualshub.com/

FIG. 6532 HYDRAULIC PIPING (BOOM AND ARM CYLINDER LINE) (ATTACHMENT SIDE) (PC240)

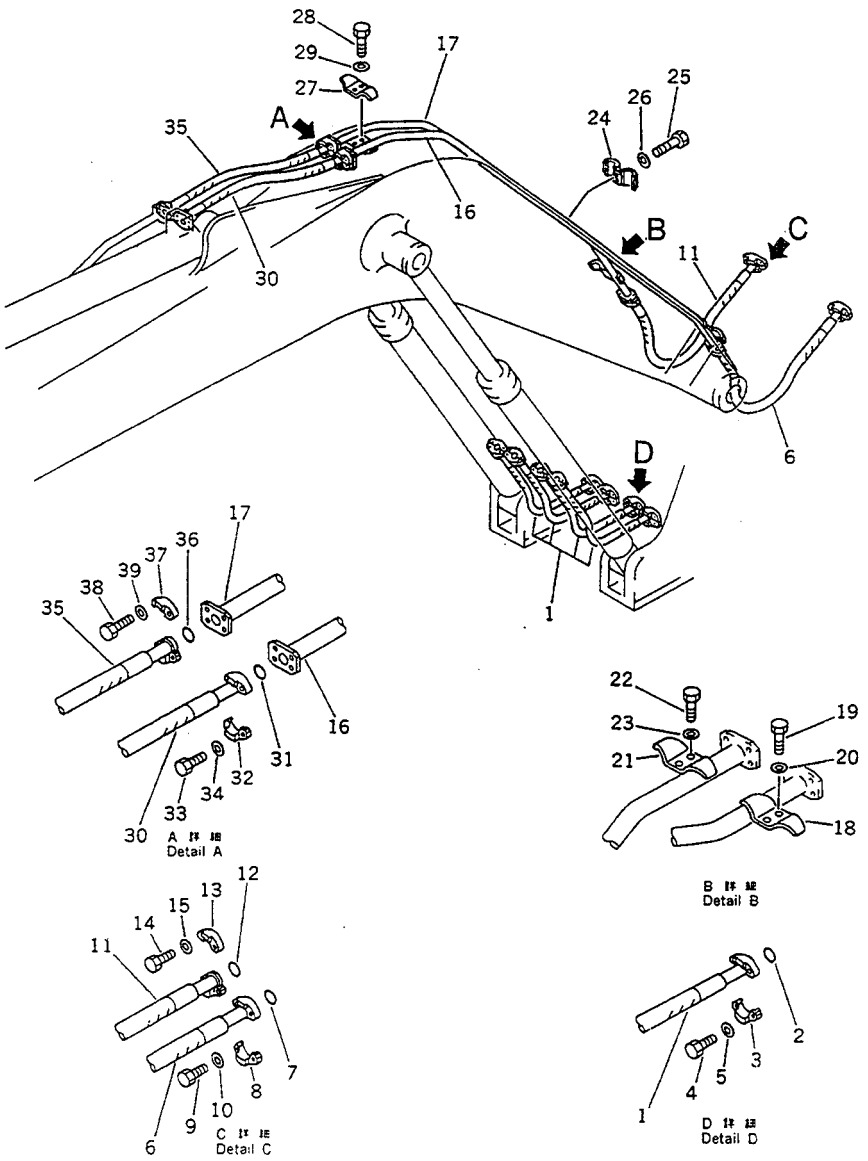

FIG NO. :6532

INDEX NO.	PART NO.	DESCRIPTION	Q'TY	SERIAL NO. PC210-3KP	SERIAL NO. PC240-3KP
1	205-62-K1160	HOSE	4		K15001-
2	07000-13025	O-RING	8		K15001-
3	07371-30638	FLANGE,SPLIT	16		K15001-
4	01010-50830	BOLT	32		K15001-
5	01643-50823	WASHER	32		K15001-
6	205-62-K1180	HOSE	1		K15001-
7	07000-13032	O-RING	2		K15001-
8	07371-31049	FLANGE,SPLIT	4		K15001-
9	07372-21035	BOLT	8		K15001-
10	01643-51032	WASHER	8		K15001-
11	07099-00610	HOSE	1		K15001-
12	07000-13025	O-RING	2		K15001-
13	07371-30638	FLANGE,SPLIT	4		K15001-
14	01010-50830	BOLT	8		K15001-
15	01643-50823	WASHER	8		K15001-
16	206-62-45261	TUBE	1		K15001-
17	206-62-45251	TUBE	1		K15001-
18	205-62-71560	CLAMP	1		K15001-
19	205-09-71110	BOLT	2		K15001-
20	01643-31032	WASHER	2		K15001-
21	205-62-71470	CLAMP	1		K15001-
22	205-09-71110	BOLT	2		K15001-
23	01643-31032	WASHER	2		K15001-
24	205-62-73450	CLAMP	1		K15001-
25	205-09-71110	BOLT	2		K15001-
26	01643-31032	WASHER	2		K15001-
27	205-62-73460	CLAMP	1		K15001-
28	205-09-71110	BOLT	2		K15001-
29	01643-31032	WASHER	2		K15001-
30	205-62-K1190	HOSE	1		K15001-

https://truckmanualshub.com/

FIG NO. :6532

INDEX NO.	PART NO.	DESCRIPTION	Q'TY	SERIAL NO. PC210-3KP	SERIAL NO. PC240-3KP
31	07000-13032	O-RING	2		K15001-
32	07371-31049	FLANGE,SPLIT	4		K15001-
33	07372-21035	BOLT	8		K15001-
34	01643-51032	WASHER	8		K15001-
35	205-62-K1160	HOSE	1		K15001-
36	07000-13025	O-RING	2		K15001-
37	07371-30638	FLANGE,SPLIT	4		K15001-
38	01010-50830	BOLT	8		K15001-
39	01643-50823	WASHER	8		K15001-

https://truckmanualshub.com/

FIG. 6533 HYDRAULIC PIPING (BUCKET CYLINDER LINE) (ATTACHMENT SIDE) (PC210)

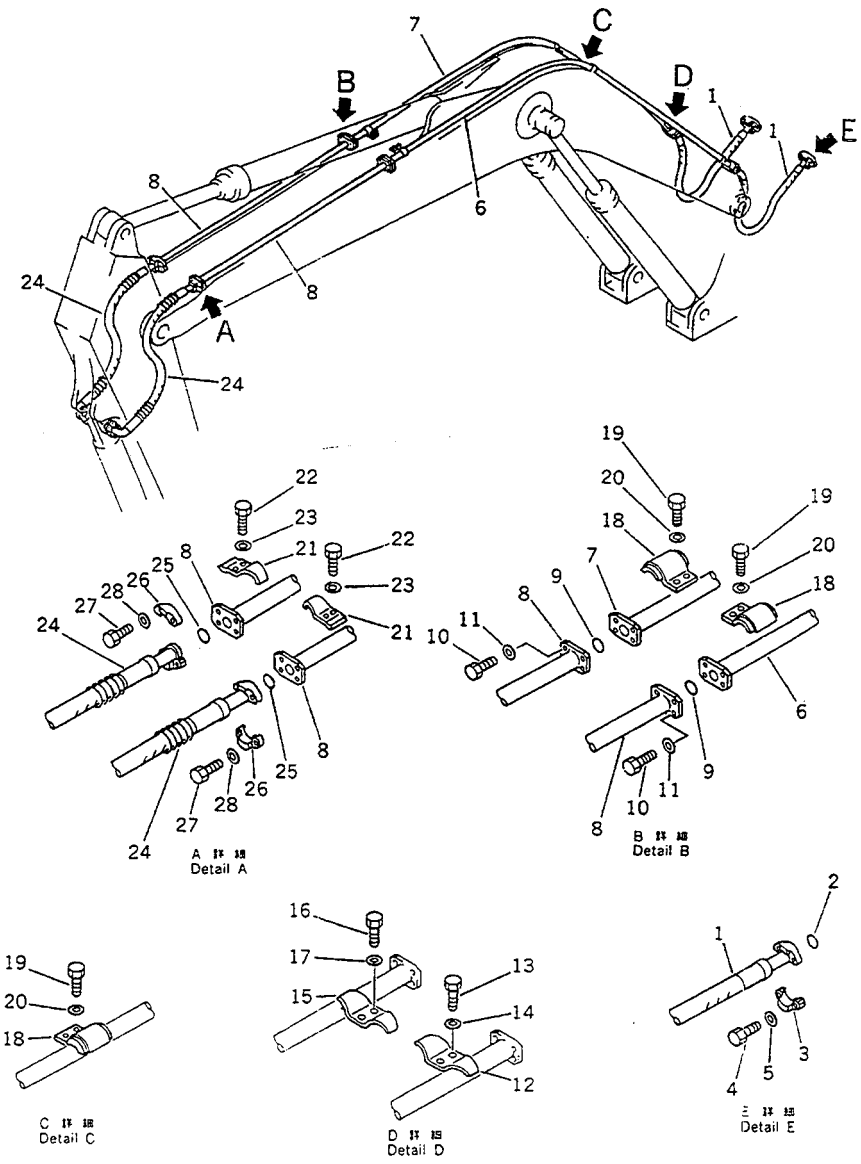

FIG NO. :6533

INDEX NO.	PART NO.	DESCRIPTION	Q'TY	SERIAL NO. PC210-3KP	SERIAL NO. PC240-3KP
1	205-62-K1210	HOSE	2	K15001-	
2	07000-13025	O-RING	4	K15001-	
3	07371-30638	FLANGE,SPLIT	8	K15001-	
4	01010-50830	BOLT	16	K15001-	
5	01643-50823	WASHER	16	K15001-	
6	205-62-73112	TUBE	1	K15001-	
7	205-62-73122	TUBE	1	K15001-	
8	205-62-73130	TUBE	2	K15001-	
9	07000-13030	O-RING	2	K15001-	
10	01010-50830	BOLT	8	K15001-	
11	01643-50823	WASHER	8	K15001-	
12	(205-62-71560)	CLAMP	1	K15001-	
13	(01010-51030)	BOLT	2	K15001-	
14	(01643-31032)	WASHER	2	K15001-	
15	(205-62-71470)	CLAMP	1	K15001-	
16	(01010-51030)	BOLT	2	K15001-	
17	(01643-31032)	WASHER	2	K15001-	
18	205-62-73480	CLAMP	4	K15001-	
19	205-09-71110	BOLT	8	K15001-	
20	01643-31032	WASHER	8	K15001-	
21	205-62-71550	CLAMP	2	K15001-	
22	205-09-71110	BOLT	4	K15001-	
23	01643-31032	WASHER	4	K15001-	
24	205-62-K1230	HOSE	2	K15001-	
25	07000-13025	O-RING	4	K15001-	
26	07371-30638	FLANGE,SPLIT	8	K15001-	
27	01010-50830	BOLT	16	K15001-	
28	01643-50823	WASHER	16	K15001-	

https://truckmanualshub.com/

FIG. 6534 HYDRAULIC PIPING (BUCKET CYLINDER LINE) (ATTACHMENT SIDE) (PC240)

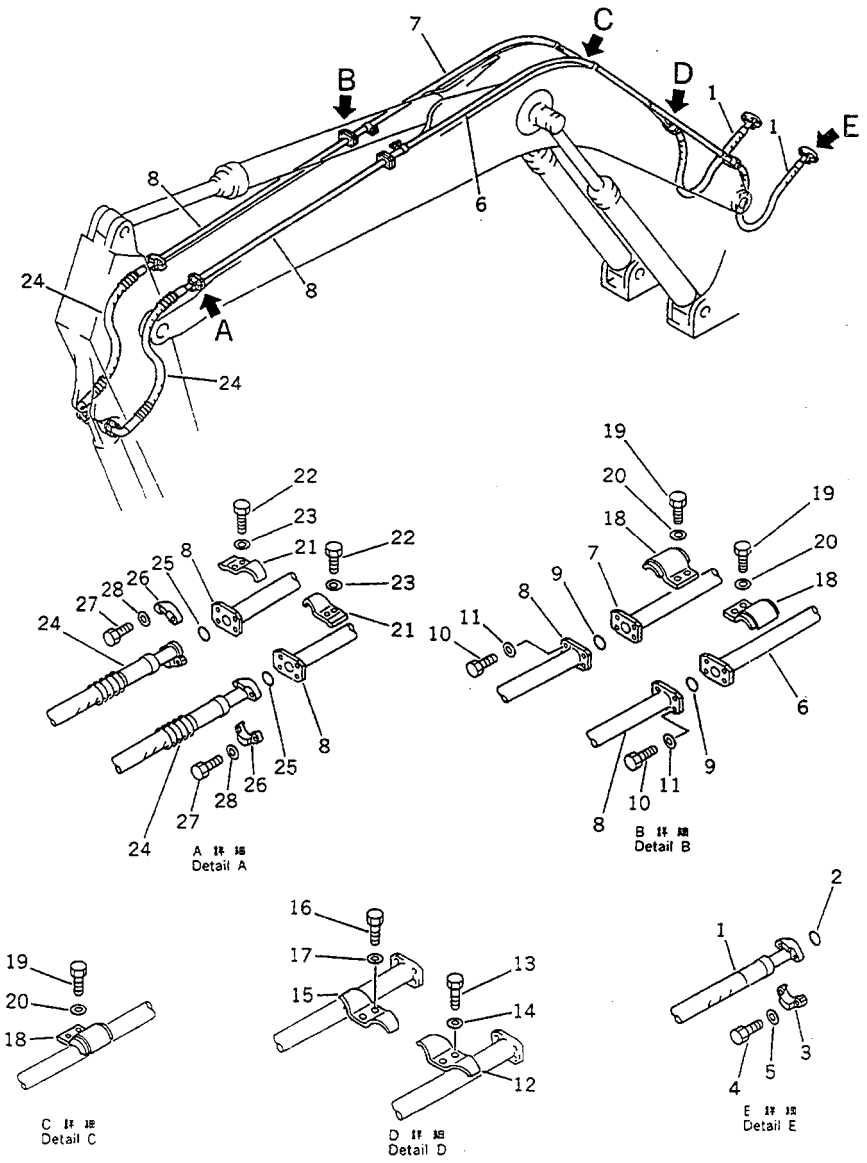

FIG NO. :6534

NDEX NO.	PART NO.	DESCRIPTION	Q'TY	SERIAL NO. PC210-3KP	SERIAL NO. PC240-3KP
1	205-62-K1210	HOSE	2		K15001-
2	07000-13025	O-RING	4		K15001-
3	07371-30638	FLANGE,SPLIT	8		K15001-
4	01010-50830	BOLT	16		K15001-
5	01643-50823	WASHER	16		K15001-
6	206-62-45231	TUBE	1		K15001-
7	206-62-45241	TUBE	1		K15001-
8	205-62-73130	TUBE	2		K15001-
9	07000-13030	O-RING	2		K15001-
10	01010-50830	BOLT	8		K15001-
11	01643-50823	WASHER	8		K15001-
12	(205-62-71560)	CLAMP	1		K15001-
13	(01010-51030)	BOLT	2		K15001-
14	(01643-31032)	WASHER	2		K15001-
15	(205-62-71470)	CLAMP	1		K15001-
16	(01010-51030)	BOLT	2		K15001-
17	(01643-31032)	WASHER	2		K15001-
18	205-62-73480	CLAMP	4		K15001-
19	205-09-71110	BOLT	8		K15001-
20	01643-31032	WASHER	8		K15001-
21	205-62-71550	CLAMP	2		K15001-
22	205-09-71110	BOLT	4		K15001-
23	01643-31032	WASHER	4		K15001-
24	205-62-K1230	HOSE	2		K15001-
25	07000-13025	O-RING	4		K15001-
26	07371-30638	FLANGE,SPLIT	8		K15001-
27	01010-50830	BOLT	16		K15001-
28	01643-50823	WASHER	16		K15001-

https://truckmanualshub.com/

WORK EQUIPMENT

https://truckmanualshub.com/

FIG. 7001 BOOM (PC210)

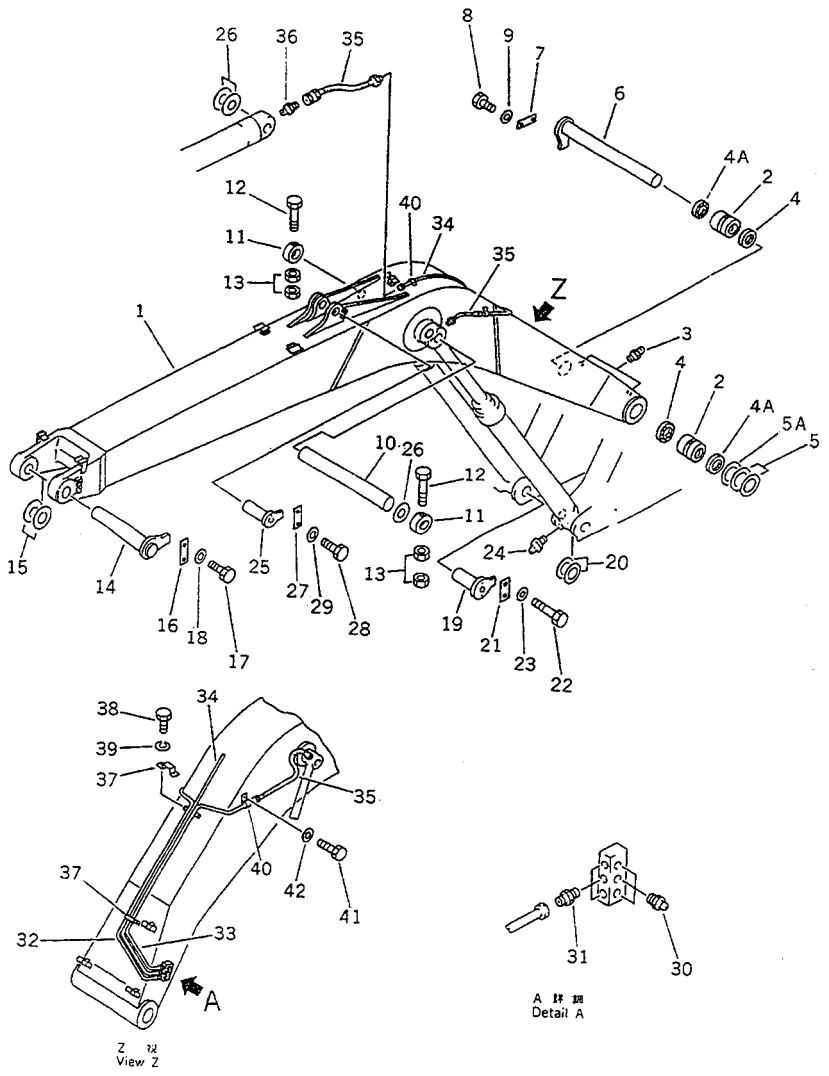

FIG NO. :7001

INDEX NO.	PART NO.	DESCRIPTION	Q'TY	SERIAL NO. PC210-3KP	SERIAL NO. PC240-3KP
	205-70-00071	BOOM ASS'Y	1	K15001-	
1	☆	.BOOM	1	K15001-	
2	205-70-71291	.BUSHING	2	K15001-	
3	07020-00000	.FITTING,GREASE	2	K15001-	
4	07145-00080	.SEAL,DUST	2	K15001-	
4A	07145-00080	SEAL,DUST	2	K15001-	
5	205-70-51450	SPACER, 1.0MM	2	K15001-	
5A	205-70-61570	SPACER, 1.5MM	1	K15001-	
6	205-70-71160	PIN	1	K15001-	
7	205-70-71311	PLATE	1	K15001-	
8	01010-51640	BOLT	2	K15001-	
9	01643-31645	WASHER	2	K15001-	
10	206-70-51190	PIN	1	K15001-	
11	205-70-65670	PLATE	2	K15001-	
12	205-70-73190	BOLT	2	K15001-	
13	01580-12016	NUT	4	K15001-	
14	205-70-65680	PIN	1	K15001-	
15	206-70-45220	SPACER, 1.0MM	AR	K15001-	
16	205-70-71310	PLATE	1	K15001-	
17	01010-51235	BOLT	2	K15001-	
18	01643-31232	WASHER	2	K15001-	
19	205-70-71210	PIN	2	K15001-	
20	203-70-24170	SPACER, 1.0MM	AR	K15001-	
21	205-70-66580	PLATE	2	K15001-	
22	01010-51235	BOLT	4	K15001-	
23	01643-31232	WASHER	4	K15001-	
24	07020-00000	FITTING,GREASE	2	K15001-	
25	205-70-71320	PIN	1	K15001-	
26	205-70-51520	SPACER, 1.0MM	AR	K15001-	
27	205-70-66580	PLATE	1	K15001-	

https://truckmanualshub.com/

FIG NO. :7001

INDEX NO.	PART NO.	DESCRIPTION	Q'TY	SERIAL NO. PC210-3KP	SERIAL NO. PC240-3KP
28	01010-51235	BOLT	2	K15001-	
29	01643-31232	WASHER	2	K15001-	
30	07020-00000	FITTING,GREASE	3	K15001-	
31	07213-50813	CONNECTOR	3	K15001-	
32	205-70-71251	TUBE	1	K15001-	
33	205-70-71271	TUBE	1	K15001-	
34	205-70-71261	TUBE	1	K15001-	
35	205-70-51360	HOSE	3	K15001-	
36	205-70-51390	NIPPLE	3	K15001-	
37	205-70-51410	CLIP	2	K15001-	
38	01010-50612	BOLT	4	K15001-	
39	01602-20619	WASHER,SPRING	4	K15001-	
40	08036-00814	CLIP	3	K15001-	
41	01010-51020	BOLT	6	K15001-	
42	01643-31032	WASHER	6	K15001-	

https://truckmanualshub.com/

FIG. 7003 BOOM (PC240)

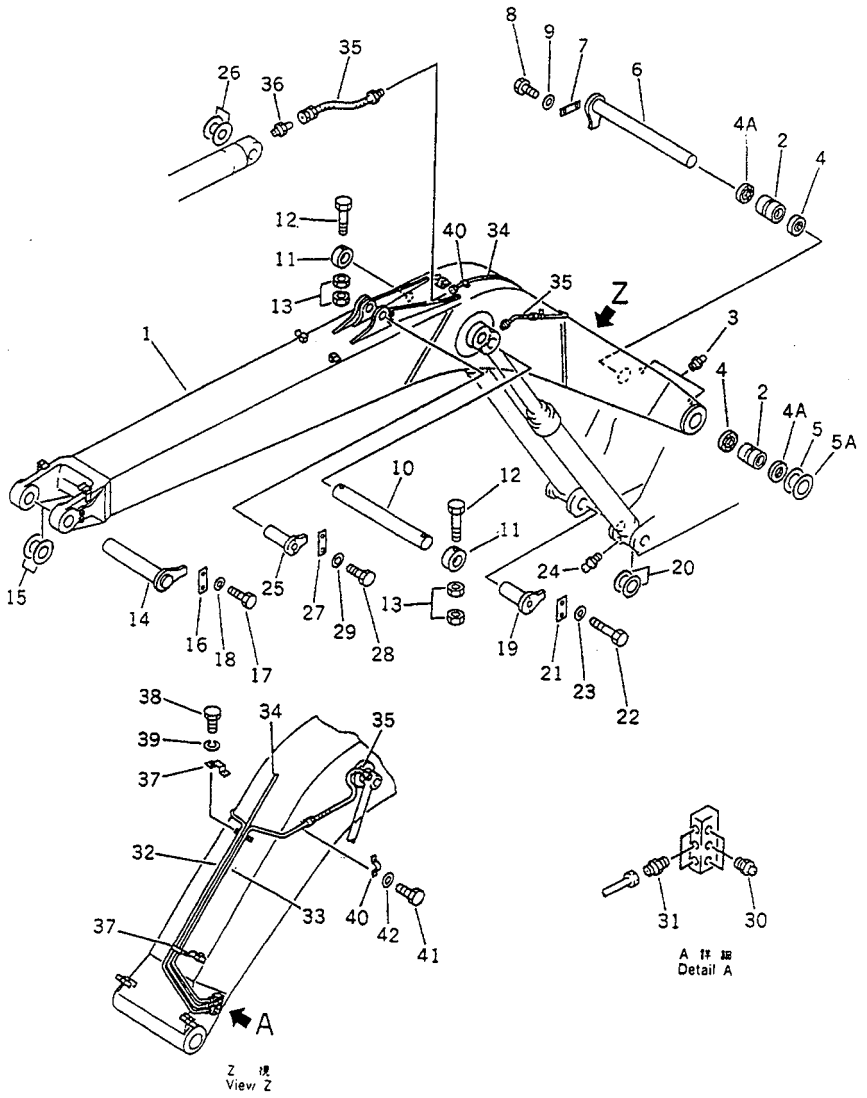

FIG NO. :7003

INDEX NO.	PART NO.	DESCRIPTION	Q'TY	SERIAL NO. PC210-3KP	SERIAL NO. PC240-3KP
	206-70-00070	BOOM ASS'Y	1		K15001-
1	☆	.BOOM	1		K15001-
2	205-70-65760	.BUSHING	2		K15001-
3	07020-00000	.FITTING,GREASE	2		K15001-
4	07145-00090	.SEAL,DUST	2		K15001-
4A	07145-00090	SEAL,DUST	2		K15001-
5	205-70-51450	SPACER, 1.0MM	2		K15001-
5A	206-70-45210	SPACER, 1.5MM	1		K15001-
6	206-70-51160	PIN	1		K15001-
7	205-70-71311	PLATE	1		K15001-
8	01010-51640	BOLT	2		K15001-
9	01643-31645	WASHER	2		K15001-
10	206-70-51190	PIN	1		K15001-
11	205-70-65670	PLATE	2		K15001-
12	205-70-73190	BOLT	2		K15001-
13	01580-12016	NUT	4		K15001-
14	205-70-65680	PIN	1		K15001-
15	206-70-45220	SPACER, 1.0MM	AR		K15001-
16	205-70-71310	PLATE	1		K15001-
17	01010-51235	BOLT	2		K15001-
18	01643-31232	WASHER	2		K15001-
19	205-70-65750	PIN	2		K15001-
20	205-70-51450	SPACER, 1.0MM	AR		K15001-
21	205-70-66580	PLATE	2		K15001-
22	01010-51235	BOLT	4		K15001-
23	01643-31232	WASHER	4		K15001-
24	07020-00000	FITTING,GREASE	2		K15001-
25	206-70-51170	PIN	1		K15001-
26	205-70-51520	SPACER, 1.0MM	AR		K15001-
27	205-70-66580	PLATE	1		K15001-

https://truckmanualshub.com/

FIG NO. :7003

INDEX NO.	PART NO.	DESCRIPTION	Q'TY	SERIAL NO. PC210-3KP	SERIAL NO. PC240-3KP
28	01010-51235	BOLT	2		K15001-
29	01643-31232	WASHER	2		K15001-
30	07020-00000	FITTING,GREASE	3		K15001-
31	07213-50813	CONNECTOR	3		K15001-
32	205-70-71251	TUBE	1		K15001-
33	205-70-71271	TUBE	1		K15001-
34	206-70-51181	TUBE	1		K15001-
35	205-70-51360	HOSE	3		K15001-
36	205-70-51390	NIPPLE	3		K15001-
37	205-70-51410	CLIP	2		K15001-
38	01010-50612	BOLT	4		K15001-
39	01602-20619	WASHER,SPRING	4		K15001-
40	08036-00814	CLIP	3		K15001-
41	01010-51020	BOLT	6		K15001-
42	01643-31032	WASHER	6		K15001-

https://truckmanualshub.com/

FIG. 7005 ARM, 2925MM (PC210)

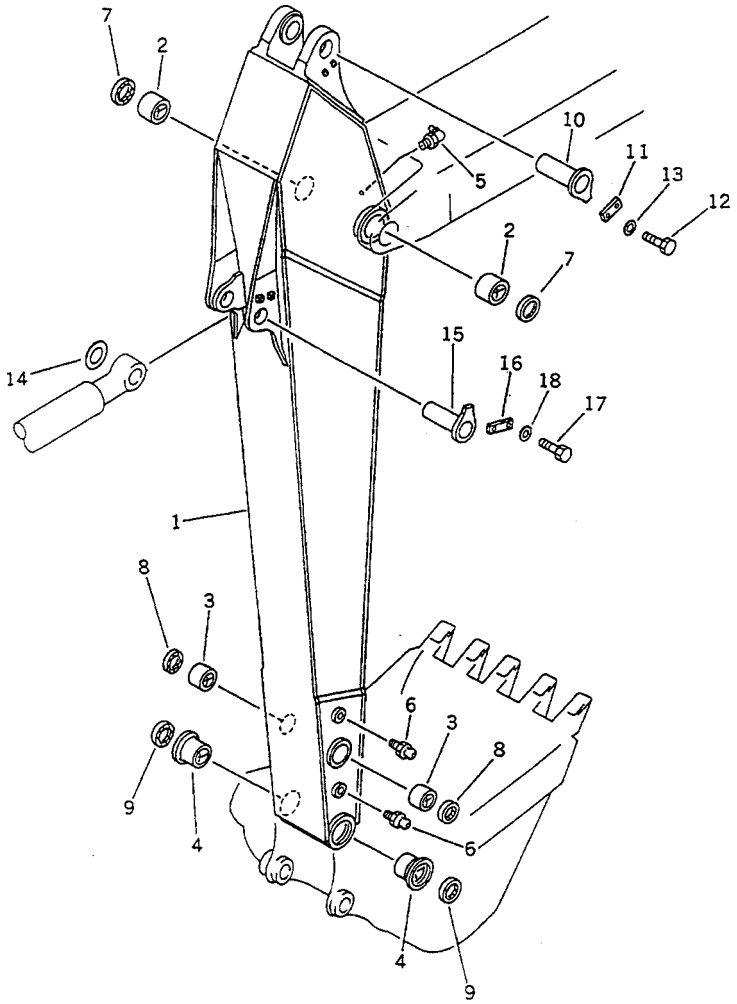

FIG NO. :7005

INDEX NO.	PART NO.	DESCRIPTION	Q'TY	SERIAL NO. PC210-3KP	SERIAL NO. PC240-3KP
	205-70-00080	ARM ASS'Y	1	K15001-	
1	☆	.ARM	1	K15001-	
2	205-70-66550	.BUSHING	2	K15001-	
3	21K-70-12170	.BUSHING	2	K15001-	
4	205-70-72130	.BUSHING	2	K15001-	
5	07020-00900	.FITTING,GREASE	1	K15001-	
6	07020-00000	.FITTING,GREASE	2	K15001-	
7	07145-00090	SEAL,DUST	2	K15001-	
8	21K-70-12180	SEAL,DUST	2	K15001-	
9	205-70-62150	SEAL,DUST	2	K15001-	
10	205-70-71320	PIN	1	K15001-	
11	205-70-66580	PLATE	1	K15001-	
12	01010-51235	BOLT	2	K15001-	
13	01643-31232	WASHER	2	K15001-	
14	203-70-24170	SPACER, 1.0MM	AR	K15001-	
15	205-70-71190	PIN	1	K15001-	
16	205-70-66580	PLATE	1	K15001-	
17	01010-51235	BOLT	2	K15001-	
18	01643-31232	WASHER	2	K15001-	

https://truckmanualshub.com/

FIG. 7007 ARM, 2500MM (PC240)

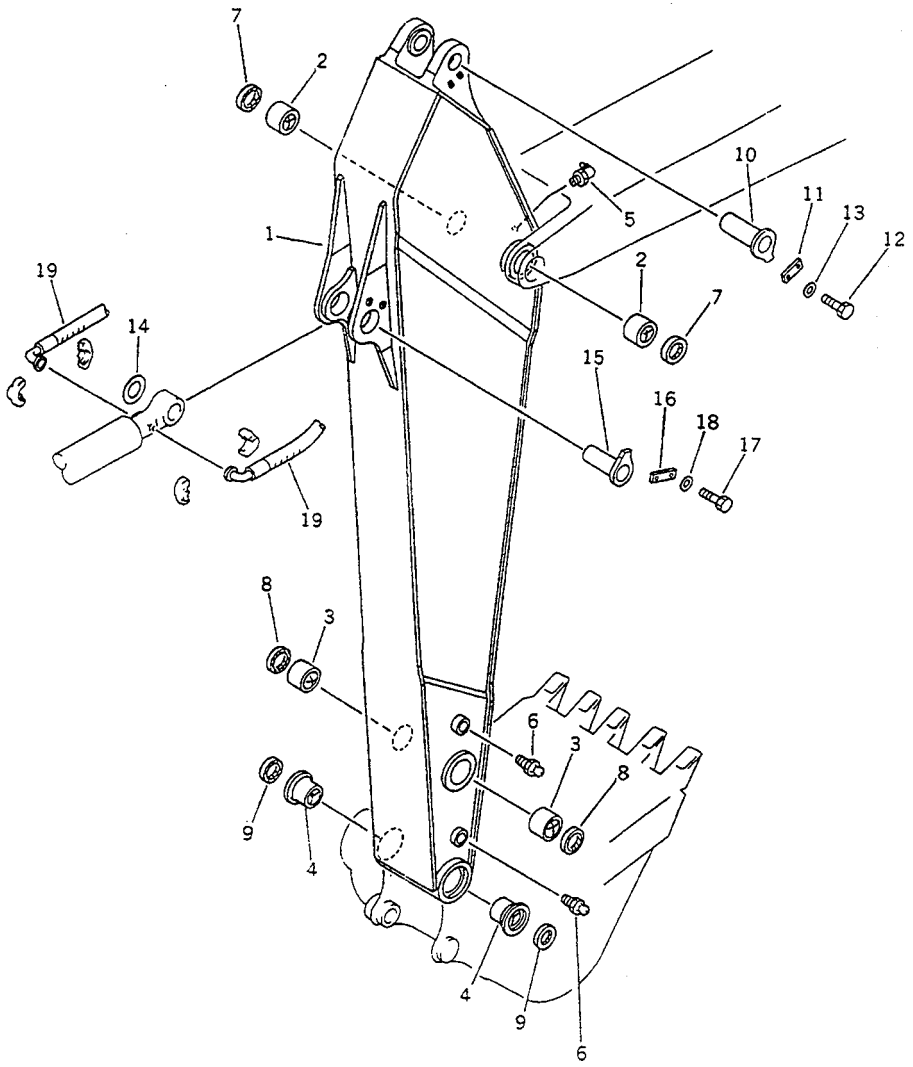

FIG NO. :7007

INDEX NO.	PART NO.	DESCRIPTION	Q'TY	SERIAL NO. PC210-3KP	SERIAL NO. PC240-3KP
	206-944-0040	SHORT ARM ASS'Y	1		K15001-
1	☆	.ARM	1		K15001-
2	205-70-66550	.BUSHING	2		K15001-
3	21K-70-12161	.BUSHING	2		K15001-
4	205-70-72130	.BUSHING	2		K15001-
5	07020-00900	.FITTING,GREASE	1		K15001-
6	07020-00000	.FITTING,GREASE	2		K15001-
7	07145-00090	SEAL,DUST	2		K15001-
8	205-70-62140	SEAL,DUST	2		K15001-
9	205-70-62150	SEAL,DUST	2		K15001-
10	205-70-51170	PIN	1		K15001-
11	205-70-66580	PLATE	1		K15001-
12	01010-51235	BOLT	2		K15001-
13	01643-31232	WASHER	2		K15001-
14	205-70-51520	SPACER, 1.0MM	AR		K15001-
15	205-70-71320	PIN	1		K15001-
16	205-70-66580	PLATE	1		K15001-
17	01010-51235	BOLT	2		K15001-
18	01643-31232	WASHER	2		K15001-
19	205-62-K1240	HOSE	2		K15001-

https://truckmanualshub.com/

FIG. 7011 LINK (PC210)

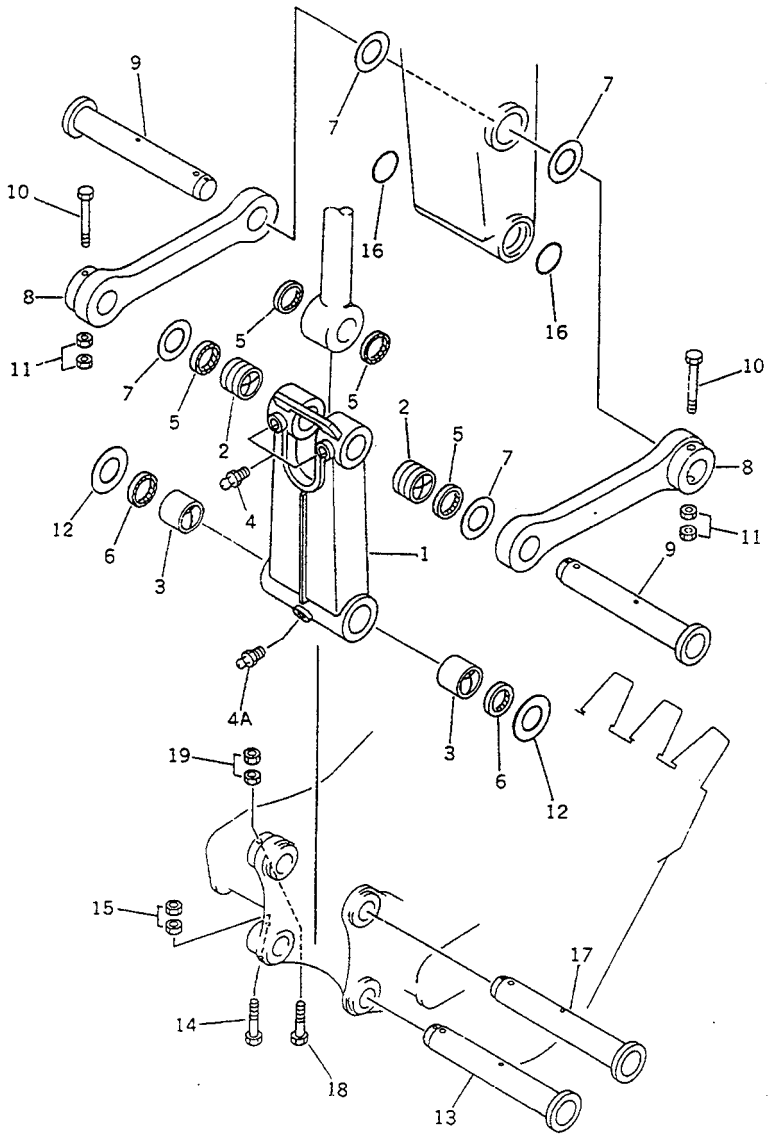

FIG NO. :7011

INDEX NO.	PART NO.	DESCRIPTION	Q'TY	SERIAL NO. PC210-3KP	SERIAL NO. PC240-3KP
	205-70-00091	LINK ASS'Y	1	K15001-	
1	☆	.LINK	1	K15001-	
2	205-70-73180	.BUSHING	2	K15001-	
3	205-70-67150	.BUSHING	2	K15001-	
4	07020-00675	.FITTING,GREASE	2	K15001-	
4A	07020-00000	.FITTING,GREASE	1	K15001-	
5	21K-70-12180	SEAL,DUST	4	K15001-	
6	205-70-62140	SEAL,DUST	2	K15001-	
7	203-70-11210	SPACER, 1.0MM	AR	K15001-	
8	205-70-73130	LINK	2	K15001-	
9	205-70-73160	PIN	2	K15001-	
10	205-70-73190	BOLT	2	K15001-	
11	01580-12016	NUT	4	K15001-	
12	205-70-51520	SPACER, 1.0MM	AR	K15001-	
13	205-70-73270	PIN	1	K15001-	
14	205-70-73190	BOLT	1	K15001-	
15	01580-12016	NUT	2	K15001-	
16	205-70-73280	O-RING	2	K15001-	
17	205-70-73270	PIN	1	K15001-	
18	362-46-11210	BOLT	1	K15001-	
19	01580-12016	NUT	2	K15001-	

https://truckmanualshub.com/

FIG. 7015 LINK (PC240)

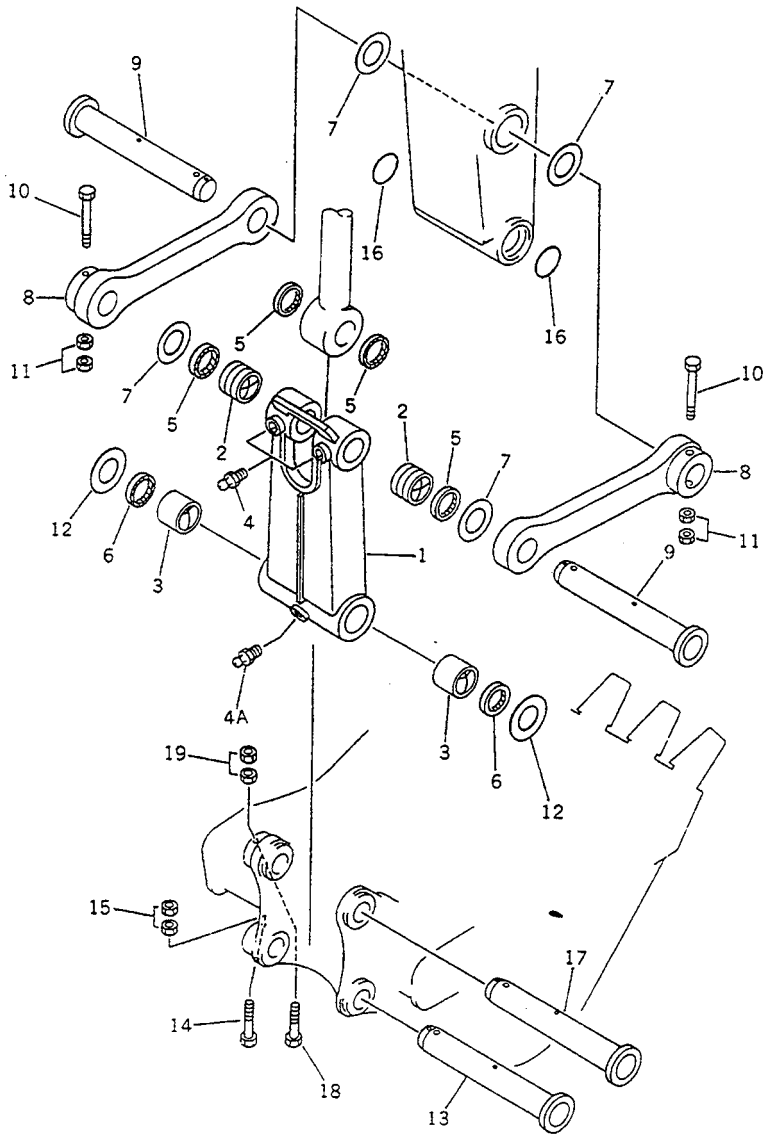

FIG NO. :7015

INDEX NO.	PART NO.	DESCRIPTION	Q'TY	SERIAL NO. PC210-3KP	SERIAL NO. PC240-3KP
	206-70-00091	LINK ASS'Y	1		K15001-
1	☆	.LINK	1		K15001-
2	206-70-53150	.BUSHING	2		K15001-
3	205-70-67150	.BUSHING	2		K15001-
4	07020-00675	.FITTING,GREASE	2		K15001-
4A	07020-00000	.FITTING,GREASE	1		K15001-
5	205-70-62140	SEAL,DUST	4		K15001-
6	205-70-62140	SEAL,DUST	2		K15001-
7	203-70-11210	SPACER, 1.0MM	AR		K15001-
8	206-70-53130	LINK	2		K15001-
9	206-70-53140	PIN	2		K15001-
10	205-70-73190	BOLT	2		K15001-
11	01580-12016	NUT	4		K15001-
12	205-70-51520	SPACER, 1.0MM	AR		K15001-
13	205-70-73270	PIN	1		K15001-
14	205-70-73190	BOLT	1		K15001-
15	01580-12016	NUT	2		K15001-
16	205-70-73280	O-RING	2		K15001-
17	205-70-73270	PIN	1		K15001-
18	362-46-11210	BOLT	1		K15001-
19	01580-12016	NUT	2		K15001-

https://truckmanualshub.com/

FIG. 7305 LONG ARM, 3500MM (PC240)

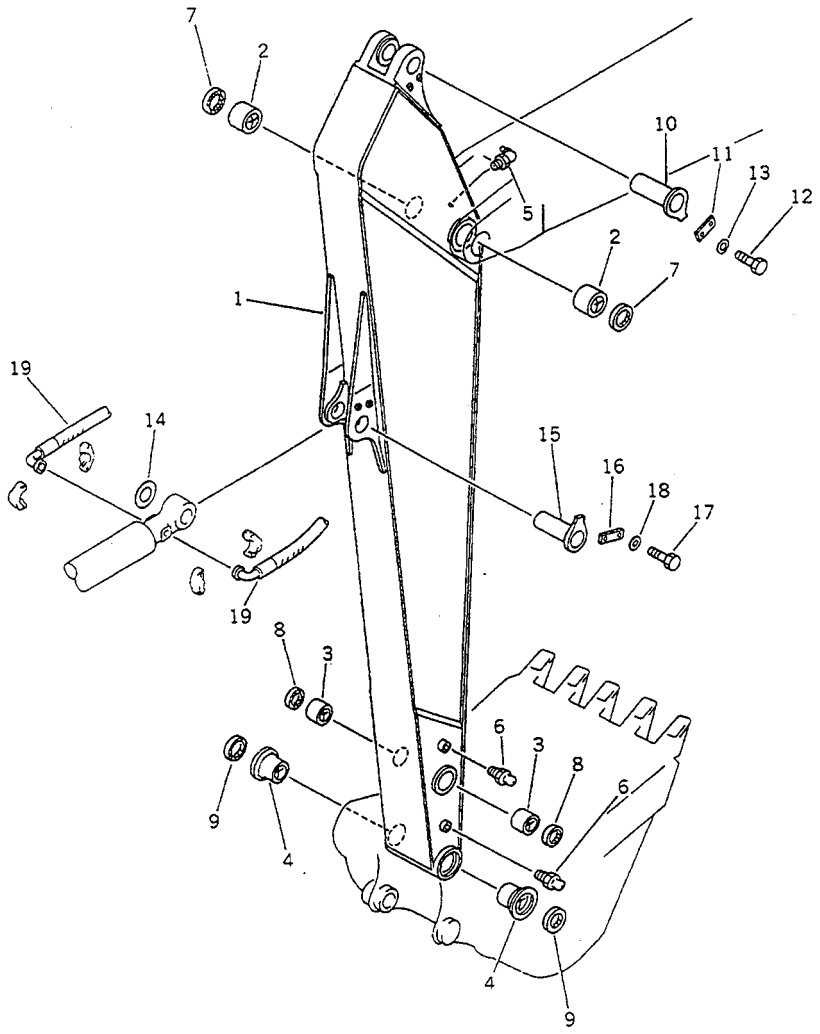

FIG NO. :7305

INDEX NO.	PART NO.	DESCRIPTION	Q'TY	SERIAL NO. PC210-3KP	SERIAL NO. PC240-3KP
	206-943-0020	LONG ARM ASS'Y	1		K15001-
1	☆	.ARM	1		K15001-
2	205-70-66550	.BUSHING	2		K15001-
3	21K-70-12161	.BUSHING	2		K15001-
4	205-70-72130	.BUSHING	2		K15001-
5	07020-00900	.FITTING,GREASE	1		K15001-
6	07020-00000	.FITTING,GREASE	2		K15001-
7	07145-00090	SEAL,DUST	2		K15001-
8	205-70-62140	SEAL,DUST	2		K15001-
9	205-70-62150	SEAL,DUST	2		K15001-
10	206-70-51170	PIN	1		K15001-
11	205-70-66580	PLATE	1		K15001-
12	01010-51235	BOLT	2		K15001-
13	01643-31232	WASHER	2		K15001-
14	205-70-51520	SPACER, 1.0MM	AR		K15001-
15	205-70-71320	PIN	1		K15001-
16	205-70-66580	PLATE	1		K15001-
17	01010-51235	BOLT	2		K15001-
18	01643-31232	WASHER	2		K15001-
19	07098-20622	HOSE	2		K15001-

https://truckmanualshub.com/

FIG. 7307 LONG ARM, 3045MM (PC240)

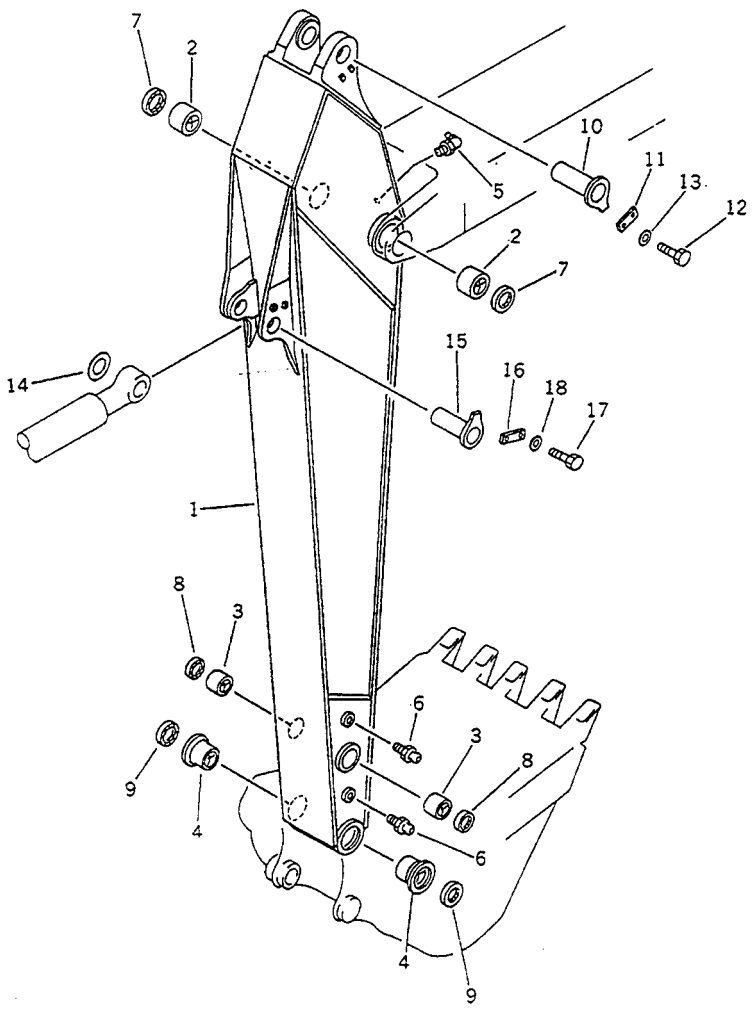

FIG NO. :7307

INDEX NO.	PART NO.	DESCRIPTION	Q'TY	SERIAL NO. PC210-3KP	SERIAL NO. PC240-3KP
	206-70-00080	ARM ASS'Y	1		K15001-
1	☆	.ARM	1		K15001-
2	205-70-66550	.BUSHING	2		K15001-
3	21K-70-12161	.BUSHING	2		K15001-
4	205-70-72130	.BUSHING	2		K15001-
5	07020-00900	.FITTING,GREASE	1		K15001-
6	07020-00000	.FITTING,GREASE	2		K15001-
7	07145-00090	SEAL,DUST	2		K15001-
8	205-70-62140	SEAL,DUST	2		K15001-
9	205-70-62150	SEAL,DUST	2		K15001-
10	206-70-51170	PIN	1		K15001-
11	205-70-66580	PLATE	1		K15001-
12	01010-51235	BOLT	2		K15001-
13	01643-31232	WASHER	2		K15001-
14	205-70-51520	SPACER, 1.0MM	AR		K15001-
15	205-70-71320	PIN	1		K15001-
16	205-70-66580	PLATE	1		K15001-
17	01010-51235	BOLT	2		K15001-
18	01643-31232	WASHER	2		K15001-

https://truckmanualshub.com/

FIG. 7321 SHORT ARM, 2400MM (PC210)

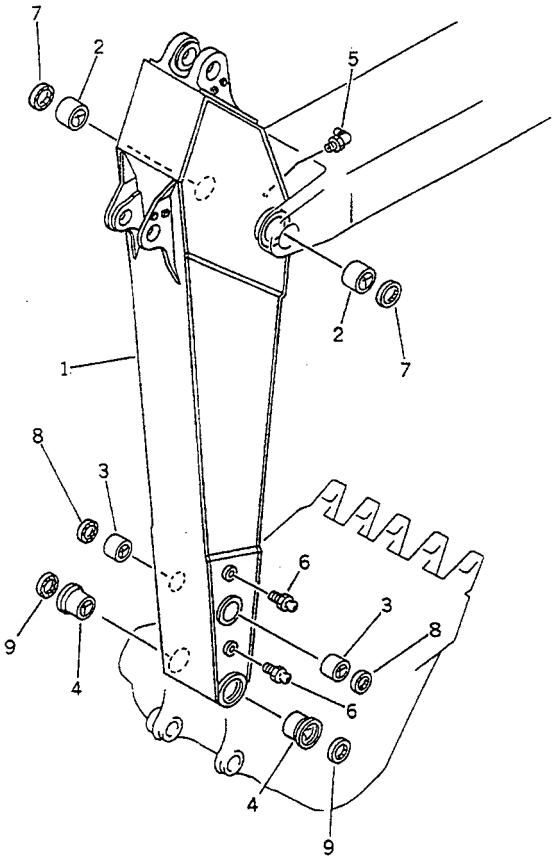

FIG NO. :7321

INDEX NO.	PART NO.	DESCRIPTION	Q'TY	SERIAL NO. PC210-3KP	SERIAL NO. PC240-3KP
	205-944-0031	SHORT ARM ASS'Y	1	K15001-	
1	☆	.ARM,SHORT	1	K15001-	
2	205-70-66550	.BUSHING	2	K15001-	
3	21K-70-12170	.BUSHING	2	K15001-	
4	205-70-72130	.BUSHING	2	K15001-	
5	07020-00900	.FITTING,GREASE	1	K15001-	
6	07020-00000	.FITTING,GREASE	2	K15001-	
7	07145-00090	SEAL,DUST	2	K15001-	
8	21K-70-12180	SEAL,DUST	2	K15001-	
9	205-70-62150	SEAL,DUST	2	K15001-	

https://truckmanualshub.com/

FIG. 7323 SHORT ARM, 1800MM (PC210)

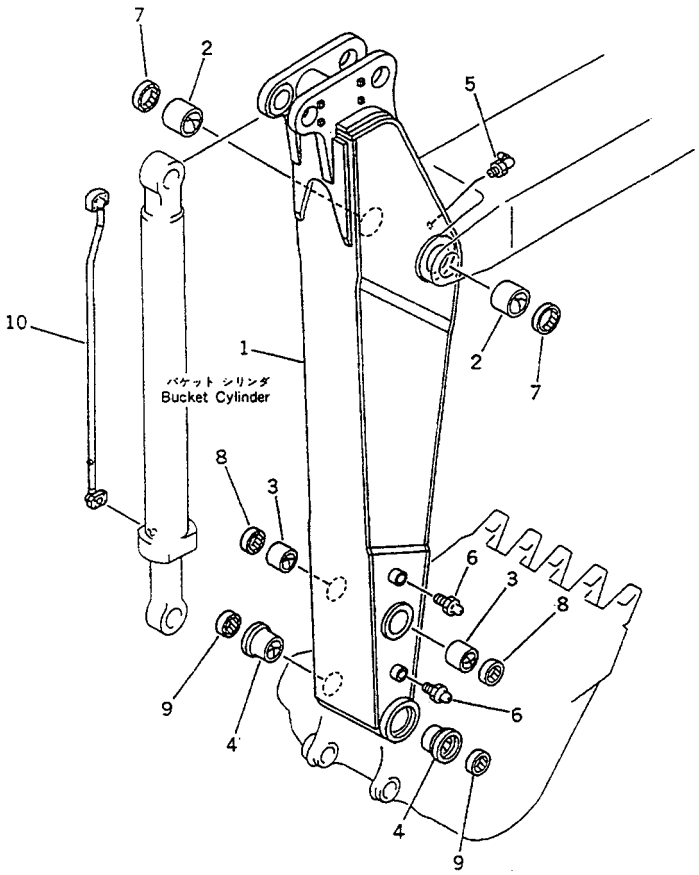

FIG NO. :7323

INDEX NO.	PART NO.	DESCRIPTION	Q'TY	SERIAL NO. PC210-3KP	SERIAL NO. PC240-3KP
	205-944-0040	SHORT ARM ASS'Y	1	K15001-	
1	☆	.ARM,SHORT	1	K15001-	
2	205-70-66550	.BUSHING	2	K15001-	
3	21K-70-12170	.BUSHING	2	K15001-	
4	205-70-72130	.BUSHING	2	K15001-	
5	07020-00900	.FITTING,GREASE	1	K15001-	
6	07020-00000	.FITTING,GREASE	2	K15001-	
7	07145-00090	SEAL,DUST	2	K15001-	
8	21K-70-12180	SEAL,DUST	2	K15001-	
9	205-70-62150	SEAL,DUST	2	K15001-	
10	205-62-73490	TUBE	1	K15001-	

https://truckmanualshub.com/

FIG. 7325 SHORT ARM, 2000MM (PC240)

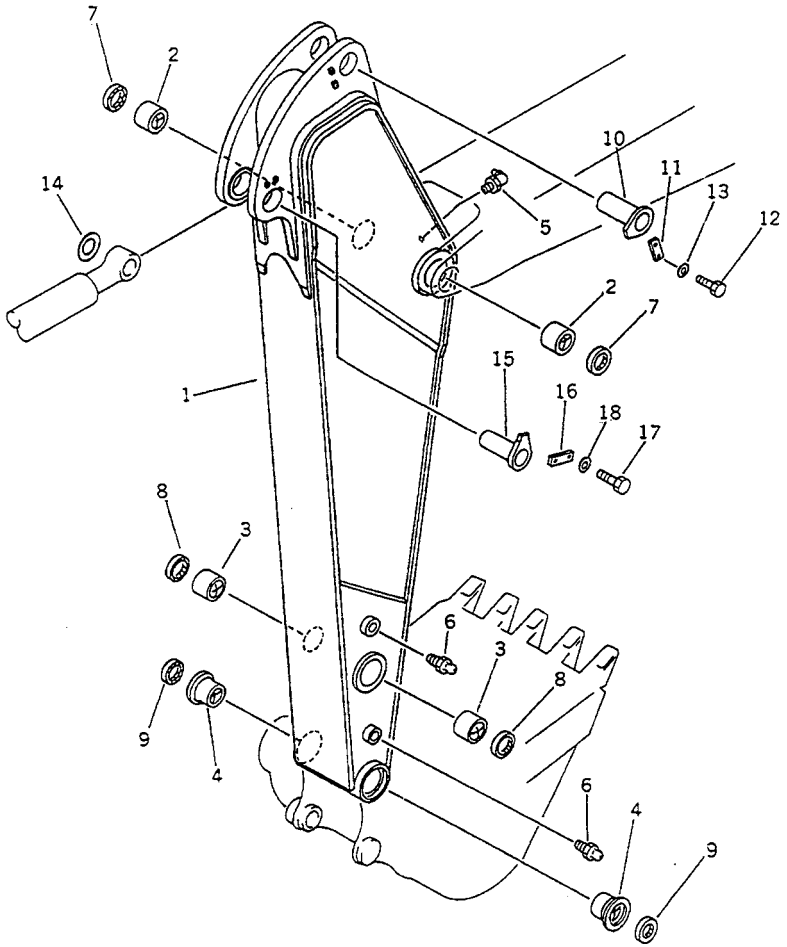

FIG NO. :7325

INDEX NO.	PART NO.	DESCRIPTION	Q'TY	SERIAL NO. PC210-3KP	SERIAL NO. PC240-3KP
	206-944-0030	SHORT ARM ASS'Y	1		K15001-
1	☆	.ARM	1		K15001-
2	205-70-66550	.BUSHING	2		K15001-
3	21K-70-12161	.BUSHING	2		K15001-
4	205-70-72130	.BUSHING	2		K15001-
5	07020-00900	.FITTING,GREASE	1		K15001-
6	07020-00000	.FITTING,GREASE	2		K15001-
7	07145-00090	SEAL,DUST	2		K15001-
8	205-70-62140	SEAL,DUST	2		K15001-
9	205-70-62150	SEAL,DUST	2		K15001-
10	206-70-51170	PIN	1		K15001-
11	205-70-66580	PLATE	1		K15001-
12	01010-51235	BOLT	2		K15001-
13	01643-31232	WASHER	2		K15001-
14	205-70-51520	SPACER, 1.0MM	AR		K15001-
15	205-70-71320	PIN	1		K15001-
16	205-70-66580	PLATE	1		K15001-
17	01010-51235	BOLT	2		K15001-
18	01643-31232	WASHER	2		K15001-

https://truckmanualshub.com/

FIG. 7331 BUCKET CYLINDER (FOR 1800MM SHORT ARM) (PC210)

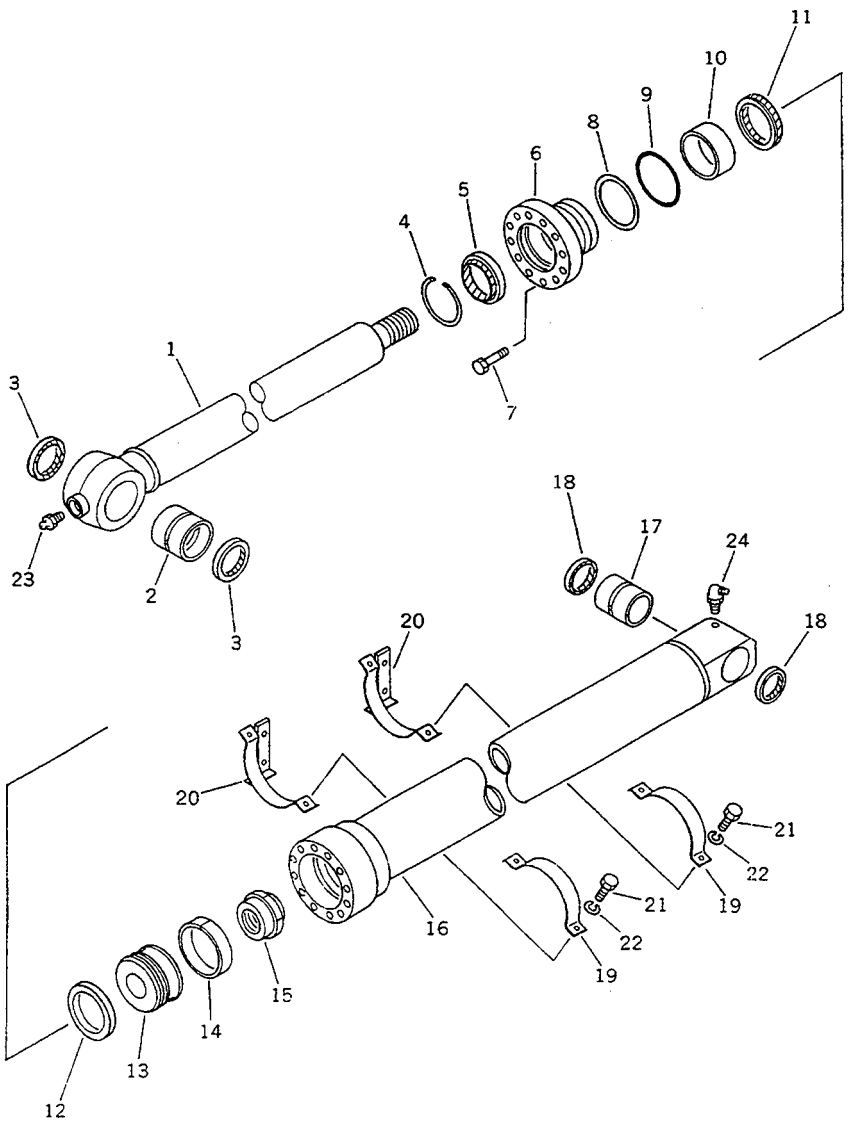

FIG NO. :7331

INDEX NO.	PART NO.	DESCRIPTION	Q'TY	SERIAL NO. PC210-3KP	SERIAL NO. PC240-3KP
	205-63-72301	CYLINDER ASS'Y	1	K15001-	
1	205-63-72320	.ROD,PISTON	1	K15001-	
2	707-76-70120	.BUSHING	1	K15001-	
3	21K-70-12180	.SEAL,DUST	2	K15001-	
4	707-75-10020	.RING,SNAP	1	K15001-	
5	707-76-85510	.SEAL,DUST	1	K15001-	
6	707-27-12470	.HEAD,CYLINDER	1	K15001-	
7	01010-81655	.BOLT	12	K15001-	
8	07146-02116	.RING,BACK-UP	1	K15001-	
9	07000-12115	.O-RING	1	K15001-	
10	707-56-10850	.BUSHING	1	K15001-	
11	707-51-85211	.PACKING,ROD	1	K15001-	
12	707-44-12080	.RING,PISTON	1	K15001-	
13	707-36-12360	.PISTON	1	K15001-	
14	07155-01230	.RING,WEAR	1	K15001-	
15	707-68-10580	.NUT	1	K15001-	
16	205-63-72341	.CYLINDER	1	K15001-	
17	707-76-70110	.BUSHING	1	K15001-	
18	07145-00070	.SEAL,DUST	2	K15001-	
19	707-88-99240	.BAND	2	K15001-	
20	707-88-99270	.BAND	2	K15001-	
21	01010-51035	.BOLT	4	K15001-	
22	01602-21030	.WASHER,SPRING	4	K15001-	
23	07020-00000	.FITTING,GREASE	1	K15001-	
24	07020-00900	.FITTING,GREASE	1	K15001-	

https://truckmanualshub.com/

FIG. 7335 BUCKET CYLINDER (FOR 2000MM SHORT ARM) (PC240)

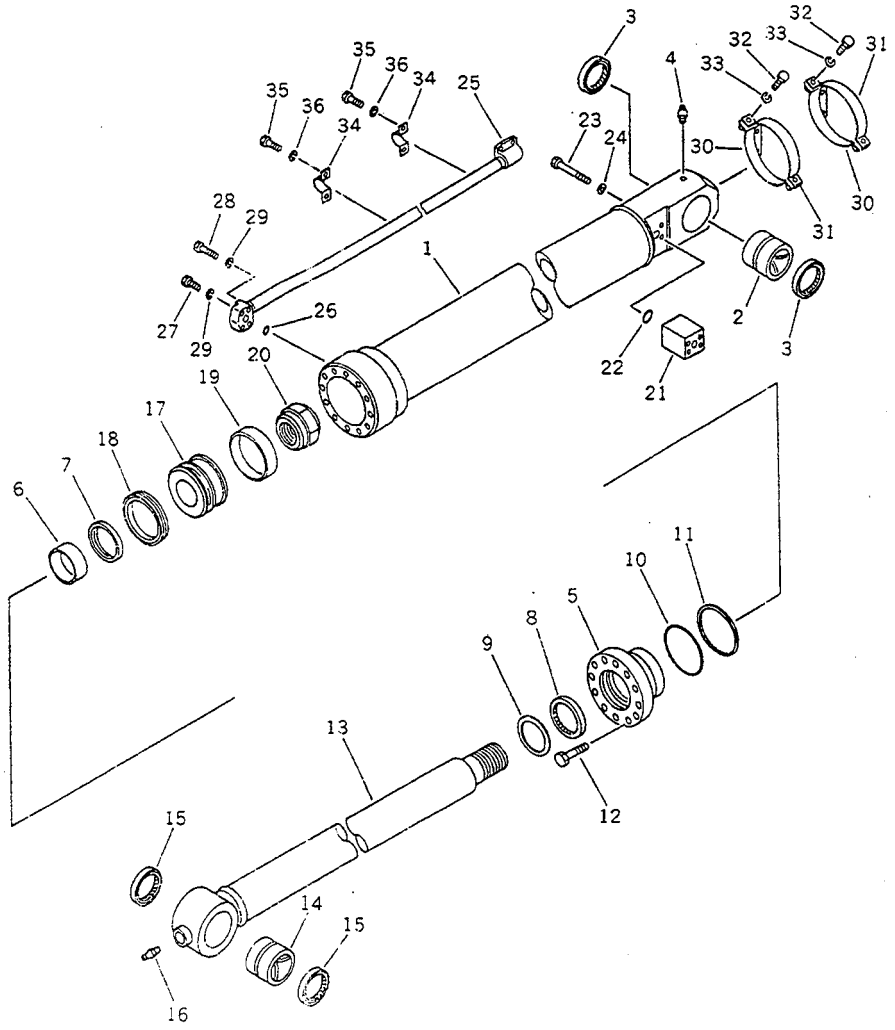

FIG NO. :7335

INDEX NO.	PART NO.	DESCRIPTION	Q'TY	SERIAL NO. PC210-3KP	SERIAL NO. PC240-3KP
	206-63-72300	BUCKET CYLINDER A.	1		K15001-
1	206-63-12340	.CYLINDER	1		K15001-
2	707-76-80010	.BUSHING	1		K15001-
3	07145-00080	.SEAL,DUST	2		K15001-
4	07020-00900	.FITTING,GREASE	1		K15001-
5	707-27-14370	.HEAD,CYLINDER	1		K15001-
6	07177-01035	.BUSHING	1		K15001-
7	707-51-10211	.PACKING,ROD	1		K15001-
8	176-63-56170	.SEAL,DUST	1		K15001-
9	07179-00123	.RING,BACK-UP	1		K15001-
10	07000-12135	.O-RING	1		K15001-
11	07146-02136	.RING,BACK-UP	1		K15001-
12	01010-81860	.BOLT	12		K15001-
13	206-63-72320	.ROD,PISTON	1		K15001-
14	707-76-80020	.BUSHING	1		K15001-
15	205-70-62140	.SEAL,DUST	2		K15001-
16	07020-00000	.FITTING,GREASE	1		K15001-
17	707-36-14460	.PISTON	1		K15001-
18	707-44-14080	.RING,PISTON	1		K15001-
19	07155-01435	.RING,WEAR	1		K15001-
20	707-68-10608	.NUT	1		K15001-
21	707-87-11710	.BLOCK	1		K15001-
22	07000-13030	.O-RING	1		K15001-
23	01011-51210	.BOLT	4		K15001-
24	01602-21236	.WASHER,SPRING	4		K15001-
25	206-63-72170	.TUBE	1		K15001-
26	07000-13030	.O-RING	1		K15001-
27	01010-50845	.BOLT	2		K15001-
28	01010-50855	.BOLT	2		K15001-
29	01602-20825	.WASHER,SPRING	4		K15001-

https://truckmanualshub.com/

FIG NO. :7335

INDEX NO.	PART NO.	DESCRIPTION	Q'TY	SERIAL NO. PC210-3KP	SERIAL NO. PC240-3KP
30	707-88-99980	.BAND	1		K15001-
31	707-88-99410	.BAND	1		K15001-
32	01010-51030	.BOLT	4		K15001-
33	01602-21030	.WASHER,SPRING	4		K15001-
34	07282-02793	.CLAMP	2		K15001-
35	01010-51020	.BOLT	4		K15001-
36	01602-21030	.WASHER,SPRING	4		K15001-

SPECIAL APPLICATION PARTS

https://truckmanualshub.com/

FIG. 8151 WINDOW WASHER

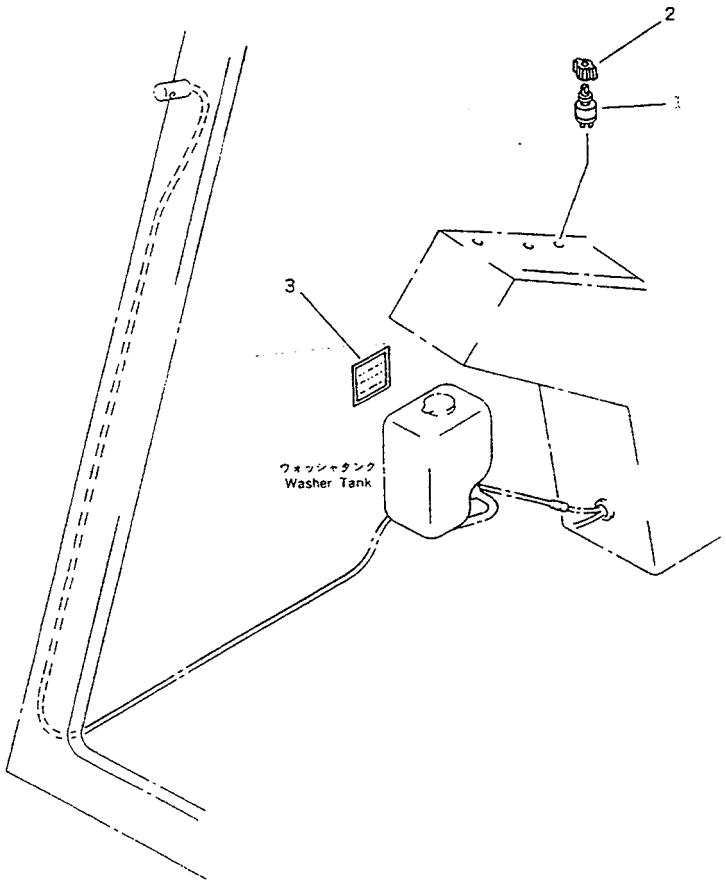

FIG NO. :8151

INDEX NO.	PART NO.	DESCRIPTION	Q'TY	SERIAL NO. PC210-3KP	SERIAL NO. PC240-3KP
	205-06-71690	SWITCH	1	K15001-	K15001-
1	205-06-71390	.SWITCH	1	K15001-	K15001-
2	205-06-71670	.KNOB	1	K15001-	K15001-
3	09699-03000	PLATE, CAUTION,(ENGLISH)	1	K15001-	K15001-
	09699-01000	PLATE, CAUTION (SPANISH-ENGLISH)	1	K15001-	K15001-
	09699-02000	PLATE, INSTRUCTION (GERMAN-ENGLISH)	1	K15001-	K15001-
	09699-05000	PLATE, CAUTION (FRENCH-ENGLISH)	1	K15001-	K15001-

https://truckmanualshub.com/

FIG. 8153 DEFROSTER

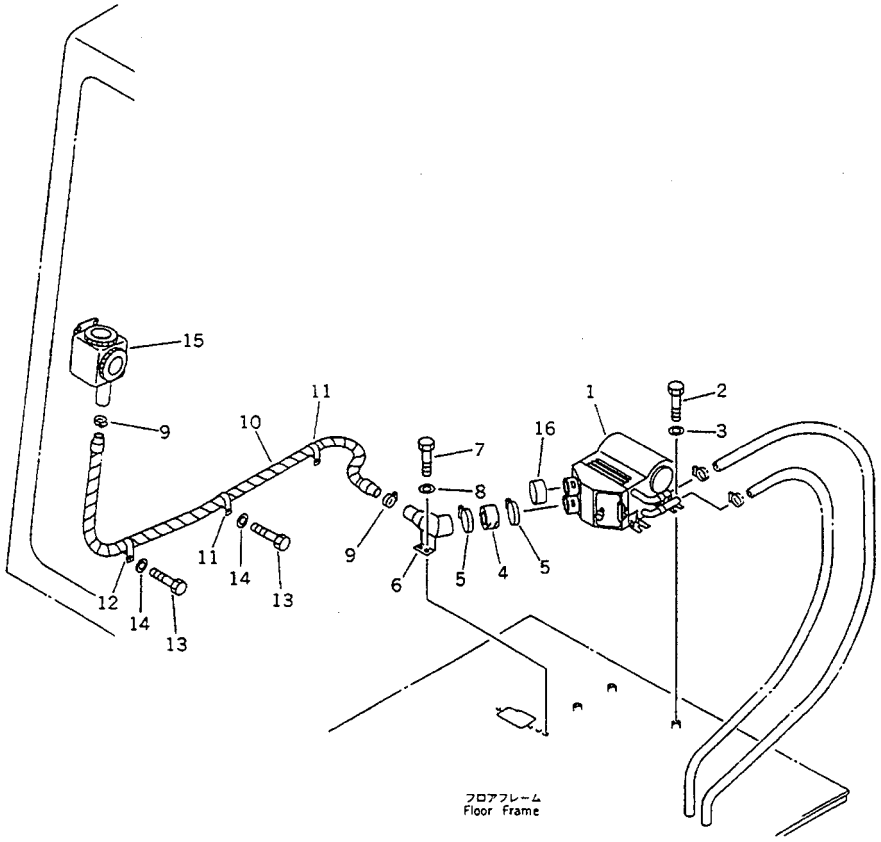

FIG NO. :8153

INDEX NO.	PART NO.	DESCRIPTION	Q'TY	SERIAL NO. PC210-3KP	SERIAL NO. PC240-3KP
1	205-977-K121	HEATER ASS'Y	1	K15001-	K15001-
2	01010-51020	BOLT	3	K15001-	K15001-
3	01643-31032	WASHER	3	K15001-	K15001-
4	198-911-5290	HOSE	1	K15001-	K15001-
5	07281-00709	CLAMP,HOSE	2	K15001-	K15001-
6	205-977-7210	DUCT	1	K15001-	K15001-
7	01010-50820	BOLT	2	K15001-	K15001-
8	01643-30823	WASHER	2	K15001-	K15001-
9	07281-00419	CLAMP,HOSE	2	K15001-	K15001-
10	09485-03717	HOSE	1	K15001-	K15001-
11	113-899-7950	CLIP	2	K15001-	K15001-
12	155-911-1790	CLIP	1	K15001-	K15001-
13	01010-51020	BOLT	4	K15001-	K15001-
14	01643-31032	WASHER	4	K15001-	K15001-
15	205-977-K130	DEMISTER	1	K15001-	K15001-
16	205-977-7190	CAP,RUBBER	1	K15001-	K15001-

https://truckmanualshub.com/

FIG. 8161 RADIO-LESS

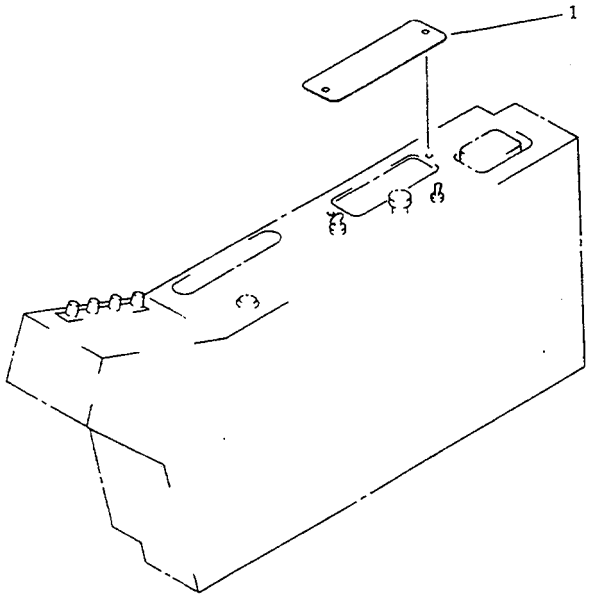

FIG NO. :8161

INDEX NO.	PART NO.	DESCRIPTION	Q'TY	SERIAL NO. PC210-3KP	SERIAL NO. PC240-3KP
1	205-06-K1240	PLATE	1	K15001-	K15001-

https://truckmanualshub.com/

FIG. 8163 HEATER-LESS (1/2)

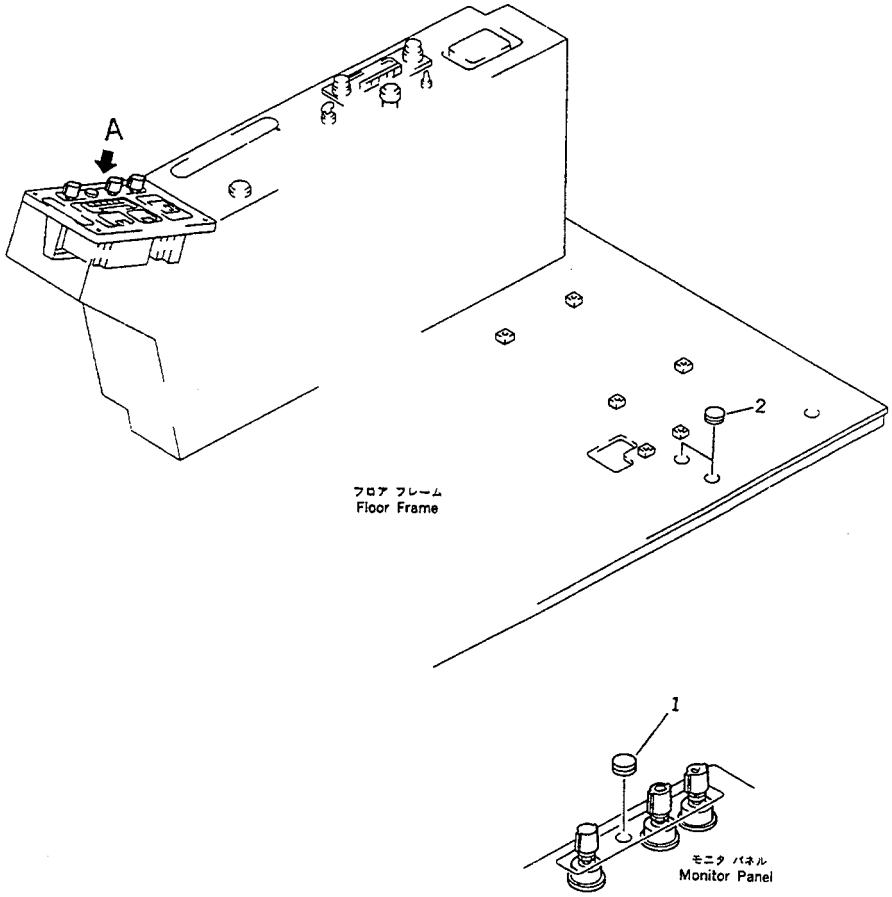

FIG NO. :8163

INDEX NO.	PART NO.	DESCRIPTION	Q'TY	SERIAL NO. PC210-3KP	SERIAL NO. PC240-3KP
1	09415-00506	CAP	1	K15001-	K15001-
2	09415-02520	CAP	2	K15001-	K15001-

https://truckmanualshub.com/

FIG. 8164 HEATER-LESS (2/2)

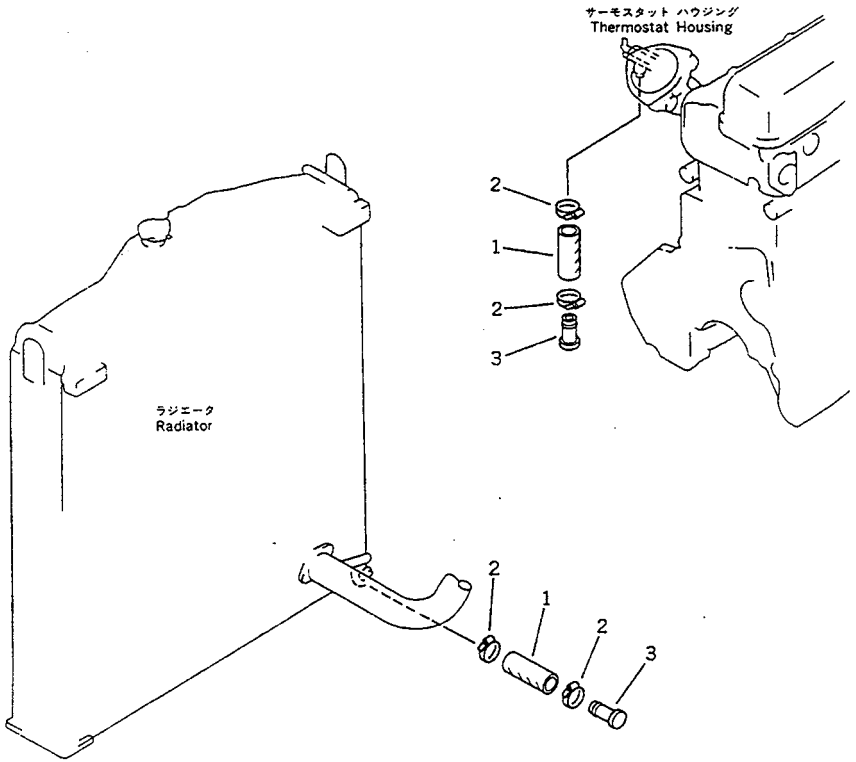

FIG NO. :8164

INDEX NO.	PART NO.	DESCRIPTION	Q'TY	SERIAL NO. PC210-3KP	SERIAL NO. PC240-3KP
1	195-979-4830	HOSE	2	K15001-	K15001-
2	07281-00259	CLAMP	4	K15001-	K15001-
3	205-03-62720	PLUG	2	K15001-	K15001-

https://truckmanualshub.com/

FIG. 8311 CONTROL PEDAL (FOR ADDITIONAL PIPING)

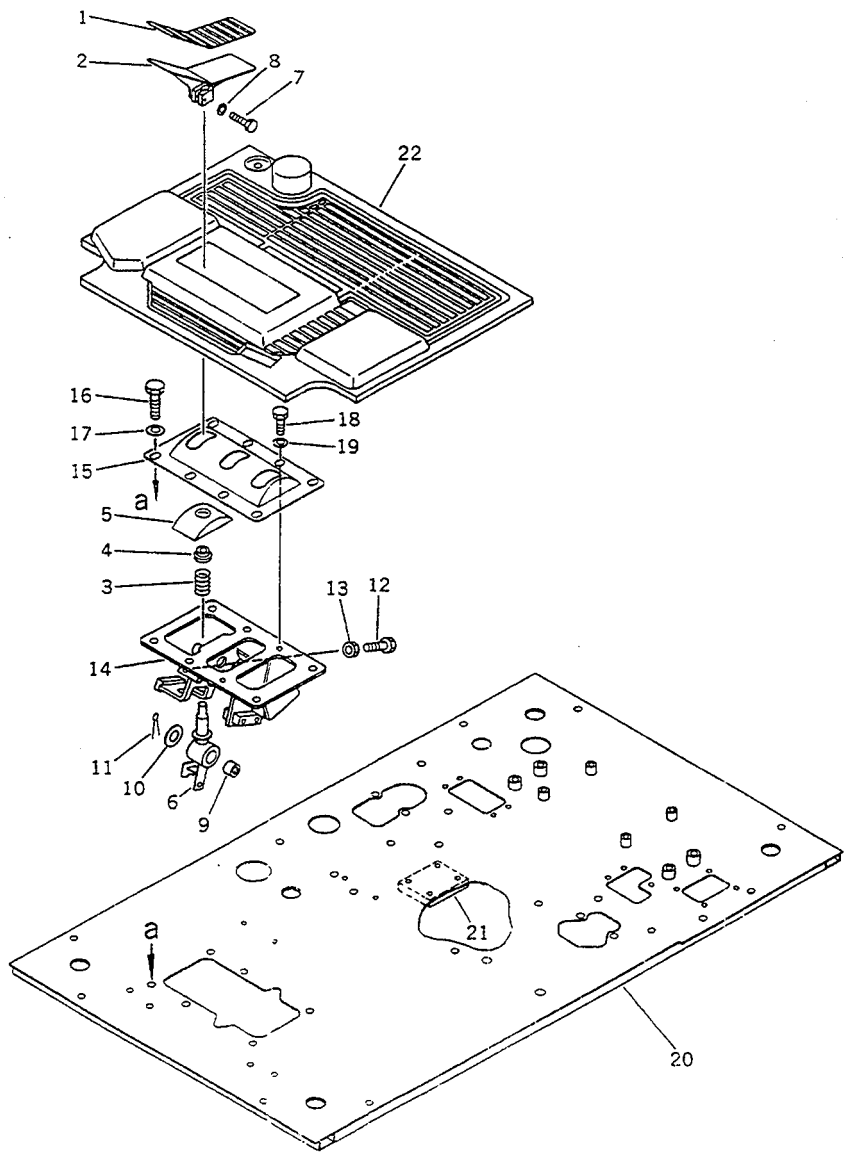

FIG NO. :8311

INDEX NO.	PART NO.	DESCRIPTION	Q'TY	SERIAL NO. PC210-3KP	SERIAL NO. PC240-3KP
1	205-970-7240	SHEET	1	K15001-	K15001-
2	205-970-7230	PEDAL	1	K15001-	K15001-
3	09340-10130	SPRING	1	K15001-	K15001-
4	203-43-41660	SPACER	1	K15001-	K15001-
5	208-43-11230	COVER	1	K15001-	K15001-
6	205-970-7251	LEVER	1	K15001-	K15001-
7	01010-50825	BOLT	1	K15001-	K15001-
8	01643-30823	WASHER	1	K15001-	K15001-
9	195-61-34130	BEARING	2	K15001-	K15001-
10	01640-02032	WASHER	1	K15001-	K15001-
11	04050-15030	PIN,COTTER	1	K15001-	K15001-
12	01016-51040	BOLT	2	K15001-	K15001-
13	01580-11008	NUT	2	K15001-	K15001-
14	205-970-7211	BRACKET	1	K15001-	K15001-
15	205-970-7220	COVER	1	K15001-	K15001-
16	01010-51235	BOLT	6	K15001-	K15001-
17	01643-31232	WASHER	6	K15001-	K15001-
18	01010-51016	BOLT	2	K15001-	K15001-
19	01643-31032	WASHER	2	K15001-	K15001-
20	205-970-7140	FRAME	1	K15001-	K15001-
21	205-970-7331	.SEAT (WELDED)	1	K15001-	K15001-
22	205-970-7370	MAT,FLOOR	1	K15001-	K15001-

https://truckmanualshub.com/

FIG. 8313 CONTROL LINKAGE (FOR ADDITIONAL PIPING)

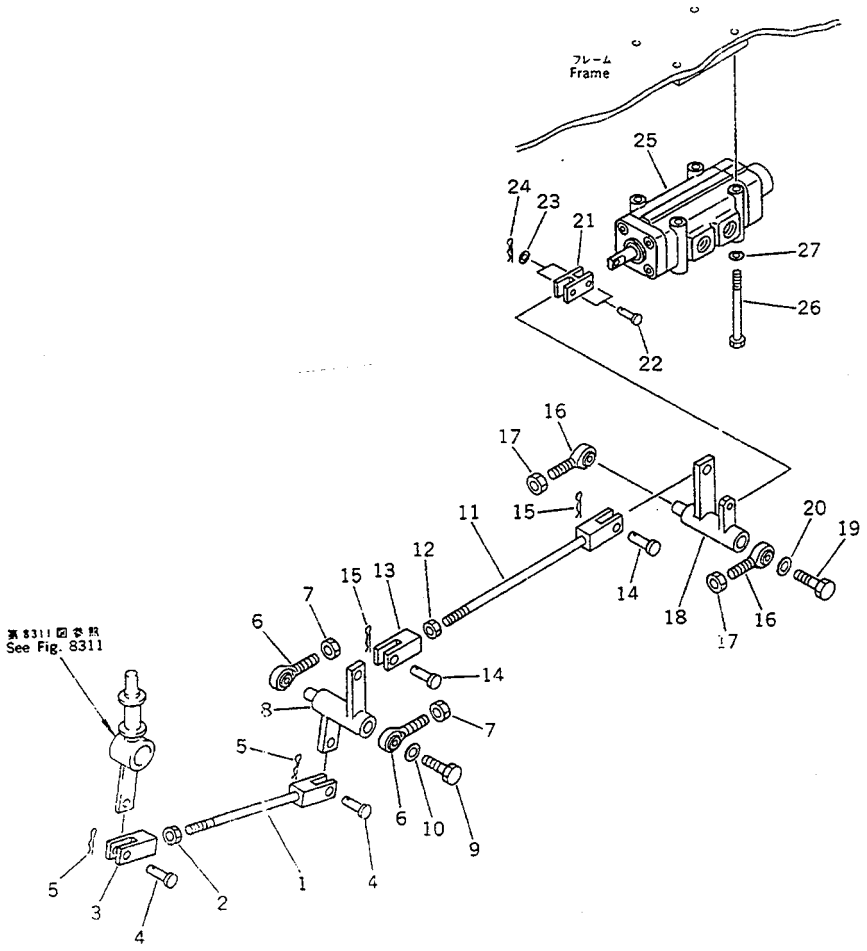

FIG NO. :8313

INDEX NO.	PART NO.	DESCRIPTION	Q'TY	SERIAL NO. PC210-3KP	SERIAL NO. PC240-3KP
1	04244-41017	ROD	1	K15001-	K15001-
2	01582-11008	NUT	1	K15001-	K15001-
3	04210-21040	YOKE	1	K15001-	K15001-
4	04205-11028	PIN	2	K15001-	K15001-
5	04052-01038	PIN,SNAP	2	K15001-	K15001-
6	04252-01269	END,ROD	2	K15001-	K15001-
7	01582-11210	NUT	2	K15001-	K15001-
8	205-970-7260	SHAFT	1	K15001-	K15001-
9	01010-51235	BOLT	1	K15001-	K15001-
10	01643-31232	WASHER	1	K15001-	K15001-
11	04244-41022	ROD	1	K15001-	K15001-
12	01582-11008	NUT	1	K15001-	K15001-
13	04210-21040	YOKE	2	K15001-	K15001-
14	04205-11028	PIN	2	K15001-	K15001-
15	04052-01038	PIN,SNAP	2	K15001-	K15001-
16	04252-01269	END,ROD	2	K15001-	K15001-
17	01582-11210	NUT	2	K15001-	K15001-
18	205-970-7270	SHAFT	1	K15001-	K15001-
19	01010-51235	BOLT	1	K15001-	K15001-
20	01643-31232	WASHER	1	K15001-	K15001-
21	205-970-5890	YOKE	1	K15001-	K15001-
22	04205-10628	PIN	2	K15001-	K15001-
23	01641-20608	WASHER	2	K15001-	K15001-
24	04052-00633	PIN,SNAP	2	K15001-	K15001-
25	205-970-5880	VALVE ASS'Y	1	K15001-	K15001-
26	01010-50880	BOLT	4	K15001-	K15001-
27	01643-30823	WASHER	4	K15001-	K15001-

https://truckmanualshub.com/

FIG. 8321 ADDITIONAL PIPING (PILOT) (PC210)

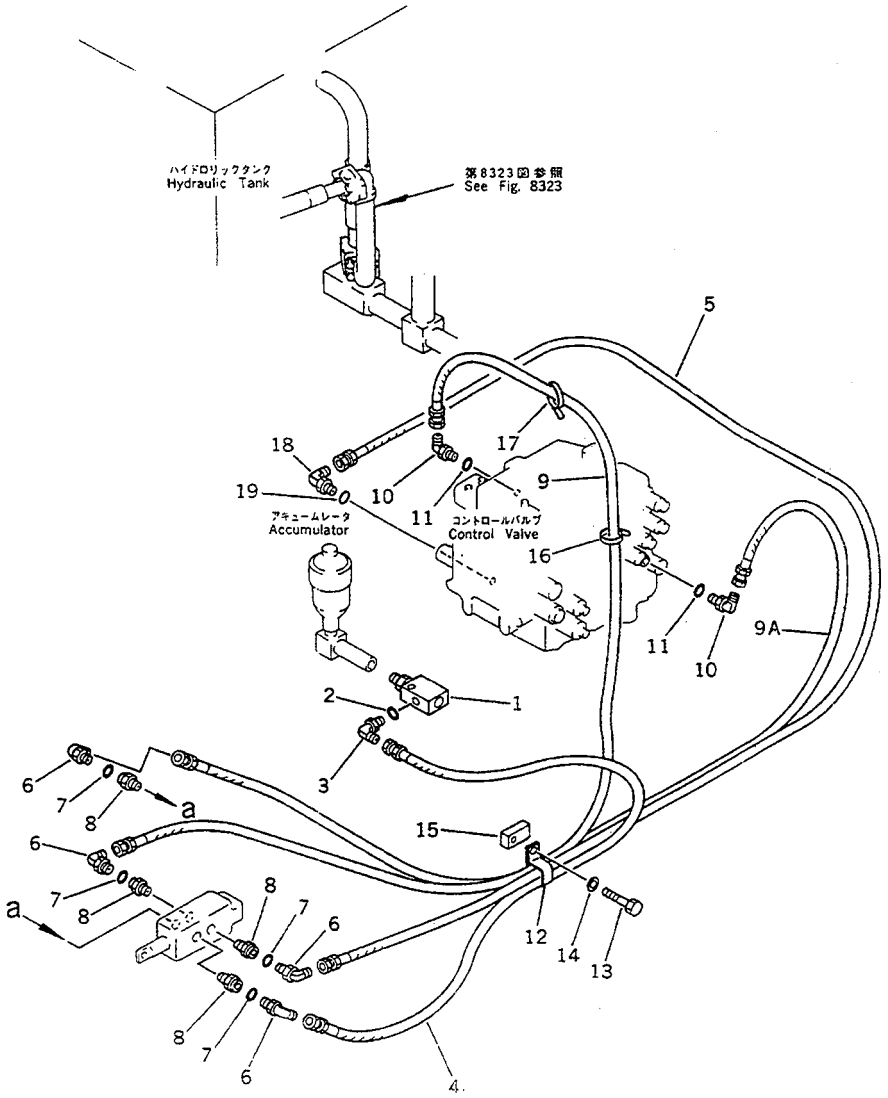

FIG NO. :8321

INDEX NO.	PART NO.	DESCRIPTION	Q'TY	SERIAL NO. PC210-3KP	SERIAL NO. PC240-3KP
1	205-970-7480	TEE	1	K15001-	
2	07002-01423	O-RING	1	K15001-	
3	07235-10210	ELBOW	1	K15001-	
4	07102-20214	HOSE	1	K15001-	
5	07102-20226	HOSE	1	K15001-	
6	07235-10210	ELBOW	4	K15001-	
7	07002-01423	O-RING	4	K15001-	
8	205-970-6050	ADAPTER	4	K15001-	
9	07102-20226	HOSE	1	K15001-	
9A	07102-20219	HOSE	1	K15001-	
10	07235-10210	ELBOW	2	K15001-	
11	07002-01423	O-RING	2	K15001-	
12	21T-06-11940	CLIP	1	K15001-	
13	01011-51230	BOLT	1	K15001-	
14	01643-31232	WASHER	1	K15001-	
15	01573-12306	SEAT	1	K15001-	
16	08034-00519	BAND	1	K15001-	
17	08034-00834	BAND	1	K15001-	
18	07235-10210	ELBOW	1	K15001-	
19	07002-01423	O-RING	1	K15001-	

https://truckmanualshub.com/

FIG. 8322 ADDITIONAL PIPING (PILOT) (PC240)

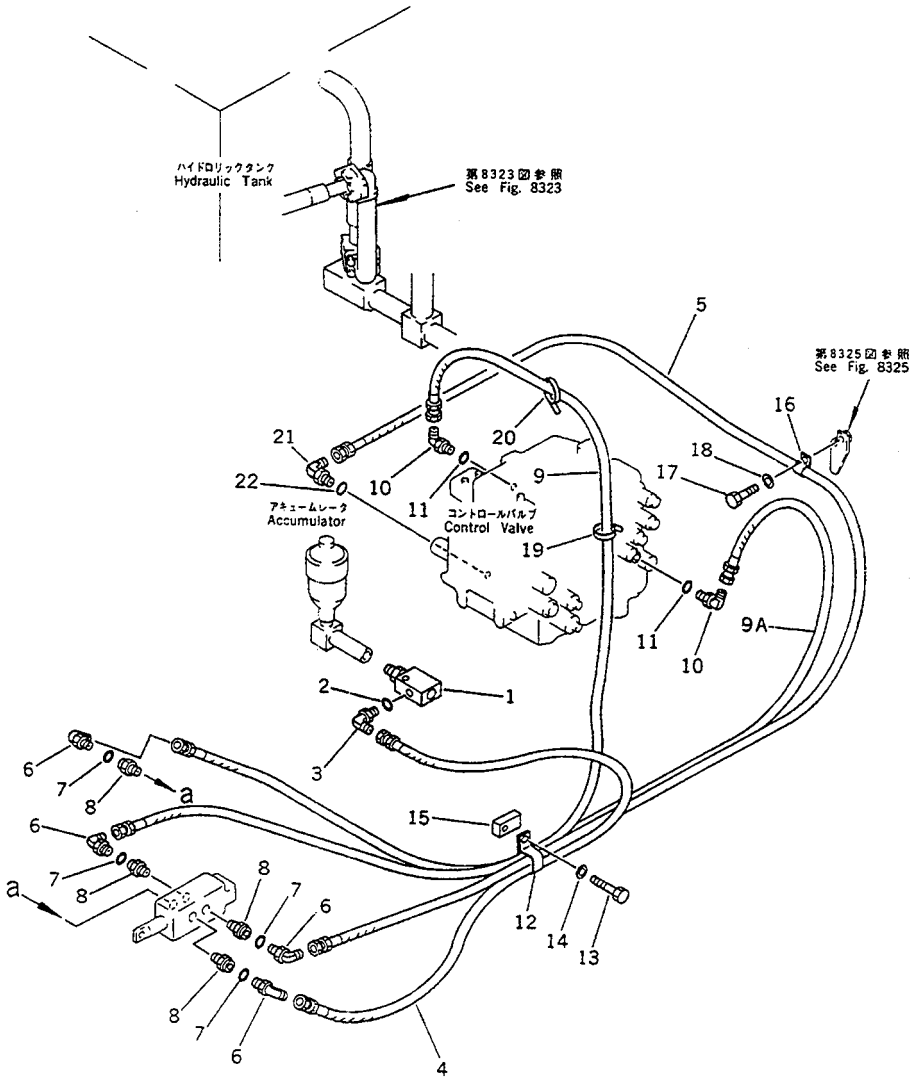

FIG NO. :8322

INDEX NO.	PART NO.	DESCRIPTION	Q'TY	SERIAL NO. PC210-3KP	SERIAL NO. PC240-3KP
1	205-970-7480	TEE	1		K15001-
2	07002-01423	O-RING	1		K15001-
3	07235-10210	ELBOW	1		K15001-
4	07102-20214	HOSE	1		K15001-
5	07102-20226	HOSE	1		K15001-
6	07235-10210	ELBOW	4		K15001-
7	07002-01423	O-RING	4		K15001-
8	205-970-6050	ADAPTER	4		K15001-
9	07102-20226	HOSE	1		K15001-
9A	07102-20219	HOSE	1		K15001-
10	07235-10210	ELBOW	2		K15001-
11	07002-01423	O-RING	2		K15001-
12	21T-06-11940	CLIP	1		K15001-
13	01011-51230	BOLT	1		K15001-
14	01643-31232	WASHER	1		K15001-
15	01573-12306	SEAT	1		K15001-
16	08036-21414	CLIP	1		K15001-
17	01010-51225	BOLT	1		K15001-
18	01643-31232	WASHER	1		K15001-
19	08034-00519	BAND	1		K15001-
20	08034-00834	BAND	1		K15001-
21	07235-10210	ELBOW	1		K15001-
22	07002-01423	O-RING	1		K15001-

https://truckmanualshub.com/

FIG. 8323 ADDITIONAL PIPING (RETURN)

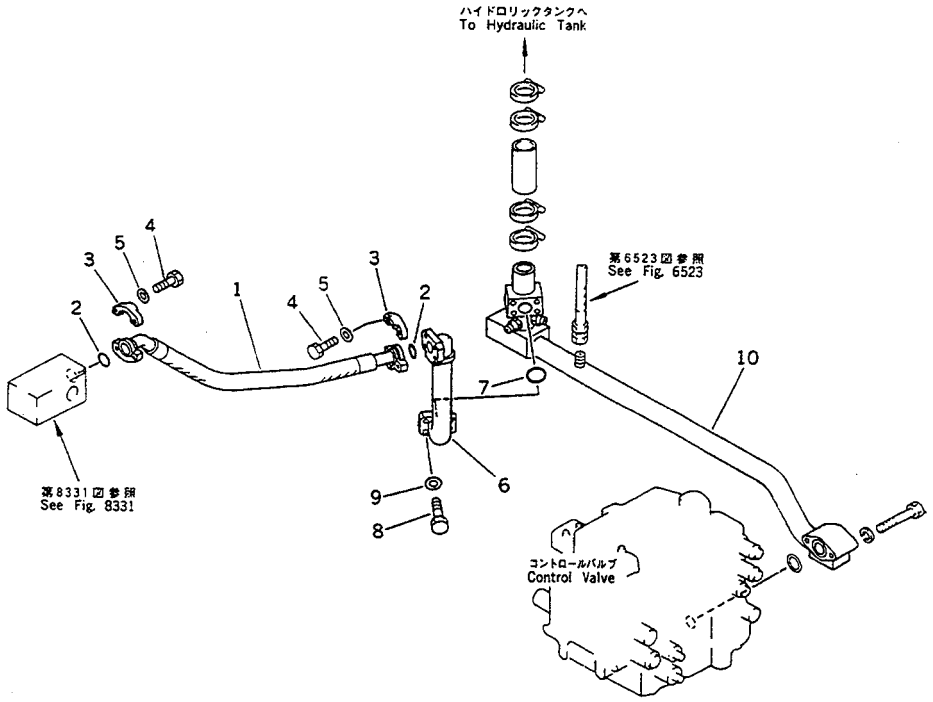

FIG NO. :8323

DEX O.	PART NO.	DESCRIPTION	Q'TY	SERIAL NO. PC210-3KP	SERIAL NO. PC240-3KP
1	07297-01007	HOSE	1	K15001-	K15001-
2	07000-13032	O-RING	2	K15001-	K15001-
3	07371-31049	FLANGE,SPLIT	4	K15001-	K15001-
4	07372-21035	BOLT	8	K15001-	K15001-
5	01643-51032	WASHER	8	K15001-	K15001-
6	205-970-7441	TUBE	1	K15001-	K15001-
7	07000-13035	O-RING	1	K15001-	K15001-
8	07372-21040	BOLT	4	K15001-	K15001-
9	01643-51032	WASHER	4	K15001-	K15001-
10	205-970-7433	TUBE	1	K15001-	K15001-

https://truckmanualshub.com/

FIG. 8325 ADDITIONAL PIPING (CONTROL VALVE TO CHANGE ROTOR) (PC210)

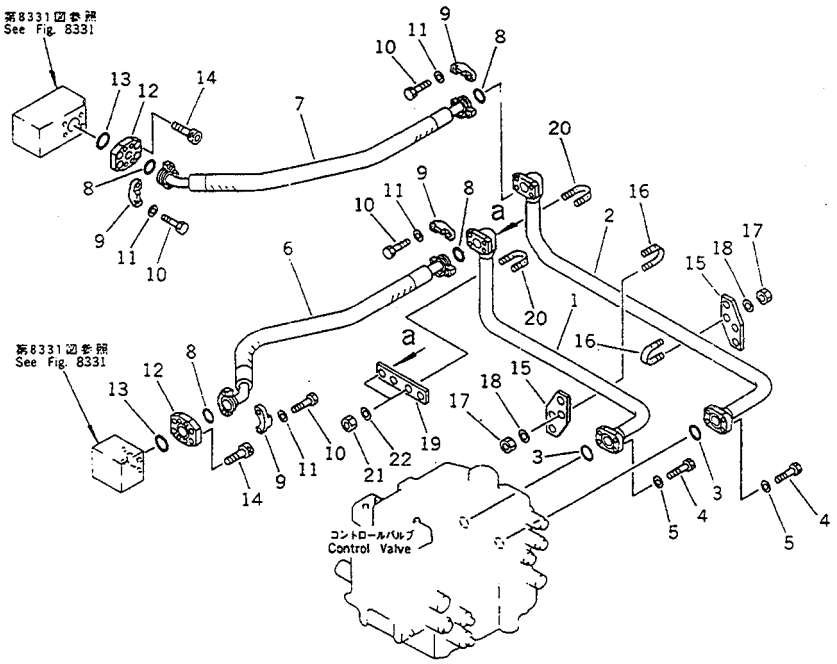

FIG NO. :8325

INDEX NO.	PART NO.	DESCRIPTION	Q'TY	SERIAL NO. PC210-3KP	SERIAL NO. PC240-3KP
1	205-970-7410	TUBE	1	K15001-	
2	205-970-7420	TUBE	1	K15001-	
3	21T-09-11450	O-RING	2	K15001-	
4	01010-50830	BOLT	8	K15001-	
5	01643-50823	WASHER	8	K15001-	
6	21P-62-K1120	HOSE	1	K15001-	
7	07097-00611	HOSE	1	K15001-	
8	07000-13025	O-RING	4	K15001-	
9	07371-30638	FLANGE,SPLIT	8	K15001-	
10	01010-50830	BOLT	16	K15001-	
11	01643-50823	WASHER	16	K15001-	
12	209-62-12730	PLATE	2	K15001-	
13	07000-13035	O-RING	2	K15001-	
14	01252-31020	BOLT	8	K15001-	
15	205-970-7560	PLATE	2	K15001-	
16	07283-22738	CLIP	4	K15001-	
17	01599-01011	NUT	8	K15001-	
18	01643-31032	WASHER	8	K15001-	
19	205-970-7550	PLATE	1	K15001-	
20	07283-22738	CLIP	2	K15001-	
21	01599-01011	NUT	4	K15001-	
22	01643-31032	WASHER	4	K15001-	

https://truckmanualshub.com/

FIG. 8326 ADDITIONAL PIPING (CONTROL VALVE TO CHANGE ROTOR) (PC240)

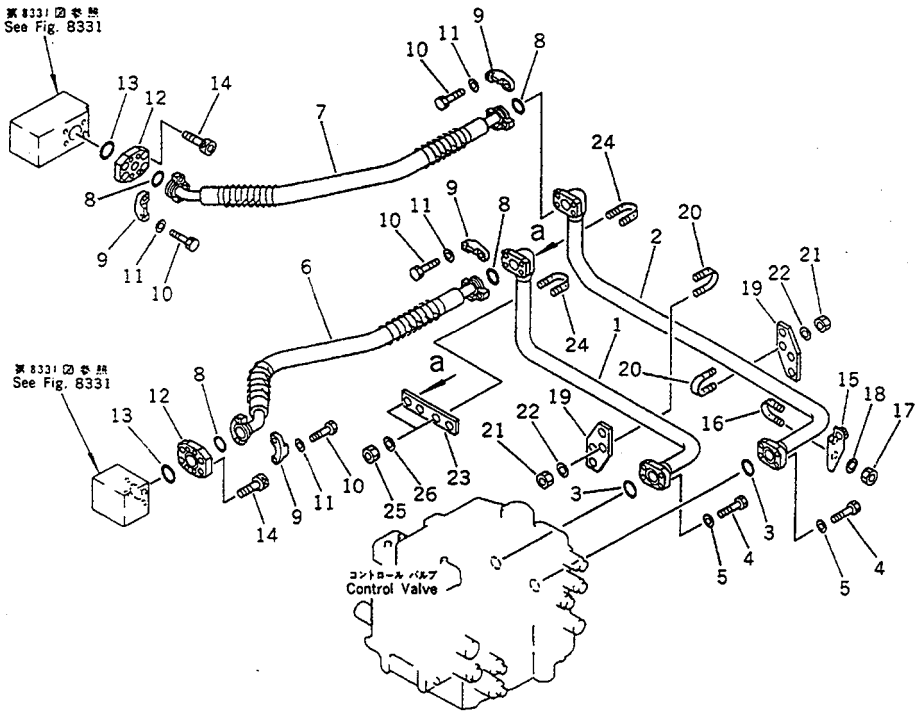

FIG NO. :8326

INDEX NO.	PART NO.	DESCRIPTION	Q'TY	SERIAL NO. PC210-3KP	SERIAL NO. PC240-3KP
1	205-970-7410	TUBE	1		K15001-
2	205-970-7420	TUBE	1		K15001-
3	21T-09-11450	O-RING	2		K15001-
4	01010-50830	BOLT	8		K15001-
5	01643-50823	WASHER	8		K15001-
6	21P-62-K1120	HOSE	1		K15001-
7	07097-00611	HOSE	1		K15001-
8	07000-13025	O-RING	4		K15001-
9	07371-30638	FLANGE,SPLIT	8		K15001-
10	01010-50830	BOLT	16		K15001-
11	01643-50823	WASHER	16		K15001-
12	209-62-12730	PLATE	2		K15001-
13	07000-13035	O-RING	2		K15001-
14	01252-31020	BOLT	8		K15001-
15	205-970-7560	PLATE	2		K15001-
16	07283-22738	CLIP	4		K15001-
17	01599-01011	NUT	8		K15001-
18	01643-31032	WASHER	8		K15001-
19	205-970-7550	PLATE	1		K15001-
20	07283-22738	CLIP	2		K15001-
21	01599-01011	NUT	4		K15001-
22	01643-31032	WASHER	4		K15001-
23	205-970-7550	PLATE	1		K15001-
24	07283-22738	CLIP	2		K15001-
25	01599-01011	NUT	4		K15001-
26	01643-31032	WASHER	4		K15001-

https://truckmanualshub.com/

FIG. 8331 ADDITIONAL PIPING (CHANGE ROTOR AND SWIVEL JOINT)

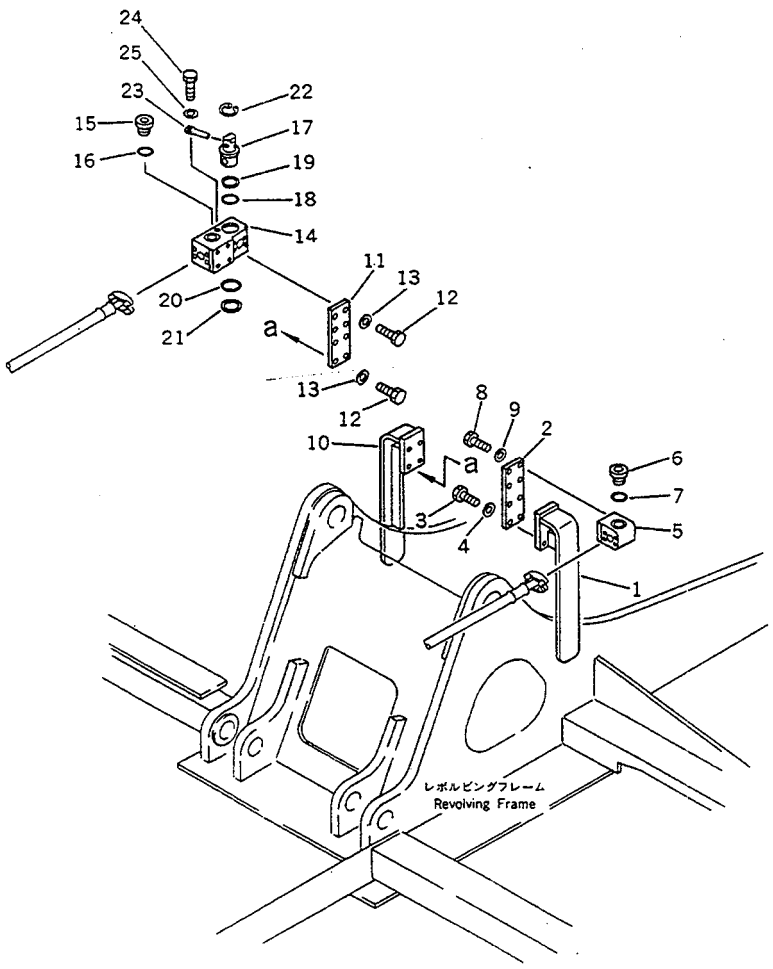

FIG NO. :8331

INDEX NO.	PART NO.	DESCRIPTION	Q'TY	SERIAL NO. PC210-3KP	SERIAL NO. PC240-3KP
1	205-970-7341	BRACKET	1	K15001-	K15001-
2	205-970-7520	PLATE	1	K15001-	K15001-
3	01010-51240	BOLT	4	K15001-	K15001-
4	01643-31232	WASHER	4	K15001-	K15001-
5	205-970-7470	BLOCK	1	K15001-	K15001-
6	07040-12414	PLUG	1	K15001-	K15001-
7	07002-12434	O-RING	1	K15001-	K15001-
8	01010-51240	BOLT	4	K15001-	K15001-
9	01643-31232	WASHER	4	K15001-	K15001-
10	205-970-7341	BRACKET	1	K15001-	K15001-
11	205-970-7520	PLATE	1	K15001-	K15001-
12	01010-51240	BOLT	8	K15001-	K15001-
13	01643-31232	WASHER	8	K15001-	K15001-
	205-970-0010	ROTARY VALVE ASS'Y	1	K15001-	K15001-
14	205-970-7450	.BLOCK	1	K15001-	K15001-
15	07040-12414	.PLUG	1	K15001-	K15001-
16	07002-12434	.O-RING	1	K15001-	K15001-
17	205-970-7460	.ROTOR	1	K15001-	K15001-
18	07000-13042	.O-RING	1	K15001-	K15001-
19	07001-03042	.RING,BACK-UP	1	K15001-	K15001-
20	07000-13048	.O-RING	1	K15001-	K15001-
21	07001-03048	.RING,BACK-UP	1	K15001-	K15001-
22	04065-05220	.RING,SNAP	1	K15001-	K15001-
23	202-970-2210	.PIN	1	K15001-	K15001-
24	01010-51230	.BOLT	1	K15001-	K15001-
25	01643-31232	.WASHER	1	K15001-	K15001-

https://truckmanualshub.com/

FIG. 8333 ADDITIONAL PIPING (ATTACHMENT SIDE) (1/3) (PC210)

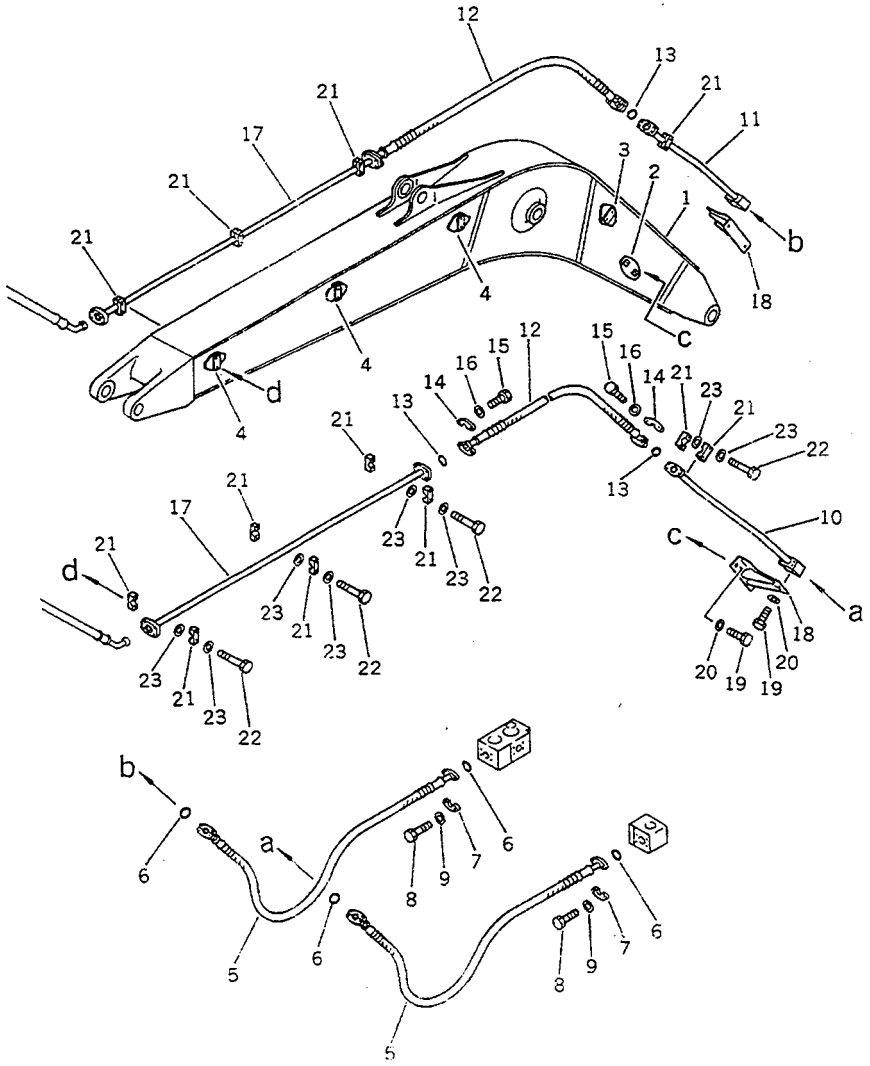

FIG NO. :8333

INDEX NO.	PART NO.	DESCRIPTION	Q'TY	SERIAL NO. PC210-3KP	SERIAL NO. PC240-3KP
1	205-970-7710	BOOM	1	K15001-	
2	205-970-2222	.BRACKET (WELDED)	2	K15001-	
3	205-970-4371	.BRACKET (WELDED)	2	K15001-	
4	205-970-7730	.BRACKET (WELDED)	6	K15001-	
5	205-970-6490	HOSE	2	K15001-	
6	07000-13032	O-RING	4	K15001-	
7	07371-31049	FLANGE,SPLIT	8	K15001-	
8	07372-21035	BOLT	16	K15001-	
9	01643-51032	WASHER	16	K15001-	
10	205-970-7610	TUBE,L.H.	1	K15001-	
11	205-970-7620	TUBE,R.H.	1	K15001-	
12	07099-01014	HOSE	2	K15001-	
13	07000-13032	O-RING	4	K15001-	
14	07371-31049	FLANGE,SPLIT	8	K15001-	
15	07372-21035	BOLT	16	K15001-	
16	01643-51032	WASHER	16	K15001-	
17	205-970-7630	TUBE	2	K15001-	
18	205-970-7740	BRACKET	2	K15001-	
19	01010-51230	BOLT	4	K15001-	
20	01643-31232	WASHER	8	K15001-	
21	205-970-2232	CLAMP	16	K15001-	
22	01010-51280	BOLT	16	K15001-	
23	01643-31232	WASHER	32	K15001-	

https://truckmanualshub.com/

FIG. 8335 ADDITIONAL PIPING (ATTACHMENT SIDE) (FOR 2925MM ARM) (2/3) (PC210)

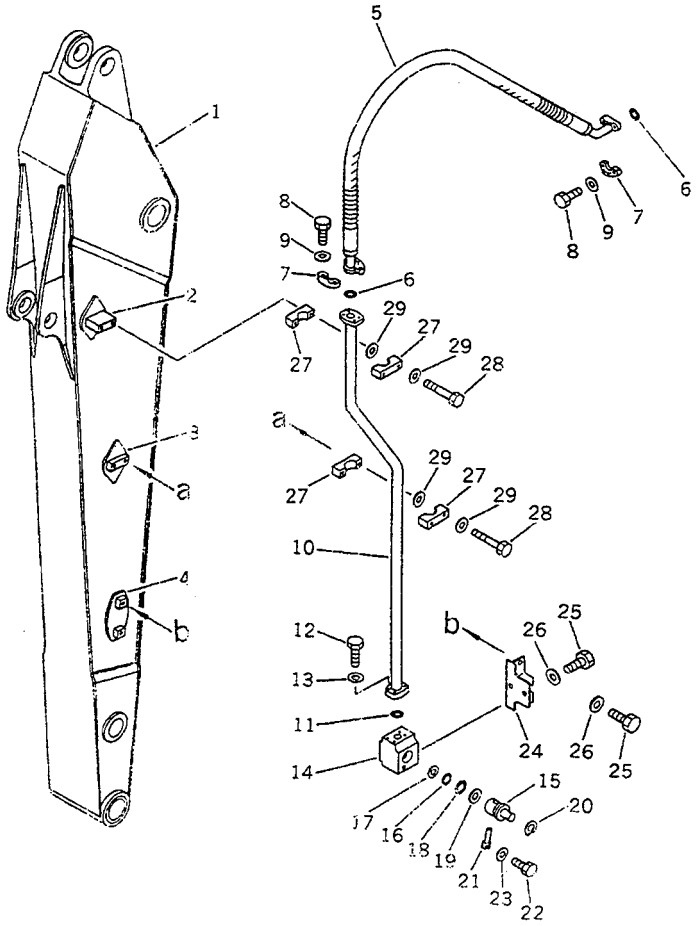

FIG NO. 8335

INDEX NO.	PART NO.	DESCRIPTION	Q'TY	SERIAL NO. PC210-3KP	SERIAL NO. PC240-3KP
1	205-970-7721	ARM	1	K15001-	
2	205-970-1521	.BRACKET (WELDED)	2	K15001-	
3	205-970-4371	.BRACKET (WELDED)	2	K15001-	
4	205-970-6133	.BRACKET (WELDED)	2	K15001-	
5	07097-21016	HOSE	1	K15001-	
6	07000-13032	O-RING	2	K15001-	
7	07371-31049	FLANGE,SPLIT	4	K15001-	
8	07372-21035	BOLT	8	K15001-	
9	01643-51032	WASHER	8	K15001-	
10	205-970-7640	TUBE,L.H.	1	K15001-	
11	07000-13035	O-RING	1	K15001-	
12	07372-21040	BOLT	4	K15001-	
13	01643-51032	WASHER	4	K15001-	
	205-970-0020	STOP VALVE ASS'Y	1	K15001-	
14	205-970-4260	.BODY	1	K15001-	
15	205-970-4270	.ROTOR	1	K15001-	
16	07000-13042	.O-RING	1	K15001-	
17	07001-03042	.RING,BACK-UP	1	K15001-	
18	07000-13048	.O-RING	1	K15001-	
19	07001-03048	.RING,BACK-UP	1	K15001-	
20	04065-05220	.RING,SNAP	1	K15001-	
21	202-970-2210	.PIN	1	K15001-	
22	01010-51230	.BOLT	1	K15001-	
23	01643-31232	.WASHER	1	K15001-	
24	205-970-6141	BRACKET	1	K15001-	
25	01010-61635	BOLT	4	K15001-	
26	01643-31645	WASHER	4	K15001-	
27	205-970-2232	CLAMP	4	K15001-	
28	01010-51280	BOLT	4	K15001-	
29	01643-31232	WASHER	8	K15001-	

https://truckmanualshub.com/

FIG. 8336 ADDITIONAL PIPING (ATTACHMENT SIDE) (FOR 1800MM AND 2400MM SHORT ARM) (2/3) (PC210)

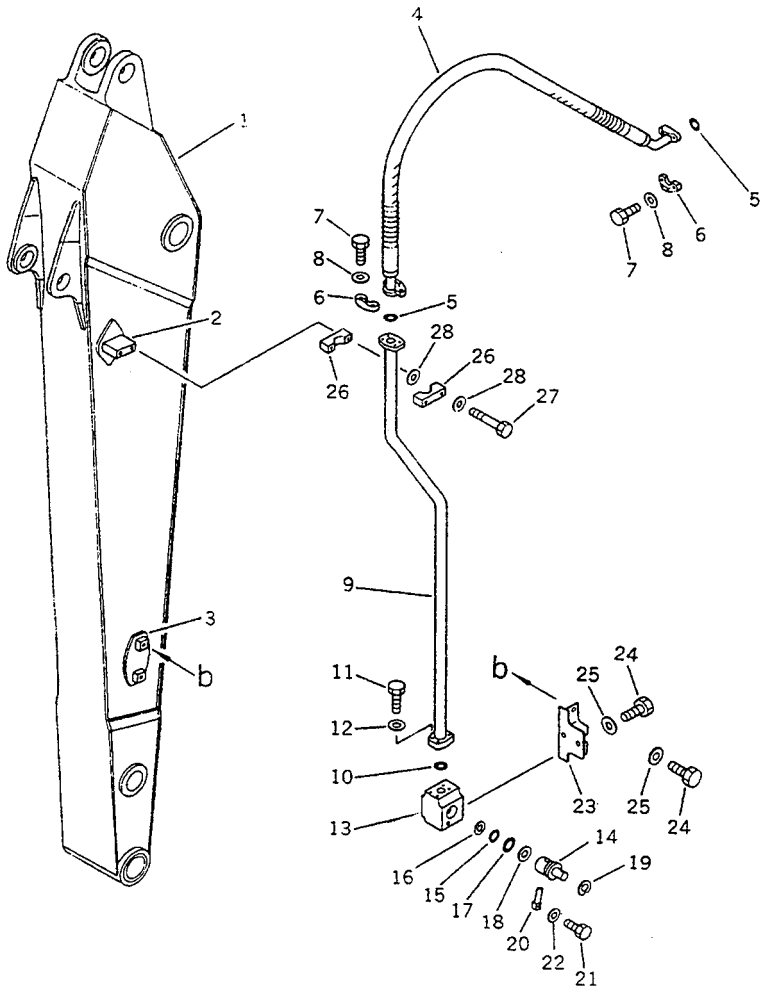

FIG NO. :8336

INDEX NO.	PART NO.	DESCRIPTION	Q'TY	SERIAL NO. PC210-3KP	SERIAL NO. PC240-3KP
1	205-970-7911	ARM,2400MM	1	K15001-	
	205-970-7780	ARM,1800MM	1	K15001-	
2	205-970-1521	.BRACKET (WELDED)	2	K15001-	
3	205-970-6133	.BRACKET (WELDED)	2	K15001-	
4	07097-21016	HOSE	1	K15001-	
5	07000-13032	O-RING	2	K15001-	
6	07371-31049	FLANGE,SPLIT	4	K15001-	
7	07372-21035	BOLT	8	K15001-	
8	01643-51032	WASHER	8	K15001-	
9	205-970-7920	TUBE,L.H. (2400MM)	1	K15001-	
	205-970-7790	TUBE,L.H. (1800MM)	1	K15001-	
10	07000-13035	O-RING	1	K15001-	
11	07372-21040	BOLT	4	K15001-	
12	01643-51032	WASHER	4	K15001-	
	205-970-0020	STOP VALVE ASS'Y	1	K15001-	
13	205-970-4260	.BODY	1	K15001-	
14	205-970-4270	.ROTOR	1	K15001-	
15	07000-13042	.O-RING	1	K15001-	
16	07001-03042	.RING,BACK-UP	1	K15001-	
17	07000-13048	.O-RING	1	K15001-	
18	07001-03048	.RING,BACK-UP	1	K15001-	
19	04065-05220	.RING,SNAP	1	K15001-	
20	202-970-2210	.PIN	1	K15001-	
21	01010-51230	.BOLT	1	K15001-	
22	01643-31232	.WASHER	1	K15001-	
23	205-970-6141	BRACKET	1	K15001-	
24	01010-61635	BOLT	4	K15001-	
25	01643-31645	WASHER	4	K15001-	
26	205-970-2232	CLAMP	2	K15001-	
27	01010-51280	BOLT	2	K15001-	

https://truckmanualshub.com/

FIG NO. :8336

INDEX NO.	PART NO.	DESCRIPTION	Q'TY	SERIAL NO. PC210-3KP	SERIAL NO. PC240-3KP
28	01643-31232	WASHER	4	K15001-	

https://truckmanualshub.com/

FIG. 8337 ADDITIONAL PIPING (ATTACHMENT SIDE) (FOR 2925MM ARM) (3/3) (PC210)

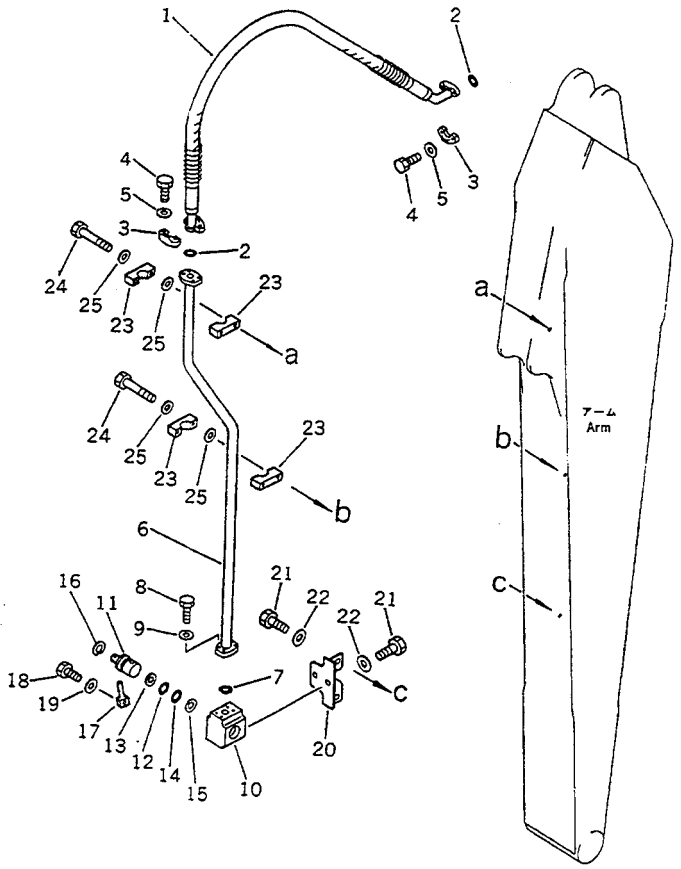

FIG NO. :8337

INDEX NO.	PART NO.	DESCRIPTION	Q'TY	SERIAL NO. PC210-3KP	SERIAL NO. PC240-3KP
1	07097-21016	HOSE	1	K15001-	
2	07000-13032	O-RING	2	K15001-	
3	07371-31049	FLANGE,SPLIT	4	K15001-	
4	07372-21035	BOLT	8	K15001-	
5	01643-51032	WASHER	8	K15001-	
6	205-970-7650	TUBE,R.H.	1	K15001-	
7	07000-13035	O-RING	1	K15001-	
8	07372-21040	BOLT	4	K15001-	
9	01643-51032	WASHER	4	K15001-	
	205-970-0020	STOP VALVE ASS'Y	1	K15001-	
10	205-970-4260	.BODY	1	K15001-	
11	205-970-4270	.ROTOR	1	K15001-	
12	07000-13042	.O-RING	1	K15001-	
13	07001-03042	.RING,BACK-UP	1	K15001-	
14	07000-13048	.O-RING	1	K15001-	
15	07001-03048	.RING,BACK-UP	1	K15001-	
16	04065-05220	.RING,SNAP	1	K15001-	
17	202-970-2210	.PIN	1	K15001-	
18	01010-51230	.BOLT	1	K15001-	
19	01643-31232	.WASHER	1	K15001-	
20	205-970-6141	BRACKET	1	K15001-	
21	01010-61635	BOLT	4	K15001-	
22	01643-31645	WASHER	4	K15001-	
23	205-970-2232	CLAMP	4	K15001-	
24	01010-51280	BOLT	4	K15001-	
25	01643-31232	WASHER	8	K15001-	

https://truckmanualshub.com/

FIG. 8338 ADDITIONAL PIPING (ATTACHMENT SIDE) (FOR 1800MM AND 2400MM SHORT ARM) (3/3) (PC210)

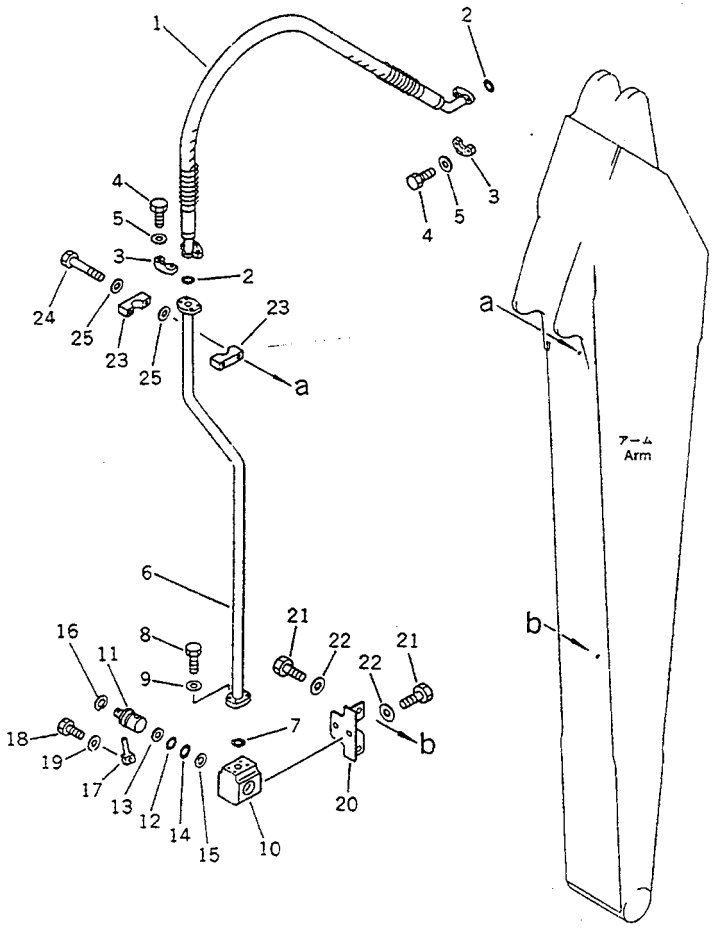

FIG NO. :8338

INDEX NO.	PART NO.	DESCRIPTION	Q'TY	SERIAL NO. PC210-3KP	SERIAL NO. PC240-3KP
1	07097-21016	HOSE	1	K15001-	
2	07000-13032	O-RING	2	K15001-	
3	07371-31049	FLANGE,SPLIT	4	K15001-	
4	07372-21035	BOLT	8	K15001-	
5	01643-51032	WASHER	8	K15001-	
6	205-970-7930	TUBE,R.H. (2400MM)	1	K15001-	
	205-970-7790	TUBE,R.H. (1800MM)	1	K15001-	
7	07000-13035	O-RING	1	K15001-	
8	07372-21040	BOLT	4	K15001-	
9	01643-51032	WASHER	4	K15001-	
	205-970-0020	STOP VALVE ASS'Y	1	K15001-	
10	205-970-4260	.BODY	1	K15001-	
11	205-970-4270	.ROTOR	1	K15001-	
12	07000-13042	.O-RING	1	K15001-	
13	07001-03042	.RING,BACK-UP	1	K15001-	
14	07000-13048	.O-RING	1	K15001-	
15	07001-03048	.RING,BACK-UP	1	K15001-	
16	04065-05220	.RING,SNAP	1	K15001-	
17	202-970-2210	.PIN	1	K15001-	
18	01010-51230	.BOLT	1	K15001-	
19	01643-31232	.WASHER	1	K15001-	
20	205-970-6141	BRACKET	1	K15001-	
21	01010-61635	BOLT	4	K15001-	
22	01643-31645	WASHER	4	K15001-	
23	205-970-2232	CLAMP	2	K15001-	
24	01010-51280	BOLT	2	K15001-	
25	01643-31232	WASHER	4	K15001-	

https://truckmanualshub.com/

FIG. 8343 ADDITIONAL PIPING (ATTACHMENT SIDE) (1/3) (PC240)

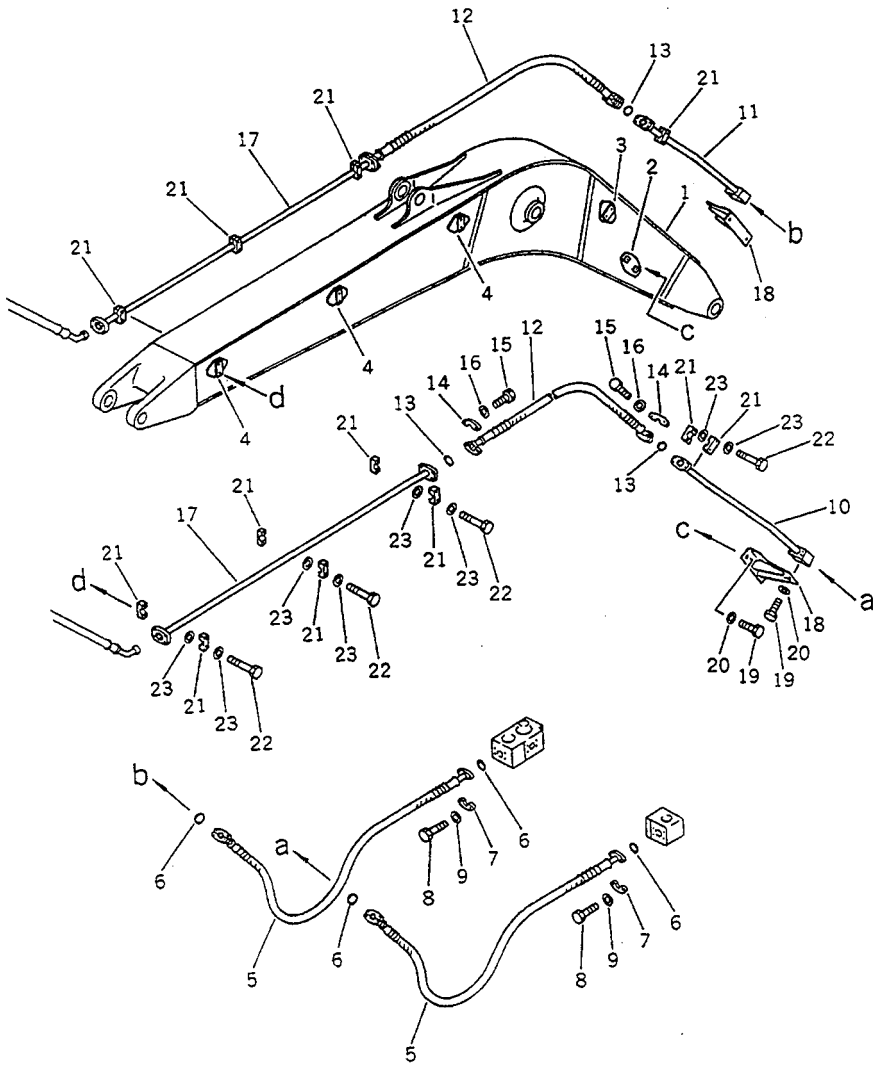

FIG NO. :8343

INDEX NO.	PART NO.	DESCRIPTION	Q'TY	SERIAL NO. PC210-3KP	SERIAL NO. PC240-3KP
1	206-970-4250	BOOM	1		K15001-
2	205-970-2222	.BRACKET (WELDED)	2		K15001-
3	205-970-4371	.BRACKET (WELDED)	2		K15001-
4	205-970-7730	.BRACKET (WELDED)	6		K15001-
5	205-970-6490	HOSE	2		K15001-
6	07000-13032	O-RING	4		K15001-
7	07371-31049	FLANGE,SPLIT	8		K15001-
8	07372-21035	BOLT	16		K15001-
9	01643-51032	WASHER	16		K15001-
10	206-970-4210	TUBE,L.H.	1		K15001-
11	206-970-4220	TUBE,R.H.	1		K15001-
12	07099-01016	HOSE	2		K15001-
13	07000-13032	O-RING	4		K15001-
14	07371-31049	FLANGE,SPLIT	8		K15001-
15	07372-21035	BOLT	16		K15001-
16	01643-51032	WASHER	16		K15001-
17	205-970-7630	TUBE	2		K15001-
18	205-970-7740	BRACKET	2		K15001-
19	01010-51230	BOLT	4		K15001-
20	01643-31232	WASHER	8		K15001-
21	205-970-2232	CLAMP	16		K15001-
22	01010-51280	BOLT	16		K15001-
23	01643-31232	WASHER	32		K15001-

https://truckmanualshub.com/

FIG. 8345 ADDITIONAL PIPING (ATTACHMENT SIDE) (FOR 2000MM ARM) (2/3) (PC240)

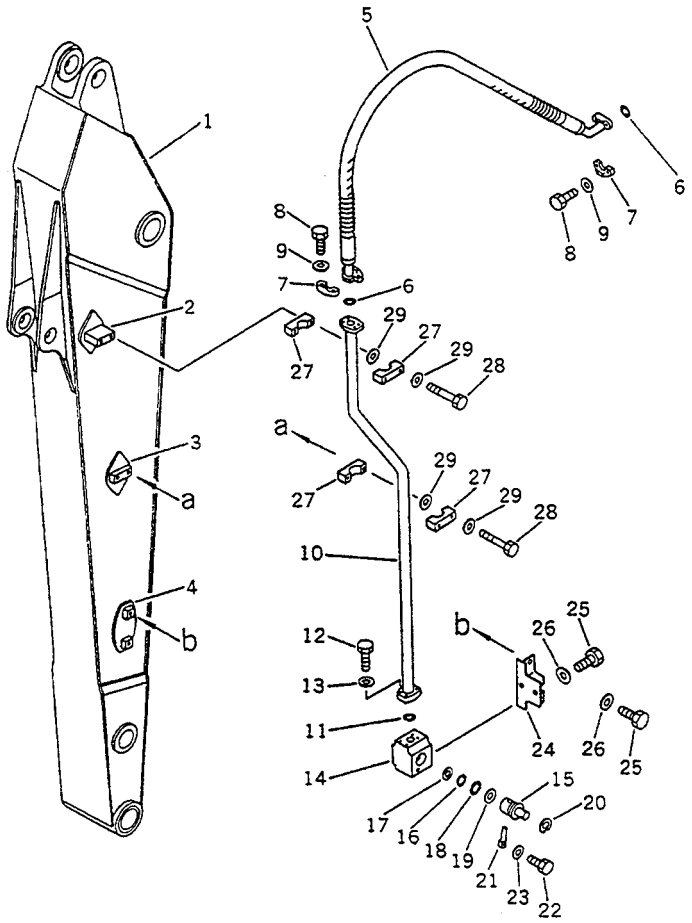

FIG NO. :8345

INDEX NO.	PART NO.	DESCRIPTION	Q'TY	SERIAL NO. PC210-3KP	SERIAL NO. PC240-3KP
1	206-970-4260	ARM	1		K15001-
2	205-970-1521	.BRACKET (WELDED)	2		K15001-
3	205-970-4371	.BRACKET (WELDED)	2		K15001-
4	205-970-6133	.BRACKET (WELDED)	2		K15001-
5	07097-21016	HOSE	1		K15001-
6	07000-13032	O-RING	2		K15001-
7	07371-31049	FLANGE,SPLIT	4		K15001-
8	07372-21035	BOLT	8		K15001-
9	01643-51032	WASHER	8		K15001-
10	206-970-4230	TUBE,L.H.	1		K15001-
11	07000-13035	O-RING	1		K15001-
12	07372-21040	BOLT	4		K15001-
13	01643-51032	WASHER	4		K15001-
	205-970-0020	STOP VALVE ASS'Y	1		K15001-
14	205-970-4260	.BODY	1		K15001-
15	205-970-4270	.ROTOR	1		K15001-
16	07000-13042	.O-RING	1		K15001-
17	07001-03042	.RING,BACK-UP	1		K15001-
18	07000-13048	.O-RING	1		K15001-
19	07001-03048	.RING,BACK-UP	1		K15001-
20	04065-05220	.RING,SNAP	1		K15001-
21	202-970-2210	.PIN	1		K15001-
22	01010-51230	.BOLT	1		K15001-
23	01643-31232	.WASHER	1		K15001-
24	205-970-6141	BRACKET	1		K15001-
25	01010-61635	BOLT	4		K15001-
26	01643-31645	WASHER	4		K15001-
27	205-970-2232	CLAMP	4		K15001-
28	01010-51280	BOLT	4		K15001-
29	01643-31232	WASHER	8		K15001-

https://truckmanualshub.com/

FIG. 8346 ADDITIONAL PIPING (ATTACHMENT SIDE) (FOR 2500MM ARM) (2/3) (PC240)

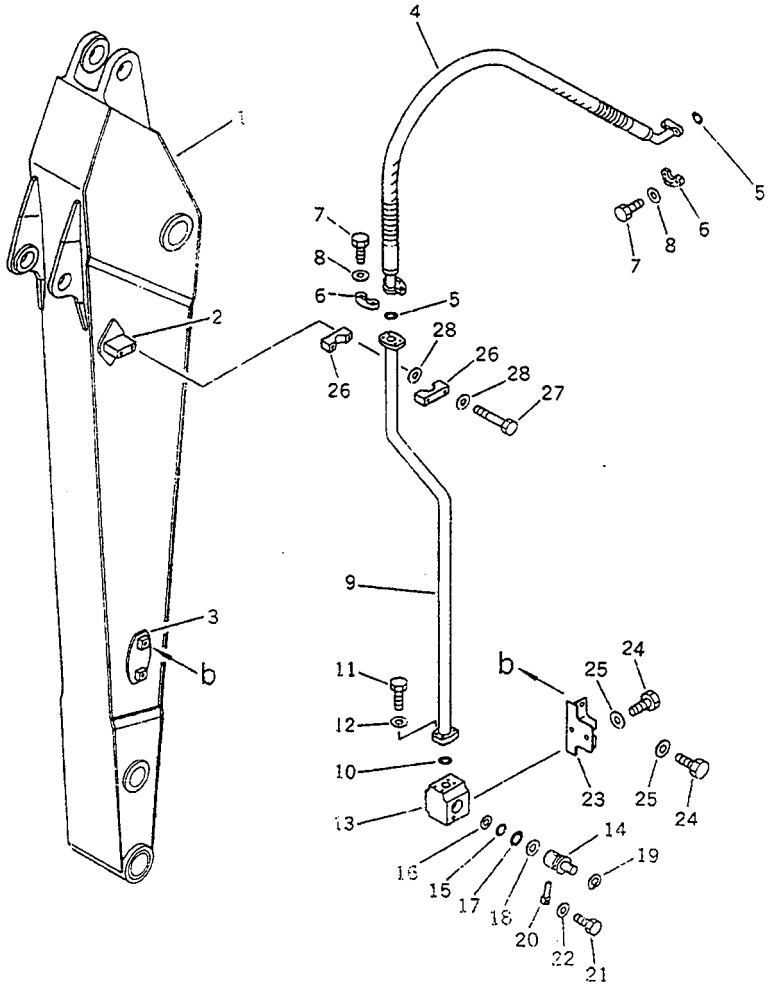

FIG NO. :8346

INDEX NO.	PART NO.	DESCRIPTION	Q'TY	SERIAL NO. PC210-3KP	SERIAL NO. PC240-3KP
1	206-970-4290	ARM,2500MM	1		K15001-
2	205-970-1521	.BRACKET (WELDED)	2		K15001-
3	205-970-6133	.BRACKET (WELDED)	2		K15001-
4	07097-21016	HOSE	1		K15001-
5	07000-13032	O-RING	2		K15001-
6	07371-31049	FLANGE,SPLIT	4		K15001-
7	07372-21035	BOLT	8		K15001-
8	01643-51032	WASHER	8		K15001-
9	206-970-4310	TUBE,L.H. (2500MM)	1		K15001-
	206-970-4280	TUBE,L.H. (2000MM)	1		K15001-
10	07000-13035	O-RING	1		K15001-
11	07372-21040	BOLT	4		K15001-
12	01643-51032	WASHER	4		K15001-
	205-970-0020	STOP VALVE ASS'Y	1		K15001-
13	205-970-4260	.BODY	1		K15001-
14	205-970-4270	.ROTOR	1		K15001-
15	07000-13042	.O-RING	1		K15001-
16	07001-03042	.RING,BACK-UP	1		K15001-
17	07000-13048	.O-RING	1		K15001-
18	07001-03048	.RING,BACK-UP	1		K15001-
19	04065-05220	.RING,SNAP	1		K15001-
20	202-970-2210	.PIN	1		K15001-
21	01010-51230	.BOLT	1		K15001-
22	01643-31232	.WASHER	1		K15001-
23	205-970-6141	BRACKET	1		K15001-
24	01010-61635	BOLT	4		K15001-
25	01643-31645	WASHER	4		K15001-
26	205-970-2232	CLAMP	2		K15001-
27	01010-51280	BOLT	2		K15001-
28	01643-31232	WASHER	4		K15001-

https://truckmanualshub.com/

FIG. 8347 ADDITIONAL PIPING (ATTACHMENT SIDE) (FOR 2000MM ARM) (3/3) (PC240)

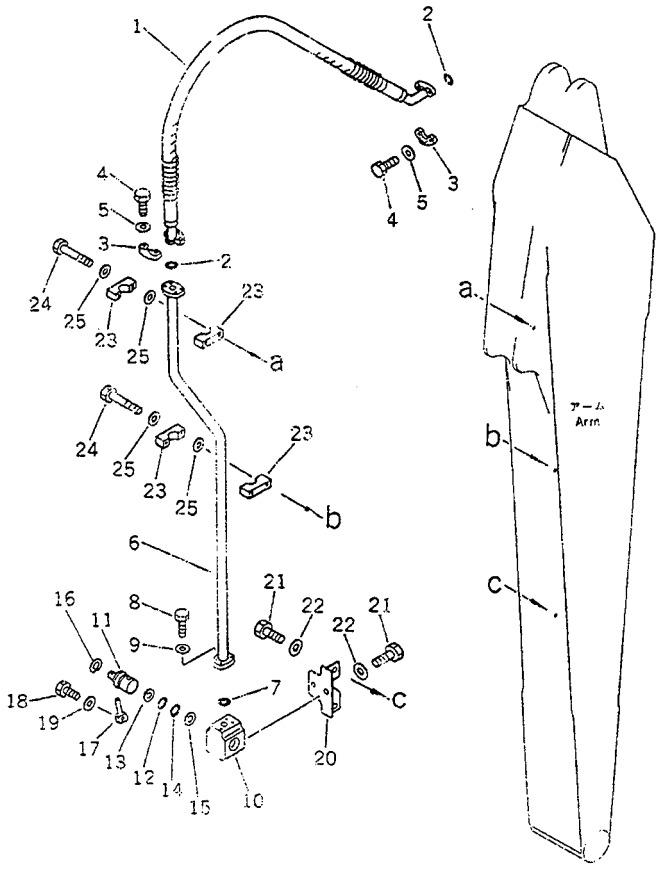

FIG NO. :8347

INDEX NO.	PART NO.	DESCRIPTION	Q'TY	SERIAL NO. PC210-3KP	SERIAL NO. PC240-3KP
1	07097-21016	HOSE	1		K15001-
2	07000-13032	O-RING	2		K15001-
3	07371-31049	FLANGE,SPLIT	4		K15001-
4	07372-21035	BOLT	8		K15001-
5	01643-51032	WASHER	8		K15001-
6	206-970-4240	TUBE,R.H.	1		K15001-
7	07000-13035	O-RING	1		K15001-
8	07372-21040	BOLT	4		K15001-
9	01643-51032	WASHER	4		K15001-
	205-970-C020	STOP VALVE ASS'Y	1		K15001-
10	205-970-4260	.BODY	1		K15001-
11	205-970-4270	.ROTOR	1		K15001-
12	07000-13042	.O-RING	1		K15001-
13	07001-03042	.RING,BACK-UP	1		K15001-
14	07000-13048	.O-RING	1		K15001-
15	07001-03048	.RING,BACK-UP	1		K15001-
16	04065-05220	.RING,SNAP	1		K15001-
17	202-970-2210	.PIN	1		K15001-
18	01010-51230	.BOLT	1		K15001-
19	01643-31232	.WASHER	1		K15001-
20	205-970-6141	BRACKET	1		K15001-
21	01010-61635	BOLT	4		K15001-
22	01643-31645	WASHER	4		K15001-
23	205-970-2232	CLAMP	4		K15001-
24	01010-51280	BOLT	4		K15001-
25	01643-31232	WASHER	8		K15001-

https://truckmanualshub.com/

FIG. 8348 ADDITIONAL PIPING (ATTACHMENT SIDE) (FOR 2500MM ARM) (3/3) (PC240)

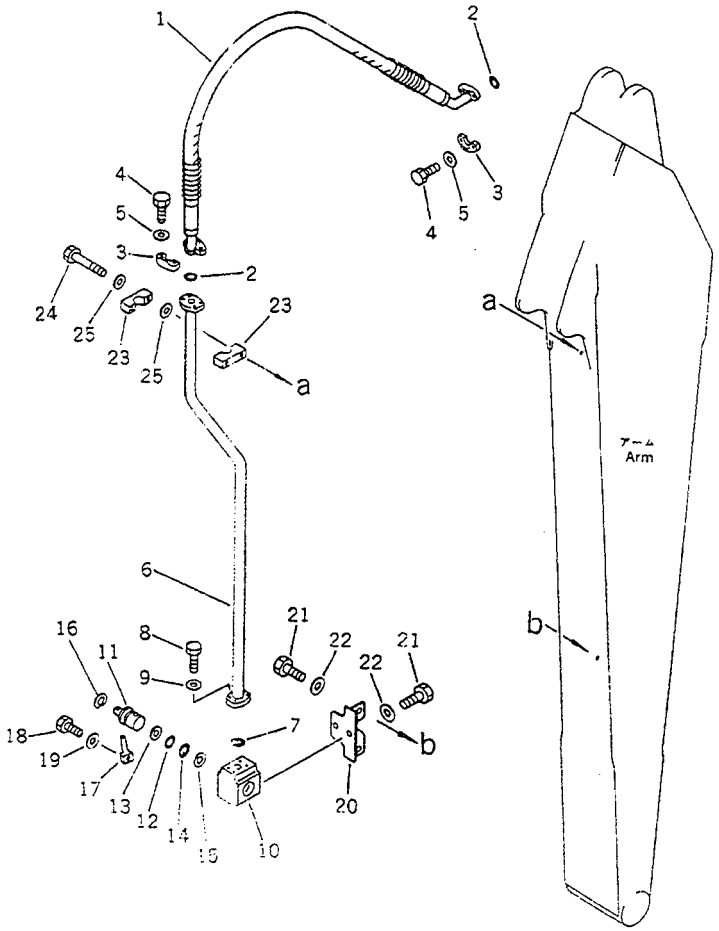

FIG NO. :8348

INDEX NO.	PART NO.	DESCRIPTION	Q'TY	SERIAL NO. PC210-3KP	SERIAL NO. PC240-3KP
1	07097-21016	HOSE	1		K15001-
2	07000-13032	O-RING	2		K15001-
3	07371-31049	FLANGE,SPLIT	4		K15001-
4	07372-21035	BOLT	8		K15001-
5	01643-51032	WASHER	8		K15001-
6	206-970-4320	TUBE,R.H. (2500MM)	1		K15001-
7	07000-13035	O-RING	1		K15001-
8	07372-21040	BOLT	4		K15001-
9	01643-51032	WASHER	4		K15001-
	205-970-0020	STOP VALVE ASS'Y	1		K15001-
10	205-970-4260	.BODY	1		K15001-
11	205-970-4270	.ROTOR	1		K15001-
12	07000-13042	.O-RING	1		K15001-
13	07001-03042	.RING,BACK-UP	1		K15001-
14	07000-13048	.O-RING	1		K15001-
15	07001-03048	.RING,BACK-UP	1		K15001-
16	04065-05220	.RING,SNAP	1		K15001-
17	202-970-2210	.PIN	1		K15001-
18	01010-51230	.BOLT	1		K15001-
19	01643-31232	.WASHER	1		K15001-
20	205-970-6141	BRACKET	1		K15001-
21	01010-61635	BOLT	4		K15001-
22	01643-31645	WASHER	4		K15001-
23	205-970-2232	CLAMP	2		K15001-
24	01010-51280	BOLT	2		K15001-
25	01643-31232	WASHER	4		K15001-

https://truckmanualshub.com/

FIG. 8401 COLD WEATHER SPECIFICATIONS (1/3)

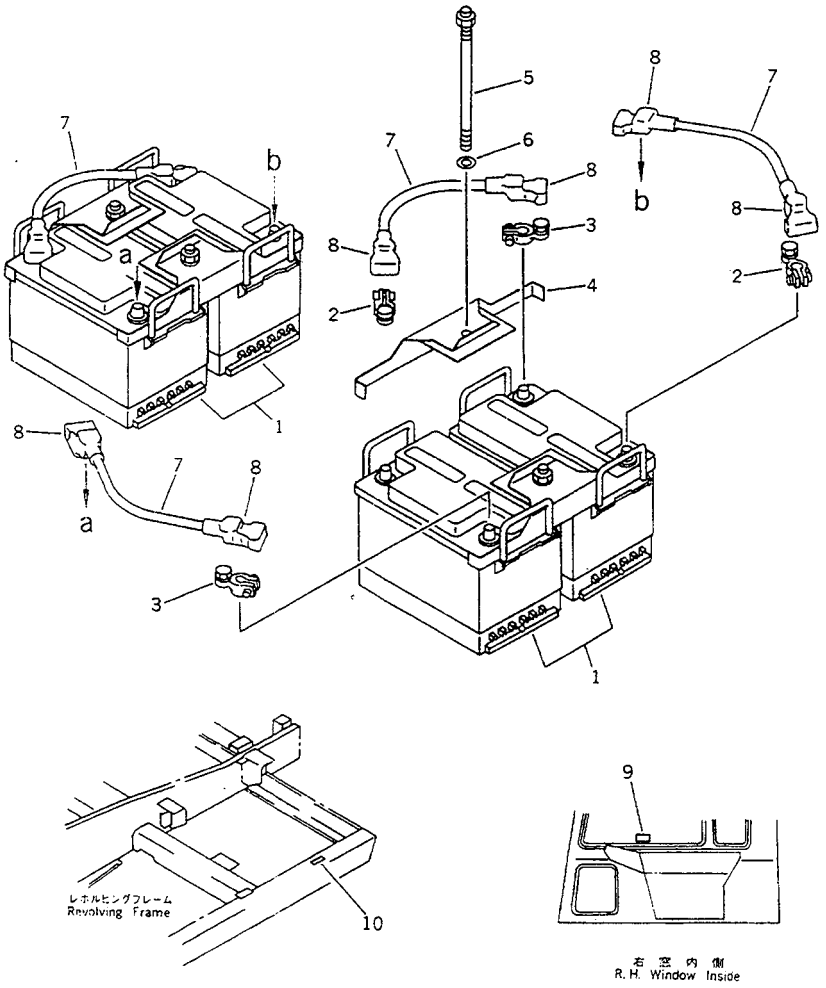

FIG NO. :8401

INDEX NO.	PART NO.	DESCRIPTION	Q'TY	SERIAL NO. PC210-3KP	SERIAL NO. PC240-3KP
1	205-06-73690	BATTERY	4	K15001-	K15001-
2	08000-00000	TERMINAL, (+)	4	K15001-	K15001-
3	08000-00001	TERMINAL, (-)	4	K15001-	K15001-
4	205-06-73380	HOLDER	4	K15001-	K15001-
5	205-06-71180	BOLT	4	K15001-	K15001-
6	01643-31232	WASHER	4	K15001-	K15001-
7	08028-13035	WIRE	4	K15001-	K15001-
8	08038-22009	CAP	8	K15001-	K15001-
9	205-00-63820	PLATE, INSTRUCTION	1	K15001-	K15001-
10	208-00-11840	PLATE, CAUTION	1	K15001-	K15001-

https://truckmanualshub.com/

FIG. 8402 COLD WEATHER SPECIFICATIONS (2/3)

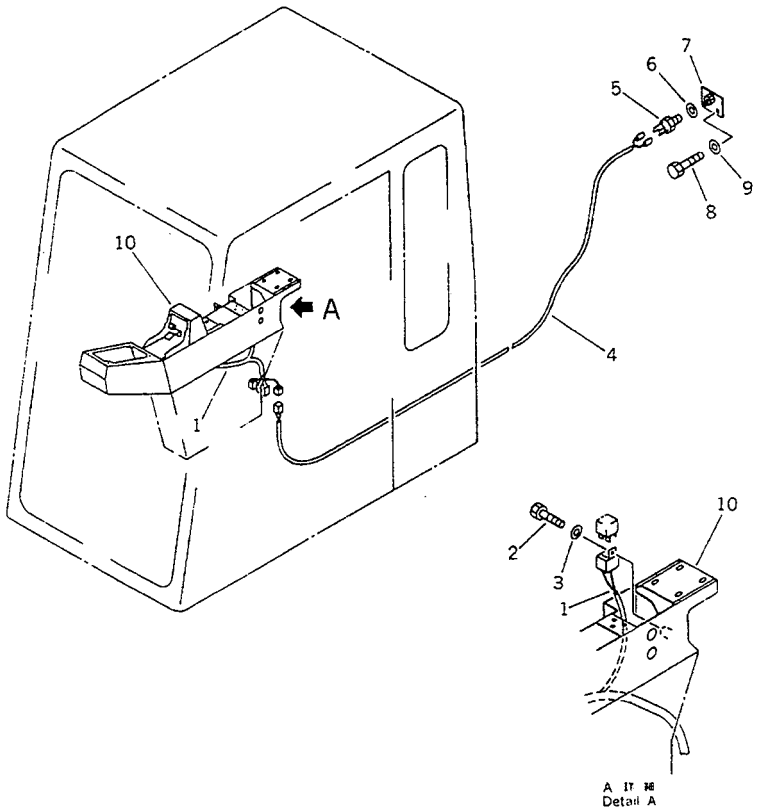

FIG NO. :8402

INDEX NO.	PART NO.	DESCRIPTION	Q'TY	SERIAL NO. PC210-3KP	SERIAL NO. PC240-3KP
1	205-06-73520	WIRING HARNESS	1	K15001-	K15001-
2	01010-50610	BOLT	1	K15001-	K15001-
3	01643-30623	WASHER	1	K15001-	K15001-
4	205-06-73510	WIRING HARNESS	1	K15001-	K15001-
5	205-06-73490	THERMOSTAT	1	K15001-	K15001-
6	01643-21445	WASHER	1	K15001-	K15001-
7	205-06-73480	BRACKET	1	K15001-	K15001-
8	01010-51025	BOLT	2	K15001-	K15001-
9	01643-31032	WASHER	2	K15001-	K15001-
10	205-43-74580	BOX,R.H.	1	K15001-	K15001-

https://truckmanualshub.com/

FIG. 8403 COLD WEATHER SPECIFICATIONS (3/3)

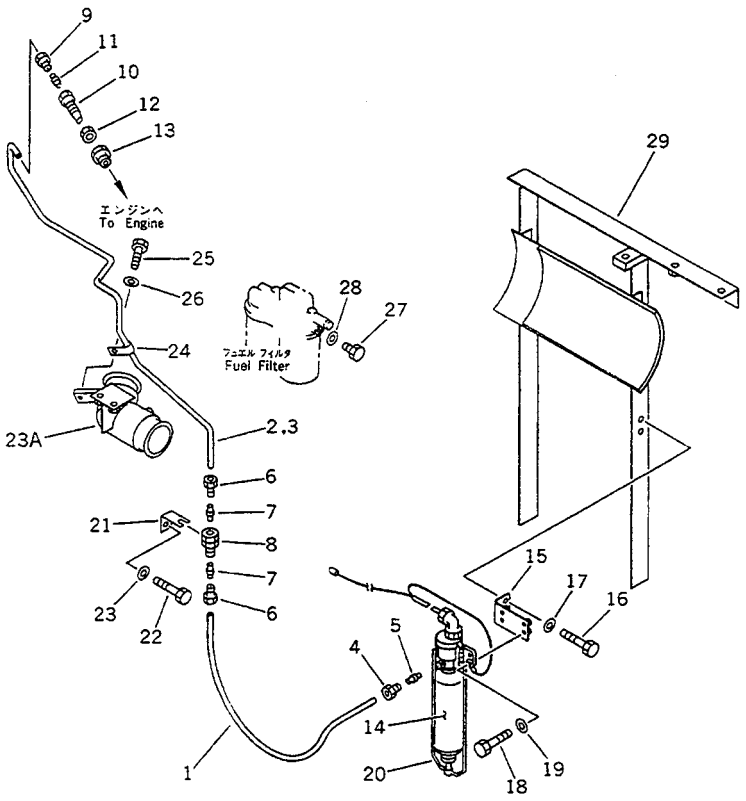

FIG NO. :8403

INDEX NO.	PART NO.	DESCRIPTION	Q'TY	SERIAL NO. PC210-3KP	SERIAL NO. PC240-3KP
1	205-06-73560	TUBE	1	K15001-	K15001-
2	205-06-73510	PIPE	1	K15001-	K15001-
3	08033-10430	TUBE	3	K15001-	K15001-
4	205-06-73570	PLUG	1	K15001-	K15001-
5	205-06-73540	OLIVE	1	K15001-	K15001-
6	205-06-73550	PLUG	2	K15001-	K15001-
7	205-06-73580	OLIVE	2	K15001-	K15001-
8	205-06-73590	ADAPTER	1	K15001-	K15001-
9	205-06-73570	PLUG	1	K15001-	K15001-
10	205-06-73620	NOZZLE	1	K15001-	K15001-
11	205-06-73540	OLIVE	1	K15001-	K15001-
12	205-06-73720	NUT	1	K15001-	K15001-
13	205-06-73630	ADAPTER	1	K15001-	K15001-
14	205-06-73640	ADAPTER	1	K15001-	K15001-
15	205-06-73470	BRACKET	1	K15001-	K15001-
16	01010-51025	BOLT	2	K15001-	K15001-
17	01643-31032	WASHER	2	K15001-	K15001-
18	01010-50825	BOLT	4	K15001-	K15001-
19	01643-30823	WASHER	4	K15001-	K15001-
20	205-06-73460	VALVE	1	K15001-	K15001-
21	205-06-73710	BRACKET	1	K15001-	K15001-
22	01010-51025	BOLT	1	K15001-	K15001-
23	01643-31032	WASHER	1	K15001-	K15001-
23A	205-01-73630	TUBE	1	K15001-	K15001-
24	6127-81-4520	CLIP	1	K15001-	K15001-
25	01010-51020	BOLT	1	K15001-	K15001-
26	01643-31032	WASHER	1	K15001-	K15001-
27	205-06-73670	PLUG	1	K15001-	K15001-
28	205-06-73660	WASHER	1	K15001-	K15001-
29	205-54-77880	FRAME	1	K15001-	K15001-

PC210-3KP

https://truckmanualshub.com/

FIG. 8501 TRACK FRAME UNDER COVER

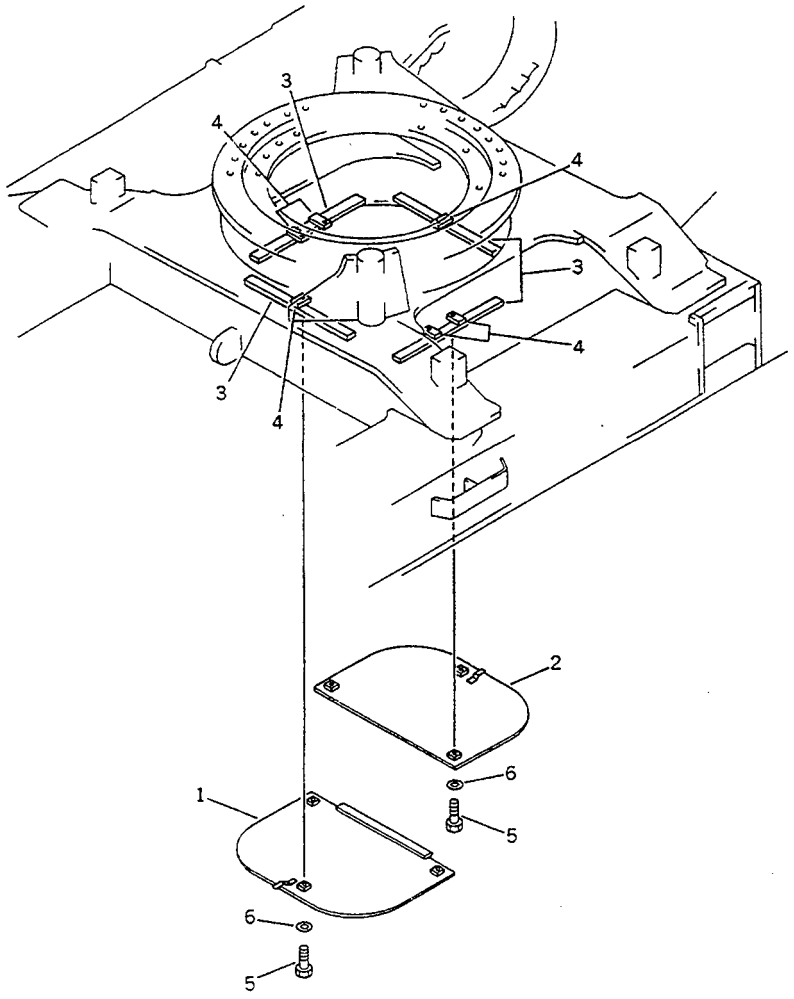

FIG NO. :8501

INDEX NO.	PART NO.	DESCRIPTION	Q'TY	SERIAL NO. PC210-3KP	SERIAL NO. PC240-3KP
1	205-30-71410	COVER	1	K15001-	K15001-
2	205-30-71420	COVER	1	K15001-	K15001-
3	205-30-71430	PLATE (WELDED)	4	K15001-	K15001-
4	01573-12308	SEAT (WELDED)	6	K15001-	K15001-
5	01010-51235	BOLT	6	K15001-	K15001-
6	01643-31232	WASHER	6	K15001-	K15001-

https://truckmanualshub.com/

FIG. 8601 SELF SUPPLY PUMP

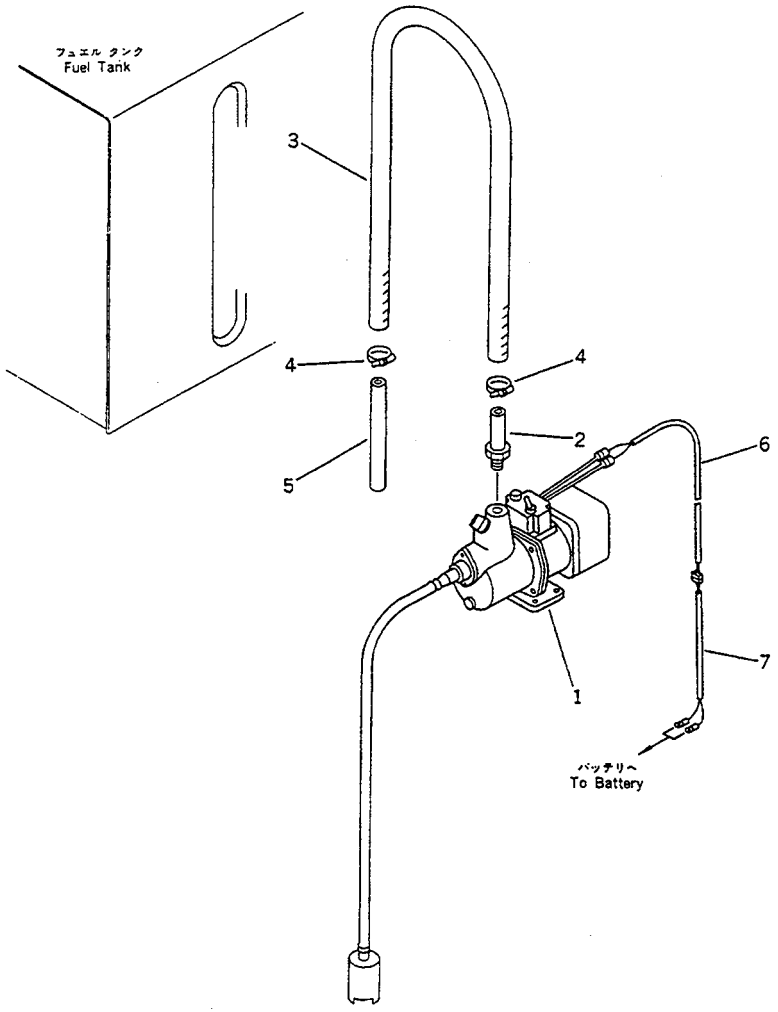

FIG NO. :8601

INDEX NO.	PART NO.	DESCRIPTION	Q'TY	SERIAL NO. PC210-3KP	SERIAL NO. PC240-3KP
1	(206-04-11130)	PUMP	1	K15001-	K15001-
2	206-04-11140	TUBE	1	K15001-	K15001-
3	07261-22020	HOSE	1	K15001-	K15001-
4	07281-00359	CLAMP	2	K15001-	K15001-
5	207-04-11190	TUBE	1	K15001-	K15001-
6	205-06-72230	WIRING HARNESS	1	K15001-	K15001-
7	205-06-72220	WIRING HARNESS	1	K15001-	K15001-

https://truckmanualshub.com/

SPECIAL APPLICATION PARTS, MARK PLATE, TOOL AND KIT

https://truckmanualshub.com/

FIG. 9001 OVER LOAD WARNING DEVICE (1/2) (TBG SPEC.) (PC210)

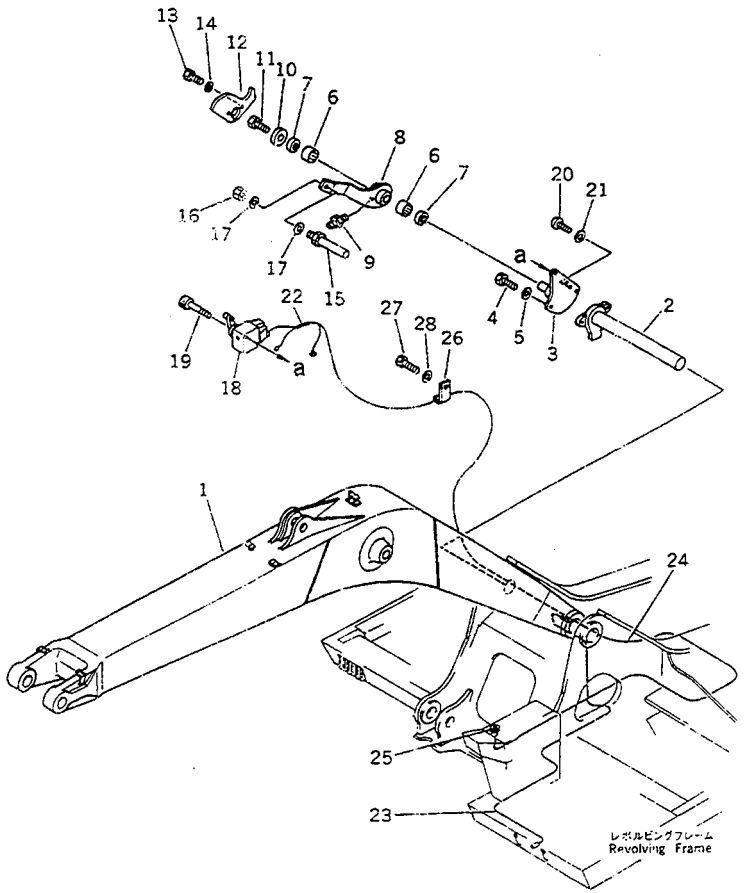

FIG NO. :9001

INDEX NO.	PART NO.	DESCRIPTION	Q'TY	SERIAL NO. PC210-3KP	SERIAL NO. PC240-3KP
1	205-70-75110	BOOM	1	K15001-	
2	205-70-75121	PIN	1	K15001-	
3	205-70-75130	BRACKET	1	K15001-	
4	01010-51230	BOLT	2	K15001-	
5	01643-31232	WASHER	2	K15001-	
6	06120-03020	BEARING	2	K15001-	
7	06122-03004	SEAL,BEARING	2	K15001-	
8	205-70-75140	LEVER	1	K15001-	
9	07020-00000	FITTING,GREASE	1	K15001-	
10	205-70-65890	WASHER	1	K15001-	
11	01010-51225	BOLT	1	K15001-	
12	205-70-75240	CAM,(FOR STANDARD ARM) (PC210)	1	K15001-	
	205-70-75230	CAM (FOR STANDARD ARM) (PC210LC)	1	K15001-	
13	01010-50825	BOLT	3	K15001-	
14	01643-30823	WASHER	3	K15001-	
15	205-70-65920	PIN	1	K15001-	
16	01580-11613	NUT	1	K15001-	
17	01643-31645	WASHER	2	K15001-	
18	205-62-69240	SWITCH	1	K15001-	
19	01252-40616	BOLT	2	K15001-	
20	01220-40612	SCREW	1	K15001-	
21	01643-30623	WASHER	1	K15001-	
22	205-06-71781	WIRE ASS'Y	1	K15001-	
23	207-06-31130	WIRE	1	K15001-	
24	205-06-71860	WIRE ASS'Y	1	K15001-	
25	08147-22400	LAMP,CAUTION	1	K15001-	
	08111-02430	.BULB, 3W	1	K15001-	
26	08036-10814	CLIP	1	K15001-	
27	01010-51230	BOLT	1	K15001-	

https://truckmanualshub.com/

FIG NO. :9001

INDEX NO.	PART NO.	DESCRIPTION	Q'TY	SERIAL NO. PC210-3KP	SERIAL NO. PC240-3KP
28	01643-31232	WASHER	1	K15001-	

https://truckmanualshub.com/

FIG. 9002 OVER LOAD WARNING DEVICE (1/2) (TBG SPEC.) (PC240)

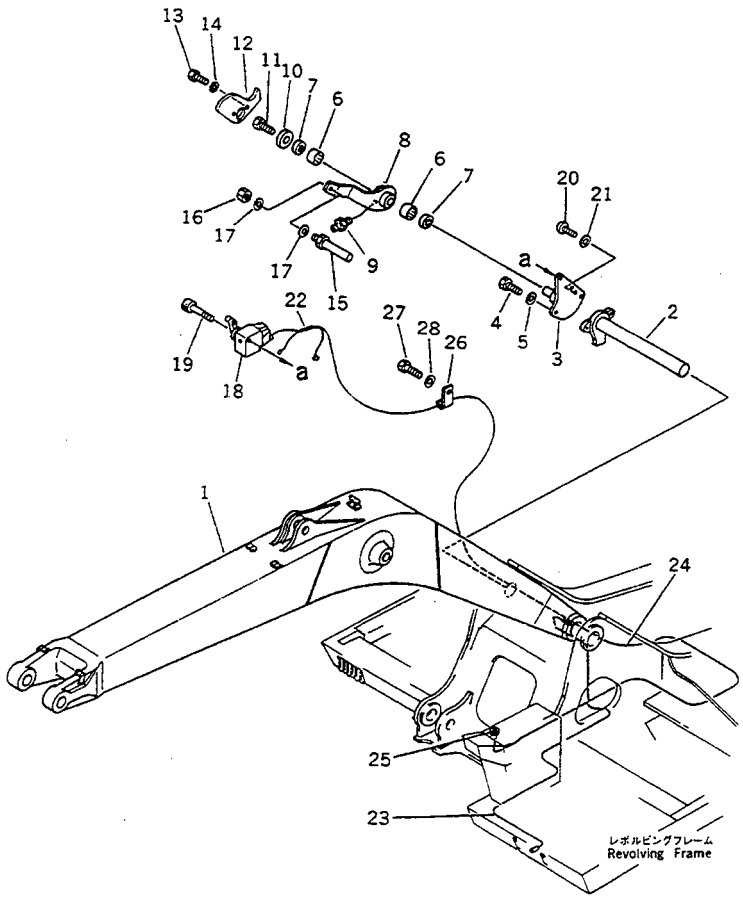

FIG NO. :9002

INDEX NO.	PART NO.	DESCRIPTION	Q'TY	SERIAL NO. PC210-3KP	SERIAL NO. PC240-3KP
1	205-70-75110	BOOM	1		K15001-
2	205-70-75121	PIN	1		K15001-
3	205-70-75130	BRACKET	1		K15001-
4	01010-51230	BOLT	2		K15001-
5	01643-31232	WASHER	2		K15001-
6	06120-03020	BEARING	2		K15001-
7	06122-03004	SEAL,BEARING	2		K15001-
8	205-70-75140	LEVER	1		K15001-
9	07020-00000	FITTING,GREASE	1		K15001-
10	205-70-65890	WASHER	1		K15001-
11	01010-51225	BOLT	1		K15001-
12	206-70-54530	CAM,(FOR STANDARD ARM)	1		K15001-
13	01010-50825	BOLT	3		K15001-
14	01643-30823	WASHER	3		K15001-
15	205-70-65920	PIN	1		K15001-
16	01580-11613	NUT	1		K15001-
17	01643-31645	WASHER	2		K15001-
18	205-62-69240	SWITCH	1		K15001-
19	01252-40616	BOLT	2		K15001-
20	01220-40612	SCREW	1		K15001-
21	01643-30623	WASHER	1		K15001-
22	205-06-71781	WIRE ASS'Y	1		K15001-
23	207-06-31130	WIRE	1		K15001-
24	205-06-71860	WIRE ASS'Y	1		K15001-
25	08147-22400	LAMP,CAUTION	1		K15001-
	08111-02430	.BULB, 3W	1		K15001-
26	08036-10814	CLIP	1		K15001-
27	01010-51230	BOLT	1		K15001-
28	01643-31232	WASHER	1		K15001-

https://truckmanualshub.com/

FIG. 9003 OVER LOAD WARNING DEVICE (2/2) (TBG SPEC.)

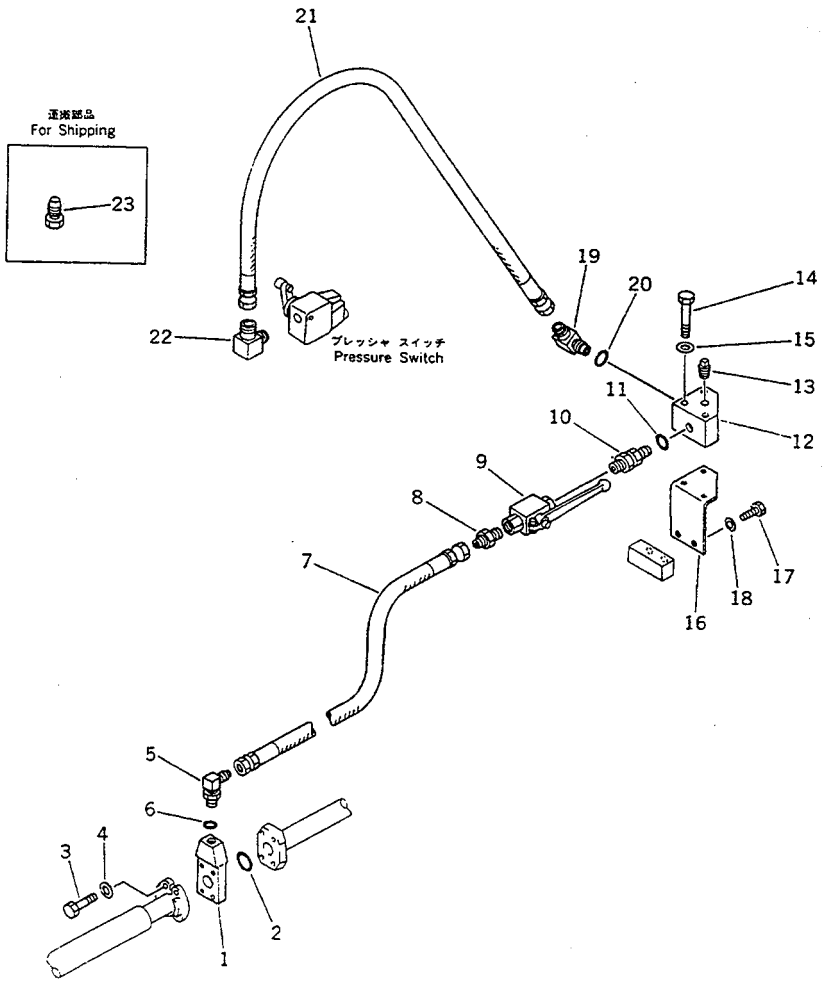

FIG NO. :9003

INDEX NO.	PART NO.	DESCRIPTION	Q'TY	SERIAL NO. PC210-3KP	SERIAL NO. PC240-3KP
1	205-62-74420	FLANGE	1	K15001-	K15001-
2	07000-13030	O-RING	1	K15001-	K15001-
3	01090-50855	BOLT	4	K15001-	K15001-
4	01643-30823	WASHER	4	K15001-	K15001-
5	07235-10210	ELBOW	1	K15001-	K15001-
6	07002-11423	O-RING	1	K15001-	K15001-
7	07121-20209	HOSE	1	K15001-	K15001-
8	07238-00210	CONNECTOR	1	K15001-	K15001-
9	205-62-69250	VALVE	1	K15001-	K15001-
10	205-62-74690	NIPPLE	1	K15001-	K15001-
11	07002-11423	O-RING	1	K15001-	K15001-
12	205-62-69220	BLOCK	1	K15001-	K15001-
13	07042-30108	PLUG	1	K15001-	K15001-
14	01010-50860	BOLT	3	K15001-	K15001-
15	01643-30823	WASHER	3	K15001-	K15001-
16	205-62-K1250	BRACKET	1	K15001-	K15001-
17	01010-51225	BOLT	2	K15001-	K15001-
18	01643-31232	WASHER	2	K15001-	K15001-
19	07235-10210	ELBOW	1	K15001-	K15001-
20	07002-11423	O-RING	1	K15001-	K15001-
21	07121-20209	HOSE	1	K15001-	K15001-
22	205-62-74710	ELBOW	1	K15001-	K15001-
23	07376-50210	PLUG	1	K15001-	K15001-

https://truckmanualshub.com/

FIG. 9005 INSTRUMENT PANEL (TBG SPEC.)

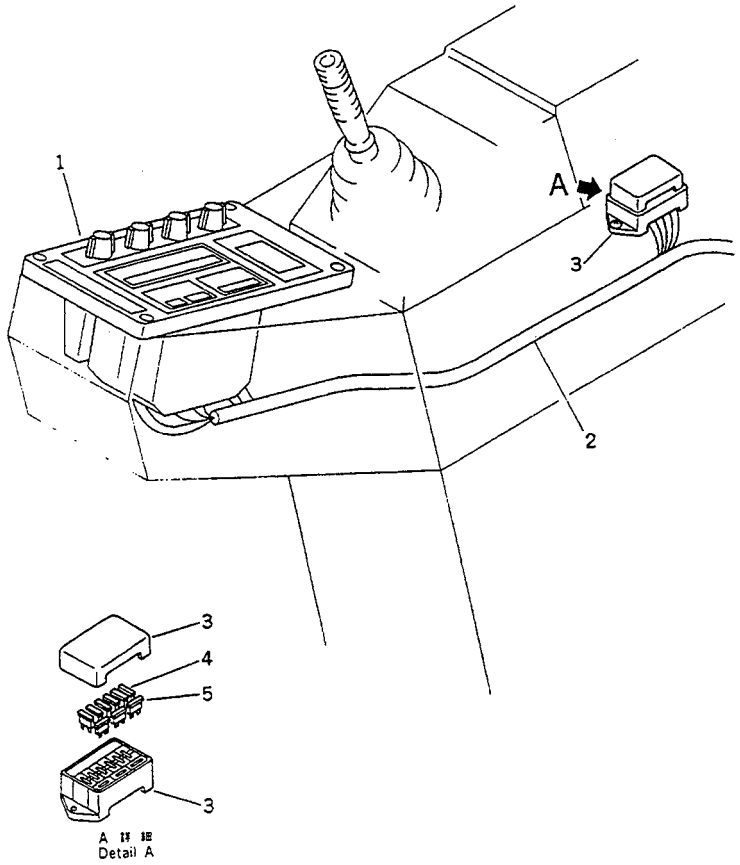

A 詳細
Detail A

FIG NO. :9005

INDEX NO.	PART NO.	DESCRIPTION	Q'TY	SERIAL NO. PC210-3KP	SERIAL NO. PC240-3KP
1	(7831-74-2000)	MONITOR PANEL ASS'Y	1	K15001-	K15001-
2	205-06-73430	WIRING HARNESS	1	K15001-	K15001-
3	205-06-71480	BOX,FUSE	1	K15001-	K15001-
4	205-06-73180	FUSE, 15A	8	K15001-	K15001-
5	22W-06-13160	FUSE, 20A	1	K15001-	K15001-

https://truckmanualshub.com/

FIG. 9006 REVOLVING FRAME (TBG SPEC.) (PC210)

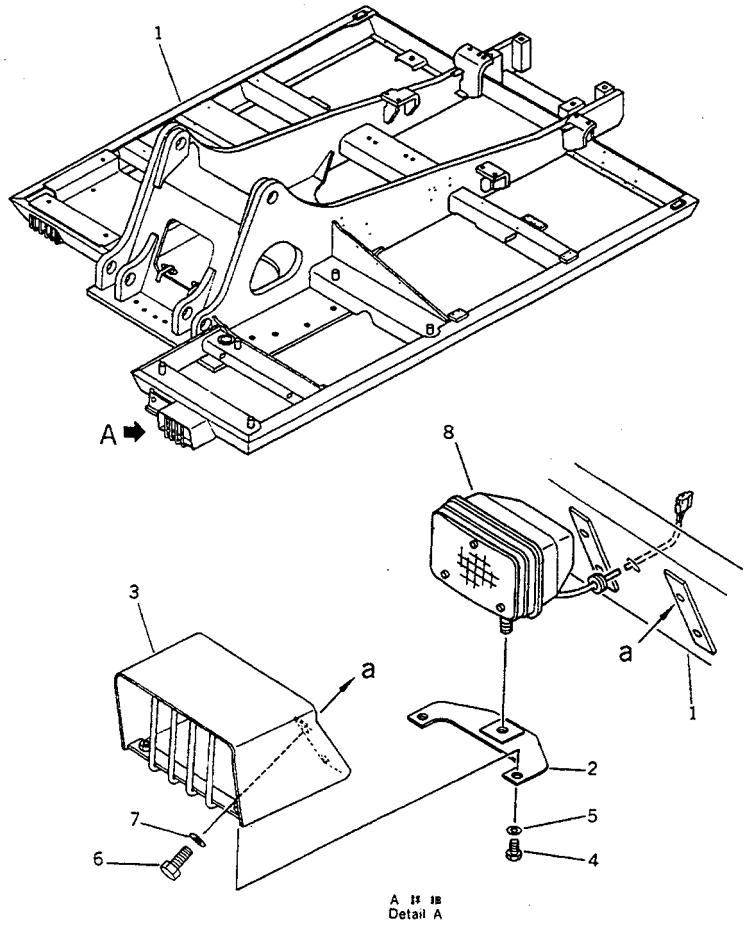

FIG NO. :9006

INDEX NO.	PART NO.	DESCRIPTION	Q'TY	SERIAL NO. PC210-3KP	SERIAL NO. PC240-3KP
1	205-46-73530	FRAME	1	K15001-	
2	205-06-71810	PLATE	1	K15001-	
3	205-06-71820	COVER	1	K15001-	
4	01010-51225	BOLT	2	K15001-	
5	01643-31232	WASHER	2	K15001-	
6	01010-51220	BOLT	4	K15001-	
7	01643-31232	WASHER	4	K15001-	
8	205-06-K1220	WORK LAMP ASS'Y	1	K15001-	

https://truckmanualshub.com/

FIG. 9007 REVOLVING FRAME (TBG SPEC.) (PC240)

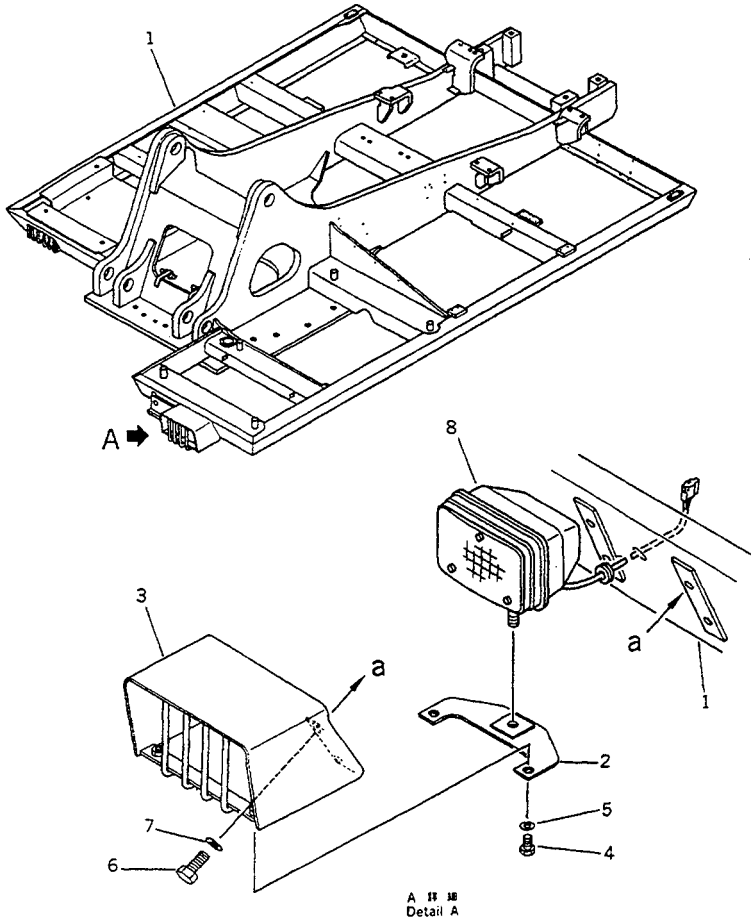

FIG NO. :9007

INDEX NO.	PART NO.	DESCRIPTION	Q'TY	SERIAL NO. PC210-3KP	SERIAL NO. PC240-3KP
1	206-46-44630	FRAME	1		K15001-
2	205-06-71810	PLATE	1		K15001-
3	205-06-71820	COVER	1		K15001-
4	01010-51225	BOLT	2		K15001-
5	01643-31232	WASHER	2		K15001-
6	01010-51220	BOLT	4		K15001-
7	01643-31232	WASHER	4		K15001-
8	205-06-K1220	WORK LAMP ASS'Y	1		K15001-

https://truckmanualshub.com/

FIG. 9008 CONTROL STAND (TBG SPEC.)

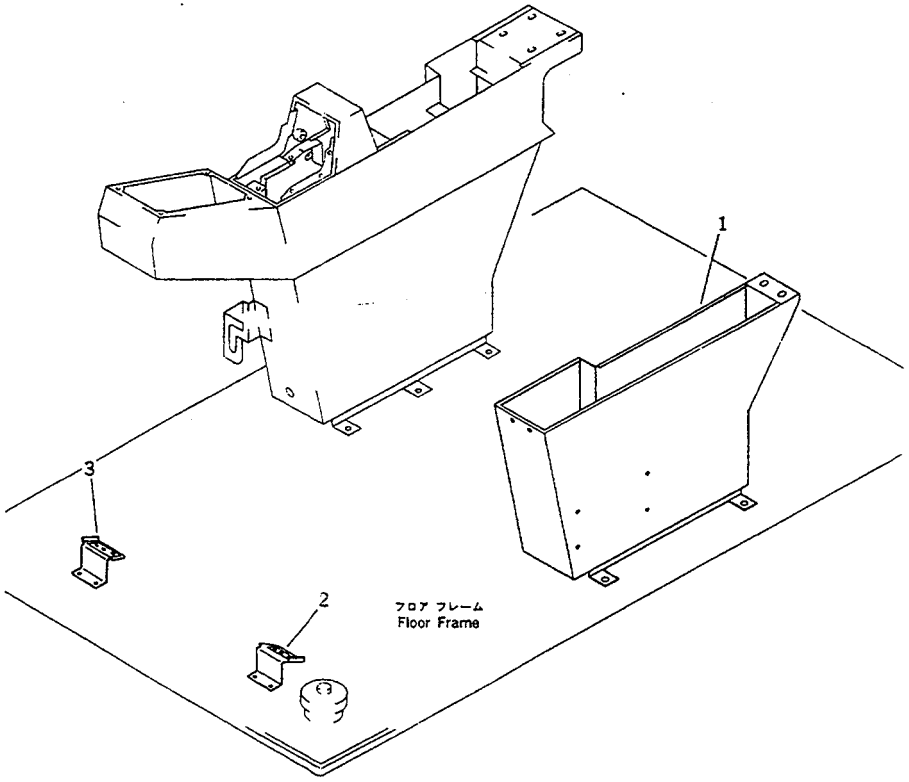

FIG NO. :9008

INDEX NO.	PART NO.	DESCRIPTION	Q'TY	SERIAL NO. PC210-3KP	SERIAL NO. PC240-3KP
1	205-43-74260	CASE,L.H.	1	K15001-	K15001-
2	203-43-43321	REST,FOOT	1	K15001-	K15001-
3	203-43-43331	REST,FOOT	1	K15001-	K15001-

https://truckmanualshub.com/

FIG. 9010 MACHINERY COMPARTMENT (1/2) (TBG SPEC.)

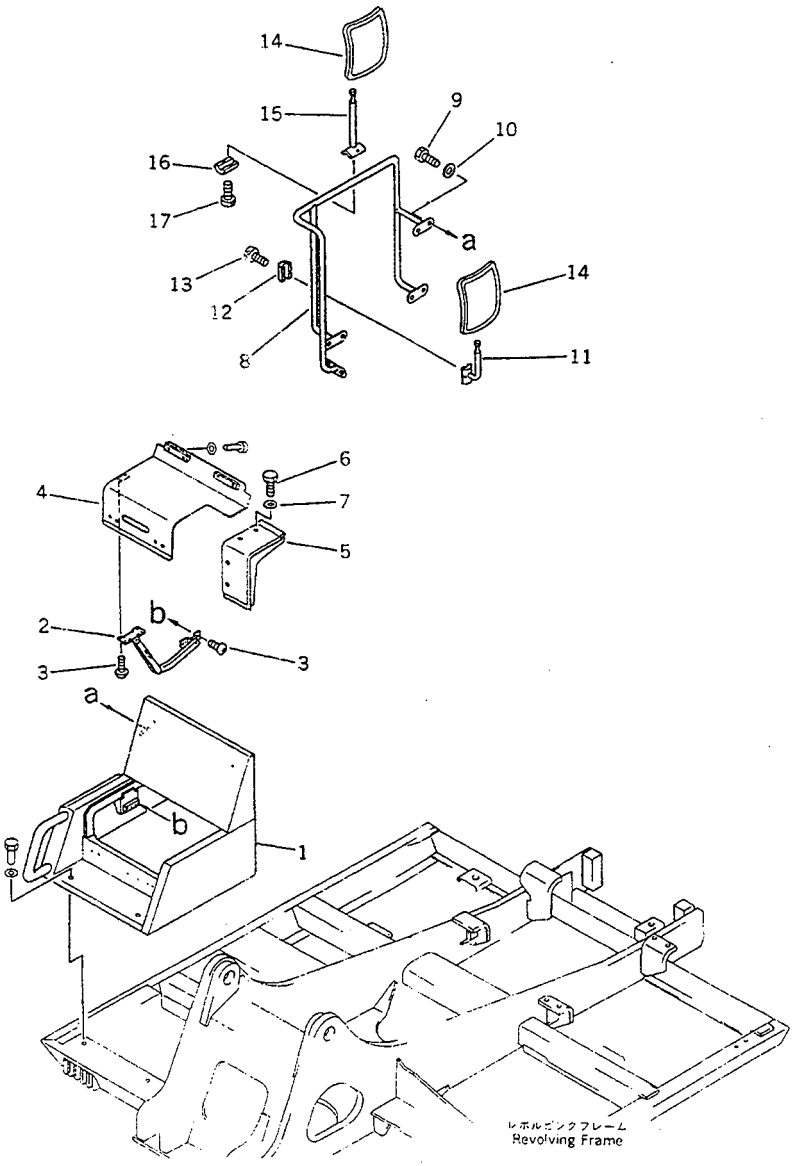

FIG NO. :9010

INDEX NO.	PART NO.	DESCRIPTION	Q'TY	SERIAL NO. PC210-3KP	SERIAL NO. PC240-3KP
1	205-54-77221	COVER	1	K15001-	K15001-
2	208-54-13160	STAY	1	K15001-	K15001-
3	01225-40510	SCREW	8	K15001-	K15001-
4	205-54-77242	COVER	1	K15001-	K15001-
5	205-54-77232	COVER	1	K15001-	K15001-
6	01010-51220	BOLT	4	K15001-	K15001-
7	01643-31232	WASHER	4	K15001-	K15001-
8	205-54-77110	HAND RAIL	1	K15001-	K15001-
9	01010-51225	BOLT	8	K15001-	K15001-
10	01643-31232	WASHER	8	K15001-	K15001-
11	205-54-68480	SUPPORT	1	K15001-	K15001-
12	207-54-17840	CLAMP	1	K15001-	K15001-
13	01252-41025	BOLT	2	K15001-	K15001-
14	08174-33023	MIRROR	2	K15001-	K15001-
15	205-54-57141	SUPPORT	1	K15001-	K15001-
16	207-54-17840	CLAMP	1	K15001-	K15001-
17	01252-41025	BOLT	2	K15001-	K15001-

https://truckmanualshub.com/

FIG. 9011 MACHINERY COMPARTMENT (2/2) (TBG SPEC.)

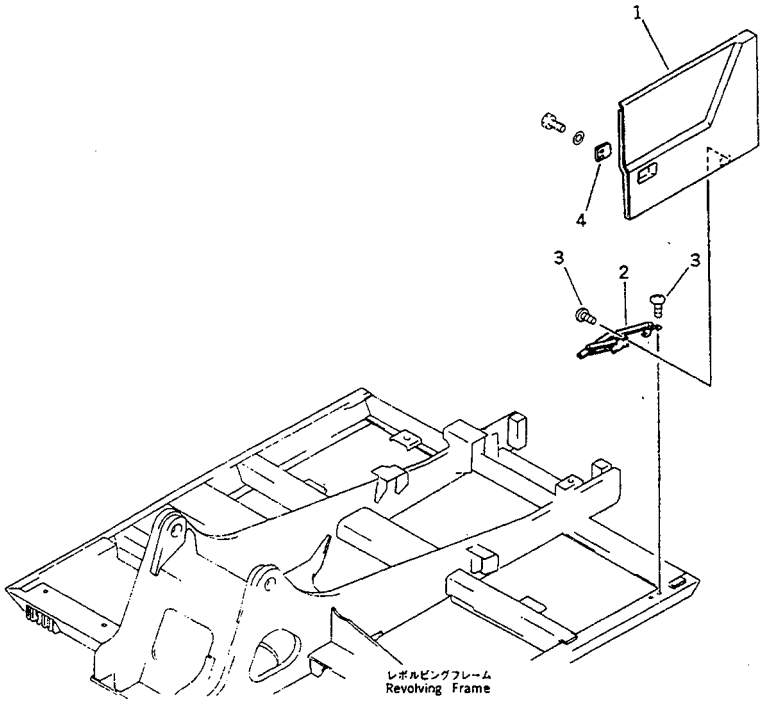

FIG NO. :9011

INDEX NO.	PART NO.	DESCRIPTION	Q'TY	SERIAL NO. PC210-3KP	SERIAL NO. PC240-3KP
1	205-54-77210	DOOR	1	K15001-	K15001-
2	208-54-12450	STAY	1	K15001-	K15001-
3	01225-40510	SCREW	8	K15001-	K15001-
4	205-54-77260	BRACKET	1	K15001-	K15001-

https://truckmanualshub.com/

FIG. 9014 OPERATOR'S CAB (TBG SPEC.)

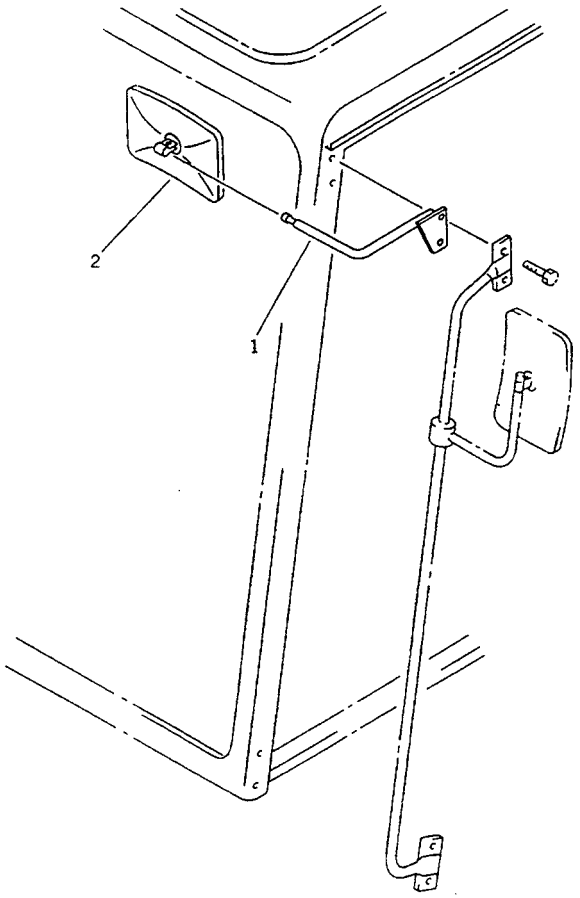

FIG NO. :9014

INDEX NO.	PART NO.	DESCRIPTION	Q'TY	SERIAL NO. PC210-3KP	SERIAL NO. PC240-3KP
1	205-54-K2780	SUPPORT	1	K15001-	K15001-
2	205-54-K2620	MIRROR	1	K15001-	K15001-

https://truckmanualshub.com/

FIG. 9016 MARKS AND PLATES (TBG SPEC.)

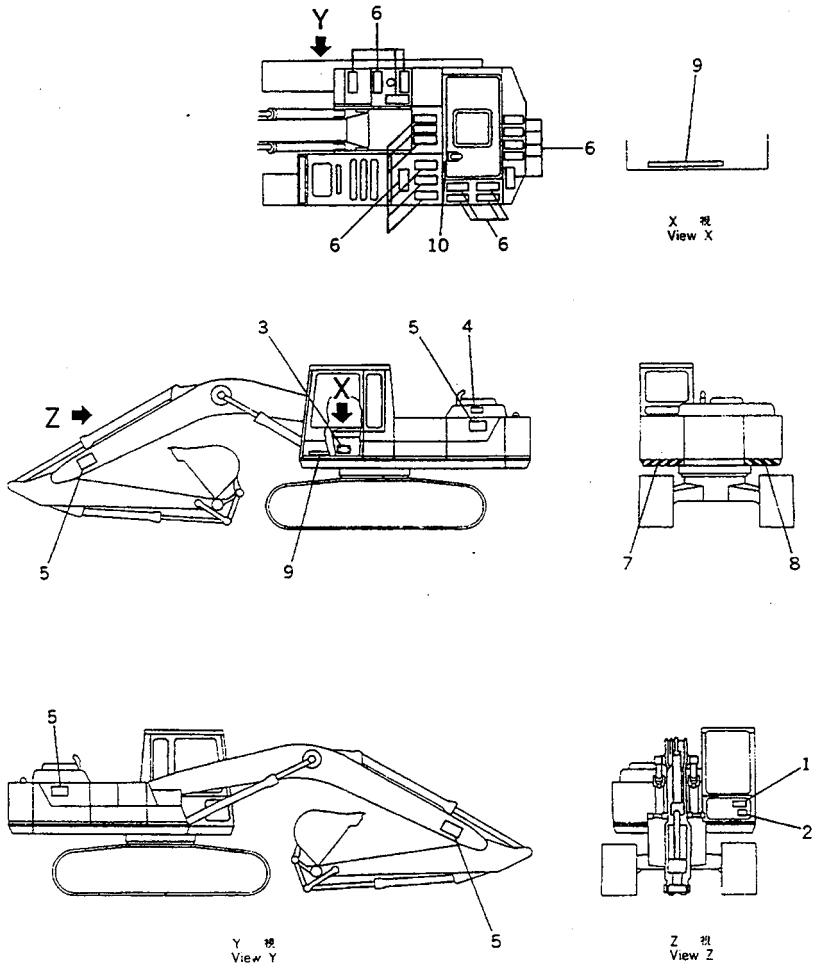

FIG NO. :9016

INDEX NO.	PART NO.	DESCRIPTION	Q'TY	SERIAL NO. PC210-3KP	SERIAL NO. PC240-3KP
1	205-00-66110	PLATE, OPERATING	1	K15001-	K15001-
2	205-00-74230	PLATE, CAUTION	1	K15001-	K15001-
3	205-00-K1120	PLATE, NAME	1	K15001-	K15001-
	01220-60408	SCREW	4	K15001-	K15001-
4	205-00-66130	PLATE, SAFETY	1	K15001-	K15001-
5	205-00-K1160	PLATE, SAFETY	4	K15001-	K15001-
6	154-54-23260	SEAT,NONSKID	19	K15001-	K15001-
7	205-00-74211	DECALCOMANIA	1	K15001-	K15001-
8	205-00-74221	DECALCOMANIA	1	K15001-	K15001-
9	205-54-77250	SHEET	1	K15001-	K15001-
10	205-00-66130	PLATE, SAFETY	1	K15001-	K15001-

https://truckmanualshub.com/

FIG. 9054 INSTRUMENT PANEL (REGULATION OF SWEDEN)

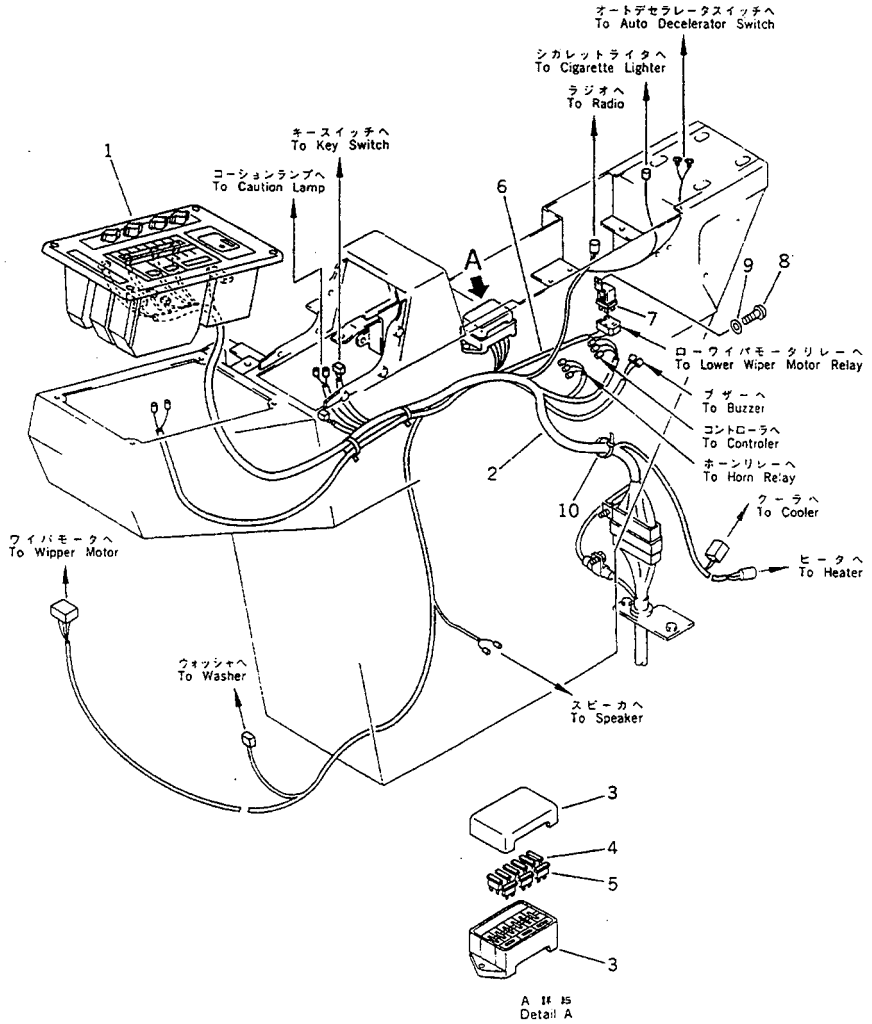

FIG NO. :9054

INDEX NO.	PART NO.	DESCRIPTION	Q'TY	SERIAL NO. PC210-3KP	SERIAL NO. PC240-3KP
1	(7831-77-2000)	MONITOR PANEL ASS'Y	1	K15001-	K15001-
2	205-06-73440	WIRING HARNESS	1	K15001-	K15001-
3	205-06-71480	.BOX,FUSE	1	K15001-	K15001-
4	205-06-73180	.FUSE, 15A	8	K15001-	K15001-
5	22W-06-13160	.FUSE, 20A	1	K15001-	K15001-
6	207-06-32260	WIRING HARNESS	1	K15001-	K15001-
7	22W-06-13450	RELAY ASS'Y,WIPER MOTOR	1	K15001-	K15001-
8	01220-40612	SCREW	1	K15001-	K15001-
9	01643-30623	WASHER	1	K15001-	K15001-
10	08034-00519	BAND	1	K15001-	K15001-

https://truckmanualshub.com/

FIG. 9057 ELECTRICAL SYSTEM (1/2) (REGULATION OF SWEDEN)

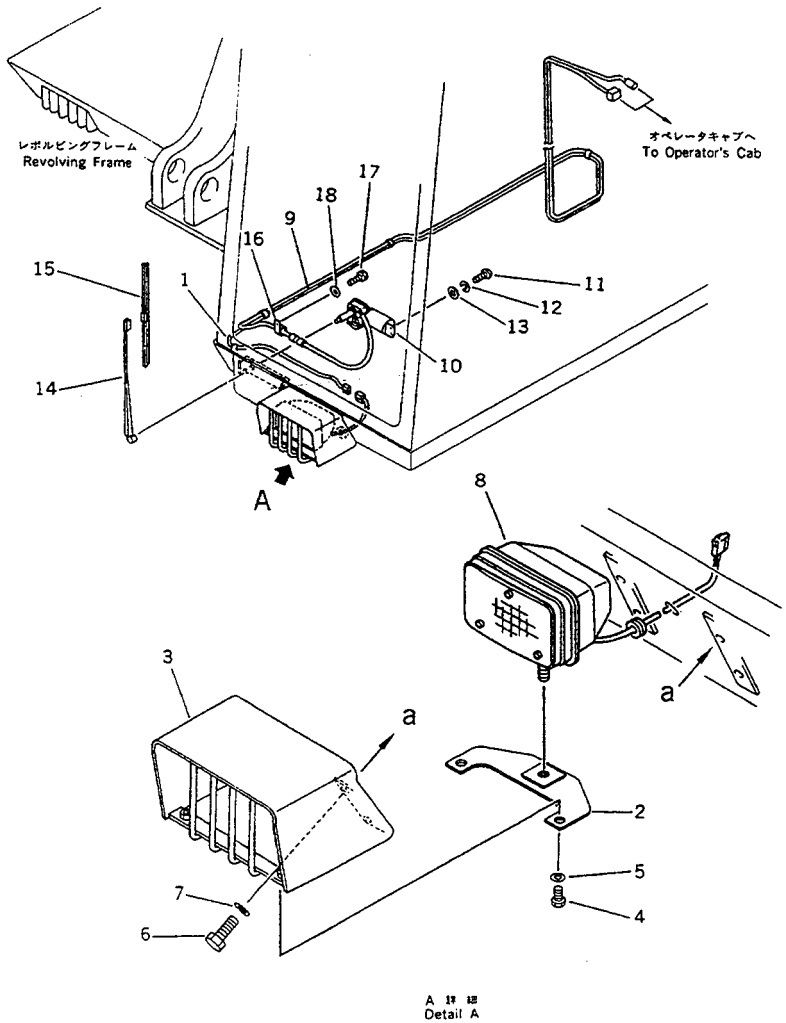

FIG NO. :9057

INDEX NO.	PART NO.	DESCRIPTION	Q'TY	SERIAL NO. PC210-3KP	SERIAL NO. PC240-3KP
1	207-06-31130	WIRE	1	K15001-	K15001-
2	205-06-71810	PLATE	1	K15001-	K15001-
3	205-06-71820	COVER	1	K15001-	K15001-
4	01010-51225	BOLT	2	K15001-	K15001-
5	01643-31232	WASHER	2	K15001-	K15001-
6	01010-51220	BOLT	4	K15001-	K15001-
7	01643-31232	WASHER	4	K15001-	K15001-
8	205-06-K1220	WORK LAMP ASS'Y	1	K15001-	K15001-
9	205-06-71270	WIRING HARNESS	1	K15001-	K15001-
10	205-06-71730	MOTOR	1	K15001-	K15001-
11	01220-40516	SCREW	2	K15001-	K15001-
12	01601-20513	WASHER,SPRING	2	K15001-	K15001-
13	01641-20508	WASHER	2	K15001-	K15001-
14	08184-30350	ARM	1	K15001-	K15001-
15	08185-00300	BLADE	1	K15001-	K15001-
16	08036-01814	CLIP	1	K15001-	K15001-
17	01010-51225	BOLT	1	K15001-	K15001-
18	01643-31232	WASHER	1	K15001-	K15001-

https://truckmanualshub.com/

FIG. 9060 ELECTRICAL SYSTEM (2/2) (REGULATION OF SWEDEN)

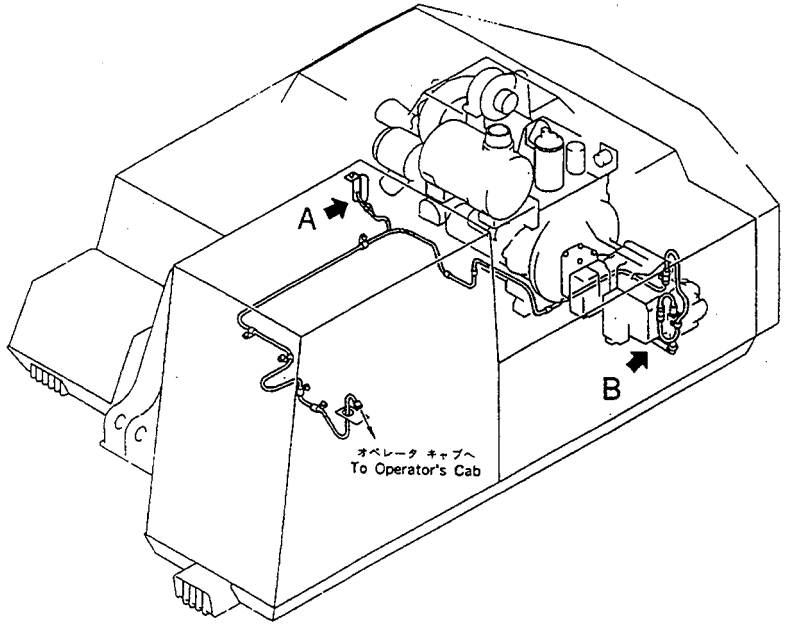

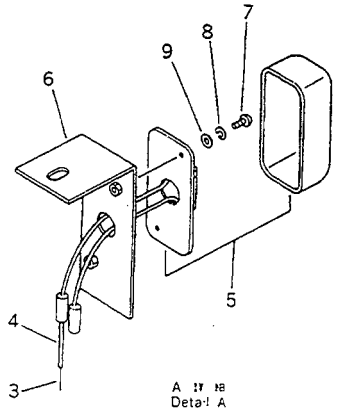

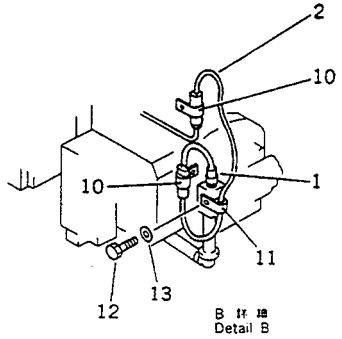

FIG NO. :9060

INDEX NO.	PART NO.	DESCRIPTION	Q'TY	SERIAL NO. PC210-3KP	SERIAL NO. PC240-3KP
1	205-06-71841	SWITCH	1	K15001-	K15001-
2	205-06-71951	WIRE ASS'Y	1	K15001-	K15001-
3	175-06-37391	WIRE	1	K15001-	K15001-
4	08023-06110	TUBE	1	K15001-	K15001-
5	08141-02400	LAMP ASS'Y	1	K15001-	K15001-
6	205-06-71970	BRACKET	1	K15001-	K15001-
7	01220-40412	SCREW	2	K15001-	K15001-
8	01601-20410	WASHER,SPRING	2	K15001-	K15001-
9	01641-20405	WASHER	2	K15001-	K15001-
10	08036-01814	CLIP	2	K15001-	K15001-
11	08036-10814	CLIP	1	K15001-	K15001-
12	01010-51016	BOLT	1	K15001-	K15001-
13	01643-31032	WASHER	1	K15001-	K15001-

https://truckmanualshub.com/

FIG. 9066 MODIFIED CHASSIS PARTS (REGULATION OF SWEDEN) (PC210)

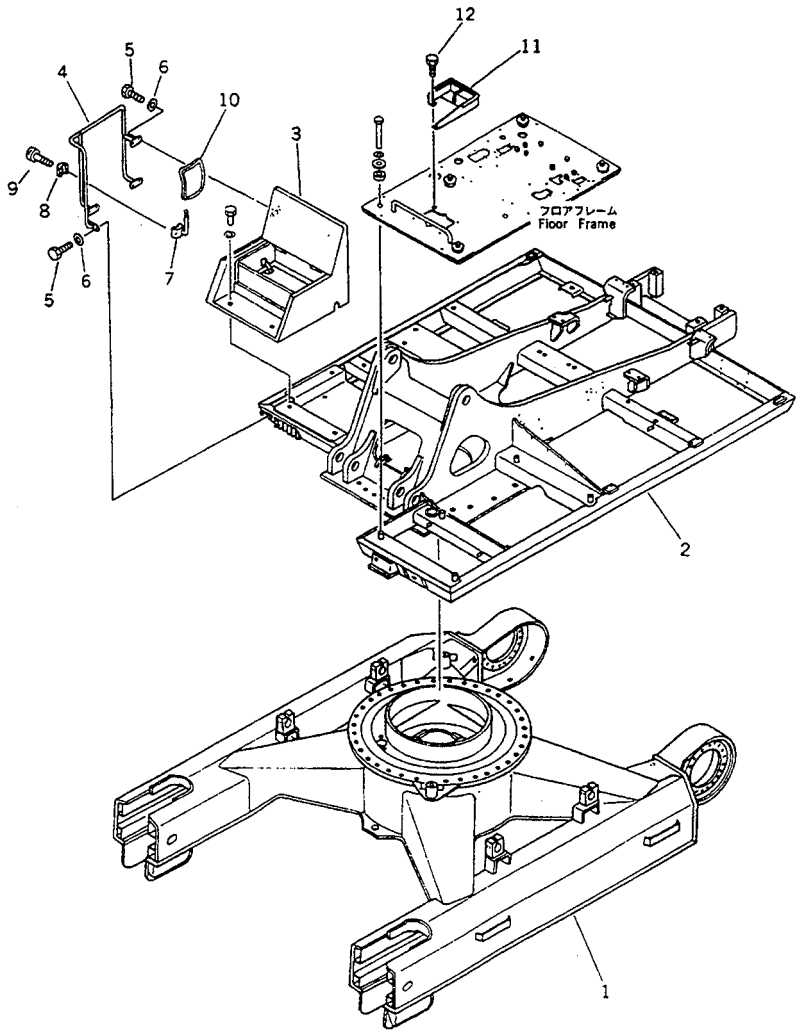

FIG NO. :9066

INDEX NO.	PART NO.	DESCRIPTION	Q'TY	SERIAL NO. PC210-3KP	SERIAL NO. PC240-3KP
1	205-30-71850	FRAME,TRACK (PC210)	1	K15001-	
	205-30-71860	FRAME,TRACK (PC210LC)	1	K15001-	
2	205-46-73540	FRAME,REVOLVING	1	K15001-	
3	205-54-77271	COVER	1	K15001-	
4	205-54-77110	HAND RAIL	1	K15001-	
5	01010-51225	BOLT	8	K15001-	
6	01643-31232	WASHER	8	K15001-	
7	205-54-68480	SUPPORT	1	K15001-	
8	207-54-17840	CLAMP	1	K15001-	
9	01252-41025	BOLT	2	K15001-	
10	205-54-K1130	MIRROR	1	K15001-	
11	205-43-71630	COVER	1	K15001-	
12	01010-51240	BOLT	4	K15001-	

https://truckmanualshub.com/

FIG. 9067 MODIFIED CHASSIS PARTS (REGULATION OF SWEDEN) (PC240)

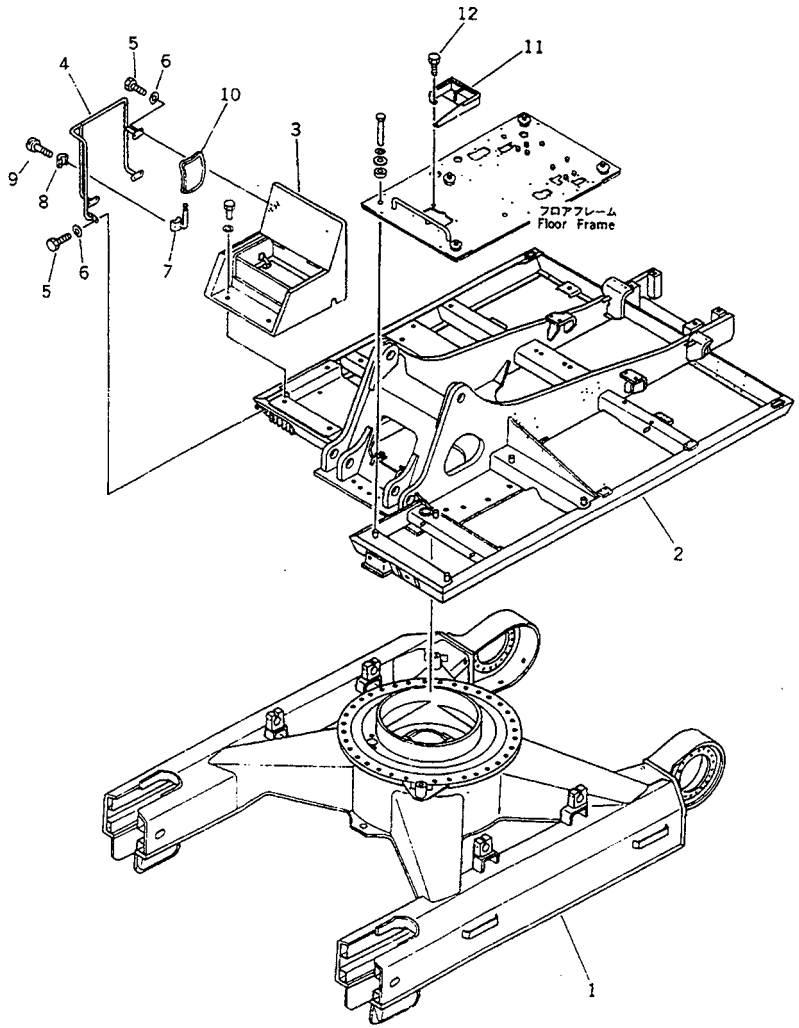

FIG NO. :9067

INDEX NO.	PART NO.	DESCRIPTION	Q'TY	SERIAL NO. PC210-3KP	SERIAL NO. PC240-3KP
1	206-30-45520	FRAME,TRACK (PC240)	1		K15001-
	206-30-45530	FRAME,TRACK (PC240LC)	1		K15001-
2	206-46-44640	FRAME,REVOLVING	1		K15001-
3	205-54-77271	COVER	1		K15001-
4	205-54-77110	HAND RAIL	1		K15001-
5	01010-51225	BOLT	8		K15001-
6	01643-31232	WASHER	8		K15001-
7	205-54-68480	SUPPORT	1		K15001-
8	207-54-17840	CLAMP	1		K15001-
9	01252-41025	BOLT	2		K15001-
10	205-54-K1130	MIRROR	1		K15001-
11	205-43-71630	COVER	1		K15001-
12	01010-51240	BOLT	4		K15001-

https://truckmanualshub.com/

FIG. 9069 OPERATOR'S CAB (REGULATION OF SWEDEN)

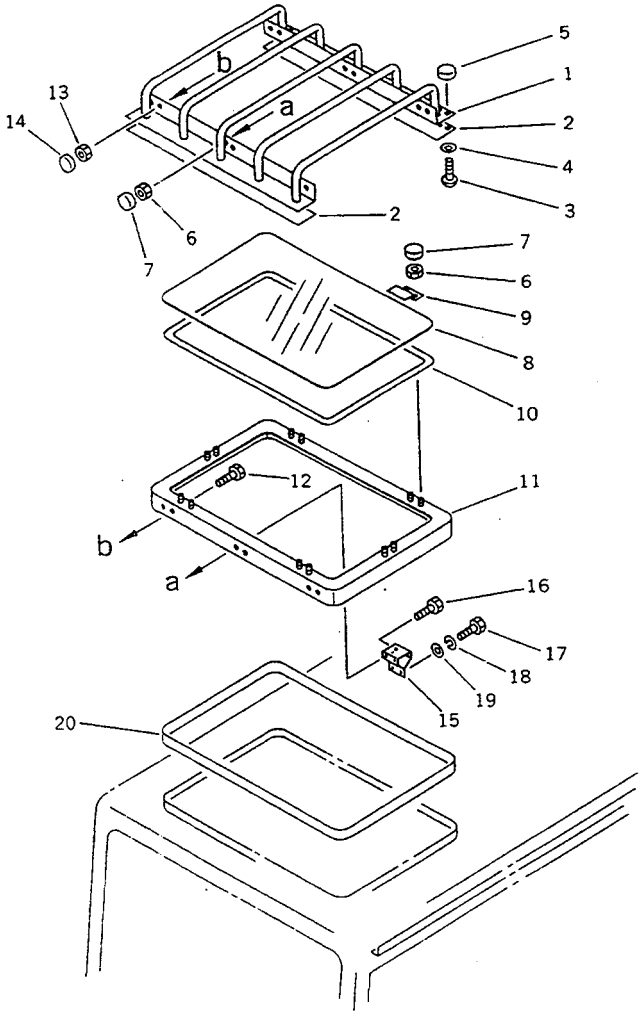

FIG NO. :9069

INDEX NO.	PART NO.	DESCRIPTION	Q'TY	SERIAL NO. PC210-3KP	SERIAL NO. PC240-3KP
	205-54-K1400	CAB ASS'Y	1	K15001-	K15001-
1	205-54-K2970	.COVER	1	K15001-	K15001-
2	205-54-K3040	.STRIP	2	K15001-	K15001-
3	205-54-K4120	.SCREW	4	K15001-	K15001-
4	01643-20608	.WASHER	4	K15001-	K15001-
5	205-54-K3070	.CAP	4	K15001-	K15001-
6	01580-00504	.NUT	14	K15001-	K15001-
7	205-54-K3080	.CAP	14	K15001-	K15001-
8	205-54-K2980	.GLASS	1	K15001-	K15001-
9	205-54-K3030	.BRACKET	6	K15001-	K15001-
10	205-54-K3020	.SEAL	1	K15001-	K15001-
11	205-54-K3050	.PANEL	1	K15001-	K15001-
12	205-54-K4110	.BOLT	8	K15001-	K15001-
13	01580-00605	.NUT	8	K15001-	K15001-
14	205-54-K3060	.CAP	8	K15001-	K15001-
15	205-54-K4530	.BRACKET	1	K15001-	K15001-
16	205-54-K3090	.BOLT	2	K15001-	K15001-
17	01016-30512	.BOLT	2	K15001-	K15001-
18	01601-00513	.WASHER	2	K15001-	K15001-
19	01643-00508	.WASHER	2	K15001-	K15001-
20	205-54-K4520	.SEAL	1	K15001-	K15001-

https://truckmanualshub.com/

FIG. 9081 REVOLVING FRAME (FOR NORWAY) (PC210)

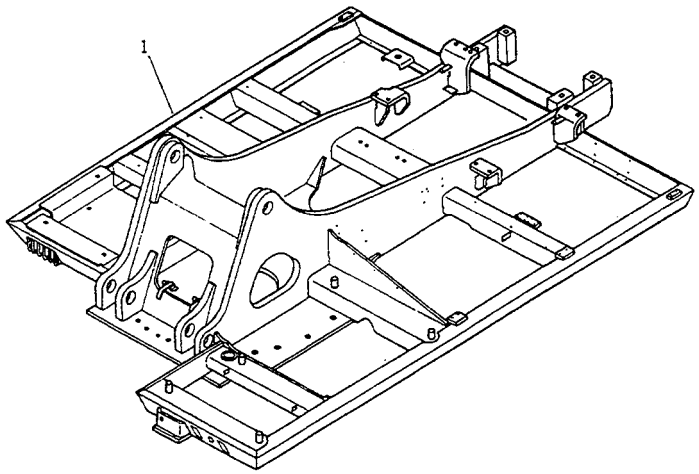

FIG NO. :9081

INDEX NO.	PART NO.	DESCRIPTION	Q'TY	SERIAL NO. PC210-3KP	SERIAL NO. PC240-3KP
1	205-46-73550	FRAME	1	K15001-	

https://truckmanualshub.com/

FIG. 9082 REVOLVING FRAME (FOR NORWAY) (PC240)

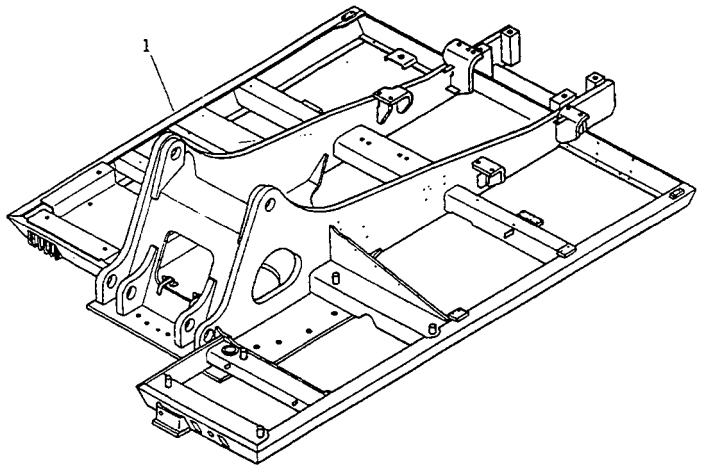

FIG NO. :9082

INDEX NO.	PART NO.	DESCRIPTION	Q'TY	SERIAL NO. PC210-3KP	SERIAL NO. PC240-3KP
1	206-46-44650	FRAME	1		K15001-

https://truckmanualshub.com/

FIG. 9301 TRACK FRAME (PC240NLC)

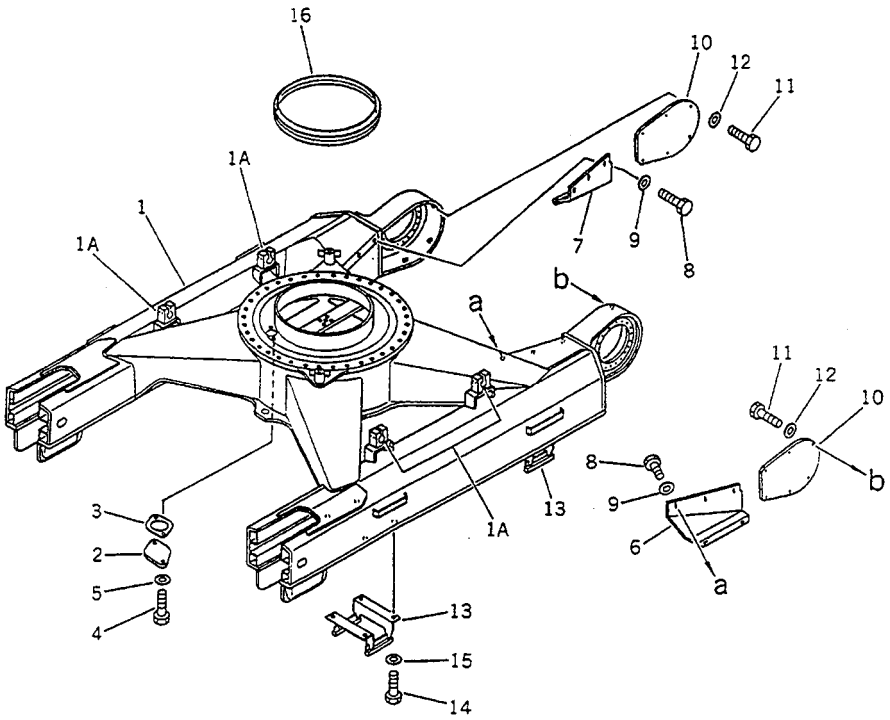

FIG NO. :9301

INDEX NO.	PART NO.	DESCRIPTION	Q'TY	SERIAL NO. PC210-3KP	SERIAL NO. PC240-3KP
1	205-30-71351	FRAME,TRACK	1		K15001-
1A	205-30-71720	.SUPPORT (WELDED)	4		K15001-
2	205-30-71181	COVER	1		K15001-
3	205-30-71191	GASKET	1		K15001-
4	01010-51225	BOLT	2		K15001-
5	01643-31232	WASHER	2		K15001-
6	205-30-71331	COVER,L.H.	1		K15001-
7	205-30-71341	COVER,R.H.	1		K15001-
8	01010-51230	BOLT	12		K15001-
9	01643-31232	WASHER	12		K15001-
10	205-30-71210	COVER	2		K15001-
11	01010-51230	BOLT	12		K15001-
12	01643-31232	WASHER	12		K15001-
13	205-30-71242	GUARD	4		K15001-
14	01010-52050	BOLT	16		K15001-
15	01643-32060	WASHER	16		K15001-
16	205-30-71170	SEAL	1		K15001-

https://truckmanualshub.com/

FIG. 9303 HYDRAULIC PIPING
(SWIVEL JOINT TO/FROM TRAVEL MOTOR) (PC240NLC)

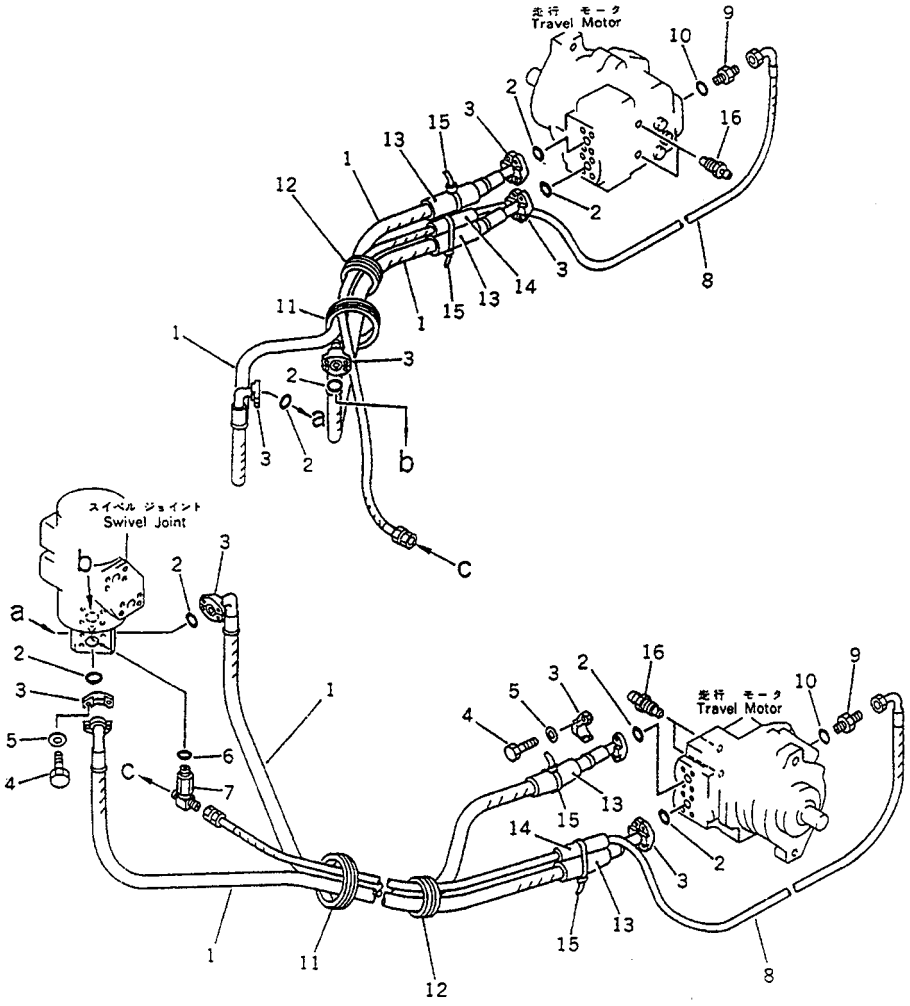

FIG NO. :9303

INDEX NO.	PART NO.	DESCRIPTION	Q'TY	SERIAL NO. PC210-3KP	SERIAL NO. PC240-3KP
1	205-62-K1120	HOSE	4		K15001-
2	07000-13025	O-RING	8		K15001-
3	07371-30638	FLANGE,SPLIT	16		K15001-
4	01010-50830	BOLT	32		K15001-
5	01643-50823	WASHER	32		K15001-
6	07002-02034	O-RING	1		K15001-
7	205-62-72121	TEE	1		K15001-
8	205-62-72230	HOSE	2		K15001-
9	07230-10315	UNION	2		K15001-
10	07002-02034	O-RING	2		K15001-
11	205-62-72330	GROMMET	2		K15001-
12	205-62-72190	GROMMET	2		K15001-
13	205-62-72240	COVER,HOSE	4		K15001-
14	205-62-72140	COVER,HOSE	2		K15001-
15	08034-00536	BAND	4		K15001-
16	20B-27-11210	BLEEDER	4		K15001-

https://truckmanualshub.com/

FIG. 9305 TRACK ROLLER (PC240NLC)

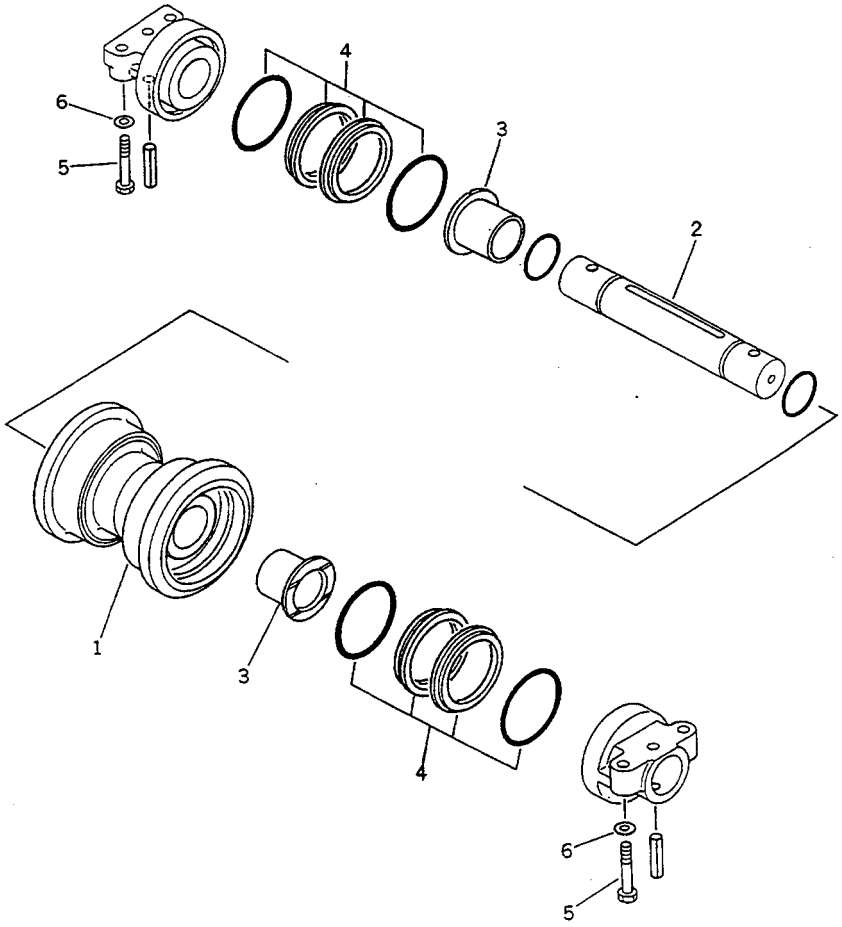

FIG NO. :9305

INDEX NO.	PART NO.	DESCRIPTION	Q'TY	SERIAL NO. PC210-3KP	SERIAL NO. PC240-3KP
	205-30-K0010	TRACK ROLLER ASS'Y SINGLE FLANGE	18		K15001-
1	205-30-K1110	.ROLLER	1		K15001-
2	205-30-K1120	.SHAFT	1		K15001-
3	205-30-K1140	.BUSHING	2		K15001-
4	205-30-K1130	.FLOATING SEAL ASS'Y	2		K15001-
5	01010-51680	BOLT	56		K15001-
6	01643-31645	WASHER	56		K15001-

https://truckmanualshub.com/

FIG. 9307 TRACK SHOE (PC240NLC)

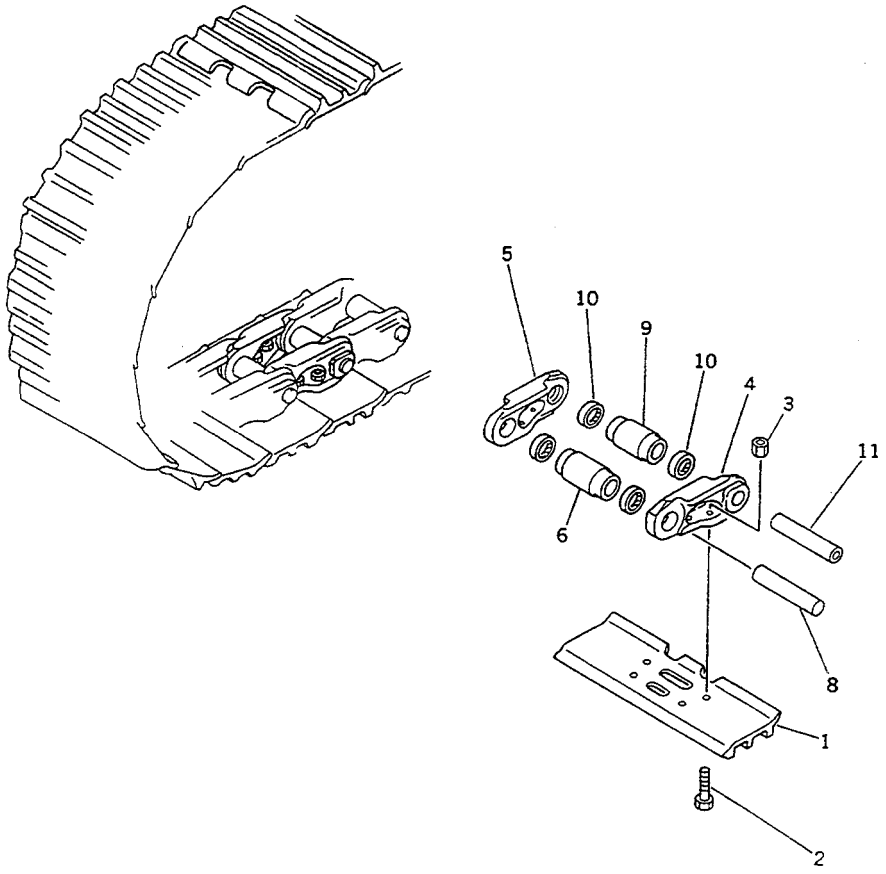

FIG NO. :9307

INDEX NO.	PART NO.	DESCRIPTION	Q'TY	SERIAL NO. PC210-3KP	SERIAL NO. PC240-3KP
		610MM WIDE			
	205-32-K1200	TRACK SHOE ASS'Y	1		K15001-
1	205-32-E5113	.SHOE,TRACK	98		K15001-
2	205-32-E5121	.BOLT, SHOE	392		K15001-
3	205-32-E1122	.NUT, SHOE	392		K15001-
	205-32-E0004	.TRACK LINK ASS'Y	1		K15001-
4	205-32-E1112	..LINK,L.H.	98		K15001-
5	205-32-E1113	..LINK,R.H.	98		K15001-
6	205-32-E1114	..BUSHING,REGULAR	96		K15001-
8	205-32-51152	..PIN,REGULAR	96		K15001-
9	135-32-E1117	..BUSHING,MASTER	2		K15001-
10	205-32-E1138	..SPACER,MASTER	4		K15001-
11	205-32-E1130	..PIN,MASTER	2		K15001-
		710MM WIDE			
	205-32-K1100	TRACK SHOE ASS'Y	1		K15001-
1	205-32-E4111	.SHOE,TRACK	98		K15001-
2	205-32-E5121	.BOLT, SHOE	392		K15001-
3	205-32-E1122	.NUT, SHOE	392		K15001-
4	205-32-E0004	.TRACK LINK ASS'Y	1		K15001-
		810MM WIDE			
	205-32-K1300	TRACK SHOE ASS'Y	1		K15001-
1	205-32-E5125	.SHOE,TRACK	98		K15001-
2	205-32-E5121	.BOLT, SHOE	392		K15001-
3	205-32-E1122	.NUT, SHOE	392		K15001-
4	205-32-E0004	.TRACK LINK ASS'Y	1		K15001-
		910MM WIDE			
	205-32-K1400	TRACK SHOE ASS'Y	1		K15001-
1	205-32-E5128	.SHOE,TRACK	98		K15001-
2	205-32-E5121	.BOLT, SHOE	392		K15001-
3	205-32-E1122	.NUT, SHOE	392		K15001-

https://truckmanualshub.com/

FIG NO. :9307

INDEX NO.	PART NO.	DESCRIPTION	Q'TY	SERIAL NO. PC210-3KP	SERIAL NO. PC240-3KP
4	205-32-E0004	.TRACK LINK ASS'Y	1		K15001-

https://truckmanualshub.com/

FIG. 9501 LOCK VALVE PIPING (FOR BOOM CYLINDER) (1/2)

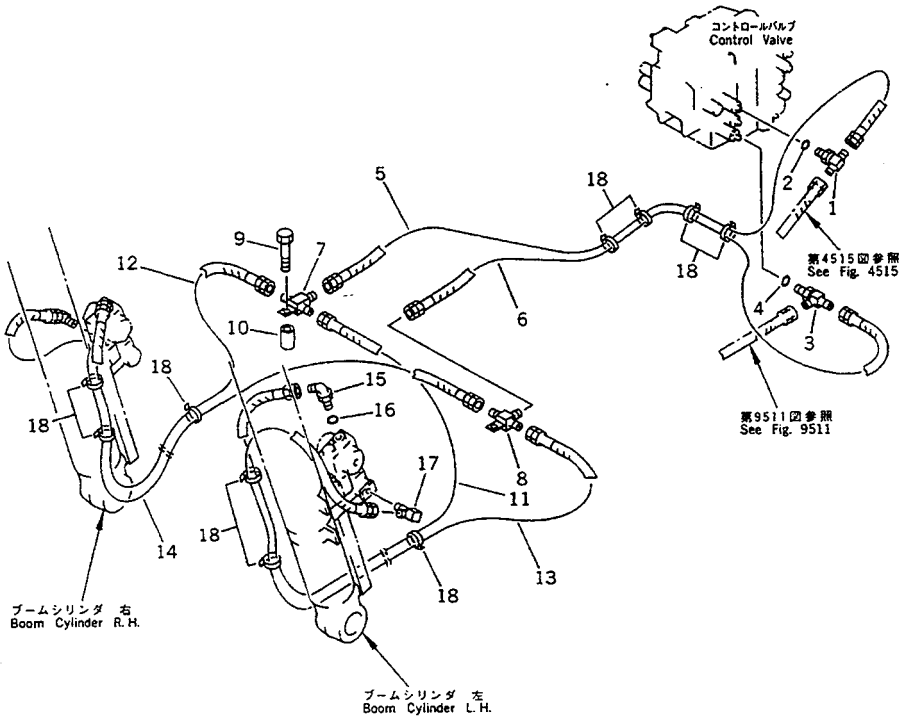

FIG NO. :9501

INDEX NO.	PART NO.	DESCRIPTION	Q'TY	SERIAL NO. PC210-3KP	SERIAL NO. PC240-3KP
1	208-26-11611	TEE	1	K15001-	K15001-
2	07002-01423	O-RING	1	K15001-	K15001-
3	205-62-72650	TEE	1	K15001-	K15001-
4	07002-02434	O-RING	1	K15001-	K15001-
5	07102-20222	HOSE	1	K15001-	K15001-
6	07102-20322	HOSE	1	K15001-	K15001-
7	207-62-34440	TEE	1	K15001-	K15001-
8	207-62-34430	TEE	1	K15001-	K15001-
9	01010-51075	BOLT	2	K15001-	K15001-
10	22D-62-12440	SPACER	2	K15001-	K15001-
11	07102-20213	HOSE	1	K15001-	K15001-
12	07102-20210	HOSE	1	K15001-	K15001-
13	07102-20313	HOSE	1	K15001-	K15001-
14	07102-20316	HOSE	1	K15001-	K15001-
15	21P-62-11590	ELBOW	2	K15001-	K15001-
16	07000-02011	O-RING	2	K15001-	K15001-
17	205-62-53461	ELBOW	2	K15001-	K15001-
18	08034-00519	BAND	10	K15001-	K15001-

https://truckmanualshub.com/

FIG. 9502 LOCK VALVE PIPING (FOR BOOM CYLINDER) (2/2) (PC210)

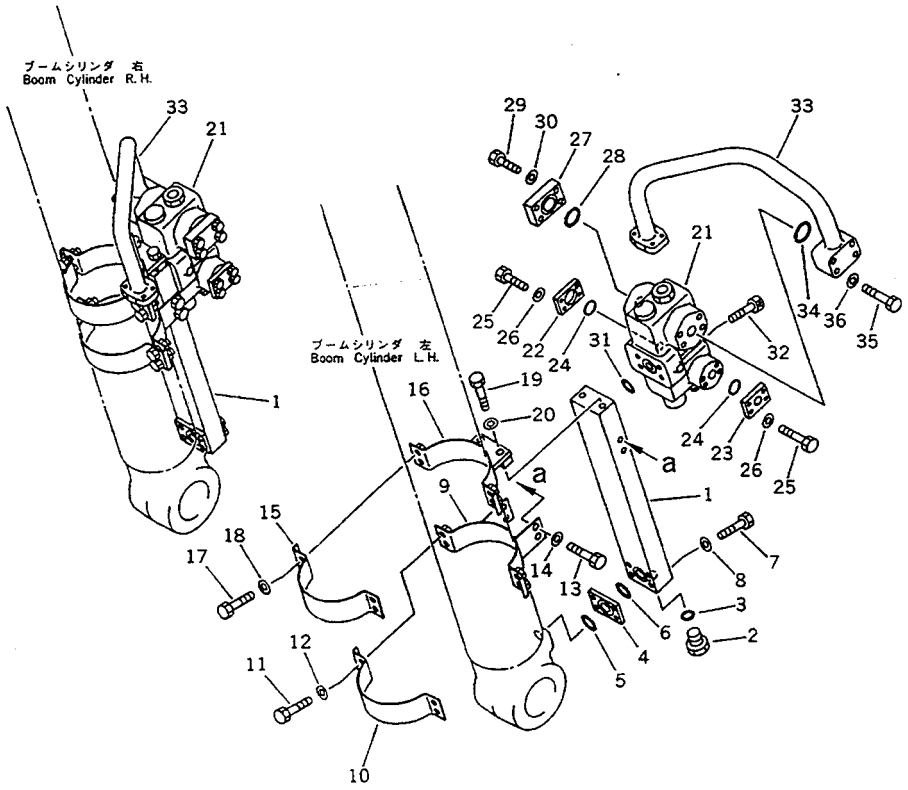

FIG NO. 9502

INDEX NO.	PART NO.	DESCRIPTION	Q'TY	SERIAL NO. PC210-3KP	SERIAL NO. PC240-3KP
1	205-62-72860	BLOCK	1	K15001-	
2	195-78-22640	PLUG	1	K15001-	
3	07002-12034	O-RING	2	K15001-	
4	206-62-43680	SPACER	2	K15001-	
5	07000-13030	O-RING	2	K15001-	
6	07000-13025	O-RING	2	K15001-	
7	01010-50860	BOLT	8	K15001-	
8	01643-30623	WASHER	8	K15001-	
9	205-62-72960	BRACKET	2	K15001-	
10	205-62-72630	CLAMP	2	K15001-	
11	01010-51035	BOLT	8	K15001-	
12	01643-51032	WASHER	8	K15001-	
13	01010-51020	BOLT	8	K15001-	
14	01643-31032	WASHER	8	K15001-	
15	205-62-72630	CLAMP	2	K15001-	
16	205-62-72940	BRACKET	2	K15001-	
17	01010-51035	BOLT	8	K15001-	
18	01643-51032	WASHER	8	K15001-	
19	01010-51045	BOLT	4	K15001-	
20	01643-31032	WASHER	4	K15001-	
21	205-60-K1120	VALVE	2	K15001-	
22	205-62-72930	FLANGE	2	K15001-	
23	205-62-72920	FLANGE	2	K15001-	
24	07000-03022	O-RING	4	K15001-	
25	01010-50822	BOLT	16	K15001-	
26	01643-50823	WASHER	16	K15001-	
27	205-62-72910	FLANGE	2	K15001-	
28	07000-13030	O-RING	2	K15001-	
29	01010-51055	BOLT	8	K15001-	
30	01643-31032	WASHER	8	K15001-	

https://truckmanualshub.com/

FIG NO. :9502

INDEX NO.	PART NO.	DESCRIPTION	Q'TY	SERIAL NO. PC210-3KP	SERIAL NO. PC240-3KP
31	07000-13030	O-RING	2	K15001-	
32	01252-41050	BOLT	8	K15001-	
33	205-62-72870	TUBE,L.H.	1	K15001-	
	205-62-72880	TUBE,R.H.	1	K15001-	
34	07000-13030	O-RING	2	K15001-	
35	01010-51035	BOLT	8	K15001-	
36	01643-31032	WASHER	8	K15001-	

https://truckmanualshub.com/

FIG. 9503 LOCK VALVE PIPING (FOR BOOM CYLINDER) (2/2) (PC240)

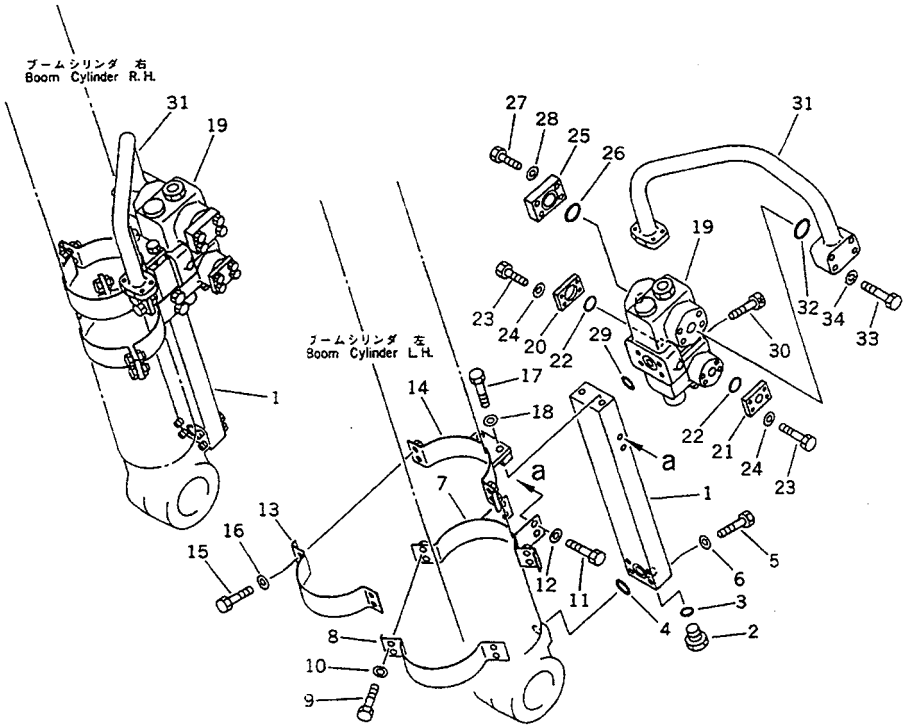

FIG NO. :9503

INDEX NO.	PART NO.	DESCRIPTION	Q'TY	SERIAL NO. PC210-3KP	SERIAL NO. PC240-3KP
1	205-62-72860	BLOCK	1		K15001-
2	195-78-22640	PLUG	1		K15001-
3	07002-12034	O-RING	2		K15001-
4	07000-13025	O-RING	2		K15001-
5	01010-50855	BOLT	8		K15001-
6	01643-30623	WASHER	8		K15001-
7	206-62-43530	BRACKET	2		K15001-
8	205-62-72430	CLAMP	2		K15001-
9	01010-51035	BOLT	8		K15001-
10	01643-51032	WASHER	8		K15001-
11	01010-51020	BOLT	8		K15001-
12	01643-31032	WASHER	8		K15001-
13	205-62-72430	CLAMP	2		K15001-
14	206-62-43520	BRACKET	2		K15001-
15	01010-51035	BOLT	8		K15001-
16	01643-51032	WASHER	8		K15001-
17	01010-51045	BOLT	4		K15001-
18	01643-31032	WASHER	4		K15001-
19	205-60-K1120	VALVE	2		K15001-
20	205-62-72930	FLANGE	2		K15001-
21	205-62-72920	FLANGE	2		K15001-
22	07000-03022	O-RING	4		K15001-
23	01010-80822	BOLT	16		K15001-
24	01643-50823	WASHER	16		K15001-
25	205-62-72910	FLANGE	2		K15001-
26	07000-13030	O-RING	2		K15001-
27	01010-51055	BOLT	8		K15001-
28	01643-31032	WASHER	8		K15001-
29	07000-13030	O-RING	2		K15001-
30	01252-41050	BOLT	8		K15001-

https://truckmanualshub.com/

FIG NO. :9503

INDEX NO.	PART NO.	DESCRIPTION	Q'TY	SERIAL NO. PC210-3KP	SERIAL NO. PC240-3KP
31	206-62-43490	TUBE,L.H.	1		K15001-
	206-62-43510	TUBE,R.H.	1		K15001-
32	07000-13030	O-RING	2		K15001-
33	01010-51035	BOLT	8		K15001-
34	01643-31032	WASHER	8		K15001-

https://truckmanualshub.com/

FIG. 9511 LOCK VALVE PIPING (FOR ARM CYLINDER) (PC210)

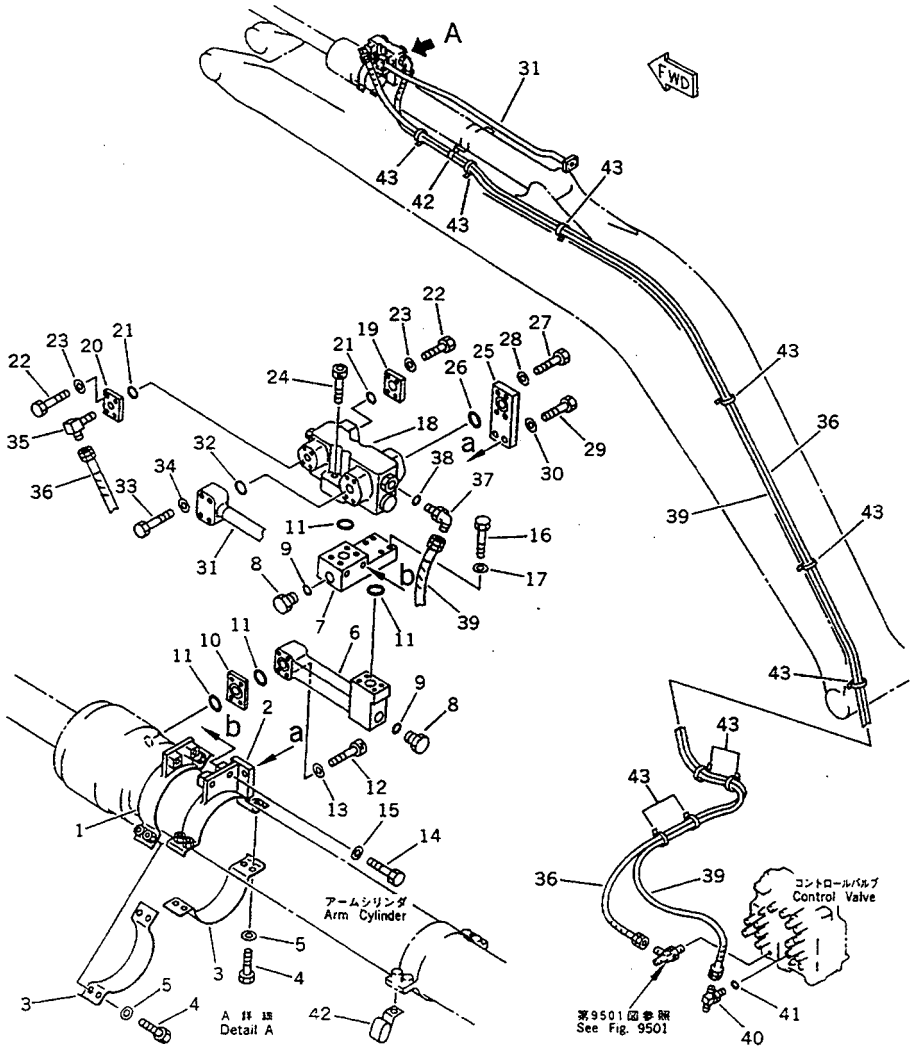

FIG NO. :9511

INDEX NO.	PART NO.	DESCRIPTION	Q'TY	SERIAL NO. PC210-3KP	SERIAL NO. PC240-3KP
1	205-62-72980	BRACKET	1	K15001-	
2	205-62-72990	BRACKET	1	K15001-	
3	206-62-43810	BRACKET	2	K15001-	
4	01010-51235	BOLT	8	K15001-	
5	01643-51232	WASHER	8	K15001-	
6	206-62-43660	BLOCK	1	K15001-	
7	206-62-43670	BLOCK	1	K15001-	
8	195-78-22640	PLUG	2	K15001-	
9	07002-12034	O-RING	2	K15001-	
10	206-62-43680	SPACER	1	K15001-	
11	07000-13030	O-RING	4	K15001-	
12	01252-40850	BOLT	4	K15001-	
13	01643-50823	WASHER	4	K15001-	
14	01010-51245	BOLT	4	K15001-	
15	01643-31232	WASHER	4	K15001-	
16	01010-51055	BOLT	4	K15001-	
17	01643-31032	WASHER	4	K15001-	
18	205-60-K1120	VALVE	1	K15001-	
19	205-62-72930	FLANGE	1	K15001-	
20	205-62-72920	FLANGE	1	K15001-	
21	07000-03022	O-RING	2	K15001-	
22	01010-50822	BOLT	8	K15001-	
23	01643-50823	WASHER	8	K15001-	
24	01252-41050	BOLT	4	K15001-	
25	206-62-43720	COVER	1	K15001-	
26	07000-13030	O-RING	1	K15001-	
27	01010-51035	BOLT	4	K15001-	
28	01643-31032	WASHER	4	K15001-	
29	01010-51235	BOLT	2	K15001-	
30	01643-31232	WASHER	2	K15001-	

https://truckmanualshub.com/

FIG NO. :9511

INDEX NO.	PART NO.	DESCRIPTION	Q'TY	SERIAL NO. PC210-3KP	SERIAL NO. PC240-3KP
31	205-62-73510	TUBE	1	K15001-	
32	07000-13030	O-RING	1	K15001-	
33	01010-51055	BOLT	4	K15001-	
34	01643-31032	WASHER	4	K15001-	
35	205-62-53461	ELBOW	1	K15001-	
36	07102-20378	HOSE	1	K15001-	
37	21P-62-11590	ELBOW	1	K15001-	
38	07000-02011	O-RING	1	K15001-	
39	07102-20280	HOSE	1	K15001-	
40	208-26-11611	TEE	1	K15001-	
41	07002-01423	O-RING	1	K15001-	
42	141-01-33250	CLIP	1	K15001-	
43	08034-00519	BAND	10	K15001-	

https://truckmanualshub.com/

FIG. 9512 LOCK VALVE PIPING (FOR ARM CYLINDER) (PC240)

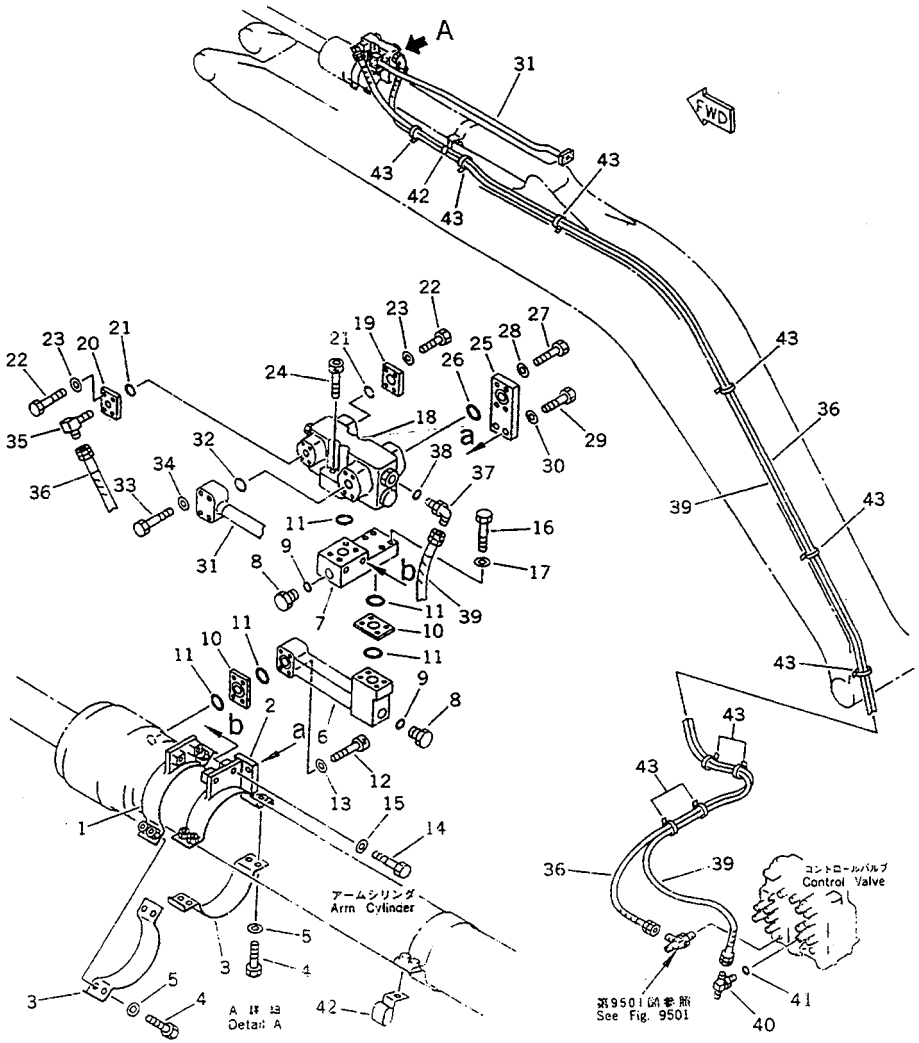

FIG NO. :9512

INDEX NO.	PART NO.	DESCRIPTION	Q'TY	SERIAL NO. PC210-3KP	SERIAL NO. PC240-3KP
1	206-62-43690	BRACKET	1		K15001-
2	206-62-43710	BRACKET	1		K15001-
3	206-62-43820	BRACKET	2		K15001-
4	01010-51240	BOLT	8		K15001-
5	01643-51232	WASHER	8		K15001-
6	206-62-43650	BLOCK	1		K15001-
7	206-62-43670	BLOCK	1		K15001-
8	195-78-22640	PLUG	2		K15001-
9	07002-12034	O-RING	2		K15001-
10	206-62-43680	SPACER	1		K15001-
11	07000-13030	O-RING	4		K15001-
12	01252-40850	BOLT	4		K15001-
13	01643-50823	WASHER	4		K15001-
14	01010-51245	BOLT	4		K15001-
15	01643-31232	WASHER	4		K15001-
16	01010-51060	BOLT	4		K15001-
17	01643-31032	WASHER	4		K15001-
18	205-60-K1120	VALVE	1		K15001-
19	205-62-72930	FLANGE	1		K15001-
20	205-62-72920	FLANGE	1		K15001-
21	07000-03022	O-RING	2		K15001-
22	01010-50822	BOLT	8		K15001-
23	01643-50823	WASHER	8		K15001-
24	01252-41050	BOLT	4		K15001-
25	206-62-43720	COVER	1		K15001-
26	07000-13030	O-RING	1		K15001-
27	01010-51035	BOLT	4		K15001-
28	01643-31032	WASHER	4		K15001-
29	01010-51235	BOLT	2		K15001-
30	01643-31232	WASHER	2		K15001-

https://truckmanualshub.com/

FIG NO. :9512

INDEX NO.	PART NO.	DESCRIPTION	Q'TY	SERIAL NO. PC210-3KP	SERIAL NO. PC240-3KP
31	206-62-43730	TUBE	1		K15001-
32	07000-13030	O-RING	1		K15001-
33	01010-51055	BOLT	4		K15001-
34	01643-31032	WASHER	4		K15001-
35	205-62-53461	ELBOW	1		K15001-
36	07102-20378	HOSE	1		K15001-
37	21P-62-11590	ELBOW	1		K15001-
38	07000-02011	O-RING	1		K15001-
39	07102-20280	HOSE	1		K15001-
40	208-26-11611	TEE	1		K15001-
41	07002-01423	O-RING	1		K15001-
42	141-01-33250	CLIP	1		K15001-
43	08034-00519	BAND	10		K15001-

https://truckmanualshub.com/

FIG. 9941 MARKS AND PLATES (ENGLISH) (PC210)

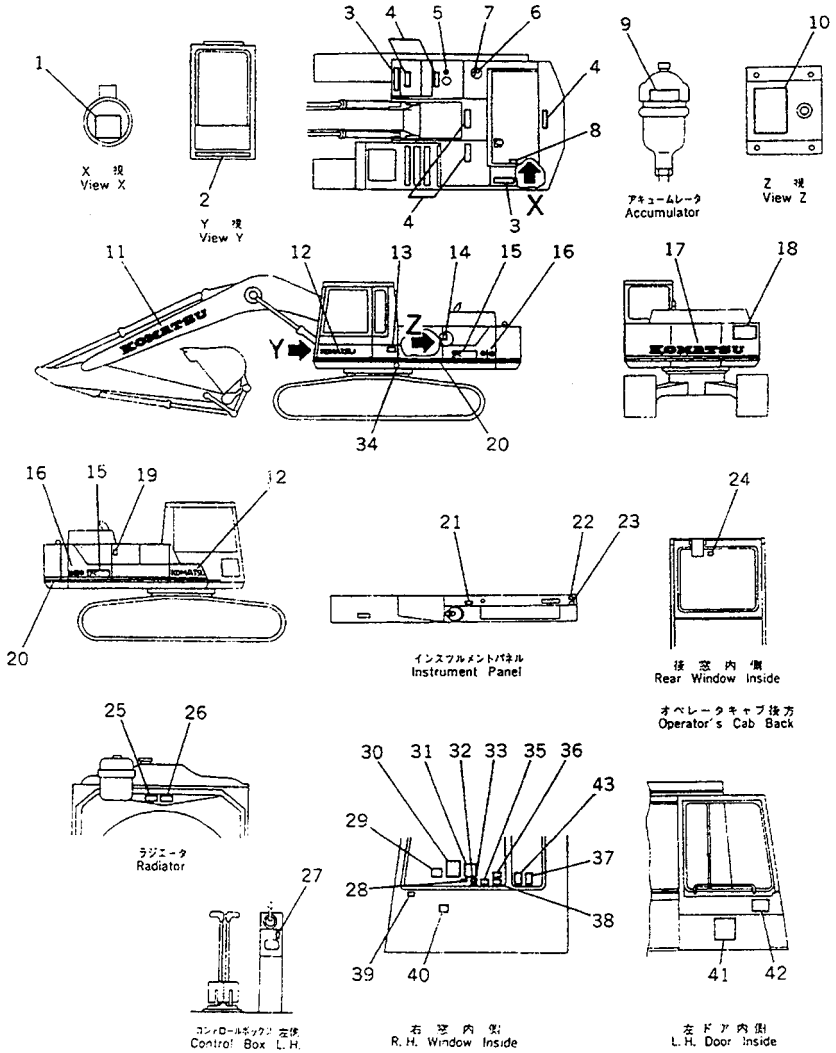

FIG NO. :9941

INDEX NO.	PART NO.	DESCRIPTION	Q'TY	SERIAL NO. PC210-3KP	SERIAL NO. PC240-3KP
1	09637-30661	PLATE, INSTRUCTION	1	K15001-	
2	207-00-31630	PLATE, MARK,KOMATSU	1	K15001-	
3	205-54-76511	SEAT,NONSKID	2	K15001-	
4	154-54-23260	SEAT,NONSKID	5	K15001-	
5	09669-00002	PLATE, CAUTION,FUEL	1	K15001-	
6	09669-00003	PLATE, CAUTION	1	K15001-	
7	09653-03000	PLATE, SAFETY	1	K15001-	
8	09667-03000	PLATE, SAFETY	1	K15001-	
9	205-00-71440	PLATE, SAFETY	1	K15001-	
10	207-00-31390	PLATE, OPERATING	1	K15001-	
11	205-00-63171	PLATE, MARK,KOMATSU	1	K15001-	
12	09690-50500	PLATE, MARK	2	K15001-	
13	09602-01643	PLATE, NAME	1	K15001-	
	205-00-71540	SCREW	4	K15001-	
14	205-00-71520	PLATE, OPERATING	1	K15001-	
15	205-00-72410	PLATE, MARK,PC210	2	K15001-	
	205-00-72420	PLATE, MARK,PC210LC	2	K15001-	
16	205-00-71240	PLATE, MARK,SYMBOL	2	K15001-	
17	205-00-71110	PLATE, MARK	1	K15001-	
18	09133-03000	PLATE, SAFETY KEEP OUT OF TURNING AREA	1	K15001-	
19	205-00-73360	PLATE	1	K15001-	
20	205-00-71530	LINE, STRIPE	1	K15001-	
21	09685-00001	PLATE, OPERATING	1	K15001-	
22	205-00-71460	PLATE, OPERATING	1	K15001-	
23	203-00-41311	PLATE, OPERATING	1	K15001-	
24	205-00-63350	PLATE, CAUTION	1	K15001-	
25	205-00-65270	PLATE, CAUTION	1	K15001-	
26	09668-03000	PLATE, SAFETY	1	K15001-	
27	09685-00002	PLATE, OPERATING SAFETY LOCK LEVER	2	K15001-	

https://truckmanualshub.com/

FIG NO. :9941

INDEX NO.	PART NO.	DESCRIPTION	Q'TY	SERIAL NO. PC210-3KP	SERIAL NO. PC240-3KP
28	205-00-76230	PLATE, CAUTION	1	K15001-	
29	205-00-71940	PLATE,2 MODE	1	K15001-	
	205-00-71820	PLATE,3 MODE	1	K15001-	
30	205-00-66110	PLATE, OPERATING	1	K15001-	
31	205-00-75340	PLATE, OPERATING	1	K15001-	
32	09131-03000	PLATE, CAUTION	1	K15001-	
33	09651-03000	PLATE, SAFETY	1	K15001-	
34	09960-61012	PLATE, MARK	2	K15001-	
35	09173-03000	PLATE, SAFETY	1	K15001-	
36	205-00-65260	PLATE, CAUTION	1	K15001-	
37	205-00-71570	PLATE, CAUTION	1	K15001-	
38	205-00-63390	PLATE, CAUTION	1	K15001-	
39	205-00-63360	PLATE, CAUTION	1	K15001-	
40	09685-00002	PLATE, OPERATING	1	K15001-	
	206-54-46410	COVER	1	K15001-	
41	206-00-44410	.CHART,LUBRICATION	1	K15001-	
42	205-00-63340	.PLATE,WARNING	1	K15001-	
43	206-00-44390	PLATE	1	K15001-	

https://truckmanualshub.com/

FIG. 9942 MARKS AND PLATES (ENGLISH) (PC240)

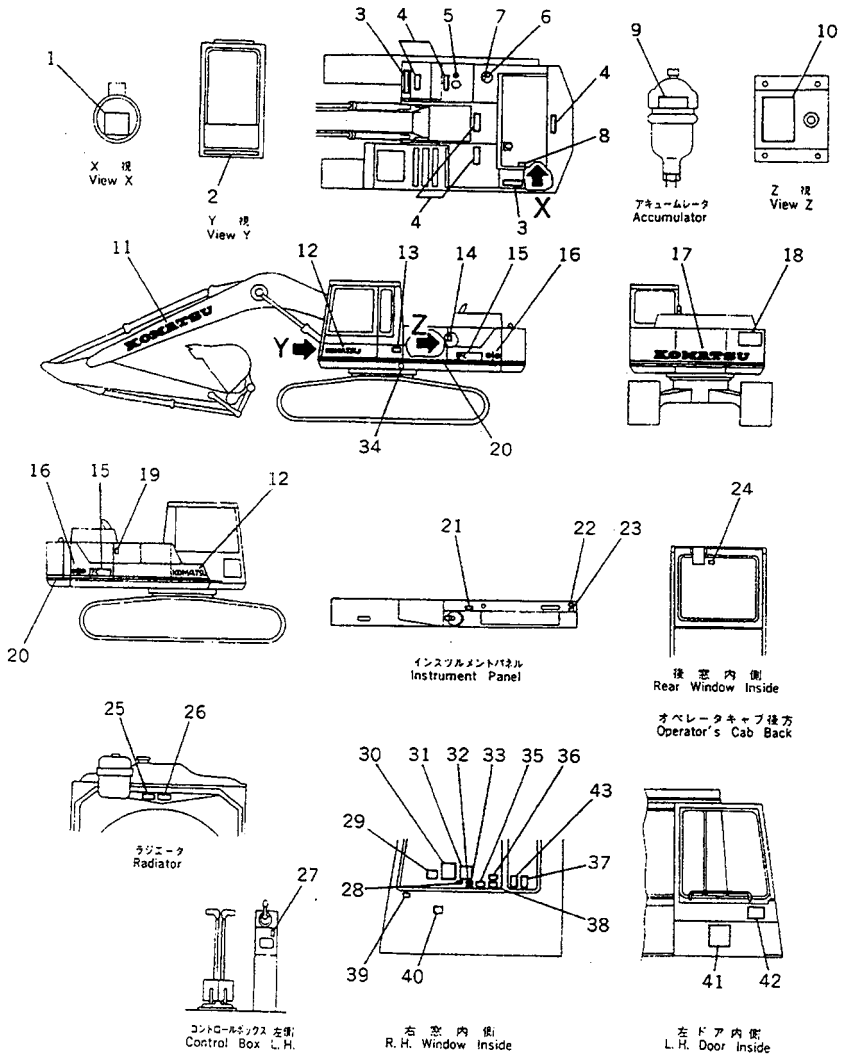

FIG NO. :9942

INDEX NO.	PART NO.	DESCRIPTION	Q'TY	SERIAL NO. PC210-3KP	SERIAL NO. PC240-3KP
1	09637-30661	PLATE, INSTRUCTION	1		K15001-
2	207-00-31630	PLATE, MARK,KOMATSU	1		K15001-
3	205-54-76511	SEAT;NONSKID	2		K15001-
4	154-54-23260	SEAT,NONSKID	5		K15001-
5	09669-00002	PLATE, CAUTION,FUEL	1		K15001-
6	09669-00003	PLATE, CAUTION	1		K15001-
7	09653-03000	PLATE, SAFETY	1		K15001-
8	09667-03000	PLATE, SAFETY	1		K15001-
9	205-00-71440	PLATE, SAFETY	1		K15001-
10	207-00-31390	PLATE, OPERATING	1		K15001-
11	205-00-63171	PLATE, MARK,KOMATSU	1		K15001-
12	09690-50500	PLATE, MARK	2		K15001-
13	09602-01643	PLATE, NAME	1		K15001-
	205-00-71540	SCREW	4		K15001-
14	205-00-71520	PLATE, OPERATING	1		K15001-
15	206-00-44240	PLATE, MARK,PC240	2		K15001-
	206-00-44250	PLATE, MARK,PC240LC	2		K15001-
16	205-00-71240	PLATE, MARK,SYMBOL	2		K15001-
17	205-00-71110	PLATE, MARK	1		K15001-
18	09133-03000	PLATE, SAFETY KEEP OUT OF TURNING AREA	1		K15001-
19	205-00-73360	PLATE	1		K15001-
20	205-00-71530	LINE, STRIPE	1		K15001-
21	09685-00001	PLATE, OPERATING	1		K15001-
22	205-00-71460	PLATE, OPERATING	1		K15001-
23	203-00-41311	PLATE, OPERATING	1		K15001-
24	205-00-63350	PLATE, CAUTION	1		K15001-
25	205-00-65270	PLATE, CAUTION	1		K15001-
26	09668-03000	PLATE, SAFETY	1		K15001-
27	09685-00002	PLATE, OPERATING SAFETY LOCK LEVER	2		K15001-

https://truckmanualshub.com/

FIG NO. :9942

INDEX NO.	PART NO.	DESCRIPTION	Q'TY	SERIAL NO. PC210-3KP	SERIAL NO. PC240-3KP
28	205-00-76230	PLATE, CAUTION	1		K15001-
29	205-00-71940	PLATE,2 MODE	1		K15001-
	205-00-71820	PLATE,3 MODE	1		K15001-
30	205-00-66110	PLATE, OPERATING	1		K15001-
31	205-00-75340	PLATE, OPERATING	1		K15001-
32	09131-03000	PLATE, CAUTION	1		K15001-
33	09651-03000	PLATE, SAFETY	1		K15001-
34	09960-61012	PLATE, MARK	2		K15001-
35	09173-03000	PLATE, SAFETY	1		K15001-
36	205-00-65260	PLATE, CAUTION	1		K15001-
37	205-00-71570	PLATE, CAUTION	1		K15001-
38	205-00-63390	PLATE, CAUTION	1		K15001-
39	205-00-63360	PLATE, CAUTION	1		K15001-
40	09685-00002	PLATE, OPERATING	1		K15001-
	206-54-46410	COVER	1		K15001-
41	206-00-44410	.CHART,LUBRICATION	1		K15001-
42	205-00-63340	.PLATE,WARNING	1		K15001-
43	206-00-44390	PLATE	1		K15001-

https://truckmanualshub.com/

FIG. 9947 MARKS AND PLATES (SPANISH) (PC210)

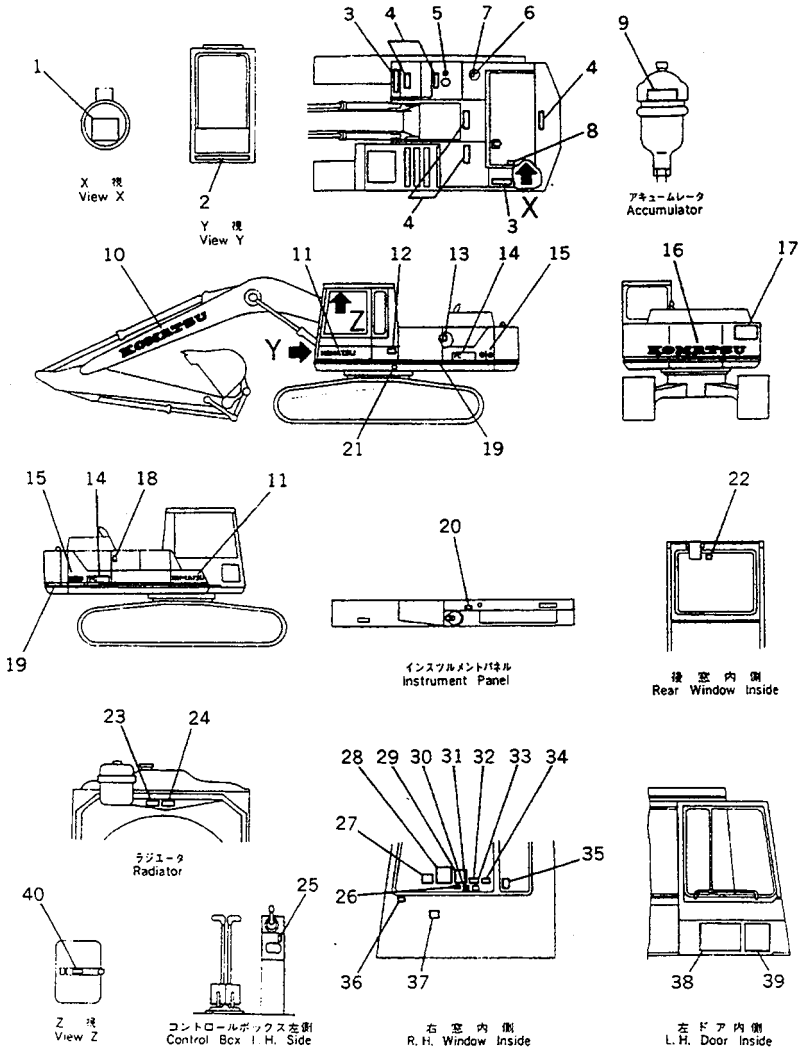

FIG NO. :9947

INDEX NO.	PART NO.	DESCRIPTION	Q'TY	SERIAL NO. PC210-3KP	SERIAL NO. PC240-3KP
1	09637-70661	PLATE, INSTRUCTION	1	K15001-	
2	207-00-31630	PLATE, MARK,KOMATSU	1	K15001-	
3	205-54-76511	SEAT,NONSKID	2	K15001-	
4	154-54-23260	SEAT,NONSKID	5	K15001-	
5	09669-00002	PLATE, CAUTION,FUEL	1	K15001-	
6	09669-00003	PLATE, CAUTION	1	K15001-	
7	09653-01000	PLATE, SAFETY	1	K15001-	
8	09667-01000	PLATE, SAFETY	1	K15001-	
9	205-00-75590	PLATE	1	K15001-	
10	205-00-63171	PLATE, MARK,KOMATSU	1	K15001-	
11	09690-50500	PLATE, MARK,KOMATSU	2	K15001-	
12	09602-11643	PLATE	1	K15001-	
	205-00-71540	SCREW	4	K15001-	
13	205-00-76420	PLATE, OPERATING	1	K15001-	
14	205-00-72410	PLATE, MARK,PC210	2	K15001-	
	205-00-72420	PLATE, MARK,PC210LC	2	K15001-	
15	205-00-71240	PLATE, MARK,SYMBOL	2	K15001-	
16	205-00-71110	PLATE, MARK	1	K15001-	
17	09133-01000	PLATE, SAFETY KEEP OUT OF TURNING AREA	1	K15001-	
18	205-00-73360	PLATE	1	K15001-	
19	205-00-71530	LINE, STRIPE	1	K15001-	
20	09685-00001	PLATE, OPERATING	1	K15001-	
21	09960-61012	PLATE, MARK	2	K15001-	
22	207-00-13590	PLATE	1	K15001-	
23	205-00-66290	PLATE	1	K15001-	
24	09668-01000	PLATE, SAFETY	1	K15001-	
25	09685-00002	PLATE, OPERATING SAFETY LOCK LEVER	2	K15001-	
26	205-00-73230	PLATE	1	K15001-	
27	205-00-71860	PLATE	1	K15001-	

https://truckmanualshub.com/

FIG NO. :9947

INDEX NO.	PART NO.	DESCRIPTION	Q'TY	SERIAL NO. PC210-3KP	SERIAL NO. PC240-3KP
28	205-00-66110	PLATE, OPERATING	1	K15001-	
29	205-00-75570	PLATE	1	K15001-	
30	09131-01000	PLATE, CAUTION	1	K15001-	
31	09651-01000	PLATE, SAFETY	1	K15001-	
32	09649-01010	PLATE, INSTRUCTION	1	K15001-	
33	09173-01000	PLATE, SAFETY	1	K15001-	
34	205-00-66210	PLATE, CAUTION	1	K15001-	
35	205-00-71630	PLATE, CAUTION	1	K15001-	
36	207-00-13610	PLATE	1	K15001-	
37	09685-00002	PLATE, OPERATING	1	K15001-	
	206-54-46440	COVER	1	K15001-	
38	206-00-44440	.CHART,LUBRICATION	1	K15001-	
39	205-00-76310	.PLATE,WARNING	1	K15001-	
40	207-00-13680	PLATE, SAFETY	1	K15001-	

https://truckmanualshub.com/

FIG. 9948 MARKS AND PLATES (SPANISH) (PC240)

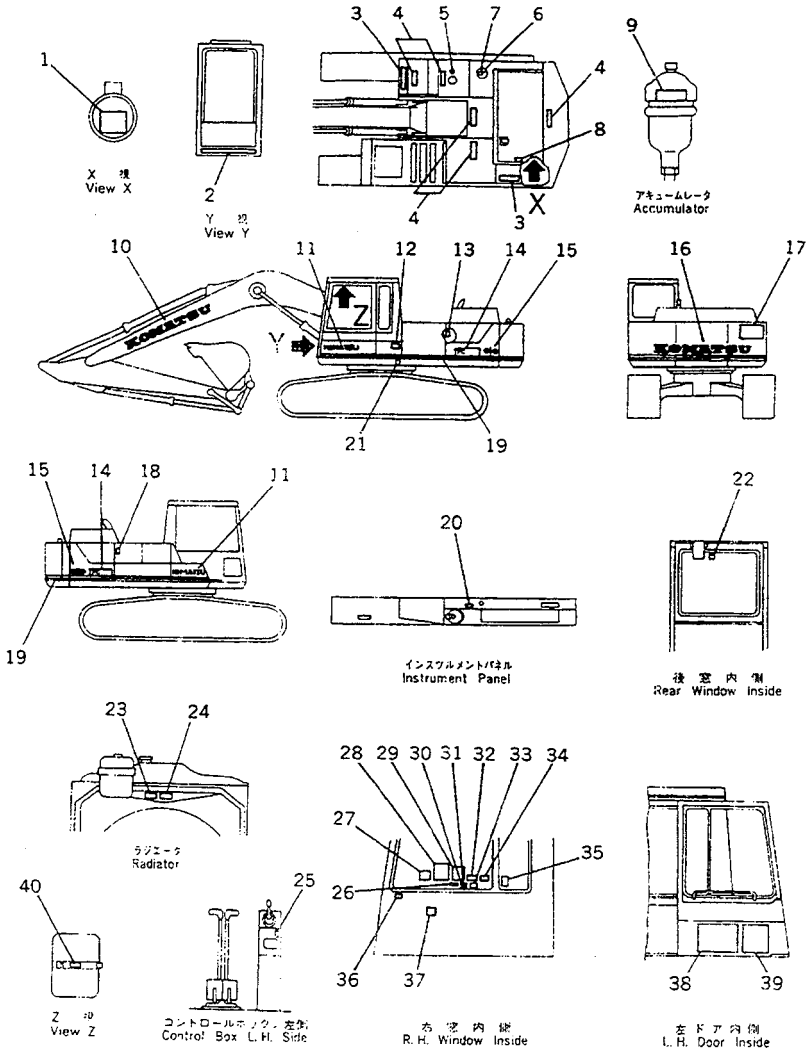

FIG NO. :9948

INDEX NO.	PART NO.	DESCRIPTION	Q'TY	SERIAL NO. PC210-3KP	SERIAL NO. PC240-3KP
1	09637-70661	PLATE, INSTRUCTION	1		K15001-
2	207-00-31630	PLATE, MARK,KOMATSU	1		K15001-
3	205-54-76511	SEAT,NONSKID	2		K15001-
4	154-54-23260	SEAT,NONSKID	5		K15001-
5	09669-00002	PLATE, CAUTION,FUEL	1		K15001-
6	09669-00003	PLATE, CAUTION	1		K15001-
7	09653-01000	PLATE, SAFETY	1		K15001-
8	09667-01000	PLATE, SAFETY	1		K15001-
9	205-00-75590	PLATE	1		K15001-
10	205-00-63171	PLATE, MARK,KOMATSU	1		K15001-
11	09690-50500	PLATE, MARK,KOMATSU	2		K15001-
12	09602-11643	PLATE	1		K15001-
	205-00-71540	SCREW	4		K15001-
13	205-00-76420	PLATE, OPERATING	1		K15001-
14	206-00-44240	PLATE, MARK,PC240	2		K15001-
	206-00-44250	PLATE, MARK,PC240LC	2		K15001-
15	205-00-71240	PLATE, MARK,SYMBOL	2		K15001-
16	205-00-71110	PLATE, MARK	1		K15001-
17	09133-01000	PLATE, SAFETY KEEP OUT OF TURNING AREA	1		K15001-
18	205-00-73360	PLATE	1		K15001-
19	205-00-71530	LINE, STRIPE	1		K15001-
20	09685-00001	PLATE, OPERATING	1		K15001-
21	09960-61012	PLATE, MARK	2		K15001-
22	207-00-13590	PLATE	1		K15001-
23	205-00-66290	PLATE	1		K15001-
24	09668-01000	PLATE, SAFETY	1		K15001-
25	09685-00002	PLATE, OPERATING SAFETY LOCK LEVER	2		K15001-
26	205-00-73230	PLATE	1		K15001-
27	205-00-71860	PLATE	1		K15001-

https://truckmanualshub.com/

FIG NO. :9948

INDEX NO.	PART NO.	DESCRIPTION	Q'TY	SERIAL NO. PC210-3KP	SERIAL NO. PC240-3KP
28	205-00-66110	PLATE, OPERATING	1		K15001-
29	205-00-75570	PLATE	1		K15001-
30	09131-01000	PLATE, CAUTION	1		K15001-
31	09651-01000	PLATE, SAFETY	1		K15001-
32	09649-01010	PLATE, INSTRUCTION	1		K15001-
33	09173-01000	PLATE, SAFETY	1		K15001-
34	205-00-66210	PLATE, CAUTION	1		K15001-
35	205-00-71630	PLATE, CAUTION	1		K15001-
36	207-00-13610	PLATE	1		K15001-
37	09685-00002	PLATE, OPERATING	1		K15001-
	206-54-46440	COVER	1		K15001-
38	206-00-44440	.CHART,LUBRICATION	1		K15001-
39	205-00-76310	.PLATE, WARNING	1		K15001-
40	207-00-13680	PLATE, SAFETY	1		K15001-

https://truckmanualshub.com/

FIG. 9950 MARKS AND PLATES (GERMAN) (PC210)

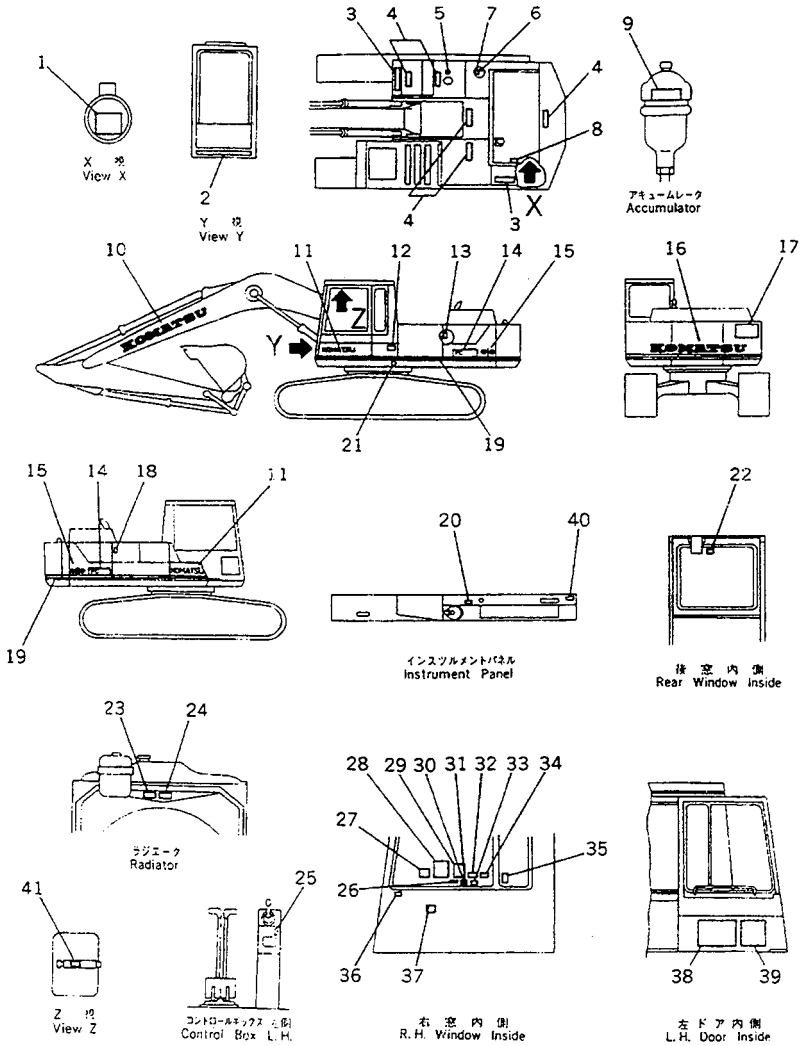

FIG NO. :9950

INDEX NO.	PART NO.	DESCRIPTION	Q'TY	SERIAL NO. PC210-3KP	SERIAL NO. PC240-3KP
1	09637-81661	PLATE, INSTRUCTION	1	K15001-	
2	207-00-31630	PLATE, MARK,KOMATSU	1	K15001-	
3	205-54-76511	SEAT,NONSKID	2	K15001-	
4	154-54-23260	SEAT,NONSKID	5	K15001-	
5	09669-00002	PLATE, CAUTION,FUEL	1	K15001-	
6	09669-00003	PLATE, CAUTION	1	K15001-	
7	09653-02000	PLATE, SAFETY	1	K15001-	
8	09667-02000	PLATE, SAFETY	1	K15001-	
9	205-00-75540	PLATE, SAFETY	1	K15001-	
10	205-00-63171	PLATE, MARK,KOMATSU	1	K15001-	
11	09690-50500	PLATE, MARK,KOMATSU	2	K15001-	
12	09602-21643	PLATE, NAME	1	K15001-	
	205-00-71540	SCREW	4	K15001-	
13	205-00-76380	PLATE, OPERATING	1	K15001-	
14	205-00-72410	PLATE, MARK,PC210	2	K15001-	
	205-00-72420	PLATE, MARK,PC210LC	2	K15001-	
15	205-00-71240	PLATE, MARK,SYMBOL	2	K15001-	
16	205-00-71110	PLATE, MARK	1	K15001-	
17	09133-02000	PLATE, SAFETY KEEP OUT OF TURNING AREA	1	K15001-	
18	205-00-73360	PLATE	1	K15001-	
19	205-00-71530	LINE, STRIPE	1	K15001-	
20	09685-00001	PLATE, OPERATING	1	K15001-	
21	09960-61012	PLATE, MARK	2	K15001-	
22	207-00-13450	PLATE, CAUTION	1	K15001-	
23	205-00-65290	PLATE	1	K15001-	
24	09668-02000	PLATE, SAFETY	1	K15001-	
25	09685-00002	PLATE, OPERATING SAFETY LOCK LEVER	2	K15001-	
26	205-00-71790	PLATE, CAUTION	1	K15001-	
27	205-00-71830	PLATE	1	K15001-	

https://truckmanualshub.com/

FIG NO. :9950

INDEX NO.	PART NO.	DESCRIPTION	Q'TY	SERIAL NO. PC210-3KP	SERIAL NO. PC240-3KP
28	205-00-66110	PLATE, OPERATING	1	K15001-	
29	205-00-75490	PLATE, OPERATING	1	K15001-	
30	09131-02000	PLATE, CAUTION	1	K15001-	
31	09651-02000	PLATE, SAFETY	1	K15001-	
32	09649-02010	PLATE, INSTRUCTION	1	K15001-	
33	09173-02000	PLATE, SAFETY	1	K15001-	
34	205-00-64230	PLATE, CAUTION	1	K15001-	
35	205-00-71650	PLATE, CAUTION	1	K15001-	
36	205-00-13460	PLATE, CAUTION	1	K15001-	
37	09685-00002	PLATE, OPERATING	1	K15001-	
	206-54-46420	COVER	1	K15001-	
38	206-00-44420	.CHART,LUBRICATION	1	K15001-	
39	205-00-71380	.PLATE, WARNING	1	K15001-	
40	205-00-74240	PLATE, OPERATING	1	K15001-	
41	207-00-13510	PLATE, SAFETY	1	K15001-	

https://truckmanualshub.com/

FIG. 9951 MARKS AND PLATES (GERMAN) (PC240)

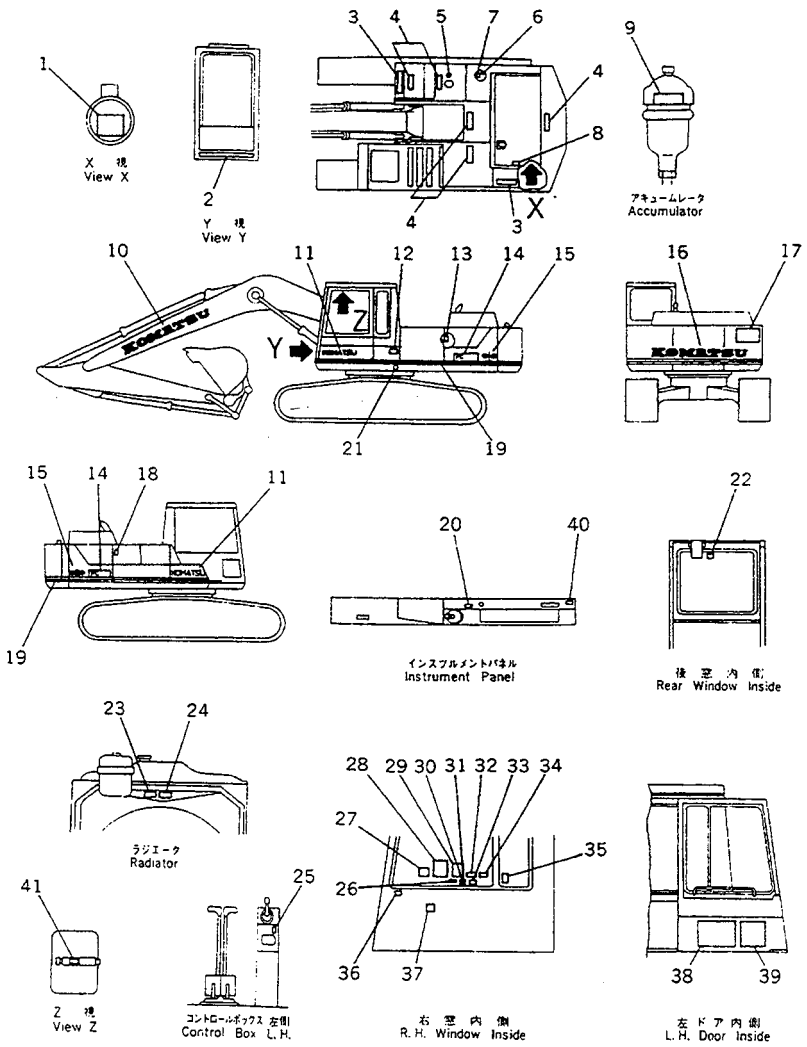

FIG NO. :9951

INDEX NO.	PART NO.	DESCRIPTION	Q'TY	SERIAL NO. PC210-3KP	SERIAL NO. PC240-3KP
1	09637-81661	PLATE, INSTRUCTION	1		K15001-
2	207-00-31630	PLATE, MARK,KOMATSU	1		K15001-
3	205-54-76511	SEAT,NONSKID	2		K15001-
4	154-54-23260	SEAT,NONSKID	5		K15001-
5	09669-00002	PLATE, CAUTION,FUEL	1		K15001-
6	09669-00003	PLATE, CAUTION	1		K15001-
7	09653-02000	PLATE, SAFETY	1		K15001-
8	09667-02000	PLATE, SAFETY	1		K15001-
9	205-00-75540	PLATE, SAFETY	1		K15001-
10	205-00-63171	PLATE, MARK,KOMATSU	1		K15001-
11	09690-50500	PLATE, MARK,KOMATSU	2		K15001-
12	09602-21643	PLATE, NAME	1		K15001-
	205-00-71540	SCREW	4		K15001-
13	205-00-76380	PLATE, OPERATING	1		K15001-
14	206-00-44240	PLATE, MARK,PC240	2		K15001-
	206-00-44250	PLATE, MARK,PC240LC	2		K15001-
15	205-00-71240	PLATE, MARK,SYMBOL	2		K15001-
16	205-00-71110	PLATE, MARK	1		K15001-
17	09133-02000	PLATE, SAFETY KEEP OUT OF TURNING AREA	1		K15001-
18	205-00-73360	PLATE	1		K15001-
19	205-00-71530	LINE, STRIPE	1		K15001-
20	09685-00001	PLATE, OPERATING	1		K15001-
21	09960-61012	PLATE, MARK	2		K15001-
22	207-00-13450	PLATE, CAUTION	1		K15001-
23	205-00-65290	PLATE	1		K15001-
24	09668-02000	PLATE, SAFETY	1		K15001-
25	09685-00002	PLATE, OPERATING SAFETY LOCK LEVER	2		K15001-
26	205-00-71790	PLATE, CAUTION	1		K15001-
27	205-00-71830	PLATE	1		K15001-

https://truckmanualshub.com/

FIG NO. :9951

INDEX NO.	PART NO.	DESCRIPTION	Q'TY	SERIAL NO. PC210-3KP	SERIAL NO. PC240-3KP
28	205-00-66110	PLATE, OPERATING	1		K15001-
29	205-00-75490	PLATE, OPERATING	1		K15001-
30	09131-02000	PLATE, CAUTION	1		K15001-
31	09651-02000	PLATE, SAFETY	1		K15001-
32	09649-02010	PLATE, INSTRUCTION	1		K15001-
33	09173-02000	PLATE, SAFETY	1		K15001-
34	205-00-64230	PLATE, CAUTION	1		K15001-
35	205-00-71650	PLATE, CAUTION	1		K15001-
36	205-00-13460	PLATE, CAUTION	1		K15001-
37	09685-00002	PLATE, OPERATING	1		K15001-
	206-54-46420	COVER	1		K15001-
38	206-00-44420	.CHART,LUBRICATION	1		K15001-
39	205-00-71380	.PLATE,WARNING	1		K15001-
40	205-00-74240	PLATE, OPERATING	1		K15001-
41	207-00-13510	PLATE, SAFETY	1		K15001-

https://truckmanualshub.com/

FIG. 9953 MARKS AND PLATES (FRENCH) (PC210)

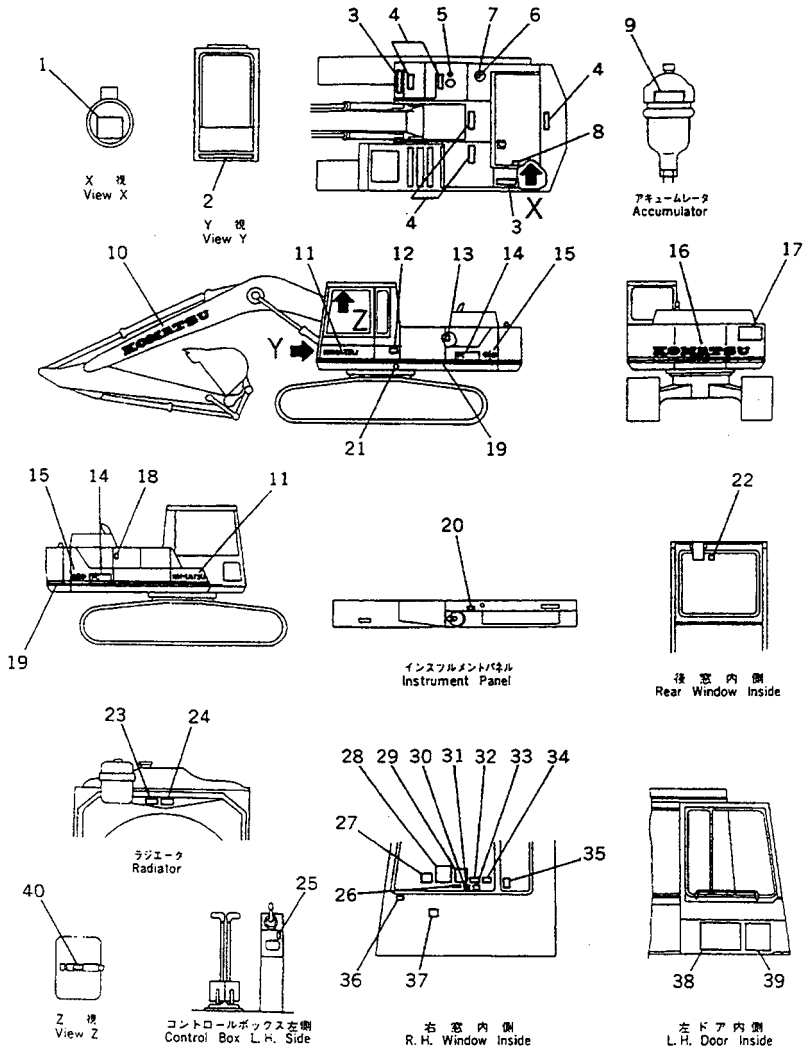

FIG NO. :9953

INDEX NO.	PART NO.	DESCRIPTION	Q'TY	SERIAL NO. PC210-3KP	SERIAL NO. PC240-3KP
1	09637-30762	PLATE, INSTRUCTION	1	K15001-	
2	207-00-31630	PLATE, MARK,KOMATSU	1	K15001-	
3	205-54-76511	SEAT,NONSKID	2	K15001-	
4	154-54-23260	SEAT,NONSKID	5	K15001-	
5	09669-00002	PLATE, CAUTION,FUEL	1	K15001-	
6	09669-00003	PLATE, CAUTION	1	K15001-	
7	09653-05000	PLATE, SAFETY	1	K15001-	
8	09667-05000	PLATE, SAFETY	1	K15001-	
9	205-00-75480	PLATE	1	K15001-	
10	205-00-63171	PLATE, MARK,KOMATSU	1	K15001-	
11	09690-50500	PLATE, MARK,KOMATSU	2	K15001-	
12	09602-52643	PLATE, NAME	1	K15001-	
	205-00-71540	SCREW	4	K15001-	
13	205-00-76410	PLATE	1	K15001-	
14	205-00-72410	PLATE, MARK,PC210	2	K15001-	
	205-00-72420	PLATE, MARK,PC210LC	2	K15001-	
15	205-00-71240	PLATE, MARK,SYMBOL	2	K15001-	
16	205-00-71110	PLATE, MARK	1	K15001-	
17	09133-05000	PLATE, SAFETY KEEP OUT OF TURNING AREA	1	K15001-	
18	205-00-73360	PLATE	1	K15001-	
19	205-00-71530	LINE, STRIPE	1	K15001-	
20	09685-00001	PLATE, OPERATING	1	K15001-	
21	09960-51012	PLATE, MARK	2	K15001-	
22	205-00-63890	PLATE, CAUTION	1	K15001-	
23	205-00-66310	PLATE	1	K15001-	
24	09668-05000	PLATE, SAFETY	1	K15001-	
25	09685-00002	PLATE, OPERATING SAFETY LOCK LEVER	2	K15001-	
26	205-00-73260	PLATE, CAUTION	1	K15001-	
27	205-00-71870	PLATE	1	K15001-	

https://truckmanualshub.com/

FIG NO. :9953

INDEX NO.	PART NO.	DESCRIPTION	Q'TY	SERIAL NO. PC210-3KP	SERIAL NO. PC240-3KP
28	205-00-66110	PLATE, OPERATING	1	K15001-	
29	205-00-75440	PLATE	1	K15001-	
30	09131-05000	PLATE, SAFETY	1	K15001-	
31	09651-05000	PLATE, SAFETY	1	K15001-	
32	09649-05010	PLATE, INSTRUCTION	1	K15001-	
33	09173-05000	PLATE, SAFETY	1	K15001-	
34	205-00-66220	PLATE, CAUTION	1	K15001-	
35	205-00-71620	PLATE, CAUTION	1	K15001-	
36	205-00-63910	PLATE, CAUTION	1	K15001-	
37	09685-00002	PLATE, OPERATING	1	K15001-	
	206-54-46430	COVER	1	K15001-	
38	206-00-44430	.CHART,LUBRICATION	1	K15001-	
39	205-00-76280	.PLATE,WARNING	1	K15001-	
40	205-00-63980	PLATE, SAFETY	1	K15001-	

https://truckmanualshub.com/

FIG. 9954 MARKS AND PLATES (FRENCH) (PC240)

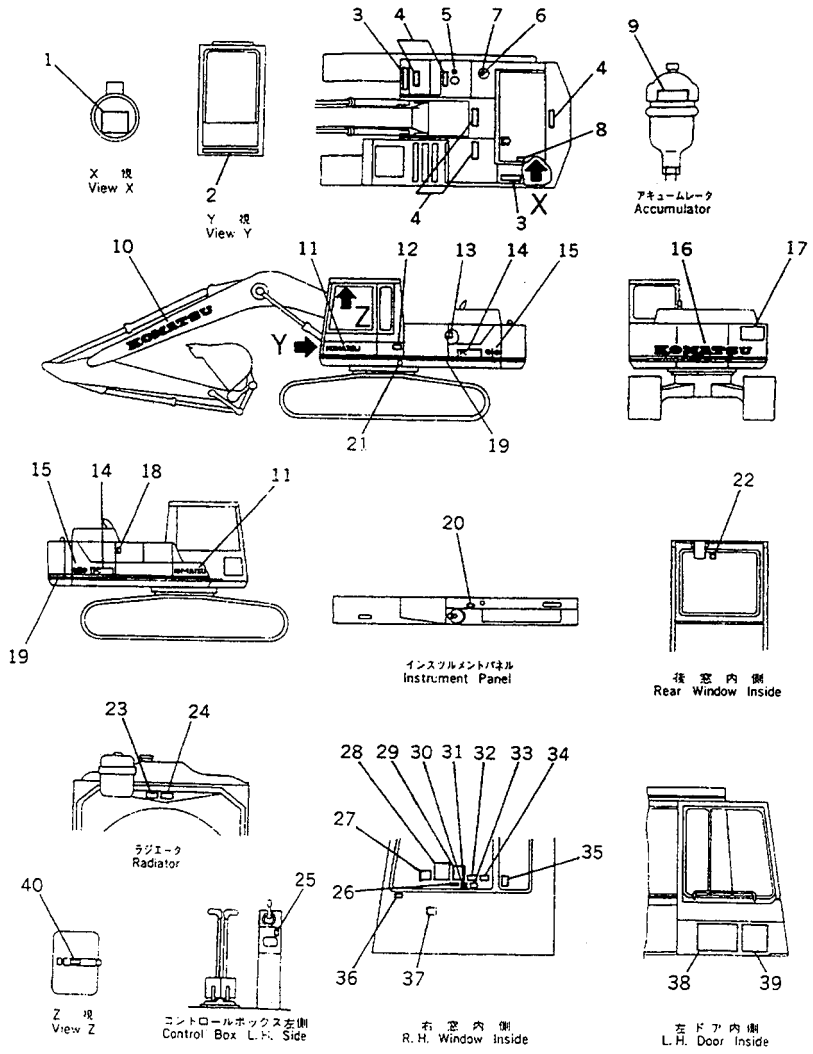

FIG NO. :9954

INDEX NO.	PART NO.	DESCRIPTION	Q'TY	SERIAL NO. PC210-3KP	SERIAL NO. PC240-3KP
1	09637-30762	PLATE, INSTRUCTION	1		K15001-
2	207-00-31630	PLATE, MARK,KOMATSU	1		K15001-
3	205-54-76511	SEAT,NONSKID	2		K15001-
4	154-54-23260	SEAT,NONSKID	5		K15001-
5	09669-00002	PLATE, CAUTION,FUEL	1		K15001-
6	09669-00003	PLATE, CAUTION	1		K15001-
7	09653-05000	PLATE, SAFETY	1		K15001-
8	09667-05000	PLATE, SAFETY	1		K15001-
9	205-00-75480	PLATE	1		K15001-
10	205-00-63171	PLATE, MARK,KOMATSU	1		K15001-
11	09690-50500	PLATE, MARK,KOMATSU	2		K15001-
12	09602-52643	PLATE, NAME	1		K15001-
	205-00-71540	SCREW	4		K15001-
13	205-00-76410	PLATE	1		K15001-
14	206-00-44240	PLATE, MARK,PC240	2		K15001-
	206-00-44250	PLATE, MARK,PC240LC	2		K15001-
15	205-00-71240	PLATE, MARK,SYMBOL	2		K15001-
16	205-00-71110	PLATE, MARK	1		K15001-
17	09133-05000	PLATE, SAFETY KEEP OUT OF TURNING AREA	1		K15001-
18	205-00-73360	PLATE	1		K15001-
19	205-00-71530	LINE, STRIPE	1		K15001-
20	09685-00001	PLATE, OPERATING	1		K15001-
21	09960-61012	PLATE, MARK	2		K15001-
22	205-00-63890	PLATE, CAUTION	1		K15001-
23	205-00-66310	PLATE	1		K15001-
24	09668-05000	PLATE, SAFETY	1		K15001-
25	09685-00002	PLATE, OPERATING SAFETY LOCK LEVER	2		K15001-
26	205-00-73260	PLATE, CAUTION	1		K15001-
27	205-00-71870	PLATE	1		K15001-

https://truckmanualshub.com/

FIG NO. :9954

INDEX NO.	PART NO.	DESCRIPTION	Q'TY	SERIAL NO. PC210-3KP	SERIAL NO. PC240-3KP
28	205-00-66110	PLATE, OPERATING	1		K15001-
29	205-00-75440	PLATE	1		K15001-
30	09131-05000	PLATE, SAFETY	1		K15001-
31	09651-05000	PLATE, SAFETY	1		K15001-
32	09649-05010	PLATE, INSTRUCTION	1		K15001-
33	09173-05000	PLATE, SAFETY	1		K15001-
34	205-00-66220	PLATE, CAUTION	1		K15001-
35	205-00-71620	PLATE, CAUTION	1		K15001-
36	205-00-63910	PLATE, CAUTION	1		K15001-
37	09685-00002	PLATE, OPERATING	1		K15001-
	206-54-46430	COVER	1		K15001-
38	206-00-44430	.CHART,LUBRICATION	1		K15001-
39	205-00-76280	.PLATE,WARNING	1		K15001-
40	205-00-63980	PLATE, SAFETY	1		K15001-

https://truckmanualshub.com/

FIG. 9992 TOOL

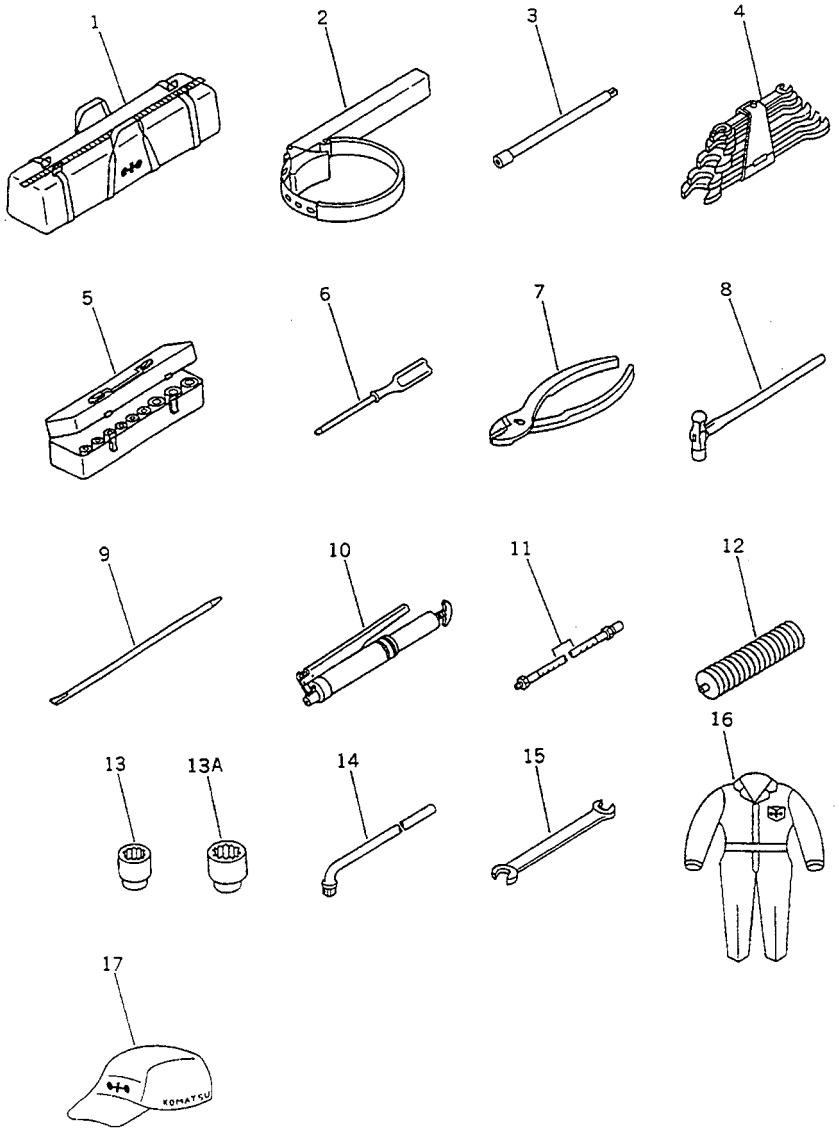

FIG NO. :9992

INDEX NO.	PART NO.	DESCRIPTION	Q'TY	SERIAL NO. PC210-3KP	SERIAL NO. PC240-3KP
1	09056-05620	BAG,TOOL	1	K15001-	K15001-
2	09019-08035	WRENCH,FILTER	1	K15001-	K15001-
3	09022-00250	EXTENSION	1	K15001-	K15001-
4	09000-30006	WRENCH SET	1	K15001-	K15001-
5	09020-10285	SOCKET WRENCH SET	1	K15001-	K15001-
6	09033-00190	DRIVER	1	K15001-	K15001-
7	09036-00150	PLIERS	1	K15001-	K15001-
8	09039-00150	HAMMER	1	K15001-	K15001-
9	09055-10390	BAR	1	K15001-	K15001-
	09055-00520	BAR,PINCH	1	K15001-	K15001-
10	07950-10450	PUMP,GREASE	1	K15001-	K15001-
11	07951-11400	NOZZLE	1	K15001-	K15001-
12	07950-90403	CARTRIDGE,GREASE	1	K15001-	K15001-
13	09021-02739	SOCKET, 27MM	1	K15001-	K15001-
13A	09021-03044	SOCKET, 30MM	1	K15001-	K15001-
14	09024-00300	HANDLE	1	K15001-	K15001-
15	09002-03236	WRENCH, 32X36	1	K15001-	K15001-
16	09980-10495	OVERALL	1	K15001-	K15001-
17	09982-10057	CAP	1	K15001-	K15001-

https://truckmanualshub.com/

NUMERICAL INDEX

https://truckmanualshub.com/

PART NO	F/NO	I/NO	M/NO
01010-30816	6004	12	
01010-30816	6034	12	
01010-30816	6104	12	
01010-30816	6134	12	
01010-30820	6001	18	
01010-30820	6031	18	
01010-30820	6101	18	
01010-30820	6131	18	
01010-31016	6001	33	
01010-31016	6031	33	
01010-31016	6101	33	
01010-31016	6131	33	
01010-31260	6001	4	
01010-31260	6031	4	
01010-31260	6101	4	
01010-31260	6131	4	
01010-50610	8402	2	
01010-50612	1011	14	
01010-50612	1012	14	
01010-50612	1019	29	
01010-50612	7001	38	
01010-50612	7003	38	
01010-50616	2315	23	
01010-50616	5103	22	
01010-50816	1019	10	
01010-50816	1019	26	
01010-50816	1201	4	
01010-50816	1203	4	
01010-50816	1211	3	
01010-50816	1211	41	
01010-50816	1213	3	
01010-50816	1213	41	
01010-50816	1301	16	
01010-50816	1431	14	
01010-50816	1431	21	
01010-50816	1437	30	
01010-50816	1441	28	
01010-50816	6002	12	
01010-50816	6032	12	
01010-50816	6102	12	
01010-50816	6132	12	
01010-50820	1019	9	
01010-50820	1201	24	
01010-50820	1203	28	
01010-50820	1431	4	
01010-50820	1438	6	
01010-50820	1438	20	
01010-50820	1438	29	
01010-50820	1438	34	
01010-50820	1443	13	

PART NO	F/NO	I/NO	M/NO
01010-50820	2401	15	
01010-50820	2403	15	
01010-50820	4011	20	
01010-50820	4431	18	
01010-50820	4431	26	
01010-50820	4431	32	
01010-50820	4432	18	
01010-50820	4432	26	
01010-50820	4432	32	
01010-50820	4433	7	
01010-50820	4433	14	
01010-50820	4433	18	
01010-50820	4435	15	
01010-50820	5109	6	
01010-50820	5109	11	
01010-50820	5411	7	
01010-50820	6002	20	
01010-50820	6032	20	
01010-50820	6102	20	
01010-50820	6132	20	
01010-50820	8153	7	
01010-50822	9502	25	
01010-50822	9511	22	
01010-50822	9512	22	
01010-50825	1011	5	
01010-50825	1012	5	
01010-50825	1201	27	
01010-50825	1211	12	
01010-50825	1213	12	
01010-50825	2315	8	
01010-50825	4431	3	
01010-50825	4431	35	
01010-50825	4432	3	
01010-50825	4432	35	
01010-50825	4435	3	
01010-50825	5101	14	
01010-50825	5101	19	
01010-50825	5102	14	
01010-50825	5102	19	
01010-50825	6201	20	
01010-50825	8311	7	
01010-50825	8403	18	
01010-50825	9001	13	
01010-50825	9002	13	
01010-50830	2201	6	
01010-50830	2201	11	
01010-50830	2203	6	
01010-50830	2203	11	
01010-50830	2211	4	
01010-50830	2213	4	

PART NO	F/NO	I/NO	M/NO
01010-50830	4301	4	
01010-50830	4301	9	
01010-50830	6503	19	
01010-50830	6511	4	
01010-50830	6513	6	
01010-50830	6513	33	
01010-50830	6514	6	
01010-50830	6514	33	
01010-50830	6531	4	
01010-50830	6531	14	
01010-50830	6531	38	
01010-50830	6532	4	
01010-50830	6532	14	
01010-50830	6532	38	
01010-50830	6533	4	
01010-50830	6533	10	
01010-50830	6533	27	
01010-50830	6534	4	
01010-50830	6534	10	
01010-50830	6534	27	
01010-50830	8325	4	
01010-50830	8325	10	
01010-50830	8326	4	
01010-50830	8326	10	
01010-50830	9303	4	
01010-50835	1013	5	
01010-50835	1014	5	
01010-50835	2101	12	
01010-50845	6401	23	
01010-50845	6402	22	
01010-50845	6403	23	
01010-50845	6404	23	
01010-50845	6405	21	
01010-50845	6406	21	
01010-50845	7335	27	
01010-50850	6503	14	
01010-50855	6201	31	
01010-50855	6401	24	
01010-50855	6402	23	
01010-50855	6403	24	
01010-50855	6404	24	
01010-50855	6405	22	
01010-50855	6406	22	
01010-50855	7335	28	
01010-50855	9503	5	
01010-50860	1005	7	
01010-50860	9003	14	
01010-50860	9502	7	
01010-50880	8313	26	
01010-51016	1019	16	

PART NO	F/NO	I/NO	M/NO
01010-51016	1019	21	
01010-51016	1431	25	
01010-51016	1437	16	
01010-51016	1441	16	
01010-51016	2315	15	
01010-51016	4001	9	
01010-51016	8311	18	
01010-51016	9060	12	
01010-51020	1003	36	
01010-51020	1051	2	
01010-51020	1061	13	
01010-51020	1437	28	
01010-51020	4551	5	
01010-51020	5103	33	
01010-51020	5501	2	
01010-51020	6405	29	
01010-51020	6406	29	
01010-51020	7001	41	
01010-51020	7003	41	
01010-51020	7335	35	
01010-51020	8153	2	
01010-51020	8153	13	
01010-51020	8403	25	
01010-51020	9502	13	
01010-51020	9503	11	
01010-51025	1003	6	
01010-51025	1003	19	
01010-51025	1003	27	
01010-51025	1003	32	
01010-51025	1019	3	
01010-51025	1111	25	
01010-51025	1301	30	
01010-51025	1423	24	
01010-51025	1438	16A	
01010-51025	1441	26	
01010-51025	1443	7A	
01010-51025	4701	14	
01010-51025	5103	18	
01010-51025	5109	19	
01010-51025	5311	15	
01010-51025	5311	19	
01010-51025	5501	11	
01010-51025	6529	15	
01010-51025	8402	8	
01010-51025	8403	16	
01010-51025	8403	22	
01010-51030	1003	24	
01010-51030	1015	4	
01010-51030	1017	4	
01010-51030	6401	28	

PART NO	F/NO	I/NO	M/NO
01010-51030	6402	27	
01010-51030	6403	32	
01010-51030	6404	32	
01010-51030	6405	26	
01010-51030	6406	26	
01010-51030	6501	20	
01010-51030	6513	22	
01010-51030	6513	28	
01010-51030	6514	22	
01010-51030	6514	28	
01010-51030	6533	13	
01010-51030	6533	16	
01010-51030	6534	13	
01010-51030	6534	16	
01010-51030	7335	32	
01010-51035	2002	12	
01010-51035	6002	41	
01010-51035	6032	41	
01010-51035	6102	41	
01010-51035	6132	41	
01010-51035	6191	15	
01010-51035	6513	12	
01010-51035	6514	12	
01010-51035	6521	20	
01010-51035	6522	20	
01010-51035	6523	20	
01010-51035	6524	20	
01010-51035	7331	21	
01010-51035	9502	11	
01010-51035	9502	17	
01010-51035	9502	35	
01010-51035	9503	9	
01010-51035	9503	15	
01010-51035	9503	33	
01010-51035	9511	27	
01010-51035	9512	27	
01010-51040	6201	6	
01010-51040	6501	25	
01010-51045	9502	19	
01010-51045	9503	17	
01010-51055	6501	23	
01010-51055	9502	29	
01010-51055	9503	27	
01010-51055	9511	16	
01010-51055	9511	33	
01010-51055	9512	33	
01010-51060	9512	16	
01010-51070	4511	13	
01010-51070	4517	13	
01010-51070	6404	28	

PART NO	F/NO	I/NO	M/NO
01010-51070	6521	21	
01010-51070	6522	21	
01010-51070	6523	21	
01010-51070	6524	21	
01010-51075	9501	9	
01010-51080	6403	28	
01010-51085	6521	5	
01010-51085	6522	5	
01010-51085	6523	5	
01010-51085	6524	5	
01010-51210	1437	21	
01010-51220	1423	17	
01010-51220	1423	20	
01010-51220	5103	3	
01010-51220	5103	7	
01010-51220	9006	6	
01010-51220	9007	6	
01010-51220	9010	6	
01010-51220	9057	6	
01010-51225	1003	21	
01010-51225	1211	24	
01010-51225	1211	28	
01010-51225	1211	31	
01010-51225	1213	24	
01010-51225	1213	28	
01010-51225	1213	31	
01010-51225	1301	25	
01010-51225	1437	7	
01010-51225	1437	10	
01010-51225	1437	13	
01010-51225	1437	18	
01010-51225	1437	25	
01010-51225	1438	2	
01010-51225	1438	11	
01010-51225	1438	16	
01010-51225	1438	25	
01010-51225	1438	36	
01010-51225	1441	7	
01010-51225	1441	10	
01010-51225	1441	13	
01010-51225	1441	18	
01010-51225	1441	23	
01010-51225	1443	2	
01010-51225	1443	7	
01010-51225	2317	7	
01010-51225	2317	10	
01010-51225	3001	4	
01010-51225	3003	4	
01010-51225	3005	4	
01010-51225	3007	4	

PART NO	F/NO	I/NO	M/NO
01010-51225	3011	14	
01010-51225	4513	17	
01010-51225	4515	18	
01010-51225	4515	21	
01010-51225	4519	17	
01010-51225	4521	17	
01010-51225	4521	20	
01010-51225	4611	16	
01010-51225	4611	18	
01010-51225	4611	37	
01010-51225	4701	11	
01010-51225	5103	35	
01010-51225	5105	8	
01010-51225	5105	14	
01010-51225	5105	21	
01010-51225	5105	24	
01010-51225	5107	23A	
01010-51225	5107	26A	
01010-51225	8322	17	
01010-51225	9001	11	
01010-51225	9002	11	
01010-51225	9003	17	
01010-51225	9006	4	
01010-51225	9007	4	
01010-51225	9010	9	
01010-51225	9057	4	
01010-51225	9057	17	
01010-51225	9066	5	
01010-51225	9067	5	
01010-51225	9301	4	
01010-51230	1007	2	
01010-51230	1061	10	
01010-51230	1127	2	
01010-51230	1201	10	
01010-51230	1201	15	
01010-51230	1203	13	
01010-51230	2201	17	
01010-51230	2201	21	
01010-51230	2201	27	
01010-51230	2203	17	
01010-51230	2203	21	
01010-51230	2203	27	
01010-51230	3001	8	
01010-51230	3001	11	
01010-51230	3003	8	
01010-51230	3003	11	
01010-51230	3005	8	
01010-51230	3005	11	
01010-51230	3007	8	
01010-51230	3007	11	

PART NO	F/NO	I/NO	M/NO
01010-51230	4431	29	
01010-51230	4432	29	
01010-51230	4433	11	
01010-51230	5001	4	
01010-51230	5003	4	
01010-51230	5101	5	
01010-51230	5101	23	
01010-51230	5101	27	
01010-51230	5101	30	
01010-51230	5102	5	
01010-51230	5102	23	
01010-51230	5102	27	
01010-51230	5102	30	
01010-51230	5103	2	
01010-51230	5103	36	
01010-51230	5103	40	
01010-51230	5103	43	
01010-51230	5103	44	
01010-51230	5103	47	
01010-51230	5103	53	
01010-51230	5103	55	
01010-51230	5105	10	
01010-51230	5105	17	
01010-51230	5105	20	
01010-51230	5107	2	
01010-51230	5107	6	
01010-51230	5107	10	
01010-51230	5107	17	
01010-51230	5107	20	
01010-51230	5107	23	
01010-51230	5107	26	
01010-51230	5109	21	
01010-51230	5411	10	
01010-51230	6191	29	
01010-51230	6513	9	
01010-51230	6513	26	
01010-51230	6514	9	
01010-51230	6514	26	
01010-51230	6521	12	
01010-51230	6522	12	
01010-51230	6523	12	
01010-51230	6524	12	
01010-51230	8331	24	
01010-51230	8333	19	
01010-51230	8335	22	
01010-51230	8336	21	
01010-51230	8337	18	
01010-51230	8338	18	
01010-51230	8343	19	
01010-51230	8345	22	

https://truckmanualshub.com/

PART NO	F/NO	I/NO	M/NO
01010-51230	8346	21	
01010-51230	8347	18	
01010-51230	8348	18	
01010-51230	9001	4	
01010-51230	9001	27	
01010-51230	9002	4	
01010-51230	9002	27	
01010-51230	9301	8	
01010-51230	9301	11	
01010-51235	1201	15A	
01010-51235	1203	18	
01010-51235	2315	17	
01010-51235	6501	5	
01010-51235	6501	14	
01010-51235	6513	19	
01010-51235	6514	19	
01010-51235	7001	17	
01010-51235	7001	22	
01010-51235	7001	28	
01010-51235	7003	17	
01010-51235	7003	22	
01010-51235	7003	28	
01010-51235	7005	12	
01010-51235	7005	17	
01010-51235	7007	12	
01010-51235	7007	17	
01010-51235	7305	12	
01010-51235	7305	17	
01010-51235	7307	12	
01010-51235	7307	17	
01010-51235	7325	12	
01010-51235	7325	17	
01010-51235	8311	16	
01010-51235	8313	9	
01010-51235	8313	19	
01010-51235	8501	5	
01010-51235	9511	4	
01010-51235	9511	29	
01010-51235	9512	29	
01010-51240	1003	29	
01010-51240	1041	11	
01010-51240	1203	19	
01010-51240	5221	44	
01010-51240	6021	9	
01010-51240	6051	9	
01010-51240	6121	9	
01010-51240	6151	9	
01010-51240	8331	3	
01010-51240	8331	8	
01010-51240	8331	12	

PART NO	F/NO	I/NO	M/NO
01010-51240	9066	12	
01010-51240	9067	12	
01010-51240	9512	4	
01010-51245	9511	14	
01010-51245	9512	14	
01010-51250	4011	14	
01010-51250	5311	10	
01010-51255	5105	15	
01010-51260	1201	12	
01010-51260	1203	15	
01010-51260	5221	45	
01010-51265	4611	34	
01010-51265	6525	6	
01010-51270	1201	21	
01010-51270	1203	25	
01010-51270	5311	12	
01010-51280	8333	22	
01010-51280	8335	28	
01010-51280	8336	27	
01010-51280	8337	24	
01010-51280	8338	24	
01010-51280	8343	22	
01010-51280	8345	28	
01010-51280	8346	27	
01010-51280	8347	24	
01010-51280	8348	24	
01010-51430	1451	4	
01010-51455	4101	31	
01010-51455	4111	24	
01010-51465	2401	27	
01010-51465	2403	27	
01010-51635	1301	9	
01010-51635	6191	34	
01010-51640	1041	3	
01010-51640	7001	8	
01010-51640	7003	8	
01010-51645	1041	4	
01010-51645	3011	10	
01010-51670	2401	1	
01010-51670	2401	38	
01010-51670	2403	1	
01010-51670	2403	38	
01010-51680	3031	5	
01010-51680	3031	5-	
01010-51680	3041	4	
01010-51680	9305	5	
01010-51685	2401	34	
01010-51685	2403	34	
01010-51690	3035	5	
01010-51690	3035	5-	

PART NO	F/NO	I/NO	M/NO
01010-51690	4011	3	
01010-52050	3001	14	
01010-52050	3003	14	
01010-52050	3005	14	
01010-52050	3007	14	
01010-52050	9301	14	
01010-52055	4011	42	
01010-52060	4011	39	
01010-61635	8335	25	
01010-61635	8336	24	
01010-61635	8337	21	
01010-61635	8338	21	
01010-61635	8345	25	
01010-61635	8346	24	
01010-61635	8347	21	
01010-61635	8348	21	
01010-80822	9503	23	
01010-81655	6401	7	
01010-81655	6402	7	
01010-81655	6403	7	
01010-81655	6405	7	
01010-81655	6406	7	
01010-81655	7331	7	
01010-81860	6404	7	
01010-81860	7335	12	
01011-51210	7335	23	
01011-51230	8321	13	
01011-51230	8322	13	
01011-51600	5311	7	
01016-20512	5107	16	
01016-30512	9069	17	
01016-31035	6004	35	
01016-31035	6034	35	
01016-31035	6104	35	
01016-31035	6134	35	
01016-51040	2315	25	
01016-51040	8311	12	
01016-51050	1111	13	
01018-32070	4001	18	
01020-10830	1003	12	
01052-51265	1111	8	
01090-50855	9003	3	
01140-81645	6003	21	
01140-81645	6033	21	
01140-81645	6103	21	
01140-81645	6133	21	
01141-81620	6003	20	
01141-81620	6033	20	
01141-81620	6103	20	
01141-81620	6133	20	

PART NO	F/NO	I/NO	M/NO
01220-40408	1421	15	
01220-40408	4431	23	
01220-40408	4432	23	
01220-40408	5103	30	
01220-40408	5105	6	
01220-40408	5109	17	
01220-40412	1423	7	
01220-40412	9060	7	
01220-40420	1423	14	
01220-40512	1127	11	
01220-40516	6191	8	
01220-40516	9057	11	
01220-40612	9001	20	
01220-40612	9002	20	
01220-40612	9054	8	
01220-40616	1421	1	
01220-40616	1423	5	
01220-40616	1423	10	
01220-60408	9016	3-	
01224-30830	5221	24	
01224-30830	5221	31	
01224-40620	5101	3	
01224-40620	5102	3	
01225-40510	9010	3	
01225-40510	9011	3	
01235-40616	5225	18	
01235-50408	1423	28	
01235-50408	1501	18	
01235-50408	1503	18	
01235-50412	1501	17	
01235-50412	1503	17	
01238-40310	5227	20	
01252-30510	5227	22	
01252-30812	6202	23	
01252-30812	6202	26	
01252-30812	6204	23	
01252-30812	6204	26	
01252-30816	6204	27	
01252-30820	6202	18	
01252-30820	6202	34	
01252-30820	6204	17	
01252-30820	6204	40	
01252-30825	6202	27	
01252-30825	6204	29	
01252-30830	6204	18	
01252-30830	6204	31	
01252-31020	8325	14	
01252-31020	8326	14	
01252-31645	1041	13	
01252-40412	1431	8	

PART NO	F/NO	I/NO	M/NO
01252-40412	1431	16	
01252-40535	4701	16	
01252-40614	4431	13	
01252-40614	4435	11	
01252-40616	9001	19	
01252-40616	9002	19	
01252-40618	4432	13	
01252-40835	2317	13	
01252-40835	2317	15	
01252-40850	9511	12	
01252-40850	9512	12	
01252-41025	5109	26	
01252-41025	5221	28	
01252-41025	9010	13	
01252-41025	9010	17	
01252-41025	9066	9	
01252-41025	9067	9	
01252-41050	9502	32	
01252-41050	9503	30	
01252-41050	9511	24	
01252-41050	9512	24	
01370-00412	5221	33	
01370-00412	5227	38	
01370-00412	5229	21	
01370-00420	5227	11	
01435-21016	1011	2	
01435-21016	1012	2	
01435-21016	1013	2	
01435-21016	1014	2	
01530-03912	2001	21	
01530-03912	4101	20	
01530-03912	4111	22	
01573-12306	8321	15	
01573-12306	8322	15	
01573-12308	8501	4	
01580-00504	9069	6	
01580-00605	9069	13	
01580-10403	1431	17	
01580-10504	4701	18	
01580-10504	4701	19	
01580-10605	1011	19	
01580-10605	1012	19	
01580-10605	1013	13	
01580-10605	1014	13	
01580-10806	1211	36	
01580-10806	1213	36	
01580-10806	5411	8	
01580-10806	6012	9	
01580-10806	6012	24	
01580-10806	6013	6	

PART NO	F/NO	I/NO	M/NO
01580-10806	6013	27	
01580-10806	6016	9	
01580-10806	6016	24	
01580-10806	6017	6	
01580-10806	6017	27	
01580-10806	6018	16	
01580-10806	6042	11	
01580-10806	6042	26	
01580-10806	6043	6	
01580-10806	6043	27	
01580-10806	6046	11	
01580-10806	6046	26	
01580-10806	6047	6	
01580-10806	6047	27	
01580-10806	6048	16	
01580-10806	6112	9	
01580-10806	6112	24	
01580-10806	6113	6	
01580-10806	6113	27	
01580-10806	6116	9	
01580-10806	6116	24	
01580-10806	6117	6	
01580-10806	6117	27	
01580-10806	6118	16	
01580-10806	6142	11	
01580-10806	6142	26	
01580-10806	6143	6	
01580-10806	6143	27	
01580-10806	6146	11	
01580-10806	6146	26	
01580-10806	6147	6	
01580-10806	6147	27	
01580-10806	6148	16	
01580-11008	1111	14	
01580-11008	2315	26	
01580-11008	8311	13	
01580-11613	9001	16	
01580-11613	9002	16	
01580-12016	7001	13	
01580-12016	7003	13	
01580-12016	7011	11	
01580-12016	7011	15	
01580-12016	7011	19	
01580-12016	7015	11	
01580-12016	7015	15	
01580-12016	7015	19	
01582-11008	1003	5	
01582-11008	1003	16	
01582-11008	8313	2	
01582-11008	8313	12	

PART NO	F/NO	I/NO	M/NO
01582-11210	8313	7	
01582-11210	8313	17	
01582-11411	6206	15	
01582-11411	6206	31	
01582-21613	6003	22	
01582-21613	6033	22	
01582-21613	6103	22	
01582-21613	6133	22	
01583-12414	6207	42	
01593-11210	1111	11	
01599-01011	1211	23	
01599-01011	1213	23	
01599-01011	2201	30	
01599-01011	2201	34	
01599-01011	2203	30	
01599-01011	2203	34	
01599-01011	6401	31	
01599-01011	6402	30	
01599-01011	6403	36	
01599-01011	6404	36	
01599-01011	6501	8	
01599-01011	6511	8	
01599-01011	6513	16	
01599-01011	6514	16	
01599-01011	6521	15	
01599-01011	6522	15	
01599-01011	6523	15	
01599-01011	6524	15	
01599-01011	8325	17	
01599-01011	8325	21	
01599-01011	8326	17	
01599-01011	8326	21	
01599-01011	8326	25	
01599-01214	4611	30	
01601-00513	5221	16	
01601-00513	5221	20	
01601-00513	5225	16	
01601-00513	5227	23	
01601-00513	5227	30	
01601-00513	5231	21	
01601-00513	9069	18	
01601-20410	4431	24	
01601-20410	4432	24	
01601-20410	9060	8	
01601-20513	4701	17	
01601-20513	6191	9	
01601-20513	9057	12	
01601-20825	5411	9	
01602-00720	5221	41	
01602-00720	5223	23	

PART NO	F/NO	I/NO	M/NO
01602-00720	5223	31	
01602-00720	5225	10	
01602-00720	5225	19	
01602-00720	5227	32	
01602-00720	5227	34	
01602-00720	5231	4	
01602-00720	5231	10	
01602-00720	5231	24	
01602-00720	5231	28	
01602-00825	6001	19	
01602-00825	6001	28	
01602-00825	6031	19	
01602-00825	6031	28	
01602-00825	6101	19	
01602-00825	6101	28	
01602-00825	6131	19	
01602-00825	6131	28	
01602-01236	6001	5	
01602-01236	6031	5	
01602-01236	6101	5	
01602-01236	6131	5	
01602-01338	5221	37	
01602-20619	1423	11	
01602-20619	6012	11	
01602-20619	6012	26	
01602-20619	6013	26	
01602-20619	6013	31	
01602-20619	6016	11	
01602-20619	6016	26	
01602-20619	6017	26	
01602-20619	6017	31	
01602-20619	6018	21	
01602-20619	6042	13	
01602-20619	6042	28	
01602-20619	6043	26	
01602-20619	6043	31	
01602-20619	6046	13	
01602-20619	6046	28	
01602-20619	6047	26	
01602-20619	6047	31	
01602-20619	6048	21	
01602-20619	6112	11	
01602-20619	6112	26	
01602-20619	6113	26	
01602-20619	6113	31	
01602-20619	6116	11	
01602-20619	6116	26	
01602-20619	6117	26	
01602-20619	6117	31	
01602-20619	6118	21	

https://truckmanualshub.com/

PART NO	F/NO	I/NO	M/NO
01602-20619	6142	13	
01602-20619	6142	28	
01602-20619	6143	26	
01602-20619	6143	31	
01602-20619	6146	13	
01602-20619	6146	28	
01602-20619	6147	26	
01602-20619	6147	31	
01602-20619	6148	21	
01602-20619	7001	39	
01602-20619	7003	39	
01602-20825	2101	13	
01602-20825	6011	5	
01602-20825	6015	8	
01602-20825	6015	10	
01602-20825	6041	5	
01602-20825	6045	8	
01602-20825	6045	10	
01602-20825	6111	5	
01602-20825	6115	8	
01602-20825	6115	10	
01602-20825	6141	5	
01602-20825	6145	8	
01602-20825	6145	10	
01602-20825	6401	25	
01602-20825	6402	24	
01602-20825	6403	25	
01602-20825	6404	25	
01602-20825	6405	23	
01602-20825	6406	23	
01602-20825	7335	29	
01602-21030	2002	13	
01602-21030	6401	29	
01602-21030	6402	28	
01602-21030	6403	29	
01602-21030	6403	33	
01602-21030	6404	29	
01602-21030	6404	33	
01602-21030	6405	27	
01602-21030	6405	30	
01602-21030	6406	27	
01602-21030	6406	30	
01602-21030	7331	22	
01602-21030	7335	33	
01602-21030	7335	36	
01602-21236	6021	10	
01602-21236	6051	10	
01602-21236	6121	10	
01602-21236	6151	10	
01602-21236	7335	24	

PART NO	F/NO	I/NO	M/NO
01602-21442	2001	35	
01602-21442	4101	32	
01602-21442	4111	25	
01640-02032	8311	10	
01640-20408	1431	9	
01640-20408	1431	19	
01640-21223	1111	9	
01641-00305	5227	21	
01641-00508	5225	17	
01641-20405	1421	16	
01641-20405	1423	15	
01641-20405	1423	29	
01641-20405	1501	19	
01641-20405	1503	19	
01641-20405	5103	31	
01641-20405	5105	7	
01641-20405	5109	18	
01641-20405	9060	9	
01641-20508	9057	13	
01641-20608	1421	2	
01641-20608	5223	24	
01641-20608	5223	32	
01641-20608	5225	11	
01641-20608	5225	20	
01641-20608	8313	23	
01641-21223	5221	38	
01641-21626	2201	15	
01641-21626	2203	15	
01642-00518	5221	17	
01642-20405	1423	8	
01642-20405	4431	25	
01642-20405	4432	25	
01642-20508	1127	12	
01642-20608	5221	13	
01642-20608	5221	21	
01642-20608	5221	42	
01642-20608	5231	5	
01642-20608	5231	8	
01642-20608	5231	11	
01643-00508	9069	19	
01643-20608	9069	4	
01643-21223	5231	31	
01643-21445	8402	6	
01643-30623	1011	15	
01643-30623	1012	15	
01643-30623	1019	30	
01643-30623	1423	12	
01643-30623	1431	10	
01643-30623	1431	18	
01643-30623	2315	24	

PART NO	F/NO	I/NO	M/NO
01643-30623	4431	12	
01643-30623	4432	12	
01643-30623	4435	10	
01643-30623	5103	23	
01643-30623	6002	31	
01643-30623	6004	27	
01643-30623	6032	31	
01643-30623	6034	27	
01643-30623	6102	31	
01643-30623	6104	27	
01643-30623	6132	31	
01643-30623	6134	27	
01643-30623	8402	3	
01643-30623	9001	21	
01643-30623	9002	21	
01643-30623	9054	9	
01643-30623	9502	8	
01643-30623	9503	6	
01643-30823	1003	13	
01643-30823	1005	8	
01643-30823	1011	6	
01643-30823	1012	6	
01643-30823	1013	6	
01643-30823	1014	6	
01643-30823	1019	11	
01643-30823	1019	27	
01643-30823	1201	5	
01643-30823	1201	25	
01643-30823	1201	28	
01643-30823	1203	5	
01643-30823	1203	29	
01643-30823	1211	4	
01643-30823	1211	13	
01643-30823	1211	37	
01643-30823	1211	42	
01643-30823	1213	4	
01643-30823	1213	13	
01643-30823	1213	37	
01643-30823	1213	42	
01643-30823	1301	17	
01643-30823	1431	5	
01643-30823	1431	15	
01643-30823	1431	22	
01643-30823	1437	31	
01643-30823	1438	7	
01643-30823	1438	21	
01643-30823	1438	30	
01643-30823	1441	29	
01643-30823	1443	14	
01643-30823	2315	9	

PART NO	F/NO	I/NO	M/NO
01643-30823	2403	16	
01643-30823	4431	4	
01643-30823	4431	19	
01643-30823	4431	27	
01643-30823	4431	33	
01643-30823	4431	36	
01643-30823	4432	4	
01643-30823	4432	19	
01643-30823	4432	27	
01643-30823	4432	33	
01643-30823	4432	36	
01643-30823	4433	8	
01643-30823	4433	15	
01643-30823	4433	19	
01643-30823	4435	4	
01643-30823	4435	16	
01643-30823	5101	15	
01643-30823	5101	20	
01643-30823	5102	15	
01643-30823	5102	20	
01643-30823	5109	7	
01643-30823	5109	12	
01643-30823	6002	21	
01643-30823	6032	21	
01643-30823	6102	21	
01643-30823	6132	21	
01643-30823	6201	32	
01643-30823	6202	24	
01643-30823	6204	24	
01643-30823	6204	28	
01643-30823	8153	8	
01643-30823	8311	8	
01643-30823	8313	27	
01643-30823	8403	19	
01643-30823	9001	14	
01643-30823	9002	14	
01643-30823	9003	4	
01643-30823	9003	15	
01643-31032	1003	4	
01643-31032	1003	7	
01643-31032	1003	15	
01643-31032	1003	20	
01643-31032	1003	25	
01643-31032	1003	28	
01643-31032	1003	33	
01643-31032	1003	37	
01643-31032	1015	5	
01643-31032	1017	5	
01643-31032	1019	4	
01643-31032	1019	17	

PART NO	F/NO	I/NO	M/NO
01643-31032	1019	22	
01643-31032	1051	3	
01643-31032	1061	14	
01643-31032	1111	26	
01643-31032	1211	22	
01643-31032	1213	22	
01643-31032	1301	31	
01643-31032	1423	25	
01643-31032	1431	26	
01643-31032	1437	17	
01643-31032	1437	29	
01643-31032	1438	17A	
01643-31032	1441	17	
01643-31032	1441	27	
01643-31032	1443	8A	
01643-31032	2201	25	
01643-31032	2201	31	
01643-31032	2201	35	
01643-31032	2203	25	
01643-31032	2203	31	
01643-31032	2203	35	
01643-31032	2315	16	
01643-31032	4001	10	
01643-31032	4301	13	
01643-31032	4511	14	
01643-31032	4517	14	
01643-31032	4551	6	
01643-31032	4701	15	
01643-31032	5103	19	
01643-31032	5103	34	
01643-31032	5109	14	
01643-31032	5109	20	
01643-31032	5311	16	
01643-31032	5311	20	
01643-31032	5501	3	
01643-31032	5501	12	
01643-31032	6001	34	
01643-31032	6002	42	
01643-31032	6003	16	
01643-31032	6004	36	
01643-31032	6031	34	
01643-31032	6032	42	
01643-31032	6033	16	
01643-31032	6034	36	
01643-31032	6101	34	
01643-31032	6102	42	
01643-31032	6103	16	
01643-31032	6104	36	
01643-31032	6131	34	
01643-31032	6132	42	

PART NO	F/NO	I/NO	M/NO
01643-31032	6133	16	
01643-31032	6134	36	
01643-31032	6201	7	
01643-31032	6401	32	
01643-31032	6402	31	
01643-31032	6403	37	
01643-31032	6404	37	
01643-31032	6501	9	
01643-31032	6501	21	
01643-31032	6501	24	
01643-31032	6501	26	
01643-31032	6511	9	
01643-31032	6511	12	
01643-31032	6513	13	
01643-31032	6513	17	
01643-31032	6513	23	
01643-31032	6513	29	
01643-31032	6514	13	
01643-31032	6514	17	
01643-31032	6514	23	
01643-31032	6514	29	
01643-31032	6521	6	
01643-31032	6521	16	
01643-31032	6521	22	
01643-31032	6522	6	
01643-31032	6522	16	
01643-31032	6522	22	
01643-31032	6523	6	
01643-31032	6523	16	
01643-31032	6523	22	
01643-31032	6524	6	
01643-31032	6524	16	
01643-31032	6524	22	
01643-31032	6529	16	
01643-31032	6531	20	
01643-31032	6531	23	
01643-31032	6531	26	
01643-31032	6531	29	
01643-31032	6532	20	
01643-31032	6532	23	
01643-31032	6532	26	
01643-31032	6532	29	
01643-31032	6533	14	
01643-31032	6533	17	
01643-31032	6533	20	
01643-31032	6533	23	
01643-31032	6534	14	
01643-31032	6534	17	
01643-31032	6534	20	
01643-31032	6534	23	

PART NO	F/NO	I/NO	M/NO
01643-31032	7001	42	
01643-31032	7003	42	
01643-31032	8153	3	
01643-31032	8153	14	
01643-31032	8311	19	
01643-31032	8325	18	
01643-31032	8325	22	
01643-31032	8326	18	
01643-31032	8326	22	
01643-31032	8326	26	
01643-31032	8402	9	
01643-31032	8403	17	
01643-31032	8403	23	
01643-31032	8403	26	
01643-31032	9060	13	
01643-31032	9502	14	
01643-31032	9502	20	
01643-31032	9502	30	
01643-31032	9502	36	
01643-31032	9503	12	
01643-31032	9503	18	
01643-31032	9503	28	
01643-31032	9503	34	
01643-31032	9511	17	
01643-31032	9511	28	
01643-31032	9511	34	
01643-31032	9512	17	
01643-31032	9512	28	
01643-31032	9512	34	
01643-31232	1003	22	
01643-31232	1003	30	
01643-31232	1007	3	
01643-31232	1041	12	
01643-31232	1127	3	
01643-31232	1201	13	
01643-31232	1201	16	
01643-31232	1201	16A	
01643-31232	1201	22	
01643-31232	1203	16	
01643-31232	1203	20	
01643-31232	1203	20A	
01643-31232	1203	26	
01643-31232	1211	25	
01643-31232	1211	29	
01643-31232	1211	32	
01643-31232	1213	25	
01643-31232	1213	29	
01643-31232	1213	32	
01643-31232	1301	26	
01643-31232	1401	5A	

PART NO	F/NO	I/NO	M/NO
01643-31232	1423	18	
01643-31232	1423	21	
01643-31232	1437	8	
01643-31232	1437	11	
01643-31232	1437	14	
01643-31232	1437	19	
01643-31232	1437	22	
01643-31232	1437	26	
01643-31232	1438	3	
01643-31232	1438	12	
01643-31232	1438	17	
01643-31232	1438	26	
01643-31232	1438	37	
01643-31232	1441	8	
01643-31232	1441	11	
01643-31232	1441	14	
01643-31232	1441	19	
01643-31232	1441	24	
01643-31232	1443	3	
01643-31232	1443	8	
01643-31232	2201	18	
01643-31232	2201	22	
01643-31232	2201	28	
01643-31232	2203	18	
01643-31232	2203	22	
01643-31232	2203	28	
01643-31232	2315	18	
01643-31232	2317	8	
01643-31232	2317	11	
01643-31232	3001	5	
01643-31232	3001	9	
01643-31232	3001	12	
01643-31232	3003	5	
01643-31232	3003	9	
01643-31232	3003	12	
01643-31232	3005	5	
01643-31232	3005	9	
01643-31232	3005	12	
01643-31232	3007	5	
01643-31232	3007	9	
01643-31232	3007	12	
01643-31232	3011	15	
01643-31232	4431	30	
01643-31232	4432	30	
01643-31232	4433	12	
01643-31232	4513	18	
01643-31232	4515	19	
01643-31232	4515	22	
01643-31232	4519	18	
01643-31232	4521	18	

https://truckmanualshub.com/

PART NO	F/NO	I/NO	M/NO
01643-31232	4521	21	
01643-31232	4611	17	
01643-31232	4611	19	
01643-31232	4611	29	
01643-31232	4611	35	
01643-31232	4611	38	
01643-31232	4701	12	
01643-31232	5001	5	
01643-31232	5003	5	
01643-31232	5101	6	
01643-31232	5101	24	
01643-31232	5101	28	
01643-31232	5101	31	
01643-31232	5102	6	
01643-31232	5102	24	
01643-31232	5102	28	
01643-31232	5102	31	
01643-31232	5103	4	
01643-31232	5103	8	
01643-31232	5103	37	
01643-31232	5103	41	
01643-31232	5103	45	
01643-31232	5103	48	
01643-31232	5103	54	
01643-31232	5103	56	
01643-31232	5105	9	
01643-31232	5105	11	
01643-31232	5105	16	
01643-31232	5105	18	
01643-31232	5105	22	
01643-31232	5105	25	
01643-31232	5107	3	
01643-31232	5107	7	
01643-31232	5107	11	
01643-31232	5107	18	
01643-31232	5107	21	
01643-31232	5107	24	
01643-31232	5107	27	
01643-31232	5109	22	
01643-31232	5221	46	
01643-31232	5311	11	
01643-31232	5311	13	
01643-31232	5411	11	
01643-31232	6191	30	
01643-31232	6501	6	
01643-31232	6501	15	
01643-31232	6513	10	
01643-31232	6513	20	
01643-31232	6513	27	
01643-31232	6514	10	

PART NO	F/NO	I/NO	M/NO
01643-31232	6514	20	
01643-31232	6514	27	
01643-31232	6521	13	
01643-31232	6522	13	
01643-31232	6523	13	
01643-31232	6524	13	
01643-31232	6525	7	
01643-31232	7001	18	
01643-31232	7001	23	
01643-31232	7001	29	
01643-31232	7003	18	
01643-31232	7003	23	
01643-31232	7003	29	
01643-31232	7005	13	
01643-31232	7005	18	
01643-31232	7007	13	
01643-31232	7007	18	
01643-31232	7305	13	
01643-31232	7305	18	
01643-31232	7307	13	
01643-31232	7307	18	
01643-31232	7325	13	
01643-31232	7325	18	
01643-31232	8311	17	
01643-31232	8313	10	
01643-31232	8313	20	
01643-31232	8321	14	
01643-31232	8322	14	
01643-31232	8322	18	
01643-31232	8331	4	
01643-31232	8331	9	
01643-31232	8331	13	
01643-31232	8331	25	
01643-31232	8333	20	
01643-31232	8333	23	
01643-31232	8335	23	
01643-31232	8335	29	
01643-31232	8336	22	
01643-31232	8336	28	
01643-31232	8337	19	
01643-31232	8337	25	
01643-31232	8338	19	
01643-31232	8338	25	
01643-31232	8343	20	
01643-31232	8343	23	
01643-31232	8345	23	
01643-31232	8345	29	
01643-31232	8346	22	
01643-31232	8346	28	
01643-31232	8347	19	

PART NO	F/NO	I/NO	M/NO
01643-31232	8347	25	
01643-31232	8348	19	
01643-31232	8348	25	
01643-31232	8401	6	
01643-31232	8501	6	
01643-31232	9001	5	
01643-31232	9001	28	
01643-31232	9002	5	
01643-31232	9002	28	
01643-31232	9003	18	
01643-31232	9006	5	
01643-31232	9006	7	
01643-31232	9007	5	
01643-31232	9007	7	
01643-31232	9010	7	
01643-31232	9010	10	
01643-31232	9057	5	
01643-31232	9057	7	
01643-31232	9057	18	
01643-31232	9066	6	
01643-31232	9067	6	
01643-31232	9301	5	
01643-31232	9301	9	
01643-31232	9301	12	
01643-31232	9511	15	
01643-31232	9511	30	
01643-31232	9512	15	
01643-31232	9512	30	
01643-31445	1451	5	
01643-31445	5109	23	
01643-31645	1041	5	
01643-31645	1301	10	
01643-31645	2401	2	
01643-31645	2401	35	
01643-31645	2401	39	
01643-31645	2403	2	
01643-31645	2403	35	
01643-31645	2403	39	
01643-31645	3011	11	
01643-31645	3031	6	
01643-31645	3031	6-	
01643-31645	3035	6	
01643-31645	3035	6-	
01643-31645	3041	5	
01643-31645	4011	4	
01643-31645	5311	8	
01643-31645	6003	23	
01643-31645	6033	23	
01643-31645	6103	23	
01643-31645	6133	23	

PART NO	F/NO	I/NO	M/NO
01643-31645	6191	35	
01643-31645	7001	9	
01643-31645	7003	9	
01643-31645	8335	26	
01643-31645	8336	25	
01643-31645	8337	22	
01643-31645	8338	22	
01643-31645	8345	26	
01643-31645	8346	25	
01643-31645	8347	22	
01643-31645	8348	22	
01643-31645	9001	17	
01643-31645	9002	17	
01643-31645	9305	6	
01643-32060	3001	15	
01643-32060	3003	15	
01643-32060	3005	15	
01643-32060	3007	15	
01643-32060	4001	19	
01643-32060	4011	40	
01643-32060	4011	43	
01643-32060	9301	15	
01643-32060	4001	14	
01643-32460	4011	23	
01643-32460	5001	8	
01643-32460	5003	8	
01643-50823	2201	7	
01643-50823	2201	12	
01643-50823	2203	7	
01643-50823	2203	12	
01643-50823	2211	5	
01643-50823	2213	5	
01643-50823	2401	16	
01643-50823	4011	21	
01643-50823	4301	5	
01643-50823	4301	10	
01643-50823	6204	30	
01643-50823	6503	15	
01643-50823	6503	20	
01643-50823	6511	5	
01643-50823	6513	7	
01643-50823	6513	34	
01643-50823	6514	7	
01643-50823	6514	34	
01643-50823	6531	5	
01643-50823	6531	15	
01643-50823	6531	39	
01643-50823	6532	5	
01643-50823	6532	15	
01643-50823	6532	39	

PART NO	F/NO	I/NO	M/NO
01643-50823	6533	5	
01643-50823	6533	11	
01643-50823	6533	28	
01643-50823	6534	5	
01643-50823	6534	11	
01643-50823	6534	28	
01643-50823	8325	5	
01643-50823	8325	11	
01643-50823	8326	5	
01643-50823	8326	11	
01643-50823	9303	5	
01643-50823	9502	26	
01643-50823	9503	24	
01643-50823	9511	13	
01643-50823	9511	23	
01643-50823	9512	13	
01643-50823	9512	23	
01643-51032	6191	16	
01643-51032	6503	6	
01643-51032	6531	10	
01643-51032	6531	34	
01643-51032	6532	10	
01643-51032	6532	34	
01643-51032	8323	5	
01643-51032	8323	9	
01643-51032	8333	9	
01643-51032	8333	16	
01643-51032	8335	9	
01643-51032	8335	13	
01643-51032	8336	8	
01643-51032	8336	12	
01643-51032	8337	5	
01643-51032	8337	9	
01643-51032	8338	5	
01643-51032	8338	9	
01643-51032	8343	9	
01643-51032	8343	16	
01643-51032	8345	9	
01643-51032	8345	13	
01643-51032	8346	8	
01643-51032	8346	12	
01643-51032	8347	5	
01643-51032	8347	9	
01643-51032	8348	5	
01643-51032	8348	9	
01643-51032	9502	12	
01643-51032	9502	18	
01643-51032	9503	10	
01643-51032	9503	16	
01643-51232	9511	5	

PART NO	F/NO	I/NO	M/NO
01643-51232	9512	5	
01643-51645	1041	14	
01658-03618	2401	26	
02030-10738	1007	4	
04020-00514	4011	16	
04020-00616	1111	6	
04020-00616	2403	26	
04020-00616	6001	29	
04020-00616	6031	29	
04020-00616	6101	29	
04020-00616	6131	29	
04020-00820	2001	9	
04020-00820	4101	9	
04020-00820	4111	9	
04020-00820	6002	11	
04020-00820	6004	11	
04020-00820	6021	7	
04020-00820	6032	11	
04020-00820	6034	11	
04020-00820	6051	7	
04020-00820	6102	11	
04020-00820	6104	11	
04020-00820	6121	7	
04020-00820	6132	11	
04020-00820	6134	11	
04020-00820	6151	7	
04020-01842	2401	18	
04020-01842	2403	18	
04020-01842	4001	11	
04025-00312	6223	15	
04025-00432	1011	16	
04025-00432	1012	16	
04025-00432	1013	10	
04025-00432	1014	10	
04025-00520	4431	9	
04025-00520	4432	9	
04025-00520	4433	2	
04050-01210	6012	31	
04050-01210	6016	31	
04050-01210	6042	33	
04050-01210	6046	33	
04050-01210	6112	31	
04050-01210	6116	31	
04050-01210	6142	33	
04050-01210	6146	33	
04050-12015	2317	5	
04050-12015	2317	18	
04050-12015	2317	20	
04050-12015	2317	23	
04050-13018	5103	28	

PART NO	F/NO	I/NO	M/NO
04050-13018	5105	4	
04050-13018	5109	15	
04050-13030	1111	12	
04050-13030	5101	32	
04050-13030	5102	32	
04050-14025	2201	16	
04050-14025	2203	16	
04050-15030	8311	11	
04052-00633	1111	18	
04052-00633	8313	24	
04052-01038	8313	5	
04052-01038	8313	15	
04052-01253	5101	10	
04052-01253	5102	10	
04052-10633	1011	21	
04052-10633	1012	21	
04052-10633	1013	15	
04052-10633	1014	15	
04052-10633	1111	23	
04052-11038	1127	6	
04064-01610	1011	11	
04064-01610	1012	11	
04064-08530	2101	9	
04065-01410	4611	24	
04065-05220	8331	22	
04065-05220	8335	20	
04065-05220	8336	19	
04065-05220	8337	16	
04065-05220	8338	16	
04065-05220	8345	20	
04065-05220	8346	19	
04065-05220	8347	16	
04065-05220	8348	16	
04065-09030	2001	19	
04065-09030	4101	19	
04065-09030	4111	21	
04071-00200	4011	28	
04077-00110	2101	4	
04205-00514	6012	30	
04205-00514	6016	30	
04205-00514	6042	32	
04205-00514	6046	32	
04205-00514	6112	30	
04205-00514	6116	30	
04205-00514	6142	32	
04205-00514	6146	32	
04205-10618	1011	20	
04205-10618	1012	20	
04205-10618	1013	14	
04205-10618	1014	14	

PART NO	F/NO	I/NO	M/NO
04205-10618	1111	17	
04205-10622	1111	22	
04205-10628	8313	22	
04205-11028	8313	4	
04205-11028	8313	14	
04205-11228	5101	9	
04205-11228	5102	9	
04205-30822	2317	4	
04205-30822	2317	19	
04205-30822	2317	22	
04205-31028	1127	5	
04205-31238	2317	17	
04210-20624	1011	18	
04210-20624	1012	18	
04210-20624	1013	12	
04210-20624	1014	12	
04210-21040	8313	3	
04210-21040	8313	13	
04211-20634	1111	16	
04211-20844	2317	3	
04244-41017	8313	1	
04244-41022	8313	11	
04245-00638	1011	17	
04245-00638	1013	11	
04245-00640	1012	17	
04245-00640	1014	11	
04252-01269	8313	6	
04252-01269	8313	16	
04260-00635	6403	18	
04260-00635	6404	18	
04260-00793	6201	23	
04260-00793	6225	3	
04260-00793	6227	3	
04530-01018	6001	32	
04530-01018	6031	32	
04530-01018	6101	32	
04530-01018	6131	32	
06030-22319	4011	29	
06120-03020	9001	6	
06120-03020	9002	6	
06122-03004	9001	7	
06122-03004	9002	7	
07000-01007	1211	10	
07000-01007	1213	10	
07000-01007	6201	25	
07000-01009	6013	24	
07000-01009	6017	24	
07000-01009	6043	24	
07000-01009	6047	24	
07000-01009	6113	24	

https://truckmanualshub.com/

PART NO	F/NO	I/NO	M/NO
07000-01009	6117	24	
07000-01009	6143	24	
07000-01009	6147	24	
07000-02010	6013	4	
07000-02010	6017	4	
07000-02010	6023	7	
07000-02010	6043	4	
07000-02010	6047	4	
07000-02010	6053	7	
07000-02010	6113	4	
07000-02010	6117	4	
07000-02010	6123	7	
07000-02010	6143	4	
07000-02010	6147	4	
07000-02010	6153	7	
07000-02010	6201	4	
07000-02010	6204	15	
07000-02011	6011	3	
07000-02011	6015	4	
07000-02011	6041	3	
07000-02011	6045	4	
07000-02011	6111	3	
07000-02011	6115	4	
07000-02011	6141	3	
07000-02011	6145	4	
07000-02011	6206	16	
07000-02011	6206	30	
07000-02011	9501	16	
07000-02011	9511	38	
07000-02011	9512	38	
07000-02012	6001	26	
07000-02012	6012	22	
07000-02012	6013	29	
07000-02012	6016	22	
07000-02012	6017	29	
07000-02012	6031	26	
07000-02012	6042	24	
07000-02012	6043	29	
07000-02012	6046	24	
07000-02012	6047	29	
07000-02012	6101	26	
07000-02012	6112	22	
07000-02012	6113	29	
07000-02012	6116	22	
07000-02012	6117	29	
07000-02012	6131	26	
07000-02012	6142	24	
07000-02012	6143	29	
07000-02012	6146	24	
07000-02012	6147	29	

PART NO	F/NO	I/NO	M/NO
07000-02014	6013	11	
07000-02014	6017	11	
07000-02014	6043	11	
07000-02014	6047	11	
07000-02014	6113	11	
07000-02014	6117	11	
07000-02014	6143	11	
07000-02014	6147	11	
07000-02014	6207	2	
07000-02016	6018	18	
07000-02016	6048	18	
07000-02016	6118	18	
07000-02016	6148	18	
07000-02018	4511	8	
07000-02018	4517	8	
07000-02018	6012	7	
07000-02018	6015	5	
07000-02018	6016	7	
07000-02018	6018	14	
07000-02018	6042	9	
07000-02018	6045	5	
07000-02018	6046	9	
07000-02018	6048	14	
07000-02018	6112	7	
07000-02018	6115	5	
07000-02018	6116	7	
07000-02018	6118	14	
07000-02018	6142	9	
07000-02018	6145	5	
07000-02018	6146	9	
07000-02018	6148	14	
07000-02018	6202	33	
07000-02018	6204	39	
07000-02020	6223	12	
07000-02021	1005	2	
07000-02021	1005	17	
07000-02021	6001	17	
07000-02021	6031	17	
07000-02021	6101	17	
07000-02021	6131	17	
07000-02055	1211	11	
07000-02055	1213	11	
07000-02065	6002	40	
07000-02065	6004	34	
07000-02065	6032	40	
07000-02065	6034	34	
07000-02065	6102	40	
07000-02065	6104	34	
07000-02065	6132	40	
07000-02065	6134	34	

PART NO	F/NO	I/NO	M/NO
07000-02065	6521	19	
07000-02065	6522	19	
07000-02065	6523	19	
07000-02065	6524	19	
07000-02075	6501	13	
07000-02080	6002	22	
07000-02080	6032	22	
07000-02080	6102	22	
07000-02080	6132	22	
07000-02085	1431	24	
07000-02110	4011	41	
07000-02115	2101	11	
07000-02135	6003	5	
07000-02135	6033	5	
07000-02135	6103	5	
07000-02135	6133	5	
07000-03022	1201	17	
07000-03022	1203	21	
07000-03022	9502	24	
07000-03022	9503	22	
07000-03022	9511	21	
07000-03022	9512	21	
07000-03025	4011	6A	
07000-03028	5311	5	
07000-03028	6013	22	
07000-03028	6017	22	
07000-03028	6043	22	
07000-03028	6047	22	
07000-03028	6113	22	
07000-03028	6117	22	
07000-03028	6143	22	
07000-03028	6147	22	
07000-03028	6501	19	
07000-03032	6003	6	
07000-03032	6033	6	
07000-03032	6103	6	
07000-03032	6133	6	
07000-03035	6521	4	
07000-03035	6522	4	
07000-03035	6523	4	
07000-03035	6524	4	
07000-03040	2001	18	
07000-03040	4101	18	
07000-03040	4111	20	
07000-03045	6525	5	
07000-03048	6001	30	
07000-03048	6011	12	
07000-03048	6015	17	
07000-03048	6031	30	
07000-03048	6041	12	

PART NO	F/NO	I/NO	M/NO
07000-03048	6045	17	
07000-03048	6101	30	
07000-03048	6111	12	
07000-03048	6115	17	
07000-03048	6131	30	
07000-03048	6141	12	
07000-03048	6145	17	
07000-05095	4011	31	
07000-05165	6003	4	
07000-05165	6033	4	
07000-05165	6103	4	
07000-05165	6133	4	
07000-05180	6191	18	
07000-05180	6191	28	
07000-05190	2401	37	
07000-05190	2403	37	
07000-05195	2001	32	
07000-05240	4011	38	
07000-11007	6225	5	
07000-11007	6227	5	
07000-11007	6227	10	
07000-11009	6003	7	
07000-11009	6011	8	
07000-11009	6015	6	
07000-11009	6015	13	
07000-11009	6033	7	
07000-11009	6041	8	
07000-11009	6045	6	
07000-11009	6045	13	
07000-11009	6103	7	
07000-11009	6111	8	
07000-11009	6115	6	
07000-11009	6115	13	
07000-11009	6133	7	
07000-11009	6141	8	
07000-11009	6145	6	
07000-11009	6145	13	
07000-11009	6201	30	
07000-11009	6227	11	
07000-12010	2001	33	
07000-12010	6011	7	
07000-12010	6011	11	
07000-12010	6015	12	
07000-12010	6015	16	
07000-12010	6041	7	
07000-12010	6041	11	
07000-12010	6045	12	
07000-12010	6045	16	
07000-12010	6111	7	
07000-12010	6111	11	

PART NO	F/NO	I/NO	M/NO
07000-12010	6115	12	
07000-12010	6115	16	
07000-12010	6141	7	
07000-12010	6141	11	
07000-12010	6145	12	
07000-12010	6145	16	
07000-12010	6203	10	
07000-12011	2002	15	
07000-12012	2002	29	
07000-12012	4102	13	
07000-12012	4112	12	
07000-12012	6013	16	
07000-12012	6017	16	
07000-12012	6043	16	
07000-12012	6047	16	
07000-12012	6113	16	
07000-12012	6117	16	
07000-12012	6143	16	
07000-12012	6147	16	
07000-12012	6207	14	
07000-12012	6207	27	
07000-12012	6207	52	
07000-12015	6002	7	
07000-12015	6003	8	
07000-12015	6004	7	
07000-12015	6032	7	
07000-12015	6033	8	
07000-12015	6034	7	
07000-12015	6102	7	
07000-12015	6103	8	
07000-12015	6104	7	
07000-12015	6132	7	
07000-12015	6133	8	
07000-12015	6134	7	
07000-12016	6018	8	
07000-12016	6048	8	
07000-12016	6118	8	
07000-12016	6148	8	
07000-12021	6013	32	
07000-12021	6017	32	
07000-12021	6043	32	
07000-12021	6047	32	
07000-12021	6113	32	
07000-12021	6117	32	
07000-12021	6143	32	
07000-12021	6147	32	
07000-12105	6405	9	
07000-12115	6401	9	
07000-12115	7331	9	
07000-12125	6402	9	

PART NO	F/NO	I/NO	M/NO
07000-12125	6403	9	
07000-12125	6406	9	
07000-12135	6404	9	
07000-12135	7335	10	
07000-13022	2002	8	
07000-13025	2201	9	
07000-13025	2203	9	
07000-13025	2211	2	
07000-13025	2213	2	
07000-13025	4301	7	
07000-13025	6201	19	
07000-13025	6531	2	
07000-13025	6531	12	
07000-13025	6531	36	
07000-13025	6532	2	
07000-13025	6532	12	
07000-13025	6532	36	
07000-13025	6533	2	
07000-13025	6533	25	
07000-13025	6534	2	
07000-13025	6534	25	
07000-13025	8325	8	
07000-13025	8326	8	
07000-13025	9303	2	
07000-13025	9502	6	
07000-13025	9503	4	
07000-13028	6201	5	
07000-13030	6401	22	
07000-13030	6402	21	
07000-13030	6403	22	
07000-13030	6404	22	
07000-13030	6405	20	
07000-13030	6406	20	
07000-13030	6533	9	
07000-13030	6534	9	
07000-13030	7335	22	
07000-13030	7335	26	
07000-13030	9003	2	
07000-13030	9502	5	
07000-13030	9502	28	
07000-13030	9502	31	
07000-13030	9502	34	
07000-13030	9503	26	
07000-13030	9503	29	
07000-13030	9503	32	
07000-13030	9511	11	
07000-13030	9511	26	
07000-13030	9511	32	
07000-13030	9512	11	
07000-13030	9512	26	

PART NO	F/NO	I/NO	M/NO
07000-13030	9512	32	
07000-13032	6531	7	
07000-13032	6531	31	
07000-13032	6532	7	
07000-13032	6532	31	
07000-13032	8323	2	
07000-13032	8333	6	
07000-13032	8333	13	
07000-13032	8335	6	
07000-13032	8336	5	
07000-13032	8337	2	
07000-13032	8338	2	
07000-13032	8343	6	
07000-13032	8343	13	
07000-13032	8345	6	
07000-13032	8346	5	
07000-13032	8347	2	
07000-13032	8348	2	
07000-13035	6403	27	
07000-13035	6404	27	
07000-13035	8323	7	
07000-13035	8325	13	
07000-13035	8326	13	
07000-13035	8335	11	
07000-13035	8336	10	
07000-13035	8337	7	
07000-13035	8338	7	
07000-13035	8345	11	
07000-13035	8346	10	
07000-13035	8347	7	
07000-13035	8348	7	
07000-13038	6201	3	
07000-13038	6205	17	
07000-13040	2002	11	
07000-13042	8331	18	
07000-13042	8335	16	
07000-13042	8336	15	
07000-13042	8337	12	
07000-13042	8338	12	
07000-13042	8345	16	
07000-13042	8346	15	
07000-13042	8347	12	
07000-13042	8348	12	
07000-13048	8331	20	
07000-13048	8335	18	
07000-13048	8336	17	
07000-13048	8337	14	
07000-13048	8338	14	
07000-13048	8345	18	
07000-13048	8346	17	

PART NO	F/NO	I/NO	M/NO
07000-13048	8347	14	
07000-13048	8348	14	
07000-15155	2001	25	
07000-15155	4101	24	
07000-15170	2001	27	
07000-15175	4101	26	
07000-22012	6206	6	
07000-22020	2002	34	
07000-22020	4102	18	
07000-22020	4112	17	
07001-02010	6203	11	
07001-02011	2002	16	
07001-02012	2002	30	
07001-02012	4102	14	
07001-02012	4112	13	
07001-02012	6013	17	
07001-02012	6017	17	
07001-02012	6043	17	
07001-02012	6047	17	
07001-02012	6113	17	
07001-02012	6117	17	
07001-02012	6143	17	
07001-02012	6147	17	
07001-02012	6206	7	
07001-02012	6207	15	
07001-02012	6207	28	
07001-02012	6207	53	
07001-02016	6018	9	
07001-02016	6048	9	
07001-02016	6118	9	
07001-02016	6148	9	
07001-02020	2002	35	
07001-02020	4102	19	
07001-02020	4112	18	
07001-02021	6013	33	
07001-02021	6017	33	
07001-02021	6043	33	
07001-02021	6047	33	
07001-02021	6113	33	
07001-02021	6117	33	
07001-02021	6143	33	
07001-02021	6147	33	
07001-03022	2002	9	
07001-03042	8331	19	
07001-03042	8335	17	
07001-03042	8336	16	
07001-03042	8337	13	
07001-03042	8338	13	
07001-03042	8345	17	
07001-03042	8346	16	

https://truckmanualshub.com/

PART NO	F/NO	I/NO	M/NO
07001-03042	8347	13	
07001-03042	8348	13	
07001-03048	8331	21	
07001-03048	8335	19	
07001-03048	8336	18	
07001-03048	8337	15	
07001-03048	8338	15	
07001-03048	8345	19	
07001-03048	8346	18	
07001-03048	8347	15	
07001-03048	8348	15	
07001-05155	2001	26	
07001-05155	4101	25	
07001-05170	2001	28	
07001-05175	4101	27	
07002-00823	6012	28	
07002-00823	6016	28	
07002-00823	6042	30	
07002-00823	6046	30	
07002-00823	6112	28	
07002-00823	6116	28	
07002-00823	6142	30	
07002-00823	6146	30	
07002-01023	6012	16	
07002-01023	6013	35	
07002-01023	6016	16	
07002-01023	6042	18	
07002-01023	6043	35	
07002-01023	6046	18	
07002-01023	6112	16	
07002-01023	6113	35	
07002-01023	6116	16	
07002-01023	6142	18	
07002-01023	6143	35	
07002-01023	6146	18	
07002-01223	6002	44	
07002-01223	6004	38	
07002-01223	6032	44	
07002-01223	6034	38	
07002-01223	6102	44	
07002-01223	6104	38	
07002-01223	6132	44	
07002-01223	6134	38	
07002-01423	1005	5	
07002-01423	1005	15	
07002-01423	4111	15	
07002-01423	4511	10	
07002-01423	4511	12	
07002-01423	4513	10	
07002-01423	4513	12	

PART NO	F/NO	I/NO	M/NO
07002-01423	4513	15	
07002-01423	4515	10	
07002-01423	4515	12	
07002-01423	4515	15	
07002-01423	4517	10	
07002-01423	4517	12	
07002-01423	4519	10	
07002-01423	4519	12	
07002-01423	4519	15	
07002-01423	4521	10	
07002-01423	4521	12	
07002-01423	4521	14	
07002-01423	4521	23	
07002-01423	4611	9	
07002-01423	4611	32	
07002-01423	4701	1	
07002-01423	4701	9	
07002-01423	6001	23	
07002-01423	6031	23	
07002-01423	6101	23	
07002-01423	6131	23	
07002-01423	6201	26	
07002-01423	6201	28	
07002-01423	6202	15	
07002-01423	6204	14	
07002-01423	8321	2	
07002-01423	8321	7	
07002-01423	8321	11	
07002-01423	8321	19	
07002-01423	8322	2	
07002-01423	8322	7	
07002-01423	8322	11	
07002-01423	8322	22	
07002-01423	9501	2	
07002-01423	9511	41	
07002-01423	9512	41	
07002-01623	6205	13	
07002-01823	6501	12	
07002-02034	1005	12	
07002-02034	2211	6	
07002-02034	2211	10	
07002-02034	2213	6	
07002-02034	2213	10	
07002-02034	4611	13	
07002-02034	4611	26	
07002-02034	6001	11	
07002-02034	6012	13	
07002-02034	6016	13	
07002-02034	6031	11	
07002-02034	6042	15	

PART NO	F/NO	I/NO	M/NO
07002-02034	6046	15	
07002-02034	6101	11	
07002-02034	6112	13	
07002-02034	6116	13	
07002-02034	6131	11	
07002-02034	6142	15	
07002-02034	6146	15	
07002-02034	6525	9	
07002-02034	6525	13	
07002-02034	9303	6	
07002-02034	9303	10	
07002-02434	2401	9	
07002-02434	2401	33	
07002-02434	2403	9	
07002-02434	2403	33	
07002-02434	6001	8	
07002-02434	6002	47	
07002-02434	6004	41	
07002-02434	6023	10	
07002-02434	6031	8	
07002-02434	6032	47	
07002-02434	6034	41	
07002-02434	6053	10	
07002-02434	6101	8	
07002-02434	6102	47	
07002-02434	6104	41	
07002-02434	6123	10	
07002-02434	6131	8	
07002-02434	6132	47	
07002-02434	6134	41	
07002-02434	6153	10	
07002-02434	6206	13	
07002-02434	6206	22	
07002-02434	6207	3	
07002-02434	6207	41	
07002-02434	6525	2	
07002-02434	6529	3	
07002-02434	6529	7	
07002-02434	6529	13	
07002-02434	9501	4	
07002-03034	6202	31	
07002-03034	6203	6	
07002-03034	6204	35	
07002-03034	6205	6	
07002-03034	6207	6	
07002-03034	6207	19	
07002-03034	6207	34	
07002-03034	6207	44	
07002-03334	6206	19	
07002-03634	1019	24	

PART NO	F/NO	I/NO	M/NO
07002-03634	1431	28	
07002-03634	6191	3	
07002-05234	6521	10	
07002-05234	6522	10	
07002-05234	6523	10	
07002-05234	6524	10	
07002-10823	2001	37	
07002-10823	2002	23	
07002-11423	2002	21	
07002-11423	4611	6	
07002-11423	6225	6	
07002-11423	6227	6	
07002-11423	6227	12	
07002-11423	9003	6	
07002-11423	9003	11	
07002-11423	9003	20	
07002-12034	2002	17	
07002-12034	9502	3	
07002-12034	9503	3	
07002-12034	9511	9	
07002-12034	9512	9	
07002-12434	2002	19	
07002-12434	2101	7	
07002-12434	4102	8	
07002-12434	4112	7	
07002-12434	6203	2	
07002-12434	6205	2	
07002-12434	8331	7	
07002-12434	8331	16	
07002-13034	2002	36	
07002-13034	4102	20	
07002-13034	4112	19	
07002-13334	4102	5	
07002-13334	4112	4	
07005-00812	6201	13	
07012-00125	4011	33	
07020-00000	4001	3	
07020-00000	6405	31	
07020-00000	6406	31	
07020-00000	7001	3	
07020-00000	7001	24	
07020-00000	7001	30	
07020-00000	7003	3	
07020-00000	7003	24	
07020-00000	7003	30	
07020-00000	7005	6	
07020-00000	7007	6	
07020-00000	7011	4A	
07020-00000	7015	4A	
07020-00000	7305	6	

PART NO	F/NO	I/NO	M/NO
07020-00000	7307	6	
07020-00000	7321	6	
07020-00000	7323	6	
07020-00000	7325	6	
07020-00000	7331	23	
07020-00000	7335	16	
07020-00000	9001	9	
07020-00000	9002	9	
07020-00675	7011	4	
07020-00675	7015	4	
07020-00900	6403	38	
07020-00900	6404	38	
07020-00900	6405	32	
07020-00900	6406	32	
07020-00900	7005	5	
07020-00900	7007	5	
07020-00900	7305	5	
07020-00900	7307	5	
07020-00900	7321	5	
07020-00900	7323	5	
07020-00900	7325	5	
07020-00900	7331	24	
07020-00900	7335	4	
07040-11007	6012	15	
07040-11007	6013	34	
07040-11007	6016	15	
07040-11007	6042	17	
07040-11007	6043	34	
07040-11007	6046	17	
07040-11007	6112	15	
07040-11007	6113	34	
07040-11007	6116	15	
07040-11007	6142	17	
07040-11007	6143	34	
07040-11007	6146	17	
07040-11409	1005	4	
07040-11409	4111	14	
07040-11409	4521	22	
07040-11409	6201	27	
07040-11409	6202	14	
07040-11409	6204	13	
07040-11812	6501	11	
07040-12414	2101	6	
07040-12414	2401	32	
07040-12414	2403	32	
07040-12414	8331	6	
07040-12414	8331	15	
07042-20108	6001	7	
07042-20108	6031	7	
07042-20108	6101	7	

PART NO	F/NO	I/NO	M/NO
07042-20108	6131	7	
07042-30108	4513	14	
07042-30108	4515	14	
07042-30108	4519	14	
07042-30108	4521	24	
07042-30108	4611	7	
07042-30108	4611	12	
07042-30108	6225	2	
07042-30108	6227	2	
07042-30108	6503	2	
07042-30108	6503	17	
07042-30108	9003	13	
07042-30211	1127	9	
07043-50312	6021	4	
07043-50312	6051	4	
07043-50312	6121	4	
07043-50312	6151	4	
07043-50312	6223	2	
07043-70108	6201	29	
07043-70312	4011	2	
07044-02412	6002	46	
07044-02412	6004	40	
07044-02412	6032	46	
07044-02412	6034	40	
07044-02412	6102	46	
07044-02412	6104	40	
07044-02412	6132	46	
07044-02412	6134	40	
07044-12412	2401	8	
07044-12412	2403	8	
07044-13620	6191	2	
07091-21200	1301	2	
07097-00611	8325	7	
07097-00611	8326	7	
07097-21016	8335	5	
07097-21016	8336	4	
07097-21016	8337	1	
07097-21016	8338	1	
07097-21016	8345	5	
07097-21016	8346	4	
07097-21016	8347	1	
07097-21016	8348	1	
07098-20622	7305	19	
07099-00610	6531	11	
07099-00610	6532	11	
07099-01014	8333	12	
07099-01016	8343	12	
07102-20203	1005	13	
07102-20204	1005	9	
07102-20209	4701	5	

PART NO	F/NO	I/NO	M/NO
07102-20210	9501	12	
07102-20213	9501	11	
07102-20214	8321	4	
07102-20214	8322	4	
07102-20219	8321	9A	
07102-20219	8322	9A	
07102-20222	9501	5	
07102-20226	8321	5	
07102-20226	8321	9	
07102-20226	8322	5	
07102-20226	8322	9	
07102-20280	9511	39	
07102-20280	9512	39	
07102-20313	9501	13	
07102-20316	9501	14	
07102-20322	9501	6	
07102-20378	9511	36	
07102-20378	9512	36	
07102-20404	6001	12	
07102-20404	6031	12	
07102-20404	6101	12	
07102-20404	6131	12	
07102-20413	4611	10	
07102-20508	6529	1	
07102-20610	6529	5	
07102-20616	6529	11	
07108-20205	4701	6	
07108-20211	4611	3	
07108-20212	4611	1	
07121-20209	9003	7	
07121-20209	9003	21	
07145-00070	6401	19	
07145-00070	6405	18	
07145-00070	7331	18	
07145-00080	6401	3	
07145-00080	6402	3	
07145-00080	6403	3	
07145-00080	6404	3	
07145-00080	6406	18	
07145-00080	7001	4	
07145-00080	7001	4A	
07145-00080	7335	3	
07145-00090	7003	4	
07145-00090	7003	4A	
07145-00090	7005	7	
07145-00090	7007	7	
07145-00090	7305	7	
07145-00090	7307	7	
07145-00090	7321	7	
07145-00090	7323	7	

PART NO	F/NO	I/NO	M/NO
07145-00090	7325	7	
07146-02106	6405	8	
07146-02116	6401	8	
07146-02116	7331	8	
07146-02126	6402	8	
07146-02126	6403	8	
07146-02126	6406	8	
07146-02136	6404	8	
07146-02136	7335	11	
07155-01125	6405	14	
07155-01230	6401	15	
07155-01230	7331	14	
07155-01330	6402	16	
07155-01330	6403	15	
07155-01330	6406	14	
07155-01435	6404	15	
07155-01435	7335	19	
07177-01035	7335	6	
07177-07530	6405	10	
07177-09040	6402	10	
07177-09040	6406	10	
07179-00097	6405	4	
07179-00113	6402	4	
07179-00113	6406	4	
07179-00123	7335	9	
07206-30508	6201	12	
07213-50813	4001	4	
07213-50813	7001	31	
07213-50813	7003	31	
07221-20210	1127	7	
07221-20210	6523	25	
07221-20315	6524	25	
07222-00210	1127	8	
07222-00210	6523	26	
07222-00312	6524	26	
07230-10210	4519	9	
07230-10315	9303	9	
07230-10422	6001	10	
07230-10422	6031	10	
07230-10422	6101	10	
07230-10422	6131	10	
07230-20210	4511	9	
07230-20210	4511	11	
07230-20210	4513	9	
07230-20210	4515	8	
07230-20210	4517	9	
07230-20210	4517	11	
07230-20210	4521	8	
07230-20210	4611	8	
07230-20210	4701	2	

https://truckmanualshub.com/

PART NO	F/NO	I/NO	M/NO
07230-20210	4701	8	
07230-20315	2211	9	
07230-20315	2213	9	
07230-20315	6525	12	
07231-20422	6001	13	
07231-20422	6031	13	
07231-20422	6101	13	
07231-20422	6131	13	
07235-10210	1005	14	
07235-10210	4513	11	
07235-10210	4515	9	
07235-10210	4515	11	
07235-10210	4519	11	
07235-10210	4521	9	
07235-10210	4521	11	
07235-10210	8321	3	
07235-10210	8321	6	
07235-10210	8321	10	
07235-10210	8321	18	
07235-10210	8322	3	
07235-10210	8322	6	
07235-10210	8322	10	
07235-10210	8322	21	
07235-10210	9003	5	
07235-10210	9003	19	
07235-10628	6525	3	
07235-10628	6529	12	
07235-50210	4513	13	
07235-50210	4515	13	
07235-50210	4519	13	
07235-50210	4521	13	
07235-50422	4611	11	
07236-10628	6529	6	
07236-50210	4611	5	
07238-00210	9003	8	
07239-12009	6001	14	
07239-12009	6012	14	
07239-12009	6016	14	
07239-12009	6031	14	
07239-12009	6042	16	
07239-12009	6046	16	
07239-12009	6101	14	
07239-12009	6112	14	
07239-12009	6116	14	
07239-12009	6131	14	
07239-12009	6142	16	
07239-12009	6146	16	
07239-12410	6001	9	
07239-12410	6031	9	
07239-12410	6101	9	

PART NO	F/NO	I/NO	M/NO
07239-12410	6131	9	
07239-12410	6206	12	
07260-02616	6501	16	
07261-22020	8601	3	
07280-00910	1211	15	
07280-00910	1213	15	
07281-00167	1301	13	
07281-00197	1301	21	
07281-00197	4011	37	
07281-00259	8164	2	
07281-00359	8601	4	
07281-00419	8153	9	
07281-00489	6501	17	
07281-00709	1211	6	
07281-00709	1211	19	
07281-00709	1213	6	
07281-00709	1213	19	
07281-00709	8153	5	
07281-00909	1061	3	
07281-00909	1211	7	
07281-00909	1213	7	
07281-01029	1061	6	
07281-01159	1061	2	
07282-02793	6405	28	
07282-02793	6406	28	
07282-02793	7335	34	
07283-22738	2201	29	
07283-22738	2201	33	
07283-22738	2203	33	
07283-22738	6401	30	
07283-22738	6402	29	
07283-22738	6403	35	
07283-22738	6404	35	
07283-22738	6511	7	
07283-22738	6513	15	
07283-22738	6514	15	
07283-22738	8325	16	
07283-22738	8325	20	
07283-22738	8326	16	
07283-22738	8326	20	
07283-22738	8326	24	
07283-22746	2203	29	
07283-24346	6521	14	
07283-24346	6522	14	
07283-24346	6523	14	
07283-24346	6524	14	
07283-26155	1211	21	
07283-26155	1213	21	
07283-27663	1003	3	
07283-27663	1003	14	

PART NO	F/NO	I/NO	M/NO
07283-27663	6501	7	
07283-28981	4611	28	
07285-00100	6191	32	
07288-10627	1301	12	
07288-11011	1301	19	
07288-11031	1301	18	
07297-01007	8323	1	
07323-30200	1301	7	
07371-30638	2201	10	
07371-30638	2203	10	
07371-30638	2211	3	
07371-30638	2213	3	
07371-30638	4301	8	
07371-30638	6503	13	
07371-30638	6503	18	
07371-30638	6513	32	
07371-30638	6514	32	
07371-30638	6531	3	
07371-30638	6531	13	
07371-30638	6531	37	
07371-30638	6532	3	
07371-30638	6532	13	
07371-30638	6532	37	
07371-30638	6533	3	
07371-30638	6533	26	
07371-30638	6534	3	
07371-30638	6534	26	
07371-30638	8325	9	
07371-30638	8326	9	
07371-30638	9303	3	
07371-31049	6503	7	
07371-31049	6531	8	
07371-31049	6531	32	
07371-31049	6532	8	
07371-31049	6532	32	
07371-31049	8323	3	
07371-31049	8333	7	
07371-31049	8333	14	
07371-31049	8335	7	
07371-31049	8336	6	
07371-31049	8337	3	
07371-31049	8338	3	
07371-31049	8343	7	
07371-31049	8343	14	
07371-31049	8345	7	
07371-31049	8346	6	
07371-31049	8347	3	
07371-31049	8348	3	
07372-21035	6503	5	
07372-21035	6531	9	

PART NO	F/NO	I/NO	M/NO
07372-21035	6531	33	
07372-21035	6532	9	
07372-21035	6532	33	
07372-21035	8323	4	
07372-21035	8333	8	
07372-21035	8333	15	
07372-21035	8335	8	
07372-21035	8336	7	
07372-21035	8337	4	
07372-21035	8338	4	
07372-21035	8343	8	
07372-21035	8343	15	
07372-21035	8345	8	
07372-21035	8346	7	
07372-21035	8347	4	
07372-21035	8348	4	
07372-21040	8323	8	
07372-21040	8335	12	
07372-21040	8336	11	
07372-21040	8337	8	
07372-21040	8338	8	
07372-21040	8345	12	
07372-21040	8346	11	
07372-21040	8347	8	
07372-21040	8348	8	
07376-50210	9003	23	
07378-10600	6513	30	
07378-10600	6514	30	
07700-40240	1301	8	
07950-10450	9992	10	
07950-90403	9992	12	
07951-11400	9992	11	
07959-20000	3011	12	
08000-00000	1401	2	
08000-00000	8401	2	
08000-00001	1401	3	
08000-00001	8401	3	
08023-06110	9060	4	
08028-13035	1437	1	
08028-13035	1441	1	
08028-13035	1441	25	
08028-13035	8401	7	
08028-13045	1437	2	
08028-13045	1441	2	
08028-13050	1437	27	
08028-13275	1441	3	
08028-13350	1437	3	
08033-10430	8403	3	
08034-00414	1423	30	
08034-00519	1005	18	

PART NO	F/NO	I/NO	M/NO
08034-00519	1301	27	
08034-00519	1438	13	
08034-00519	1438	33	
08034-00519	1443	5	
08034-00519	4611	39	
08034-00519	4701	21	
08034-00519	5501	14	
08034-00519	8321	16	
08034-00519	8322	19	
08034-00519	9054	10	
08034-00519	9501	18	
08034-00519	9511	43	
08034-00519	9512	43	
08034-00536	1061	7	
08034-00536	1301	28	
08034-00536	2211	15	
08034-00536	2213	15	
08034-00536	5501	13	
08034-00536	6529	10	
08034-00536	9303	15	
08034-00823	6529	8	
08034-00834	8321	17	
08034-00834	8322	20	
08036-00206	5227	37	
08036-00814	4001	8	
08036-00814	7001	40	
08036-00814	7003	40	
08036-01414	1019	20	
08036-01414	1437	5	
08036-01414	1437	20	
08036-01414	1437	23	
08036-01414	1441	5	
08036-01414	1441	21	
08036-01414	2317	9	
08036-01814	1019	15	
08036-01814	1301	23	
08036-01814	1437	6	
08036-01814	1438	14	
08036-01814	1438	32	
08036-01814	1441	6	
08036-01814	1441	20	
08036-01814	1443	6	
08036-01814	9057	16	
08036-01814	9060	10	
08036-02514	1437	24	
08036-02514	1441	22	
08036-02514	6529	14	
08036-03014	4611	36	
08036-10810	1431	6	
08036-10810	1438	18	

PART NO	F/NO	I/NO	M/NO
08036-10810	1443	11	
08036-10810	4551	3	
08036-10814	1437	12	
08036-10814	1438	23	
08036-10814	1441	12	
08036-10814	1443	16	
08036-10814	9001	26	
08036-10814	9002	26	
08036-10814	9060	11	
08036-11214	6191	33	
08036-21014	1003	35	
08036-21414	8322	16	
08036-21814	6001	31	
08036-21814	6031	31	
08036-21814	6101	31	
08036-21814	6131	31	
08036-30810	1019	28	
08036-30810	6201	33	
08036-31210	1301	15	
08036-31210	6201	14	
08036-31214	6201	15	
08037-02512	4433	6	
08037-02512	4433	17	
08037-03620	1111	20	
08038-00035	1441	30	
08038-02027	1019	19	
08038-02027	1437	32	
08038-16037	1019	18	
08038-22009	1401	7	
08038-22009	8401	8	
08038-22511	1401	6	
08052-11711	1019	8	
08052-11711	1019	14	
08052-12411	1431	13	
08052-21711	1019	25	
08052-31711	1211	40	
08052-31711	1213	40	
08052-31711	1437	15A	
08052-31711	1438	14A	
08052-31711	1441	15A	
08052-31711	1443	6B	
08052-31711	4551	4	
08052-31711	4701	13	
08052-32411	1438	9A	
08111-02430	9001	25-	
08111-02430	9002	25-	
08141-02400	9060	5	
08147-22400	9001	25	
08147-22400	9002	25	
08174-33023	9010	14	

PART NO	F/NO	I/NO	M/NO
08184-30350	9057	14	
08185-00300	9057	15	
08670-02001	1001	9	
08670-50641	1001	9-	
08670-60635	1001	9-	
08670-70635	1001	9-	
09000-30006	9992	4	
09002-03236	9992	15	
09019-08035	9992	2	
09020-10285	9992	5	
09021-02739	9992	13	
09021-03044	9992	13A	
09022-00250	9992	3	
09024-00300	9992	14	
09033-00190	9992	6	
09036-00150	9992	7	
09039-00150	9992	8	
09055-00520	9992	9-	
09055-10390	9992	9	
09056-05620	9992	1	
09131-01000	9947	30	
09131-01000	9948	30	
09131-02000	9950	30	
09131-02000	9951	30	
09131-03000	9941	32	
09131-03000	9942	32	
09131-05000	9953	30	
09131-05000	9954	30	
09133-01000	9947	17	
09133-01000	9948	17	
09133-02000	9950	17	
09133-02000	9951	17	
09133-03000	9941	18	
09133-03000	9942	18	
09133-05000	9953	17	
09133-05000	9954	17	
09173-01000	9947	33	
09173-01000	9948	33	
09173-02000	9950	33	
09173-02000	9951	33	
09173-03000	9941	35	
09173-03000	9942	35	
09173-05000	9953	33	
09173-05000	9954	33	
09304-01240	1111	1	
09340-10130	2315	21	
09340-10130	8311	3	
09415-00506	8163	1	
09415-00706	1421	19	
09415-01610	1421	18	

PART NO	F/NO	I/NO	M/NO
09415-02512	4433	20	
09415-02520	5311	21	
09415-02520	8163	2	
09415-05016	5311	9	
09480-10100	5501	7	
09482-20000	5501	8	
09483-00437	5501	6	
09483-00440	5501	5	
09485-03717	8153	10	
09602-01643	9941	13	
09602-01643	9942	13	
09602-11643	9947	12	
09602-11643	9948	12	
09602-21643	9950	12	
09602-21643	9951	12	
09602-52643	9953	12	
09602-52643	9954	12	
09637-30661	1001	10	
09637-30661	9941	1	
09637-30661	9942	1	
09637-30762	1001	10-	
09637-30762	9953	1	
09637-30762	9954	1	
09637-70661	1001	10-	
09637-70661	9947	1	
09637-70661	9948	1	
09637-81661	1001	10-	
09637-81661	9950	1	
09637-81661	9951	1	
09649-01010	9947	32	
09649-01010	9948	32	
09649-02010	9950	32	
09649-02010	9951	32	
09649-05010	9953	32	
09649-05010	9954	32	
09651-01000	9947	31	
09651-01000	9948	31	
09651-02000	9950	31	
09651-02000	9951	31	
09651-03000	9941	33	
09651-03000	9942	33	
09651-05000	9953	31	
09651-05000	9954	31	
09653-01000	9947	7	
09653-01000	9948	7	
09653-02000	9950	7	
09653-02000	9951	7	
09653-03000	9941	7	
09653-03000	9942	7	
09653-05000	9953	7	

https://truckmanualshub.com/

PART NO	F/NO	I/NO	M/NO
09653-05000	9954	7	
09667-01000	9947	8	
09667-01000	9948	8	
09667-02000	9950	8	
09667-02000	9951	8	
09667-03000	9941	8	
09667-03000	9942	8	
09667-05000	9953	8	
09667-05000	9954	8	
09668-01000	9947	24	
09668-01000	9948	24	
09668-02000	9950	24	
09668-02000	9951	24	
09668-03000	9941	26	
09668-03000	9942	26	
09668-05000	9953	24	
09668-05000	9954	24	
09669-00002	9941	5	
09669-00002	9942	5	
09669-00002	9947	5	
09669-00002	9948	5	
09669-00002	9950	5	
09669-00002	9951	5	
09669-00002	9953	5	
09669-00002	9954	5	
09669-00003	9941	6	
09669-00003	9942	6	
09669-00003	9947	6	
09669-00003	9948	6	
09669-00003	9950	6	
09669-00003	9951	6	
09669-00003	9953	6	
09669-00003	9954	6	
09685-00001	9941	21	
09685-00001	9942	21	
09685-00001	9947	20	
09685-00001	9948	20	
09685-00001	9950	20	
09685-00001	9951	20	
09685-00001	9953	20	
09685-00001	9954	20	
09685-00002	9941	27	
09685-00002	9941	40	
09685-00002	9942	27	
09685-00002	9942	40	
09685-00002	9947	25	
09685-00002	9947	37	
09685-00002	9948	25	
09685-00002	9948	37	
09685-00002	9950	25	

PART NO	F/NO	I/NO	M/NO
09685-00002	9950	37	
09685-00002	9951	25	
09685-00002	9951	37	
09685-00002	9953	25	
09685-00002	9953	37	
09685-00002	9954	25	
09685-00002	9954	37	
09690-50500	9941	12	
09690-50500	9942	12	
09690-50500	9947	11	
09690-50500	9948	11	
09690-50500	9950	11	
09690-50500	9951	11	
09690-50500	9953	11	
09690-50500	9954	11	
09699-01000	8151	3-	
09699-02000	8151	3-	
09699-03000	8151	3	
09699-05000	8151	3-	
09960-61012	9941	34	
09960-61012	9942	34	
09960-61012	9947	21	
09960-61012	9948	21	
09960-61012	9950	21	
09960-61012	9951	21	
09960-61012	9953	21	
09960-61012	9954	21	
09980-10495	9992	16	
09982-10057	9992	17	
101-43-11281	1111	4	
101-43-11380	1111	10	
101-75-31870	2317	21	
113-899-7950	8153	11	
12R-60-11230	6191	19	
12R-60-11300	6191	25	
12R-60-11390	6191	26	
124-54-26540	1061	11	
135-32-E1117	3101	9	
135-32-E1117	3111	9	
135-32-E1117	9307	9	
135-60-17110	6521	8	
135-60-17110	6522	8	
135-60-17110	6523	8	
135-60-17110	6524	8	
141-01-33250	9511	42	
141-01-33250	9512	42	
141-06-11220	1301	24	
141-06-11220	5501	10	
142-06-13530	1019	2	
142-06-13530	1423	16	

PART NO	F/NO	I/NO	M/NO
142-06-14510	1011	13	
142-06-14510	1012	13	
142-43-13180	1011	10	
142-43-13180	1012	10	
144-63-94170	6405	5	
150-27-00027	2401	4-	
150-27-00027	2403	4-	
150-27-00262	2401	4	
150-27-00262	2403	4	
150-27-00270	2401	5	
150-27-00270	2403	5	
150-27-24120	2401	5-	
150-27-24120	2403	5-	
150-27-24132	2401	4-	
150-27-24132	2403	4-	
154-30-14130	4001	16	
154-43-14690	1111	7	
154-54-23260	9016	6	
154-54-23260	9941	4	
154-54-23260	9942	4	
154-54-23260	9947	4	
154-54-23260	9948	4	
154-54-23260	9950	4	
154-54-23260	9951	4	
154-54-23260	9953	4	
154-54-23260	9954	4	
155-911-1790	8153	12	
175-06-37391	9060	3	
175-06-39170	1431	3	
175-32-11210	4011	22	
176-63-56170	7335	8	
195-Z11-2910	1443	17	
195-01-12520	1437	33	
195-01-12520	1441	32	
195-03-13241	4011	35	
195-06-41740	1019	5	
195-06-41740	1443	9	
195-06-41760	1019	7	
195-06-41760	1441	31	
195-06-41760	1443	10	
195-06-41760	1443	18	
195-06-41820	1437	15	
195-06-41820	1438	24	
195-06-41820	1441	15	
195-06-41820	1443	6A	
195-06-41830	1423	19	
195-06-41830	1438	9	
195-06-41830	1438	15	
195-06-41840	1438	10	
195-06-41840	1443	1	

PART NO	F/NO	I/NO	M/NO
195-57-11530	5107	15	
195-60-16320	6191	23	
195-61-34130	2315	13	
195-61-34130	8311	9	
195-63-94170	6402	5	
195-63-94170	6406	5	
195-78-22640	9502	2	
195-78-22640	9503	2	
195-78-22640	9511	8	
195-78-22640	9512	8	
195-822-6151	1421	14	
195-979-4830	8164	1	
198-06-12840	1301	11	
198-911-3160	4431	21	
198-911-3160	4432	21	
198-911-3160	4433	10	
198-911-3160	4435	24	
198-911-3430	4431	20	
198-911-3430	4432	20	
198-911-3430	4433	9	
198-911-3430	4435	23	
198-911-5290	8153	4	
20B-27-11210	2211	16	
20B-27-11210	2213	16	
20B-27-11210	9303	16	
20B-54-12210	5103	29	
20B-54-12210	5105	5	
20B-54-12210	5109	16	
20D-09-11130	6501	2	
20D-62-17860	6403	26	
20D-62-17860	6404	26	
20G-06-15120	1423	13	
20N-63-66190	1005	11	
20S-43-11230	2315	19	
20S-43-11230	8311	5	
20Y-27-11310	2401	12	
20Y-27-11320	2401	12	
20Y-27-11320	2403	12	
20Y-27-11330	2401	12-	
20Y-27-11330	2403	12-	
20Y-27-11340	2401	12-	
20Y-27-11340	2403	12-	
20Y-27-11350	2401	12-	
20Y-27-11350	2403	12-	
20Y-27-11360	2401	12-	
20Y-27-11360	2403	12-	
201-43-22181	1111	5	
201-60-11230	2201	14	
201-60-11230	2203	14	
201-60-12171	6191	7	

PART NO	F/NO	I/NO	M/NO
201-60-12190	6191	6	
202-970-2210	8331	23	
202-970-2210	8335	21	
202-970-2210	8336	20	
202-970-2210	8337	17	
202-970-2210	8338	17	
202-970-2210	8345	21	
202-970-2210	8346	20	
202-970-2210	8347	17	
202-970-2210	8348	17	
203-00-41311	9941	23	
203-00-41311	9942	23	
203-06-21290	1451	3	
203-06-41610	1421	10	
203-06-41680	1421	8	
203-09-21110	5001	7	
203-09-21110	5003	7	
203-43-41340	2315	1	
203-43-41660	2315	20	
203-43-41660	8311	4	
203-43-42572	5311	17	
203-43-42572	5311	18	
203-43-43321	9008	2	
203-43-43331	9008	3	
203-54-32260	5109	2	
203-60-31100	6191	4	
203-60-31160	1301	5	
203-60-31160	6191	5	
203-60-31192	6191	17	
203-70-11210	7011	7	
203-70-11210	7015	7	
203-70-24170	7001	20	
203-70-24170	7005	14	
203-977-3110	2213	13	
205-00-K1120	9016	3	
205-00-K1160	9016	5	
205-00-13460	9950	36	
205-00-13460	9951	36	
205-00-63171	9941	11	
205-00-63171	9942	11	
205-00-63171	9947	10	
205-00-63171	9948	10	
205-00-63171	9950	10	
205-00-63171	9951	10	
205-00-63171	9953	10	
205-00-63171	9954	10	
205-00-63340	9941	42	
205-00-63340	9942	42	
205-00-63350	9941	24	
205-00-63350	9942	24	

PART NO	F/NO	I/NO	M/NO
205-00-63360	9941	39	
205-00-63360	9942	39	
205-00-63390	9941	38	
205-00-63390	9942	38	
205-00-63820	8401	9	
205-00-63890	9953	22	
205-00-63890	9954	22	
205-00-63910	9953	36	
205-00-63910	9954	36	
205-00-63980	9953	40	
205-00-63980	9954	40	
205-00-64230	9950	34	
205-00-64230	9951	34	
205-00-65260	9941	36	
205-00-65260	9942	36	
205-00-65270	9941	25	
205-00-65270	9942	25	
205-00-65290	9950	23	
205-00-65290	9951	23	
205-00-66110	9016	1	
205-00-66110	9941	30	
205-00-66110	9942	30	
205-00-66110	9947	28	
205-00-66110	9948	28	
205-00-66110	9950	28	
205-00-66110	9951	28	
205-00-66110	9953	28	
205-00-66110	9954	28	
205-00-66130	9016	4	
205-00-66130	9016	10	
205-00-66210	9947	34	
205-00-66210	9948	34	
205-00-66220	9953	34	
205-00-66220	9954	34	
205-00-66290	9947	23	
205-00-66290	9948	23	
205-00-66310	9953	23	
205-00-66310	9954	23	
205-00-71110	9941	17	
205-00-71110	9942	17	
205-00-71110	9947	16	
205-00-71110	9948	16	
205-00-71110	9950	16	
205-00-71110	9951	16	
205-00-71110	9953	16	
205-00-71110	9954	16	
205-00-71240	9941	16	
205-00-71240	9942	16	
205-00-71240	9947	15	
205-00-71240	9948	15	

PART NO	F/NO	I/NO	M/NO
205-00-71240	9950	15	
205-00-71240	9951	15	
205-00-71240	9953	15	
205-00-71240	9954	15	
205-00-71380	9950	39	
205-00-71380	9951	39	
205-00-71440	9941	9	
205-00-71440	9942	9	
205-00-71460	9941	22	
205-00-71460	9942	22	
205-00-71520	9941	14	
205-00-71520	9942	14	
205-00-71530	9941	20	
205-00-71530	9942	20	
205-00-71530	9947	19	
205-00-71530	9948	19	
205-00-71530	9950	19	
205-00-71530	9951	19	
205-00-71530	9953	19	
205-00-71530	9954	19	
205-00-71540	9941	13-	
205-00-71540	9942	13-	
205-00-71540	9947	12-	
205-00-71540	9948	12-	
205-00-71540	9950	12-	
205-00-71540	9951	12-	
205-00-71540	9953	12-	
205-00-71540	9954	12-	
205-00-71570	9941	37	
205-00-71570	9942	37	
205-00-71620	9953	35	
205-00-71620	9954	35	
205-00-71630	9947	35	
205-00-71630	9948	35	
205-00-71650	9950	35	
205-00-71650	9951	35	
205-00-71790	9950	26	
205-00-71790	9951	26	
205-00-71820	9941	29-	
205-00-71820	9942	29-	
205-00-71830	9950	27	
205-00-71830	9951	27	
205-00-71860	9947	27	
205-00-71860	9948	27	
205-00-71870	9953	27	
205-00-71870	9954	27	
205-00-71940	9941	29	
205-00-71940	9942	29	
205-00-72410	9941	15	
205-00-72410	9947	14	

PART NO	F/NO	I/NO	M/NO
205-00-72410	9950	14	
205-00-72410	9953	14	
205-00-72420	9941	15-	
205-00-72420	9947	14-	
205-00-72420	9950	14-	
205-00-72420	9953	14-	
205-00-73230	9947	26	
205-00-73230	9948	26	
205-00-73260	9953	26	
205-00-73260	9954	26	
205-00-73360	9941	19	
205-00-73360	9942	19	
205-00-73360	9947	18	
205-00-73360	9948	18	
205-00-73360	9950	18	
205-00-73360	9951	18	
205-00-73360	9953	18	
205-00-73360	9954	18	
205-00-74211	9016	7	
205-00-74221	9016	8	
205-00-74230	9016	2	
205-00-74240	9950	40	
205-00-74240	9951	40	
205-00-75340	9941	31	
205-00-75340	9942	31	
205-00-75440	9953	29	
205-00-75440	9954	29	
205-00-75480	9953	9	
205-00-75480	9954	9	
205-00-75490	9950	29	
205-00-75490	9951	29	
205-00-75540	9950	9	
205-00-75540	9951	9	
205-00-75570	9947	29	
205-00-75570	9948	29	
205-00-75590	9947	9	
205-00-75590	9948	9	
205-00-76230	9941	28	
205-00-76230	9942	28	
205-00-76280	9953	39	
205-00-76280	9954	39	
205-00-76310	9947	39	
205-00-76310	9948	39	
205-00-76380	9950	13	
205-00-76380	9951	13	
205-00-76410	9953	13	
205-00-76410	9954	13	
205-00-76420	9947	13	
205-00-76420	9948	13	
205-01-K1450	1001	4	

https://truckmanualshub.com/

PART NO	F/NO	I/NO	M/NO
205-01-K1460	1001	3	
205-01-67170	6501	22	
205-01-71111	1041	6	
205-01-71120	1041	8	
205-01-71151	1041	7	
205-01-72110	1051	1	
205-01-73240	1007	5	
205-01-73250	1061	5	
205-01-73260	1005	10	
205-01-73270	1041	9	
205-01-73280	1041	10	
205-01-73290	1007	1	
205-01-73310	1003	18	
205-01-73320	1003	26	
205-01-73330	1061	4	
205-01-73340	1003	23	
205-01-73350	1003	31	
205-01-73360	1061	12	
205-01-73370	1005	6	
205-01-73380	1005	16	
205-01-73390	1061	9	
205-01-73410	1003	17	
205-01-73420	1003	1	
205-01-73430	1003	8	
205-01-73440	1003	34	
205-01-73450	1003	2	
205-01-73460	1003	10	
205-01-73520	1005	1	
205-01-73530	1005	3	
205-01-73540	1041	1	
205-01-73550	1041	2	
205-01-73560	1001	1	
205-01-73570	1001	2	
205-01-73580	1001	5	
205-01-73590	1001	6	
205-01-73600	1001	1-	
205-01-73610	1061	8	
205-01-73620	1051	1-	
205-01-73630	8403	23A	
205-03-00041	1201	1-	
205-03-62660	1211	9	
205-03-62660	1213	9	
205-03-62720	8164	3	
205-03-71111	1201	1	
205-03-71121	1201	23	
205-03-71131	1201	3	
205-03-71160	1211	1	
205-03-71170	1211	2	
205-03-71210	1211	8	
205-03-71210	1213	8	

PART NO	F/NO	I/NO	M/NO
205-03-71230	1211	14	
205-03-71230	1213	14	
205-03-71242	1211	33	
205-03-71242	1213	33	
205-03-71251	1211	30	
205-03-71260	1211	35	
205-03-71260	1213	35	
205-03-71280	1201	2	
205-03-71280	1203	2	
205-03-71292	1201	14	
205-03-71310	1201	9	
205-03-71310	1203	12	
205-03-71330	1201	18	
205-03-71330	1203	22	
205-03-71340	1201	20	
205-03-71340	1203	24	
205-03-71380	1201	8	
205-03-71380	1203	8	
205-03-71390	1201	26	
205-03-71470	1201	19	
205-03-71470	1203	23	
205-03-71491	1211	26	
205-03-71491	1213	26	
205-03-71520	1201	11	
205-03-71520	1203	14	
205-03-71531	1211	34	
205-03-71531	1213	34	
205-03-71710	1211	5	
205-03-71710	1213	5	
205-03-71720	1211	16	
205-03-71720	1213	16	
205-03-71730	1211	18	
205-03-71730	1213	18	
205-03-71740	1211	17	
205-03-71740	1213	17	
205-03-71750	1211	20	
205-03-71750	1213	20	
205-03-71780	1211	27	
205-03-71780	1213	27	
205-03-71790	1201	6	
205-03-71810	1201	7	
205-04-71140	1301	3	
205-04-71210	1301	1	
205-04-71220	1301	29	
205-04-71230	1301	20	
205-04-71240	1301	22	
205-04-71250	1301	14	
205-06-K1130	5227	18	
205-06-K1140	1401	4	
205-06-K1160	1401	1	

PART NO	F/NO	I/NO	M/NO
205-06-K1170	1421	13	
205-06-K1190	1421	20	
205-06-K1210	4433	21	
205-06-K1220	1431	1	
205-06-K1220	1451	2	
205-06-K1220	9006	8	
205-06-K1220	9007	8	
205-06-K1220	9057	8	
205-06-K1240	8161	1	
205-06-K1580	1423	1	
205-06-64430	1431	2	
205-06-71137	1441	4	
205-06-71160	1451	1	
205-06-71180	1401	5	
205-06-71180	8401	5	
205-06-71211	1438	1	
205-06-71240	1437	9	
205-06-71240	1441	9	
205-06-71261	1438	4	
205-06-71270	9057	9	
205-06-71290	1438	35	
205-06-71321	1421	4	
205-06-71331	1421	5	
205-06-71341	1421	6	
205-06-71390	8151	1	
205-06-71480	1423	2	
205-06-71480	9005	3	
205-06-71480	9054	3	
205-06-71670	8151	2	
205-06-71690	8151	1-	
205-06-71730	9057	10	
205-06-71771	5311	14	
205-06-71781	9001	22	
205-06-71781	9002	22	
205-06-71810	9006	2	
205-06-71810	9007	2	
205-06-71810	9057	2	
205-06-71820	9006	3	
205-06-71820	9007	3	
205-06-71820	9057	3	
205-06-71841	9060	1	
205-06-71860	9001	24	
205-06-71860	9002	24	
205-06-71890	1438	8	
205-06-71951	9060	2	
205-06-71970	9060	6	
205-06-72160	1421	3	
205-06-72211	1423	23	
205-06-72220	8601	7	
205-06-72230	8601	6	

PART NO	F/NO	I/NO	M/NO
205-06-72251	1443	15	
205-06-72280	1438	28	
205-06-72280	1443	12	
205-06-72410	1423	22	
205-06-72431	4551	1	
205-06-72442	4551	2	
205-06-72520	4439	6	
205-06-72540	1438	31	
205-06-72550	1438	27	
205-06-72620	1423	27	
205-06-73180	1423	3	
205-06-73180	9005	4	
205-06-73180	9054	4	
205-06-73320	1437	4	
205-06-73330	1019	1	
205-06-73340	1431	12	
205-06-73350	1421	11	
205-06-73360	1431	11	
205-06-73370	1431	20	
205-06-73380	8401	4	
205-06-73420	1431	7	
205-06-73430	9005	2	
205-06-73440	9054	2	
205-06-73460	8403	20	
205-06-73470	8403	15	
205-06-73480	8402	7	
205-06-73490	8402	5	
205-06-73510	8402	4	
205-06-73520	8402	1	
205-06-73540	8403	5	
205-06-73540	8403	11	
205-06-73550	8403	6	
205-06-73560	8403	1	
205-06-73570	8403	4	
205-06-73570	8403	9	
205-06-73580	8403	7	
205-06-73590	8403	8	
205-06-73610	8403	2	
205-06-73620	8403	10	
205-06-73630	8403	13	
205-06-73640	8403	14	
205-06-73650	8403	14-	
205-06-73660	8403	28	
205-06-73670	8403	27	
205-06-73690	8401	1	
205-06-73710	8403	21	
205-06-73720	8403	12	
205-06-91140	1421	12	
205-09-71110	2201	24	
205-09-71110	2203	24	

PART NO	F/NO	I/NO	M/NO
205-09-71110	4301	12	
205-09-71110	6511	11	
205-09-71110	6531	19	
205-09-71110	6531	22	
205-09-71110	6531	25	
205-09-71110	6531	28	
205-09-71110	6532	19	
205-09-71110	6532	22	
205-09-71110	6532	25	
205-09-71110	6532	28	
205-09-71110	6533	19	
205-09-71110	6533	22	
205-09-71110	6534	19	
205-09-71110	6534	22	
205-25-71103	4001	1	
205-25-71151	4001	2	
205-25-71220	4001	5	
205-25-71230	4001	6	
205-25-71250	4001	12	
205-25-71260	4001	13	
205-25-71270	4001	17	
205-25-71280	4001	2A	
205-26-00031	4011	11	
205-26-00042	4011	1-	
205-26-71313	4011	30	
205-26-71323	4011	1	
205-26-71332	4011	10	
205-26-71352	4011	11-	
205-26-71362	4011	8	
205-26-71373	4011	18	
205-26-71383	4011	25	
205-26-71393	4011	34	
205-26-71430	4011	32	
205-26-71453	4011	13	
205-26-71482	4011	5	
205-26-71493	4011	6	
205-26-71510	4011	19	
205-26-71521	4011	24	
205-26-71530	4011	9	
205-26-71560	4011	27	
205-26-71580	4011	26	
205-26-71591	4011	7	
205-26-71611	4011	17	
205-26-71620	4011	36	
205-26-71650	4011	12	
205-26-71660	4011	15	
205-26-71680	4011	6B	
205-27-00060	2403	12	
205-27-00070	2401	22-	
205-27-00087	2401	3-	

PART NO	F/NO	I/NO	M/NO
205-27-71131	2401	36	
205-27-71131	2403	36	
205-27-71281	2401	10	
205-27-71281	2403	10	
205-27-71360	2401	30	
205-27-71360	2403	30	
205-27-71430	2401	6	
205-27-71430	2403	6	
205-27-71471	2401	7	
205-27-71471	2403	7	
205-27-71481	2401	3	
205-27-71481	2403	3	
205-27-71492	2401	31	
205-27-71492	2403	31	
205-27-71510	2401	21	
205-27-71510	2403	21	
205-27-71520	2401	29	
205-27-71531	2401	13	
205-27-71531	2403	13	
205-27-71540	2401	22	
205-27-71550	2401	20	
205-27-71560	2401	23	
205-27-71560	2403	23	
205-27-71570	2401	28	
205-27-71570	2403	28	
205-27-71582	2401	24	
205-27-71582	2403	24	
205-27-71592	2401	25	
205-27-71592	2403	25	
205-27-71610	2401	14	
205-27-71610	2403	14	
205-27-71630	2401	17	
205-27-71630	2403	17	
205-27-71650	2403	12-	
205-27-71660	2403	12-	
205-27-71670	2401	11	
205-27-71670	2403	11	
205-27-71680	2401	19	
205-27-71680	2403	19	
205-30-K0010	3031	1-	
205-30-K0010	3031	1-	
205-30-K0010	3035	1-	
205-30-K0010	3035	1-	
205-30-K0010	9305	1-	
205-30-K1110	3031	1	
205-30-K1110	3035	1	
205-30-K1110	9305	1	
205-30-K1120	3031	2	
205-30-K1120	3035	2	
205-30-K1120	9305	2	

PART NO	F/NO	I/NO	M/NO
205-30-K1130	3031	4	
205-30-K1130	3035	4	
205-30-K1130	9305	4	
205-30-K1140	3031	3	
205-30-K1140	3035	3	
205-30-K1140	9305	3	
205-30-K1150	3041	1	
205-30-K1160	3041	2	
205-30-K1170	3041	3	
205-30-K1200	3041	1-	
205-30-K1310	3021	1-	
205-30-K1322	3011	1-	
205-30-K1330	3011	2	
205-30-K1340	3021	1	
205-30-K1350	3021	7	
205-30-K1360	3021	2	
205-30-K1370	3021	4	
205-30-K1380	3021	8	
205-30-K1390	3021	3	
205-30-K1410	3021	5	
205-30-K1420	3021	6	
205-30-K1450	3011	1	
205-30-K1470	3011	3	
205-30-K1480	3011	4	
205-30-K1490	3011	5	
205-30-K1530	3011	8	
205-30-K1550	3011	9	
205-30-71170	3001	16	
205-30-71170	3003	16	
205-30-71170	3005	16	
205-30-71170	3007	16	
205-30-71170	9301	16	
205-30-71181	3001	2	
205-30-71181	3003	2	
205-30-71181	3005	2	
205-30-71181	3007	2	
205-30-71181	5001	2	
205-30-71181	5003	2	
205-30-71181	9301	2	
205-30-71191	3001	3	
205-30-71191	3003	3	
205-30-71191	3005	3	
205-30-71191	3007	3	
205-30-71191	5001	3	
205-30-71191	5003	3	
205-30-71191	9301	3	
205-30-71210	3001	10	
205-30-71210	3003	10	
205-30-71210	3005	10	
205-30-71210	3007	10	

PART NO	F/NO	I/NO	M/NO
205-30-71210	9301	10	
205-30-71221	3001	6	
205-30-71231	3001	7	
205-30-71242	9301	13	
205-30-71243	3001	13	
205-30-71243	3003	13	
205-30-71243	3005	13	
205-30-71243	3007	13	
205-30-71331	3003	6	
205-30-71331	9301	6	
205-30-71341	3003	7	
205-30-71341	9301	7	
205-30-71351	9301	1	
205-30-71410	8501	1	
205-30-71420	8501	2	
205-30-71430	8501	3	
205-30-71690	3001	1A	
205-30-71690	3005	1A	
205-30-71710	3001	1B	
205-30-71710	3005	1B	
205-30-71720	3003	1A	
205-30-71720	3007	1A	
205-30-71720	9301	1A	
205-30-71830	3001	1	
205-30-71850	9066	1	
205-30-71860	3003	1	
205-30-71860	9066	1-	
205-30-72170	3011	13	
205-32-E0004	3111	4-	
205-32-E0004	3111	4	
205-32-E0004	3111	4	
205-32-E0004	9307	4-	
205-32-E0004	9307	4	
205-32-E0004	9307	4	
205-32-E0004	9307	4	
205-32-E0005	3101	4-	
205-32-E0005	3101	4	
205-32-E0005	3101	4	
205-32-E0005	3101	4	
205-32-E1112	3101	4	
205-32-E1112	3111	4	
205-32-E1112	3121	4	
205-32-E1112	9307	4	
205-32-E1113	3101	5	
205-32-E1113	3111	5	
205-32-E1113	3121	5	
205-32-E1113	3131	5	
205-32-E1113	9307	5	
205-32-E1114	3101	6	

https://truckmanualshub.com/

PART NO	F/NO	I/NO	M/NO
205-32-E1114	3111	6	
205-32-E1114	3121	6	
205-32-E1114	3131	6	
205-32-E1114	9307	6	
205-32-E1117	3121	9	
205-32-E1117	3131	9	
205-32-E1122	3101	3	
205-32-E1122	3101	3	
205-32-E1122	3101	3	
205-32-E1122	3101	3	
205-32-E1122	3111	3	
205-32-E1122	3111	3	
205-32-E1122	3111	3	
205-32-E1122	3111	3	
205-32-E1122	3121	3	
205-32-E1122	3121	3	
205-32-E1122	3121	3	
205-32-E1122	3131	3	
205-32-E1122	3131	3	
205-32-E1122	3131	3	
205-32-E1122	9307	3	
205-32-E1122	9307	3	
205-32-E1122	9307	3	
205-32-E1122	9307	3	
205-32-E1130	3111	11	
205-32-E1130	9307	11	
205-32-E1138	3101	10	
205-32-E1138	3111	10	
205-32-E1138	3121	10	
205-32-E1138	3131	10	
205-32-E1138	9307	10	
205-32-E4111	3111	1	
205-32-E4111	3121	1	
205-32-E4111	9307	1	
205-32-E5113	3101	1	
205-32-E5113	3111	1	
205-32-E5113	3121	1	
205-32-E5113	3131	1	
205-32-E5113	9307	1	
205-32-E5121	3101	2	
205-32-E5121	3101	2	
205-32-E5121	3101	2	
205-32-E5121	3111	2	
205-32-E5121	3111	2	
205-32-E5121	3111	2	
205-32-E5121	3111	2	
205-32-E5121	3121	2	
205-32-E5121	3121	2	
205-32-E5121	3121	2	

PART NO	F/NO	I/NO	M/NO
205-32-E5121	3131	2	
205-32-E5121	3131	2	
205-32-E5121	3131	2	
205-32-E5121	9307	2	
205-32-E5121	9307	2	
205-32-E5121	9307	2	
205-32-E5125	3101	1	
205-32-E5125	3111	1	
205-32-E5125	3121	1	
205-32-E5125	3131	1	
205-32-E5125	9307	1	
205-32-E5128	3101	1	
205-32-E5128	3111	1	
205-32-E5128	9307	1	
205-32-K1100	3111	1-	
205-32-K1100	9307	1-	
205-32-K1130	3101	11	
205-32-K1130	3121	11	
205-32-K1130	3131	11	
205-32-K1200	3111	1-	
205-32-K1200	9307	1-	
205-32-K1300	3111	1-	
205-32-K1300	9307	1-	
205-32-K1400	3111	1-	
205-32-K1400	9307	1-	
205-32-K1500	3101	1-	
205-32-K1600	3101	1-	
205-32-K1700	3101	1-	
205-32-K1800	3101	1-	
205-32-51152	3101	8	
205-32-51152	3111	8	
205-32-51152	3121	8	
205-32-51152	3131	8	
205-32-51152	9307	8	
205-43-K1110	4435	22	
205-43-K1120	4433	13	
205-43-K1230	4435	17	
205-43-62121	1111	15	
205-43-71195	4431	10	
205-43-71195	4432	10	
205-43-71223	4431	5	
205-43-71223	4432	5	
205-43-71223	4435	5	
205-43-71243	4431	15	
205-43-71243	4432	15	
205-43-71254	4433	3	
205-43-71280	4431	7	
205-43-71280	4432	7	
205-43-71280	4435	7	

PART NO	F/NO	I/NO	M/NO
205-43-71280	4435	18	
205-43-71280	4435	20	
205-43-71291	4433	1	
205-43-71463	2315	12	
205-43-71472	2315	10	
205-43-71491	2317	16A	
205-43-71533	2317	12	
205-43-71542	2317	14	
205-43-71590	2315	14	
205-43-71612	4431	17	
205-43-71612	4432	17	
205-43-71622	4435	14	
205-43-71630	9066	11	
205-43-71630	9067	11	
205-43-71652	4431	28	
205-43-71652	4432	28	
205-43-71663	4433	5	
205-43-71762	4431	31	
205-43-71762	4432	31	
205-43-71811	2317	6	
205-43-71871	2315	3	
205-43-71883	2315	4	
205-43-71893	2315	6	
205-43-71911	2315	5	
205-43-71911	2315	7	
205-43-71930	2317	16	
205-43-71944	4435	8	
205-43-71951	4435	19	
205-43-71991	4431	6	
205-43-71991	4432	6	
205-43-71991	4435	6	
205-43-72480	4431	34	
205-43-72480	4432	34	
205-43-72492	4433	16	
205-43-73250	1111	2	
205-43-73270	2315	11	
205-43-73280	2315	22	
205-43-73340	4431	14	
205-43-73340	4432	14	
205-43-73340	4435	12	
205-43-73381	4431	8	
205-43-73381	4432	8	
205-43-73420	4435	21	
205-43-73530	2317	1	
205-43-73540	2317	2	
205-43-73551	4431	11	
205-43-73551	4432	11	
205-43-73561	4435	9	
205-43-73570	4431	16	
205-43-73570	4432	16	

PART NO	F/NO	I/NO	M/NO
205-43-73580	4435	13	
205-43-73600	4431	1	
205-43-73600	4432	1	
205-43-73600	4439	1-	
205-43-73680	4439	2	
205-43-73700	4435	1	
205-43-73700	4439	3-	
205-43-73710	4439	1	
205-43-73710	4439	3	
205-43-73720	4439	4	
205-43-73730	4439	5	
205-43-73750	4431	2	
205-43-73760	4432	2	
205-43-73760	4435	2	
205-43-74260	9008	1	
205-43-74320	1127	10	
205-43-74420	1011	1	
205-43-74420	1012	1	
205-43-74420	1013	1	
205-43-74420	1014	1	
205-43-74430	1011	3	
205-43-74430	1012	3	
205-43-74430	1013	3	
205-43-74430	1014	3	
205-43-74440	1013	4	
205-43-74440	1014	4	
205-43-74450	1011	4	
205-43-74450	1012	4	
205-43-74460	1013	9	
205-43-74460	1014	9	
205-43-74510	1111	3	
205-43-74530	1111	21	
205-43-74570	1111	24	
205-43-74580	8402	10	
205-46-71160	5001	9	
205-46-71160	5003	9	
205-46-71190	5001	10	
205-46-71190	5003	10	
205-46-72160	5001	6	
205-46-73510	5001	1	
205-46-73530	9006	1	
205-46-73540	9066	2	
205-46-73550	9081	1	
205-54-K1110	5311	2	
205-54-K1130	5109	27	
205-54-K1130	9066	10	
205-54-K1130	9067	10	
205-54-K1300	5221	1-	
205-54-K1300	5223	1-	
205-54-K1300	5225	1-	

PART NO	F/NO	I/NO	M/NO
205-54-K1300	5227	1-	
205-54-K1300	5229	1-	
205-54-K1300	5231	1-	
205-54-K1310	5229	1-	
205-54-K1310	5231	1-	
205-54-K1320	5229	1	
205-54-K1330	5231	1	
205-54-K1340	5229	2-	
205-54-K1350	5229	2	
205-54-K1360	5229	9	
205-54-K1370	5229	3	
205-54-K1380	5229	6	
205-54-K1390	5229	5	
205-54-K1400	9069	1-	
205-54-K1410	5229	7	
205-54-K1420	5229	8	
205-54-K1430	5229	10	
205-54-K1440	5231	2	
205-54-K1450	5231	16	
205-54-K1460	5229	14	
205-54-K1470	5229	15	
205-54-K1480	5231	14	
205-54-K1490	5231	15	
205-54-K1510	5229	25	
205-54-K1520	5231	12	
205-54-K1530	5221	1	
205-54-K1540	5221	2-	
205-54-K1550	5221	11	
205-54-K1560	5221	4	
205-54-K1570	5221	5	
205-54-K1580	5221	7	
205-54-K1590	5221	14	
205-54-K1610	5221	9	
205-54-K1620	5221	2	
205-54-K1630	5221	3	
205-54-K1640	5223	1-	
205-54-K1650	5223	2	
205-54-K1660	5223	3	
205-54-K1670	5223	1	
205-54-K1680	5223	7	
205-54-K1690	5223	8	
205-54-K1710	5223	6	
205-54-K1720	5223	18	
205-54-K1730	5223	20	
205-54-K1740	5223	21	
205-54-K1750	5223	29	
205-54-K1760	5223	16	
205-54-K1770	5223	17	
205-54-K1780	5223	14	
205-54-K1790	5223	15	

PART NO	F/NO	I/NO	M/NO
205-54-K1810	5223	12	
205-54-K1820	5223	25	
205-54-K1830	5229	11	
205-54-K1840	5221	35	
205-54-K1840	5225	21	
205-54-K1840	5227	10	
205-54-K1840	5227	16	
205-54-K1850	5225	1	
205-54-K1860	5225	2	
205-54-K1870	5221	29	
205-54-K1880	5221	22	
205-54-K1890	5231	29	
205-54-K1910	5229	26	
205-54-K1920	5221	23	
205-54-K1930	5221	30	
205-54-K1940	5225	3	
205-54-K1950	5221	18	
205-54-K1960	5229	22	
205-54-K1970	5231	26	
205-54-K1980	5225	14	
205-54-K1990	5231	25	
205-54-K2110	5231	1-	
205-54-K2120	5221	43	
205-54-K2130	5221	10	
205-54-K2140	5231	13	
205-54-K2150	5223	19	
205-54-K2150	5229	16	
205-54-K2160	5221	12	
205-54-K2160	5229	13	
205-54-K2160	5231	7	
205-54-K2170	5223	26	
205-54-K2180	5223	4	
205-54-K2180	5223	9	
205-54-K2180	5223	11	
205-54-K2190	5223	27	
205-54-K2210	5225	8	
205-54-K2220	5221	6	
205-54-K2230	5225	6	
205-54-K2240	5227	1	
205-54-K2250	5227	2	
205-54-K2260	5227	7	
205-54-K2270	5227	8	
205-54-K2280	5227	5	
205-54-K2290	5227	6	
205-54-K2310	5227	4	
205-54-K2320	5231	18	
205-54-K2410	5227	28	
205-54-K2420	5227	26	
205-54-K2430	5227	15	
205-54-K2440	5227	24	

PART NO	F/NO	I/NO	M/NO
205-54-K2450	5227	19	
205-54-K2460	5227	17	
205-54-K2470	5225	12	
205-54-K2480	5227	25	
205-54-K2490	5227	27	
205-54-K2510	5221	47	
205-54-K2520	5221	39	
205-54-K2530	5227	9	
205-54-K2540	5225	7	
205-54-K2560	5229	18	
205-54-K2570	5229	17	
205-54-K2580	5229	19	
205-54-K2590	5229	20	
205-54-K2610	5221	26	
205-54-K2620	5221	25	
205-54-K2620	9014	2	
205-54-K2640	5229	4	
205-54-K2650	5229	24	
205-54-K2660	5221	8	
205-54-K2670	5223	5	
205-54-K2680	5223	13	
205-54-K2690	5225	5	
205-54-K2710	5225	13	
205-54-K2720	5231	30	
205-54-K2730	5223	28	
205-54-K2740	5227	3	
205-54-K2750	5227	35	
205-54-K2770	5223	10	
205-54-K2780	9014	1	
205-54-K2810	5231	19	
205-54-K2820	5227	14	
205-54-K2830	5229	23	
205-54-K2840	5225	4	
205-54-K2860	5225	15	
205-54-K2860	5227	29	
205-54-K2860	5231	20	
205-54-K2870	5221	15	
205-54-K2870	5221	19	
205-54-K2870	5221	40	
205-54-K2870	5223	22	
205-54-K2870	5223	30	
205-54-K2870	5225	9	
205-54-K2870	5227	33	
205-54-K2870	5231	3	
205-54-K2870	5231	23	
205-54-K2870	5231	27	
205-54-K2880	5229	12	
205-54-K2880	5231	9	
205-54-K2890	5227	31	
205-54-K2910	5231	17	

PART NO	F/NO	I/NO	M/NO
205-54-K2950	5221	36	
205-54-K2970	9069	1	
205-54-K2980	9069	8	
205-54-K3020	9069	10	
205-54-K3030	9069	9	
205-54-K3040	9069	2	
205-54-K3050	9069	11	
205-54-K3060	9069	14	
205-54-K3070	9069	5	
205-54-K3080	9069	7	
205-54-K3090	9069	16	
205-54-K4110	9069	12	
205-54-K4120	9069	3	
205-54-K4520	9069	20	
205-54-K4530	9069	15	
205-54-51970	5103	20	
205-54-53550	5103	21	
205-54-64140	5103	27	
205-54-64140	5105	3	
205-54-65940	5101	8	
205-54-65940	5102	8	
205-54-67141	9010	15	
205-54-67660	5101	12	
205-54-67660	5101	13	
205-54-67660	5102	12	
205-54-67660	5102	13	
205-54-67660	5109	4	
205-54-67660	5109	5	
205-54-68440	5101	2	
205-54-68440	5102	2	
205-54-68480	9010	11	
205-54-68480	9066	7	
205-54-68480	9067	7	
205-54-71165	5311	1	
205-54-71680	5311	4	
205-54-71691	5311	3	
205-54-72240	4431	22	
205-54-72240	4432	22	
205-54-72640	5311	6	
205-54-72710	1423	26	
205-54-75112	5109	1	
205-54-75181	5103	32	
205-54-75290	5105	12	
205-54-75323	5101	7	
205-54-75323	5102	7	
205-54-75344	5101	11	
205-54-75344	5102	11	
205-54-75372	5105	13	
205-54-75412	5107	25	
205-54-75432	5107	22	

https://truckmanualshub.com/

PART NO	F/NO	I/NO	M/NO
205-54-75523	5103	52	
205-54-75532	5103	50	
205-54-75551	5105	2B	
205-54-75561	5105	2A	
205-54-75571	5103	6	
205-54-75581	5103	25	
205-54-75592	5103	26	
205-54-75611	5101	26	
205-54-75611	5102	26	
205-54-75661	5103	16	
205-54-75671	5103	15	
205-54-75681	5103	13	
205-54-75691	5103	12	
205-54-75711	5109	3	
205-54-75720	5109	13	
205-54-75730	5107	19	
205-54-75740	5103	14	
205-54-75812	5103	24	
205-54-75822	5103	10	
205-54-75832	5103	9	
205-54-75860	5103	17	
205-54-75881	5103	38	
205-54-75914	5103	1	
205-54-75972	5105	1	
205-54-75981	5105	2	
205-54-76111	5101	25	
205-54-76111	5102	25	
205-54-76132	5101	29	
205-54-76132	5102	29	
205-54-76151	5103	5	
205-54-76163	5103	49	
205-54-76174	5103	51	
205-54-76240	5105	23	
205-54-76250	5103	11	
205-54-76260	5101	16	
205-54-76260	5102	16	
205-54-76260	5109	8	
205-54-76280	5101	17	
205-54-76280	5102	17	
205-54-76280	5109	9	
205-54-76280	6191	13	
205-54-76320	5103	46	
205-54-76360	5107	13	
205-54-76370	5107	14	
205-54-76380	5109	24	
205-54-76390	5109	25	
205-54-76390	5221	27	
205-54-76411	5107	4	
205-54-76411	5107	8	
205-54-76411	5107	12	

PART NO	F/NO	I/NO	M/NO
205-54-76511	9941	3	
205-54-76511	9942	3	
205-54-76511	9947	3	
205-54-76511	9948	3	
205-54-76511	9950	3	
205-54-76511	9951	3	
205-54-76511	9953	3	
205-54-76511	9954	3	
205-54-76530	5101	18	
205-54-76530	5102	18	
205-54-76530	5109	10	
205-54-77110	9010	8	
205-54-77110	9066	4	
205-54-77110	9067	4	
205-54-77210	9011	1	
205-54-77221	9010	1	
205-54-77232	9010	5	
205-54-77242	9010	4	
205-54-77250	9016	9	
205-54-77260	9011	4	
205-54-77271	9066	3	
205-54-77271	9067	3	
205-54-77660	5103	42	
205-54-77680	5107	1	
205-54-77710	5101	1	
205-54-77770	5105	19	
205-54-77780	5103	39	
205-54-77790	5101	21	
205-54-77790	5102	21	
205-54-77820	5107	5	
205-54-77830	5107	9	
205-54-77880	8403	29	
205-57-K1000	5411	1-	
205-57-K1100	5411	1	
205-57-K1110	5411	6	
205-57-K1120	5411	2	
205-57-K1130	5411	3	
205-57-K1140	5411	4	
205-57-K1150	5411	5	
205-60-K1120	9502	21	
205-60-K1120	9503	19	
205-60-K1120	9511	18	
205-60-K1120	9512	18	
205-60-00083	6191	1-	
205-60-51390	4611	21	
205-60-51410	4611	22	
205-60-51420	4611	23	
205-60-51450	6191	21	
205-60-51460	6191	10	
205-60-64290	4611	20	

PART NO	F/NO	I/NO	M/NO
205-60-64300	4611	20-	
205-60-71114	6191	1	
205-60-71141	6191	27	
205-60-71152	4611	27	
205-60-71170	6191	20	
205-60-71190	6191	11	
205-60-71210	6191	14	
205-60-71220	6191	12	
205-60-71230	6521	9	
205-60-71230	6522	9	
205-60-71230	6523	9	
205-60-71230	6524	9	
205-60-71270	6191	22	
205-62-K1120	9303	1	
205-62-K1130	6503	9	
205-62-K1140	6503	8	
205-62-K1160	6503	10	
205-62-K1160	6531	1	
205-62-K1160	6531	35	
205-62-K1160	6532	1	
205-62-K1160	6532	35	
205-62-K1170	4301	6	
205-62-K1180	6531	6	
205-62-K1180	6532	6	
205-62-K1190	6531	30	
205-62-K1190	6532	30	
205-62-K1210	6533	1	
205-62-K1210	6534	1	
205-62-K1220	2211	1	
205-62-K1220	2213	1	
205-62-K1230	6533	24	
205-62-K1230	6534	24	
205-62-K1240	7007	19	
205-62-K1250	9003	16	
205-62-53461	9501	17	
205-62-53461	9511	35	
205-62-53461	9512	35	
205-62-68330	6521	1	
205-62-68330	6521	23	
205-62-68330	6522	1	
205-62-68330	6522	23	
205-62-68330	6523	1	
205-62-68330	6523	23	
205-62-68330	6524	1	
205-62-68330	6524	23	
205-62-69220	9003	12	
205-62-69240	9001	18	
205-62-69240	9002	18	
205-62-69250	9003	9	
205-62-71230	6503	1	

PART NO	F/NO	I/NO	M/NO
205-62-71242	6501	10	
205-62-71253	6501	3	
205-62-71261	6501	18	
205-62-71276	6521	3	
205-62-71276	6522	3	
205-62-71277	6523	3	
205-62-71277	6524	3	
205-62-71282	6525	8	
205-62-71290	6525	11	
205-62-71312	4301	1	
205-62-71322	4301	2	
205-62-71333	2201	1	
205-62-71333	2203	1	
205-62-71343	2201	2	
205-62-71343	2203	2	
205-62-71354	2201	3	
205-62-71354	2203	3	
205-62-71364	2201	4	
205-62-71364	2203	4	
205-62-71372	6511	1	
205-62-71382	6511	2	
205-62-71392	6513	1	
205-62-71392	6514	1	
205-62-71412	6513	2	
205-62-71412	6514	2	
205-62-71422	6513	3	
205-62-71422	6514	3	
205-62-71432	6513	4	
205-62-71432	6514	4	
205-62-71441	2201	19	
205-62-71451	2201	20	
205-62-71461	6513	18	
205-62-71461	6514	18	
205-62-71470	2201	23	
205-62-71470	2203	23	
205-62-71470	4301	11	
205-62-71470	6511	10	
205-62-71470	6513	11	
205-62-71470	6514	11	
205-62-71470	6531	21	
205-62-71470	6532	21	
205-62-71470	6533	15	
205-62-71470	6534	15	
205-62-71492	6513	8	
205-62-71514	2201	26	
205-62-71514	2203	26	
205-62-71550	6513	21	
205-62-71550	6514	21	
205-62-71550	6533	21	
205-62-71550	6534	21	

PART NO	F/NO	I/NO	M/NO
205-62-71560	6531	18	
205-62-71560	6532	18	
205-62-71560	6533	12	
205-62-71560	6534	12	
205-62-71581	2201	32	
205-62-71581	2203	32	
205-62-71581	6511	6	
205-62-71591	6513	14	
205-62-71591	6514	14	
205-62-71612	6513	24	
205-62-71612	6514	24	
205-62-71622	6513	25	
205-62-71622	6514	25	
205-62-71630	4511	3	
205-62-71630	4511	4	
205-62-71630	4511	5	
205-62-71630	4511	6	
205-62-71630	4517	3	
205-62-71630	4517	4	
205-62-71630	4517	5	
205-62-71630	4517	6	
205-62-71640	4511	1	
205-62-71640	4511	2	
205-62-71640	4517	1	
205-62-71640	4517	2	
205-62-71671	4611	25	
205-62-71681	4611	14	
205-62-71720	4513	3	
205-62-71720	4519	3	
205-62-71730	4513	2	
205-62-71730	4513	4	
205-62-71730	4519	2	
205-62-71730	4519	4	
205-62-71740	4513	1	
205-62-71740	4515	2	
205-62-71740	4515	6	
205-62-71740	4519	1	
205-62-71740	4521	2	
205-62-71740	4521	6	
205-62-71770	4611	2	
205-62-71780	4513	8	
205-62-71780	4519	8	
205-62-71790	4513	5	
205-62-71790	4513	7	
205-62-71790	4515	4	
205-62-71790	4519	5	
205-62-71790	4519	7	
205-62-71790	4521	4	
205-62-71810	4515	3	
205-62-71810	4521	3	

PART NO	F/NO	I/NO	M/NO
205-62-71880	4611	15	
205-62-71890	4515	17	
205-62-71890	4521	16	
205-62-71912	6521	17	
205-62-71912	6522	17	
205-62-71913	6523	17	
205-62-71913	6524	17	
205-62-71922	6521	18	
205-62-71923	6523	18	
205-62-71952	6521	11	
205-62-71952	6522	11	
205-62-71952	6523	11	
205-62-71952	6524	11	
205-62-71971	6521	7	
205-62-71971	6522	7	
205-62-71971	6523	7	
205-62-71971	6524	7	
205-62-72111	2211	8	
205-62-72121	2211	7	
205-62-72121	2213	7	
205-62-72121	9303	7	
205-62-72140	2211	14	
205-62-72140	2213	14	
205-62-72140	9303	14	
205-62-72190	2211	12	
205-62-72190	2213	12	
205-62-72190	9303	12	
205-62-72230	2213	8	
205-62-72230	9303	8	
205-62-72240	2211	13	
205-62-72240	6529	9	
205-62-72240	9303	13	
205-62-72330	2211	11	
205-62-72330	2213	11	
205-62-72330	9303	11	
205-62-72430	9503	8	
205-62-72430	9503	13	
205-62-72470	6525	4	
205-62-72630	9502	10	
205-62-72630	9502	15	
205-62-72650	9501	3	
205-62-72840	6525	1	
205-62-72860	9502	1	
205-62-72860	9503	1	
205-62-72870	9502	33	
205-62-72880	9502	33-	
205-62-72910	9502	27	
205-62-72910	9503	25	
205-62-72920	9502	23	
205-62-72920	9503	21	

PART NO	F/NO	I/NO	M/NO
205-62-72920	9511	20	
205-62-72920	9512	20	
205-62-72930	9502	22	
205-62-72930	9503	20	
205-62-72930	9511	19	
205-62-72930	9512	19	
205-62-72940	9502	16	
205-62-72960	9502	9	
205-62-72980	9511	1	
205-62-72990	9511	2	
205-62-73112	6533	6	
205-62-73122	6533	7	
205-62-73130	6533	8	
205-62-73130	6534	8	
205-62-73142	6531	17	
205-62-73152	6531	16	
205-62-73450	6531	24	
205-62-73450	6532	24	
205-62-73460	6531	27	
205-62-73460	6532	27	
205-62-73480	6533	18	
205-62-73480	6534	18	
205-62-73490	7323	10	
205-62-73510	9511	31	
205-62-74150	4611	1-	
205-62-74160	4511	1-	
205-62-74160	4517	1-	
205-62-74170	4513	1-	
205-62-74170	4519	1-	
205-62-74180	4515	1-	
205-62-74180	4521	1-	
205-62-74221	4701	10	
205-62-74290	4611	4	
205-62-74310	4701	4	
205-62-74420	9003	1	
205-62-74470	2201	8	
205-62-74470	2203	8	
205-62-74520	4513	6	
205-62-74520	4515	1	
205-62-74520	4519	6	
205-62-74520	4521	1	
205-62-74530	4515	5	
205-62-74530	4515	7	
205-62-74530	4521	5	
205-62-74530	4521	7	
205-62-74550	4701	20	
205-62-74650	6501	1	
205-62-74690	9003	10	
205-62-74710	9003	22	
205-62-74722	6529	4	

PART NO	F/NO	I/NO	M/NO
205-62-74740	6503	4	
205-62-74910	6529	2	
205-62-74930	6503	16	
205-62-74940	6501	4	
205-63-52100	6401	1-	
205-63-52110	6401	1-	
205-63-52121	6401	1	
205-63-52141	6401	17	
205-63-52170	6401	20	
205-63-52180	6401	21	
205-63-52200	6401	1-	
205-63-52270	6401	20-	
205-63-52280	6401	21-	
205-63-62101	6403	1-	
205-63-62122	6403	1	
205-63-62141	6403	20	
205-63-62170	6403	21	
205-63-72100	6405	1-	
205-63-72121	6405	1	
205-63-72141	6405	16	
205-63-72170	6405	19	
205-63-72301	7331	1-	
205-63-72320	7331	1	
205-63-72341	7331	16	
205-70-00071	7001	1-	
205-70-00080	7005	1-	
205-70-00091	7011	1-	
205-70-51360	7001	35	
205-70-51360	7003	35	
205-70-51390	7001	36	
205-70-51390	7003	36	
205-70-51410	7001	37	
205-70-51410	7003	37	
205-70-51450	7001	5	
205-70-51450	7003	5	
205-70-51450	7003	20	
205-70-51520	7001	26	
205-70-51520	7003	26	
205-70-51520	7007	14	
205-70-51520	7011	12	
205-70-51520	7015	12	
205-70-51520	7305	14	
205-70-51520	7307	14	
205-70-51520	7325	14	
205-70-61570	7001	5A	
205-70-62140	6406	3	
205-70-62140	7007	8	
205-70-62140	7011	6	
205-70-62140	7015	5	
205-70-62140	7015	6	

https://truckmanualshub.com/

PART NO	F/NO	I/NO	M/NO
205-70-62140	7305	8	
205-70-62140	7307	8	
205-70-62140	7325	8	
205-70-62140	7335	15	
205-70-62150	7005	9	
205-70-62150	7007	9	
205-70-62150	7305	9	
205-70-62150	7307	9	
205-70-62150	7321	9	
205-70-62150	7323	9	
205-70-62150	7325	9	
205-70-65670	7001	11	
205-70-65670	7003	11	
205-70-65680	7001	14	
205-70-65680	7003	14	
205-70-65750	7003	19	
205-70-65760	7003	2	
205-70-65890	9001	10	
205-70-65890	9002	10	
205-70-65920	9001	15	
205-70-65920	9002	15	
205-70-66550	7005	2	
205-70-66550	7007	2	
205-70-66550	7305	2	
205-70-66550	7307	2	
205-70-66550	7321	2	
205-70-66550	7323	2	
205-70-66550	7325	2	
205-70-66580	7001	21	
205-70-66580	7001	27	
205-70-66580	7003	21	
205-70-66580	7003	27	
205-70-66580	7005	11	
205-70-66580	7005	16	
205-70-66580	7007	11	
205-70-66580	7007	16	
205-70-66580	7305	11	
205-70-66580	7305	16	
205-70-66580	7307	11	
205-70-66580	7307	16	
205-70-66580	7325	11	
205-70-66580	7325	16	
205-70-67150	7011	3	
205-70-67150	7015	3	
205-70-71112	7001	1	
205-70-71160	7001	6	
205-70-71190	7005	15	
205-70-71210	7001	19	
205-70-71251	7001	32	
205-70-71251	7003	32	

PART NO	F/NO	I/NO	M/NO
205-70-71261	7001	34	
205-70-71271	7001	33	
205-70-71271	7003	33	
205-70-71291	7001	2	
205-70-71310	7001	16	
205-70-71310	7003	16	
205-70-71311	7001	7	
205-70-71311	7003	7	
205-70-71320	7001	25	
205-70-71320	7005	10	
205-70-71320	7007	15	
205-70-71320	7305	15	
205-70-71320	7307	15	
205-70-71320	7325	15	
205-70-72112	7005	1	
205-70-72130	7005	4	
205-70-72130	7007	4	
205-70-72130	7305	4	
205-70-72130	7307	4	
205-70-72130	7321	4	
205-70-72130	7323	4	
205-70-72130	7325	4	
205-70-73130	7011	8	
205-70-73160	7011	9	
205-70-73180	7011	2	
205-70-73190	7001	12	
205-70-73190	7003	12	
205-70-73190	7011	10	
205-70-73190	7011	14	
205-70-73190	7015	10	
205-70-73190	7015	14	
205-70-73241	7011	1	
205-70-73270	7011	13	
205-70-73270	7011	17	
205-70-73270	7015	13	
205-70-73270	7015	17	
205-70-73280	7011	16	
205-70-73280	7015	16	
205-70-75110	9001	1	
205-70-75110	9002	1	
205-70-75121	9001	2	
205-70-75121	9002	2	
205-70-75130	9001	3	
205-70-75130	9002	3	
205-70-75140	9001	8	
205-70-75140	9002	8	
205-70-75230	9001	12-	
205-70-75240	9001	12	
205-944-0031	7321	1-	
205-944-0040	7323	1-	

PART NO	F/NO	I/NO	M/NO
205-944-7111	7321	1	
205-944-7210	7323	1	
205-970-0010	8331	14-	
205-970-0020	8335	14-	
205-970-0020	8336	13-	
205-970-0020	8337	10-	
205-970-0020	8338	10-	
205-970-0020	8345	14-	
205-970-0020	8346	13-	
205-970-0020	8347	10-	
205-970-0020	8348	10-	
205-970-1521	8335	2	
205-970-1521	8336	2	
205-970-1521	8345	2	
205-970-1521	8346	2	
205-970-2222	8333	2	
205-970-2222	8343	2	
205-970-2232	8333	21	
205-970-2232	8335	27	
205-970-2232	8336	26	
205-970-2232	8337	23	
205-970-2232	8338	23	
205-970-2232	8343	21	
205-970-2232	8345	27	
205-970-2232	8346	26	
205-970-2232	8347	23	
205-970-2232	8348	23	
205-970-4260	8335	14	
205-970-4260	8336	13	
205-970-4260	8337	10	
205-970-4260	8338	10	
205-970-4260	8345	14	
205-970-4260	8346	13	
205-970-4260	8347	10	
205-970-4260	8348	10	
205-970-4270	8335	15	
205-970-4270	8336	14	
205-970-4270	8337	11	
205-970-4270	8338	11	
205-970-4270	8345	15	
205-970-4270	8346	14	
205-970-4270	8347	11	
205-970-4270	8348	11	
205-970-4371	8333	3	
205-970-4371	8335	3	
205-970-4371	8343	3	
205-970-4371	8345	3	
205-970-5880	8313	25	
205-970-5890	8313	21	
205-970-6050	8321	8	

PART NO	F/NO	I/NO	M/NO
205-970-6050	8322	8	
205-970-6133	8335	4	
205-970-6133	8336	3	
205-970-6133	8345	4	
205-970-6133	8346	3	
205-970-6141	8335	24	
205-970-6141	8336	23	
205-970-6141	8337	20	
205-970-6141	8338	20	
205-970-6141	8345	24	
205-970-6141	8346	23	
205-970-6141	8347	20	
205-970-6141	8348	20	
205-970-6490	8333	5	
205-970-6490	8343	5	
205-970-7140	8311	20	
205-970-7211	8311	14	
205-970-7220	8311	15	
205-970-7230	8311	2	
205-970-7240	8311	1	
205-970-7251	8311	6	
205-970-7260	8313	8	
205-970-7270	8313	18	
205-970-7331	8311	21	
205-970-7341	8331	1	
205-970-7341	8331	10	
205-970-7370	8311	22	
205-970-7410	8325	1	
205-970-7410	8326	1	
205-970-7420	8325	2	
205-970-7420	8326	2	
205-970-7433	8323	10	
205-970-7441	8323	6	
205-970-7450	8331	14	
205-970-7460	8331	17	
205-970-7470	8331	5	
205-970-7480	8321	1	
205-970-7480	8322	1	
205-970-7520	8331	2	
205-970-7520	8331	11	
205-970-7550	8325	19	
205-970-7550	8326	19	
205-970-7550	8326	23	
205-970-7560	8325	15	
205-970-7560	8326	15	
205-970-7610	8333	10	
205-970-7620	8333	11	
205-970-7630	8333	17	
205-970-7630	8343	17	
205-970-7640	8335	10	

PART NO	F/NO	I/NO	M/NO
205-970-7650	8337	6	
205-970-7710	8333	1	
205-970-7721	8335	1	
205-970-7730	8333	4	
205-970-7730	8343	4	
205-970-7740	8333	18	
205-970-7740	8343	18	
205-970-7780	8336	1-	
205-970-7790	8336	9-	
205-970-7790	8338	6-	
205-970-7911	8336	1	
205-970-7920	8336	9	
205-970-7930	8338	6	
205-977-K110	5501	1	
205-977-K121	8153	1	
205-977-K130	8153	15	
205-977-7190	8153	16	
205-977-7210	8153	6	
205-977-7310	5501	4	
205-977-7320	5501	9	
206-00-44240	9942	15	
206-00-44240	9948	14	
206-00-44240	9951	14	
206-00-44240	9954	14	
206-00-44250	9942	15-	
206-00-44250	9948	14-	
206-00-44250	9951	14-	
206-00-44250	9954	14-	
206-00-44390	9941	43	
206-00-44390	9942	43	
206-00-44410	9941	41	
206-00-44410	9942	41	
206-00-44420	9950	38	
206-00-44420	9951	38	
206-00-44430	9953	38	
206-00-44430	9954	38	
206-00-44440	9947	38	
206-00-44440	9948	38	
206-03-00021	1203	1-	
206-03-43331	1211	38	
206-03-43331	1213	38	
206-03-43340	1211	39	
206-03-43340	1213	39	
206-03-44111	1203	27	
206-03-44121	1203	3	
206-03-44180	1213	30	
206-03-44191	1203	17	
206-03-44211	1203	1	
206-03-44240	1203	9	
206-03-44250	1203	10	

PART NO	F/NO	I/NO	M/NO
206-03-44260	1203	11	
206-03-44510	1213	1	
206-03-44520	1213	2	
206-03-44530	1203	6	
206-03-44540	1203	7	
206-04-11130	8601	1	
206-04-11140	8601	2	
206-06-41130	1423	9	
206-06-42115	1438	22	
206-27-00010	2401	22-	
206-27-00010	2403	22-	
206-27-00024	2403	3-	
206-27-00027	2401	3-	
206-27-44112	2401	20-	
206-27-44112	2403	20	
206-27-44122	2401	22-	
206-27-44122	2403	22	
206-27-44132	2401	29-	
206-27-44132	2403	29	
206-30-45310	3005	1	
206-30-45320	3005	6	
206-30-45330	3005	7	
206-30-45410	3007	1	
206-30-45420	3007	6	
206-30-45430	3007	7	
206-30-45520	9067	1	
206-30-45530	9067	1-	
206-32-E0002	3131	4-	
206-32-E0002	3131	4	
206-32-E0002	3131	4	
206-32-E0003	3121	4-	
206-32-E0003	3121	4	
206-32-E0003	3121	4	
206-32-E1112	3131	4	
206-32-E4111	3101	1	
206-32-E4111	3131	1	
206-32-K1100	3121	1-	
206-32-K1200	3121	1-	
206-32-K1300	3121	1-	
206-32-K1400	3131	1-	
206-32-K1500	3131	1-	
206-32-K1600	3131	1-	
206-43-48110	1127	1	
206-46-44160	5003	6	
206-46-44610	5003	1	
206-46-44630	9007	1	
206-46-44640	9067	2	
206-46-44650	9082	1	
206-54-46310	5102	1	
206-54-46410	9941	41-	

PART NO	F/NO	I/NO	M/NO
206-54-46410	9942	41-	
206-54-46420	9950	38-	
206-54-46420	9951	38-	
206-54-46430	9953	38-	
206-54-46430	9954	38-	
206-54-46440	9947	38-	
206-54-46440	9948	38-	
206-60-41221	6191	24	
206-62-43490	9503	31	
206-62-43510	9503	31-	
206-62-43520	9503	14	
206-62-43530	9503	7	
206-62-43660	9511	6	
206-62-43660	9512	6	
206-62-43670	9511	7	
206-62-43670	9512	7	
206-62-43680	9502	4	
206-62-43680	9511	10	
206-62-43680	9512	10	
206-62-43690	9512	1	
206-62-43710	9512	2	
206-62-43720	9511	25	
206-62-43720	9512	25	
206-62-43730	9512	31	
206-62-43810	9511	3	
206-62-43820	9512	3	
206-62-45121	6514	8	
206-62-45130	2203	19	
206-62-45140	2203	20	
206-62-45161	6522	18	
206-62-45161	6524	18	
206-62-45231	6534	6	
206-62-45241	6534	7	
206-62-45251	6532	17	
206-62-45261	6532	16	
206-63-12340	7335	1	
206-63-52100	6402	1-	
206-63-52110	6402	1-	
206-63-52120	6402	1	
206-63-52140	6402	18	
206-63-52170	6402	19	
206-63-52180	6402	20	
206-63-52200	6402	1-	
206-63-52270	6402	19-	
206-63-52280	6402	20-	
206-63-62101	6404	1-	
206-63-62121	6404	1	
206-63-62140	6404	20	
206-63-62170	6404	21	
206-63-72100	6406	1-	

PART NO	F/NO	I/NO	M/NO
206-63-72120	6406	1	
206-63-72140	6406	16	
206-63-72170	6406	19	
206-63-72170	7335	25	
206-63-72300	7335	1-	
206-63-72320	7335	13	
206-70-00070	7003	1-	
206-70-00080	7307	1-	
206-70-00091	7015	1-	
206-70-45210	7003	5A	
206-70-45220	7001	15	
206-70-45220	7003	15	
206-70-51112	7003	1	
206-70-51160	7003	6	
206-70-51170	7003	25	
206-70-51170	7007	10	
206-70-51170	7305	10	
206-70-51170	7307	10	
206-70-51170	7325	10	
206-70-51181	7003	34	
206-70-51190	7001	10	
206-70-51190	7003	10	
206-70-52111	7307	1	
206-70-53130	7015	8	
206-70-53140	7015	9	
206-70-53150	7015	2	
206-70-53161	7015	1	
206-70-54530	9002	12	
206-943-0020	7305	1-	
206-943-5110	7305	1	
206-944-0030	7325	1-	
206-944-0040	7007	1-	
206-944-5110	7325	1	
206-944-5210	7007	1	
206-970-4210	8343	10	
206-970-4220	8343	11	
206-970-4230	8345	10	
206-970-4240	8347	6	
206-970-4250	8343	1	
206-970-4260	8345	1	
206-970-4280	8346	9-	
206-970-4290	8346	1	
206-970-4310	8346	9	
206-970-4320	8348	6	
207-00-13450	9950	22	
207-00-13450	9951	22	
207-00-13510	9950	41	
207-00-13510	9951	41	
207-00-13590	9947	22	
207-00-13590	9948	22	

https://truckmanualshub.com/

PART NO	F/NO	I/NO	M/NO
207-00-13610	9947	36	
207-00-13610	9948	36	
207-00-13680	9947	40	
207-00-13680	9948	40	
207-00-31390	9941	10	
207-00-31390	9942	10	
207-00-31630	5001	11	
207-00-31630	5003	11	
207-00-31630	9941	2	
207-00-31630	9942	2	
207-00-31630	9947	2	
207-00-31630	9948	2	
207-00-31630	9950	2	
207-00-31630	9951	2	
207-00-31630	9953	2	
207-00-31630	9954	2	
207-01-52180	1061	1	
207-04-11190	8601	5	
207-06-31130	9001	23	
207-06-31130	9002	23	
207-06-31130	9057	1	
207-06-31160	1423	6	
207-06-31220	1421	7	
207-06-31240	1421	9	
207-06-31370	1443	4	
207-06-32260	9054	6	
207-09-11130	2315	2	
207-54-17840	9010	12	
207-54-17840	9010	16	
207-54-17840	9066	8	
207-54-17840	9067	8	
207-60-11350	6191	31	
207-62-34430	9501	8	
207-62-34440	9501	7	
207-70-11740	4001	7	
208-00-11840	8401	10	
208-04-19130	1301	6	
208-04-19160	1301	4	
208-09-11110	6521	2	
208-09-11110	6521	24	
208-09-11110	6522	2	
208-09-11110	6522	24	
208-09-11110	6523	2	
208-09-11110	6523	24	
208-09-11110	6524	2	
208-09-11110	6524	24	
208-26-11611	4611	31	
208-26-11611	9501	1	
208-26-11611	9511	40	
208-26-11611	9512	40	

PART NO	F/NO	I/NO	M/NO
208-27-31371	4001	15	
208-54-K2890	5231	6	
208-54-12450	9011	2	
208-54-13160	9010	2	
209-06-51750	1421	17	
209-54-12280	5101	4	
209-54-12280	5102	4	
209-54-12280	5109	28	
209-62-12730	8325	12	
209-62-12730	8326	12	
209-62-14430	2201	13	
209-62-14430	2203	13	
209-62-27580	6525	10	
20910-54-429	5101	22	
20910-54-429	5102	22	
21K-70-12161	7007	3	
21K-70-12161	7305	3	
21K-70-12161	7307	3	
21K-70-12161	7325	3	
21K-70-12170	7005	3	
21K-70-12170	7321	3	
21K-70-12170	7323	3	
21K-70-12180	6405	3	
21K-70-12180	7005	8	
21K-70-12180	7011	5	
21K-70-12180	7321	8	
21K-70-12180	7323	8	
21K-70-12180	7331	3	
21P-30-K1130	3011	7	
21P-30-K1140	3011	6	
21P-62-K1120	8325	6	
21P-62-K1120	8326	6	
21P-62-11590	9501	15	
21P-62-11590	9511	37	
21P-62-11590	9512	37	
21T-06-11940	8321	12	
21T-06-11940	8322	12	
21T-06-11950	4513	16	
21T-06-11950	4515	16	
21T-06-11950	4515	20	
21T-06-11950	4519	16	
21T-06-11950	4521	15	
21T-06-11950	4521	19	
21T-06-12650	4611	33	
21T-09-11430	6503	11	
21T-09-11430	6503	12	
21T-09-11430	6513	31	
21T-09-11430	6514	31	
21T-09-11450	2201	5	
21T-09-11450	2203	5	

PART NO	F/NO	I/NO	M/NO
21T-09-11450	4301	3	
21T-09-11450	6511	3	
21T-09-11450	6513	5	
21T-09-11450	6514	5	
21T-09-11450	8325	3	
21T-09-11450	8326	3	
21T-09-11460	6503	3	
21T-54-26220	4433	4	
22D-43-14220	1127	4	
22D-62-12440	9501	10	
22W-06-13160	1423	4	
22W-06-13160	9005	5	
22W-06-13160	9054	5	
22W-06-13450	9054	7	
22W-62-17710	4701	3	
22W-62-17710	4701	7	
362-46-11210	7011	18	
362-46-11210	7015	18	
423-56-K1290	5227	36	
423-56-K1480	5221	32	
423-56-K1490	5227	12	
423-56-K1500	5227	13	
423-56-K1780	5231	22	
423-56-K1950	5221	34	
566-54-11340	1111	19	
600-625-6580	1015	2	
600-625-6620	1017	2	
6127-81-4520	8403	24	
6130-21-1910	6003	9	
6130-21-1910	6033	9	
6130-21-1910	6103	9	
6130-21-1910	6133	9	
6131-11-4520	1001	7	
6131-62-3310	1015	3	
6131-62-3310	1017	3	
6136-12-5280	1003	9	
6136-61-3610	1015	1	
6136-61-3610	1017	1	
6136-71-9730	1011	9	
6136-71-9730	1012	9	
6137-11-5370	1003	11	
6643-11-4620	1001	7-	
6643-11-4630	1001	7-	
6643-11-4641	1001	8	
700-13-31161	6206	17	
700-20-14810	6053	1	
700-20-51340	6206	29	
700-20-51540	6206	24	
700-20-51550	6206	23	
700-22-11370	6203	1	
700-22-11370	6205	1	
700-22-11410	6023	9	
700-22-11410	6053	9	
700-22-11410	6123	9	
700-22-11410	6153	9	
700-22-11410	6203	4	
700-22-11410	6205	4	
700-22-11410	6206	21	
700-22-11410	6207	32	
700-23-13130	6204	32	
700-23-14810	6023	1	
700-23-14820	6053	3	
700-80-51190	6206	18	
700-80-51240	6206	32	
700-80-51340	6206	5	
700-80-51350	6206	4	
700-80-51360	6206	11	
700-80-51380	6206	2	
700-80-51390	6206	3	
700-80-51610	6206	1	
700-80-51630	6206	14	
700-80-61190	6206	8	
700-80-62250	6207	17	
700-80-62250	6207	30	
700-80-62250	6207	55	
700-80-62310	6207	5	
700-80-62310	6207	18	
700-80-62310	6207	43	
700-80-62341	6207	11	
700-80-62341	6207	24	
700-80-62350	6207	8	
700-80-62350	6207	21	
700-80-62350	6207	46	
700-80-62361	6207	16	
700-80-62361	6207	29	
700-80-62361	6207	54	
700-80-62370	6207	12	
700-80-62370	6207	25	
700-80-62370	6207	38	
700-80-62370	6207	50	
700-80-62380	6207	13	
700-80-62380	6207	26	
700-80-62380	6207	39	
700-80-62380	6207	51	
700-80-62390	6207	23	
700-80-62390	6207	36	
700-80-62390	6207	48	
700-80-62420	6207	10	
700-80-62431	6207	7	
700-80-62431	6207	20	

PART NO	F/NO	I/NO	M/NO
700-80-62440	6207	9	
700-80-62440	6207	22	
700-80-62440	6207	35	
700-80-62440	6207	47	
700-80-64220	6203	5	
700-80-64220	6205	5	
700-80-64220	6207	33	
700-80-71140	6207	37	
700-80-71150	6207	40	
700-80-71170	6207	31	
700-84-11730	6227	8	
700-84-13960	6203	3	
700-84-13960	6205	3	
700-93-11320	6203	17	
700-93-11320	6205	10	
700-93-11330	6203	18	
700-93-11330	6205	11	
700-93-12660	6207	1	
702-11-51110	6223	1	
702-16-11490	1011	7	
702-16-11490	1012	7	
702-16-11490	1013	7	
702-16-11490	1014	7	
702-16-11510	1011	8	
702-16-11510	1012	8	
702-16-11510	1013	8	
702-16-11510	1014	8	
702-16-51130	6223	3	
702-16-51140	6223	4	
702-16-51161	6223	8	
702-16-51170	6223	9	
702-16-51180	6223	6	
702-16-51190	6223	7	
702-16-51210	6223	10	
702-16-51220	6223	11	
702-16-51231	6223	14	
702-16-51240	6223	16	
702-16-51250	6223	17	
702-16-51260	6223	18	
702-16-51270	6223	13	
702-16-51510	6223	5	
702-16-53001	6223	1-	
702-19-11000	6227	7-	
702-19-11110	6227	7	
702-19-11120	6227	9	
702-19-12000	6227	1-	
702-19-12110	6227	1	
702-19-12120	6225	4	
702-19-12120	6227	4	
702-19-13000	6225	1-	

PART NO	F/NO	I/NO	M/NO
702-19-13110	6225	1	
703-09-31620	2101	1-	
703-09-91530	2101	1	
703-09-92530	2101	5	
703-09-93520	2101	10	
703-09-94210	2101	8	
703-09-95312	2101	2	
703-09-96310	2101	3	
704-24-28202	6001	2	
704-24-28202	6021	1-	
704-24-28202	6031	2	
704-24-28202	6051	1-	
704-24-28202	6101	2	
704-24-28202	6121	1-	
704-24-28202	6131	2	
704-24-28202	6151	1-	
704-28-02410	6021	8	
704-28-02410	6051	8	
704-28-02410	6121	8	
704-28-02410	6151	8	
704-28-02710	6021	11	
704-28-02710	6051	11	
704-28-02710	6121	11	
704-28-02710	6151	11	
704-28-02751	6021	2	
704-28-02751	6051	2	
704-28-02751	6121	2	
704-28-02751	6151	2	
704-28-02760	6021	3	
704-28-02760	6051	3	
704-28-02760	6121	3	
704-28-02760	6151	3	
704-28-02771	6021	12	
704-28-02771	6051	12	
704-28-02771	6121	12	
704-28-02771	6151	12	
704-28-28050	6021	1	
704-28-28050	6051	1	
704-28-28050	6121	1	
704-28-28050	6151	1	
704-28-28450	6021	5	
704-28-28450	6051	5	
704-28-28450	6121	5	
704-28-28450	6151	5	
704-28-28550	6021	6	
704-28-28550	6051	6	
704-28-28550	6121	6	
704-28-28550	6151	6	
706-46-53180	6001	25	
706-46-53180	6031	25	

PART NO	F/NO	I/NO	M/NO
706-46-53180	6101	25	
706-46-53180	6131	25	
706-46-53260	6001	22	
706-46-53260	6031	22	
706-46-53260	6101	22	
706-46-53260	6131	22	
706-46-56290	4511	7	
706-46-56290	4517	7	
706-73-41163	4111	2	
706-73-42270	6003	19	
706-73-42270	6033	19	
706-73-42270	6103	19	
706-73-42270	6133	19	
706-73-70140	6203	13	
706-73-70150	6203	14	
706-73-71450	2002	20	
706-73-75170	2002	27	
706-73-75170	4102	11	
706-73-75170	4112	10	
706-73-75350	6023	8	
706-73-75350	6053	8	
706-73-75350	6123	8	
706-73-75350	6153	8	
706-73-77140	6201	21	
706-74-40320	6003	15	
706-74-40320	6033	15	
706-74-40320	6103	15	
706-74-40320	6133	15	
706-75-00030	2002	1-	
706-75-03102	4101	1-	
706-75-03102	4102	1-	
706-75-03202	4111	1-	
706-75-03202	4112	1-	
706-75-03302	2001	1-	
706-75-03302	2002	1-	
706-75-10402	2001	1-	
706-75-10402	2002	1-	
706-75-11302	4101	1-	
706-75-11302	4102	1-	
706-75-11902	4111	1-	
706-75-11902	4112	1-	
706-75-40010	2001	7	
706-75-40010	4101	7	
706-75-40010	4111	7	
706-75-40360	2001	34	
706-75-40940	2001	20	
706-75-40940	4101	21	
706-75-40940	4111	23	
706-75-41091	2001	1	
706-75-41091	4101	1	
706-75-41091	4111	1	
706-75-41110	2001	5	
706-75-41110	4101	5	
706-75-41110	4111	5	
706-75-41130	2001	6	
706-75-41130	4101	6	
706-75-41130	4111	6	
706-75-41163	2001	2	
706-75-41163	4101	2	
706-75-41220	2001	4	
706-75-41220	4101	4	
706-75-41220	4111	4	
706-75-42051	4101	13	
706-75-42051	4111	13	
706-75-42060	2001	13	
706-75-42080	2001	3	
706-75-42080	4101	3	
706-75-42080	4111	3	
706-75-42260	2001	10	
706-75-42260	4101	10	
706-75-42260	4111	10	
706-75-42270	2001	12	
706-75-42270	4101	12	
706-75-42270	4111	12	
706-75-42370	4101	33	
706-75-42370	4111	26	
706-75-42820	4102	2	
706-75-42830	2002	24	
706-75-42840	2001	8	
706-75-42840	4101	8	
706-75-42840	4111	8	
706-75-42880	2001	14	
706-75-42880	4101	14	
706-75-42880	4111	16	
706-75-42910	2001	16	
706-75-42910	4101	16	
706-75-42910	4111	18	
706-75-42960	2001	11	
706-75-42960	4101	11	
706-75-42960	4111	11	
706-75-71420	2001	36	
706-75-71420	2002	22	
706-75-74141	4102	1	
706-75-74141	4112	1	
706-75-74150	2002	1	
706-75-74161	2002	4	
706-75-74190	2002	3	
706-75-74220	2002	10	
706-75-74231	2002	5	
706-75-74240	2002	6	

https://truckmanualshub.com/

PART NO	F/NO	I/NO	M/NO
706-75-74261	2002	7	
706-75-74420	2002	14	
706-75-74530	2002	2	
706-75-74540	4102	3	
706-75-74540	4112	2	
706-75-74550	4102	4	
706-75-74550	4112	3	
706-75-74560	4102	6	
706-75-74560	4112	5	
706-75-75280	2002	28	
706-75-75280	4102	12	
706-75-75280	4112	11	
706-75-75291	2002	31	
706-75-75291	4102	15	
706-75-75291	4112	14	
706-75-75310	2002	26	
706-75-75310	4102	10	
706-75-75310	4112	9	
706-75-75331	2002	25	
706-75-75331	4102	9	
706-75-75331	4112	8	
706-75-75350	2002	32	
706-75-75350	4102	16	
706-75-75350	4112	15	
706-75-75381	2002	33	
706-75-75392	4102	17	
706-75-75392	4112	16	
706-75-85401	2002	25-	
706-75-85502	4102	9-	
706-75-85502	4112	8-	
706-75-91330	2001	31	
706-75-91330	4101	30	
706-75-91340	2001	29	
706-75-91340	4101	28	
706-75-91350	2001	30	
706-75-91350	4101	29	
706-75-91382	2001	22	
706-75-91410	2001	24	
706-75-91420	2001	23	
706-75-91431	4101	23	
706-75-91481	4101	22	
706-76-40890	2001	15	
706-76-40890	4101	15	
706-76-40890	4111	17	
706-76-40920	4101	17	
706-76-40920	4111	19	
706-76-41931	2001	17	
706-77-72170	2002	18	
706-77-72170	4102	7	
706-77-72170	4112	6	

PART NO	F/NO	I/NO	M/NO
706-86-51180	6002	2	
706-86-51180	6002	5	
706-86-51180	6003	2	
706-86-51180	6004	2	
706-86-51180	6004	5	
706-86-51180	6004	37	
706-86-51180	6032	2	
706-86-51180	6032	5	
706-86-51180	6033	2	
706-86-51180	6034	2	
706-86-51180	6034	5	
706-86-51180	6034	37	
706-86-51180	6102	2	
706-86-51180	6102	5	
706-86-51180	6103	2	
706-86-51180	6104	2	
706-86-51180	6104	5	
706-86-51180	6104	37	
706-86-51180	6132	2	
706-86-51180	6132	5	
706-86-51180	6133	2	
706-86-51180	6134	2	
706-86-51180	6134	5	
706-86-51180	6134	37	
707-27-11371	6405	6	
707-27-12470	7331	6	
707-27-13771	6406	6	
707-27-14370	7335	5	
707-28-12570	6401	6	
707-28-13170	6402	6	
707-28-13270	6403	6	
707-28-14270	6404	6	
707-35-91310	6403	8A	
707-35-91410	6404	8A	
707-36-11460	6405	13	
707-36-12360	6401	14	
707-36-12360	7331	13	
707-36-13460	6402	15	
707-36-13460	6403	14	
707-36-13460	6406	13	
707-36-14460	6404	14	
707-36-14460	7335	17	
707-40-13470	6402	13	
707-44-11080	6405	12	
707-44-12080	6401	13	
707-44-12080	7331	12	
707-44-13080	6402	14	
707-44-13080	6403	13	
707-44-13080	6406	12	
707-44-14080	6404	13	

PART NO	F/NO	I/NO	M/NO
707-44-14080	7335	18	
707-51-10211	7335	7	
707-51-75211	6405	11	
707-51-85211	6401	11	
707-51-85211	7331	11	
707-51-90211	6402	11	
707-51-90211	6406	11	
707-51-95211	6403	11	
707-51-95211	6404	11	
707-52-10850	6401	10	
707-52-10950	6403	10	
707-52-10950	6404	10	
707-56-10850	7331	10	
707-56-85510	6401	5	
707-56-95510	6403	5	
707-56-95510	6404	5	
707-68-10580	6401	16	
707-68-10580	6405	15	
707-68-10580	7331	15	
707-68-10608	7335	20	
707-68-10680	6402	17	
707-68-10680	6403	16	
707-68-10680	6404	16	
707-68-10680	6406	15	
707-71-50011	6403	12	
707-71-50011	6404	12	
707-71-50252	6403	19	
707-71-50252	6404	19	
707-71-50911	6401	12	
707-71-50920	6402	12	
707-71-91250	6403	17	
707-71-91250	6404	17	
707-75-10020	6401	4	
707-75-10020	7331	4	
707-75-10030	6403	4	
707-75-10030	6404	4	
707-76-70110	6401	18	
707-76-70110	6405	17	
707-76-70110	7331	17	
707-76-70120	6405	2	
707-76-70120	7331	2	
707-76-80010	6401	2	
707-76-80010	6402	2	
707-76-80010	6403	2	
707-76-80010	6404	2	
707-76-80010	6406	17	
707-76-80010	7335	2	
707-76-80020	6406	2	
707-76-80020	7335	14	
707-76-85510	7331	5	

PART NO	F/NO	I/NO	M/NO
707-87-11710	7335	21	
707-88-10820	6403	34	
707-88-10820	6404	34	
707-88-99110	6405	24	
707-88-99160	6405	25	
707-88-99220	6401	27	
707-88-99230	6401	26	
707-88-99240	7331	19	
707-88-99270	7331	20	
707-88-99310	6402	26	
707-88-99310	6403	31	
707-88-99310	6406	25	
707-88-99330	6402	25	
707-88-99340	6406	24	
707-88-99360	6403	30	
707-88-99410	6404	31	
707-88-99410	7335	31	
707-88-99460	6404	30	
707-88-99980	7335	30	
708-21-17110	6013	1	
708-21-17110	6043	1	
708-21-17110	6113	1	
708-21-17110	6143	1	
708-23-07011	6016	1-	
708-23-07011	6046	1-	
708-23-07011	6116	1-	
708-23-07011	6146	1-	
708-23-07021	6012	1-	
708-23-07021	6042	1-	
708-23-07021	6112	1-	
708-23-07021	6142	1-	
708-23-07031	6043	1-	
708-23-07031	6143	1-	
708-23-07041	6017	1-	
708-23-07041	6047	1-	
708-23-07041	6117	1-	
708-23-07041	6147	1-	
708-23-07051	6018	1-	
708-23-07051	6048	1-	
708-23-07051	6118	1-	
708-23-07051	6148	1-	
708-23-14810	6123	1	
708-23-14810	6153	1	
708-23-14820	6023	3	
708-23-14820	6123	3	
708-23-14820	6153	3	
708-23-14830	6023	2	
708-23-14830	6053	2	
708-23-14830	6123	2	
708-23-14830	6153	2	

PART NO	F/NO	I/NO	M/NO
708-23-14840	6023	4	
708-23-14840	6053	4	
708-23-14840	6123	4	
708-23-14840	6153	4	
708-23-14850	6023	5	
708-23-14850	6053	5	
708-23-14850	6123	5	
708-23-14850	6153	5	
708-23-14860	6023	6	
708-23-14860	6053	6	
708-23-14860	6123	6	
708-23-14860	6153	6	
708-23-15110	6142	5	
708-23-15120	6042	6	
708-23-15120	6046	6	
708-23-15120	6142	6	
708-23-15120	6146	6	
708-23-15130	6142	7	
708-23-15160	6018	13	
708-23-15160	6042	8	
708-23-15160	6046	8	
708-23-15160	6048	13	
708-23-15160	6118	13	
708-23-15160	6142	8	
708-23-15160	6146	8	
708-23-15160	6148	13	
708-23-18112	6018	1	
708-23-18112	6048	1	
708-23-18112	6118	1	
708-23-18112	6148	1	
708-23-18120	6018	4	
708-23-18120	6048	4	
708-23-18120	6118	4	
708-23-18120	6148	4	
708-23-18130	6018	5	
708-23-18130	6048	5	
708-23-18130	6118	5	
708-23-18130	6148	5	
708-23-18140	6018	6	
708-23-18140	6048	6	
708-23-18140	6118	6	
708-23-18140	6148	6	
708-23-18150	6018	7	
708-23-18150	6048	7	
708-23-18150	6118	7	
708-23-18150	6148	7	
708-23-18161	6018	10	
708-23-18161	6048	10	
708-23-18161	6118	10	
708-23-18161	6148	10	

PART NO	F/NO	I/NO	M/NO
708-23-18170	6018	11	
708-23-18170	6048	11	
708-23-18170	6118	11	
708-23-18170	6148	11	
708-23-18181	6018	12	
708-23-18181	6048	12	
708-23-18181	6118	12	
708-23-18181	6148	12	
708-23-18210	6018	15	
708-23-18210	6048	15	
708-23-18210	6118	15	
708-23-18210	6148	15	
708-23-18221	6018	17	
708-23-18221	6048	17	
708-23-18221	6118	17	
708-23-18221	6148	17	
708-23-18250	6118	19	
708-23-18250	6148	19	
708-25-00010	6002	23-	
708-25-00010	6032	23-	
708-25-00010	6102	23-	
708-25-00010	6132	23-	
708-25-00020	6004	17-	
708-25-00020	6034	17-	
708-25-00020	6104	17-	
708-25-00020	6134	17-	
708-25-00030	6002	3-	
708-25-00030	6032	3-	
708-25-00030	6102	3-	
708-25-00030	6132	3-	
708-25-00040	6004	3-	
708-25-00040	6034	3-	
708-25-00040	6104	3-	
708-25-00040	6134	3-	
708-25-00090	6002	1-	
708-25-00090	6032	1-	
708-25-00090	6102	1-	
708-25-00090	6132	1-	
708-25-00100	6034	1-	
708-25-00100	6104	1-	
708-25-00100	6134	1-	
708-25-00110	6003	1-	
708-25-00110	6004	1-	
708-25-00110	6033	1-	
708-25-00110	6103	1-	
708-25-00110	6133	1-	
708-25-01051	6101	1-	
708-25-01051	6102	1-	
708-25-01051	6103	1-	
708-25-01051	6104	1-	

PART NO	F/NO	I/NO	M/NO
708-25-01051	6111	1-	
708-25-01051	6112	1-	
708-25-01051	6113	1-	
708-25-01051	6115	1-	
708-25-01051	6116	1-	
708-25-01051	6117	1-	
708-25-01051	6118	1-	
708-25-01051	6121	1-	
708-25-01051	6123	1-	
708-25-01061	6001	1-	
708-25-01061	6002	1-	
708-25-01061	6003	1-	
708-25-01061	6004	1-	
708-25-01061	6011	1-	
708-25-01061	6012	1-	
708-25-01061	6013	1-	
708-25-01061	6015	1-	
708-25-01061	6016	1-	
708-25-01061	6017	1-	
708-25-01061	6018	1-	
708-25-01061	6021	1-	
708-25-01061	6023	1-	
708-25-01071	6131	1-	
708-25-01071	6132	1-	
708-25-01071	6133	1-	
708-25-01071	6134	1-	
708-25-01071	6141	1-	
708-25-01071	6142	1-	
708-25-01071	6143	1-	
708-25-01071	6145	1-	
708-25-01071	6146	1-	
708-25-01071	6147	1-	
708-25-01071	6148	1-	
708-25-01071	6151	1-	
708-25-01071	6153	1-	
708-25-01081	6031	1-	
708-25-01081	6032	1-	
708-25-01081	6033	1-	
708-25-01081	6034	1-	
708-25-01081	6041	1-	
708-25-01081	6042	1-	
708-25-01081	6043	1-	
708-25-01081	6045	1-	
708-25-01081	6046	1-	
708-25-01081	6047	1-	
708-25-01081	6048	1-	
708-25-01081	6051	1-	
708-25-01081	6053	1-	
708-25-01150	6001	1-	
708-25-01150	6002	1-	

PART NO	F/NO	I/NO	M/NO
708-25-01150	6003	1-	
708-25-01150	6004	1-	
708-25-01150	6021	1-	
708-25-01150	6023	1-	
708-25-01150	6031	1-	
708-25-01150	6032	1-	
708-25-01150	6033	1-	
708-25-01150	6034	1-	
708-25-01150	6051	1-	
708-25-01150	6053	1-	
708-25-01150	6101	1-	
708-25-01150	6102	1-	
708-25-01150	6103	1-	
708-25-01150	6104	1-	
708-25-01150	6121	1-	
708-25-01150	6123	1-	
708-25-01150	6131	1-	
708-25-01150	6132	1-	
708-25-01150	6133	1-	
708-25-01150	6134	1-	
708-25-01150	6151	1-	
708-25-01150	6153	1-	
708-25-01250	6001	1	
708-25-01250	6002	1-	
708-25-01250	6003	1-	
708-25-01250	6004	1-	
708-25-01250	6031	1	
708-25-01250	6032	1-	
708-25-01250	6033	1-	
708-25-01250	6034	1-	
708-25-01250	6101	1	
708-25-01250	6102	1-	
708-25-01250	6103	1-	
708-25-01250	6104	1-	
708-25-01250	6131	1	
708-25-01250	6132	1-	
708-25-01250	6133	1-	
708-25-01250	6134	1-	
708-25-05010	6002	15	
708-25-05010	6004	15	
708-25-05010	6032	15	
708-25-05010	6034	15	
708-25-05010	6102	15	
708-25-05010	6104	15	
708-25-05010	6132	15	
708-25-05010	6134	15	
708-25-05020	6003	13	
708-25-05020	6033	13	
708-25-05020	6103	13	
708-25-05020	6133	13	

https://truckmanualshub.com/

PART NO	F/NO	I/NO	M/NO
708-25-05050	6002	39	
708-25-05050	6004	33	
708-25-05050	6032	39	
708-25-05050	6034	33	
708-25-05050	6102	39	
708-25-05050	6104	33	
708-25-05050	6132	39	
708-25-05050	6134	33	
708-25-05060	6002	33	
708-25-05060	6004	24	
708-25-05060	6032	33	
708-25-05060	6034	24	
708-25-05060	6102	33	
708-25-05060	6104	24	
708-25-05060	6132	33	
708-25-05060	6134	24	
708-25-05130	6002	19	
708-25-05130	6032	19	
708-25-05130	6102	19	
708-25-05130	6132	19	
708-25-07110	6001	20	
708-25-07110	6011	1	-
708-25-07110	6012	1	-
708-25-07110	6013	1	-
708-25-07110	6101	20	
708-25-07110	6111	1	-
708-25-07110	6112	1	-
708-25-07110	6113	1	-
708-25-07130	6031	20	
708-25-07130	6041	1	-
708-25-07130	6042	1	-
708-25-07130	6043	1	-
708-25-07140	6131	20	
708-25-07140	6141	1	-
708-25-07140	6142	1	-
708-25-07140	6143	1	-
708-25-07210	6001	21	
708-25-07210	6015	1	-
708-25-07210	6016	1	-
708-25-07210	6017	1	-
708-25-07210	6018	1	-
708-25-07220	6101	21	
708-25-07220	6115	1	-
708-25-07220	6116	1	-
708-25-07220	6117	1	-
708-25-07220	6118	1	-
708-25-07230	6031	21	
708-25-07230	6045	1	-
708-25-07230	6046	1	-
708-25-07230	6047	1	-

PART NO	F/NO	I/NO	M/NO
708-25-07230	6048	1	-
708-25-07240	6131	21	
708-25-07240	6145	1	-
708-25-07240	6146	1	-
708-25-07240	6147	1	-
708-25-07240	6148	1	-
708-25-07510	6011	2	
708-25-07510	6013	1	-
708-25-07510	6111	2	
708-25-07510	6113	1	-
708-25-07530	6041	2	
708-25-07530	6043	1	-
708-25-07540	6141	2	
708-25-07540	6143	1	-
708-25-07610	6015	2	
708-25-07610	6017	1	-
708-25-07610	6115	2	
708-25-07610	6117	1	-
708-25-07630	6045	2	
708-25-07630	6047	1	-
708-25-07640	6145	2	
708-25-07640	6147	1	-
708-25-11101	6001	1	-
708-25-12110	6002	1	
708-25-12110	6032	1	
708-25-12110	6102	1	
708-25-12110	6132	1	
708-25-12120	6004	1	
708-25-12120	6034	1	
708-25-12120	6104	1	
708-25-12120	6134	1	
708-25-12310	6002	3	
708-25-12310	6032	3	
708-25-12310	6102	3	
708-25-12310	6132	3	
708-25-12320	6004	3	
708-25-12320	6034	3	
708-25-12320	6104	3	
708-25-12320	6134	3	
708-25-12330	6002	6	
708-25-12330	6004	6	
708-25-12330	6032	6	
708-25-12330	6034	6	
708-25-12330	6102	6	
708-25-12330	6104	6	
708-25-12330	6132	6	
708-25-12330	6134	6	
708-25-12340	6002	8	
708-25-12340	6004	8	
708-25-12340	6032	8	

PART NO	F/NO	I/NO	M/NO
708-25-12340	6034	8	
708-25-12340	6102	8	
708-25-12340	6104	8	
708-25-12340	6132	8	
708-25-12340	6134	8	
708-25-12350	6004	9	
708-25-12350	6034	9	
708-25-12350	6104	9	
708-25-12350	6134	9	
708-25-12360	6002	10	
708-25-12360	6004	10	
708-25-12360	6032	10	
708-25-12360	6034	10	
708-25-12360	6102	10	
708-25-12360	6104	10	
708-25-12360	6132	10	
708-25-12360	6134	10	
708-25-12390	6002	9	
708-25-12390	6032	9	
708-25-12390	6102	9	
708-25-12390	6132	9	
708-25-12511	6003	1	
708-25-12511	6033	1	
708-25-12511	6103	1	
708-25-12511	6133	1	
708-25-12521	6003	3	
708-25-12521	6033	3	
708-25-12521	6103	3	
708-25-12521	6133	3	
708-25-12530	6003	11	
708-25-12530	6033	11	
708-25-12530	6103	11	
708-25-12530	6133	11	
708-25-12542	6003	17	
708-25-12542	6033	17	
708-25-12542	6103	17	
708-25-12542	6133	17	
708-25-12552	6003	18	
708-25-12552	6033	18	
708-25-12552	6103	18	
708-25-12552	6133	18	
708-25-12711	6002	13	
708-25-12711	6032	13	
708-25-12711	6102	13	
708-25-12711	6132	13	
708-25-12721	6004	13	
708-25-12721	6034	13	
708-25-12721	6104	13	
708-25-12721	6134	13	
708-25-12731	6002	14	
708-25-12731	6004	14	
708-25-12731	6032	14	
708-25-12731	6034	14	
708-25-12731	6102	14	
708-25-12731	6104	14	
708-25-12731	6132	14	
708-25-12731	6134	14	
708-25-12740	6003	12	
708-25-12740	6033	12	
708-25-12740	6103	12	
708-25-12740	6133	12	
708-25-12760	6002	15	-
708-25-12760	6004	15	-
708-25-12760	6032	15	-
708-25-12760	6034	15	-
708-25-12760	6102	15	-
708-25-12760	6104	15	-
708-25-12760	6132	15	-
708-25-12760	6134	15	-
708-25-12770	6002	15	-
708-25-12770	6004	15	-
708-25-12770	6032	15	-
708-25-12770	6034	15	-
708-25-12770	6102	15	-
708-25-12770	6104	15	-
708-25-12770	6132	15	-
708-25-12770	6134	15	-
708-25-12780	6002	15	-
708-25-12780	6004	15	-
708-25-12780	6032	15	-
708-25-12780	6034	15	-
708-25-12780	6102	15	-
708-25-12780	6104	15	-
708-25-12780	6132	15	-
708-25-12780	6134	15	-
708-25-12790	6002	16	
708-25-12790	6004	16	
708-25-12790	6032	16	
708-25-12790	6034	16	
708-25-12790	6102	16	
708-25-12790	6104	16	
708-25-12790	6132	16	
708-25-12790	6134	16	
708-25-12811	6002	17	
708-25-12811	6032	17	
708-25-12811	6102	17	
708-25-12811	6132	17	
708-25-12840	6003	13	-
708-25-12840	6033	13	-
708-25-12840	6103	13	-

PART NO	F/NO	I/NO	M/NO
708-25-12840	6133	13	-
708-25-12850	6003	13	-
708-25-12850	6033	13	-
708-25-12850	6103	13	-
708-25-12850	6133	13	-
708-25-12860	6003	13	-
708-25-12860	6033	13	-
708-25-12860	6103	13	-
708-25-12860	6133	13	-
708-25-12870	6003	13	-
708-25-12870	6033	13	-
708-25-12870	6103	13	-
708-25-12870	6133	13	-
708-25-12930	6002	19	-
708-25-12930	6032	19	-
708-25-12930	6102	19	-
708-25-12940	6002	19	-
708-25-12940	6032	19	-
708-25-12940	6102	19	-
708-25-12950	6003	14	
708-25-12950	6033	14	
708-25-12950	6103	14	
708-25-12950	6133	14	
708-25-12970	6002	45	
708-25-12970	6004	39	
708-25-12970	6032	45	
708-25-12970	6034	39	
708-25-12970	6102	45	
708-25-12970	6104	39	
708-25-12970	6132	45	
708-25-12970	6134	39	
708-25-12980	6002	18	
708-25-12980	6032	18	
708-25-12980	6102	18	
708-25-12980	6132	18	
708-25-13120	6002	26	
708-25-13120	6004	20	
708-25-13120	6032	26	
708-25-13120	6034	20	
708-25-13120	6102	26	
708-25-13120	6104	20	
708-25-13120	6132	26	
708-25-13120	6134	20	
708-25-13130	6002	27	
708-25-13130	6004	21	
708-25-13130	6032	27	
708-25-13130	6034	21	
708-25-13130	6102	27	
708-25-13130	6104	21	
708-25-13130	6132	27	

PART NO	F/NO	I/NO	M/NO
708-25-13130	6134	21	
708-25-13140	6002	28	
708-25-13140	6004	22	
708-25-13140	6032	28	
708-25-13140	6034	22	
708-25-13140	6102	28	
708-25-13140	6104	22	
708-25-13140	6132	28	
708-25-13140	6134	22	
708-25-13151	6002	23	
708-25-13151	6004	17	
708-25-13151	6032	23	
708-25-13151	6034	17	
708-25-13151	6102	23	
708-25-13151	6104	17	
708-25-13151	6132	23	
708-25-13151	6134	17	
708-25-13210	6002	24	
708-25-13210	6032	24	
708-25-13210	6102	24	
708-25-13210	6132	24	
708-25-13220	6004	18	
708-25-13220	6034	18	
708-25-13220	6104	18	
708-25-13220	6134	18	
708-25-13310	6102	32	
708-25-13310	6132	32	
708-25-13311	6002	32	
708-25-13311	6004	23	
708-25-13311	6032	32	
708-25-13311	6034	23	
708-25-13311	6104	23	
708-25-13311	6134	23	
708-25-13410	6002	4	
708-25-13410	6004	4	
708-25-13410	6032	4	
708-25-13410	6034	4	
708-25-13410	6102	4	
708-25-13410	6104	4	
708-25-13410	6132	4	
708-25-13410	6134	4	
708-25-13422	6002	25	
708-25-13422	6004	19	
708-25-13422	6032	25	
708-25-13422	6034	19	
708-25-13422	6102	25	
708-25-13422	6104	19	
708-25-13422	6132	25	
708-25-13422	6134	19	
708-25-13441	6002	29	

PART NO	F/NO	I/NO	M/NO
708-25-13441	6004	25	
708-25-13441	6032	29	
708-25-13441	6034	25	
708-25-13441	6102	29	
708-25-13441	6104	25	
708-25-13441	6132	29	
708-25-13441	6134	25	
708-25-13470	6002	30	
708-25-13470	6004	26	
708-25-13470	6032	30	
708-25-13470	6034	26	
708-25-13470	6102	30	
708-25-13470	6104	26	
708-25-13470	6132	30	
708-25-13470	6134	26	
708-25-13511	6002	33	-
708-25-13511	6004	24	-
708-25-13511	6032	33	-
708-25-13511	6034	24	-
708-25-13511	6102	33	-
708-25-13511	6104	24	-
708-25-13511	6132	33	-
708-25-13511	6134	24	-
708-25-13521	6002	33	-
708-25-13521	6004	24	-
708-25-13521	6032	33	-
708-25-13521	6034	24	-
708-25-13521	6102	33	-
708-25-13521	6104	24	-
708-25-13521	6132	33	-
708-25-13521	6134	24	-
708-25-13531	6002	33	-
708-25-13531	6004	24	-
708-25-13531	6032	33	-
708-25-13531	6034	24	-
708-25-13531	6102	33	-
708-25-13531	6104	24	-
708-25-13531	6132	33	-
708-25-13531	6134	24	-
708-25-14111	6004	28	
708-25-14111	6034	28	
708-25-14111	6104	28	
708-25-14111	6134	28	
708-25-14120	6002	37	
708-25-14120	6004	31	
708-25-14120	6032	37	
708-25-14120	6034	31	
708-25-14120	6102	37	
708-25-14120	6104	31	
708-25-14120	6132	37	

PART NO	F/NO	I/NO	M/NO
708-25-14120	6134	31	
708-25-14130	6002	38	
708-25-14130	6004	32	
708-25-14130	6032	38	
708-25-14130	6034	32	
708-25-14130	6102	38	
708-25-14130	6104	32	
708-25-14130	6132	38	
708-25-14130	6134	32	
708-25-14140	6002	35	
708-25-14140	6004	29	
708-25-14140	6032	35	
708-25-14140	6034	29	
708-25-14140	6102	35	
708-25-14140	6104	29	
708-25-14140	6132	35	
708-25-14140	6134	29	
708-25-14150	6002	36	
708-25-14150	6004	30	
708-25-14150	6032	36	
708-25-14150	6034	30	
708-25-14150	6102	36	
708-25-14150	6104	30	
708-25-14150	6132	36	
708-25-14150	6134	30	
708-25-14160	6002	39	-
708-25-14160	6004	33	-
708-25-14160	6032	39	-
708-25-14160	6034	33	-
708-25-14160	6102	39	-
708-25-14160	6104	33	-
708-25-14160	6132	39	-
708-25-14160	6134	33	-
708-25-14170	6002	39	-
708-25-14170	6004	33	-
708-25-14170	6032	39	-
708-25-14170	6034	33	-
708-25-14170	6102	39	-
708-25-14170	6104	33	-
708-25-14170	6132	39	-
708-25-14170	6134	33	-
708-25-14180	6002	39	-
708-25-14180	6004	33	-
708-25-14180	6032	39	-
708-25-14180	6034	33	-
708-25-14180	6102	39	-
708-25-14180	6104	33	-
708-25-14180	6132	39	-
708-25-14180	6134	33	-
708-25-14190	6002	39	-

https://truckmanualshub.com/

PART NO	F/NO	I/NO	M/NO
708-25-14190	6004	33-	
708-25-14190	6032	39-	
708-25-14190	6034	33-	
708-25-14190	6102	39-	
708-25-14190	6104	33-	
708-25-14190	6132	39-	
708-25-14190	6134	33-	
708-25-14210	6002	34	
708-25-14210	6032	34	
708-25-14210	6102	34	
708-25-14210	6132	34	
708-25-14901	6001	3	
708-25-14901	6023	1-	
708-25-14901	6031	3	
708-25-14901	6053	1-	
708-25-14901	6101	3	
708-25-14901	6123	1-	
708-25-14901	6131	3	
708-25-14901	6153	1-	
708-25-15110	6012	1	
708-25-15110	6042	1	
708-25-15110	6112	1	
708-25-15110	6142	1	
708-25-15110	6146	5	
708-25-15120	6012	3	
708-25-15120	6016	3	
708-25-15120	6042	3	
708-25-15120	6046	3	
708-25-15120	6112	3	
708-25-15120	6116	3	
708-25-15120	6142	3	
708-25-15120	6146	3	
708-25-15130	6012	4	
708-25-15130	6016	4	
708-25-15130	6042	4	
708-25-15130	6046	4	
708-25-15130	6112	4	
708-25-15130	6116	4	
708-25-15130	6142	4	
708-25-15130	6146	4	
708-25-15130	6146	7	
708-25-15140	6012	5	
708-25-15140	6016	5	
708-25-15140	6112	5	
708-25-15140	6116	5	
708-25-15150	6012	8	
708-25-15150	6016	8	
708-25-15150	6042	10	
708-25-15150	6046	10	
708-25-15150	6112	8	

PART NO	F/NO	I/NO	M/NO
708-25-15150	6116	8	
708-25-15150	6142	10	
708-25-15150	6146	10	
708-25-15171	6012	12	
708-25-15171	6016	12	
708-25-15171	6042	14	
708-25-15171	6046	14	
708-25-15171	6112	12	
708-25-15171	6116	12	
708-25-15171	6142	14	
708-25-15171	6146	14	
708-25-15180	6012	17	
708-25-15180	6016	17	
708-25-15180	6042	19	
708-25-15180	6046	19	
708-25-15180	6112	17	
708-25-15180	6116	17	
708-25-15180	6142	19	
708-25-15180	6146	19	
708-25-15200	6011	1	
708-25-15200	6012	1-	
708-25-15200	6111	1	
708-25-15200	6112	1-	
708-25-15240	6146	23	
708-25-15250	6012	23	
708-25-15250	6016	23	
708-25-15250	6042	25	
708-25-15250	6046	25	
708-25-15250	6112	23	
708-25-15250	6116	23	
708-25-15250	6142	25	
708-25-15250	6146	25	
708-25-15260	6012	27	
708-25-15260	6016	27	
708-25-15260	6042	29	
708-25-15260	6046	29	
708-25-15260	6112	27	
708-25-15260	6116	27	
708-25-15260	6142	29	
708-25-15260	6146	29	
708-25-15270	6012	29	
708-25-15270	6016	29	
708-25-15270	6042	31	
708-25-15270	6046	31	
708-25-15270	6112	29	
708-25-15270	6116	29	
708-25-15270	6142	31	
708-25-15270	6146	31	
708-25-15280	6012	18	
708-25-15280	6016	18	

PART NO	F/NO	I/NO	M/NO
708-25-15280	6042	20	
708-25-15280	6046	20	
708-25-15280	6112	18	
708-25-15280	6116	18	
708-25-15280	6142	20	
708-25-15280	6146	20	
708-25-15310	6012	19	
708-25-15310	6016	19	
708-25-15310	6042	21	
708-25-15310	6046	21	
708-25-15310	6112	19	
708-25-15310	6116	19	
708-25-15310	6142	21	
708-25-15310	6146	21	
708-25-15320	6012	10	
708-25-15320	6012	25	
708-25-15320	6013	25	
708-25-15320	6013	30	
708-25-15320	6016	10	
708-25-15320	6016	25	
708-25-15320	6017	25	
708-25-15320	6017	30	
708-25-15320	6018	20	
708-25-15320	6042	12	
708-25-15320	6042	27	
708-25-15320	6043	25	
708-25-15320	6043	30	
708-25-15320	6046	12	
708-25-15320	6046	27	
708-25-15320	6047	25	
708-25-15320	6047	30	
708-25-15320	6048	20	
708-25-15320	6112	10	
708-25-15320	6112	25	
708-25-15320	6113	25	
708-25-15320	6113	30	
708-25-15320	6116	10	
708-25-15320	6116	25	
708-25-15320	6117	25	
708-25-15320	6117	30	
708-25-15320	6118	20	
708-25-15320	6142	12	
708-25-15320	6142	27	
708-25-15320	6143	25	
708-25-15320	6143	30	
708-25-15320	6146	12	
708-25-15320	6146	27	
708-25-15320	6147	25	
708-25-15320	6147	30	
708-25-15320	6148	20	

PART NO	F/NO	I/NO	M/NO
708-25-15330	6012	20	
708-25-15330	6016	20	
708-25-15330	6042	22	
708-25-15330	6046	22	
708-25-15330	6112	20	
708-25-15330	6116	20	
708-25-15330	6142	22	
708-25-15340	6012	32	
708-25-15340	6013	37	
708-25-15340	6016	32	
708-25-15340	6017	35	
708-25-15340	6018	24	
708-25-15340	6042	34	
708-25-15340	6043	37	
708-25-15340	6046	34	
708-25-15340	6047	35	
708-25-15340	6048	24	
708-25-15340	6112	32	
708-25-15340	6113	37	
708-25-15340	6116	32	
708-25-15340	6117	35	
708-25-15340	6118	24	
708-25-15340	6142	34	
708-25-15340	6143	37	
708-25-15340	6146	34	
708-25-15340	6147	35	
708-25-15340	6148	24	
708-25-15350	6012	2	
708-25-15350	6013	2	
708-25-15350	6016	2	
708-25-15350	6017	2	
708-25-15350	6018	3	
708-25-15350	6042	2	
708-25-15350	6043	2	
708-25-15350	6046	2	
708-25-15350	6047	2	
708-25-15350	6112	2	
708-25-15350	6113	2	
708-25-15350	6116	2	
708-25-15350	6117	2	
708-25-15350	6118	3	
708-25-15350	6142	2	
708-25-15350	6143	2	
708-25-15350	6143	21	
708-25-15350	6147	2	
708-25-15350	6148	3	
708-25-15420	6012	6	
708-25-15420	6016	6	
708-25-15420	6112	6	
708-25-15420	6116	6	

PART NO	F/NO	I/NO	M/NO
708-25-15430	6012	21	
708-25-15430	6016	21	
708-25-15430	6042	23	
708-25-15430	6046	23	
708-25-15430	6112	21	
708-25-15430	6116	21	
708-25-15430	6142	23	
708-25-15430	6146	22	
708-25-16110	6016	1	
708-25-16110	6046	1	
708-25-16110	6116	1	
708-25-16110	6146	1	
708-25-16200	6015	1	
708-25-16200	6016	1-	
708-25-16200	6115	1	
708-25-16200	6116	1-	
708-25-17110	6017	1	
708-25-17110	6047	1	
708-25-17110	6117	1	
708-25-17110	6147	1	
708-25-17131	6013	5	
708-25-17131	6017	5	
708-25-17131	6043	5	
708-25-17131	6047	5	
708-25-17131	6113	5	
708-25-17131	6117	5	
708-25-17131	6143	5	
708-25-17131	6147	5	
708-25-17140	6013	7	
708-25-17140	6017	7	
708-25-17140	6043	7	
708-25-17140	6047	7	
708-25-17140	6113	7	
708-25-17140	6117	7	
708-25-17140	6143	7	
708-25-17140	6147	7	
708-25-17150	6013	8	
708-25-17150	6017	8	
708-25-17150	6043	8	
708-25-17150	6047	8	
708-25-17150	6113	8	
708-25-17150	6117	8	
708-25-17150	6143	8	
708-25-17150	6147	8	
708-25-17160	6013	9	
708-25-17160	6017	9	
708-25-17160	6043	9	
708-25-17160	6047	9	
708-25-17160	6113	9	
708-25-17160	6117	9	

PART NO	F/NO	I/NO	M/NO
708-25-17160	6143	9	
708-25-17160	6147	9	
708-25-17170	6013	10	
708-25-17170	6017	10	
708-25-17170	6043	10	
708-25-17170	6047	10	
708-25-17170	6113	10	
708-25-17170	6117	10	
708-25-17170	6143	10	
708-25-17170	6147	10	
708-25-17180	6013	12	
708-25-17180	6017	12	
708-25-17180	6043	12	
708-25-17180	6047	12	
708-25-17180	6113	12	
708-25-17180	6117	12	
708-25-17180	6143	12	
708-25-17180	6147	12	
708-25-17190	6013	13	
708-25-17190	6017	13	
708-25-17190	6043	13	
708-25-17190	6047	13	
708-25-17190	6113	13	
708-25-17190	6117	13	
708-25-17190	6143	13	
708-25-17190	6147	13	
708-25-17210	6013	14	
708-25-17210	6017	14	
708-25-17210	6043	14	
708-25-17210	6047	14	
708-25-17210	6113	14	
708-25-17210	6117	14	
708-25-17210	6143	14	
708-25-17210	6147	14	
708-25-17220	6013	15	
708-25-17220	6017	15	
708-25-17220	6043	15	
708-25-17220	6047	15	
708-25-17220	6113	15	
708-25-17220	6117	15	
708-25-17220	6143	15	
708-25-17220	6147	15	
708-25-17230	6013	28	
708-25-17230	6017	28	
708-25-17230	6043	28	
708-25-17230	6047	28	
708-25-17230	6113	28	
708-25-17230	6117	28	
708-25-17230	6143	28	
708-25-17230	6147	28	

PART NO	F/NO	I/NO	M/NO
708-25-17250	6013	19	
708-25-17250	6017	19	
708-25-17250	6043	19	
708-25-17250	6047	19	
708-25-17250	6113	19	
708-25-17250	6117	19	
708-25-17250	6143	19	
708-25-17250	6147	19	
708-25-17260	6013	20	
708-25-17260	6017	20	
708-25-17260	6043	20	
708-25-17260	6047	20	
708-25-17260	6113	20	
708-25-17260	6117	20	
708-25-17260	6143	20	
708-25-17260	6147	20	
708-25-17280	6047	21	
708-25-17280	6113	21	
708-25-17350	6013	21	
708-25-17350	6017	21	
708-25-17350	6043	21	
708-25-17350	6117	21	
708-25-17350	6147	21	
708-25-17370	6013	18	
708-25-17370	6017	18	
708-25-17370	6043	18	
708-25-17370	6047	18	
708-25-17370	6113	18	
708-25-17370	6117	18	
708-25-17370	6143	18	
708-25-17370	6147	18	
708-25-17410	6013	23	
708-25-17410	6017	23	
708-25-17410	6043	23	
708-25-17410	6047	23	
708-25-17410	6113	23	
708-25-17410	6117	23	
708-25-17410	6143	23	
708-25-17410	6147	23	
708-25-17420	6013	3	
708-25-17420	6017	3	
708-25-17420	6043	3	
708-25-17420	6047	3	
708-25-17420	6113	3	
708-25-17420	6117	3	
708-25-17420	6143	3	
708-25-17420	6147	3	
708-25-17430	6013	36	
708-25-17430	6017	34	
708-25-17430	6043	36	

PART NO	F/NO	I/NO	M/NO
708-25-17430	6047	34	
708-25-17430	6113	36	
708-25-17430	6117	34	
708-25-17430	6143	36	
708-25-17430	6147	34	
708-25-18100	6115	3	
708-25-18100	6118	1-	
708-25-18100	6145	3	
708-25-18100	6148	1-	
708-25-18250	6018	19	
708-25-18250	6048	19	
708-25-18571	6018	22	
708-25-18571	6048	22	
708-25-18571	6118	22	
708-25-18571	6148	22	
708-25-18580	6018	23	
708-25-18580	6048	23	
708-25-18580	6118	23	
708-25-18580	6148	23	
708-25-18600	6015	3	
708-25-18600	6018	1-	
708-25-19111	6001	6	
708-25-19111	6031	6	
708-25-19111	6101	6	
708-25-19111	6131	6	
708-25-19120	6001	15	
708-25-19120	6031	15	
708-25-19120	6101	15	
708-25-19120	6131	15	
708-25-19130	6001	27	
708-25-19130	6015	9	
708-25-19130	6031	27	
708-25-19130	6045	9	
708-25-19130	6101	27	
708-25-19130	6115	9	
708-25-19130	6131	27	
708-25-19130	6145	9	
708-25-19140	6001	24	
708-25-19140	6031	24	
708-25-19140	6101	24	
708-25-19140	6131	24	
708-25-19150	6011	10	
708-25-19150	6015	15	
708-25-19150	6041	10	
708-25-19150	6045	15	
708-25-19150	6111	10	
708-25-19150	6115	15	
708-25-19150	6141	10	
708-25-19150	6145	15	
708-25-19160	6011	4	

https://truckmanualshub.com/

PART NO	F/NO	I/NO	M/NO
708-25-19160	6015	7	
708-25-19160	6041	4	
708-25-19160	6045	7	
708-25-19160	6111	4	
708-25-19160	6115	7	
708-25-19160	6141	4	
708-25-19160	6145	7	
708-25-25110	6042	5	
708-25-25110	6046	5	
708-25-25120	6042	7	
708-25-25120	6046	7	
708-25-35200	6041	1	
708-25-35200	6042	1-	
708-25-35300	6141	1	
708-25-35300	6142	1-	
708-25-36200	6045	1	
708-25-36200	6046	1-	
708-25-36300	6145	1	
708-25-36300	6146	1-	
708-25-38600	6045	3	
708-25-38600	6048	1-	
709-20-51231	6206	10	
709-20-51260	6206	9	
709-20-51580	6206	28	
709-70-51121	6206	25	
709-70-51200	6203	22	
709-70-51200	6205	18	
709-70-51200	6206	1-	
709-70-51210	6206	26	
709-70-51410	6206	20	
709-70-51420	6206	27	
709-70-55103	6203	23	
709-70-55103	6205	19	
709-70-55103	6206	20-	
709-70-61101	6205	21	
709-70-61101	6207	5-	
709-70-61110	6207	45	
709-70-61120	6207	49	
709-70-61201	6205	22	
709-70-61201	6207	18-	
709-70-61601	6203	26	
709-70-61601	6207	43-	
709-70-62100	6203	25	
709-70-91102	6201	16-	
709-70-91112	6201	16	
709-70-91120	6201	17	
709-70-91130	6201	22	
709-70-91150	6201	18	
709-70-91170	6201	24	
709-70-91210	6207	4	

PART NO	F/NO	I/NO	M/NO
709-70-91300	6203	24	
709-70-91300	6205	20	
709-70-91300	6207	1-	
709-74-91111	6204	1	
709-74-91310	6204	3	
709-74-91321	6202	5	
709-74-91331	6204	5	
709-74-91340	6202	2	
709-74-91350	6204	6	
709-74-91370	6202	7	
709-74-91380	6204	4	
709-74-91390	6202	4	
709-74-91420	6202	6	
709-74-91420	6204	2	
709-74-91430	6202	3	
709-74-91450	6204	7	
709-74-92105	6201	2	
709-74-92105	6204	1-	
709-74-92105	6205	1-	
709-74-92110	6202	8	
709-74-92110	6204	8	
709-74-92120	6202	13	
709-74-92120	6204	11	
709-74-92140	6204	12	
709-74-92170	6202	17	
709-74-92170	6204	16	
709-74-92180	6202	9	
709-74-92180	6204	9	
709-74-92190	6204	36	
709-74-92210	6202	28	
709-74-92220	6204	34	
709-74-92230	6202	30	
709-74-92240	6204	38	
709-74-92250	6204	37	
709-74-92260	6202	32	
709-74-92270	6202	29	
709-74-92270	6204	33	
709-74-92281	6203	19	
709-74-92281	6205	14	
709-74-92290	6203	20	
709-74-92290	6205	15	
709-74-92310	6203	21	
709-74-92310	6205	16	
709-74-92360	6204	10	
709-74-92420	6202	10	
709-74-92430	6202	11	
709-74-92440	6203	12	
709-74-92450	6203	9	
709-74-92460	6203	15	
709-74-92580	6202	12	

PART NO	F/NO	I/NO	M/NO
709-74-92590	6202	16	
709-74-92810	6203	7	
709-74-92810	6205	7	
709-74-92820	6203	16	
709-74-92820	6205	9	
709-75-91111	6202	1	
709-75-92105	6201	1	
709-75-92105	6202	1-	
709-75-92105	6203	1-	
709-75-92110	6202	19	
709-75-92110	6204	19	
709-75-92120	6202	20	
709-75-92120	6204	20	
709-75-92130	6202	22	
709-75-92130	6204	22	
709-75-92140	6202	25	
709-75-92140	6204	25	
709-75-92180	6202	21	
709-75-92180	6204	21	
709-75-92220	6203	8	
709-75-92220	6205	8	
709-75-92240	6205	12	
709-79-11110	6201	9	
709-79-11120	6201	11	
709-79-11130	6201	8	
709-79-11140	6201	10	
709-79-22101	6201	1-	
709-79-22101	6202	1-	
709-79-22101	6203	1-	
709-79-22101	6204	1-	
709-79-22101	6205	1-	
709-79-22101	6206	1-	
709-79-22101	6207	1-	
720-25-15350	6048	3	
720-68-11920	6011	6	
720-68-11920	6011	9	
720-68-11920	6015	11	
720-68-11920	6015	14	
720-68-11920	6041	6	
720-68-11920	6041	9	
720-68-11920	6045	11	
720-68-11920	6045	14	
720-68-11920	6111	6	
720-68-11920	6111	9	
720-68-11920	6115	11	
720-68-11920	6115	14	
720-68-11920	6141	6	
720-68-11920	6141	9	
720-68-11920	6145	11	
720-68-11920	6145	14	

PART NO	F/NO	I/NO	M/NO
720-68-15240	6001	16	
720-68-15240	6031	16	
720-68-15240	6101	16	
720-68-15240	6131	16	
720-68-19510	6018	2	
720-68-19510	6048	2	
720-68-19510	6118	2	
720-68-19510	6148	2	
720-68-19610	6003	10	
720-68-19610	6033	10	
720-68-19610	6103	10	
720-68-19610	6133	10	
720-68-19740	6146	2	
720-68-19870	6002	43	
720-68-19870	6032	43	
720-68-19870	6102	43	
720-68-19870	6132	43	
7815-11-1010	1501	6	
7815-11-1010	1501	10	
7815-11-1010	1501	14	
7815-11-1010	1503	6	
7815-11-1010	1503	10	
7815-11-1010	1503	14	
7819-11-2310	1019	6	
7827-11-1500	1438	19	
7827-13-1000	1438	5	
7831-74-2000	9005	1	
7831-77-2000	9054	1	
7861-01-1320	1501	5	
7861-01-1320	1501	9	
7861-01-1320	1503	5	
7861-01-1320	1503	9	
7861-01-1820	1501	13	
7861-01-1820	1503	13	
7861-21-1101	1503	1-	
7861-21-1110	1503	1	
7861-21-1140	1501	3	
7861-21-1140	1503	3	
7861-21-1150	1501	16	
7861-21-1150	1503	16	
7861-21-1170	1501	7	
7861-21-1170	1501	11	
7861-21-1170	1503	7	
7861-21-1170	1503	11	
7861-21-1180	1501	15	
7861-21-1180	1503	15	
7861-21-1190	1501	2	
7861-21-1190	1503	2	
7861-21-1300	1501	4	
7861-21-1300	1503	4	

PART NO	F/NO	I/NO	M/NO
7861-21-1701	1501	8	
7861-21-1701	1503	8	
7861-21-1800	1501	12	
7861-21-1800	1503	12	
7861-22-1101	1501	1-	
7861-22-1110	1501	1	
7861-91-3370	1019	13	
7861-91-4110	1011	12	
7861-91-4110	1012	12	
7861-91-4520	1019	23	
7861-91-4520	1431	27	
7861-91-4700	1431	23	
7861-99-1300	1019	12	

PART NO	F/NO	I/NO	M/NO

https://truckmanualshub.com/

https://truckmanualshub.com/