FENC0032-00

Parts Book

HYDRAULIC
EXCAVATOR

PC210 -10M0
PC210LC-10M0

SERIAL NUMBERS C00001 and up

KOMATSU

RUTHZIL TRATOR COMERCIAL DE PEÇAS LTDA 11 97083-6812 ROLANDO CITRANGULO

FENC0032-00

PARTS BOOK

KOMATSU

PC210-10M0, PC210LC-10M0
Serial No. C00001 and up

SAA6D107E-1
Serial No. 26689866 and up

FOREWORD

When ordering replacement parts, specify the part number, part name, and quantity required, and also specify your machine model code, machine serial number, engine serial number and the service meter reading of which the parts are needed. This Parts Book contains not only standard replacement parts but also optional equipment, tools and field repair service parts.

To order these items, please contact your nearest Komatsu distributor.

NOTE
The illustrations, parts configuration, parts number or parts name in this publication may differ from your machine unit, and these are subject to change without notice for continuous product improvement.
Whenever concerns and questions arise regarding items in this publication and your machine unit or when you order there replacement parts, please consult your nearest Komatsu distributor for the latest information.

This Parts Book contains the information and special codes as follows:

ILLUSTRATION AND PARTS LIST

When you open this Parts Book, you will find an illustration following its figure number (FIG.) Each individual
part in the illustration is given an index number. Following the illustration, the component parts of the unit are listed in the order of the index numbers shown in the illustration. The part number, part name, quantity and applicable serial number are given for each part as a parts list.

FIGURE NUMBER (FIG.)

The figure number (FIG.) is the number which shows the figure of the page. It is not the spare part number.
The numbers are not always continuous.

PARTS LIST

Spare parts information are listed in the parts list page as follows:

Index:

This is the same as the index number in the illustration. The parts are listed in index number order.

Code:

Codes are used in this column and represent as follows:

A1 This part and the part specified in the line immediately above are interchangeable.
A2 The part specified in the line above can be used instead of this part.
A3 This part can be used instead of the part specified in the line immediately above.
A4 The part specified in the description column can be used instead of this part if it is used as a set.
B1 This shows discontinued part. The part specified in the above line is supplied instead.
B2 This shows a discontinued part. The part specified in the description column is supplied instead as a set.

C1 This part cannot be supplied as an individual part. It is supplied as an assembly.
C2 This part is supplied for authorized Komatsu distributors only. It cannot be supplied as an individual part. It is supplied as an assembly.
C3 This indicates a part supplied as semi-finished. It requires additional work before installation.

Part Number:

The number given in the part number column is the part number for the part shown. It is the identification
code used when ordering that part. It is important that there be no mistake in this code number when ordering.

Description:

This gives the name of part that has the part number listed. The mark "•" is put in front of the component part name of an assembly part and the item is entered following the assembly. If a part marked with "•" is a sub assembly, its components are marked with "••".

Example: Tank Assembly
- •Tank
- •Cap
- ••Packing

Furthermore, the following marks and abbreviations are used in this column.

Kit This indicates kit parts. For kit parts, refer to the section FIELD REPAIR SERVICE PARTS in this Parts Book.
D Diameter
L Length
L.H. Left-hand side
R.H. Right-hand side
T Thickness
W Width

Quantity (Qty):

This specifies the number of pieces used for one machine. However, if a part is included in the assembly and/or component, the quantity per such assembly and/or component is specified.
Code AR (as required) shall be used in the Quantity column if the part cannot be specified numbers requires per machine and/or component. In such case, any number of quantities may be ordered depend on the field service requirement.

Serial Numbers:

Applicable engine serial number is indicated for the engine volume. In the chassis volume, this indicates the machine serial number in which the part is used.
If the serial number is enclosed in parenthesis, it shows that it is the applicable serial number for exclusive use of the equipment of figure number (FIG.)

AVANT-PROPOS

Lorsque vous passez une commande d'une pièce de rechange, vous êtes prié de spécifier le numéro de la pièce, la désignation de la pièce et la quantité requise et d'indiquer également le code du modèle de la machine, le numéro de série de la machine, le numéro de série du moteur et la lecture du compteur de service du véhicule.

Sur le présent catalogue des pièces figurent non seulement les équipements standard, mais également les équipements et accessoires en option. Si vous désirez un équipement ou une pièce quelconque, vous êtes prié de prendre contact avec le concessionnaire Komatsu le plus proche.

Ce catalogue des pièces comprend les informations et codes spéciaux de la manière suivante:

FIGURES ET LISTES DES PIÈCES

Lorsque vous ouvrez le présent catalogue, vous pouvez rechercher les figures en fonction du numéro de figure (FIG.). Chaque pièce individuelle dans la figure est fournie d'un numéro de référence. D'après la figure, les éléments de l'unité sont énumérés dans l'ordre des numéros de référence montrés sur la figure. Le numéro de la pièce, la désignation de la pièce, la quantité et le numéro de série utilisés sont indiqués pour chaque pièce comme liste des pièces.

NUMÉRO DE FIGURE (FIG.)

Le numéro de figure (FIG.) est un numéro qui permet d'identifier une figure sur une page. Il ne représente pas le numéro de la pièce de rechange. Les numéros ne sont pas toujours séquentiels.

LISTE DES PIÈCES DE RECHANGE

Les informations des pièces de rechange sont données dans la page de la liste des pièces comme ci-après:

Numéro de référence (Index):

Les numéros de référence correspondent aux numéros de référence notés sur la figure et sont énumérés dans l'ordre des numéros de référence.

Codification (Code):

Les codes sont utilisés dans cette colonne et représentent comme ci-après:

A1 Cette pièce et la pièce qui figure sur la ligne juste au-dessus sont interchangeables.

A2 La pièce indiquée sur la ligne au-dessus peut être utilisée au lieu de cette pièce.

A3 Cette pièce peut être utilisée au lieu de la pièce indiquée sur la ligne juste au-dessus.

A4 La pièce indiquée dans la colonne de description peut être utilisée au lieu de cette pièce si elle est utilisée comme ensemble.

B1 Ceci montre la pièce dont la production est interrompue. La pièce indiquée dans la ligne au-dessus est fournie à sa place.

B2 Ceci montre la pièce dont la production est interrompue. La pièce indiquée dans la colonne de description est fournie à sa place comme ensemble.

C1 Cette pièce ne peut pas être fournie comme pièce individuelle. Elle est fournie en tant qu'ensemble.

C2 Cette pièce est fournie pour les distributeurs autorisés de Komatsu seulement. Elle ne peut pas être fournie comme pièce individuelle. Elle est fournie en tant qu'ensemble.

C3 Ceci indique une pièce fournie à l'état semi-fini. Ceci exige un travail additionnel avant l'installation.

Numéros de pièce (Part Number):

Les numéros indiqués dans cette colonne correspondent aux numéros des pièces représentées et constituent les codes à spécifier pour toute commande de pièce. Il est important de ne pas faire d'erreur avec ce code au moment de la commande.

Description (Description):

Ceci indique le nom de la pièce qui montre le numéro de la pièce énumérée. La marque "•" est placée devant le nom de la pièce du composant d'une pièce d'ensemble et l'item est introduit suivant l'ensemble. Si une pièce marquée avec "•" est un sous-ensemble, ses composants sont marqués avec "• •".
Exemple: Tank Assembly (Ensemble de réservoir)
• Tank
• Cap
• • Packing

En outre, les marques et abréviations suivantes sont utilisées dans cette colonne.

Kit Ceci indique les pièces de kit. Pour les pièces de kit, se référer à la Section FIELD REPAIR SERVICE PARTS de ce Catalogue des Pièces.
D Diamètre
L Longueur
L.H. Côté gauche
R.H. Côté droit
T Épaisseur
W Largeur

Quantité (Qty):

Ceci spécifie le nombre de pièces nécessaires pour l'équipement en question. S'il s'agit de pièces comprises dans un ensemble et/ou composant, et la quantité indiquée est le nombre de pièces nécessaires pour l'ensemble et/ou le composant en question.
Le code AR (comme requis) sera utilisé dans la colonne de Quantité si la pièce ne peut pas se présenter en nombres indiqués comme requis par machine et/ou composant. Dans ce cas, tout nombre de quantités peut être commandé selon la condition de service de champ.

Numéros de série (Serial Numbers):

Le numéro de série du moteur applicable est indiqué pour le volume du moteur. Dans le volume de la carrosserie, ceci indique le numéro de série de l'équipement sur lequel la pièce est utilisée.

Si le numéro de série est placé entre parenthèses, cela signifie qu'il s'agit d'un numéro de série destiné exclusivement à l'utilisation de l'équipement mentionné dans le numéro de figure (FIG.).

PREFAZIONE

Quando fate un ordinazione di una parte di ricambio, siete pregati di precisare il numero della parte, la designazione della parte e la quantità necessaria ed indicare anche il codice del modello della macchina, il numero di serie della macchina, il numero di serie del motore e la lettura dell'indicatore di servizio del veicolo.

Sul presente catalogo delle parti appaiono non solo le attrezzature standard, ma anche le attrezzature ed accessori in opzione. Se desiderate un'attrezzatura o una parte qualunque, siete pregati di prendere contatto con il concessionario Komatsu più vicino.

Questo catalogo delle parti comprende le informazioni ed i codici speciali nel modo seguente:

ILLUSTRAZIONI ED ELENCO DELLE PARTI

Quando aprite il presente catalogo, troverete una figura secondo il suo numero di figura (FIG.). Ogni parte individuale nella figura è fornita di un numero di riferimento. Secondo la figura, gli elementi dell'unità sono enumerati nell'ordine dei numeri di riferimento mostrati sulla figura. Il numero della parte, la designazione della parte, la quantità ed il numero di serie utilizzati sono indicati per ogni parte come elenco delle parti.

NUMERO DI FIGURA (FIG.)

Il numero di figura (FIG.) è il numero che indica la figura della pagina. Non rappresenta il numero della parte di ricambio. I numeri non sono sempre continui.

ELENCO DELLE PARTI DI RICAMBIO

Le informazioni dei pezzi di ricambio sono elencate nella pagina dell'elenco dei pezzi come segue:

Numero di riferimento (Index):

I numeri di riferimento corrispondono ai numeri di riferimento notati sulla figura e sono enumerati nell'ordine dei numeri di riferimento.

Codice (Code):

I codici sono usati in questa colonna e rappresentano come segue:

A1 Questa parte ed la parte specificata nella linea immediatamente sopra sono intercambiabili.

A2 La parte specificata nella linea sopra può essere usata anziché questa parte.

A3 Questa parte può essere usata anziché la parte specificata nella linea immediatamente sopra.

A4 La parte specificata nella colonna di descrizione può essere usata anziché questa parte se è usata come insieme.

B1 Ciò mostra la parte non più in produzione. La parte specificata nella suddetta linea è invece fornita.

B2 Ciò mostra una parte non più in produzione. La parte specificata nella colonna di descrizione è fornita invece come insieme.

C1 Questa parte non può essere fornita come pezzo individuale. È fornita come insieme.

C2 Questa parte è destinata solo ai distributori autorizzati Komatsu. Non può essere fornita come parte individuale. È fornita come insieme.

C3 Ciò indica una parte fornita come semifinito. Richiede un lavoro supplementare prima dell'installazione.

Numeri di parte (Part Number):

I numeri indicati in questa colonna corrispondono ai numeri delle parti rappresentate e costituiscono i codici da precisare per qualsiasi ordinazione di parte. È importante non fare un errore con questo codice al momento dell'ordinazione.

Descrizione (Description):

Ciò dà il nome della parte che presenta il numero di parte elencato. Il contrassegno "•" è messo davanti al nome della parte componente di una parte di gruppo e l'articolo è inserito dopo il gruppo. Se un pezzo segnato con "•" è un sotto-gruppo, i suoi componenti sono segnati con "• •".

Esempio: Tank Assembly
- • Tank
- • Cap
- • • Packing

Inoltre, i seguenti contrassegni ed abbreviazioni sono usati in questa colonna.

Kit Ciò indica le parti di kit. Per le parti di kit, riferirsi alla sezione PARTI DI RICAMBIO PER SERVIZIO DI RIPARAZIONE IN SEDE in questo Catalogo delle Parti.
D Diametro
L Lunghezza
L.H. Lato a sinistra
R.H. Lato a destra
T Spessore
W Larghezza

Quantità (Qty):

Questo precisa il numero di parti necessarie per l'attrezzatura in questione. Se si tratta di parti comprese in un insieme e/o componente, e la quantità indicata è il numero di parti necessarie per l'insieme e/o il componente in questione.
Il codice AR (come richiesto) sarà utilizzato nella colonna di Quantità se la parte non può presentarsi in numeri indicati come richiesto per macchina e/o componente. In questo caso, qualsiasi numero di quantità può essere ordinato secondo la condizione di servizio di campo.

Numeri di serie (Serial Numbers):

Il numero di serie del motore applicabile è indicato per il volume del motore. Nel volume della carrozzeria, questo indica il numero di serie dell'attrezzatura sulla quale la parte è utilizzata.

Se il numero seriale è racchiuso tra parentesi, indica che è il numero di serie applicabile per uso esclusivo dell'attrezzatura del numero di figura (FIG.)

Bei der Bestellung von Teilen bitte die Teilenummer, die Teilebezeichnung und die Menge des jeweiligen Teils sowie die Modellnummer, die Seriennummer der Maschine, die Seriennummer des Motors und den Stand des Betriebsstundenzählers angeben.

In dieser Ersatzteilliste ist nicht nur das Standardzubehör aufgeführt, sondern auch als Sonderausstattung erhältliche Teile und Einrichtungen. Bestellungen nimmt Ihr zuständiger Komatsu-Händler entgegen.

Die folgenden Informationen und Kodes sind in der Ersatzteilliste enthalten:

Bilder und Ersatzteilliste

Beim Aufschlagen des Ersatzteilkatalogs finden Sie nach der Bildnummer (BILD) geordnete Bilder. Jedes Einzelteil einer Baugruppe ist mit einer Kennzahl versehen. Ausgehend von den Bildern sind die Bauteile der Baugruppe aufgeführt, und zwar geordnet nach den in den Bildern angegebenen Kennzahlen. Jedes Einzelteil wird mit Teilenummer, Teilebezeichnung und entsprechender Seriennummer angegeben.

Bildnummer (BILD)

Mit der Bildnummer (BILD) können Bilder auf einer Seite identifiziert werden. Es handelt sich dabei nicht um die Nummer des Lieferteils. Auch sind die Bilder nicht fortlaufend nummeriert.

Ersatzteilliste

Angaben zu den Ersatzteilen sind auf der Auflistungsseite wie folgt dargestellt::

Kennzahl (Index):

Hierbei handelt es sich um die Kennzahlen aus den Bildern. Die Bauteile sind nach diesen Kennzahlen geordnet aufgeführt.

Kode (Code):

In dieser Spalte werden Kodes mit den folgenden Bedeutungen benutzt:

A1 Dieses Teil ist mit dem in der vorangegangenen Zeile aufgeführten Teil austauschbar.

A2 Das in der vorangegangen Zeile aufgeführte Teil kann anstelle dieses Teils verwendet werden.

A3 Dieses Teil kann anstelle des in der vorangegangenen Zeile aufgeführten Teils verwendet werden.

A4 Anstelle dieses Teils kann das in der Spalte „Beschreibung“ aufgeführte Teil verwendet werden, wenn das Teil zusammen mit anderen Teilen als ein Bauteilsatz verwendet wird.

B1 Dieses Teil kann nicht mehr geliefert werden. Stattdessen wird das in der vorangegangenen Zeile aufgeführte Teil geliefert.

B2 Dieses Teil kann nicht mehr geliefert werden. Stattdessen wird das in der Spalte „Beschreibung“ aufgeführte Teil als ein Bauteilsatz geliefert.

C1 Dieses Teil kann nicht als Einzelteil, sondern nur als Baugruppe geliefert werden.

C2 Dieses Teil wird nur an autorisierte Komatsu-Händler geliefert. Es kann nicht als Einzelteil, sondern nur als Baugruppe geliefert werden.

C3 Hiermit werden Teile gekennzeichnet, die in vorbearbeitetem Zustand geliefert werden und für den Einbau nachbearbeitet werden müssen.

Teilenummer (Part Number):

Die in der Spalte „Teilenummer“ aufgeführte Nummer entspricht der Teilenummer für das betreffende Teil. Diese Nummer dient zur Identifizierung des Teils bei einer Bestellung. Deshalb sollte bei der Bestellung stets auf die genaue Angabe der Teilenummer geachtet werden.

Beschreibung (Description):

Hierunter wird die Bezeichnung des Teils mit der aufgeführten Teilenummer angegeben. Jedes Baugruppen-Bauteil ist mit dem vorangestellten Symbol „•“ gekennzeichnet und wird hinter der entsprechenden Baugruppe aufgeführt. Handelt es sich bei dem mit „•“ gekennzeichneten Bauteil um eine Baugruppe, sind die Bauteile dieser Baugruppe mit „• •“ gekennzeichnet.

Beispiel: Tank Assembly
- • Tank
- • Cap
- • • Packing

Zusätzlich werden die folgenden Zeichen und Abkürzungen in dieser Spalte verwendet:

Kit Hiermit werden Teile gekennzeichnet, die nur als Satz erhältlich sind. Siehe dazu den Abschnitt „FIELD REPAIR SERVICE PARTS“ dieses Ersatzteilkatalogs.
D Durchmesser
L Länge
L.H. linke Seite
R.H. Rechte Seite
T Dicke
W Breite

Menge (Qty):

Hierunter wird die Anzahl der Bauteile für eine Maschine angegeben. Im Falle einer Baugruppe oder eines Aggregats wird allerdings die Anzahl der Teile pro Baugruppe angegeben.
Der Kode AR (nach Bedarf) wird in dieser Spalte dann benutzt, wenn keine genaue Angabe darüber möglich ist, wie groß der Mengenbedarf pro Maschine und/oder Baugruppe ist. In diesem Fall kann eine beliebige Menge je nach Bedarf bestellt werden.

Serial Numbers (Seriennummern):

Im Ersatzteilkatalog für den Motor versteht man hierunter die Seriennummer des Motors, in den das betreffende Teil eingebaut ist. Im Ersatzteilkatalog für die Maschine versteht man hierunter die Seriennummer der Maschine, in die das entsprechende Teil eingebaut ist.
Wenn die Seriennummer in Klammern angegeben ist, ist diese Seriennummer ausschließlich für das in der Bildnummer (BILD) angegebene Zubehör bestimmt.

INTRODUÇÃO

Ao solicitar uma peça, informe o número, nome e quantidade da peça necessária, bem como o código de modelo da máquina e seu número de série, o número do motor e a leitura do medidor de serviço.

Este catálogo de peças não somente especifica os acessórios padrões mas também as peças opcionais e aditamentos. Para pedir uma peça, entre em contato com o revendedor Komatsu mais próximo.

Este catálogo de peças contém as seguintes informações e códigos especiais:

LISTA DE PEÇAS E ILUSTRAÇÕES

Ao abrir este catálogo de peças, encontrar-se-á uma ilustração seguida do número da figura (FIG.). A cada peça individual na ilustração corresponde um número de índice. Seguindo a ilustração, as peças componentes da unidade são listadas na ordem dos números de índice nela indicados. O número, nome, quantidade e número de série aplicável da peça são aprsentados como uma lista de peças.

NÚMERO DA FIGURA (FIG.)

O número da figura (FIG.) é o número que mostra a ilustração da página. Não é um número para fornecimento de peças sobressalentes. Os números nem sempre são contínuos.ebene Zubehör bestimmt.

LISTA DE PEÇAS

As informações das peças sobressalentes são relacionadas na página com a lista de peças de acordo com o seguinte:

Índice (Index):

Este é o mesmo que o número de índice na ilustração. As peças são relacionadas na ordem dos números de índice.

Código (Code):

Códigos são utilizados nesta coluna e significam o seguinte:

A1 Esta peça e a peça especificada na linha imediatamente acima são intercambiáveis.

A2 A peça especificada na linha acima pode ser utilizada no lugar desta peça.

A3 Esta peça pode ser utilizada no lugar da peça especificada na linha imediatamente acima.

A4 A peça especificada na coluna “Descrição” pode ser utilizada no lugar desta peça se usada como um conjunto.

B1 Indica peça descontinuada. A peça especificada na linha acima é fornecida em seu lugar.

B2 Indica peça descontinuada. A peça especificada na coluna “Descrição” é fornecida em seu lugar como um conjunto.

C1 Esta peça não pode ser fornecida como peça individual. Ela é fornecida como um conjunto.

C2 Esta peça é fornecida somente para revendedores Komatsu autorizados. Não pode ser fornecida como peça individual. Ela é fornecida como um conjunto.

C3 Indica peça fornecida em condição semiacabada. Requer trabalho adicional antes da instalação.

Número da peça (Part Number):

O número indicado na coluna de números de peça corresponde ao número da peça exibida. É o código de identificação usado para o pedido da peça. É importante não enganar-se de número de código ao pedir a peça.

Descrição (Description):

Indica o nome da peça que tem o seu número de peça relacionado. O símbolo "•" é colocado na frente do nome peça do componente de uma peça de conjunto, e o item é lançado seguindo o conjunto. Se uma peça indicada com "•" é um subconjunto, os seus componentes são indicados por "• •".
Exemplo: Tank Assembly
• Tank
• Cap
• • Packing

Além disso, os seguintes símbolos e abreviações são usados nesta coluna.

Kit Indica peças de um jogo. Para peças de jogo, referir-se à seção "FIELD REPAIR SERVICE PARTS" neste catálogo de peças.

D Diâmetro
L Comprimento
L.H. Lado esquerdo
R.H. Lado direito
T Espessura
W Largura

Quantidade (Qty):

Indica o número de peças utilizadas em uma máquina. Contudo, se uma peça é incluída no conjunto e/ou componente, a quantidade por conjunto e/ou componente é especificada.
O código AR (como requerido) usar-se-á na coluna "Quantitade" caso o número de peças por máquina e/ou componente não possa ser especificado. Em tal caso, qualquer número de peças pode ser pedido dependendo dos requisitos de serviço em campo.

Números de série (Serial Numbers):

O número de série do motor aplicável é indicado para o volume do motor. No volume da carroceria, indica o número de série da máquina na qual a peça é utilizada.

Se o número de série está entre parêntesis, mostra que é o número de série aplicável para uso exclusivo do equipamento do número da figura (FIG.)

订购零件时，请注明需要零件的货号、品名、数量以及使用机器的车辆编号、发动机型号和系列号、工作时数。

此零件明细表上不仅记载了标准装备零件，还记载了选购零件、附件零件。如果您需要订货，请与最近的小松代理店联系。

为了清楚明了，零件手册中有如下规定：

图表

打开此零件清单后，可以看到附带图号（FIG.）的零件明细表图示。在图示上标有各种零件的索引号码。除图之外，还按索引号码的顺序列表表示货号、品名、数量、适用机型。

图号（FIG.）

图号表示该页图的号码。它不是补充零件用的货号。此号码不一定是连续号码。

零件表

从左栏开始按以下顺序显示零件的明细。

索引 (Index):

与图的索引号码一致，按索引号码顺序编制为表格形式。

代号 (Code):

此栏使用的代号如下所示：

A1　此行零件可与紧挨着的上一行零件互换使用。

A2　上一行的零件可取代此行零件来使用。

A3　此行零件可代替紧挨着的上一行零件使用。

A4　品名栏内的零件配套后，可取代此行零件来使用。

B1　该行零件已停止供应，用上一行的零件代替使用。

B2　该行零件已停止供应，品名栏内的零件配套后代替此行零件供应。

C1　此行零件拟成套供应，不以单一零件供应。

C2　此行零件主要面向特定的代理。不以单一零件供应，只拟成套供应。

C3　此行零件以半成品的形式供应，使用前必需再加工。

货号 (Part Number):

此栏所示的编号是图示零件的货号。它是在订货时需要标明的特定代号，是非常重要的。

品名 (Description):

表示相当于货号的零件名称。构成组装品的零件，在品名的前面有 “·” 标记，记载在组装品之后。
另外，如果标记 “·” 的零件是组装品，则该构成零件的品名前标有 “· ·” 标记。

例： TANK ASSEMBLY
· TANK
· CAP
· · PACKING

另外，说明栏可能显示以下代号。

Kit 表示修理包。关于修理包构件详情，请参考此零件清单中 “现场修理服务零件” 部分的内容。
D 直径
L 全长
L.H. 左侧
R.H. 右侧
T 厚度
W 全宽

数量 (Qty):

表示一台机器中需要使用的该零件数量。但是，如果是组装零件的构成零件时，表示其组装件的件数。
如果不能指定每个机器以及（或者）组装零件中必须的零件数量时，可以在零件数量栏中使用代码 AR。
此时，数量由现场的服务要件决定，然后进行定购。

适用机型 (Serial Numbers):

发动机篇中表示该使用零件的发动机型号，在机体篇中表示该使用零件的车辆号码。

如果适用机型位于括号中，表明该适用机型专门用于图号 (FIG.) 中所指的设备。

ПРЕДИСЛОВИЕ

При заказе запчасти укажите номер части, наименование части и нужное количество; кроме того, укажите код модели вашей машины, серийный номер машины, серийный номер двигателя и показания счетчика мото-часов.

В Каталоге приведены не только стандартные изделия, но и дополнительное оборудование и принадлежности. Для заказа запчасти пожалуйста обратитесь к ближайшему дилеру "Комацу".

Содержащаяся в Каталоге информация и специальные коды разъясняются ниже:

РИСУНОК И ПЕРЕЧЕНЬ ЧАСТЕЙ

Раскрыв Каталог, вы увидите рисунок после номера рисунка (ПОЗ). Каждой отдельной части на рисунке присвоен позиционный номер. За рисунком следует перечень составных частей устройства в порядке номеров позиций рисунка. Перечень частей указывает для каждой части ее номер, наименование, количество и применимый серийный номер.

НОМЕР РИСУНКА (ПОЗ)

Номер рисунка (ПОЗ) – это номер, который указывает рисунок на странице. Он не является номером запчасти. Последовательность номеров не обязательно непрерывна.

ПЕРЕЧЕНЬ ЧАСТЕЙ

Данные запасных частей приведены на странице перечня частей следующим образом:

Индекс (Index):

То же, что номер позиции на рисунке. Части перечислены в порядке их позиционных номеров.

Код: (Code):

В этой колонке находятся коды, обозначающие следующее:

A1 Данная часть и часть, указанная в предыдущей строке, взаимозаменяемы.

A2 Вместо данной части можно использовать часть, указанную в предыдущей строке.

A3 Данную часть можно использовать вместо части, указанной в предыдущей строке.

A4 В комплекте, вместо данной части можно использовать указанную в колонке описания.

B1 Поставки этой части прекращены. Взамен поставляется часть, указанная в предыдущей строке.

B2 Поставки этой части прекращены. Взамен комплектом поставляется часть, указанная в колонке описания.

C1 Данная часть отдельно не поставляется. Она поставляется с узлом.

C2 Данная часть поставляется лишь уполномоченным дилерам "Комацу". Отдельно не поставляется. Поставляется с узлом.

C3 Обозначает часть, поставляемую без доводки. Требует предустановочной подготовки.

Номер части (Part Number):

Приведенный в колонке номеров частей номер является номером изображенной части. Это код-идентификатор для заказа данной части. Важно, чтобы при заказе этот кодовый номер был указан без ошибок.

Описание (Description):

Здесь приводится наименование части, обозначенной номером в перечне. Значок "·" ставится перед наименованием детали компонента, причем деталь записана после узла. Если помеченная "·" часть является подсборкой узла, то ее составные части обозначаются значком "··".

Пример: Tank Assembly
·Tank
·Cap
··Packing

Далее, в этой колонке используются следующие обозначения и сокращения.

Kit	Указывает на элементы комплекта. Элементы комплекта смотри в разделе ЗАПАСНЫЕ ЧАСТИ ДЛЯ РЕМОНТА В УСЛОВИЯХ ЭКСПЛУАТАЦИИ данного Каталога.
D	Диаметр
L	Длина
L.H.	Левая сторона
R.H.	Правая сторона
T	Толщина
W	Ширина

Количество (Qty):

Указывает общее число изделий в одной машине. Если же изделие является частью узла и/или устройства, то указывается количество в таком узле и/или устройстве.
При невозможности указать количество частей на машину и/или устройство, в колонке Количество проставляется код AR (по потребности). В таком случае можно заказывать любые количества в зависимости от потребностей обслуживания на месте.

Серийные номера (Serial Numbers):

В книге по двигателю приводится соответствующий серийный номер двигателя. В книге по шасси указывает на серийный номер машины, где используется данная часть.

Серийный номер, заключенный в круглые скобки означает, что он применяется только для оборудования с номером рисунка (ПОЗ.)

. رقم القطعة (Part Number)

الرقم الوارد في عمود رقم القطعة هو رقم القطعة الخاص بالقطعة المبينة. وهو الرمز المستخدم لطلب تلك القطعة. ومن الضروري عدم ارتكاب اي خطأ في تحديد هذا الرقم عند طلب القطع.

. الوصف (Description)

يعطي اسم القطعة المدرج رقمها في القائمة. توضع العلامة "٠" امام اسم المكون لمجموعة ما ويدرج البند بعد المجموعة. اذا كانت القطعة المشار اليها بالعلامة "٠" هي نفسها عبارة عن مجموعة مكونات, فان كلا من مكوناتها يشار اليها بالعلامة "٠٠".
مثال

Tank Assembly
٠Tank
٠Cap
٠٠Packing

بالاضافة الى ذلك, العلامات والمختصرات التالية تستخدم في هذا العمود.

Kit	هذا يشير الى قطع الطقم. حول قطع الطقم, راجع قسم "قطع غيار خدمة الإصلاح الميداني" في كتاب القطع هذا.
D	قطر
L	طول
L.H.	جانب اليد اليسارى
R.H.	جانب اليد اليمنى
T	السمك
W	العرض

. الكمية (Qty)

هذا هو عدد القطع المستخدمة لآلية واحدة. اما بالنسبة لمجموعات المكونات ومجموعات القطع فانه يتم تحديد عدد القطع لكل مجموعة.
الرمز AR (حسب الطلب) سوف يستخدم في عمود الكمية اذا لم يتم تحديد عدد القطع المطلوبة لكل مانكة و/او للمجموعة. في مثل هذه الحالة, فان اي عدد من الكميات ربما يتم طلبه بشكل يعتمد على متطلبات مجال الخدمة.

. الرقم التسلسلي (Serial Numbers)

في كتاب قطع المحرك يشير هذا الرقم الى الرقم التسلسلي للمحرك الذي تستخدم فيه القطعة. قي كتاب قطع الآلية, يشير هذا الرقم الى الرقم التسلسلي للآلية التي تستخدم فيها القطع.

في حالة وضع الرقم التسلسلي بين الأقواس، فهذا يعني أن هذا هو الرقم التسلسلي الساري للاستخدام الحصري للقطعة الموضحة بالشكل.

عند طلب القطع, يرجى تحديد رقم القطعة واسم القطعة والكمية المطلوبة من القطعة, مع تحديد رقم الموديل والرقم التسلسلي وقراءة عداد الخدمة.

قائمة القطع هذه لا تقتصر على الكميات القياسية فقط بل تشمل ايضاً القطع والملحقات الاختيارية. لطلب القطع, يرجى الاتصال باقرب موزع لمنتجات كوماتسو.

كتاب القطع هذا يحتوي على المعلومات ورموز التخصيص وكما مبين ادناه:

الشكل والقائمة

عندما تفتح كتاب القطع هذا, سوف تجد رسومًا توضيحية تتضمن رقم الشكل (الشكل). كل قطعة مفردة في الرسم يعطى لها رقم فهرس. في الرسم التالي, قطع المجموعة للوحدة تم ادراجها حسب ترتيب ارقام الفهرس المبينة في الرسم.. رقم القطعة, اسم القطعة, الكمية والرقم التسلسلي المطابق يعطى لكل قطعة حسب تسلسل القطع في القائمة.

رقم الشكل (الشكل)

رقم الشكل (الشكل) هو الرقم الذي يميز شكل ما داخل الصفحة. إنه ليس رقم القطعة. وليست الأرقام متتابعة دائمًا.

قائمة القطع

معلومات قطع الغيار مثبتة في صفحة قائمة القطع وكلاتي:

. الفهرست (Index)

هذا الرقم هو نفس رقم الفهرس الوارد في الشكل التوضيحي. تدرج القطع في القائمة مرتبة تبعاً لارقام الفهرس.

. الرمز (Code)

الرموز تستخدم في هذا العمود وتوصف كلاتي:

A1 هذه القطعة والقطعة المذكورة في السطر السابق مباشرة يمكن لكل منهما ان تحل محل الاخرى.

A2 القطعة المذكورة في السطر السابق يمكن استعمالها بدلاً من هذه القطعة.

A3 هذه القطعة يمكن استعمالها بدلاً من القطعة المذكورة في السطر السابق مباشرة.

A4 القطعة المذكورة في عمود الوصف يمكن استعمالها بدلاً من هذه القطعة اذا استخدمت كطقم.

B1 هذه القطعة توقف توريدها. يتم توريد القطعة المذكورة في السطر السابق بدلاً منها.

B2 هذه القطعة توقف توريدها. يتم توريد القطعة المذكورة في عمود "الوصف" بدلاً منها كطقم.

C1 هذه القطعة لا يمكن توريدها كقطعة منفردة. يتم توريدها كمجموعة.

C2 هذه القطعة يتم تجهيزها من قبل موزعين كوماتسو المرخصين فقط. لا يمكن تجهيزها كقطعة مفردة. يتم تجهيزها كمجموعة.

C3 هذا يشير الى قطعة موردة شبه مكتملة التصنيع. تتطلب استكمال تصنيعها قبل الاستعمال.

CONTENTS

FOREWORD 2

	FIG No.	PAGE
ENGINE		
Engine Unit (60Amp., 4.5KW)	(X21-2634360)	
Engine Assembly	A0000-001001	34
Exhaust Muffler and Connector Clamp	A0000-001002	35
Heat Shield	A0000-001003	36
ENGINE CYLINDER HEAD AND ITS RELATED PARTS		
Lifting Bracket Mounting	(LA 9108)	
	ALA10-001001	38
Lifting Bracket	(LA 9106)	
	ALA00-001001	39
Breather And Hose	(BR 9249)	
	ABR00-001001	40
Exhaust Connector Clamp	(XS 9252)	
	AXS00-001001	41
Cylinder Head	(X16-0B90020)	
	A1009-001001	42
Cylinder Head Cover	(VC 9586)	
	AVC00-001001	43
Air Intake Port Cover	(IM 9119)	
	AIM00-001001	44
Air Intake Connector	(IC90J054)	
	AIC00-001001	45
Air Intake Connector Mounting	(IC90J055)	
	AIC20-001001	46
Air Intake Heater	(AH 9147)	
	AAH00-001001	47
Exhaust Manifold	(TB91135)	
	ATB30-001001	48
Turbocharger	(X16-0B90030)	
	A1539-001001	49
Turbocharger Oil Piping	(TP97898)	
	ATP00-001001	50
Heat Shield	(X16-0B03730)	
	A1570-001001	51
Heat Shield	(SH 9031)	
	ASH00-001001	52
Dust Seal	(SR 9023)	
	ASR00-001001	53
Damper	(X21-2518091)	
1/1	A9999-001001	54
1/2	A9999-001002	55
Exhaust Muffler	(X16-0B06260)	
	A1610-001001	56
ENGINE CYLINDER BLOCK AND ITS RELATED PARTS		
Breather Hose Related Parts	(X16-0B00040)	
	A2210-001001	58
Front Gear Cover	(GG 9787)	
	AGG00-001001	59
Rocker Arm	(RL 9770)	
	ARL00-001001	60
Accessory Drive Pulley	(PA 9045)	
	APA00-001001	61

Flywheel Housing ..... (X16-0B90100) A2219-001001 62
Flywheel ..... (FW 9766) AFW00-001001 63
Flywheel Mounting ..... (FW 9704) AFW10-001001 64
Engine Oil Pan ..... (OP 9677) AOP10-001001 65
Engine Oil Pan Drain ..... (RD 9028) ARD00-001001 66
Engine Oil Level Sensor ..... (SD 9128) ASD00-001001 67
Cylinder Block ..... (X16-0B90090) A2019-001001 68
Crankshaft ..... (X16-0B90040) A2319-001001 69
Vibration Damper ..... (DA90K979) ADA00-001001 70
Piston And Connecting Rod ..... (X16-0B90050) A2359-001001 71
Oil Level Gauge ..... (LG90J056) ALG00-001001 72
Rear Gear Housing ..... (BB 9135) ABB20-001001 73
Rear Gear Housing Fitting Parts ..... (DR 9024) ADR20-001001 74
Engine Oil Filler Cap ..... (X16-0B03481) A2070-001001 75
Cylinder Block Related Parts ..... (BB 9449) ABB00-001001 76
Fuel System Related Parts ..... (FP90313) AFP10-001001 77

ENGINE LUBRICATION SYSTEM

Engine Oil Filter and Piping ..... (LF 9368) ALF00-001001 80
Engine Oil Pump ..... (LP 9057) ALP00-001001 81
Engine Oil Cooler ..... (LC 9274) ALC00-001001 82

ENGINE FUEL SYSTEM

Fuel Filter Piping ..... (FF90980) AFF20-001001 84
Fuel Supply Pump ..... (X16-0B90070) A4019-001001 85
Fuel Injector ..... (X16-0B90110) A4219-001001 86
Fuel Piping ..... (FT90J053) AFT00-001001 87
Fuel Filter Cartridge ..... (X16-0B90201) A4119-001001 88
Fuel Filter ..... (FF90273) AFF10-001001 89
Fuel Injection Piping Cover ..... (FS 9905) AFS20-001001 90

ENGINE COOLING SYSTEM

Cooling Fan Drive Pulley ..... (FA90337)
AFA10-001001 92
Cooling Fan Belt (For 60Amp.Brushless Alternator) ..... (WP98022)
AWP10-001001 93
Cooling Fan Belt (For 35Amp.) ..... (WP 9143)
AWP10-002001 94
Cooling Fan Belt Tensioner ..... (WP97056)
AWP20-001001 95
Water Pump ..... (X16-0B90690)
A5019-001001 96
Water Inlet Connector (For 60Amp.Brushless Alternator) ..... (WI90J017)
AWI10-001001 97
Water Outlet Connector ..... (WO 9143)
AWO00-002001 98
Water Inlet Connector ..... (WI90J038)
AWI10-001001 99
Thermostat ..... (EC 9049)
AEC00-001001 100
Water Pump Mounting ..... (WP98094)
AWP00-001001 101
ENGINE ELECTRICAL SYSTEM
Wiring Harness Cap ..... (X16-0B02220)
A6810-001001 104
Alternator Mounting (For 60Amp.Brushless,China 3rd EX-Gas Regulation) ..... (X16-0B06330)
Inner Parts A6020-001001 105
Mounting A6020-001002 106
Alternator Mounting (35Amp.) ..... (X16-0B06340)
Inner Parts A6020-002001 107
Mounting A6020-002002 108
Starting Motor Mounting ..... (SM 9145)
ASM00-001001 109
Starting Motor ..... (ST 9391)
AST00-001001 110
Wiring Harness ..... (WR90937)
AWR00-001001 112
ENGINE ACCESSORIES AND OTHERS
Engine Controller ..... (X16-0B92050)
A4719-001001 114
Engine Controller ..... (PH98265)
APH00-001001 115
Parts Performance(For China 3rd EX-Gas Regulation Arrangement) ..... (PP44983)
Camshaft APP10-002001 116
Common Rail APP10-002002 117
ENGINE MARKS AND PLATES
Caution Plates ..... (X16-0B90620)
A9810-001001 120
FIELD REPAIR SERVICE PARTS
Repair Service Parts ..... (X16-0B90120)
A8110-001001 122
ENGINE RELATED PARTS
Damper And Piston Pump ..... (X21-251809P)
Damper, 1/2 ..... A9999-001001 126
Damper, 2/2 ..... A9999-001002 127
Piston Pump, 1/12 ..... A9999-001003 128
Piston Pump, 2/12 ..... A9999-001004 129

Piston Pump, 3/12 ..... A9999-001005 130
Piston Pump, 4/12 ..... A9999-001006 131
Piston Pump, 5/12 ..... A9999-001007 132
Piston Pump, 6/12 ..... A9999-001008 133
Piston Pump, 7/12 ..... A9999-001009 134
Piston Pump, 8/12 ..... A9999-001010 135
Piston Pump, 9/12 ..... A9999-001011 136
Piston Pump, 10/12 ..... A9999-001012 137
Piston Pump, 11/12 ..... A9999-001013 138
Piston Pump, 12/12 ..... A9999-001014 139
Engine Mounting ..... (X21-2518481)
B0100-001001 140
Engine Related Parts (With Pre Cleaner, Auto Cleaning) ..... (X21-2518411)
Inner Parts, Air Cleaner B0200-001001 141
Air Cleaner Mounting B0200-001002 142
Coolant Filter ..... (X21-2614080)
Water Filter Head B0930-001001 143
Bracket B0930-001002 144
Hose B0930-001003 145
COOLING SYSTEM
Cooling System ..... (X21-2627390)
Radiator C0100-001001 148
Oil Cooler C0100-001002 149
Shroud C0100-001003 150
Aftercooler C0100-001004 151
Fuel Cooler and Condenser C0100-001005 152
Seat C0100-001006 153
Aftercooler Piping, 60Amp. Alternator C0100-001007 154
Radiator Piping C0100-001008 155
Fan Guard C0100-001009 156
Variable Geometry Turbocharger (VGT) Piping C0100-001010 157
Related Parts C0100-001011 158
Fan Clutch ..... (X21-2518681)
C0200-001001 159
FUEL SYSTEM
Fuel Tank ..... (X21-2518651)
D0100-001001 162
Fuel Tank (With Breather) ..... (X21-2615680)
D0100-002001 163
Fuel Tank (Refueling Pump, With Breather) ..... (X21-2615710)
D0100-003001 164
Fuel Supply Piping ..... (X21-2521121)
Fuel Piping D0200-001001 165
Inner Parts, Fuel Prefilter D0200-001002 166
Fuel Prefilter Related Parts D0200-001003 167
Water Separator Inner Parts D0200-001004 168
Water Separator Mounting D0200-001005 169
Remote Drain D0200-001006 170
Fuel Filter Bracket D0200-001007 171
Clip D0200-001008 172
Fuel Supply Piping (For Additional Fuel Prefilter) ..... (X21-2615760)
Fuel Piping D0200-002001 174
Inner Parts, Fuel Prefilter D0200-002002 175
Fuel Prefilter Related Parts D0200-002003 176
Water Separator Inner Parts D0200-002004 177

Water Separator Mounting D0200-002005 178
Remote Drain D0200-002006 179
Fuel Filter Bracket D0200-002007 180
Clip D0200-002008 181
Additional Fuel Prefilter D0200-002009 183
ELECTRICAL SYSTEM
Battery ..... (X21-2614100)
E0100-001001 186
Battery (Large Capacity) ..... (X21-2614110)
E0100-002001 187
Front Working Lamp ..... (X21-2517682)
Wiring Harness Mounting, 1/2 ..... E0200-001001 188
Wiring Harness Mounting, 2/2 ..... E0200-001002 189
Working Lamp, Front E0200-001003 190
Connector E0200-001004 191
Antenna Guard ..... (X21-2276280)
E0201-001001 192
Battery Electric Wiring Harness (With Battery Disconnect Switch) ..... (X21-2625260)
E0210-001001 193
Engine Wiring Harness ..... (X21-2625240)
E0250-001001 194
Additional Working Lamp ..... (X21-1407570)
E0310-001001 195
Additional Rear Working Lamp ..... (X21-2614190)
E0320-001001 196
Beacon Lamp ..... (X21-1088762)
E0340-001001 197
Horn ..... (X21-2614200)
E0410-001001 198
Travel Alarm ..... (X21-2617870)
E0420-001001 199
Rearview Camera ..... (X21-2517891)
E0450-001001 200
Rearview Camera Less ..... (X21-2518081)
E0450-002001 201
HYDRAULIC SYSTEM
Hydraulic Tank ..... (X21-2614210)
Tank H0110-001001 204
Breather H0110-001002 205
Bypass Valve H0110-001003 206
Related Parts H0110-001004 207
Hydraulic Tank ..... (X21-2615820)
Tank H0110-002001 208
Breather H0110-002002 209
Bypass Valve H0110-002003 210
Related Parts H0110-002004 211
Control Valve (6-Spool Valve) ..... (X21-2614230)
6-Spool, 1/18 ..... H0120-001001 212
6-Spool, 2/18 ..... H0120-001002 213
6-Spool, 3/18 ..... H0120-001003 214
6-Spool, 4/18 ..... H0120-001004 215
6-Spool, 5/18 ..... H0120-001005 216
6-Spool, 6/18 ..... H0120-001006 217
6-Spool, 7/18 ..... H0120-001007 218
6-Spool, 8/18 ..... H0120-001008 219

6-Spool, 9/18 ..... H0120-001009 220
6-Spool, 10/18 ..... H0120-001010 221
6-Spool, 11/18 ..... H0120-001011 222
6-Spool, 12/18 ..... H0120-001012 223
6-Spool, 13/18 ..... H0120-001013 224
6-Spool, 14/18 ..... H0120-001014 225
6-Spool, 15/18 ..... H0120-001015 226
6-Spool, 16/18 ..... H0120-001016 227
6-Spool, 17/18 ..... H0120-001017 228
6-Spool, 18/18 ..... H0120-001018 229
Mounting Bracket H0120-001019 230
Connecting Parts, 1/5 ..... H0120-001020 231
Connecting Parts, 2/5 ..... H0120-001021 233
Slow Return Valve,1/2, Front H0120-001022 234
Connecting Parts, 3/5 ..... H0120-001023 235
Slow Return Valve, 2/2, Rear H0120-001024 236
Connecting Parts, 4/5 ..... H0120-001025 237
Connecting Parts, 5/5 ..... H0120-001026 238
Control Valve (7-Spool Valve for 1-Service Valve) ..... (X21-2614250)
7-Spool, 1/21 ..... H0120-002001 239
7-Spool, 2/21 ..... H0120-002002 240
7-Spool, 3/21 ..... H0120-002003 241
7-Spool, 4/21 ..... H0120-002004 242
7-Spool, 5/21 ..... H0120-002005 243
7-Spool, 6/21 ..... H0120-002006 244
7-Spool, 7/21 ..... H0120-002007 245
7-Spool, 8/21 ..... H0120-002008 246
7-Spool, 9/21 ..... H0120-002009 247
7-Spool, 10/21 ..... H0120-002010 248
7-Spool, 11/21 ..... H0120-002011 249
7-Spool, 12/21 ..... H0120-002012 250
7-Spool, 13/21 ..... H0120-002013 251
7-Spool, 14/21 ..... H0120-002014 252
7-Spool, 15/21 ..... H0120-002015 253
7-Spool, 16/21 ..... H0120-002016 254
7-Spool, 17/21 ..... H0120-002017 255
7-Spool, 18/21 ..... H0120-002018 256
7-Spool, 19/21 ..... H0120-002019 257
7-Spool, 20/21 ..... H0120-002020 258
7-Spool, 21/21 ..... H0120-002021 259
Mounting Bracket H0120-002022 260
Connecting Parts, 1/5 ..... H0120-002023 261
Connecting Parts, 2/5, 1-Service Valve H0120-002024 263
Slow Return Valve,1/2, Front H0120-002025 264
Connecting Parts, 3/5 ..... H0120-002026 265
Slow Return Valve, 2/2, Rear H0120-002027 266
Connecting Parts, 4/5 ..... H0120-002028 267
Connecting Parts, 5/5 ,1-Service Valve H0120-002029 268
Control Valve (7-Spool Valve, For 1-Additional Actuator Piping, Accumulator) ..... (X21-2614270)
Connecting Parts, 2/5, 1-Additional Actuator Piping, Accumulator H0120-003024 269
Connecting Parts, 5/5, 1-Additional Actuator Piping, Accumulator H0120-003029 270
Hydraulic Pump ..... (X21-2519081)
H0210-001001 271
Hydraulic Pump (1-Additional Actuator Piping, Accumulator) ..... (X21-2519091)
H0210-002001 272

Suction Piping ..... (X21-2517921) H0311-001001 273
Delivery Piping ..... (X21-2517941) H0312-001001 274
Delivery Piping (With Inline Filter) ..... (X21-2517951) H0312-002001 275
Oil Cooler Piping ..... (X21-2520171) H0320-001001 276
Return Piping ..... (X21-2520271) H0330-001001 277
Return Piping (1-Additional Actuator Piping, Accumulator) ..... (X21-2520291) H0330-002001 279
Drain Piping ..... (X21-2520431) H0340-001001 280
Boom Piping ..... (X21-2517931) H1210-001001 281
Arm and Bucket Piping ..... (X21-2517961) H1220-001001 283
Attachment Piping ..... (X21-2520001)
Main Piping, L.H. H1270-001001 284
EPC Valve H1270-001002 285
Main Piping, R.H. H1270-001003 286
Return Piping, 1/2 ..... H1270-001004 287
Return Piping, 2/2 ..... H1270-001005 288
Pilot Filter H1270-001006 289
Travel Piping ..... (X21-2518811) H1310-001001 290
Swing Piping ..... (X21-2344870) H1340-001001 291
LS Piping ..... (X21-2520721) H1810-001001 292
LS Piping (1-Additional Actuator Piping, Accumulator) ..... (X21-2521001) H1810-002001 293
Solenoid Valve ..... (X21-2521131)
Inner Parts H1831-001001 294
Related Parts H1831-001002 295
Solenoid Valve Piping H1831-001003 296
Mounting H1831-001004 297
Solenoid Valve (1-Additional Actuator Piping, Accumulator) ..... (X21-2517431)
Inner Parts H1831-002001 298
Related Parts H1831-002002 299
Solenoid Valve Piping H1831-002003 300
Mounting H1831-002004 301
Pressure Switch Block ..... (X21-2520321)
Block H1833-001001 302
Slow Return Valve, 1/2, For Swing R.H. H1833-001002 303
Related Parts, 1/2 ..... H1833-001003 304
Slow Return Valve, 2/2, For Swing L.H. H1833-001004 305
Related Parts, 2/2 ..... H1833-001005 306
Bracket H1833-001006 307
Proportional Pressure Control (PPC) Main Piping ..... (X21-2614330) H1840-001001 308

FRAME AND ITS RELATED PARTS
Revolving Frame ..... (X21-2518221) J1110-001001 310

Revolving Frame (With Deck Guard) ..... (X21-2518231)
J1110-002001 311
Boom Foot Pin (100 Hours Lubrication Interval) ..... (X21-0839480)
J1310-001001 312
OPERATOR'S COMPARTMENT AND CONTROL SYSTEM
Operator's Seat (Suspension Type, Hi Back, Fabric, Reclining, Tilt) ..... (X21-1992970)
1/2 ..... K0110-001001 314
2/2 ..... K0110-001002 315
Seat Belt (50mm, 2-Point Type, Rigid Type Operator's Seat) ..... (X21-1045180)
K0160-001001 316
Seat Belt (78mm, 2-Point Type, Non Cinching) ..... (X21-1145200)
K0160-002001 317
Top Guard, Level 2 ..... (X87-0008830)
K0220-001001 318
Front Guard, Half Guard ..... (X87-0002520)
K0230-001001 319
Front Guard, Full Guard LV2 ..... (X87-0008860)
K0230-002001 320
Floor Mat ..... (X21-1993670)
K0310-001001 321
Floor Mat (1-additional Actuator Piping, Accumulator) ..... (X21-1992771)
K0310-002001 322
Sun Roller Blind ..... (X87-0010090)
K0330-003001 323
Parts For Window Washer Tank ..... (X21-2519101)
K0350-001001 324
Air Conditioner ..... (X21-2518131)
Compressor K0700-001001 325
Compressor Mounting K0700-001002 326
Heater Piping Clamp K0700-001003 327
Cooler Piping K0700-001004 328
V-Belt K0700-001005 329
Cab (With GPRS, 3G) ..... (X87-0011410)
Cab Body and Window K1110-001001 330
Front Window K1110-001002 331
Front Lower Window K1110-001003 333
Roof Ventilator K1110-001004 334
Door K1110-001005 335
Door Lock K1110-001006 336
Open Lock and Door Catch K1110-001007 337
Wiper and Room Lamp K1110-001008 338
Inner Parts, Rubber Antenna K1110-001009 339
Speaker and Window Washer K1110-001010 340
Roof Cover, Hanger, Drink Holder and Air Intake K1110-001011 341
Grip K1110-001012 343
KOMTRAX Antenna, With GPRS 3G K1110-001013 344
KOMATSU Mark K1110-001014 345
Plate K1110-001015 346
Cab In Parts, Console Cover, Front, R.H., With Monitor Guard K1110-001016 347
Cab In Parts, Monitor Cover, With Monitor Guard K1110-001017 348
Cab In Parts, Washer Hose Mounting K1110-001018 349
Cab In Parts, Luggage Plate and Cigarette Lighter K1110-001019 350
Cab In Parts, Air Duct K1110-001020 351
Cab In Parts, Air Duct and Fresh Air Filter K1110-001021 352
Cab In Parts, Partition and Recirculation Air Filter K1110-001022 353

Cab In Parts, Pump Controller and Relay K1110-001023 354
Cab In Parts, Air Conditioner Controller and KOMTRAX Controller K1110-001024 355
Cab In Parts, Main Wiring Harness Clamp K1110-001025 356
Cab In Parts, Rear Cover, With 12V Converter K1110-001026 357
Controller and Monitor K1110-001027 359
Floor, Frame K1110-001028 360
PPC Valve, 1/3, For Travel K1110-001029 361
Floor, Travel Control Lever K1110-001030 362
Floor, Footrest, L.H. K1110-001031 363
Floor, Footrest, R.H. K1110-001032 364
Floor, Base K1110-001033 365
Floor, Wiring Harness K1110-001034 366
Floor, Wiring Harness Clamp and Ground K1110-001035 367
Floor, Window Washer Hose K1110-001036 368
Floor, Work Equipment Control Lever, L.H. K1110-001037 369
PPC Valve, 2/3, L.H. K1110-001038 370
Floor, PPC Valve Mounting for Work Equipment, L.H., 1/2 ..... K1110-001039 371
Floor, PPC Valve Mounting for Work Equipment, L.H., 2/2 ..... K1110-001040 372
Floor, Radio and Work Equipment Lock Lever, Radio USB MP3 ..... K1110-001041 373
Floor, Armrest, L.H. K1110-001042 374
Floor, Work Equipment Control Lever, R.H. K1110-001043 375
PPC Valve, 3/3, R.H. K1110-001044 376
Floor, PPC Valve Mounting for Work Equipment, R.H. K1110-001045 377
Floor, Console, R.H. K1110-001046 378
Floor, Armrest, R.H. K1110-001047 380
Inner Parts, Air Conditioner Unit, 1/3 ..... K1110-001048 381
Inner Parts, Air Conditioner Unit, 2/3 ..... K1110-001049 382
Inner Parts, Air Conditioner Unit, 3/3 ..... K1110-001050 383
Floor, Air Conditioner Mounting K1110-001051 384
Floor, Air Conditioner Piping K1110-001052 385
Floor, PPC Valve Piping for Travel K1110-001053 386
Floor, PPC Valve Piping for Work Equipment K1110-001054 387
Floor, Piping Mounting K1110-001055 388
Floor, P, T Block K1110-001056 389
Floor, Seal K1110-001057 390
Cab (With Komtrax) ..... (X21-263420A)
KOMTRAX Antenna, With KOMTRAX K1110-002013 391
Cab In Parts, Console Cover, Front, R.H., Without Monitor Guard K1110-002016 392
Cab In Parts, Monitor Cover, Without Monitor Guard K1110-002017 393
Controller and Monitor, With KOMTRAX K1110-002027 394
Cab (With 1-Additional Actuator Piping, Accumulator) ..... (X87-0011820)
PPC Valve, 2/4, For Attachment K1110-003032 395
Floor, 1st Attachment Control K1110-003033 396
Floor, Console, R.H., With Beacon Lamp K1110-003047 398
Floor, P, T Block K1110-003057 400
Floor Mounting ..... (X21-1993650)
K1120-001001 401
Switch ..... (X21-0273360)
K1730-001001 402
GUARDS AND COVERS
Engine Hood ..... (X21-2519981)
M1110-001001 404
Engine Hood (With Pre-cleaner) ..... (X21-2520211)
M1110-002001 405
Frame ..... (X21-2518731)
M1120-001001 406

Frame (With Pre-cleaner) ..... (X21-2627310)
M1120-002001 407
Door L.H. ..... (X21-2614370)
M1130-001001 408
Door L.H. (With Pre-cleaner) ..... (X21-2615900)
M1130-002001 410
Door R.H. ..... (X21-2614380)
M1140-001001 412
Partition ..... (X21-2518911)
1/4 ..... M1150-001001 413
2/4 ..... M1150-001002 414
3/4 ..... M1150-001003 415
4/4 ..... M1150-001004 416
Partition (With Pre-cleaner) ..... (X21-2520031)
Partition (With Pre-cleaner) M1150-002001 417
Partition (With Pre-cleaner) M1150-002002 418
Partition M1150-002003 419
Partition (With Pre-cleaner) M1150-002004 420
Partition Cover ..... (X21-2624690)
M1160-001001 421
Partition Cover (With Pre-cleaner) ..... (X21-2624720)
M1160-002001 422
Upper Cover ..... (X21-2519762)
M1210-001001 423
Right Side Case ..... (X21-2519892)
M1220-001001 424
Floor Cover ..... (X21-2624700)
M1230-001001 425
Floor Cover (Refueling Pump) ..... (X21-2624710)
M1230-002001 426
Handrail ..... (X21-2518751)
M1310-001001 427
Rearview Mirror L.H. ..... (X21-1167361)
M1410-001001 428
Rearview Mirror R.H. ..... (X21-2518801)
M1420-001001 429
Parts Without Rearview Mirror ..... (X21-2614400)
M1430-001001 430
Rearview Mirror ..... (X21-2614390)
M1430-002001 431
Counterweight (3920kg) ..... (X21-2518561)
M1510-001001 432
Counterweight Mounting ..... (X21-1148630)
M1520-001001 433
Under Cover ..... (X21-2614431)
M1810-001001 434
Under Cover (Heavy Duty Type) ..... (X21-2617900)
1/2 ..... M1810-002001 435
2/2 ..... M1810-002002 436
Under Cover (With Battery Case Under Cover) ..... (X21-261443A)
M1810-003001 437
Under Cover ..... (X21-2628200)
M1811-001001 438
Under Cover (With Blowby Pressure Sensor) ..... (X21-2628210)
M1811-002001 439

Under Cover (Heavy Duty Type,With Blowby Pressure Sensor) ..... (X21-2628230) M1811-003001 440
Under Cover (Heavy Duty Type) ..... (X21-2634520) M1811-004001 441
Under Cover ..... (X21-2628240) M1812-001001 442
Under Cover (Refueling Pump) ..... (X21-2628250) M1812-002001 443
Under Cover (With Blowby Pressure Sensor) ..... (X21-2628260) M1812-003001 444
Under Cover (Refueling Pump,With Blowby Pressure Sensor) ..... (X21-2628270) M1812-004001 445
Under Cover (Heavy Duty Type) ..... (X21-2628280) M1812-005001 446
Under Cover (Heavy Duty Type,With Blowby Pressure Sensor) ..... (X21-2628300) M1812-006001 447
SWING CIRCLE AND ITS RELATED PARTS
Swing Circle (For Asia) ..... (X21-261608A) N1110-001001 450
Swing Circle (Oil Resistance, For Asia) ..... (X21-262760A) N1110-002001 451
Swing Circle ..... (X21-2616080) N1110-003001 452
Swing Machinery and Motor (Swing Shock Pressure Reducing Valve) ..... (X21-2627620)
Swing Motor, 1/3 ..... N1210-001001 453
Swing Motor, 2/3 ..... N1210-001002 454
Swing Motor, 3/3 ..... N1210-001003 455
Mounting N1210-001004 456
Drain Piping N1210-001005 457
Swing Machinery and Motor (Supply Only, Oil Resistance) ..... (X19-6004540) N1210-002001 458
Swivel Joint ..... (X21-2519141)
Inner Parts, Swivel Joint N1310-001001 459
Connecting Parts N1310-001002 460
Related Parts N1310-001003 461
TRAVEL SYSTEM AND ITS RELATED PARTS
Travel Piping ..... (X21-2188300) P1120-001001 464
Travel Piping, Long Track Frame ..... (X21-2193730) P1120-002001 465
Travel Motor and Final Drive ..... (X21-2616100)
Travel Motor, L.H., 1/2 ..... P1210-001001 466
Travel Motor, L.H., 2/2 ..... P1210-001002 467
Final Drive L.H. P1210-001003 468
Travel Motor, R.H., 1/2 ..... P1210-001004 469
Travel Motor, R.H., 2/2 ..... P1210-001005 470
Final Drive R.H. P1210-001006 471
Cover P1210-001007 472
UNDERCARRIAGE
Front Idler and Idler Cushion (Link, 6 Type) ..... (X21-2637470)
Front Idler R0110-001001 474
Idler Cushion R0110-001002 475
Front Idler and Idler Cushion ..... (X21-2518451)
Front Idler R0110-002001 476
Idler Cushion R0110-002002 477

Track Roller ..... (X21-2196170)
R0200-001001 478
Track Roller ..... (X21-2192380)
R0200-002001 479
Carrier Roller ..... (X21-2191080)
R0300-001001 480
Track Shoe Assembly (Triple Grouser Shoe, 600mm Width, Grease Sealed Type, Link, 6 Type) ..... (X21-2633840)
R0500-001001 481
Track Shoe Assembly (Triple Grouser Shoe, 600mm Width, Grease Sealed Type, T=8.5mm) ..... (X21-0815770)
R0500-002001 482
Track Shoe Assembly (Triple Grouser Shoe, 700mm Width, Grease Sealed Type, Link, 6Type,LC) ... (X21-2633860)
R0500-003001 483
Track Shoe Assembly (Triple Grouser Shoe, 800mm Width, Grease Sealed Type, Link, 6 Type) ..... (X21-2633850)
R0500-004001 484
Track Shoe Assembly (Triple Grouser Shoe, 800mm Width, Grease Sealed Type, Link, 6Type,LC) ... (X21-2633870)
R0500-005001 485
Track Link Assembly ..... (20Y-32-00300)
R0501-001001 486
Track Shoe Assembly (Supply Only, 90 Set,Grease Sealed Type,Link, 6 Type) ..... (20Y-32-00520)
R0501-002001 487
Track Frame (Link, 6 Type) ..... (X21-2625430)
R1100-001001 488
Track Frame (Link, 7 Type) ..... (X21-2616140)
R1100-002001 489
Track Frame (Link, 6 Type, For LC) ..... (X21-2625470)
R1100-003001 490
Track Frame Under Cover ..... (X21-2259290)
R1140-001001 491
Track Roller Guard (Link, 6 Type) ..... (X21-0296550)
R1200-001001 492
Track Roller Guard (Link, 7Type) ..... (X21-0793780)
R1200-002001 493
Track Roller Guard (Link, 6 Type, For LC) ..... (X21-0296560)
R1200-003001 494

WORK EQUIPMENT

Boom (5700mm Heavy Duty Type) ..... (X21-261639A)
Boom and Bushing T1110-001001 496
Top Pin and Bottom Pin T1110-001002 497
Arm Cylinder Piping T1110-001003 498
Bucket Cylinder Piping T1110-001004 499
Lubrication Piping T1110-001005 500
Attachment Plug T1110-001006 501
Working Lamp T1110-001007 502
Boom (5700mm Heavy Duty Type) ..... (X21-261641A)
Boom and Bushing T1110-002001 503
Top Pin and Bottom Pin T1110-002002 504
Arm Cylinder Piping T1110-002003 505
Bucket Cylinder Piping T1110-002004 506
Lubrication Piping T1110-002005 507
Additional Piping T1110-002006 508
Working Lamp T1110-002007 509
Boom Cylinder (100 Hours Lubrication Interval) ..... (X21-261667A)
Inner Parts, Boom Cylinder, L.H. T1120-001001 510
Inner Parts, Boom Cylinder, R.H. T1120-001002 512
Fitting T1120-001003 514

Boom Cylinder ..... (X21-263606A) T1120-002003 515
Boom Cylinder ..... (X87-0011600) T1120-003003 516
Boom Cylinder Head Pin ..... (X21-114522B) T1125-001001 517
Arm Cylinder (Inner Parts, Arm Cylinder) (100 Hours Lubrication Interval) ..... (X21-261671A) T1140-001001 518
Shipping Parts ..... (X21-0566910) T1190-001001 520
Arm (2900mm, Heavy Duty Type) ..... (X21-263471A)
Arm and Pin T1200-001001 521
Plug T1200-001002 522
Inner Parts, Bucket Cylinder T1200-001003 523
Bucket Link T1200-001004 525
Bucket Cylinder Hose T1200-001005 526
Arm (2900mm, Heavy Duty Type, 1-Attachment,100 Hours Lubrication Interval) ..... (X21-263472A)
Arm and Pin T1200-002001 527
Plug T1200-002002 528
Inner Parts, Bucket Cylinder T1200-002003 529
Bucket Link T1200-002004 531
Bucket Cylinder Hose T1200-002005 532
Additional Piping T1200-002006 533
Arm (2400mm, Heavy Duty Type, 1-Attachment,100 Hours Lubrication Interval) ..... (X21-263557A)
Arm and Pin T1200-003001 535
Inner Parts, Bucket Cylinder T1200-003002 536
Bucket Link T1200-003003 538
Bucket Cylinder Hose T1200-003004 539
Additional Piping T1200-003005 540
Shipping Parts ..... (X21-0332411) T1290-001001 542
Bucket (1.00m3, 1085mm Width, Horizontal Pin Type, Side Cutter, Bottom Wear Plate) ..... (X87-0010711) T1510-006001 543
Bucket (1.00m3, 1085mm Width, Horizontal Pin Type, Side Cutter, Bottom Wear Plate, Hook) ..... (X87-0010741) T1510-007001 544
Bucket (0.94m3, 1220mm Width, Horizontal Pin Type, Side Cutter, Hook) ..... (X87-0011680) T1510-008001 545
Bucket (1.20m3, 1200mm Width, Horizontal Pin Type, Side Cutter, Hook) ..... (X87-0011720) T1510-009001 546
Bucket (1.00m3, 1085mm Width, Horizontal Pin Type, Side Cutter, Wear Plate, K-MAX Tooth) ..... (X87-0011940) T1510-010001 547
Bucket Less Parts ..... (X87-0008310) T1930-001001 548

MARKS AND PLATES

Marks and Plates ..... (X21-2614480) U0100-001001 550
Marks and Plates, For LC ..... (X21-2614490) U0100-002001 551
Marks and Plates ..... (X21-2635840) U0108-001001 552
Lubrication Chart (100 Hours Lubrication Interval,Large Fuel Prefilter) ..... (X21-261450A) U0110-001001 553
Lubrication Chart (100 Hours Lubrication Interval,Large Fuel Prefilter,With Breather) ..... (X21-261451A) U0110-002001 554
Lubrication Chart (100 Hours Lubrication Interval,Large Fuel Prefilter,With ..... (X21-261452A) U0110-003001 555

Caution Plates, Window Lock ..... (X21-1167232)
U0120-001001 556
Komatsu Logo, 3Set ..... (X21-2245480)
U0150-001001 557
Komatsu Logo (Additional) ..... (X21-2245470)
U0150-002001 558
Caution Plate, Refuel ..... (X21-2636270)
U0200-001001 559
Caution Plate (Bucket Hook MT50, Thai) ..... (X87-0005240)
U0200-002001 560
Caution Plate (Bucket Hook MT50, English) ..... (X87-0010650)
U0200-003001 561
Caution Plates, Battery ..... (X21-1456540)
U0201-001001 562
Coolant Decal ..... (X21-1392171)
U0202-001001 563
Caution Plates, Blast Site ..... (X21-2020160)
U0205-001001 564
KOMTRAX Plate, GPRS, 3G, TC630 ..... (X87-0002191)
U0205-002001 565
Caution Plates, Seat Belt ..... (X21-2476400)
U0206-001001 566
(X21-2476400)
Caution Plates, Keep Off Working Ranges ..... (X21-1134080)
U0510-001001 567
ROPS Plate ..... (X21-2072680)
U0521-001001 568
Plates, Air Cleaner ..... (X21-0575911)
U0550-001001 569
Caution Plates, Accumulator ..... (X21-2612730)
U0580-001001 570
Caution Plates, Backward ..... (X21-1337580)
U0610-001001 571
Caution Plates (With Power Supply, 12volt) ..... (X21-2639140)
U0710-001001 572
Caution Plates (Nippon Pneumatic Breaker Kit) ..... (X21-2639150)
U0710-002001 573
Caution Plates (With Breaker Kit, Thai) ..... (X87-0011970)
U0710-003001 574
AUXILIARY PARTS AND TOOL
Spare Parts (60Amp. Alternator) ..... (X21-263551A)
V0100-001001 576
Spare Parts (60Amp. Alternator) ..... (X21-261469A)
V0100-002001 577
Cap and Overall ..... (X21-0291910)
V0200-001001 578
Tool ..... (X21-2614730)
V0300-001001 579
OTHER EQUIPMENT
Preventive Maintenance Service Connectors ..... (X21-2614750)
W0111-001001 582
Preventive Maintenance Service Connectors ..... (X21-2637530)
Valve W0111-002001 583
Hose W0111-002002 584
Sensor W0111-002003 585

Preventive Maintenance Service Connectors ..... (X21-2637540)
Valve W0111-003001 586
Tee W0111-003002 587
Sensor W0111-003003 588
Refueling Pump ..... (X21-2624740)
W1113-001001 589
Anti-Vandalism Guard ..... (X87-0011550)
W1115-001001 590
FIELD REPAIR SERVICE PARTS
Service Kit Parts ..... (Y99-0000001)
KIT-001001 592

ENGINE

FIG. A0000-001001 Engine Unit (60Amp., 4.5KW) (Engine Assembly)

Index	Code	Part Number	Description	Qty	Serial Number
1		6754-S0-CA10	Engine Assembly	1	C00001-

FIG. A0000-001002 Engine Related Part (Exhaust Muffler and Connector Clamp)

Index	Code	Part Number	Description	Qty	Serial Number
1		6754-11-6160	Muffler	1	C00001-
2		6754-11-5940	U-bolt	2	C00001-
3		01594-01008	Nut	4	C00001-
4		6210-11-5232	Clamp	1	C00001-
5		6208-11-5850	Plate	1	C00001-
6		01435-01235	Bolt	2	C00001-
7		6754-11-5490	Bracket	1	C00001-
8		01435-01030	Bolt	2	C00001-
9		6754-11-5420	Bracket	1	C00001-
10		01435-01025	Bolt	2	C00001-
11		6754-71-9740	Bracket	1	C00001-
12		6754-71-9770	Cover	1	C00001-
13		01435-00820	Bolt	6	C00001-
14		6735-11-5611	Tube	1	C00001-
15		6732-81-8220	Clamp	1	C00001-

FIG. A0000-001003 Engine Related Part (Heat Shield)

Index	Code	Part Number	Description	Qty	Serial Number
1		01435-00820	Bolt	2	C00001-
2		6131-12-4570	Spacer	2	C00001-
3		6732-81-8451	Cover	1	C00001-

ENGINE CYLINDER HEAD AND ITS RELATED PARTS

FIG. ALA10-001001 Lifting Bracket Mounting

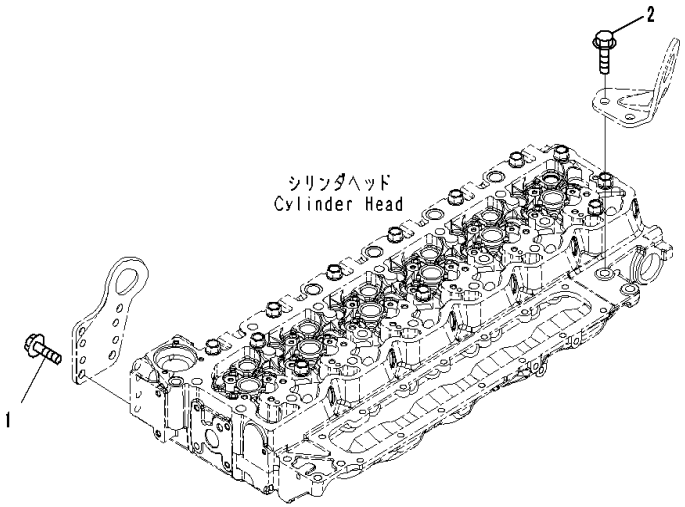

Index	Code	Part Number	Description	Qty	Serial Number
1		01435-61025	Bolt	4	26689866-
2		6754-11-4130	Screw	2	26689866-

FIG. ALA00-001001 Lifting Bracket

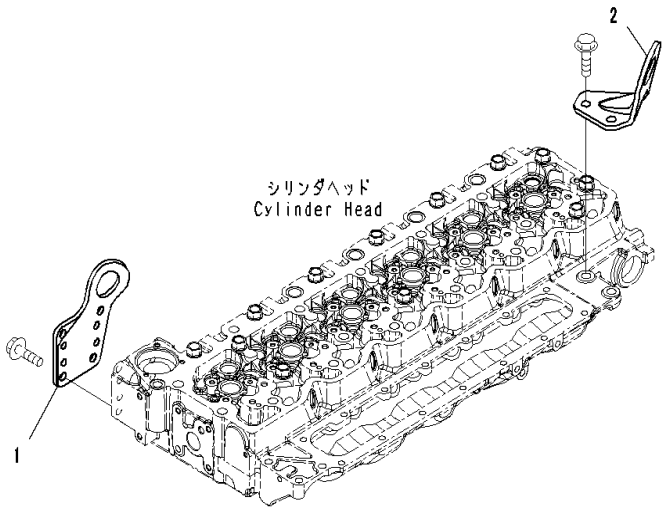

Index	Code	Part Number	Description	Qty	Serial Number
1		6754-11-1710	Bracket	1	26689866-
2		6754-11-1960	Bracket	1	26689866-

FIG. ABR00-001001 Breather And Hose

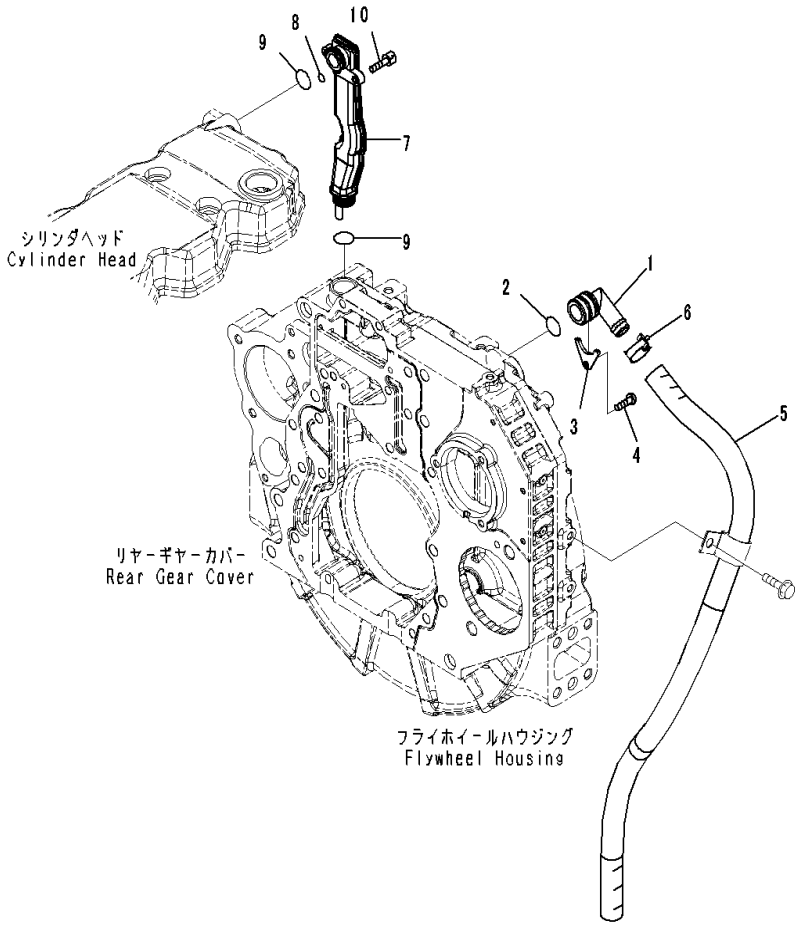

Index	Code	Part Number	Description	Qty	Serial Number
1		6754-21-6140	Breather	1	26689866-
2		1241155H1	O-Ring	1	26689866-
3		6754-21-6150	Plate	1	26689866-
4		6754-21-6160	Bolt	1	26689866-
5		6754-21-6170	Hose	1	26689866-
6		6754-21-6180	Clamp	1	26689866-
		6754-21-6100	Tube Assembly	1	26689866-
7	C1		• Tube	1	26689866-
8		6754-21-6250	• O-Ring	1	26689866-
9		6754-21-6240	• O-Ring	2	26689866-
10		6754-21-6280	Bolt	2	26689866-

FIG. AXS00-001001 Exhaust Connector Clamp

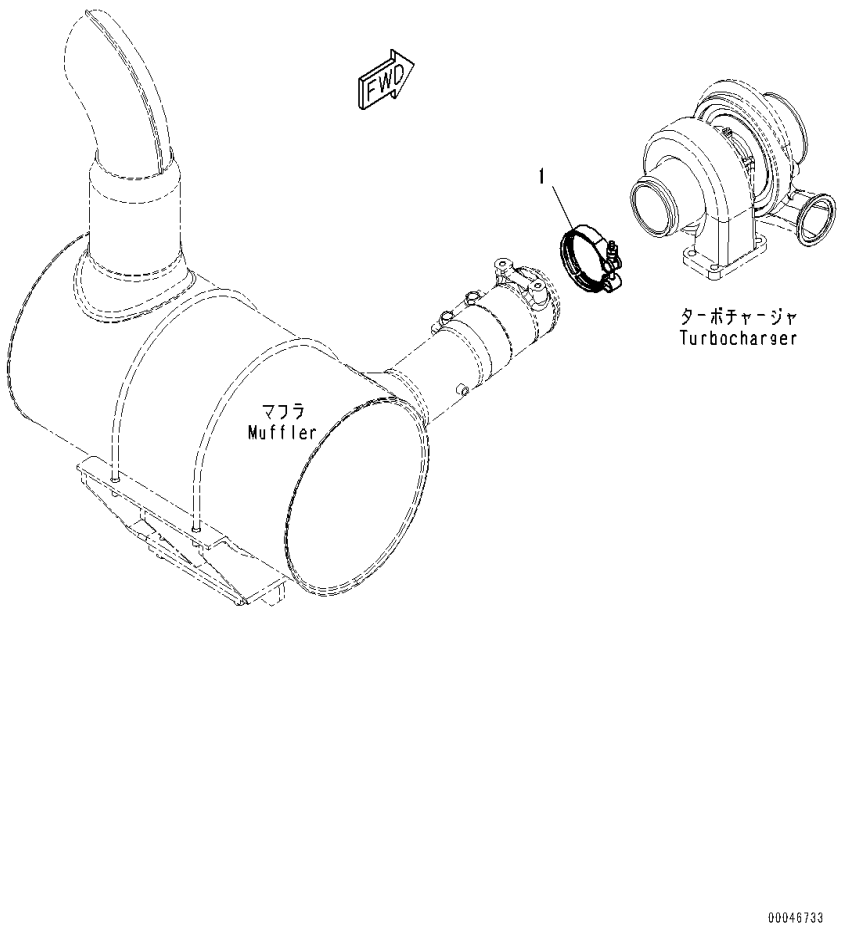

Index	Code	Part Number	Description	Qty	Serial Number
1		6732-81-8220	Clamp	1	26689866-

FIG. A1009-001001 Cylinder Head

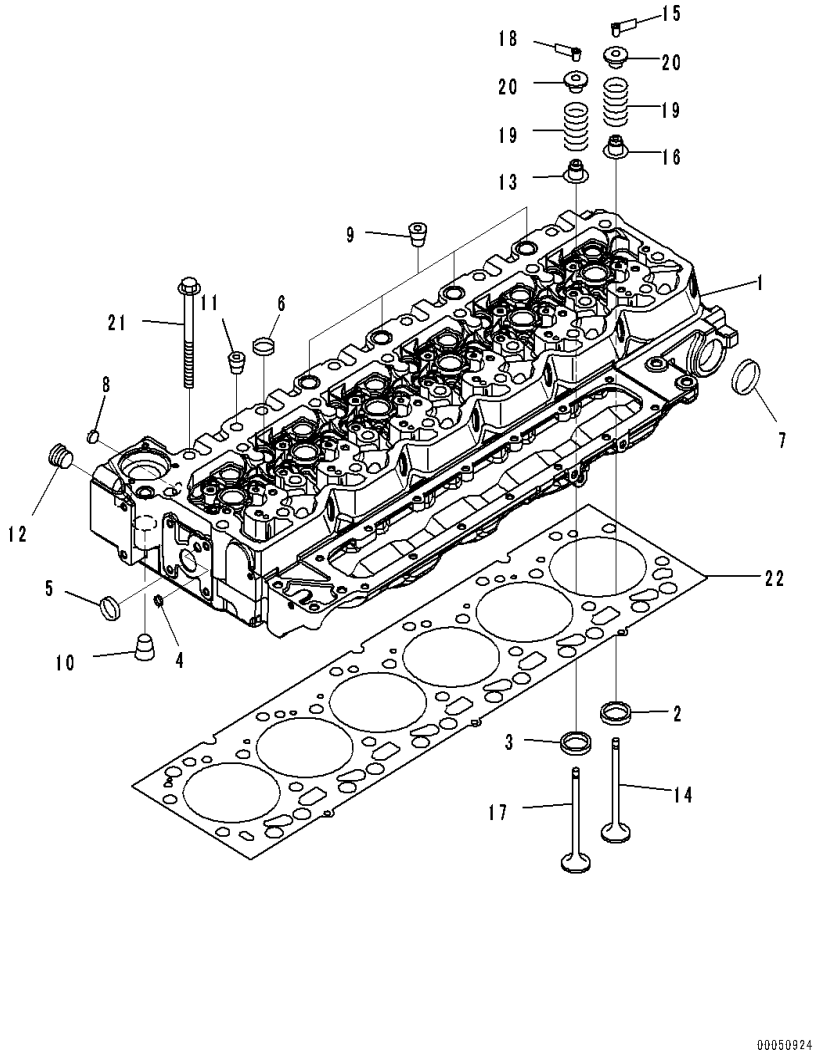

Index	Code	Part Number	Description	Qty	Serial Number
		6754-11-1211	Cylinder Head Assembly	1	26689866-
	C1		• Head Assembly, Cylinder	1	26689866-
1	C1		• • Cylinder Head	1	26689866-
2		6754-11-1170	• • Insert, Intake	12	26689866-
3		6754-11-1180	• • Insert, Exhaust	12	26689866-
4		6754-11-1150	• • Plug	7	26689866-
5		6732-21-1820	• • Plug	13	26689866-
6		6735-21-5531	• • Plug, Expansion	11	26689866-
7		6744-11-1070	• • Plug	2	26689866-
8		6754-11-1160	• • Plug	2	26689866-
9		6732-21-1981	• Plug, Pipe	4	26689866-
10		6732-11-1920	• Plug	3	26689866-
11		6732-61-2240	• Plug	1	26689866-
12		6216-14-6820	• Plug Assembly	1	26689866-
		6216-14-6860	• • O-Ring	1	26689866-
13		6754-41-4541	Seal	12	26689866-
		6754-41-4100	Valve Kit, Intake	12	26689866-
14		6754-41-4110	• Valve	1	26689866-
15		6744-11-1020	• Collet	2	26689866-
16		6754-41-4540	• Seal	1	26689866-
		6754-41-4200	Valve Kit, Exhaust	12	26689866-
17		6754-41-4210	• Valve	1	26689866-
18		6744-11-1020	• Collet	2	26689866-
19		6754-41-4440	Spring	24	26689866-
20		6754-41-4510	Retainer	24	26689866-
21		6754-11-1610	Bolt	26	26689866-
22		6754-11-1811	Gasket	1	26689866-

FIG. AVC00-001001 Cylinder Head Cover

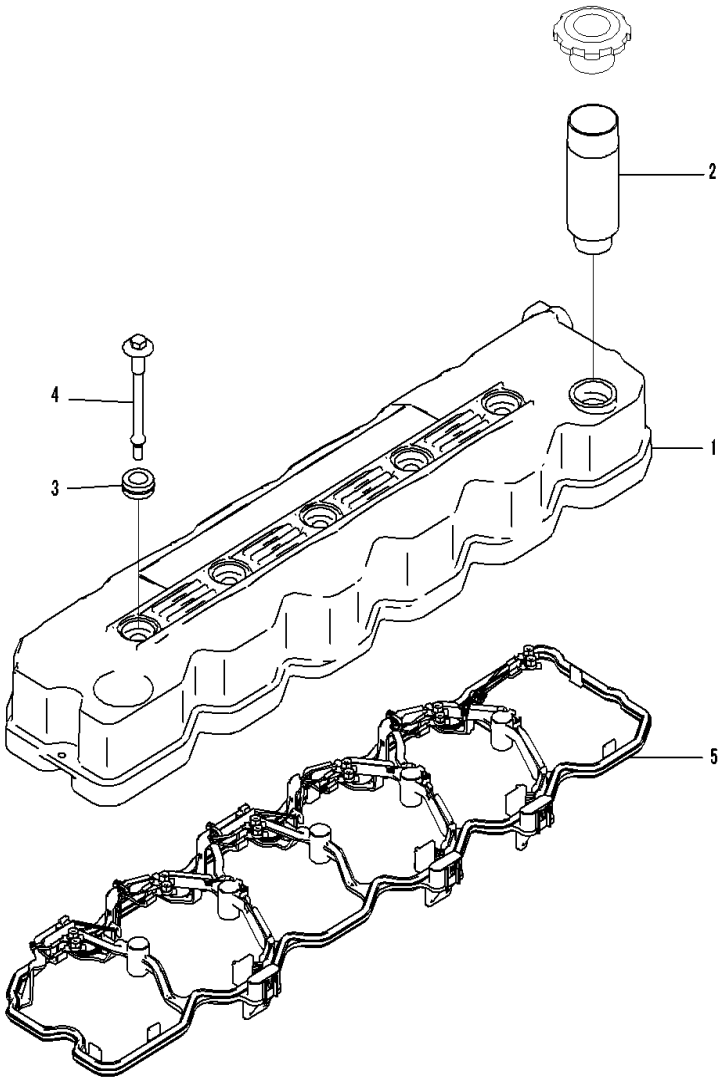

Index	Code	Part Number	Description	Qty	Serial Number
		6754-11-8311	Cover	1	26689866-
		6754-11-8310	• Cover	1	26689866-
1	C1		• • Cover	1	26689866-
2		6754-11-8371	Tube	1	26689866-
		6754-11-8340	Bolt	5	26689866-
3		6754-11-8260	• Isolator	1	26689866-
4	C1		• Screw	1	26689866-
5		6754-11-8330	Gasket	1	26689866-

FIG. AIM00-001001 Air Intake Port Cover

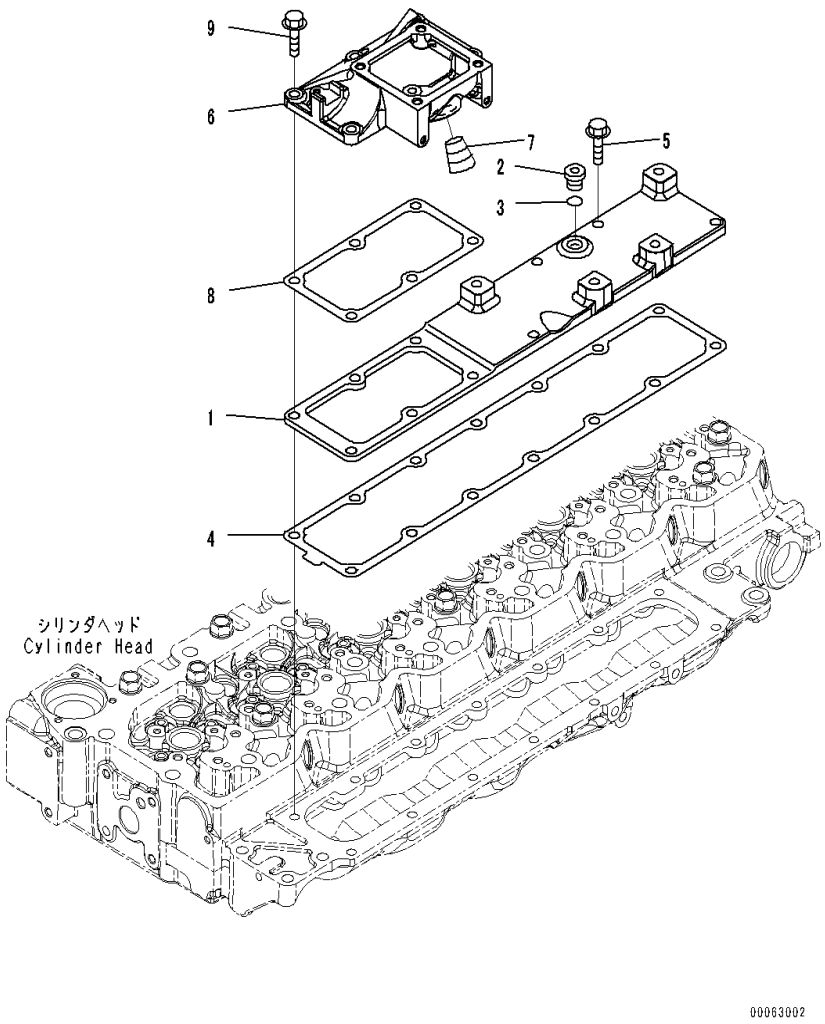

Index	Code	Part Number	Description	Qty	Serial Number
1		6754-11-4230	Cover	1	26689866-
		6735-21-1910	Plug Assembly	1	26689866-
2		6735-21-1920	• Plug	1	26689866-
3		6735-21-1930	• O-Ring	1	26689866-
4		6754-11-4280	Gasket	1	26689866-
5		6732-11-4160	Bolt	4	26689866-
6		6754-11-4221	Connector	1	26689866-
7		6732-11-1920	Plug	1	26689866-
8		6754-11-4390	Gasket	1	26689866-
9		6743-12-4110	Bolt	6	26689866-

FIG. AIC00-001001 Air Intake Connector

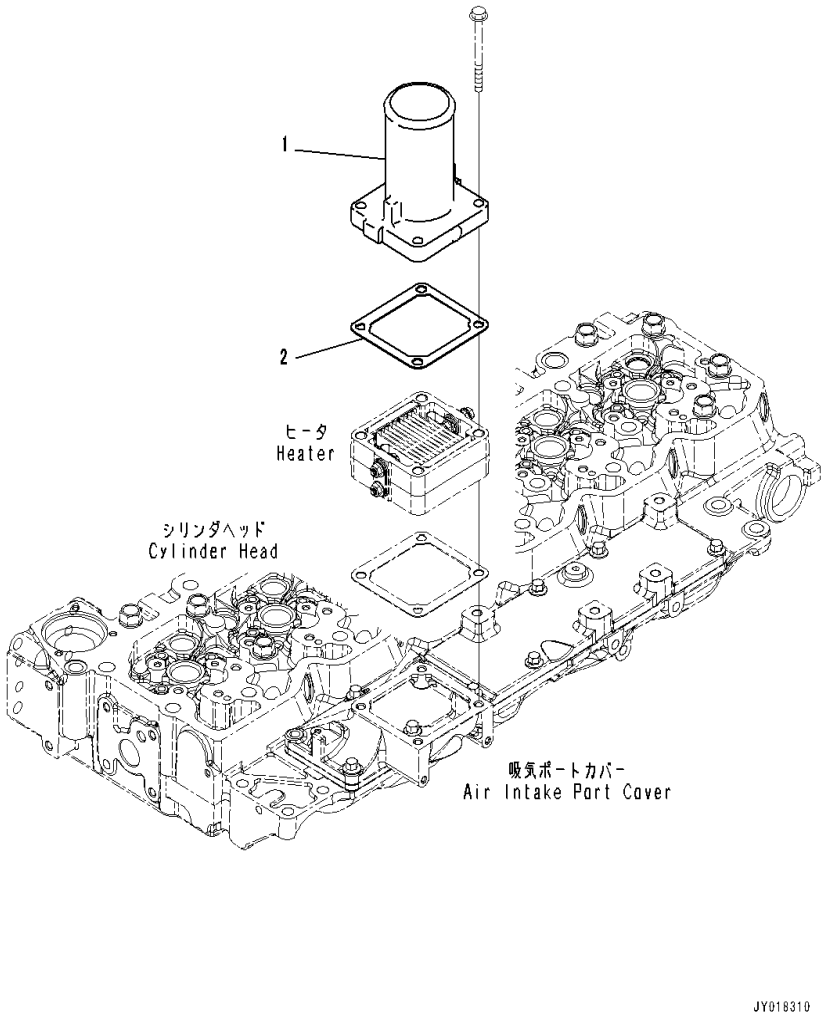

Index	Code	Part Number	Description	Qty	Serial Number
1		6754-11-4440	Connector	1	26689866-
2		6754-11-4120	Gasket	1	26689866-

FIG. AIC20-001001 Air Intake Connector Mounting

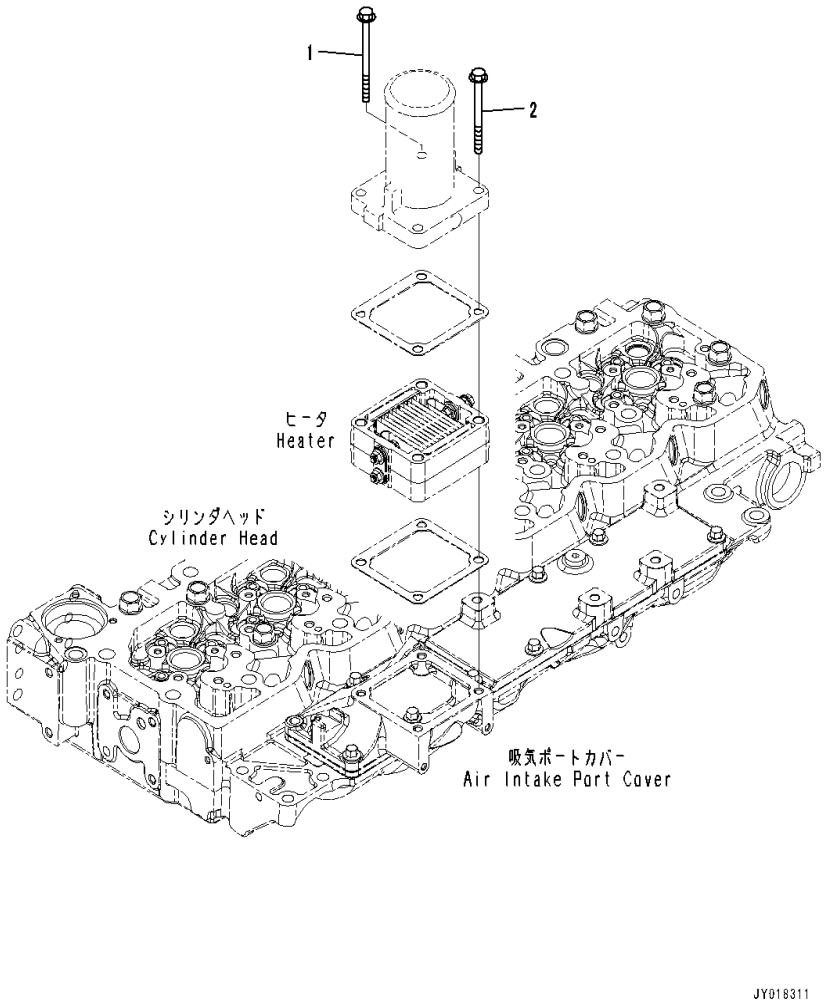

Index	Code	Part Number	Description	Qty	Serial Number
1		6734-11-5210	Bolt	1	26689866-
2		6733-61-3150	Bolt	3	26689866-

FIG. AAH00-001001 Air Intake Heater

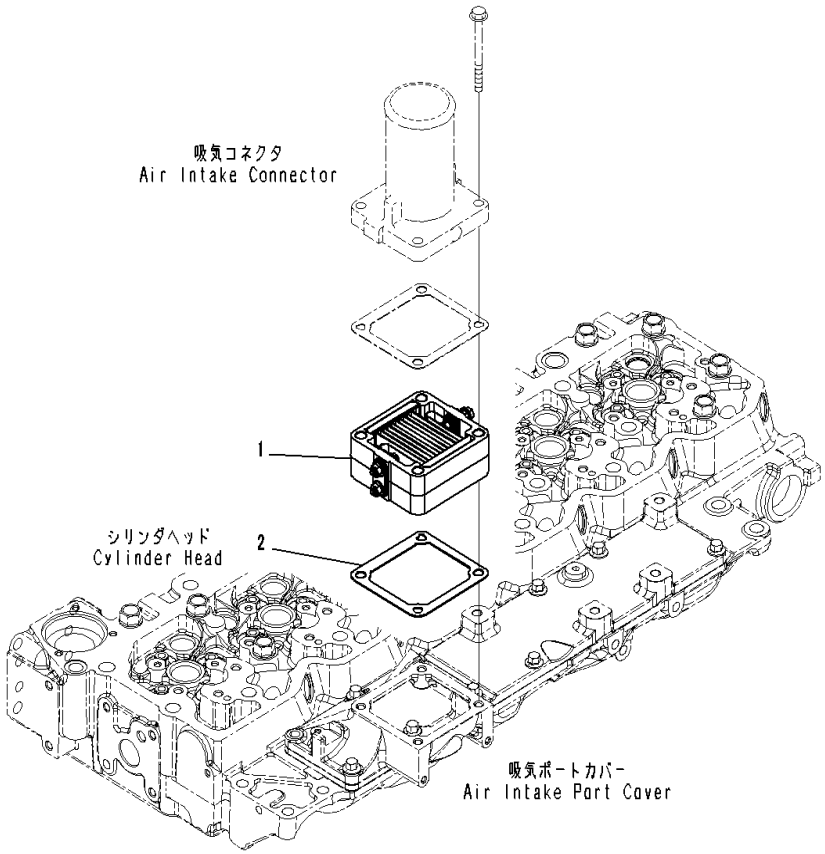

Index	Code	Part Number	Description	Qty	Serial Number
1		600-816-3120	Heater,Ribbon	1	26689866-
2		6754-11-4120	Gasket	1	26689866-

FIG. ATB30-001001 Exhaust Manifold

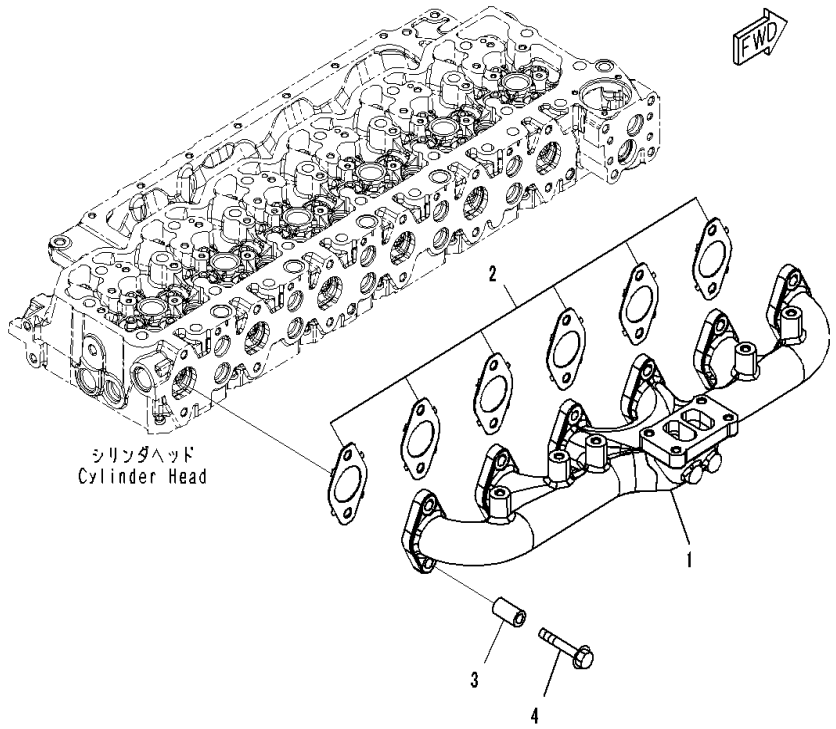

Index	Code	Part Number	Description	Qty	Serial Number
1		6754-11-5110	Manifold	1	26689866-
2		6754-11-5142	Gasket	6	26689866-
3		6754-11-5150	Spacer	12	26689866-
4		6732-11-5860	Bolt	12	26689866-

FIG. A1539-001001 Turbocharger

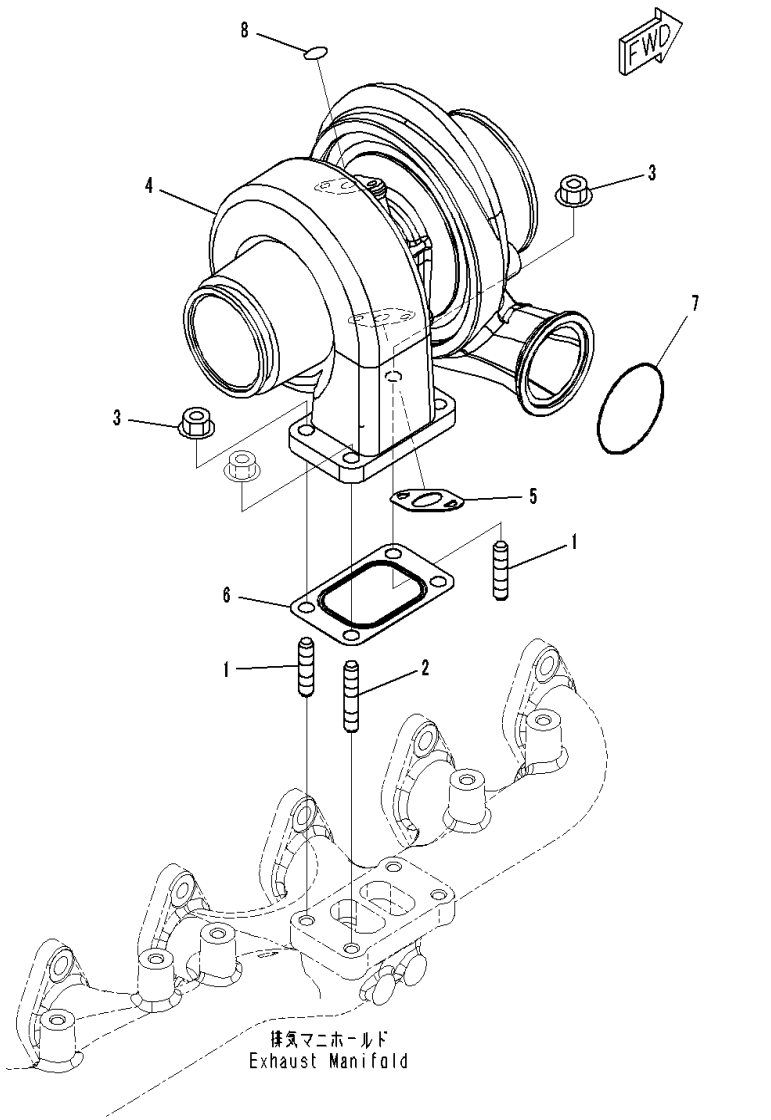

Index	Code	Part Number	Description	Qty	Serial Number
1		6732-81-8810	Stud	2	26689866-
2		6738-82-8810	Stud	2	26689866-
3		6732-81-8820	Nut	4	26689866-
		6754-81-8090	Turbocharger Kit	1	26689866-
4	C1		• Turbocharger	1	26689866-
5		6754-51-8121	• Gasket	1	26689866-
6		6754-81-8710	• Gasket	1	26689866-
7		6738-11-4370	• O-Ring	1	26689866-
8		6736-51-8710	• O-Ring	1	26689866-

FIG. ATP00-001001 Turbocharger Oil Piping

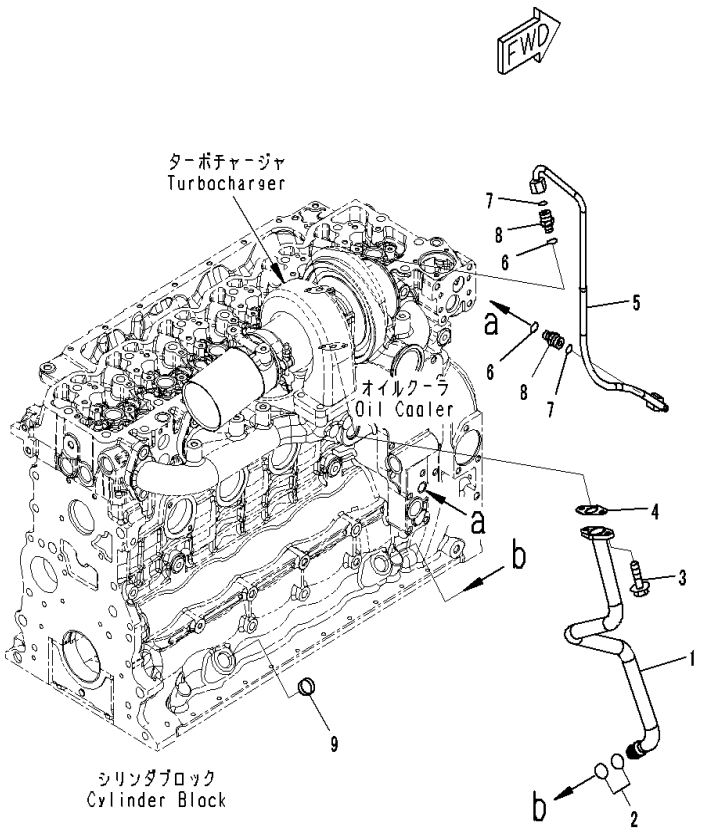

Index	Code	Part Number	Description	Qty	Serial Number
1		6754-51-8101	Tube Assembly	1	26689866-
2		6731-61-1370	Bolt	2	26689866-
3		6754-51-8121	Gasket	1	26689866-
4		6754-51-8210	Hose	1	26689866-
5		6745-61-8160	Connector Assembly	2	26689866-
6		6735-21-5530	Plug? Expansion	1	26689866-

FIG. A1570-001001 Heat Shield

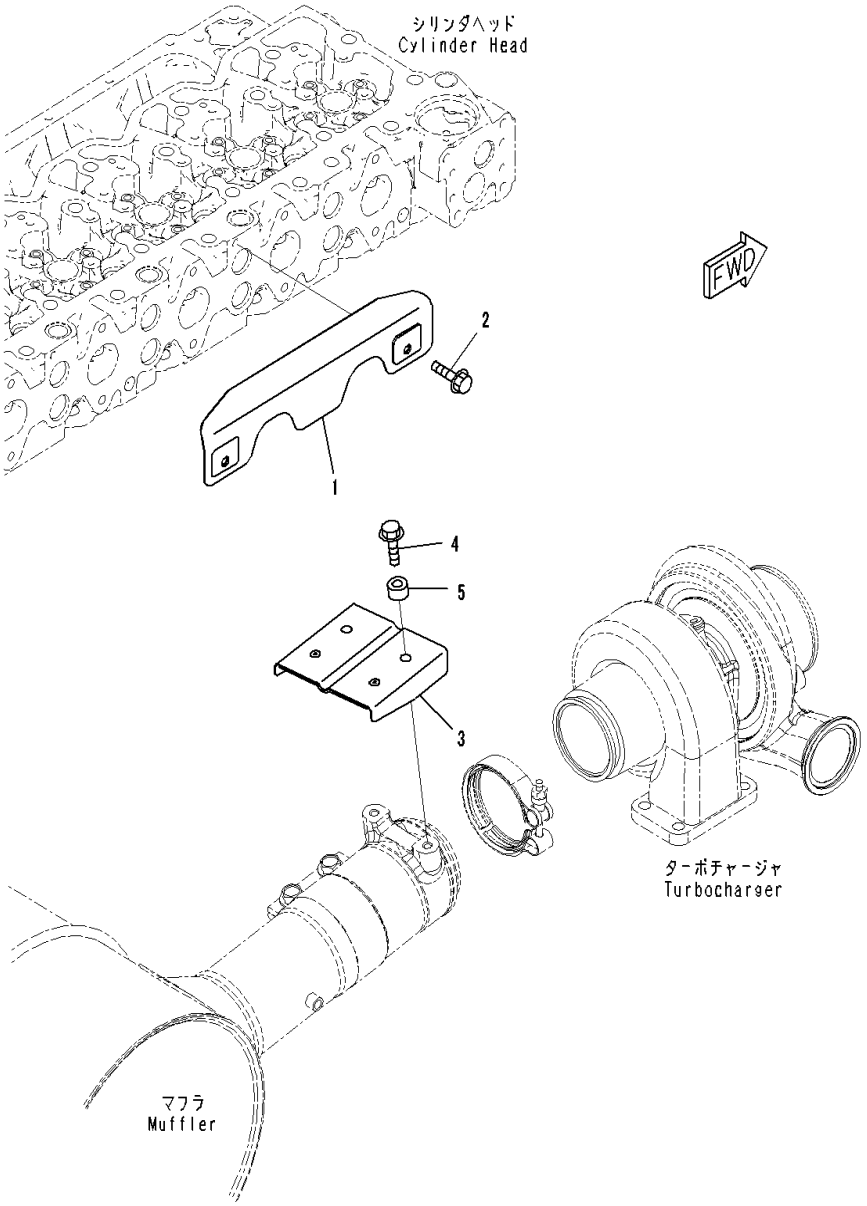

Index	Code	Part Number	Description	Qty	Serial Number
1		6754-81-8350	Shield	1	26689866-
2		01435-00814	Bolt	2	26689866-
3		6732-81-8451	Cover	1	26689866-
4		01435-00820	Bolt	2	26689866-
5		6131-12-4570	Spacer	2	26689866-

FIG. ASH00-001001 Heat Shield

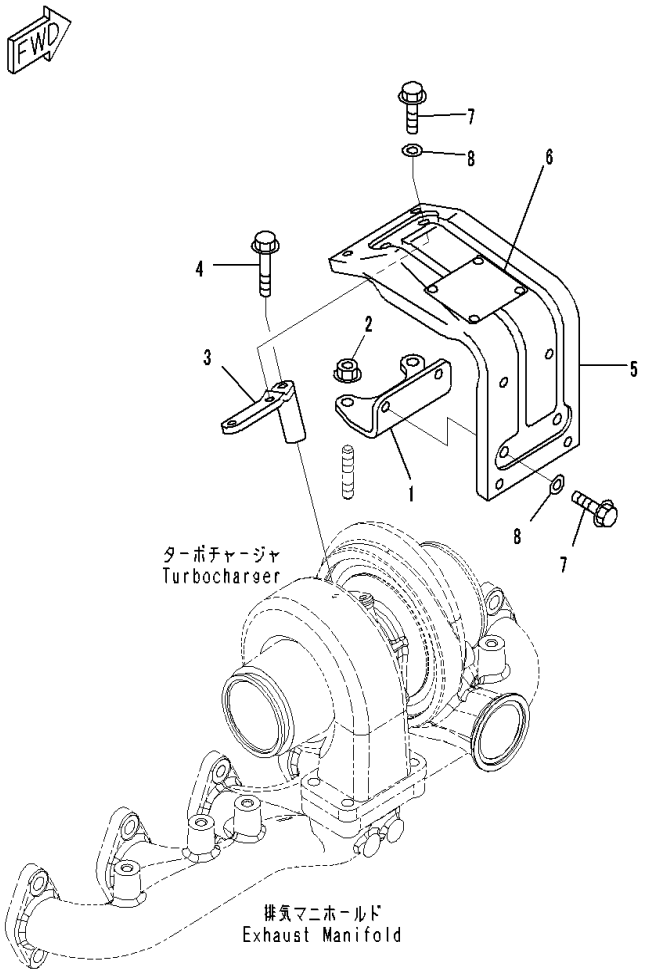

Index	Code	Part Number	Description	Qty	Serial Number
1		6754-81-8340	Bracket	1	26689866-
2		6732-81-8820	Nut	2	26689866-
3		6754-81-8410	Bracket	1	26689866-
4		01435-00845	Bolt	1	26689866-
5		6732-81-8412	Cover	1	26689866-
6		09817-A0753	• Plate, Warning, High Temperature	1	26689866-
7		01435-00816	Bolt	4	26689866-
8		154-61-16570	Washer	4	26689866-

FIG. ASR00-001001 Dust Seal

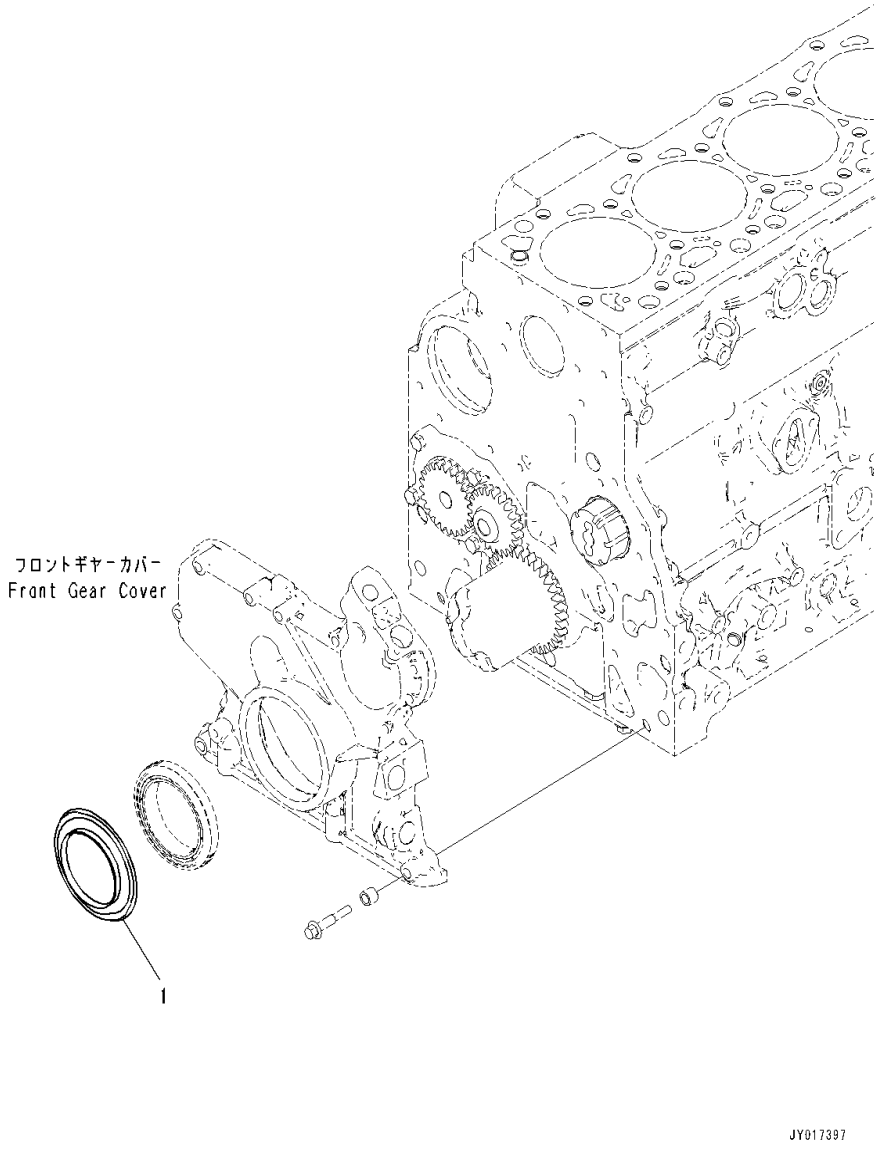

Index	Code	Part Number	Description	Qty	Serial Number
1		6754-21-3160	Seal, Dust	1	26689866-

FIG. A9999-001001 Damper (1/1)

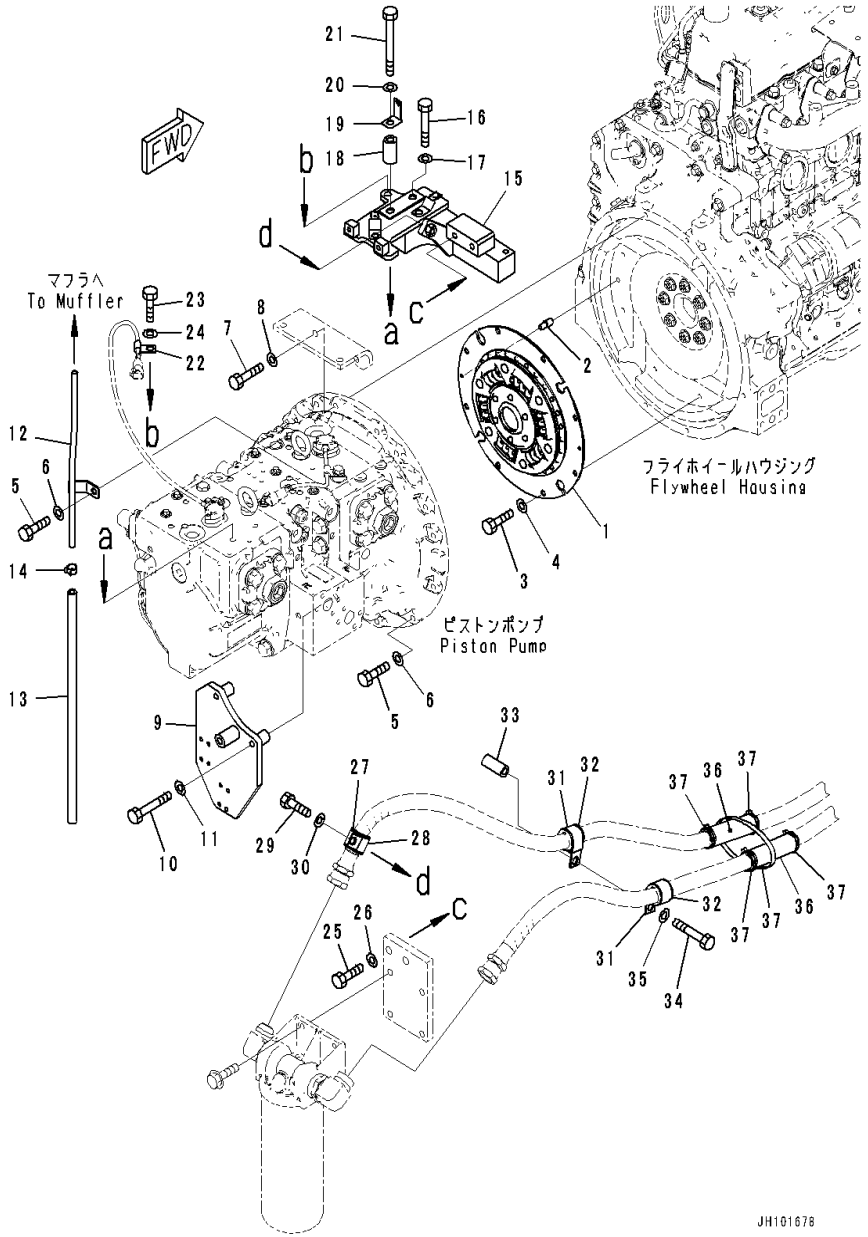

Index	Code	Part Number	Description	Qty	Serial Number
1		22U-01-21310	Damper	1	26689866-
2		203-01-51120	Pin	2	26689866-
3		01010-81020	Bolt	8	26689866-
4		01643-31032	Washer	8	26689866-
5		01010-81050	Bolt	8	26689866-
6		01643-31032	Washer	8	26689866-
7		01010-81060	Bolt	2	26689866-
8		01643-31032	Washer	2	26689866-
9		20Y-62-56621	Bracket	1	26689866-
10		01010-81085	Bolt	2	26689866-
11		01643-31032	Washer	2	26689866-
12		6754-11-5440	Tube	1	26689866-
13		07260-20950	Hose	1	26689866-
14		07285-00155	Clip	1	26689866-
15		20Y-62-56111	Bracket	1	26689866-
16		01010-81280	Bolt	1	26689866-
17		01643-31232	Washer	1	26689866-
18		581-22-12760	Spacer	1	26689866-
19		08057-14012	Clip	1	26689866-
20		01643-31232	Washer	1	26689866-
21		01011-81225	Bolt	1	26689866-
22		04434-50612	Clip	1	26689866-
23		01010-81025	Bolt	1	26689866-
24		01643-31032	Washer	1	26689866-
25		01010-81235	Bolt	2	26689866-
26		01643-31232	Washer	2	26689866-
27		198-06-53630	Cushion	1	26689866-
28		04434-53412	Clip	1	26689866-
29		01010-81230	Bolt	1	26689866-
30		01643-31232	Washer	1	26689866-
31		04434-53412	Clip	2	26689866-
32		198-06-53630	Cushion	2	26689866-
33		195-979-5190	Collar	1	26689866-
34		01010-81280	Bolt	1	26689866-
35		01643-31232	Washer	1	26689866-
36		20Y-01-41250	Cover	2	26689866-
37		08034-20536	Band	5	26689866-

FIG. A9999-001002 Damper (1/2)

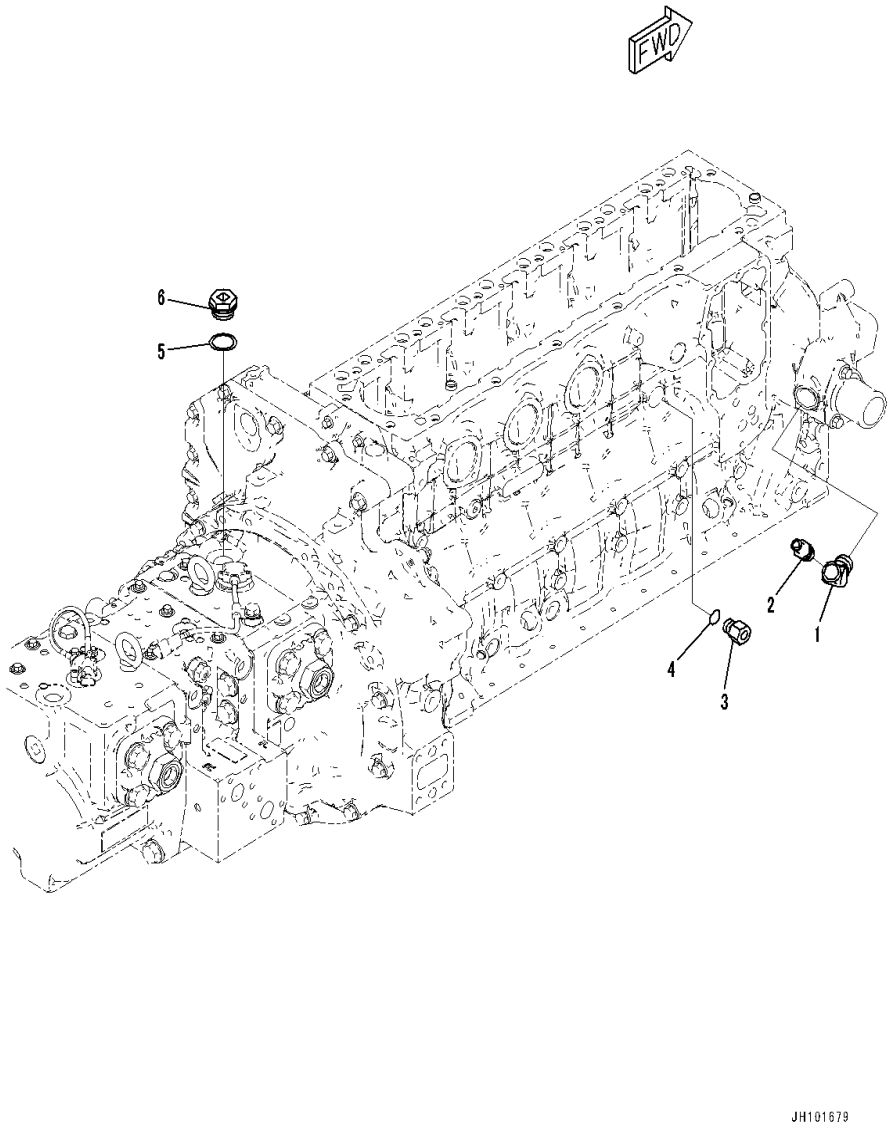

Index	Code	Part Number	Description	Qty	Serial Number
1		20Y-810-1161	Elbow	1	26689866-
2		22U-979-1930	Nipple	1	26689866-
3		20Y-01-56280	Joint	1	26689866-
4		07002-11823	O-ring	1	26689866-
5		07005-03016	Seal, Washer	1	26689866-
6		20Y-62-57860	Plug	1	26689866-

FIG. A1610-001001 Exhaust Muffler

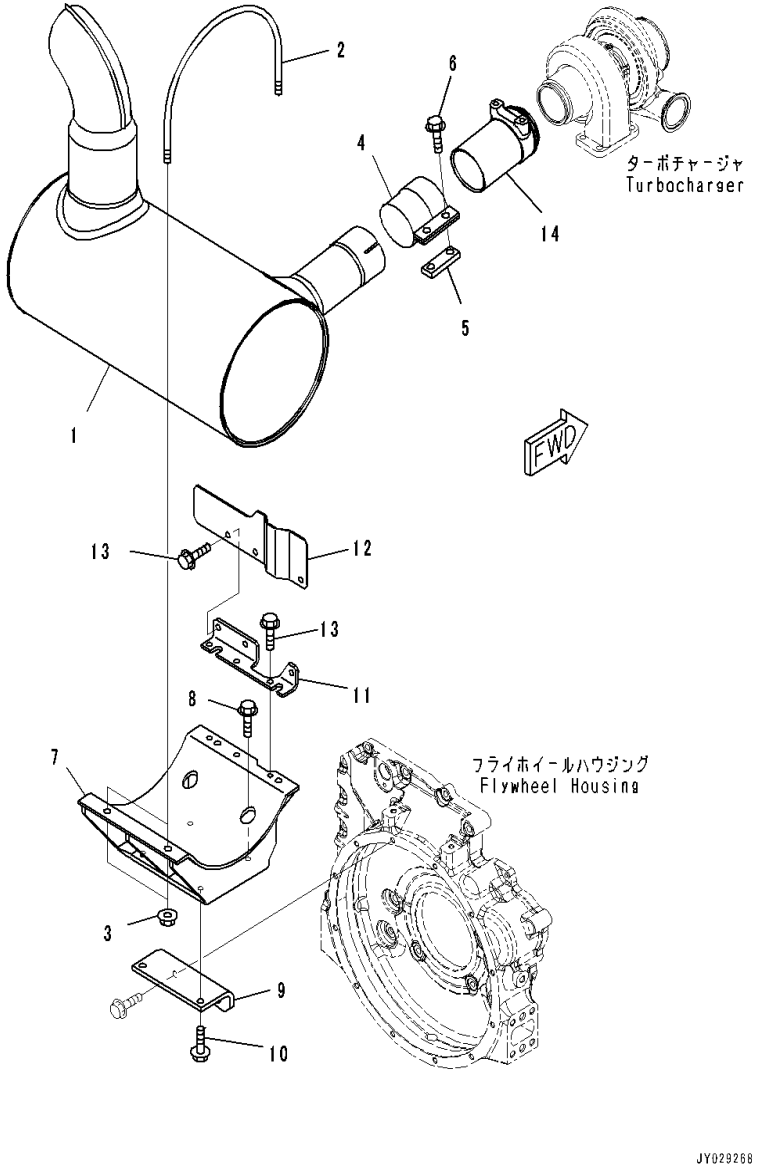

Index	Code	Part Number	Description	Qty	Serial Number
1		6754-11-6160	Muffler	1	26689866-
2		6754-11-5940	U-bolt	2	26689866-
3		01594-01008	Nut	4	26689866-
4		6210-11-5232	Clamp	1	26689866-
5		6208-11-5850	Plate	1	26689866-
6		01435-01235	Bolt	2	26689866-
7		6754-11-5490	Bracket	1	26689866-
8		01435-01030	Bolt	2	26689866-
9		6754-11-5420	Bracket	1	26689866-
10		01435-01025	Bolt	2	26689866-
11		6754-71-9740	Bracket	1	26689866-
12		6754-71-9770	Cover	1	26689866-
13		01435-00820	Bolt	6	26689866-
14		6735-11-5611	Tube	1	26689866-

ENGINE CYLINDER BLOCK AND ITS RELATED PARTS

FIG. A2210-001001 Breather Hose Related Parts

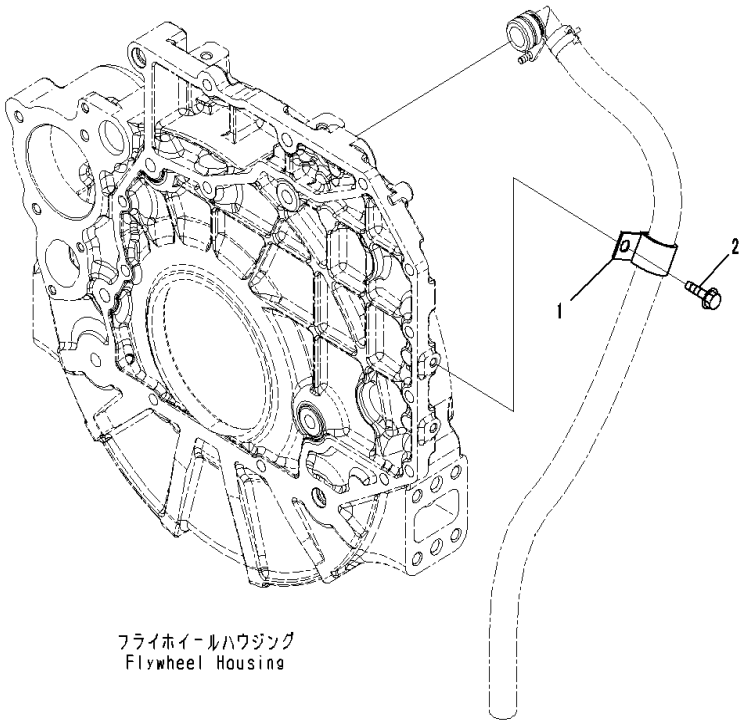

Index	Code	Part Number	Description	Qty	Serial Number
1		04434-52511	Clip	1	26689866-
2		01435-00820	Bolt	1	26689866-

FIG. AGG00-001001 Front Gear Cover

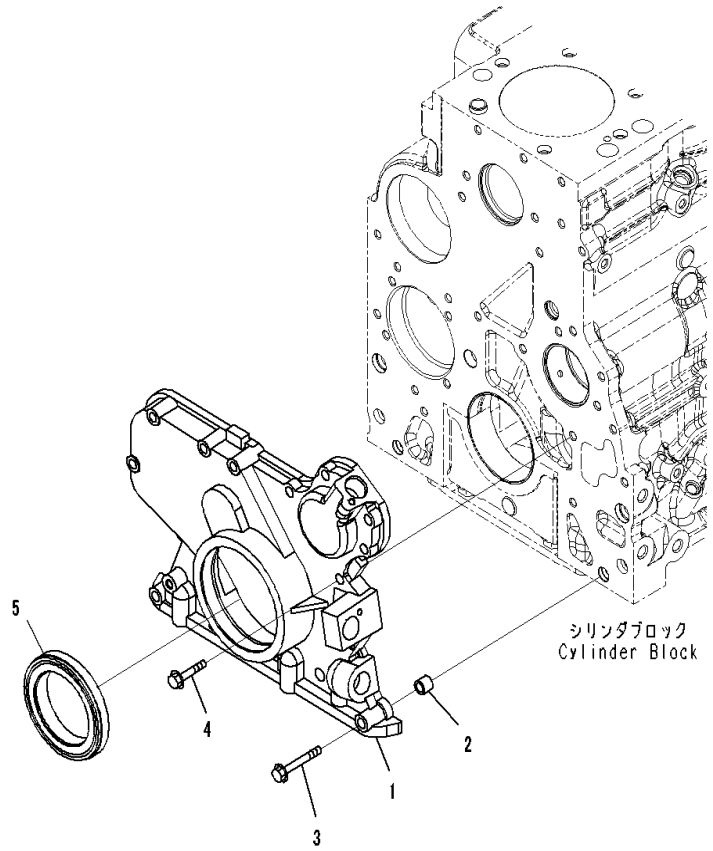

Index	Code	Part Number	Description	Qty	Serial Number
1		6754-21-6212	Cover, Front	1	26689866-
2		6754-21-6220	Pin, Dowel	2	26689866-
3		6735-61-2120	Bolt	6	26689866-
4		6732-21-6630	Screw	7	26689866-
5		6754-21-6231	Seal,Front	1	26689866-

FIG. ARL00-001001 Rocker Arm

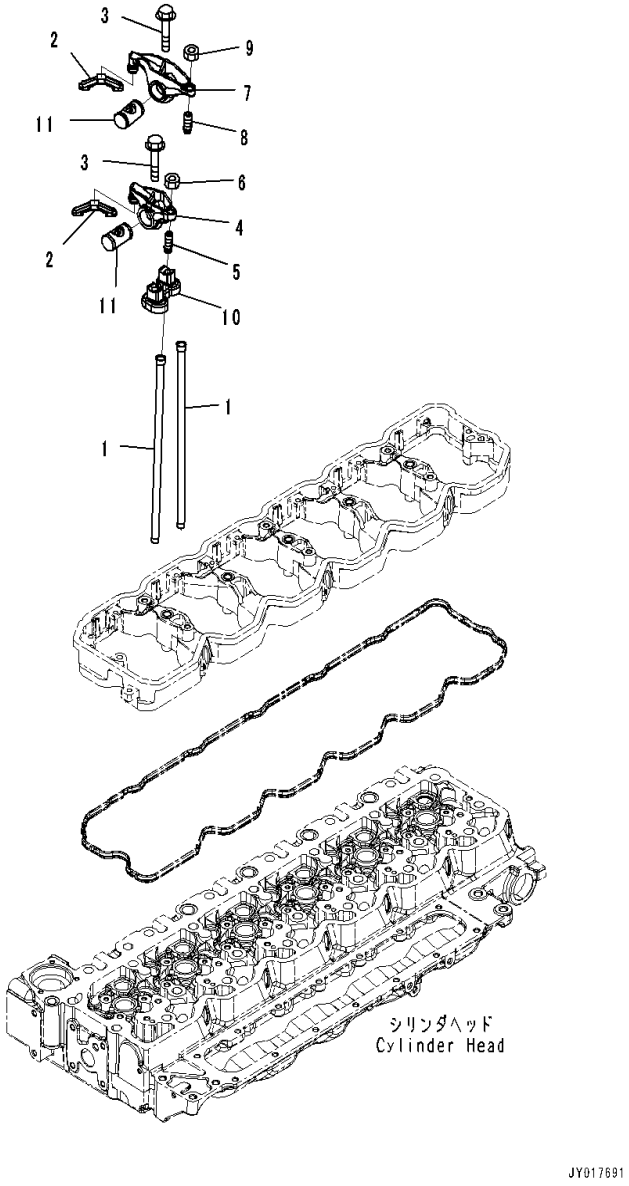

Index	Code	Part Number	Description	Qty	Serial Number
1		6754-41-3110	Rod	12	26689866-
2		6754-41-5310	Crosshead	12	26689866-
		6754-41-5101	Arm Assembly	6	26689866-
3		6754-41-5180	• Bolt	2	26689866-
		6754-41-5211	• Arm Assembly, Intake Valve	1	26689866-
4	C1		• • Lever Assembly	1	26689866-
5		6754-41-5140	• • • Screw	1	26689866-
6		6735-41-5550	• • • Nut	1	26689866-
		6754-41-5111	• Arm Assembly, Exhaust Valve	1	26689866-
7	C1		• • Lever Assembly	1	26689866-
8		6754-41-5140	• • • Screw	1	26689866-
9		6735-41-5550	• • • Nut	1	26689866-
10		6754-41-5260	• Support	1	26689866-
11	C1		• Shaft	2	26689866-

FIG. APA00-001001 Accessory Drive Pulley

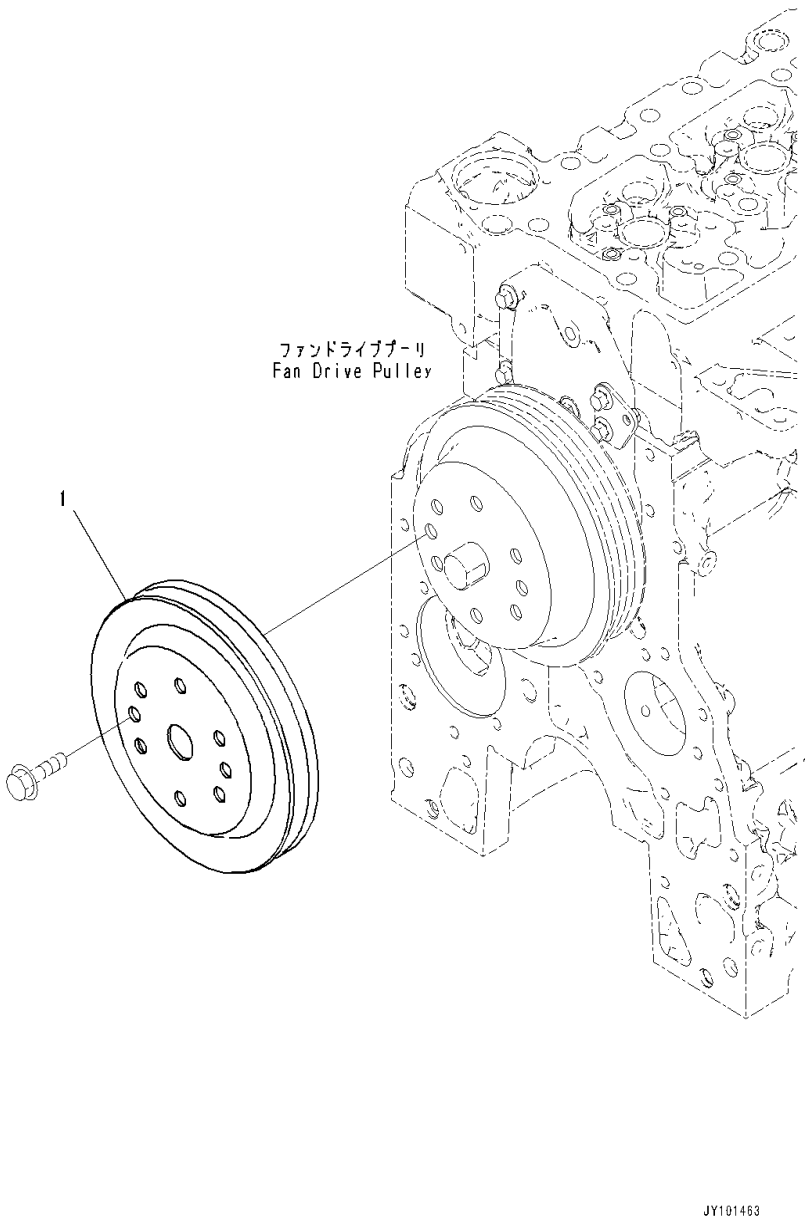

Index	Code	Part Number	Description	Qty	Serial Number
1		6754-61-4420	Pulley	1	26689866-

FIG. A2219-001001 Flywheel Housing

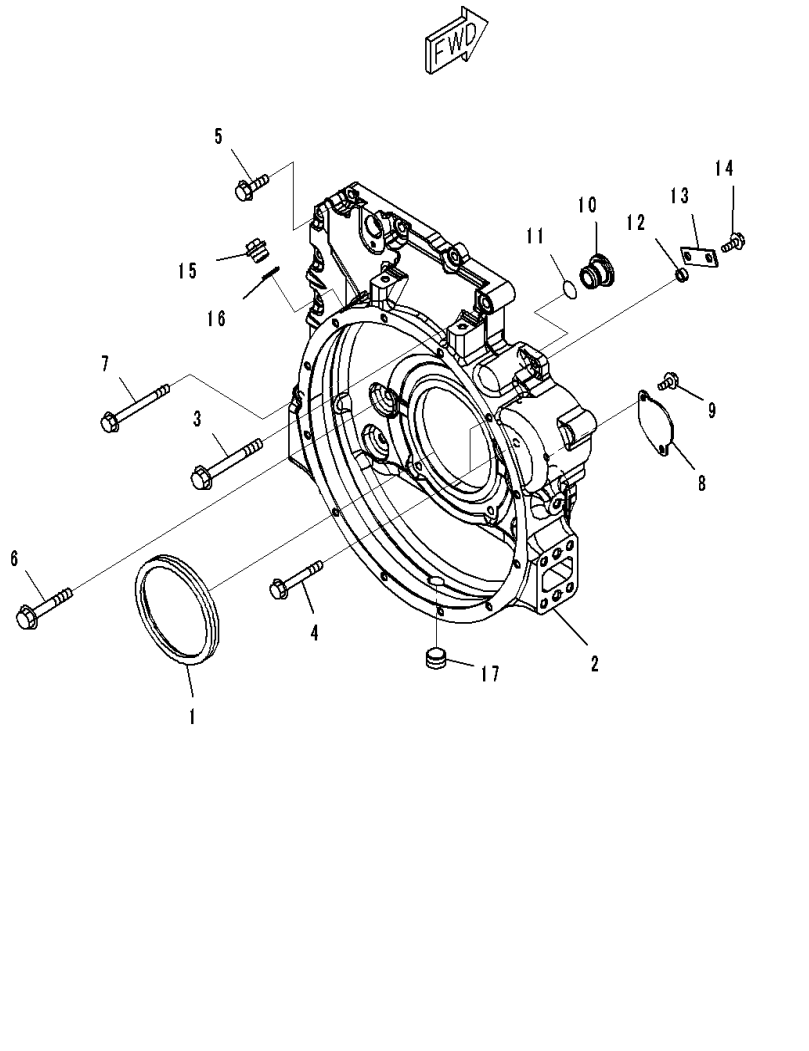

Index	Code	Part Number	Description	Qty	Serial Number
1		6736-21-4221	Seal	1	26689866-
2		6754-21-4111	Housing, Flywheel	1	26689866-
3		6754-21-4210	Bolt	2	26689866-
4		6731-21-6220	Bolt	2	26689866-
5		6742-01-5504	Bolt	9	26689866-
6		6736-21-5350	Bolt	6	26689866-
7		6754-21-4220	Bolt	1	26689866-
8		6732-21-4130	Plate	1	26689866-
9		01435-60816	Bolt	2	26689866-
10		6732-21-4150	Plug	1	26689866-
11		6732-21-4161	O-Ring	1	26689866-
12		6130-12-1961	Spacer	1	26689866-
13		6301-11-4630	Plate	1	26689866-
14		01435-60825	Bolt	1	26689866-
15		6736-21-5320	Plug	1	26689866-
16		6732-21-5170	Gasket	1	26689866-
17		6732-11-1920	Plug	1	26689866-

FIG. AFW00-001001 Flywheel

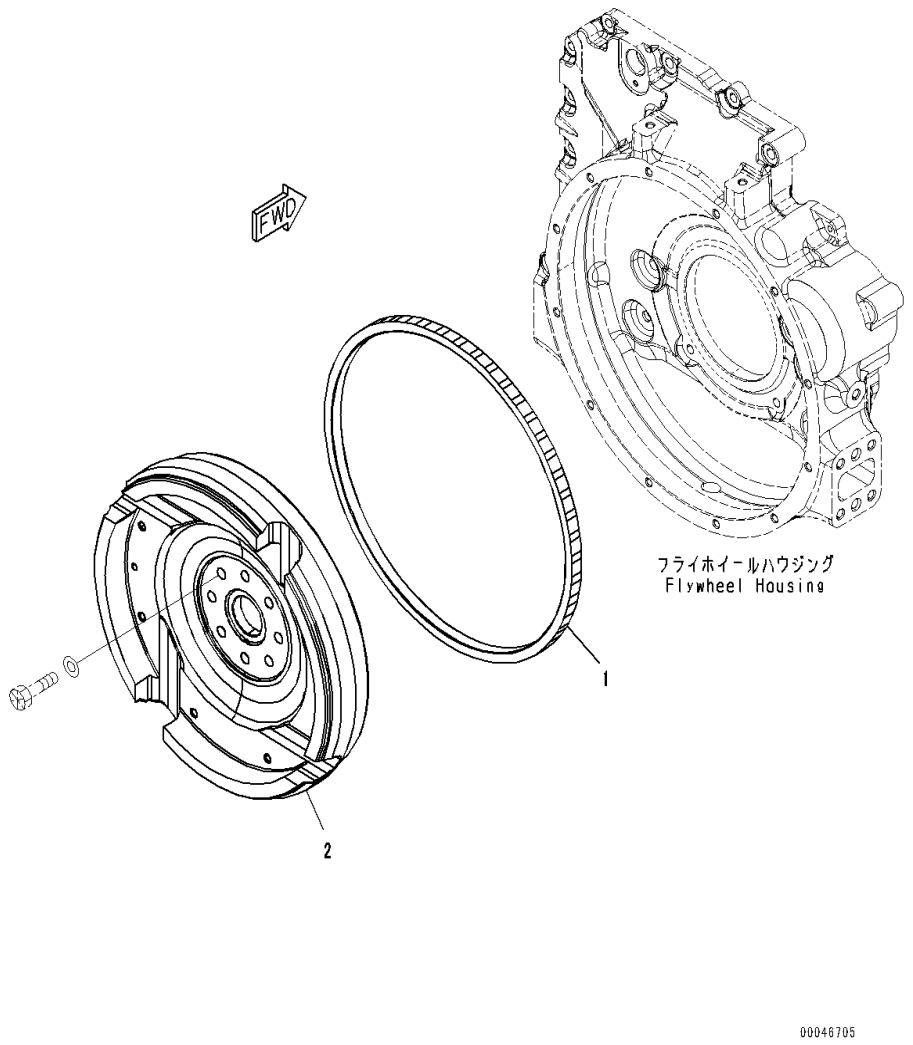

Index	Code	Part Number	Description	Qty	Serial Number
		6738-31-4200	Flywheel Assembly	1	26689866-
1		6732-31-4180	• Gear,Ring	1	26689866-
2	C1		• Flywheel	1	26689866-

FIG. AFW10-001001 Flywheel Mounting

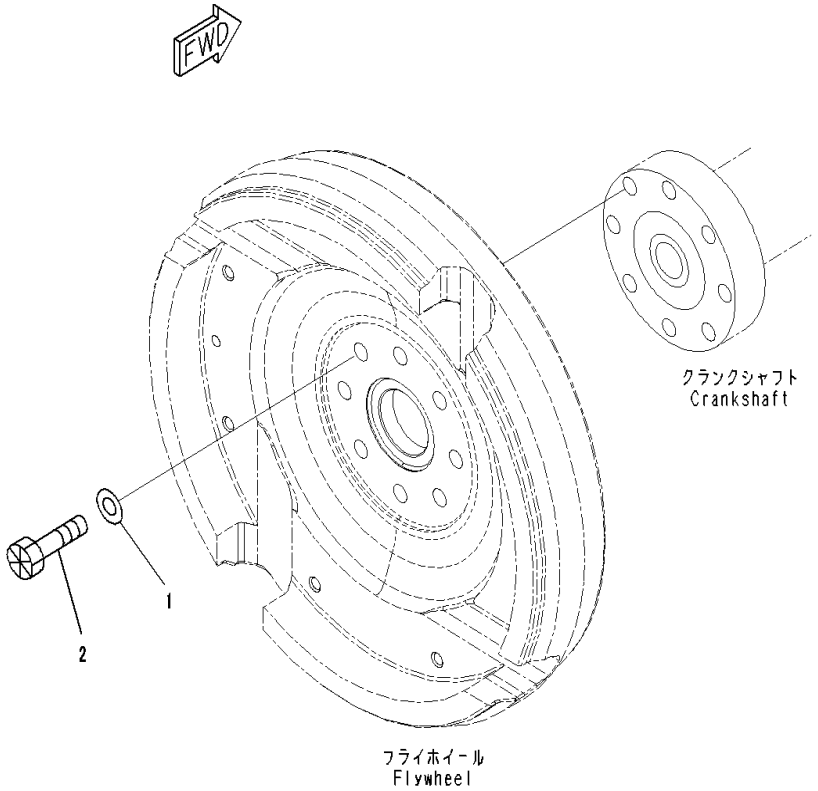

Index	Code	Part Number	Description	Qty	Serial Number
1		6732-31-4120	Washer	8	26689866-
2		6732-31-4130	Bolt	8	26689866-

FIG. AOP10-001001 Engine Oil Pan

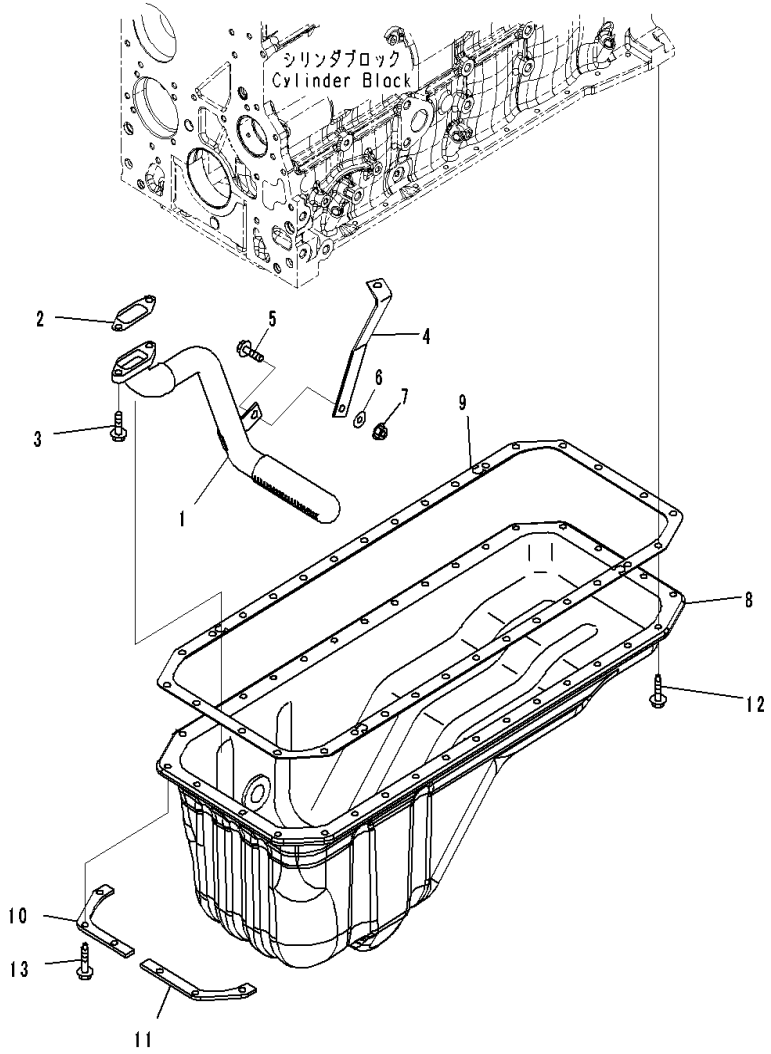

Index	Code	Part Number	Description	Qty	Serial Number
1		6754-21-5510	Tube, Suction	1	26689866-
2		6754-21-5530	Gasket	1	26689866-
3		01435-60825	Bolt	2	26689866-
4		6754-21-5520	Bracket	1	26689866-
5		6735-71-5190	Bolt	1	26689866-
6		6742-01-2690	Washer	1	26689866-
7		01584-00605	Nut	1	26689866-
8		6754-21-5180	Oil Pan	1	26689866-
9		6754-21-5840	Gasket	1	26689866-
10		6754-21-5130	Plate	1	26689866-
11		6754-21-5140	Plate	1	26689866-
12		6735-21-5540	Bolt	26	26689866-
13		6732-21-6610	Bolt	6	26689866-

FIG. ARD00-001001 Engine Oil Pan Drain

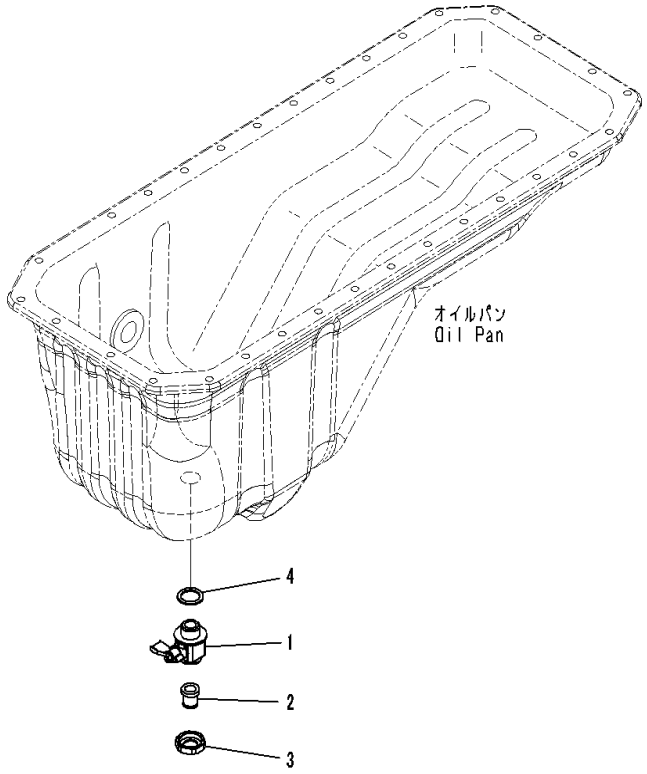

Index	Code	Part Number	Description	Qty	Serial Number
		6738-21-5610	Valve Assembly	1	26689866-
1	C1		• Valve	1	26689866-
2		6738-21-5630	• Joint	1	26689866-
3		6738-21-5640	• Union	1	26689866-
4		07005-02216	Seal, Washer	1	26689866-

FIG. ASD00-001001 Engine Oil Level Sensor

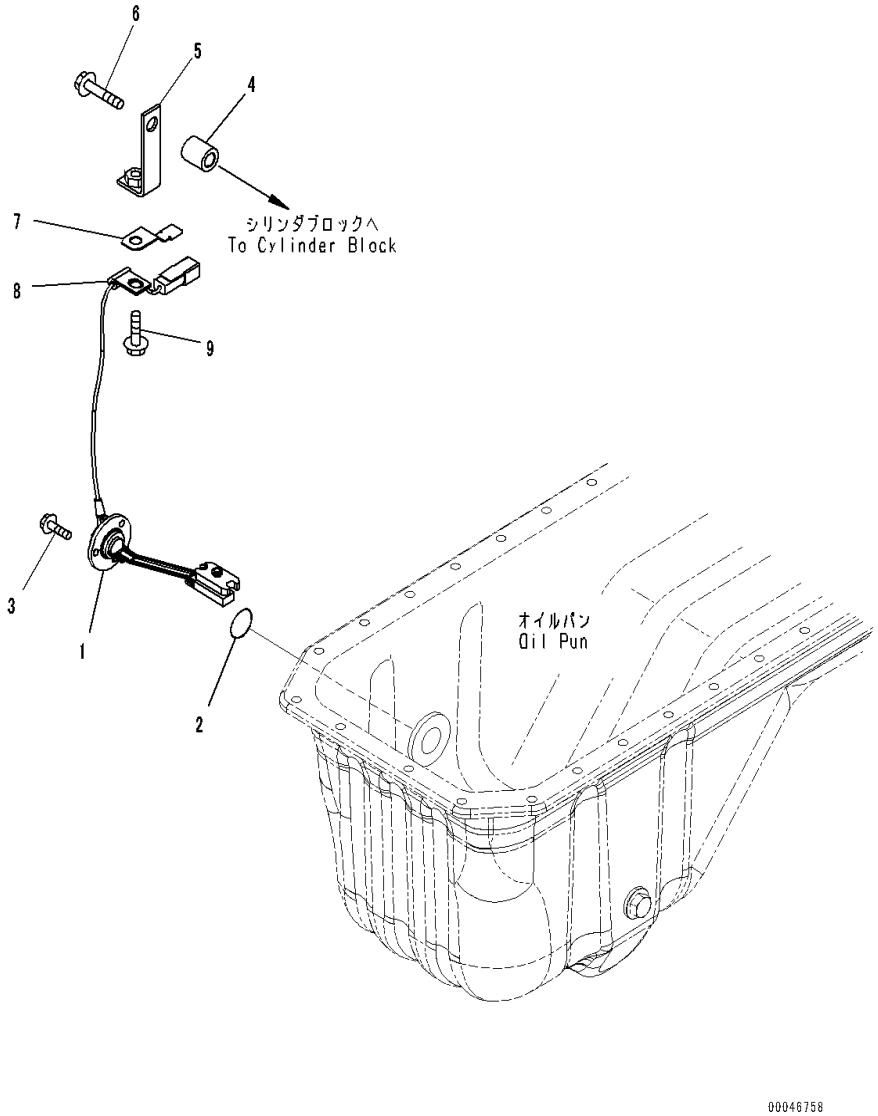

Index	Code	Part Number	Description	Qty	Serial Number
1		6741-81-9220	Switch, Level	1	26689866-
2		7861-91-4220	• O-Ring	1	26689866-
3		01435-60612	Bolt	3	26689866-
4		6144-81-6680	Spacer	1	26689866-
5		6215-11-6330	Bracket	1	26689866-
6		6754-81-9190	Bolt	1	26689866-
7		08193-20010	Clip	1	26689866-
8		04434-50510	Clip	1	26689866-
9		6734-71-5610	Bolt	1	26689866-

FIG. A2019-001001 Cylinder Block

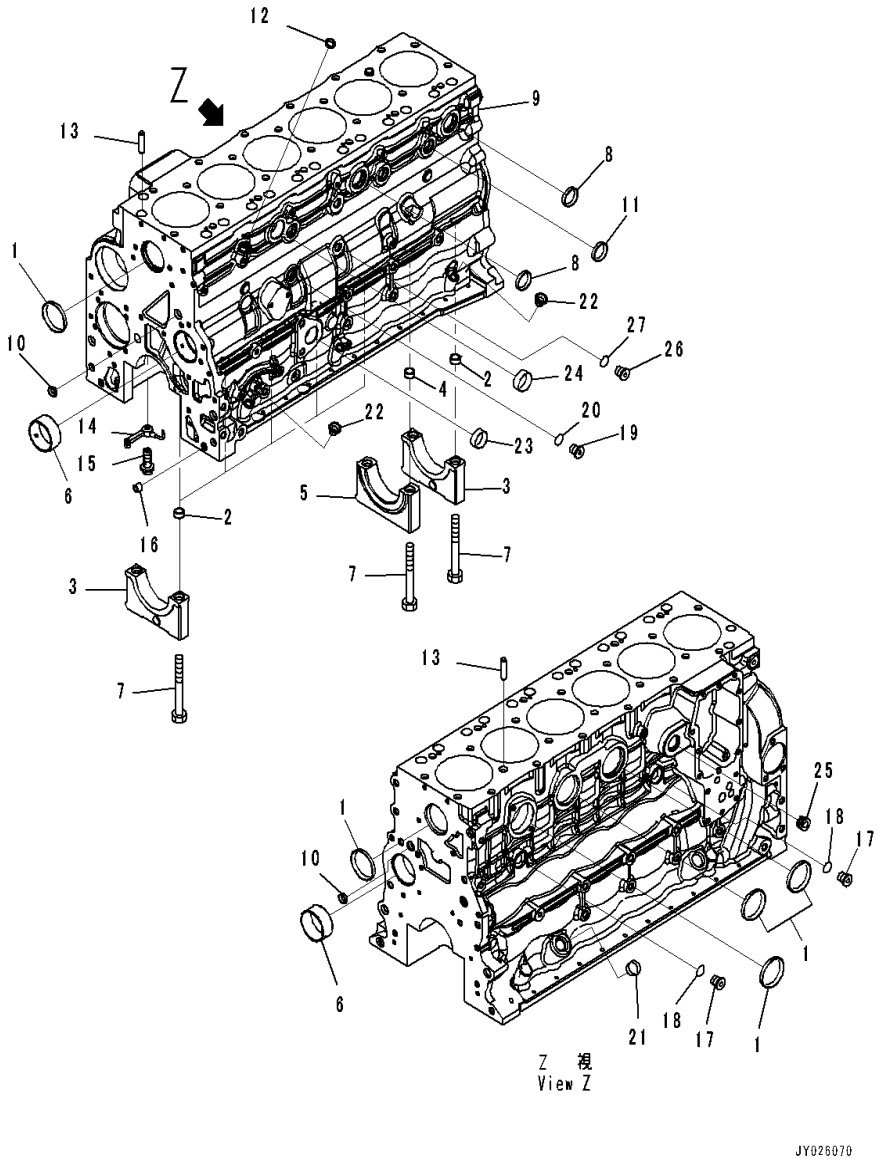

Index	Code	Part Number	Description	Qty	Serial Number
		6754-21-1310	Cylinder Block Assembly	1	26689866-
	C1		• Cylinder Block	1	26689866-
	C1		• • Cylinder Block	1	26689866-
1		6732-21-1831	• • • Plug	5	26689866-
	C3		• • • Cap Assembly	6	26689866-
2	C1		• • • • Ring	2	26689866-
3	C1		• • • • Cap	1	26689866-
	C3		• • • Cap Assembly	1	26689866-
4	C1		• • • • Ring	2	26689866-
5	C1		• • • • Cap	1	26689866-
6		6732-21-1412	• • • Bushing	2	26689866-
7		6732-21-1611	• • • Bolt	14	26689866-
8		6742-01-1420	• • • Plug	3	26689866-
9	C1		• • • Block Assembly	1	26689866-
10		6732-21-1812	• • Plug	2	26689866-
11		6732-21-1820	• • Plug	3	26689866-
12		6732-21-1812	• Plug	1	26689866-
		6754-21-1320	• Block Kit	1	26689866-
13		6732-21-6140	• • Ring	2	26689866-
14		6754-21-1191	• • Nozzle	6	26689866-
15		6754-21-1180	• • Joint	6	26689866-
16		6754-21-6220	• • Pin? Dowel	2	26689866-
		6560-81-7110	• • Plug Assembly	2	26689866-
17		6560-81-7120	• • • Plug	1	26689866-
18		6560-81-7130	• • • O-Ring	1	26689866-
		6732-21-1960	• • Plug Assembly	1	26689866-
19		6215-81-9510	• • • Plug	1	26689866-
20		6215-81-9710	• • • O-Ring	1	26689866-
21		6735-21-5530	• • Plug? Expansion	1	26689866-
22		6732-21-5530	• • Plug	4	26689866-
23		6732-21-6160	• • Plug	1	26689866-
24		6742-01-1420	• • Plug	1	26689866-
25		6732-11-1920	• • Plug	1	26689866-
		6735-21-1910	• • Plug Assembly	1	26689866-
26		6735-21-1920	• • • Plug	1	26689866-
27		6735-21-1930	• • • O-Ring	1	26689866-

FIG. A2319-001001 Crankshaft

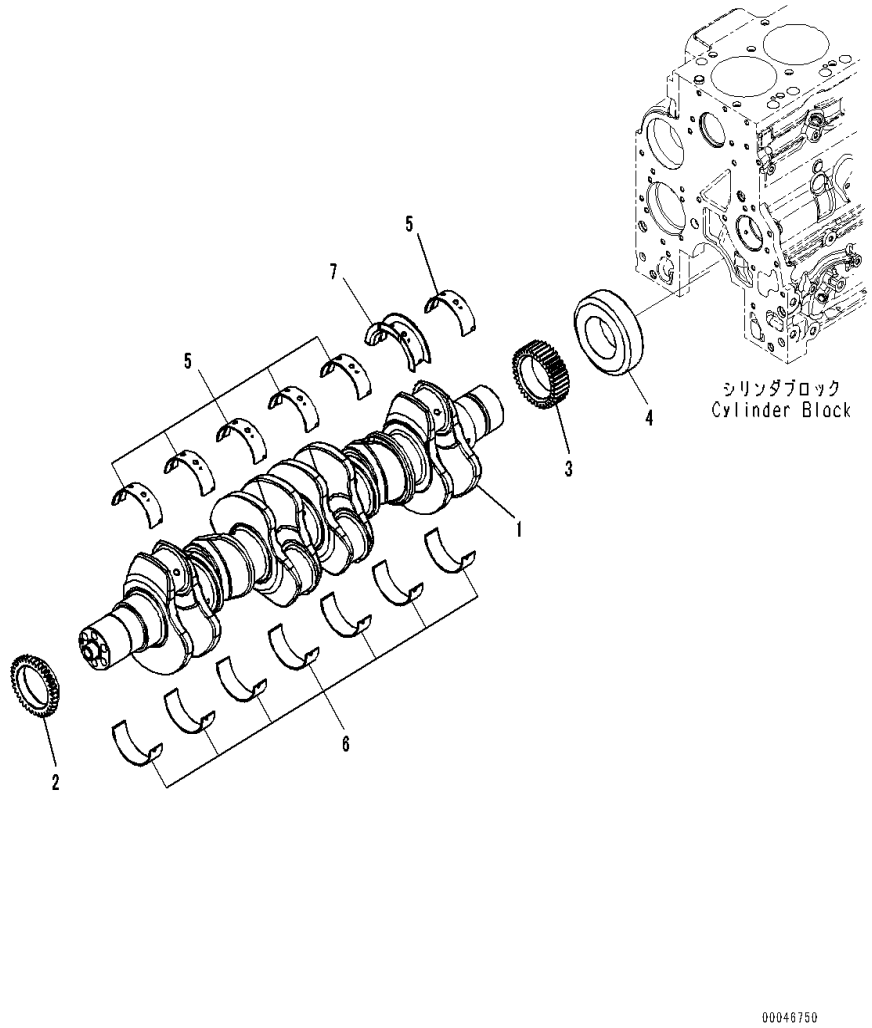

Index	Code	Part Number	Description	Qty	Serial Number
		6754-32-1330	Crankshaft Assembly	1	26689866-
1	C1		• Crankshaft	1	26689866-
2		6754-31-1330	• Gear	1	26689866-
3		6754-31-1340	• Gear	1	26689866-
4		6754-31-1190	• Collar	1	26689866-
5	C1		• Bearing, Upper	6	26689866-
6	C1		• Bearing, Lower	7	26689866-
7	C1		• Bearing, Thrust, Upper	1	26689866-

FIG. ADA00-001001 Vibration Damper

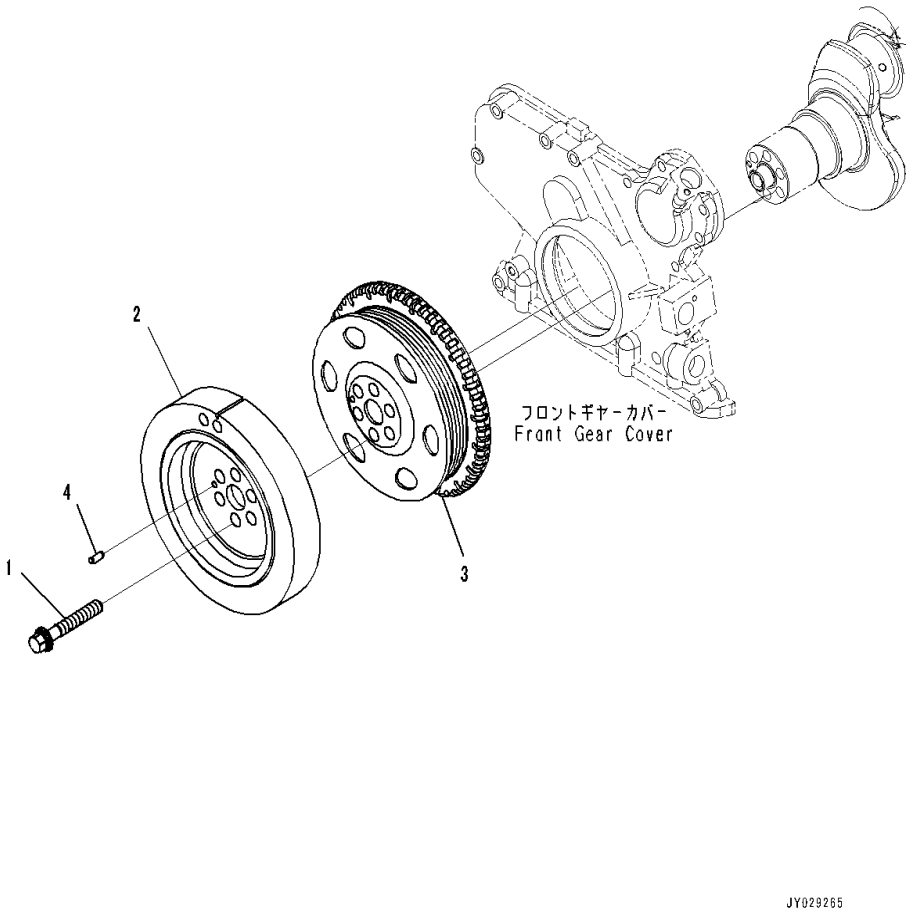

Index	Code	Part Number	Description	Qty	Serial Number
1		6754-31-8120	Bolt	6	26689866-
2		6754-31-8210	Damper	1	26689866-
3		6751-81-2612	Pulley,Crankshaft	1	26689866-
4		6754-31-8131	Pin, Dowel	1	26689866-

FIG. A2359-001001 Piston And Connecting Rod

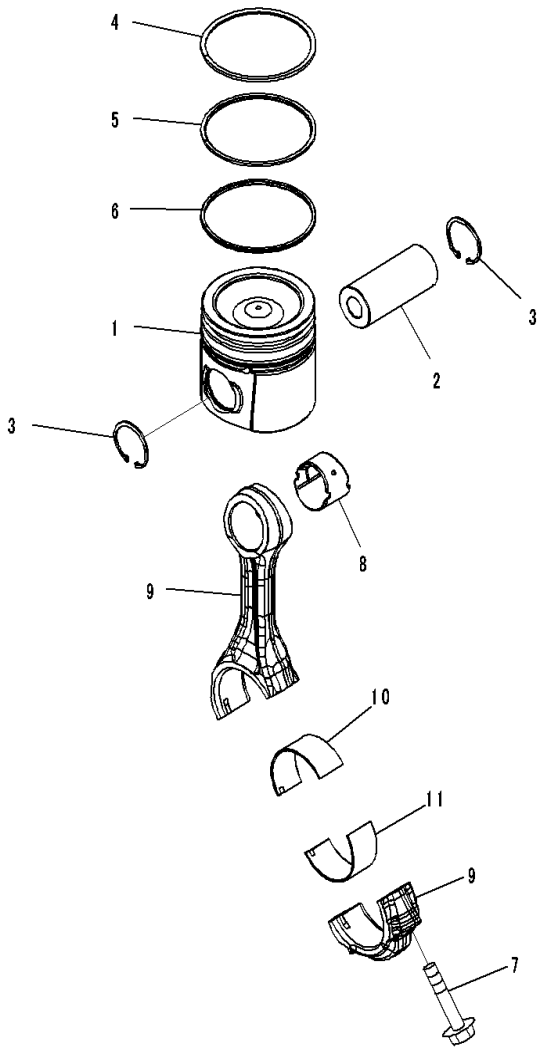

Index	Code	Part Number	Description	Qty	Serial Number
1		6754-31-2112	Piston	6	26689866-
2		6754-31-2410	Pin	6	26689866-
3		6732-31-2420	Ring	12	26689866-
		6754-31-2510	Ring Assembly	6	26689866-
4	C1		• Ring, Top	1	26689866-
5	C1		• Ring, Second	1	26689866-
6	C1		• Ring, Oil	1	26689866-
		6737-32-3121	Rod Assembly	6	26689866-
7		6732-31-3320	• Screw	2	26689866-
8		6732-31-3132	• Bushing	1	26689866-
9	C1		• Rod	1	26689866-
10		6754-31-3410	Bearing, Upper	6	26689866-
		6754-39-3410	Bearing,upper, Undersize, 0.25mm	6	26689866-
		6754-38-3410	Bearing,upper, Undersize, 0.50mm	6	26689866-
		6754-37-3410	Bearing,upper, Undersize, 0.75mm	6	26689866-
		6754-36-3410	Bearing,upper, Undersize, 1.00mm	6	26689866-
11		6732-31-3420	Bearing, Lower	6	26689866-
		6738-39-3400	Bearing,lower, Undersize, 0.25mm	6	26689866-
		6738-38-3400	Bearing,lower, Undersize, 0.50mm	6	26689866-
		6738-37-3400	Bearing,lower, Undersize, 0.75mm	6	26689866-
		6738-36-3400	Bearing,lower, Undersize, 1.00mm	6	26689866-

FIG. ALG00-001001 Oil Level Gauge

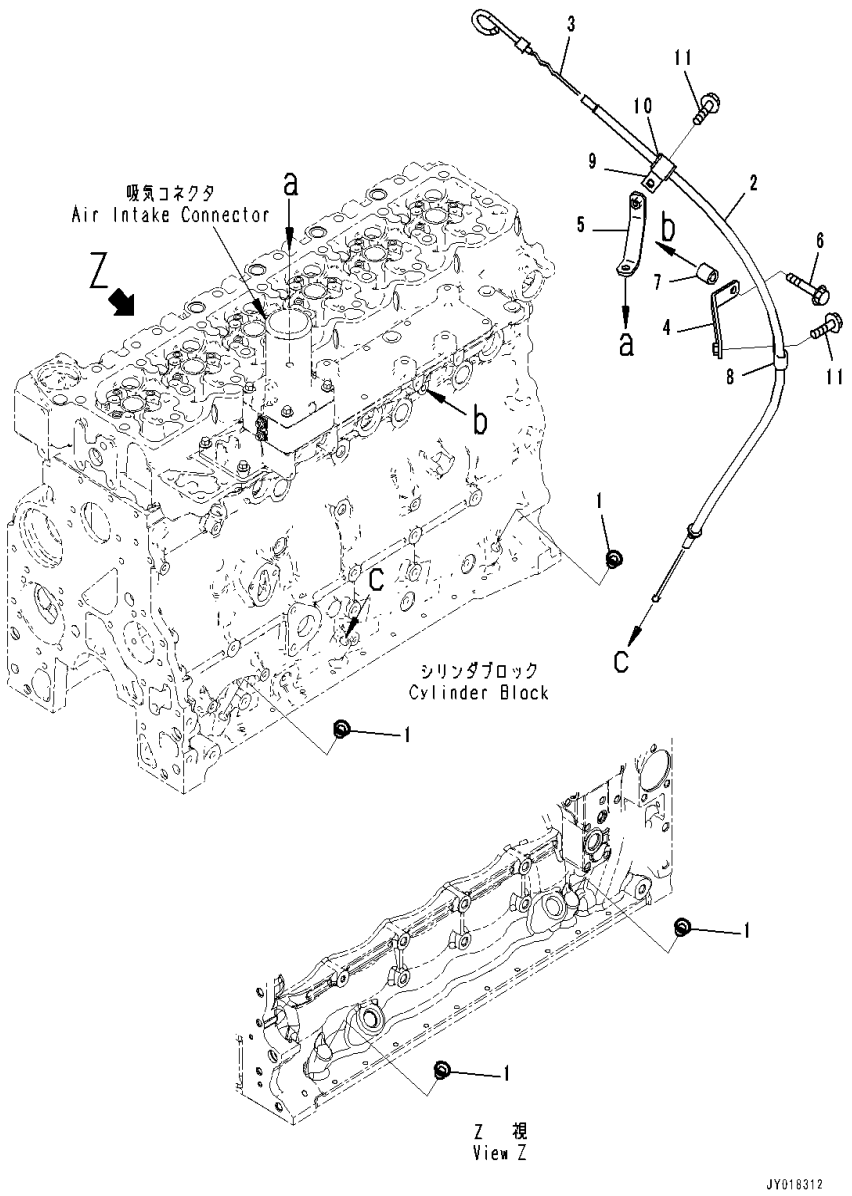

Index	Code	Part Number	Description	Qty	Serial Number
1		6732-21-5530	Plug	4	26689866-
2		6754-21-6370	Tube	1	26689866-
3		6754-21-5770	Gauge	1	26689866-
4		6754-21-5850	Brace	1	26689866-
5		6754-21-5860	Brace	1	26689866-
6		6732-61-3110	Bolt	1	26689866-
7		6210-11-5820	Spacer	1	26689866-
8		04434-51208	Clip	1	26689866-
9		04434-51708	Clip	1	26689866-
10		07095-40211	Cushion	1	26689866-
11		01435-60816	Bolt	2	26689866-

FIG. ABB20-001001 Rear Gear Housing

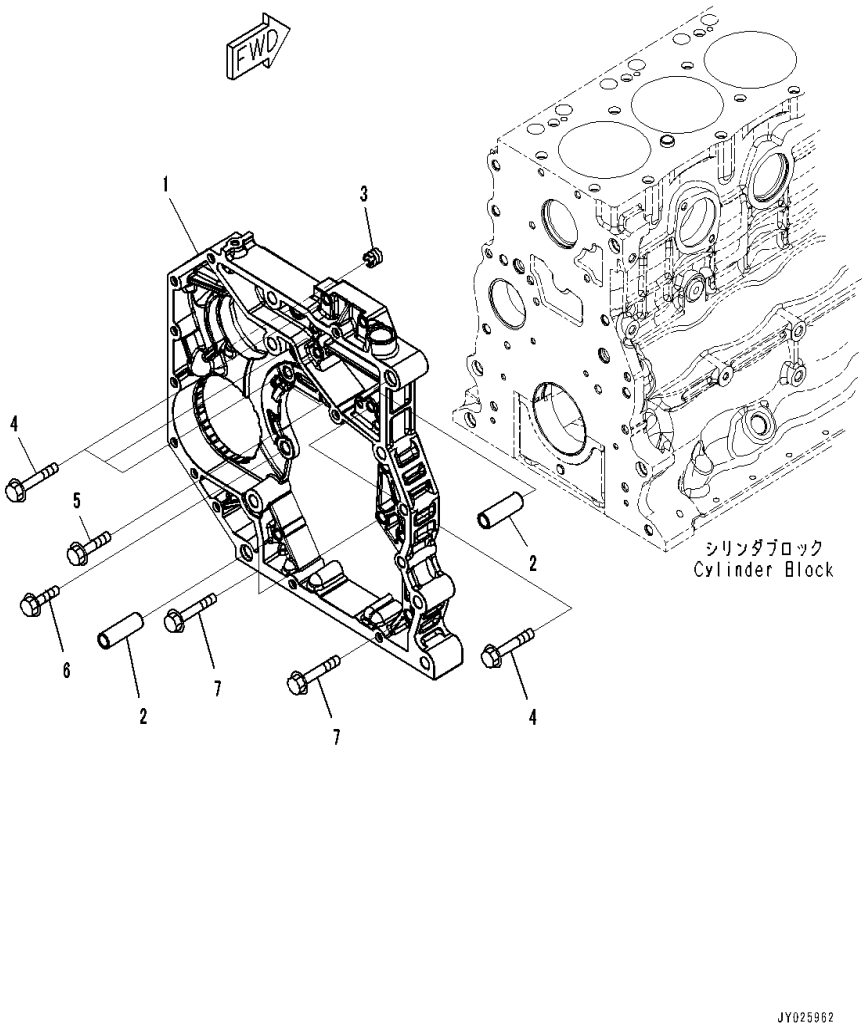

Index	Code	Part Number	Description	Qty	Serial Number
		6754-21-3104	Housing Assembly	1	26689866-
1	C1		• Housing	1	26689866-
2		6754-21-3120	• Pin	2	26689866-
3		6754-21-3150	• Insert	2	26689866-
4		6735-61-2120	Bolt	4	26689866-
5		01435-61030	Bolt	2	26689866-
6		6732-11-1720	Bolt	1	26689866-
7		6754-21-3140	Bolt	3	26689866-

FIG. ADR20-001001 Rear Gear Housing Fitting Parts

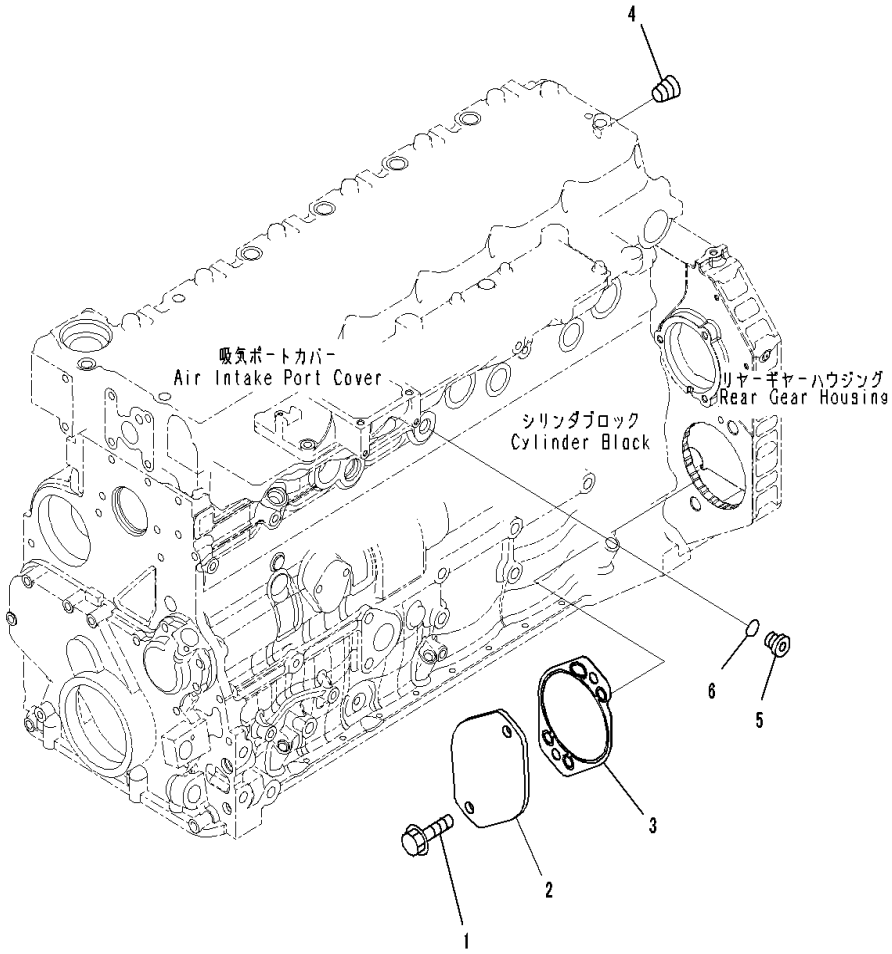

Index	Code	Part Number	Description	Qty	Serial Number
1		6732-51-5130	Bolt	2	26689866-
2		6754-21-9110	Plate	1	26689866-
3		6751-21-1220	Gasket	1	26689866-
4		6732-11-1920	Plug	1	26689866-
		6216-14-6830	Plug Assembly	1	26689866-
5	C1		• Plug	1	26689866-
6		6216-14-6840	• Seal	1	26689866-

FIG. A2070-001001 Engine Oil Filler Cap

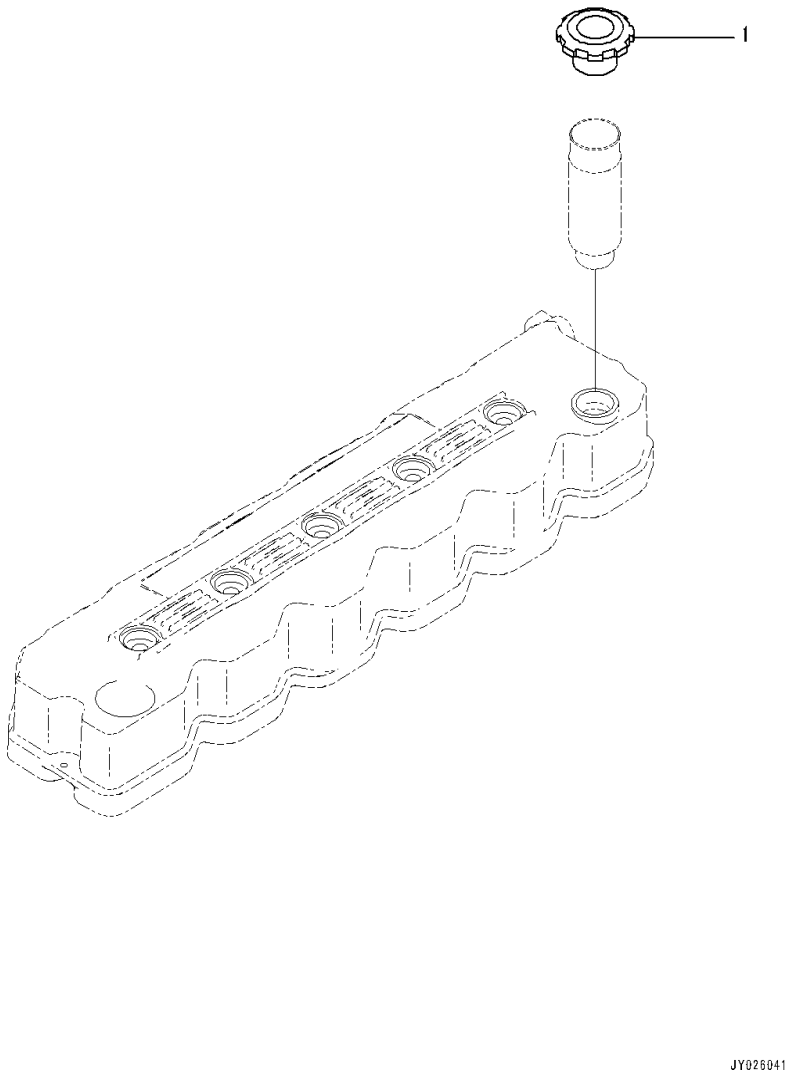

Index	Code	Part Number	Description	Qty	Serial Number
1		6754-11-8480	Cap	1	26689866-

FIG. ABB00-001001 Cylinder Block Related Parts

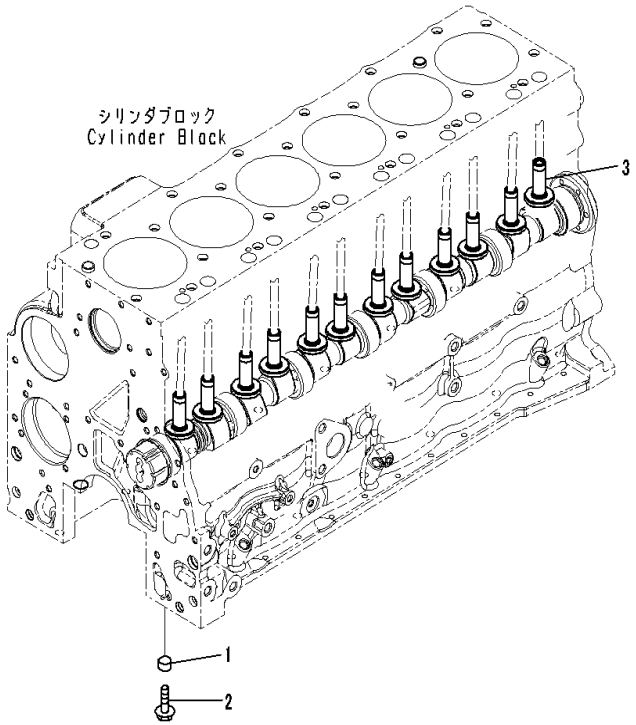

Index	Code	Part Number	Description	Qty	Serial Number
1		6136-51-6190	Spacer	1	26689866-
2		01435-61025	Bolt	1	26689866-
3		6754-41-2110	Tappet	12	26689866-

FIG. AFP10-001001 Fuel System Related Parts

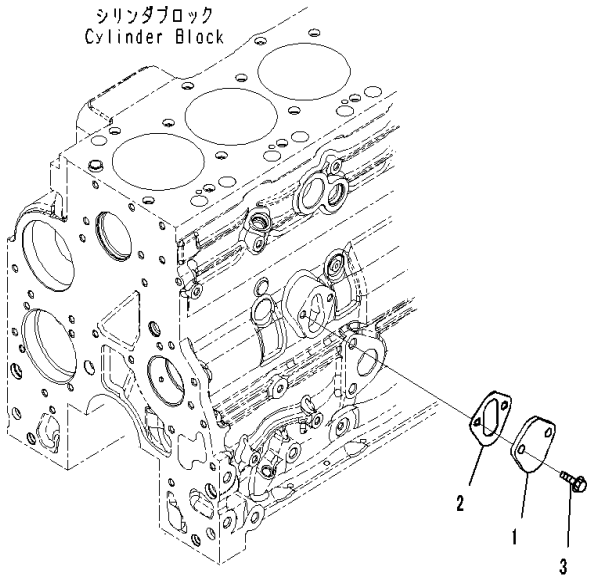

00046762

Index	Code	Part Number	Description	Qty	Serial Number
1		6736-71-5811	Plate	1	26689866-
2		6735-61-6411	Gasket	1	26689866-
3		01435-60820	Bolt	2	26689866-

ENGINE LUBRICATION SYSTEM

FIG. ALF00-001001 Engine Oil Filter and Piping

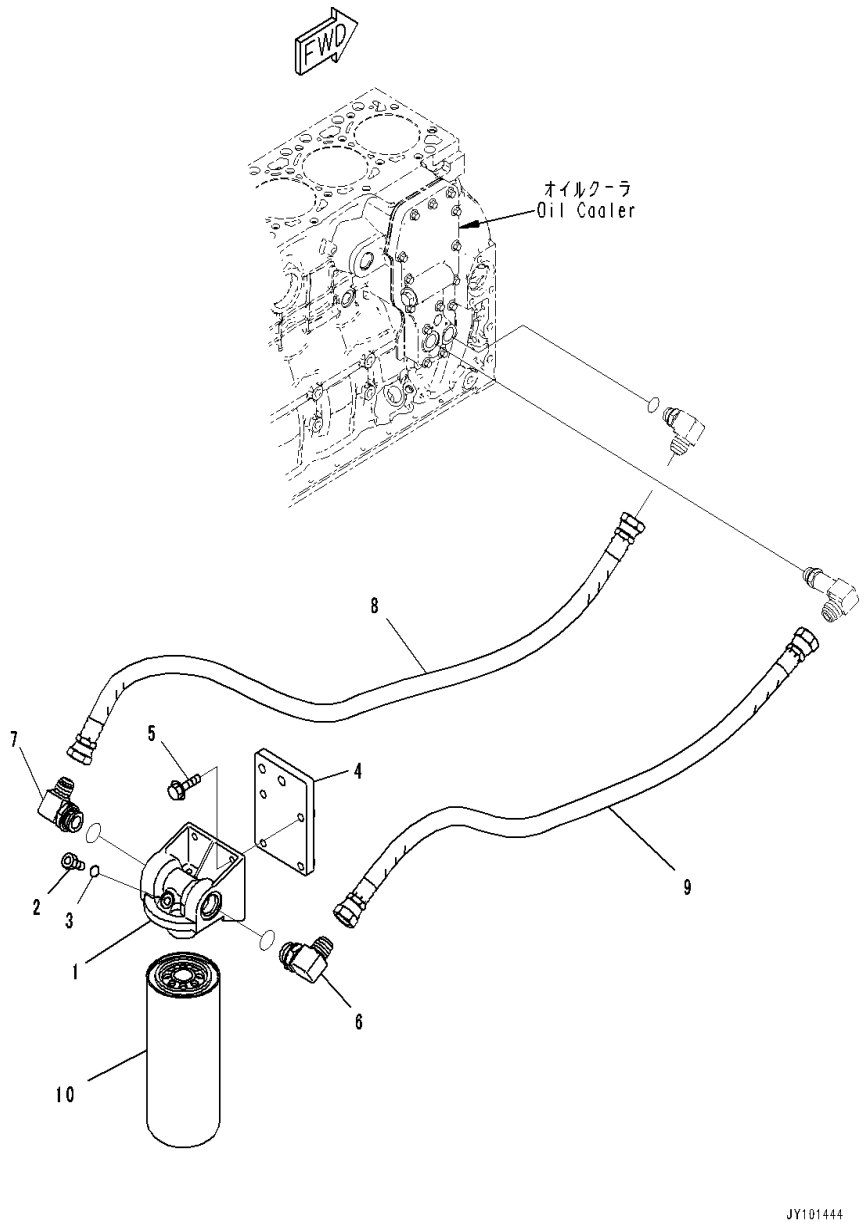

Index	Code	Part Number	Description	Qty	Serial Number
1		6754-51-5120	Head	1	26689866-
		6732-21-1960	Plug Assembly	1	26689866-
2	C1		• Plug	1	26689866-
3		6735-21-1970	• O-ring	1	26689866-
4		6754-51-5140	Bracket	1	26689866-
5		01435-61035	Bolt	4	26689866-
6		6751-51-1240	Elbow	1	26689866-
7		6751-51-1250	Elbow	1	26689866-
8		6738-51-9821	Hose	1	26689866-
9		6754-51-9710	Hose	1	26689866-
10		6742-01-4540	Cartridge	1	26689866-

FIG. ALP00-001001 Engine Oil Pump

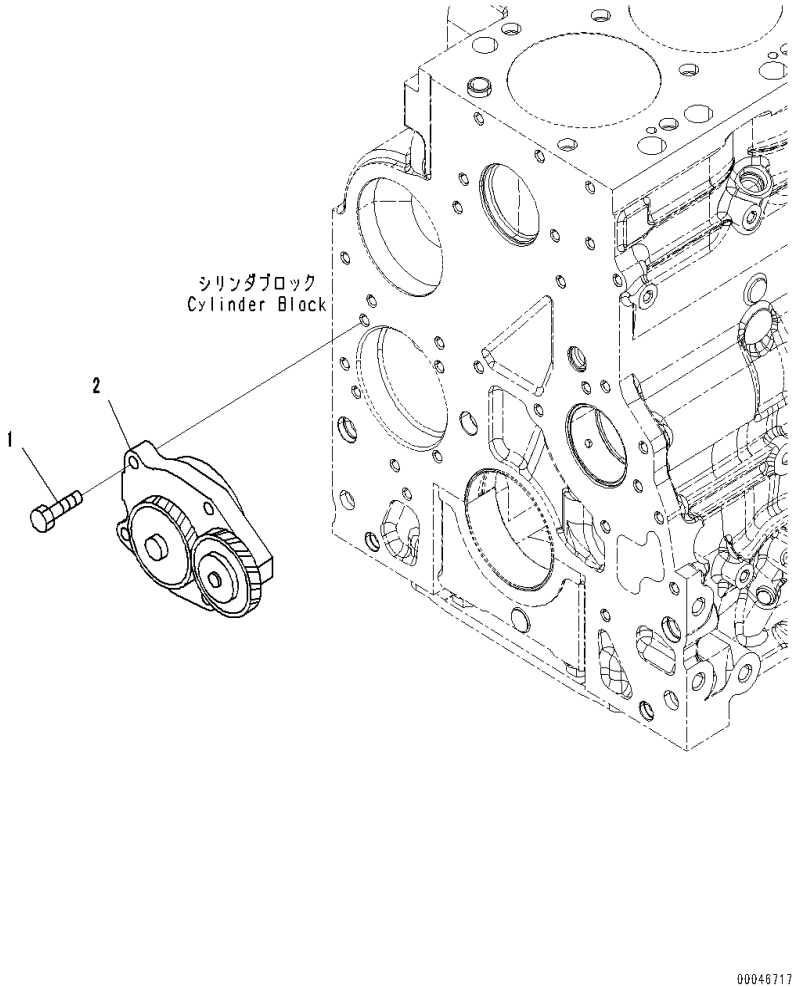

Index	Code	Part Number	Description	Qty	Serial Number
1		01010-80830	Bolt	4	26689866-
2		6754-51-1111	Pump Assembly	1	26689866-

FIG. ALC00-001001 Engine Oil Cooler

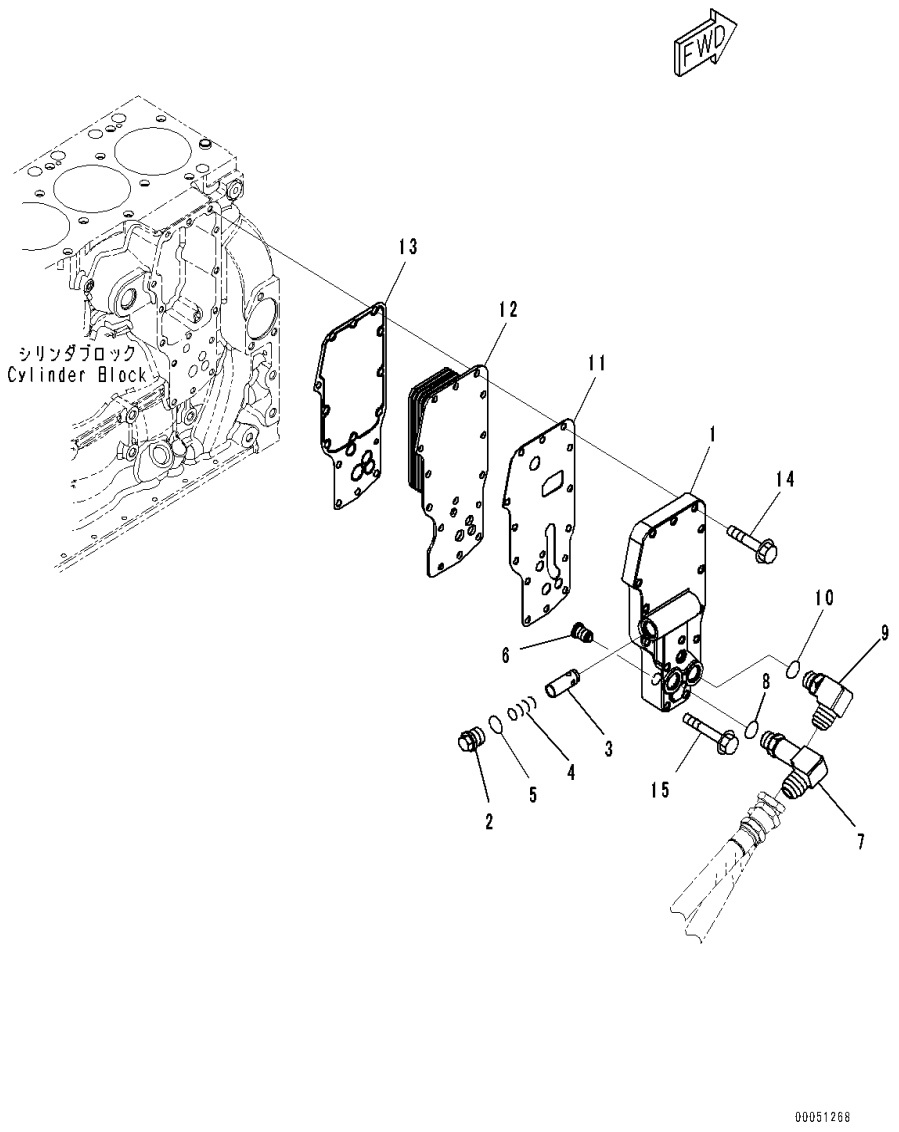

Index	Code	Part Number	Description	Qty	Serial Number
1		6754-61-2220	Cover, Oil Cooler	1	26689866-
2		6735-61-2140	Plug	1	26689866-
3		6735-61-2160	Plunger	1	26689866-
4		6735-61-2190	Spring	1	26689866-
5		6732-51-4420	O-Ring	1	26689866-
6		6731-61-2151	Valve	1	26689866-
7		6731-51-5250	Elbow	1	26689866-
8		6731-51-5290	• O-Ring	1	26689866-
9		6738-51-5240	Elbow	1	26689866-
10		6731-51-5290	• O-Ring	1	26689866-
11		6754-51-4440	Gasket	1	26689866-
12		6754-61-2110	Core, Cooler	1	26689866-
13		6754-61-2320	Gasket	1	26689866-
14		6735-61-2120	Bolt	11	26689866-
15		6736-21-3230	Bolt	4	26689866-

ENGINE FUEL SYSTEM

FIG. AFF20-001001 Fuel Filter Piping

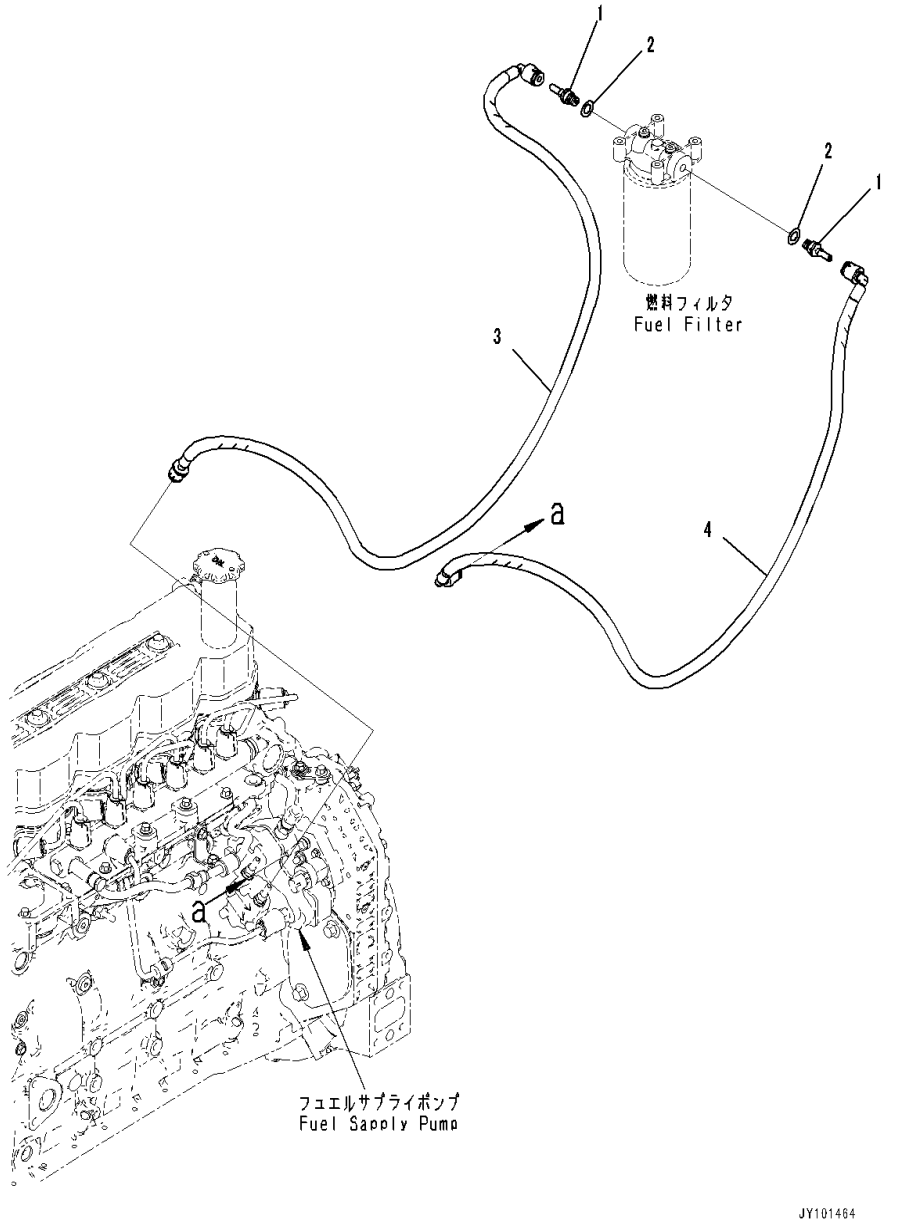

Index	Code	Part Number	Description	Qty	Serial Number
1		6754-71-5341	Connector	2	26689866-
2		6745-71-1130	Seal, Washer	2	26689866-
3		6751-71-9960	Hose	1	26689866-
4		6751-71-9940	Hose	1	26689866-

FIG. A4019-001001 Fuel Supply Pump

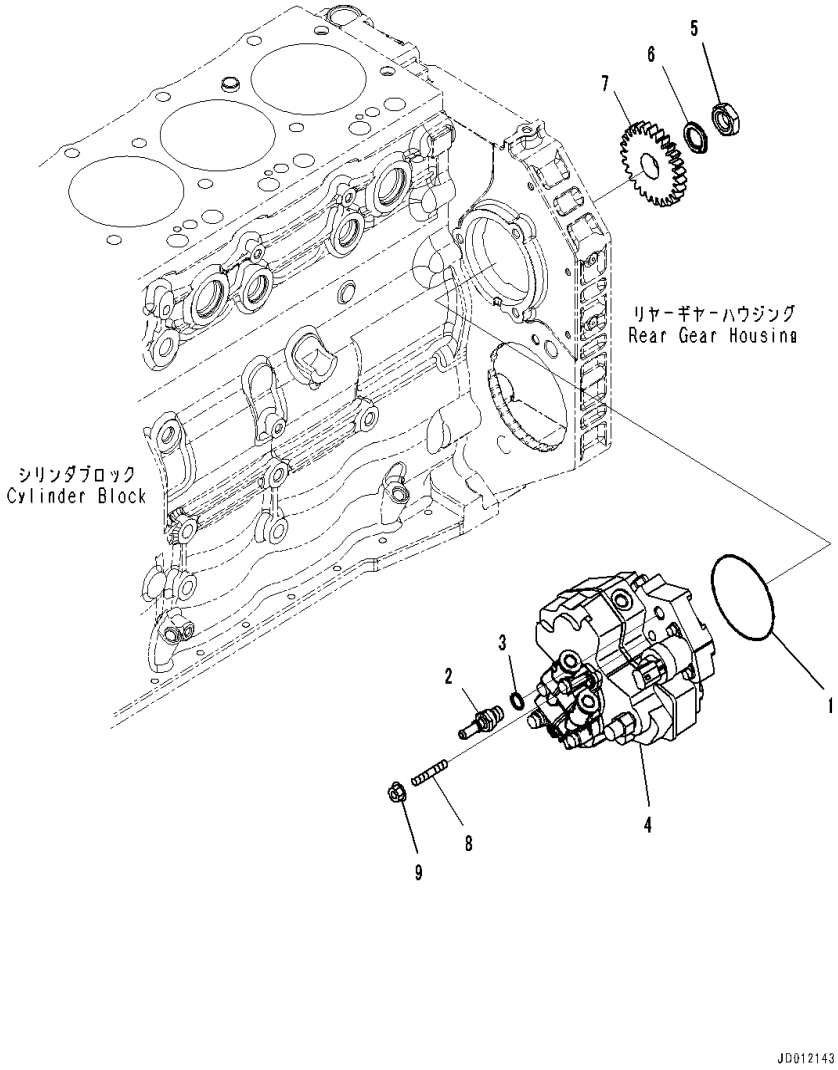

Index	Code	Part Number	Description	Qty	Serial Number
		6754-71-1012	Fuel Supply Pump Assembly	1	26689866-
		6754-72-1012	• Pump Assembly	1	26689866-
1		6754-71-1320	• • O-Ring	1	26689866-
2		6754-71-1330	• • Connector	1	26689866-
3		6754-71-5350	• • Washer	1	26689866-
4	C1		• • Pump	1	26689866-
5		6754-71-1340	• • Nut	1	26689866-
6		6754-71-1351	• • Washer, Spring	1	26689866-
7		6754-71-3110	• Gear	1	26689866-
8		6754-71-3131	Stud	3	26689866-
9		6732-71-3210	Nut	3	26689866-

FIG. A4219-001001 Fuel Injector

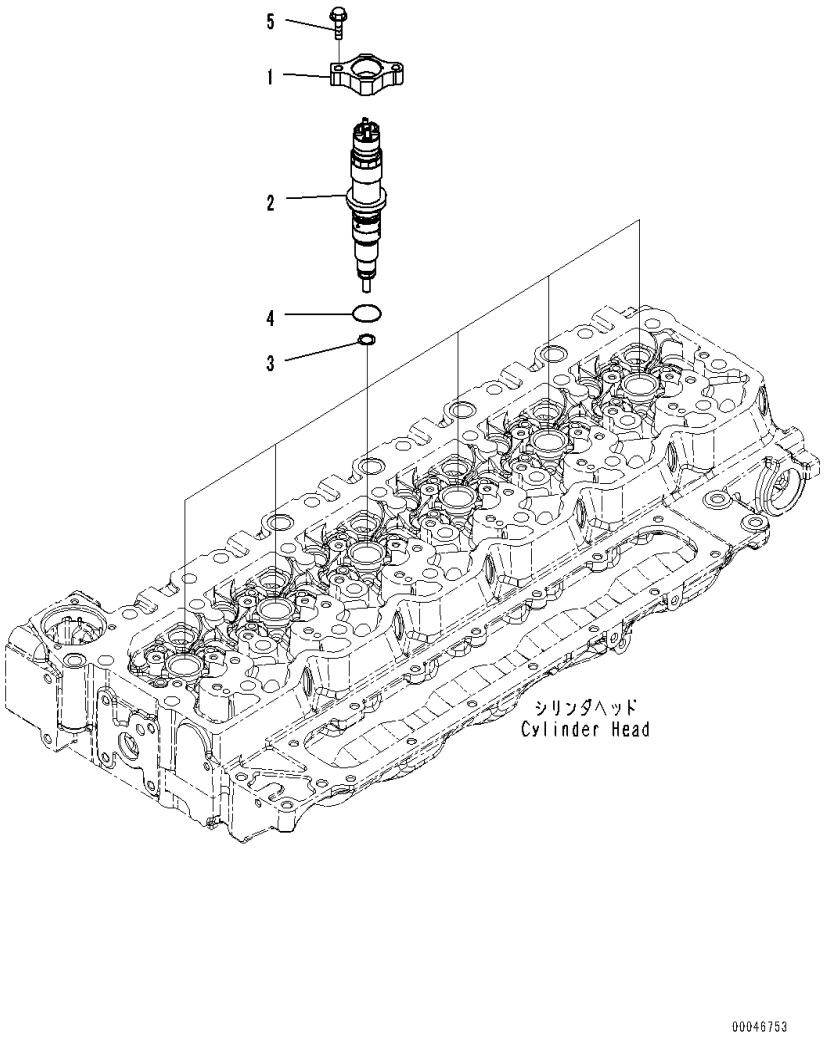

Index	Code	Part Number	Description	Qty	Serial Number
		6754-11-3011	Injector Assembly	6	26689866-
1		6754-11-3110	• Clamp	1	26689866-
2	C1		• Injector	1	26689866-
3		6754-11-3130	• • Gasket	1	26689866-
4		6754-11-3140	• • O-Ring	1	26689866-
5		6742-01-2630	Bolt	12	26689866-

FIG. AFT00-001001 Fuel Piping

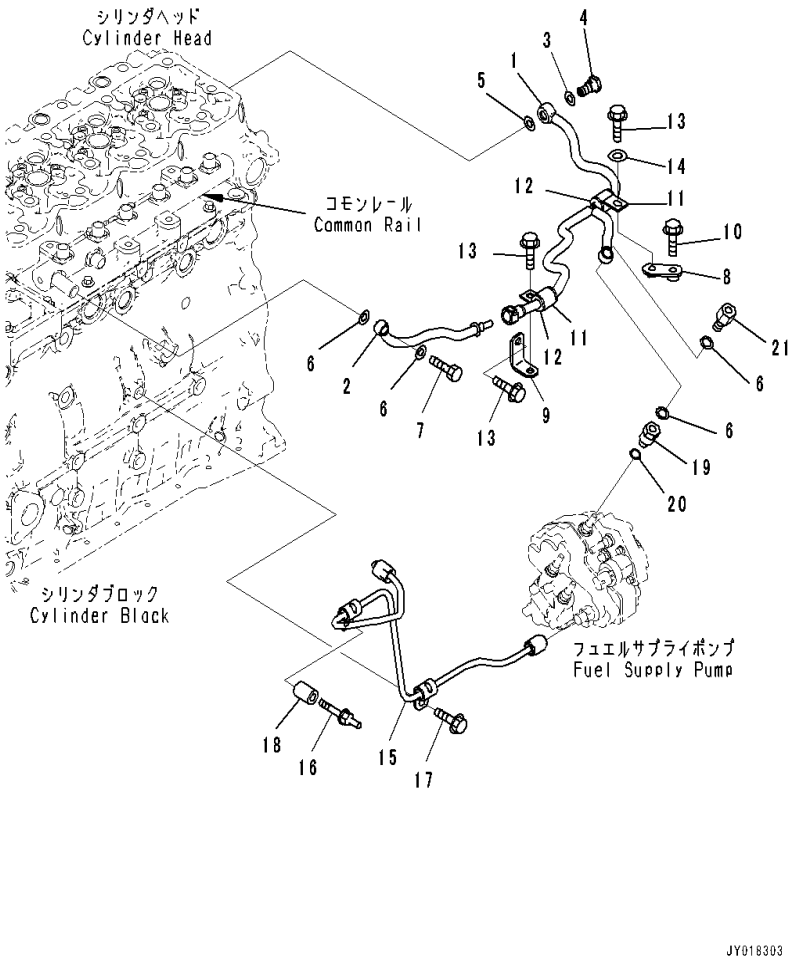

Index	Code	Part Number	Description	Qty	Serial Number
1		6754-71-5471	Tube, Drain	1	26689866-
2		6754-71-5461	Tube, Drain	1	26689866-
3		6735-71-3821	Seal	1	26689866-
4		6754-71-5430	Valve, Check	1	26689866-
5		6745-71-1130	Seal, Washer	1	26689866-
6		07005-01212	Seal, Washer	4	26689866-
7		6732-71-6510	Bolt, Joint	2	26689866-
8		6754-71-5450	Bracket	1	26689866-
9		6754-71-5260	Brace	1	26689866-
10		6732-21-6630	Screw	1	26689866-
11		04434-51708	Clip	2	26689866-
12		07095-40211	Cushion	2	26689866-
13		01435-60816	Bolt	3	26689866-
14		154-61-16570	Washer	1	26689866-
15		6754-71-5170	Tube	1	26689866-
16		6745-72-6131	Bolt	1	26689866-
17		01435-60816	Bolt	1	26689866-
18		6130-12-4581	Spacer	1	26689866-
19		6754-71-5480	Adapter	1	26689866-
20		6754-71-5350	Washer	1	26689866-
21		6755-71-5120	Joint	1	26689866-

FIG. A4119-001001 Fuel Filter Cartridge

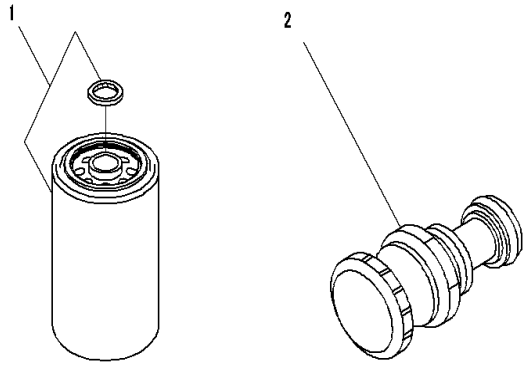

Index	Code	Part Number	Description	Qty	Serial Number
1		600-319-3750	Cartridge	1	26689866-
2		6754-79-7210	Pump Assembly	1	26689866-

FIG. AFF10-001001 Fuel Filter

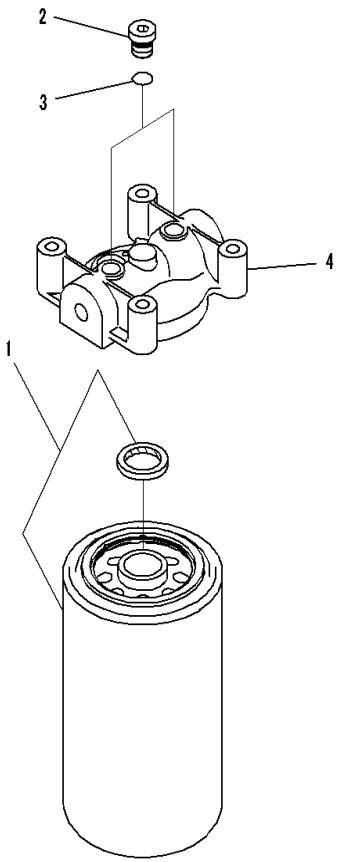

JY018443

Index	Code	Part Number	Description	Qty	Serial Number
1		600-319-3750	Cartridge	1	26689866-
		6732-21-1960	Plug Assembly	2	26689866-
2		6215-81-9510	• Plug	1	26689866-
3		6735-21-1970	• O-Ring	1	26689866-
4		6754-71-6360	Head	1	26689866-

FIG. AFS20-001001 Fuel Injection Piping Cover

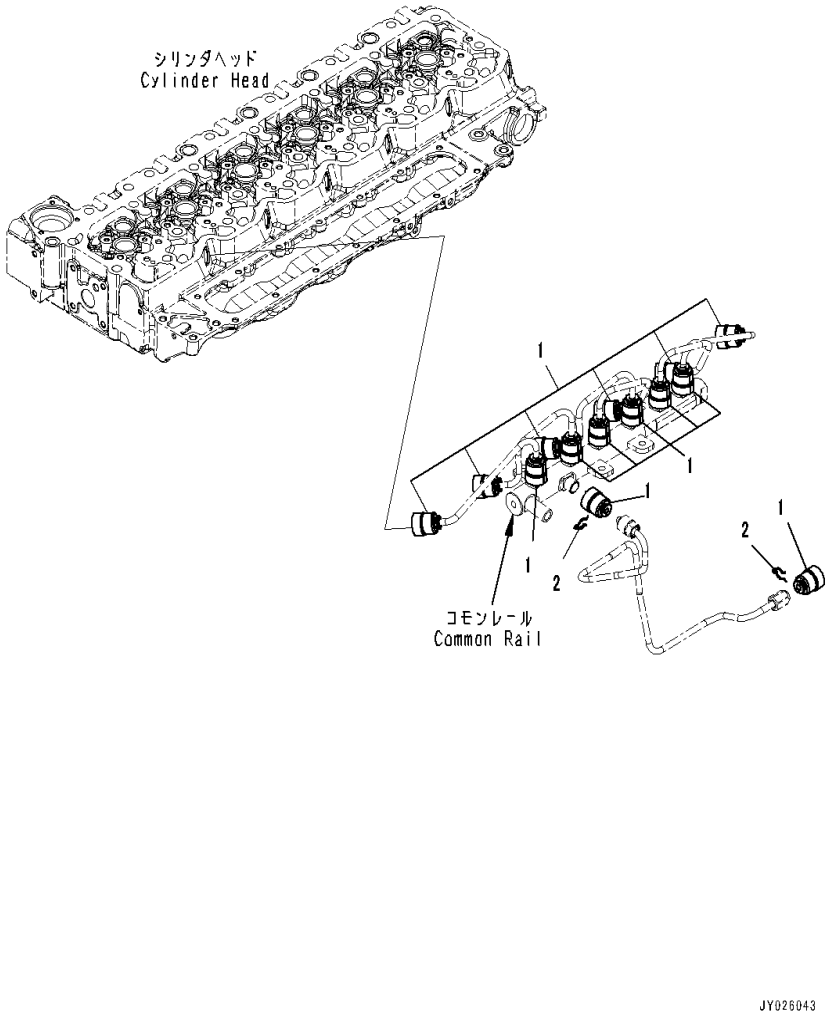

Index	Code	Part Number	Description	Qty	Serial Number
1		6754-71-9710	Cover	14	26689866-
2		6754-71-5750	Clip	14	26689866-

ENGINE COOLING SYSTEM

FIG. AFA10-001001 Cooling Fan Drive Pulley

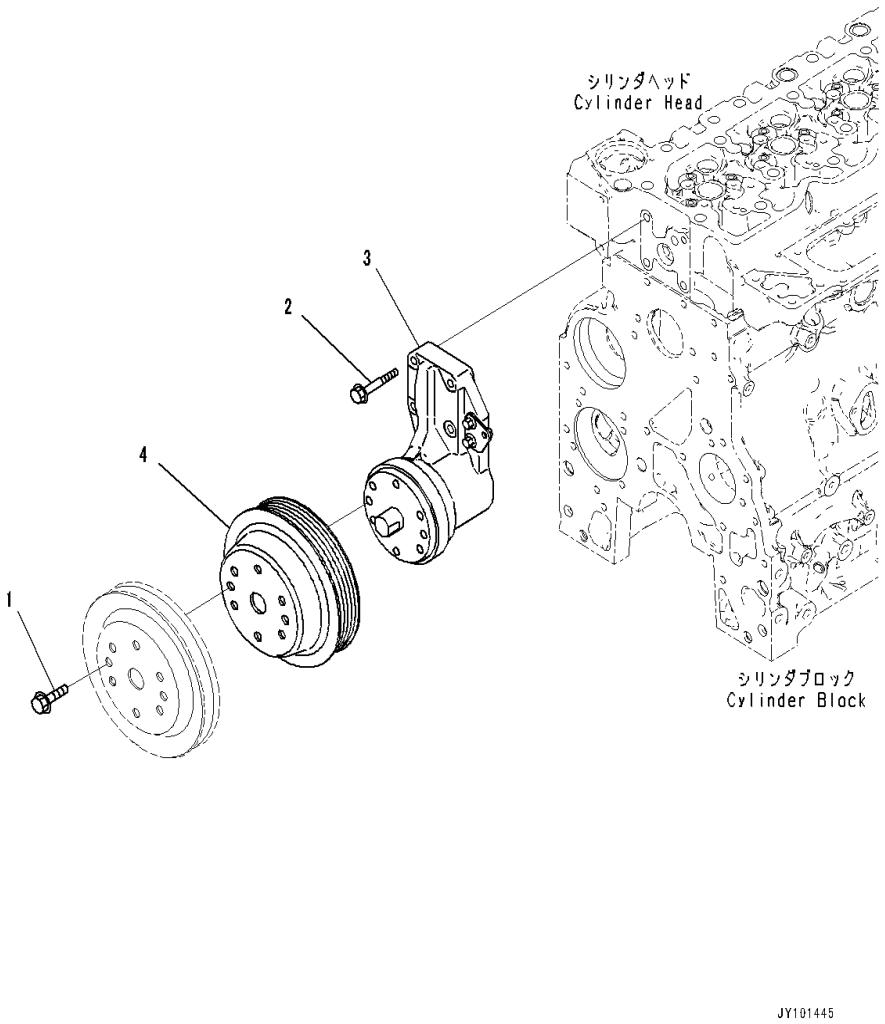

Index	Code	Part Number	Description	Qty	Serial Number
1		01435-01020	Bolt	2	26689866-
2		6732-61-3170	Bolt	3	26689866-
3		6754-61-3610	Support	1	26689866-
4		6754-61-4410	Pulley	1	26689866-

FIG. AWP10-001001 Cooling Fan Belt (For 60Amp.Brushless Alternator)

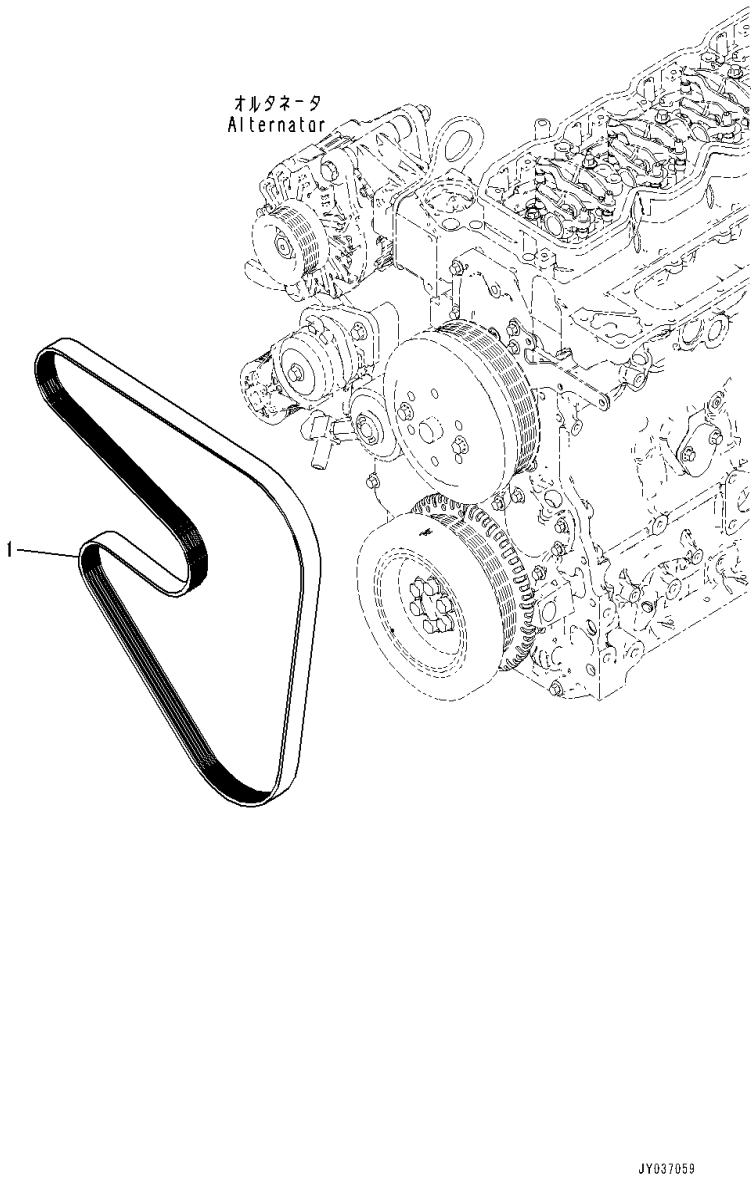

Index	Code	Part Number	Description	Qty	Serial Number
1		6756-61-4130	Belt,1780mm	1	26689866-

FIG. AWP10-002001 Cooling Fan Belt (For 35Amp.)

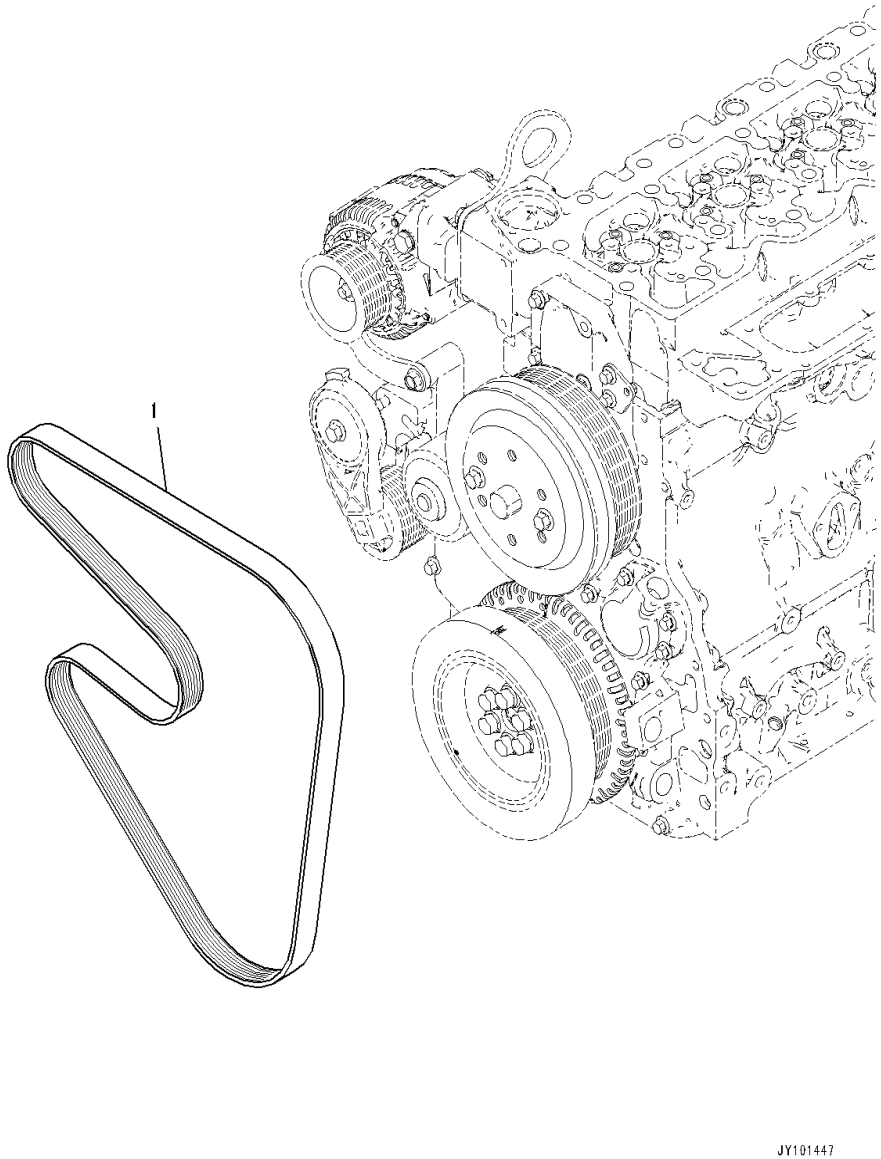

Index	Code	Part Number	Description	Qty	Serial Number
1		6732-61-3871	Belt,L=1714.5mm	1	26689866-

FIG. AWP20-001001 Cooling Fan Belt Tensioner

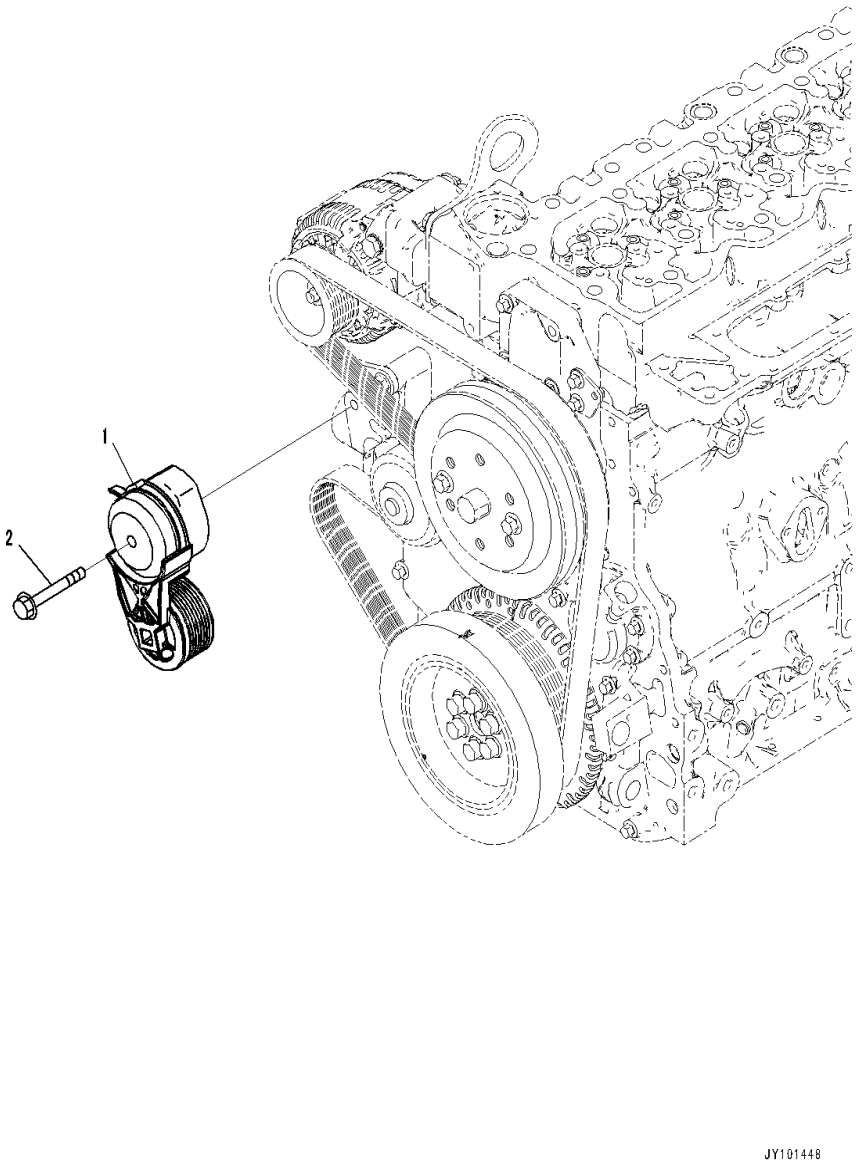

Index	Code	Part Number	Description	Qty	Serial Number
1		6754-61-4111	Tensioner	1	26689866-
2		6731-21-6220	Bolt	1	26689866-

FIG. A5019-001001 Water Pump

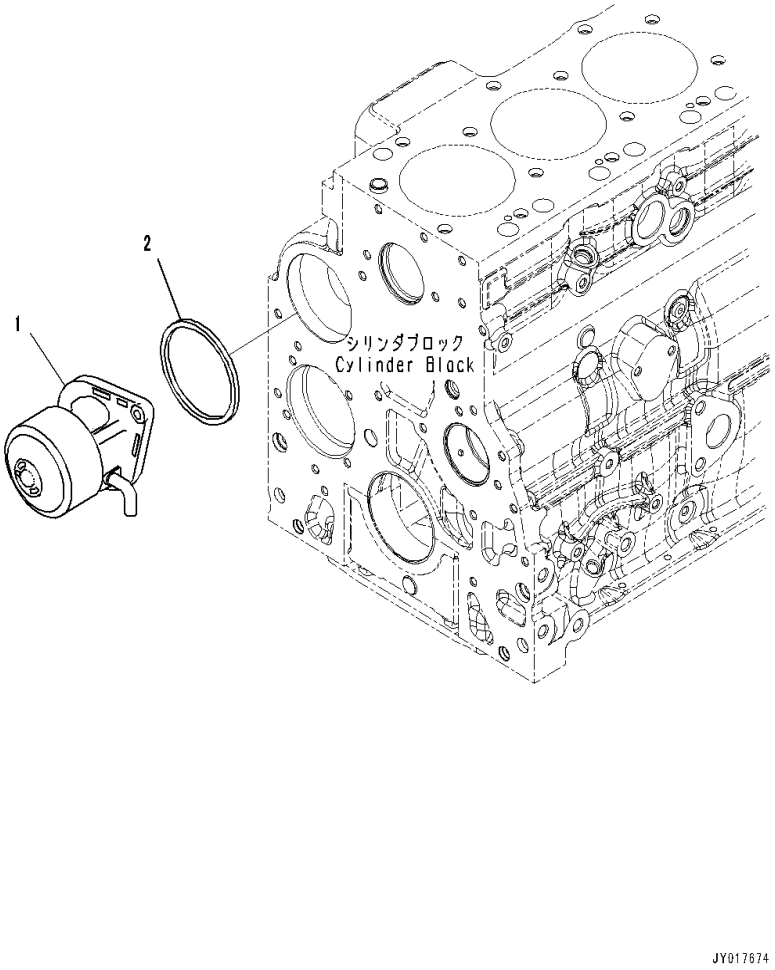

Index	Code	Part Number	Description	Qty	Serial Number
1		6754-61-1201	Pump, Water	1	26689866-
2		6736-61-1520	Seal	1	26689866-

FIG. AWI10-001001 Water Inlet Connector (For 60Amp.Brushless Alternator)

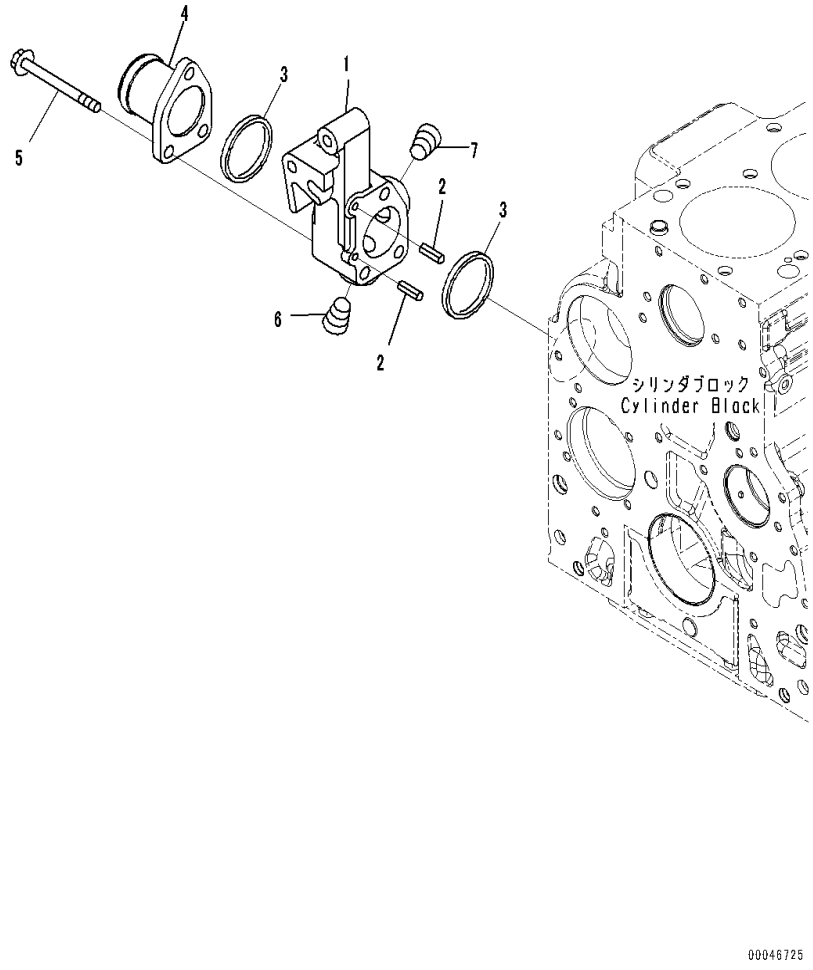

Index	Code	Part Number	Description	Qty	Serial Number
		6754-61-6280	Connector Assembly	1	26689866-
1	C1		• Connection	1	26689866-
2		6737-32-2110	• Pin	2	26689866-
3		6732-61-6131	Seal Ring	2	26689866-
4		6754-61-6130	Connector	1	26689866-
5		6731-21-6220	Bolt	3	26689866-
6		6732-11-1910	Plug, Pipe	1	26689866-
7		6732-11-1920	Plug	1	26689866-

FIG. AWO00-002001 Water Outlet Connector

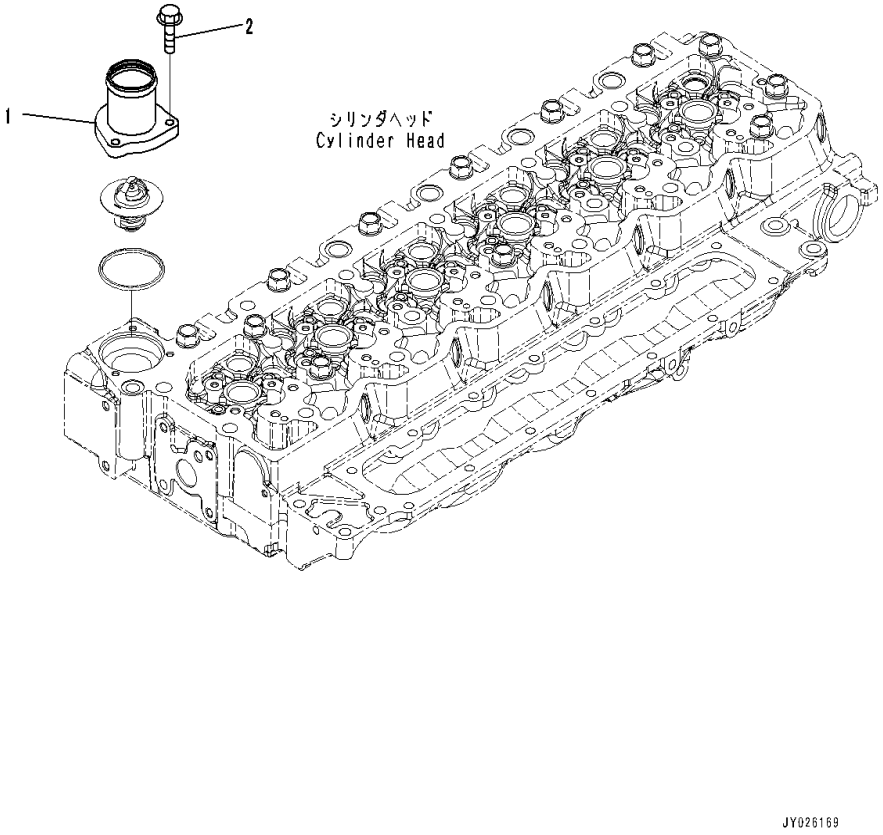

Index	Code	Part Number	Description	Qty	Serial Number
1		6755-61-6250	Connector, Outlet	1	26689866-
2		6735-71-5190	Bolt	3	26689866-

FIG. AWI10-001001 Water Inlet Connector

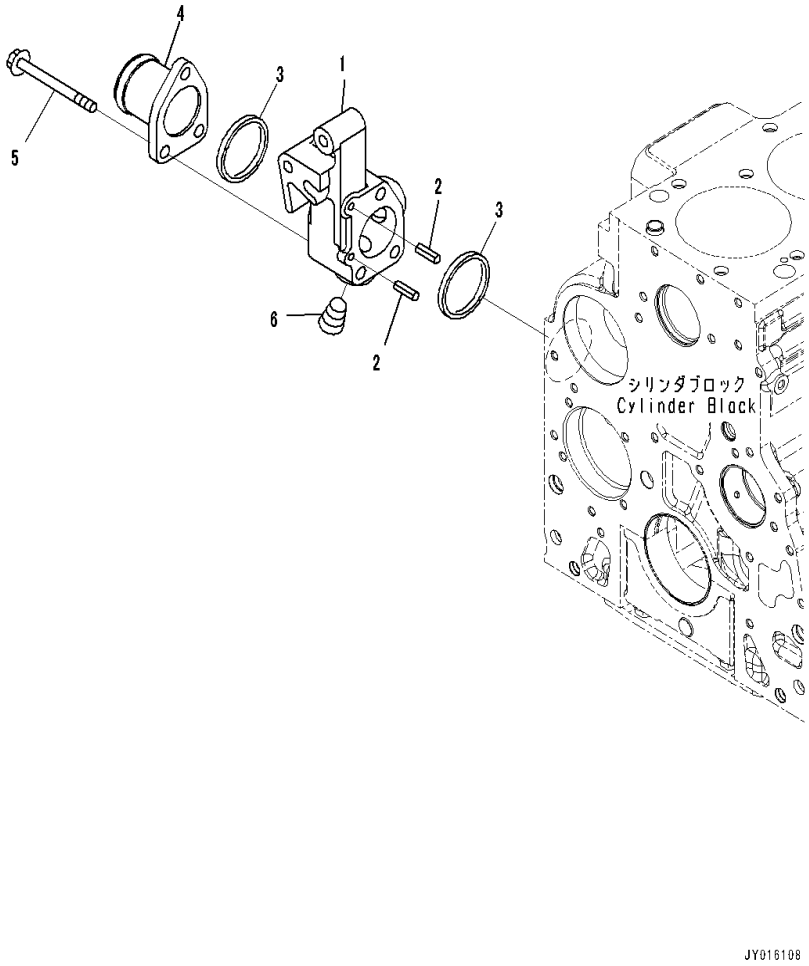

Index	Code	Part Number	Description	Qty	Serial Number
		6737-62-6220	Connector Assembly	1	26689866-
1	C1		• Connector	1	26689866-
2		6737-32-2110	• Pin	2	26689866-
3		6732-61-6131	Seal Ring	2	26689866-
4		6754-61-6130	Connector	1	26689866-
5		6731-21-6220	Bolt	3	26689866-
6		6732-11-1910	Plug, Pipe	1	26689866-

FIG. AEC00-001001 Thermostat

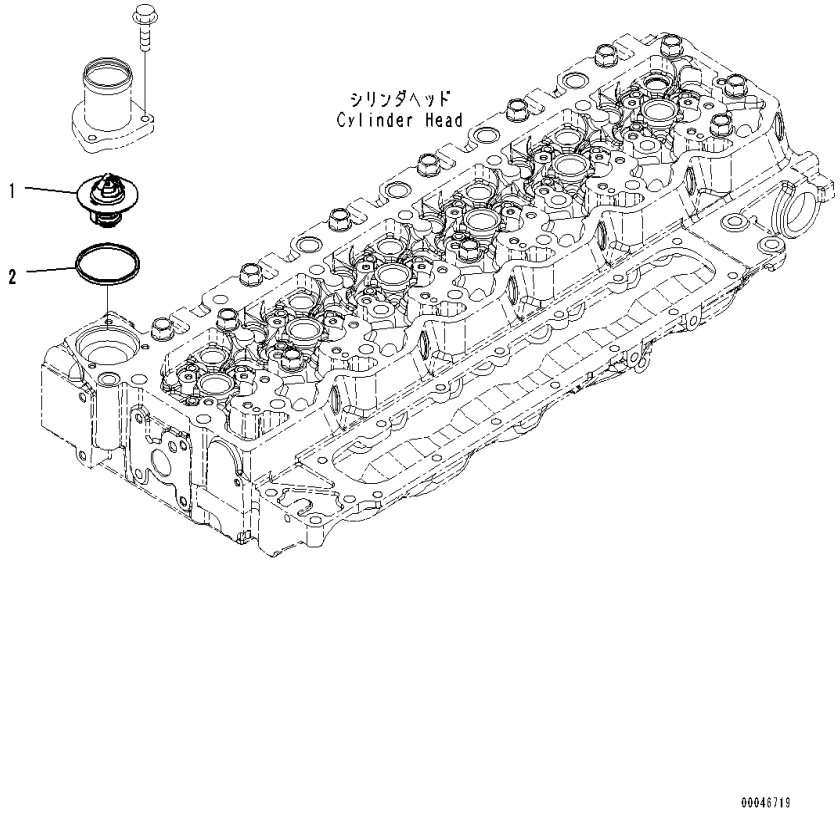

Index	Code	Part Number	Description	Qty	Serial Number
		6754-61-6212	Thermostat Assembly	1	26689866-
1	C1		• Thermostat	1	26689866-
2		6754-61-6230	• Seal	1	26689866-

FIG. AWP00-001001 Water Pump Mounting

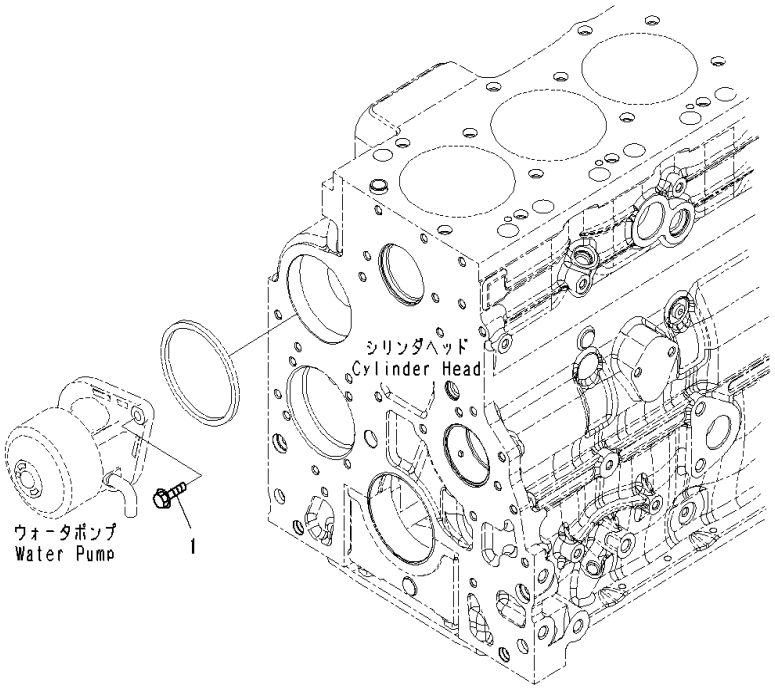

Index	Code	Part Number	Description	Qty	Serial Number
1		01435-00825	Bolt	2	26689866-

ENGINE ELECTRICAL SYSTEM

FIG. A6810-001001 Wiring Harness Cap

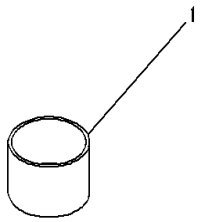

00088721

Index	Code	Part Number	Description	Qty	Serial Number
1		6754-81-9480	Cap	1	26689866-

FIG. A6020-001001 Alternator Mounting (For 60Amp.Brushless,China 3rd EX-Gas Regulation) (Inner Parts)

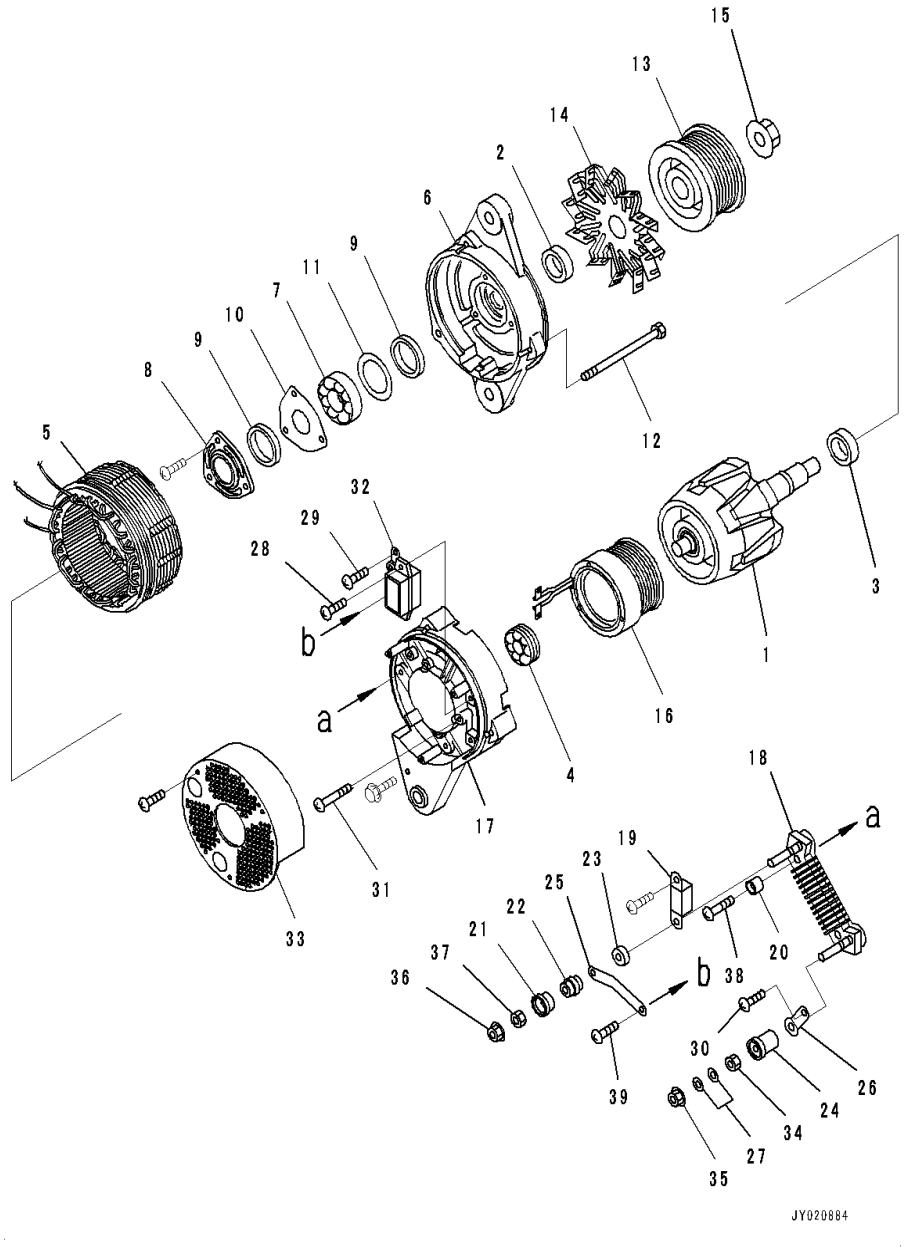

Index	Code	Part Number	Description	Qty	Serial Number
		600-861-6111	Alternator, 60Amp.	1	26689866-
1		KD0-35100-0418	• Rotor Assembly	1	26689866-
2		KD0-35943-0240	• Collar	1	26689866-
3		KD0-35923-0160	• Collar	1	26689866-
4		KD0-09201-0980	• Bearing, Ball	1	26689866-
5		KD0-35200-0528	• Stator Assembly	1	26689866-
6		KD0-35300-0450	• Bracket Assembly	1	26689866-
7		KD0-09201-1450	• • Bearing	1	26689866-
8		KD0-35926-0070	• • Retainer	1	26689866-
9		KD0-35951-0060	• • Packing	2	26689866-
10		KD0-35926-0090	• • Retainer	1	26689866-
11		KD1-33926-0730	• • Retainer	1	26689866-
12		KD0-0275-06802	• Bolt	3	26689866-
13		KD0-35411-0648	• Pulley	1	26689866-
14		KD0-35421-0240	• Fan	1	26689866-
15		KD0-09006-0730	• Nut	1	26689866-
16		KD0-35120-0528	• Coil, Field	1	26689866-
17		KD0-35710-1330	• Bracket	1	26689866-
18		KD0-35730-0700	• Rectifier Assembly	1	26689866-
19		KD0-09170-2501	• Condenser	1	26689866-
20		KD0-35943-0170	• Bushing	2	26689866-
21		KD0-35943-0154	• Bushing	1	26689866-
22		KD0-35923-0134	• Collar	1	26689866-
23		KD0-35943-0160	• Bushing	1	26689866-
24		KD0-35943-0140	• Bushing	1	26689866-
25		KD0-35784-0210	• Bar	1	26689866-
26		KD0-35784-0290	• Bar	1	26689866-
27		KD0-09057-0220	• Washer	2	26689866-
28		KD0-0055-05202	• Screw	2	26689866-
29		KD0-0055-05122	• Screw	2	26689866-
30		KD0-09011-3540	• Screw	1	26689866-
31		KD0-0056-05302	• Screw	2	26689866-
32		KD0-35719-0201	• Regulator Assembly	1	26689866-
33		KD0-35761-0308	• Cover	1	26689866-
34		KD0-35902-0010	• • Nut	1	26689866-
35		KD0-09006-0370	• • Nut	1	26689866-
36		KD0-33902-0080	• • Nut	1	26689866-
37		KD0-33902-0090	• • Nut	1	26689866-
38		KD0-0056-05302	• • Screw	3	26689866-
39		KD0-09011-3540	• • Screw	2	26689866-

FIG. A6020-001002 Alternator Mounting (For 60 Amp.) (Mounting)

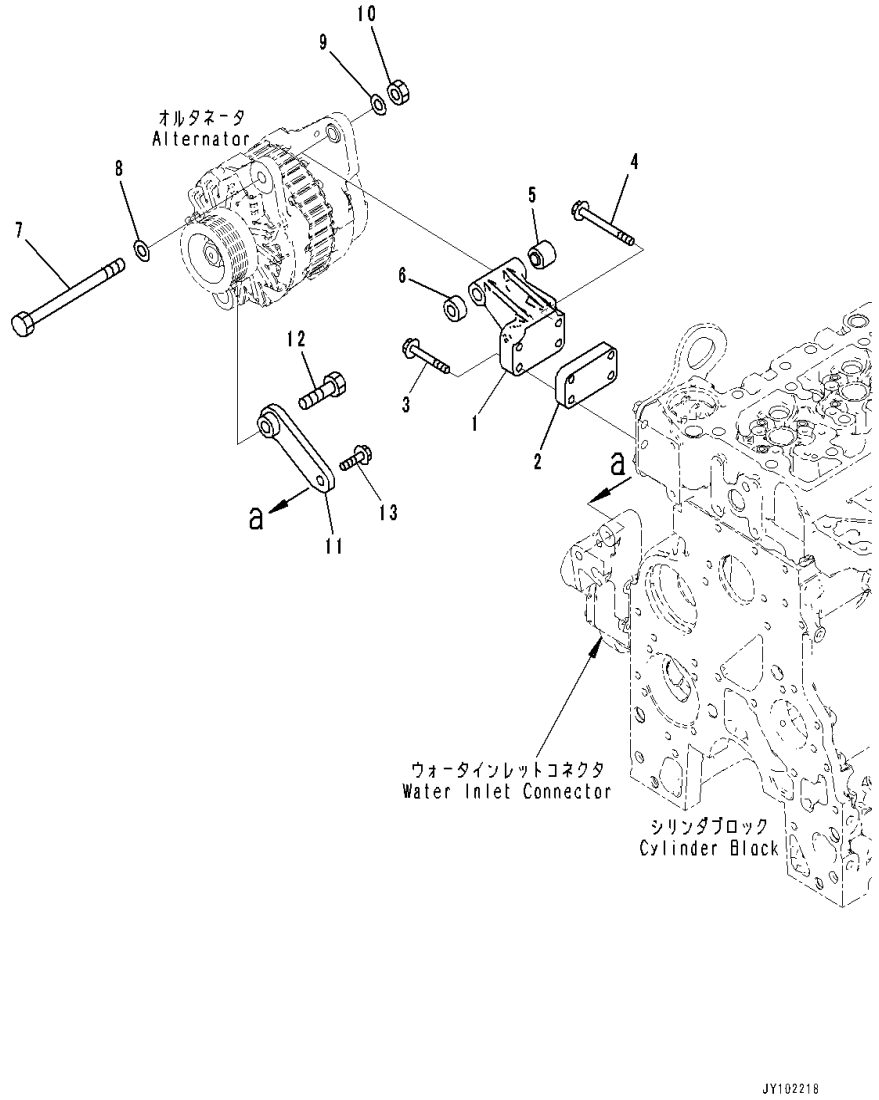

Index	Code	Part Number	Description	Qty	Serial Number
1		6754-81-6140	Support Assembly	1	26689866-
2		6755-81-6140	Support	1	26689866-
3		01435-00860	Bolt	3	26689866-
4		01435-00885	Bolt	1	26689866-
5		6732-81-6530	Spacer	1	26689866-
6		6732-81-6490	Spacer	1	26689866-
7		6207-81-6980	Bolt	1	26689866-
8		01641-21223	Washer	1	26689866-
9		01641-21223	Washer	1	26689866-
10		01580-11210	Nut	1	26689866-
11		6754-81-6460	Brace	1	26689866-
12		6135-85-8190	Bolt	1	26689866-
13		01435-61025	Bolt	1	26689866-

FIG. A6020-002001 Alternator Mounting (35Amp.) (Inner Parts)

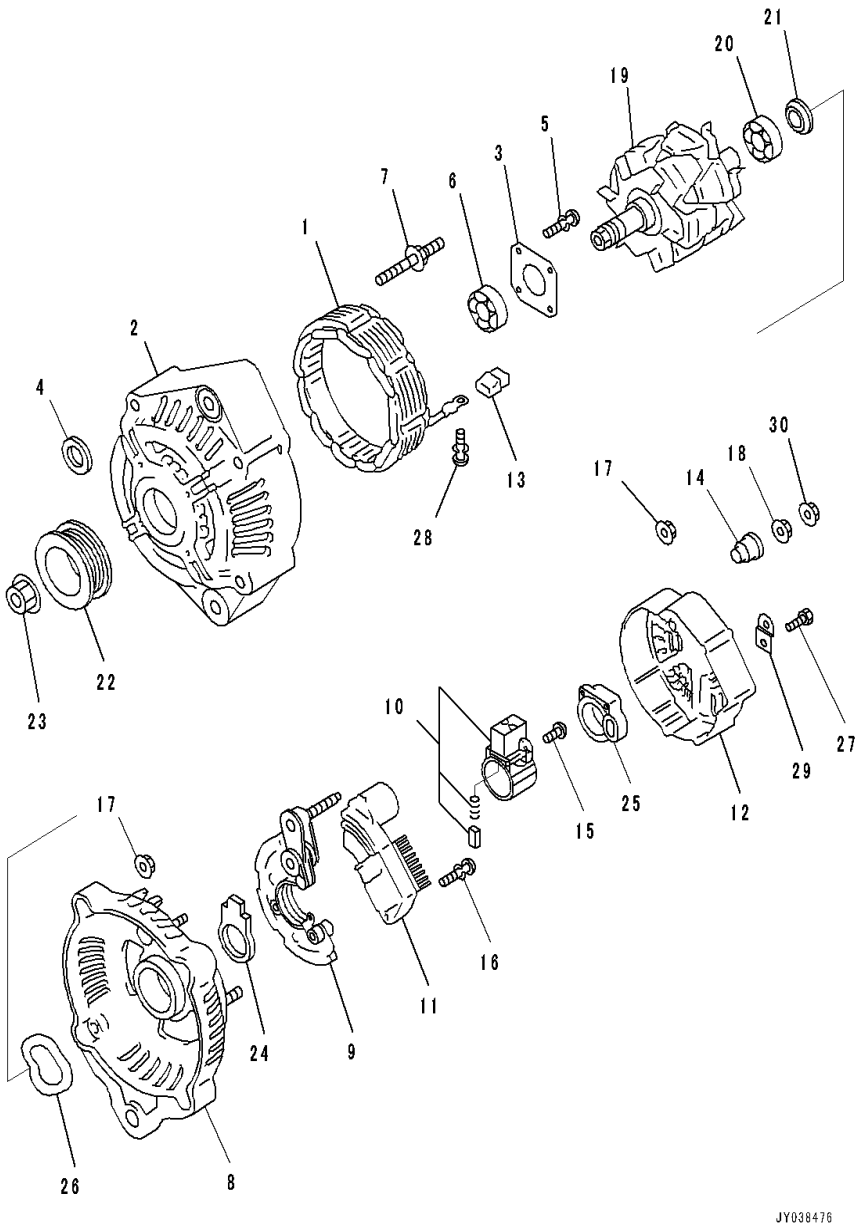

Index	Code	Part Number	Description	Qty	Serial Number
		600-861-3421	Alternator	1	26689866-
		ND121400-4840	• Frame Assembly	1	26689866-
1		ND021100-5060	• • Stator Assembly	1	26689866-
2		ND021401-1620	• • Frame	1	26689866-
3		ND021411-0570	• • Plate	1	26689866-
4		ND021045-0530	• • Collar	1	26689866-
5		ND949006-5590	• • Screw	4	26689866-
6		ND949100-5010	• • Bearing, Ball	1	26689866-
7		ND949043-2000	• • Bolt	4	26689866-
8		ND121501-2920	• Frame	1	26689866-
9		ND021580-4670	• Rectifier Assembly	1	26689866-
10		ND021620-2720	• Holder Assembly, Brush	1	26689866-
11		ND126000-3730	• Regulator Assembly	1	26689866-
12		ND021551-2360	• Cover	1	26689866-
13		ND021605-1970	• Bushing	4	26689866-
14		ND021605-2950	• Bushing	1	26689866-
15		ND949006-5460	• Screw	3	26689866-
16		ND91310-04251	• Screw	2	26689866-
17		ND949056-2481	• Nut	7	26689866-
18		ND949056-1001	• Nut	1	26689866-
19		ND021200-8610	• Rotor Assembly	1	26689866-
20		ND949100-2790	• • Bearing, Ball	1	26689866-
21		ND021506-0070	• • Cover	1	26689866-
22		ND021041-8620	• Pulley	1	26689866-
23		ND949056-2520	• Nut	1	26689866-
24		ND021626-0190	• Seal	1	26689866-
25		ND021626-0250	• Seal	1	26689866-
26		ND021542-0160	• Washer	1	26689866-
27		ND949006-6401	• Screw	1	26689866-
28		ND949007-6280	• Screw	4	26689866-
29		ND021602-5230	• Plate	1	26689866-
30		ND92150-06061	• Nut	1	26689866-

FIG. A6020-002002 Alternator Mounting (35Amp.) (Mounting)

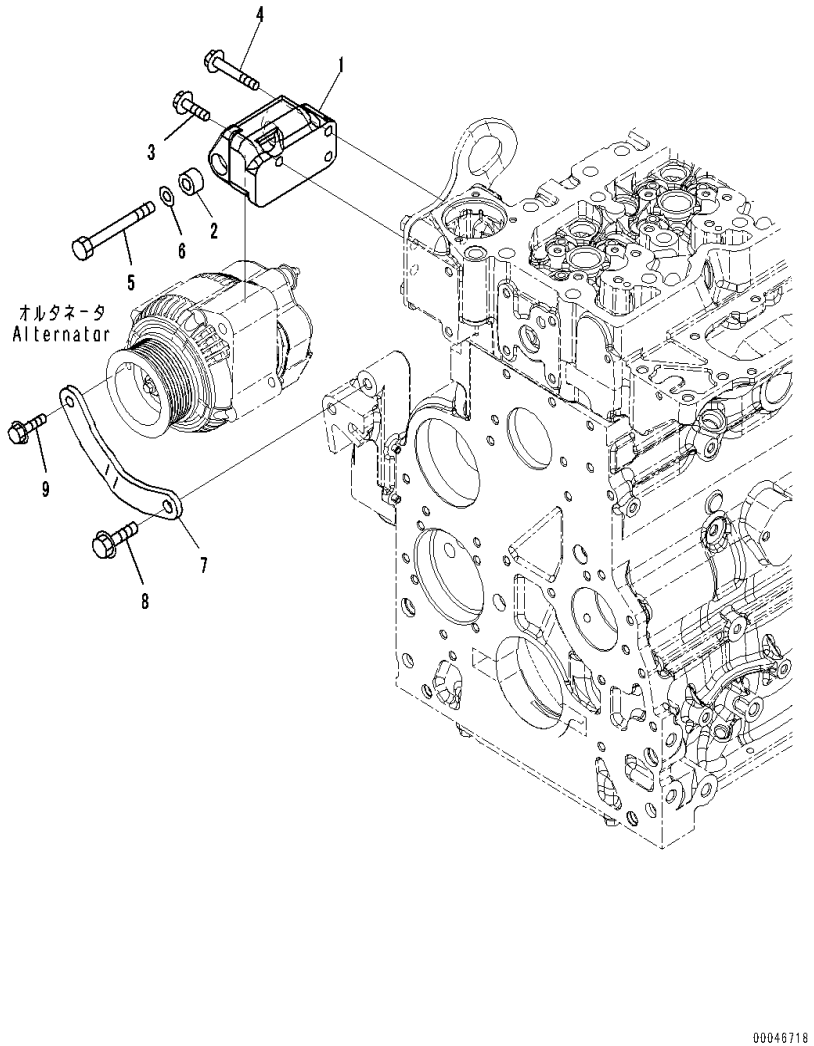

Index	Code	Part Number	Description	Qty	Serial Number
		6754-81-6110	Support Assembly	1	26689866-
1	C1		• Support	1	26689866-
2		6732-81-6630	• Spacer	1	26689866-
3		6732-21-6630	Screw	1	26689866-
4		6736-11-4460	Bolt	2	26689866-
5		01018-31095	Bolt	1	26689866-
6		01641-01016	Washer	1	26689866-
7		6754-81-6130	Bracket	1	26689866-
8		01435-61025	Bolt	1	26689866-
9		01435-60825	Bolt	1	26689866-

FIG. ASM00-001001 Starting Motor Mounting (4.5KW)

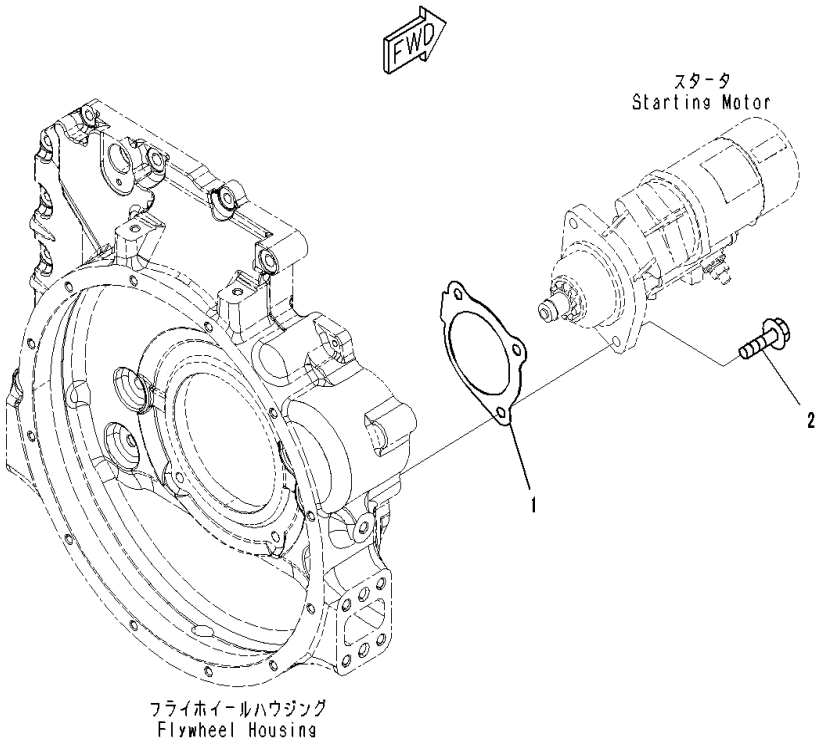

Index	Code	Part Number	Description	Qty	Serial Number
1		6754-81-6810	Gasket	1	26689866-
2		6731-82-6810	Bolt	2	26689866-

FIG. AST00-001001 Starting Motor (4.5KW)

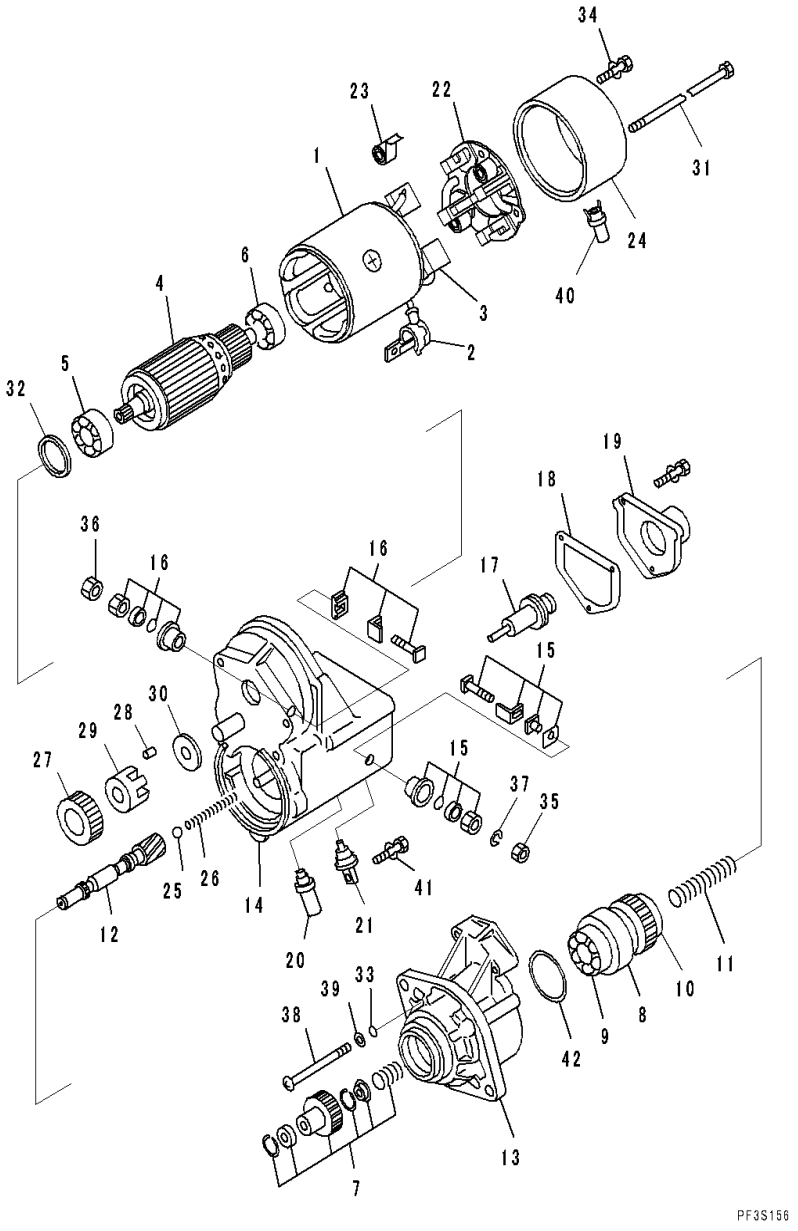

Index	Code	Part Number	Description	Qty	Serial Number
		600-863-4211	Starting Motor Assembly	1	26689866-
1		ND028100-2882	• Yoke Assembly	1	26689866-
2		ND028062-0130	• • Cover	1	26689866-
3		ND028099-3570	• • Starting Motor Kit	2	26689866-
4		ND028200-1590	• Armature Assembly	1	26689866-
5		ND949100-1930	• • Bearing, Ball	1	26689866-
6		ND949100-1750	• • Bearing, Ball	1	26689866-
		ND028300-6551	• Clutch Assembly	1	26689866-
7		ND028099-3270	• • Starting Motor Kit	1	26689866-
8		ND028300-6751	• • Clutch Assembly	1	26689866-
9		ND949100-4500	• • • Bearing, Ball	1	26689866-
10		ND949100-1920	• • • Bearing, Ball	1	26689866-
11		ND949170-4040	• • Spring	1	26689866-
12		ND028381-0071	• • Shaft	1	26689866-
13		ND228401-0633	• Housing Assembly	1	26689866-
14		ND153400-8530	• Switch Assembly, Magnetic	1	26689866-
15		ND128099-5620	• • Starting Motor Kit	1	26689866-
16		ND028099-3160	• • Starting Motor Kit	1	26689866-
17		ND053660-7170	• • Plunger	1	26689866-
18		ND053404-0240	• • Gasket	1	26689866-
19		ND053505-0290	• • Cover	1	26689866-
20		ND053480-7560	• • Bolt Assembly	1	26689866-
21		ND028065-0250	• • Bushing	1	26689866-
22		ND028510-5390	• Holder Assembly, Brush	1	26689866-
23		ND949173-0571	• • Spring	4	26689866-
24		ND028501-8091	• Frame	1	26689866-
25		ND128961-0010	• Ball	1	26689866-
26		ND949170-4070	• Spring	1	26689866-
27		ND028371-1500	• Pinion	1	26689866-
28		ND028306-0070	• Roller	5	26689866-
29		ND028063-0030	• Retainer	1	26689866-
30		ND028327-0171	• Retainer	1	26689866-
31		ND128950-0520	• Bolt	2	26689866-
32		ND949020-0600	• Washer	1	26689866-
33		ND90801-10050	• O-ring	3	26689866-
34		ND949007-6530	• Screw	2	26689866-
35		ND90170-10061	• Nut	1	26689866-
36		ND949056-4480	• Nut	1	26689866-
37		ND90258-10001	• Washer	1	26689866-
38		ND949006-4720	• Screw	3	26689866-

FIG. AST00-001001 Starting Motor (4.5KW)

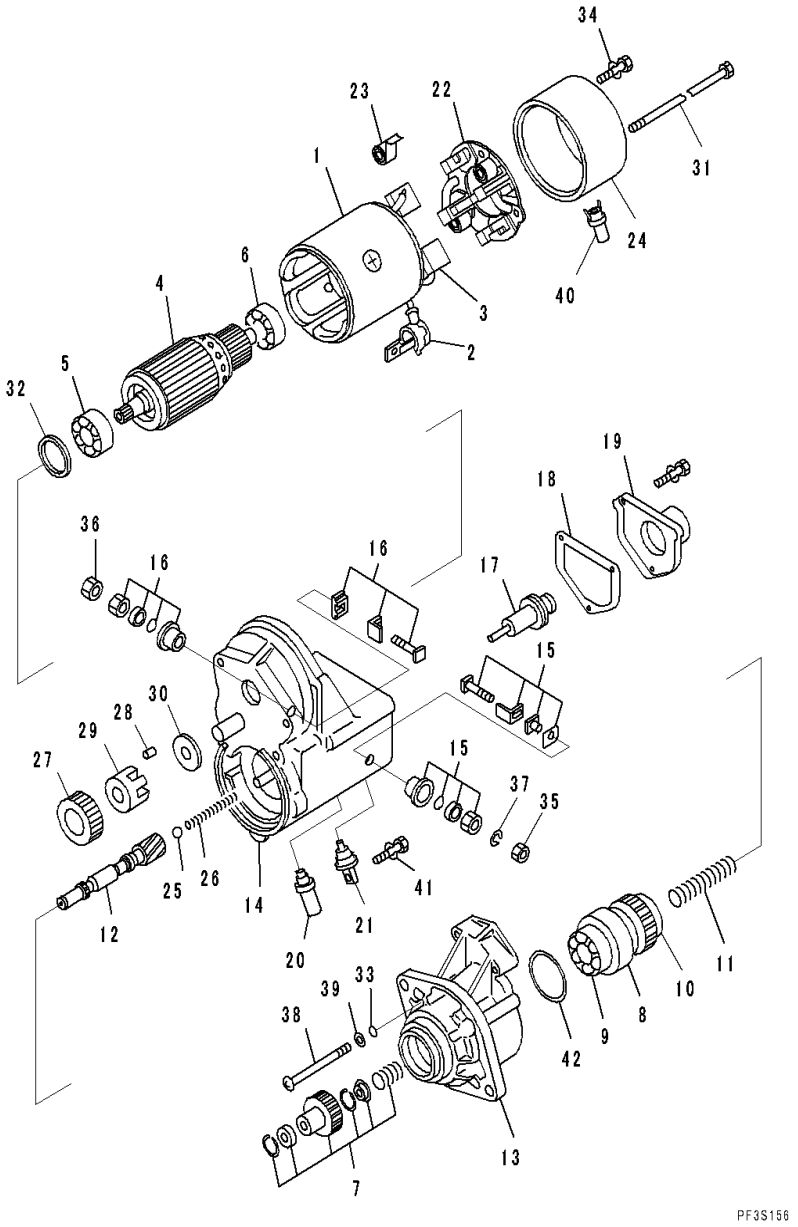

Index	Code	Part Number	Description	Qty	Serial Number
41		ND90200-06241	• Washer	3	26689866-
42		ND028062-5790	• Cover	1	26689866-
43		ND949007-6850	• Screw	1	26689866-
44		ND028901-5190	• Seal	1	26689866-

FIG. AWR00-001001 Wiring Harness (5.5KW)

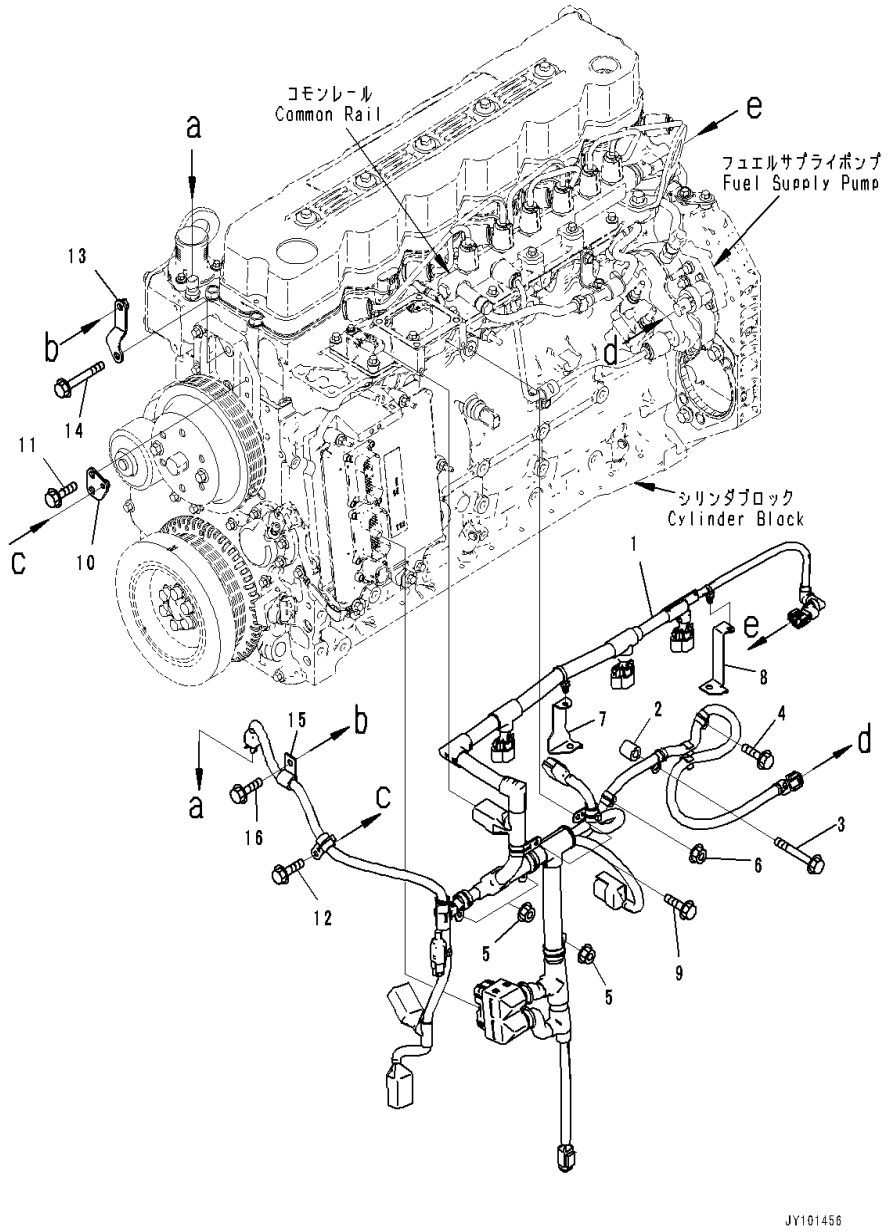

Index	Code	Part Number	Description	Qty	Serial Number
1		6754-81-9520	Wiring Harness	1	26689866-
2		6210-11-5820	Spacer	1	26689866-
3		01435-60835	Bolt	1	26689866-
4		6216-74-6180	Bolt	1	26689866-
5		01584-00605	Nut	3	26689866-
6		01584-00806	Nut	1	26689866-
7		6754-81-9530	Bracket	1	26689866-
8		6754-81-9540	Bracket	1	26689866-
9		6736-81-5110	Bolt	2	26689866-
10		6754-81-9570	Brace	1	26689866-
11		01435-60816	Bolt	2	26689866-
12		01435-60612	Bolt	1	26689866-
13		6754-81-9270	Bracket	1	26689866-
14		6754-81-9390	Bolt	1	26689866-
15		04434-51308	Clip	1	26689866-
16		6216-74-6180	Bolt	1	26689866-

ENGINE ACCESSORIES AND OTHERS

FIG. A4719-001001 Engine Controller

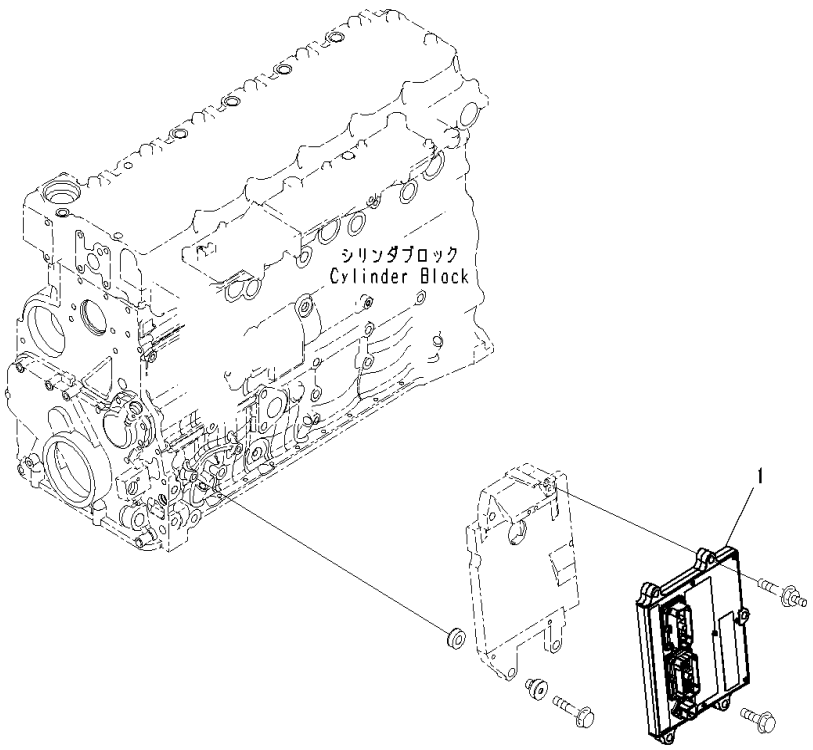

Index	Code	Part Number	Description	Qty	Serial Number
1		600-467-4300	Controller Assembly	1	26689866-

FIG. APH00-001001 Engine Controller

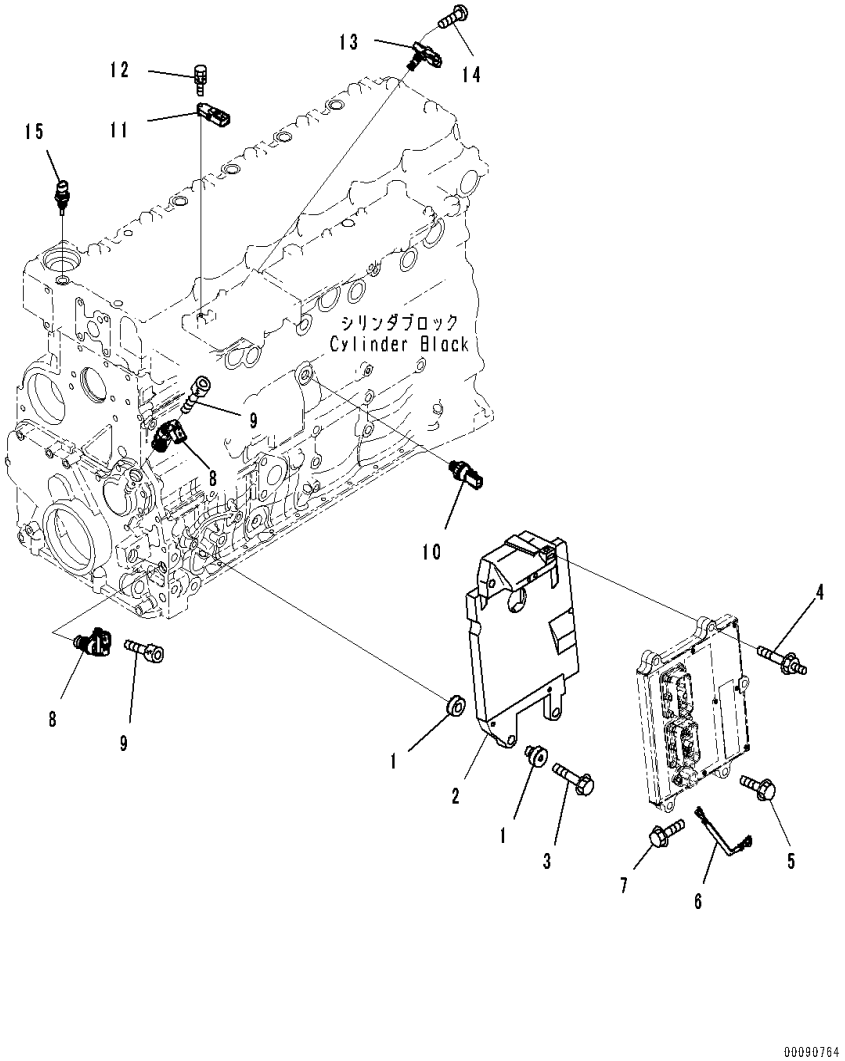

Index	Code	Part Number	Description	Qty	Serial Number
1		6754-81-9470	Isolator	3	26689866-
2		6754-81-9461	Bracket	1	26689866-
3		6735-61-2120	Bolt	3	26689866-
4		6754-81-9161	Bolt	3	26689866-
5		6732-61-3110	Bolt	2	26689866-
6		6754-81-9170	Wire	1	26689866-
7		6216-74-6180	Bolt	1	26689866-
8		6271-81-9201	Sensor	2	26689866-
		6271-81-9220	• O-ring	1	26689866-
9		6216-84-9220	Bolt	2	26689866-
10		6744-81-4010	Switch	1	26689866-
11		6755-81-1900	Sensor,Pressure	1	26689866-
12		6734-71-5520	Bolt	1	26689866-
13		6754-81-2702	Sensor,Temperature and Pressure	1	26689866-
14		6754-81-9180	Screw	1	26689866-
15		6261-81-6901	Sensor, Temperature	1	26689866-

FIG. APP10-002001 Parts Performance(For China 3rd EX-Gas Regulation Arrangement) (Camshaft)

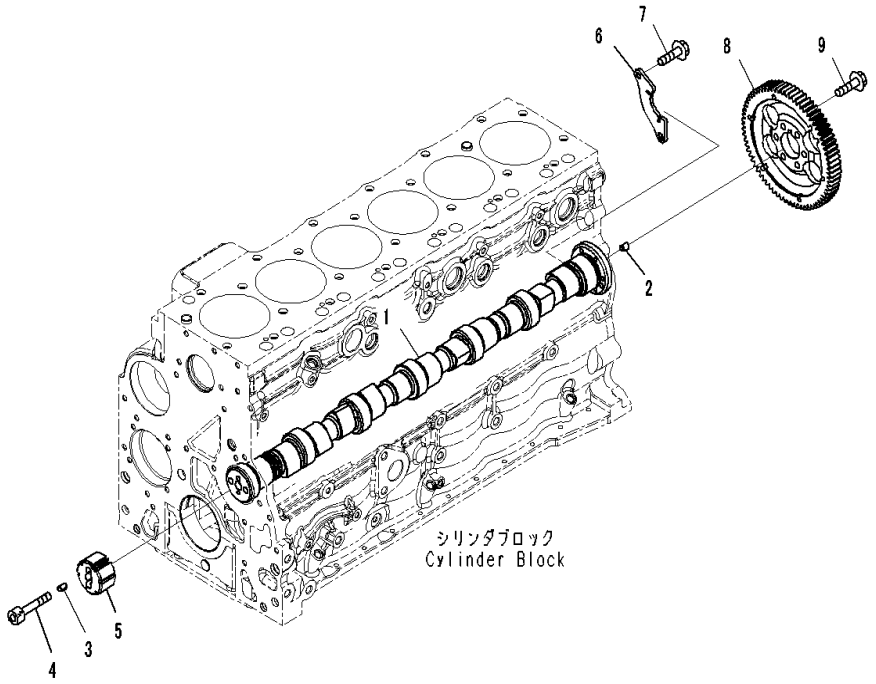

Index	Code	Part Number	Description	Qty	Serial Number
		6754-41-1100	Camshaft Assembly	1	26689866-
		6754-41-1170	• Camshaft Assembly	1	26689866-
1	C1		• • Camshaft	1	26689866-
2	C1		• • Pin, Dowel	1	26689866-
3		6754-41-1120	• Ring. Dowel	1	26689866-
4		6754-41-1130	• Bolt	2	26689866-
5		6754-41-1141	• Ring	1	26689866-
6		6754-41-1161	Support	1	26689866-
7		01435-60816	Bolt	2	26689866-
8		6754-41-1150	Gear	1	26689866-
9		01435-00825	Bolt	6	26689866-

FIG. APP10-002002 Parts Performance (Common Rail)

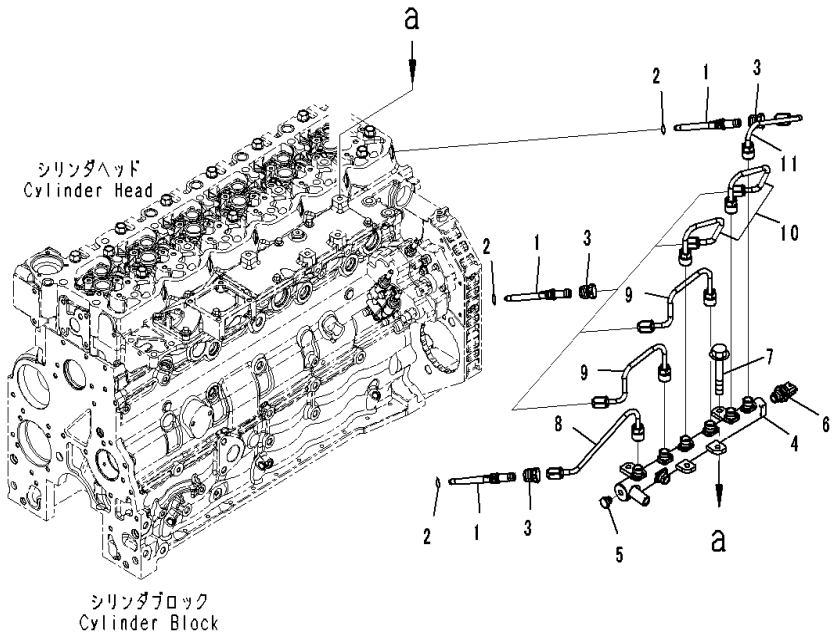

Index	Code	Part Number	Description	Qty	Serial Number
1		6754-71-5512	Connector Assembly	6	26689866-
2		6754-71-5541	Retainer	6	26689866-
3		6754-71-1210	Rail Assembly	1	26689866-
4	C1		• Common Rail	1	26689866-
5		6754-72-1221	• Valve	1	26689866-
6		6754-72-1212	• Sensor, Pressure	1	26689866-
7		6733-11-4150	Bolt	4	26689866-
8		6754-71-5210	Tube	1	26689866-
9		6754-71-5220	Tube	2	26689866-
10		6754-71-5230	Tube	2	26689866-
11		6754-71-5240	Tube	1	26689866-

ENGINE MARKS AND PLATES

FIG. A9810-001001 Caution Plates

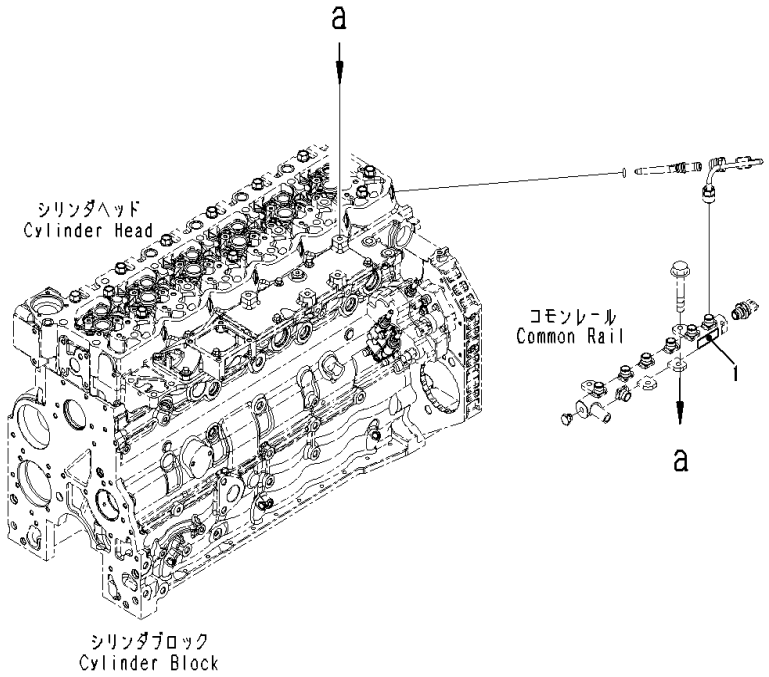

Index	Code	Part Number	Description	Qty	Serial Number
1		6271-81-2981	Plate, Caution	1	26689866-

FIELD REPAIR SERVICE PARTS

FIG. A8110-001001 Repair Service Parts

Index	Code	Part Number	Description	Qty	Serial Number
1		6736-29-1410	Bushing, Camshaft, No.1	1	26689866-
2		6736-39-1130	Sleeve, Rear	1	26689866-
		6754-29-8320	Bearing Assembly, Main, Undersize, 0.25mm	6	26689866-
3	C1		• Bearing, Upper	1	26689866-
4	C1		• Bearing, Lower	1	26689866-
		6754-29-8310	Bearing Assembly, Thrust, Undersize, 0.25mm	1	26689866-
5	C1		• Bearing, Upper	1	26689866-
6	C1		• Bearing	1	26689866-
		6754-28-8320	Bearing Assembly, Main, Undersize, 0.50mm	6	26689866-
	C1		• Bearing, Upper	1	26689866-
	C1		• Bearing, Lower	1	26689866-
		6754-28-8310	Bearing Assembly, Thrust, Undersize, 0.50mm	1	26689866-
	C1		• Bearing, Upper	1	26689866-
	C1		• Bearing	1	26689866-
		6754-27-8320	Bearing Assembly, Main, Undersize, 0.75mm	6	26689866-
	C1		• Bearing, Upper	1	26689866-
	C1		• Bearing, Lower	1	26689866-
		6754-27-8310	Bearing Assembly, Thrust, Undersize, 0.75mm	1	26689866-
	C1		• Bearing, Upper	1	26689866-
	C1		• Bearing	1	26689866-
		6754-26-8320	Bearing Assembly, Main, Undersize, 1.00mm	6	26689866-
	C1		• Bearing, Upper	1	26689866-
	C1		• Bearing, Lower	1	26689866-
		6754-26-8310	Bearing Assembly, Thrust, Undersize, 1.00mm	1	26689866-
	C1		• Bearing, Upper	1	26689866-
	C1		• Bearing	1	26689866-
		6754-28-8410	Bearing Assembly, Thrust, T=0.5mm	1	26689866-
	C1		• Bearing	1	26689866-
	C1		• Bearing	1	26689866-
		6754-26-8410	Bearing Assembly, Thrust, T=1.0mm	1	26689866-
	C1		• Bearing	1	26689866-
	C1		• Bearing	1	26689866-
7		6738-39-3400	Bearing, Lower, Undersize, 0.25mm	6	26689866-
		6738-38-3400	Bearing, Lower, Undersize, 0.50mm	6	26689866-
		6738-37-3400	Bearing, Lower, Undersize, 0.75mm	6	26689866-
		6738-36-3400	Bearing, Lower, Undersize, 1.00mm	6	26689866-
8		6754-39-2111	Piston, Oversize 0.50mm	6	26689866-
		6754-39-2010	Ring Assembly, Piston, Oversize 0.50mm	6	26689866-
9	C1		• Ring, Top	1	26689866-
10	C1		• Ring, Second	1	26689866-

FIG. A8110-001001 Repair Service Parts

Index	Code	Part Number	Description	Qty	Serial Number
11	C1		• Ring, Oil	1	26689866-
12		6754-39-3410	Bearing, Upper, Undersize, 0.25mm	6	26689866-
		6754-38-3410	Bearing, Upper, Undersize, 0.50mm	6	26689866-
		6754-37-3410	Bearing, Upper, Undersize, 0.75mm	6	26689866-
		6754-36-3410	Bearing, Upper, Undersize, 1.00mm	6	26689866-
13		6754-29-2010	Sleeve, Cylinder Liner	6	26689866-

ENGINE RELATED PARTS

FIG. A9999-001001 Damper (Damper, 1/2)

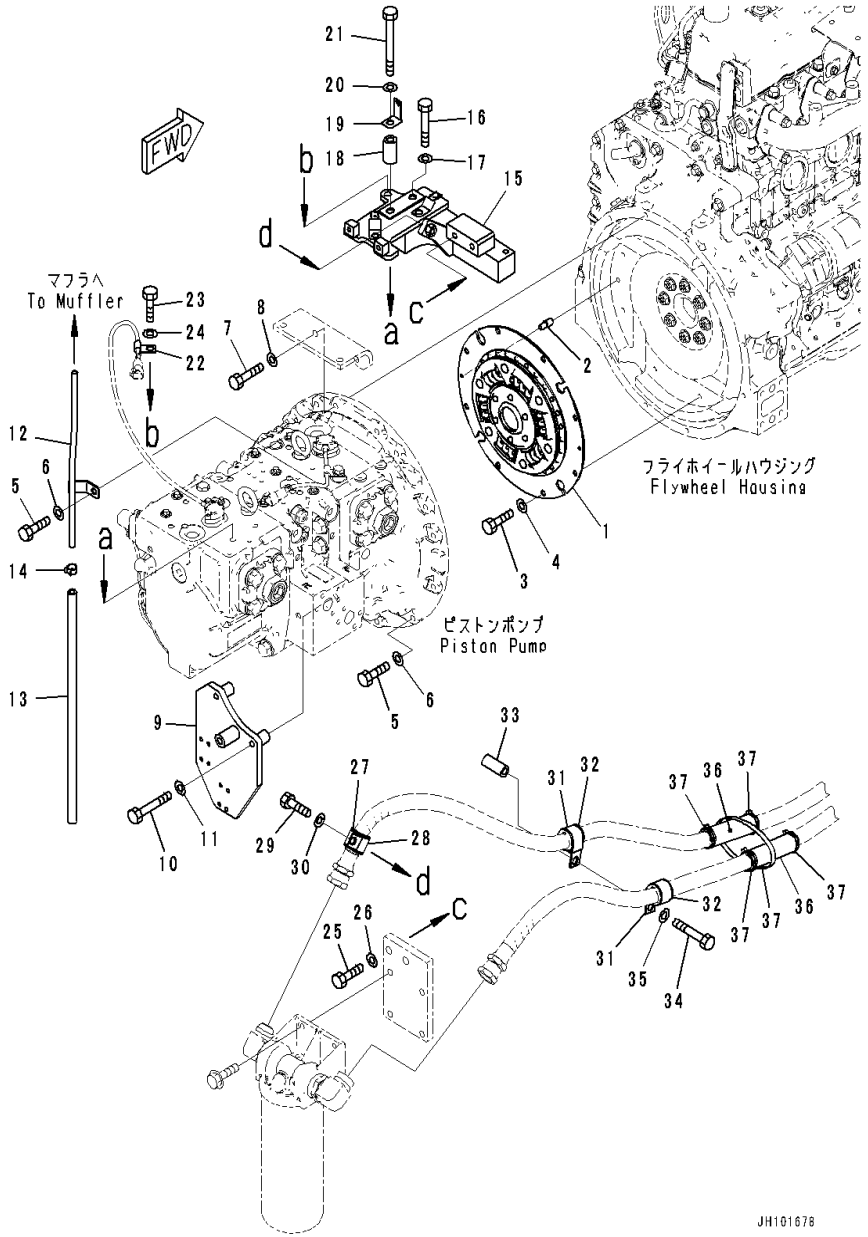

Index	Code	Part Number	Description	Qty	Serial Number
1		22U-01-21310	Damper	1	C00001-
2		203-01-51120	Pin	2	C00001-
3		01010-81020	Bolt	8	C00001-
4		01643-31032	Washer	8	C00001-
5		01010-81050	Bolt	8	C00001-
6		01643-31032	Washer	8	C00001-
7		01010-81060	Bolt	2	C00001-
8		01643-31032	Washer	2	C00001-
9		20Y-62-56621	Bracket	1	C00001-
10		01010-81085	Bolt	2	C00001-
11		01643-31032	Washer	2	C00001-
12		6754-11-5440	Tube	1	C00001-
13		07260-20950	Hose	1	C00001-
14		07285-00155	Clip	1	C00001-
15		20Y-62-56111	Bracket	1	C00001-
16		01010-81280	Bolt	1	C00001-
17		01643-31232	Washer	1	C00001-
18		581-22-12760	Spacer	1	C00001-
19		08057-14012	Clip	1	C00001-
20		01643-31232	Washer	1	C00001-
21		01011-81225	Bolt	1	C00001-
22		04434-50612	Clip	1	C00001-
23		01010-81025	Bolt	1	C00001-
24		01643-31032	Washer	1	C00001-
25		01010-81235	Bolt	2	C00001-
26		01643-31232	Washer	2	C00001-
27		198-06-53630	Cushion	1	C00001-
28		04434-53412	Clip	1	C00001-
29		01010-81230	Bolt	1	C00001-
30		01643-31232	Washer	1	C00001-
31		04434-53412	Clip	2	C00001-
32		198-06-53630	Cushion	2	C00001-
33		195-979-5190	Collar	1	C00001-
34		01010-81280	Bolt	1	C00001-
35		01643-31232	Washer	1	C00001-
36		20Y-01-41250	Cover	2	C00001-
37		08034-20536	Band	5	C00001-

FIG. A9999-001002 Damper (Damper, 2/2)

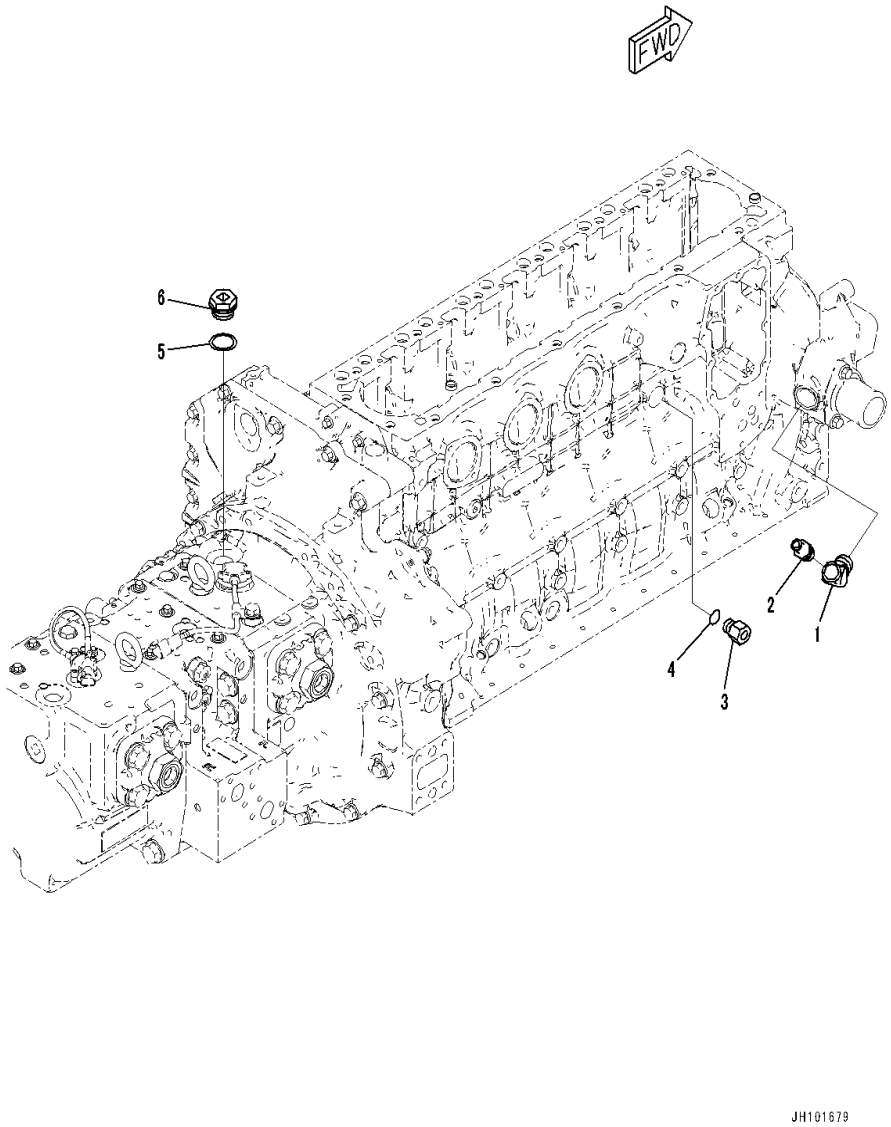

Index	Code	Part Number	Description	Qty	Serial Number
1		20Y-810-1161	Elbow	1	C00001-
2		22U-979-1930	Nipple	1	C00001-
3		20Y-01-56280	Joint	1	C00001-
4		07002-11823	O-ring	1	C00001-
5		07005-03016	Seal, Washer	1	C00001-
6		20Y-62-57860	Plug	1	C00001-

FIG. A9999-001003 Hydraulic Pump (Piston Pump, 1/12)

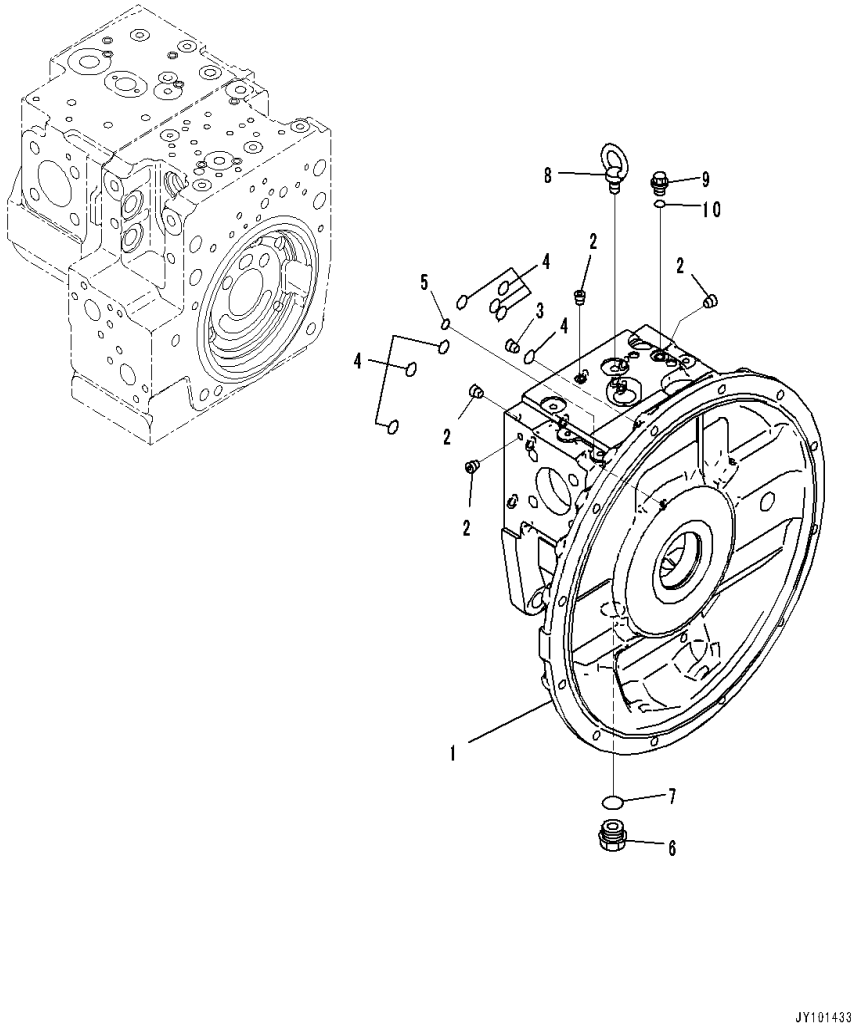

Index	Code	Part Number	Description	Qty	Serial Number
		708-2G-00620	Pump Assembly	1	C00001-
	C1		• Pump Subassembly	1	C00001-
	C2	708-2G-04960	• • Case Assembly	1	C00001-
1	C1		• • • Case,Front	1	C00001-
2	C1		• • • Plug, Stocking	15	C00001-
3	C2	708-1L-29340	• • Orifice	1	C00001-
4	C2	07000-B2012	• • O-ring	8	C00001-
5	C2	07000-B1009	• • O-ring	1	C00001-
6		07044-12412	• • Plug	1	C00001-
7		07002-62434	• • O-ring	1	C00001-
8		04530-11222	• • Bolt, Eye	1	C00001-
9		708-8E-16150	• • Plug	1	C00001-
10		07002-61023	• • O-ring	1	C00001-

FIG. A9999-001004 Hydraulic Pump (Piston Pump, 2/12)

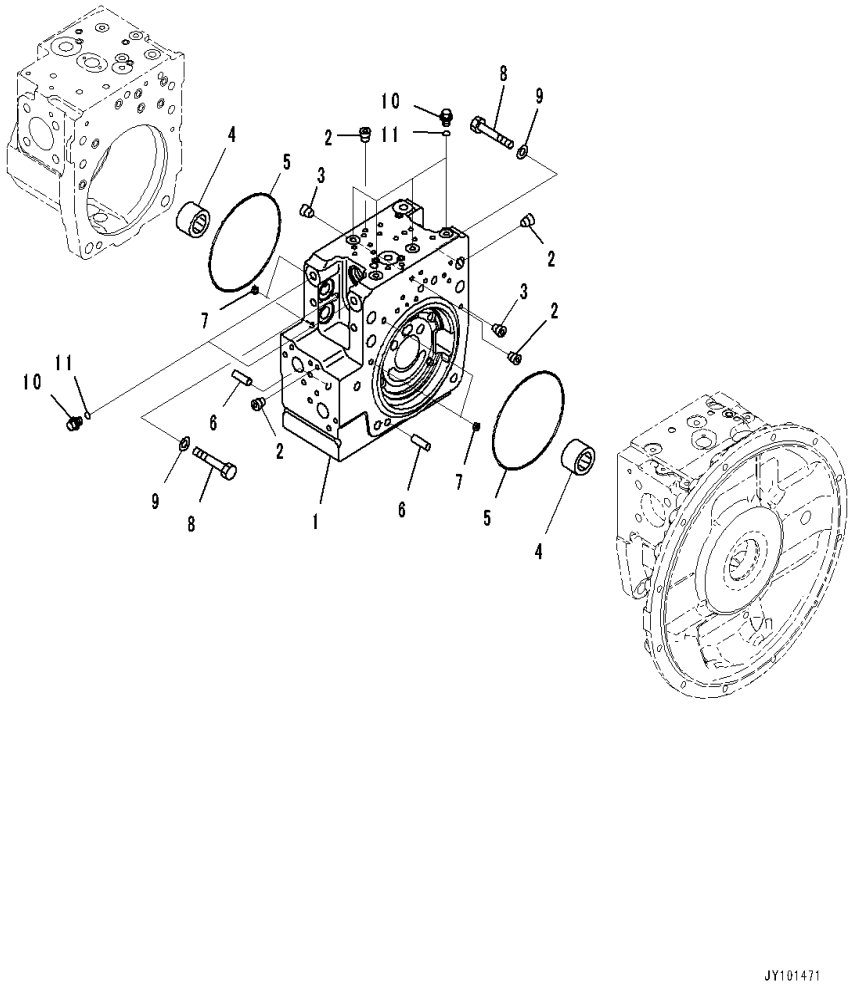

Index	Code	Part Number	Description	Qty	Serial Number
		708-2G-00620	Pump Assembly	1	C00001-
	C1		• Pump Subassembly	1	C00001-
	C2	708-2G-04970	• • Cap Assembly	1	C00001-
1	C1		• • • Cap, End	1	C00001-
2	C1		• • • Plug, Stocking	54	C00001-
3	C2	708-1L-29340	• • Orifice	2	C00001-
4	C2	708-2L-42150	• • Bearing	2	C00001-
5	C2	07000-A5190	• • O-ring	2	C00001-
6	C2	04020-01228	• • Pin, Dowel	2	C00001-
7	C2	708-2L-25480	• • Filter	4	C00001-
8	C2	01010-61660	• • Bolt	12	C00001-
9	C2	01643-31645	• • Washer	12	C00001-
10		708-8E-16150	• • Plug	6	C00001-
11		07002-61023	• • O-ring	6	C00001-

FIG. A9999-001005 Hydraulic Pump (Piston Pump, 3/12)

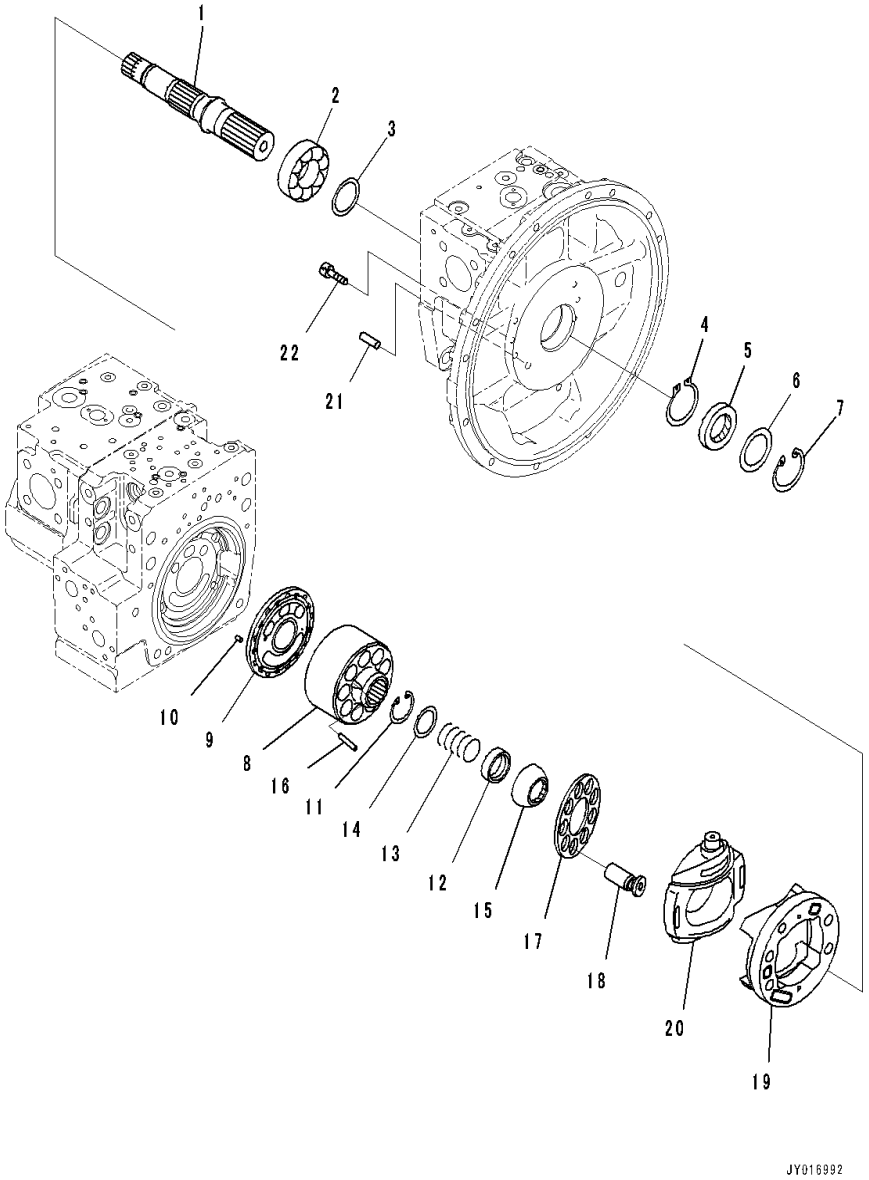

Index	Code	Part Number	Description	Qty	Serial Number
		708-2G-00620	Pump Assembly	1	C00001-
	C1		• Pump Subassembly	1	C00001-
1	C2	708-2G-12610	• • Shaft	1	C00001-
2	C2	708-2L-42250	• • Bearing	1	C00001-
3	C2	708-2E-05040	• • Washer Kit	1	C00001-
	C1		• • • Washer,T=3.1mm	1	C00001-
	C1		• • • Washer,T=3.0mm	1	C00001-
	C1		• • • Washer,T=2.9mm	1	C00001-
	C1		• • • Washer,T=2.8mm	1	C00001-
4		708-25-12790	• • Ring, Snap	1	C00001-
5		708-2L-32460	• • Seal, Oil	1	C00001-
6		708-2L-22160	• • Spacer	1	C00001-
7		04065-06825	• • Ring, Snap	1	C00001-
	C2	708-2G-04640	• • Block Assembly	1	C00001-
8	C1		• • • Cylinder Block	1	C00001-
9	C1		• • • Plate, Valve	1	C00001-
10	C2	708-18-13230	• • Pin	1	C00001-
11	C2	04065-05820	• • Ring, Snap	1	C00001-
12	C2	708-2L-43130	• • Seat	1	C00001-
13	C2	708-2G-13760	• • Spring	1	C00001-
14	C2	708-2H-23141	• • Seat	1	C00001-
15	C2	708-2G-13740	• • Guide, Retainer	1	C00001-
16	C2	708-2L-43360	• • Pin	3	C00001-
17	C2	708-2G-13750	• • Retainer, Shoe	1	C00001-
18	C2	708-2L-43311	• • Piston Subassembly	9	C00001-
	C2	708-2G-04660	• • Cradle Assembly	1	C00001-
19	C1		• • • Cradle	1	C00001-
20	C1		• • • Cam, Rocker	1	C00001-
21	C2	04020-01228	• • Pin, Dowel	1	C00001-
22	C2	01252-61025	• • Bolt, Hexagon Socket Head	6	C00001-

FIG. A9999-001006 Hydraulic Pump (Piston Pump, 4/12)

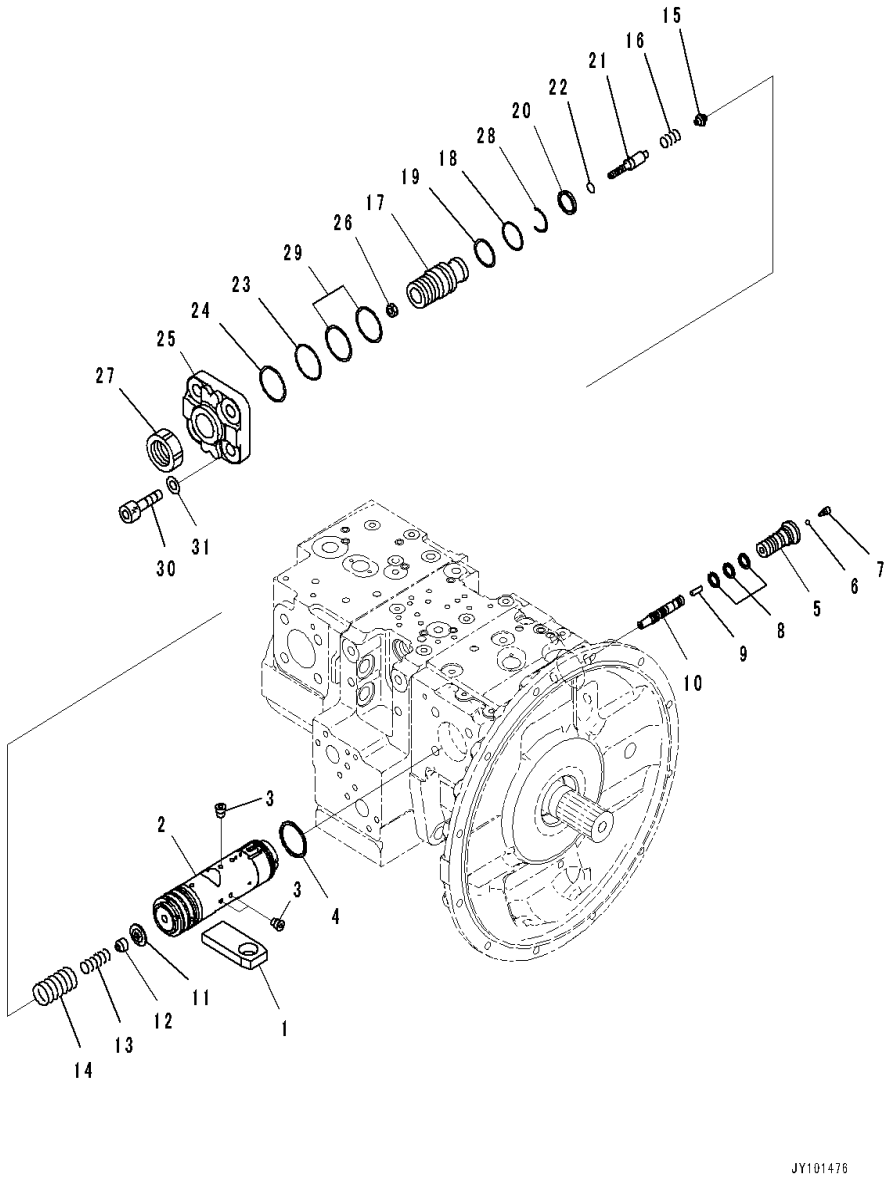

Index	Code	Part Number	Description	Qty	Serial Number
		708-2G-00620	Pump Assembly	1	C00001-
	C1		• Pump Subassembly	1	C00001-
1	C2	708-2G-14610	• • Slider	1	C00001-
	C2	708-2G-03351	• • Valve Assembly, PC	1	C00001-
	C2	708-2G-03321	• • • Piston Assembly, Servo	1	C00001-
2	C1		• • • • Piston	1	C00001-
3	C1		• • • • Plug	7	C00001-
4	C1		• • • Seal	1	C00001-
5	C1		• • • Plug	1	C00001-
6	C2	708-2L-35760	• • • Ball	1	C00001-
7	C2	708-2L-35770	• • • Plug	1	C00001-
8	C1		• • • Seal	3	C00001-
9	C1		• • • Pin	1	C00001-
10	C1		• • • Spool	1	C00001-
11	C1		• • • Retainer	1	C00001-
12	C1		• • • Seat	1	C00001-
13	C1		• • • Spring	1	C00001-
14	C1		• • • Spring	1	C00001-
15	C1		• • • Seat	1	C00001-
16	C1		• • • Spring	1	C00001-
17	C1		• • • Screw	1	C00001-
18	C1		• • • O-ring	1	C00001-
19	C1		• • • Ring, Back-up	1	C00001-
20	C1		• • • Seal	1	C00001-
21	C1		• • • Plug	1	C00001-
22	C1		• • • O-ring	1	C00001-
23	C1		• • • O-ring	1	C00001-
24	C1		• • • Ring, Back-up	1	C00001-
25	C1		• • • Cover	1	C00001-
26	C1		• • • Nut	1	C00001-
27	C1		• • • Nut	1	C00001-
28	C1		• • • Ring, Wear	1	C00001-
29	C2	708-2L-45240	• • • Seal Ring	2	C00001-
30	C2	01010-61645	• • Bolt	4	C00001-
31	C2	01643-31645	• • Washer	4	C00001-

FIG. A9999-001007 Hydraulic Pump (Piston Pump, 5/12)

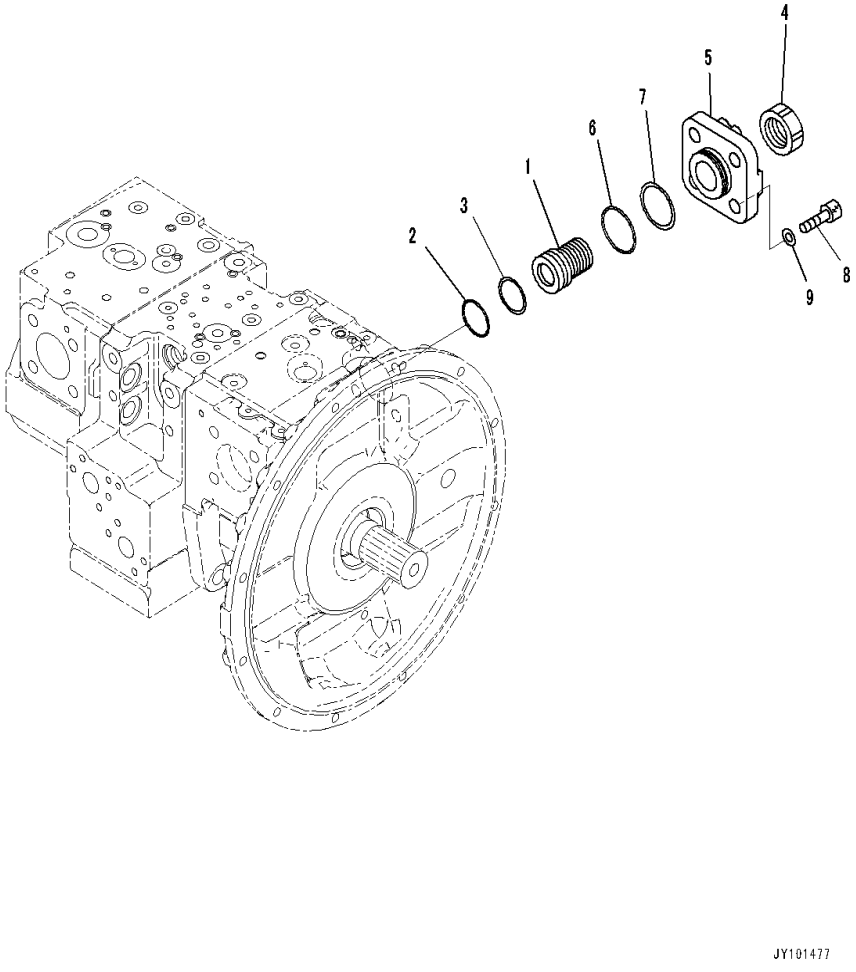

Index	Code	Part Number	Description	Qty	Serial Number
		708-2G-00620	Pump Assembly	1	C00001-
	C1		• Pump Subassembly	1	C00001-
	C2	708-2G-03330	• • Cover Assembly	1	C00001-
1	C2	708-2G-14630	• • • Screw	1	C00001-
2	C2	07000-B3038	• • • O-ring	1	C00001-
3	C2	708-2G-15230	• • • Ring, Back-up	1	C00001-
4	C2	708-2L-35290	• • • Nut	1	C00001-
5	C2	708-2G-14620	• • • Cover	1	C00001-
6	C2	07000-B2050	• • • O-ring	1	C00001-
7	C2	708-2G-15310	• • • Ring, Back-up	1	C00001-
8	C2	01010-61645	• • Bolt	4	C00001-
9	C2	01643-31645	• • Washer	4	C00001-

FIG. A9999-001008 Hydraulic Pump (Piston Pump, 6/12)

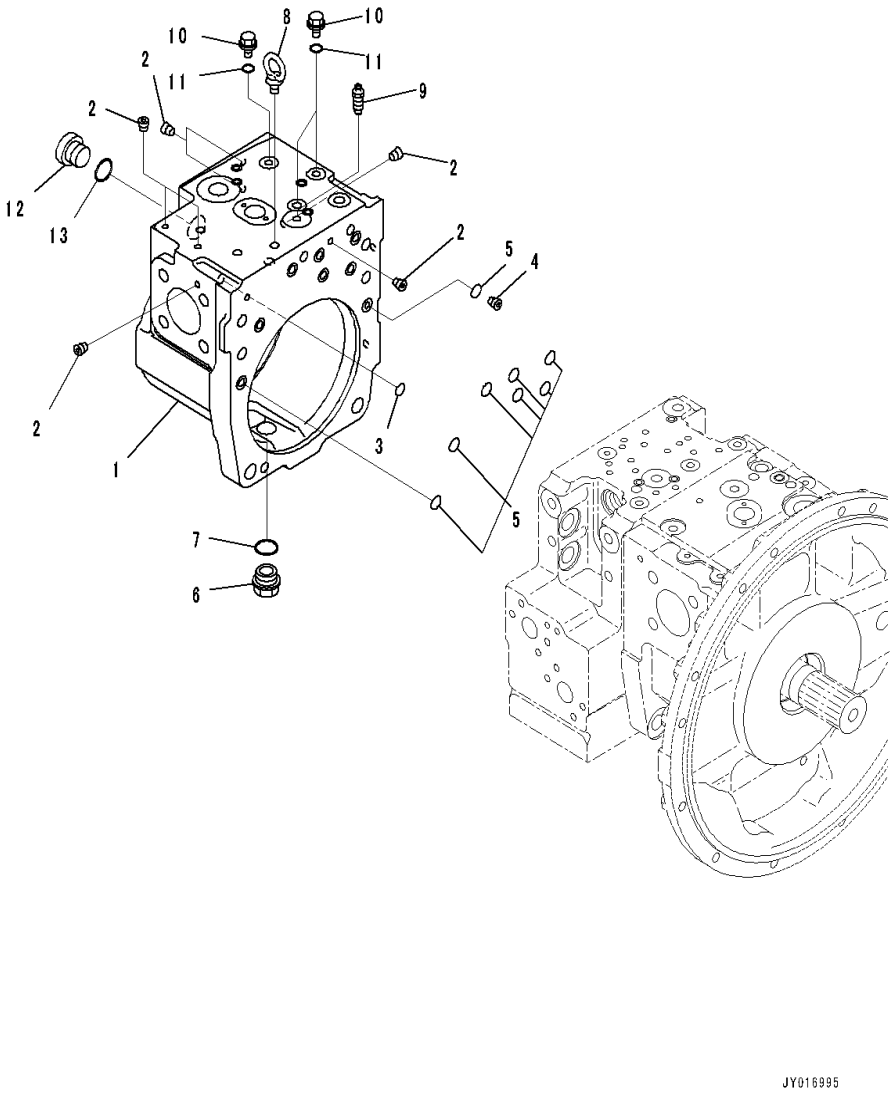

Index	Code	Part Number	Description	Qty	Serial Number
		708-2G-00620	Pump Assembly	1	C00001-
	C1		• Pump Subassembly	1	C00001-
	C2	708-2G-04620	• • Case Assembly	1	C00001-
1	C1		• • • Case	1	C00001-
2	C1		• • • Plug, Stocking	14	C00001-
3	C2	07000-B1009	• • O-ring	1	C00001-
4	C2	708-1L-29340	• • Orifice	1	C00001-
5	C2	07000-B2012	• • O-ring	8	C00001-
6		07044-12412	• • Plug	1	C00001-
7		07002-62434	• • O-ring	1	C00001-
8		04530-11222	• • Bolt, Eye	1	C00001-
9		20B-27-11210	• • Bleeder	1	C00001-
10		708-8E-16150	• • Plug	3	C00001-
11		07002-61023	• • O-ring	3	C00001-
12		07040-13016	• • Plug	1	C00001-
13		07002-63034	• • O-ring	1	C00001-

FIG. A9999-001009 Hydraulic Pump (Piston Pump, 7/12)

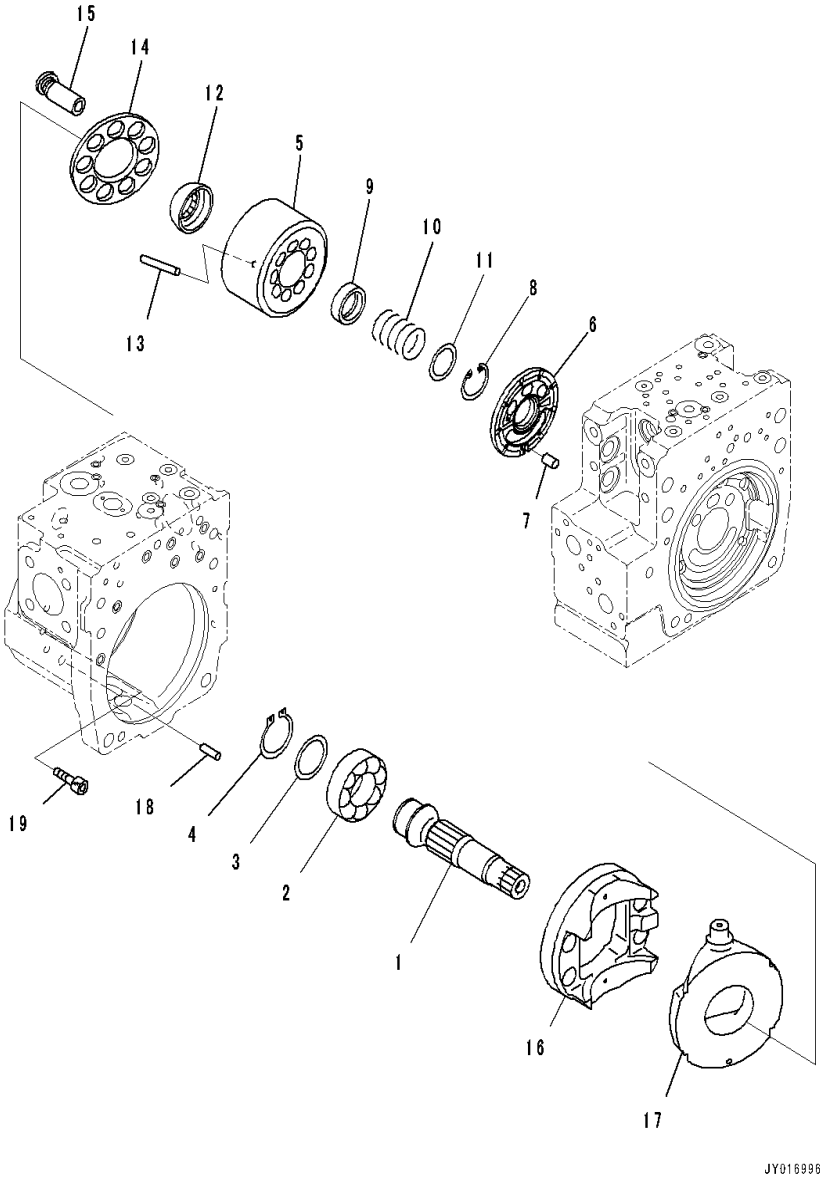

Index	Code	Part Number	Description	Qty	Serial Number
		708-2G-00620	Pump Assembly	1	C00001-
	C1		• Pump Subassembly	1	C00001-
1	C2	708-2G-12620	• • Shaft	1	C00001-
2	C2	708-2L-42250	• • Bearing	1	C00001-
3	C2	708-2E-05040	• • Washer Kit	1	C00001-
	C1		• • • Washer,T=3.1mm	1	C00001-
	C1		• • • Washer,T=3.0mm	1	C00001-
	C1		• • • Washer,T=2.9mm	1	C00001-
	C1		• • • Washer,T=2.8mm	1	C00001-
4	C2	708-25-12790	• • Ring, Snap	1	C00001-
	C2	708-2G-04650	• • Block Assembly	1	C00001-
5	C1		• • • Cylinder Block	1	C00001-
6	C1		• • • Plate, Valve	1	C00001-
7	C2	708-18-13230	• • Pin	1	C00001-
8	C2	04065-05820	• • Ring, Snap	1	C00001-
9	C2	708-2L-43130	• • Seat	1	C00001-
10	C2	708-2G-13760	• • Spring	1	C00001-
11	C2	708-2H-23141	• • Seat	1	C00001-
12	C2	708-2G-13740	• • Guide, Retainer	1	C00001-
13	C2	708-2L-43360	• • Pin	3	C00001-
14	C2	708-2G-13750	• • Retainer, Shoe	1	C00001-
15	C2	708-2L-43311	• • Piston Subassembly	9	C00001-
	C2	708-2G-04660	• • Cradle Assembly	1	C00001-
16	C1		• • • Cradle	1	C00001-
17	C1		• • • Cam, Rocker	1	C00001-
18	C2	04020-01228	• • Pin, Dowel	1	C00001-
19	C2	01252-61025	• • Bolt, Hexagon Socket Head	6	C00001-

FIG. A9999-001010 Hydraulic Pump (Piston Pump, 8/12)

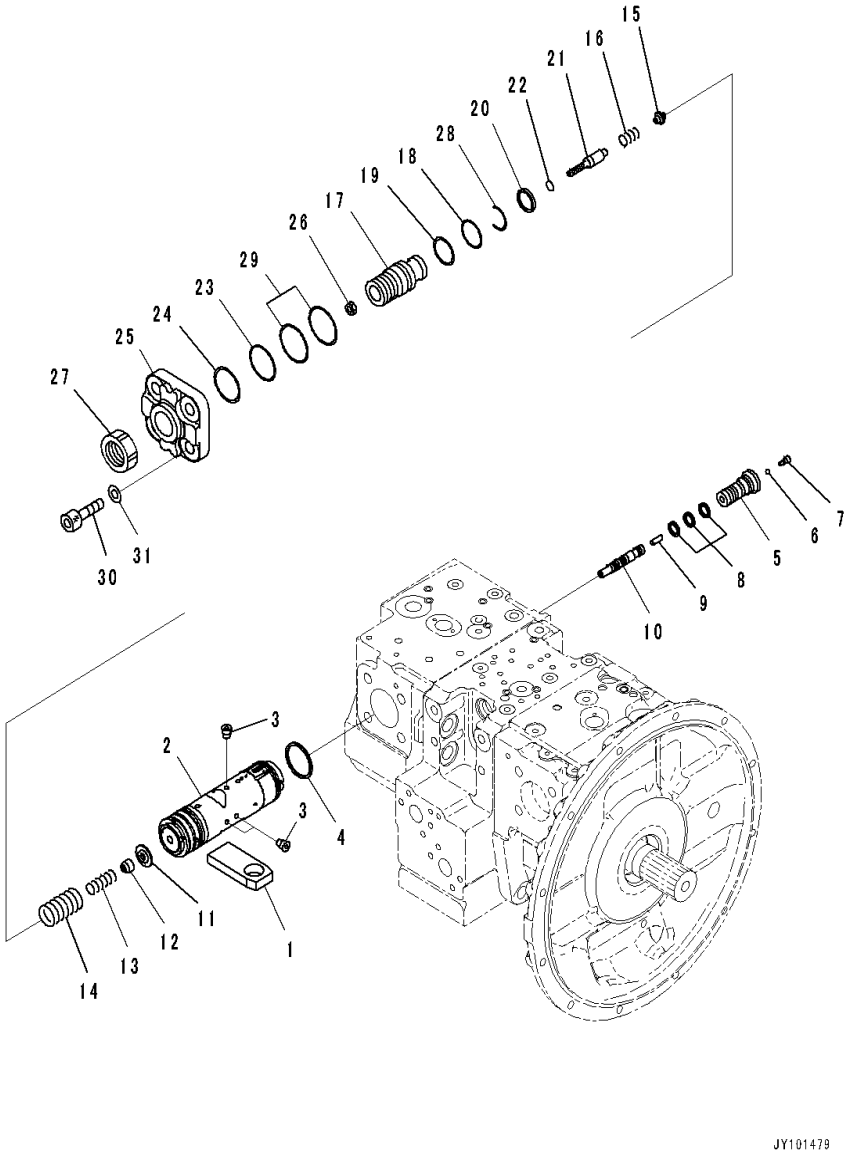

Index	Code	Part Number	Description	Qty	Serial Number
		708-2G-00620	Pump Assembly	1	C00001-
	C1		• Pump Subassembly	1	C00001-
1	C2	708-2G-14610	• • Slider	1	C00001-
	C2	708-2G-03351	• • Valve Assembly, PC	1	C00001-
	C2	708-2G-03321	• • • Piston Assembly, Servo	1	C00001-
2	C1		• • • • Piston	1	C00001-
3	C1		• • • • Plug	7	C00001-
4	C1		• • • Seal	1	C00001-
5	C1		• • • Plug	1	C00001-
6	C2	708-2L-35760	• • • Ball	1	C00001-
7	C2	708-2L-35770	• • • Plug	1	C00001-
8	C1		• • • Seal	3	C00001-
9	C1		• • • Pin	1	C00001-
10	C1		• • • Spool	1	C00001-
11	C1		• • • Retainer	1	C00001-
12	C1		• • • Seat	1	C00001-
13	C1		• • • Spring	1	C00001-
14	C1		• • • Spring	1	C00001-
15	C1		• • • Seat	1	C00001-
16	C1		• • • Spring	1	C00001-
17	C1		• • • Screw	1	C00001-
18	C1		• • • O-ring	1	C00001-
19	C1		• • • Ring, Back-up	1	C00001-
20	C1		• • • Seal	1	C00001-
21	C1		• • • Plug	1	C00001-
22	C1		• • • O-ring	1	C00001-
23	C1		• • • O-ring	1	C00001-
24	C1		• • • Ring, Back-up	1	C00001-
25	C1		• • • Cover	1	C00001-
26	C1		• • • Nut	1	C00001-
27	C1		• • • Nut	1	C00001-
28	C1		• • • Ring, Wear	1	C00001-
29	C2	708-2L-45240	• • • Seal Ring	2	C00001-
30	C2	01010-61645	• • Bolt	4	C00001-
31	C2	01643-31645	• • Washer	4	C00001-

FIG. A9999-001011 Hydraulic Pump (Piston Pump, 9/12)

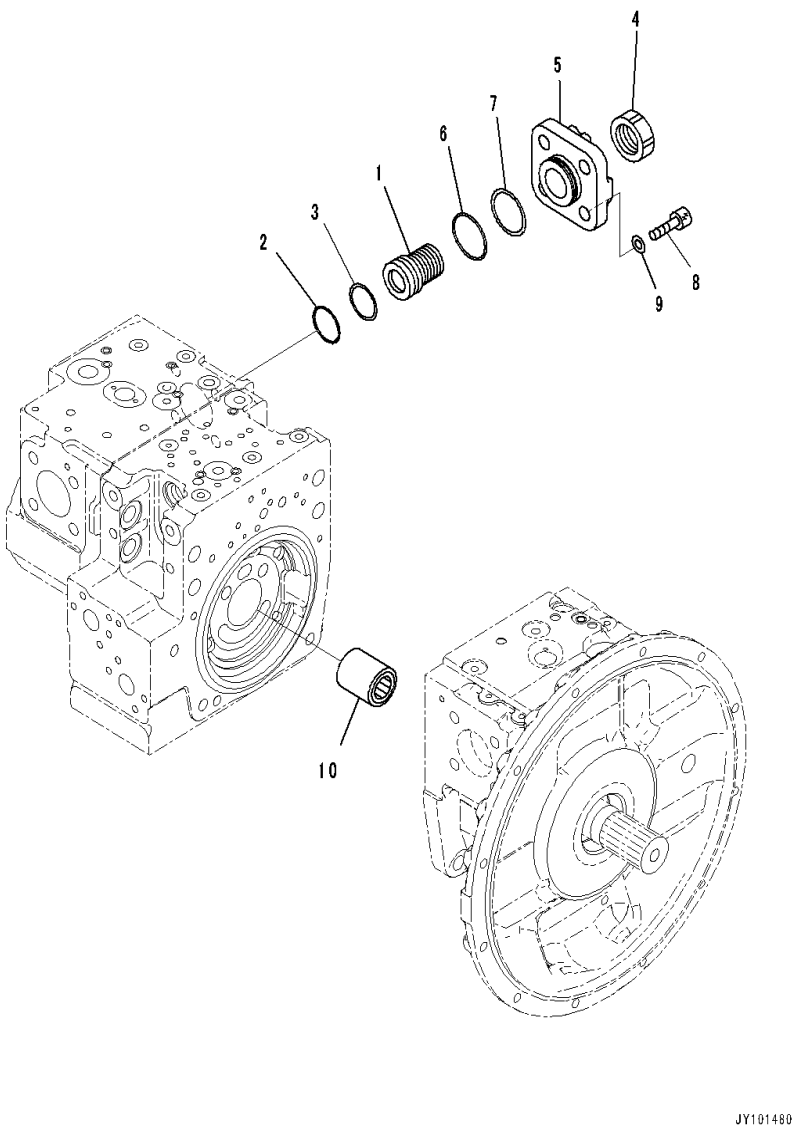

Index	Code	Part Number	Description	Qty	Serial Number
		708-2G-00620	Pump Assembly	1	C00001-
	C1		• Pump Subassembly	1	C00001-
	C2	708-2G-03330	• • Cover Assembly	1	C00001-
1	C2	708-2G-14630	• • • Screw	1	C00001-
2	C2	07000-B3038	• • • O-ring	1	C00001-
3	C2	708-2G-15230	• • • Ring, Back-up	1	C00001-
4	C2	708-2L-35290	• • • Nut	1	C00001-
5	C2	708-2G-14620	• • • Cover	1	C00001-
6	C2	07000-B2050	• • • O-ring	1	C00001-
7	C2	708-2G-15310	• • • Ring, Back-up	1	C00001-
8	C2	01010-61645	• • Bolt	4	C00001-
9	C2	01643-31645	• • Washer	4	C00001-
10	C2	708-2G-12630	• • Coupling	1	C00001-

FIG. A9999-001012 Hydraulic Pump (Piston Pump, 10/12)

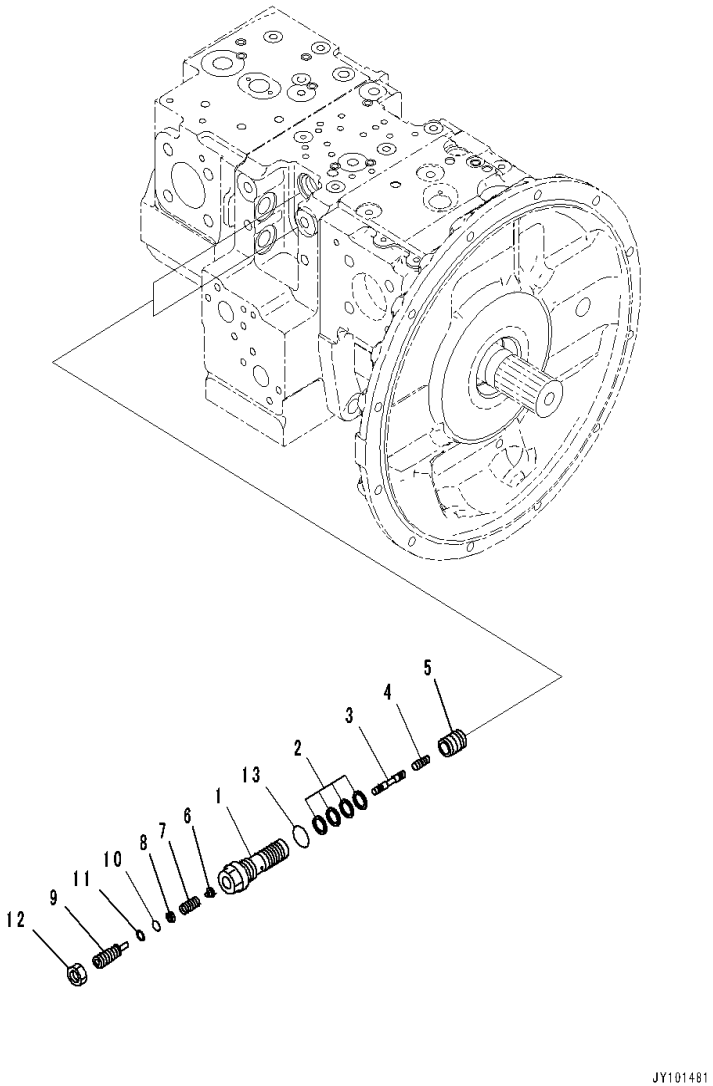

Index	Code	Part Number	Description	Qty	Serial Number
		708-2G-00620	Pump Assembly	1	C00001-
	C2	708-2G-03340	• Valve Assembly, LS	2	C00001-
1	C1		• • Sleeve	1	C00001-
2	C1		• • Seal	4	C00001-
3	C1		• • Spool	1	C00001-
4	C1		• • Piston	1	C00001-
5	C1		• • Sleeve	1	C00001-
6	C1		• • Seat	1	C00001-
7	C1		• • Spring	1	C00001-
8	C1		• • Seat	1	C00001-
9	C1		• • Plug	1	C00001-
10	C1		• • O-ring	1	C00001-
11	C1		• • Ring, Back-up	1	C00001-
12	C1		• • Nut	1	C00001-
13		07002-62434	• • O-ring	1	C00001-

FIG. A9999-001013 Hydraulic Pump (Piston Pump, 11/12)

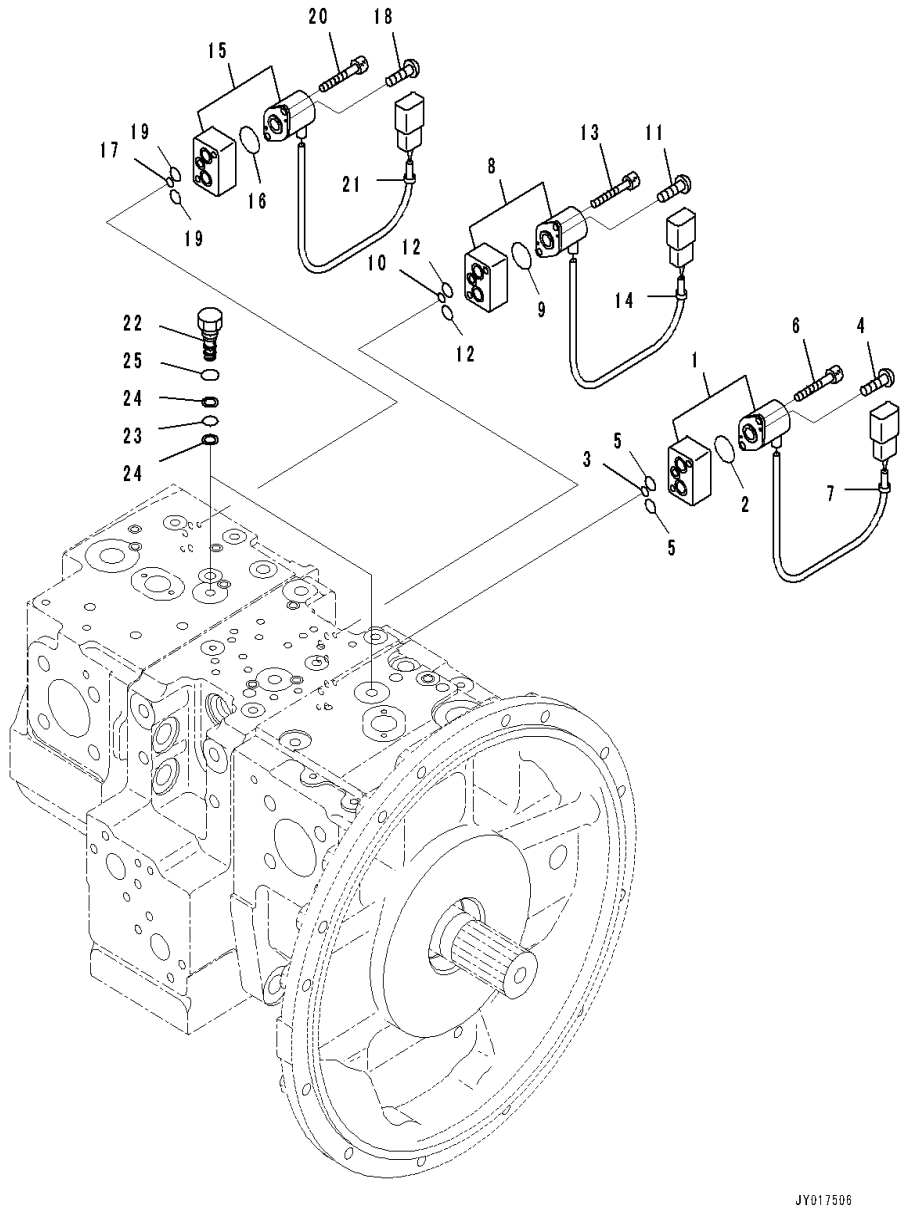

Index	Code	Part Number	Description	Qty	Serial Number
		708-2G-00620	Pump Assembly	1	C00001-
1		702-21-62200	• Valve, Pilot	1	C00001-
2		720-1L-15440	• • O-ring	1	C00001-
3		720-1L-15430	• • O-ring	1	C00001-
4		702-21-54180	• • Screw	2	C00001-
5		702-16-58320	• • O-ring	2	C00001-
6		01252-60635	• Bolt, Hexagon Socket Head	2	C00001-
7		20Y-62-22790	• Band,Red	1	C00001-
8		702-21-62200	• Valve, Pilot	1	C00001-
9		720-1L-15440	• • O-ring	1	C00001-
10		720-1L-15430	• • O-ring	1	C00001-
11		702-21-54180	• • Screw	2	C00001-
12		702-16-58320	• • O-ring	2	C00001-
13		01252-60635	• Bolt, Hexagon Socket Head	2	C00001-
14		20Y-62-22830	• Band,White	1	C00001-
15		702-21-62200	• Valve, Pilot	1	C00001-
16		720-1L-15440	• • O-ring	1	C00001-
17		720-1L-15430	• • O-ring	1	C00001-
18		702-21-54180	• • Screw	2	C00001-
19		702-16-58320	• • O-ring	2	C00001-
20		01252-60635	• Bolt, Hexagon Socket Head	2	C00001-
21		20Y-62-22810	• Band,Yellow	1	C00001-
22	C2	708-2G-15910	• Plug	2	C00001-
23		07000-B1008	• O-ring	2	C00001-
24		07001-01008	• Ring, Back-up	4	C00001-
25		07002-61423	• O-ring	2	C00001-

FIG. A9999-001014 Hydraulic Pump (Piston Pump, 12/12)

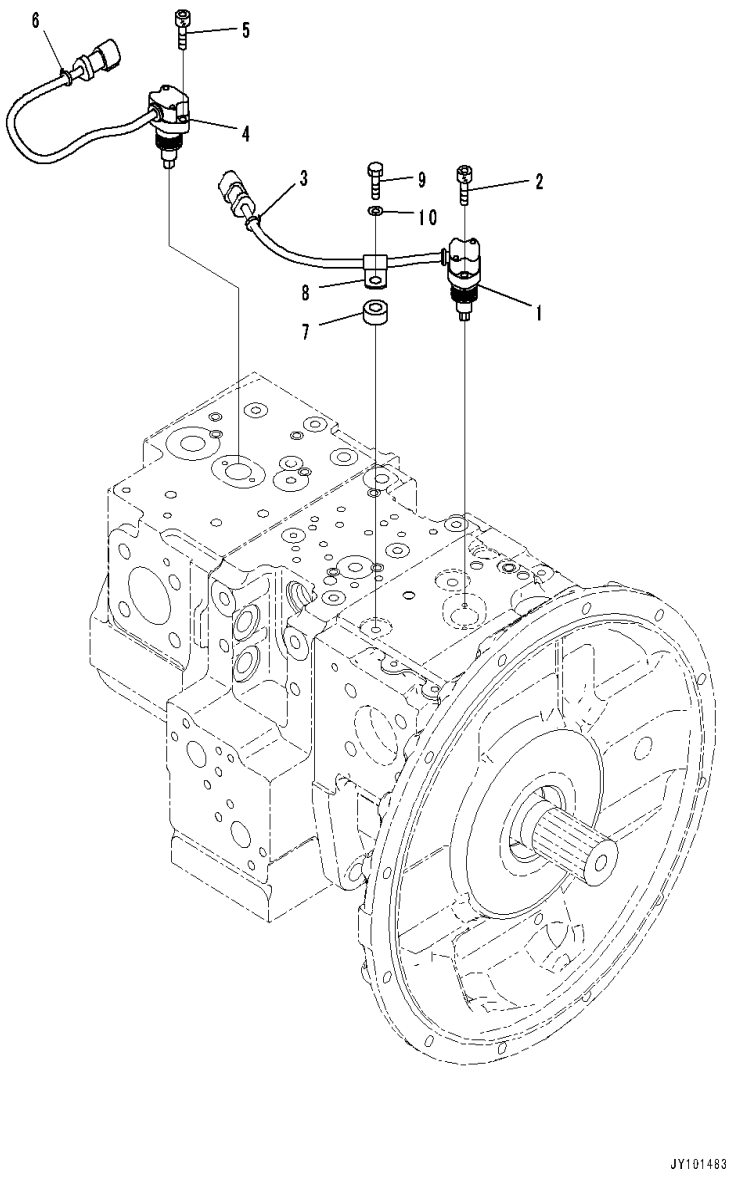

Index	Code	Part Number	Description	Qty	Serial Number
		708-2G-00620	Pump Assembly	1	C00001-
1		729-12-21000	• Sensor Assembly, Angle	1	C00001-
2		01252-60625	• Bolt	2	C00001-
3		20Y-62-22820	• Band,Blue	1	C00001-
4		729-12-21000	• Sensor Assembly, Angle	1	C00001-
5		01252-60625	• Bolt	2	C00001-
6		20Y-62-22850	• Band,Green	1	C00001-
7		6715-11-4450	• Spacer	1	C00001-
8		04434-50610	• Clip	1	C00001-
9		01010-81030	• Bolt	1	C00001-
10		01643-31032	• Washer	1	C00001-

FIG. B0100-001001 Engine Mounting

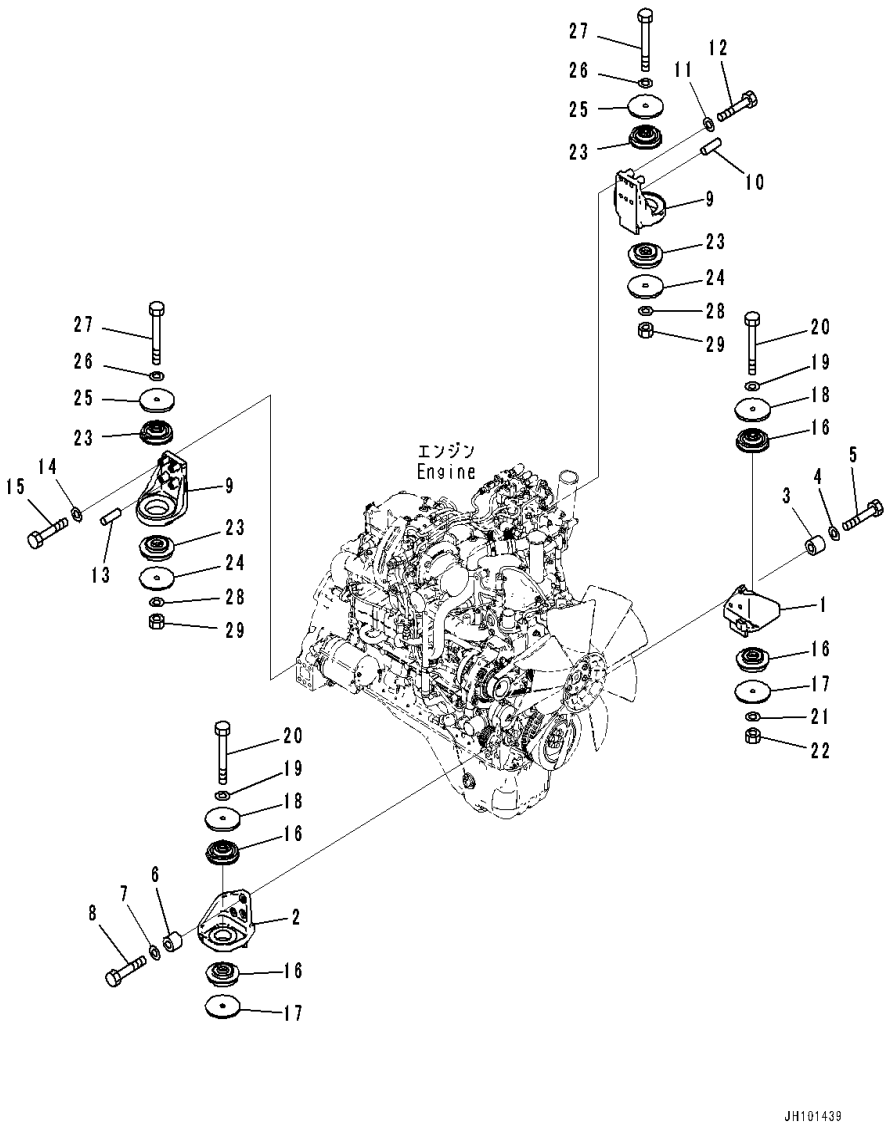

Index	Code	Part Number	Description	Qty	Serial Number
1		20Y-01-41162	Bracket	1	C00001-
2		20Y-01-41171	Bracket	1	C00001-
3		20Y-01-21260	Spacer	3	C00001-
4		01643-31232	Washer	3	C00001-
5		20Y-01-41230	Bolt	3	C00001-
6		20Y-01-21260	Spacer	3	C00001-
7		01643-31232	Washer	3	C00001-
8		20Y-01-41230	Bolt	3	C00001-
9		2A5-01-11910	Bracket	2	C00001-
10		04020-01228	Pin, Dowel	2	C00001-
11		01643-31232	Washer	4	C00001-
12		2A5-01-11230	Bolt	4	C00001-
13		04020-01228	Pin, Dowel	2	C00001-
14		01643-31232	Washer	4	C00001-
15		2A5-01-11230	Bolt	4	C00001-
16		20Y-01-56210	Cushion	4	C00001-
17		20Y-01-41210	Plate	2	C00001-
18		20Y-01-11141	Washer	2	C00001-
19		01643-31645	Washer	2	C00001-
20		20Y-01-12270	Bolt	2	C00001-
21		01643-31645	Washer	1	C00001-
22		01580-11613	Nut	1	C00001-
23		2A5-01-11330	Cushion	4	C00001-
24		2A5-01-11261	Plate	2	C00001-
25		2A5-01-11271	Plate	2	C00001-
26		01643-31645	Washer	2	C00001-
27		01011-B1645	Bolt	2	C00001-
28		01643-31645	Washer	2	C00001-
29		01580-11613	Nut	2	C00001-

FIG. B0200-001001 Engine Related Parts (With Pre Cleaner, Auto Cleaning) (Inner Parts, Air Cleaner)

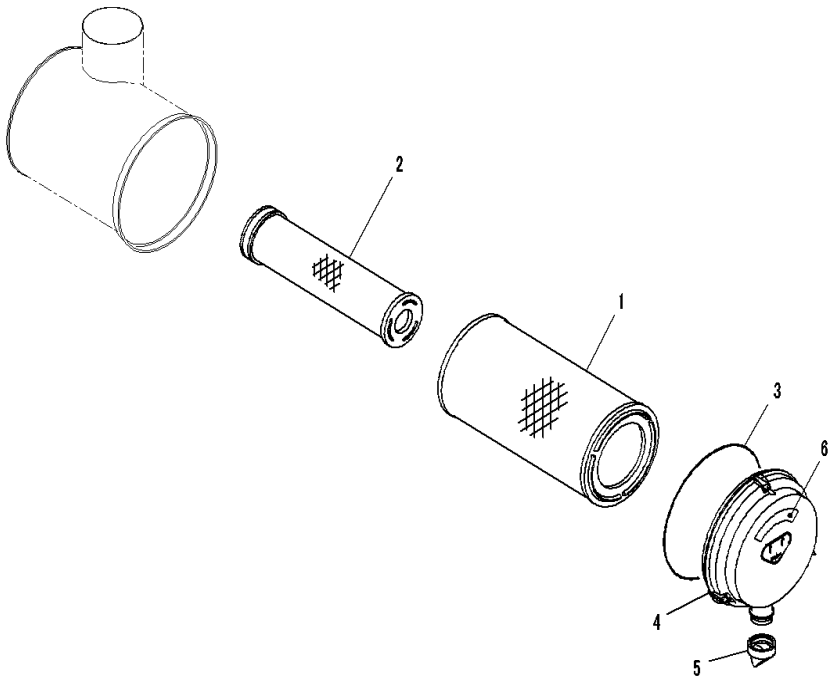

Index	Code	Part Number	Description	Qty	Serial Number
		6754-81-7500	Air Cleaner Assembly	1	C00001-
		600-185-5100	• Element Assembly	1	C00001-
1		600-185-5110	• • Element, Outer	1	C00001-
2	C1		• • Element, Inner	1	C00001-
3		600-184-1570	• • O-Ring	1	C00001-
4		600-184-1510	• Cover Assembly	1	C00001-
5		600-184-1350	• Valve, Vacuator	1	C00001-
6		600-181-1930	• Plate, Service Instruction, Air Cleaner .	1	C00001-

FIG. B0200-001002 Engine Related Parts (With Pre Cleaner, Auto Cleaning) (Air Cleaner Mounting)

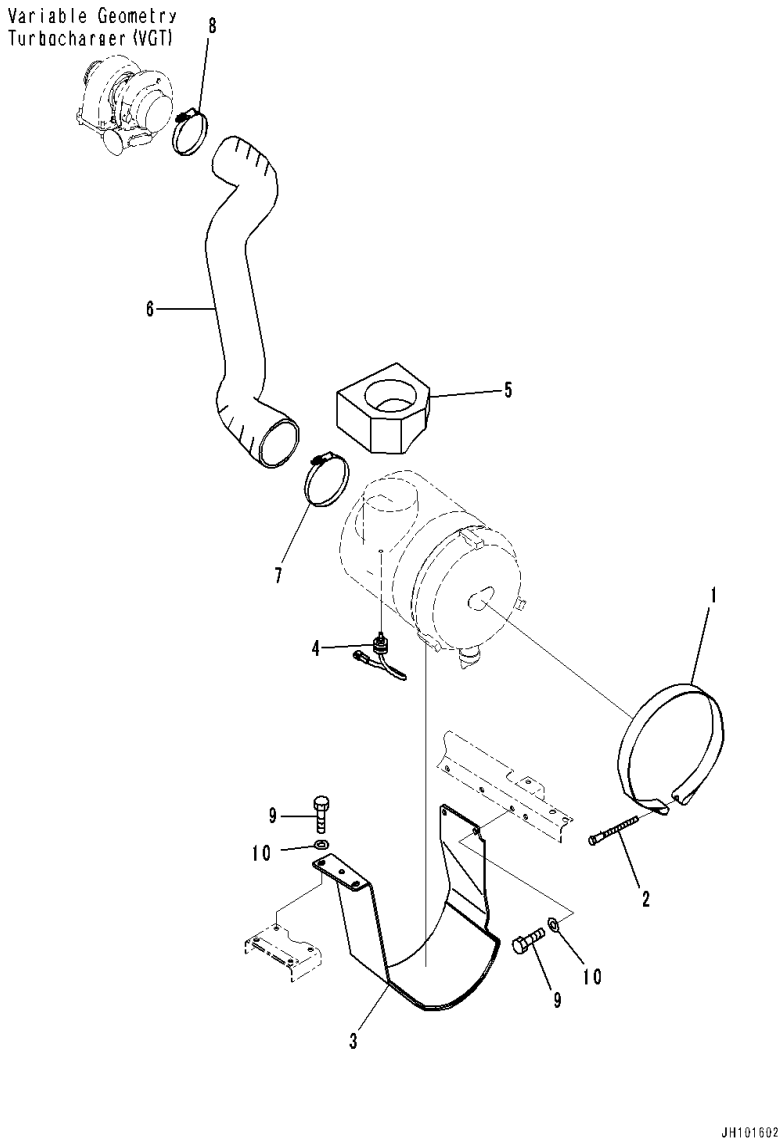

Index	Code	Part Number	Description	Qty	Serial Number
1		6151-11-4840	Band	1	C00001-
2		14X-01-51630	Bolt	1	C00001-
3		20Y-01-56220	Bracket	1	C00001-
4		7861-93-1430	Sensor, Dust Indicator	1	C00001-
5		206-01-41160	Seal	1	C00001-
6		20Y-01-56230	Hose	1	C00001-
7		07299-00145	Clamp	1	C00001-
8		07299-00120	Clamp	1	C00001-
9		01010-81230	Bolt	4	C00001-
10		01643-31232	Washer	4	C00001-

FIG. B0930-001001 Coolant Filter (Water Filter Head)

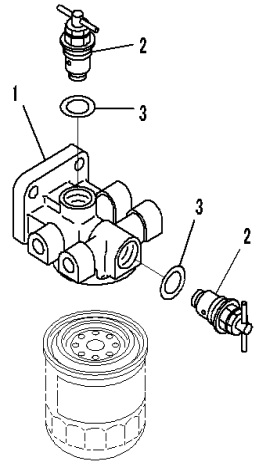

クーラントフィルタ
Coolant Filter

JY101421

Index	Code	Part Number	Description	Qty	Serial Number
		6732-61-8200	Head Assembly	1	C00001-
1		600-411-2110	• Head	1	C00001-
2		600-411-2120	• Valve	2	C00001-
3		600-411-2130	• Gasket	2	C00001-

FIG. B0930-001002 Coolant Filter (Bracket)

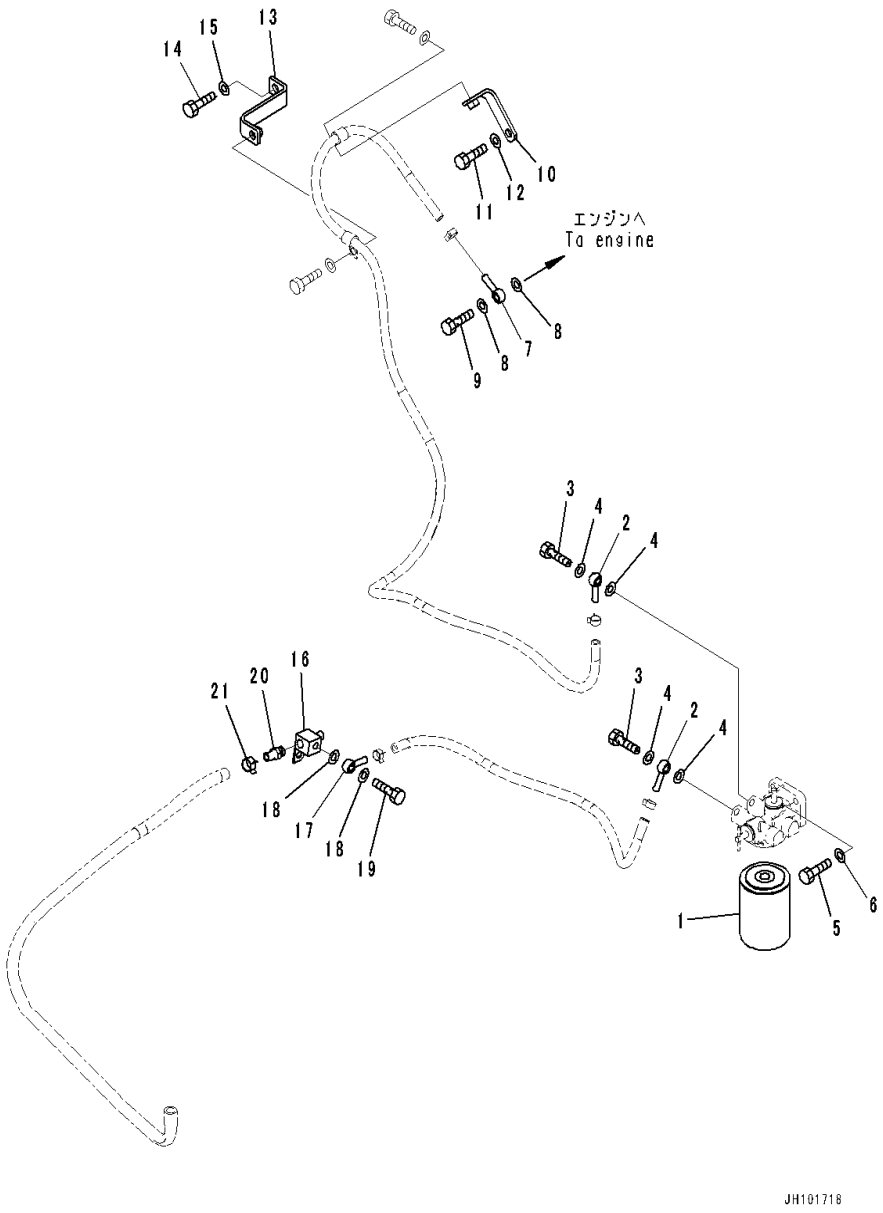

Index	Code	Part Number	Description	Qty	Serial Number
1		600-411-5110	Cartridge	1	C00001-
2		205-04-62150	Joint	2	C00001-
3		07206-31014	Bolt, Joint	2	C00001-
4		07005-01412	Seal, Washer	4	C00001-
5		01010-81030	Bolt	2	C00001-
6		01643-31032	Washer	2	C00001-
7		205-04-62150	Joint	1	C00001-
8		07005-01412	Seal, Washer	2	C00001-
9		07206-31014	Bolt, Joint	1	C00001-
10		20Y-01-56251	Bracket	1	C00001-
11		01010-81225	Bolt	1	C00001-
12		01643-31232	Washer	1	C00001-
13		20Y-01-56190	Bracket	1	C00001-
14		01010-81225	Bolt	1	C00001-
15		01643-31232	Washer	1	C00001-
16		20Y-01-41310	Block	1	C00001-
17		205-04-62150	Joint	1	C00001-
18		07005-01412	Seal, Washer	2	C00001-
19		07206-31014	Bolt, Joint	1	C00001-
20		20T-54-42510	Nipple	1	C00001-
21		11Y-09-11160	Clip	1	C00001-

FIG. B0930-001003 Coolant Filter (Hose)

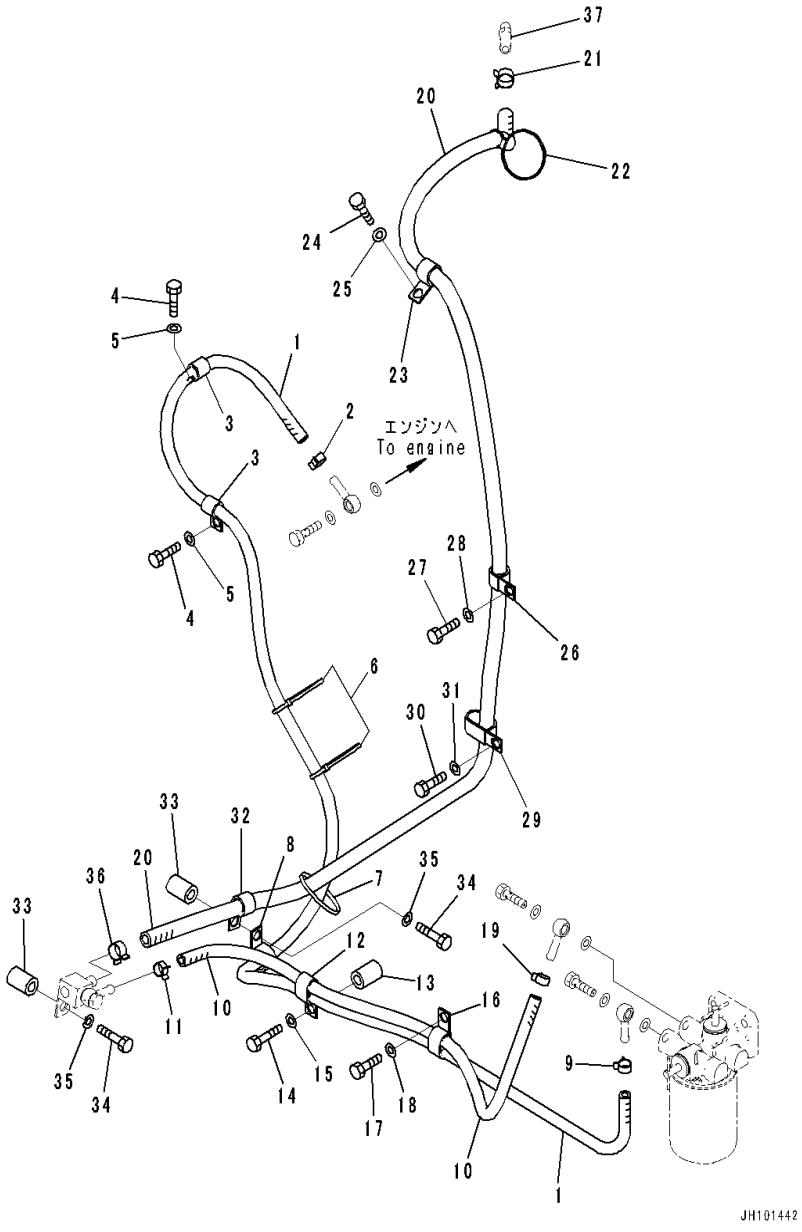

Index	Code	Part Number	Description	Qty	Serial Number
1		20Y-01-56181	Hose Assembly	1	C00001-
2		11Y-09-11140	Clip	1	C00001-
3		04434-51612	Clip	2	C00001-
4		01010-81225	Bolt	2	C00001-
5		01643-31232	Washer	2	C00001-
6		134-03-61410	Band	2	C00001-
7		08034-20536	Band	1	C00001-
8		04434-52312	Clip	1	C00001-
9		11Y-09-11140	Clip	1	C00001-
10		20Y-01-56260	Hose	1	C00001-
11		11Y-09-11140	Clip	1	C00001-
12		04435-51612	Clip	1	C00001-
13		20Y-03-11220	Collar	1	C00001-
14		01010-81265	Bolt	1	C00001-
15		01643-31232	Washer	1	C00001-
16		04435-51612	Clip	1	C00001-
17		01010-81225	Bolt	1	C00001-
18		01643-31232	Washer	1	C00001-
19		11Y-09-11140	Clip	1	C00001-
20		20Y-979-5760	Hose Assembly	1	C00001-
21		11Y-09-11160	Clip	1	C00001-
22		134-03-61410	Band	1	C00001-
23		04434-52112	Clip	1	C00001-
24		01010-81225	Bolt	1	C00001-
25		01643-31232	Washer	1	C00001-
26		04434-52112	Clip	1	C00001-
27		01010-81225	Bolt	1	C00001-
28		01643-31232	Washer	1	C00001-
29		04435-52112	Clip	1	C00001-
30		01010-81225	Bolt	1	C00001-
31		01643-31232	Washer	1	C00001-
32		04434-52112	Clip	1	C00001-
33		20Y-03-11220	Collar	2	C00001-
34		01010-81265	Bolt	2	C00001-
35		01643-31232	Washer	2	C00001-
36		11Y-09-11160	Clip	1	C00001-
37		(20Y-810-1121)	Nipple(Air Conditioner,V-Belt)		

COOLING SYSTEM

FIG. C0100-001001 Cooling System (Radiator)

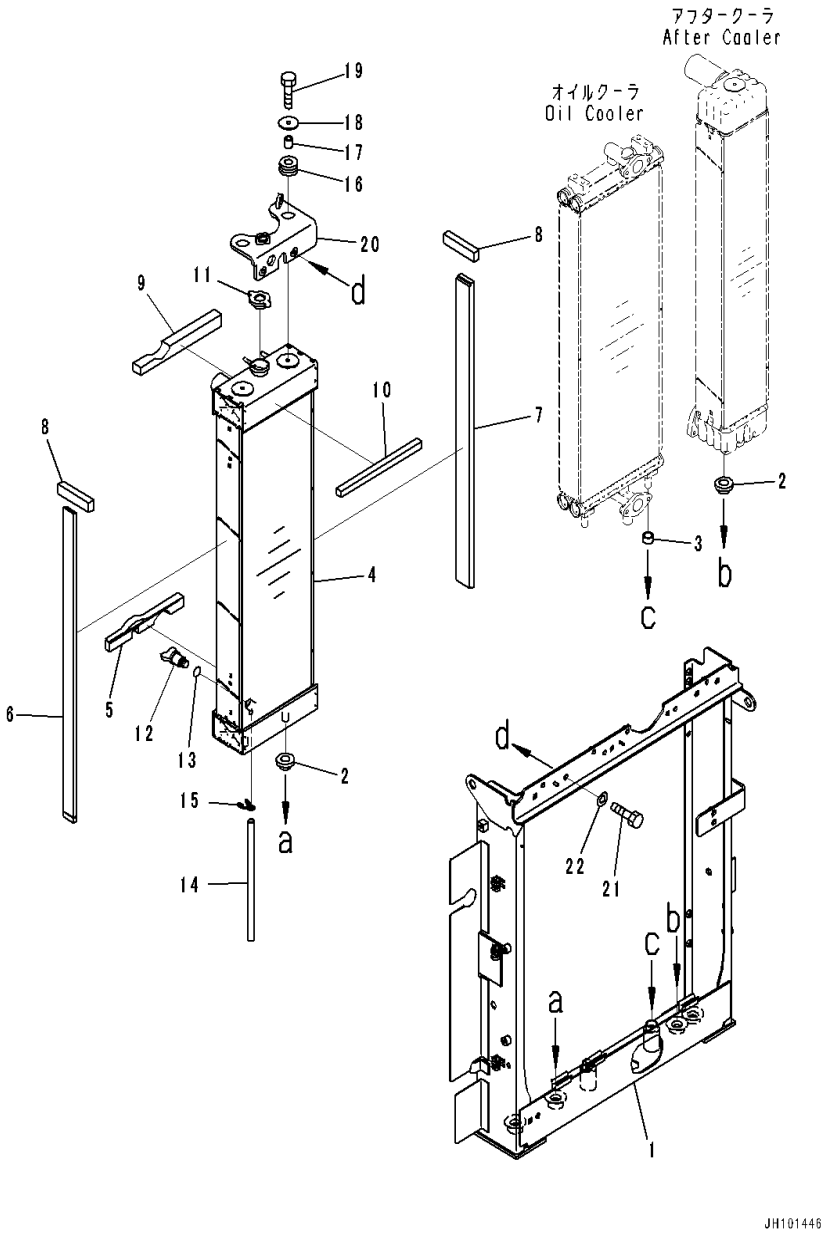

Index	Code	Part Number	Description	Qty	Serial Number
1		20Y-03-56211	Frame	1	C00001-
2		20Y-03-41580	Cushion	4	C00001-
3		22B-03-12590	Cushion	2	C00001-
		20Y-03-56110	Radiator Assembly	1	C00001-
4	C1		• Radiator	1	C00001-
5		20Y-03-56411	• Sheet	1	C00001-
6		20Y-03-56441	• Sheet	1	C00001-
7		20Y-03-56470	• Sheet	1	C00001-
8		20Y-03-56480	• Sheet	2	C00001-
9		20Y-03-56491	• Sheet	1	C00001-
10		20Y-03-56920	• Sheet	1	C00001-
11		208-03-61460	Cap	1	C00001-
12		208-03-22410	Plug	1	C00001-
13		07000-11007	• O-ring	1	C00001-
14		203-03-41410	Hose	1	C00001-
15		20Y-03-11330	Clip	1	C00001-
16		14X-03-51621	Cushion	4	C00001-
17		14X-03-51640	Spacer	2	C00001-
18		14X-03-51770	Washer	2	C00001-
19		01010-81045	Bolt	2	C00001-
20		20Y-03-56271	Bracket	1	C00001-
21		01010-81225	Bolt	2	C00001-
22		01643-31232	Washer	2	C00001-

FIG. C0100-001002 Cooling System (Oil Cooler)

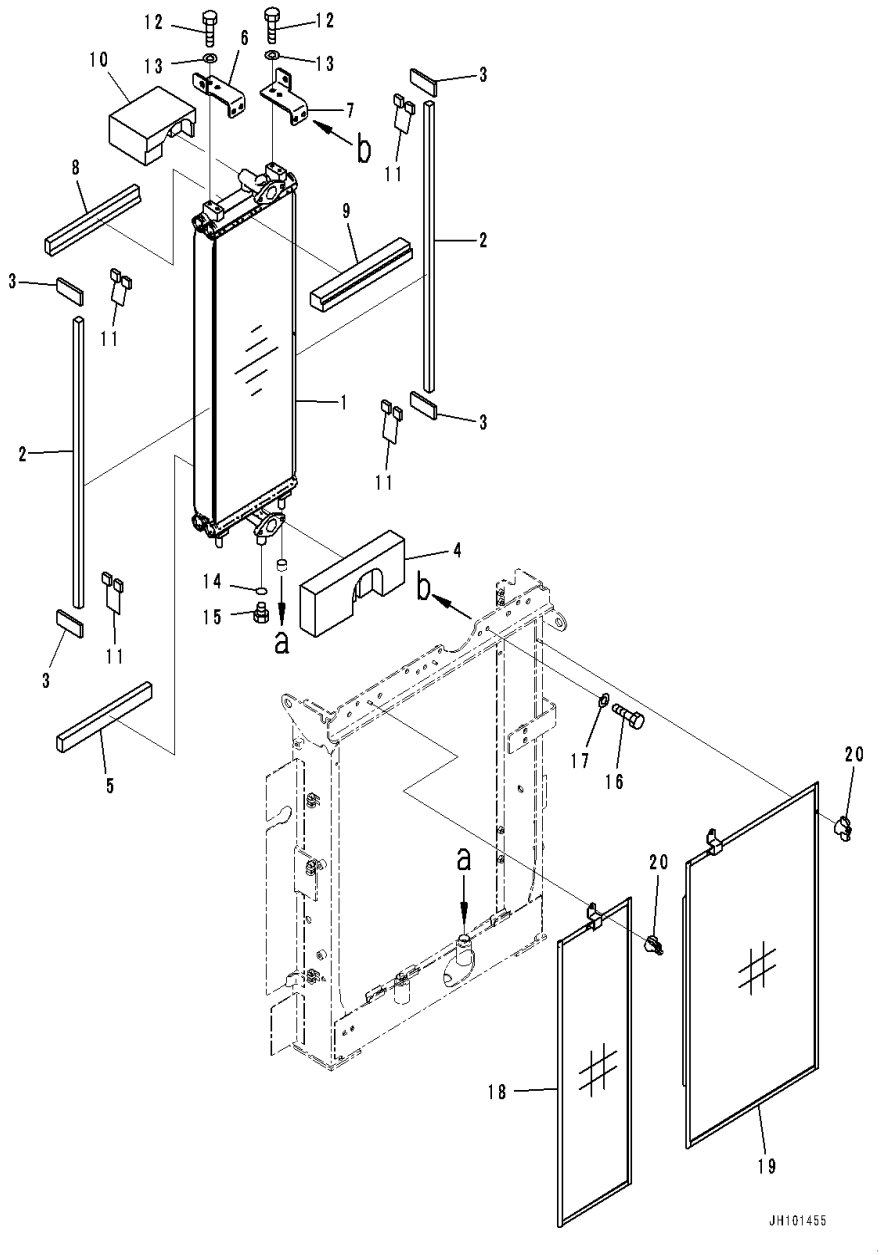

Index	Code	Part Number	Description	Qty	Serial Number
		20Y-03-56130	Oil Cooler Assembly	1	C00001-
1	C1		• Oil Cooler	1	C00001-
2		20Y-03-56520	• Sheet	2	C00001-
3		20Y-03-56531	• Sheet	4	C00001-
4		20Y-03-56541	• Sheet	1	C00001-
5		20Y-03-56550	• Sheet	1	C00001-
6		20Y-03-56581	• Bracket	1	C00001-
7		20Y-03-56591	• Bracket	1	C00001-
8		20Y-03-56930	• Sheet	1	C00001-
9		20Y-03-56940	• Sheet	1	C00001-
10		20Y-03-56951	• Sheet	1	C00001-
11		20Y-03-57260	• Sheet	8	C00001-
12		01010-81025	• Bolt	4	C00001-
13		01643-31032	• Washer	4	C00001-
14		07002-11423	• O-ring	1	C00001-
15		07040-11409	• Plug	1	C00001-
16		01010-81030	Bolt	4	C00001-
17		01643-31032	Washer	4	C00001-
18		20Y-03-56260	Net	1	C00001-
19		20Y-03-56722	Net	1	C00001-
20		21K-03-72780	Nut	3	C00001-

FIG. C0100-001003 Cooling System (Shroud)

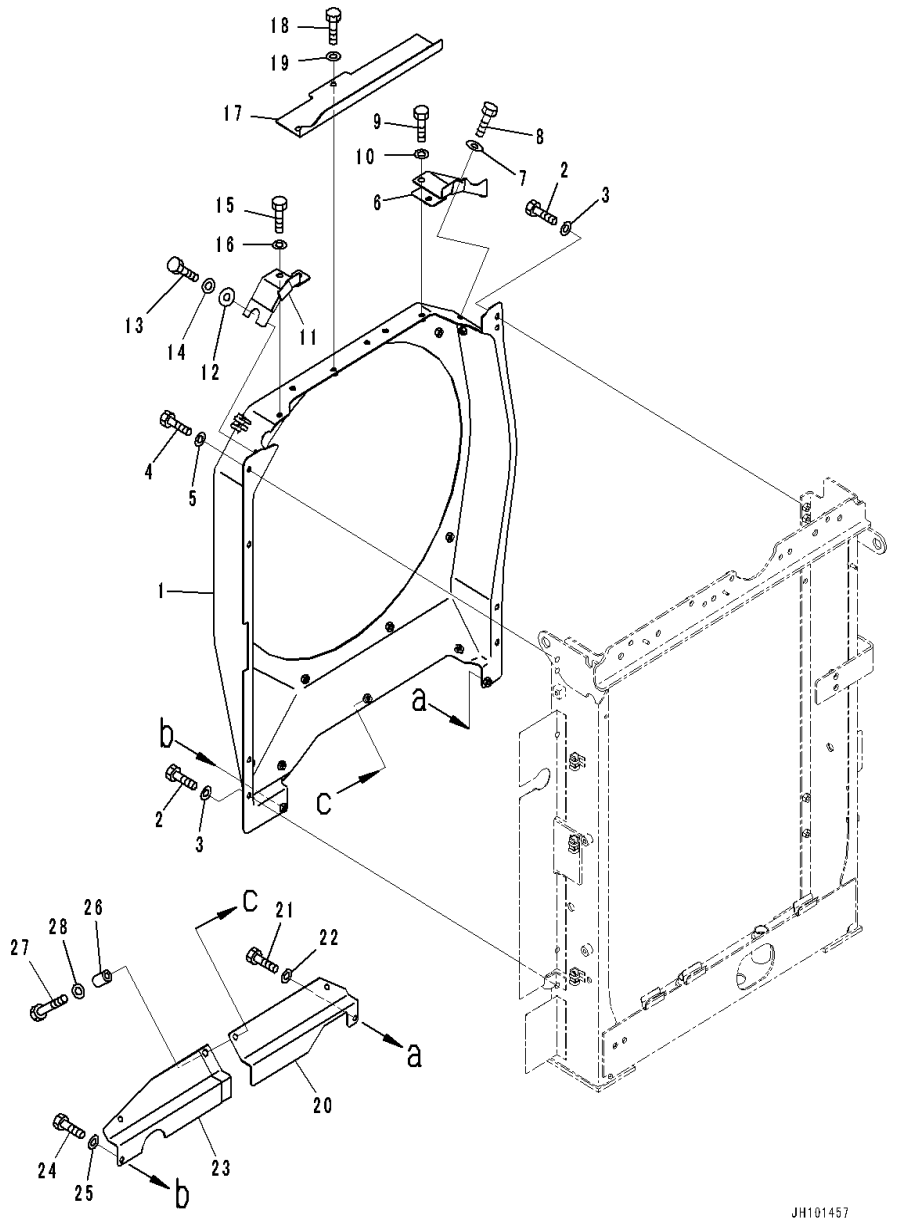

Index	Code	Part Number	Description	Qty	Serial Number
1		20Y-03-56180	Shroud	1	C00001-
2		01010-81020	Bolt	7	C00001-
3		01643-31032	Washer	7	C00001-
4		01010-D1025	Bolt	1	C00001-
5		01643-71032	Washer	1	C00001-
6		20Y-03-56282	Cover	1	C00001-
7		203-54-56970	Washer	1	C00001-
8		01010-81030	Bolt	1	C00001-
9		01010-81020	Bolt	1	C00001-
10		01643-31032	Washer	1	C00001-
11		20Y-03-57281	Cover	1	C00001-
12		203-54-56960	Collar	1	C00001-
13		01010-81030	Bolt	1	C00001-
14		01643-31032	Washer	1	C00001-
15		01010-81020	Bolt	1	C00001-
16		01643-31032	Washer	1	C00001-
17		20Y-03-57221	Cover	1	C00001-
18		01010-81020	Bolt	3	C00001-
19		01643-31032	Washer	3	C00001-
20		20Y-03-56381	Plate	1	C00001-
21		01010-81020	Bolt	2	C00001-
22		01643-31032	Washer	2	C00001-
23		20Y-03-57210	Cover	1	C00001-
24		01010-81020	Bolt	2	C00001-
25		01643-31032	Washer	2	C00001-
26		14X-01-61371	Spacer	1	C00001-
27		01010-81065	Bolt	1	C00001-
28		01643-31032	Washer	1	C00001-

FIG. C0100-001004 Cooling System (Aftercooler)

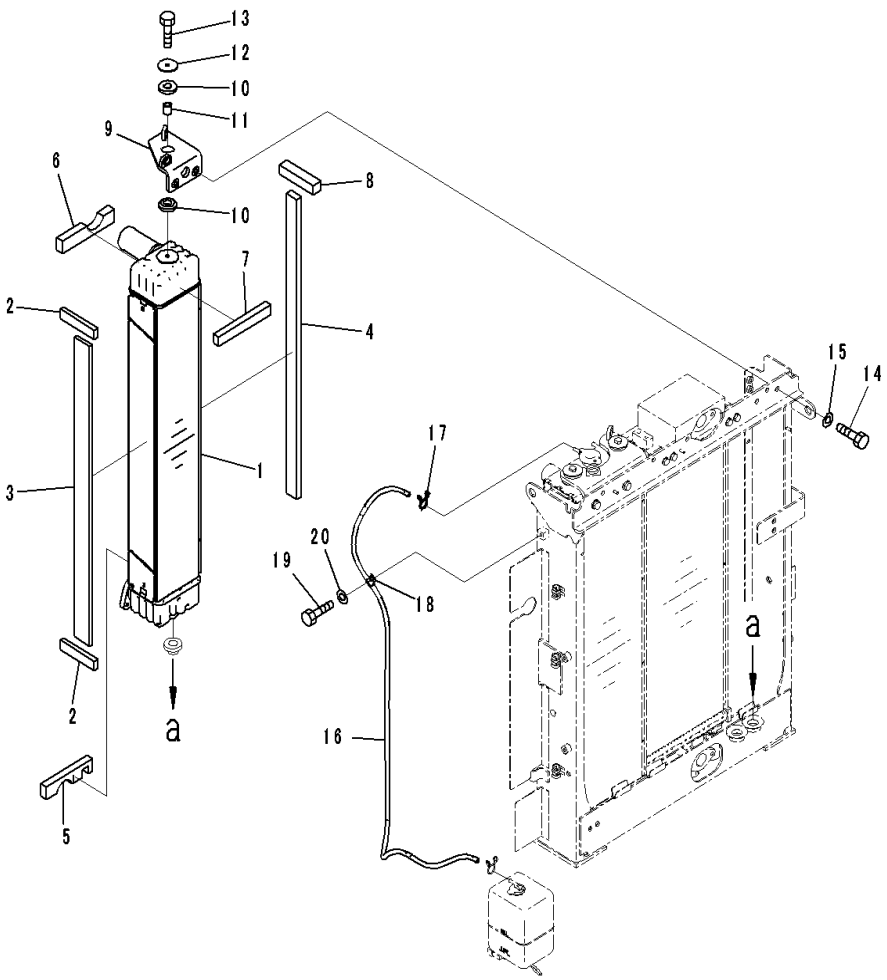

Index	Code	Part Number	Description	Qty	Serial Number
		20Y-03-56160	Aftercooler Assembly	1	C00001-
1	C1		• Aftercooler	1	C00001-
2		20Y-03-56610	• Sheet	2	C00001-
3		20Y-03-56620	• Sheet	1	C00001-
4		20Y-03-56651	• Sheet	1	C00001-
5		20Y-03-56671	• Sheet	1	C00001-
6		20Y-03-56681	• Sheet	1	C00001-
7		20Y-03-56910	• Sheet	1	C00001-
8		20Y-03-57350	• Sheet	1	C00001-
9		20Y-03-56981	Bracket	1	C00001-
10		14X-03-51621	Cushion	2	C00001-
11		14X-03-51640	Spacer	1	C00001-
12		14X-03-51770	Washer	1	C00001-
13		01010-81045	Bolt	1	C00001-
14		01010-81225	Bolt	2	C00001-
15		01643-31232	Washer	2	C00001-
16		21M-03-22240	Hose	1	C00001-
17		206-03-43340	Clip	1	C00001-
18		04434-51010	Clip	1	C00001-
19		01010-81020	Bolt	1	C00001-
20		01643-31032	Washer	1	C00001-

FIG. C0100-001005 Cooling System (Fuel Cooler and Condenser)

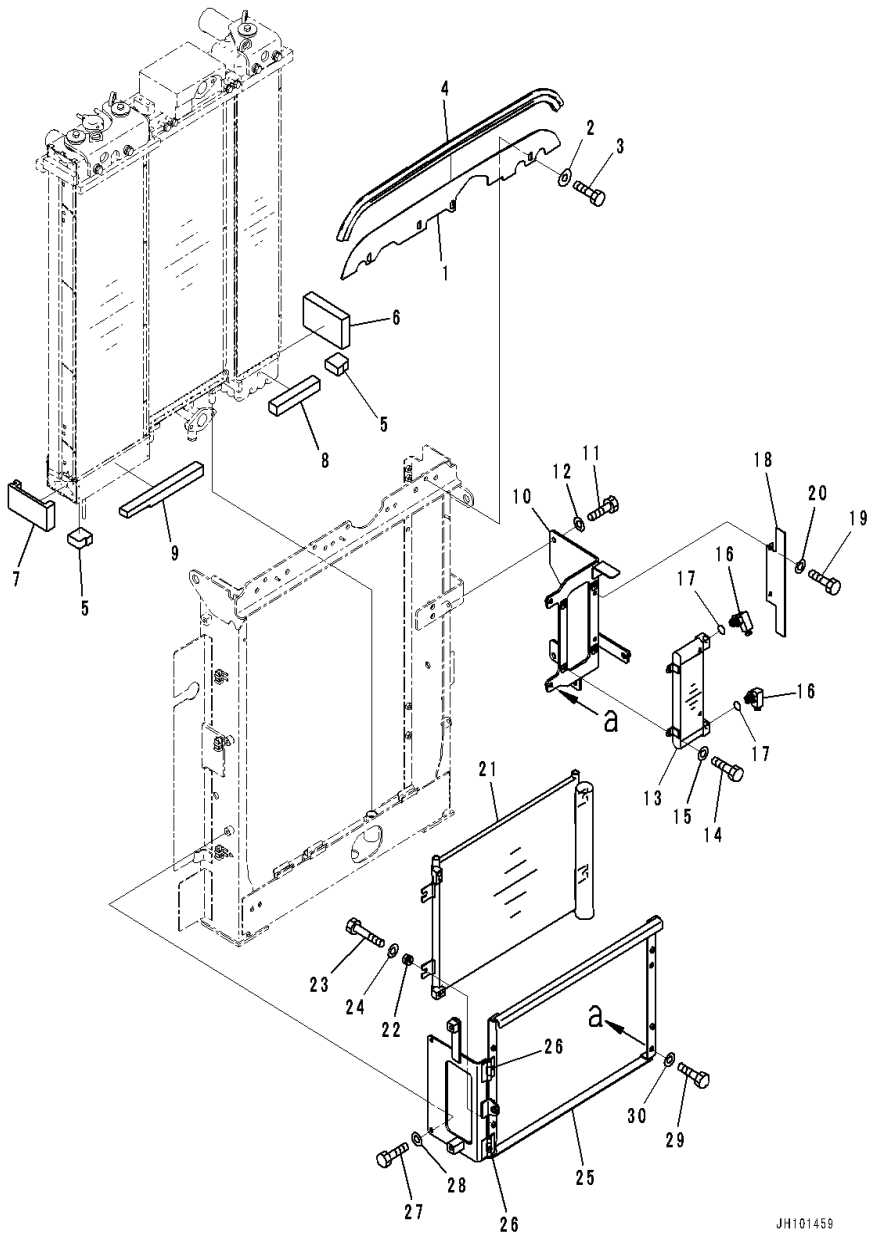

Index	Code	Part Number	Description	Qty	Serial Number
1		20Y-03-56771	Cover	1	C00001-
2		203-54-56970	Washer	4	C00001-
3		01010-81020	Bolt	4	C00001-
4		20Y-03-46350	Seal	1	C00001-
5		20Y-03-56420	Sheet	2	C00001-
6		20Y-03-56641	Sheet	1	C00001-
7		20Y-03-56431	Sheet	1	C00001-
8		20Y-03-57251	Sheet	1	C00001-
9		20Y-03-56511	Sheet	1	C00001-
10		20Y-03-56291	Bracket	1	C00001-
11		01010-81225	Bolt	2	C00001-
12		01643-31232	Washer	2	C00001-
13		208-03-71161	Fuel Cooler	1	C00001-
14		01010-80825	Bolt	4	C00001-
15		01643-30823	Washer	4	C00001-
16		2A5-03-12130	Elbow	2	C00001-
17		07002-12034	O-ring	2	C00001-
18		20Y-03-57180	Cover	1	C00001-
19		01010-80825	Bolt	2	C00001-
20		01643-30823	Washer	2	C00001-
21		2A5-979-1281	Condenser Assembly	1	C00001-
		20Y-810-1250	• Filter	1	C00001-
22		20Y-810-1240	Cushion	4	C00001-
23		01010-80835	Bolt	4	C00001-
24		01643-30823	Washer	4	C00001-
25		20Y-03-56191	Bracket	1	C00001-
26		198-06-62820	• Hinge,Welded	2	C00001-
27		01010-81020	Bolt	2	C00001-
28		01643-31032	Washer	2	C00001-
29		01010-81030	Bolt	2	C00001-
30		01643-31032	Washer	2	C00001-

FIG. C0100-001006 Cooling System (Seat)

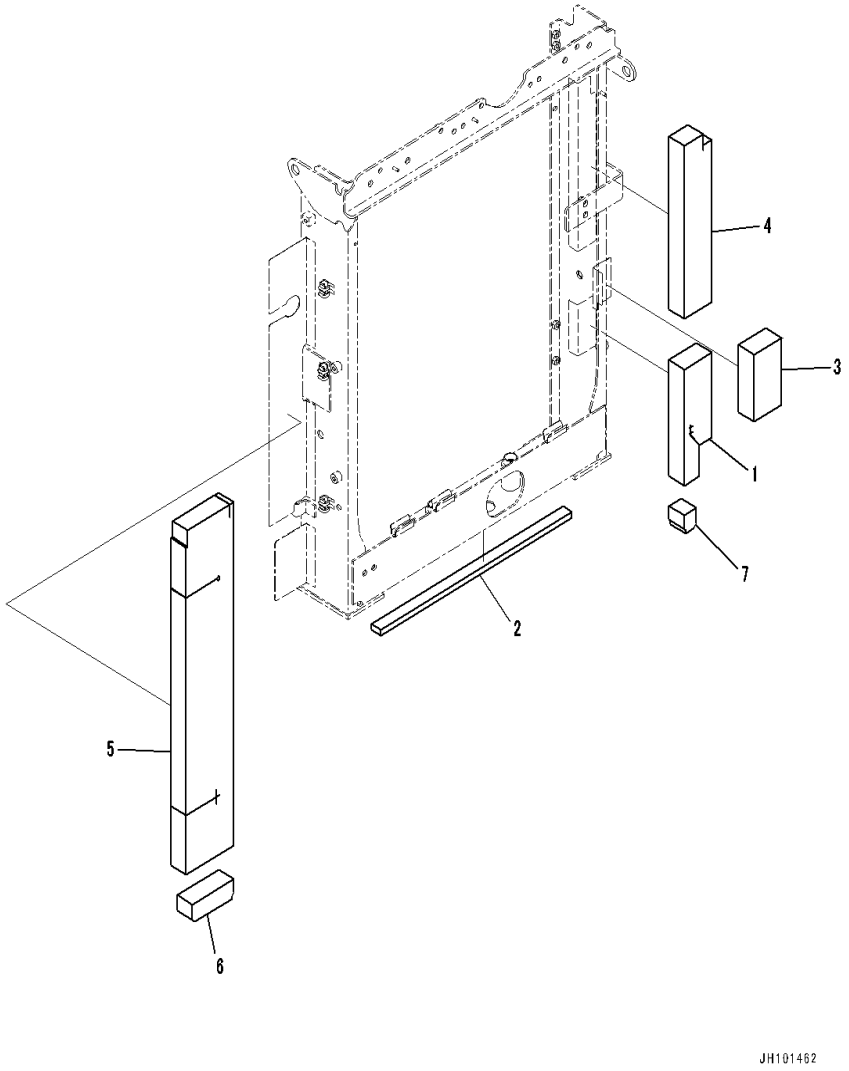

Index	Code	Part Number	Description	Qty	Serial Number
1		20Y-03-56451	Sheet	1	C00001-
2		20Y-03-56660	Sheet	1	C00001-
3		20Y-03-56731	Sheet	1	C00001-
4		20Y-03-56741	Sheet	1	C00001-
5		20Y-03-56461	Sheet	1	C00001-
6		20Y-03-57130	Sheet	1	C00001-
7		20Y-03-57140	Sheet	1	C00001-

FIG. C0100-001007 Cooling System (60Amp. Alternator) (Aftercooler Piping, 60Amp. Alternator)

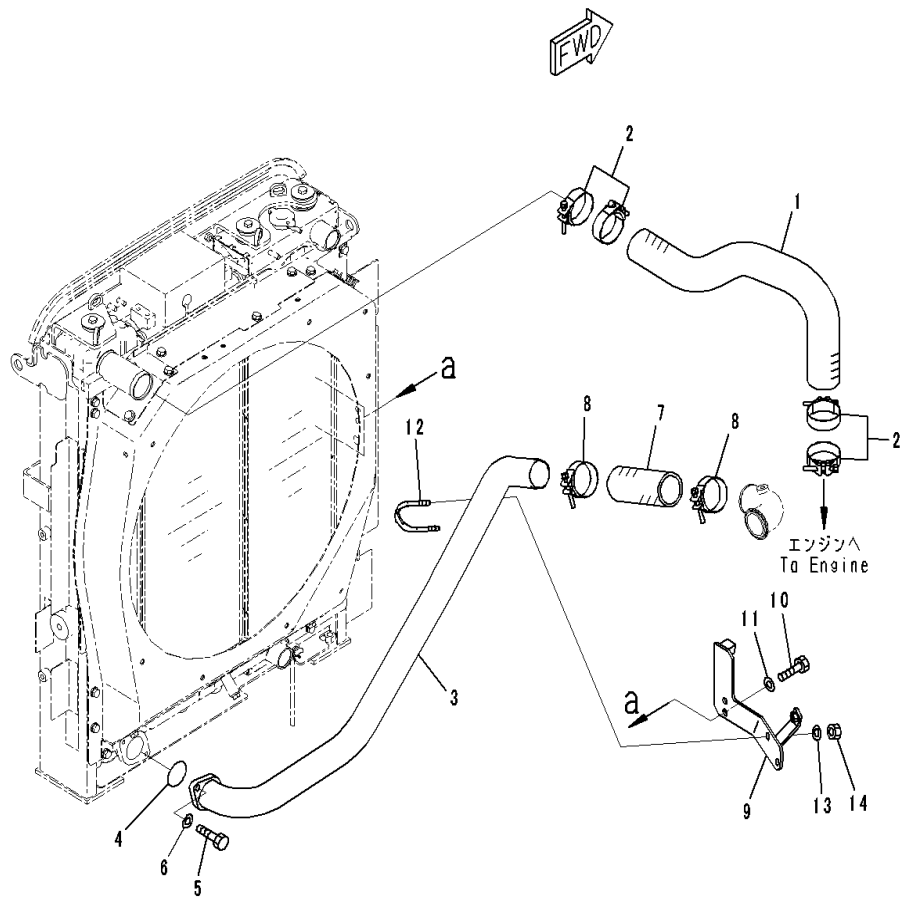

Index	Code	Part Number	Description	Qty	Serial Number
1		20Y-03-56310	Hose	1	C00001-
2		21T-62-69711	Clamp	4	C00001-
3		20Y-03-56352	Tube	1	C00001-
4		07000-E2065	O-ring	1	C00001-
5		01010-81035	Bolt	2	C00001-
6		01643-31032	Washer	2	C00001-
7		22U-03-52120	Hose	1	C00001-
8		21T-62-69711	Clamp	2	C00001-
9		20Y-03-56362	Bracket	1	C00001-
10		01010-81230	Bolt	2	C00001-
11		01643-31232	Washer	2	C00001-
12		416-03-43190	Clip	1	C00001-
13		01643-31032	Washer	2	C00001-
14		01597-01009	Nut	2	C00001-

FIG. C0100-001008 Cooling System (Radiator Piping)

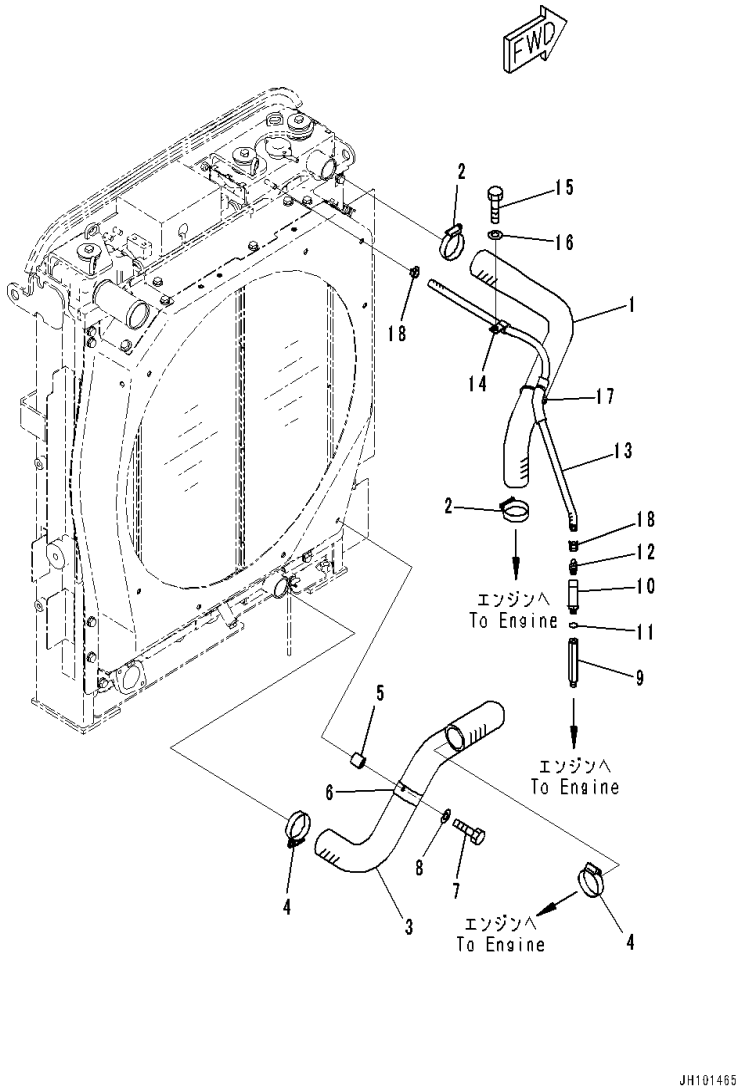

Index	Code	Part Number	Description	Qty	Serial Number
1		20Y-03-56860	Hose	1	C00001-
2		07289-00055	Clamp	2	C00001-
3		20Y-03-56691	Hose	1	C00001-
4		07289-00055	Clamp	2	C00001-
5		195-33-11220	Spacer	1	C00001-
6		208-62-38370	Clip	1	C00001-
7		01010-81045	Bolt	1	C00001-
8		01643-31032	Washer	1	C00001-
9		205-03-31331	Nipple	1	C00001-
10		205-03-31341	Elbow	1	C00001-
11		07002-11423	O-ring	1	C00001-
12		20Y-03-57370	Nipple	1	C00001-
13		20Y-03-56560	Hose Assembly	1	C00001-
14		04434-51610	Clip	1	C00001-
15		01010-81025	Bolt	1	C00001-
16		01643-31032	Washer	1	C00001-
17		134-03-61410	Band	1	C00001-
18		11Y-09-11140	Clip	2	C00001-

FIG. C0100-001009 Cooling System (Fan Guard)

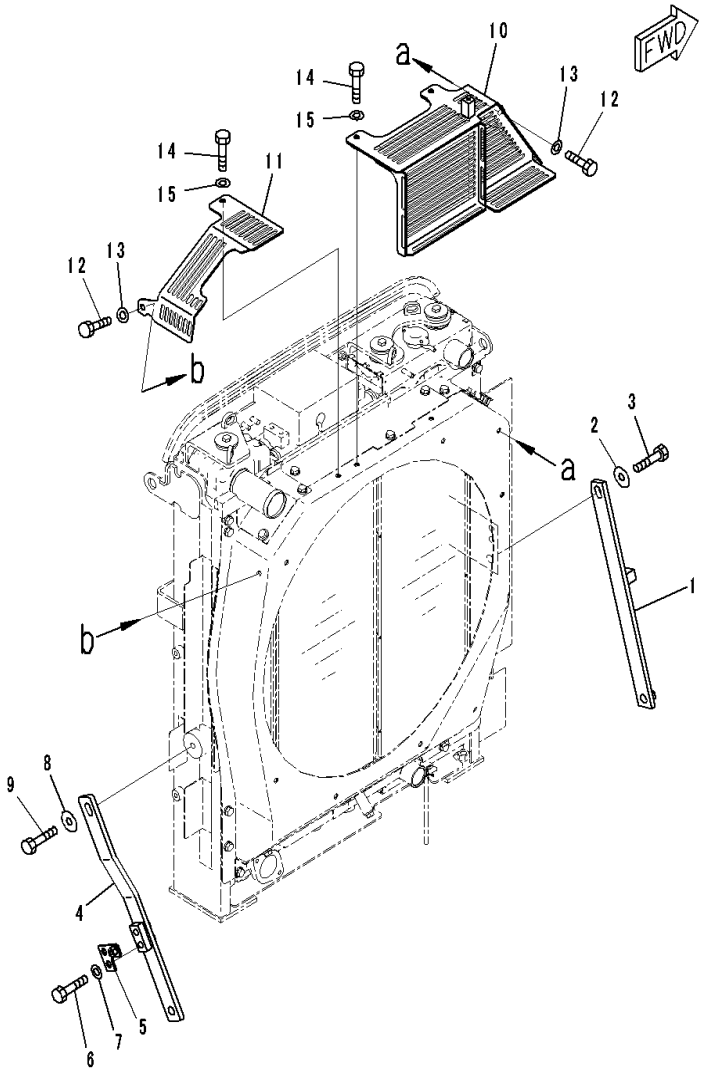

Index	Code	Part Number	Description	Qty	Serial Number
1		20Y-03-56830	Stay	1	C00001-
2		21T-54-16150	Washer	1	C00001-
3		01010-81650	Bolt	1	C00001-
4		20Y-03-56840	Stay	1	C00001-
5		20Y-03-57160	Bracket	1	C00001-
6		01010-81250	Bolt	2	C00001-
7		01643-31232	Washer	2	C00001-
8		21T-54-16150	Washer	1	C00001-
9		01010-81640	Bolt	1	C00001-
10		20Y-03-56320	Guard	1	C00001-
11		20Y-03-56340	Cover	1	C00001-
12		01010-81025	Bolt	2	C00001-
13		01643-31032	Washer	2	C00001-
14		01010-81045	Bolt	3	C00001-
15		01643-31032	Washer	3	C00001-

FIG. C0100-001010 Cooling System (Variable Geometry Turbocharger (VGT) Piping)

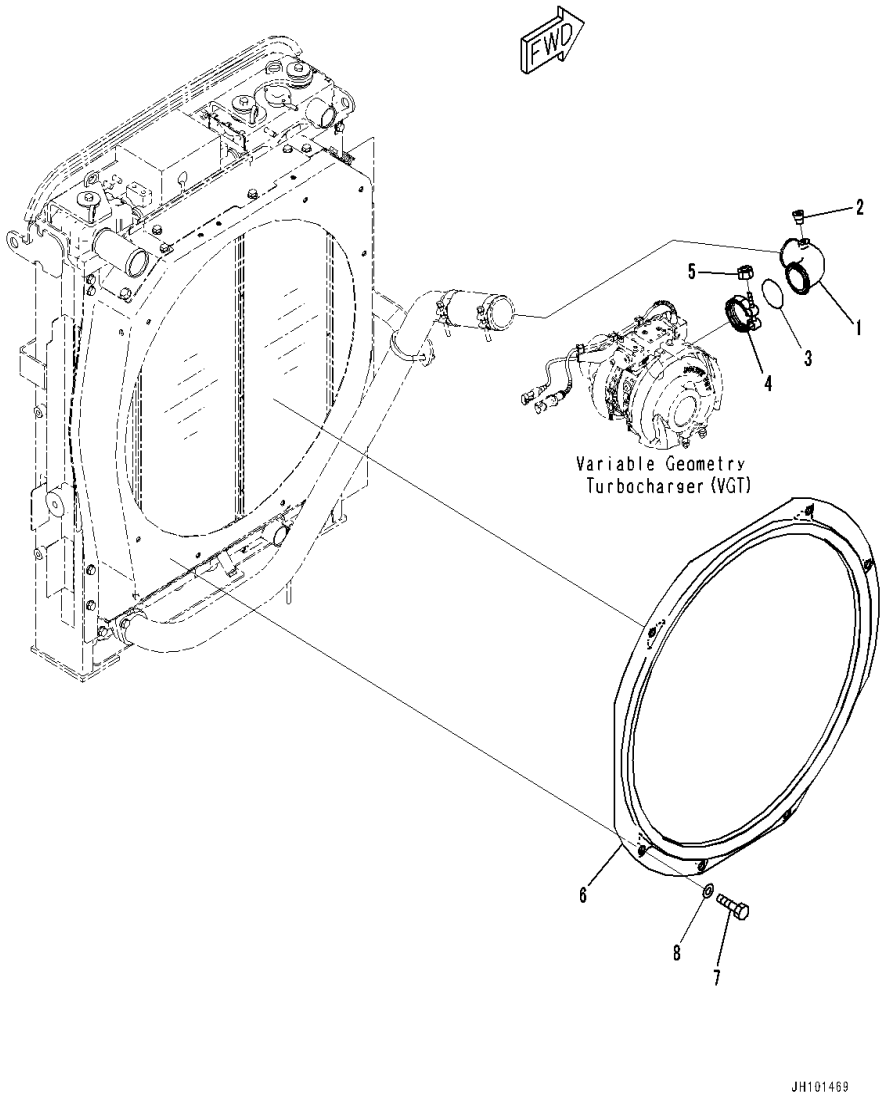

Index	Code	Part Number	Description	Qty	Serial Number
1		6738-11-4320	Pipe	1	C00001-
2		07043-70108	Plug, Taper	1	C00001-
3		6738-11-4370	O-ring	1	C00001-
4		6738-11-4380	Clamp	1	C00001-
5		6738-11-4390	Nut	1	C00001-
6		20Y-03-56970	Shroud	1	C00001-
7		01010-81025	Bolt	6	C00001-
8		203-54-56970	Washer	6	C00001-

FIG. C0100-001011 Cooling System (Related Parts)

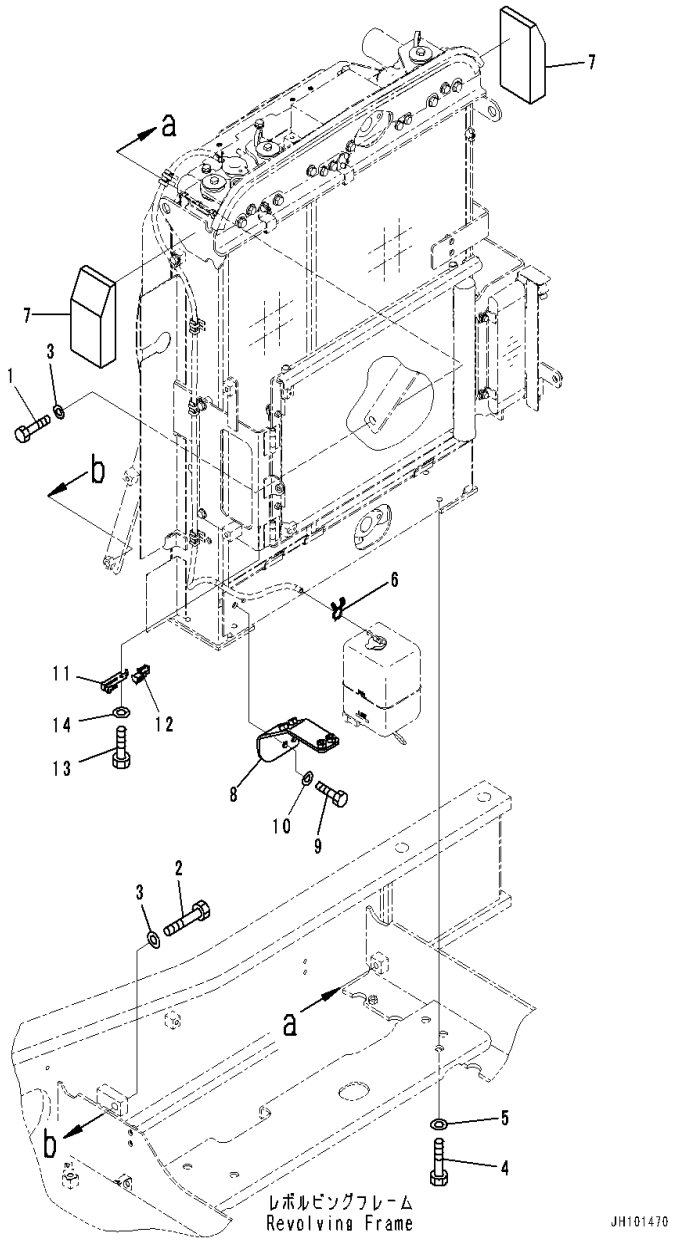

Index	Code	Part Number	Description	Qty	Serial Number
1		01010-81640	Bolt	1	C00001-
2		01010-81660	Bolt	1	C00001-
3		01643-31645	Washer	2	C00001-
4		01010-81640	Bolt	4	C00001-
5		01643-31645	Washer	4	C00001-
6		206-03-43340	Clip	1	C00001-
7		20Y-03-57241	Sheet	1	C00001-
		20Y-03-57241	Sheet	1	C00001-
8		20Y-62-57740	Bracket	1	C00001-
9		01010-81230	Bolt	2	C00001-
10		01643-31232	Washer	2	C00001-
11		20Y-979-6271	Bracket	1	C00001-
12		20Y-979-6191	Sensor	1	C00001-
13		01010-80616	Bolt	1	C00001-
14		01643-30623	Washer	1	C00001-

FIG. C0200-001001 Fan Clutch

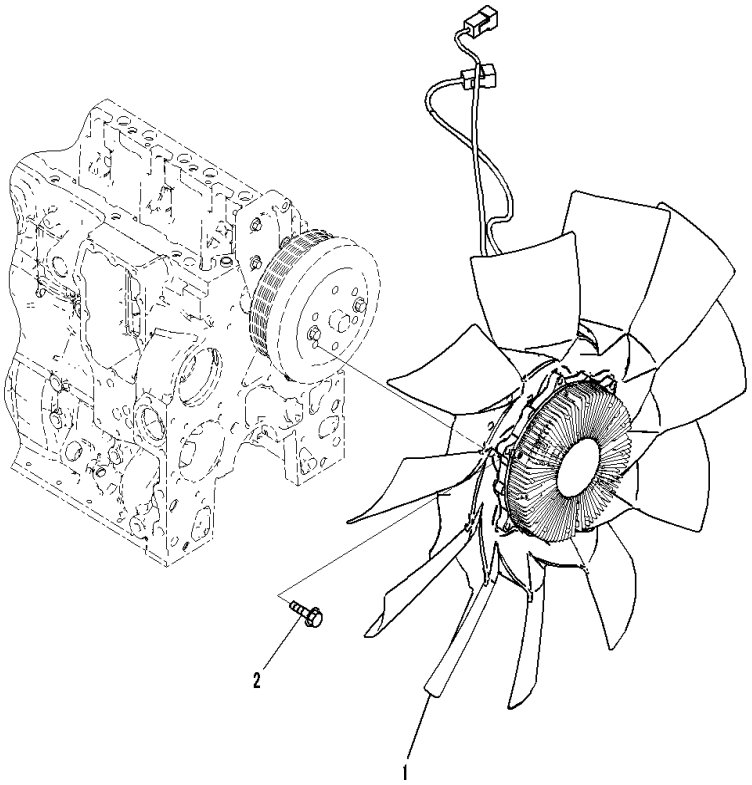

Index	Code	Part Number	Description	Qty	Serial Number
1		20Y-01-56130	Clutch	1	C00001-
2		01435-01030	Bolt	6	C00001-

FUEL SYSTEM

FIG. D0100-001001 Fuel Tank

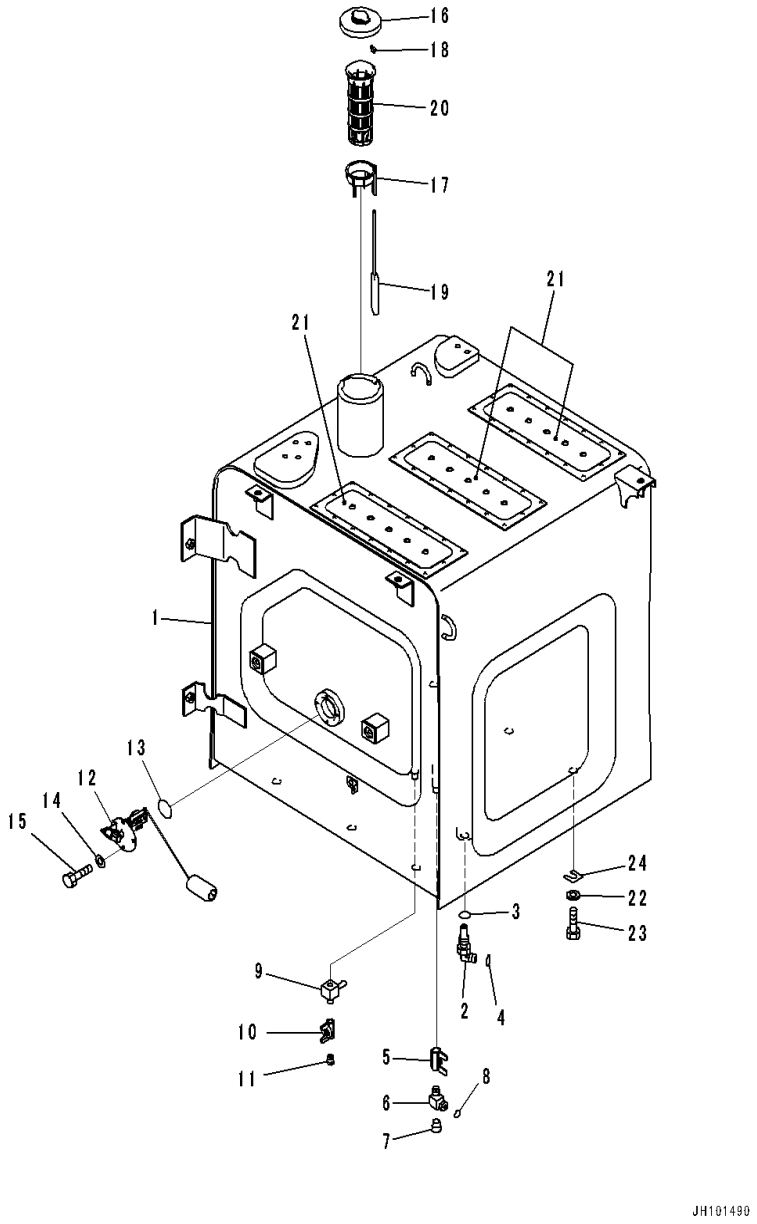

Index	Code	Part Number	Description	Qty	Serial Number
1		20Y-04-56141	Tank	1	C00001-
2		20Y-04-41590	Elbow	1	C00001-
3		07002-12034	O-ring	1	C00001-
4		02896-11009	O-ring	1	C00001-
5		07700-50240	Valve	1	C00001-
6		20Y-04-41231	Elbow	1	C00001-
7		07043-A0108	Plug	1	C00001-
8		02896-11009	O-ring	1	C00001-
9		20Y-04-56281	Tee	1	C00001-
10		07700-50240	Valve	1	C00001-
11		20Y-04-56460	Nipple	1	C00001-
12		20Y-06-56240	Sensor, Fuel Level	1	C00001-
13		07000-13050	O-ring	1	C00001-
14		01643-30623	Washer	4	C00001-
15		01010-80612	Bolt	4	C00001-
16		20Y-04-11162	Cap	1	C00001-
		20Y-04-11240	• Packing	1	C00001-
		22U-04-21241	Strainer Assembly	1	C00001-
		22U-04-21200	• Float Assembly	1	C00001-
17		22U-04-21210	• • Guide	1	C00001-
18		20Y-04-21580	• • Cap	1	C00001-
19		22U-04-21220	• • Float	1	C00001-
20		07056-18425	• Strainer	1	C00001-
21		20Y-00-42110	Plate	3	C00001-
22		01643-31645	Washer, Flat	6	C00001-
23		01010-81635	Bolt	6	C00001-
24		195-03-11570	Shim,T=1.0mm	6	C00001-

FIG. D0100-002001 Fuel Tank (With Breather)

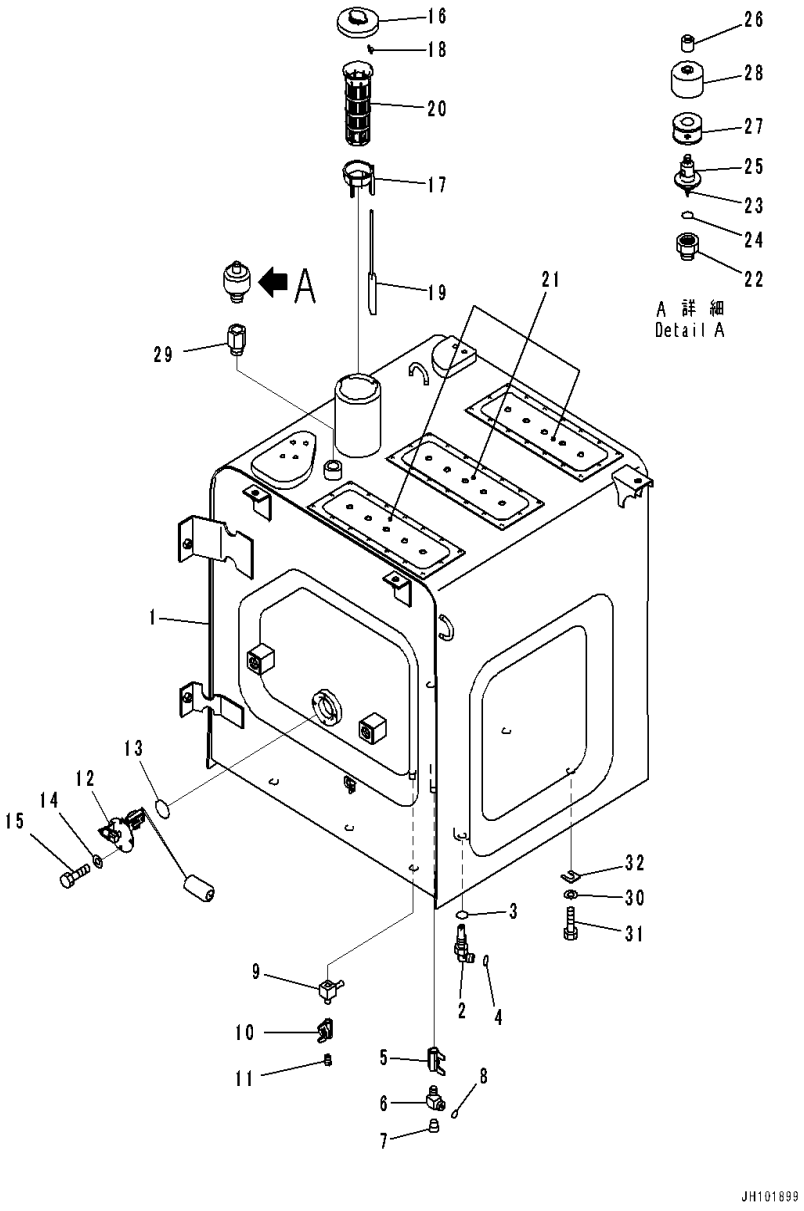

Index	Code	Part Number	Description	Qty	Serial Number
1		20Y-04-56550	Tank	1	C00001-
2		20Y-04-41590	Elbow	1	C00001-
3		07002-12034	O-ring	1	C00001-
4		02896-11009	O-ring	1	C00001-
5		07700-50240	Valve	1	C00001-
6		20Y-04-41231	Elbow	1	C00001-
7		07043-A0108	Plug	1	C00001-
8		02896-11009	O-ring	1	C00001-
9		20Y-04-56281	Tee	1	C00001-
10		07700-50240	Valve	1	C00001-
11		20Y-04-56460	Nipple	1	C00001-
12		20Y-06-56240	Sensor, Fuel Level	1	C00001-
13		07000-13050	O-ring	1	C00001-
14		01643-30623	Washer	4	C00001-
15		01010-80612	Bolt	4	C00001-
16		2A7-04-11260	Cap	1	C00001-
		20Y-04-11240	• Packing	1	C00001-
		22U-04-21241	Strainer Assembly	1	C00001-
		22U-04-21200	• Float Assembly	1	C00001-
17		22U-04-21210	• • Guide	1	C00001-
18		20Y-04-21580	• • Cap	1	C00001-
19		22U-04-21220	• • Float	1	C00001-
20		07056-18425	• Strainer	1	C00001-
21		20Y-00-42110	Plate	3	C00001-
		22U-60-21522	Breather	1	C00001-
22	C1		• Body	1	C00001-
23	C1		• Valve Assembly	1	C00001-
24	C1		• O-ring	1	C00001-
25	C1		• Case	1	C00001-
26		20Y-60-56260	• Nut	1	C00001-
27		421-60-35170	• Element	1	C00001-
28		421-60-35180	• Cover	1	C00001-
29		205-04-35170	Adapter	1	C00001-
30		01643-31645	Washer, Flat	6	C00001-
31		01010-81635	Bolt	6	C00001-
32		195-03-11570	Shim,T=1.0mm	6	C00001-

FIG. D0100-003001 Fuel Tank (Refueling Pump, With Breather)

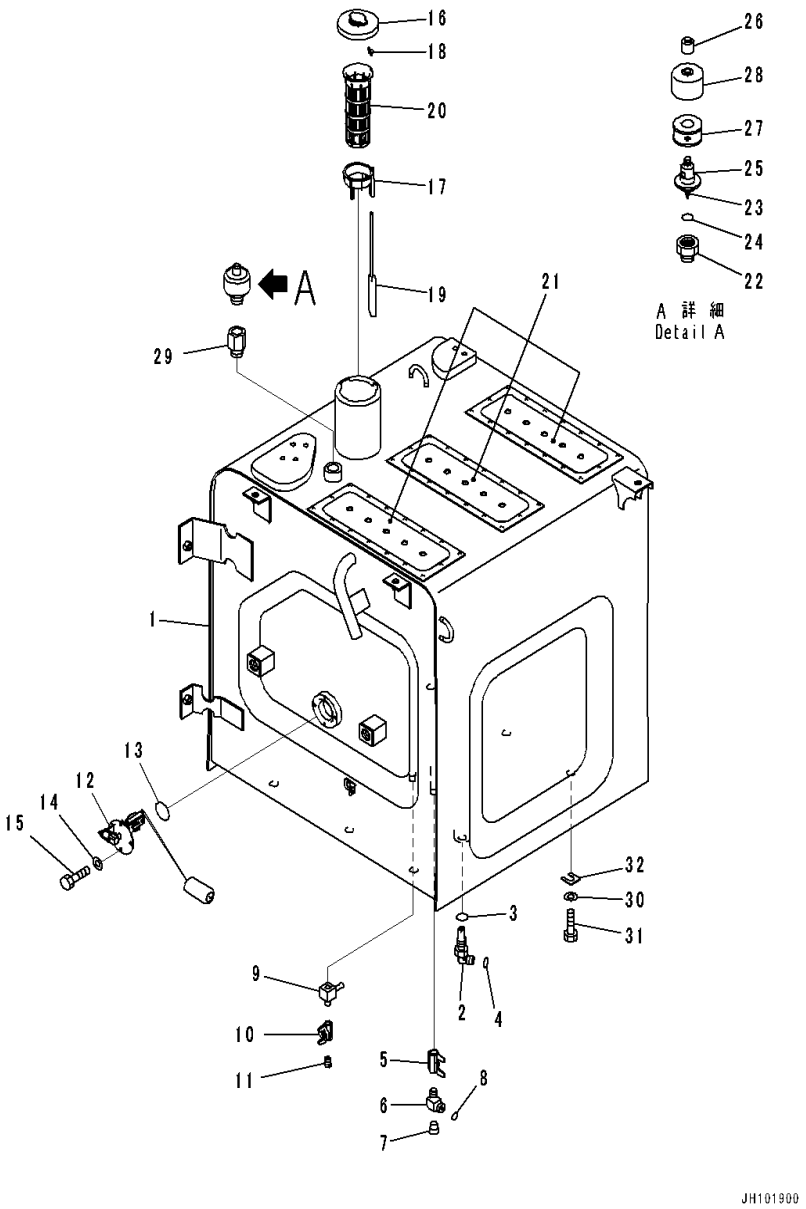

Index	Code	Part Number	Description	Qty	Serial Number
1		20Y-04-56560	Tank	1	C00001-
2		20Y-04-41590	Elbow	1	C00001-
3		07002-12034	O-ring	1	C00001-
4		02896-11009	O-ring	1	C00001-
5		07700-50240	Valve	1	C00001-
6		20Y-04-41231	Elbow	1	C00001-
7		07043-A0108	Plug	1	C00001-
8		02896-11009	O-ring	1	C00001-
9		20Y-04-56281	Tee	1	C00001-
10		07700-50240	Valve	1	C00001-
11		20Y-04-56460	Nipple	1	C00001-
12		20Y-06-56240	Sensor, Fuel Level	1	C00001-
13		07000-13050	O-ring	1	C00001-
14		01643-30623	Washer	4	C00001-
15		01010-80612	Bolt	4	C00001-
16		2A7-04-11260	Cap	1	C00001-
		20Y-04-11240	• Packing	1	C00001-
		22U-04-21241	Strainer Assembly	1	C00001-
		22U-04-21200	• Float Assembly	1	C00001-
17		22U-04-21210	• • Guide	1	C00001-
18		20Y-04-21580	• • Cap	1	C00001-
19		22U-04-21220	• • Float	1	C00001-
20		07056-18425	• Strainer	1	C00001-
21		20Y-00-42110	Plate	3	C00001-
		22U-60-21522	Breather	1	C00001-
22	C1		• Body	1	C00001-
23	C1		• Valve Assembly	1	C00001-
24	C1		• O-ring	1	C00001-
25	C1		• Case	1	C00001-
26		20Y-60-56260	• Nut	1	C00001-
27		421-60-35170	• Element	1	C00001-
28		421-60-35180	• Cover	1	C00001-
29		205-04-35170	Adapter	1	C00001-
30		01643-31645	Washer, Flat	6	C00001-
31		01010-81635	Bolt	6	C00001-
32		195-03-11570	Shim,T=1.0mm	6	C00001-

FIG. D0200-001001 Fuel Supply Piping (Fuel Piping)

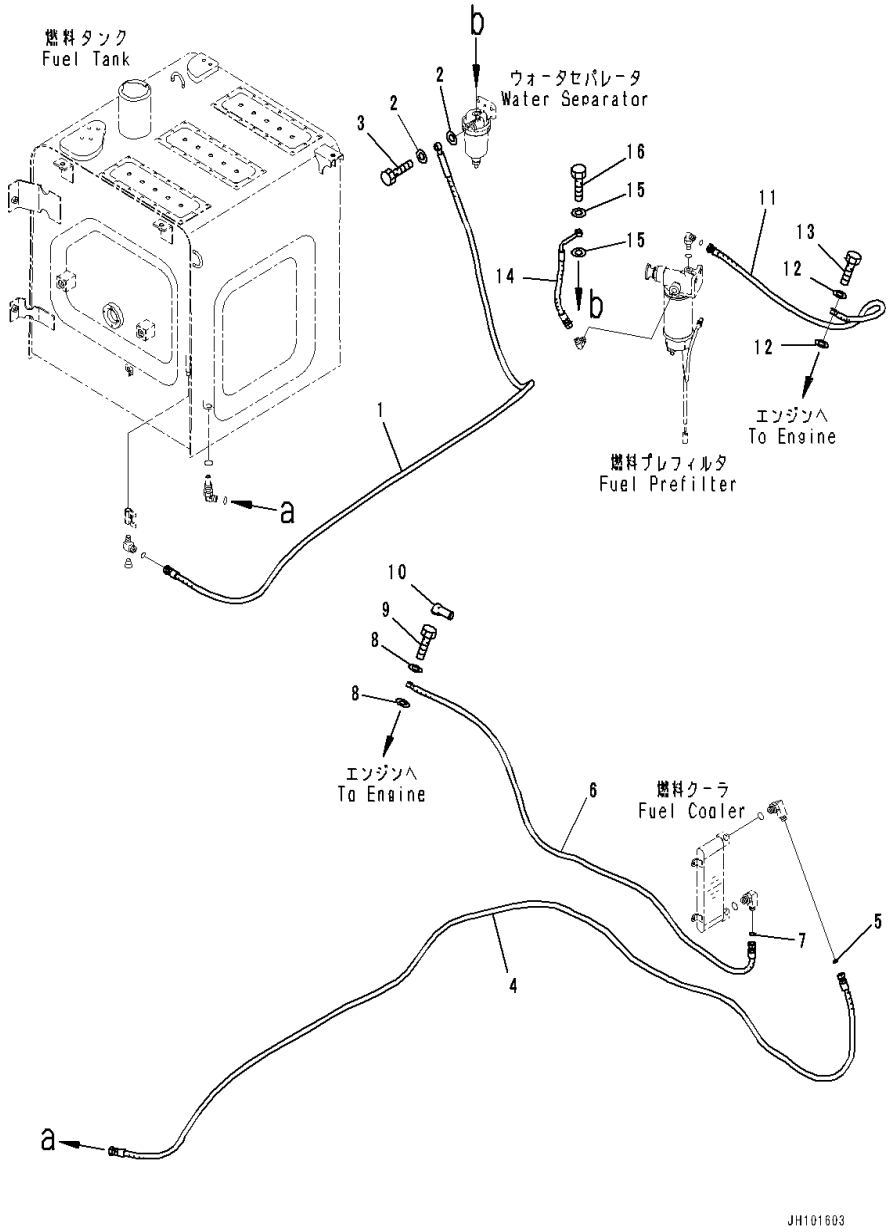

Index	Code	Part Number	Description	Qty	Serial Number
1		20Y-04-56242	Hose	1	C00001-
2		07005-01412	Seal, Washer	2	C00001-
3		07206-31014	Bolt, Joint	1	C00001-
4		20Y-04-56171	Hose	1	C00001-
5		02896-11009	O-ring	1	C00001-
6		20Y-04-56311	Hose	1	C00001-
7		02896-11009	O-ring	1	C00001-
8		07005-01212	Seal, Washer	2	C00001-
9		07206-30812	Bolt, Joint	1	C00001-
10		20Y-03-24340	Cap	1	C00001-
11		20Y-04-56252	Hose	1	C00001-
12		07005-01212	Seal, Washer	2	C00001-
13		07206-30812	Bolt, Joint	1	C00001-
14		20Y-04-56341	Hose	1	C00001-
15		07005-01412	Seal, Washer	2	C00001-
16		07206-31014	Bolt, Joint	1	C00001-

FIG. D0200-001002 Fuel Supply Piping (Inner Parts, Fuel Prefilter)

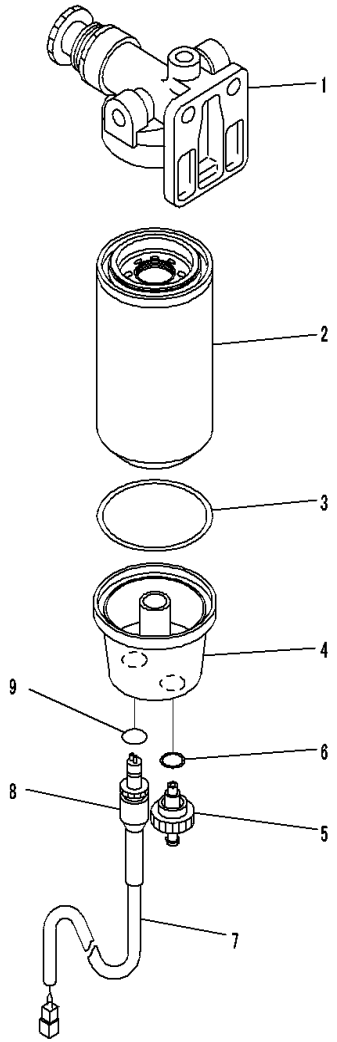

00065763

Index	Code	Part Number	Description	Qty	Serial Number
		6754-71-7700	Filter Assembly	1	C00001-
1		6754-71-7710	• Head Assembly	1	C00001-
		600-319-3602	• Filter Assembly	1	C00001-
		600-319-3610	• • Cartridge Assembly	1	C00001-
2	C1		• • • Cartridge	1	C00001-
3		600-311-3630	• • • Seal	1	C00001-
4		600-311-3640	• • Bowl	1	C00001-
		600-311-3660	• • Valve Assembly	1	C00001-
5	C1		• • • Valve	1	C00001-
6		600-311-3670	• • • Seal	1	C00001-
		600-311-3722	• • Sensor, Water-in-fuel	1	C00001-
7	C1		• • • Tube	1	C00001-
8	C1		• • • Sensor	1	C00001-
9		600-311-3690	• • • O-ring	1	C00001-

FIG. D0200-001003 Fuel Supply Piping (Fuel Prefilter Related Parts)

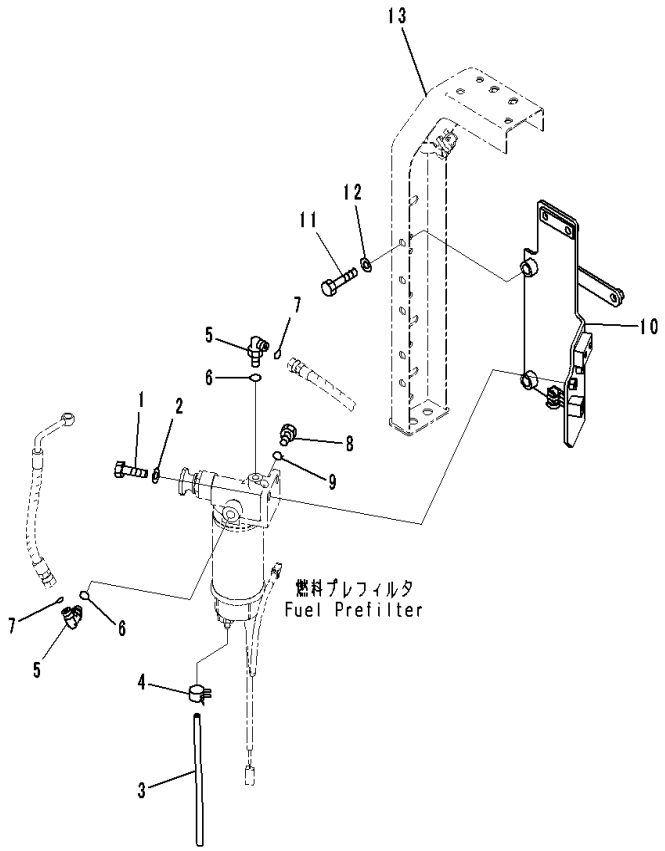

Index	Code	Part Number	Description	Qty	Serial Number
1		07372-21240	Bolt	2	C00001-
2		01643-51232	Washer	2	C00001-
3		07270-00825	Tube	1	C00001-
4		07285-00110	Clip	1	C00001-
5		02782-10311	Elbow	2	C00001-
6		07002-11423	O-ring	2	C00001-
7		02896-11009	O-ring	2	C00001-
8		07040-11409	Plug	1	C00001-
9		07002-11423	O-ring	1	C00001-
10		20Y-04-56261	Bracket	1	C00001-
11		01010-81245	Bolt	2	C00001-
12		01643-31232	Washer	2	C00001-
13		(20Y-54-57411)	Frame(Door R.H.)		

FIG. D0200-001004 Fuel Supply Piping (Water Separator Inner Parts)

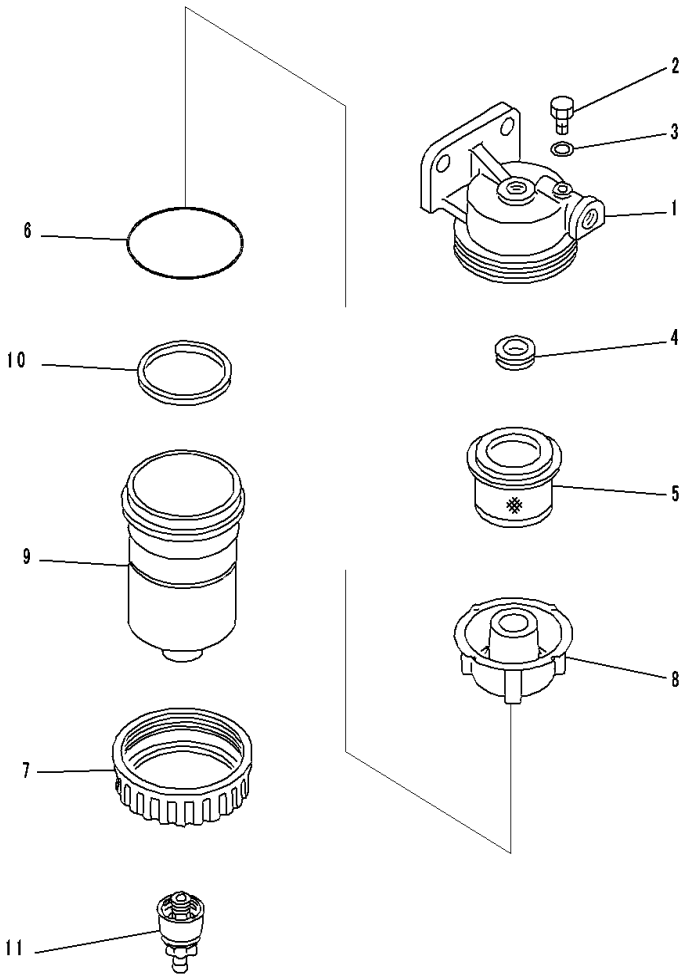

Index	Code	Part Number	Description	Qty	Serial Number
		600-311-9733	Water Separator	1	C00001-
1		600-311-9912	• Cover	1	C00001-
2		6110-73-6231	• Plug	1	C00001-
3		07005-00812	• Seal, Washer	1	C00001-
4		600-311-9961	• Gasket	1	C00001-
5		600-311-9971	• Screen	1	C00001-
6		600-311-9490	• O-ring	1	C00001-
7		600-311-9931	• Nut	1	C00001-
8		600-311-9941	• Baffle	1	C00001-
9		600-311-9921	• Case	1	C00001-
10		600-311-9950	• Ring	1	C00001-
11		600-311-9591	• Plug	1	C00001-

FIG. D0200-001005 Fuel Supply Piping (Water Separator Mounting)

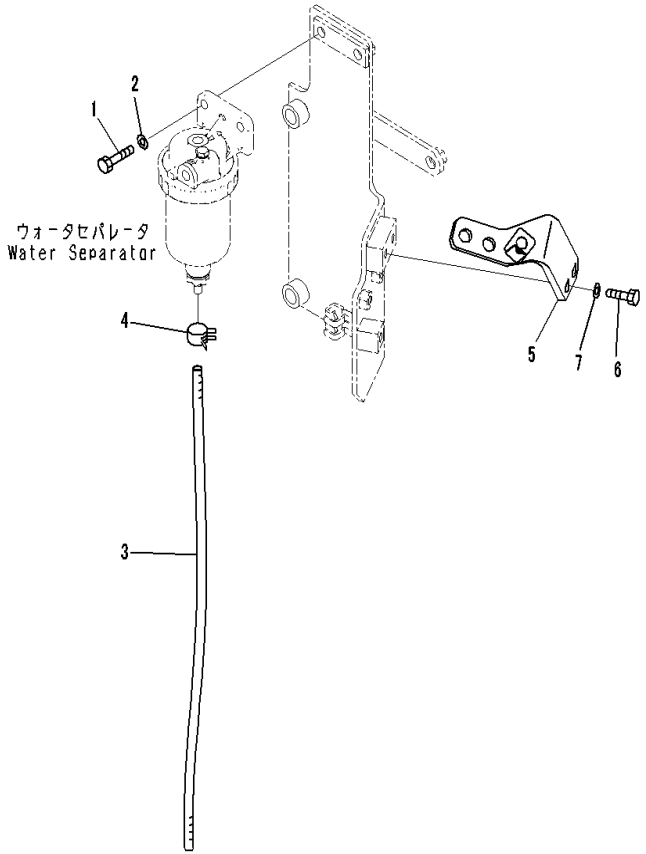

Index	Code	Part Number	Description	Qty	Serial Number
1		01010-81040	Bolt	2	C00001-
2		01643-31032	Washer	2	C00001-
3		07270-00860	Tube	1	C00001-
4		07285-00100	Clip	1	C00001-
5		20Y-62-56781	Bracket	1	C00001-
6		01010-81230	Bolt	2	C00001-
7		01643-31232	Washer	2	C00001-

FIG. D0200-001006 Fuel Supply Piping (Remote Drain)

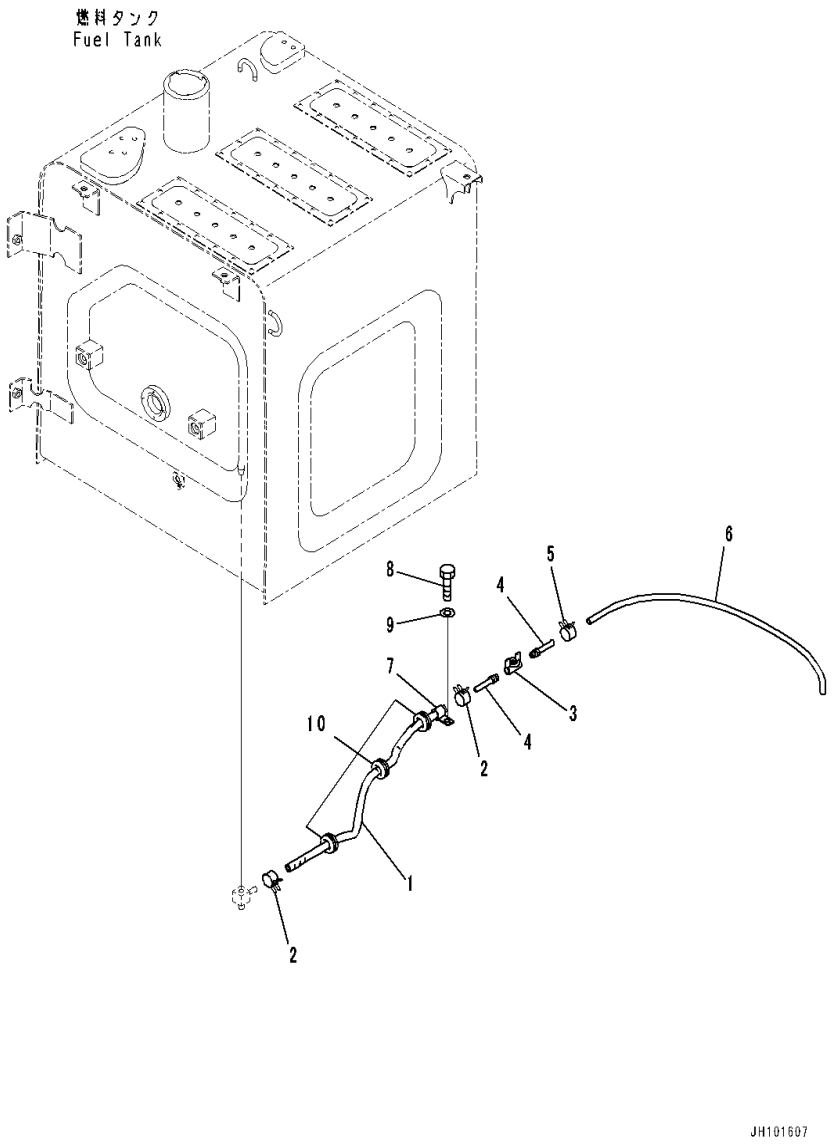

Index	Code	Part Number	Description	Qty	Serial Number
1		20Y-04-56452	Hose	1	C00001-
2		11Y-09-11140	Clip	2	C00001-
3		07700-50240	Valve	1	C00001-
4		20Y-04-31170	Nipple	2	C00001-
5		07285-00115	Clip	1	C00001-
6		07270-01065	Tube	1	C00001-
7		04434-51612	Clip	1	C00001-
8		01010-81225	Bolt	1	C00001-
9		01643-31232	Washer	1	C00001-
10		205-977-7310	Grommet	3	C00001-

FIG. D0200-001007 Fuel Supply Piping (Fuel Filter Bracket)

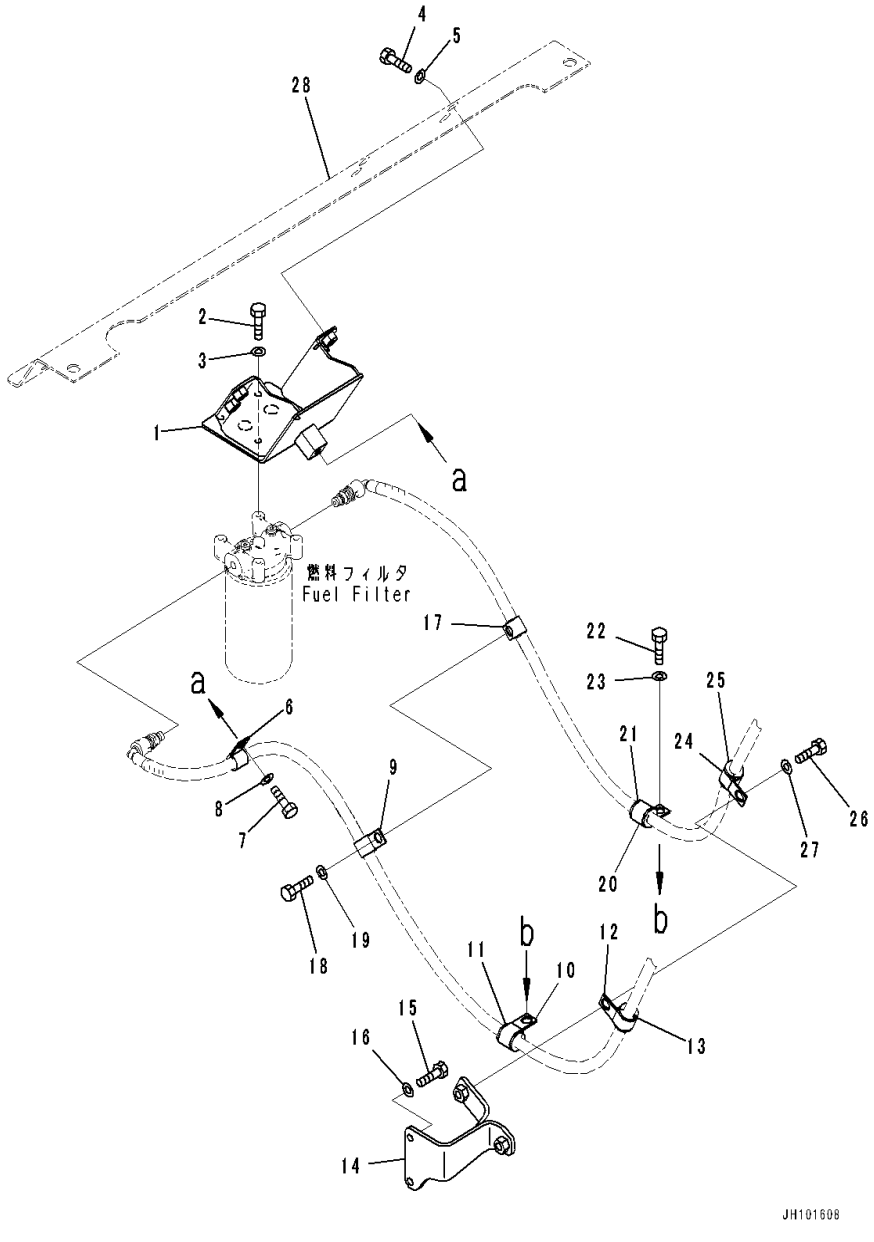

Index	Code	Part Number	Description	Qty	Serial Number
1		20Y-04-56121	Bracket	1	C00001-
2		01010-80825	Bolt	4	C00001-
3		01643-30823	Washer	4	C00001-
4		01010-81225	Bolt	4	C00001-
5		01643-31232	Washer	4	C00001-
6		04434-51512	Clip	1	C00001-
7		01010-81225	Bolt	1	C00001-
8		01643-31232	Washer	1	C00001-
9		04434-51512	Clip	1	C00001-
10		04434-52112	Clip	1	C00001-
11		07095-40314	Cushion	1	C00001-
12		04434-52112	Clip	1	C00001-
13		07095-40314	Cushion	1	C00001-
14		20Y-04-56130	Plate	1	C00001-
15		01010-80825	Bolt	2	C00001-
16		01643-30823	Washer	2	C00001-
17		04434-51512	Clip	1	C00001-
18		01010-81235	Bolt	1	C00001-
19		01643-31232	Washer	1	C00001-
20		04434-52112	Clip	1	C00001-
21		07095-40314	Cushion	1	C00001-
22		01010-81225	Bolt	1	C00001-
23		01643-31232	Washer	1	C00001-
24		04434-52112	Clip	1	C00001-
25		07095-40314	Cushion	1	C00001-
26		01010-81235	Bolt	1	C00001-
27		01643-31232	Washer	1	C00001-
28		(20Y-54-56431)	Frame(Door R.H.)		

FIG. D0200-001008 Fuel Supply Piping (Clip)

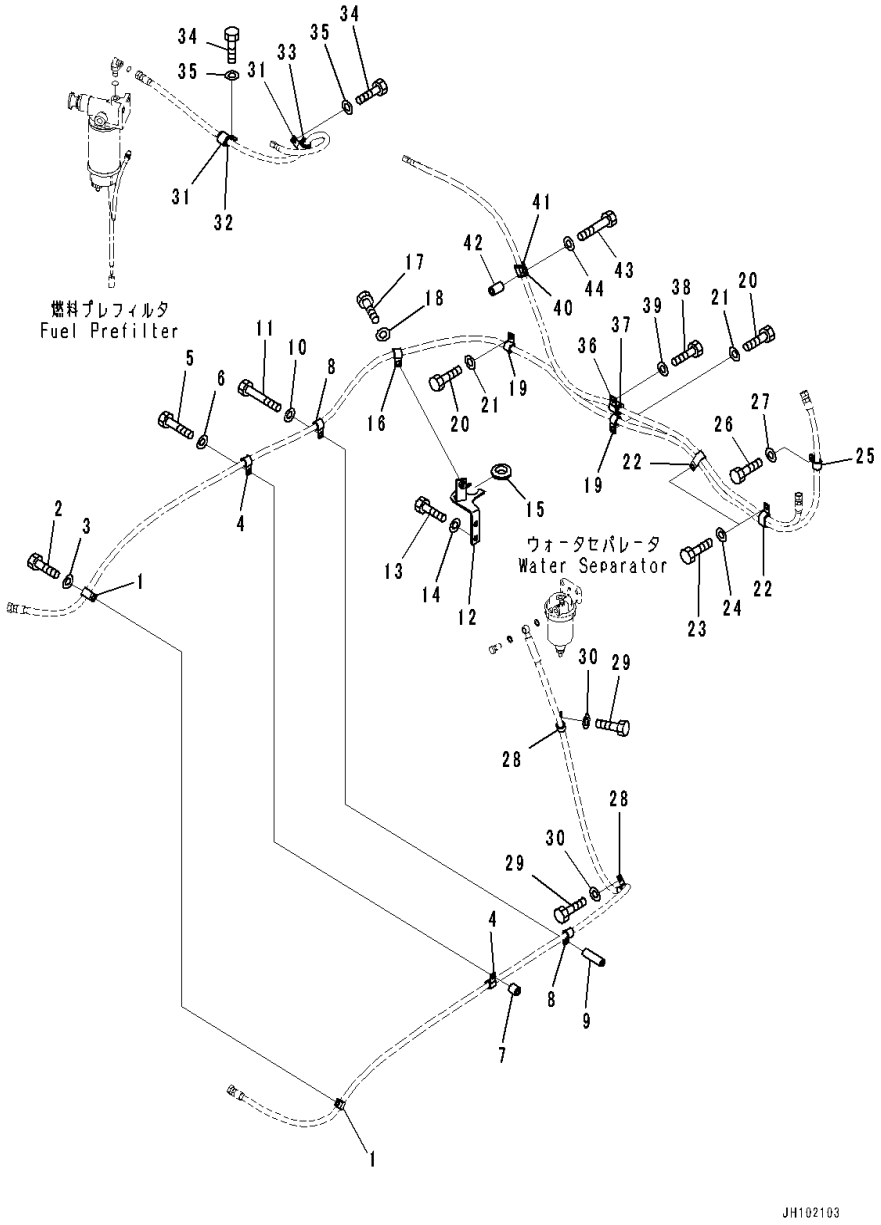

Index	Code	Part Number	Description	Qty	Serial Number
1		04434-51812	Clip	2	C00001-
2		01010-81225	Bolt	1	C00001-
3		01643-31232	Washer	1	C00001-
4		04434-51812	Clip	2	C00001-
5		01010-81250	Bolt	1	C00001-
6		01643-31232	Washer	1	C00001-
7		195-33-11220	Spacer	1	C00001-
8		04434-51812	Clip	2	C00001-
9		415-S62-2380	Collar	1	C00001-
10		01643-31232	Washer	1	C00001-
11		01011-81200	Bolt	1	C00001-
12		20Y-04-56351	Bracket	1	C00001-
13		01010-81225	Bolt	2	C00001-
14		01643-31232	Washer	2	C00001-
15		08037-03614	Grommet	1	C00001-
16		04434-51812	Clip	1	C00001-
17		01010-81225	Bolt	1	C00001-
18		01643-31232	Washer	1	C00001-
19		04434-51812	Clip	2	C00001-
20		01010-81225	Bolt	2	C00001-
21		01643-31232	Washer	2	C00001-
22		04435-51812	Clip	2	C00001-
23		01010-81225	Bolt	2	C00001-
24		01643-31232	Washer	2	C00001-
25		04434-51412	Clip	1	C00001-
26		01010-81225	Bolt	1	C00001-
27		01643-31232	Washer	1	C00001-
28		04434-51812	Clip	2	C00001-
29		01010-81225	Bolt	2	C00001-
30		01643-31232	Washer	2	C00001-
31		04434-52512	Clip	2	C00001-
32		198-06-53560	Cushion	1	C00001-
33		198-06-53560	Cushion	1	C00001-
34		01010-81225	Bolt	2	C00001-
35		01643-31232	Washer	2	C00001-
36		04434-52512	Clip	1	C00001-
37		198-06-53560	Cushion	1	C00001-
38		01010-81225	Bolt	1	C00001-
39		01643-31232	Washer	1	C00001-
40		04434-52512	Clip	1	C00001-

FIG. D0200-001008 Fuel Supply Piping (Clip)

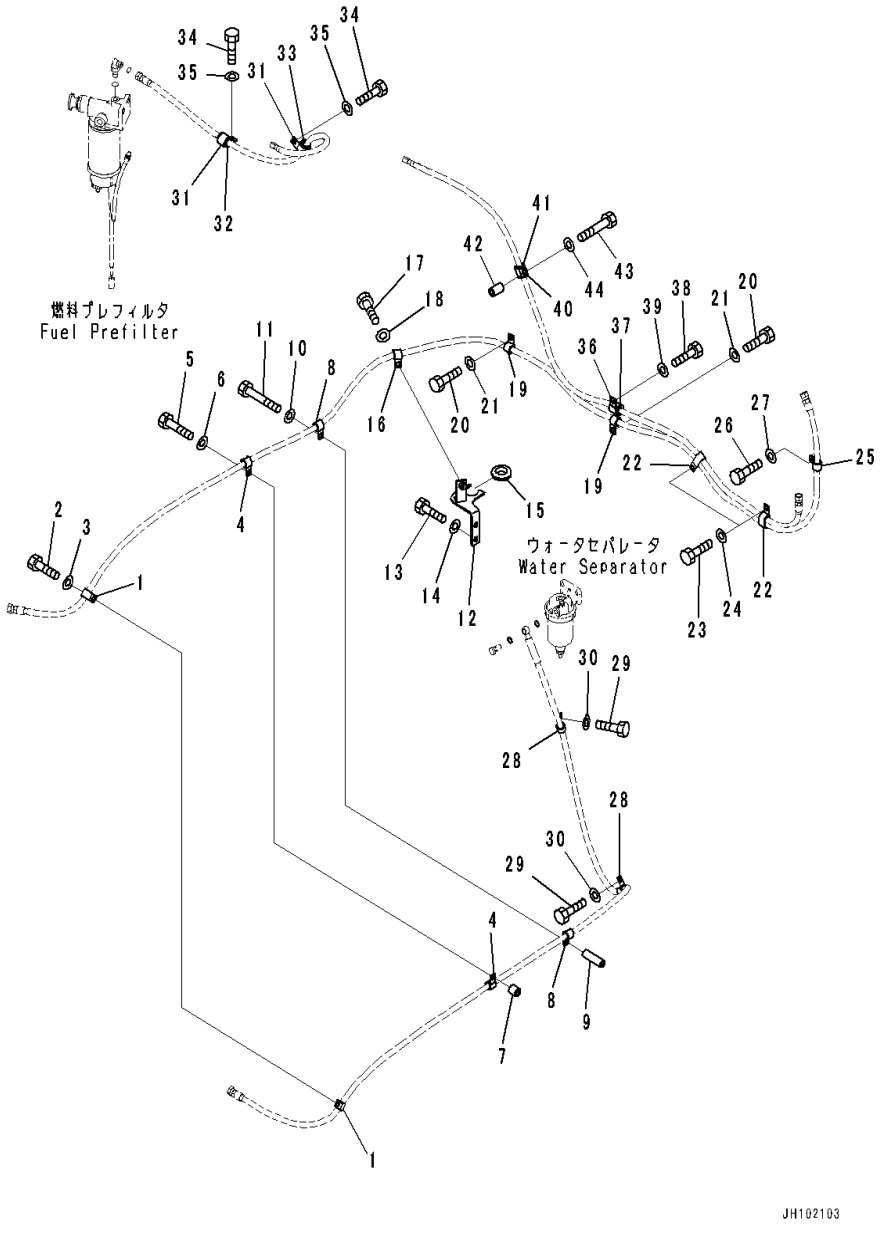

Index	Code	Part Number	Description	Qty	Serial Number
41		198-06-53560	Cushion	1	C00001-
42		205-03-71330	Collar	1	C00001-
43		01010-81275	Bolt	1	C00001-
44		01643-31232	Washer	1	C00001-

FIG. D0200-002001 Fuel Supply Piping (For Additional Fuel Prefilter) (Fuel Piping)

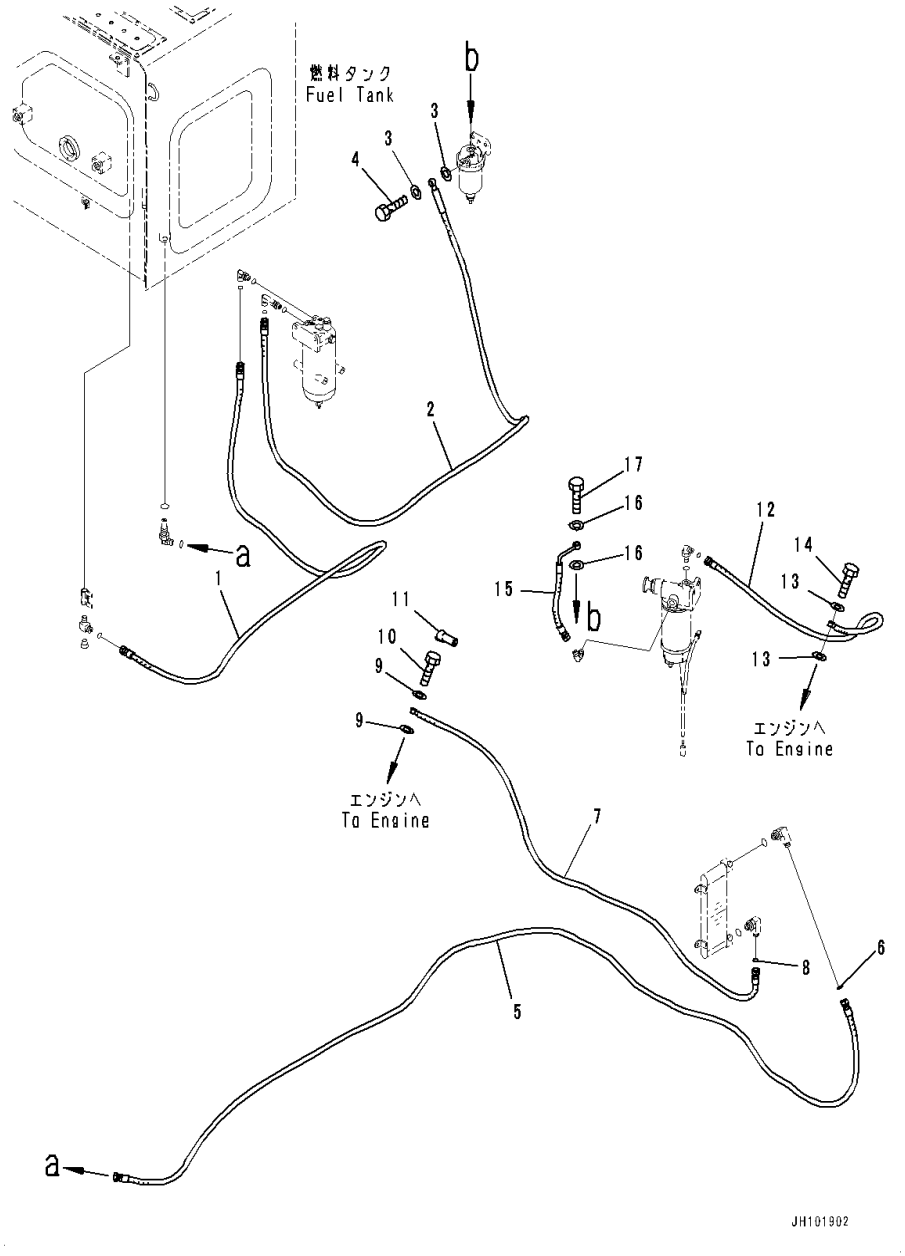

Index	Code	Part Number	Description	Qty	Serial Number
1		20Y-04-56580	Hose	1	C00001-
2		20Y-04-56590	Hose	1	C00001-
3		07005-01412	Seal, Washer	2	C00001-
4		07206-31014	Bolt, Joint	1	C00001-
5		20Y-04-56171	Hose	1	C00001-
6		02896-11009	O-ring	1	C00001-
7		20Y-04-56311	Hose	1	C00001-
8		02896-11009	O-ring	1	C00001-
9		07005-01212	Seal, Washer	2	C00001-
10		07206-30812	Bolt, Joint	1	C00001-
11		20Y-03-24340	Cap	1	C00001-
12		20Y-04-56252	Hose	1	C00001-
13		07005-01212	Seal, Washer	2	C00001-
14		07206-30812	Bolt, Joint	1	C00001-
15		20Y-04-56341	Hose	1	C00001-
16		07005-01412	Seal, Washer	2	C00001-
17		07206-31014	Bolt, Joint	1	C00001-

FIG. D0200-002002 Fuel Supply Piping (Inner Parts, Fuel Prefilter)

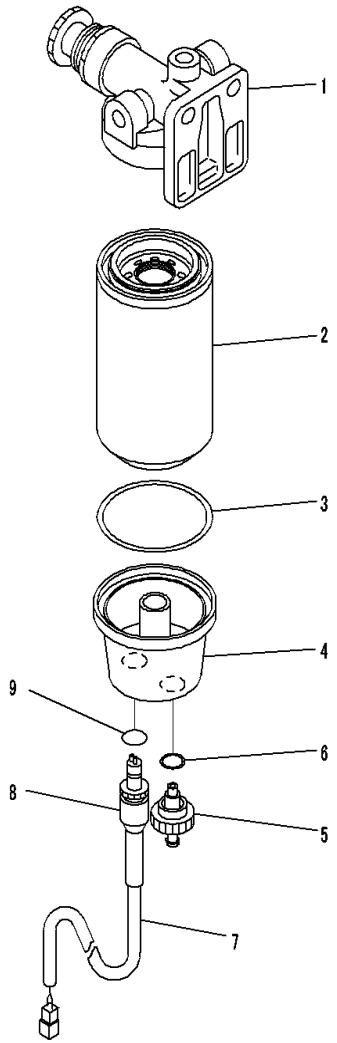

00065763

Index	Code	Part Number	Description	Qty	Serial Number
		6754-71-7700	Filter Assembly	1	C00001-
1		6754-71-7710	• Head Assembly	1	C00001-
		600-319-3602	• Filter Assembly	1	C00001-
		600-319-3610	• • Cartridge Assembly	1	C00001-
2	C1		• • • Cartridge	1	C00001-
3		600-311-3630	• • • Seal	1	C00001-
4		600-311-3640	• • Bowl	1	C00001-
		600-311-3660	• • Valve Assembly	1	C00001-
5	C1		• • • Valve	1	C00001-
6		600-311-3670	• • • Seal	1	C00001-
		600-311-3722	• • Sensor, Water-in-fuel	1	C00001-
7	C1		• • • Tube	1	C00001-
8	C1		• • • Sensor	1	C00001-
9		600-311-3690	• • • O-ring	1	C00001-

FIG. D0200-002003 Fuel Supply Piping (Fuel Prefilter Related Parts)

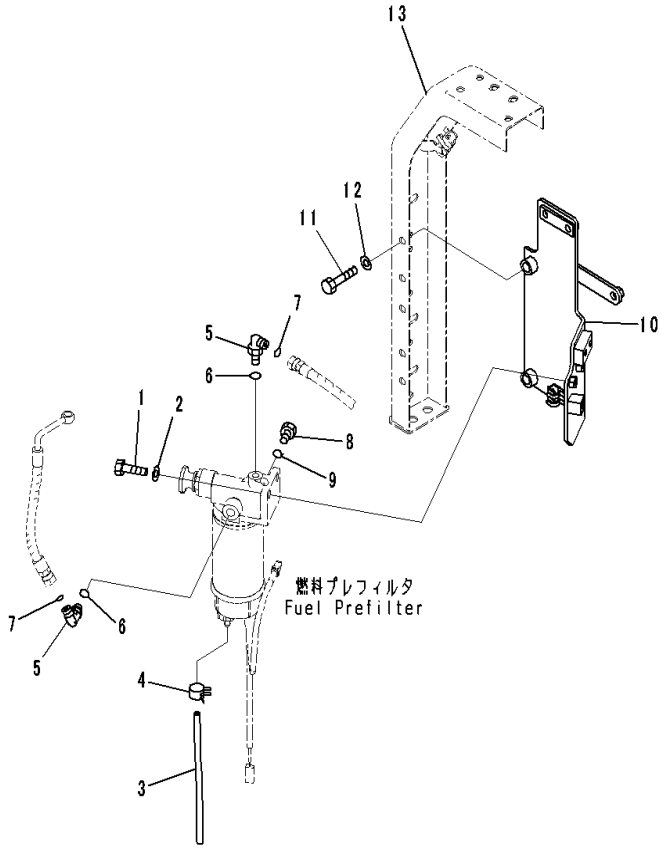

Index	Code	Part Number	Description	Qty	Serial Number
1		07372-21240	Bolt	2	C00001-
2		01643-51232	Washer	2	C00001-
3		07270-00825	Tube	1	C00001-
4		07285-00110	Clip	1	C00001-
5		02782-10311	Elbow	2	C00001-
6		07002-11423	O-ring	2	C00001-
7		02896-11009	O-ring	2	C00001-
8		07040-11409	Plug	1	C00001-
9		07002-11423	O-ring	1	C00001-
10		20Y-04-56261	Bracket	1	C00001-
11		01010-81245	Bolt	2	C00001-
12		01643-31232	Washer	2	C00001-
13		(20Y-54-57411)	Frame(Door R.H.)		

FIG. D0200-002004 Fuel Supply Piping (Water Separator Inner Parts)

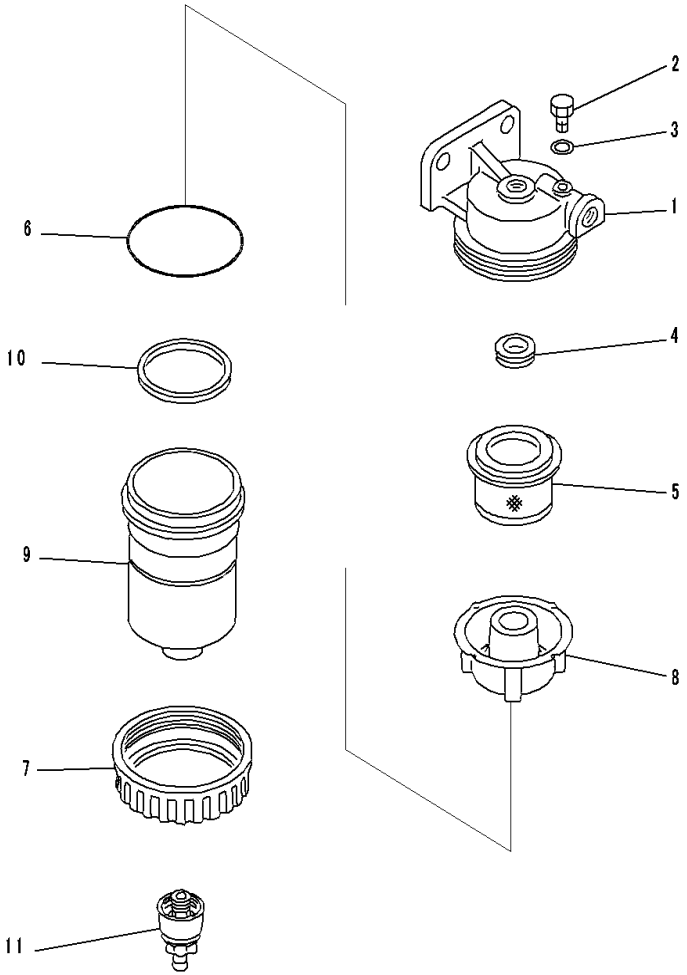

Index	Code	Part Number	Description	Qty	Serial Number
		600-311-9733	Water Separator	1	C00001-
1		600-311-9912	• Cover	1	C00001-
2		6110-73-6231	• Plug	1	C00001-
3		07005-00812	• Seal, Washer	1	C00001-
4		600-311-9961	• Gasket	1	C00001-
5		600-311-9971	• Screen	1	C00001-
6		600-311-9490	• O-ring	1	C00001-
7		600-311-9931	• Nut	1	C00001-
8		600-311-9941	• Baffle	1	C00001-
9		600-311-9921	• Case	1	C00001-
10		600-311-9950	• Ring	1	C00001-
11		600-311-9591	• Plug	1	C00001-

FIG. D0200-002005 Fuel Supply Piping (Water Separator Mounting)

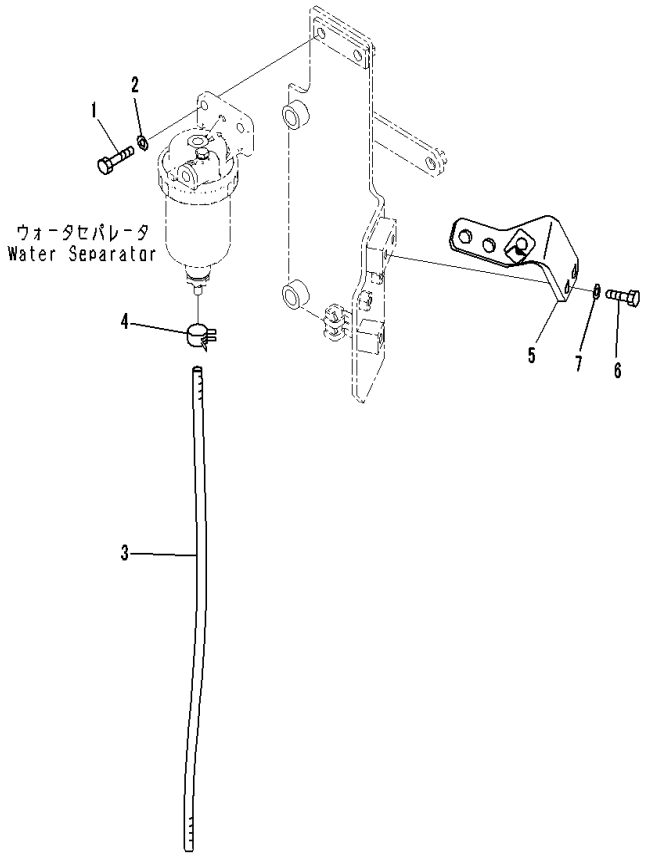

Index	Code	Part Number	Description	Qty	Serial Number
1		01010-81040	Bolt	2	C00001-
2		01643-31032	Washer	2	C00001-
3		07270-00860	Tube	1	C00001-
4		07285-00100	Clip	1	C00001-
5		20Y-62-56781	Bracket	1	C00001-
6		01010-81230	Bolt	2	C00001-
7		01643-31232	Washer	2	C00001-

FIG. D0200-002006 Fuel Supply Piping (Remote Drain)

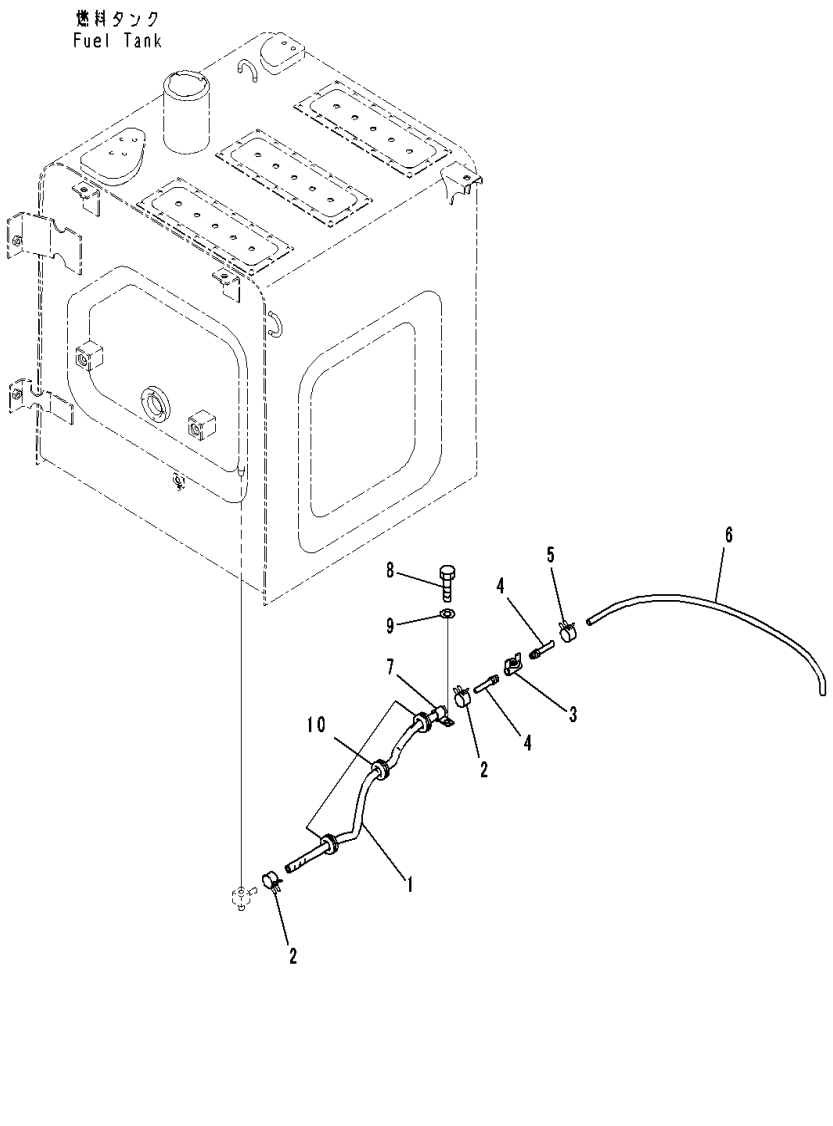

Index	Code	Part Number	Description	Qty	Serial Number
1		20Y-04-56452	Hose	1	C00001-
2		11Y-09-11140	Clip	2	C00001-
3		07700-50240	Valve	1	C00001-
4		20Y-04-31170	Nipple	2	C00001-
5		07285-00115	Clip	1	C00001-
6		07270-01065	Tube	1	C00001-
7		04434-51612	Clip	1	C00001-
8		01010-81225	Bolt	1	C00001-
9		01643-31232	Washer	1	C00001-
10		205-977-7310	Grommet	3	C00001-

FIG. D0200-002007 Fuel Supply Piping (Fuel Filter Bracket)

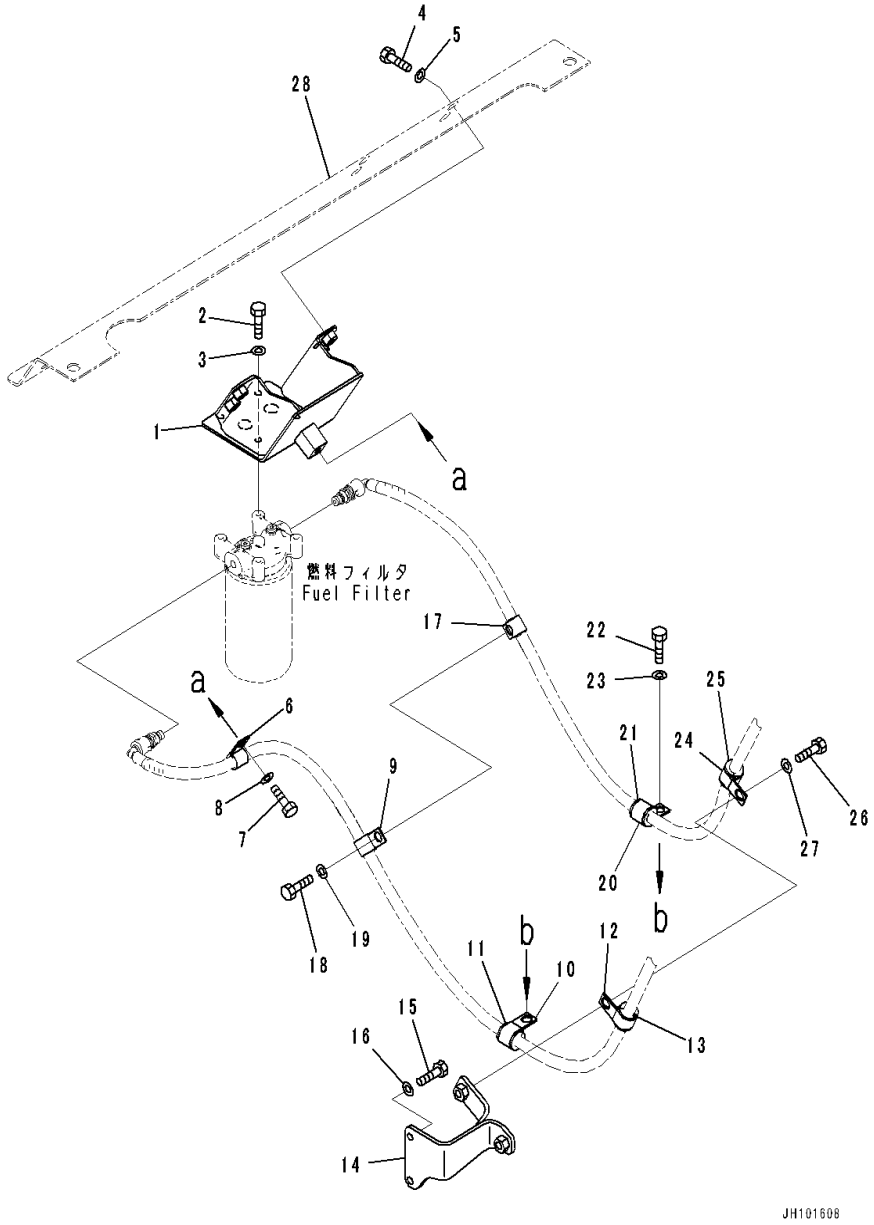

Index	Code	Part Number	Description	Qty	Serial Number
1		20Y-04-56121	Bracket	1	C00001-
2		01010-80825	Bolt	4	C00001-
3		01643-30823	Washer	4	C00001-
4		01010-81225	Bolt	4	C00001-
5		01643-31232	Washer	4	C00001-
6		04434-51512	Clip	1	C00001-
7		01010-81225	Bolt	1	C00001-
8		01643-31232	Washer	1	C00001-
9		04434-51512	Clip	1	C00001-
10		04434-52112	Clip	1	C00001-
11		07095-40314	Cushion	1	C00001-
12		04434-52112	Clip	1	C00001-
13		07095-40314	Cushion	1	C00001-
14		20Y-04-56130	Plate	1	C00001-
15		01010-80825	Bolt	2	C00001-
16		01643-30823	Washer	2	C00001-
17		04434-51512	Clip	1	C00001-
18		01010-81235	Bolt	1	C00001-
19		01643-31232	Washer	1	C00001-
20		04434-52112	Clip	1	C00001-
21		07095-40314	Cushion	1	C00001-
22		01010-81225	Bolt	1	C00001-
23		01643-31232	Washer	1	C00001-
24		04434-52112	Clip	1	C00001-
25		07095-40314	Cushion	1	C00001-
26		01010-81235	Bolt	1	C00001-
27		01643-31232	Washer	1	C00001-
28		(20Y-54-56431)	Frame(Door R.H.)		

FIG. D0200-002008 Fuel Supply Piping (For Additional Fuel Prefilter) (Clip)

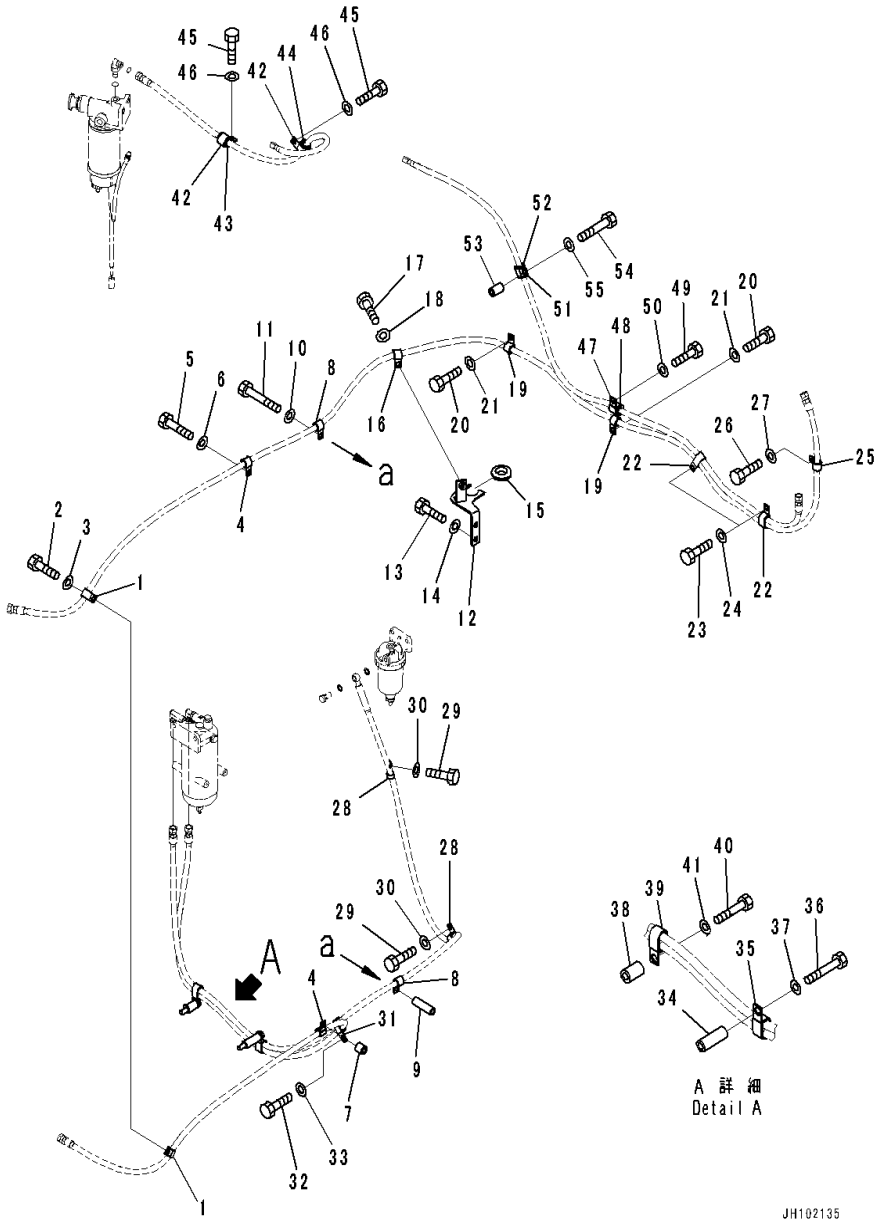

Index	Code	Part Number	Description	Qty	Serial Number
1		04434-51812	Clip	2	C00001-
2		01010-81225	Bolt	1	C00001-
3		01643-31232	Washer	1	C00001-
4		04434-51812	Clip	2	C00001-
5		01010-81250	Bolt	1	C00001-
6		01643-31232	Washer	1	C00001-
7		195-33-11220	Spacer	1	C00001-
8		04434-51812	Clip	2	C00001-
9		415-S62-2380	Collar	1	C00001-
10		01643-31232	Washer	1	C00001-
11		01011-81200	Bolt	1	C00001-
12		20Y-04-56351	Bracket	1	C00001-
13		01010-81225	Bolt	2	C00001-
14		01643-31232	Washer	2	C00001-
15		08037-03614	Grommet	1	C00001-
16		04434-51812	Clip	1	C00001-
17		01010-81225	Bolt	1	C00001-
18		01643-31232	Washer	1	C00001-
19		04434-51812	Clip	2	C00001-
20		01010-81225	Bolt	2	C00001-
21		01643-31232	Washer	2	C00001-
22		04435-51812	Clip	2	C00001-
23		01010-81225	Bolt	2	C00001-
24		01643-31232	Washer	2	C00001-
25		04434-51412	Clip	1	C00001-
26		01010-81225	Bolt	1	C00001-
27		01643-31232	Washer	1	C00001-
28		04434-51812	Clip	2	C00001-
29		01010-81225	Bolt	2	C00001-
30		01643-31232	Washer	2	C00001-
31		04435-51812	Clip	1	C00001-
32		01010-81225	Bolt	1	C00001-
33		01643-31232	Washer	1	C00001-
34		175-61-17240	Collar	1	C00001-
35		04435-51812	Clip	1	C00001-
36		01010-81290	Bolt	1	C00001-
37		01643-31232	Washer	1	C00001-
38		20Y-03-11220	Collar	1	C00001-
39		04435-51812	Clip	1	C00001-
40		01010-81265	Bolt	1	C00001-

FIG. D0200-002008 Fuel Supply Piping (For Additional Fuel Prefilter) (Clip)

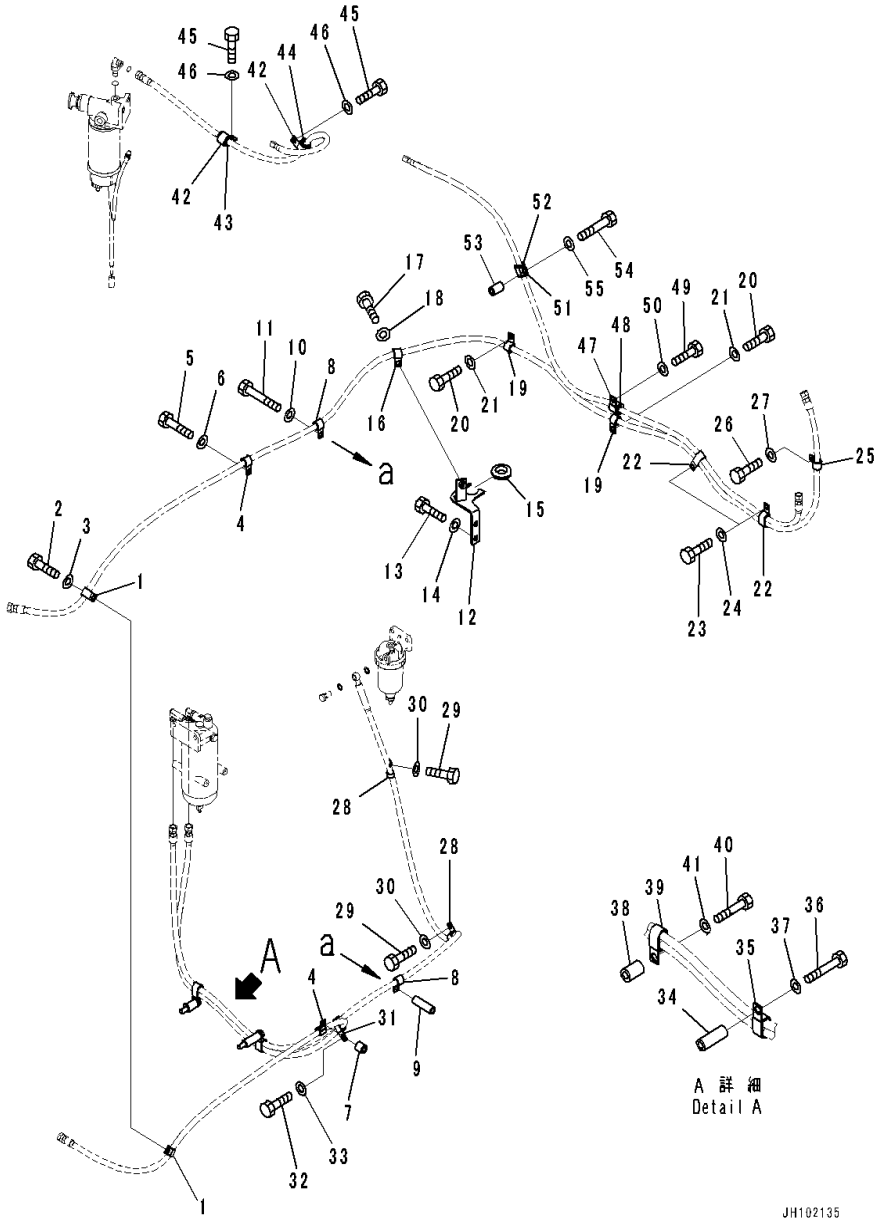

Index	Code	Part Number	Description	Qty	Serial Number
41		01643-31232	Washer	1	C00001-
42		04434-52512	Clip	2	C00001-
43		198-06-53560	Cushion	1	C00001-
44		198-06-53560	Cushion	1	C00001-
45		01010-81225	Bolt	2	C00001-
46		01643-31232	Washer	2	C00001-
47		04434-52512	Clip	1	C00001-
48		198-06-53560	Cushion	1	C00001-
49		01010-81225	Bolt	1	C00001-
50		01643-31232	Washer	1	C00001-
51		04434-52512	Clip	1	C00001-
52		198-06-53560	Cushion	1	C00001-
53		205-03-71330	Collar	1	C00001-
54		01010-81275	Bolt	1	C00001-
55		01643-31232	Washer	1	C00001-

FIG. D0200-002009 Fuel Supply Piping (For Additional Fuel Prefilter) (Additional Fuel Prefilter)

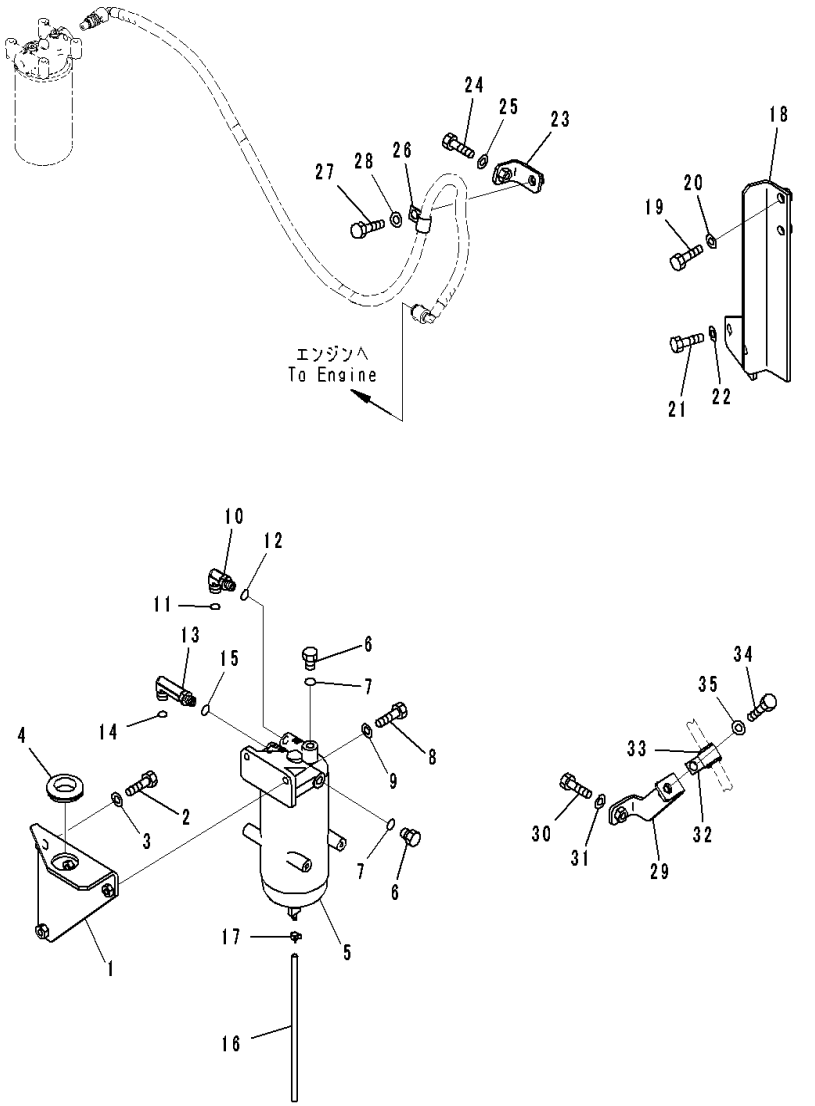

Index	Code	Part Number	Description	Qty	Serial Number
1		20Y-04-56390	Bracket	1	C00001-
2		01010-81235	Bolt	2	C00001-
3		01643-31232	Washer	2	C00001-
4		08037-03614	Grommet	1	C00001-
5		208-04-J2212	Fuel Prefilter	1	C00001-
6		07040-11409	Plug	2	C00001-
7		07002-11423	O-ring	2	C00001-
8		01010-81035	Bolt	2	C00001-
9		01643-31032	Washer	2	C00001-
10		02782-10311	Elbow	1	C00001-
11		02896-11009	O-ring	1	C00001-
12		07002-11423	O-ring	1	C00001-
13		02782-10312	Elbow	1	C00001-
14		02896-11009	O-ring	1	C00001-
15		07002-11423	O-ring	1	C00001-
16		07270-00627	Tube	1	C00001-
17		07285-00080	Clip, Hose	1	C00001-
18		20Y-04-56420	Bracket	1	C00001-
19		01010-81235	Bolt	2	C00001-
20		01643-31232	Washer	2	C00001-
21		01010-81245	Bolt	2	C00001-
22		01643-31232	Washer	2	C00001-
23		20Y-04-56410	Bracket	1	C00001-
24		01010-81225	Bolt	1	C00001-
25		01643-31232	Washer	1	C00001-
26		04434-51512	Clip	1	C00001-
27		01010-81225	Bolt	1	C00001-
28		01643-31232	Washer	1	C00001-
29		20Y-04-56431	Bracket	1	C00001-
30		01010-81225	Bolt	1	C00001-
31		01643-31232	Washer	1	C00001-
32		04434-52112	Clip	1	C00001-
33		07095-40314	Cushion	1	C00001-
34		01010-81225	Bolt	1	C00001-
35		01643-31232	Washer	1	C00001-

ELECTRICAL SYSTEM

FIG. E0100-001001 Battery

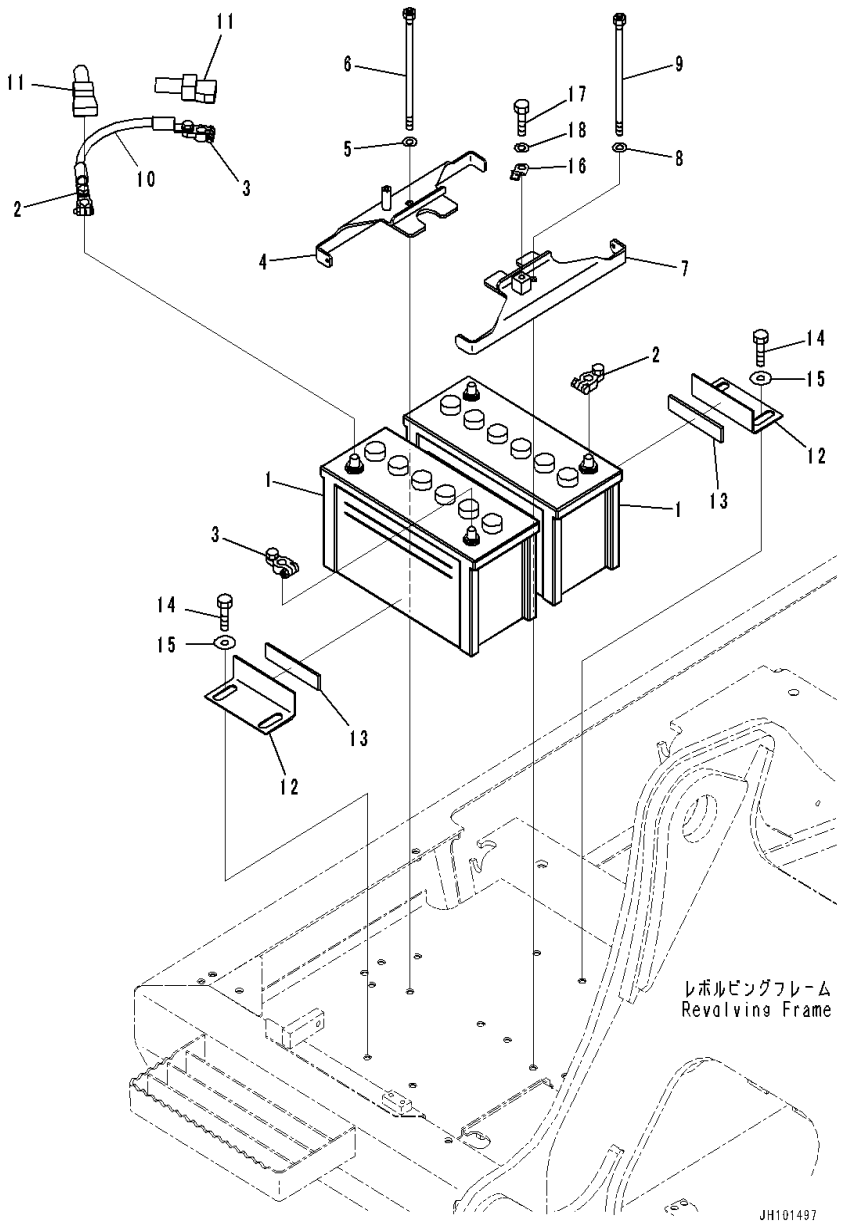

Index	Code	Part Number	Description	Qty	Serial Number
1		08001-0115E	Battery, Wet,115E41R	2	C00001-
2		08000-00020	Terminal,(+)	2	C00001-
3		08000-00021	Terminal,(-)	2	C00001-
4		22U-06-21151	Holder	1	C00001-
5		01643-31232	Washer	1	C00001-
6		22U-06-21130	Bolt	1	C00001-
7		20Y-06-56530	Holder	1	C00001-
8		01643-31232	Washer	1	C00001-
9		22U-06-21130	Bolt	1	C00001-
10		08028-63035	Cable, Battery	1	C00001-
11		08038-42511	Cap	2	C00001-
12		207-06-61461	Bracket	2	C00001-
13		207-06-51330	• Sheet	1	C00001-
14		01010-81230	Bolt	4	C00001-
15		175-54-34170	Washer	4	C00001-
16		08193-20012	Clip	1	C00001-
17		01010-81225	Bolt	1	C00001-
18		01643-31232	Washer	1	C00001-

FIG. E0100-002001 Battery (Large Capacity)

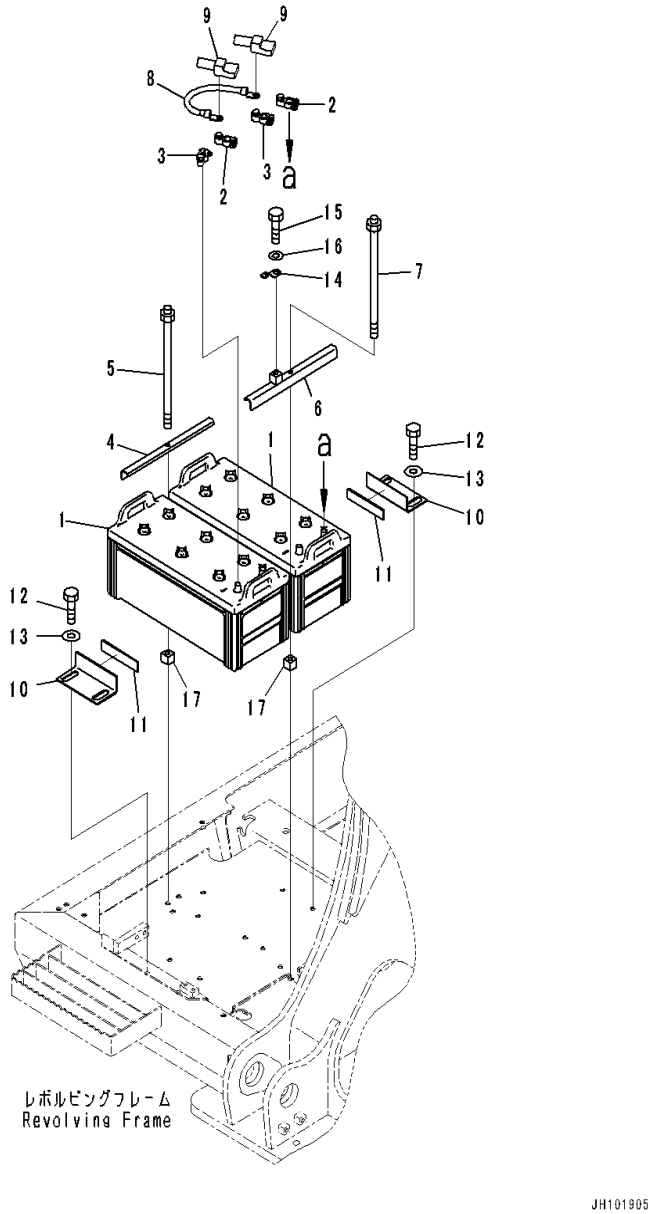

Index	Code	Part Number	Description	Qty	Serial Number
1		08000-3222Z	Battery, Wet,195G51	2	C00001-
2		08000-00020	Terminal,(+)	2	C00001-
3		08000-00021	Terminal,(-)	2	C00001-
4		205-06-51380	Clamp	1	C00001-
5		202-09-11120	Bolt	1	C00001-
6		20Y-06-56540	Clamp	1	C00001-
7		202-09-11120	Bolt	1	C00001-
8		08028-63035	Cable, Battery	1	C00001-
9		08038-42511	Cap	2	C00001-
10		207-06-61461	Bracket	2	C00001-
11		207-06-51330	• Sheet	1	C00001-
12		01010-81230	Bolt	4	C00001-
13		175-54-34170	Washer	4	C00001-
14		08193-20012	Clip	1	C00001-
15		01010-81225	Bolt	1	C00001-
16		01643-31232	Washer	1	C00001-
17		207-06-51461	Block	2	C00001-

FIG. E0200-001001 Front Working Lamp (Wiring Harness Mounting, 1/2)

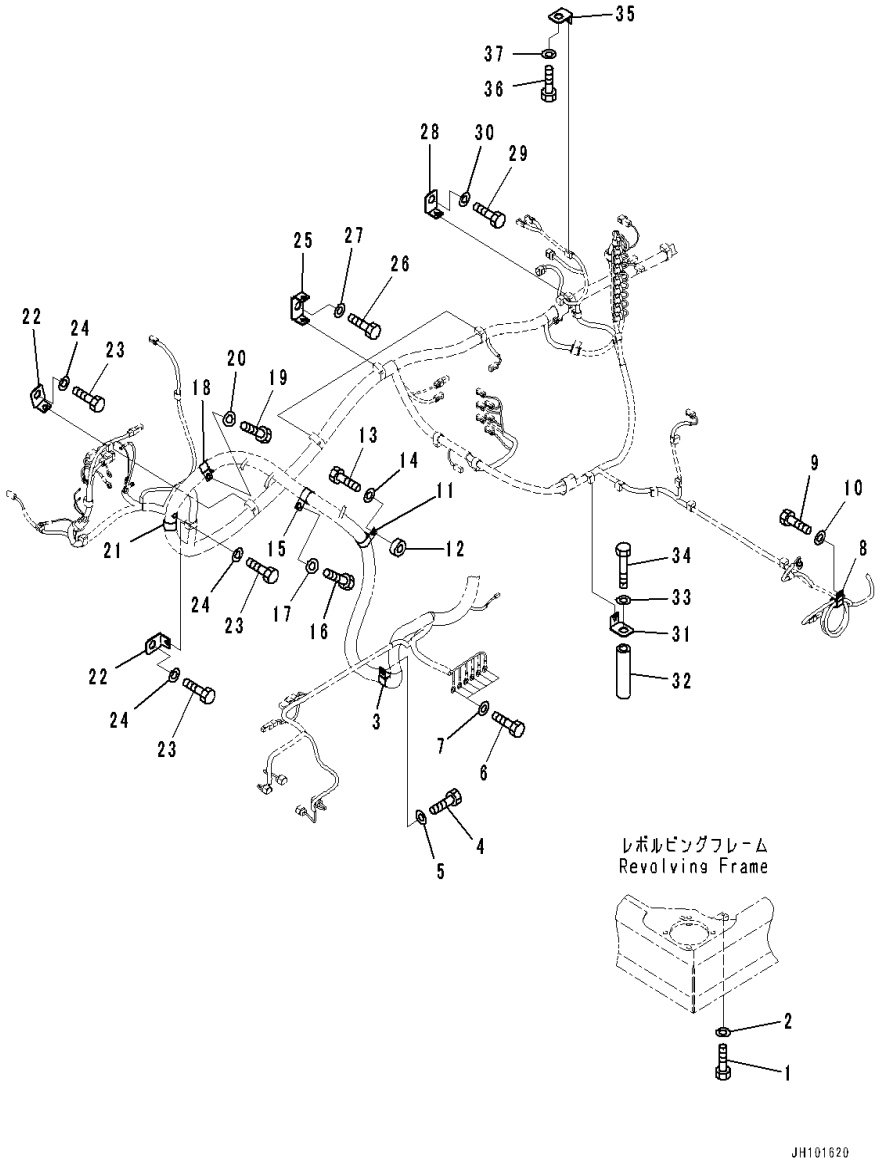

Index	Code	Part Number	Description	Qty	Serial Number
1		01010-81020	Bolt	1	C00001-
2		01643-31032	Washer	1	C00001-
3		04434-53412	Clip	1	C00001-
4		01010-81235	Bolt	1	C00001-
5		01643-31232	Washer	1	C00001-
6		01010-81020	Bolt	6	C00001-
7		01643-31032	Washer	6	C00001-
8		04434-52512	Clip	1	C00001-
9		01010-81225	Bolt	1	C00001-
10		01643-31232	Washer	1	C00001-
11		04434-53412	Clip	1	C00001-
12		198-43-15310	Collar	1	C00001-
13		01010-81235	Bolt	1	C00001-
14		01643-31232	Washer	1	C00001-
15		04434-53412	Clip	1	C00001-
16		01010-81225	Bolt	1	C00001-
17		01643-31232	Washer	1	C00001-
18		04434-53412	Clip	1	C00001-
19		01010-81225	Bolt	1	C00001-
20		01643-31232	Washer	1	C00001-
21		04434-53412	Clip	1	C00001-
22		08057-12012	Clip	2	C00001-
23		01010-81225	Bolt	3	C00001-
24		01643-31232	Washer	3	C00001-
25		08057-22012	Clip	3	C00001-
26		01010-81225	Bolt	3	C00001-
27		01643-31232	Washer	3	C00001-
28		08057-12012	Clip	1	C00001-
29		01010-81225	Bolt	1	C00001-
30		01643-31232	Washer	1	C00001-
31		08057-12012	Clip	1	C00001-
32		425-S62-4360	Spacer	1	C00001-
33		01643-31232	Washer	1	C00001-
34		01011-81205	Bolt	1	C00001-
35		08057-12012	Clip	1	C00001-
36		01010-81225	Bolt	1	C00001-
37		01643-31232	Washer	1	C00001-

FIG. E0200-001002 Front Working Lamp (Wiring Harness Mounting, 2/2)

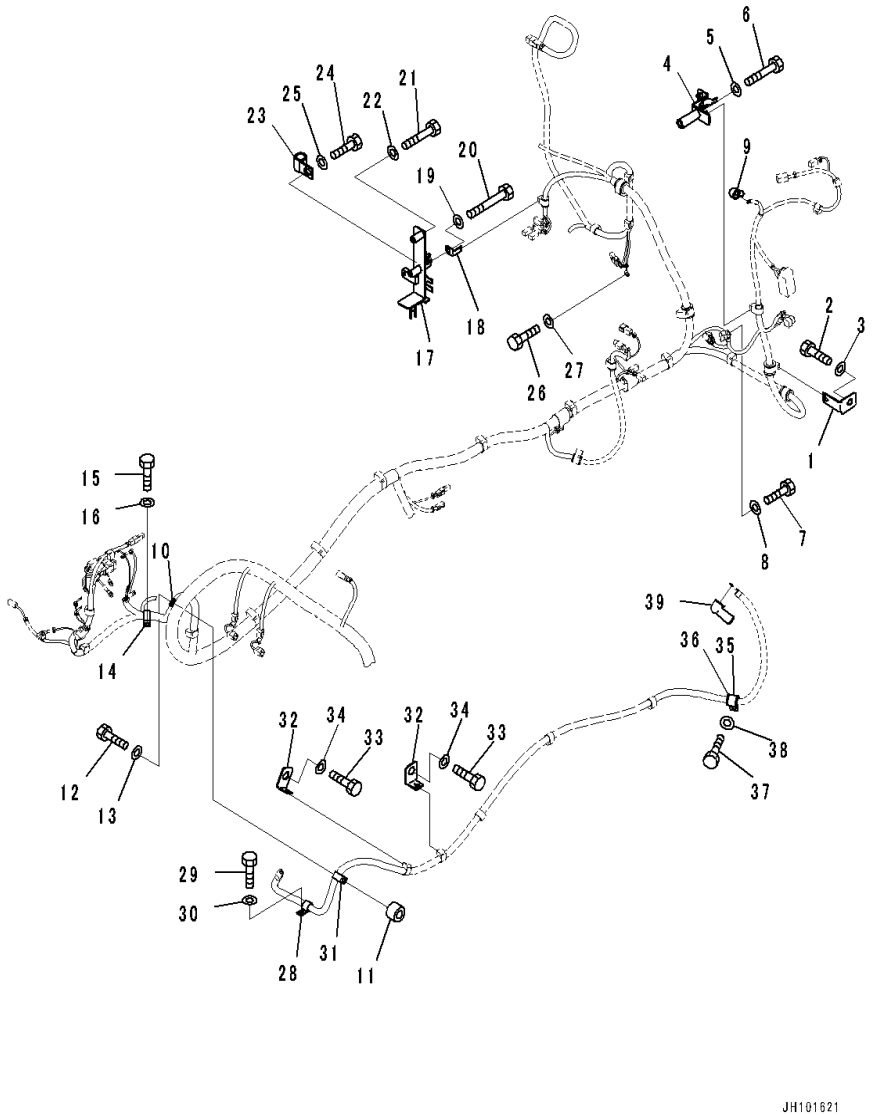

Index	Code	Part Number	Description	Qty	Serial Number
1		08057-14010	Clip	1	C00001-
2		01010-81020	Bolt	1	C00001-
3		01643-31032	Washer	1	C00001-
4		20Y-06-56140	Bracket	1	C00001-
5		01643-31232	Washer	1	C00001-
6		01011-81210	Bolt	1	C00001-
7		01010-81225	Bolt	1	C00001-
8		01643-31232	Washer	1	C00001-
9		08038-12027	Cap, Terminal	1	C00001-
10		04434-52212	Clip	1	C00001-
11		144-947-3490	Spacer	1	C00001-
12		01010-81245	Bolt	1	C00001-
13		01643-31232	Washer	1	C00001-
14		04434-52212	Clip	1	C00001-
15		01010-81225	Bolt	1	C00001-
16		01643-31232	Washer	1	C00001-
17		20Y-06-56160	Bracket	1	C00001-
18		08057-14012	Clip	1	C00001-
19		01643-31032	Washer	1	C00001-
20		01011-81005	Bolt	1	C00001-
21		01010-81065	Bolt	1	C00001-
22		01643-31032	Washer	1	C00001-
23		04434-51410	Clip	1	C00001-
24		01010-81020	Bolt	1	C00001-
25		01643-31032	Washer	1	C00001-
26		01010-81016	Bolt	1	C00001-
27		01643-31032	Washer	1	C00001-
28		04434-51912	Clip	1	C00001-
29		01010-81225	Bolt	1	C00001-
30		01643-31232	Washer	1	C00001-
31		04434-51912	Clip	1	C00001-
32		08057-12012	Clip	2	C00001-
33		01010-81225	Bolt	2	C00001-
34		01643-31232	Washer	2	C00001-
35		04434-52712	Clip	1	C00001-
36		198-06-53580	Cushion	1	C00001-
37		01010-81225	Bolt	1	C00001-
38		01643-31232	Washer	1	C00001-
39		2A5-06-11990	Cap	1	C00001-

FIG. E0200-001003 Front Working Lamp (Working Lamp, Front)

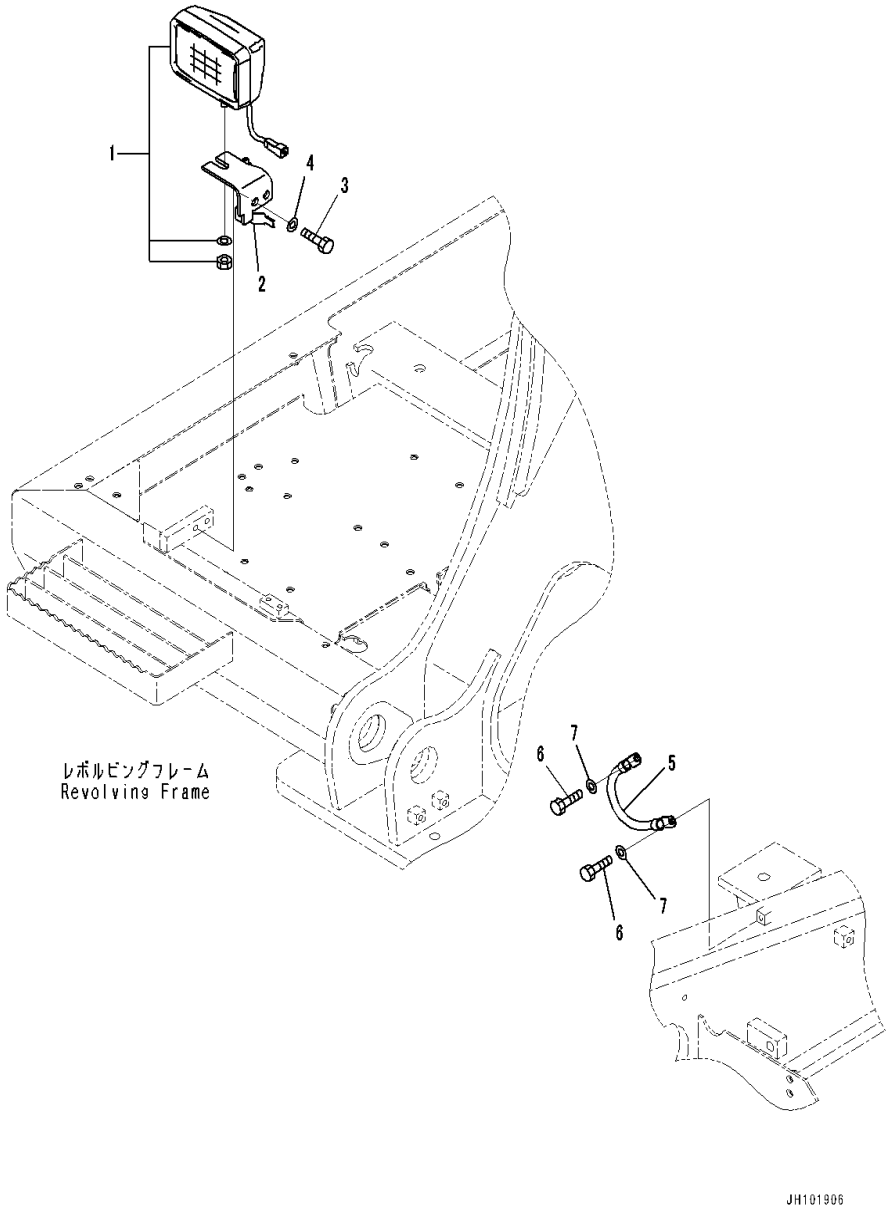

Index	Code	Part Number	Description	Qty	Serial Number
1		20Y-06-43230	Working Lamp Assembly	1	C00001-
		421-06-23330	• Bulb,70watt	1	C00001-
2		20Y-06-56381	Bracket	1	C00001-
3		01010-81225	Bolt	2	C00001-
4		01643-31232	Washer	2	C00001-
5		08028-43030	Cable, Ground	1	C00001-
6		01010-81020	Bolt	2	C00001-
7		01643-31032	Washer	2	C00001-

FIG. E0200-001004 Front Working Lamp (Connector)

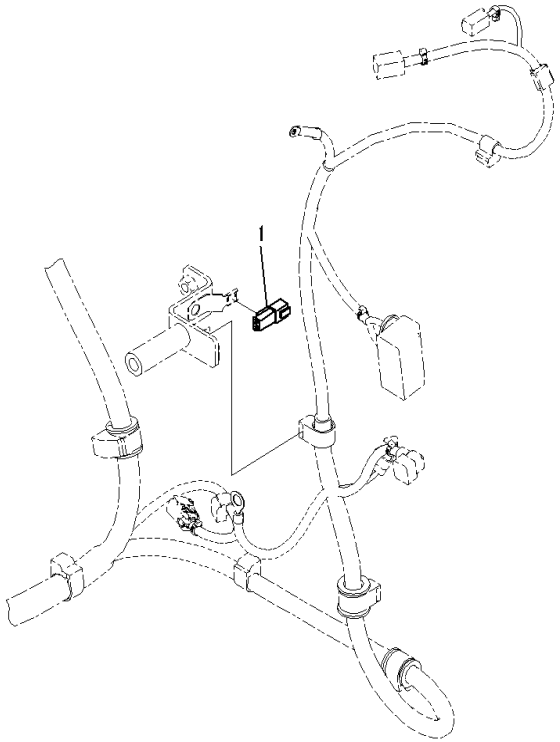

Index	Code	Part Number	Description	Qty	Serial Number
1		14X-54-59170	Connector	1	C00001-

FIG. E0201-001001 Antenna Guard

Index	Code	Part Number	Description	Qty	Serial Number
1		20Y-53-17120	Bracket	1	C00001-

FIG. E0210-001001 Battery Electric Wiring Harness (With Battery Disconnect Switch)

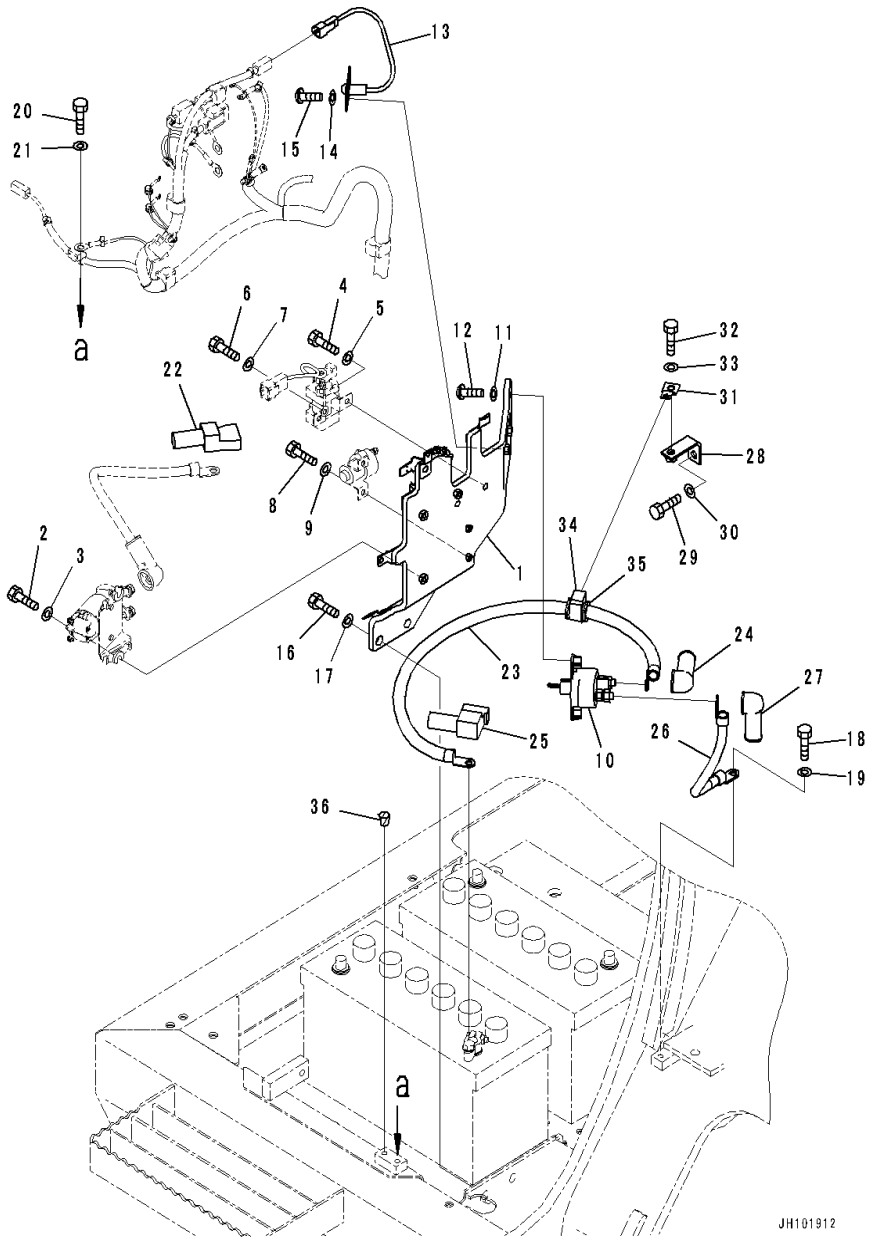

Index	Code	Part Number	Description	Qty	Serial Number
1		20Y-06-56221	Bracket	1	C00001-
2		01010-80835	Bolt	2	C00001-
3		01643-30823	Washer	2	C00001-
4		01010-80816	Bolt	2	C00001-
5		01643-30823	Washer	2	C00001-
6		01010-80825	Bolt	1	C00001-
7		01643-30823	Washer	1	C00001-
8		01010-80625	Bolt	2	C00001-
9		01643-30623	Washer	2	C00001-
10		08068-00001	Switch, Battery	1	C00001-
		08068-00002	• Key	1	C00001-
11		01643-70823	Washer	2	C00001-
12		01245-00830	Screw, Hexagon Socket Head	2	C00001-
13		08155-02400	Lamp	1	C00001-
14		01643-70823	Washer	2	C00001-
15		01245-00825	Screw	2	C00001-
16		01010-81230	Bolt	2	C00001-
17		01643-31232	Washer	2	C00001-
18		01010-81016	Bolt	1	C00001-
19		01643-31032	Washer	1	C00001-
20		01010-81016	Bolt	1	C00001-
21		01643-31032	Washer	1	C00001-
22		08038-42511	Cap	1	C00001-
23		08028-EC085	Cable	1	C00001-
24		08038-00035	Cap, Terminal	1	C00001-
25		14X-06-12270	Cover	1	C00001-
26		08028-43035	Cable, Ground	1	C00001-
27		08038-00035	Cap, Terminal	1	C00001-
28		203-62-56381	Bracket	1	C00001-
29		01010-81020	Bolt	1	C00001-
30		01643-31032	Washer	1	C00001-
31		08057-00810	Clip	1	C00001-
32		01010-81020	Bolt	1	C00001-
33		01643-31032	Washer	1	C00001-
34		08211-02220	Clip	1	C00001-
35		198-06-53580	Cushion	1	C00001-
36		07049-01012	Plug	1	C00001-

FIG. E0250-001001 Engine Wiring Harness

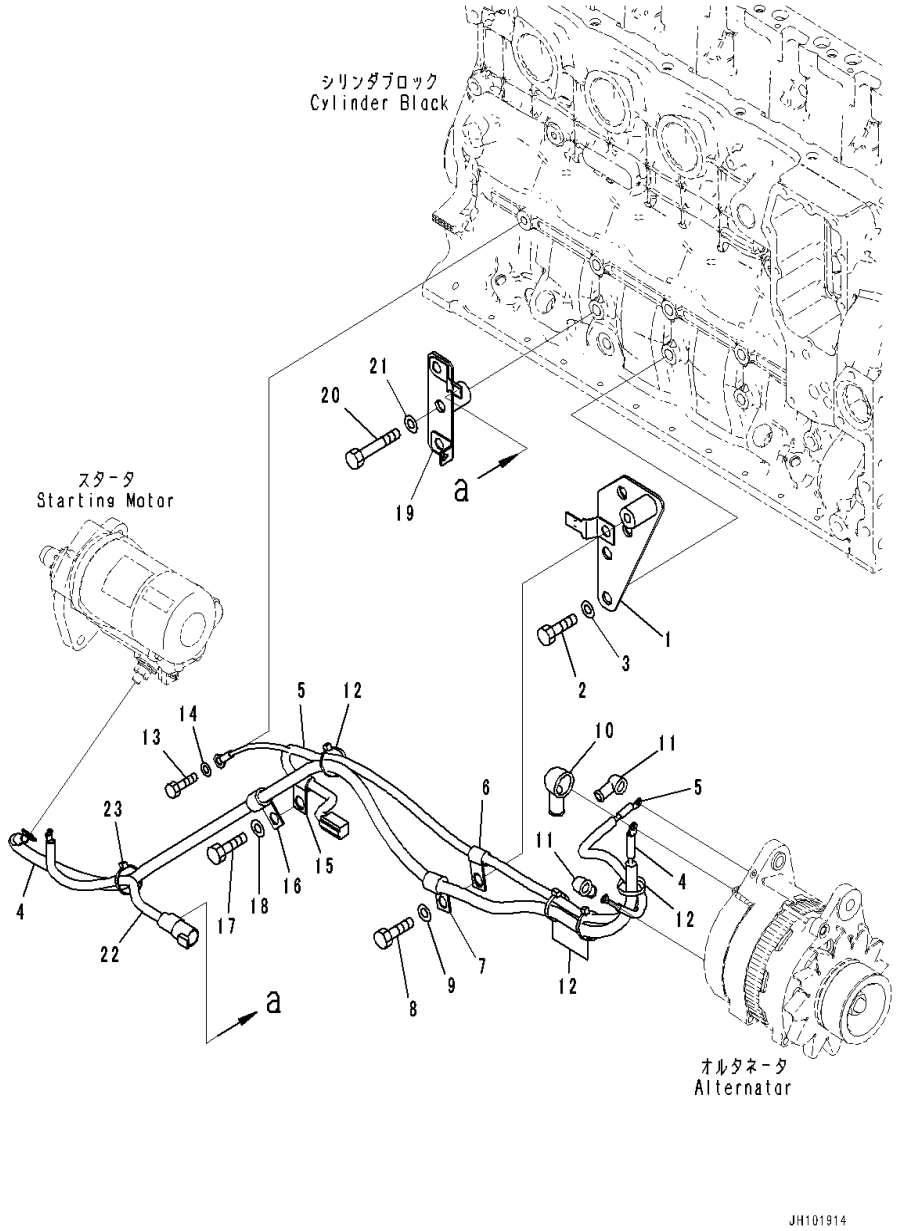

Index	Code	Part Number	Description	Qty	Serial Number
1		20Y-06-56131	Bracket	1	C00001-
2		01010-81230	Bolt	2	C00001-
3		01643-31232	Washer	2	C00001-
4		20Y-06-41351	Cable	1	C00001-
5		20Y-06-56550	Wiring Harness	1	C00001-
6		04434-51012	Clip	1	C00001-
7		04434-51412	Clip	1	C00001-
8		01010-81230	Bolt	1	C00001-
9		01643-31232	Washer	1	C00001-
10		20Y-06-57310	Cap	1	C00001-
11		08038-10519	Cap	2	C00001-
12		08034-20536	Band	4	C00001-
13		01010-80816	Bolt	1	C00001-
14		01643-30823	Washer	1	C00001-
15		04434-51012	Clip	1	C00001-
16		04434-51412	Clip	1	C00001-
17		01010-81230	Bolt	1	C00001-
18		01643-31232	Washer	1	C00001-
19		20Y-06-56150	Bracket	1	C00001-
20		01010-81265	Bolt	1	C00001-
21		01643-31232	Washer	1	C00001-
22		20Y-06-41770	Cable	1	C00001-
23		08034-20536	Band	1	C00001-

FIG. E0310-001001 Additional Working Lamp

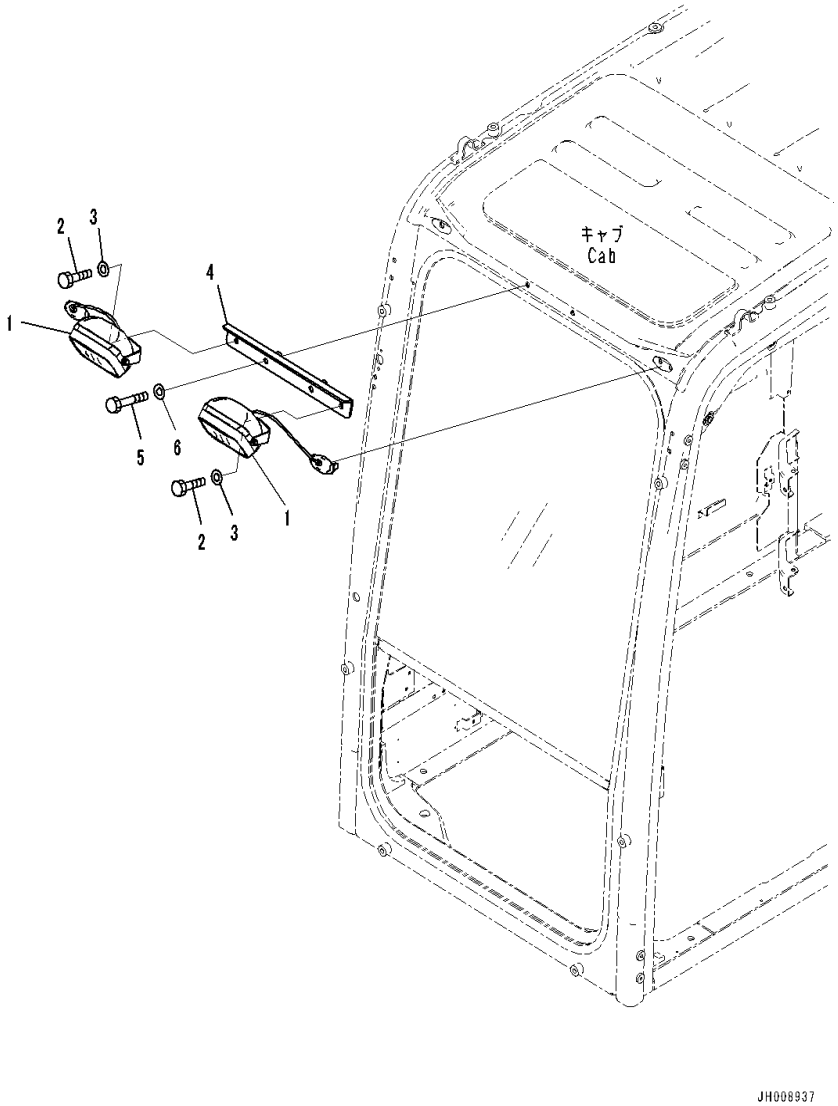

Index	Code	Part Number	Description	Qty	Serial Number
1		2A5-06-12431	Working Lamp Assembly	2	C00001-
		22B-54-17271	• Grommet	1	C00001-
		421-06-23330	• Bulb,70watt	1	C00001-
2		01010-D1025	Bolt	2	C00001-
3		01643-71032	Washer	2	C00001-
4		20Y-53-15281	Bracket	1	C00001-
5		01010-D1065	Bolt	2	C00001-
6		01643-71032	Washer	2	C00001-

FIG. E0320-001001 Additional Rear Working Lamp

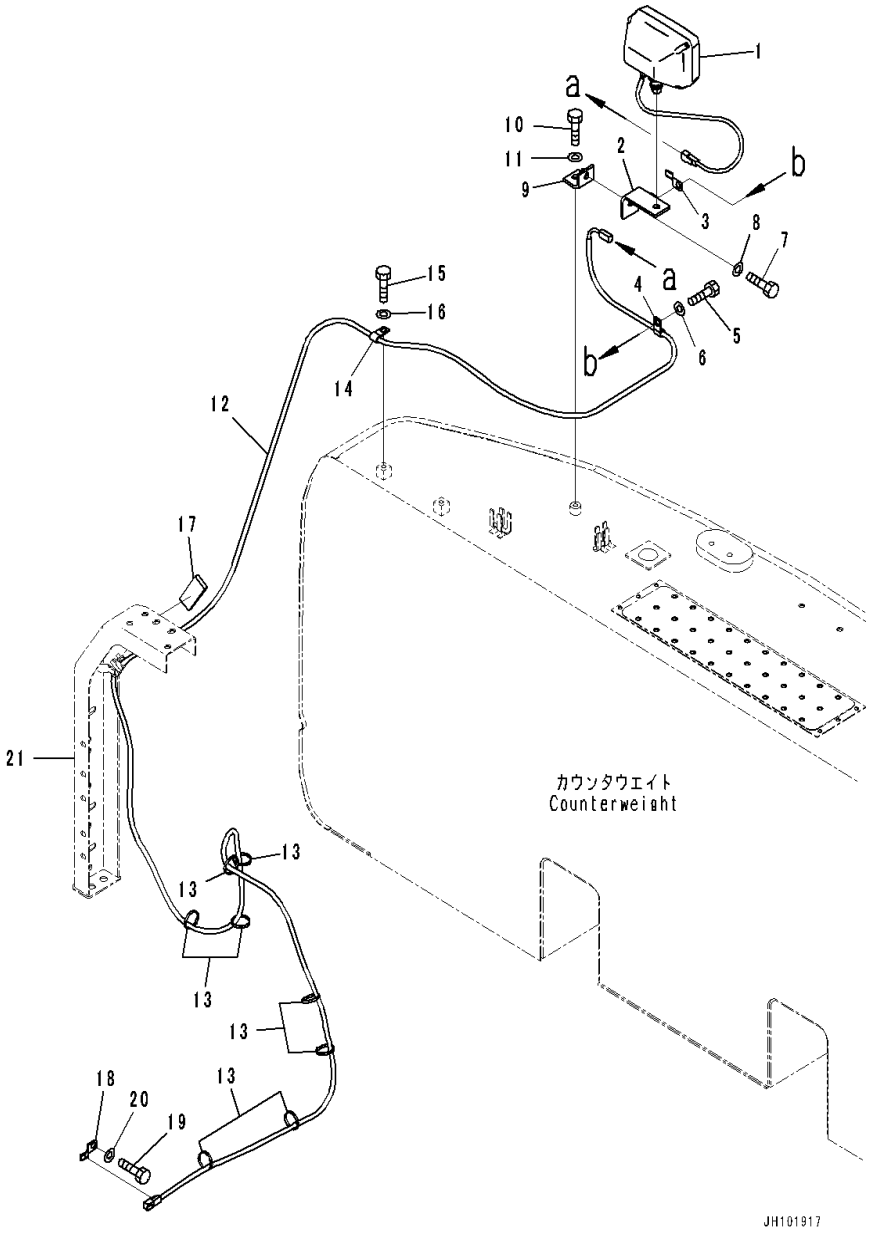

Index	Code	Part Number	Description	Qty	Serial Number
1		20Y-06-43230	Working Lamp Assembly	1	C00001-
		421-06-23330	• Bulb,70watt	1	C00001-
2		20Y-06-21551	Bracket	1	C00001-
3		08193-20012	Clip	1	C00001-
4		04434-51012	Clip	1	C00001-
5		01010-81225	Bolt	1	C00001-
6		01643-31232	Washer	1	C00001-
7		01010-81225	Bolt	1	C00001-
8		01643-31232	Washer	1	C00001-
9		20Y-06-21590	Bracket	1	C00001-
10		01010-81225	Bolt	1	C00001-
11		01643-31232	Washer	1	C00001-
12		20Y-06-56340	Wiring Harness	1	C00001-
13		08034-20536	Band	8	C00001-
14		04434-51012	Clip	1	C00001-
15		01010-81225	Bolt	1	C00001-
16		01643-31232	Washer	1	C00001-
17		20Y-06-56490	Sheet	1	C00001-
18		08193-20012	Clip	1	C00001-
19		01010-81225	Bolt	1	C00001-
20		01643-31232	Washer	1	C00001-
21		(20Y-54-57411)	Frame(Door R.H.,For Asia)		

FIG. E0340-001001 Beacon Lamp

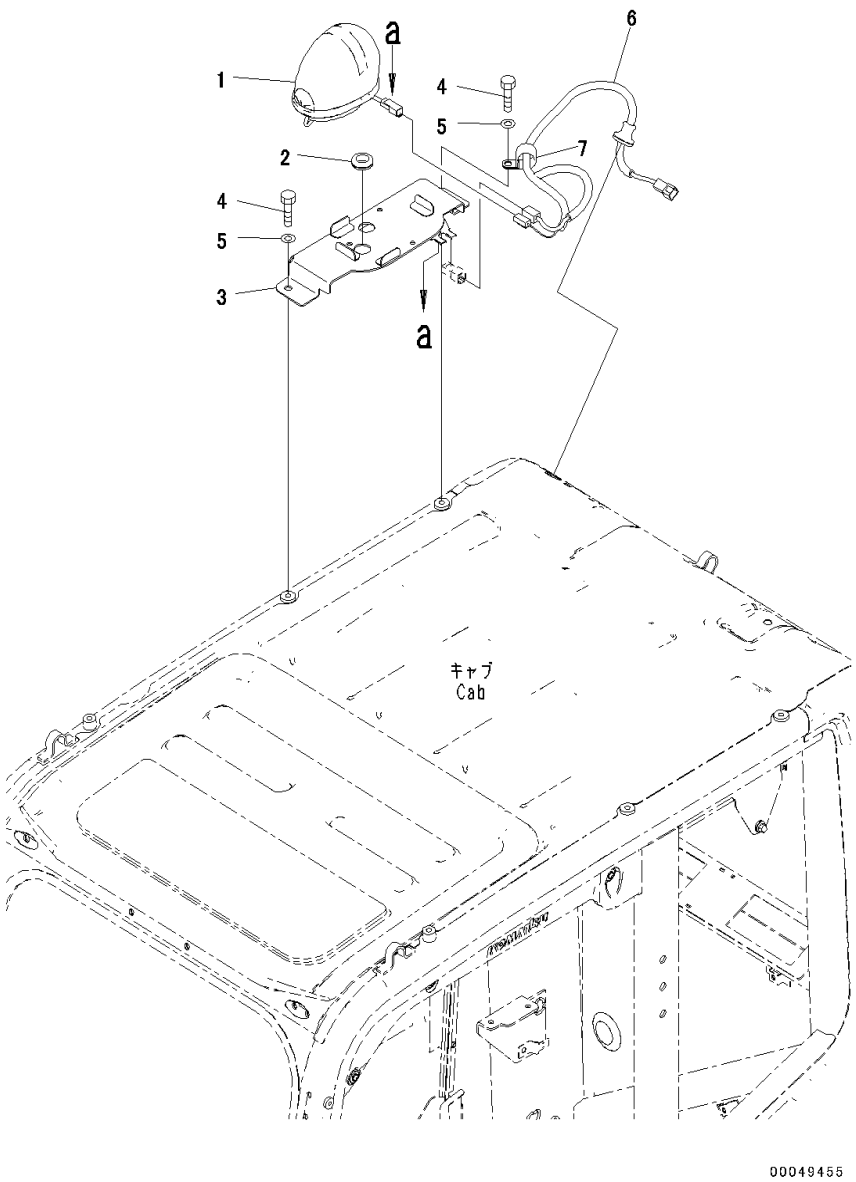

Index	Code	Part Number	Description	Qty	Serial Number
1		22B-54-17612	Working Lamp Assembly, Beacon	1	C00001-
		22B-54-17660	• Bulb	1	C00001-
2		08037-02512	Grommet	1	C00001-
3		20Y-53-15121	Bracket	1	C00001-
4		01010-D1220	Bolt	2	C00001-
5		01643-71232	Washer	2	C00001-
6		20Y-06-41543	Wire Harness	1	C00001-
7		04434-51012	Clip	1	C00001-
		04435-51012	Clip	1	C00001-

FIG. E0410-001001 Horn

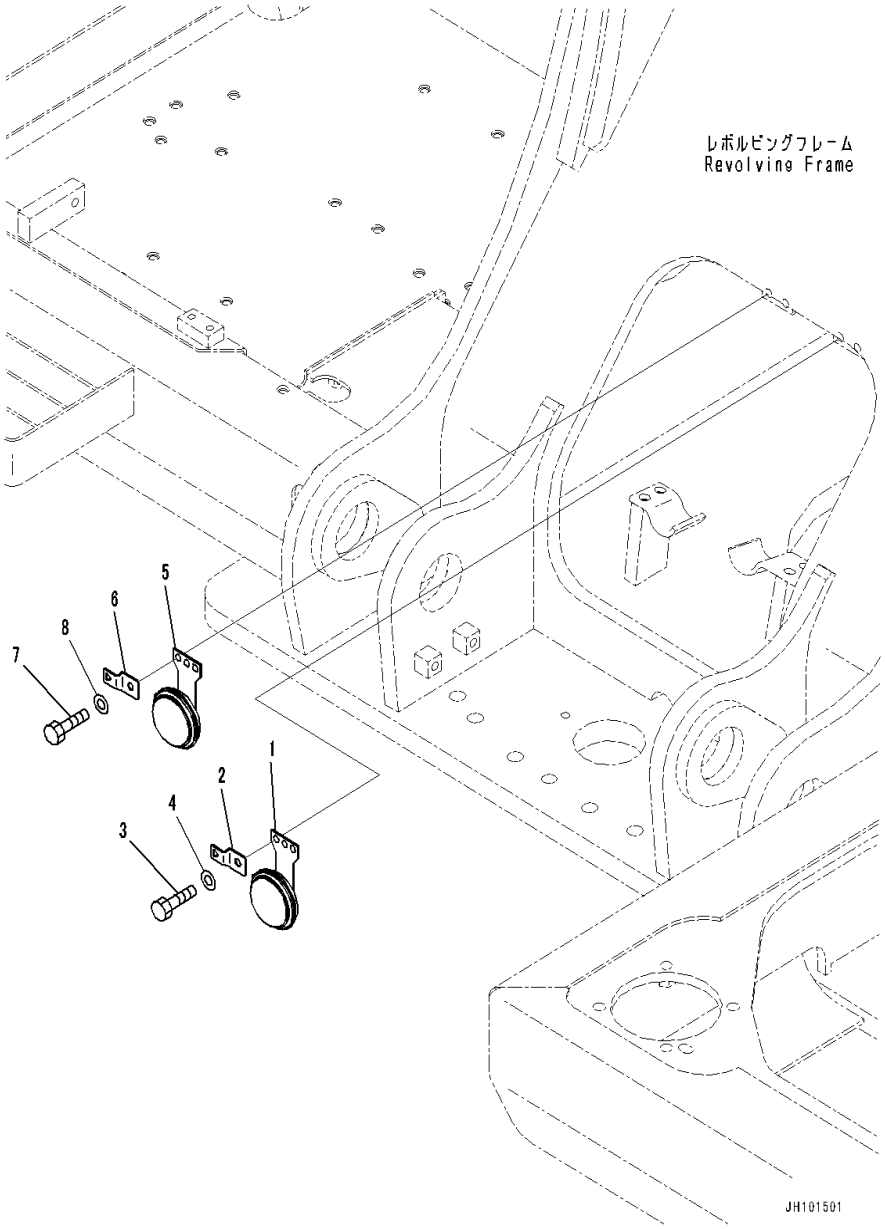

Index	Code	Part Number	Description	Qty	Serial Number
1		08160-72400	Horn	1	C00001-
2		08057-00808	Clip	1	C00001-
3		01010-80825	Bolt	2	C00001-
4		01643-30823	Washer	2	C00001-
5		08160-72420	Horn	1	C00001-
6		08057-00808	Clip	1	C00001-
7		01010-80825	Bolt	2	C00001-
8		01643-30823	Washer	2	C00001-

FIG. E0420-001001 Travel Alarm

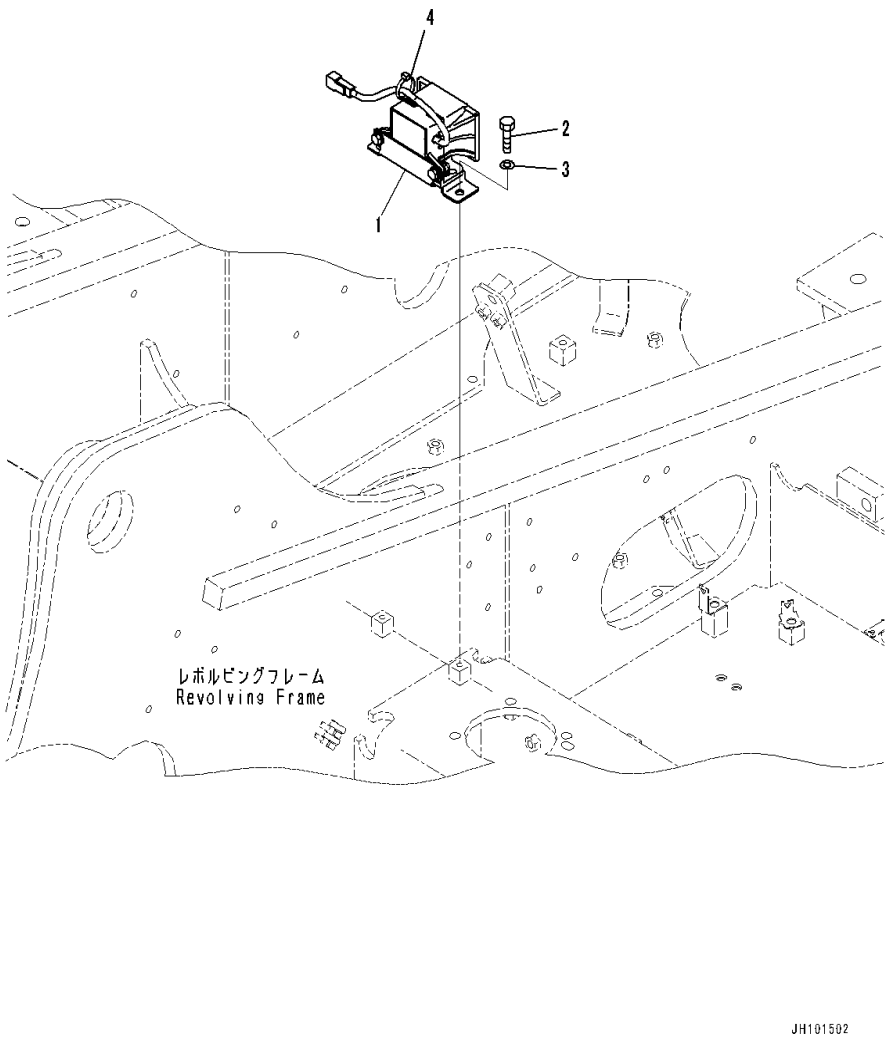

Index	Code	Part Number	Description	Qty	Serial Number
1		20Y-06-41812	Alarm, Back-up	1	C00001-
2		01010-81020	Bolt	2	C00001-
3		01643-31032	Washer	2	C00001-
4		08034-20536	Band	1	C00001-

FIG. E0450-001001 Rearview Camera

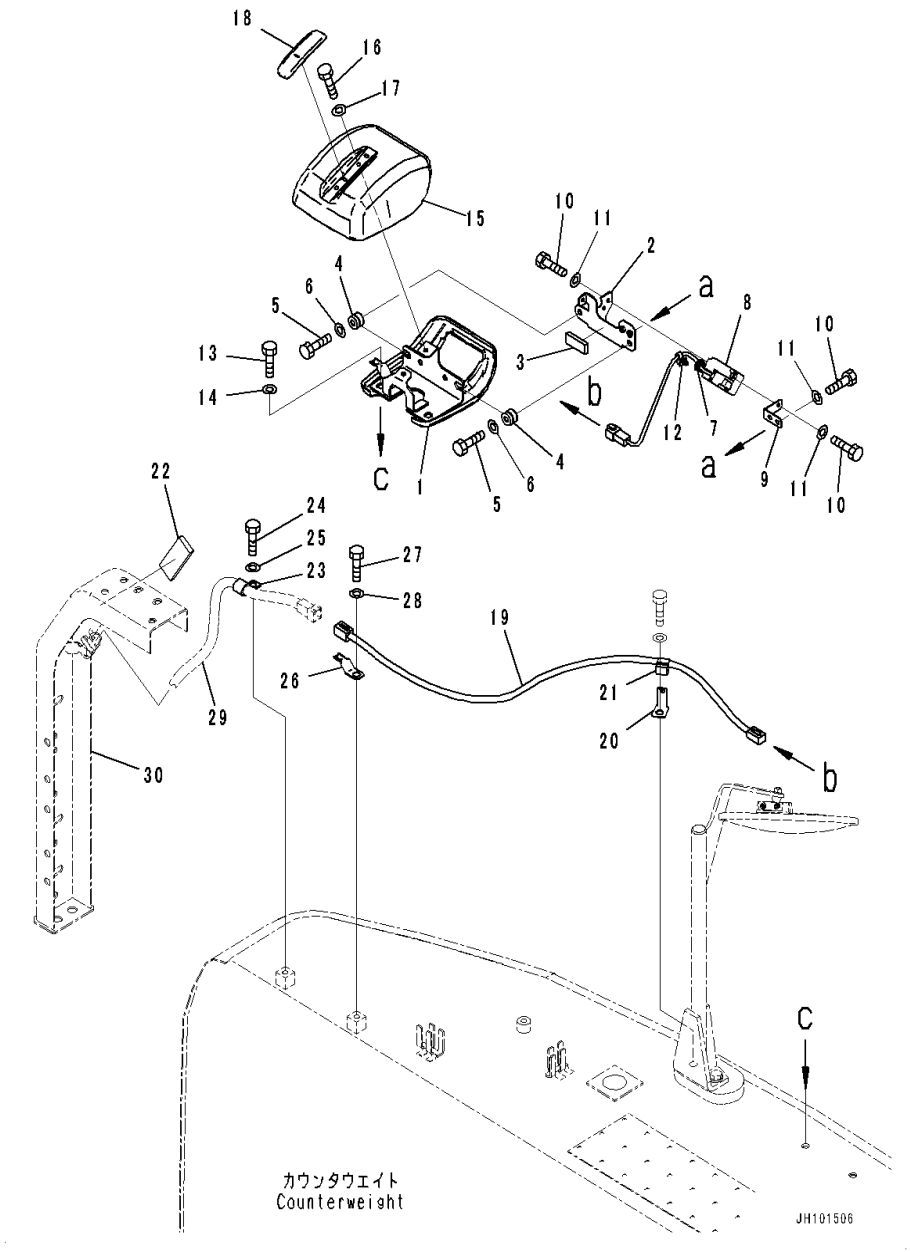

Index	Code	Part Number	Description	Qty	Serial Number
1		20Y-06-56450	Cover	1	C00001-
2		2A7-06-21560	Bracket	1	C00001-
3		207-06-76460	• Sheet	1	C00001-
4		20Y-810-1240	Cushion	2	C00001-
5		01010-80835	Bolt	2	C00001-
6		01643-30823	Washer	2	C00001-
7		175-06-81610	Grommet	1	C00001-
8		7835-80-1000	Camera	1	C00001-
9		22U-06-31440	Bracket	1	C00001-
10		01010-80616	Bolt	5	C00001-
11		01643-30623	Washer	5	C00001-
12		08059-00310	Clip	1	C00001-
13		01010-81230	Bolt	2	C00001-
14		01643-31232	Washer	2	C00001-
15		20Y-06-56460	Cover	1	C00001-
16		01010-80616	Bolt	2	C00001-
17		01643-30623	Washer	2	C00001-
18		207-06-76451	Cover	1	C00001-
19		20Y-06-56281	Cable	1	C00001-
20		08057-14012	Clip	1	C00001-
21		08211-00720	Clip	1	C00001-
22		20Y-06-56490	Sheet	1	C00001-
23		04434-51712	Clip	1	C00001-
24		01010-81225	Bolt	1	C00001-
25		01643-31232	Washer	1	C00001-
26		08193-20012	Clip	1	C00001-
27		01010-81225	Bolt	1	C00001-
28		01643-31232	Washer	1	C00001-
29		(20Y-06-56112)	Wiring Harness(Cab,Floor, Wiring to Harness)		
30		(20Y-54-57411)	Frame(Door R.H.)		

FIG. E0450-002001 Rearview Camera Less

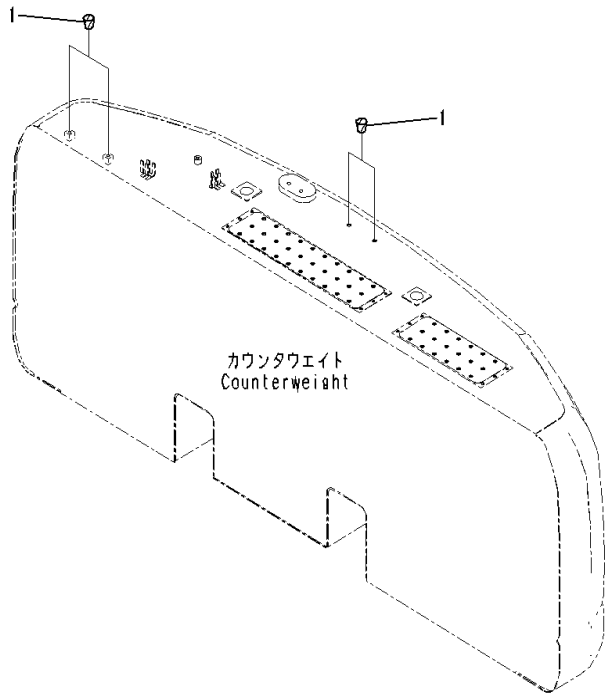

Index	Code	Part Number	Description	Qty	Serial Number
1		07049-01215	Plug	4	C00001-

HYDRAULIC SYSTEM

FIG. H0110-001001 Hydraulic Tank (Tank)

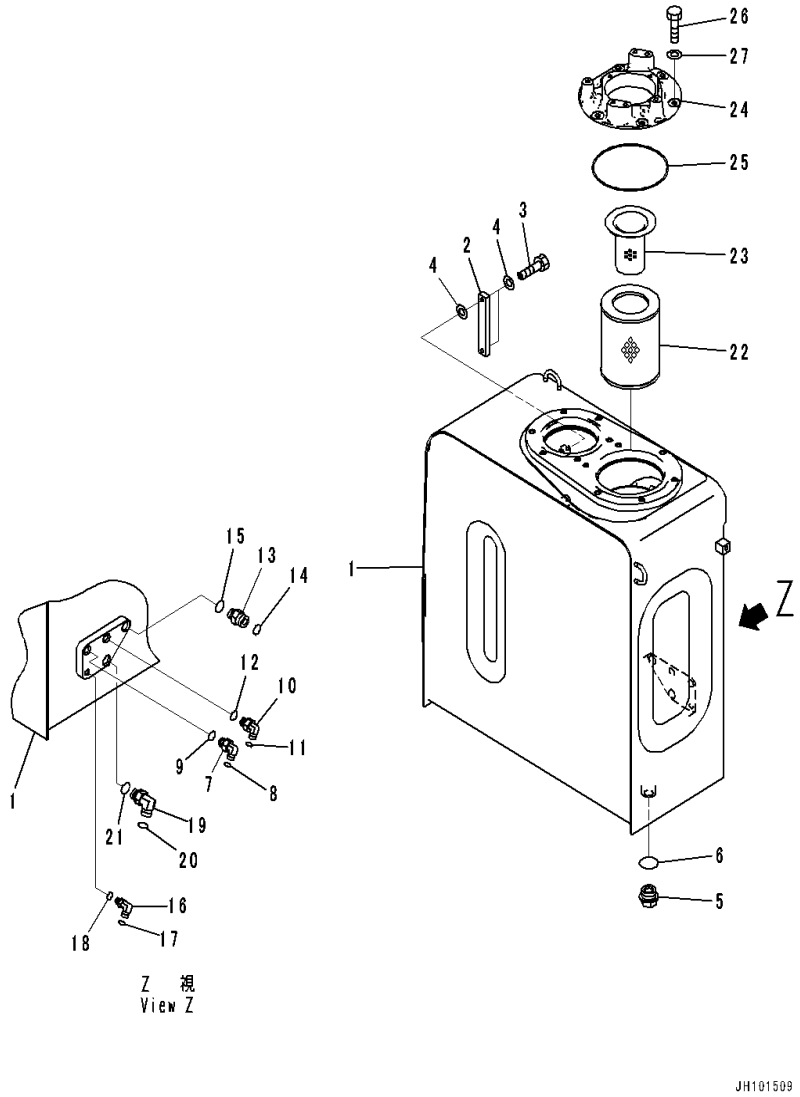

Index	Code	Part Number	Description	Qty	Serial Number
1		20Y-60-56110	Tank	1	C00001-
2		195-03-61550	Gauge	1	C00001-
3		20N-60-41360	• Bolt	2	C00001-
4		20N-60-41371	• Gasket	4	C00001-
5		07044-12412	Plug	1	C00001-
6		07002-12434	O-ring	1	C00001-
7		02782-10315	Elbow	1	C00001-
8		02896-11009	O-ring	1	C00001-
9		07002-12034	O-ring	1	C00001-
10		02782-10315	Elbow	1	C00001-
11		02896-11009	O-ring	1	C00001-
12		07002-12034	O-ring	1	C00001-
13		02781-00628	Union	1	C00001-
14		02896-11018	O-ring	1	C00001-
15		07002-12434	O-ring	1	C00001-
16		02782-10311	Elbow	1	C00001-
17		02896-11009	O-ring	1	C00001-
18		07002-11423	O-ring	1	C00001-
19		02782-10522	Elbow	1	C00001-
20		02896-11015	O-ring	1	C00001-
21		07002-12434	O-ring	1	C00001-
22		207-60-71183	Element, Hydraulic Oil Filter	1	C00001-
23		20Y-60-31140	Strainer	1	C00001-
24		20Y-60-56122	Flange	1	C00001-
25		07000-15195	O-ring	1	C00001-
26		01010-81225	Bolt	6	C00001-
27		01643-31232	Washer	6	C00001-

FIG. H0110-001002 Hydraulic Tank (Breather)

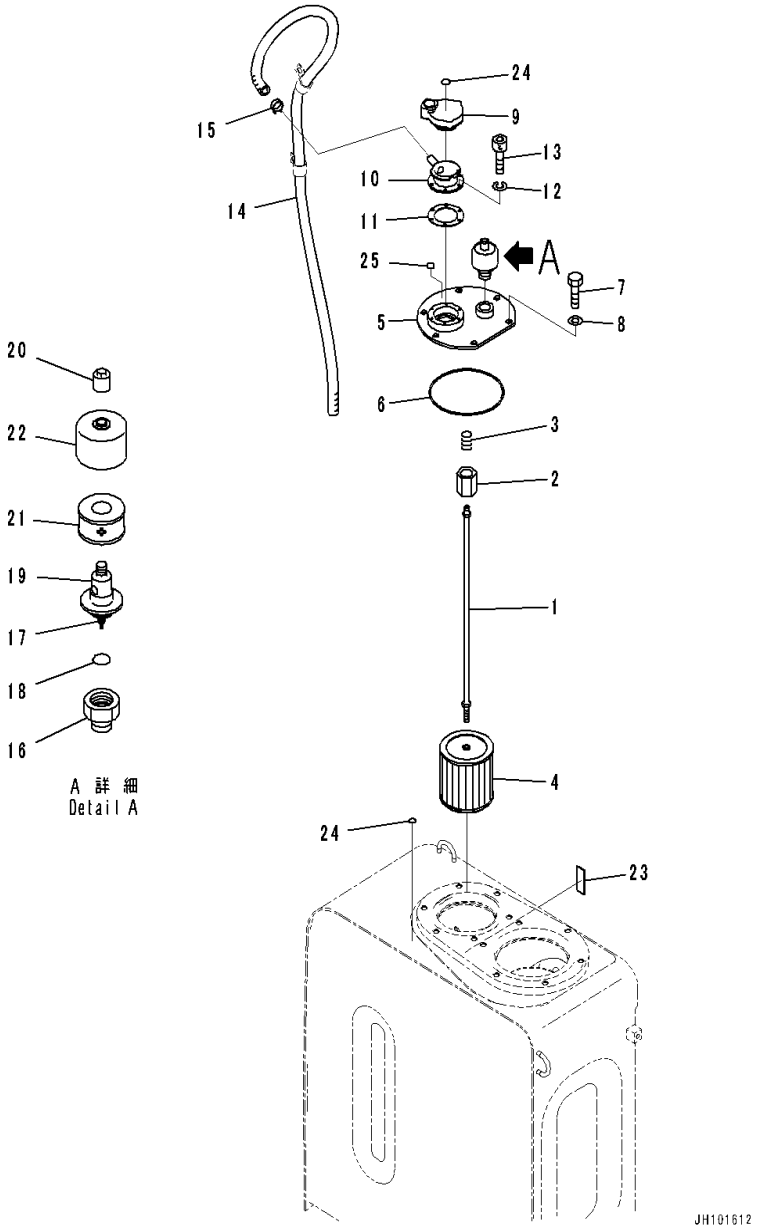

Index	Code	Part Number	Description	Qty	Serial Number
		20Y-60-31171	Strainer Assembly	1	C00001-
1		207-60-61150	• Rod Assembly	1	C00001-
2		20Y-60-21320	• • Holder	1	C00001-
3		12R-60-11230	• • Spring	1	C00001-
4		22B-60-11160	• Strainer	1	C00001-
5		20Y-60-42143	Cover	1	C00001-
6		07000-15160	O-ring	1	C00001-
7		01010-81225	Bolt	6	C00001-
8		01643-31232	Washer	6	C00001-
9		208-60-41211	Cap Assembly	1	C00001-
10		20Y-60-42211	Filler Neck	1	C00001-
11		20Y-60-21340	Gasket	1	C00001-
12		01601-20513	Washer	6	C00001-
13		01252-70516	Bolt	6	C00001-
14		20Y-60-56240	Hose	1	C00001-
15		07285-00200	Clip, Hose	1	C00001-
		20Y-60-42251	Breather	1	C00001-
16	C1		• Body	1	C00001-
17	C1		• Valve Assembly	1	C00001-
18	C1		• O-ring	1	C00001-
19	C1		• Case	1	C00001-
20		20Y-60-56260	• Nut	1	C00001-
21		421-60-35170	• Element	1	C00001-
22		421-60-35180	• Cover	1	C00001-
23		205-00-73360	Plate, Operating	1	C00001-
24		203-00-17210	Mark, Triangle	2	C00001-
25		203-00-17220	Mark, Key	1	C00001-

FIG. H0110-001003 Hydraulic Tank (Bypass Valve)

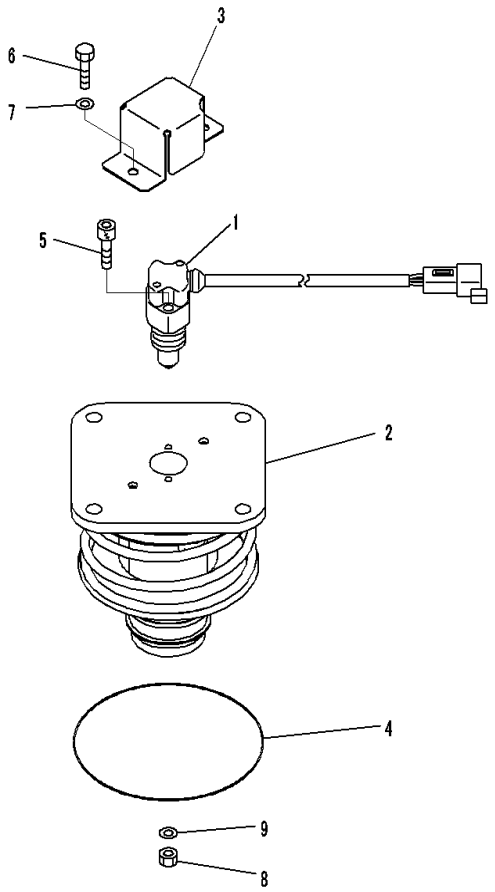

Index	Code	Part Number	Description	Qty	Serial Number
		729-17-15000	Valve Assembly	1	C00001-
1		729-12-27000	• Sensor Assembly	1	C00001-
2	C1		• Body	1	C00001-
3		729-17-11220	• Cover	1	C00001-
4		07000-A2125	• O-ring	1	C00001-
5		01252-A0630	• Bolt, Hexagon Socket Head	2	C00001-
6		01010-80620	• Bolt	2	C00001-
7		01643-30623	• Washer	2	C00001-
8		01580-00806	• Nut	1	C00001-
9		01643-30823	• Washer	1	C00001-

FIG. H0110-001004 Hydraulic Tank (Related Parts)

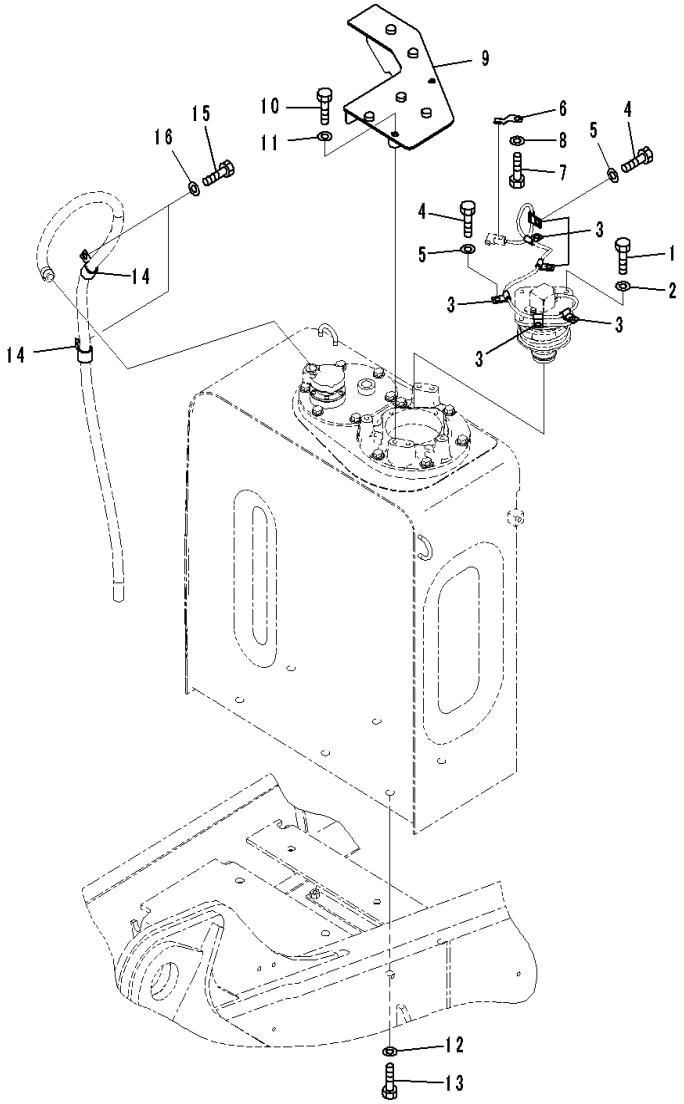

Index	Code	Part Number	Description	Qty	Serial Number
1		01010-81030	Bolt	4	C00001-
2		01643-31032	Washer	4	C00001-
3		04434-50612	Clip	6	C00001-
4		01010-81225	Bolt	6	C00001-
5		01643-31232	Washer	6	C00001-
6		08193-20012	Clip	1	C00001-
7		01010-81225	Bolt	1	C00001-
8		01643-31232	Washer	1	C00001-
9		20Y-60-56151	Cover	1	C00001-
10		01010-81250	Bolt	2	C00001-
11		01643-31232	Washer	2	C00001-
12		01643-31645	Washer, Flat	6	C00001-
13		01010-81635	Bolt	6	C00001-
14		04434-52512	Clip	2	C00001-
15		01010-81225	Bolt	2	C00001-
16		01643-31232	Washer	2	C00001-

FIG. H0110-002001 Hydraulic Tank (1-Additional Actuator Piping, Accumulator) (Tank)

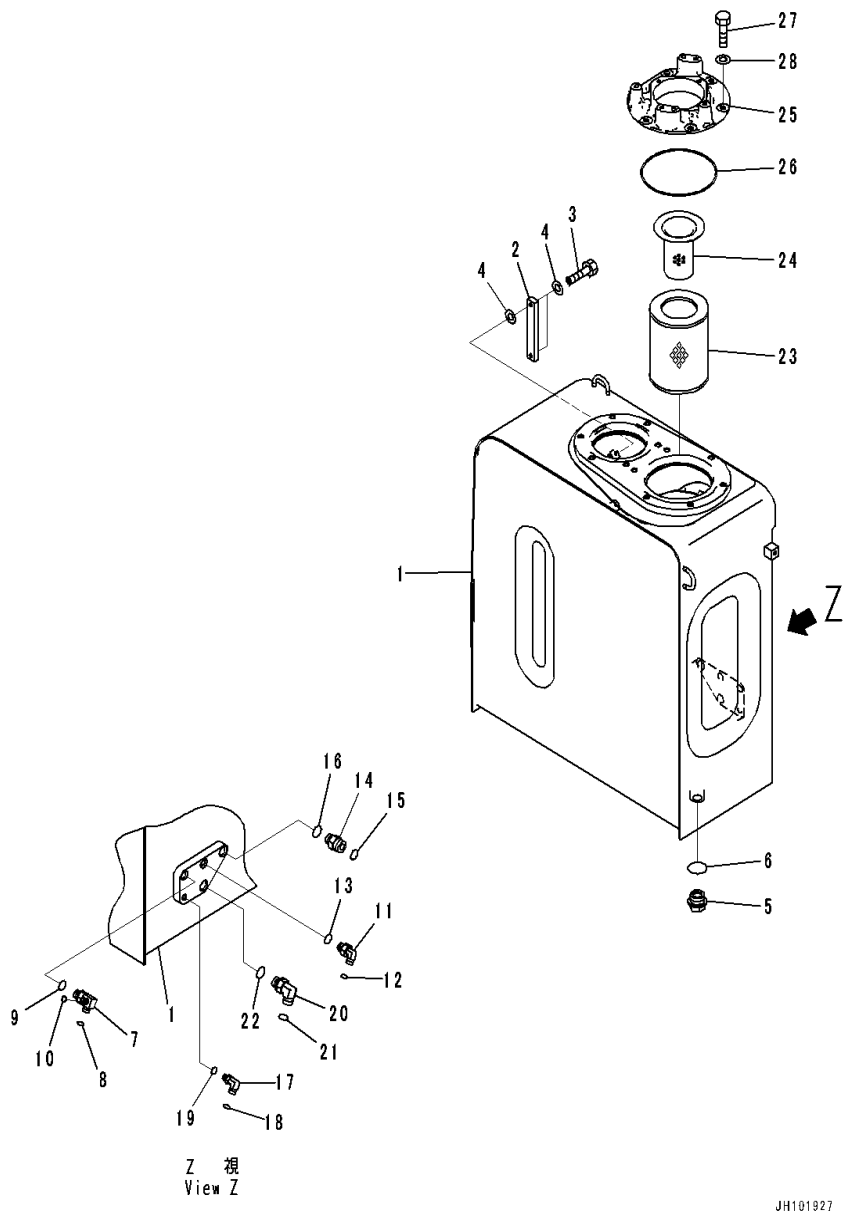

Index	Code	Part Number	Description	Qty	Serial Number
1		20Y-60-56110	Tank	1	C00001-
2		195-03-61550	Gauge	1	C00001-
3		20N-60-41360	• Bolt	2	C00001-
4		20N-60-41371	• Gasket	4	C00001-
5		07044-12412	Plug	1	C00001-
6		07002-12434	O-ring	1	C00001-
7		20Y-62-45690	Tee	1	C00001-
8		02896-11009	O-ring	1	C00001-
9		07002-12034	O-ring	1	C00001-
10		02896-11008	O-ring	1	C00001-
11		02782-10315	Elbow	1	C00001-
12		02896-11009	O-ring	1	C00001-
13		07002-12034	O-ring	1	C00001-
14		02781-00628	Union	1	C00001-
15		02896-11018	O-ring	1	C00001-
16		07002-12434	O-ring	1	C00001-
17		02782-10311	Elbow	1	C00001-
18		02896-11009	O-ring	1	C00001-
19		07002-11423	O-ring	1	C00001-
20		02782-10522	Elbow	1	C00001-
21		02896-11015	O-ring	1	C00001-
22		07002-12434	O-ring	1	C00001-
23		207-60-71183	Element, Hydraulic Oil Filter	1	C00001-
24		20Y-60-31140	Strainer	1	C00001-
25		20Y-60-56122	Flange	1	C00001-
26		07000-15195	O-ring	1	C00001-
27		01010-81225	Bolt	6	C00001-
28		01643-31232	Washer	6	C00001-

FIG. H0110-002002 Hydraulic Tank (Breather)

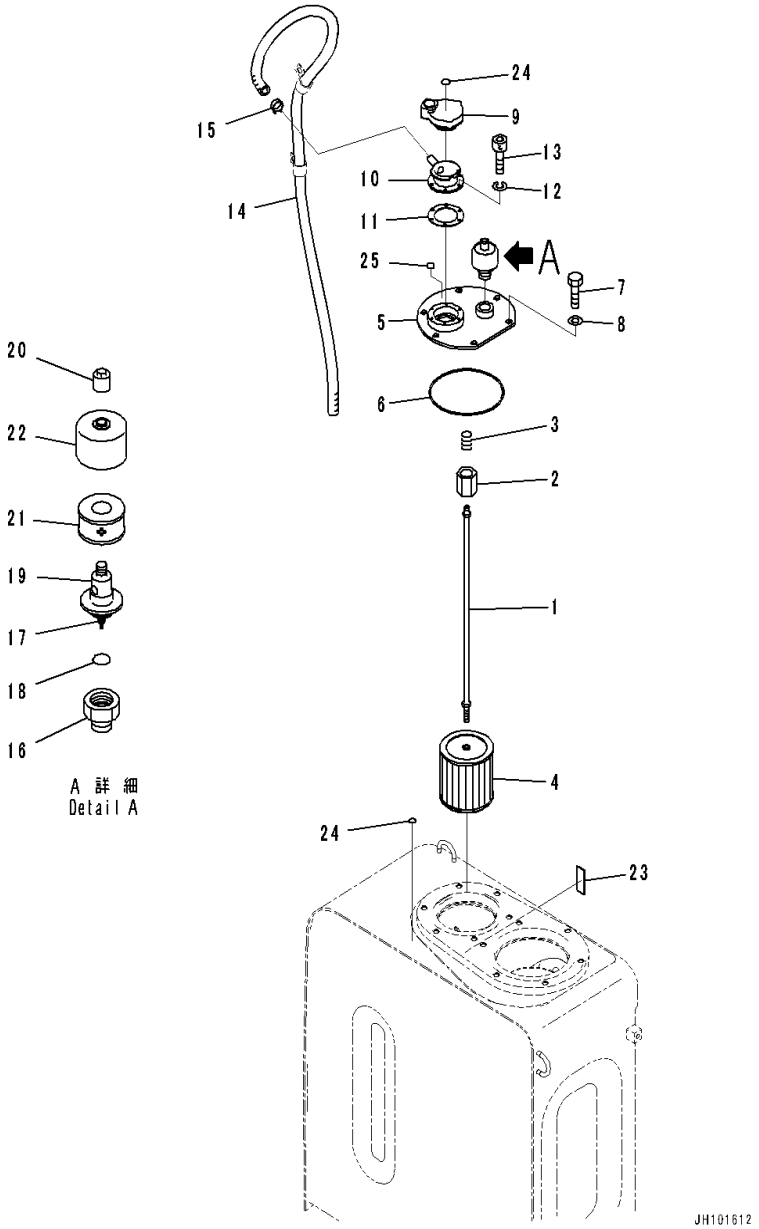

Index	Code	Part Number	Description	Qty	Serial Number
		20Y-60-31171	Strainer Assembly	1	C00001-
1		207-60-61150	• Rod Assembly	1	C00001-
2		20Y-60-21320	• • Holder	1	C00001-
3		12R-60-11230	• • Spring	1	C00001-
4		22B-60-11160	• Strainer	1	C00001-
5		20Y-60-42143	Cover	1	C00001-
6		07000-15160	O-ring	1	C00001-
7		01010-81225	Bolt	6	C00001-
8		01643-31232	Washer	6	C00001-
9		208-60-41211	Cap Assembly	1	C00001-
10		20Y-60-42211	Filler Neck	1	C00001-
11		20Y-60-21340	Gasket	1	C00001-
12		01601-20513	Washer	6	C00001-
13		01252-70516	Bolt	6	C00001-
14		20Y-60-56240	Hose	1	C00001-
15		07285-00200	Clip, Hose	1	C00001-
		20Y-60-42251	Breather	1	C00001-
16	C1		• Body	1	C00001-
17	C1		• Valve Assembly	1	C00001-
18	C1		• O-ring	1	C00001-
19	C1		• Case	1	C00001-
20		20Y-60-56260	• Nut	1	C00001-
21		421-60-35170	• Element	1	C00001-
22		421-60-35180	• Cover	1	C00001-
23		205-00-73360	Plate, Operating	1	C00001-
24		203-00-17210	Mark, Triangle	2	C00001-
25		203-00-17220	Mark, Key	1	C00001-

FIG. H0110-002003 Hydraulic Tank (Bypass Valve)

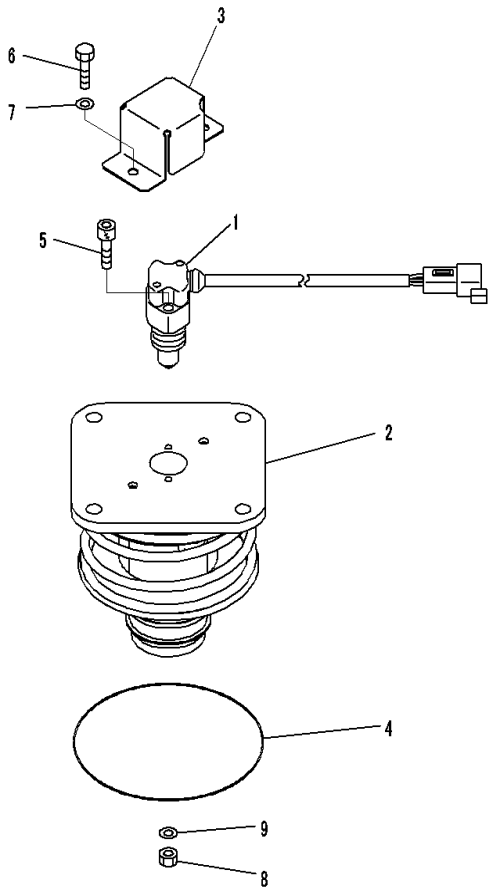

Index	Code	Part Number	Description	Qty	Serial Number
		729-17-15000	Valve Assembly	1	C00001-
1		729-12-27000	• Sensor Assembly	1	C00001-
2	C1		• Body	1	C00001-
3		729-17-11220	• Cover	1	C00001-
4		07000-A2125	• O-ring	1	C00001-
5		01252-A0630	• Bolt, Hexagon Socket Head	2	C00001-
6		01010-80620	• Bolt	2	C00001-
7		01643-30623	• Washer	2	C00001-
8		01580-00806	• Nut	1	C00001-
9		01643-30823	• Washer	1	C00001-

FIG. H0110-002004 Hydraulic Tank (Related Parts)

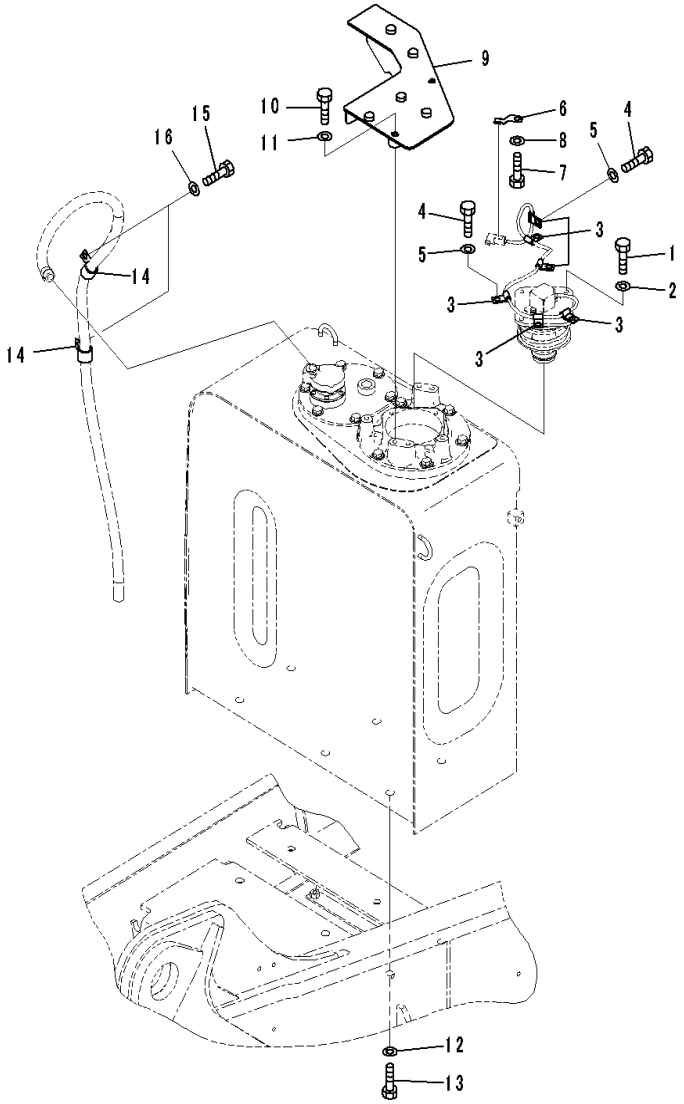

Index	Code	Part Number	Description	Qty	Serial Number
1		01010-81030	Bolt	4	C00001-
2		01643-31032	Washer	4	C00001-
3		04434-50612	Clip	6	C00001-
4		01010-81225	Bolt	6	C00001-
5		01643-31232	Washer	6	C00001-
6		08193-20012	Clip	1	C00001-
7		01010-81225	Bolt	1	C00001-
8		01643-31232	Washer	1	C00001-
9		20Y-60-56151	Cover	1	C00001-
10		01010-81250	Bolt	2	C00001-
11		01643-31232	Washer	2	C00001-
12		01643-31645	Washer, Flat	6	C00001-
13		01010-81635	Bolt	6	C00001-
14		04434-52512	Clip	2	C00001-
15		01010-81225	Bolt	2	C00001-
16		01643-31232	Washer	2	C00001-

FIG. H0120-001001 Control Valve (6-Spool, 1/18)

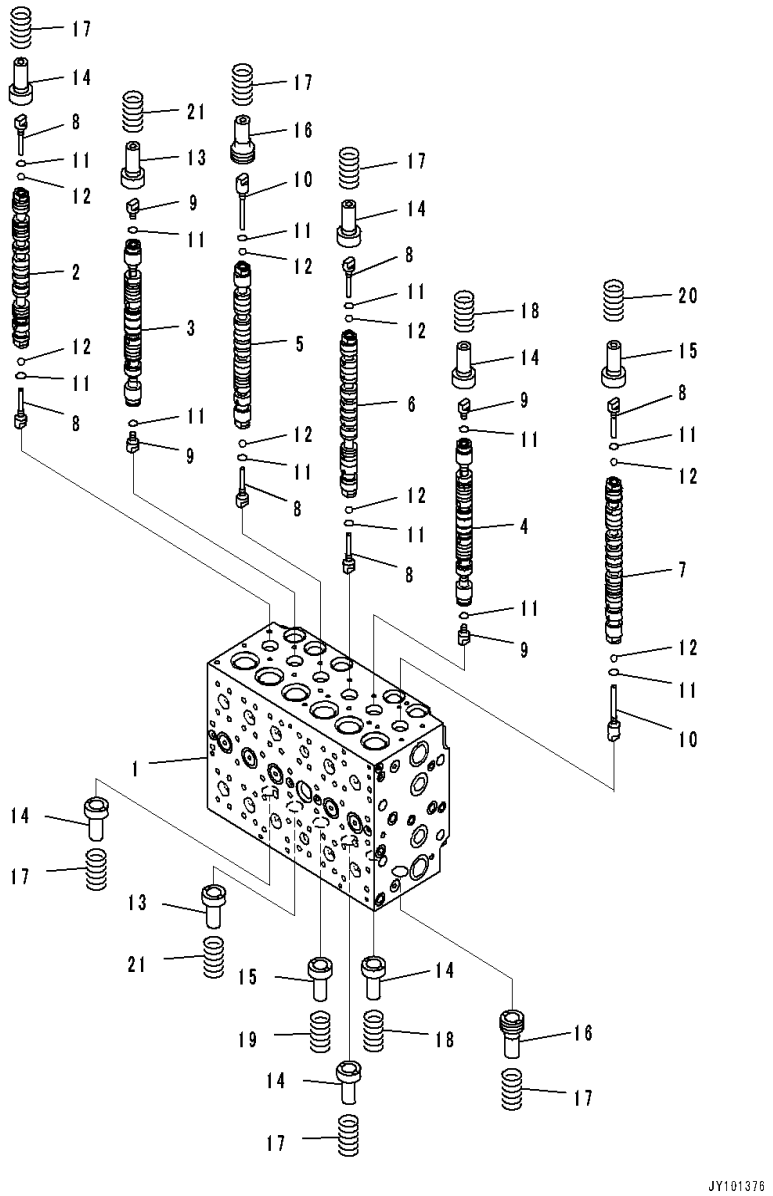

Index	Code	Part Number	Description	Qty	Serial Number
		723-46-31200	Valve, Control	1	C00001-
	C1		• Body Subassembly	1	C00001-
1	C1		• • Valve Body	1	C00001-
2	C1		• • Spool	1	C00001-
3	C1		• • Spool	1	C00001-
4	C1		• • Spool	1	C00001-
5	C1		• • Spool	1	C00001-
6	C1		• • Spool	1	C00001-
7	C1		• • Spool	1	C00001-
8		723-46-15130	• • Plug	6	C00001-
9		723-46-15140	• • Plug	4	C00001-
10		723-46-15650	• • Plug	2	C00001-
11		07002-10823	• • O-ring	12	C00001-
12		708-7T-16460	• • Ball	8	C00001-
13		723-46-15120	• • Retainer	2	C00001-
14		723-46-15690	• • Retainer	6	C00001-
15		723-46-15950	• • Retainer	2	C00001-
16		723-46-15880	• • Retainer	2	C00001-
17		723-46-14110	• • Spring	6	C00001-
18		723-46-14470	• • Spring	2	C00001-
19		723-46-14280	• • Spring	1	C00001-
20		723-46-14290	• • Spring	1	C00001-
21		723-46-14460	• • Spring	2	C00001-

FIG. H0120-001002 Control Valve (6-Spool, 2/18)

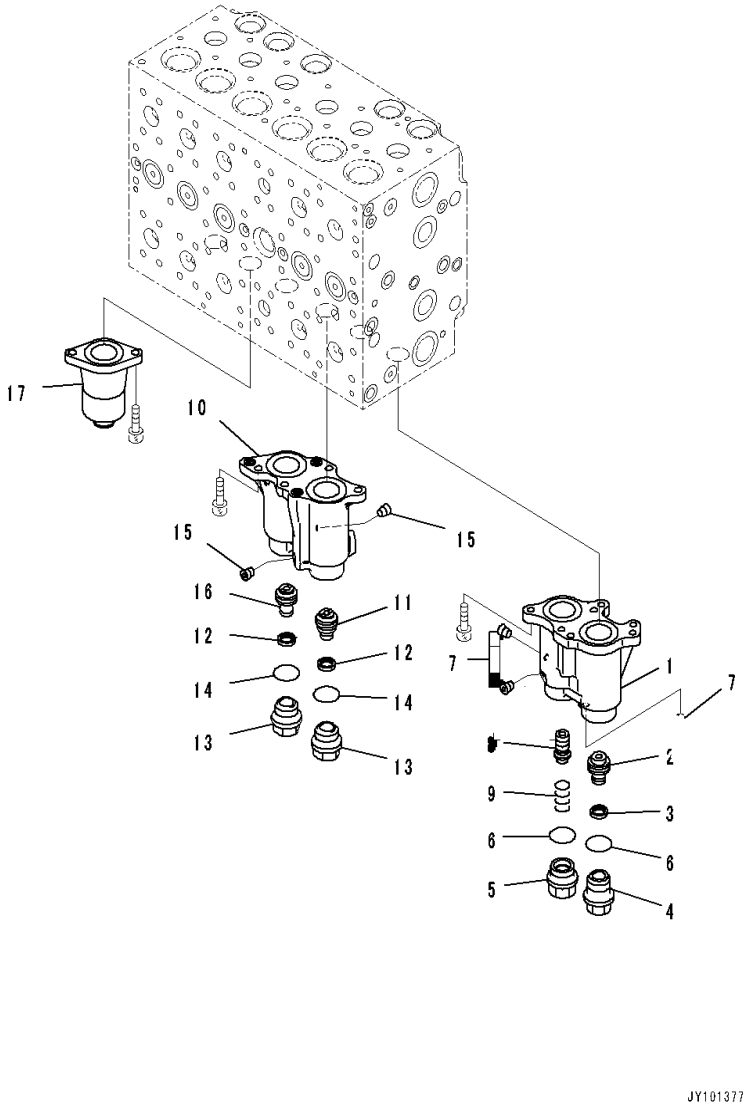

Index	Code	Part Number	Description	Qty	Serial Number
		723-46-31200	Valve, Control	1	C00001-
	C1		• Body Subassembly	1	C00001-
		723-46-19700	• • Case Subassembly	1	C00001-
1	C1		• • • Case	1	C00001-
2		723-46-15640	• • • Piston	1	C00001-
3		702-73-11510	• • • Seal	1	C00001-
4		723-46-15630	• • • Plug	1	C00001-
5		723-46-17340	• • • Plug	1	C00001-
6		07000-13024	• • • O-ring	2	C00001-
7	C1		• • • Plug	2	C00001-
8		723-46-17320	• • • Spool	1	C00001-
9		723-46-17330	• • • Spring	1	C00001-
		723-46-19850	• • Case Subassembly	1	C00001-
10	C1		• • • Case	1	C00001-
11		723-46-15980	• • • Piston	1	C00001-
12		702-73-11510	• • • Seal	2	C00001-
13		723-46-15630	• • • Plug	2	C00001-
14		07000-13024	• • • O-ring	2	C00001-
15	C1		• • • Plug	1	C00001-
16		723-46-15960	• • • Piston	1	C00001-
17		723-46-15111	• • Case	1	C00001-

FIG. H0120-001003 Control Valve (6-Spool, 3/18)

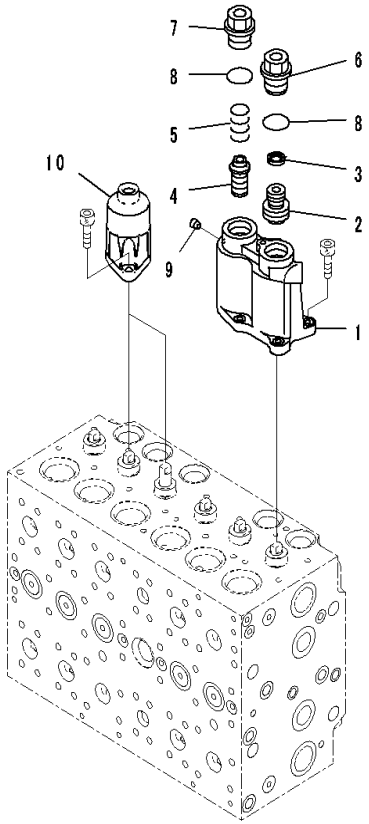

Index	Code	Part Number	Description	Qty	Serial Number
		723-46-31200	Valve, Control	1	C00001-
	C1		• Body Subassembly	1	C00001-
		723-46-19220	• • Case Subassembly	1	C00001-
1	C1		• • • Case	1	C00001-
2		723-46-15970	• • • Piston	1	C00001-
3		702-73-11510	• • • Seal	1	C00001-
4		723-46-17320	• • • Spool	1	C00001-
5		723-46-17330	• • • Spring	1	C00001-
6		723-46-15630	• • • Plug	1	C00001-
7		723-46-17340	• • • Plug	1	C00001-
8		07000-13024	• • • O-ring	2	C00001-
9	C1		• • • Plug	2	C00001-
10		723-46-15111	• • Case	2	C00001-

FIG. H0120-001004 Control Valve (6-Spool, 4/18)

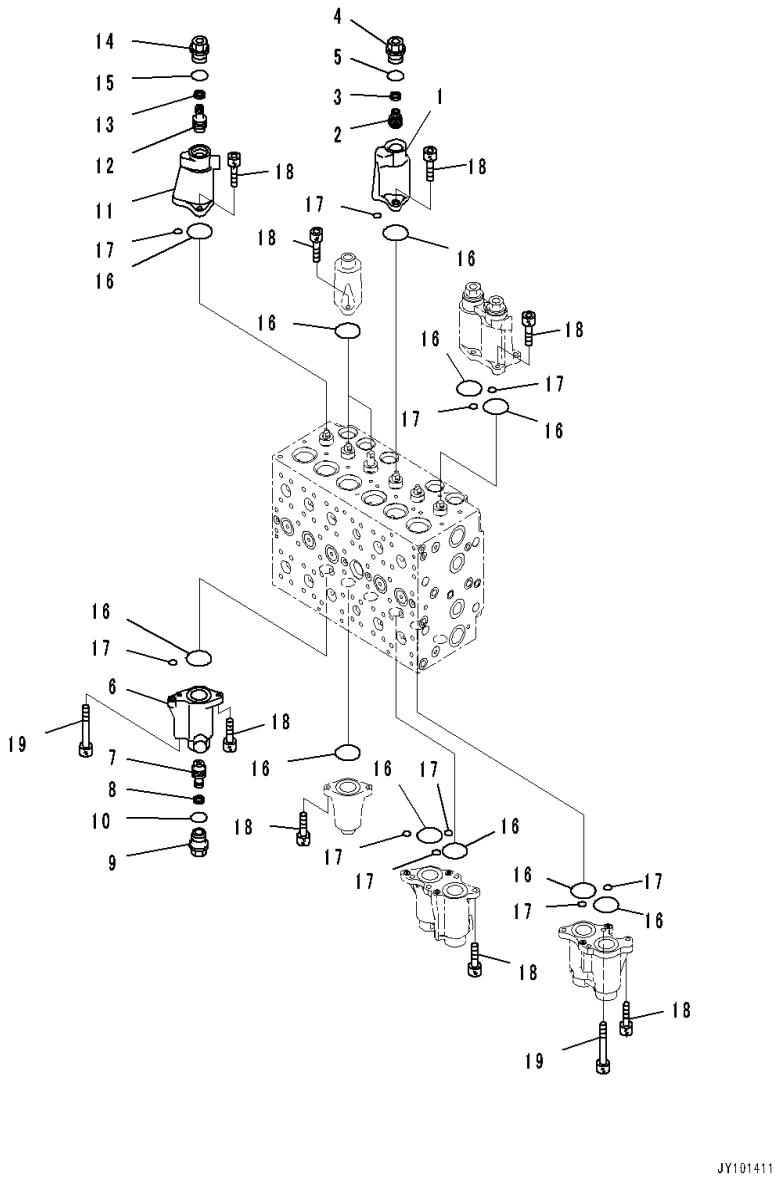

Index	Code	Part Number	Description	Qty	Serial Number
		723-46-31200	Valve, Control	1	C00001-
	C1		• Body Subassembly	1	C00001-
		723-46-19870	• • Case Subassembly	1	C00001-
1	C1		• • • Case	1	C00001-
2		723-46-15980	• • • Piston	1	C00001-
3		702-73-11510	• • • Seal	1	C00001-
4		723-46-15630	• • • Plug	1	C00001-
5		07000-13024	• • • O-ring	1	C00001-
		723-46-19510	• • Case Subassembly	1	C00001-
6	C1		• • • Case	1	C00001-
7		723-46-17590	• • • Piston	1	C00001-
8		702-73-11510	• • • Seal	1	C00001-
9		723-46-15630	• • • Plug	1	C00001-
10		07000-13024	• • • O-ring	1	C00001-
		723-46-19610	• • Case Subassembly	1	C00001-
11	C1		• • • Case	1	C00001-
12		723-46-17590	• • • Piston	1	C00001-
13		702-73-11510	• • • Seal	1	C00001-
14		723-46-15630	• • • Plug	1	C00001-
15		07000-13024	• • • O-ring	1	C00001-
16		07430-71380	• • O-ring	12	C00001-
17		07000-11010	• • O-ring	10	C00001-
18		01252-60820	• • Bolt, Hexagon Socket Head	22	C00001-
19		723-46-17350	• • Bolt, Hexagon Socket Head	2	C00001-

FIG. H0120-001005 Control Valve (6-Spool, 5/18)

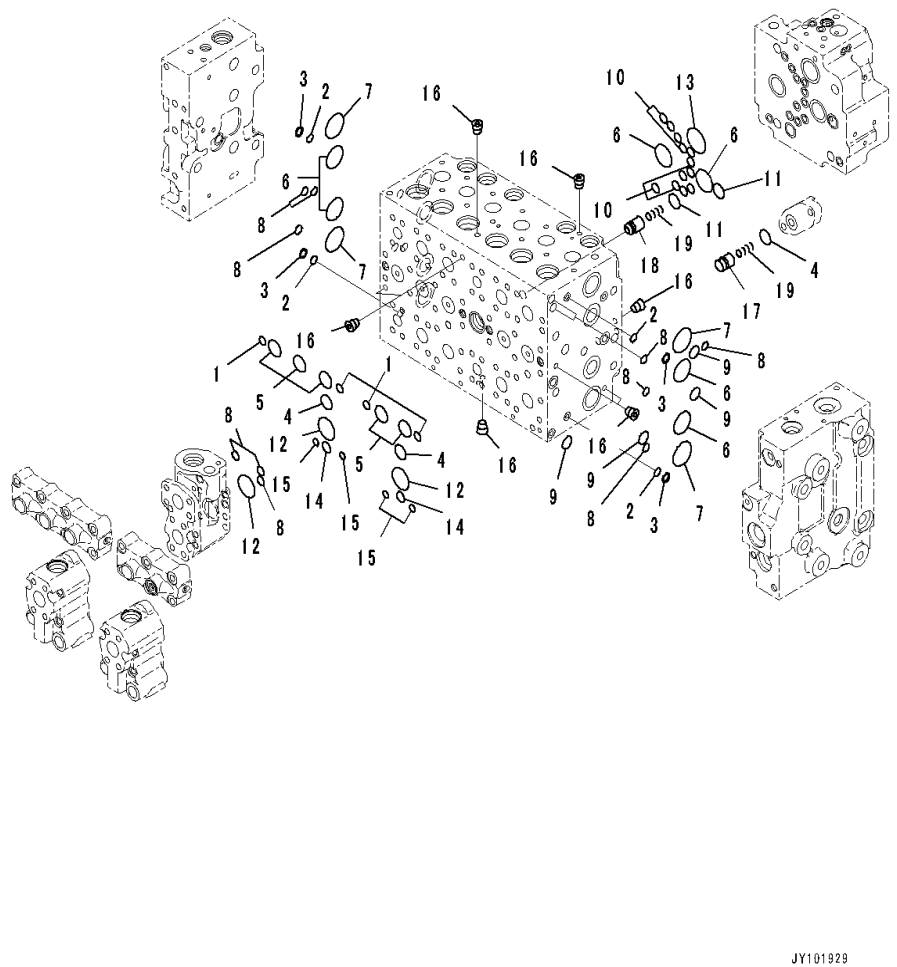

Index	Code	Part Number	Description	Qty	Serial Number
		723-46-31200	Valve, Control	1	C00001-
	C1		• Body Subassembly	1	C00001-
1		07000-12012	• • O-ring	4	C00001-
2		723-11-19130	• • O-ring	4	C00001-
3		723-46-17520	• • Ring, Back-up	4	C00001-
4		07000-12021	• • O-ring	3	C00001-
5		07000-13028	• • O-ring	5	C00001-
6		07000-13032	• • O-ring	6	C00001-
7		723-46-17510	• • O-ring	4	C00001-
8		723-46-17530	• • O-ring	11	C00001-
9		723-11-18150	• • O-ring	4	C00001-
10		07000-12012	• • O-ring	12	C00001-
11		07000-12021	• • O-ring	2	C00001-
12		07000-13032	• • O-ring	3	C00001-
13		07000-13036	• • O-ring	1	C00001-
14		07000-12015	• • O-ring	2	C00001-
15		07000-11010	• • O-ring	4	C00001-
16	C1		• • Plug, Stocking	16	C00001-
17		723-46-17650	• • Valve	1	C00001-
18		723-46-15150	• • Valve	1	C00001-
19		723-46-14150	• • Spring	2	C00001-

FIG. H0120-001006 Control Valve (6-Spool, 6/18)

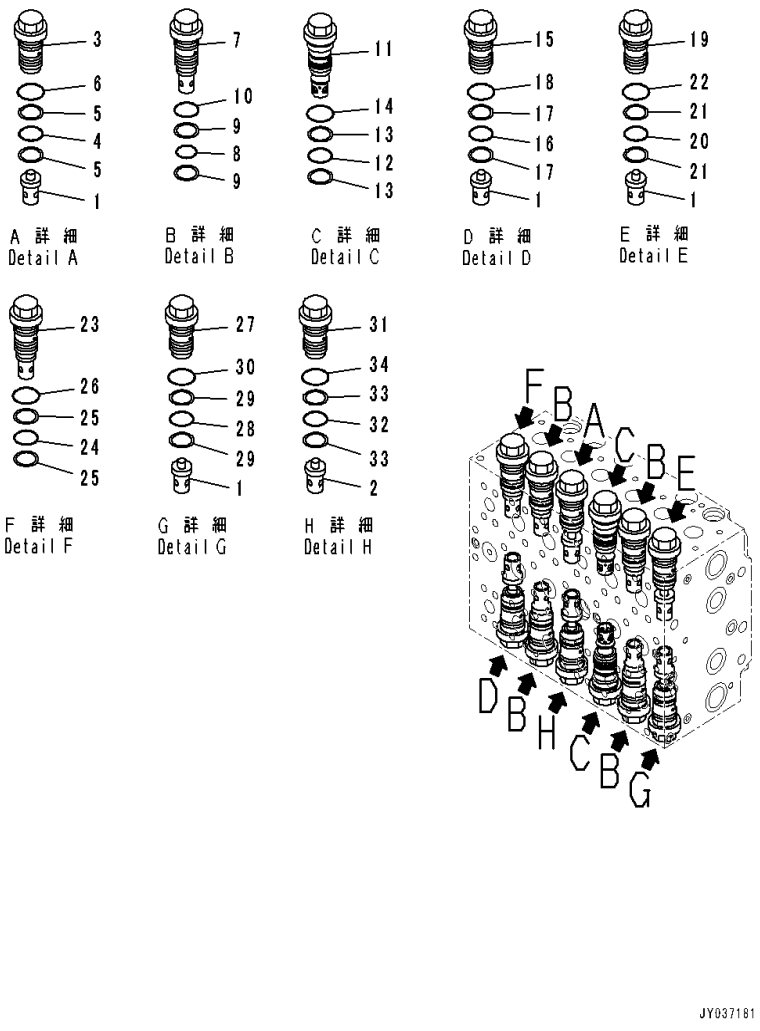

Index	Code	Part Number	Description	Qty	Serial Number
		723-46-31200	Valve, Control	1	C00001-
	C1		• Body Subassembly	1	C00001-
1		723-46-41210	• • Valve	4	C00001-
2		723-46-41190	• • Valve	1	C00001-
3		723-46-40100	• • Valve Assembly	1	C00001-
4		700-93-11320	• • • O-ring	1	C00001-
5		723-46-41950	• • • Ring, Back-up	2	C00001-
6		07002-13634	• • • O-ring	1	C00001-
7		723-46-42700	• • Valve Assembly	4	C00001-
8		700-93-11320	• • • O-ring	1	C00001-
9	C1		• • • Ring, Back-up	2	C00001-
10		07002-13634	• • • O-ring	1	C00001-
11		723-46-41500	• • Valve Assembly	2	C00001-
12		700-93-11320	• • • O-ring	1	C00001-
13		723-46-41950	• • • Ring, Back-up	2	C00001-
14		07002-13634	• • • O-ring	1	C00001-
15		723-46-45100	• • Valve Assembly	1	C00001-
16		700-93-11320	• • • O-ring	1	C00001-
17	C1		• • • Ring, Back-up	2	C00001-
18		07002-13634	• • • O-ring	1	C00001-
19		723-46-43300	• • Valve Assembly	1	C00001-
20		700-93-11320	• • • O-ring	1	C00001-
21		723-46-41950	• • • Ring, Back-up	2	C00001-
22		07002-13634	• • • O-ring	1	C00001-
23		723-46-43400	• • Valve Assembly	1	C00001-
24		700-93-11320	• • • O-ring	1	C00001-
25	C1		• • • Ring, Back-up	2	C00001-
26		07002-13634	• • • O-ring	1	C00001-
27		723-46-43100	• • Valve Assembly	1	C00001-
28		700-93-11320	• • • O-ring	1	C00001-
29	C1		• • • Ring, Back-up	2	C00001-
30		07002-13634	• • • O-ring	1	C00001-
31		723-46-46101	• • Valve Assembly	1	C00001-
32		700-93-11320	• • • O-ring	1	C00001-
33	C1		• • • Ring, Back-up	2	C00001-
34		07002-13634	• • • O-ring	1	C00001-

FIG. H0120-001007 Control Valve (6-Spool, 7/18)

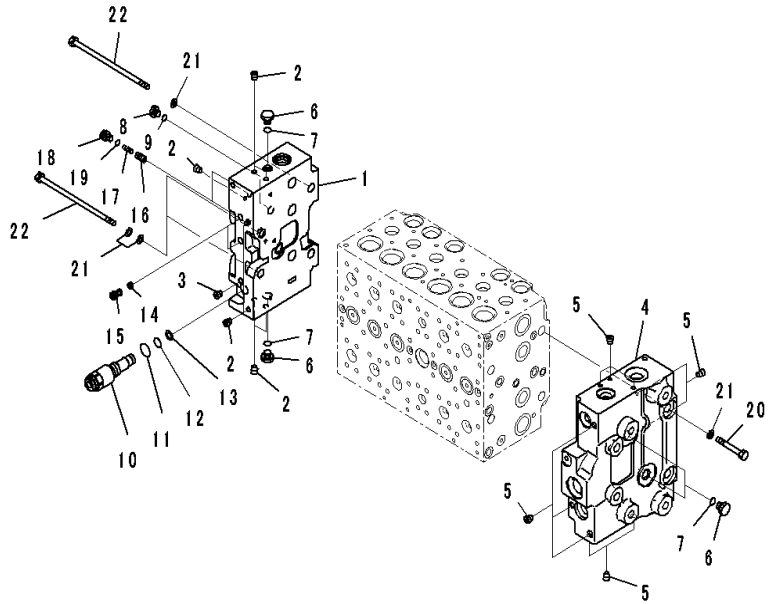

Index	Code	Part Number	Description	Qty	Serial Number
		723-46-31200	Valve, Control	1	C00001-
		723-46-00630	• Cover Assembly	1	C00001-
1	C1		• • Cover	1	C00001-
2		708-21-12541	• • Plug, Stocking	7	C00001-
3		708-21-12531	• • Plug	1	C00001-
		723-46-00840	• Cover Assembly	1	C00001-
4	C1		• • Cover	1	C00001-
5		708-21-12541	• • Plug, Stocking	10	C00001-
6		708-8E-16250	• Plug	4	C00001-
7		07002-11823	• O-ring	4	C00001-
8		708-8H-11530	• Plug	1	C00001-
9		07002-11423	• O-ring	1	C00001-
10		723-46-17600	• Plug Assembly	1	C00001-
11		07002-11423	• • O-ring	1	C00001-
12		07000-11007	• • O-ring	1	C00001-
13	C1		• • Ring, Back-up	1	C00001-
14		723-40-82220	• Filter	2	C00001-
15		723-46-17550	• Plug	2	C00001-
16		723-46-15190	• Valve	2	C00001-
17		723-46-14140	• Spring	2	C00001-
18		708-8E-16160	• Plug	2	C00001-
19		07002-11023	• O-ring	2	C00001-
20		01011-61405	• Bolt	4	C00001-
21		01643-31445	• Washer, Flat	10	C00001-
22		01010-61490	• Bolt	4	C00001-

FIG. H0120-001008 Control Valve (6-Spool, 8/18)

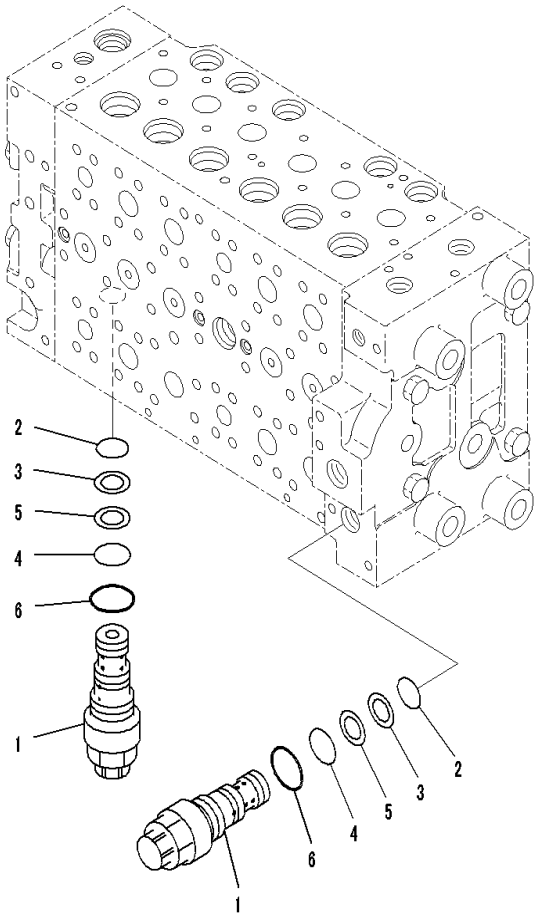

00046806

Index	Code	Part Number	Description	Qty	Serial Number
		723-46-31200	Valve, Control	1	C00001-
1		723-40-57200	• Valve Assembly, Unload	2	C00001-
2		07000-12014	• • O-ring	1	C00001-
3	C1		• • Ring, Back-up	1	C00001-
4		07000-12016	• • O-ring	1	C00001-
5	C1		• • Ring, Back-up	1	C00001-
6		07002-12434	• • O-ring	1	C00001-

FIG. H0120-001009 Control Valve (6-Spool, 9/18)

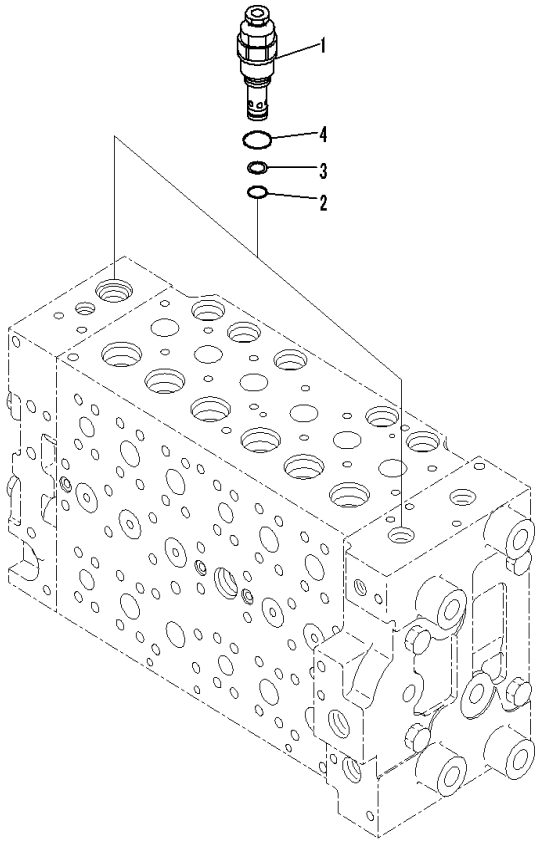

00045796

Index	Code	Part Number	Description	Qty	Serial Number
		723-46-31200	Valve, Control	1	C00001-
1		723-40-94501	• Valve, Relief	2	C00001-
2		700-22-11410	• • O-ring	1	C00001-
3	C1		• • Ring, Back-up	1	C00001-
4		07002-12434	• • O-ring	1	C00001-

FIG. H0120-001010 Control Valve (6-Spool, 10/18)

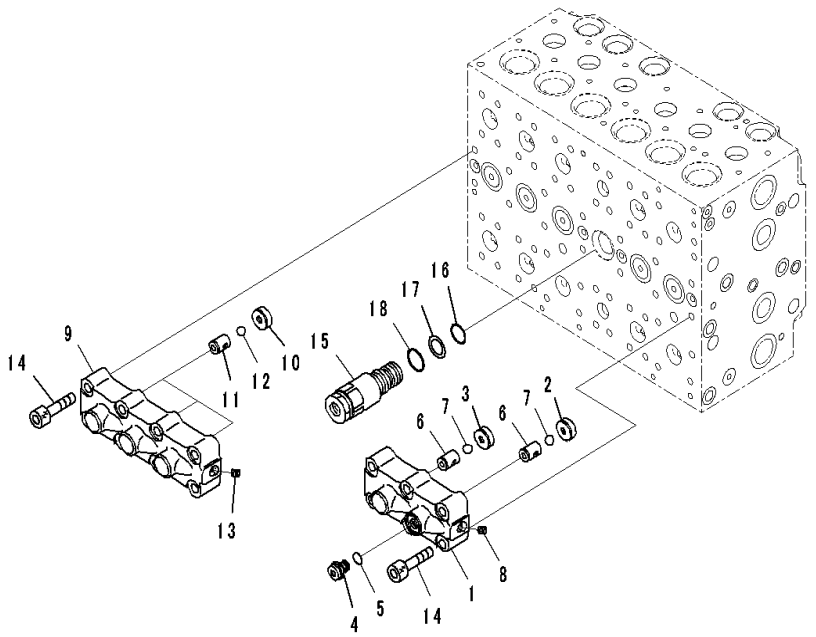

Index	Code	Part Number	Description	Qty	Serial Number
		723-46-31200	Valve, Control	1	C00001-
		723-40-66701	• Valve Assembly	1	C00001-
1	C1		• • Case	1	C00001-
2	C1		• • Seat	1	C00001-
3	C1		• • Seat	1	C00001-
4		708-8H-11530	• • Plug	1	C00001-
5		07002-11423	• • O-ring	1	C00001-
6	C1		• • Seat	2	C00001-
7	C1		• • Ball	2	C00001-
8	C1		• • Plug, Stocking	1	C00001-
		723-40-66601	• Valve Assembly	1	C00001-
9	C1		• • Case	1	C00001-
10	C1		• • Seat	3	C00001-
11	C1		• • Seat	3	C00001-
12	C1		• • Ball	3	C00001-
13	C1		• • Plug, Stocking	1	C00001-
14		01252-61045	• Bolt, Hexagon Socket Head	14	C00001-
15		723-40-60101	• Valve Assembly	1	C00001-
16		07000-12020	• • O-ring	1	C00001-
17	C1		• • Ring, Back-up	1	C00001-
18		709-25-11390	• • O-ring	1	C00001-

FIG. H0120-001011 Control Valve (6-Spool, 11/18)

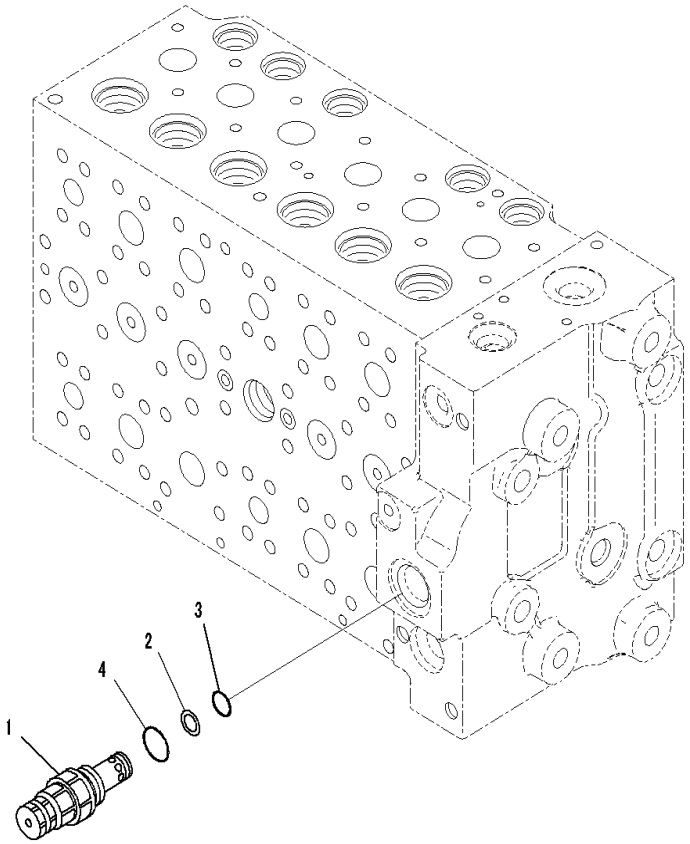

Index	Code	Part Number	Description	Qty	Serial Number
		723-46-31200	Valve, Control	1	C00001-
1		723-90-66900	• Valve, Relief	1	C00001-
2	C1		• • Ring, Back-up	1	C00001-
3		700-22-11410	• • O-ring	1	C00001-
4		709-25-11390	• • O-ring	1	C00001-

FIG. H0120-001012 Control Valve (6-Spool, 12/18)

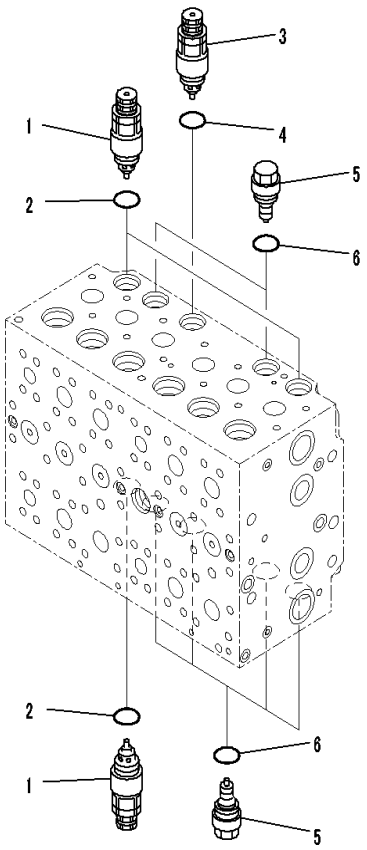

00046772

Index	Code	Part Number	Description	Qty	Serial Number
		723-46-31200	Valve, Control	1	C00001-
1		723-90-66800	• Valve Assembly, Suction and Relief	3	C00001-
2		709-25-11390	• • O-ring	1	C00001-
3		723-90-61600	• Valve Assembly, Suction and Relief	1	C00001-
4		07000-13024	• • O-ring	1	C00001-
5		723-40-85100	• Valve Assembly, Suction	6	C00001-
6		709-25-11390	• • O-ring	1	C00001-

FIG. H0120-001013 Control Valve (6-Spool, 13/18)

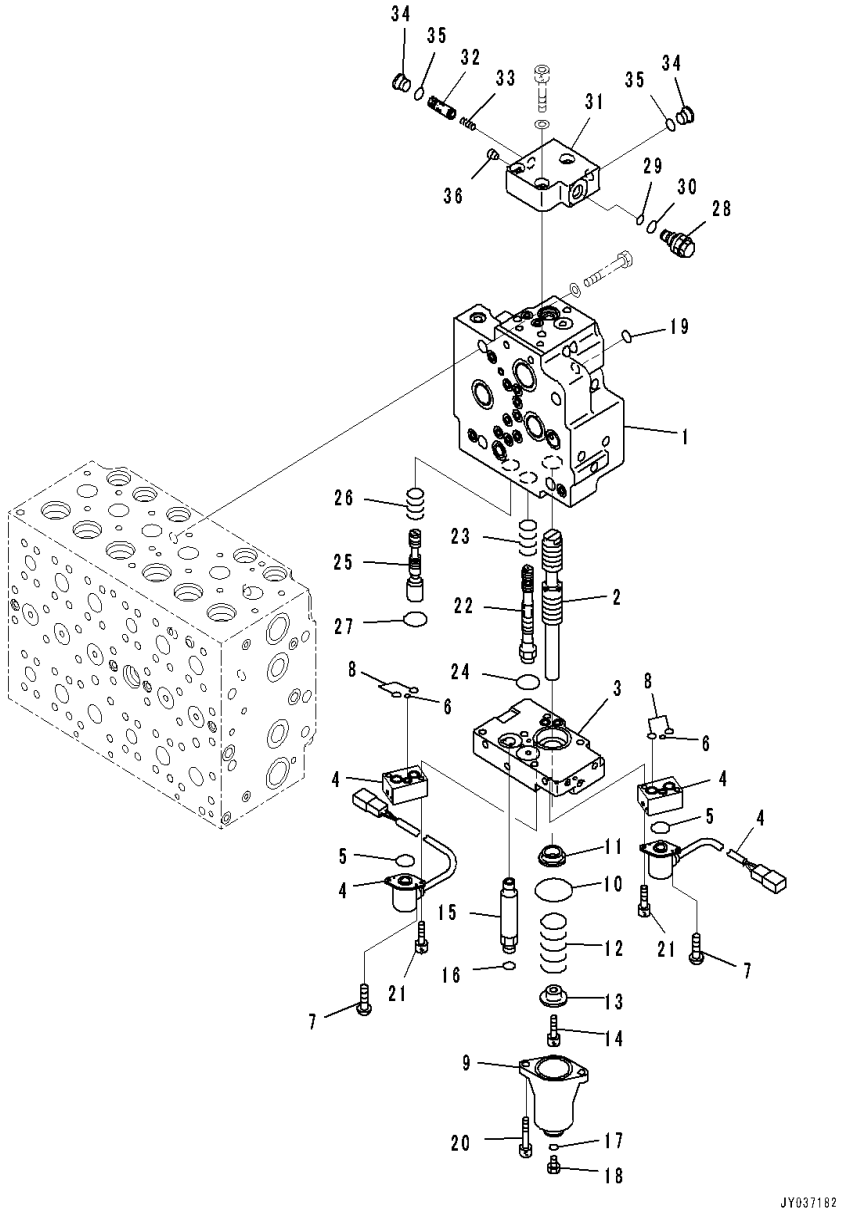

Index	Code	Part Number	Description	Qty	Serial Number
		723-46-31200	Valve, Control	1	C00001-
		723-40-74300	• Valve Assembly	1	C00001-
1	C1		• • Valve Body	1	C00001-
2	C1		• • Spool	1	C00001-
3		723-40-72800	• • Plate Assembly	1	C00001-
4		702-21-62300	• • Valve, Pilot	2	C00001-
5		700-80-61260	• • • O-ring	1	C00001-
6		723-11-19960	• • • O-ring	1	C00001-
7		702-21-54180	• • • Screw	2	C00001-
8		702-16-55610	• • • O-ring	2	C00001-
9		723-46-15111	• • Case	1	C00001-
10		07430-71380	• • O-ring	1	C00001-
11	C1		• • Retainer	1	C00001-
12	C1		• • Spring	1	C00001-
13	C1		• • Retainer	1	C00001-
14		01252-60816	• • Bolt, Hexagon Socket Head	1	C00001-
15		723-40-71870	• • Union	1	C00001-
16		02896-11008	• • O-ring	1	C00001-
17		07002-11423	• • O-ring	1	C00001-
18		07040-11409	• • Plug	1	C00001-
19		07002-11423	• • O-ring	1	C00001-
20		01252-60855	• • Bolt, Hexagon Socket Head	2	C00001-
21		01252-60635	• • Bolt, Hexagon Socket Head	4	C00001-
22	C1		• • Spool Assembly	1	C00001-
23	C1		• • Spring	1	C00001-
24		723-46-18720	• • O-ring	1	C00001-
25	C1		• • Spool	1	C00001-
26	C1		• • Spring	1	C00001-
27		723-46-18720	• • O-ring	1	C00001-
		723-40-75200	• • Valve Assembly	1	C00001-
28		723-40-73700	• • • Valve, Relief	1	C00001-
29		702-16-53920	• • • • O-ring	1	C00001-
30		07002-11623	• • • • O-ring	1	C00001-
31	C1		• • • Block	1	C00001-
32	C1		• • • Spool	1	C00001-
33	C1		• • • Spring	1	C00001-
34		702-21-55620	• • • Plug	2	C00001-
35		07002-11423	• • • O-ring	2	C00001-
36	C1		• • • Plug, Stocking	1	C00001-

FIG. H0120-001014 Control Valve (6-Spool, 14/18)

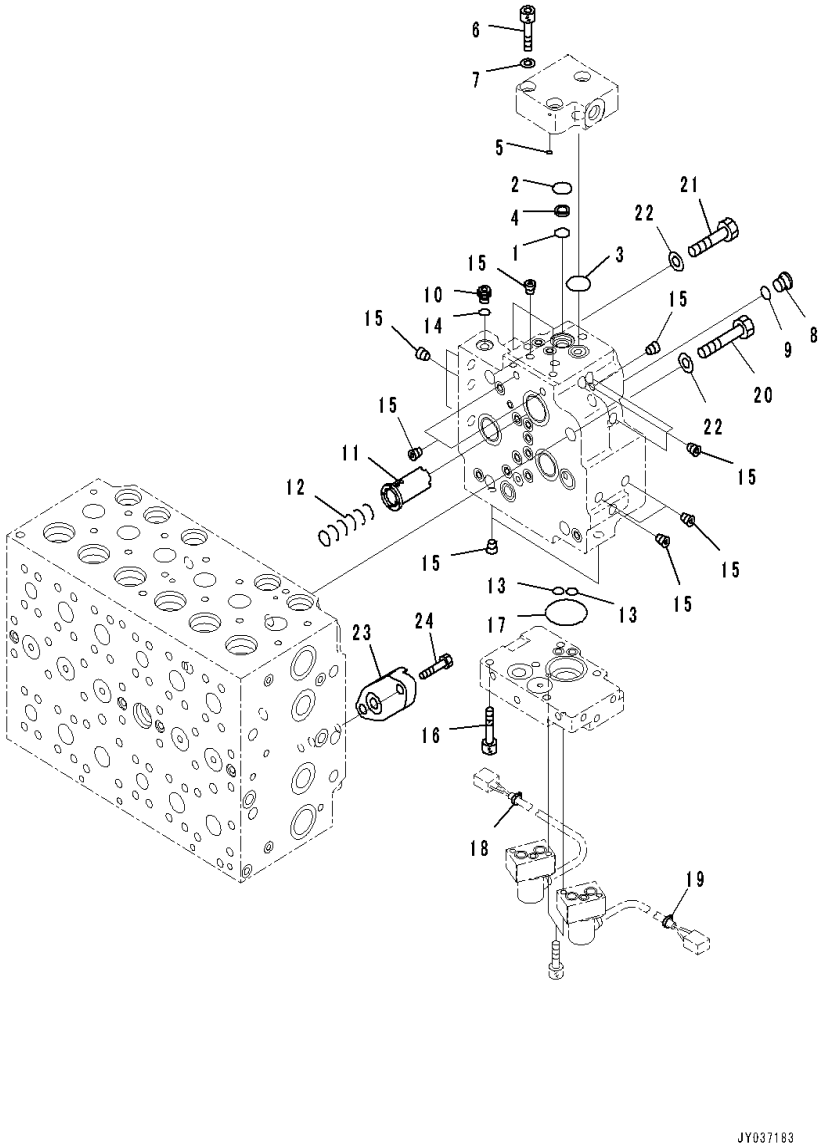

Index	Code	Part Number	Description	Qty	Serial Number
		723-46-31200	Valve, Control	1	C00001-
		723-40-74300	• Valve Assembly	1	C00001-
1		07000-12018	• • O-ring	1	C00001-
2		723-11-18430	• • O-ring	1	C00001-
3		07000-12020	• • O-ring	1	C00001-
4		723-56-33660	• • Filter	1	C00001-
5		07000-12011	• • O-ring	2	C00001-
6		01252-61040	• • Bolt, Hexagon Socket Head	3	C00001-
7		01643-51032	• • Washer	3	C00001-
8		702-21-55620	• • Plug	1	C00001-
9		07002-11423	• • O-ring	1	C00001-
10		708-8E-16160	• • Plug	1	C00001-
11		723-40-71940	• • Valve	1	C00001-
12		723-40-71950	• • Spring	1	C00001-
13		07000-11010	• • O-ring	2	C00001-
14		07002-11023	• • O-ring	1	C00001-
15	C1		• • Plug, Stocking	17	C00001-
16		01252-60845	• • Bolt, Hexagon Socket Head	3	C00001-
17		07000-12035	• • O-ring	1	C00001-
18		20Y-62-22790	• • Band,Red	1	C00001-
19		20Y-62-22830	• • Band,White	1	C00001-
20		01010-61470	• Bolt	3	C00001-
21		01010-61460	• Bolt	1	C00001-
22		01643-31445	• Washer, Flat	4	C00001-
23		723-46-17680	• Plate	1	C00001-
24		01010-61030	• Bolt	2	C00001-

FIG. H0120-001015 Control Valve (6-Spool, 15/18)

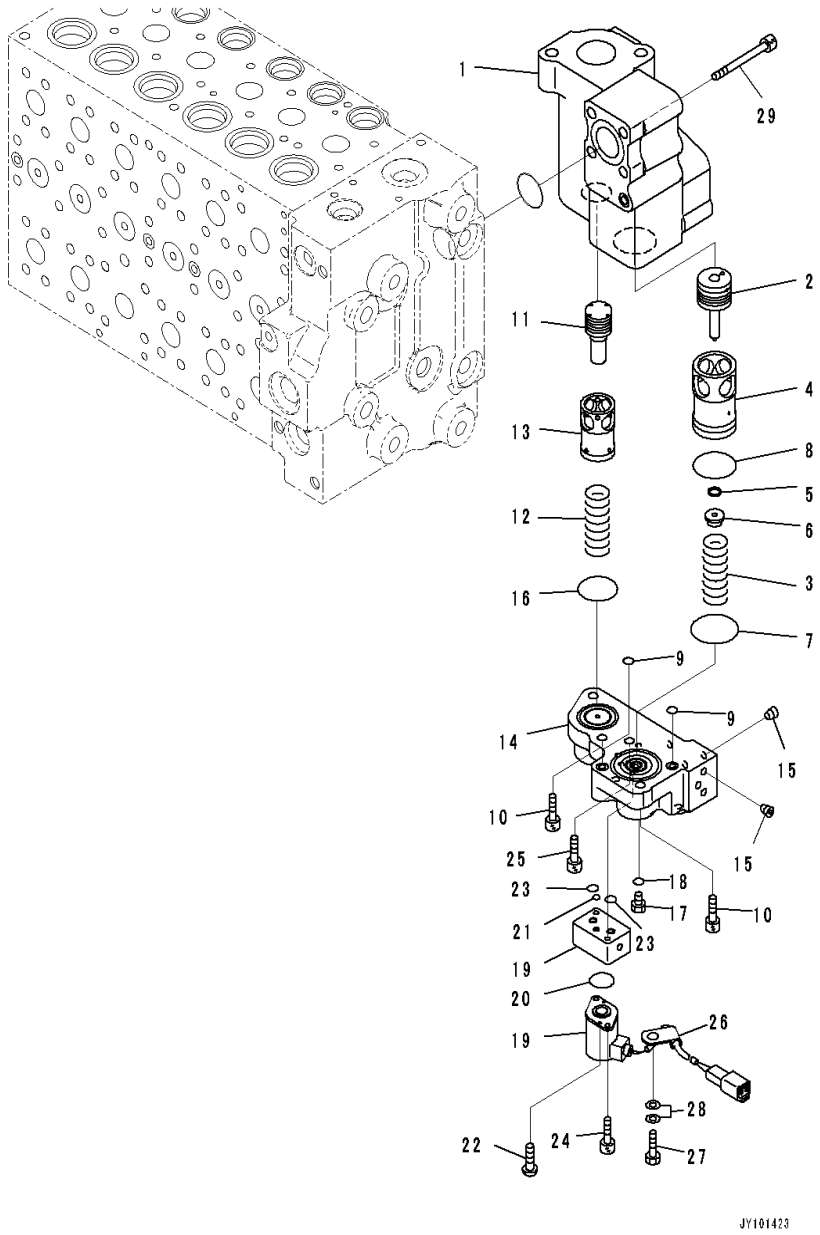

Index	Code	Part Number	Description	Qty	Serial Number
		723-46-31200	Valve, Control	1	C00001-
		723-40-88300	• Valve Assembly	1	C00001-
1	C1		• • Body	1	C00001-
2	C1		• • Spool	1	C00001-
3		723-40-87820	• • Spring	1	C00001-
4	C1		• • Sleeve	1	C00001-
5	C1		• • Seal	1	C00001-
6		723-40-87810	• • Retainer	1	C00001-
7		702-16-72440	• • O-ring	1	C00001-
8		07000-13048	• • O-ring	1	C00001-
9		07000-11009	• • O-ring	2	C00001-
10		01252-60825	• • Bolt, Hexagon Socket Head	2	C00001-
11	C1		• • Piston	1	C00001-
12		723-40-87540	• • Spring	1	C00001-
13	C1		• • Sleeve	1	C00001-
14	C1		• • Case	1	C00001-
15	C1		• • Plug, Stocking	6	C00001-
16		723-40-87170	• • O-ring	1	C00001-
17		07040-11007	• • Plug	1	C00001-
18		07002-11023	• • O-ring	1	C00001-
19		702-21-60900	• • Valve, Pilot	1	C00001-
20		700-80-61260	• • • O-ring	1	C00001-
21		723-11-19960	• • • O-ring	1	C00001-
22		702-21-54180	• • • Screw	2	C00001-
23		702-21-54910	• • • O-ring	2	C00001-
24		01252-60635	• • Bolt, Hexagon Socket Head	2	C00001-
25		01252-60840	• • Bolt, Hexagon Socket Head	2	C00001-
26		04434-50508	• • Clip	1	C00001-
27		01010-80816	• • Bolt	1	C00001-
28		01643-30823	• • Washer	2	C00001-
29		01252-61080	• Bolt, Hexagon Socket Head	4	C00001-

FIG. H0120-001016 Control Valve (6-Spool, 16/18)

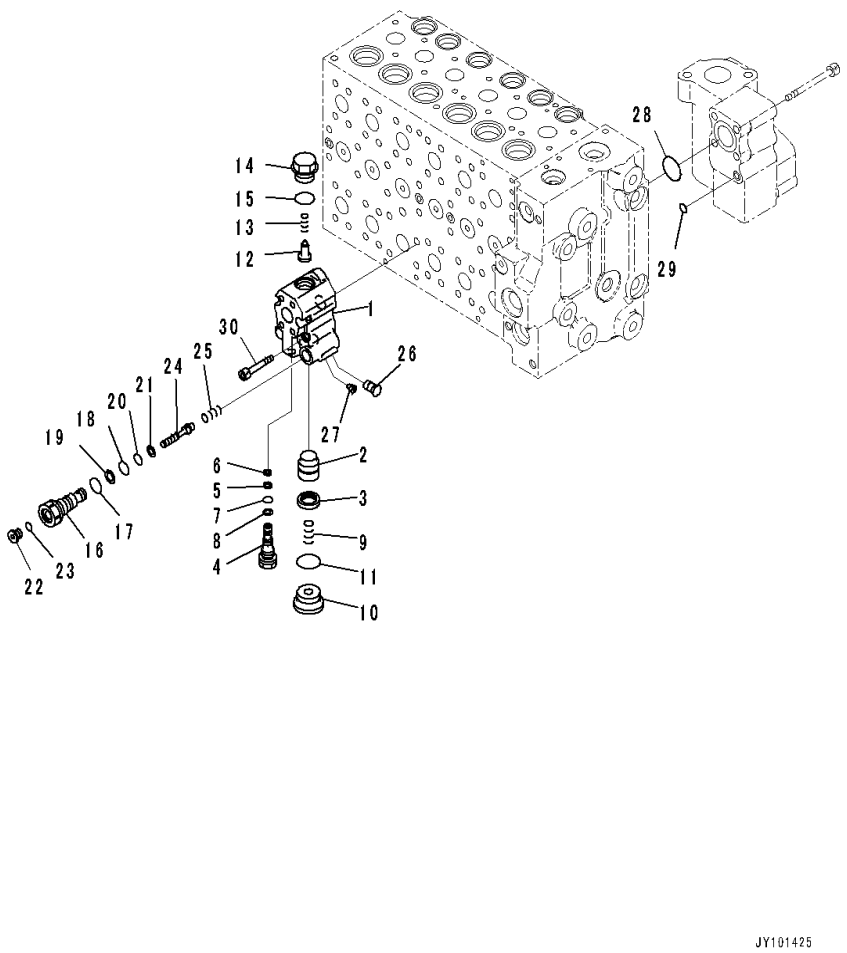

Index	Code	Part Number	Description	Qty	Serial Number
		723-46-31200	Valve, Control	1	C00001-
		723-40-83700	• Valve Assembly	1	C00001-
1	C1		• • Body	1	C00001-
2	C1		• • Valve	1	C00001-
3	C1		• • Seal	1	C00001-
4	C1		• • Plug	1	C00001-
5	C1		• • Seal	1	C00001-
6		723-40-82220	• • Filter	1	C00001-
7		07000-11008	• • O-ring	1	C00001-
8	C1		• • Ring, Back-up	1	C00001-
9		723-40-82460	• • Spring	1	C00001-
10		723-40-82520	• • Plug	1	C00001-
11		07002-13634	• • O-ring	1	C00001-
12		723-40-84420	• • Valve, Check	1	C00001-
13		723-40-84430	• • Spring	1	C00001-
14	C1		• • Plug	1	C00001-
15		07000-13024	• • O-ring	1	C00001-
16	C1		• • Plug	1	C00001-
17		07002-11823	• • O-ring	1	C00001-
18		07000-12011	• • O-ring	1	C00001-
19		07001-02011	• • Ring, Back-up	1	C00001-
20		07000-11010	• • O-ring	1	C00001-
21		07001-01010	• • Ring, Back-up	1	C00001-
22		723-11-18190	• • Plug	1	C00001-
23		07002-11023	• • O-ring	1	C00001-
24	C1		• • Piston	1	C00001-
25		723-40-82290	• • Spring	1	C00001-
26	C1		• • Plug	1	C00001-
27	C1		• • Plug, Stocking	1	C00001-
28		07000-12055	• O-ring	1	C00001-
29		07000-11010	• O-ring	2	C00001-
30		01252-61075	• Bolt, Hexagon Socket Head	4	C00001-

FIG. H0120-001017 Control Valve (6-Spool, 17/18)

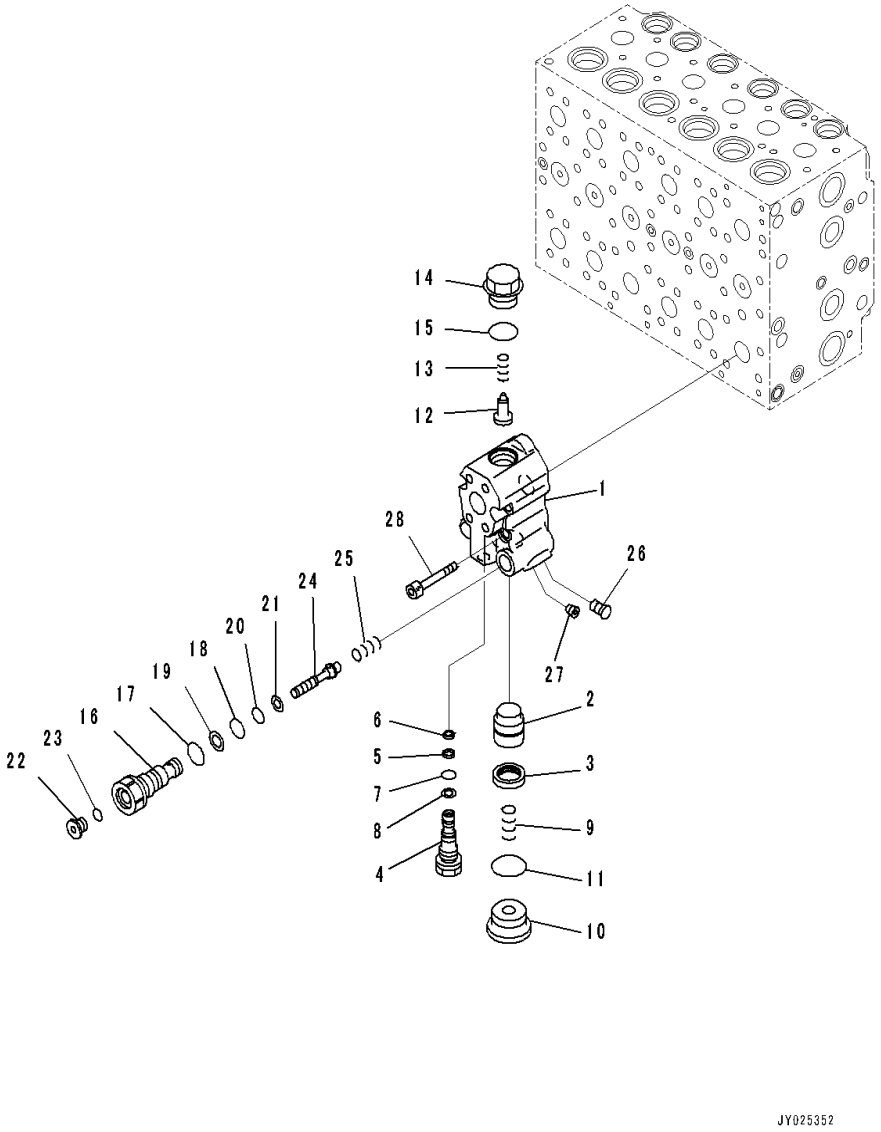

Index	Code	Part Number	Description	Qty	Serial Number
		723-46-31200	Valve, Control	1	C00001-
		723-40-83700	• Valve Assembly	1	C00001-
1	C1		• • Body	1	C00001-
2	C1		• • Valve	1	C00001-
3	C1		• • Seal	1	C00001-
4	C1		• • Plug	1	C00001-
5	C1		• • Seal	1	C00001-
6		723-40-82220	• • Filter	1	C00001-
7		07000-11008	• • O-ring	1	C00001-
8	C1		• • Ring, Back-up	1	C00001-
9		723-40-82460	• • Spring	1	C00001-
10		723-40-82520	• • Plug	1	C00001-
11		07002-13634	• • O-ring	1	C00001-
12		723-40-84420	• • Valve, Check	1	C00001-
13		723-40-84430	• • Spring	1	C00001-
14	C1		• • Plug	1	C00001-
15		07000-13024	• • O-ring	1	C00001-
16	C1		• • Plug	1	C00001-
17		07002-11823	• • O-ring	1	C00001-
18		07000-12011	• • O-ring	1	C00001-
19		07001-02011	• • Ring, Back-up	1	C00001-
20		07000-11010	• • O-ring	1	C00001-
21		07001-01010	• • Ring, Back-up	1	C00001-
22		723-11-18190	• • Plug	1	C00001-
23		07002-11023	• • O-ring	1	C00001-
24	C1		• • Piston	1	C00001-
25		723-40-82290	• • Spring	1	C00001-
26	C1		• • Plug	1	C00001-
27	C1		• • Plug, Stocking	1	C00001-
28		01252-61075	• Bolt, Hexagon Socket Head	4	C00001-

FIG. H0120-001018 Control Valve (6-Spool, 18/18)

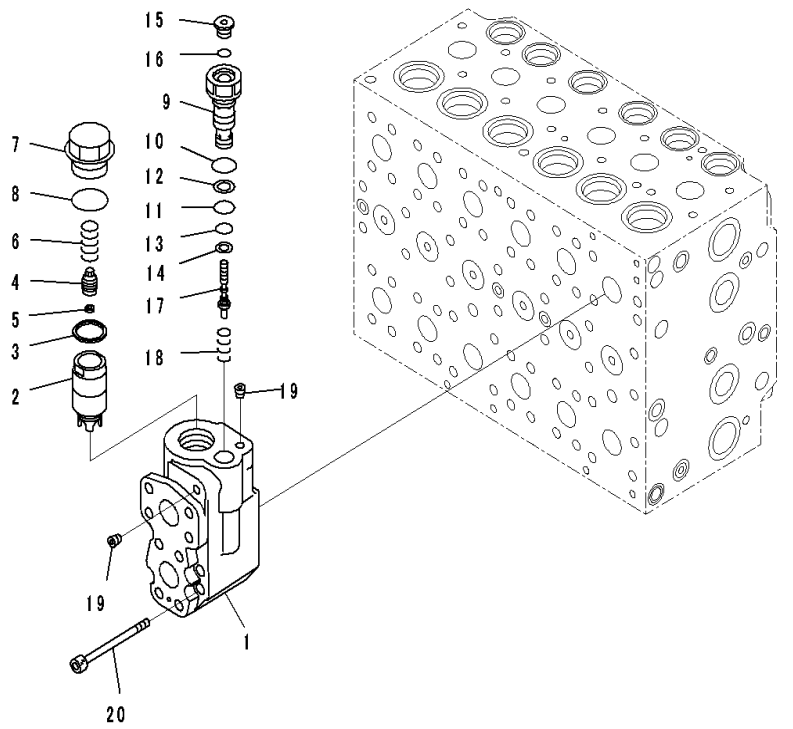

Index	Code	Part Number	Description	Qty	Serial Number
		723-46-31200	Valve, Control	1	C00001-
		723-40-84501	• Valve Assembly	1	C00001-
1	C1		• • Body	1	C00001-
2	C1		• • Valve	1	C00001-
3	C1		• • Seal	1	C00001-
4	C1		• • Plug	1	C00001-
5		723-40-82220	• • Filter	1	C00001-
6	C1		• • Spring	1	C00001-
7		723-40-84350	• • Plug	1	C00001-
8		07002-13334	• • O-ring	1	C00001-
9	C1		• • Plug	1	C00001-
10		07002-11823	• • O-ring	1	C00001-
11		07000-12011	• • O-ring	1	C00001-
12	C1		• • Ring, Back-up	1	C00001-
13		07000-11010	• • O-ring	1	C00001-
14	C1		• • Ring, Back-up	1	C00001-
15		723-11-18190	• • Plug	1	C00001-
16		07002-11023	• • O-ring	1	C00001-
17	C1		• • Piston	1	C00001-
18	C1		• • Spring	1	C00001-
19	C1		• • Plug, Stocking	2	C00001-
20		01252-61080	• Bolt, Hexagon Socket Head	4	C00001-

FIG. H0120-001019 Control Valve (Mounting Bracket)

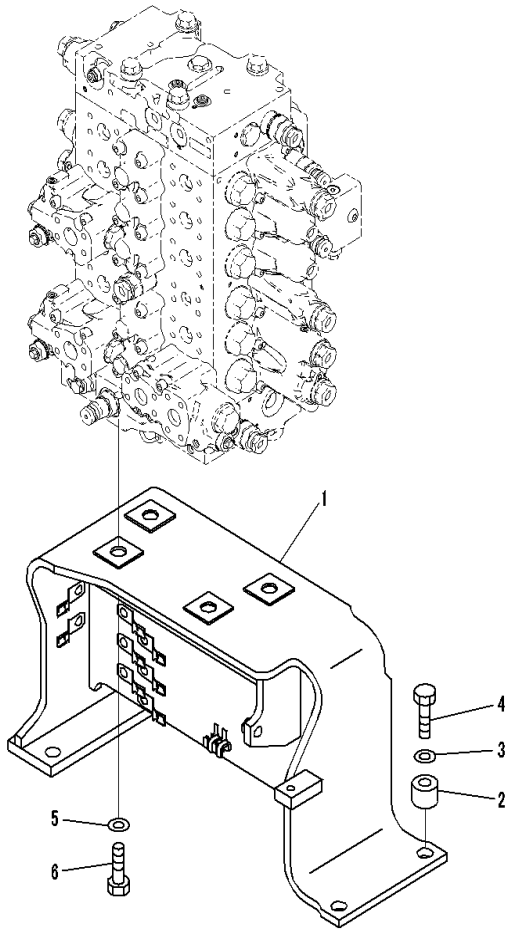

Index	Code	Part Number	Description	Qty	Serial Number
1		20Y-62-56311	Bracket	1	C00001-
2		176-54-11760	Spacer	4	C00001-
3		01643-31645	Washer	4	C00001-
4		01010-81670	Bolt	4	C00001-
5		01643-31645	Washer	4	C00001-
6		01010-81645	Bolt	4	C00001-

FIG. H0120-001020 Control Valve (Connecting Parts, 1/5)

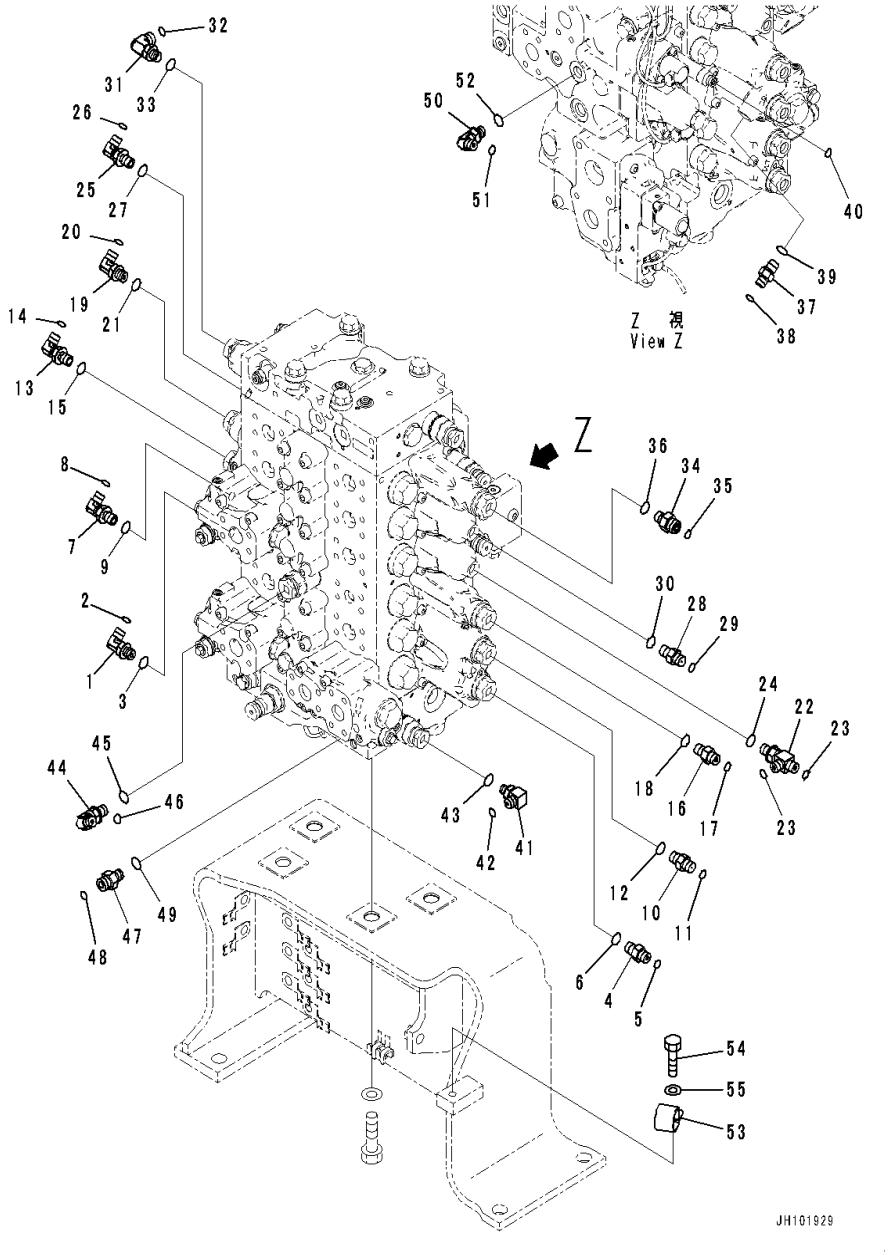

Index	Code	Part Number	Description	Qty	Serial Number
1		02782-10210	Elbow	1	C00001-
2		02896-11008	O-ring	1	C00001-
3		07002-11423	O-ring	1	C00001-
4		02781-0021D	Union	1	C00001-
5		02896-11008	O-ring	1	C00001-
6		07002-11423	O-ring	1	C00001-
7		20Y-62-45620	Elbow	1	C00001-
8		02896-11008	O-ring	1	C00001-
9		07002-11423	O-ring	1	C00001-
10		20Y-62-45610	Nipple	1	C00001-
11		02896-11008	O-ring	1	C00001-
12		07002-11423	O-ring	1	C00001-
13		02782-10210	Elbow	1	C00001-
14		02896-11008	O-ring	1	C00001-
15		07002-11423	O-ring	1	C00001-
16		02781-0021D	Union	1	C00001-
17		02896-11008	O-ring	1	C00001-
18		07002-11423	O-ring	1	C00001-
19		02782-10210	Elbow	1	C00001-
20		02896-11008	O-ring	1	C00001-
21		07002-11423	O-ring	1	C00001-
22		11Y-62-12330	Tee	1	C00001-
23		02896-11008	O-ring	2	C00001-
24		07002-11423	O-ring	1	C00001-
25		20Y-62-45620	Elbow	1	C00001-
26		02896-11008	O-ring	1	C00001-
27		07002-11423	O-ring	1	C00001-
28		20Y-62-45610	Nipple	1	C00001-
29		02896-11008	O-ring	1	C00001-
30		07002-11423	O-ring	1	C00001-
31		02782-10311	Elbow	1	C00001-
32		02896-11009	O-ring	1	C00001-
33		07002-11423	O-ring	1	C00001-
34		11Y-62-12520	Union	1	C00001-
35		02896-11009	O-ring	1	C00001-
36		07002-11423	O-ring	1	C00001-
37		02781-0021D	Union	1	C00001-
38		02896-11008	O-ring	1	C00001-
39		07002-11423	O-ring	1	C00001-
40		02896-11008	O-ring	1	C00001-

FIG. H0120-001020 Control Valve (Connecting Parts, 1/5)

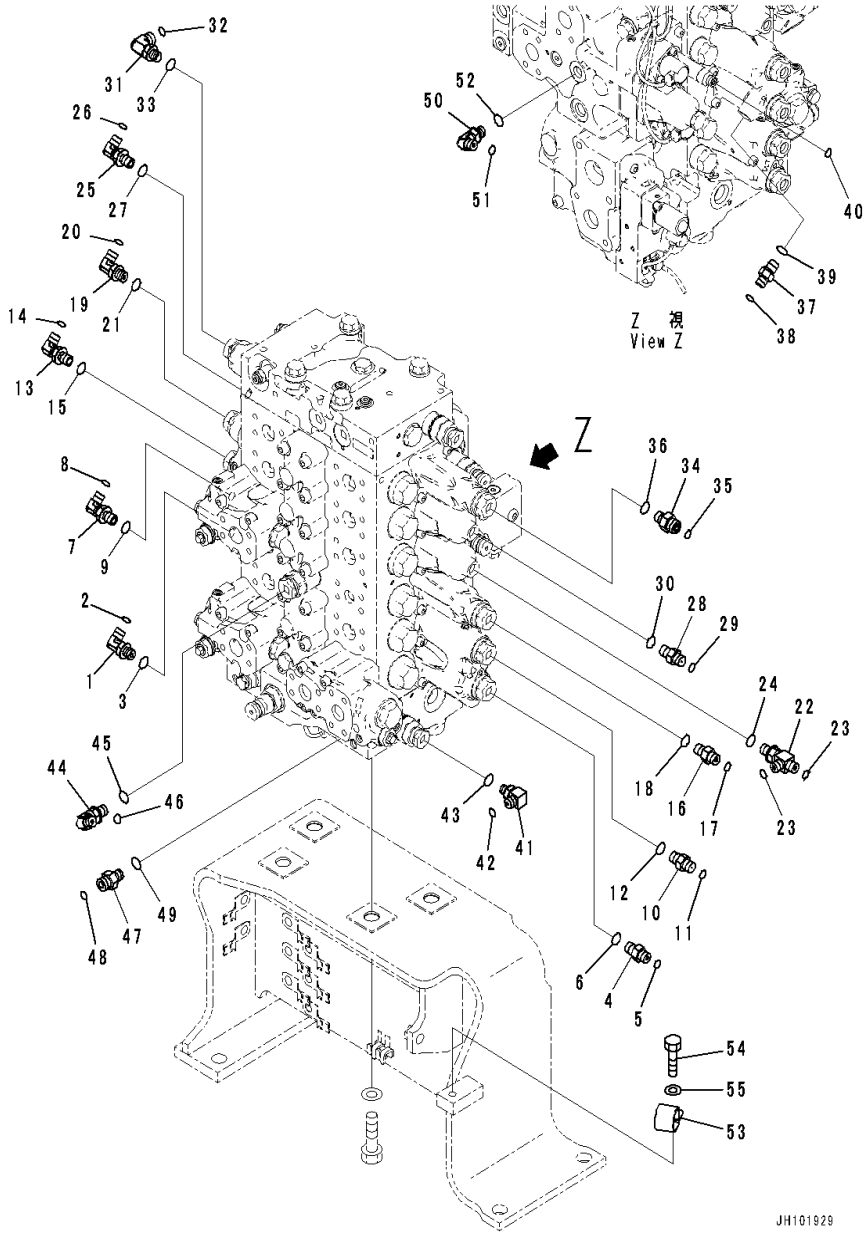

Index	Code	Part Number	Description	Qty	Serial Number
41		20Y-62-41920	Elbow	1	C00001-
42		02896-11008	O-ring	1	C00001-
43		07002-11223	O-ring	1	C00001-
44		02782-10210	Elbow	1	C00001-
45		07002-11423	O-ring	1	C00001-
46		02896-11008	O-ring	1	C00001-
47		11Y-62-12520	Union	1	C00001-
48		02896-11009	O-ring	1	C00001-
49		07002-11423	O-ring	1	C00001-
50		02782-10210	Elbow	1	C00001-
51		02896-61008	O-ring	1	C00001-
52		07002-61423	O-ring	1	C00001-
53		142-06-13540	Clip	1	C00001-
54		01010-81225	Bolt	1	C00001-
55		01643-31232	Washer	1	C00001-

FIG. H0120-001021 Control Valve (Connecting Parts, 2/5)

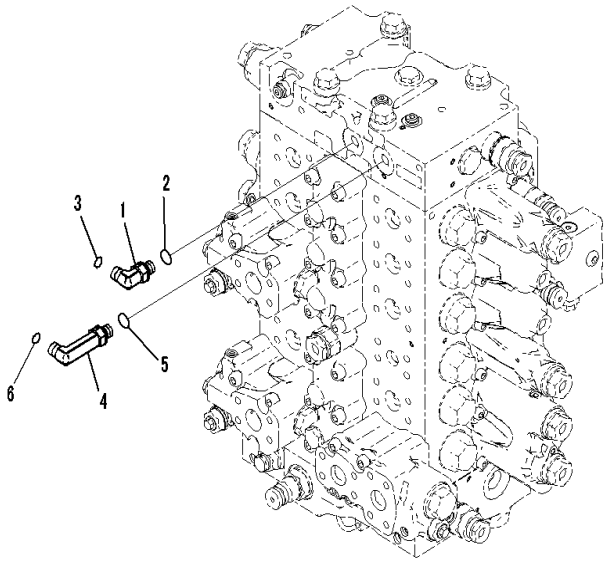

JH101933

Index	Code	Part Number	Description	Qty	Serial Number
1		02782-10210	Elbow	1	C00001-
2		07002-61423	O-ring	1	C00001-
3		02896-61008	O-ring	1	C00001-
4		02782-10212	Elbow	1	C00001-
5		07002-61423	O-ring	1	C00001-
6		02896-61008	O-ring	1	C00001-

FIG. H0120-001022 Control Valve (Slow Return Valve,1/2, Front)

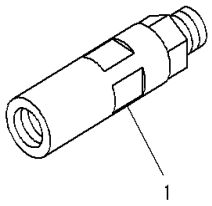

JY018288

Index	Code	Part Number	Description	Qty	Serial Number
		723-46-17770	Valve Assembly	1	C00001-
1	C1		• Body	1	C00001-

FIG. H0120-001023 Control Valve (Connecting Parts, 3/5)

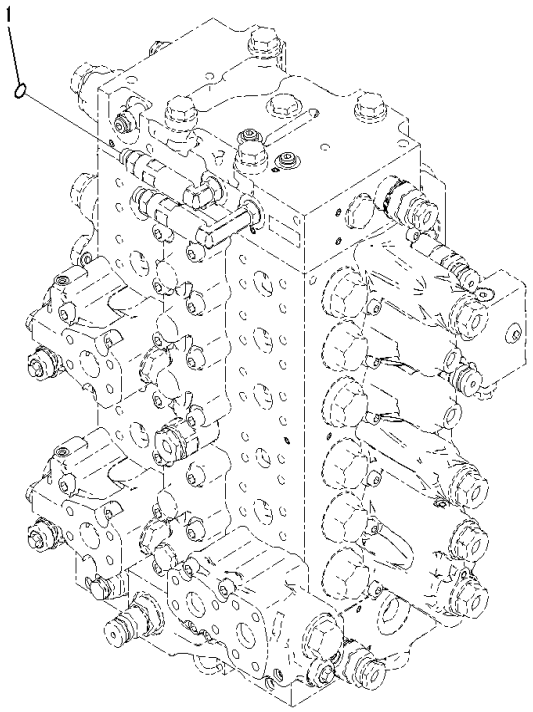

Index	Code	Part Number	Description	Qty	Serial Number
1		02896-61008	O-ring	1	C00001-

FIG. H0120-001024 Control Valve (Slow Return Valve, 2/2, Rear)

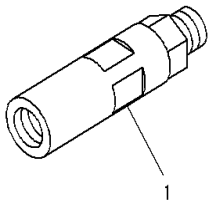

JY018288

Index	Code	Part Number	Description	Qty	Serial Number
		723-46-17770	Valve Assembly	1	C00001-
1	C1		• Body	1	C00001-

FIG. H0120-001025 Control Valve (Connecting Parts, 4/5)

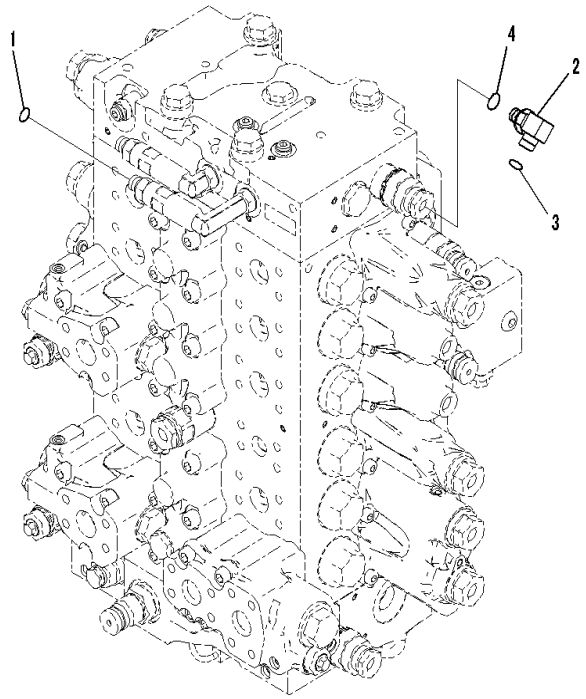

JH101932

Index	Code	Part Number	Description	Qty	Serial Number
1		02896-61008	O-ring	1	C00001-
2		20Y-62-41920	Elbow	1	C00001-
3		02896-11008	O-ring	1	C00001-
4		07002-11223	O-ring	1	C00001-

FIG. H0120-001026 Control Valve (Connecting Parts, 5/5)

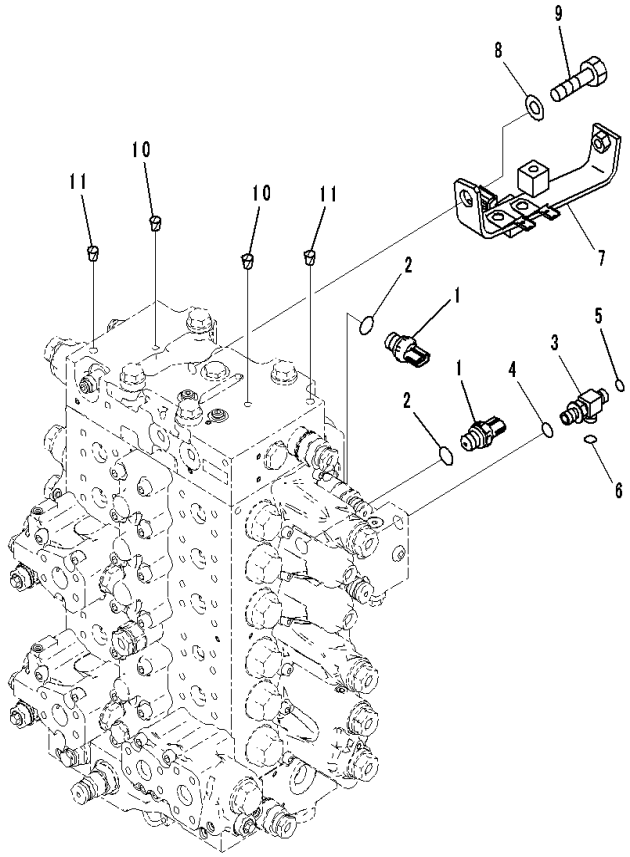

Index	Code	Part Number	Description	Qty	Serial Number
1		7861-93-1890	Sensor	2	C00001-
2		07002-61823	• O-ring	1	C00001-
3		2A6-62-12241	Tee	1	C00001-
4		07002-11823	O-ring	1	C00001-
5		02896-11008	O-ring	1	C00001-
6		02896-11009	O-ring	1	C00001-
7		20Y-62-56451	Bracket	1	C00001-
8		01643-31645	Washer	1	C00001-
9		01010-81635	Bolt	1	C00001-
10		07049-01012	Plug	2	C00001-
11		07049-01215	Plug	2	C00001-

FIG. H0120-002001 Control Valve (7-Spool, 1/21)

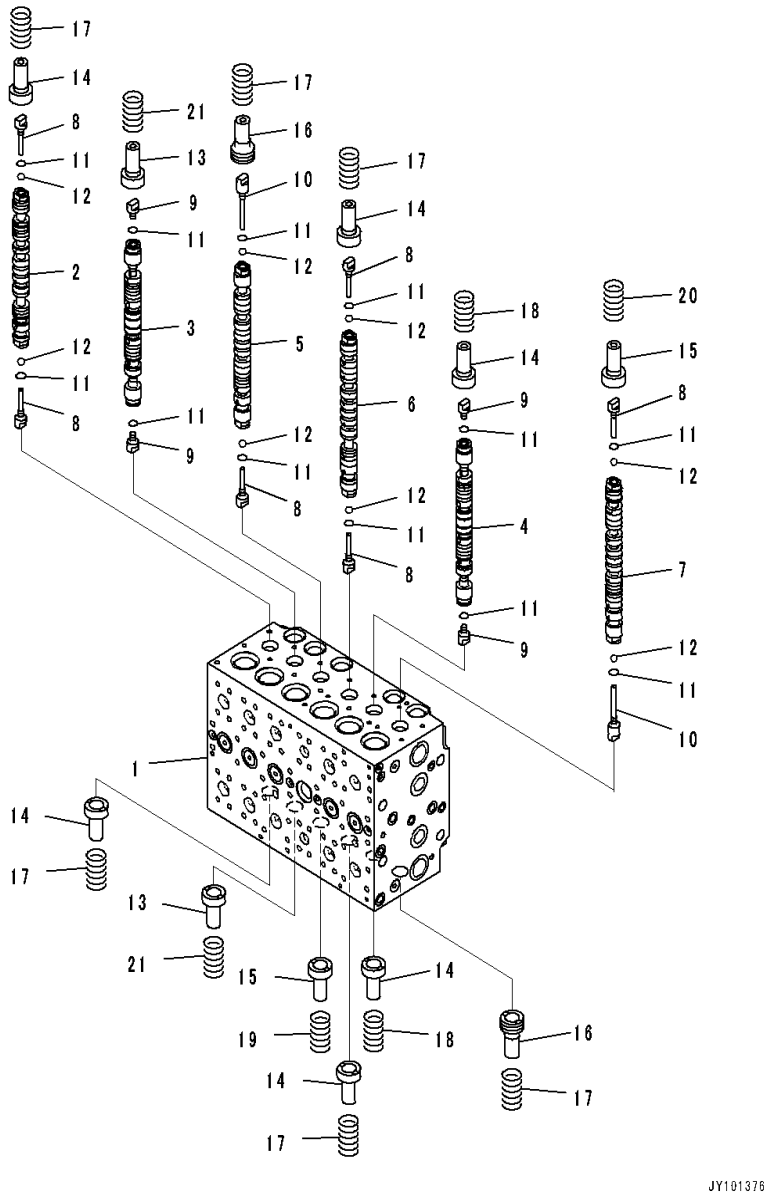

Index	Code	Part Number	Description	Qty	Serial Number
		723-47-31200	Valve, Control	1	C00001-
	C1		• Body Subassembly	1	C00001-
1	C1		• • Valve Body	1	C00001-
2	C1		• • Spool	1	C00001-
3	C1		• • Spool	1	C00001-
4	C1		• • Spool	1	C00001-
5	C1		• • Spool	1	C00001-
6	C1		• • Spool	1	C00001-
7	C1		• • Spool	1	C00001-
8		723-46-15130	• • Plug	6	C00001-
9		723-46-15140	• • Plug	4	C00001-
10		723-46-15650	• • Plug	2	C00001-
11		07002-10823	• • O-ring	12	C00001-
12		708-7T-16460	• • Ball	8	C00001-
13		723-46-15120	• • Retainer	2	C00001-
14		723-46-15690	• • Retainer	6	C00001-
15		723-46-15950	• • Retainer	2	C00001-
16		723-46-15880	• • Retainer	2	C00001-
17		723-46-14110	• • Spring	6	C00001-
18		723-46-14470	• • Spring	2	C00001-
19		723-46-14280	• • Spring	1	C00001-
20		723-46-14290	• • Spring	1	C00001-
21		723-46-14460	• • Spring	2	C00001-

FIG. H0120-002002 Control Valve (7-Spool, 2/21)

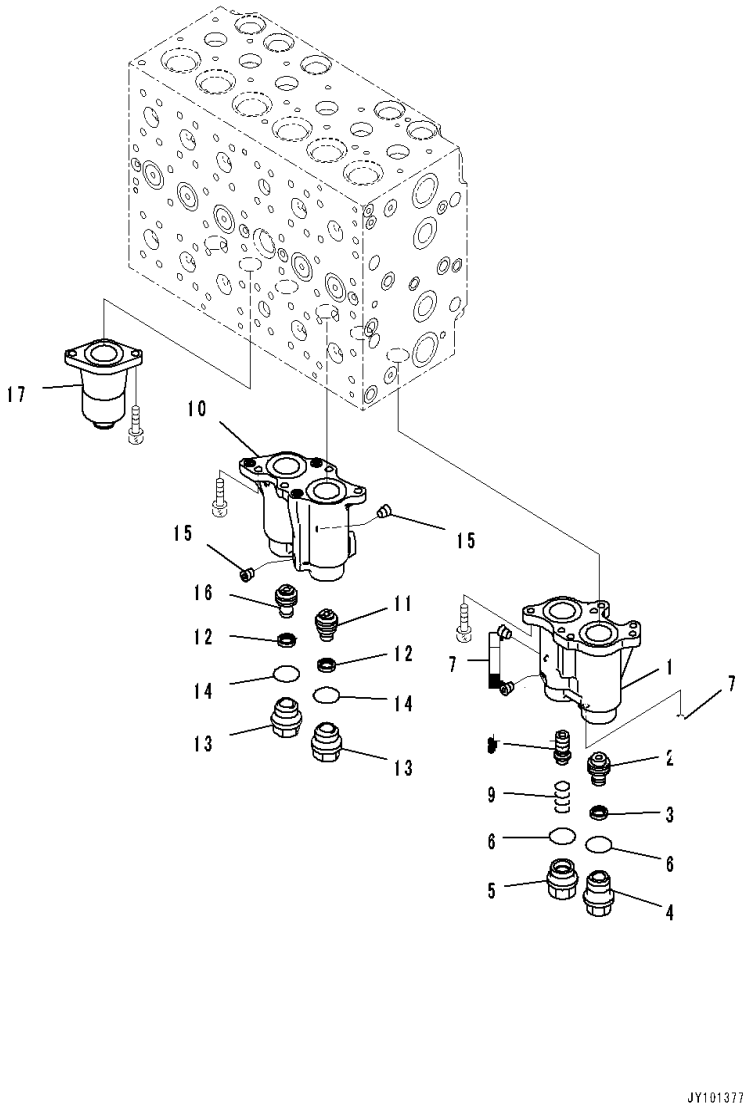

Index	Code	Part Number	Description	Qty	Serial Number
		723-47-31200	Valve, Control	1	C00001-
	C1		• Body Subassembly	1	C00001-
		723-46-19700	• • Case Subassembly	1	C00001-
1	C1		• • • Case	1	C00001-
2		723-46-15640	• • • Piston	1	C00001-
3		702-73-11510	• • • Seal	1	C00001-
4		723-46-15630	• • • Plug	1	C00001-
5		723-46-17340	• • • Plug	1	C00001-
6		07000-13024	• • • O-ring	2	C00001-
7	C1		• • • Plug	2	C00001-
8		723-46-17320	• • • Spool	1	C00001-
9		723-46-17330	• • • Spring	1	C00001-
		723-46-19850	• • Case Subassembly	1	C00001-
10	C1		• • • Case	1	C00001-
11		723-46-15980	• • • Piston	1	C00001-
12		702-73-11510	• • • Seal	2	C00001-
13		723-46-15630	• • • Plug	2	C00001-
14		07000-13024	• • • O-ring	2	C00001-
15	C1		• • • Plug	1	C00001-
16		723-46-15960	• • • Piston	1	C00001-
17		723-46-15111	• • Case	1	C00001-

FIG. H0120-002003 Control Valve (7-Spool, 3/21)

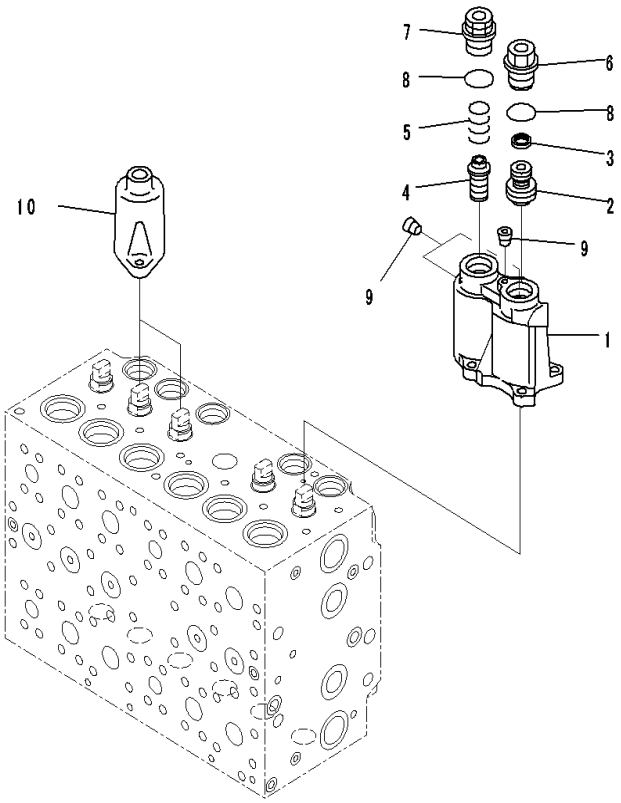

Index	Code	Part Number	Description	Qty	Serial Number
		723-47-31200	Valve, Control	1	C00001-
	C1		• Body Subassembly	1	C00001-
		723-46-19220	• • Case Subassembly	1	C00001-
1	C1		• • • Case	1	C00001-
2		723-46-15970	• • • Piston	1	C00001-
3		702-73-11510	• • • Seal	1	C00001-
4		723-46-17320	• • • Spool	1	C00001-
5		723-46-17330	• • • Spring	1	C00001-
6		723-46-15630	• • • Plug	1	C00001-
7		723-46-17340	• • • Plug	1	C00001-
8		07000-13024	• • • O-ring	2	C00001-
9	C1		• • • Plug	2	C00001-
10		723-46-15111	• • Case	2	C00001-

FIG. H0120-002004 Control Valve (7-Spool, 4/21)

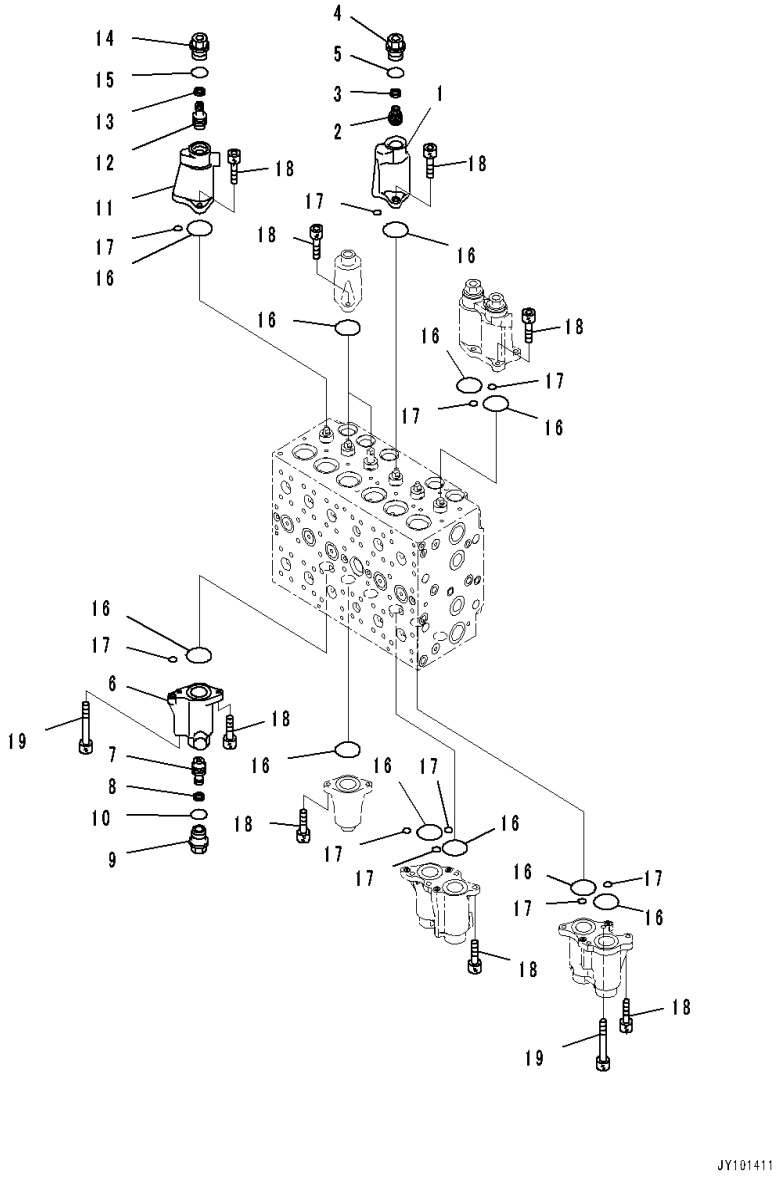

Index	Code	Part Number	Description	Qty	Serial Number
		723-47-31200	Valve, Control	1	C00001-
	C1		• Body Subassembly	1	C00001-
		723-46-19870	• • Case Subassembly	1	C00001-
1	C1		• • • Case	1	C00001-
2		723-46-15980	• • • Piston	1	C00001-
3		702-73-11510	• • • Seal	1	C00001-
4		723-46-15630	• • • Plug	1	C00001-
5		07000-13024	• • • O-ring	1	C00001-
		723-46-19510	• • Case Subassembly	1	C00001-
6	C1		• • • Case	1	C00001-
7		723-46-17590	• • • Piston	1	C00001-
8		702-73-11510	• • • Seal	1	C00001-
9		723-46-15630	• • • Plug	1	C00001-
10		07000-13024	• • • O-ring	1	C00001-
		723-46-19610	• • Case Subassembly	1	C00001-
11	C1		• • • Case	1	C00001-
12		723-46-17590	• • • Piston	1	C00001-
13		702-73-11510	• • • Seal	1	C00001-
14		723-46-15630	• • • Plug	1	C00001-
15		07000-13024	• • • O-ring	1	C00001-
16		07430-71380	• • O-ring	12	C00001-
17		07000-11010	• • O-ring	10	C00001-
18		01252-60820	• • Bolt, Hexagon Socket Head	22	C00001-
19		723-46-17350	• • Bolt, Hexagon Socket Head	2	C00001-

FIG. H0120-002005 Control Valve (7-Spool, 5/21)

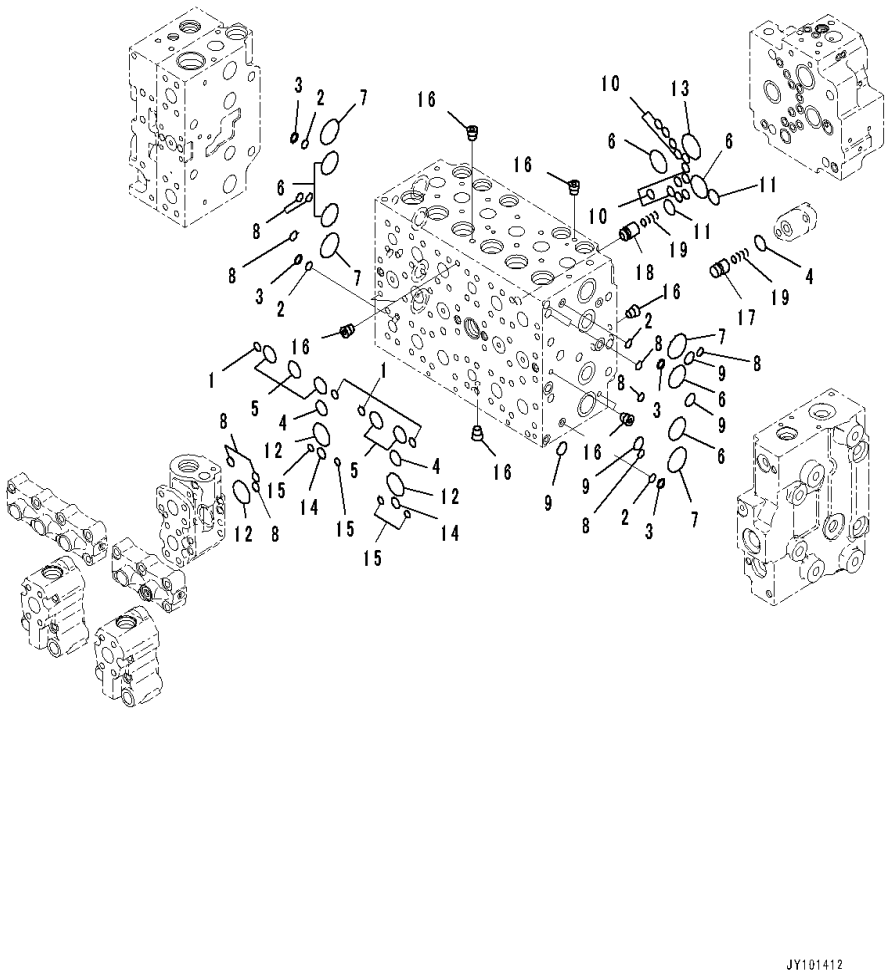

Index	Code	Part Number	Description	Qty	Serial Number
		723-47-31200	Valve, Control	1	C00001-
	C1		• Body Subassembly	1	C00001-
1		07000-12012	• • O-ring	4	C00001-
2		723-11-19130	• • O-ring	4	C00001-
3		723-46-17520	• • Ring, Back-up	4	C00001-
4		07000-12021	• • O-ring	3	C00001-
5		07000-13028	• • O-ring	5	C00001-
6		07000-13032	• • O-ring	6	C00001-
7		723-46-17510	• • O-ring	4	C00001-
8		723-46-17530	• • O-ring	11	C00001-
9		723-11-18150	• • O-ring	4	C00001-
10		07000-12012	• • O-ring	12	C00001-
11		07000-12021	• • O-ring	2	C00001-
12		07000-13032	• • O-ring	3	C00001-
13		07000-13036	• • O-ring	1	C00001-
14		07000-12015	• • O-ring	2	C00001-
15		07000-11010	• • O-ring	4	C00001-
16	C1		• • Plug, Stocking	16	C00001-
17		723-46-17650	• • Valve	1	C00001-
18		723-46-15150	• • Valve	1	C00001-
19		723-46-14150	• • Spring	2	C00001-

FIG. H0120-002006 Control Valve (7-Spool, 6/21)

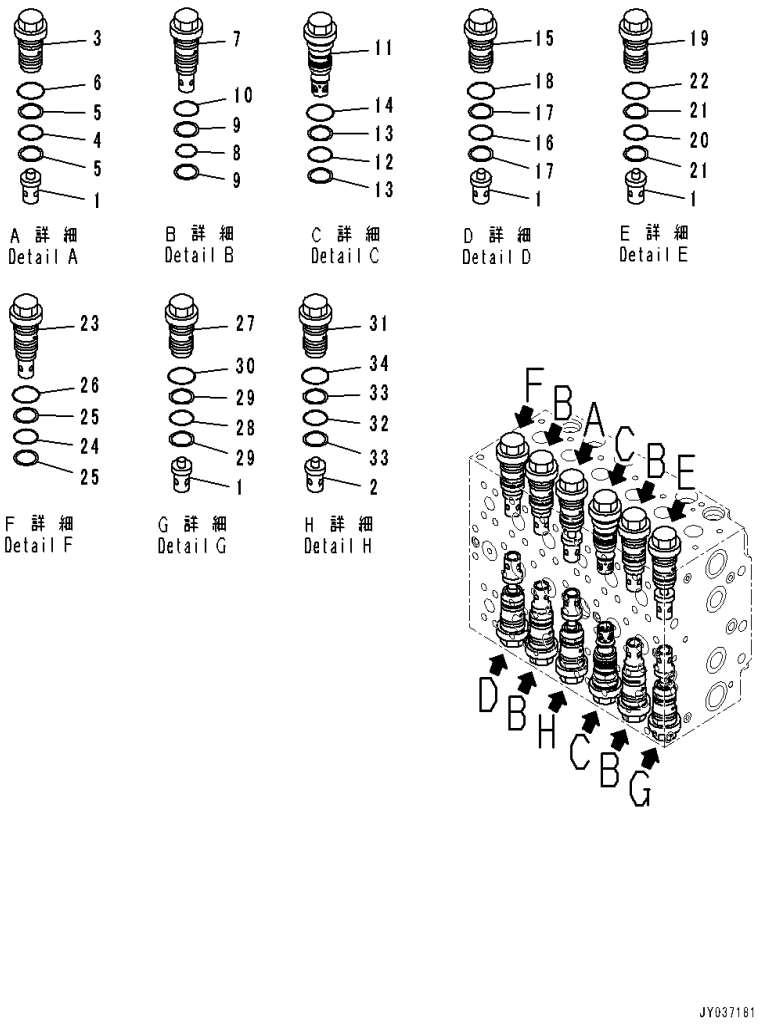

Index	Code	Part Number	Description	Qty	Serial Number
		723-47-31200	Valve, Control	1	C00001-
	C1		• Body Subassembly	1	C00001-
1		723-46-41210	• • Valve	4	C00001-
2		723-46-41190	• • Valve	1	C00001-
3		723-46-40100	• • Valve Assembly	1	C00001-
4		700-93-11320	• • • O-ring	1	C00001-
5		723-46-41950	• • • Ring, Back-up	2	C00001-
6		07002-13634	• • • O-ring	1	C00001-
7		723-46-42700	• • Valve Assembly	4	C00001-
8		700-93-11320	• • • O-ring	1	C00001-
9	C1		• • • Ring, Back-up	2	C00001-
10		07002-13634	• • • O-ring	1	C00001-
11		723-46-41500	• • Valve Assembly	2	C00001-
12		700-93-11320	• • • O-ring	1	C00001-
13		723-46-41950	• • • Ring, Back-up	2	C00001-
14		07002-13634	• • • O-ring	1	C00001-
15		723-46-45100	• • Valve Assembly	1	C00001-
16		700-93-11320	• • • O-ring	1	C00001-
17	C1		• • • Ring, Back-up	2	C00001-
18		07002-13634	• • • O-ring	1	C00001-
19		723-46-43300	• • Valve Assembly	1	C00001-
20		700-93-11320	• • • O-ring	1	C00001-
21		723-46-41950	• • • Ring, Back-up	2	C00001-
22		07002-13634	• • • O-ring	1	C00001-
23		723-46-43400	• • Valve Assembly	1	C00001-
24		700-93-11320	• • • O-ring	1	C00001-
25	C1		• • • Ring, Back-up	2	C00001-
26		07002-13634	• • • O-ring	1	C00001-
27		723-46-43100	• • Valve Assembly	1	C00001-
28		700-93-11320	• • • O-ring	1	C00001-
29	C1		• • • Ring, Back-up	2	C00001-
30		07002-13634	• • • O-ring	1	C00001-
31		723-46-46101	• • Valve Assembly	1	C00001-
32		700-93-11320	• • • O-ring	1	C00001-
33	C1		• • • Ring, Back-up	2	C00001-
34		07002-13634	• • • O-ring	1	C00001-

FIG. H0120-002007 Control Valve (7-Spool, 7/21)

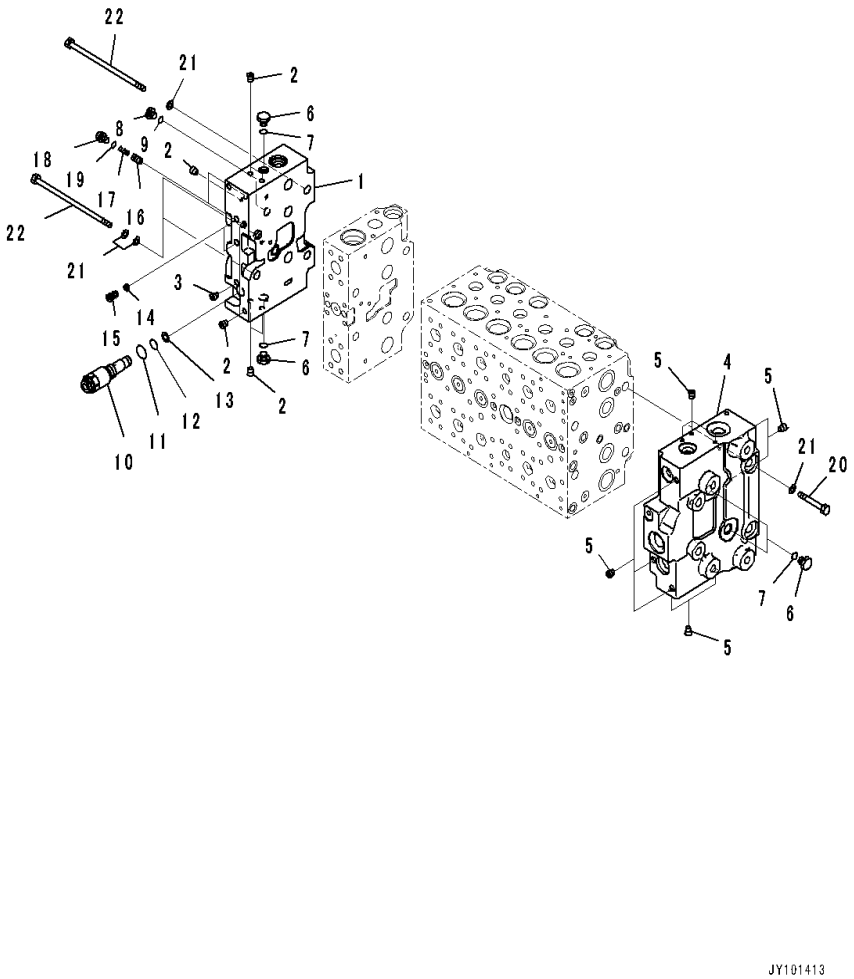

Index	Code	Part Number	Description	Qty	Serial Number
		723-47-31200	Valve, Control	1	C00001-
		723-46-00630	• Cover Assembly	1	C00001-
1	C1		• • Cover	1	C00001-
2		708-21-12541	• • Plug, Stocking	7	C00001-
3		708-21-12531	• • Plug	1	C00001-
		723-46-00840	• Cover Assembly	1	C00001-
4	C1		• • Cover	1	C00001-
5		708-21-12541	• • Plug, Stocking	10	C00001-
6		708-8E-16250	• Plug	4	C00001-
7		07002-11823	• O-ring	4	C00001-
8		708-8H-11530	• Plug	1	C00001-
9		07002-11423	• O-ring	1	C00001-
10		723-46-17600	• Plug Assembly	1	C00001-
11		07002-11423	• • O-ring	1	C00001-
12		07000-11007	• • O-ring	1	C00001-
13	C1		• • Ring, Back-up	1	C00001-
14		723-40-82220	• Filter	2	C00001-
15		723-46-17550	• Plug	2	C00001-
16		723-46-15190	• Valve	2	C00001-
17		723-46-14140	• Spring	2	C00001-
18		708-8E-16160	• Plug	2	C00001-
19		07002-11023	• O-ring	2	C00001-
20		01011-61405	• Bolt	4	C00001-
21		01643-31445	• Washer, Flat	10	C00001-
22		01011-61455	• Bolt	4	C00001-

FIG. H0120-002008 Control Valve (7-Spool, 8/21)

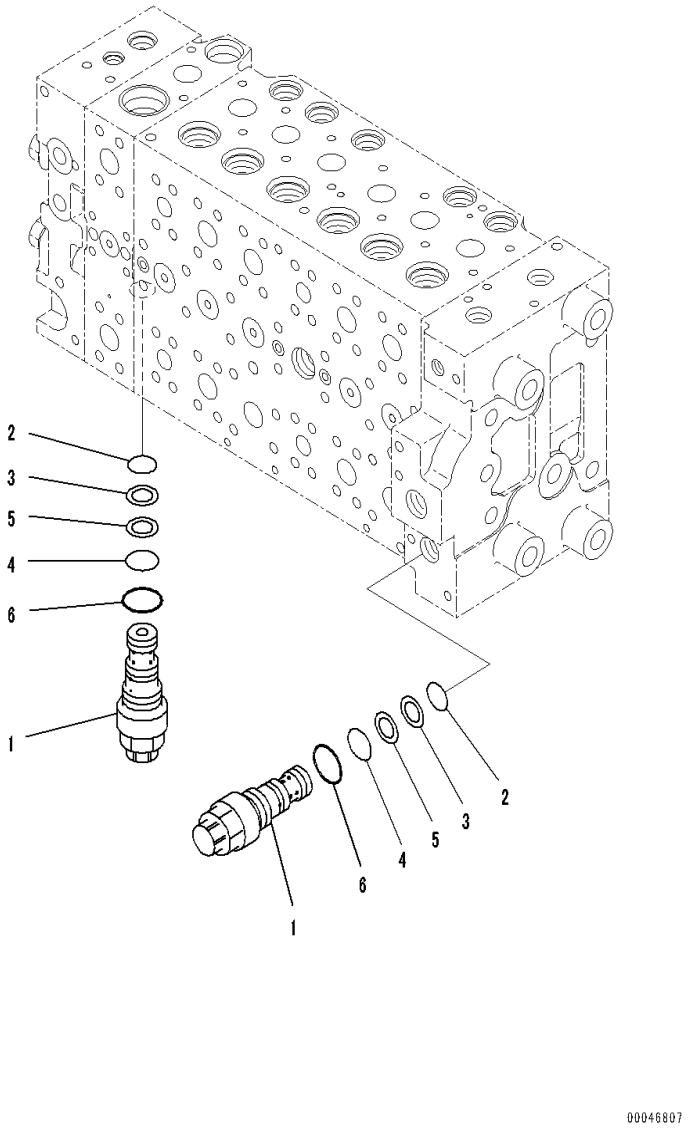

Index	Code	Part Number	Description	Qty	Serial Number
		723-47-31200	Valve, Control	1	C00001-
1		723-40-57200	• Valve Assembly, Unload	2	C00001-
2		07000-12014	• • O-ring	1	C00001-
3	C1		• • Ring, Back-up	1	C00001-
4		07000-12016	• • O-ring	1	C00001-
5	C1		• • Ring, Back-up	1	C00001-
6		07002-12434	• • O-ring	1	C00001-

FIG. H0120-002009 Control Valve (7-Spool, 9/21)

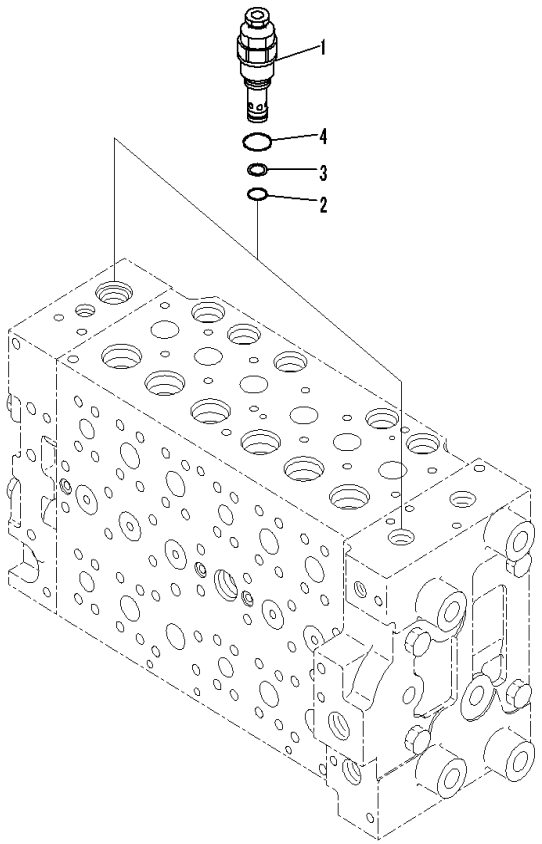

00045796

Index	Code	Part Number	Description	Qty	Serial Number
		723-47-31200	Valve, Control	1	C00001-
1		723-40-94501	• Valve, Relief	2	C00001-
2		700-22-11410	• • O-ring	1	C00001-
3	C1		• • Ring, Back-up	1	C00001-
4		07002-12434	• • O-ring	1	C00001-

FIG. H0120-002010 Control Valve (7-Spool, 10/21)

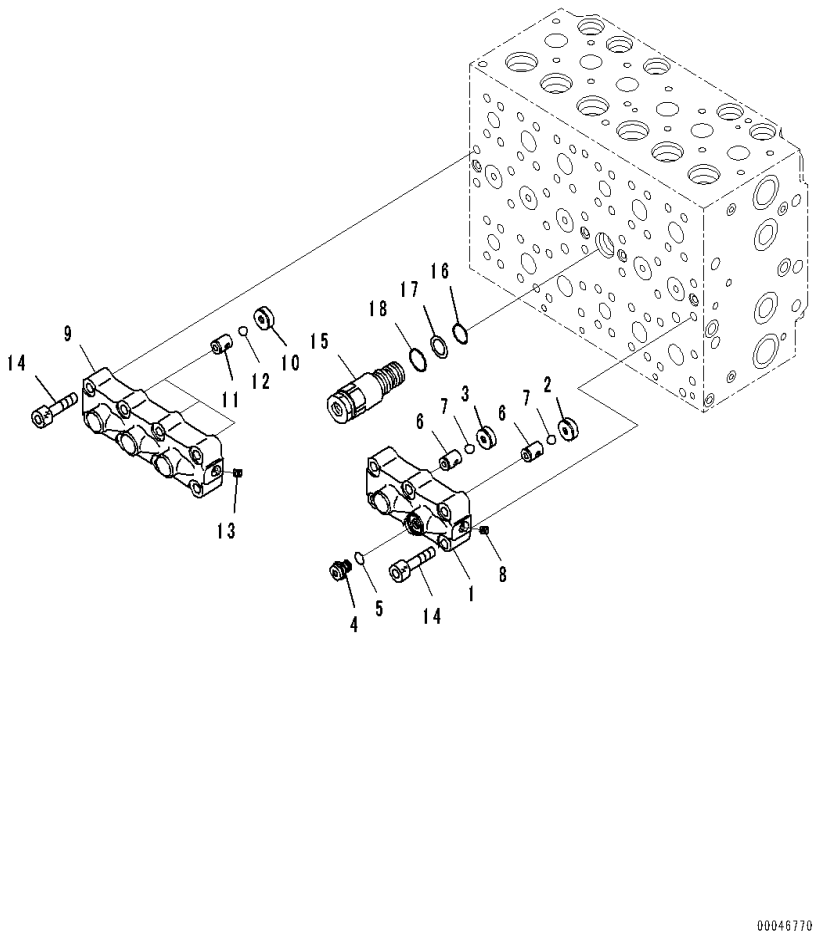

Index	Code	Part Number	Description	Qty	Serial Number
		723-47-31200	Valve, Control	1	C00001-
		723-40-66701	• Valve Assembly	1	C00001-
1	C1		• • Case	1	C00001-
2	C1		• • Seat	1	C00001-
3	C1		• • Seat	1	C00001-
4		708-8H-11530	• • Plug	1	C00001-
5		07002-11423	• • O-ring	1	C00001-
6	C1		• • Seat	2	C00001-
7	C1		• • Ball	2	C00001-
8	C1		• • Plug, Stocking	1	C00001-
		723-40-66601	• Valve Assembly	1	C00001-
9	C1		• • Case	1	C00001-
10	C1		• • Seat	3	C00001-
11	C1		• • Seat	3	C00001-
12	C1		• • Ball	3	C00001-
13	C1		• • Plug, Stocking	1	C00001-
14		01252-61045	• Bolt, Hexagon Socket Head	14	C00001-
15		723-40-60101	• Valve Assembly	1	C00001-
16		07000-12020	• • O-ring	1	C00001-
17	C1		• • Ring, Back-up	1	C00001-
18		709-25-11390	• • O-ring	1	C00001-

FIG. H0120-002011 Control Valve (7-Spool, 11/21)

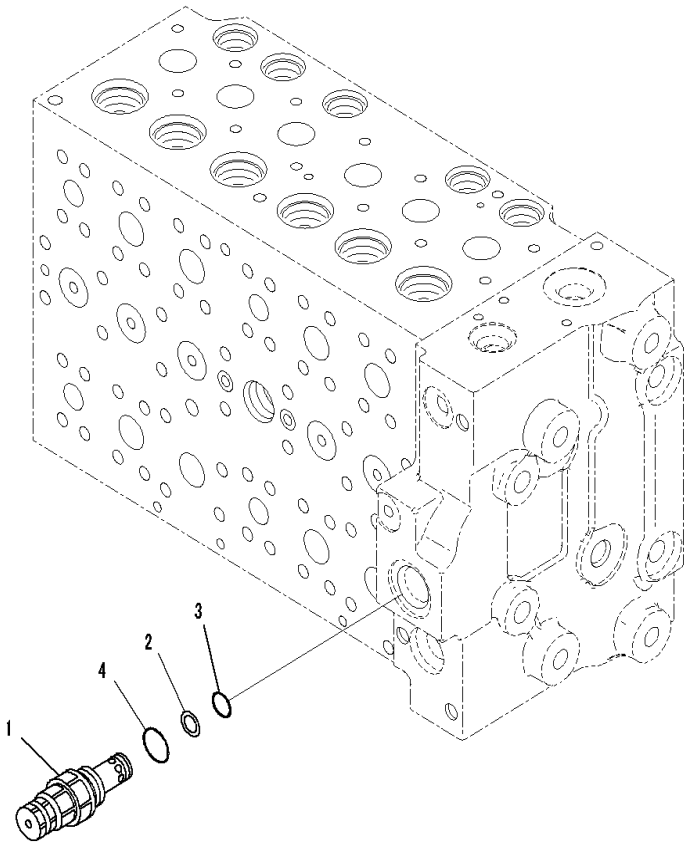

Index	Code	Part Number	Description	Qty	Serial Number
		723-47-31200	Valve, Control	1	C00001-
1		723-90-66900	• Valve, Relief	1	C00001-
2	C1		• • Ring, Back-up	1	C00001-
3		700-22-11410	• • O-ring	1	C00001-
4		709-25-11390	• • O-ring	1	C00001-

FIG. H0120-002012 Control Valve (7-Spool, 12/21)

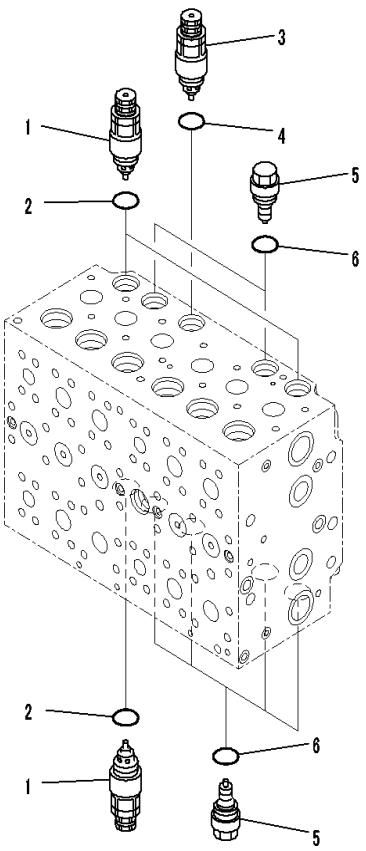

00046772

Index	Code	Part Number	Description	Qty	Serial Number
		723-47-31200	Valve, Control	1	C00001-
1		723-90-66800	• Valve Assembly, Suction and Relief	3	C00001-
2		709-25-11390	• • O-ring	1	C00001-
3		723-90-61600	• Valve Assembly, Suction and Relief	1	C00001-
4		07000-13024	• • O-ring	1	C00001-
5		723-40-85100	• Valve Assembly, Suction	6	C00001-
6		709-25-11390	• • O-ring	1	C00001-

FIG. H0120-002013 Control Valve (7-Spool, 13/21)

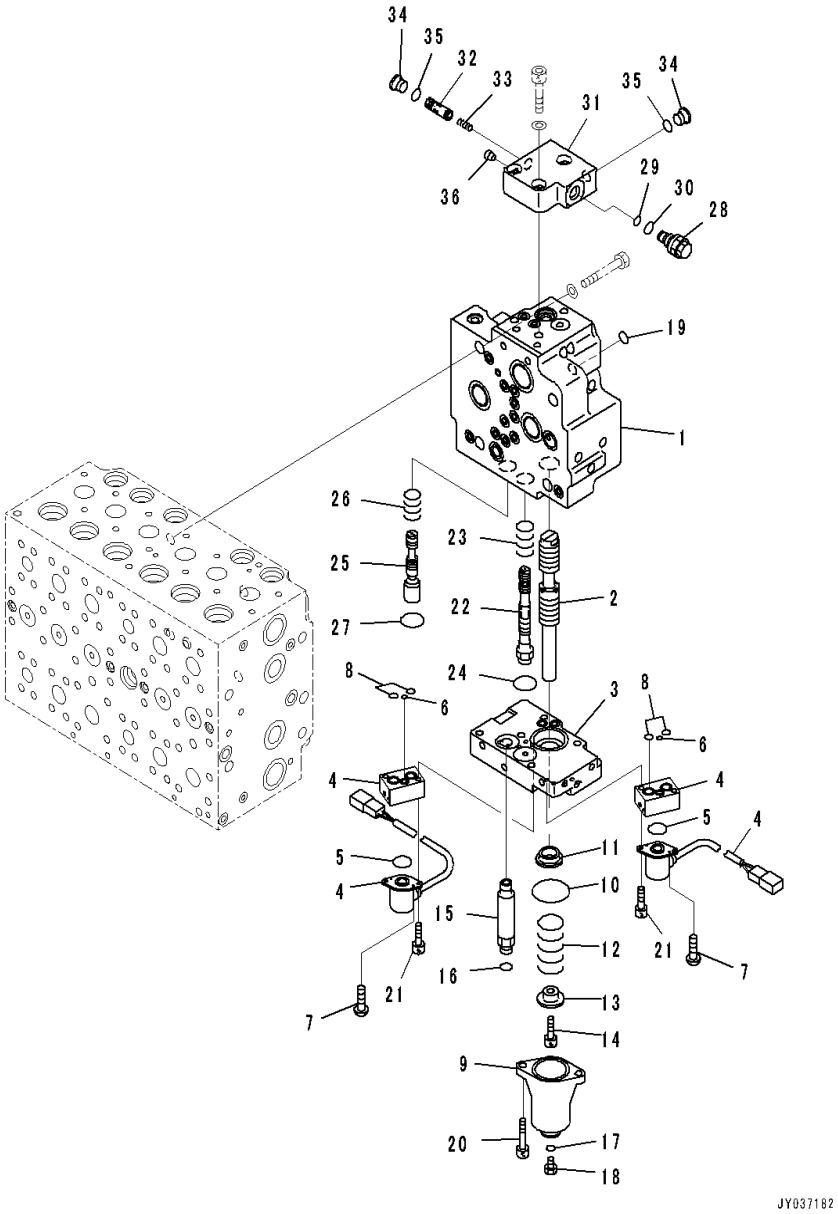

Index	Code	Part Number	Description	Qty	Serial Number
		723-47-31200	Valve, Control	1	C00001-
		723-40-74300	• Valve Assembly	1	C00001-
1	C1		• • Valve Body	1	C00001-
2	C1		• • Spool	1	C00001-
3		723-40-72800	• • Plate Assembly	1	C00001-
4		702-21-62300	• • Valve, Pilot	2	C00001-
5		700-80-61260	• • • O-ring	1	C00001-
6		723-11-19960	• • • O-ring	1	C00001-
7		702-21-54180	• • • Screw	2	C00001-
8		702-16-55610	• • • O-ring	2	C00001-
9		723-46-15111	• • Case	1	C00001-
10		07430-71380	• • O-ring	1	C00001-
11	C1		• • Retainer	1	C00001-
12	C1		• • Spring	1	C00001-
13	C1		• • Retainer	1	C00001-
14		01252-60816	• • Bolt, Hexagon Socket Head	1	C00001-
15		723-40-71870	• • Union	1	C00001-
16		02896-11008	• • O-ring	1	C00001-
17		07002-11423	• • O-ring	1	C00001-
18		07040-11409	• • Plug	1	C00001-
19		07002-11423	• • O-ring	1	C00001-
20		01252-60855	• • Bolt, Hexagon Socket Head	2	C00001-
21		01252-60635	• • Bolt, Hexagon Socket Head	4	C00001-
22	C1		• • Spool Assembly	1	C00001-
23	C1		• • Spring	1	C00001-
24		723-46-18720	• • O-ring	1	C00001-
25	C1		• • Spool	1	C00001-
26	C1		• • Spring	1	C00001-
27		723-46-18720	• • O-ring	1	C00001-
		723-40-75200	• • Valve Assembly	1	C00001-
28		723-40-73700	• • • Valve, Relief	1	C00001-
29		702-16-53920	• • • • O-ring	1	C00001-
30		07002-11623	• • • • O-ring	1	C00001-
31	C1		• • • Block	1	C00001-
32	C1		• • • Spool	1	C00001-
33	C1		• • • Spring	1	C00001-
34		702-21-55620	• • • Plug	2	C00001-
35		07002-11423	• • • O-ring	2	C00001-
36	C1		• • • Plug, Stocking	1	C00001-

FIG. H0120-002014 Control Valve (7-Spool, 14/21)

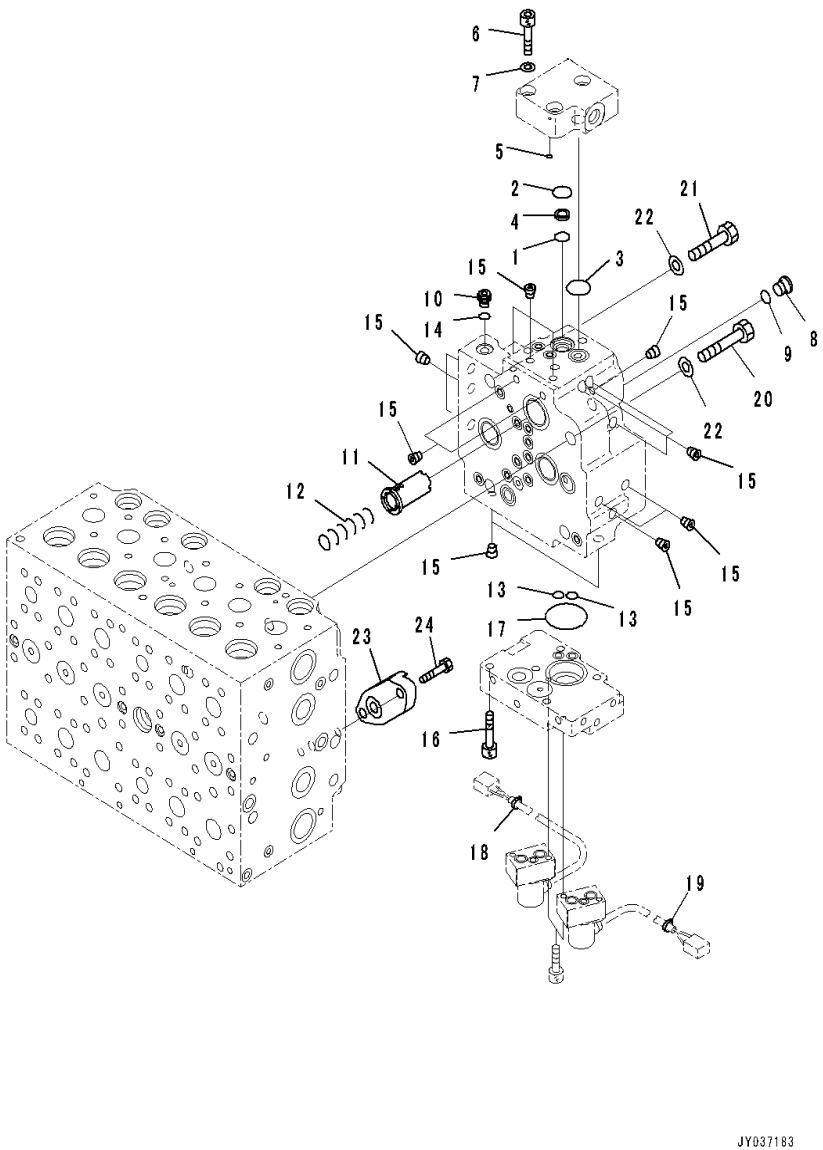

Index	Code	Part Number	Description	Qty	Serial Number
		723-47-31200	Valve, Control	1	C00001-
		723-40-74300	• Valve Assembly	1	C00001-
1		07000-12018	• • O-ring	1	C00001-
2		723-11-18430	• • O-ring	1	C00001-
3		07000-12020	• • O-ring	1	C00001-
4		723-56-33660	• • Filter	1	C00001-
5		07000-12011	• • O-ring	2	C00001-
6		01252-61040	• • Bolt, Hexagon Socket Head	3	C00001-
7		01643-51032	• • Washer	3	C00001-
8		702-21-55620	• • Plug	1	C00001-
9		07002-11423	• • O-ring	1	C00001-
10		708-8E-16160	• • Plug	1	C00001-
11		723-40-71940	• • Valve	1	C00001-
12		723-40-71950	• • Spring	1	C00001-
13		07000-11010	• • O-ring	2	C00001-
14		07002-11023	• • O-ring	1	C00001-
15	C1		• • Plug, Stocking	17	C00001-
16		01252-60845	• • Bolt, Hexagon Socket Head	3	C00001-
17		07000-12035	• • O-ring	1	C00001-
18		20Y-62-22790	• • Band,Red	1	C00001-
19		20Y-62-22830	• • Band,White	1	C00001-
20		01010-61470	• Bolt	3	C00001-
21		01010-61460	• Bolt	1	C00001-
22		01643-31445	• Washer, Flat	4	C00001-
23		723-46-17680	• Plate	1	C00001-
24		01010-61030	• Bolt	2	C00001-

FIG. H0120-002015 Control Valve (7-Spool, 15/21)

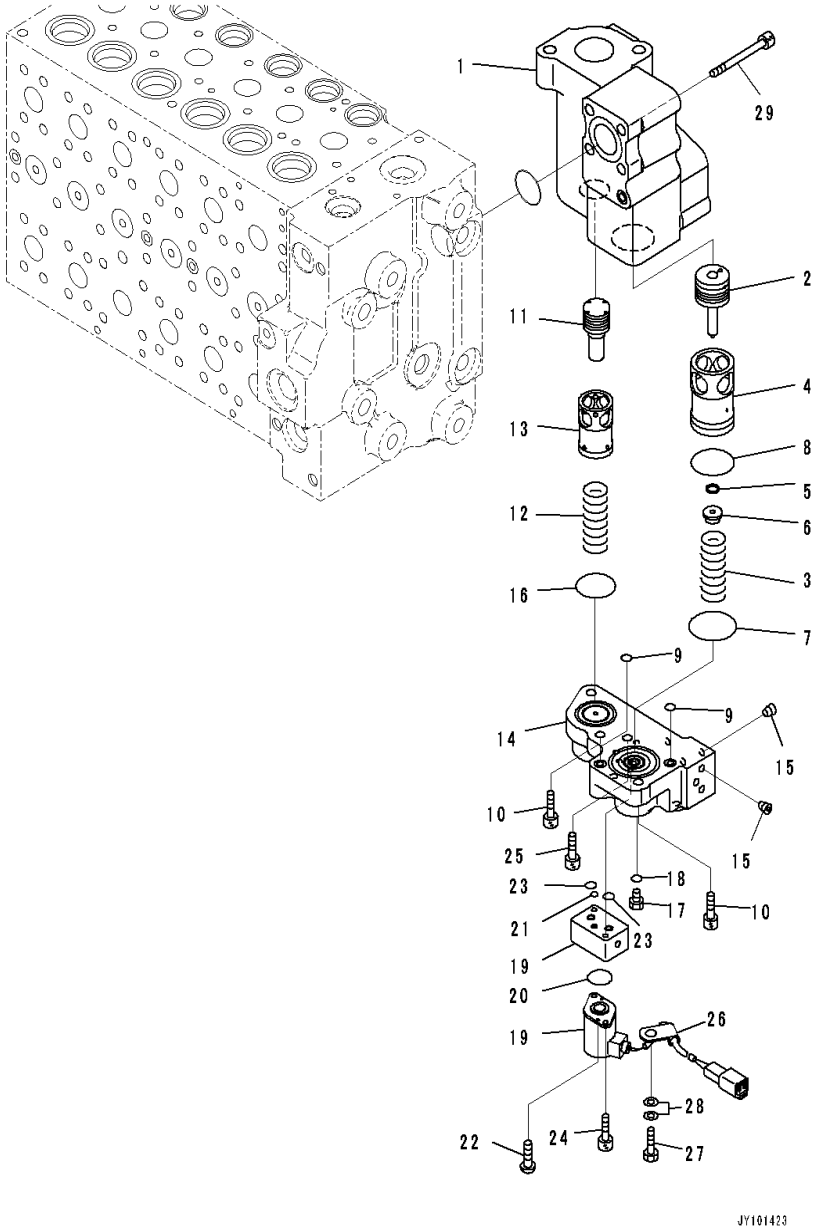

Index	Code	Part Number	Description	Qty	Serial Number
		723-47-31200	Valve, Control	1	C00001-
		723-40-88300	• Valve Assembly	1	C00001-
1	C1		• • Body	1	C00001-
2	C1		• • Spool	1	C00001-
3		723-40-87820	• • Spring	1	C00001-
4	C1		• • Sleeve	1	C00001-
5	C1		• • Seal	1	C00001-
6		723-40-87810	• • Retainer	1	C00001-
7		702-16-72440	• • O-ring	1	C00001-
8		07000-13048	• • O-ring	1	C00001-
9		07000-11009	• • O-ring	2	C00001-
10		01252-60825	• • Bolt, Hexagon Socket Head	2	C00001-
11	C1		• • Piston	1	C00001-
12		723-40-87540	• • Spring	1	C00001-
13	C1		• • Sleeve	1	C00001-
14	C1		• • Case	1	C00001-
15	C1		• • Plug, Stocking	6	C00001-
16		723-40-87170	• • O-ring	1	C00001-
17		07040-11007	• • Plug	1	C00001-
18		07002-11023	• • O-ring	1	C00001-
19		702-21-60900	• • Valve, Pilot	1	C00001-
20		700-80-61260	• • • O-ring	1	C00001-
21		723-11-19960	• • • O-ring	1	C00001-
22		702-21-54180	• • • Screw	2	C00001-
23		702-21-54910	• • • O-ring	2	C00001-
24		01252-60635	• • Bolt, Hexagon Socket Head	2	C00001-
25		01252-60840	• • Bolt, Hexagon Socket Head	2	C00001-
26		04434-50508	• • Clip	1	C00001-
27		01010-80816	• • Bolt	1	C00001-
28		01643-30823	• • Washer	2	C00001-
29		01252-61080	• Bolt, Hexagon Socket Head	4	C00001-

FIG. H0120-002016 Control Valve (7-Spool, 16/21)

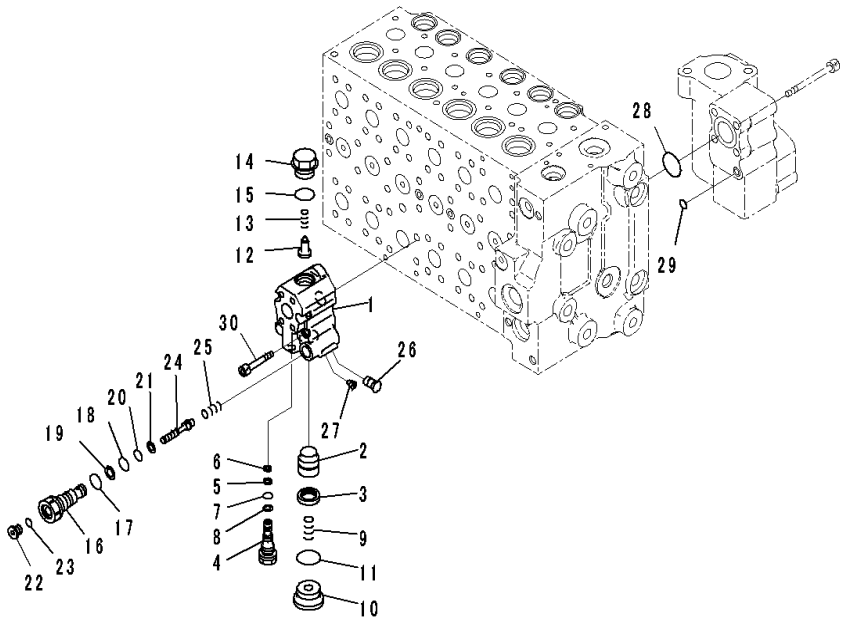

Index	Code	Part Number	Description	Qty	Serial Number
		723-47-31200	Valve, Control	1	C00001-
		723-40-83700	• Valve Assembly	1	C00001-
1	C1		• • Body	1	C00001-
2	C1		• • Valve	1	C00001-
3	C1		• • Seal	1	C00001-
4	C1		• • Plug	1	C00001-
5	C1		• • Seal	1	C00001-
6		723-40-82220	• • Filter	1	C00001-
7		07000-11008	• • O-ring	1	C00001-
8	C1		• • Ring, Back-up	1	C00001-
9		723-40-82460	• • Spring	1	C00001-
10		723-40-82520	• • Plug	1	C00001-
11		07002-13634	• • O-ring	1	C00001-
12		723-40-84420	• • Valve, Check	1	C00001-
13		723-40-84430	• • Spring	1	C00001-
14	C1		• • Plug	1	C00001-
15		07000-13024	• • O-ring	1	C00001-
16	C1		• • Plug	1	C00001-
17		07002-11823	• • O-ring	1	C00001-
18		07000-12011	• • O-ring	1	C00001-
19		07001-02011	• • Ring, Back-up	1	C00001-
20		07000-11010	• • O-ring	1	C00001-
21		07001-01010	• • Ring, Back-up	1	C00001-
22		723-11-18190	• • Plug	1	C00001-
23		07002-11023	• • O-ring	1	C00001-
24	C1		• • Piston	1	C00001-
25		723-40-82290	• • Spring	1	C00001-
26	C1		• • Plug	1	C00001-
27	C1		• • Plug, Stocking	1	C00001-
28		07000-12055	• O-ring	1	C00001-
29		07000-11010	• O-ring	2	C00001-
30		01252-61075	• Bolt, Hexagon Socket Head	4	C00001-

FIG. H0120-002017 Control Valve (7-Spool, 17/21)

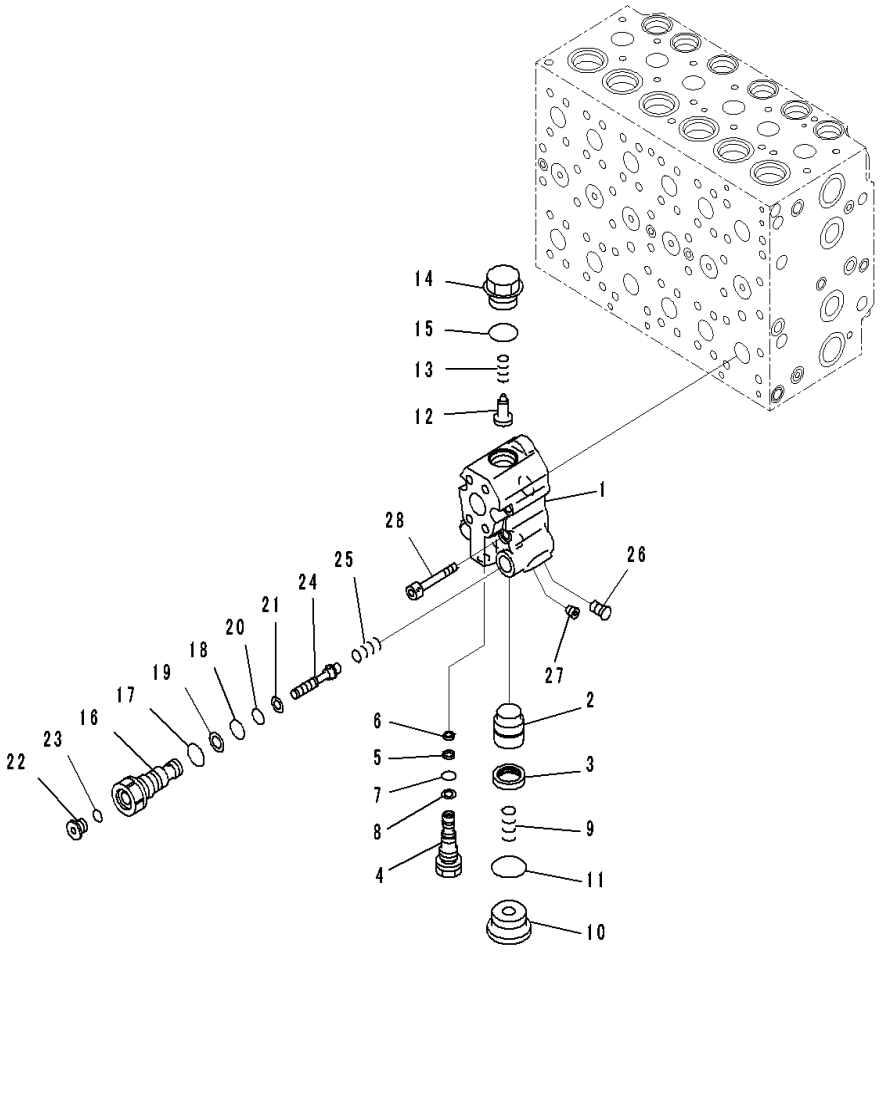

Index	Code	Part Number	Description	Qty	Serial Number
		723-47-31200	Valve, Control	1	C00001-
		723-40-83700	• Valve Assembly	1	C00001-
1	C1		• • Body	1	C00001-
2	C1		• • Valve	1	C00001-
3	C1		• • Seal	1	C00001-
4	C1		• • Plug	1	C00001-
5	C1		• • Seal	1	C00001-
6		723-40-82220	• • Filter	1	C00001-
7		07000-11008	• • O-ring	1	C00001-
8		07001-01008	• • Ring, Back-up	1	C00001-
9		723-40-82460	• • Spring	1	C00001-
10		723-40-82520	• • Plug	1	C00001-
11		07002-13634	• • O-ring	1	C00001-
12		723-40-84420	• • Valve, Check	1	C00001-
13		723-40-84430	• • Spring	1	C00001-
14	C1		• • Plug	1	C00001-
15		07000-13024	• • O-ring	1	C00001-
16	C1		• • Plug	1	C00001-
17		07002-11823	• • O-ring	1	C00001-
18		07000-12011	• • O-ring	1	C00001-
19		07001-02011	• • Ring, Back-up	1	C00001-
20		07000-11010	• • O-ring	1	C00001-
21		07001-01010	• • Ring, Back-up	1	C00001-
22		723-11-18190	• • Plug	1	C00001-
23		07002-11023	• • O-ring	1	C00001-
24	C1		• • Piston	1	C00001-
25		723-40-82290	• • Spring	1	C00001-
26	C1		• • Plug	1	C00001-
27	C1		• • Plug, Stocking	1	C00001-
28		01252-61075	• Bolt, Hexagon Socket Head	4	C00001-

FIG. H0120-002018 Control Valve (7-Spool, 18/21)

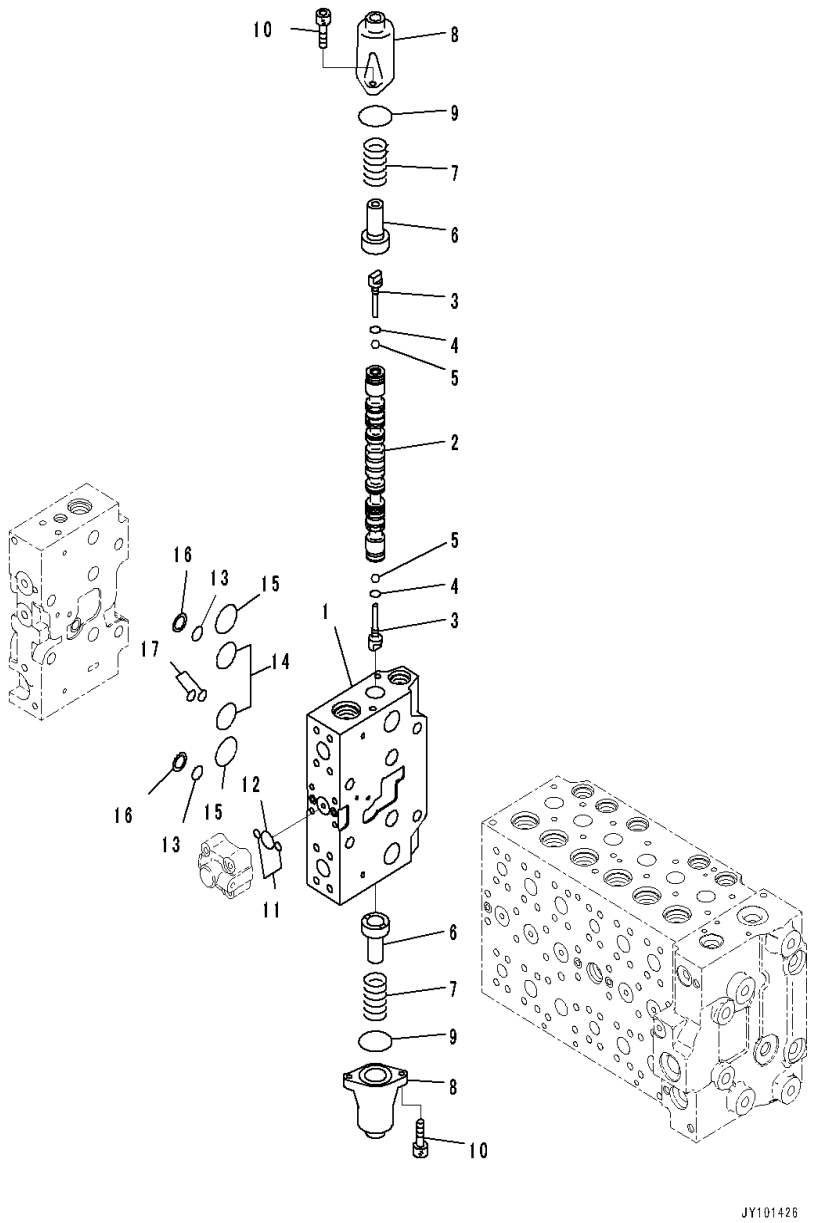

Index	Code	Part Number	Description	Qty	Serial Number
		723-47-31200	Valve, Control	1	C00001-
	C1		• Body Subassembly	1	C00001-
1	C1		• • Valve Body	1	C00001-
2	C1		• • Spool	1	C00001-
3		723-46-15130	• • Plug	2	C00001-
4		07002-10823	• • O-ring	2	C00001-
5		708-7T-16460	• • Ball	2	C00001-
6		723-46-15120	• • Retainer	2	C00001-
7		723-46-14110	• • Spring	2	C00001-
8		723-46-15111	• • Case	2	C00001-
9		07430-71380	• • O-ring	2	C00001-
10		01252-60820	• • Bolt, Hexagon Socket Head	4	C00001-
11		07000-11009	• • O-ring	2	C00001-
12		07000-12021	• • O-ring	1	C00001-
13		723-11-19130	• • O-ring	2	C00001-
14		07000-13032	• • O-ring	2	C00001-
15		723-46-17510	• • O-ring	2	C00001-
16		723-46-17520	• • Ring, Back-up	2	C00001-
17		723-46-17530	• • O-ring	2	C00001-

FIG. H0120-002019 Control Valve (7-Spool, 19/21)

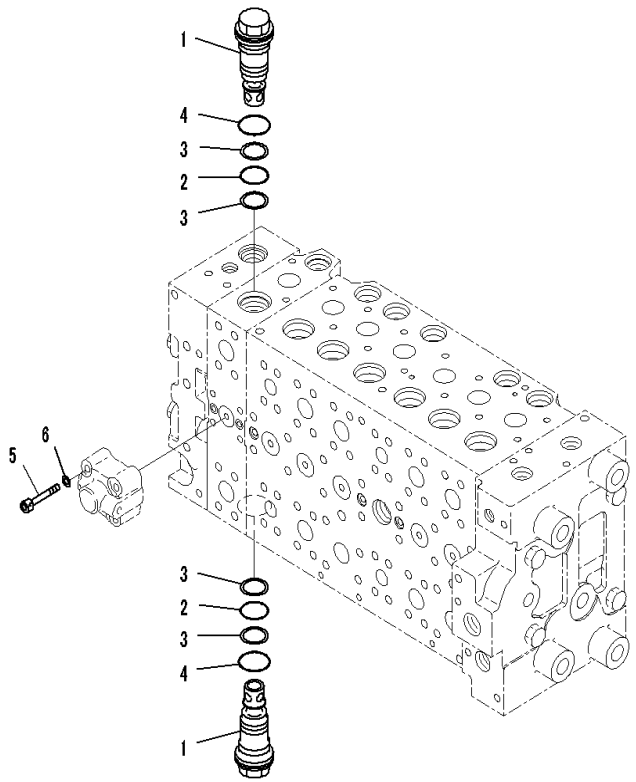

Index	Code	Part Number	Description	Qty	Serial Number
		723-47-31200	Valve, Control	1	C00001-
	C1		• Body Subassembly	1	C00001-
1		723-46-45700	• • Valve Assembly	2	C00001-
2		700-93-11320	• • • O-ring	1	C00001-
3	C1		• • • Ring, Back-up	2	C00001-
4		07002-13634	• • • O-ring	1	C00001-
5		01252-60845	• • Bolt, Hexagon Socket Head	4	C00001-
6		01643-50823	• • Washer	4	C00001-

FIG. H0120-002020 Control Valve (7-Spool, 20/21)

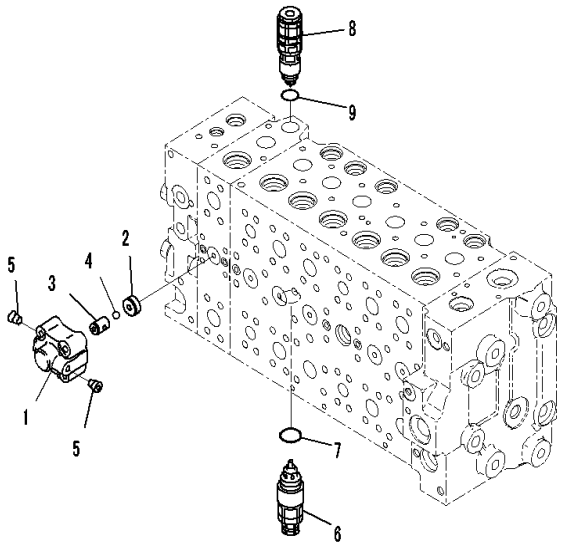

JY101428

Index	Code	Part Number	Description	Qty	Serial Number
		723-47-31200	Valve, Control	1	C00001-
		723-40-66300	• Valve Assembly	1	C00001-
1	C1		• • Case	1	C00001-
2	C1		• • Seat	1	C00001-
3	C1		• • Seat	1	C00001-
4	C1		• • Ball	1	C00001-
5	C1		• • Plug, Stocking	2	C00001-
6		723-40-91300	• Valve Assembly, Suction and Relief	1	C00001-
7		709-25-11390	• • O-ring	1	C00001-
8		723-90-76300	• Valve Assembly, Suction and Relief	1	C00001-
9		07000-13024	• • O-ring	1	C00001-

FIG. H0120-002021 Control Valve (7-Spool, 21/21)

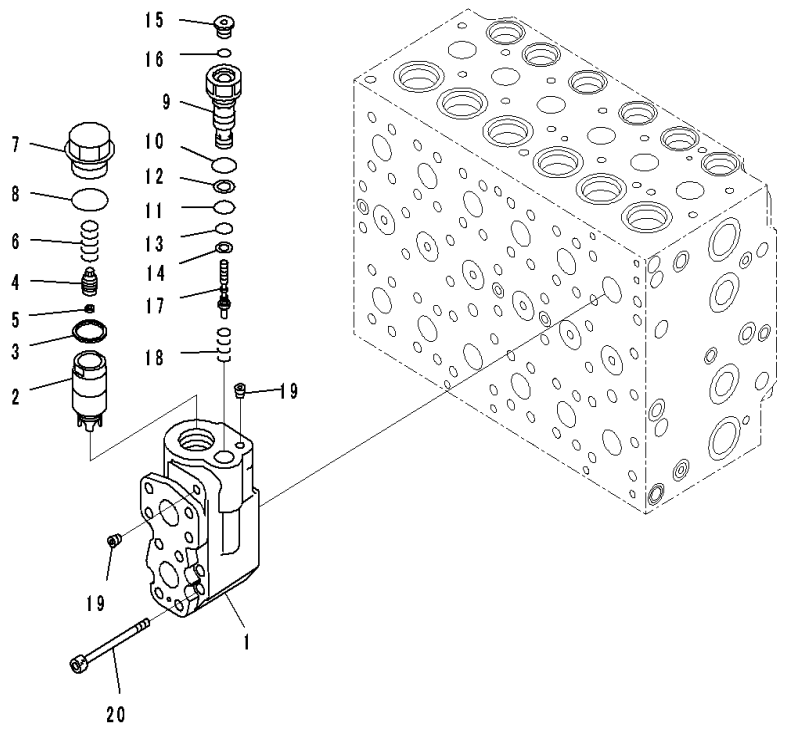

Index	Code	Part Number	Description	Qty	Serial Number
		723-47-31200	Valve, Control	1	C00001-
		723-40-84501	• Valve Assembly	1	C00001-
1	C1		• • Body	1	C00001-
2	C1		• • Valve	1	C00001-
3	C1		• • Seal	1	C00001-
4	C1		• • Plug	1	C00001-
5		723-40-82220	• • Filter	1	C00001-
6	C1		• • Spring	1	C00001-
7		723-40-84350	• • Plug	1	C00001-
8		07002-13334	• • O-ring	1	C00001-
9	C1		• • Plug	1	C00001-
10		07002-11823	• • O-ring	1	C00001-
11		07000-12011	• • O-ring	1	C00001-
12	C1		• • Ring, Back-up	1	C00001-
13		07000-11010	• • O-ring	1	C00001-
14	C1		• • Ring, Back-up	1	C00001-
15		723-11-18190	• • Plug	1	C00001-
16		07002-11023	• • O-ring	1	C00001-
17	C1		• • Piston	1	C00001-
18	C1		• • Spring	1	C00001-
19	C1		• • Plug, Stocking	2	C00001-
20		01252-61080	• Bolt, Hexagon Socket Head	4	C00001-

FIG. H0120-002022 Control Valve (Mounting Bracket)

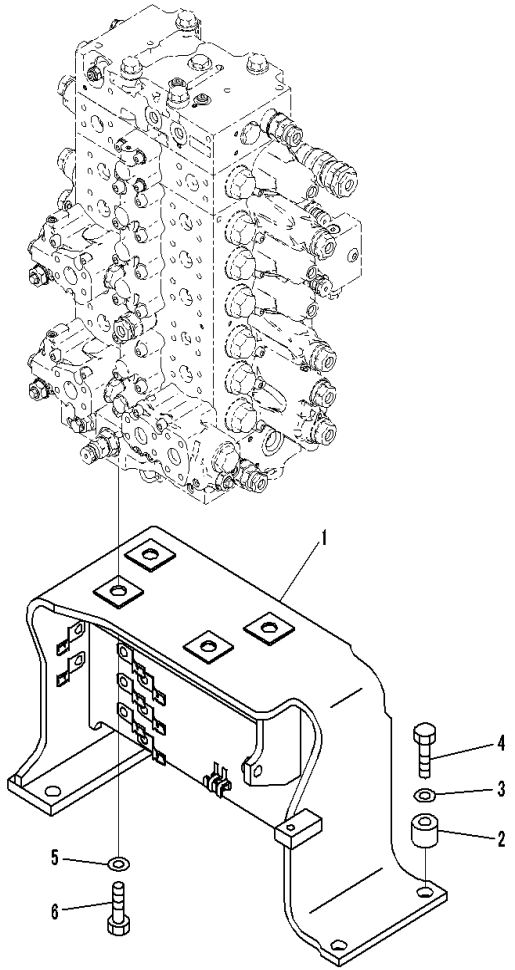

JH101548

Index	Code	Part Number	Description	Qty	Serial Number
1		20Y-62-56311	Bracket	1	C00001-
2		176-54-11760	Spacer	4	C00001-
3		01643-31645	Washer	4	C00001-
4		01010-81670	Bolt	4	C00001-
5		01643-31645	Washer	4	C00001-
6		01010-81645	Bolt	4	C00001-

FIG. H0120-002023 Control Valve (Connecting Parts, 1/5)

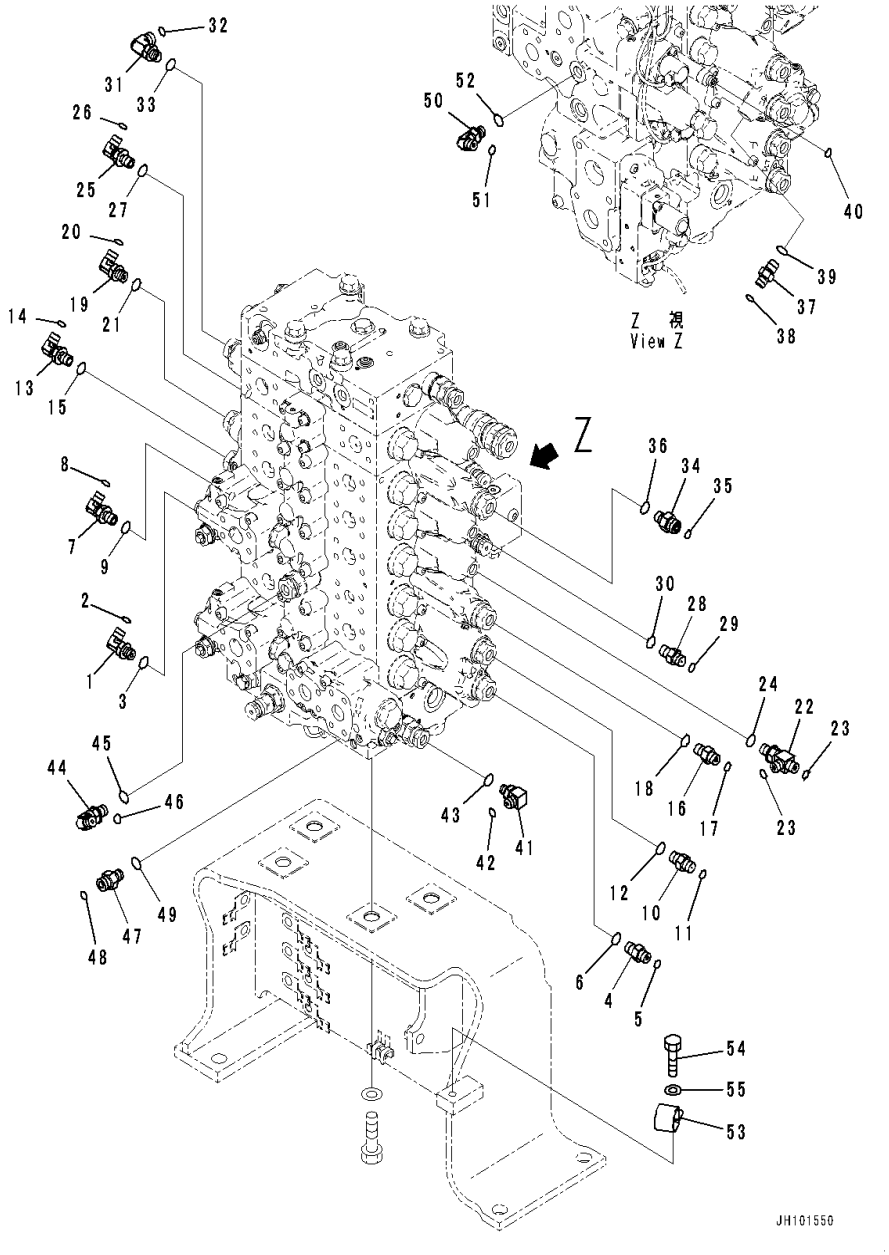

Index	Code	Part Number	Description	Qty	Serial Number
1		02782-10210	Elbow	1	C00001-
2		02896-11008	O-ring	1	C00001-
3		07002-11423	O-ring	1	C00001-
4		02781-0021D	Union	1	C00001-
5		02896-11008	O-ring	1	C00001-
6		07002-11423	O-ring	1	C00001-
7		20Y-62-45620	Elbow	1	C00001-
8		02896-11008	O-ring	1	C00001-
9		07002-11423	O-ring	1	C00001-
10		20Y-62-45610	Nipple	1	C00001-
11		02896-11008	O-ring	1	C00001-
12		07002-11423	O-ring	1	C00001-
13		02782-10210	Elbow	1	C00001-
14		02896-11008	O-ring	1	C00001-
15		07002-11423	O-ring	1	C00001-
16		02781-0021D	Union	1	C00001-
17		02896-11008	O-ring	1	C00001-
18		07002-11423	O-ring	1	C00001-
19		02782-10210	Elbow	1	C00001-
20		02896-11008	O-ring	1	C00001-
21		07002-11423	O-ring	1	C00001-
22		11Y-62-12330	Tee	1	C00001-
23		02896-11008	O-ring	2	C00001-
24		07002-11423	O-ring	1	C00001-
25		20Y-62-45620	Elbow	1	C00001-
26		02896-11008	O-ring	1	C00001-
27		07002-11423	O-ring	1	C00001-
28		20Y-62-45610	Nipple	1	C00001-
29		02896-11008	O-ring	1	C00001-
30		07002-11423	O-ring	1	C00001-
31		02782-10311	Elbow	1	C00001-
32		02896-11009	O-ring	1	C00001-
33		07002-11423	O-ring	1	C00001-
34		11Y-62-12520	Union	1	C00001-
35		02896-11009	O-ring	1	C00001-
36		07002-11423	O-ring	1	C00001-
37		02781-0021D	Union	1	C00001-
38		02896-11008	O-ring	1	C00001-
39		07002-11423	O-ring	1	C00001-
40		02896-11008	O-ring	1	C00001-

FIG. H0120-002023 Control Valve (Connecting Parts, 1/5)

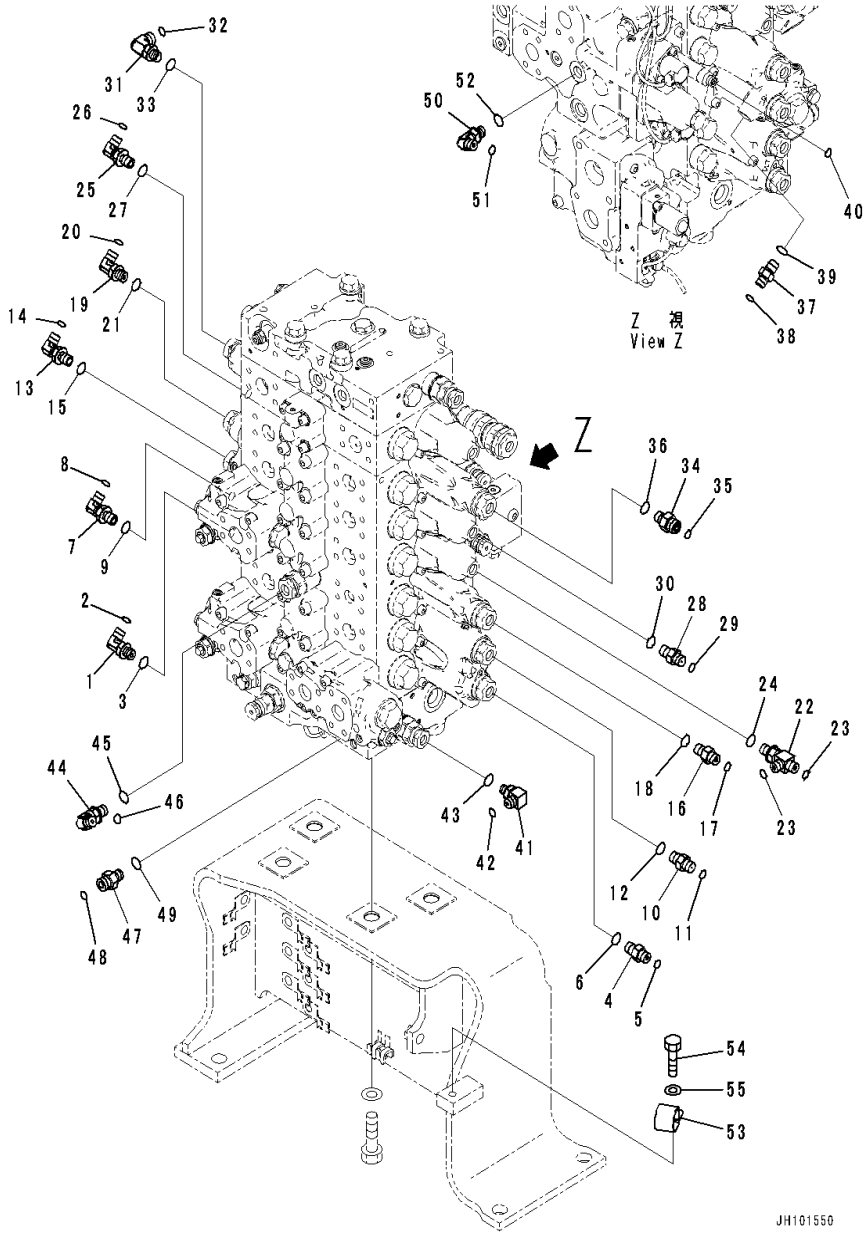

Index	Code	Part Number	Description	Qty	Serial Number
41		20Y-62-41920	Elbow	1	C00001-
42		02896-11008	O-ring	1	C00001-
43		07002-11223	O-ring	1	C00001-
44		02782-10210	Elbow	1	C00001-
45		07002-11423	O-ring	1	C00001-
46		02896-11008	O-ring	1	C00001-
47		11Y-62-12520	Union	1	C00001-
48		02896-11009	O-ring	1	C00001-
49		07002-11423	O-ring	1	C00001-
50		02782-10210	Elbow	1	C00001-
51		02896-61008	O-ring	1	C00001-
52		07002-61423	O-ring	1	C00001-
53		142-06-13540	Clip	1	C00001-
54		01010-81225	Bolt	1	C00001-
55		01643-31232	Washer	1	C00001-

FIG. H0120-002024 Control Valve (Connecting Parts, 2/5, 1-Service Valve)

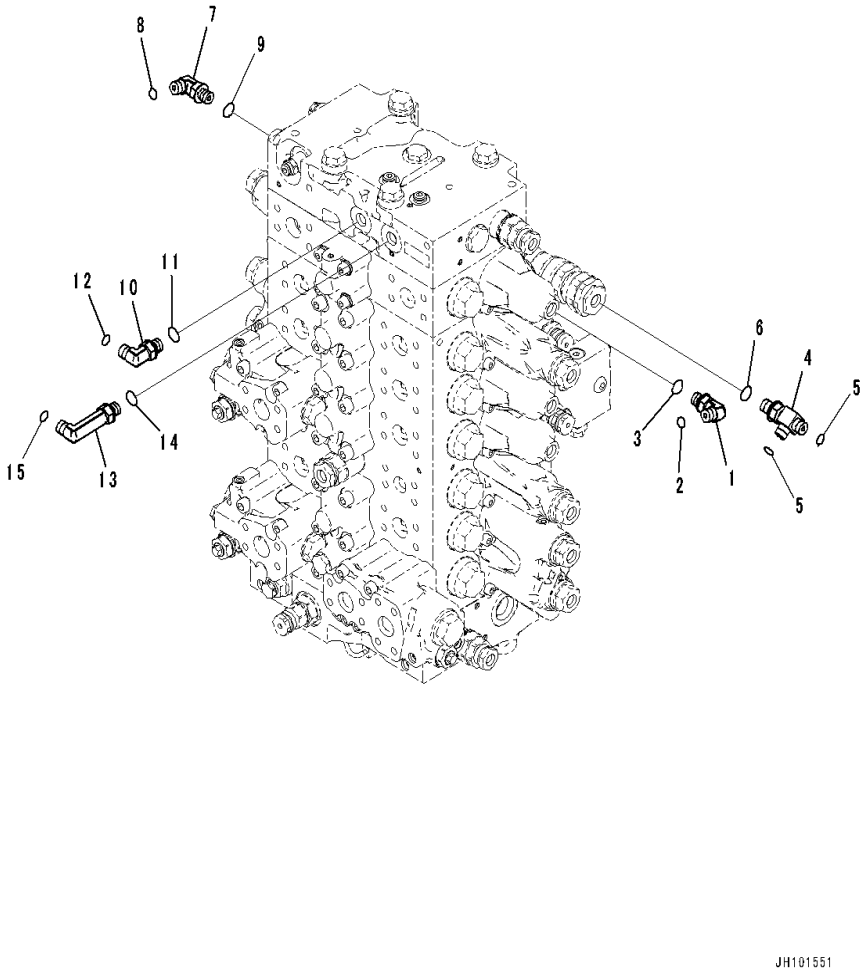

Index	Code	Part Number	Description	Qty	Serial Number
1		02782-10210	Elbow	1	C00001-
2		02896-11008	O-ring	1	C00001-
3		07002-11423	O-ring	1	C00001-
4		11Y-62-12330	Tee	1	C00001-
5		02896-11008	O-ring	2	C00001-
6		07002-11423	O-ring	1	C00001-
7		02782-10210	Elbow	1	C00001-
8		02896-11008	O-ring	1	C00001-
9		07002-11423	O-ring	1	C00001-
10		02782-10210	Elbow	1	C00001-
11		07002-61423	O-ring	1	C00001-
12		02896-61008	O-ring	1	C00001-
13		02782-10212	Elbow	1	C00001-
14		07002-61423	O-ring	1	C00001-
15		02896-61008	O-ring	1	C00001-

FIG. H0120-002025 Control Valve (Slow Return Valve,1/2, Front)

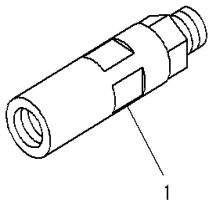

JY018288

Index	Code	Part Number	Description	Qty	Serial Number
		723-46-17770	Valve Assembly	1	C00001-
1	C1		• Body	1	C00001-

FIG. H0120-002026 Control Valve (Connecting Parts, 3/5)

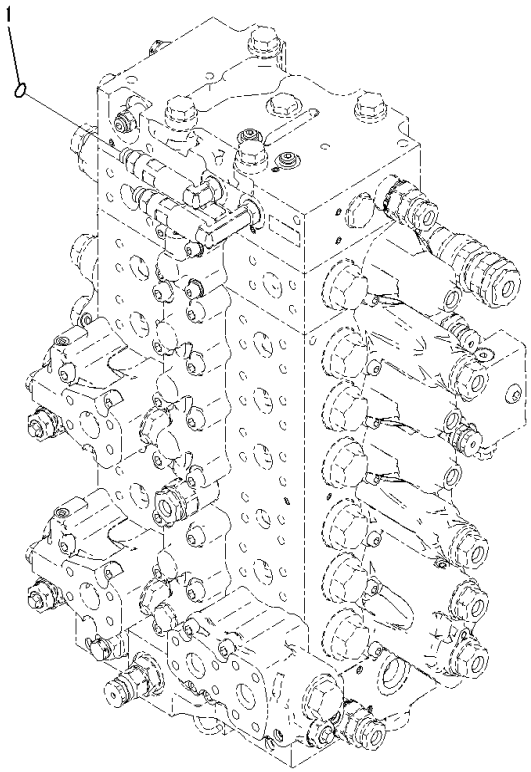

Index	Code	Part Number	Description	Qty	Serial Number
1		02896-61008	O-ring	1	C00001-

FIG. H0120-002027 Control Valve (Slow Return Valve, 2/2, Rear)

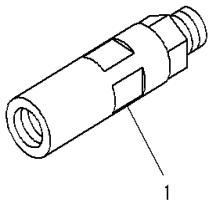

JY018288

Index	Code	Part Number	Description	Qty	Serial Number
		723-46-17770	Valve Assembly	1	C00001-
1	C1		• Body	1	C00001-

FIG. H0120-002028 Control Valve (Connecting Parts, 4/5)

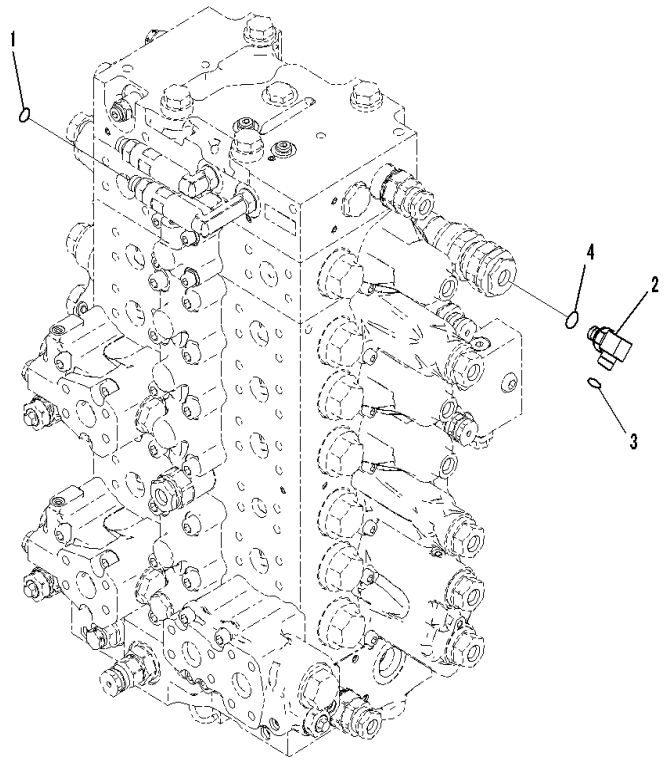

Index	Code	Part Number	Description	Qty	Serial Number
1		02896-61008	O-ring	1	C00001-
2		20Y-62-41920	Elbow	1	C00001-
3		02896-11008	O-ring	1	C00001-
4		07002-11223	O-ring	1	C00001-

FIG. H0120-002029 Control Valve (Connecting Parts, 5/5 ,1-Service Valve)

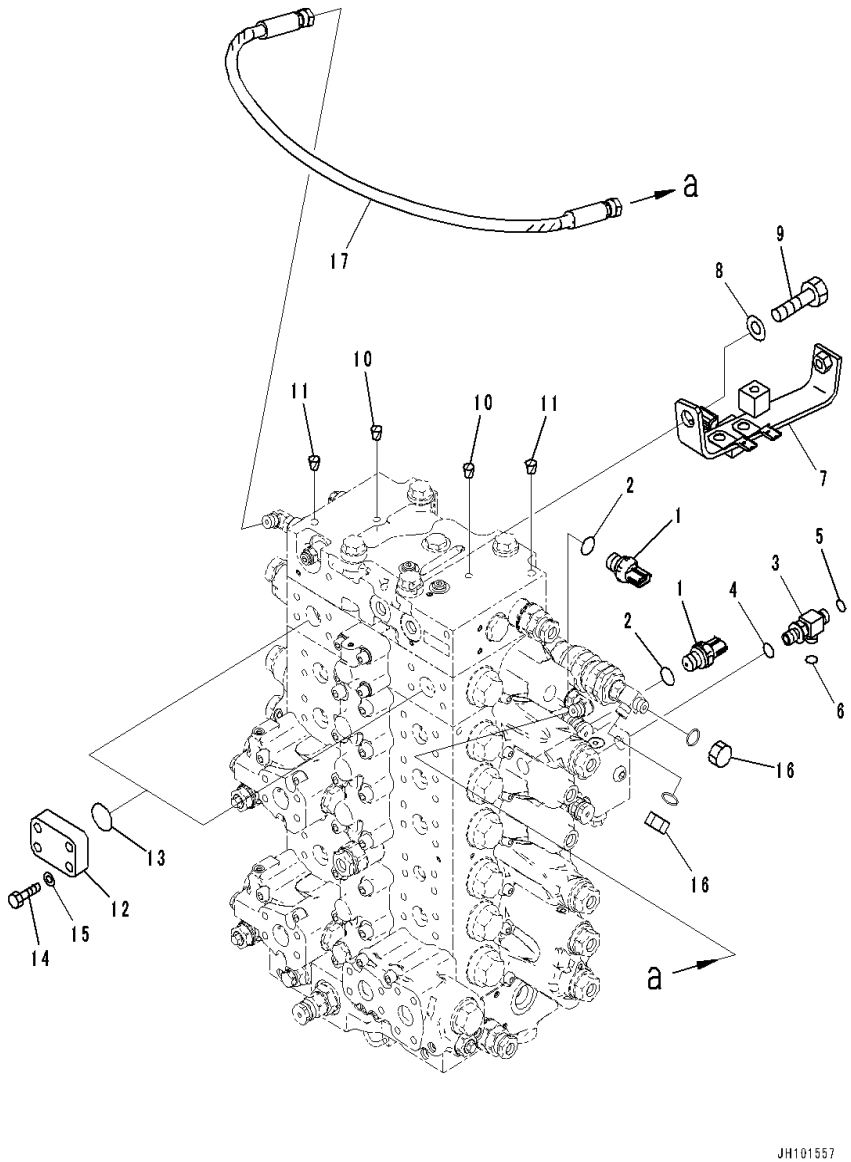

Index	Code	Part Number	Description	Qty	Serial Number
1		7861-93-1890	Sensor, Pressure	2	C00001-
2		07002-61823	• O-ring	1	C00001-
3		2A6-62-12241	Tee	1	C00001-
4		07002-11823	O-ring	1	C00001-
5		02896-11008	O-ring	1	C00001-
6		02896-11009	O-ring	1	C00001-
7		20Y-62-56451	Bracket	1	C00001-
8		01643-31645	Washer	1	C00001-
9		01010-81635	Bolt	1	C00001-
10		07049-01012	Plug	2	C00001-
11		07049-01215	Plug	2	C00001-
12		207-62-56190	Flange	2	C00001-
13		07000-13035	O-ring	2	C00001-
14		07372-21040	Bolt	8	C00001-
15		01643-51032	Washer	8	C00001-
16		02789-00210	Plug	2	C00001-
17		205-62-34191	Hose Assembly	1	C00001-

FIG. H0120-003024 Control Valve (Connecting Parts, 2/5, 1-Additional Actuator Piping, Accumulator)

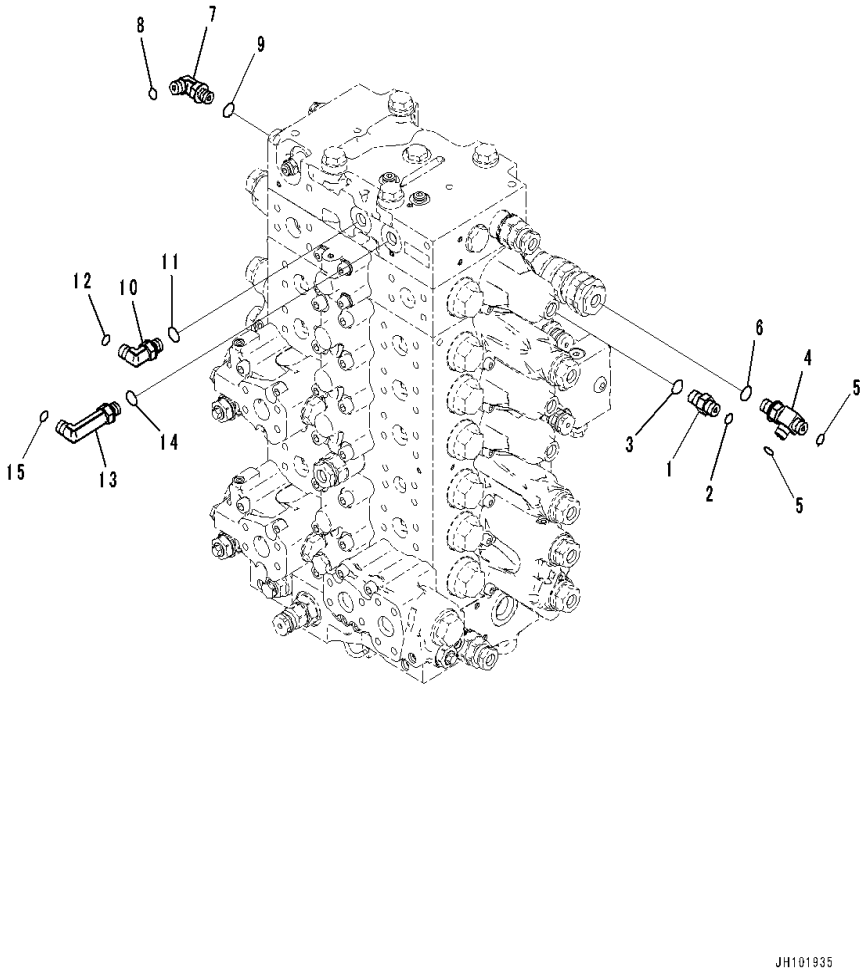

Index	Code	Part Number	Description	Qty	Serial Number
1		02781-0021D	Union	1	C00001-
2		02896-11008	O-ring	1	C00001-
3		07002-11423	O-ring	1	C00001-
4		11Y-62-12330	Tee	1	C00001-
5		02896-11008	O-ring	2	C00001-
6		07002-11423	O-ring	1	C00001-
7		02782-10210	Elbow	1	C00001-
8		02896-11008	O-ring	1	C00001-
9		07002-11423	O-ring	1	C00001-
10		02782-10210	Elbow	1	C00001-
11		07002-61423	O-ring	1	C00001-
12		02896-61008	O-ring	1	C00001-
13		02782-10212	Elbow	1	C00001-
14		07002-61423	O-ring	1	C00001-
15		02896-61008	O-ring	1	C00001-

FIG. H0120-003029 Control Valve (Connecting Parts, 5/5, 1-Additional Actuator Piping, Accumulator)

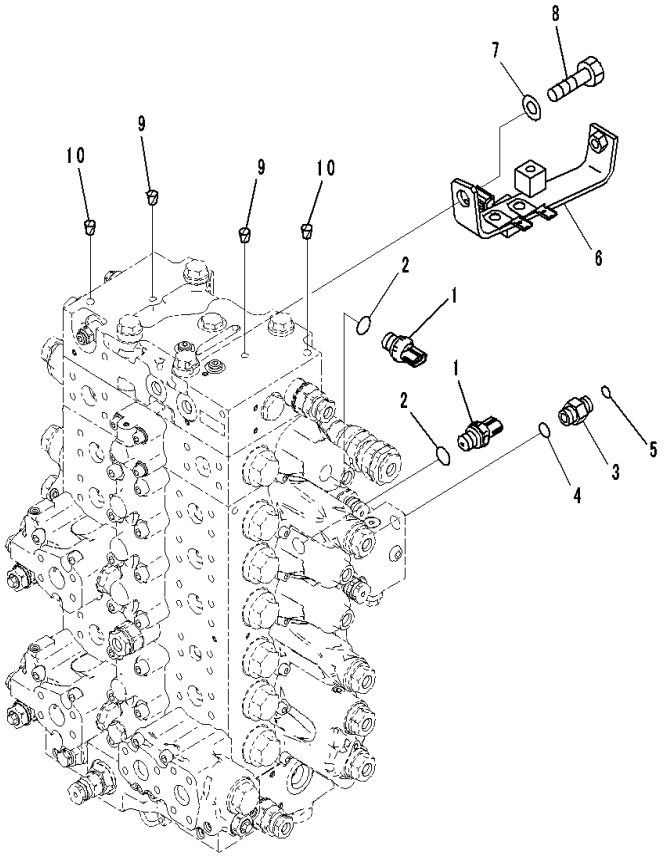

Index	Code	Part Number	Description	Qty	Serial Number
1		7861-93-1890	Sensor	2	C00001-
2		07002-61823	• O-ring	1	C00001-
3		11Y-62-12350	Nipple	1	C00001-
4		07002-11823	O-ring	1	C00001-
5		02896-11009	O-ring	1	C00001-
6		20Y-62-56451	Bracket	1	C00001-
7		01643-31645	Washer	1	C00001-
8		01010-81635	Bolt	1	C00001-
9		07049-01012	Plug	2	C00001-
10		07049-01215	Plug	2	C00001-

FIG. H0210-001001 Hydraulic Pump (Related Parts)

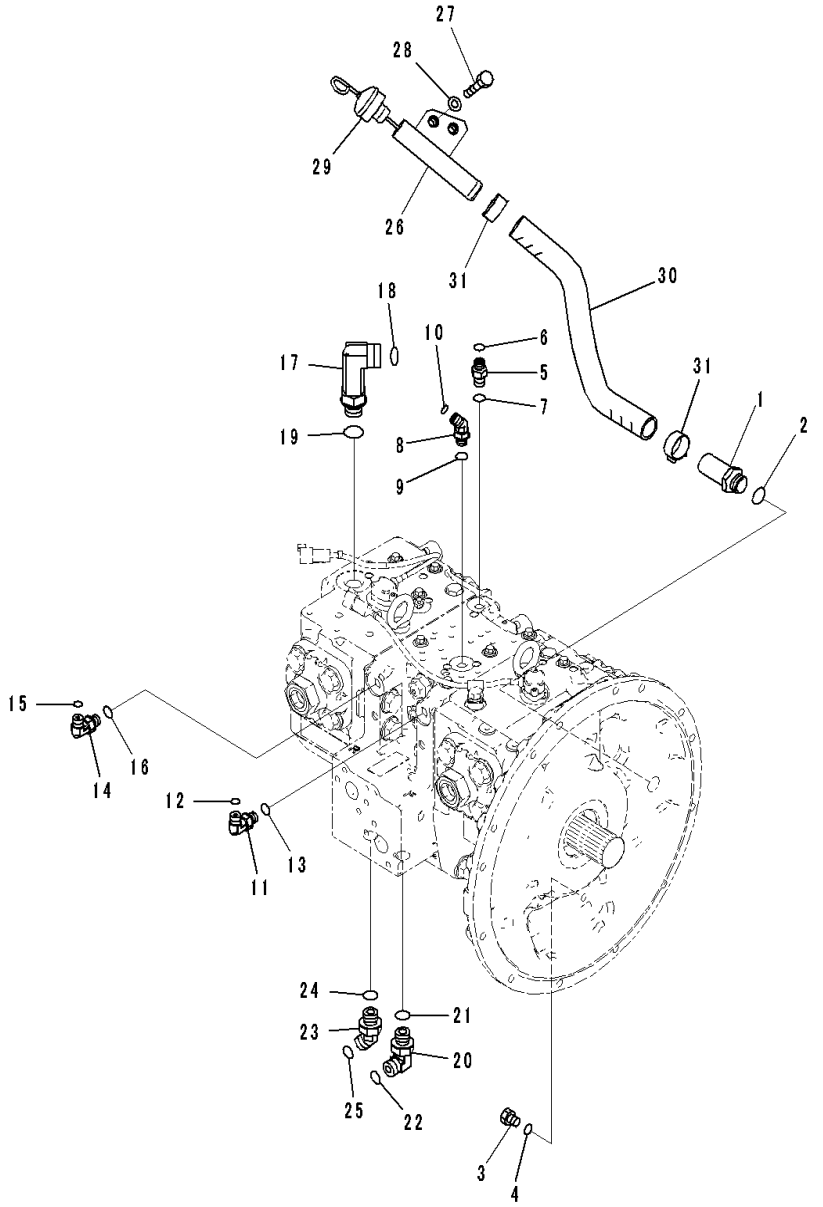

Index	Code	Part Number	Description	Qty	Serial Number
1		20Y-62-56711	Joint	1	C00001-
2		07002-12434	O-ring	1	C00001-
3		07040-11209	Plug	1	C00001-
4		07002-11223	O-ring	1	C00001-
5		02781-0021D	Union	1	C00001-
6		02896-11008	O-ring	1	C00001-
7		07002-11423	O-ring	1	C00001-
8		02783-10210	Elbow	1	C00001-
9		07002-61423	O-ring	1	C00001-
10		02896-61008	O-ring	1	C00001-
11		02782-10210	Elbow	1	C00001-
12		02896-61008	O-ring	1	C00001-
13		07002-61423	O-ring	1	C00001-
14		02782-10210	Elbow	1	C00001-
15		02896-61008	O-ring	1	C00001-
16		07002-61423	O-ring	1	C00001-
17		02782-10630	Elbow	1	C00001-
18		02896-11018	O-ring	1	C00001-
19		07002-12434	O-ring	1	C00001-
20		02782-10422	Elbow	1	C00001-
21		07002-62034	O-ring	1	C00001-
22		02896-61012	O-ring	1	C00001-
23		02783-10422	Elbow	1	C00001-
24		07002-62034	O-ring	1	C00001-
25		02896-61012	O-ring	1	C00001-
26		20Y-62-56721	Tube	1	C00001-
27		01010-81230	Bolt	2	C00001-
28		01643-31232	Washer	2	C00001-
29		207-01-41710	Gauge	1	C00001-
30		20Y-62-57810	Hose	1	C00001-
31		07285-00280	Clip	2	C00001-

FIG. H0210-002001 Hydraulic Pump (1-Additional Actuator Piping, Accumulator) (Related Parts)

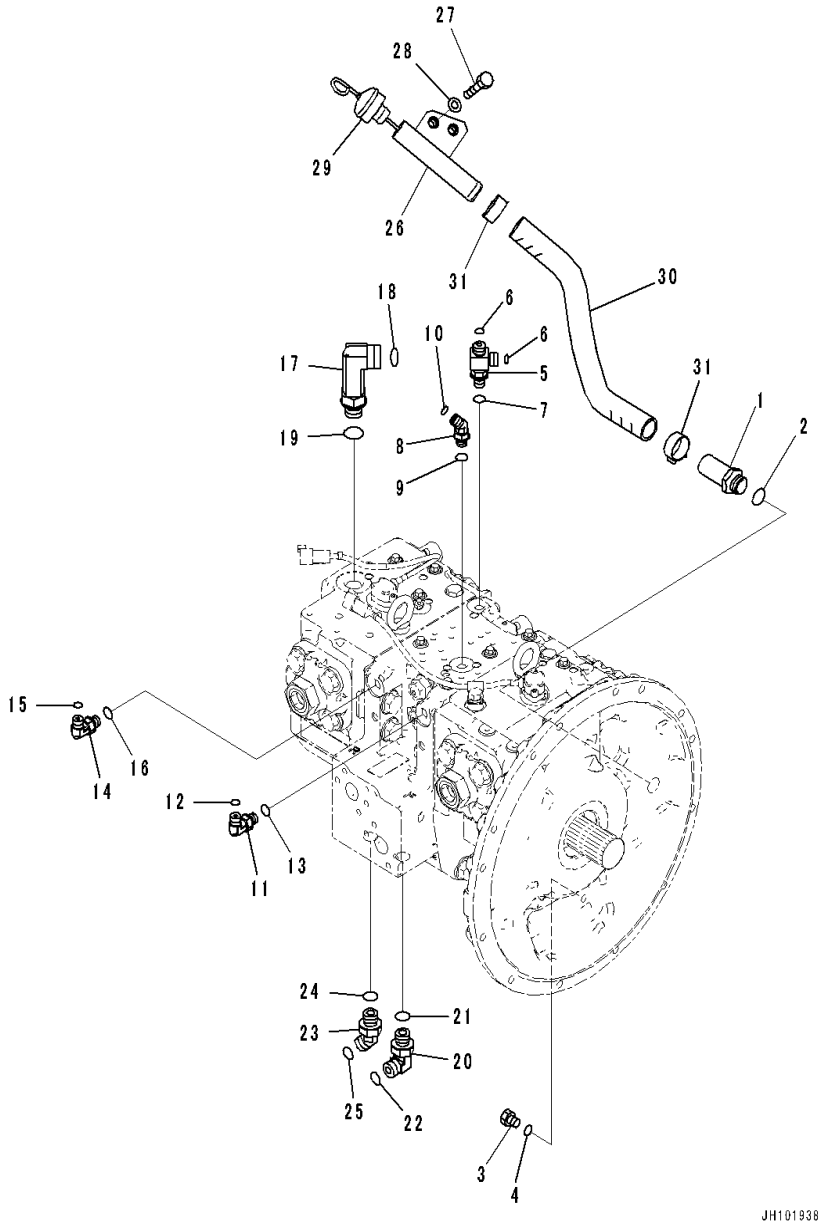

Index	Code	Part Number	Description	Qty	Serial Number
1		20Y-62-56711	Joint	1	C00001-
2		07002-12434	O-ring	1	C00001-
3		07040-11209	Plug	1	C00001-
4		07002-11223	O-ring	1	C00001-
5		21N-64-36680	Tee	1	C00001-
6		02896-11009	O-ring	2	C00001-
7		07002-11423	O-ring	1	C00001-
8		02783-10210	Elbow	1	C00001-
9		07002-61423	O-ring	1	C00001-
10		02896-61008	O-ring	1	C00001-
11		02782-10210	Elbow	1	C00001-
12		02896-61008	O-ring	1	C00001-
13		07002-61423	O-ring	1	C00001-
14		02782-10210	Elbow	1	C00001-
15		02896-61008	O-ring	1	C00001-
16		07002-61423	O-ring	1	C00001-
17		02782-10630	Elbow	1	C00001-
18		02896-11018	O-ring	1	C00001-
19		07002-12434	O-ring	1	C00001-
20		02782-10422	Elbow	1	C00001-
21		07002-62034	O-ring	1	C00001-
22		02896-61012	O-ring	1	C00001-
23		02783-10422	Elbow	1	C00001-
24		07002-62034	O-ring	1	C00001-
25		02896-61012	O-ring	1	C00001-
26		20Y-62-56721	Tube	1	C00001-
27		01010-81230	Bolt	2	C00001-
28		01643-31232	Washer	2	C00001-
29		207-01-41710	Gauge	1	C00001-
30		20Y-62-57810	Hose	1	C00001-
31		07285-00280	Clip, Hose	2	C00001-

FIG. H0311-001001 Suction Piping

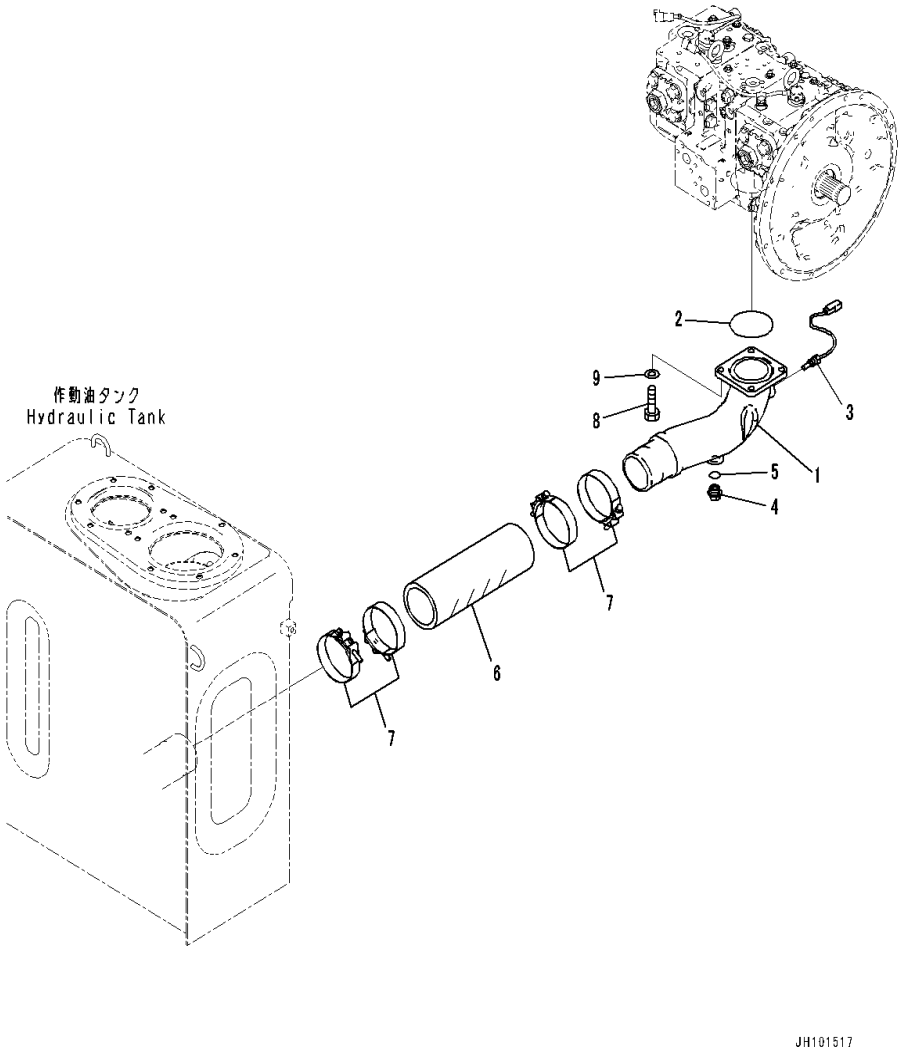

Index	Code	Part Number	Description	Qty	Serial Number
1		20Y-62-56131	Tube	1	C00001-
2		07000-12100	O-ring	1	C00001-
3		7861-93-3320	Sensor, Temperature	1	C00001-
4		07044-12412	Plug	1	C00001-
5		07002-12434	O-ring	1	C00001-
6		07260-08732	Hose	1	C00001-
7		20Y-62-51671	Clamp	4	C00001-
8		01010-81235	Bolt	4	C00001-
9		01643-31232	Washer	4	C00001-

FIG. H0312-001001 Delivery Piping

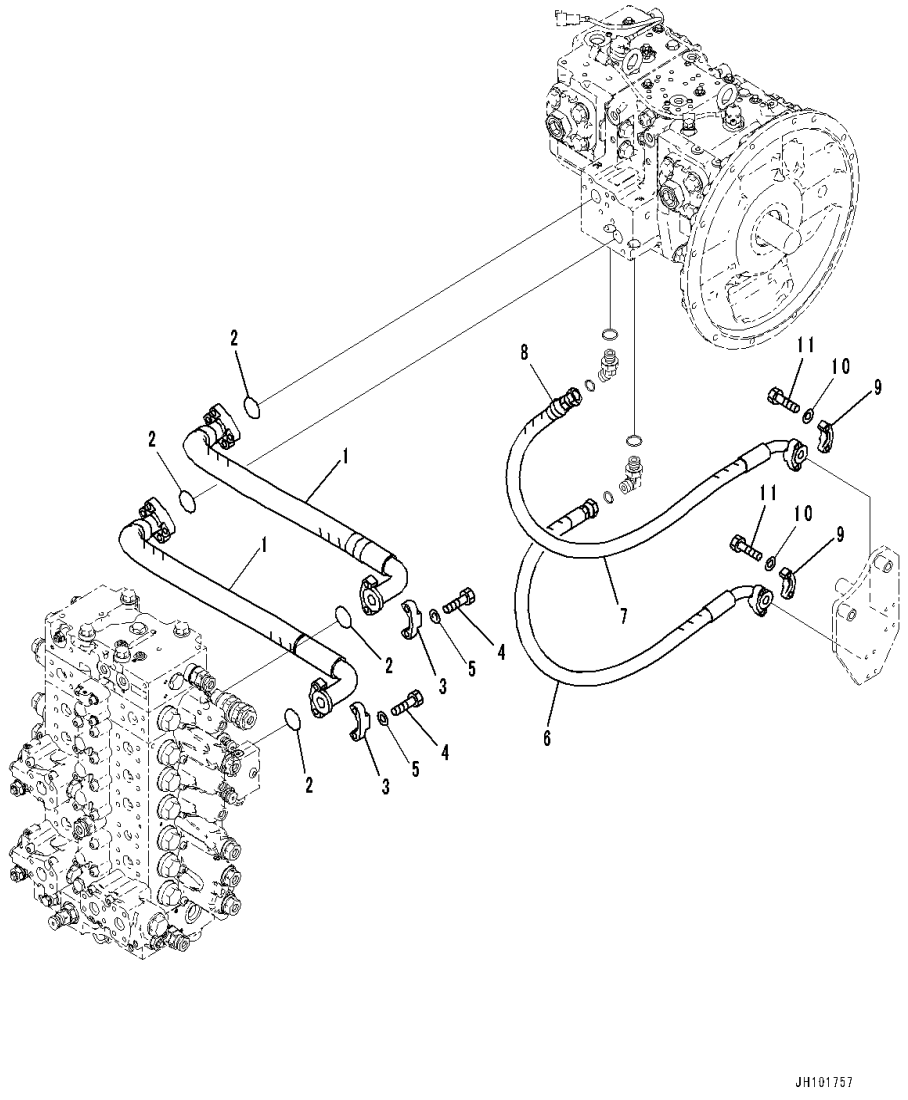

Index	Code	Part Number	Description	Qty	Serial Number
1		2A5-62-11242	Hose	2	C00001-
2		07000-13032	O-ring	4	C00001-
3		07371-31049	Flange, Split	8	C00001-
4		07372-21035	Bolt	16	C00001-
5		01643-51032	Washer	16	C00001-
6		20Y-62-57620	Hose	1	C00001-
7		20Y-62-57630	Hose	1	C00001-
8		20Y-62-22790	• Band,Red	1	C00001-
9		07371-30500	Flange, Split	4	C00001-
10		01643-50823	Washer	8	C00001-
11		01010-80830	Bolt	8	C00001-

FIG. H0312-002001 Delivery Piping (With Inline Filter)

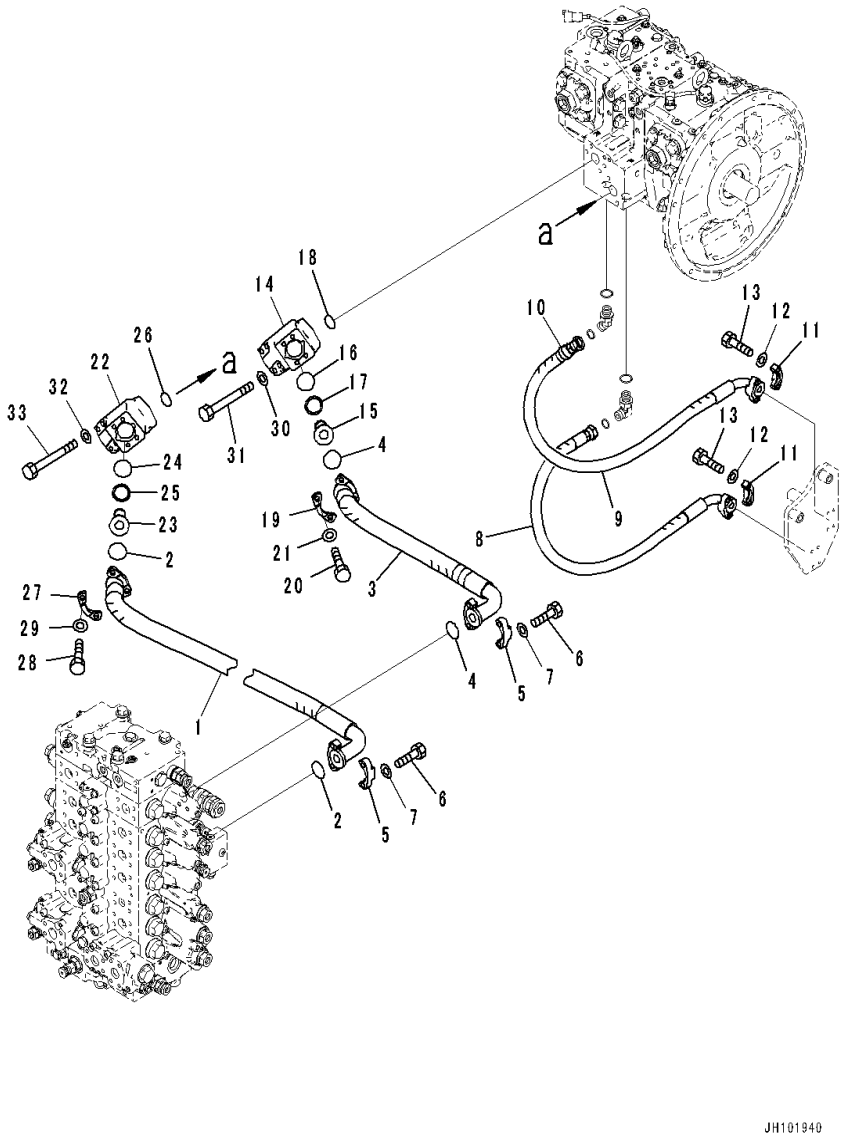

Index	Code	Part Number	Description	Qty	Serial Number
1		2A5-62-25370	Hose	1	C00001-
2		07000-13032	O-ring	2	C00001-
3		2A5-62-25360	Hose	1	C00001-
4		07000-13032	O-ring	2	C00001-
5		07371-31049	Flange, Split	4	C00001-
6		07372-21035	Bolt	8	C00001-
7		01643-51032	Washer	8	C00001-
8		20Y-62-57620	Hose	1	C00001-
9		20Y-62-57630	Hose	1	C00001-
10		20Y-62-22790	• Band,Red	1	C00001-
11		07371-30500	Flange, Split	4	C00001-
12		01643-50823	Washer	8	C00001-
13		01010-80830	Bolt	8	C00001-
14		2A5-60-11241	Filter Assembly	1	C00001-
15		20Y-60-31430	• Element	1	C00001-
16		07000-12035	• • O-ring	1	C00001-
17		21K-62-72790	• • Ring, Back-up	1	C00001-
18		07000-13035	O-ring	1	C00001-
19		07371-31049	Flange, Split	2	C00001-
20		07372-21035	Bolt	4	C00001-
21		01643-51032	Washer	4	C00001-
22		2A5-60-11251	Filter Assembly	1	C00001-
23		20Y-60-31430	• Element	1	C00001-
24		07000-12035	• • O-ring	1	C00001-
25		21K-62-72790	• • Ring, Back-up	1	C00001-
26		07000-13035	O-ring	1	C00001-
27		07371-31049	Flange, Split	2	C00001-
28		07372-21035	Bolt	4	C00001-
29		01643-51032	Washer	4	C00001-
30		01643-31032	Washer	4	C00001-
31		01011-81040	Bolt	4	C00001-
32		01643-31032	Washer	4	C00001-
33		01011-81040	Bolt	4	C00001-

FIG. H0320-001001 Oil Cooler Piping

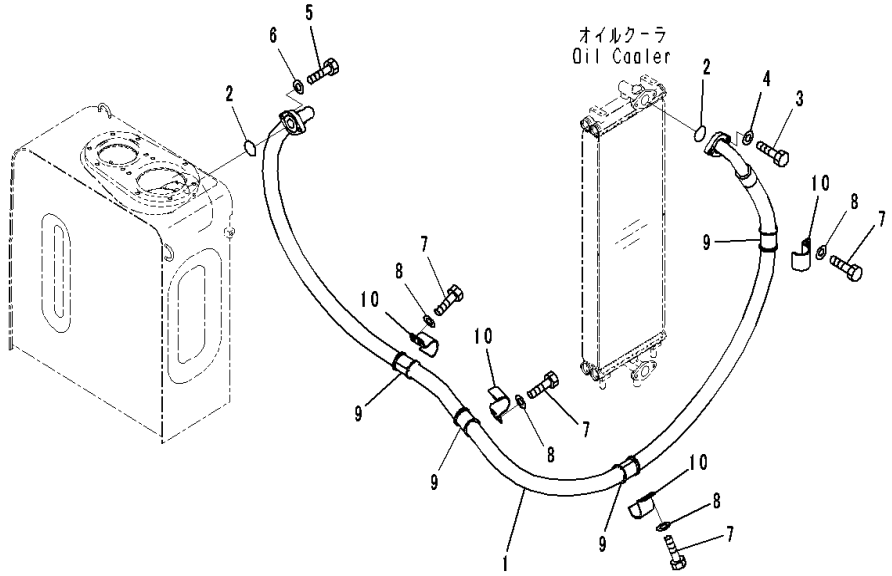

Index	Code	Part Number	Description	Qty	Serial Number
1		20Y-62-56171	Hose	1	C00001-
2		07000-13048	O-ring	2	C00001-
3		01010-81240	Bolt	2	C00001-
4		01643-31232	Washer	2	C00001-
5		01010-81235	Bolt	2	C00001-
6		01643-31232	Washer	2	C00001-
7		01010-81230	Bolt	8	C00001-
8		01643-31232	Washer	8	C00001-
9		07095-01245	Cushion	4	C00001-
10		22U-62-21551	Clamp	4	C00001-

FIG. H0330-001001 Return Piping

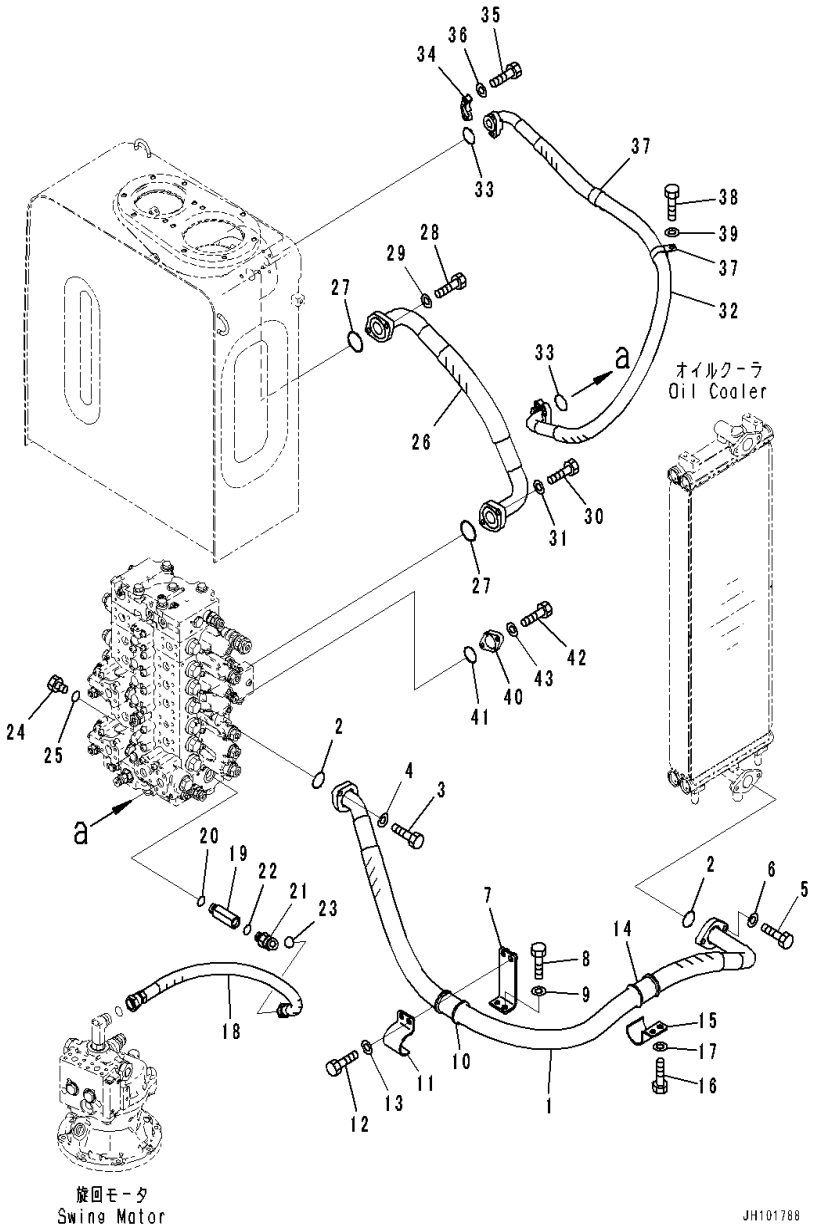

Index	Code	Part Number	Description	Qty	Serial Number
1		20Y-62-56191	Hose	1	C00001-
2		07000-13048	O-ring	2	C00001-
3		01010-81240	Bolt	2	C00001-
4		01643-31232	Washer	2	C00001-
5		01010-81240	Bolt	2	C00001-
6		01643-31232	Washer	2	C00001-
7		20Y-62-56321	Bracket	1	C00001-
8		01010-81230	Bolt	2	C00001-
9		01643-31232	Washer	2	C00001-
10		07095-01245	Cushion	1	C00001-
11		22U-62-21551	Clamp	1	C00001-
12		01010-81230	Bolt	2	C00001-
13		01643-31232	Washer	2	C00001-
14		07095-01245	Cushion	1	C00001-
15		22U-62-21551	Clamp	1	C00001-
16		01010-81230	Bolt	2	C00001-
17		01643-31232	Washer	2	C00001-
18		02753-006A8	Hose, Face Seal Type	1	C00001-
19		203-62-61410	Joint	1	C00001-
20		07002-12434	O-ring	1	C00001-
21		02783-10628	Elbow	1	C00001-
22		07002-12434	O-ring	1	C00001-
23		02896-11018	O-ring	1	C00001-
24		07040-12412	Plug	1	C00001-
25		07002-12434	O-ring	1	C00001-
26		20Y-62-56180	Hose	1	C00001-
27		07000-13048	O-ring	2	C00001-
28		01010-81235	Bolt	2	C00001-
29		01643-31232	Washer	2	C00001-
30		01010-81240	Bolt	2	C00001-
31		01643-31232	Washer	2	C00001-
32		20Y-62-56211	Hose	1	C00001-
33		07000-13032	O-ring	2	C00001-
34		07371-31049	Flange, Split	4	C00001-
35		07372-21035	Bolt	8	C00001-
36		01643-51032	Washer	8	C00001-
37		281-01-13180	Clip	2	C00001-
38		01010-81225	Bolt	2	C00001-
39		01643-31232	Washer	2	C00001-
40		20Y-62-53160	Flange	1	C00001-

FIG. H0330-001001 Return Piping

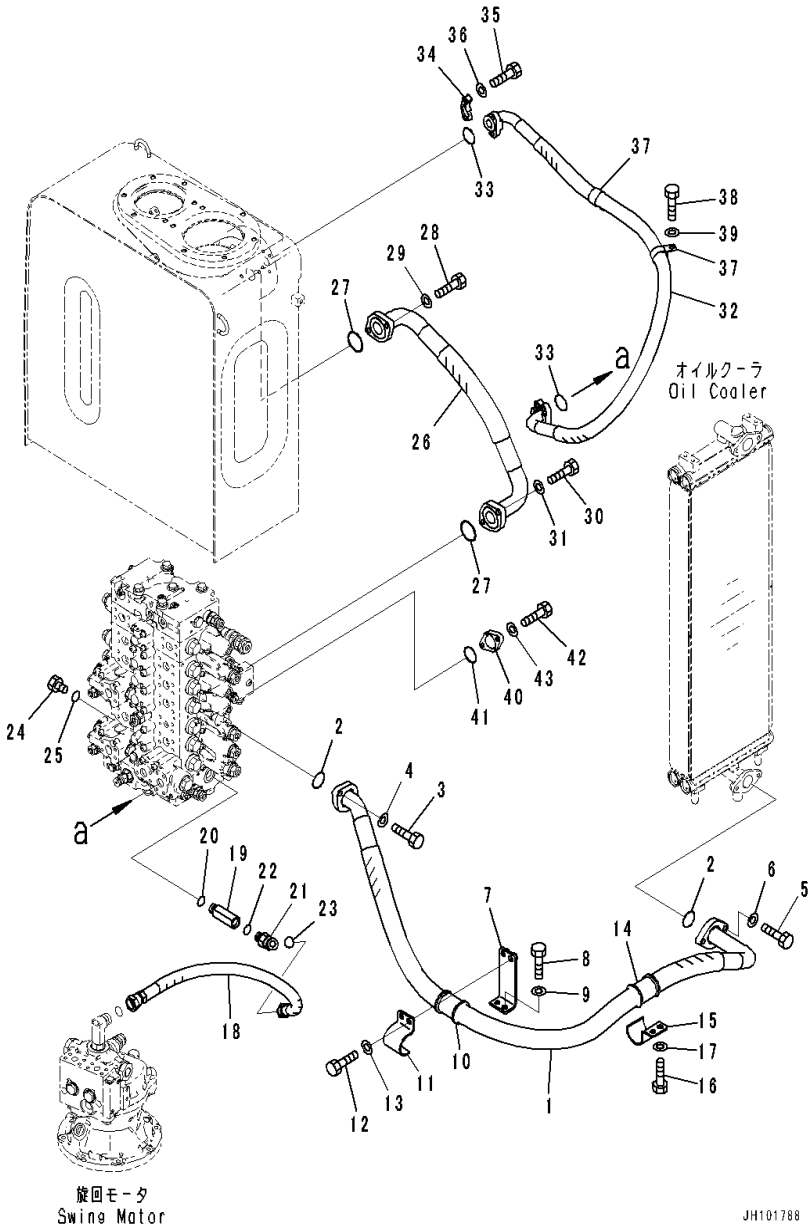

Index	Code	Part Number	Description	Qty	Serial Number
41		07000-13040	O-ring	1	C00001-
42		01010-81035	Bolt	2	C00001-
43		01643-31032	Washer	2	C00001-

FIG. H0330-002001 Return Piping (1-Additional Actuator Piping, Accumulator)

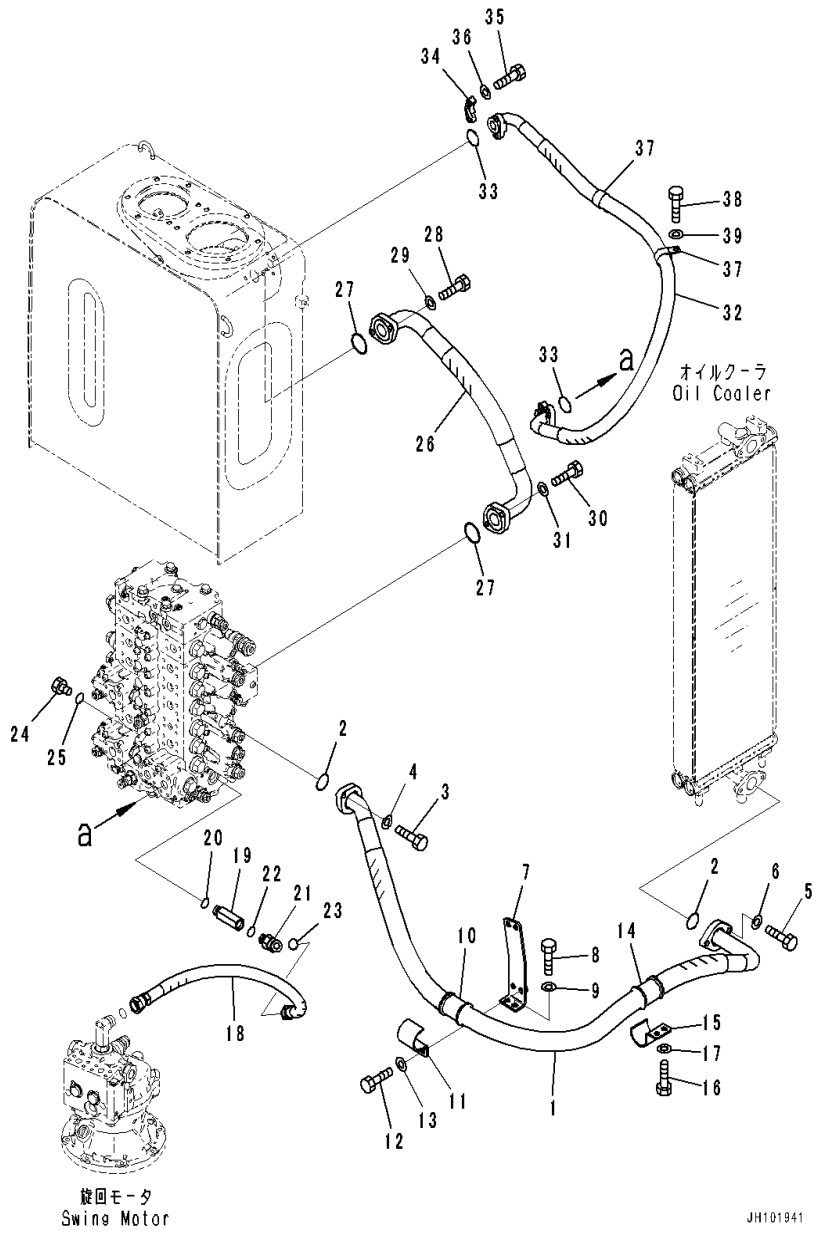

Index	Code	Part Number	Description	Qty	Serial Number
1		20Y-62-56191	Hose	1	C00001-
2		07000-13048	O-ring	2	C00001-
3		01010-81240	Bolt	2	C00001-
4		01643-31232	Washer	2	C00001-
5		01010-81240	Bolt	2	C00001-
6		01643-31232	Washer	2	C00001-
7		20Y-62-56581	Bracket	1	C00001-
8		01010-81230	Bolt	2	C00001-
9		01643-31232	Washer	2	C00001-
10		07095-01245	Cushion	1	C00001-
11		22U-62-21551	Clamp	1	C00001-
12		01010-81230	Bolt	2	C00001-
13		01643-31232	Washer	2	C00001-
14		07095-01245	Cushion	1	C00001-
15		22U-62-21551	Clamp	1	C00001-
16		01010-81230	Bolt	2	C00001-
17		01643-31232	Washer	2	C00001-
18		02753-006A8	Hose, Face Seal Type	1	C00001-
19		203-62-61410	Joint	1	C00001-
20		07002-12434	O-ring	1	C00001-
21		02783-10628	Elbow	1	C00001-
22		07002-12434	O-ring	1	C00001-
23		02896-11018	O-ring	1	C00001-
24		07040-12412	Plug	1	C00001-
25		07002-12434	O-ring	1	C00001-
26		20Y-62-56180	Hose	1	C00001-
27		07000-13048	O-ring	2	C00001-
28		01010-81235	Bolt	2	C00001-
29		01643-31232	Washer	2	C00001-
30		01010-81240	Bolt	2	C00001-
31		01643-31232	Washer	2	C00001-
32		20Y-62-56211	Hose	1	C00001-
33		07000-13032	O-ring	2	C00001-
34		07371-31049	Flange, Split	4	C00001-
35		07372-21035	Bolt	8	C00001-
36		01643-51032	Washer	8	C00001-
37		281-01-13180	Clip	2	C00001-
38		01010-81225	Bolt	2	C00001-
39		01643-31232	Washer	2	C00001-

FIG. H0340-001001 Drain Piping

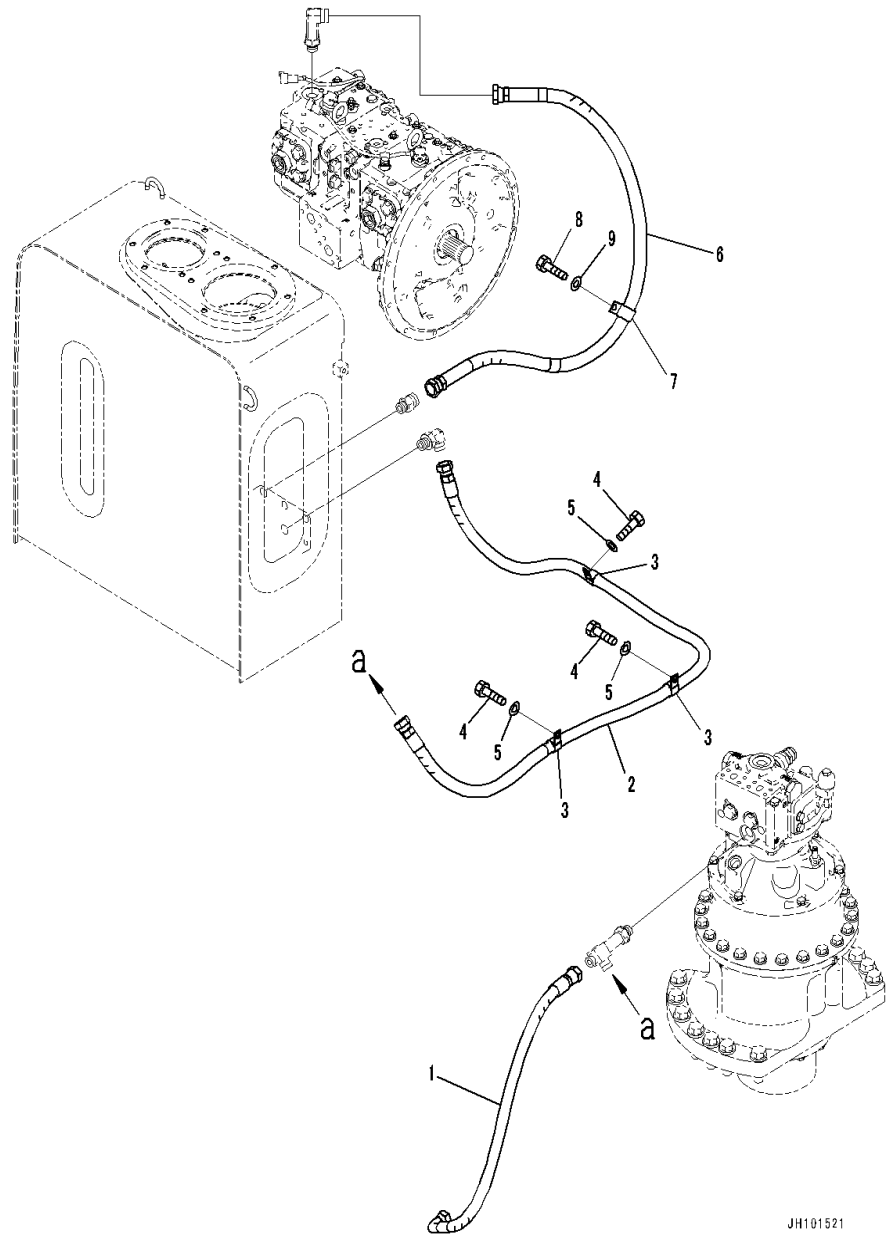

Index	Code	Part Number	Description	Qty	Serial Number
1		20Y-62-54371	Hose	1	C00001-
2		20Y-62-56220	Hose Assembly	1	C00001-
3		04434-52312	Clip	3	C00001-
4		01010-81225	Bolt	3	C00001-
5		01643-31232	Washer	3	C00001-
6		20Y-62-56231	Hose	1	C00001-
7		04434-52712	Clip	1	C00001-
8		01010-81225	Bolt	1	C00001-
9		01643-31232	Washer	1	C00001-

FIG. H1210-001001 Boom Piping

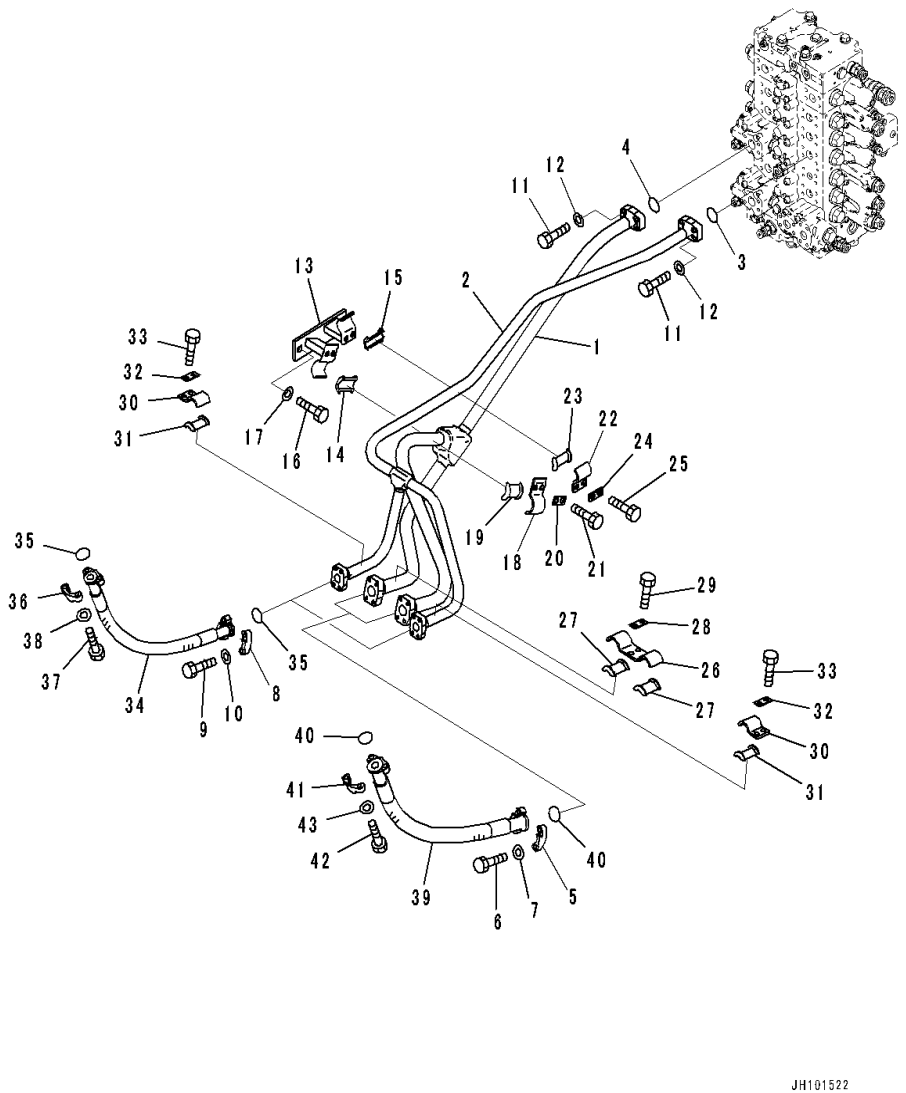

Index	Code	Part Number	Description	Qty	Serial Number
1		20Y-62-56411	Tube	1	C00001-
2		20Y-62-56430	Tube	1	C00001-
3		07000-13032	O-ring	1	C00001-
4		07000-13035	O-ring	1	C00001-
5		07371-30640	Flange, Split	4	C00001-
6		07372-21035	Bolt	8	C00001-
7		01643-51032	Washer	8	C00001-
8		07371-31049	Flange, Split	4	C00001-
9		07372-21035	Bolt	8	C00001-
10		01643-51032	Washer	8	C00001-
11		07372-21040	Bolt	8	C00001-
12		01643-51032	Washer	8	C00001-
13		20Y-62-56651	Clamp	1	C00001-
14		205-62-73430	• Seat	1	C00001-
15		20Y-62-13760	• Seat	1	C00001-
16		01010-81235	Bolt	2	C00001-
17		01643-31232	Washer	2	C00001-
18		207-62-52431	Clamp	1	C00001-
19		205-62-73430	• Seat	1	C00001-
20		20Y-62-13450	Plate	1	C00001-
21		01010-81235	Bolt	2	C00001-
22		20Y-62-13221	Clamp	1	C00001-
23		20Y-62-13760	• Seat	1	C00001-
24		20Y-62-13450	Plate	1	C00001-
25		01010-81235	Bolt	2	C00001-
26		2A5-62-11581	Clamp	1	C00001-
27		205-62-73430	• Seat	2	C00001-
28		20Y-62-13450	Plate	1	C00001-
29		01010-81235	Bolt	2	C00001-
30		20Y-62-13221	Clamp	2	C00001-
31		20Y-62-13760	• Seat	1	C00001-
32		20Y-62-13450	Plate	2	C00001-
33		01010-81235	Bolt	4	C00001-
34		2A5-62-11131	Hose	2	C00001-
35		07000-13025	O-ring	4	C00001-
36		07371-30640	Flange, Split	4	C00001-
37		07372-21035	Bolt	8	C00001-
38		01643-51032	Washer	8	C00001-
39		206-62-31732	Hose	2	C00001-
40		07000-13032	O-ring	4	C00001-

FIG. H1210-001001 Boom Piping

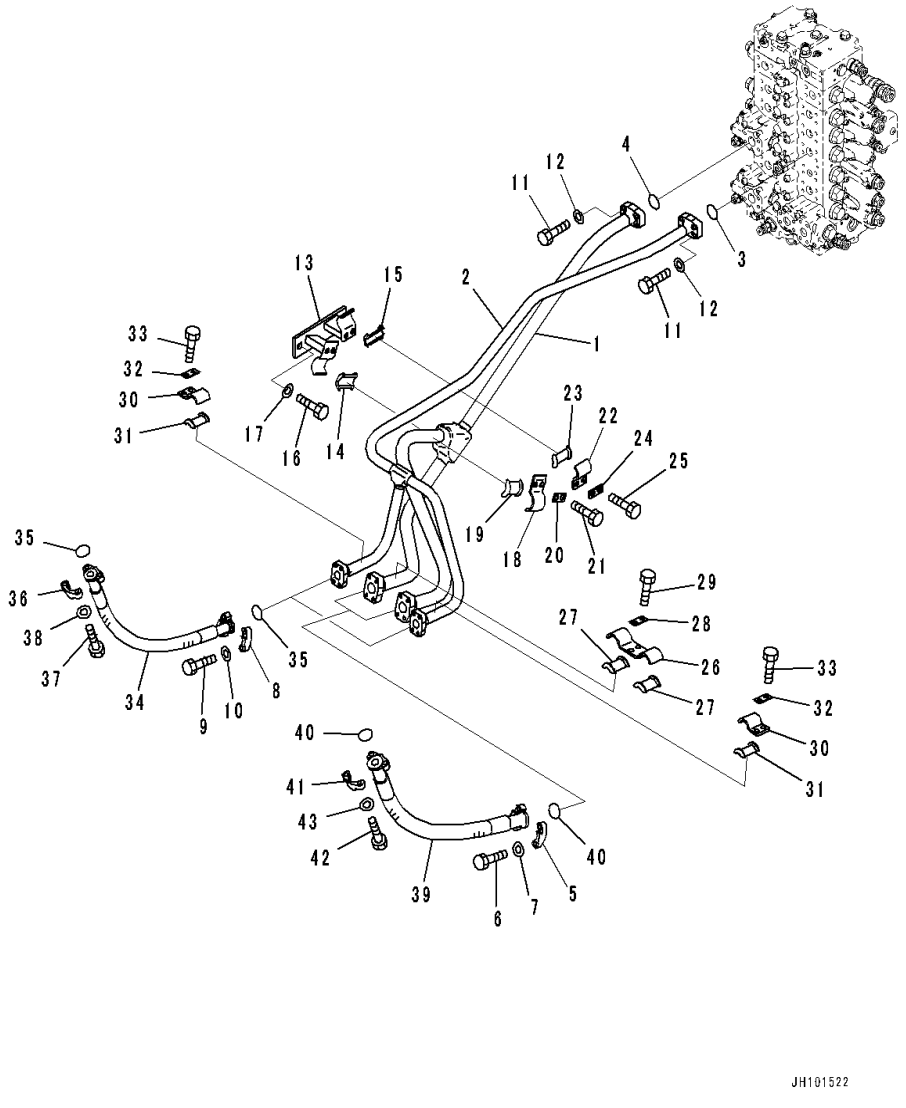

Index	Code	Part Number	Description	Qty	Serial Number
41		07371-31049	Flange, Split	4	C00001-
42		07372-21035	Bolt	8	C00001-
43		01643-51032	Washer	8	C00001-

FIG. H1220-001001 Arm and Bucket Piping

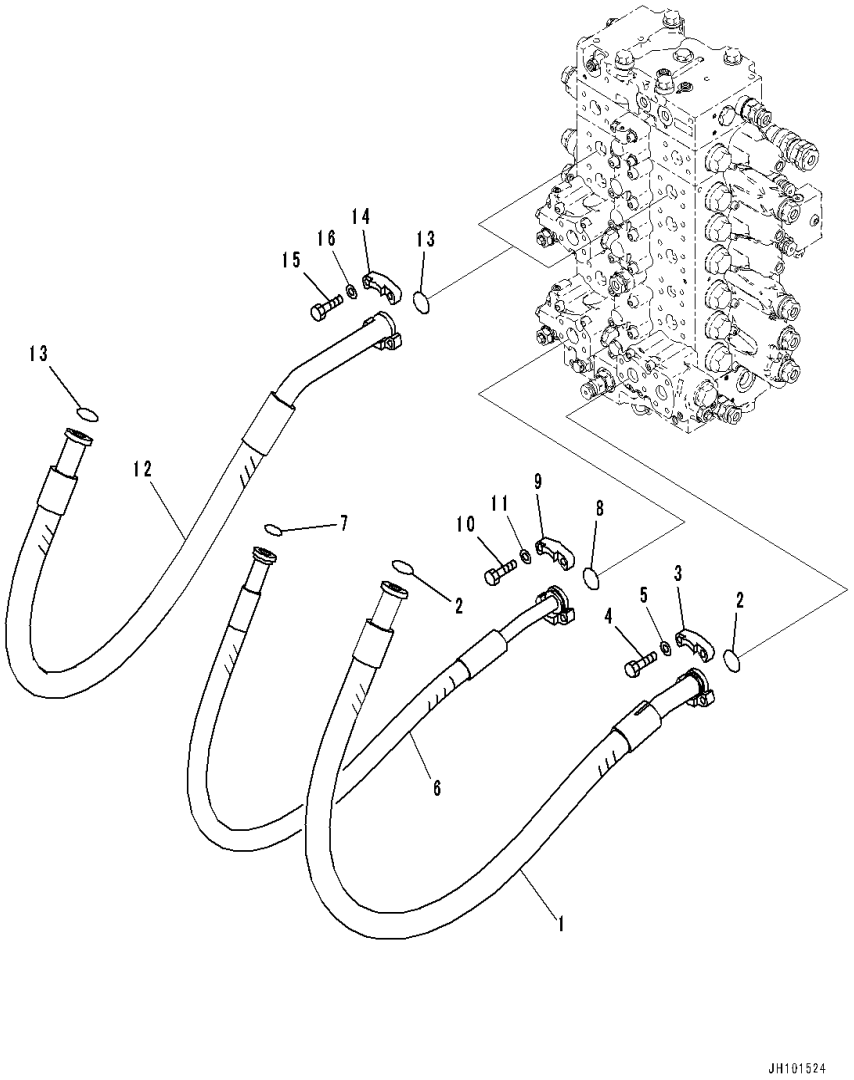

Index	Code	Part Number	Description	Qty	Serial Number
1		20Y-62-56281	Hose	1	C00001-
2		07000-13032	O-ring	2	C00001-
3		07371-31049	Flange, Split	2	C00001-
4		07372-21035	Bolt	4	C00001-
5		01643-51032	Washer	4	C00001-
6		20Y-62-56291	Hose	1	C00001-
7		07000-13025	O-ring	1	C00001-
8		07000-13032	O-ring	1	C00001-
9		07371-31049	Flange, Split	2	C00001-
10		07372-21035	Bolt	4	C00001-
11		01643-51032	Washer	4	C00001-
12		20Y-62-56241	Hose	2	C00001-
13		07000-13032	O-ring	4	C00001-
14		07371-31049	Flange, Split	4	C00001-
15		07372-21035	Bolt	8	C00001-
16		01643-51032	Washer	8	C00001-

FIG. H1270-001001 Attachment Piping (Main Piping, L.H.)

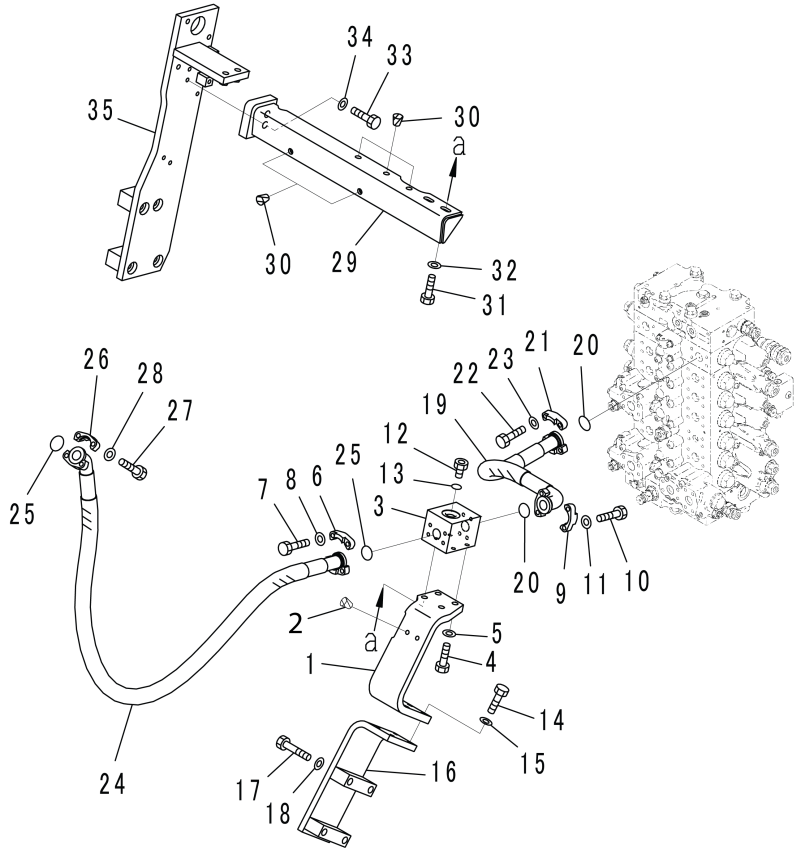

Index	Code	Part Number	Description	Qty	Serial Number
1		20Y-62-K6790	Bracket	1	C00001-
2		07049-01215	Plug	2	C00001-
3		20Y-62-51580	Block	1	C00001-
4		01010-81240	Bolt	2	C00001-
5		01643-31232	Washer	2	C00001-
6		07371-31049	Flange, Split	2	C00001-
7		07372-21035	Bolt	4	C00001-
8		01643-51032	Washer	4	C00001-
9		07371-31049	Flange, Split	2	C00001-
10		07372-21035	Bolt	4	C00001-
11		01643-51032	Washer	4	C00001-
12		07040-12412	Plug	1	C00001-
13		07002-12434	O-ring	1	C00001-
14		01010-81240	Bolt	4	C00001-
15		01643-31232	Washer	4	C00001-
16		20Y-62-56441	Bracket	1	C00001-
17		01010-81285	Bolt	4	C00001-
18		01643-31232	Washer	4	C00001-
19		07098-01007	Hose, Flange Type	1	C00001-
20		07000-13032	O-ring	2	C00001-
21		07371-31049	Flange, Split	2	C00001-
22		07372-21035	Bolt	4	C00001-
23		01643-51032	Washer	4	C00001-
24		07099-21016	Hose, Flange Type	1	C00001-
25		07000-13032	O-ring	2	C00001-
26		07371-31049	Flange, Split	2	C00001-
27		07372-21035	Bolt	4	C00001-
28		01643-51032	Washer	4	C00001-
29		20Y-62-57430	Frame	1	C00001-
30		07049-01215	Plug	5	C00001-
31		01010-81245	Bolt	2	C00001-
32		175-54-34170	Washer	2	C00001-
33		01010-81245	Bolt	2	C00001-
34		01643-31232	Washer	2	C00001-
35		20Y-62-57460	Bracket	1	C00001-

FIG. H1270-001002 Attachment Piping (EPC Valve)

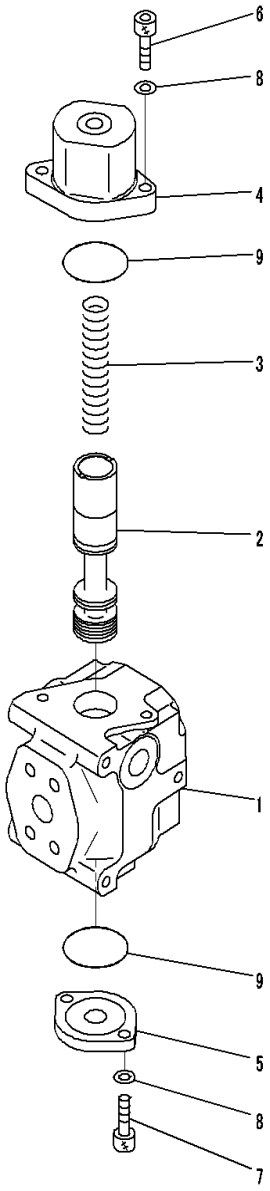

Index	Code	Part Number	Description	Qty	Serial Number
		702-21-01910	Valve Assembly	1	C00001-
1	C1		• Block	1	C00001-
2	C1		• Spool	1	C00001-
3		702-21-11930	• Spring	1	C00001-
4		702-21-11940	• Case	1	C00001-
5		709-10-91240	• Flange	1	C00001-
6		01252-61040	• Bolt, Hexagon Socket Head	2	C00001-
7		01252-61030	• Bolt, Hexagon Socket Head	2	C00001-
8		01643-51032	• Washer	4	C00001-
9		07000-12055	• O-ring	2	C00001-

FIG. H1270-001003 Attachment Piping (Main Piping, R.H.)

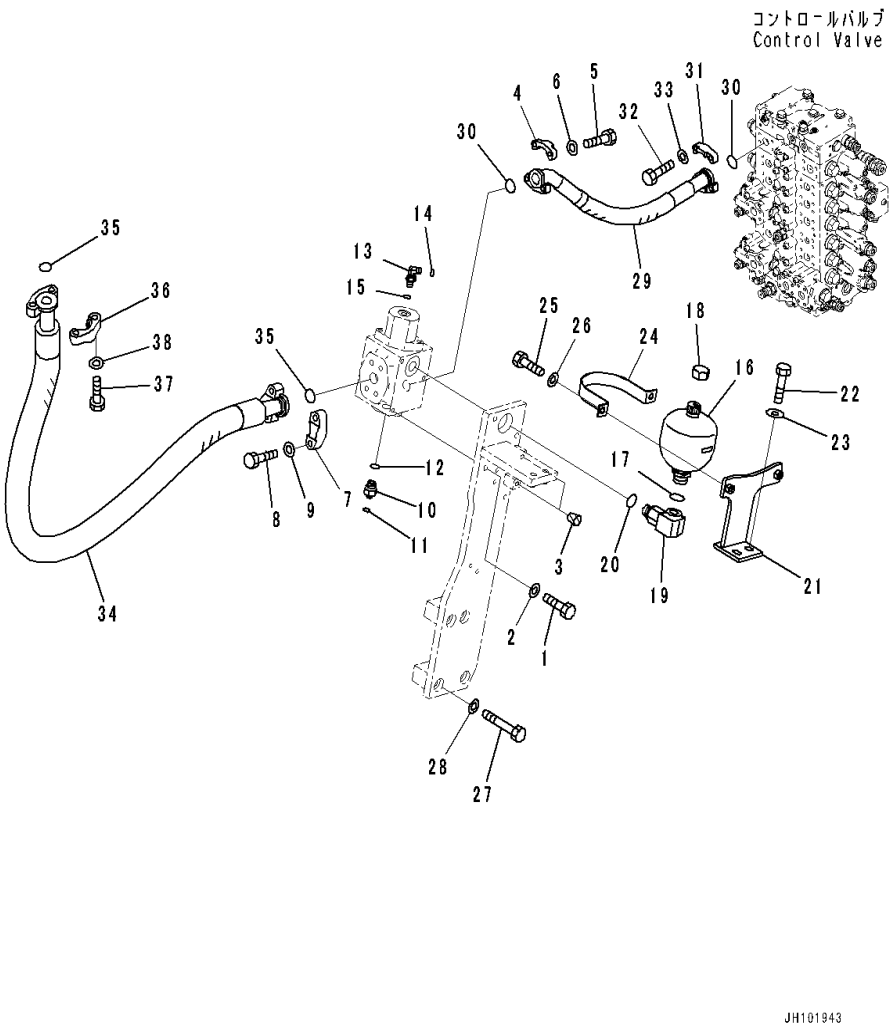

Index	Code	Part Number	Description	Qty	Serial Number
1		01010-81040	Bolt	3	C00001-
2		01643-31032	Washer	3	C00001-
3		07049-01215	Plug	2	C00001-
4		07371-31049	Flange, Split	2	C00001-
5		07372-21035	Bolt	4	C00001-
6		01643-51032	Washer	4	C00001-
7		07371-51260	Flange, Split	2	C00001-
8		01010-81245	Bolt	4	C00001-
9		01643-31232	Washer	4	C00001-
10		20Y-62-43460	Nipple	1	C00001-
11		02896-11008	O-ring	1	C00001-
12		07002-12034	O-ring	1	C00001-
13		11Y-62-12160	Elbow	1	C00001-
14		02896-11008	O-ring	1	C00001-
15		07002-11423	O-ring	1	C00001-
16		2A8-62-12550	Accumulator Assembly	1	C00001-
17		20Y-62-56730	• O-ring	1	C00001-
18		2A8-62-12650	• Cap	1	C00001-
19		20Y-62-56850	Elbow	1	C00001-
20		07002-12434	O-ring	1	C00001-
21		20Y-62-56810	Bracket	1	C00001-
22		01010-81250	Bolt	2	C00001-
23		175-54-34170	Washer	2	C00001-
24		20Y-62-56840	Plate	1	C00001-
25		01010-81230	Bolt	2	C00001-
26		01643-31232	Washer	2	C00001-
27		01010-81285	Bolt	4	C00001-
28		01643-31232	Washer	4	C00001-
29		20Y-62-56830	Hose	1	C00001-
30		07000-13032	O-ring	2	C00001-
31		07371-31049	Flange, Split	2	C00001-
32		07372-21035	Bolt	4	C00001-
33		01643-51032	Washer	4	C00001-
34		07099-21217	Hose, Flange Type	1	C00001-
35		07000-13038	O-ring	2	C00001-
36		07371-51260	Flange, Split	2	C00001-
37		01010-81245	Bolt	4	C00001-
38		01643-31232	Washer	4	C00001-

FIG. H1270-001004 Attachment Piping (Return Piping, 1/2)

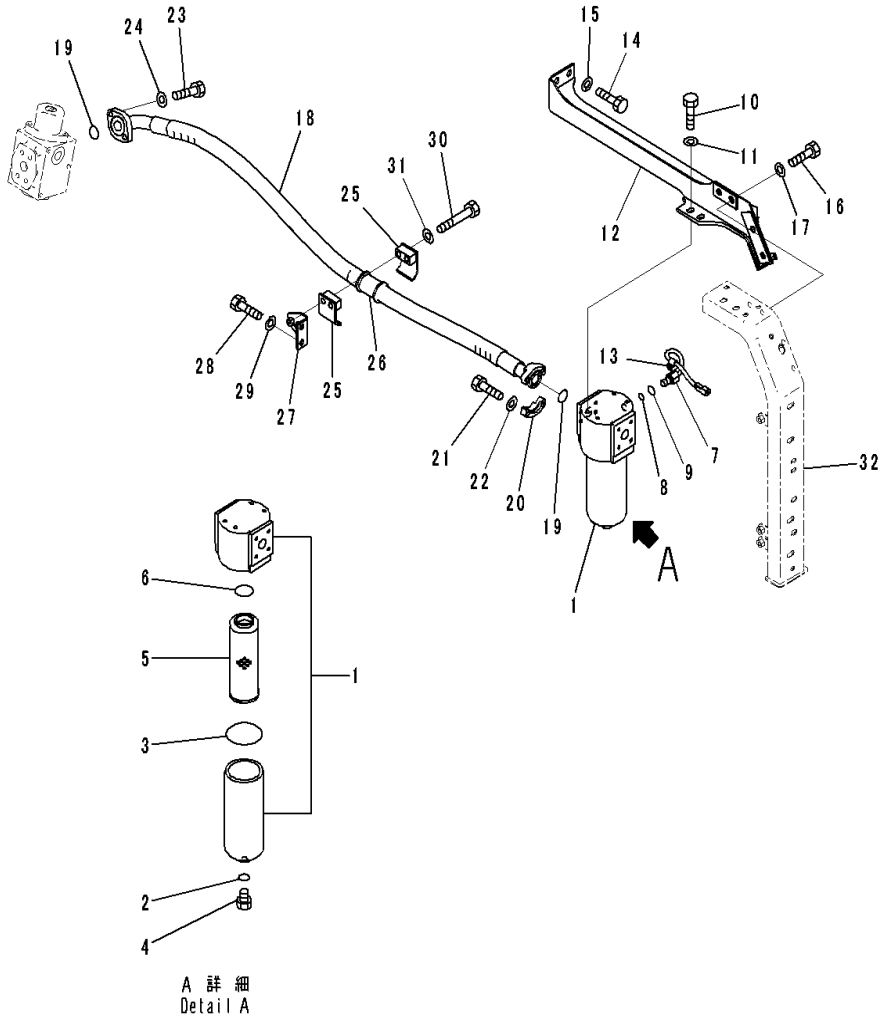

Index	Code	Part Number	Description	Qty	Serial Number
1		20Y-62-57870	Filter Assembly	1	C00001-
2		07000-12011	• O-ring	1	C00001-
3		07000-12100	• O-ring	1	C00001-
4		207-62-52510	• Plug	1	C00001-
5		20Y-62-57350	• Element	1	C00001-
6		20Y-62-57540	• • O-ring	1	C00001-
7		20Y-62-57530	• Switch	1	C00001-
8		11Y-06-21350	• • O-ring	1	C00001-
9		11Y-06-21360	• • O-ring	1	C00001-
10		01010-81235	Bolt	4	C00001-
11		01643-31232	Washer	4	C00001-
12		20Y-62-56791	Frame	1	C00001-
13		08211-00720	Clip	1	C00001-
14		01010-81225	Bolt	2	C00001-
15		01643-31232	Washer	2	C00001-
16		01010-81230	Bolt	4	C00001-
17		01643-31232	Washer	4	C00001-
18		20Y-62-56481	Hose	1	C00001-
19		07000-13038	O-ring	2	C00001-
20		07371-31255	Flange, Split	2	C00001-
21		07372-21040	Bolt	4	C00001-
22		01643-51032	Washer	4	C00001-
23		01010-81035	Bolt	2	C00001-
24		01643-31032	Washer	2	C00001-
25		07094-11024	Clamp	2	C00001-
26		07095-01038	Cushion	1	C00001-
27		20Y-62-43320	Bracket	1	C00001-
28		01010-81225	Bolt	2	C00001-
29		01643-31232	Washer	2	C00001-
30		01010-81280	Bolt	2	C00001-
31		01643-31232	Washer	2	C00001-
32		(20Y-54-56330)	Frame(Door L.H.,For Asia)		

FIG. H1270-001005 Attachment Piping (Return Piping, 2/2)

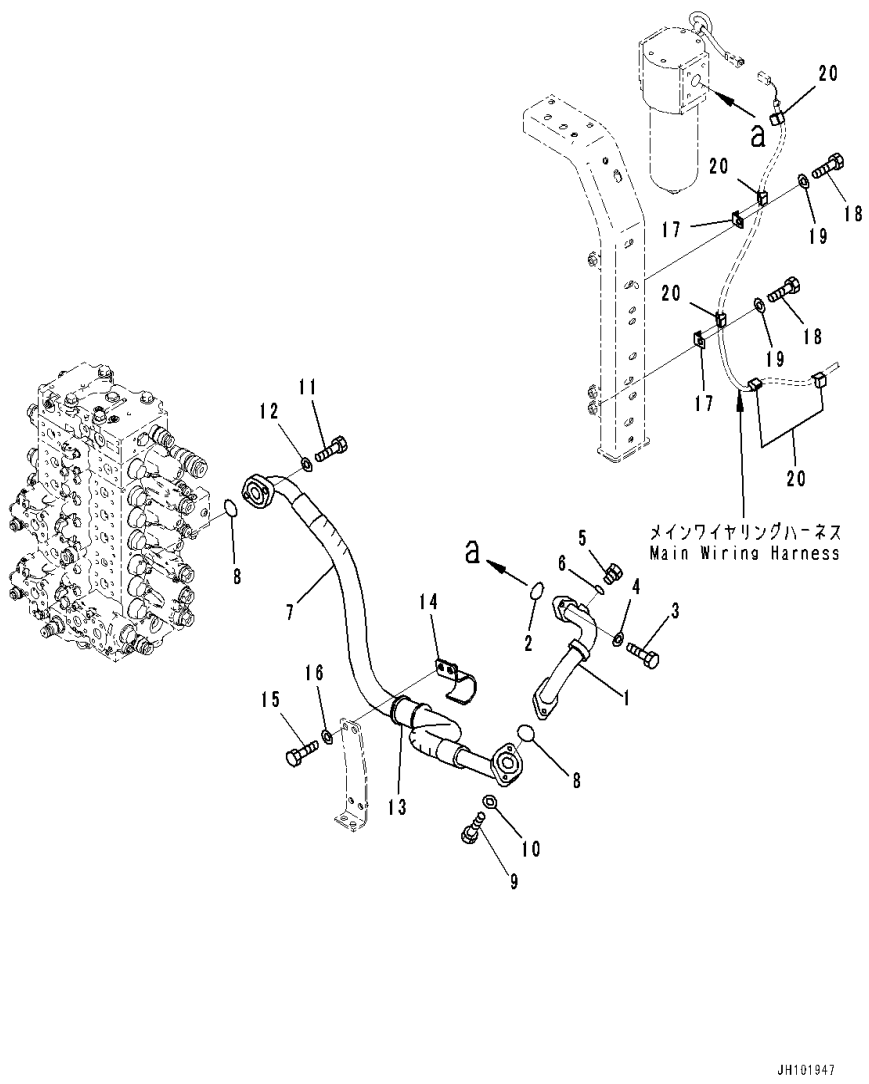

Index	Code	Part Number	Description	Qty	Serial Number
1		20Y-62-56991	Tube	1	C00001-
2		07000-13035	O-ring	1	C00001-
3		01010-81040	Bolt	2	C00001-
4		01643-31032	Washer	2	C00001-
5		07040-11209	Plug	1	C00001-
6		07002-11223	O-ring	1	C00001-
7		20Y-62-56490	Hose	1	C00001-
8		07000-13038	O-ring	2	C00001-
9		01010-81045	Bolt	2	C00001-
10		01643-31032	Washer	2	C00001-
11		01010-81040	Bolt	2	C00001-
12		01643-31032	Washer	2	C00001-
13		07095-01241	Cushion	1	C00001-
14		21K-62-72810	Clamp	1	C00001-
15		01010-81230	Bolt	2	C00001-
16		01643-31232	Washer	2	C00001-
17		08057-12012	Clip	2	C00001-
18		01010-81225	Bolt	2	C00001-
19		01643-31232	Washer	2	C00001-
20		08211-00720	Clip	5	C00001-

FIG. H1270-001006 Attachment Piping (Pilot Filter)

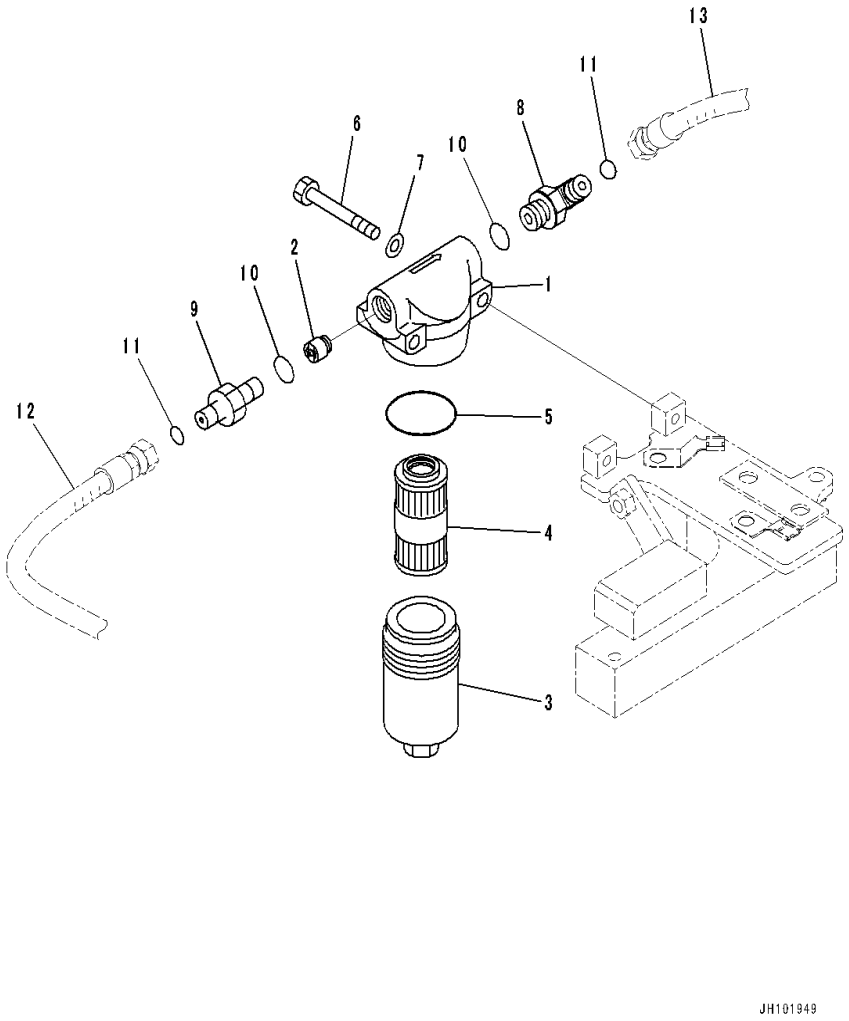

Index	Code	Part Number	Description	Qty	Serial Number
		20Y-62-51681	Filter Assembly	1	C00001-
1	C1		• Head	1	C00001-
2	C1		• Valve Assembly	1	C00001-
3	C1		• Case	1	C00001-
4		20Y-62-51691	• Element	1	C00001-
5		706-76-71390	• O-ring	1	C00001-
6		01010-81075	Bolt	2	C00001-
7		01643-31032	Washer	2	C00001-
8		02782-10315	Elbow	1	C00001-
9		02781-00315	Union	1	C00001-
10		07002-12034	O-ring	2	C00001-
11		02896-11009	O-ring	2	C00001-
12		(20Y-62-56591)	Hose Assembly(LSPiping,1-Additional ... Actuator Piping, Accumulator)		
13		(02771-00304)	Hose (Solenoid Valve,Mounting, 1- ..... Additional Actuator Piping, Accumulator)		

FIG. H1310-001001 Travel Piping

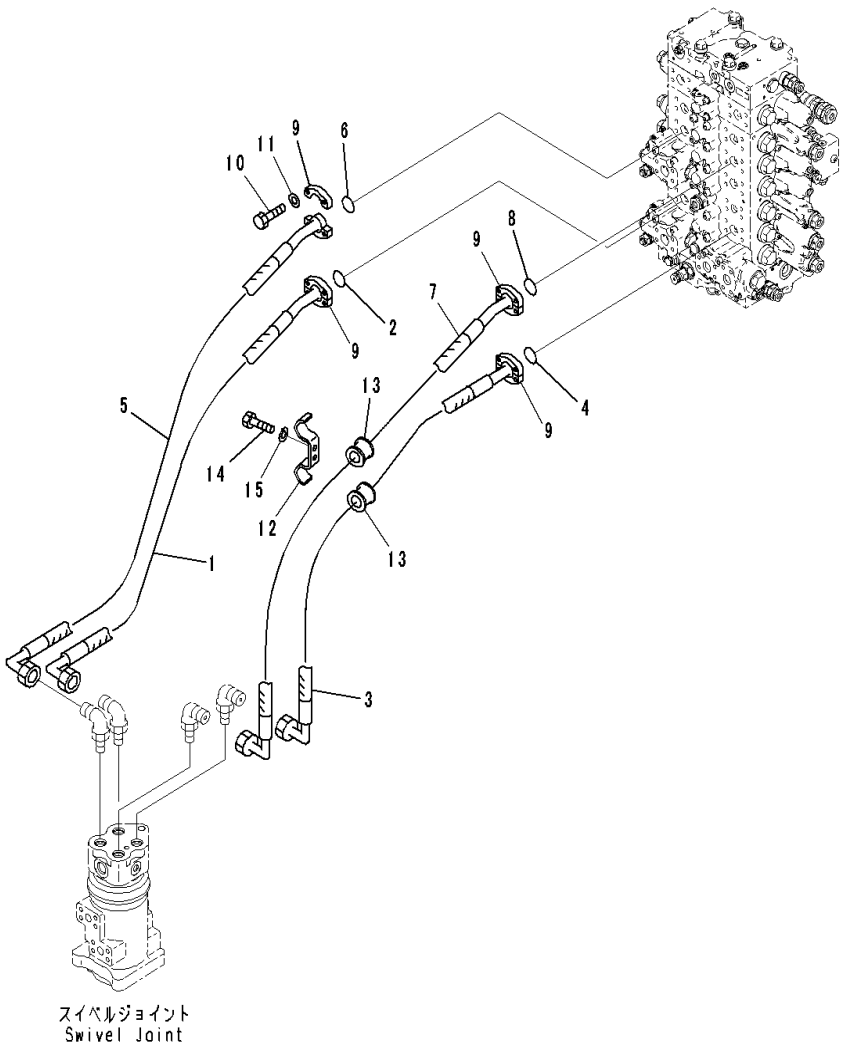

Index	Code	Part Number	Description	Qty	Serial Number
1		20Y-62-57770	Hose	1	C00001-
2		07000-13032	O-ring	1	C00001-
3		2A5-62-25320	Hose	1	C00001-
4		07000-13032	O-ring	1	C00001-
5		20Y-62-57760	Hose	1	C00001-
6		07000-13032	O-ring	1	C00001-
7		2A6-62-11680	Hose	1	C00001-
8		07000-13032	O-ring	1	C00001-
9		07371-31049	Flange, Split	8	C00001-
10		07372-21035	Bolt	16	C00001-
11		01643-51032	Washer	16	C00001-
12		206-62-71141	Clamp	1	C00001-
13		07095-00628	Cushion	2	C00001-
14		01010-81030	Bolt	2	C00001-
15		01643-31032	Washer	2	C00001-

FIG. H1340-001001 Swing Piping

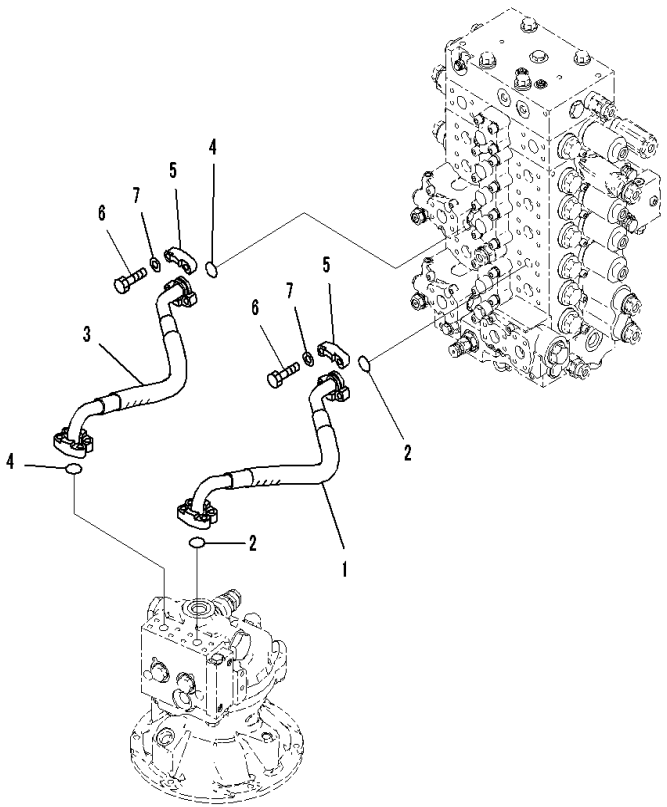

Index	Code	Part Number	Description	Qty	Serial Number
1		2A5-62-25230	Hose	1	C00001-
2		07000-13025	O-ring	2	C00001-
3		2A5-62-25240	Hose	1	C00001-
4		07000-13025	O-ring	2	C00001-
5		07371-30640	Flange, Split	8	C00001-
6		07372-21035	Bolt	16	C00001-
7		01643-51032	Washer	16	C00001-

FIG. H1810-001001 LS Piping

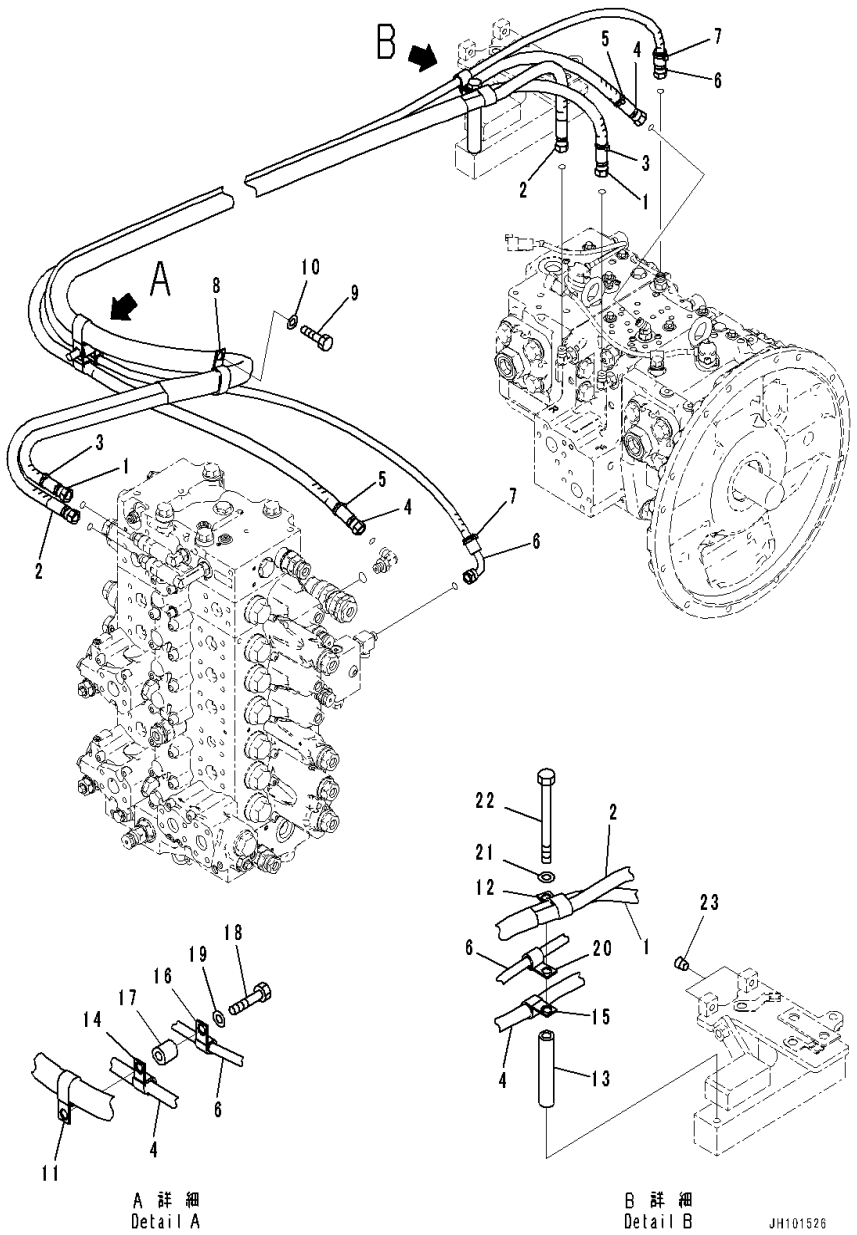

Index	Code	Part Number	Description	Qty	Serial Number
1		20Y-62-53651	Hose	1	C00001-
2		20Y-62-53661	Hose	1	C00001-
3		20Y-62-22790	Band,Red	2	C00001-
4		20Y-62-57610	Hose Assembly	1	C00001-
5		20Y-62-22820	• Band,Blue	2	C00001-
6		20Y-62-56982	Hose Assembly	1	C00001-
7		20Y-62-22810	• Band,Yellow	2	C00001-
8		04435-51812	Clip	1	C00001-
9		01010-81220	Bolt	1	C00001-
10		01643-31232	Washer	1	C00001-
11		04435-51812	Clip	1	C00001-
12		04435-51512	Clip	1	C00001-
13		154-03-82191	Spacer	1	C00001-
14		04434-51812	Clip	1	C00001-
15		04434-51812	Clip	1	C00001-
16		04434-51412	Clip	1	C00001-
17		195-33-11220	Spacer	1	C00001-
18		01010-81255	Bolt	1	C00001-
19		01643-31232	Washer	1	C00001-
20		04434-51412	Clip	1	C00001-
21		01643-31232	Washer	1	C00001-
22		01011-81235	Bolt	1	C00001-
23		07049-01012	Plug	2	C00001-

FIG. H1810-002001 LS Piping (1-Additional Actuator Piping, Accumulator)

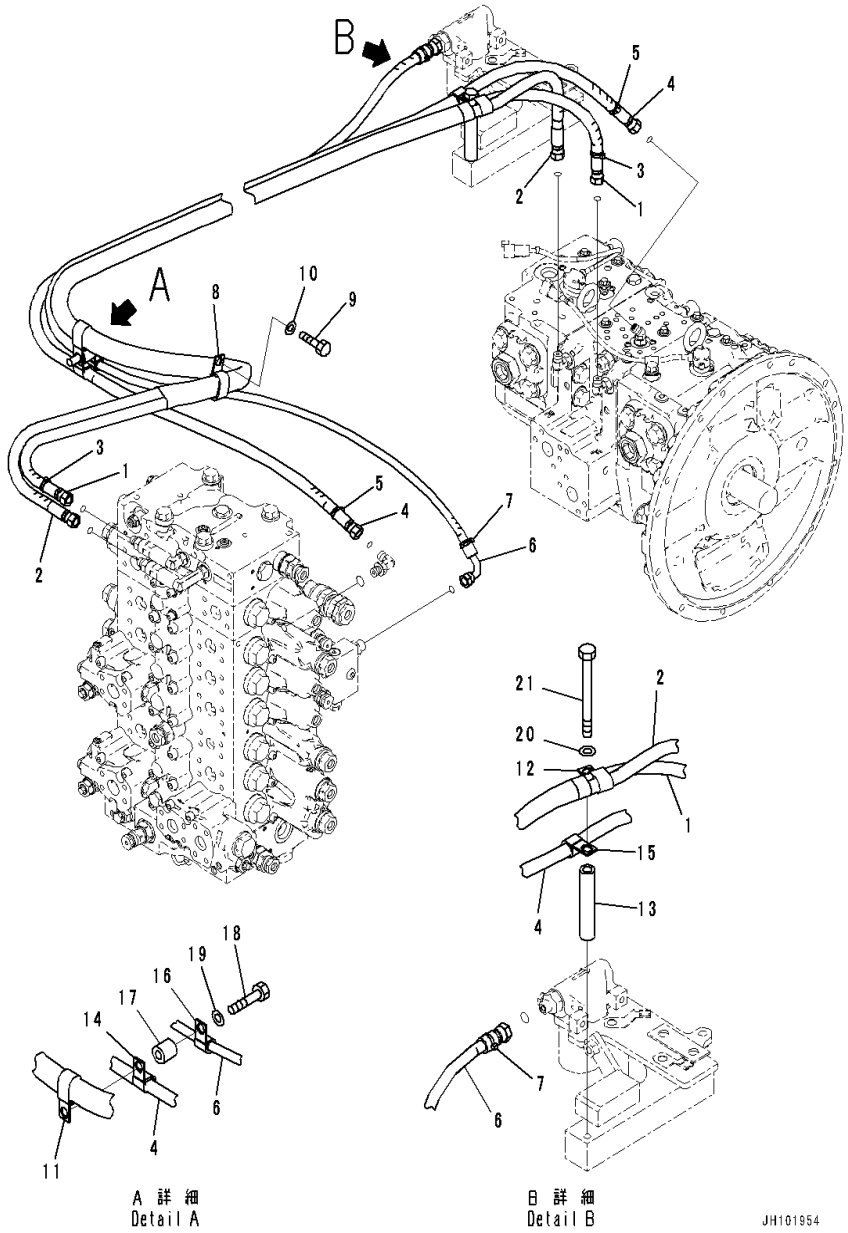

Index	Code	Part Number	Description	Qty	Serial Number
1		20Y-62-53651	Hose	1	C00001-
2		20Y-62-53661	Hose	1	C00001-
3		20Y-62-22790	Band,Red	2	C00001-
4		20Y-62-57610	Hose Assembly	1	C00001-
5		20Y-62-22820	• Band,Blue	2	C00001-
6		20Y-62-56591	Hose Assembly	1	C00001-
7		20Y-62-22810	• Band,Yellow	2	C00001-
8		04435-51812	Clip	1	C00001-
9		01010-81220	Bolt	1	C00001-
10		01643-31232	Washer	1	C00001-
11		04435-51812	Clip	1	C00001-
12		04435-51512	Clip	1	C00001-
13		154-03-82191	Spacer	1	C00001-
14		04434-51812	Clip	1	C00001-
15		04434-51812	Clip	1	C00001-
16		04434-51812	Clip	1	C00001-
17		195-33-11220	Spacer	1	C00001-
18		01010-81255	Bolt	1	C00001-
19		01643-31232	Washer	1	C00001-
20		01643-31232	Washer	1	C00001-
21		01011-81235	Bolt	1	C00001-

FIG. H1831-001001 Solenoid Valve (Inner Parts)

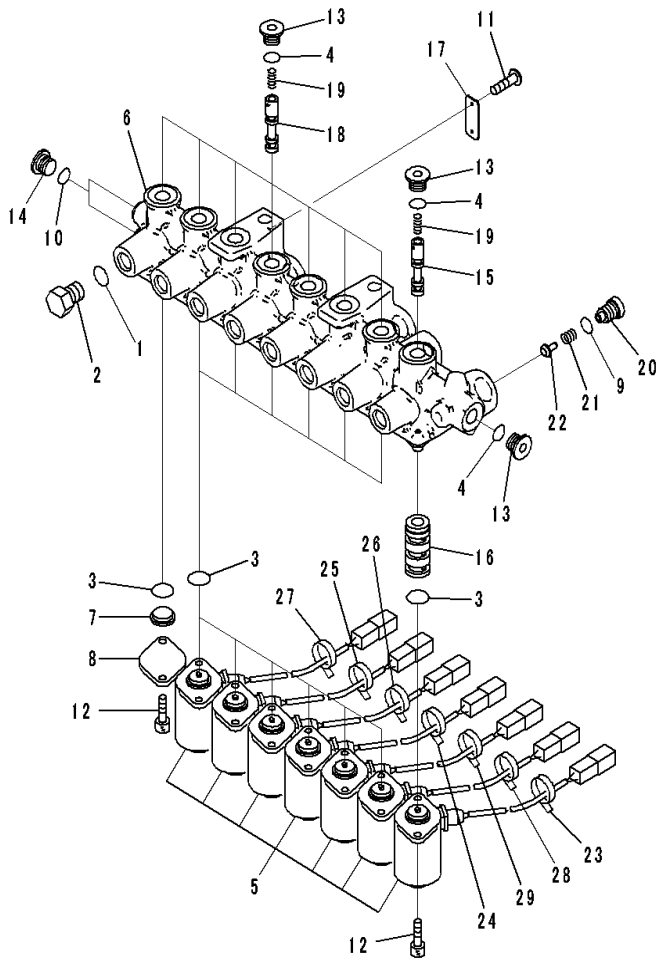

Index	Code	Part Number	Description	Qty	Serial Number
		20Y-60-56270	Solenoid Assembly	1	C00001-
1		07002-11423	• O-ring	1	C00001-
2		07040-11409	• Plug	1	C00001-
3		20Y-60-31240	• O-ring	8	C00001-
4		20Y-60-31250	• O-ring	9	C00001-
5		22B-62-45811	• Solenoid Assembly	7	C00001-
6	C1		• Body	1	C00001-
7		NY01720-10600	• Stopper	1	C00001-
8		NY07926-10100	• Plate	1	C00001-
9		NY86711-01010	• O-ring	1	C00001-
10		NY86711-01008	• O-ring	3	C00001-
11		NY84110-00248	• Screw	2	C00001-
12		NY81416-05010	• Bolt	16	C00001-
13		NY80000-02200	• Plug	9	C00001-
14		NY80000-02100	• Plug	3	C00001-
15		NY16207-10300	• Spool	1	C00001-
16		NY16207-10200	• Sleeve	1	C00001-
17		NY09000-11400	• Plate	1	C00001-
18		NY07493-10200	• Spool	7	C00001-
19		NY06339-10200	• Spring	8	C00001-
20		NY06277-1320A	• Plug	1	C00001-
21		NY05062-11800	• Spring	1	C00001-
22		NY05062-1170A	• Plunger	1	C00001-
		NY89103-00292	• Band,Black	1	C00001-
23		NY07207-1170A	• Tube	1	C00001-
		NY89103-00291	• Band,Yellow	1	C00001-
24		NY07529-1040A	• Tube	1	C00001-
		NY89103-00290	• Band,Brown	1	C00001-
25		NY07529-1060A	• Tube	1	C00001-
		NY89103-00288	• Band,Green	1	C00001-
26		NY07529-1050A	• Tube	1	C00001-
		NY89103-00289	• Band,White	1	C00001-
27		NY07207-1180A	• Tube	1	C00001-
		NY89103-00286	• Band,Blue	1	C00001-
28		NY07529-1020A	• Tube	1	C00001-
		NY89103-00285	• Band,Red	1	C00001-
29		NY07529-1030A	• Tube	1	C00001-

FIG. H1831-001002 Solenoid Valve (Related Parts)

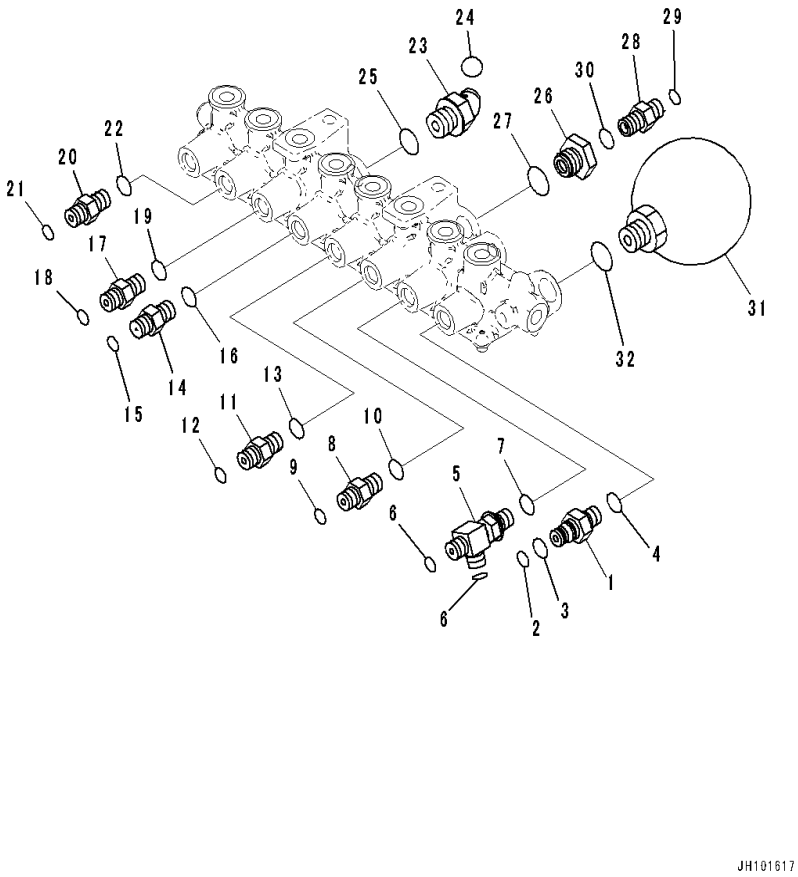

Index	Code	Part Number	Description	Qty	Serial Number
1		20Y-62-16630	Nipple	1	C00001-
2		201-60-11390	• O-ring	1	C00001-
3		20Y-62-19560	• O-ring	1	C00001-
4		07002-11423	O-ring	1	C00001-
5		20Y-62-41960	Tee	1	C00001-
6		02896-11008	O-ring	2	C00001-
7		07002-11423	O-ring	1	C00001-
8		02781-0021D	Union	1	C00001-
9		02896-11008	O-ring	1	C00001-
10		07002-11423	O-ring	1	C00001-
11		02781-0021D	Union	1	C00001-
12		02896-11008	O-ring	1	C00001-
13		07002-11423	O-ring	1	C00001-
14		20Y-62-45610	Nipple	1	C00001-
15		02896-11008	O-ring	1	C00001-
16		07002-11423	O-ring	1	C00001-
17		02781-0021D	Union	1	C00001-
18		02896-11008	O-ring	1	C00001-
19		07002-11423	O-ring	1	C00001-
20		02781-0021D	Union	1	C00001-
21		02896-11008	O-ring	1	C00001-
22		07002-11423	O-ring	1	C00001-
23		02783-10315	Elbow	1	C00001-
24		02896-11009	O-ring	1	C00001-
25		07002-12034	O-ring	1	C00001-
26		20Y-62-21940	Joint	1	C00001-
27		07002-12034	O-ring	1	C00001-
28		11Y-62-12520	Union	1	C00001-
29		02896-11009	O-ring	1	C00001-
30		07002-11423	O-ring	1	C00001-
31		22U-60-21331	Accumulator	1	C00001-
32		07002-12034	O-ring	1	C00001-

FIG. H1831-001003 Solenoid Valve (Solenoid Valve Piping)

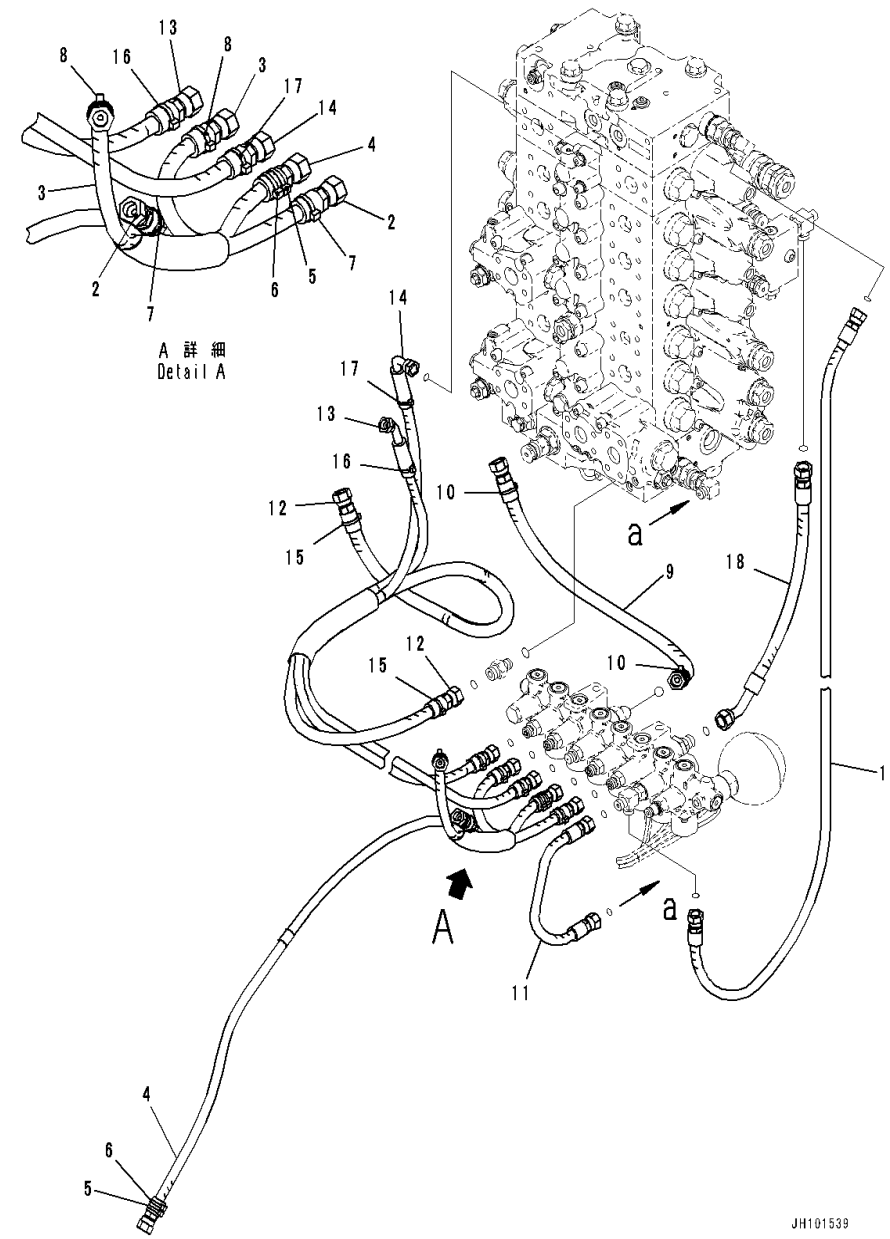

Index	Code	Part Number	Description	Qty	Serial Number
1		02740-00210	Hose	1	C00001-
2		02740-002A5	Hose	1	C00001-
3		02740-002A7	Hose	1	C00001-
4		02740-00214	Hose	1	C00001-
5		20Y-62-22790	Band,Red	2	C00001-
6		20Y-62-22810	Band,Yellow	2	C00001-
7		20Y-62-22820	Band,Blue	2	C00001-
8		20Y-62-22830	Band,White	2	C00001-
9		20Y-62-56471	Hose Assembly	1	C00001-
10		20Y-62-22840	• Band,Black	2	C00001-
11		02740-002A3	Hose	1	C00001-
12		02740-00313	Hose	1	C00001-
13		02742-002A7	Hose	1	C00001-
14		02741-002A8	Hose	1	C00001-
15		20Y-62-22810	Band,Yellow	2	C00001-
16		20Y-62-22840	Band,Black	2	C00001-
17		20Y-62-22860	Band,Brown	2	C00001-
18		02742-003A4	Hose	1	C00001-

FIG. H1831-001004 Solenoid Valve (Mounting)

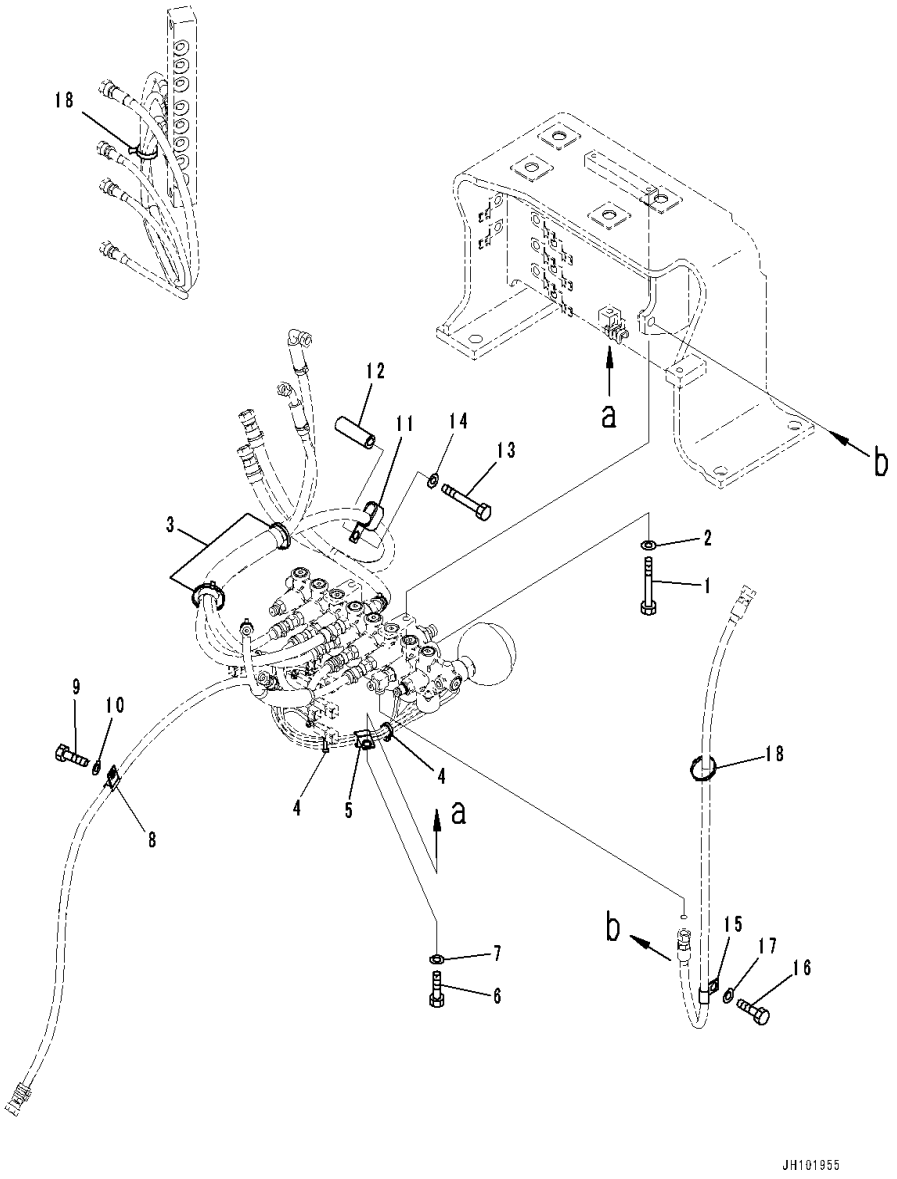

Index	Code	Part Number	Description	Qty	Serial Number
1		01010-81085	Bolt	2	C00001-
2		01643-31032	Washer	2	C00001-
3		08034-20536	Band	2	C00001-
4		08034-20536	Band	2	C00001-
5		04434-51712	Clip	1	C00001-
6		01010-81225	Bolt	1	C00001-
7		01643-31232	Washer	1	C00001-
8		04434-51010	Clip	1	C00001-
9		01010-81030	Bolt	1	C00001-
10		01643-31032	Washer	1	C00001-
11		04435-51712	Clip	1	C00001-
12		195-979-3570	Collar	1	C00001-
13		01010-81295	Bolt	1	C00001-
14		01643-31232	Washer	1	C00001-
15		04434-51012	Clip	1	C00001-
16		01010-81230	Bolt	1	C00001-
17		01643-31232	Washer	1	C00001-
18		08034-20536	Band	2	C00001-

FIG. H1831-002001 Solenoid Valve (1-Additional Actuator Piping, Accumulator) (Inner Parts)

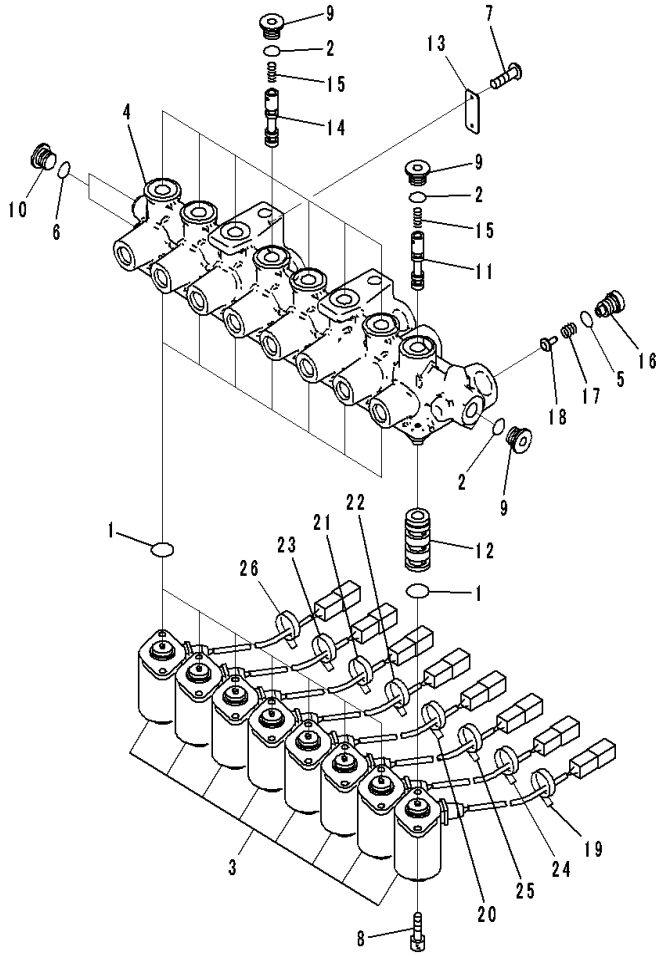

Index	Code	Part Number	Description	Qty	Serial Number
		20Y-60-56140	Solenoid Assembly	1	C00001-
1		20Y-60-31240	• O-ring	8	C00001-
2		20Y-60-31250	• O-ring	9	C00001-
3		22B-62-45811	• Solenoid Assembly	8	C00001-
4	C1		• Body	1	C00001-
5		NY86711-01010	• O-ring	1	C00001-
6		NY86711-01008	• O-ring	3	C00001-
7		NY84110-00248	• Screw	2	C00001-
8		NY81416-05010	• Bolt, Hexagon Socket Head	16	C00001-
9		NY80000-02200	• Plug	9	C00001-
10		NY80000-02100	• Plug	3	C00001-
11		NY16207-10300	• Spool	1	C00001-
12		NY16207-10200	• Sleeve	1	C00001-
13		NY09000-11400	• Plate	1	C00001-
14		NY07493-10200	• Spool	7	C00001-
15		NY06339-10200	• Spring	8	C00001-
16		NY06277-1320A	• Plug	1	C00001-
17		NY05062-11800	• Spring	1	C00001-
18		NY05062-1170A	• Plunger	1	C00001-
		NY89103-00292	• Band,Black	1	C00001-
19		NY07207-1170A	• Tube	1	C00001-
		NY89103-00291	• Band,Yellow	1	C00001-
20		NY07529-1040A	• Tube	1	C00001-
		NY89103-00290	• Band,Brown	1	C00001-
21		NY07529-1060A	• Tube	1	C00001-
		NY89103-00288	• Band,Green	1	C00001-
22		NY07529-1050A	• Tube	1	C00001-
		NY89103-00289	• Band,Pink	1	C00001-
23		NY07207-1180A	• Tube	1	C00001-
		NY89103-00286	• Band,Blue	1	C00001-
24		NY07529-1020A	• Tube	1	C00001-
		NY89103-00285	• Band,Red	1	C00001-
25		NY07529-1030A	• Tube	1	C00001-
		NY89103-00287	• Band,White	1	C00001-
26		NY07505-1020A	• Tube	1	C00001-

FIG. H1831-002002 Solenoid Valve (1-Additional Actuator Piping, Accumulator) (Related Parts)

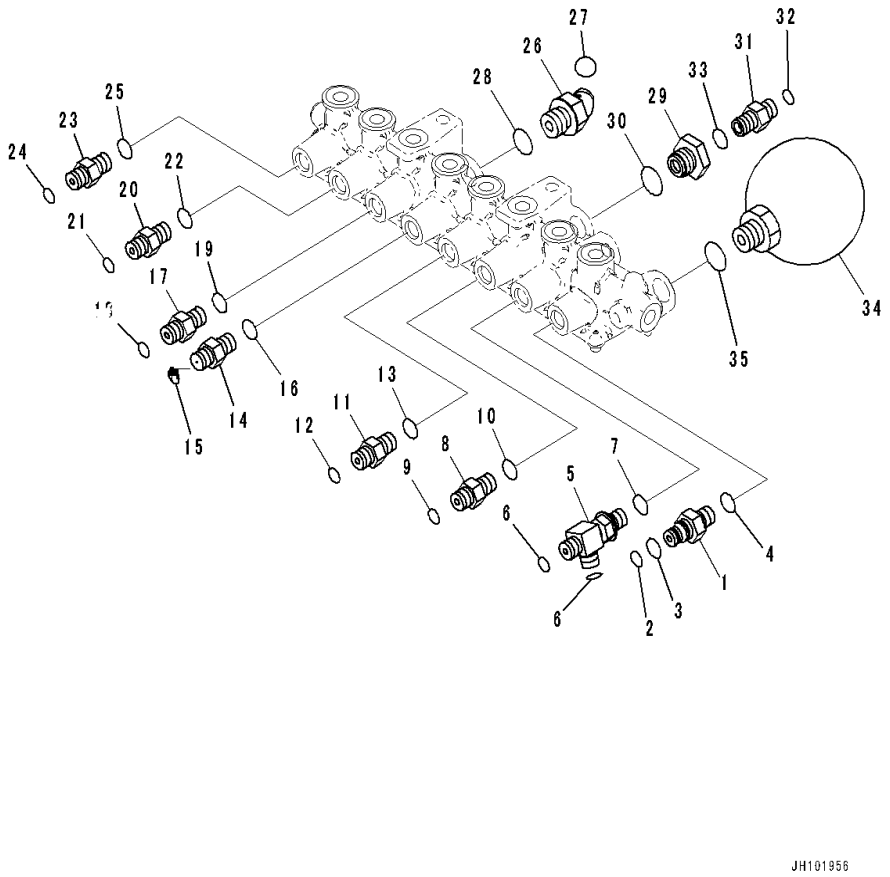

Index	Code	Part Number	Description	Qty	Serial Number
1		20Y-62-16630	Nipple	1	C00001-
2		201-60-11390	• O-ring	1	C00001-
3		20Y-62-19560	• O-ring	1	C00001-
4		07002-11423	O-ring	1	C00001-
5		20Y-62-41960	Tee	1	C00001-
6		02896-11008	O-ring	2	C00001-
7		07002-11423	O-ring	1	C00001-
8		02781-0021D	Union	1	C00001-
9		02896-11008	O-ring	1	C00001-
10		07002-11423	O-ring	1	C00001-
11		02781-0021D	Union	1	C00001-
12		02896-11008	O-ring	1	C00001-
13		07002-11423	O-ring	1	C00001-
14		20Y-62-45610	Nipple	1	C00001-
15		02896-11008	O-ring	1	C00001-
16		07002-11423	O-ring	1	C00001-
17		02781-0021D	Union	1	C00001-
18		02896-11008	O-ring	1	C00001-
19		07002-11423	O-ring	1	C00001-
20		02781-0021D	Union	1	C00001-
21		02896-11008	O-ring	1	C00001-
22		07002-11423	O-ring	1	C00001-
23		22B-26-11320	Union	1	C00001-
24		02896-11008	O-ring	1	C00001-
25		07002-11423	O-ring	1	C00001-
26		02783-10315	Elbow	1	C00001-
27		02896-11009	O-ring	1	C00001-
28		07002-12034	O-ring	1	C00001-
29		20Y-62-21940	Joint	1	C00001-
30		07002-12034	O-ring	1	C00001-
31		11Y-62-12520	Union	1	C00001-
32		02896-11009	O-ring	1	C00001-
33		07002-11423	O-ring	1	C00001-
34		22U-60-21331	Accumulator	1	C00001-
35		07002-12034	O-ring	1	C00001-

FIG. H1831-002003 Solenoid Valve (1-Additional Actuator Piping, Accumulator) (Solenoid Valve Piping)

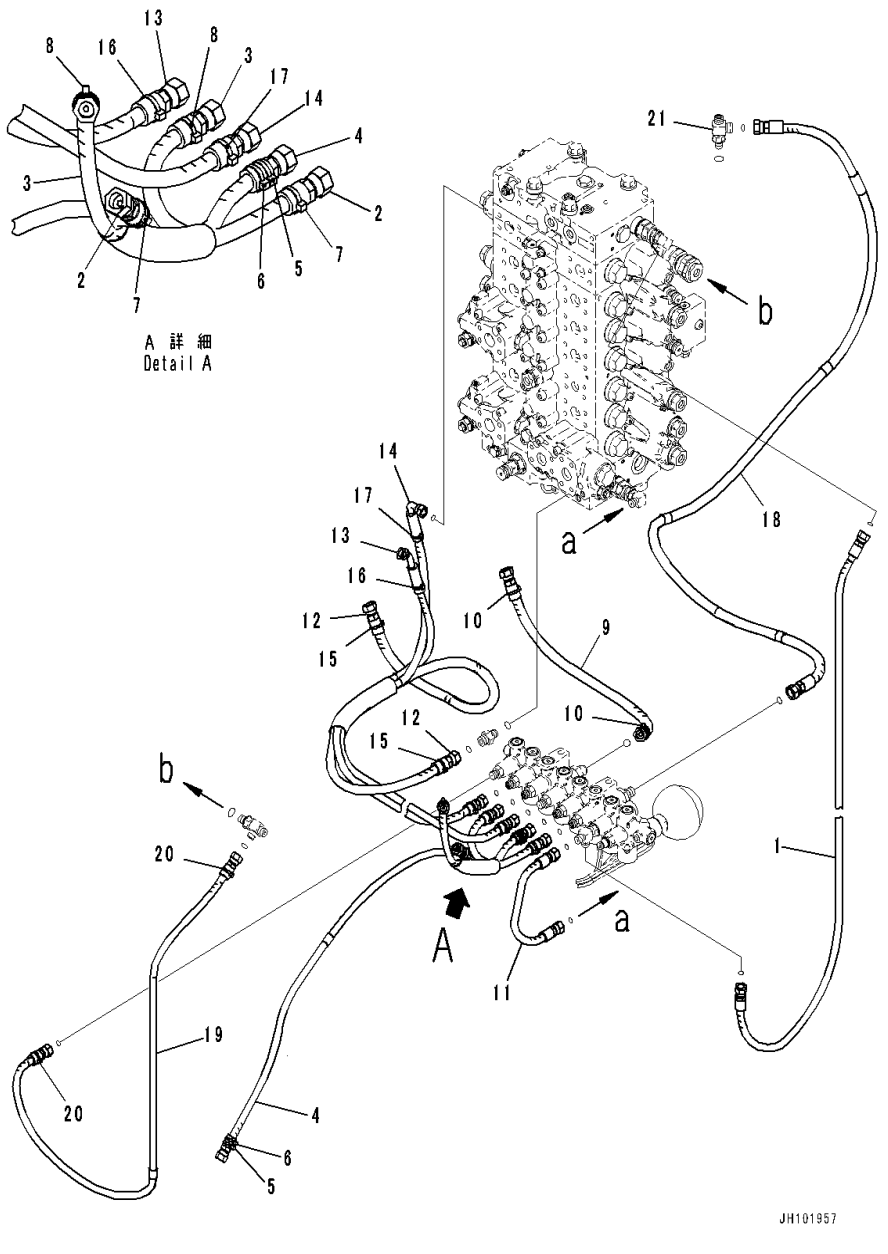

Index	Code	Part Number	Description	Qty	Serial Number
1		02740-00210	Hose	1	C00001-
2		02740-002A5	Hose	1	C00001-
3		02740-002A7	Hose	1	C00001-
4		02740-00214	Hose	1	C00001-
5		20Y-62-22790	Band,Red	2	C00001-
6		20Y-62-22810	Band,Yellow	2	C00001-
7		20Y-62-22820	Band,Blue	2	C00001-
8		20Y-62-22830	Band,White	2	C00001-
9		20Y-62-56471	Hose Assembly	1	C00001-
10		20Y-62-22840	• Band,Black	2	C00001-
11		02740-002A3	Hose	1	C00001-
12		02740-00313	Hose	1	C00001-
13		02742-002A7	Hose	1	C00001-
14		02741-002A8	Hose	1	C00001-
15		20Y-62-22810	Band,Yellow	2	C00001-
16		20Y-62-22840	Band,Black	2	C00001-
17		20Y-62-22860	Band,Brown	2	C00001-
18		20Y-62-56561	Hose Assembly	1	C00001-
19		20Y-62-56570	Hose	1	C00001-
20		20Y-62-22850	• Band,Green	2	C00001-
21		(21N-64-36680)	Tee(Hydraulic Pump Related Parts,1- Addit ional Actuator Piping,Accumulator)		

FIG. H1831-002004 Solenoid Valve (1-Additional Actuator Piping, Accumulator) (Mounting)

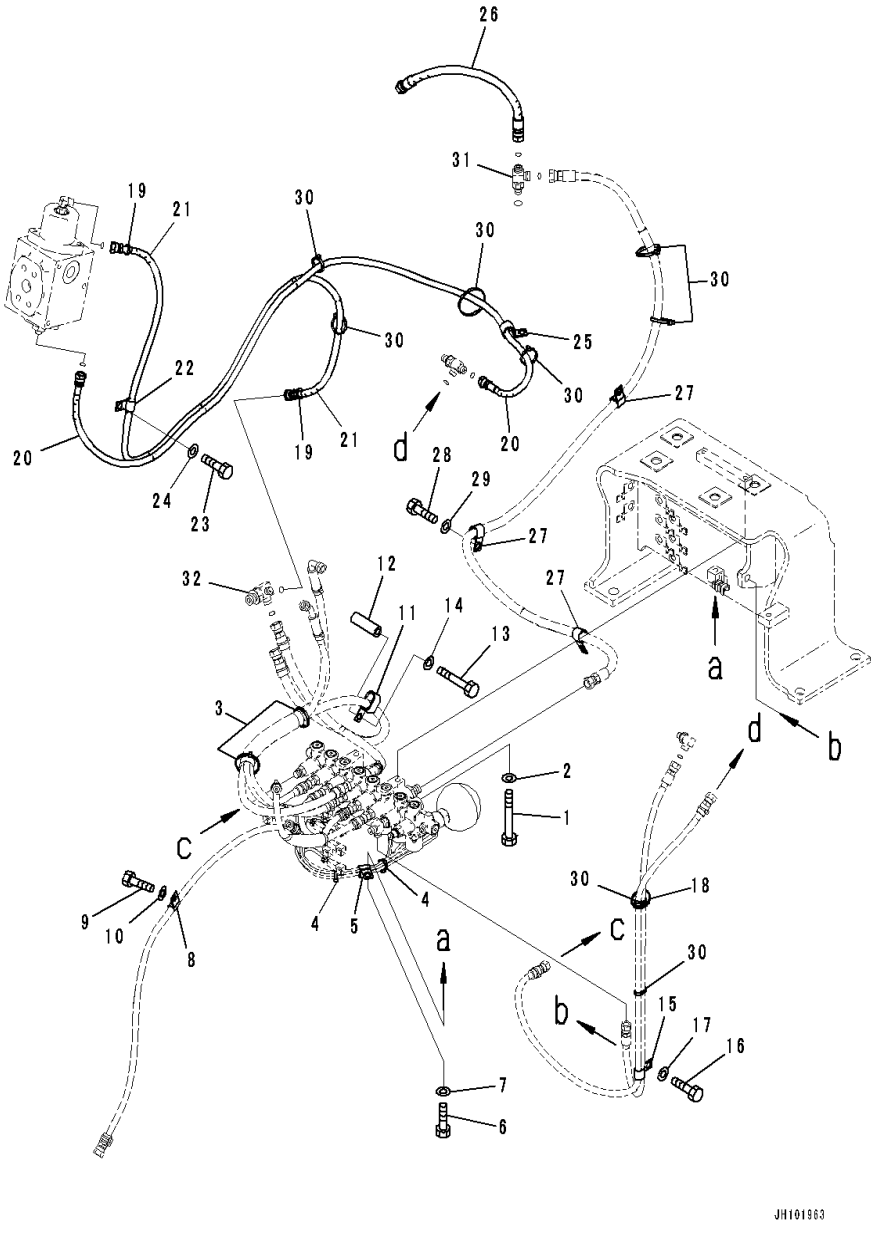

Index	Code	Part Number	Description	Qty	Serial Number
1		01010-81085	Bolt	2	C00001-
2		01643-31032	Washer	2	C00001-
3		08034-20536	Band	2	C00001-
4		08034-20536	Band	2	C00001-
5		04434-51712	Clip	1	C00001-
6		01010-81225	Bolt	1	C00001-
7		01643-31232	Washer	1	C00001-
8		04434-51010	Clip	1	C00001-
9		01010-81030	Bolt	1	C00001-
10		01643-31032	Washer	1	C00001-
11		04435-51712	Clip	1	C00001-
12		195-979-3570	Collar	1	C00001-
13		01010-81295	Bolt	1	C00001-
14		01643-31232	Washer	1	C00001-
15		04435-51012	Clip	1	C00001-
16		01010-81230	Bolt	1	C00001-
17		01643-31232	Washer	1	C00001-
18		08034-20536	Band	1	C00001-
19		20Y-62-22820	Band,Blue	2	C00001-
20		20Y-62-57820	Hose	1	C00001-
21		21W-X14-3531	Hose	1	C00001-
22		04434-51212	Clip	1	C00001-
23		01010-81225	Bolt	1	C00001-
24		01643-31232	Washer	1	C00001-
25		04434-52212	Clip	1	C00001-
26		02771-00304	Hose	1	C00001-
27		04434-51712	Clip	3	C00001-
28		01010-81225	Bolt	1	C00001-
29		01643-31232	Washer	1	C00001-
30		08034-20536	Band	8	C00001-
31		(21N-64-36680)	Tee(Hydraulic Pump Related Parts,1-Additional Actuator Piping,Accumulator)		
32		(20Y-62-45690)	Tee(Hydraulic Tank,Tank,1-Additional Actuator Piping, Accumulator)		

FIG. H1833-001001 Pressure Switch Block (Block)

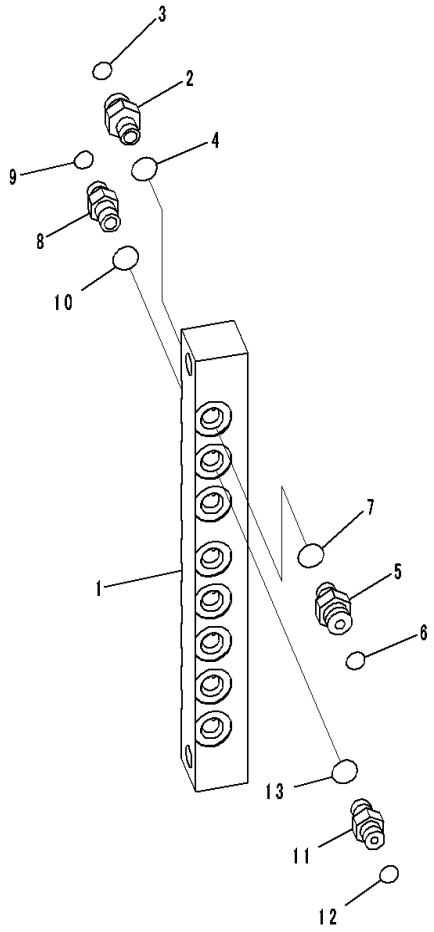

JH101568

Index	Code	Part Number	Description	Qty	Serial Number
1		2A5-62-12771	Block	1	C00001-
2		11Y-62-12520	Union	1	C00001-
3		02896-11009	O-ring	1	C00001-
4		07002-11423	O-ring	1	C00001-
5		11Y-62-12520	Union	1	C00001-
6		02896-11009	O-ring	1	C00001-
7		07002-11423	O-ring	1	C00001-
8		11Y-62-12130	Nipple	1	C00001-
9		02896-11008	O-ring	1	C00001-
10		07002-11423	O-ring	1	C00001-
11		11Y-62-12130	Nipple	1	C00001-
12		02896-11008	O-ring	1	C00001-
13		07002-11423	O-ring	1	C00001-

FIG. H1833-001002 Pressure Switch Block (Slow Return Valve, 1/2, For Swing R.H.)

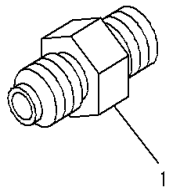

JY018287

Index	Code	Part Number	Description	Qty	Serial Number
		702-16-08190	Valve Assembly	1	C00001-
1	C1		• Union	1	C00001-
	C1		• Filter	2	C00001-
	C1		• Plate	1	C00001-
	C1		• Ball	1	C00001-
	C1		• Seat	1	C00001-

FIG. H1833-001003 Pressure Switch Block (Related Parts, 1/2)

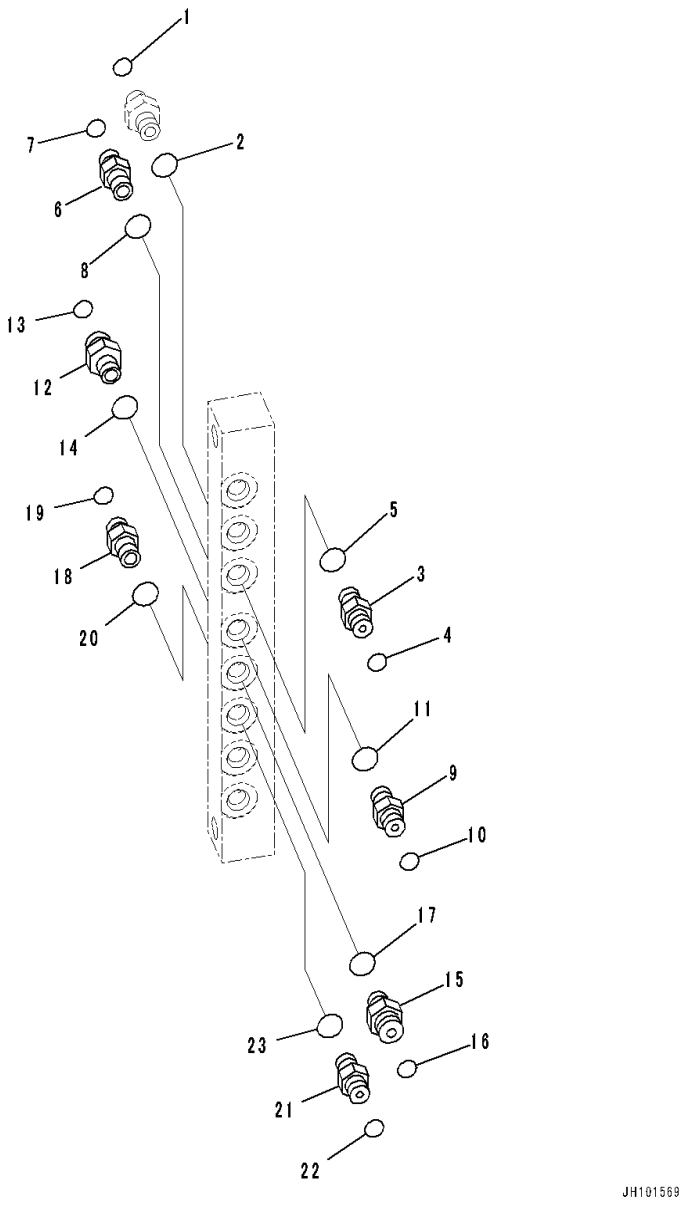

Index	Code	Part Number	Description	Qty	Serial Number
1		02896-11008	O-ring	1	C00001-
2		07002-11423	O-ring	1	C00001-
3		11Y-62-12130	Nipple	1	C00001-
4		02896-11008	O-ring	1	C00001-
5		07002-11423	O-ring	1	C00001-
6		11Y-62-12130	Nipple	1	C00001-
7		02896-11008	O-ring	1	C00001-
8		07002-11423	O-ring	1	C00001-
9		11Y-62-12130	Nipple	1	C00001-
10		02896-11008	O-ring	1	C00001-
11		07002-11423	O-ring	1	C00001-
12		11Y-62-12520	Union	1	C00001-
13		02896-11009	O-ring	1	C00001-
14		07002-11423	O-ring	1	C00001-
15		11Y-62-12520	Union	1	C00001-
16		02896-11009	O-ring	1	C00001-
17		07002-11423	O-ring	1	C00001-
18		11Y-62-12130	Nipple	1	C00001-
19		02896-11008	O-ring	1	C00001-
20		07002-11423	O-ring	1	C00001-
21		11Y-62-12130	Nipple	1	C00001-
22		02896-11008	O-ring	1	C00001-
23		07002-11423	O-ring	1	C00001-

FIG. H1833-001004 Pressure Switch Block (Slow Return Valve, 2/2, For Swing L.H.)

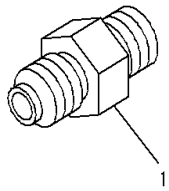

JY018287

Index	Code	Part Number	Description	Qty	Serial Number
		702-16-08190	Valve Assembly	1	C00001-
1	C1		• Union	1	C00001-
	C1		• Filter	2	C00001-
	C1		• Plate	1	C00001-
	C1		• Ball	1	C00001-
	C1		• Seat	1	C00001-

FIG. H1833-001005 Pressure Switch Block (Related Parts, 2/2)

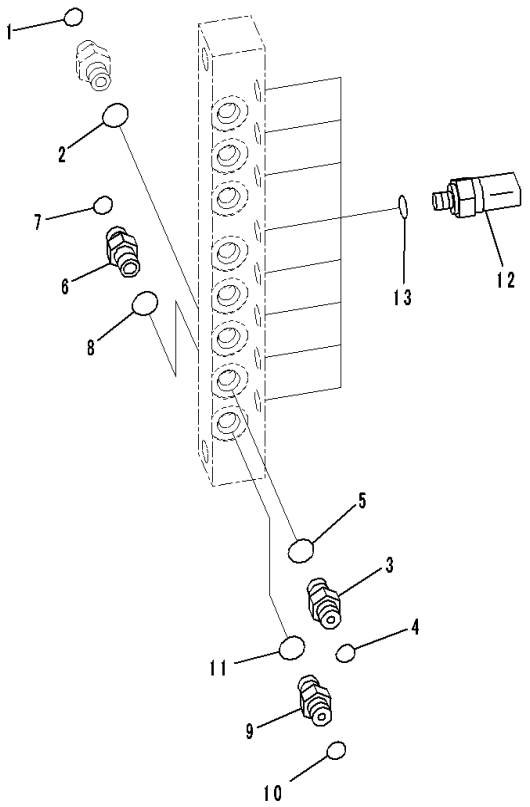

JH101570

Index	Code	Part Number	Description	Qty	Serial Number
1		02896-11008	O-ring	1	C00001-
2		07002-11423	O-ring	1	C00001-
3		11Y-62-12130	Nipple	1	C00001-
4		02896-11008	O-ring	1	C00001-
5		07002-11423	O-ring	1	C00001-
6		11Y-62-12130	Nipple	1	C00001-
7		02896-11008	O-ring	1	C00001-
8		07002-11423	O-ring	1	C00001-
9		11Y-62-12130	Nipple	1	C00001-
10		02896-11008	O-ring	1	C00001-
11		07002-11423	O-ring	1	C00001-
12		7861-93-1880	Sensor, Pressure	8	C00001-
13		07000-12011	• O-ring	1	C00001-

FIG. H1833-001006 Pressure Switch Block (Bracket)

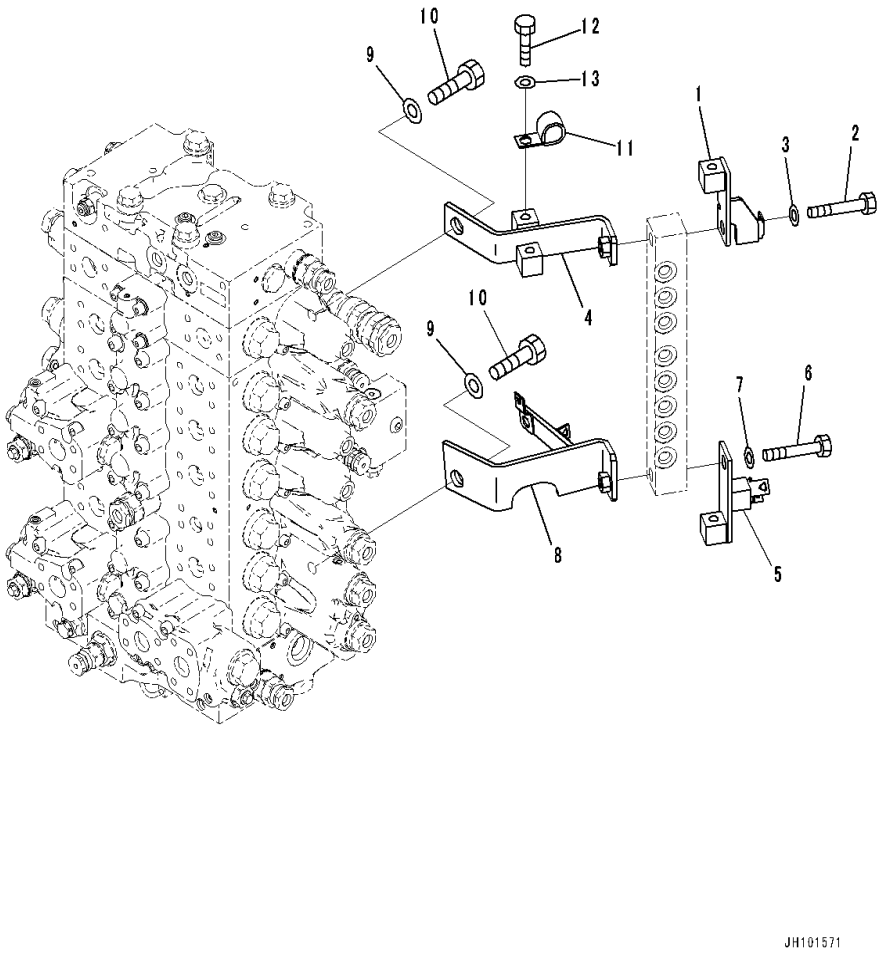

Index	Code	Part Number	Description	Qty	Serial Number
1		20Y-62-51412	Bracket	1	C00001-
2		01010-81265	Bolt	1	C00001-
3		01643-31232	Washer	1	C00001-
4		20Y-62-51392	Bracket	1	C00001-
5		20Y-62-57680	Bracket	1	C00001-
6		01010-81265	Bolt	1	C00001-
7		01643-31232	Washer	1	C00001-
8		20Y-62-56461	Bracket	1	C00001-
9		01643-31645	Washer	2	C00001-
10		01010-81635	Bolt	2	C00001-
11		04434-52112	Clip	1	C00001-
12		01010-81225	Bolt	1	C00001-
13		01643-31232	Washer	1	C00001-

FIG. H1840-001001 Proportional Pressure Control (PPC) Main Piping

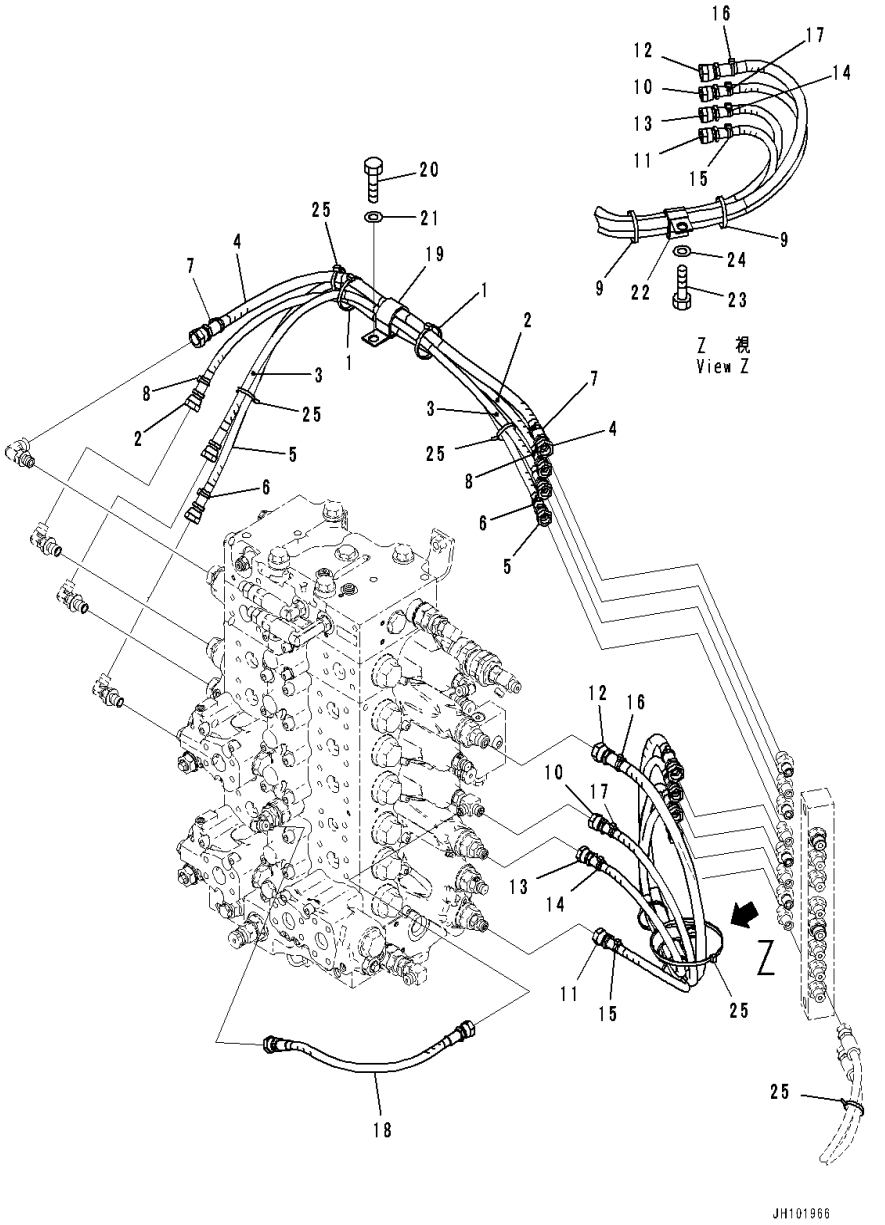

Index	Code	Part Number	Description	Qty	Serial Number
1		08034-20536	Band	2	C00001-
2		208-62-72160	Hose	1	C00001-
3		20Y-62-51160	Hose	1	C00001-
4		20Y-62-51870	Hose	1	C00001-
5		20Y-62-51890	Hose	1	C00001-
6		20Y-62-22820	Band,Blue	2	C00001-
7		20Y-62-22830	Band,White	2	C00001-
8		20Y-62-22860	Band,Brown	2	C00001-
9		08034-20536	Band	2	C00001-
10		208-62-72310	Hose	1	C00001-
11		208-62-72590	Hose	1	C00001-
12		02774-00311	Hose	1	C00001-
13		20Y-62-51890	Hose	1	C00001-
14		20Y-62-22790	Band,Red	2	C00001-
15		20Y-62-22810	Band,Yellow	2	C00001-
16		20Y-62-22840	Band,Black	2	C00001-
17		20Y-62-22850	Band,Green	2	C00001-
18		20Y-62-51910	Hose	1	C00001-
19		04434-53212	Clip	1	C00001-
20		01010-81225	Bolt	1	C00001-
21		01643-31232	Washer	1	C00001-
22		04434-52712	Clip	1	C00001-
23		01010-81225	Bolt	1	C00001-
24		01643-31232	Washer	1	C00001-
25		08034-20536	Band	5	C00001-

FRAME AND ITS RELATED PARTS

FIG. J1110-001001 Revolving Frame

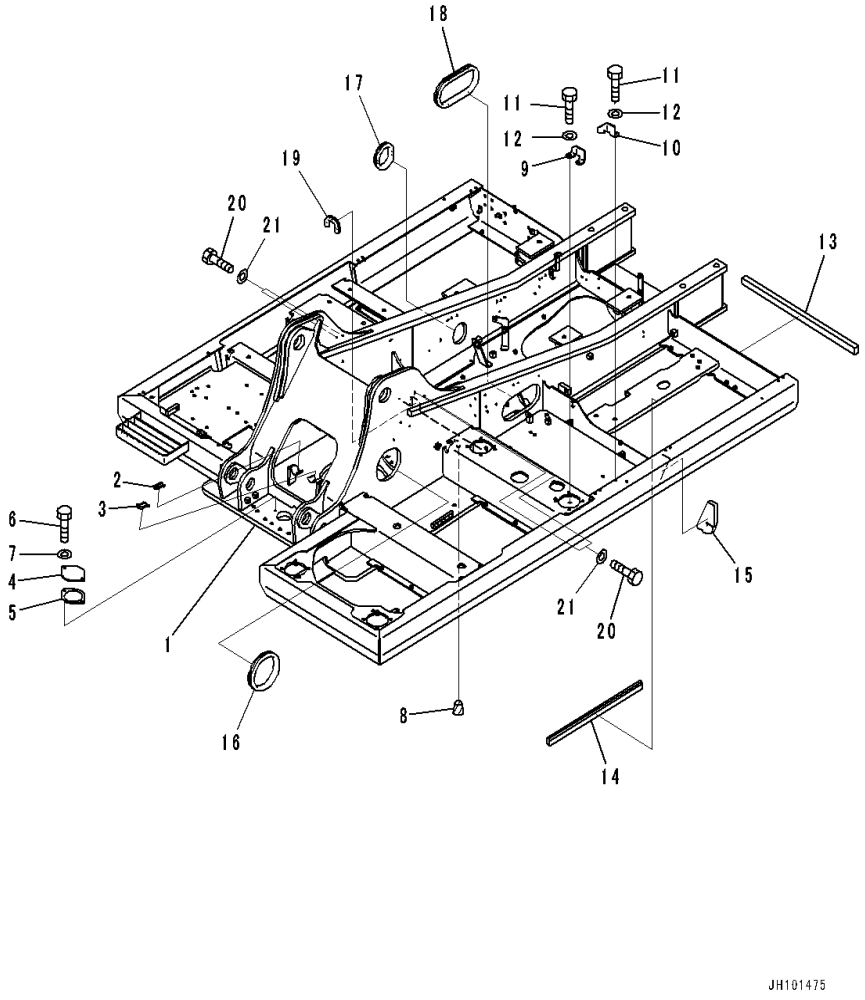

Index	Code	Part Number	Description	Qty	Serial Number
1		20Y-46-56202	Frame	1	C00001-
2		20Y-62-13760	• Seat	2	C00001-
3		205-62-73430	• Seat	2	C00001-
4		205-30-71181	Cover	1	C00001-
5		205-30-71191	Gasket	1	C00001-
6		01010-81230	Bolt	2	C00001-
7		175-54-34170	Washer	2	C00001-
8		20Y-46-41280	Plug	2	C00001-
9		205-54-36481	Bracket	1	C00001-
10		20Y-54-56970	Bracket	1	C00001-
11		01010-81230	Bolt	4	C00001-
12		01643-31232	Washer	4	C00001-
13		20Y-46-56130	Sheet	1	C00001-
14		20Y-46-56160	Sheet	1	C00001-
15		20Y-46-52141	Sheet	1	C00001-
16		20Y-46-41170	Grommet	1	C00001-
17		20Y-46-51180	Grommet	1	C00001-
18		20Y-46-51190	Grommet	1	C00001-
19		20Y-46-51140	Grommet	1	C00001-
20		01010-81230	Bolt	4	C00001-
21		01643-31232	Washer	4	C00001-

FIG. J1110-002001 Revolving Frame (With Deck Guard)

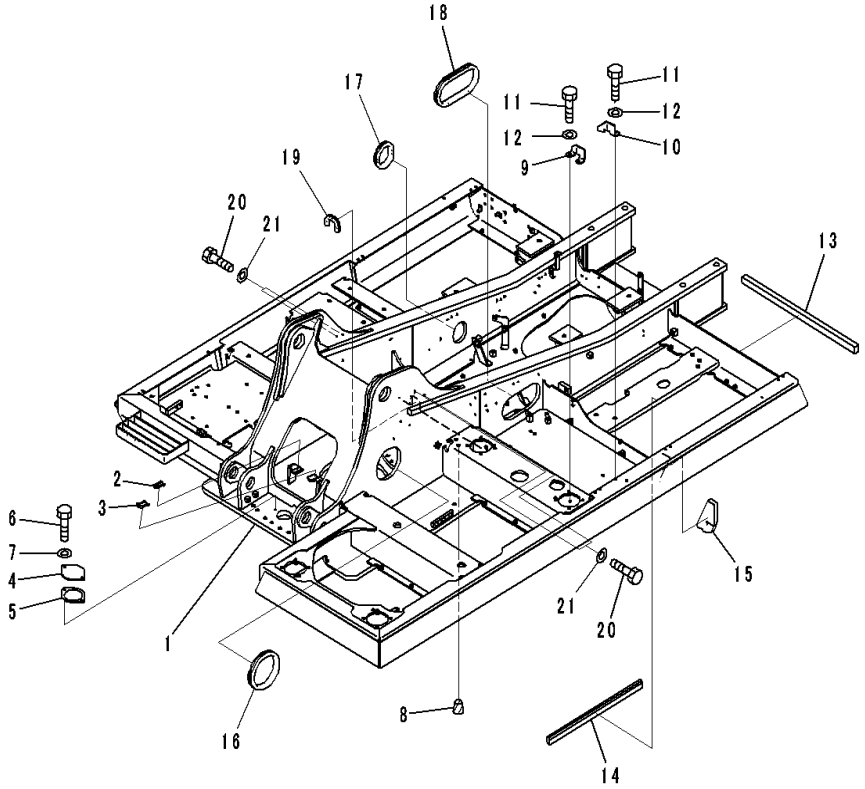

Index	Code	Part Number	Description	Qty	Serial Number
1		20Y-46-56502	Frame	1	C00001-
2		20Y-62-13760	• Seat	2	C00001-
3		205-62-73430	• Seat	2	C00001-
4		205-30-71181	Cover	1	C00001-
5		205-30-71191	Gasket	1	C00001-
6		01010-81230	Bolt	2	C00001-
7		175-54-34170	Washer	2	C00001-
8		20Y-46-41280	Plug	2	C00001-
9		205-54-36481	Bracket	1	C00001-
10		20Y-54-56970	Bracket	1	C00001-
11		01010-81230	Bolt	4	C00001-
12		01643-31232	Washer	4	C00001-
13		20Y-46-56130	Sheet	1	C00001-
14		20Y-46-56160	Sheet	1	C00001-
15		20Y-46-52141	Sheet	1	C00001-
16		20Y-46-41170	Grommet	1	C00001-
17		20Y-46-51180	Grommet	1	C00001-
18		20Y-46-51190	Grommet	1	C00001-
19		20Y-46-51140	Grommet	1	C00001-
20		01010-81230	Bolt	4	C00001-
21		01643-31232	Washer	4	C00001-

FIG. J1310-001001 Boom Foot Pin (100 Hours Lubrication Interval)

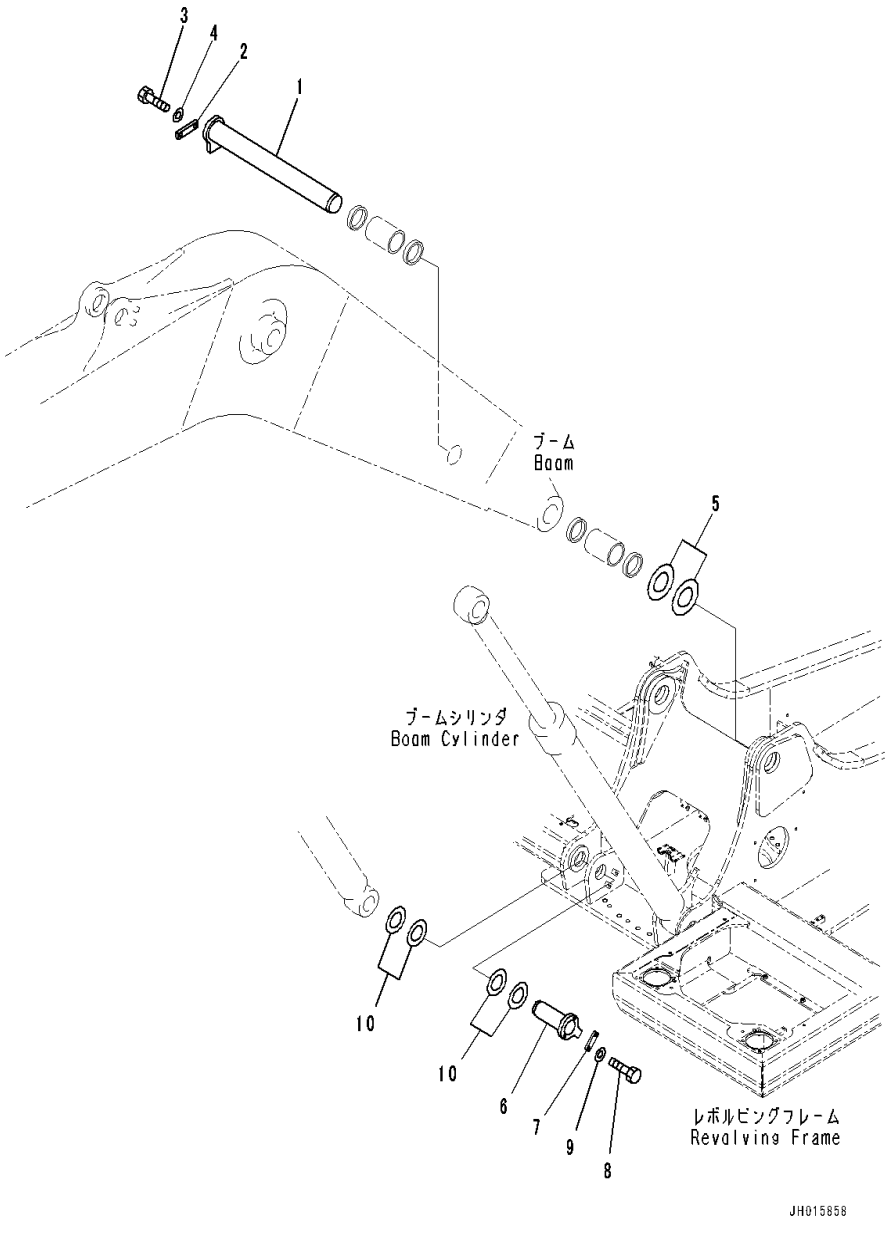

Index	Code	Part Number	Description	Qty	Serial Number
1		206-70-55160	Pin	1	C00001-
2		20Y-70-11190	Plate	1	C00001-
3		01010-81640	Bolt	2	C00001-
4		01643-31645	Washer	2	C00001-
5		20Y-70-11410	Spacer,T=0.8mm	1	C00001-
		20Y-70-11420	Spacer,T=1.5mm	4	C00001-
6		205-70-71210	Pin	2	C00001-
7		205-70-66580	Plate	2	C00001-
8		01010-81235	Bolt	4	C00001-
9		01643-31232	Washer	4	C00001-
10		20Y-70-11430	Spacer,T=0.8mm	2	C00001-
		20Y-70-11440	Spacer,T=1.5mm	6	C00001-

OPERATOR'S COMPARTMENT AND CONTROL SYSTEM

FIG. K0110-001001 Operator's Seat (Suspension Type, Hi Back, Fabric, Reclining, Tilt) (1/2)

Index	Code	Part Number	Description	Qty	Serial Number
		20Y-57-42100	Seat Assembly	1	C00001-
		AS195398	• Upper Assembly	1	C00001-
1		AS195400	• • Back Seat Cover Kit	1	C00001-
2		AS157332	• • Back Seat Foam Kit	1	C00001-
3		AS195370	• • Seat Cover Kit	1	C00001-
4		AS195372	• • Seat Foam Kit	1	C00001-
5		AS195401	• •Frame Kit	1	C00001-
6		AS197031	• Headrest Kit	1	C00001-
7		AS192161	• Cable Kit	1	C00001-
8		AS186833	• Handle Kit	1	C00001-
9		AS160122	• Spring Kit	1	C00001-
10		AS195376	• Latch Kit	1	C00001-
11		AS200179	• Riser Kit	1	C00001-
12		AS208634	• Suspension Kit	1	C00001-
13		AS198243	• Damper Kit	1	C00001-
14		AS166011	• Bearing Kit	1	C00001-
15		AS195389	• Up Stop and Bump Stop Kit	1	C00001-
16		AS195390	• Tether Belt Kit	1	C00001-
17		AS195391	• Suspension Cover Kit	1	C00001-
18		AS195392	• Weight Adjuster Kit	1	C00001-
19		AS165989	• Lever, Center Pivot Kit	1	C00001-
20		AS208635	• Adapter Kit	1	C00001-

FIG. K0110-001002 Operator's Seat (Suspension Type, Hi Back, Fabric, Reclining, Tilt) (2/2)

Index	Code	Part Number	Description	Qty	Serial Number
1		01252-80825	Bolt	4	C00001-

FIG. K0160-001001 Seat Belt (50mm, 2-Point Type, Rigid Type Operator's Seat)

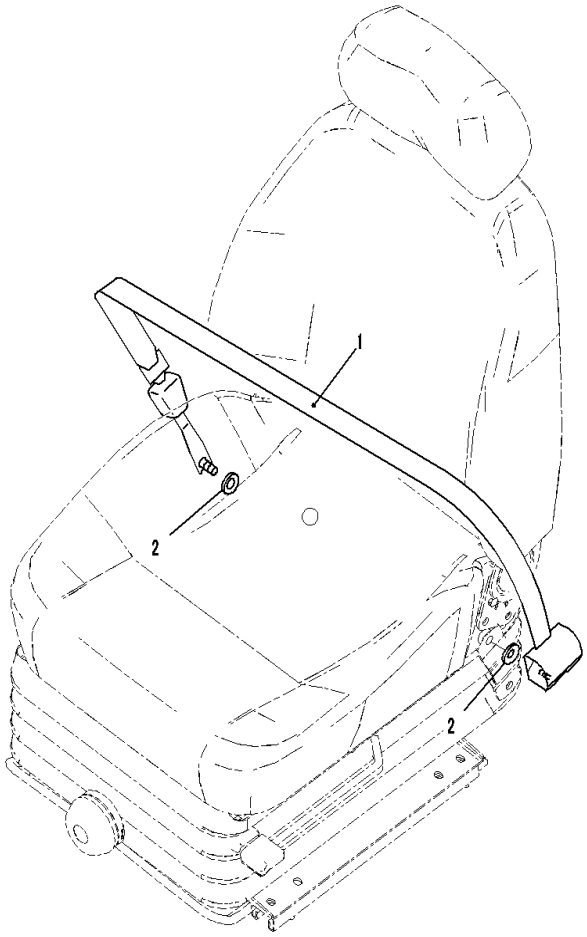

Index	Code	Part Number	Description	Qty	Serial Number
1		20Y-57-41910	Belt Kit	1	C00001-
2		01643-11232	Washer	2	C00001-

FIG. K0160-002001 Seat Belt (78mm, 2-Point Type, Non Cinching)

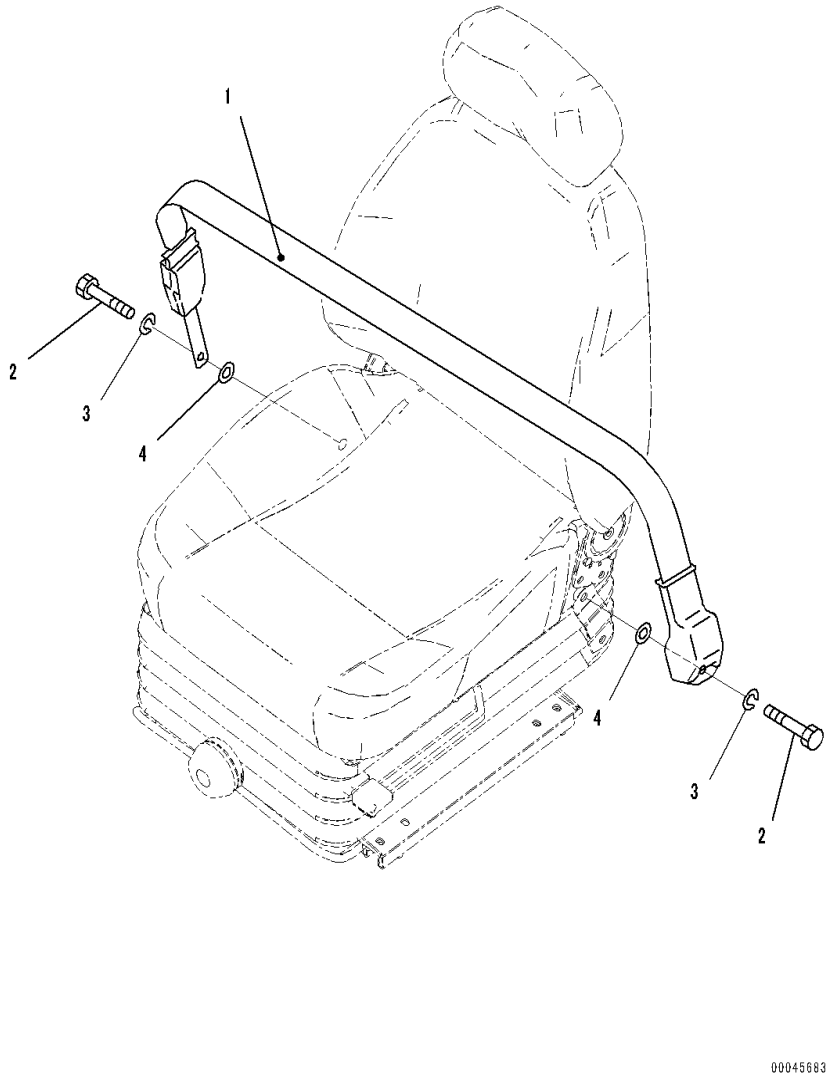

Index	Code	Part Number	Description	Qty	Serial Number
1		22B-57-11911	Belt	1	C00001-
2		02030-70751	• Bolt	2	C00001-
3		09409-00002	• Washer, Spring	2	C00001-
4		01643-11232	Washer	2	C00001-

FIG. K0220-001001 Top Guard, Level 2

Index	Code	Part Number	Description	Qty	Serial Number
1		20Y-954-C150	Guard, Top	1	C00001-
2		20Y-954-6241	Pipe	4	C00001-
3		01010-81280	Bolt	6	C00001-
4		01643-31232	Washer	6	C00001-
5		130-43-64260	Collar	6	C00001-
6		195-Z11-2970	Cap	6	C00001-
7		08037-02512	Grommet	1	C00001-
8		01010-D1220	Bolt	2	C00001-
9		01643-71232	Washer	2	C00001-
10		20Y-954-6250	Plate	1	C00001-
11		01023-20612	Screw	2	C00001-

FIG. K0230-001001 Front Guard, Half Guard

Index	Code	Part Number	Description	Qty	Serial Number
1		20Y-954-C110	Guard	1	C00001-
2		20Y-954-6192	Spacer	4	C00001-
3		01011-D1245	Bolt	4	C00001-
4		01643-71232	Washer	4	C00001-

FIG. K0230-002001 Front Guard, Full Guard LV2

Index	Code	Part Number	Description	Qty	Serial Number
1		20Y-954-C130	Guard	1	C00001-
2		130-43-64260	Collar	6	C00001-
3		01010-D1225	Bolt	6	C00001-
4		01643-71232	Washer	6	C00001-

FIG. K0310-001001 Floor Mat

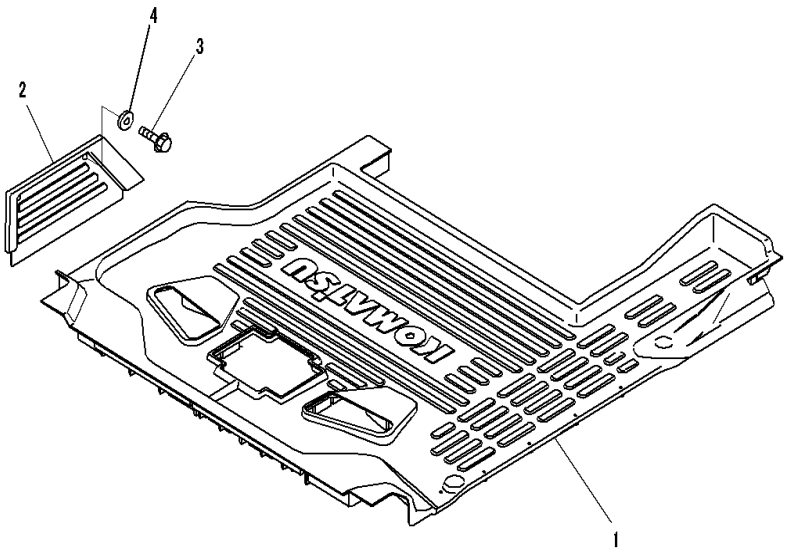

Index	Code	Part Number	Description	Qty	Serial Number
1		20Y-43-15751	Mat	1	C00001-
2		2A5-43-11261	Mat	1	C00001-
3		01435-40616	Bolt	2	C00001-
4		20Y-43-41290	Collar	2	C00001-

FIG. K0310-002001 Floor Mat (1-additional Actuator Piping, Accumulator)

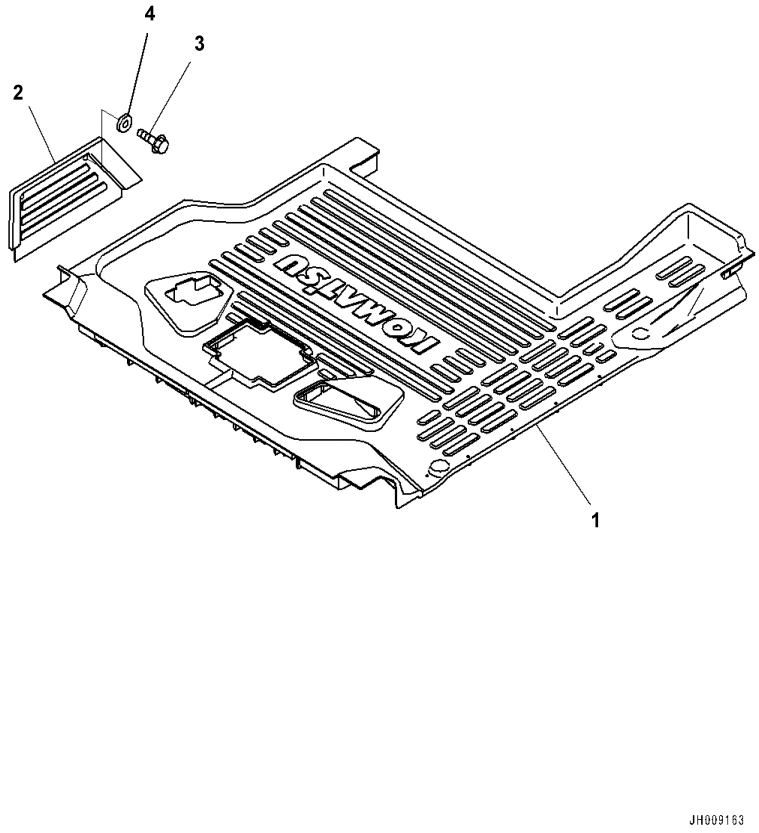

Index	Code	Part Number	Description	Qty	Serial Number
1		20Y-43-15761	Mat	1	C00001-
2		2A5-43-11261	Mat	1	C00001-
3		01435-40616	Bolt	2	C00001-
4		20Y-43-41290	Collar	2	C00001-

FIG. K0330-003001 Sun Roller Blind

Index	Code	Part Number	Description	Qty	Serial Number
1		20Y-54-K1060	Sun Roller Blind	1	C00001-
2		01224-40410	Screw	8	C00001-
3		01023-20616	Screw	2	C00001-
4		207-54-K3371	Spacer	2	C00001-

FIG. K0350-001001 Parts For Window Washer Tank

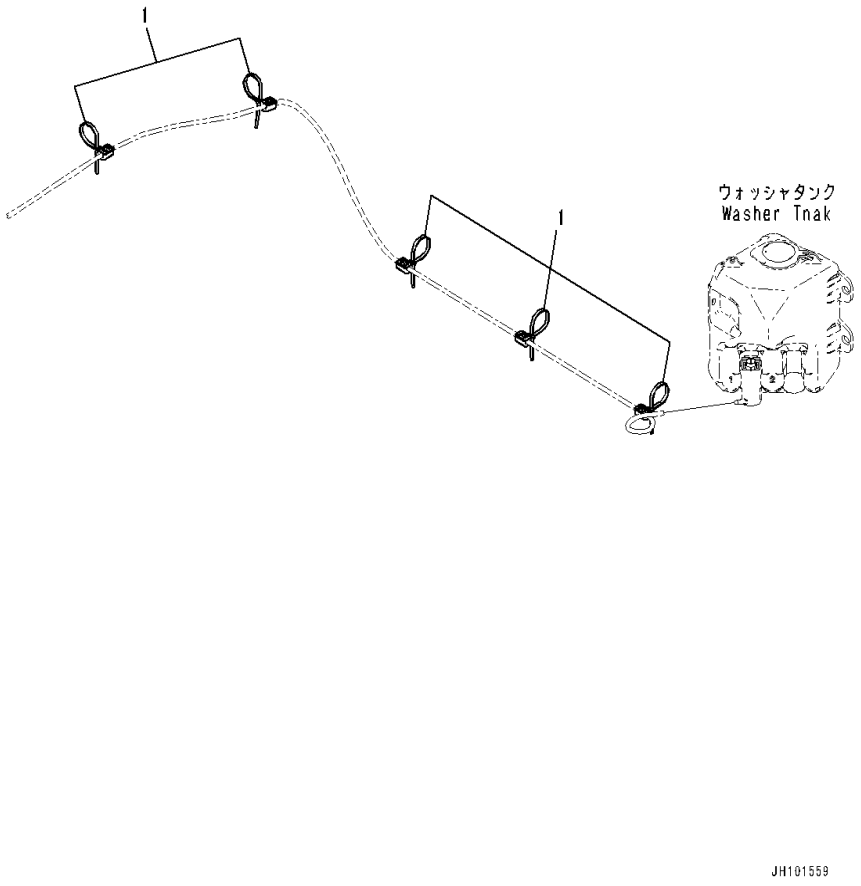

Index	Code	Part Number	Description	Qty	Serial Number
1		20Y-06-56260	Clip	5	C00001-

FIG. K0700-001001 Air Conditioner (Compressor)

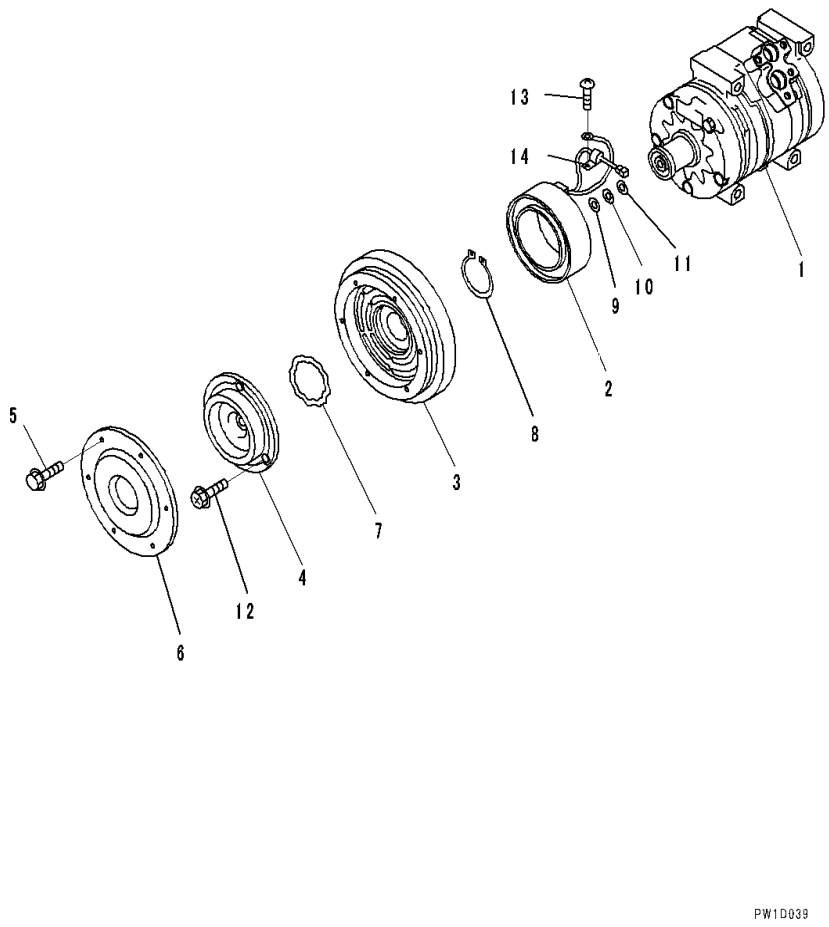

Index	Code	Part Number	Description	Qty	Serial Number
		20Y-810-1260	Compressor Assembly	1	C00001-
1		ND447220-4051	• Compressor Assembly	1	C00001-
		ND247300-0510	• Clutch Assembly, Magnetic	1	C00001-
2		ND047310-7240	• • Stator	1	C00001-
3	C1		• • Rotor	1	C00001-
4		ND047410-1570	• • Hub	1	C00001-
5		ND949047-2950	• • Bolt and Washer	6	C00001-
6		ND047372-0660	• • Dust Cover	1	C00001-
7		ND949070-1360	• Ring, Snap	1	C00001-
8		ND949070-1390	• Ring Assembly	1	C00001-
9		ND949013-7480	• Washer,0.1mm	1	C00001-
10		ND949013-7500	• Washer,0.3mm	1	C00001-
11		ND949013-7510	• Washer,0.5mm	1	C00001-
12		ND949048-0430	• Bolt	1	C00001-
13		ND91310-05081	• Screw	1	C00001-
14		ND146691-4470	• Clamp	1	C00001-

FIG. K0700-001002 Air Conditioner (Compressor Mounting)

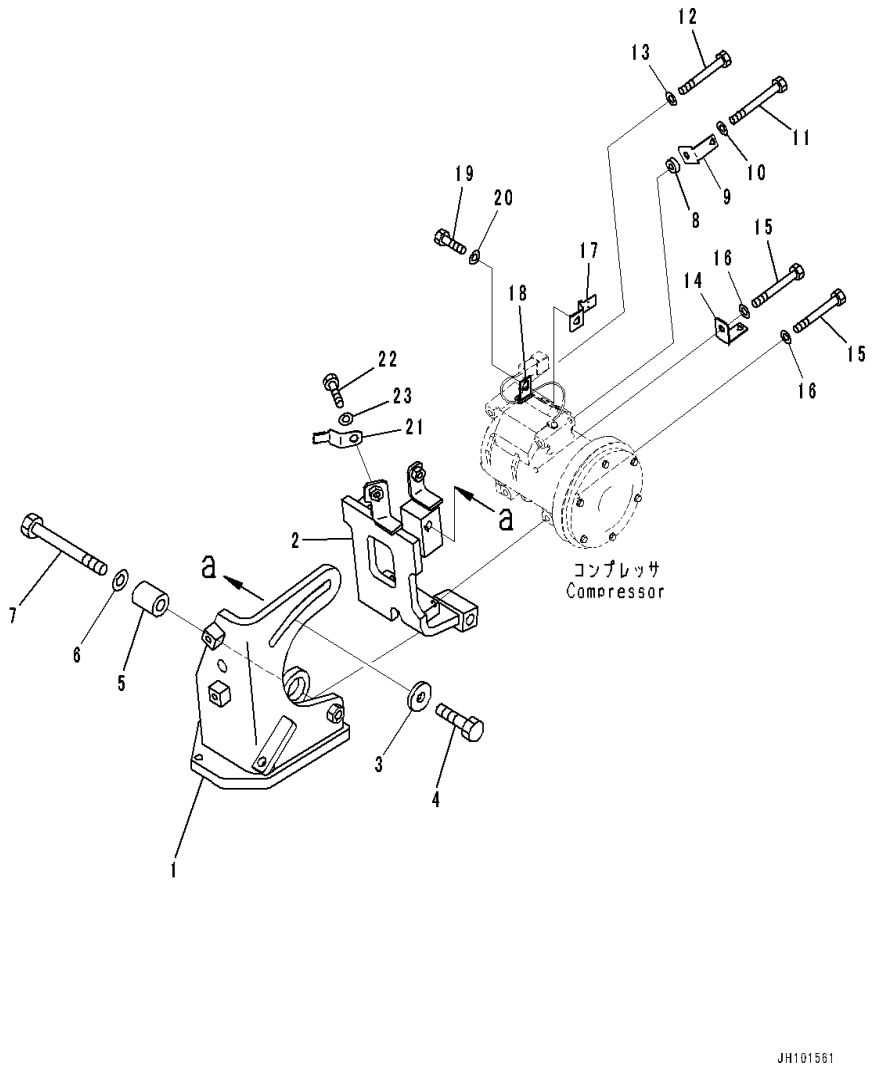

Index	Code	Part Number	Description	Qty	Serial Number
1		20Y-979-5731	Bracket	1	C00001-
2		20Y-979-5741	Bracket	1	C00001-
3		195-71-32220	Washer	1	C00001-
4		01010-81440	Bolt	1	C00001-
5		20Y-810-1180	Spacer	1	C00001-
6		01643-31445	Washer, Flat	1	C00001-
7		20Y-810-1190	Bolt	1	C00001-
8		22N-957-1420	Collar	1	C00001-
9		08057-14008	Clip	1	C00001-
10		01643-30823	Washer	1	C00001-
11		01010-80890	Bolt	1	C00001-
12		01010-80880	Bolt	1	C00001-
13		01643-30823	Washer	1	C00001-
14		08057-14008	Clip	1	C00001-
15		01010-80880	Bolt	2	C00001-
16		01643-30823	Washer	2	C00001-
17		08053-01510	Clip	1	C00001-
18		04434-50510	Clip	1	C00001-
19		01010-81025	Bolt	1	C00001-
20		01643-31032	Washer	1	C00001-
21		08193-20010	Clip	1	C00001-
22		01010-81020	Bolt	1	C00001-
23		01643-31032	Washer	1	C00001-

FIG. K0700-001003 Air Conditioner (Heater Piping Clamp)

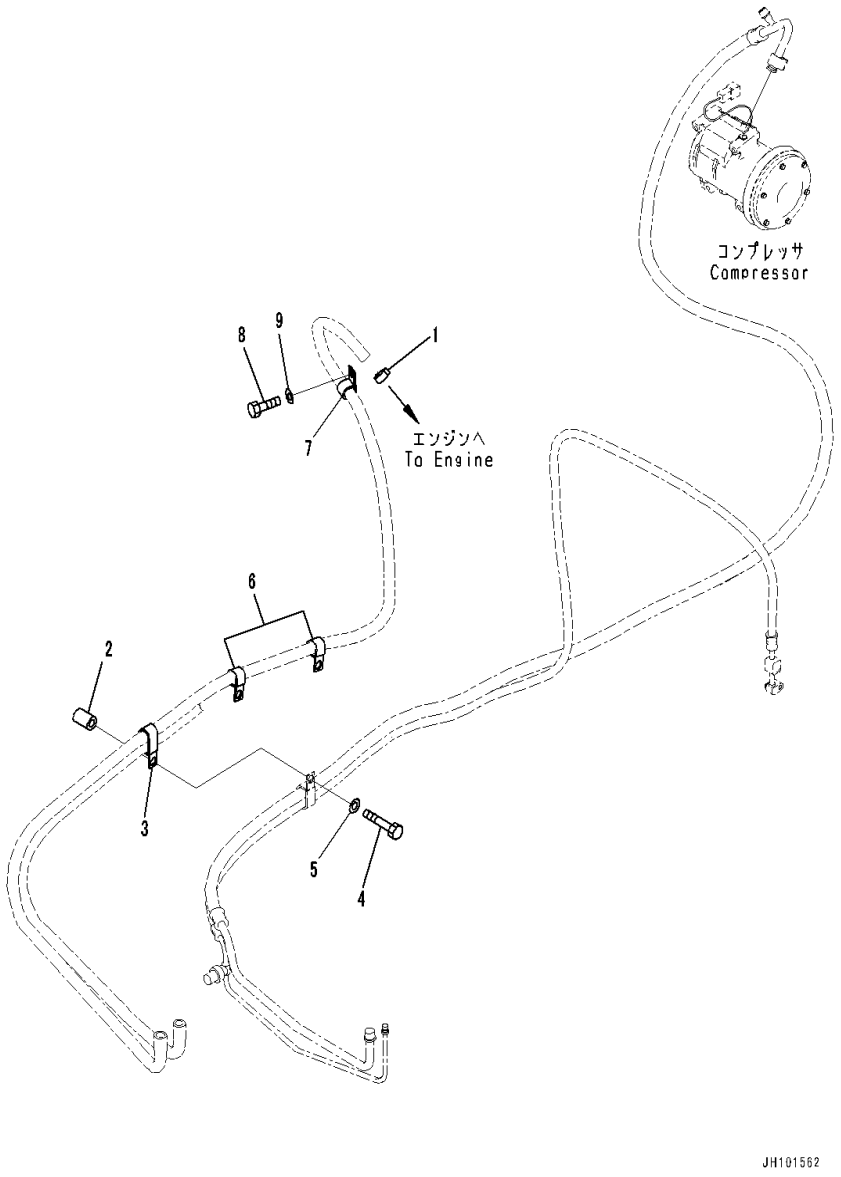

Index	Code	Part Number	Description	Qty	Serial Number
1		11Y-09-11160	Clip	1	C00001-
2		20Y-03-11220	Collar	1	C00001-
3		04435-52112	Clip	1	C00001-
4		01010-81265	Bolt	1	C00001-
5		01643-31232	Washer	1	C00001-
6		04434-52112	Clip	2	C00001-
7		04434-52112	Clip	1	C00001-
8		01010-81225	Bolt	1	C00001-
9		01643-31232	Washer	1	C00001-

FIG. K0700-001004 Air Conditioner (Cooler Piping)

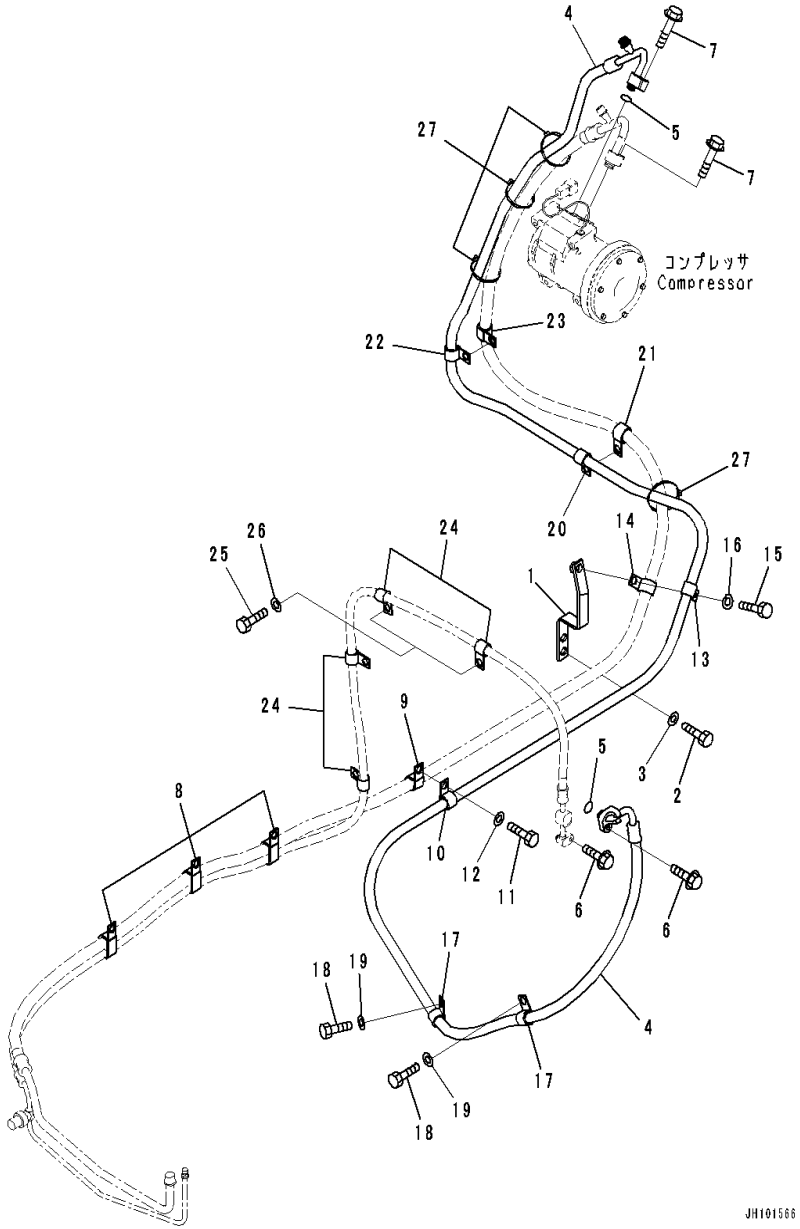

Index	Code	Part Number	Description	Qty	Serial Number
1		20Y-46-56140	Bracket	1	C00001-
2		01010-81225	Bolt	2	C00001-
3		01643-31232	Washer	2	C00001-
4		20Y-979-5671	Hose	1	C00001-
5		20Y-979-3140	• O-ring	2	C00001-
6		01435-00625	Bolt	2	C00001-
7		01435-00630	Bolt	2	C00001-
8		20Y-810-1170	Clip	3	C00001-
9		04434-52112	Clip	1	C00001-
10		04434-51912	Clip	1	C00001-
11		01010-81230	Bolt	1	C00001-
12		01643-31232	Washer	1	C00001-
13		04434-52112	Clip	1	C00001-
14		04434-51912	Clip	1	C00001-
15		01010-81225	Bolt	1	C00001-
16		01643-31232	Washer	1	C00001-
17		04434-51912	Clip	2	C00001-
18		01010-81225	Bolt	2	C00001-
19		01643-31232	Washer	2	C00001-
20		04434-51912	Clip	1	C00001-
21		04434-52112	Clip	1	C00001-
22		04434-51912	Clip	1	C00001-
23		04434-52112	Clip	1	C00001-
24		04434-51512	Clip	4	C00001-
25		01010-81225	Bolt	2	C00001-
26		01643-31232	Washer	2	C00001-
27		08034-20519	Band	4	C00001-

FIG. K0700-001005 Air Conditioner (V-Belt)

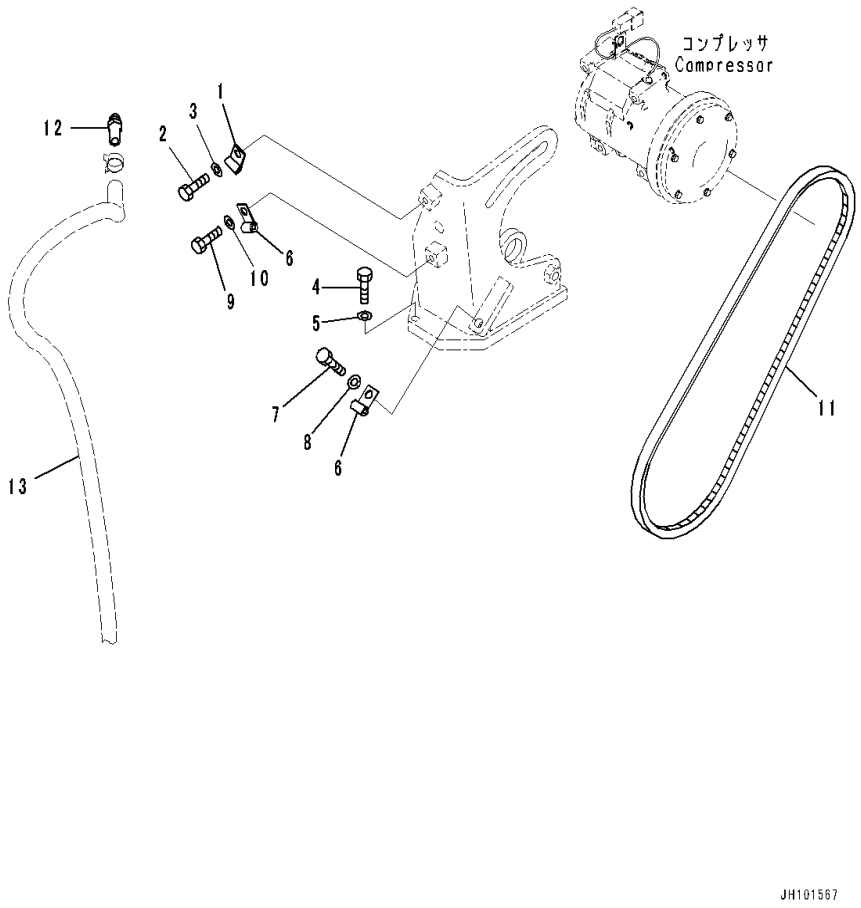

Index	Code	Part Number	Description	Qty	Serial Number
1		04434-50610	Clip	1	C00001-
2		01010-81020	Bolt	1	C00001-
3		01643-31032	Washer	1	C00001-
4		01010-81035	Bolt	3	C00001-
5		01643-31032	Washer	3	C00001-
6		04434-50610	Clip	2	C00001-
7		01010-81030	Bolt	1	C00001-
8		01643-31032	Washer	1	C00001-
9		01010-81020	Bolt	1	C00001-
10		01643-31032	Washer	1	C00001-
11		04120-21750	V-belt,1270mm	1	C00001-
12		20Y-810-1121	Nipple	1	C00001-
13		(20Y-979-5760)	Hose Assembly (Coolant Filter,Hose)		

FIG. K1110-001001 Cab (Cab Body and Window)

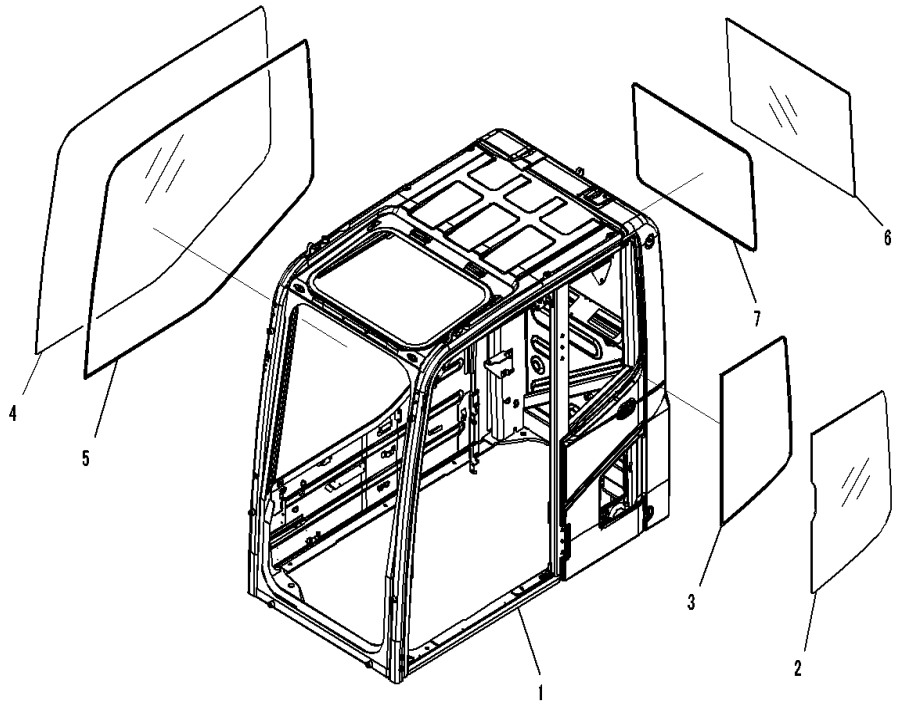

Index	Code	Part Number	Description	Qty	Serial Number
		20Y-53-01320	Cab Assembly	1	C00001-
1	C1		• Cab	1	C00001-
2		20Y-53-11241	• Glass	1	C00001-
3		20Y-53-11260	• Seal	1	C00001-
4		20Y-53-11841	• Glass	1	C00001-
5		20Y-53-11850	• Seal	1	C00001-
6		20Y-53-11271	• Glass	1	C00001-
7		20Y-53-11250	• Seal	1	C00001-

FIG. K1110-001002 Cab (Front Window)

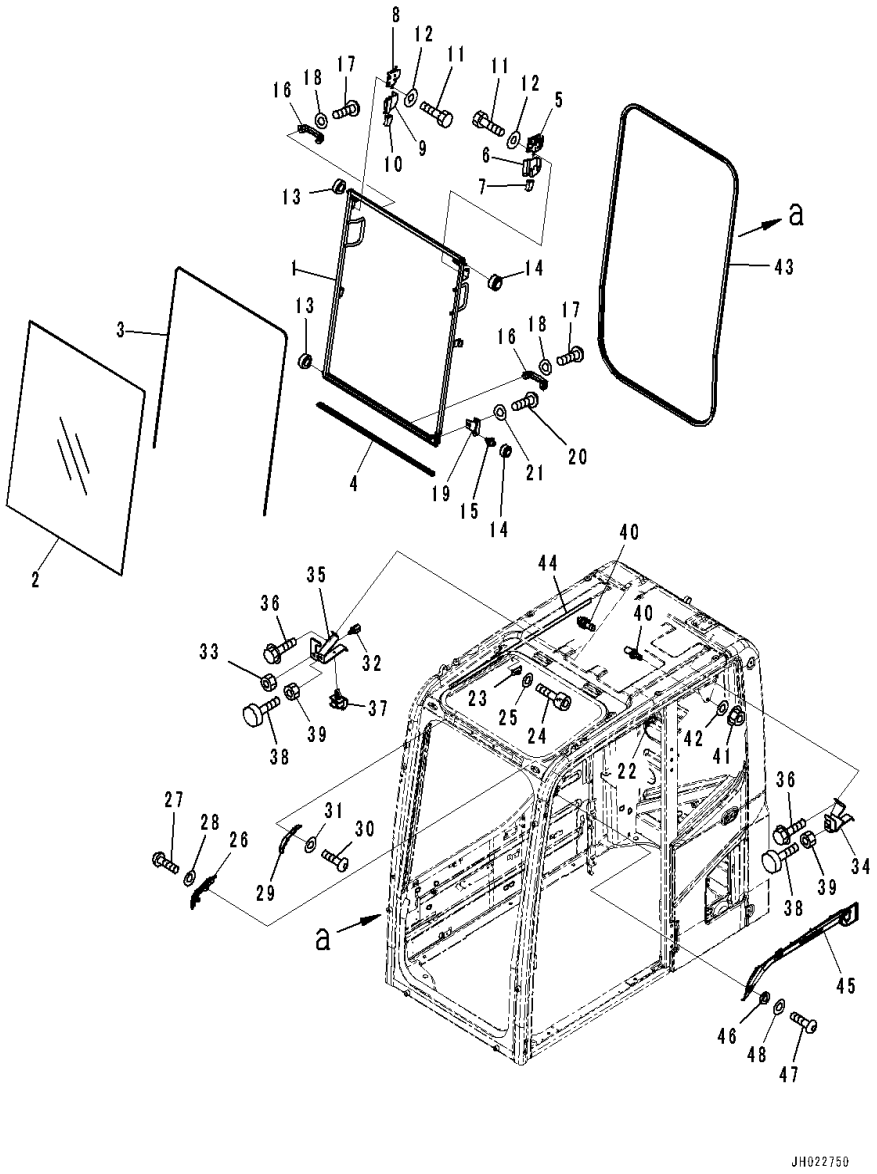

Index	Code	Part Number	Description	Qty	Serial Number
		20Y-53-01320	Cab Assembly	1	C00001-
		2A5-53-00062	• Window Assembly	1	C00001-
1	C1		• • Frame	1	C00001-
2		20Y-53-11520	• • Glass	1	C00001-
3		20Y-54-51531	• • Seal	1	C00001-
4		20Y-53-11551	• • Seal	1	C00001-
5		22B-54-15411	• • Lock Assembly	1	C00001-
6		22B-54-15440	• • Case	1	C00001-
7		22B-54-15470	• • Knob	1	C00001-
8		22B-54-15421	• • Lock Assembly	1	C00001-
9		22B-54-15450	• • Case	1	C00001-
10		22B-54-15480	• • Knob	1	C00001-
11		01010-D0816	• • Bolt	4	C00001-
12		418-54-35450	• • Washer	4	C00001-
13		20Y-54-52621	• • Roller	2	C00001-
14		20Y-54-52681	• • Roller	2	C00001-
15		20Y-53-12330	• • Pin	1	C00001-
16		20Y-54-14590	• • Handle	2	C00001-
17		01245-00616	• • Screw	4	C00001-
18		01643-70623	• • Washer	4	C00001-
19		20Y-53-12830	• • Bracket	1	C00001-
20		01245-00816	• • Screw	2	C00001-
21		01643-70823	• • Washer	2	C00001-
22		20Y-54-51670	• Stopper	1	C00001-
23		20Y-54-51680	• Stopper	1	C00001-
24		01252-80616	• Bolt	4	C00001-
25		01643-70623	• Washer	4	C00001-
26		20Y-53-11561	• Block Assembly	1	C00001-
27		01245-00816	• Screw	2	C00001-
28		01643-70823	• Washer	2	C00001-
29		20Y-53-11661	• Bracket	1	C00001-
30		01245-00816	• Screw	2	C00001-
31		01643-70823	• Washer	2	C00001-
32		21J-06-12440	• Switch	1	C00001-
33		01583-11811	• Nut	1	C00001-
34		20Y-53-11581	• Bracket	1	C00001-
35		2A5-53-12850	• Bracket	1	C00001-
36		01435-00612	• Bolt	4	C00001-
37		08059-00515	• Clip	1	C00001-
38		20Y-54-11611	• Stopper	2	C00001-

FIG. K1110-001002 Cab (Front Window)

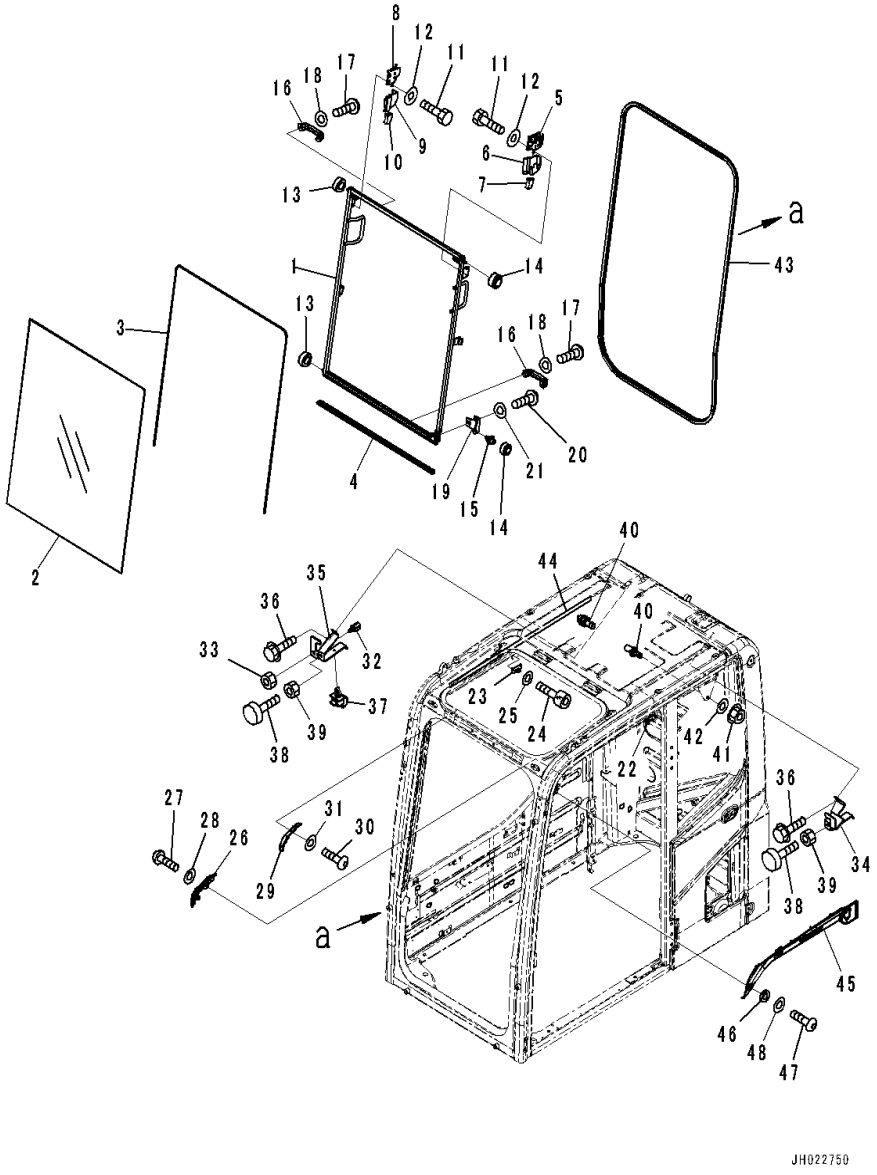

Index	Code	Part Number	Description	Qty	Serial Number
39		01580-11008	• Nut	2	C00001-
40		20Y-54-51621	• Striker	2	C00001-
41		01584-31008	• Nut	2	C00001-
42		01643-71032	• Washer	2	C00001-
43		20Y-53-11540	• Seal	1	C00001-
44		20Y-54-51420	• Seal	1	C00001-
45		20Y-53-12531	• Cover	1	C00001-
46		20Y-53-12310	• Collar	3	C00001-
47		01245-00616	• Screw	3	C00001-
48		01643-70623	• Washer	3	C00001-

FIG. K1110-001003 Cab (Front Lower Window)

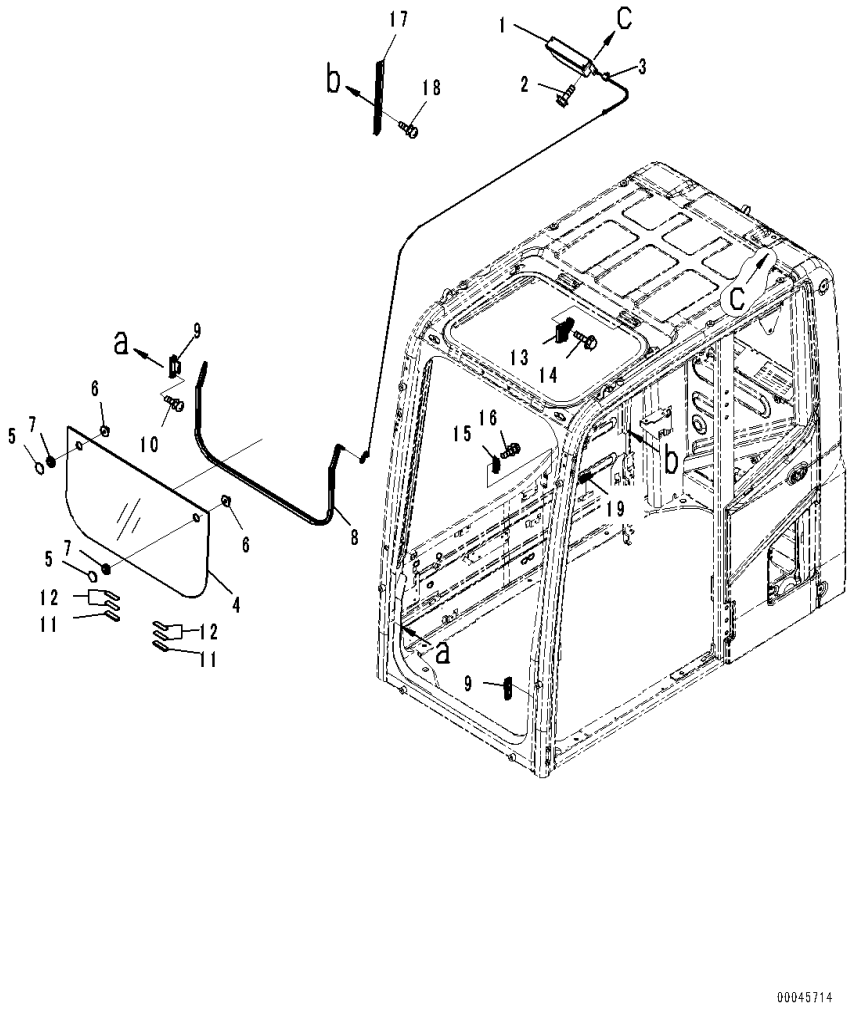

Index	Code	Part Number	Description	Qty	Serial Number
		20Y-53-01320	Cab Assembly	1	C00001-
1		20Y-53-11591	• Spring Assembly	1	C00001-
2		01435-00616	• Bolt	2	C00001-
3		20Y-54-51640	• Holder	1	C00001-
		20Y-53-11601	• Glass Assembly	1	C00001-
4		20Y-53-11611	• • Glass	1	C00001-
5		22B-54-15970	• • Retainer	2	C00001-
6		22B-54-15980	• • Knob	2	C00001-
7		08037-02512	• • Grommet	2	C00001-
8		2A5-53-12160	• Trim	1	C00001-
9		20Y-53-11940	• Seat	2	C00001-
10		01023-20612	• Screw	4	C00001-
11		2A5-53-11981	• Stopper	2	C00001-
12		20Y-53-12892	• Rubber	4	C00001-
13		22B-54-15841	• Lock Assembly	1	C00001-
14		01435-40616	• Bolt	2	C00001-
15		20Y-53-12611	• Seat	1	C00001-
16		01023-20616	• Screw	2	C00001-
17		20Y-53-12631	• Rail	1	C00001-
18		01023-20616	• Screw	2	C00001-
19		20U-54-25140	• Stopper	1	C00001-

FIG. K1110-001004 Cab (Roof Ventilator)

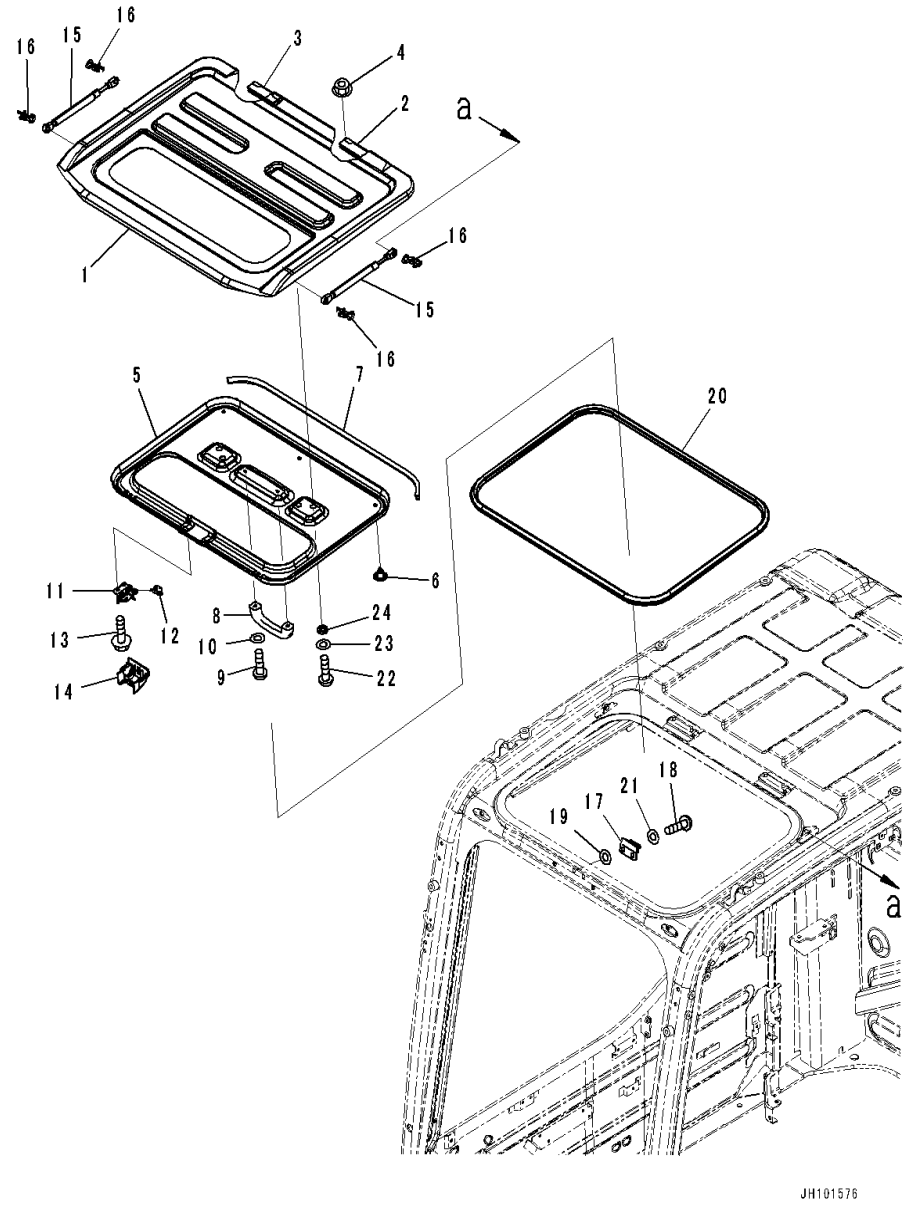

Index	Code	Part Number	Description	Qty	Serial Number
		20Y-53-01320	Cab Assembly	1	C00001-
1		20Y-53-56150	• Roof	1	C00001-
2		2A5-53-11K11	• • Hinge,Welded	1	C00001-
3		2A5-53-11K21	• • Hinge,Welded	1	C00001-
4		01584-30806	• Nut	4	C00001-
5		20Y-53-56310	• Cover	1	C00001-
6		09416-10200	• Rivet	5	C00001-
7		2A5-53-11471	• Seal	1	C00001-
8		20Y-54-14590	• Handle	1	C00001-
9		01245-00616	• Screw	2	C00001-
10		01643-70623	• Washer	2	C00001-
11		2A5-53-12970	• Lock Assembly	1	C00001-
12		20Y-53-11781	• Knob	1	C00001-
13		01435-40610	• Bolt	3	C00001-
14		20Y-53-11931	• Cover	1	C00001-
15		22B-54-38541	• Spring, Gas	2	C00001-
16		2A5-53-12530	• Pin, Snap	4	C00001-
17		20Y-53-11771	• Striker	1	C00001-
18		01245-00820	• Screw	2	C00001-
19		20Y-54-52651	• Spacer	2	C00001-
20		20Y-53-11861	• Seal	1	C00001-
21		01643-70823	• Washer	2	C00001-
22		01245-00620	• Screw	4	C00001-
23		01643-70623	• Washer	4	C00001-
24		20Y-54-52651	• Spacer	4	C00001-

FIG. K1110-001005 Cab (Door)

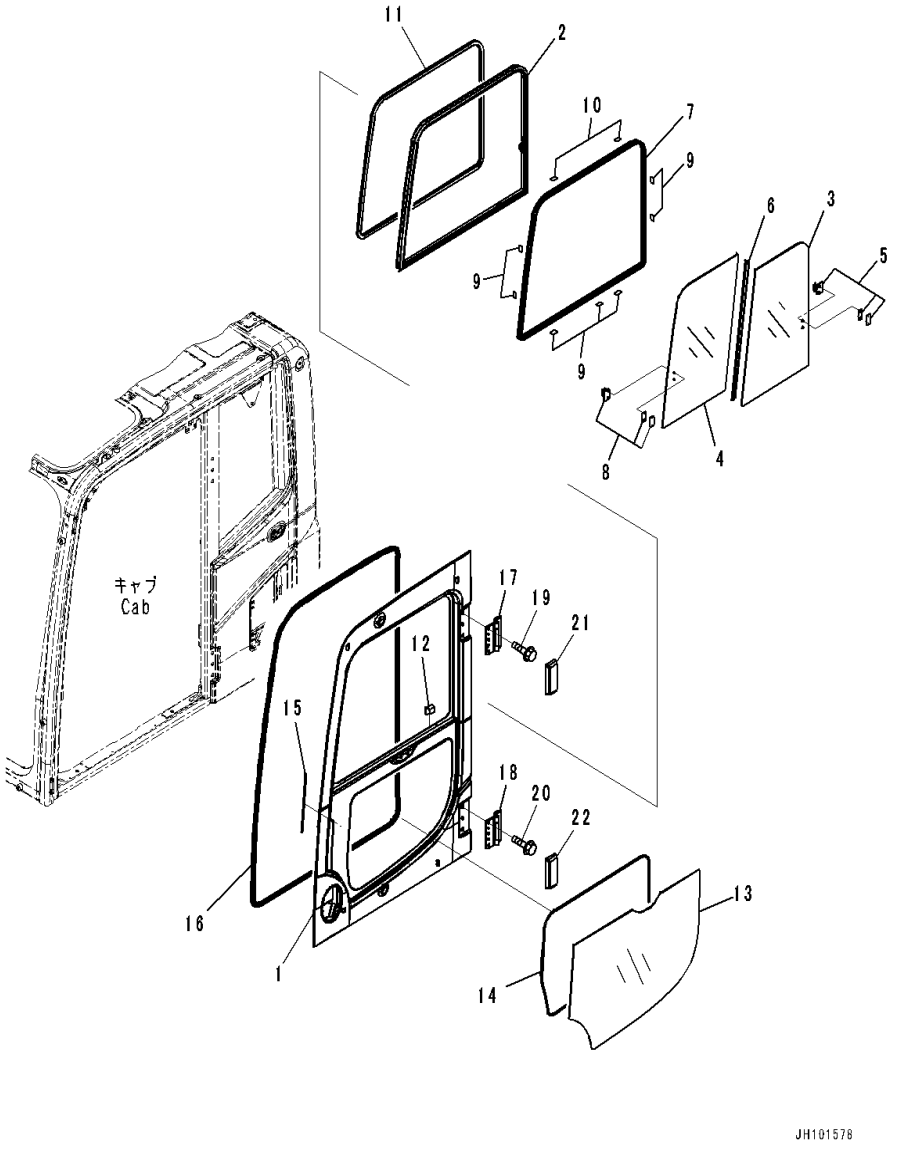

Index	Code	Part Number	Description	Qty	Serial Number
		20Y-53-01210	Cab Assembly	1	C00001-
		20Y-53-01220	• Door Assembly	1	C00001-
1	C1		• • Door	1	C00001-
		20Y-53-11402	• • Sash Assembly	1	C00001-
2	C1		• • • Frame	1	C00001-
3		20Y-53-12840	• • • Glass	1	C00001-
4		20Y-53-12850	• • • Glass	1	C00001-
5		20Y-54-52860	• • • Lock Assembly	1	C00001-
6		20Y-53-12870	• • • Seal	1	C00001-
7		20Y-53-12880	• • • Seal	1	C00001-
8		20Y-54-13322	• • • Lock Assembly	1	C00001-
9		20Y-53-12971	• • Seat	7	C00001-
10		20Y-54-13180	• • Seat	2	C00001-
11		20Y-53-11470	• • Trim	1	C00001-
12		20Y-53-13910	• • Cover	1	C00001-
13		20Y-53-11451	• • Glass	1	C00001-
14		20Y-53-11460	• • Seal	1	C00001-
15		20Y-53-13880	• • Seal	1	C00001-
16		20Y-53-11485	• • Weather Strip	1	C00001-
17		20Y-53-11332	• • Hinge	1	C00001-
18		20Y-53-11332	• • Hinge	1	C00001-
19		01435-01220	• • Bolt	6	C00001-
20		01435-01220	• • Bolt	6	C00001-
21		20Y-53-11411	• • Cover	1	C00001-
22		20Y-53-11411	• • Cover	1	C00001-

FIG. K1110-001006 Cab (Door Lock)

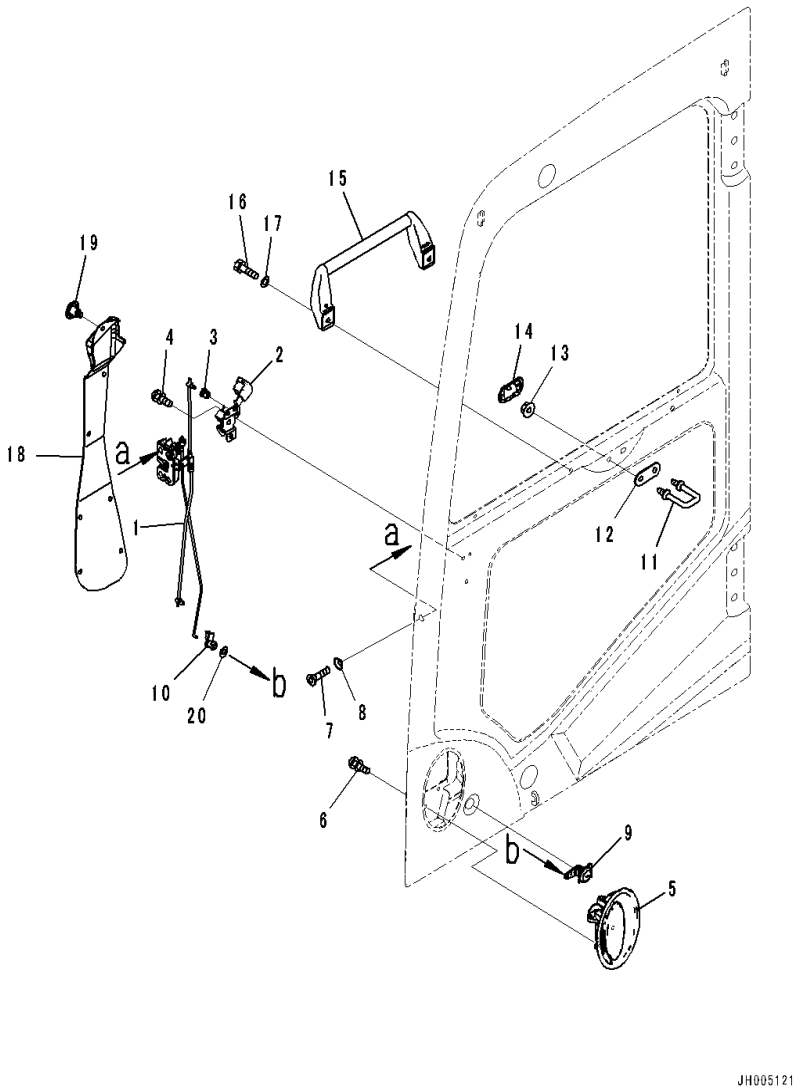

Index	Code	Part Number	Description	Qty	Serial Number
		20Y-53-01320	Cab Assembly	1	C00001-
		20Y-53-01220	• Door Assembly	1	C00001-
1		20Y-53-12201	• • Latch Assembly	1	C00001-
2		20Y-54-52300	• • Handle Assembly	1	C00001-
3		22B-54-16340	• • • Snap	1	C00001-
4		01023-10612	• • Screw	3	C00001-
5		20Y-53-12991	• • Handle	1	C00001-
6		01023-10612	• • Screw	3	C00001-
7		01240-00616	• • Screw	3	C00001-
8		195-Z11-1690	• • Washer	3	C00001-
9		2A5-53-12710	• • Lock Assembly	1	C00001-
10		22B-54-16330	• • Snap	1	C00001-
11		20Y-53-11320	• • Striker	1	C00001-
12		20Y-53-12940	• • Plate	1	C00001-
13		01584-01008	• • Nut	2	C00001-
14		20Y-53-12661	• • Cover	1	C00001-
15		2A5-53-13130	• • Grip	1	C00001-
16		01010-80820	• • Bolt	2	C00001-
17		01643-30823	• • Washer	2	C00001-
18		20Y-53-11441	• • Cover	1	C00001-
19		22B-54-16461	• • Rivet	7	C00001-
20		145-Z79-6270	• • Washer	1	C00001-

FIG. K1110-001007 Cab (Open Lock and Door Catch)

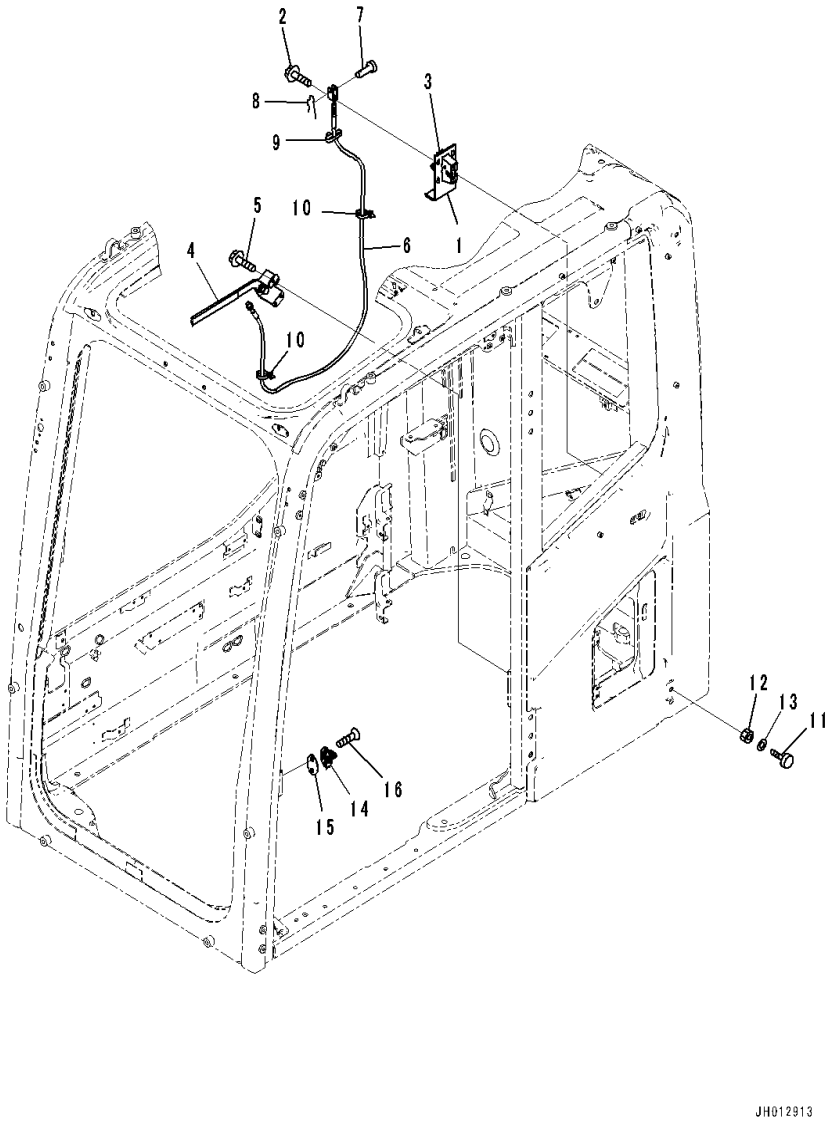

Index	Code	Part Number	Description	Qty	Serial Number
		20Y-53-01320	Cab Assembly	1	C00001-
1		20Y-53-11981	• Lock	1	C00001-
2		01435-00820	• Bolt	4	C00001-
3		20Y-53-12280	• Cover	1	C00001-
4		208-53-14540	• Lever Assembly	1	C00001-
5		01435-40616	• Bolt	3	C00001-
6		20Y-53-11990	• Cable	1	C00001-
7		04205-10520	• Pin	1	C00001-
8		04052-10530	• Pin	1	C00001-
9		08034-20519	• Band	1	C00001-
10		08059-00413	• Clip	2	C00001-
11		20Y-54-11611	• Stopper	2	C00001-
12		01580-11008	• Nut	2	C00001-
13		01643-31032	• Washer	2	C00001-
14		208-53-22810	• Striker	1	C00001-
15		20Y-53-11890	• Plate	1	C00001-
16		01240-01025	• Screw	2	C00001-

FIG. K1110-001008 Cab (Wiper and Room Lamp)

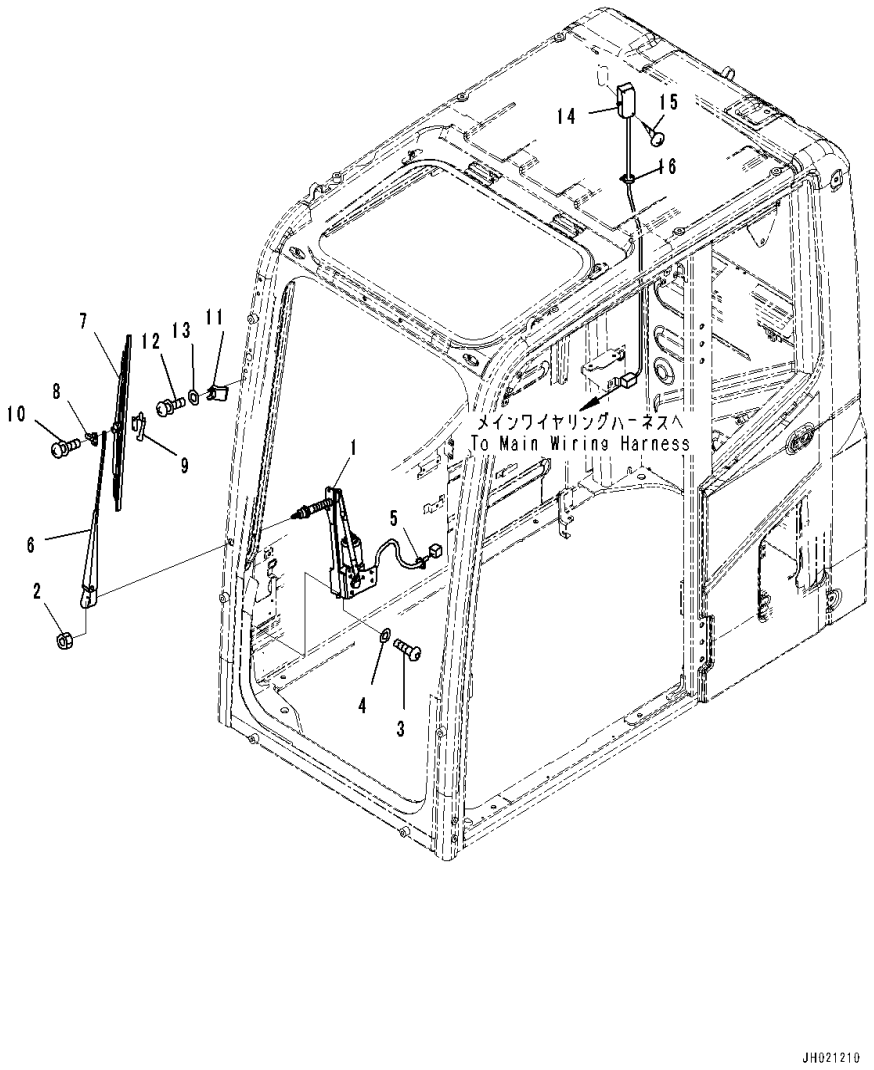

Index	Code	Part Number	Description	Qty	Serial Number
		20Y-53-01320	Cab Assembly	1	C00001-
1		2A5-53-12721	• Motor Assembly	1	C00001-
2		ND859918-1430	• • Nut	1	C00001-
3		01245-00616	• Screw	6	C00001-
4		01643-70623	• Washer	6	C00001-
5		08034-20519	• Band	1	C00001-
		20Y-54-52221	• Wiper Assembly	1	C00001-
6		20Y-54-52350	• • Arm	1	C00001-
7		20Y-54-39450	• • Wiper Blade	1	C00001-
8		20Y-54-39460	• • Slider	1	C00001-
9		20Y-54-39480	• • Plate	1	C00001-
10		ND949007-2350	• • Screw and Washer	2	C00001-
11		20Y-53-12233	• Stopper	1	C00001-
12		01245-00625	• Screw	2	C00001-
13		01643-70623	• Washer	2	C00001-
14		2A5-53-13540	• Lamp Assembly, Room	1	C00001-
		08116-02410	• • Bulb,10watt	1	C00001-
15		01370-00420	• Screw	2	C00001-
16		08034-20519	• Band	1	C00001-

FIG. K1110-001009 Cab (Inner Parts, Rubber Antenna)

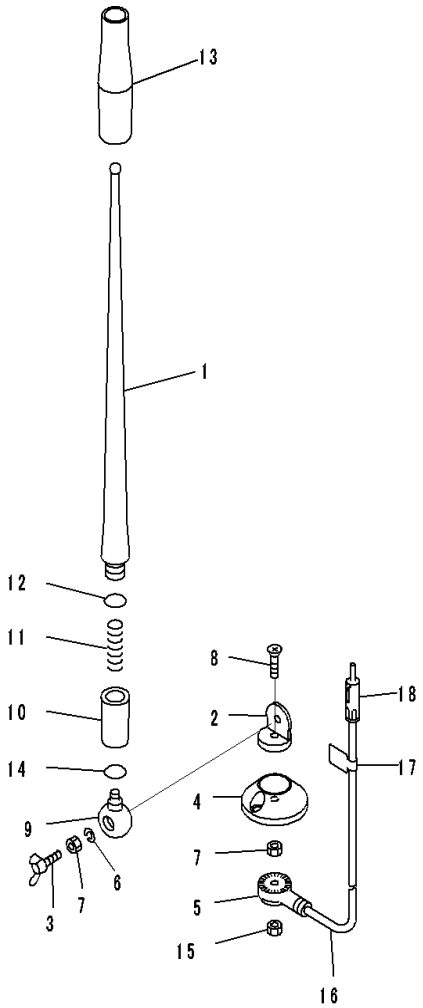

Index	Code	Part Number	Description	Qty	Serial Number
		20Y-53-01320	Cab Assembly	1	C00001-
		20Y-06-41990	• Antenna Assembly	1	C00001-
1		RFU419B-418-A	• • Rod	1	C00001-
2	C1		• • Holder	1	C00001-
3		RFU419B-418-D	• • Bolt, Wing	1	C00001-
4		RFU419B-418-E	• • Base	1	C00001-
5	C1		• • Holder	1	C00001-
6		RFU419B-418-B	• • Washer, Spring	1	C00001-
7		RFU419B-418-C	• • Nut	2	C00001-
8	C1		• • Screw	1	C00001-
9	C1		• • Holder	1	C00001-
10	C1		• • Holder Assembly	1	C00001-
11	C1		• • Spring	1	C00001-
12	C1		• • O-ring	1	C00001-
13	C1		• • Tube	1	C00001-
14	C1		• • O-ring	1	C00001-
15		RFU419B-418-C	• • Nut	1	C00001-
16		RFU419B-418-F	• • Cable	1	C00001-
17	C1		• • Plate	1	C00001-
18	C1		• • Plug	1	C00001-

FIG. K1110-001010 Cab (Speaker and Window Washer)

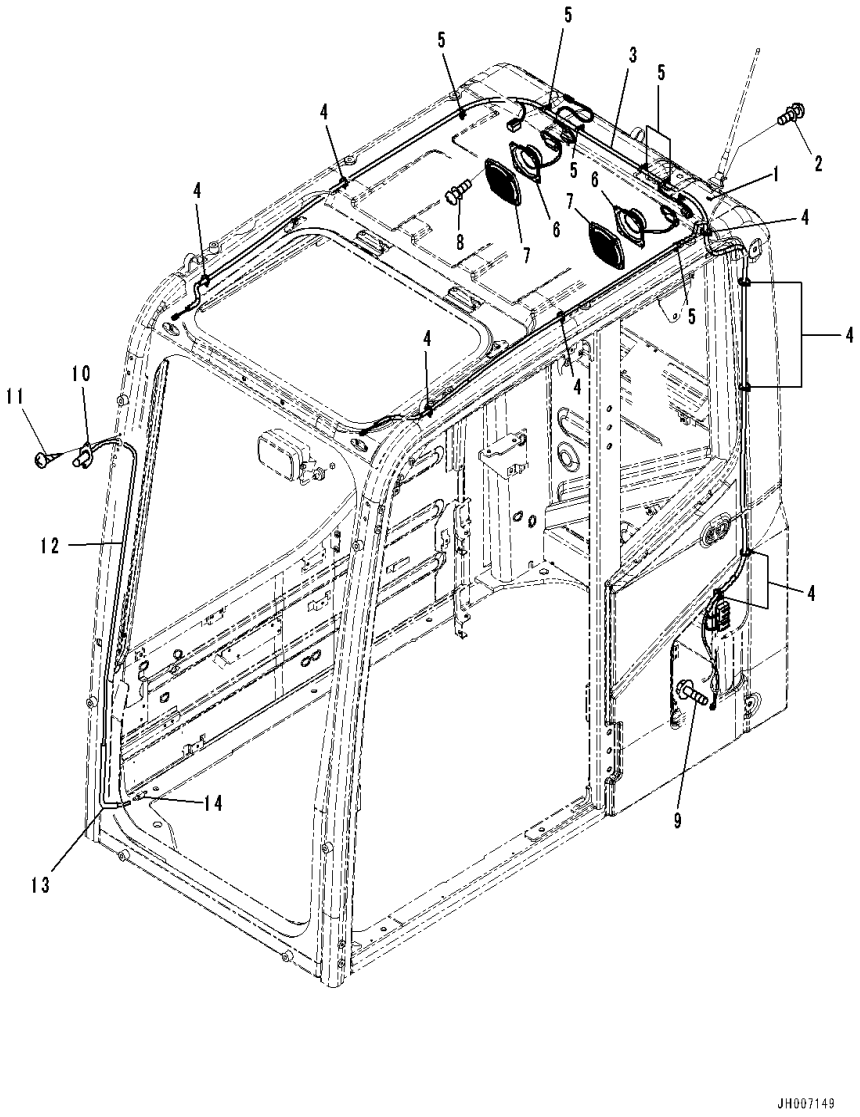

Index	Code	Part Number	Description	Qty	Serial Number
		20Y-53-01320	Cab Assembly	1	C00001-
1		01643-30623	• Washer	1	C00001-
2		01023-20412	• Screw	2	C00001-
3		2A5-06-12351	• Wiring Harness	1	C00001-
4		08034-20519	• Band	9	C00001-
5		08059-00515	• Clip	6	C00001-
6		20Y-06-42180	• Speaker	2	C00001-
7		20Y-53-13190	• Cover	2	C00001-
8		01023-20416	• Screw	8	C00001-
9		01435-40812	• Bolt	1	C00001-
10		20Y-54-39511	• Nozzle	1	C00001-
11		01023-70412	• Screw	2	C00001-
12		2A5-53-12920	• Hose	1	C00001-
13		08017-A0702	• Conduit	1	C00001-
14		(17A-Z11-4610)	Valve(Cab,Floor,Window Washer Hose)		

FIG. K1110-001011 Cab (Roof Cover, Hanger, Drink Holder and Air Intake)

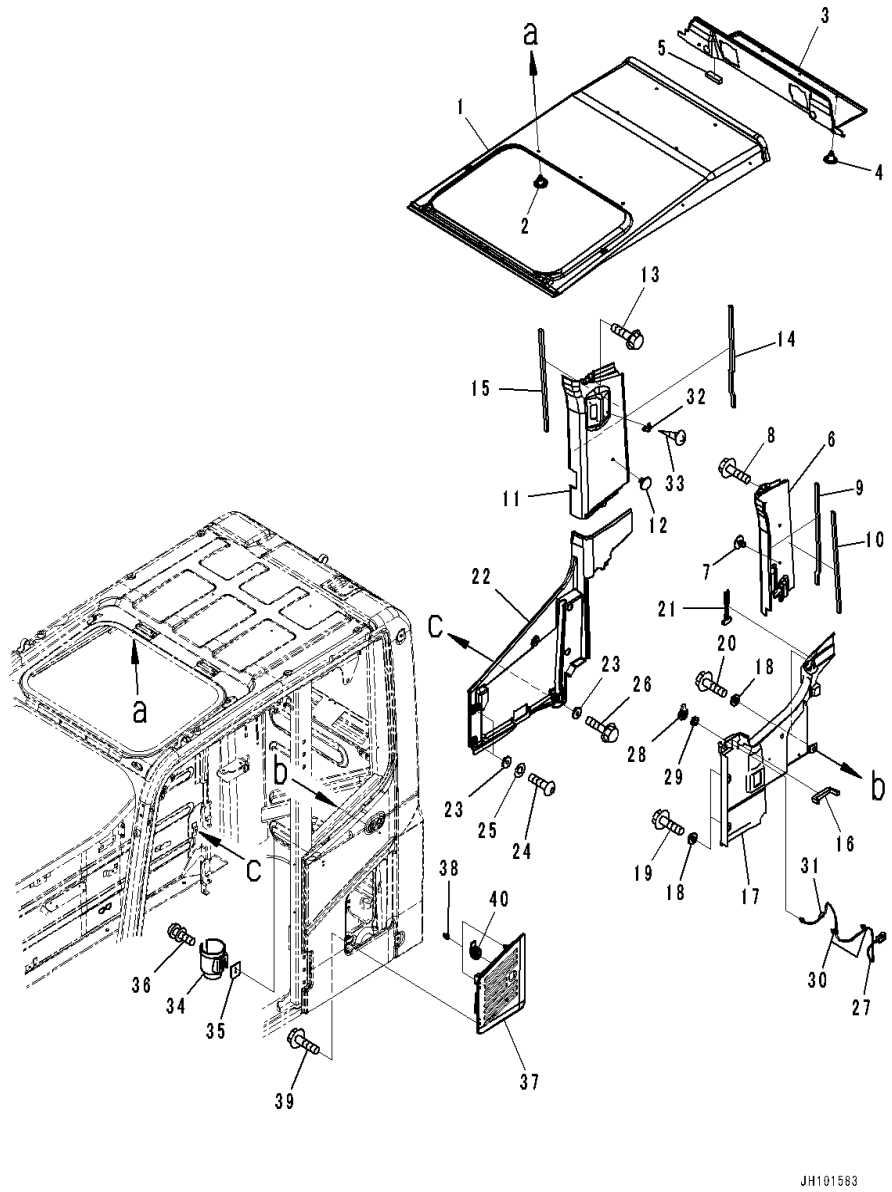

Index	Code	Part Number	Description	Qty	Serial Number
		20Y-53-01320	Cab Assembly	1	C00001-
1		2A5-53-12561	• Cover	1	C00001-
2		09416-10200	• Rivet	15	C00001-
3		20Y-53-12421	• Cover	1	C00001-
4		09416-10200	• Rivet	3	C00001-
5		20Y-53-13870	• Seal	1	C00001-
6		20Y-53-12431	• Cover	1	C00001-
7		208-53-13270	• Rivet	2	C00001-
8		01435-00612	• Bolt	1	C00001-
9		20Y-53-12710	• Seal	1	C00001-
10		20Y-53-15870	• Seal Assembly	1	C00001-
11		20Y-53-12442	• Cover	1	C00001-
12		09416-10200	• Rivet	1	C00001-
13		01435-00612	• Bolt	1	C00001-
14		20Y-53-12710	• Seal	1	C00001-
15		20Y-53-15870	• Seal Assembly	1	C00001-
16		20Y-53-12552	• Seal	1	C00001-
17		2A5-53-11291	• Cover	1	C00001-
18		20Y-53-12310	• Collar	4	C00001-
19		01435-80616	• Bolt	2	C00001-
20		01435-00612	• Bolt	2	C00001-
21		22B-54-17380	• Hammer	1	C00001-
22		20Y-53-12472	• Cover	1	C00001-
23		20Y-53-12310	• Collar	5	C00001-
24		01245-00616	• Screw	3	C00001-
25		01643-70623	• Washer	3	C00001-
26		01435-00612	• Bolt	2	C00001-
27		2A5-06-11940	• Cable	1	C00001-
28		09415-00706	• Cap	1	C00001-
29		2A5-53-12580	• Nut	1	C00001-
30		08059-00515	• Clip	2	C00001-
31		08051-00801	• Clip	1	C00001-
32		205-54-51250	• Hanger	1	C00001-
33		01370-30416	• Screw	2	C00001-
34		208-53-12991	• Holder	1	C00001-
35		208-53-12980	• Plate	1	C00001-
36		01023-20616	• Screw	2	C00001-
37		20Y-53-15470	• Cover	1	C00001-
38		20Y-54-52791	• Stopper	2	C00001-
39		01435-40610	• Bolt	4	C00001-

FIG. K1110-001011 Cab (Roof Cover, Hanger, Drink Holder and Air Intake)

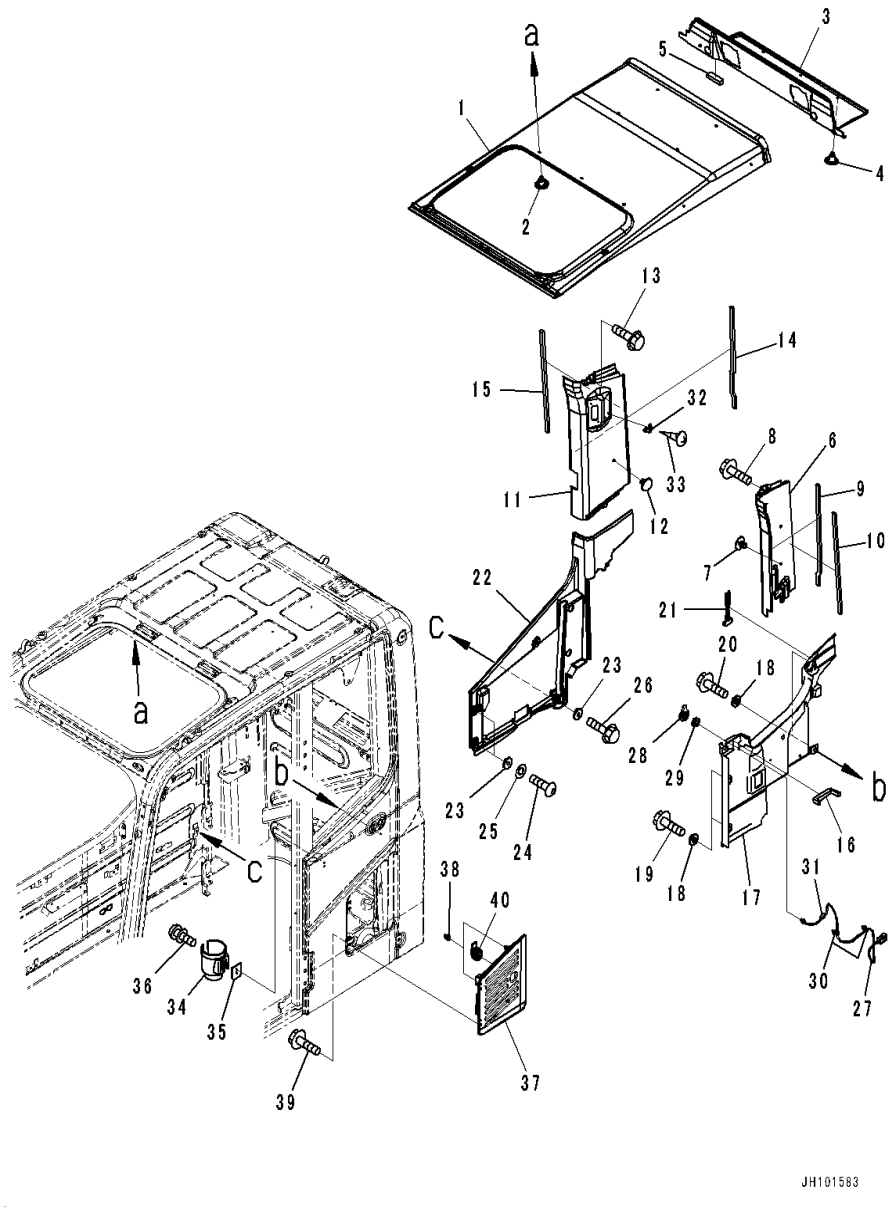

Index	Code	Part Number	Description	Qty	Serial Number
40		20Y-53-11761	• Lock Assembly	1	C00001-

FIG. K1110-001012 Cab (Grip)

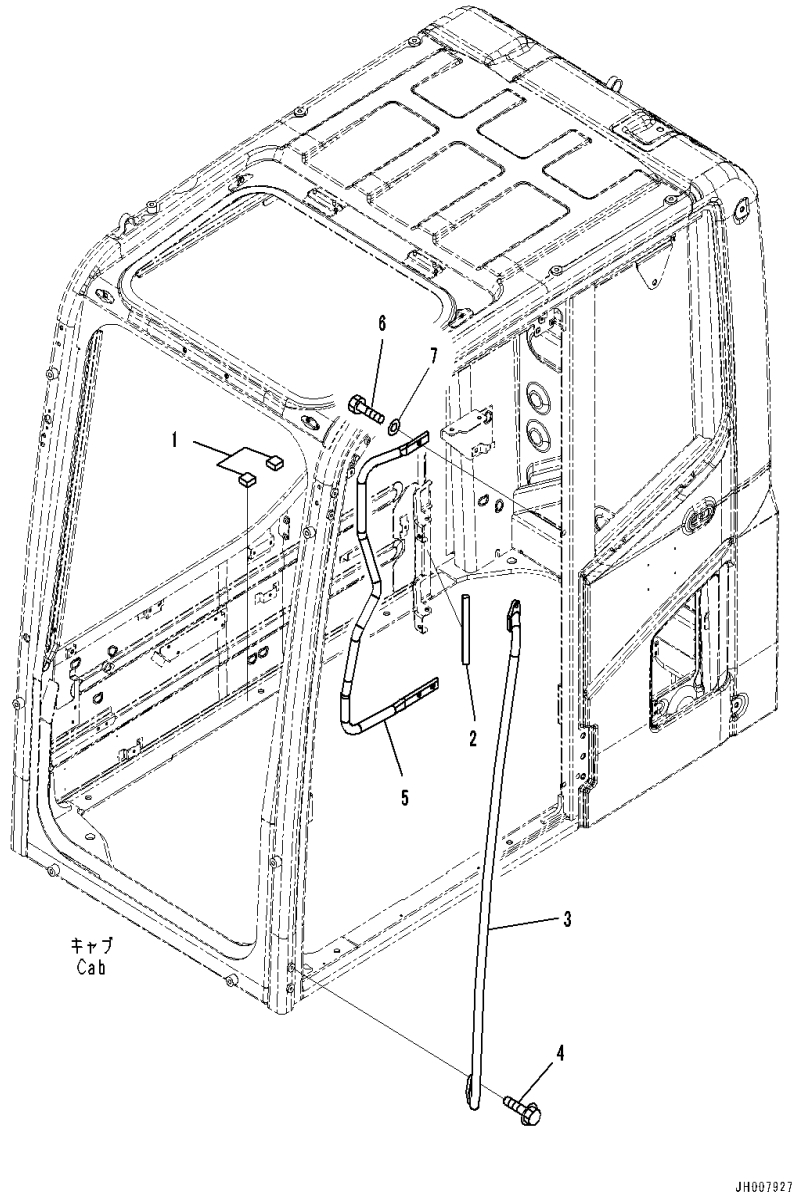

Index	Code	Part Number	Description	Qty	Serial Number
		20Y-53-01320	Cab Assembly	1	C00001-
1		20Y-53-13490	• Rubber	2	C00001-
2		2A5-53-11870	• Seal	1	C00001-
3		20Y-53-11821	• Grip	1	C00001-
4		01435-40825	• Bolt	4	C00001-
5		2A5-53-13140	• Grip	1	C00001-
6		01010-D1030	• Bolt	3	C00001-
7		01643-71032	• Washer	3	C00001-

FIG. K1110-001013 Cab (With GPRS 3G) (KOMTRAX Antenna, With GPRS 3G)

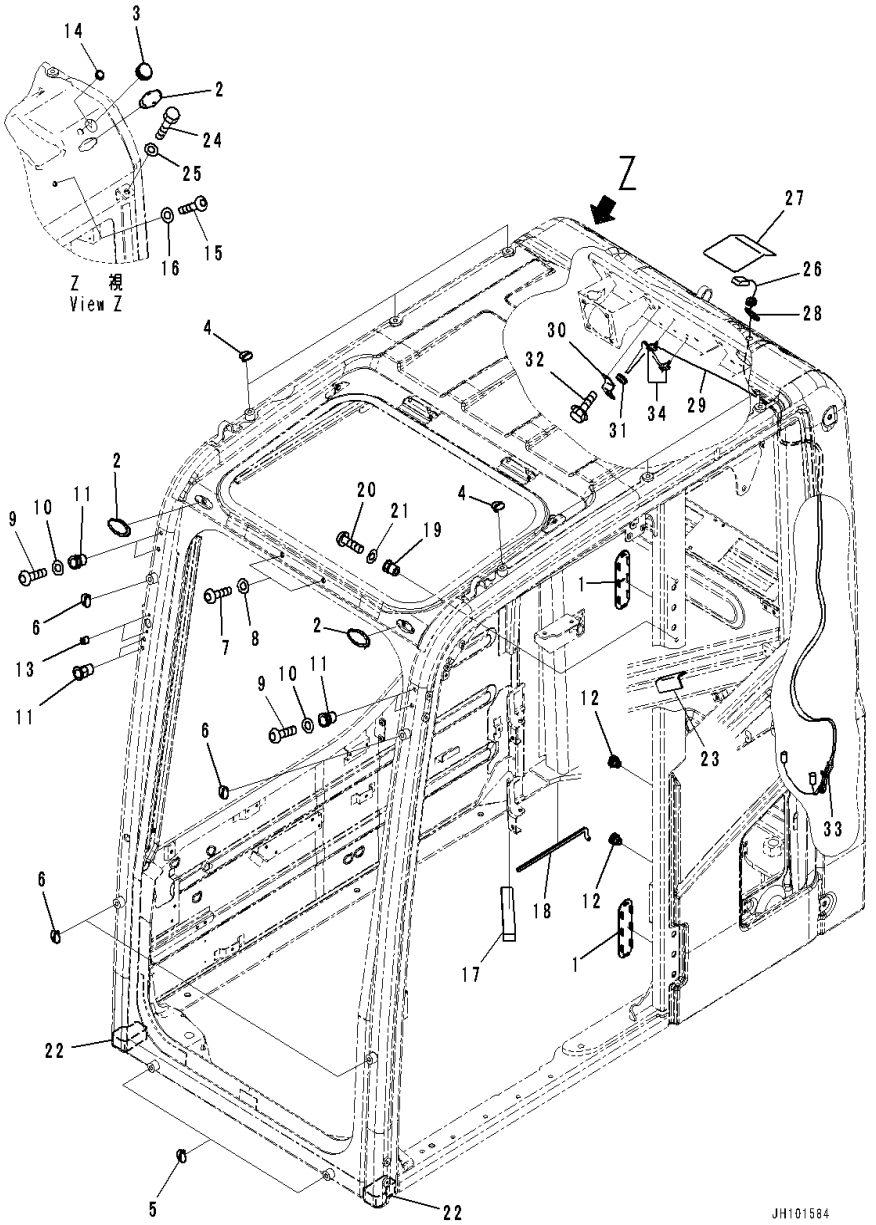

Index	Code	Part Number	Description	Qty	Serial Number
		20Y-53-01320	Cab Assembly	1	C00001-
1		20Y-53-12960	• Cover	2	C00001-
2		22B-54-17282	• Cap	3	C00001-
3		09415-02512	• Cap	1	C00001-
4		20Y-53-11390	• Cap	6	C00001-
5		20Y-53-11380	• Cap	2	C00001-
6		20Y-53-11380	• Cap	4	C00001-
7		01245-01016	• Screw	2	C00001-
8		01643-71032	• Washer	2	C00001-
9		01245-00616	• Screw	4	C00001-
10		01643-70623	• Washer	4	C00001-
11		20Y-53-12260	• Nut	6	C00001-
12		20Y-54-35451	• Nut	2	C00001-
13		20Y-53-12320	• Nut	2	C00001-
14		09415-01008	• Cap	1	C00001-
15		01245-01016	• Screw	1	C00001-
16		01643-71032	• Washer	1	C00001-
17		20Y-53-12580	• Seal	1	C00001-
18		2A5-53-13381	• Trim	1	C00001-
19		20Y-53-12270	• Nut	2	C00001-
20		01245-00816	• Screw	2	C00001-
21		01643-70823	• Washer	2	C00001-
22		2A5-53-11361	• Seal	2	C00001-
23		205-53-31210	• Plate	2	C00001-
24		01010-D1225	• Bolt	1	C00001-
25		01643-71232	• Washer	1	C00001-
26		8A13-10-1320	• Antenna	1	C00001-
27		20Y-53-12951	• Cover	1	C00001-
28		2A5-53-12130	• Grommet	1	C00001-
29		8A13-10-3131	• Antenna	1	C00001-
30		2A5-53-26230	• Plate	1	C00001-
31		08037-01610	• Grommet	1	C00001-
32		01435-00612	• Bolt	1	C00001-
33		08034-20414	• Band,Black	1	C00001-
34		08059-00515	• Clip	2	C00001-

FIG. K1110-001014 Cab (KOMATSU Mark)

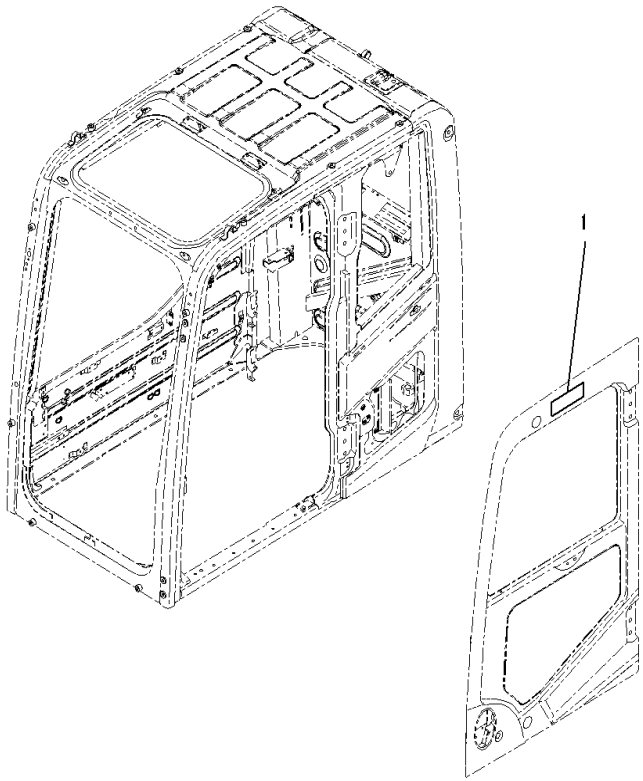

Index	Code	Part Number	Description	Qty	Serial Number
		20Y-53-01320	Cab Assembly	1	C00001-
1		09693-00400	• Emblem, KOMATSU	1	C00001-

FIG. K1110-001015 Cab (Plate)

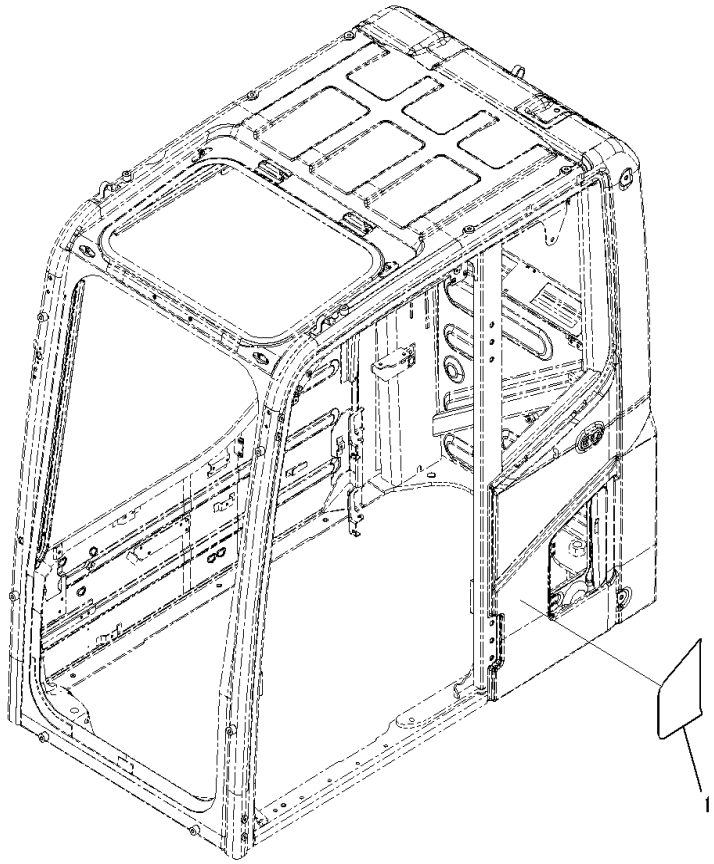

Index	Code	Part Number	Description	Qty	Serial Number
		20Y-53-01320	Cab Assembly	1	C00001-
1		20Y-00-56131	• Plate	1	C00001-

FIG. K1110-001016 Cab (With Monitor Guard) (Cab In Parts, Console Cover, Front, R.H., With Monitor Guard)

Index	Code	Part Number	Description	Qty	Serial Number
1		01435-00616	Bolt	4	C00001-
2		209-72-12230	Washer	4	C00001-
3		2A5-53-11532	Cover	1	C00001-
4		01435-00616	Bolt	4	C00001-
5		209-72-12230	Washer	4	C00001-
6		01435-00820	Bolt	1	C00001-
7		208-53-11330	Washer	1	C00001-
8		20Y-53-12172	Grille	1	C00001-
9		20Y-53-12122	Cover	1	C00001-
10		22U-54-25360	• Clip	2	C00001-
11		205-54-75240	Collar	1	C00001-
12		01643-70823	Washer	1	C00001-
13		20Y-53-12310	Collar	2	C00001-
14		01245-00616	Screw	2	C00001-
15		01252-80650	Bolt	1	C00001-
16		01643-70623	Washer	3	C00001-
17		20Y-53-12161	Cover	1	C00001-
18		01010-80616	Bolt	2	C00001-
19		01643-30623	Washer	2	C00001-
20		20Y-53-21321	Cover	1	C00001-
21		01245-00616	Screw	2	C00001-
22		01245-00625	Screw	1	C00001-
23		01643-70623	Washer	3	C00001-
		20Y-53-C1371	Guard Assembly	1	C00001-
24	C1		• Guard	1	C00001-
25	C1		• Seal	1	C00001-

FIG. K1110-001017 Cab (With Monitor Guard) (Cab In Parts, Monitor Cover, With Monitor Guard)

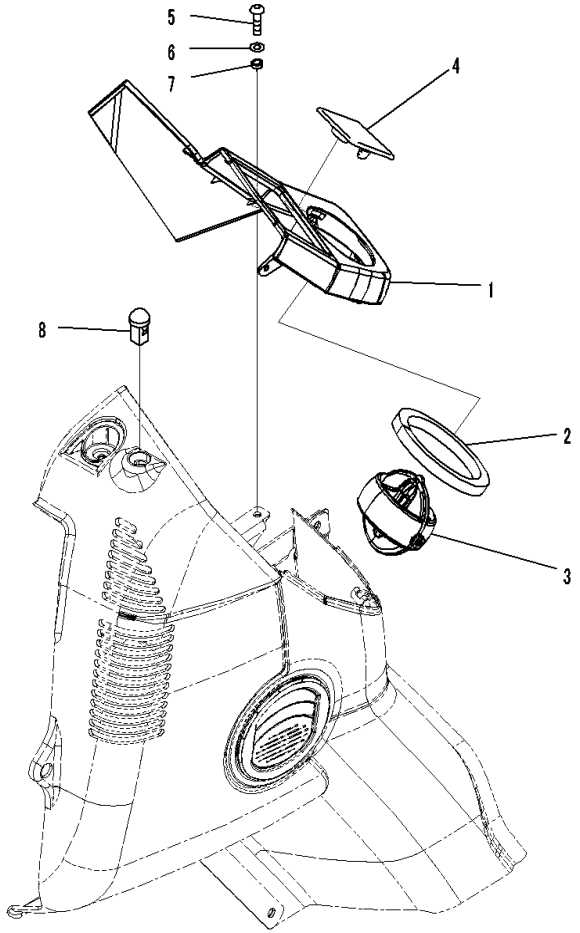

Index	Code	Part Number	Description	Qty	Serial Number
		2A5-53-12651	Cover Assembly	1	C00001-
1	C1		• Cover	1	C00001-
2		2A5-53-12140	• Seal	1	C00001-
3		20Y-53-12240	Louver	1	C00001-
4		20Y-53-14230	Cap	1	C00001-
5		01245-00625	Screw	1	C00001-
6		01643-70623	Washer	1	C00001-
7		20Y-43-41290	Collar	1	C00001-
8		20Y-979-6161	Sensor,Auto Air Conditioner	1	C00001-

FIG. K1110-001018 Cab (Cab In Parts, Washer Hose Mounting)

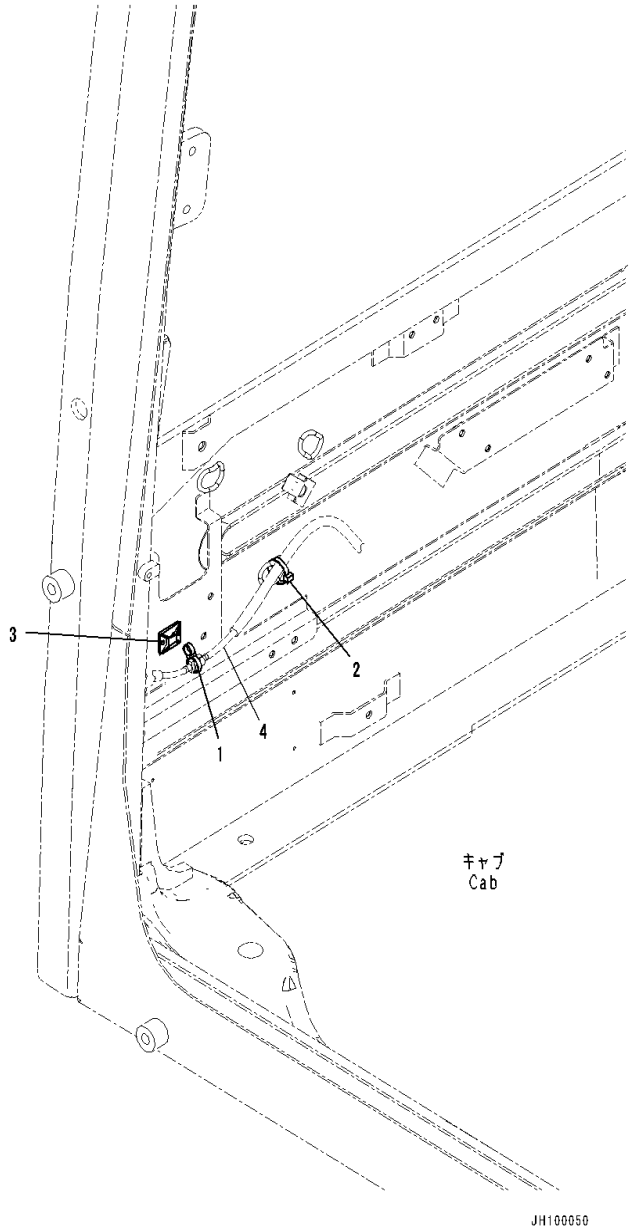

Index	Code	Part Number	Description	Qty	Serial Number
1		08034-40521	Band	1	C00001-
2		08034-20519	Band	1	C00001-
3		20U-54-46520	Hook, Sticker Type	1	C00001-
4		(21T-06-11411)	Hose(Cab,Floor,Window Washer Hose)		

FIG. K1110-001019 Cab (Cab In Parts, Luggage Plate and Cigarette Lighter)

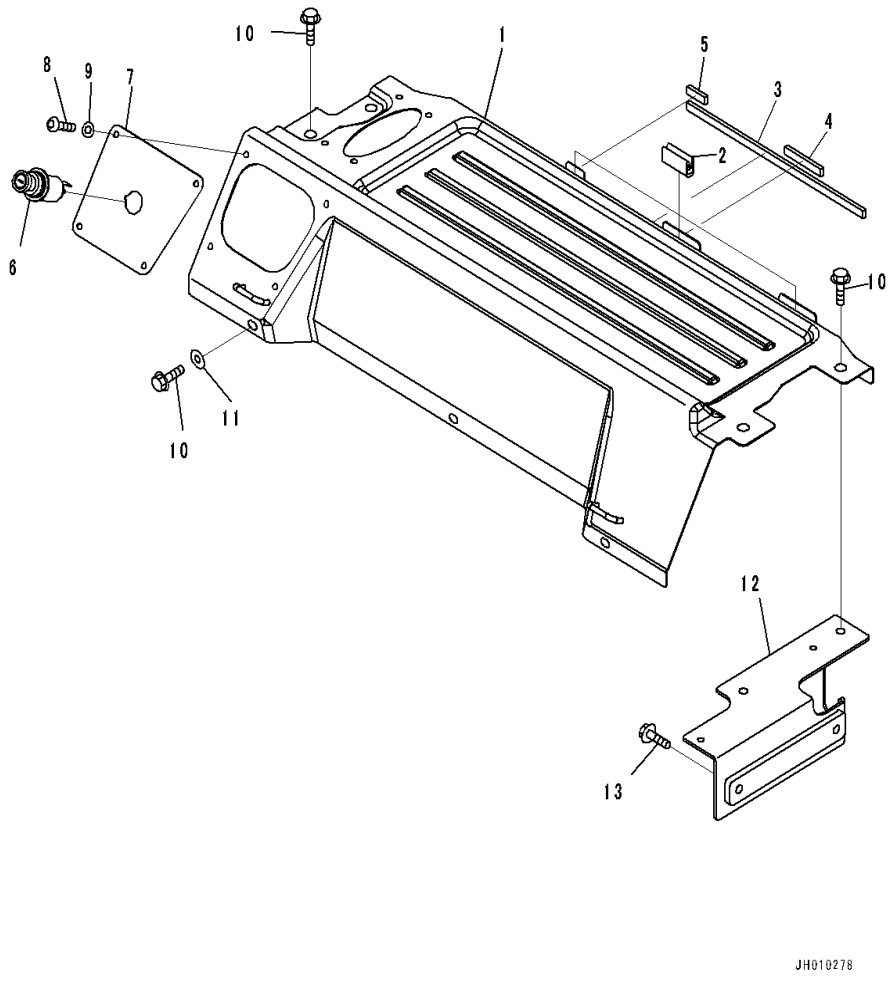

Index	Code	Part Number	Description	Qty	Serial Number
		20Y-53-13619	Cover Assembly	1	C00001-
1	C1		• Cover	1	C00001-
2		208-53-12460	• Seat	3	C00001-
3		205-53-31182	• Sheet	1	C00001-
4		205-53-31190	• Sheet	1	C00001-
5		20Y-53-16180	• Sheet	1	C00001-
6		20Y-06-23472	Cigarette Lighter	1	C00001-
7		20Y-53-13680	Plate	1	C00001-
8		01245-00616	Screw	4	C00001-
9		01643-70623	Washer	4	C00001-
10		01435-80825	Bolt	7	C00001-
11		418-54-35450	Washer	3	C00001-
12		20Y-53-12771	Plate	1	C00001-
13		01435-80825	Bolt	2	C00001-

FIG. K1110-001020 Cab (Cab In Parts, Air Duct)

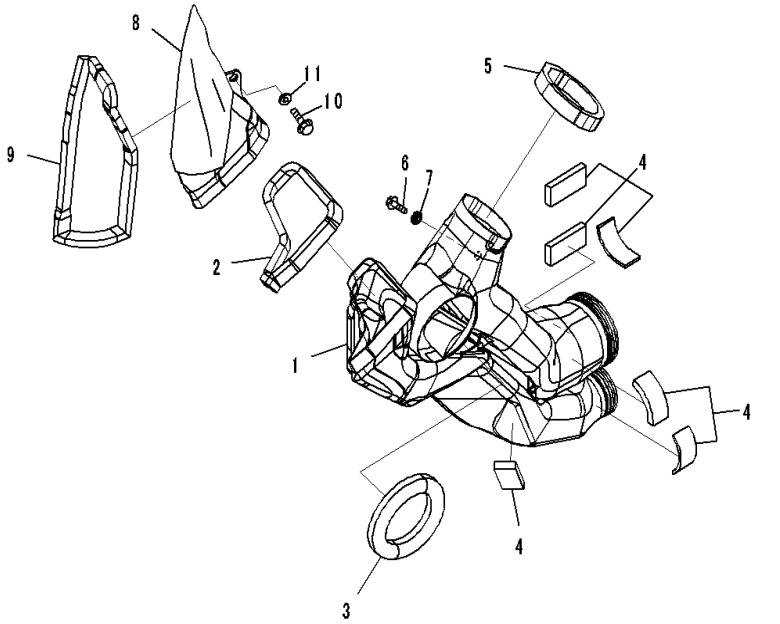

Index	Code	Part Number	Description	Qty	Serial Number
		20Y-53-13381	Duct	1	C00001-
1	C1		• Duct	1	C00001-
2		20Y-53-13480	• Seal	1	C00001-
3		20Y-53-13280	• Seal	1	C00001-
4		208-53-12440	• Seal	6	C00001-
5		208-53-11941	• Seal	1	C00001-
6		01435-00616	Bolt	1	C00001-
7		20Y-53-12310	Collar	1	C00001-
		20Y-53-13411	Duct	1	C00001-
8	C1		• Duct	1	C00001-
9		208-53-11920	• Seal	1	C00001-
10		01435-00616	Bolt	1	C00001-
11		20Y-53-12310	Collar	1	C00001-

FIG. K1110-001021 Cab (Cab In Parts, Air Duct and Fresh Air Filter)

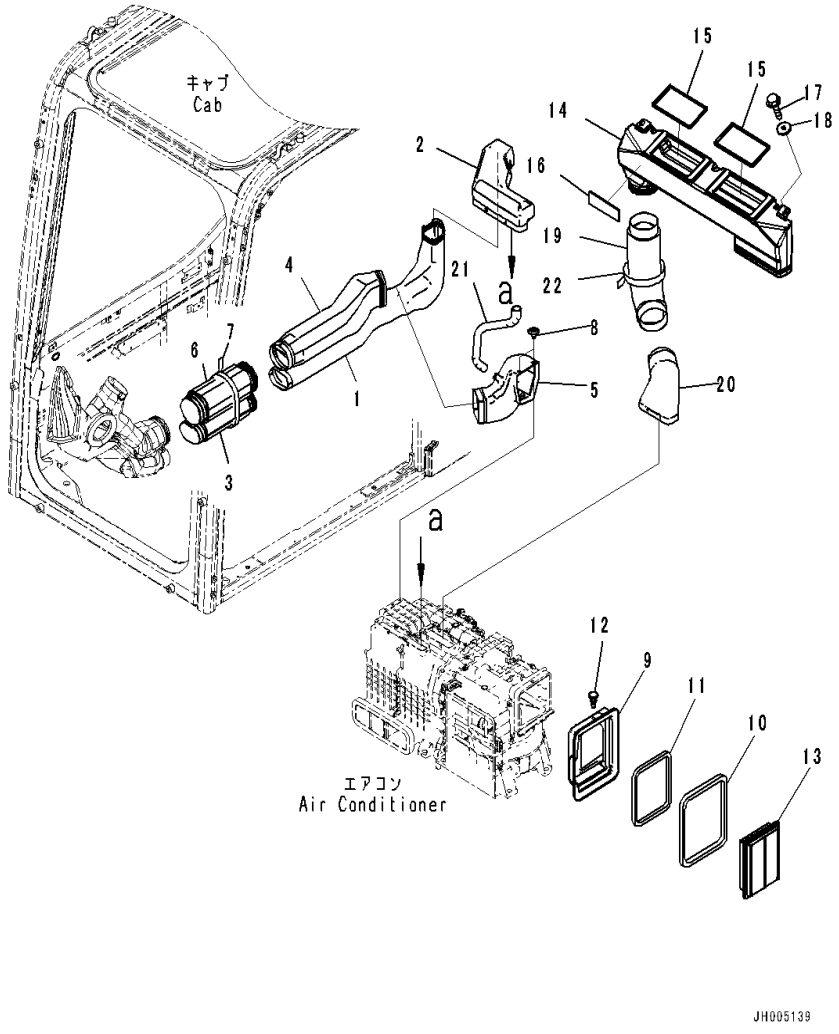

Index	Code	Part Number	Description	Qty	Serial Number
1		2A5-979-1211	Duct	1	C00001-
2		2A5-979-1221	Duct	1	C00001-
3		20Y-53-13351	Duct	1	C00001-
4		2A5-979-1231	Duct	1	C00001-
5		2A5-979-1241	Duct	1	C00001-
6		20Y-53-13361	Duct	1	C00001-
7		08034-20876	Band	1	C00001-
8		22B-54-16461	Rivet	2	C00001-
9		2A5-979-1252	Duct	1	C00001-
10		2A5-979-1660	• Seal	1	C00001-
11		2A5-979-1670	• Seal	1	C00001-
12		208-53-12680	Clip	1	C00001-
13		17M-911-3530	Element	1	C00001-
14		20Y-53-13451	Duct	1	C00001-
15		2A5-979-1580	Seal	2	C00001-
16		2A5-979-1590	Seal	1	C00001-
17		01435-80616	Bolt	2	C00001-
18		20Y-53-12310	Collar	2	C00001-
19		208-53-12220	Duct	1	C00001-
20		2A5-979-1261	Duct	1	C00001-
21		2A5-979-1271	Hose	1	C00001-
22		08034-20876	Band	1	C00001-

FIG. K1110-001022 Cab (Cab In Parts, Partition and Recirculation Air Filter)

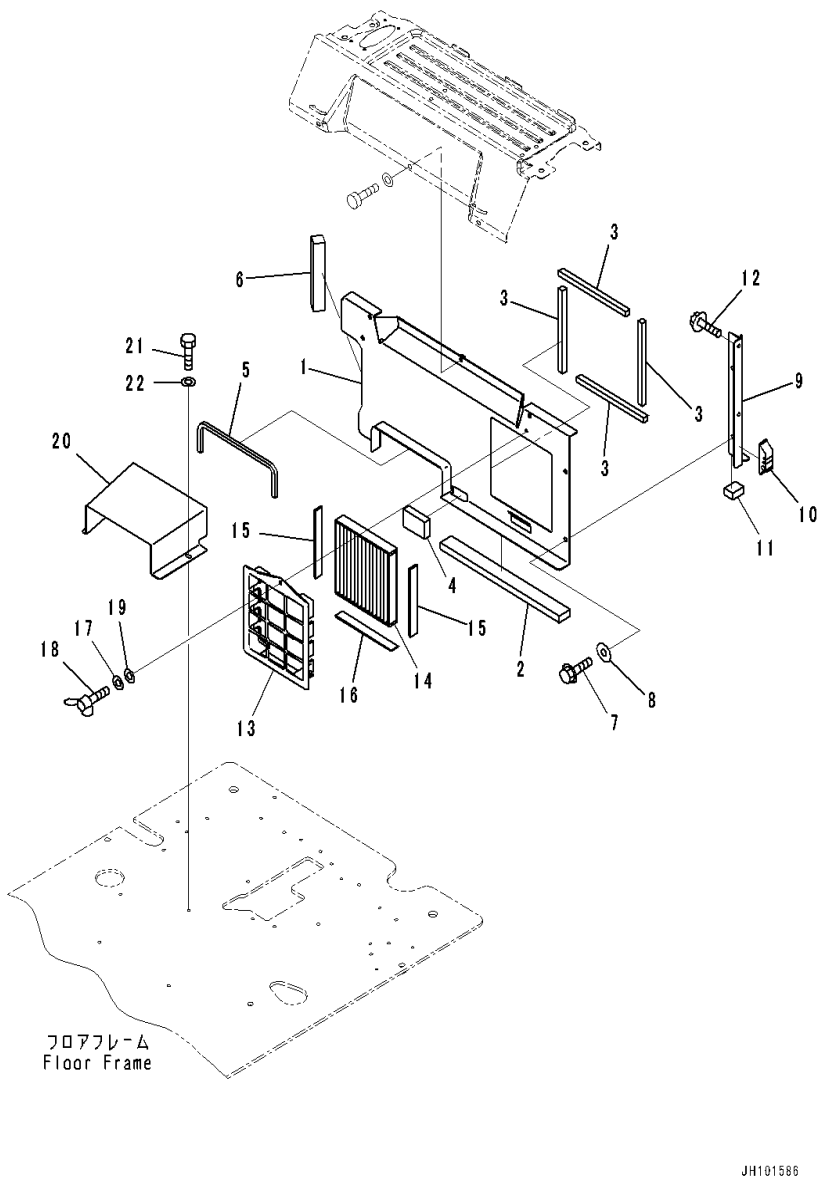

Index	Code	Part Number	Description	Qty	Serial Number
		2A5-53-11742	Bracket Assembly	1	C00001-
1	C1		• Bracket	1	C00001-
2		2A5-53-11760	• Seal	1	C00001-
3		2A5-53-11770	• Seal	4	C00001-
4		2A5-53-11780	• Seal	1	C00001-
5		2A5-53-11790	• Seal	1	C00001-
6		2A5-53-11860	• Seal	1	C00001-
7		01435-80820	Bolt	3	C00001-
8		418-54-35450	Washer	3	C00001-
		20Y-53-13662	Bracket Assembly	1	C00001-
9	C1		• Plate	1	C00001-
10		20Y-53-12751	• Seal	1	C00001-
11		20Y-53-12760	• Seal	1	C00001-
12		01435-80820	Bolt	2	C00001-
13		2A5-979-1181	Holder	1	C00001-
		2A5-979-1551	Filter Assembly	1	C00001-
14	C1		• Filter	1	C00001-
15		2A5-979-1541	• Seal Assembly	2	C00001-
16		2A5-979-1611	• Seal Assembly	1	C00001-
17		20Y-54-65690	Washer	1	C00001-
18		20Y-54-65790	Bolt	1	C00001-
19		01640-20610	Washer	1	C00001-
20		20Y-53-13922	Duct	1	C00001-
21		01010-D0820	Bolt	2	C00001-
22		01643-70823	Washer	2	C00001-

FIG. K1110-001023 Cab (Cab In Parts, Pump Controller and Relay)

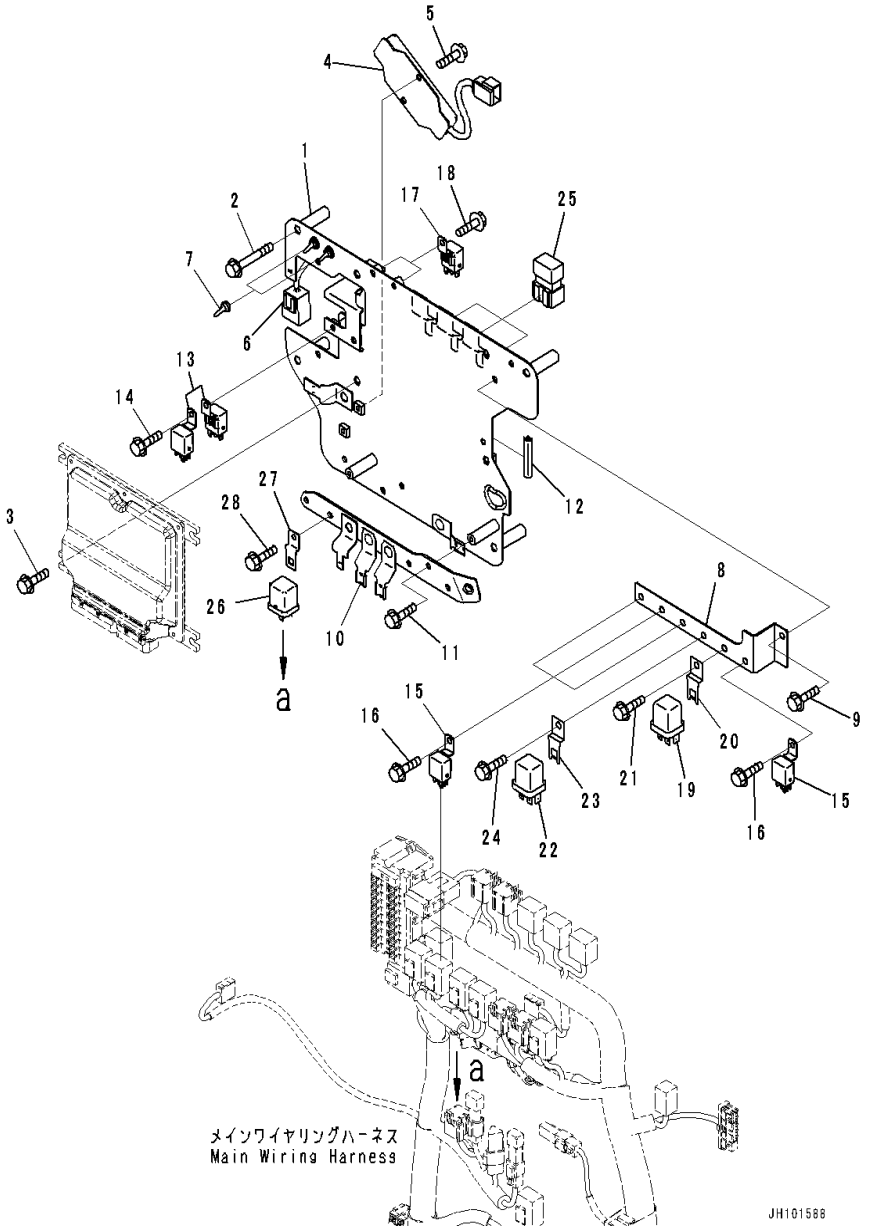

Index	Code	Part Number	Description	Qty	Serial Number
1		20Y-53-56210	Bracket	1	C00001-
2		01435-00860	Bolt	4	C00001-
3		01435-00820	Bolt	4	C00001-
4		2A5-06-15211	Resistor	1	C00001-
5		01435-00610	Bolt	2	C00001-
6		20Y-06-41151	Wiring Harness	1	C00001-
7		208-43-71420	Cap	2	C00001-
8		20Y-53-18211	Bracket	1	C00001-
9		01435-00610	Bolt	1	C00001-
10		20Y-53-56221	Bracket	1	C00001-
11		01435-00610	Bolt	2	C00001-
12		2A5-53-13310	Trim	1	C00001-
13		7861-74-5100	Relay	2	C00001-
14		01435-00610	Bolt	1	C00001-
15		7861-74-5100	Relay	4	C00001-
16		01435-00610	Bolt	4	C00001-
17		7861-74-5100	Relay	2	C00001-
18		01435-00610	Bolt	2	C00001-
19		569-06-61960	Relay	1	C00001-
20		287-06-16420	Bracket	1	C00001-
21		01435-00610	Bolt	1	C00001-
22		569-06-61970	Relay	1	C00001-
23		287-06-16420	Bracket	1	C00001-
24		01435-00610	Bolt	1	C00001-
25		8233-06-3350	Diode	3	C00001-
26		569-06-61960	Relay	1	C00001-
27		287-06-16420	Bracket	1	C00001-
28		01435-00610	Bolt	1	C00001-

FIG. K1110-001024 Cab (Cab In Parts, Air Conditioner Controller and KOMTRAX Controller)

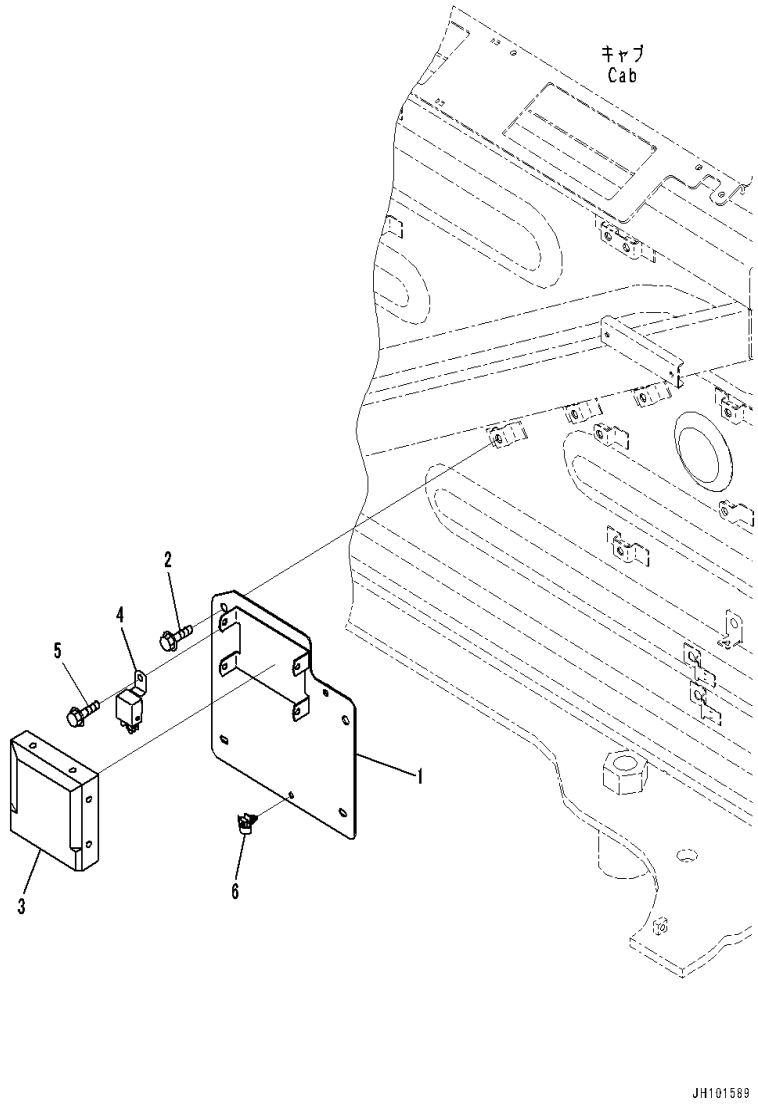

Index	Code	Part Number	Description	Qty	Serial Number
1		20Y-53-56230	Plate	1	C00001-
2		01435-40812	Bolt	2	C00001-
3		2A5-979-1122	Controller	1	C00001-
4		7861-74-5100	Relay	1	C00001-
5		01435-00610	Bolt	1	C00001-
6		08059-00515	Clip	1	C00001-

FIG. K1110-001025 Cab (Cab In Parts, Main Wiring Harness Clamp)

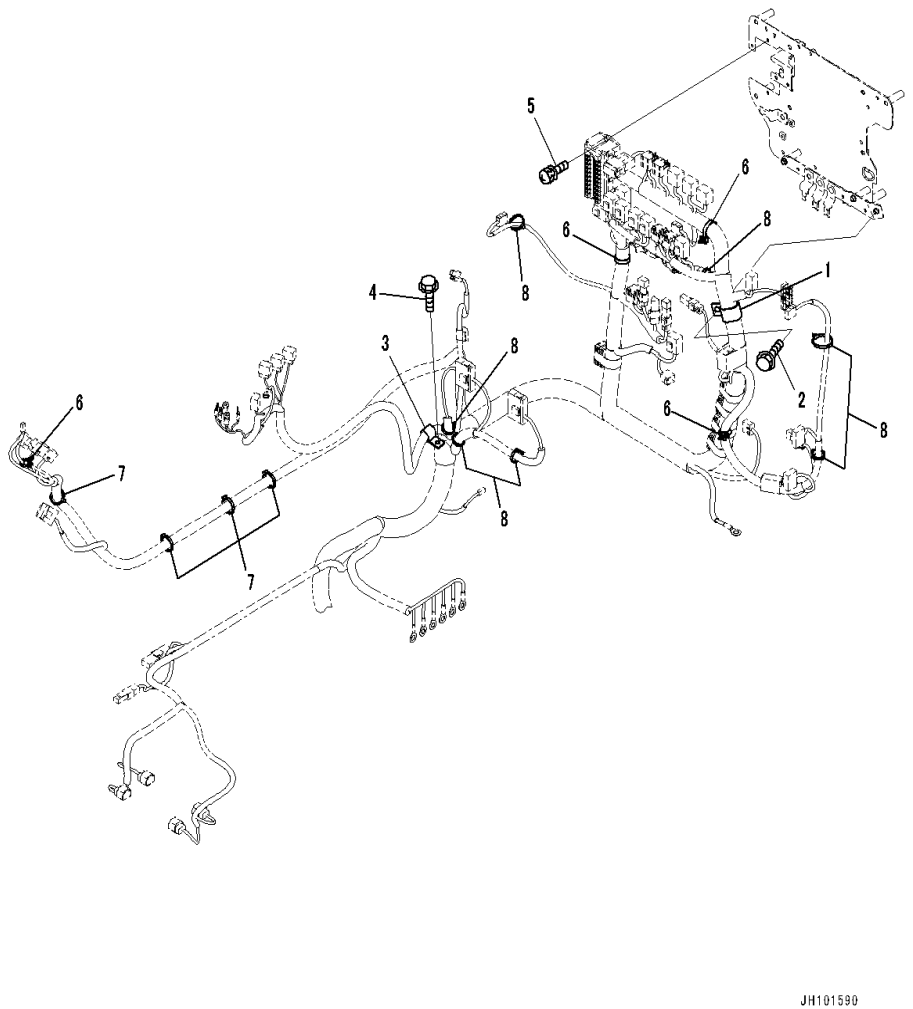

Index	Code	Part Number	Description	Qty	Serial Number
1		04434-53411	Clip	1	C00001-
2		01435-01016	Bolt	1	C00001-
3		04434-51708	Clip	1	C00001-
4		01435-00816	Bolt	1	C00001-
5		01023-60620	Screw	2	C00001-
6		08059-00515	Clip	4	C00001-
7		08034-20519	Band	4	C00001-
8		08034-20519	Band	7	C00001-

FIG. K1110-001026 Cab (Cab In Parts, Rear Cover, With 12V Converter)

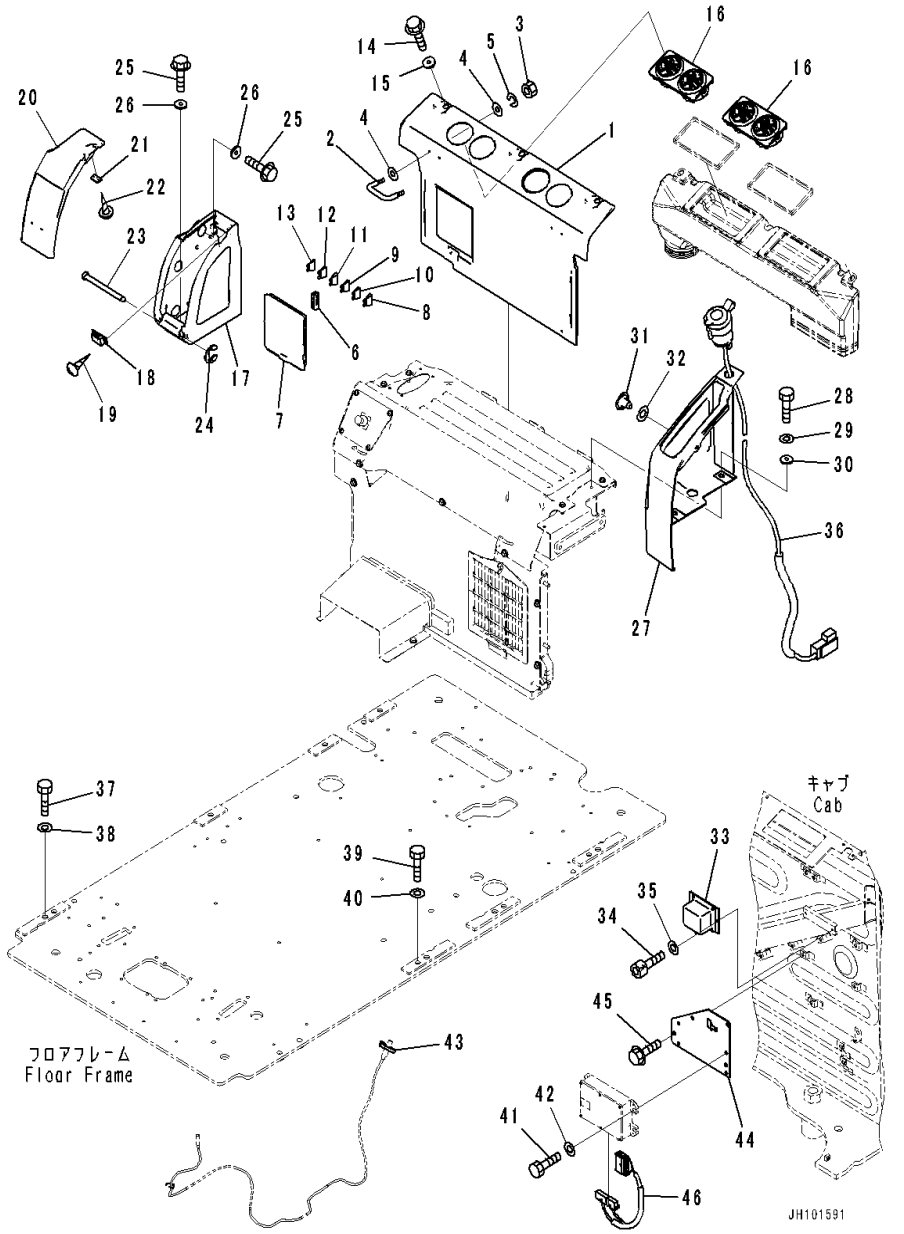

Index	Code	Part Number	Description	Qty	Serial Number
1		20Y-53-12371	Cover	1	C00001-
2		208-53-12290	• Hook	2	C00001-
3		01580-10403	• Nut	4	C00001-
4		01640-20408	• Washer	8	C00001-
5		01601-20410	• Washer	4	C00001-
		20Y-53-56430	Cover Assembly	1	C00001-
6		22U-43-22340	• Puller	1	C00001-
7	C1		• Cover	1	C00001-
8		08041-00500	• Fuse,5Amp.	1	C00001-
9		08041-01500	• Fuse,15Amp.	1	C00001-
10		08041-01000	• Fuse,10Amp.	1	C00001-
11		08041-02000	• Fuse,20Amp.	1	C00001-
12		08041-02500	• Fuse,25Amp.	1	C00001-
13		08041-03000	• Fuse,30Amp.	1	C00001-
14		01435-80616	Bolt	3	C00001-
15		20Y-53-12310	Collar	3	C00001-
16		208-979-7560	Grille	2	C00001-
17		20Y-53-12381	Cover	1	C00001-
18		09452-14503	Catcher	1	C00001-
19		01370-10308	Screw	2	C00001-
20		20Y-53-12391	Cover	1	C00001-
21		208-53-12410	Plate	1	C00001-
22		01370-20308	Screw	2	C00001-
23		208-53-12320	Pin	1	C00001-
24		208-53-12330	Ring	1	C00001-
25		01435-80616	Bolt	5	C00001-
26		20Y-53-12310	Collar	5	C00001-
27		20Y-53-56250	Cover	1	C00001-
28		01010-D0620	Bolt	2	C00001-
29		01643-70623	Washer	2	C00001-
30		20Y-53-12310	Collar	2	C00001-
31		23D-950-4450	Button	1	C00001-
32		20Y-53-12860	Spacer	1	C00001-
33		2A5-06-12661	Converter	1	C00001-
34		01252-80512	Bolt, Hexagon Socket Head	2	C00001-
35		01640-50508	Washer	2	C00001-
36		2A5-06-12182	Socket Assembly	1	C00001-
37		01010-81240	Bolt	5	C00001-
38		01643-31232	Washer	5	C00001-
39		01010-81250	Bolt	2	C00001-

FIG. K1110-001026 Cab (Cab In Parts, Rear Cover, With 12V Converter)

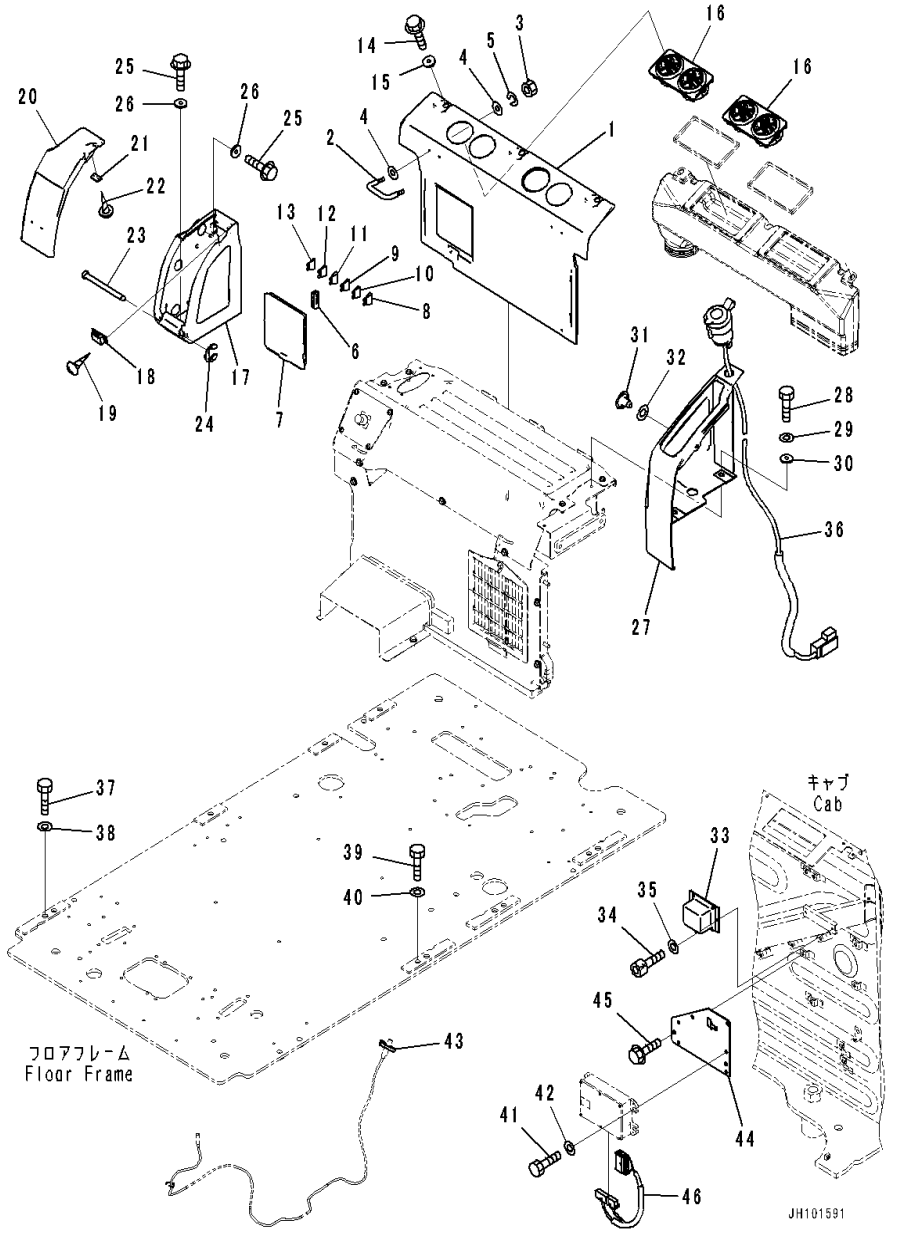

Index	Code	Part Number	Description	Qty	Serial Number
40		01643-31232	Washer	2	C00001-
41		01010-80620	Bolt	4	C00001-
42		01643-30623	Washer	4	C00001-
43		08034-20519	Band	1	C00001-
44		2A5-53-28351	Bracket	1	C00001-
45		01435-00812	Bolt	4	C00001-
46		2A5-06-28261	Wiring Harness	1	C00001-

FIG. K1110-001027 Cab (Controller and Monitor)

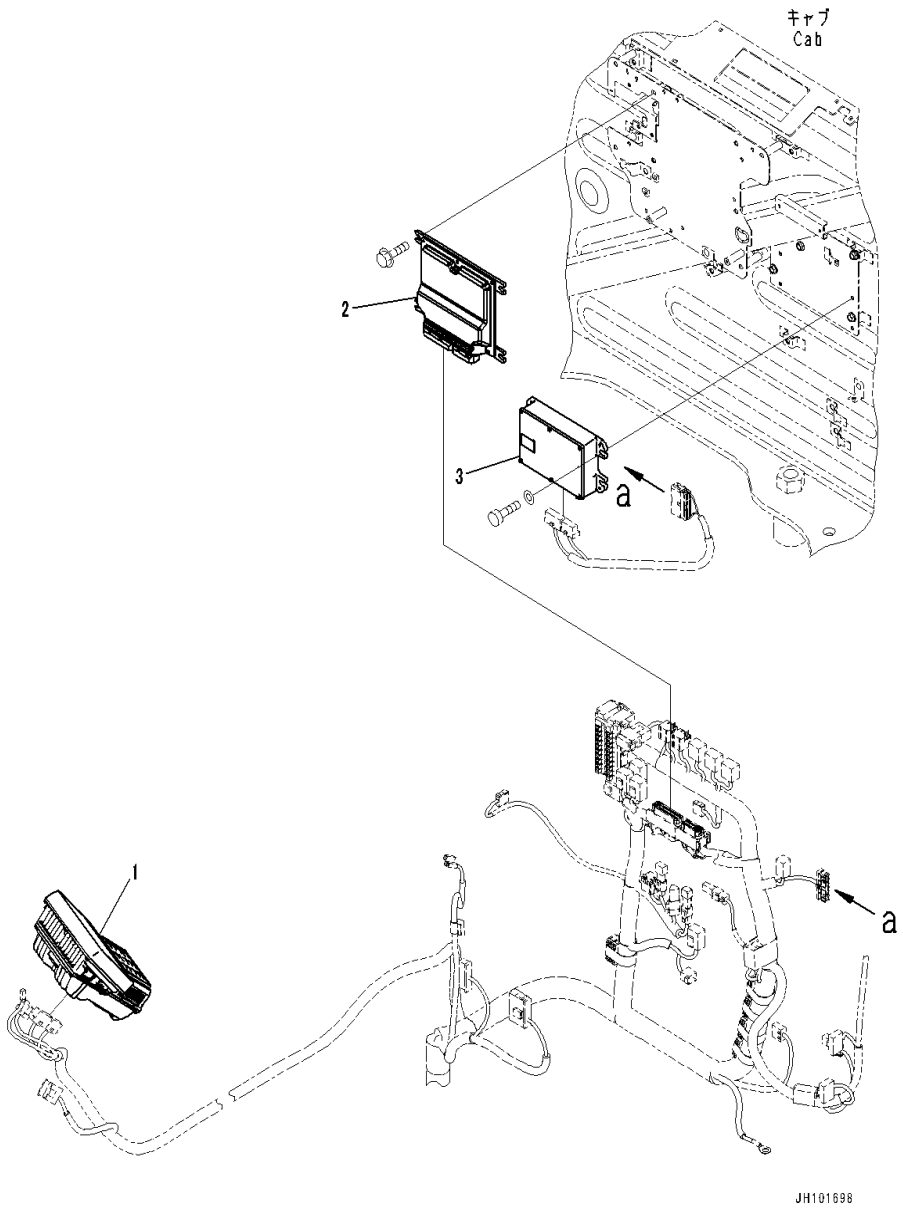

Index	Code	Part Number	Description	Qty	Serial Number
1		7835-34-5101	Monitor	1	C00001-
2		7835-51-1001	Controller, Pump	1	C00001-
3		7826-25-6010	Controller, TC630	1	C00001-

FIG. K1110-001028 Cab (Floor, Frame)

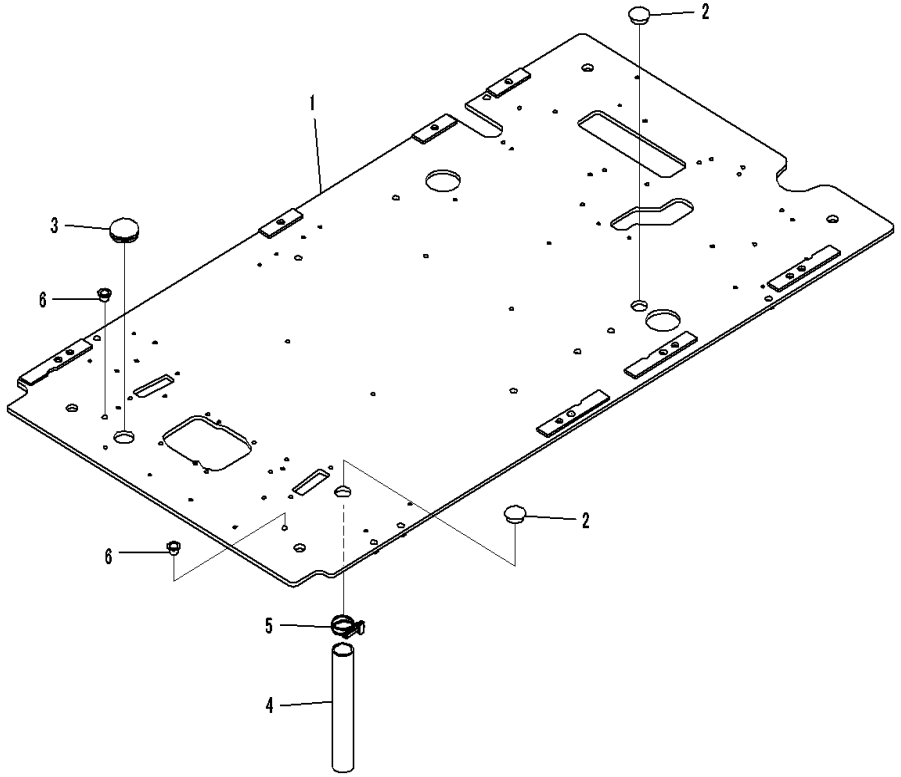

Index	Code	Part Number	Description	Qty	Serial Number
1		20Y-43-15711	Floor	1	C00001-
2		22U-54-25581	Grommet	2	C00001-
3		09415-03620	Cap	1	C00001-
4		07286-03828	Hose	1	C00001-
5		07280-04726	Clamp	1	C00001-
6		07048-01310	Plug	2	C00001-

FIG. K1110-001029 Cab (PPC Valve, 1/3, For Travel)

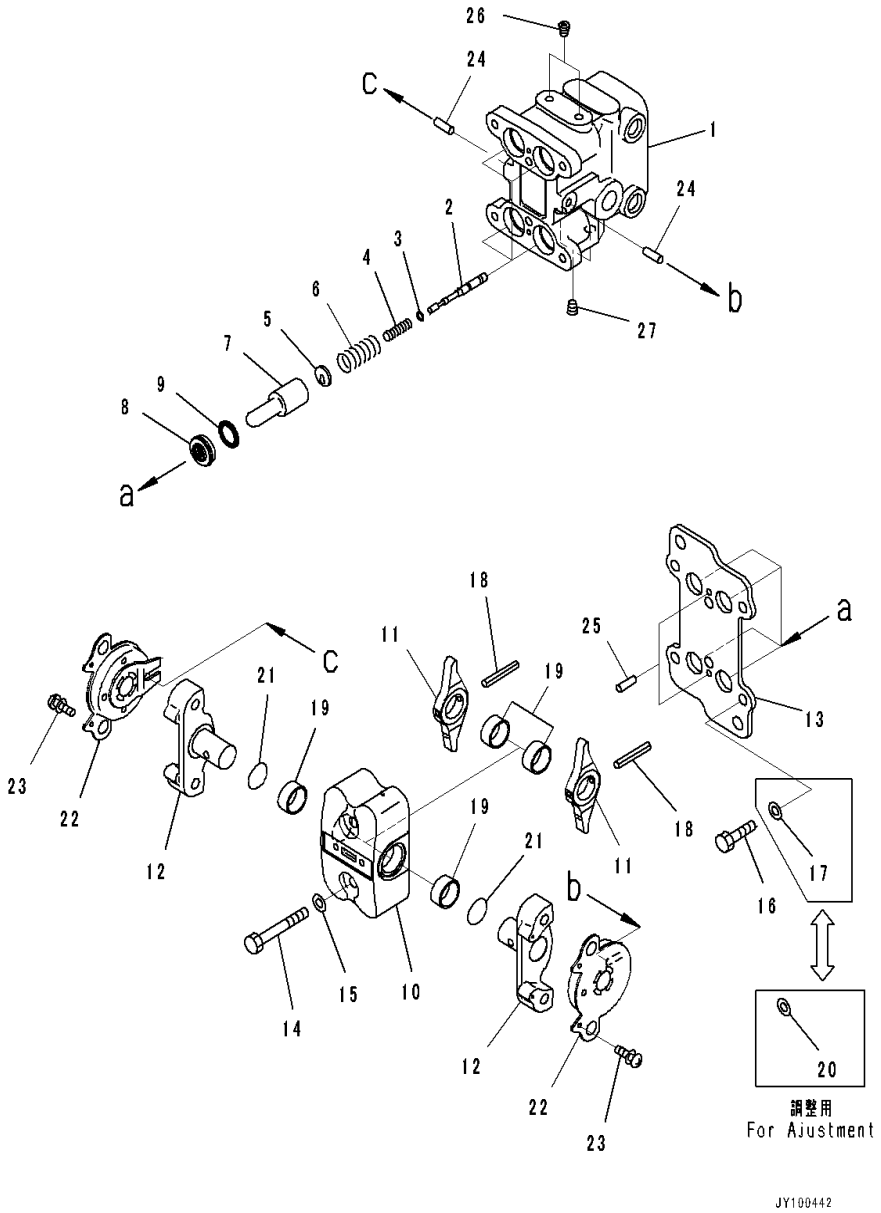

Index	Code	Part Number	Description	Qty	Serial Number
		702-22-01010	Valve, Pilot	1	C00001-
1	C1		• Valve Body	1	C00001-
2	C1		• Valve	4	C00001-
3		702-16-51140	• Shim, T=0.30mm	4	C00001-
4		702-16-53420	• Spring	4	C00001-
5		702-16-53140	• Retainer	4	C00001-
6		702-16-54420	• Spring	4	C00001-
7		702-16-53170	• Piston	4	C00001-
8		702-16-71150	• Seal	4	C00001-
9		702-16-71160	• Seat	4	C00001-
10	C1		• Case	1	C00001-
11	C1		• Lever	2	C00001-
12	C1		• Shaft	2	C00001-
13		702-16-73640	• Plate	1	C00001-
14		01010-80855	• Bolt	2	C00001-
15		01643-30823	• Washer	2	C00001-
16		01010-80820	• Bolt	4	C00001-
17		702-16-54331	• Washer, T=1.60mm	4	C00001-
18	C1		• Pin, Spring	2	C00001-
19	C1		• Bushing	4	C00001-
20		702-16-54341	• Washer, T=1.30mm	4	C00001-
		702-16-54351	• Washer, T=1.00mm	4	C00001-
		702-16-56380	• Washer, T=1.90mm	4	C00001-
		702-16-56390	• Washer, T=2.20mm	4	C00001-
21	C1		• O-Ring	2	C00001-
22		702-16-73610	• Damper Assembly	2	C00001-
23		01023-10306	• Screw	4	C00001-
24	C1		• Pin	2	C00001-
25		04022-04016	• Pin, Dowel	2	C00001-
26	C1		• Plug	2	C00001-
27	C1		• Plug	2	C00001-

FIG. K1110-001030 Cab (Floor, Travel Control Lever)

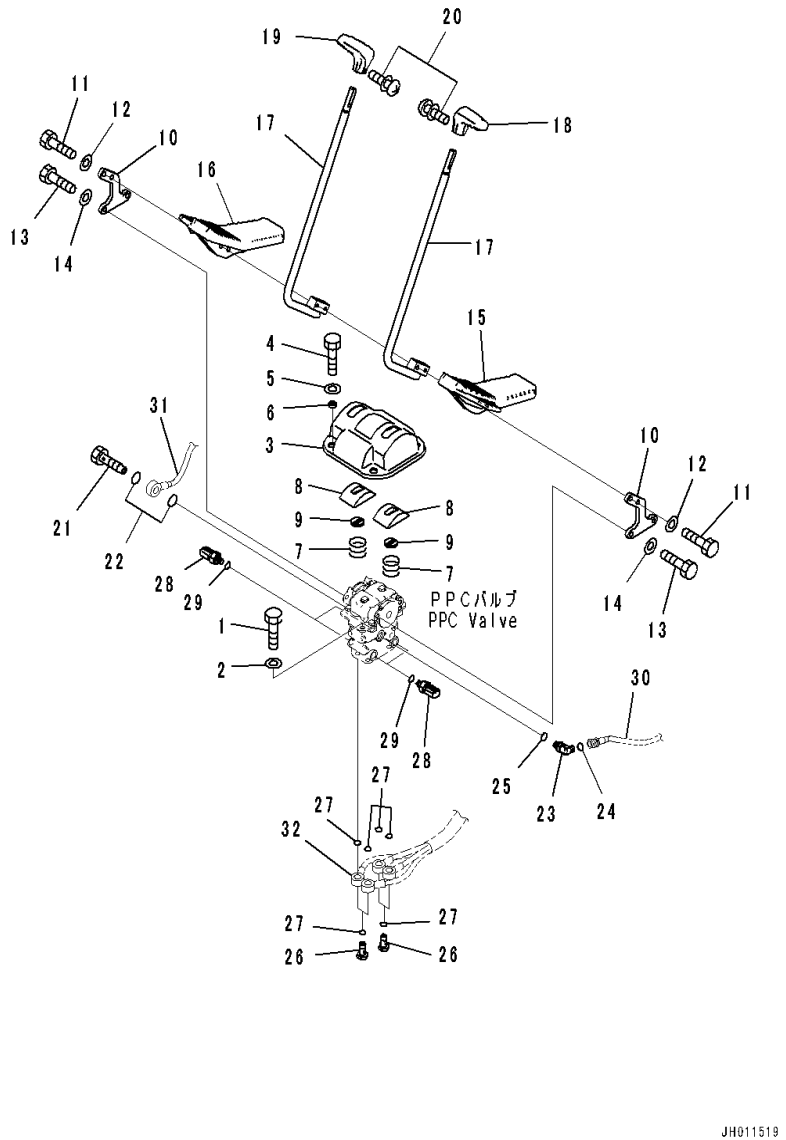

Index	Code	Part Number	Description	Qty	Serial Number
1		01010-81020	Bolt	2	C00001-
2		01643-31032	Washer	2	C00001-
3		20Y-43-41121	Cover	1	C00001-
4		01010-81020	Bolt	4	C00001-
5		01643-31032	Washer	4	C00001-
6		20Y-43-41361	Collar	4	C00001-
7		203-43-51620	Spring	2	C00001-
		22U-43-21350	Cover Assembly	2	C00001-
8	C1		• Cover	1	C00001-
9		22U-43-21360	• Seal	1	C00001-
10		20Y-43-41111	Lever	2	C00001-
11		01010-D1045	Bolt	4	C00001-
12		01643-71032	Washer	4	C00001-
13		01010-81030	Bolt	4	C00001-
14		01643-31032	Washer	4	C00001-
15		22U-43-21111	Pedal	1	C00001-
16		22U-43-21121	Pedal	1	C00001-
17		22U-43-21131	Lever	2	C00001-
18		20Y-43-21231	Knob	1	C00001-
19		20Y-43-21241	Knob	1	C00001-
20		01023-20416	Screw	2	C00001-
21		20Y-62-18910	Plug	1	C00001-
22		07000-12018	O-ring	2	C00001-
23		11Y-62-12160	Elbow	1	C00001-
24		02896-11008	O-ring	1	C00001-
25		07002-11423	O-ring	1	C00001-
26		20Y-62-18890	Bolt, Joint	4	C00001-
27		07000-12015	O-ring	8	C00001-
28		7861-93-1880	Sensor, Pressure	4	C00001-
29		07000-12011	• O-ring	1	C00001-
30		(208-62-72310)	Hose(Cab,Floor,PPC Valve Piping for Travel)		
31		(208-62-72290)	Hose(Cab,Floor,PPC Valve Piping for Travel)		

FIG. K1110-001031 Cab (Floor, Footrest, L.H.)

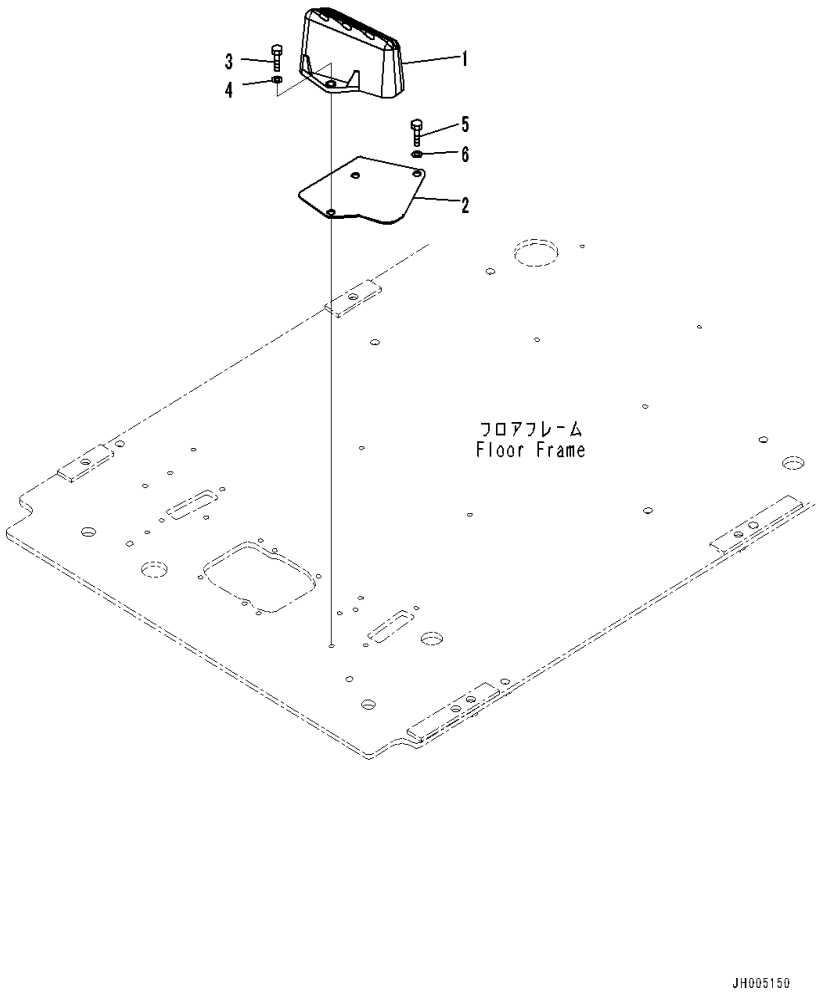

Index	Code	Part Number	Description	Qty	Serial Number
1		22U-54-25110	Footrest	1	C00001-
2		22U-54-25521	Plate	1	C00001-
3		01010-81025	Bolt	2	C00001-
4		01643-31032	Washer	2	C00001-
5		01010-81020	Bolt	1	C00001-
6		01643-31032	Washer	1	C00001-

FIG. K1110-001032 Cab (Floor, Footrest, R.H.)

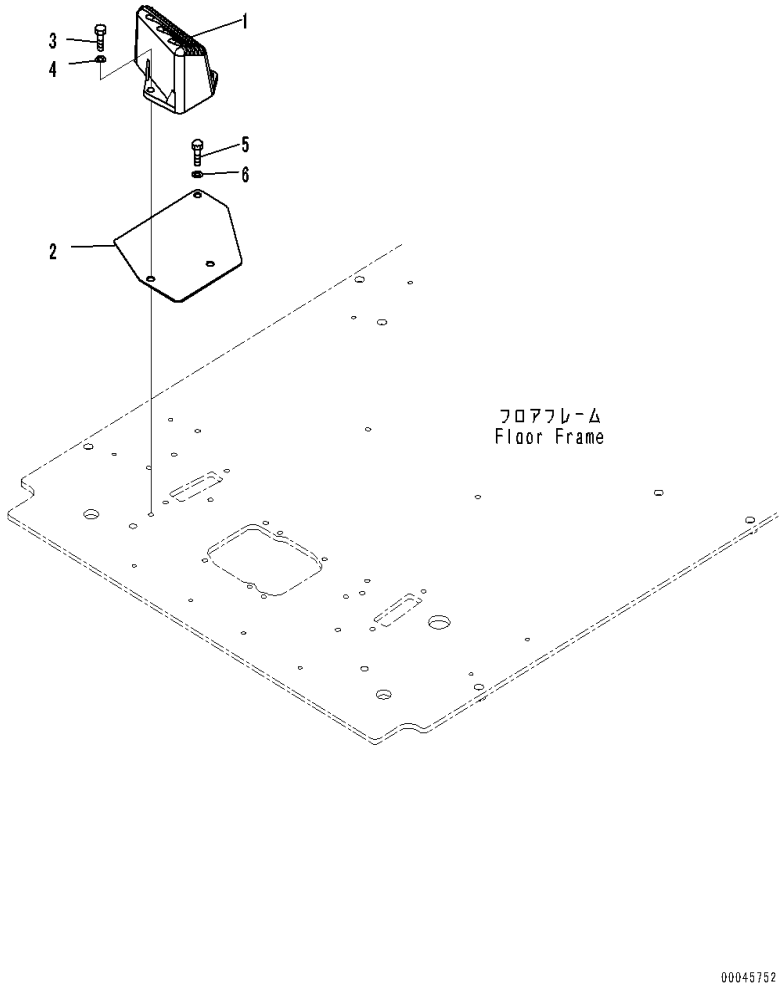

Index	Code	Part Number	Description	Qty	Serial Number
1		22U-54-25120	Footrest	1	C00001-
2		22U-54-25531	Plate	1	C00001-
3		01010-81025	Bolt	2	C00001-
4		01643-31032	Washer	2	C00001-
5		01010-81020	Bolt	1	C00001-
6		01643-31032	Washer	1	C00001-

FIG. K1110-001033 Cab (Floor, Base)

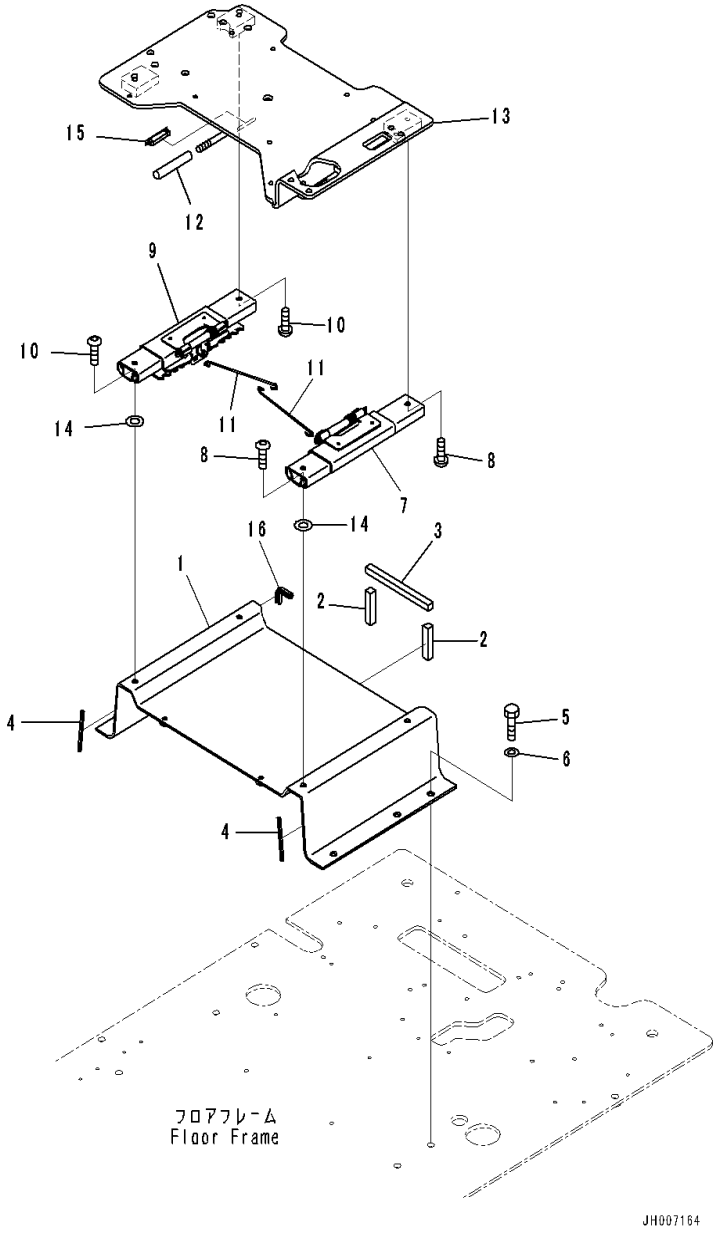

Index	Code	Part Number	Description	Qty	Serial Number
1		207-43-21120	Frame	1	C00001-
2		208-43-71520	• Seal	2	C00001-
3		208-43-71530	• Seal	1	C00001-
4		208-43-71590	• Seal	2	C00001-
5		01010-81230	Bolt	5	C00001-
6		01643-31232	Washer	5	C00001-
7		2A5-43-12353	Adjuster	1	C00001-
8		01245-01025	Screw	4	C00001-
9		2A5-43-12363	Adjuster	1	C00001-
10		01245-01025	Screw	4	C00001-
11		20Y-43-41833	Wire	2	C00001-
12		22U-43-21390	Cap	1	C00001-
13		20Y-43-41253	Frame	1	C00001-
14		2A5-43-12480	Washer	4	C00001-
15		20Y-979-6630	Catcher	1	C00001-
16		12Y-979-1850	Trim	1	C00001-

FIG. K1110-001034 Cab (Floor, Wiring Harness)

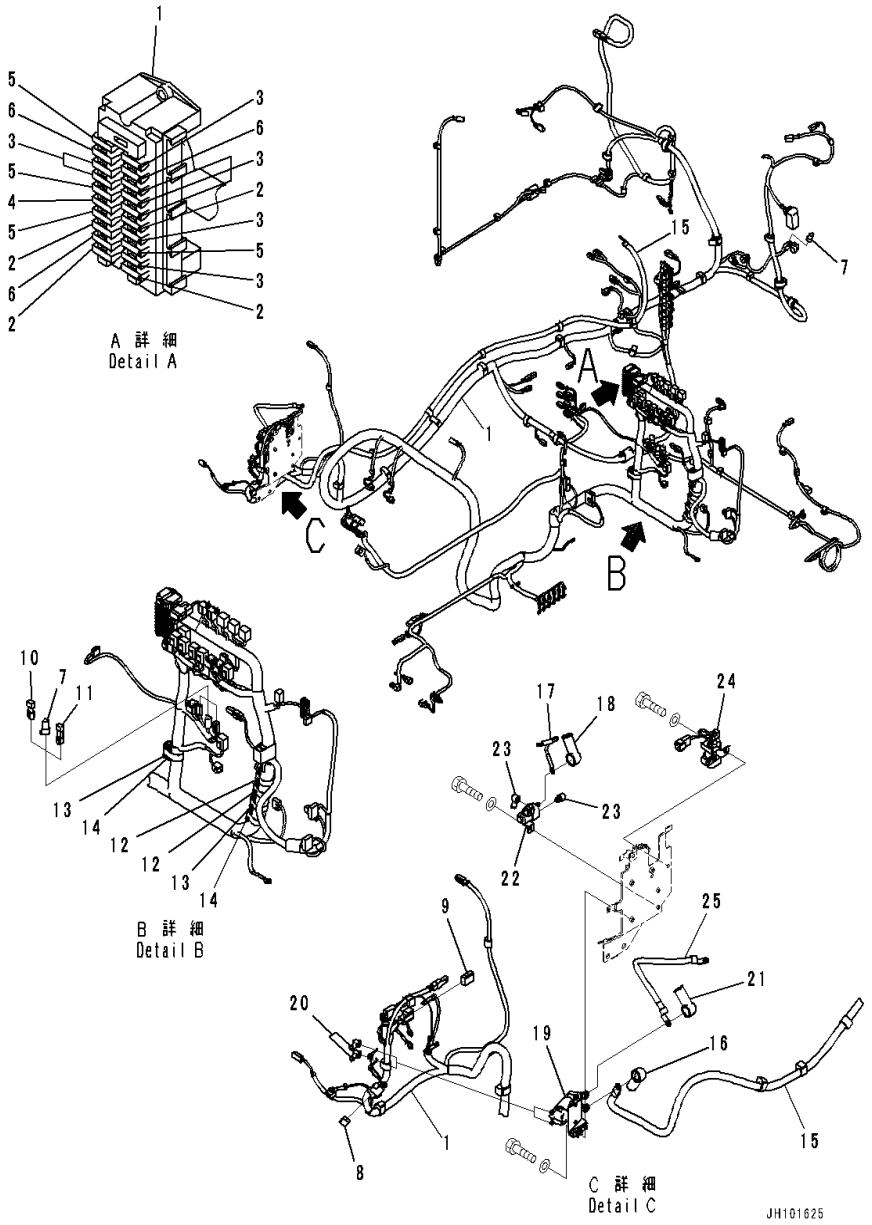

Index	Code	Part Number	Description	Qty	Serial Number
1		20Y-06-56113	Wiring Harness	1	C00001-
2		08041-00500	• Fuse,5Amp.	4	C00001-
3		08041-01000	• Fuse,10Amp.	8	C00001-
4		08041-01500	• Fuse,15Amp.	1	C00001-
5		08041-02000	• Fuse,20Amp.	4	C00001-
6		08041-03000	• Fuse,30Amp.	3	C00001-
7		19M-06-31720	• Resistor	2	C00001-
8		20Y-06-31660	• Fusible Link,30Amp.	1	C00001-
9		22U-06-11270	• Fusible Link,65Amp.	1	C00001-
10		2A5-06-25161	• Resistor	1	C00001-
11		20Y-06-43270	• Resistor	1	C00001-
12		HM6440-0129	• F-Connector,Pink	2	C00001-
		HM6440-0128	• M-Connector,Pink	2	C00001-
13		HM6400-0013	• F-Connector,Green	2	C00001-
		HM6413-0072	• M-Connector	2	C00001-
14		HM6400-0012	• F-Connector,Black	2	C00001-
		HM6409-0071	• M-Connector,Black	2	C00001-
15		20Y-06-56121	Cable	1	C00001-
16		2A5-06-11990	Cap	1	C00001-
17		20Y-06-56370	Cable	1	C00001-
18		22L-06-21250	Cap	1	C00001-
19		08088-70000	Switch, Battery Relay	1	C00001-
20		08038-00519	Cap, Terminal	2	C00001-
21		22L-06-21250	Cap	1	C00001-
22		600-815-2170	Switch, Heater	1	C00001-
23		08038-00519	Cap, Terminal	2	C00001-
24		600-815-8941	Relay	1	C00001-
25		08028-GC055	Cable, Ground	1	C00001-

FIG. K1110-001035 Cab (Floor, Wiring Harness Clamp and Ground)

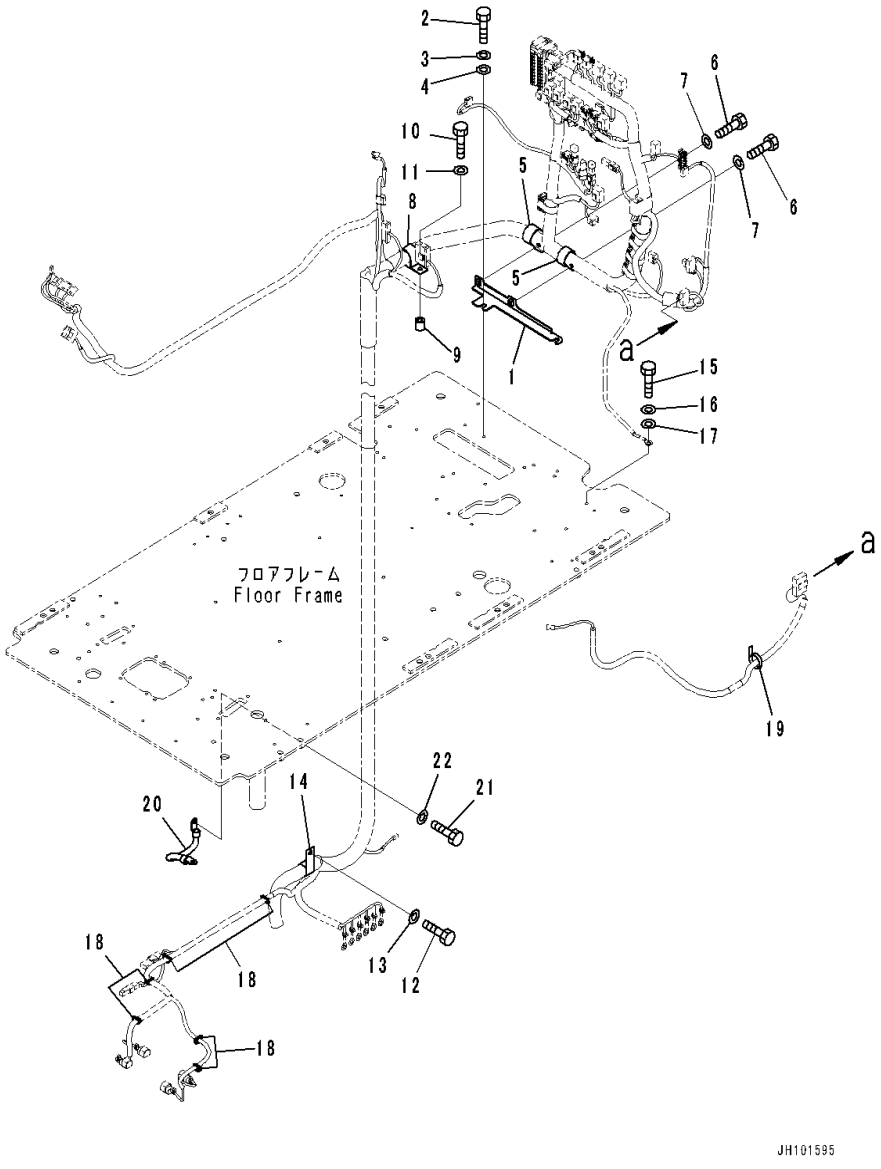

Index	Code	Part Number	Description	Qty	Serial Number
1		20Y-43-56110	Bracket	1	C00001-
2		01010-81016	Bolt	2	C00001-
3		01643-31032	Washer	2	C00001-
4		01643-31032	Washer	1	C00001-
5		208-06-19170	Clip	2	C00001-
6		01010-81020	Bolt	2	C00001-
7		01643-31032	Washer	2	C00001-
8		208-06-19170	Clip	1	C00001-
9		195-33-11220	Spacer	1	C00001-
10		01010-81040	Bolt	1	C00001-
11		01643-31032	Washer	1	C00001-
12		01010-81020	Bolt	1	C00001-
13		01643-31032	Washer	1	C00001-
14		04434-53411	Clip	1	C00001-
15		01010-81020	Bolt	1	C00001-
16		01643-31032	Washer	1	C00001-
17		01643-81032	Washer, Flat	1	C00001-
18		08034-20519	Band	6	C00001-
19		08059-00413	Clip	1	C00001-
20		08028-43030	Cable, Ground	1	C00001-
21		01010-81020	Bolt	1	C00001-
22		01643-31032	Washer	1	C00001-

FIG. K1110-001036 Cab (Floor, Window Washer Hose)

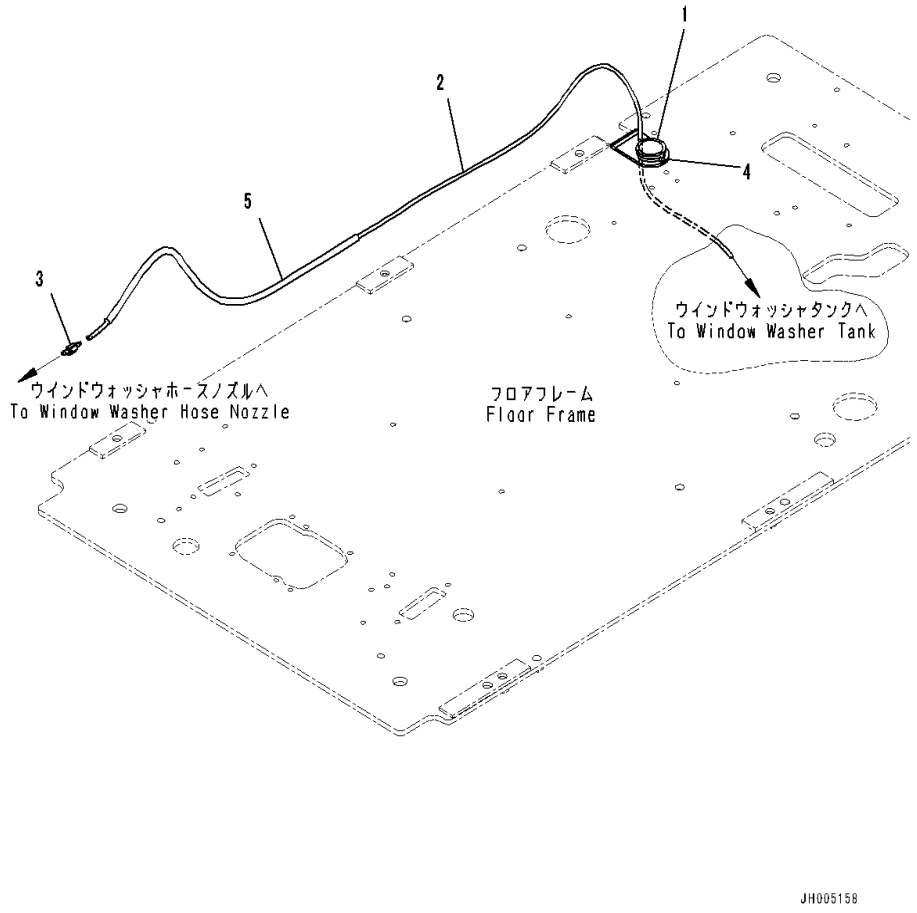

Index	Code	Part Number	Description	Qty	Serial Number
1		2A5-43-11420	Grommet	1	C00001-
2		20Y-54-58410	Hose	1	C00001-
3		17A-Z11-4610	Valve	1	C00001-
4		08034-20536	Band	1	C00001-
5		08017-A0707	Conduit	1	C00001-

FIG. K1110-001037 Cab (Floor, Work Equipment Control Lever, L.H.)

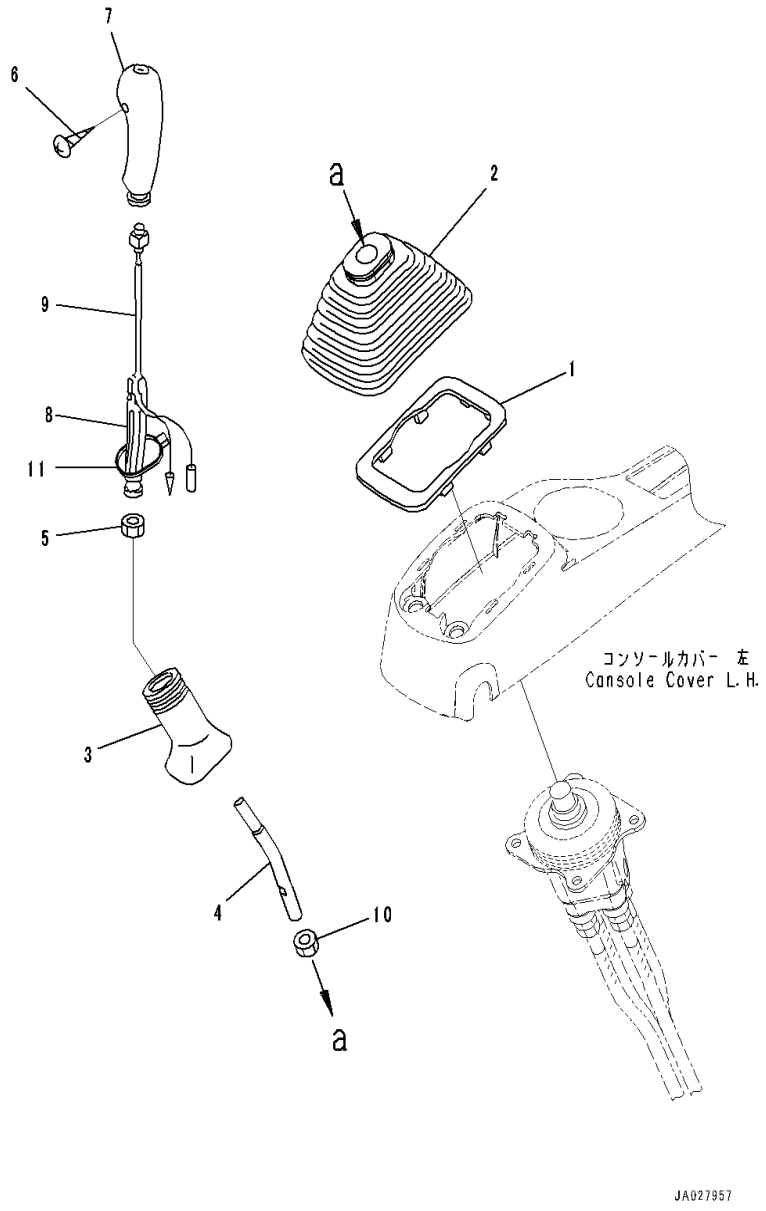

Index	Code	Part Number	Description	Qty	Serial Number
1		20Y-43-22250	Plate	1	C00001-
2		20Y-43-22261	Boot	1	C00001-
3		20Y-43-22370	Boot	1	C00001-
		20Y-43-42380	Lever Assembly	1	C00001-
4	C1		• Lever	1	C00001-
5		600-411-1280	• Nut	1	C00001-
		22U-43-21182	Knob	1	C00001-
6	C1		• Screw	1	C00001-
7		20Y-43-22381	• Knob	1	C00001-
8		20Y-43-22421	• Insert	1	C00001-
9		22U-43-21211	• Switch, Horn	1	C00001-
10		01582-11411	Nut	1	C00001-
11		08034-20536	Band	1	C00001-

FIG. K1110-001038 Cab (PPC Valve, 2/3, L.H.)

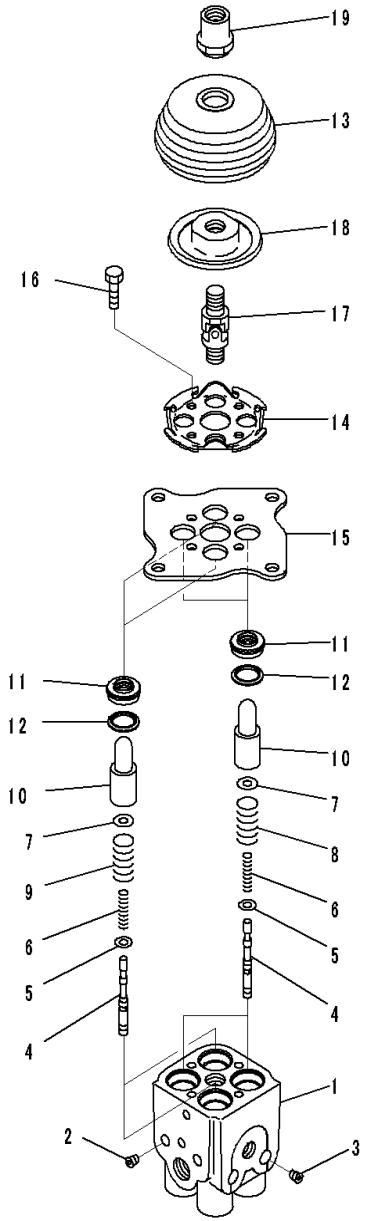

Index	Code	Part Number	Description	Qty	Serial Number
		702-16-03910	Valve Assembly, Pilot	1	C00001-
1	C1		• Body, Valve	1	C00001-
2	C1		• Plug	2	C00001-
3	C1		• Plug	2	C00001-
4	C1		• Valve	4	C00001-
5	C1		• Shim,T=0.30mm	4	C00001-
6	C1		• Spring	4	C00001-
7	C1		• Retainer	4	C00001-
8	C1		• Spring	2	C00001-
9	C1		• Spring	2	C00001-
10	C1		• Piston	4	C00001-
11		702-16-71210	• Seal	4	C00001-
12		702-16-71160	• Seat	4	C00001-
13		702-16-71280	• Boot	1	C00001-
14	C1		• Plate	1	C00001-
15	C1		• Plate	1	C00001-
16		01010-80620	• Bolt	4	C00001-
17		702-16-51240	• Joint, Universal	1	C00001-
18		702-16-71361	• Disc	1	C00001-
19		702-16-71441	• Nut	1	C00001-

FIG. K1110-001039 Cab (Floor, PPC Valve Mounting for Work Equipment, L.H., 1/2)

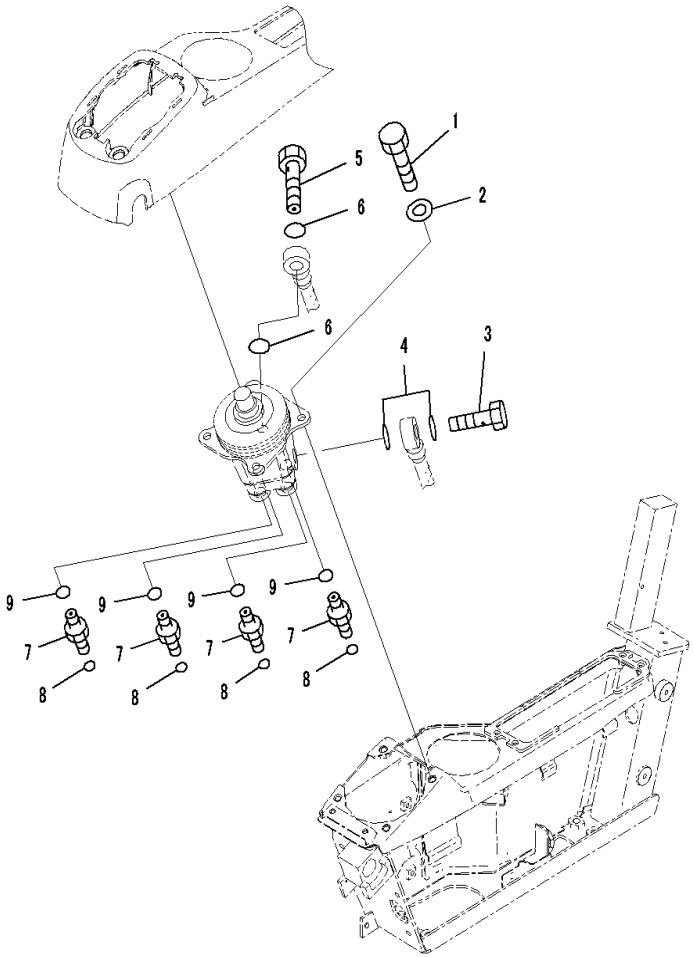

Index	Code	Part Number	Description	Qty	Serial Number
1		01010-80820	Bolt	4	C00001-
2		01643-30823	Washer	4	C00001-
3		20Y-62-18910	Plug	1	C00001-
4		07000-12018	O-ring	2	C00001-
5		20Y-62-18890	Bolt, Joint	1	C00001-
6		07000-12015	O-ring	2	C00001-
7		11Y-62-12130	Nipple	4	C00001-
8		02896-11008	O-ring	4	C00001-
9		07002-11423	O-ring	4	C00001-

FIG. K1110-001040 Cab (Floor, PPC Valve Mounting for Work Equipment, L.H., 2/2)

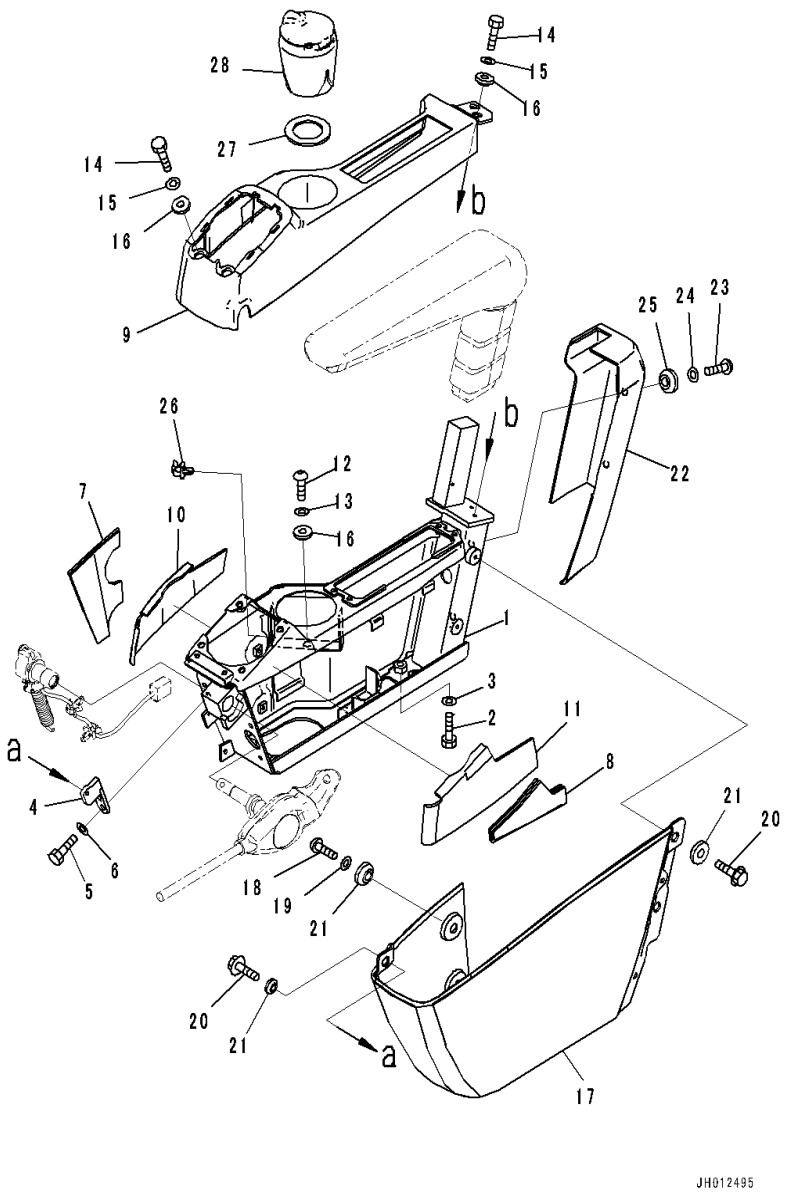

Index	Code	Part Number	Description	Qty	Serial Number
1		20Y-43-56130	Frame	1	C00001-
2		01010-81030	Bolt	4	C00001-
3		01643-31032	Washer	4	C00001-
4		20Y-43-41472	Bracket	1	C00001-
5		01010-80616	Bolt	2	C00001-
6		01643-30623	Washer	2	C00001-
7		20Y-43-41621	Sheet	1	C00001-
8		20Y-43-41641	Sheet	1	C00001-
9		20Y-43-41424	Cover	1	C00001-
10		20Y-43-41651	Sheet	1	C00001-
11		20Y-43-41661	Sheet	1	C00001-
12		01245-00616	Screw	1	C00001-
13		01643-70623	Washer	1	C00001-
14		01010-80616	Bolt	4	C00001-
15		01643-30623	Washer	4	C00001-
16		20Y-43-41290	Collar	5	C00001-
17		20Y-43-41442	Cover	1	C00001-
18		01245-00616	Screw	2	C00001-
19		01643-70623	Washer	2	C00001-
20		01435-00612	Bolt	3	C00001-
21		20Y-43-41290	Collar	5	C00001-
22		20Y-43-41453	Cover	1	C00001-
23		01245-00616	Screw	2	C00001-
24		01643-70623	Washer	2	C00001-
25		20Y-43-41290	Collar	2	C00001-
26		22U-43-23260	Clip	1	C00001-
27		20Y-43-41970	Sheet	1	C00001-
28		20Y-43-41491	Ashtray	1	C00001-

FIG. K1110-001041 Cab (Radio USB MP3) (Floor, Radio and Work Equipment Lock Lever, Radio USB MP3)

Index	Code	Part Number	Description	Qty	Serial Number
1		20Y-06-C1512	Radio, With USB MP3	1	C00001-
2		20Y-43-C1211	Plate	2	C00001-
3		01023-60510	Screw	6	C00001-
4		01010-80616	Bolt	4	C00001-
5		01643-30623	Washer	4	C00001-
6		566-07-12151	Cable	1	C00001-
7		20Y-06-16910	Wiring Harness	1	C00001-
8		08034-20414	Band,Black	1	C00001-
9		01023-60410	Screw	6	C00001-
10		08037-11425	Grommet	1	C00001-
11		208-53-12280	Cap	1	C00001-
12		20Y-43-31513	Lever	1	C00001-
13		20Y-43-31522	Cover	1	C00001-
14		20Y-43-31611	Knob	1	C00001-
15		20Y-43-31621	Cover	1	C00001-
16		20Y-43-31432	Cam	1	C00001-
17		01252-70816	Bolt	1	C00001-
18		20Y-43-31421	Spring	1	C00001-
19		20Y-43-31440	Ring	1	C00001-
20		20Y-43-31450	Plate	1	C00001-
21		06124-01616	Bearing	2	C00001-
22		22U-06-22490	Plate	1	C00001-
23		22U-06-22360	Switch Assembly	1	C00001-
24		22U-43-23260	Clip	2	C00001-
25		01023-60320	Screw	2	C00001-

FIG. K1110-001042 Cab (Floor, Armrest, L.H.)

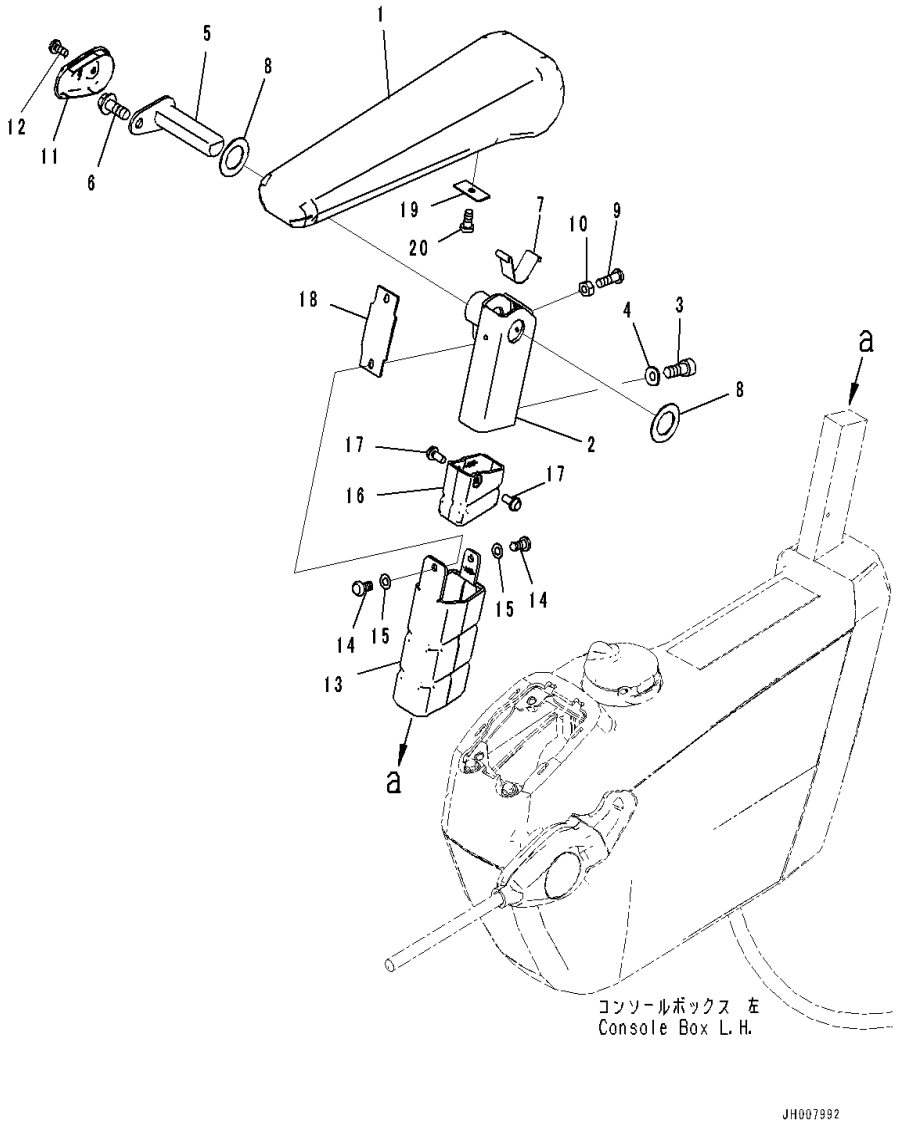

Index	Code	Part Number	Description	Qty	Serial Number
1		20Y-43-41143	Armrest	1	C00001-
2		20Y-43-41173	Bracket	1	C00001-
3		01252-80820	Bolt	2	C00001-
4		01643-70823	Washer	2	C00001-
5		20Y-43-41162	Pin	1	C00001-
6		01435-40816	Bolt	1	C00001-
7		20Y-43-41152	Spring	1	C00001-
8		437-40-26240	Washer	2	C00001-
9		01245-00620	Screw	1	C00001-
10		01580-40605	Nut	1	C00001-
11		20Y-43-41181	Cap	1	C00001-
12		01023-20512	Screw	1	C00001-
13		20Y-43-41191	Cover	1	C00001-
14		20Y-53-15890	Screw	2	C00001-
15		01640-50508	Washer	2	C00001-
16		20Y-43-41591	Cover	1	C00001-
17		01023-20512	Screw	2	C00001-
18		20Y-43-41281	Rubber	1	C00001-
19		20Y-43-41461	Plate	1	C00001-
20		01370-40610	Screw	1	C00001-

FIG. K1110-001043 Cab (Floor, Work Equipment Control Lever, R.H.)

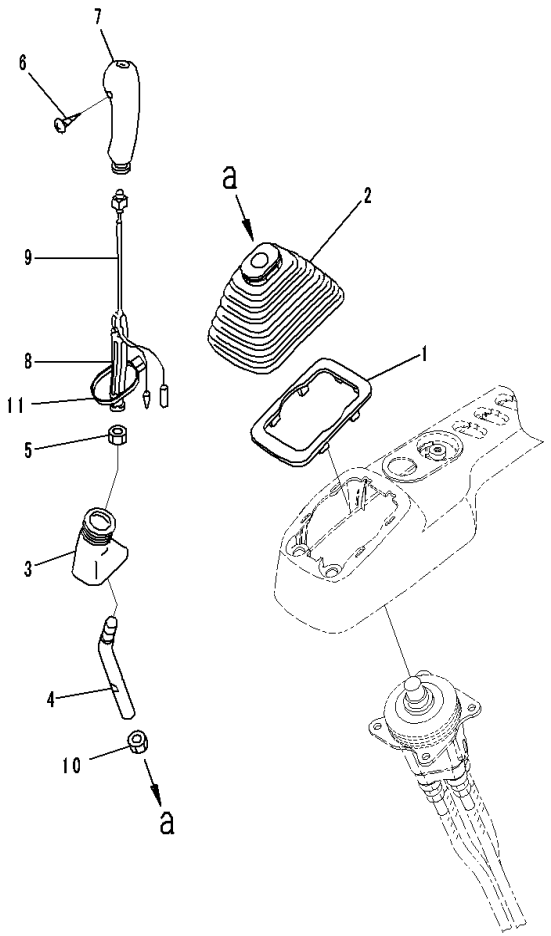

Index	Code	Part Number	Description	Qty	Serial Number
1		20Y-43-22250	Plate	1	C00001-
2		20Y-43-22261	Boot	1	C00001-
3		20Y-43-22370	Boot	1	C00001-
		20Y-43-42380	Lever Assembly	1	C00001-
4	C1		• Lever	1	C00001-
5		600-411-1280	• Nut	1	C00001-
		2A5-43-12941	Knob	1	C00001-
6	C1		• Screw	1	C00001-
7		2A5-43-12951	• Knob	1	C00001-
8		2A5-43-12971	• Insert	1	C00001-
9		2A5-43-12861	• Switch	1	C00001-
10		01582-11411	Nut	1	C00001-
11		08034-20536	Band	1	C00001-

FIG. K1110-001044 Cab (PPC Valve, 3/3, R.H.)

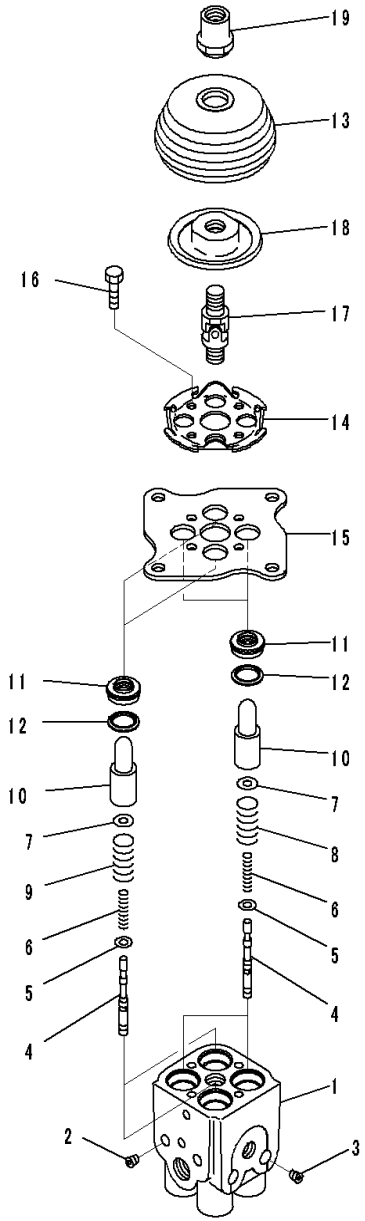

Index	Code	Part Number	Description	Qty	Serial Number
		702-16-03910	Valve Assembly, Pilot	1	C00001-
1	C1		• Body, Valve	1	C00001-
2	C1		• Plug	2	C00001-
3	C1		• Plug	2	C00001-
4	C1		• Valve	4	C00001-
5	C1		• Shim,T=0.30mm	4	C00001-
6	C1		• Spring	4	C00001-
7	C1		• Retainer	4	C00001-
8	C1		• Spring	2	C00001-
9	C1		• Spring	2	C00001-
10	C1		• Piston	4	C00001-
11		702-16-71210	• Seal	4	C00001-
12		702-16-71160	• Seat	4	C00001-
13		702-16-71280	• Boot	1	C00001-
14	C1		• Plate	1	C00001-
15	C1		• Plate	1	C00001-
16		01010-80620	• Bolt	4	C00001-
17		702-16-51240	• Joint, Universal	1	C00001-
18		702-16-71361	• Disc	1	C00001-
19		702-16-71441	• Nut	1	C00001-

FIG. K1110-001045 Cab (Floor, PPC Valve Mounting for Work Equipment, R.H.)

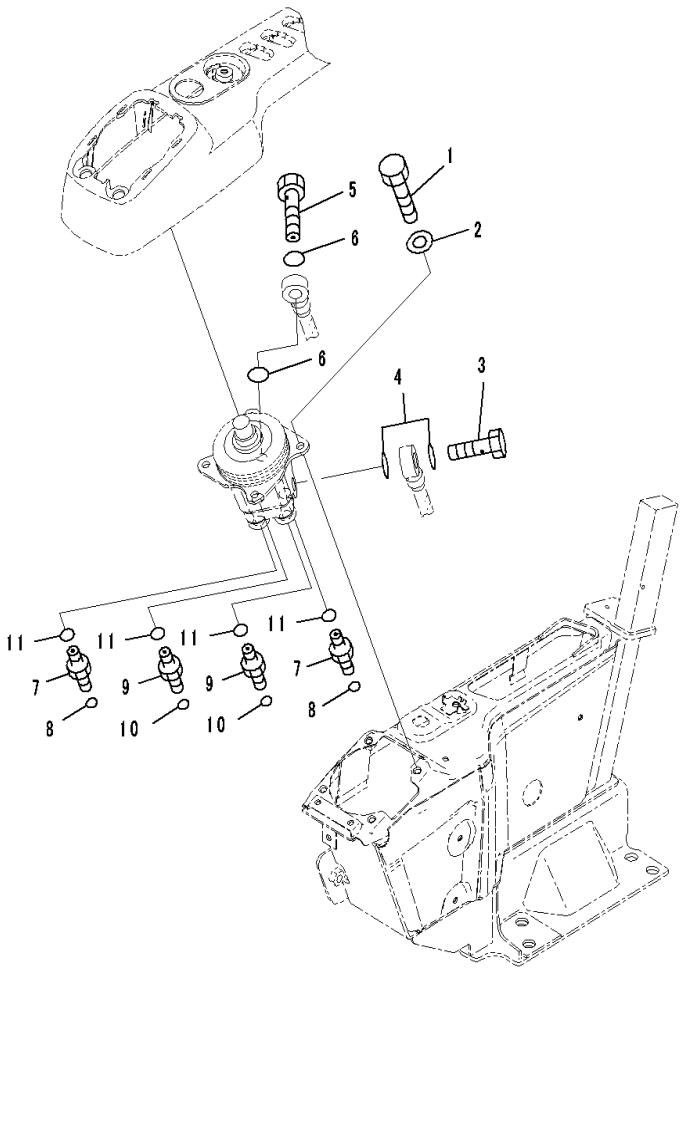

Index	Code	Part Number	Description	Qty	Serial Number
1		01010-80820	Bolt	4	C00001-
2		01643-30823	Washer	4	C00001-
3		20Y-62-18910	Plug	1	C00001-
4		07000-12018	O-ring	2	C00001-
5		20Y-62-18890	Bolt, Joint	1	C00001-
6		07000-12015	O-ring	2	C00001-
7		11Y-62-12130	Nipple	2	C00001-
8		02896-11008	O-ring	2	C00001-
9		11Y-62-12520	Union	2	C00001-
10		02896-11009	O-ring	2	C00001-
11		07002-11423	O-ring	4	C00001-

FIG. K1110-001046 Cab (Floor, Console, R.H.)

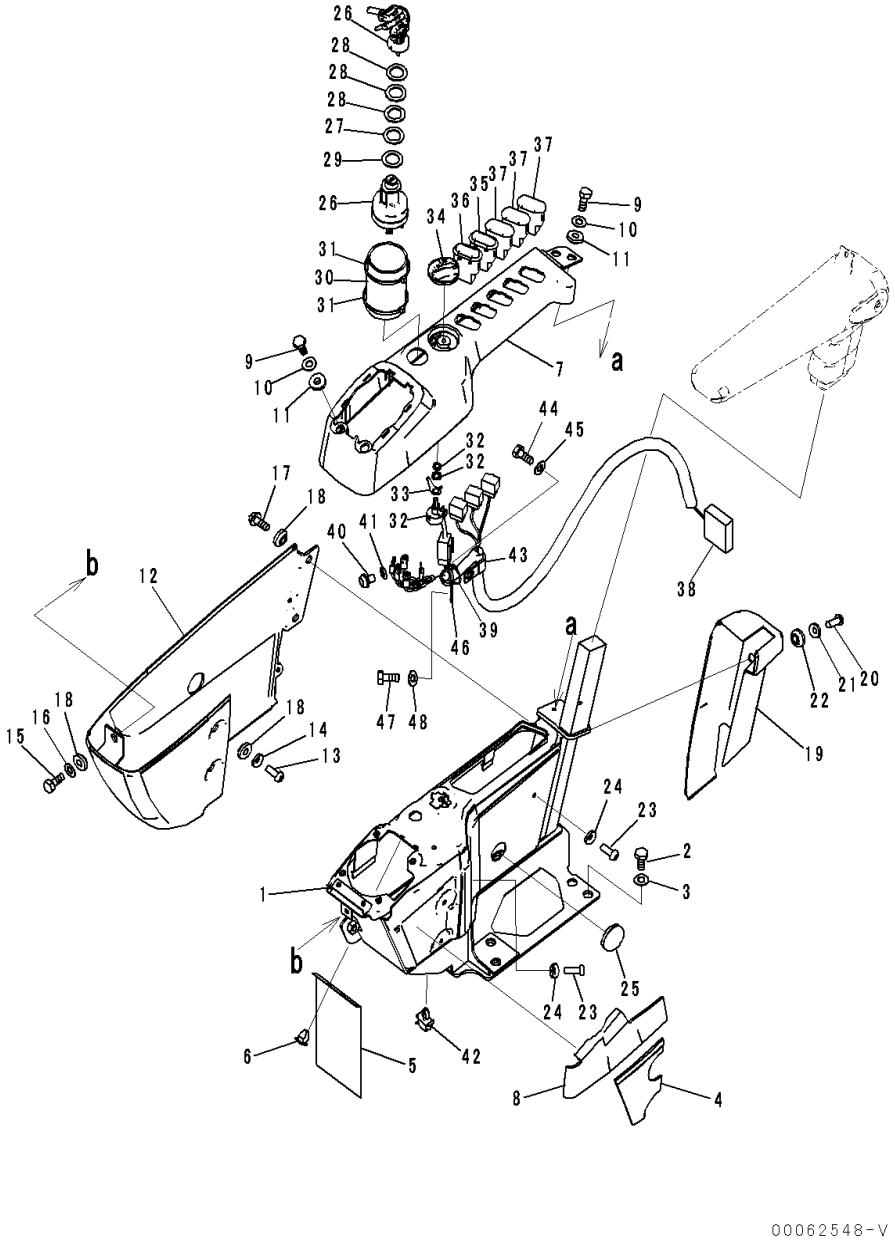

Index	Code	Part Number	Description	Qty	Serial Number
1		20Y-43-56120	Frame	1	C00001-
2		01010-D1230	Bolt	4	C00001-
3		01643-71232	Washer	4	C00001-
4		20Y-43-41631	Sheet	1	C00001-
5		22U-43-23251	Sheet	1	C00001-
6		22U-43-23290	Clip	2	C00001-
7		20Y-43-41324	Cover	1	C00001-
8		20Y-43-41661	Sheet	1	C00001-
9		01010-80616	Bolt	4	C00001-
10		01643-30623	Washer	4	C00001-
11		20Y-43-41290	Collar	4	C00001-
12		20Y-43-41332	Cover	1	C00001-
13		01245-00616	Screw	2	C00001-
14		01643-70623	Washer	2	C00001-
15		01010-80616	Bolt	1	C00001-
16		01643-30623	Washer	1	C00001-
17		01435-00612	Bolt	2	C00001-
18		20Y-43-41290	Collar	5	C00001-
19		20Y-43-41353	Cover	1	C00001-
20		01245-00616	Screw	2	C00001-
21		01643-70623	Washer	2	C00001-
22		20Y-43-41290	Collar	2	C00001-
23		01245-00616	Screw	3	C00001-
24		01643-70623	Washer	3	C00001-
25		09415-02512	Cap	1	C00001-
26		08086-50000	Switch, Starting	1	C00001-
27		20Y-43-41740	Plate	1	C00001-
28		20Y-43-41750	Washer	3	C00001-
29		20Y-43-41790	Washer	1	C00001-
30		20Y-43-41671	Sheet	1	C00001-
31		08034-20519	Band	2	C00001-
32		22U-06-22380	Potentiometer	1	C00001-
33		22U-06-22460	Spring	1	C00001-
34		20Y-43-41781	Knob	1	C00001-
35		20Y-06-42110	Switch, Swing Lock	1	C00001-
36		20Y-06-42450	Switch, Lamp	1	C00001-
37		20Y-06-42190	Cover	3	C00001-
38		20Y-06-16920	Wiring Harness	1	C00001-
39		08034-20414	Band,Black	1	C00001-
40		01023-10508	Screw	5	C00001-

FIG. K1110-001046 Cab (Floor, Console, R.H.)

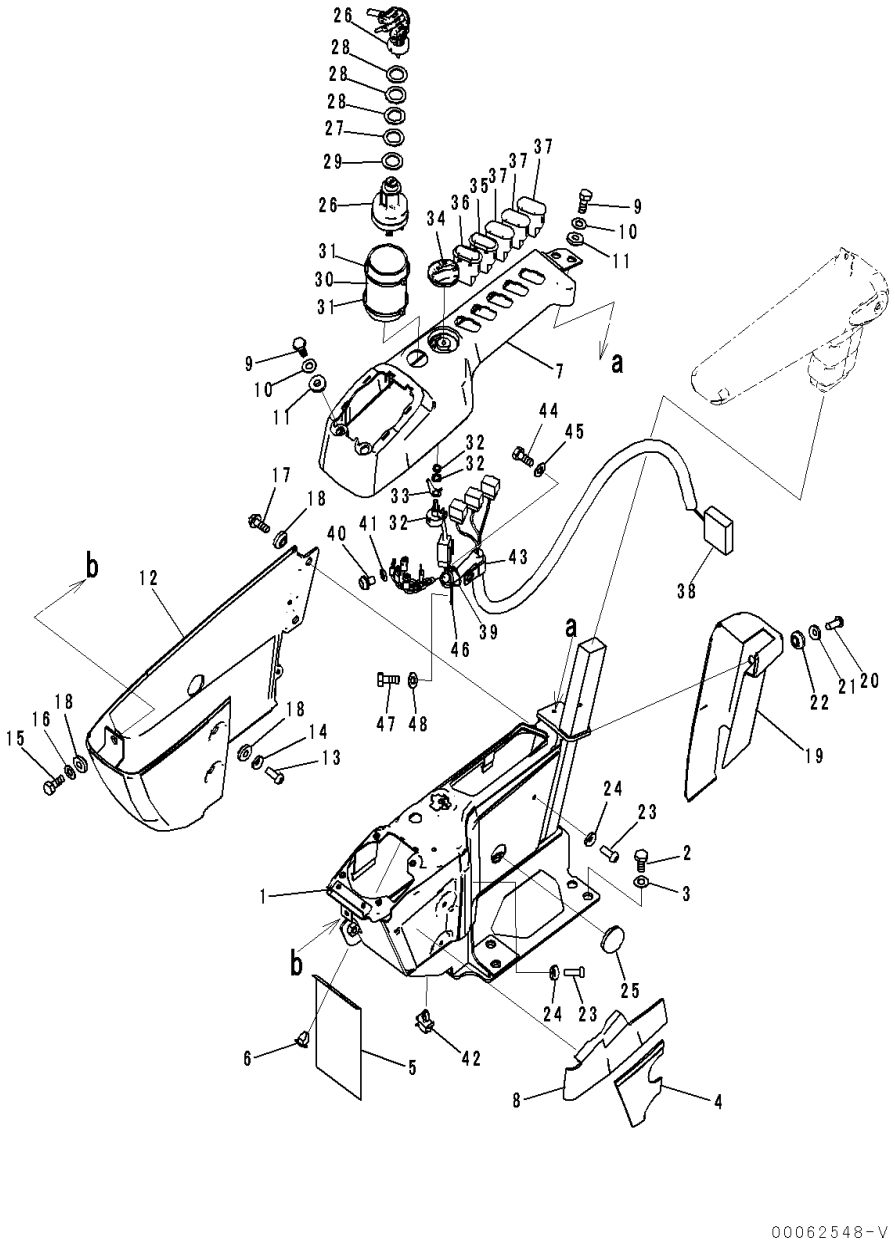

Index	Code	Part Number	Description	Qty	Serial Number
41		01601-20513	Washer	5	C00001-
42		22U-43-23260	Clip	1	C00001-
43		04434-51710	Clip	1	C00001-
44		01010-81016	Bolt	1	C00001-
45		01643-31032	Washer	1	C00001-
46		04434-51410	Clip	1	C00001-
47		01010-81016	Bolt	1	C00001-
48		01643-31032	Washer	1	C00001-

FIG. K1110-001047 Cab (Floor, Armrest, R.H.)

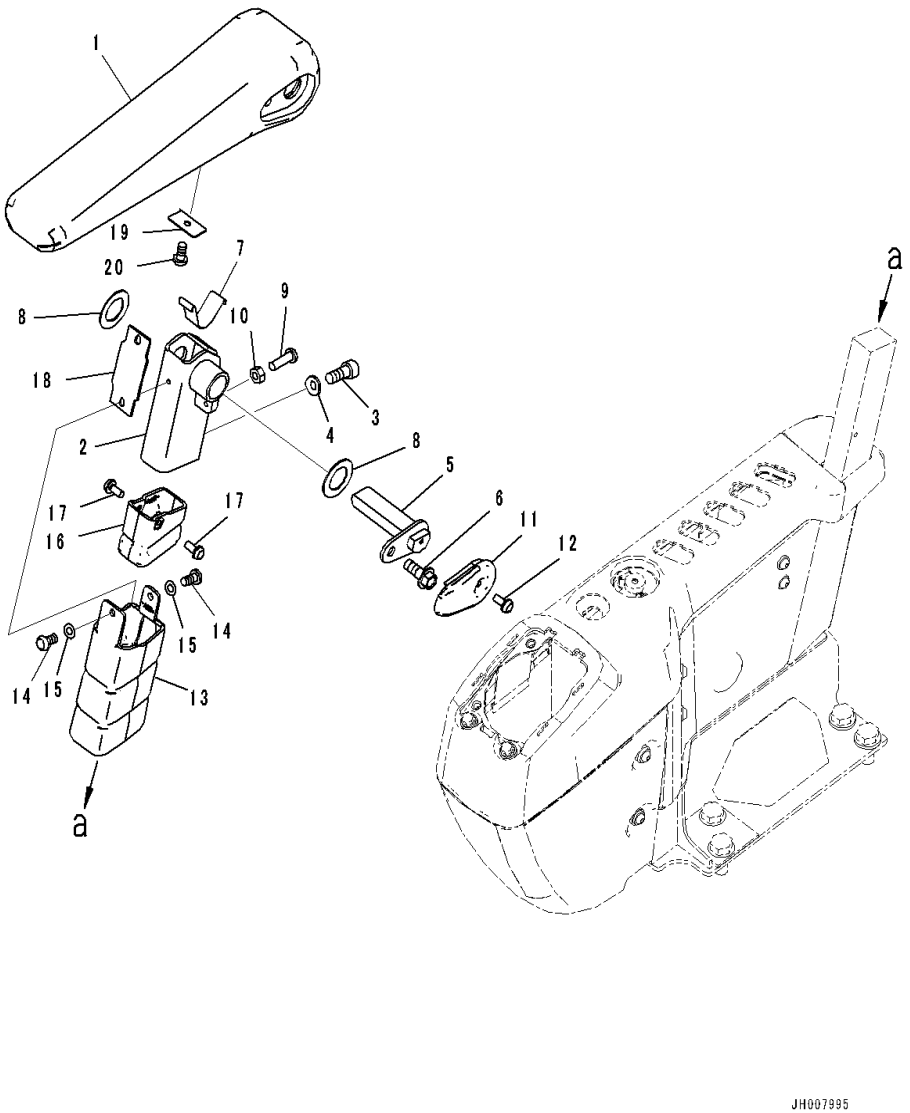

Index	Code	Part Number	Description	Qty	Serial Number
1		20Y-43-41343	Armrest	1	C00001-
2		20Y-43-41533	Bracket	1	C00001-
3		01252-80820	Bolt	2	C00001-
4		01643-70823	Washer	2	C00001-
5		20Y-43-41850	Pin	1	C00001-
6		01435-40816	Bolt	1	C00001-
7		20Y-43-41152	Spring	1	C00001-
8		437-40-26240	Washer	2	C00001-
9		01245-00620	Screw	1	C00001-
10		01580-40605	Nut	1	C00001-
11		20Y-43-41181	Cap	1	C00001-
12		01023-20512	Screw	1	C00001-
13		20Y-43-41191	Cover	1	C00001-
14		20Y-53-15890	Screw	2	C00001-
15		01640-50508	Washer	2	C00001-
16		20Y-43-41591	Cover	1	C00001-
17		01023-20512	Screw	2	C00001-
18		20Y-43-41281	Rubber	1	C00001-
19		20Y-43-41461	Plate	1	C00001-
20		01370-40610	Screw	1	C00001-

FIG. K1110-001048 CAB (Inner Parts, Air Conditioner Unit, 1/3)

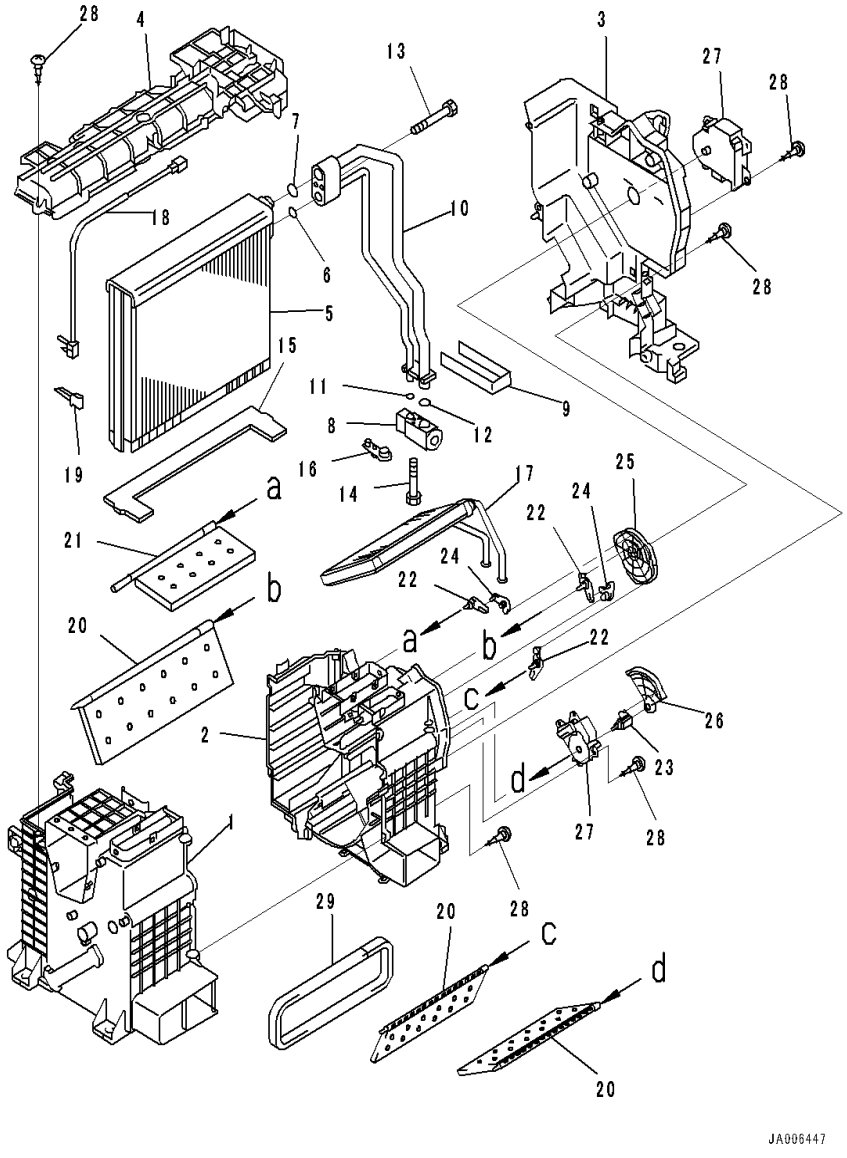

Index	Code	Part Number	Description	Qty	Serial Number
		2A5-979-1113	Air Conditioner	1	C00001-
		ND443120-1961	• Cooling Assembly	1	C00001-
1		ND245450-8520	• • Case	1	C00001-
2		ND245450-8530	• • Case	1	C00001-
3		ND245450-8540	• • Case	1	C00001-
4		ND116577-0970	• • Plate	1	C00001-
		ND446010-5360	• • Evaporator	1	C00001-
5		ND447610-0630	• • • Evaporator Assembly	1	C00001-
6		ND949142-0020	• • • O-Ring	1	C00001-
7		ND949142-0030	• • • O-Ring	1	C00001-
8		ND447500-4010	• • • Valve	1	C00001-
9		ND146636-7450	• • • Packing	1	C00001-
10		ND446260-2160	• • • Tube	1	C00001-
11		ND949142-0020	• • • O-Ring	1	C00001-
12		ND949142-0030	• • • O-Ring	1	C00001-
13		ND949046-3610	• • • Bolt	2	C00001-
14		ND949046-3100	• • • Bolt	2	C00001-
15		ND146636-7460	• • • Packing	1	C00001-
16		ND445021-3091	• • • Plug	1	C00001-
17		ND116420-7450	• • Core Subassembly	1	C00001-
18		ND100775-8400	• • Thermistor Assembly	1	C00001-
19		ND246790-2060	• • Clamp	1	C00001-
20		ND116740-4980	• • Door Assembly	3	C00001-
21		ND116740-4990	• • Door Assembly	1	C00001-
22		ND116782-6690	• • Lever	3	C00001-
23		ND116782-6700	• • Lever	1	C00001-
24		ND116780-5651	• • Lever Subassembly	2	C00001-
25		ND116577-0981	• • Plate	1	C00001-
26		ND116577-0990	• • Plate	1	C00001-
27		ND063800-0300	• • Servo Motor Assembly	2	C00001-
28		ND949001-1730	• • Screw, Tapping	23	C00001-
29		ND146636-7560	• • Packing	1	C00001-

FIG. K1110-001049 CAB (Inner Parts, Air Conditioner Unit, 2/3)

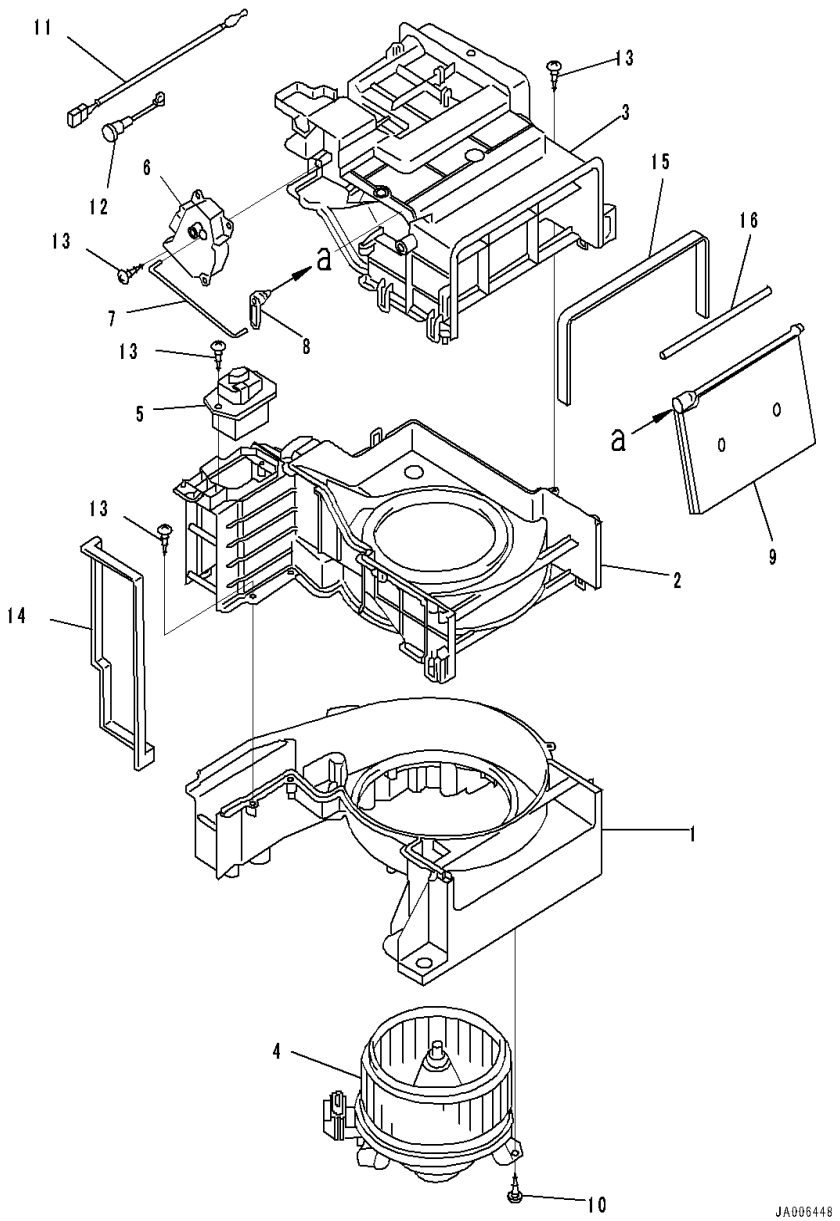

Index	Code	Part Number	Description	Qty	Serial Number
		2A5-979-1113	Air Conditioner	1	C00001-
		ND117300-2601	• Motor Assembly	1	C00001-
1		ND116242-7000	• • Case	1	C00001-
2		ND116242-7010	• • Case	1	C00001-
3		ND017321-4600	• • Case	1	C00001-
4		ND116360-0030	• • Motor Assembly	1	C00001-
5		ND077800-1130	• • Transistor	1	C00001-
6		ND063600-4580	• • Servo Motor Assembly	1	C00001-
7		ND116662-8530	• • Shaft	1	C00001-
8		ND116782-6720	• • Lever	1	C00001-
9		ND116740-5000	• • Door Assembly	1	C00001-
10		ND949008-0330	• • Screw, Tapping	3	C00001-
11		ND077500-5650	• • Thermistor Assembly	1	C00001-
12		ND017661-3560	• • Bracket	1	C00001-
13		ND949001-1730	• • Screw, Tapping	11	C00001-
14		ND146636-7530	• • Packing	1	C00001-
15		ND146636-7540	• • Packing	1	C00001-
16		ND146636-7550	• • Packing	1	C00001-

FIG. K1110-001050 Cab (Inner Parts, Air Conditioner Unit, 3/3)

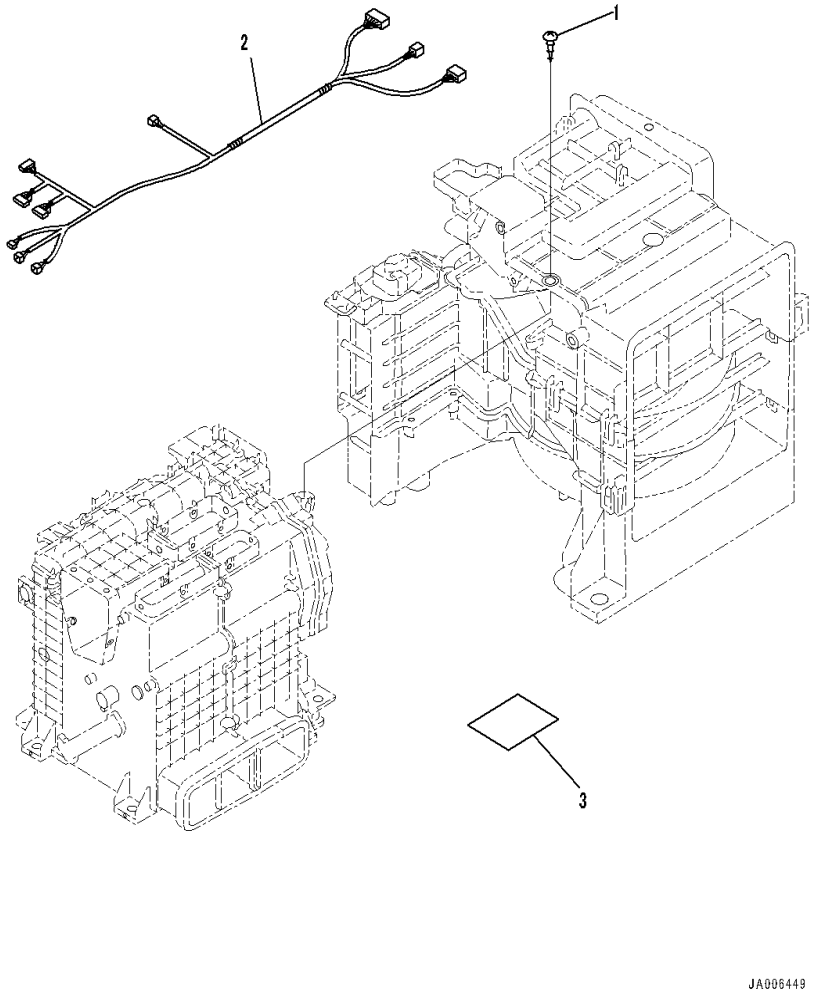

Index	Code	Part Number	Description	Qty	Serial Number
		2A5-979-1113	Air Conditioner	1	C00001-
1		ND949008-0330	• Screw, Tapping	2	C00001-
2		ND246470-8154	• Wiring Harness Assembly	1	C00001-
3		ND113104-2260	• Plate, Name	1	C00001-

FIG. K1110-001051 Cab (Floor, Air Conditioner Mounting)

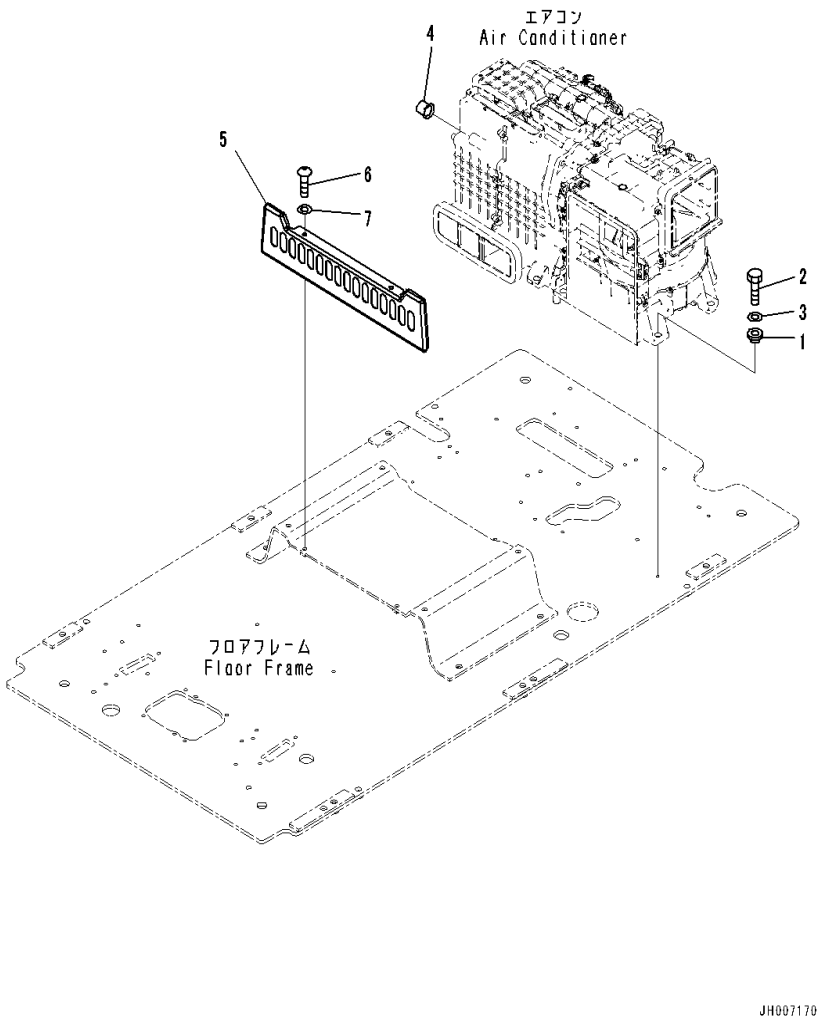

Index	Code	Part Number	Description	Qty	Serial Number
1		208-979-7540	Collar	6	C00001-
2		01010-80825	Bolt	6	C00001-
3		01643-30823	Washer	6	C00001-
4		17A-979-3131	Cap	1	C00001-
5		20Y-43-41240	Cover	1	C00001-
6		01245-00820	Screw	2	C00001-
7		01643-70823	Washer	2	C00001-

FIG. K1110-001052 Cab (Floor, Air Conditioner Piping)

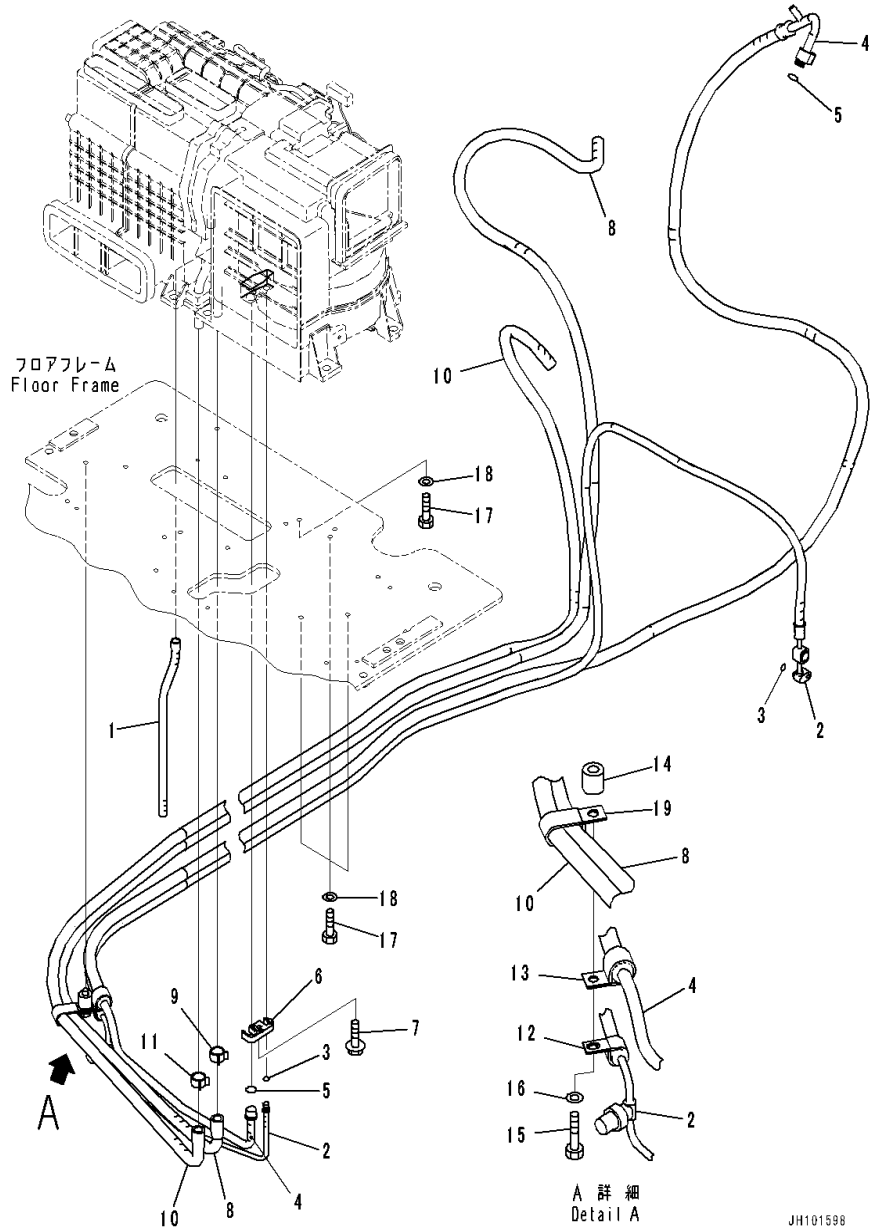

Index	Code	Part Number	Description	Qty	Serial Number
1		2A5-979-1131	Hose	1	C00001-
2		20Y-979-5681	Hose	1	C00001-
3		20Y-979-3150	• O-ring	2	C00001-
4		20Y-979-5691	Hose	1	C00001-
5		20Y-979-3130	• O-ring	2	C00001-
6		208-979-7650	Connector	1	C00001-
7		01435-40620	Bolt	1	C00001-
8		20Y-979-5770	Hose Assembly	1	C00001-
9		09479-02400	Clip	1	C00001-
10		20Y-979-5721	Hose Assembly	1	C00001-
11		09479-02400	Clip	1	C00001-
12		04434-51910	Clip	1	C00001-
13		04434-52511	Clip	1	C00001-
14		195-33-11220	Spacer	1	C00001-
15		01010-81045	Bolt	1	C00001-
16		01643-31032	Washer	1	C00001-
17		01010-81016	Bolt	4	C00001-
18		01643-31032	Washer	4	C00001-
19		141-06-11220	Clip	1	C00001-

FIG. K1110-001053 CAB (Floor, PPC Valve Piping for Travel)

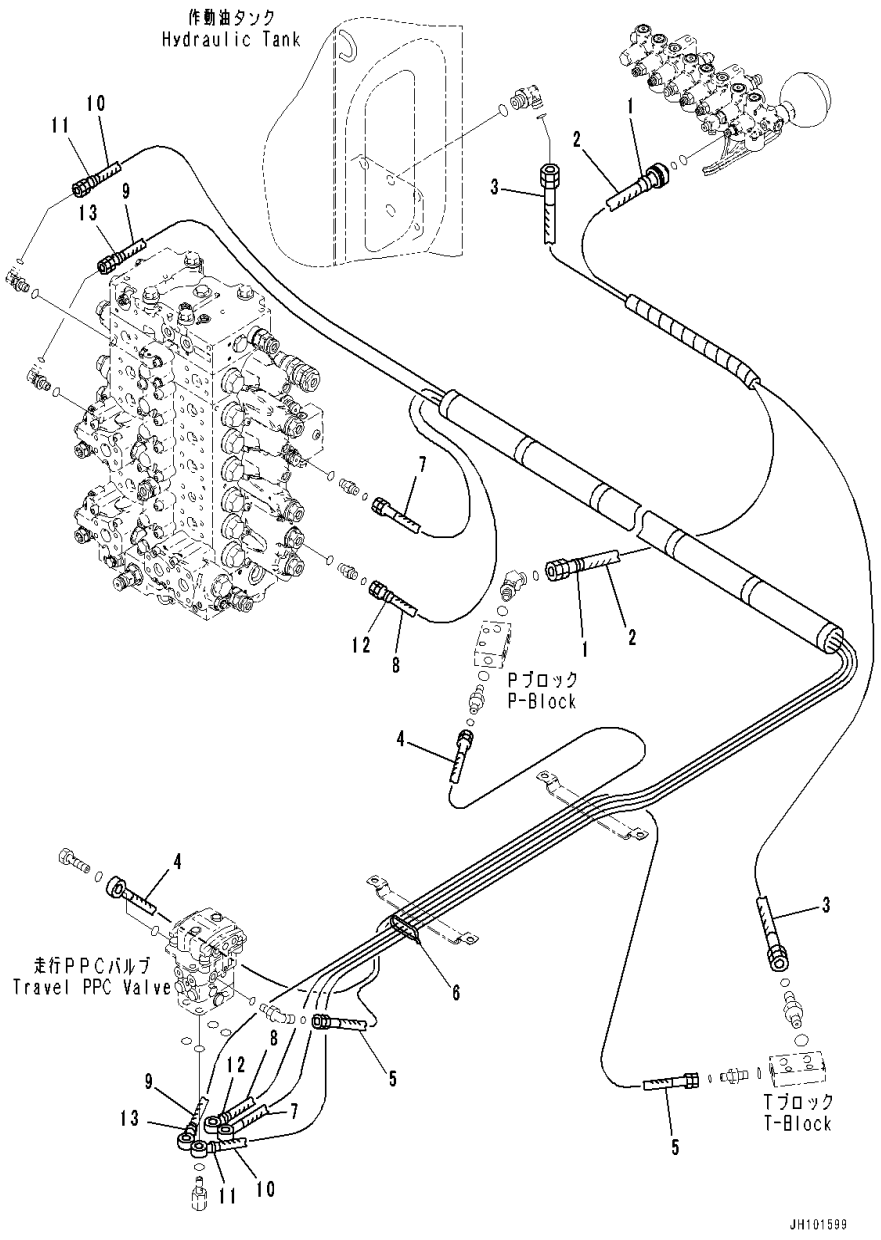

Index	Code	Part Number	Description	Qty	Serial Number
		20Y-62-57580	Hose Assembly	1	C00001-
1		20Y-62-22790	• Band, Red	2	C00001-
2		20Y-62-52210	• Hose	1	C00001-
3		22B-62-45410	• Hose	1	C00001-
4		208-62-72290	Hose	1	C00001-
5		208-62-72310	Hose	1	C00001-
		20Y-62-56861	Hose Assembly	1	C00001-
6		08034-20536	• Band	1	C00001-
7		20Y-62-56871	• Hose	1	C00001-
8		20Y-62-56880	• Hose	1	C00001-
9		2A5-62-15730	• Hose	1	C00001-
10		2A5-62-15740	• Hose	1	C00001-
11		20Y-62-22790	• Band, Red	2	C00001-
12		20Y-62-22820	• Band, Blue	2	C00001-
13		20Y-62-22850	• Band, Green	2	C00001-

FIG. K1110-001054 Cab (Floor, PPC Valve Piping for Work Equipment)

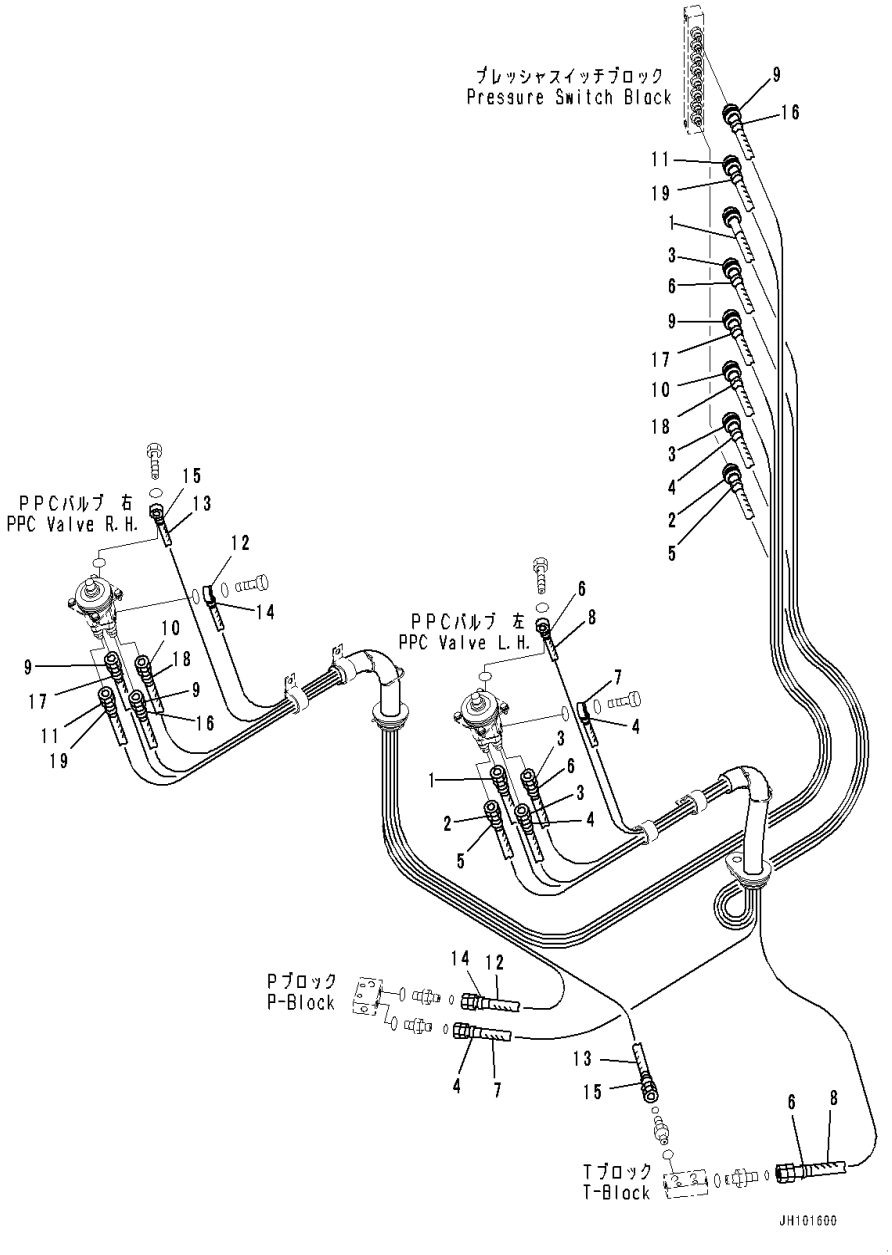

Index	Code	Part Number	Description	Qty	Serial Number
		20Y-62-56891	Hose Assembly	1	C00001-
1		02771-00235	• Hose	1	C00001-
2		02771-00236	• Hose	1	C00001-
3		02771-00234	• Hose	2	C00001-
4		20Y-62-22790	• Band, Red	4	C00001-
5		20Y-62-22810	• Band, Yellow	2	C00001-
6		20Y-62-22820	• Band, Blue	4	C00001-
7		208-62-22670	• Hose	1	C00001-
8		208-62-22680	• Hose	1	C00001-
		20Y-62-56911	Hose Assembly	1	C00001-
9		02771-00331	• Hose	2	C00001-
10		02771-00230	• Hose	1	C00001-
11		02771-00231	• Hose	1	C00001-
12		20Y-62-16880	• Hose	1	C00001-
13		20Y-62-16890	• Hose	1	C00001-
14		20Y-62-22790	• Band, Red	2	C00001-
15		20Y-62-22820	• Band, Blue	2	C00001-
16		20Y-62-22830	• Band, White	2	C00001-
17		20Y-62-22840	• Band, Black	2	C00001-
18		20Y-62-22850	• Band, Green	2	C00001-
19		20Y-62-22860	• Band, Brown	2	C00001-

FIG. K1110-001055 Cab (Floor, Piping Mounting)

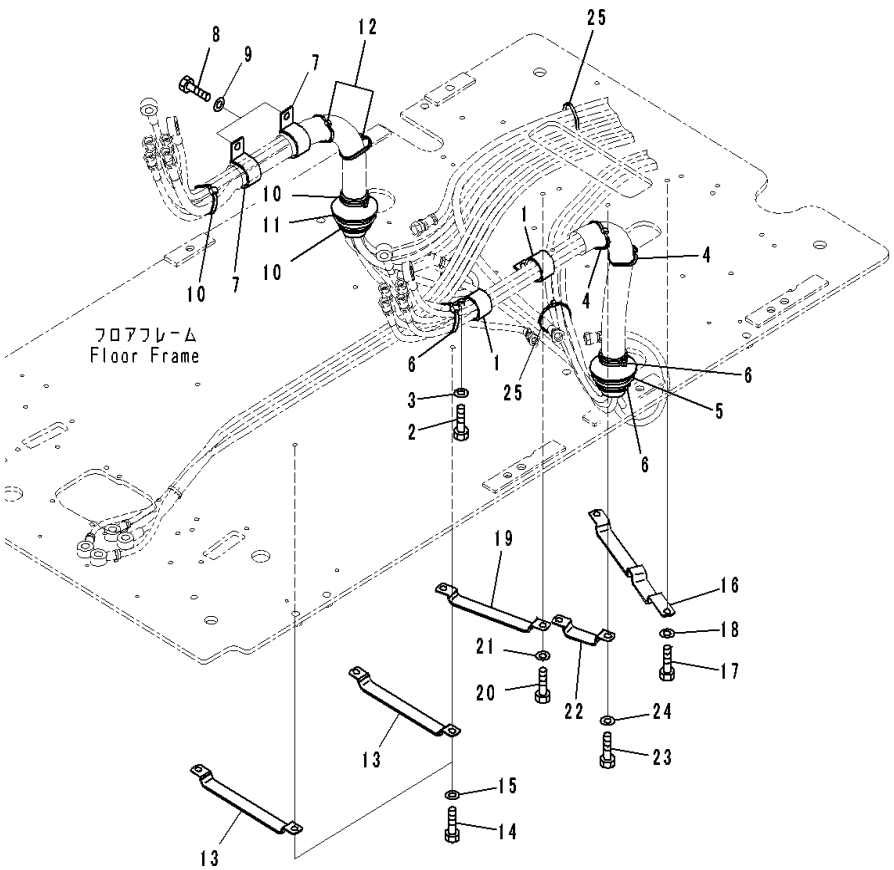

Index	Code	Part Number	Description	Qty	Serial Number
1		04434-53211	Clip	2	C00001-
2		01010-81020	Bolt	2	C00001-
3		01643-31032	Washer	2	C00001-
4		08034-20536	Band	2	C00001-
5		2A5-43-11441	Grommet	1	C00001-
6		08034-20536	Band	3	C00001-
7		04434-53411	Clip	2	C00001-
8		01010-81020	Bolt	2	C00001-
9		01643-31032	Washer	2	C00001-
10		08034-20536	Band	3	C00001-
11		2A5-43-11441	Grommet	1	C00001-
12		08034-20536	Band	2	C00001-
13		20Y-62-27770	Clamp	2	C00001-
14		01010-81016	Bolt	4	C00001-
15		01643-31032	Washer	4	C00001-
16		2A5-62-13811	Clamp	1	C00001-
17		01010-81016	Bolt	2	C00001-
18		01643-31032	Washer	2	C00001-
19		2A5-62-13820	Clamp	1	C00001-
20		01010-81016	Bolt	2	C00001-
21		01643-31032	Washer	2	C00001-
22		2A5-62-13831	Clamp	1	C00001-
23		01010-81016	Bolt	2	C00001-
24		01643-31032	Washer	2	C00001-
25		08034-20536	Band	2	C00001-

FIG. K1110-001056 Cab (Floor, P, T Block)

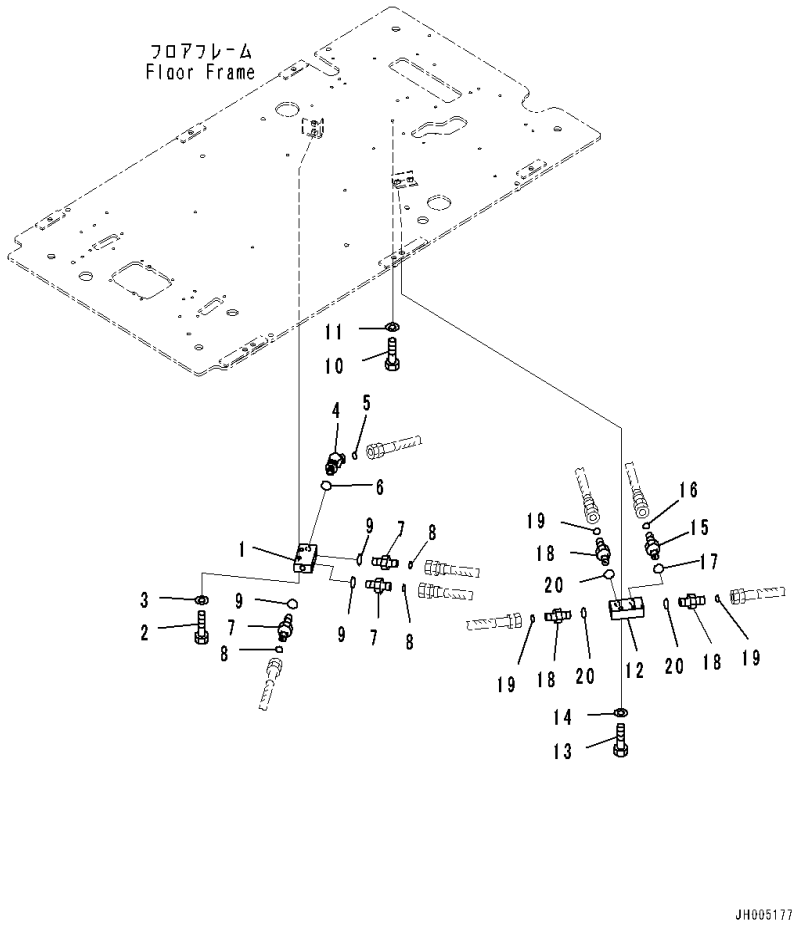

Index	Code	Part Number	Description	Qty	Serial Number
1		20Y-62-15831	Block	1	C00001-
2		01010-81045	Bolt	2	C00001-
3		01643-31032	Washer	2	C00001-
4		11Y-62-12510	Elbow	1	C00001-
5		02896-11009	O-ring	1	C00001-
6		07002-11423	O-ring	1	C00001-
7		02781-0021D	Union	3	C00001-
8		02896-11008	O-ring	3	C00001-
9		07002-11423	O-ring	3	C00001-
10		01010-81016	Bolt	1	C00001-
11		01643-31032	Washer	1	C00001-
12		20Y-62-15831	Block	1	C00001-
13		01010-81045	Bolt	2	C00001-
14		01643-31032	Washer	2	C00001-
15		02781-0031D	Union	1	C00001-
16		02896-11009	O-ring	1	C00001-
17		07002-11423	O-ring	1	C00001-
18		02781-0021D	Union	3	C00001-
19		02896-11008	O-ring	3	C00001-
20		07002-11423	O-ring	3	C00001-

FIG. K1110-001057 Cab (Floor, Seal)

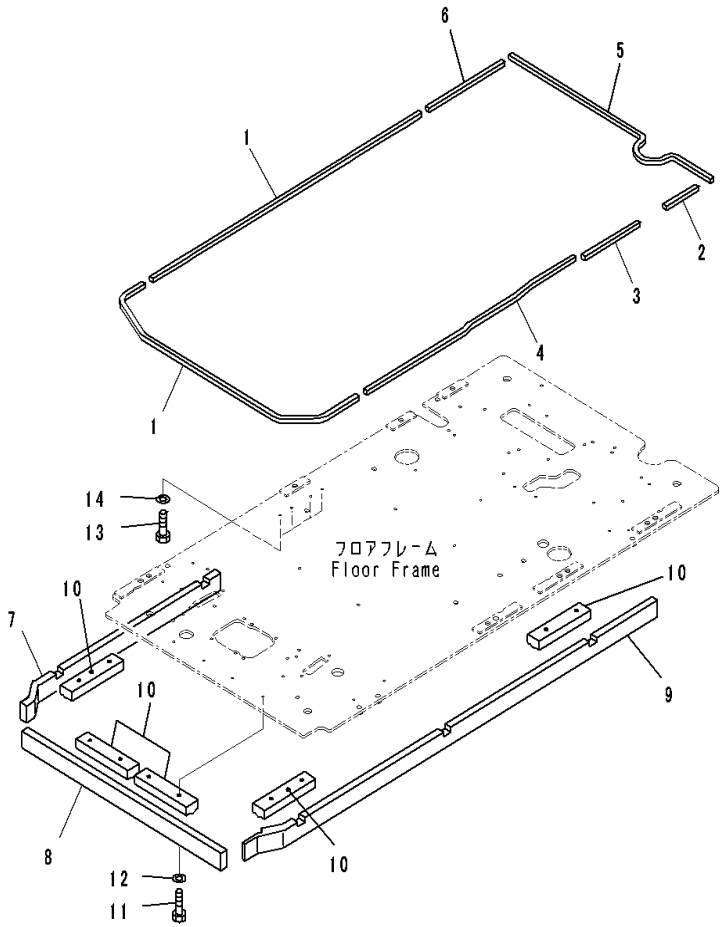

Index	Code	Part Number	Description	Qty	Serial Number
1		2A5-43-12131	Seal	2	C00001-
2		20Y-43-15650	Seal	1	C00001-
3		20Y-43-15640	Seal	1	C00001-
4		20Y-43-15630	Seal	1	C00001-
5		20Y-53-14940	Seal	1	C00001-
6		20Y-53-14950	Seal	1	C00001-
7		20Y-43-15720	Sheet	1	C00001-
8		20Y-43-15730	Sheet	1	C00001-
9		20Y-43-15741	Sheet	1	C00001-
10		20Y-43-15790	Sheet	5	C00001-
11		01010-80830	Bolt	10	C00001-
12		01643-30823	Washer	10	C00001-
13		01010-80816	Bolt	4	C00001-
14		01643-30823	Washer	4	C00001-

FIG. K1110-002013 Cab (With KOMTRAX) (KOMTRAX Antenna, With KOMTRAX)

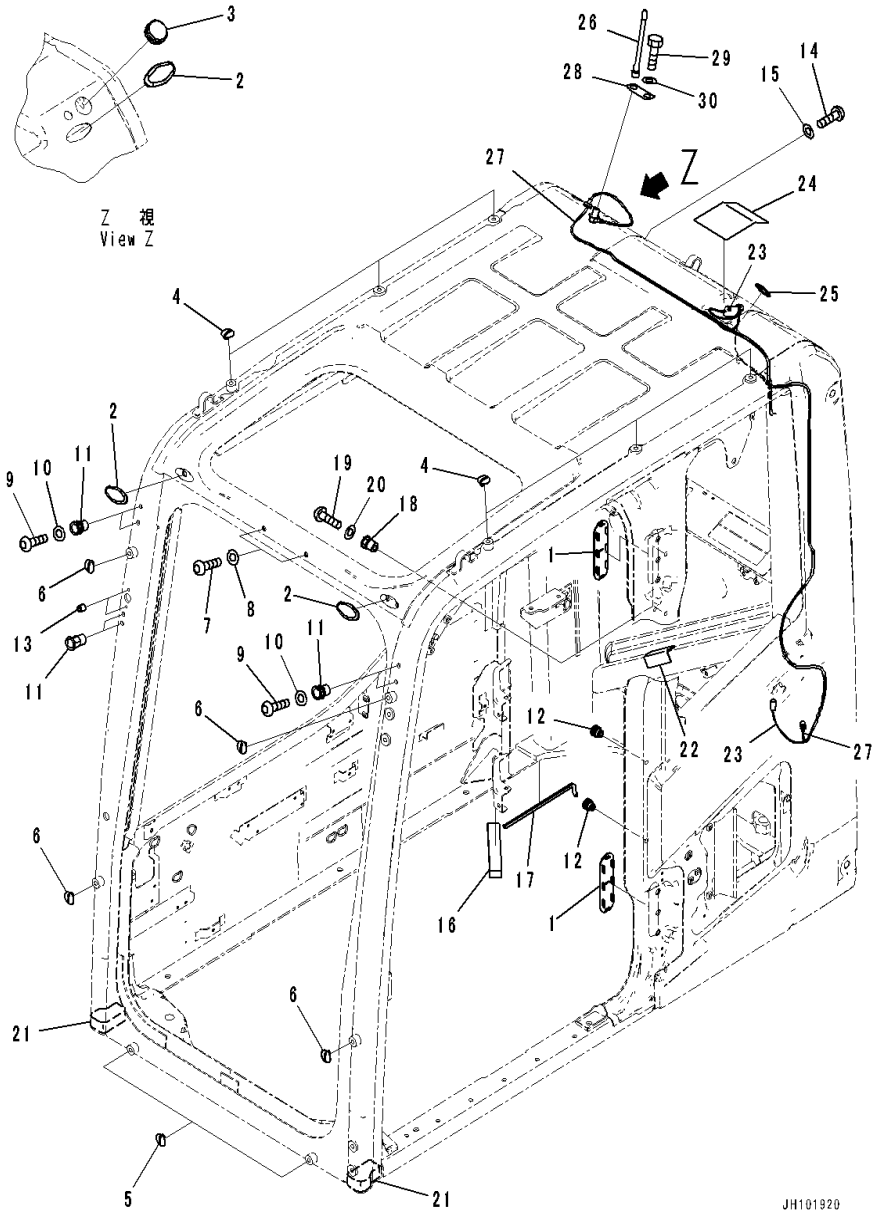

Index	Code	Part Number	Description	Qty	Serial Number
		20Y-53-01330	Cab Assembly	1	C00001-
1		20Y-53-12960	• Cover	2	C00001-
2		22B-54-17282	• Cap	3	C00001-
3		09415-02512	• Cap	1	C00001-
4		20Y-53-11390	• Cap	6	C00001-
5		20Y-53-11380	• Cap	2	C00001-
6		20Y-53-11380	• Cap	4	C00001-
7		01245-01016	• Screw	2	C00001-
8		01643-71032	• Washer	2	C00001-
9		01245-00616	• Screw	4	C00001-
10		01643-70623	• Washer	4	C00001-
11		20Y-53-12260	• Nut	6	C00001-
12		20Y-54-35451	• Nut	2	C00001-
13		20Y-53-12320	• Nut	2	C00001-
14		01245-01016	• Screw	1	C00001-
15		01643-71032	• Washer	1	C00001-
16		20Y-53-12580	• Seal	1	C00001-
17		2A5-53-13381	• Trim	1	C00001-
18		20Y-53-12270	• Nut	2	C00001-
19		01245-00816	• Screw	2	C00001-
20		01643-70823	• Washer	2	C00001-
21		2A5-53-11361	• Seal	2	C00001-
22		205-53-31210	• Plate	2	C00001-
23		8A13-10-1320	• Antenna	1	C00001-
24		20Y-53-12951	• Cover	1	C00001-
25		2A5-53-12130	• Grommet	1	C00001-
26		8A13-10-2100	• Antenna	1	C00001-
27		8A13-10-2200	• Cable	1	C00001-
28		20Y-53-15140	• Plate	1	C00001-
29		01010-D1225	• Bolt	1	C00001-
30		01643-71232	• Washer	1	C00001-

FIG. K1110-002016 Cab (Without Monitor Guard) (Cab In Parts, Console Cover, Front, R.H., Without Monitor Guard)

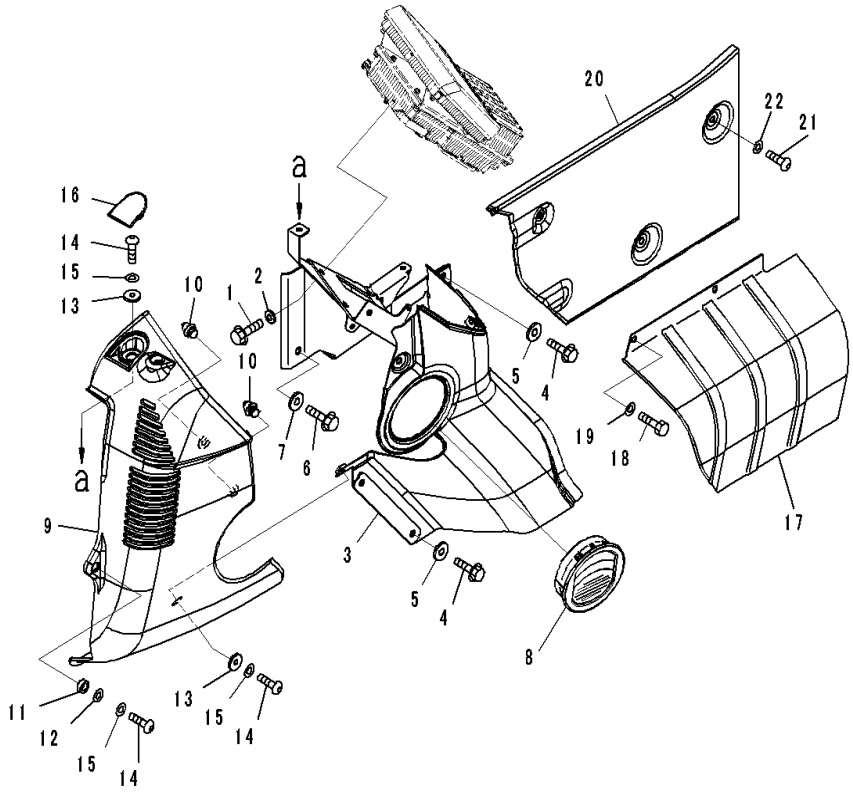

Index	Code	Part Number	Description	Qty	Serial Number
1		01435-00616	Bolt	4	C00001-
2		209-72-12230	Washer	4	C00001-
3		2A5-53-11532	Cover	1	C00001-
4		01435-00616	Bolt	4	C00001-
5		209-72-12230	Washer	4	C00001-
6		01435-00820	Bolt	1	C00001-
7		208-53-11330	Washer	1	C00001-
8		20Y-53-12172	Grille	1	C00001-
9		20Y-53-12122	Cover	1	C00001-
10		22U-54-25360	• Clip	2	C00001-
11		205-54-75240	Collar	1	C00001-
12		01643-70823	Washer	1	C00001-
13		20Y-53-12310	Collar	2	C00001-
14		01245-00616	Screw	3	C00001-
15		01643-70623	Washer	3	C00001-
16		20Y-53-12291	Cap	1	C00001-
17		20Y-53-12161	Cover	1	C00001-
18		01010-80616	Bolt	2	C00001-
19		01643-30623	Washer	2	C00001-
20		20Y-53-12483	Cover	1	C00001-
21		01245-00616	Screw	3	C00001-
22		01643-70623	Washer	3	C00001-

FIG. K1110-002017 Cab (Without Monitor Guard) (Cab In Parts, Monitor Cover, Without Monitor Guard)

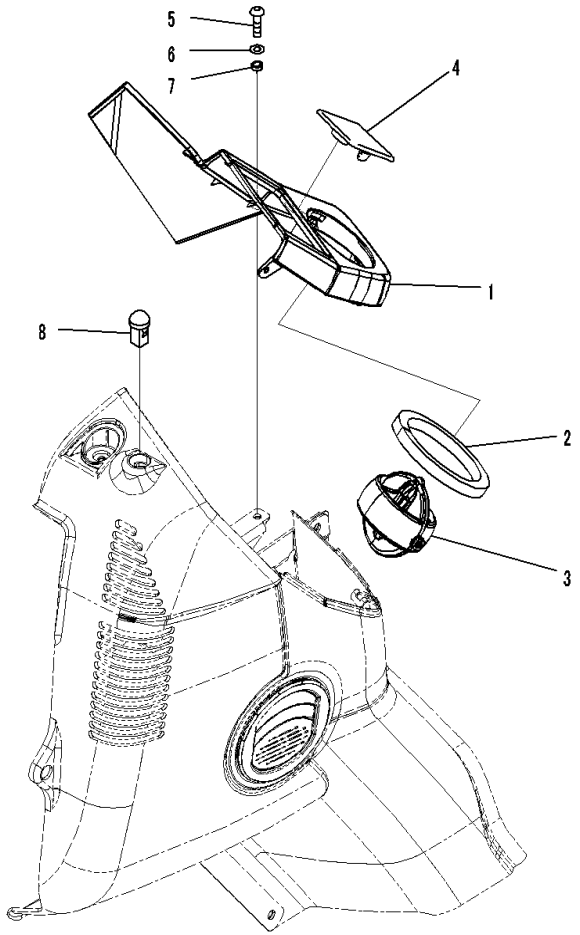

Index	Code	Part Number	Description	Qty	Serial Number
		2A5-53-12651	Cover Assembly	1	C00001-
1	C1		• Cover	1	C00001-
2		2A5-53-12140	• Seal	1	C00001-
3		20Y-53-12240	Louver	1	C00001-
4		20Y-53-14230	Cap	1	C00001-
5		01245-00616	Screw	1	C00001-
6		01643-70623	Washer	1	C00001-
7		20Y-43-41290	Collar	1	C00001-
8		20Y-979-6161	Sensor,Auto Air Conditioner	1	C00001-

FIG. K1110-002027 Cab (With KOMTRAX) (Controller and Monitor, With KOMTRAX)

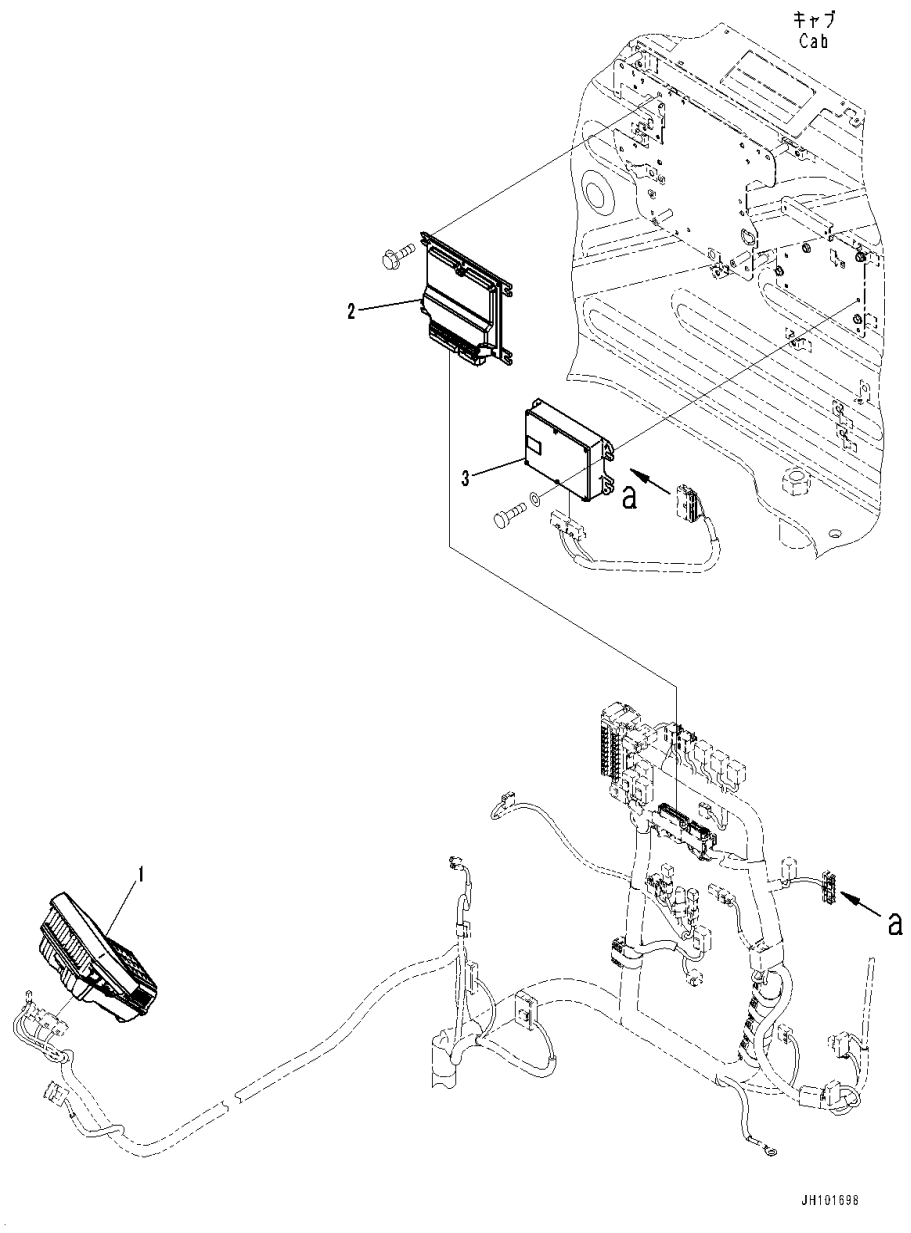

Index	Code	Part Number	Description	Qty	Serial Number
1		7835-34-5101	Monitor	1	C00001-
2		7835-51-1001	Controller, Pump	1	C00001-
3		7826-25-3060	Controller, TC330	1	C00001-

FIG. K1110-003032 Cab (With 1-Additional Actuator Piping, Accumulator) (PPC Valve, 2/4, For Attachment)

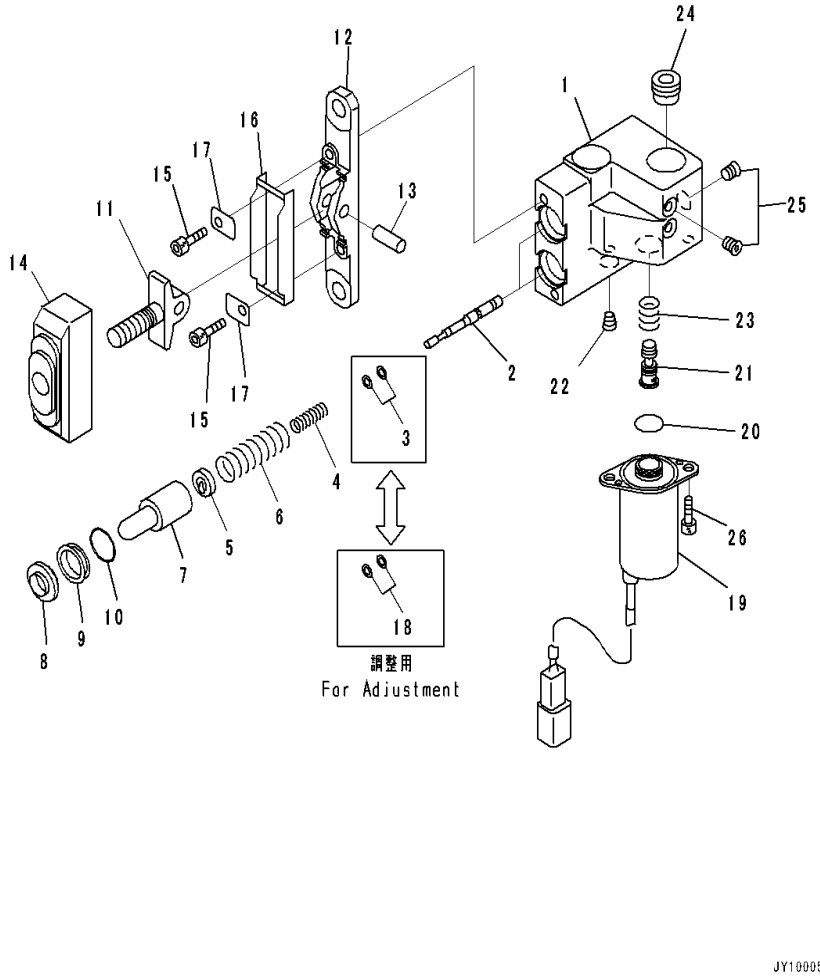

Index	Code	Part Number	Description	Qty	Serial Number
		702-16-05261	Valve, Pilot	1	C00001-
1	C1		• Body, Valve	1	C00001-
2	C1		• Valve	2	C00001-
3	C1		• Shim,T=0.30mm	2	C00001-
4	C1		• Spring,L=22.73mm	2	C00001-
	C1		• Spring,L=22.75mm	2	C00001-
5	C1		• Retainer,T=5.9mm	2	C00001-
	C1		• Retainer,T=5.7mm	2	C00001-
	C1		• Retainer,T=5.7mm	2	C00001-
	C1		• Retainer,T=5.5mm	2	C00001-
6	C1		• Spring	2	C00001-
7	C1		• Piston	2	C00001-
8		702-16-51270	• Seal	2	C00001-
9		702-16-54580	• Collar	2	C00001-
10		702-16-54590	• O-ring	2	C00001-
11	C1		• Lever	1	C00001-
12	C1		• Plate	1	C00001-
13	C1		• Shaft	1	C00001-
14		702-16-54641	• Boot	1	C00001-
15		01252-60625	• Bolt	2	C00001-
16		702-16-54660	• Plate	1	C00001-
17		702-16-54650	• Plate	2	C00001-
18	C1		• Shim,T=0.20mm	4	C00001-
19	C1		• Solenoid Assembly	1	C00001-
20		702-21-53680	• • O-ring	1	C00001-
21	C1		• Spool	1	C00001-
22	C1		• Plug	1	C00001-
23		702-21-53311	• Spring,L=9.5mm	1	C00001-
		702-21-53340	• Spring,L=9.1mm	1	C00001-
		702-21-53350	• Spring,L=9.9mm	1	C00001-
		702-22-13250	• Spring,L=8.7mm	1	C00001-
24		702-16-56490	• Filter	1	C00001-
25	C1		• Plug	2	C00001-
26		01252-60620	• Bolt, Hexagon Socket Head	2	C00001-

FIG. K1110-003033 Cab (With 1-Additional Actuator Piping, Accumulator) (Floor, 1st Attachment Control)

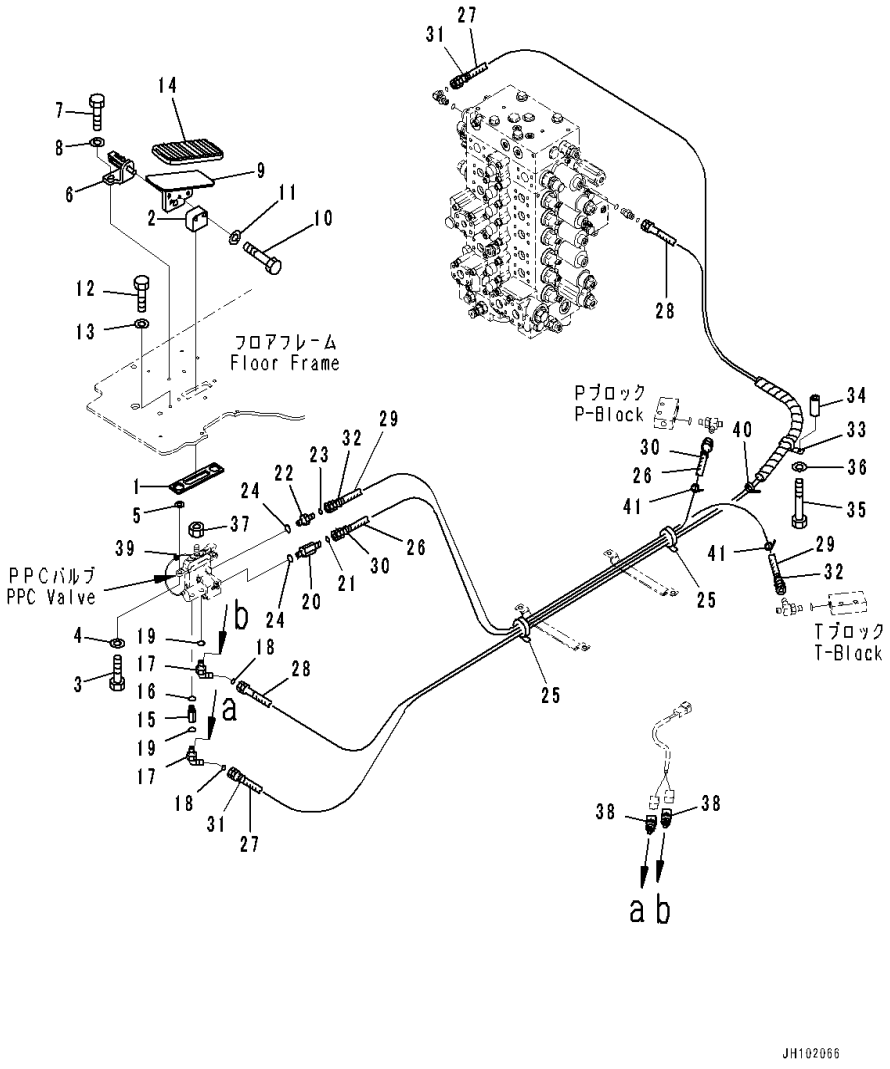

Index	Code	Part Number	Description	Qty	Serial Number
1		22U-54-25660	Seal	1	C00001-
2		20Y-43-41760	Seat	1	C00001-
3		01010-81025	Bolt	2	C00001-
4		01643-31032	Washer	2	C00001-
5		01643-31032	Washer	2	C00001-
6		2A5-62-12350	Bracket	1	C00001-
7		01010-81025	Bolt	2	C00001-
8		01643-31032	Washer	2	C00001-
9		20Y-53-14220	Pedal	1	C00001-
10		01010-D1045	Bolt	2	C00001-
11		01643-71032	Washer	2	C00001-
12		01010-81020	Bolt	3	C00001-
13		01643-31032	Washer	3	C00001-
14		207-43-81240	Cap	1	C00001-
15		20T-910-8660	Nipple	1	C00001-
16		07000-12011	O-ring	1	C00001-
17		20Y-62-52160	Elbow	2	C00001-
18		02896-11008	O-ring	2	C00001-
19		07000-12011	O-ring	2	C00001-
20		20Y-62-43470	Nipple	1	C00001-
21		02896-11008	O-ring	1	C00001-
22		11Y-62-12140	Nipple	1	C00001-
23		02896-11008	O-ring	1	C00001-
24		07000-12011	O-ring	2	C00001-
25		08034-20519	Band	2	C00001-
26		20Y-62-52330	Hose	1	C00001-
27		20Y-62-56930	Hose	1	C00001-
28		20Y-62-56940	Hose	1	C00001-
29		208-62-72480	Hose	1	C00001-
30		20Y-62-22790	Band,Red	2	C00001-
31		20Y-62-22810	Band,Yellow	2	C00001-
32		20Y-62-22820	Band,Blue	2	C00001-
33		04435-51210	Clip	1	C00001-
34		175-40-22540	Spacer	1	C00001-
35		01010-81070	Bolt	1	C00001-
36		01643-31032	Washer	1	C00001-
37		01583-11408	Nut	1	C00001-
38		206-06-61130	Switch, Pressure	2	C00001-
39		08034-20519	Band	1	C00001-
40		08034-20536	Band	1	C00001-

FIG. K1110-003033 Cab (With 1-Additional Actuator Piping, Accumulator) (Floor, 1st Attachment Control)

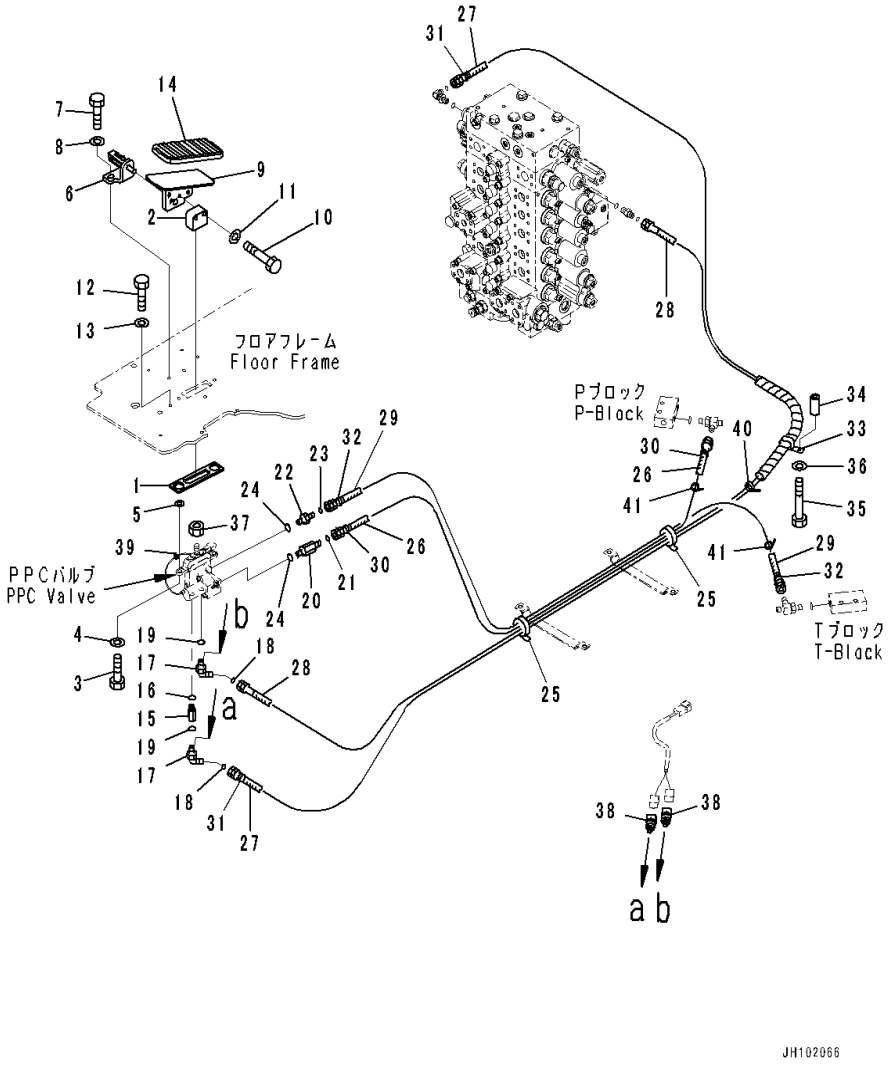

Index	Code	Part Number	Description	Qty	Serial Number
41		08034-20519	Band	2	C00001-

FIG. K1110-003047 Cab (With Amber Color Warning Beacon) (Floor, Console, R.H., With Beacon Lamp)

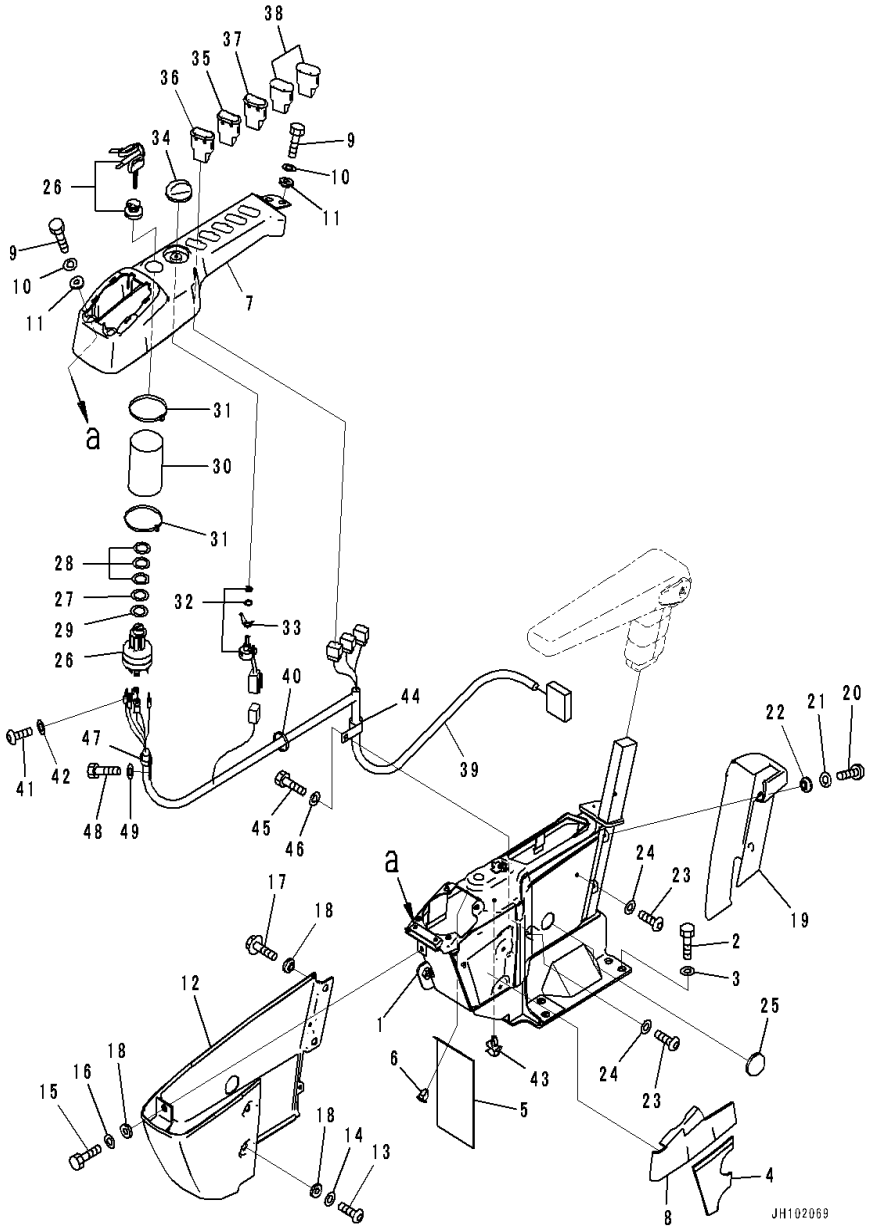

Index	Code	Part Number	Description	Qty	Serial Number
1		20Y-43-56120	Frame	1	C00001-
2		01010-D1230	Bolt	4	C00001-
3		01643-71232	Washer	4	C00001-
4		20Y-43-41631	Sheet	1	C00001-
5		22U-43-23251	Sheet	1	C00001-
6		22U-43-23290	Clip	2	C00001-
7		20Y-43-41324	Cover	1	C00001-
8		20Y-43-41661	Sheet	1	C00001-
9		01010-80616	Bolt	4	C00001-
10		01643-30623	Washer	4	C00001-
11		20Y-43-41290	Collar	4	C00001-
12		20Y-43-41332	Cover	1	C00001-
13		01245-00616	Screw	2	C00001-
14		01643-70623	Washer	2	C00001-
15		01010-80616	Bolt	1	C00001-
16		01643-30623	Washer	1	C00001-
17		01435-00612	Bolt	2	C00001-
18		20Y-43-41290	Collar	5	C00001-
19		20Y-43-41353	Cover	1	C00001-
20		01245-00616	Screw	2	C00001-
21		01643-70623	Washer	2	C00001-
22		20Y-43-41290	Collar	2	C00001-
23		01245-00616	Screw	3	C00001-
24		01643-70623	Washer	3	C00001-
25		09415-02512	Cap	1	C00001-
26		08086-50000	Switch, Starting	1	C00001-
27		20Y-43-41740	Plate	1	C00001-
28		20Y-43-41750	Washer	3	C00001-
29		20Y-43-41790	Washer	1	C00001-
30		20Y-43-41671	Sheet	1	C00001-
31		08034-20519	Band	2	C00001-
32		22U-06-22380	Potentiometer	1	C00001-
33		22U-06-22460	Spring	1	C00001-
34		20Y-43-41781	Knob	1	C00001-
35		20Y-06-42110	Switch, Swing Lock	1	C00001-
36		20Y-06-42450	Switch, Lamp	1	C00001-
37		20Y-06-42130	Switch, Beacon Lamp	1	C00001-
38		20Y-06-42190	Cover	2	C00001-
39		20Y-06-16920	Wiring Harness	1	C00001-
40		08034-20414	Band,Black	1	C00001-

FIG. K1110-003047 Cab (With Amber Color Warning Beacon) (Floor, Console, R.H., With Beacon Lamp)

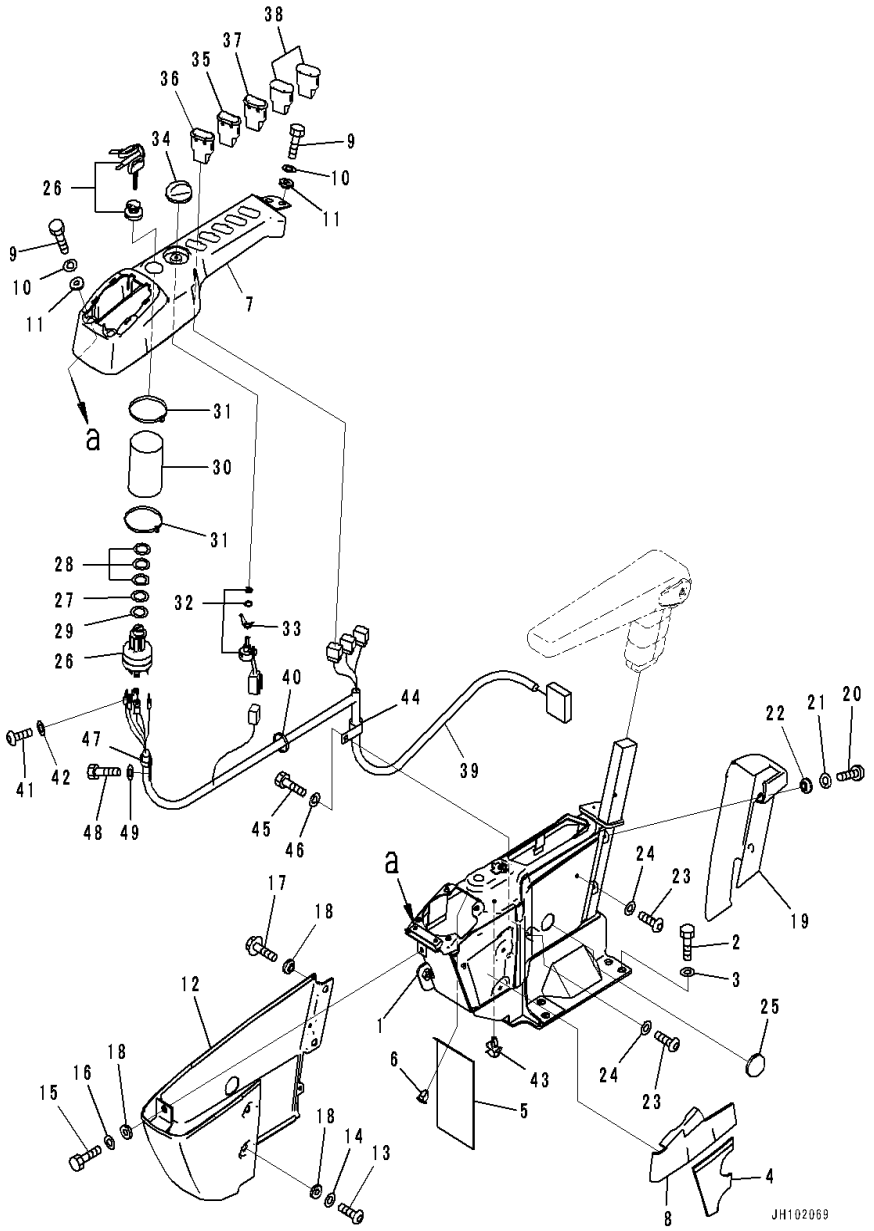

Index	Code	Part Number	Description	Qty	Serial Number
41		01023-10508	Screw	5	C00001-
42		01601-20513	Washer	5	C00001-
43		22U-43-23260	Clip	1	C00001-
44		04434-51710	Clip	1	C00001-
45		01010-81016	Bolt	1	C00001-
46		01643-31032	Washer	1	C00001-
47		04434-51410	Clip	1	C00001-
48		01010-81016	Bolt	1	C00001-
49		01643-31032	Washer	1	C00001-

FIG. K1110-003057 Cab (With 1-Additional Actuator Piping, Accumulator) (Floor, P, T Block)

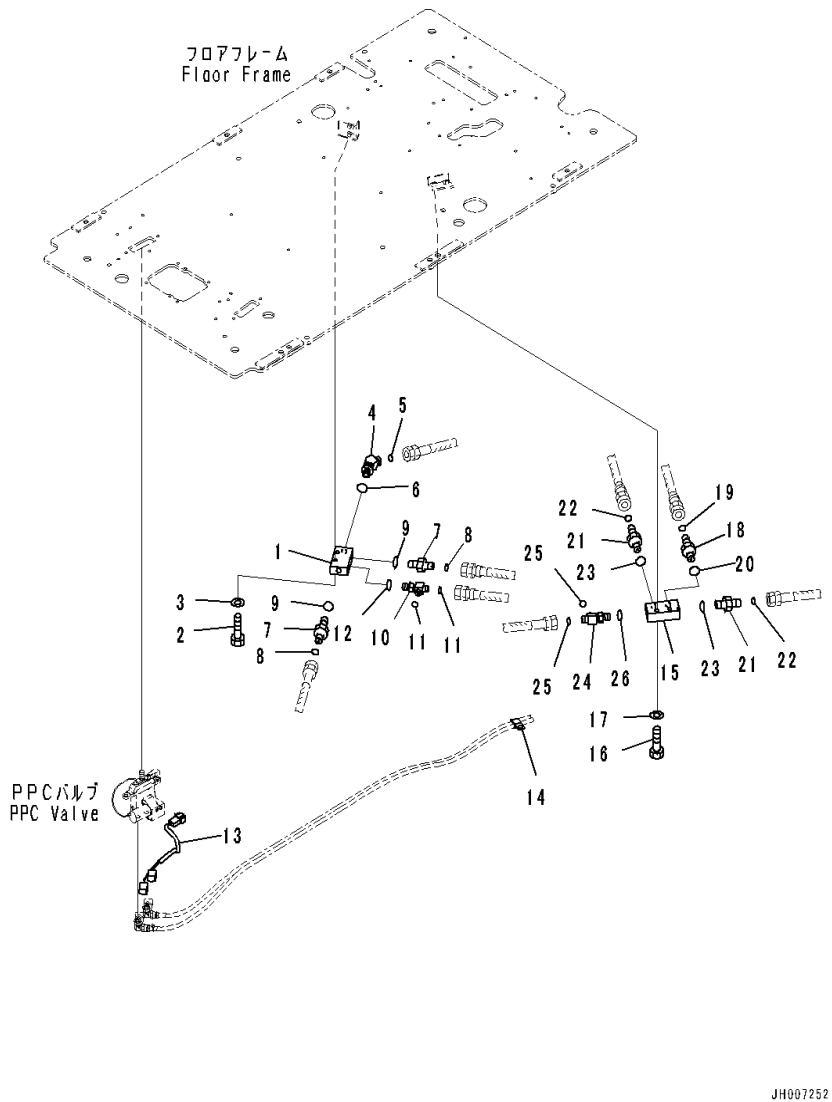

Index	Code	Part Number	Description	Qty	Serial Number
1		20Y-62-15831	Block	1	C00001-
2		01010-81045	Bolt	2	C00001-
3		01643-31032	Washer	2	C00001-
4		11Y-62-12510	Elbow	1	C00001-
5		02896-11009	O-ring	1	C00001-
6		07002-11423	O-ring	1	C00001-
7		02781-0021D	Union	2	C00001-
8		02896-11008	O-ring	2	C00001-
9		07002-11423	O-ring	2	C00001-
10		11Y-62-12330	Tee	1	C00001-
11		02896-11008	O-ring	2	C00001-
12		07002-11423	O-ring	1	C00001-
13		20Y-06-41251	Wiring Harness	1	C00001-
14		04435-51210	Clip	1	C00001-
15		20Y-62-15831	Block	1	C00001-
16		01010-81045	Bolt	2	C00001-
17		01643-31032	Washer	2	C00001-
18		02781-0031D	Union	1	C00001-
19		02896-11009	O-ring	1	C00001-
20		07002-11423	O-ring	1	C00001-
21		02781-0021D	Union	2	C00001-
22		02896-11008	O-ring	2	C00001-
23		07002-11423	O-ring	2	C00001-
24		11Y-62-12330	Tee	1	C00001-
25		02896-11008	O-ring	2	C00001-
26		07002-11423	O-ring	1	C00001-

FIG. K1120-001001 Floor Mounting

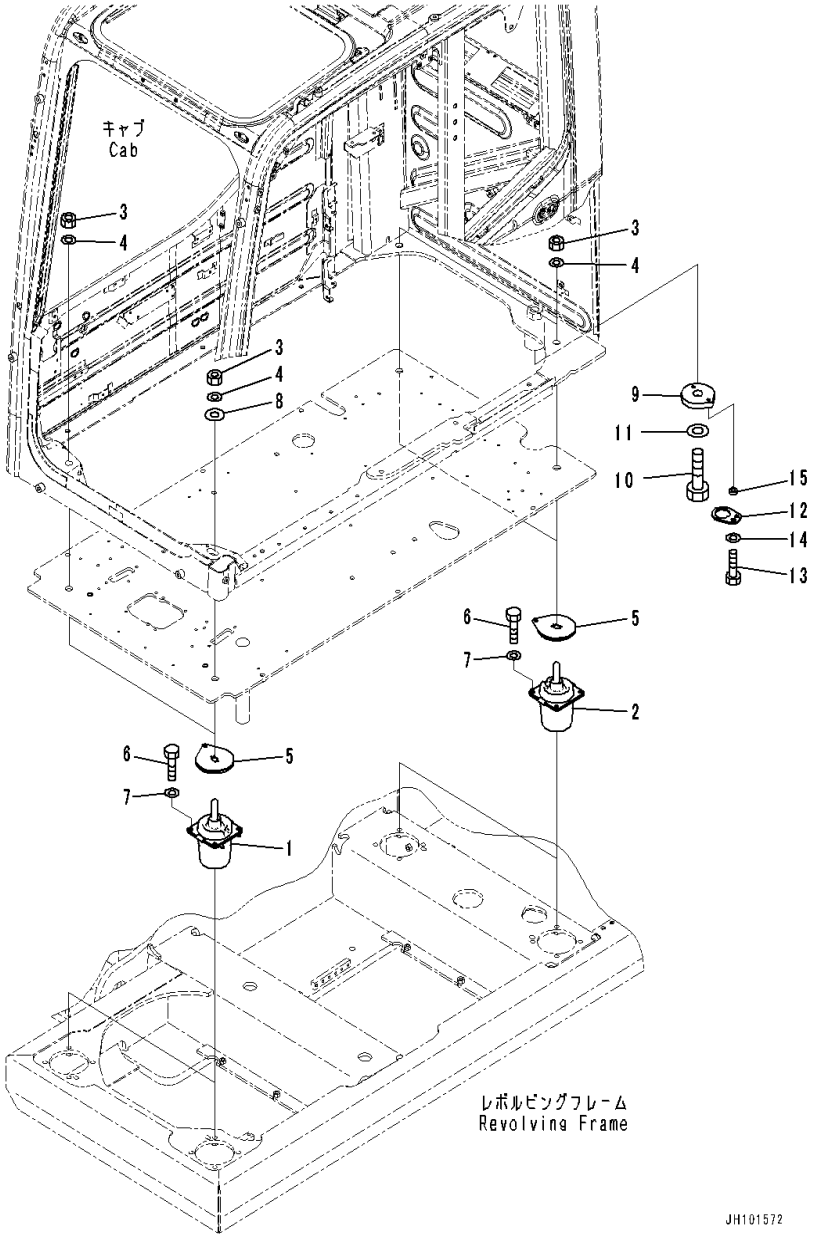

Index	Code	Part Number	Description	Qty	Serial Number
1		20Y-53-13113	Cushion	2	C00001-
2		20Y-53-13121	Cushion	2	C00001-
3		01580-12016	Nut	4	C00001-
4		01643-32060	Washer	4	C00001-
5		20Y-53-13130	Spacer	4	C00001-
6		01010-81235	Bolt	16	C00001-
7		01643-31232	Washer	16	C00001-
8		2A5-53-11941	Plate	1	C00001-
9		20Y-53-13142	Plate	1	C00001-
10		01011-83065	Bolt	1	C00001-
11		01643-33080	Washer	1	C00001-
12		20Y-53-13151	Lock	1	C00001-
13		01010-81235	Bolt	1	C00001-
14		01643-31232	Washer	1	C00001-
15		198-43-15310	Collar	1	C00001-

FIG. K1730-001001 Switch

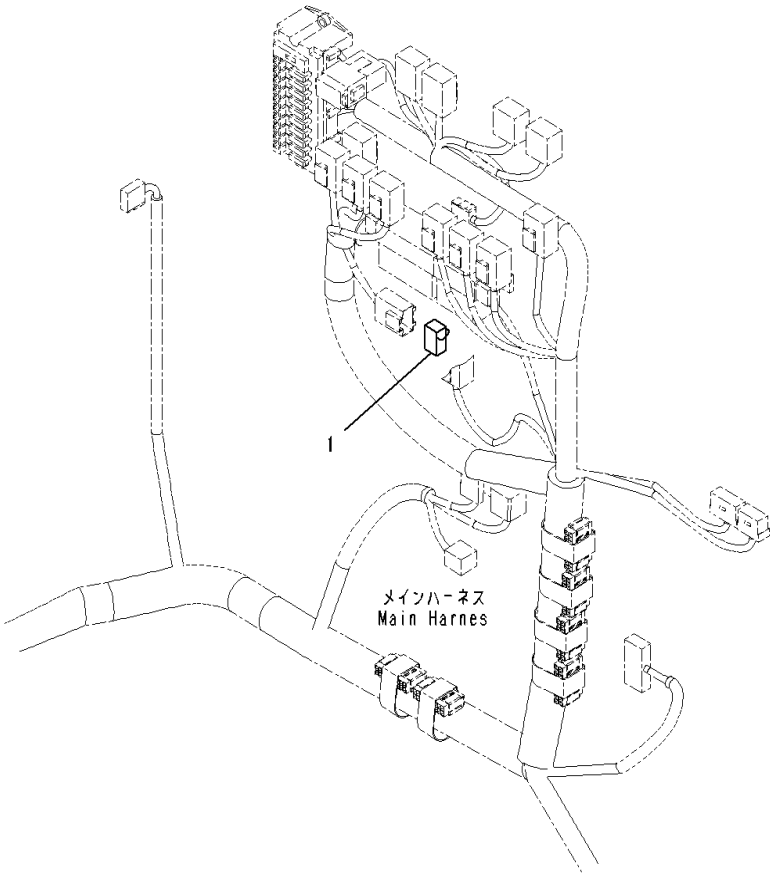

Index	Code	Part Number	Description	Qty	Serial Number
1		20Y-06-21421	Switch	1	C00001-

GUARDS AND COVERS

FIG. M1110-001001 Engine Hood

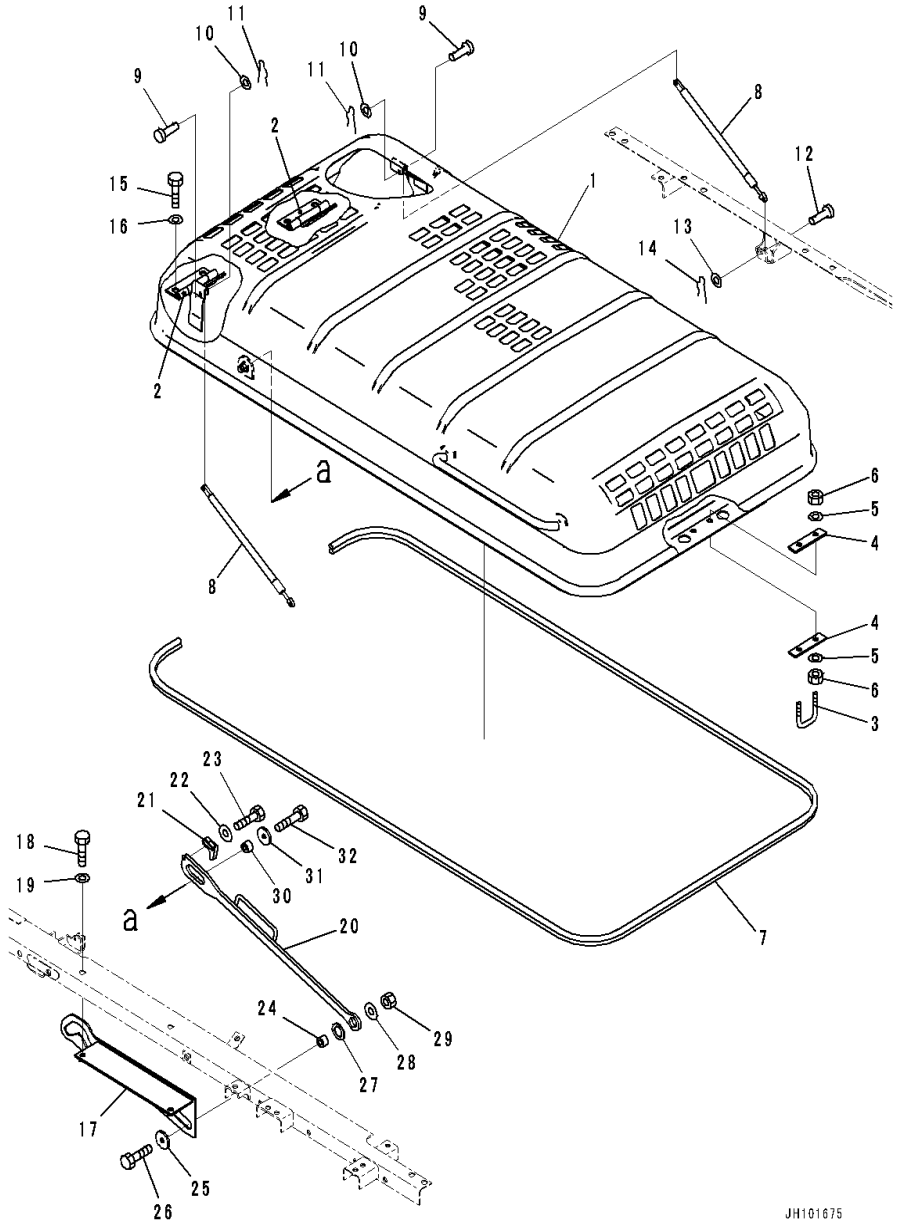

Index	Code	Part Number	Description	Qty	Serial Number
1		20Y-54-58111	Hood	1	C00001-
2		20Y-54-K7321	• Hinge,Welded	2	C00001-
3		20Y-54-27172	U-bolt	1	C00001-
4		20Y-54-27330	Plate	2	C00001-
5		01643-31232	Washer	4	C00001-
6		01580-11210	Nut	4	C00001-
7		20Y-54-71470	Seal	1	C00001-
8		20Y-54-71182	Damper	2	C00001-
9		04205-30825	Pin	2	C00001-
10		01640-20816	Washer	2	C00001-
11		04052-20833	Pin, Snap	2	C00001-
12		04205-30828	Pin	2	C00001-
13		01640-20816	Washer	2	C00001-
14		04052-20833	Pin, Snap	2	C00001-
15		01010-81230	Bolt	4	C00001-
16		01643-31232	Washer	4	C00001-
17		20Y-54-56982	Bracket	1	C00001-
18		01010-81230	Bolt	2	C00001-
19		01643-31232	Washer	2	C00001-
20		20Y-54-56731	Stay	1	C00001-
21		20Y-54-56390	Bracket	1	C00001-
22		21U-54-64160	Washer	1	C00001-
23		01010-80825	Bolt	1	C00001-
24		20Y-54-56290	Collar	1	C00001-
25		21U-01-31221	Washer	1	C00001-
26		01010-81240	Bolt	1	C00001-
27		20Y-54-56371	Plate	1	C00001-
28		124-54-26540	Washer	1	C00001-
29		01580-11210	Nut	1	C00001-
30		20Y-54-56290	Collar	1	C00001-
31		21U-01-31221	Washer	1	C00001-
32		01010-81240	Bolt	1	C00001-

FIG. M1110-002001 Engine Hood (With Pre-cleaner)

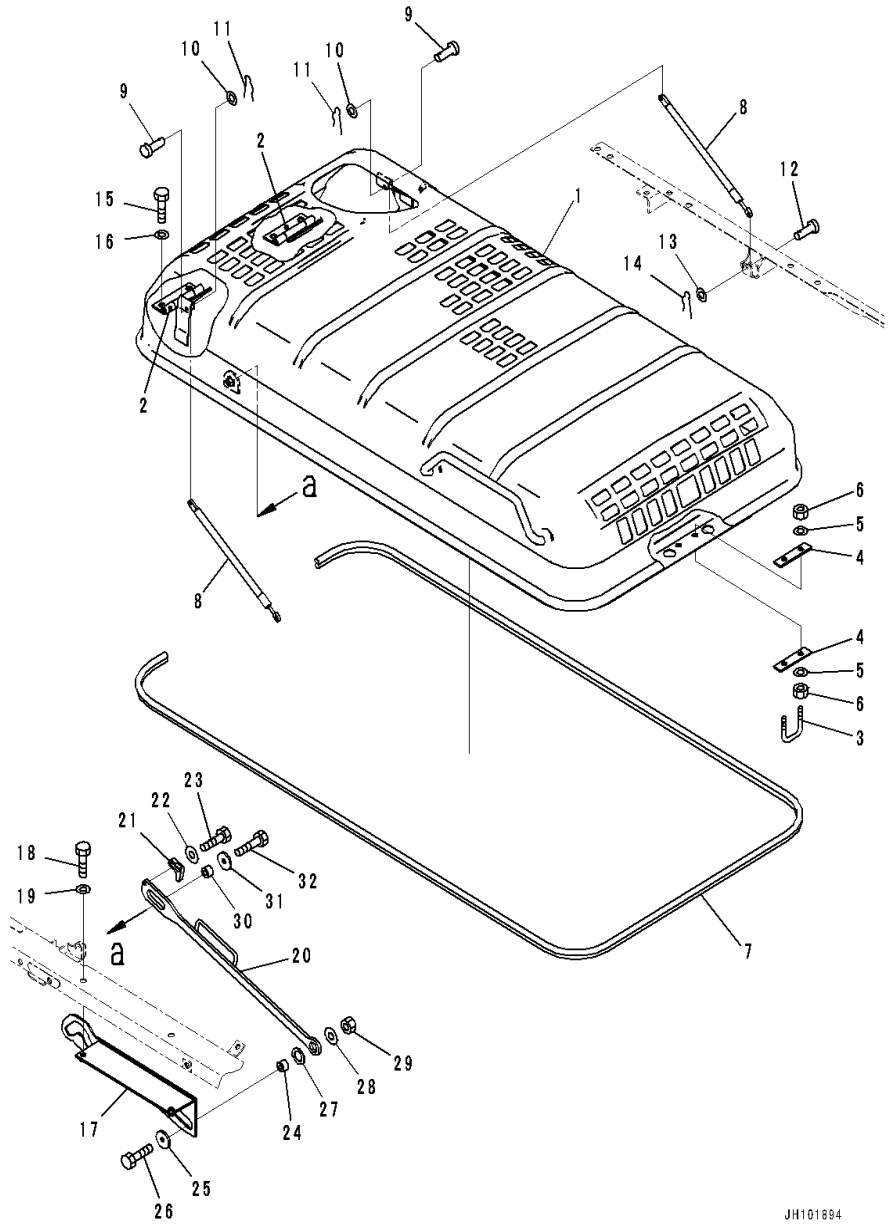

Index	Code	Part Number	Description	Qty	Serial Number
1		20Y-54-56111	Hood	1	C00001-
2		20Y-54-K7321	• Hinge,Welded	2	C00001-
3		20Y-54-27172	U-bolt	1	C00001-
4		20Y-54-27330	Plate	2	C00001-
5		01643-31232	Washer	4	C00001-
6		01580-11210	Nut	4	C00001-
7		20Y-54-71470	Seal	1	C00001-
8		20Y-54-71182	Damper	2	C00001-
9		04205-30825	Pin	2	C00001-
10		01640-20816	Washer	2	C00001-
11		04052-20833	Pin, Snap	2	C00001-
12		04205-30828	Pin	2	C00001-
13		01640-20816	Washer	2	C00001-
14		04052-20833	Pin, Snap	2	C00001-
15		01010-81230	Bolt	4	C00001-
16		01643-31232	Washer	4	C00001-
17		20Y-54-56982	Bracket	1	C00001-
18		01010-81230	Bolt	2	C00001-
19		01643-31232	Washer	2	C00001-
20		20Y-54-56731	Stay	1	C00001-
21		20Y-54-56390	Bracket	1	C00001-
22		21U-54-64160	Washer	1	C00001-
23		01010-80825	Bolt	1	C00001-
24		20Y-54-56290	Collar	1	C00001-
25		21U-01-31221	Washer	1	C00001-
26		01010-81240	Bolt	1	C00001-
27		20Y-54-56371	Plate	1	C00001-
28		124-54-26540	Washer	1	C00001-
29		01580-11210	Nut	1	C00001-
30		20Y-54-56290	Collar	1	C00001-
31		21U-01-31221	Washer	1	C00001-
32		01010-81240	Bolt	1	C00001-

FIG. M1120-001001 Frame

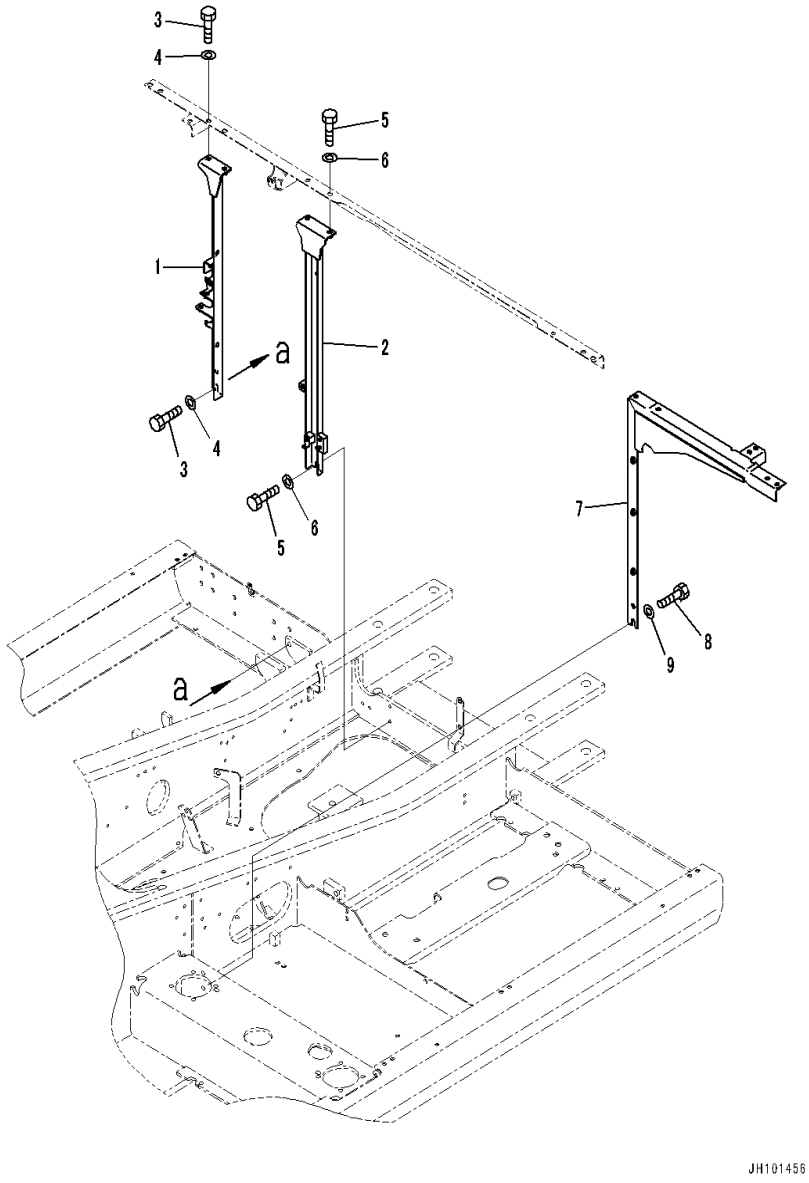

Index	Code	Part Number	Description	Qty	Serial Number
1		20Y-54-56211	Frame	1	C00001-
2		20Y-54-56231	Frame	1	C00001-
3		01010-81230	Bolt	4	C00001-
4		01643-31232	Washer	4	C00001-
5		01010-81230	Bolt	4	C00001-
6		01643-31232	Washer	4	C00001-
7		20Y-54-56611	Frame	1	C00001-
8		01010-81235	Bolt	2	C00001-
9		01643-31232	Washer	2	C00001-

FIG. M1120-002001 Frame (With Pre-cleaner)

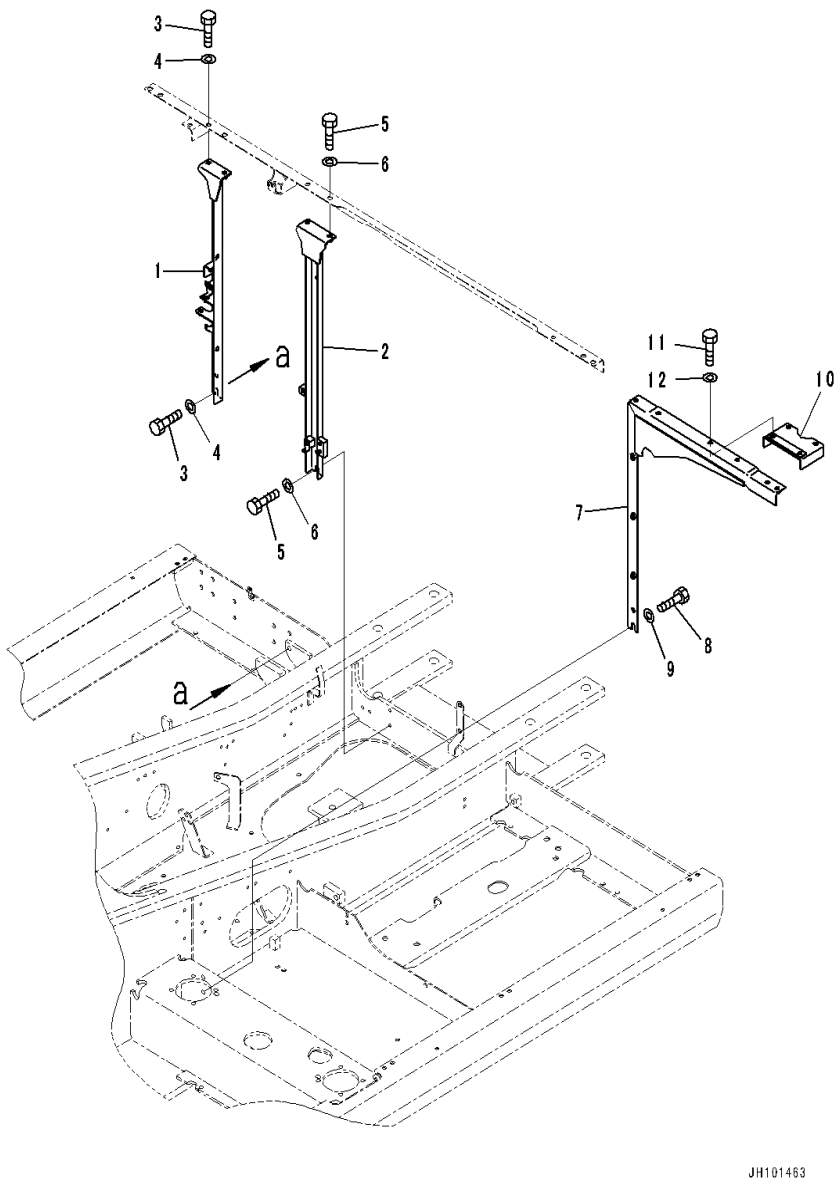

Index	Code	Part Number	Description	Qty	Serial Number
1		20Y-54-56211	Frame	1	C00001-
2		20Y-54-56231	Frame	1	C00001-
3		01010-81230	Bolt	4	C00001-
4		01643-31232	Washer	4	C00001-
5		01010-81230	Bolt	4	C00001-
6		01643-31232	Washer	4	C00001-
7		20Y-54-57750	Frame	1	C00001-
8		01010-81235	Bolt	2	C00001-
9		01643-31232	Washer	2	C00001-
10		206-54-25151	Bracket	1	C00001-
11		01010-81230	Bolt	2	C00001-
12		01643-31232	Washer	2	C00001-

FIG. M1130-001001 Door L.H.

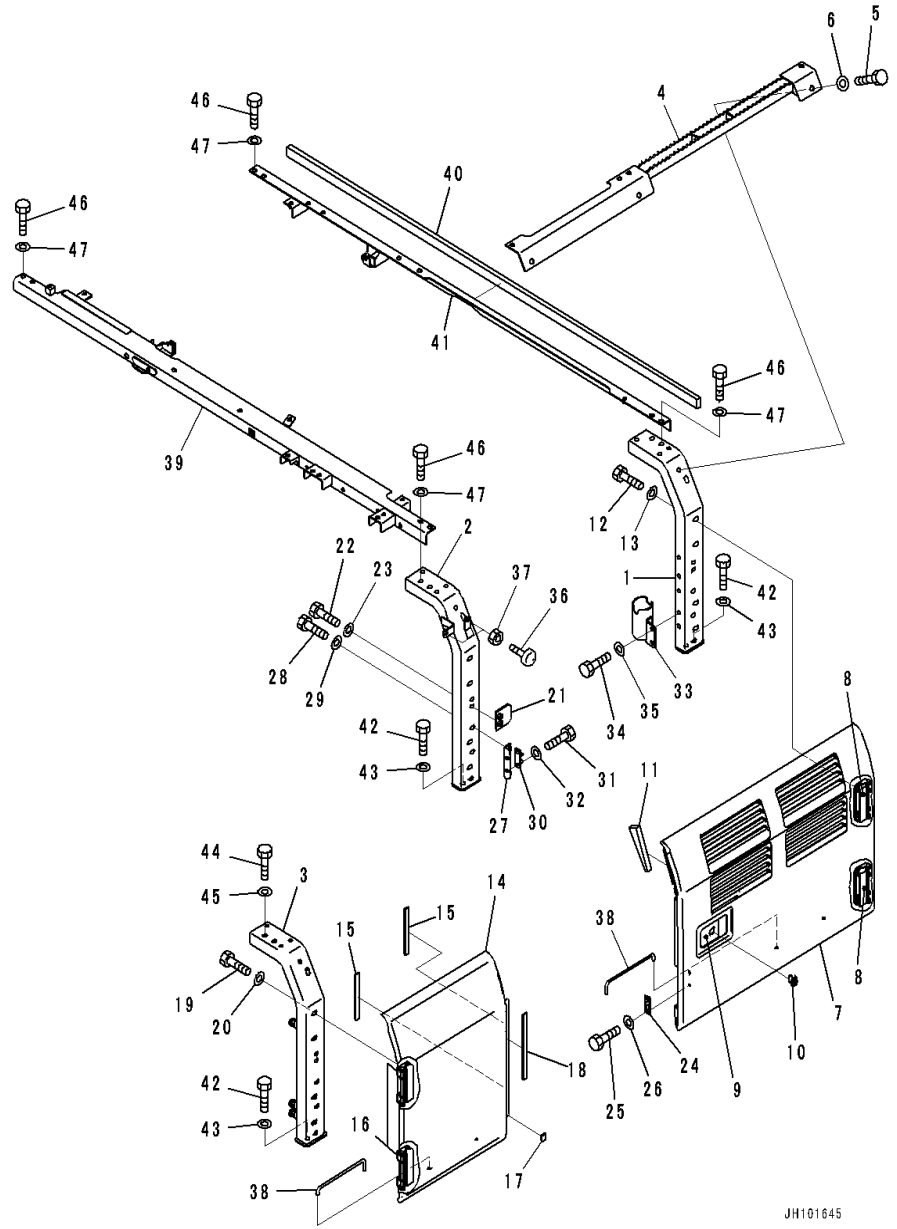

Index	Code	Part Number	Description	Qty	Serial Number
1		20Y-54-71312	Frame	1	C00001-
2		20Y-54-71323	Frame	1	C00001-
3		20Y-54-56330	Frame	1	C00001-
4		20Y-54-56340	Frame	1	C00001-
5		01010-81225	Bolt	3	C00001-
6		01643-31232	Washer	3	C00001-
		20Y-54-57220	Cover	1	C00001-
7	C1		• Cover	1	C00001-
8		20Y-54-63414	• • Hinge,Welded	2	C00001-
9		20Y-54-71372	• • Lock,Welded	1	C00001-
10		20Y-54-74182	• • • Lock Assembly	1	C00001-
11		20Y-54-72870	• Sheet	1	C00001-
12		01010-81225	Bolt	4	C00001-
13		01643-31232	Washer	4	C00001-
14		20Y-54-71144	Cover	1	C00001-
15		20Y-54-63390	• Sheet	2	C00001-
16		20Y-54-63414	• Hinge,Welded	2	C00001-
17		20Y-54-73841	• Sheet	1	C00001-
18		20Y-54-73752	• Sheet	1	C00001-
19		01010-81225	Bolt	4	C00001-
20		01643-31232	Washer	4	C00001-
21		20Y-54-61470	Plate	1	C00001-
22		01010-81225	Bolt	2	C00001-
23		01643-31232	Washer	2	C00001-
24		205-54-53550	Dovetail	1	C00001-
25		01010-80616	Bolt	2	C00001-
26		01643-30623	Washer	2	C00001-
27		20Y-54-28170	Bracket	1	C00001-
28		01010-81225	Bolt	2	C00001-
29		01643-31232	Washer	2	C00001-
30		205-54-51971	Dovetail	1	C00001-
31		01010-80616	Bolt	2	C00001-
32		01643-30623	Washer	2	C00001-
33		20Y-54-61372	Bracket	1	C00001-
34		01010-81225	Bolt	2	C00001-
35		01643-31232	Washer	2	C00001-
36		20Y-54-11611	Stopper	2	C00001-
37		01580-11008	Nut	2	C00001-
38		20Y-54-29232	Bar	2	C00001-
39		20Y-54-56221	Frame	1	C00001-

FIG. M1130-001001 Door L.H.

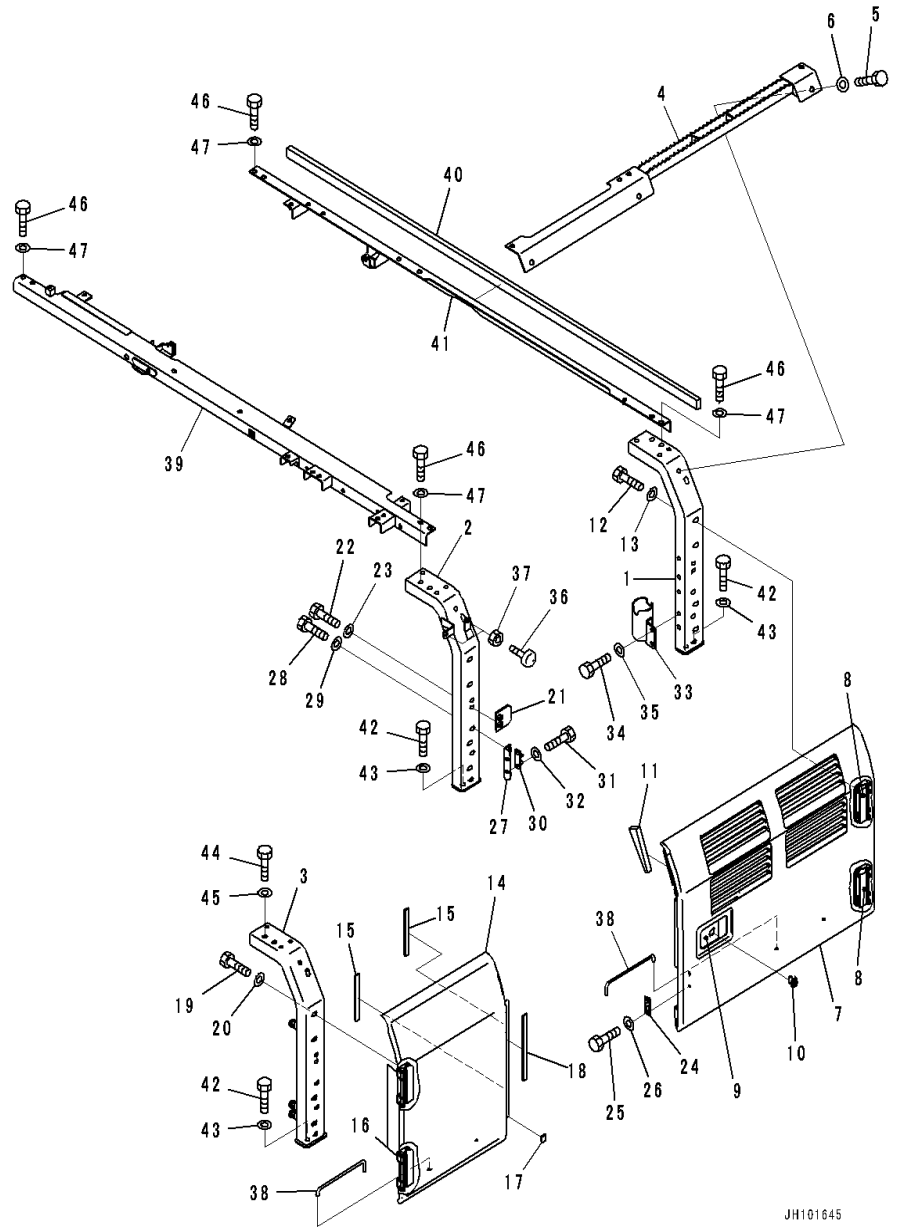

Index	Code	Part Number	Description	Qty	Serial Number
		20Y-54-57831	Frame	1	C00001-
40		20Y-54-57240	• Sheet	1	C00001-
41	C1		• Frame	1	C00001-
42		01010-81230	Bolt	6	C00001-
43		01643-31232	Washer	6	C00001-
44		01010-81230	Bolt	2	C00001-
45		01643-31232	Washer	2	C00001-
46		01010-81230	Bolt	5	C00001-
47		01643-31232	Washer	5	C00001-

FIG. M1130-002001 Door L.H. (With Pre-cleaner)

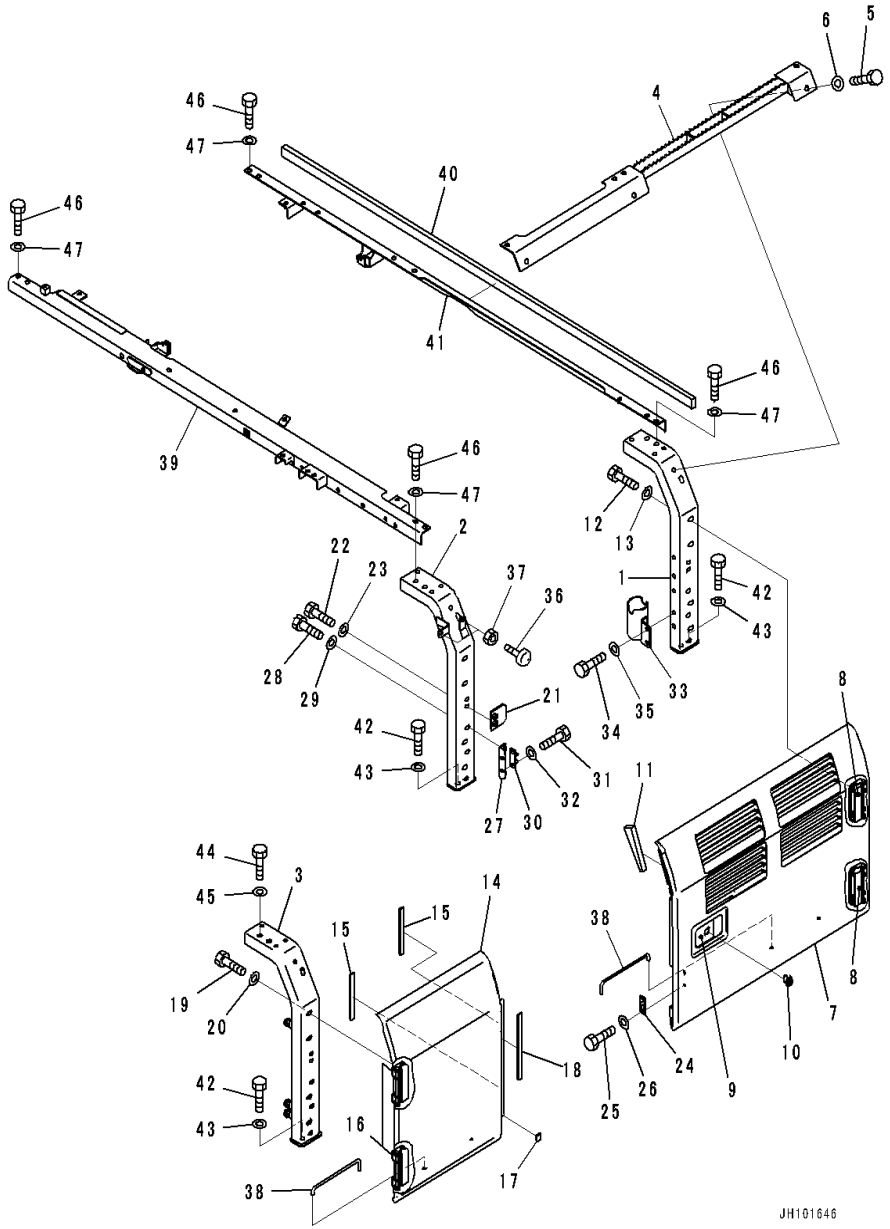

Index	Code	Part Number	Description	Qty	Serial Number
1		20Y-54-71312	Frame	1	C00001-
2		20Y-54-71323	Frame	1	C00001-
3		20Y-54-56330	Frame	1	C00001-
4		20Y-54-56340	Frame	1	C00001-
5		01010-81225	Bolt	3	C00001-
6		01643-31232	Washer	3	C00001-
		20Y-54-57220	Cover	1	C00001-
7	C1		• Cover	1	C00001-
8		20Y-54-63414	• • Hinge,Welded	2	C00001-
9		20Y-54-71372	• • Lock,Welded	1	C00001-
10		20Y-54-74182	• • • Lock Assembly	1	C00001-
11		20Y-54-72870	• Sheet	1	C00001-
12		01010-81225	Bolt	4	C00001-
13		01643-31232	Washer	4	C00001-
14		20Y-54-71144	Cover	1	C00001-
15		20Y-54-63390	• Sheet	2	C00001-
16		20Y-54-63414	• Hinge,Welded	2	C00001-
17		20Y-54-73841	• Sheet	1	C00001-
18		20Y-54-73752	• Sheet	1	C00001-
19		01010-81225	Bolt	4	C00001-
20		01643-31232	Washer	4	C00001-
21		20Y-54-61470	Plate	1	C00001-
22		01010-81225	Bolt	2	C00001-
23		01643-31232	Washer	2	C00001-
24		205-54-53550	Dovetail	1	C00001-
25		01010-80616	Bolt	2	C00001-
26		01643-30623	Washer	2	C00001-
27		20Y-54-28170	Bracket	1	C00001-
28		01010-81225	Bolt	2	C00001-
29		01643-31232	Washer	2	C00001-
30		205-54-51971	Dovetail	1	C00001-
31		01010-80616	Bolt	2	C00001-
32		01643-30623	Washer	2	C00001-
33		20Y-54-61372	Bracket	1	C00001-
34		01010-81225	Bolt	2	C00001-
35		01643-31232	Washer	2	C00001-
36		20Y-54-11611	Stopper	2	C00001-
37		01580-11008	Nut	2	C00001-
38		20Y-54-29232	Bar	2	C00001-
39		20Y-54-57730	Frame	1	C00001-

FIG. M1130-002001 Door L.H. (With Pre-cleaner)

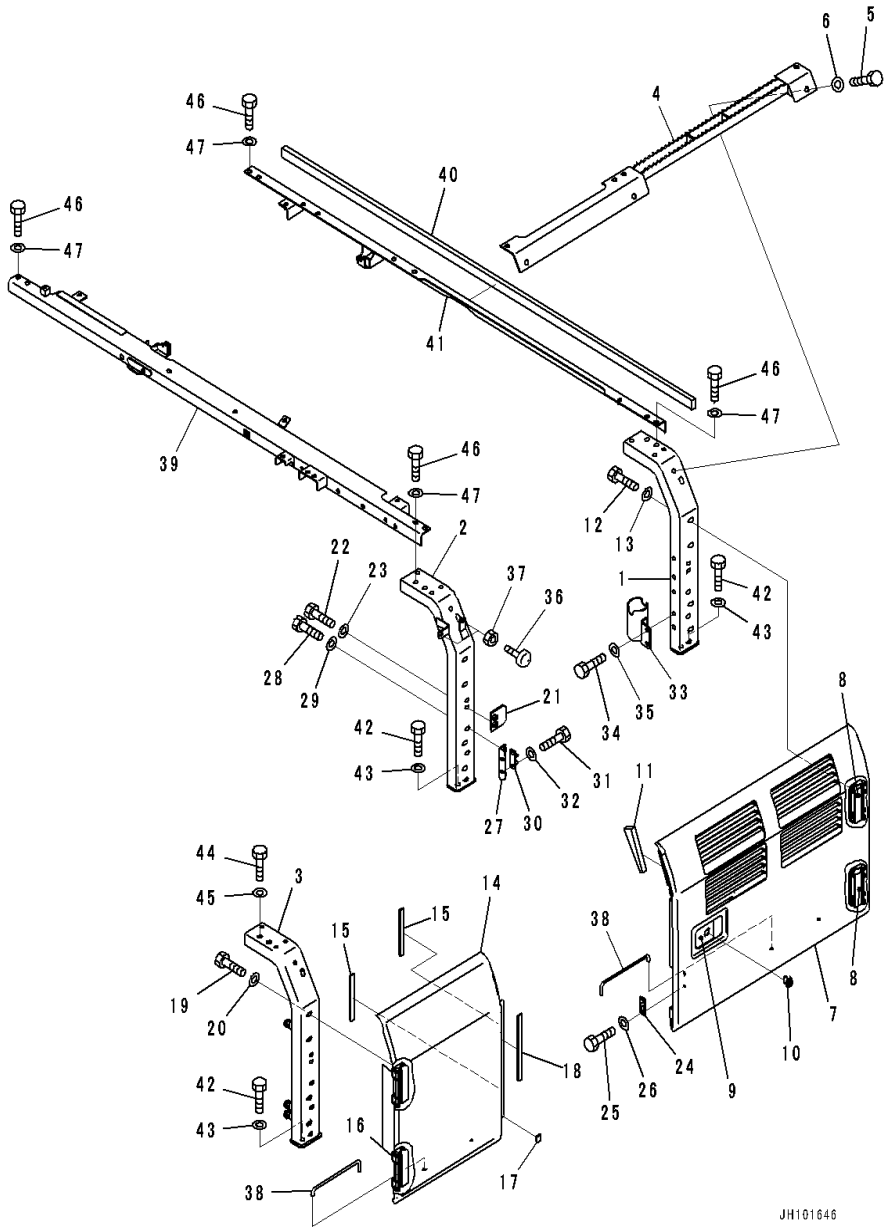

Index	Code	Part Number	Description	Qty	Serial Number
		20Y-54-57831	Frame	1	C00001-
40		20Y-54-57240	• Sheet	1	C00001-
41	C1		• Frame	1	C00001-
42		01010-81230	Bolt	6	C00001-
43		01643-31232	Washer	6	C00001-
44		01010-81230	Bolt	2	C00001-
45		01643-31232	Washer	2	C00001-
46		01010-81230	Bolt	5	C00001-
47		01643-31232	Washer	5	C00001-

FIG. M1140-001001 Door R.H.

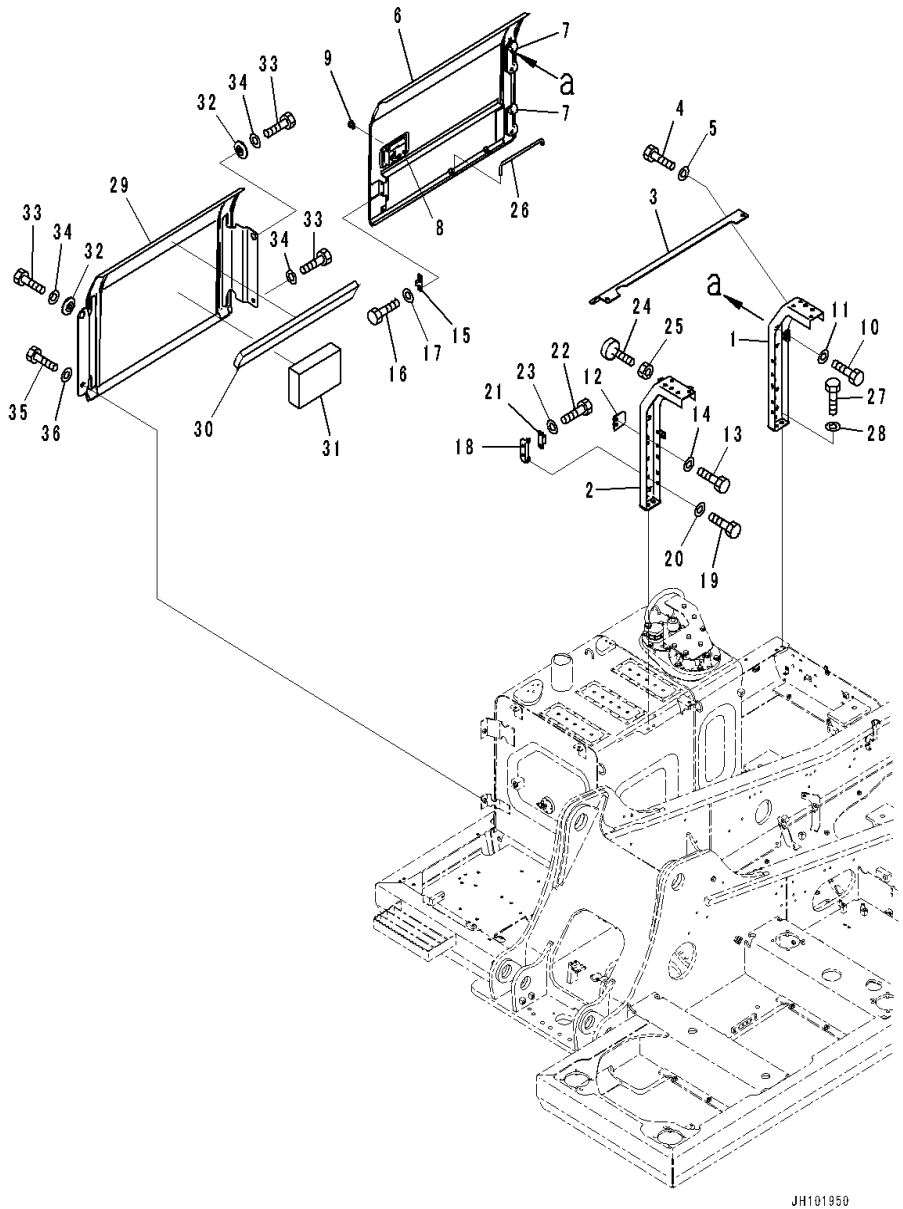

Index	Code	Part Number	Description	Qty	Serial Number
1		20Y-54-57411	Frame	1	C00001-
2		20Y-54-56421	Frame	1	C00001-
3		20Y-54-56431	Frame	1	C00001-
4		01010-81225	Bolt	2	C00001-
5		01643-31232	Washer	2	C00001-
6		20Y-54-57451	Cover	1	C00001-
7		20Y-54-63414	• Hinge,Welded	2	C00001-
8		20Y-54-71491	• Lock,Welded	1	C00001-
9		20Y-54-73171	• • Lock Assembly	1	C00001-
10		01010-81225	Bolt	4	C00001-
11		01643-31232	Washer	4	C00001-
12		20Y-54-61470	Plate	1	C00001-
13		01010-81225	Bolt	2	C00001-
14		01643-31232	Washer	2	C00001-
15		205-54-53550	Dovetail	1	C00001-
16		01010-80616	Bolt	2	C00001-
17		01643-30623	Washer	2	C00001-
18		20Y-54-57980	Bracket	1	C00001-
19		01010-81225	Bolt	2	C00001-
20		01643-31232	Washer	2	C00001-
21		205-54-51971	Dovetail	1	C00001-
22		01010-80616	Bolt	2	C00001-
23		01643-30623	Washer	2	C00001-
24		20Y-54-11611	Stopper	1	C00001-
25		01580-11008	Nut	1	C00001-
26		20Y-54-29232	Bar	1	C00001-
27		01010-81230	Bolt	4	C00001-
28		01643-31232	Washer	4	C00001-
		20Y-54-77320	Cover	1	C00001-
29	C1		• Cover	1	C00001-
30		20Y-54-61391	• Sheet	1	C00001-
31		20Y-54-77330	• Sheet	1	C00001-
32		208-54-57180	Collar	2	C00001-
33		01010-81230	Bolt	3	C00001-
34		01643-31232	Washer	3	C00001-
35		01010-81230	Bolt	1	C00001-
36		175-54-34170	Washer	1	C00001-

FIG. M1150-001001 Partition (1/4)

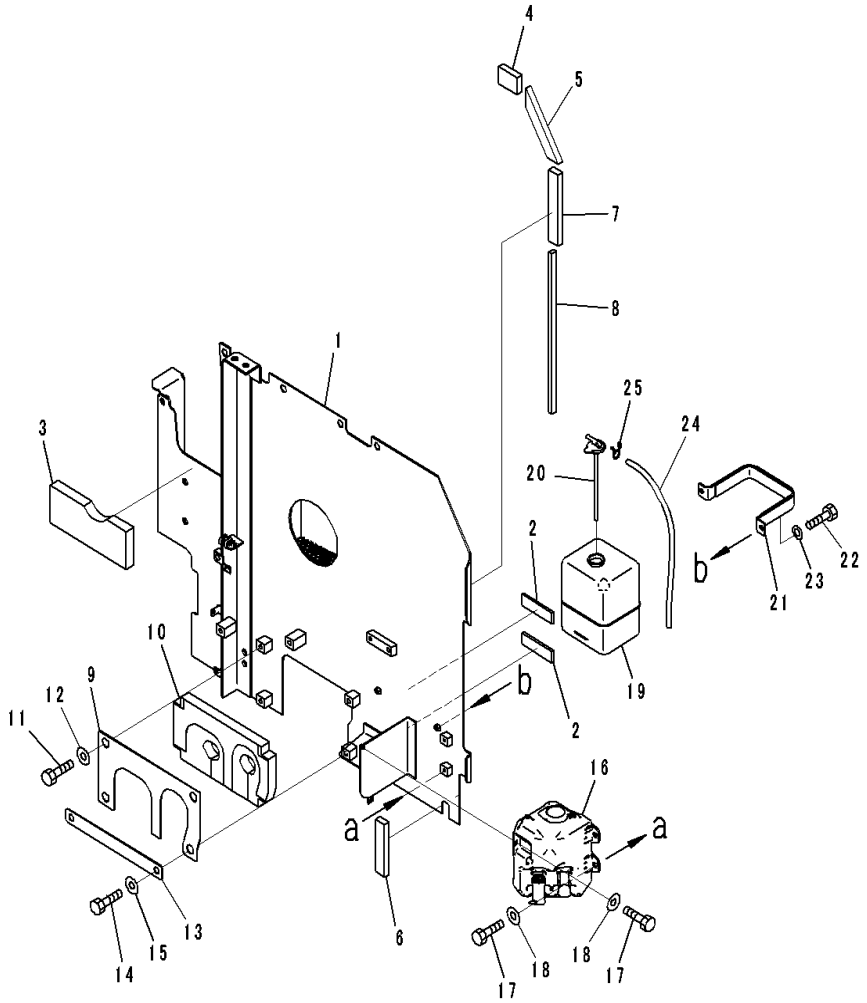

Index	Code	Part Number	Description	Qty	Serial Number
		20Y-54-56621	Cover	1	C00001-
1	C1		• Cover	1	C00001-
2		205-03-71440	• Sheet	2	C00001-
3		20Y-54-56590	• Sheet	1	C00001-
4		20Y-54-72510	• Sheet	1	C00001-
5		20Y-54-72520	• Sheet	1	C00001-
6		20Y-54-72540	• Sheet	1	C00001-
7		20Y-54-72551	• Sheet	1	C00001-
8		20Y-54-75590	• Sheet	1	C00001-
		20Y-54-57611	Cover	1	C00001-
9	C1		• Cover	1	C00001-
10		20Y-54-57631	• Sheet	1	C00001-
11		01010-81225	Bolt	2	C00001-
12		175-54-34170	Washer	2	C00001-
13		20Y-54-57671	Plate	1	C00001-
14		01010-81225	Bolt	2	C00001-
15		175-54-34170	Washer	2	C00001-
16		21T-06-11351	Tank Assembly	1	C00001-
17		01010-80616	Bolt	3	C00001-
18		209-72-12230	Washer	3	C00001-
19		20Y-06-15240	Tank	1	C00001-
20		205-03-71532	• Cap	1	C00001-
		205-03-71540	• • Packing	1	C00001-
21		203-03-56650	Bracket	1	C00001-
22		01010-80820	Bolt	2	C00001-
23		01643-30823	Washer	2	C00001-
24		20Y-03-41880	Hose	1	C00001-
25		206-03-43340	Clip	1	C00001-

FIG. M1150-001002 Partition (2/4)

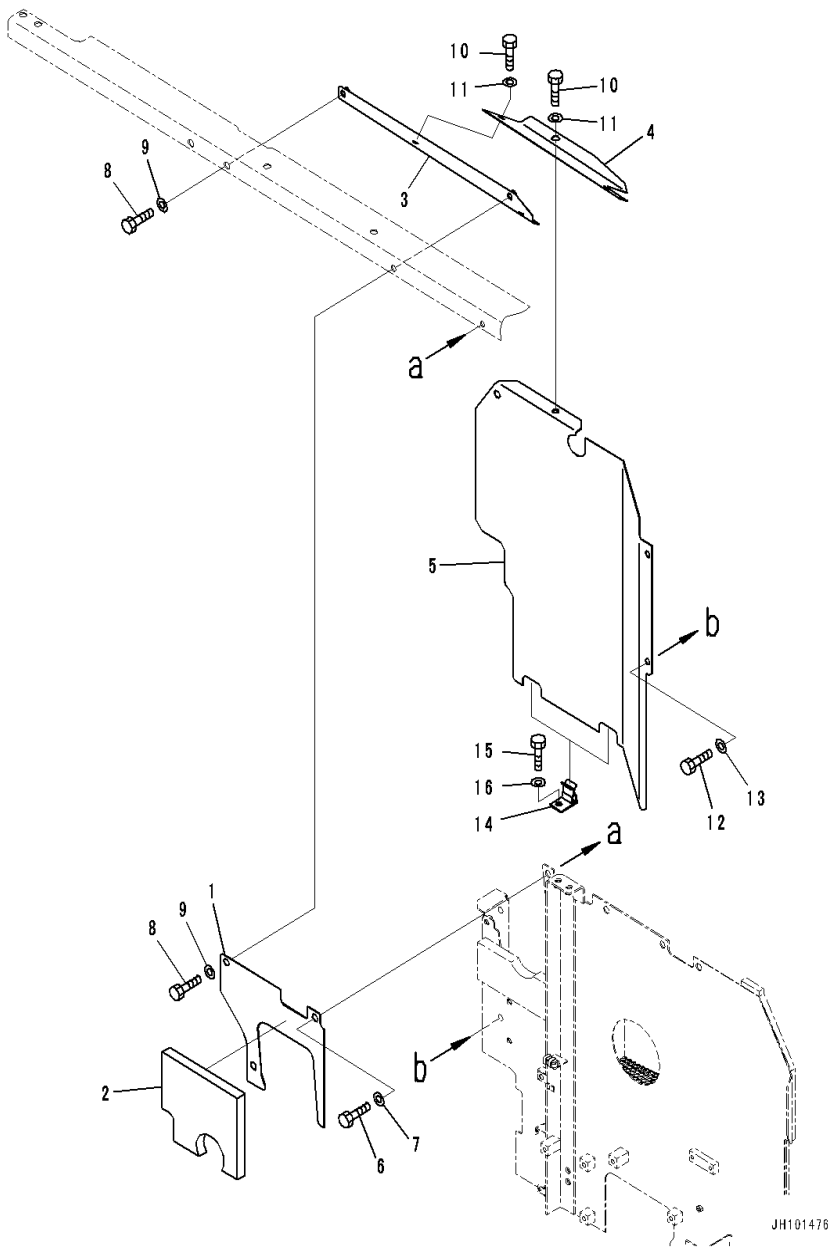

Index	Code	Part Number	Description	Qty	Serial Number
		20Y-54-58321	Cover	1	C00001-
1	C1		• Cover	1	C00001-
2		20Y-54-56991	• Sheet	1	C00001-
3		20Y-54-56532	Cover	1	C00001-
4		20Y-54-56542	Cover	1	C00001-
5		20Y-54-56641	Cover	1	C00001-
6		01010-81230	Bolt	2	C00001-
7		01643-31232	Washer	2	C00001-
8		01010-81230	Bolt	2	C00001-
9		01643-31232	Washer	2	C00001-
10		01010-81230	Bolt	3	C00001-
11		01643-31232	Washer	3	C00001-
12		01010-81230	Bolt	3	C00001-
13		01643-31232	Washer	3	C00001-
14		20Y-54-12320	Catcher	2	C00001-
15		01010-81230	Bolt	2	C00001-
16		01643-31232	Washer	2	C00001-

FIG. M1150-001003 Partition (3/4)

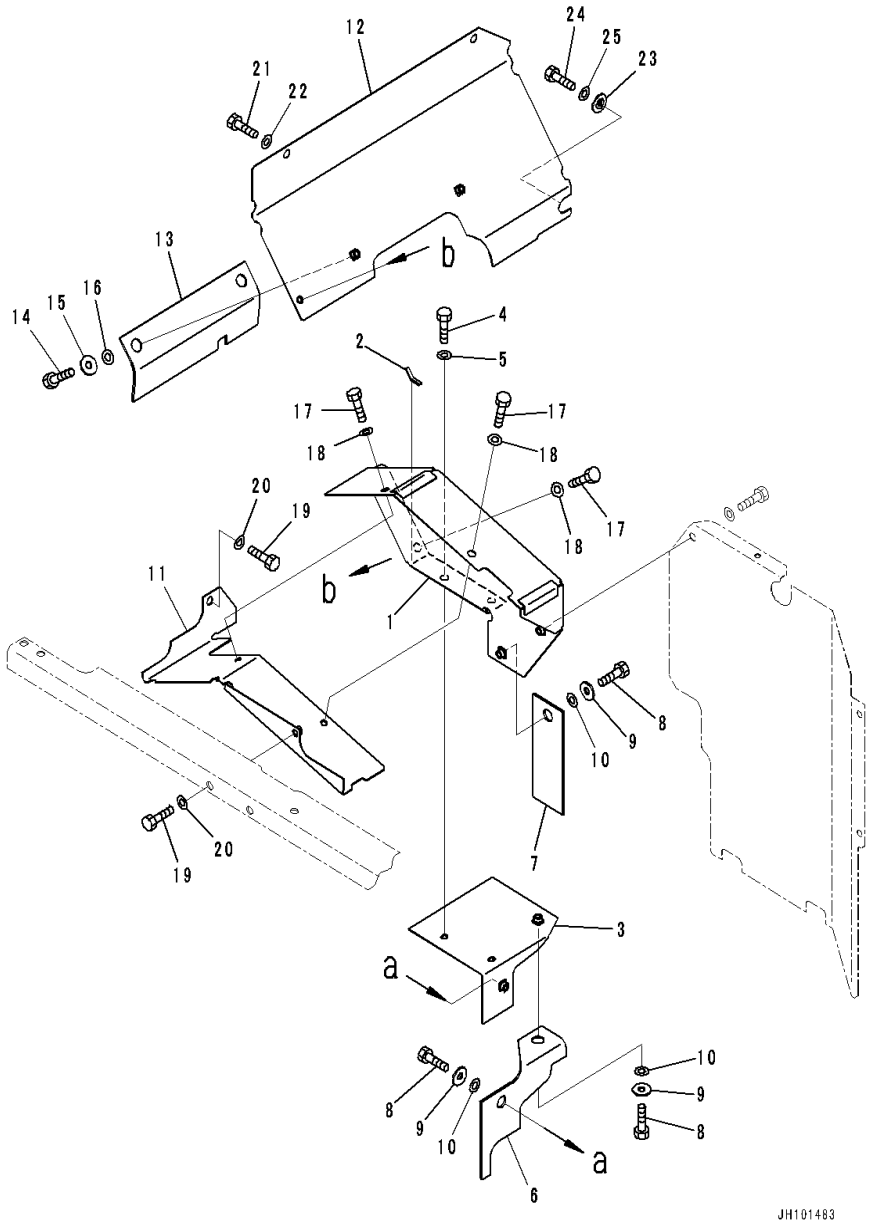

Index	Code	Part Number	Description	Qty	Serial Number
		20Y-54-57851	Cover	1	C00001-
1	C1		• Cover	1	C00001-
2		20Y-54-73781	• Sheet	1	C00001-
3		20Y-54-56481	Cover	1	C00001-
4		01010-81225	Bolt	2	C00001-
5		01643-31232	Washer	2	C00001-
6		20Y-54-56651	Sheet	1	C00001-
7		20Y-54-73760	Sheet	1	C00001-
8		01010-81225	Bolt	3	C00001-
9		124-54-26540	Washer	3	C00001-
10		01643-51232	Washer	3	C00001-
11		20Y-54-56661	Cover	1	C00001-
		20Y-54-56891	Cover Assembly	1	C00001-
12	C1		• Cover	1	C00001-
13		20Y-54-72470	• Sheet	1	C00001-
14		01010-81225	• Bolt	2	C00001-
15		124-54-26540	• Washer	2	C00001-
16		01643-51232	• Washer	2	C00001-
17		01010-81230	Bolt	3	C00001-
18		01643-31232	Washer	3	C00001-
19		01010-81230	Bolt	2	C00001-
20		01643-31232	Washer	2	C00001-
21		01010-81230	Bolt	2	C00001-
22		01643-31232	Washer	2	C00001-
23		20Y-54-56190	Collar	1	C00001-
24		01010-81230	Bolt	1	C00001-
25		01643-31232	Washer	1	C00001-

FIG. M1150-001004 Partition (4/4)

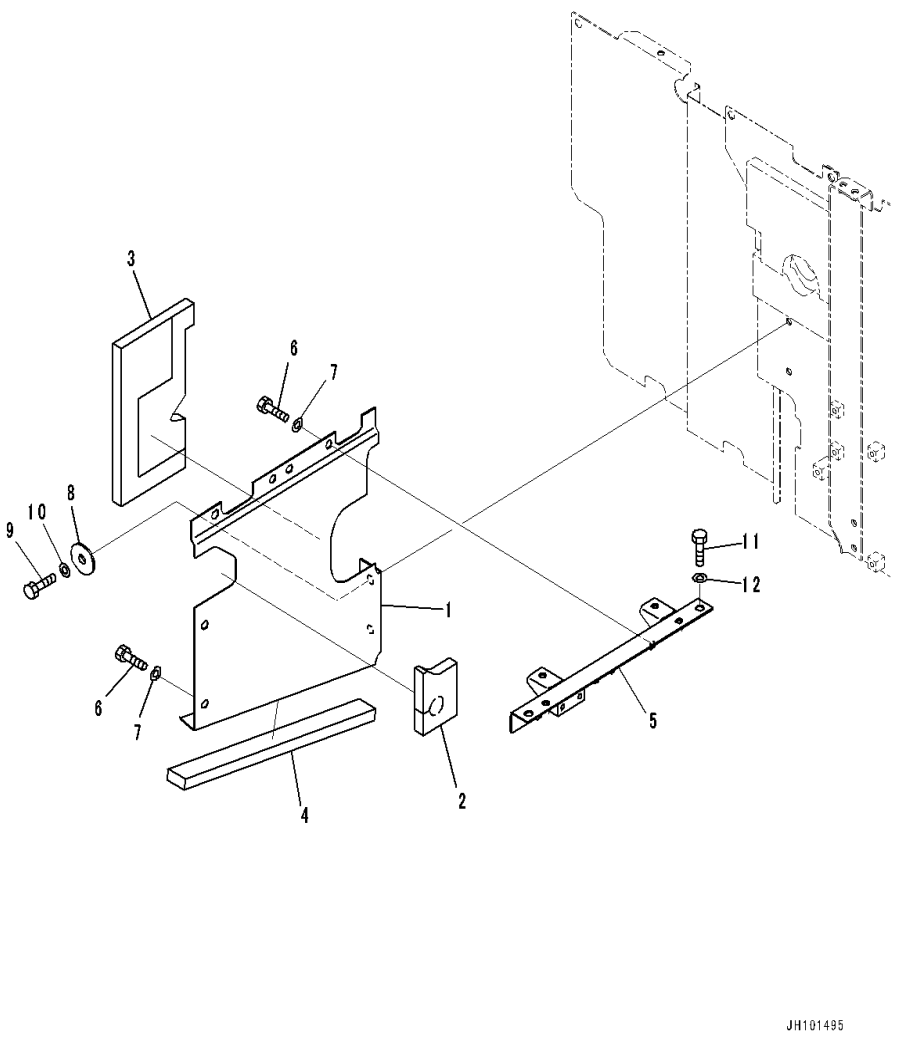

Index	Code	Part Number	Description	Qty	Serial Number
		20Y-54-56581	Cover Assembly	1	C00001-
1	C1		• Cover	1	C00001-
2		206-54-71460	• Sheet	1	C00001-
3		20Y-54-56690	• Sheet	1	C00001-
4		20Y-54-71962	• Sheet	1	C00001-
5		20Y-54-71262	Frame	1	C00001-
6		01010-81230	Bolt	6	C00001-
7		01643-31232	Washer	6	C00001-
8		20Y-54-12550	Collar	2	C00001-
9		01010-81230	Bolt	2	C00001-
10		01643-31232	Washer	2	C00001-
11		01010-81230	Bolt	2	C00001-
12		01643-31232	Washer	2	C00001-

FIG. M1150-002001 Partition (With Pre-cleaner)

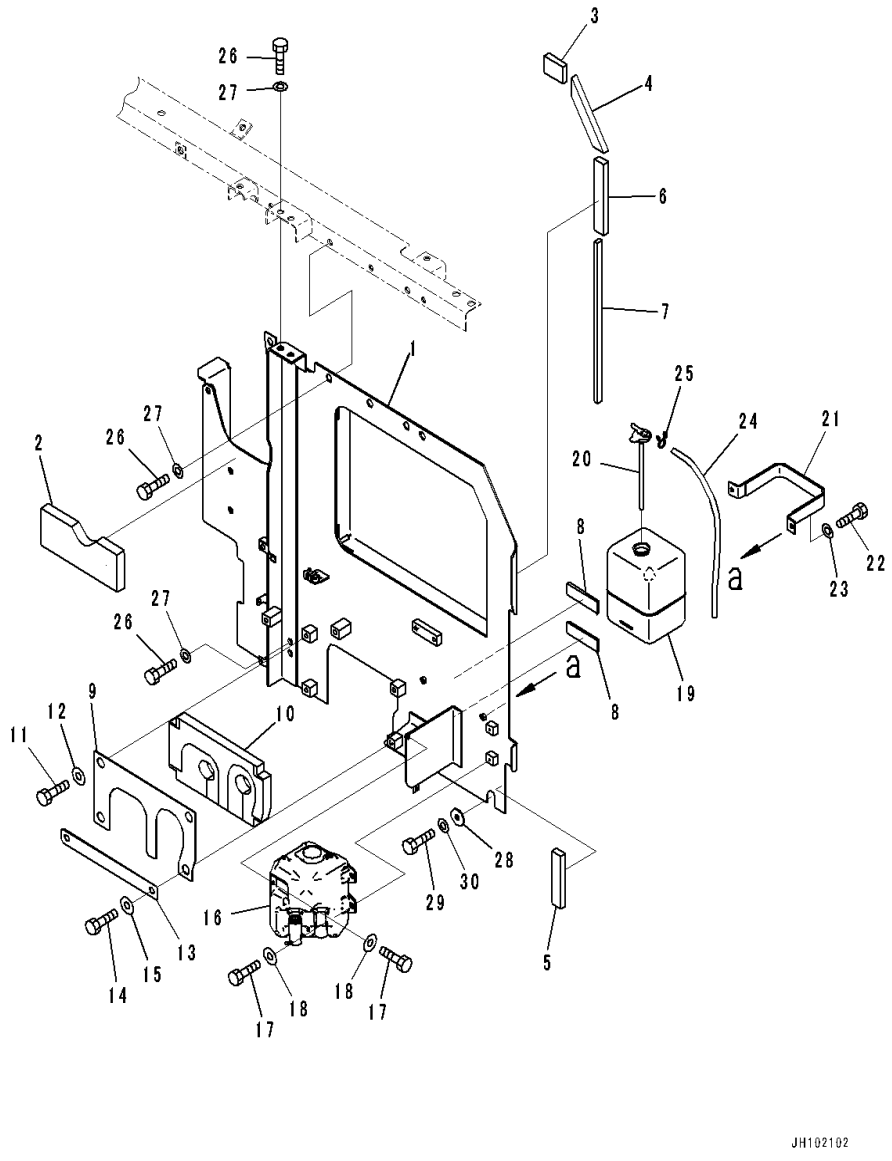

Index	Code	Part Number	Description	Qty	Serial Number
		20Y-54-59822	Cover	1	C00001-
1	C1		• Cover	1	C00001-
2		20Y-54-59950	• Sheet	1	C00001-
3		20Y-54-72510	• Sheet	1	C00001-
4		20Y-54-72520	• Sheet	1	C00001-
5		20Y-54-72540	• Sheet	1	C00001-
6		20Y-54-72551	• Sheet	1	C00001-
7		20Y-54-75590	• Sheet	1	C00001-
8		205-03-71440	• Sheet	2	C00001-
		20Y-54-57611	Cover	1	C00001-
9	C1		• Cover	1	C00001-
10		20Y-54-57631	• Sheet	1	C00001-
11		01010-81225	Bolt	2	C00001-
12		175-54-34170	Washer	2	C00001-
13		20Y-54-57671	Plate	1	C00001-
14		01010-81225	Bolt	2	C00001-
15		175-54-34170	Washer	2	C00001-
16		21T-06-11351	Tank Assembly	1	C00001-
17		01010-80616	Bolt	3	C00001-
18		209-72-12230	Washer	3	C00001-
19		20Y-06-15240	Tank	1	C00001-
20		205-03-71532	• Cap	1	C00001-
		205-03-71540	• • Packing	1	C00001-
21		203-03-56650	Bracket	1	C00001-
22		01010-80820	Bolt	2	C00001-
23		01643-30823	Washer	2	C00001-
24		20Y-03-41880	Hose	1	C00001-
25		206-03-43340	Clip	1	C00001-
26		01010-81230	Bolt	6	C00001-
27		01643-31232	Washer	6	C00001-
28		205-54-76411	Collar	2	C00001-
29		01010-81230	Bolt	2	C00001-
30		01643-31232	Washer	2	C00001-

FIG. M1150-002002 Partition (With Pre-cleaner)

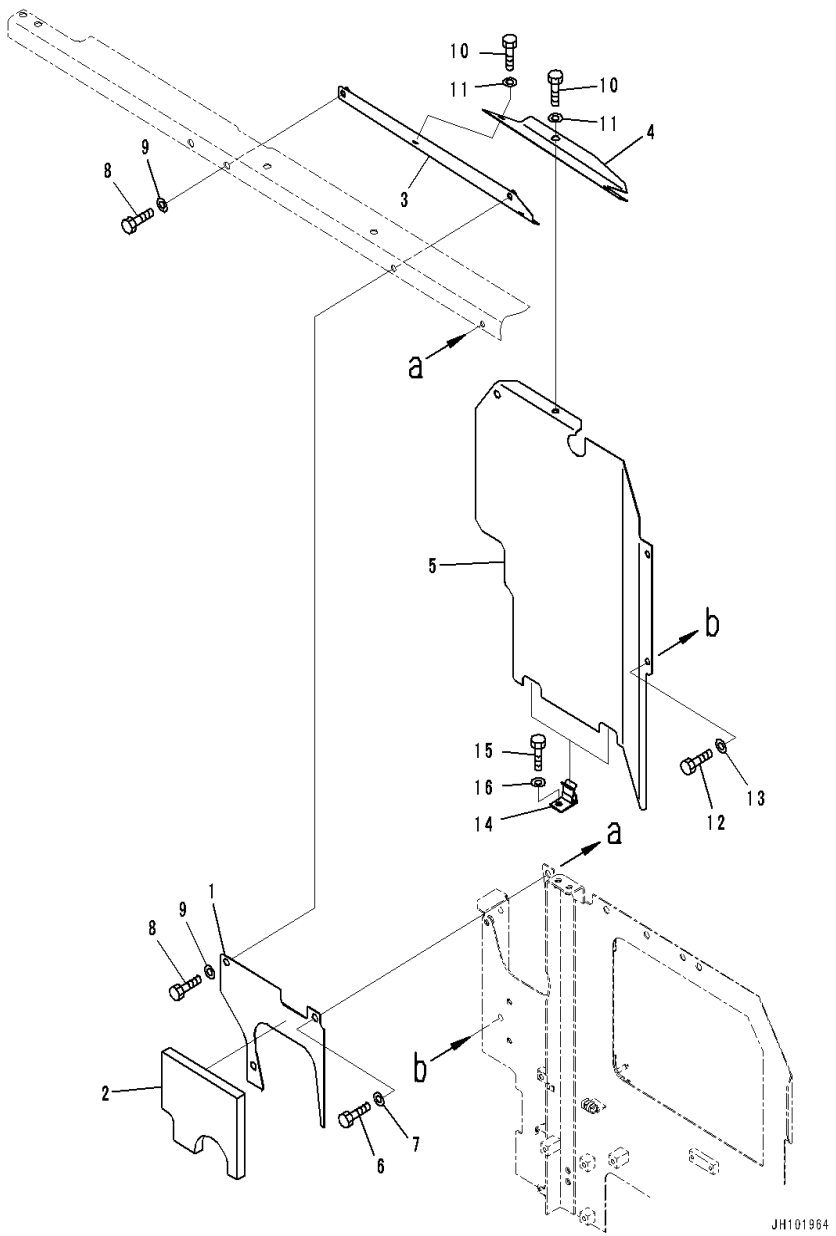

Index	Code	Part Number	Description	Qty	Serial Number
		20Y-54-58630	Cover	1	C00001-
1	C1		• Cover	1	C00001-
2		20Y-54-58650	• Sheet	1	C00001-
3		20Y-54-56532	Cover	1	C00001-
4		20Y-54-56542	Cover	1	C00001-
5		20Y-54-56641	Cover	1	C00001-
6		01010-81230	Bolt	2	C00001-
7		01643-31232	Washer	2	C00001-
8		01010-81230	Bolt	2	C00001-
9		01643-31232	Washer	2	C00001-
10		01010-81230	Bolt	3	C00001-
11		01643-31232	Washer	3	C00001-
12		01010-81230	Bolt	3	C00001-
13		01643-31232	Washer	3	C00001-
14		20Y-54-12320	Catcher	2	C00001-
15		01010-81230	Bolt	2	C00001-
16		01643-31232	Washer	2	C00001-

FIG. M1150-002003 Partition

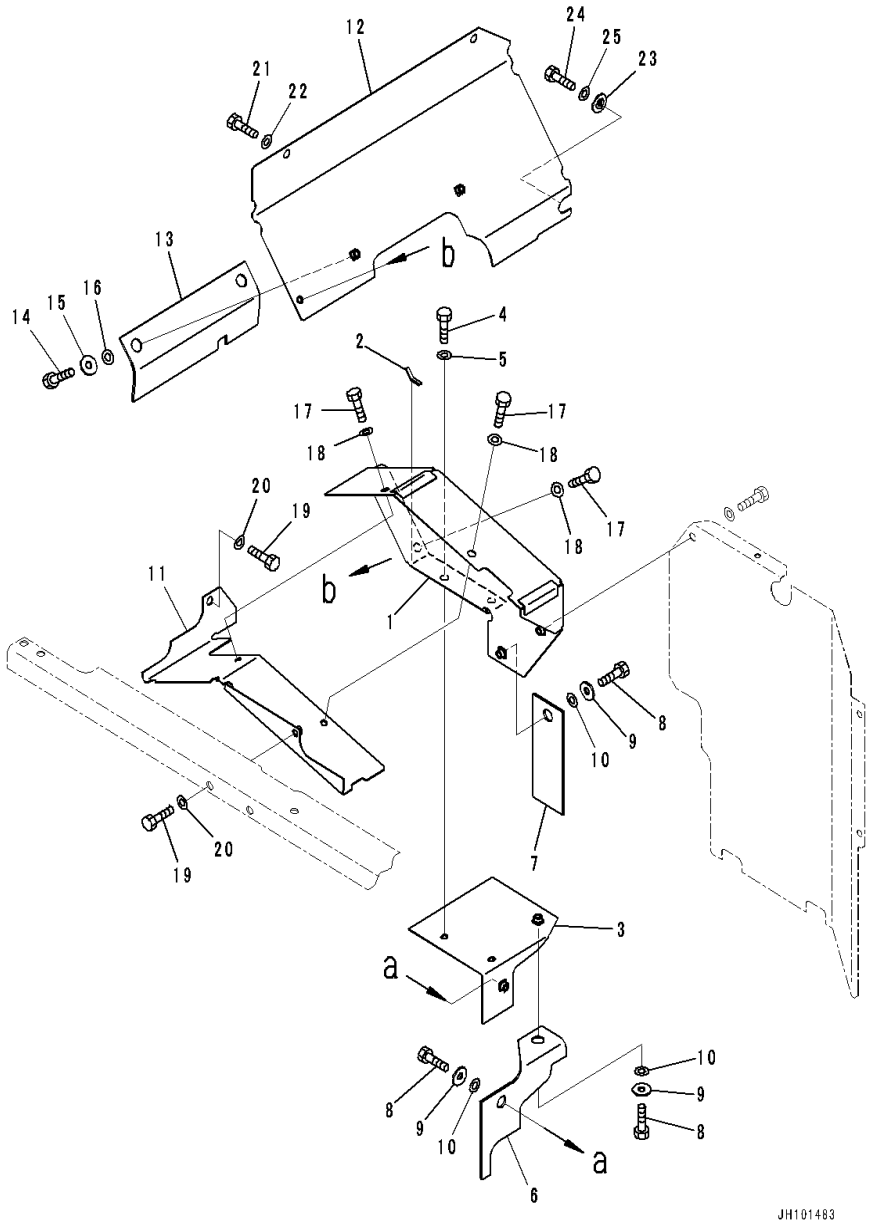

Index	Code	Part Number	Description	Qty	Serial Number
		20Y-54-57852	Cover	1	C00001-
1	C1		• Cover	1	C00001-
2		20Y-54-73781	• Sheet	1	C00001-
3		20Y-54-56481	Cover	1	C00001-
4		01010-81225	Bolt	2	C00001-
5		01643-31232	Washer	2	C00001-
6		20Y-54-56651	Sheet	1	C00001-
7		20Y-54-73760	Sheet	1	C00001-
8		01010-81225	Bolt	3	C00001-
9		124-54-26540	Washer	3	C00001-
10		01643-51232	Washer	3	C00001-
11		20Y-54-56661	Cover	1	C00001-
		20Y-54-56891	Cover Assembly	1	C00001-
12	C1		• Cover	1	C00001-
13		20Y-54-72470	• Sheet	1	C00001-
14		01010-81225	• Bolt	2	C00001-
15		124-54-26540	• Washer	2	C00001-
16		01643-51232	• Washer	2	C00001-
17		01010-81230	Bolt	3	C00001-
18		01643-31232	Washer	3	C00001-
19		01010-81230	Bolt	2	C00001-
20		01643-31232	Washer	2	C00001-
21		01010-81230	Bolt	2	C00001-
22		01643-31232	Washer	2	C00001-
23		20Y-54-56190	Collar	1	C00001-
24		01010-81230	Bolt	1	C00001-
25		01643-31232	Washer	1	C00001-

FIG. M1150-002004 Partition (With Pre-cleaner)

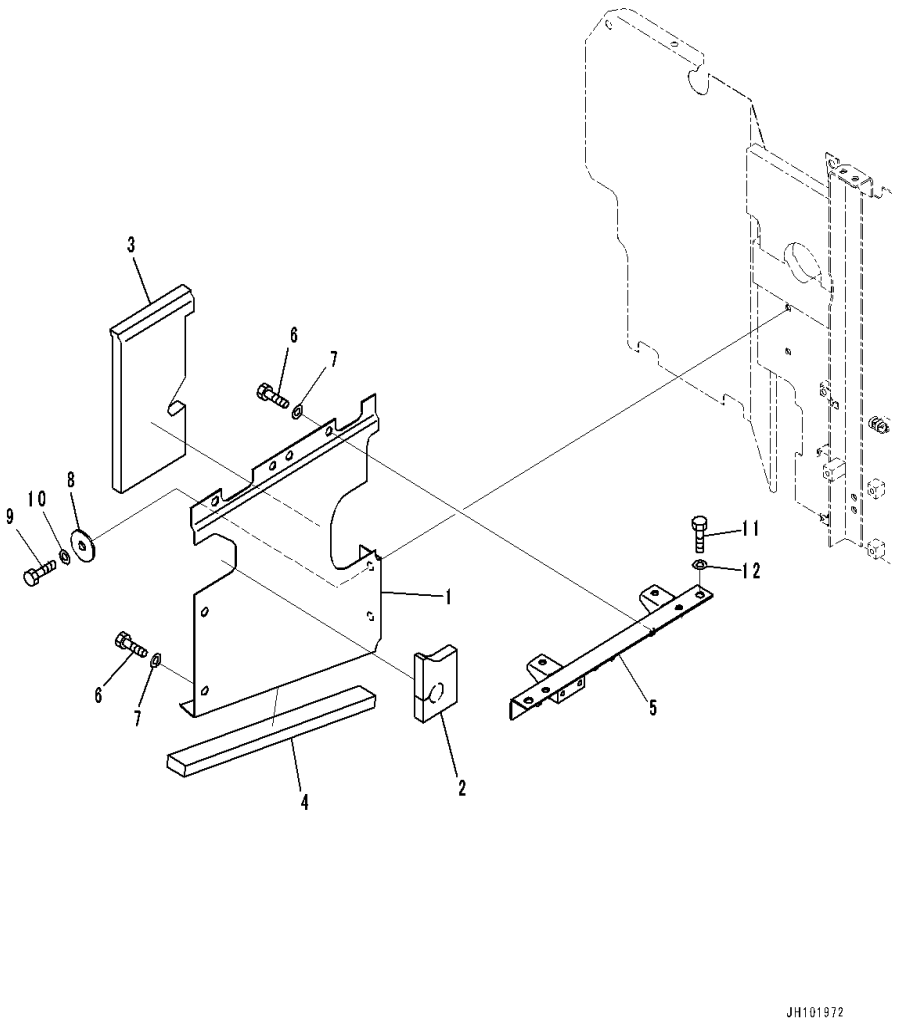

Index	Code	Part Number	Description	Qty	Serial Number
		20Y-54-59930	Cover Assembly	1	C00001-
1	C1		• Cover	1	C00001-
2		206-54-71460	• Sheet	1	C00001-
3		20Y-54-71950	• Sheet	1	C00001-
4		20Y-54-71962	• Sheet	1	C00001-
5		20Y-54-71262	Frame	1	C00001-
6		01010-81230	Bolt	6	C00001-
7		01643-31232	Washer	6	C00001-
8		20Y-54-12550	Collar	2	C00001-
9		01010-81230	Bolt	2	C00001-
10		01643-31232	Washer	2	C00001-
11		01010-81230	Bolt	2	C00001-
12		01643-31232	Washer	2	C00001-

FIG. M1160-001001 Partition Cover

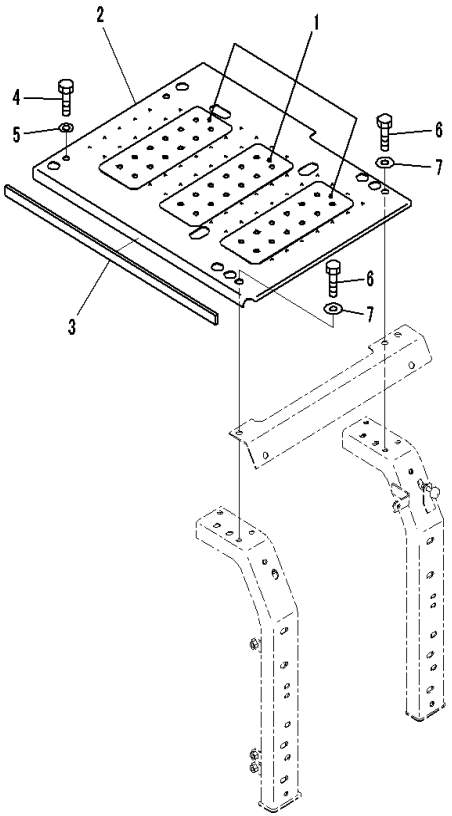

Index	Code	Part Number	Description	Qty	Serial Number
		20Y-54-56742	Cover	1	C00001-
1		20Y-00-42140	• Plate	3	C00001-
2	C1		• Cover	1	C00001-
3		20Y-54-73730	• Sheet	1	C00001-
4		01010-81230	Bolt	2	C00001-
5		01643-31232	Washer	2	C00001-
6		01010-81230	Bolt	2	C00001-
7		175-54-34170	Washer	2	C00001-

FIG. M1160-002001 Partition Cover (With Pre-cleaner)

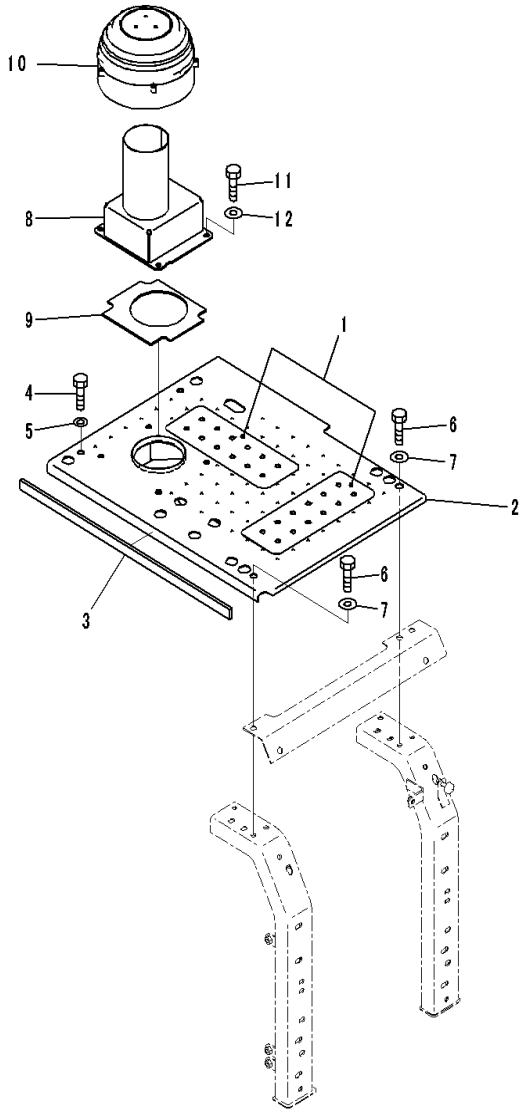

Index	Code	Part Number	Description	Qty	Serial Number
		20Y-54-57540	Cover	1	C00001-
1		20Y-00-42140	• Plate	2	C00001-
2	C1		• Cover	1	C00001-
3		20Y-54-73730	• Sheet	1	C00001-
4		01010-81230	Bolt	2	C00001-
5		01643-31232	Washer	2	C00001-
6		01010-81230	Bolt	2	C00001-
7		175-54-34170	Washer	2	C00001-
8		20Y-01-56821	Duct	1	C00001-
9		20Y-01-57650	• Seal	1	C00001-
10		20Y-01-56400	Cleaner Assembly	1	C00001-
11		01010-81230	Bolt	4	C00001-
12		01643-31232	Washer	4	C00001-

FIG. M1210-001001 Upper Cover

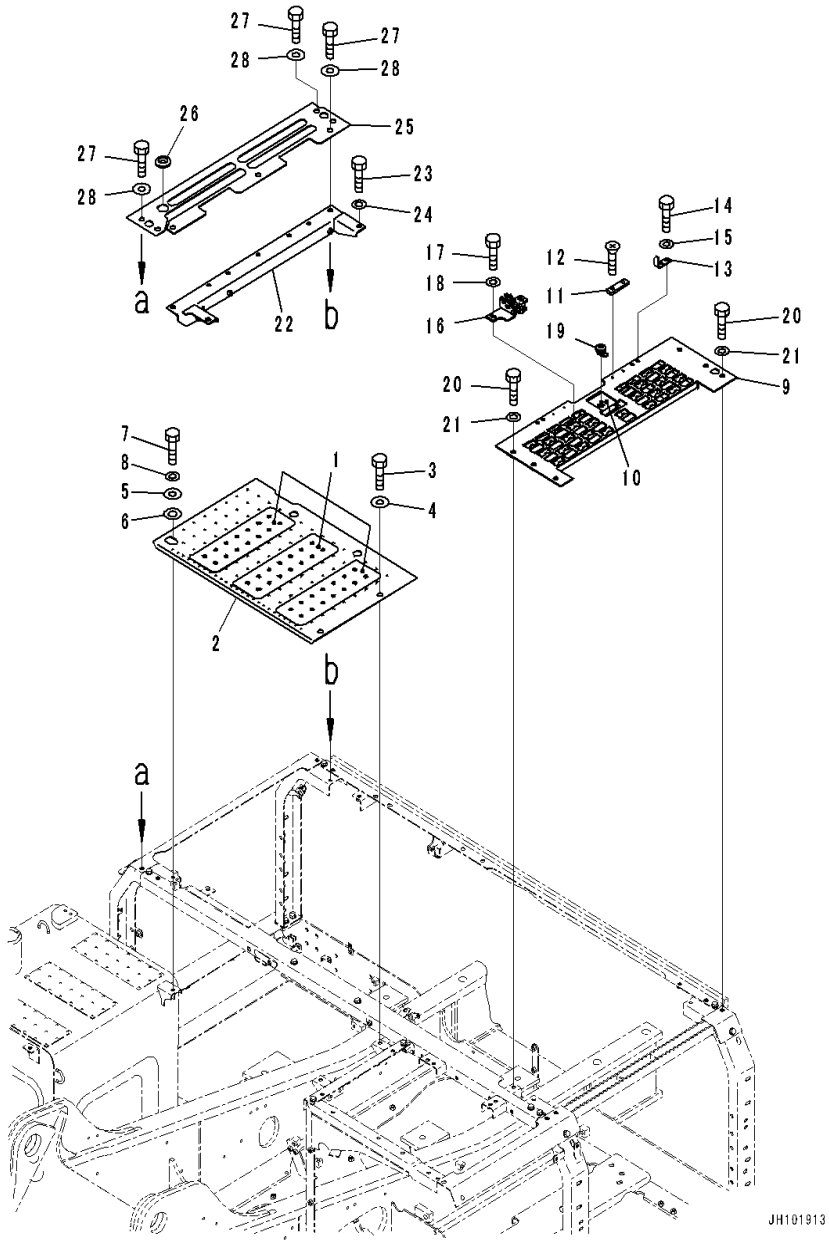

Index	Code	Part Number	Description	Qty	Serial Number
		20Y-54-57560	Cover	1	C00001-
1		20Y-00-56210	• Plate	3	C00001-
2	C1		• Cover	1	C00001-
3		01010-81230	Bolt	2	C00001-
4		175-54-34170	Washer	2	C00001-
5		20Y-54-61990	Collar	1	C00001-
6		20Y-54-61790	Plate	1	C00001-
7		01010-81230	Bolt	1	C00001-
8		01643-31232	Washer	1	C00001-
		20Y-54-56401	Cover Assembly	1	C00001-
9	C1		• Cover	1	C00001-
10		20Y-54-25852	• • Lock,Welded	1	C00001-
11		205-54-68440	• Plate	2	C00001-
12		01224-40620	• Screw, Philips Head	4	C00001-
13		20Y-54-27182	• Bracket	2	C00001-
14		01010-81025	• Bolt	4	C00001-
15		01643-31032	• Washer	4	C00001-
16		20Y-54-75900	• Lock Assembly	1	C00001-
17		01010-81025	• Bolt	2	C00001-
18		01643-31032	• Washer	2	C00001-
19		20Y-54-73190	• Lock Assembly	1	C00001-
20		01010-81230	Bolt	6	C00001-
21		01643-31232	Washer	6	C00001-
22		20Y-54-56170	Frame	1	C00001-
23		01010-81230	Bolt	2	C00001-
24		01643-31232	Washer	2	C00001-
		20Y-54-57431	Cover Assembly	1	C00001-
25	C1		• Plate	1	C00001-
26		08037-03614	• Grommet	1	C00001-
27		01010-81230	Bolt	7	C00001-
28		175-54-34170	Washer	7	C00001-

FIG. M1220-001001 Right Side Case

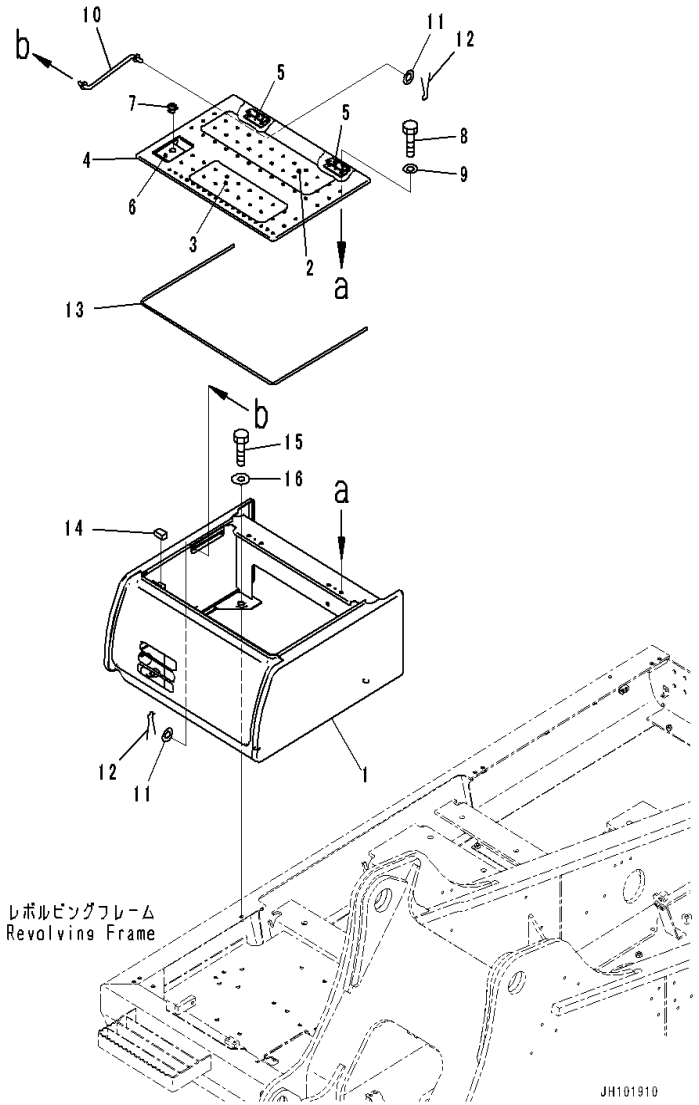

Index	Code	Part Number	Description	Qty	Serial Number
1		20Y-54-56121	Cover	1	C00001-
		20Y-54-56152	Cover	1	C00001-
2		209-00-41550	• Plate	1	C00001-
3		20Y-00-42140	• Plate	1	C00001-
4	C1		• Cover	1	C00001-
5		20Y-54-74161	• • Hinge,Welded	2	C00001-
6		20Y-54-74172	• • Lock,Welded	1	C00001-
7		20Y-54-74182	• • • Lock Assembly	1	C00001-
8		01010-81020	Bolt	4	C00001-
9		01643-31032	Washer	4	C00001-
10		203-54-56630	Rod	1	C00001-
11		01643-30623	Washer	2	C00001-
12		04050-11612	Pin, Cotter	2	C00001-
13		20Y-54-29660	Seal	1	C00001-
14		20Y-54-29680	Sheet	1	C00001-
15		01010-81230	Bolt	4	C00001-
16		175-54-34170	Washer	4	C00001-

FIG. M1230-001001 Floor Cover

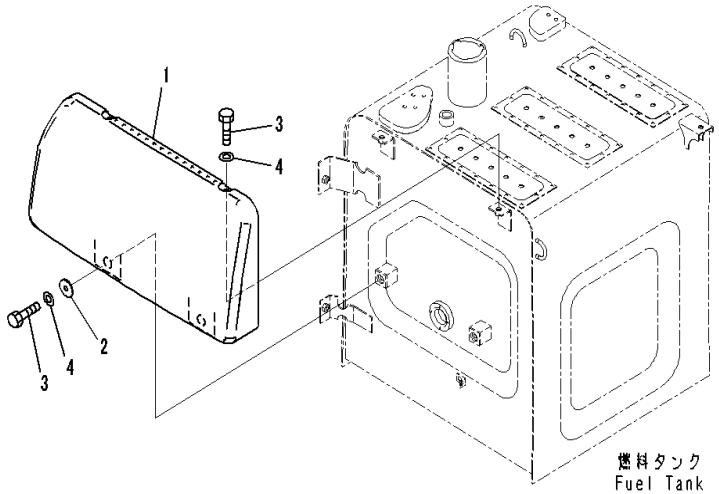

Index	Code	Part Number	Description	Qty	Serial Number
1		20Y-54-56181	Cover	1	C00001-
2		20Y-54-19930	Collar	2	C00001-
3		01010-81230	Bolt	4	C00001-
4		01643-31232	Washer	4	C00001-

FIG. M1230-002001 Floor Cover (Refueling Pump)

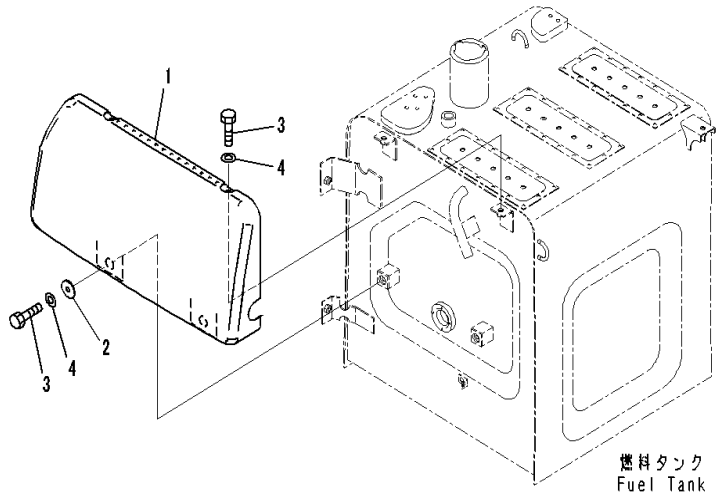

JH101908

Index	Code	Part Number	Description	Qty	Serial Number
1		20Y-54-57530	Cover	1	C00001-
2		20Y-54-19930	Collar	2	C00001-
3		01010-81230	Bolt	4	C00001-
4		01643-31232	Washer	4	C00001-

FIG. M1310-001001 Handrail

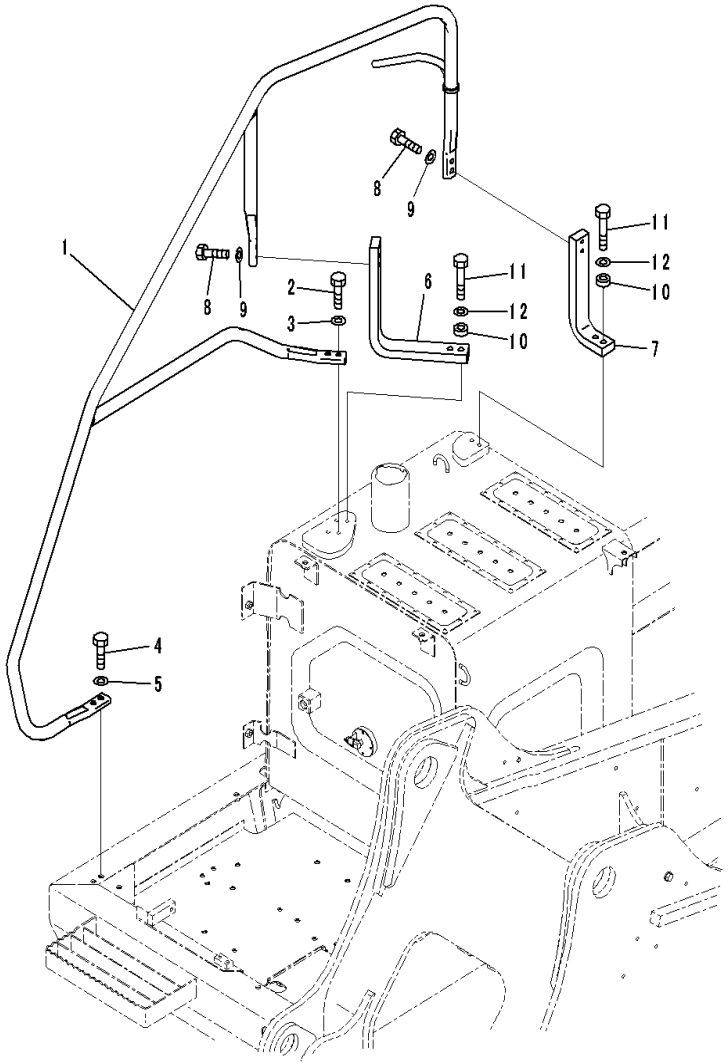

Index	Code	Part Number	Description	Qty	Serial Number
1		20Y-54-57321	Handrail	1	C00001-
2		01010-81240	Bolt	2	C00001-
3		01643-31232	Washer	2	C00001-
4		01010-81250	Bolt	2	C00001-
5		01643-31232	Washer	2	C00001-
6		20Y-54-57490	Bracket	1	C00001-
7		20Y-54-57311	Bracket	1	C00001-
8		01010-D1245	Bolt	4	C00001-
9		01643-71232	Washer	4	C00001-
10		198-43-15310	Collar	4	C00001-
11		01010-81255	Bolt	4	C00001-
12		01643-31232	Washer	4	C00001-

FIG. M1410-001001 Rearview Mirror L.H.

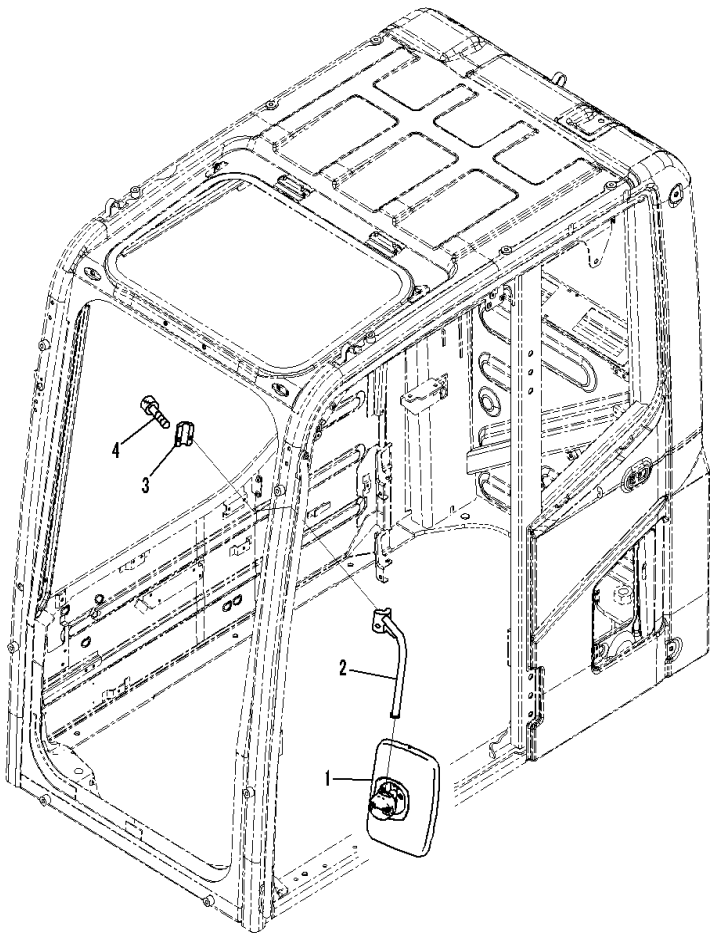

JH101666

Index	Code	Part Number	Description	Qty	Serial Number
1		2A5-54-13421	Mirror, Rearview	1	C00001-
2		20Y-54-74260	Support	1	C00001-
3		20Y-54-35430	Clamp	1	C00001-
4		01252-71030	Bolt	2	C00001-

FIG. M1420-001001 Rearview Mirror R.H.

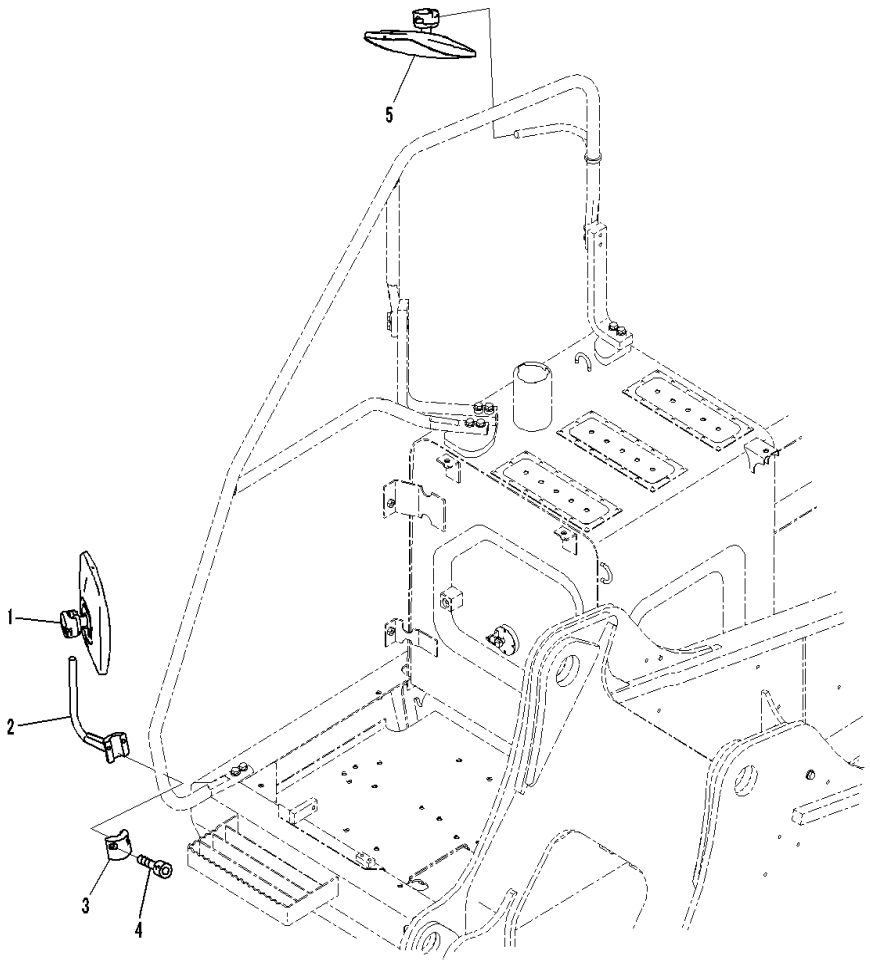

Index	Code	Part Number	Description	Qty	Serial Number
1		2A5-54-13421	Mirror, Rearview	1	C00001-
2		20Y-54-74270	Support	1	C00001-
3		20Y-54-61630	Clamp	1	C00001-
4		01252-71030	Bolt	2	C00001-
5		2A5-54-13421	Mirror, Rearview	1	C00001-
6		20Y-98-56110	Plate	1	C00001-

FIG. M1430-001001 Parts Without Rearview Mirror

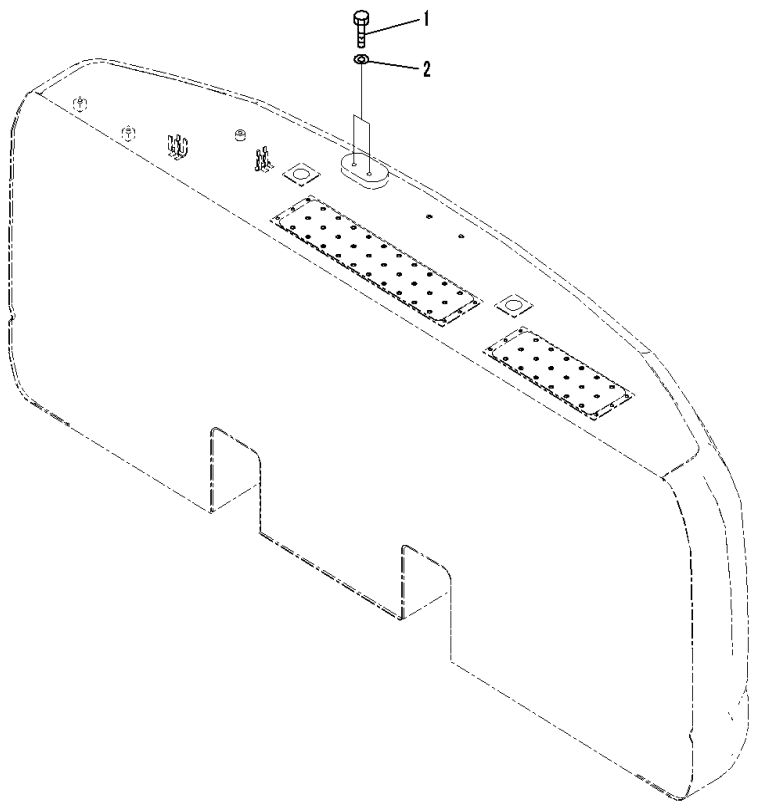

Index	Code	Part Number	Description	Qty	Serial Number
1		01010-81220	Bolt	2	C00001-
2		01643-31232	Washer	2	C00001-

FIG. M1430-002001 Rearview Mirror

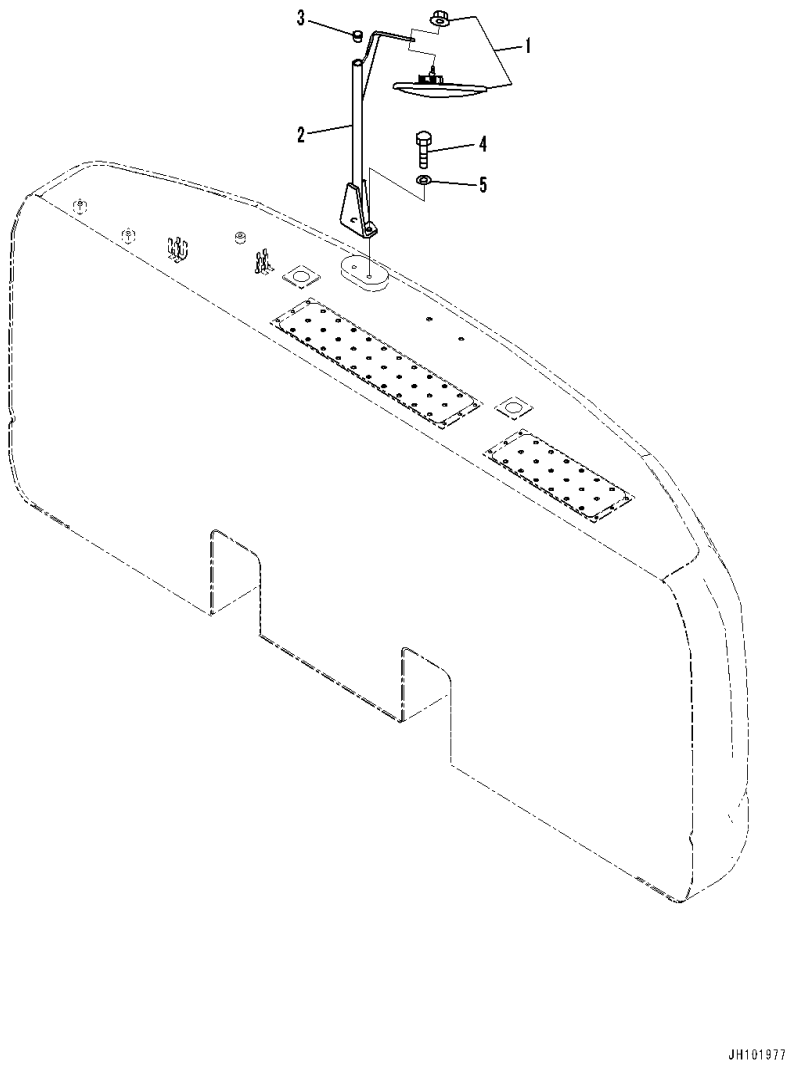

Index	Code	Part Number	Description	Qty	Serial Number
1		207-54-75711	Mirror	1	C00001-
2		20Y-54-74311	Bracket	1	C00001-
3		207-54-77970	• Cap	1	C00001-
4		01010-81230	Bolt	2	C00001-
5		01643-31232	Washer	2	C00001-

FIG. M1510-001001 Counterweight (3920kg)

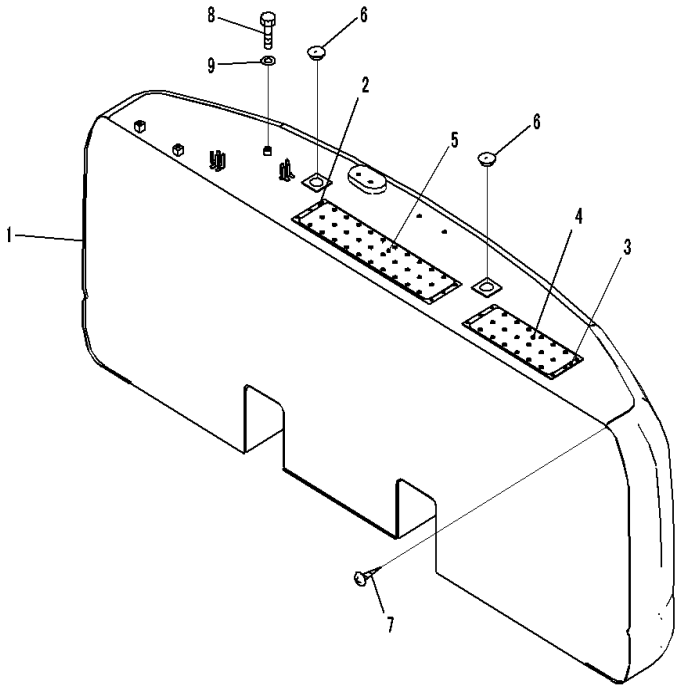

Index	Code	Part Number	Description	Qty	Serial Number
1		20Y-46-56621	Weight	1	C00001-
2		20Y-46-54313	• Plate,Welded	1	C00001-
3		20Y-46-54323	• Plate,Welded	1	C00001-
4		20Y-00-42150	Plate	1	C00001-
5		20Y-00-42160	Plate	1	C00001-
6		20Y-46-11270	Cap	2	C00001-
7		01370-00508	Screw	1	C00001-
8		01010-81220	Bolt	1	C00001-
9		01643-31232	Washer	1	C00001-

FIG. M1520-001001 Counterweight Mounting

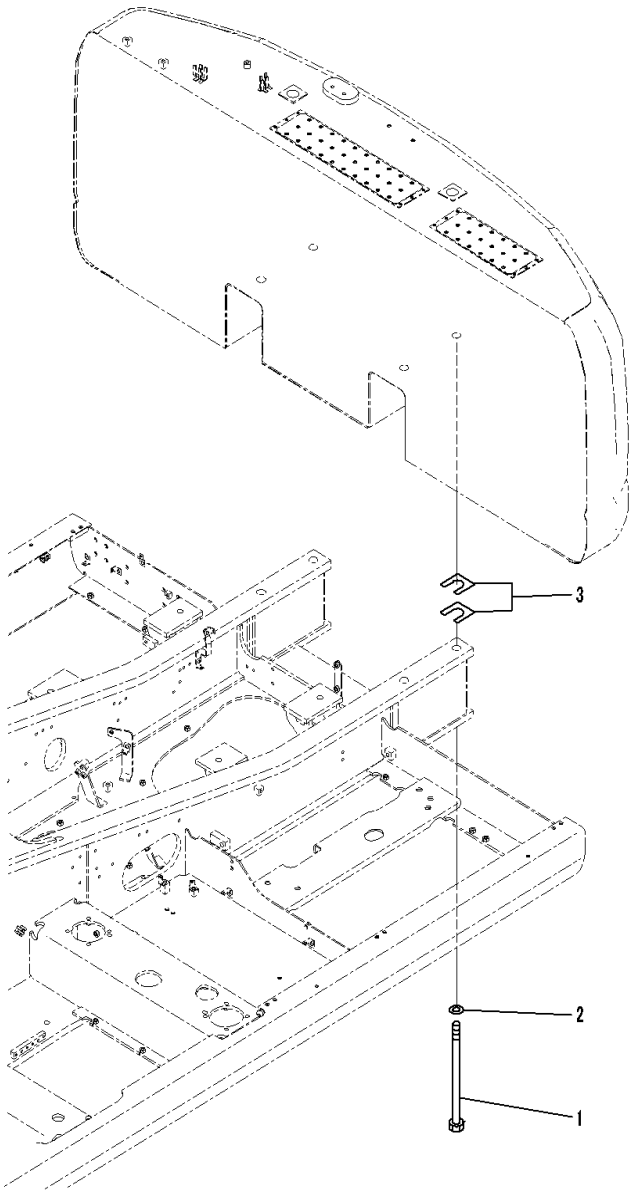

Index	Code	Part Number	Description	Qty	Serial Number
1		20Y-46-54130	Bolt	4	C00001-
2		207-46-32220	Washer	4	C00001-
3		20Y-46-11410	Plate,T=1.6mm	2	C00001-

FIG. M1810-001001 Under Cover

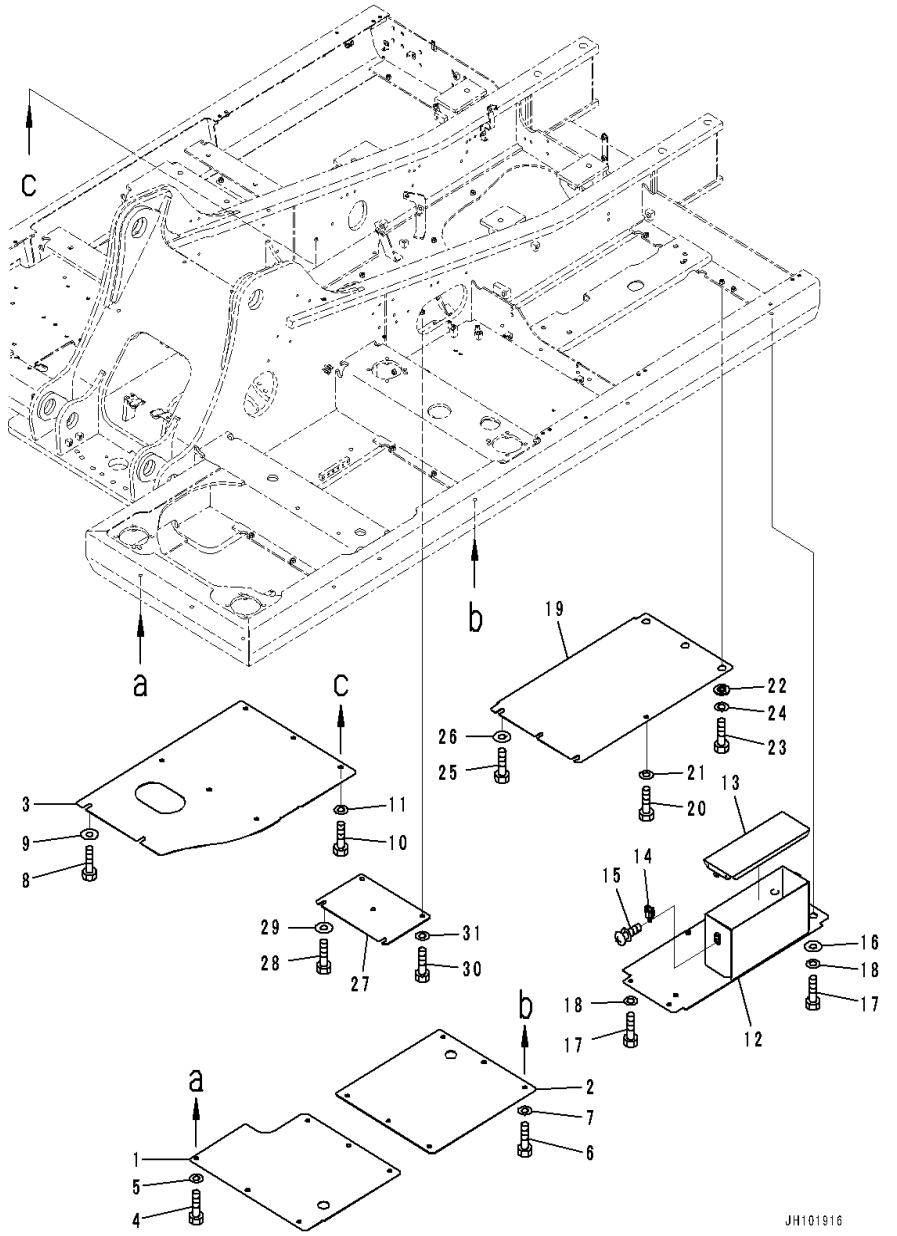

Index	Code	Part Number	Description	Qty	Serial Number
1		20Y-54-77921	Cover	1	C00001-
2		20Y-54-73630	Cover	1	C00001-
3		20Y-54-57170	Cover	1	C00001-
4		01010-81230	Bolt	6	C00001-
5		01643-31232	Washer	6	C00001-
6		01010-81230	Bolt	6	C00001-
7		01643-31232	Washer	6	C00001-
8		01010-81230	Bolt	2	C00001-
9		175-54-34170	Washer	2	C00001-
10		01010-81230	Bolt	6	C00001-
11		01643-31232	Washer	6	C00001-
		20Y-54-56810	Cover	1	C00001-
12	C1		• Cover	1	C00001-
13		20Y-54-73870	• Cover	1	C00001-
14		195-57-11530	• Catch	1	C00001-
15		01023-20512	• Screw	3	C00001-
16		203-54-62670	Collar	2	C00001-
17		01010-81230	Bolt	4	C00001-
18		01643-31232	Washer	4	C00001-
19		20Y-54-56830	Cover	1	C00001-
20		01010-81230	Bolt	1	C00001-
21		01643-31232	Washer	1	C00001-
22		20Y-54-12550	Collar	3	C00001-
23		01010-81230	Bolt	3	C00001-
24		01643-31232	Washer	3	C00001-
25		01010-81230	Bolt	3	C00001-
26		175-54-34170	Washer	3	C00001-
27		20Y-54-56870	Cover	1	C00001-
28		01010-81230	Bolt	2	C00001-
29		175-54-34170	Washer	2	C00001-
30		01010-81230	Bolt	2	C00001-
31		01643-31232	Washer	2	C00001-

FIG. M1810-002001 Under Cover (Heavy Duty Type) (1/2)

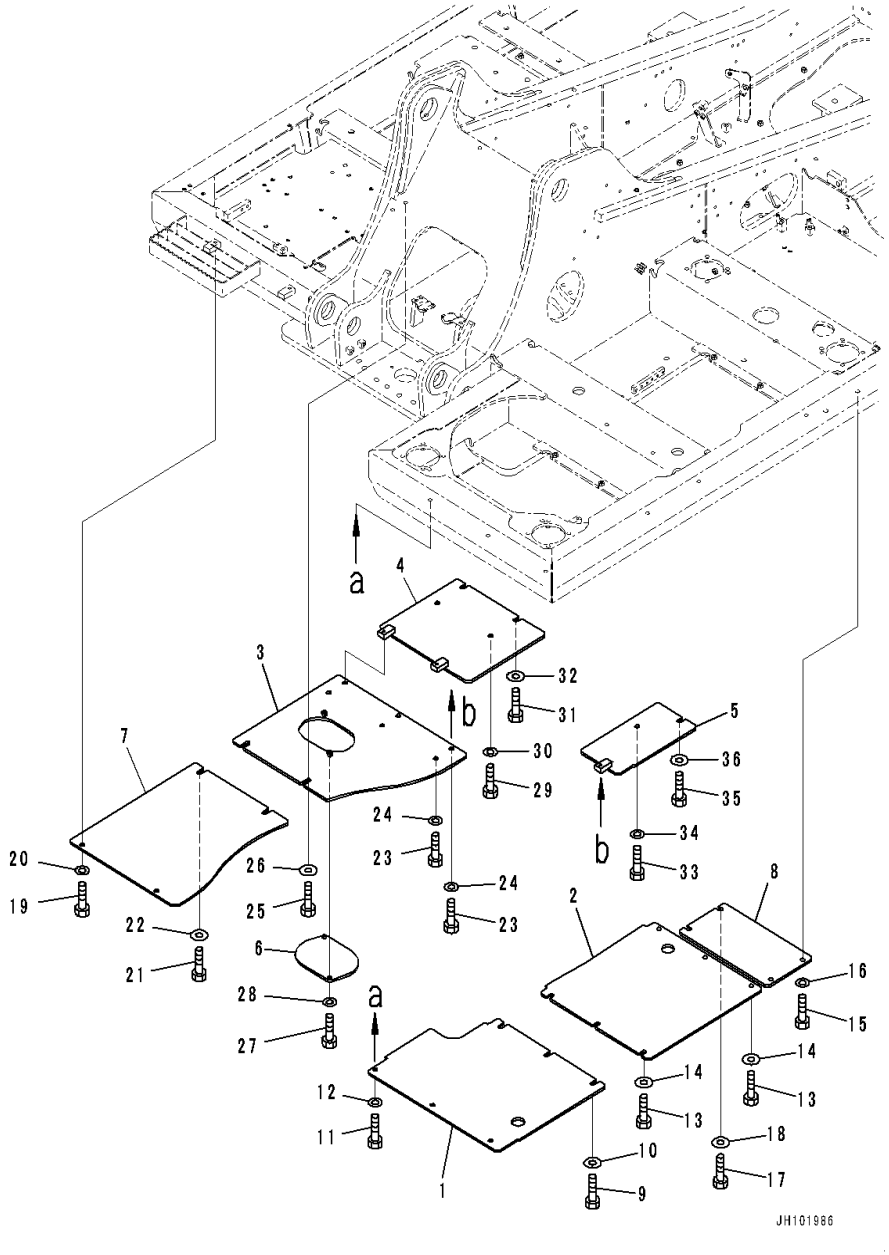

Index	Code	Part Number	Description	Qty	Serial Number
1		20Y-54-57440	Cover	1	C00001-
2		20Y-54-57330	Cover	1	C00001-
3		20Y-54-57380	Cover	1	C00001-
4		20Y-54-57370	Cover	1	C00001-
5		20Y-54-57660	Cover	1	C00001-
6		20Y-54-77660	Cover	1	C00001-
7		20Y-54-57390	Cover	1	C00001-
8		20Y-54-57340	Cover	1	C00001-
9		01010-81240	Bolt	3	C00001-
10		175-54-34170	Washer	3	C00001-
11		01010-81240	Bolt	3	C00001-
12		01643-31232	Washer	3	C00001-
13		01010-81240	Bolt	6	C00001-
14		175-54-34170	Washer	6	C00001-
15		01010-81240	Bolt	2	C00001-
16		01643-31232	Washer	2	C00001-
17		01010-81240	Bolt	2	C00001-
18		175-54-34170	Washer	2	C00001-
19		01010-81240	Bolt	2	C00001-
20		01643-31232	Washer	2	C00001-
21		01010-81240	Bolt	2	C00001-
22		175-54-34170	Washer	2	C00001-
23		01010-81240	Bolt	6	C00001-
24		01643-31232	Washer	6	C00001-
25		01010-81240	Bolt	2	C00001-
26		175-54-34170	Washer	2	C00001-
27		01010-81240	Bolt	2	C00001-
28		01643-31232	Washer	2	C00001-
29		01010-81240	Bolt	2	C00001-
30		01643-31232	Washer	2	C00001-
31		01010-81240	Bolt	2	C00001-
32		175-54-34170	Washer	2	C00001-
33		01010-81240	Bolt	1	C00001-
34		01643-31232	Washer	1	C00001-
35		01010-81240	Bolt	1	C00001-
36		175-54-34170	Washer	1	C00001-

FIG. M1810-002002 Under Cover (Heavy Duty Type) (2/2)

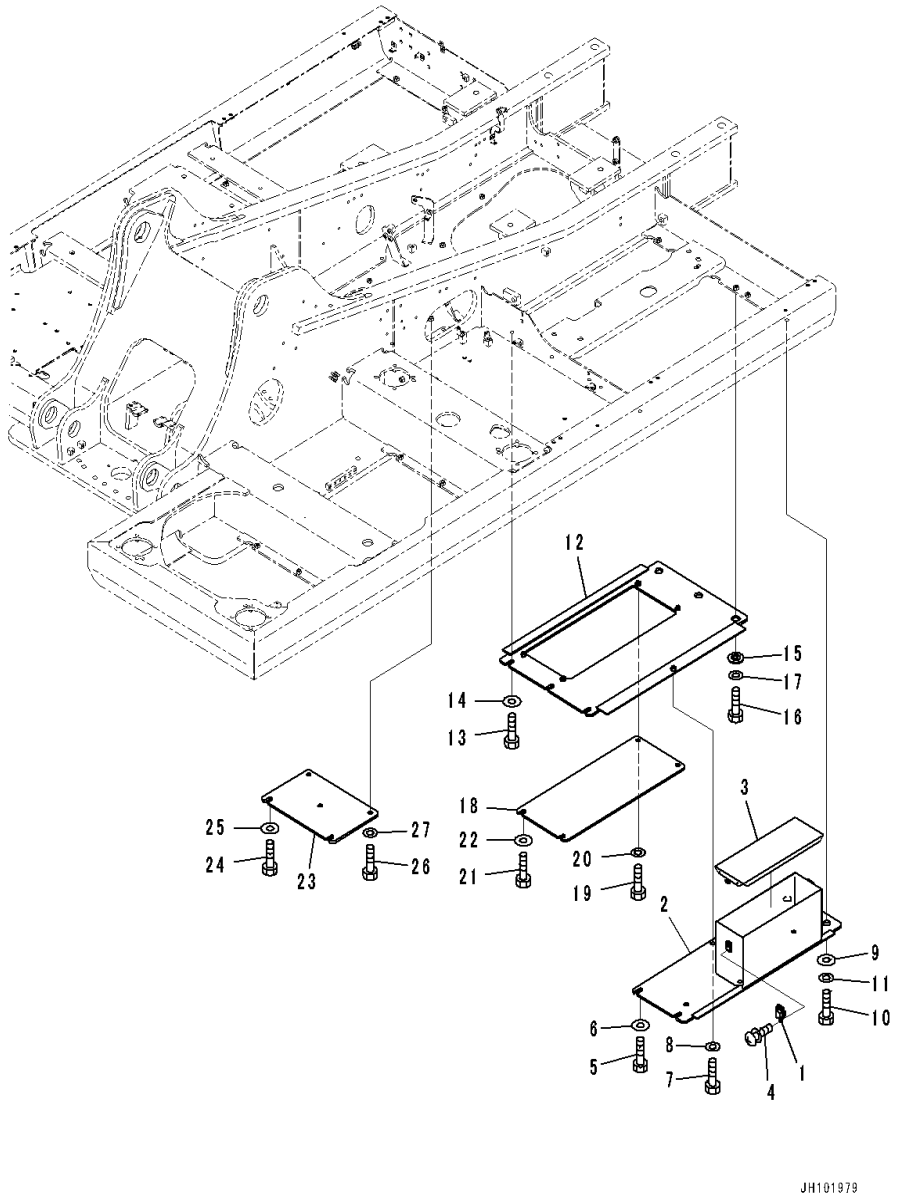

Index	Code	Part Number	Description	Qty	Serial Number
		20Y-54-57931	Cover Assembly	1	C00001-
1		195-57-11530	• Catch	1	C00001-
2	C1		• Cover	1	C00001-
3		20Y-54-73870	• Cover	1	C00001-
4		01023-20512	• Screw	3	C00001-
5		01010-81240	Bolt	2	C00001-
6		175-54-34170	Washer	2	C00001-
7		01010-81240	Bolt	1	C00001-
8		01643-31232	Washer	1	C00001-
9		20Y-973-2430	Collar	2	C00001-
10		01010-81240	Bolt	2	C00001-
11		01643-31232	Washer	2	C00001-
12		20Y-54-57921	Cover	1	C00001-
13		01010-81240	Bolt	3	C00001-
14		175-54-34170	Washer	3	C00001-
15		20Y-973-2430	Collar	3	C00001-
16		01010-81240	Bolt	3	C00001-
17		01643-31232	Washer	3	C00001-
18		20Y-54-57350	Cover	1	C00001-
19		01010-81240	Bolt	2	C00001-
20		01643-31232	Washer	2	C00001-
21		01010-81240	Bolt	2	C00001-
22		175-54-34170	Washer	2	C00001-
23		20Y-54-56380	Cover	1	C00001-
24		01010-81240	Bolt	2	C00001-
25		175-54-34170	Washer	2	C00001-
26		01010-81240	Bolt	2	C00001-
27		01643-31232	Washer	2	C00001-

FIG. M1810-003001 Under Cover (With Battery Case Under Cover)

Index	Code	Part Number	Description	Qty	Serial Number
1		20Y-54-77921	Cover	1	C00001-
2		20Y-54-73630	Cover	1	C00001-
3		20Y-54-57170	Cover	1	C00001-
4		01010-81230	Bolt	6	C00001-
5		01643-31232	Washer	6	C00001-
6		01010-81230	Bolt	6	C00001-
7		01643-31232	Washer	6	C00001-
8		01010-81230	Bolt	2	C00001-
9		175-54-34170	Washer	2	C00001-
10		01010-81230	Bolt	6	C00001-
11		01643-31232	Washer	6	C00001-
		20Y-54-56810	Cover	1	C00001-
12	C1		• Cover	1	C00001-
13		20Y-54-73870	• Cover	1	C00001-
14		195-57-11530	• Catch	1	C00001-
15		01023-20512	• Screw	3	C00001-
16		203-54-62670	Collar	2	C00001-
17		01010-81230	Bolt	4	C00001-
18		01643-31232	Washer	4	C00001-
19		20Y-54-56830	Cover	1	C00001-
20		01010-81230	Bolt	1	C00001-
21		01643-31232	Washer	1	C00001-
22		20Y-54-12550	Collar	3	C00001-
23		01010-81230	Bolt	3	C00001-
24		01643-31232	Washer	3	C00001-
25		01010-81230	Bolt	3	C00001-
26		175-54-34170	Washer	3	C00001-
27		20Y-54-56870	Cover	1	C00001-
28		01010-81230	Bolt	2	C00001-
29		175-54-34170	Washer	2	C00001-
30		01010-81230	Bolt	2	C00001-
31		01643-31232	Washer	2	C00001-
32		20Y-54-76650	Cover	1	C00001-
33		01010-81230	Bolt	4	C00001-
34		01643-31232	Washer	4	C00001-

FIG. M1811-001001 Under Cover

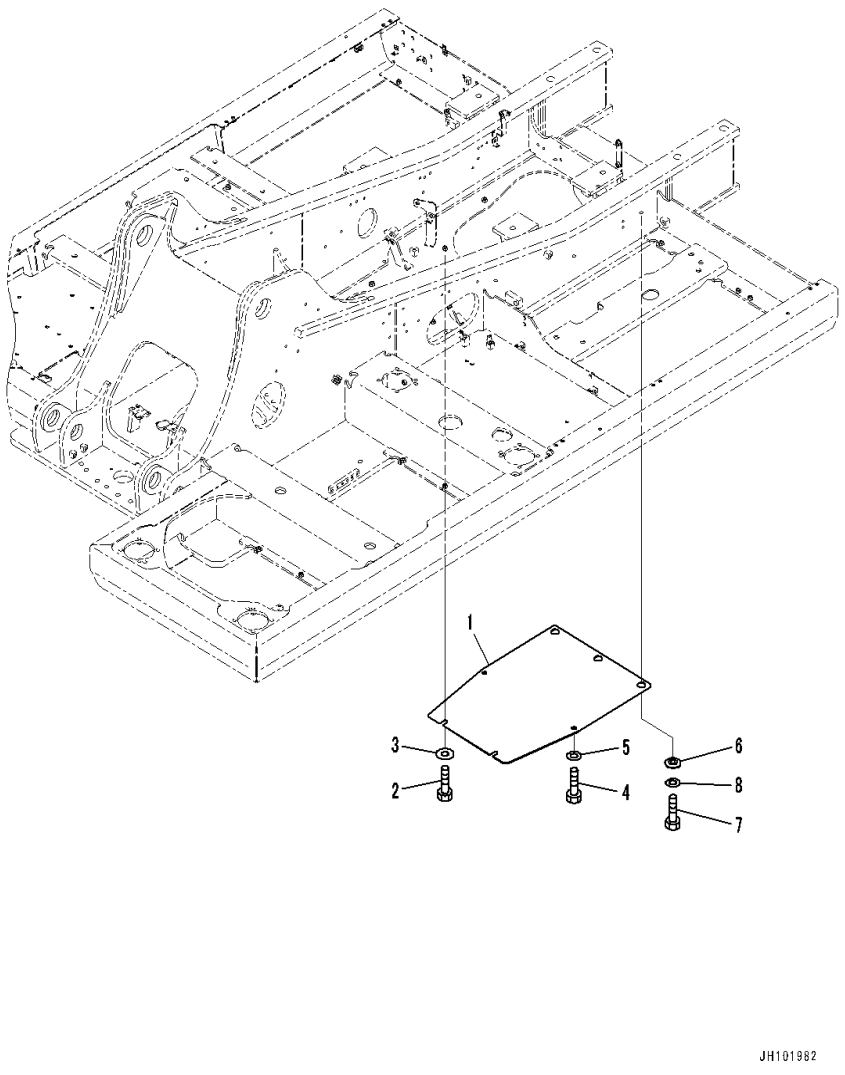

Index	Code	Part Number	Description	Qty	Serial Number
1		20Y-54-56850	Cover	1	C00001-
2		01010-81230	Bolt	2	C00001-
3		175-54-34170	Washer	2	C00001-
4		01010-81230	Bolt	2	C00001-
5		01643-31232	Washer	2	C00001-
6		203-54-62670	Collar	3	C00001-
7		01010-81230	Bolt	3	C00001-
8		01643-31232	Washer	3	C00001-

FIG. M1811-002001 Under Cover (With Blowby Pressure Sensor)

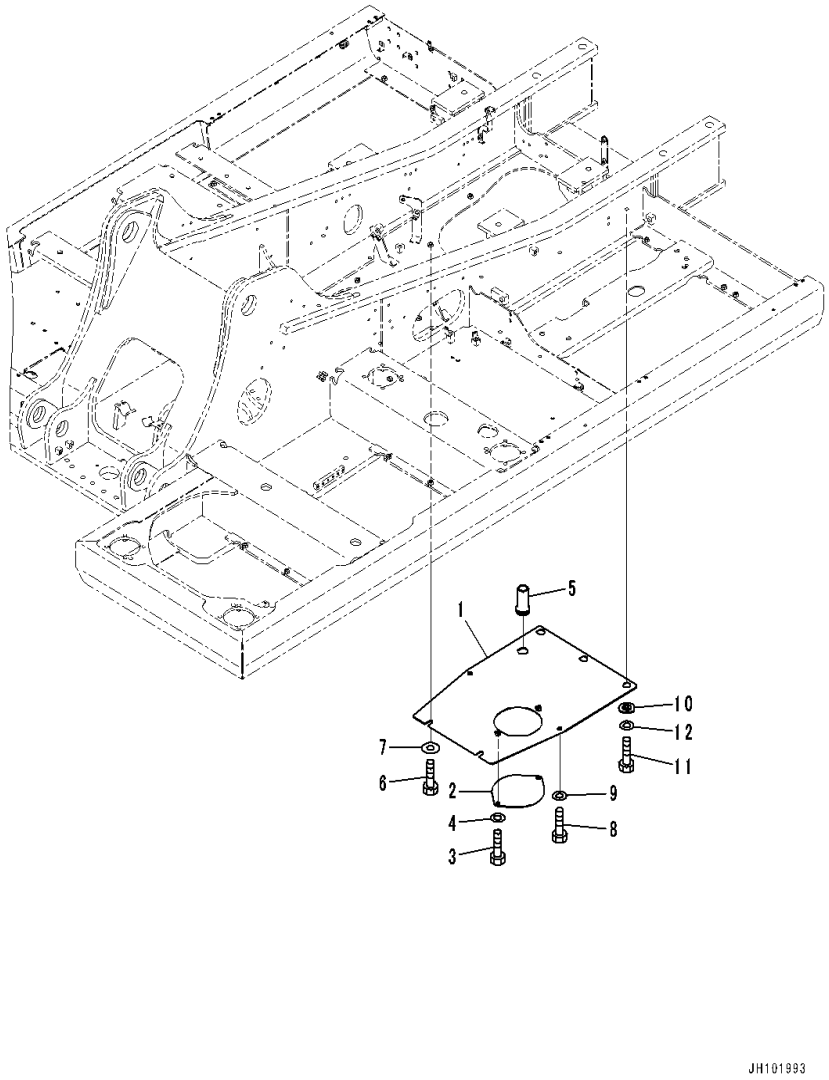

Index	Code	Part Number	Description	Qty	Serial Number
		20Y-54-56780	Cover	1	C00001-
1	C1		• Cover	1	C00001-
2		207-54-51440	• Plate	1	C00001-
3		01010-81230	• Bolt	2	C00001-
4		01643-31232	• Washer	2	C00001-
5		22U-54-24760	• Grommet	1	C00001-
6		01010-81230	Bolt	2	C00001-
7		175-54-34170	Washer	2	C00001-
8		01010-81230	Bolt	2	C00001-
9		01643-31232	Washer	2	C00001-
10		203-54-62670	Collar	3	C00001-
11		01010-81230	Bolt	3	C00001-
12		01643-31232	Washer	3	C00001-

FIG. M1811-003001 Under Cover (Heavy Duty Type,With Blowby Pressure Sensor)

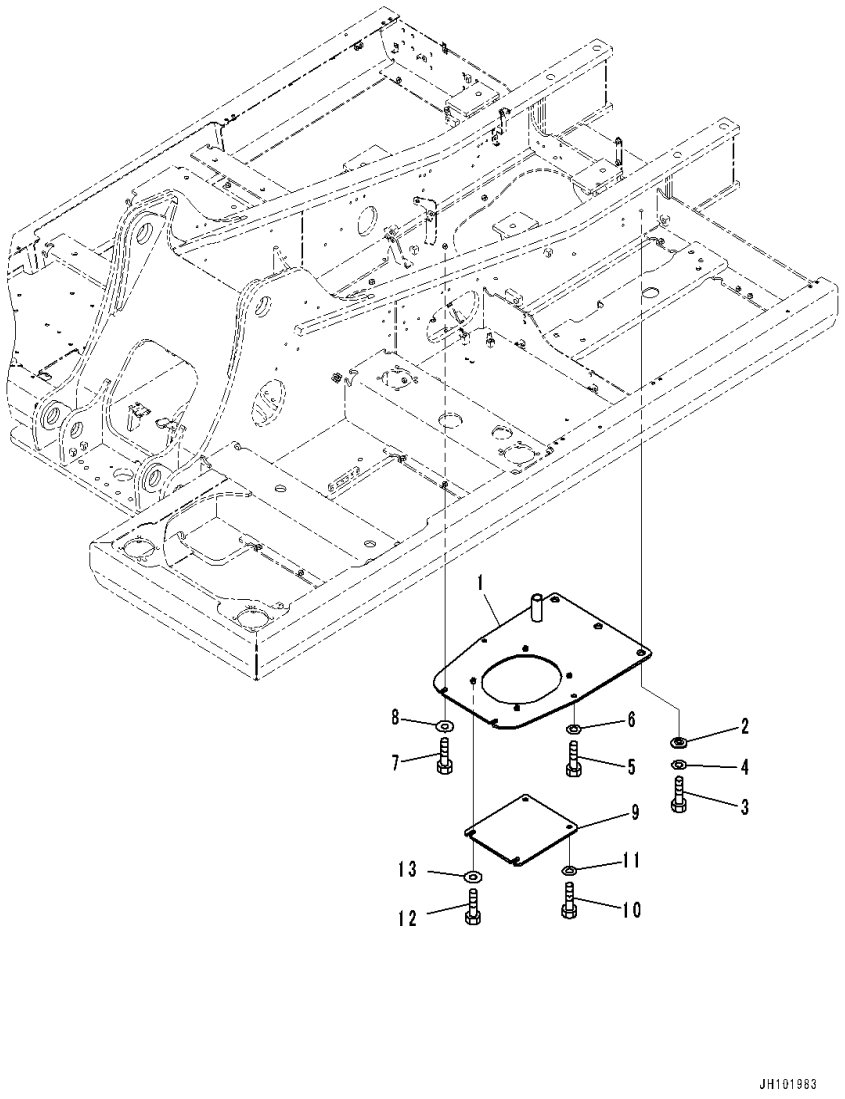

Index	Code	Part Number	Description	Qty	Serial Number
1		20Y-54-57111	Cover	1	C00001-
2		20Y-973-2430	Collar	3	C00001-
3		01010-81240	Bolt	3	C00001-
4		01643-31232	Washer	3	C00001-
5		01010-81240	Bolt	2	C00001-
6		01643-31232	Washer	2	C00001-
7		01010-81240	Bolt	2	C00001-
8		175-54-34170	Washer	2	C00001-
9		20Y-54-57141	Cover	1	C00001-
10		01010-81240	Bolt	2	C00001-
11		01643-31232	Washer	2	C00001-
12		01010-81240	Bolt	2	C00001-
13		175-54-34170	Washer	2	C00001-

FIG. M1811-004001 Under Cover (Heavy Duty Type)

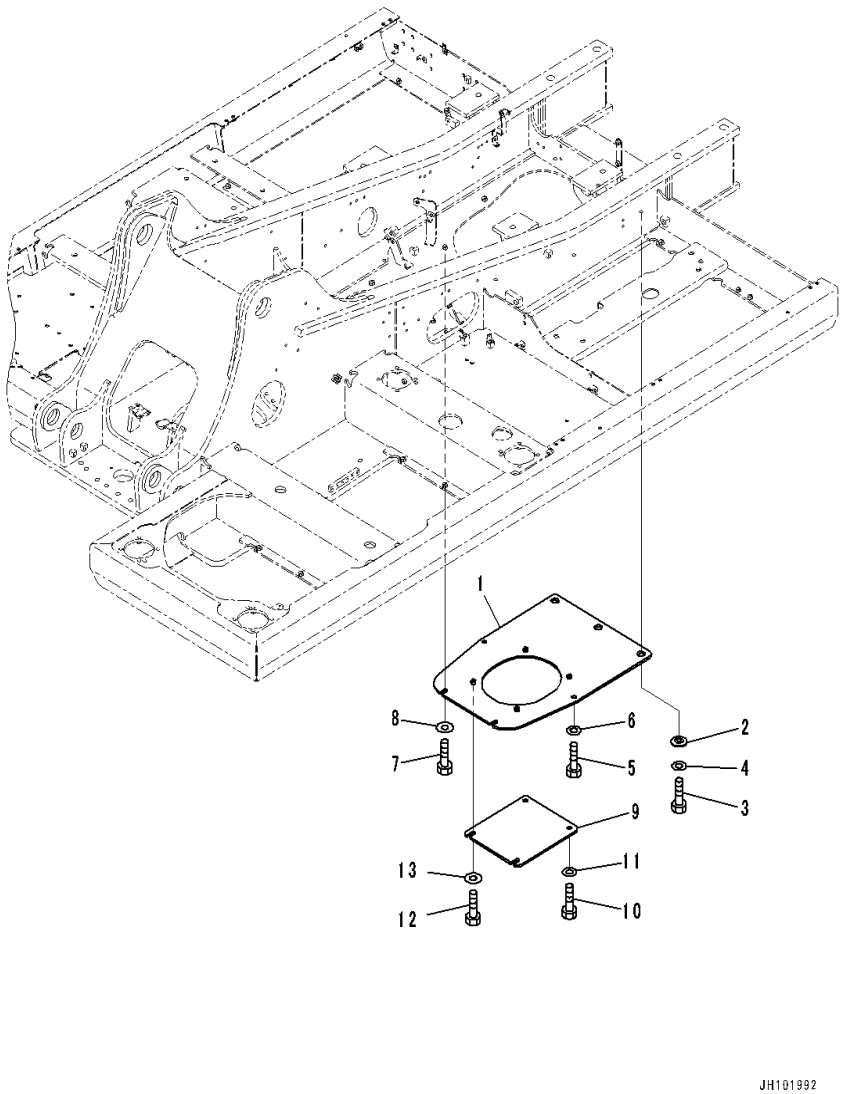

Index	Code	Part Number	Description	Qty	Serial Number
1		20Y-54-57860	Cover	1	C00001-
2		20Y-973-2430	Collar	3	C00001-
3		01010-81240	Bolt	3	C00001-
4		01643-31232	Washer	3	C00001-
5		01010-81240	Bolt	2	C00001-
6		01643-31232	Washer	2	C00001-
7		01010-81240	Bolt	2	C00001-
8		175-54-34170	Washer	2	C00001-
9		20Y-54-57141	Cover	1	C00001-
10		01010-81240	Bolt	2	C00001-
11		01643-31232	Washer	2	C00001-
12		01010-81240	Bolt	2	C00001-
13		175-54-34170	Washer	2	C00001-

FIG. M1812-001001 Under Cover

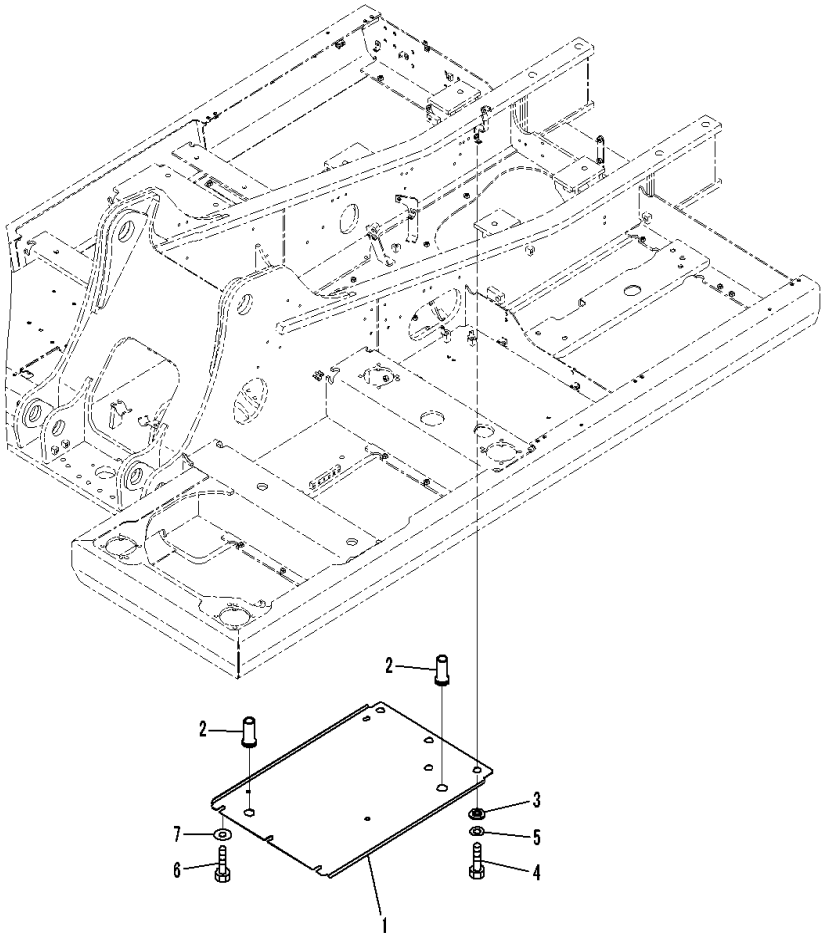

Index	Code	Part Number	Description	Qty	Serial Number
		20Y-54-58141	Cover	1	C00001-
1	C1		• Cover	1	C00001-
2		22U-54-24760	• Grommet	2	C00001-
3		20Y-54-12550	Collar	3	C00001-
4		01010-81230	Bolt	3	C00001-
5		01643-31232	Washer	3	C00001-
6		01010-81230	Bolt	3	C00001-
7		175-54-34170	Washer	3	C00001-

FIG. M1812-002001 Under Cover (Refueling Pump)

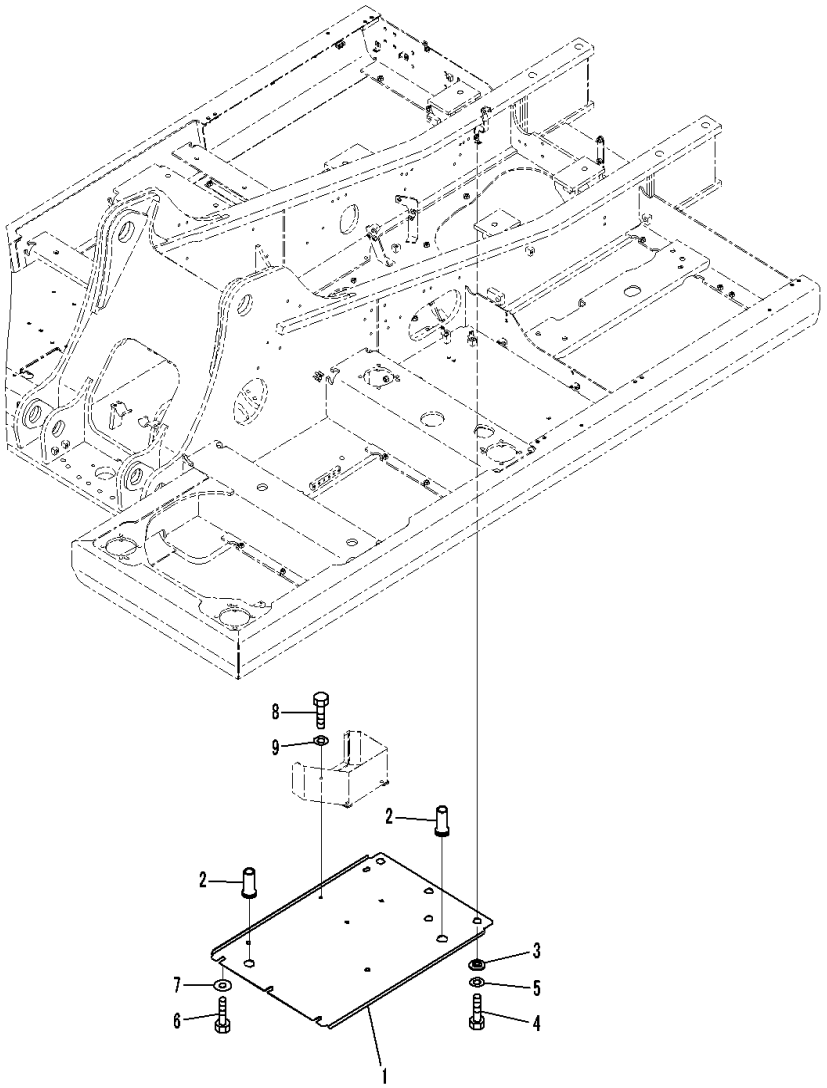

Index	Code	Part Number	Description	Qty	Serial Number
		20Y-54-57512	Cover	1	C00001-
1	C1		• Cover	1	C00001-
2		22U-54-24760	• Grommet	2	C00001-
3		203-54-62670	Collar	3	C00001-
4		01010-81230	Bolt	3	C00001-
5		01643-31232	Washer	3	C00001-
6		01010-81230	Bolt	3	C00001-
7		175-54-34170	Washer	3	C00001-
8		01010-81025	Bolt	3	C00001-
9		01643-31032	Washer	3	C00001-

FIG. M1812-003001 Under Cover (With Blowby Pressure Sensor)

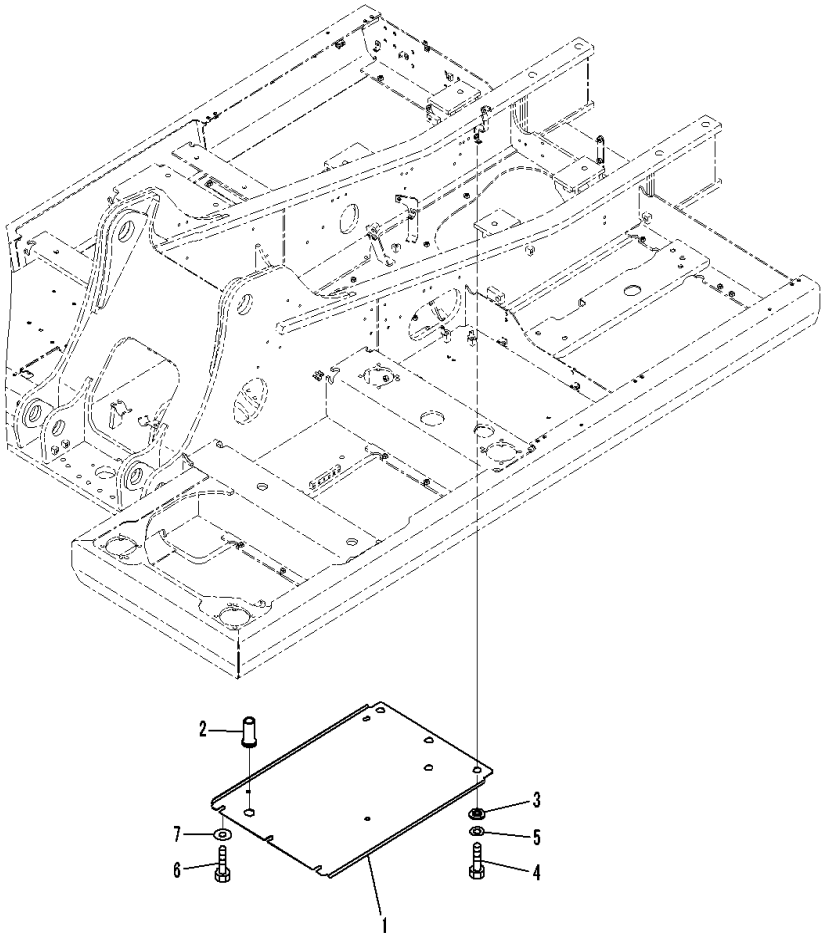

Index	Code	Part Number	Description	Qty	Serial Number
		20Y-54-56762	Cover	1	C00001-
1	C1		• Cover	1	C00001-
2		22U-54-24760	• Grommet	1	C00001-
3		20Y-54-12550	Collar	3	C00001-
4		01010-81230	Bolt	3	C00001-
5		01643-31232	Washer	3	C00001-
6		01010-81230	Bolt	3	C00001-
7		175-54-34170	Washer	3	C00001-

FIG. M1812-004001 Under Cover (Refueling Pump,With Blowby Pressure Sensor)

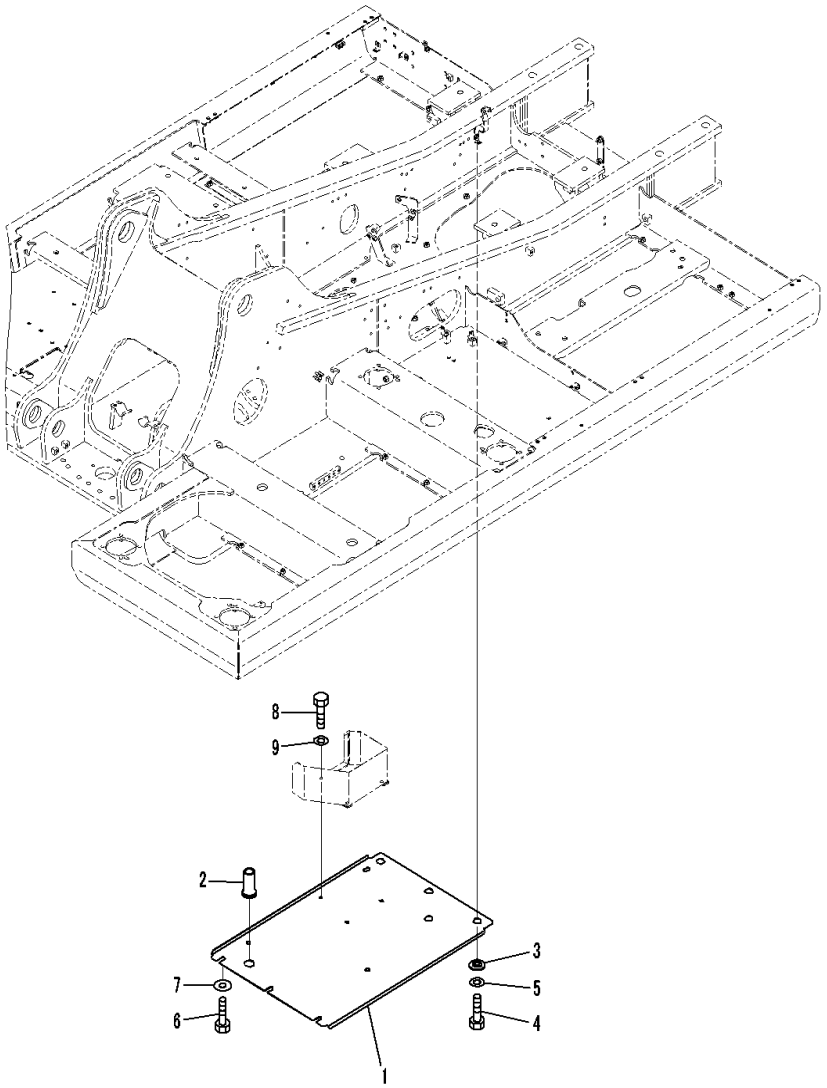

Index	Code	Part Number	Description	Qty	Serial Number
		20Y-54-57962	Cover	1	C00001-
1	C1		• Cover	1	C00001-
2		22U-54-24760	• Grommet	1	C00001-
3		203-54-62670	Collar	3	C00001-
4		01010-81230	Bolt	3	C00001-
5		01643-31232	Washer	3	C00001-
6		01010-81230	Bolt	3	C00001-
7		175-54-34170	Washer	3	C00001-
8		01010-81025	Bolt	3	C00001-
9		01643-31032	Washer	3	C00001-

FIG. M1812-005001 Under Cover (Heavy Duty Type)

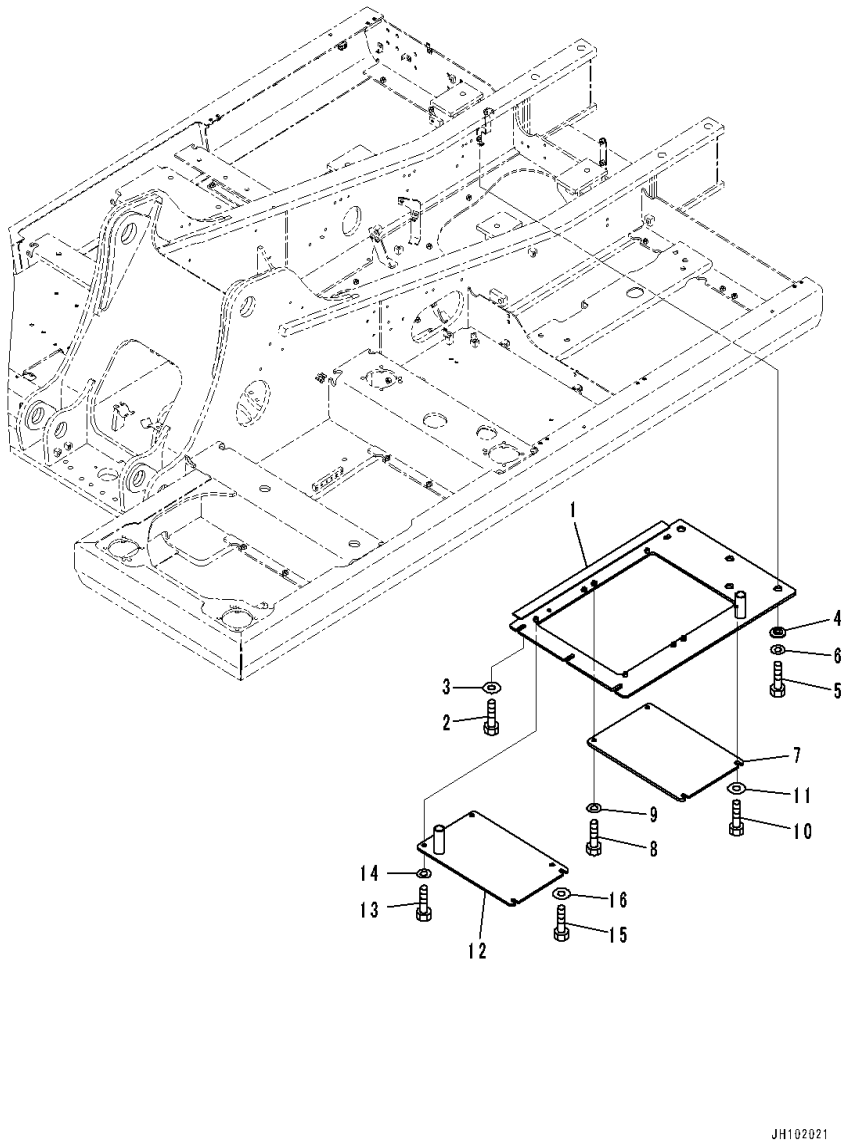

Index	Code	Part Number	Description	Qty	Serial Number
1		20Y-54-57942	Cover	1	C00001-
2		01010-81240	Bolt	3	C00001-
3		175-54-34170	Washer	3	C00001-
4		20Y-973-2430	Collar	3	C00001-
5		01010-81240	Bolt	3	C00001-
6		01643-31232	Washer	3	C00001-
7		20Y-54-57991	Cover	1	C00001-
8		01010-81240	Bolt	2	C00001-
9		01643-31232	Washer	2	C00001-
10		01010-81240	Bolt	2	C00001-
11		175-54-34170	Washer	2	C00001-
12		20Y-54-57361	Cover	1	C00001-
13		01010-81240	Bolt	2	C00001-
14		01643-31232	Washer	2	C00001-
15		01010-81240	Bolt	2	C00001-
16		175-54-34170	Washer	2	C00001-

FIG. M1812-006001 Under Cover (Heavy Duty Type,With Blowby Pressure Sensor)

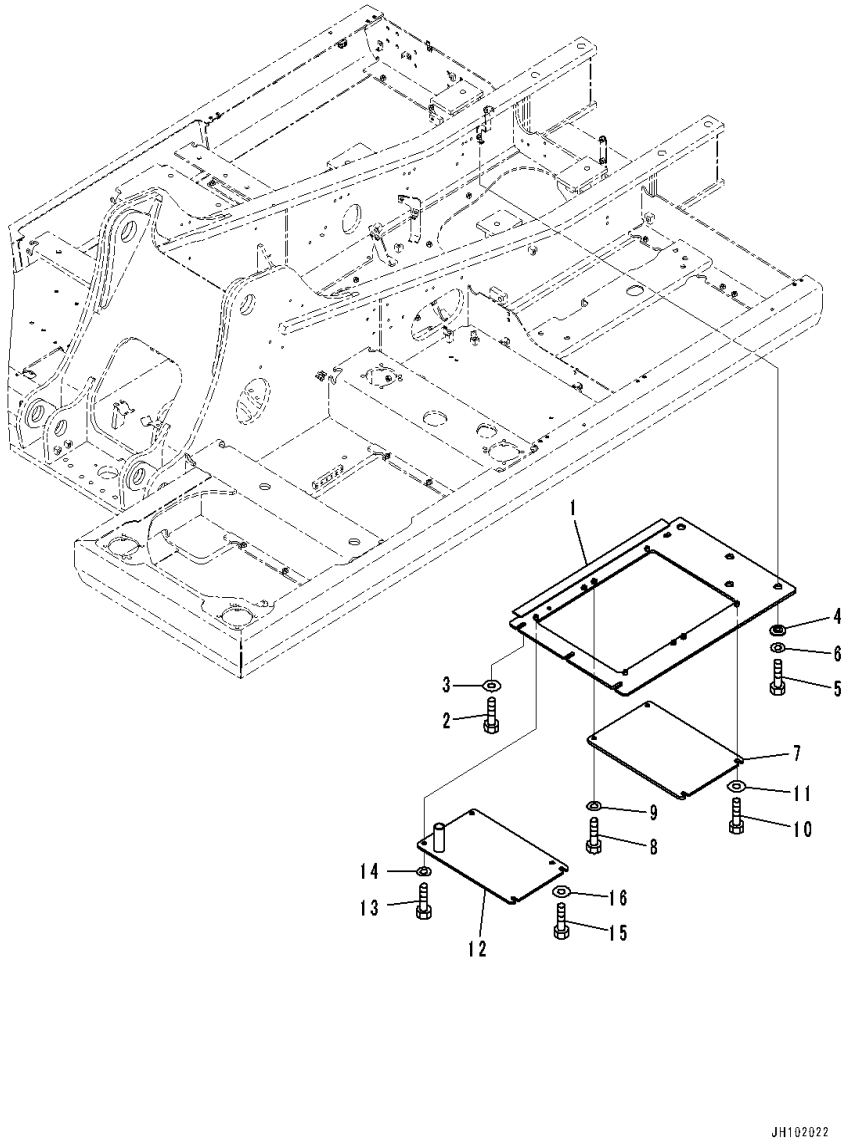

Index	Code	Part Number	Description	Qty	Serial Number
1		20Y-54-57821	Cover	1	C00001-
2		01010-81240	Bolt	3	C00001-
3		175-54-34170	Washer	3	C00001-
4		20Y-973-2430	Collar	3	C00001-
5		01010-81240	Bolt	3	C00001-
6		01643-31232	Washer	3	C00001-
7		20Y-54-57991	Cover	1	C00001-
8		01010-81240	Bolt	2	C00001-
9		01643-31232	Washer	2	C00001-
10		01010-81240	Bolt	2	C00001-
11		175-54-34170	Washer	2	C00001-
12		20Y-54-57361	Cover	1	C00001-
13		01010-81240	Bolt	2	C00001-
14		01643-31232	Washer	2	C00001-
15		01010-81240	Bolt	2	C00001-
16		175-54-34170	Washer	2	C00001-

SWING CIRCLE AND ITS RELATED PARTS

FIG. N1110-001001 Swing Circle (For Asia)

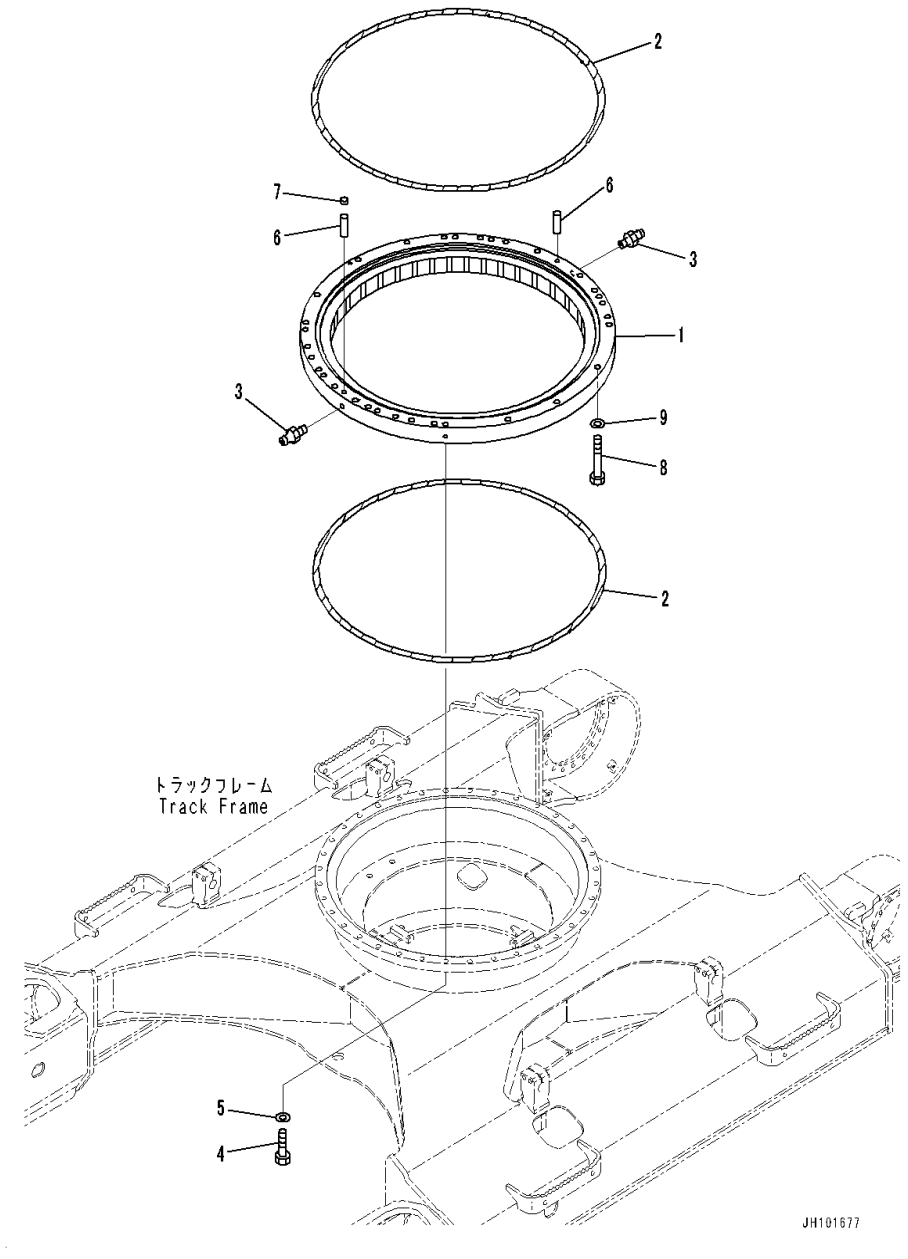

Index	Code	Part Number	Description	Qty	Serial Number
1		20Y-25-00510	Swing Circle	1	C00001-
2		205-25-71154	• Seal	2	C00001-
3		07020-00000	• Fitting, Grease	2	C00001-
4		20Y-25-11291	Bolt	36	C00001-
5		01643-72060	Washer	36	C00001-
6		04020-01842	Pin, Dowel	2	C00001-
7		20Y-46-21520	Cap	1	C00001-
8		206-25-61110	Bolt	32	C00001-
9		01643-72260	Washer	32	C00001-

FIG. N1110-002001 Swing Circle (Oil Resistance, For Asia)

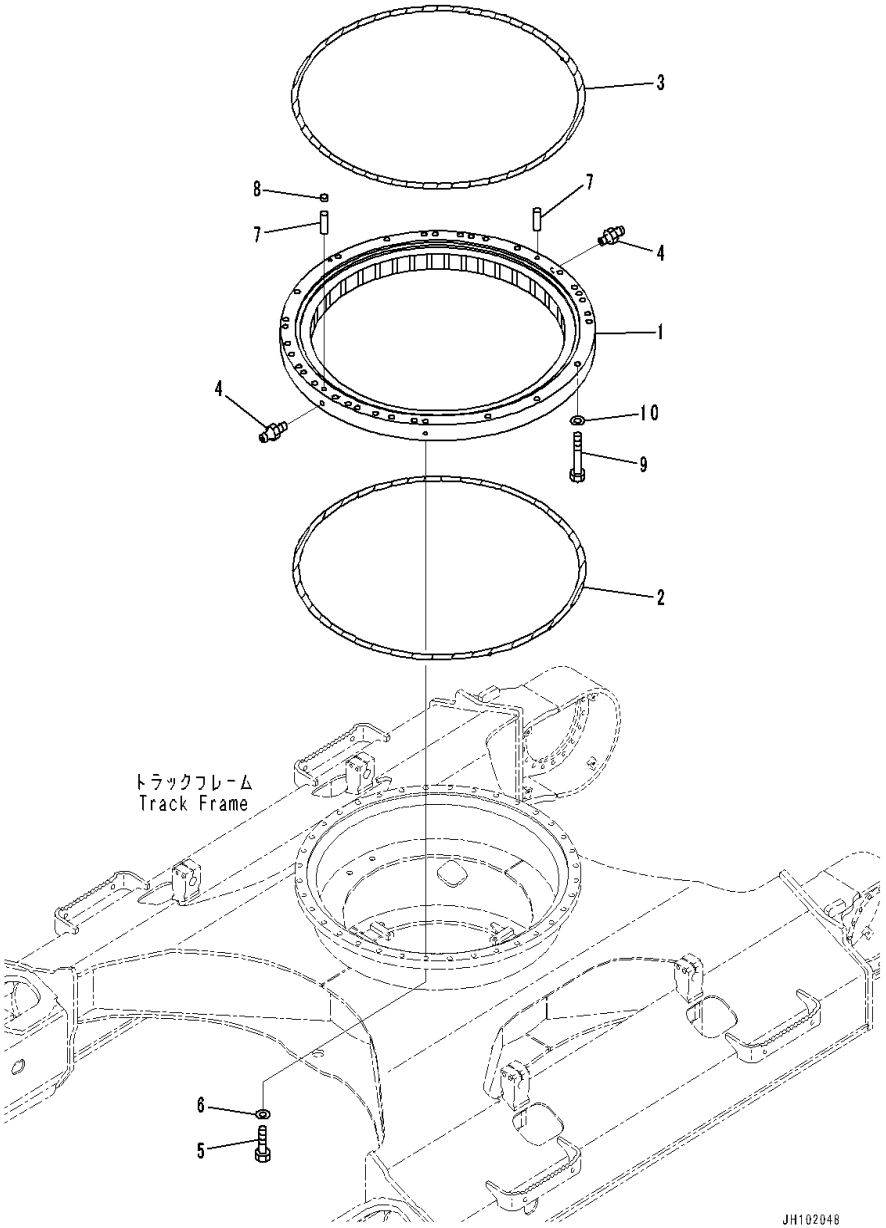

Index	Code	Part Number	Description	Qty	Serial Number
1		20Y-25-00520	Swing Circle	1	C00001-
2		205-25-71154	• Seal	1	C00001-
3		20Y-25-21311	• Seal	1	C00001-
4		07020-00000	• Fitting, Grease	2	C00001-
5		20Y-25-11291	Bolt	36	C00001-
6		01643-72060	Washer	36	C00001-
7		04020-01842	Pin, Dowel	2	C00001-
8		20Y-46-21520	Cap	1	C00001-
9		206-25-61110	Bolt	32	C00001-
10		01643-72260	Washer	32	C00001-

FIG. N1110-003001 Swing Circle

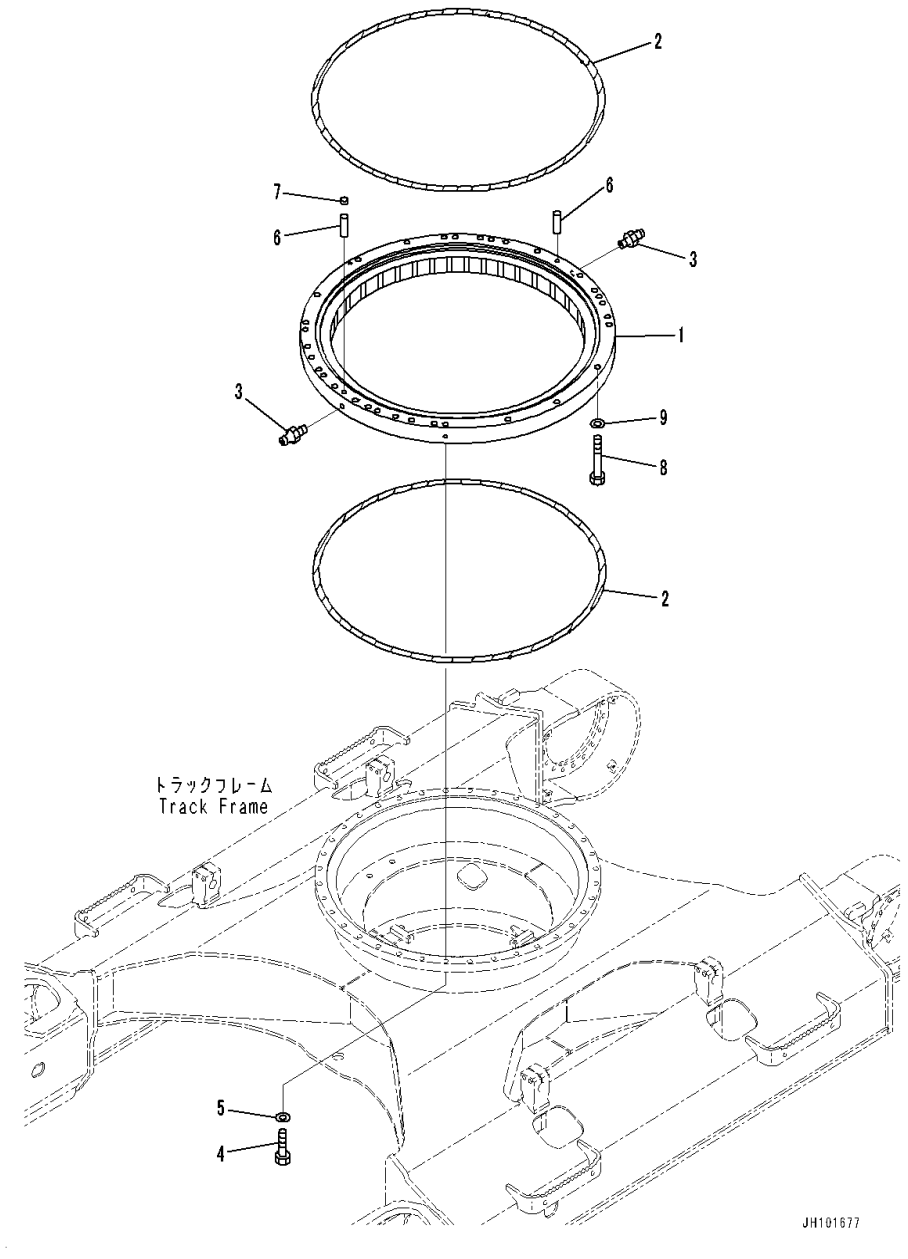

Index	Code	Part Number	Description	Qty	Serial Number
1		20Y-25-00510	Swing Circle	1	C00001-
2		205-25-71154	• Seal	2	C00001-
3		07020-00000	• Fitting, Grease	2	C00001-
4		20Y-09-11170	Bolt	36	C00001-
5		01643-72060	Washer	36	C00001-
6		04020-01842	Pin, Dowel	2	C00001-
7		20Y-46-21520	Cap	1	C00001-
8		206-25-61110	Bolt	32	C00001-
9		01643-72260	Washer	32	C00001-

FIG. N1210-001001 Swing Machinery and Motor (Swing Shock Pressure Reducing Valve) (Swing Motor, 1/3)

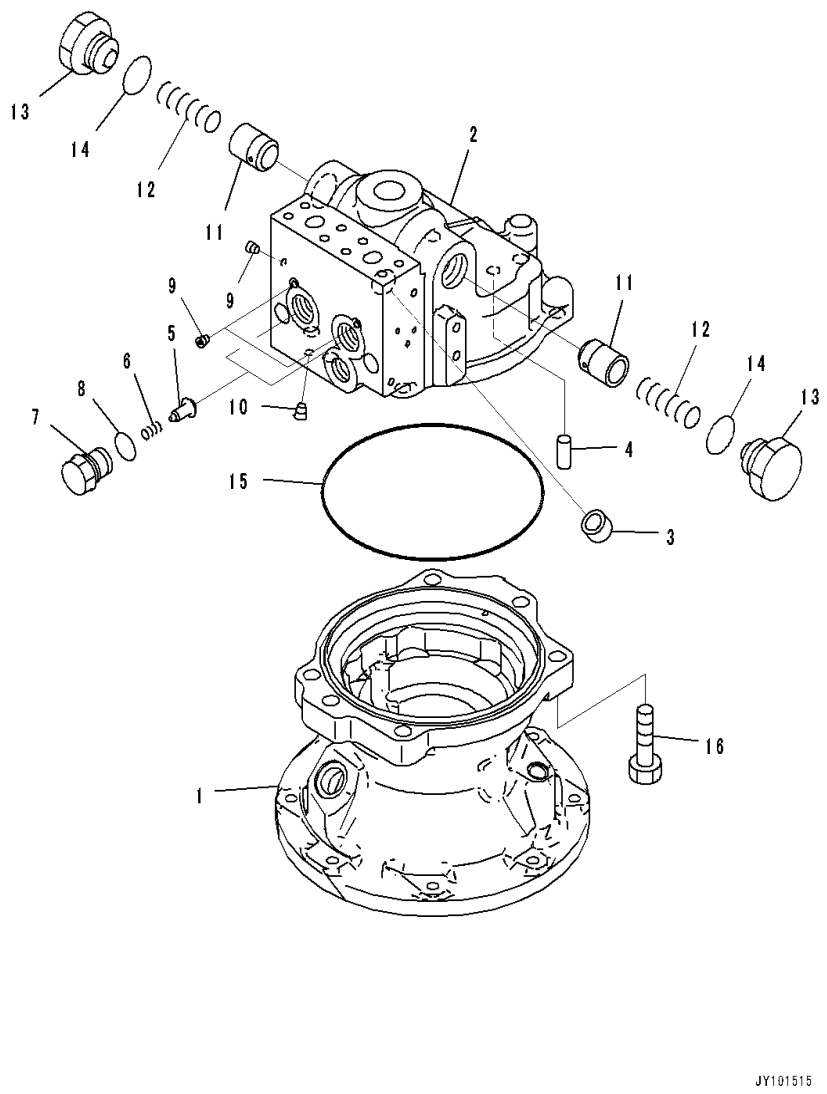

Index	Code	Part Number	Description	Qty	Serial Number
		706-7G-01240	Motor Assembly	1	C00001-
		706-7G-03210	• Motor Subassembly	1	C00001-
1	C2	706-7G-41270	• • Case	1	C00001-
2	C2	706-7G-71180	• • Housing	1	C00001-
3	C2	706-7G-40110	• • Bushing	1	C00001-
4	C2	708-8K-15190	• • Pin, Dowel	1	C00001-
5		709-25-11650	• • Valve, Check	2	C00001-
6		709-25-11361	• • Spring	2	C00001-
7		709-25-11640	• • Plug	2	C00001-
8		07000-B2020	• • O-ring	2	C00001-
9	C1		• • Plug, Stocking	3	C00001-
10	C1		• • Plug	1	C00001-
11		706-7G-71710	• • Valve	2	C00001-
12		706-7G-71560	• • Spring	2	C00001-
13		706-7G-71630	• • Plug	2	C00001-
14		07002-63334	• • O-ring	2	C00001-
15	C2	706-7G-40210	• • O-ring	1	C00001-
16	C2	01010-61450	• • Bolt	6	C00001-

FIG. N1210-001002 Swing Machinery and Motor (Swing Motor, 2/3)

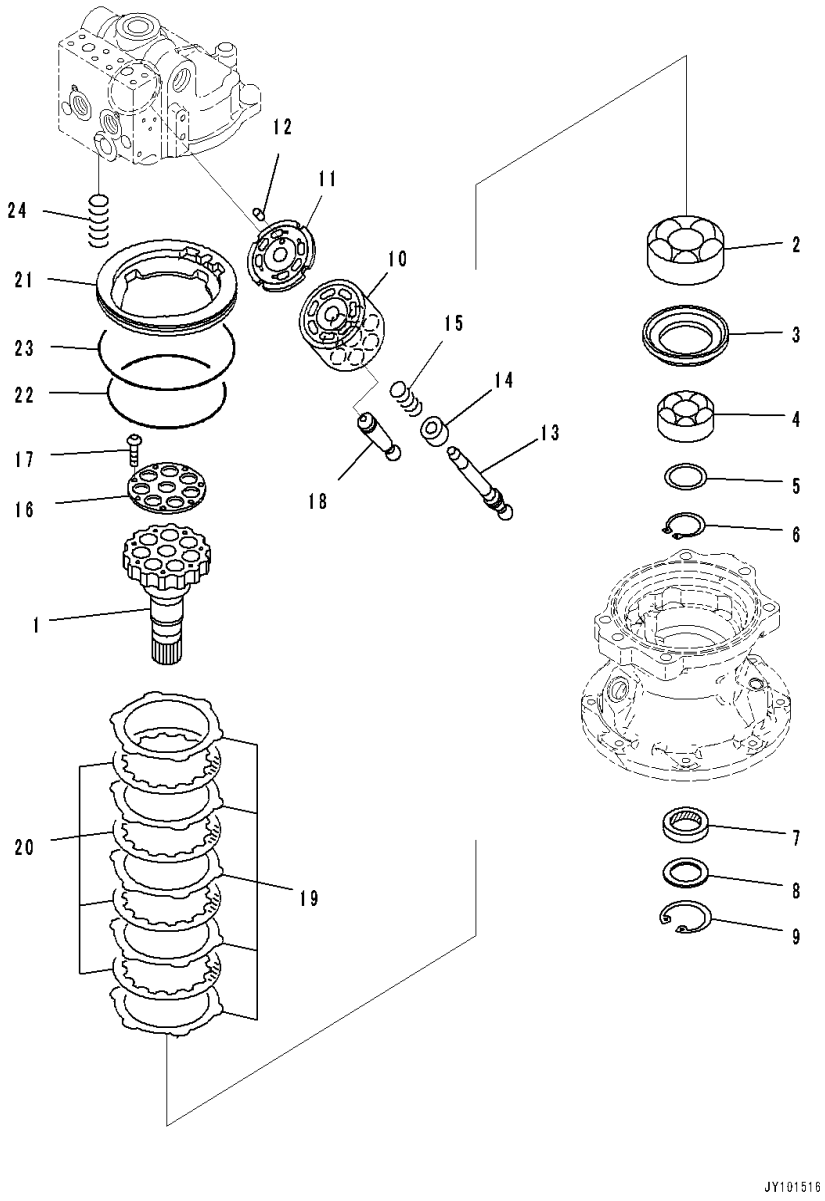

Index	Code	Part Number	Description	Qty	Serial Number
		706-7G-01240	Motor Assembly	1	C00001-
		706-7G-03210	• Motor Subassembly	1	C00001-
1	C2	706-7G-41630	• • Shaft, Drive	1	C00001-
2	C2	706-75-42880	• • Bearing	1	C00001-
3	C2	706-7G-41660	• • Spacer	1	C00001-
4	C2	706-76-40890	• • Bearing	1	C00001-
5	C2	706-7G-41510	• • Spacer Kit	1	C00001-
	C1		• • • Spacer,T=3.1mm	1	C00001-
	C1		• • • Spacer,T=3.4mm	1	C00001-
	C1		• • • Spacer,T=3.7mm	1	C00001-
6	C2	04064-04518	• • Ring, Snap	1	C00001-
7		706-75-43410	• • Seal, Oil	1	C00001-
8		706-7G-41910	• • Spacer	1	C00001-
9		04065-06220	• • Ring, Snap	1	C00001-
10	C2	706-7G-41310	• • Block, Cylinder	1	C00001-
11	C2	706-7G-41720	• • Plate, Valve	1	C00001-
12	C2	706-75-43750	• • Pin, Dowel	1	C00001-
13	C2	706-7G-41320	• • Shaft	1	C00001-
14	C2	706-7G-41130	• • Ring	1	C00001-
15	C2	706-7G-41140	• • Spring	1	C00001-
16	C2	706-7G-41260	• • Retainer	1	C00001-
17	C2	706-75-42270	• • Screw	7	C00001-
18	C2	706-7G-41410	• • Piston Subassembly	7	C00001-
19	C2	706-7G-91441	• • Plate	5	C00001-
20	C2	706-7G-91450	• • Disc	4	C00001-
21	C2	706-7G-91120	• • Piston, Brake	1	C00001-
22	C2	706-7G-91530	• • O-ring	1	C00001-
23	C2	706-7G-91520	• • O-ring	1	C00001-
24	C2	706-7G-91360	• • Spring	6	C00001-

FIG. N1210-001003 Swing Machinery and Motor (Swing Shock Pressure Reducing Valve) (Swing Motor, 3/3)

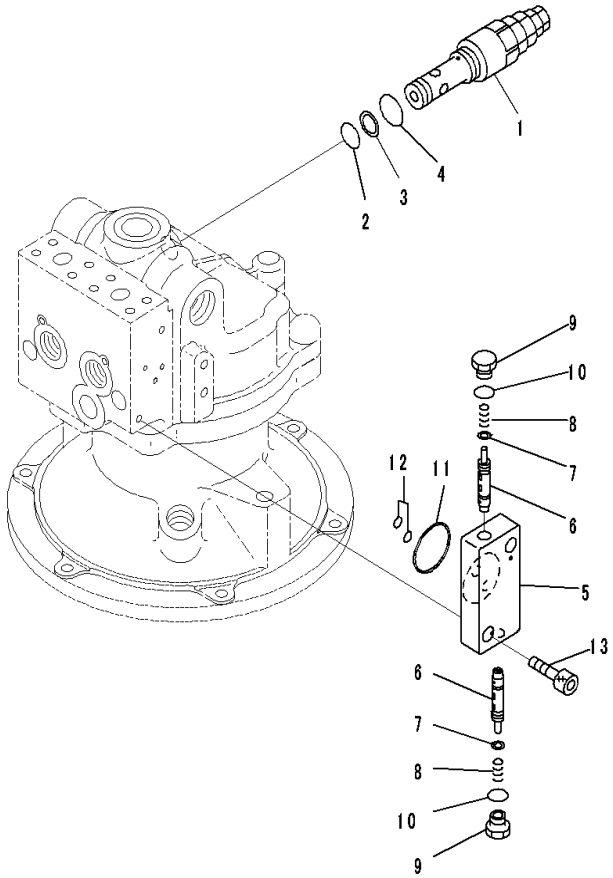

Index	Code	Part Number	Description	Qty	Serial Number
		706-7G-01240	Motor Assembly	1	C00001-
1		702-75-01330	• Valve, Relief	1	C00001-
2		07000-F2020	• • O-ring	1	C00001-
3		702-77-11380	• • Ring, Back-up	1	C00001-
4		07002-63034	• • O-ring	1	C00001-
		702-15-77000	• Valve Assembly	1	C00001-
5	C1		• • Body	1	C00001-
6	C1		• • Spool	2	C00001-
7	C1		• • Seal	2	C00001-
8		702-15-71130	• • Spring	2	C00001-
9		702-15-71140	• • Plug	2	C00001-
10		07002-11423	• • O-ring	2	C00001-
11		07000-B3042	• O-ring	1	C00001-
12		07000-B1009	• O-ring	2	C00001-
13		01252-60825	• Bolt, Hexagon Socket Head	2	C00001-

FIG. N1210-001004 Swing Machinery and Motor (Oil Resistance) (Mounting)

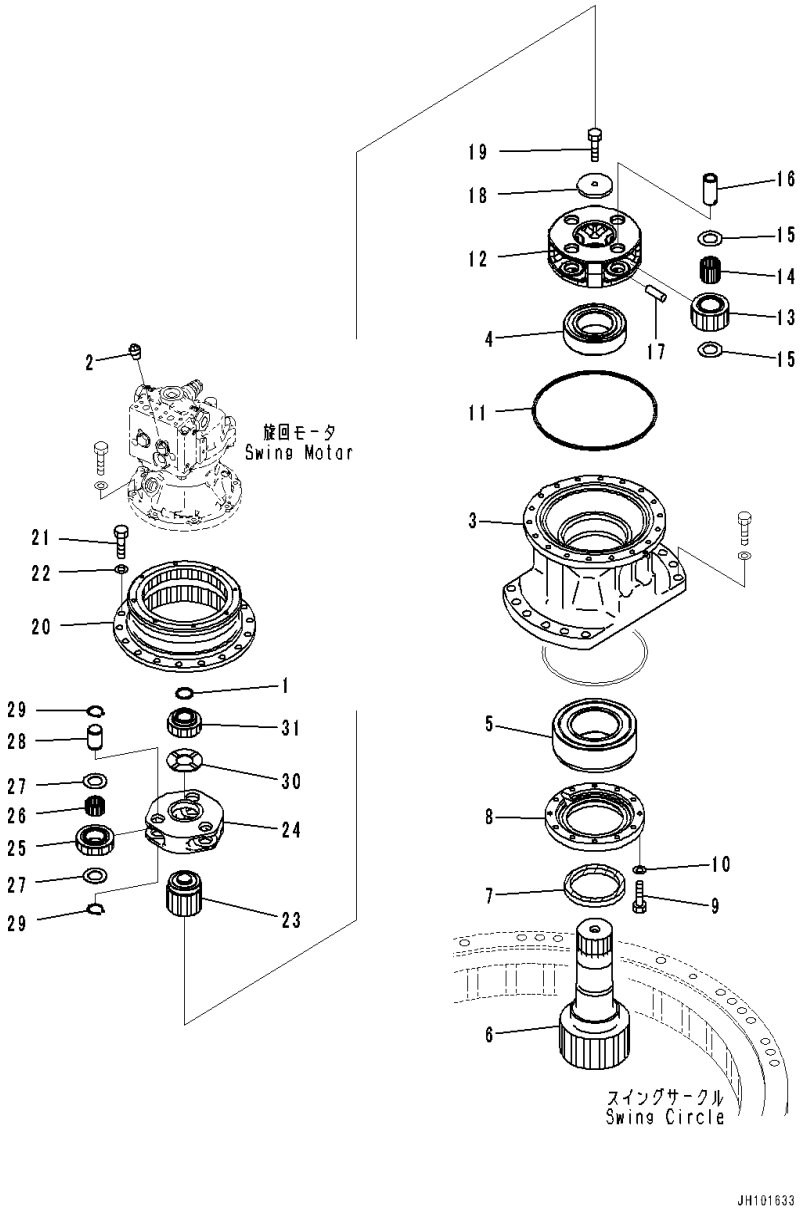

Index	Code	Part Number	Description	Qty	Serial Number
1		22U-26-21280	Ring	1	C00001-
2		07042-00312	Plug, Taper	1	C00001-
3		20Y-26-51180	Case	1	C00001-
4		20Y-26-22430	Bearing	1	C00001-
5		20Y-26-22440	Bearing	1	C00001-
6		206-26-69112	Shaft	1	C00001-
7		20Y-26-22450	Seal	1	C00001-
8		20Y-26-51190	Cover	1	C00001-
9		01010-81045	Bolt	12	C00001-
10		01643-31032	Washer	12	C00001-
11		07000-15290	O-ring	1	C00001-
12		20Y-26-51170	Carrier	1	C00001-
13		20Y-26-51140	Gear	4	C00001-
14		20Y-26-51210	Bearing	4	C00001-
15		20Y-27-21240	Washer, Thrust	8	C00001-
16		20Y-26-22250	Pin	4	C00001-
17		20Y-27-21280	Pin	4	C00001-
18		20Y-26-21240	Plate	1	C00001-
19		112-32-11211	Bolt	1	C00001-
20		20Y-26-51150	Gear	1	C00001-
21		01010-81440	Bolt	18	C00001-
22		01643-31445	Washer, Flat	18	C00001-
23		20Y-26-51130	Gear	1	C00001-
24		20Y-26-51160	Carrier	1	C00001-
25		20Y-26-51120	Gear	3	C00001-
26		20Y-26-21510	Bearing	3	C00001-
27		20Y-27-21240	Washer, Thrust	6	C00001-
28		20Y-26-22240	Pin	3	C00001-
29		20Y-27-21280	Pin	3	C00001-
30		20Y-26-51250	Washer, Thrust	1	C00001-
31		20Y-26-51110	Gear	1	C00001-

FIG. N1210-001005 Swing Machinery and Motor (Drain Piping)

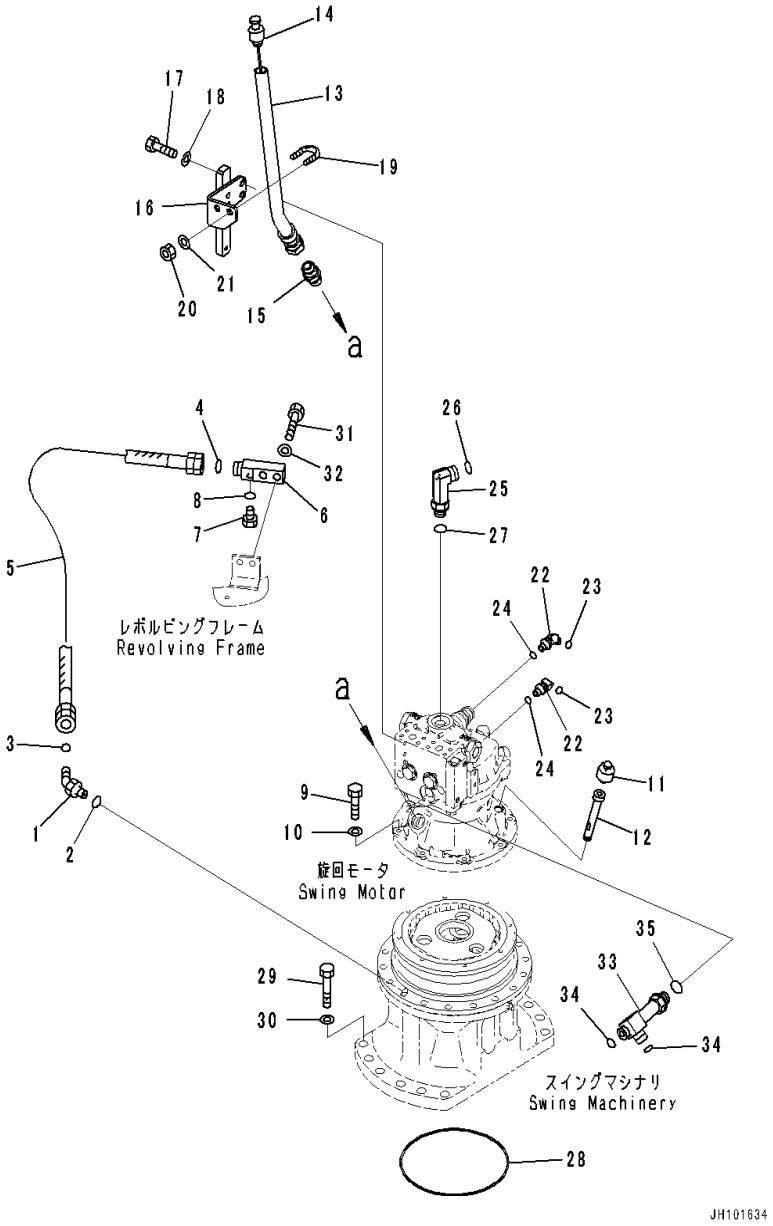

Index	Code	Part Number	Description	Qty	Serial Number
1		02783-10522	Elbow	1	C00001-
2		07002-12434	O-ring	1	C00001-
3		02896-11015	O-ring	1	C00001-
4		02896-11015	O-ring	1	C00001-
5		02774-005A5	Hose	1	C00001-
6		20Y-26-31211	Elbow	1	C00001-
7		07040-11409	Plug	1	C00001-
8		07002-11423	O-ring	1	C00001-
9		01010-81035	Bolt	8	C00001-
10		01643-51032	Washer	8	C00001-
11		07030-00252	Breather	1	C00001-
12		20Y-26-51220	Tube	1	C00001-
13		20Y-26-51240	Tube	1	C00001-
14		20Y-26-51230	Gauge	1	C00001-
15		07238-10630	Connector	1	C00001-
16		20Y-62-56961	Bracket	1	C00001-
17		01010-81025	Bolt	2	C00001-
18		01643-31032	Washer	2	C00001-
19		07283-32738	Clip, Pipe	1	C00001-
20		01597-01009	Nut	2	C00001-
21		01643-31032	Washer	2	C00001-
22		11Y-62-12240	Elbow	2	C00001-
23		02896-11008	O-ring	2	C00001-
24		07002-11423	O-ring	2	C00001-
25		02782-10630	Elbow	1	C00001-
26		02896-11018	O-ring	1	C00001-
27		07002-12434	O-ring	1	C00001-
28		07000-15240	O-ring	1	C00001-
29		20Y-26-56120	Bolt	12	C00001-
30		01643-32060	Washer	12	C00001-
31		01010-81250	Bolt	2	C00001-
32		01643-31232	Washer	2	C00001-
33		20Y-62-41940	Elbow	1	C00001-
34		02896-11015	O-ring	2	C00001-
35		07002-12434	O-ring	1	C00001-

FIG. N1210-002001 Swing Machinery and Motor (Supply Only, Oil Resistance)

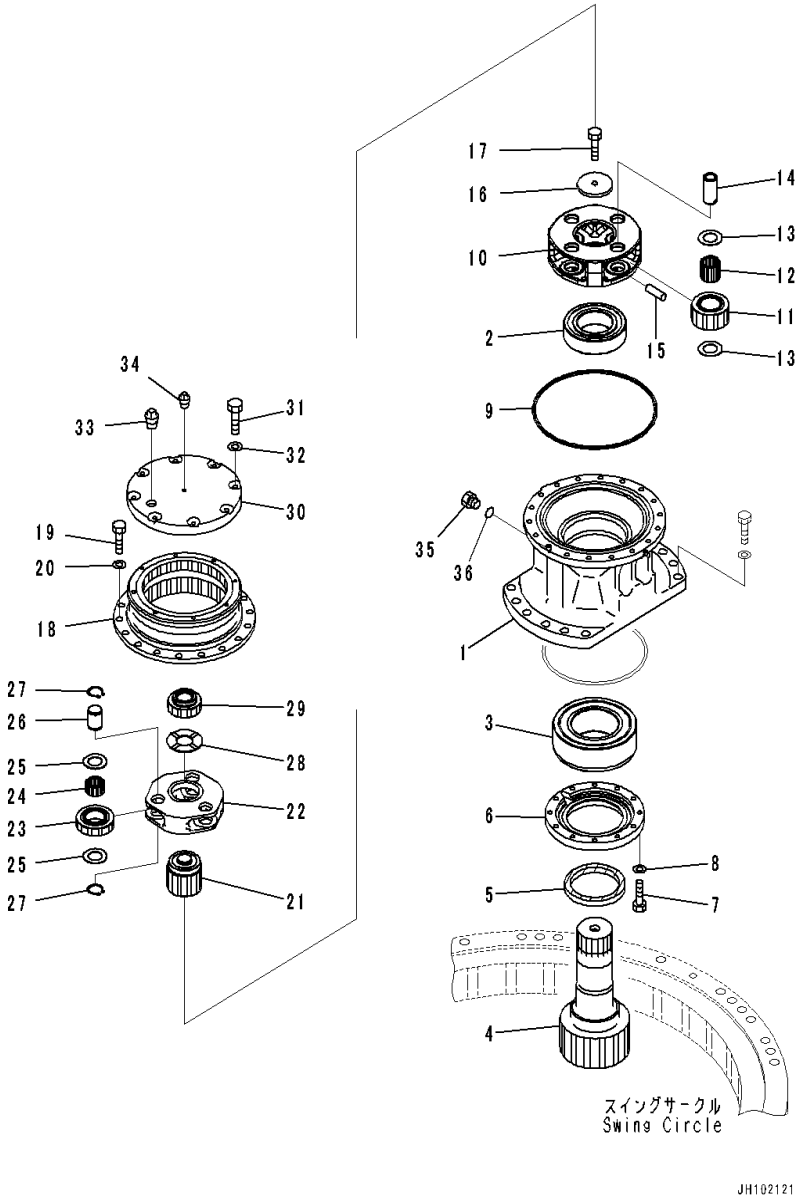

Index	Code	Part Number	Description	Qty	Serial Number
1		20Y-26-51180	Case	1	C00001-
2		20Y-26-22430	Bearing	1	C00001-
3		20Y-26-22440	Bearing	1	C00001-
4		206-26-69112	Shaft	1	C00001-
5		20Y-26-22450	Seal	1	C00001-
6		20Y-26-51190	Cover	1	C00001-
7		01010-81045	Bolt	12	C00001-
8		01643-31032	Washer	12	C00001-
9		07000-15290	O-ring	1	C00001-
10		20Y-26-51170	Carrier	1	C00001-
11		20Y-26-51140	Gear	4	C00001-
12		20Y-26-51210	Bearing	4	C00001-
13		20Y-27-21240	Washer, Thrust	8	C00001-
14		20Y-26-22250	Pin	4	C00001-
15		20Y-27-21280	Pin	4	C00001-
16		20Y-26-21240	Plate	1	C00001-
17		112-32-11211	Bolt	1	C00001-
18		20Y-26-51150	Gear	1	C00001-
19		01010-81440	Bolt	18	C00001-
20		01643-31445	Washer, Flat	18	C00001-
21		20Y-26-51130	Gear	1	C00001-
22		20Y-26-51160	Carrier	1	C00001-
23		20Y-26-51120	Gear	3	C00001-
24		20Y-26-21510	Bearing	3	C00001-
25		20Y-27-21240	Washer, Thrust	6	C00001-
26		20Y-26-22240	Pin	3	C00001-
27		20Y-27-21280	Pin	3	C00001-
28		20Y-26-51250	Washer, Thrust	1	C00001-
29		20Y-26-51110	Gear	1	C00001-
30		20Y-26-51610	Cover	1	C00001-
31		01010-81035	Bolt	8	C00001-
32		01643-51032	Washer	8	C00001-
33		07042-30617	Plug, Taper	1	C00001-
34		07042-30108	Plug	1	C00001-
35		07040-12412	Plug	1	C00001-
36		07002-12434	O-ring	1	C00001-

FIG. N1310-001001 Swivel Joint (Inner Parts, Swivel Joint)

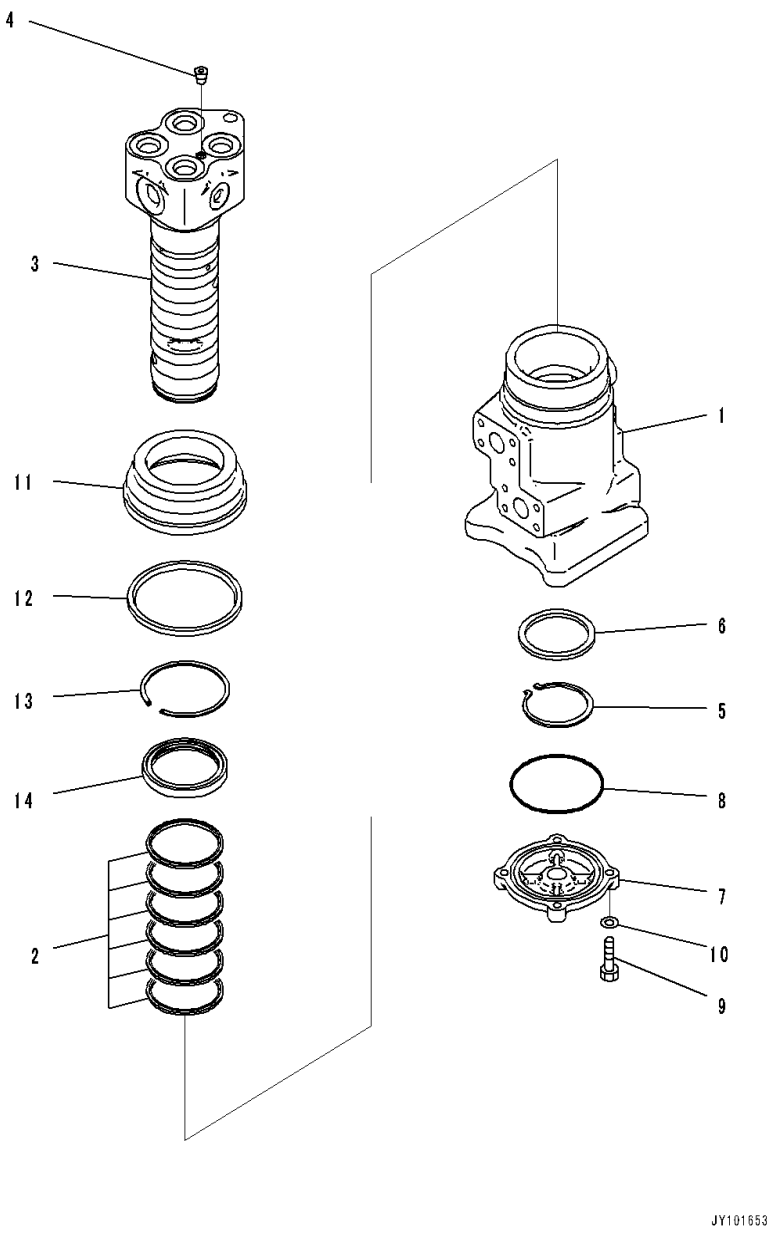

Index	Code	Part Number	Description	Qty	Serial Number
		703-08-33740	Swivel Joint Assembly	1	C00001-
1		703-08-91230	• Rotor	1	C00001-
2		703-08-95621	• Seal	6	C00001-
3		703-08-92192	• Shaft	1	C00001-
4		703-08-98930	• • Plug	1	C00001-
5		04064-07525	• Ring, Snap	1	C00001-
6		703-08-94510	• Ring	1	C00001-
7		703-08-93170	• Cover	1	C00001-
8		07000-B2105	• O-ring	1	C00001-
9		01010-80835	• Bolt	4	C00001-
10		01643-30823	• Washer	4	C00001-
11		703-08-93771	• Cover	1	C00001-
12		703-08-95770	• Seal, Dust	1	C00001-
13		04077-00100	• Ring, Snap, for Hole Side	1	C00001-
14		703-08-96140	• Seal, Oil	1	C00001-

FIG. N1310-001002 Swivel Joint (Connecting Parts)

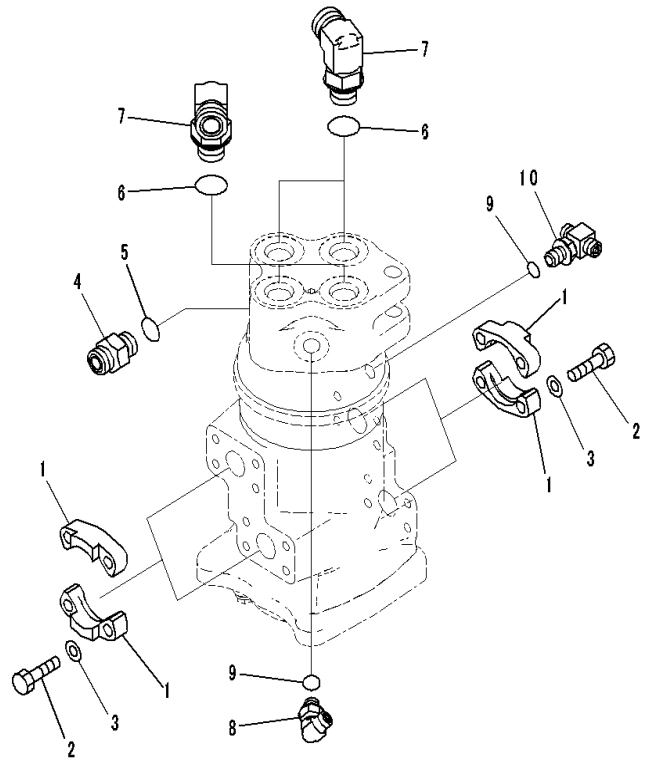

Index	Code	Part Number	Description	Qty	Serial Number
1		07371-31049	Flange, Split	8	C00001-
2		07372-21035	Bolt	16	C00001-
3		01643-51032	Washer	16	C00001-
4		02781-00522	Union	1	C00001-
5		07002-12434	O-ring	1	C00001-
6		07002-62434	O-ring	4	C00001-
7		02782-10628	Elbow	4	C00001-
8		11Y-62-12160	Elbow	1	C00001-
9		07002-11423	O-ring	2	C00001-
10		11Y-62-12250	Tee	1	C00001-

FIG. N1310-001003 Swivel Joint (Related Parts)

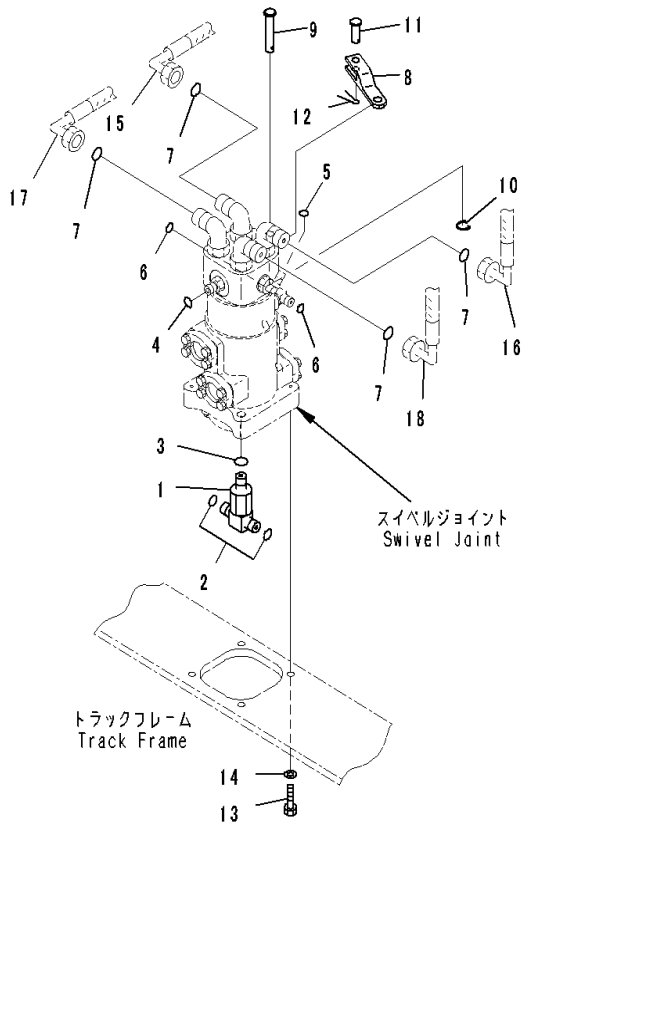

Index	Code	Part Number	Description	Qty	Serial Number
1		20Y-62-41930	Tee	1	C00001-
2		02896-11012	O-ring	2	C00001-
3		07002-12434	O-ring	1	C00001-
4		02896-11015	O-ring	1	C00001-
5		02896-11008	O-ring	1	C00001-
6		02896-11008	O-ring	2	C00001-
7		02896-61018	O-ring	4	C00001-
8		20Y-62-54252	Bracket	1	C00001-
9		22U-62-21870	Pin	1	C00001-
10		22U-62-24420	Pin	1	C00001-
11		201-60-11230	Pin	1	C00001-
12		04050-14028	Pin, Cotter	1	C00001-
13		01010-81235	Bolt	4	C00001-
14		01643-31232	Washer	4	C00001-
15		(20Y-62-57770)	Hose(Travel Piping)		
16		(2A5-62-25320)	Hose(Travel Piping)		
17		(20Y-62-57760)	Hose(Travel Piping)		
18		(2A6-62-11680)	Hose(Travel Piping)		

TRAVEL SYSTEM AND ITS RELATED PARTS

FIG. P1120-001001 Travel Piping

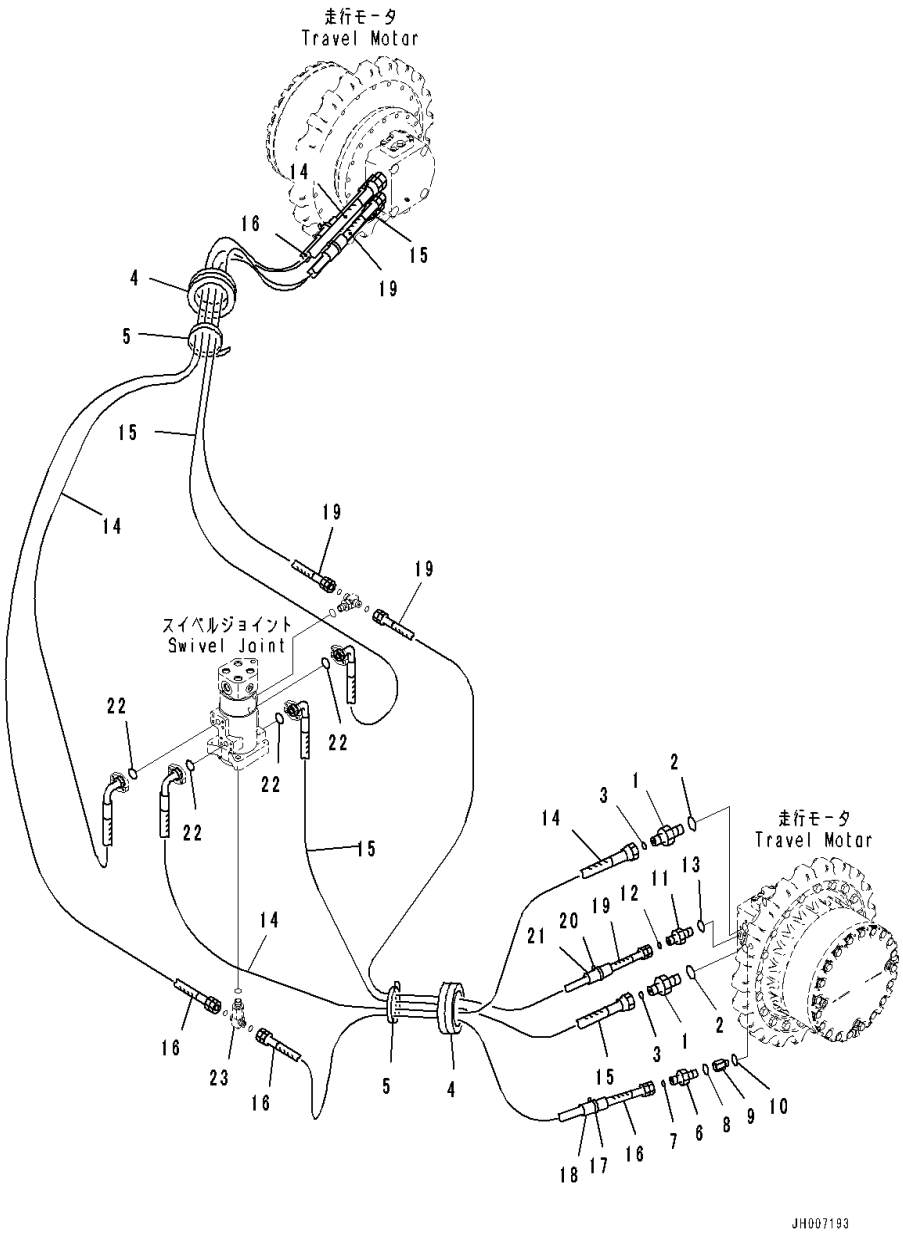

Index	Code	Part Number	Description	Qty	Serial Number
1		207-62-72110	Union	4	C00001-
2		07002-63334	O-ring	4	C00001-
3		11Y-62-11980	O-ring	4	C00001-
4		20Y-62-54260	Grommet	2	C00001-
5		08034-20536	Band	2	C00001-
6		02781-00422	Union	2	C00001-
7		02896-11012	O-ring	2	C00001-
8		07002-12034	O-ring	2	C00001-
9		11T-61-11280	Nipple	2	C00001-
10		07002-12034	O-ring	2	C00001-
11		02781-0021D	Union	2	C00001-
12		02896-11008	O-ring	2	C00001-
13		07002-11423	O-ring	2	C00001-
14		2A5-62-11191	Hose	2	C00001-
15		2A5-62-11211	Hose	2	C00001-
16		02774-00419	Hose	2	C00001-
17		08034-20536	Band	2	C00001-
18		205-62-72240	Cover	2	C00001-
19		02774-00220	Hose	2	C00001-
20		08034-20536	Band	2	C00001-
21		205-62-72140	Cover	2	C00001-
22		07000-13032	O-ring	4	C00001-
23		(20Y-62-41930)	Tee (Swivel Joint, Related Parts)		

FIG. P1120-002001 Travel Piping, Long Track Frame

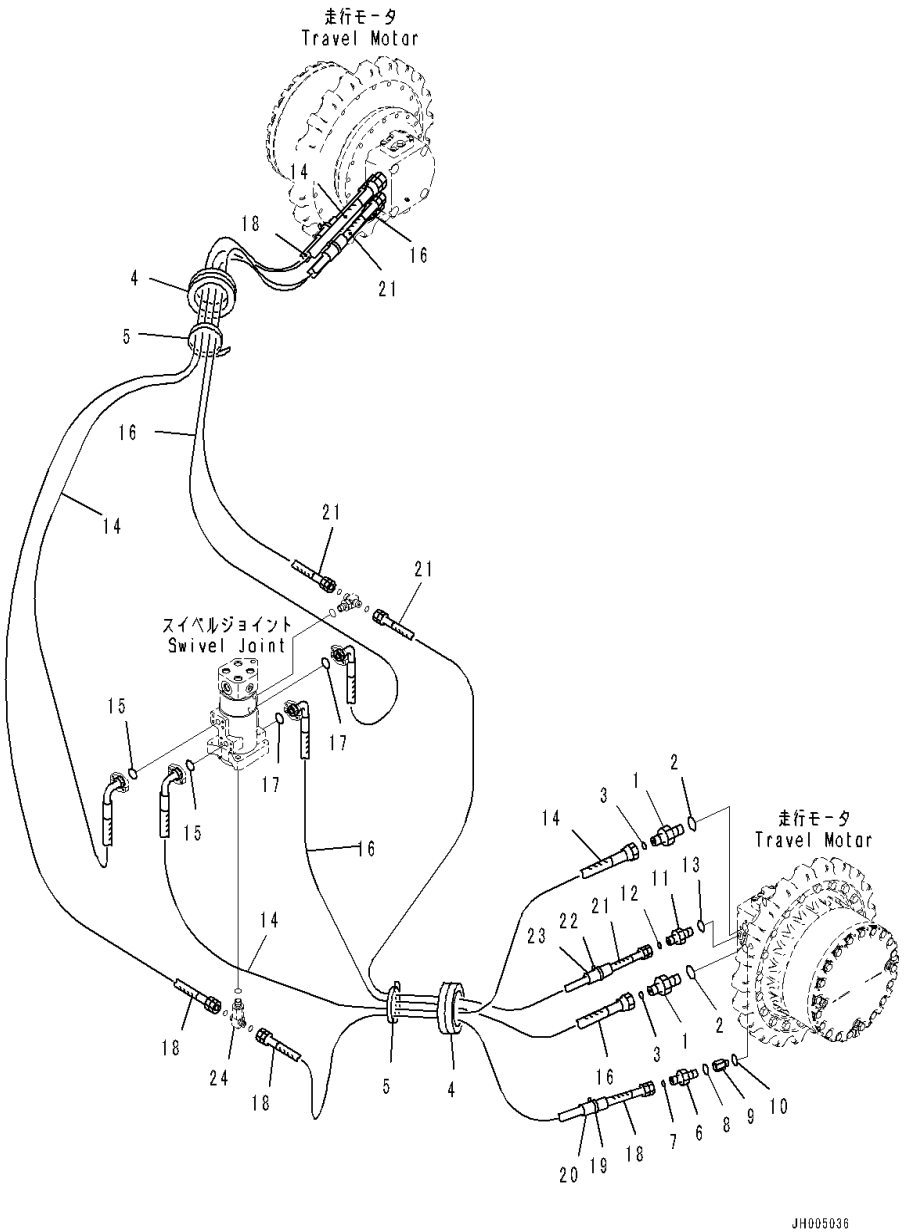

Index	Code	Part Number	Description	Qty	Serial Number
1		207-62-72110	Union	4	C00001-
2		07002-63334	O-ring	4	C00001-
3		11Y-62-11980	O-ring	4	C00001-
4		20Y-62-12560	Grommet	2	C00001-
5		08034-20536	Band	2	C00001-
6		02781-00422	Union	2	C00001-
7		02896-11012	O-ring	2	C00001-
8		07002-12034	O-ring	2	C00001-
9		11T-61-11280	Nipple	2	C00001-
10		07002-12034	O-ring	2	C00001-
11		02781-0021D	Union	2	C00001-
12		02896-11008	O-ring	2	C00001-
13		07002-11423	O-ring	2	C00001-
14		206-62-31151	Hose	2	C00001-
15		07000-13032	O-ring	2	C00001-
16		206-62-31161	Hose	2	C00001-
17		07000-13032	O-ring	2	C00001-
18		02774-00421	Hose	2	C00001-
19		08034-20536	Band	2	C00001-
20		205-62-72240	Cover	2	C00001-
21		02774-00222	Hose, Face seal Type	2	C00001-
22		08034-20536	Band	2	C00001-
23		205-62-72140	Cover	2	C00001-
24		(20Y-62-41930)	Tee (Swivel Joint, Related Parts)		

FIG. P1210-001001 Travel Motor and Final Drive (Travel Motor, L.H., 1/2)

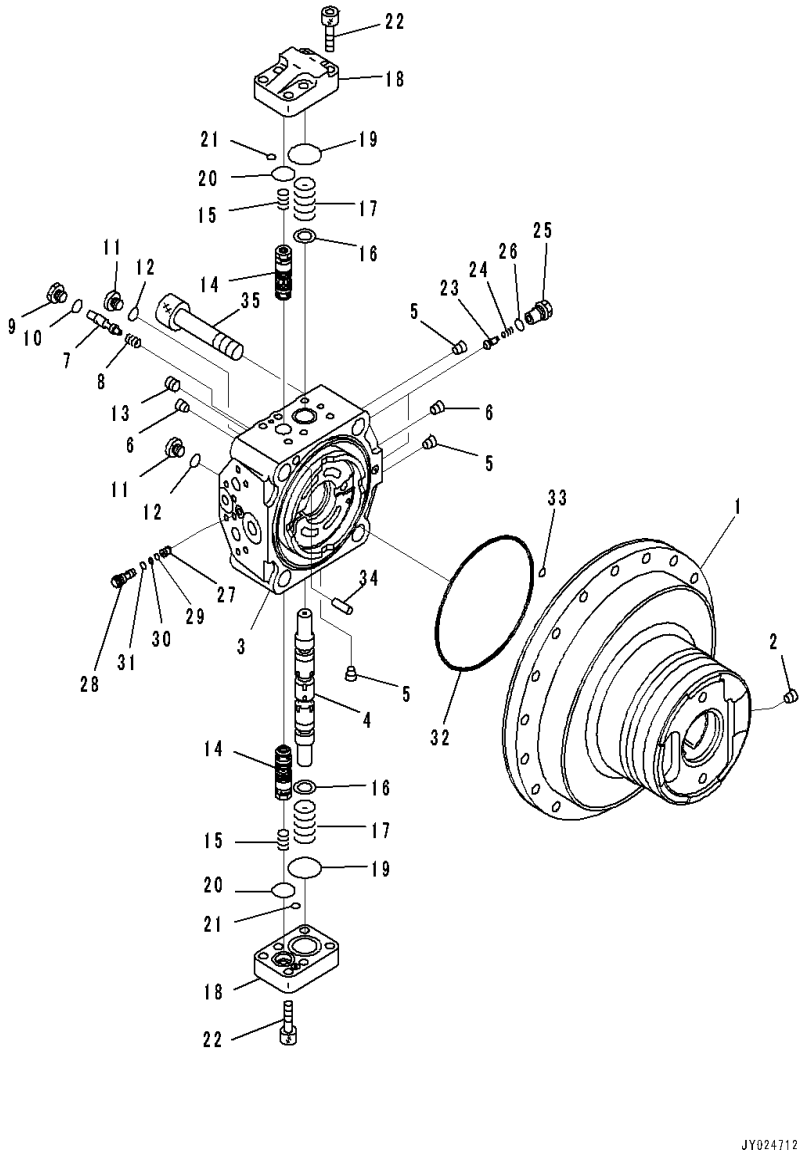

Index	Code	Part Number	Description	Qty	Serial Number
		708-8F-00560	Motor Assembly	1	C00001-
	C2	708-8F-04820	• Case Subassembly	1	C00001-
1	C1		• • Case, Motor	1	C00001-
2	C1		• • Plug, Stocking	1	C00001-
	C2	708-8F-04320	• Cover Subassembly	1	C00001-
3	C1		• • Cover, End	1	C00001-
4	C1		• • Spool	1	C00001-
5	C1		• • Plug	3	C00001-
6	C1		• • Plug, Stocking	2	C00001-
7	C1		• • Spool	1	C00001-
8	C2	708-8F-34220	• • Spring	1	C00001-
9		708-8H-11530	• Plug	1	C00001-
10		07002-11423	• O-ring	1	C00001-
11		702-21-55620	• Plug	2	C00001-
12		07002-11423	• O-ring	2	C00001-
13		20B-27-11210	• Bleeder	1	C00001-
14		702-73-02112	• Valve Assembly, Relief	2	C00001-
15		708-8F-36611	• Spring	2	C00001-
16		708-8F-36120	• Ring	2	C00001-
17		708-8H-36121	• Spring	2	C00001-
18		708-8F-36320	• Cover	2	C00001-
19		07000-13040	• O-ring	2	C00001-
20		700-93-11320	• O-ring	2	C00001-
21		07000-11009	• O-ring	2	C00001-
22		01252-61235	• Bolt, Hexagon Socket Head	12	C00001-
23		708-8F-34120	• Valve	2	C00001-
24		722-10-91130	• Spring	2	C00001-
25		708-8F-34110	• Plug	2	C00001-
26		07002-11823	• O-ring	2	C00001-
27		708-8E-16180	• Valve	1	C00001-
28		708-8F-31650	• Plug	1	C00001-
29		07000-11006	• O-ring	1	C00001-
30		07001-01006	• Ring, Back-up	1	C00001-
31		07002-11223	• O-ring	1	C00001-
32	C2	708-8F-31610	• O-ring	1	C00001-
33	C2	07000-11009	• O-ring	1	C00001-
34	C2	04020-01228	• Pin, Dowel	1	C00001-
35	C2	708-8F-31210	• Bolt	4	C00001-

FIG. P1210-001002 Travel Motor and Final Drive (Travel Motor, L.H., 2/2)

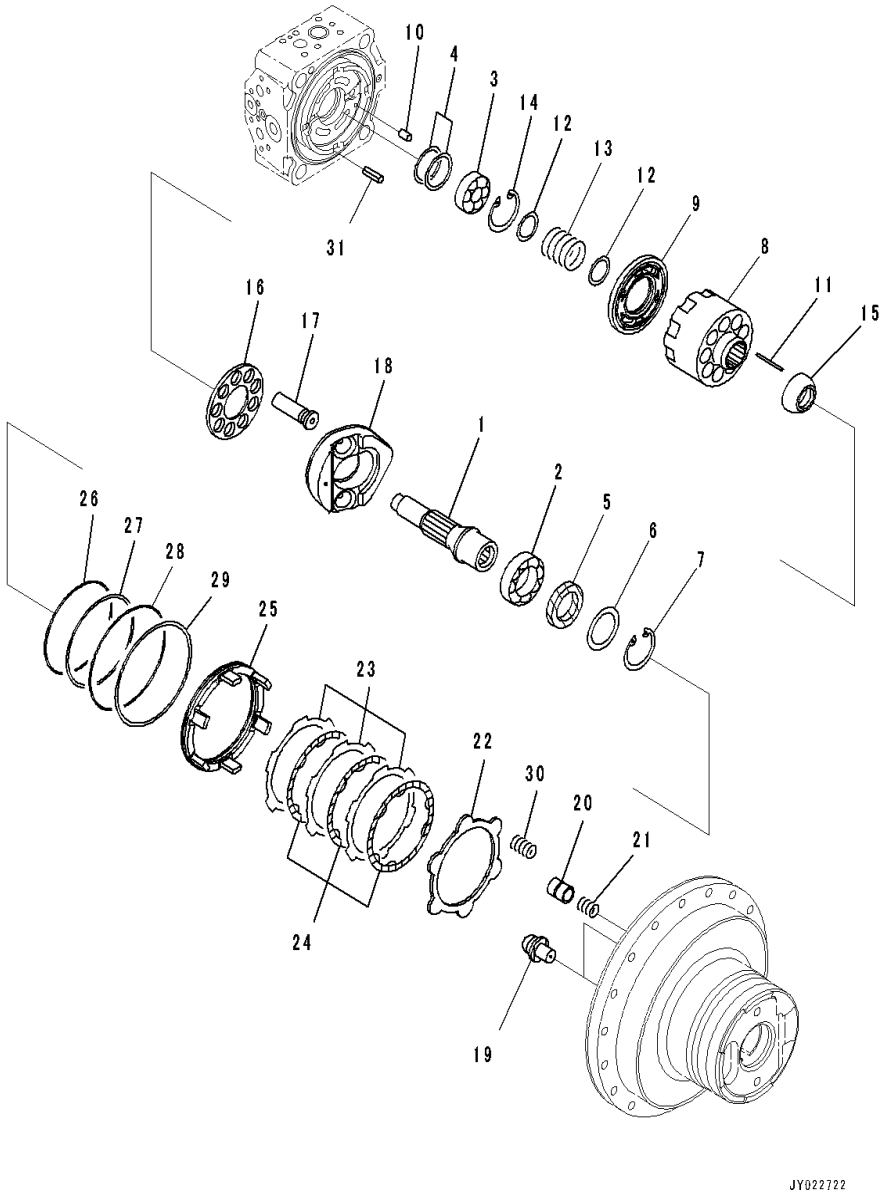

Index	Code	Part Number	Description	Qty	Serial Number
		708-8F-00560	Motor Assembly	1	C00001-
1	C2	708-8F-32140	• Shaft	1	C00001-
2	C2	708-8F-12151	• Bearing	1	C00001-
3	C2	708-7L-12140	• Bearing	1	C00001-
4	C2	708-7L-05010	• Spacer Kit	1	C00001-
	C1		• • Spacer,T=1.5mm	1	C00001-
	C1		• • Spacer,T=1.6mm	1	C00001-
	C1		• • Spacer,T=1.7mm	1	C00001-
	C1		• • Spacer,T=1.8mm	1	C00001-
	C1		• • Spacer,T=1.9mm	1	C00001-
	C1		• • Spacer,T=2.0mm	1	C00001-
5		706-7G-11291	• Seal, Oil	1	C00001-
6		708-8F-12230	• Spacer,T=3.2mm	1	C00001-
7		04065-07225	• Ring, Snap	1	C00001-
8	C2	708-8F-33130	• Block, Cylinder	1	C00001-
9	C2	708-8F-33230	• Plate, Valve	1	C00001-
10	C2	720-68-19610	• Pin	1	C00001-
11	C2	708-8F-33360	• Pin	3	C00001-
12	C2	708-7L-13140	• Seat	2	C00001-
13	C2	708-8F-33160	• Spring	1	C00001-
14	C2	04065-04818	• Ring, Snap	1	C00001-
15	C2	708-8F-33350	• Guide,Retainer	1	C00001-
16	C2	708-2L-33350	• Retainer, Shoe	1	C00001-
17	C2	708-8F-33370	• Piston Subassembly	9	C00001-
18	C2	708-8F-33581	• Cam, Rocker	1	C00001-
19	C2	708-8F-33710	• Ball	2	C00001-
20	C2	708-8F-34141	• Piston	1	C00001-
21	C2	708-8F-34270	• Spring	1	C00001-
22	C2	708-8F-35220	• Plate	1	C00001-
23	C2	708-8F-35230	• Plate	3	C00001-
24	C2	708-8F-35120	• Disc	3	C00001-
25	C2	708-8F-35140	• Piston, Brake	1	C00001-
26	C2	708-8F-35160	• O-ring	1	C00001-
27	C2	708-8F-35170	• Ring, Back-up	1	C00001-
28	C2	708-8F-35180	• O-ring	1	C00001-
29	C2	708-8F-35190	• Ring, Back-up	1	C00001-
30	C2	708-8F-35150	• Spring	6	C00001-
31	C2	04025-00324	• Pin, Spring	1	C00001-

FIG. P1210-001003 Travel Motor and Final Drive (Final Drive L.H.)

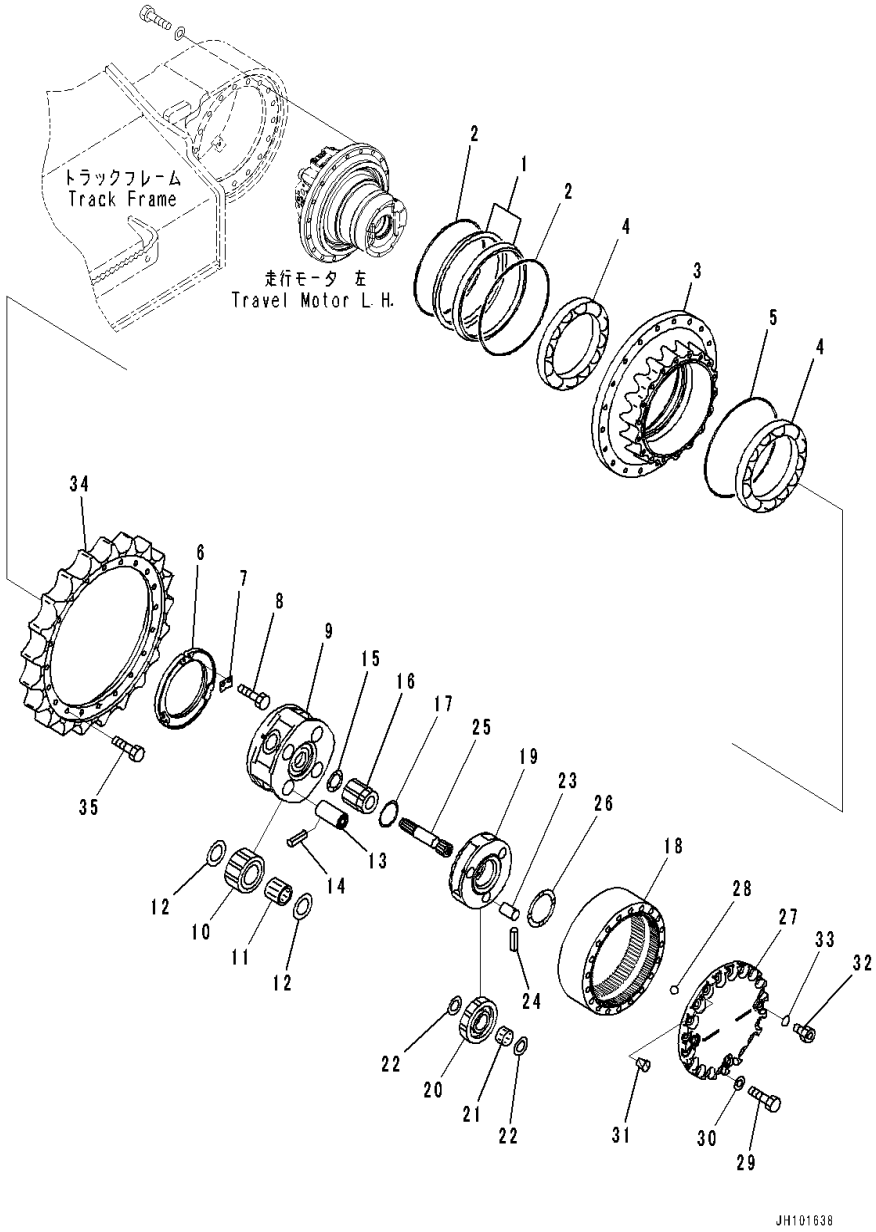

Index	Code	Part Number	Description	Qty	Serial Number
		20Y-27-00141	Floating Seal Assembly	1	C00001-
1	C1		• Seal	2	C00001-
2	C1		• O-ring	2	C00001-
3		20Y-27-51180	Hub	1	C00001-
4		20Y-27-41320	Bearing	2	C00001-
5		20Y-27-51220	O-ring	1	C00001-
6		20Y-27-41190	Nut, Lock	1	C00001-
7		20Y-27-41180	Lock	1	C00001-
8		01010-81020	Bolt	2	C00001-
9		20Y-27-51170	Carrier	1	C00001-
10		20Y-27-51140	Gear	4	C00001-
11		20Y-27-41250	Bearing	4	C00001-
12		20Y-27-41270	Washer, Thrust	8	C00001-
13		20Y-27-51230	Pin	4	C00001-
14		20Y-26-21330	Pin	4	C00001-
15		20Y-27-51240	Washer, Thrust	1	C00001-
16		20Y-27-51130	Gear	1	C00001-
17		20Y-27-22240	Washer, Thrust	1	C00001-
18		20Y-27-51150	Gear	1	C00001-
19		20Y-27-51160	Carrier	1	C00001-
20		20Y-27-51120	Gear	3	C00001-
21		20Y-27-22210	Bearing	3	C00001-
22		20Y-27-21240	Washer, Thrust	6	C00001-
23		20Y-27-21220	Pin	3	C00001-
24		20Y-27-21280	Pin	3	C00001-
25		20Y-27-51110	Shaft	1	C00001-
26		20Y-27-21310	Washer, Thrust	1	C00001-
27		20Y-27-51190	Cover	1	C00001-
28		04260-01587	Ball, Steel	1	C00001-
29		20Y-27-21360	Bolt	20	C00001-
30		01643-31645	Washer	20	C00001-
31		07049-01012	Plug	2	C00001-
32		20Y-27-31190	Plug	3	C00001-
33		07002-12434	O-ring	3	C00001-
34		20Y-27-11583	Sprocket	1	C00001-
35		20Y-27-11561	Bolt	20	C00001-

FIG. P1210-001004 Travel Motor and Final Drive (Travel Motor, R.H., 1/2)

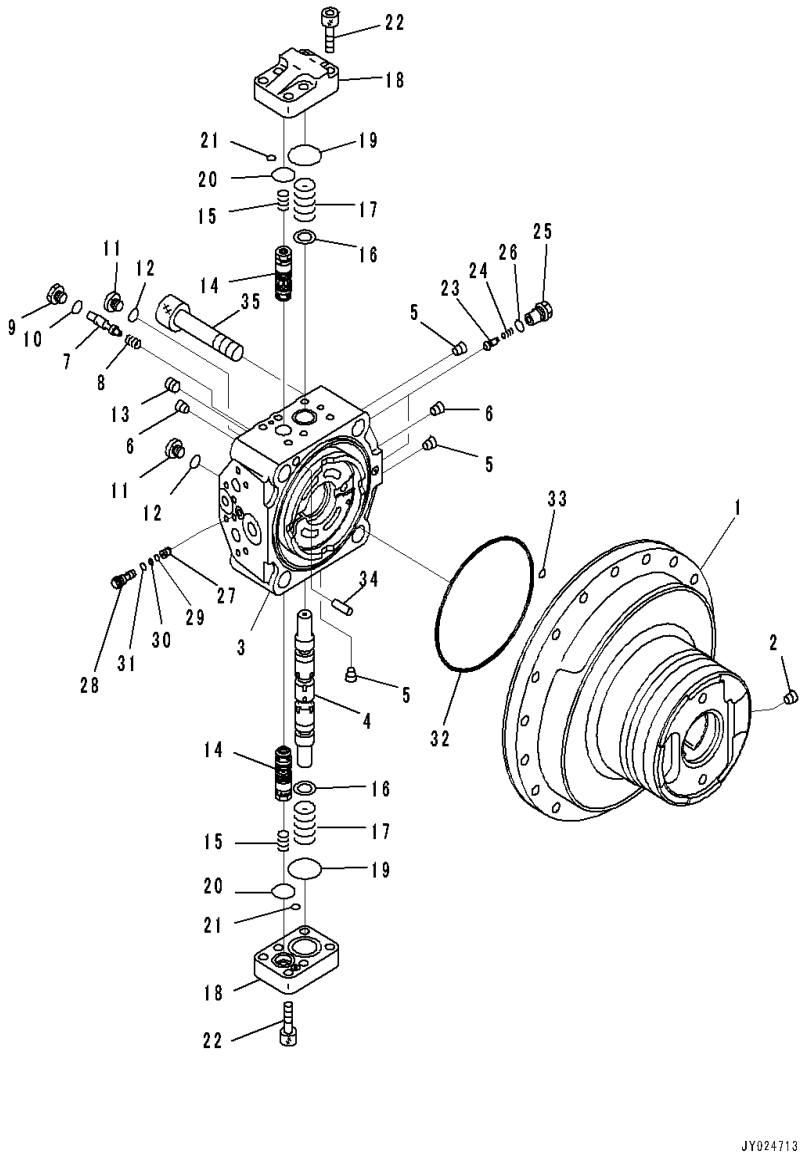

Index	Code	Part Number	Description	Qty	Serial Number
		708-8F-00550	Motor Assembly	1	C00001-
	C2	708-8F-04810	• Case Subassembly	1	C00001-
1	C1		• • Case, Motor	1	C00001-
2	C1		• • Plug, Stocking	1	C00001-
	C2	708-8F-04320	• Cover Subassembly	1	C00001-
3	C1		• • Cover, End	1	C00001-
4	C1		• • Spool	1	C00001-
5	C1		• • Plug	3	C00001-
6	C1		• • Plug, Stocking	2	C00001-
7	C1		• • Spool	1	C00001-
8	C2	708-8F-34220	• • Spring	1	C00001-
9		708-8H-11530	• Plug	1	C00001-
10		07002-11423	• O-ring	1	C00001-
11		702-21-55620	• Plug	2	C00001-
12		07002-11423	• O-ring	2	C00001-
13		20B-27-11210	• Bleeder	1	C00001-
14		702-73-02112	• Valve Assembly, Relief	2	C00001-
15		708-8F-36611	• Spring	2	C00001-
16		708-8F-36120	• Ring	2	C00001-
17		708-8H-36121	• Spring	2	C00001-
18		708-8F-36320	• Cover	2	C00001-
19		07000-13040	• O-ring	2	C00001-
20		700-93-11320	• O-ring	2	C00001-
21		07000-11009	• O-ring	2	C00001-
22		01252-61235	• Bolt, Hexagon Socket Head	12	C00001-
23		708-8F-34120	• Valve	2	C00001-
24		722-10-91130	• Spring	2	C00001-
25		708-8F-34110	• Plug	2	C00001-
26		07002-11823	• O-ring	2	C00001-
27		708-8E-16180	• Valve	1	C00001-
28		708-8F-31650	• Plug	1	C00001-
29		07000-11006	• O-ring	1	C00001-
30		07001-01006	• Ring, Back-up	1	C00001-
31		07002-11223	• O-ring	1	C00001-
32	C2	708-8F-31610	• O-ring	1	C00001-
33	C2	07000-11009	• O-ring	1	C00001-
34	C2	04020-01228	• Pin, Dowel	1	C00001-
35	C2	708-8F-31210	• Bolt	4	C00001-

FIG. P1210-001005 Travel Motor and Final Drive (Travel Motor, R.H., 2/2)

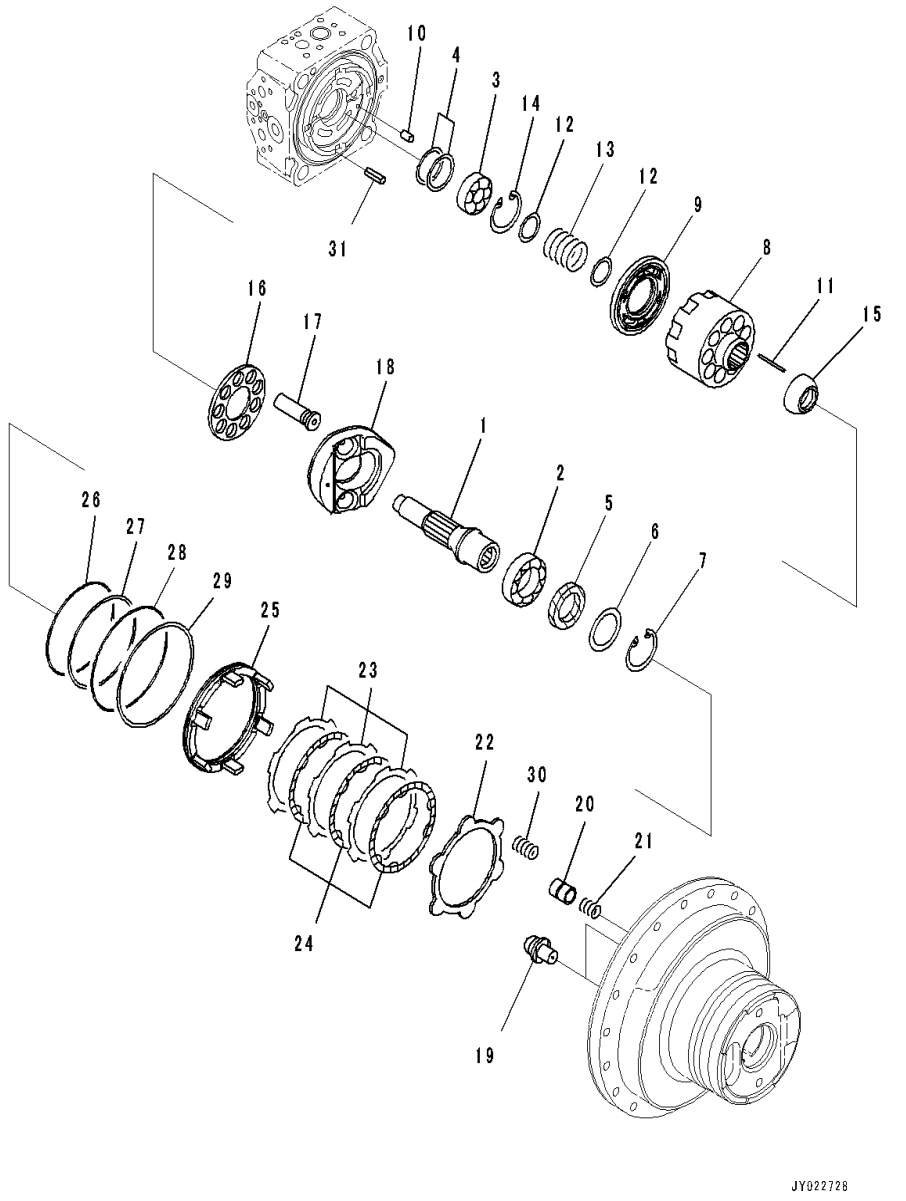

Index	Code	Part Number	Description	Qty	Serial Number
		708-8F-00550	Motor Assembly	1	C00001-
1	C2	708-8F-32140	• Shaft	1	C00001-
2	C2	708-8F-12151	• Bearing	1	C00001-
3	C2	708-7L-12140	• Bearing	1	C00001-
4	C2	708-7L-05010	• Spacer Kit	1	C00001-
	C1		• • Spacer,T=1.5mm	1	C00001-
	C1		• • Spacer,T=1.6mm	1	C00001-
	C1		• • Spacer,T=1.7mm	1	C00001-
	C1		• • Spacer,T=1.8mm	1	C00001-
	C1		• • Spacer,T=1.9mm	1	C00001-
	C1		• • Spacer,T=2.0mm	1	C00001-
5		706-7G-11291	• Seal, Oil	1	C00001-
6		708-8F-12230	• Spacer,T=3.2mm	1	C00001-
7		04065-07225	• Ring, Snap	1	C00001-
8	C2	708-8F-33130	• Block, Cylinder	1	C00001-
9	C2	708-8F-33230	• Plate, Valve	1	C00001-
10	C2	720-68-19610	• Pin	1	C00001-
11	C2	708-8F-33360	• Pin	3	C00001-
12	C2	708-7L-13140	• Seat	2	C00001-
13	C2	708-8F-33160	• Spring	1	C00001-
14	C2	04065-04818	• Ring, Snap	1	C00001-
15	C2	708-8F-33350	• Guide,Retainer	1	C00001-
16	C2	708-2L-33350	• Retainer, Shoe	1	C00001-
17	C2	708-8F-33370	• Piston Subassembly	9	C00001-
18	C2	708-8F-33581	• Cam, Rocker	1	C00001-
19	C2	708-8F-33710	• Ball	2	C00001-
20	C2	708-8F-34141	• Piston	1	C00001-
21	C2	708-8F-34270	• Spring	1	C00001-
22	C2	708-8F-35220	• Plate	1	C00001-
23	C2	708-8F-35230	• Plate	3	C00001-
24	C2	708-8F-35120	• Disc	3	C00001-
25	C2	708-8F-35140	• Piston, Brake	1	C00001-
26	C2	708-8F-35160	• O-ring	1	C00001-
27	C2	708-8F-35170	• Ring, Back-up	1	C00001-
28	C2	708-8F-35180	• O-ring	1	C00001-
29	C2	708-8F-35190	• Ring, Back-up	1	C00001-
30	C2	708-8F-35150	• Spring	6	C00001-
31	C2	04025-00324	• Pin, Spring	1	C00001-

FIG. P1210-001006 Travel Motor and Final Drive (Final Drive R.H.)

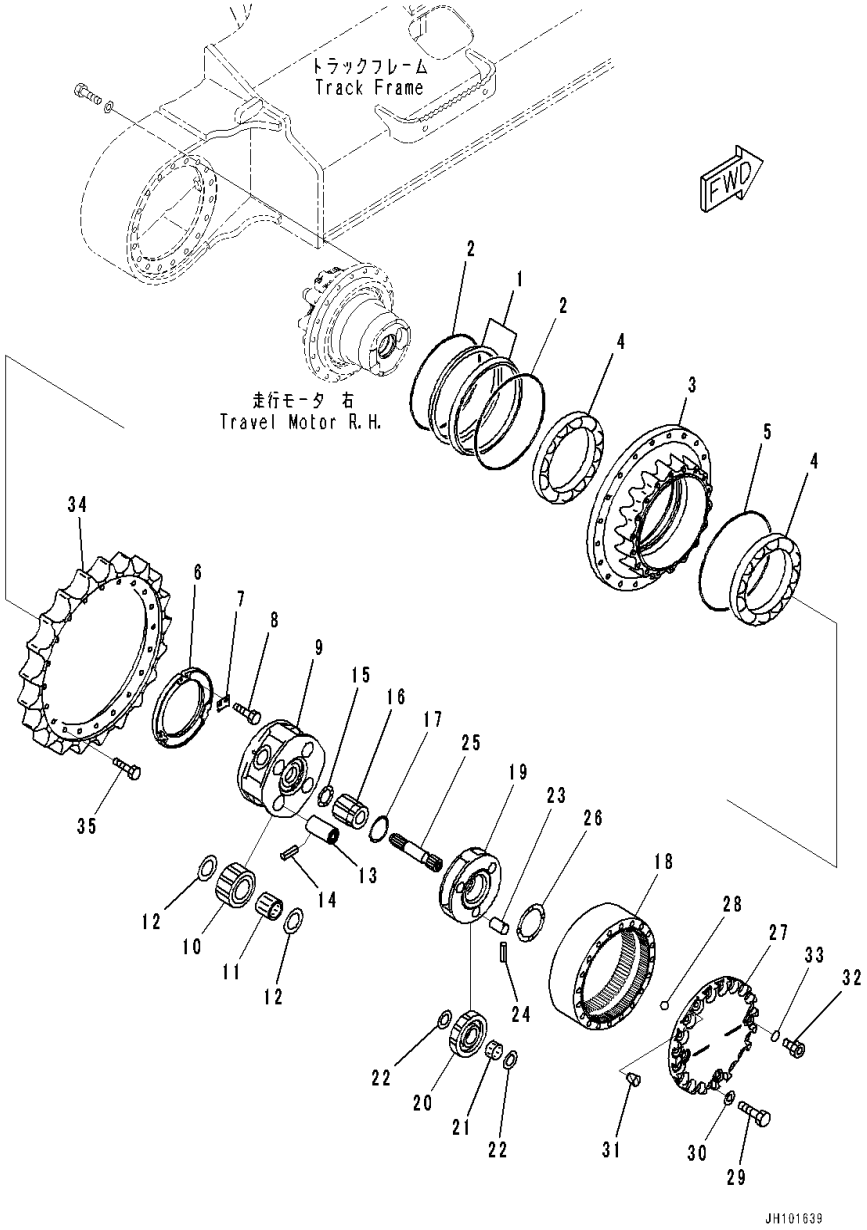

Index	Code	Part Number	Description	Qty	Serial Number
		20Y-27-00141	Floating Seal Assembly	1	C00001-
1	C1		• Seal	2	C00001-
2	C1		• O-ring	2	C00001-
3		20Y-27-51180	Hub	1	C00001-
4		20Y-27-41320	Bearing	2	C00001-
5		20Y-27-51220	O-ring	1	C00001-
6		20Y-27-41190	Nut, Lock	1	C00001-
7		20Y-27-41180	Lock	1	C00001-
8		01010-81020	Bolt	2	C00001-
9		20Y-27-51170	Carrier	1	C00001-
10		20Y-27-51140	Gear	4	C00001-
11		20Y-27-41250	Bearing	4	C00001-
12		20Y-27-41270	Washer, Thrust	8	C00001-
13		20Y-27-51230	Pin	4	C00001-
14		20Y-26-21330	Pin	4	C00001-
15		20Y-27-51240	Washer, Thrust	1	C00001-
16		20Y-27-51130	Gear	1	C00001-
17		20Y-27-22240	Washer, Thrust	1	C00001-
18		20Y-27-51150	Gear	1	C00001-
19		20Y-27-51160	Carrier	1	C00001-
20		20Y-27-51120	Gear	3	C00001-
21		20Y-27-22210	Bearing	3	C00001-
22		20Y-27-21240	Washer, Thrust	6	C00001-
23		20Y-27-21220	Pin	3	C00001-
24		20Y-27-21280	Pin	3	C00001-
25		20Y-27-51110	Shaft	1	C00001-
26		20Y-27-21310	Washer, Thrust	1	C00001-
27		20Y-27-51190	Cover	1	C00001-
28		04260-01587	Ball, Steel	1	C00001-
29		20Y-27-21360	Bolt	20	C00001-
30		01643-31645	Washer	20	C00001-
31		07049-01012	Plug	2	C00001-
32		20Y-27-31190	Plug	3	C00001-
33		07002-12434	O-ring	3	C00001-
34		20Y-27-11583	Sprocket	1	C00001-
35		20Y-27-11561	Bolt	20	C00001-

FIG. P1210-001007 Travel Motor and Final Drive (Cover)

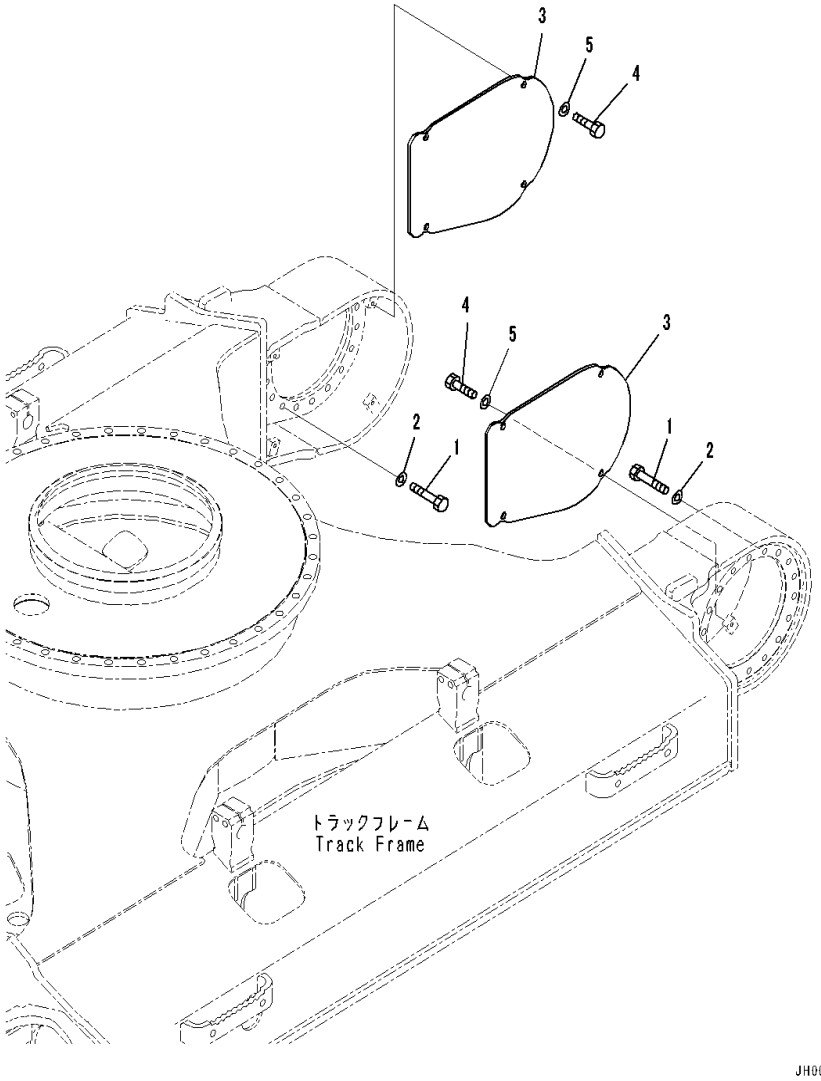

Index	Code	Part Number	Description	Qty	Serial Number
1		01010-61660	Bolt	36	C00001-
2		01643-31645	Washer	36	C00001-
3		20Y-30-44191	Cover	2	C00001-
4		01010-81230	Bolt	8	C00001-
5		01643-31232	Washer	8	C00001-

UNDERCARRIAGE

FIG. R0110-001001 Front Idler and Idler Cushion (Link, 6 Type) (Front Idler)

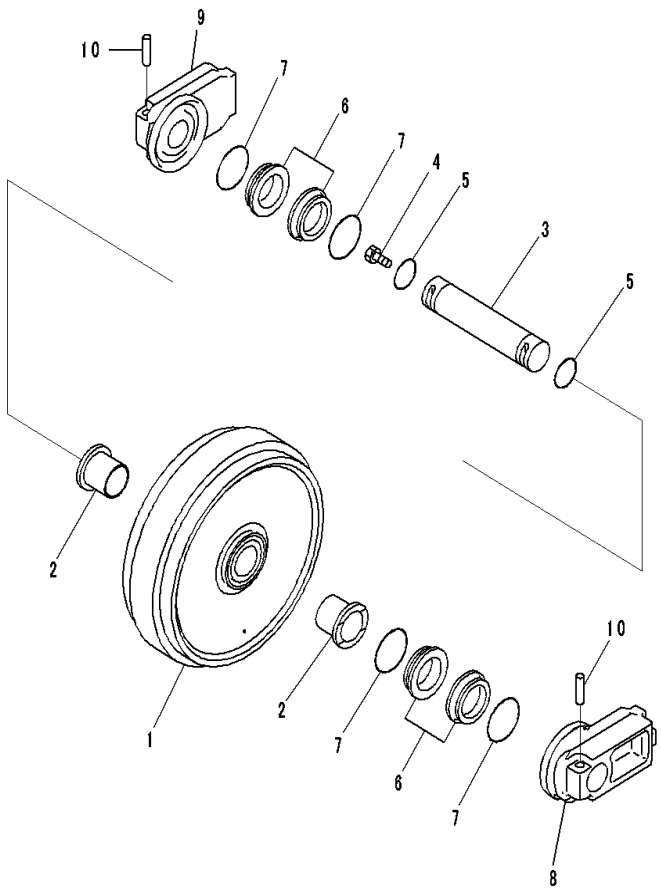

Index	Code	Part Number	Description	Qty	Serial Number
		20Y-30-00950	Idler Assembly	2	C00001-
1		20Y-30-43610	• Idler	1	C00001-
2		20Y-30-43341	• Bushing	2	C00001-
3		20Y-30-43630	• Shaft	1	C00001-
4		20Y-30-16330	• Plug	1	C00001-
5		07000-12060	• O-ring	2	C00001-
		20Y-30-00710	• Floating Seal Assembly	2	C00001-
6	C1		• • Seal	2	C00001-
7	C1		• • O-ring	2	C00001-
8		20Y-30-43640	• Support	1	C00001-
9		20Y-30-43650	• Support	1	C00001-
10		205-30-76190	• Pin	2	C00001-

FIG. R0110-001002 Front Idler and Idler Cushion (Link, 6 Type) (Idler Cushion)

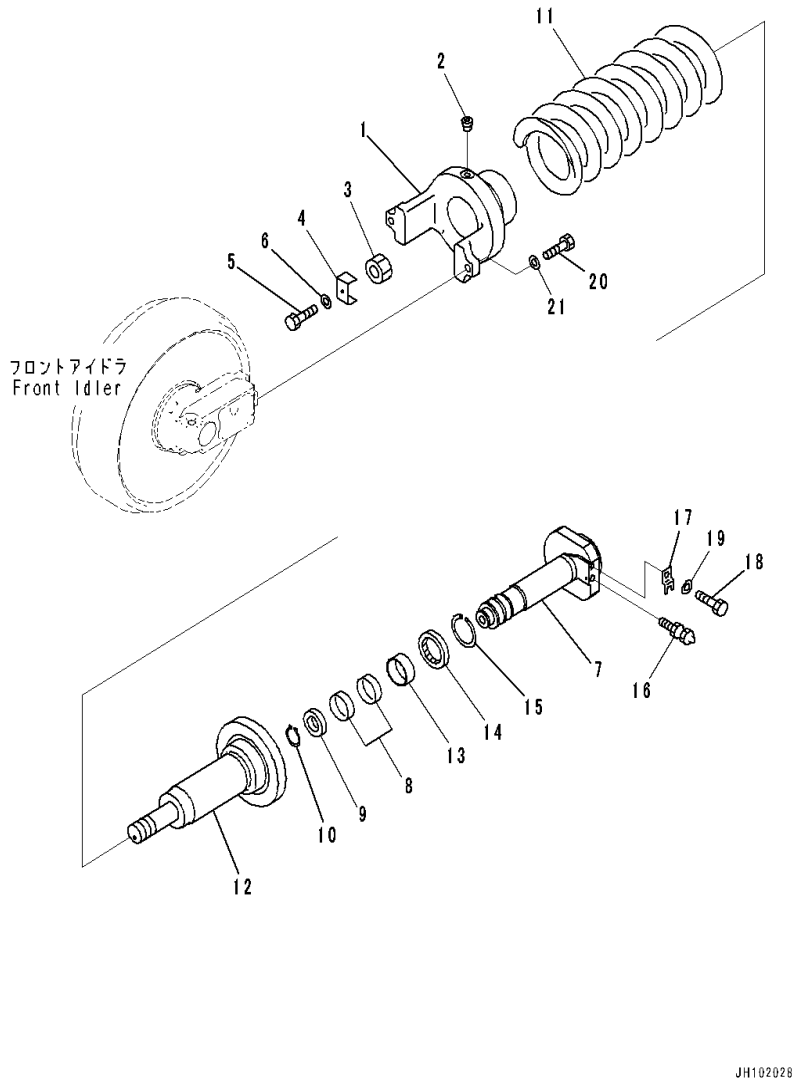

Index	Code	Part Number	Description	Qty	Serial Number
1		20Y-30-42211	Yoke	2	C00001-
2		20Y-30-42280	Plug	2	C00001-
3		206-30-45381	Nut	2	C00001-
4		20Y-30-42160	Lock	2	C00001-
5		01010-81225	Bolt	2	C00001-
6		01643-31232	Washer	2	C00001-
7		206-30-72140	Shaft	2	C00001-
8		07155-00720	Ring, Wear	4	C00001-
9		09370-00070	U-packing	2	C00001-
10		04064-04518	Ring, Snap	2	C00001-
11		20Y-30-C2920	Spring	2	C00001-
		206-30-22140	Spring	2	C00001-
12		206-30-22120	Cylinder	2	C00001-
13		07177-07030	Bushing	2	C00001-
14		707-56-70540	Seal, Dust	2	C00001-
15		04077-00085	Ring, Snap, for Hole Side	2	C00001-
16		07959-20001	Valve	2	C00001-
17		205-30-72170	Plate	2	C00001-
18		01010-81225	Bolt	2	C00001-
19		01643-31232	Washer	2	C00001-
20		01010-81655	Bolt	4	C00001-
21		01643-31645	Washer	4	C00001-

FIG. R0110-002001 Front Idler and Idler Cushion (Front Idler)

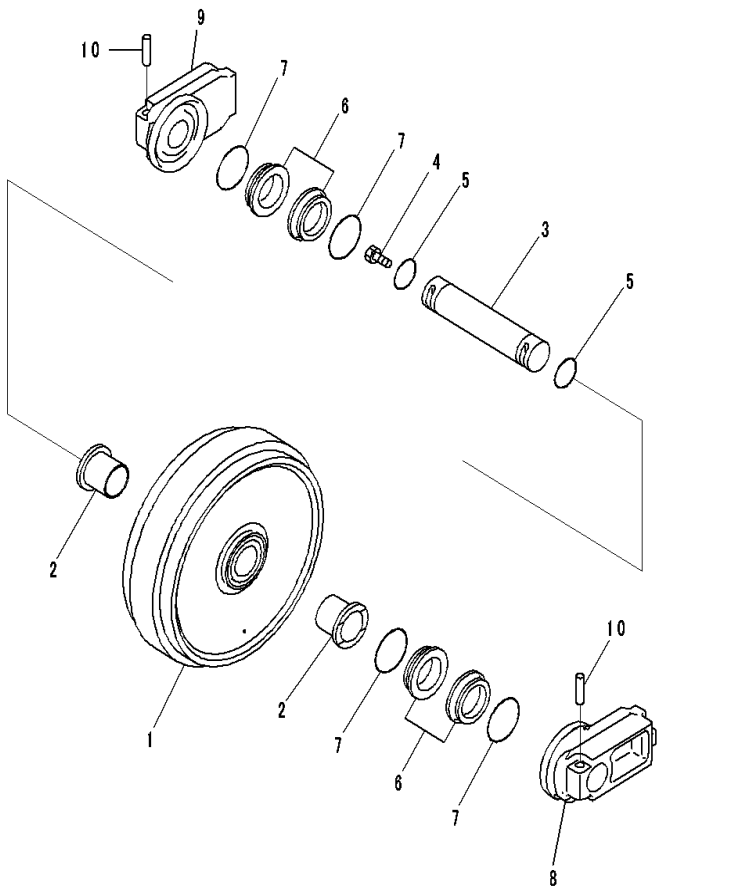

Index	Code	Part Number	Description	Qty	Serial Number
		20Y-30-00950	Idler Assembly	2	C00001-
1		20Y-30-43610	• Idler	1	C00001-
2		20Y-30-43341	• Bushing	2	C00001-
3		20Y-30-43630	• Shaft	1	C00001-
4		20Y-30-16330	• Plug	1	C00001-
5		07000-12060	• O-ring	2	C00001-
		20Y-30-00710	• Floating Seal Assembly	2	C00001-
6	C1		• • Seal	2	C00001-
7	C1		• • O-ring	2	C00001-
8		20Y-30-43640	• Support	1	C00001-
9		20Y-30-43650	• Support	1	C00001-
10		205-30-76190	• Pin	2	C00001-

FIG. R0110-002002 Front Idler and Idler Cushion (Idler Cushion)

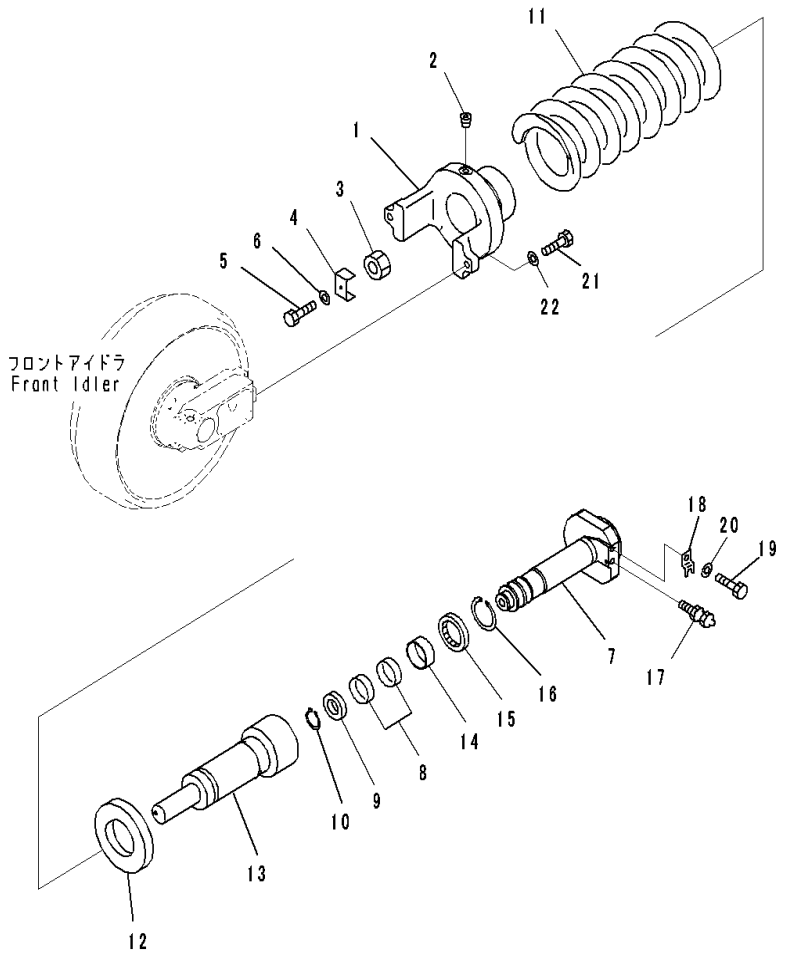

Index	Code	Part Number	Description	Qty	Serial Number
		20Y-30-00660	Cushion Assembly	2	C00001-
1		20Y-30-42211	• Yoke	1	C00001-
2		20Y-30-42280	• Plug	1	C00001-
3		206-30-45381	• Nut	1	C00001-
4		20Y-30-42160	• Lock	1	C00001-
5		01010-81225	• Bolt	1	C00001-
6		01643-31232	• Washer	1	C00001-
7		206-30-72140	• Shaft	1	C00001-
8		07155-00720	• Ring, Wear	2	C00001-
9		09370-00070	• U-packing	1	C00001-
10		04064-04518	• Ring, Snap	1	C00001-
11		20Y-30-42251	• Spring	1	C00001-
12		20Y-30-42241	• Collar	1	C00001-
13		20Y-30-42231	• Cylinder	1	C00001-
14		07177-07030	• Bushing	1	C00001-
15		707-56-70540	• Seal, Dust	1	C00001-
16		04077-00085	• Ring, Snap, for Hole Side	1	C00001-
17		07959-20001	• Valve	1	C00001-
18		205-30-72170	• Plate	1	C00001-
19		01010-81225	• Bolt	1	C00001-
20		01643-31232	• Washer	1	C00001-
21		01010-81655	Bolt	4	C00001-
22		01643-31645	Washer	4	C00001-

FIG. R0200-001001 Track Roller

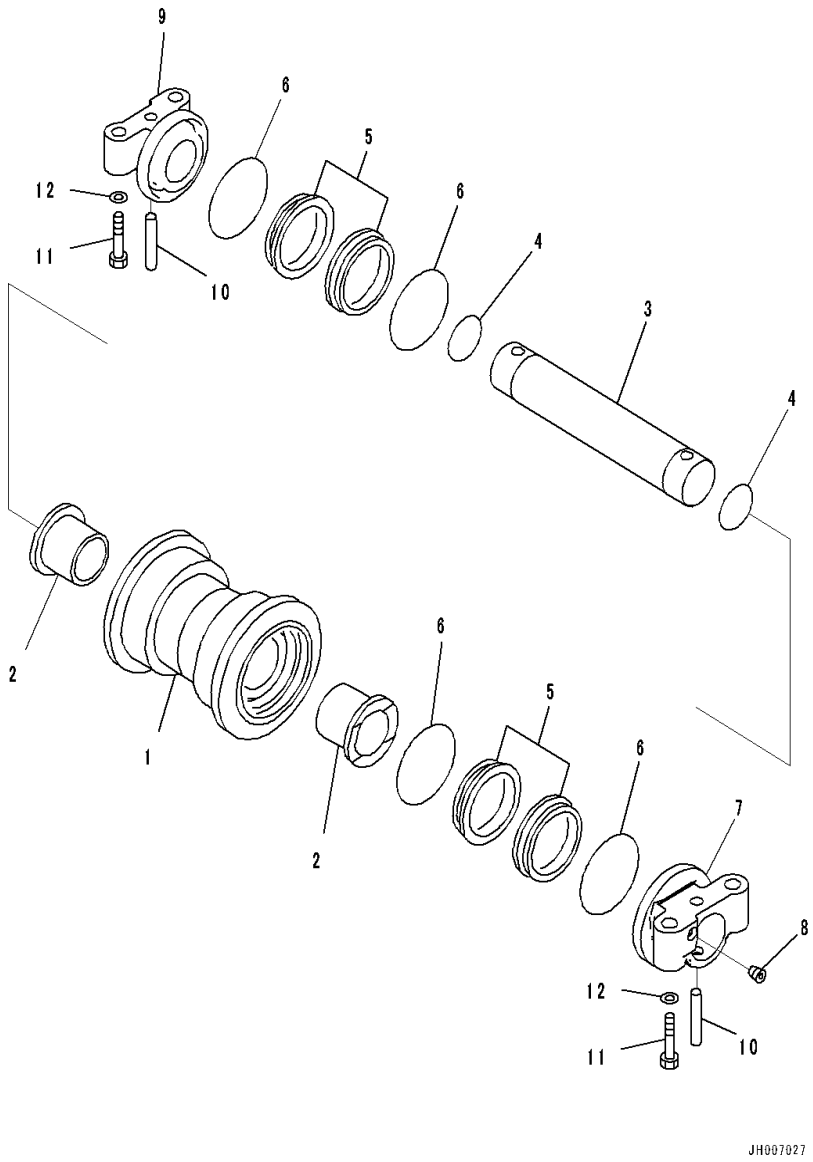

Index	Code	Part Number	Description	Qty	Serial Number
		2A5-30-00110	Track Roller Assembly	14	C00001-
1		2A5-30-12110	• Roller	1	C00001-
2		22U-30-11450	• Bushing	2	C00001-
3		2A5-30-12130	• Shaft	1	C00001-
4		205-30-76260	• O-ring	2	C00001-
		22U-30-00060	• Floating Seal Assembly	2	C00001-
5	C1		• • Seal	2	C00001-
6	C1		• • O-ring	2	C00001-
7		2A5-30-12140	• Collar	1	C00001-
8		20Y-30-16330	• Plug	1	C00001-
9		2A5-30-12150	• Collar	1	C00001-
10		20Y-30-16170	• Pin	2	C00001-
11		20Y-30-11340	Bolt	56	C00001-
12		01643-31845	Washer	56	C00001-

FIG. R0200-002001 Track Roller

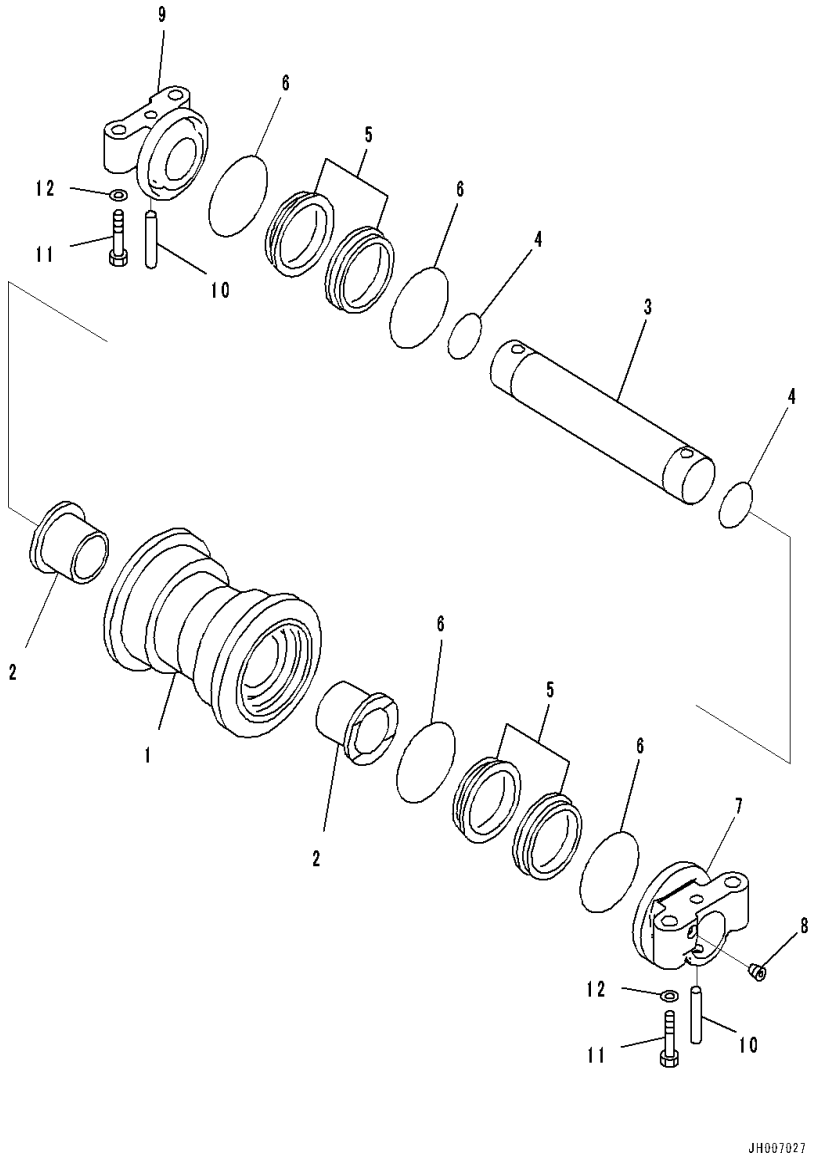

Index	Code	Part Number	Description	Qty	Serial Number
		2A5-30-00110	Track Roller Assembly	18	C00001-
1		2A5-30-12110	• Roller	1	C00001-
2		22U-30-11450	• Bushing	2	C00001-
3		2A5-30-12130	• Shaft	1	C00001-
4		205-30-76260	• O-ring	2	C00001-
		22U-30-00060	• Floating Seal Assembly	2	C00001-
5	C1		• • Seal	2	C00001-
6	C1		• • O-ring	2	C00001-
7		2A5-30-12140	• Collar	1	C00001-
8		20Y-30-16330	• Plug	1	C00001-
9		2A5-30-12150	• Collar	1	C00001-
10		20Y-30-16170	• Pin	2	C00001-
11		20Y-30-11340	Bolt	72	C00001-
12		01643-31845	Washer	72	C00001-

FIG. R0300-001001 Carrier Roller

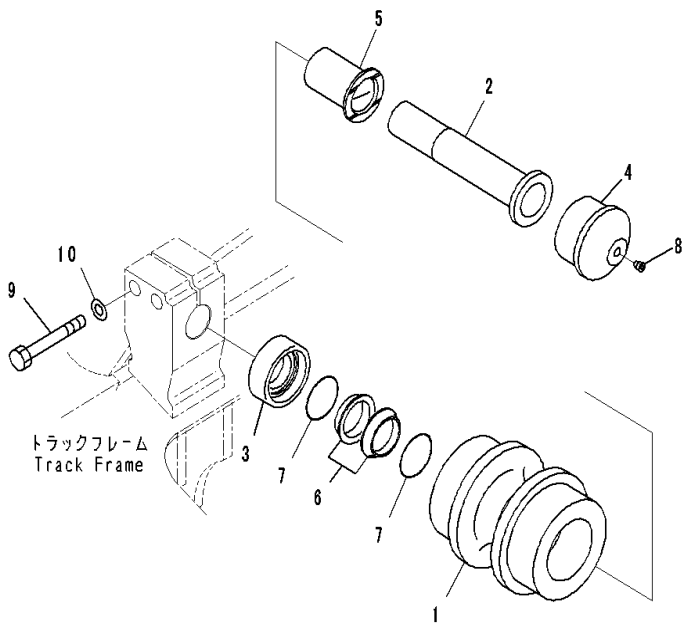

Index	Code	Part Number	Description	Qty	Serial Number
		20Y-30-00670	Carrier Roller Assembly	4	C00001-
1		20Y-30-43510	• Roller	1	C00001-
2		20Y-30-43221	• Shaft	1	C00001-
3		20Y-30-43230	• Ring	1	C00001-
4		20Y-30-43240	• Cover	1	C00001-
5		20Y-30-43250	• Bushing	1	C00001-
		110-30-00086	• Floating Seal Assembly	1	C00001-
6	C1		• • Seal	2	C00001-
7	C1		• • O-ring	2	C00001-
8		20Y-30-16330	• Plug	1	C00001-
9		01010-81680	Bolt	8	C00001-
10		01643-31645	Washer	8	C00001-

FIG. R0500-001001 Track Shoe Assembly (Triple Grouser Shoe, 600mm Width, Grease Sealed Type, Link, 6 Type)

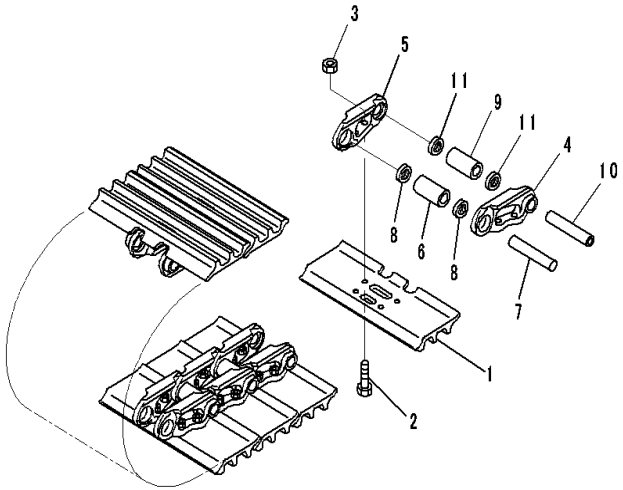

JH102063

Index	Code	Part Number	Description	Qty	Serial Number
		20Y-32-01500	Track Shoe Assembly	1	C00001-
1		20Y-32-21110	• Shoe	90	C00001-
2		20Y-32-31210	• Bolt	360	C00001-
3		154-32-31220	• Nut	360	C00001-
4		20Y-32-11123	• Link	90	C00001-
5		20Y-32-11133	• Link	90	C00001-
6		20Y-32-11141	• Bushing,Regular	88	C00001-
7		20Y-32-11150	• Pin,Regular	88	C00001-
8		20Y-32-11240	• Seal	176	C00001-
9		20Y-32-11171	• Bushing,Master	2	C00001-
10		20Y-32-11190	• Pin,Master	2	C00001-
11		20Y-32-11260	• Seal	4	C00001-

FIG. R0500-002001 Track Shoe Assembly (Triple Grouser Shoe, 600mm Width, Grease Sealed Type, T=8.5mm)

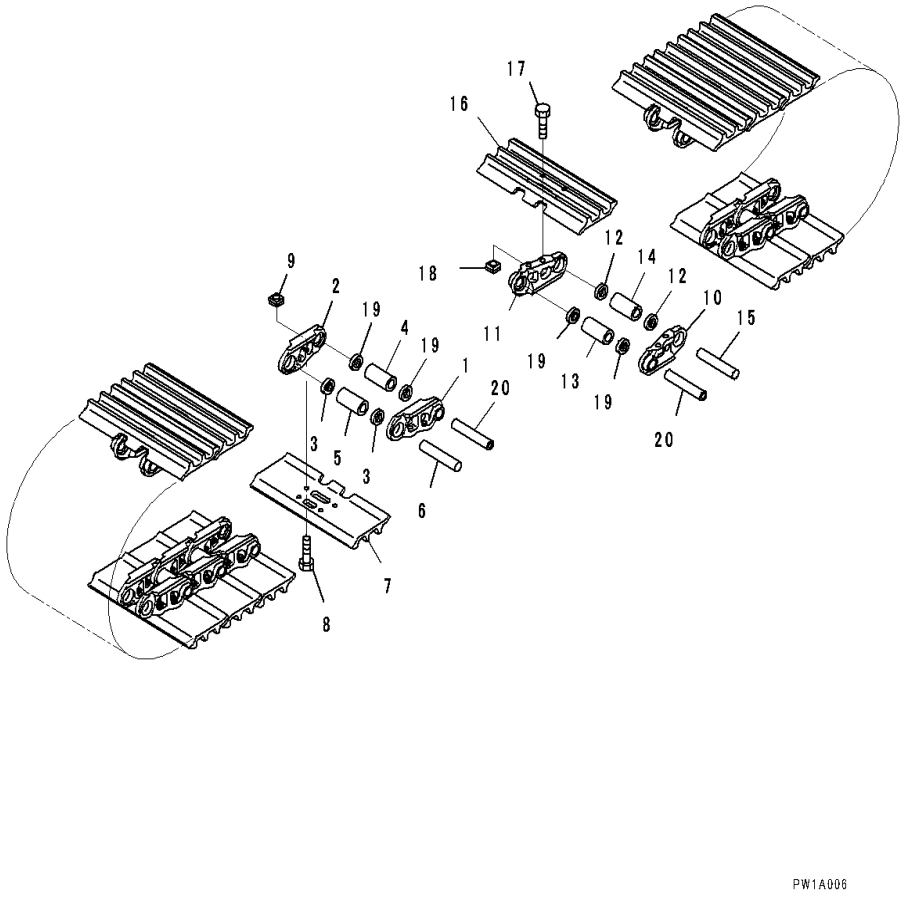

Index	Code	Part Number	Description	Qty	Serial Number
1		20Y-32-31120	Link	44	C00001-
2		20Y-32-31130	Link	44	C00001-
3		20Y-32-11240	Seal	84	C00001-
4		20Y-32-11171	Bushing,Master	2	C00001-
5		20Y-32-11141	Bushing,Regular	42	C00001-
6		20Y-32-31150	Pin,Regular	42	C00001-
7		20Y-32-21110	Shoe	44	C00001-
8		20Y-32-31210	Bolt, (Kit : K02)	176	C00001-
9		134-32-61221	Nut, (Kit : K02)	176	C00001-
10		20Y-32-31120	Link	46	C00001-
11		20Y-32-31130	Link	46	C00001-
12		20Y-32-11240	Seal	88	C00001-
13		20Y-32-11171	Bushing,Master	2	C00001-
14		20Y-32-11141	Bushing,Regular	44	C00001-
15		20Y-32-31150	Pin,Regular	44	C00001-
16		20Y-32-21110	Shoe	46	C00001-
17		20Y-32-31210	Bolt, (Kit : K02)	184	C00001-
18		134-32-61221	Nut, (Kit : K02)	184	C00001-
19		20Y-32-11260	Seal	8	C00001-
20		20Y-32-31190	Pin,Master	4	C00001-

FIG. R0500-003001 Track Shoe Assembly (Triple Grouser Shoe, 700mm Width, Grease Sealed Type, Link, 6Type,LC)

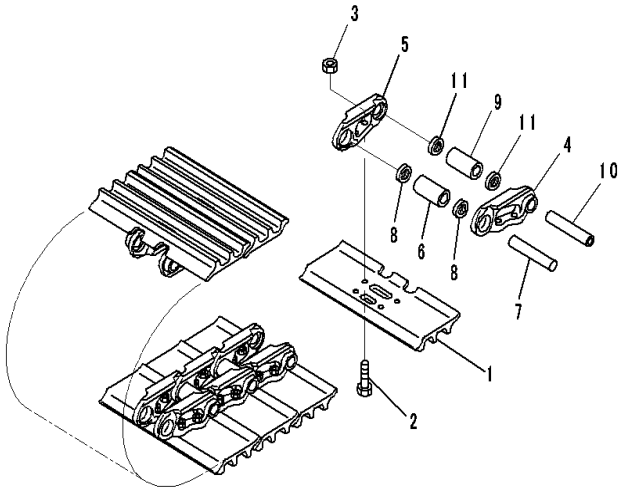

JH102063

Index	Code	Part Number	Description	Qty	Serial Number
		20Y-32-01520	Track Shoe Assembly	1	C00001-
1		20Y-32-31310	• Shoe	98	C00001-
2		20Y-32-31210	• Bolt	392	C00001-
3		154-32-31220	• Nut	392	C00001-
4		20Y-32-11123	• Link	98	C00001-
5		20Y-32-11133	• Link	98	C00001-
6		20Y-32-11141	• Bushing,Regular	96	C00001-
7		20Y-32-11150	• Pin,Regular	96	C00001-
8		20Y-32-11240	• Seal	192	C00001-
9		20Y-32-11171	• Bushing,Master	2	C00001-
10		20Y-32-11190	• Pin,Master	2	C00001-
11		20Y-32-11260	• Seal	4	C00001-

FIG. R0500-004001 Track Shoe Assembly (Triple Grouser Shoe, 800mm Width, Grease Sealed Type, Link, 6 Type)

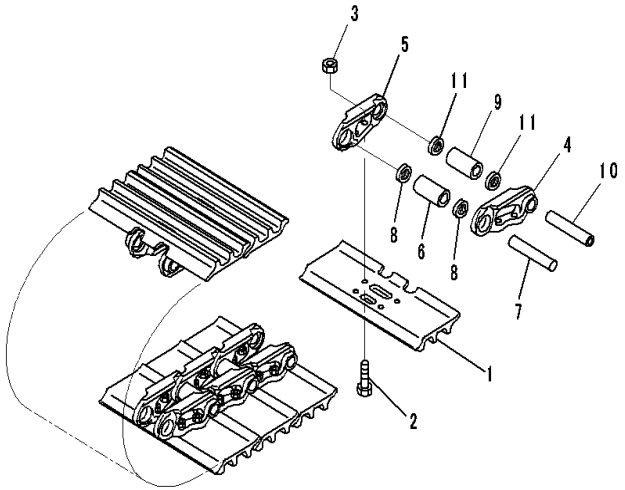

Index	Code	Part Number	Description	Qty	Serial Number
		20Y-32-01510	Track Shoe Assembly	1	C00001-
1		20Y-32-31320	• Shoe	90	C00001-
2		20Y-32-31210	• Bolt	360	C00001-
3		154-32-31220	• Nut	360	C00001-
4		20Y-32-11123	• Link	90	C00001-
5		20Y-32-11133	• Link	90	C00001-
6		20Y-32-11141	• Bushing,Regular	88	C00001-
7		20Y-32-11150	• Pin,Regular	88	C00001-
8		20Y-32-11240	• Seal	176	C00001-
9		20Y-32-11171	• Bushing,Master	2	C00001-
10		20Y-32-11190	• Pin,Master	2	C00001-
11		20Y-32-11260	• Seal	4	C00001-

FIG. R0500-005001 Track Shoe Assembly (Triple Grouser Shoe, 800mm Width, Grease Sealed Type, Link, 6Type,LC)

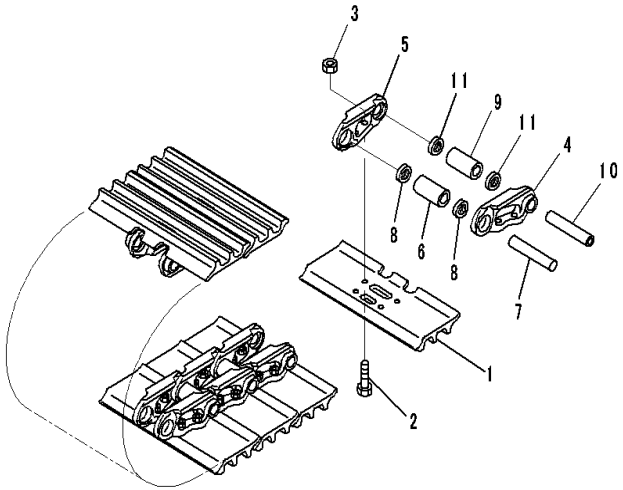

JH102063

Index	Code	Part Number	Description	Qty	Serial Number
		20Y-32-01530	Track Shoe Assembly	1	C00001-
1		20Y-32-31320	• Shoe	98	C00001-
2		20Y-32-31210	• Bolt	392	C00001-
3		154-32-31220	• Nut	392	C00001-
4		20Y-32-11123	• Link	98	C00001-
5		20Y-32-11133	• Link	98	C00001-
6		20Y-32-11141	• Bushing,Regular	96	C00001-
7		20Y-32-11150	• Pin,Regular	96	C00001-
8		20Y-32-11240	• Seal	192	C00001-
9		20Y-32-11171	• Bushing,Master	2	C00001-
10		20Y-32-11190	• Pin,Master	2	C00001-
11		20Y-32-11260	• Seal	4	C00001-

FIG. R0501-001001 Track Link Assembly (Supply Only, 90 Set,Grease Sealed Type)

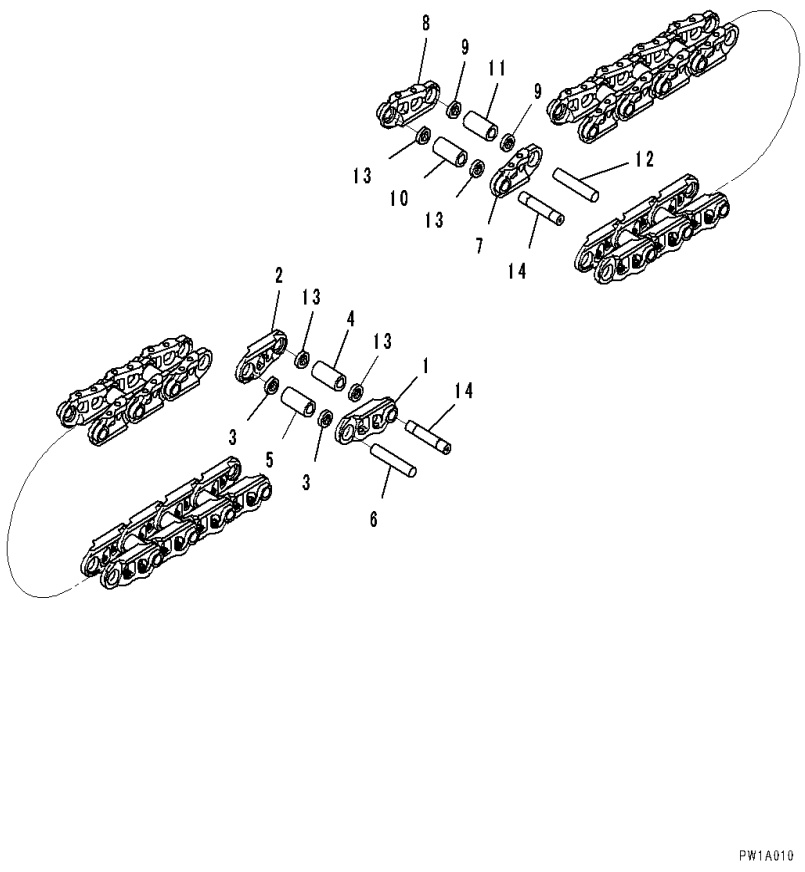

Index	Code	Part Number	Description	Qty	Serial Number
		20Y-32-00300	Track Link Assembly	1	C00001-
1		20Y-32-31120	Link	44	C00001-
2		20Y-32-31130	Link	44	C00001-
3		20Y-32-11240	Seal	84	C00001-
4		20Y-32-11171	Bushing,Master	2	C00001-
5		20Y-32-11141	Bushing,Regular	42	C00001-
6		20Y-32-31150	Pin,Regular	42	C00001-
7		20Y-32-31120	Link	46	C00001-
8		20Y-32-31130	Link	46	C00001-
9		20Y-32-11240	Seal	88	C00001-
10		20Y-32-11171	Bushing,Master	2	C00001-
11		20Y-32-11141	Bushing,Regular	44	C00001-
12		20Y-32-31150	Pin,Regular	44	C00001-
13		20Y-32-11260	Seal	8	C00001-
14		20Y-32-31190	Pin,Master	4	C00001-

FIG. R0501-002001 Track Shoe Assembly (Supply Only, 90 Set,Grease Sealed Type,Link, 6 Type)

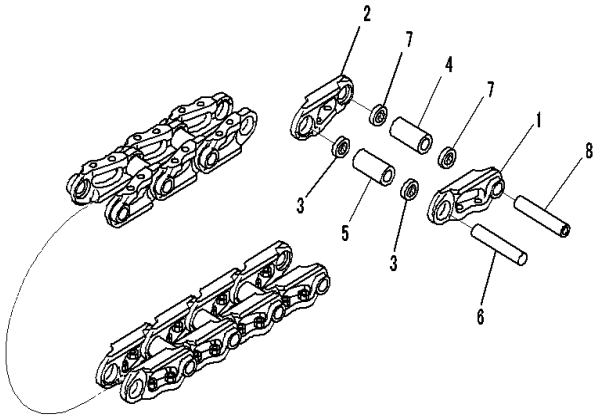

JH102065

Index	Code	Part Number	Description	Qty	Serial Number
		20Y-32-00520	Track Link Assembly	1	C00001-
1		20Y-32-11123	• Link	90	C00001-
2		20Y-32-11133	• Link	90	C00001-
3		20Y-32-11240	• Seal	176	C00001-
4		20Y-32-11171	• Bushing,Master	2	C00001-
5		20Y-32-11141	• Bushing,Regular	88	C00001-
6		20Y-32-11150	• Pin,Regular	88	C00001-
7		20Y-32-11260	• Seal	4	C00001-
8		20Y-32-11190	• Pin,Master	2	C00001-

FIG. R1100-001001 Track Frame (Link, 6 Type)

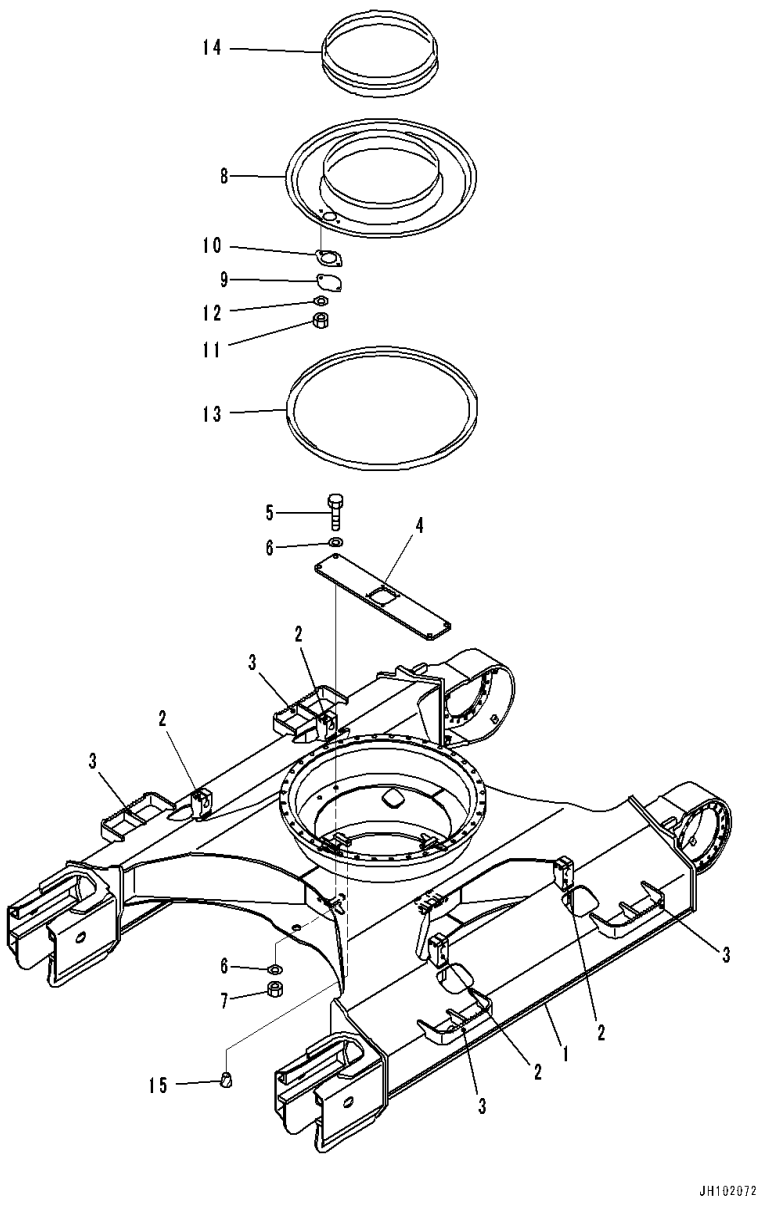

Index	Code	Part Number	Description	Qty	Serial Number
1		20Y-30-56220	Frame	1	C00001-
2		20Y-30-31D24	• Bracket,Welded	4	C00001-
3		20Y-30-44H10	• Plate,Welded	4	C00001-
4		20Y-30-31E81	Plate	1	C00001-
5		01010-82065	Bolt	4	C00001-
6		01643-32060	Washer	8	C00001-
7		01580-12016	Nut	4	C00001-
8		20Y-30-21151	Cover	1	C00001-
9		205-30-71181	Cover	1	C00001-
10		205-30-71191	Gasket	1	C00001-
11		01580-11008	Nut	2	C00001-
12		01643-31032	Washer	2	C00001-
13		20Y-30-56190	Seal	1	C00001-
14		205-30-71171	Seal	1	C00001-
15		07049-01215	Plug	6	C00001-

FIG. R1100-002001 Track Frame (Link, 7 Type)

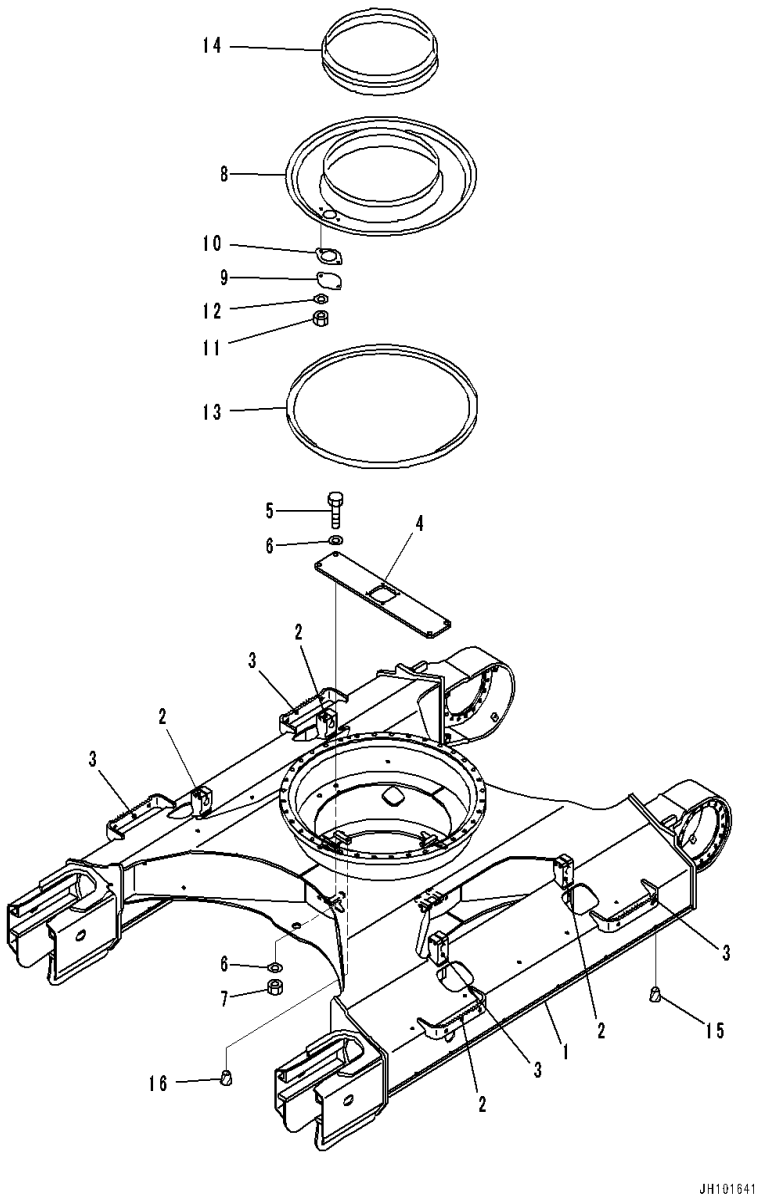

Index	Code	Part Number	Description	Qty	Serial Number
1		20Y-30-56122	Frame	1	C00001-
2		20Y-30-31D24	• Bracket,Welded	4	C00001-
3		20Y-30-44C91	• Plate,Welded	4	C00001-
4		20Y-30-31E81	Plate	1	C00001-
5		01010-82065	Bolt	4	C00001-
6		01643-32060	Washer	8	C00001-
7		01580-12016	Nut	4	C00001-
8		20Y-30-21151	Cover	1	C00001-
9		205-30-71181	Cover	1	C00001-
10		205-30-71191	Gasket	1	C00001-
11		01580-11008	Nut	2	C00001-
12		01643-31032	Washer	2	C00001-
13		20Y-30-56190	Seal	1	C00001-
14		205-30-71171	Seal	1	C00001-
15		07049-02025	Plug	24	C00001-
16		07049-01215	Plug	6	C00001-

FIG. R1100-003001 Track Frame (Link, 6 Type, For LC)

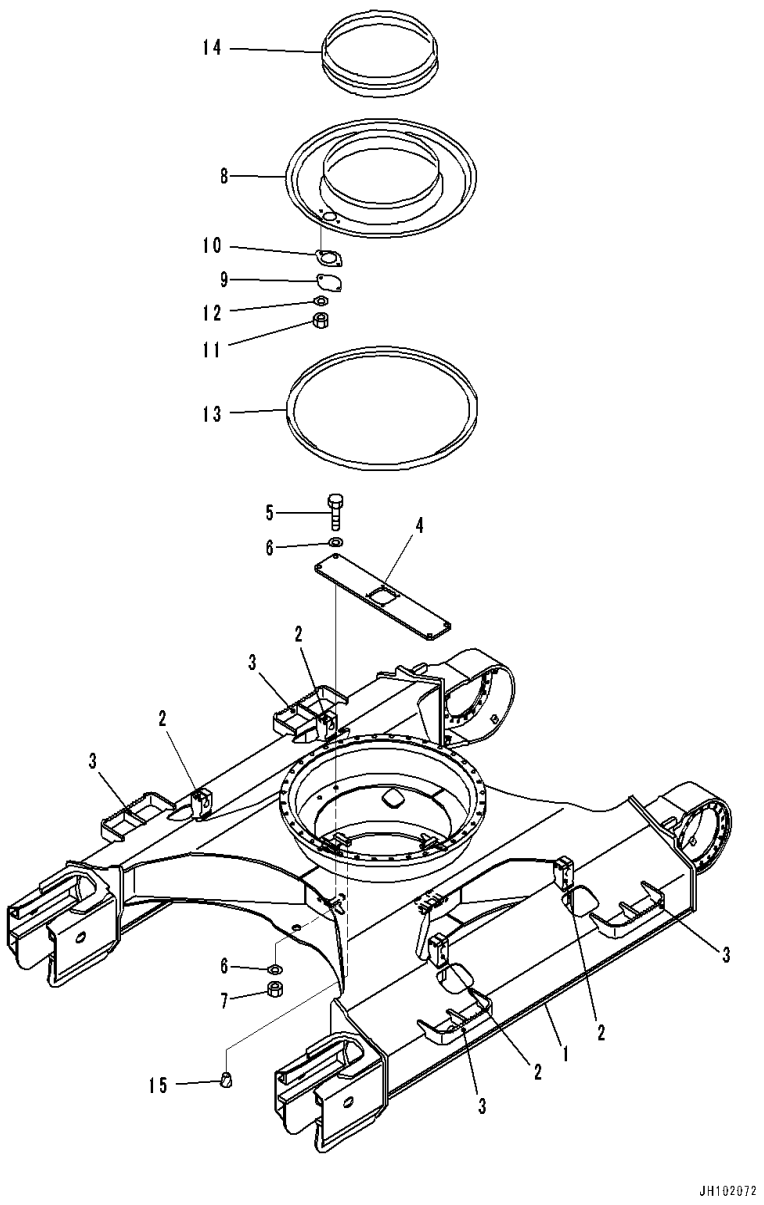

Index	Code	Part Number	Description	Qty	Serial Number
1		20Y-30-56420	Frame	1	C00001-
2		20Y-30-31D24	• Bracket,Welded	4	C00001-
3		20Y-30-44H10	• Plate,Welded	4	C00001-
4		20Y-30-31E81	Plate	1	C00001-
5		01010-82065	Bolt	4	C00001-
6		01643-32060	Washer	8	C00001-
7		01580-12016	Nut	4	C00001-
8		20Y-30-21151	Cover	1	C00001-
9		205-30-71181	Cover	1	C00001-
10		205-30-71191	Gasket	1	C00001-
11		01580-11008	Nut	2	C00001-
12		01643-31032	Washer	2	C00001-
13		20Y-30-56190	Seal	1	C00001-
14		205-30-71171	Seal	1	C00001-
15		07049-01215	Plug	6	C00001-

FIG. R1140-001001 Track Frame Under Cover

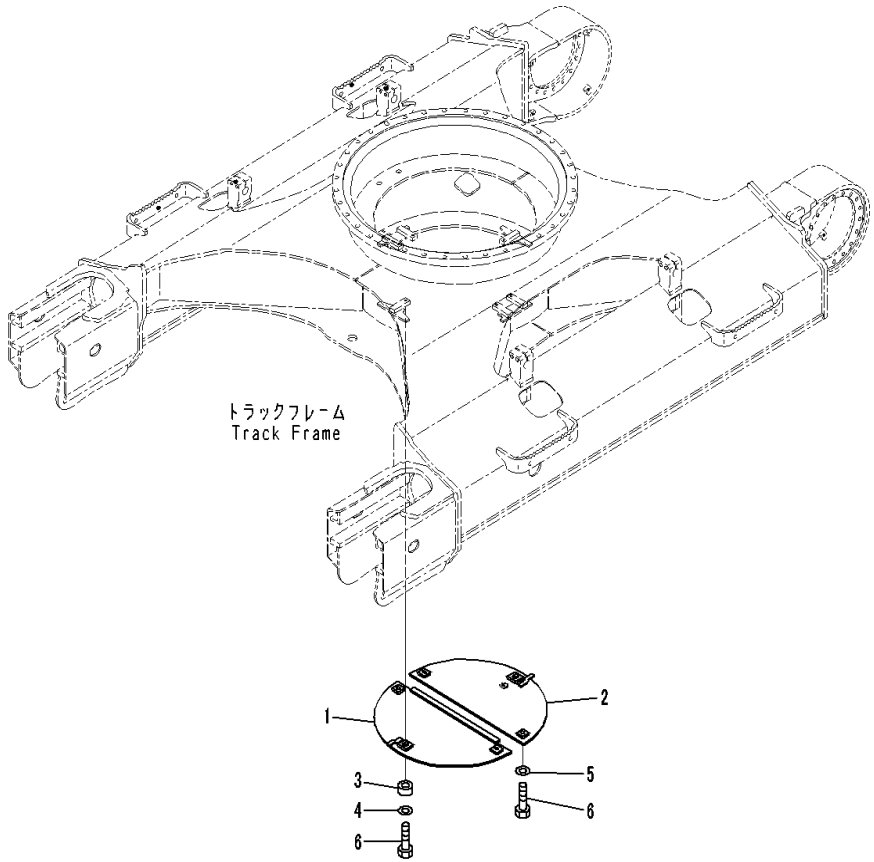

Index	Code	Part Number	Description	Qty	Serial Number
1		21K-30-41231	Cover	1	C00001-
2		21K-30-41241	Cover	1	C00001-
3		21K-30-41251	Collar	2	C00001-
4		419-43-17920	Washer	2	C00001-
5		20Y-54-12670	Washer	4	C00001-
6		01010-81235	Bolt	6	C00001-

FIG. R1200-001001 Track Roller Guard (Link, 6 Type)

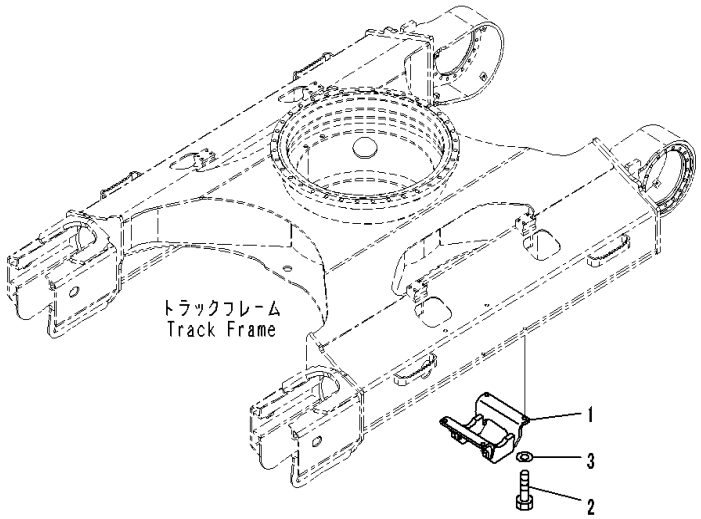

PW1F740

Index	Code	Part Number	Description	Qty	Serial Number
1		20Y-30-11312	Guard	2	C00001-
2		01010-62050	Bolt	8	C00001-
3		01643-32060	Washer	8	C00001-

FIG. R1200-002001 Track Roller Guard (Link, 7Type)

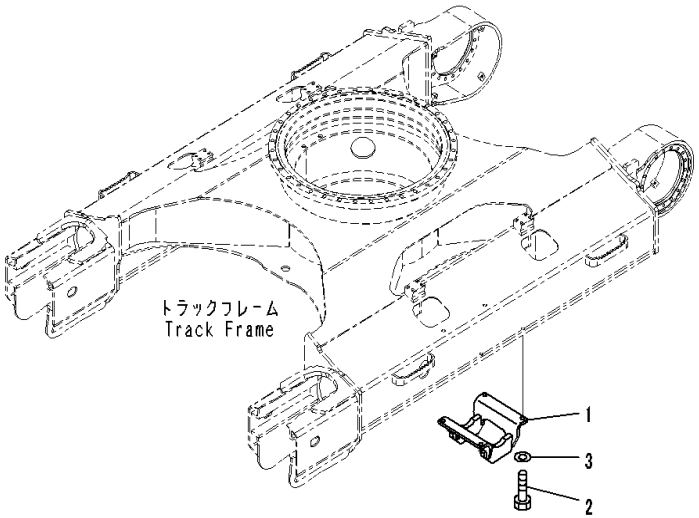

Index	Code	Part Number	Description	Qty	Serial Number
1		20Y-30-31160	Guard	2	C00001-
2		01010-62050	Bolt	8	C00001-
3		01643-32060	Washer	8	C00001-

FIG. R1200-003001 Track Roller Guard (Link, 6 Type, For LC)

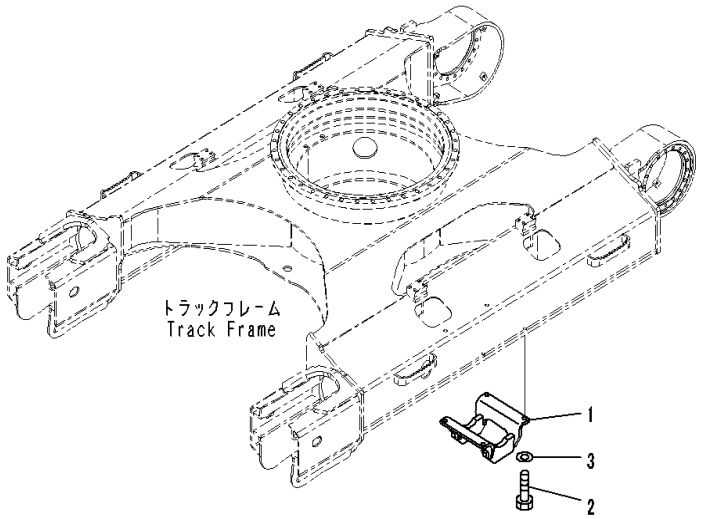

Index	Code	Part Number	Description	Qty	Serial Number
1		20Y-30-11312	Guard	4	C00001-
2		01010-62050	Bolt	16	C00001-
3		01643-32060	Washer	16	C00001-

WORK EQUIPMENT

FIG. T1110-001001 Boom (5700mm Heavy Duty Type) (Boom and Bushing)

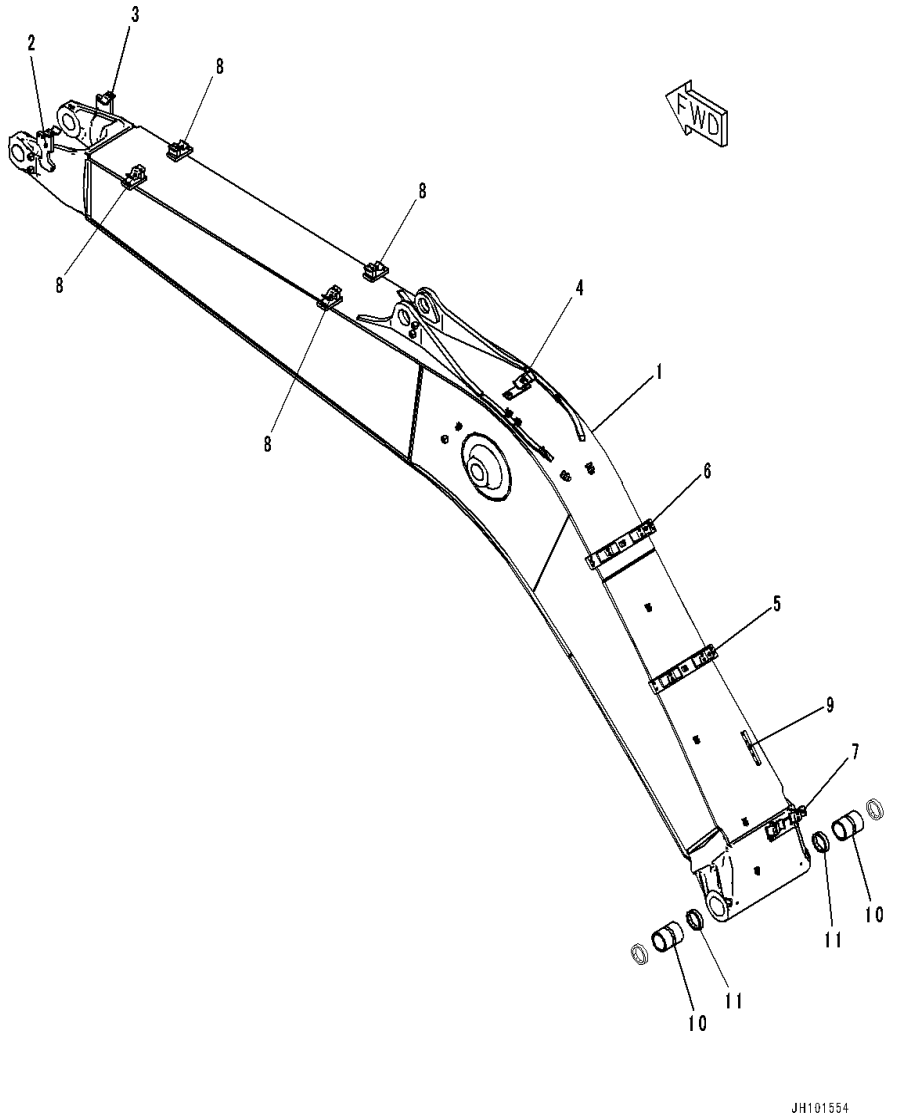

Index	Code	Part Number	Description	Qty	Serial Number
1		20Y-70-56610	Boom	1	C00001-
2		22U-62-34140	• Bracket,Welded	1	C00001-
3		205-62-21180	• Bracket,Welded	1	C00001-
4		20Y-62-45172	• Bracket,Welded	1	C00001-
5		2A5-62-28270	• Bracket,Welded	1	C00001-
6		2A5-62-28280	• Bracket,Welded	1	C00001-
7		20Y-62-57340	• Bracket,Welded	1	C00001-
8		2A5-62-13140	• Bracket,Welded	4	C00001-
9		2A5-70-11130	• Plate,Welded	1	C00001-
10		20Y-70-31512	Bushing	2	C00001-
11		07145-00090	Seal, Dust	2	C00001-

FIG. T1110-001002 Boom (100 Hours Lubrication Interval) (Top Pin and Bottom Pin)

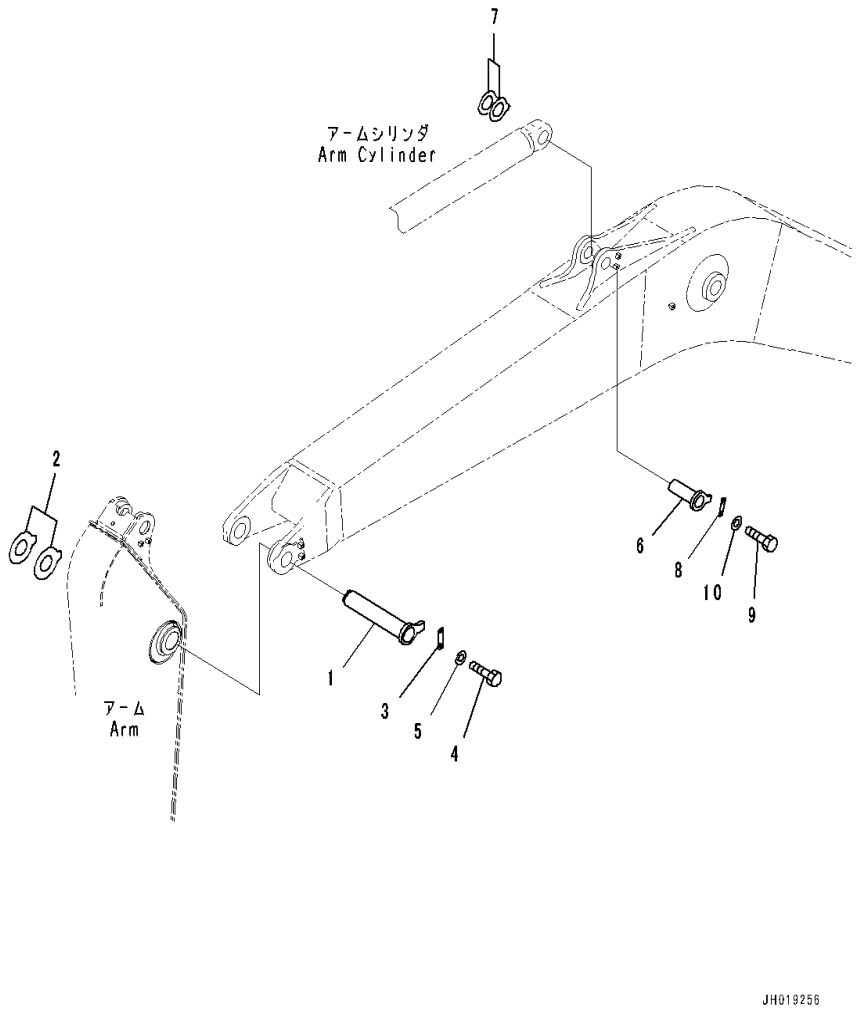

Index	Code	Part Number	Description	Qty	Serial Number
1		205-70-65682	Pin	1	C00001-
2		20Y-70-11360	Spacer,T=0.8mm	1	C00001-
		206-70-45210	Spacer,T=1.5mm	3	C00001-
3		205-70-71312	Plate	1	C00001-
4		01010-81235	Bolt	2	C00001-
5		01643-31232	Washer	2	C00001-
6		20Y-70-41250	Pin	1	C00001-
7		20Y-70-11340	Spacer,T=0.8mm	1	C00001-
		205-70-51530	Spacer,T=1.5mm	3	C00001-
8		205-70-66581	Plate	1	C00001-
9		01010-81230	Bolt	2	C00001-
10		01643-31232	Washer	2	C00001-

FIG. T1110-001003 Boom (Arm Cylinder Piping)

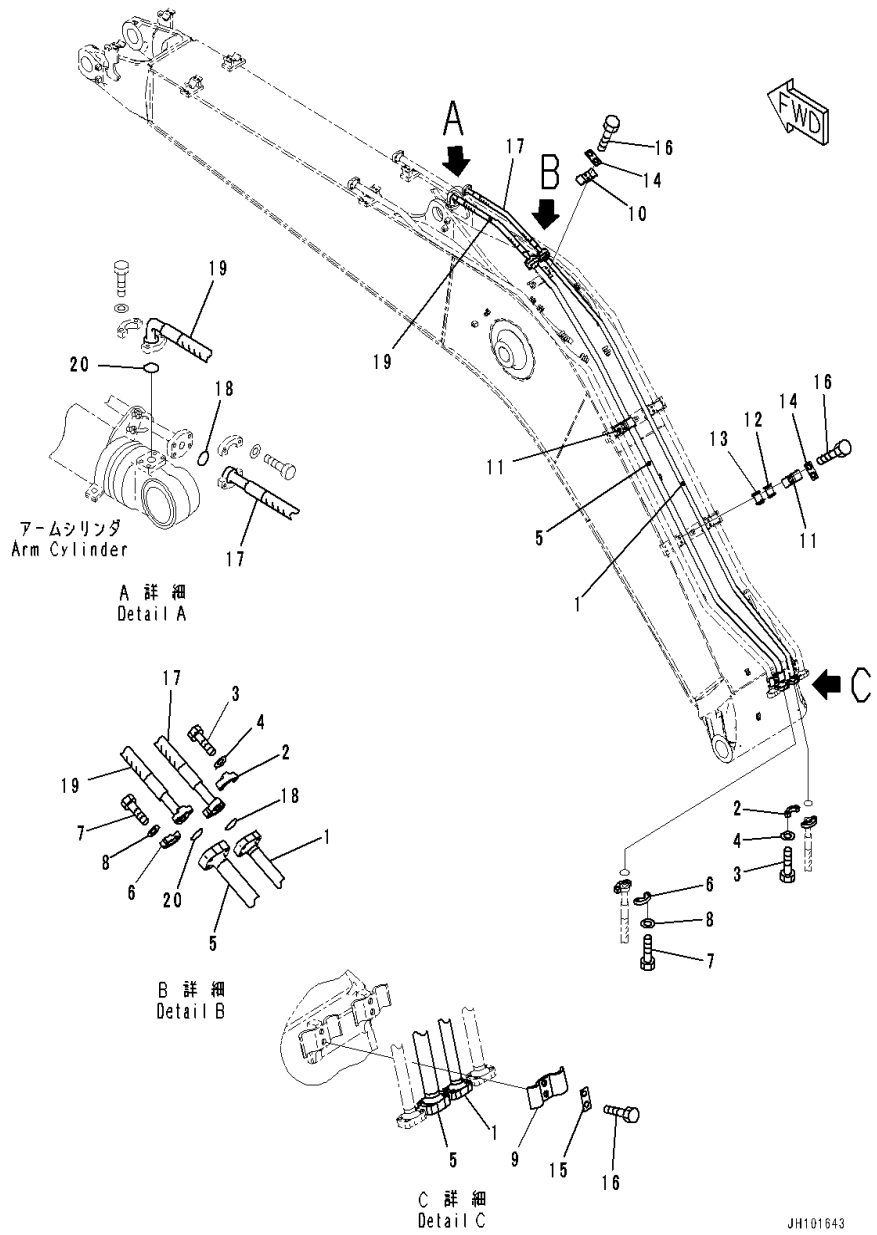

Index	Code	Part Number	Description	Qty	Serial Number
1		20Y-62-57380	Tube	1	C00001-
2		07371-30640	Flange, Split	4	C00001-
3		07372-21035	Bolt	8	C00001-
4		01643-51032	Washer	8	C00001-
5		20Y-62-57371	Tube	1	C00001-
6		07371-31049	Flange, Split	4	C00001-
7		07372-21035	Bolt	8	C00001-
8		01643-51032	Washer	8	C00001-
9		207-62-31340	Clamp	1	C00001-
10		20Y-62-13720	Clamp	1	C00001-
11		207-62-54780	Clamp	2	C00001-
12		205-62-73431	Seat	2	C00001-
13		20Y-62-13761	Seat	2	C00001-
14		20Y-62-13450	Plate	3	C00001-
15		2A5-62-19710	Plate	1	C00001-
16		01010-81230	Bolt	8	C00001-
17		07085-006A7	Hose, Flange Type	1	C00001-
18		07000-13025	O-ring	2	C00001-
19		20Y-62-53750	Hose	1	C00001-
20		07000-13032	O-ring	2	C00001-

FIG. T1110-001004 Boom (Bucket Cylinder Piping)

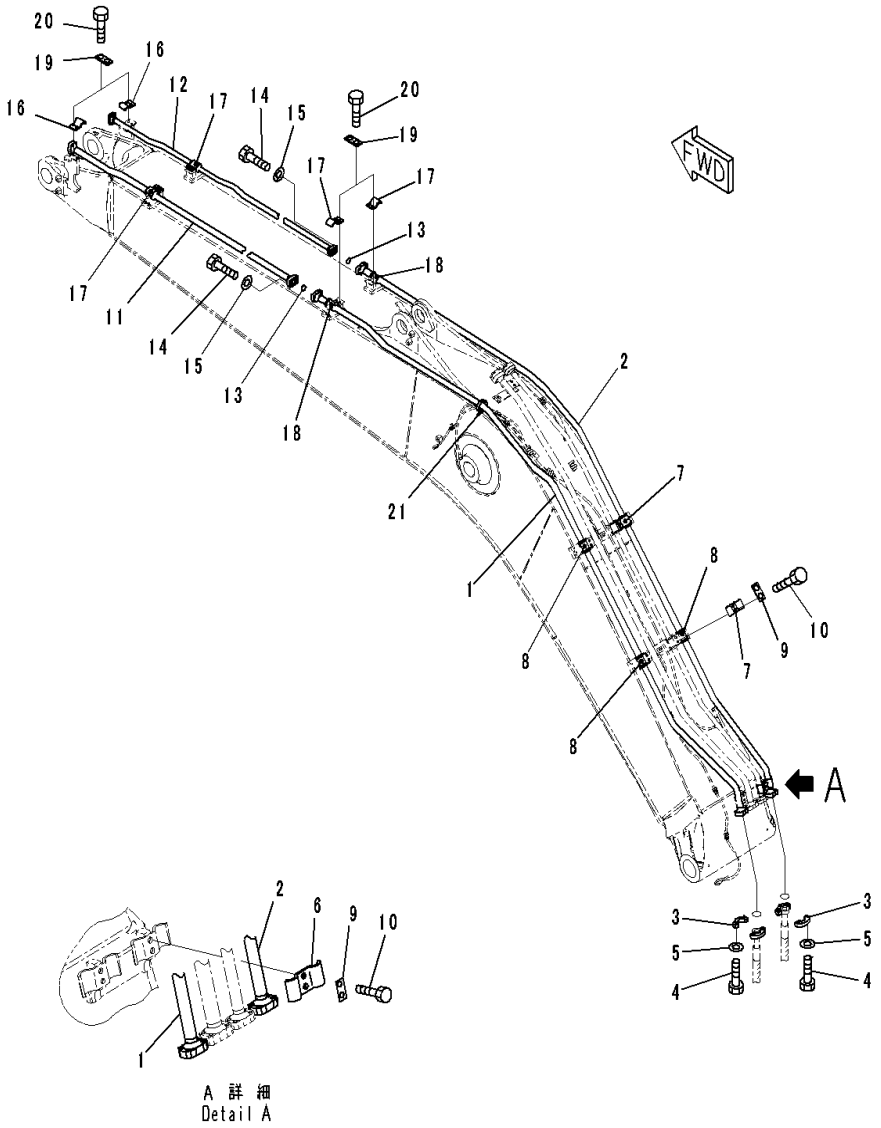

Index	Code	Part Number	Description	Qty	Serial Number
1		20Y-62-57361	Tube	1	C00001-
2		20Y-62-57391	Tube	1	C00001-
3		07371-31049	Flange, Split	4	C00001-
4		07372-21035	Bolt	8	C00001-
5		01643-51032	Washer	8	C00001-
6		20Y-62-13690	Clamp	1	C00001-
7		20Y-62-13730	Clamp	2	C00001-
8		205-62-73431	Seat	4	C00001-
9		20Y-62-13450	Plate	3	C00001-
10		01010-81230	Bolt	6	C00001-
11		2A6-62-11150	Tube	1	C00001-
12		2A5-62-28160	Tube	1	C00001-
13		07000-13035	O-ring	2	C00001-
14		07372-21040	Bolt	8	C00001-
15		01643-51032	Washer	8	C00001-
16		207-62-31330	Clamp	2	C00001-
17		207-62-52350	Clamp	4	C00001-
18		205-62-73431	Seat	4	C00001-
19		20Y-62-13450	Plate	6	C00001-
20		01010-81230	Bolt	12	C00001-
21		08034-20519	Band	1	C00001-

FIG. T1110-001005 Boom (Lubrication Piping)

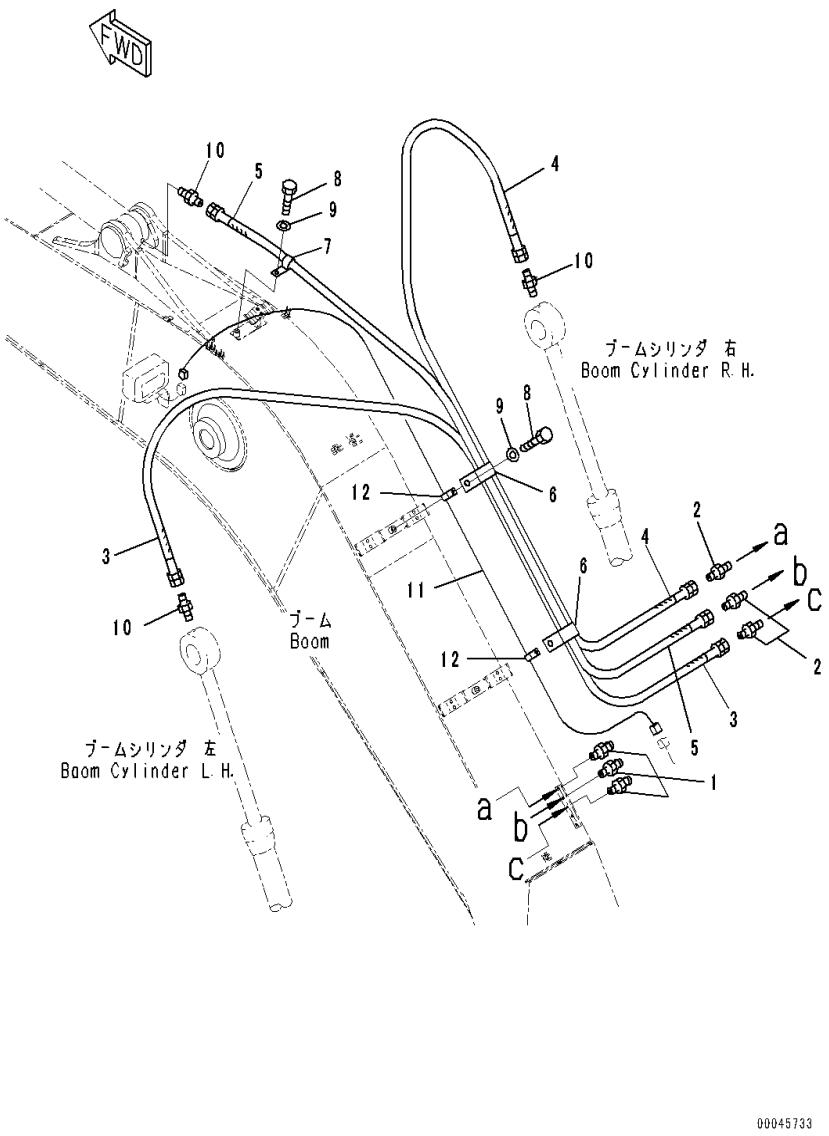

Index	Code	Part Number	Description	Qty	Serial Number
1		07020-00000	Fitting, Grease	3	C00001-
2		205-70-51390	Nipple	3	C00001-
3		20Y-70-31330	Hose	1	C00001-
4		20Y-70-41230	Hose	1	C00001-
5		20Y-70-41240	Hose	1	C00001-
6		04434-52112	Clip	2	C00001-
7		04434-51012	Clip	1	C00001-
8		01010-81220	Bolt	3	C00001-
9		01643-31232	Washer	3	C00001-
10		205-70-51390	Nipple	3	C00001-
11		20Y-06-41161	Wiring Harness	1	C00001-
12		04434-51012	Clip	2	C00001-

FIG. T1110-001006 Boom (Attachment Plug)

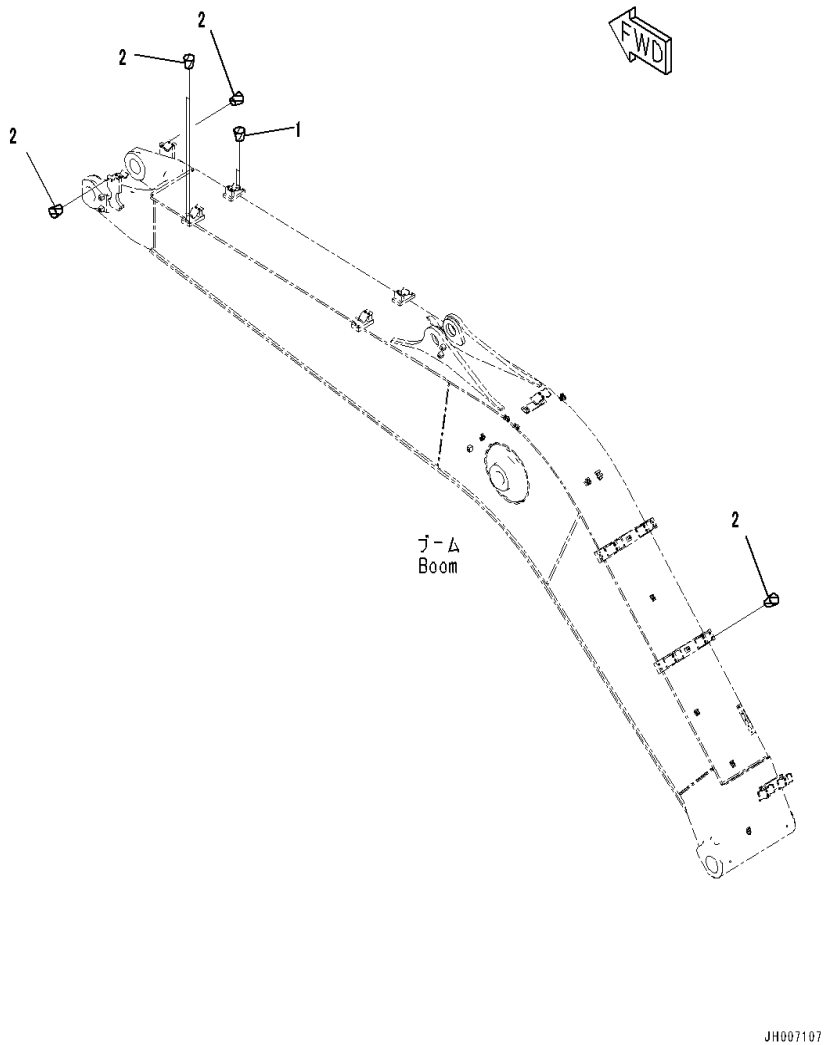

Index	Code	Part Number	Description	Qty	Serial Number
1		07049-01012	Plug	12	C00001-
2		07049-01215	Plug	20	C00001-

FIG. T1110-001007 Boom (Working Lamp)

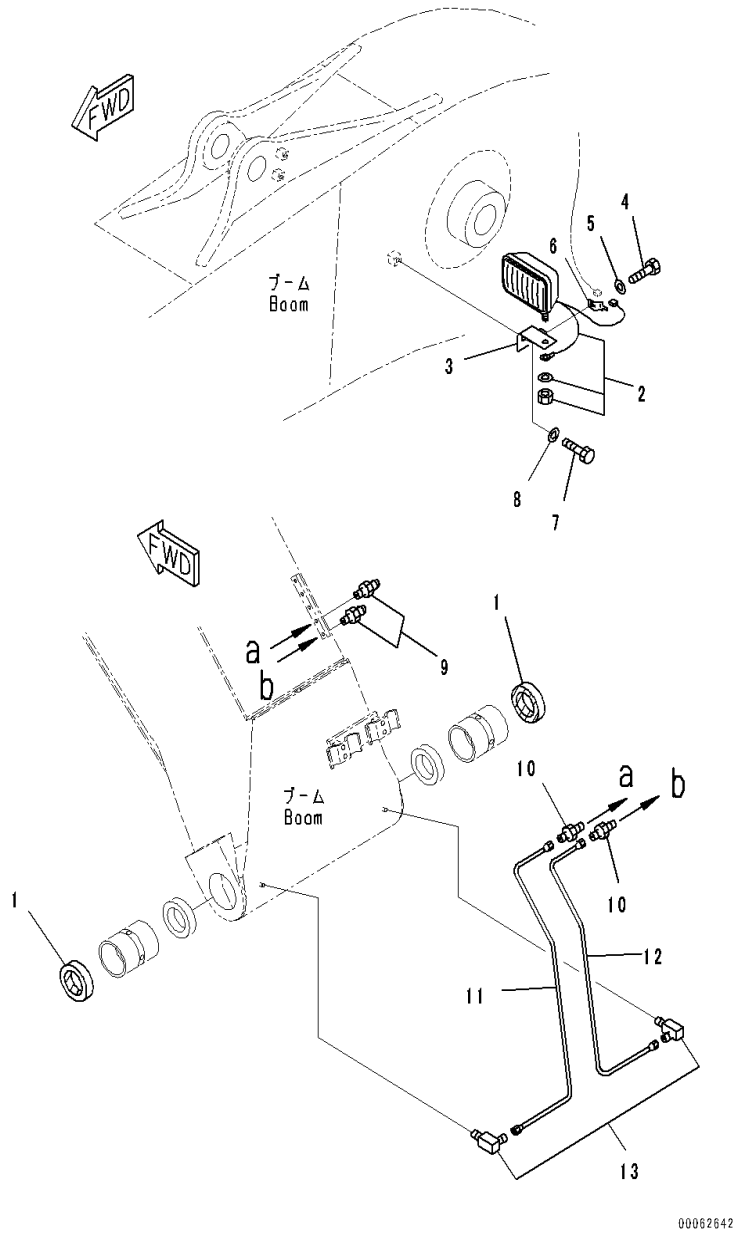

Index	Code	Part Number	Description	Qty	Serial Number
1		07145-00090	Seal, Dust	2	C00001-
2		20Y-06-43230	Working Lamp Assembly	1	C00001-
		421-06-23330	• Bulb,70watt	1	C00001-
3		20Y-06-21551	Bracket	1	C00001-
4		01010-81220	Bolt	1	C00001-
5		01643-31232	Washer	1	C00001-
6		08193-21012	Clip	1	C00001-
7		01010-81230	Bolt	1	C00001-
8		01643-31232	Washer	1	C00001-
9		07020-00000	Fitting, Grease	2	C00001-
10		20Y-70-11540	Connector	2	C00001-
11		20Y-70-57161	Tube	1	C00001-
12		20Y-70-57171	Tube	1	C00001-
13		20Y-25-11270	Elbow	2	C00001-

FIG. T1110-002001 Boom (5700mm Heavy Duty Type) (Boom and Bushing)

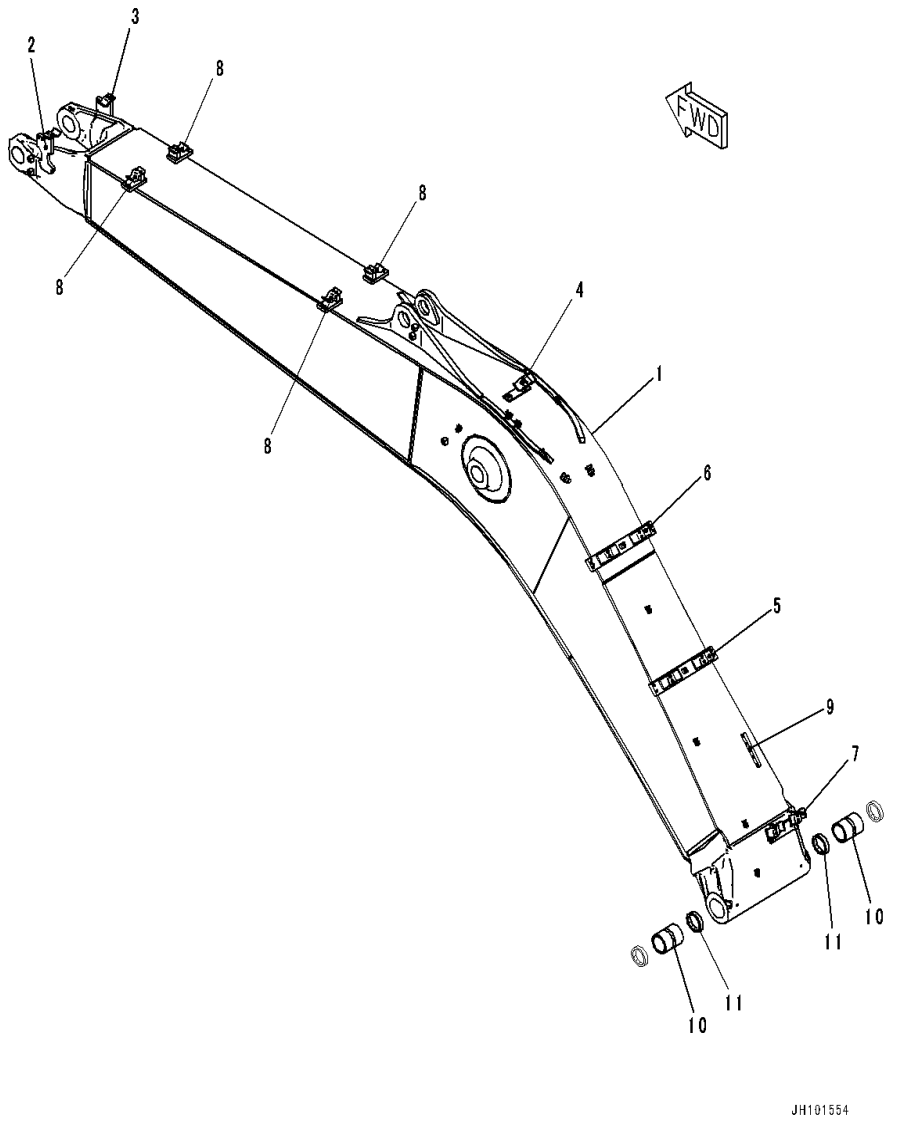

Index	Code	Part Number	Description	Qty	Serial Number
1		20Y-70-56610	Boom	1	C00001-
2		22U-62-34140	• Bracket,Welded	1	C00001-
3		205-62-21180	• Bracket,Welded	1	C00001-
4		20Y-62-45172	• Bracket,Welded	1	C00001-
5		2A5-62-28270	• Bracket,Welded	1	C00001-
6		2A5-62-28280	• Bracket,Welded	1	C00001-
7		20Y-62-57340	• Bracket,Welded	1	C00001-
8		2A5-62-13140	• Bracket,Welded	4	C00001-
9		2A5-70-11130	• Plate,Welded	1	C00001-
10		20Y-70-31512	Bushing	2	C00001-
11		07145-00090	Seal, Dust	2	C00001-

FIG. T1110-002002 Boom (100 Hours Lubrication Interval) (Top Pin and Bottom Pin)

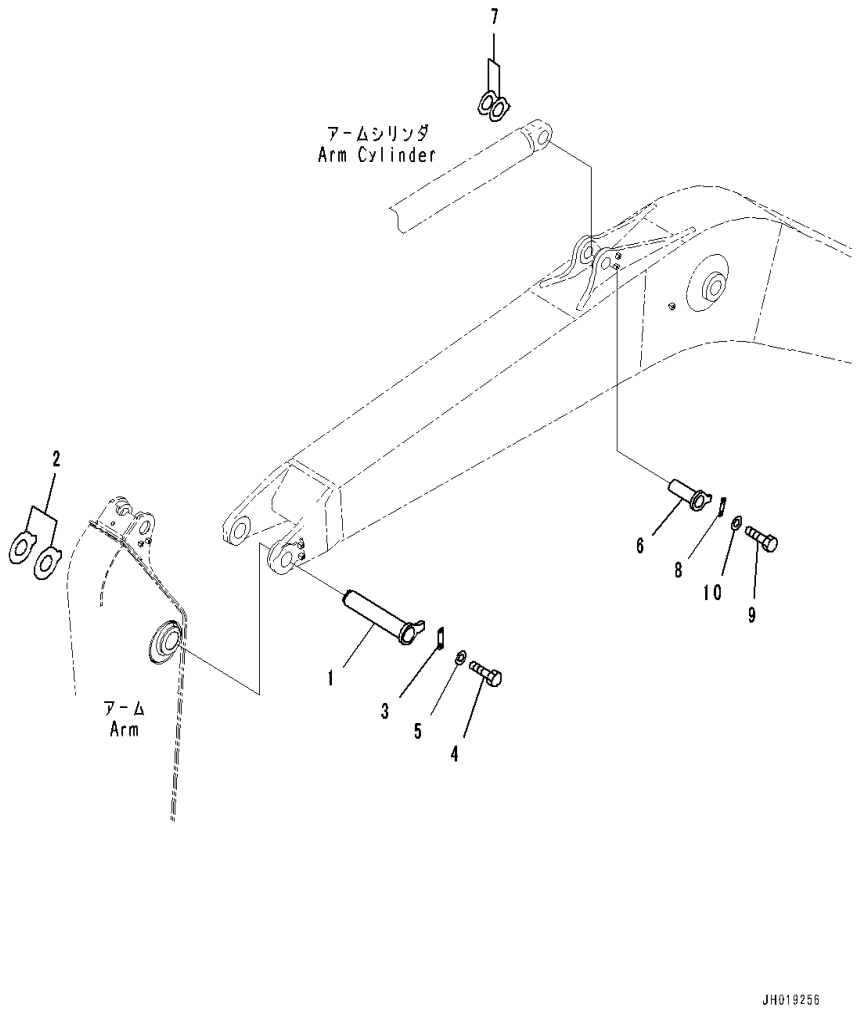

Index	Code	Part Number	Description	Qty	Serial Number
1		205-70-65682	Pin	1	C00001-
2		20Y-70-11360	Spacer,T=0.8mm	1	C00001-
		206-70-45210	Spacer,T=1.5mm	3	C00001-
3		205-70-71312	Plate	1	C00001-
4		01010-81235	Bolt	2	C00001-
5		01643-31232	Washer	2	C00001-
6		20Y-70-41250	Pin	1	C00001-
7		20Y-70-11340	Spacer,T=0.8mm	1	C00001-
		205-70-51530	Spacer,T=1.5mm	3	C00001-
8		205-70-66581	Plate	1	C00001-
9		01010-81230	Bolt	2	C00001-
10		01643-31232	Washer	2	C00001-

FIG. T1110-002003 Boom (Arm Cylinder Piping)

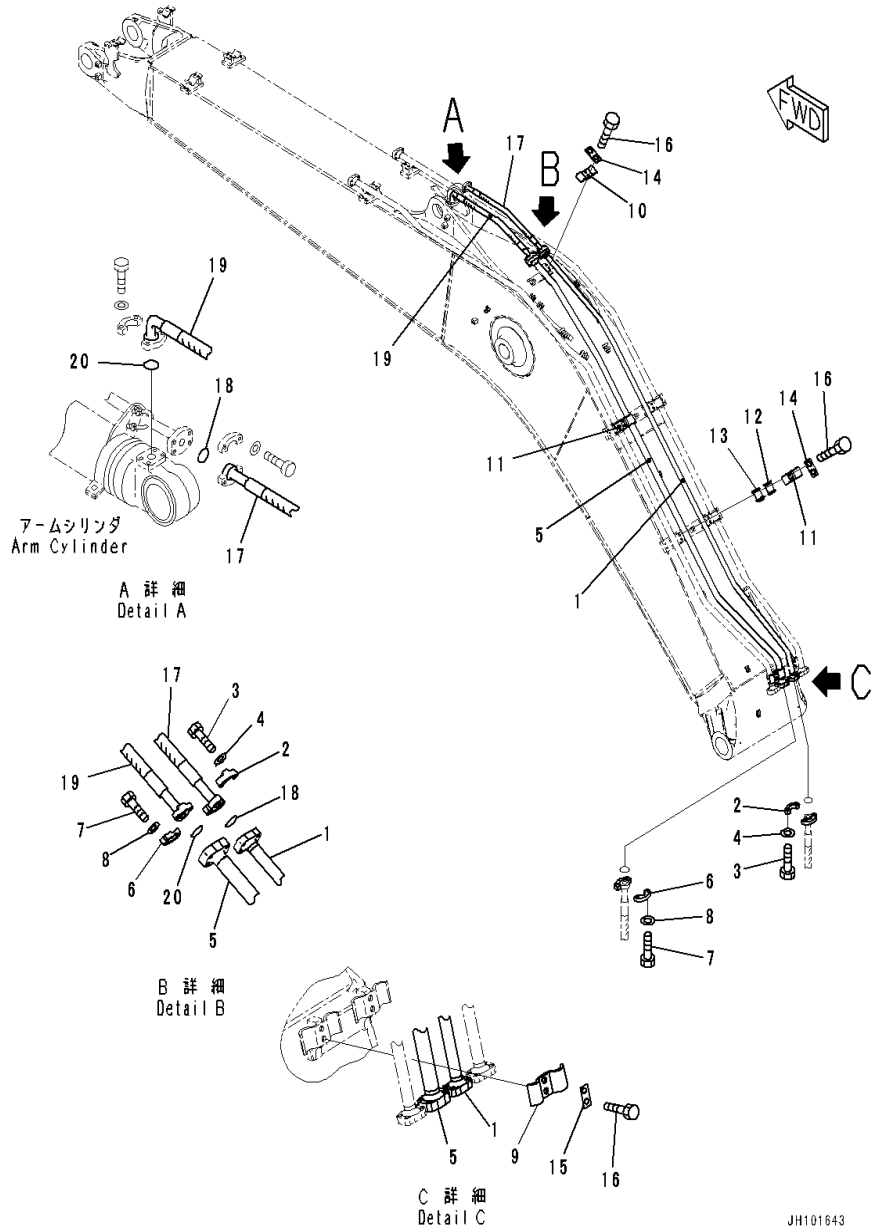

Index	Code	Part Number	Description	Qty	Serial Number
1		20Y-62-57380	Tube	1	C00001-
2		07371-30640	Flange, Split	4	C00001-
3		07372-21035	Bolt	8	C00001-
4		01643-51032	Washer	8	C00001-
5		20Y-62-57371	Tube	1	C00001-
6		07371-31049	Flange, Split	4	C00001-
7		07372-21035	Bolt	8	C00001-
8		01643-51032	Washer	8	C00001-
9		207-62-31340	Clamp	1	C00001-
10		20Y-62-13720	Clamp	1	C00001-
11		207-62-54780	Clamp	2	C00001-
12		205-62-73431	Seat	2	C00001-
13		20Y-62-13761	Seat	2	C00001-
14		20Y-62-13450	Plate	3	C00001-
15		2A5-62-19710	Plate	1	C00001-
16		01010-81230	Bolt	8	C00001-
17		07085-006A7	Hose, Flange Type	1	C00001-
18		07000-13025	O-ring	2	C00001-
19		20Y-62-53750	Hose	1	C00001-
20		07000-13032	O-ring	2	C00001-

FIG. T1110-002004 Boom (Bucket Cylinder Piping)

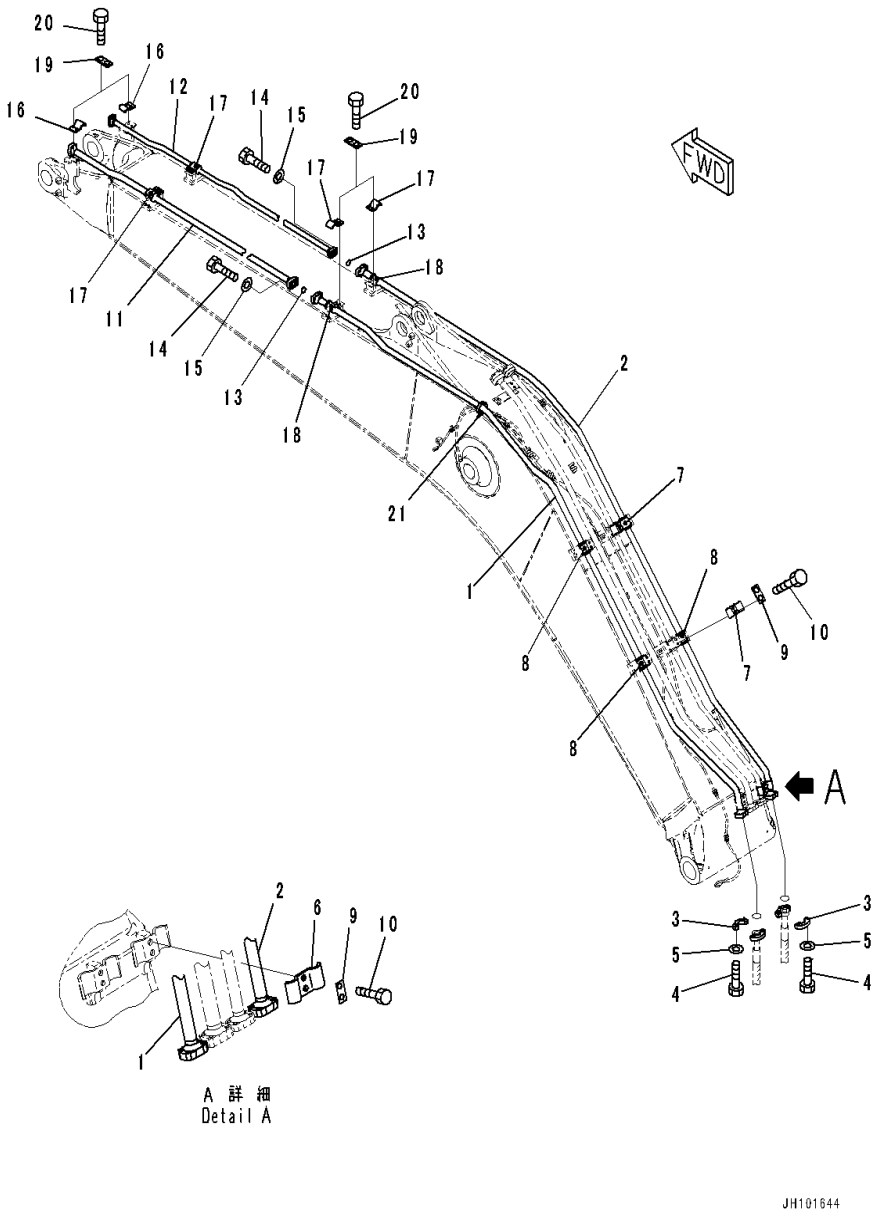

Index	Code	Part Number	Description	Qty	Serial Number
1		20Y-62-57361	Tube	1	C00001-
2		20Y-62-57391	Tube	1	C00001-
3		07371-31049	Flange, Split	4	C00001-
4		07372-21035	Bolt	8	C00001-
5		01643-51032	Washer	8	C00001-
6		20Y-62-13690	Clamp	1	C00001-
7		20Y-62-13730	Clamp	2	C00001-
8		205-62-73431	Seat	4	C00001-
9		20Y-62-13450	Plate	3	C00001-
10		01010-81230	Bolt	6	C00001-
11		2A6-62-11150	Tube	1	C00001-
12		2A5-62-28160	Tube	1	C00001-
13		07000-13035	O-ring	2	C00001-
14		07372-21040	Bolt	8	C00001-
15		01643-51032	Washer	8	C00001-
16		207-62-31330	Clamp	2	C00001-
17		207-62-52350	Clamp	4	C00001-
18		205-62-73431	Seat	4	C00001-
19		20Y-62-13450	Plate	6	C00001-
20		01010-81230	Bolt	12	C00001-
21		08034-20519	Band	1	C00001-

FIG. T1110-002005 Boom (Lubrication Piping)

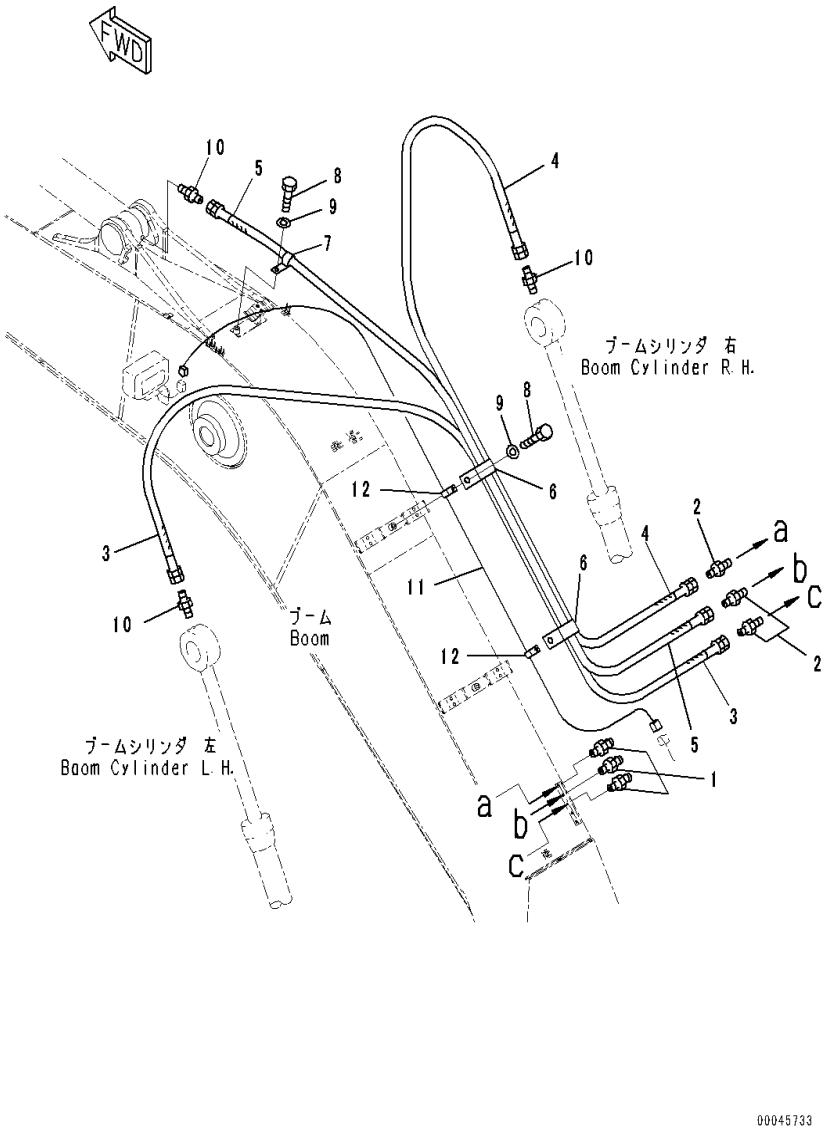

Index	Code	Part Number	Description	Qty	Serial Number
1		07020-00000	Fitting, Grease	3	C00001-
2		205-70-51390	Nipple	3	C00001-
3		20Y-70-31330	Hose	1	C00001-
4		20Y-70-41230	Hose	1	C00001-
5		20Y-70-41240	Hose	1	C00001-
6		04434-52112	Clip	2	C00001-
7		04434-51012	Clip	1	C00001-
8		01010-81220	Bolt	3	C00001-
9		01643-31232	Washer	3	C00001-
10		205-70-51390	Nipple	3	C00001-
11		20Y-06-41161	Wiring Harness	1	C00001-
12		04434-51012	Clip	2	C00001-

FIG. T1110-002006 Boom (Additional Piping)

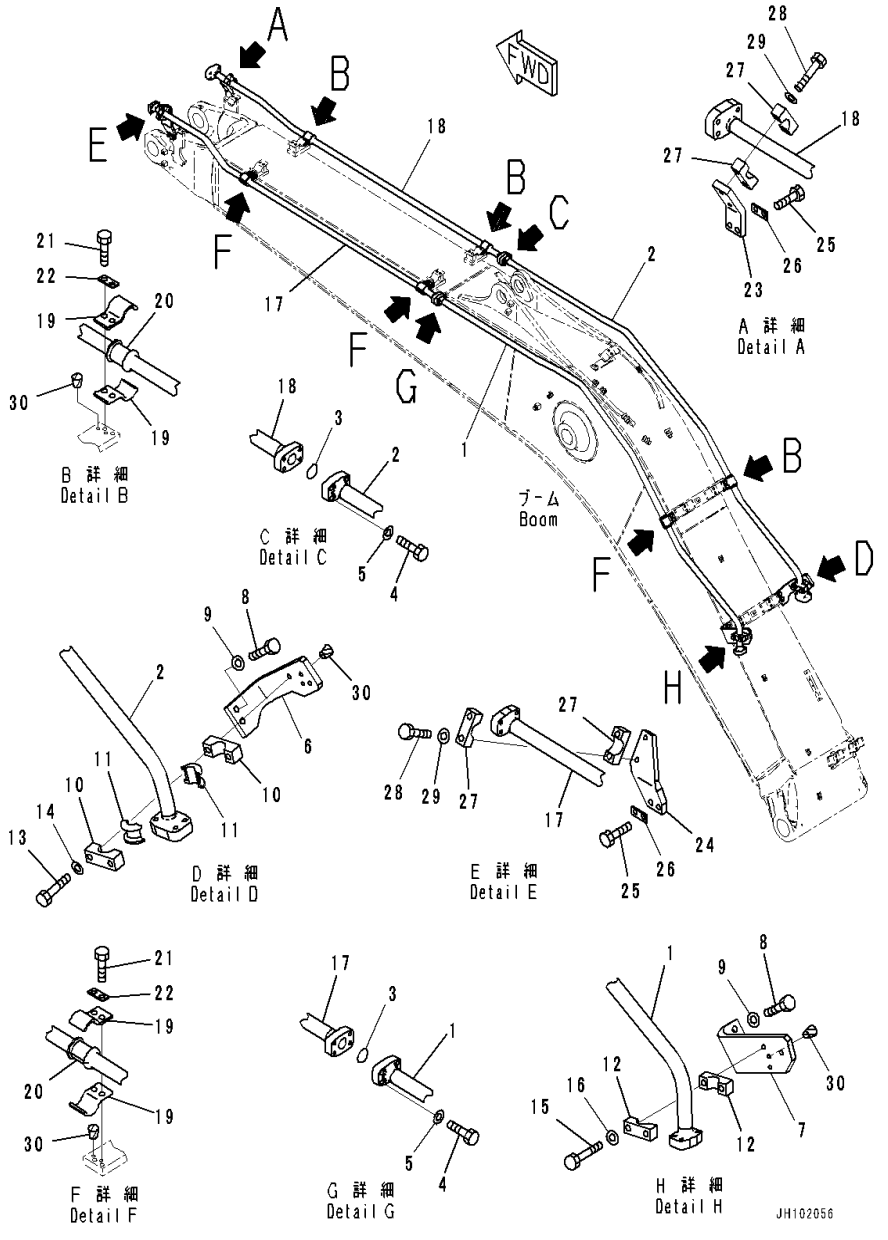

Index	Code	Part Number	Description	Qty	Serial Number
1		20Y-62-57471	Tube	1	C00001-
2		20Y-62-57481	Tube	1	C00001-
3		07000-13035	O-ring	2	C00001-
4		07372-21040	Bolt	8	C00001-
5		01643-51032	Washer	8	C00001-
6		20Y-62-57271	Bracket	1	C00001-
7		20Y-62-57280	Bracket	1	C00001-
8		01010-81240	Bolt	4	C00001-
9		01643-31232	Washer	4	C00001-
10		21N-62-13490	Clamp	2	C00001-
11		205-62-54622	• Seat	1	C00001-
12		20Y-62-52671	Clamp	2	C00001-
13		01010-81285	Bolt	2	C00001-
14		01643-31232	Washer	2	C00001-
15		01010-81275	Bolt	2	C00001-
16		01643-31232	Washer	2	C00001-
17		2A5-62-13261	Tube	1	C00001-
18		2A5-62-13251	Tube	1	C00001-
19		20Y-62-52680	Clamp	12	C00001-
20		205-62-73431	Seat	6	C00001-
21		01010-81230	Bolt	12	C00001-
22		20Y-62-13450	Plate	6	C00001-
23		20Y-62-45382	Bracket	1	C00001-
24		20Y-62-54550	Bracket	1	C00001-
25		01010-81235	Bolt	4	C00001-
26		20Y-62-13450	Plate	2	C00001-
27		20Y-62-54560	Clamp	4	C00001-
28		01010-81275	Bolt	4	C00001-
29		01643-31232	Washer	4	C00001-
30		07049-01012	Plug	16	C00001-

FIG. T1110-002007 Boom (Working Lamp)

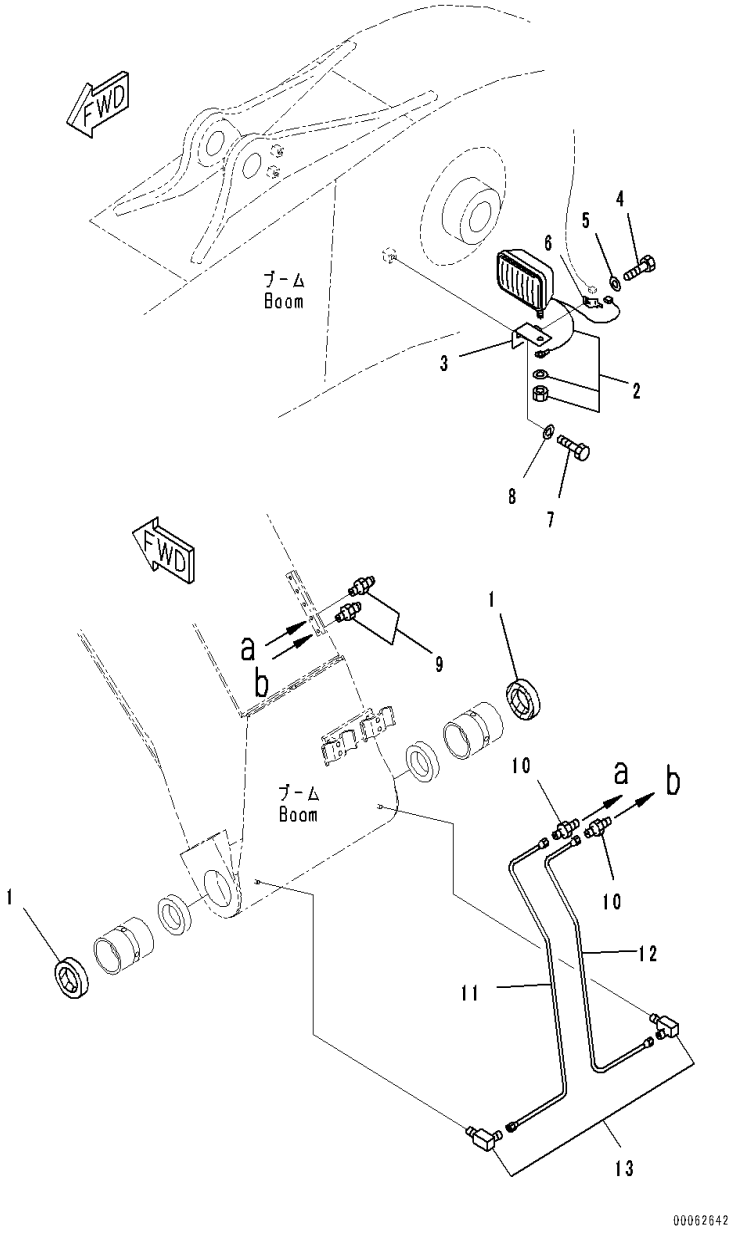

Index	Code	Part Number	Description	Qty	Serial Number
1		07145-00090	Seal, Dust	2	C00001-
2		20Y-06-43230	Working Lamp Assembly	1	C00001-
		421-06-23330	• Bulb,70watt	1	C00001-
3		20Y-06-21551	Bracket	1	C00001-
4		01010-81220	Bolt	1	C00001-
5		01643-31232	Washer	1	C00001-
6		08193-21012	Clip	1	C00001-
7		01010-81230	Bolt	1	C00001-
8		01643-31232	Washer	1	C00001-
9		07020-00000	Fitting, Grease	2	C00001-
10		20Y-70-11540	Connector	2	C00001-
11		20Y-70-57161	Tube	1	C00001-
12		20Y-70-57171	Tube	1	C00001-
13		20Y-25-11270	Elbow	2	C00001-

FIG. T1120-001001 Boom Cylinder (100 Hours Lubrication Interval) (Inner Parts, Boom Cylinder, L.H.)

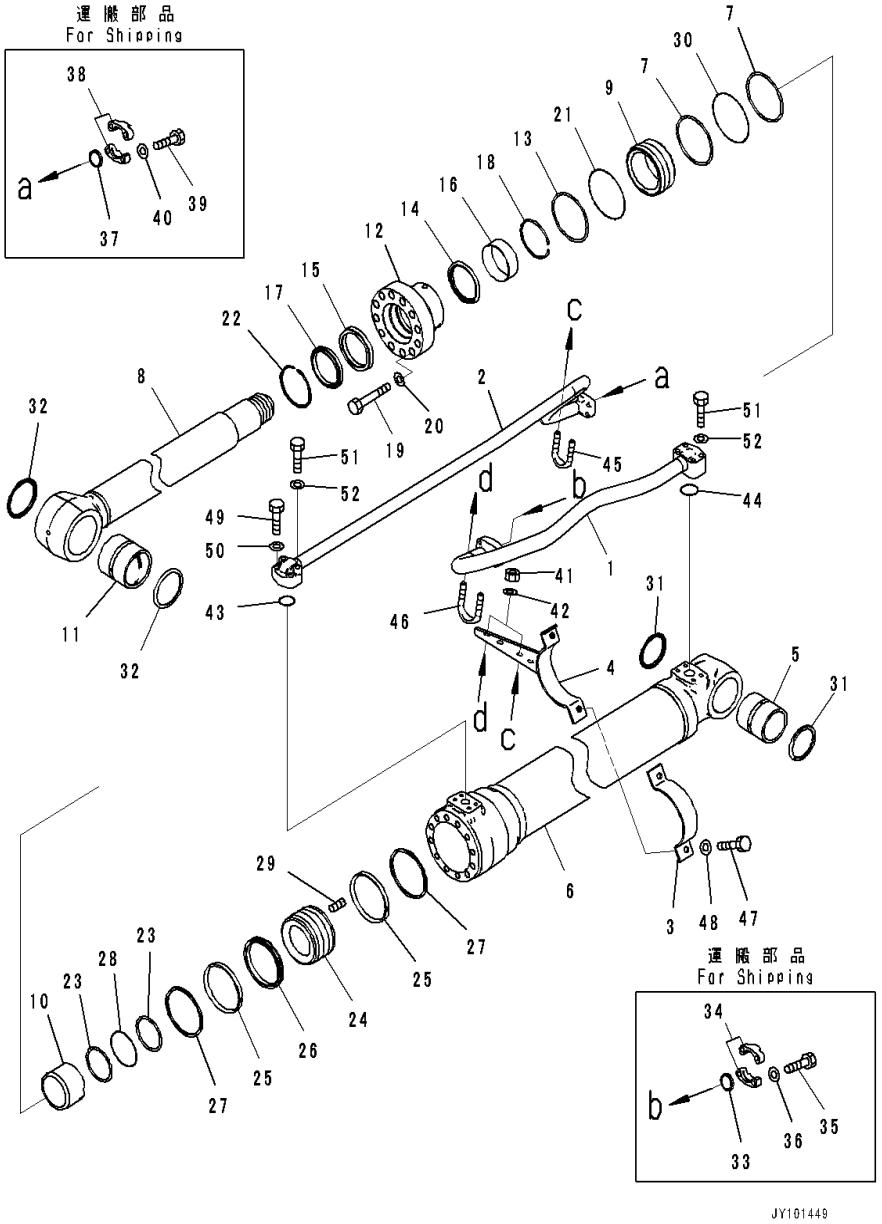

Index	Code	Part Number	Description	Qty	Serial Number
		707-H1-X6010	Cylinder Group, L.H.	1	C00001-
1		707-86-16230	• Tube	1	C00001-
2		707-86-69590	• Tube	1	C00001-
3		707-88-21251	• Band	1	C00001-
4		707-88-51431	• Bracket	1	C00001-
		707-G1-06010	• Cylinder Assembly	1	C00001-
5		205-70-71360	• • Bushing	1	C00001-
6		707-13-12850	• • Cylinder	1	C00001-
7		707-35-31110	• • Ring, Back-up, (Kit : K03)	2	C00001-
8		707-58-85560	• • Rod, Piston	1	C00001-
9		707-71-35490	• • Collar	1	C00001-
10		707-71-70820	• • Plunger	1	C00001-
11		707-76-80010	• • Bushing	1	C00001-
12		707-27-12650	• • Head, Cylinder	1	C00001-
13		707-35-31110	• • Ring, Back-up, (Kit : K03)	1	C00001-
14		707-51-85650	• • Ring, Buffer, (Kit : K03)	1	C00001-
15		707-51-85860	• • Packing, Rod, (Kit : K03)	1	C00001-
16		707-52-90611	• • Bushing	1	C00001-
17		707-56-85740	• • Seal, Dust, (Kit : K03)	1	C00001-
18		707-75-85110	• • Ring, Snap	1	C00001-
19		01010-81670	• • Bolt	12	C00001-
20		01643-51645	• • Washer	12	C00001-
21		07000-B5110	• • O-ring, (Kit : K03)	1	C00001-
22		07179-13099	• • Ring, Snap	1	C00001-
23		707-35-30750	• • Ring, Back-up, (Kit : K03)	2	C00001-
24		707-36-12851	• • Piston	1	C00001-
25		707-39-12140	• • Ring, Wear, (Kit : K03)	2	C00001-
26		707-44-12150	• • Ring, Piston, (Kit : K03)	1	C00001-
27		707-44-12911	• • Ring	2	C00001-
28		07000-B5075	• • O-ring, (Kit : K03)	1	C00001-
29		01310-01216	• • Screw	1	C00001-
30		07000-B5110	• • O-ring, (Kit : K03)	1	C00001-
31		07145-00070	• • Seal, Dust, (Kit : K03)	2	C00001-
32		07145-00080	• • Seal, Dust, (Kit : K03)	2	C00001-
33		707-88-33040	• Cap	1	C00001-
34		07371-31049	• Flange, Split	2	C00001-
35		07372-21035	• Bolt	4	C00001-
36		01643-51032	• Washer	4	C00001-
37		707-88-33030	• Cap	1	C00001-
38		07371-30640	• Flange, Split	2	C00001-

FIG. T1120-001001 Boom Cylinder (100 Hours Lubrication Interval) (Inner Parts, Boom Cylinder, L.H.)

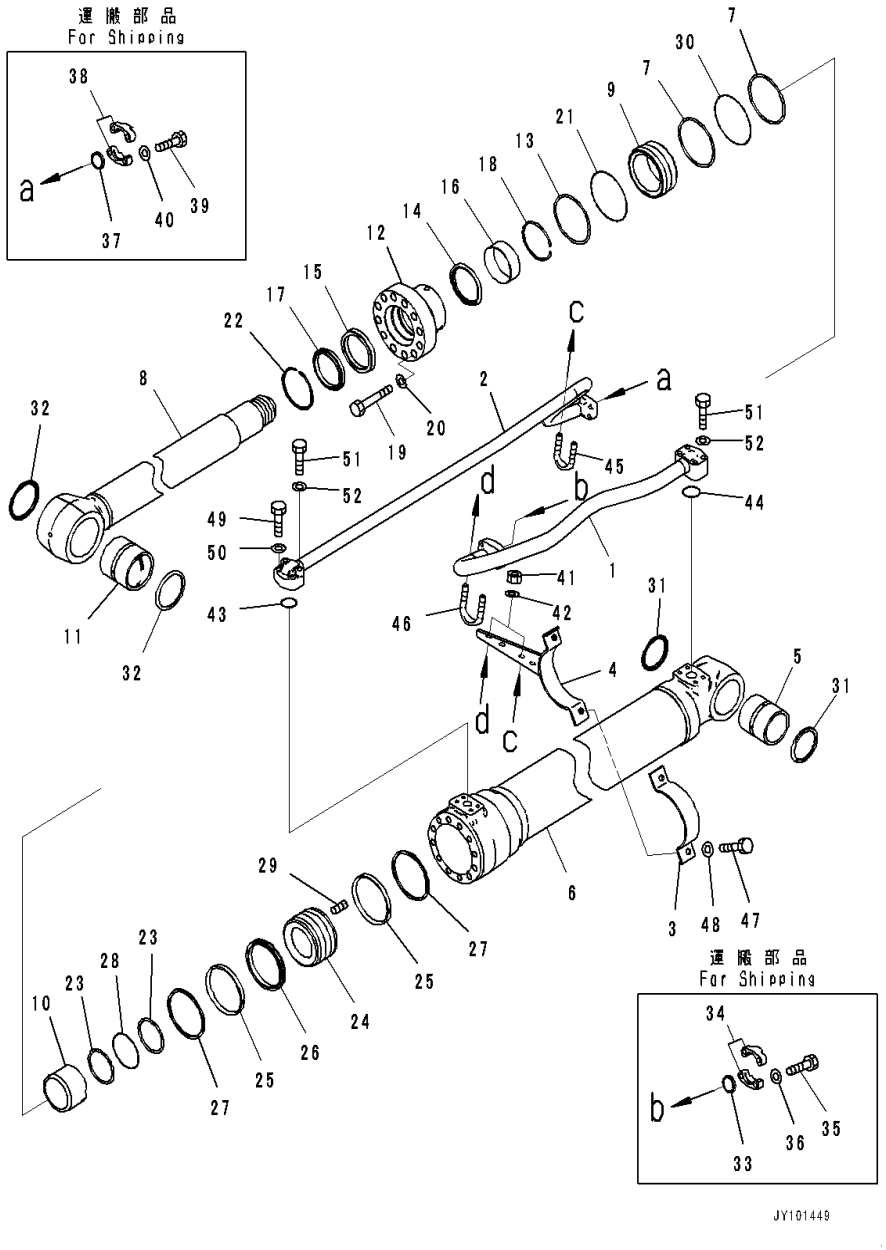

Index	Code	Part Number	Description	Qty	Serial Number
39		07372-21035	• Bolt	4	C00001-
40		01643-51032	• Washer	4	C00001-
41		01597-01009	• Nut	4	C00001-
42		01643-31032	• Washer	4	C00001-
43		07000-B3030	• O-ring, (Kit : K03)	1	C00001-
44		07000-B3035	• O-ring, (Kit : K03)	1	C00001-
45		07283-32738	• Clip, Pipe	1	C00001-
46		07283-33442	• Clip, Pipe	1	C00001-
47		07372-21035	• Bolt	2	C00001-
48		01643-51032	• Washer	2	C00001-
49		07372-21045	• Bolt	2	C00001-
50		01643-51032	• Washer	2	C00001-
51		07372-21060	• Bolt	6	C00001-
52		01643-51032	• Washer	6	C00001-

FIG. T1120-001002 Boom Cylinder (100 Hours Lubrication Interval) (Inner Parts, Boom Cylinder, R.H.)

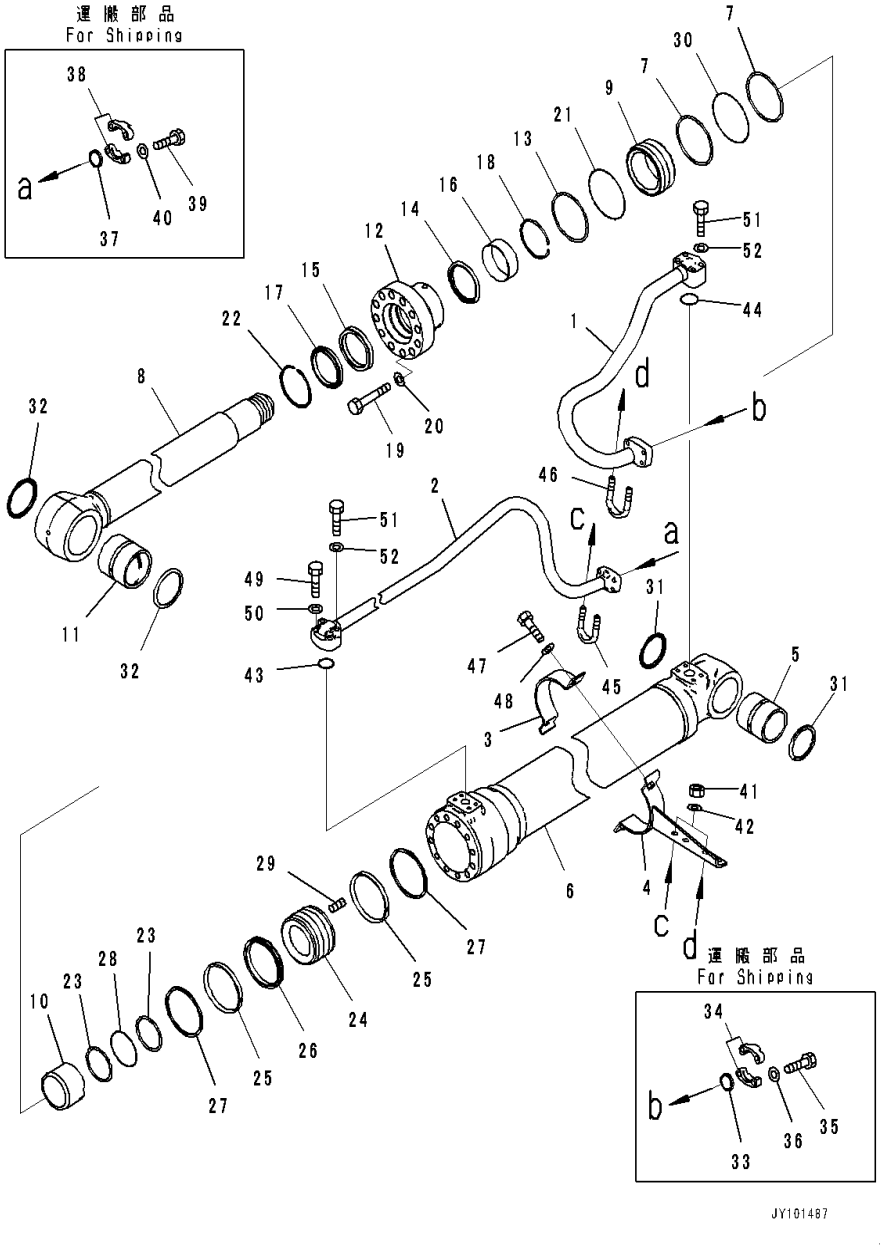

Index	Code	Part Number	Description	Qty	Serial Number
		707-H1-X6020	Cylinder Group, R.H.	1	C00001-
1		707-86-16240	• Tube	1	C00001-
2		707-86-69610	• Tube	1	C00001-
3		707-88-21251	• Band	1	C00001-
4		707-88-51441	• Bracket	1	C00001-
		707-G1-06010	• Cylinder Assembly	1	C00001-
5		205-70-71360	• • Bushing	1	C00001-
6		707-13-12850	• • Cylinder	1	C00001-
7		707-35-31110	• • Ring, Back-up, (Kit : K03)	2	C00001-
8		707-58-85560	• • Rod, Piston	1	C00001-
9		707-71-35490	• • Collar	1	C00001-
10		707-71-70820	• • Plunger	1	C00001-
11		707-76-80010	• • Bushing	1	C00001-
12		707-27-12650	• • Head, Cylinder	1	C00001-
13		707-35-31110	• • Ring, Back-up, (Kit : K03)	1	C00001-
14		707-51-85650	• • Ring, Buffer, (Kit : K03)	1	C00001-
15		707-51-85860	• • Packing, Rod, (Kit : K03)	1	C00001-
16		707-52-90611	• • Bushing	1	C00001-
17		707-56-85740	• • Seal, Dust, (Kit : K03)	1	C00001-
18		707-75-85110	• • Ring, Snap	1	C00001-
19		01010-81670	• • Bolt	12	C00001-
20		01643-51645	• • Washer	12	C00001-
21		07000-B5110	• • O-ring, (Kit : K03)	1	C00001-
22		07179-13099	• • Ring, Snap	1	C00001-
23		707-35-30750	• • Ring, Back-up, (Kit : K03)	2	C00001-
24		707-36-12851	• • Piston	1	C00001-
25		707-39-12140	• • Ring, Wear, (Kit : K03)	2	C00001-
26		707-44-12150	• • Ring, Piston, (Kit : K03)	1	C00001-
27		707-44-12911	• • Ring	2	C00001-
28		07000-B5075	• • O-ring, (Kit : K03)	1	C00001-
29		01310-01216	• • Screw	1	C00001-
30		07000-B5110	• • O-ring, (Kit : K03)	1	C00001-
31		07145-00070	• • Seal, Dust, (Kit : K03)	2	C00001-
32		07145-00080	• • Seal, Dust, (Kit : K03)	2	C00001-
33		707-88-33040	• Cap	1	C00001-
34		07371-31049	• Flange, Split	2	C00001-
35		07372-21035	• Bolt	4	C00001-
36		01643-51032	• Washer	4	C00001-
37		707-88-33030	• Cap	1	C00001-
38		07371-30640	• Flange, Split	2	C00001-

FIG. T1120-001002 Boom Cylinder (100 Hours Lubrication Interval) (Inner Parts, Boom Cylinder, R.H.)

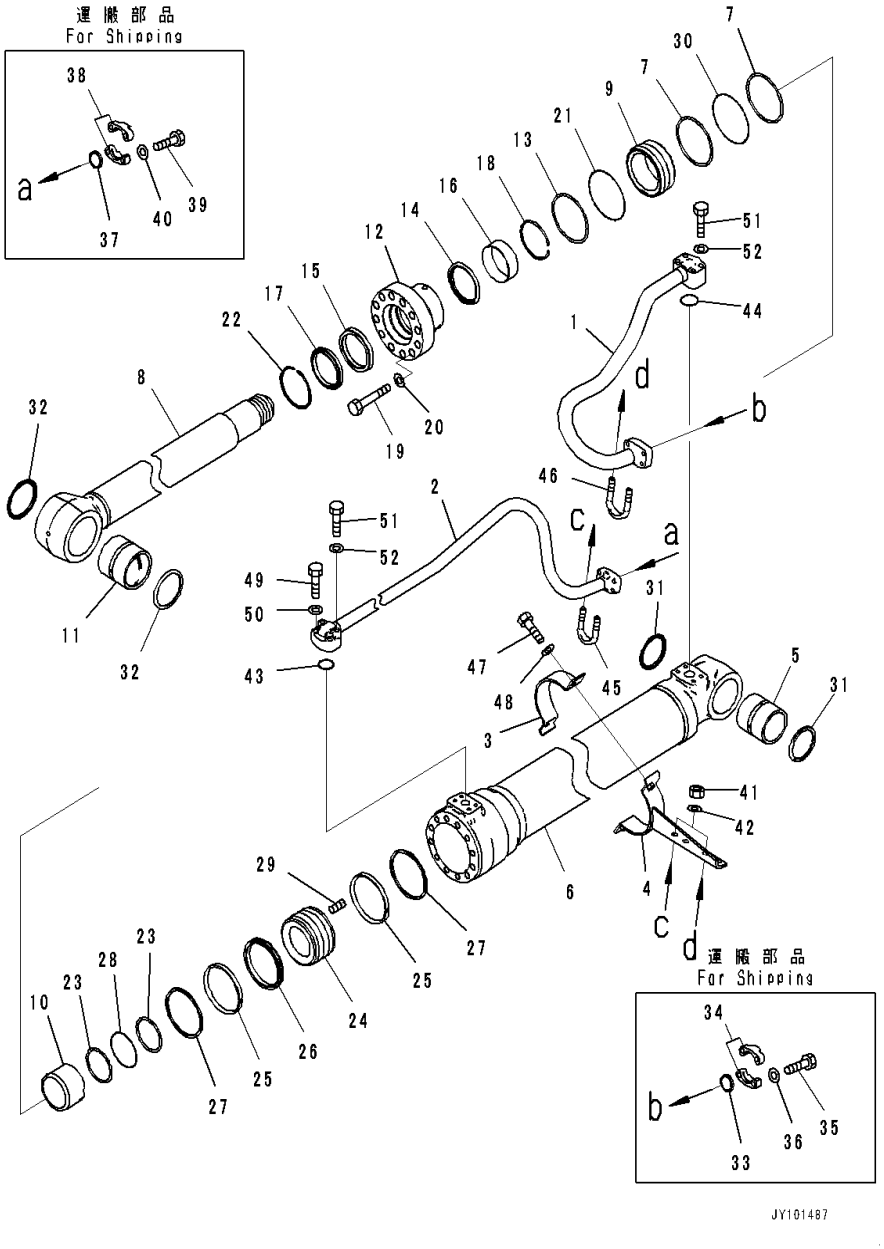

Index	Code	Part Number	Description	Qty	Serial Number
39		07372-21035	• Bolt	4	C00001-
40		01643-51032	• Washer	4	C00001-
41		01597-01009	• Nut	4	C00001-
42		01643-31032	• Washer	4	C00001-
43		07000-B3030	• O-ring, (Kit : K03)	1	C00001-
44		07000-B3035	• O-ring, (Kit : K03)	1	C00001-
45		07283-32738	• Clip, Pipe	1	C00001-
46		07283-33442	• Clip, Pipe	1	C00001-
47		07372-21035	• Bolt	2	C00001-
48		01643-51032	• Washer	2	C00001-
49		07372-21045	• Bolt	2	C00001-
50		01643-51032	• Washer	2	C00001-
51		07372-21060	• Bolt	6	C00001-
52		01643-51032	• Washer	6	C00001-

FIG. T1120-001003 Boom Cylinder (Fitting)

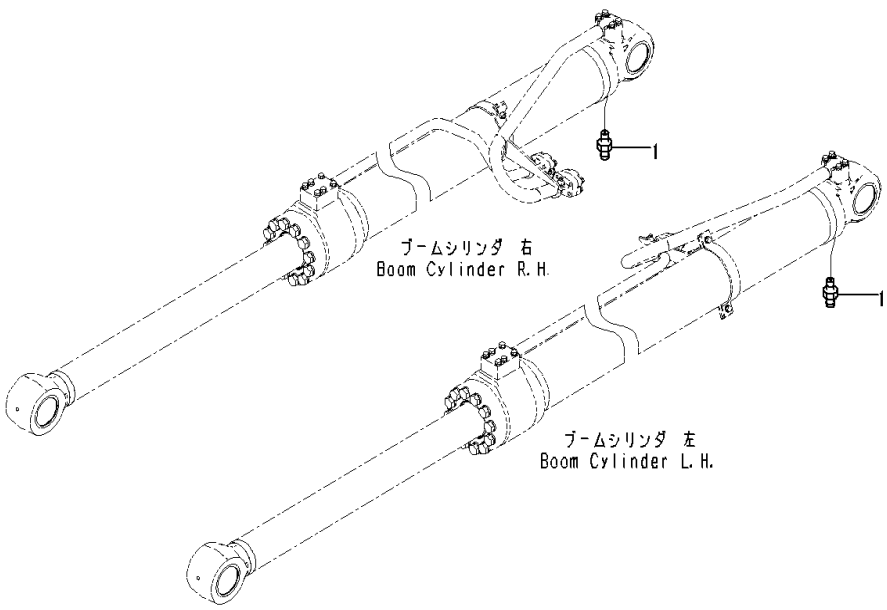

Index	Code	Part Number	Description	Qty	Serial Number
1		07020-00000	Fitting, Grease	2	C00001-

FIG. T1120-002003 Boom Cylinder (Fitting and Working Lamp)

Index	Code	Part Number	Description	Qty	Serial Number
1		07020-00000	Fitting, Grease	2	C00001-
2		20Y-06-43411	Bracket	1	C00001-
3		07283-33450	Clip	2	C00001-
4		01597-01009	Nut	4	C00001-
5		01643-31032	Washer	4	C00001-
6		20Y-06-43230	Work Lamp Assembly	1	C00001-
		421-06-23330	• Bulb, 70w	1	C00001-
7		20Y-06-43431	Wiring Harness	1	C00001-
8		134-03-61410	Band	3	C00001-
9		08193-20012	Clip	1	C00001-
10		01010-81225	Bolt	1	C00001-
11		01643-31232	Washer	1	C00001-
12		20Y-06-43420	Bracket	1	C00001-
13		07283-53444	Seat	1	C00001-
14		04434-51012	Clip	1	C00001-
15		01010-81230	Bolt	1	C00001-
16		01643-31232	Washer	1	C00001-
17		07095-01034	Cushion	1	C00001-
18		08034-20536	Band	2	C00001-
19		08057-14012	Clip	1	C00001-
20		01010-81240	Bolt	1	C00001-
21		01643-31232	Washer	1	C00001-

FIG. T1120-003003 Boom Cylinder (Fitting and 2-Working Lamp)

Index	Code	Part Number	Description	Qty	Serial Number
1		07020-00000	Fitting	2	C00001-
2		20Y-70-C2530	Bracket, L.H.	1	C00001-
3		20Y-70-C2540	Bracket, R.H.	1	C00001-
4		707-88-21251	Band	2	C00001-
5		07372-21035	Bolt	4	C00001-
6		01643-51032	Washer	4	C00001-
7		20Y-06-C2120	Wiring Harness	1	C00001-
8		08034-20536	Band	8	C00001-
9		07283-33450	Clip	2	C00001-
10		01597-01009	Nut	4	C00001-
11		01643-31032	Washer	4	C00001-
12		20Y-06-43230	Work Lamp Assembly	2	C00001-
		421-06-23330	• Bulb, 24V 70W	1	C00001-
13		20Y-06-43431	Wiring Harness	1	C00001-
14		134-03-61410	Band	8	C00001-
15		08193-20012	Clip	2	C00001-
16		01010-81225	Bolt	2	C00001-
17		01643-31232	Washer	2	C00001-
18		20Y-06-43420	Bracket	2	C00001-
19		07283-53444	Seat	2	C00001-
20		04434-51012	Clip	2	C00001-
21		01010-81230	Bolt	2	C00001-
22		01643-31232	Washer	2	C00001-
23		07095-01034	Cushion	2	C00001-
24		08034-20536	Band	4	C00001-
25		08057-14012	Clip	2	C00001-
26		01010-81240	Bolt	2	C00001-
27		01643-31232	Washer	2	C00001-

FIG. T1125-001001 Boom Cylinder Head Pin (100Hours Lubrication Interval)

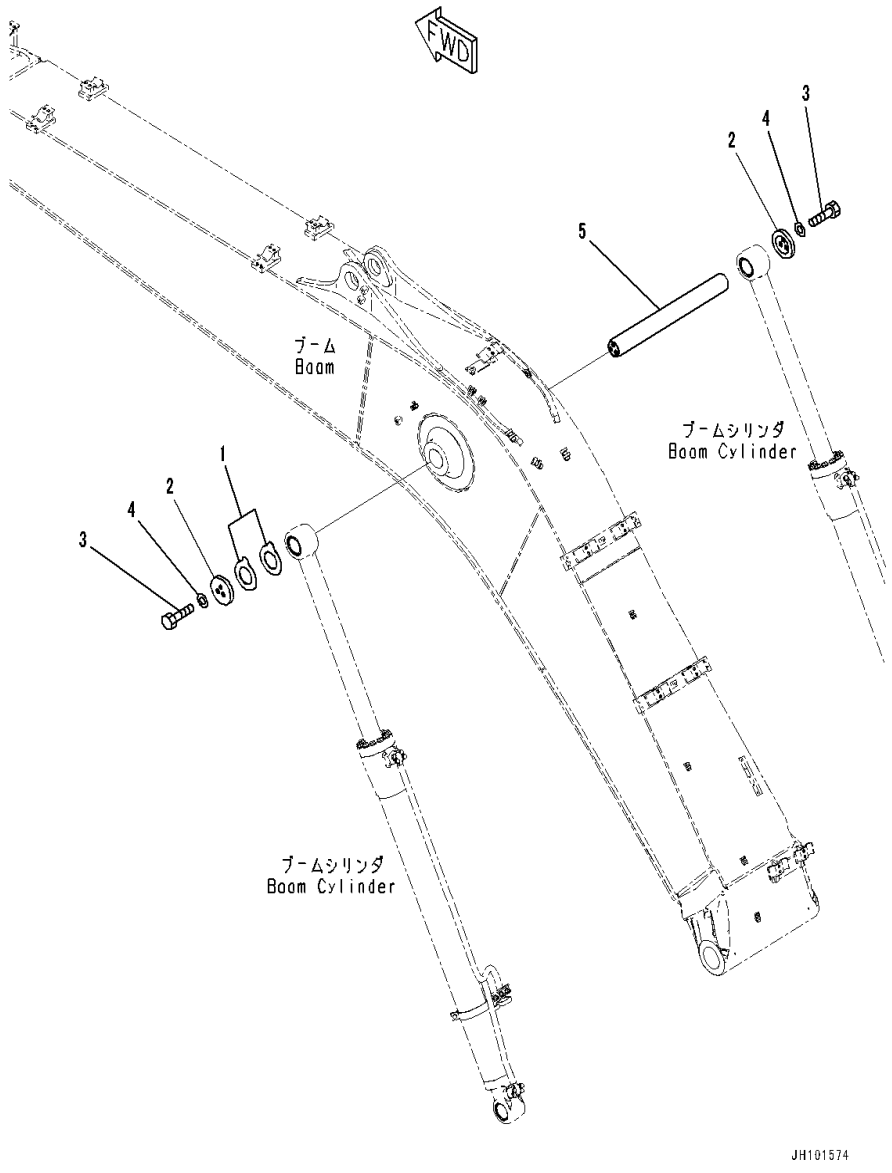

Index	Code	Part Number	Description	Qty	Serial Number
1		20Y-70-11370	Spacer,T=1.5mm	5	C00001-
		20Y-70-11390	Spacer,T=0.8mm	1	C00001-
2		20Y-70-41221	Plate	2	C00001-
3		01010-81640	Bolt	6	C00001-
4		01643-31645	Washer	6	C00001-
5		20Y-70-41211	Pin	1	C00001-

FIG. T1140-001001 Arm Cylinder (Inner Parts, Arm Cylinder) (100 Hours Lubrication Interval)

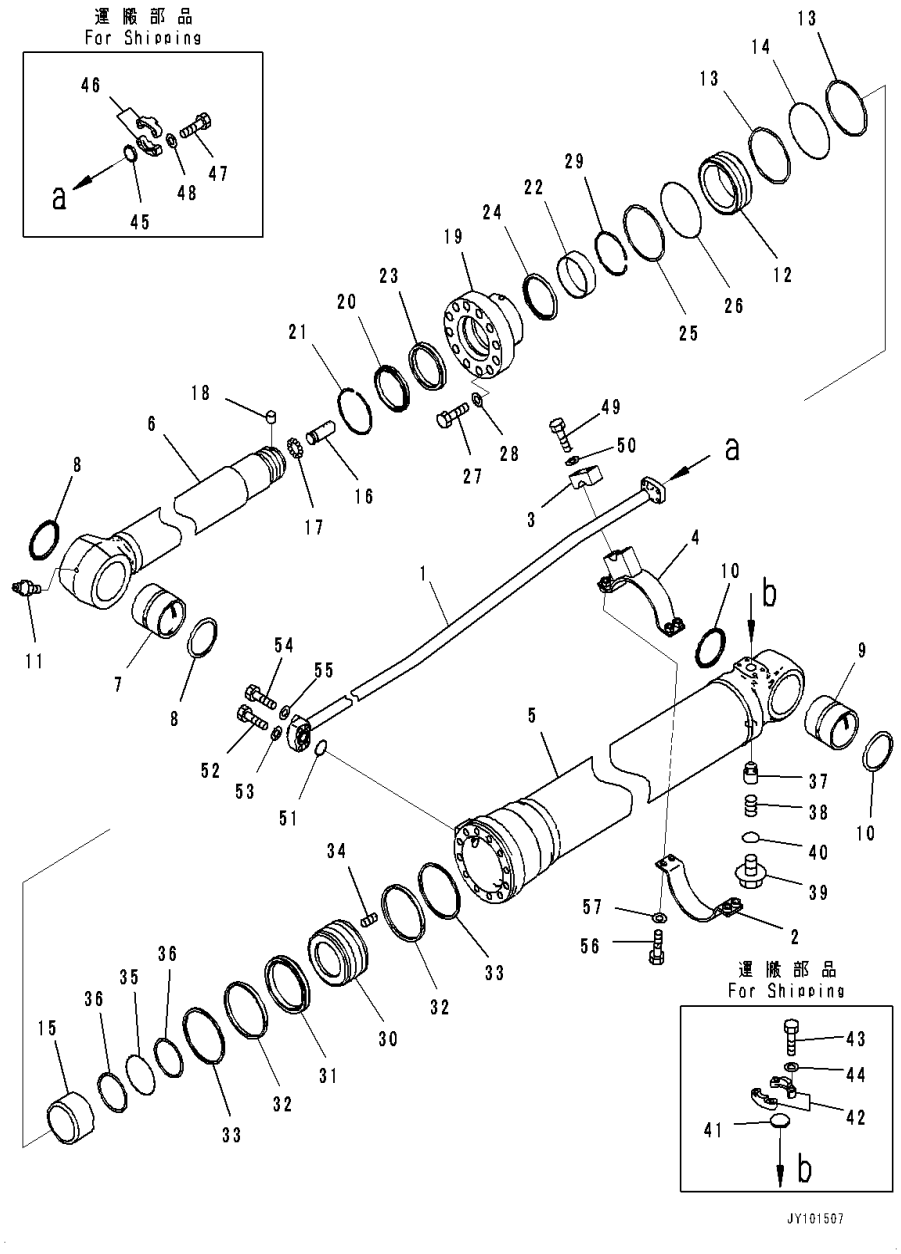

Index	Code	Part Number	Description	Qty	Serial Number
		707-H1-X6030	Cylinder Group	1	C00001-
1		707-86-19110	• Tube	1	C00001-
2		707-88-26670	• Band	1	C00001-
3		707-88-47020	• Clamp	1	C00001-
4		707-88-53100	• Bracket	1	C00001-
		707-E1-01470	• Cylinder Assembly	1	C00001-
5		721-13-13100	• • Cylinder	1	C00001-
6		707-58-95270	• • Rod, Piston	1	C00001-
7		707-76-80010	• • Bushing	1	C00001-
8		07145-00080	• • Seal, Dust, (Kit : K04)	2	C00001-
9		707-76-80010	• • Bushing	1	C00001-
10		07145-00080	• • Seal, Dust, (Kit : K04)	2	C00001-
11		07020-00000	• • Fitting, Grease	1	C00001-
12		707-71-35140	• • Collar	1	C00001-
13		707-35-31260	• • Ring, Back-up, (Kit : K04)	2	C00001-
14		07000-B5125	• • O-ring, (Kit : K04)	1	C00001-
15		707-71-71010	• • Plunger	1	C00001-
16		707-71-80320	• • Plunger	1	C00001-
17		04260-00635	• • Ball, Steel	12	C00001-
18		707-71-91270	• • Cap	1	C00001-
19		707-27-13850	• • Head, Cylinder	1	C00001-
20		707-56-95740	• • Seal, Dust, (Kit : K04)	1	C00001-
21		07179-13109	• • Ring, Snap	1	C00001-
22		707-52-90721	• • Bushing	1	C00001-
23		707-51-95860	• • Packing, Rod, (Kit : K04)	1	C00001-
24		707-51-95650	• • Ring, Buffer, (Kit : K04)	1	C00001-
25		707-35-31260	• • Ring, Back-up, (Kit : K04)	1	C00001-
26		07000-B5125	• • O-ring, (Kit : K04)	1	C00001-
27		01010-81875	• • Bolt	12	C00001-
28		707-41-11840	• • Washer	12	C00001-
29		707-75-95030	• • Ring, Snap	1	C00001-
30		707-36-13771	• • Piston	1	C00001-
31		707-44-13250	• • Ring, Piston, (Kit : K04)	1	C00001-
32		707-39-13530	• • Ring, Wear, (Kit : K04)	2	C00001-
33		707-44-13920	• • Ring	2	C00001-
34		01310-01216	• • Screw	1	C00001-
35		07000-B5085	• • O-ring, (Kit : K04)	1	C00001-
36		707-35-30850	• • Ring, Back-up, (Kit : K04)	2	C00001-
37		707-83-13010	• • Valve	1	C00001-
38		07750-01628	• • Spring	1	C00001-

FIG. T1140-001001 Arm Cylinder (Inner Parts, Arm Cylinder) (100 Hours Lubrication Interval)

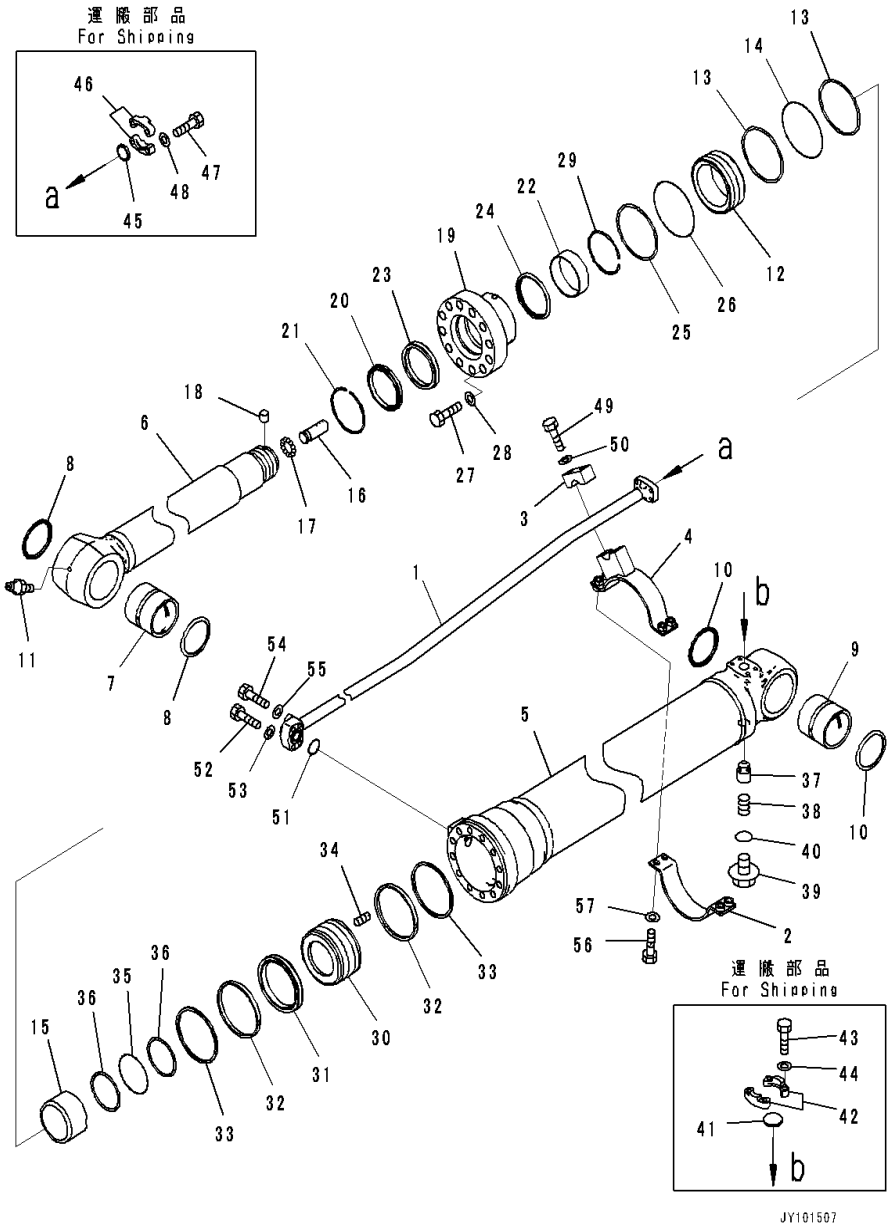

Index	Code	Part Number	Description	Qty	Serial Number
39		707-87-14071	• • Plug	1	C00001-
40		07002-62034	• • O-ring, (Kit : K04)	1	C00001-
41		707-88-33040	• Cap	1	C00001-
42		07371-31049	• Flange, Split	2	C00001-
43		07372-21035	• Bolt	4	C00001-
44		01643-51032	• Washer	4	C00001-
45		707-88-33030	• Cap	1	C00001-
46		07371-30640	• Flange, Split	2	C00001-
47		07372-21035	• Bolt	4	C00001-
48		01643-51032	• Washer	4	C00001-
49		01010-81255	• Bolt	2	C00001-
50		01643-31232	• Washer	2	C00001-
51		07000-B3030	• O-ring, (Kit : K04)	1	C00001-
52		07372-21045	• Bolt	2	C00001-
53		01643-51032	• Washer	2	C00001-
54		07372-21060	• Bolt	2	C00001-
55		01643-51032	• Washer	2	C00001-
56		07372-21240	• Bolt	4	C00001-
57		01643-51232	• Washer	4	C00001-

FIG. T1190-001001 Shipping Parts

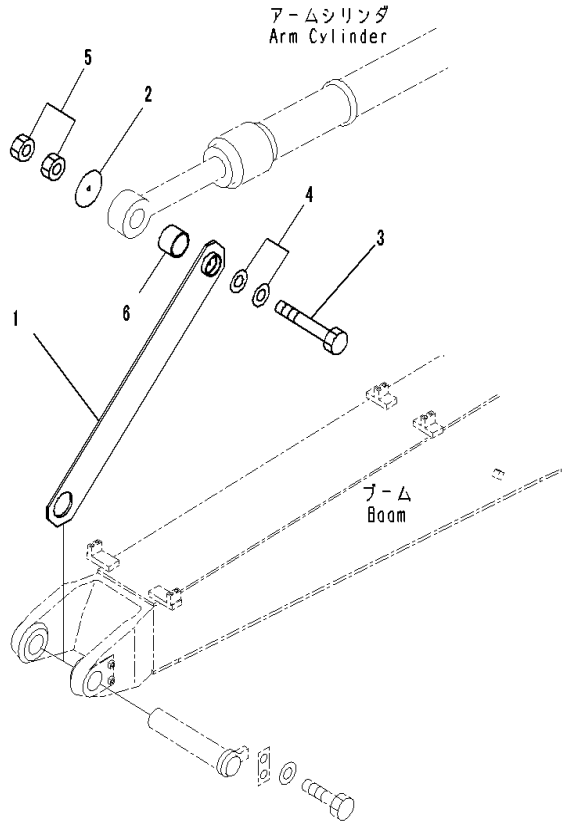

Index	Code	Part Number	Description	Qty	Serial Number
1		20Y-70-13160	Link	1	C00001-
2		207-70-53170	Plate	1	C00001-
3		01011-81250	Bolt	1	C00001-
4		01643-31232	Washer	2	C00001-
5		01580-11210	Nut	2	C00001-
6		20Y-70-13150	Collar	3	C00001-

FIG. T1200-001001 Arm (2900mm, Heavy Duty Type,100 Hours Lubrication Interval) (Arm and Pin)

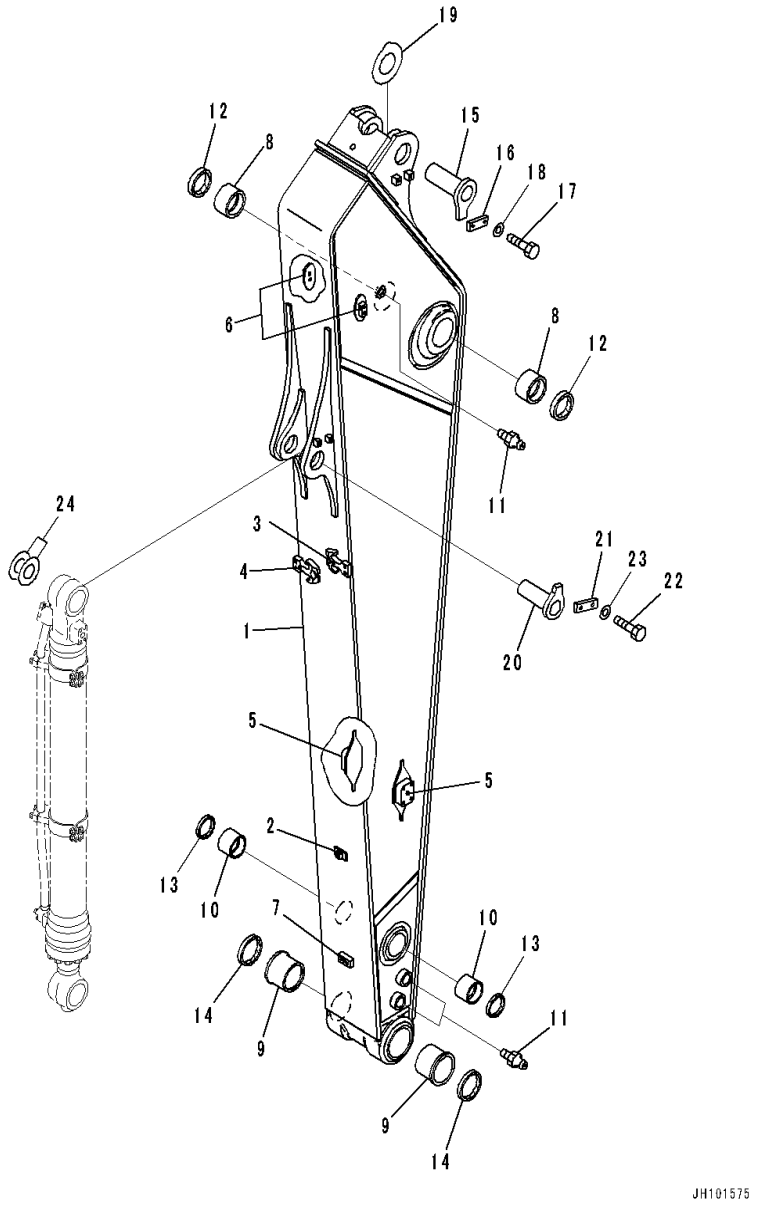

Index	Code	Part Number	Description	Qty	Serial Number
		20Y-70-01500	Arm Assembly	1	C00001-
1	C1		• Arm	1	C00001-
2		207-62-76360	• • Seat,Welded	1	C00001-
3		20Y-70-42E51	• • Plate,Welded	1	C00001-
4		20Y-70-57E10	• • Plate,Welded	1	C00001-
5		20Y-970-5771	• • Bracket,Welded	2	C00001-
6		2A5-62-21370	• • Bracket,Welded	2	C00001-
7		01573-22306	• • Seat,Welded	1	C00001-
8		205-70-72180	• Bushing	2	C00001-
9		20Y-70-32410	• Bushing	2	C00001-
10		205-70-73180	• Bushing	2	C00001-
11		07020-00000	• Fitting, Grease	3	C00001-
12		07145-00090	Seal, Dust	2	C00001-
13		20Y-70-23220	Seal, Dust	2	C00001-
14		20Y-70-23230	Seal, Dust	2	C00001-
15		20Y-70-42220	Pin	1	C00001-
16		205-70-66581	Plate	1	C00001-
17		01010-81230	Bolt	2	C00001-
18		01643-31232	Washer	2	C00001-
19		205-70-51530	Spacer,T=1.5mm	1	C00001-
20		205-70-71190	Pin	1	C00001-
21		205-70-66580	Plate	1	C00001-
22		01010-81230	Bolt	2	C00001-
23		01643-31232	Washer	2	C00001-
24		20Y-70-11290	Spacer,T=0.8mm	1	C00001-
		20Y-70-11310	Spacer,T=1.5mm	3	C00001-

FIG. T1200-001002 Arm (2900mm, Heavy Duty Type) (Plug)

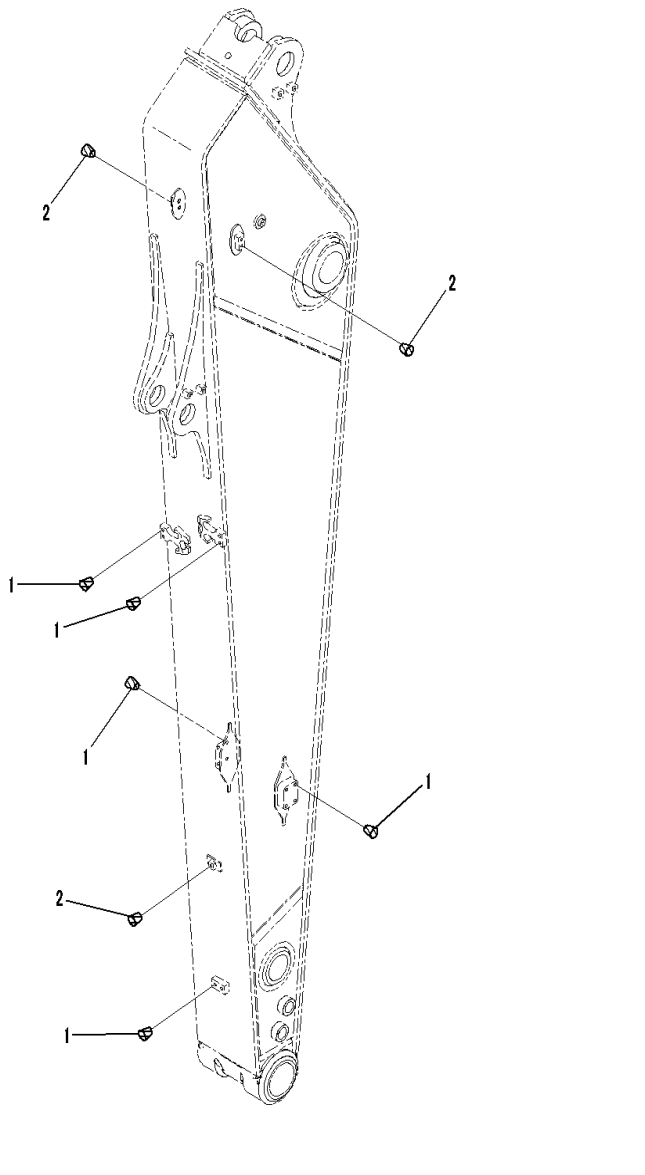

Index	Code	Part Number	Description	Qty	Serial Number
1		07049-01215	Plug	14	C00001-
2		07049-01012	Plug	5	C00001-

FIG. T1200-001003 Arm (100 Hours Lubrication Interval, Multi Dust Cylinder) (Inner Parts, Bucket Cylinder)

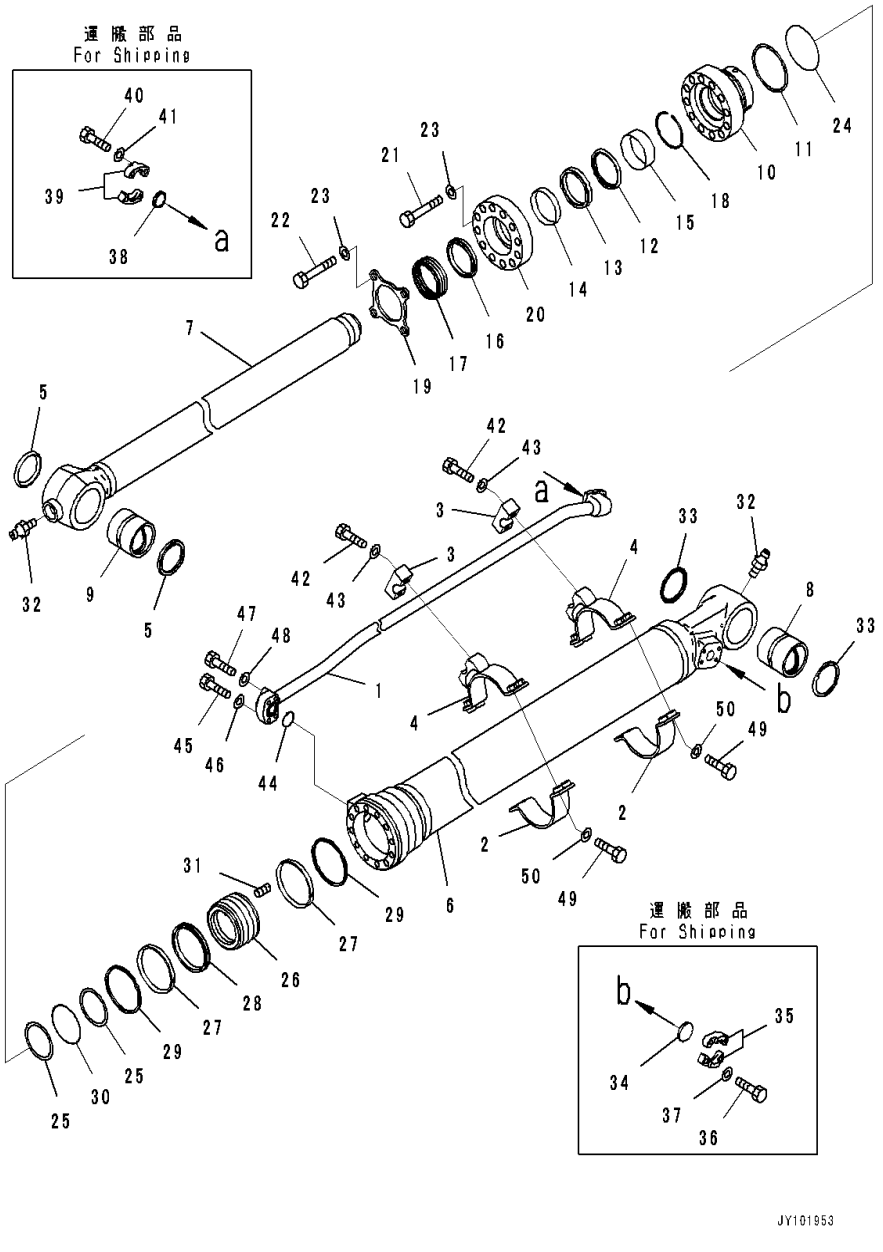

Index	Code	Part Number	Description	Qty	Serial Number
		707-H1-X6170	Cylinder Group	1	C00001-
1		707-86-69140	• Tube	1	C00001-
2		707-88-26660	• Band	2	C00001-
3		707-88-47020	• Clamp	2	C00001-
4		707-88-53090	• Bracket	2	C00001-
		707-G1-06170	• Cylinder Assembly	1	C00001-
5		20Y-70-23220	• • Seal, Dust, (Kit : K43)	2	C00001-
6		707-13-11880	• • Cylinder	1	C00001-
7		707-58-80A20	• • Rod, Piston	1	C00001-
8		707-76-70110	• • Bushing	1	C00001-
9		707-76-70120	• • Bushing	1	C00001-
10		707-27-11860	• • Head, Cylinder	1	C00001-
11		707-35-31060	• • Ring, Back-up, (Kit : K43)	1	C00001-
12		707-51-80650	• • Ring, Buffer, (Kit : K43)	1	C00001-
13		707-51-80860	• • Packing, Rod, (Kit : K43)	1	C00001-
14		707-52-15520	• • Bushing	1	C00001-
15		707-52-90561	• • Bushing	1	C00001-
16		707-56-80770	• • Seal, Dust, (Kit : K43)	1	C00001-
17		707-56-80800	• • Seal, Dust, (Kit : K43)	3	C00001-
18		707-75-80040	• • Ring, Snap	1	C00001-
19		707-88-04980	• • Plate	1	C00001-
20		707-88-47730	• • Housing	1	C00001-
21		01011-81605	• • Bolt	8	C00001-
22		01011-81610	• • Bolt	4	C00001-
23		01643-51645	• • Washer	12	C00001-
24		07000-B5105	• • O-ring, (Kit : K43)	1	C00001-
25		707-35-30800	• • Ring, Back-up, (Kit : K43)	2	C00001-
26		707-36-11A70	• • Piston	1	C00001-
27		707-39-11530	• • Ring, Wear, (Kit : K43)	2	C00001-
28		707-44-11250	• • Ring, Piston, (Kit : K43)	1	C00001-
29		707-44-11920	• • Ring	2	C00001-
30		07000-B5080	• • O-ring, (Kit : K43)	1	C00001-
31		01310-01216	• • Screw	1	C00001-
32		07020-00000	• • Fitting, Grease	2	C00001-
33		07145-00070	• • Seal, Dust, (Kit : K43)	2	C00001-
34		707-88-33040	• Cap	1	C00001-
35		07371-31049	• Flange, Split	2	C00001-
36		07372-21035	• Bolt	4	C00001-
37		01643-51032	• Washer	4	C00001-
38		707-88-33030	• Cap	1	C00001-

FIG. T1200-001003 Arm (100 Hours Lubrication Interval, Multi Dust Cylinder) (Inner Parts, Bucket Cylinder)

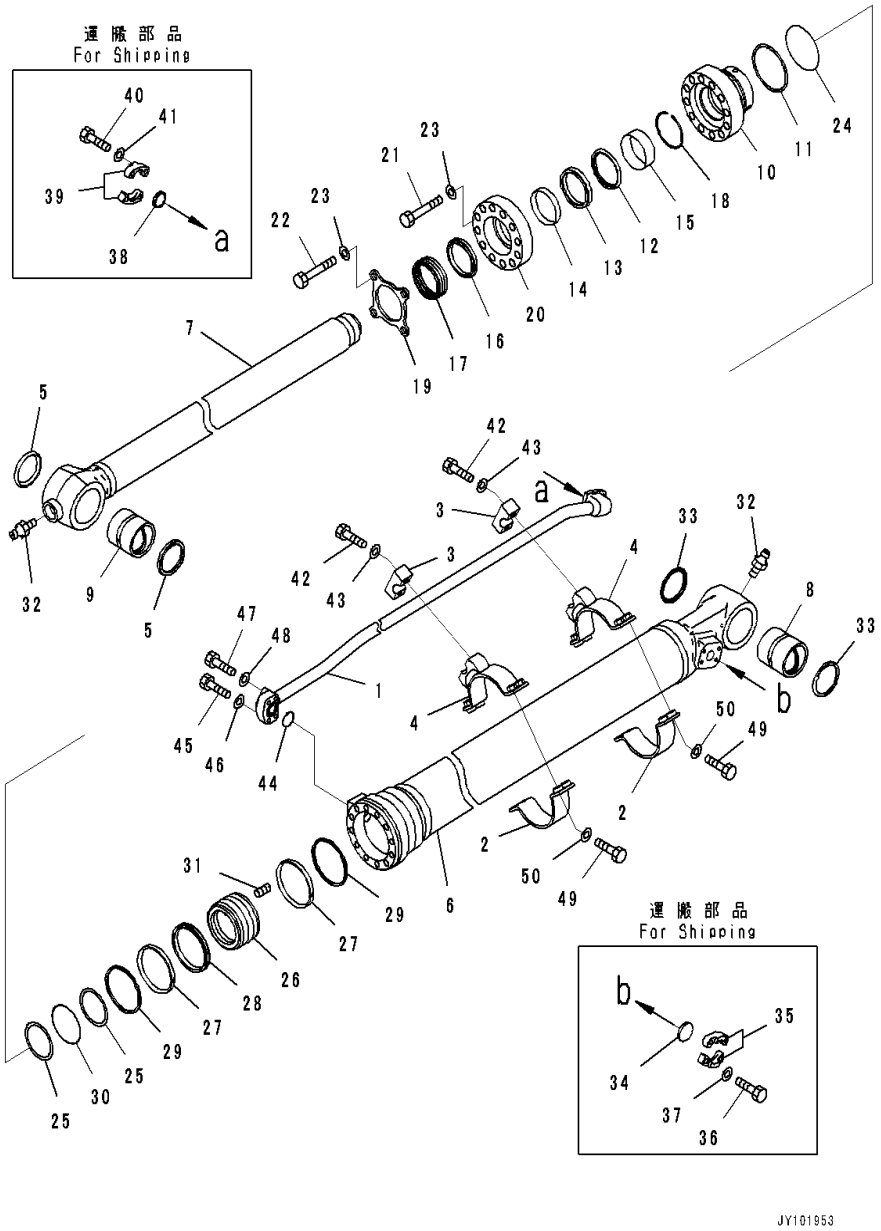

Index	Code	Part Number	Description	Qty	Serial Number
39		07371-30640	• Flange, Split	2	C00001-
40		07372-21035	• Bolt	4	C00001-
41		01643-51032	• Washer	4	C00001-
42		01010-81255	• Bolt	4	C00001-
43		01643-31232	• Washer	4	C00001-
44		07000-B3030	• O-ring, (Kit : K43)	1	C00001-
45		07372-21045	• Bolt	2	C00001-
46		01643-51032	• Washer	2	C00001-
47		07372-21060	• Bolt	2	C00001-
48		01643-51032	• Washer	2	C00001-
49		07372-21240	• Bolt	8	C00001-
50		01643-51232	• Washer	8	C00001-

FIG. T1200-001004 Arm (Bucket Link)

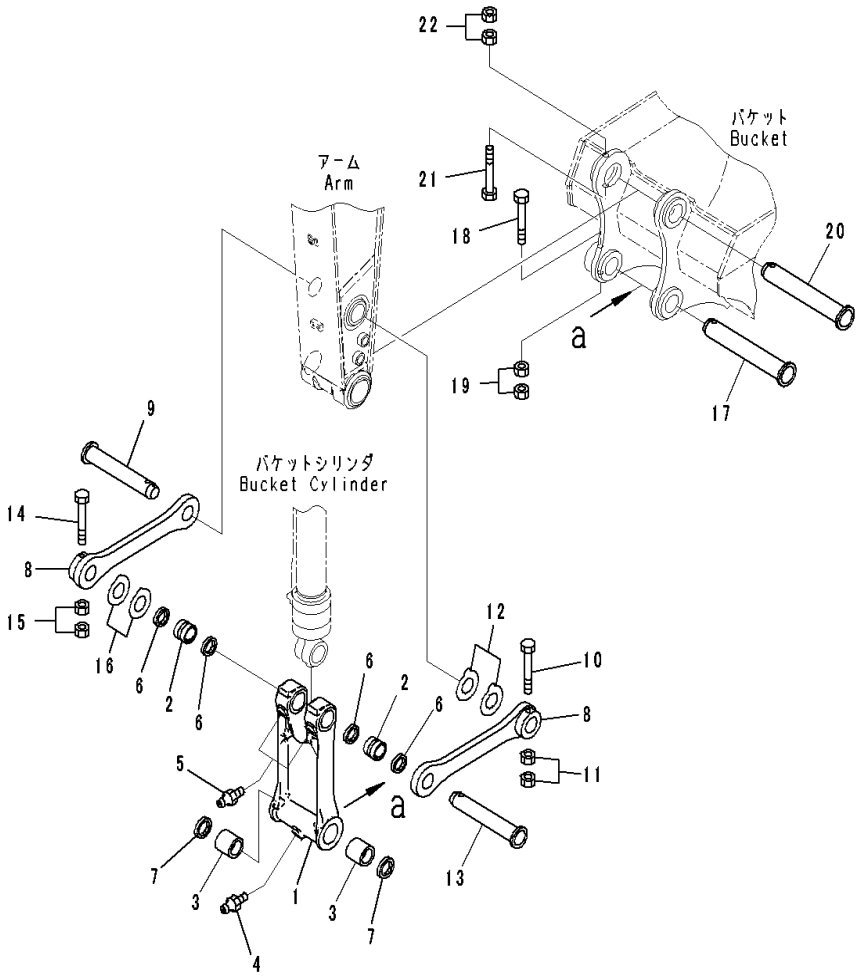

Index	Code	Part Number	Description	Qty	Serial Number
		22U-70-00200	Link Group	1	C00001-
1	C1		• Link	1	C00001-
2		205-70-73180	• Bushing	2	C00001-
3		21K-70-12161	• Bushing	2	C00001-
4		07020-00000	• Fitting, Grease	1	C00001-
5		07020-00000	• Fitting, Grease	2	C00001-
6		20Y-70-23220	• Seal, Dust	4	C00001-
7		20Y-70-23230	• Seal, Dust	2	C00001-
8		205-70-73130	Link	2	C00001-
9		22U-70-21191	Pin	1	C00001-
10		20Y-70-32450	Bolt	1	C00001-
11		01580-12016	Nut	2	C00001-
12		20Y-70-11320	Spacer,T=0.8mm	1	C00001-
		20Y-70-11330	Spacer,T=1.5mm	3	C00001-
13		22U-70-21191	Pin	1	C00001-
14		20Y-70-32450	Bolt	1	C00001-
15		01580-12016	Nut	2	C00001-
16		20Y-70-11320	Spacer,T=0.8mm	1	C00001-
		20Y-70-11330	Spacer,T=1.5mm	4	C00001-
17		205-70-73270	Pin	1	C00001-
18		20Y-70-32450	Bolt	1	C00001-
19		01580-12016	Nut	2	C00001-
20		205-70-73270	Pin	1	C00001-
21		20Y-70-32460	Bolt	1	C00001-
22		01580-12016	Nut	2	C00001-

FIG. T1200-001005 Arm (2900mm, Heavy Duty Type) (Bucket Cylinder Hose)

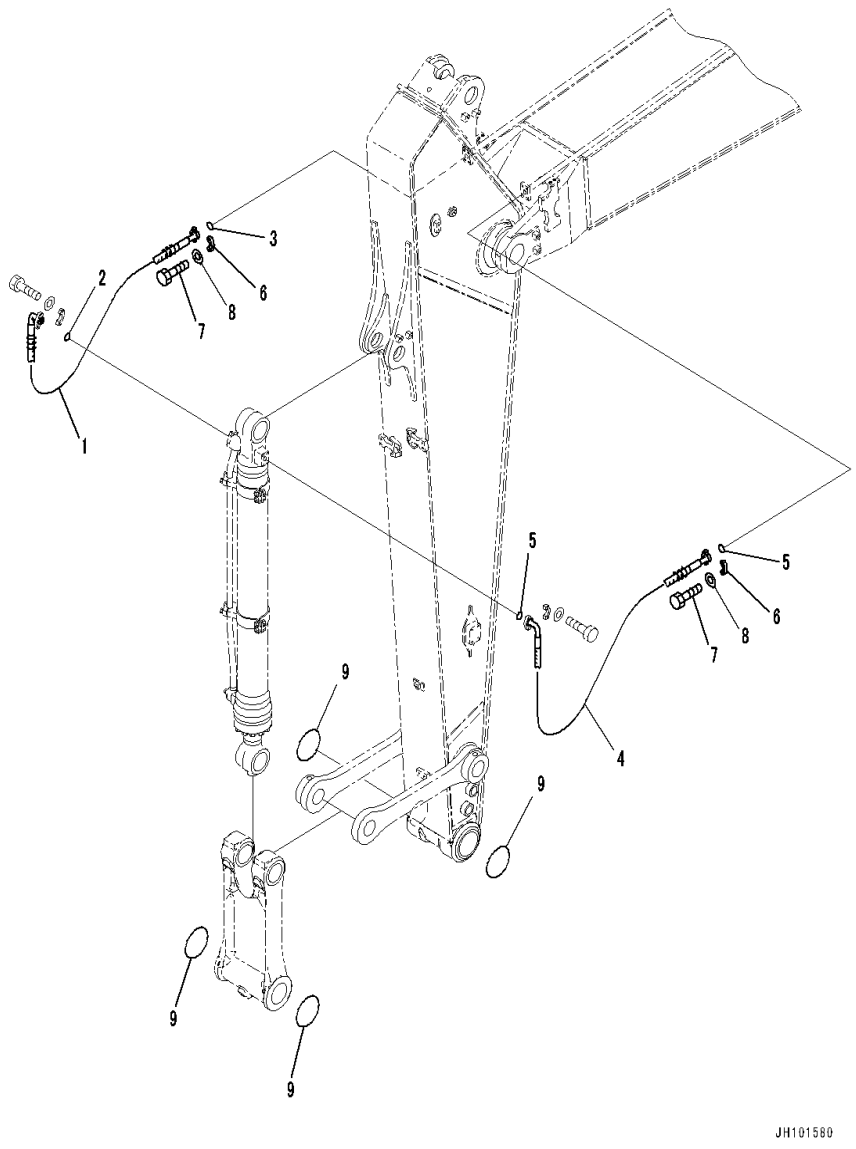

Index	Code	Part Number	Description	Qty	Serial Number
1		2A5-62-28230	Hose	1	C00001-
2		07000-13025	O-ring	1	C00001-
3		07000-13032	O-ring	1	C00001-
4		22U-62-34611	Hose	1	C00001-
5		07000-13032	O-ring	2	C00001-
6		07371-31049	Flange, Split	4	C00001-
7		07372-21035	Bolt	8	C00001-
8		01643-51032	Washer	8	C00001-
9		205-70-73280	O-ring	4	C00001-

FIG. T1200-002001 Arm (2900mm, Heavy Duty Type, 1-Attachment,100 Hours Lubrication Interval) (Arm and Pin)

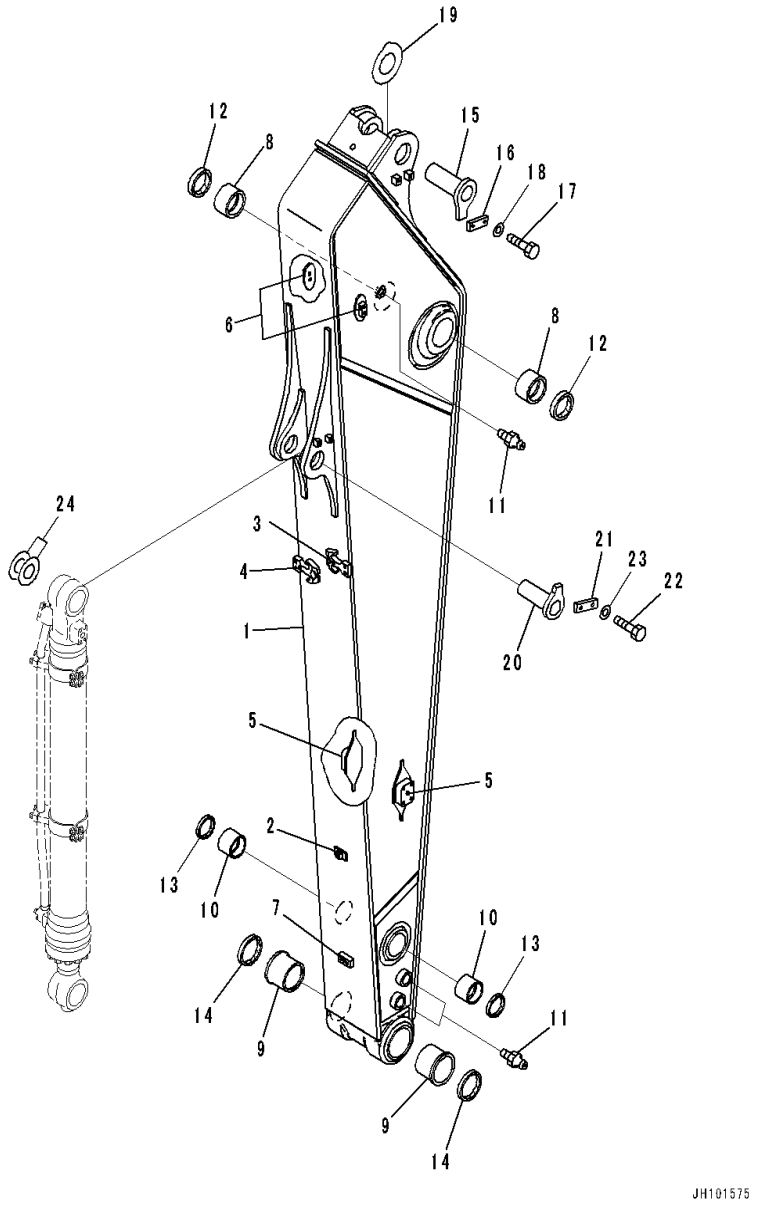

Index	Code	Part Number	Description	Qty	Serial Number
		20Y-70-01510	Arm Assembly	1	C00001-
1	C1		• Arm	1	C00001-
2		207-62-76360	• • Seat,Welded	1	C00001-
3		20Y-70-42E51	• • Plate,Welded	1	C00001-
4		20Y-70-57E10	• • Plate,Welded	1	C00001-
5		20Y-970-5771	• • Bracket,Welded	2	C00001-
6		2A5-62-21370	• • Bracket,Welded	2	C00001-
7		01573-22306	• • Seat,Welded	1	C00001-
8		205-70-72180	• Bushing	2	C00001-
9		20Y-70-32410	• Bushing	2	C00001-
10		205-70-73180	• Bushing	2	C00001-
11		07020-00000	• Fitting, Grease	3	C00001-
12		07145-00090	Seal, Dust	2	C00001-
13		20Y-70-23220	Seal, Dust	2	C00001-
14		20Y-70-23230	Seal, Dust	2	C00001-
15		20Y-70-42220	Pin	1	C00001-
16		205-70-66581	Plate	1	C00001-
17		01010-81230	Bolt	2	C00001-
18		01643-31232	Washer	2	C00001-
19		205-70-51530	Spacer,T=1.5mm	1	C00001-
20		205-70-71190	Pin	1	C00001-
21		205-70-66580	Plate	1	C00001-
22		01010-81230	Bolt	2	C00001-
23		01643-31232	Washer	2	C00001-
24		20Y-70-11290	Spacer,T=0.8mm	1	C00001-
		20Y-70-11310	Spacer,T=1.5mm	3	C00001-

FIG. T1200-002002 Arm (2900mm, Heavy Duty Type, 1-Attachment) (Plug)

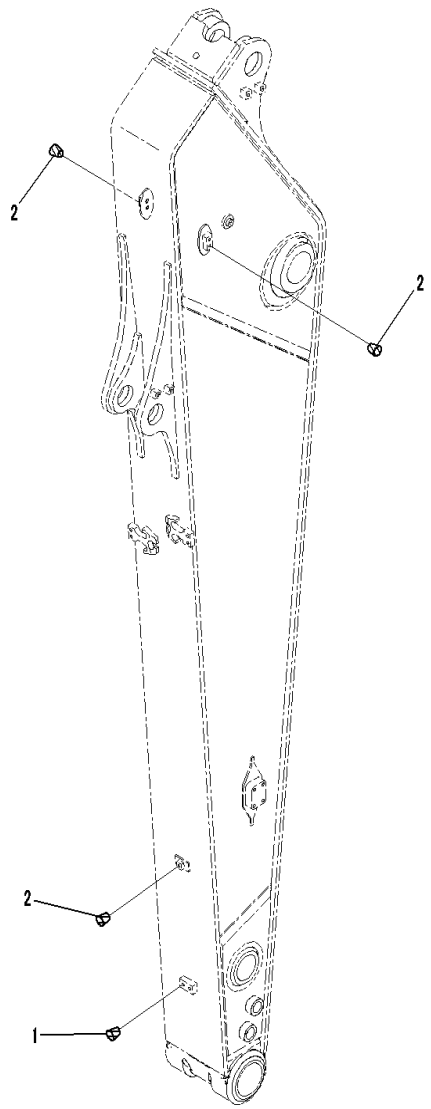

Index	Code	Part Number	Description	Qty	Serial Number
1		07049-01215	Plug	2	C00001-
2		07049-01012	Plug	5	C00001-

FIG. T1200-002003 Arm (100 Hours Lubrication Interval, Multi Dust Cylinder) (Inner Parts, Bucket Cylinder)

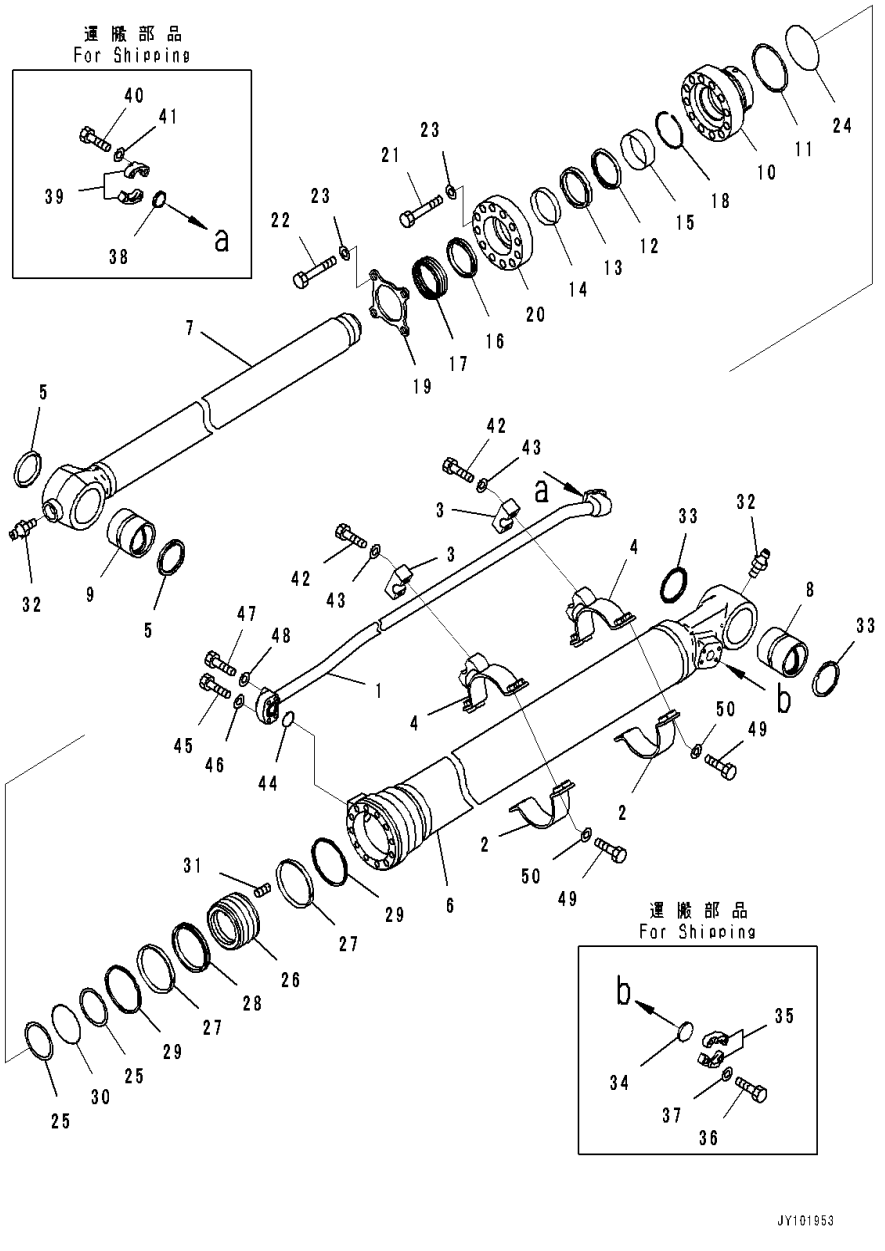

Index	Code	Part Number	Description	Qty	Serial Number
		707-H1-X6170	Cylinder Group	1	C00001-
1		707-86-69140	• Tube	1	C00001-
2		707-88-26660	• Band	2	C00001-
3		707-88-47020	• Clamp	2	C00001-
4		707-88-53090	• Bracket	2	C00001-
		707-G1-06170	• Cylinder Assembly	1	C00001-
5		20Y-70-23220	• • Seal, Dust, (Kit : K43)	2	C00001-
6		707-13-11880	• • Cylinder	1	C00001-
7		707-58-80A20	• • Rod, Piston	1	C00001-
8		707-76-70110	• • Bushing	1	C00001-
9		707-76-70120	• • Bushing	1	C00001-
10		707-27-11860	• • Head, Cylinder	1	C00001-
11		707-35-31060	• • Ring, Back-up, (Kit : K43)	1	C00001-
12		707-51-80650	• • Ring, Buffer, (Kit : K43)	1	C00001-
13		707-51-80860	• • Packing, Rod, (Kit : K43)	1	C00001-
14		707-52-15520	• • Bushing	1	C00001-
15		707-52-90561	• • Bushing	1	C00001-
16		707-56-80770	• • Seal, Dust, (Kit : K43)	1	C00001-
17		707-56-80800	• • Seal, Dust, (Kit : K43)	3	C00001-
18		707-75-80040	• • Ring, Snap	1	C00001-
19		707-88-04980	• • Plate	1	C00001-
20		707-88-47730	• • Housing	1	C00001-
21		01011-81605	• • Bolt	8	C00001-
22		01011-81610	• • Bolt	4	C00001-
23		01643-51645	• • Washer	12	C00001-
24		07000-B5105	• • O-ring, (Kit : K43)	1	C00001-
25		707-35-30800	• • Ring, Back-up, (Kit : K43)	2	C00001-
26		707-36-11A70	• • Piston	1	C00001-
27		707-39-11530	• • Ring, Wear, (Kit : K43)	2	C00001-
28		707-44-11250	• • Ring, Piston, (Kit : K43)	1	C00001-
29		707-44-11920	• • Ring	2	C00001-
30		07000-B5080	• • O-ring, (Kit : K43)	1	C00001-
31		01310-01216	• • Screw	1	C00001-
32		07020-00000	• • Fitting, Grease	2	C00001-
33		07145-00070	• • Seal, Dust, (Kit : K43)	2	C00001-
34		707-88-33040	• Cap	1	C00001-
35		07371-31049	• Flange, Split	2	C00001-
36		07372-21035	• Bolt	4	C00001-
37		01643-51032	• Washer	4	C00001-
38		707-88-33030	• Cap	1	C00001-

FIG. T1200-002003 Arm (100 Hours Lubrication Interval, Multi Dust Cylinder) (Inner Parts, Bucket Cylinder)

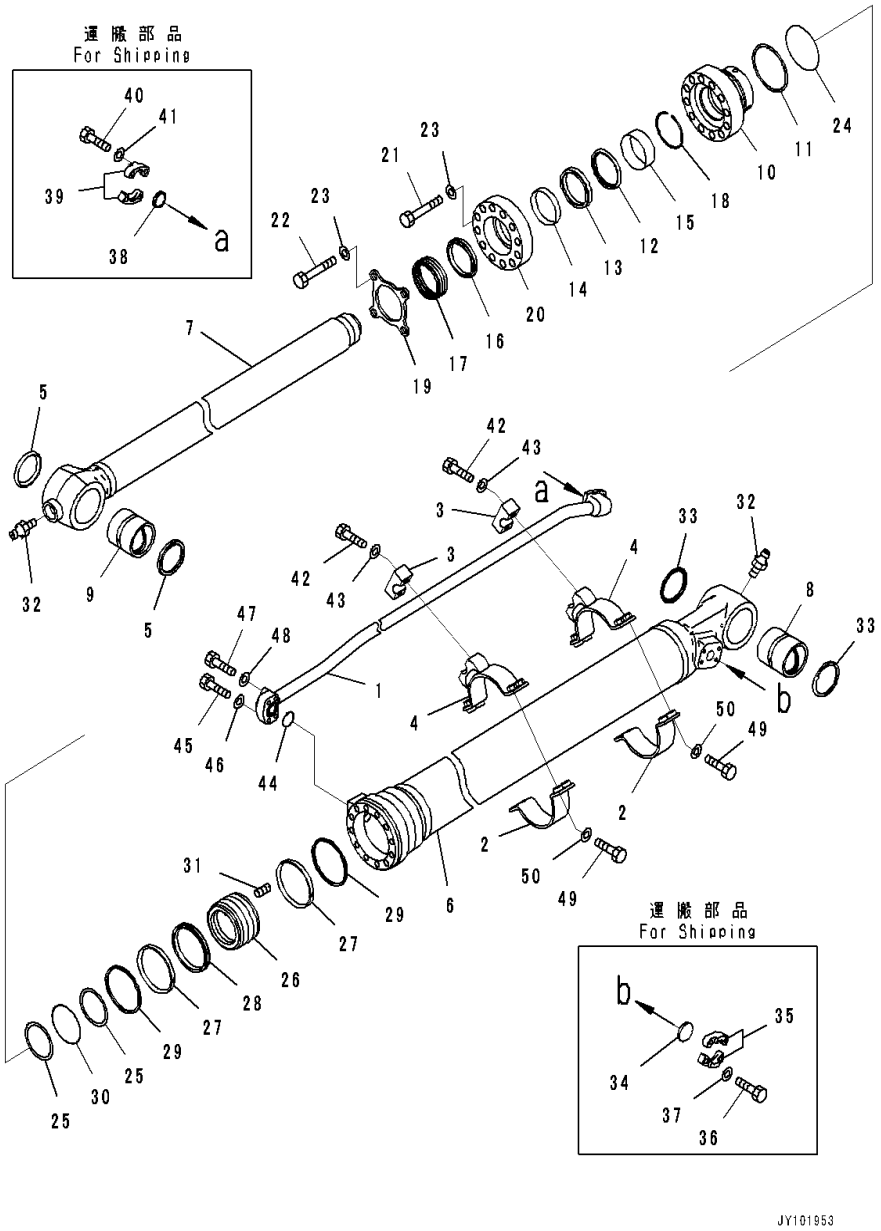

Index	Code	Part Number	Description	Qty	Serial Number
39		07371-30640	• Flange, Split	2	C00001-
40		07372-21035	• Bolt	4	C00001-
41		01643-51032	• Washer	4	C00001-
42		01010-81255	• Bolt	4	C00001-
43		01643-31232	• Washer	4	C00001-
44		07000-B3030	• O-ring, (Kit : K43)	1	C00001-
45		07372-21045	• Bolt	2	C00001-
46		01643-51032	• Washer	2	C00001-
47		07372-21060	• Bolt	2	C00001-
48		01643-51032	• Washer	2	C00001-
49		07372-21240	• Bolt	8	C00001-
50		01643-51232	• Washer	8	C00001-

FIG. T1200-002004 Arm (Bucket Link)

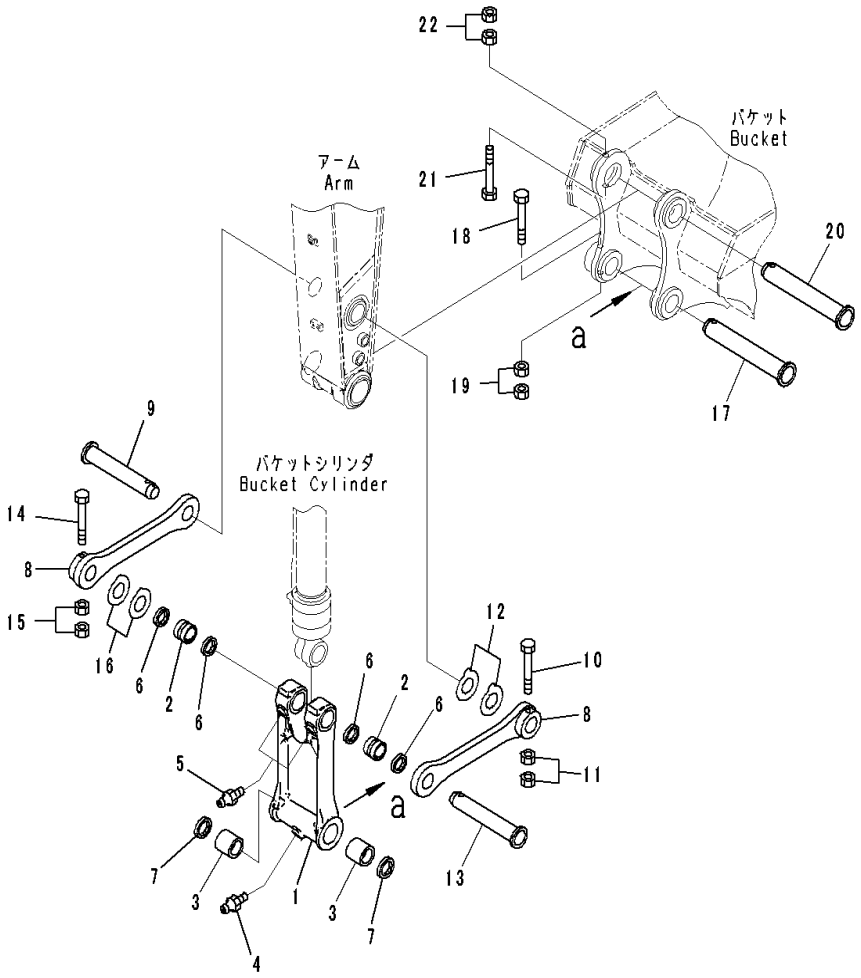

Index	Code	Part Number	Description	Qty	Serial Number
		22U-70-00200	Link Group	1	C00001-
1	C1		• Link	1	C00001-
2		205-70-73180	• Bushing	2	C00001-
3		21K-70-12161	• Bushing	2	C00001-
4		07020-00000	• Fitting, Grease	1	C00001-
5		07020-00000	• Fitting, Grease	2	C00001-
6		20Y-70-23220	• Seal, Dust	4	C00001-
7		20Y-70-23230	• Seal, Dust	2	C00001-
8		205-70-73130	Link	2	C00001-
9		22U-70-21191	Pin	1	C00001-
10		20Y-70-32450	Bolt	1	C00001-
11		01580-12016	Nut	2	C00001-
12		20Y-70-11320	Spacer,T=0.8mm	1	C00001-
		20Y-70-11330	Spacer,T=1.5mm	3	C00001-
13		22U-70-21191	Pin	1	C00001-
14		20Y-70-32450	Bolt	1	C00001-
15		01580-12016	Nut	2	C00001-
16		20Y-70-11320	Spacer,T=0.8mm	1	C00001-
		20Y-70-11330	Spacer,T=1.5mm	4	C00001-
17		205-70-73270	Pin	1	C00001-
18		20Y-70-32450	Bolt	1	C00001-
19		01580-12016	Nut	2	C00001-
20		205-70-73270	Pin	1	C00001-
21		20Y-70-32460	Bolt	1	C00001-
22		01580-12016	Nut	2	C00001-

FIG. T1200-002005 Arm (2900mm, Heavy Duty Type, 1-Attachment) (Bucket Cylinder Hose)

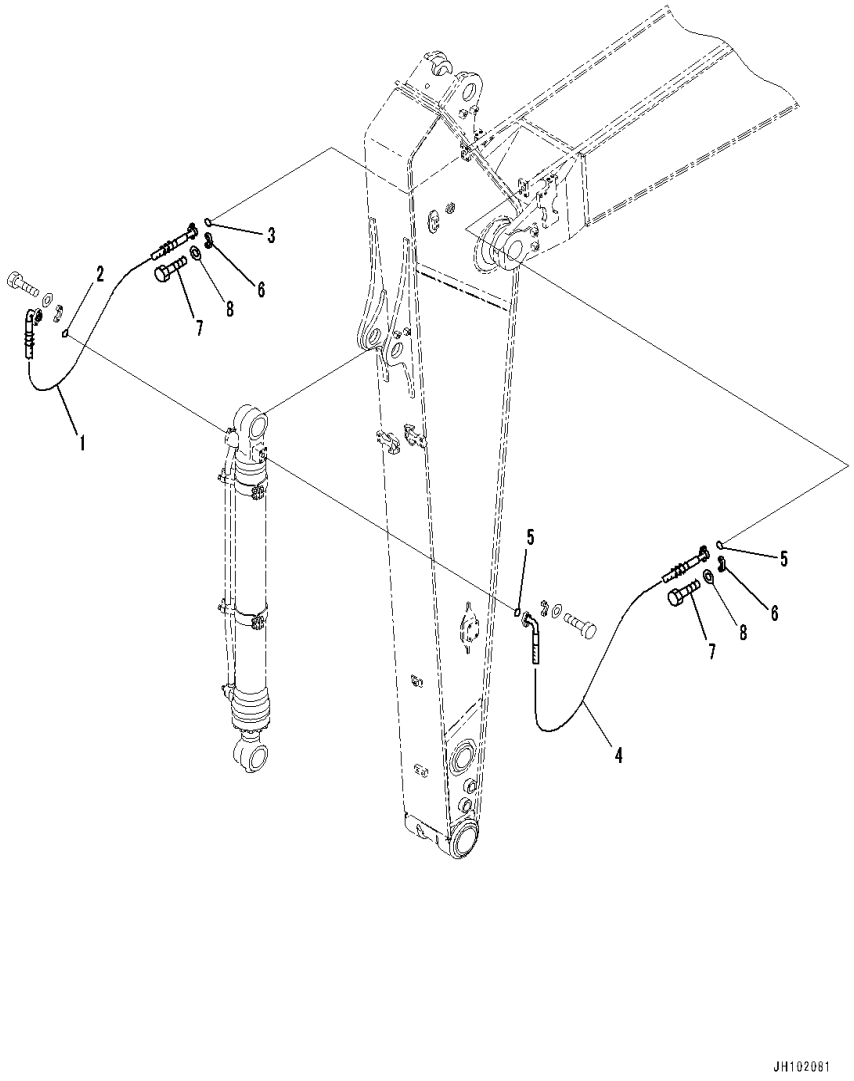

Index	Code	Part Number	Description	Qty	Serial Number
1		2A5-62-28230	Hose	1	C00001-
2		07000-13025	O-ring	1	C00001-
3		07000-13032	O-ring	1	C00001-
4		22U-62-34611	Hose	1	C00001-
5		07000-13032	O-ring	2	C00001-
6		07371-31049	Flange, Split	4	C00001-
7		07372-21035	Bolt	8	C00001-
8		01643-51032	Washer	8	C00001-

FIG. T1200-002006 Arm (2900mm, Heavy Duty Type, 1-Attachment) (Additional Piping)

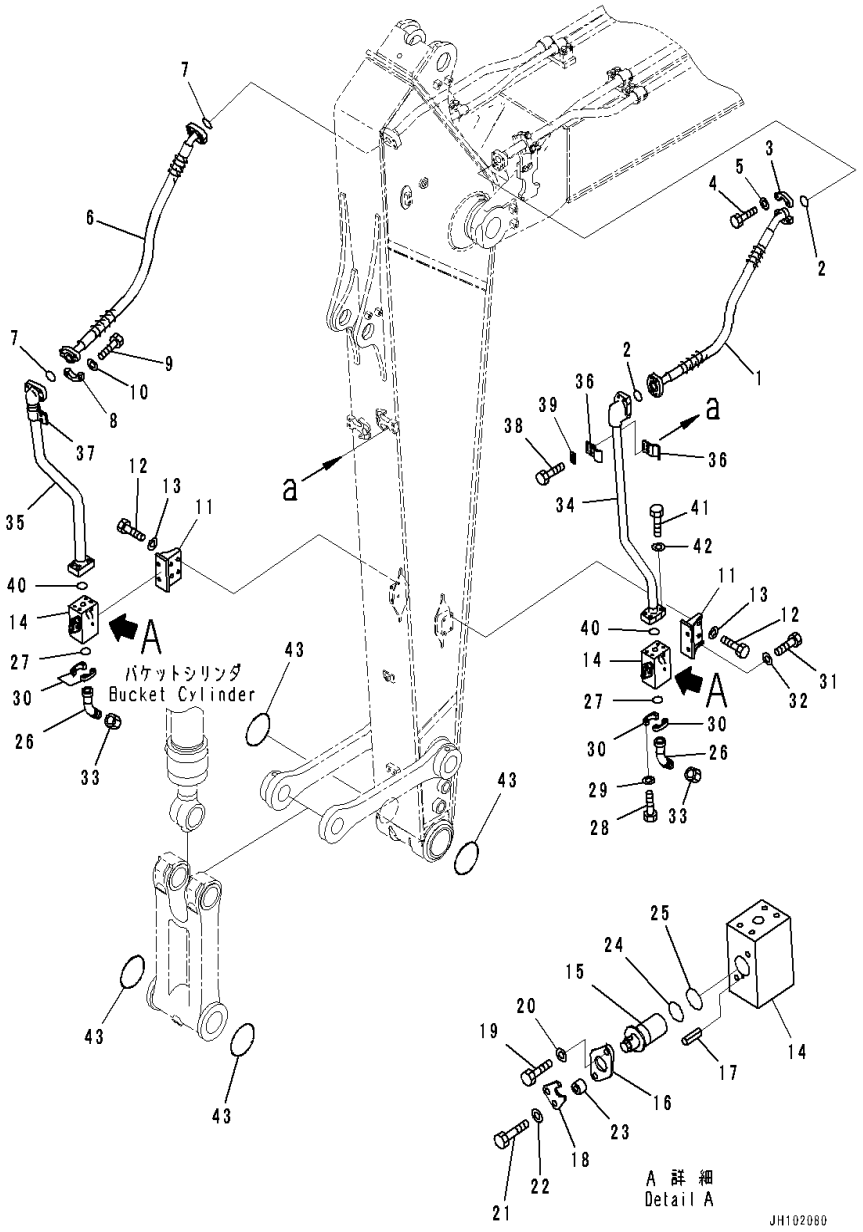

Index	Code	Part Number	Description	Qty	Serial Number
1		07097-21015	Hose, Flange Type	1	C00001-
2		07000-13032	O-ring	2	C00001-
3		07371-31049	Flange, Split	4	C00001-
4		07372-21035	Bolt	8	C00001-
5		01643-51032	Washer	8	C00001-
6		07097-21218	Hose, Flange Type	1	C00001-
7		07000-13038	O-ring	2	C00001-
8		07371-51260	Flange, Split	4	C00001-
9		01010-81245	Bolt	8	C00001-
10		01643-31232	Washer	8	C00001-
11		20Y-970-5321	Bracket	2	C00001-
12		01010-81230	Bolt	8	C00001-
13		01643-31232	Washer	8	C00001-
		20Y-970-5300	Valve Assembly	2	C00001-
14	C1		• Body	1	C00001-
15		20Y-970-5240	• Shaft	1	C00001-
16		20Y-970-3270	• Cover	1	C00001-
17		04025-00412	• Pin, Spring	1	C00001-
18		20Y-970-4612	• Plate	1	C00001-
19		01010-81025	• Bolt	1	C00001-
20		01643-31032	• Washer	1	C00001-
21		01010-81045	• Bolt	1	C00001-
22		01643-31032	• Washer	1	C00001-
23		201-03-29160	• Spacer	1	C00001-
24		07000-B3032	• O-ring	1	C00001-
25		07000-B3038	• O-ring	1	C00001-
26		207-970-2110	Elbow	2	C00001-
27		07000-13038	O-ring	2	C00001-
28		01010-81245	Bolt	8	C00001-
29		01643-31232	Washer	8	C00001-
30		07371-51260	Flange, Split	4	C00001-
31		01010-81230	Bolt	4	C00001-
32		01643-31232	Washer	4	C00001-
33		205-970-5770	Cap	2	C00001-
34		20Y-62-55340	Tube	1	C00001-
35		20Y-62-57491	Tube	1	C00001-
36		207-62-31330	Clamp	2	C00001-
37		207-970-7310	Clamp	2	C00001-
38		01010-81230	Bolt	4	C00001-
39		20Y-62-13450	Plate	2	C00001-

FIG. T1200-002006 Arm (2900mm, Heavy Duty Type, 1-Attachment) (Additional Piping)

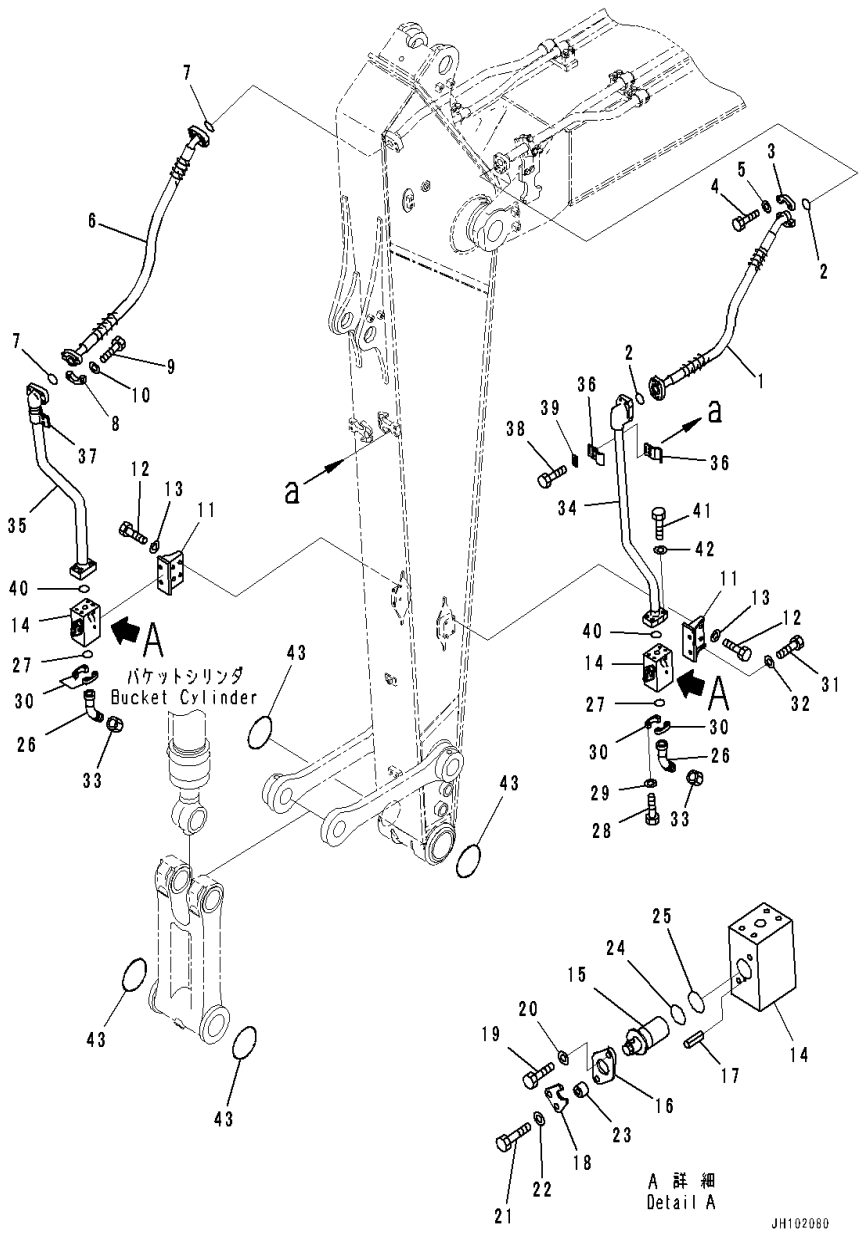

Index	Code	Part Number	Description	Qty	Serial Number
40		07000-13038	O-ring	2	C00001-
41		01010-81245	Bolt	8	C00001-
42		01643-31232	Washer	8	C00001-
43		205-70-73280	O-ring	4	C00001-

FIG. T1200-003001 Arm (2400mm, Heavy Duty Type, 1-Attachment,100 Hours Lubrication Interval) (Arm and Pin)

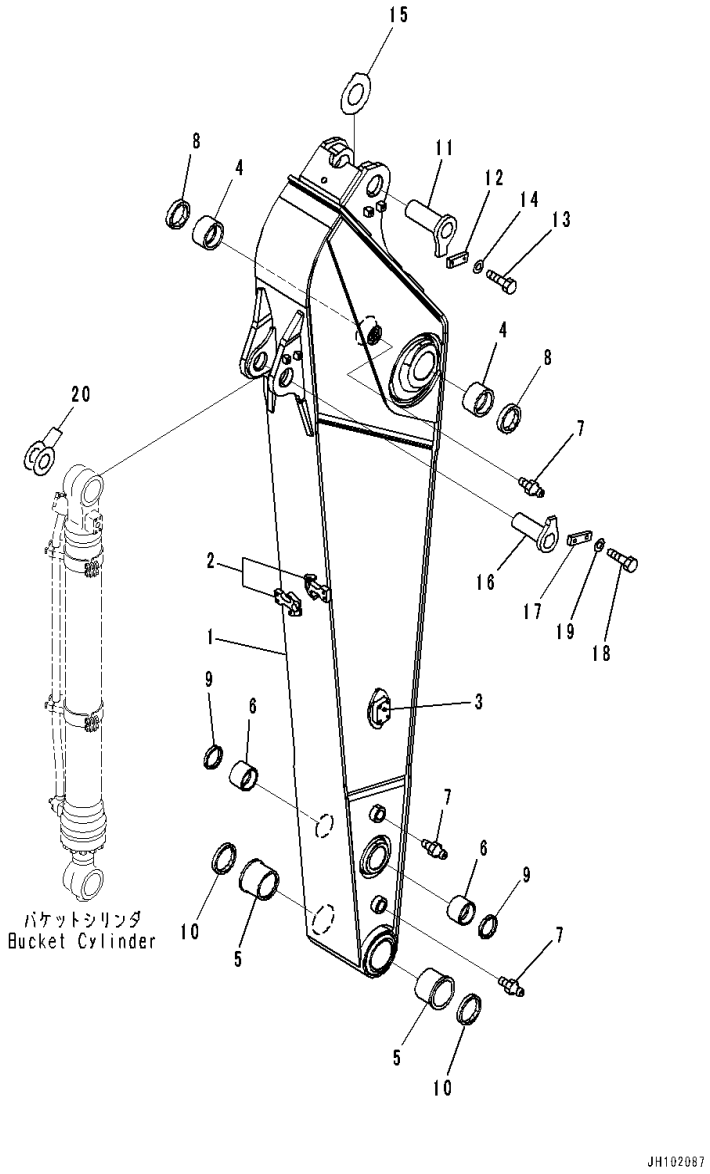

Index	Code	Part Number	Description	Qty	Serial Number
		20Y-70-01390	Arm Assembly	1	C00001-
1	C1		• Arm	1	C00001-
2		20Y-70-42E51	• • Plate,Welded	2	C00001-
3		20Y-970-3572	• • Bracket,Welded	2	C00001-
4		205-70-72180	• Bushing	2	C00001-
5		20Y-70-32410	• Bushing	2	C00001-
6		205-70-73180	• Bushing	2	C00001-
7		07020-00000	Fitting, Grease	3	C00001-
8		07145-00090	Seal, Dust	2	C00001-
9		20Y-70-23220	Seal, Dust	2	C00001-
10		20Y-70-23230	Seal, Dust	2	C00001-
11		20Y-70-42220	Pin	1	C00001-
12		205-70-66581	Plate	1	C00001-
13		01010-81230	Bolt	2	C00001-
14		01643-31232	Washer	2	C00001-
15		205-70-51530	Spacer,T=1.5mm	1	C00001-
16		205-70-71190	Pin	1	C00001-
17		205-70-66580	Plate	1	C00001-
18		01010-81230	Bolt	2	C00001-
19		01643-31232	Washer	2	C00001-
20		20Y-70-11290	Spacer,T=0.8mm	1	C00001-
		20Y-70-11310	Spacer,T=1.5mm	3	C00001-

FIG. T1200-003002 Arm (100 Hours Lubrication Interval, Multi Dust Cylinder) (Inner Parts, Bucket Cylinder)

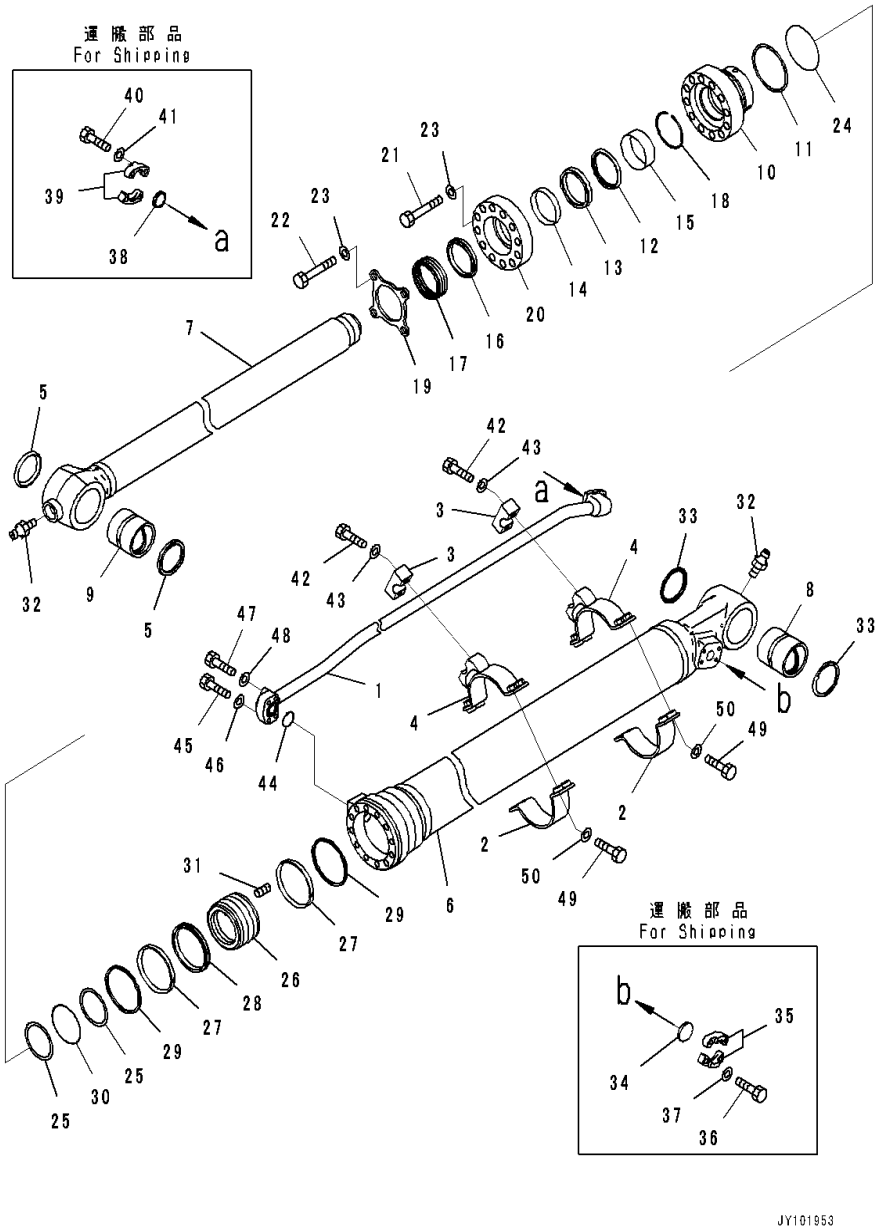

Index	Code	Part Number	Description	Qty	Serial Number
		707-H1-X6170	Cylinder Group	1	C00001-
1		707-86-69140	• Tube	1	C00001-
2		707-88-26660	• Band	2	C00001-
3		707-88-47020	• Clamp	2	C00001-
4		707-88-53090	• Bracket	2	C00001-
		707-G1-06170	• Cylinder Assembly	1	C00001-
5		20Y-70-23220	• • Seal, Dust, (Kit : K43)	2	C00001-
6		707-13-11880	• • Cylinder	1	C00001-
7		707-58-80A20	• • Rod, Piston	1	C00001-
8		707-76-70110	• • Bushing	1	C00001-
9		707-76-70120	• • Bushing	1	C00001-
10		707-27-11860	• • Head, Cylinder	1	C00001-
11		707-35-31060	• • Ring, Back-up, (Kit : K43)	1	C00001-
12		707-51-80650	• • Ring, Buffer, (Kit : K43)	1	C00001-
13		707-51-80860	• • Packing, Rod, (Kit : K43)	1	C00001-
14		707-52-15520	• • Bushing	1	C00001-
15		707-52-90561	• • Bushing	1	C00001-
16		707-56-80770	• • Seal, Dust, (Kit : K43)	1	C00001-
17		707-56-80800	• • Seal, Dust, (Kit : K43)	3	C00001-
18		707-75-80040	• • Ring, Snap	1	C00001-
19		707-88-04980	• • Plate	1	C00001-
20		707-88-47730	• • Housing	1	C00001-
21		01011-81605	• • Bolt	8	C00001-
22		01011-81610	• • Bolt	4	C00001-
23		01643-51645	• • Washer	12	C00001-
24		07000-B5105	• • O-ring, (Kit : K43)	1	C00001-
25		707-35-30800	• • Ring, Back-up, (Kit : K43)	2	C00001-
26		707-36-11A70	• • Piston	1	C00001-
27		707-39-11530	• • Ring, Wear, (Kit : K43)	2	C00001-
28		707-44-11250	• • Ring, Piston, (Kit : K43)	1	C00001-
29		707-44-11920	• • Ring	2	C00001-
30		07000-B5080	• • O-ring, (Kit : K43)	1	C00001-
31		01310-01216	• • Screw	1	C00001-
32		07020-00000	• • Fitting, Grease	2	C00001-
33		07145-00070	• • Seal, Dust, (Kit : K43)	2	C00001-
34		707-88-33040	• Cap	1	C00001-
35		07371-31049	• Flange, Split	2	C00001-
36		07372-21035	• Bolt	4	C00001-
37		01643-51032	• Washer	4	C00001-
38		707-88-33030	• Cap	1	C00001-

FIG. T1200-003002 Arm (100 Hours Lubrication Interval, Multi Dust Cylinder) (Inner Parts, Bucket Cylinder)

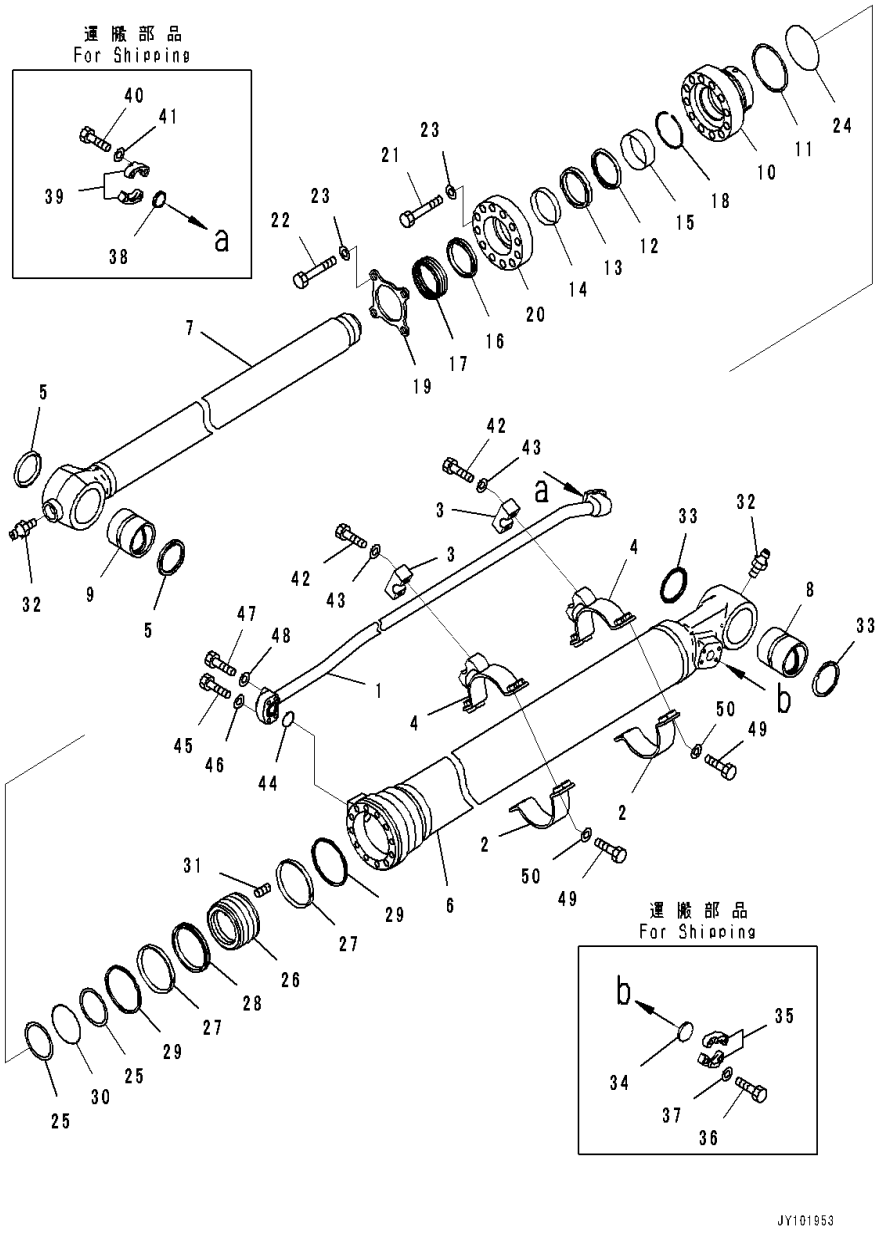

Index	Code	Part Number	Description	Qty	Serial Number
39		07371-30640	• Flange, Split	2	C00001-
40		07372-21035	• Bolt	4	C00001-
41		01643-51032	• Washer	4	C00001-
42		01010-81255	• Bolt	4	C00001-
43		01643-31232	• Washer	4	C00001-
44		07000-B3030	• O-ring, (Kit : K43)	1	C00001-
45		07372-21045	• Bolt	2	C00001-
46		01643-51032	• Washer	2	C00001-
47		07372-21060	• Bolt	2	C00001-
48		01643-51032	• Washer	2	C00001-
49		07372-21240	• Bolt	8	C00001-
50		01643-51232	• Washer	8	C00001-

FIG. T1200-003003 Arm (Bucket Link)

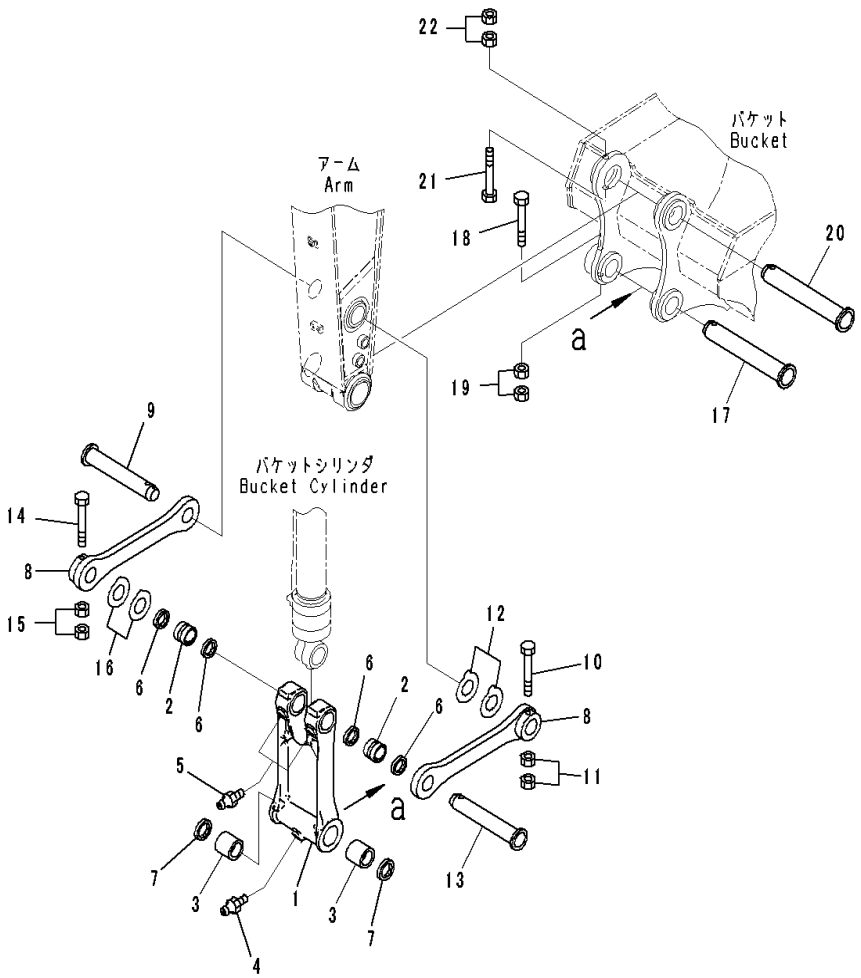

Index	Code	Part Number	Description	Qty	Serial Number
		22U-70-00200	Link Group	1	C00001-
1	C1		• Link	1	C00001-
2		205-70-73180	• Bushing	2	C00001-
3		21K-70-12161	• Bushing	2	C00001-
4		07020-00000	• Fitting, Grease	1	C00001-
5		07020-00000	• Fitting, Grease	2	C00001-
6		20Y-70-23220	• Seal, Dust	4	C00001-
7		20Y-70-23230	• Seal, Dust	2	C00001-
8		205-70-73130	Link	2	C00001-
9		22U-70-21191	Pin	1	C00001-
10		20Y-70-32450	Bolt	1	C00001-
11		01580-12016	Nut	2	C00001-
12		20Y-70-11320	Spacer,T=0.8mm	1	C00001-
		20Y-70-11330	Spacer,T=1.5mm	3	C00001-
13		22U-70-21191	Pin	1	C00001-
14		20Y-70-32450	Bolt	1	C00001-
15		01580-12016	Nut	2	C00001-
16		20Y-70-11320	Spacer,T=0.8mm	1	C00001-
		20Y-70-11330	Spacer,T=1.5mm	4	C00001-
17		205-70-73270	Pin	1	C00001-
18		20Y-70-32450	Bolt	1	C00001-
19		01580-12016	Nut	2	C00001-
20		205-70-73270	Pin	1	C00001-
21		20Y-70-32460	Bolt	1	C00001-
22		01580-12016	Nut	2	C00001-

FIG. T1200-003004 Arm (2400mm, Heavy Duty Type, 1-Attachment) (Bucket Cylinder Hose)

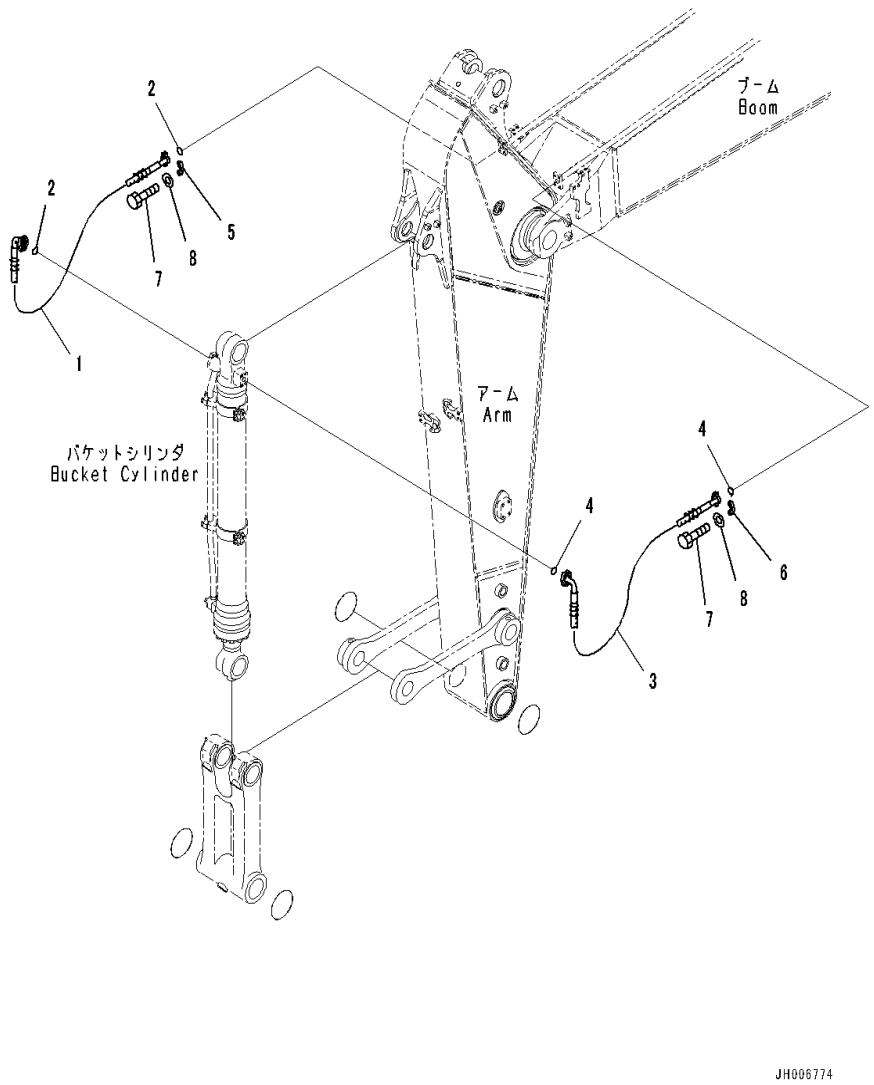

Index	Code	Part Number	Description	Qty	Serial Number
1		20Y-62-13412	Hose	1	C00001-
2		07000-13025	O-ring	2	C00001-
3		206-62-31991	Hose	1	C00001-
4		07000-13032	O-ring	2	C00001-
5		07371-30640	Flange, Split	4	C00001-
6		07371-31049	Flange, Split	4	C00001-
7		07372-21035	Bolt	16	C00001-
8		01643-51032	Washer	16	C00001-

FIG. T1200-003005 Arm (2400mm, Heavy Duty Type, 1-Attachment) (Additional Piping)

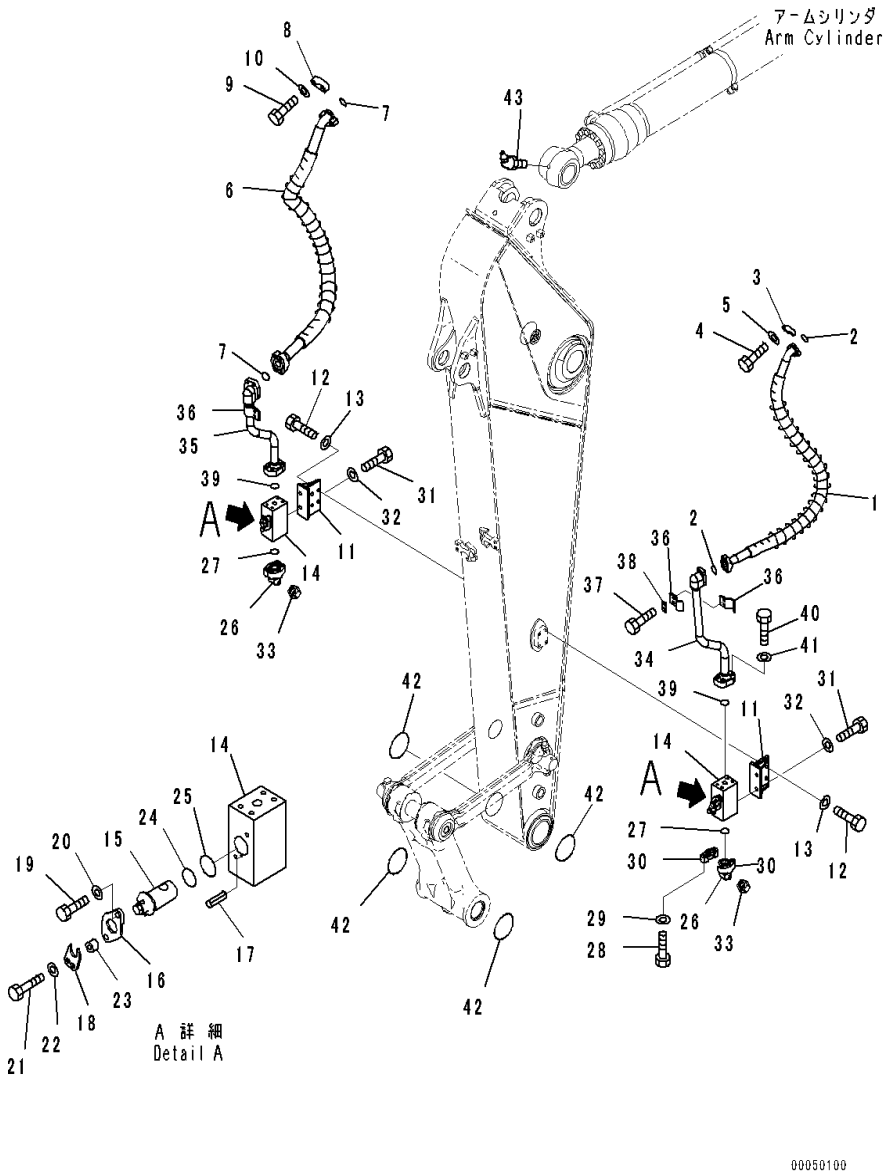

Index	Code	Part Number	Description	Qty	Serial Number
1		07097-21015	Hose, Flange Type	1	C00001-
2		07000-13032	O-ring	2	C00001-
3		07371-31049	Flange, Split	4	C00001-
4		07372-21035	Bolt	8	C00001-
5		01643-51032	Washer	8	C00001-
6		07097-21218	Hose, Flange Type	1	C00001-
7		07000-13038	O-ring	2	C00001-
8		07371-51260	Flange, Split	4	C00001-
9		01010-81245	Bolt	8	C00001-
10		01643-31232	Washer	8	C00001-
11		20Y-970-5321	Bracket	2	C00001-
12		01010-81230	Bolt	8	C00001-
13		01643-31232	Washer	8	C00001-
		20Y-970-5300	Valve Assembly	2	C00001-
14	C1		• Body	1	C00001-
15		20Y-970-5240	• Shaft	1	C00001-
16		20Y-970-3270	• Cover	1	C00001-
17		04025-00412	• Pin, Spring	1	C00001-
18		20Y-970-4612	• Plate	1	C00001-
19		01010-81025	• Bolt	1	C00001-
20		01643-31032	• Washer	1	C00001-
21		01010-81045	• Bolt	1	C00001-
22		01643-31032	• Washer	1	C00001-
23		201-03-29160	• Spacer	1	C00001-
24		07000-B3032	• O-ring	1	C00001-
25		07000-B3038	• O-ring	1	C00001-
26		207-970-2110	Elbow	2	C00001-
27		07000-13038	O-ring	2	C00001-
28		01010-81245	Bolt	8	C00001-
29		01643-31232	Washer	8	C00001-
30		07371-51260	Flange, Split	4	C00001-
31		01010-81230	Bolt	4	C00001-
32		01643-31232	Washer	4	C00001-
33		205-970-5770	Cap	2	C00001-
34		20Y-970-5631	Tube	1	C00001-
35		20Y-970-5641	Tube	1	C00001-
36		207-62-31330	Clamp	4	C00001-
37		01010-81230	Bolt	4	C00001-
38		20Y-62-13450	Plate	2	C00001-
39		07000-13038	O-ring	2	C00001-

FIG. T1200-003005 Arm (2400mm, Heavy Duty Type, 1-Attachment) (Additional Piping)

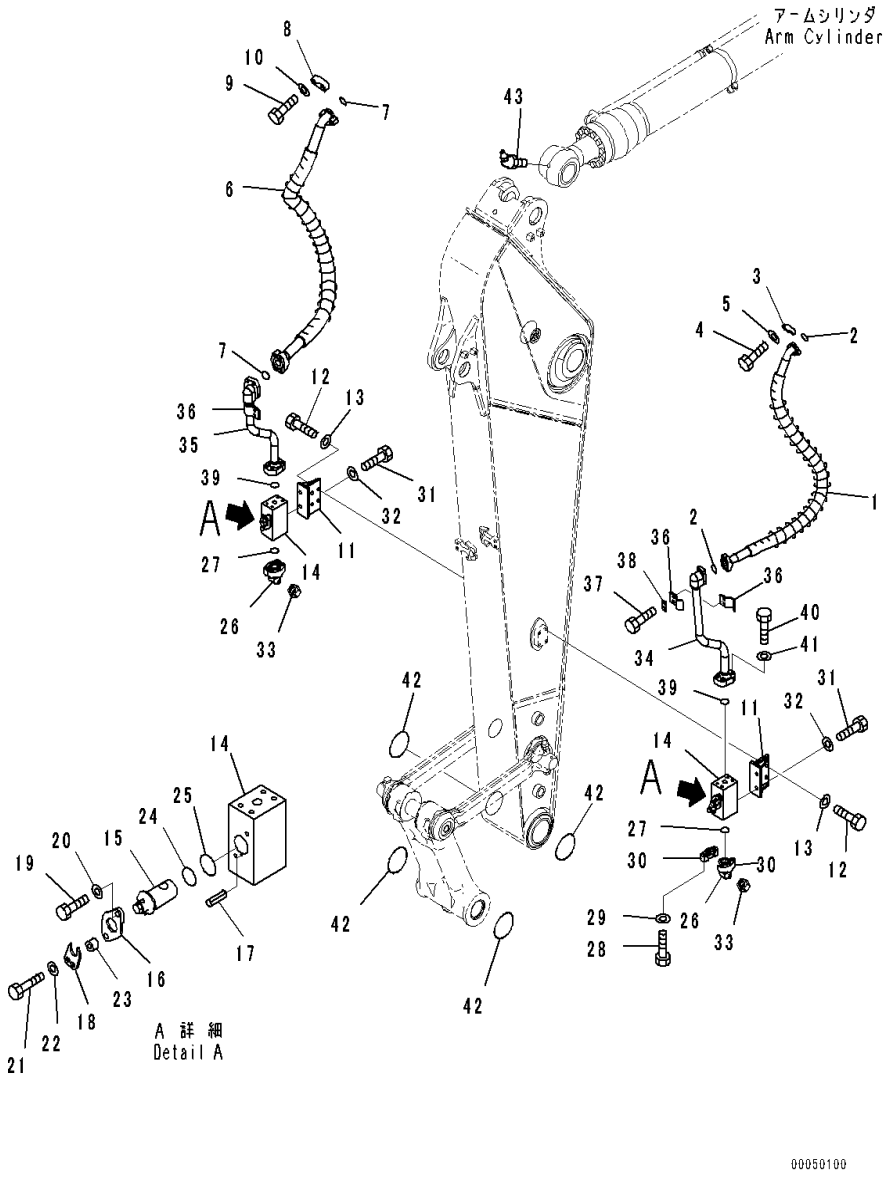

Index	Code	Part Number	Description	Qty	Serial Number
40		01010-81245	Bolt	8	C00001-
41		01643-31232	Washer	8	C00001-
42		205-70-73280	O-ring	4	C00001-
43		07020-00675	Fitting, Grease	1	C00001-

FIG. T1290-001001 Shipping Parts

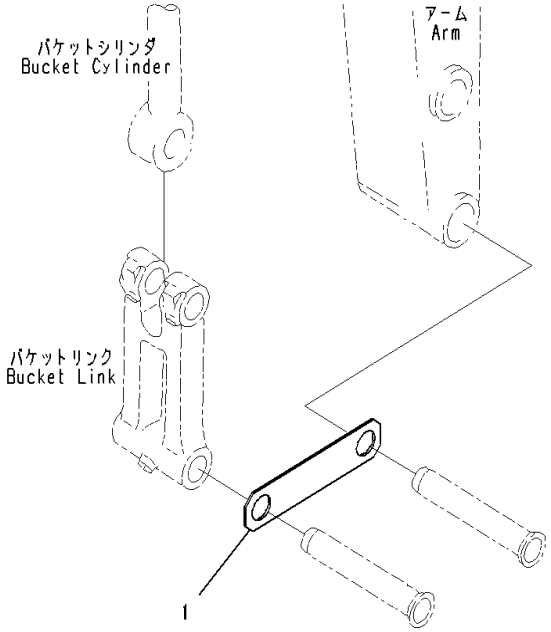

PEB3804

Index	Code	Part Number	Description	Qty	Serial Number
1		207-70-33220	Plate	1	C00001-

FIG. T1510-006001 Bucket (1.00m3, 1085mm Width, Horizontal Pin Type, Side Cutter, Bottom Wear Plate)

Index	Code	Part Number	Description	Qty	Serial Number
1		776-920-4C22	Bucket	1	C00001-
	C1		• Bucket	1	C00001-
2		20Y-934-C242	• • Plate, L.H., Welded	1	C00001-
3		20Y-934-C252	• • Plate, R.H., Welded	1	C00001-
4		20Y-934-C340	• • Plate, Welded	1	C00001-
5		20Y-70-14520	• • Adapter, Welded	5	C00001-
6		20Y-934-C141	• Plate, Welded	9	C00001-
7		20Y-934-C151	• Plate, Welded	18	C00001-
8		205-70-19570	Tooth	5	C00001-
9		09244-02496	Pin	5	C00001-
10		205-70-74180	Cutter, L.H.	1	C00001-
11		205-70-74190	Cutter, R.H.	1	C00001-
12		176-32-11210	Bolt	8	C00001-
13		01803-02430	Nut	8	C00001-
14		205-70-00100	Shim Assembly	1	C00001-
	C1		• Shim, T=1.0mm	8	C00001-
	C1		• Shim, T=0.5mm	4	C00001-
15		205-70-74381	Spacer	1	C00001-
16		205-70-74391	Plate	1	C00001-
17		01010-62055	Bolt	4	C00001-
18		01643-32060	Washer	4	C00001-
19	C2	(09601-80000)	Plate, Name (Limited Supply)	1	C00001-
20		04418-13060	Screw	4	C00001-

FIG. T1510-007001 Bucket (1.00m3, 1085mm Width, Horizontal Pin Type, Side Cutter, Bottom Wear Plate, Hook)

Index	Code	Part Number	Description	Qty	Serial Number
1		776-920-4C41	Bucket	1	C00001-
		776-920-4C22	• Bucket	1	C00001-
	C1		• • Bucket	1	C00001-
2		20Y-934-C242	• • • Plate, L.H., Welded	1	C00001-
3		20Y-934-C252	• • • Plate, R.H., Welded	1	C00001-
4		20Y-934-C340	• • • Plate, Welded	1	C00001-
5		20Y-70-14520	• • • Adapter, Welded	5	C00001-
6		20Y-934-C141	• • Plate, Welded	9	C00001-
7		20Y-934-C151	• • Plate, Welded	18	C00001-
8		20Y-920-C510	• Hook, MT50, Welded	1	C00001-
9		205-70-19570	Tooth	5	C00001-
10		09244-02496	Pin	5	C00001-
11		205-70-74180	Cutter, L.H.	1	C00001-
12		205-70-74190	Cutter, R.H.	1	C00001-
13		176-32-11210	Bolt	8	C00001-
14		01803-02430	Nut	8	C00001-
15		205-70-00100	Shim Assembly	1	C00001-
	C1		• Shim, T=1.0mm	8	C00001-
	C1		• Shim, T=0.5mm	4	C00001-
16		205-70-74381	Spacer	1	C00001-
17		205-70-74391	Plate	1	C00001-
18		01010-62055	Bolt	4	C00001-
19		01643-32060	Washer	4	C00001-
20	C2	(09601-80000)	Plate, Name (Limited Supply)	1	C00001-
21		04418-13060	Screw	4	C00001-

FIG. T1510-008001 Bucket (0.94m3, 1220mm Width, Horizontal Pin Type, Side Cutter, Hook)

Index	Code	Part Number	Description	Qty	Serial Number
1		20Y-70-C1270	Bucket	1	C00001-
	C1		• Bucket	1	C00001-
2		20Y-70-59D10	• • Plate, Welded	1	C00001-
3		20Y-70-59D20	• • Plate, L.H., Welded	1	C00001-
4		20Y-70-59D30	• • Plate, R.H., Welded	1	C00001-
5		20Y-70-14520	• • Adapter, Welded	5	C00001-
6		20Y-920-C510	• Hook, MT50, Welded	1	C00001-
7		205-70-19570	Tooth	5	C00001-
8		09244-02496	Pin	5	C00001-
9		205-70-74391	Plate	1	C00001-
10		01010-62055	Bolt	4	C00001-
11		01643-32060	Washer	4	C00001-
12		205-70-74180	Cutte, L.H.	1	C00001-
13		205-70-74190	Cutter, R.H.	1	C00001-
14		176-32-11210	Bolt	8	C00001-
15		01803-02430	Nut	8	C00001-
16		205-70-00100	Shim Assembly	1	C00001-
	C1		• Shim, T=1.0mm	8	C00001-
	C1		• Shim, T=0.5mm	4	C00001-
17		205-70-74381	Spacer	1	C00001-
18	C2	(09601-80000)	Plate, Name (Limited Supply)	1	C00001-
19		04418-13060	Screw	4	C00001-

FIG. T1510-009001 Bucket (1.20m3, 1200mm Width, Horizontal Pin Type, Side Cutter, Hook)

Index	Code	Part Number	Description	Qty	Serial Number
1		20Y-70-C1280	Bucket	1	C00001-
	C1		• Bucket	1	C00001-
2		20Y-70-59H50	• • Plate, L.H., Welded	1	C00001-
3		20Y-70-59H60	• • Plate, R.H., Welded	1	C00001-
4		20Y-70-59H80	• • Plate, Welded	1	C00001-
5		20Y-70-14520	• • Adapter, Welded	5	C00001-
6		20Y-920-C510	• Hook, MT50, Welded	1	C00001-
7		205-70-19570	Tooth	5	C00001-
8		09244-02496	Pin	5	C00001-
9		205-70-74391	Plate	1	C00001-
10		01010-62055	Bolt	4	C00001-
11		01643-32060	Washer	4	C00001-
12		205-70-74180	Cutte, L.H.	1	C00001-
13		205-70-74190	Cutter, R.H.	1	C00001-
14		176-32-11210	Bolt	8	C00001-
15		01803-02430	Nut	8	C00001-
16		205-70-00100	Shim Assembly	1	C00001-
	C1		• Shim, T=1.0mm	8	C00001-
	C1		• Shim, T=0.5mm	4	C00001-
17		205-70-74381	Spacer	1	C00001-
18	C2	(09601-80000)	Plate, Name (Limited Supply)	1	C00001-
19		04418-13060	Screw	4	C00001-

FIG. T1510-010001 Bucket (1.00m3, 1085mm Width, Horizontal Pin Type, Side Cutter, Wear Plate, K-MAX Tooth)

Index	Code	Part Number	Description	Qty	Serial Number
1		776-939-4C10	Bucket	1	C00001-
	C1		• Bucket	1	C00001-
2		20Y-939-C210	• • Plate, L.H., (Welded)	1	C00001-
3		20Y-939-C220	• • Plate, R.H., (Welded)	1	C00001-
4		20Y-939-C230	• • Plate, (Welded)	1	C00001-
5		206-70-24210	• • Adapter, (Welded)	5	C00001-
6		20Y-934-C141	• Plate	9	C00001-
7		20Y-934-C151	• Plate	18	C00001-
8		775-920-4K10	Tooth	5	C00001-
9		775-920-4K20	Pin Assembly	5	C00001-
10		205-70-74180	Cutter, L.H.	1	C00001-
11		205-70-74190	Cutter, R.H.	1	C00001-
12		176-32-11210	Bolt	8	C00001-
13		01803-02430	Nut	8	C00001-
14		205-70-00100	Shim Assembly	1	C00001-
	C1		• Shim, T=1.0mm	8	C00001-
	C1		• Shim, T=0.5mm	4	C00001-
15		205-70-74381	Spacer	1	C00001-
16		205-70-74391	Plate	1	C00001-
17		01010-62055	Bolt	4	C00001-
18		01643-32060	Washer	4	C00001-
19	C2	09601-80000	Plate, Name (Limited Supply)	1	C00001-
20		04418-13060	Screw	4	C00001-

FIG. T1930-001001 Bucket Less Parts (Bolt, Short)

Index	Code	Part Number	Description	Qty	Serial Number
1		20Y-70-32450	Bolt	1	C00001-

MARKS AND PLATES

FIG. U0100-001001 Marks and Plates

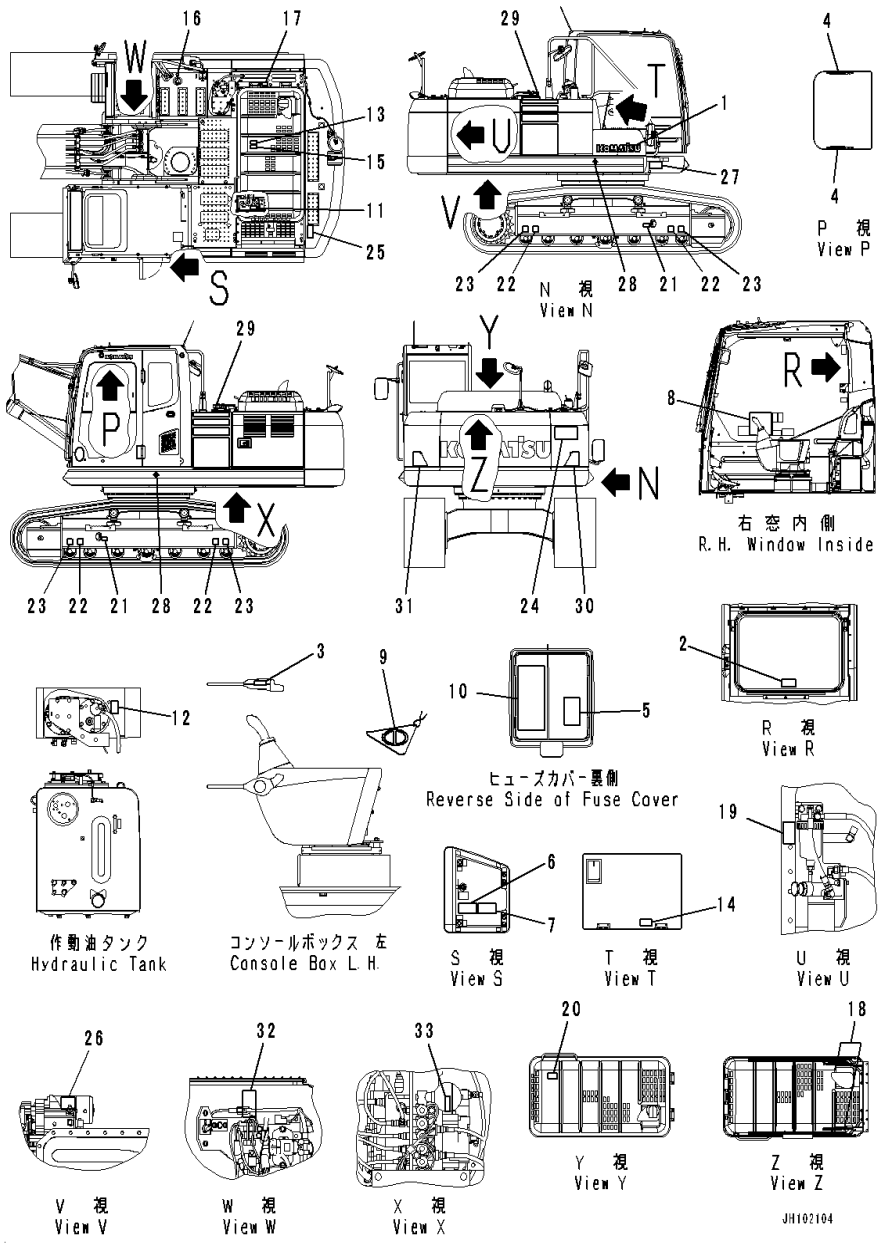

Index	Code	Part Number	Description	Qty	Serial Number
1		09690-P0630	Plate, Komatsu Logo	1	C00001-
2		09844-00050	Plate, Emergency Exit	1	C00001-
3		09685-00002	Plate, Symbol, Lock/Unlock	1	C00001-
4		09659-A057B	Plate, Warning, Explosion Hazard	2	C00001-
5		206-00-K1010	Plate, Emergency Pump Drive and Swing Parking Cancel	1	C00001-
6		208-00-71262	Plate	1	C00001-
7		2A5-00-11480	Plate	1	C00001-
8		21M-00-31371	Plate	1	C00001-
9		09963-A1640	Tag, Danger, Do Not Operate	1	C00001-
10		20Y-00-56141	Plate	1	C00001-
11		09653-A0481	Plate, Warning, High Temperature	1	C00001-
12		09653-A0481	Plate, Warning, High Temperature	1	C00001-
13		09805-C0481	Plate, Caution, Do Not Get On	1	C00001-
14		09808-A0881	Plate, Warning, Battery Cables	1	C00001-
15		09667-A0481	Plate, Caution, Rotating Object	1	C00001-
16		09669-0000E	Plate, Symbol, Fuel Filler	1	C00001-
17		09805-C0481	Plate, Caution, Do Not Get On	1	C00001-
18		09659-A057B	Plate, Warning, Explosion Hazard	2	C00001-
19		20Y-00-41341	Plate, Caution	1	C00001-
20		20Y-00-41490	Plate	1	C00001-
21		09657-A0881	Plate, Warning, Track Adjustment	2	C00001-
22		09960-00801	Mark, Lift Point	4	C00001-
23		09960-00802	Mark, Tie Down Point	4	C00001-
24		09133-A3281	Plate, Danger, Keep Off Swing Area	1	C00001-
25		09805-A0881	Plate, Caution, Do Not Approach	1	C00001-
26		09842-A0482	Plate, Warning, No Jump Start	1	C00001-
27		20Y-00-31840	Plate, Lift Point	1	C00001-
28		21U-98-31160	Plate, Mark,Location Of Center Of	2	C00001-
29		20Y-00-56170	Plate	2	C00001-
30		2A5-00-11410	Plate, Reflector	1	C00001-
31		2A5-00-11420	Plate, Reflector	1	C00001-
32		09842-A0482	Plate, Warning, No Jump Start	1	C00001-
33		09659-A057B	Plate, Warning, Explosion Hazard	1	C00001-

FIG. U0100-002001 Marks and Plates, For LC

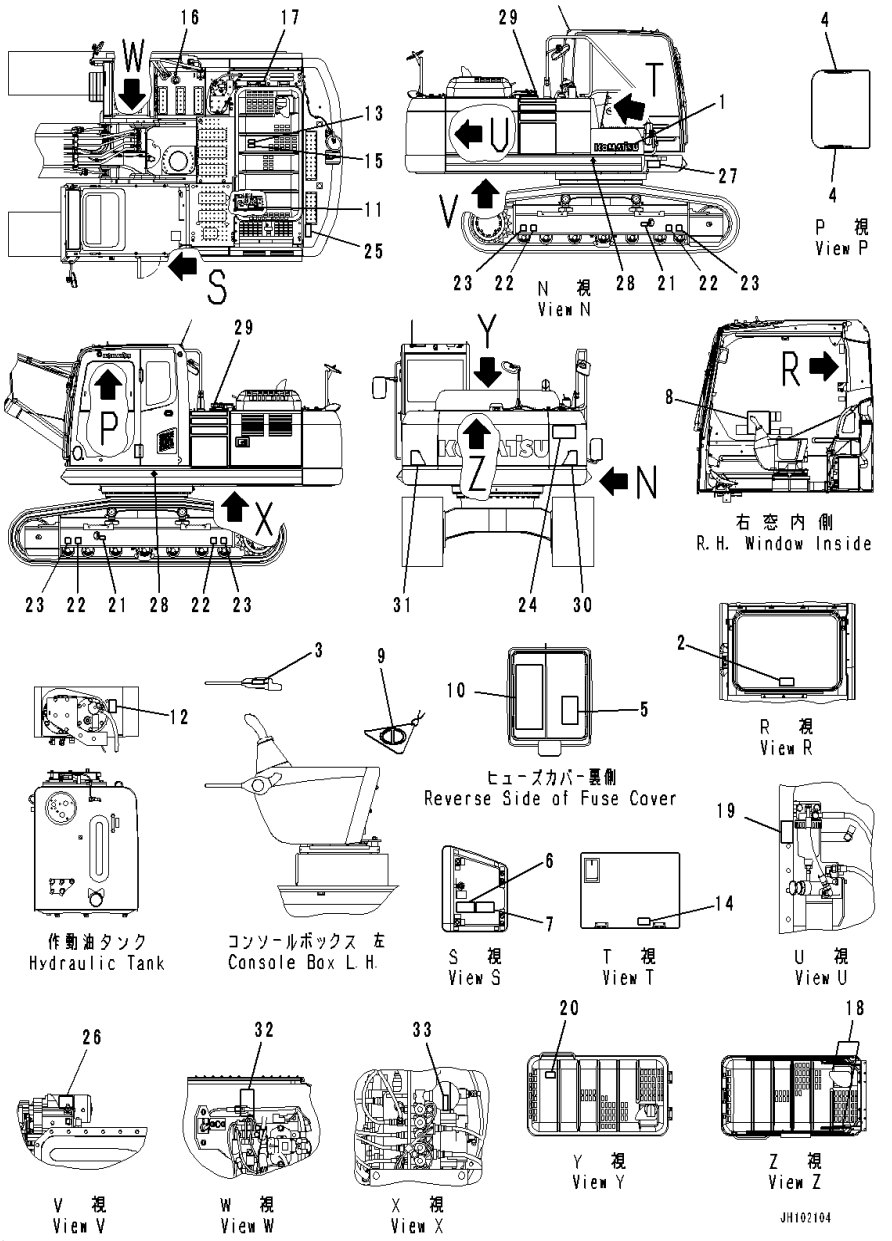

Index	Code	Part Number	Description	Qty	Serial Number
1		09690-P0630	Plate, Komatsu Logo	1	C00001-
2		09844-00050	Plate, Emergency Exit	1	C00001-
3		09685-00002	Plate, Symbol, Lock/Unlock	1	C00001-
4		09659-A057B	Plate, Warning, Explosion Hazard	2	C00001-
5		206-00-K1010	Plate, Emergency Pump Drive and ..... Swing Parking Cancel.....	1	C00001-
6		208-00-71262	Plate	1	C00001-
7		2A5-00-11480	Plate	1	C00001-
8		21M-00-31371	Plate	1	C00001-
9		09963-A1640	Tag, Danger, Do Not Operate	1	C00001-
10		20Y-00-56141	Plate	1	C00001-
11		09653-A0481	Plate, Warning, High Temperature	1	C00001-
12		09653-A0481	Plate, Warning, High Temperature	1	C00001-
13		09805-C0481	Plate, Caution, Do Not Get On	1	C00001-
14		09808-A0881	Plate, Warning, Battery Cables	1	C00001-
15		09667-A0481	Plate, Caution, Rotating Object	1	C00001-
16		09669-0000E	Plate, Symbol, Fuel Filler	1	C00001-
17		09805-C0481	Plate, Caution, Do Not Get On	1	C00001-
18		09659-A057B	Plate, Warning, Explosion Hazard	2	C00001-
19		20Y-00-41341	Plate, Caution	1	C00001-
20		20Y-00-41490	Plate	1	C00001-
21		09657-A0881	Plate, Warning, Track Adjustment	2	C00001-
22		09960-00801	Mark, Lift Point	4	C00001-
23		09960-00802	Mark, Tie Down Point	4	C00001-
24		09133-A3281	Plate, Danger, Keep Off Swing Area	1	C00001-
25		09805-A0881	Plate, Caution, Do Not Approach	1	C00001-
26		09842-A0482	Plate, Warning, No Jump Start	1	C00001-
27		20Y-00-31840	Plate, Lift Point	1	C00001-
28		21U-98-31160	Plate, Mark,Location Of Center Of	2	C00001-
29		20Y-00-56180	Plate	2	C00001-
30		2A5-00-11410	Plate, Reflector	1	C00001-
31		2A5-00-11420	Plate, Reflector	1	C00001-
32		09842-A0482	Plate, Warning, No Jump Start	1	C00001-
33		09659-A057B	Plate, Warning, Explosion Hazard	1	C00001-

FIG. U0108-001001 Marks and Plates

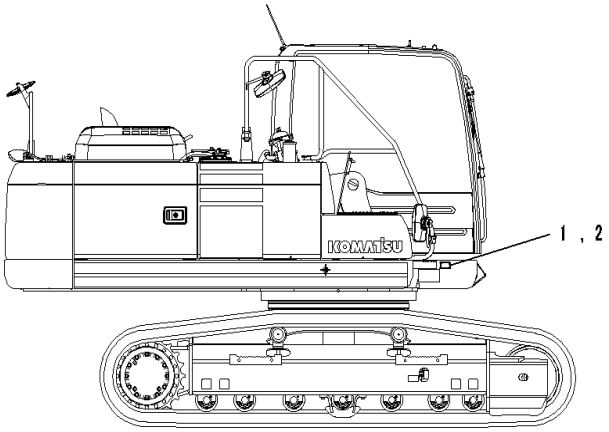

Index	Code	Part Number	Description	Qty	Serial Number
1	C2	09601-120E2	Plate, Name (Limited Supply)	1	C00001-
2		04418-13060	Screw	4	C00001-

FIG. U0110-001001 Lubrication Chart (100 Hours Lubrication Interval,Large Fuel Prefilter)

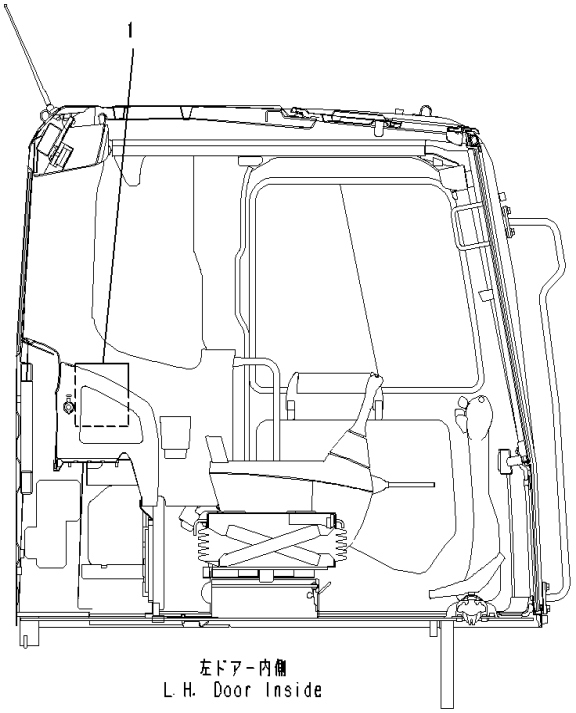

Index	Code	Part Number	Description	Qty	Serial Number
1		20Y-00-56310	Plate	1	C00001-

FIG. U0110-002001 Lubrication Chart (100 Hours Lubrication Interval,Large Fuel Prefilter,With Breather)

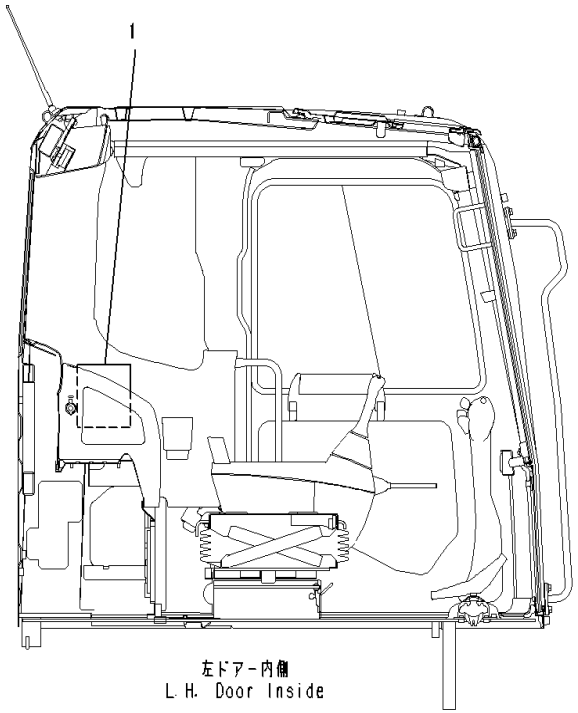

JH005056

Index	Code	Part Number	Description	Qty	Serial Number
1		20Y-00-56320	Plate	1	C00001-

FIG. U0110-003001 Lubrication Chart (100 Hours Lubrication Interval,Large Fuel Prefilter,With

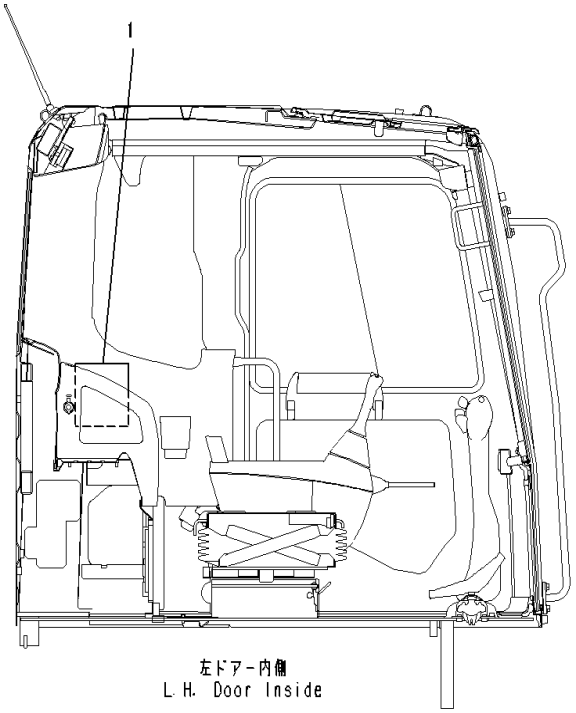

Index	Code	Part Number	Description	Qty	Serial Number
1		20Y-00-56330	Plate	1	C00001-

FIG. U0120-001001 Caution Plates, Window Lock

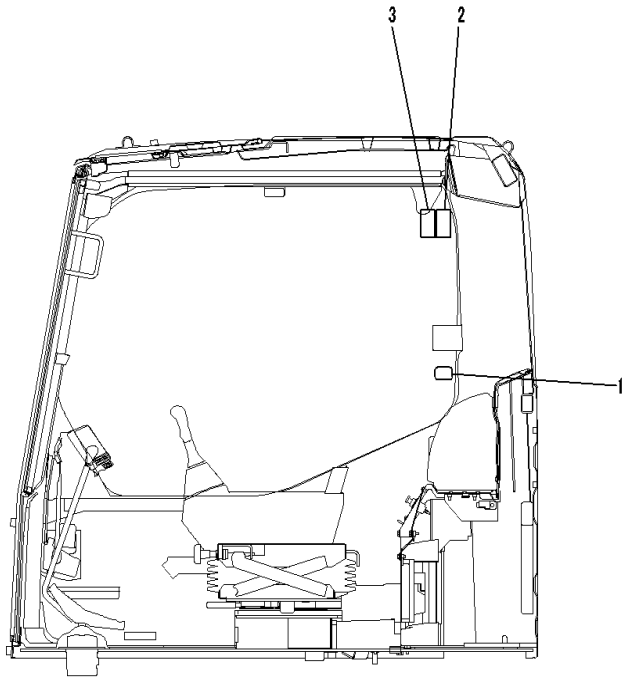

Index	Code	Part Number	Description	Qty	Serial Number
1		20Y-00-41461	Plate	1	C00001-
2		09803-A0481	Plate, Warning, Window Lock	1	C00001-
3		22B-00-32710	Plate. Caution, Stow the Wiper	1	C00001-

FIG. U0150-001001 Komatsu Logo, 3Set

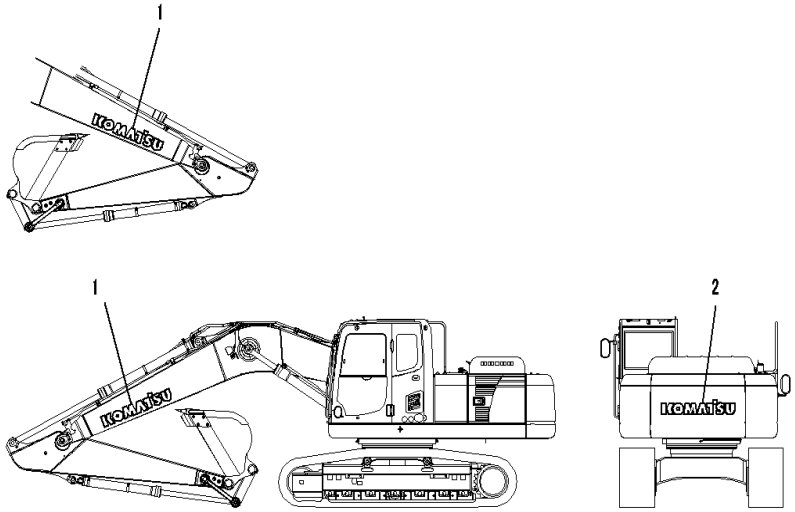

Index	Code	Part Number	Description	Qty	Serial Number
1		09690-P1600	Plate, Komatsu Logo	2	C00001-
2		09690-P1600	Plate, Komatsu Logo	1	C00001-

FIG. U0150-002001 Komatsu Logo (Additional)

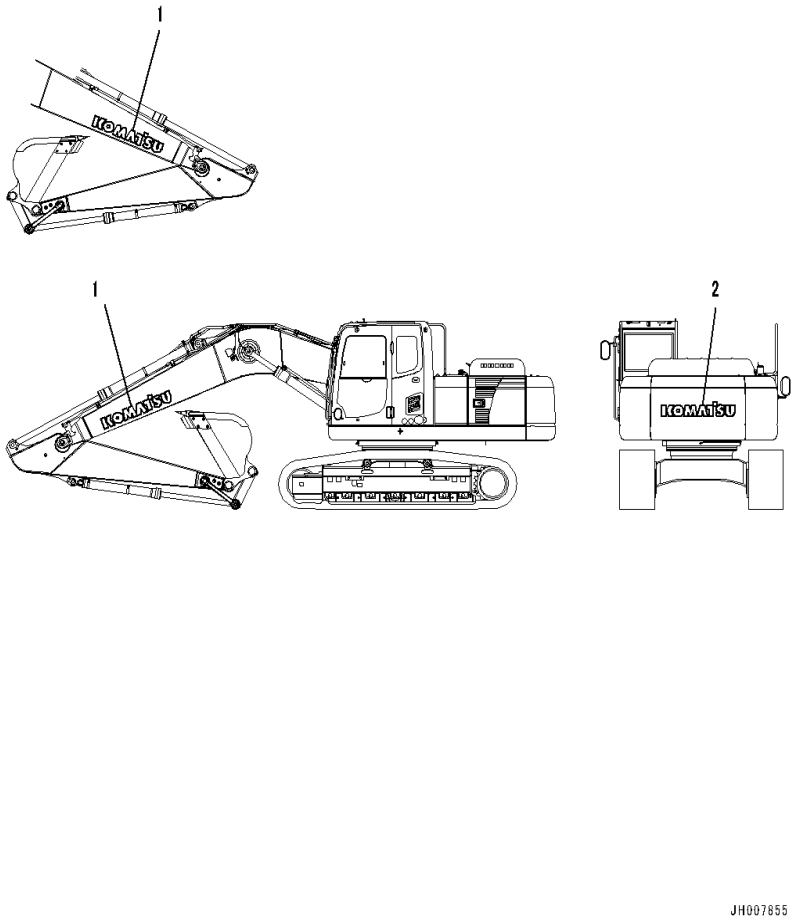

Index	Code	Part Number	Description	Qty	Serial Number
1		09690-P1600	Plate, Komatsu Logo	2	C00001-
2		09690-P1600	Plate, Komatsu Logo	1	C00001-

FIG. U0200-001001 Caution Plate, Refuel

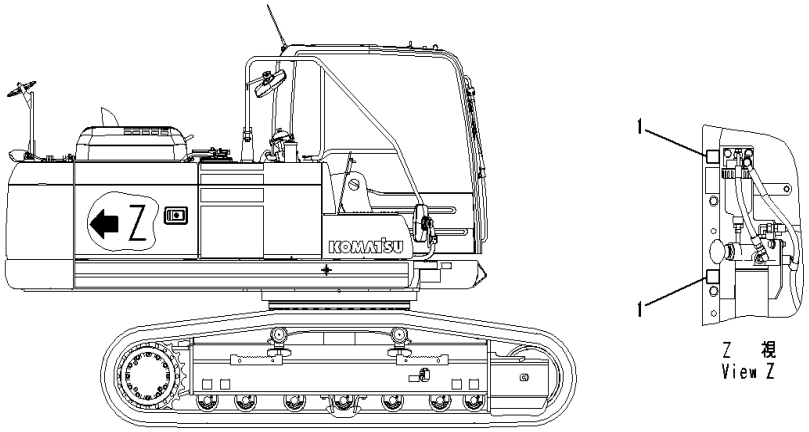

Index	Code	Part Number	Description	Qty	Serial Number
1		20Y-00-43130	Plate	2	C00001-

FIG. U0200-002001 Caution Plate (Bucket Hook MT50, Thai)

Index	Code	Part Number	Description	Qty	Serial Number
1		20Y-00-C2010	Plate	1	C00001-

FIG. U0200-003001 Caution Plate (Bucket Hook MT50, English)

Index	Code	Part Number	Description	Qty	Serial Number
1		20Y-00-C2021	Plate.....	1	C00001-

FIG. U0201-001001 Caution Plates, Battery

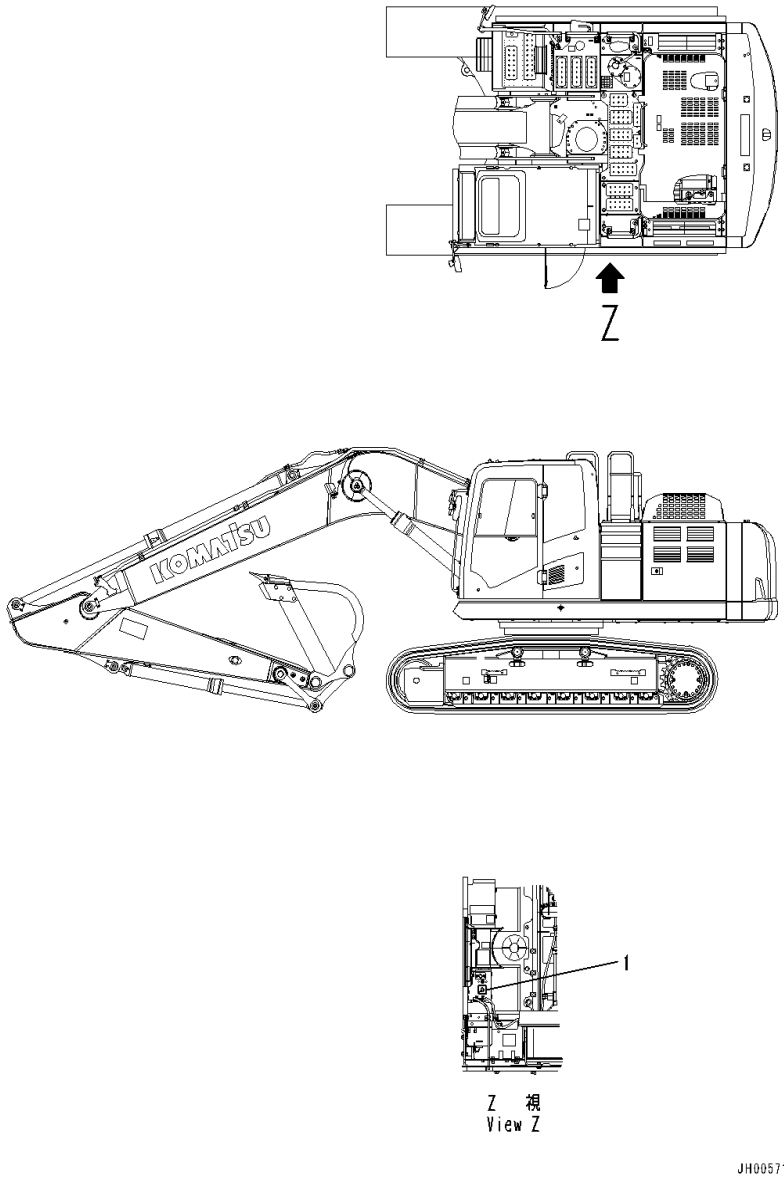

Index	Code	Part Number	Description	Qty	Serial Number
1		09697-00001	Plate,Battery Disconnect Switch	1	C00001-

FIG. U0202-001001 Coolant Decal

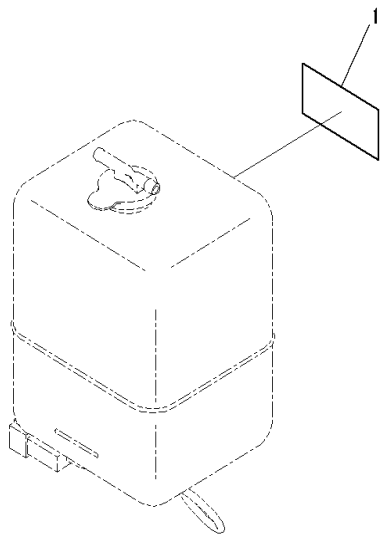

JH101670

Index	Code	Part Number	Description	Qty	Serial Number
1		09642-A0480	Plate, Notice, Coolant	1	C00001-

FIG. U0205-001001 Caution Plates, Blast Site

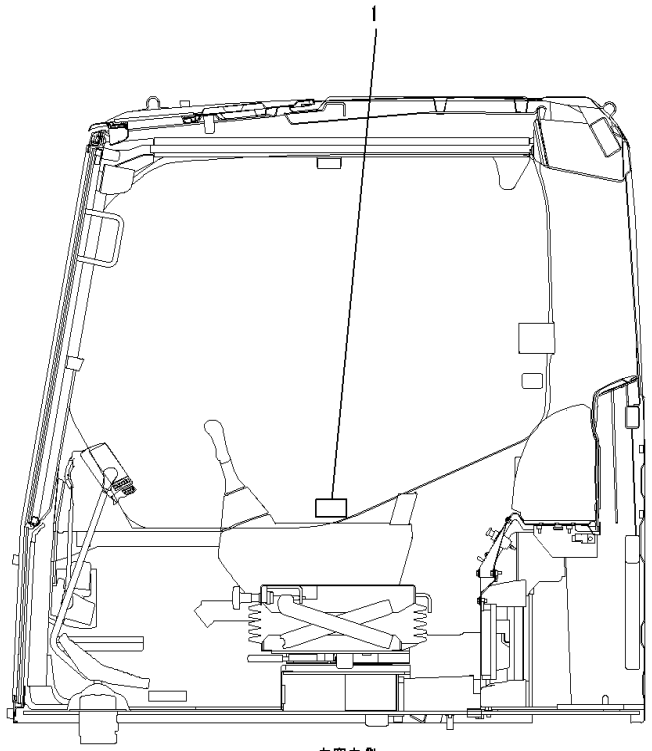

Index	Code	Part Number	Description	Qty	Serial Number
1		09845-00480	Plate, Caution, Blast Site	1	C00001-

FIG. U0205-002001 KOMTRAX Plate, GPRS, 3G, TC630

Index	Code	Part Number	Description	Qty	Serial Number
1		09845-00480	Plate, Caution, Blast Site	1	C00001-
2		20Y-00-C1132	Plate	1	C00001-

FIG. U0206-001001 Caution Plates, Seat Belt

Index	Code	Part Number	Description	Qty	Serial Number
1		09848-A0480	Plate, Safety	1	C00001-

FIG. U0510-001001 Caution Plates, Keep Off Working Ranges

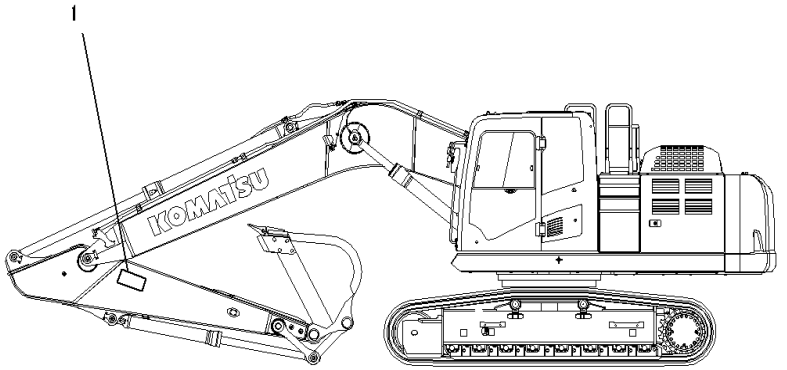

Index	Code	Part Number	Description	Qty	Serial Number
1		09134-A1681	Plate, Danger, Keep Off Working Area ..	2	C00001-

FIG. U0521-001001 ROPS Plate

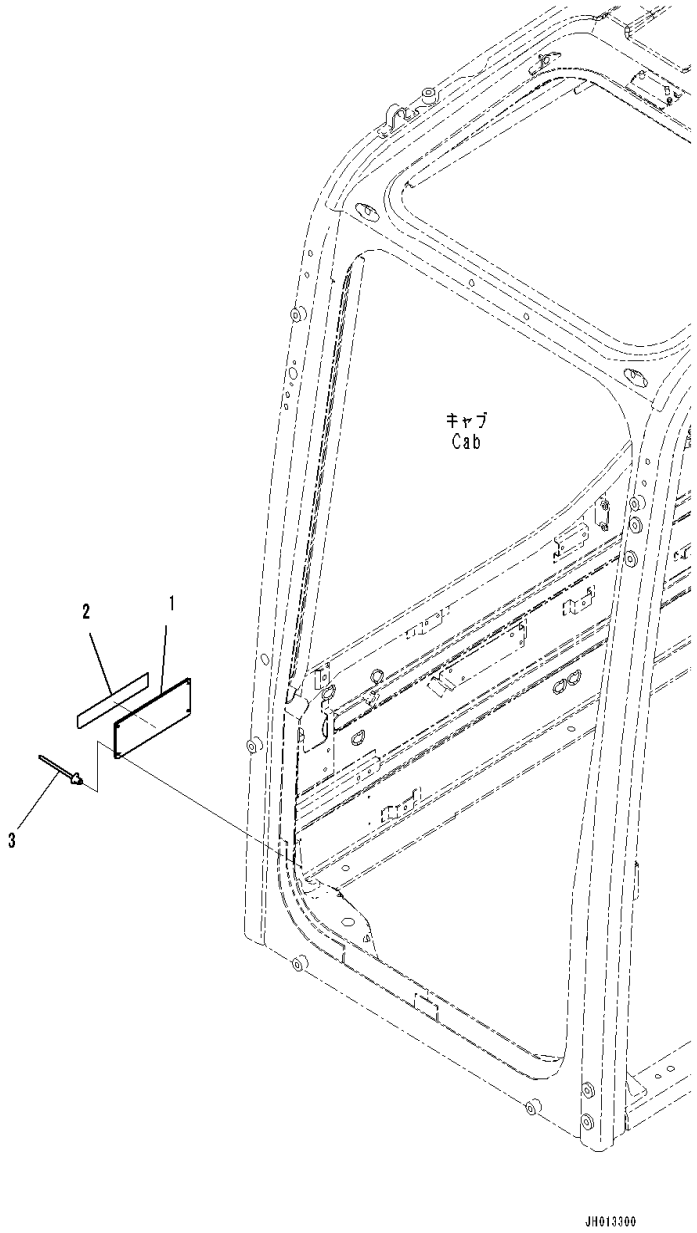

Index	Code	Part Number	Description	Qty	Serial Number
1	C2	09620-T2001	Plate, Name, ROPS (Limited Supply)	1	C00001-
2		09620-A3001	Plate, Warning, ROPS/FOPS	1	C00001-
3		205-00-72430	Rivet	4	C00001-

FIG. U0550-001001 Plates, Air Cleaner

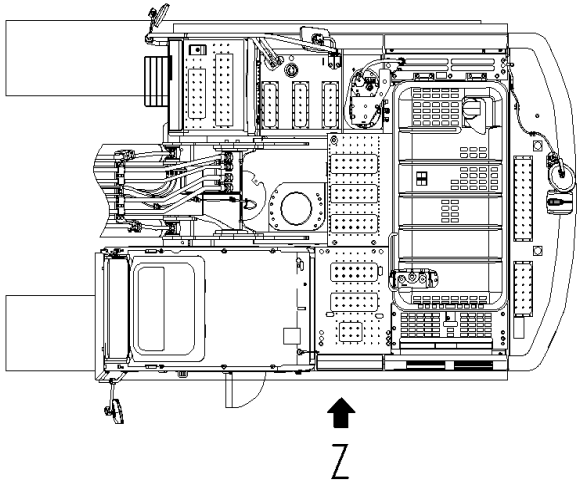

Index	Code	Part Number	Description	Qty	Serial Number
1		09637-A0480	Plate, Service Instruction, Air Cleaner ...	1	C00001-

FIG. U0580-001001 Caution Plates, Accumulator

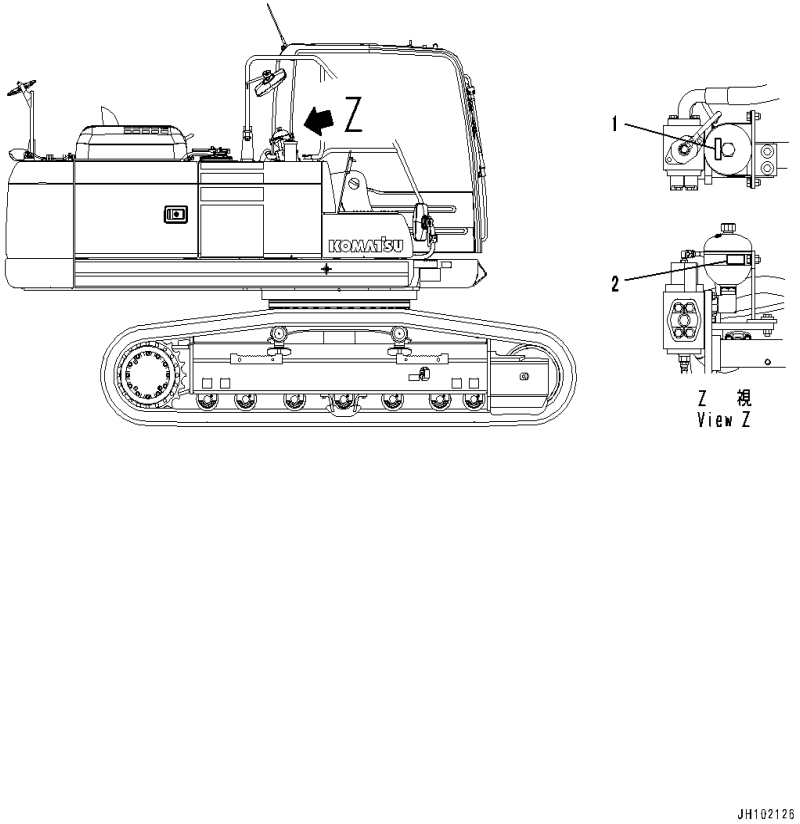

Index	Code	Part Number	Description	Qty	Serial Number
1		09659-A057B	Plate, Warning, Explosion Hazard	1	C00001-
2		2A8-00-11150	Plate	1	C00001-

FIG. U0610-001001 Caution Plates, Backward

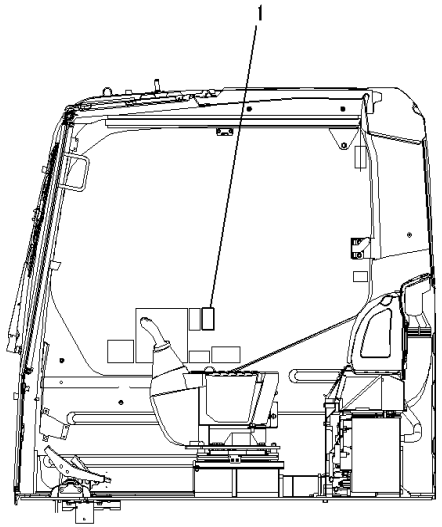

Index	Code	Part Number	Description	Qty	Serial Number
1		09833-A0881	Plate, Warning, Swinging and Traveling	1	C00001-

FIG. U0710-001001 Caution Plates (With Power Supply, 12volt)

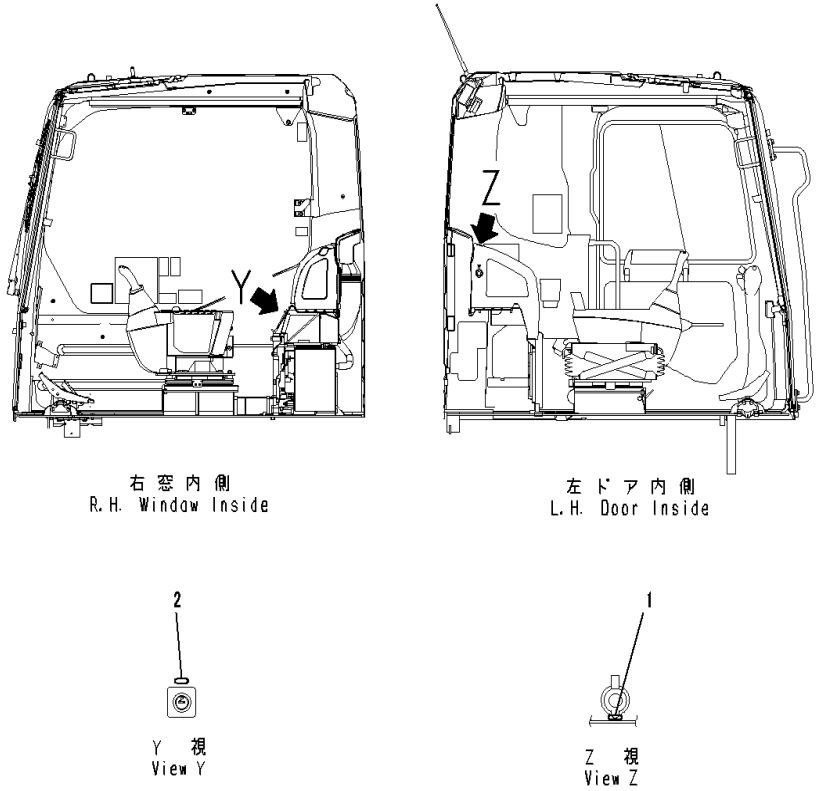

Index	Code	Part Number	Description	Qty	Serial Number
1		2A5-00-11370	Plate,12volt	1	C00001-
2		2A5-00-11380	Plate,24volt	1	C00001-

FIG. U0710-002001 Caution Plates (Nippon Pneumatic Breaker Kit)

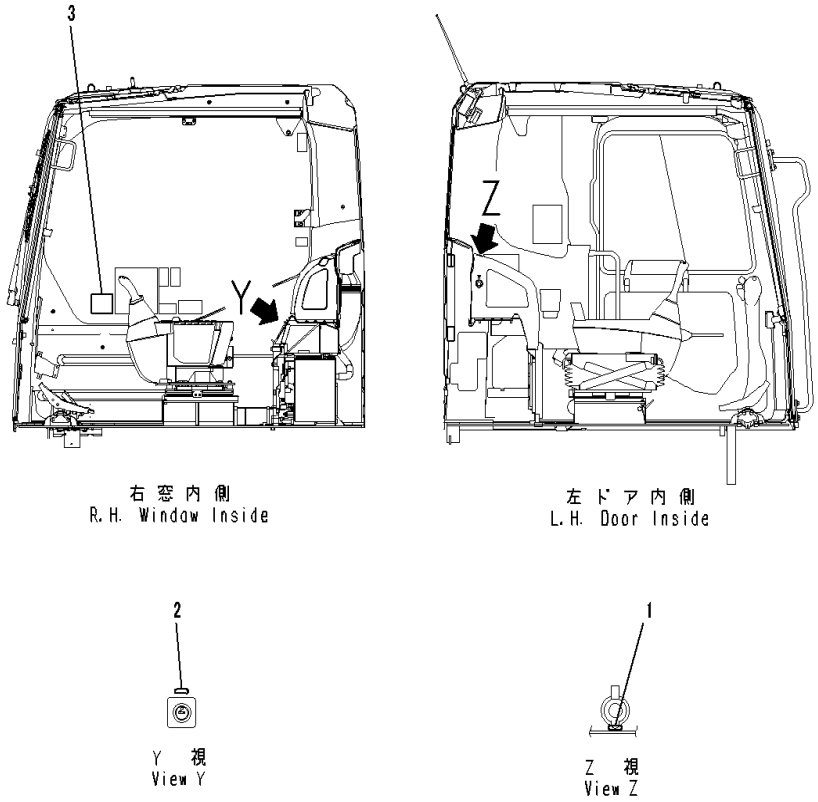

Index	Code	Part Number	Description	Qty	Serial Number
1		2A5-00-11370	Plate,12volt	1	C00001-
2		2A5-00-11380	Plate,24volt	1	C00001-
3		20Y-00-32450	Plate	1	C00001-

FIG. U0710-003001 Caution Plates (With Breaker Kit, Thai)

Index	Code	Part Number	Description	Qty	Serial Number
1		2A5-00-11370	Plate	1	C00001-
2		2A5-00-11380	Plate	1	C00001-
3		20Y-00-C2450	Plate	1	C00001-

AUXILIARY PARTS AND TOOL

FIG. V0100-001001 Spare Parts (60Amp. Alternator)

Index	Code	Part Number	Description	Qty	Serial Number
1		09059-00800	Box	1	C00001-
2		6754-11-8331	Gasket	1	C00001-
3		6754-11-8260	Isolator	5	C00001-
4		6756-61-4130	Belt, L=1780mm	1	C00001-
5		6742-01-4540	Cartridge, Oil Filter	1	C00001-
6		600-319-3750	Cartridge, Fuel Filter	1	C00001-
7		600-319-3610	Cartridge Assembly, Pre-Filter	1	C00001-
8		207-60-71183	Element, Hydraulic Oil Filter	1	C00001-
9		421-60-35170	Element	2	C00001-
10		07000-15160	O-Ring	1	C00001-
11		07000-15195	O-Ring	1	C00001-
12		07002-61223	O-Ring	1	C00001-
13		07002-62434	O-Ring	4	C00001-
14		07020-00000	Fitting, Grease	4	C00001-
15		07020-00675	Fitting, Grease	4	C00001-

FIG. V0100-002001 Spare Parts (60Amp. Alternator) (With Additional Pre-Filter)

Index	Code	Part Number	Description	Qty	Serial Number
1		09059-00800	Box	1	C00001-
2		6754-11-8331	Gasket	1	C00001-
3		6754-11-8260	Isolator	5	C00001-
4		6756-61-4130	Belt, L=1780mm	1	C00001-
5		6742-01-4540	Cartridge, Oil Filter	1	C00001-
6		600-319-3750	Cartridge, Fuel Filter	1	C00001-
7		600-319-3610	Cartridge Assembly, Pre-Filter	1	C00001-
8		207-60-71183	Element, Hydraulic Oil Filter	1	C00001-
9		421-60-35170	Element	2	C00001-
10		07000-15160	O-Ring	1	C00001-
11		07000-15195	O-Ring	1	C00001-
12		07002-61223	O-Ring	1	C00001-
13		07002-62434	O-Ring	4	C00001-
14		07020-00000	Fitting, Grease	4	C00001-
15		07020-00675	Fitting, Grease	4	C00001-
16		20Y-04-J1130	Element Assembly, Additional	1	C00001-

FIG. V0200-001001 Cap and Overall

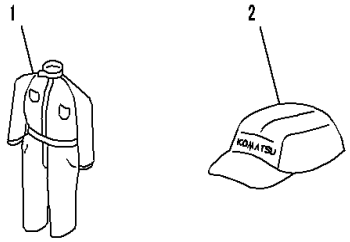

PEB0040

Index	Code	Part Number	Description	Qty	Serial Number
1		09980-10550	Overall	1	C00001-
2		09982-20057	Cap	1	C00001-

FIG. V0300-001001 Tool

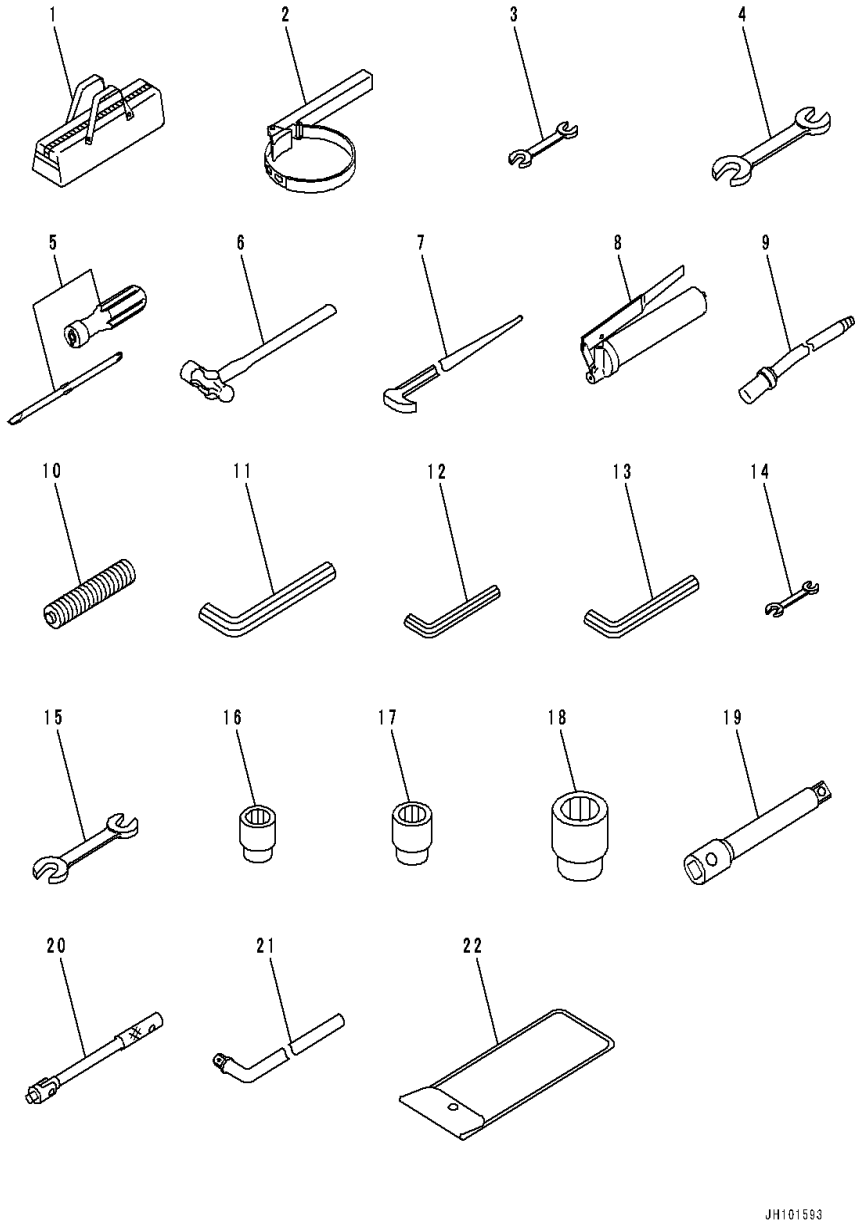

Index	Code	Part Number	Description	Qty	Serial Number
1		09056-04613	Bag	1	C00001-
2		09019-28036	Wrench, Filter	1	C00001-
3		09002-01417	Wrench,W=14X17mm	1	C00001-
4		09002-03032	Wrench,W=30X32mm	1	C00001-
5		09033-00190	Driver	1	C00001-
6		09039-00150	Hammer	1	C00001-
7		09055-10390	Bar	1	C00001-
		07952-70014	Pump Assembly	1	C00001-
8		07950-10451	• Grease Pump	1	C00001-
9		07951-41017	• Nozzle	1	C00001-
10		07950-90403	Cartridge, Grease	1	C00001-
11		09007-00836	Wrench,W=8mm	1	C00001-
12		09007-00425	Wrench,W=4mm	1	C00001-
13		09007-00528	Wrench,W=5mm	1	C00001-
14		09002-00810	Wrench,W=8X10mm	1	C00001-
15		09002-02427	Wrench,W=24X27mm	1	C00001-
16		09021-01928	Socket,W=19mm	1	C00001-
17		09021-02233	Socket,W=22mm	1	C00001-
18		09021-03044	Socket,W=30mm	1	C00001-
19		09022-00150	Extension,L=150mm	1	C00001-
20		09023-00300	Handle	1	C00001-
21		09024-00300	Handle	1	C00001-
22		20Y-98-21140	Tool Bag	1	C00001-

OTHER EQUIPMENT

FIG. W0111-001001 Preventive Maintenance Service Connectors (Sensor)

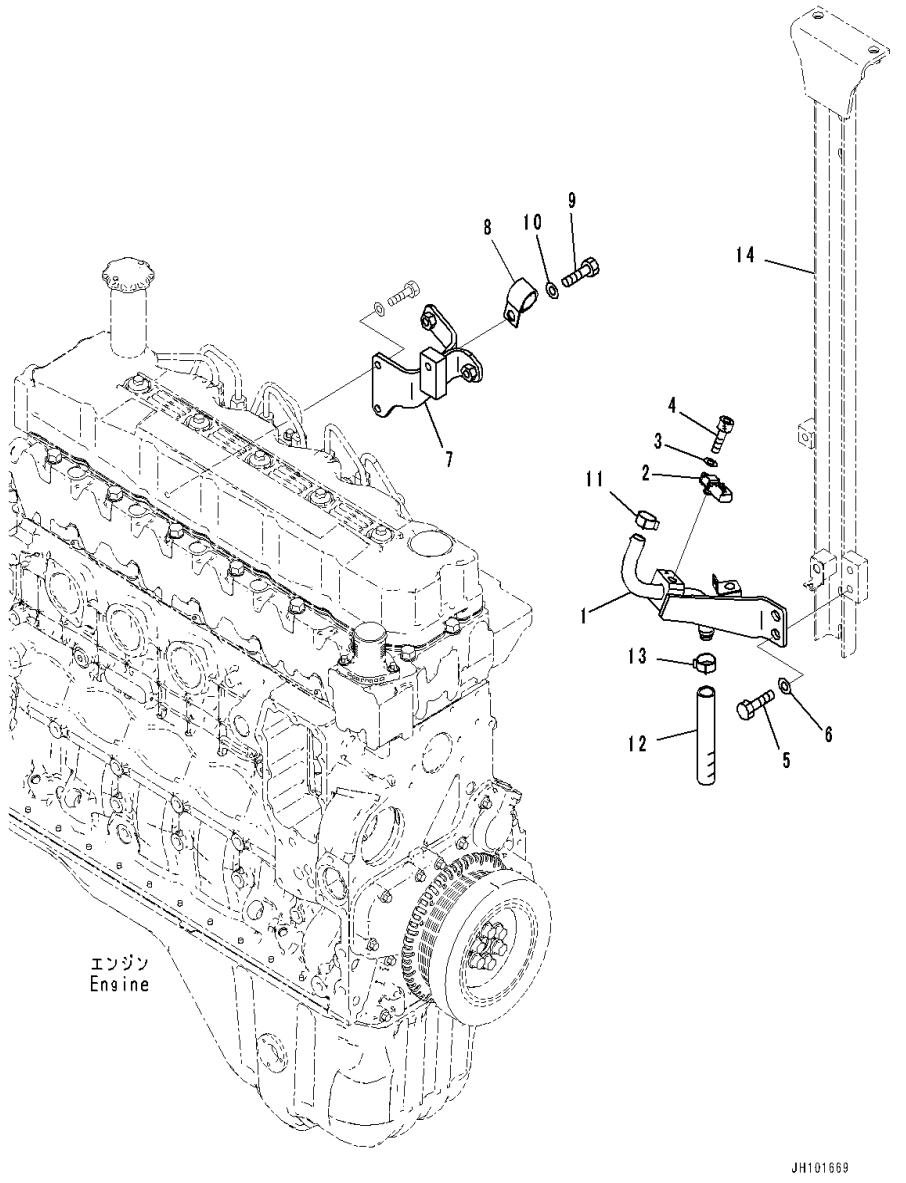

Index	Code	Part Number	Description	Qty	Serial Number
1		20Y-06-56171	Tube	1	C00001-
2		6252-11-2901	Sensor	1	C00001-
		6252-11-2800	• O-ring	1	C00001-
3		01640-20508	Washer	1	C00001-
4		600-331-1930	Bolt	1	C00001-
5		01010-81225	Bolt	2	C00001-
6		01643-31232	Washer	2	C00001-
7		20Y-04-56370	Bracket	1	C00001-
8		04434-52512	Clip	1	C00001-
9		01010-81225	Bolt	1	C00001-
10		01643-31232	Washer	1	C00001-
11		07285-00220	Clip	1	C00001-
12		07286-01914	Hose	1	C00001-
13		07285-00220	Clip	1	C00001-
14		(20Y-54-56231)	Frame(Frame,WithPre-cleaner)		

FIG. W0111-002001 Preventive Maintenance Service Connectors (Valve)

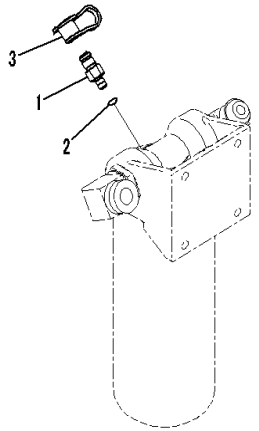

JH102101

Index	Code	Part Number	Description	Qty	Serial Number
		20Y-01-57500	Valve Assembly	1	C00001-
1	C1		• Valve Assembly	1	C00001-
2		20Y-01-57530	• • O-ring	1	C00001-
3		20Y-01-57520	• Cap	1	C00001-

FIG. W0111-002002 Preventive Maintenance Service Connectors (Hose)

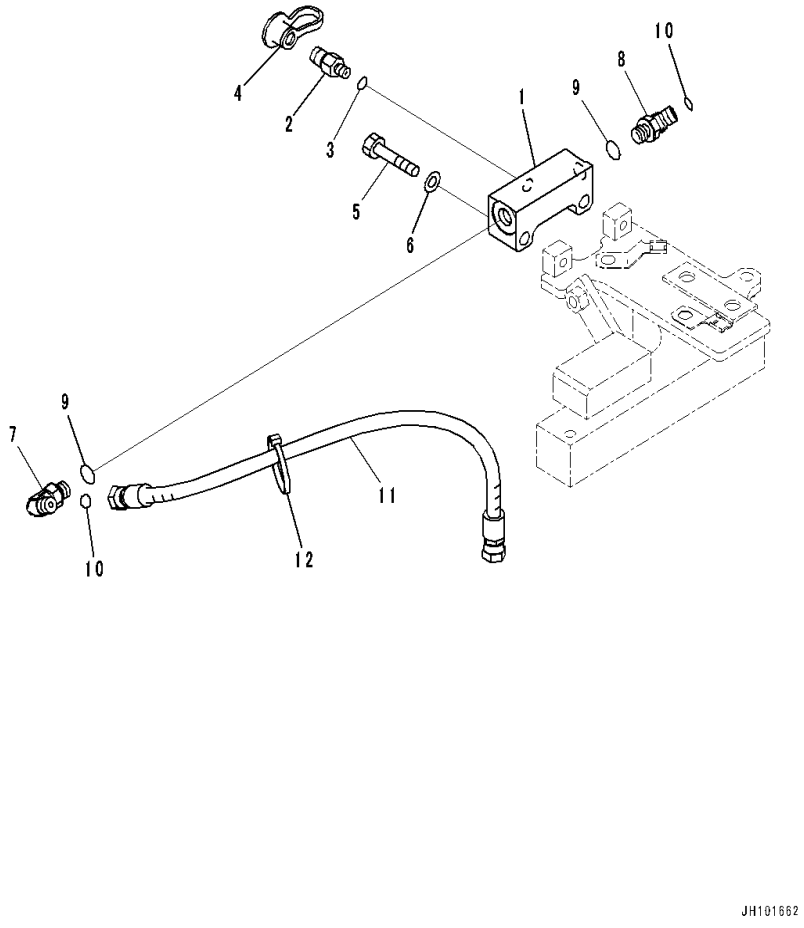

Index	Code	Part Number	Description	Qty	Serial Number
1		20Y-62-57560	Block	1	C00001-
		20Y-62-57500	Valve Assembly	1	C00001-
2	C1		• Valve Assembly	1	C00001-
3		20Y-01-57530	• • O-ring	1	C00001-
4		20Y-62-57520	• Cap	1	C00001-
5		01010-81060	Bolt	2	C00001-
6		01643-31032	Washer	2	C00001-
7		02782-10210	Elbow	1	C00001-
8		02783-10210	Elbow	1	C00001-
9		07002-11423	O-ring	2	C00001-
10		02896-11008	O-ring	2	C00001-
11		02771-002A5	Hose	1	C00001-
12		08034-20536	Band	1	C00001-

FIG. W0111-002003 Preventive Maintenance Service Connectors (Sensor)

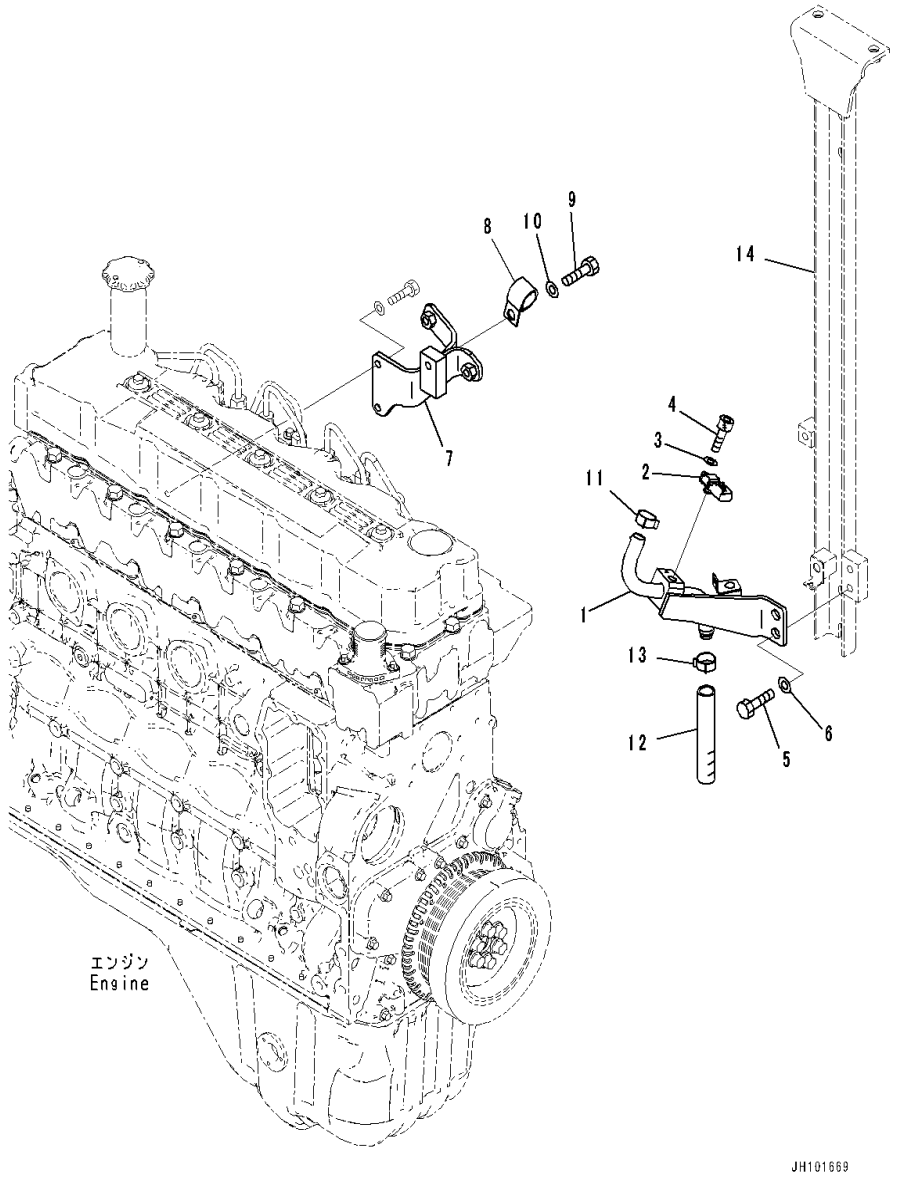

Index	Code	Part Number	Description	Qty	Serial Number
1		20Y-06-56171	Tube	1	C00001-
2		6252-11-2901	Sensor	1	C00001-
		6252-11-2800	• O-ring	1	C00001-
3		01640-20508	Washer	1	C00001-
4		600-331-1930	Bolt	1	C00001-
5		01010-81225	Bolt	2	C00001-
6		01643-31232	Washer	2	C00001-
7		20Y-04-56370	Bracket	1	C00001-
8		04434-52512	Clip	1	C00001-
9		01010-81225	Bolt	1	C00001-
10		01643-31232	Washer	1	C00001-
11		07285-00220	Clip	1	C00001-
12		07286-01914	Hose	1	C00001-
13		07285-00220	Clip	1	C00001-
14		(20Y-54-56231)	Frame(Frame,WithPre-cleaner)		

FIG. W0111-003001 Preventive Maintenance Service Connectors (Valve)

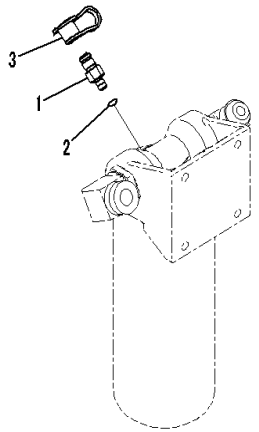

JH102101

Index	Code	Part Number	Description	Qty	Serial Number
		20Y-01-57500	Valve Assembly	1	C00001-
1	C1		• Valve Assembly	1	C00001-
2		20Y-01-57530	• • O-ring	1	C00001-
3		20Y-01-57520	• Cap	1	C00001-

FIG. W0111-003002 Preventive Maintenance Service Connectors (Tee)

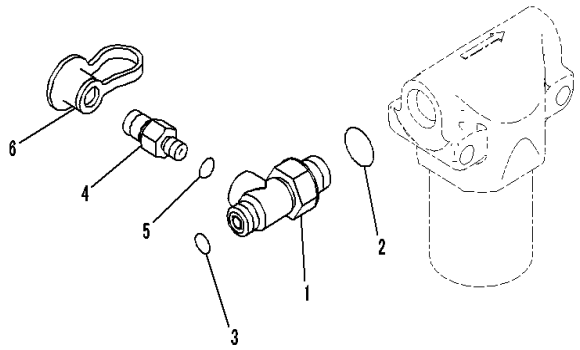

JH102098

Index	Code	Part Number	Description	Qty	Serial Number
1		20Y-62-57570	Tee	1	C00001-
2		07002-12034	O-ring	1	C00001-
3		02896-11009	O-ring	1	C00001-
		20Y-62-57500	Valve Assembly	1	C00001-
4	C1		• Valve Assembly	1	C00001-
5		20Y-01-57530	• • O-ring	1	C00001-
6		20Y-62-57520	• Cap	1	C00001-

FIG. W0111-003003 Preventive Maintenance Service Connectors (Sensor)

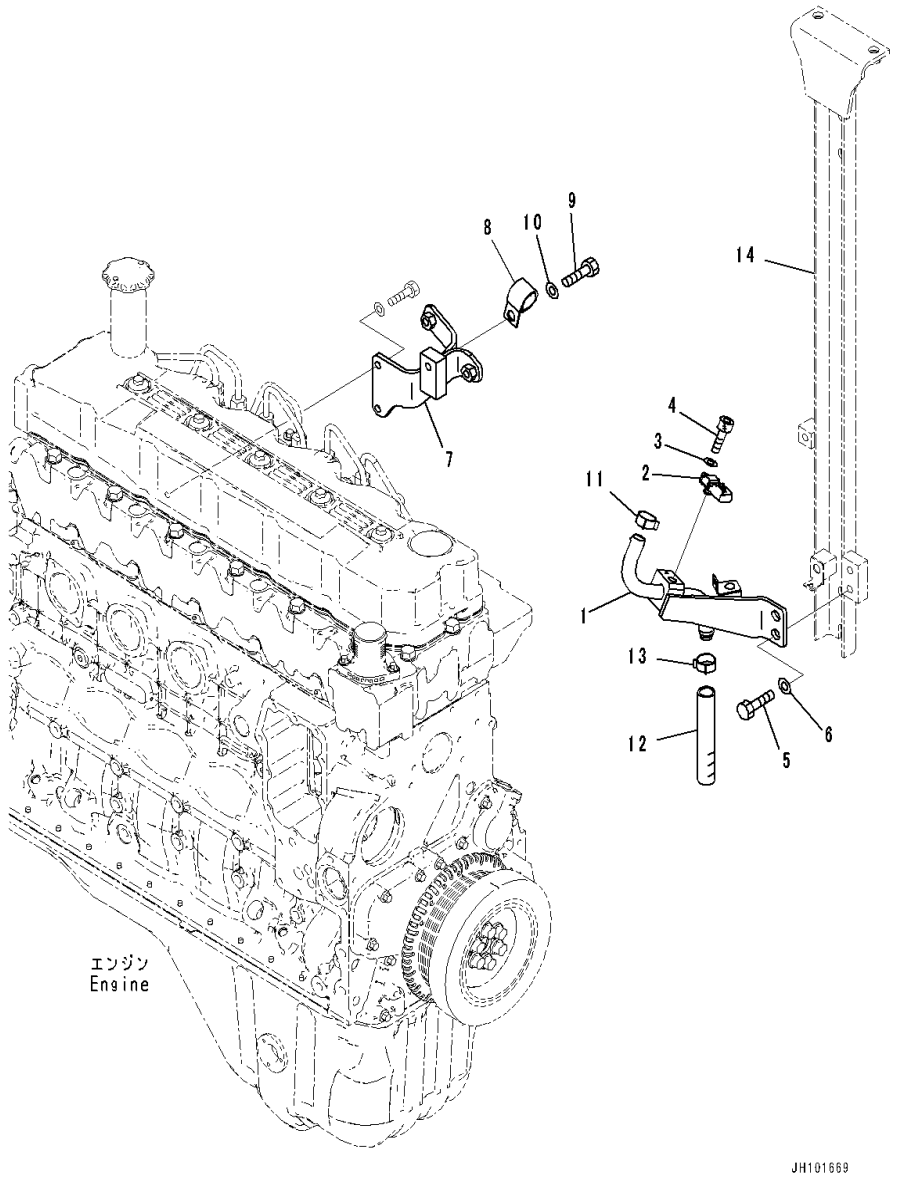

Index	Code	Part Number	Description	Qty	Serial Number
1		20Y-06-56171	Tube	1	C00001-
2		6252-11-2901	Sensor	1	C00001-
		6252-11-2800	• O-ring	1	C00001-
3		01640-20508	Washer	1	C00001-
4		600-331-1930	Bolt	1	C00001-
5		01010-81225	Bolt	2	C00001-
6		01643-31232	Washer	2	C00001-
7		20Y-04-56370	Bracket	1	C00001-
8		04434-52512	Clip	1	C00001-
9		01010-81225	Bolt	1	C00001-
10		01643-31232	Washer	1	C00001-
11		07285-00220	Clip	1	C00001-
12		07286-01914	Hose	1	C00001-
13		07285-00220	Clip	1	C00001-
14		(20Y-54-56231)	Frame(Frame,WithPre-cleaner)		

FIG. W1113-001001 Refueling Pump

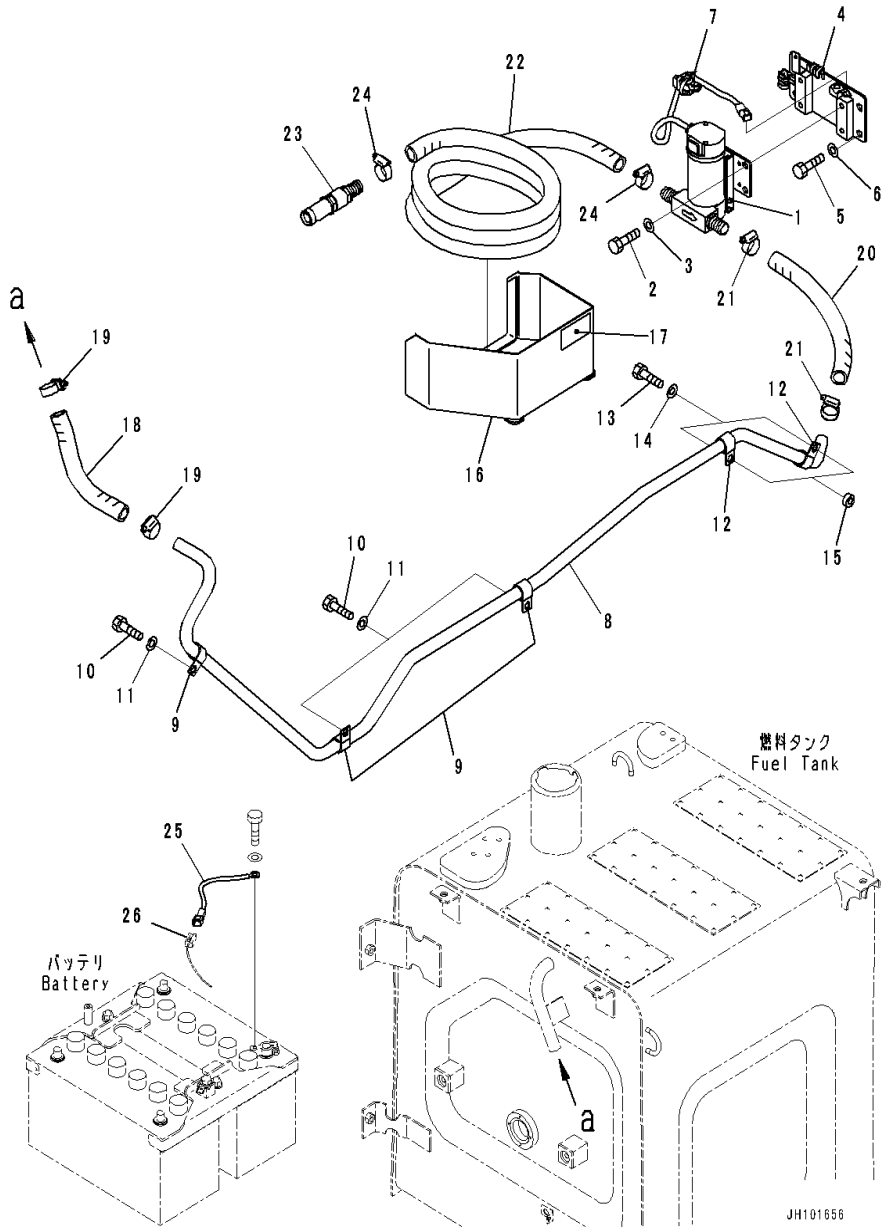

Index	Code	Part Number	Description	Qty	Serial Number
1		20Y-04-C1033	Pump	1	C00001-
2		01010-81225	Bolt	4	C00001-
3		01643-31232	Washer	4	C00001-
4		20Y-04-56531	Bracket	1	C00001-
5		01010-81230	Bolt	4	C00001-
6		01643-31232	Washer	4	C00001-
7		08059-00515	Clip	1	C00001-
8		20Y-04-56510	Tube	1	C00001-
9		04434-52512	Clip	3	C00001-
10		01010-81225	Bolt	3	C00001-
11		01643-31232	Washer	3	C00001-
12		04434-52512	Clip	2	C00001-
13		01010-81235	Bolt	2	C00001-
14		01643-31232	Washer	2	C00001-
15		198-43-15310	Collar	2	C00001-
16		20Y-04-42160	Bracket	1	C00001-
17		09651-A0841	Plate, Warning, Read Manual Before Operating	1	C00001-
18		20Y-04-56570	Hose	1	C00001-
19		07289-00035	Clamp	2	C00001-
20		20Y-04-56540	Hose	1	C00001-
21		07289-00035	Clamp	2	C00001-
22		20Y-04-K2351	Hose	1	C00001-
23		20Y-04-K2451	Valve Assembly	1	C00001-
24		07289-00035	Clamp	2	C00001-
25		20Y-06-56520	Wiring Harness	1	C00001-
26		(20Y-06-56112)	Wiring Harness(Cab, Floor, Wiring Harness)		

FIG. W1115-001001 Anti-Vandalism Guard

Index	Code	Part Number	Description	Qty	Serial Number
1		20Y-53-21261	Cover Assembly	1	C00001-
2		17A-04-41440	Lock	2	C00001-
3		17A-04-41440	Lock	2	C00001-

FIELD REPAIR SERVICE PARTS

FIG. KIT-001001 Service Kit Parts

Index	Code	Part Number	Description	Qty	Serial Number
1	K02	20Y-32-05070	Service Kit, Shoe Bolt and Nut	1	C00001-
		134-32-61221	• Nut	50	
		20Y-32-31210	• Bolt	50	
2	K03	721-98-00660	Seal Kit, Boom Cylinder	1	C00001-
		707-51-85860	• Packing, Rod	1	
		707-56-85740	• Seal, Dust	1	
		07000-B5110	• O-ring	2	
		707-35-31110	• Ring, Back-up	3	
		707-51-85650	• Ring, Buffer	1	
		707-44-12150	• Ring, Piston	1	
		707-39-12140	• Ring, Wear	2	
		07000-B5075	• O-ring	1	
		707-35-30750	• Ring, Back-up	2	
		07145-00070	• Seal, Dust	2	
		07145-00080	• Seal, Dust	2	
		07000-B3030	• O-ring	1	
		07000-B3035	• O-ring	1	
3	K04	721-98-00690	Seal Kit, Arm Cylinder	1	C00001-
		707-51-95860	• Packing, Rod	1	
		707-56-95740	• Seal, Dust	1	
		07000-B5125	• O-ring	2	
		707-35-31260	• Ring, Back-up	3	
		707-51-95650	• Ring, Buffer	1	
		707-44-13250	• Ring, Piston	1	
		707-39-13530	• Ring, Wear	2	
		07000-B5085	• O-ring	1	
		707-35-30850	• Ring, Back-up	2	
		07145-00080	• Seal, Dust	4	
		07002-62034	• O-ring	1	
		07000-B3030	• O-ring	1	
4	K43	721-98-04280	Seal Kit, Bucket Cylinder	1	C00001-
		707-56-80800	• Seal, Dust	3	
		707-56-80770	• Seal, Dust	1	
		707-51-80860	• Packing, Rod	1	
		707-51-80650	• Ring, Buffer	1	
		707-44-11250	• Ring, Piston	1	
		707-39-11530	• Ring, Wear	2	
		707-35-31060	• Ring, Back-up	1	
		707-35-30800	• Ring, Back-up	2	
		20Y-70-23220	• Seal, Dust	2	

FIG. KIT-001001 Service Kit Parts

Index	Code	Part Number	Description	Qty	Serial Number
		07145-00070	• Seal, Dust	2	
		07000-B5105	• O-ring	1	
		07000-B5080	• O-ring	1	
		07000-B3030	• O-ring	1	

NUMERICAL INDEX

PartNumber	Page	Index
01010-61030	225	24
	252	24
01010-61450	453	16
01010-61460	225	21
	252	21
01010-61470	225	20
	252	20
01010-61490	218	22
01010-61645	131	30
	132	8
	135	30
	136	8
01010-61660	129	8
	472	1
01010-62050	492	2
	493	2
	494	2
01010-62055	543	17
	544	18
	545	10
	546	10
	547	17
01010-80612	162	15
	163	15
	164	15
01010-80616	158	13
	200	10
	200	16
	347	18
	372	14
	372	5
	373	4
	378	15
	378	9
	392	18
	398	15
	398	9
	408	25
	408	31
	410	25
	410	31
	412	16
	412	22
	413	17
	417	17
01010-80620	206	6
	210	6
	358	41
	370	16
	376	16
01010-80625	193	8
01010-80816	193	4
	194	13
	226	27
	253	27
	390	13
01010-80820	336	16
	361	16
	371	1
	377	1
	413	22
	417	22
01010-80825	152	14
	152	19
	171	15
	171	2
	180	15
	180	2
	193	6
	198	3
	198	7
	384	2
	404	23
	405	23
01010-80830	81	1
	274	11
	275	13
	390	11
01010-80835	152	23
	193	2
	200	5
	459	9
01010-80855	361	14
01010-80880	326	12
	326	15
01010-80890	326	11
01010-81016	189	26
	193	18
	193	20
	367	2
	379	44
	379	47
	385	17
	388	14
	388	17
	388	20
	388	23
	389	10
	399	45
	399	48
01010-81020	54	3
	126	3
	150	15
	150	18
	150	2
	150	21
	150	24
	150	9
	151	19
	152	27
	152	3
	188	1
	188	6
	189	2
	189	24
	190	6
	193	29
	193	32
	199	2
	326	22
	329	2
	329	9
	362	1
	362	4
	363	5
	364	5
	367	12
	367	15
	367	21
	367	6
	388	2
	388	8
	396	12
	424	8
	468	8
	471	8
01010-81025	54	23
	126	23
	149	12
	155	15
	156	12
	157	7
	326	19
	363	3
	364	3
	396	3
	396	7
	423	14
	423	17
	443	8
	445	8
	457	17
	533	19
	540	19
01010-81030	139	9
	144	5
	149	16
	150	13
	150	8
	152	29
	207	1
	211	1
	290	14
	297	9
	301	9
	329	7
	362	13
	372	2
01010-81035	154	5
	183	8
	278	42
	287	23
	329	4
	457	9
	458	31
01010-81040	169	1
	178	1
	286	1
	288	11
	288	3
	367	10
01010-81045	148	19
	151	13
	155	7
	156	14
	288	9
	385	15
	389	13
	389	2
	400	16
	400	2
	456	9
	458	7
	533	21
	540	21
01010-81050	54	5
	126	5
01010-81060	54	7
	126	7
	584	5
01010-81065	150	27
	189	21
01010-81070	396	35
01010-81075	289	6
01010-81085	54	10
	126	10
	297	1
	301	1
01010-81220	292	9
	293	9
	430	1
	432	8
	500	8
	502	4
	507	8
	509	4
01010-81225	144	11
	144	14
	145	17
	145	24
	145	27
	145	30
	145	4
	148	21
	151	14

PartNumber	Page	Index
	152	11
	170	8
	171	22
	171	4
	171	7
	172	13
	172	17
	172	2
	172	20
	172	23
	172	26
	172	29
	172	34
	172	38
	179	8
	180	22
	180	4
	180	7
	181	13
	181	17
	181	2
	181	20
	181	23
	181	26
	181	29
	181	32
	182	45
	182	49
	183	24
	183	27
	183	30
	183	34
	186	17
	187	15
	188	16
	188	19
	188	23
	188	26
	188	29
	188	36
	188	9
	189	15
	189	29
	189	33
	189	37
	189	7
	190	3
	196	10
	196	15
	196	19
	196	5
	196	7
	200	24
	200	27
	204	26
	205	7
	207	15
	207	4
	207	7
	208	27
	209	7
	211	15
	211	4
	211	7
	232	54
	262	54
	277	38
	279	38
	280	4
	280	8
	287	14
	287	28
	288	18
	297	6
	301	23

PartNumber	Page	Index
	301	28
	301	6
	307	12
	308	20
	308	23
	327	8
	328	15
	328	18
	328	2
	328	25
	408	12
	408	19
	408	22
	408	28
	408	34
	408	5
	410	12
	410	19
	410	22
	410	28
	410	34
	410	5
	412	10
	412	13
	412	19
	412	4
	413	11
	413	14
	415	14
	415	4
	415	8
	417	11
	417	14
	419	14
	419	4
	419	8
	475	18
	475	5
	477	19
	477	5
	515	10
	516	16
	582	5
	582	9
	585	5
	585	9
	588	5
	588	9
	589	10
	589	2
01010-81230	54	29
	126	29
	142	9
	154	10
	158	9
	169	6
	178	6
	186	14
	187	12
	193	16
	194	17
	194	2
	194	8
	200	13
	271	27
	272	27
	276	7
	277	12
	277	16
	277	8
	279	12
	279	16
	279	8
	286	25
	287	16

PartNumber	Page	Index
	288	15
	297	16
	301	16
	310	11
	310	20
	310	6
	311	11
	311	20
	311	6
	328	11
	365	5
	404	15
	404	18
	405	15
	405	18
	406	3
	406	5
	407	11
	407	3
	407	5
	409	42
	409	44
	409	46
	411	42
	411	44
	411	46
	412	27
	412	33
	412	35
	414	10
	414	12
	414	15
	414	6
	414	8
	415	17
	415	19
	415	21
	415	24
	416	11
	416	6
	416	9
	417	26
	417	29
	418	10
	418	12
	418	15
	418	6
	418	8
	419	17
	419	19
	419	21
	419	24
	420	11
	420	6
	420	9
	421	4
	421	6
	422	11
	422	4
	422	6
	423	20
	423	23
	423	27
	423	3
	423	7
	424	15
	425	3
	426	3
	431	4
	434	10
	434	17
	434	20
	434	23
	434	25
	434	28

PartNumber	Page	Index
	434	30
	434	4
	434	6
	434	8
	437	10
	437	17
	437	20
	437	23
	437	25
	437	28
	437	30
	437	33
	437	4
	437	6
	437	8
	438	2
	438	4
	438	7
	439	11
	439	3
	439	6
	439	8
	442	4
	442	6
	443	4
	443	6
	444	4
	444	6
	445	4
	445	6
	472	4
	497	9
	498	16
	499	10
	499	20
	502	7
	504	9
	505	16
	506	10
	506	20
	508	21
	509	7
	515	15
	516	21
	521	17
	521	22
	527	17
	527	22
	533	12
	533	31
	533	38
	535	13
	535	18
	540	12
	540	31
	540	37
	589	5
01010-81235	54	25
	126	25
	171	18
	171	26
	180	18
	180	26
	183	19
	183	2
	188	13
	188	4
	273	8
	276	5
	277	28
	279	28
	281	16
	281	21
	281	25
	281	29

PartNumber	Page	Index
	281	33
	287	10
	312	8
	401	13
	401	6
	406	8
	407	8
	461	13
	491	6
	497	4
	504	4
	508	25
	589	13
01010-81240	276	3
	277	3
	277	30
	277	5
	279	3
	279	30
	279	5
	284	14
	284	4
	357	37
	404	26
	404	32
	405	26
	405	32
	427	2
	435	11
	435	13
	435	15
	435	17
	435	19
	435	21
	435	23
	435	25
	435	27
	435	29
	435	31
	435	33
	435	35
	435	9
	436	10
	436	13
	436	16
	436	19
	436	21
	436	24
	436	26
	436	5
	436	7
	440	10
	440	12
	440	3
	440	5
	440	7
	441	10
	441	12
	441	3
	441	5
	441	7
	446	10
	446	13
	446	15
	446	2
	446	5
	446	8
	447	10
	447	13
	447	15
	447	2
	447	5
	447	8
	508	8
	515	20

PartNumber	Page	Index
	516	26
01010-81245	167	11
	176	11
	183	21
	189	12
	284	31
	284	33
	286	37
	286	8
	533	28
	533	9
	534	41
	540	28
	540	9
	541	40
01010-81250	156	6
	172	5
	181	5
	207	10
	211	10
	286	22
	357	39
	427	4
	457	31
01010-81255	292	18
	293	18
	427	11
	519	49
	524	42
	530	42
	537	42
01010-81265	145	14
	145	34
	181	40
	194	20
	307	2
	307	6
	327	4
01010-81275	173	43
	182	54
	508	15
	508	28
01010-81280	54	16
	54	34
	126	16
	126	34
	287	30
	318	3
01010-81285	284	17
	286	27
	508	13
01010-81290	181	36
01010-81295	297	13
	301	13
01010-81440	326	4
	456	21
	458	19
01010-81635	162	23
	163	31
	164	31
	207	13
	211	13
	238	9
	268	9
	270	8
	307	10
01010-81640	156	9
	158	1
	158	4
	312	3
	517	3
01010-81645	230	6
	260	6
01010-81650	156	3
01010-81655	475	20

PartNumber	Page	Index
	477	21
01010-81660	158	2
01010-81670	230	4
	260	4
	510	19
	512	19
01010-81680	480	9
01010-81875	518	27
01010-82065	488	5
	489	5
	490	5
01010-D0620	357	28
01010-D0816	331	11
01010-D0820	353	21
01010-D1025	150	4
	195	2
01010-D1030	343	6
01010-D1045	362	11
	396	10
01010-D1065	195	5
01010-D1220	197	4
	318	8
01010-D1225	320	3
	344	24
	391	29
01010-D1230	378	2
	398	2
01010-D1245	427	8
01011-61405	218	20
	245	20
01011-61455	245	22
01011-81005	189	20
01011-81040	275	31
	275	33
01011-81200	172	11
	181	11
01011-81205	188	34
01011-81210	189	6
01011-81225	54	21
	126	21
01011-81235	292	22
	293	21
01011-81250	520	3
01011-81605	523	21
	529	21
	536	21
01011-81610	523	22
	529	22
	536	22
01011-83065	401	10
01011-B1645	140	27
01011-D1245	319	3
01018-31095	108	5
01023-10306	361	23
01023-10508	378	40
	399	41
01023-10612	336	4
	336	6
01023-20412	340	2
01023-20416	340	8
	362	20
01023-20512	374	12
	374	17
	380	12
	380	17
	434	15
	436	4
	437	15
01023-20612	318	11
	333	10
01023-20616	323	3
	333	16
	333	18
	341	36
01023-60320	373	25
01023-60410	373	9
01023-60510	373	3
01023-60620	356	5
01023-70412	340	11
01224-40410	323	2
01224-40620	423	12
01240-00616	336	7
01240-01025	337	16
01245-00616	331	17
	332	47
	334	9
	338	3
	341	24
	344	9
	347	14
	347	21
	350	8
	372	12
	372	18
	372	23
	378	13
	378	20
	378	23
	391	9
	392	14
	392	21
	393	5
	398	13
	398	20
	398	23
01245-00620	334	22
	374	9
	380	9
01245-00625	338	12
	347	22
	348	5
01245-00816	331	20
	331	27
	331	30
	344	20
	391	19
01245-00820	334	18
	384	6
01245-00825	193	15
01245-00830	193	12
01245-01016	344	15
	344	7
	391	14
	391	7
01245-01025	365	10
	365	8
01252-60620	395	26
01252-60625	139	2
	139	5
	395	15
01252-60635	138	13
	138	20
	138	6
	224	21
	226	24
	251	21
	253	24
01252-60816	224	14
	251	14
01252-60820	215	18
	242	18
	256	10
01252-60825	226	10
	253	10
	455	13
01252-60840	226	25
	253	25
01252-60845	225	16
	252	16
	257	5
01252-60855	224	20
	251	20
01252-61025	130	22
	134	19
01252-61030	285	7
01252-61040	225	6
	252	6
	285	6
01252-61045	221	14
	248	14
01252-61075	227	30
	228	28
	254	30
	255	28
01252-61080	226	29
	229	20
	253	29
	259	20
01252-61235	466	22
	469	22
01252-70516	205	13
	209	13
01252-70816	373	17
01252-71030	428	4
	429	4
01252-80512	357	34
01252-80616	331	24
01252-80650	347	15
01252-80820	374	3
	380	3
01252-80825	315	1
01252-A0630	206	5
	210	5
01310-01216	510	29
	512	29
	518	34
	523	31
	529	31
	536	31
01370-00420	338	15
01370-00508	432	7
01370-10308	357	19
01370-20308	357	22
01370-30416	341	33
01370-40610	374	20
	380	20
01435-00610	354	11
	354	14
	354	16
	354	18
	354	21
	354	24
	354	28
	354	5
	354	9
	355	5
01435-00612	331	36
	341	13
	341	20
	341	26
	341	8
	344	32
	372	20
	378	17
	398	17
01435-00616	333	2
	347	1
	347	4
	351	10
	351	6
	392	1
	392	4
01435-00625	328	6
01435-00630	328	7
01435-00812	358	45

PartNumber	Page	Index
01435-00814	51	2
01435-00816	52	7
	356	4
01435-00820	35	13
	36	1
	51	4
	56	13
	58	2
	337	2
	347	6
	354	3
	392	6
01435-00825	101	1
	116	9
01435-00845	52	4
01435-00860	106	3
	354	2
01435-00885	106	4
01435-01016	356	2
01435-01020	92	1
01435-01025	35	10
	56	10
01435-01030	35	8
	56	8
	159	2
01435-01220	335	19
	335	20
01435-01235	35	6
	56	6
01435-40610	334	13
	341	39
01435-40616	321	3
	322	3
	333	14
	337	5
01435-40620	385	7
01435-40812	340	9
	355	2
01435-40816	374	6
	380	6
01435-40825	343	4
01435-60612	67	3
	112	12
01435-60816	62	9
	72	11
	87	13
	87	17
	112	11
	116	7
01435-60820	77	3
01435-60825	62	14
	65	3
	108	9
01435-60835	112	3
01435-61025	38	1
	76	2
	106	13
	108	8
01435-61030	73	5
01435-61035	80	5
01435-80616	341	19
	352	17
	357	14
	357	25
01435-80820	353	12
	353	7
01435-80825	350	10
	350	13
01573-22306	521	7
	527	7
01580-00806	206	8
	210	8
01580-10403	357	3
01580-11008	332	39
	337	12
	408	37
	410	37
	412	25
	488	11
	489	11
	490	11
01580-11210	106	10
	404	29
	404	6
	405	29
	405	6
	520	5
01580-11613	140	22
	140	29
01580-12016	401	3
	488	7
	489	7
	490	7
	525	11
	525	15
	525	19
	525	22
	531	11
	531	15
	531	19
	531	22
	538	11
	538	15
	538	19
	538	22
01580-40605	374	10
	380	10
01582-11411	369	10
	375	10
01583-11408	396	37
01583-11811	331	33
01584-00605	65	7
	112	5
01584-00806	112	6
01584-01008	336	13
01584-30806	334	4
01584-31008	332	41
01594-01008	35	3
	56	3
01597-01009	154	14
	457	20
	511	41
	513	41
	515	4
	516	10
01601-20410	357	5
01601-20513	205	12
	209	12
	379	41
	399	42
01640-20408	357	4
01640-20508	582	3
	585	3
	588	3
01640-20610	353	19
01640-20816	404	10
	404	13
	405	10
	405	13
01640-50508	357	35
	374	15
	380	15
01641-01016	108	6
01641-21223	106	8
	106	9
01643-11232	316	2
	317	4
01643-30623	158	14
	162	14
	163	14
	164	14
	193	9
	200	11
	200	17
	206	7
	210	7
	340	1
	347	19
	358	42
	372	15
	372	6
	373	5
	378	10
	378	16
	392	19
	398	10
	398	16
	408	26
	408	32
	410	26
	410	32
	412	17
	412	23
	424	11
01643-30823	152	15
	152	20
	152	24
	171	16
	171	3
	180	16
	180	3
	193	3
	193	5
	193	7
	194	14
	198	4
	198	8
	200	6
	206	9
	210	9
	226	28
	253	28
	326	10
	326	13
	326	16
	336	17
	361	15
	371	2
	377	2
	384	3
	390	12
	390	14
	413	23
	417	23
	459	10
01643-31032	54	11
	54	24
	54	4
	54	6
	54	8
	126	11
	126	24
	126	4
	126	6
	126	8
	139	10
	144	6
	149	13
	149	17
	150	10
	150	14
	150	16
	150	19
	150	22
	150	25

PartNumber	Page	Index
	150	28
	150	3
	151	20
	152	28
	152	30
	154	13
	154	6
	155	16
	155	8
	156	13
	156	15
	169	2
	178	2
	183	9
	188	2
	188	7
	189	19
	189	22
	189	25
	189	27
	189	3
	190	7
	193	19
	193	21
	193	30
	193	33
	199	3
	207	2
	211	2
	275	30
	275	32
	278	43
	286	2
	287	24
	288	10
	288	12
	288	4
	289	7
	290	15
	297	10
	297	2
	301	10
	301	2
	326	20
	326	23
	329	10
	329	3
	329	5
	329	8
	337	13
	362	14
	362	2
	362	5
	363	4
	363	6
	364	4
	364	6
	367	11
	367	13
	367	16
	367	22
	367	3
	367	4
	367	7
	372	3
	379	45
	379	48
	385	16
	385	18
	388	15
	388	18
	388	21
	388	24
	388	3
	388	9
	389	11
	389	14
	389	3
	396	13
	396	36
	396	4
	396	5
	396	8
	399	46
	399	49
	400	17
	400	3
	423	15
	423	18
	424	9
	443	9
	445	9
	456	10
	457	18
	457	21
	458	8
	488	12
	489	12
	490	12
	511	42
	513	42
	515	5
	516	11
	533	20
	533	22
	540	20
	540	22
	584	6
01643-31232	54	17
	54	20
	54	26
	54	30
	54	35
	126	17
	126	20
	126	26
	126	30
	126	35
	140	11
	140	14
	140	4
	140	7
	142	10
	144	12
	144	15
	145	15
	145	18
	145	25
	145	28
	145	31
	145	35
	145	5
	148	22
	151	15
	152	12
	154	11
	156	7
	158	10
	167	12
	169	7
	170	9
	171	19
	171	23
	171	27
	171	5
	171	8
	172	10
	172	14
	172	18
	172	21
	172	24
	172	27
	172	3
	172	30
	172	35
	172	39
	172	6
	173	44
	176	12
	178	7
	179	9
	180	19
	180	23
	180	27
	180	5
	180	8
	181	10
	181	14
	181	18
	181	21
	181	24
	181	27
	181	3
	181	30
	181	33
	181	37
	181	6
	182	41
	182	46
	182	50
	182	55
	183	20
	183	22
	183	25
	183	28
	183	3
	183	31
	183	35
	186	18
	186	5
	186	8
	187	16
	188	10
	188	14
	188	17
	188	20
	188	24
	188	27
	188	30
	188	33
	188	37
	188	5
	189	13
	189	16
	189	30
	189	34
	189	38
	189	5
	189	8
	190	4
	193	17
	194	18
	194	21
	194	3
	194	9
	196	11
	196	16
	196	20
	196	6
	196	8
	200	14
	200	25
	200	28
	204	27
	205	8

PartNumber	Page	Index
	207	11
	207	16
	207	5
	207	8
	208	28
	209	8
	211	11
	211	16
	211	5
	211	8
	232	55
	262	55
	271	28
	272	28
	273	9
	276	4
	276	6
	276	8
	277	13
	277	17
	277	29
	277	31
	277	39
	277	4
	277	6
	277	9
	279	13
	279	17
	279	29
	279	31
	279	39
	279	4
	279	6
	279	9
	280	5
	280	9
	281	17
	284	15
	284	18
	284	34
	284	5
	286	26
	286	28
	286	38
	286	9
	287	11
	287	15
	287	17
	287	29
	287	31
	288	16
	288	19
	292	10
	292	19
	292	21
	293	10
	293	19
	293	20
	297	14
	297	17
	297	7
	301	14
	301	17
	301	24
	301	29
	301	7
	307	13
	307	3
	307	7
	308	21
	308	24
	310	12
	310	21
	311	12
	311	21

PartNumber	Page	Index
	312	9
	318	4
	327	5
	327	9
	328	12
	328	16
	328	19
	328	26
	328	3
	357	38
	358	40
	365	6
	401	14
	401	7
	404	16
	404	19
	404	5
	405	16
	405	19
	405	5
	406	4
	406	6
	406	9
	407	12
	407	4
	407	6
	407	9
	408	13
	408	20
	408	23
	408	29
	408	35
	408	6
	409	43
	409	45
	409	47
	410	13
	410	20
	410	23
	410	29
	410	35
	410	6
	411	43
	411	45
	411	47
	412	11
	412	14
	412	20
	412	28
	412	34
	412	5
	414	11
	414	13
	414	16
	414	7
	414	9
	415	18
	415	20
	415	22
	415	25
	415	5
	416	10
	416	12
	416	7
	417	27
	417	30
	418	11
	418	13
	418	16
	418	7
	418	9
	419	18
	419	20
	419	22
	419	25

PartNumber	Page	Index
	419	5
	420	10
	420	12
	420	7
	421	5
	422	12
	422	5
	423	21
	423	24
	423	8
	425	4
	426	4
	427	12
	427	3
	427	5
	430	2
	431	5
	432	9
	434	11
	434	18
	434	21
	434	24
	434	31
	434	5
	434	7
	435	12
	435	16
	435	20
	435	24
	435	28
	435	30
	435	34
	436	11
	436	17
	436	20
	436	27
	436	8
	437	11
	437	18
	437	21
	437	24
	437	31
	437	34
	437	5
	437	7
	438	5
	438	8
	439	12
	439	4
	439	9
	440	11
	440	4
	440	6
	441	11
	441	4
	441	6
	442	5
	443	5
	444	5
	445	5
	446	14
	446	6
	446	9
	447	14
	447	6
	447	9
	457	32
	461	14
	472	5
	475	19
	475	6
	477	20
	477	6
	497	10
	497	5

PartNumber	Page	Index
	500	9
	502	5
	502	8
	504	10
	504	5
	507	9
	508	14
	508	16
	508	29
	508	9
	509	5
	509	8
	515	11
	515	16
	515	21
	516	17
	516	22
	516	27
	519	50
	520	4
	521	18
	521	23
	524	43
	527	18
	527	23
	530	43
	533	10
	533	13
	533	29
	533	32
	534	42
	535	14
	535	19
	537	43
	540	10
	540	13
	540	29
	540	32
	541	41
	582	10
	582	6
	585	10
	585	6
	588	10
	588	6
	589	11
	589	14
	589	3
	589	6
01643-31445	218	21
	225	22
	245	21
	252	22
	326	6
	456	22
	458	20
01643-31645	129	9
	131	31
	132	9
	135	31
	136	9
	140	19
	140	21
	140	26
	140	28
	158	3
	158	5
	162	22
	163	30
	164	30
	207	12
	211	12
	230	3
	230	5
	238	8

PartNumber	Page	Index
	260	3
	260	5
	268	8
	270	7
	307	9
	312	4
	468	30
	471	30
	472	2
	475	21
	477	22
	480	10
	517	4
01643-31845	478	12
	479	12
01643-32060	401	4
	457	30
	488	6
	489	6
	490	6
	492	3
	493	3
	494	3
	543	18
	544	19
	545	11
	546	11
	547	18
01643-33080	401	11
01643-50823	257	6
	274	10
	275	12
01643-51032	225	7
	252	7
	268	15
	274	5
	275	21
	275	29
	275	7
	277	36
	279	36
	281	10
	281	12
	281	38
	281	7
	282	43
	283	11
	283	16
	283	5
	284	11
	284	23
	284	28
	284	8
	285	8
	286	33
	286	6
	287	22
	290	11
	291	7
	457	10
	458	32
	460	3
	498	4
	498	8
	499	15
	499	5
	505	4
	505	8
	506	15
	506	5
	508	5
	510	36
	511	40
	511	48
	511	50

PartNumber	Page	Index
	511	52
	512	36
	513	40
	513	48
	513	50
	513	52
	516	6
	519	44
	519	48
	519	53
	519	55
	523	37
	524	41
	524	46
	524	48
	526	8
	529	37
	530	41
	530	46
	530	48
	532	8
	533	5
	536	37
	537	41
	537	46
	537	48
	539	8
	540	5
01643-51232	167	2
	176	2
	415	10
	415	16
	419	10
	419	16
	519	57
	524	50
	530	50
	537	50
01643-51645	510	20
	512	20
	523	23
	529	23
	536	23
01643-70623	331	18
	331	25
	332	48
	334	10
	334	23
	338	13
	338	4
	341	25
	344	10
	347	16
	347	23
	348	6
	350	9
	357	29
	372	13
	372	19
	372	24
	378	14
	378	21
	378	24
	391	10
	392	15
	392	22
	393	6
	398	14
	398	21
	398	24
01643-70823	193	11
	193	14
	331	21
	331	28
	331	31

PartNumber	Page	Index
	334	21
	344	21
	347	12
	353	22
	374	4
	380	4
	384	7
	391	20
	392	12
01643-71032	150	5
	195	3
	195	6
	332	42
	343	7
	344	16
	344	8
	362	12
	391	15
	391	8
	396	11
01643-71232	197	5
	318	9
	319	4
	320	4
	344	25
	378	3
	391	30
	398	3
	427	9
01643-72060	450	5
	451	6
	452	5
01643-72260	450	9
	451	10
	452	9
01643-81032	367	17
01803-02430	543	13
	544	14
	545	15
	546	15
	547	13
02030-70751	317	2
02740-00210	296	1
	300	1
02740-00214	296	4
	300	4
02740-002A3	296	11
	300	11
02740-002A5	296	2
	300	2
02740-002A7	296	3
	300	3
02740-00313	296	12
	300	12
02741-002A8	296	14
	300	14
02742-002A7	296	13
	300	13
02742-003A4	296	18
02753-006A8	277	18
	279	18
02771-00230	387	10
02771-00231	387	11
02771-00234	387	3
02771-00235	387	1
02771-00236	387	2
02771-002A5	584	11
02771-00304	289	13
	301	26
02771-00331	387	9
02774-00220	464	19
02774-00222	465	21
02774-00311	308	12
02774-00419	464	16
02774-00421	465	18

PartNumber	Page	Index
02774-005A5	457	5
02781-0021D	231	16
	231	37
	231	4
	261	16
	261	37
	261	4
	269	1
	271	5
	295	11
	295	17
	295	20
	295	8
	299	11
	299	17
	299	20
	299	8
	389	18
	389	7
	400	21
	400	7
	464	11
	465	11
02781-00315	289	9
02781-0031D	389	15
	400	18
02781-00422	464	6
	465	6
02781-00522	460	4
02781-00628	204	13
	208	14
02782-10210	231	1
	231	13
	231	19
	232	44
	232	50
	233	1
	261	1
	261	13
	261	19
	262	44
	262	50
	263	1
	263	10
	263	7
	269	10
	269	7
	271	11
	271	14
	272	11
	272	14
	584	7
02782-10212	233	4
	263	13
	269	13
02782-10311	167	5
	176	5
	183	10
	204	16
	208	17
	231	31
	261	31
02782-10312	183	13
02782-10315	204	10
	204	7
	208	11
	289	8
02782-10422	271	20
	272	20
02782-10522	204	19
	208	20
02782-10628	460	7
02782-10630	271	17
	272	17
	457	25

PartNumber	Page	Index
02783-10210	271	8
	272	8
	584	8
02783-10315	295	23
	299	26
02783-10422	271	23
	272	23
02783-10522	457	1
02783-10628	277	21
	279	21
02789-00210	268	16
02896-11008	208	10
	224	16
	231	11
	231	14
	231	17
	231	2
	231	20
	231	23
	231	26
	231	29
	231	38
	231	40
	231	5
	231	8
	232	42
	232	46
	237	3
	238	5
	251	16
	261	11
	261	14
	261	17
	261	2
	261	20
	261	23
	261	26
	261	29
	261	38
	261	40
	261	5
	261	8
	262	42
	262	46
	263	2
	263	5
	263	8
	267	3
	268	5
	269	2
	269	5
	269	8
	271	6
	286	11
	286	14
	295	12
	295	15
	295	18
	295	21
	295	6
	295	9
	299	12
	299	15
	299	18
	299	21
	299	24
	299	6
	299	9
	302	12
	302	9
	304	1
	304	10
	304	19
	304	22
	304	4

PartNumber	Page	Index
	304	7
	306	1
	306	10
	306	4
	306	7
	362	24
	371	8
	377	8
	389	19
	389	8
	396	18
	396	21
	396	23
	400	11
	400	22
	400	25
	400	8
	457	23
	461	5
	461	6
	464	12
	465	12
	584	10
02896-11009	162	4
	162	8
	163	4
	163	8
	164	4
	164	8
	165	5
	165	7
	167	7
	174	6
	174	8
	176	7
	183	11
	183	14
	204	11
	204	17
	204	8
	208	12
	208	18
	208	8
	231	32
	231	35
	232	48
	238	6
	261	32
	261	35
	262	48
	268	6
	270	5
	272	6
	289	11
	295	24
	295	29
	299	27
	299	32
	302	3
	302	6
	304	13
	304	16
	377	10
	389	16
	389	5
	400	19
	400	5
	587	3
02896-11012	461	2
	464	7
	465	7
02896-11015	204	20
	208	21
	457	3
	457	34
	457	4
	461	4
02896-11018	204	14
	208	15
	271	18
	272	18
	277	23
	279	23
	457	26
02896-61008	232	51
	233	3
	233	6
	235	1
	237	1
	262	51
	263	12
	263	15
	265	1
	267	1
	269	12
	269	15
	271	10
	271	12
	271	15
	272	10
	272	12
	272	15
02896-61012	271	22
	271	25
	272	22
	272	25
02896-61018	461	7
04020-01228	129	6
	130	21
	134	18
	140	10
	140	13
	466	34
	469	34
04020-01842	450	6
	451	7
	452	6
04022-04016	361	25
04025-00324	467	31
	470	31
04025-00412	533	17
	540	17
04050-11612	424	12
04050-14028	461	12
04052-10530	337	8
04052-20833	404	11
	404	14
	405	11
	405	14
04064-04518	454	6
	475	10
	477	10
04064-07525	459	5
04065-04818	467	14
	470	14
04065-05820	130	11
	134	8
04065-06220	454	9
04065-06825	130	7
04065-07225	467	7
	470	7
04077-00085	475	15
	477	16
04077-00100	459	13
04120-21750	329	11
04205-10520	337	7
04205-30825	404	9
	405	9
04205-30828	404	12
	405	12
04260-00635	518	17
04260-01587	468	28
	471	28
04418-13060	543	20
	544	21
	545	19
	546	19
	547	20
	552	2
04434-50508	226	26
	253	26
04434-50510	67	8
	326	18
04434-50610	139	8
	329	1
	329	6
04434-50612	54	22
	126	22
	207	3
	211	3
04434-51010	151	18
	297	8
	301	8
04434-51012	194	15
	194	6
	196	14
	196	4
	197	7
	297	15
	500	12
	500	7
	507	12
	507	7
	515	14
	516	20
04434-51208	72	8
04434-51212	301	22
04434-51308	112	15
04434-51410	189	23
	379	46
	399	47
04434-51412	172	25
	181	25
	194	16
	194	7
	292	16
	292	20
04434-51512	171	17
	171	6
	171	9
	180	17
	180	6
	180	9
	183	26
	328	24
04434-51610	155	14
04434-51612	145	3
	170	7
	179	7
04434-51708	72	9
	87	11
	356	3
04434-51710	379	43
	399	44
04434-51712	200	23
	297	5
	301	27
	301	5
04434-51812	172	1
	172	16
	172	19
	172	28
	172	4
	172	8
	181	1

PartNumber	Page	Index
	181	16
	181	19
	181	28
	181	4
	181	8
	292	14
	292	15
	293	14
	293	15
	293	16
04434-51910	385	12
04434-51912	189	28
	189	31
	328	10
	328	14
	328	17
	328	20
	328	22
04434-52112	145	23
	145	26
	145	32
	171	10
	171	12
	171	20
	171	24
	180	10
	180	12
	180	20
	180	24
	183	32
	307	11
	327	6
	327	7
	328	13
	328	21
	328	23
	328	9
	500	6
	507	6
04434-52212	189	10
	189	14
	301	25
04434-52312	145	8
	280	3
04434-52511	58	1
	385	13
04434-52512	172	31
	172	36
	172	40
	182	42
	182	47
	182	51
	188	8
	207	14
	211	14
	582	8
	585	8
	588	8
	589	12
	589	9
04434-52712	189	35
	280	7
	308	22
04434-53211	388	1
04434-53212	308	19
04434-53411	356	1
	367	14
	388	7
04434-53412	54	28
	54	31
	126	28
	126	31
	188	11
	188	15
	188	18
	188	21
	188	3
04435-51012	197	
	301	15
04435-51210	396	33
	400	14
04435-51512	292	12
	293	12
04435-51612	145	12
	145	16
04435-51712	297	11
	301	11
04435-51812	172	22
	181	22
	181	31
	181	35
	181	39
	292	11
	292	8
	293	11
	293	8
04435-52112	145	29
	327	3
04530-11222	128	8
	133	8
06124-01616	373	21
07000-11006	466	29
	469	29
07000-11007	148	13
	218	12
	245	12
07000-11008	227	7
	228	7
	254	7
	255	7
07000-11009	226	9
	253	9
	256	11
	466	21
	466	33
	469	21
	469	33
07000-11010	215	17
	216	15
	225	13
	227	20
	227	29
	228	20
	229	13
	242	17
	243	15
	252	13
	254	20
	254	29
	255	20
	259	13
07000-12011	225	5
	227	18
	228	18
	229	11
	252	5
	254	18
	255	18
	259	11
	287	2
	306	13
	362	29
	396	16
	396	19
	396	24
07000-12012	216	1
	216	10
	243	1
	243	10
07000-12014	219	2
	246	2
07000-12015	216	14
	243	14
	362	27
	371	6
	377	6
07000-12016	219	4
	246	4
07000-12018	225	1
	252	1
	362	22
	371	4
	377	4
07000-12020	221	16
	225	3
	248	16
	252	3
07000-12021	216	11
	216	4
	243	11
	243	4
	256	12
07000-12035	225	17
	252	17
	275	16
	275	24
07000-12055	227	28
	254	28
	285	9
07000-12060	474	5
	476	5
07000-12100	273	2
	287	3
07000-13024	213	14
	213	6
	214	8
	215	10
	215	15
	215	5
	223	4
	227	15
	228	15
	240	14
	240	6
	241	8
	242	10
	242	15
	242	5
	250	4
	254	15
	255	15
	258	9
07000-13025	281	35
	283	7
	291	2
	291	4
	498	18
	505	18
	526	2
	532	2
	539	2
07000-13028	216	5
	243	5
07000-13032	216	12
	216	6
	243	12
	243	6
	256	14
	274	2
	275	2
	275	4
	277	33
	279	33
	281	3
	281	40

PartNumber	Page	Index
	283	13
	283	2
	283	8
	284	20
	284	25
	286	30
	290	2
	290	4
	290	6
	290	8
	464	22
	465	15
	465	17
	498	20
	505	20
	526	3
	526	5
	532	3
	532	5
	533	2
	539	4
	540	2
07000-13035	268	13
	275	18
	275	26
	281	4
	288	2
	499	13
	506	13
	508	3
07000-13036	216	13
	243	13
07000-13038	286	35
	287	19
	288	8
	533	27
	533	7
	534	40
	540	27
	540	39
	540	7
07000-13040	278	41
	466	19
	469	19
07000-13048	226	8
	253	8
	276	2
	277	2
	277	27
	279	2
	279	27
07000-13050	162	13
	163	13
	164	13
07000-15160	205	6
	209	6
	576	10
	577	10
07000-15195	204	25
	208	26
	576	11
	577	11
07000-15240	457	28
07000-15290	456	11
	458	9
07000-A2125	206	4
	210	4
07000-A5190	129	5
07000-B1008	138	23
07000-B1009	128	5
	133	3
	455	12
07000-B2012	128	4
	133	5
07000-B2020	453	8
07000-B2050	132	6
	136	6
07000-B2105	459	8
07000-B3030	511	43
	513	43
	519	51
	524	44
	530	44
	537	44
	592	
	592	
	593	
07000-B3032	533	24
	540	24
07000-B3035	511	44
	513	44
	592	
07000-B3038	132	2
	136	2
	533	25
	540	25
07000-B3042	455	11
07000-B5075	510	28
	512	28
	592	
07000-B5080	523	30
	529	30
	536	30
	593	
07000-B5085	518	35
	592	
07000-B5105	523	24
	529	24
	536	24
	593	
07000-B5110	510	21
	510	30
	512	21
	512	30
	592	
07000-B5125	518	14
	518	26
	592	
07000-E2065	154	4
07000-F2020	455	2
07001-01006	466	30
	469	30
07001-01008	138	24
	255	8
07001-01010	227	21
	228	21
	254	21
	255	21
07001-02011	227	19
	228	19
	254	19
	255	19
07002-10823	212	11
	239	11
	256	4
07002-11023	218	19
	225	14
	226	18
	227	23
	228	23
	229	16
	245	19
	252	14
	253	18
	254	23
	255	23
	259	16
07002-11223	232	43
	237	4
	262	43
	267	4
	271	4
	272	4
	288	6
	466	31
	469	31
07002-11423	149	14
	155	11
	167	6
	167	9
	176	6
	176	9
	183	12
	183	15
	183	7
	204	18
	208	19
	218	11
	218	9
	221	5
	224	17
	224	19
	224	35
	225	9
	231	12
	231	15
	231	18
	231	21
	231	24
	231	27
	231	3
	231	30
	231	33
	231	36
	231	39
	231	6
	231	9
	232	45
	232	49
	245	11
	245	9
	248	5
	251	17
	251	19
	251	35
	252	9
	261	12
	261	15
	261	18
	261	21
	261	24
	261	27
	261	3
	261	30
	261	33
	261	36
	261	39
	261	6
	261	9
	262	45
	262	49
	263	3
	263	6
	263	9
	269	3
	269	6
	269	9
	271	7
	272	7
	286	15
	294	1
	295	10
	295	13
	295	16
	295	19

PartNumber	Page	Index
	295	22
	295	30
	295	4
	295	7
	299	10
	299	13
	299	16
	299	19
	299	22
	299	25
	299	33
	299	4
	299	7
	302	10
	302	13
	302	4
	302	7
	304	11
	304	14
	304	17
	304	2
	304	20
	304	23
	304	5
	304	8
	306	11
	306	2
	306	5
	306	8
	362	25
	371	9
	377	11
	389	17
	389	20
	389	6
	389	9
	400	12
	400	20
	400	23
	400	26
	400	6
	400	9
	455	10
	457	24
	457	8
	460	9
	464	13
	465	13
	466	10
	466	12
	469	10
	469	12
	584	9
07002-11623	224	30
	251	30
07002-11823	55	4
	127	4
	218	7
	227	17
	228	17
	229	10
	238	4
	245	7
	254	17
	255	17
	259	10
	268	4
	270	4
	466	26
	469	26
07002-12034	152	17
	162	3
	163	3
	164	3
	204	12
	204	9
	208	13
	208	9
	286	12
	289	10
	295	25
	295	27
	295	32
	299	28
	299	30
	299	35
	464	10
	464	8
	465	10
	465	8
	587	2
07002-12434	204	15
	204	21
	204	6
	208	16
	208	22
	208	6
	219	6
	220	4
	246	6
	247	4
	271	19
	271	2
	272	19
	272	2
	273	5
	277	20
	277	22
	277	25
	279	20
	279	22
	279	25
	284	13
	286	20
	457	2
	457	27
	457	35
	458	36
	460	5
	461	3
	468	33
	471	33
07002-13334	229	8
	259	8
07002-13634	217	10
	217	14
	217	18
	217	22
	217	26
	217	30
	217	34
	217	6
	227	11
	228	11
	244	10
	244	14
	244	18
	244	22
	244	26
	244	30
	244	34
	244	6
	254	11
	255	11
	257	4
07002-61023	128	10
	129	11
	133	11
07002-61223	576	12
	577	12
07002-61423	138	25
	232	52
	233	2
	233	5
	262	52
	263	11
	263	14
	269	11
	269	14
	271	13
	271	16
	271	9
	272	13
	272	16
	272	9
07002-61823	238	2
	268	2
	270	2
07002-62034	271	21
	271	24
	272	21
	272	24
	519	40
	592	
07002-62434	128	7
	133	7
	137	13
	460	6
	576	13
	577	13
07002-63034	133	13
	455	4
07002-63334	453	14
	464	2
	465	2
07005-00812	168	3
	177	3
07005-01212	87	6
	165	12
	165	8
	174	13
	174	9
07005-01412	144	18
	144	4
	144	8
	165	15
	165	2
	174	16
	174	3
07005-02216	66	4
07005-03016	55	5
	127	5
07020-00000	450	3
	451	4
	452	3
	500	1
	502	9
	507	1
	509	9
	514	1
	515	1
	516	1
	518	11
	521	11
	523	32
	525	4
	525	5
	527	11
	529	32
	531	4
	531	5
	535	7
	536	32
	538	4
	538	5

PartNumber	Page	Index
	576	14
	577	14
07020-00675	541	43
	576	15
	577	15
07030-00252	457	11
07040-11007	226	17
	253	17
07040-11209	271	3
	272	3
	288	5
07040-11409	149	15
	167	8
	176	8
	183	6
	224	18
	251	18
	294	2
	457	7
07040-12412	277	24
	279	24
	284	12
	458	35
07040-13016	133	12
07042-00312	456	2
07042-30108	458	34
07042-30617	458	33
07043-70108	157	2
07043-A0108	162	7
	163	7
	164	7
07044-12412	128	6
	133	6
	204	5
	208	5
	273	4
07048-01310	360	6
07049-01012	193	36
	238	10
	268	10
	270	9
	292	23
	468	31
	471	31
	501	1
	508	30
	522	2
	528	2
07049-01215	201	1
	238	11
	268	11
	270	10
	284	2
	284	30
	286	3
	488	15
	489	16
	490	15
	501	2
	522	1
	528	1
07049-02025	489	15
07056-18425	162	20
	163	20
	164	20
07085-006A7	498	17
	505	17
07094-11024	287	25
07095-00628	290	13
07095-01034	515	17
	516	23
07095-01038	287	26
07095-01241	288	13
07095-01245	276	9
	277	10

PartNumber	Page	Index
	277	14
	279	10
	279	14
07095-40211	72	10
	87	12
07095-40314	171	11
	171	13
	171	21
	171	25
	180	11
	180	13
	180	21
	180	25
	183	33
07097-21015	533	1
	540	1
07097-21218	533	6
	540	6
07098-01007	284	19
07099-21016	284	24
07099-21217	286	34
07145-00070	510	31
	512	31
	523	33
	529	33
	536	33
	592	
	593	
07145-00080	510	32
	512	32
	518	10
	518	8
	592	
	592	
07145-00090	496	11
	502	1
	503	11
	509	1
	521	12
	527	12
	535	8
07155-00720	475	8
	477	8
07177-07030	475	13
	477	14
07179-13099	510	22
	512	22
07179-13109	518	21
07206-30812	165	13
	165	9
	174	10
	174	14
07206-31014	144	19
	144	3
	144	9
	165	16
	165	3
	174	17
	174	4
07238-10630	457	15
07260-08732	273	6
07260-20950	54	13
	126	13
07270-00627	183	16
07270-00825	167	3
	176	3
07270-00860	169	3
	178	3
07270-01065	170	6
	179	6
07280-04726	360	5
07283-32738	457	19
	511	45
	513	45
07283-33442	511	46

PartNumber	Page	Index
	513	46
07283-33450	515	3
	516	9
07283-53444	515	13
	516	19
07285-00080	183	17
07285-00100	169	4
	178	4
07285-00110	167	4
	176	4
07285-00115	170	5
	179	5
07285-00155	54	14
	126	14
07285-00200	205	15
	209	15
07285-00220	582	11
	582	13
	585	11
	585	13
	588	11
	588	13
07285-00280	271	31
	272	31
07286-01914	582	12
	585	12
	588	12
07286-03828	360	4
07289-00035	589	19
	589	21
	589	24
07289-00055	155	2
	155	4
07299-00120	142	8
07299-00145	142	7
07371-30500	274	9
	275	11
07371-30640	281	36
	281	5
	291	5
	498	2
	505	2
	510	38
	512	38
	519	46
	523	39
	529	39
	536	39
	539	5
07371-31049	274	3
	275	19
	275	27
	275	5
	277	34
	279	34
	281	8
	282	41
	283	14
	283	3
	283	9
	284	21
	284	26
	284	6
	284	9
	286	31
	286	4
	290	9
	460	1
	498	6
	499	3
	505	6
	506	3
	510	34
	512	34
	519	42

PartNumber	Page	Index
	523	35
	526	6
	529	35
	532	6
	533	3
	536	35
	539	6
	540	3
07371-31255	287	20
07371-51260	286	36
	286	7
	533	30
	533	8
	540	30
	540	8
07372-21035	274	4
	275	20
	275	28
	275	6
	277	35
	279	35
	281	37
	281	6
	281	9
	282	42
	283	10
	283	15
	283	4
	284	10
	284	22
	284	27
	284	7
	286	32
	286	5
	290	10
	291	6
	460	2
	498	3
	498	7
	499	4
	505	3
	505	7
	506	4
	510	35
	510	39
	511	47
	512	35
	512	39
	513	47
	516	5
	519	43
	519	47
	523	36
	524	40
	526	7
	529	36
	530	40
	532	7
	533	4
	536	36
	537	40
	539	7
	540	4
07372-21040	268	14
	281	11
	287	21
	499	14
	506	14
	508	4
07372-21045	511	49
	513	49
	519	52
	524	45
	530	45
	537	45

PartNumber	Page	Index
07372-21060	511	51
	513	51
	519	54
	524	47
	530	47
	537	47
07372-21240	167	1
	176	1
	519	56
	524	49
	530	49
	537	49
07430-71380	215	16
	224	10
	242	16
	251	10
	256	9
07700-50240	162	10
	162	5
	163	10
	163	5
	164	10
	164	5
	170	3
	179	3
07750-01628	518	38
07950-10451	579	8
07950-90403	579	10
07951-41017	579	9
07952-70014	579	
07959-20001	475	16
	477	17
08000-00020	186	2
	187	2
08000-00021	186	3
	187	3
08000-3222Z	187	1
08001-0115E	186	1
08017-A0702	340	13
08017-A0707	368	5
08028-43030	190	5
	367	20
08028-43035	193	26
08028-63035	186	10
	187	8
08028-EC085	193	23
08028-GC055	366	25
08034-20414	344	33
	373	8
	378	39
	398	40
08034-20519	328	27
	337	9
	338	16
	338	5
	340	4
	349	2
	356	7
	356	8
	358	43
	367	18
	378	31
	396	25
	396	39
	397	41
	398	31
	499	21
	506	21
08034-20536	54	37
	126	37
	145	7
	194	12
	194	23
	196	13
	199	4

PartNumber	Page	Index
	297	18
	297	3
	297	4
	301	18
	301	3
	301	30
	301	4
	308	1
	308	25
	308	9
	368	4
	369	11
	375	11
	386	6
	388	10
	388	12
	388	25
	388	4
	388	6
	396	40
	464	17
	464	20
	464	5
	465	19
	465	22
	465	5
	515	18
	516	24
	516	8
	584	12
08034-20876	352	22
	352	7
08034-40521	349	1
08037-01610	344	31
08037-02512	197	2
	318	7
	333	7
08037-03614	172	15
	181	15
	183	4
	423	26
08037-11425	373	10
08038-00035	193	24
	193	27
08038-00519	366	20
	366	23
08038-10519	194	11
08038-12027	189	9
08038-42511	186	11
	187	9
	193	22
08041-00500	357	8
	366	2
08041-01000	357	10
	366	3
08041-01500	357	9
	366	4
08041-02000	357	11
	366	5
08041-02500	357	12
08041-03000	357	13
	366	6
08051-00801	341	31
08053-01510	326	17
08057-00808	198	2
	198	6
08057-00810	193	31
08057-12012	188	22
	188	28
	188	31
	188	35
	189	32
	288	17
08057-14008	326	14
	326	9

PartNumber	Page	Index
08057-14010	189	1
08057-14012	54	19
	126	19
	189	18
	200	20
	515	19
	516	25
08057-22012	188	25
08059-00310	200	12
08059-00413	337	10
	367	19
08059-00515	331	37
	340	5
	341	30
	344	34
	355	6
	356	6
	589	7
08068-00001	193	10
08068-00002	193	
08086-50000	378	26
	398	26
08088-70000	366	19
08116-02410	338	
08155-02400	193	13
08160-72400	198	1
08160-72420	198	5
08193-20010	67	7
	326	21
08193-20012	186	16
	187	14
	196	18
	196	3
	200	26
	207	6
	211	6
	515	9
	516	15
08193-21012	502	6
	509	6
08211-00720	200	21
	287	13
	288	20
08211-02220	193	34
09002-00810	579	14
09002-01417	579	3
09002-02427	579	15
09002-03032	579	4
09007-00425	579	12
09007-00528	579	13
09007-00836	579	11
09019-28036	579	2
09021-01928	579	16
09021-02233	579	17
09021-03044	579	18
09022-00150	579	19
09023-00300	579	20
09024-00300	579	21
09033-00190	579	5
09039-00150	579	6
09055-10390	579	7
09056-04613	579	1
09059-00800	576	1
	577	1
09133-A3281	550	24
	551	24
09134-A1681	567	1
09244-02496	543	9
	544	10
	545	8
	546	8
09370-00070	475	9
	477	9
09409-00002	317	3
09415-00706	341	28
09415-01008	344	14
09415-02512	344	3
	378	25
	391	3
	398	25
09415-03620	360	3
09416-10200	334	6
	341	12
	341	2
	341	4
09452-14503	357	18
09479-02400	385	11
	385	9
09601-120E2	552	1
09601-80000	543	19
	544	20
	545	18
	546	18
	547	19
09620-A3001	568	2
09620-T2001	568	1
09637-A0480	569	1
09642-A0480	563	1
09651-A0841	589	17
09653-A0481	550	11
	550	12
	551	11
	551	12
09657-A0881	550	21
	551	21
09659-A057B	550	18
	550	33
	550	4
	551	18
	551	33
	551	4
	570	1
09667-A0481	550	15
	551	15
09669-0000E	550	16
	551	16
09685-00002	550	3
	551	3
09690-P0630	550	1
	551	1
09690-P1600	557	1
	557	2
	558	1
	558	2
09693-00400	345	1
09697-00001	562	1
09803-A0481	556	2
09805-A0881	550	25
	551	25
09805-C0481	550	13
	550	17
	551	13
	551	17
09808-A0881	550	14
	551	14
09817-A0753	52	6
09833-A0881	571	1
09842-A0482	550	26
	550	32
	551	26
	551	32
09844-00050	550	2
	551	2
09845-00480	564	1
	565	1
09848-A0480	566	1
09960-00801	550	22
	551	22
09960-00802	550	23
	551	23
09963-A1640	550	9
	551	9
09980-10550	578	1
09982-20057	578	2
110-30-00086	480	
112-32-11211	456	19
	458	17
11T-61-11280	464	9
	465	9
11Y-06-21350	287	8
11Y-06-21360	287	9
11Y-09-11140	145	11
	145	19
	145	2
	145	9
	155	18
	170	2
	179	2
11Y-09-11160	144	21
	145	21
	145	36
	327	1
11Y-62-11980	464	3
	465	3
11Y-62-12130	302	11
	302	8
	304	18
	304	21
	304	3
	304	6
	304	9
	306	3
	306	6
	306	9
	371	7
	377	7
11Y-62-12140	396	22
11Y-62-12160	286	13
	362	23
	460	8
11Y-62-12240	457	22
11Y-62-12250	460	10
11Y-62-12330	231	22
	261	22
	263	4
	269	4
	400	10
	400	24
11Y-62-12350	270	3
11Y-62-12510	389	4
	400	4
11Y-62-12520	231	34
	232	47
	261	34
	262	47
	295	28
	299	31
	302	2
	302	5
	304	12
	304	15
	377	9
124-54-26540	404	28
	405	28
	415	15
	415	9
	419	15
	419	9
1241155H1	40	2
12R-60-11230	205	3
	209	3
12Y-979-1850	365	16
130-43-64260	318	5
	320	2
134-03-61410	145	22

PartNumber	Page	Index
	145	6
	155	17
	515	8
	516	14
134-32-61221	482	18
	482	9
	592	
141-06-11220	385	19
142-06-13540	232	53
	262	53
144-947-3490	189	11
145-Z79-6270	336	20
14X-01-51630	142	2
14X-01-61371	150	26
14X-03-51621	148	16
	151	10
14X-03-51640	148	17
	151	11
14X-03-51770	148	18
	151	12
14X-06-12270	193	25
14X-54-59170	191	1
154-03-82191	292	13
	293	13
154-32-31220	481	3
	483	3
	484	3
	485	3
154-61-16570	52	8
	87	14
175-06-81610	200	7
175-40-22540	396	34
175-54-34170	186	15
	187	13
	284	32
	286	23
	310	7
	311	7
	412	36
	413	12
	413	15
	417	12
	417	15
	421	7
	422	7
	423	28
	423	4
	424	16
	434	26
	434	29
	434	9
	435	10
	435	14
	435	18
	435	22
	435	26
	435	32
	435	36
	436	14
	436	22
	436	25
	436	6
	437	26
	437	29
	437	9
	438	3
	439	7
	440	13
	440	8
	441	13
	441	8
	442	7
	443	7
	444	7
	445	7

PartNumber	Page	Index
	446	11
	446	16
	446	3
	447	11
	447	16
	447	3
175-61-17240	181	34
176-32-11210	543	12
	544	13
	545	14
	546	14
	547	12
176-54-11760	230	2
	260	2
17A-04-41440	590	2
	590	3
17A-979-3131	384	4
17A-Z11-4610	340	14
	368	3
17M-911-3530	352	13
195-03-11570	162	24
	163	32
	164	32
195-03-61550	204	2
	208	2
195-33-11220	155	5
	172	7
	181	7
	292	17
	293	17
	367	9
	385	14
195-57-11530	434	14
	436	1
	437	14
195-71-32220	326	3
195-979-3570	297	12
	301	12
195-979-5190	54	33
	126	33
195-Z11-1690	336	8
195-Z11-2970	318	6
198-06-53560	172	32
	172	33
	172	37
	173	41
	182	43
	182	44
	182	48
	182	52
198-06-53580	189	36
	193	35
198-06-53630	54	27
	54	32
	126	27
	126	32
198-06-62820	152	26
198-43-15310	188	12
	401	15
	427	10
	589	15
19M-06-31720	366	7
201-03-29160	533	23
	540	23
201-60-11230	461	11
201-60-11390	295	2
	299	2
202-09-11120	187	5
	187	7
203-00-17210	205	24
	209	24
203-00-17220	205	25
	209	25
203-01-51120	54	2
	126	2

PartNumber	Page	Index
203-03-41410	148	14
203-03-56650	413	21
	417	21
203-43-51620	362	7
203-54-56630	424	10
203-54-56960	150	12
203-54-56970	150	7
	152	2
	157	8
203-54-62670	434	16
	437	16
	438	6
	439	10
	443	3
	445	3
203-62-56381	193	28
203-62-61410	277	19
	279	19
205-00-72430	568	3
205-00-73360	205	23
	209	23
205-03-31331	155	9
205-03-31341	155	10
205-03-71330	173	42
	182	53
205-03-71440	413	2
	417	8
205-03-71532	413	20
	417	20
205-03-71540	413	
	417	
205-04-35170	163	29
	164	29
205-04-62150	144	17
	144	2
	144	7
205-06-51380	187	4
205-25-71154	450	2
	451	2
	452	2
205-30-71171	488	14
	489	14
	490	14
205-30-71181	310	4
	311	4
	488	9
	489	9
	490	9
205-30-71191	310	5
	311	5
	488	10
	489	10
	490	10
205-30-72170	475	17
	477	18
205-30-76190	474	10
	476	10
205-30-76260	478	4
	479	4
205-53-31182	350	3
205-53-31190	350	4
205-53-31210	344	23
	391	22
205-54-36481	310	9
	311	9
205-54-51250	341	32
205-54-51971	408	30
	410	30
	412	21
205-54-53550	408	24
	410	24
	412	15
205-54-68440	423	11
205-54-75240	347	11
	392	11

PartNumber	Page	Index
205-54-76411	417	28
205-62-21180	496	3
	503	3
205-62-34191	268	17
205-62-54622	508	11
205-62-72140	464	21
	465	23
205-62-72240	464	18
	465	20
205-62-73430	281	14
	281	19
	281	27
	310	3
	311	3
205-62-73431	498	12
	499	18
	499	8
	505	12
	506	18
	506	8
	508	20
205-70-00100	543	14
	544	15
	545	16
	546	16
	547	14
205-70-19570	543	8
	544	9
	545	7
	546	7
205-70-51390	500	10
	500	2
	507	10
	507	2
205-70-51530	497	
	504	
	521	19
	527	19
	535	15
205-70-65682	497	1
	504	1
205-70-66580	312	7
	521	21
	527	21
	535	17
205-70-66581	497	8
	504	8
	521	16
	527	16
	535	12
205-70-71190	521	20
	527	20
	535	16
205-70-71210	312	6
205-70-71312	497	3
	504	3
205-70-71360	510	5
	512	5
205-70-72180	521	8
	527	8
	535	4
205-70-73130	525	8
	531	8
	538	8
205-70-73180	521	10
	525	2
	527	10
	531	2
	535	6
	538	2
205-70-73270	525	17
	525	20
	531	17
	531	20
	538	17
	538	20
205-70-73280	526	9
	534	43
	541	42
205-70-74180	543	10
	544	11
	545	12
	546	12
	547	10
205-70-74190	543	11
	544	12
	545	13
	546	13
	547	11
205-70-74381	543	15
	544	16
	545	17
	546	17
	547	15
205-70-74391	543	16
	544	17
	545	9
	546	9
	547	16
205-970-5770	533	33
	540	33
205-977-7310	170	10
	179	10
206-00-K1010	550	5
	551	5
206-01-41160	142	5
206-03-43340	151	17
	158	6
	413	25
	417	25
206-06-61130	396	38
206-25-61110	450	8
	451	9
	452	8
206-26-69112	456	6
	458	4
206-30-22120	475	12
206-30-22140	475	
206-30-45381	475	3
	477	3
206-30-72140	475	7
	477	7
206-54-25151	407	10
206-54-71460	416	2
	420	2
206-62-31151	465	14
206-62-31161	465	16
206-62-31732	281	39
206-62-31991	539	3
206-62-71141	290	12
206-70-24210	547	5
206-70-45210	497	
	504	
206-70-55160	312	1
207-01-41710	271	29
	272	29
207-06-51330	186	13
	187	11
207-06-51461	187	17
207-06-61461	186	12
	187	10
207-06-76451	200	18
207-06-76460	200	3
207-43-21120	365	1
207-43-81240	396	14
207-46-32220	433	2
207-54-51440	439	2
207-54-75711	431	1
207-54-77970	431	3
207-54-K3371	323	4
207-60-61150	205	1
	209	1
207-60-71183	204	22
	208	23
	576	8
	577	8
207-62-31330	499	16
	506	16
	533	36
	540	36
207-62-31340	498	9
	505	9
207-62-52350	499	17
	506	17
207-62-52431	281	18
207-62-52510	287	4
207-62-54780	498	11
	505	11
207-62-56190	268	12
207-62-72110	464	1
	465	1
207-62-76360	521	2
	527	2
207-70-33220	542	1
207-70-53170	520	2
207-970-2110	533	26
	540	26
207-970-7310	533	37
208-00-71262	550	6
	551	6
208-03-22410	148	12
208-03-61460	148	11
208-03-71161	152	13
208-04-J2212	183	5
208-06-19170	367	5
	367	8
208-43-71420	354	7
208-43-71520	365	2
208-43-71530	365	3
208-43-71590	365	4
208-53-11330	347	7
	392	7
208-53-11920	351	9
208-53-11941	351	5
208-53-12220	352	19
208-53-12280	373	11
208-53-12290	357	2
208-53-12320	357	23
208-53-12330	357	24
208-53-12410	357	21
208-53-12440	351	4
208-53-12460	350	2
208-53-12680	352	12
208-53-12980	341	35
208-53-12991	341	34
208-53-13270	341	7
208-53-14540	337	4
208-53-22810	337	14
208-54-57180	412	32
208-60-41211	205	9
	209	9
208-62-22670	387	7
208-62-22680	387	8
208-62-38370	155	6
208-62-72160	308	2
208-62-72290	362	31
	386	4
208-62-72310	308	10
	362	30
	386	5
208-62-72480	396	29
208-62-72590	308	11
208-979-7540	384	1
208-979-7560	357	16
208-979-7650	385	6

PartNumber	Page	Index
209-00-41550	424	2
209-72-12230	347	2
	347	5
	392	2
	392	5
	413	18
	417	18
20B-27-11210	133	9
	466	13
	469	13
20N-60-41360	204	3
	208	3
20N-60-41371	204	4
	208	4
20T-54-42510	144	20
20T-910-8660	396	15
20U-54-25140	333	19
20U-54-46520	349	3
20Y-00-31840	550	27
	551	27
20Y-00-32450	573	3
20Y-00-41341	550	19
	551	19
20Y-00-41461	556	1
20Y-00-41490	550	20
	551	20
20Y-00-42110	162	21
	163	21
	164	21
20Y-00-42140	421	1
	422	1
	424	3
20Y-00-42150	432	4
20Y-00-42160	432	5
20Y-00-43130	559	1
20Y-00-56131	346	1
20Y-00-56141	550	10
	551	10
20Y-00-56170	550	29
20Y-00-56180	551	29
20Y-00-56210	423	1
20Y-00-56310	553	1
20Y-00-56320	554	1
20Y-00-56330	555	1
20Y-00-C1132	565	2
20Y-00-C2010	560	1
20Y-00-C2021	561	1
20Y-00-C2450	574	3
20Y-01-11141	140	18
20Y-01-12270	140	20
20Y-01-21260	140	3
	140	6
20Y-01-41162	140	1
20Y-01-41171	140	2
20Y-01-41210	140	17
20Y-01-41230	140	5
	140	8
20Y-01-41250	54	36
	126	36
20Y-01-41310	144	16
20Y-01-56130	159	1
20Y-01-56181	145	1
20Y-01-56190	144	13
20Y-01-56210	140	16
20Y-01-56220	142	3
20Y-01-56230	142	6
20Y-01-56251	144	10
20Y-01-56260	145	10
20Y-01-56280	55	3
	127	3
20Y-01-56400	422	10
20Y-01-56821	422	8
20Y-01-57500	583	
	586	
20Y-01-57520	583	3
	586	3
20Y-01-57530	583	2
	584	3
	586	2
	587	5
20Y-01-57650	422	9
20Y-03-11220	145	13
	145	33
	181	38
	327	2
20Y-03-11330	148	15
20Y-03-24340	165	10
	174	11
20Y-03-41580	148	2
20Y-03-41880	413	24
	417	24
20Y-03-46350	152	4
20Y-03-56110	148	
20Y-03-56130	149	
20Y-03-56160	151	
20Y-03-56180	150	1
20Y-03-56191	152	25
20Y-03-56211	148	1
20Y-03-56260	149	18
20Y-03-56271	148	20
20Y-03-56282	150	6
20Y-03-56291	152	10
20Y-03-56310	154	1
20Y-03-56320	156	10
20Y-03-56340	156	11
20Y-03-56352	154	3
20Y-03-56362	154	9
20Y-03-56381	150	20
20Y-03-56411	148	5
20Y-03-56420	152	5
20Y-03-56431	152	7
20Y-03-56441	148	6
20Y-03-56451	153	1
20Y-03-56461	153	5
20Y-03-56470	148	7
20Y-03-56480	148	8
20Y-03-56491	148	9
20Y-03-56511	152	9
20Y-03-56520	149	2
20Y-03-56531	149	3
20Y-03-56541	149	4
20Y-03-56550	149	5
20Y-03-56560	155	13
20Y-03-56581	149	6
20Y-03-56591	149	7
20Y-03-56610	151	2
20Y-03-56620	151	3
20Y-03-56641	152	6
20Y-03-56651	151	4
20Y-03-56660	153	2
20Y-03-56671	151	5
20Y-03-56681	151	6
20Y-03-56691	155	3
20Y-03-56722	149	19
20Y-03-56731	153	3
20Y-03-56741	153	4
20Y-03-56771	152	1
20Y-03-56830	156	1
20Y-03-56840	156	4
20Y-03-56860	155	1
20Y-03-56910	151	7
20Y-03-56920	148	10
20Y-03-56930	149	8
20Y-03-56940	149	9
20Y-03-56951	149	10
20Y-03-56970	157	6
20Y-03-56981	151	9
20Y-03-57130	153	6
20Y-03-57140	153	7
20Y-03-57160	156	5
20Y-03-57180	152	18
20Y-03-57210	150	23
20Y-03-57221	150	17
20Y-03-57241	158	
	158	7
20Y-03-57251	152	8
20Y-03-57260	149	11
20Y-03-57281	150	11
20Y-03-57350	151	8
20Y-03-57370	155	12
20Y-04-11162	162	16
20Y-04-11240	162	
	163	
	164	
20Y-04-21580	162	18
	163	18
	164	18
20Y-04-31170	170	4
	179	4
20Y-04-41231	162	6
	163	6
	164	6
20Y-04-41590	162	2
	163	2
	164	2
20Y-04-42160	589	16
20Y-04-56121	171	1
	180	1
20Y-04-56130	171	14
	180	14
20Y-04-56141	162	1
20Y-04-56171	165	4
	174	5
20Y-04-56242	165	1
20Y-04-56252	165	11
	174	12
20Y-04-56261	167	10
	176	10
20Y-04-56281	162	9
	163	9
	164	9
20Y-04-56311	165	6
	174	7
20Y-04-56341	165	14
	174	15
20Y-04-56351	172	12
	181	12
20Y-04-56370	582	7
	585	7
	588	7
20Y-04-56390	183	1
20Y-04-56410	183	23
20Y-04-56420	183	18
20Y-04-56431	183	29
20Y-04-56452	170	1
	179	1
20Y-04-56460	162	11
	163	11
	164	11
20Y-04-56510	589	8
20Y-04-56531	589	4
20Y-04-56540	589	20
20Y-04-56550	163	1
20Y-04-56560	164	1
20Y-04-56570	589	18
20Y-04-56580	174	1
20Y-04-56590	174	2
20Y-04-C1033	589	1
20Y-04-J1130	577	16
20Y-04-K2351	589	22
20Y-04-K2451	589	23
20Y-06-15240	413	19
	417	19
20Y-06-16910	373	7
20Y-06-16920	378	38

PartNumber	Page	Index
	398	39
20Y-06-21421	402	1
20Y-06-21551	196	2
	502	3
	509	3
20Y-06-21590	196	9
20Y-06-23472	350	6
20Y-06-31660	366	8
20Y-06-41151	354	6
20Y-06-41161	500	11
	507	11
20Y-06-41251	400	13
20Y-06-41351	194	4
20Y-06-41543	197	6
20Y-06-41770	194	22
20Y-06-41812	199	1
20Y-06-41990	339	
20Y-06-42110	378	35
	398	35
20Y-06-42130	398	37
20Y-06-42180	340	6
20Y-06-42190	378	37
	398	38
20Y-06-42450	378	36
	398	36
20Y-06-43230	190	1
	196	1
	502	2
	509	2
	515	6
	516	12
20Y-06-43270	366	11
20Y-06-43411	515	2
20Y-06-43420	515	12
	516	18
20Y-06-43431	515	7
	516	13
20Y-06-56112	200	29
	589	26
20Y-06-56113	366	1
20Y-06-56121	366	15
20Y-06-56131	194	1
20Y-06-56140	189	4
20Y-06-56150	194	19
20Y-06-56160	189	17
20Y-06-56171	582	1
	585	1
	588	1
20Y-06-56221	193	1
20Y-06-56240	162	12
	163	12
	164	12
20Y-06-56260	324	1
20Y-06-56281	200	19
20Y-06-56340	196	12
20Y-06-56370	366	17
20Y-06-56381	190	2
20Y-06-56450	200	1
20Y-06-56460	200	15
20Y-06-56490	196	17
	200	22
20Y-06-56520	589	25
20Y-06-56530	186	7
20Y-06-56540	187	6
20Y-06-56550	194	5
20Y-06-57310	194	10
20Y-06-C1512	373	1
20Y-06-C2120	516	7
20Y-09-11170	452	4
20Y-25-00510	450	1
	452	1
20Y-25-00520	451	1
20Y-25-11270	502	13
	509	13
20Y-25-11291	450	4

PartNumber	Page	Index
	451	5
20Y-25-21311	451	3
20Y-26-21240	456	18
	458	16
20Y-26-21330	468	14
	471	14
20Y-26-21510	456	26
	458	24
20Y-26-22240	456	28
	458	26
20Y-26-22250	456	16
	458	14
20Y-26-22430	456	4
	458	2
20Y-26-22440	456	5
	458	3
20Y-26-22450	456	7
	458	5
20Y-26-31211	457	6
20Y-26-51110	456	31
	458	29
20Y-26-51120	456	25
	458	23
20Y-26-51130	456	23
	458	21
20Y-26-51140	456	13
	458	11
20Y-26-51150	456	20
	458	18
20Y-26-51160	456	24
	458	22
20Y-26-51170	456	12
	458	10
20Y-26-51180	456	3
	458	1
20Y-26-51190	456	8
	458	6
20Y-26-51210	456	14
	458	12
20Y-26-51220	457	12
20Y-26-51230	457	14
20Y-26-51240	457	13
20Y-26-51250	456	30
	458	28
20Y-26-51610	458	30
20Y-26-56120	457	29
20Y-27-00141	468	
	471	
20Y-27-11561	468	35
	471	35
20Y-27-11583	468	34
	471	34
20Y-27-21220	468	23
	471	23
20Y-27-21240	456	15
	456	27
	458	13
	458	25
	468	22
	471	22
20Y-27-21280	456	17
	456	29
	458	15
	458	27
	468	24
	471	24
20Y-27-21310	468	26
	471	26
20Y-27-21360	468	29
	471	29
20Y-27-22210	468	21
	471	21
20Y-27-22240	468	17
	471	17
20Y-27-31190	468	32

PartNumber	Page	Index
	471	32
20Y-27-41180	468	7
	471	7
20Y-27-41190	468	6
	471	6
20Y-27-41250	468	11
	471	11
20Y-27-41270	468	12
	471	12
20Y-27-41320	468	4
	471	4
20Y-27-51110	468	25
	471	25
20Y-27-51120	468	20
	471	20
20Y-27-51130	468	16
	471	16
20Y-27-51140	468	10
	471	10
20Y-27-51150	468	18
	471	18
20Y-27-51160	468	19
	471	19
20Y-27-51170	468	9
	471	9
20Y-27-51180	468	3
	471	3
20Y-27-51190	468	27
	471	27
20Y-27-51220	468	5
	471	5
20Y-27-51230	468	13
	471	13
20Y-27-51240	468	15
	471	15
20Y-30-00660	477	
20Y-30-00670	480	
20Y-30-00710	474	
	476	
20Y-30-00950	474	
	476	
20Y-30-11312	492	1
	494	1
20Y-30-11340	478	11
	479	11
20Y-30-16170	478	10
	479	10
20Y-30-16330	474	4
	476	4
	478	8
	479	8
	480	8
20Y-30-21151	488	8
	489	8
	490	8
20Y-30-31160	493	1
20Y-30-31D24	488	2
	489	2
	490	2
20Y-30-31E81	488	4
	489	4
	490	4
20Y-30-42160	475	4
	477	4
20Y-30-42211	475	1
	477	1
20Y-30-42231	477	13
20Y-30-42241	477	12
20Y-30-42251	477	11
20Y-30-42280	475	2
	477	2
20Y-30-43221	480	2
20Y-30-43230	480	3
20Y-30-43240	480	4
20Y-30-43250	480	5

PartNumber	Page	Index
20Y-30-43341	474	2
	476	2
20Y-30-43510	480	1
20Y-30-43610	474	1
	476	1
20Y-30-43630	474	3
	476	3
20Y-30-43640	474	8
	476	8
20Y-30-43650	474	9
	476	9
20Y-30-44191	472	3
20Y-30-44C91	489	3
20Y-30-44H10	488	3
	490	3
20Y-30-56122	489	1
20Y-30-56190	488	13
	489	13
	490	13
20Y-30-56220	488	1
20Y-30-56420	490	1
20Y-30-C2920	475	11
20Y-32-00300	486	
20Y-32-00520	487	
20Y-32-01500	481	
20Y-32-01510	484	
20Y-32-01520	483	
20Y-32-01530	485	
20Y-32-05070	592	1
20Y-32-11123	481	4
	483	4
	484	4
	485	4
	487	1
20Y-32-11133	481	5
	483	5
	484	5
	485	5
	487	2
20Y-32-11141	481	6
	482	14
	482	5
	483	6
	484	6
	485	6
	486	11
	486	5
	487	5
20Y-32-11150	481	7
	483	7
	484	7
	485	7
	487	6
20Y-32-11171	481	9
	482	13
	482	4
	483	9
	484	9
	485	9
	486	10
	486	4
	487	4
20Y-32-11190	481	10
	483	10
	484	10
	485	10
	487	8
20Y-32-11240	481	8
	482	12
	482	3
	483	8
	484	8
	485	8
	486	3
	486	9
	487	3
20Y-32-11260	481	11
	482	19
	483	11
	484	11
	485	11
	486	13
	487	7
20Y-32-21110	481	1
	482	16
	482	7
20Y-32-31120	482	1
	482	10
	486	1
	486	7
20Y-32-31130	482	11
	482	2
	486	2
	486	8
20Y-32-31150	482	15
	482	6
	486	12
	486	6
20Y-32-31190	482	20
	486	14
20Y-32-31210	481	2
	482	17
	482	8
	483	2
	484	2
	485	2
	592	
20Y-32-31310	483	1
20Y-32-31320	484	1
	485	1
20Y-43-15630	390	4
20Y-43-15640	390	3
20Y-43-15650	390	2
20Y-43-15711	360	1
20Y-43-15720	390	7
20Y-43-15730	390	8
20Y-43-15741	390	9
20Y-43-15751	321	1
20Y-43-15761	322	1
20Y-43-15790	390	10
20Y-43-21231	362	18
20Y-43-21241	362	19
20Y-43-22250	369	1
	375	1
20Y-43-22261	369	2
	375	2
20Y-43-22370	369	3
	375	3
20Y-43-22381	369	7
20Y-43-22421	369	8
20Y-43-31421	373	18
20Y-43-31432	373	16
20Y-43-31440	373	19
20Y-43-31450	373	20
20Y-43-31513	373	12
20Y-43-31522	373	13
20Y-43-31611	373	14
20Y-43-31621	373	15
20Y-43-41111	362	10
20Y-43-41121	362	3
20Y-43-41143	374	1
20Y-43-41152	374	7
	380	7
20Y-43-41162	374	5
20Y-43-41173	374	2
20Y-43-41181	374	11
	380	11
20Y-43-41191	374	13
	380	13
20Y-43-41240	384	5
20Y-43-41253	365	13
20Y-43-41281	374	18
	380	18
20Y-43-41290	321	4
	322	4
	348	7
	372	16
	372	21
	372	25
	378	11
	378	18
	378	22
20Y-43-41324	378	7
	398	7
20Y-43-41332	378	12
	398	12
20Y-43-41343	380	1
20Y-43-41353	378	19
	398	19
20Y-43-41361	362	6
20Y-43-41424	372	9
20Y-43-41442	372	17
20Y-43-41453	372	22
20Y-43-41461	374	19
	380	19
20Y-43-41472	372	4
20Y-43-41491	372	28
20Y-43-41533	380	2
20Y-43-41591	374	16
	380	16
20Y-43-41621	372	7
20Y-43-41631	378	4
	398	4
20Y-43-41641	372	8
20Y-43-41651	372	10
20Y-43-41661	372	11
	378	8
	398	8
20Y-43-41671	378	30
	398	30
20Y-43-41740	378	27
	398	27
20Y-43-41750	378	28
	398	28
20Y-43-41760	396	2
20Y-43-41781	378	34
	398	34
20Y-43-41790	378	29
	398	29
20Y-43-41833	365	11
20Y-43-41850	380	5
20Y-43-41970	372	27
20Y-43-42380	369	
	375	
20Y-43-56110	367	1
20Y-43-56120	378	1
	398	1
20Y-43-56130	372	1
20Y-43-C1211	373	2
20Y-46-11270	432	6
20Y-46-11410	433	3
20Y-46-21520	450	7
	451	8
	452	7
20Y-46-41170	310	16
	311	16
20Y-46-41280	310	8
	311	8
20Y-46-51140	310	19
	311	19
20Y-46-51180	310	17

PartNumber	Page	Index
	311	17
20Y-46-51190	310	18
	311	18
20Y-46-52141	310	15
	311	15
20Y-46-54130	433	1
20Y-46-54313	432	2
20Y-46-54323	432	3
20Y-46-56130	310	13
	311	13
20Y-46-56140	328	1
20Y-46-56160	310	14
	311	14
20Y-46-56202	310	1
20Y-46-56502	311	1
20Y-46-56621	432	1
20Y-53-01210	335	
20Y-53-01220	335	
	336	
20Y-53-01320	330	
	331	
	333	
	334	
	336	
	337	
	338	
	339	
	340	
	341	
	343	
	344	
	345	
	346	
20Y-53-01330	391	
20Y-53-11241	330	2
20Y-53-11250	330	7
20Y-53-11260	330	3
20Y-53-11271	330	6
20Y-53-11320	336	11
20Y-53-11332	335	17
	335	18
20Y-53-11380	344	5
	344	6
	391	5
	391	6
20Y-53-11390	344	4
	391	4
20Y-53-11402	335	
20Y-53-11411	335	21
	335	22
20Y-53-11441	336	18
20Y-53-11451	335	13
20Y-53-11460	335	14
20Y-53-11470	335	11
20Y-53-11485	335	16
20Y-53-11520	331	2
20Y-53-11540	332	43
20Y-53-11551	331	4
20Y-53-11561	331	26
20Y-53-11581	331	34
20Y-53-11591	333	1
20Y-53-11601	333	
20Y-53-11611	333	4
20Y-53-11661	331	29
20Y-53-11761	342	40
20Y-53-11771	334	17
20Y-53-11781	334	12
20Y-53-11821	343	3
20Y-53-11841	330	4
20Y-53-11850	330	5
20Y-53-11861	334	20
20Y-53-11890	337	15
20Y-53-11931	334	14
20Y-53-11940	333	9
20Y-53-11981	337	1

PartNumber	Page	Index
20Y-53-11990	337	6
20Y-53-12122	347	9
	392	9
20Y-53-12161	347	17
	392	17
20Y-53-12172	347	8
	392	8
20Y-53-12201	336	1
20Y-53-12233	338	11
20Y-53-12240	348	3
	393	3
20Y-53-12260	344	11
	391	11
20Y-53-12270	344	19
	391	18
20Y-53-12280	337	3
20Y-53-12291	392	16
20Y-53-12310	332	46
	341	18
	341	23
	347	13
	351	11
	351	7
	352	18
	357	15
	357	26
	357	30
	392	13
20Y-53-12320	344	13
	391	13
20Y-53-12330	331	15
20Y-53-12371	357	1
20Y-53-12381	357	17
20Y-53-12391	357	20
20Y-53-12421	341	3
20Y-53-12431	341	6
20Y-53-12442	341	11
20Y-53-12472	341	22
20Y-53-12483	392	20
20Y-53-12531	332	45
20Y-53-12552	341	16
20Y-53-12580	344	17
	391	16
20Y-53-12611	333	15
20Y-53-12631	333	17
20Y-53-12661	336	14
20Y-53-12710	341	14
	341	9
20Y-53-12751	353	10
20Y-53-12760	353	11
20Y-53-12771	350	12
20Y-53-12830	331	19
20Y-53-12840	335	3
20Y-53-12850	335	4
20Y-53-12860	357	32
20Y-53-12870	335	6
20Y-53-12880	335	7
20Y-53-12892	333	12
20Y-53-12940	336	12
20Y-53-12951	344	27
	391	24
20Y-53-12960	344	1
	391	1
20Y-53-12971	335	9
20Y-53-12991	336	5
20Y-53-13113	401	1
20Y-53-13121	401	2
20Y-53-13130	401	5
20Y-53-13142	401	9
20Y-53-13151	401	12
20Y-53-13190	340	7
20Y-53-13280	351	3
20Y-53-13351	352	3
20Y-53-13361	352	6
20Y-53-13381	351	

PartNumber	Page	Index
20Y-53-13411	351	
20Y-53-13451	352	14
20Y-53-13480	351	2
20Y-53-13490	343	1
20Y-53-13619	350	
20Y-53-13662	353	
20Y-53-13680	350	7
20Y-53-13870	341	5
20Y-53-13880	335	15
20Y-53-13910	335	12
20Y-53-13922	353	20
20Y-53-14220	396	9
20Y-53-14230	348	4
	393	4
20Y-53-14940	390	5
20Y-53-14950	390	6
20Y-53-15121	197	3
20Y-53-15140	391	28
20Y-53-15281	195	4
20Y-53-15470	341	37
20Y-53-15870	341	10
	341	15
20Y-53-15890	374	14
	380	14
20Y-53-16180	350	5
20Y-53-17120	192	1
20Y-53-18211	354	8
20Y-53-21261	590	1
20Y-53-21321	347	20
20Y-53-56150	334	1
20Y-53-56210	354	1
20Y-53-56221	354	10
20Y-53-56230	355	1
20Y-53-56250	357	27
20Y-53-56310	334	5
20Y-53-56430	357	
20Y-53-C1371	347	
20Y-54-11611	331	38
	337	11
	408	36
	410	36
	412	24
20Y-54-12320	414	14
	418	14
20Y-54-12550	416	8
	420	8
	434	22
	437	22
	442	3
	444	3
20Y-54-12670	491	5
20Y-54-13180	335	10
20Y-54-13322	335	8
20Y-54-14590	331	16
	334	8
20Y-54-19930	425	2
	426	2
20Y-54-25852	423	10
20Y-54-27172	404	3
	405	3
20Y-54-27182	423	13
20Y-54-27330	404	4
	405	4
20Y-54-28170	408	27
	410	27
20Y-54-29232	408	38
	410	38
	412	26
20Y-54-29660	424	13
20Y-54-29680	424	14
20Y-54-35430	428	3
20Y-54-35451	344	12
	391	12
20Y-54-39450	338	7
20Y-54-39460	338	8

PartNumber	Page	Index
20Y-54-39480	338	9
20Y-54-39511	340	10
20Y-54-51420	332	44
20Y-54-51531	331	3
20Y-54-51621	332	40
20Y-54-51640	333	3
20Y-54-51670	331	22
20Y-54-51680	331	23
20Y-54-52221	338	
20Y-54-52300	336	2
20Y-54-52350	338	6
20Y-54-52621	331	13
20Y-54-52651	334	19
	334	24
20Y-54-52681	331	14
20Y-54-52791	341	38
20Y-54-52860	335	5
20Y-54-56111	405	1
20Y-54-56121	424	1
20Y-54-56152	424	
20Y-54-56170	423	22
20Y-54-56181	425	1
20Y-54-56190	415	23
	419	23
20Y-54-56211	406	1
	407	1
20Y-54-56221	408	39
20Y-54-56231	406	2
	407	2
	582	14
	585	14
	588	14
20Y-54-56290	404	24
	404	30
	405	24
	405	30
20Y-54-56330	287	32
	408	3
	410	3
20Y-54-56340	408	4
	410	4
20Y-54-56371	404	27
	405	27
20Y-54-56380	436	23
20Y-54-56390	404	21
	405	21
20Y-54-56401	423	
20Y-54-56421	412	2
20Y-54-56431	171	28
	180	28
	412	3
20Y-54-56481	415	3
	419	3
20Y-54-56532	414	3
	418	3
20Y-54-56542	414	4
	418	4
20Y-54-56581	416	
20Y-54-56590	413	3
20Y-54-56611	406	7
20Y-54-56621	413	
20Y-54-56641	414	5
	418	5
20Y-54-56651	415	6
	419	6
20Y-54-56661	415	11
	419	11
20Y-54-56690	416	3
20Y-54-56731	404	20
	405	20
20Y-54-56742	421	
20Y-54-56762	444	
20Y-54-56780	439	
20Y-54-56810	434	
	437	

PartNumber	Page	Index
20Y-54-56830	434	19
	437	19
20Y-54-56850	438	1
20Y-54-56870	434	27
	437	27
20Y-54-56891	415	
	419	
20Y-54-56970	310	10
	311	10
20Y-54-56982	404	17
	405	17
20Y-54-56991	414	2
20Y-54-57111	440	1
20Y-54-57141	440	9
	441	9
20Y-54-57170	434	3
	437	3
20Y-54-57220	408	
	410	
20Y-54-57240	409	40
	411	40
20Y-54-57311	427	7
20Y-54-57321	427	1
20Y-54-57330	435	2
20Y-54-57340	435	8
20Y-54-57350	436	18
20Y-54-57361	446	12
	447	12
20Y-54-57370	435	4
20Y-54-57380	435	3
20Y-54-57390	435	7
20Y-54-57411	167	13
	176	13
	196	21
	200	30
	412	1
20Y-54-57431	423	
20Y-54-57440	435	1
20Y-54-57451	412	6
20Y-54-57490	427	6
20Y-54-57512	443	
20Y-54-57530	426	1
20Y-54-57540	422	
20Y-54-57560	423	
20Y-54-57611	413	
	417	
20Y-54-57631	413	10
	417	10
20Y-54-57660	435	5
20Y-54-57671	413	13
	417	13
20Y-54-57730	410	39
20Y-54-57750	407	7
20Y-54-57821	447	1
20Y-54-57831	409	
	411	
20Y-54-57851	415	
20Y-54-57852	419	
20Y-54-57860	441	1
20Y-54-57921	436	12
20Y-54-57931	436	
20Y-54-57942	446	1
20Y-54-57962	445	
20Y-54-57980	412	18
20Y-54-57991	446	7
	447	7
20Y-54-58111	404	1
20Y-54-58141	442	
20Y-54-58321	414	
20Y-54-58410	368	2
20Y-54-58630	418	
20Y-54-58650	418	2
20Y-54-59822	417	
20Y-54-59930	420	
20Y-54-59950	417	2

PartNumber	Page	Index
20Y-54-61372	408	33
	410	33
20Y-54-61391	412	30
20Y-54-61470	408	21
	410	21
	412	12
20Y-54-61630	429	3
20Y-54-61790	423	6
20Y-54-61990	423	5
20Y-54-63390	408	15
	410	15
20Y-54-63414	408	16
	408	8
	410	16
	410	8
	412	7
20Y-54-65690	353	17
20Y-54-65790	353	18
20Y-54-71144	408	14
	410	14
20Y-54-71182	404	8
	405	8
20Y-54-71262	416	5
	420	5
20Y-54-71312	408	1
	410	1
20Y-54-71323	408	2
	410	2
20Y-54-71372	408	9
	410	9
20Y-54-71470	404	7
	405	7
20Y-54-71491	412	8
20Y-54-71950	420	3
20Y-54-71962	416	4
	420	4
20Y-54-72470	415	13
	419	13
20Y-54-72510	413	4
	417	3
20Y-54-72520	413	5
	417	4
20Y-54-72540	413	6
	417	5
20Y-54-72551	413	7
	417	6
20Y-54-72870	408	11
	410	11
20Y-54-73171	412	9
20Y-54-73190	423	19
20Y-54-73630	434	2
	437	2
20Y-54-73730	421	3
	422	3
20Y-54-73752	408	18
	410	18
20Y-54-73760	415	7
	419	7
20Y-54-73781	415	2
	419	2
20Y-54-73841	408	17
	410	17
20Y-54-73870	434	13
	436	3
	437	13
20Y-54-74161	424	5
20Y-54-74172	424	6
20Y-54-74182	408	10
	410	10
	424	7
20Y-54-74260	428	2
20Y-54-74270	429	2
20Y-54-74311	431	2
20Y-54-75590	413	8
	417	7

PartNumber	Page	Index
20Y-54-75900	423	16
20Y-54-76650	437	32
20Y-54-77320	412	
20Y-54-77330	412	31
20Y-54-77660	435	6
20Y-54-77921	434	1
	437	1
20Y-54-K1060	323	1
20Y-54-K7321	404	2
	405	2
20Y-57-41910	316	1
20Y-57-42100	314	
20Y-60-21320	205	2
	209	2
20Y-60-21340	205	11
	209	11
20Y-60-31140	204	23
	208	24
20Y-60-31171	205	
	209	
20Y-60-31240	294	3
	298	1
20Y-60-31250	294	4
	298	2
20Y-60-31430	275	15
	275	23
20Y-60-42143	205	5
	209	5
20Y-60-42211	205	10
	209	10
20Y-60-42251	205	
	209	
20Y-60-56110	204	1
	208	1
20Y-60-56122	204	24
	208	25
20Y-60-56140	298	
20Y-60-56151	207	9
	211	9
20Y-60-56240	205	14
	209	14
20Y-60-56260	163	26
	164	26
	205	20
	209	20
20Y-60-56270	294	
20Y-62-12560	465	4
20Y-62-13221	281	22
	281	30
20Y-62-13412	539	1
20Y-62-13450	281	20
	281	24
	281	28
	281	32
	498	14
	499	19
	499	9
	505	14
	506	19
	506	9
	508	22
	508	26
	533	39
	540	38
20Y-62-13690	499	6
	506	6
20Y-62-13720	498	10
	505	10
20Y-62-13730	499	7
	506	7
20Y-62-13760	281	15
	281	23
	281	31
	310	2
	311	2
20Y-62-13761	498	13
	505	13
20Y-62-15831	389	1
	389	12
	400	1
	400	15
20Y-62-16630	295	1
	299	1
20Y-62-16880	387	12
20Y-62-16890	387	13
20Y-62-18890	362	26
	371	5
	377	5
20Y-62-18910	362	21
	371	3
	377	3
20Y-62-19560	295	3
	299	3
20Y-62-21940	295	26
	299	29
20Y-62-22790	138	7
	225	18
	252	18
	274	8
	275	10
	292	3
	293	3
	296	5
	300	5
	308	14
	386	1
	386	11
	387	14
	387	4
	396	30
20Y-62-22810	138	21
	292	7
	293	7
	296	15
	296	6
	300	15
	300	6
	308	15
	387	5
	396	31
20Y-62-22820	139	3
	292	5
	293	5
	296	7
	300	7
	301	19
	308	6
	386	12
	387	15
	387	6
	396	32
20Y-62-22830	138	14
	225	19
	252	19
	296	8
	300	8
	308	7
	387	16
20Y-62-22840	296	10
	296	16
	300	10
	300	16
	308	16
	387	17
20Y-62-22850	139	6
	300	20
	308	17
	386	13
	387	18
20Y-62-22860	296	17
	300	17
	308	8
	387	19
20Y-62-27770	388	13
20Y-62-41920	232	41
	237	2
	262	41
	267	2
20Y-62-41930	461	1
	464	23
	465	24
20Y-62-41940	457	33
20Y-62-41960	295	5
	299	5
20Y-62-43320	287	27
20Y-62-43460	286	10
20Y-62-43470	396	20
20Y-62-45172	496	4
	503	4
20Y-62-45382	508	23
20Y-62-45610	231	10
	231	28
	261	10
	261	28
	295	14
	299	14
20Y-62-45620	231	25
	231	7
	261	25
	261	7
20Y-62-45690	208	7
	301	32
20Y-62-51160	308	3
20Y-62-51392	307	4
20Y-62-51412	307	1
20Y-62-51580	284	3
20Y-62-51671	273	7
20Y-62-51681	289	
20Y-62-51691	289	4
20Y-62-51870	308	4
20Y-62-51890	308	13
	308	5
20Y-62-51910	308	18
20Y-62-52160	396	17
20Y-62-52210	386	2
20Y-62-52330	396	26
20Y-62-52671	508	12
20Y-62-52680	508	19
20Y-62-53160	277	40
20Y-62-53651	292	1
	293	1
20Y-62-53661	292	2
	293	2
20Y-62-53750	498	19
	505	19
20Y-62-54252	461	8
20Y-62-54260	464	4
20Y-62-54371	280	1
20Y-62-54550	508	24
20Y-62-54560	508	27
20Y-62-55340	533	34
20Y-62-56111	54	15
	126	15
20Y-62-56131	273	1
20Y-62-56171	276	1
20Y-62-56180	277	26
	279	26
20Y-62-56191	277	1
	279	1
20Y-62-56211	277	32
	279	32
20Y-62-56220	280	2
20Y-62-56231	280	6
20Y-62-56241	283	12
20Y-62-56281	283	1

PartNumber	Page	Index
20Y-62-56291	283	6
20Y-62-56311	230	1
	260	1
20Y-62-56321	277	7
20Y-62-56411	281	1
20Y-62-56430	281	2
20Y-62-56441	284	16
20Y-62-56451	238	7
	268	7
	270	6
20Y-62-56461	307	8
20Y-62-56471	296	9
	300	9
20Y-62-56481	287	18
20Y-62-56490	288	7
20Y-62-56561	300	18
20Y-62-56570	300	19
20Y-62-56581	279	7
20Y-62-56591	289	12
	293	6
20Y-62-56621	54	9
	126	9
20Y-62-56651	281	13
20Y-62-56711	271	1
	272	1
20Y-62-56721	271	26
	272	26
20Y-62-56730	286	17
20Y-62-56781	169	5
	178	5
20Y-62-56791	287	12
20Y-62-56810	286	21
20Y-62-56830	286	29
20Y-62-56840	286	24
20Y-62-56850	286	19
20Y-62-56861	386	
20Y-62-56871	386	7
20Y-62-56880	386	8
20Y-62-56891	387	
20Y-62-56911	387	
20Y-62-56930	396	27
20Y-62-56940	396	28
20Y-62-56961	457	16
20Y-62-56982	292	6
20Y-62-56991	288	1
20Y-62-57271	508	6
20Y-62-57280	508	7
20Y-62-57340	496	7
	503	7
20Y-62-57350	287	5
20Y-62-57361	499	1
	506	1
20Y-62-57371	498	5
	505	5
20Y-62-57380	498	1
	505	1
20Y-62-57391	499	2
	506	2
20Y-62-57430	284	29
20Y-62-57460	284	35
20Y-62-57471	508	1
20Y-62-57481	508	2
20Y-62-57491	533	35
20Y-62-57500	584	
	587	
20Y-62-57520	584	4
	587	6
20Y-62-57530	287	7
20Y-62-57540	287	6
20Y-62-57560	584	1
20Y-62-57570	587	1
20Y-62-57580	386	
20Y-62-57610	292	4
	293	4
20Y-62-57620	274	6

PartNumber	Page	Index
	275	8
20Y-62-57630	274	7
	275	9
20Y-62-57680	307	5
20Y-62-57740	158	8
20Y-62-57760	290	5
	461	17
20Y-62-57770	290	1
	461	15
20Y-62-57810	271	30
	272	30
20Y-62-57820	301	20
20Y-62-57860	55	6
	127	6
20Y-62-57870	287	1
20Y-62-K6790	284	1
20Y-70-01390	535	
20Y-70-01500	521	
20Y-70-01510	527	
20Y-70-11190	312	2
20Y-70-11290	521	24
	527	24
	535	20
20Y-70-11310	521	
	527	
	535	
20Y-70-11320	525	12
	525	16
	531	12
	531	16
	538	12
	538	16
20Y-70-11330	525	
	525	
	531	
	531	
	538	
	538	
20Y-70-11340	497	7
	504	7
20Y-70-11360	497	2
	504	2
20Y-70-11370	517	1
20Y-70-11390	517	
20Y-70-11410	312	5
20Y-70-11420	312	
20Y-70-11430	312	10
20Y-70-11440	312	
20Y-70-11540	502	10
	509	10
20Y-70-13150	520	6
20Y-70-13160	520	1
20Y-70-14520	543	5
	544	5
	545	5
	546	5
20Y-70-23220	521	13
	523	5
	525	6
	527	13
	529	5
	531	6
	535	9
	536	5
	538	6
	592	
20Y-70-23230	521	14
	525	7
	527	14
	531	7
	535	10
	538	7
20Y-70-31330	500	3
	507	3
20Y-70-31512	496	10

PartNumber	Page	Index
	503	10
20Y-70-32410	521	9
	527	9
	535	5
20Y-70-32450	525	10
	525	14
	525	18
	531	10
	531	14
	531	18
	538	10
	538	14
	538	18
	548	1
20Y-70-32460	525	21
	531	21
	538	21
20Y-70-41211	517	5
20Y-70-41221	517	2
20Y-70-41230	500	4
	507	4
20Y-70-41240	500	5
	507	5
20Y-70-41250	497	6
	504	6
20Y-70-42220	521	15
	527	15
	535	11
20Y-70-42E51	521	3
	527	3
	535	2
20Y-70-56610	496	1
	503	1
20Y-70-57161	502	11
	509	11
20Y-70-57171	502	12
	509	12
20Y-70-57E10	521	4
	527	4
20Y-70-59D10	545	2
20Y-70-59D20	545	3
20Y-70-59D30	545	4
20Y-70-59H50	546	2
20Y-70-59H60	546	3
20Y-70-59H80	546	4
20Y-70-C1270	545	1
20Y-70-C1280	546	1
20Y-70-C2530	516	2
20Y-70-C2540	516	3
20Y-810-1121	145	37
	329	12
20Y-810-1161	55	1
	127	1
20Y-810-1170	328	8
20Y-810-1180	326	5
20Y-810-1190	326	7
20Y-810-1240	152	22
	200	4
20Y-810-1250	152	
20Y-810-1260	325	
20Y-920-C510	544	8
	545	6
	546	6
20Y-934-C141	543	6
	544	6
	547	6
20Y-934-C151	543	7
	544	7
	547	7
20Y-934-C242	543	2
	544	2
20Y-934-C252	543	3
	544	3
20Y-934-C340	543	4
	544	4

PartNumber	Page	Index
20Y-939-C210	547	2
20Y-939-C220	547	3
20Y-939-C230	547	4
20Y-954-6192	319	2
20Y-954-6241	318	2
20Y-954-6250	318	10
20Y-954-C110	319	1
20Y-954-C130	320	1
20Y-954-C150	318	1
20Y-970-3270	533	16
	540	16
20Y-970-3572	535	3
20Y-970-4612	533	18
	540	18
20Y-970-5240	533	15
	540	15
20Y-970-5300	533	
	540	
20Y-970-5321	533	11
	540	11
20Y-970-5631	540	34
20Y-970-5641	540	35
20Y-970-5771	521	5
	527	5
20Y-973-2430	436	15
	436	9
	440	2
	441	2
	446	4
	447	4
20Y-979-3130	385	5
20Y-979-3140	328	5
20Y-979-3150	385	3
20Y-979-5671	328	4
20Y-979-5681	385	2
20Y-979-5691	385	4
20Y-979-5721	385	10
20Y-979-5731	326	1
20Y-979-5741	326	2
20Y-979-5760	145	20
	329	13
20Y-979-5770	385	8
20Y-979-6161	348	8
	393	8
20Y-979-6191	158	12
20Y-979-6271	158	11
20Y-979-6630	365	15
20Y-98-21140	579	22
20Y-98-56110	429	6
21J-06-12440	331	32
21K-03-72780	149	20
21K-30-41231	491	1
21K-30-41241	491	2
21K-30-41251	491	3
21K-62-72790	275	17
	275	25
21K-62-72810	288	14
21K-70-12161	525	3
	531	3
	538	3
21M-00-31371	550	8
	551	8
21M-03-22240	151	16
21N-62-13490	508	10
21N-64-36680	272	5
	300	21
	301	31
21T-06-11351	413	16
	417	16
21T-06-11411	349	4
21T-54-16150	156	2
	156	8
21T-62-69711	154	2
	154	8
21U-01-31221	404	25
	404	31
	405	25
	405	31
21U-54-64160	404	22
	405	22
21U-98-31160	550	28
	551	28
21W-X14-3531	301	21
22B-00-32710	556	3
22B-03-12590	148	3
22B-26-11320	299	23
22B-54-15411	331	5
22B-54-15421	331	8
22B-54-15440	331	6
22B-54-15450	331	9
22B-54-15470	331	7
22B-54-15480	331	10
22B-54-15841	333	13
22B-54-15970	333	5
22B-54-15980	333	6
22B-54-16330	336	10
22B-54-16340	336	3
22B-54-16461	336	19
	352	8
22B-54-17271	195	
22B-54-17282	344	2
	391	2
22B-54-17380	341	21
22B-54-17612	197	1
22B-54-17660	197	
22B-54-38541	334	15
22B-57-11911	317	1
22B-60-11160	205	4
	209	4
22B-62-45410	386	3
22B-62-45811	294	5
	298	3
22L-06-21250	366	18
	366	21
22N-957-1420	326	8
22U-01-21310	54	1
	126	1
22U-03-52120	154	7
22U-04-21200	162	
	163	
	164	
22U-04-21210	162	17
	163	17
	164	17
22U-04-21220	162	19
	163	19
	164	19
22U-04-21241	162	
	163	
	164	
22U-06-11270	366	9
22U-06-21130	186	6
	186	9
22U-06-21151	186	4
22U-06-22360	373	23
22U-06-22380	378	32
	398	32
22U-06-22460	378	33
	398	33
22U-06-22490	373	22
22U-06-31440	200	9
22U-26-21280	456	1
22U-30-00060	478	
	479	
22U-30-11450	478	2
	479	2
22U-43-21111	362	15
22U-43-21121	362	16
22U-43-21131	362	17
22U-43-21182	369	
22U-43-21211	369	9
22U-43-21350	362	
22U-43-21360	362	9
22U-43-21390	365	12
22U-43-22340	357	6
22U-43-23251	378	5
	398	5
22U-43-23260	372	26
	373	24
	379	42
	399	43
22U-43-23290	378	6
	398	6
22U-54-24760	439	5
	442	2
	443	2
	444	2
	445	2
22U-54-25110	363	1
22U-54-25120	364	1
22U-54-25360	347	10
	392	10
22U-54-25521	363	2
22U-54-25531	364	2
22U-54-25581	360	2
22U-54-25660	396	1
22U-60-21331	295	31
	299	34
22U-60-21522	163	
	164	
22U-62-21551	276	10
	277	11
	277	15
	279	11
	279	15
22U-62-21870	461	9
22U-62-24420	461	10
22U-62-34140	496	2
	503	2
22U-62-34611	526	4
	532	4
22U-70-00200	525	
	531	
	538	
22U-70-21191	525	13
	525	9
	531	13
	531	9
	538	13
	538	9
22U-979-1930	55	2
	127	2
23D-950-4450	357	31
281-01-13180	277	37
	279	37
287-06-16420	354	20
	354	23
	354	27
2A5-00-11370	572	1
	573	1
	574	1
2A5-00-11380	572	2
	573	2
	574	2
2A5-00-11410	550	30
	551	30
2A5-00-11420	550	31
	551	31
2A5-00-11480	550	7
	551	7
2A5-01-11230	140	12
	140	15
2A5-01-11261	140	24
2A5-01-11271	140	25
2A5-01-11330	140	23

PartNumber	Page	Index
2A5-01-11910	140	9
2A5-03-12130	152	16
2A5-06-11940	341	27
2A5-06-11990	189	39
	366	16
2A5-06-12182	357	36
2A5-06-12351	340	3
2A5-06-12431	195	1
2A5-06-12661	357	33
2A5-06-15211	354	4
2A5-06-25161	366	10
2A5-06-28261	358	46
2A5-30-00110	478	
	479	
2A5-30-12110	478	1
	479	1
2A5-30-12130	478	3
	479	3
2A5-30-12140	478	7
	479	7
2A5-30-12150	478	9
	479	9
2A5-43-11261	321	2
	322	2
2A5-43-11420	368	1
2A5-43-11441	388	11
	388	5
2A5-43-12131	390	1
2A5-43-12353	365	7
2A5-43-12363	365	9
2A5-43-12480	365	14
2A5-43-12861	375	9
2A5-43-12941	375	
2A5-43-12951	375	7
2A5-43-12971	375	8
2A5-53-00062	331	
2A5-53-11291	341	17
2A5-53-11361	344	22
	391	21
2A5-53-11471	334	7
2A5-53-11532	347	3
	392	3
2A5-53-11742	353	
2A5-53-11760	353	2
2A5-53-11770	353	3
2A5-53-11780	353	4
2A5-53-11790	353	5
2A5-53-11860	353	6
2A5-53-11870	343	2
2A5-53-11941	401	8
2A5-53-11981	333	11
2A5-53-11K11	334	2
2A5-53-11K21	334	3
2A5-53-12130	344	28
	391	25
2A5-53-12140	348	2
	393	2
2A5-53-12160	333	8
2A5-53-12530	334	16
2A5-53-12561	341	1
2A5-53-12580	341	29
2A5-53-12651	348	
	393	
2A5-53-12710	336	9
2A5-53-12721	338	1
2A5-53-12850	331	35
2A5-53-12920	340	12
2A5-53-12970	334	11
2A5-53-13130	336	15
2A5-53-13140	343	5
2A5-53-13310	354	12
2A5-53-13381	344	18
	391	17
2A5-53-13540	338	14
2A5-53-26230	344	30

PartNumber	Page	Index
2A5-53-28351	358	44
2A5-54-13421	428	1
	429	1
	429	5
2A5-60-11241	275	14
2A5-60-11251	275	22
2A5-62-11131	281	34
2A5-62-11191	464	14
2A5-62-11211	464	15
2A5-62-11242	274	1
2A5-62-11581	281	26
2A5-62-12350	396	6
2A5-62-12771	302	1
2A5-62-13140	496	8
	503	8
2A5-62-13251	508	18
2A5-62-13261	508	17
2A5-62-13811	388	16
2A5-62-13820	388	19
2A5-62-13831	388	22
2A5-62-15730	386	9
2A5-62-15740	386	10
2A5-62-19710	498	15
	505	15
2A5-62-21370	521	6
	527	6
2A5-62-25230	291	1
2A5-62-25240	291	3
2A5-62-25320	290	3
	461	16
2A5-62-25360	275	3
2A5-62-25370	275	1
2A5-62-28160	499	12
	506	12
2A5-62-28230	526	1
	532	1
2A5-62-28270	496	5
	503	5
2A5-62-28280	496	6
	503	6
2A5-70-11130	496	9
	503	9
2A5-979-1113	381	
	382	
	383	
2A5-979-1122	355	3
2A5-979-1131	385	1
2A5-979-1181	353	13
2A5-979-1211	352	1
2A5-979-1221	352	2
2A5-979-1231	352	4
2A5-979-1241	352	5
2A5-979-1252	352	9
2A5-979-1261	352	20
2A5-979-1271	352	21
2A5-979-1281	152	21
2A5-979-1541	353	15
2A5-979-1551	353	
2A5-979-1580	352	15
2A5-979-1590	352	16
2A5-979-1611	353	16
2A5-979-1660	352	10
2A5-979-1670	352	11
2A6-62-11150	499	11
	506	11
2A6-62-11680	290	7
	461	18
2A6-62-12241	238	3
	268	3
2A7-04-11260	163	16
	164	16
2A7-06-21560	200	2
2A8-00-11150	570	2
2A8-62-12550	286	16
2A8-62-12650	286	18

PartNumber	Page	Index
415-S62-2380	172	9
	181	9
416-03-43190	154	12
418-54-35450	331	12
	350	11
	353	8
419-43-17920	491	4
421-06-23330	190	
	195	
	196	
	502	
	509	
	515	
	516	
421-60-35170	163	27
	164	27
	205	21
	209	21
	576	9
	577	9
421-60-35180	163	28
	164	28
	205	22
	209	22
425-S62-4360	188	32
437-40-26240	374	8
	380	8
566-07-12151	373	6
569-06-61960	354	19
	354	26
569-06-61970	354	22
581-22-12760	54	18
	126	18
600-181-1930	141	6
600-184-1350	141	5
600-184-1510	141	4
600-184-1570	141	3
600-185-5100	141	
600-185-5110	141	1
600-311-3630	166	3
	175	3
600-311-3640	166	4
	175	4
600-311-3660	166	
	175	
600-311-3670	166	6
	175	6
600-311-3690	166	9
	175	9
600-311-3722	166	
	175	
600-311-9490	168	6
	177	6
600-311-9591	168	11
	177	11
600-311-9733	168	
	177	
600-311-9912	168	1
	177	1
600-311-9921	168	9
	177	9
600-311-9931	168	7
	177	7
600-311-9941	168	8
	177	8
600-311-9950	168	10
	177	10
600-311-9961	168	4
	177	4
600-311-9971	168	5
	177	5
600-319-3602	166	
	175	
600-319-3610	166	
	175	

PartNumber	Page	Index
	576	7
	577	7
600-319-3750	88	1
	89	1
	576	6
	577	6
600-331-1930	582	4
	585	4
	588	4
600-411-1280	369	5
	375	5
600-411-2110	143	1
600-411-2120	143	2
600-411-2130	143	3
600-411-5110	144	1
600-467-4300	114	1
600-815-2170	366	22
600-815-8941	366	24
600-816-3120	47	1
600-861-3421	107	
600-861-6111	105	
600-863-4211	110	
6110-73-6231	168	2
	177	2
6130-12-1961	62	12
6130-12-4581	87	18
6131-12-4570	36	2
	51	5
6135-85-8190	106	12
6136-51-6190	76	1
6144-81-6680	67	4
6151-11-4840	142	1
6207-81-6980	106	7
6208-11-5850	35	5
	56	5
6210-11-5232	35	4
	56	4
6210-11-5820	72	7
	112	2
6215-11-6330	67	5
6215-81-9510	68	19
	89	2
6215-81-9710	68	20
6216-14-6820	42	12
6216-14-6830	74	
6216-14-6840	74	6
6216-14-6860	42	
6216-74-6180	112	16
	112	4
	115	7
6216-84-9220	115	9
6252-11-2800	582	
	585	
	588	
6252-11-2901	582	2
	585	2
	588	2
6261-81-6901	115	15
6271-81-2981	120	1
6271-81-9201	115	8
6271-81-9220	115	
6301-11-4630	62	13
6560-81-7110	68	
6560-81-7120	68	17
6560-81-7130	68	18
6715-11-4450	139	7
6731-21-6220	62	4
	95	2
	97	5
	99	5
6731-51-5250	82	7
6731-51-5290	82	10
	82	8
6731-61-1370	50	2
6731-61-2151	82	6
6731-82-6810	109	2
6732-11-1720	73	6
6732-11-1910	97	6
	99	6
6732-11-1920	42	10
	44	7
	62	17
	68	25
	74	4
	97	7
6732-11-4160	44	5
6732-11-5860	48	4
6732-21-1412	68	6
6732-21-1611	68	7
6732-21-1812	68	10
	68	12
6732-21-1820	42	5
	68	11
6732-21-1831	68	1
6732-21-1960	68	
	80	
	89	
6732-21-1981	42	9
6732-21-4130	62	8
6732-21-4150	62	10
6732-21-4161	62	11
6732-21-5170	62	16
6732-21-5530	68	22
	72	1
6732-21-6140	68	13
6732-21-6160	68	23
6732-21-6610	65	13
6732-21-6630	59	4
	87	10
	108	3
6732-31-2420	71	3
6732-31-3132	71	8
6732-31-3320	71	7
6732-31-3420	71	11
6732-31-4120	64	1
6732-31-4130	64	2
6732-31-4180	63	1
6732-51-4420	82	5
6732-51-5130	74	1
6732-61-2240	42	11
6732-61-3110	72	6
	115	5
6732-61-3170	92	2
6732-61-3871	94	1
6732-61-6131	97	3
	99	3
6732-61-8200	143	
6732-71-3210	85	9
6732-71-6510	87	7
6732-81-6490	106	6
6732-81-6530	106	5
6732-81-6630	108	2
6732-81-8220	35	15
	41	1
6732-81-8412	52	5
6732-81-8451	36	3
	51	3
6732-81-8810	49	1
6732-81-8820	49	3
	52	2
6733-11-4150	117	7
6733-61-3150	46	2
6734-11-5210	46	1
6734-71-5520	115	12
6734-71-5610	67	9
6735-11-5611	35	14
	56	14
6735-21-1910	44	
	68	
6735-21-1920	44	2
	68	26
6735-21-1930	44	3
	68	27
6735-21-1970	80	3
	89	3
6735-21-5530	50	6
	68	21
6735-21-5531	42	6
6735-21-5540	65	12
6735-41-5550	60	6
	60	9
6735-61-2120	59	3
	73	4
	82	14
	115	3
6735-61-2140	82	2
6735-61-2160	82	3
6735-61-2190	82	4
6735-61-6411	77	2
6735-71-3821	87	3
6735-71-5190	65	5
	98	2
6736-11-4460	108	4
6736-21-3230	82	15
6736-21-4221	62	1
6736-21-5320	62	15
6736-21-5350	62	6
6736-29-1410	122	1
6736-39-1130	122	2
6736-51-8710	49	8
6736-61-1520	96	2
6736-71-5811	77	1
6736-81-5110	112	9
6737-32-2110	97	2
	99	2
6737-32-3121	71	
6737-62-6220	99	
6738-11-4320	157	1
6738-11-4370	49	7
	157	3
6738-11-4380	157	4
6738-11-4390	157	5
6738-21-5610	66	
6738-21-5630	66	2
6738-21-5640	66	3
6738-31-4200	63	
6738-36-3400	71	
	122	
6738-37-3400	71	
	122	
6738-38-3400	71	
	122	
6738-39-3400	71	
	122	7
6738-51-5240	82	9
6738-51-9821	80	8
6738-82-8810	49	2
6741-81-9220	67	1
6742-01-1420	68	24
	68	8
6742-01-2630	86	5
6742-01-2690	65	6
6742-01-4540	80	10
	576	5
	577	5
6742-01-5504	62	5
6743-12-4110	44	9
6744-11-1020	42	15
	42	18
6744-11-1070	42	7
6744-81-4010	115	10
6745-61-8160	50	5
6745-71-1130	84	2
	87	5
6745-72-6131	87	16

PartNumber	Page	Index
6751-21-1220	74	3
6751-51-1240	80	6
6751-51-1250	80	7
6751-71-9940	84	4
6751-71-9960	84	3
6751-81-2612	70	3
6754-11-1150	42	4
6754-11-1160	42	8
6754-11-1170	42	2
6754-11-1180	42	3
6754-11-1211	42	
6754-11-1610	42	21
6754-11-1710	39	1
6754-11-1811	42	22
6754-11-1960	39	2
6754-11-3011	86	
6754-11-3110	86	1
6754-11-3130	86	3
6754-11-3140	86	4
6754-11-4120	45	2
	47	2
6754-11-4130	38	2
6754-11-4221	44	6
6754-11-4230	44	1
6754-11-4280	44	4
6754-11-4390	44	8
6754-11-4440	45	1
6754-11-5110	48	1
6754-11-5142	48	2
6754-11-5150	48	3
6754-11-5420	35	9
	56	9
6754-11-5440	54	12
	126	12
6754-11-5490	35	7
	56	7
6754-11-5940	35	2
	56	2
6754-11-6160	35	1
	56	1
6754-11-8260	43	3
	576	3
	577	3
6754-11-8310	43	
6754-11-8311	43	
6754-11-8330	43	5
6754-11-8331	576	2
	577	2
6754-11-8340	43	
6754-11-8371	43	2
6754-11-8480	75	1
6754-21-1180	68	15
6754-21-1191	68	14
6754-21-1310	68	
6754-21-1320	68	
6754-21-3104	73	
6754-21-3120	73	2
6754-21-3140	73	7
6754-21-3150	73	3
6754-21-3160	53	1
6754-21-4111	62	2
6754-21-4210	62	3
6754-21-4220	62	7
6754-21-5130	65	10
6754-21-5140	65	11
6754-21-5180	65	8
6754-21-5510	65	1
6754-21-5520	65	4
6754-21-5530	65	2
6754-21-5770	72	3
6754-21-5840	65	9
6754-21-5850	72	4
6754-21-5860	72	5
6754-21-6100	40	
6754-21-6140	40	1
6754-21-6150	40	3
6754-21-6160	40	4
6754-21-6170	40	5
6754-21-6180	40	6
6754-21-6212	59	1
6754-21-6220	59	2
	68	16
6754-21-6231	59	5
6754-21-6240	40	9
6754-21-6250	40	8
6754-21-6280	40	10
6754-21-6370	72	2
6754-21-9110	74	2
6754-26-8310	122	
6754-26-8320	122	
6754-26-8410	122	
6754-27-8310	122	
6754-27-8320	122	
6754-28-8310	122	
6754-28-8320	122	
6754-28-8410	122	
6754-29-2010	123	13
6754-29-8310	122	
6754-29-8320	122	
6754-31-1190	69	4
6754-31-1330	69	2
6754-31-1340	69	3
6754-31-2112	71	1
6754-31-2410	71	2
6754-31-2510	71	
6754-31-3410	71	10
6754-31-8120	70	1
6754-31-8131	70	4
6754-31-8210	70	2
6754-32-1330	69	
6754-36-3410	71	
	123	
6754-37-3410	71	
	123	
6754-38-3410	71	
	123	
6754-39-2010	122	
6754-39-2111	122	8
6754-39-3410	71	
	123	12
6754-41-1100	116	
6754-41-1120	116	3
6754-41-1130	116	4
6754-41-1141	116	5
6754-41-1150	116	8
6754-41-1161	116	6
6754-41-1170	116	
6754-41-2110	76	3
6754-41-3110	60	1
6754-41-4100	42	
6754-41-4110	42	14
6754-41-4200	42	
6754-41-4210	42	17
6754-41-4440	42	19
6754-41-4510	42	20
6754-41-4540	42	16
6754-41-4541	42	13
6754-41-5101	60	
6754-41-5111	60	
6754-41-5140	60	5
	60	8
6754-41-5180	60	3
6754-41-5211	60	
6754-41-5260	60	10
6754-41-5310	60	2
6754-51-1111	81	2
6754-51-4440	82	11
6754-51-5120	80	1
6754-51-5140	80	4
6754-51-8101	50	1
6754-51-8121	49	5
	50	3
6754-51-8210	50	4
6754-51-9710	80	9
6754-61-1201	96	1
6754-61-2110	82	12
6754-61-2220	82	1
6754-61-2320	82	13
6754-61-3610	92	3
6754-61-4111	95	1
6754-61-4410	92	4
6754-61-4420	61	1
6754-61-6130	97	4
	99	4
6754-61-6212	100	
6754-61-6230	100	2
6754-61-6280	97	
6754-71-1012	85	
6754-71-1210	117	3
6754-71-1320	85	1
6754-71-1330	85	2
6754-71-1340	85	5
6754-71-1351	85	6
6754-71-3110	85	7
6754-71-3131	85	8
6754-71-5170	87	15
6754-71-5210	117	8
6754-71-5220	117	9
6754-71-5230	117	10
6754-71-5240	117	11
6754-71-5260	87	9
6754-71-5341	84	1
6754-71-5350	85	3
	87	20
6754-71-5430	87	4
6754-71-5450	87	8
6754-71-5461	87	2
6754-71-5471	87	1
6754-71-5480	87	19
6754-71-5512	117	1
6754-71-5541	117	2
6754-71-5750	90	2
6754-71-6360	89	4
6754-71-7700	166	
	175	
6754-71-7710	166	1
	175	1
6754-71-9710	90	1
6754-71-9740	35	11
	56	11
6754-71-9770	35	12
	56	12
6754-72-1012	85	
6754-72-1212	117	6
6754-72-1221	117	5
6754-79-7210	88	2
6754-81-2702	115	13
6754-81-6110	108	
6754-81-6130	108	7
6754-81-6140	106	1
6754-81-6460	106	11
6754-81-6810	109	1
6754-81-7500	141	
6754-81-8090	49	
6754-81-8340	52	1
6754-81-8350	51	1
6754-81-8410	52	3
6754-81-8710	49	6
6754-81-9161	115	4
6754-81-9170	115	6
6754-81-9180	115	14
6754-81-9190	67	6
6754-81-9270	112	13
6754-81-9390	112	14
6754-81-9461	115	2

PartNumber	Page	Index
6754-81-9470	115	1
6754-81-9480	104	1
6754-81-9520	112	1
6754-81-9530	112	7
6754-81-9540	112	8
6754-81-9570	112	10
6754-S0-CA10	34	1
6755-61-6250	98	1
6755-71-5120	87	21
6755-81-1900	115	11
6755-81-6140	106	2
6756-61-4130	93	1
	576	4
	577	4
700-22-11410	220	2
	222	3
	247	2
	249	3
700-80-61260	224	5
	226	20
	251	5
	253	20
700-93-11320	217	12
	217	16
	217	20
	217	24
	217	28
	217	32
	217	4
	217	8
	244	12
	244	16
	244	20
	244	24
	244	28
	244	32
	244	4
	244	8
	257	2
	466	20
	469	20
702-15-71130	455	8
702-15-71140	455	9
702-15-77000	455	
702-16-03910	370	
	376	
702-16-05261	395	
702-16-08190	303	
	305	
702-16-51140	361	3
702-16-51240	370	17
	376	17
702-16-51270	395	8
702-16-53140	361	5
702-16-53170	361	7
702-16-53420	361	4
702-16-53920	224	29
	251	29
702-16-54331	361	17
702-16-54341	361	20
702-16-54351	361	
702-16-54420	361	6
702-16-54580	395	9
702-16-54590	395	10
702-16-54641	395	14
702-16-54650	395	17
702-16-54660	395	16
702-16-55610	224	8
	251	8
702-16-56380	361	
702-16-56390	361	
702-16-56490	395	24
702-16-58320	138	12
	138	19
	138	5

PartNumber	Page	Index
702-16-71150	361	8
702-16-71160	361	9
	370	12
	376	12
702-16-71210	370	11
	376	11
702-16-71280	370	13
	376	13
702-16-71361	370	18
	376	18
702-16-71441	370	19
	376	19
702-16-72440	226	7
	253	7
702-16-73610	361	22
702-16-73640	361	13
702-21-01910	285	
702-21-11930	285	3
702-21-11940	285	4
702-21-53311	395	23
702-21-53340	395	
702-21-53350	395	
702-21-53680	395	20
702-21-54180	138	11
	138	18
	138	4
	224	7
	226	22
	251	7
	253	22
702-21-54910	226	23
	253	23
702-21-55620	224	34
	225	8
	251	34
	252	8
	466	11
	469	11
702-21-60900	226	19
	253	19
702-21-62200	138	1
	138	15
	138	8
702-21-62300	224	4
	251	4
702-22-01010	361	
702-22-13250	395	
702-73-02112	466	14
	469	14
702-73-11510	213	12
	213	3
	214	3
	215	13
	215	3
	215	8
	240	12
	240	3
	241	3
	242	13
	242	3
	242	8
702-75-01330	455	1
702-77-11380	455	3
703-08-33740	459	
703-08-91230	459	1
703-08-92192	459	3
703-08-93170	459	7
703-08-93771	459	11
703-08-94510	459	6
703-08-95621	459	2
703-08-95770	459	12
703-08-96140	459	14
703-08-98930	459	4
706-75-42270	454	17
706-75-42880	454	2

PartNumber	Page	Index
706-75-43410	454	7
706-75-43750	454	12
706-76-40890	454	4
706-76-71390	289	5
706-7G-01240	453	
	454	
	455	
706-7G-03210	453	
	454	
706-7G-11291	467	5
	470	5
706-7G-40110	453	3
706-7G-40210	453	15
706-7G-41130	454	14
706-7G-41140	454	15
706-7G-41260	454	16
706-7G-41270	453	1
706-7G-41310	454	10
706-7G-41320	454	13
706-7G-41410	454	18
706-7G-41510	454	5
706-7G-41630	454	1
706-7G-41660	454	3
706-7G-41720	454	11
706-7G-41910	454	8
706-7G-71180	453	2
706-7G-71560	453	12
706-7G-71630	453	13
706-7G-71710	453	11
706-7G-91120	454	21
706-7G-91360	454	24
706-7G-91441	454	19
706-7G-91450	454	20
706-7G-91520	454	23
706-7G-91530	454	22
707-13-11880	523	6
	529	6
	536	6
707-13-12850	510	6
	512	6
707-27-11860	523	10
	529	10
	536	10
707-27-12650	510	12
	512	12
707-27-13850	518	19
707-35-30750	510	23
	512	23
	592	
707-35-30800	523	25
	529	25
	536	25
	592	
707-35-30850	518	36
	592	
707-35-31060	523	11
	529	11
	536	11
	592	
707-35-31110	510	13
	510	7
	512	13
	512	7
	592	
707-35-31260	518	13
	518	25
	592	
707-36-11A70	523	26
	529	26
	536	26
707-36-12851	510	24
	512	24
707-36-13771	518	30
707-39-11530	523	27
	529	27

PartNumber	Page	Index
	536	27
	592	
707-39-12140	510	25
	512	25
	592	
707-39-13530	518	32
	592	
707-41-11840	518	28
707-44-11250	523	28
	529	28
	536	28
	592	
707-44-11920	523	29
	529	29
	536	29
707-44-12150	510	26
	512	26
	592	
707-44-12911	510	27
	512	27
707-44-13250	518	31
	592	
707-44-13920	518	33
707-51-80650	523	12
	529	12
	536	12
	592	
707-51-80860	523	13
	529	13
	536	13
	592	
707-51-85650	510	14
	512	14
	592	
707-51-85860	510	15
	512	15
	592	
707-51-95650	518	24
	592	
707-51-95860	518	23
	592	
707-52-15520	523	14
	529	14
	536	14
707-52-90561	523	15
	529	15
	536	15
707-52-90611	510	16
	512	16
707-52-90721	518	22
707-56-70540	475	14
	477	15
707-56-80770	523	16
	529	16
	536	16
	592	
707-56-80800	523	17
	529	17
	536	17
	592	
707-56-85740	510	17
	512	17
	592	
707-56-95740	518	20
	592	
707-58-80A20	523	7
	529	7
	536	7
707-58-85560	510	8
	512	8
707-58-95270	518	6
707-71-35140	518	12
707-71-35490	510	9
	512	9
707-71-70820	510	10
	512	10
707-71-71010	518	15
707-71-80320	518	16
707-71-91270	518	18
707-75-80040	523	18
	529	18
	536	18
707-75-85110	510	18
	512	18
707-75-95030	518	29
707-76-70110	523	8
	529	8
	536	8
707-76-70120	523	9
	529	9
	536	9
707-76-80010	510	11
	512	11
	518	7
	518	9
707-83-13010	518	37
707-86-16230	510	1
707-86-16240	512	1
707-86-19110	518	1
707-86-69140	523	1
	529	1
	536	1
707-86-69590	510	2
707-86-69610	512	2
707-87-14071	518	39
707-88-04980	523	19
	529	19
	536	19
707-88-21251	510	3
	512	3
	516	4
707-88-26660	523	2
	529	2
	536	2
707-88-26670	518	2
707-88-33030	510	37
	512	37
	519	45
	523	38
	529	38
	536	38
707-88-33040	510	33
	512	33
	519	41
	523	34
	529	34
	536	34
707-88-47020	518	3
	523	3
	529	3
	536	3
707-88-47730	523	20
	529	20
	536	20
707-88-51431	510	4
707-88-51441	512	4
707-88-53090	523	4
	529	4
	536	4
707-88-53100	518	4
707-E1-01470	518	
707-G1-06010	510	
	512	
707-G1-06170	523	
	529	
	536	
707-H1-X6010	510	
707-H1-X6020	512	
707-H1-X6030	518	
707-H1-X6170	523	
	529	
	536	
708-18-13230	130	10
	134	7
708-1L-29340	128	3
	129	3
	133	4
708-21-12531	218	3
	245	3
708-21-12541	218	2
	218	5
	245	2
	245	5
708-25-12790	130	4
	134	4
708-2E-05040	130	3
	134	3
708-2G-00620	128	
	129	
	130	
	131	
	132	
	133	
	134	
	135	
	136	
	137	
	138	
	139	
708-2G-03321	131	
	135	
708-2G-03330	132	
	136	
708-2G-03340	137	
708-2G-03351	131	
	135	
708-2G-04620	133	
708-2G-04640	130	
708-2G-04650	134	
708-2G-04660	130	
	134	
708-2G-04960	128	
708-2G-04970	129	
708-2G-12610	130	1
708-2G-12620	134	1
708-2G-12630	136	10
708-2G-13740	130	15
	134	12
708-2G-13750	130	17
	134	14
708-2G-13760	130	13
	134	10
708-2G-14610	131	1
	135	1
708-2G-14620	132	5
	136	5
708-2G-14630	132	1
	136	1
708-2G-15230	132	3
	136	3
708-2G-15310	132	7
	136	7
708-2G-15910	138	22
708-2H-23141	130	14
	134	11
708-2L-22160	130	6
708-2L-25480	129	7
708-2L-32460	130	5
708-2L-33350	467	16
	470	16
708-2L-35290	132	4
	136	4
708-2L-35760	131	6
	135	6
708-2L-35770	131	7

PartNumber	Page	Index
	135	7
708-2L-42150	129	4
708-2L-42250	130	2
	134	2
708-2L-43130	130	12
	134	9
708-2L-43311	130	18
	134	15
708-2L-43360	130	16
	134	13
708-2L-45240	131	29
	135	29
708-7L-05010	467	4
	470	4
708-7L-12140	467	3
	470	3
708-7L-13140	467	12
	470	12
708-7T-16460	212	12
	239	12
	256	5
708-8E-16150	128	9
	129	10
	133	10
708-8E-16160	218	18
	225	10
	245	18
	252	10
708-8E-16180	466	27
	469	27
708-8E-16250	218	6
	245	6
708-8F-00550	469	
	470	
708-8F-00560	466	
	467	
708-8F-04320	466	
	469	
708-8F-04810	469	
708-8F-04820	466	
708-8F-12151	467	2
	470	2
708-8F-12230	467	6
	470	6
708-8F-31210	466	35
	469	35
708-8F-31610	466	32
	469	32
708-8F-31650	466	28
	469	28
708-8F-32140	467	1
	470	1
708-8F-33130	467	8
	470	8
708-8F-33160	467	13
	470	13
708-8F-33230	467	9
	470	9
708-8F-33350	467	15
	470	15
708-8F-33360	467	11
	470	11
708-8F-33370	467	17
	470	17
708-8F-33581	467	18
	470	18
708-8F-33710	467	19
	470	19
708-8F-34110	466	25
	469	25
708-8F-34120	466	23
	469	23
708-8F-34141	467	20
	470	20
708-8F-34220	466	8
	469	8
708-8F-34270	467	21
	470	21
708-8F-35120	467	24
	470	24
708-8F-35140	467	25
	470	25
708-8F-35150	467	30
	470	30
708-8F-35160	467	26
	470	26
708-8F-35170	467	27
	470	27
708-8F-35180	467	28
	470	28
708-8F-35190	467	29
	470	29
708-8F-35220	467	22
	470	22
708-8F-35230	467	23
	470	23
708-8F-36120	466	16
	469	16
708-8F-36320	466	18
	469	18
708-8F-36611	466	15
	469	15
708-8H-11530	218	8
	221	4
	245	8
	248	4
	466	9
	469	9
708-8H-36121	466	17
	469	17
708-8K-15190	453	4
709-10-91240	285	5
709-25-11361	453	6
709-25-11390	221	18
	222	4
	223	2
	223	6
	248	18
	249	4
	250	2
	250	6
	258	7
709-25-11640	453	7
709-25-11650	453	5
720-1L-15430	138	10
	138	17
	138	3
720-1L-15440	138	16
	138	2
	138	9
720-68-19610	467	10
	470	10
721-13-13100	518	5
721-98-00660	592	2
721-98-00690	592	3
721-98-04280	592	4
722-10-91130	466	24
	469	24
723-11-18150	216	9
	243	9
723-11-18190	227	22
	228	22
	229	15
	254	22
	255	22
	259	15
723-11-18430	225	2
	252	2
723-11-19130	216	2
	243	2
	256	13
723-11-19960	224	6
	226	21
	251	6
	253	21
723-40-57200	219	1
	246	1
723-40-60101	221	15
	248	15
723-40-66300	258	
723-40-66601	221	
	248	
723-40-66701	221	
	248	
723-40-71870	224	15
	251	15
723-40-71940	225	11
	252	11
723-40-71950	225	12
	252	12
723-40-72800	224	3
	251	3
723-40-73700	224	28
	251	28
723-40-74300	224	
	225	
	251	
	252	
723-40-75200	224	
	251	
723-40-82220	218	14
	227	6
	228	6
	229	5
	245	14
	254	6
	255	6
	259	5
723-40-82290	227	25
	228	25
	254	25
	255	25
723-40-82460	227	9
	228	9
	254	9
	255	9
723-40-82520	227	10
	228	10
	254	10
	255	10
723-40-83700	227	
	228	
	254	
	255	
723-40-84350	229	7
	259	7
723-40-84420	227	12
	228	12
	254	12
	255	12
723-40-84430	227	13
	228	13
	254	13
	255	13
723-40-84501	229	
	259	
723-40-85100	223	5
	250	5
723-40-87170	226	16
	253	16
723-40-87540	226	12
	253	12
723-40-87810	226	6
	253	6
723-40-87820	226	3

PartNumber	Page	Index
	253	3
723-40-88300	226	
	253	
723-40-91300	258	6
723-40-94501	220	1
	247	1
723-46-00630	218	
	245	
723-46-00840	218	
	245	
723-46-14110	212	17
	239	17
	256	7
723-46-14140	218	17
	245	17
723-46-14150	216	19
	243	19
723-46-14280	212	19
	239	19
723-46-14290	212	20
	239	20
723-46-14460	212	21
	239	21
723-46-14470	212	18
	239	18
723-46-15111	213	17
	214	10
	224	9
	240	17
	241	10
	251	9
	256	8
723-46-15120	212	13
	239	13
	256	6
723-46-15130	212	8
	239	8
	256	3
723-46-15140	212	9
	239	9
723-46-15150	216	18
	243	18
723-46-15190	218	16
	245	16
723-46-15630	213	13
	213	4
	214	6
	215	14
	215	4
	215	9
	240	13
	240	4
	241	6
	242	14
	242	4
	242	9
723-46-15640	213	2
	240	2
723-46-15650	212	10
	239	10
723-46-15690	212	14
	239	14
723-46-15880	212	16
	239	16
723-46-15950	212	15
	239	15
723-46-15960	213	16
	240	16
723-46-15970	214	2
	241	2
723-46-15980	213	11
	215	2
	240	11
	242	2
723-46-17320	213	8
	214	4
	240	8
	241	4
723-46-17330	213	9
	214	5
	240	9
	241	5
723-46-17340	213	5
	214	7
	240	5
	241	7
723-46-17350	215	19
	242	19
723-46-17510	216	7
	243	7
	256	15
723-46-17520	216	3
	243	3
	256	16
723-46-17530	216	8
	243	8
	256	17
723-46-17550	218	15
	245	15
723-46-17590	215	12
	215	7
	242	12
	242	7
723-46-17600	218	10
	245	10
723-46-17650	216	17
	243	17
723-46-17680	225	23
	252	23
723-46-17770	234	
	236	
	264	
	266	
723-46-18720	224	24
	224	27
	251	24
	251	27
723-46-19220	214	
	241	
723-46-19510	215	
	242	
723-46-19610	215	
	242	
723-46-19700	213	
	240	
723-46-19850	213	
	240	
723-46-19870	215	
	242	
723-46-31200	212	
	213	
	214	
	215	
	216	
	217	
	218	
	219	
	220	
	221	
	222	
	223	
	224	
	225	
	226	
	227	
	228	
	229	
723-46-40100	217	3
	244	3
723-46-41190	217	2
	244	2
723-46-41210	217	1
	244	1
723-46-41500	217	11
	244	11
723-46-41950	217	13
	217	21
	217	5
	244	13
	244	21
	244	5
723-46-42700	217	7
	244	7
723-46-43100	217	27
	244	27
723-46-43300	217	19
	244	19
723-46-43400	217	23
	244	23
723-46-45100	217	15
	244	15
723-46-45700	257	1
723-46-46101	217	31
	244	31
723-47-31200	239	
	240	
	241	
	242	
	243	
	244	
	245	
	246	
	247	
	248	
	249	
	250	
	251	
	252	
	253	
	254	
	255	
	256	
	257	
	258	
	259	
723-56-33660	225	4
	252	4
723-90-61600	223	3
	250	3
723-90-66800	223	1
	250	1
723-90-66900	222	1
	249	1
723-90-76300	258	8
729-12-21000	139	1
	139	4
729-12-27000	206	1
	210	1
729-17-11220	206	3
	210	3
729-17-15000	206	
	210	
775-920-4K10	547	8
775-920-4K20	547	9
776-920-4C22	543	1
	544	
776-920-4C41	544	1
776-939-4C10	547	1
7826-25-3060	394	3
7826-25-6010	359	3
7835-34-5101	359	1
	394	1
7835-51-1001	359	2
	394	2
7835-80-1000	200	8

PartNumber	Page	Index
7861-74-5100	354	13
	354	15
	354	17
	355	4
7861-91-4220	67	2
7861-93-1430	142	4
7861-93-1880	306	12
	362	28
7861-93-1890	238	1
	268	1
	270	1
7861-93-3320	273	3
8233-06-3350	354	25
8A13-10-1320	344	26
	391	23
8A13-10-2100	391	26
8A13-10-2200	391	27
8A13-10-3131	344	29
AS157332	314	2
AS160122	314	9
AS165989	314	19
AS166011	314	14
AS186833	314	8
AS192161	314	7
AS195370	314	3
AS195372	314	4
AS195376	314	10
AS195389	314	15
AS195390	314	16
AS195391	314	17
AS195392	314	18
AS195398	314	
AS195400	314	1
AS195401	314	5
AS197031	314	6
AS198243	314	13
AS200179	314	11
AS208634	314	12
AS208635	314	20
HM6400-0012	366	14
HM6400-0013	366	13
HM6409-0071	366	
HM6413-0072	366	
HM6440-0128	366	
HM6440-0129	366	12
KD0-0055-05122	105	29
KD0-0055-05202	105	28
KD0-0056-05302	105	31
	105	38
KD0-0275-06802	105	12
KD0-09006-0370	105	35
KD0-09006-0730	105	15
KD0-09011-3540	105	30
	105	39
KD0-09057-0220	105	27
KD0-09170-2501	105	19
KD0-09201-0980	105	4
KD0-09201-1450	105	7
KD0-33902-0080	105	36
KD0-33902-0090	105	37
KD0-35100-0418	105	1
KD0-35120-0528	105	16
KD0-35200-0528	105	5
KD0-35300-0450	105	6
KD0-35411-0648	105	13
KD0-35421-0240	105	14
KD0-35710-1330	105	17
KD0-35719-0201	105	32
KD0-35730-0700	105	18
KD0-35761-0308	105	33
KD0-35784-0210	105	25
KD0-35784-0290	105	26
KD0-35902-0010	105	34
KD0-35923-0134	105	22
KD0-35923-0160	105	3
KD0-35926-0070	105	8
KD0-35926-0090	105	10
KD0-35943-0140	105	24
KD0-35943-0154	105	21
KD0-35943-0160	105	23
KD0-35943-0170	105	20
KD0-35943-0240	105	2
KD0-35951-0060	105	9
KD1-33926-0730	105	11
ND017321-4600	382	3
ND017661-3560	382	12
ND021041-8620	107	22
ND021045-0530	107	4
ND021100-5060	107	1
ND021200-8610	107	19
ND021401-1620	107	2
ND021411-0570	107	3
ND021506-0070	107	21
ND021542-0160	107	26
ND021551-2360	107	12
ND021580-4670	107	9
ND021602-5230	107	29
ND021605-1970	107	13
ND021605-2950	107	14
ND021620-2720	107	10
ND021626-0190	107	24
ND021626-0250	107	25
ND028062-0130	110	2
ND028062-5790	111	42
ND028063-0030	110	29
ND028065-0250	110	21
ND028099-3160	110	16
ND028099-3270	110	7
ND028099-3570	110	3
ND028100-2882	110	1
ND028200-1590	110	4
ND028300-6551	110	
ND028300-6751	110	8
ND028306-0070	110	28
ND028327-0171	110	30
ND028371-1500	110	27
ND028381-0071	110	12
ND028501-8091	110	24
ND028510-5390	110	22
ND028901-5190	111	44
ND047310-7240	325	2
ND047372-0660	325	6
ND047410-1570	325	4
ND053404-0240	110	18
ND053480-7560	110	20
ND053505-0290	110	19
ND053660-7170	110	17
ND063600-4580	382	6
ND063800-0300	381	27
ND077500-5650	382	11
ND077800-1130	382	5
ND100775-8400	381	18
ND113104-2260	383	3
ND116242-7000	382	1
ND116242-7010	382	2
ND116360-0030	382	4
ND116420-7450	381	17
ND116577-0970	381	4
ND116577-0981	381	25
ND116577-0990	381	26
ND116662-8530	382	7
ND116740-4980	381	20
ND116740-4990	381	21
ND116740-5000	382	9
ND116780-5651	381	24
ND116782-6690	381	22
ND116782-6700	381	23
ND116782-6720	382	8
ND117300-2601	382	
ND121400-4840	107	
ND121501-2920	107	8
ND126000-3730	107	11
ND128099-5620	110	15
ND128950-0520	110	31
ND128961-0010	110	25
ND146636-7450	381	9
ND146636-7460	381	15
ND146636-7530	382	14
ND146636-7540	382	15
ND146636-7550	382	16
ND146636-7560	381	29
ND146691-4470	325	14
ND153400-8530	110	14
ND228401-0633	110	13
ND245450-8520	381	1
ND245450-8530	381	2
ND245450-8540	381	3
ND246470-8154	383	2
ND246790-2060	381	19
ND247300-0510	325	
ND443120-1961	381	
ND445021-3091	381	16
ND446010-5360	381	
ND446260-2160	381	10
ND447220-4051	325	1
ND447500-4010	381	8
ND447610-0630	381	5
ND859918-1430	338	2
ND90170-10061	110	35
ND90200-06241	111	41
ND90258-10001	110	37
ND90801-10050	110	33
ND91310-04251	107	16
ND91310-05081	325	13
ND92150-06061	107	30
ND949001-1730	381	28
	382	13
ND949006-4720	110	38
ND949006-5460	107	15
ND949006-5590	107	5
ND949006-6401	107	27
ND949007-2350	338	10
ND949007-6280	107	28
ND949007-6530	110	34
ND949007-6850	111	43
ND949008-0330	382	10
	383	1
ND949013-7480	325	9
ND949013-7500	325	10
ND949013-7510	325	11
ND949020-0600	110	32
ND949043-2000	107	7
ND949046-3100	381	14
ND949046-3610	381	13
ND949047-2950	325	5
ND949048-0430	325	12
ND949056-1001	107	18
ND949056-2481	107	17
ND949056-2520	107	23
ND949056-4480	110	36
ND949070-1360	325	7
ND949070-1390	325	8
ND949100-1750	110	6
ND949100-1920	110	10
ND949100-1930	110	5
ND949100-2790	107	20
ND949100-4500	110	9
ND949100-5010	107	6
ND949142-0020	381	11
	381	6
ND949142-0030	381	12
	381	7
ND949170-4040	110	11
ND949170-4070	110	26
ND949173-0571	110	23

PartNumber	Page	Index
NY01720-10600	294	7
NY05062-1170A	294	22
	298	18
NY05062-11800	294	21
	298	17
NY06277-1320A	294	20
	298	16
NY06339-10200	294	19
	298	15
NY07207-1170A	294	23
	298	19
NY07207-1180A	294	27
	298	23
NY07493-10200	294	18
	298	14
NY07505-1020A	298	26
NY07529-1020A	294	28
	298	24
NY07529-1030A	294	29
	298	25
NY07529-1040A	294	24
	298	20
NY07529-1050A	294	26
	298	22
NY07529-1060A	294	25
	298	21
NY07926-10100	294	8
NY09000-11400	294	17
	298	13
NY16207-10200	294	16
	298	12
NY16207-10300	294	15
	298	11
NY80000-02100	294	14
	298	10
NY80000-02200	294	13
	298	9
NY81416-05010	294	12
	298	8
NY84110-00248	294	11
	298	7
NY86711-01008	294	10
	298	6
NY86711-01010	294	9
	298	5
NY89103-00285	294	
	298	
NY89103-00286	294	
	298	
NY89103-00287	298	
NY89103-00288	294	
	298	
NY89103-00289	294	
	298	
NY89103-00290	294	
	298	
NY89103-00291	294	
	298	
NY89103-00292	294	
	298	
RFU419B-418-A	339	1
RFU419B-418-B	339	6
RFU419B-418-C	339	15
	339	7
RFU419B-418-D	339	3
RFU419B-418-E	339	4
RFU419B-418-F	339	16

PC210-10M0, PC210LC-10M0 Hydraulic Excavator (Track Type)

Form No. FENC0032-00

©2018 KOMATSU
All Rights Reserved
Printed in Thailand 11-18